GENERAL INFORMATION SECTION

FOREWORD	FW
HOW TO USE THIS MANUAL	HU
SPECIFICATIONS	SPC
PRECAUTION	PC
REPAIR CONTENTS	RC
IDENTIFICATION	ID
RECOMMENDED MATERIALS	RM
PRE-DELIVERY INSPECTION	PI
PERIODIC MAINTENANCE SERVICES	PM

This service manual has been prepared to provide SUBARU service personnel with the necessary information and data for the correct maintenance and repair of SUBARU vehicles.
This manual includes the procedures for maintenance, disassembling, reassembling, inspection and adjustment of components and diagnostics for guidance of experienced mechanics.
Please peruse and utilize this manual fully to ensure complete repair work for satisfying our customers by keeping their vehicle in optimum condition. When replacement of parts during repair work is needed, be sure to use SUBARU genuine parts.

All information, illustration and specifications contained in this manual are based on the latest product information available at the time of publication approval.

FUJI HEAVY INDUSTRIES LTD. G2520BE1

FOREWORD

FW

Page

1. Foreword 2

1. Foreword

A: FOREWORD

These manuals are used when performing maintenance, repair or diagnosis of Subaru LEGACY and Subaru OUTBACK.

Applicable model:
2016MY BN*****, BS*****

The manuals contain the latest information at the time of publication. Changes in the specifications, methods, etc. may be made without notice.

HOW TO USE THIS MANUAL

HU

Page
1. How to Use This Manual 2

1. How to Use This Manual

A: HOW TO USE THIS MANUAL

1. STRUCTURE

Each section consists of SCT that are broken down into SC that are divided into sections for each component. The specification, maintenance and other information for the components are included, and the diagnostic information has also been added where necessary.

2. CONTENTS

The first page has an index with tabs.

3. COMPONENT

Illustrations are provided for each component. The information necessary for repair work (tightening torque, grease up points, etc.) is described on these illustrations. Information is described using symbol.
To order parts, refer to parts catalogue.

Example:

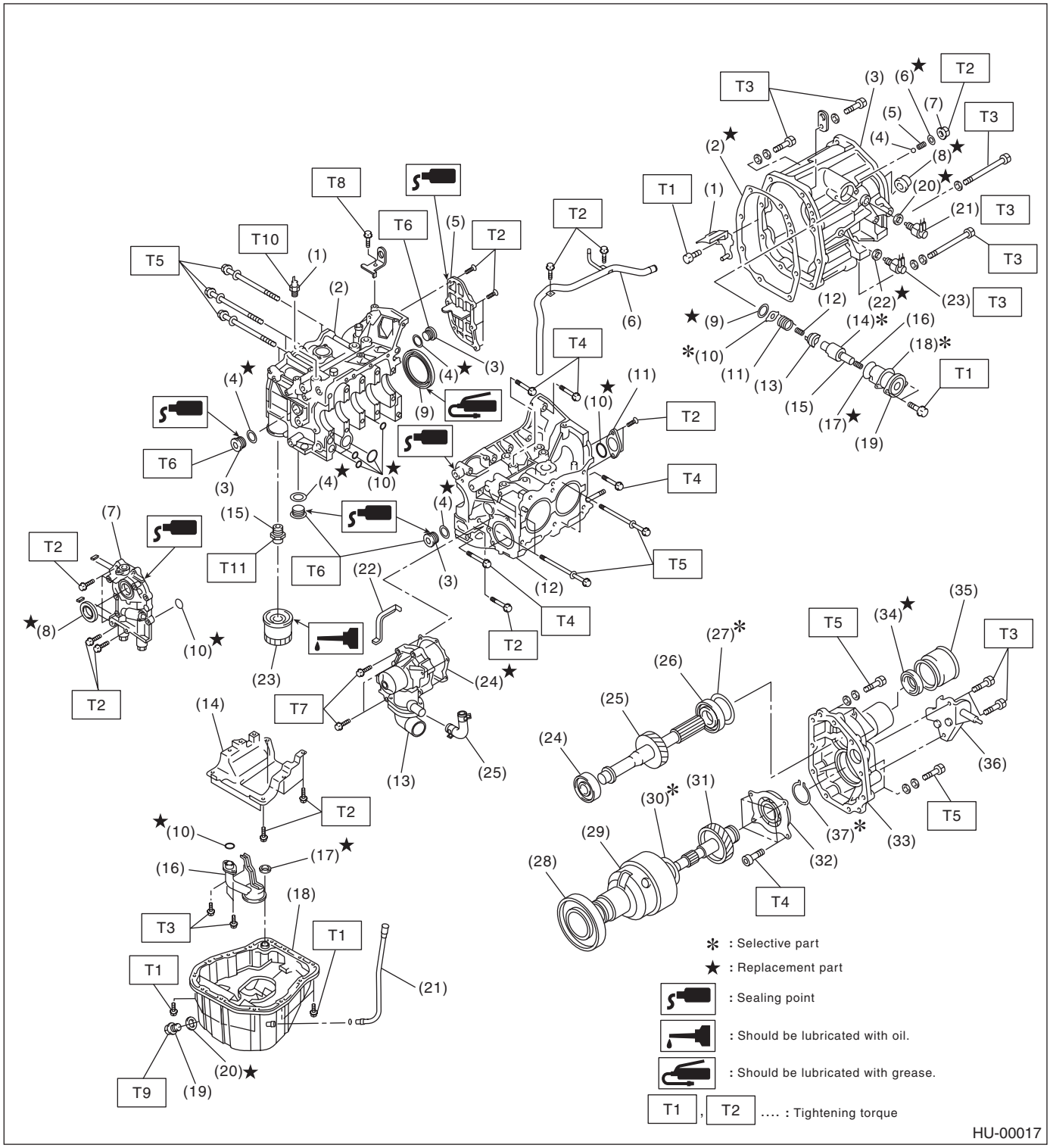

4. DEFINITIONS OF “NOTE”, “CAUTION” AND “WARNING”

- NOTE:

Describes additional information to make works easier.

- CAUTION:

Describes prohibited matters to prevent vehicle or parts damage, or matters that requires special attention during work.

- WARNING:

Describes matters that may cause serious damage to the operator or other person, or that may cause damage or accident.

5. SPECIFICATIONS

If necessary, specifications are also included.

6. INSPECTION

Inspections to be carried out before and after maintenance are included.

7. MAINTENANCE

• Maintenance instructions for serviceable parts describe work area and detailed step with illustration. It also describes the use of special tool, tightening torque, caution for each procedure.
• If many serviceable parts are included in one service procedure, appropriate reference is provided for each part.

Example:

15.Main Shaft ← (A)

A: REMOVAL ← (B)

1) Remove the manual transmission assembly from vehicle. <Ref. to MT-33, REMOVAL, Manual Transmission Assembly.> ← (C)

---

11) Tighten the lock nuts to the specified torque using ST1 and ST2.

NOTE: ← (D)
Secure the lock nuts in two places after tightening.

ST1 498937000 TRANSMISSION HOLDER
ST2 499987003 (E) SOCKET WRENCH (35) (F)

Tightening torque:
118 N·m (12.0 kgf-m, 86.8 ft-lb) ← (G)

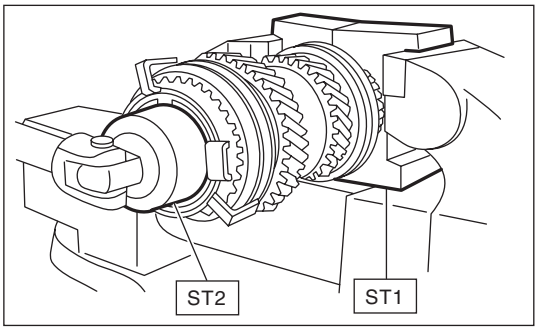

← (H)

HU-00020

(A) Component
(B) Process
(C) Reference
(D) Cautions
(E) Tool number of special tool
(F) Name of special tool
(G) Tightening torque
(H) Illustration

8. DIAGNOSIS

Step-by-step process is employed for easier diagnosis.

9. SI UNITS

Measurements in these manuals are according to the SI units. Metric and yard/pound measurements are also included.

Example:

Tightening torque:
44 N·m (4.5 kgf-m, 33 ft-lb)

List of SI unit

Item	SI units	Conventional unit	Remarks
Force	N (Newton)	kgf	1 kgf = 9.807 N
Mass (weight)	kg, g	kg, g	
Capacity	L, mL or cm^3	L or cc	1 cc = 1 cm^3 = 1 mL
Torque	N·m	kgf-m, kgf-cm	1 kgf-m = 9.807 N·m
Rotating speed	r/min	rpm	
Pressure	kPa (Kilopascal)	kgf/cm^2	1 kgf/cm^2 = 98.07 kPa
		mmHg	1 mmHg = 0.1333 kPa
Power	W	PS	1 PS = 0.7355 kW
Calorie	W·h	cal	1 kcal = 1.163 W·h
Fuel consumption rate	g/kW·h	g/PS·h	1 g/PS·h = 1.3596 g/kW·h

The figure used in these manuals are described in the SI units and conventional units are described in ( ).

10.EXPLANATION OF TERMINOLOGY

List

2ndr	Secondary
AAI	Air Assist Injection
AAR	Angular Adjusted Roller
A/B	Airbag
ABS	Anti-lock Brake System
A/C	Air Conditioner
AC	Angular Contact
ACC	Accessory
A/F	Air Fuel Ratio
AFS	Adaptive Front Lighting System
ALT	Generator
API	American Petroleum Institute
APS	Accessory Power Supply Socket
ASSY	Assembly
AT	Automatic Transmission
ATF	Automatic Transmission Fluid
AUX	Auxiliary Storage Unit (External storage)
AVCS	Active Valve Control System
AWD	All Wheel Drive
BATT	Battery
BCM	Brake Control Module
BJ	Bell Joint
BRKT	Bracket
BSD/RCTA	Blind Spot Detection/Rear Cross Traffic Alert
CAN	Controller Area Network
CCA	Cold Cranking Ampere
CD	Compact Disc
CD-R/RW	CD Recordable/Rewritable
COMPL	Complete
CPC	Canister Purge Control Solenoid Valve
CPU	Central Processing Unit
CTR	Center
CM	Control Module
CVT	Continuously Variable Transmission
CVTF	Continuously Variable Transmission Fluid
DCCD	Driver's Control Center Differential
DOHC	Double Overhead Camshaft
DOJ	Double Offset Joint
D/R	Dual-range
DTC	Diagnosis Trouble Code
DU	Drive Unit
DVD	Digital Versatile Disc or Digital Video Disc
EBD	Electronic Brake Distribution
EBJ	High-Efficiency Compact Ball Fixed Joint
ECM	Engine Control Module
EDJ	High-Efficiency Compact Double Offset Joint
E/G	Engine
EGI	Electronic Gasoline Injection

EGR	Exhaust Gas Recirculation
ELR	Emergency Locking Retractor
EPB	Electronic Parking Brake
ETC	Electronic Throttle Control
EX	Exhaust
F/B	Fuse & Joint Box
FL	Fusible Link
Ft	Front
FWD	Front Wheel Drive
GPS	Global Positioning System
HBA	High Beam Assist
HI	High
HID	High-Intensity Discharge
H/K	Harman/Kardon Audio
H/L	Headlight
H/U	Hydraulic Unit
HVAC	Heater, Ventilator and Air Conditioner
I/F	Interface
IG	Ignition
ILSAC	International Lubricants Standardization and Approval Committee
IN	Intake
INT	Intermittent
I/O	Input/Output
IR	Infrared Ray
ISC	Idle Speed Control
K/A	Keyless access
LAN	Local Area Network
LCD	Liquid Crystal Display
LED	Light Emitting Diode
LH	LH (Left Hand)
LHD	Left Hand Drive
Lo	Low
LSD	Limited Slip Differential
LWR	Lower
M/B	Main Fuse & Relay Box
MD	Mini Disc
MID	Multi Information Display
MFI	Multi-Point Fuel Injection
MP-T	Multi-Plate Transfer
M/R	Moon Roof
MT	Manual Transmission
NA	Natural Aspiration
NC	Normal Close (Relay)
NO	Normal Open (Relay)
OBD	On-Board Diagnosis
OP	Option Parts
PC	Personal Computer
PCD	Pitch Circle Diameter
PCV	Positive Crankcase Ventilation
PID	Parameter Identification
Pr	Primary

PRG	Power Rear Gate
P/S	Power Steering
PTJ	Pillow Tripod Joint
P/W	Power Window
RAM	Random Access Memory
RH	RH (Right Hand)
RHD	Right Hand Drive
ROM	Read Only Memory
Rr	Rear
SDI	Subaru Diagnostic Interface
SI	Subaru Intelligent
SOHC	Single Overhead Camshaft
SRS	Supplemental Restraint System
SSM	Subaru Select Monitor
ST	Special Tool
STD	Standard
SW	Switch
T/B	Turbocharger
TCS	Traction Control System
TCM	Transmission Control Module
TGV	Tumble Generator Valve
T/M	Transmission
TPMS	Tire Pressure Monitoring System
UJ	Universal Joint
UPR	Upper
UV	Ultraviolet
VDC	Vehicle Dynamics Control
V.I.N.	Vehicle Identification Number
ViS-C	Viscous Coupling
VSV	Vacuum Switching Valve
VTD	Variable Torque Distribution
W/H	Wiring Harness

SPECIFICATIONS

SPC

Page

1. LEGACY 2
2. OUTBACK 9

1. LEGACY

A: DIMENSION

Model			2.5 L DOHC non-turbo	3.6 L DOHC non-turbo
Overall length		mm (in)	4,796 (188.8)	
Overall width		mm (in)	1,840 (72.4)	
Overall height (at C.W.[*1])		mm (in)	1,500 (59.0)	
Compartment	Length	mm (in)	2,035 (80.1)	
	Width	mm (in)	1,545 (60.8)	
	Height	mm (in)	1,220 (48.0), 1,185 (46.7)[*2]	
Wheelbase		mm (in)	2,750 (108.3)	
Tread	Front	mm (in)	1,580 (62.2)	
	Rear	mm (in)	1,595 (62.8)	
Minimum road clearance		mm (in)	150 (5.9)	

[*1]: Curb weight
[*2]: With sunroof

B: ENGINE

Model	2.5 L DOHC non-turbo	3.6 L DOHC non-turbo
Engine type	Horizontally opposed, liquid cooled, 4-cylinder, 4-stroke gasoline engine	Horizontally opposed, liquid cooled, 6-cylinder, 4-stroke gasoline engine
Valve arrangement	DOHC	
Bore × stroke mm (in)	94.0 × 90.0 (3.70 × 3.54)	92.0 × 91.0 (3.62 × 3.58)
Displacement cm^3 (cu in)	2,498 (152)	3,630 (221.5)
Compression ratio	10.3	10.5
Ignition order	1 — 3 — 2 — 4	1 — 6 — 3 — 2 — 5 — 4
Idle speed at parking or neutral position r/min	CVT: 675±100 MT: 650±100	700±100
Maximum output kW (HP)/(r/min)	130 (175)/5,800	191 (256)/6,000
Maximum torque N·m (kgf-m, ft-lb)/(r/min)	235 (24.0, 174)/4,000	335 (34.1, 247)/4,400

C: ELECTRICAL

Model		2.5 L DOHC non-turbo	3.6 L DOHC non-turbo
Ignition timing (at idling) BTDC		CVT: 5°±10° MT: 6°±10°	15°±8°
Spark plug	Type and manufacturer	NGK: SILZKAR7B11	NGK: SILFR6C11
Generator		12 V — 130 A	
Battery	Type and capacity (5HR)	12 V — 48AH (55D23R)	12 V — 52AH (75D23R)
	CCA	356 A	490 A

D: TRANSMISSION

1. MT

Model			2.5 L DOHC non-turbo
Transmission type			6MT
Clutch type			DSPD
Gear ratio		1st	3.545
		2nd	1.888
		3rd	1.296
		4th	1.029
		5th	0.825
		6th	0.738
		Rev.	3.636
Reduction gear (front)		Type of gear	Hypoid
		Gear ratio	4.111
Transfer reduction		Type of gear	Helical
		Gear ratio	1.000
Reduction gear (rear)	Final reduction	Type of gear	Hypoid
		Gear ratio	4.111

6MT: 6-forward speeds and 1-reverse with synchromesh
DSPD: Dry Single Plate Diaphragm

2. CVT

Model			2.5 L DOHC non-turbo	3.6 L DOHC non-turbo
Transmission type			CVT	
Clutch type			TCC	
Gear ratio		Forward	3.581 — 0.570	3.105 — 0.482
		Reverse	3.667	3.018
Reduction gear (front)	Final reduction	Type of gear	Hypoid	
		Gear ratio	3.900	4.111
Transfer reduction ratio			1.000	
Reduction gear (rear)		Type of gear	Hypoid	
		Gear ratio	3.900	4.111

CVT: Forward continuously variable speed change, 1-reverse
TCC: Torque Converter Clutch

E: STEERING

Model	2.5 L DOHC non-turbo	3.6 L DOHC non-turbo
Type	Rack and pinion	
	Electric power steering	
Turns, lock to lock	2.82	
Minimum turning radius m (ft)	5.6 (18.37)	

F: SUSPENSION

Model	2.5 L DOHC non-turbo	3.6 L DOHC non-turbo
Front	Macpherson strut type suspension	
Rear	Double-wishbone type suspension	

G: BRAKE

Model	2.5 L DOHC non-turbo	3.6 L DOHC non-turbo
Service brake system	Dual circuit hydraulic with vacuum suspended power unit	
Front	Ventilated disc brake	
Rear	Ventilated disc brake	
Parking brake	Electrical on rear brakes	

H: TIRE

Model	2.5 L DOHC non-turbo	3.6 L DOHC non-turbo
Wheel size	17 × 7J 17 × 7 1/2J 18 × 7 1/2J	17 × 7 1/2J 18 × 7 1/2J
Tire size	225/55R17 97V 225/50R18 95H	
Type	Tubeless, steel belted radial	

I: CAPACITY

Model			2.5 L DOHC non-turbo		3.6 L DOHC non-turbo
			6MT	CVT	
Fuel tank		L (US gal, Imp gal)	70 (18.5, 15.4)		
Engine oil	Total capacity (at overhaul)	L (US qt, Imp qt)	5.7 (6.0, 5.0)		7.8 (8.2, 6.9)
	Filling amount of engine oil L (US qt, Imp qt)	When replacing engine oil and oil filter	4.8 (5.1, 4.2)		6.5 (6.9, 5.7)
		When replacing engine oil only	4.6 (4.9, 4.0)		6.3 (6.7, 5.5)
Transmission gear oil		L (US qt, Imp qt)	3.3 (3.5, 2.9)	—	
CVTF		L (US qt, Imp qt)	—	10.95 — 11.45 (11.6 — 12.1, 9.6 — 10.1)	12.45 — 12.95 (13.2 — 13.7, 11.0 — 11.4)
CVT front differential gear oil		L (US qt, Imp qt)	—	1.14 — 1.24 (1.2 — 1.3, 1.0 — 1.1)	1.3 — 1.5 (1.4 — 1.6, 1.1 — 1.3)
Rear differential gear oil		L (US qt, Imp qt)	0.8 (0.8, 0.7)		
Engine coolant		L (US qt, Imp qt)	7.6 (8.0, 6.7)	7.8 (8.2, 6.9)	7.0 (7.4, 6.2)

J: WEIGHT

Model			SEDAN								
			2.5 L DOHC non-turbo								
			2.5 i					2.5 i-P			
			6MT	CVT				6MT	CVT		
OP code			C0	C0	C5	U5	U6	C0	C0	U5	U5
			KX	KX	KX	QX	QX	KC	KC	KA	KC
Curb weight (C.W.)	Total	kg (lb)	1,537 (3,388)	1,575 (3,472)	1,575 (3,472)	1,573 (3,468)	1,573 (3,468)	1,543 (3,402)	1,581 (3,485)	1,568 (3,457)	1,581 (3,485)
	Front	kg (lb)	884 (1,949)	925 (2,039)	925 (2,039)	924 (2,037)	924 (2,037)	887 (1,955)	929 (2,048)	923 (2,035)	929 (2,048)
	Rear	kg (lb)	653 (1,439)	650 (1,433)	650 (1,433)	649 (1,431)	649 (1,431)	656 (1,447)	652 (1,437)	645 (1,422)	652 (1,437)
Gross vehicle weight (G.V.W.)		kg (lb)	2,050 (4,519)	2,050 (4,519)	2,050 (4,519)	2,050 (4,519)	2,050 (4,519)	2,050 (4,519)	2,050 (4,519)	2,050 (4,519)	2,050 (4,519)
Maximum permissible axle weight (G.A.W.)	Front	kg (lb)	1,150 (2,535)	1,150 (2,535)	1,150 (2,535)	1,150 (2,535)	1,150 (2,535)	1,150 (2,535)	1,150 (2,535)	1,150 (2,535)	1,150 (2,535)
	Rear	kg (lb)	1,200 (2,645)	1,200 (2,645)	1,200 (2,645)	1,200 (2,645)	1,200 (2,645)	1,200 (2,645)	1,200 (2,645)	1,200 (2,645)	1,200 (2,645)
Option	HID headlight		—	—	—	—	—	—	—	—	—
	Power seat		○	○	○	—	—	○	○	○	○
	Keyless access with push button start		—	—	—	—	—	—	—	—	—
	Genuine leather seat		—	—	—	—	—	—	—	—	—
	L package		—	—	—	—	—	—	—	—	—
	Rearview camera		○	○	○	○	○	○	○	○	○
	Power rear gate		—	—	—	—	—	—	—	—	—
	Dark-colored glass		—	—	—	—	—	—	—	—	—
	Winter pack		—	—	—	—	—	○	○	○	○
	HK-type audio		—	—	—	—	—	—	—	—	—
	Navigation system		—	—	—	—	—	—	—	—	—
	Navigation system + HK audio		—	—	—	—	—	—	—	—	—
	Sunroof		—	—	—	—	—	○	○	—	○

Model			SEDAN								
			2.5 L DOHC non-turbo								
			2.5 i-P				2.5 i-P EyeSight				
			CVT								
OP code			U5	U6	U6	U6	C0	U5	U5	U6	U6
			KE	KA	KC	KE	FC	KA	KE	KA	KE
Curb weight (C.W.)	Total	kg (lb)	1,582 (3,488)	1,568 (3,457)	1,581 (3,485)	1,582 (3,488)	1,582 (3,488)	1,569 (3,459)	1,583 (3,490)	1,569 (3,459)	1,583 (3,490)
	Front	kg (lb)	929 (2,048)	923 (2,035)	929 (2,048)	929 (2,048)	929 (2,048)	924 (2,037)	930 (2,050)	924 (2,037)	930 (2,050)
	Rear	kg (lb)	653 (1,439)	645 (1,422)	652 (1,437)	653 (1,439)	653 (1,440)	645 (1,422)	653 (1,440)	645 (1,422)	653 (1,440)
Gross vehicle weight (G.V.W.)		kg (lb)	2,050 (4,519)	2,050 (4,519)	2,050 (4,519)	2,050 (4,519)	2,050 (4,519)	2,050 (4,519)	2,050 (4,519)	2,050 (4,519)	2,050 (4,519)
Maximum permissible axle weight (G.A.W.)	Front	kg (lb)	1,150 (2,535)	1,150 (2,535)	1,150 (2,535)	1,150 (2,535)	1,150 (2,535)	1,150 (2,535)	1,150 (2,535)	1,150 (2,535)	1,150 (2,535)
	Rear	kg (lb)	1,200 (2,645)	1,200 (2,645)	1,200 (2,645)	1,200 (2,645)	1,200 (2,645)	1,200 (2,645)	1,200 (2,645)	1,200 (2,645)	1,200 (2,645)
Option	HID headlight		—	—	—	—	—	—	—	—	—
	Power seat		○	○	○	○	○	○	○	○	○
	Keyless access with push button start		—	—	—	—	○	—	—	—	—
	Genuine leather seat		—	—	—	—	—	—	—	—	—
	L package		—	—	—	—	—	—	—	—	—
	Rearview camera		○	○	○	○	○	○	○	○	○
	Power rear gate		—	—	—	—	—	—	—	—	—
	Dark-colored glass		—	—	—	—	—	—	—	—	—
	Winter pack		○	○	○	○	○	○	○	○	○
	HK-type audio		—	—	—	—	—	—	—	—	—
	Navigation system		○	—	—	○	—	—	○	—	○
	Navigation system + HK audio		—	—	—	—	—	—	—	—	—
	Sunroof		○	—	○	○	○	—	○	—	○

Model			SEDAN					
			2.5 L DOHC non-turbo					
			2.5 i-L					
			CVT					
OP code			C0	C0	U5	U5	U6	U6
			WG	WV	2W	GG	2W	GG
Curb weight (C.W.)	Total	kg (lb)	1,597 (3,521)	1,596 (3,519)	1,583 (3,490)	1,598 (3,523)	1,583 (3,490)	1,598 (3,523)
	Front	kg (lb)	934 (2,059)	934 (2,059)	928 (2,046)	934 (2,059)	928 (2,046)	934 (2,059)
	Rear	kg (lb)	663 (1,462)	662 (1,460)	655 (1,444)	664 (1,464)	655 (1,444)	664 (1,464)
Gross vehicle weight (G.V.W.)		kg (lb)	2,050 (4,519)	2,050 (4,519)	2,050 (4,519)	2,050 (4,519)	2,050 (4,519)	2,050 (4,519)
Maximum permissible axle weight (G.A.W.)	Front	kg (lb)	1,150 (2,535)	1,150 (2,535)	1,150 (2,535)	1,150 (2,535)	1,150 (2,535)	1,150 (2,535)
	Rear	kg (lb)	1,200 (2,645)	1,200 (2,645)	1,200 (2,645)	1,200 (2,645)	1,200 (2,645)	1,200 (2,645)
Option	HID headlight		○	○	—	—	—	—
	Power seat		○	○	○	○	○	○
	Keyless access with push button start		—	—	—	○	—	○
	Genuine leather seat		○	○	○	○	○	○
	L package		○	○	○	○	○	○
	Rearview camera		○	○	○	○	○	○
	Power rear gate		—	—	—	—	—	—
	Dark-colored glass		—	—	—	—	—	—
	Winter pack		○	○	○	○	○	○
	HK-type audio		—	○	○	—	○	—
	Navigation system		—	—	—	—	—	—
	Navigation system + HK audio		○	—	—	○	—	○
	Sunroof		○	○	—	○	—	○

Model			SEDAN									
			2.5 L DOHC non-turbo			3.6 L DOHC non-turbo						
			2.5 i-L EyeSight			3.6 R	3.6 R-P	3.6 R-L			3.6 R-L EyeSight	
			CVT									
OP code			C0	U5	U6	C0	C0	C0	C0	U4	C0	U4
			CG	GG	GG	KX	KC	WG	WV	WW	CG	CG
Curb weight (C.W.)	Total	kg (lb)	1,598 (3,523)	1,599 (3,525)	1,599 (3,525)	1,645 (3,627)	1,659 (3,657)	1,676 (3,695)	1,675 (3,693)	1,663 (3,666)	1,677 (3,697)	1,679 (3,701)
	Front	kg (lb)	935 (2,061)	935 (2,061)	935 (2,061)	980 (2,160)	986 (2,174)	992 (2,187)	992 (2,187)	987 (2,176)	993 (2,189)	994 (2,191)
	Rear	kg (lb)	663 (1,462)	664 (1,464)	664 (1,464)	665 (1,467)	673 (1,483)	684 (1,508)	683 (1,506)	676 (1,490)	684 (1,508)	685 (1,510)
Gross vehicle weight (G.V.W.)		kg (lb)	2,050 (4,519)	2,050 (4,519)	2,050 (4,519)	2,100 (4,629)	2,100 (4,629)	2,100 (4,629)	2,100 (4,629)	2,100 (4,629)	2,100 (4,629)	2,100 (4,629)
Maximum permissible axle weight (G.A.W.)	Front	kg (lb)	1,150 (2,535)	1,150 (2,535)	1,150 (2,535)	1,150 (2,535)	1,150 (2,535)	1,150 (2,535)	1,150 (2,535)	1,150 (2,535)	1,150 (2,535)	1,150 (2,535)
	Rear	kg (lb)	1,200 (2,645)	1,200 (2,645)	1,200 (2,645)	1,200 (2,645)	1,200 (2,645)	1,200 (2,645)	1,200 (2,645)	1,200 (2,645)	1,200 (2,645)	1,200 (2,645)
Option	HID headlight		○	—	—	—	—	○	○	○	○	○
	Power seat		○	○	○	○	○	○	○	○	○	○
	Keyless access with push button start		○	○	○	—	—	—	—	—	○	○
	Genuine leather seat		○	○	○	—	—	○	○	○	○	○
	L package		○	○	○	—	—	○	○	○	○	○
	Rearview camera		○	○	○	○	○	○	○	○	○	○
	Power rear gate		—	—	—	—	—	—	—	—	—	—
	Dark-colored glass		—	—	—	—	—	—	—	—	—	—
	Winter pack		○	○	○	—	○	○	○	○	○	○
	HK-type audio		—	—	—	—	—	—	○	○	—	—
	Navigation system		—	—	—	—	—	—	—	—	—	—
	Navigation system + HK audio		○	○	○	—	—	○	—	—	○	○
	Sunroof		○	○	○	—	○	○	○	—	○	○

2. OUTBACK

A: DIMENSION

Model			2.5 L DOHC non-turbo	3.6 L DOHC non-turbo
Overall length		mm (in)	4,817 (189.6)	
Overall width		mm (in)	1,840 (72.4)	
Overall height (at C.W.*1)		mm (in)	1,680 (66.1)	
Compartment	Length	mm (in)	2,035 (80.1)	
	Width	mm (in)	1,545 (60.8)	
	Height	mm (in)	1,240 (48.8), 1,205 (47.4)*2	
Wheelbase		mm (in)	2,745 (108.1)	
Tread	Front	mm (in)	1,570 (61.8)	
	Rear	mm (in)	1,580 (62.2)	
Minimum road clearance		mm (in)	220 (8.7)	

*1: Curb weight
*2: With sunroof

B: ENGINE

Model		2.5 L DOHC non-turbo	3.6 L DOHC non-turbo
Engine type		Horizontally opposed, liquid cooled, 4-cylinder, 4-stroke gasoline engine	Horizontally opposed, liquid cooled, 6-cylinder, 4-stroke gasoline engine
Valve arrangement		DOHC	
Bore × stroke	mm (in)	94.0 × 90.0 (3.70 × 3.54)	92.0 × 91.0 (3.62 × 3.58)
Displacement	cm^3 (cu in)	2,498 (152)	3,630 (221.5)
Compression ratio		10.3	10.5
Ignition order		1 — 3 — 2 — 4	1 — 6 — 3 — 2 — 5 — 4
Idle speed at parking or neutral position	r/min	CVT: 675±100 MT: 650±100	700±100
Maximum output	kW (HP)/(r/min)	130 (175)/5,800	191 (256)/6,000
Maximum torque	N·m (kgf-m, ft-lb)/(r/min)	235 (24.0, 174)/4,000	335 (34.1, 247)/4,400

C: ELECTRICAL

Model		2.5 L DOHC non-turbo	3.6 L DOHC non-turbo
Ignition timing (at idling)	BTDC	CVT: 5°±10° MT: 6°±10°	15°±8°
Spark plug	Type and manufacturer	NGK: SILZKAR7B11	NGK: SILFR6C11
Generator		12 V — 130 A	
Battery	Type and capacity (5HR)	12 V — 48AH (55D23R)	12 V — 52AH (75D23R)
	CCA	356 A	490 A

D: TRANSMISSION

1. MT

Model			2.5 L DOHC non-turbo
Transmission type			6MT
Clutch type			DSPD
Gear ratio		1st	3.545
		2nd	1.888
		3rd	1.296
		4th	1.029
		5th	0.825
		6th	0.738
		Rev.	3.636
Reduction gear (front)		Type of gear	Hypoid
		Gear ratio	4.444
Transfer reduction		Type of gear	Helical
		Gear ratio	1.000
Reduction gear (rear)	Final reduction	Type of gear	Hypoid
		Gear ratio	4.444

6MT: 6-forward speeds and 1-reverse with synchromesh
DSPD: Dry Single Plate Diaphragm

2. CVT

Model			2.5 L DOHC non-turbo	3.6 L DOHC non-turbo
Transmission type			CVT	
Clutch type			TCC	
Gear ratio		Forward	3.581 — 0.570	3.105 — 0.482
		Reverse	3.667	3.018
Reduction gear (front)	Final reduction	Type of gear	Hypoid	
		Gear ratio	4.111	
Transfer reduction ratio			1.000	
Reduction gear (rear)		Type of gear	Hypoid	
		Gear ratio	4.111	

CVT: Forward continuously variable speed change, 1-reverse
TCC: Torque Converter Clutch

E: STEERING

Model	2.5 L DOHC non-turbo	3.6 L DOHC non-turbo
Type	Rack and pinion	
	Electric power steering	
Turns, lock to lock	2.82	
Minimum turning diameter m (ft)	5.4 (17.72)	

F: SUSPENSION

Model	2.5 L DOHC non-turbo	3.6 L DOHC non-turbo
Front	Macpherson strut type suspension	
Rear	Double-wishbone type suspension	

G: BRAKE

Model	2.5 L DOHC non-turbo	3.6 L DOHC non-turbo
Service brake system	Dual circuit hydraulic with vacuum suspended power unit	
Front	Ventilated disc brake	
Rear	Ventilated disc brake	
Parking brake	Electrical on rear brakes	

H: TIRE

Model	2.5 L DOHC non-turbo	3.6 L DOHC non-turbo
Wheel size	17 × 7J 18 × 7J	
Tire size	225/65R17 102H 225/60R18 100H	
Type	Tubeless, steel belted radial	

I: CAPACITY

Model			2.5 L DOHC non-turbo		3.6 L DOHC non-turbo
			6MT	CVT	
Fuel tank		L (US gal, Imp gal)	70 (18.5, 15.4)		
Engine oil	Total capacity (at overhaul)	L (US qt, Imp qt)	5.7 (6.0, 5.0)		7.8 (8.2, 6.9)
	Filling amount of engine oil L (US qt, Imp qt)	When replacing engine oil and oil filter	4.8 (5.1, 4.2)		6.5 (6.9, 5.7)
		When replacing engine oil only	4.6 (4.9, 4.0)		6.3 (6.7, 5.5)
Transmission gear oil		L (US qt, Imp qt)	3.3 (3.5, 2.9)	—	
CVTF		L (US qt, Imp qt)	—	11.36 — 11.86 (12.0 — 12.5, 10.0 — 10.4)	12.45 — 12.95 (13.2 — 13.7, 11.0 — 11.4)
CVT front differential gear oil		L (US qt, Imp qt)	—	1.14 — 1.24 (1.2 — 1.3, 1.0 — 1.1)	1.3 — 1.5 (1.4 — 1.6, 1.1 — 1.3)
Rear differential gear oil		L (US qt, Imp qt)	0.8 (0.8, 0.7)		
Engine coolant		L (US qt, Imp qt)	7.6 (8.0, 6.7)	7.8 (8.2, 6.9)	7.0 (7.4, 6.2)

J: WEIGHT

Model			OUTBACK								
			2.5 L DOHC non-turbo								
			2.5 i					2.5 i-P			
			6MT	CVT				6MT	CVT		
OP code			C0	C0	C5	U5	U6	C0	C0	U5	U5
			KJ	KJ	KJ	QX	QX	3F	3F	KI	3F
Curb weight (C.W.)	Total	kg (lb)	1,600 (3,527)	1,635 (3,604)	1,635 (3,604)	1,630 (3,593)	1,630 (3,593)	1,614 (3,558)	1,650 (3,638)	1,631 (3,596)	1,651 (3,640)
	Front	kg (lb)	891 (1,964)	931 (2,052)	931 (2,052)	930 (2,050)	930 (2,050)	892 (1,966)	934 (2,059)	930 (2,050)	935 (2,061)
	Rear	kg (lb)	709 (1,563)	704 (1,552)	704 (1,552)	700 (1,543)	700 (1,543)	722 (1,592)	716 (1,579)	701 (1,546)	716 (1,579)
Gross vehicle weight (G.V.W.)		kg (lb)	2,130 (4,695)	2,130 (4,695)	2,130 (4,695)	2,130 (4,695)	2,130 (4,695)	2,130 (4,695)	2,130 (4,695)	2,130 (4,695)	2,130 (4,695)
Maximum permissible axle weight (G.A.W.)	Front	kg (lb)	1,150 (2,535)	1,150 (2,535)	1,150 (2,535)	1,150 (2,535)	1,150 (2,535)	1,150 (2,535)	1,150 (2,535)	1,150 (2,535)	1,150 (2,535)
	Rear	kg (lb)	1,200 (2,645)	1,200 (2,645)	1,200 (2,645)	1,200 (2,645)	1,200 (2,645)	1,200 (2,645)	1,200 (2,645)	1,200 (2,645)	1,200 (2,645)
Option	HID headlight		—	—	—	—	—	—	—	—	—
	Power seat		○	○	○	—	—	○	○	○	○
	Keyless access with push button start		—	—	—	—	—	—	—	—	—
	Genuine leather seat		—	—	—	—	—	—	—	—	—
	L package		—	—	—	—	—	—	—	—	—
	Rearview camera		○	○	○	○	○	○	○	○	○
	Power rear gate		—	—	—	—	—	○	○	—	○
	Dark-colored glass		○	○	○	—	—	○	○	○	○
	Winter pack		—	—	—	—	—	○	○	○	○
	HK-type audio		—	—	—	—	—	—	—	—	—
	Navigation system		—	—	—	—	—	—	—	—	—
	Navigation system + HK audio		—	—	—	—	—	—	—	—	—
	Sunroof		—	—	—	—	—	○	○	—	○

Model			OUTBACK								
			2.5 L DOHC non-turbo								
			2.5 i-P				2.5 i-P EyeSight				
			CVT								
OP code			U5	U6	U6	U6	C0	U5	U5	U6	U6
			3H	KI	3F	3H	UF	3I	3H	3I	3H
Curb weight (C.W.)	Total	kg (lb)	1,652 (3,642)	1,631 (3,596)	1,651 (3,640)	1,652 (3,642)	1,651 (3,640)	1,639 (3,613)	1,654 (3,646)	1,639 (3,613)	1,654 (3,646)
	Front	kg (lb)	935 (2,061)	930 (2,050)	935 (2,061)	935 (2,061)	935 (2,061)	930 (2,050)	936 (2,063)	930 (2,050)	936 (2,063)
	Rear	kg (lb)	717 (1,581)	701 (1,546)	716 (1,579)	717 (1,581)	716 (1,579)	709 (1,563)	718 (1,583)	709 (1,563)	718 (1,583)
Gross vehicle weight (G.V.W.)		kg (lb)	2,130 (4,695)	2,130 (4,695)	2,130 (4,695)	2,130 (4,695)	2,130 (4,695)	2,130 (4,695)	2,130 (4,695)	2,130 (4,695)	2,130 (4,695)
Maximum permissible axle weight (G.A.W.)	Front	kg (lb)	1,150 (2,535)	1,150 (2,535)	1,150 (2,535)	1,150 (2,535)	1,150 (2,535)	1,150 (2,535)	1,150 (2,535)	1,150 (2,535)	1,150 (2,535)
	Rear	kg (lb)	1,200 (2,645)	1,200 (2,645)	1,200 (2,645)	1,200 (2,645)	1,200 (2,645)	1,200 (2,645)	1,200 (2,645)	1,200 (2,645)	1,200 (2,645)
Option	HID headlight		—	—	—	—	—	—	—	—	—
	Power seat		○	○	○	○	○	○	○	○	○
	Keyless access with push button start		—	—	—	—	○	—	—	—	—
	Genuine leather seat		—	—	—	—	—	—	—	—	—
	L package		—	—	—	—	—	—	—	—	—
	Rearview camera		○	○	○	○	○	○	○	○	○
	Power rear gate		○	—	○	○	○	○	○	○	○
	Dark-colored glass		○	○	○	○	○	○	○	○	○
	Winter pack		○	○	○	○	○	○	○	○	○
	HK-type audio		—	—	—	—	—	—	—	—	—
	Navigation system		○	—	—	○	—	—	○	—	○
	Navigation system + HK audio		—	—	—	—	—	—	—	—	—
	Sunroof		○	—	○	○	○	—	○	—	○

SPECIFICATIONS

Model			OUTBACK					
			2.5 L DOHC non-turbo					
			2.5 i-L					
			CVT					
OP code			C0	C0	U5	U5	U6	U6
			AP	AT	1Z	5P	1Z	5P
Curb weight (C.W.)	Total	kg (lb)	1,664 (3,668)	1,663 (3,666)	1,650 (3,638)	1,665 (3,671)	1,650 (3,638)	1,665 (3,671)
	Front	kg (lb)	938 (2,068)	938 (2,068)	932 (2,055)	938 (2,068)	932 (2,055)	938 (2,068)
	Rear	kg (lb)	726 (1,600)	725 (1,598)	718 (1,583)	727 (1,603)	718 (1,583)	727 (1,603)
Gross vehicle weight (G.V.W.)		kg (lb)	2,130 (4,695)	2,130 (4,695)	2,130 (4,695)	2,130 (4,695)	2,130 (4,695)	2,130 (4,695)
Maximum permissible axle weight (G.A.W.)	Front	kg (lb)	1,150 (2,535)	1,150 (2,535)	1,150 (2,535)	1,150 (2,535)	1,150 (2,535)	1,150 (2,535)
	Rear	kg (lb)	1,200 (2,645)	1,200 (2,645)	1,200 (2,645)	1,200 (2,645)	1,200 (2,645)	1,200 (2,645)
Option	HID headlight		○	○	—	—	—	—
	Power seat		○	○	○	○	○	○
	Keyless access with push button start		—	—	—	○	—	○
	Genuine leather seat		○	○	○	○	○	○
	L package		○	○	○	○	○	○
	Rearview camera		○	○	○	○	○	○
	Power rear gate		○	○	○	○	○	○
	Dark-colored glass		○	○	○	○	○	○
	Winter pack		○	○	○	○	○	○
	HK-type audio		—	○	○	—	○	—
	Navigation system		—	—	—	—	—	—
	Navigation system + HK audio		○	—	—	○	—	○
	Sunroof		○	○	—	○	—	○

Model			OUTBACK								
			2.5 L DOHC non-turbo			3.6 L DOHC non-turbo					
			2.5 i-L EyeSight			3.6 R-P	3.6 R-L			3.6 R-L EyeSight	
			CVT								
OP code			C0	U5	U6	C0	C0	C0	U4	C0	U4
			DP	5P	5P	3F	AP	AT	AZ	DP	DP
Curb weight (C.W.)	Total	kg (lb)	1,665 (3,671)	1,666 (3,673)	1,666 (3,673)	1,729 (3,812)	1,743 (3,843)	1,742 (3,840)	1,730 (3,814)	1,744 (3,845)	1,746 (3,849)
	Front	kg (lb)	939 (2,070)	939 (2,070)	939 (2,070)	992 (2,187)	996 (2,196)	996 (2,196)	991 (2,185)	997 (2,198)	998 (2,200)
	Rear	kg (lb)	726 (1,601)	727 (1,603)	727 (1,603)	737 (1,625)	747 (1,647)	746 (1,644)	739 (1,629)	747 (1,647)	748 (1,649)
Gross vehicle weight (G.V.W.)		kg (lb)	2,130 (4,695)	2,130 (4,695)	2,130 (4,695)	2,200 (4,850)	2,200 (4,850)	2,200 (4,850)	2,200 (4,850)	2,200 (4,850)	2,200 (4,850)
Maximum permissible axle weight (G.A.W.)	Front	kg (lb)	1,150 (2,535)	1,150 (2,535)	1,150 (2,535)	1,150 (2,535)	1,150 (2,535)	1,150 (2,535)	1,150 (2,535)	1,150 (2,535)	1,150 (2,535)
	Rear	kg (lb)	1,200 (2,645)	1,200 (2,645)	1,200 (2,645)	1,200 (2,645)	1,200 (2,645)	1,200 (2,645)	1,200 (2,645)	1,200 (2,645)	1,200 (2,645)
Option	HID headlight		○	—	—	—	○	○	○	○	○
	Power seat		○	○	○	○	○	○	○	○	○
	Keyless access with push button start		○	○	○	—	—	—	—	○	○
	Genuine leather seat		○	○	○	—	○	○	○	○	○
	L package		○	○	○	—	○	○	○	○	○
	Rearview camera		○	○	○	○	○	○	○	○	○
	Power rear gate		○	○	○	○	○	○	○	○	○
	Dark-colored glass		○	○	○	○	○	○	○	○	○
	Winter pack		○	○	○	○	○	○	○	○	○
	HK-type audio		—	—	—	—	—	○	○	—	—
	Navigation system		—	—	—	—	—	—	—	—	—
	Navigation system + HK audio		○	○	○	—	○	—	—	○	○
	Sunroof		○	○	○	○	○	○	—	○	○

PRECAUTION

PC

Page
1. Precaution 2

1. Precaution

A: CAUTION

Please clearly understand and adhere to the following general precautions. They must be strictly followed to avoid minor or serious injury to the person doing the work or people in the area.

1. VEHICLE DYNAMICS CONTROL (VDC)

Handle the VDC as a total system. Do not disassemble or attempt to repair parts which are not instructed in this manual. Follow the directions in this manual when performing maintenance on the VDCCM&H/U. When parts other than those specified are disassembled, it is possible that the VDC system will not operate when needed or cause it to operate incorrectly and result in injury.

2. ELECTRONIC PARKING BRAKE

Handle the electronic parking brake as a total system. Do not disassemble or attempt to repair individual parts. When parts are disassembled, it is possible that the electronic parking brake will not operate when needed or cause it to operate incorrectly and result in injury.

3. BRAKE FLUID

If brake fluid gets in your eyes or on your skin, do the following:
- Wash eyes and seek immediate medical attention.
- Wash your skin with soap and then rinse thoroughly with water.

4. RADIATOR FAN

The radiator fan may rotate without warning, even when the engine is not ON. Do not place your hand, cloth, tools or other items near the fan at any time.

5. ROAD TEST

Always conduct road tests in accordance with traffic rules and regulations to avoid bodily injury and interrupting traffic.

6. AIRBAG

To prevent bodily injury from unexpected deployment of airbags and unnecessary maintenance, follow the instructions in this manual when performing maintenance on the airbag components and nearby, around front of the vehicle (radiator panel, front wheel apron, front side frame, front bumper, front hood panel, front fender panel), around side of the vehicle (front door trim, front door panel, rear door panel, center pillar, rear fender panel, side sill, rear wheel apron), around rear of the vehicle (rear seat cushion, rear floor pan, rear sub frame assembly) and the airbag wiring harnesses and nearby.
To prevent unexpected deployment, turn the ignition switch to OFF and disconnect the ground cable from battery, then wait at least 60 seconds to discharge backup power supply before starting work. Removing or installing the components or the connectors with the ignition switch ON will electrically impair them.

7. AIRBAG AND SEAT BELT PRETENSIONER DISPOSAL

To prevent bodily injury from unexpected airbag deployment, do not dispose the airbag modules or seat belt pretensioner in the same way as other waste. Follow the special instructions for disposal in this manual. Follow all government regulations concerning disposal of refuse.

8. AIRBAG MODULE

Adhere to the following when handing and storing the airbag module to prevent bodily injury from unexpected deployment:
- Do not hold the harnesses or connectors to carry the module.
- Do not face the bag in the direction that it opens towards yourself or other people.
- Do not face the bag in the direction that it opens towards the floor or walls.

9. AIRBAG SPECIAL TOOL

To prevent unexpected deployment, only use special tools.

10.WINDOW

Always wear protective goggles when working around any glass to prevent glass fragments from damaging your eyes.

11.WINDOW ADHESIVE

Always use the recommended or equivalent adhesive when attaching glass to prevent it from coming falling, resulting in accidents and injury.

12.OIL

When handling oil, adhere to the following to prevent unexpected accident.

- Prepare a container and cloth to prevent scattering of fuels when performing work where oil can be spilled. If the oil spills, wipe it off immediately to prevent from penetrating into floor or flowing out for environmental protection.
- Follow all government and local regulations concerning disposal of refuse when disposing.

13.FUEL

When handling and storing fuel, carefully observe the following to prevent unexpected accidents.

- Be careful with fire.
- Prepare a container and cloth to prevent scattering of fuels when performing work where fuels can be spilled. If the fuel spills, wipe it off immediately to prevent it from penetrating the floor or flowing out, to protect the environmental.
- Follow all government and local regulations concerning disposal of refuse when disposing.

14.ENGINE COOLANT

When handling engine coolant, adhere to the following to prevent from unexpected accident.

- Never remove the radiator cap since engine coolant may blow out when it is hot.
- Prepare a container and cloth to prevent scattering of engine coolant when performing work where engine coolant can be spilled. If the oil spills, wipe it off immediately to prevent from penetrating into floor or flowing out for environmental protection.
- Follow all government and local regulations concerning disposal of refuse when disposing.

15.AIR CONDITIONER REFRIGERANT

In order to prevent from global warming, avoid releasing air conditioner refrigerant into the atmosphere. Using a refrigerant recovery system, discharge and recycle it.

16.REMOVAL AND INSTALLATION OPERATION OF HOSES, ETC.

1. Before the removal and installation operation of hoses, etc.

• If you keep using the damaged or deformed hose, it results bleeds or leakage of the fat adheres or disconnection of the hose. Be careful not to spill fat adheres on exhaust pipes, etc. during maintenance to prevent emitting smoke or causing fires.
• Perform the operation with the hose removed. If the operation is performed without removing the hose, it may damage inner surface of the hose.

2. Removal and installation operation of hoses, etc. during the inspection

• Follow the instructions below when removing hose.
• Do not use a pointed hose remover (hose plucker) when using a general hose remover. It may damage the pipe surface or the hose.

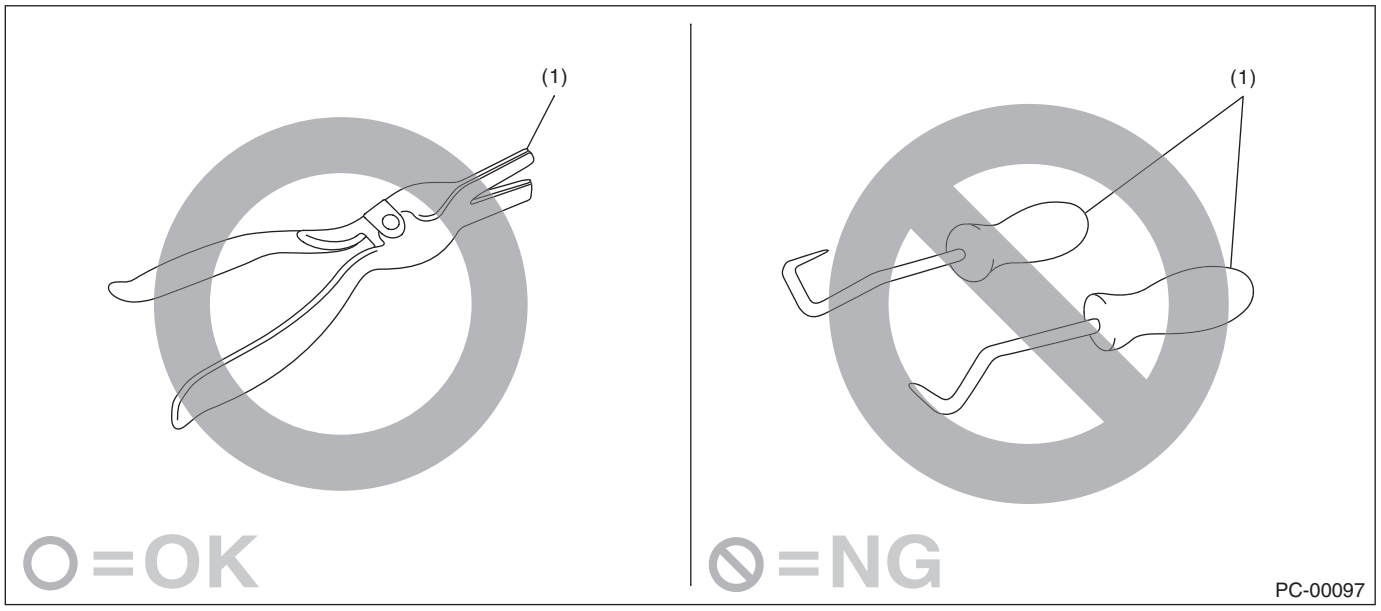

(1) Hose remover

• When draining hose using pliers, be sure to cover the hose with cloth and rotate the hose slightly to extract straight.

• If you keep using the hose, perform the inspection below and replace the hose with a new part if faulty.

- Replace the hose with a new part if it rides over the stay or the top of spool.

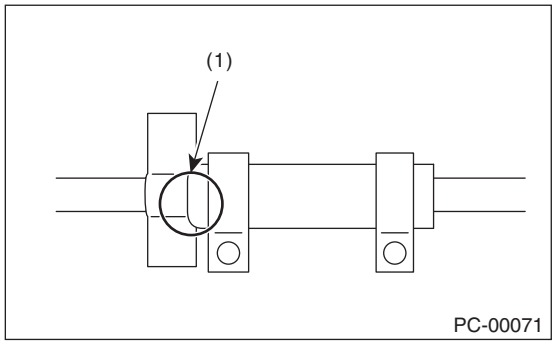

(1) Hose rides over the stay

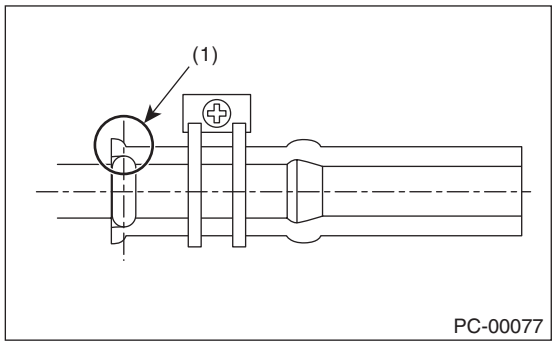

(1) Hose rides over the top of spool

- Check if the surface and the inner surface of the hose are damaged, cracked, bend, hardened, softened, swelled, peeled or deformed due to the adherence or the entry of the foreign matter by bending the hose. Replace with the new part if faulty.

- **Follow the instructions below during installation.**
  - Check carefully for assembling position.
  - Never use lubricants.
  - Insert the hose to the specified position (stopper or spool) securely. (The hose should stop at the position between the spool top and root.)

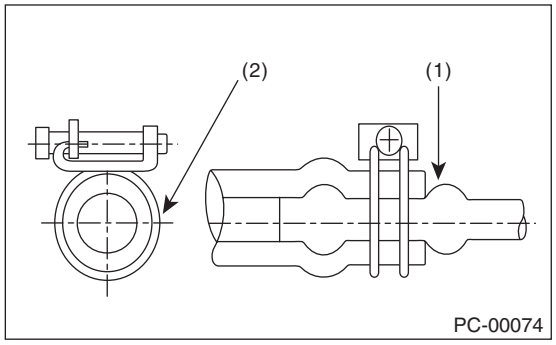

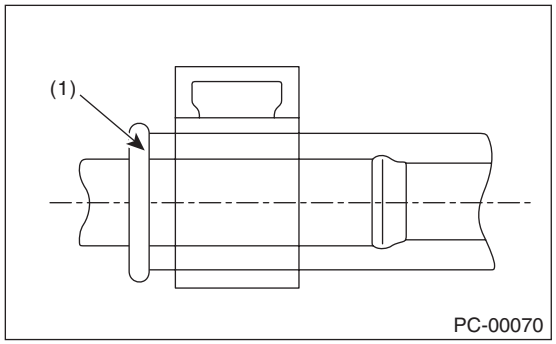

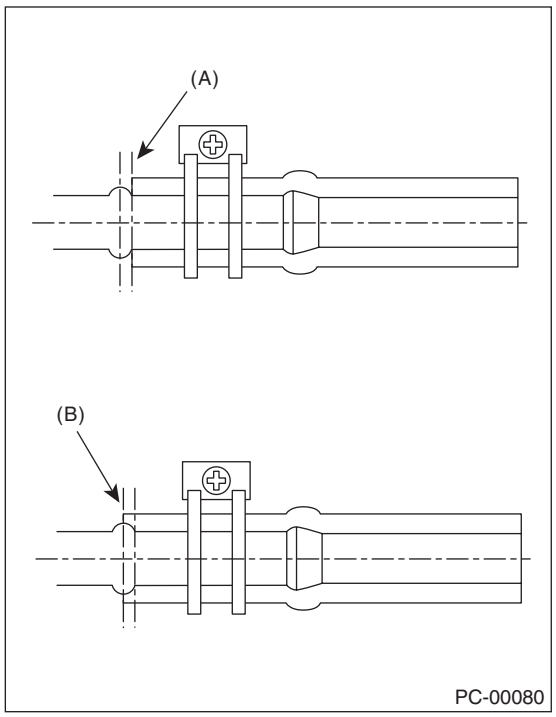

(1) Push against the spool. (Insert the hose and prevent it from becoming wrinkled.)

(2) Tighten the hose outwards and apply force thoroughly.

(A) OK position (bottom of spool)

(B) OK position (top of spool)

- Check if the position, direction and hose layout of the hose clamp are correct. (Check if the position, direction, length and the gap around are correct, or if it is different from the condition before the work)
- After the installation, check that the hose is installed securely and there is no leakage. (Check if it is fixed securely with the clamp)

- **For hose clips and hose clamps, perform the inspection below and replace them with a new part if faulty.**
  - Check for deformation, rust, damage or foreign matters.
  - For hose clip, check if it works and has clamping force.
  - For hose clamp, check if it can tighten screw, not ovalized or the screw is not damaged.
- **For hose pipes, perform the inspection below and replace with a new part if faulty.**
  Check if the pipe is not damaged, rusted, peeled (peeled plates included), covered with foreign matter, bent, compressed or cracked.
- **For the parts below, replaces with a new part when the hose is removed or the installation position is changed.**
  CVTF oil cooler hose, engine oil cooler hose, fuel hose (except for those with quick connector)

17.HANDLING PRECAUTIONS FOR SILICON-CONTAINING SPRAY

When a silicone contained in the lubricant, rust inhibitor or glazing agent adheres to the electrical contact of the relay or switch, nonconducting silica dioxide (SiO_2) film will be formed, which may lead to poor continuity. Therefore, the following precautions must be observed when using the silicon-containing spray.

- Never spray directly to the electrical equipment.
- When using the spray close to the electrical equipment, always put the cover on it. Be sure to put the cover on the electrical equipment especially when using the spray to the locations shown in the figure below and their surrounding areas.

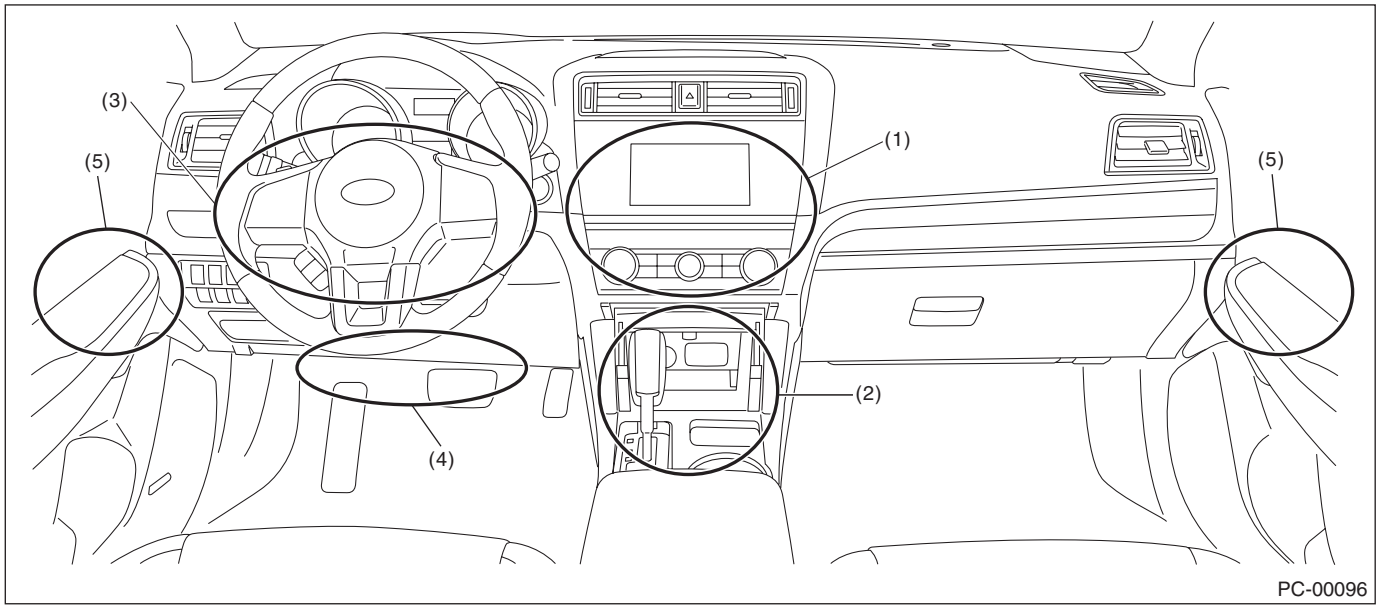

(1)	Audio, heater control switch	(3)	Combination switch, steering switch	(5)	Power window switch
(2)	Shift/select lever switch, parking switch	(4)	Stop light switch, brake light switch, clutch switch, clutch start switch		

- If the residual silicon remains in the vicinity of the electrical equipment after the spray has been used, the vaporized silicon stands around the electrical equipment and it may adhere to electrical contact. After using the spray, be sure to wipe the silicon off with a cloth.
- Even when using the spray to the place away from the electrical equipment, the droplet of the spray may be splashed to the periphery. Use as small amount of spray as possible, and take care not to splash the silicon to the periphery.

NOTE:
The “silicon” used in this section refers to “silicone”, that is, silicon polymer.

REPAIR CONTENTS

RC

Page
1. Repair Contents 2

1. Repair Contents

A: NOTE

This section describes basic points that the service operator must understand before performing the service operation.

1. APPEARANCE

- Always wear clean work clothing.
- Wear a cap and protective shoes.

2. PROTECTION OF VEHICLE UNDER MAINTENANCE AND PREPARATION OF TOOLS/ EQUIPMENT

- Before work, cover the vehicle body. (Ex. grille cover, fender cover, seat cover and floor mat cover)
- Before performing the service operation, prepare tools, equipment, container box, grease and cloth etc.

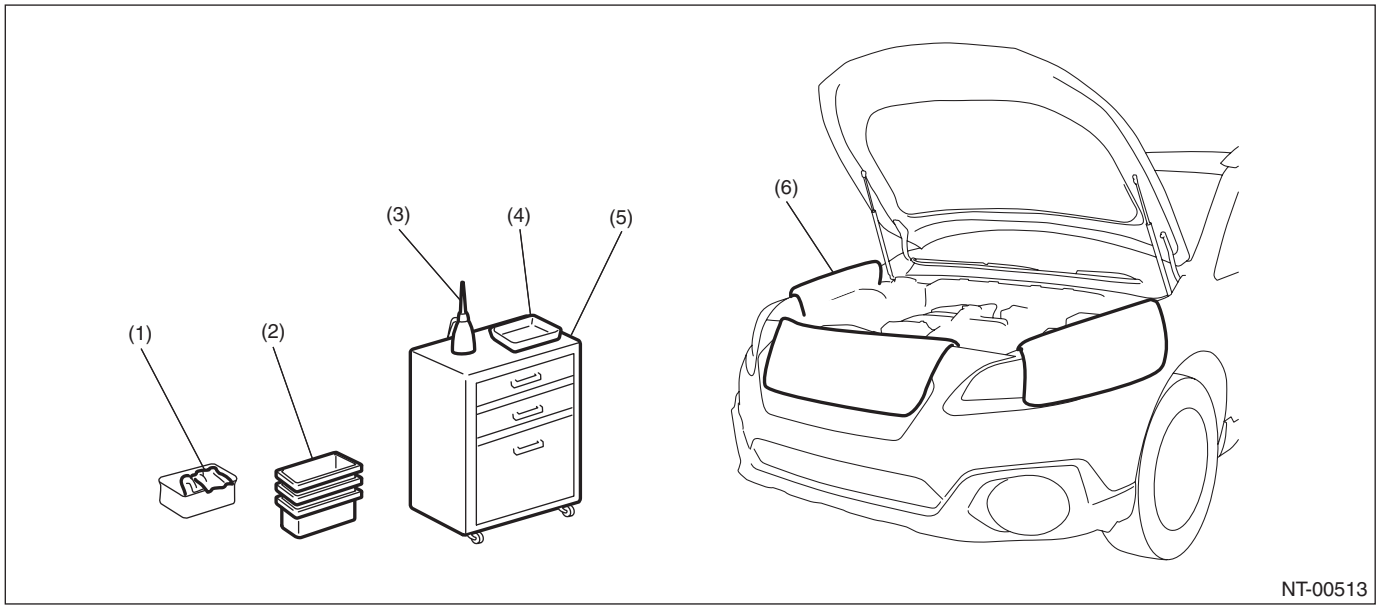

(1) Cloth
(2) Container box
(3) Oil
(4) Tray
(5) Tools/equipment case
(6) Fender cover

3. SAFETY

- Before work, set the wheel stoppers to secure the vehicle.
- When performing work by multiple workers, call to each other to make sure that service operation is performed safely.
- Ventilate the room when starting the engine.
- When performing the service operation of high-temperature parts like muffler, or rotating parts like fan and other movable parts, be careful not to get burned or injured.
- For the jack-up and lift up, set the tool to the proper location to support the vehicle correctly. And use the safety device properly when lifting up.

4. SERVICE OPERATION

- By identifying the vehicle problems thoroughly before work, service operation will be performed effectively.
- Before removing parts, confirm the installation condition or the damage of the parts.
- To reinstall parts properly, leave a note of the condition before work as necessary.
- For a part which needs positioning, take appropriate action such as putting alignment marks.
- For a removed part, clean it as necessary and check for damage and defect before installation.

If a part is damaged or does not work properly, replace it with a new part.

- Removing or installing the components or the connectors with the ignition switch ON will electrically impair them.
- Reconnect the harness connectors for each control module one or more minutes after disconnecting them.
- For installation of the bolt, nut, and screws, use tools suitable for each dimension, and use them vertically and securely.

5. SERVICE PARTS

- A removed part must be organized to avoid mixing up with similar parts. When same parts are used in multiple locations, such as pistons in engine, manage the parts by using labels with cylinder No. so that the parts are not installed to the wrong location.
- Always replace nonreusable parts such as gasket and O-ring with new parts.
- After work, have a customer confirm the replaced part.
- Use genuine parts for maximum performance and maintenance when conducting repairs. Subaru/FHI will not be responsible for poor performance resulting from the use of parts except for genuine parts.

6. BATTERY

• Actions to take after removing battery or disconnecting ground terminal

When removing the battery or disconnecting the battery terminal, always be sure to turn the ignition switch to OFF and disconnect the battery ground terminal first.
When removing the battery or disconnecting the battery terminal, power supply is cut off and the information stored in the computer memory is volatilized. Therefore, setting information of some devices is initialized to the factory default. The device and functions initialized by removing battery are as follows.

No.	Item	Job contents when connecting battery
1	Clock	Set the clock to the current time.
2	MID	Set to the contents checked before disconnecting the battery.
3	Audio (settings that the customer set)	Set to the contents checked before disconnecting the battery.
4	Navigation system (settings that the customer set)	• Time setting is not necessary because the time information is received via GPS. • Set the sound and other settings (items that were set in the selection) to the contents checked before disconnecting the battery.
5	Temperature setting of fully automatic air conditioner (settings that the customer set)	Set to the contents checked before disconnecting the battery.
6	Power window system	Initialize automatic full open/close of driver's window (power window system). For the initialization procedure, refer to "GW" section. <Ref. to GW-10, OPERATION, Power Window System.>
7	Steering lock system (model with keyless access with push button start)	If the engine does not start, initialize the steering lock system. For the initialization procedure, refer to "KPS" section. <Ref. to KPS(diag)-138, ENGINE DOES NOT START, INSPECTION, Diagnostics with Phenomenon.>
8	EyeSight (model with EyeSight)	Set to the contents checked before disconnecting the battery.
9	Electronic throttle system	Turn the ignition switch to ON, wait for 10 seconds or more, and start the engine.
10	Engine control system	• Let the engine run at idle until it fully warms up (the radiator fan turns 2 times or more) under no electrical load condition. • After the battery ground terminal is connected, wait for 10 seconds or more to turn the ignition switch to ON.
11	Power rear gate	When the battery is connected again with the power rear gate opened, perform the initialization. (When the battery is connected again with the power rear gate closed, the initialization is automatically performed.) Refer to "PRG" section for initialization. <Ref. to PRG-5, INITIALIZATION, PROCEDURE, Power Rear Gate System.>
12	Past trouble history (memory code)	—
13	Active grille shutter system	Close the shutter by performing the active test. For procedures, refer to the EN (H4DO) (DIAGNOSIS) section. <Ref. to EN(H4DO)(diag)-79, OPERATION, Active Test.>

• **Ground terminal removal or installation**

1) Disconnect the ground terminal from battery sensor.

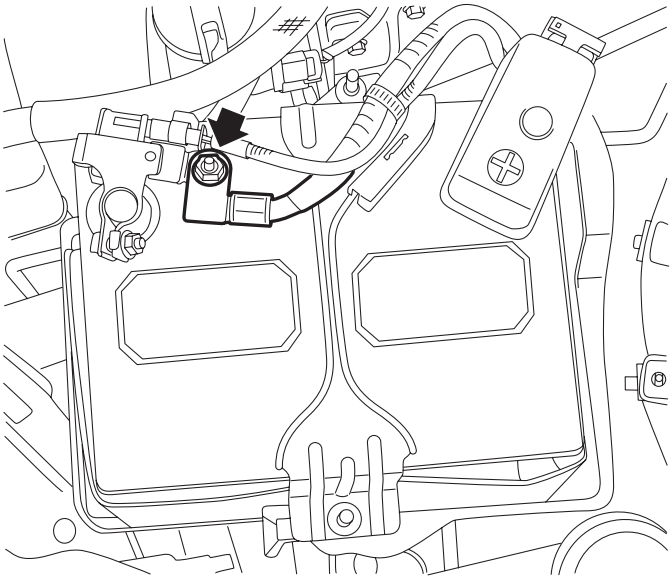
NT-00512

2) Install the ground terminal to the battery sensor.

NOTE:
• Install the battery sensor while holding it by hand to prevent rotating.
• Clean the battery cable terminals and apply grease to retard the formation of corrosion.
• Connect the positive (+) terminal, and then connect the negative (–) terminal of the battery.
• Since DTCs may be detected, after the battery ground terminal is connected, wait for 10 seconds or more to turn the ignition switch to ON.
• After the battery is installed, initial diagnosis of the electronic throttle control is performed. Wait for 10 seconds or more after turning the ignition switch to ON, and then start the engine.
• For battery replacement procedures, refer to the “SC” section. <Ref. to SC(H4DO)-63, REMOVAL, Battery.> <Ref. to SC(H6DO)-57, REMOVAL, Battery.>

Tightening torque:
7.5 N·m (0.8 kgf-m, 5.5 ft-lb)

7. OTHER ADJUSTMENT OPERATIONS BEFORE DELIVERING THE VEHICLE TO CUSTOMER

Due to service and parts replacement convenience, perform the following operations before delivering the vehicle to the customer.

No.	Item	Check operation	Adjustment operation	Additional adjustment operations when replacing parts
1	Positions of devices • Steering • Room mirror • Door mirror • Seat • Air conditioner vent grille	Is the device set to the same position when the vehicle was received from the customer?	Adjust the device to the similar position when the vehicle was received from the customer.	When removing/installing each device • Meter, instrument panel, steering column, etc. • Room mirror, roof trim, sunroof assembly, etc. • Door mirror, door panel, etc. • Seat, floor carpet, etc. • Vent grille, instrument panel, console box, etc.
2	Positions of switches • Wiper, light (AUTO or OFF) • Headlight beam leveler • Illumination control • Room light • Seat heater, etc.	Is the switch set to the same position when the vehicle was received from the customer?	Set the switch to the same position when the vehicle was received from the customer.	When removing/installing each switch

8. PARTS CLEANING

CAUTION:
Do not spray parts cleaner directly to rubber parts such as bushing or other resin parts.

- Perform the operation in a clean location and use extra caution in dust proofing.
- Clean the items (except for assembly components) with steam, etc. before disassembly. During steam cleaning, wrap the air breather, oil level gauge, connectors, etc. with vinyl tape to prevent steam from entering inside the parts.
- Use an appropriate cleaning solvent.
- Do not clean rubber parts such as O-ring, gasket and oil seal with cleaning solution.

9. FASTENERS NOTICE

Fasteners must be tightened to the specified torque.
Do not apply paint, lubricant, rust retardant or other substance to the surface around bolts, nuts, etc. Doing so will make it difficult to obtain the correct torque and result in looseness and other problem.

10.ABOUT SCREWS

Use an appropriate sized tool. Insert a screw vertically into the hole. Check for any loose screws after installation.
If improper tools are used or screws are inserted obliquely to the hole, the screws cannot be installed correctly, which may result in insufficient tightening force or damage on the hole.

11.STATIC ELECTRICITY DAMAGE

Do not touch the control modules, connectors, logic boards and other such parts when there is a risk of static electricity. Always use a static electricity prevention cord or touch grounded metal for the elimination of static electricity before conducting work.

12.TROUBLESHOOTING OF ELECTRICAL SYSTEM

1) Always refer to “CAUTION” of “General Description” in the same models service manual before starting the diagnostics and repair.
2) Always refer to the cautions of each section when diagnosing and repairing each system and component.
3) The battery cable must be disconnected from the negative terminal after the ignition switch is set to the OFF position, unless otherwise required by the diagnostics.
4) When disconnecting a connector, do not pull the harness, but pull while holding the connector housing.

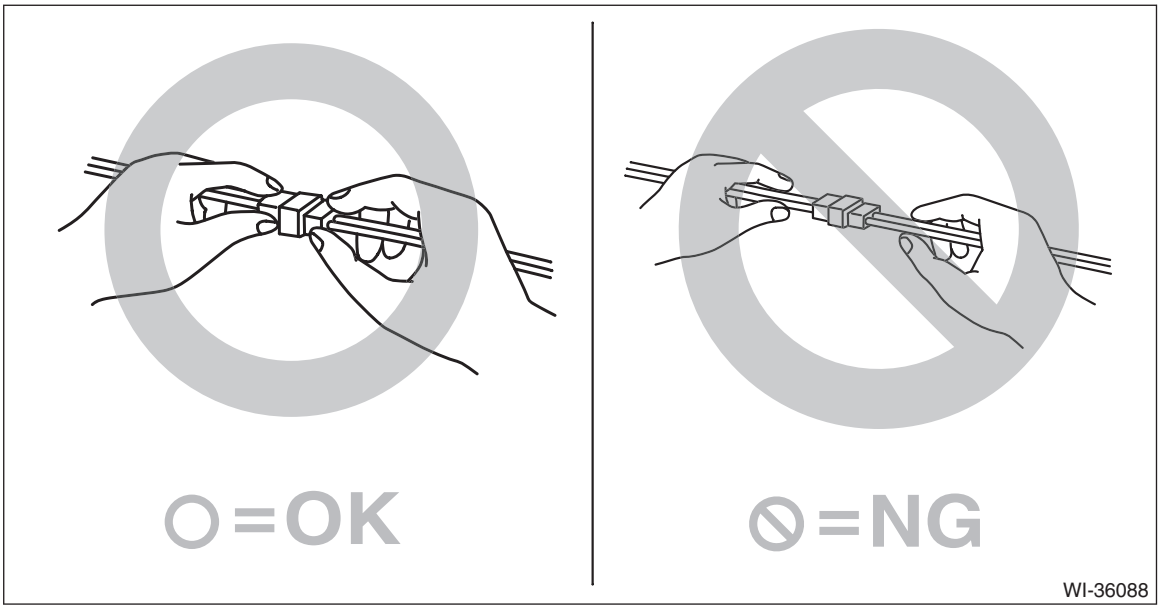

5) Confirm the locking shape completely before disconnecting a connector. In addition, firmly push in the connector until a click sounds when connecting a connector.
6) When checking continuity between connector terminals, or measuring voltage across the terminal and ground, always touch tester probe(s) to terminals from the harness side.
If the probe is too thick to gain access to the terminal, do not push it in forcibly but use a mini test lead.
7) When measuring the voltage or resistance of individual sensor or all electrical control modules, use a tapered pin with a diameter of 0.6 mm (0.024 in) or less and touch it to the tip of terminal. Never insert the tapered pin into the terminal at this time. Doing so may cause internal deformation and a malfunction can occur.
8) To check water-proof connectors (which are not measurable from the harness side), touch tester probes on the terminal side and be very careful not to bend or damage the terminals.

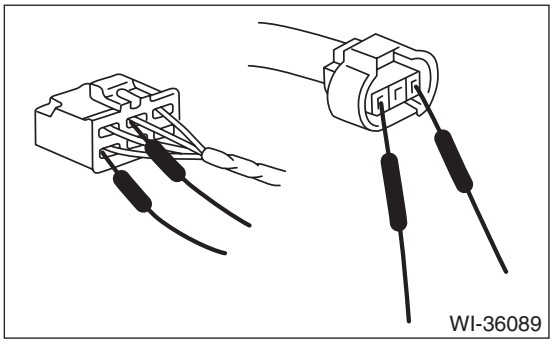

9) Securely fasten the harness with clamps and clips so that the harness does not interfere with the body end parts, edges, bolts or screws.
10) When installing a harness and a component, be careful not to catch them on the harness.
11) Sensors, relays, units, etc., are sensitive to strong impacts. Handle them with extra care so that they are not dropped or mishandled.
12) Because the HID headlight uses high voltage, be sure to confirm that the power supply is turned off before diagnostics and repair. Furthermore, do not perform diagnostics and repair with wet hands because there is a possibility of electrical shock.
13) When inspecting the airbag system, in order to avoid malfunction, always refer to “CAUTION” of “General Description” of the airbag system in the same model’s service manual.

13.BACKUP/POWER SUPPLY FUSE

Backup fuse (30 A) remains removed to prevent the battery consumption when vehicles are delivered. Install the backup fuse by following the illustration. Besides, removing the backup fuse from the fuse holder deactivates the control during shipping (delivery mode).

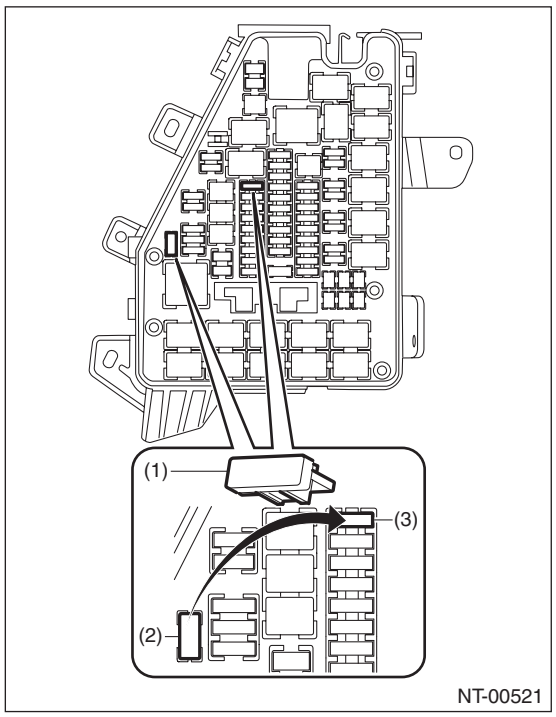

(1) Backup fuse (30 A)
(2) Backup fuse holder
(3) Backup fuse inlet

14.IMMOBILIZER RELATED PART

- Do not replace the immobilizer related parts with the parts from other vehicle.
- Registration of the immobilizer is necessary when a immobilizer-related control module has been replaced. For detailed operation procedure, refer to the “REGISTRATION MANUAL FOR IMMOBILIZER” provided as a separate volume.

15.LIFT AND JACK

When using a lift or shop jack to raise a vehicle or using rigid rack to support a vehicle, always follow instructions concerning jack-up points and weight limits to prevent the vehicle from falling, which could result in injury. Be especially careful that the vehicle is balanced before raising it. Be sure to set the wheel stoppers when jacking-up only the front or rear side of the vehicle.

CAUTION:
Select and use the lift attachment so that the side sill does not contact the lift arm.

NOTE:
- When using a lift, follow its operation manual.
- When the side sill cover contacts the lift arm, use a lift attachment.
- Do not work or leave unattended while the vehicle is supported with jack, support it with rigid racks.
- Be sure to use the rigid racks with rubber attached to cradle to support the vehicle.
- When using a lift, use an attachment or something similar.
- When using a plate lift, use a rubber attachment. Place the attachment to the specified position of the vehicle, by adjusting front/rear and left/right sides accordingly.

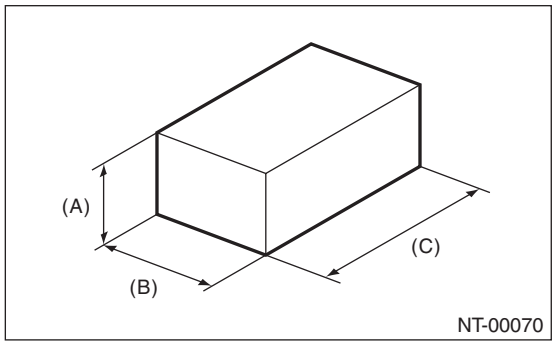

(A) 80 mm (3.1 in) or more
(B) 80 — 100 mm (3.15 — 3.94 in)
(C) 120 — 200 mm (4.72 — 7.87 in)

- Align the cushion rubber center part of plate lift with the center part of rubber attachment.
- Do not use the plate lift whose attachment does not reach the supporting locations.

- **Support locations**

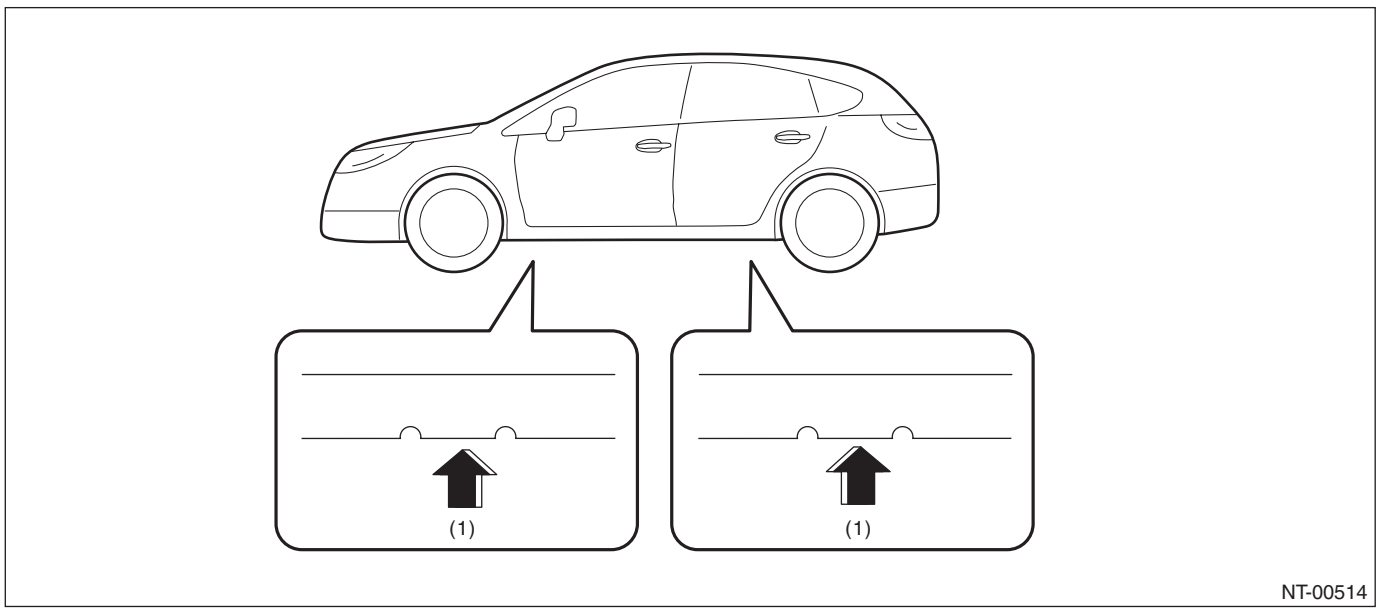

(1) Jack-up point

- **Pantograph jack**

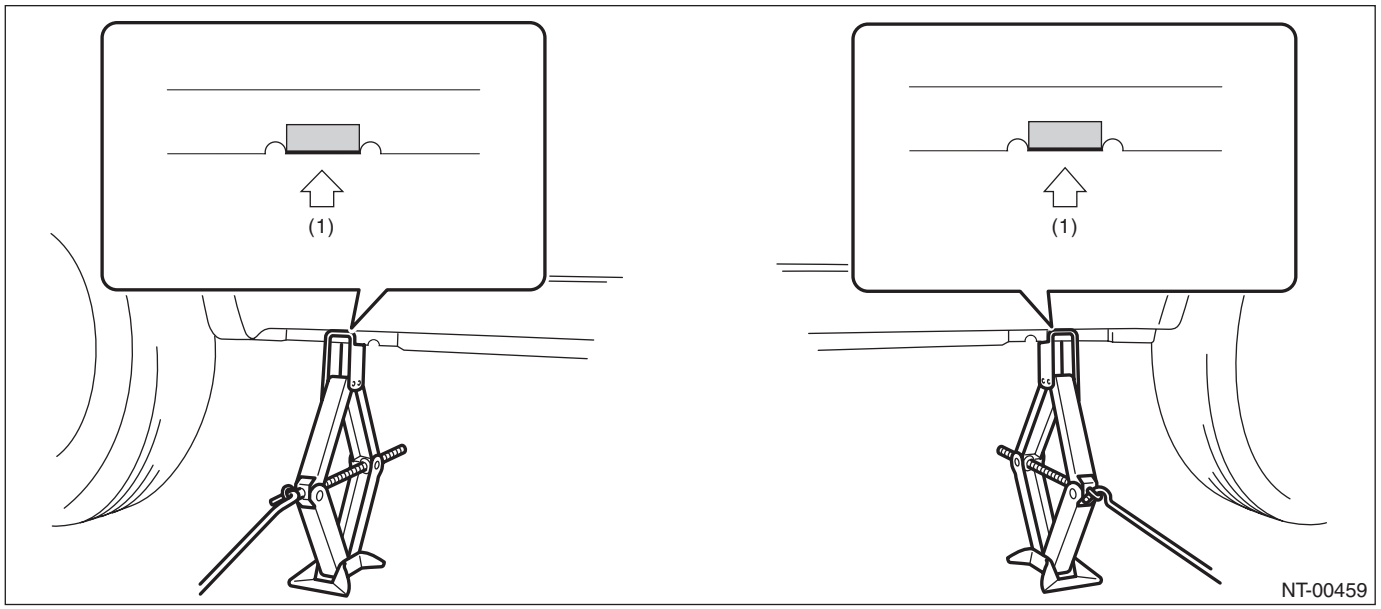

(1) Jack-up point

- **Lift**

CAUTION:
For models with side garnish, use a spacer or an attachment to lift up the vehicle securely at jack up point without the side garnish contacting the lift.

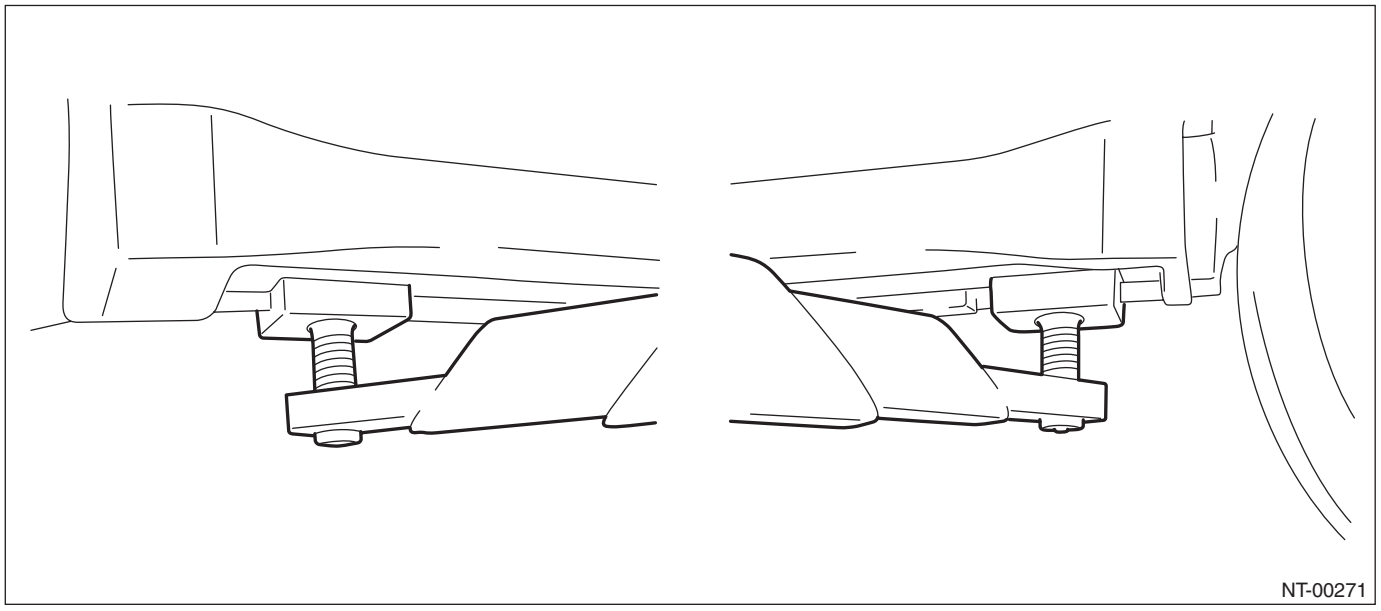

- **Rigid rack**

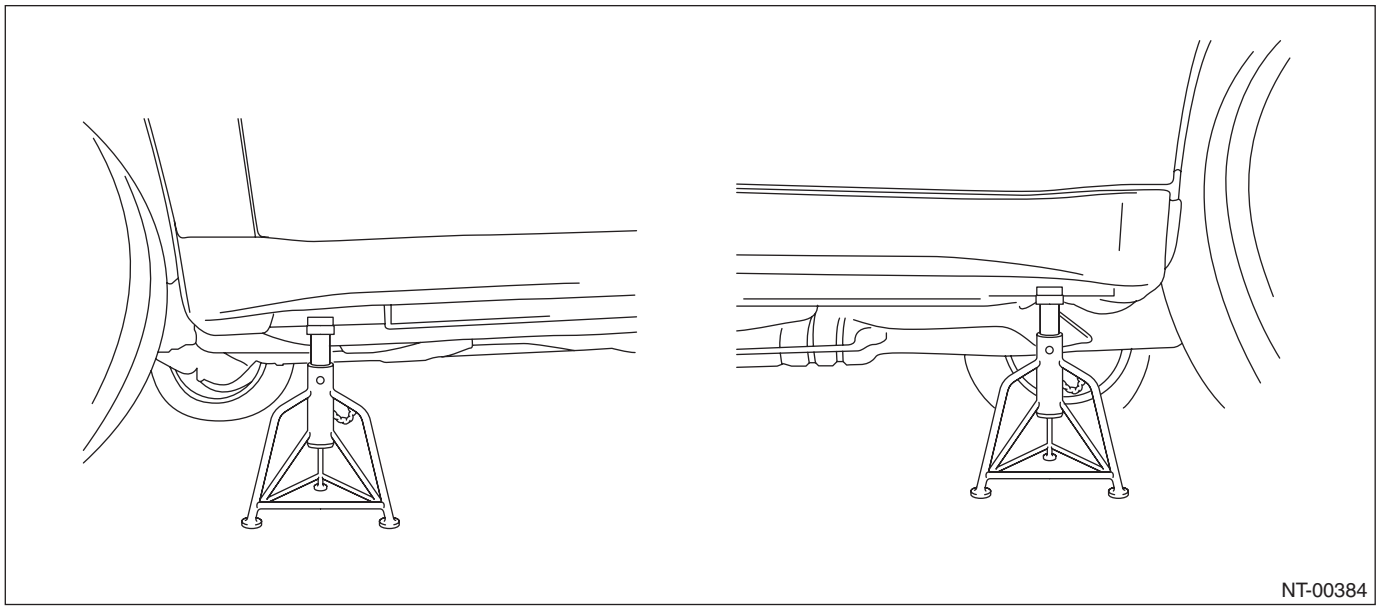

- **Plate lift**

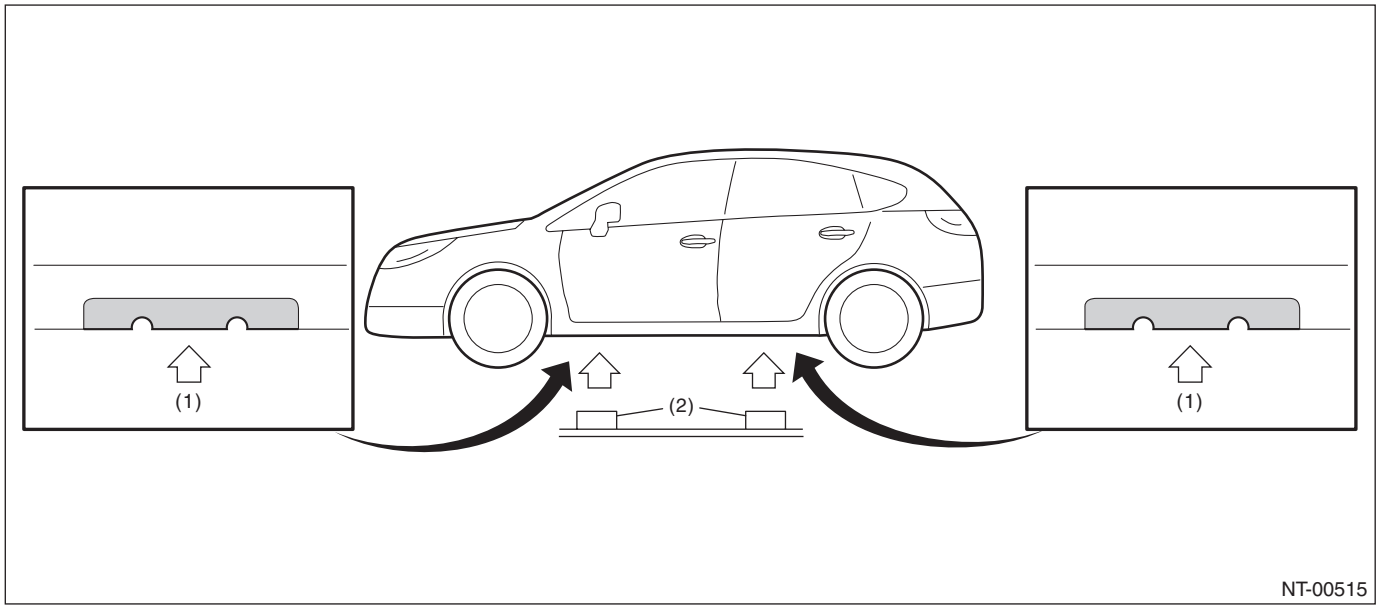

(1) Jack-up point (2) Attachment

- **Jack-up point (when using a garage jack)**

CAUTION:
If jacking up the front side of the vehicle, make sure that the jack is attached at the center of the jack-up plate not at the sides.
2.5 L model

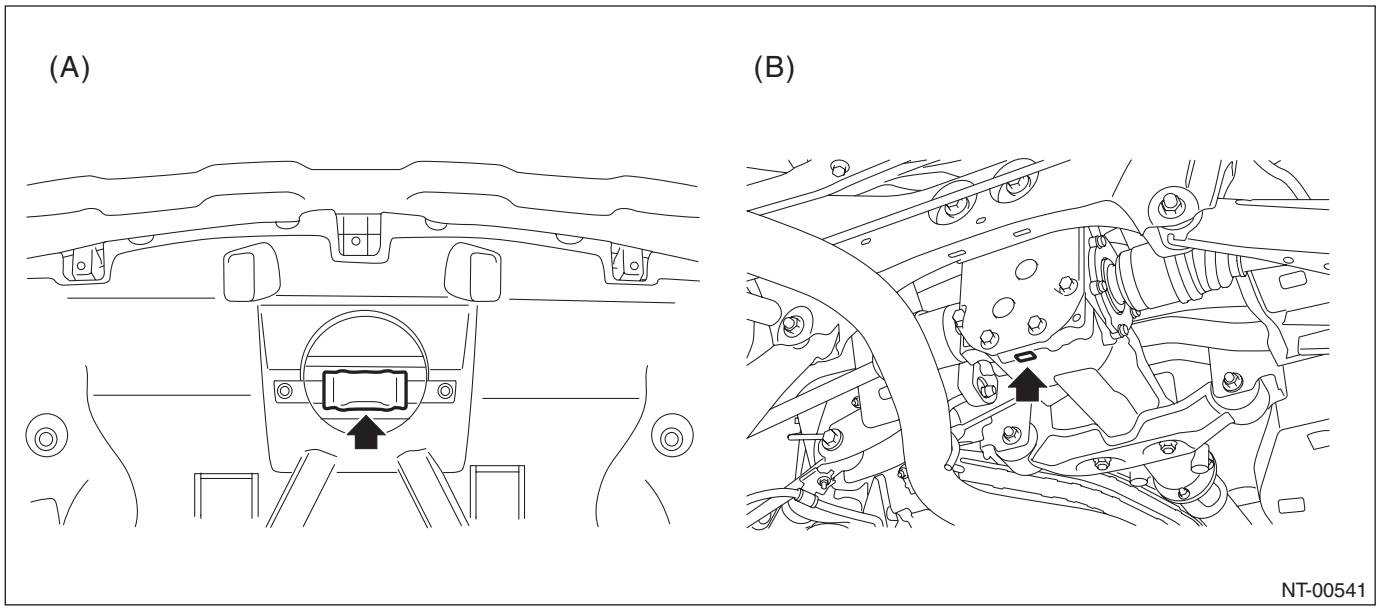

(A) Front (B) Rear

3.6 L model

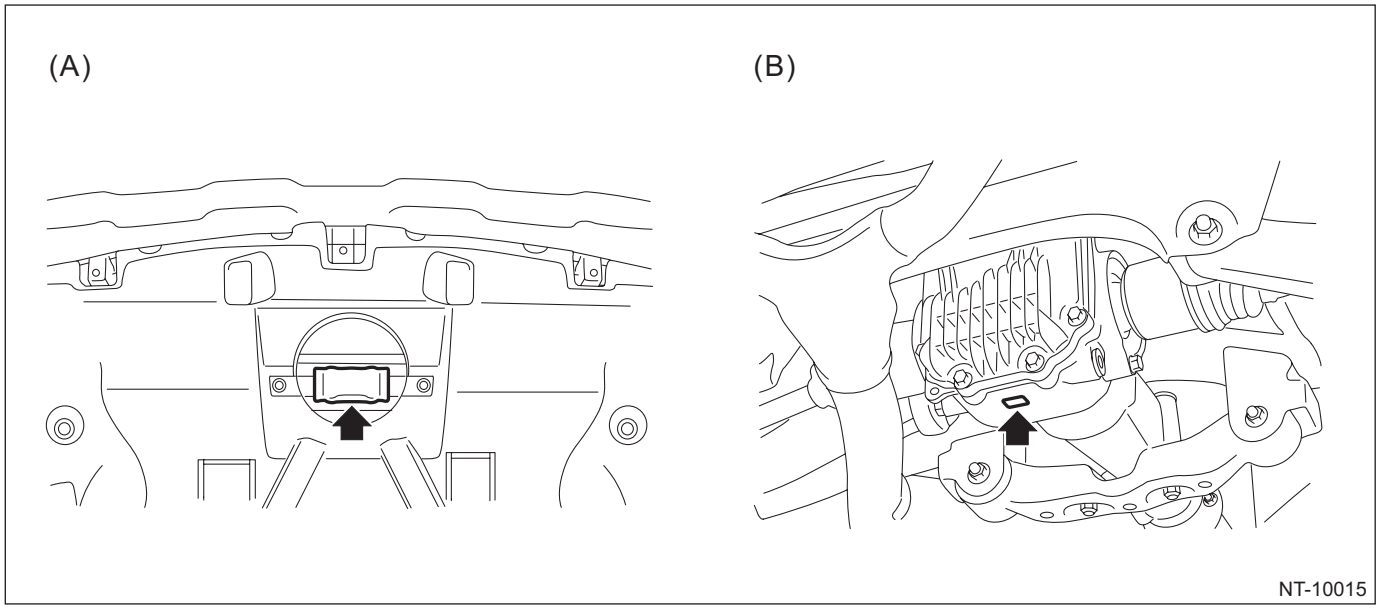

(A) Front (B) Rear

16.TIE-DOWNS

Tie-downs are used when transporting vehicles and when using the chassis dynamo. Attach tie-down only to the specified locations on the vehicle.

- **Tie-down location**

CAUTION:
Make sure that the rear tie-down hole is firmly plugged with the grommet after the rear tie-down hole is used. Otherwise, dust, smell, etc. may come into the passenger compartment indirectly from the rear quarter, via the side sill from the rear tie-down hole.

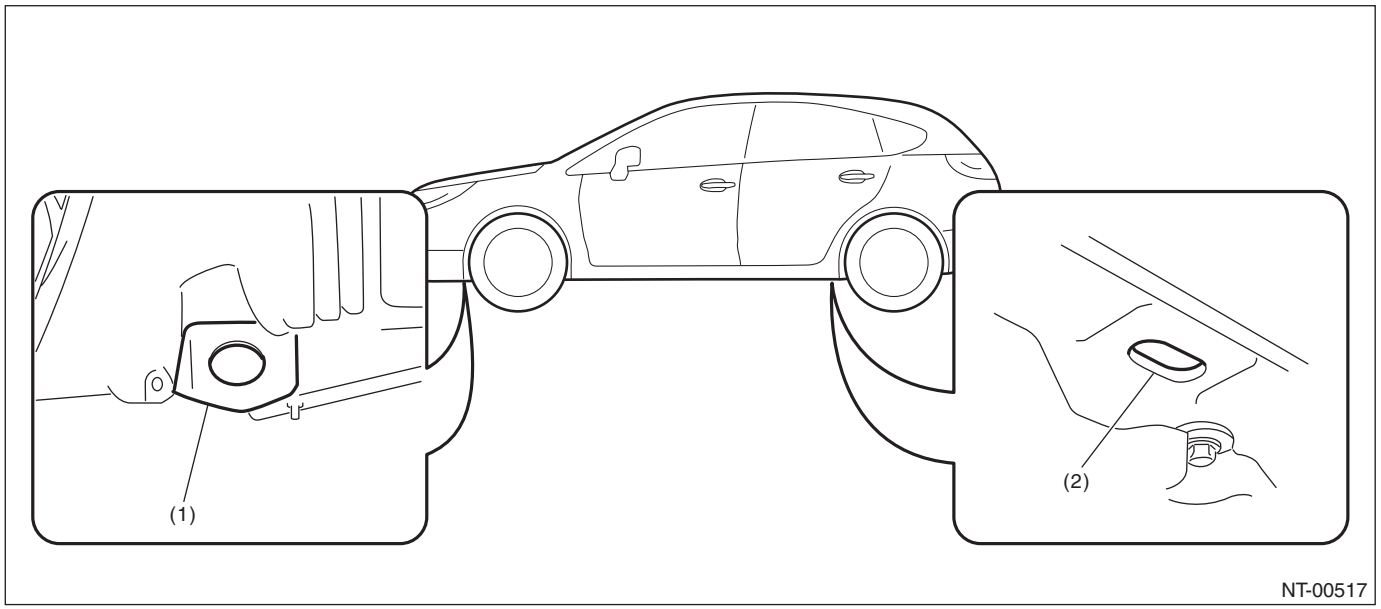

(1) Front tie-down hook
(2) Rear tie-down hole

• Chain direction at tie-down condition

CAUTION:
• Pull the front and rear of the vehicle in the opposite direction, and pull the left and right of the vehicle in the same direction.
• Patterns except for the followings (recommended) are not allowed.

	Recommended
Tie-down direction	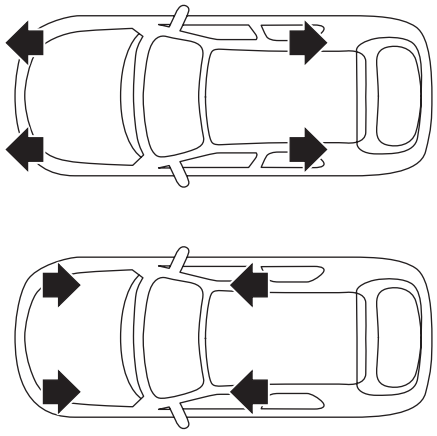 NT-00214

- **Tie-down range**

For ground transportation

CAUTION:

When the vehicle is tied down from vehicle inside, hook the hooks of tie-down chain on the rear tie-down holes from vehicle inside. When the vehicle is tied down from vehicle outside, hook the hooks of tie-down chain on the rear tie-down hooks from vehicle outside.

NOTE:

Transportation with the front tire and rear tire tie-down is available.

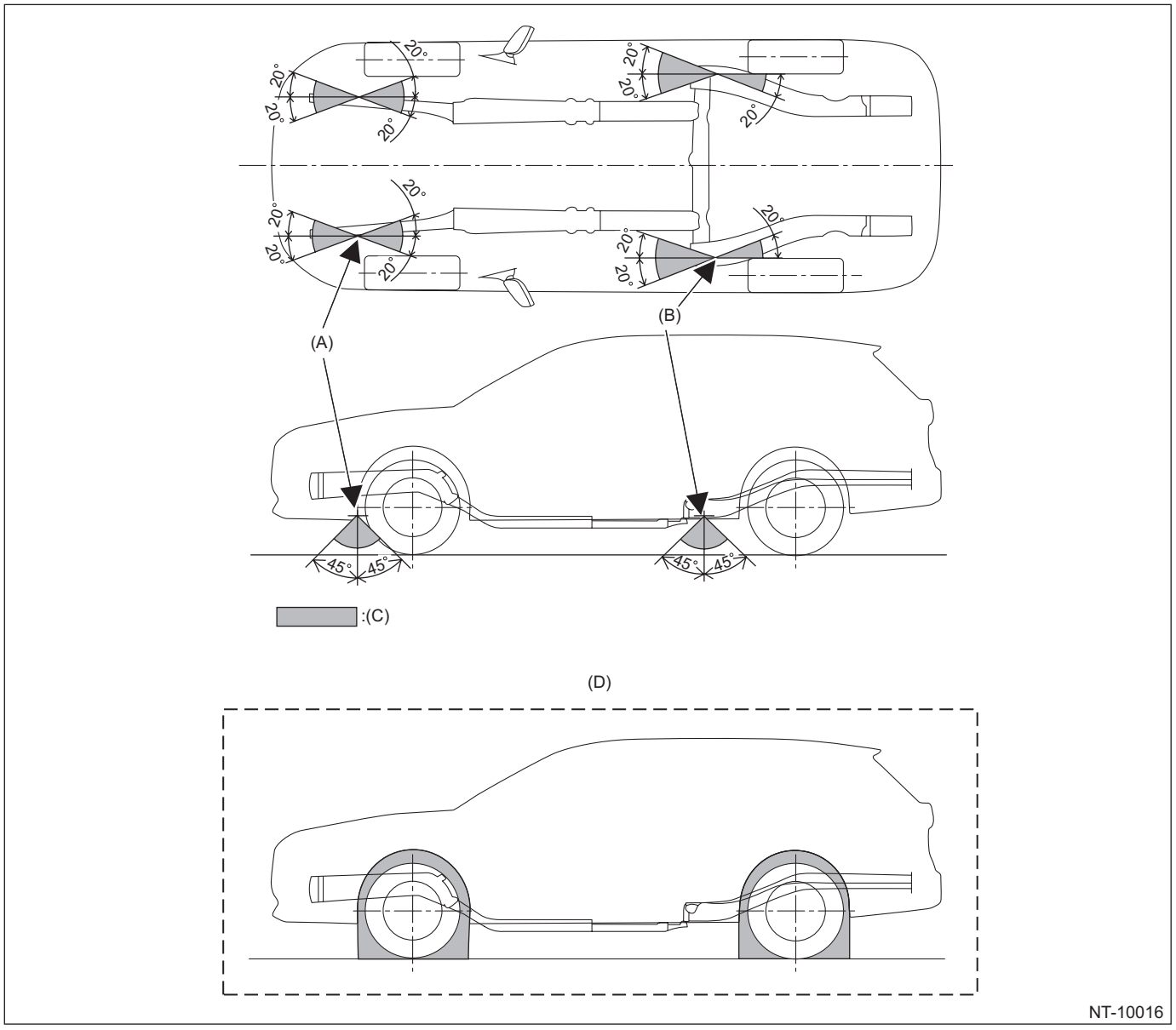

(A) Front tie-down hook

(B) Rear tie-down hole

(C) Chain pulling range at tie-down condition

(D) When front tire and rear tire are tied down

For sea transportation

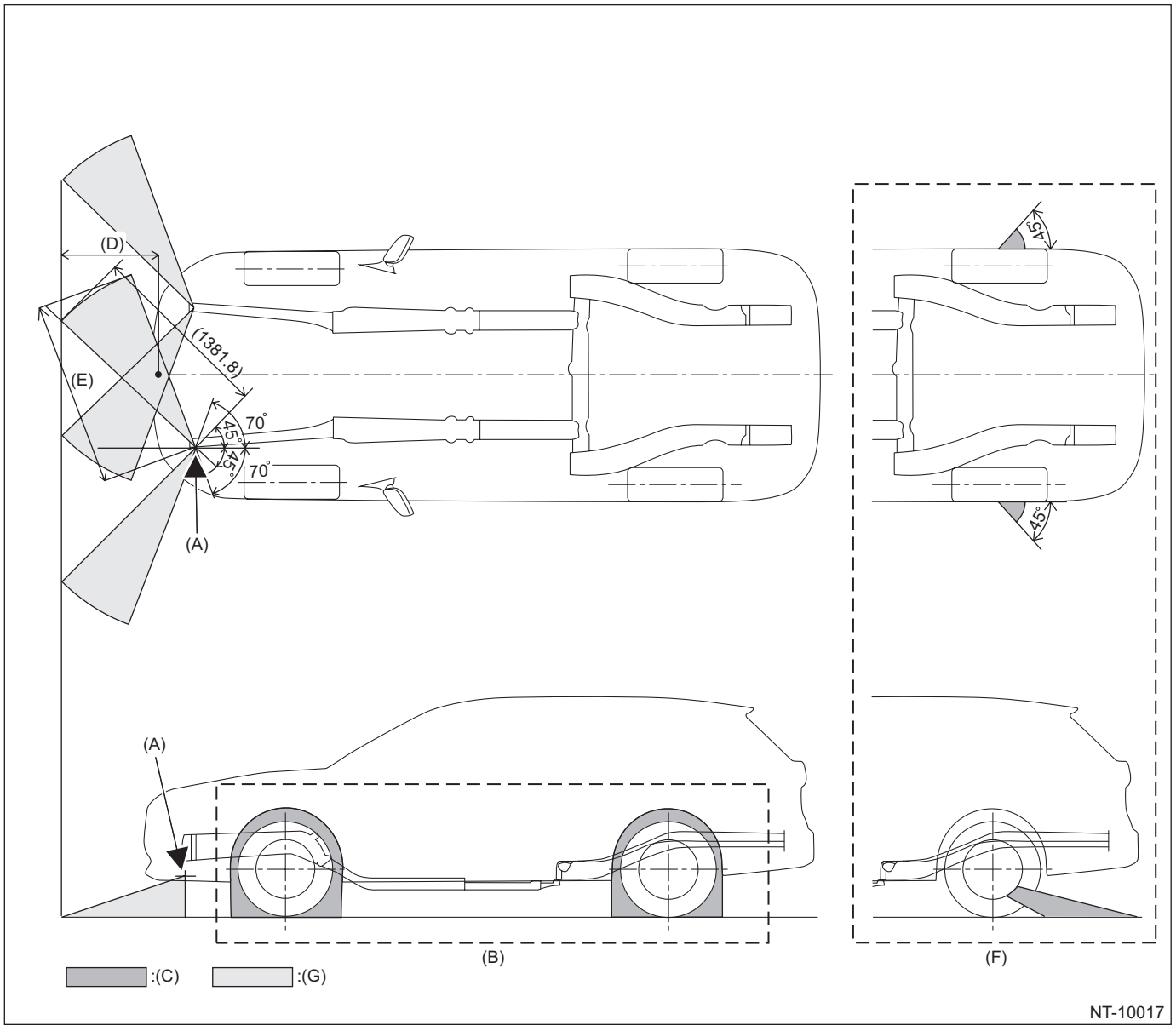

(A) Front tie-down hook
(B) When front tire and rear tire are tied down
(C) Pulling range of lashing belt at tie-down
(D) 400 mm (15.7 in)
(E) 1,320 mm (52.0 in)
(F) When rear wheel is tied down
(G) Pulling range of rope at tie-down

CAUTION:

- **Never use the rear tie-down hole.**
- **For rear tie-down, use the rear tire or rear wheel.**
- **Tie-down procedure should be followed as much as reasonably possible depending on the deck condition, however, lashing belt and vehicle must not contact each other. When the wheel is tied down, observe the following instructions.**
  1. **Tie-down range must be within the backward of rear wheel as shown in the figure.**
  2. **Wheel tie-down should be used only during sea transportation, and lashing belt should not contact air valve while tie-down. Be careful not damage the wheel and vehicle.**
  3. **Maximum tie-down load to each lashing belt is 5,000 N (510 kgf, 1,124 lbf).**
  4. **For steel wheel, do not tie down wheels.**

- **Vehicle sinking volume at tie-down condition**

CAUTION:
The vehicle sinking volume at tie-down condition should be less than 50 mm (1.97 in) for sedan model and 70 mm (2.75 in) for OUTBACK model, and make sure that the vehicle is firmly secured.
Check to see if the tensions of chains or belts at tie-down condition are appropriate in the following procedures.
1) Before tie-down, measure the distance between the highest tire point and highest arch point at the center of wheel.
2) After tie-down, measure the distance between the highest tire point and highest arch point at the center of wheel.
3) If the distance (A) between the measured value of 1) and 2) above, is less than 50 mm (1.97 in), it is judged as OK. If the distance is 50 mm (1.97 in) or more, it is judged as NG because the tension is too high. (Sedan model)
If the distance (A) between the measured value of 1) and 2) above, is less than 70 mm (2.75 in), it is judged as OK. If the distance is 70 mm (2.75 in) or more, it is judged as NG because the tension is too high. (OUTBACK model)

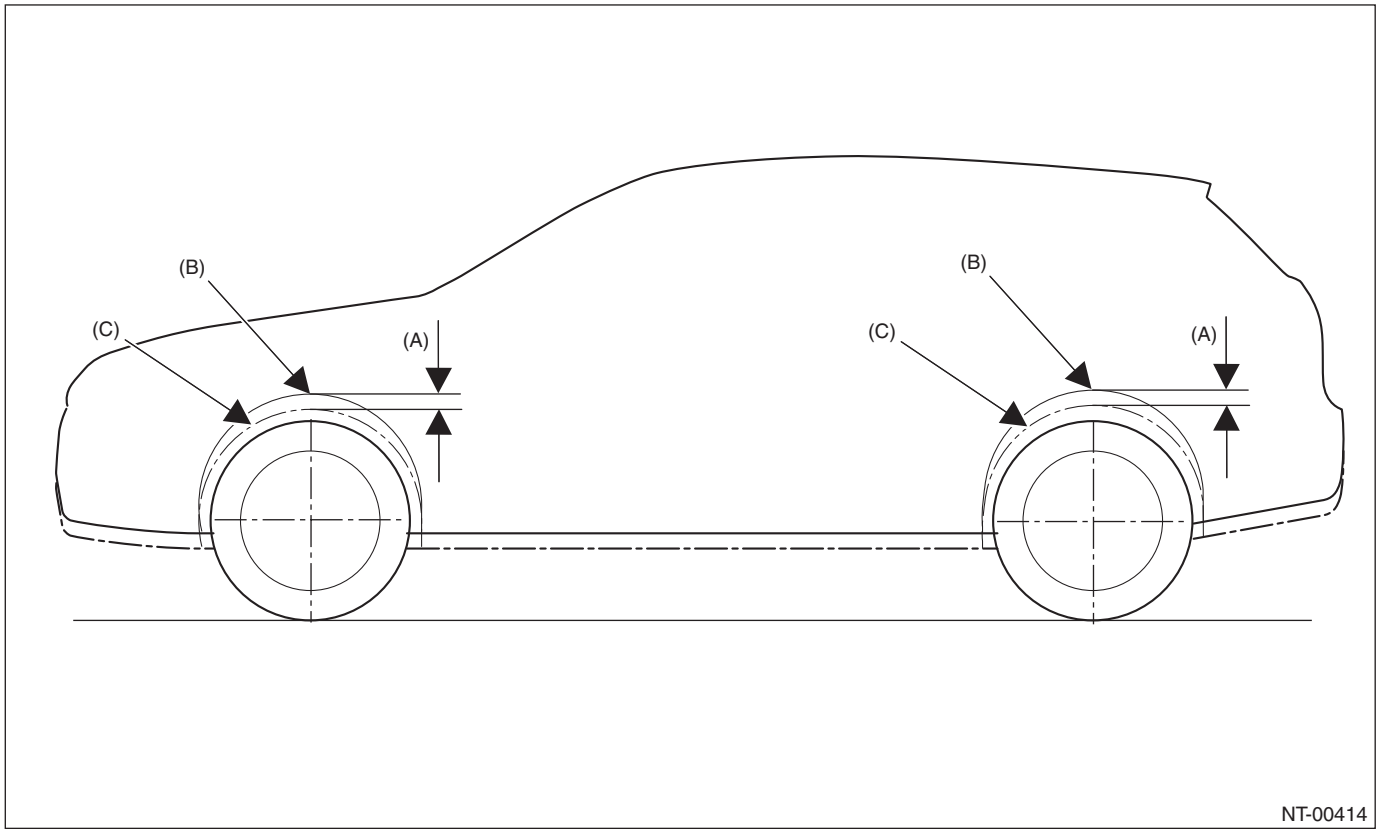

(B) Arch position before tie-down (C) Arch position after tie-down

- **Notes for the use of tie-down hook**

When the vehicle is tied down from vehicle inside, hook the hooks of tie-down chain from vehicle inside, and when the vehicle is tied down from vehicle outside, hook the hooks of tie-down chain from vehicle outside.
For front tie-down hook, use S hook and J hook, and for rear tie-down hole, use S hook, J hook and T hook. T hook can be used only for rear tie-down hole.

17.TOWING

Avoid towing vehicles except when the vehicle cannot be driven. For models with AWD and CVT, use a loader instead of towing. When towing other vehicles, pay attention to the following to prevent hook or vehicle damage resulting from excessive weight.

- Do not tow other vehicles with a front tie-down hook.
- Make sure the vehicle towing is heavier than the vehicle being towed.
- When towing the vehicle equipped with Subaru EyeSight, be sure to hold down the pre-collision brake OFF switch to turn OFF the pre-collision brake function. (Check that the pre-collision brake OFF indicator light in the meter lights up.)
- Front

Remove the hook cover, and install the towing hook (eyebolt).

NOTE:
For sedan models, the towing hook (eyebolt) is not a standard equipment.

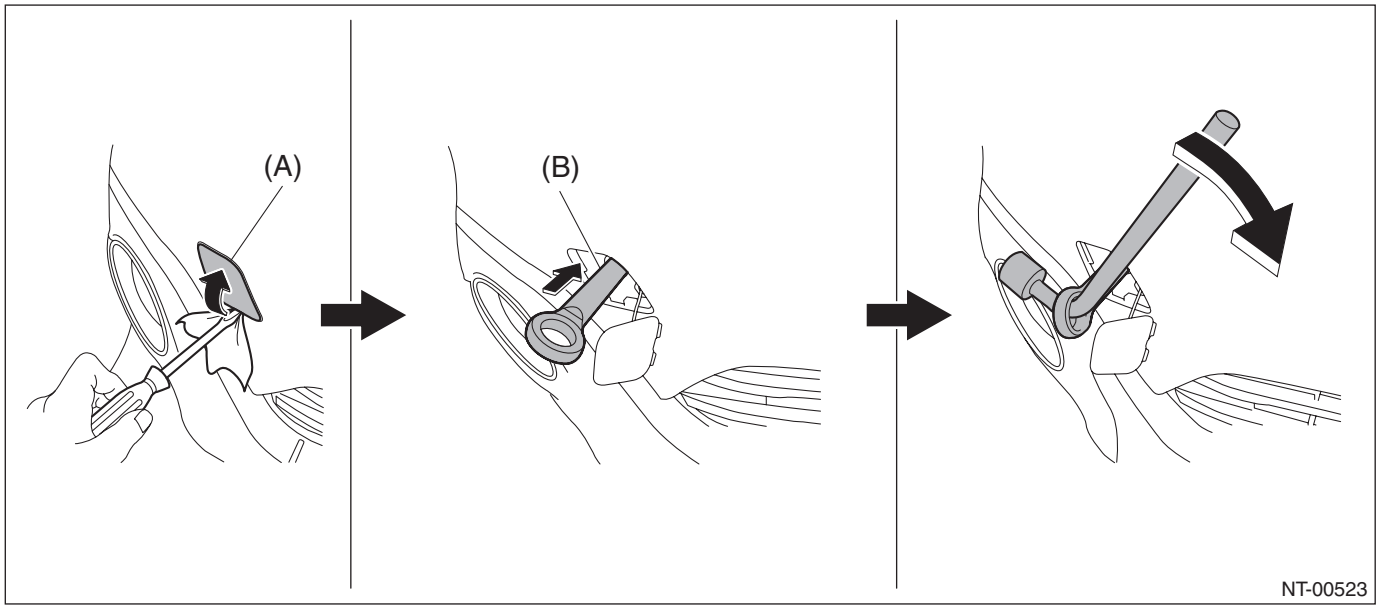

(A) Hook cover (B) Towing hook (eyebolt)

- Rear

Remove the hook cover, and install the towing hook.

NOTE:
For sedan models, the towing hook (eyebolt) is not a standard equipment.

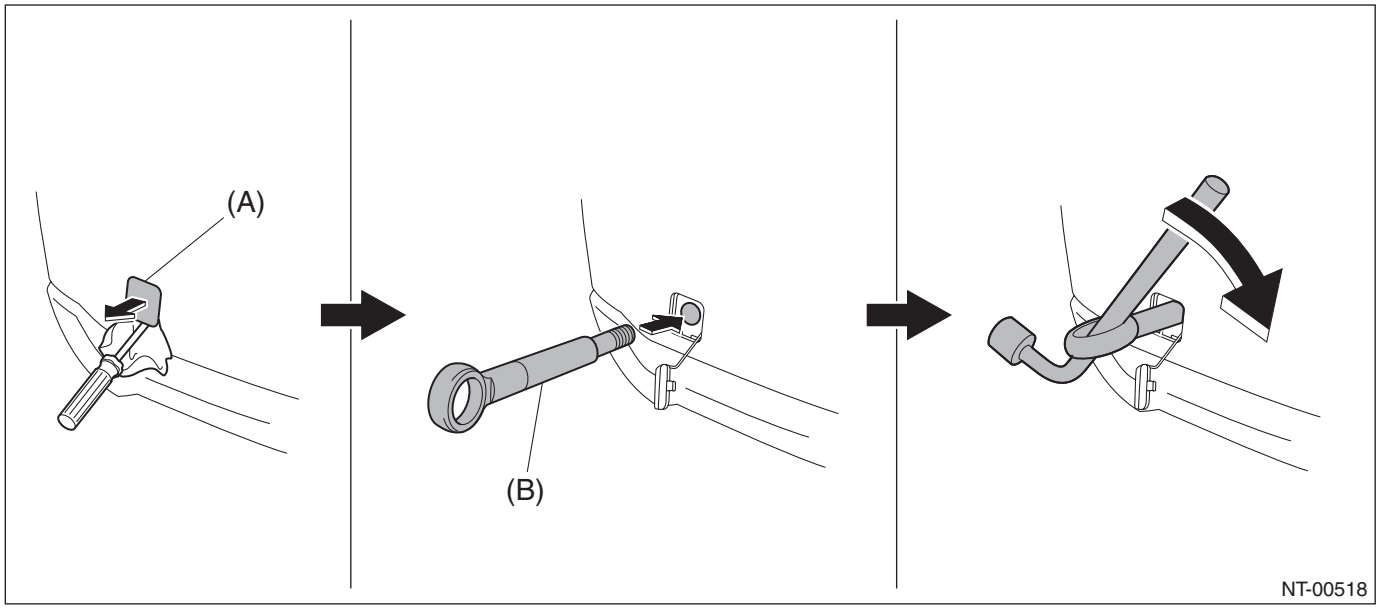

(A) Hook cover (B) Towing hook (eyebolt)

- Precautions

Towing	Precautions	MT	CVT
Lifting up four wheels (on a trailer) 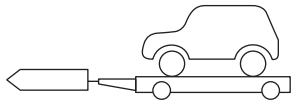 NT-00023	Towing the vehicle after lifting up all four wheels is a basic rule for AWD model.	○	○
Rope  NT-00024	• Check if both front and rear wheels are rotated normally. • CVT model driving conditions: Driving speed of 30 km/h (19 MPH) or less Allow driving distance 50 km (31 miles) or less	○	▲
Raising the front wheels 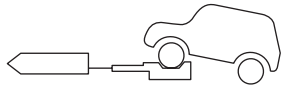 NT-00025	Prohibited for full-time AWD model.	×	×
Lifting up the front wheels 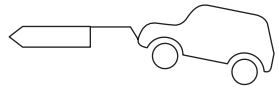 NT-00026	• Prohibited, due to damage on bumper, front grille, etc. • Do not raise the vehicle with bumper.	×	×

Marked ○: OK, Marked ×: Prohibited, Marked ▲: Conditionally OK

CAUTION:
- **Place the shift lever in "N" position during towing.**
- **Do not lift up the rear wheels to avoid unsteady rotation.**
- **Turn the ignition key to "ACC", then check the steering wheel moves freely. (Models without the keyless access with push button start)**
- **Turn the ignition switch to "ACC" or "ON" position, and check that the steering wheel moves freely. (Model with keyless access with push button start)**
- **Release the parking brake to avoid tire dragging.**
- **Since the power steering does not work, be careful for the heavy steering effort. (When engine is stopped)**
- **Since the servo brake does not work, be careful that the brake is not applied effectively. (When engine is stopped)**
- **In case of the malfunction of internal transmission or drive system, lift up four wheels (on a trailer) for towing.**
- **Do not use towing hook (eyebolt) except when towing.**
- **Make sure to detach the towing hook (eyebolt) after towing. If the hook remains attached, the fuel leakage control function of the fuel pump may not operate properly when receiving an impact. And it may also affect the crash performance of the vehicle.**
- **While being towed with all four wheels on the ground, turn the engine switch to ON but do not start the engine.**

18.CARRIER CAR

Before lowering the vehicle from the carrier car, perform the following operations.

CAUTION:
Always perform the following operations before lowering the vehicle from the carrier car. Otherwise, the power unit will rotate reversely, which may cause the damage to the engine, vacuum pump, and transmission.

1) Start the engine.
2) Set the transmission shift position into driving direction of the vehicle. (When the vehicle drives forward, do not set the transmission into R range. When the vehicle drives rearward, do not set the transmission into 1 — 6 speed, or D range.)

CAUTION:
Be sure to perform 2) mentioned above even if the engine cannot be started in some reasons.

19.FRONT HOOD DAMPER STAY

1) Always perform works such as inspections and maintenance with both damper stays attached.

CAUTION:
At the inspection and general maintenance, do not detach the damper stays.

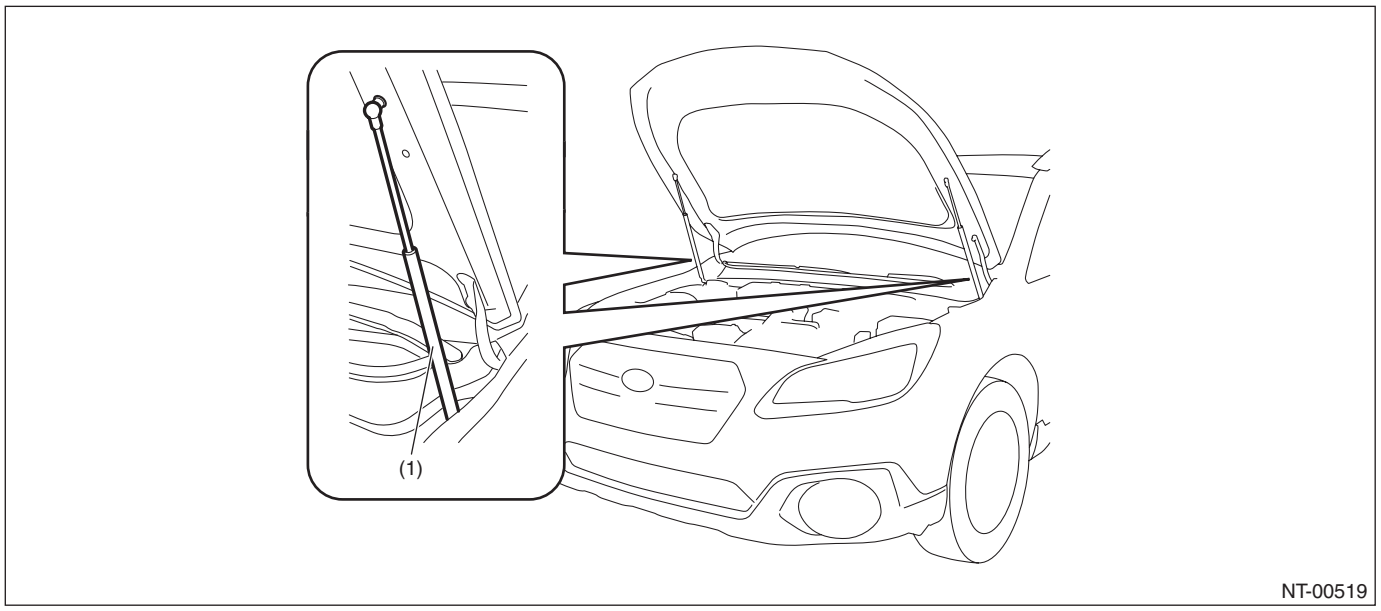

(1) Normal attached position

2) When wider hood opening is necessary, set the damper stay below as shown in the figure.

Tightening torque:
<Ref. to EB-2, FRONT HOOD, COMPONENT, General Description.>

CAUTION:
• The hood cannot be closed with the hood damper on the full open side. When it is necessary to close, tie the hood striker and the radiator panel with a string etc. to fix them.
• After work, set the damper stays back to the normal position and tighten the bolts to the specified torque.

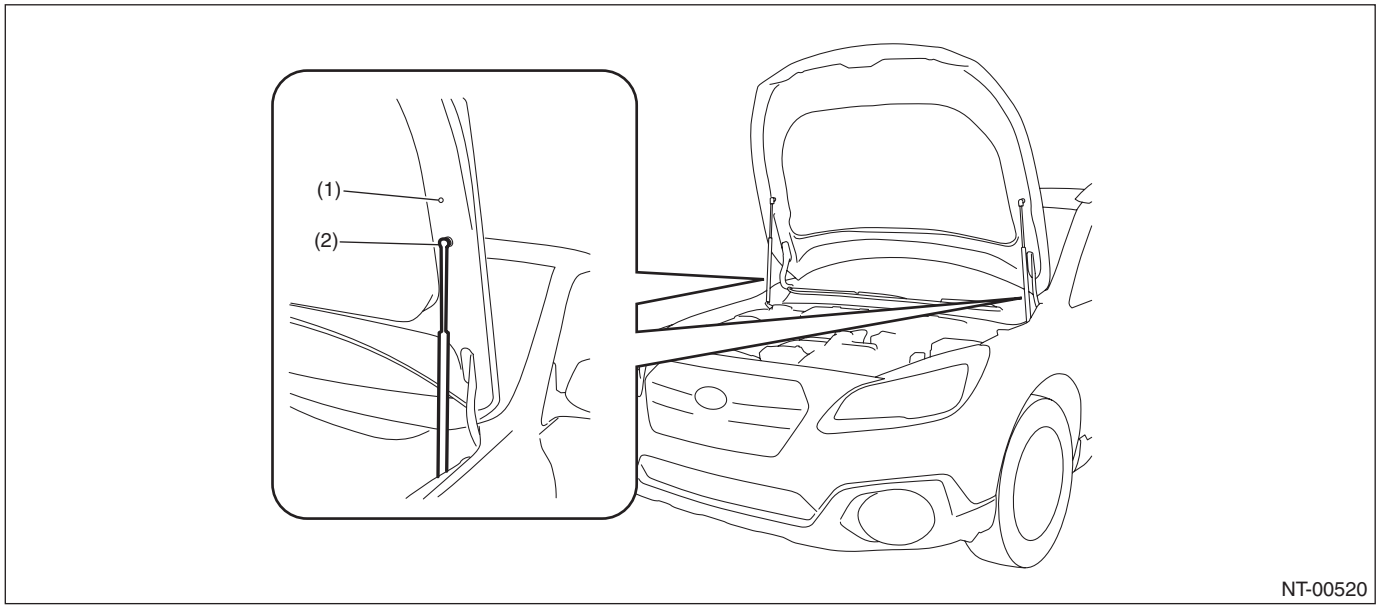

(1) Normal attached position (2) Installation position at full open

20.GENERAL SCAN TOOL

Using general scan tools will greatly improve the efficiency of repairing engine electronic controls. Subaru Select Monitor can be used to diagnose the engine, VDC, air conditioner and other electrically controlled parts.

21.AWD CIRCUIT MEASURES

1) Full-time AWD MT model
Since viscous coupling (limited slip differential) is used in the center differential, cut-off of AWD circuit cannot be carried out.
2) Full-time AWD CVT model
Since electronically controlled MP-T hydraulic multi-plate clutch is adapted for center differential, switch to FWD by using Subaru Select Monitor.

22.SPEEDOMETER TEST

1) Rear wheel free roller system
   (1) Set the free roller on the floor of rear wheel side securely according to the wheel base and rear tread of the vehicle.
   (2) Let the vehicle ride on the tester and free roller gently.

CAUTION:
Fix the vehicle using a pulling metal (chain or wire) to the front and rear towing hooks or tie-down hook to prevent the lateral runout of front wheels and springing out of vehicle.

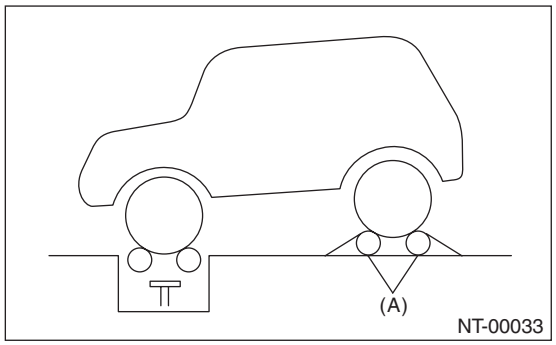

(A) Free roller

   (3) Set the speedometer tester.
   (4) Conduct the speedometer test work.

CAUTION:
Do not operate the clutch quickly and do not accelerate or decelerate suddenly during work.

2) Rear wheel jack-up system
(1) Set the vehicle on speedometer tester.

CAUTION:
Fix the vehicle using a pulling metal (chain or wire) to the front and rear towing hooks or tie-down hook to prevent the lateral runout of front wheels and springing out of vehicle.

(2) Jack up the rear wheels and set the rigid racks to the specified locations of side sill.

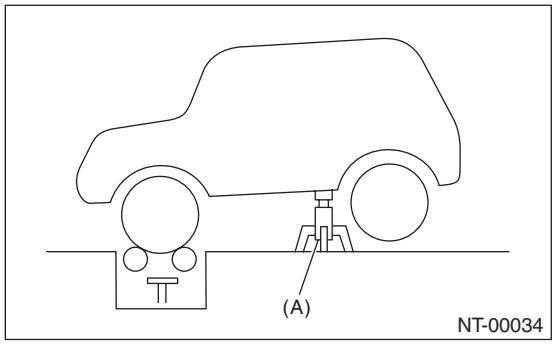

(A) Rigid rack

(3) Conduct the speedometer test work.

CAUTION:
Do not operate the clutch quickly and do not accelerate or decelerate suddenly during work.

23.BRAKE TEST

1) Full-time AWD MT model
(1) Perform this test after driving the vehicle 2 to 3 km (1.24 to 1.86 miles) on road in order to stabilize the viscous torque of viscous coupling.
(2) Keep the front or rear wheels on the ground for this test.

NOTE:
Effect of the viscous torque on braking force will be added approx. 25 kg compared with FWD model.

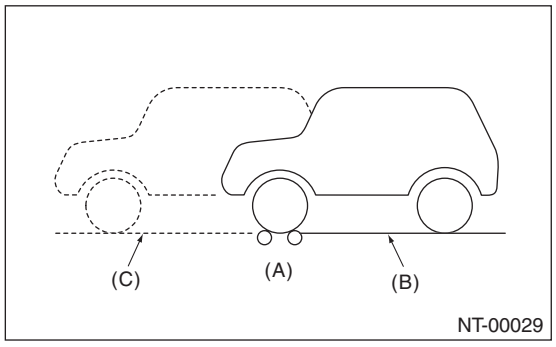

(A) Brake tester
(B) Position for measuring front wheel
(C) Position for measuring rear wheel

(3) When the brake dragging force is large.
- Check the dragging of brake pad or brake shoe.
- Since it may be affected by the viscosity of viscous coupling, jack up either of the front or rear two wheels to check the each wheel rotation condition with the viscous coupling affection removed.

2) Full-time AWD CVT model

(1) Keep the front or rear wheels on the ground during measurement.

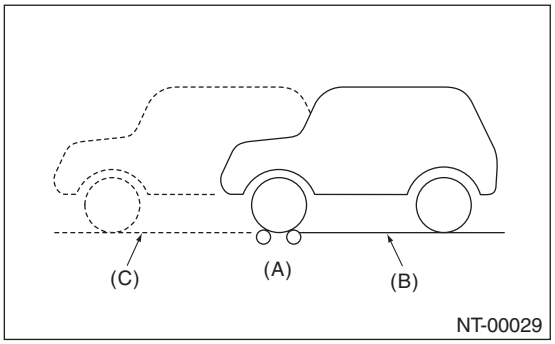

(A) Brake tester
(B) Position for measuring front wheel
(C) Position for measuring rear wheel

(2) When the brake dragging force is large.

- Check the dragging of brake pad or brake shoe.

Specifications:

	Braking force
Rear wheel total	10% or more of load on front or rear wheels
Difference between right and left wheels	8% or less of load on front or rear wheels
Grand total	50% or more of vehicle weight at the time of test

- When measurement is difficult to carry out because both of front wheels are locked, brake force measurement in this condition conforms to standard grand total.

24.ON THE CAR WHEEL BALANCING

CAUTION:
- **Carry out the procedures after measuring the balance of each single tire.**
- **Set the vehicle so that the front and rear wheels are the same height.**
- **Make sure that the VDC is deactivated.**
- **Release the parking brake during measurement.**
- **Rotate each wheel by hands, and make sure it rotates without dragging.**
- **Do not operate the clutch quickly and do not accelerate or decelerate suddenly during work.**
- **When an error is indicated during engine drive, do not use the motor drive together.**

1) Set the rigid rack to the specified locations of side sill, jack up the front or rear two wheels of non-measuring side and set the pickup stands to two wheels of measuring side.

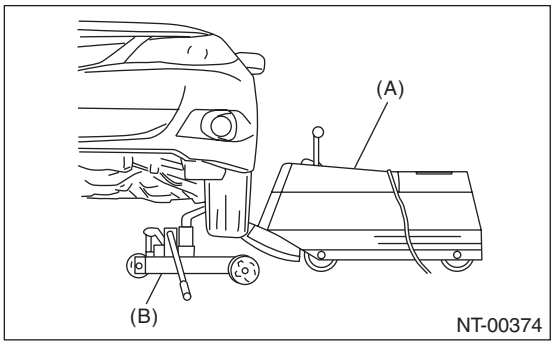

(A) Balancer body
(B) Pickup stand (left and right)

2) For drive wheel, drive the tires with engine for measurement.
3) For non-drive wheel, drive the tires from the on the car wheel balancer for measurement.

IDENTIFICATION

ID

Page
1. Identification 2

1. Identification

A: IDENTIFICATION

1. IDENTIFICATION NUMBER & LABEL LOCATIONS

The V.I.N. (Vehicle Identification Numbers) is used to classify the vehicle.

- **Positioning of the plate label for identification**

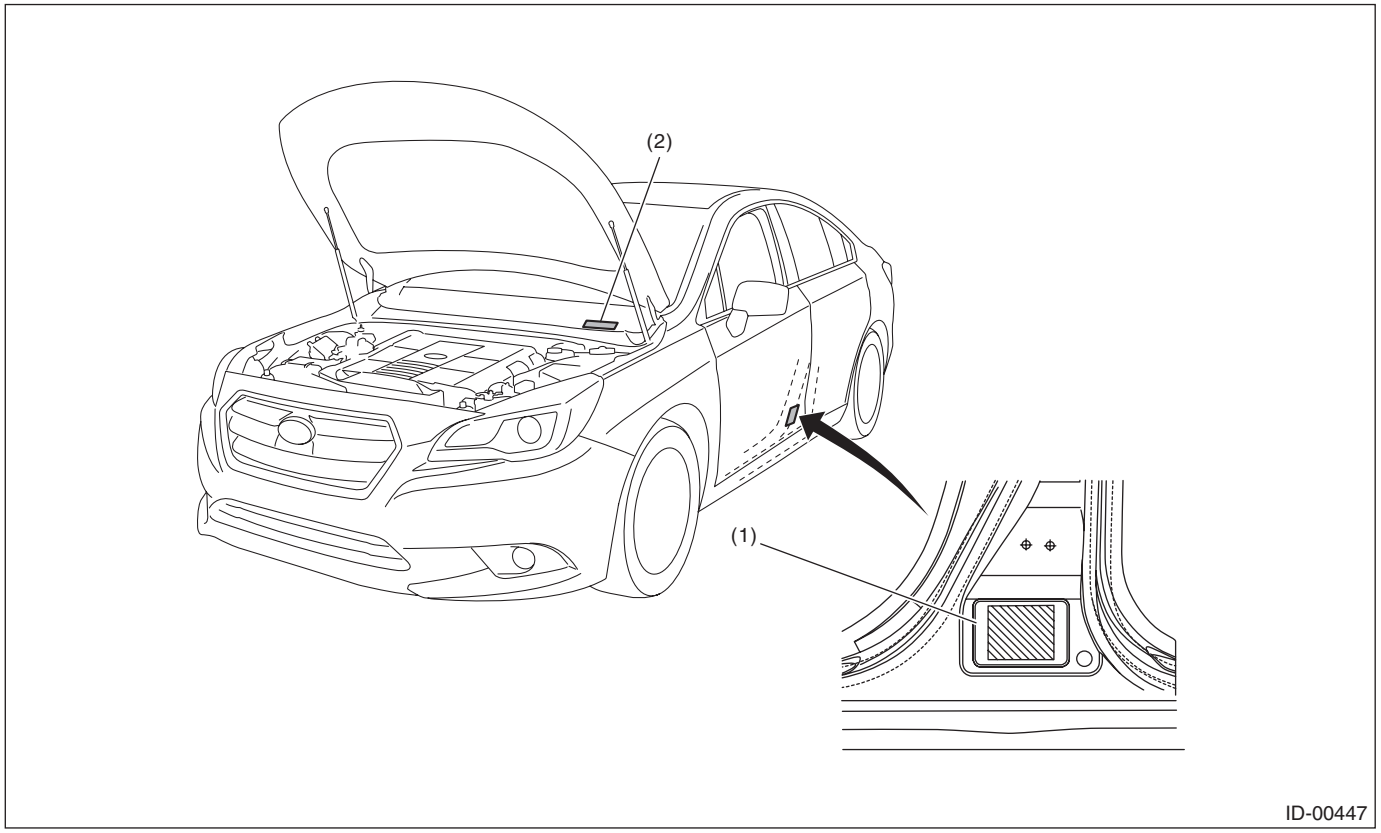

(1) FMVSS label (U.S. model, attached to left side of vehicle)
CMVSS label (Canada model, attached to left side of vehicle)
Model number label (attached to right side of vehicle)

(2) VIN plate

- **Engine**

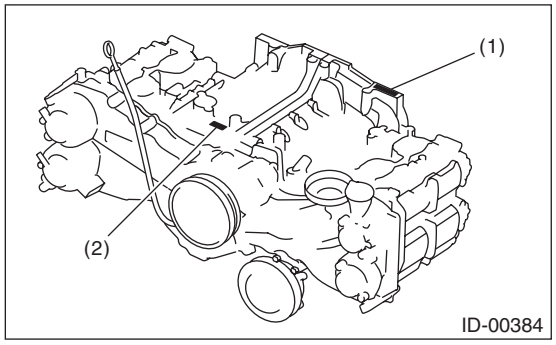

(1) Engine serial number (punch mark)
(2) Engine type (casting) crankcase upper side

- **Automatic transmission**
  CVT
  - TR690

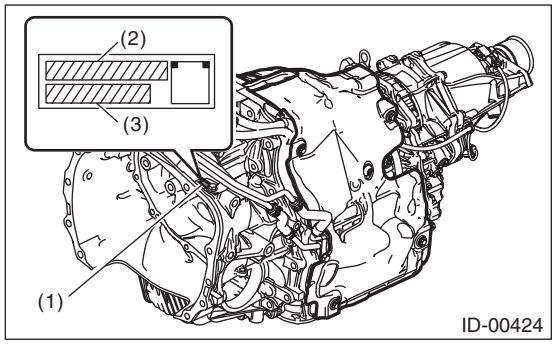

(1) Label
(2) CVT type label
(3) Transmission serial No. label

  - TR580

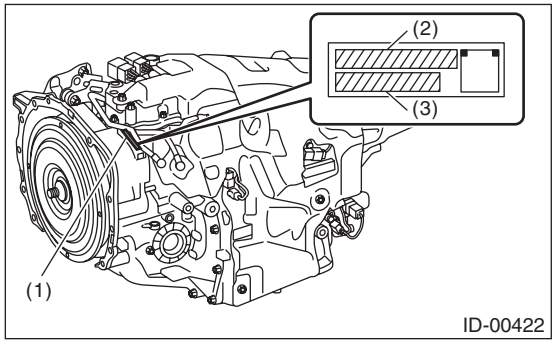

(1) Label
(2) CVT type label
(3) Transmission serial No. label

- **Manual transmission**
  6MT

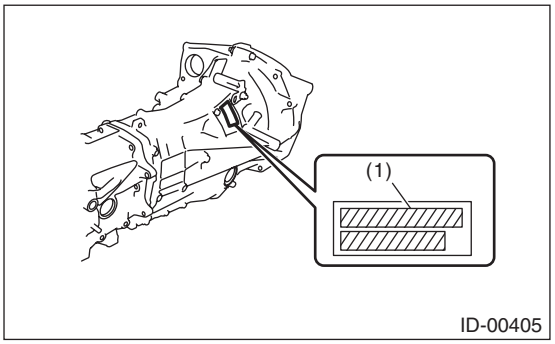

(1) Transmission serial number label and MT type label

- **Rear differential**
  T-type

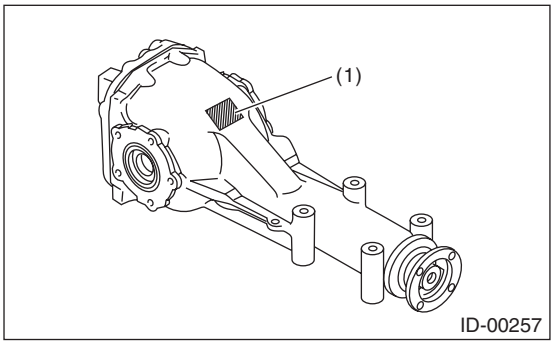

(1) Identification (white paint)

VA1-type

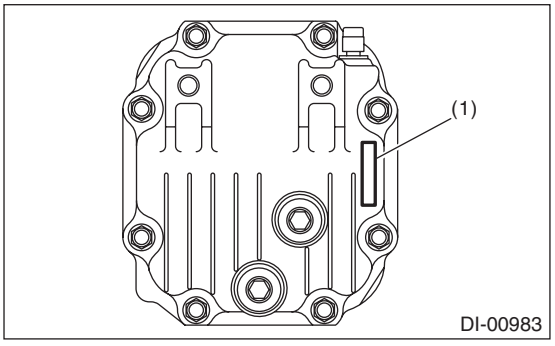

(1) Type (label)

VA2-type

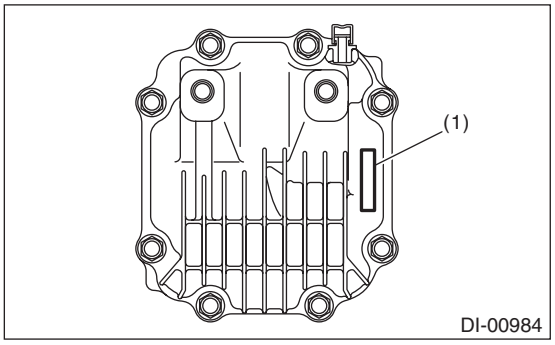

(1) Type (label)

- **FMVSS label**

For U.S.A.

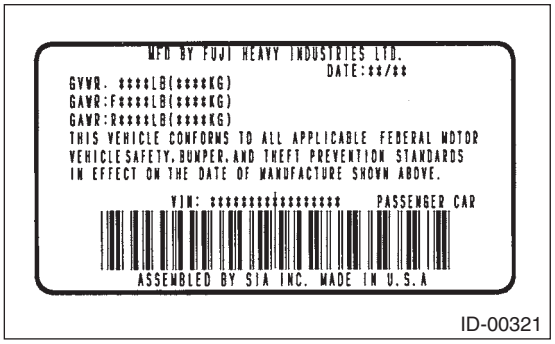

- **CMVSS label**

For Canada

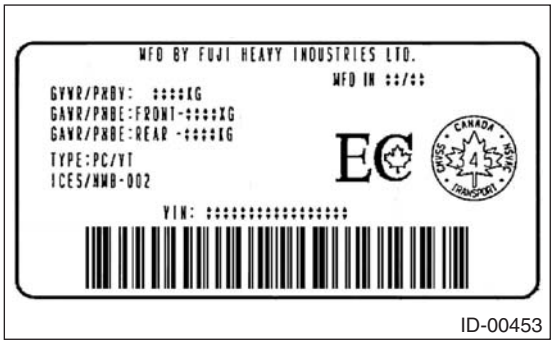

- **Model number label**

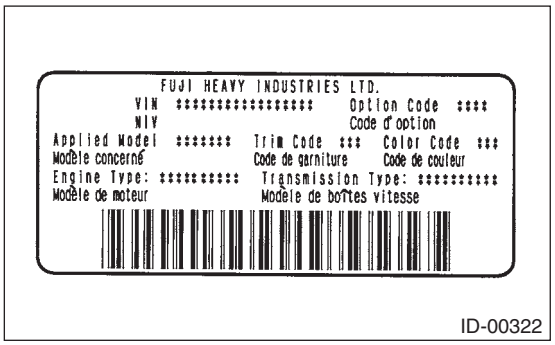

2. MEANING OF V.I.N.

The meaning of the V.I.N. is as follows:
]4S3BNAA6XG1002001[
The starting and ending brackets ( ] [ ) are stop marks.

Digits	Code	Meaning	Details
1 — 3	4S3	Manufacturer body area	4S3: Except for OUTBACK model 4S4: OUTBACK model
4	B	Car line	B: LEGACY/OUTBACK
5	N	Body type	N: Sedan S: OUTBACK
6	A	Total emission and destination	A: 2.5 L for U5 B: 2.5 L for U6 C: 2.5 L for C0 D: 2.5 L for C5 E: 3.6 L for U4 F: 3.6 L for C0
7	A	Grade	A: Base C: Premium + AWP D: Premium + AWP + M/R E: Premium + AWP + Navi + M/R F: Premium + AWP + EyeSight G: Premium + AWP + M/R + EyeSight H: Premium + AWP + M/R + EyeSight + Navi J: Limited K: Limited + M/R L: Limited + M/R + Navi N: Limited + M/R + EyeSight + Navi
8	6	Restraint system or GVWR Class	6: Manual belt, dual airbag, side airbag for seat back + curtain airbag for roof, front seat cushion airbag (except for OUTBACK model) C: Manual belt, dual airbag, side airbag for seat back + curtain airbag for roof, front seat cushion airbag, class C (GVWR 4,001 — 5,000 lb) (for OUTBACK model)
9	X	Check numbers	0 — 9 & X
10	G	Model year	G: 2016MY
11	1	Transmission type	1: Full-time AWD 6MT 3: Full-time AWD CVT
12 — 17	002001	Serial number	002001 — 199999: Sedan 200001 — 399999: OUTBACK

3. MODEL NUMBER LABEL

The model number label indicates: the applied model, the option code, the trim code, the engine type, the transmission type, and the exterior color code. This information is helpful when placing orders for parts.

- **BN9BY2A**

Digits	Code	Meaning	Details
1	B	Series	B: LEGACY
2	N	Body type	N: Sedan S: OUTBACK
3	9	Total engine displacement / drive system	9: 2.5 L AWD F: 3.6 L AWD
4	B	Model year	B: 2016MY
5	Y	Destination	Y: U.S.A., Canada
6	2	Grade	2: 2.5 i 4: 2.5 i Premium 5: 2.5 i Premium EyeSight 8: 2.5 i Limited 9: 2.5 i Limited EyeSight A: 3.6 R B: 3.6 R Premium D: 3.6 R Limited E: 3.6 R Limited EyeSight G: OUTBACK 2.5 i H: OUTBACK 2.5 i Premium J: OUTBACK 2.5 i Premium EyeSight M: OUTBACK 2.5 i Limited N: OUTBACK 2.5 i Limited EyeSight T: OUTBACK 3.6 R Premium V: OUTBACK 3.6 R Limited W: OUTBACK 3.6 R Limited EyeSight
7	A	Fuel feed system / transmission	A: DOHC MFI 6MT C: DOHC MFI CVT

The engine and transmission type are as follows.

- **Engine**

FB25BAYBBA

Digits	Code	Meaning	Details
1 and 2	FB	Engine type symbol	FB: 4 cylinders
3 and 4	25	Displacement	25: 2.5 L
5	B	Valve train/fuel supply system/steering	B: DOHC non-turbo (LH)
6	A	Exhaust regulations	A: For states not using California emission standards C: For states using California emission standards
7	Y	Intake and exhaust system	Y: Intake AVCS, TGV, EGR
8	B	Mounted transmission	B: 6MT H: CVT
9 and 10	BA	Detailed specifications	Used when ordering parts. For details, refer to the parts catalog.

EZ36DBUALB

Digits	Code	Meaning	Details
1 and 2	EZ	Engine type symbol	EZ: 6 cylinders
3 and 4	36	Displacement	36: 3.6 L
5	D	Fuel feed device	D: MFI non-turbo
6	B	Exhaust regulations	B: For all states
7	U	Mounted transmission	U: CVT
8 — 10	ALB	Detailed specifications	Used when ordering parts. For details, refer to the parts catalog.

- **Transmission**

1. MT

TY751VHACA

Digits	Code	Meaning	Details
1	T	Transmission	T: Transmission
2	Y	Transmission system	Y: Full-time AWD MT center differential
3 and 4	75	Distance between gear center	75: Between main shaft and drive pinion
5	1	Classification	1: 6MT
6	V	Transmission specifications	V: Full-time AWD single range 6MT with viscous coupling center differential
7	H	Mounted engine	H: 2.5 L DOHC non-turbo
8 — 10	ACA	Detailed specifications	Used when ordering parts. For details, refer to the parts catalog.

2. CVT

TR690KJACA

Digits	Code	Meaning	Details
1	T	Transmission	T: Transmission
2	R	Transmission system	R: Full-time AWD CVT
3 and 4	69	Distance between pulley centers	58: Between pulley centers 69: Between pulley centers
5	0	Classification	0: CVT
6	K	Transmission specifications	G: Without Auto Start Stop, with CVTF cooler (with warmer feature), without CVTF cooler (air cooler) K: Without Auto Start Stop, with CVTF cooler (without warmer feature), without CVTF cooler (air cooler) S: Without Auto Start Stop, with CVTF cooler (with warmer feature), with CVTF cooler (air cooler)
7	J	Mounted engine	H: 2.5 L DOHC non-turbo J: 3.6 L DOHC non-turbo
8 — 10	ACA	Detailed specifications	Used when ordering parts. For details, refer to the parts catalog.

- **Rear differential**

Identification	Reduction gear ratio	LSD
Y4	4.111	None
Y2	3.900	None
Y3	4.111	None
B1	4.111	None
B4	4.444	None

- **Option**

C0KX

Digits	Code	Meaning	Details
1 — 2	C0	Destination	C0: Canada C5: Canada (PZEV) U4: U.S.A U5: U.S.A (for states using California emission standards) U6: U.S.A (for states not using California emission standards)
3 — 4	KX	Option equipment	Refer to the option list

- 3-digit number

	A	C	D	F	G	K	Q	U	W	1	2	3	5
HID headlight	○	○	○	—	—	—	—	—	○	—	—	—	—
Power seat	○	○	○	○	○	○	—	○	○	○	○	○	○
Keyless access with push button start	—	○	○	○	○	—	—	○	—	—	—	—	○
Genuine leather seat	○	○	○	—	○	—	—	—	○	○	○	—	○
L package	○	○	○	—	○	—	—	—	○	○	○	—	○
Rearview camera	○	○	○	○	○	○	○	○	○	○	○	○	○
Power rear gate	○	—	○	—	—	—	—	○	—	○	—	○	○

- 4-digit number

	A	C	E	F	G	H	I	J	P	T	V	W	X	Z
Dark-colored glass	—	—	—	○	—	○	○	○	○	○	—	—	—	○
Winter pack	○	○	○	○	○	○	○	—	○	○	○	○	—	○
HK-type audio	—	—	—	—	—	—	—	—	—	○	○	○	—	○
Navigation system	—	—	○	—	—	○	—	—	—	—	—	—	—	—
Navigation system + HK audio	—	—	—	—	○	—	—	—	○	—	—	—	—	—
Sunroof	—	○	○	○	○	○	—	—	○	○	○	—	—	—

RECOMMENDED MATERIALS

RM

Page
1. Recommended Materials 2

1. Recommended Materials

A: RECOMMENDED MATERIALS

1. GENERAL

To insure the best performance, always use the specified oil, gasoline, adhesive, sealant, etc. or a substitute of equivalent quality.

2. FUEL

- Use unleaded gasoline to reduce air pollution, because using leaded gasoline will damage the catalytic converter.
- Do not use the low quality gasoline, or improper fuel such as diesel fuel, fuel alcohol, or gasoline additive because they will adversely affect on engine components and fuel system components.
- Always use gasoline that is equivalent to that prescribed in the owner's manual or that of high octane value. There is the possibility of damaging or improper operation of the engine and fuel injection system if the specifications are not observed. Use the prescribed gasoline type to maintain proper vehicle performance.

3. LUBRICANT

Use the lubricants shown in the table below, or equivalent. See the table below to choose the correct SAE viscosity.

<table>
<tr><td rowspan="2">Lubricant</td><td>Recommended materials</td></tr>
<tr><td>Engine oil standard</td></tr>
<tr><td>Engine oil
Choose oil suitable for the standard from the right.</td><td> 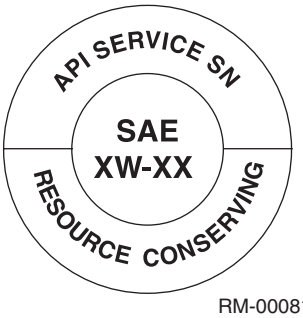

RM-00081
Those with SN “Resource Conserving” logo in case of API standard.
or
 

RM-00002
Those with GF-5 “starburst mark” displayed on top of the container in case of ILSAC standard.</td></tr>
<tr><td colspan="2">SAE viscosity No. and applicable temperature</td></tr>
<tr><td>2.5 L model</td><td> 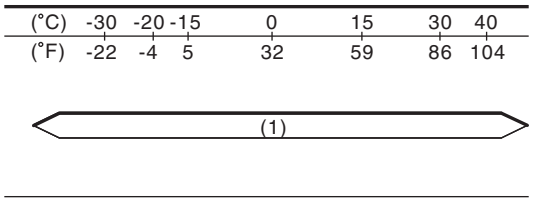

RM-00082
(1) 0W-20 (synthetic oil) Specified</td></tr>
<tr><td>3.6 L model</td><td> 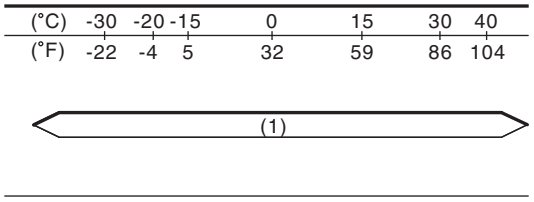

RM-00082
(1) 5W-30 (recommended)</td></tr>
</table>

Lubricant	Recommended materials
	API standard
Rear differential gear oil*	GL-5
SAE viscosity No. and applicable temperature	

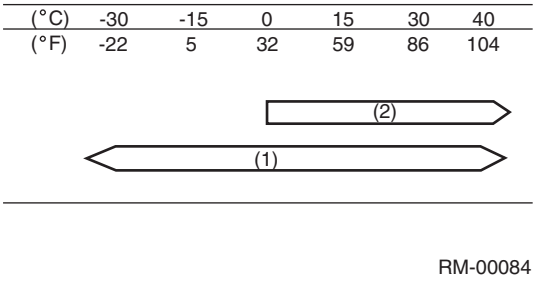

(1) 75W-90 (recommended)
(2) 90

*

CAUTION:
Do not mix two different kinds or makes of gear oil.

4. FLUID

Use the fluids specified in the table below. Do not mix two different kinds or makes of fluid.

CAUTION:
• Be sure to use the recommended CVTF. Using material except recommended one would cause trouble.
• If an alternative transmission gear oil is used, you may not have expected functionality and performance.

Fluid		Recommended materials	Item number	Alternative
Transmission fluid	2.5 L	SUBARU CVT FLUID LINEARTRONIC II	K0425Y0711	—
	3.6 L	Subaru High Torque CVT Fluid	K0421Y0700	—
Transmission gear oil		SUBARU GEAR OIL EXTRA MT	—	GL-5 (75W-90)
CVT front differential gear oil		SUBARU GEAR OIL EXTRA MT	—	GL-5 (75W-90)
Brake fluid and clutch fluid		FMVSS No. 116 DOT3, or DOT4	—	—

5. ENGINE COOLANT

Use genuine engine coolant to protect the engine.

Engine coolant	Recommended materials	Item number	Alternative
Coolant	SUBARU SUPER COOLANT (concentrated type)	—	—
	SUBARU SUPER COOLANT (diluted type)	K0670Y0001	—
Water for dilution	Distilled water	—	Soft water or tap water
Cooling system protective agent	Cooling system conditioner	SOA345001	—

6. REFRIGERANT

Standard air conditioners on Subaru vehicles use HFC134a refrigerant. Do not mix it with other refrigerants. Also, do not use any compressor oil other than DENSO OIL 8.

Air Conditioner	Recommended materials	Item number	Alternative
Refrigerant	HFC134a	—	—
Compressor oil	DENSO OIL 8	—	—

7. GREASE

Use grease and supplementary lubricants shown in the table below.

Grease	Application point		Application point	Recommended materials (Item number)	Alternative
Supplementary lubricants	Exhaust		Oxygen sensor	Spray type lubricant (004301003)	—
Grease	MT		MT main shaft (spline parts)	NICHIMOLY N-130	—
			MT main shaft (oil seal lip)		
			Transfer driven gear (front roller bearing, rear roller bearing)		
			Clutch operating cylinder		
			Release bearing (inner circumference)		
			Clutch release lever		
			Clutch master cylinder push rod	SILICONE GREASE G-40M	—
			Gear shift lever	Multemp HL-D	—
			Clutch pedal	NIGTIGHT LYW No. 2 grease	—
	Brake		Brake pedal		
	CVT		Select lever	Multemp D No. 2	—
	Door		Door latch	SILICONE GREASE G-30M (004404002)	—
			Door striker		
	Steering		Steering gearbox (rack and pinion)	Molywhite LS-G	—
			Steering gearbox (boot and tie-rod installation parts)	One-Luber 2128	—
	Brake	Front 16-inch	Disc brake (lock pin, guide pin)	NIGLUBE RM	—
		Front 17-inch		NIGLUBE RX-2 (000041000)	—
		Front 16-inch	Between brake pad and shim	Molykote M77	—
		Front 16-inch	Brake pad clip	Molykote G-5029	—
		Front 17-inch		Molykote M7439 (K0770YA000)	—
	Drive shaft		Front axle PTJ	NKG302	—
			Front axle EBJ	NKG814	—
			Rear axle BJ		
			Rear axle EBJ		
			Rear axle DOJ		

8. ADHESIVE

Use the adhesives shown in the table below, or an alternative.

Adhesive	Application point	Application point	Recommended materials	Alternative
Adhesive	Glass and body	Windshield glass, rear window glass, rear quarter glass, rear gate glass and body	• Dow Automotive's adhesive: ESSEX U-400HV or the equivalent • Glass primer: U-401 and U-402 • Painted surface primer: U-413	—

9. SEAL MATERIAL

Use the seal material shown in the table below, or an alternative.

Seal material	Application point		Application point	Recommended materials (Item number)	Alternative
Seal material	Engine	FB/EZ	Engine oil pressure switch	THREE BOND 1324 (004403042)	—
			PCV valve		
			Camshaft cap	THREE BOND 1217G (K0877Y0100) THREE BOND 1217H	—
			Rocker cover		
			Oil pan (oil pan upper)		
			Block (oil pan upper)		
			Cylinder block		
			Cylinder head gasket		
		FB	Camshaft carrier		
			Chain cover (block, head, oil pan upper, camshaft carrier, front camshaft cap)		
			Separator cover		
		EZ	Strainer		
			Chain cover (block, head, oil pan upper, camshaft cap)		
			Intake manifold nipple	THREE BOND 1105 (004403010)	DOW CORNING No. 7038
	MT		MT transmission case	THREE BOND 1215B	DOW CORNING No. 7038 THREE BOND 1215 (004403007)
			MT transfer case		
			MT transmission cover		
	CVT	TR690	CVT intermediate case		
			CVT converter case cover		
		TR580/ TR690	CVT transmission case		
			CVT extension case		
			CVT chain cover		
			CVT drive pinion retainer		
			Transmission oil pan	THREE BOND 1217B (K0877YA020)	—
	Steering		Steering adjusting screw	SEAL END No. 22	—
	Door	Front	Sealing cover	3M Butyl Tape 8626	—
		Rear			
	Rear differential	VA-type	Drive pinion shaft and self-locking nut (seating face)	THREE BOND 1324 (004403042)	—
			Hypoid driven gear bolt		
		T-type	Drive pinion shaft and self-locking nut (seating face)		
			Hypoid driven gear bolt		
			Filler plug, drain plug	THREE BOND 1105 (004403010)	DOW CORNING No. 7038
			Side retainer bolt	THREE BOND 1110F	THREE BOND 1110B

PRE-DELIVERY INSPECTION

PI

Page
1. Pre-delivery Inspection 2

1. Pre-delivery Inspection

A: GENERAL DESCRIPTION

The purposes of the pre-delivery inspection (PDI) are as follows.
- Remove the vehicle protective parts for transportation.
- Check that the vehicle or parts before delivery are not damaged during transportation or storage.
- Check that the vehicle after repair is normal.
- Make sure to provide a complete vehicle to customer.

For above reasons, all SOA service center must carry out the PDIs before delivery of vehicle.
Besides, all SOA service center and PDI center check the condition of all vehicles to make sure to take responsibility.

B: PRE-DELIVERY INSPECTION (PDI) PROCEDURE

Static checks just after vehicle receipt

Item	Check point
1. Appearance	1. If the vehicle is covered with protective coating, visually check the vehicle body for damage and dents. If the protective coating has been removed, visually check the painted body surfaces in detail for damage or rust. 2. Visually check the glass and light lenses for any damage, cracks or excessive gaps between body sheet metal. 3. Visually check the plated parts for any damage. 4. Check the instrument panel, console and trim for stains or dirt.
2. Tire	1. Check the tires for damage, defective, and dents on wheels. 2. Check the tire air pressure.
3. Fuses	If the vehicle is about to be delivered to customer, attach a back-up fuse.
4. Lock/unlock and open/close operation checks of doors	1. Using the key, check the door can be locked or unlocked normally. 2. Open and close all doors to check that there are no problems. 3. Operate the power door lock switch to check that all doors and the rear gate lock and unlock normally.
5. Child safety lock	Check the child safety lock system operates normally.
6. Trunk lid open/close operations	1. Using the key, check that the trunk lid can be locked or unlocked normally. 2. Press the trunk opener switch for approx. one second to check for normal operation of the trunk lid. 3. Check that main and sub keys can lock/unlock the release lever, and that valet key can not lock/unlock the release lever. 4. Open and close the trunk lid to see that there are no abnormal conditions.
7. Trunk lid release lever	Operate the trunk lid release lever to check that the trunk lock is unlocked normally.
8. Rear gate lock/unlock and open/close operations	1. Open and close the rear gate to check that there are no problems. 2. Check if the rear gate can be unlocked normally through the emergency hole. 3. Operate the power door lock switch to check that all doors and the rear gate lock and unlock normally.
9. Power rear gate	Check if the power rear gate operates normally.
10. Fuel lid opener lever	Operate the fuel lid opener to check that the fuel lid is unlocked normally.
11. Accessory	Check that the following accessories are provided. • Owner's manual • Warranty booklet • Maintenance note • Spare key • Key number plate • Jack • Tool set • Spare tire • Towing hook (eyebolt (OUTBACK model)) • Security ID plate (model without keyless access with push button start)

Item	Check point
12. Front hood lock release system	Operate the front hood lock release lever to check that the front hood opens normally.
13. Battery	Check the battery for any abnormal conditions such as rust or traces of battery fluid leaks.
14. Brake fluid	Check the brake fluid amount.
15. Engine oil	Check the engine oil amount.
16. CVTF	Check for leakage of CVTF.
17. Transmission gear oil	Check that the transmission gear oil level is normal.
18. CVT front differential gear oil	Check for no leakage of CVT front differential gear oil.
19. Rear differential gear oil	Check for leakage of gear oil from the rear differential.
20. Engine coolant	Check the engine coolant level.
21. Clutch fluid	Check the clutch fluid amount.
22. Window washer fluid	Check the window washer fluid amount.
23. Front hood latch	Check that the front hood is closed normally and locked securely.
24. Keyless entry system	Check that the keyless entry system operates normally.
25. Keyless access system	Check that the keyless access system operates normally.
26. Alarm system	Check that the alarm system operates normally.
27. Seat	1. Check the seat surfaces for stains or dirt. 2. Check the seat installation conditions and functionality. 3. Check that the occupant detection system for passenger's seat operates normally.
28. Seat belt	1. Check the seat belt installation conditions and functionality. 2. Check the seat belt warning system operates normally.
29. TPMS (U.S. model)	If the display of TPMS warning light does not operate normally, perform the diagnosis by referring to TPMS (Diagnosis).
30. Grommet installation	Install the grommet provided in the glove box to the tie-down hole.
31. Delivery (test) mode	Turn the ignition switch to ON and check that the malfunction indicator light starts blinking.

Checks with the engine running

Item	Check point
32. Immobilizer system	1. Check that the engine starts with all keys that are equipped on vehicle. 2. Check that the security indicator light operates normally.
33. Push button start	Using the push button start function of the access key equipped with the vehicle, check that the engine starts and stops.
34. Starting condition	Start the engine and check that the engine starts smoothly.
35. Exhaust system	Check that the exhaust noise is normal and no leaks are found.
36. Indicator and warning lights	Check that all indicator lights and warning lights are operating correctly.
37. Heater & ventilation	Check that the heater & ventilation system operates normally.
38. Air conditioner	Check that the air conditioner operates normally.
39. Multi information display (MID)	Check that the multi information display (MID) function operates normally.
40. Audio	1. Check that the display and the switches (including the knob) operate normally. 2. Check that the radio, CD, USB and AUX systems operate normally. 3. Check that the rearview camera operates normally.
41. Navigation system	1. Check that the display and the switches (including the knob) operate normally. 2. Check that the navigation, radio, CD, USB and AUX systems operate normally. 3. Check that the rearview camera operates normally.
42. Telematics system	Check that the indicator light on the overhead console or on the stereo camera cover assembly goes off.
43. Accessory power supply socket	Check that the accessory power supply socket operates normally.
44. Lighting system	Check that the lighting system operates normally.

Item	Check point
45. Wiper deicer	Check that the wiper deicer operates normally.
46. Illumination control	Check that the illumination control operates normally.
47. Window washer system	Check that the window washer system operates normally.
48. Wiper system	Check that the wiper system operates normally.
49. Power window	Check that the power window operates normally.
50. Sunroof	Check that the sunroof operates normally.
51. Door mirror	Check that the remote control mirror and heated mirror operate normally.
52. Room mirror	Check that the automatic anti-glare function operates normally.
53. Rear defogger system	Check that the rear defogger system operates normally.
54. Parking brake	Check that the parking brake operates normally.
55. Blind Spot Detection/Rear Cross Traffic Alert (BSD/RCTA)	1. Press the BSD/RCTA OFF switch several times to check that the system is activated and deactivated correctly. 2. Check the rear bumper around the sensor for dirt, scratch, affixed stickers and poor paint coating.
56. Diagnostic trouble code (DTC) check	Check that the diagnostic trouble code (DTC) is not detected.

Dynamic test with the vehicle running

Item	Check point
57. Brake test	Check the foot brake for normal operations.
58. Shift control	Check that the MT, CVT shifts normally.
59. Cruise control	Check that the cruise control system operates normally.
60. Subaru EyeSight	Check that the Subaru EyeSight operates normally.

Checks after dynamic test

Item	Check point
61. Power steering system (electric power steering model)	Check the steering warning light operation.
62. Fluid leakage	Check for fluid/oil leaks.
63. Water leakage	Spray the vehicle with water and check for water leaks.
64. Appearance 2	1. Remove the protective coat. (If attached) 2. Check the body paints for damage and stain. 3. Check the plated parts for damage and rust.

1. APPEARANCE

- If the vehicle is covered with protective coating, visually check the vehicle body for damage and dents.
- If the protective coating has been removed, visually check the body painted area for damage or stains in detail and repair as necessary.
- Visually check the windshield glass, door glasses and light lenses for any damage, cracks or excessive gaps to the body sheet metal and repair as necessary.
- Visually check the plated parts, such as the grilles and door knobs, for damage or loss of gloss and replace the parts as necessary.
- Check the instrument panel, console and trim for stains or dirt.
- Check the keyless key or access key for dirt, and wipe off if necessary.

2. TIRE

- Check the tires for damage, defective, and dents on wheels.
- Check and correct the tire size, spare tire and tire air pressure described on the tire air pressure label (driver's side).

3. FUSE

Backup fuse (30 A) remains removed to prevent the battery consumption when vehicles are delivered. Install the backup fuse by following the illustration. Besides, removing the backup fuse from the fuse holder deactivates the control during shipping (delivery mode).

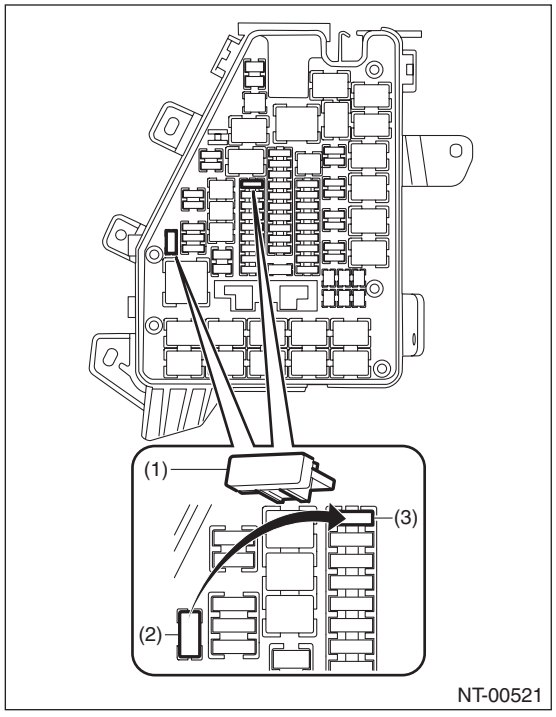

(1) Backup fuse (30 A)
(2) Backup fuse holder
(3) Backup fuse inlet

4. LOCK/UNLOCK AND OPEN/CLOSE OPERATION CHECKS OF DOORS

1) Using the key, lock and unlock the door several times to check for normal operation. Open and close the door several times for smooth movement.

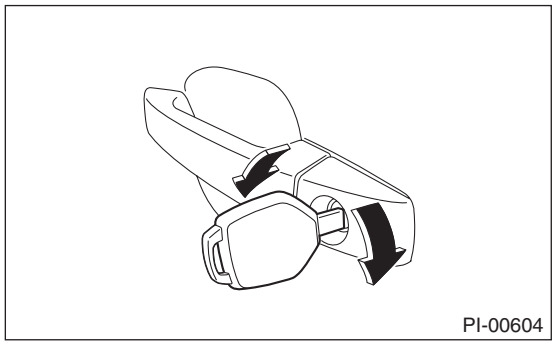

2) Completely close the driver's door, and then check the smooth movement with operating door lock knob from lock to unlock several times. Set the door lock knob (A) to lock position. Then pull the inner remote (B) to ensure that doors will not open.
For other doors, place the door lock knob (A) to lock position and then pull the inner remote (B) to ensure that doors will not open.

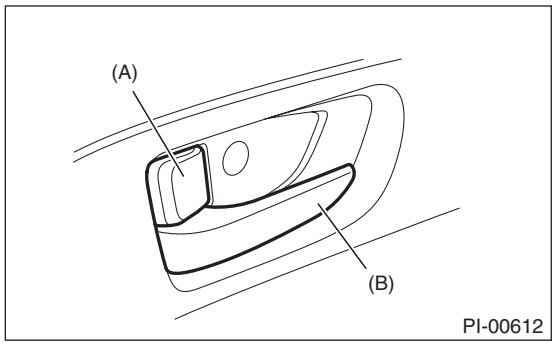

(A) Door lock knob
(B) Inner remote

3) Close all the doors, and then press the lock on power door lock switch at driver's side. Check that all doors (including the rear gate) lock.

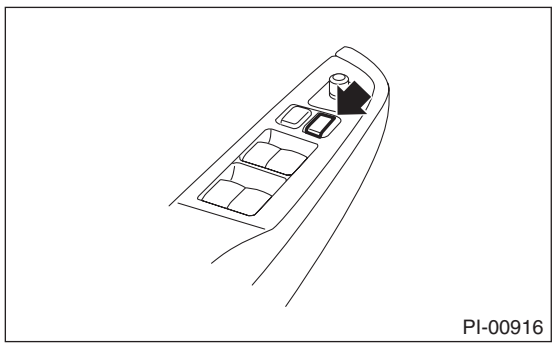

4) Press the driver's side power door lock switch to unlock side. Check that all doors including rear gate are unlocked.

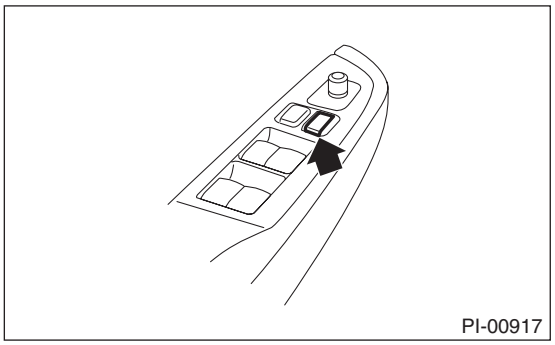

5) Check that the passenger's power door lock switch locks and unlocks normally in the same manner.

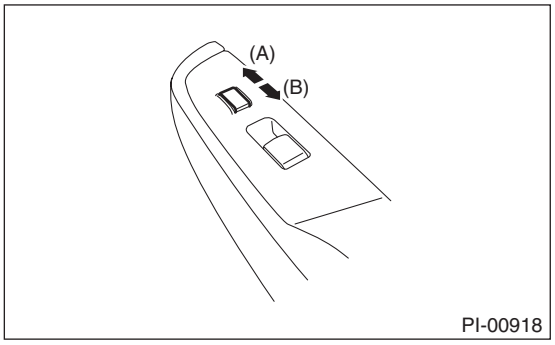

(A) Lock
(B) Unlock

6) Insert the key to ignition switch, and open the driver's side door. Press lock on power door lock. Check that the door is not locked.

5. CHILD SAFETY LOCK SYSTEM

1) Set the child safety lock on both rear doors to the lock position.
2) Close the rear doors completely.
3) Check that the lock levers of the rear doors are in the unlock position. Then, pull inner remote of rear doors to ensure that the doors will not open.

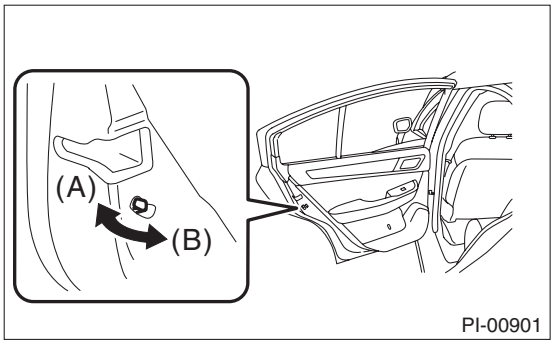

(A) Unlock
(B) Lock

4) Pull the outer handles of rear doors to ensure that the doors will open.

6. TRUNK LID OPEN/CLOSE OPERATIONS

1) Press the trunk opener switch for approx. one second to check for normal operation of the trunk lid.

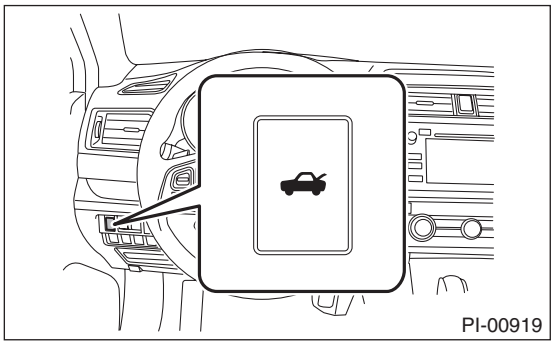

2) Open and close the trunk lid several times for smooth movement.

7. TRUNK LID RELEASE LEVER

CAUTION:
Do not check the trunk lid release lever when you are inside the trunk. If the trunk lid release lever is defective, you may be trapped in.

1) Use a flat tip screwdriver. Slide the screwdriver blade from the slit aperture of the lock assembly fully to the end until you hear a click. This places the latch in the locked position.

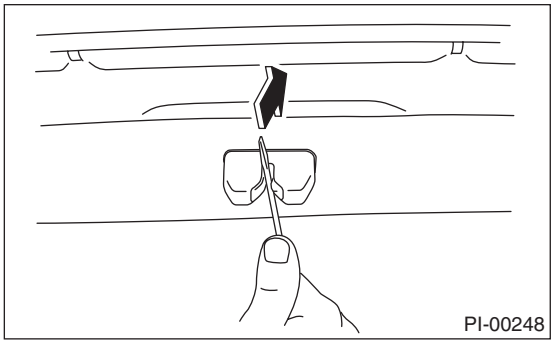

2) Make sure the latch is released by pulling the yellow trunk lid release lever in the direction of arrow.

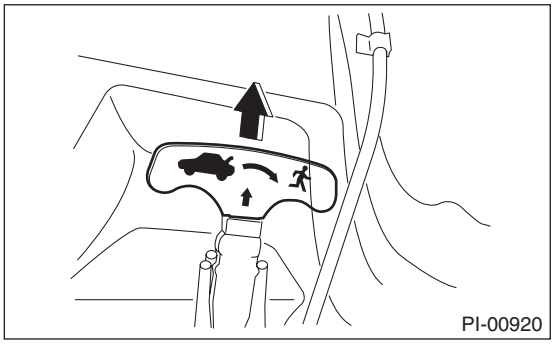

8. LOCK/UNLOCK AND OPEN/CLOSE OPERATIONS OF REAR GATE

1) Open and close the rear gate several times for smooth movement.
2) Operate the rear gate lever to check that the rear gate is locked and unlocked normally.
(1) Remove the cover inside the rear gate.

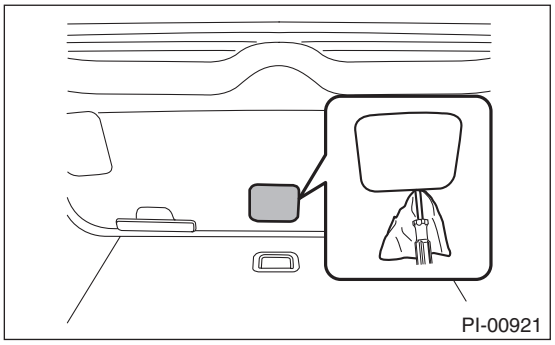
PI-00921

(2) Operate the lever to check that the rear gate is locked and unlocked normally.
- Except for model with power rear gate

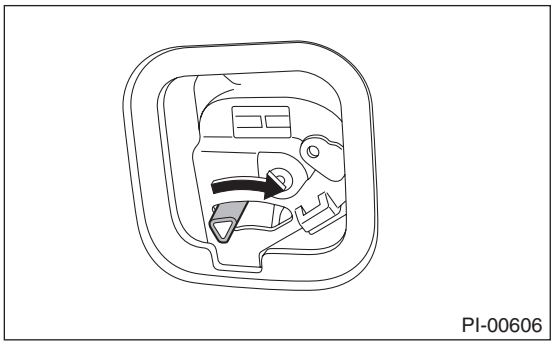
PI-00606

- Model with power rear gate

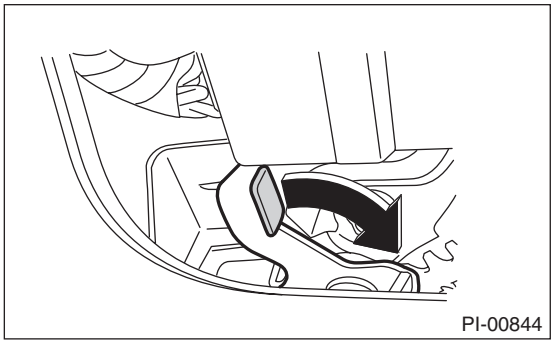
PI-00844

9. POWER REAR GATE

1) Check that the power rear gate normally opens/closes and temporarily stops by pressing the power rear gate switch, power rear gate inner switch, power rear gate driver's switch and rear gate/trunk button of keyless transmitter and access key. Also, check that it can be opened/closed manually.
2) Operate the memory height switch to check that it normally stops at the memory position. At the same time, check that the opening angle of the stop position stored in the memory is fully closed to 30 cm or more.

NOTE:
The memory position of the vehicle before delivery is set to the opening angle from fully closed to 30 cm.
3) Push the power rear gate inner switch with the power rear gate fully opened. Immediately after the power rear gate starts closing, press in either right or left touch sensor by 2 mm or more and check that the auto-reverse operation activates.

10.FUEL LID OPENER LEVER

Operate the fuel lid opener to check that the fuel lid is unlocked normally. Check that the filler cap is securely closed.

11.ACCESSORY

Check that the following accessories are provided.

- Owner's manual
- Warranty booklet
- Maintenance note
- Spare key
- Key number plate
- Jack
- Tool set
- Spare tire
- Towing hook (eyebolt (OUTBACK model))
- Security ID plate (model without keyless access with push button start)
  - Sedan model

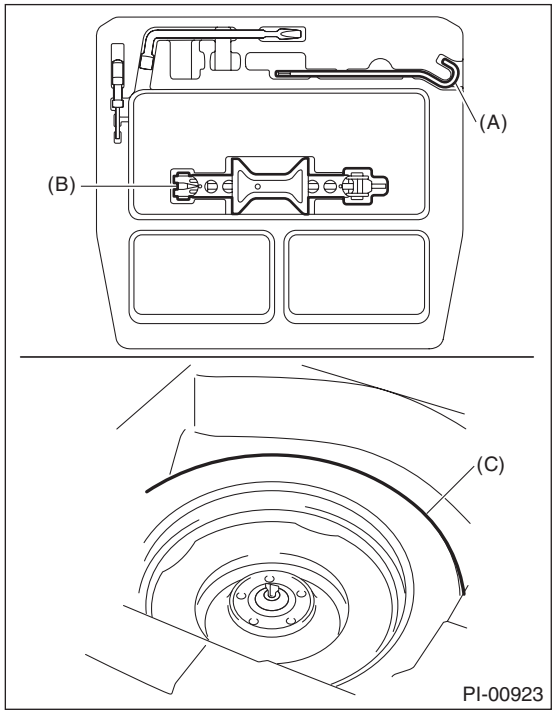

(A) Jack handle
(B) Jack
(C) Spare tire

- OUTBACK model

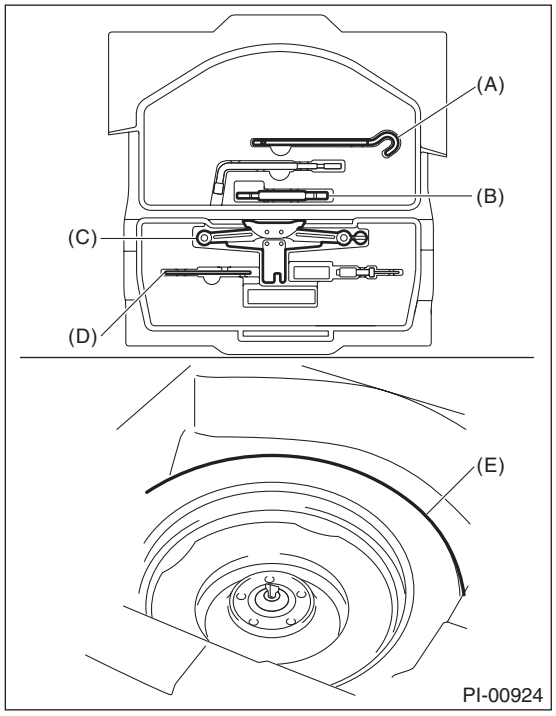

(A) Jack handle
(B) Towing hook (eyebolt)
(C) Jack
(D) Torque wrench (for roof rail adjustment)
(E) Spare tire

12.FRONT HOOD LOCK RELEASE SYSTEM

Operate the front hood lock release lever (A) to check that the front hood is unlocked normally.

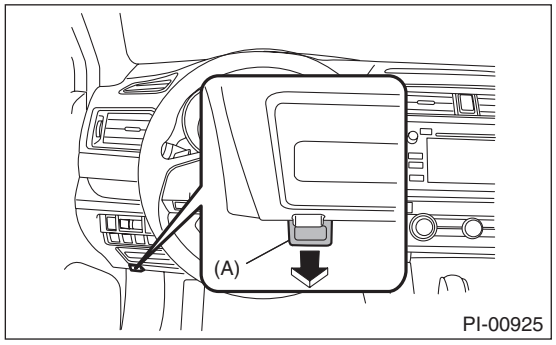

Operate the lever (B) and check that the front hood is opened normally. Check that the front hood can be supported by damper stay.

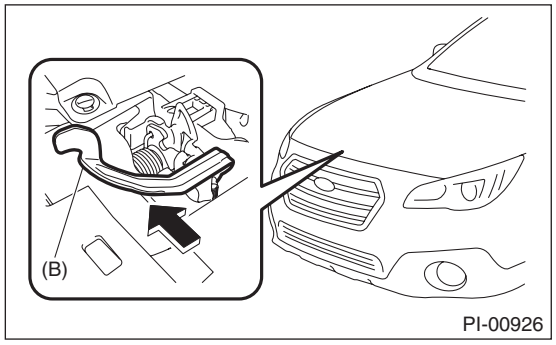

13.BATTERY

Check the battery terminals to make sure that there are no rust or corrosions due to fluid leaks.

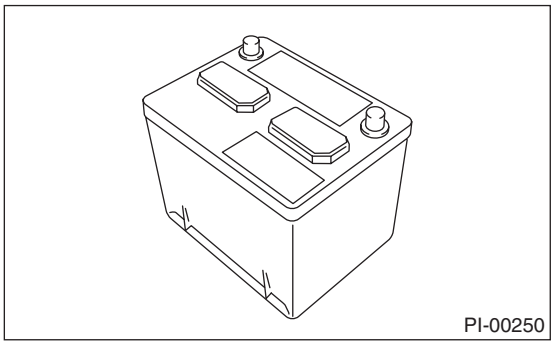

14.BRAKE FLUID

CAUTION:

• If the brake fluid is spilt over exhaust pipe, wipe it off with cloth to avoid emitting smoke or causing a fire.

• Always check the level using the specified direction because there is a partition in the reservoir tank.

Check that the brake fluid level is normal. If the amount is insufficient, carry out a brake line test to identify brake fluid leaks and check the brake operation. After that, refill the brake fluid tank with the specified type of fluid.

• 2.5 L model

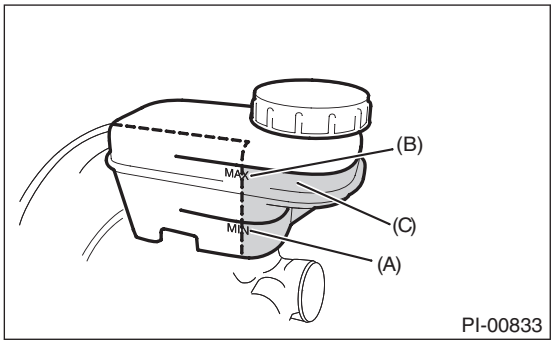

(A) MIN. level
(B) MAX. level
(C) Brake fluid

• 3.6 L model

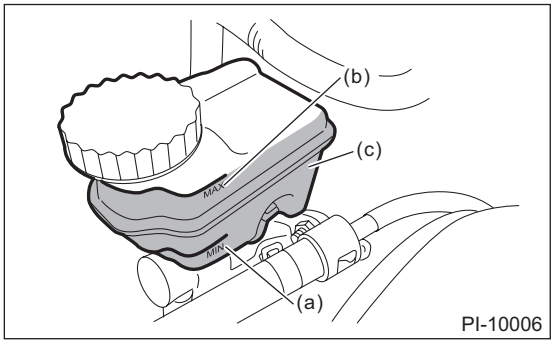

(a) MIN. level
(b) MAX. level
(c) Brake fluid

15.ENGINE OIL

CAUTION:
If engine oil is spilt onto the exhaust pipe, wipe it off with cloth to avoid emission of smoke or causing a fire.
Check the engine oil amount. If the amount of oil is insufficient, check that no leaks are found. Then, add the necessary amount of the specified engine oil.

NOTE:
When checking the oil level, look at both sides of the oil level gauge, and use the lower reading side to judge the oil level.

- 2.5 L model

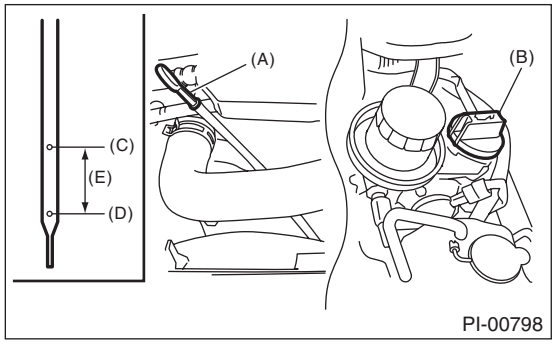

(A) Oil level gauge
(B) Engine oil filler cap
(C) “F” line
(D) “L” line
(E) Approx. 1.0 L (1.1 US qt, 0.9 Imp qt)

- 3.6 L model

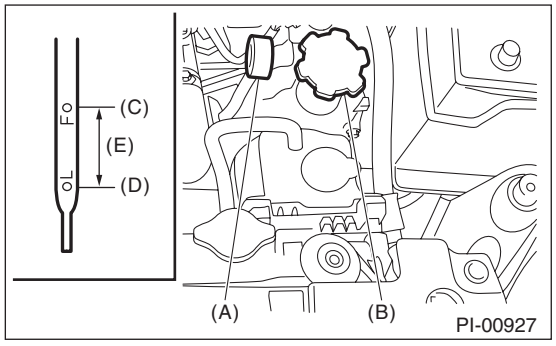

(A) Oil level gauge
(B) Engine oil filler cap
(C) “F” line
(D) “L” line
(E) Approx. 1.0 L (1.1 US qt, 0.9 Imp qt)

16.CVTF

CAUTION:
If the front differential gear oil is spilt over exhaust pipe, wipe it off with cloth to avoid emitting smoke or causing a fire.
Check for leakage of CVTF.

17.TRANSMISSION GEAR OIL

CAUTION:
If transmission gear oil is spilt over the exhaust pipe, wipe it off with a cloth to avoid emitting smoke or causing a fire.
Check that the transmission gear oil level is normal. If the amount of gear oil is insufficient, check that no leaks are found. Then add the necessary amount of the specified transmission gear oil. Refer to “6MT” section for transmission gear oil inspection. <Ref. to 6MT-25, INSPECTION, Transmission Gear Oil.>

18.CVT FRONT DIFFERENTIAL GEAR OIL

CAUTION:
If the front differential gear oil is spilt over exhaust pipe, wipe it off with cloth to avoid emitting smoke or causing a fire.
Check for no leakage of CVT front differential gear oil.

19.REAR DIFFERENTIAL GEAR OIL

CAUTION:
If the rear differential gear oil is spilt over exhaust pipe, wipe it off with cloth to avoid emitting smoke or causing a fire.
Check for leakage of gear oil from the rear differential.

20.ENGINE COOLANT

CAUTION:
If the engine coolant is spilt over exhaust pipe, wipe it off with cloth to avoid emitting smoke or causing a fire.
Check that the engine coolant level on the reservoir tank is normal. If the amount of engine coolant is insufficient, check that no leaks are found. Then, add the necessary amount of coolant with the specified concentration.

21.CLUTCH FLUID

CAUTION:
• If any clutch fluid is spilt on the exhaust pipe, wipe it off with a cloth to avoid emitting smoke or causing a fire.
• This reservoir tank has the brake fluid chamber and the clutch fluid chamber. When checking the fluid level, always check the fluid from the clutch fluid chamber side where the tank hose is connected.
Check that the clutch fluid level is normal. If the amount of fluid is insufficient, check that no leaks are found. Then, add the necessary amount of specified fluid.

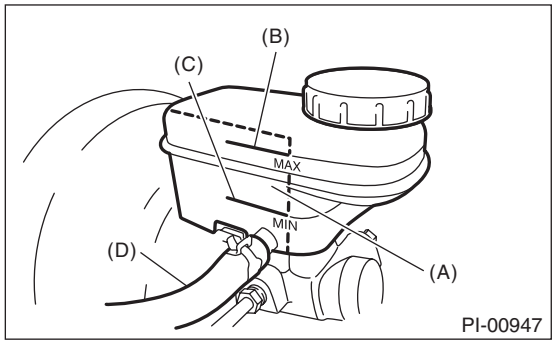

(A) Clutch fluid chamber
(B) MAX. level
(C) MIN. level
(D) Tank hose

22.WINDOW WASHER FLUID

Check that the window washer fluid level is normal. If the amount of washer fluid is insufficient, check that no leaks are found. Then, add the necessary amount of washer fluid.

NOTE:
If there is the vibration, water comes into the layer of air in the washer tank and the water level may drop. This is not a malfunction.

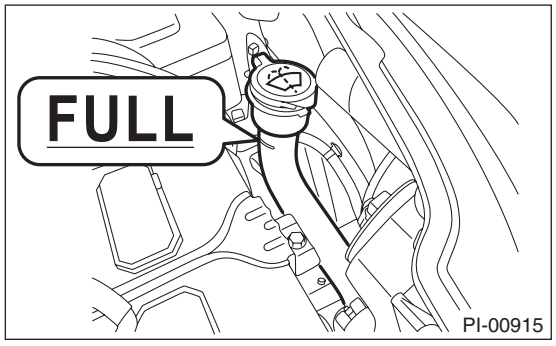

23.FRONT HOOD LATCH

Close the front hood. Check that the front hood is securely latched.

24.KEYLESS ENTRY SYSTEM

NOTE:
The following inspections show the initial settings. When the settings are different from the initial settings, use Subaru Select Monitor to check the details of each setting for inspections. <Ref. to BC(diag)-30, OPERATION, User Customizing.>
1) Fully open all the door windows.
2) Remove the key from the ignition switch and close all the doors including rear gate.
3) Press the rear gate and trunk open button for at least one second.
• For sedan model, check if the trunk is opened and the hazard light blinks twice and the buzzer sounds twice.
• For OUTBACK model, check if the rear gate is unlocked and the hazard light blinks twice and the buzzer sounds twice.

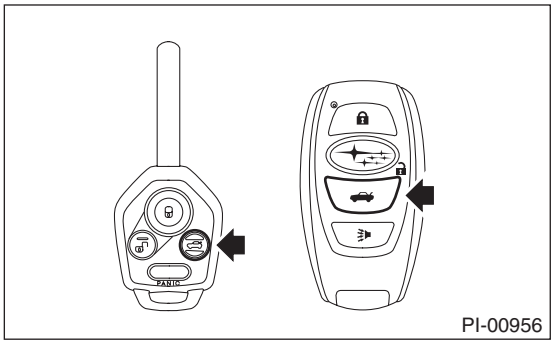
PI-00956

4) Press the “LOCK” button with one of the doors (including the rear gate and trunk) opened.
Check if all doors are locked, hazard light blinks five times and the buzzer sounds five times and warning shows one of the doors (including the rear gate and trunk) open.
5) Close all the doors including rear gate and trunk. Press the “LOCK” button momentarily.
Check that all the doors (including rear gate and trunk) are locked, hazard light blinks once and buzzer sounds once.

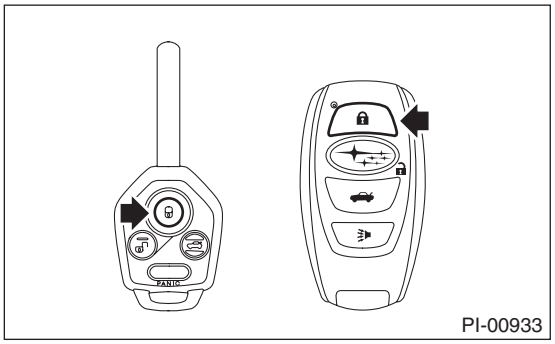
PI-00933

6) Press the “UNLOCK” button momentarily.
Check that the driver’s door is unlocked and hazard light blinks twice and the buzzer sounds twice.
And press the “UNLOCK” button momentarily again in 5 seconds. Check that all doors (including rear gate) are unlocked.

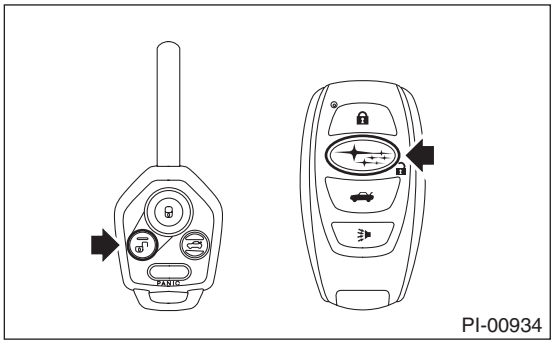
PI-00934

7) Within a distance of 10 m from a vehicle, press keyless transmitter's "LOCK" button three times within five seconds. Check that the horn sounds once, and the hazard lights flash 3 times.
8) Move the power door lock switch to the lock position with one of doors (including the rear gate) opened. Next, close all the doors including rear gate.
Check that all the doors become locked, the buzzer sounds once, and the hazard lights flash once.
9) Check buzzer operation (models without keyless access with push button start)
The buzzer sounds when the doors are locked or unlocked. The buzzer can be turned off if desired. Turn the buzzer off or on with following procedure.

(1) Close all the doors including rear gate, then remove the key from ignition key lock.
(2) Press the power door lock switch to unlock and hold it until the operation is finished.
(3) Insert the key into ignition key lock, and insert and remove the key in ignition key lock 5 times in 10 seconds.
(4) After finishing step (3), open and close the driver's door once within 10 seconds.

NOTE:
When the door is not opened and closed within 10 seconds, hazard light blinks once and the change over operation is cancelled. Retry from the step (1).

(5) Hazard light blinks 3 times and the buzzer turns off or on.

10) Press the "PANIC" button of the keyless transmitter. Check if the alarm condition happens (horn sounds continuously, hazard light blinks, security indicator comes on). Check whether this condition lasts until any button on the keyless transmitter is pressed or lasts for 30 seconds.

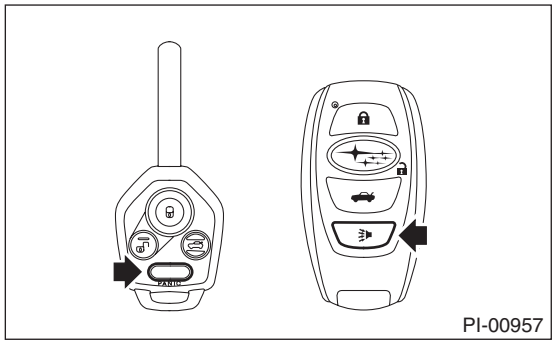

PI-00957

25.KEYLESS ACCESS SYSTEM

CAUTION:
- **When performing the check, check one access key at a time, separating individual keys.**
- **Do not leave any separated access keys in the vehicle.**

NOTE:
The following inspections show the initial settings. When the settings are different from the initial settings, use Subaru Select Monitor to check the details of each setting for inspections. <Ref. to BC(diag)-20, OPERATION, Read Current Data.>

- While carrying the access key, check that the room light illuminates when you move close to the front door handles of the vehicle whose doors are all locked.
- While carrying the access key, check that the driver's door is unlocked, the hazard lights flash, and the buzzer sounds by grasping the front door knob on the driver's side (touching the touch sensor).
- While carrying the access key, check that all doors and the rear gate are unlocked, the hazard lights flash, and the buzzer sounds by grasping the front door knob on the passenger's side (touching the touch sensor).
- While carrying the access key, check that all doors and the rear gate are locked, and the hazard lights flash when you touch the touch sensor (lock) of the front door or press the rear lock button of the rear gate.

NOTE:
- The hazard lights flash twice and the buzzer sounds twice when unlocking.
- The hazard lights flash once and the buzzer sounds once when locking.
- The hazard lights flash twice when the power rear gate is automatically opened/closed. (Locked state)

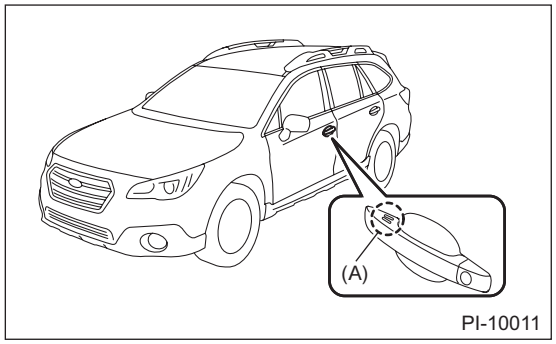

(A) Touch sensor (lock)

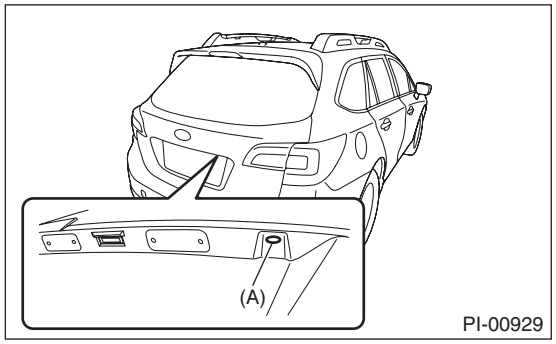

(A) Rear lock button

• For OUTBACK model, check that the rear gate unlocks, the hazard lights flash twice, and the buzzer sounds twice when the rear gate opener button is pressed while carrying the access key.

NOTE:
For the power rear gate, the rear gate automatically opens when pressing the power rear gate switch.

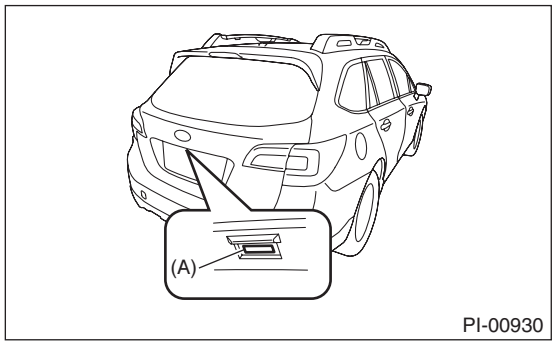

(A) Rear gate opener button

• For sedan model, check that the trunk unlocks, the hazard lights flash twice, and the buzzer sounds twice when the trunk opener button is pressed while carrying the access key.

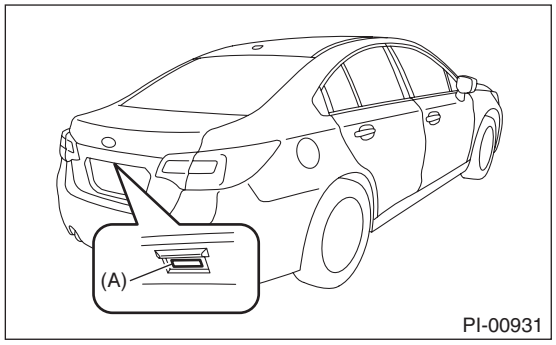

(A) Trunk opener button

• Check the mechanical key attached to the access key can be used for locking/unlocking.

CAUTION:
The mechanical key is a single groove type. Insert the mechanical key with the groove side facing the front side of the vehicle.

Front door

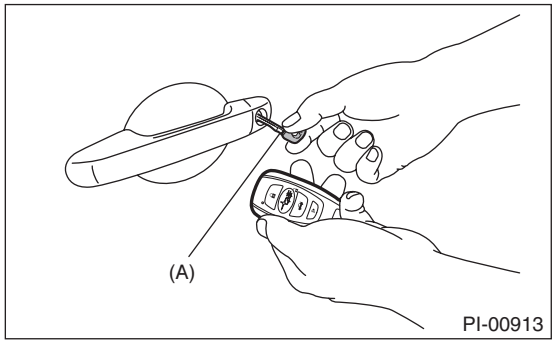

(A) Mechanical key

Trunk

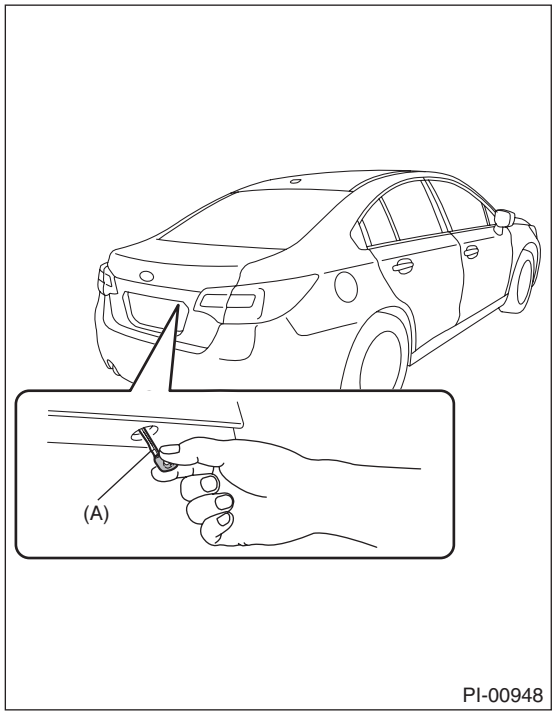

(A) Mechanical key

• With the access key left in the vehicle, check that warning buzzer sounds and locking does not occur when you touch the front door touch sensor (lock) or press the rear lock button.

CAUTION:
Remove the mechanical key from the access key and hold the mechanical key.

26.ALARM SYSTEM

NOTE:
The following inspections show the initial settings. When the settings are different from the initial settings, use Subaru Select Monitor to check the details of each setting for inspections. <Ref. to BC(diag)-30, OPERATION, User Customizing.>
1) Fully open all the door windows.
2) Remove the key from the ignition switch and close all the doors including rear gate.
3) Press the “LOCK” button momentarily on the keyless transmitter or the access key. All doors are locked, and the security indicator light blinks faster (five times per two seconds) for 30 seconds and goes slower (twice per two seconds), then the alarm system is in set condition.

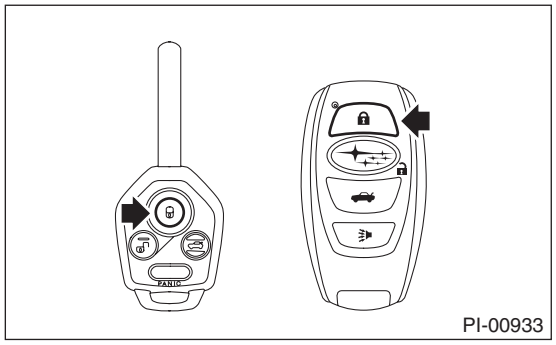

4) Press the “UNLOCK” button momentarily on the keyless transmitter or the access key. When the door of the driver’s seat is unlocked, the security indicator light operates (flashes once in three seconds), and the alarm system enters the release mode.

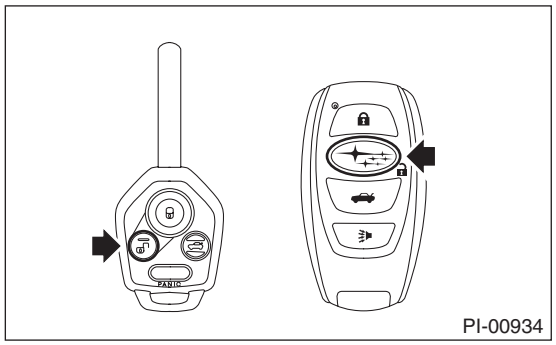

5) Close all the doors including rear gate. Press the “LOCK” button momentarily on the keyless transmitter or the access key. All doors are locked and the alarm system is in set condition after 30 seconds.
6) Unlock the door using the inner lock knob and open the door while the alarm system is in the set mode. Check if the alarm condition happens (horn sounds continuously, hazard light blinks, security indicator illuminates). Check if this condition lasts for a maximum of three minutes or until the “UNLOCK” button of the keyless transmitter or the access key is pressed.

NOTE:
The alarm condition will continue for 3 minutes with the door opened, and the alarm condition will cease within 30 seconds once the door is closed after alarm activation.
7) When none of above is applicable, perform troubleshooting for the security system.

27.SEAT

1) Check the seat surfaces for stains or dirt.
2) Check that each seat provides full functionality in sliding, reclining, lifter, and tilting. Check that the seat position memory for driver’s power seat function properly. Check all available functions of the rear seat such as a trunk-through and center armrest.
3) Check the passenger’s seat occupant detection system.
   (1) Turn the ignition switch to ON.
   (2) Check the ON and OFF of passenger’s airbag indicator light come on simultaneously for about 6 seconds and go off for 2 seconds, and then only OFF illuminates again.



   (3) Have a person weighing approximately 70 kg (155 lb) or more sit in the passenger’s seat, and check whether the passenger’s airbag indicator light illuminate or not.
   (4) Empty the passenger seat, then check whether the passenger side airbag indicator light OFF illuminates.

28.SEAT BELT

1) Check installation condition of seat belt.
2) Pull out the seat belt and then release it. Check that the belt retracts smoothly.
3) Check that the ALR seat belt operates normally.
4) Check seat belt warning function.
   (1) Turn the ignition switch to ON with the driver's and passenger's seat belt detached.
   (2) Check the driver's and passenger's seat belt warning light blink for approx. 6 seconds and the buzzer sounds intermittently.
   (3) Then, check the seat belt warning light illuminates and blinks repeatedly at a cycle of approx. 15 seconds. (If no passenger is on the passenger's seat, the seat belt warning light on passenger's seat does not operate.)
   (4) When the driver's seat belt is fastened, check that the driver's seat belt warning light turns off.
   (5) When the passenger's seat belt is fastened, check that the passenger's seat belt warning light turns off. (If no passenger is on the passenger's seat, the seat belt warning light on passenger's seat does not operate.)

29.TPMS

1) Turn the ignition switch to ON, and check TPMS warning light for normal operation.
- Normal operation (IG ON (light check))

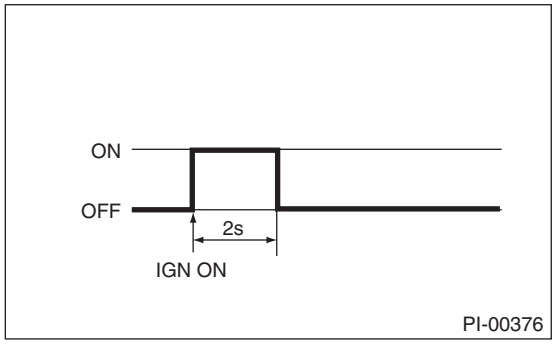

2) If the TPMS warning light display does not operate normally, check and repair the system. <Ref. to TPM(diag)-2, Basic Diagnostic Procedure.>

30.GROMMET INSTALLATION

Install the grommet provided in the sub trunk to the tie-down hole.

CAUTION:
Make sure that the rear tie-down hole is firmly plugged with the grommet. Otherwise, dust, smell, etc. may come into the passenger compartment indirectly from the rear quarter, via the side sill from the rear tie-down hole.

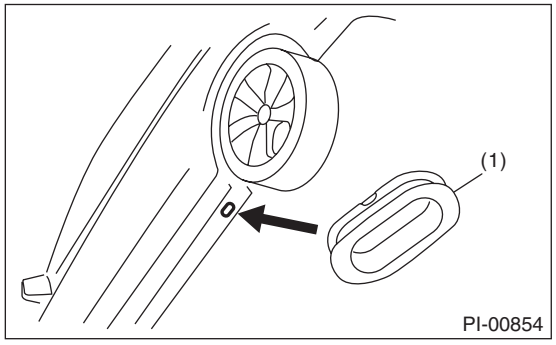

(1) Grommet

31.DELIVERY (TEST) MODE

1) Install the delivery (test) mode fuse with ignition switch to OFF.

CAUTION:
Do not use any fuses that are installed on the vehicle.

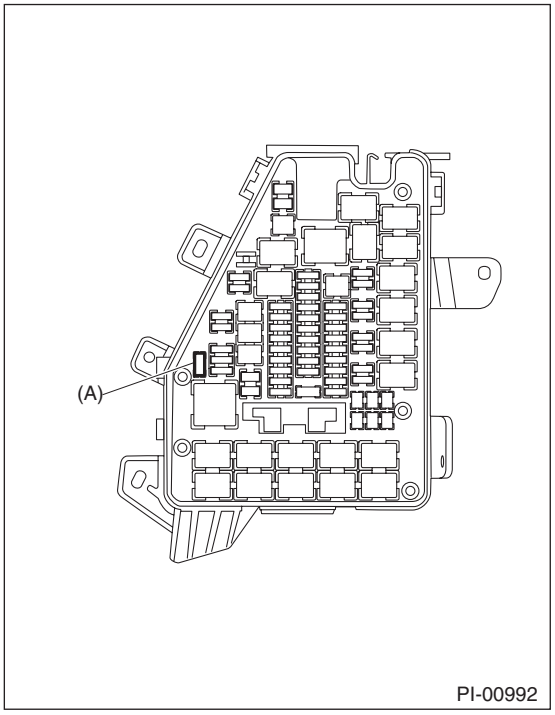

(A) Delivery (test) mode fuse

2) Turn the ignition switch to ON and check that the malfunction indicator light starts blinking.
3) If the malfunction indicator light blinks, return the ignition key to LOCK.
4) Remove the delivery (test) mode fuse and attach it to the spare fuse holder provided on the fuse box cover.
5) Then, turn the ignition key to ON again.
6) Make sure that the malfunction indicator light is off. If the malfunction indicator light blinks, carry out an engine diagnosis.

32.IMMOBILIZER SYSTEM

1) Check that the engine starts with all keys that are equipped on vehicle.
2) Check that the security indicator light blinks in 60 seconds after turning the ignition switch from ON to ACC or to OFF, and immediately after removing the key. (Models without the keyless access with push button start)
3) Immediately after turning ignition switch from ON to OFF, and immediately after opening/closing a door while the ignition switch is in ON or ACC with the engine stopped and the access key is outside the vehicle, check that the security indicator light is blinking. (Model with keyless access with push button start)

NOTE:
If malfunctions occur, refer to “IMMOBILIZER (DIAGNOSTICS)”. <Ref. to IM(diag)-2, Basic Diagnostic Procedure.>

33.PUSH BUTTON START FUNCTION

1) Get into the vehicle while carrying the access key, with the vehicle in P range and the brake pedal OFF, and check that every time the push button ignition switch is pressed, that it cycles through ACC → IGN ON → IGN OFF, and the indicator light for the push button ignition switch is illuminated in orange.
2) Get into the vehicle while carrying the access key, with the vehicle in P range and the brake pedal ON, check that the indicator light for the push button ignition switch is illuminated in green.

NOTE:
While the select lever button is being pressed, the indicator light of the push button ignition switch does not illuminate in green even if the shift position is in the P range.
3) Get into the vehicle while carrying the access key, with the vehicle in P range and the brake pedal ON, check that the engine starts when you press the push button ignition switch.
4) With the vehicle stopped, the engine running and in P range, check that the engine stops when you press the push button ignition switch.
5) With the vehicle stopped, the engine running and in N range, check that the engine stops when you press the push button ignition switch, and cycles through ACC → IGN ON each time you press the push button ignition switch.

34.STARTING CONDITION

Start the engine and check that the engine starts smoothly. If the battery voltage is low, recharge or replace the battery. If any noises are observed, immediately stop the engine and check and repair the abnormal components.

35.EXHAUST SYSTEM

Listen to the exhaust noise to see if no exhaust gas leak or abnormal noises are observed.

36.INDICATOR LIGHT AND WARNING LIGHT

Check that all indicator lights and warning lights operate normally.

37.HEATER & VENTILATION

Operate the heater & ventilation system to check for normal airflow outlet control, air inlet control, airflow capacity and heating performance.

38.AIR CONDITIONER

Operate the air conditioner. Check that the A/C compressor operates normally and enough cooling is provided.

NOTE:
To prevent the insufficient lubrication of the air conditioner, operate the air conditioner for five minutes at idling.

39.MULTI INFORMATION DISPLAY (MID)

Check that the multi information display (MID) function operates normally.

40.AUDIO

1) Check that the display and the switches (including the knob) operate normally.
2) Check that the radio, CD, USB and AUX systems operate normally. (Check that the speakers emit sound properly and the noise is at an acceptable level.)
3) Check that the rearview camera operates normally. (Shift the shift lever to the R range, and check that the image of the rearview camera and guide lines are displayed.)

41.NAVIGATION SYSTEM

1) Check that the display and the switches (including the knob) operate normally.
2) Check that the navigation, radio, CD, USB and AUX systems operate normally. (Check that the speakers emit sound properly and the noise is at an acceptable level.)
3) Check that the rearview camera operates normally. (Shift the shift lever to the R range, and check that the image of the rearview camera and guide lines are displayed.)

42.TELEMATICS SYSTEM

Check that the indicator light on the overhead console or on the stereo camera cover assembly goes off.

43.ACCESSORY POWER SUPPLY SOCKET

1) Check the operation of the front accessory power supply socket.
2) Check operation of the accessory power supply socket in console box.
3) Check operation of the accessory power supply socket in the luggage room.

44.LIGHTING SYSTEM

1) Check the headlight operations.
2) Check the stop light operation.
3) Check other lights for normal operations.

45.WIPER DEICER

Check that the wiper deicer operates normally.

NOTE:
When an ambient temperature is 5°C or more, wiper deicer operation is cancelled. Press the switch for 3 seconds or more to perform the compulsory operation.

46.ILLUMINATION CONTROL

Check that the illumination control operates normally. (The illumination control does not operate even when the headlight is turned on in the daytime.)

47.WINDOW WASHER SYSTEM

Check that the window washer system injects washer fluid to the specified area of the windshield and rear window glass. <Ref. to WW-38, ADJUSTMENT, Front Washer Nozzle.> <Ref. to WW-47, INSPECTING THE SPRAY POSITION, INSPECTION, Rear Washer.>

48.WIPER SYSTEM

Check the front and rear wipers for normal operations.

49.POWER WINDOW

• Operate the power window switches one by one to check that each of the power windows goes up and down without noises.
• Check AUTO UP/AUTO DOWN operate properly by operating the power window switch on driver's seat side.

CAUTION:
If battery has been removed, AUTO UP does not operate properly because initialized. In this case, perform the initial setting (reset A) and check AUTO UP operates properly.

50.SUNROOF

Check that the sunroof operates normally.

51.DOOR MIRROR

Check that the remote control mirror and heated mirror operate normally.

52.ROOM MIRROR

Check that the automatic anti-glare function operates normally.

53.REAR DEFOGGER SYSTEM

Check that the rear defogger system operates normally.

54.PARKING BRAKE

Check the parking brake operates properly by depressing brake pedal and operating the electronic parking brake switch.

55.Blind Spot Detection/Rear Cross Traffic Alert (BSD/RCTA)

1) Check that the BSD/RCTA system is activated and deactivated correctly.
   (1) Press the BSD/RCTA OFF switch to check that “BSD/RCTA OFF” is displayed in the combination meter.
   (2) Press the BSD/RCTA OFF switch again to check that the indicators of the right and left side door mirrors illuminate → go off and “BSD/RCTA OFF” is displayed in the combination meter.
   (3) Check that the BSD/RCTA error message is not displayed.
2) Check the rear bumper around the radar sensor for dirt, scratch, affixed stickers and poor paint coating.

- If any dirt is found, clean it off so that the rear bumper is not damaged.
- If any stickers are affixed, remove it so that the rear bumper is not damaged.
- If the bumper is damaged or has poor paint coating, refer to “CAUTION” in “Subaru Rear Vehicle Detection (DIAGNOSTICS)”. <Ref. to RVD(diag)-4, CAUTION, General Description.>

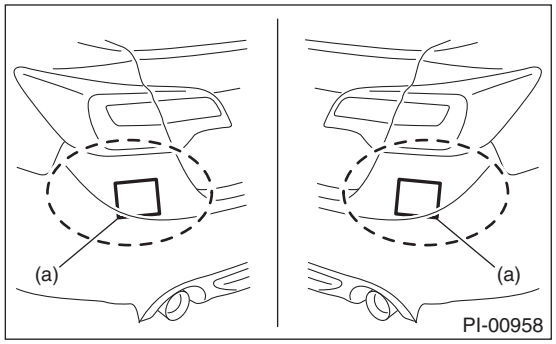

(a) Radar sensor

56.DIAGNOSTIC TROUBLE CODE (DTC) CHECK

Read the diagnostic trouble code and check that the diagnostic trouble code is not detected.
If any diagnostic trouble code is detected, clear all.
1) Read Diagnostic Trouble Code

NOTE:
For detailed operation procedures, refer to “Application help”.
2) Clear Memory Mode

NOTE:
For detailed operation procedures, refer to “Application help”.

57.BRAKE TEST

Check the foot brake for normal operations.

58.SHIFT CONTROL

- **CVT model**

1) Turn the ignition switch to ON.
2) While brake pedal is not depressed, check if the select lever does not move from “P” range.
3) While brake pedal is depressed, check if the select lever moves from “P” range.
4) Set the selector lever to each gear position and check the shifting while driving the vehicle. Operate the paddle shift at manual mode and check the shifting while driving the vehicle.

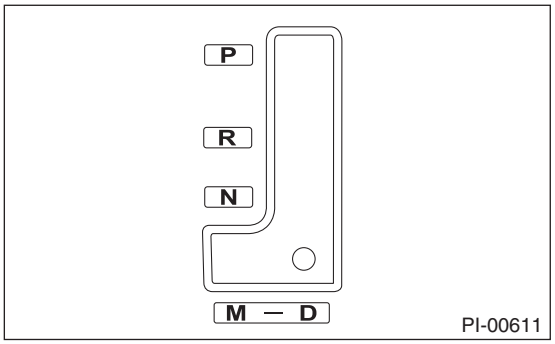

Selector position	Gear position					
	1st	2nd	3rd	4th	5th	6th
D	Continuously variable speed change					
Manual mode	OK	OK	OK	OK	OK	OK

5) Set the select lever to other than “P” range. (Models without the keyless access with push button start)
6) When the ignition switch is turned to OFF, check if the ignition key switch cannot be removed. (Models without the keyless access with push button start)

• **MT model**

1) Check for smooth operation to each position. Especially, shift to 5th ←→ 6th and to Rev, and check for stuck.
2) Check the slider returns to the original position by shifting to the Rev and then back in neutral while pulling up the slider.
3) If the shifting operation is not smooth, readjust the exposed length (a) of MT gear select cable by referring to the following figure.

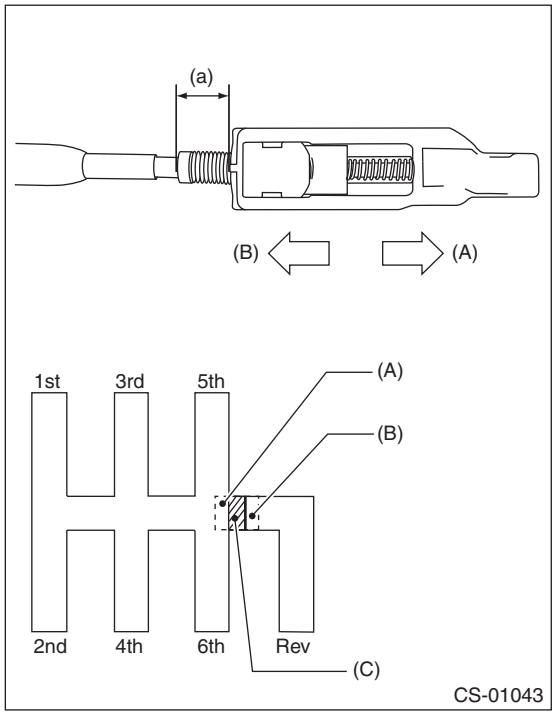

(a) Exposed length of MT gear select cable
(A) Extend direction of exposed length of MT gear select cable
(B) Shorten direction of exposed length of MT gear select cable
(C) Specification of exposed length (a)

If the shift cannot be inserted to push the reverse lock bracket 5th and 6th.
→ Extend the exposed length (a) of MT gear select cable.

59.CRUISE CONTROL

Operate the cruise control system. Check that the system is activated and deactivated correctly.

60.SUBARU EyeSight

• Operate the EyeSight system. Check that the system is activated and deactivated correctly.
• Check the stereo camera cover opening for foreign matter.
• Check the glass in front of stereo camera for dirt and stickers.
• Check the lens and filter of the stereo camera for dirt such as fingerprints.
• Check the filter at lens portion of stereo camera for damage.
• According to the “ES(diag)” section, check the windshield glass and dashboard in front of stereo camera to make sure that no aftermarket part is adhered or attached in the prohibited area. <Ref. to ES(diag)-8, WINDSHIELD GLASS AND DASHBOARD, INSPECTION, General Description.>
• When delivering the vehicle, explain to the customer to make sure not to touch the filter at lens portion of the stereo camera.

61.POWER STEERING SYSTEM (ELECTRIC POWER STEERING MODEL)

Check that “STEERING” warning light illuminates when the ignition switch is turned to ON, and that “STEERING” warning light turns off after the engine is started.

62.FLUID LEAKAGE

Check entire areas of the vehicle for any trace of coolant/oil (such as engine and gear oil)/fluid (such as transmission and brake) leaks.

63.WATER LEAK TEST

Spray the vehicle with water using a hose and check that no water enters the passenger compartment.

- Before performing the water leakage test, remove anything that may obstruct the operation or which must be kept dry.
- Close all the windows and doors securely. Close the front hood, rear gate and trunk lid before starting the test.
- Spray the vehicle with water using a hose. The rate of water spray must be approx. 20 to 25 L (5.3 — 6.6 US gal, 4.4 — 5.5 Imp gal) per minute.

When spraying water on areas adjacent to the floor and wheel house, increase the pressure. When spraying water on areas other than the floor and wheel house, decrease the pressure. But the force of water must be made strong occasionally by pressing the end of the hose.

NOTE:
Be sure to keep the hose at least 10 cm (3.9 in) away from vehicle.
Check the following areas.

- Front window and body framework mating portion
- Door mating portions
- Glass mating portions
- Rear quarter window mating portions
- Rear window and body framework mating portion
- Around loop antenna (model with XM antenna)
- Around roof drips

If any dampness in the compartments is discovered after the water has been applied, carefully check all the areas that may have possibly contributed to the leak.

64.APPEARANCE 2

1) If protective coating (wrap guard) is applied, remove it.

NOTE:
- It is easier to remove the wrap guard using steam.
- For a vehicle left for a long time or at low temperature, sprinkle some water heated to 50 — 60°C (122 — 140°F) over the vehicle to raise its surface temperature before peeling off the wrap guard. Do not use the water heated to over 60°C (140°F).
- If the adhesive remains exist on the coated surface, soak a flannel rag, etc. with a small amount of coating wax or solvent such as oil benzene and IPA, put the soaked cloth on the remains lightly, and then wipe them off with a flannel rag etc.
- Keep solvent from touching the resin or rubber parts. Do not use coating wax or solvent while the component surface temperature is high due to hot weather etc.
- If the coated surface is swollen out due to seams or moisture, expose the vehicle to the sunlight for a few hours or heat the seam and swollen portions using a dryer etc.
- Dispose of the peeled wrap guard as burnable industrial garbage.
- If a yellow or blue label is attached to the fog light lens, remove it.

2) Check the whole vehicle body for flaking paint, damage by transportation, corrosion, dirt, cracks or blisters.

NOTE:
- It is better to determine an inspection pattern in order to avoid missing an area, since the total inspection area is wide.
- Do not repair the body paint unless absolutely necessary. Also, if the vehicle is in need of repair to remove scratches or corroded paint, the repair area must be limited to the minimum. Re-painting and spray painting must be avoided as much as possible.

3) Check each window glass for scratches carefully. Slight damage may be removed by polishing with cerium oxide. (Fill a cup half with cerium oxide, and add warm water to it. Then agitate the content until it turns to wax. Apply this wax to a soft cloth, and polish the glass with it.)

4) Check each portion of the vehicle body and underside components for the formation of rust. If rust is discovered, remove it with sandpaper of #80 to #180 and treat the surface with rust preventive. After this treatment is completed, flush the portion thoroughly, and prepare the surface for repair painting.

5) Check each portion of body and all of the exterior parts for deformation or distortion. Also, check each light lens for cracks.

6) Peel the protective tape, vinyl wrapping and identification seal attached to the following places.
- Seat
- Door trim (protective tape applied for driver's seat only)
- Floor carpet
- Side sill
- Rear wiper
- Roof rail
- Assist rail
- Fog light (outer lens surface)
- Fuel opener lever
- Instrument panel (identification seal, protective tape)
- Door mirror

NOTE:
If any adhesive remains on the instrument panel after removing the identification seal, soak a flannel or similar cloth with a small amount of alcohol (IPA), put it lightly on the remaining adhesive, then wipe off with a flannel cloth etc.

PERIODIC MAINTENANCE SERVICES

PM

		Page
1.	General Description	2
2.	Schedule	3
3.	Engine Oil	6
4.	Engine Oil Filter	7
5.	Spark Plug	8
6.	V-belt	9
7.	Fuel Line	10
8.	Fuel Filter	11
9.	Air Cleaner Element	12
10.	Cooling System	13
11.	Engine Coolant	14
12.	Clutch System	15
13.	Transmission Gear Oil	16
14.	CVTF	17
15.	Front & Rear Differential Gear Oil	18
16.	Brake Line	19
17.	Brake Fluid	21
18.	Disc Brake Pad and Disc	22
19.	Parking Brake	23
20.	Suspension	24
21.	Wheel Bearing	28
22.	Axle Boots & Joints	29
23.	Tire Inspection and Rotation	30
24.	Steering System (Power Steering)	31
25.	A/C Filter	34

1. General Description

A: GENERAL DESCRIPTION

Be sure to perform periodic maintenance in order to maintain vehicle performance and find problems before they occur.

2. Schedule

A: MAINTENANCE SCHEDULE

1. MODEL WITH US SPECIFICATION

Maintenance item		Maintenance interval [Number of months or km (miles), whichever occurs first]													
	Months	3	6	12	18	24	30	36	42	48	54	60	66	To be continued to the next table.	Remarks
	× 1,000 km	4.8	9.6	19.2	28.8	38.4	48	57.6	67.2	76.8	86.4	96	105.6		
	× 1,000 miles	3	6	12	18	24	30	36	42	48	54	60	66		
1	Engine oil		R	R	R	R	R	R	R	R	R	R	R		Note 1.
2	Engine oil filter		R	R	R	R	R	R	R	R	R	R	R		Note 1.
3	Spark plug											R			
4	V-belt						I					I			
5	Fuel line						I					I			Note 6. Note 7.
6	Fuel filter														Note 2. Note 7.
7	Air cleaner element						R					R			Note 8.
8	Cooling system						I					I			Note 10.
9	Engine coolant	Replace after the first 11 years or 220,000 km (137,500 miles), and every six years or 120,000 km (75,000 miles) thereafter													Note 10.
10	Clutch system			I		I		I		I		I			
11	Transmission gear oil						I					I			Note 3.
12	CVTF						I					I			Note 4.
13	Front & rear differential gear oil						I					I			Note 3.
14	Brake line			I		I		I		I		I			Note 6.
15	Brake fluid / clutch fluid (MT model only)						R					R			Note 5.
16	Disc brake pad and disc			I		I		I		I		I			Note 6.
17	Parking brake			I		I		I		I		I			Note 6.
18	Suspension			I		I		I		I		I			Note 6.
19	Wheel bearing											I			
20	Axle boots and joints			I		I		I		I		I			Note 6.
21	Tire rotation		P	P	P	P	P	P	P	P	P	P	P		Note 9.
22	Steering system (Power steering)			I		I		I		I		I			Note 6.
23	A/C filter	Replace every 12 months or 19,200 km (12,000 miles)													Note 8.

PERIODIC MAINTENANCE SERVICES

	Maintenance item	Maintenance interval [Number of months or km (miles), whichever occurs first]												
	Months	Continued from previous table	72	78	84	90	96	102	108	114	120	126	132	Remarks
	× 1,000 km		115.2	124.8	134.4	144	153.6	163.2	172.8	182.4	192	201.6	211.2	
	× 1,000 miles		72	78	84	90	96	102	108	114	120	126	132	
1	Engine oil		R	R	R	R	R	R	R	R	R	R	R	Note 1.
2	Engine oil filter		R	R	R	R	R	R	R	R	R	R	R	Note 1.
3	Spark plug										R			
4	V-belt					I					I			
5	Fuel line					I					I			Note 6. Note 7.
6	Fuel filter		R											Note 2. Note 7.
7	Air cleaner element					R					R			Note 8.
8	Cooling system					I					I			Note 10.
9	Engine coolant	Replace after the first 11 years or 220,000 km (137,500 miles), and every six years or 120,000 km (75,000 miles) thereafter												Note 10.
10	Clutch system		I		I		I		I		I		I	
11	Transmission gear oil					I					I			Note 3.
12	CVTF					I					I			Note 4.
13	Front & rear differential gear oil					I					I			Note 3.
14	Brake line		I		I		I		I		I		I	Note 6.
15	Brake fluid / clutch fluid (MT model only)					R					R			Note 5.
16	Disc brake pad and disc		I		I		I		I		I		I	Note 6.
17	Parking brake		I		I		I		I		I		I	Note 6.
18	Suspension		I		I		I		I		I		I	Note 6.
19	Wheel bearing										I			
20	Axle boots and joints		I		I		I		I		I		I	Note 6.
21	Tire rotation		P	P	P	P	P	P	P	P	P	P	P	Note 9.
22	Steering system (Power steering)		I		I		I		I		I		I	Note 6.
23	A/C filter	Replace every 12 months or 19,200 km (12,000 miles)												Note 8.

Symbol
R: Replace
I: Inspection
P: Perform

NOTE:
1. When the vehicle is used under severe conditions, replace the engine oil and engine oil filter every 3 months or 4,800 km (3,000 miles).
2. When the vehicle is used under extremely low or high temperature conditions, the fuel filter may become dirty. Therefore, it should be replaced frequently.
3. When the vehicle is used under severe conditions, replace every 15 months or 24,000 km (15,000 miles).
4. When the vehicle is used under severe conditions, replace CVTF every 40,000 km (24,855 miles).
5. When the vehicle is used in high humidity area or mountain area, replace the brake fluid every 15 months or 24,000 km (15,000 miles).
6. When the vehicle is used under severe conditions, replace every 6 months or 9,600 km (6,000 miles).
7. This inspection is not required to maintain emission warranty eligibility and it dose not affect the manufacturer's obligations under EPA's in-use compliance program.
8. When the vehicle is used under extremely dusty conditions, the air cleaner element and A/C filter should be replaced more often.
9. A tire should be replaced when the tread wear indicator appears as a solid band across the tread. The indicators appear when the remaining tread has been worn to 1.6 mm (0.063 in) or less.
10. To prevent cooling system leakage, be sure to add SUBARU genuine cooling system conditioner when replacing coolant.

Examples of severe conditions

a. Drive repeatedly at short distance. (Maintenance items 1 and 2)
b. Drive repeatedly on bumpy muddy road. (Maintenance items 14, 15 and 17)
c. Drive repeatedly in dusty conditions. (Maintenance items 7 and 23)
d. Drive in extremely cold weather. (Maintenance items 1, 2, 16, 18, 20 and 22)
e. Area where salt or other corrosive used. (Maintenance items 5, 14, 15, 16, 17 and 20)
f. Coastal area. (Maintenance item 5)
g. Repeat towing trailer. * (Maintenance items 1, 2, 11, 12, 13, 14, 15, 16, 17, 18, 20 and 22)

*: OUTBACK model only

3. Engine Oil

A: INSPECTION

Refer to “LU” section for engine oil inspection. <Ref. to LU(H4DO)-9, INSPECTION, Engine Oil.> <Ref. to LU(H6DO)-11, INSPECTION, Engine Oil.>

B: REPLACEMENT

Refer to “LU” section for engine oil replacement. <Ref. to LU(H4DO)-10, REPLACEMENT, Engine Oil.> <Ref. to LU(H6DO)-12, REPLACEMENT, Engine Oil.>

4. Engine Oil Filter

A: REPLACEMENT

Refer to “LU” section for engine oil filter replacement. <Ref. to LU(H4DO)-22, Engine Oil Filter.> <Ref. to LU(H6DO)-21, Engine Oil Filter.>

5. Spark Plug

A: REPLACEMENT

Refer to “IG” section for spark plug replacement. <Ref. to IG(H4DO)-4, Spark Plug.> <Ref. to IG(H6DO)-4, Spark Plug.>

6. V-belt

A: INSPECTION

Refer to “ME” section for V-belt inspection. <Ref. to ME(H4DO)-75, INSPECTION, V-belt.> <Ref. to ME(H6DO)-77, INSPECTION, V-belt.>

B: REPLACEMENT

Refer to “ME” section for V-belt replacement. <Ref. to ME(H4DO)-71, V-belt.> <Ref. to ME(H6DO)-74, V-belt.>

7. Fuel Line

A: INSPECTION

The fuel line is located mostly internally, so check pipes, areas near pipes, and engine compartment piping for rust, hose and tube damage, loose band, etc. If faulty parts are found, repair or replace them. <Ref. to FU(H4DO)-154, INSPECTION, Fuel Delivery and Evaporation Lines.> <Ref. to FU(H6DO)-167, INSPECTION, Fuel Delivery and Evaporation Lines.>

8. Fuel Filter

A: REPLACEMENT

For fuel filter replacement procedure, refer to “FU” section. <Ref. to FU(H4DO)-132, Fuel Filter.> <Ref. to FU(H6DO)-135, Fuel Filter.>

B: INSPECTION

If the filter is clogged, or if the replacement interval has been reached, replace it.

9. Air Cleaner Element

A: REPLACEMENT

Refer to “IN” section for air cleaner element replacement. <Ref. to IN(H4DO)-4, Air Cleaner Element.> <Ref. to IN(H6DO)-4, Air Cleaner Element.>

10.Cooling System

A: INSPECTION

1. RADIATOR

Check that there are no engine coolant leaks from the hose connections. Refer to “CO” section for radiator inspection. <Ref. to CO(H4DO)-52, INSPECTION, Radiator.> <Ref. to CO(H6DO)-35, INSPECTION, Radiator.>

2. RADIATOR CAP

Refer to “CO” section for radiator cap inspection. <Ref. to CO(H4DO)-53, INSPECTION, Radiator Cap.> <Ref. to CO(H6DO)-36, INSPECTION, Radiator Cap.>

3. COOLING FAN

Refer to “CO” section for cooling fan inspection. <Ref. to CO(H4DO)-9, INSPECTION, Radiator Fan System.> <Ref. to CO(H6DO)-9, INSPECTION, Radiator Fan System.>

4. COOLING SYSTEM

Start the engine, and then inspect that it does not overheat or it is not cooled excessively. If it overheats or it is cooled excessively, check the cooling system.

11.Engine Coolant

A: INSPECTION

CAUTION:
- **Do not use water instead of coolant.**
- **Refer to "RM" section for the recommended engine coolant. <Ref. to RM-4, ENGINE COOLANT, RECOMMENDED MATERIALS, Recommended Materials.>**

1) Park the vehicle on a level surface.
2) Make sure the engine coolant level in the reservoir tank is between "FULL" and "LOW" when the engine is cold.

NOTE:
If the engine coolant level drops, make sure that there are no engine coolant leakage, and add engine coolant to the "FULL" line.

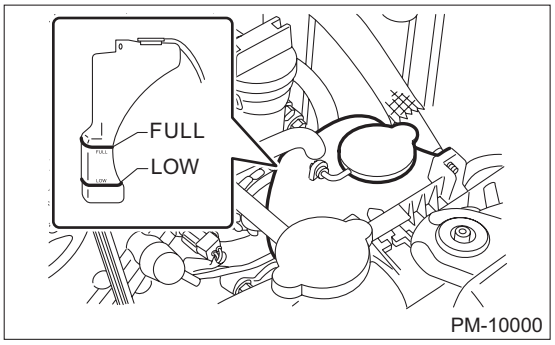

3) Remove the radiator cap and make sure that the radiator is filled with engine coolant up to the filler neck position.

B: REPLACEMENT

Refer to "CO" section for engine coolant replacement. <Ref. to CO(H4DO)-15, REPLACEMENT, Engine Coolant.> <Ref. to CO(H6DO)-13, REPLACEMENT, Engine Coolant.>

12.Clutch System

A: INSPECTION AND ADJUSTMENT

Refer to “CL” section for inspection and adjustment of clutch system. <Ref. to CL-30, INSPECTION, Clutch Pedal.> <Ref. to CL-30, ADJUSTMENT, Clutch Pedal.>

13.Transmission Gear Oil

A: INSPECTION

Refer to “6MT” section for transmission gear oil inspection. <Ref. to 6MT-25, INSPECTION, Transmission Gear Oil.>

B: REPLACEMENT

Refer to “6MT” section for transmission gear oil replacement. <Ref. to 6MT-26, REPLACEMENT, Transmission Gear Oil.>

14.CVTF

A: INSPECTION

Refer to “CVT (TR580)” or “CVT (TR690)” section for CVTF inspection. <Ref. to CVT(TR580)-39, INSPECTION, CVTF.> <Ref. to CVT(TR690)-38, INSPECTION, CVTF.>

B: REPLACEMENT

Refer to “CVT (TR580)” or “CVT (TR690)” section for CVTF replacement procedures. <Ref. to CVT(TR580)-40, REPLACEMENT, CVTF.> <Ref. to CVT(TR690)-40, REPLACEMENT, CVTF.>

15.Front & Rear Differential Gear Oil

A: INSPECTION

1. FRONT DIFFERENTIAL (MT MODEL)

Front differential gear oil of MT model lubricates the transmission and differential together. Refer to “Transmission Gear Oil” for inspection procedures. <Ref. to 6MT-25, INSPECTION, Transmission Gear Oil.>

2. FRONT DIFFERENTIAL (CVT MODEL)

Refer to “CVT (TR580)” or “CVT (TR690)” section for inspection of CVT model front differential gear oil. <Ref. to CVT(TR580)-43, INSPECTION, Differential Gear Oil.> <Ref. to CVT(TR690)-43, INSPECTION, Differential Gear Oil.>

3. REAR DIFFERENTIAL

Refer to “DI” section for rear differential gear oil inspection. <Ref. to DI-22, INSPECTION, Differential Gear Oil.>

B: REPLACEMENT

1. FRONT DIFFERENTIAL (MT MODEL)

Front differential gear oil of MT model lubricates the transmission and differential together. Refer to “6MT” section for replacement procedure. <Ref. to 6MT-26, REPLACEMENT, Transmission Gear Oil.>

2. FRONT DIFFERENTIAL (CVT MODEL)

Refer to “CVT (TR580)” or “CVT (TR690)” section for front differential gear oil replacement. <Ref. to CVT(TR580)-44, REPLACEMENT, Differential Gear Oil.> <Ref. to CVT(TR690)-44, REPLACEMENT, Differential Gear Oil.>

3. REAR DIFFERENTIAL

Refer to “DI” section for rear differential gear oil replacement. <Ref. to DI-22, REPLACEMENT, Differential Gear Oil.>

16.Brake Line

A: INSPECTION

1. BRAKE LINE

1) Check for scratches, swelling, corrosion, traces of fluid leakage on the brake hoses or pipe joints.
2) Make sure that brake pipes/hoses do not interfere with adjacent parts and there is no loose connector/clamp during driving.
3) Check any trace of fluid leakage, scratches, etc. on master cylinder, wheel cylinder and hydraulic unit.

NOTE:
• When the brake fluid level in the reservoir tank is lower than specified limit, the brake warning light on the combination meter will illuminate.
• Visually check the brake hose for damage. (Use a mirror where it is difficult to see)

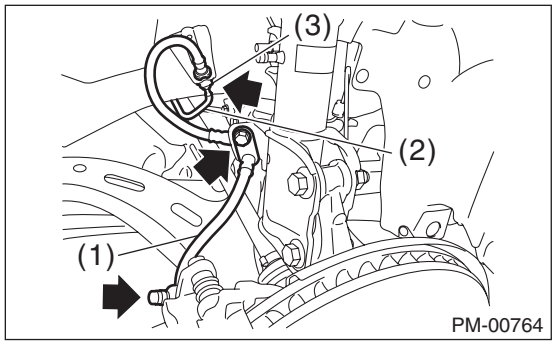

(1) Front brake hose
(2) Front brake pipe
(3) Clamp

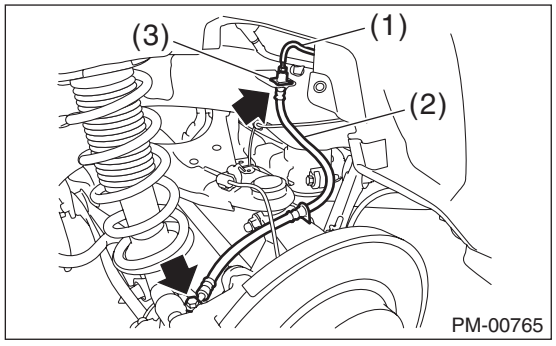

(1) Brake pipe
(2) Rear brake hose
(3) Clamp

2. SERVICE BRAKE

Refer to “BR” section for foot brake inspection. <Ref. to BR-79, INSPECTION, Brake Pedal.>

3. BRAKE SERVO SYSTEM

1) With the engine off, depress the brake pedal several times applying the same pedal force. Check that the travel distance should not change.
2) With the brake pedal depressed, start the engine. Check that the pedal moves slightly toward the floor.
3) With the brake pedal depressed, stop the engine and keep the pedal depressed for 30 seconds. Check that the pedal height does not change.
4) A check valve is built into the brake booster nipple. Disconnect the vacuum hose to inspect function of check valve.
Check that check valve ventilates from booster side to engine side. Also, check that there is no ventilation from engine side to booster side.

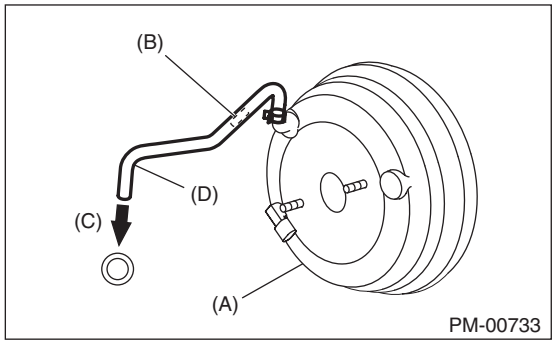

(A) Brake booster
(B) Check valve
(C) Engine side
(D) Brake booster side

5) Check the vacuum hose for cracks or other damage.

CAUTION:
When installing the vacuum hose on the engine and brake booster, do not use soapy water or lubricating oil on their connections.
6) Check that the vacuum hose is securely tightened.

17.Brake Fluid

A: INSPECTION

Refer to “BR” section for brake fluid inspection. <Ref. to BR-65, INSPECTION, Brake Fluid.>

B: REPLACEMENT

Refer to “BR” section for brake fluid replacement. <Ref. to BR-67, REPLACEMENT, Brake Fluid.>

18. Disc Brake Pad and Disc

A: INSPECTION

Refer to “BR” section for disc brake pad and disc inspection. <Ref. to BR-22, INSPECTION, Front Brake Pad.> <Ref. to BR-39, INSPECTION, Rear Brake Pad.> <Ref. to BR-24, INSPECTION, Front Disc Rotor.> <Ref. to BR-43, INSPECTION, Rear Disc Rotor.>

19.Parking Brake

A: INSPECTION

Refer to “PB” section for parking brake inspection. <Ref. to PB-6, INSPECTION, Parking Brake System.>

20.Suspension

A: INSPECTION

1. FRONT SUSPENSION BALL JOINT

1) Lift up the vehicle until front wheels are off ground.
2) Grasp the bottom of tire and move it in and out in axial direction. If movement (B) is observed between the brake disc cover (A) and end of front arm (D), ball joint (C) may be excessively worn.

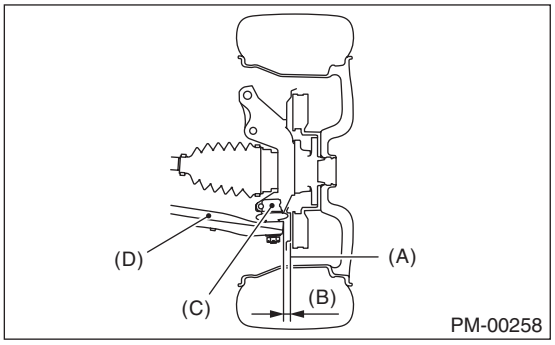

3) Next, grasp the end of front arm (C) and move it up and down. If movement (A) between the housing (D) and front arm (C) boss is observed, ball joint (B) may be excessively worn.

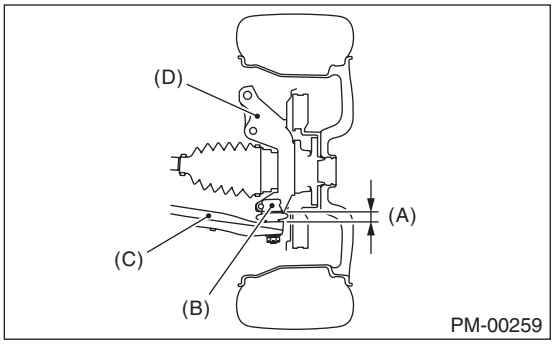

4) If the relative movement is observed in the preceding two steps, remove and inspect the ball joint. If the free play exceeds standard value, replace the ball joint. <Ref. to FS-36, Front Ball Joint.>
5) Damage of dust boots
Visually inspect the ball joint dust boots. Replace if ball joint is damaged.

NOTE:
When the front arm ball joint is removed or replaced, check the toe-in of front wheel. If it is not within the specified value, adjust the toe-in. <Ref. to FS-10, Wheel Alignment.>

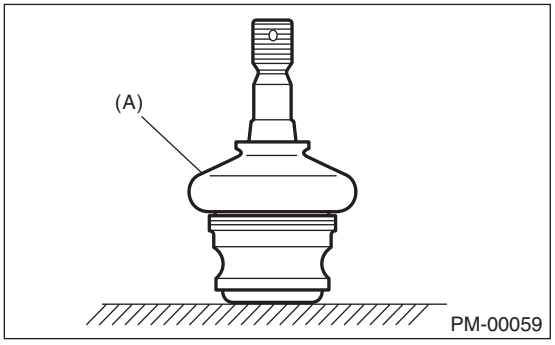

(A) Dust boots

2. REAR SUSPENSION BALL JOINT

1) Lift up the vehicle until rear wheels are off ground.
2) Grasp the bottom of tire and move it in and out in axial direction.
3) If movement is observed between the brake disc cover (A) and end of front lateral link (B), ball joint may be excessively worn.

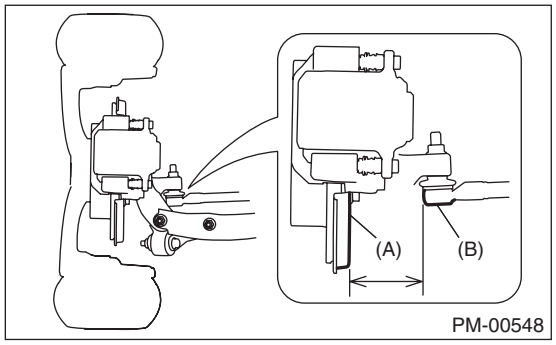

4) Grasp the end of front lateral link (B) and move it up and down. If movement is observed between the housing (C) and front lateral link (B) boss, ball joint may be excessively worn.

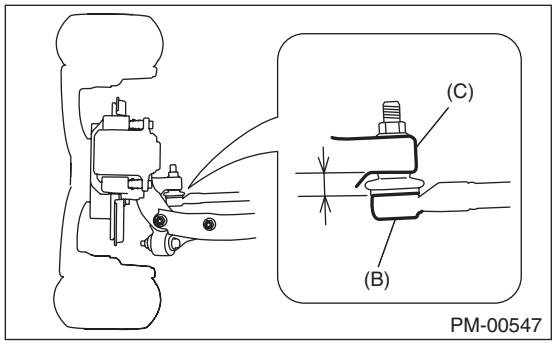

5) If the movement related to the previous two steps is observed, replace the front lateral link. <Ref. to RS-22, Front Lateral Link.>
6) Damage of dust boots
Visually inspect the ball joint dust boots. Replace if front lateral link is damaged.
7) Check upper arm ball joint in the same manner.

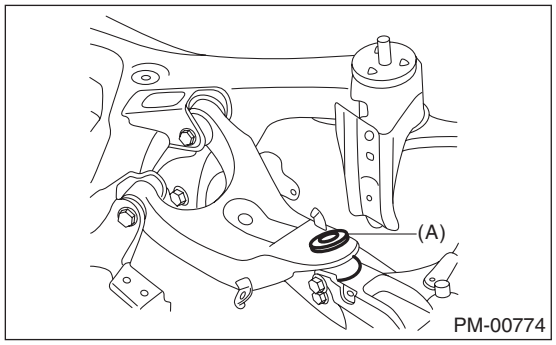

(A) Upper arm ball joint

3. FRONT, REAR SUSPENSION BUSHING

Apply pressure with tire lever etc, and inspect the bushing for excessive wear or damage. If defective, replace the bushing.

- Front suspension bushing

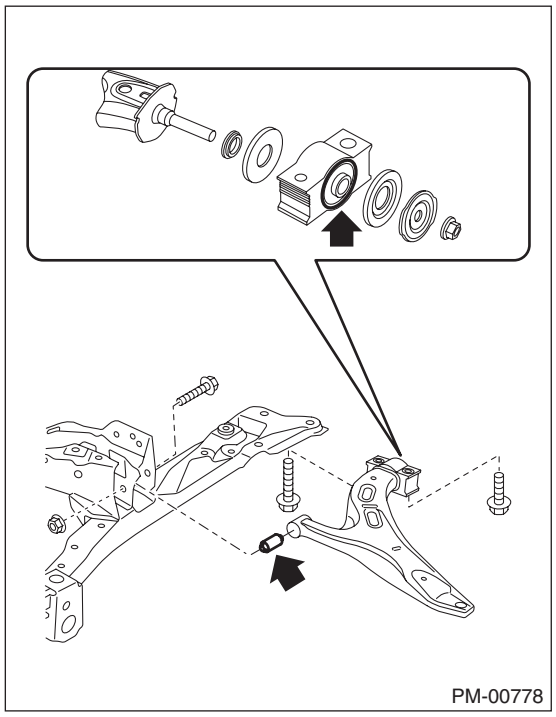

- Rear suspension bushing

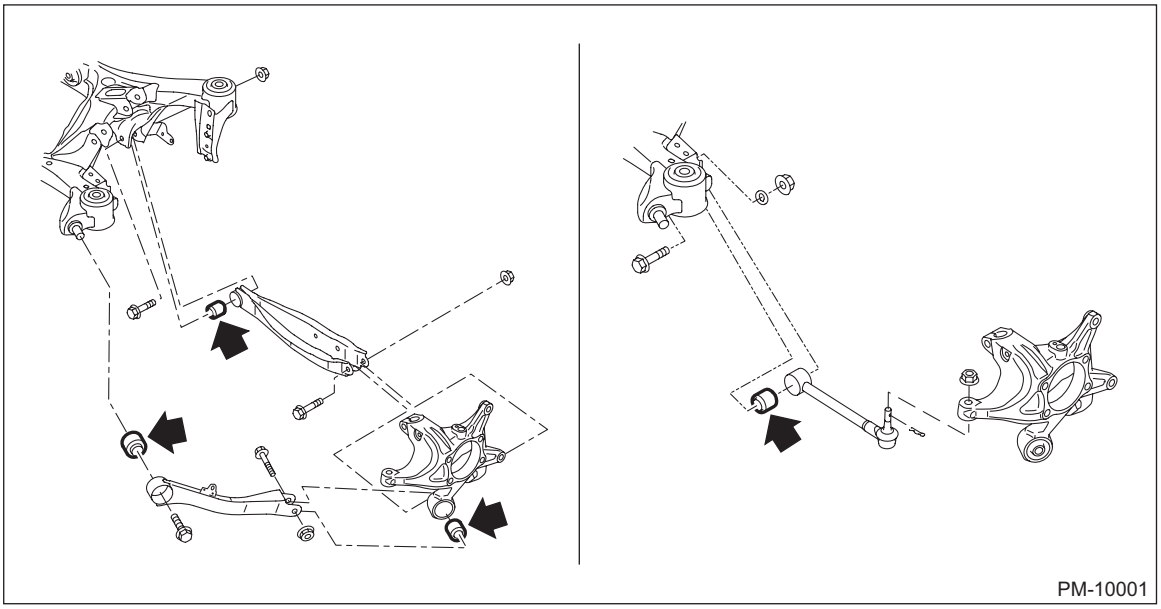

4. WHEEL ARCH HEIGHT

Refer to “FS” section for wheel arch height inspection. <Ref. to FS-11, WHEEL ARCH HEIGHT, INSPECTION, Wheel Alignment.>

5. WHEEL ALIGNMENT

Measure and adjust the front and rear wheel alignment at a time. Refer to “FS” section for measurement and adjustment of wheel alignment. <Ref. to FS-10, INSPECTION, Wheel Alignment.>

6. OIL LEAKAGE OF STRUT AND SHOCK ABSORBER

Visually inspect the front strut and rear shock absorber for oil leakage. Replace the front strut and rear shock absorber if oil leaks excessively.

7. TIGHTNESS OF BOLTS AND NUTS

Check the bolts and nuts for looseness. Retighten the bolts and nuts to specified torque. If the self-locking nuts and bolts are removed, replace them with new parts. <Ref. to FS-2, General Description.> <Ref. to RS-2, General Description.>

8. DAMAGE TO SUSPENSION PARTS

Check the following parts and the fastening portion of the vehicle body for deformation or excessive rusting which impairs the suspension. Thoroughly remove the deposits of the lower spring seat of strut where dust or mud are likely piled up. If necessary, replace the damaged parts with new parts. If minor rust formation, pitting, etc. are noted, remove the rust and take rust prevention measure.

- Front suspension
  - Front arm
  - Cradle
  - Strut
- Rear suspension
  - Sub frame
  - Front lateral link
  - Rear lateral link
  - Upper arm
  - Trailing link
  - Shock absorber
- In the area where salt is sprayed to melt snow on a road in winter, check suspension parts for damage caused by rust every 12 months after lapse of 60 months. Take rust prevention measures as required.

21.Wheel Bearing

A: INSPECTION

1. FRONT WHEEL BEARING

NOTE:
Inspect the condition of front wheel bearing grease.
1) Jack-up the front side of vehicle.
2) While holding the front wheel by hand, swing it in and out to check bearing free play.
3) Loosen the wheel nuts, and remove the front wheel.
4) If the bearing free play exists in step 2) above, attach a dial gauge to the hub and measure axial play in axial direction.

Service limit:
Straight-ahead position within 0.05 mm (0.0020 in)
5) Remove the bolts and self-locking nuts, and extract the front arm from front crossmember.
6) Remove the joint of front drive shaft from transmission. <Ref. to DS-16, Front Axle.>
7) While supporting the front drive shaft horizontally with one hand, turn the hub with the other hand to check for noise or binding.
If the hub is noisy or binds, replace the front axle.

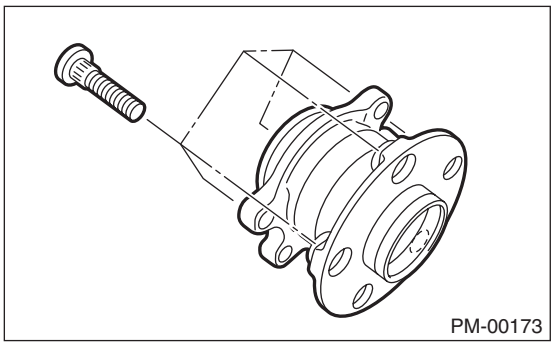
PM-00173

2. REAR WHEEL BEARING

1) Jack-up the rear side of vehicle.
2) While holding the rear wheel by hand, swing it in and out to check bearing free play.
3) Loosen the wheel nuts, and remove the rear wheel.
4) If the bearing free play exists in step 2) above, attach a dial gauge to the hub and measure axial play in axial direction.

Service limit:
Straight-ahead position within 0.05 mm (0.0020 in)
5) Remove the joint of rear drive shaft from rear differential. <Ref. to DS-51, Rear Drive Shaft.>
6) While supporting rear drive shaft horizontally with one hand, turn the hub with the other hand to check for noise or binding.
If the hub is noisy or binds, replace the rear axle.

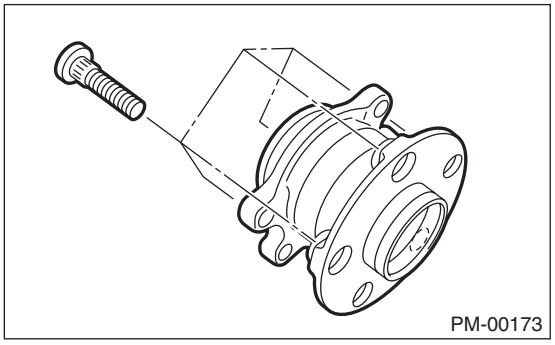
PM-00173

22.Axle Boots & Joints

A: INSPECTION

1. FRONT AND REAR AXLE BOOTS

Inspect the front axle boots (A) and rear axle boots (B) for deformation, damage or failure. If faulty, replace with new part. <Ref. to DS-40, Front Drive Shaft.> <Ref. to DS-51, Rear Drive Shaft.>

- Front

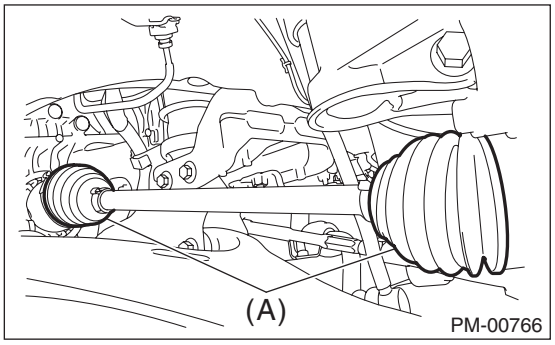

- Rear

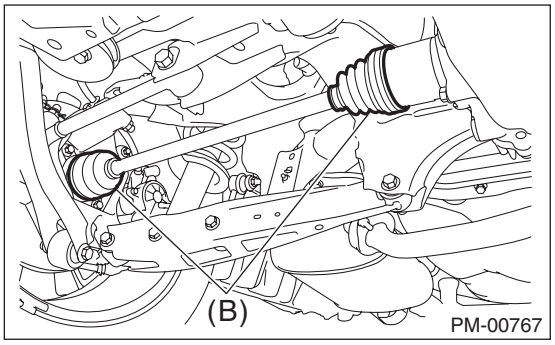

2. PROPELLER SHAFT

Inspect the propeller shaft for damage or failure. If faulty, replace with new part. <Ref. to DS-10, Propeller Shaft.>

23.Tire Inspection and Rotation

A: INSPECTION

Refer to “WT” section for tire inspection and rotation. <Ref. to WT-6, TIRE ROTATION, INSPECTION, Tire and Wheel.>

24.Steering System (Power Steering)

A: INSPECTION

1. STEERING WHEEL

1) Set the steering wheel in a straight-ahead position, and check the wheel spokes to make sure they are correctly set in their specified positions.
2) Lightly turn the steering wheel to the left and right to determine the point where front wheels start to move. Measure the distance of the movement of steering wheel (periphery).

Steering wheel free play:
0 — 17 mm (0 — 0.67 in)

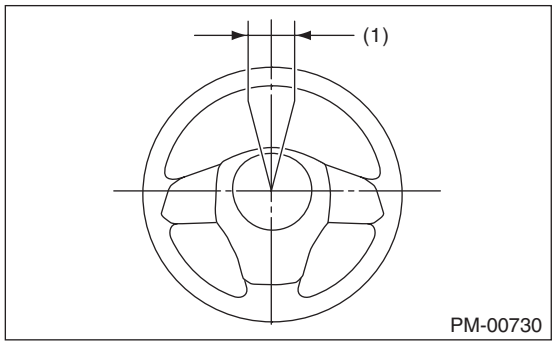

(1) Steering wheel free play

Move the steering wheel toward the shaft to check if there is play in the direction.

Play limit:
0.5 mm (0.020 in)

3) Drive the vehicle and check the following items.
(1) Steering force:
The effort required for steering should be smooth and even at all points, and should not vary.
(2) Pulled to one side:
Steering wheel should not be pulled to one side while driving on a level surface.
(3) Wheel runout:
Steering wheel should not show any sign of runout.
(4) Return status:
Steering wheel should return to its original position after it has been turned and then released.

2. STEERING SHAFT JOINT

If steering wheel play is excessive, disconnect the universal joint of steering shaft and then check the play where the joints cross and yawing torque. Also, check the seal for damage or serrations for wear. If the joint is loose, retighten the mounting bolts to the specified torque. <Ref. to PS-14, Universal Joint.>

Tightening torque:
24 N·m (2.4 kgf-m, 17.4 ft-lb)

3. GEARBOX

1) Set the steering wheel in the straight position, then rotate it 90° in both the left and right directions. While steering wheel is being rotated, check the looseness of the gearbox.

Tightening torque:
60 N·m (6.1 kgf-m, 44.3 ft-lb)

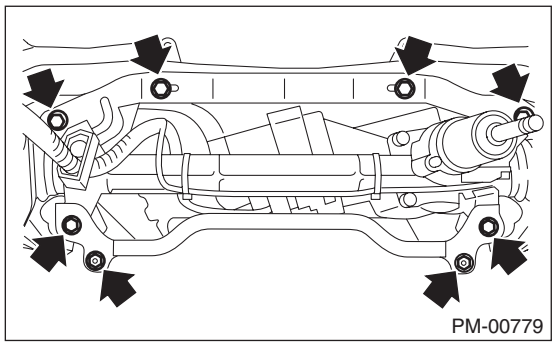

2) Check the boot for damage, cracks or deterioration.
3) With the vehicle stopped on a level surface, quickly turn the steering wheel to the left and right. While steering wheel is being rotated, check the gear backlash. If any noise is noticed, adjust the gear backlash. <Ref. to PS-35, GEARBOX BACKLASH ADJUSTMENT (SERVICING ON VEHICLE), ADJUSTMENT, Electric Power Steering Gearbox.>

4. TIE-ROD

1) Check the tie-rod and tie-rod end for bend, cracks or other damages.

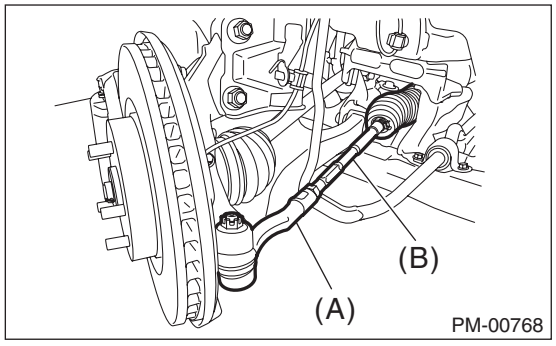

(A) Tie-rod end
(B) Tie-rod

2) Confirm that the connections of knuckle ball joints for play, and then check for damage on dust boots and free play of ball studs. If castle nut is loose, retighten it to the specified torque, then tighten further up to a maximum of 60° until the cotter pin hole is aligned.

Tightening torque:
27 N·m (2.75 kgf-m, 19.9 ft-lb)
3) Check the tightening of tie-rod end lock nut. If it is loose, tighten it to the specified torque.

Tightening torque:
85 N·m (8.7 kgf-m, 62.7 ft-lb)

5. GEARBOX BOOTS

Inspect both sides of the gearbox boot as follows, and correct the defects if necessary.
1) The (A) and (B) positions of the gearbox boot are fitted in (A) and (C) grooves of gearbox and the rod.
2) Clips are fitted onto the boot grooves to the positions (A) and (B) of the boot.
3) Check that there is no cracks or holes in the boot.

NOTE:
Rotate (B) position of gearbox boot against the torsion produced by the adjustment of toe-in etc.

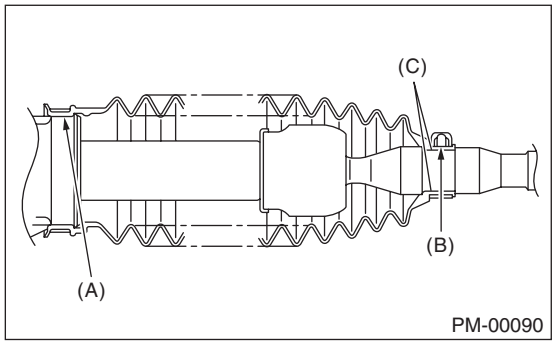

6. CHECK HARNESS

Check the harness of the electric power steering for cracks or damages.
Replace the electric power steering gear box with a new part if necessary.

7. CHECK POWER STEERING CONTROL MODULE

Check for the electric power steering diagnostic trouble codes. If the diagnostic trouble code is detected, perform the diagnosis. <Ref. to PS(diag)-2, Basic Diagnostic Procedure.>
Replace the steering gear box with a new part if necessary.

25.A/C Filter

A: REPLACEMENT

Refer to “AC” section for A/C filter replacement. <Ref. to AC-100, REPLACEMENT, A/C Filter.>

ENGINE 1 SECTION

FUEL INJECTION (FUEL SYSTEMS)	FU(H4DO)
EMISSION CONTROL (AUX. EMISSION CONTROL DEVICES)	EC(H4DO)
INTAKE (INDUCTION)	IN(H4DO)
MECHANICAL	ME(H4DO)
EXHAUST	EX(H4DO)
COOLING	CO(H4DO)
LUBRICATION	LU(H4DO)
SPEED CONTROL SYSTEMS	SP(H4DO)
IGNITION	IG(H4DO)
STARTING/CHARGING SYSTEMS	SC(H4DO)
ENGINE (DIAGNOSTICS)	EN(H4DO)(diag)

This service manual has been prepared to provide SUBARU service personnel with the necessary information and data for the correct maintenance and repair of SUBARU vehicles.
This manual includes the procedures for maintenance, disassembling, reassembling, inspection and adjustment of components and diagnostics for guidance of experienced mechanics.
Please peruse and utilize this manual fully to ensure complete repair work for satisfying our customers by keeping their vehicle in optimum condition. When replacement of parts during repair work is needed, be sure to use SUBARU genuine parts.

All information, illustration and specifications contained in this manual are based on the latest product information available at the time of publication approval.

FUJI HEAVY INDUSTRIES LTD. G2520BE2

FUEL INJECTION (FUEL SYSTEMS)

FU(H4DO)

		Page
1.	General Description	2
2.	Throttle Body	14
3.	Intake Manifold Assembly	18
4.	Engine Wiring Harness	36
5.	Engine Coolant Temperature Sensor	43
6.	Engine Oil Temperature Sensor	45
7.	Crankshaft Position Sensor	47
8.	Crankshaft Position Sensor Plate	50
9.	Camshaft Position Sensor	51
10.	Oil Control Solenoid	54
11.	Knock Sensor	56
12.	Throttle Position Sensor	59
13.	Mass Air Flow and Intake Air Temperature Sensor	60
14.	Manifold Absolute Pressure Sensor	63
15.	Fuel Injector	66
16.	Tumble Generator Valve	74
17.	Tumble Generator Valve Actuator	75
18.	Front Oxygen (A/F) Sensor	76
19.	Rear Oxygen Sensor	79
20.	Engine Control Module (ECM)	82
21.	Main Relay	84
22.	Electronic Throttle Control Relay	86
23.	Fuel Pump Relay	88
24.	Fuel	90
25.	Fuel Tank Protector	96
26.	Fuel Tank	97
27.	Fuel Filler Pipe	110
28.	Fuel Pump	116
29.	Fuel Level Sensor	122
30.	Fuel Sub Level Sensor	125
31.	Fuel Filter	132
32.	Fuel Delivery and Evaporation Lines	143
33.	Fuel System Trouble in General	155

1. General Description

A: SPECIFICATION

Fuel tank	Capacity	70 L (18.5 US gal, 15.4 Imp gal)
	Location	Under rear seat
Fuel pump	Type	Impeller
	Shutoff discharge pressure	840 kPa (8.57 kg/cm^2, 121.8 psi), or less
	Discharge rate	114 L (30.1 US gal, 25.1 Imp gal)/h or more [12.5 V at 343 kPa (3.5 kg/cm^2, 49.7 psi)]
Fuel filter		In-tank type

B: COMPONENT

1. INTAKE MANIFOLD ASSEMBLY 1

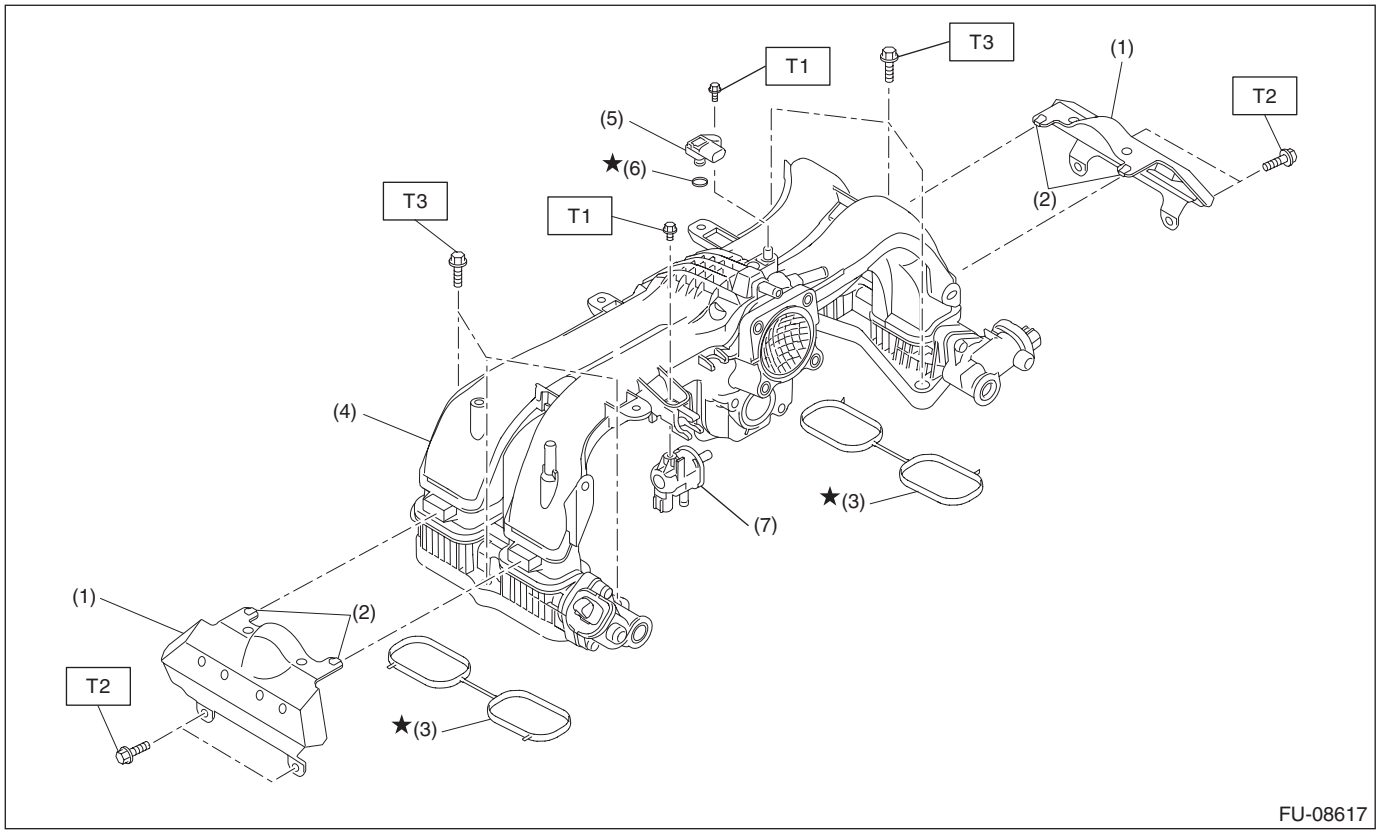

(1) Intake manifold protector
(2) Cushion
(3) Gasket
(4) Intake manifold ASSY
(5) Manifold absolute pressure sensor
(6) O-ring
(7) Purge control solenoid valve

Tightening torque: N·m (kgf-m, ft-lb)
T1: 3.4 (0.3, 2.5)
T2: 6.4 (0.7, 4.7)
T3: 25 (2.5, 18.4)

2. INTAKE MANIFOLD ASSEMBLY 2

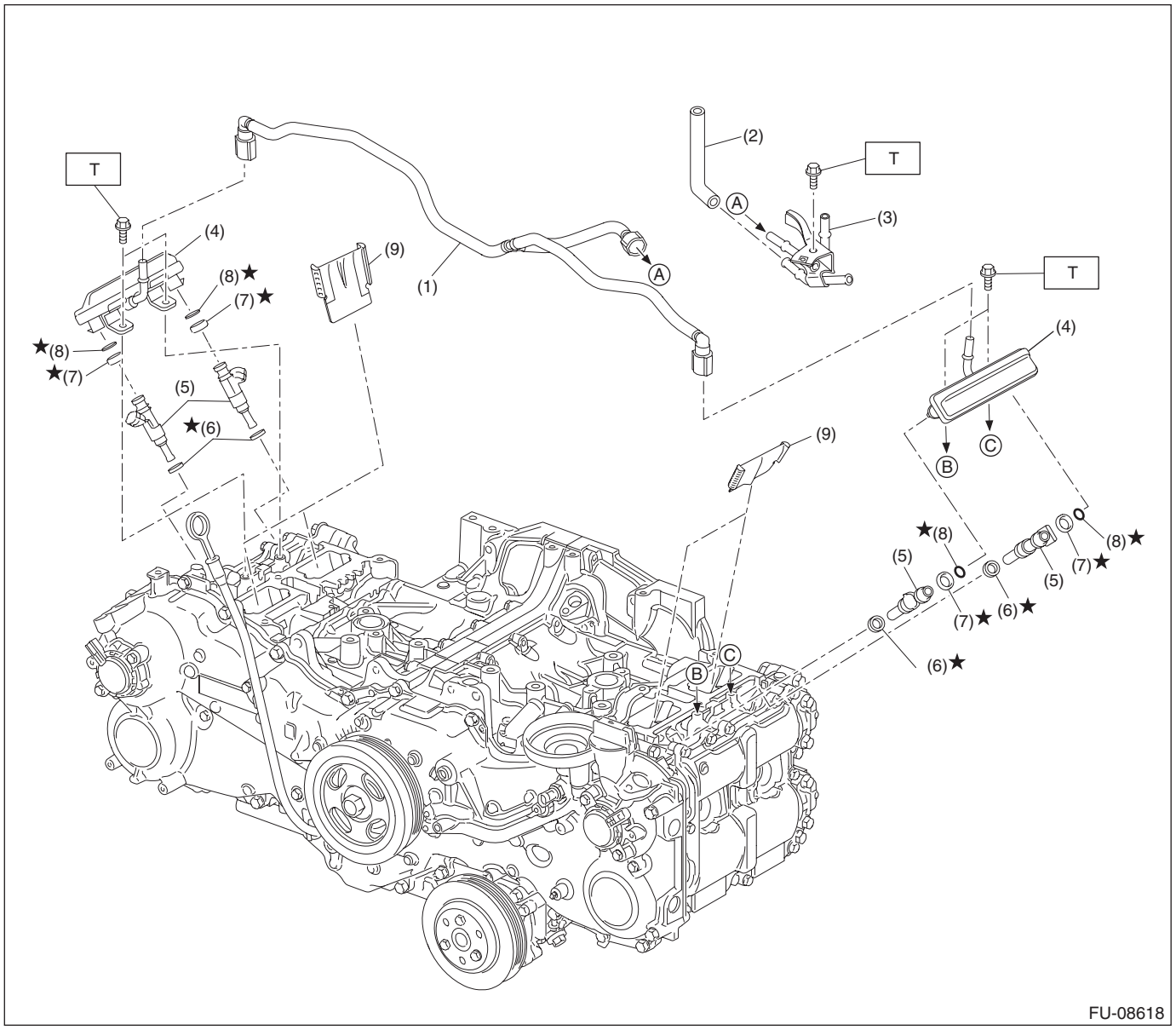

(1) Fuel delivery pipe
(2) Vacuum hose
(3) Fuel pipe ASSY
(4) Fuel pipe
(5) Fuel injector
(6) Seal ring
(7) Rubber
(8) O-ring
(9) Cylinder head plate

Tightening torque: N·m (kgf-m, ft-lb)
T: 6.4 (0.7, 4.7)

3. THROTTLE BODY

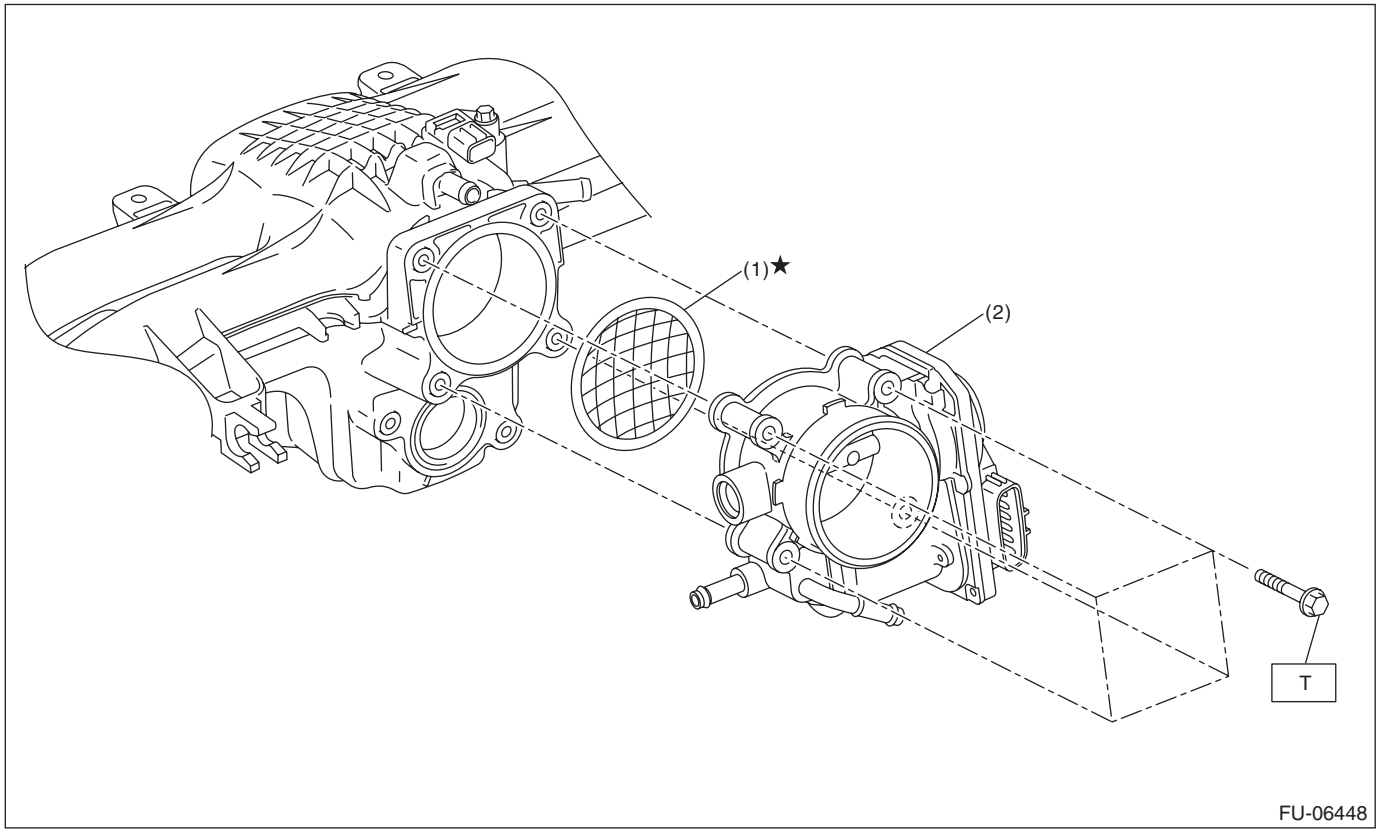

(1) Gasket
(2) Throttle body

Tightening torque: N·m (kgf-m, ft-lb)
T: 8 (0.8, 5.9)

4. CRANKSHAFT POSITION, CAMSHAFT POSITION AND KNOCK SENSORS

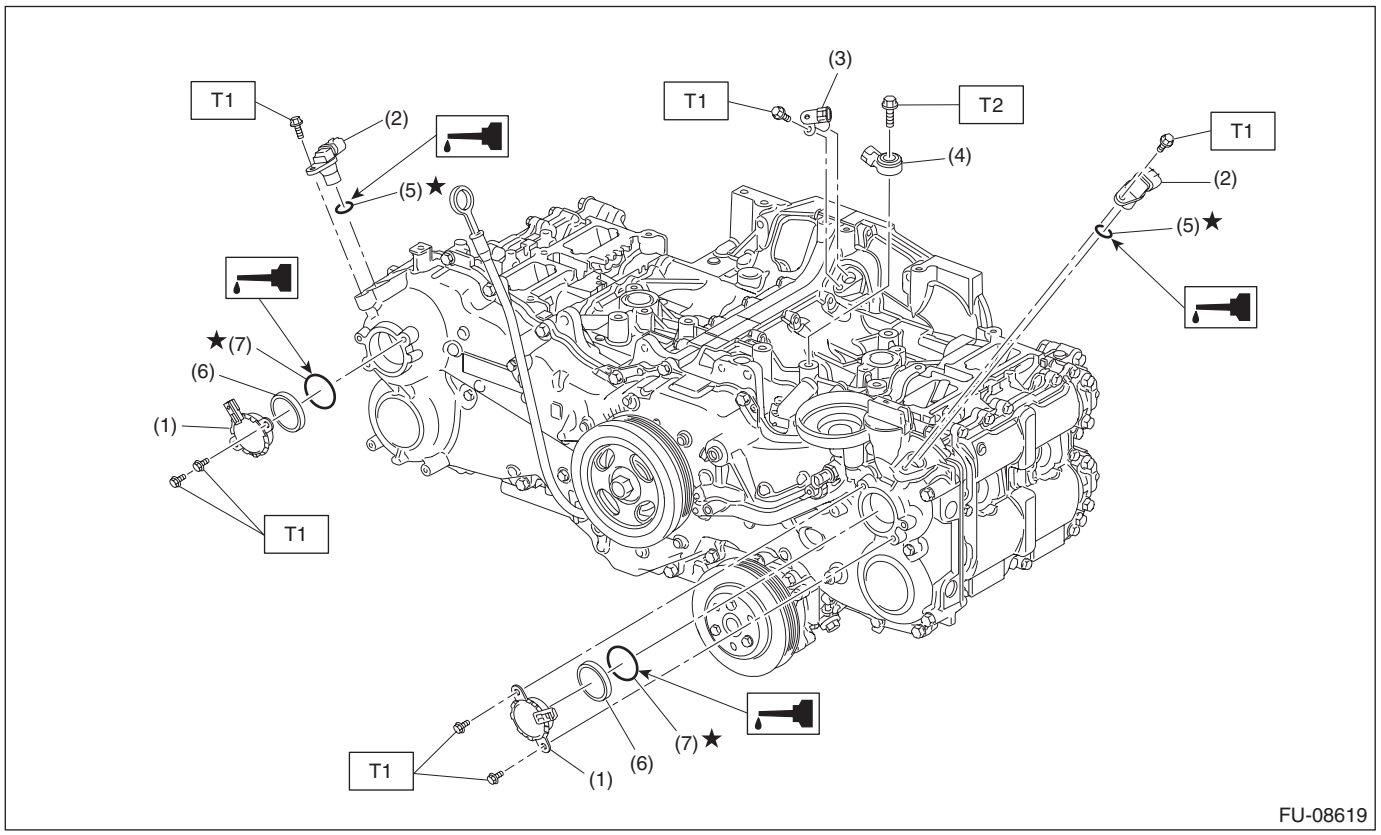

(1) Oil control solenoid
(2) Camshaft position sensor
(3) Crankshaft position sensor
(4) Knock sensor
(5) O-ring
(6) Back-up ring
(7) O-ring

Tightening torque: N·m (kgf-m, ft-lb)
T1: 6.4 (0.7, 4.7)
T2: 25 (2.5, 18.4)

5. FUEL TANK

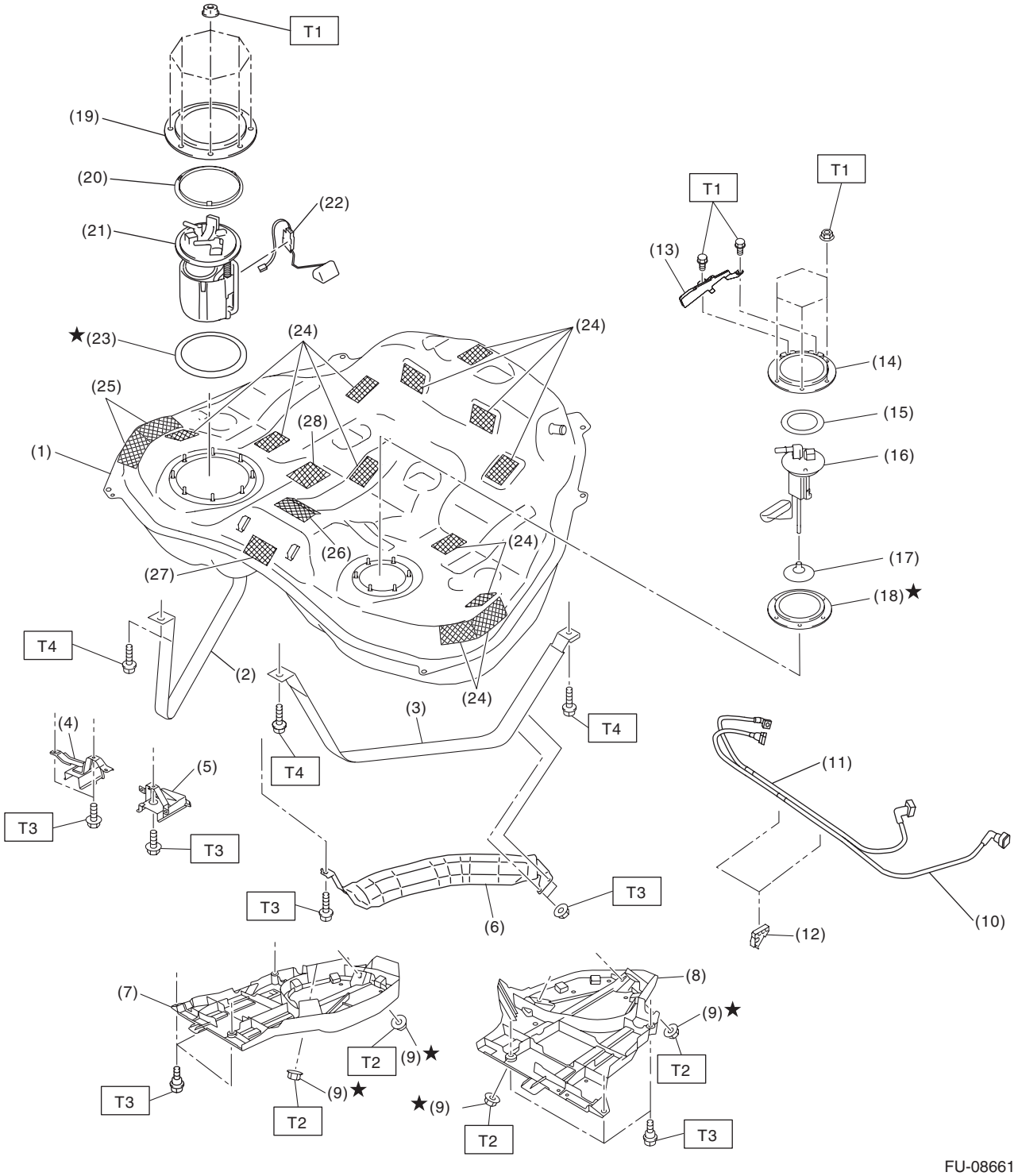

FU-08661

(1) Fuel tank
(2) Fuel tank band RH
(3) Fuel tank band LH
(4) Stopper RH
(5) Stopper LH
(6) Heat shield cover
(7) Fuel tank protector RH
(8) Fuel tank protector LH
(9) Self-locking nut
(10) Fuel delivery tube
(11) Fuel delivery sub tube
(12) Tube clamp
(13) Fuel sub level sensor protector
(14) Fuel sub level sensor upper plate
(15) Fuel sub level sensor upper plate cushion
(16) Fuel sub level sensor
(17) Fuel sub level sensor filter
(18) Fuel sub level sensor gasket
(19) Fuel pump upper plate
(20) Fuel upper plate cushion
(21) Fuel pump ASSY
(22) Fuel level sensor
(23) Fuel pump gasket
(24) Cushion
(25) Cushion
(26) Cushion
(27) Cushion
(28) Cushion

Tightening torque: N·m (kgf-m, ft-lb)

T1: 4.4 (0.4, 3.2)
T2: 9 (0.9, 6.6)
T3: 18 (1.8, 13.3)
T4: 33 (3.4, 24.3)

6. FUEL LINE

- Fuel line 1

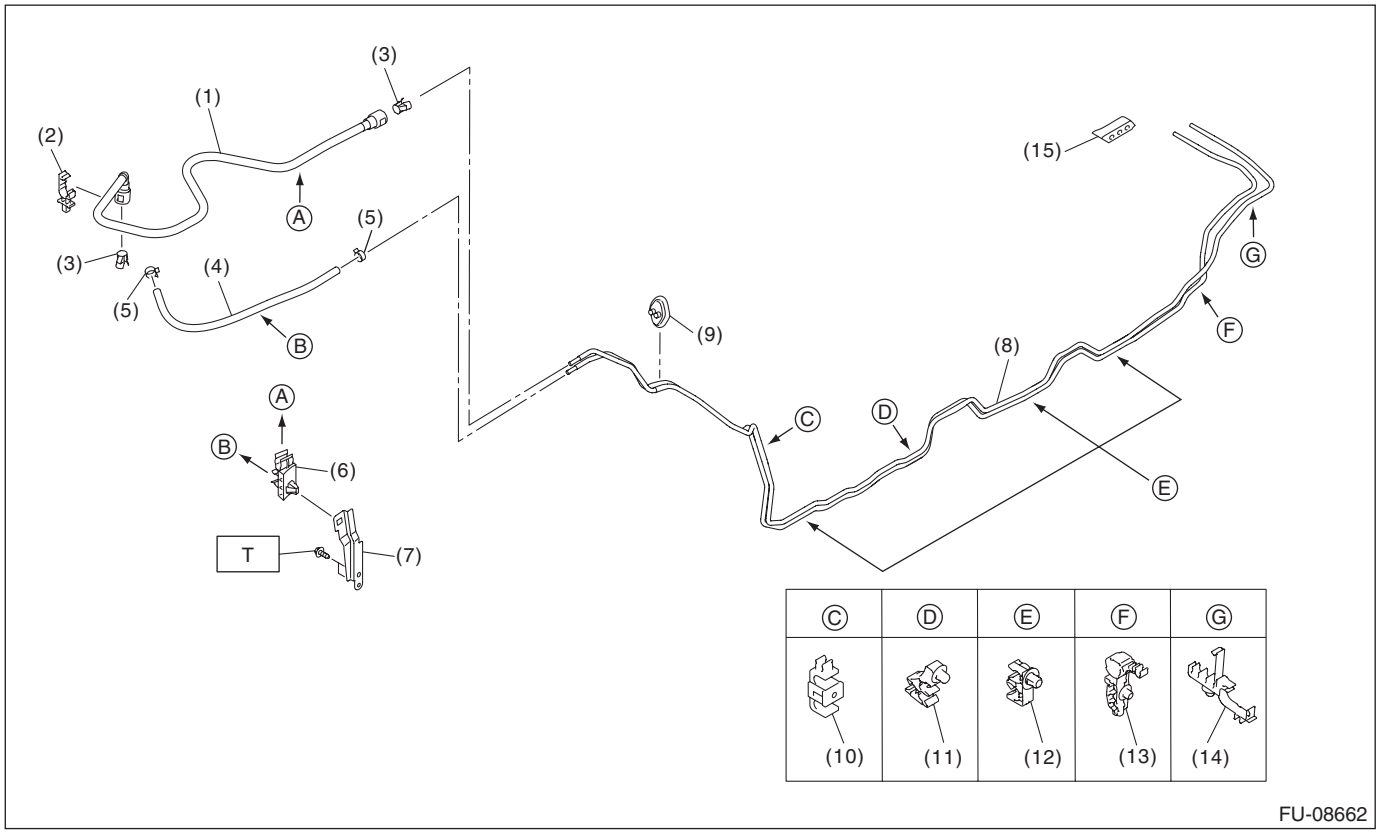

(1) Fuel delivery tube
(2) Tube clamp
(3) Retainer
(4) Evaporation hose
(5) Clip
(6) Tube clamp
(7) Tube clamp bracket
(8) Fuel pipe ASSY
(9) Fuel pipe front grommet
(10) Pipe clamp
(11) Pipe clamp
(12) Pipe clamp
(13) Pipe clamp
(14) Pipe clamp
(15) Fuel pipe rear grommet

Tightening torque: N·m (kgf-m, ft-lb)
T: 7.5 (0.8, 5.5)

- Fuel line 2

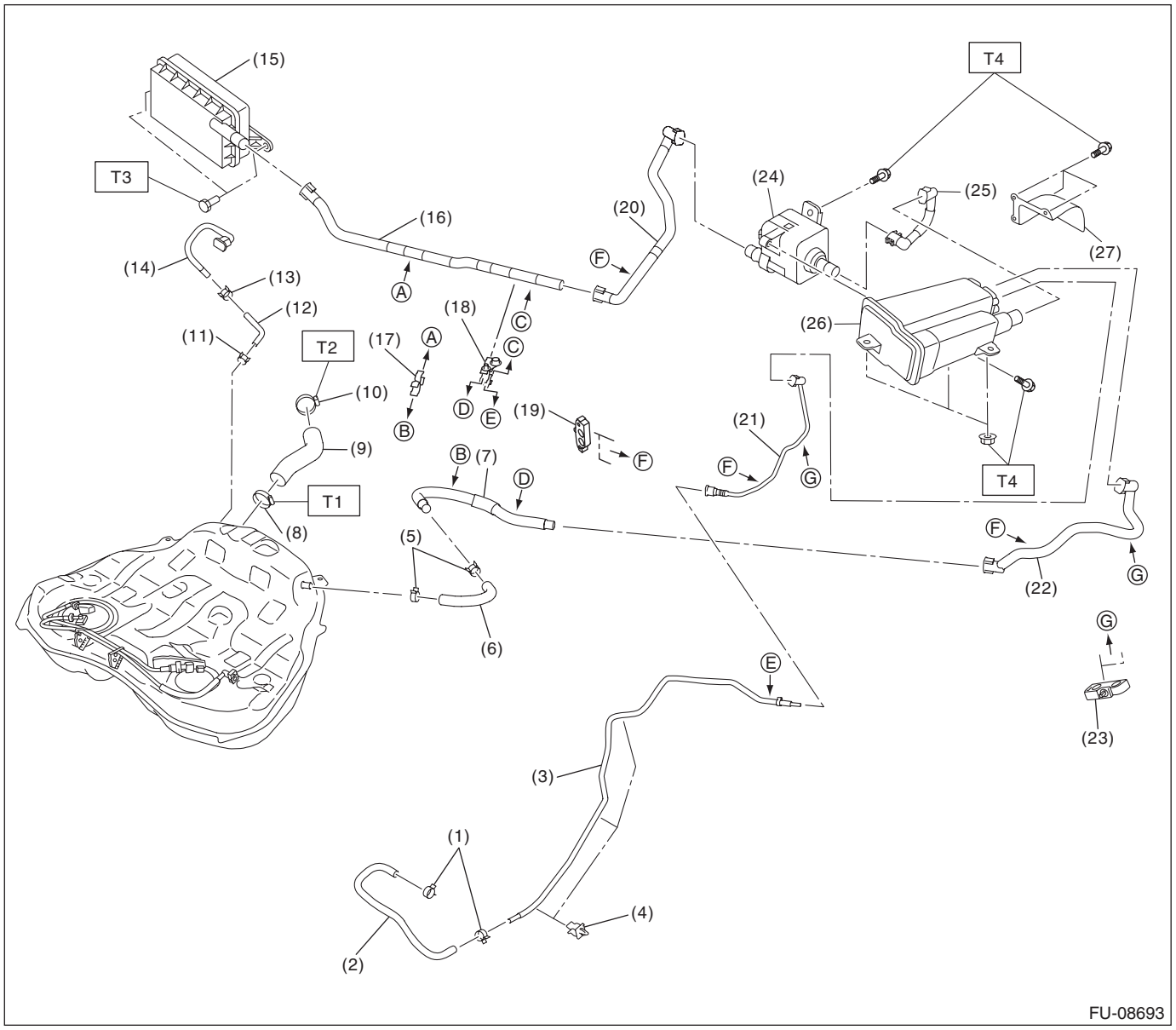

(1) Clip
(2) Purge hose
(3) Purge pipe
(4) Pipe clamp
(5) Clip
(6) Air vent hose
(7) Air vent tube
(8) Clamp
(9) Fuel filler hose
(10) Clamp
(11) Clip
(12) Circulate hose
(13) Clip
(14) Circulate tube
(15) Drain filter
(16) Drain tube
(17) Tube clamp
(18) Tube clamp
(19) Tube clamp
(20) Drain tube
(21) Purge tube
(22) Vent tube
(23) Tube clamp
(24) Leak check valve ASSY
(25) Drain tube
(26) Canister
(27) Canister protector

Tightening torque: N·m (kgf-m, ft-lb)
T1: 2 (0.2, 1.5)
T2: 2.5 (0.3, 1.8)
T3: 7.5 (0.8, 5.5)
T4: 8 (0.8, 5.9)

7. FUEL FILLER PIPE

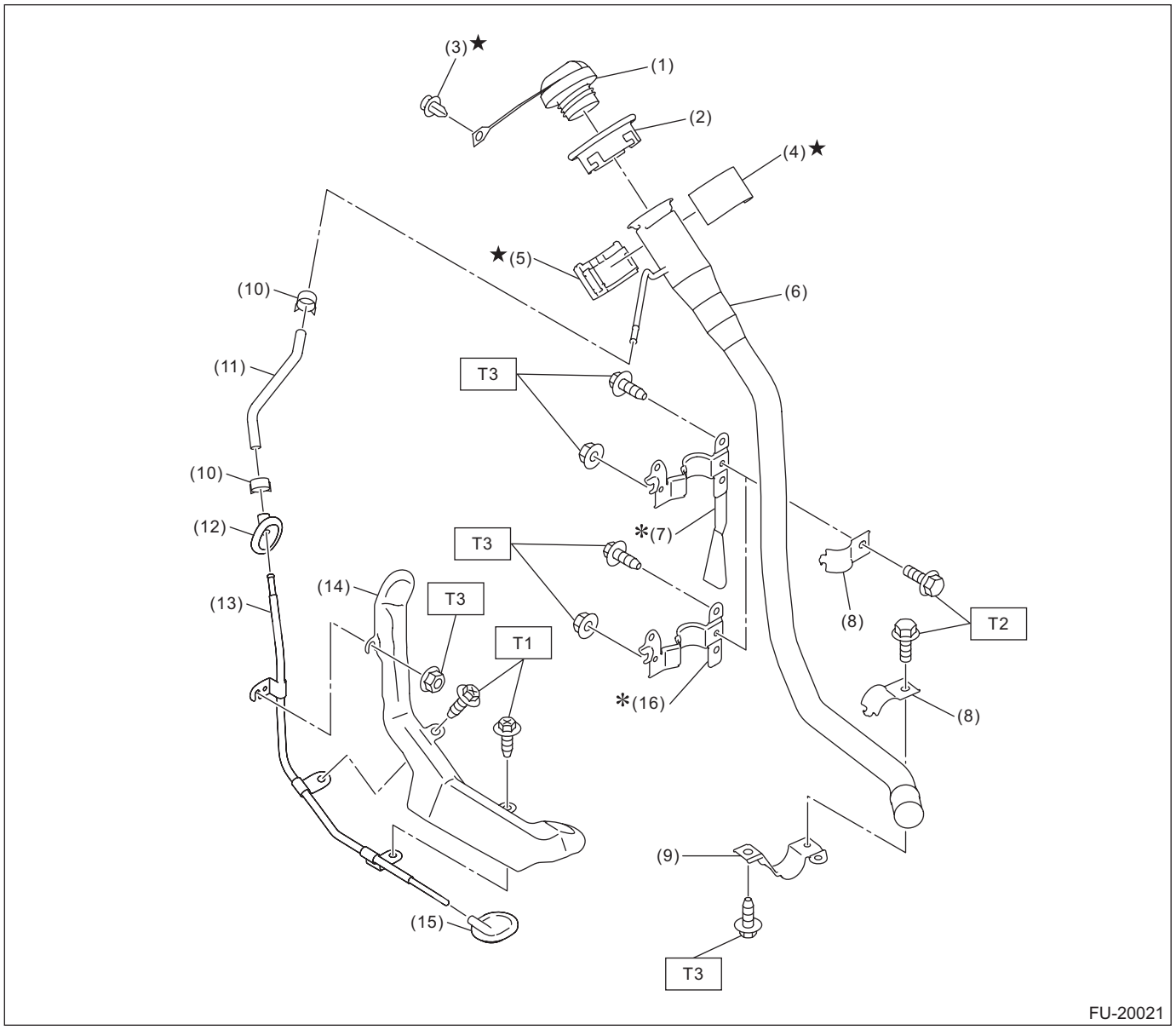

(1) Fuel filler cap
(2) Fuel filler pipe protector
(3) Clip
(4) Neck holder A
(5) Neck holder B
(6) Fuel filler pipe
(7) Fuel filler pipe bracket A (with protector)
(8) Fuel filler pipe bracket B
(9) Fuel filler pipe bracket C
(10) Clip
(11) Evaporation hose
(12) Grommet
(13) Evaporation pipe
(14) Evaporation pipe protector
(15) Grommet
(16) Fuel filler pipe bracket A (without protector)

Tightening torque: N·m (kgf-m, ft-lb)
T1: 1 (0.1, 0.7)
T2: 7.35 (0.7, 5.4)
T3: 7.5 (0.8, 5.5)

*For the fuel filler pipe bracket A, either one with the protector or without the protector is installed depending on the specification.

8. FUEL PUMP

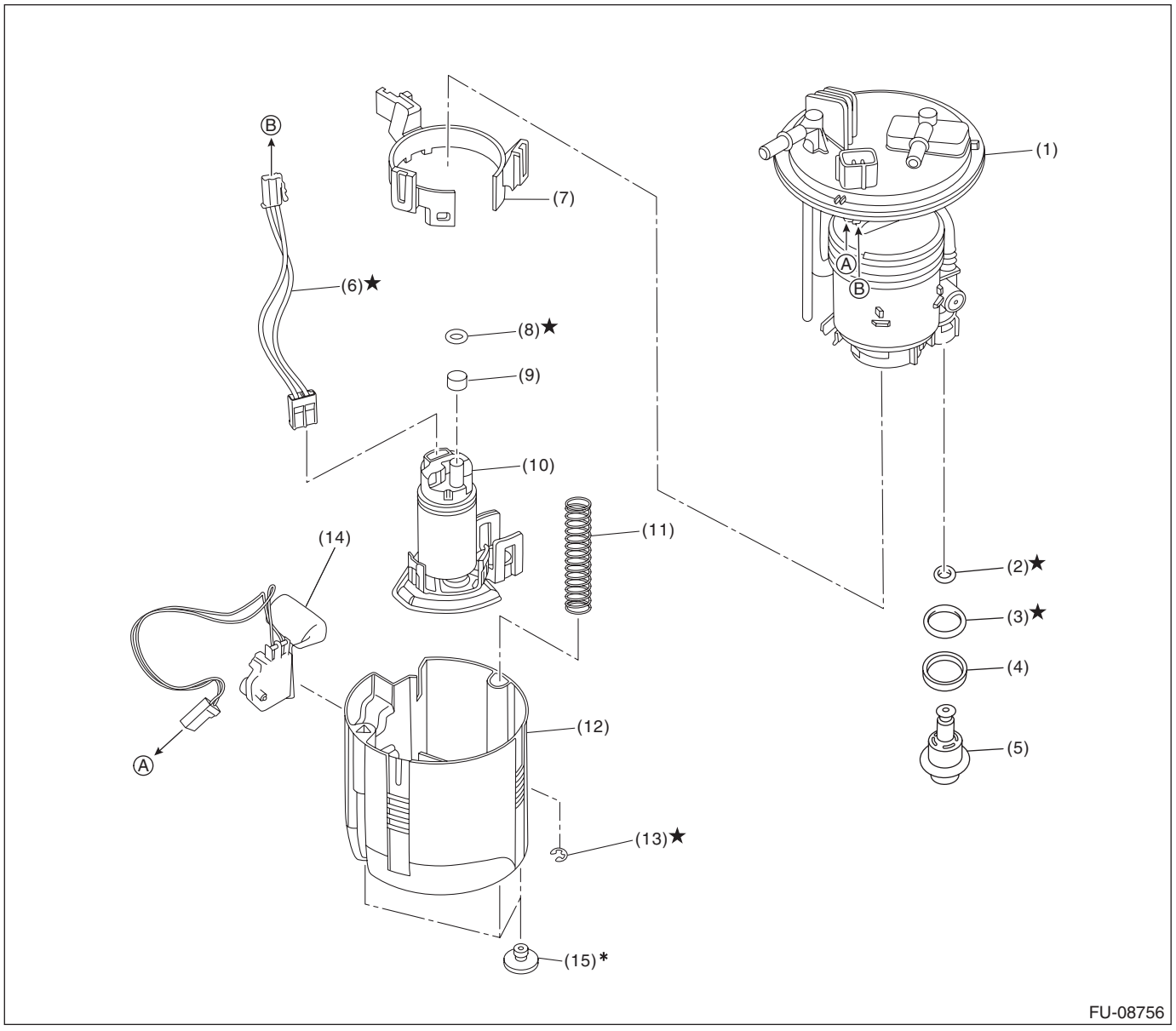

(1)	Fuel filter ASSY	(6)	Connector cable	(11)	Spring
(2)	O-ring	(7)	Fuel pump holder	(12)	Fuel chamber ASSY
(3)	O-ring	(8)	O-ring	(13)	Clip
(4)	Back-up ring	(9)	Spacer	(14)	Fuel level sensor
(5)	Pressure regulator	(10)	Fuel pump	(15)	Cushion

* When removing the cushion from the fuel chamber assembly, replace it with a new part.

C: CAUTION

- Prior to starting work, pay special attention to the following:
  1. Always wear work clothes, a work cap, and protective shoes. Additionally, wear a helmet, protective goggles, etc. if necessary.
  2. Protect the vehicle using a seat cover, fender cover, etc.
  3. Prepare the service tools, clean cloth, containers to catch grease and oil, etc.
- Place “NO OPEN FLAMES” signs near the working area.
- Prepare a container and cloth to prevent scattering of fuels when performing work where fuels can be spilled. If the oil spills, wipe it off immediately to prevent from penetrating into floor or flowing out for environmental protection.
- Vehicle components are extremely hot immediately after driving. Be wary of receiving burns from heated parts.
- When performing a repair, identify the cause of trouble and avoid unnecessary removal, disassembly and replacement.
- Before disconnecting connectors of sensors or units, be sure to disconnect the ground cable from battery.
- Always use the jack-up point when the shop jacks or rigid racks are used to support the vehicle.
- Remove contamination including dirt and corrosion before removal, installation, disassembly or assembly.
- Keep the removed parts in order and protect them from dust and dirt.
- All removed parts, if to be reused, should be reinstalled in the original positions with attention to the correct directions, etc.
- Bolts, nuts and washers should be replaced with new parts as required.
- Follow all government and local regulations concerning disposal of refuse when disposing fuel.

D: PREPARATION TOOL

1. SPECIAL TOOL

ILLUSTRATION	TOOL NUMBER	DESCRIPTION	REMARKS
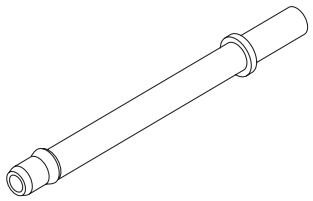 ST18471AA000	18471AA000	FUEL PIPE ADAPTER	Used for draining fuel.
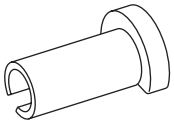 ST42099AE000	42099AE000	QUICK CONNECTOR RELEASE	Used for removing the quick connector of the fuel delivery tube.
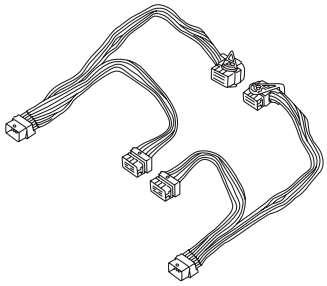 ST18460AA050	18460AA050	CHECK BOARD	Used for inspecting the fuel system.
SSM 4 STSSM4	— (Newly adopted tool)	SUBARU SELECT MONITOR 4	Used for setting of each function and troubleshooting for electrical system. NOTE: For detailed operation procedures of Subaru Select Monitor 4, refer to “Application help”.

2. GENERAL TOOL

TOOL NAME	REMARKS
Circuit tester	Used for measuring resistance, voltage and current.
Oscilloscope	Used for inspecting the waveform of each sensor.
Mighty Vac	Used for inspecting the manifold absolute pressure sensor.
DST-i	Used together with Subaru Select Monitor 4.

2. Throttle Body

A: REMOVAL

1) Disconnect the ground terminal from battery sensor. <Ref. to RC-4, BATTERY, NOTE, Repair Contents.>
2) Drain approximately 3.0 L (3.2 US qt, 2.6 Imp qt) of coolant. <Ref. to CO(H4DO)-15, DRAINING OF ENGINE COOLANT, REPLACEMENT, Engine Coolant.>
3) Remove the clip (A), and loosen the clamps (B) and (C) securing the air intake boot.

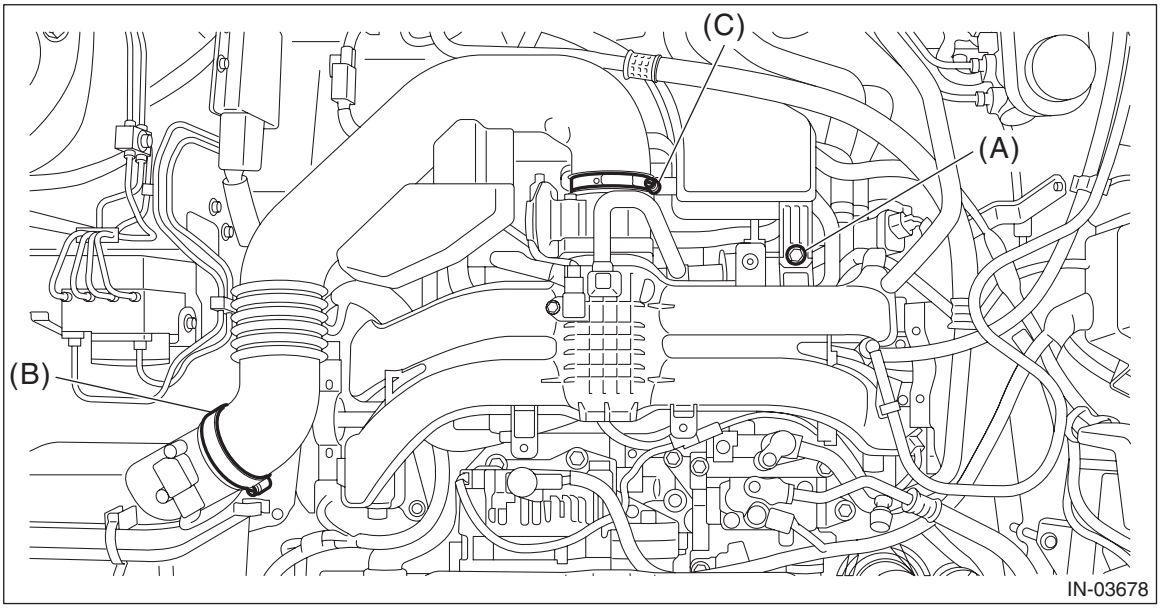

4) Remove the air intake boot from the air cleaner case (rear) and throttle body, and move it to the left side wheel apron.

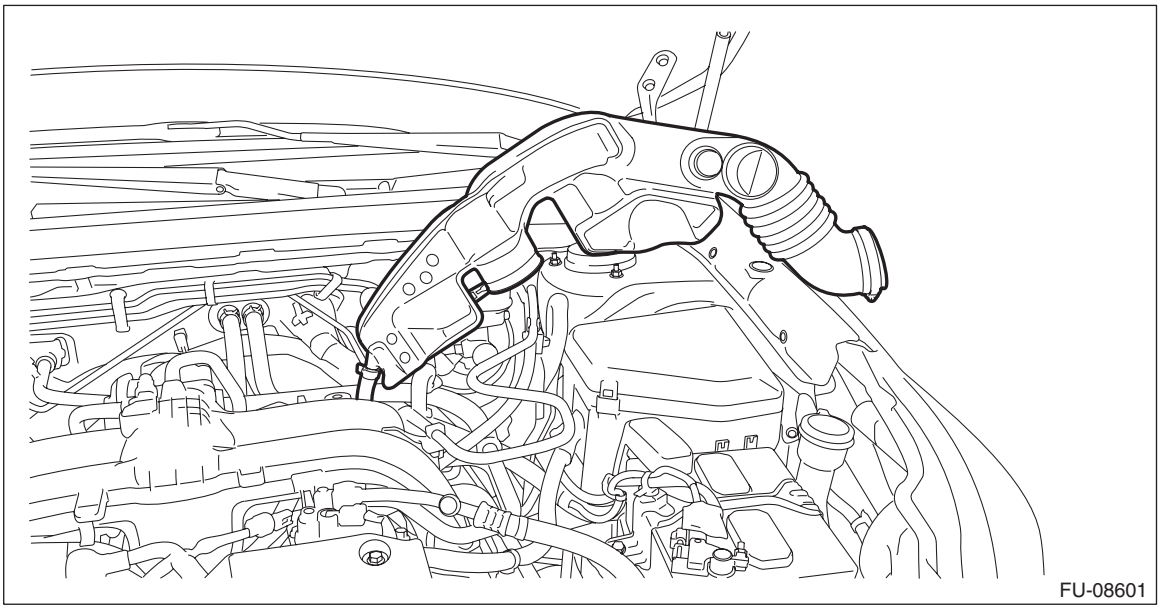

5) Disconnect the connectors (A) from the throttle position sensor.
6) Disconnect the preheater hose (B) from the throttle body.

7) Remove the throttle body from the intake manifold assembly.

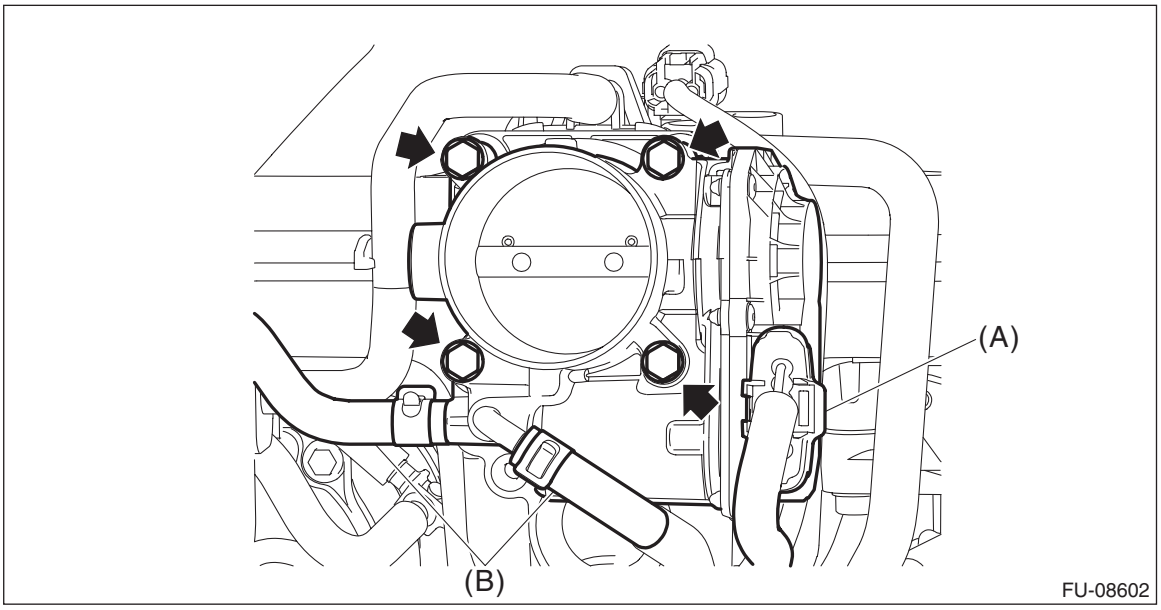

B: INSTALLATION

1) Install the throttle body to the intake manifold assembly.

NOTE:
Use a new gasket.

Tightening torque:
8 N·m (0.8 kgf-m, 5.9 ft-lb)

2) Connect the connector to the throttle position sensor.
3) Connect the preheater hoses to the throttle body.
4) Install the air intake boot. <Ref. to IN(H4DO)-10, INSTALLATION, Air Intake Boot.>
5) Connect the ground terminal to battery sensor. <Ref. to RC-4, BATTERY, NOTE, Repair Contents.>
6) Fill engine coolant. <Ref. to CO(H4DO)-16, FILLING OF ENGINE COOLANT, REPLACEMENT, Engine Coolant.>

C: INSPECTION

1. THROTTLE SENSOR (METHOD WITH CIRCUIT TESTER)

1) Disconnect the ground terminal from battery sensor. <Ref. to RC-4, BATTERY, NOTE, Repair Contents.>
2) While pressing the section (A) shown in the figure, move the lock lever (B) in the direction of the arrow to disconnect the connectors from the ECM in numerical order as shown in the figure.

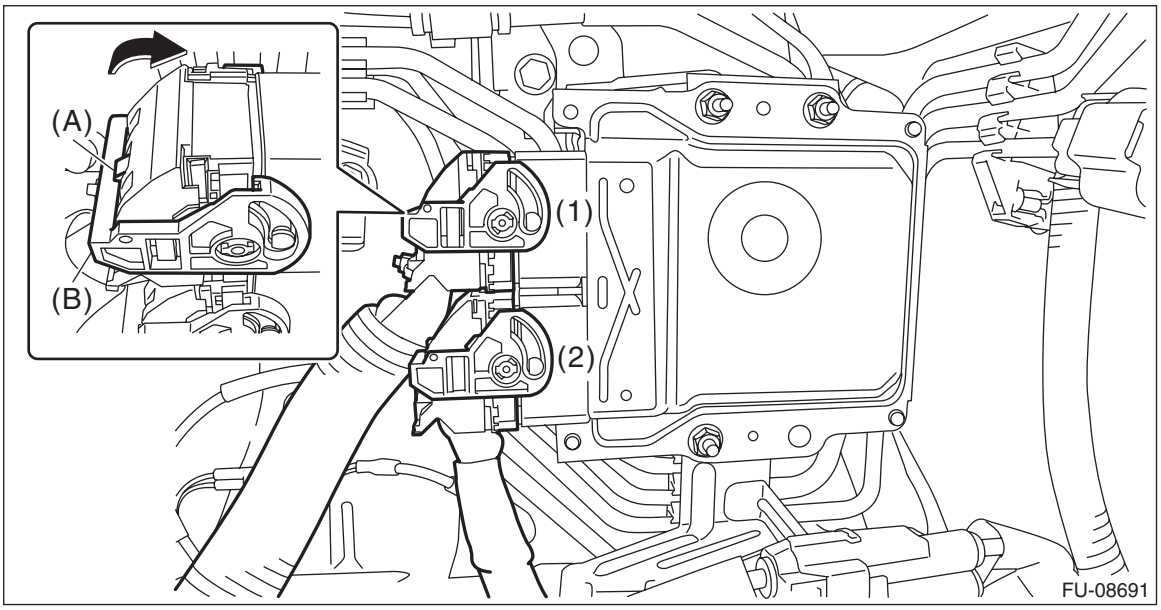

3) Attach the ST between the ECM, engine harness and the bulkhead wiring harness. <Ref. to EN(H4DO)(diag)-6, CAUTION, General Description.>
ST 18460AA050 CHECK BOARD
4) Connect the ground terminal to battery sensor. <Ref. to RC-4, BATTERY, NOTE, Repair Contents.>
5) Turn the ignition switch to ON. (Engine OFF)

6) Measure the voltage between ECM connector terminals using ST.

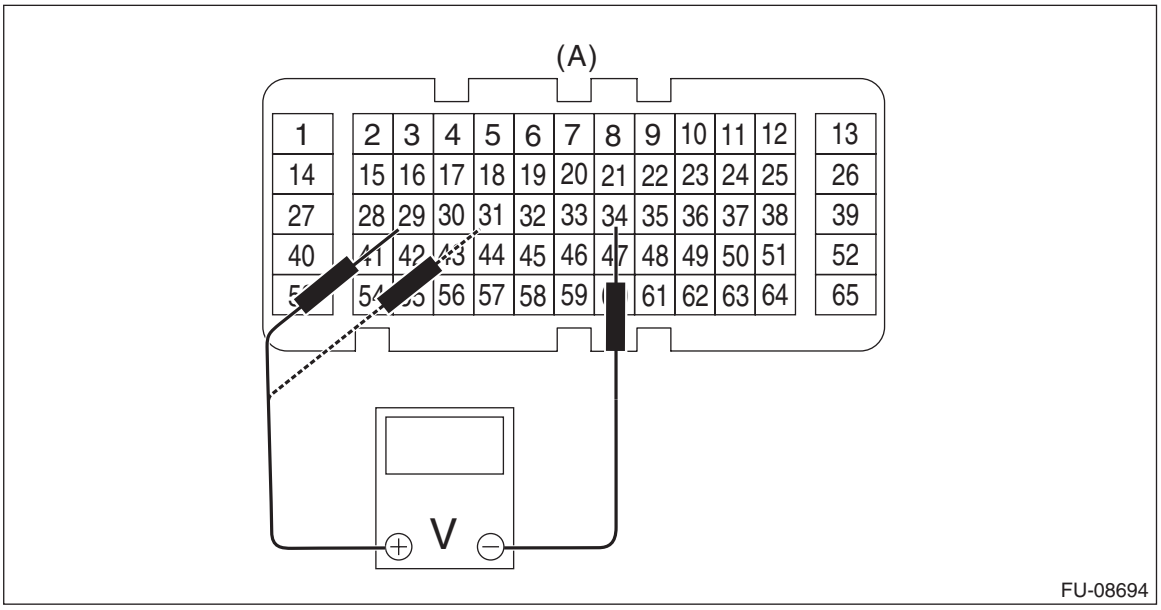

(A) To the check board connector (ECM connector)

Throttle sensor	Accelerator pedal	Terminal No.	Standard
Main	Not depressed (full closed)	29 (+) and 34 (–)	Approx. 0.6 — 1.2 V
	Depressed (full opened)		Approx. 3.8 — 4.4 V
Sub	Not depressed (full closed)	31 (+) and 34 (–)	Approx. 1.4 — 2.0 V
	Depressed (full opened)		Approx. 4.0 — 4.6 V

7) After inspection, install the related parts in the reverse order of removal.

2. THROTTLE SENSOR (METHOD WITH SUBARU SELECT MONITOR)

1) Turn the ignition switch to ON. (Engine OFF)
2) Read the throttle opening angle signal and voltage of throttle sensor using Subaru Select Monitor. <Ref. to EN(H4DO)(diag)-45, DISPLAY CURRENT ENGINE DATA, OPERATION, Subaru Select Monitor.>

Throttle sensor	Throttle opening angle signal	Standard
Main	0.0%	Approx. 0.6 — 1.2 V
	100.0%	Approx. 3.8 — 4.4 V
Sub	0.0%	Approx. 1.4 — 2.0 V
	100.0%	Approx. 4.0 — 4.6 V

3. OTHER INSPECTIONS

1) Check that the throttle body has no deformation, cracks or other damages.
2) Check that the preheater hose has no cracks, damage or loose part.

3. Intake Manifold Assembly

A: REMOVAL

1) Release the fuel pressure. <Ref. to FU(H4DO)-90, RELEASING OF FUEL PRESSURE, PROCEDURE, Fuel.>
2) Disconnect the ground terminal from battery sensor. <Ref. to RC-4, BATTERY, NOTE, Repair Contents.>
3) Open the fuel filler lid and remove the fuel filler cap.

NOTE:
This operation is required to release the inner pressure of the fuel tank.
4) Drain approximately 3.0 L (3.2 US qt, 2.6 Imp qt) of coolant. <Ref. to CO(H4DO)-15, DRAINING OF ENGINE COOLANT, REPLACEMENT, Engine Coolant.>
5) Remove the clip (A), and loosen the clamps (B) and (C) securing the air intake boot.

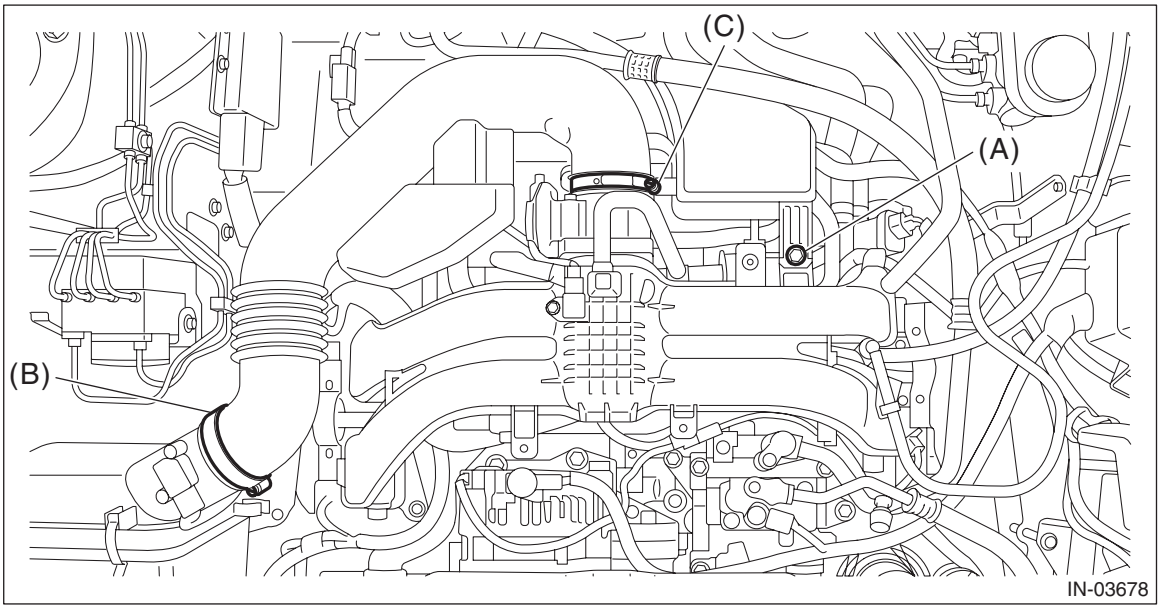

6) Remove the air intake boot from the air cleaner case (rear) and throttle body, and move it to the left side wheel apron.

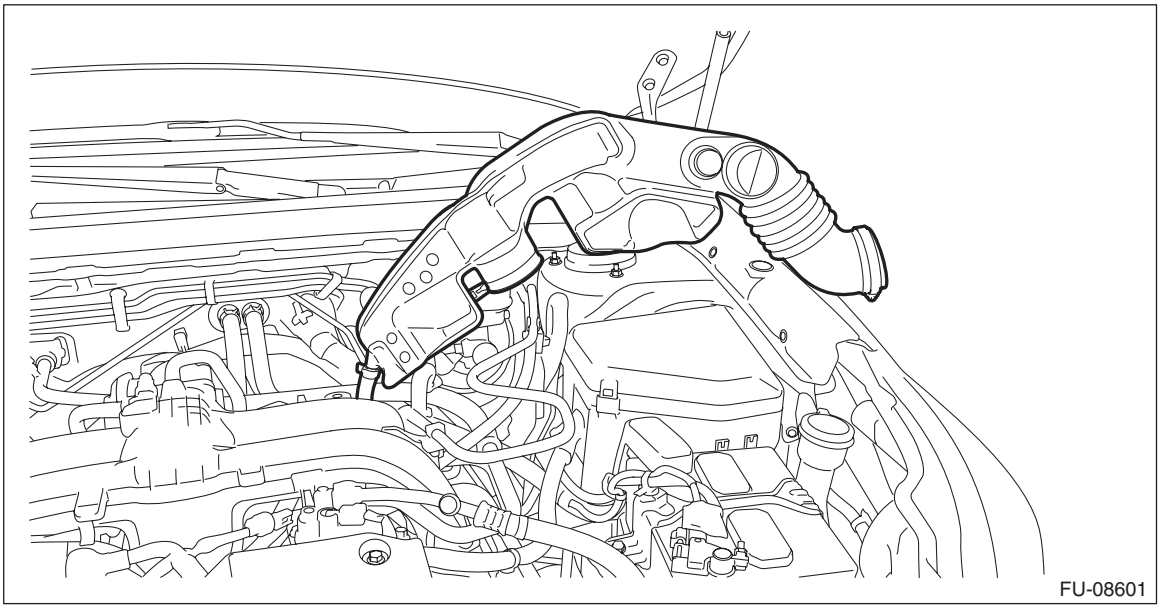

7) Disconnect the preheater hose from throttle body.

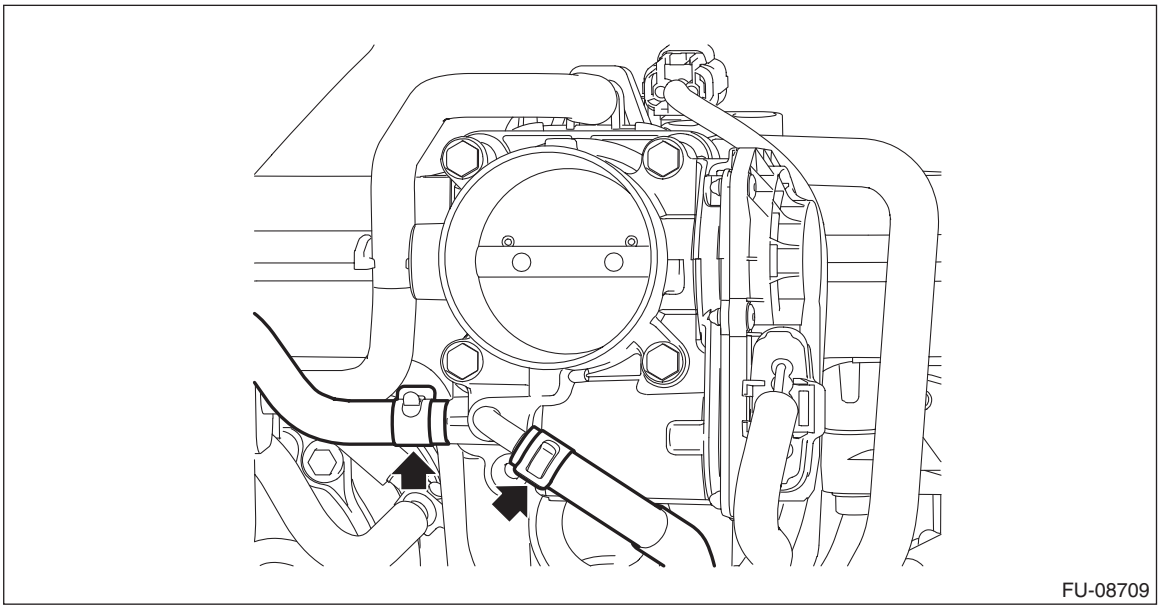

8) Disconnect the PCV hose (A) from intake manifold assembly.
9) Disconnect the connector (B) from manifold absolute pressure sensor.
10) Disconnect the connector (C) from throttle body.

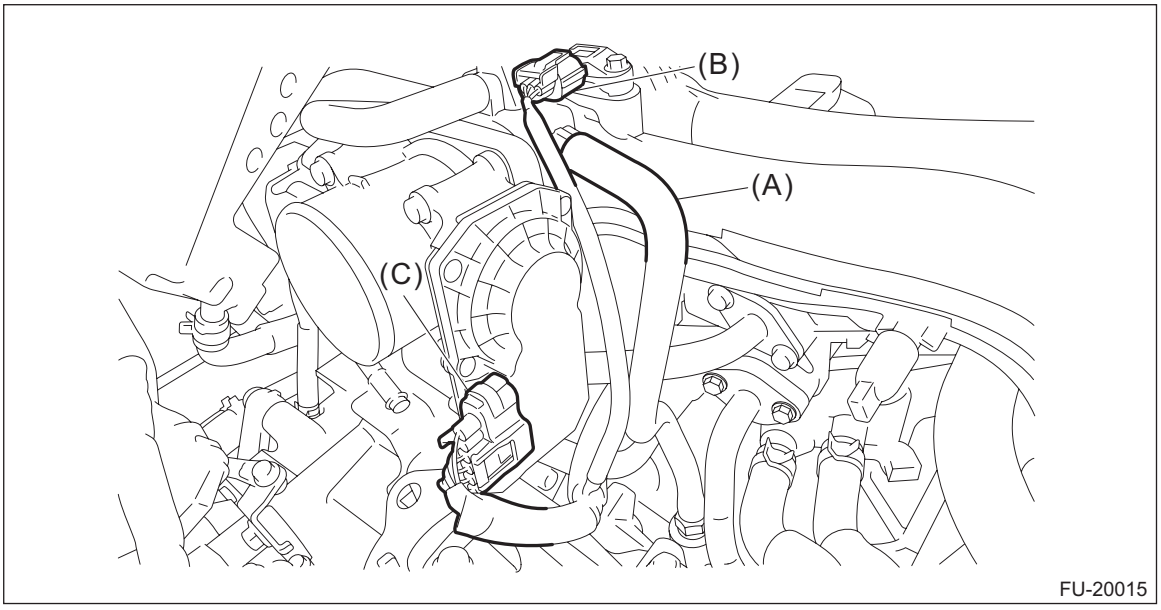

11) Remove the bolt securing the EGR cooler to the EGR control valve.

12) Loosen the bolts holding the EGR cooler to the cylinder head RH.

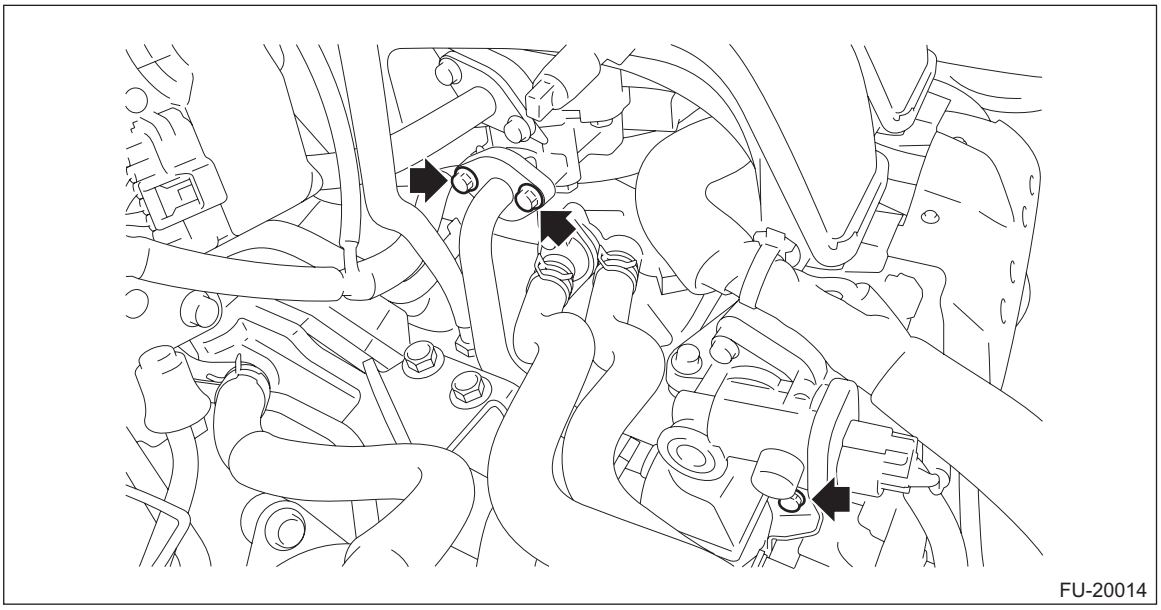

13) Disconnect the brake booster vacuum hose (A), and disconnect the connector (B) from the purge control solenoid valve.

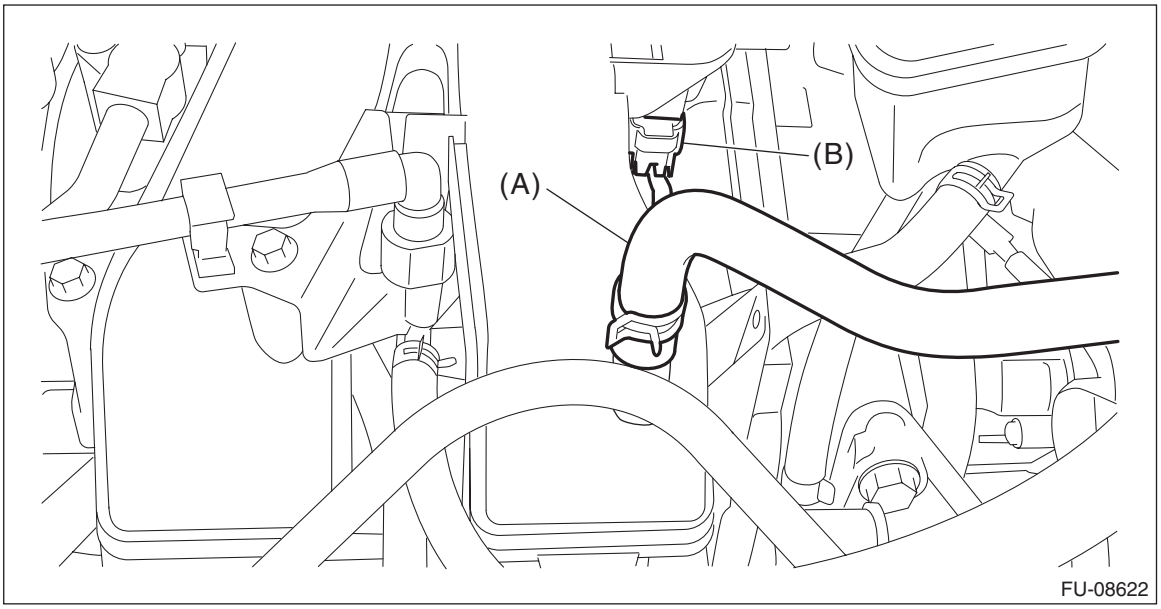

14) Remove the air intake duct. <Ref. to IN(H4DO)-12, REMOVAL, Air Intake Duct.>
15) Disconnect the connector (A) from the mass air flow and intake air temperature sensor, and remove the clip (B) securing the bulkhead wiring harness.
16) Remove the clip (C), and the air cleaner case (rear) together with the air cleaner element.

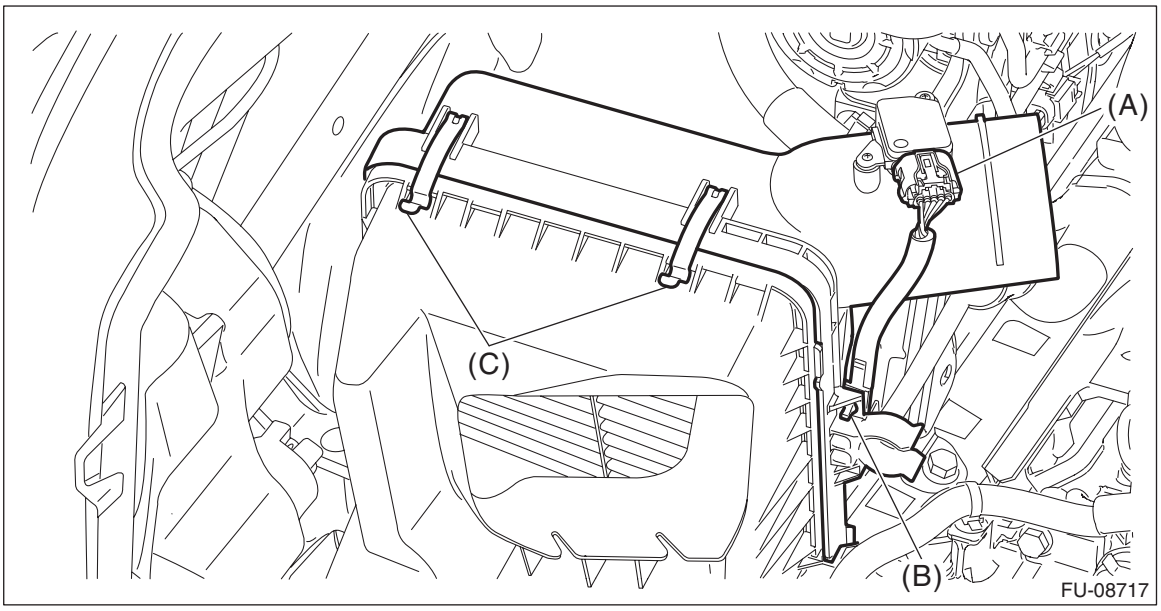

17) Disconnect the connector from the EGR control valve.

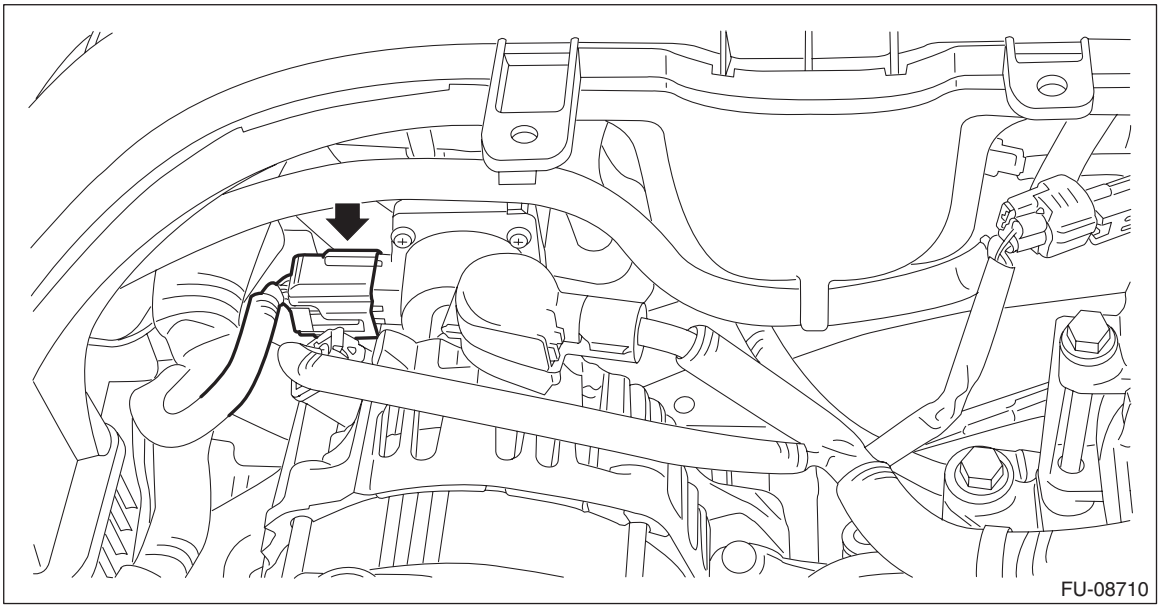

18) Remove the intake manifold protector RH.

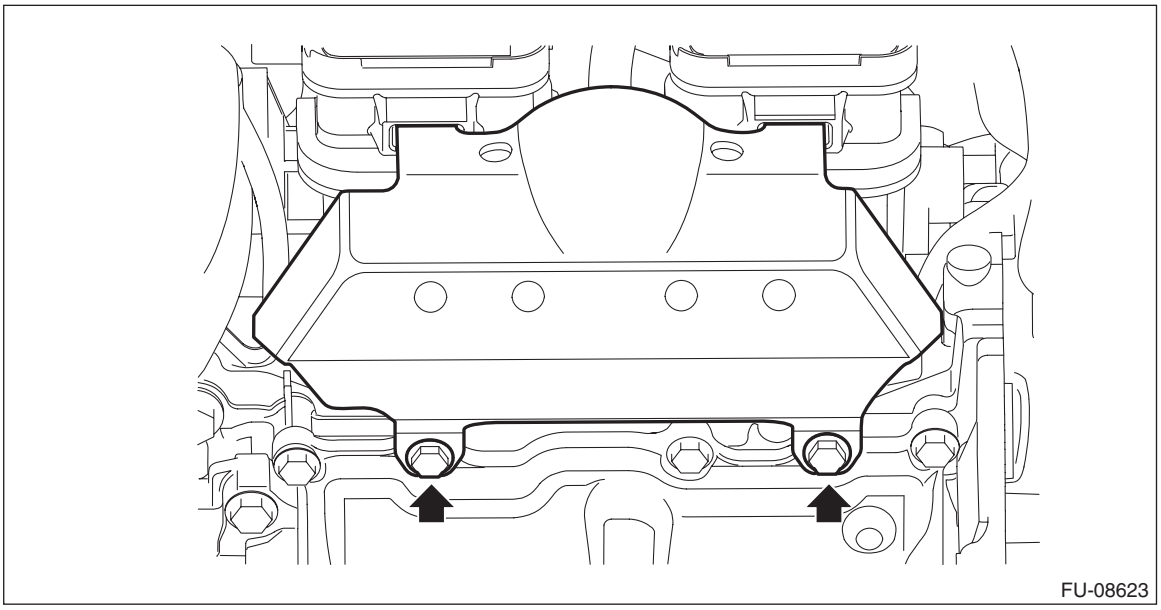

19) Remove the clip (A) securing the engine harness to the intake manifold assembly, and disconnect the connector (B) from the tumble generator valve and disconnect the connector (C) from the fuel injector #3.
20) Disconnect the fuel delivery pipe from the fuel pipe RH.

CAUTION:
- **Be careful not to spill fuel.**
- **Catch the fuel from the pipes using a container or cloth.**

NOTE:
Disconnect the quick connector as shown in the figure.

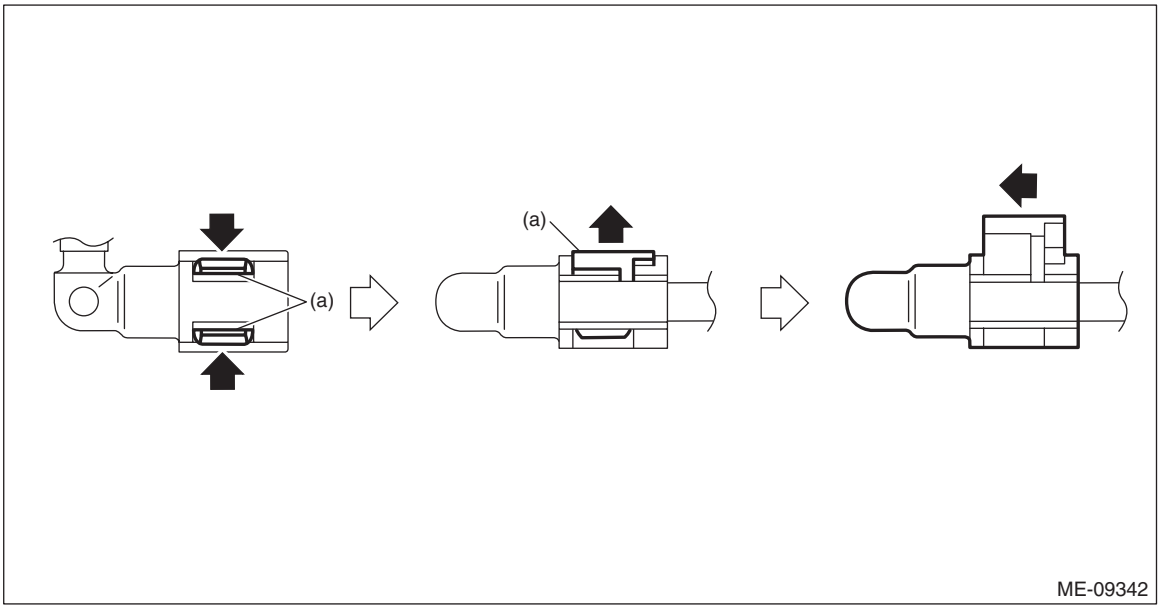

(a) Slider

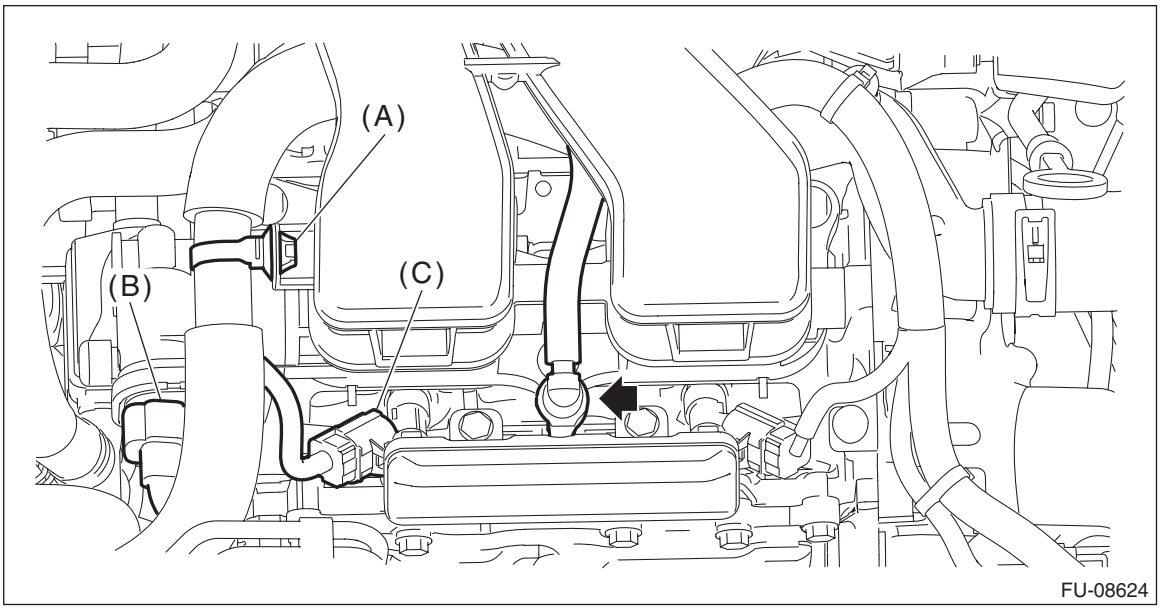

21) Remove the clip (A) securing the engine harness to the intake manifold protector LH to remove the intake manifold protector LH.

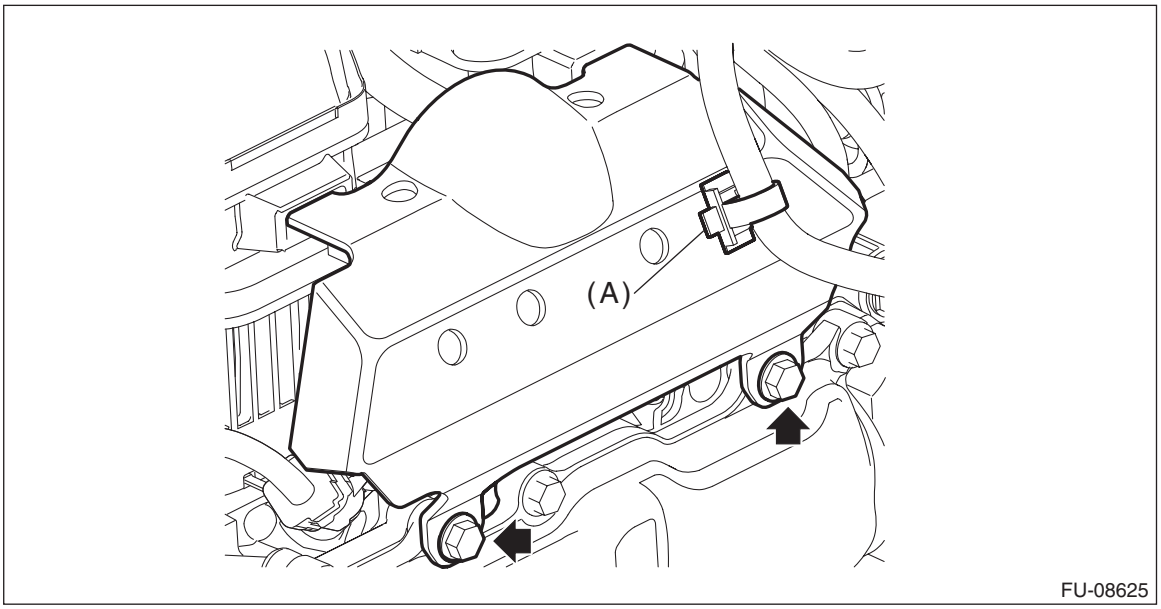

22) Disconnect the connector (A) from the tumble generator valve, and disconnect the connector (B) from the fuel injector #4.
23) Disconnect the fuel delivery pipe from the fuel pipe LH.

CAUTION:
- **Be careful not to spill fuel.**
- **Catch the fuel from the pipes using a container or cloth.**

NOTE:
Disconnect the quick connector as shown in the figure.

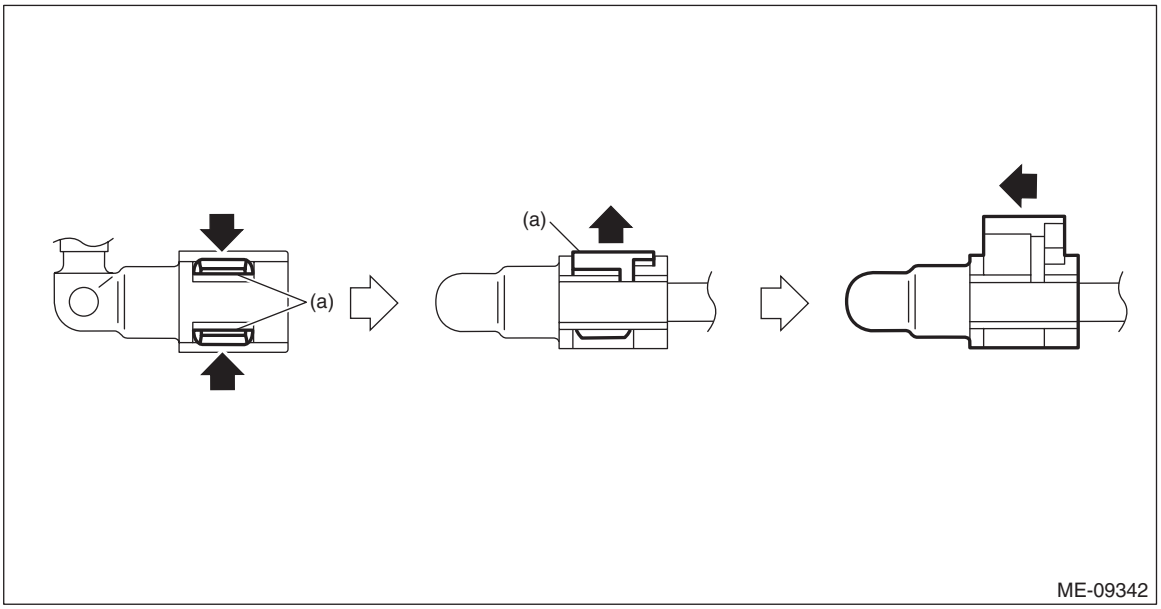

(a) Slider

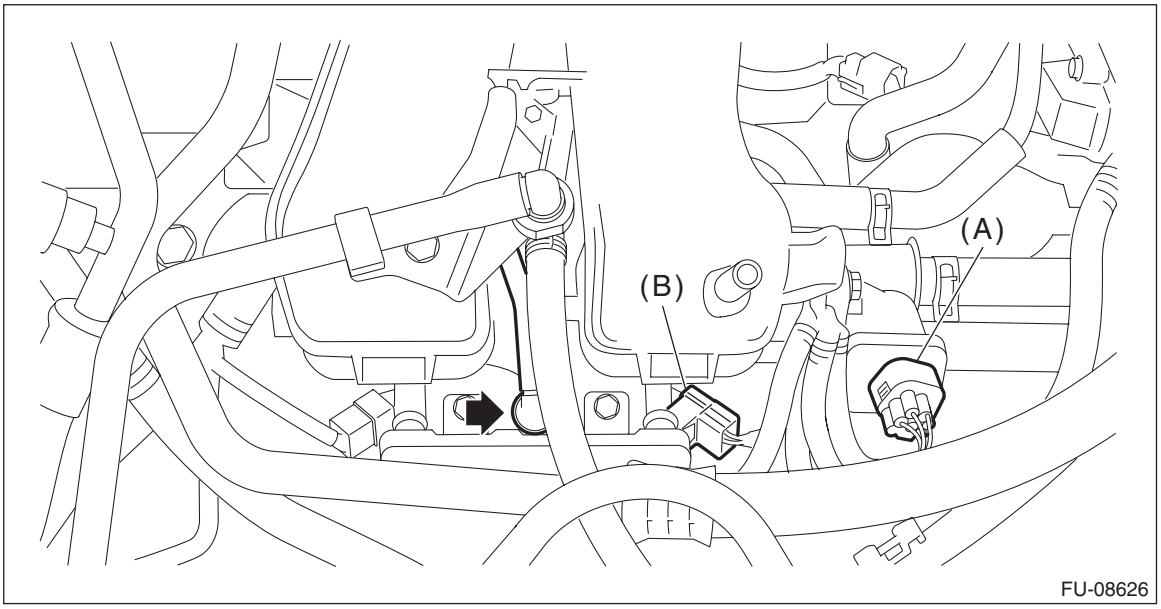

24) Disconnect the fuel delivery tube and evaporation hose.

CAUTION:
- **Be careful not to spill fuel.**
- **Catch the fuel from the tubes using a container or cloth.**

(1) Remove the clip (A) securing the fuel delivery tube.
(2) Attach ST to the fuel pipe assembly and push ST in the direction of arrow mark to disconnect the quick connector of the fuel delivery tube (B).

ST 42099AE000 QUICK CONNECTOR RELEASE

(3) Disconnect the evaporation hose (C) from the fuel pipe assembly.

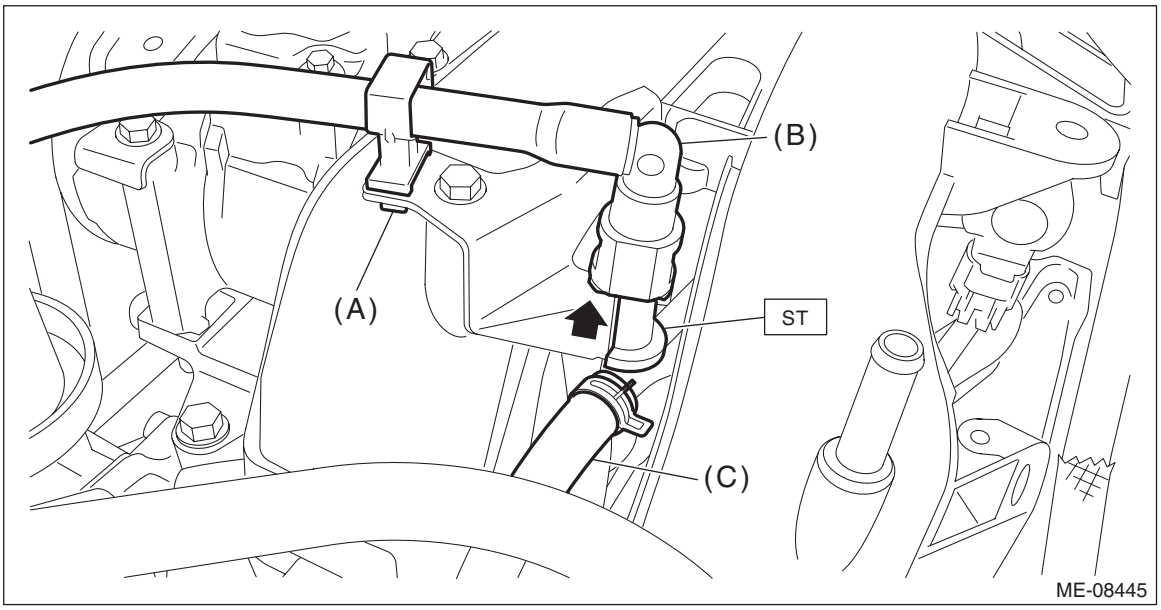

25) Remove the intake manifold assembly from cylinder head.

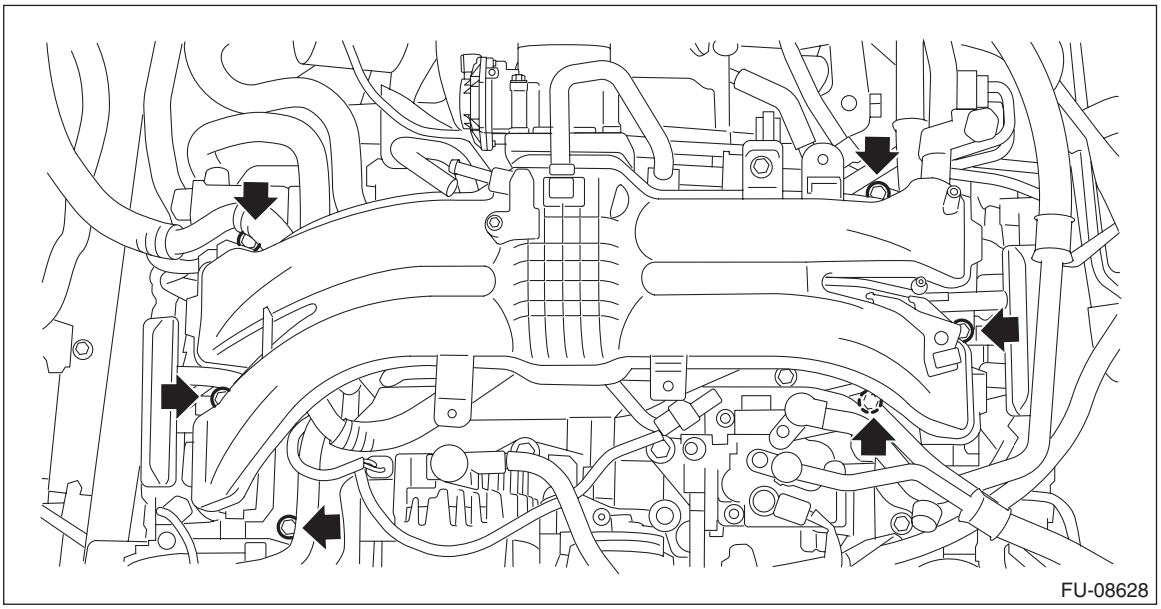

B: INSTALLATION

1) Install the intake manifold assembly onto cylinder head.

NOTE:
- Use a new gasket.
- Be careful not to let the engine harness be caught by the parts.

Tightening torque:
25 N·m (2.5 kgf-m, 18.4 ft-lb)

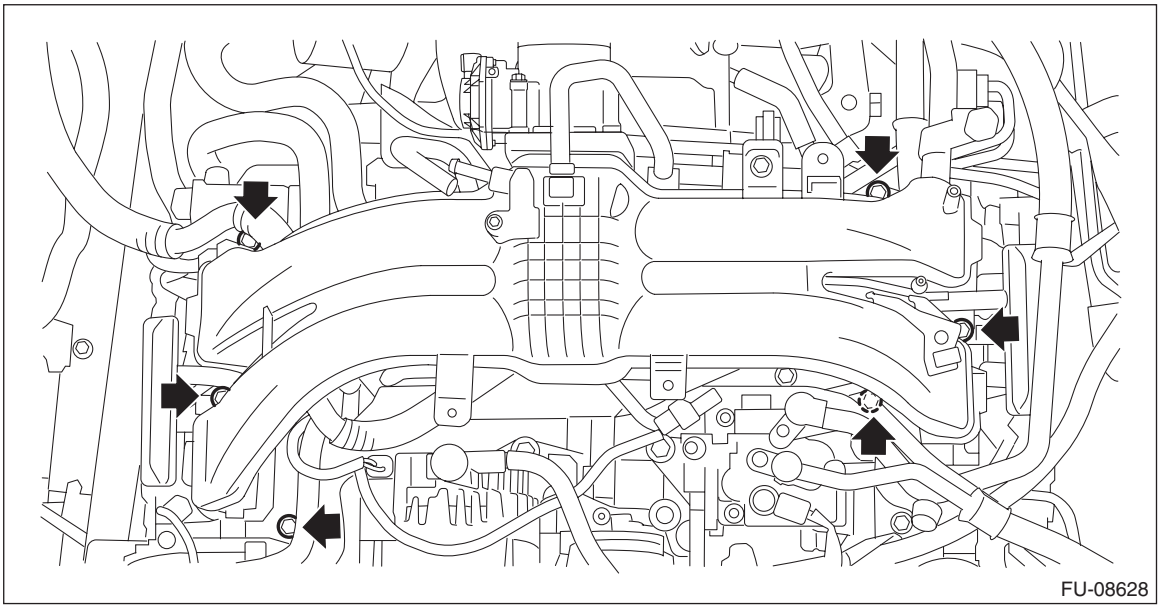

2) Connect the fuel delivery tube and evaporation hose.
(1) Connect the evaporation hose (C) to the fuel pipe assembly.
(2) Connect the connector of the fuel delivery tube (B) to the fuel pipe assembly, and secure the fuel delivery tube using clip (A).

CAUTION:
• Check that there is no damage or dust on the quick connector. If necessary, clean the seal surface of the pipe.
• Make sure that the quick connector is securely connected.

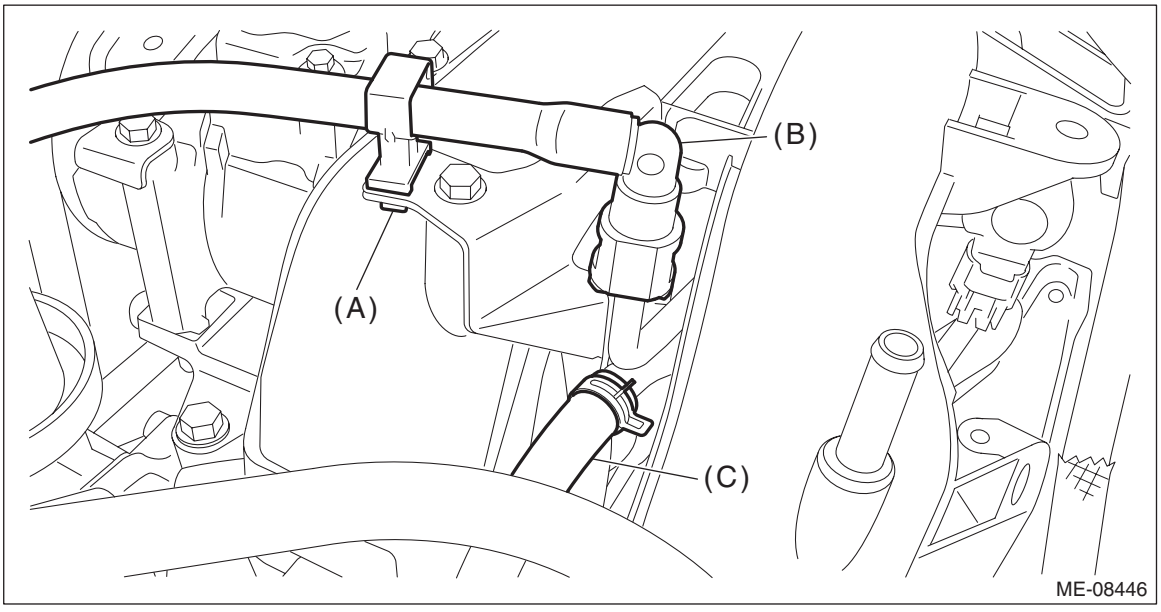

3) Connect the fuel delivery pipe to the fuel pipe LH.

CAUTION:
- **Check that there is no damage or dust on the quick connector. If necessary, clean the seal surface of the pipe.**
- **When connecting the quick connector, make sure to insert it all the way in before locking the slider.**
- **When it is difficult to lock the slider, check that the connector is fully inserted.**
- **After locking the slider, check again that the quick connector is securely connected.**

NOTE:
Connect the quick connector as shown in the figure.

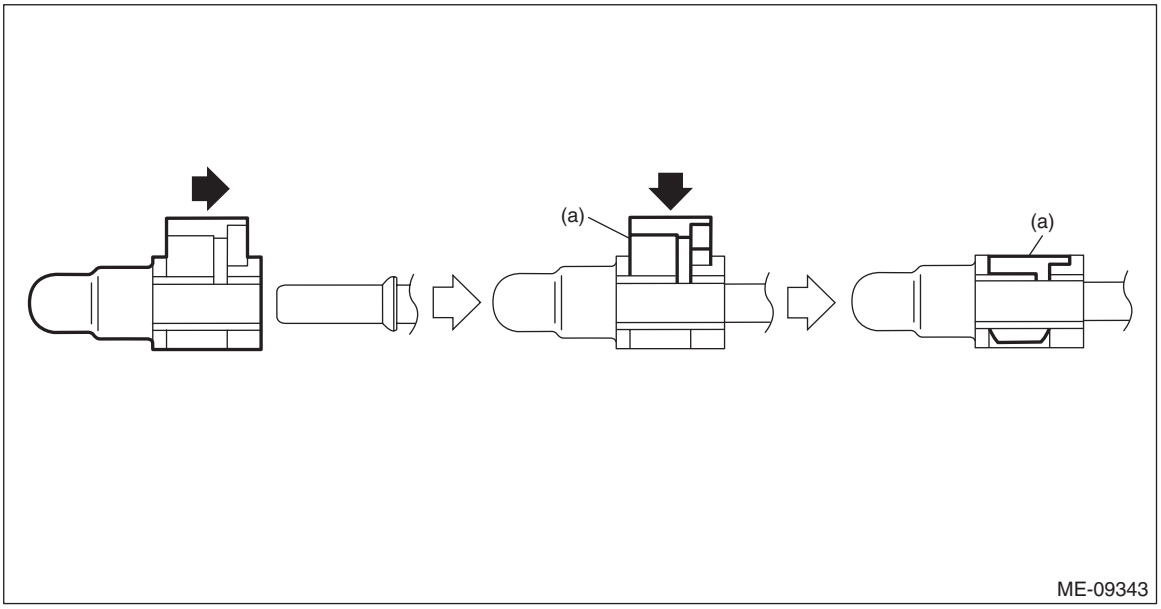

(a) Slider

4) Connect the connector (A) to the tumble generator valve, and connect the connector (B) to the fuel injector #4.

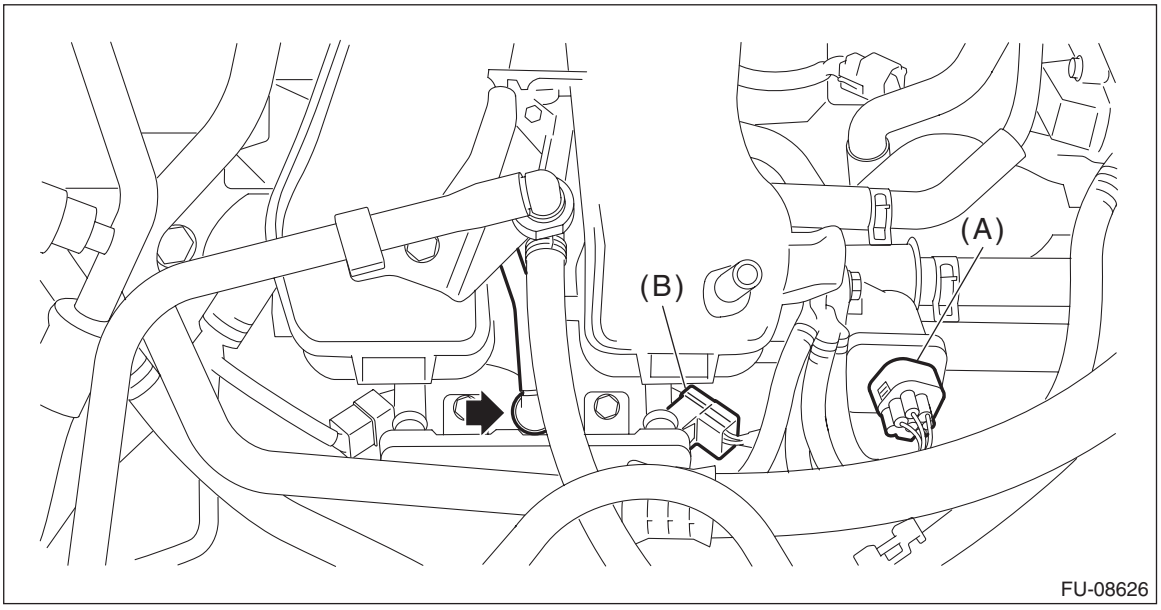

5) Install the intake manifold protector LH, and install the clip (A) securing the engine harness to the intake manifold protector LH.

Tightening torque:
6.4 N·m (0.7 kgf-m, 4.7 ft-lb)

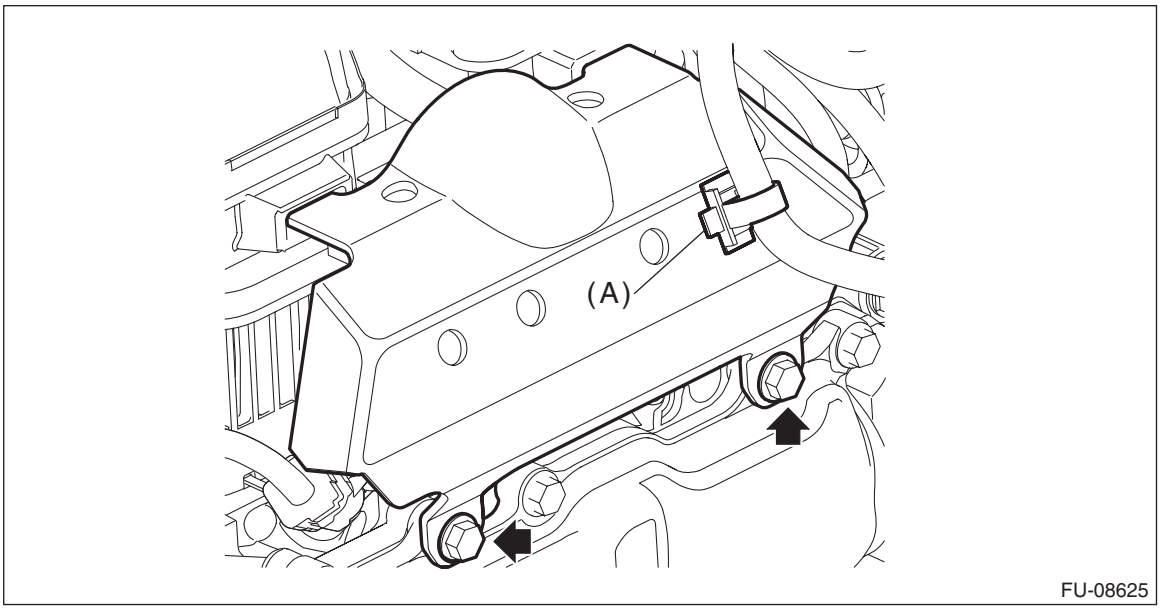

6) Install the clip (A) securing the engine harness to the intake manifold assembly, and connect the connector (B) to the tumble generator valve and connect the connector (C) to the fuel injector #3.
7) Connect the fuel delivery pipe to the fuel pipe RH.

CAUTION:
• Check that there is no damage or dust on the quick connector. If necessary, clean the seal surface of the pipe.
• When connecting the quick connector, make sure to insert it all the way in before locking the slider.
• When it is difficult to lock the slider, check that the connector is fully inserted.
• After locking the slider, check again that the quick connector is securely connected.

NOTE:
Connect the quick connector as shown in the figure.

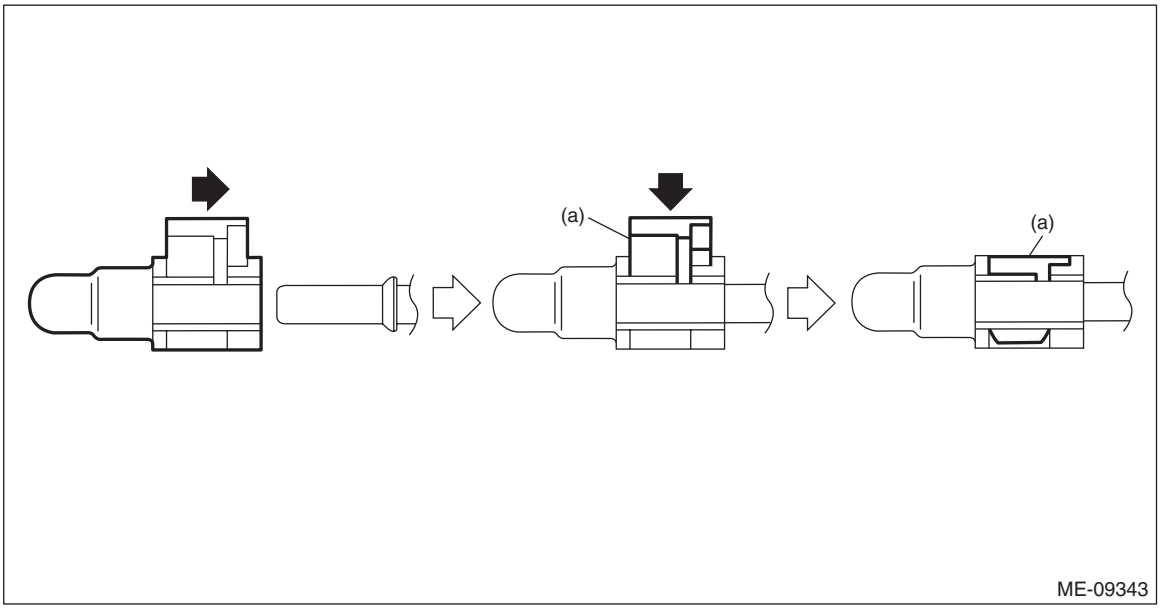

(a) Slider

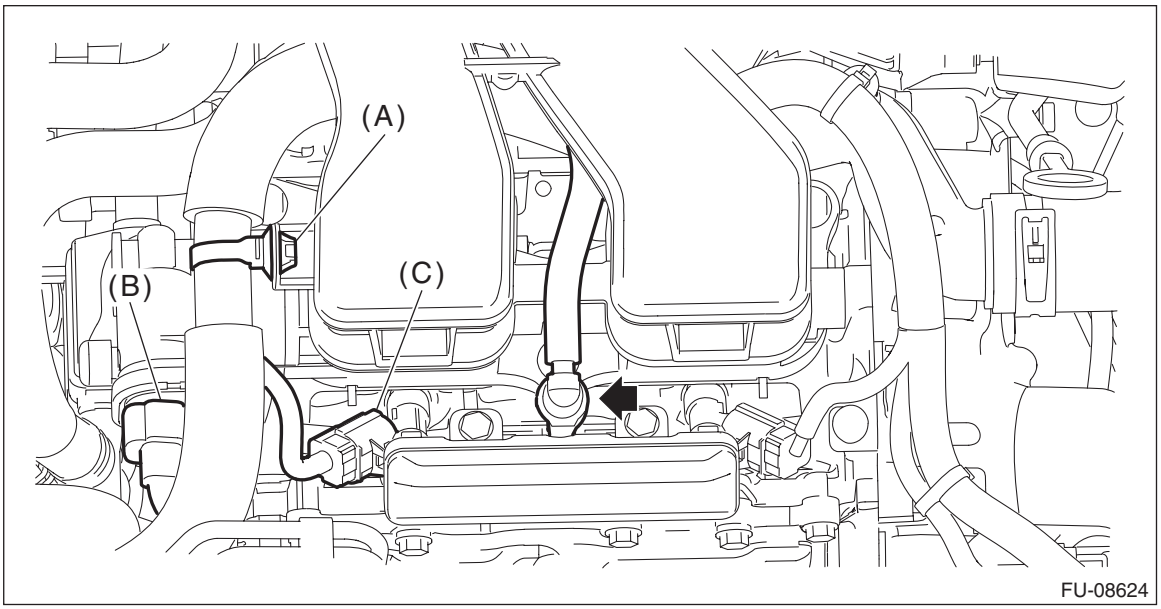

8) Install the intake manifold protector RH.

Tightening torque:
6.4 N·m (0.7 kgf-m, 4.7 ft-lb)

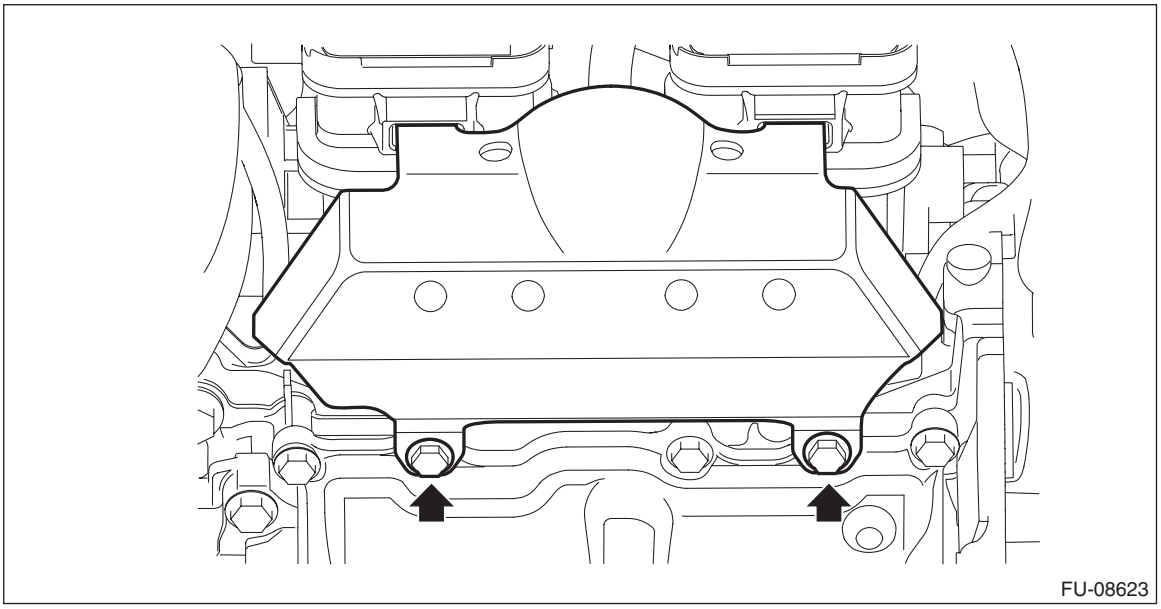

9) Connect the connector to the EGR control valve.

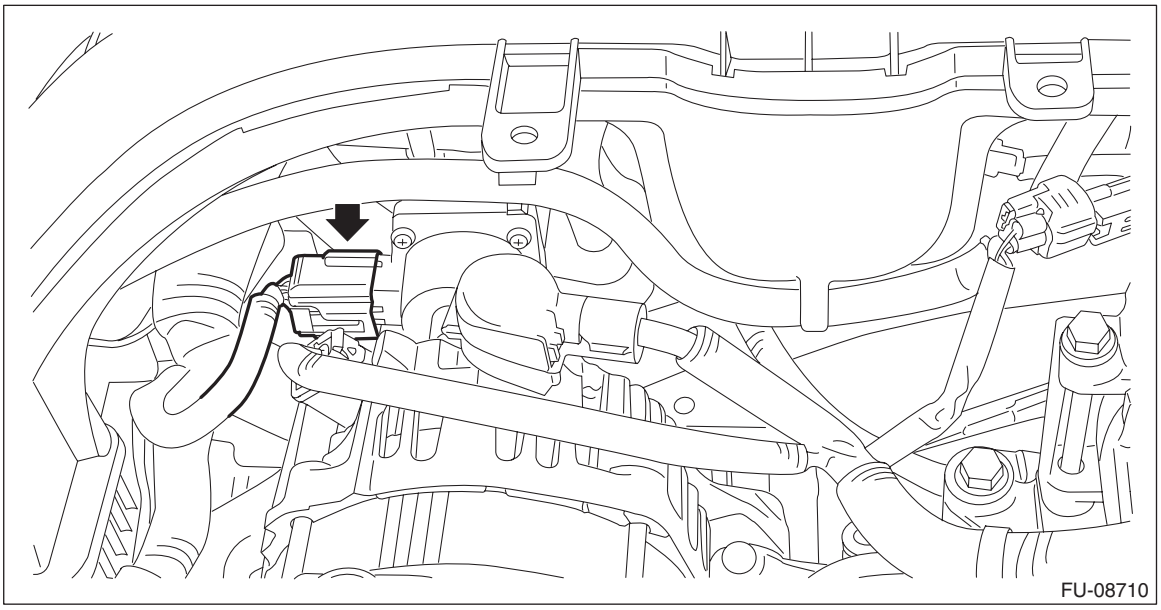

10) Install the air cleaner case (rear) together with the air cleaner element. <Ref. to IN(H4DO)-9, INSTALLATION, Air Cleaner Case.>

11) Secure the bulkhead wiring harness with clip (B) and connect the connector (A) to the mass air flow and intake air temperature sensor.

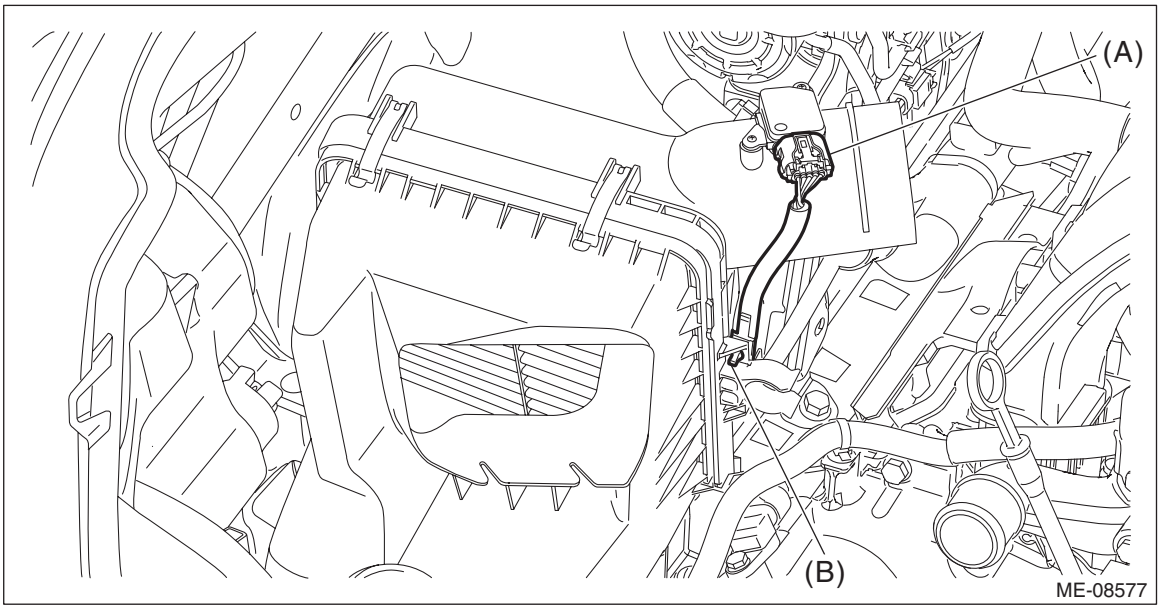

12) Install the air intake duct. <Ref. to IN(H4DO)-12, INSTALLATION, Air Intake Duct.>

13) Connect the brake booster vacuum hose (A) and the connector (B) of the purge control solenoid valve.

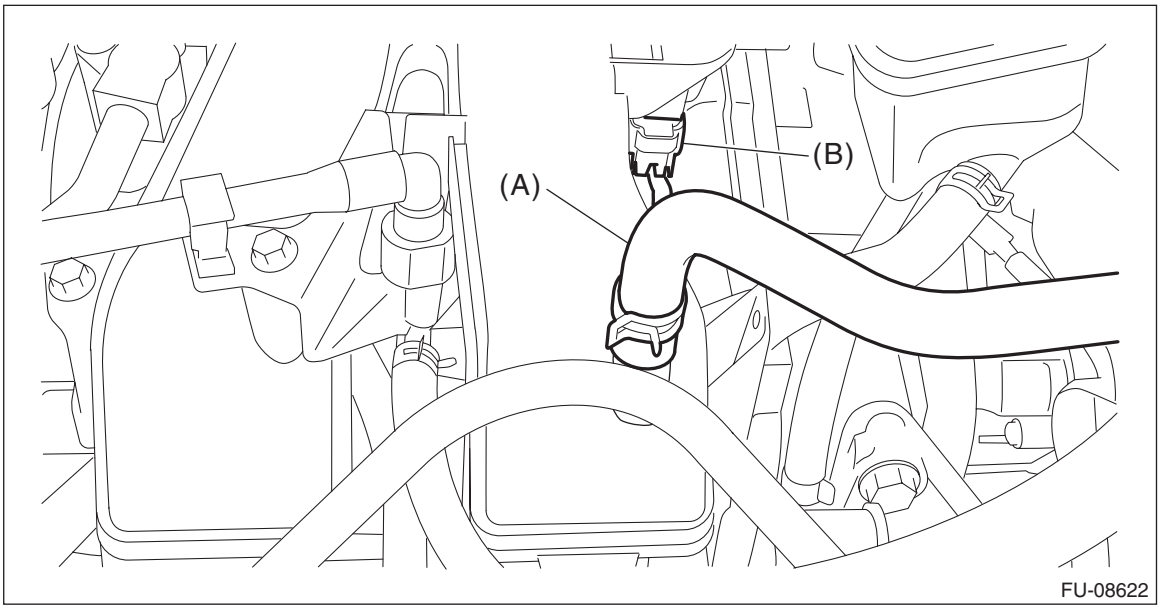

14) Tighten the bolt securing the EGR cooler to the EGR control valve.

NOTE:
Use a new gasket.

Tightening torque:
T1: 9 N·m (0.9 kgf-m, 6.6 ft-lb)

15) Tighten the bolts holding the EGR cooler to the cylinder head RH.

Tightening torque:
T2: 6.4 N·m (0.7 kgf-m, 4.7 ft-lb)

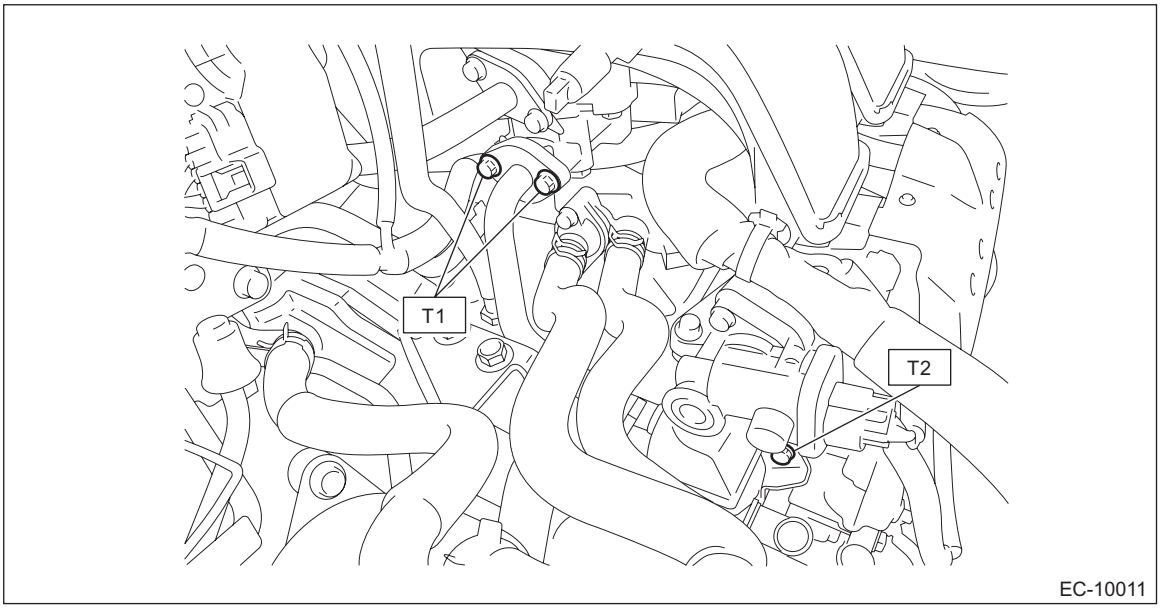

16) Connect the PCV hose (A) to intake manifold assembly.
17) Connect the connector (B) to the manifold absolute pressure sensor.
18) Connect the connector (C) to throttle body.

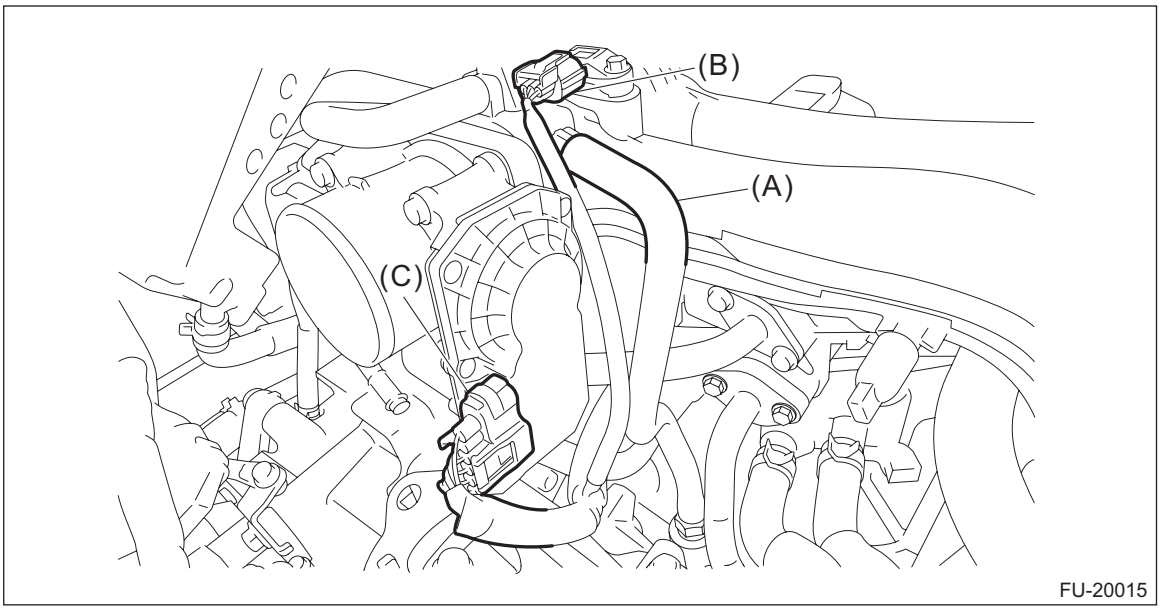

19) Connect the preheater hoses to the throttle body.

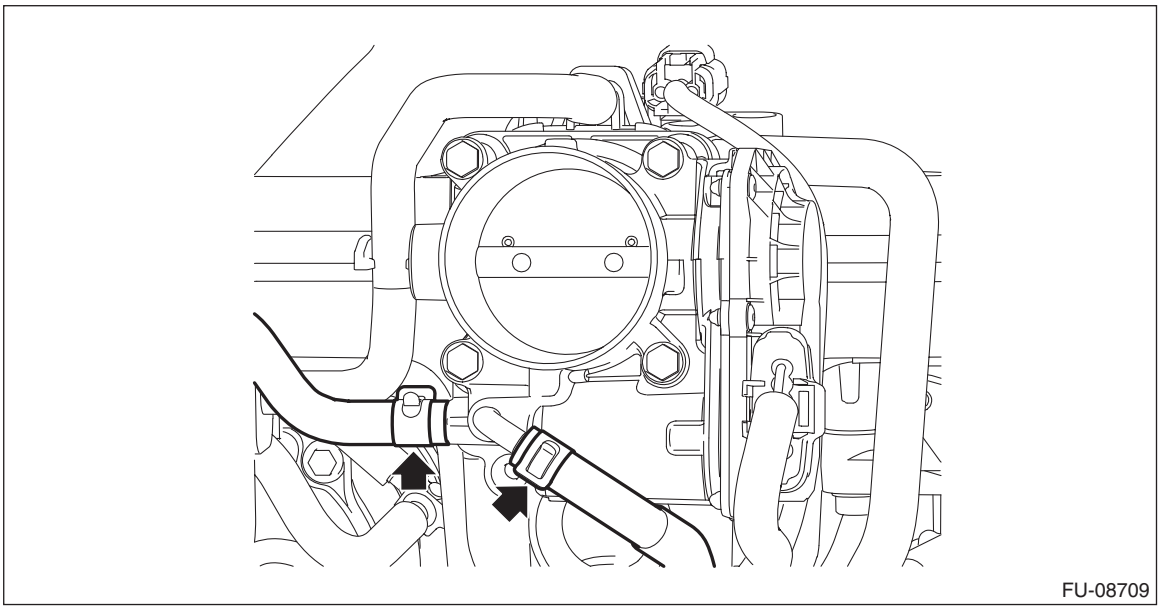

20) Install the air intake boot. <Ref. to IN(H4DO)-10, INSTALLATION, Air Intake Boot.>
21) Connect the ground terminal to battery sensor. <Ref. to RC-4, BATTERY, NOTE, Repair Contents.>
22) Fill engine coolant. <Ref. to CO(H4DO)-16, FILLING OF ENGINE COOLANT, REPLACEMENT, Engine Coolant.>

C: DISASSEMBLY

1) Remove the throttle body. <Ref. to FU(H4DO)-14, REMOVAL, Throttle Body.>
2) Remove the EGR pipe. <Ref. to EC(H4DO)-30, REMOVAL, EGR Pipe.>
3) Remove the EGR control valve. <Ref. to EC(H4DO)-26, REMOVAL, EGR Control Valve.>
4) Remove the purge control solenoid valve. <Ref. to EC(H4DO)-21, REMOVAL, Purge Control Solenoid Valve.>
5) Remove the manifold absolute pressure sensor. <Ref. to FU(H4DO)-63, REMOVAL, Manifold Absolute Pressure Sensor.>
6) Remove the fuel delivery pipe assembly from the intake manifold assembly.

NOTE:
Disconnect the quick connector as shown in the figure.

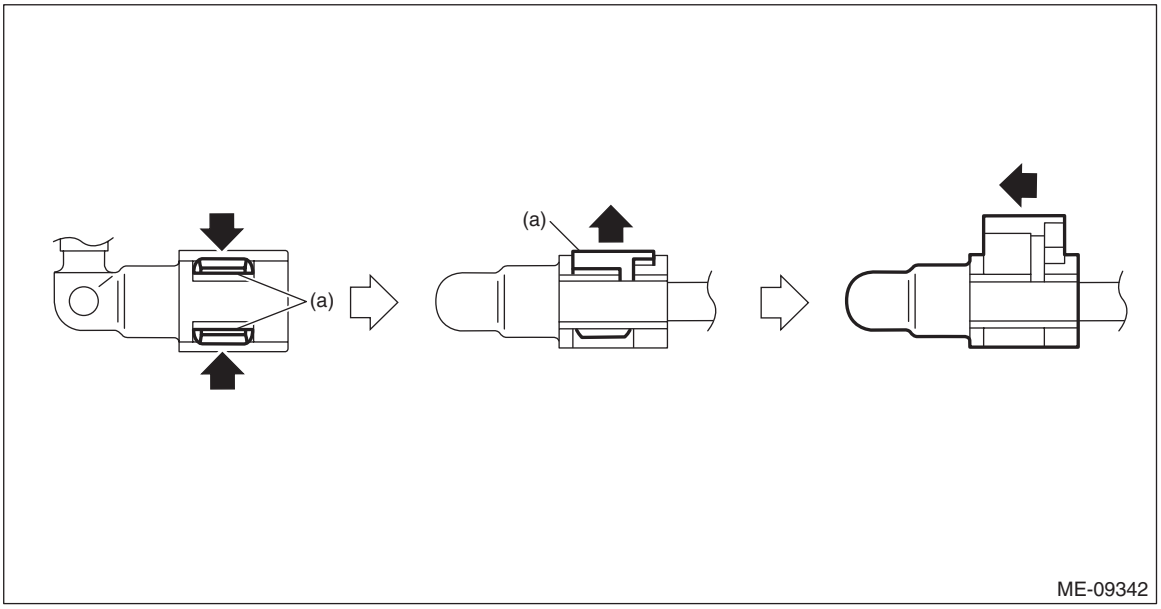

(a) Slider

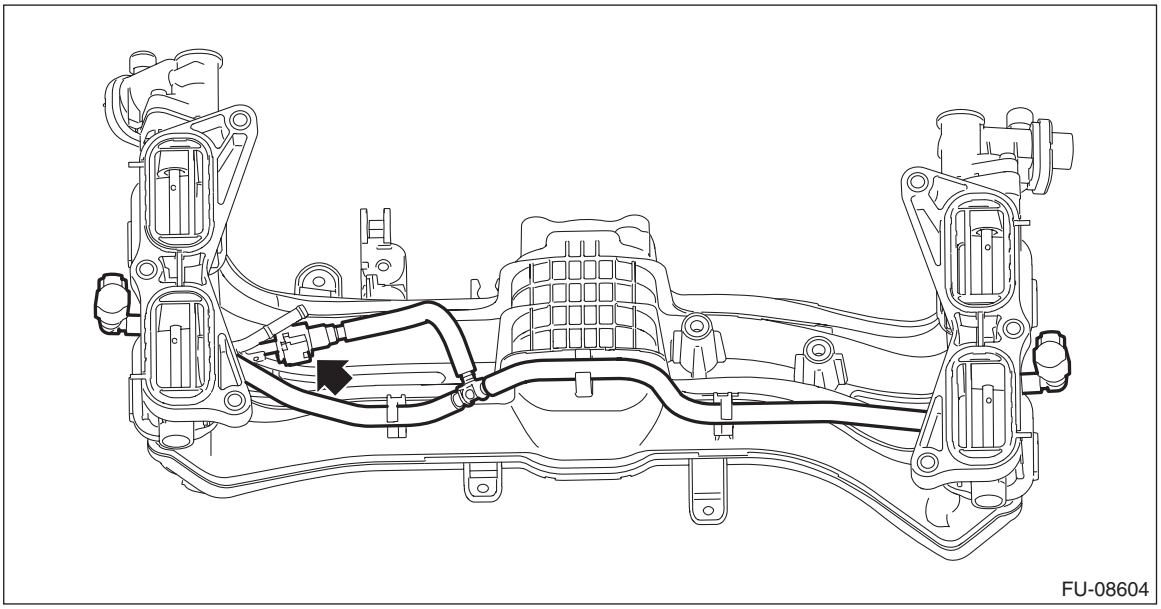

7) Remove the fuel pipe assembly from the intake manifold assembly.

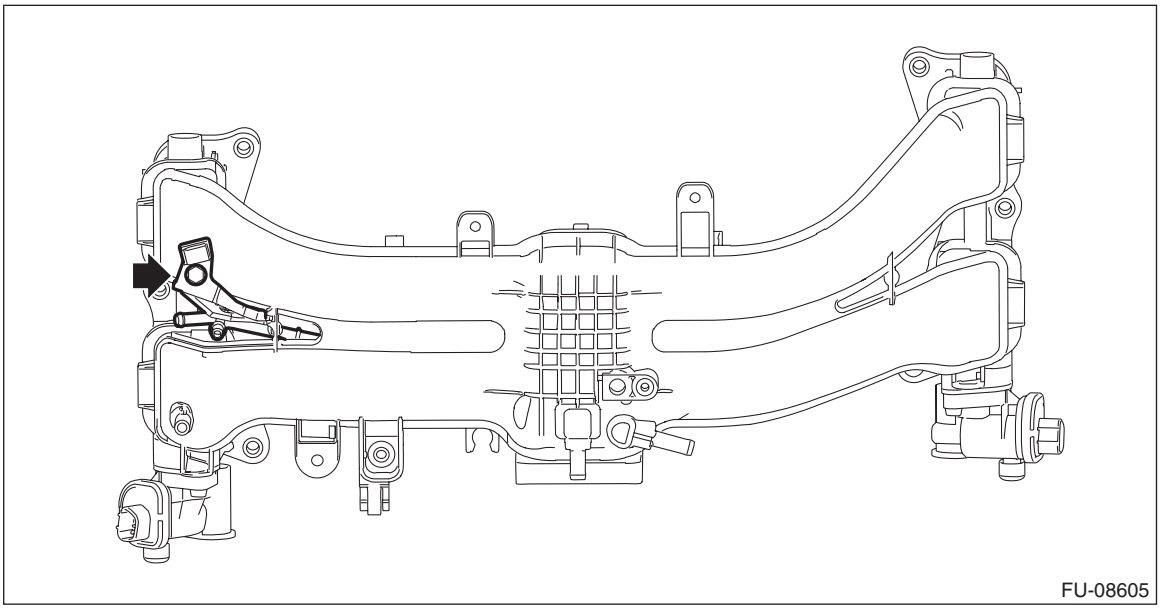

D: ASSEMBLY

1) Install the fuel pipe assembly to the intake manifold assembly.

Tightening torque:
6.4 N·m (0.7 kgf-m, 4.7 ft-lb)

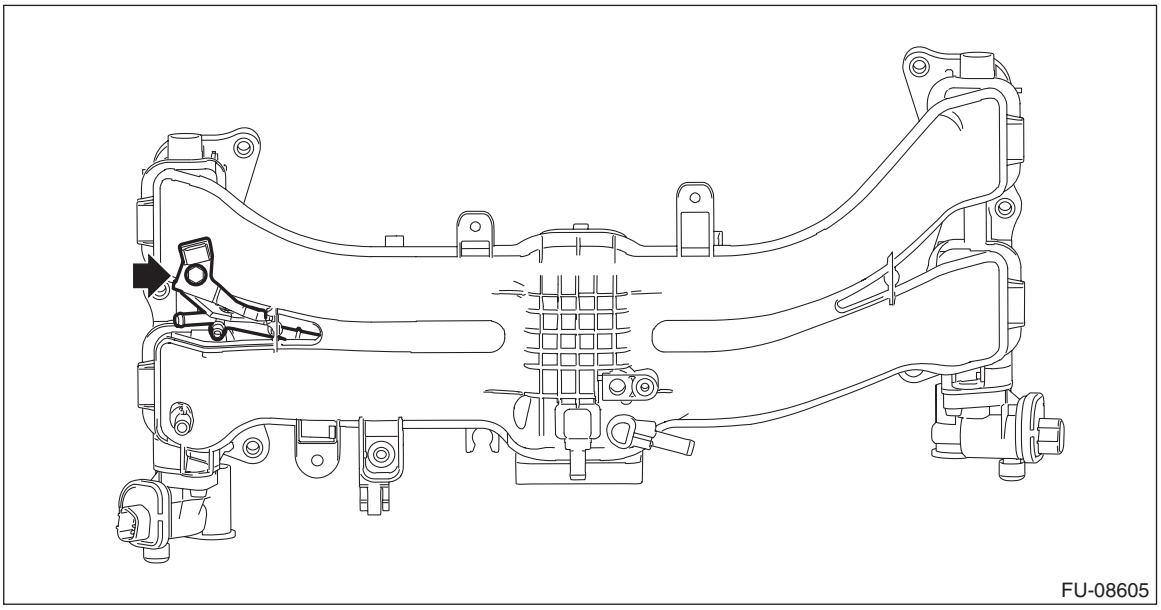

2) Install the fuel delivery pipe to the intake manifold assembly.

CAUTION:
• Check that there is no damage or dust on the quick connector. If necessary, clean the seal surface of the pipe.
• When connecting the quick connector, make sure to insert it all the way in before locking the slider.
• When it is difficult to lock the slider, check that the connector is fully inserted.
• After locking the slider, check again that the quick connector is securely connected.

NOTE:
Connect the quick connector as shown in the figure.

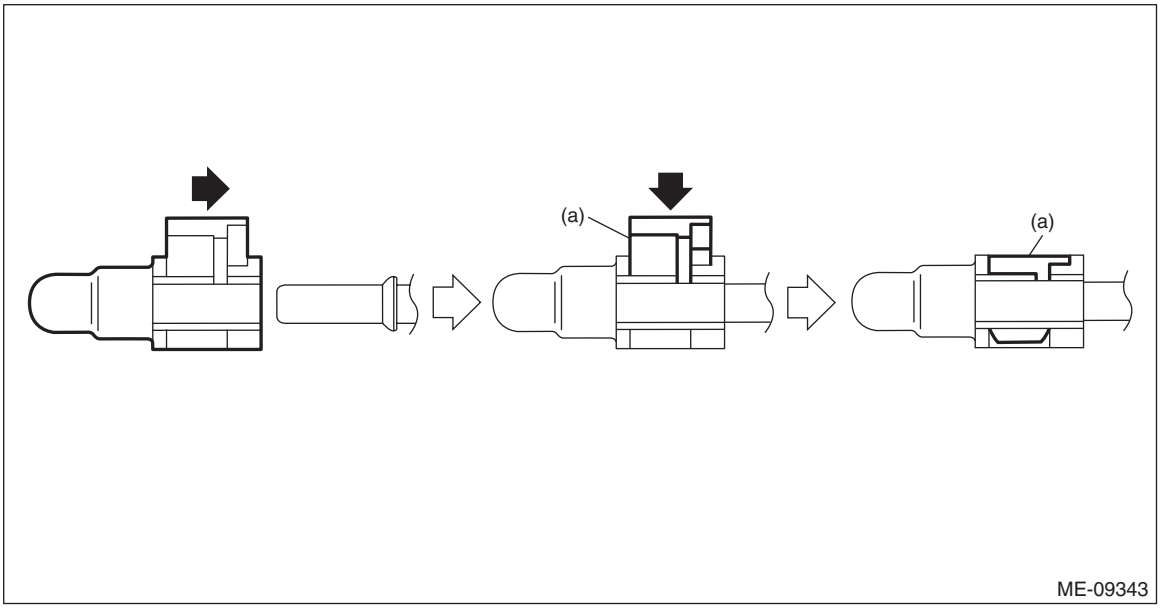

(a) Slider

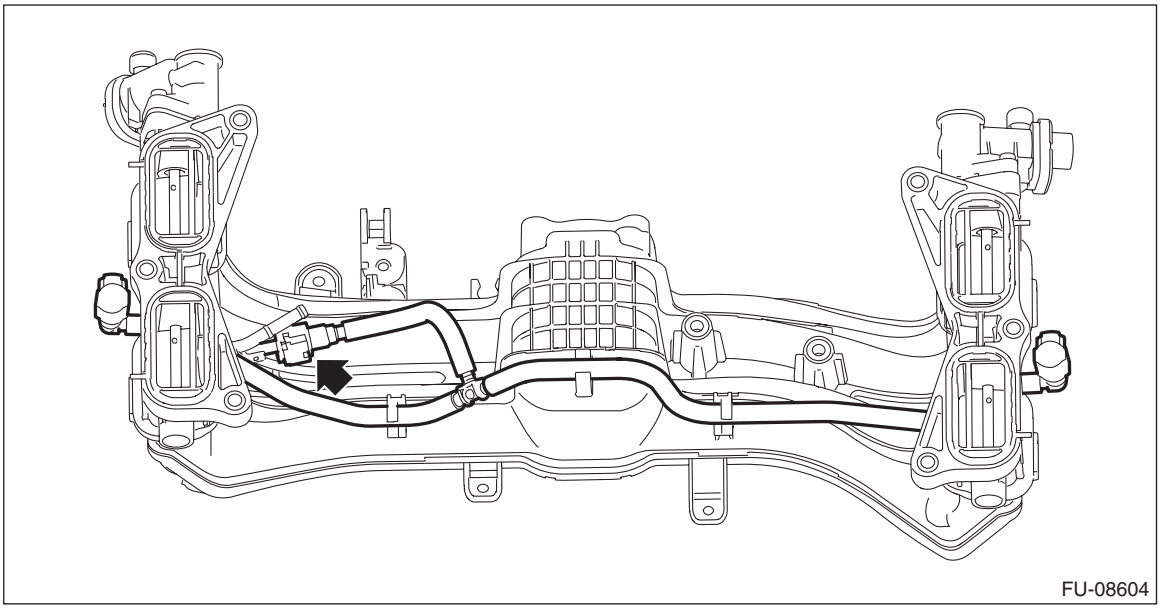

3) Install the manifold absolute pressure sensor. <Ref. to FU(H4DO)-63, INSTALLATION, Manifold Absolute Pressure Sensor.>
4) Install the purge control solenoid valve. <Ref. to EC(H4DO)-22, INSTALLATION, Purge Control Solenoid Valve.>
5) Install the EGR control valve. <Ref. to EC(H4DO)-28, INSTALLATION, EGR Control Valve.>
6) Install the EGR pipe. <Ref. to EC(H4DO)-31, INSTALLATION, EGR Pipe.>
7) Install the throttle body. <Ref. to FU(H4DO)-15, INSTALLATION, Throttle Body.>

E: INSPECTION

1) Check that the intake manifold assembly and fuel pipe assembly have no deformation, cracks and other damages.
2) Check that the hose has no cracks, damage or loose part.
3) Check tumble generator valve for contamination or clogging.

4. Engine Wiring Harness

A: REMOVAL

1) Disconnect the ground terminal from battery sensor. <Ref. to RC-4, BATTERY, NOTE, Repair Contents.>
2) Remove the intake manifold assembly. <Ref. to FU(H4DO)-18, REMOVAL, Intake Manifold Assembly.>
3) Disconnect each connector to remove the engine wiring harness.

- Structural diagram 1

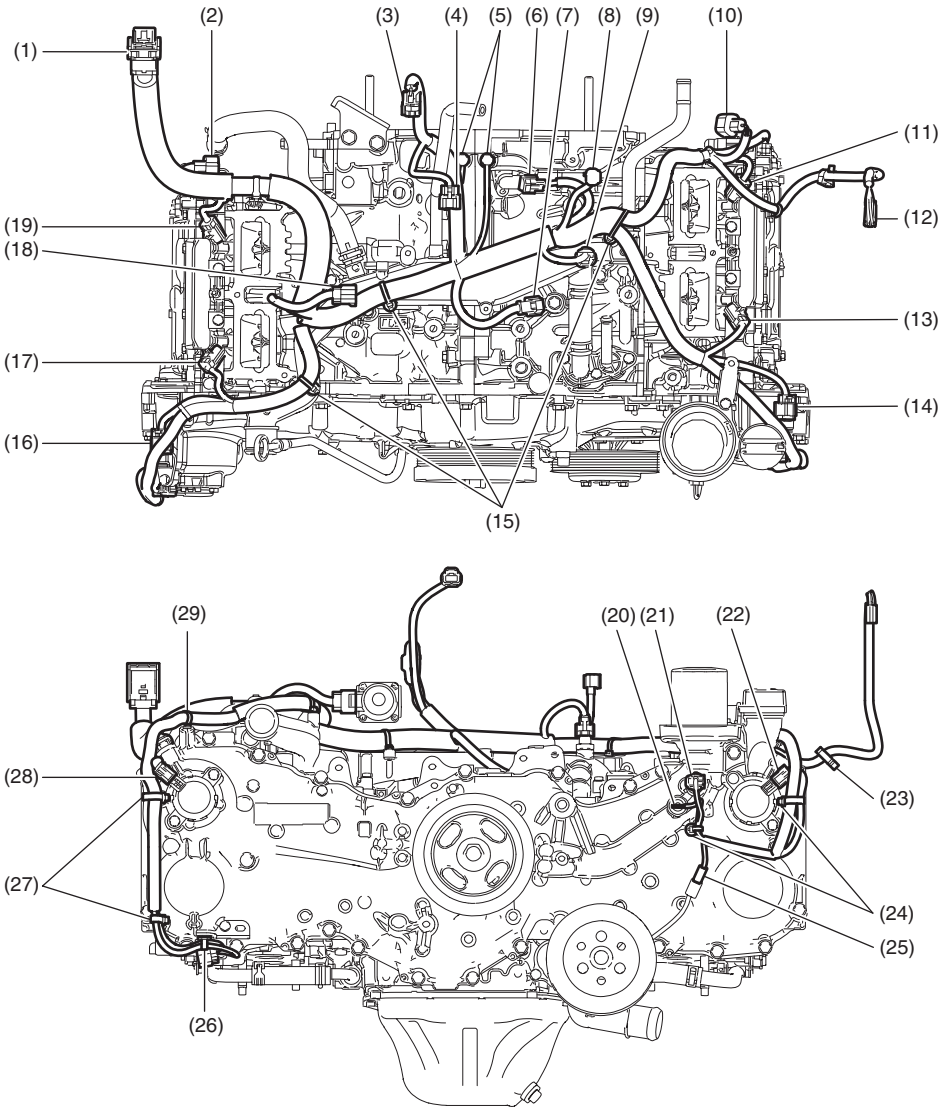

(1) Engine harness connector (65P)
(2) Tumble generator valve actuator RH
(3) Throttle position sensor connector
(4) Manifold absolute pressure sensor connector
(5) Engine ground (2 locations)
(6) Crankshaft position sensor
(7) Knock sensor
(8) Purge control solenoid valve connector
(9) Engine coolant temperature sensor
(10) Tumble generator valve actuator LH
(11) Fuel injector (#4)
(12) Engine harness connector (12P)
(13) Fuel injector (#2)
(14) Camshaft position sensor LH
(15) Remove the clip from the screw hole.
(16) Camshaft position sensor RH
(17) Fuel injector (#1)
(18) EGR valve
(19) Fuel injector (#3)
(20) Oil pressure switch
(21) Engine oil temperature sensor
(22) Intake oil control solenoid LH
(23) Remove the clip from the main fuse box.
(24) Remove the clip from the screw hole.
(25) Oil level switch
(26) Remove the clip from the oval hole.
(27) Remove the clip from the screw hole.
(28) Intake oil control solenoid RH
(29) Remove the clip from the screw hole.

- Structural diagram 2

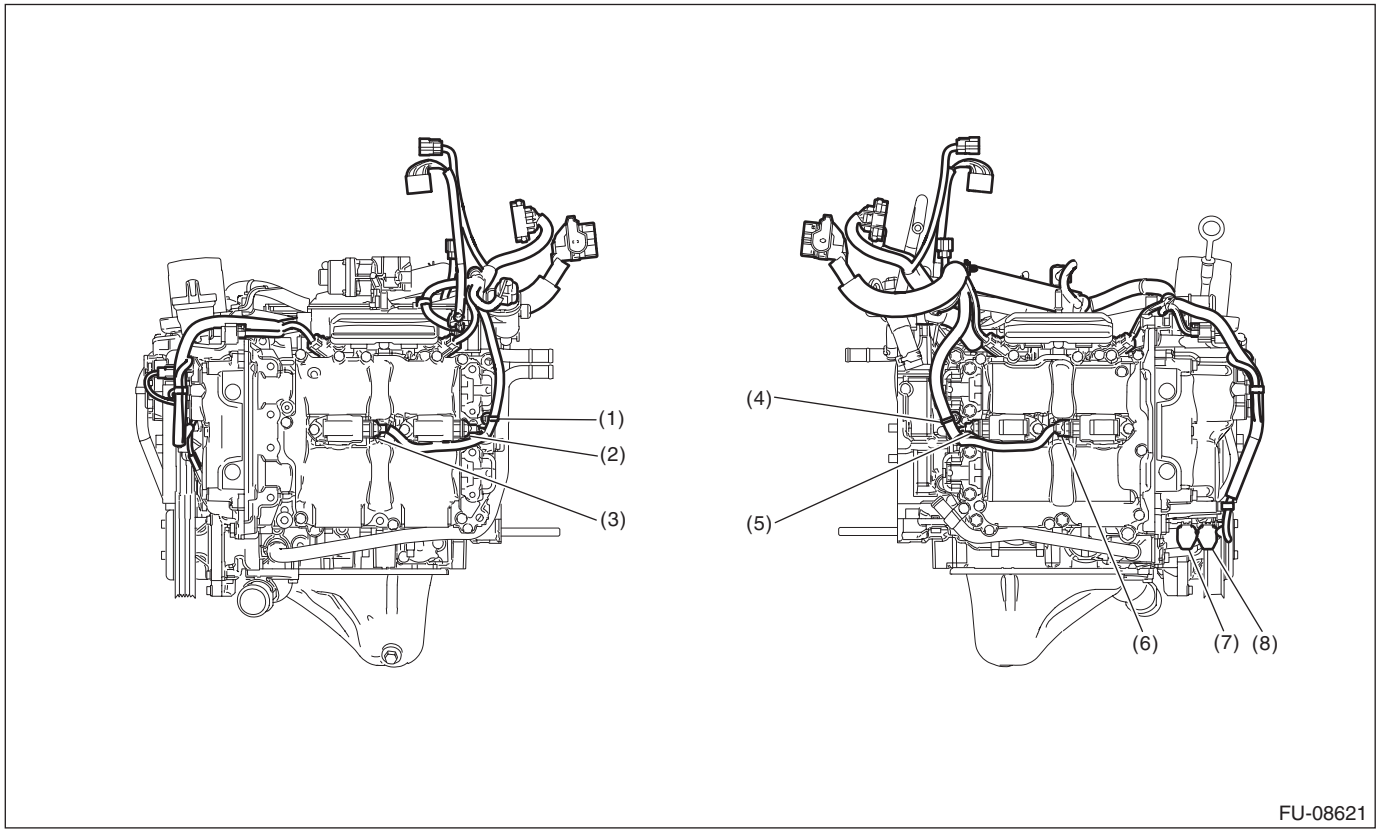

(1) Remove the clip from the screw hole.
(2) Ignition coil No. 4
(3) Ignition coil No. 2
(4) Remove the clip from the screw hole.
(5) Ignition coil No. 3
(6) Ignition coil No. 1
(7) Rear oxygen sensor
(8) Front oxygen (A/F) sensor

B: INSTALLATION

1) Set the engine wiring harness to the engine, and connect the connector.

NOTE:
- If the clip is damaged, replace it with a new part.
- Before replacing the clip, put an alignment mark (a) on both engine wiring harness and clip to remove the clip, and then align to the alignment mark (a) to attach a new clip to the engine wiring harness.

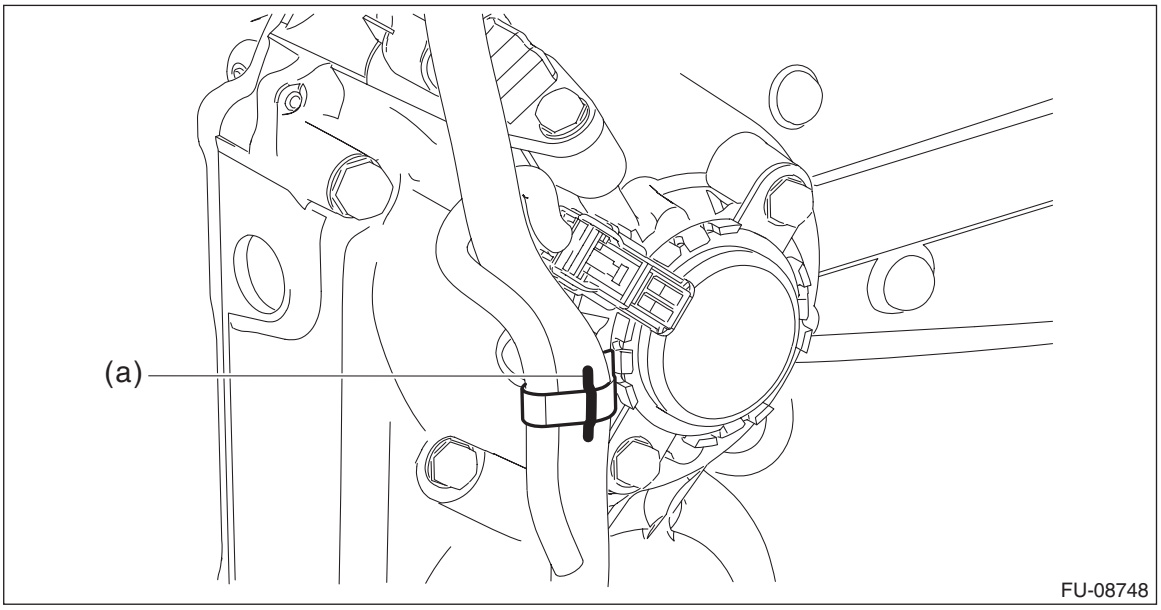

- Structural diagram 1

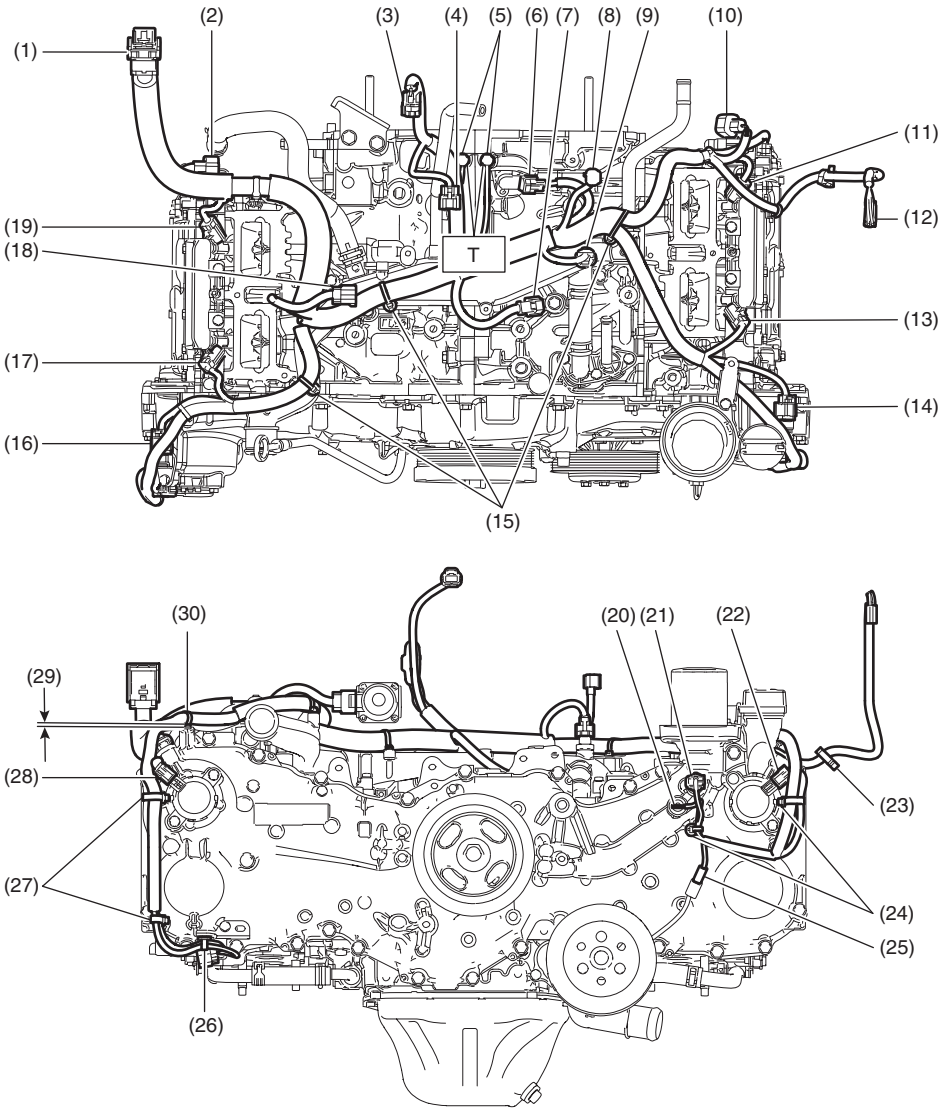

(1) Engine harness connector (65P)
(2) Tumble generator valve actuator RH
(3) Throttle position sensor connector
(4) Manifold absolute pressure sensor connector
(5) Engine ground (2 locations)
(6) Crankshaft position sensor
(7) Knock sensor
(8) Purge control solenoid valve connector
(9) Engine coolant temperature sensor
(10) Tumble generator valve actuator LH
(11) Fuel injector (#4)
(12) Engine harness connector (12P)
(13) Fuel injector (#2)
(14) Camshaft position sensor LH
(15) Secure the clip to the screw hole.
(16) Camshaft position sensor RH
(17) Fuel injector (#1)
(18) EGR valve
(19) Fuel injector (#3)
(20) Oil pressure switch
(21) Engine oil temperature sensor
(22) Intake oil control solenoid LH
(23) Secure the clip to the main fuse box.
(24) Secure the clip to the screw hole.
(25) Oil level switch
(26) Secure the clip to the oval hole.
(27) Secure the clip to the screw hole.
(28) Intake oil control solenoid RH
(29) Maximum of 0 — 2 mm (0 — 0.079 in) gap is allowed.
(30) Secure the clip to the screw hole.

Tightening torque: N·m (kgf-m, ft-lb)	
T:	***19 (1.9, 14.0)***

- Structural diagram 2

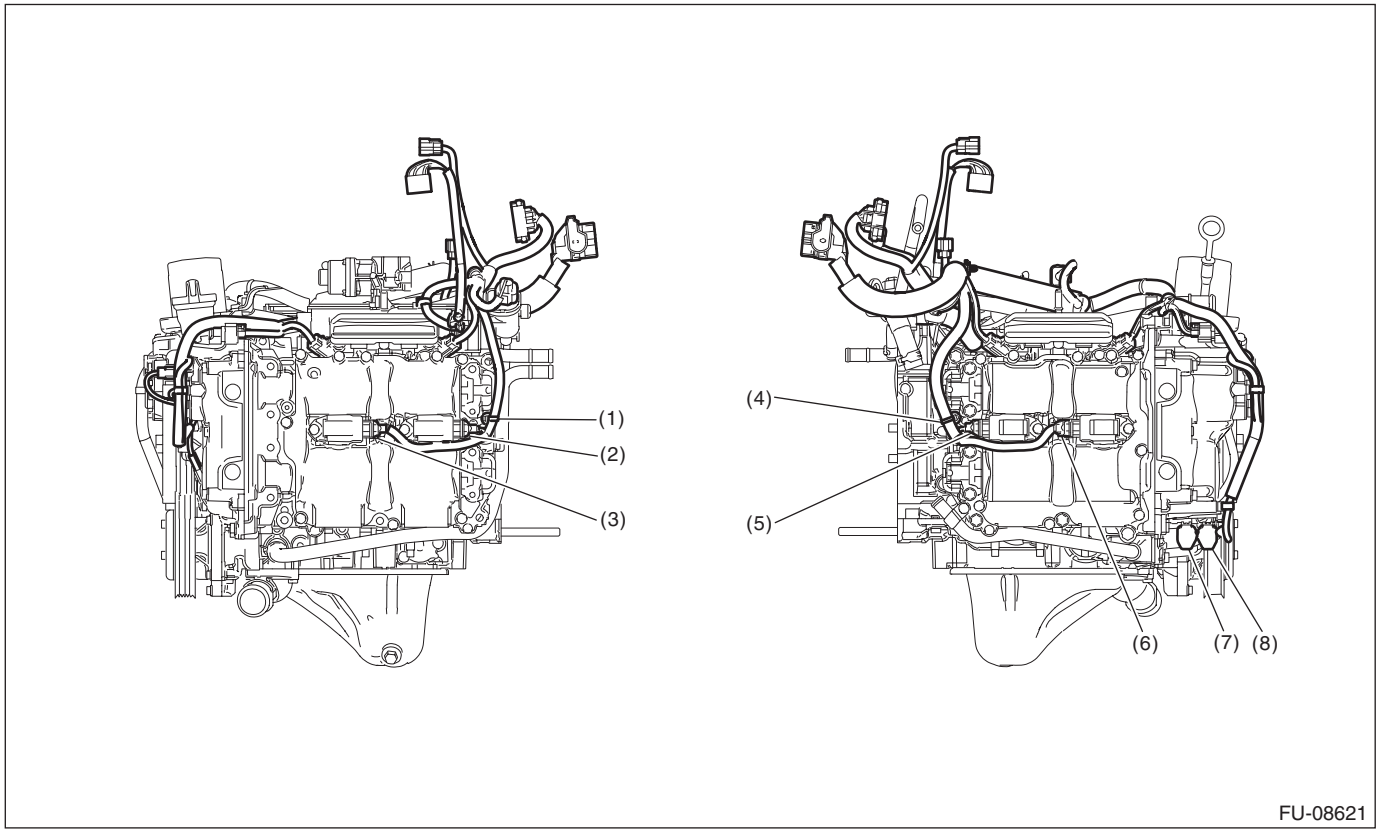

(1) Secure the clip to the screw hole.
(2) Ignition coil No. 4
(3) Ignition coil No. 2
(4) Secure the clip to the screw hole.
(5) Ignition coil No. 3
(6) Ignition coil No. 1
(7) Rear oxygen sensor
(8) Front oxygen (A/F) sensor

2) Install the intake manifold assembly. <Ref. to FU(H4DO)-26, INSTALLATION, Intake Manifold Assembly.>
3) Connect the ground terminal to battery sensor. <Ref. to RC-4, BATTERY, NOTE, Repair Contents.>

C: INSPECTION

Check that the engine wiring harness does not have deformation, cracks and any other damage.

5. Engine Coolant Temperature Sensor

A: REMOVAL

1) Disconnect the ground terminal from battery sensor. <Ref. to RC-4, BATTERY, NOTE, Repair Contents.>
2) Drain engine coolant. <Ref. to CO(H4DO)-15, DRAINING OF ENGINE COOLANT, REPLACEMENT, Engine Coolant.>
3) Disconnect the connector (A) from the engine coolant temperature sensor, and remove the engine coolant temperature sensor.

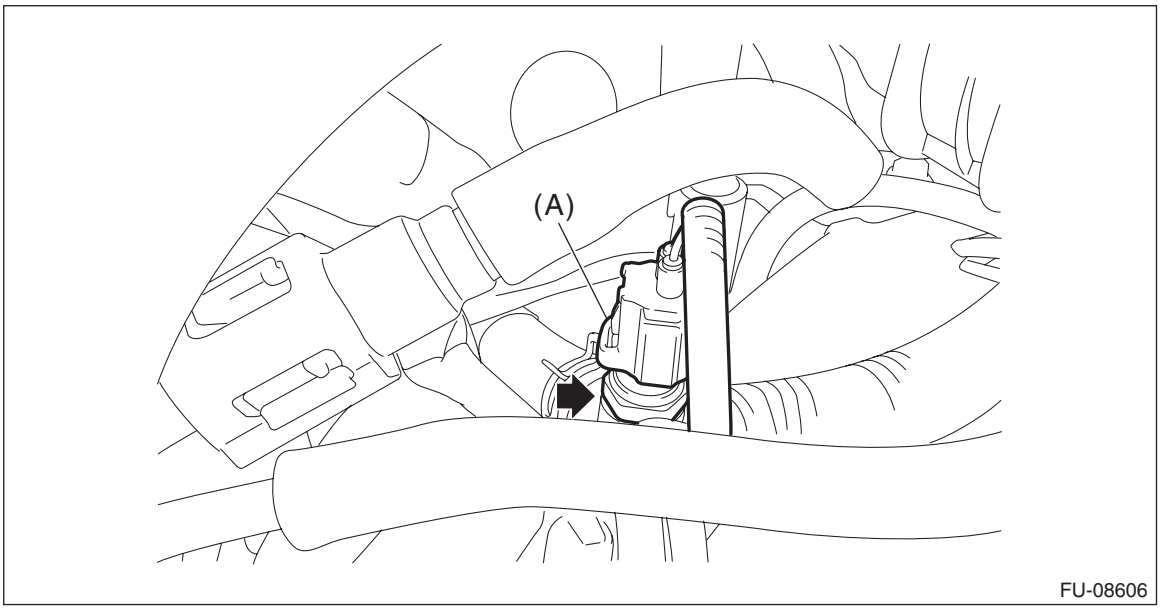

B: INSTALLATION

1) Install the engine coolant temperature sensor, and connect the connector to the engine coolant temperature sensor.

NOTE:
Use a new gasket.

Tightening torque:
18 N·m (1.8 kgf-m, 13.3 ft-lb)

2) Connect the ground terminal to battery sensor. <Ref. to RC-4, BATTERY, NOTE, Repair Contents.>
3) Fill engine coolant. <Ref. to CO(H4DO)-16, FILLING OF ENGINE COOLANT, REPLACEMENT, Engine Coolant.>

C: INSPECTION

1) Check that the engine coolant temperature sensor has no deformation, cracks or other damages.
2) Immerse the engine coolant temperature sensor and a thermometer in water.

CAUTION:
Take care not to allow water to get into the engine coolant temperature sensor connector. Completely remove any water inside.

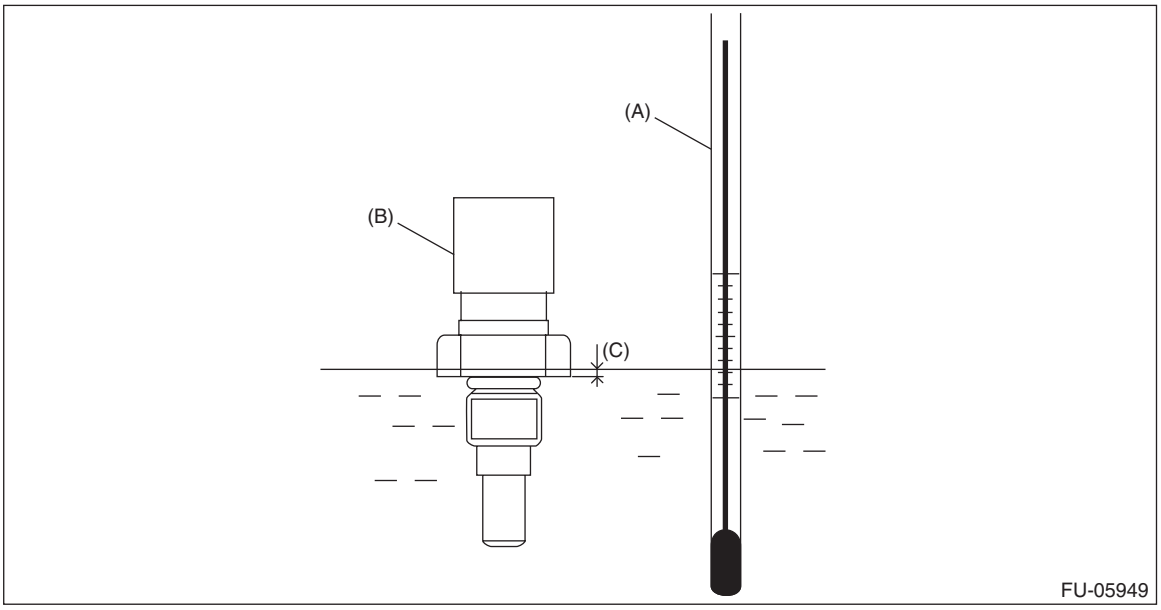

(A) Thermometer
(B) Engine coolant temperature sensor
(C) Hexagonal part height: To approx. $^{1}/_{3}$

3) Raise water temperature gradually, measure the resistance between the engine coolant temperature sensor terminals when the temperature is 20°C (68°F) and 80°C (176°F).

NOTE:
Agitate the water for even temperature distribution.

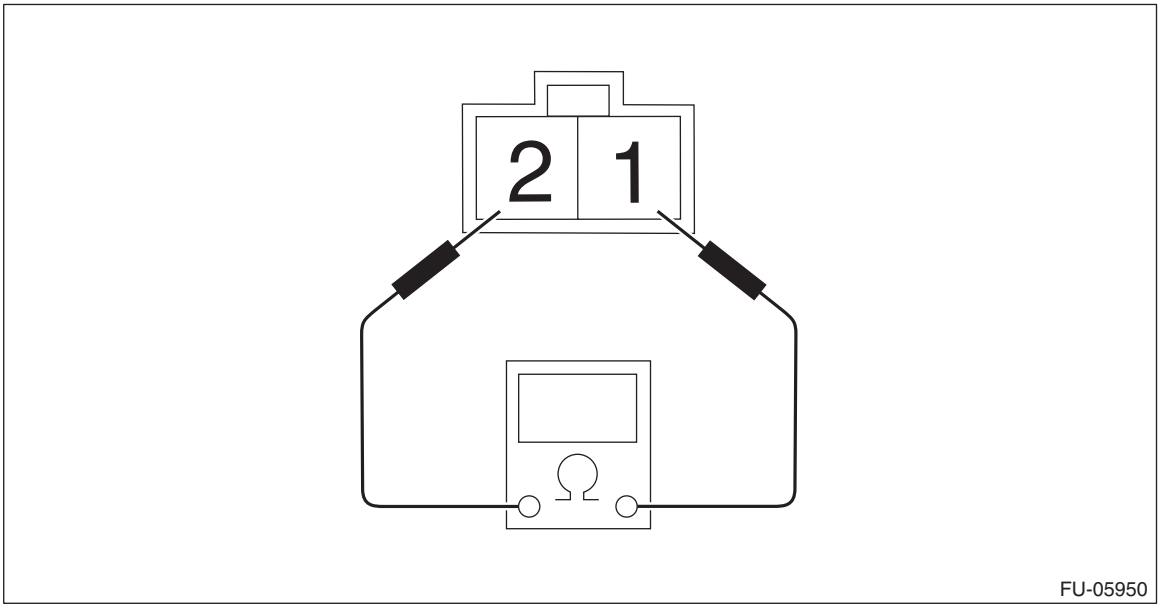

Water temperature	Terminal No.	Standard
20°C (68°F)	1 and 2	Approx. $2.45^{+0.14}_{-0.13}$ kΩ
80°C (176°F)		Approx. 0.318±0.008 kΩ

6. Engine Oil Temperature Sensor

A: REMOVAL

CAUTION:
If the engine oil is spilt over exhaust pipe or the under cover, wipe it off with cloth to avoid emission of smoke or causing a fire.

1) Disconnect the ground terminal from battery sensor. <Ref. to RC-4, BATTERY, NOTE, Repair Contents.>
2) Disconnect the connector (A) from the engine oil temperature sensor, and remove the engine oil temperature sensor from the chain cover.

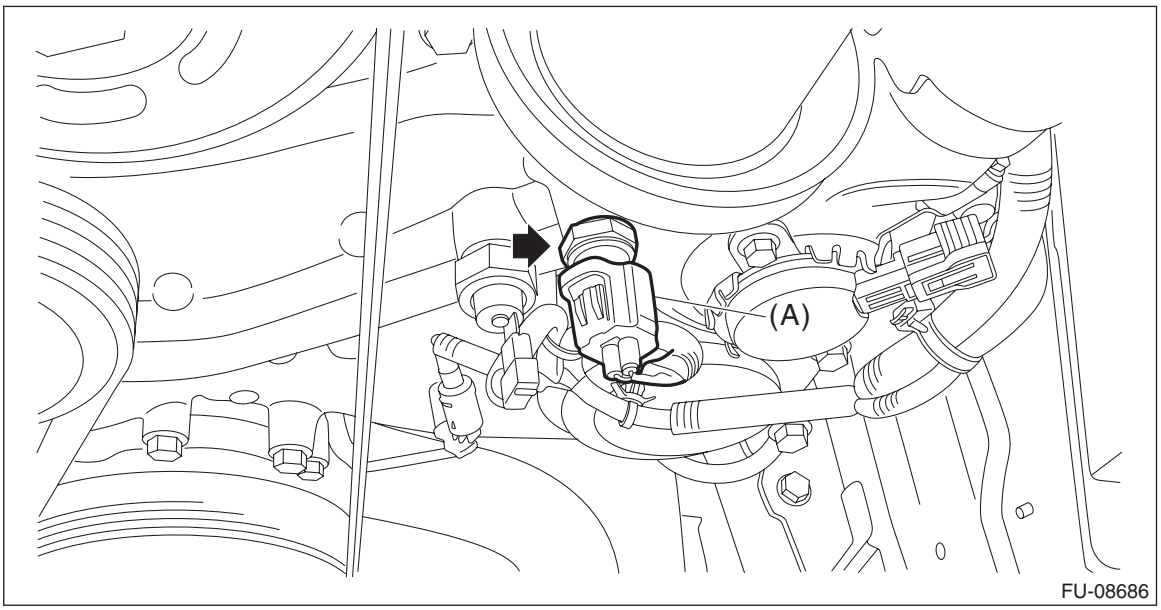

B: INSTALLATION

1) Install the engine oil temperature sensor to the chain cover, and connect the connector to the engine oil temperature sensor.

NOTE:
Use a new gasket.

Tightening torque:
18 N·m (1.8 kgf-m, 13.3 ft-lb)

2) Connect the ground terminal to battery sensor. <Ref. to RC-4, BATTERY, NOTE, Repair Contents.>

C: INSPECTION

1) Check that the engine oil temperature sensor has no deformation, cracks or other damages.
2) Immerse the engine oil temperature sensor and a thermometer in water.

CAUTION:
Take care not to allow water to get into the engine oil temperature sensor connector. Completely remove any water inside.

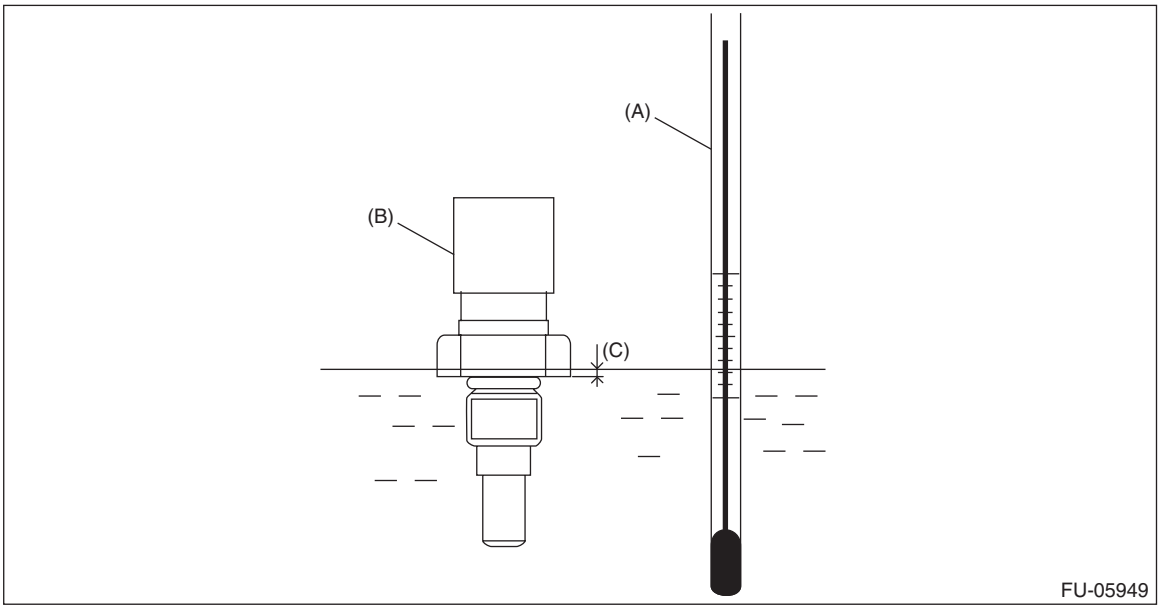

(A) Thermometer
(B) Engine oil temperature sensor
(C) Hexagonal part height: To approx. $^{1}/_{3}$

3) Raise water temperature gradually, measure the resistance between the engine oil temperature sensor terminals when the temperature is 20°C (68°F) and 80°C (176°F).

NOTE:
Agitate the water for even temperature distribution.

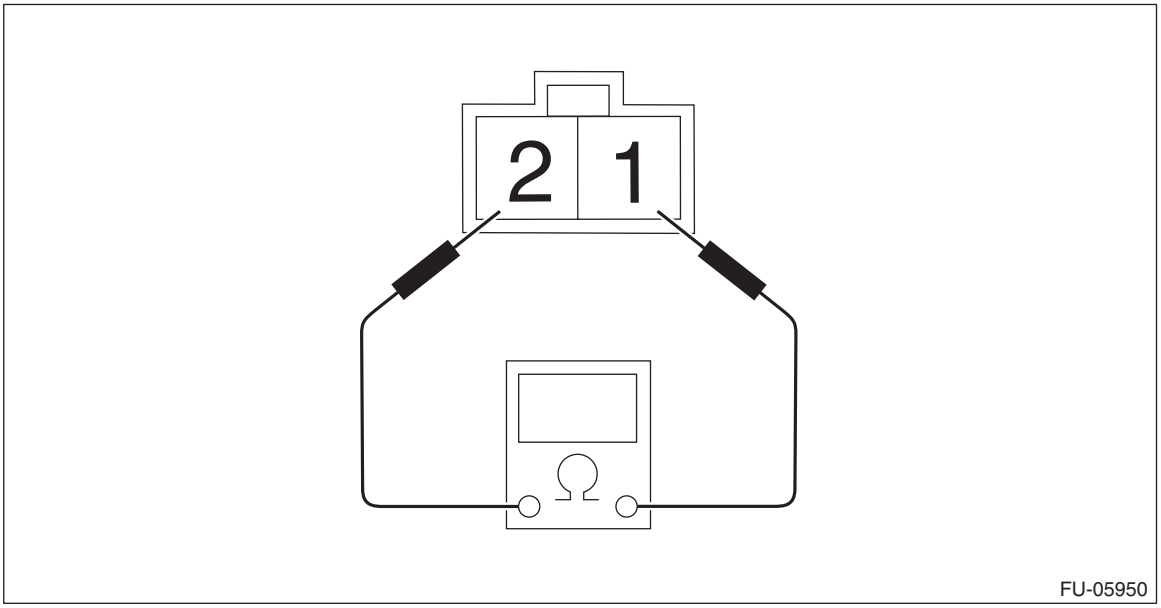

Water temperature	Terminal No.	Standard
20°C (68°F)	1 and 2	Approx. $2.45^{+0.14}_{-0.13}$ kΩ
80°C (176°F)		Approx. 0.318±0.008 kΩ

7. Crankshaft Position Sensor

A: REMOVAL

1) Disconnect the ground terminal from battery sensor. <Ref. to RC-4, BATTERY, NOTE, Repair Contents.>
2) Remove the clip (A), and loosen the clamps (B) and (C) securing the air intake boot.

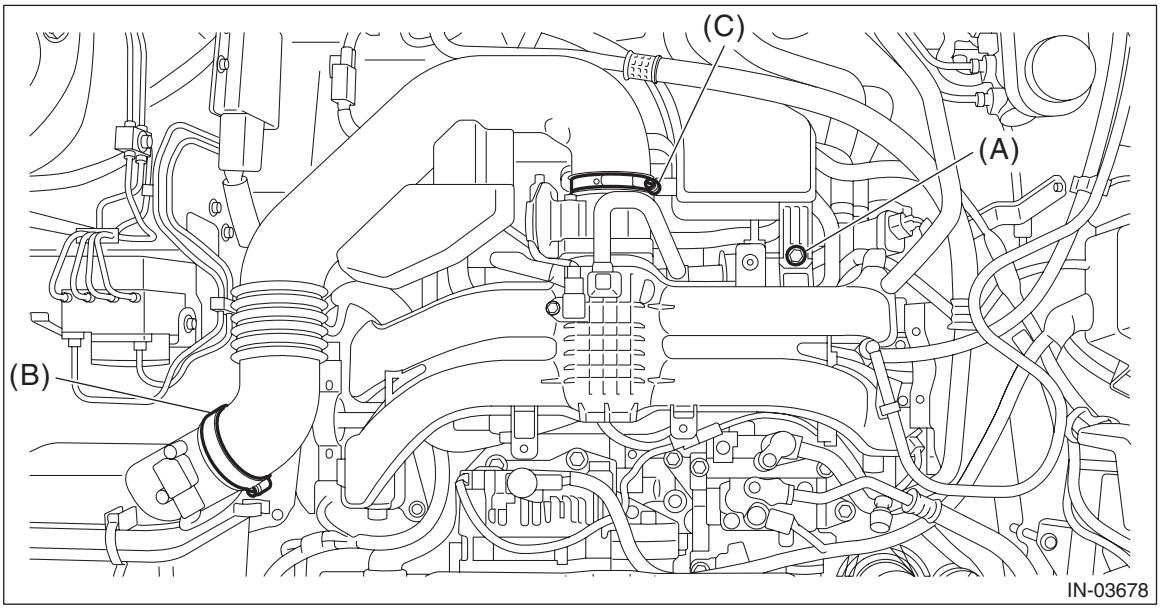

3) Remove the air intake boot from the air cleaner case (rear) and throttle body, and move it to the left side wheel apron.

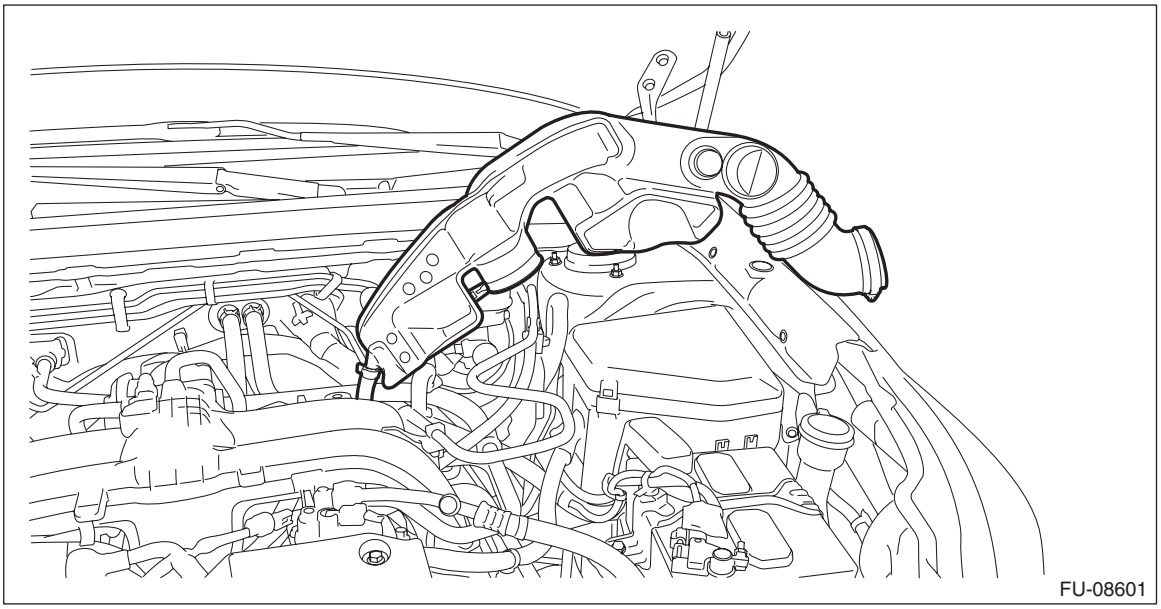

4) Disconnect the connector (A) from the crankshaft position sensor, and remove the crankshaft position sensor from the cylinder block.

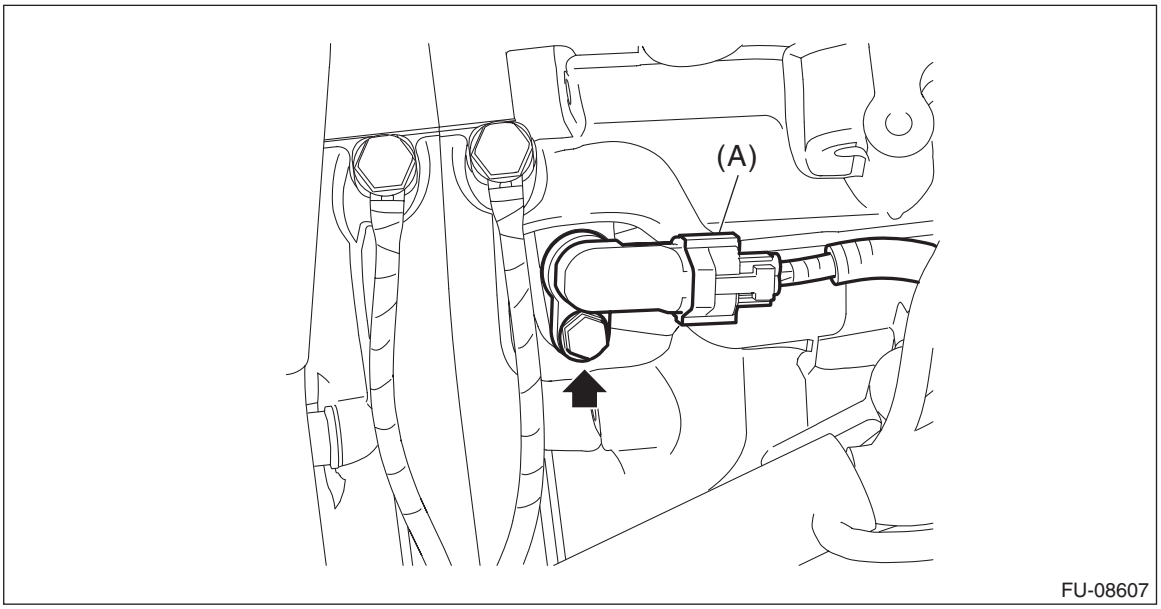

B: INSTALLATION

1) Install the crankshaft position sensor to the cylinder block, and connect the connector to the crankshaft position sensor.

Tightening torque:
6.4 N·m (0.7 kgf-m, 4.7 ft-lb)

2) Install the air intake boot. <Ref. to IN(H4DO)-10, INSTALLATION, Air Intake Boot.>
3) Connect the ground terminal to battery sensor. <Ref. to RC-4, BATTERY, NOTE, Repair Contents.>

C: INSPECTION

1. CRANKSHAFT POSITION SENSOR

1) Disconnect the ground terminal from battery sensor. <Ref. to RC-4, BATTERY, NOTE, Repair Contents.>
2) Prepare an oscilloscope.
3) While pressing the section (A) shown in the figure, move the lock lever (B) in the direction of the arrow to disconnect the connectors from the ECM in numerical order as shown in the figure.

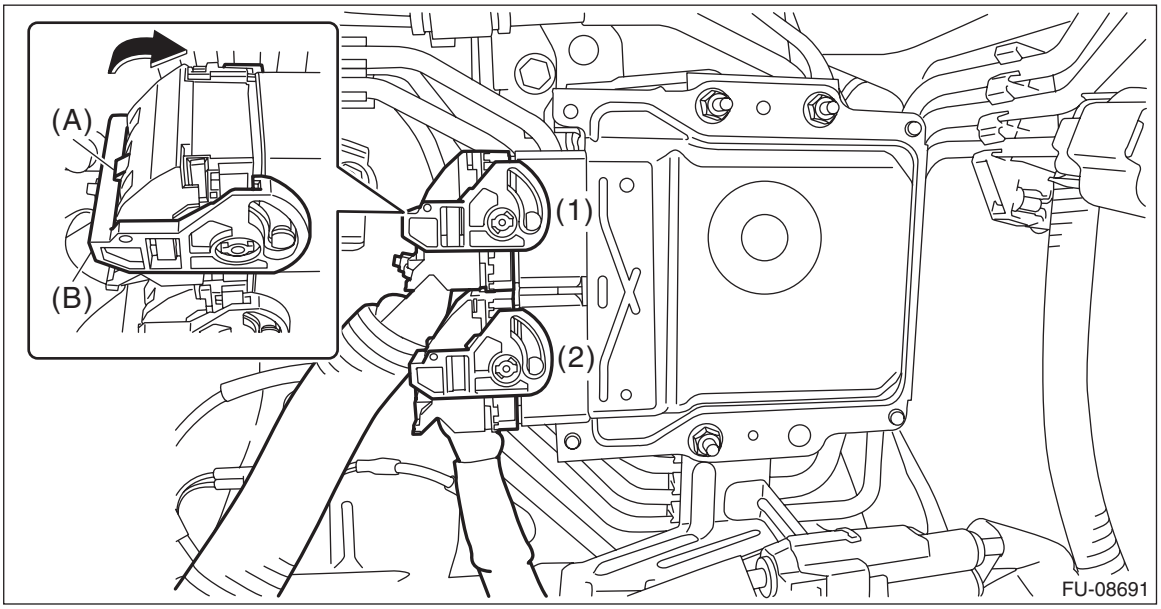

4) Attach the ST between the ECM, engine harness and the bulkhead wiring harness. <Ref. to EN(H4DO)(diag)-6, CAUTION, General Description.>
ST 18460AA050 CHECK BOARD
5) Connect the probe to ST.

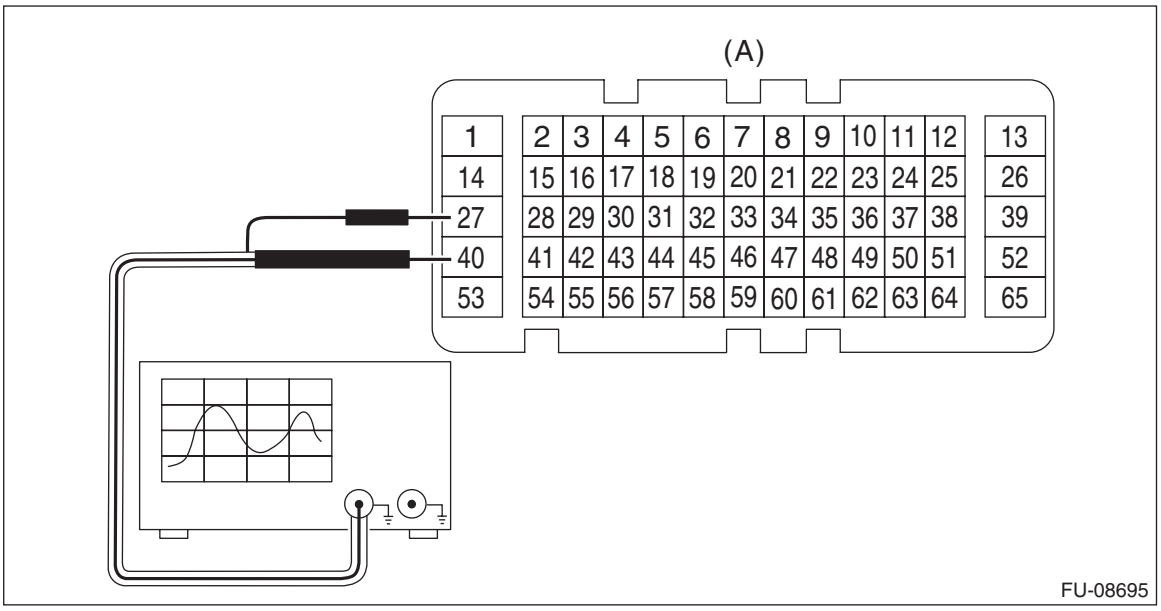

(A) To the check board connector (ECM connector)

Terminal No.	Probe
40	+
27	–

6) Start the engine and let it idle.
7) Check the waveforms and voltage.

NOTE:
For waveform and voltage, refer to “Engine Control Module (ECM) I/O Signal”. <Ref. to EN(H4DO)(diag)-20, ELECTRICAL SPECIFICATION, Engine Control Module (ECM) I/O Signal.>
8) After inspection, install the related parts in the reverse order of removal.

2. OTHER INSPECTIONS

Check that the crankshaft position sensor has no deformation, cracks or other damages.

8. Crankshaft Position Sensor Plate

A: REMOVAL

The crankshaft position sensor plate is tightened together with the drive plate or flywheel; therefore, refer to “Drive Plate” or “Flywheel” for removal procedure. <Ref. to CVT(TR580)-194, REMOVAL, Drive Plate.> <Ref. to CL-12, REMOVAL, Flywheel.>

B: INSTALLATION

The crankshaft position sensor plate is tightened together with the drive plate or flywheel; therefore, refer to “Drive Plate” or “Flywheel” for installation procedure. <Ref. to CVT(TR580)-194, INSTALLATION, Drive Plate.> <Ref. to CL-12, INSTALLATION, Flywheel.>

C: INSPECTION

Check that the crankshaft position sensor plate has no deformation, cracks or other damages.

9. Camshaft Position Sensor

A: REMOVAL

1) Disconnect the ground terminal from battery sensor. <Ref. to RC-4, BATTERY, NOTE, Repair Contents.>
2) Remove the air intake duct. (RH side only) <Ref. to IN(H4DO)-12, REMOVAL, Air Intake Duct.>
3) Disconnect the connector (A) from the camshaft position sensor, and remove the camshaft position sensor from the chain cover.

- RH side

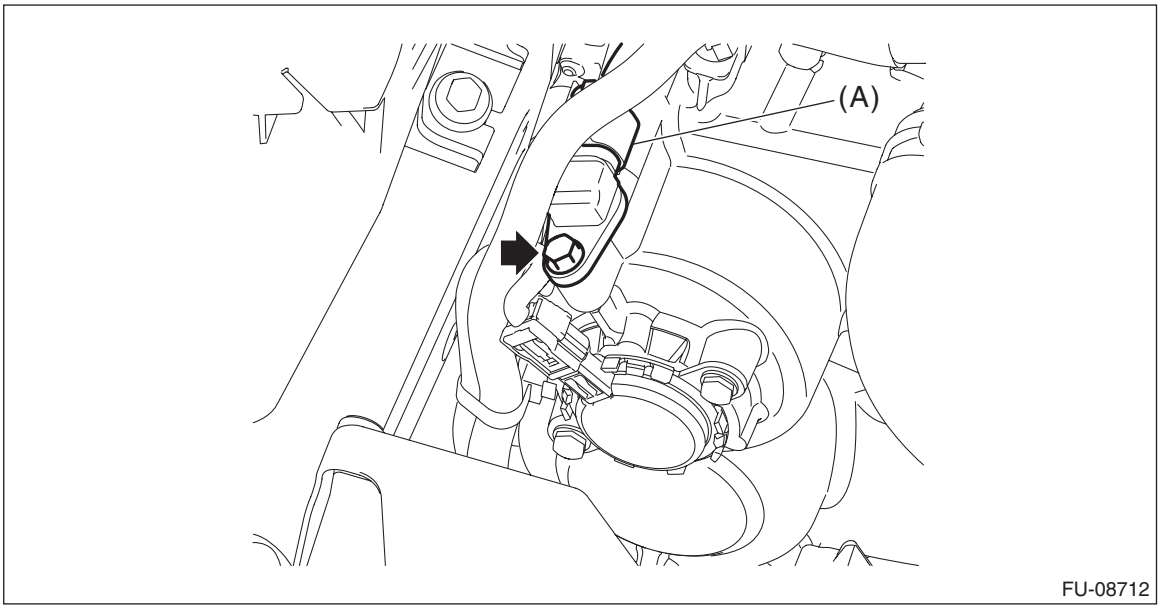

- LH side

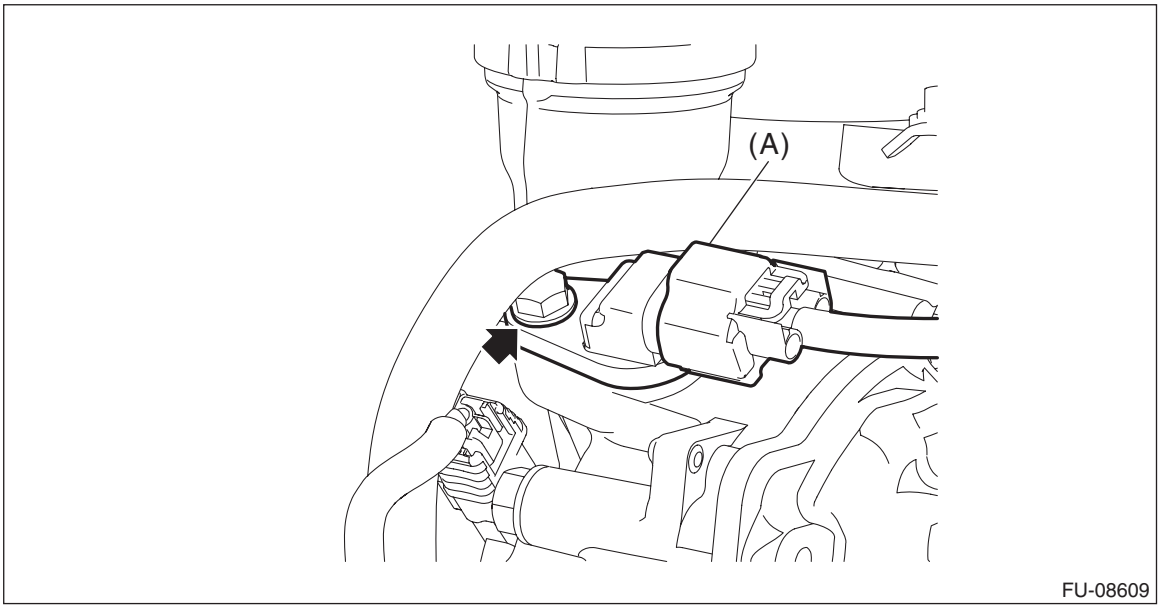

B: INSTALLATION

1) Install the camshaft position sensor to the chain cover, and connect the connector to the camshaft position sensor.

NOTE:
- Use new O-rings.
- Apply engine oil to O-ring.

Tightening torque:
6.4 N·m (0.7 kgf-m, 4.7 ft-lb)

2) Install the air intake duct. (RH side only) <Ref. to IN(H4DO)-12, INSTALLATION, Air Intake Duct.>

C: INSPECTION

1. CAMSHAFT POSITION SENSOR

1) Disconnect the ground terminal from battery sensor. <Ref. to RC-4, BATTERY, NOTE, Repair Contents.>
2) Prepare an oscilloscope.
3) While pressing the section (A) shown in the figure, move the lock lever (B) in the direction of the arrow to disconnect the connectors from the ECM in numerical order as shown in the figure.

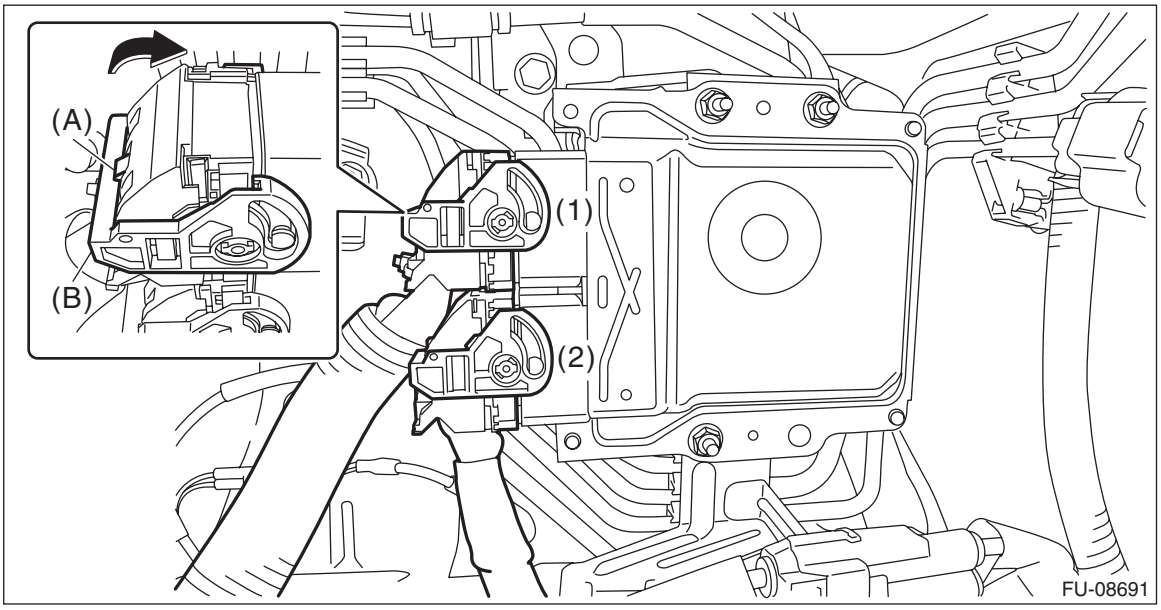

4) Attach the ST between the ECM, engine harness and the bulkhead wiring harness. <Ref. to EN(H4DO)(diag)-6, CAUTION, General Description.>
ST 18460AA050 CHECK BOARD

5) Connect the probe to ST.

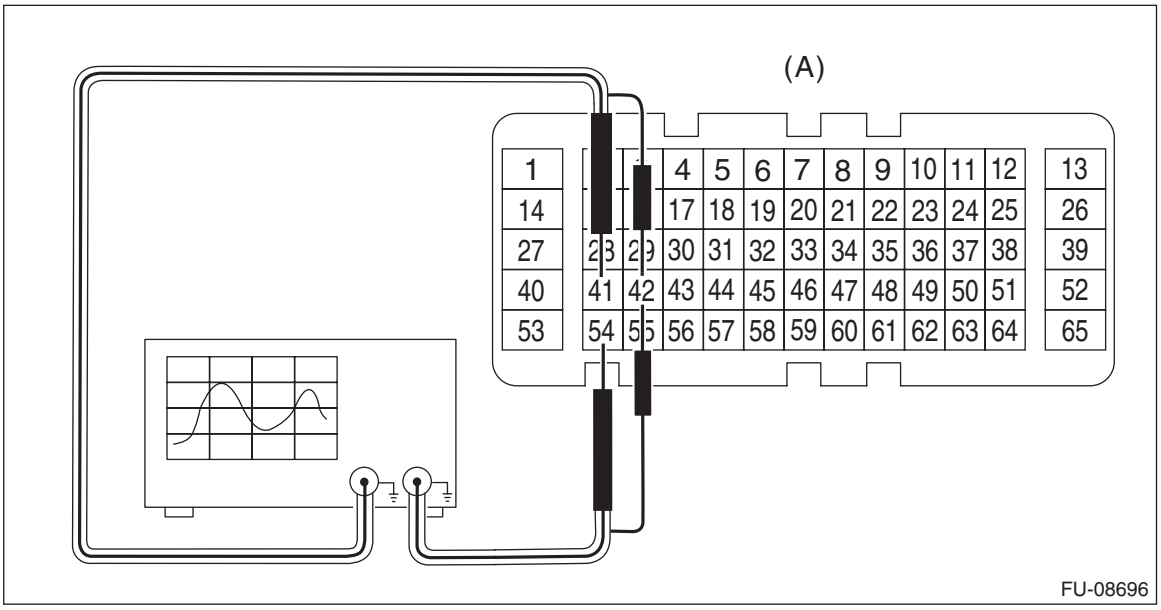

(A) To the check board connector (ECM connector)

Camshaft position sensor	Terminal No.	Probe
RH	54	+
LH	41	+
RH and LH	42	–

6) Start the engine and let it idle.
7) Check the waveforms and voltage.

NOTE:
For waveform and voltage, refer to “Engine Control Module (ECM) I/O Signal”. <Ref. to EN(H4DO)(diag)-20, ELECTRICAL SPECIFICATION, Engine Control Module (ECM) I/O Signal.>
8) After inspection, install the related parts in the reverse order of removal.

2. OTHER INSPECTIONS

Check that the camshaft position sensor has no deformation, cracks or other damages.

10.Oil Control Solenoid

A: REMOVAL

CAUTION:
If the engine oil is spilt over exhaust pipe or the under cover, wipe it off with cloth to avoid emission of smoke or causing a fire.

1) Disconnect the ground terminal from battery sensor. <Ref. to RC-4, BATTERY, NOTE, Repair Contents.>
2) Remove the air intake duct. (RH side only) <Ref. to IN(H4DO)-12, REMOVAL, Air Intake Duct.>
3) Disconnect the connector (A) from the intake oil control solenoid, and remove the intake oil control solenoid from the chain cover.

- RH side

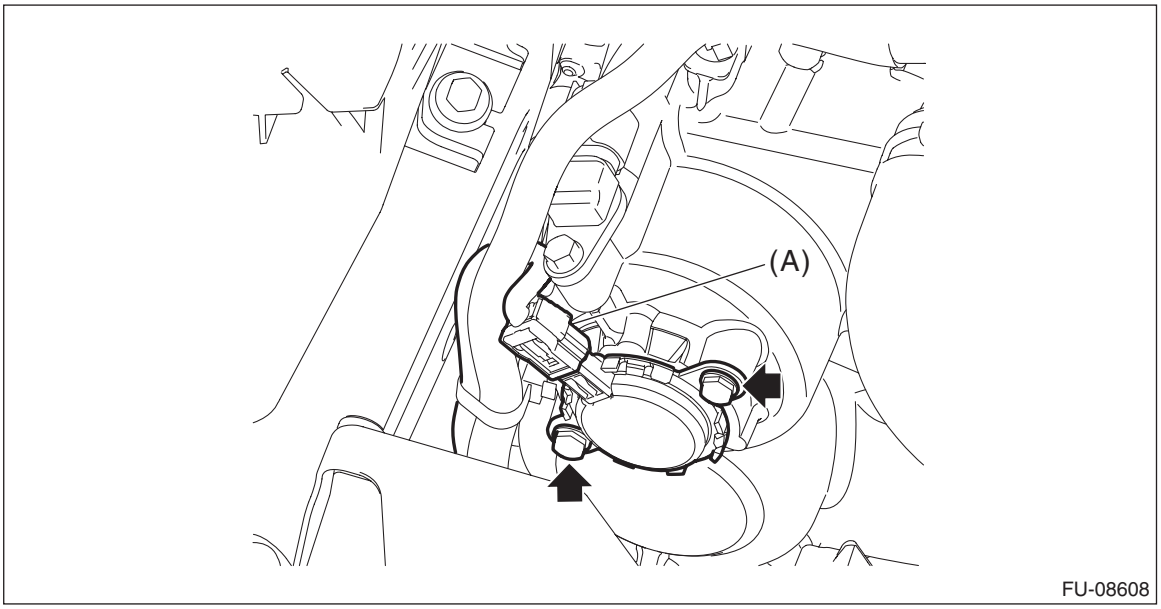

- LH side

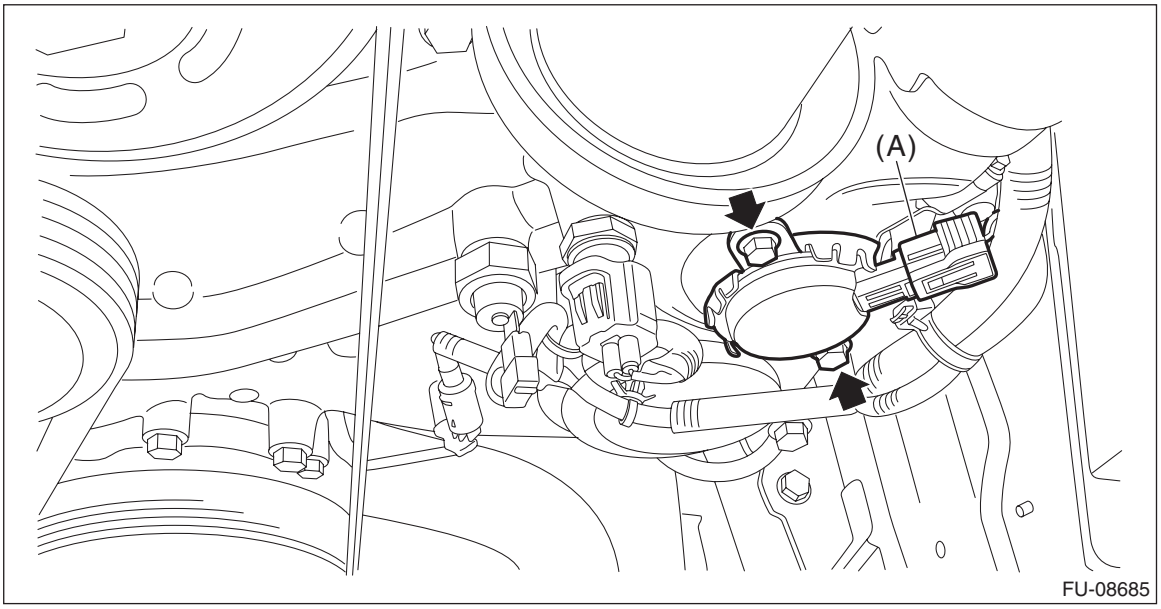

B: INSTALLATION

1) Install the intake oil control solenoid to the chain cover, and connect the connector to the intake oil control solenoid.

NOTE:
- Use new O-rings.
- Apply engine oil to O-ring.

Tightening torque:
6.4 N·m (0.7 kgf-m, 4.7 ft-lb)

2) Install the air intake duct. (RH side only) <Ref. to IN(H4DO)-12, INSTALLATION, Air Intake Duct.>
3) Connect the ground terminal to battery sensor. <Ref. to RC-4, BATTERY, NOTE, Repair Contents.>

C: INSPECTION

1) Check that the oil control solenoid has no deformation, cracks or other damages.
2) Measure the resistance between the oil control solenoid terminals.

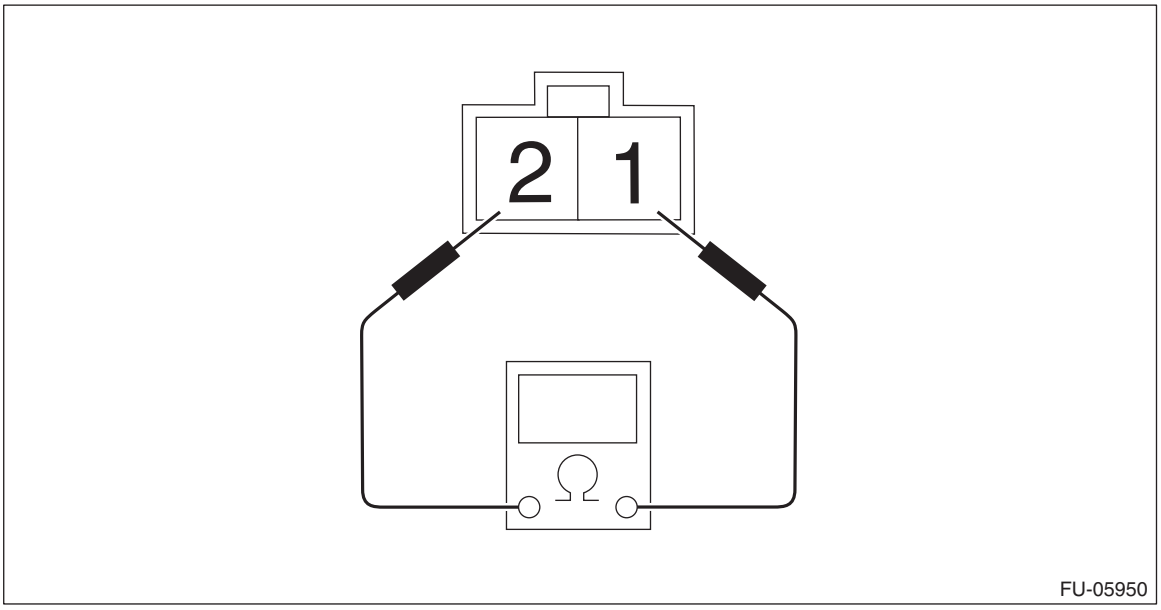

Terminal No.	Standard
1 and 2	7.25±0.4 Ω (when 20°C (68°F))

11.Knock Sensor

A: REMOVAL

1) Disconnect the ground terminal from battery sensor. <Ref. to RC-4, BATTERY, NOTE, Repair Contents.>
2) Remove the bolt securing the connector to the A/C compressor.

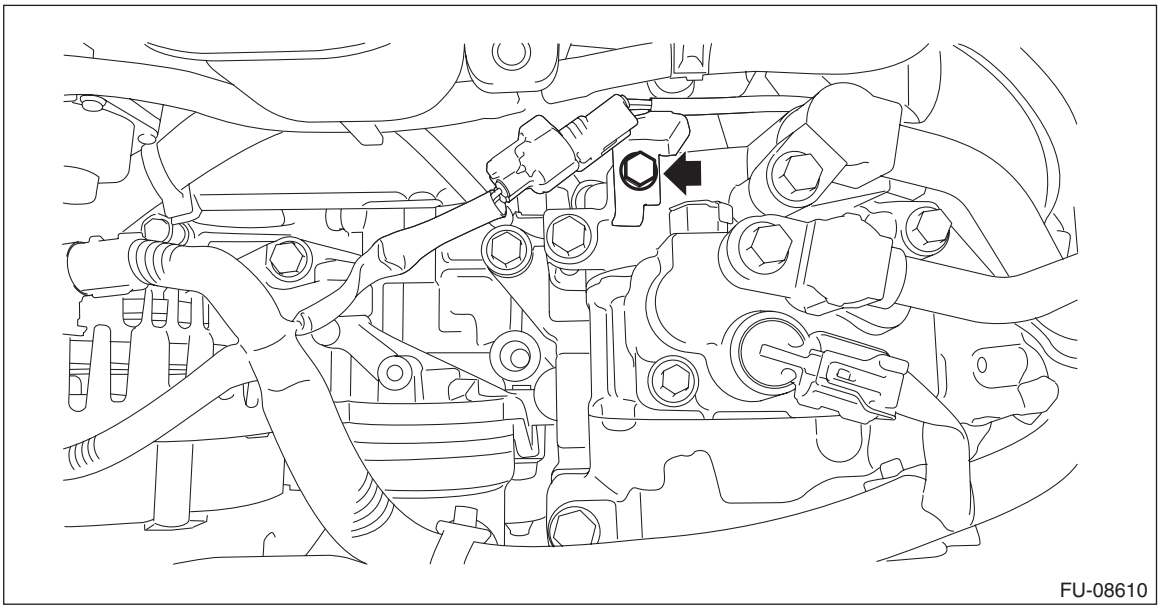
FU-08610

3) Disconnect the connector (A) from the knock sensor, and remove the knock sensor from the cylinder block.

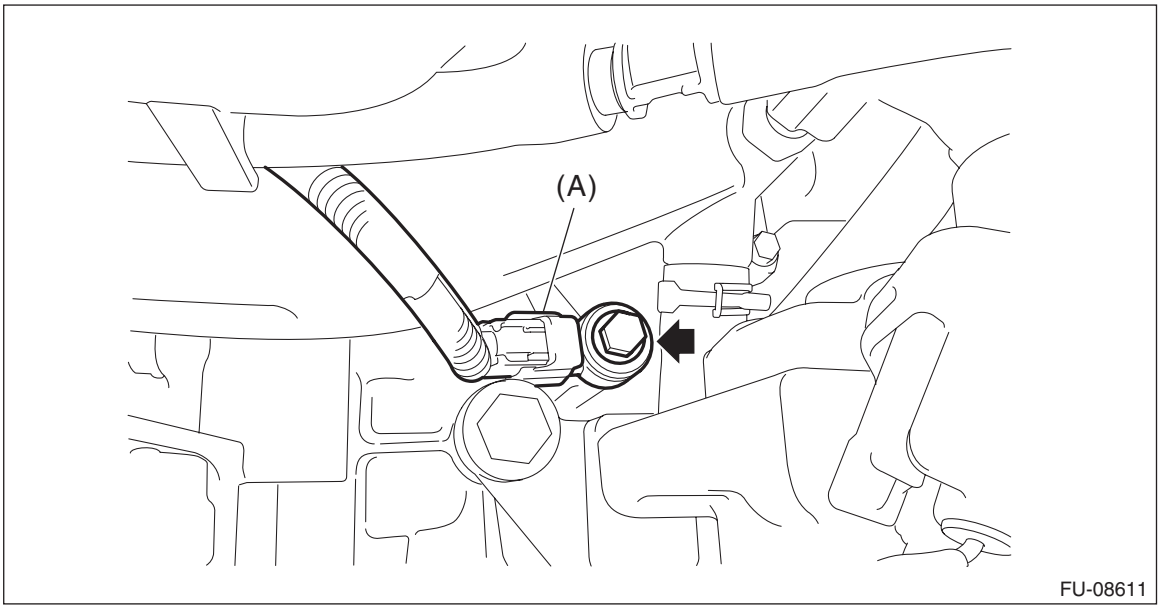

FU-08611

B: INSTALLATION

1) Install the knock sensor to the cylinder block, and connect the connector to the knock sensor.

NOTE:
• Install the knock sensor connector so that the center of the connector is aligned with the extension line from the cylinder block rib (a).
• Make sure that the knock sensor and its connector do not touch the adjacent parts.

Tightening torque:
25 N·m (2.5 kgf-m, 18.4 ft-lb)

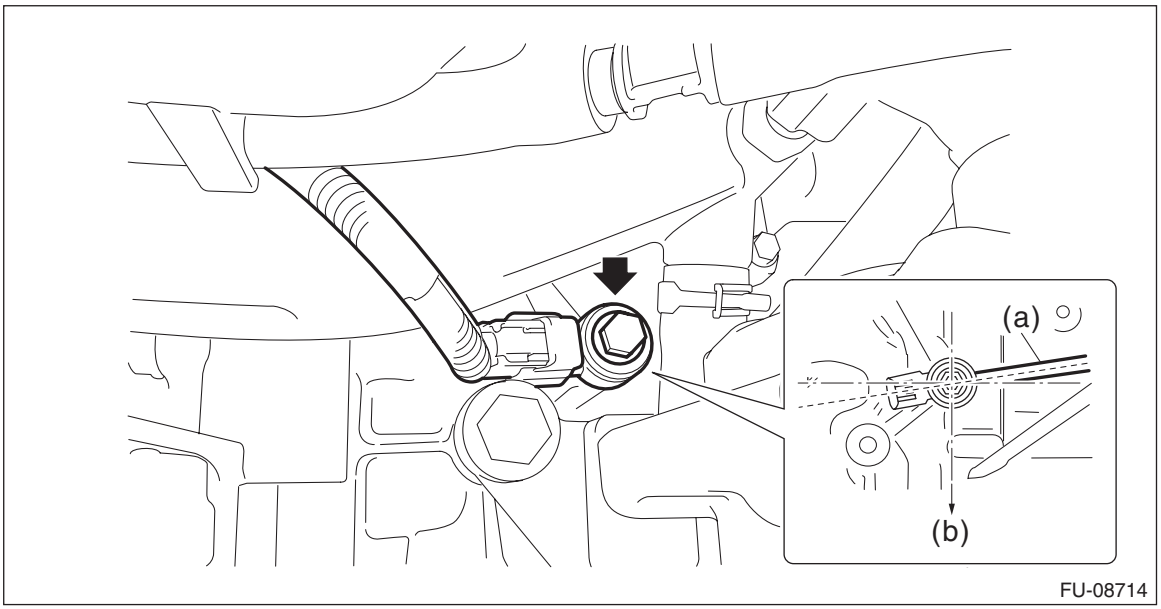

(a) Rib (b) Front of engine

2) Install the bolt securing the connector to the A/C compressor.

Tightening torque:
6.4 N·m (0.7 kgf-m, 4.7 ft-lb)

3) Connect the ground terminal to battery sensor. <Ref. to RC-4, BATTERY, NOTE, Repair Contents.>

C: INSPECTION

1) Check that the knock sensor has no deformation, cracks or other damages.
2) Measure the resistance between knock sensor terminals.

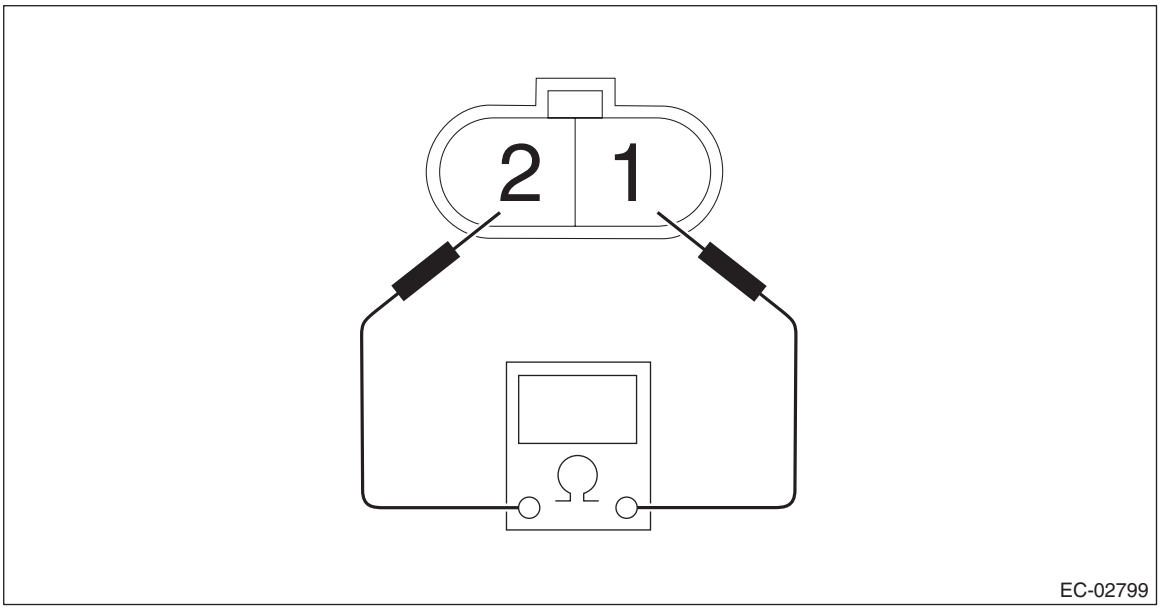

Terminal No.	Standard
1 and 2	560±28 kΩ

12.Throttle Position Sensor

A: SPECIFICATION

Throttle body is a non-disassembled part, so do not remove the throttle position sensor from throttle body. Refer to “Throttle Body” for removal and installation procedure. <Ref. to FU(H4DO)-14, REMOVAL, Throttle Body.> <Ref. to FU(H4DO)-15, INSTALLATION, Throttle Body.>

13.Mass Air Flow and Intake Air Temperature Sensor

A: REMOVAL

1) Disconnect the ground terminal from battery sensor. <Ref. to RC-4, BATTERY, NOTE, Repair Contents.>
2) Disconnect the connector (A) from the mass air flow and intake air temperature sensor, and remove the mass air flow and intake air temperature sensor.

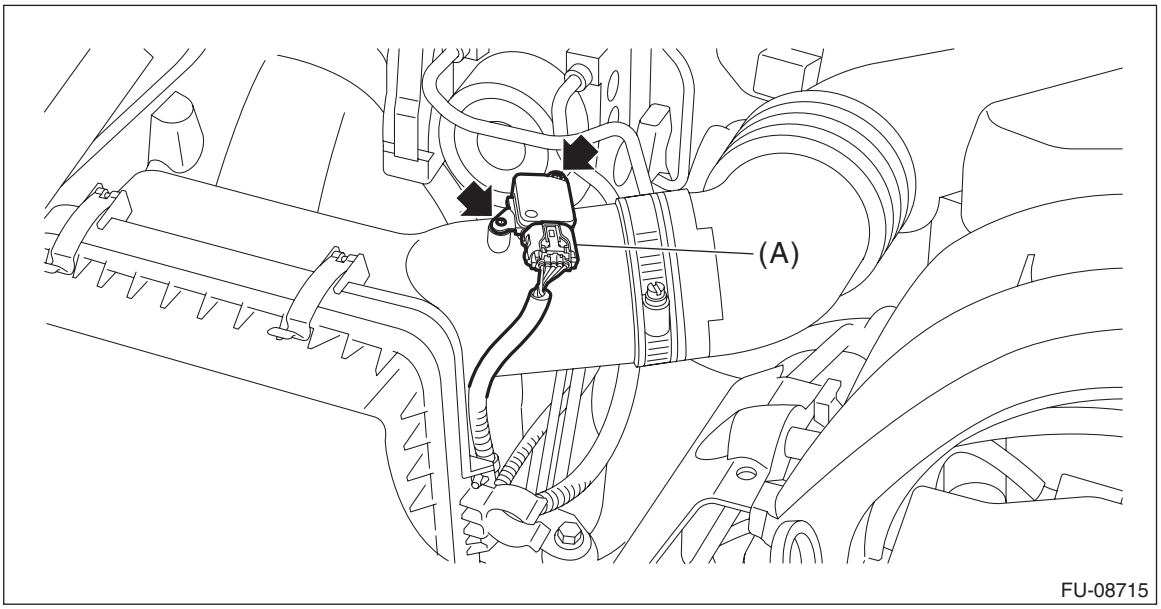

B: INSTALLATION

1) Install the mass air flow and intake air temperature sensor, and connect the connector to the mass air flow and intake air temperature sensor.

Tightening torque:
1 N·m (0.1 kgf-m, 0.7 ft-lb)
2) Connect the ground terminal to battery sensor. <Ref. to RC-4, BATTERY, NOTE, Repair Contents.>

C: INSPECTION

1. CHECK THE MASS AIR FLOW SENSOR UNIT

1) Connect the battery positive terminal to terminal No. 3 and the battery ground terminal to terminal No. 4, and connect the circuit tester positive terminal to terminal No. 5 and the circuit tester ground terminal to terminal No. 4.

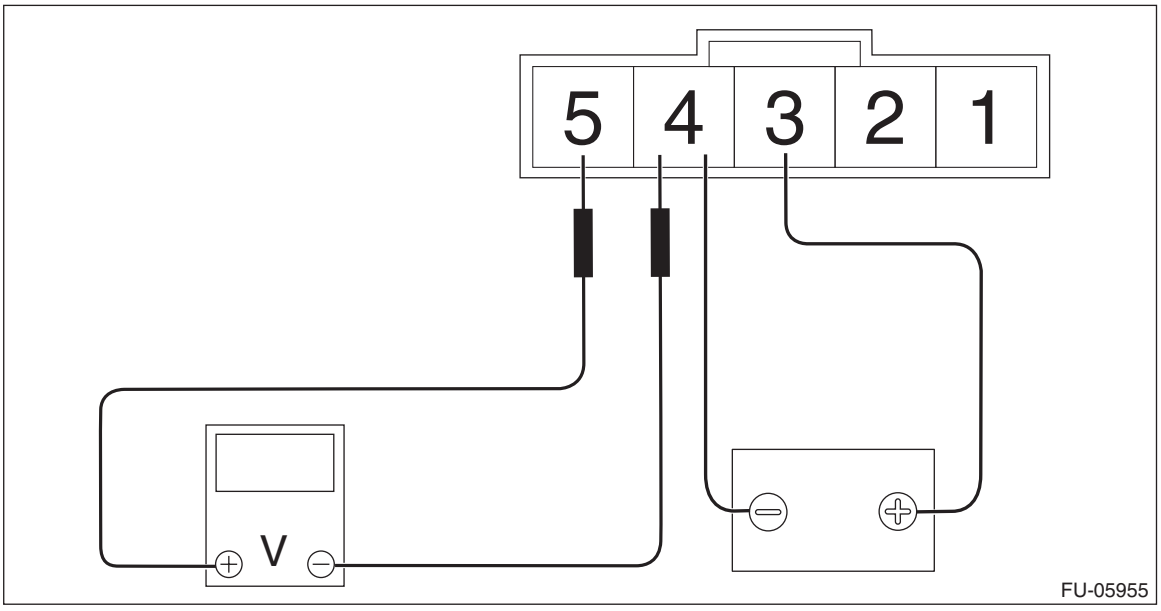

2) Check the voltage changes when air is blown to the mass air flow sensor unit in arrow direction.

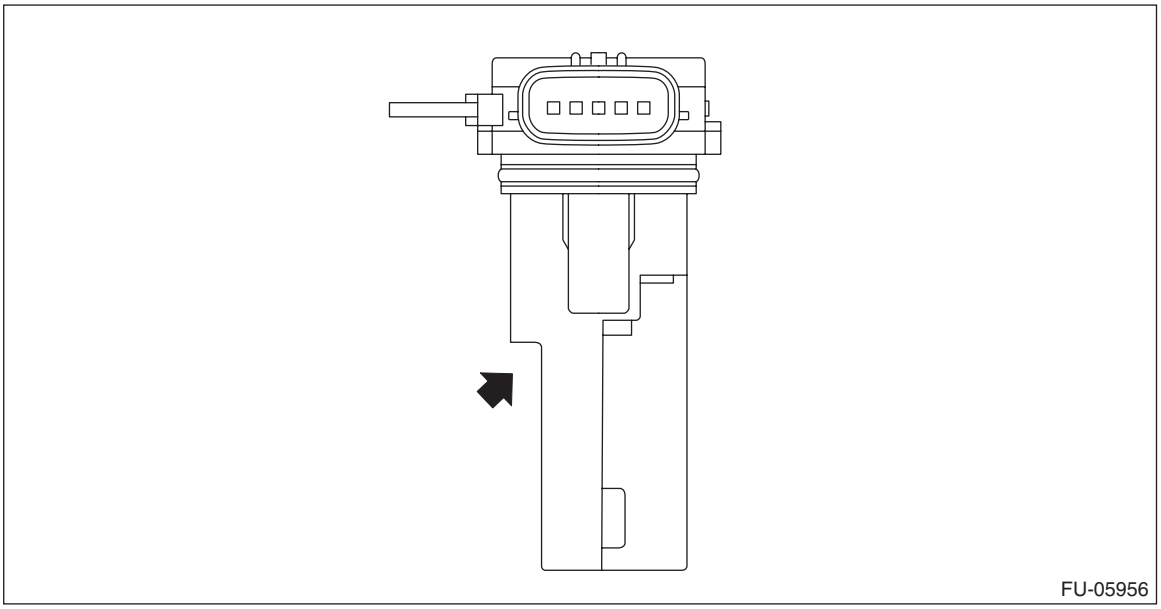

2. CHECK THE INTAKE AIR TEMPERATURE SENSOR UNIT

Measure the resistance between intake air temperature sensor terminals.

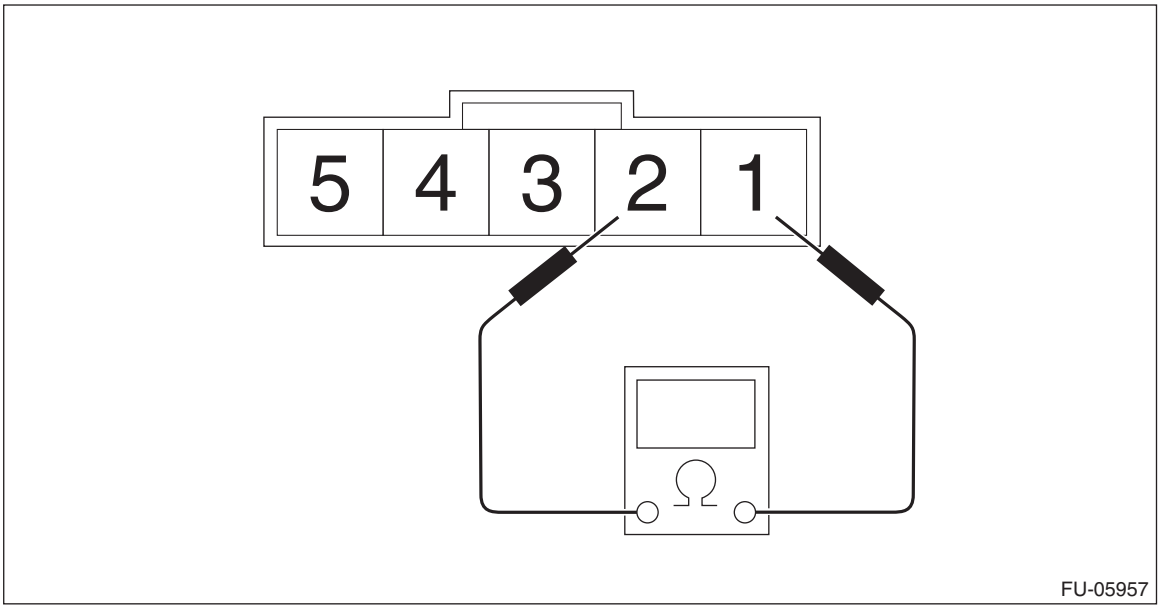

Temperature	Terminal No.	Standard
–20°C (–4°F)	1 and 2	16.0±2.4 kΩ
20°C (68°F)		2.45±0.24 kΩ
60°C (140°F)		0.58±0.087 kΩ

3. OTHER INSPECTIONS

1) Check that the mass air flow and intake air temperature sensor has no deformation, cracks or other damages.
2) Check that the mass air flow and intake air temperature sensor has no dirt.

14.Manifold Absolute Pressure Sensor

A: REMOVAL

1) Disconnect the ground terminal from battery sensor. <Ref. to RC-4, BATTERY, NOTE, Repair Contents.>
2) Disconnect the connector (A) from the manifold absolute pressure sensor, and remove the manifold absolute pressure sensor from intake manifold assembly.

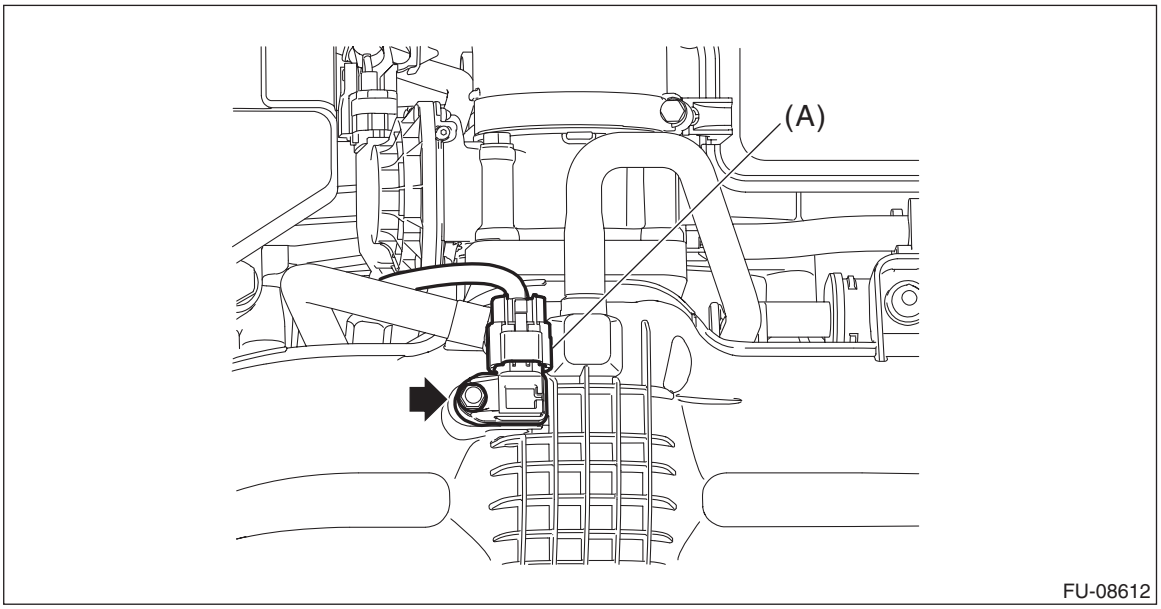

B: INSTALLATION

1) Install the manifold absolute pressure sensor to the intake manifold assembly, and connect the connector to the manifold absolute pressure sensor.

NOTE:
Use new O-rings.

Tightening torque:
3.4 N·m (0.3 kgf-m, 2.5 ft-lb)
2) Connect the ground terminal to battery sensor. <Ref. to RC-4, BATTERY, NOTE, Repair Contents.>

C: INSPECTION

1) Check that the manifold absolute pressure sensor has no deformation, cracks or other damages.
2) Connect dry-cell battery positive terminal to terminal No. 3 and dry-cell battery ground terminal to terminal No. 1, circuit tester positive terminal to terminal No. 2 and the circuit tester ground terminal to terminal No. 1.

NOTE:
- Use new dry-cell batteries.
- Using circuit tester, check that the initial voltage of a single dry-cell battery is 1.6 V or more. And also check that the voltage of three batteries in series is between 4.8 V and 5.2 V.
- For power supply, 5 V DC voltage source can also be used.

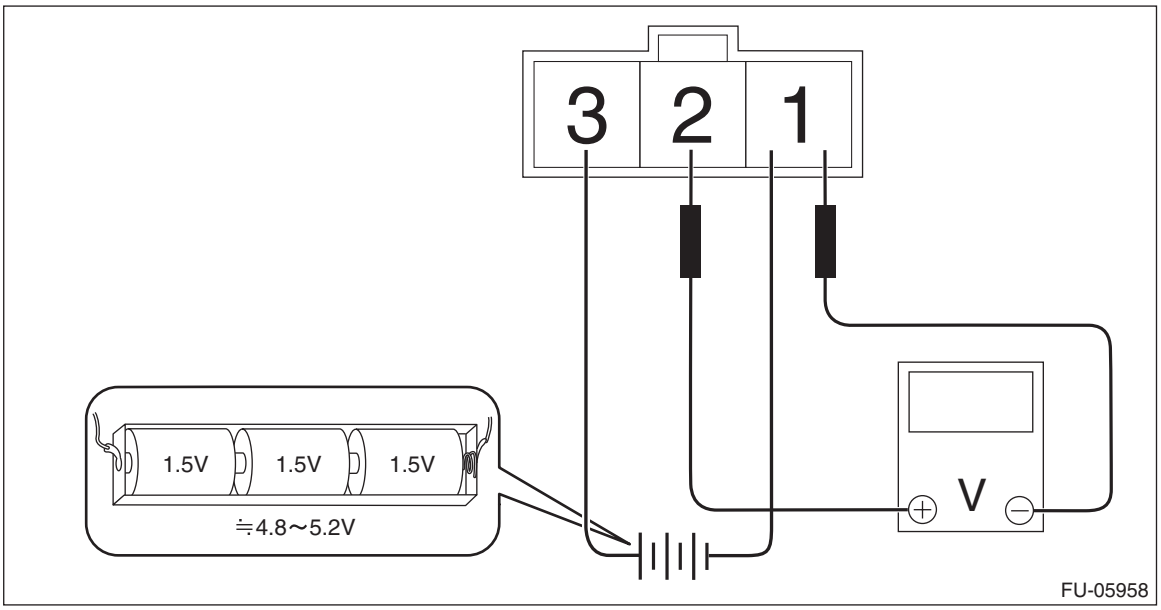

3) Check the voltage at a normal atmospheric pressure.

NOTE:
The atmospheric pressure at higher altitude is lower than normal. Therefore, the voltage is lower than the standard value.

Terminal No.	Standard
2 (+) and 1 (–)	Approx. 4.2 V (when 25°C (77°F))

4) Connect the Mighty Vac to the pressure port (A) of manifold absolute pressure sensor.

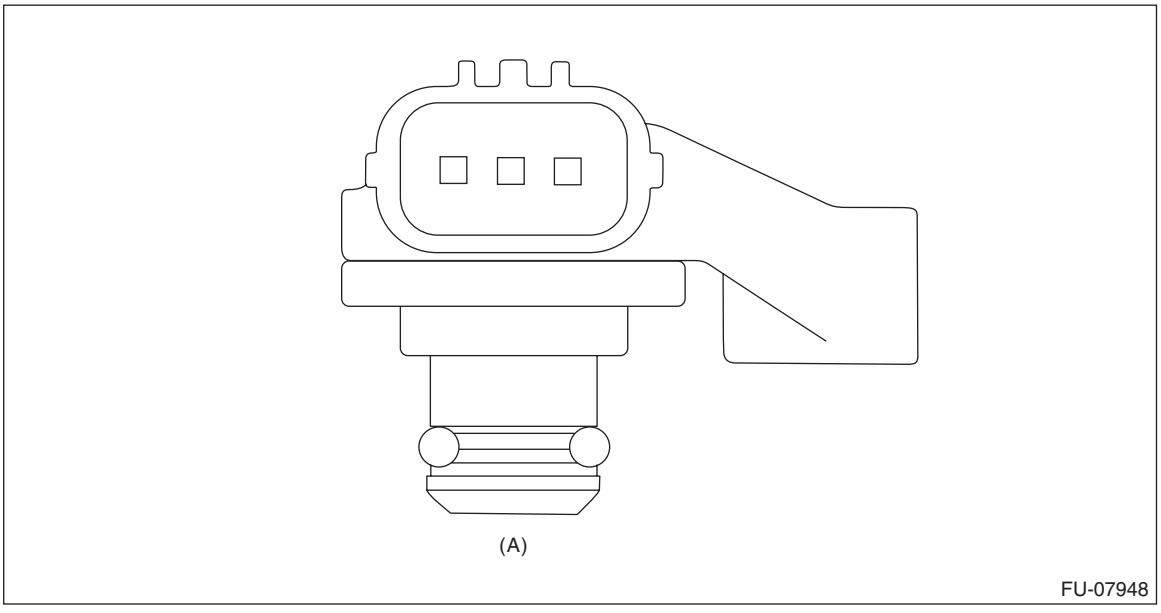

5) Check the voltage when generating vacuum using Mighty Vac.

CAUTION:
Do not apply vacuum of less than –88 kPa (–0.9 kg/cm^2, –12.8 psi). Doing so may damage the manifold absolute pressure sensor.

NOTE:
When vacuum occurs at the pressure port of manifold absolute pressure sensor, the voltage will drop from the value as in step 3).

Pressure	Terminal No.	Standard
–88 kPa (–0.9 kg/cm^2, –12.8 psi)	2 (+) and 1 (–)	Approx. 1 V (when 25°C (77°F))

15.Fuel Injector

A: REMOVAL

1) Release the fuel pressure. <Ref. to FU(H4DO)-90, RELEASING OF FUEL PRESSURE, PROCEDURE, Fuel.>
2) Disconnect the ground terminal from battery sensor. <Ref. to RC-4, BATTERY, NOTE, Repair Contents.>
3) Open the fuel filler lid and remove the fuel filler cap.

NOTE:
This operation is required to release the inner pressure of the fuel tank.

4) When removing the RH side, also perform the following steps.
   (1) Remove the clip (A), and loosen the clamps (B) and (C) securing the air intake boot.

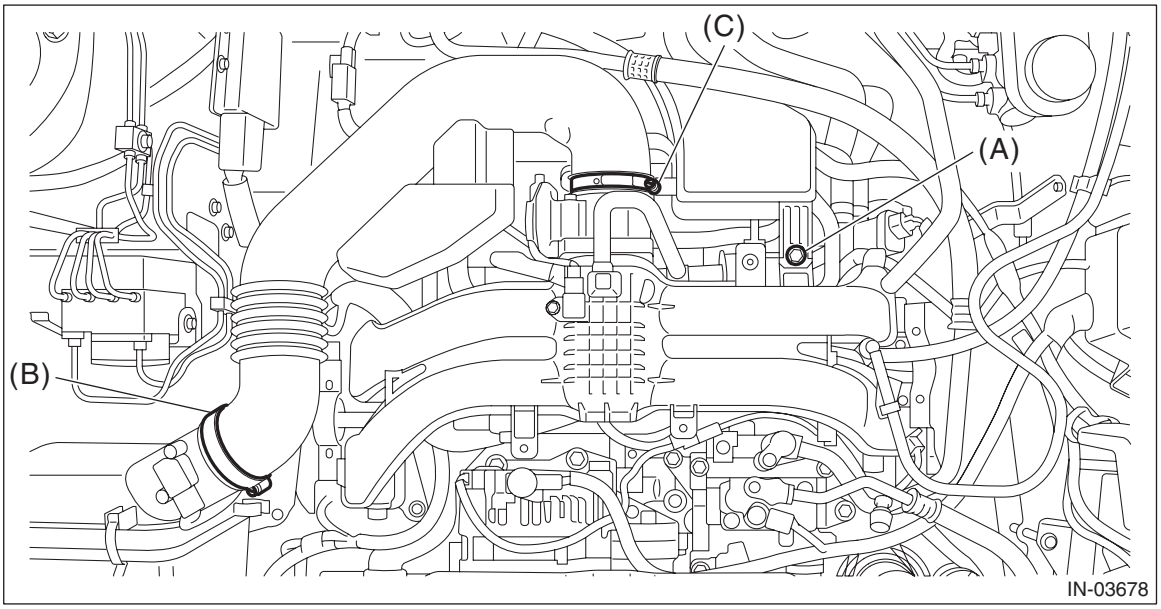

   (2) Remove the air intake boot from the air cleaner case (rear) and throttle body, and move it to the left side wheel apron.

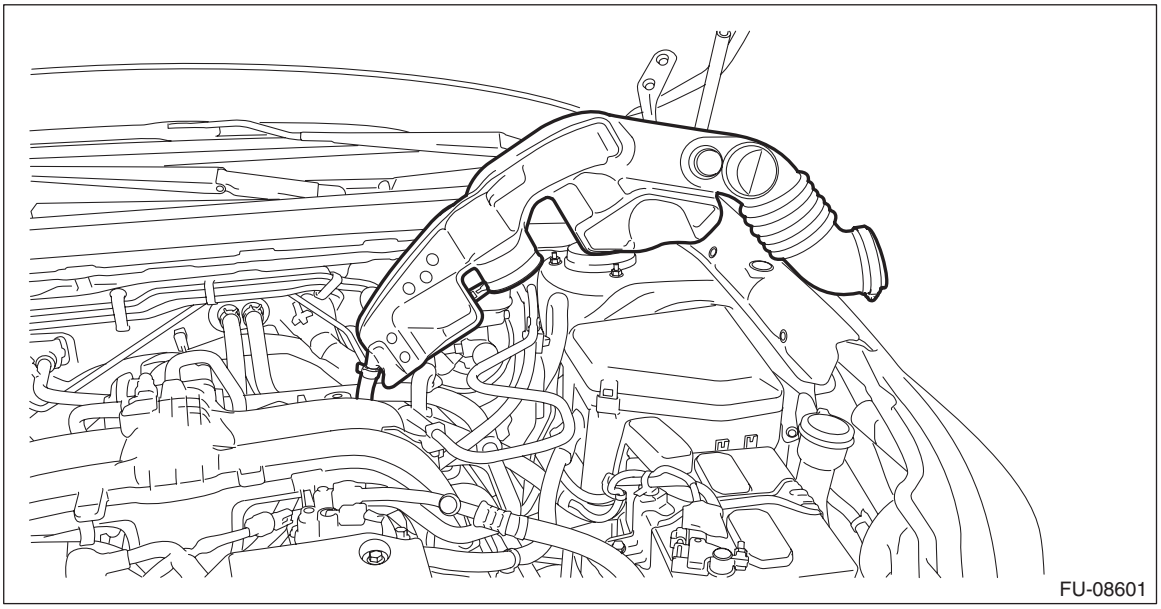

(3) Remove the air intake duct. <Ref. to IN(H4DO)-12, REMOVAL, Air Intake Duct.>
(4) Disconnect the connector (A) from the mass air flow and intake air temperature sensor, and remove the clip (B) securing the bulkhead wiring harness.
(5) Remove the clip (C), and the air cleaner case (rear) together with the air cleaner element.

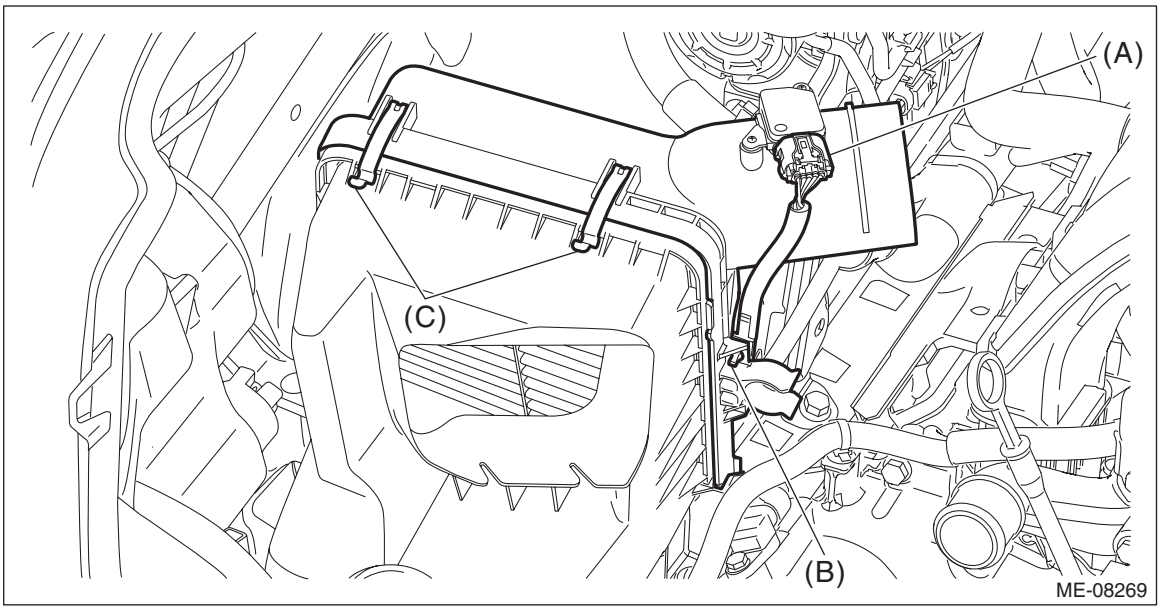

(6) Remove the intake manifold protector RH.

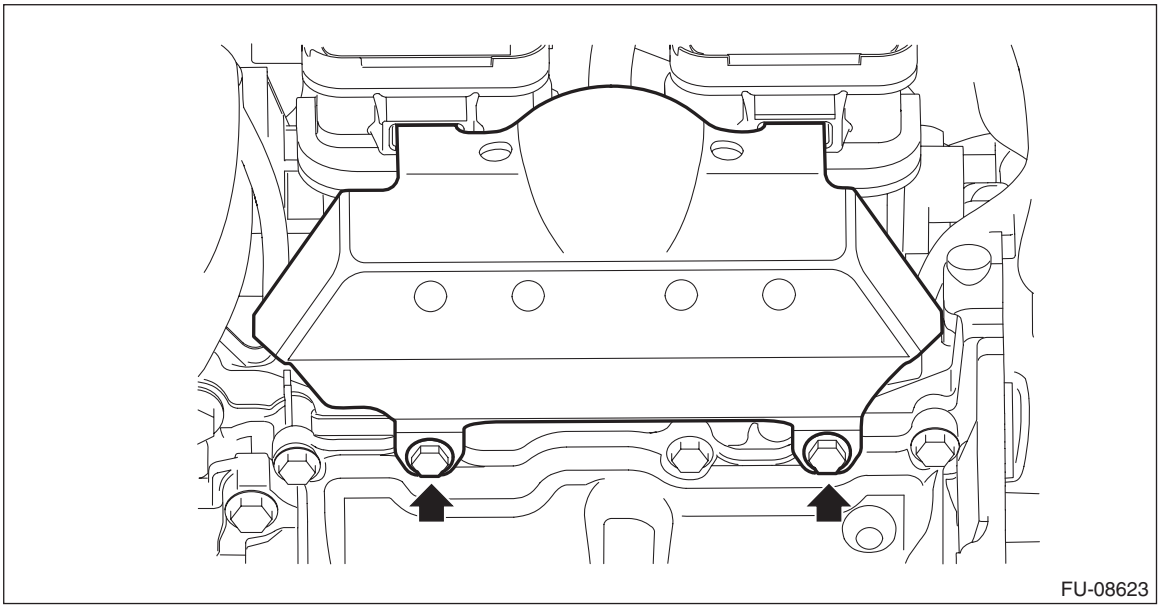

5) When removing the LH side, also perform the following steps.
(1) Remove the clip (A) securing the engine harness to the intake manifold protector LH to remove the intake manifold protector LH.

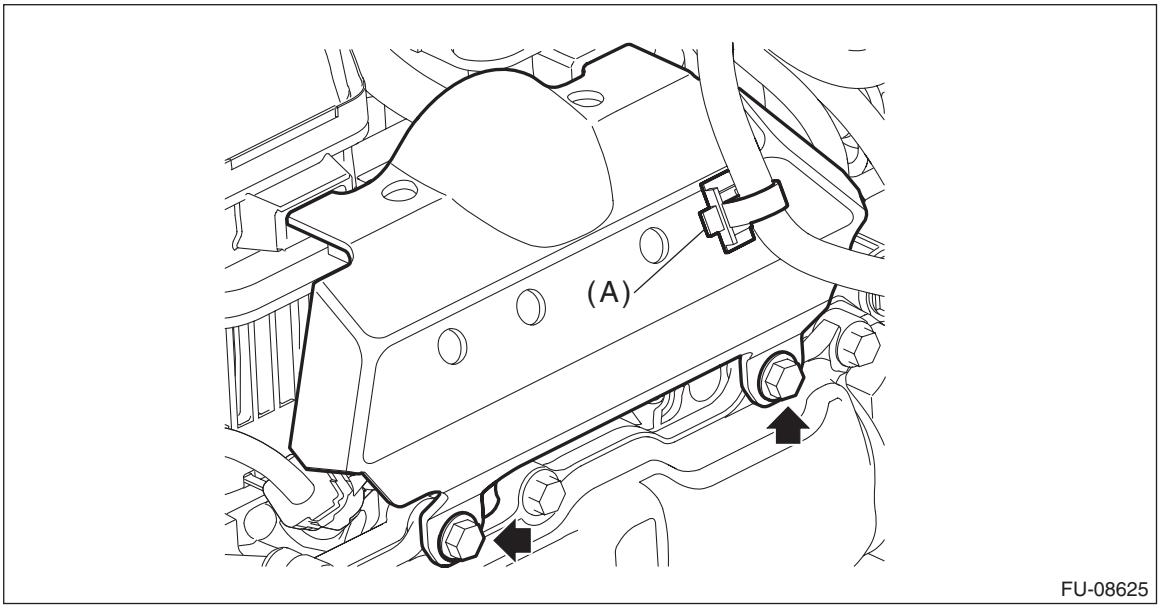

6) Disconnect the connectors (A) from fuel injector.
7) Disconnect the fuel delivery pipe (B) from the fuel pipe.

CAUTION:
- **Be careful not to spill fuel.**
- **Catch the fuel from the pipes using a container or cloth.**

NOTE:
Disconnect the quick connector as shown in the figure.

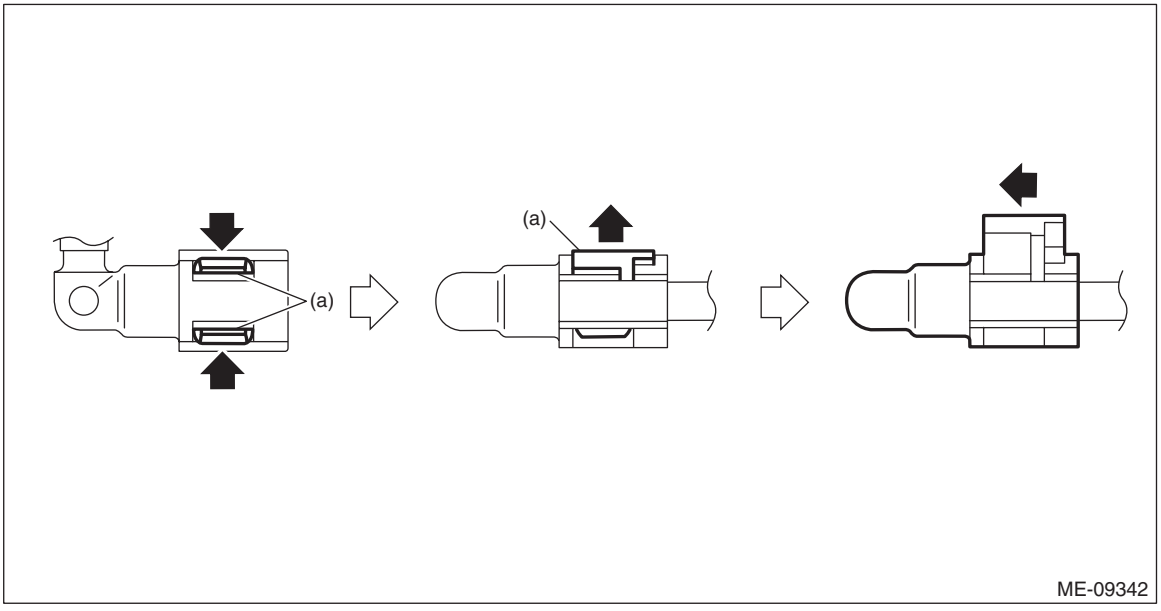

(a) Slider

8) Remove the bolt securing the fuel pipe to the cam carrier, and remove the fuel injector together with the fuel pipe.

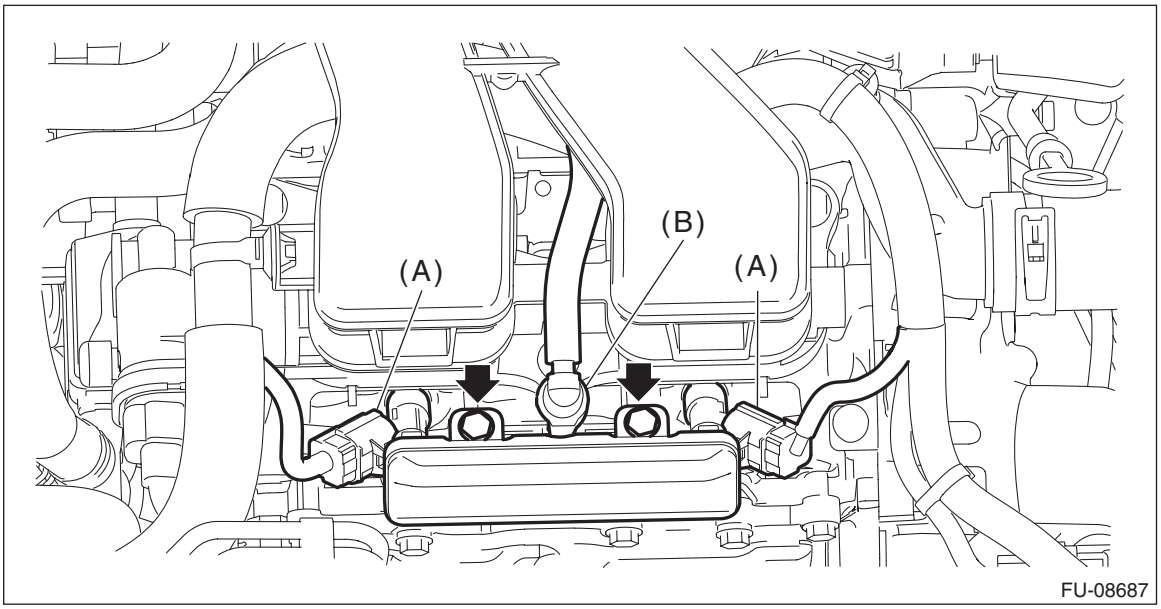

9) Remove the fuel injector from the fuel pipe.

CAUTION:
- **Be careful not to spill fuel.**
- **Catch the fuel from the pipes using a container or cloth.**

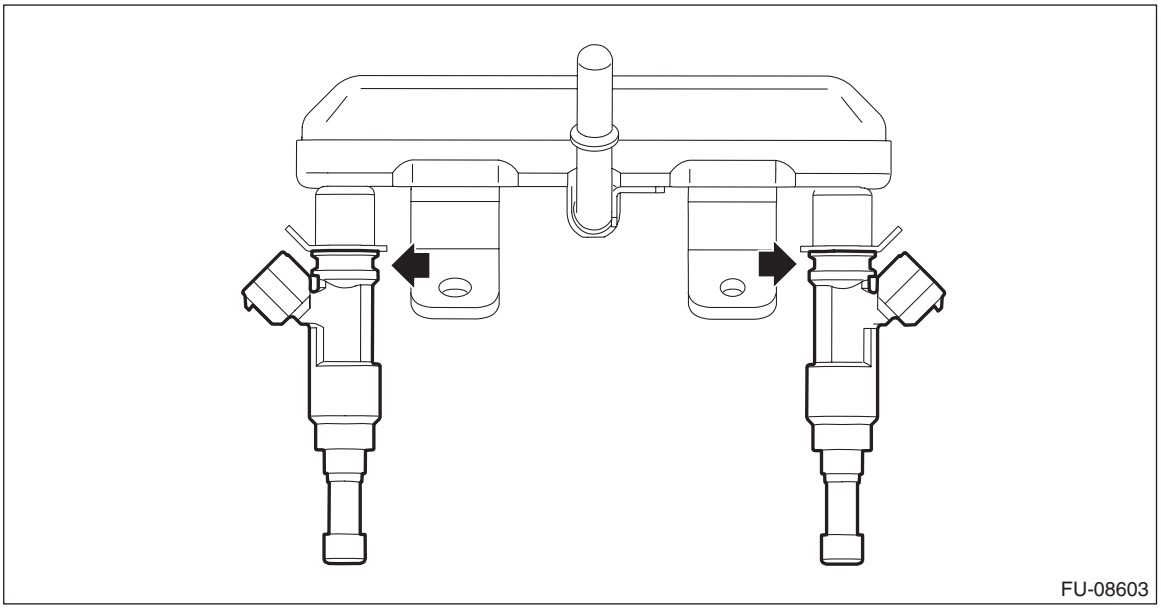

B: INSTALLATION

1) Install the fuel injector to the fuel pipe.

NOTE:
Use new O-rings and rubbers.

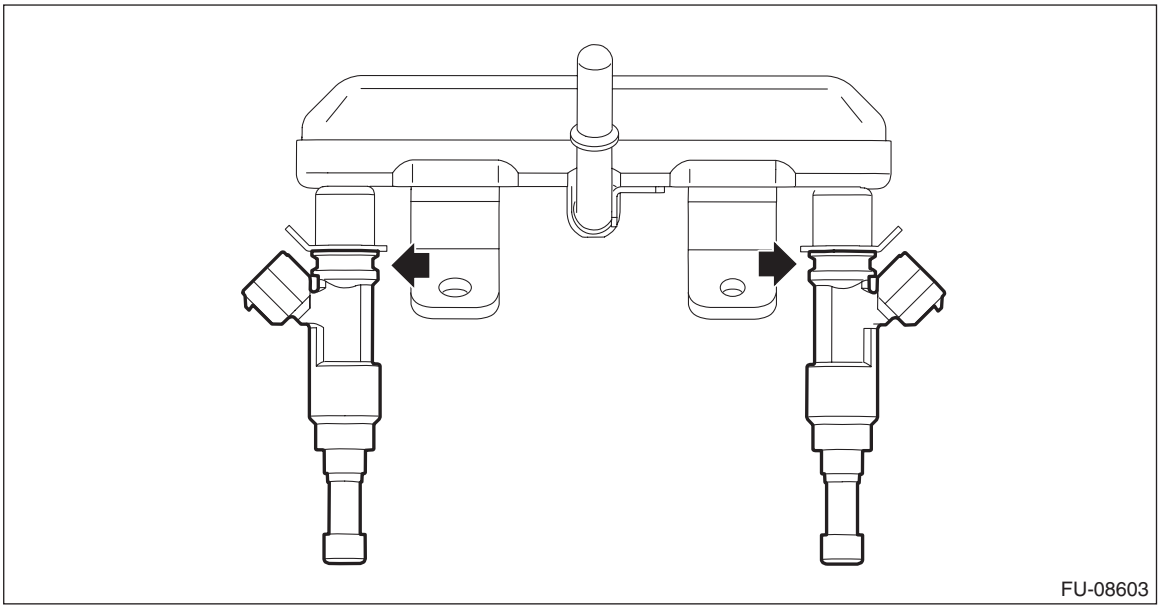

2) Install the fuel injector and fuel pipe as a unit, and install the bolt securing the fuel pipe to the cam carrier.

NOTE:
Use new seal rings.

Tightening torque:
6.4 N·m (0.7 kgf-m, 4.7 ft-lb)

3) Connect the fuel delivery pipe (B) to the fuel pipe LH.

CAUTION:
- **Check that there is no damage or dust on the quick connector. If necessary, clean the seal surface of the pipe.**
- **When connecting the quick connector, make sure to insert it all the way in before locking the slider.**
- **When it is difficult to lock the slider, check that the connector is fully inserted.**
- **After locking the slider, check again that the quick connector is securely connected.**

NOTE:
Connect the quick connector as shown in the figure.

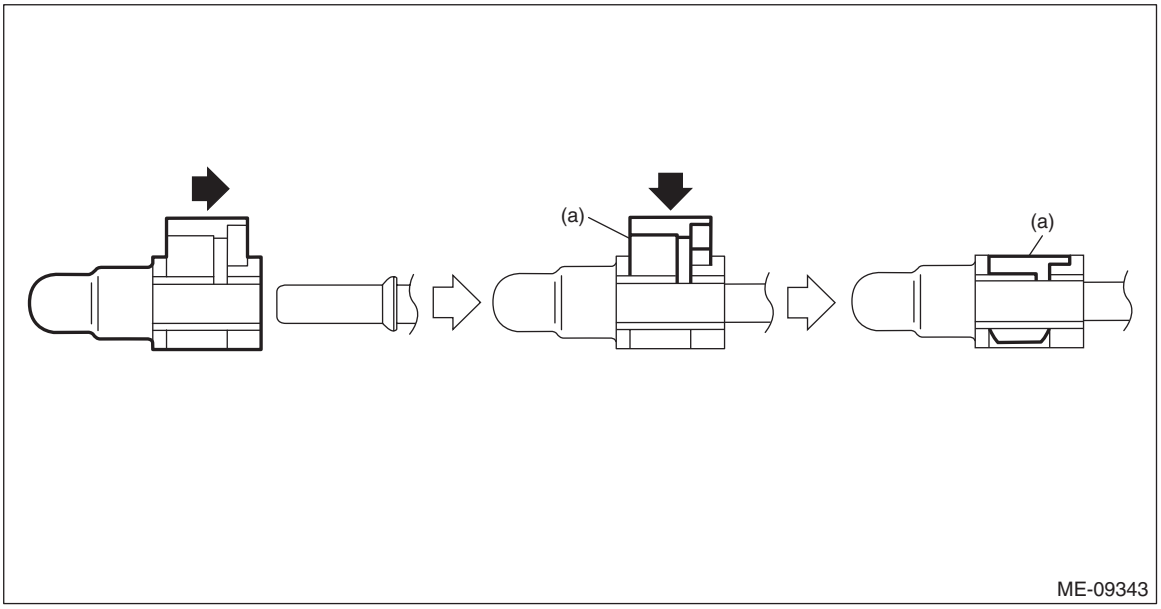

(a) Slider

4) Connect the connectors (A) to fuel injector.

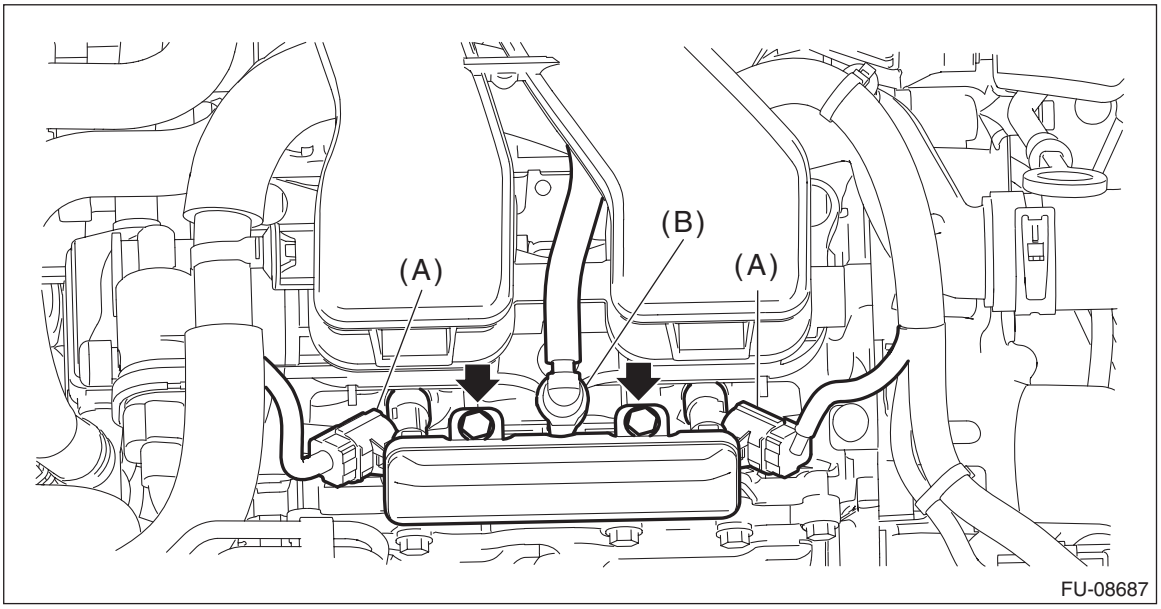

5) Install the intake manifold protector RH. (RH side only)

Tightening torque:
6.4 N·m (0.7 kgf-m, 4.7 ft-lb)

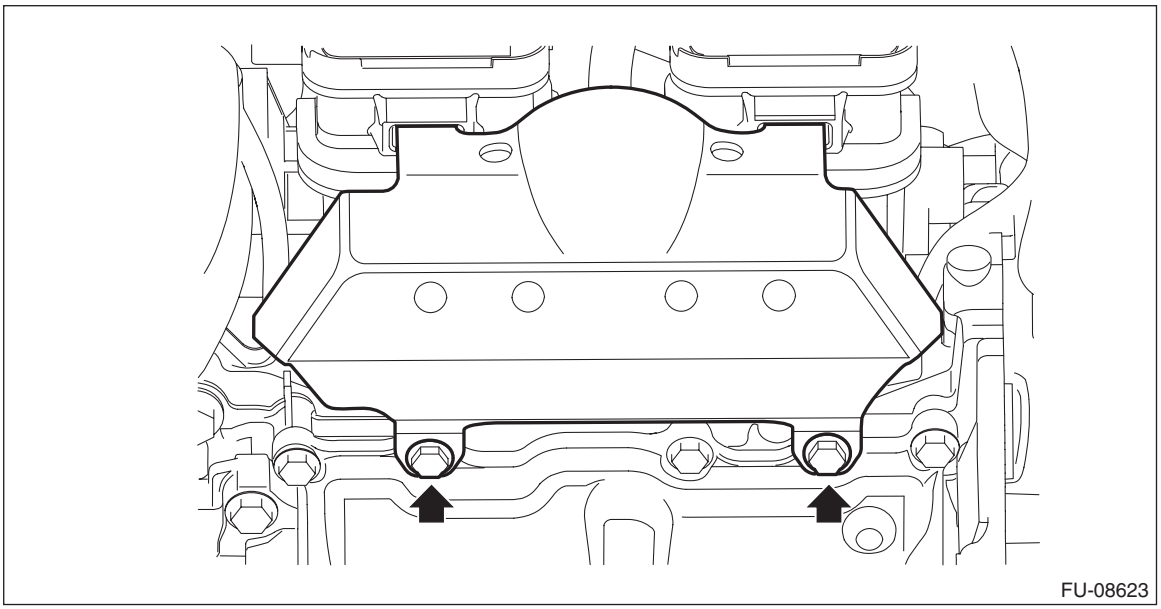

6) Install the intake manifold protector LH, and install the clip (A) securing the engine harness to the intake manifold protector LH. (LH side only)

Tightening torque:
6.4 N·m (0.7 kgf-m, 4.7 ft-lb)

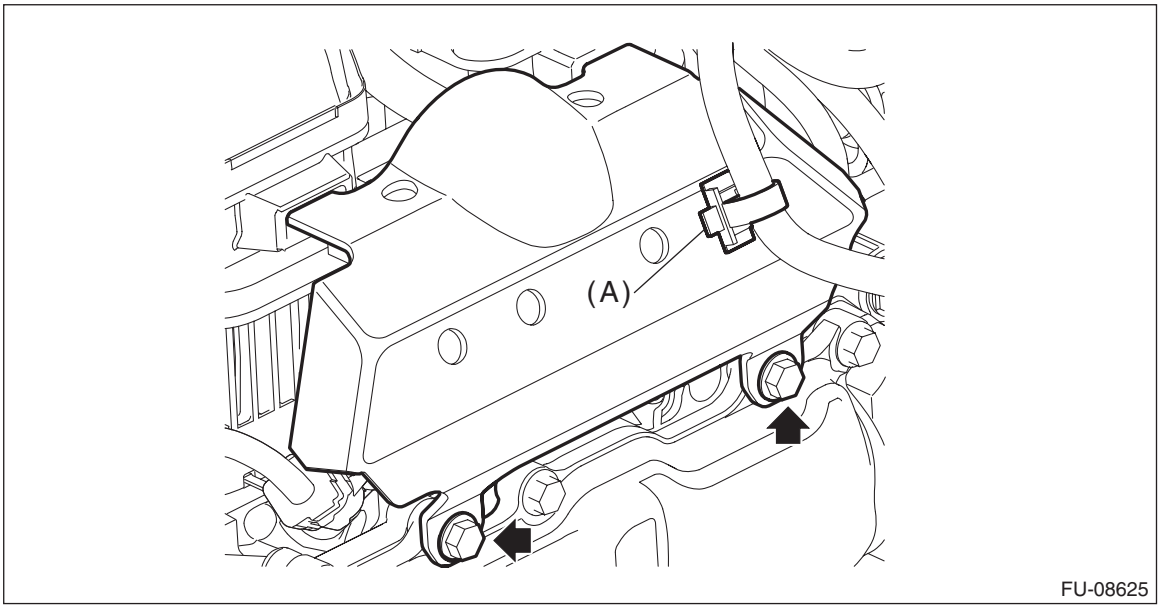

7) Install the air cleaner case (rear) together with the air cleaner element. (RH side only) <Ref. to IN(H4DO)-9, INSTALLATION, Air Cleaner Case.>

8) Secure the bulkhead wiring harness with clip (B) and connect the connector (A) to the mass air flow and intake air temperature sensor. (RH side only)

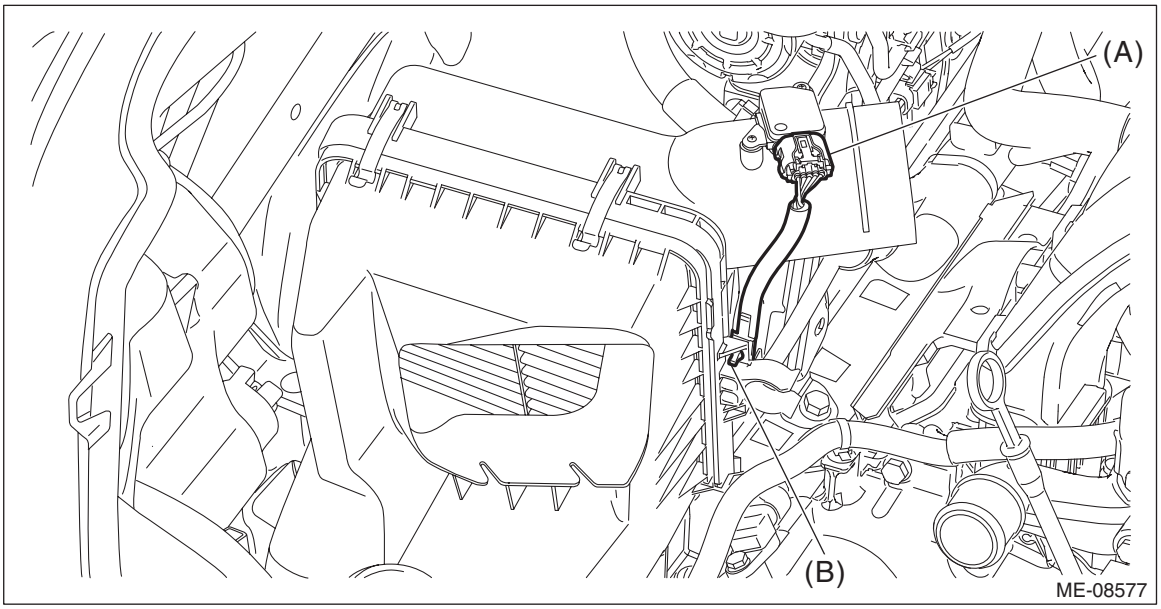

9) Install the air intake duct. (RH side only) <Ref. to IN(H4DO)-12, INSTALLATION, Air Intake Duct.>
10) Install the air intake boot. (RH side only) <Ref. to IN(H4DO)-10, INSTALLATION, Air Intake Boot.>
11) Connect the ground terminal to battery sensor. <Ref. to RC-4, BATTERY, NOTE, Repair Contents.>

C: INSPECTION

1) Check that the fuel injector has no deformation, cracks or other damages.
2) Measure the resistance between fuel injector terminals.

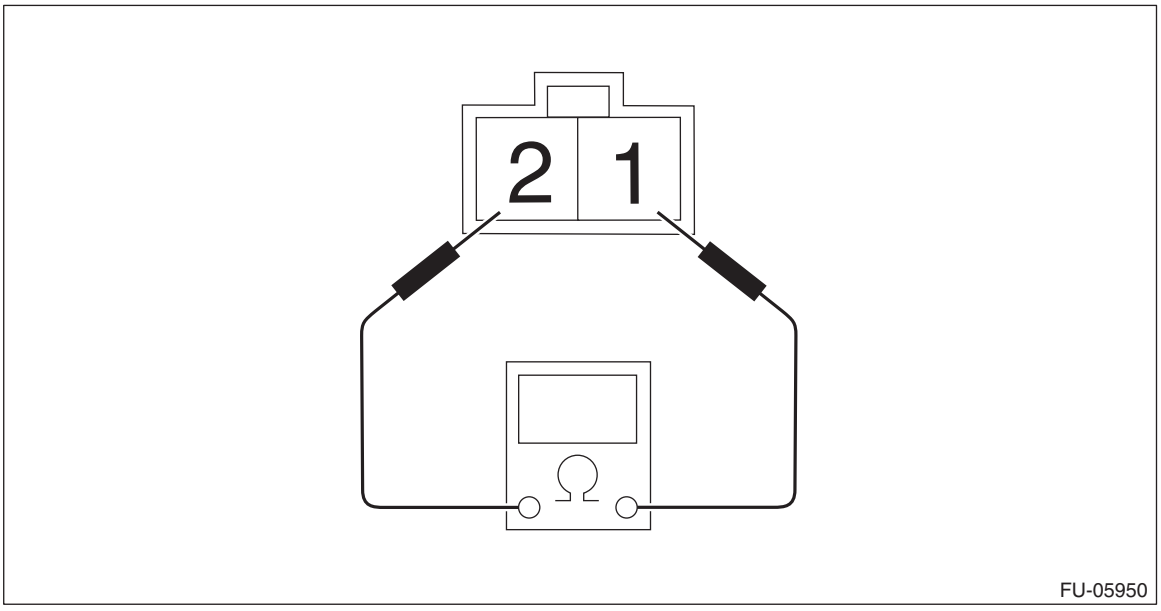

Terminal No.	Standard
1 and 2	Approx. 12.0 Ω (when 20°C (68°F))

16.Tumble Generator Valve

A: SPECIFICATION

The tumble generator valve is integrated in the intake manifold assembly.
Refer to “Intake Manifold Assembly” for removal and installation. <Ref. to FU(H4DO)-18, REMOVAL, Intake Manifold Assembly.> <Ref. to FU(H4DO)-26, INSTALLATION, Intake Manifold Assembly.>

17.Tumble Generator Valve Actuator

A: SPECIFICATION

The tumble generator valve actuator must not be removed from the intake manifold assembly since it is integrated in the intake manifold assembly.
Refer to “Intake Manifold Assembly” for removal and installation. <Ref. to FU(H4DO)-18, REMOVAL, Intake Manifold Assembly.> <Ref. to FU(H4DO)-26, INSTALLATION, Intake Manifold Assembly.>

18.Front Oxygen (A/F) Sensor

A: REMOVAL

1) Disconnect the ground terminal from battery sensor. <Ref. to RC-4, BATTERY, NOTE, Repair Contents.>
2) Lift up the vehicle.
3) Remove the under cover. <Ref. to EI-28, REMOVAL, Front Under Cover.>
4) Disconnect the front oxygen (A/F) sensor connector, and remove the clip holding the front oxygen (A/F) sensor harness.

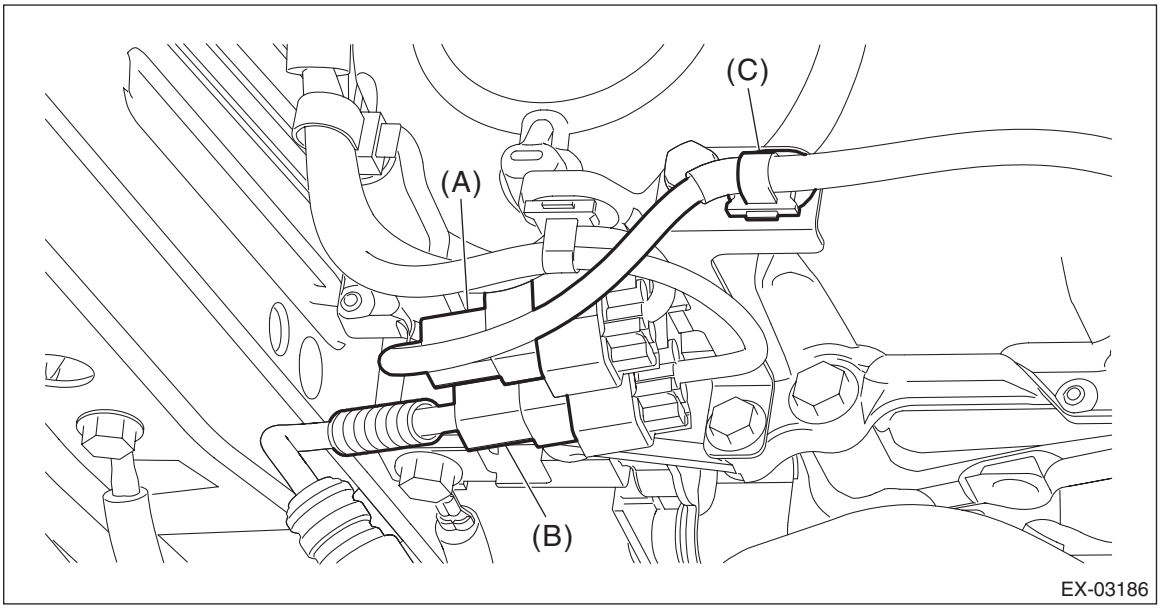

(A) Front oxygen (A/F) sensor connector
(B) Rear oxygen sensor connector
(C) Clip

5) Lower the vehicle.
6) Apply spray-type lubricant (004301003) or equivalent to the threaded portion of front oxygen (A/F) sensor, and leave it for one minute or more.
7) Remove the front oxygen (A/F) sensor.

CAUTION:
When removing the front oxygen (A/F) sensor, wait until exhaust pipe cools, otherwise it will damage the exhaust pipe.

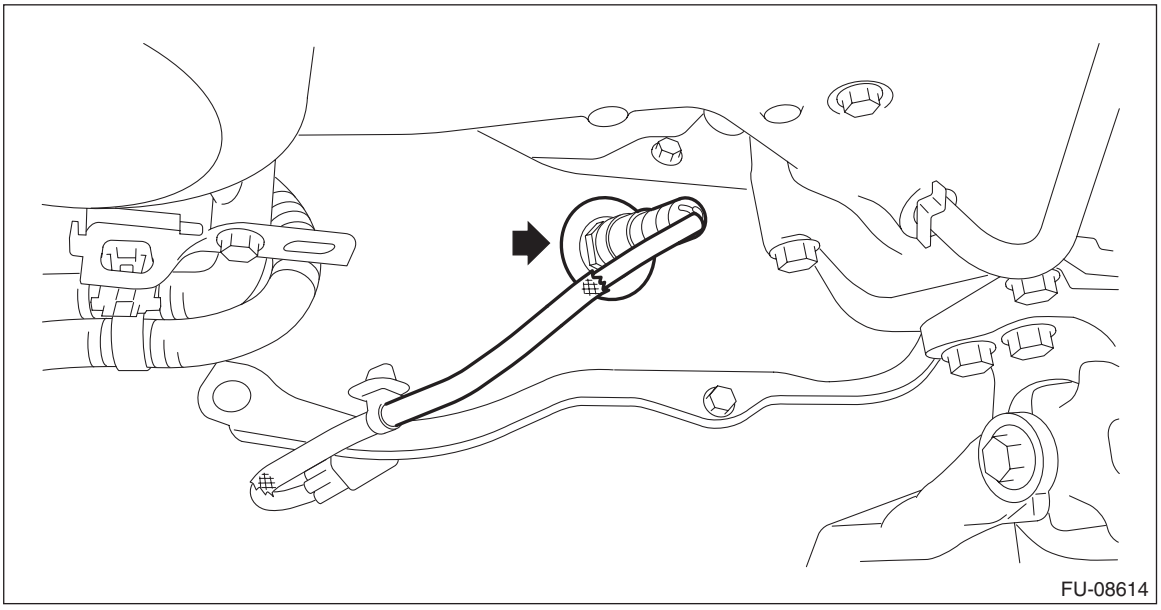

B: INSTALLATION

CAUTION:
If lubricant is spilt over the exhaust pipe, wipe it off with cloth to avoid emission of smoke or causing a fire.

1) Before installing front oxygen (A/F) sensor, apply anti-seize compound only to the threaded portion of front oxygen (A/F) sensor to make the next removal easier.

CAUTION:
Never apply anti-seize compound to the protector of front oxygen (A/F) sensor.

Anti-seize compound:
NEVER-SEEZ NSN, JET LUBE SS-30 or equivalent

2) Install the front oxygen (A/F) sensor.

Tightening torque:
21 N·m (2.1 kgf-m, 15.5 ft-lb)

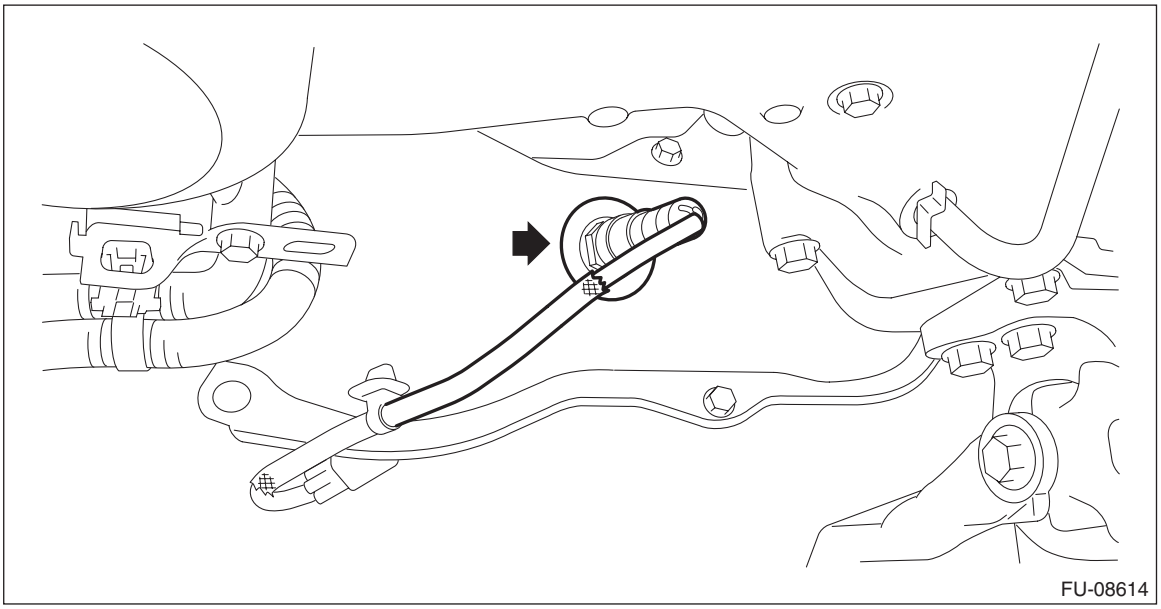

3) Lift up the vehicle.

4) Connect the front oxygen (A/F) sensor connector, and secure the front oxygen (A/F) sensor harness by using the clip.

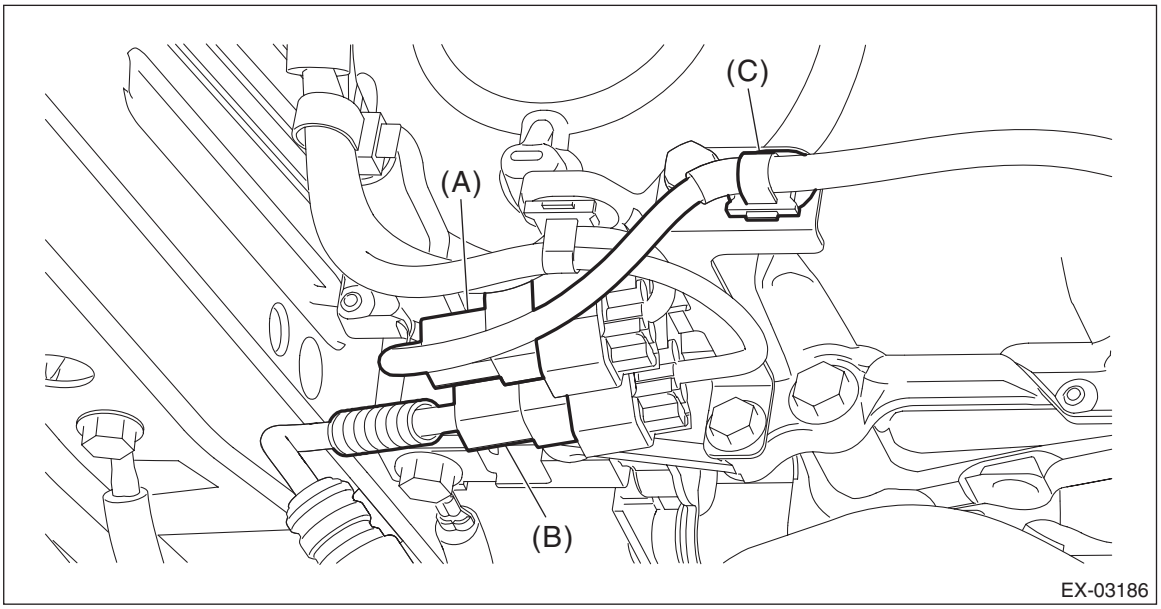

(A) Front oxygen (A/F) sensor connector
(B) Rear oxygen sensor connector
(C) Clip

5) Install the under cover. <Ref. to EI-28, INSTALLATION, Front Under Cover.>
6) Lower the vehicle.
7) Connect the ground terminal to battery sensor. <Ref. to RC-4, BATTERY, NOTE, Repair Contents.>

C: INSPECTION

1) Check that the front oxygen (A/F) sensor has no deformation, cracks or other damages.
2) Measure the resistance between front oxygen (A/F) sensor terminals.

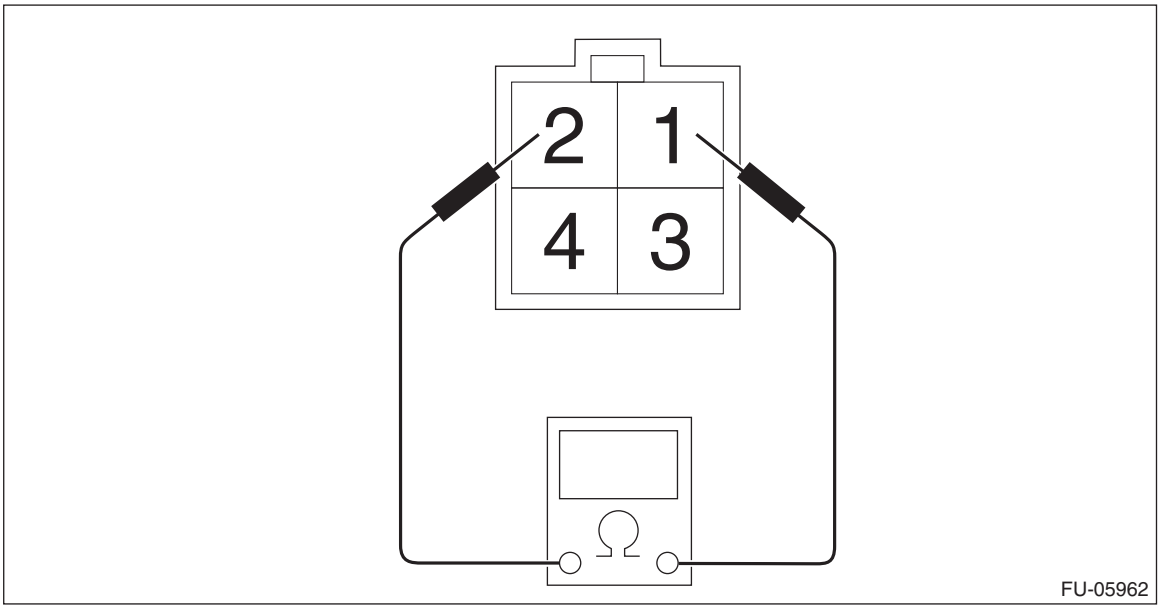

Terminal No.	Standard
1 and 2	$2.0^{+0.42}_{-0.2}$ Ω (when 20°C (68°F))

19.Rear Oxygen Sensor

A: REMOVAL

1) Disconnect the ground terminal from battery sensor. <Ref. to RC-4, BATTERY, NOTE, Repair Contents.>
2) Lift up the vehicle.
3) Remove the under cover. <Ref. to EI-28, REMOVAL, Front Under Cover.>
4) Disconnect the rear oxygen sensor connector.

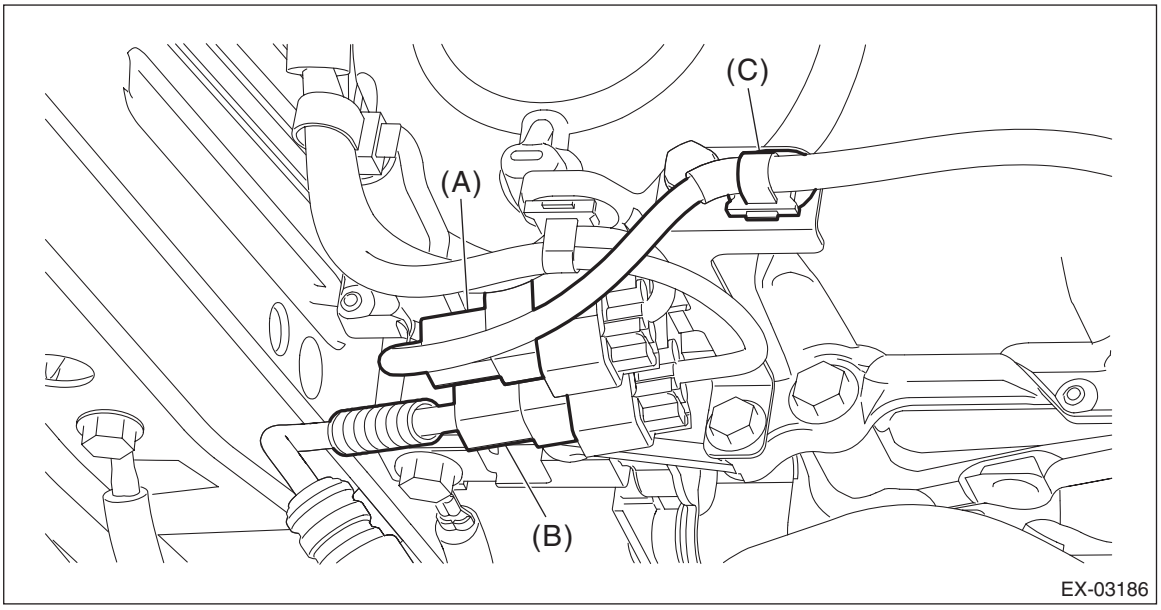

(A) Front oxygen (A/F) sensor connector
(B) Rear oxygen sensor connector
(C) Clip

5) Remove the front mud guard RH. <Ref. to EI-29, REMOVAL, Mud Guard.>
6) Apply spray-type lubricant (004301003) or equivalent to the threaded portion of rear oxygen sensor, and leave it for one minute or more.
7) Remove the rear oxygen sensor.

CAUTION:
When removing the rear oxygen sensor, wait until exhaust pipe cools, otherwise it will damage the exhaust pipe.

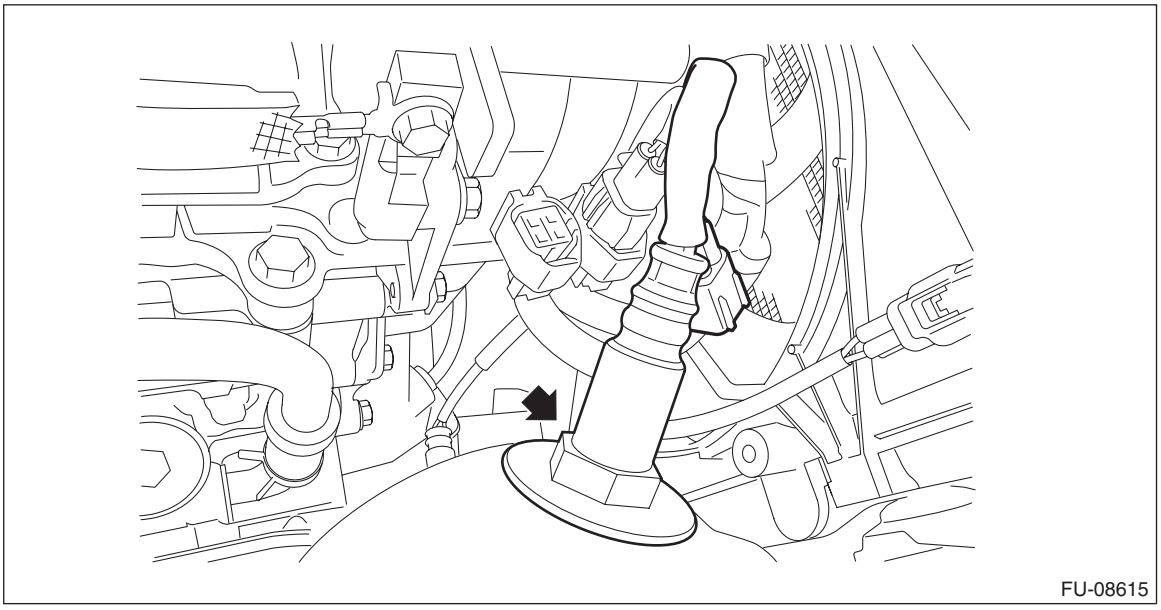

B: INSTALLATION

CAUTION:
If lubricant is spilt over the exhaust pipe, wipe it off with cloth to avoid emission of smoke or causing a fire.

1) Before installing rear oxygen sensor, apply the anti-seize compound only to the threaded portion of rear oxygen sensor to make the next removal easier.

CAUTION:
Never apply anti-seize compound to the protector of rear oxygen sensor.

Anti-seize compound:
NEVER-SEEZ NSN, JET LUBE SS-30 or equivalent

2) Install the rear oxygen sensor.

Tightening torque:
21 N·m (2.1 kgf-m, 15.5 ft-lb)

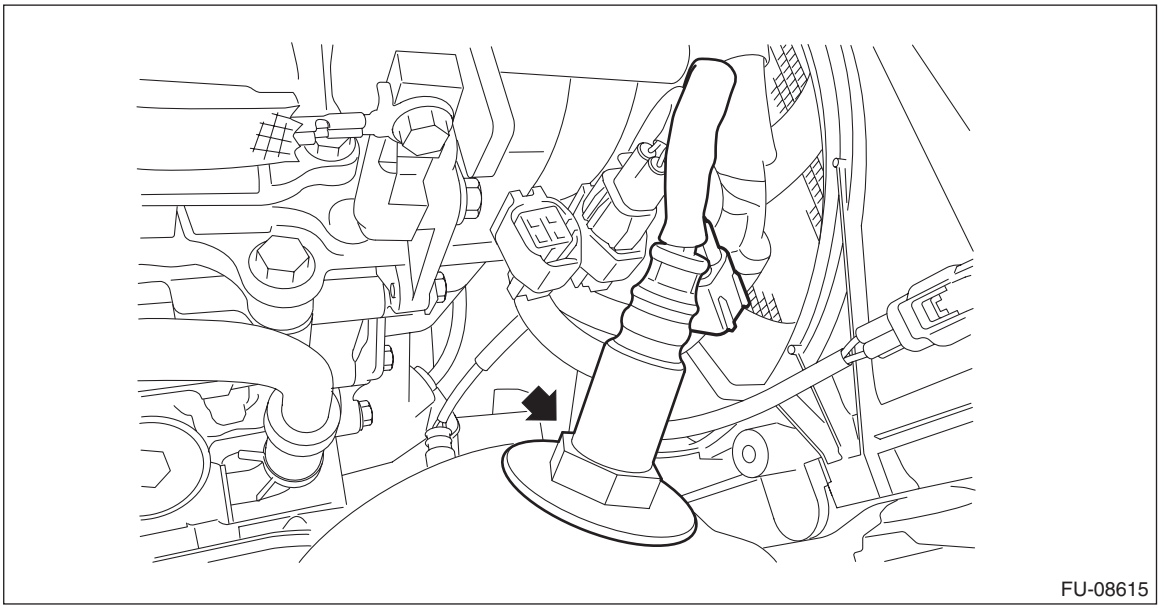

3) Install the front mud guard RH. <Ref. to EI-29, INSTALLATION, Mud Guard.>

4) Connect the rear oxygen sensor connector.

NOTE:
Be careful not to allow the rear oxygen sensor harness to interfere with the sensor unit and the front oxygen (A/F) sensor harness.

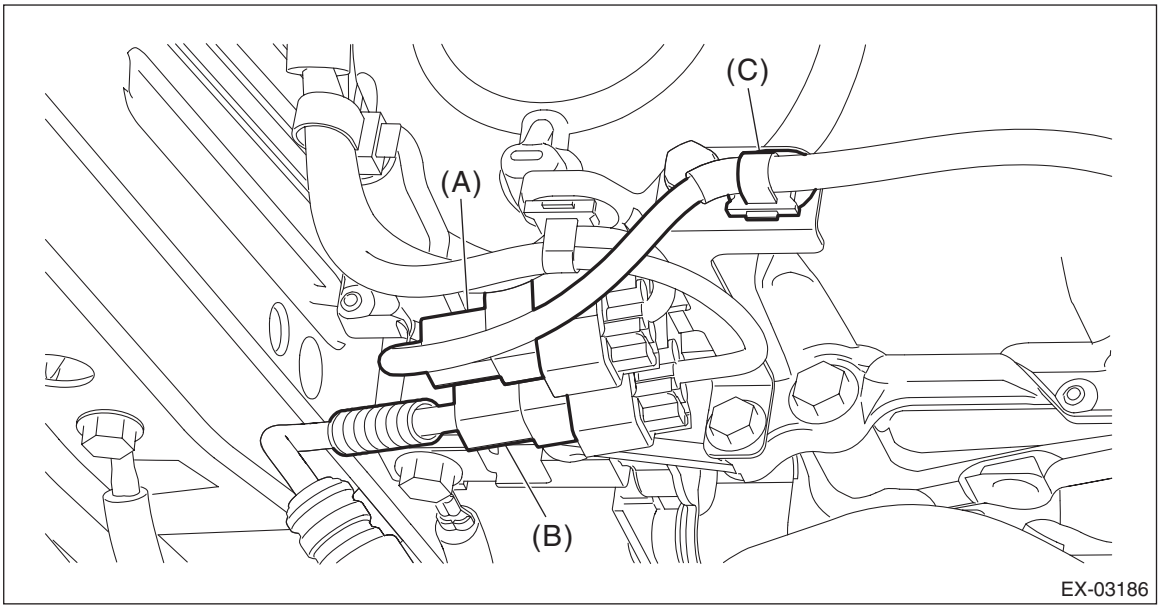

(A) Front oxygen (A/F) sensor connector
(B) Rear oxygen sensor connector
(C) Clip

5) Install the under cover. <Ref. to EI-28, INSTALLATION, Front Under Cover.>
6) Lower the vehicle.
7) Connect the ground terminal to battery sensor. <Ref. to RC-4, BATTERY, NOTE, Repair Contents.>

C: INSPECTION

1) Check that the rear oxygen sensor has no deformation, cracks or other damages.
2) Measure the resistance between rear oxygen sensor terminals.

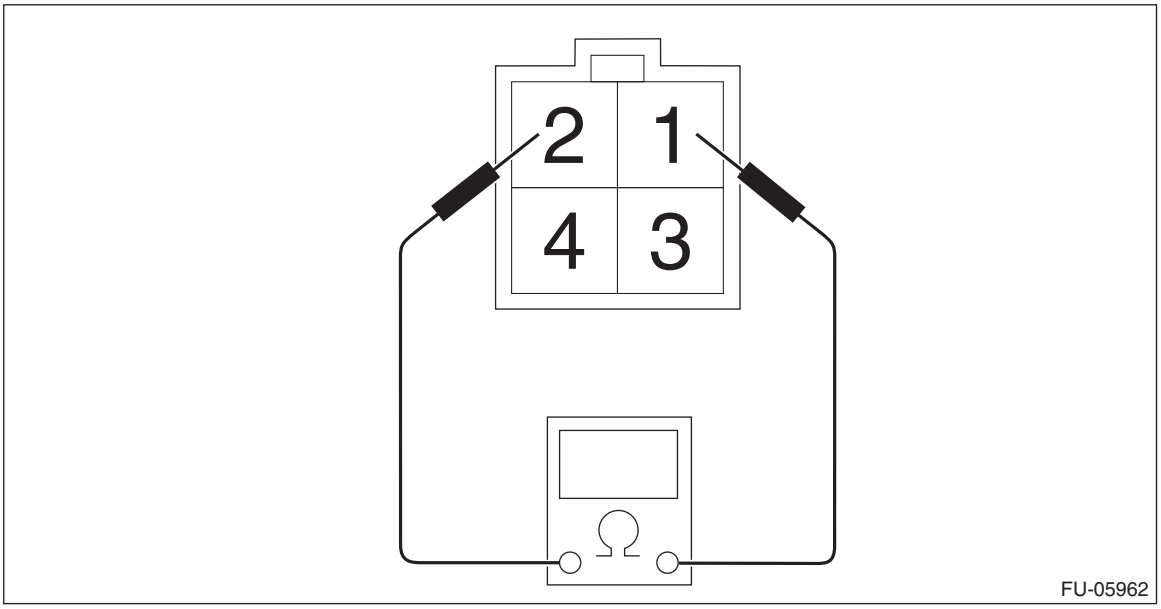

Terminal No.	Standard
1 and 2	$5.6^{+1.7}_{-0.6}$ Ω (when 20°C (68°F))

20.Engine Control Module (ECM)

A: REMOVAL

1) Disconnect the ground terminal from battery sensor. <Ref. to RC-4, BATTERY, NOTE, Repair Contents.>
2) While pressing the section (A) shown in the figure, move the lock lever (B) in the direction of the arrow to disconnect the connectors from the ECM in numerical order as shown in the figure.
3) Remove the ECM from the ECM bracket.

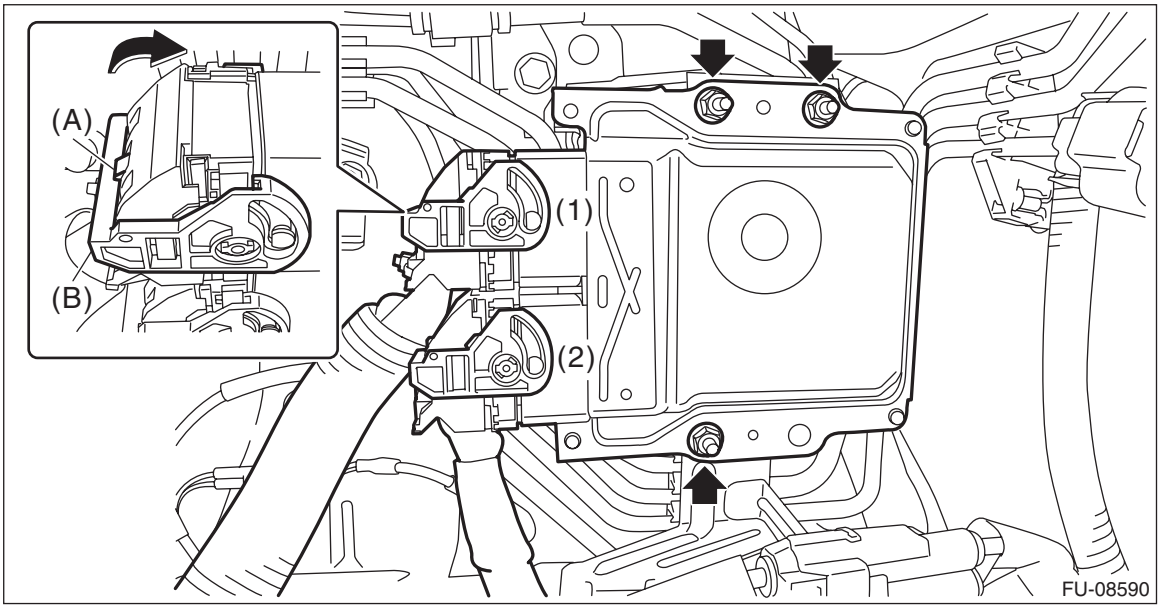

4) Remove the connector (A) and connector (B) from the ECM bracket, and remove the clip (C) securing the harness.
5) Remove the ECM bracket from the vehicle.

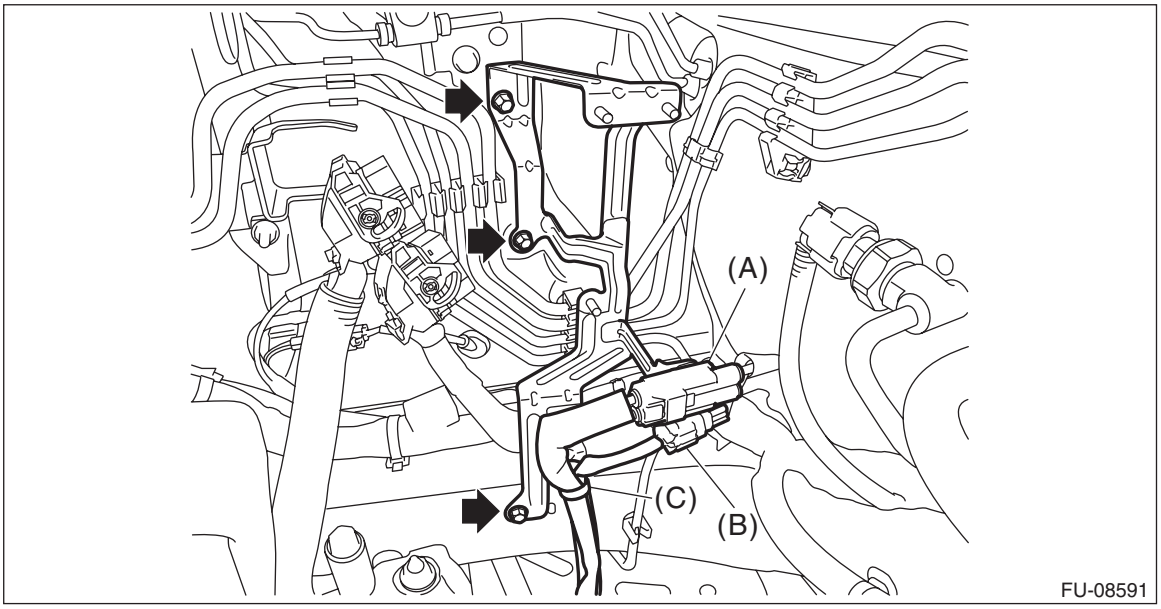

B: INSTALLATION

CAUTION:
When the ECM of model with immobilizer has been replaced, be sure to perform the registration of immobilizer system. (Refer to the "REGISTRATION MANUAL FOR IMMOBILIZER".)

NOTE:
When replacing the ECM, be careful not to use the ECM of wrong specification to avoid any damage on the fuel injection system.
1) Install the ECM bracket to the vehicle.

Tightening torque:
7.5 N·m (0.8 kgf-m, 5.5 ft-lb)
2) Connect the connector to the ECM bracket, and install the clip securing the harness.
3) Install the ECM to the ECM bracket.

Tightening torque:
7.5 N·m (0.8 kgf-m, 5.5 ft-lb)
4) Move the lock lever in the direction of the arrow, and connect the connector to the ECM in numerical order as shown in the figure.

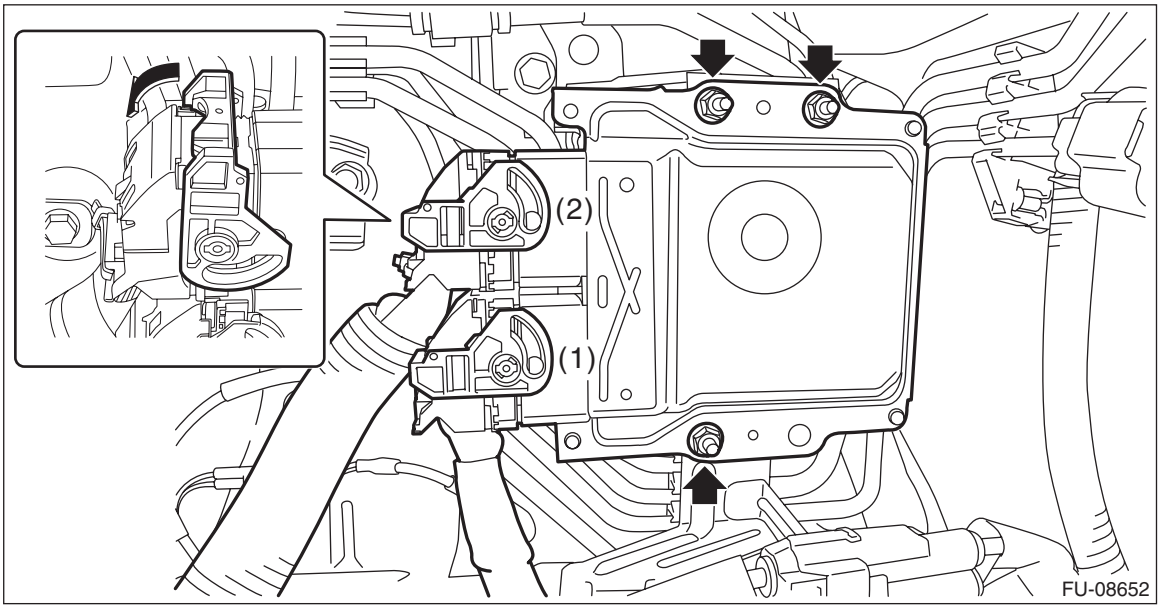

5) Connect the ground terminal to battery sensor. <Ref. to RC-4, BATTERY, NOTE, Repair Contents.>

C: INSPECTION

Check that the ECM has no deformation, cracks or other damages.

21.Main Relay

A: REMOVAL

1) Disconnect the ground terminal from battery sensor. <Ref. to RC-4, BATTERY, NOTE, Repair Contents.>
2) Remove the main relay from main fuse box.

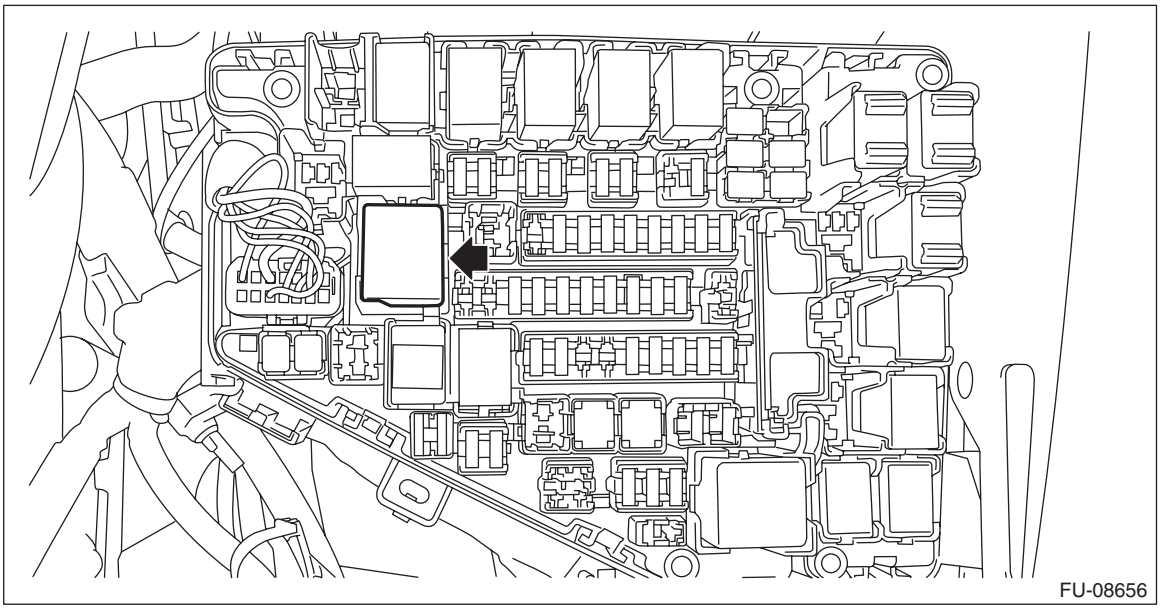

B: INSTALLATION

1) Install the main relay to the main fuse box.
2) Connect the ground terminal to battery sensor. <Ref. to RC-4, BATTERY, NOTE, Repair Contents.>

C: INSPECTION

1) Check that the main relay has no deformation, cracks or other damages.
2) Measure the resistance between main relay terminals.

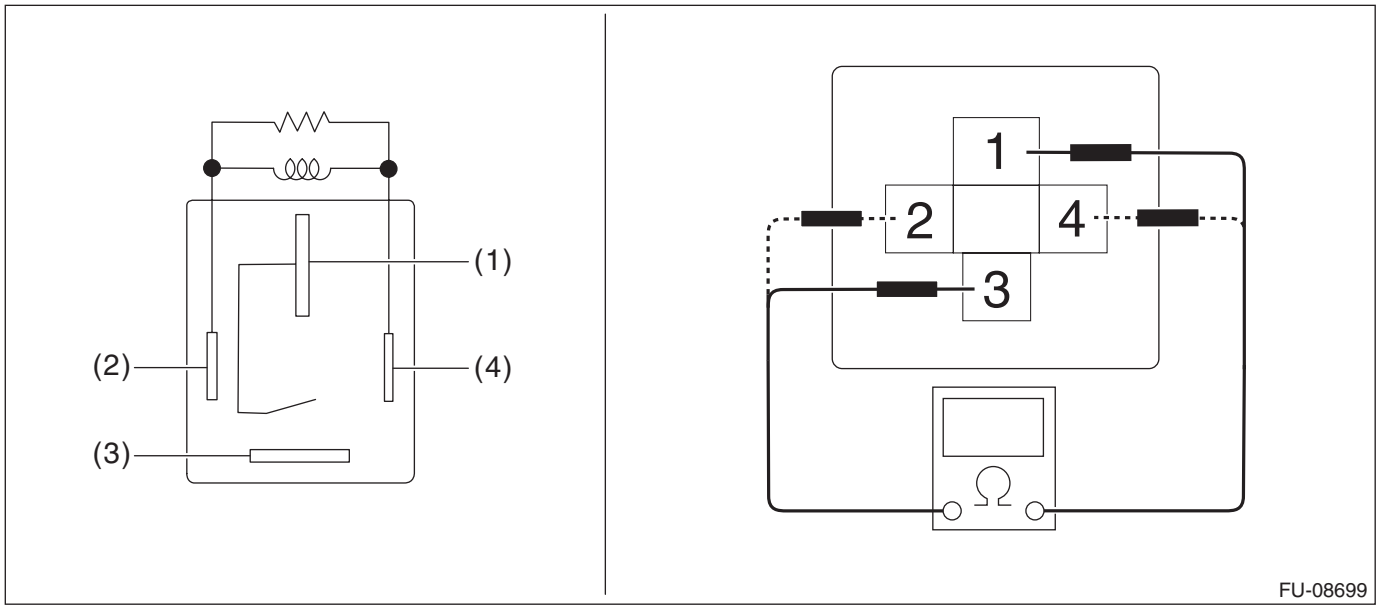

Terminal No.	Standard
1 and 3	1 MΩ or more
2 and 4	80.55 — 98.45 Ω (when 20°C (68°F))

3) Connect battery positive terminal to terminal No. 2 and battery ground terminal to terminal No. 4, and measure the resistance between the main relay terminals.

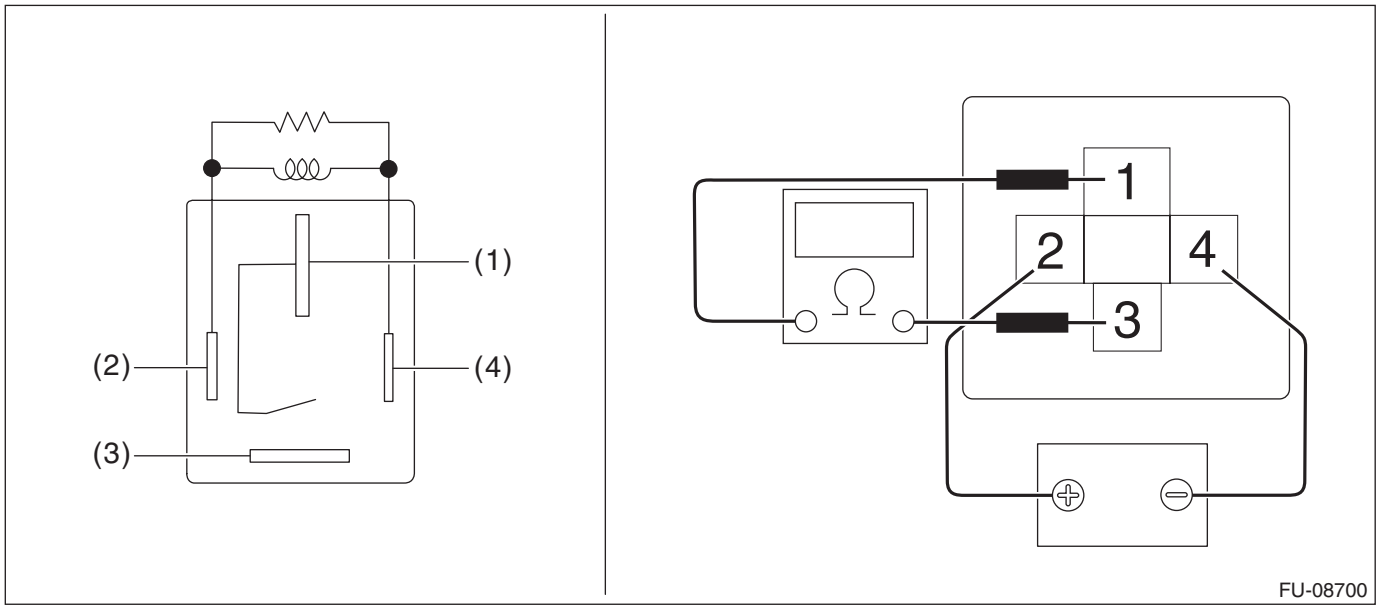

Terminal No.	Standard
1 and 3	Less than 1 Ω

22.Electronic Throttle Control Relay

A: REMOVAL

1) Disconnect the ground terminal from battery sensor. <Ref. to RC-4, BATTERY, NOTE, Repair Contents.>
2) Remove the electronic throttle control relay from the main fuse box.

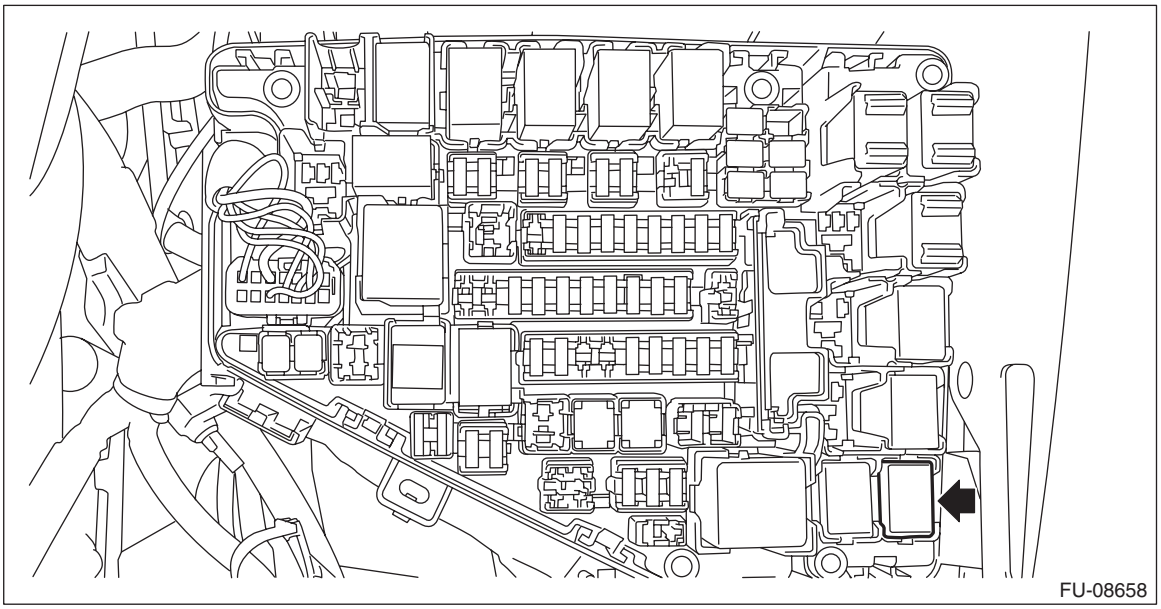

B: INSTALLATION

1) Install the electronic throttle control relay to the main fuse box.
2) Connect the ground terminal to battery sensor. <Ref. to RC-4, BATTERY, NOTE, Repair Contents.>

C: INSPECTION

1) Check that the electronic throttle control relay has no deformation, cracks or other damages.
2) Measure the resistance between electronic throttle control relay terminals.

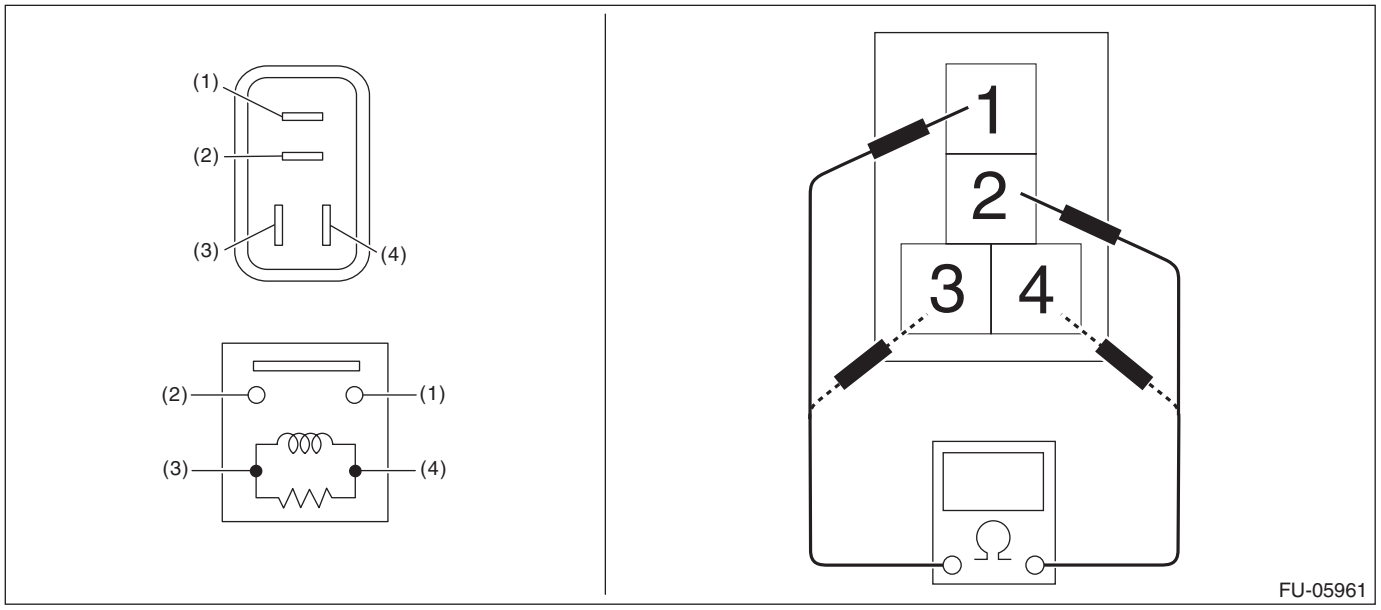

Terminal No.	Standard
1 and 2	1 MΩ or more
3 and 4	130.4 — 230.8 Ω (when 20°C (68°F))

3) Connect battery positive terminal to terminal No. 3 and battery ground terminal to terminal No. 4, and measure the resistance between the electronic throttle control relay terminals.

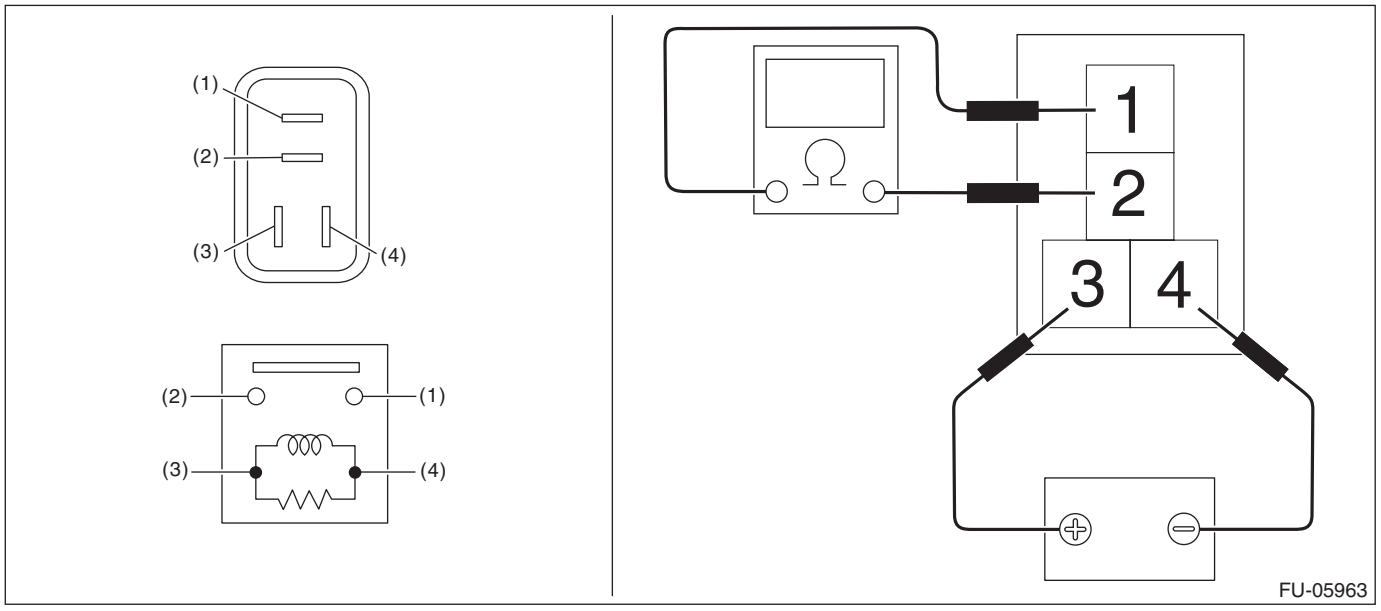

Terminal No.	Standard
1 and 2	Less than 1 Ω

23.Fuel Pump Relay

A: REMOVAL

1) Disconnect the ground terminal from battery sensor. <Ref. to RC-4, BATTERY, NOTE, Repair Contents.>
2) Remove the fuel pump relay from the main fuse box.

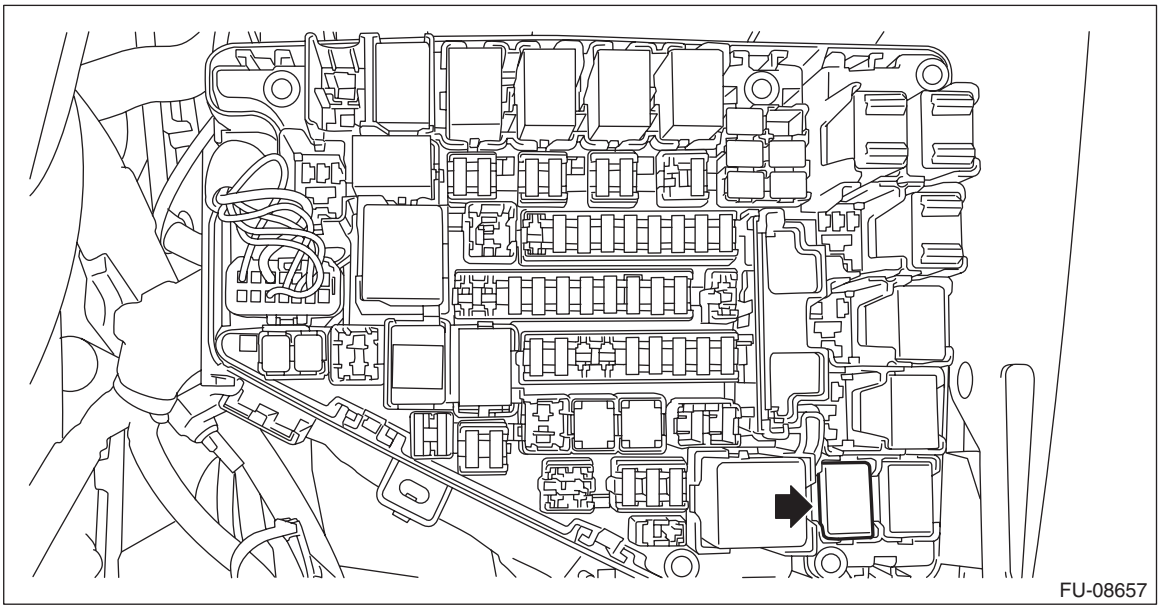

B: INSTALLATION

1) Install the fuel pump relay to the main fuse box.
2) Connect the ground terminal to battery sensor. <Ref. to RC-4, BATTERY, NOTE, Repair Contents.>

C: INSPECTION

1) Check that the fuel pump relay has no deformation, cracks or other damages.
2) Measure the resistance between fuel pump relay terminals.

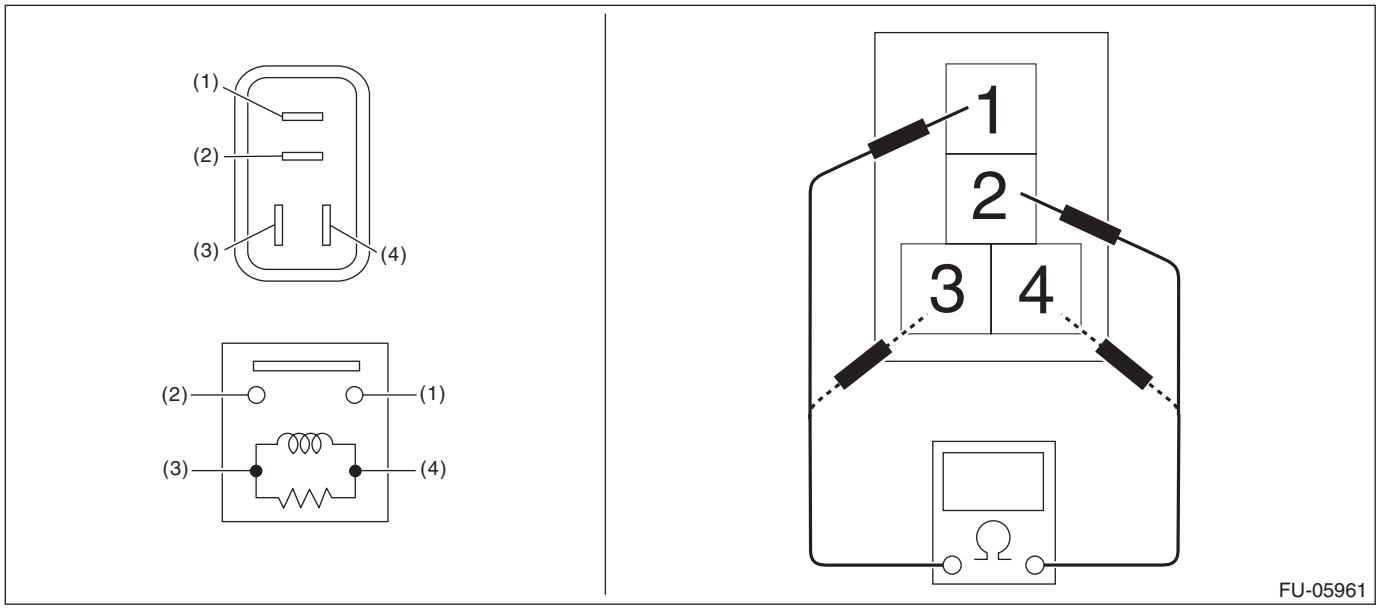

Terminal No.	Standard
1 and 2	1 MΩ or more
3 and 4	130.4 — 230.8 Ω (when 20°C (68°F))

3) Connect battery positive terminal to terminal No. 3 and battery ground terminal to terminal No. 4, and measure the resistance between the fuel pump relay terminals.

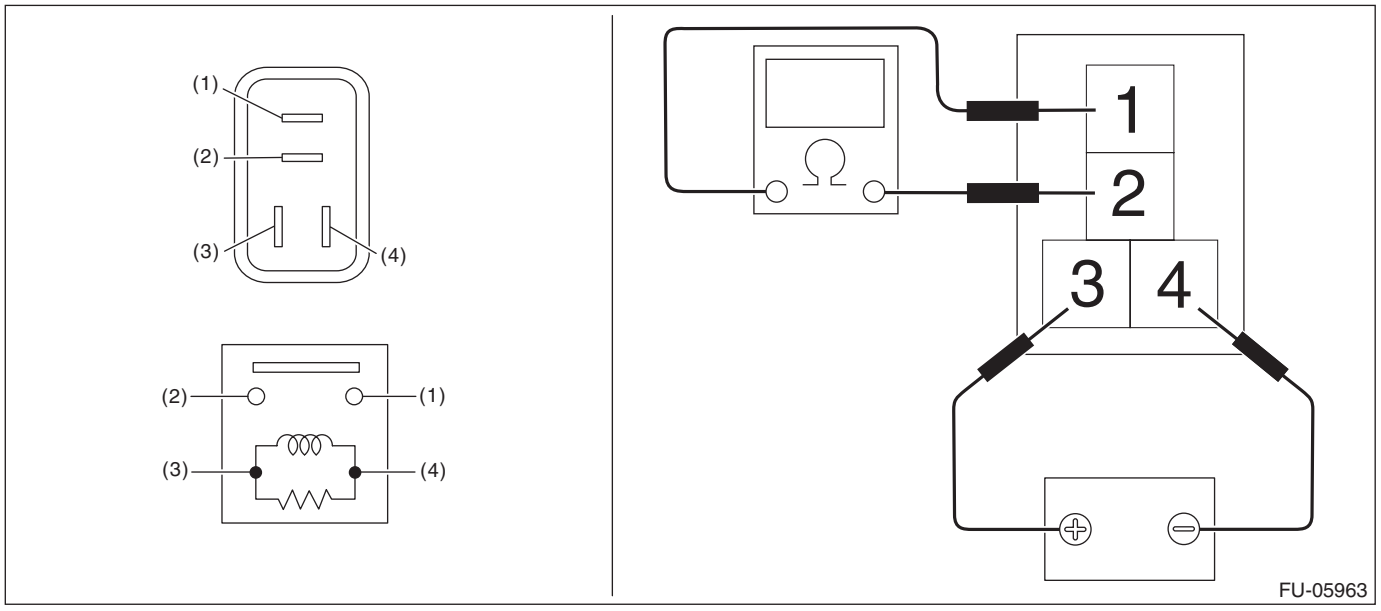

Terminal No.	Standard
1 and 2	Less than 1 Ω

24.Fuel

A: PROCEDURE

1. RELEASING OF FUEL PRESSURE

WARNING:
Place “NO OPEN FLAMES” signs near the working area.

CAUTION:
Be careful not to spill fuel.

1) Remove the fuse of fuel pump from main fuse box.

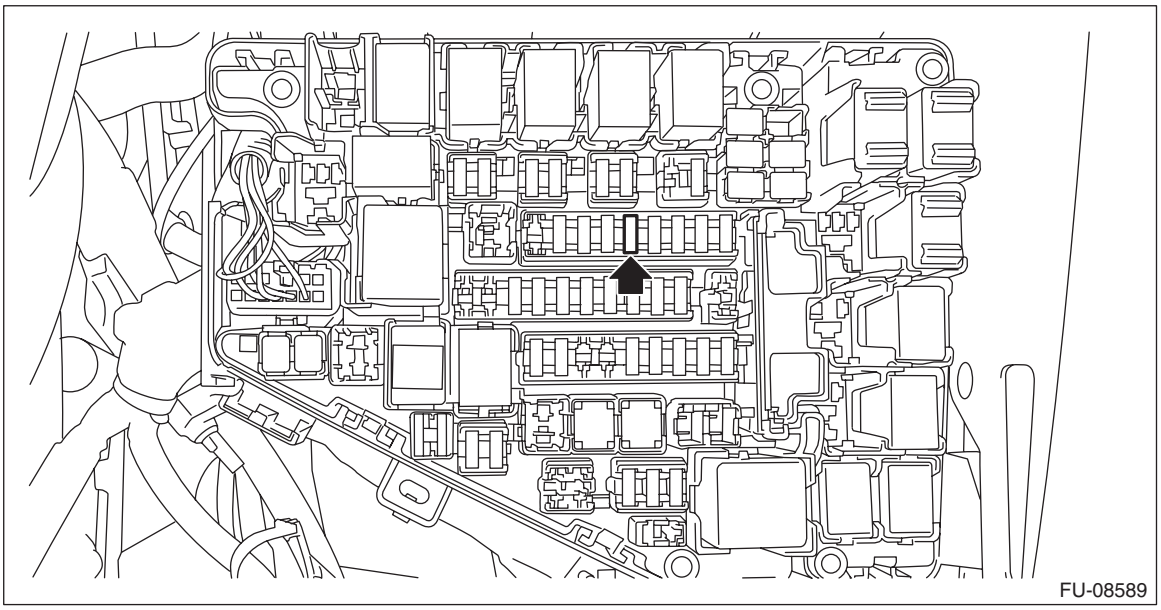

2) Start the engine and run it until it stalls.
3) After the engine stalls, crank it for five more seconds.
4) Turn the ignition switch to OFF.
5) Install the fuse of fuel pump to the main fuse box.

2. DRAINING FUEL (WITH SUBARU SELECT MONITOR)

WARNING:
Place “NO OPEN FLAMES” signs near the working area.

CAUTION:
Be careful not to spill fuel.

NOTE:
• If the fuel pump cannot be driven, refer to the procedures for draining from the fuel filler hose. <Ref. to FU(H4DO)-92, DRAINING FUEL (THROUGH THE FUEL FILLER HOSE), PROCEDURE, Fuel.>
• Be careful not to let the battery run-out.
• Be aware that the fuel may remain in the fuel tank after draining the fuel.

1) Release the fuel pressure. <Ref. to FU(H4DO)-90, RELEASING OF FUEL PRESSURE, PROCEDURE, Fuel.>
2) Remove the clip (A) securing the fuel delivery tube to the fuel pipe assembly.
3) Attach ST to the fuel pipe assembly and push ST in the direction of arrow mark to disconnect the connector of the fuel delivery tube.
ST 42099AE000 QUICK CONNECTOR RELEASE

CAUTION:
• Be careful not to spill fuel.
• Catch the fuel from the tubes using a container or cloth.

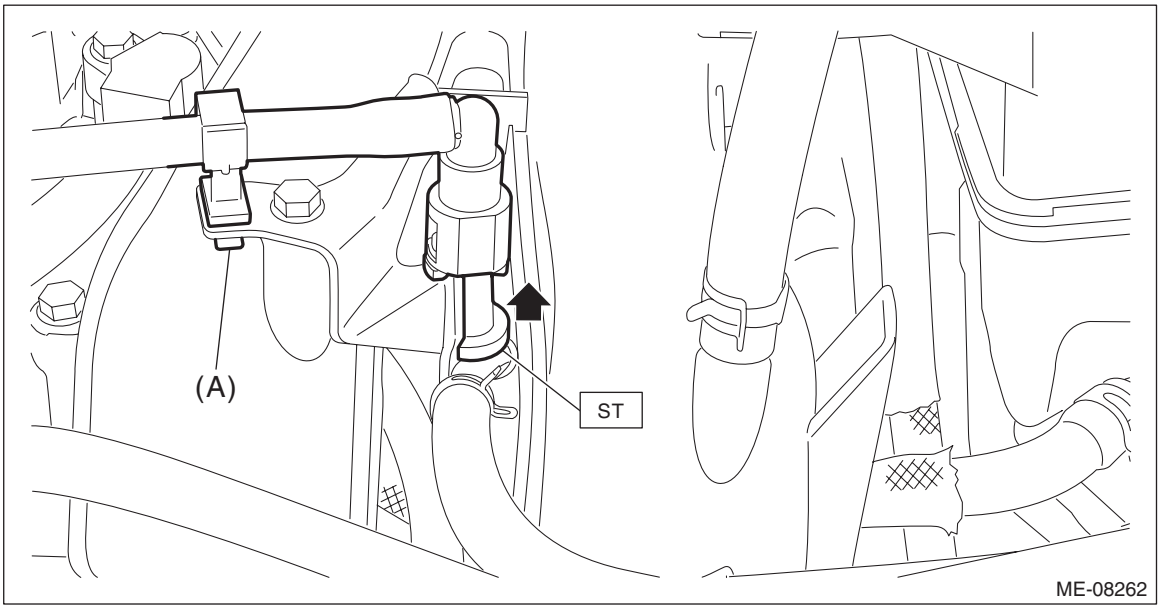

4) Connect ST to the fuel delivery tube.
ST 18471AA000 FUEL PIPE ADAPTER
5) Connect the gasoline proof hose to ST and put the end of the hose in the container.
6) Drive the fuel pump and drain the fuel using Subaru Select Monitor.

CAUTION:
Be careful not to spill fuel.

NOTE:
For detailed operation procedures, refer to “PC application help for Subaru Select Monitor”.
7) Install the related parts in the reverse order after draining the fuel.

CAUTION:
• Be careful not to spill fuel.
• Catch the fuel from the tubes using a container or cloth.
• Check that there is no damage or dust on the quick connector. If necessary, clean the seal surface of the pipe.
• Make sure that the quick connector is securely connected.

3. DRAINING FUEL (THROUGH THE FUEL FILLER HOSE)

• Sedan model

WARNING:
Place "NO OPEN FLAMES" signs near the working area.

CAUTION:
• Be careful not to spill fuel.
• Fuel may remain in the fuel filler pipe. Drain the fuel from the fuel filler pipe through the fill opening using the gasoline proof pump and the gasoline proof hose (ø10 or less) before the operation.

NOTE:
Be aware that the fuel may remain in the fuel tank after draining the fuel.
1) Lift up the vehicle.
2) Remove the rear sub frame. <Ref. to RS-10, REMOVAL, Rear Sub Frame.>
3) Open the fuel filler lid and remove the fuel filler cap.
4) Drain the fuel from the fuel filler pipe through the filler opening using the gasoline proof pump and the gasoline proof hose (ø10 or less).
5) Disconnect the fuel filler hoses from the fuel filler pipe.

CAUTION:
• Be careful not to spill fuel.
• Catch the fuel from hoses using a container or cloth.

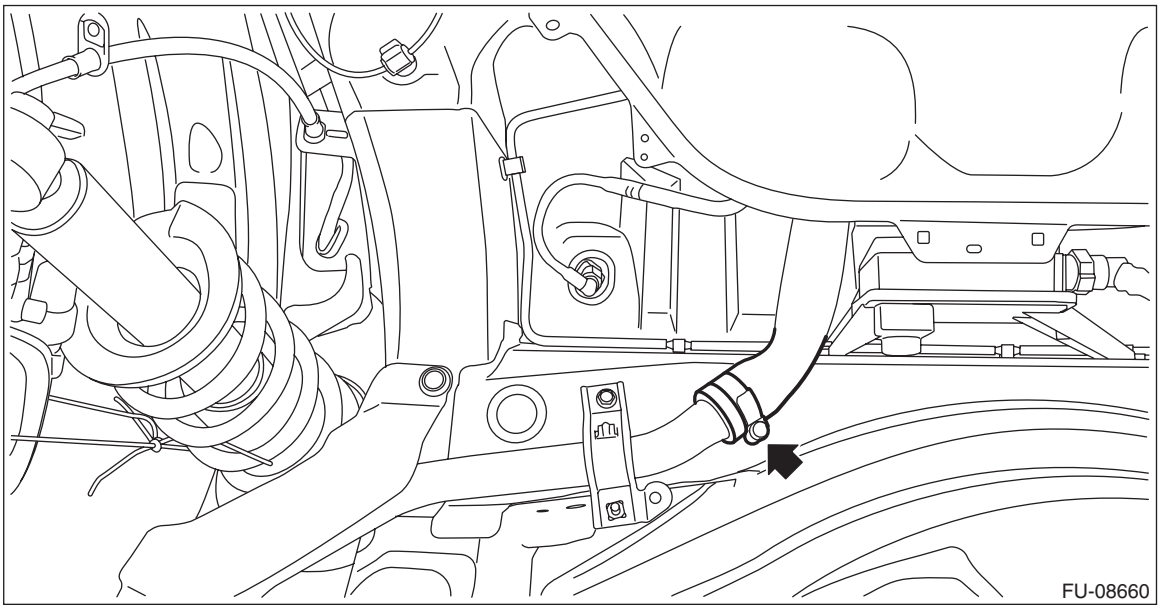

6) Set the container under the vehicle and insert the gasoline proof hose (ø10 or less) into the fuel filler hose to drain the fuel.

CAUTION:
Be careful not to spill fuel.

7) Install the related parts in the reverse order after draining the fuel.

NOTE:
Correctly insert the fuel filler hose to the spool, and then install the clamp as shown.

Tightening torque:
2.5 N·m (0.3 kgf-m, 1.8 ft-lb)

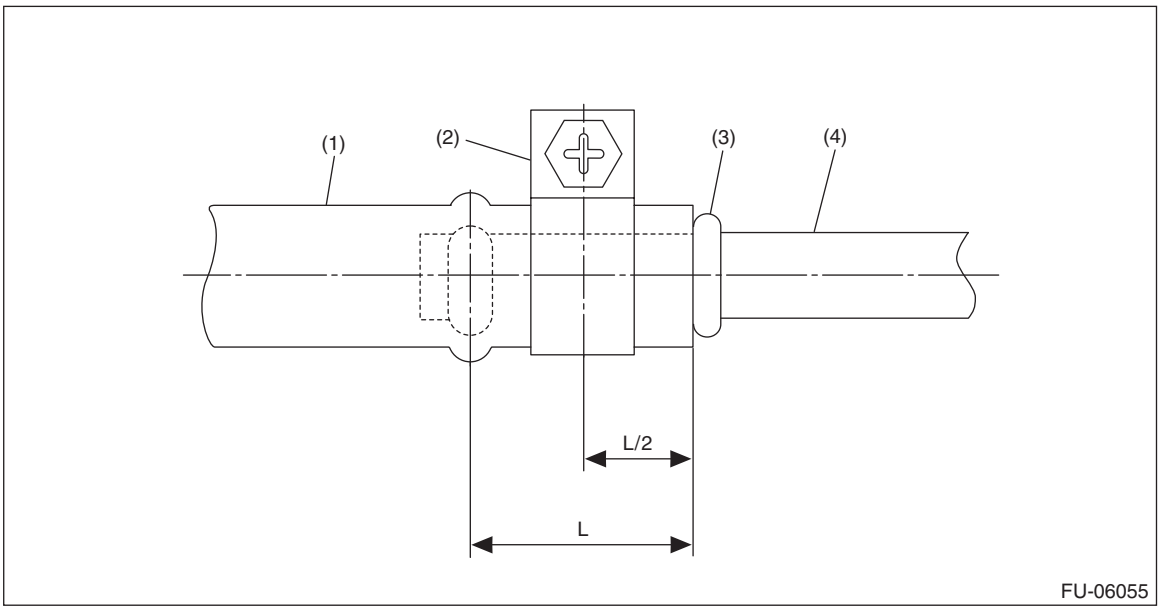

(1) Fuel filler hose
(2) Clamp
(3) Spool
(4) Fuel filler pipe

• **OUTBACK model**

WARNING:
Place “NO OPEN FLAMES” signs near the working area.

CAUTION:
• **Be careful not to spill fuel.**
• **Fuel may remain in the fuel filler pipe. Drain the fuel from the fuel filler pipe through the fill opening using the gasoline proof pump and the gasoline proof hose (ø10 or less) before the operation.**

NOTE:
Be aware that the fuel may remain in the fuel tank after draining the fuel.
1) Open the fuel filler lid and remove the fuel filler cap.
2) Lift up the vehicle.
3) Drain the fuel from the fuel filler pipe through the filler opening using the gasoline proof pump and the gasoline proof hose (ø10 or less).
4) Disconnect the fuel filler hoses from the fuel filler pipe.

CAUTION:
• **Be careful not to spill fuel.**
• **Catch the fuel from hoses using a container or cloth.**

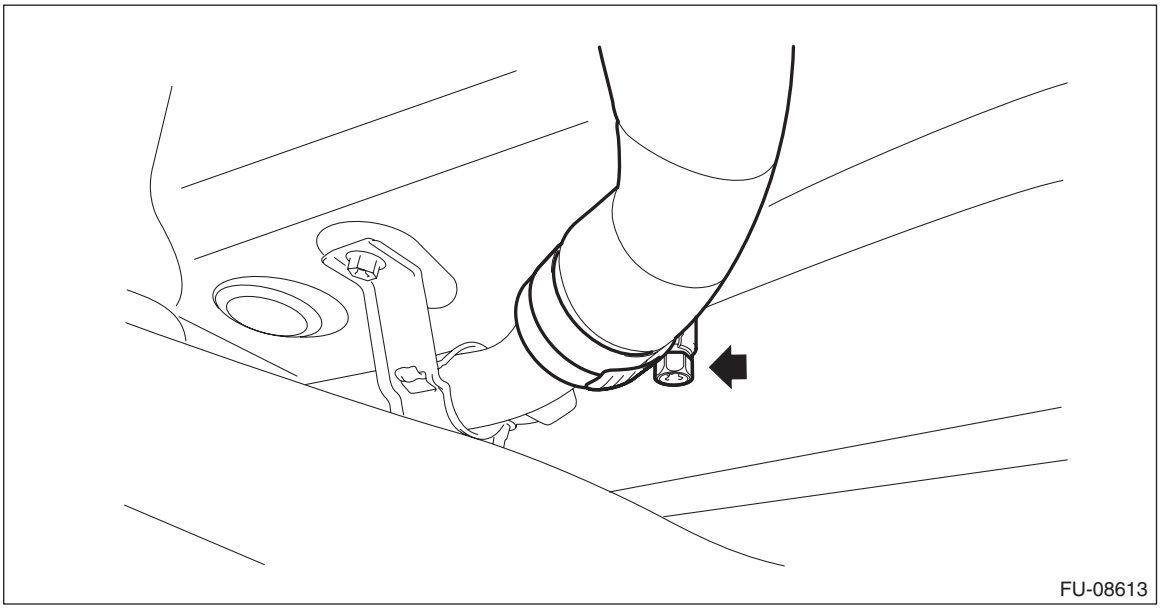

5) Set the container under the vehicle and insert the gasoline proof hose (ø10 or less) into the fuel filler hose to drain the fuel.

CAUTION:
Be careful not to spill fuel.

6) Install the related parts in the reverse order after draining the fuel.

NOTE:
Correctly insert the fuel filler hose to the spool, and then install the clamp as shown.

Tightening torque:
2.5 N·m (0.3 kgf-m, 1.8 ft-lb)

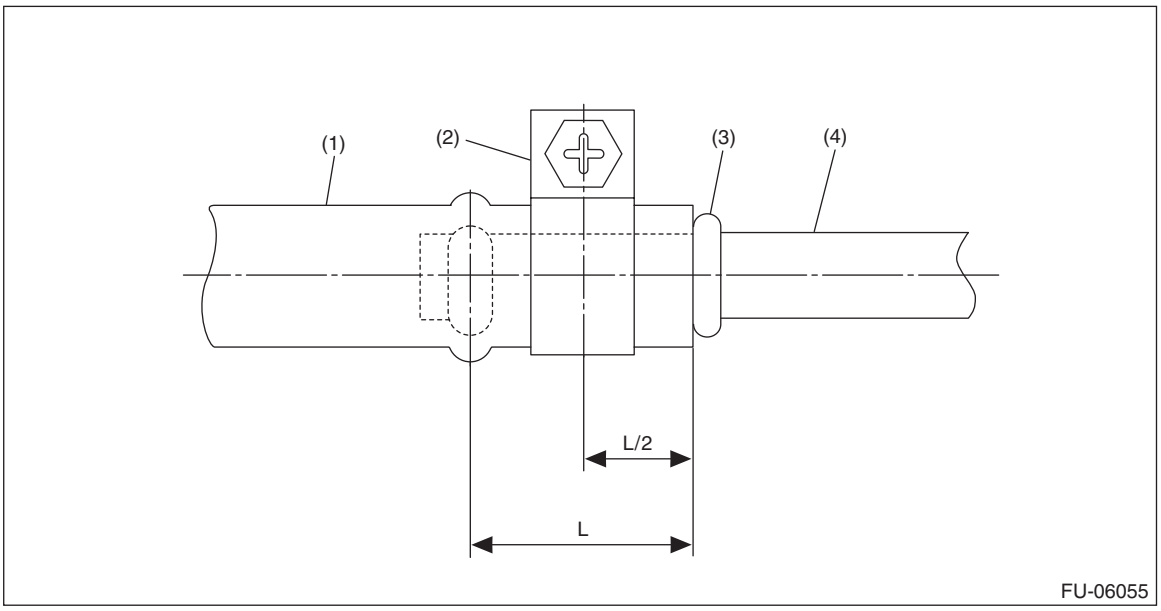

(1) Fuel filler hose
(2) Clamp
(3) Spool
(4) Fuel filler pipe

25.Fuel Tank Protector

A: REMOVAL

1) Lift up the vehicle.
2) Remove the bolt and nuts and remove the fuel tank protector.

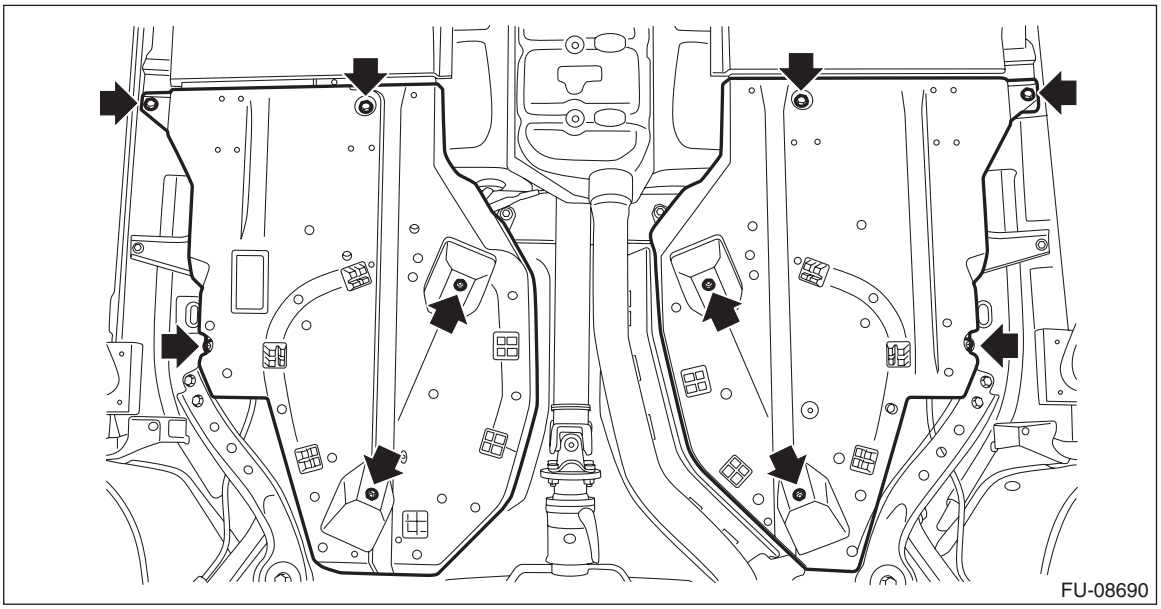

B: INSTALLATION

1) Install the fuel tank protector.

NOTE:
Use a new self-locking nut (a).

Tightening torque:
T1: 9 N·m (0.9 kgf-m, 6.6 ft-lb)
T2: 18 N·m (1.8 kgf-m, 13.3 ft-lb)

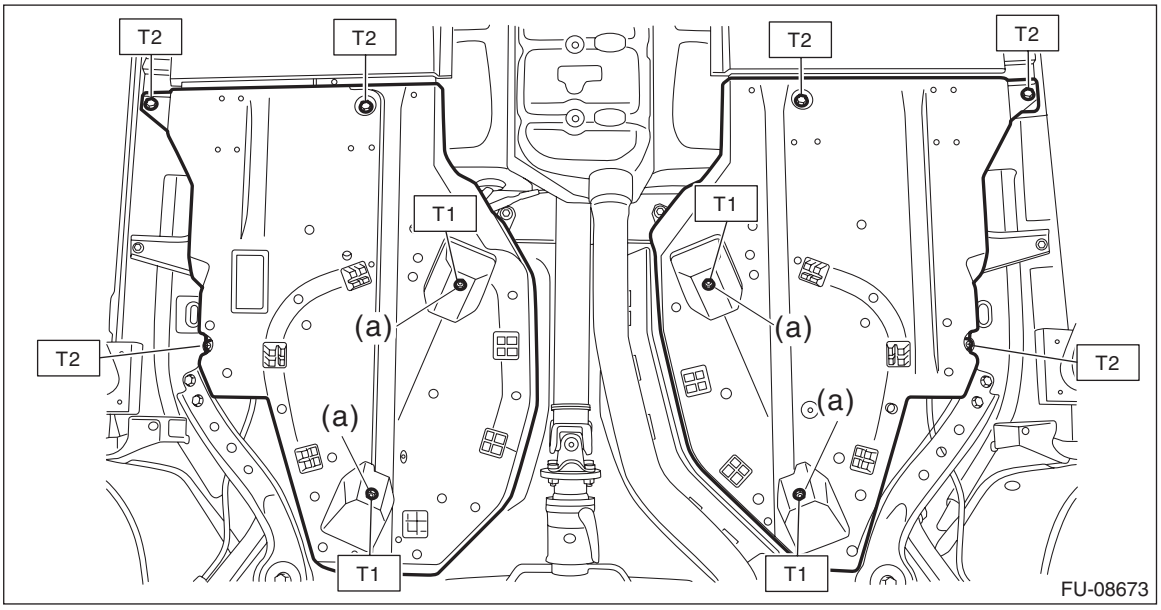

2) Lower the vehicle.

26.Fuel Tank

A: REMOVAL

WARNING:
Place “NO OPEN FLAMES” signs near the working area.

CAUTION:
- **Be careful not to spill fuel.**
- **Catch the fuel from the tubes using a container or cloth.**

1) Release the fuel pressure. <Ref. to FU(H4DO)-90, RELEASING OF FUEL PRESSURE, PROCEDURE, Fuel.>
2) Drain fuel. <Ref. to FU(H4DO)-91, DRAINING FUEL (WITH SUBARU SELECT MONITOR), PROCEDURE, Fuel.>
3) Disconnect the ground terminal from battery sensor. <Ref. to RC-4, BATTERY, NOTE, Repair Contents.>
4) Remove the rear seat cushion. <Ref. to SE-33, REMOVAL, Rear Seat.>
5) Remove the service hole cover of fuel pump.

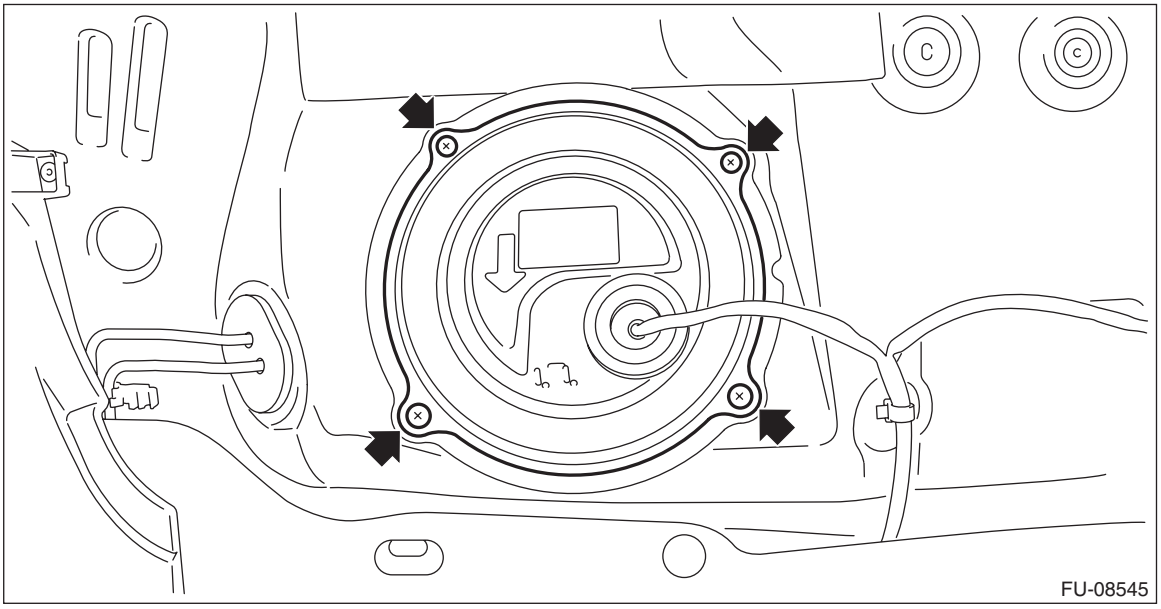
FU-08545

6) Disconnect connectors from the fuel pump, and move aside the service hole cover.

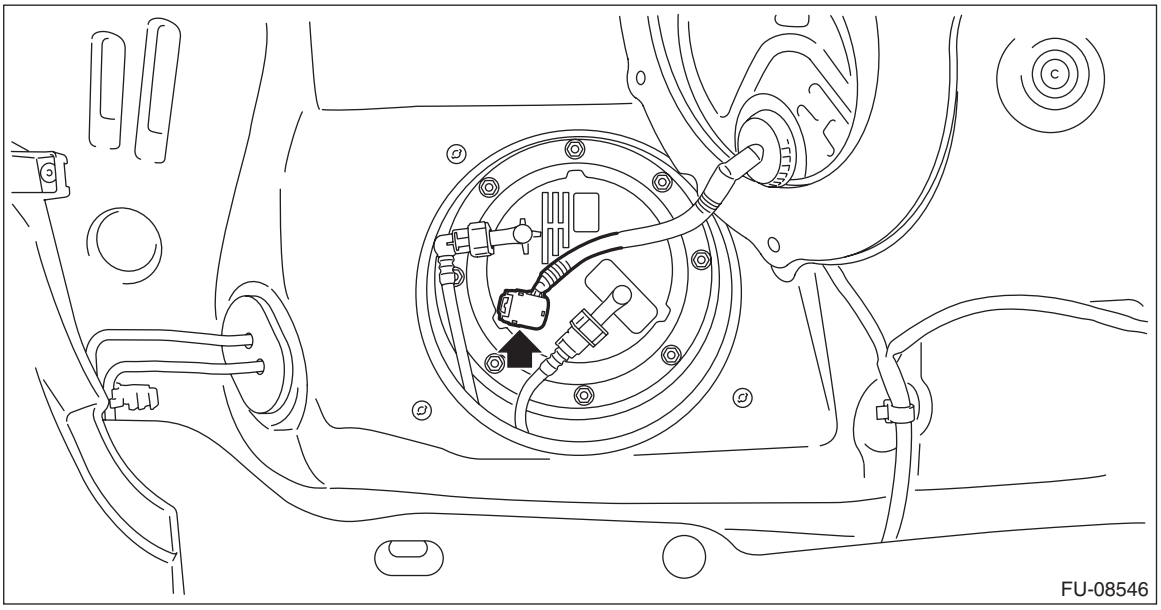
FU-08546

7) Remove the service hole cover of fuel sub level sensor.

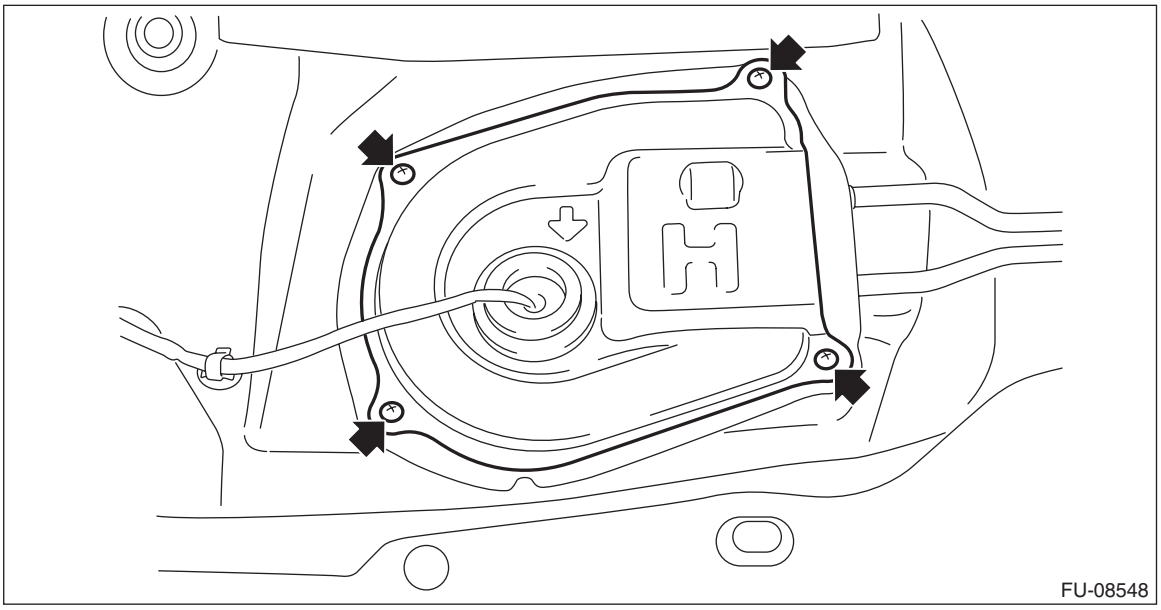

8) Disconnect the connector from the fuel sub level sensor, and move aside the service hole cover.

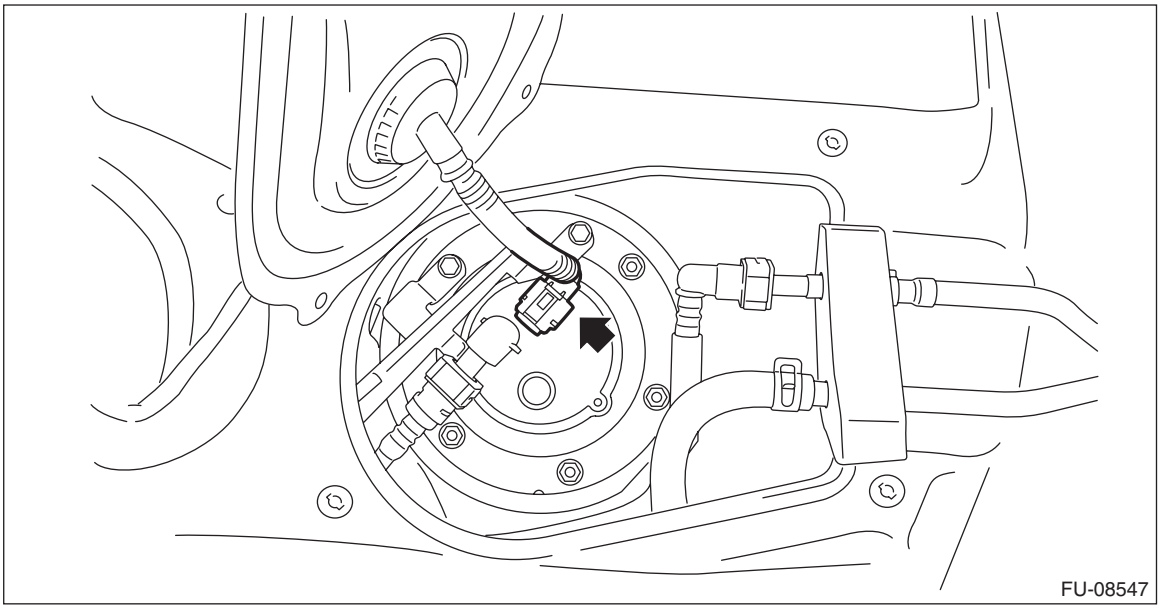

9) Disconnect the quick connector on the fuel delivery tube.

NOTE:
Disconnect the quick connector as shown in the figure.

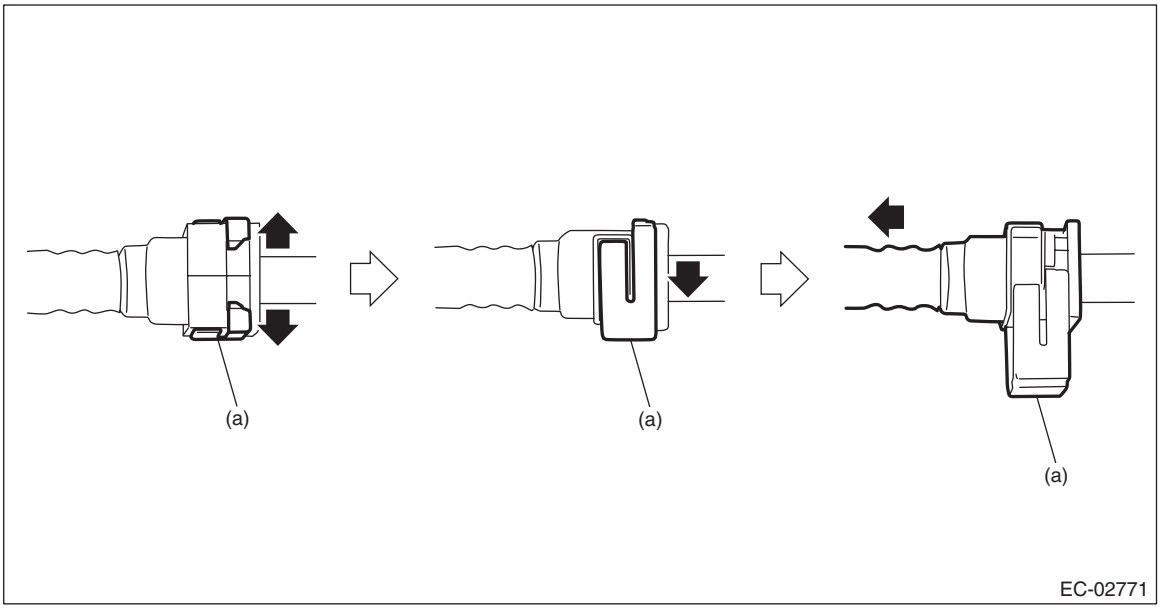

(a) Slider

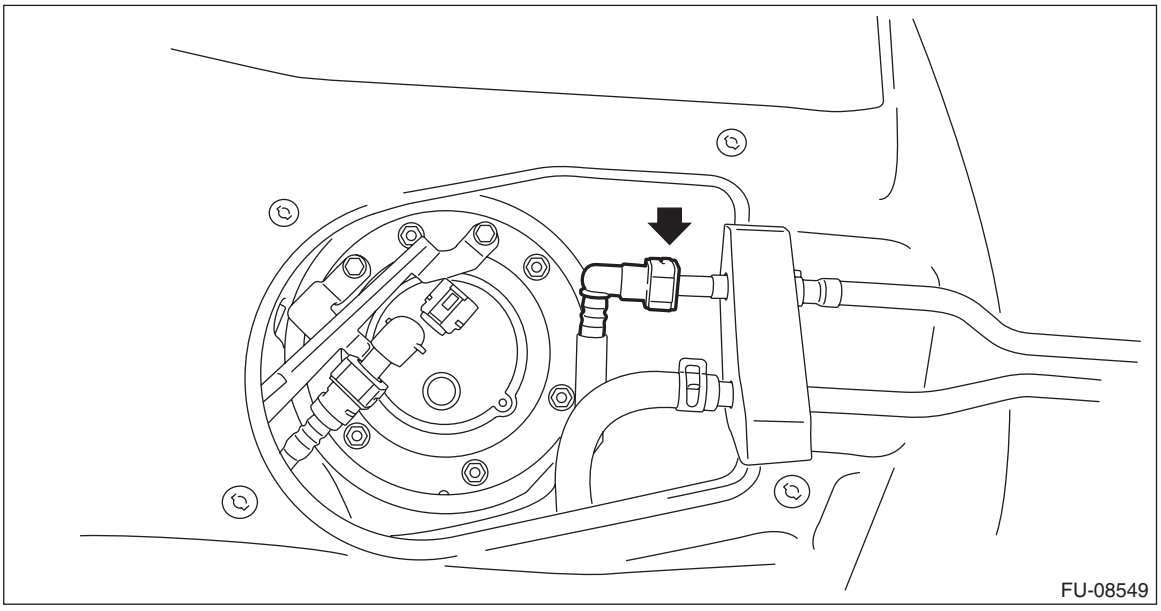

10) Remove the rear sub frame assembly. <Ref. to RS-10, REMOVAL, Rear Sub Frame.>

11) Disconnect the air vent hose from the fuel tank.

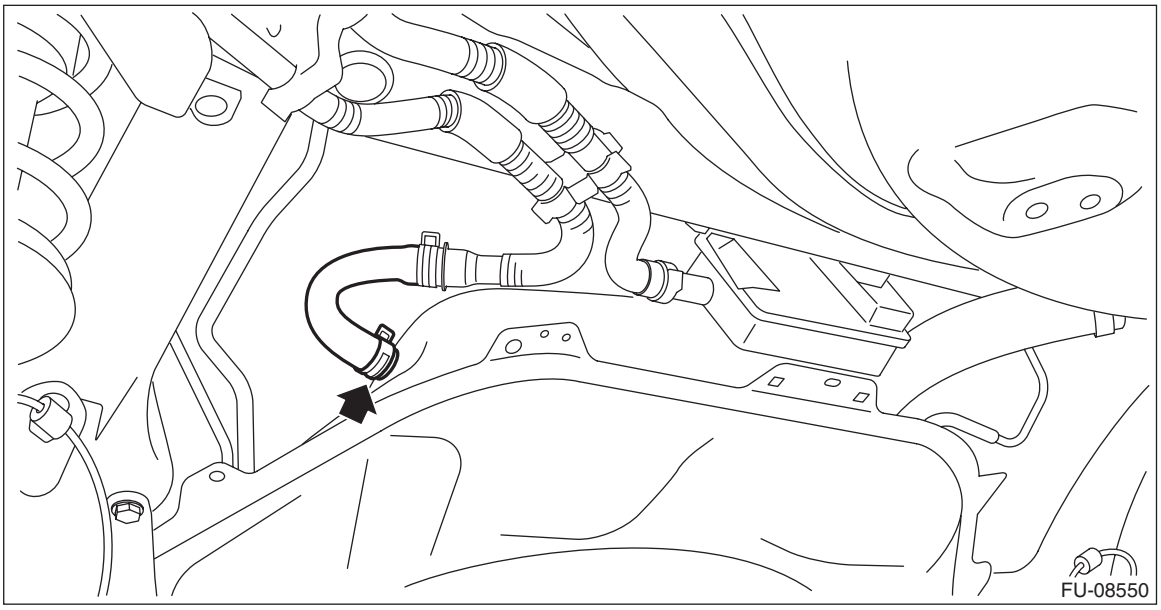

12) Disconnect the quick connector of the circulate tube from evaporation pipe.

NOTE:
Disconnect the quick connector as shown in the figure.

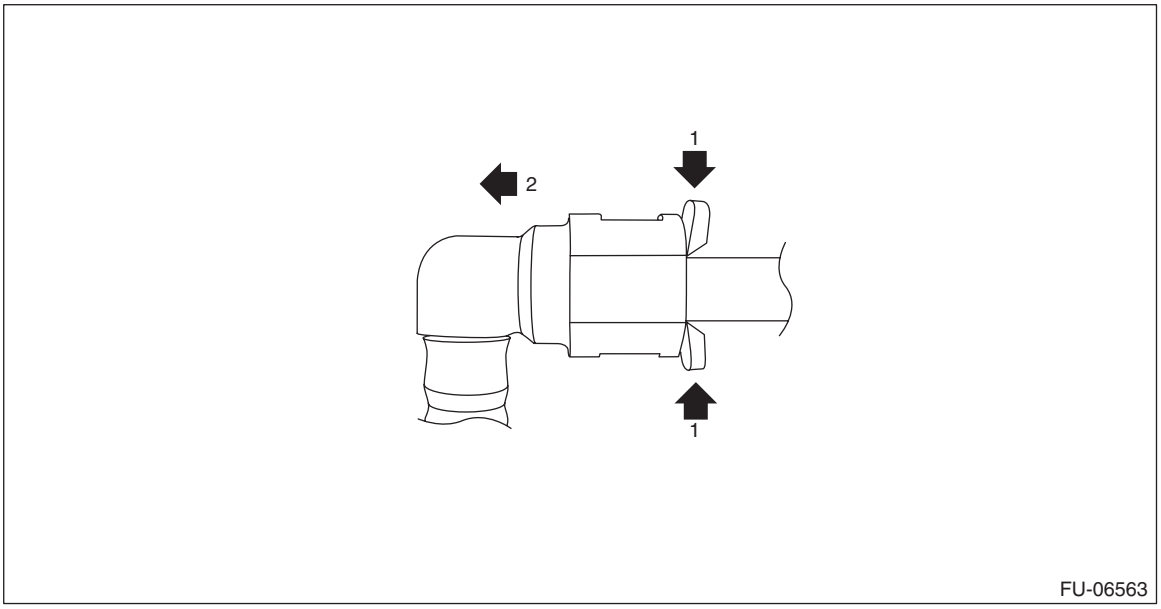

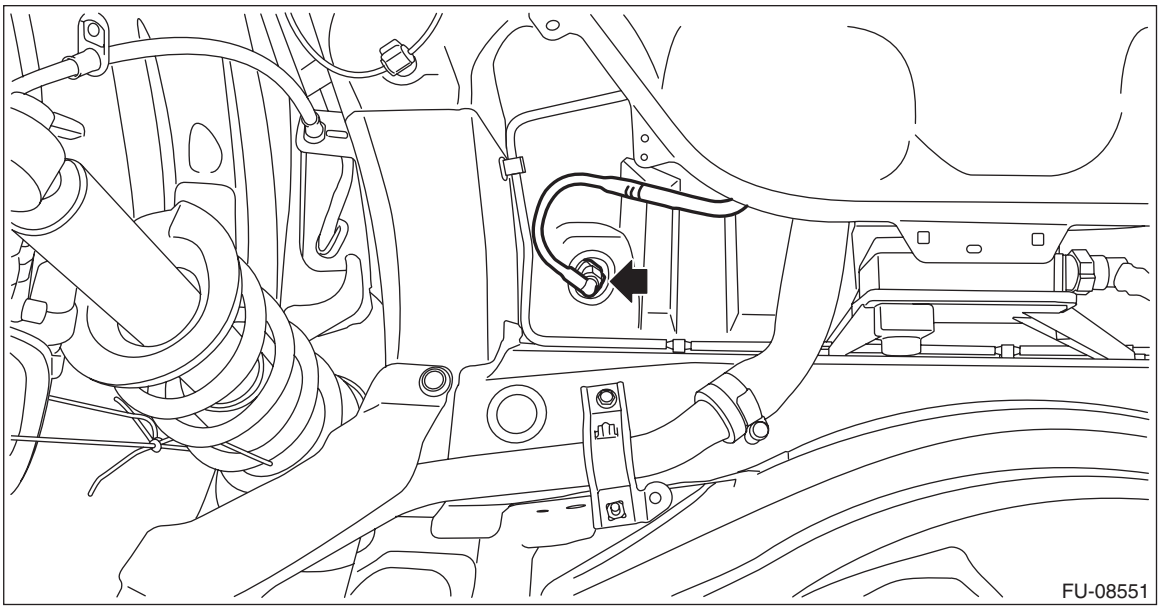

13) Disconnect the fuel filler hoses from the fuel filler pipe.

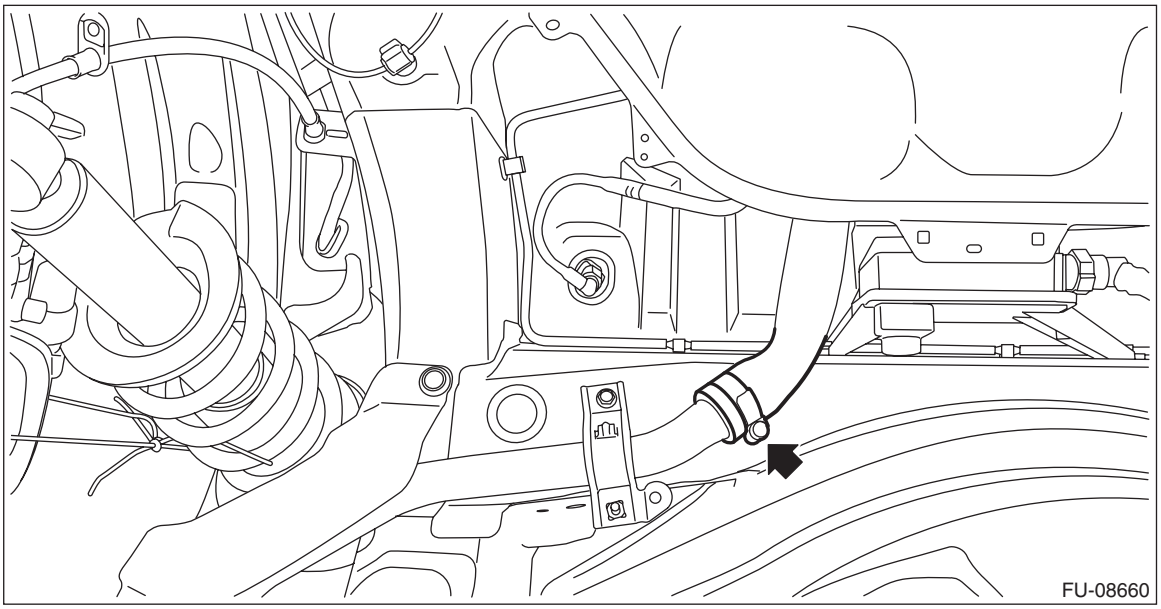

14) Remove the heat shield cover.

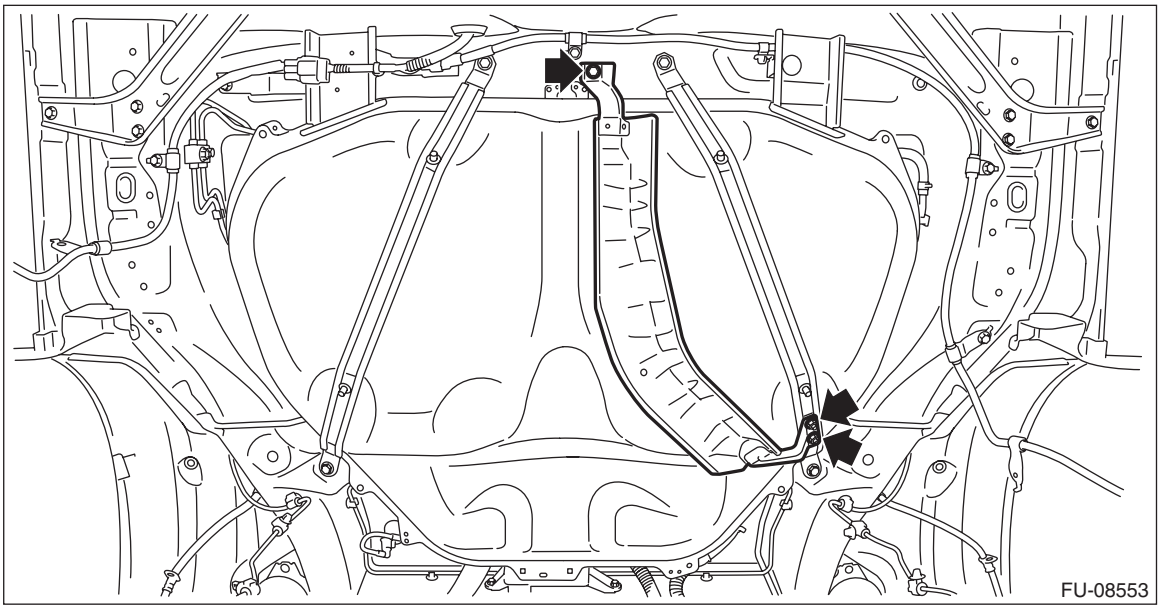

15) Support the fuel tank with a transmission jack, remove the fuel tank band, and remove the fuel tank from the vehicle.

WARNING:
- **A helper is required to perform this work.**
- **Fuel may remain in the fuel tank. This will cause the left and right sides to be unbalanced. Be careful not to drop the fuel tank.**

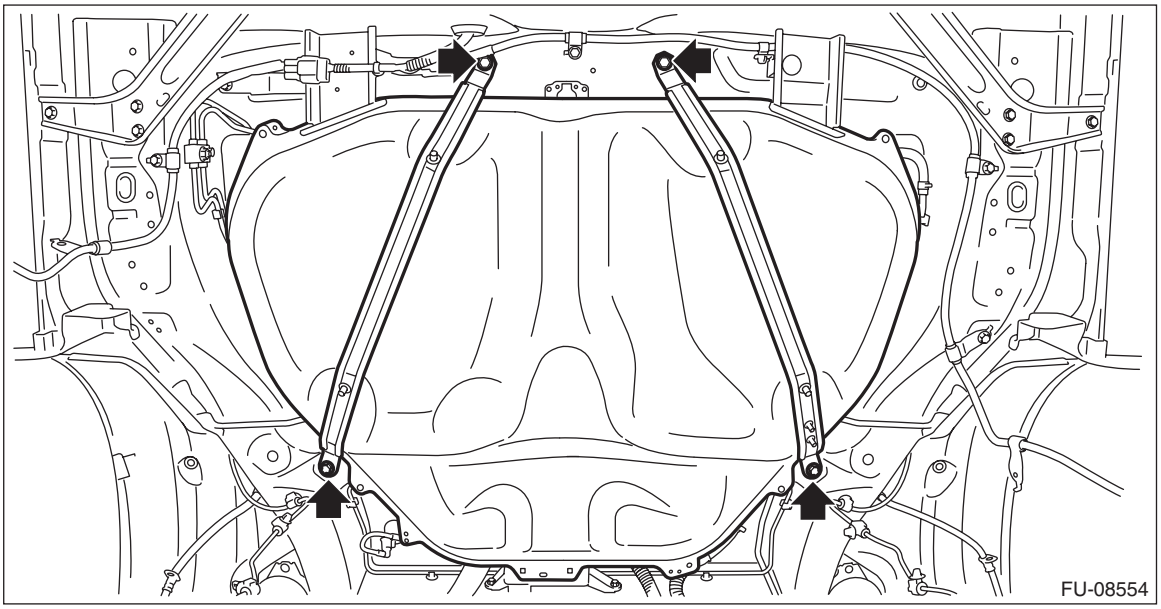

B: INSTALLATION

1) Support the fuel tank with a transmission jack, set the fuel tank and the fuel tank band in place, and temporarily tighten the bolts of the fuel tank band.

WARNING:
A helper is required to perform this work.

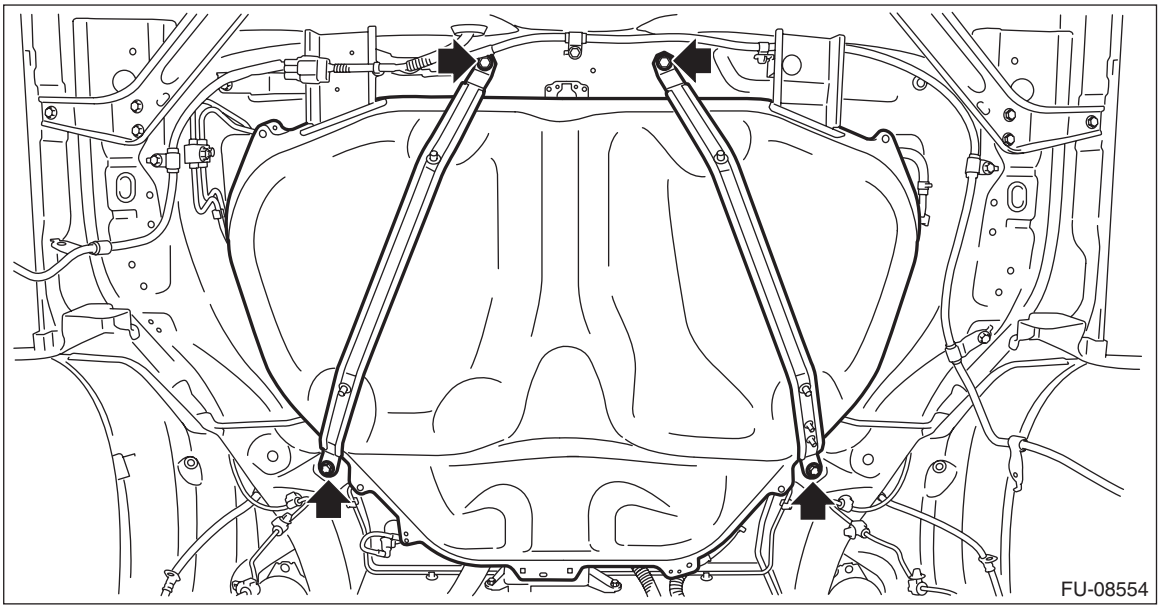

2) Correctly insert the fuel filler hose to the spool, and then install the clamp as shown.

Tightening torque:
2.5 N·m (0.3 kgf-m, 1.8 ft-lb)

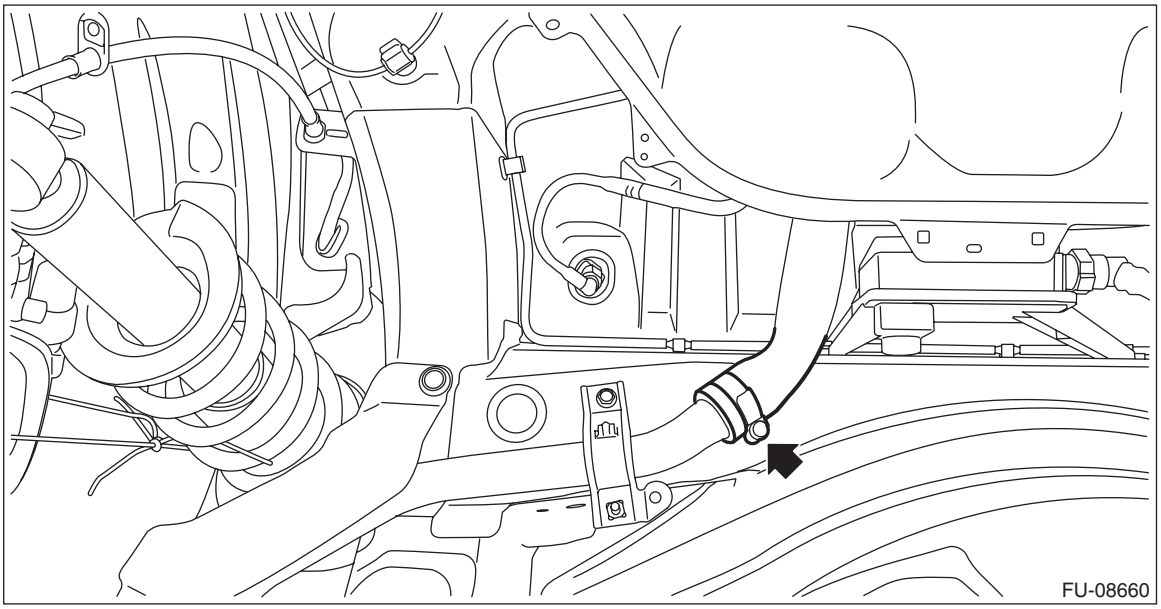

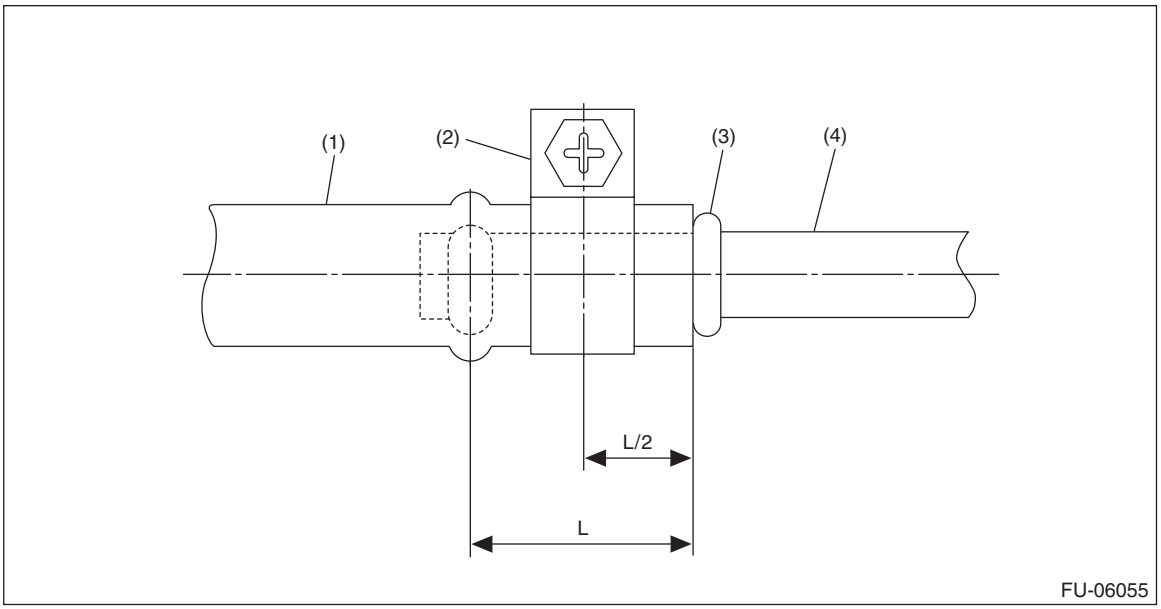

(1) Fuel filler hose
(2) Clamp
(3) Spool
(4) Fuel filler pipe

3) Connect the quick connector of the circulate tube to the evaporation pipe as shown in the figure.

CAUTION:
• Check that there is no damage or dust on the quick connector. If necessary, clean the seal surface of the pipe.
• Make sure that the quick connector is securely connected.

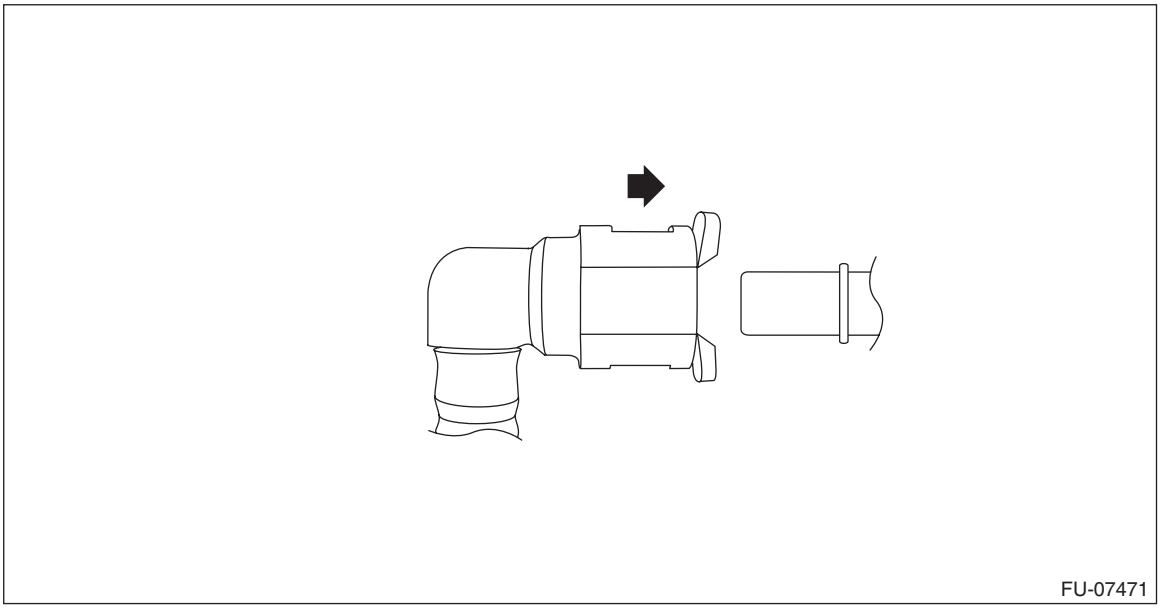

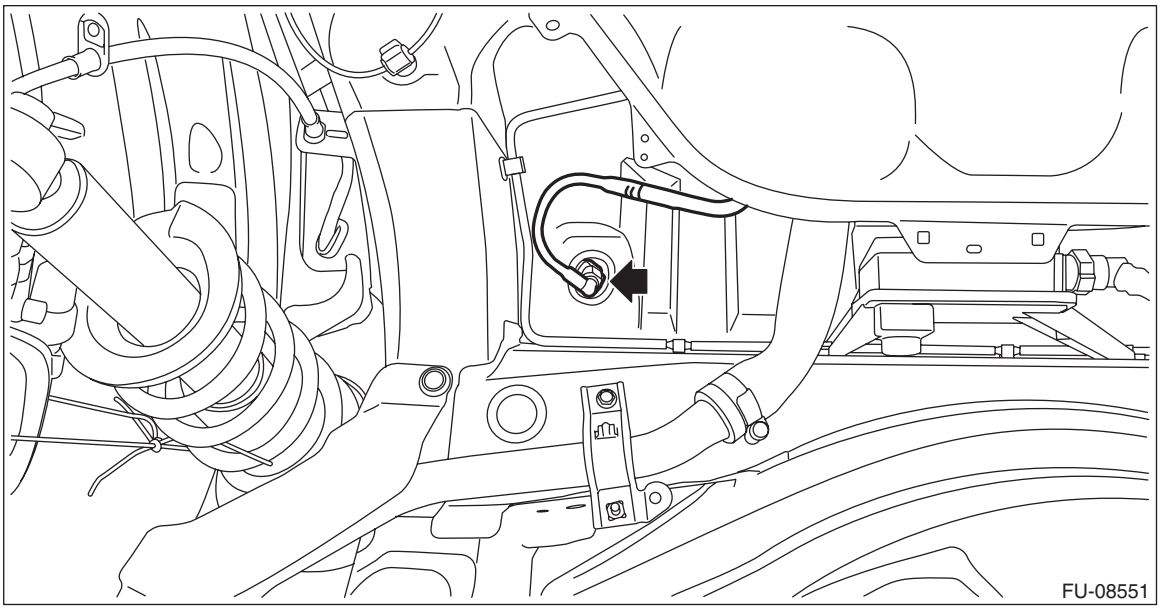

4) Connect the air vent hose to fuel tank.

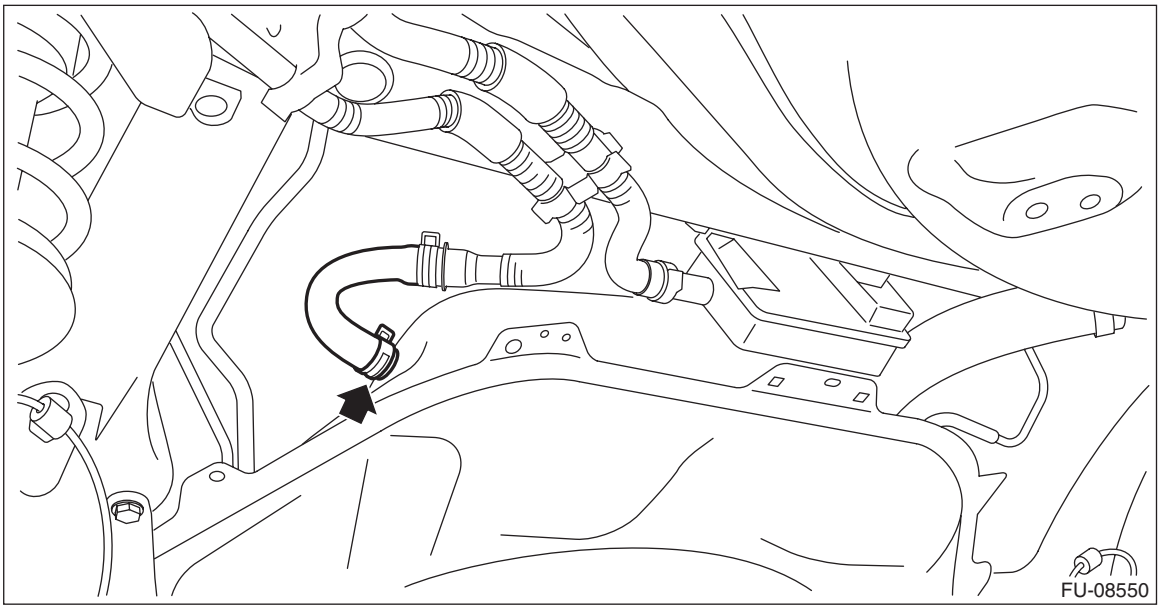

5) Move the fuel tank so that the distance between the center of the positioning hole for the body (A) and the front end of the fuel tank flange (B) becomes L, and tighten the bolts of the fuel tank bands in the sequence shown in the figure.

CAUTION:
To prevent the fuel tank from damage, after tightening the bolts of the fuel tank bands, make sure that the distance between the center of the positioning hole for the body (A) and the front end of the fuel tank flange (B) is L.

Distance L: Center of the positioning hole for the body (A) — Front end of the fuel tank flange (B)
14.5 mm (0.571 in) or less

Tightening torque:
33 N·m (3.4 kgf-m, 24.3 ft-lb)

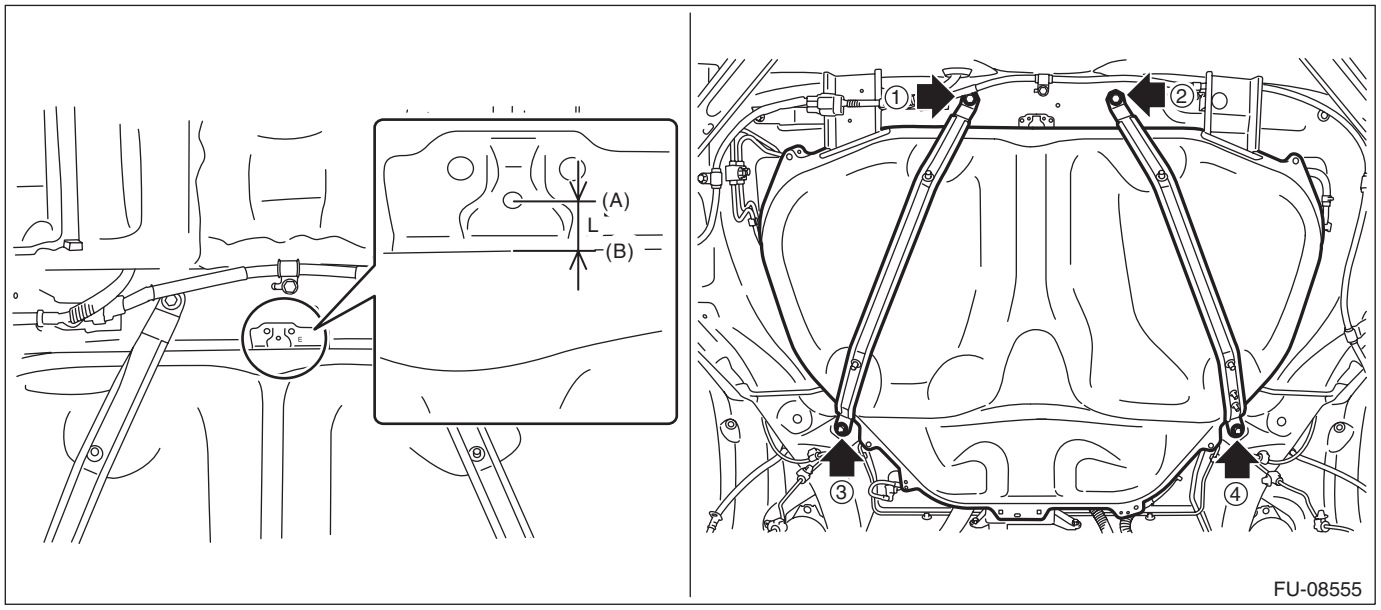

6) Install the heat shield cover.

Tightening torque:
18 N·m (1.8 kgf-m, 13.3 ft-lb)

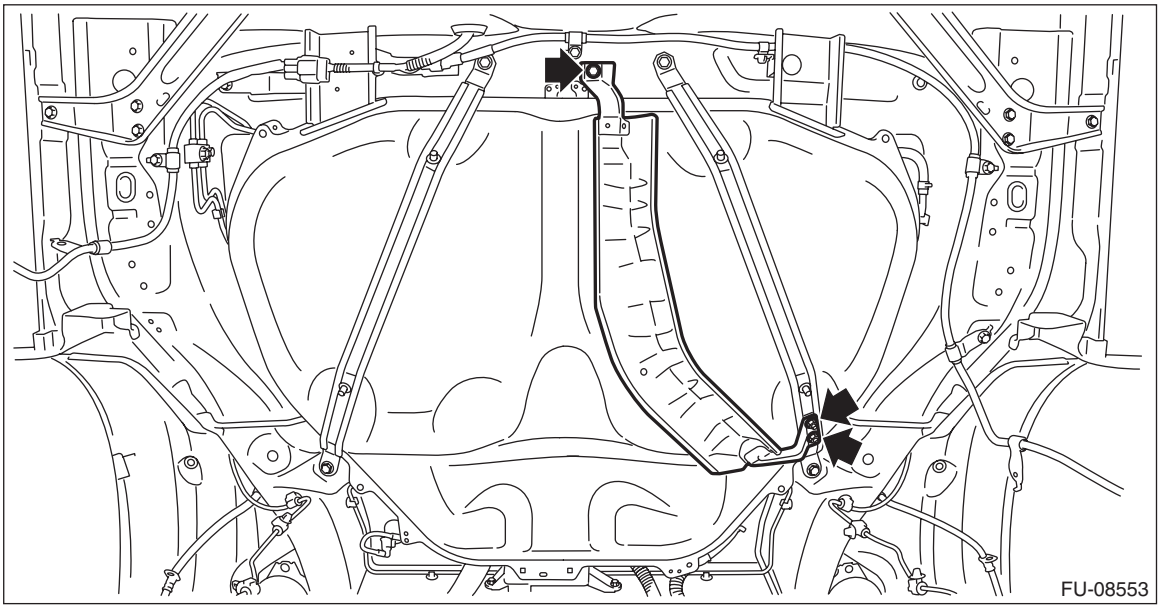

7) Install the rear sub frame assembly. <Ref. to RS-13, INSTALLATION, Rear Sub Frame.>

8) Connect the quick connector of the fuel delivery tube.

CAUTION:
- **Check that there is no damage or dust on the quick connector. If necessary, clean the seal surface of the pipe.**
- **When connecting the quick connector, make sure to insert it all the way in before locking the slider.**
- **When it is difficult to lock the slider, check that the connector is fully inserted.**
- **After locking the slider, check again that the quick connector is securely connected.**

NOTE:
Connect the quick connector as shown in the figure.

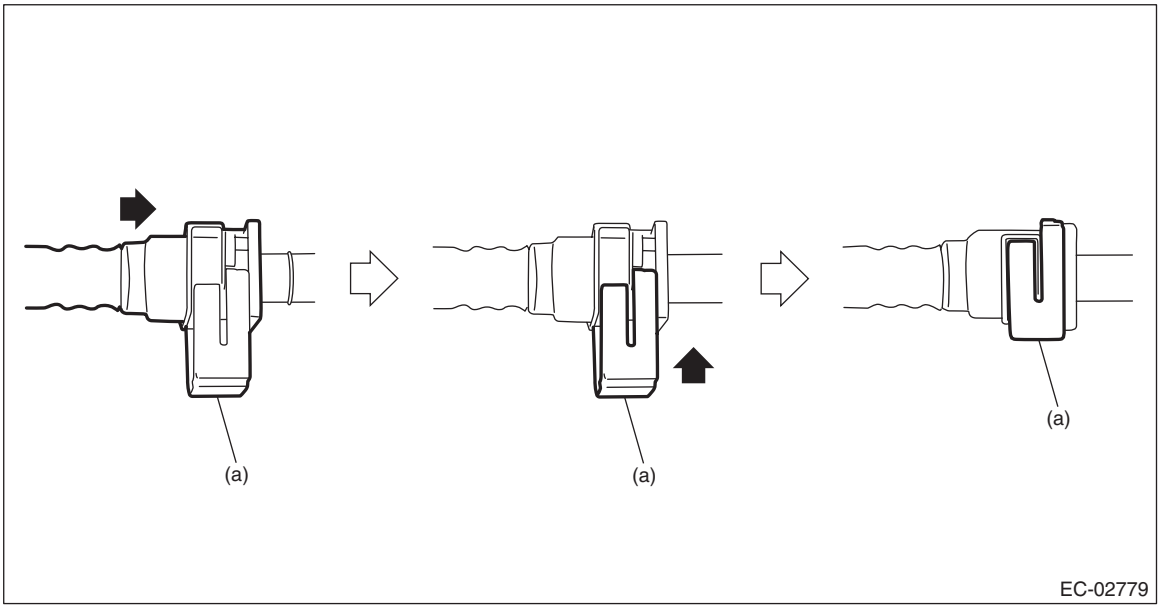

(a) Slider

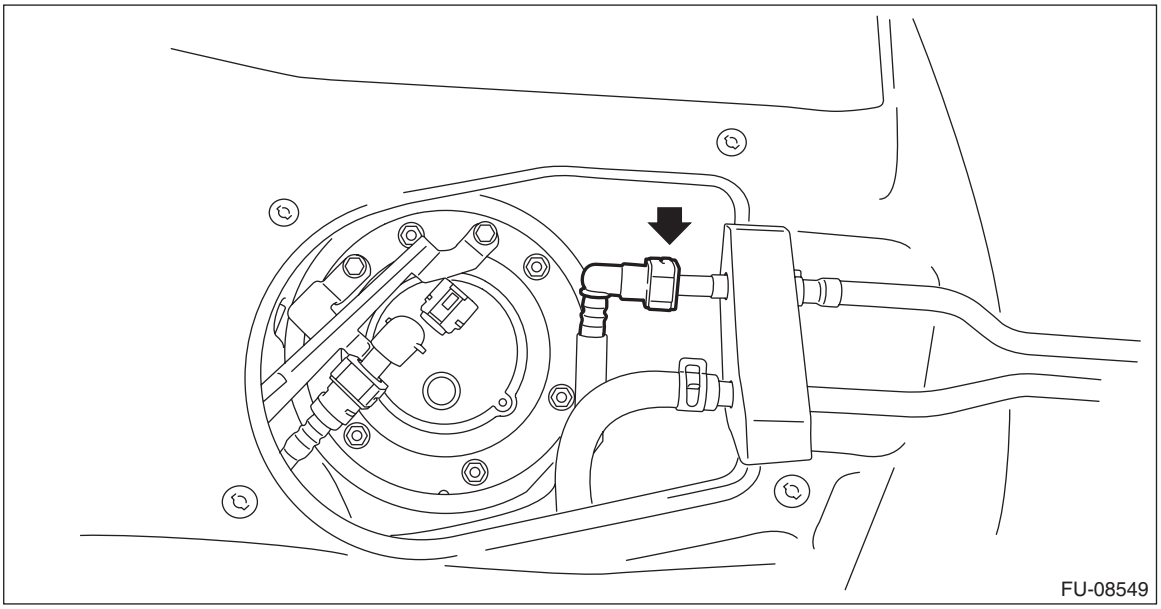

9) Connect the connector to the fuel sub level sensor.

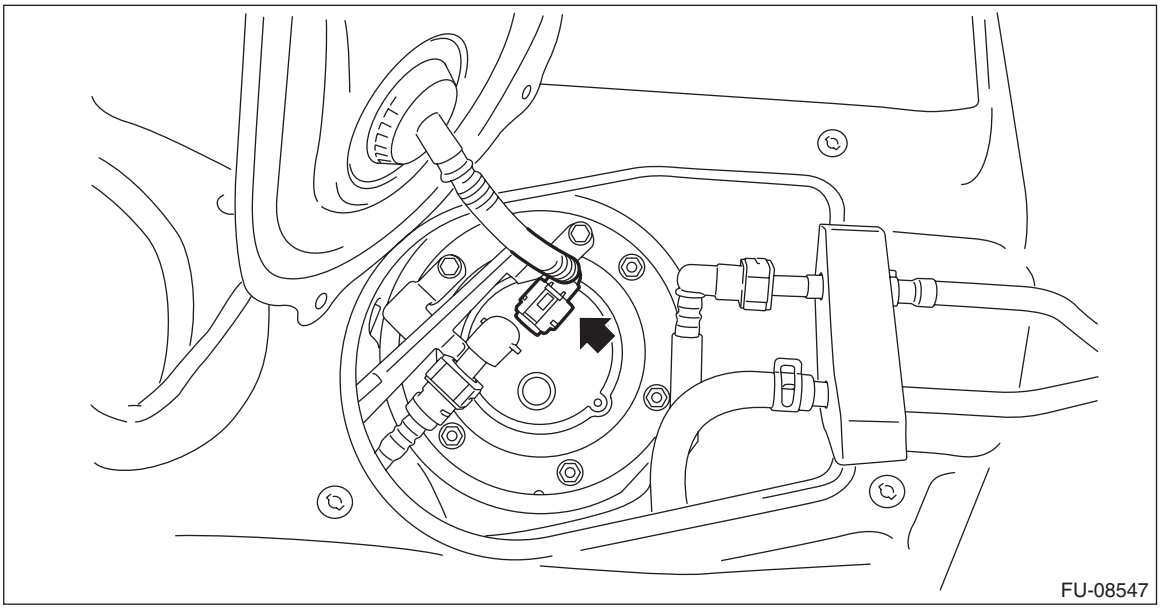

10) Install the service hole cover of fuel sub level sensor.

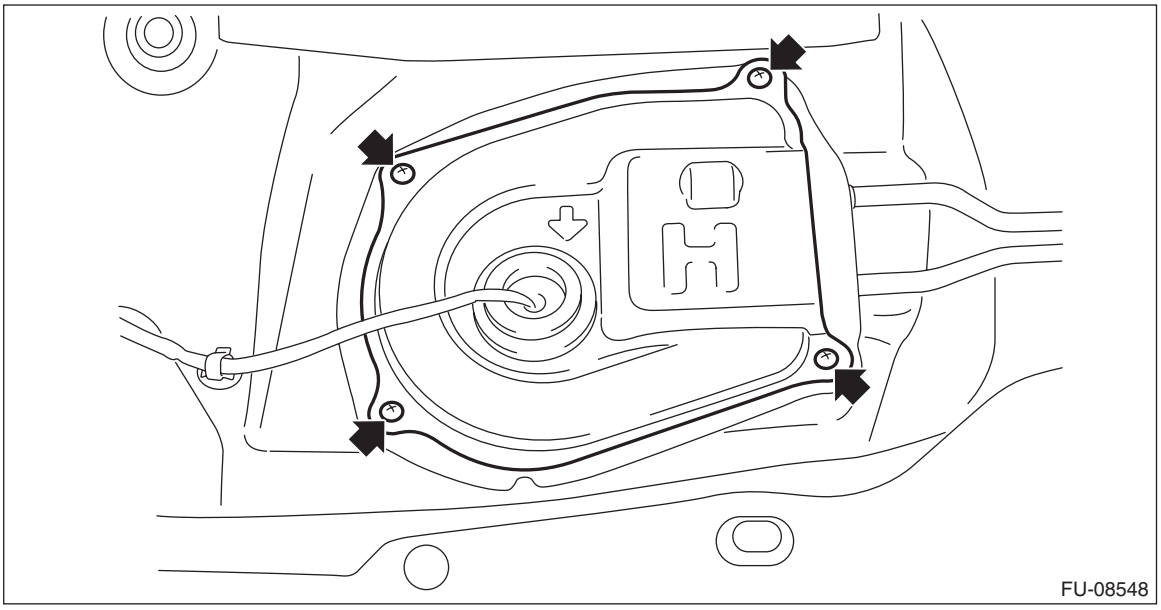

11) Connect the connector to the fuel pump.

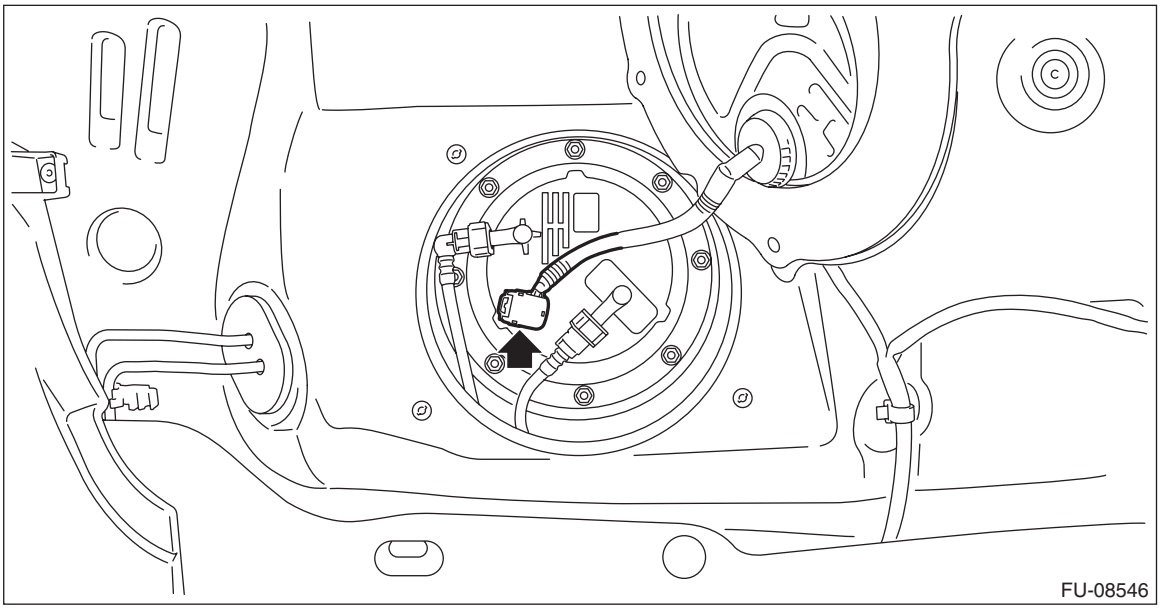

12) Install the service hole cover of fuel pump.

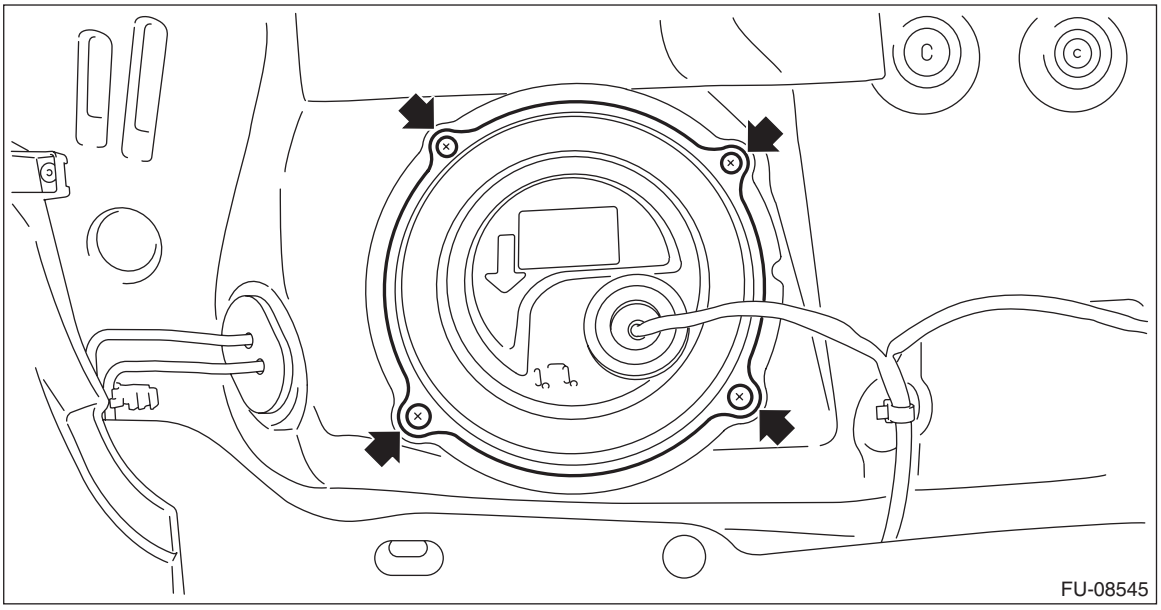

13) Install the rear seat cushion. <Ref. to SE-44, INSTALLATION, Rear Seat.>
14) Connect the ground terminal to battery sensor. <Ref. to RC-4, BATTERY, NOTE, Repair Contents.>

C: INSPECTION

1) Check that the fuel tank and fuel pipe have no deformation, cracks and other damages.
2) Check that the fuel hose and tube have no cracks, damage or loose part.

27.Fuel Filler Pipe

A: REMOVAL

WARNING:
Place “NO OPEN FLAMES” signs near the working area.

CAUTION:
Be careful not to spill fuel.

1) Release the fuel pressure. <Ref. to FU(H4DO)-90, RELEASING OF FUEL PRESSURE, PROCEDURE, Fuel.>
2) Drain fuel. <Ref. to FU(H4DO)-91, DRAINING FUEL (WITH SUBARU SELECT MONITOR), PROCEDURE, Fuel.>
3) Open the fuel filler lid and remove the fuel filler cap.
4) Turn the fuel filler pipe protector in the direction of the arrow to unlock and remove it.

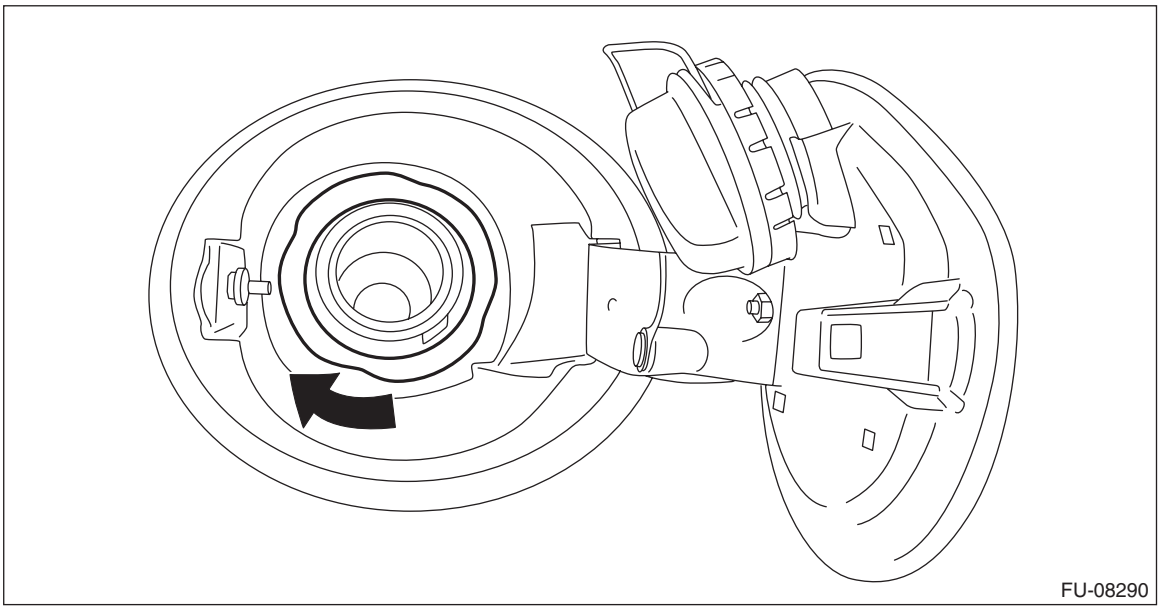
FU-08290

5) Remove the rear sub frame assembly. <Ref. to RS-10, REMOVAL, Rear Sub Frame.>
6) Remove the rear mud guard RH. <Ref. to EI-29, REMOVAL, Mud Guard.>
7) Disconnect the fuel filler hoses from the fuel filler pipe.

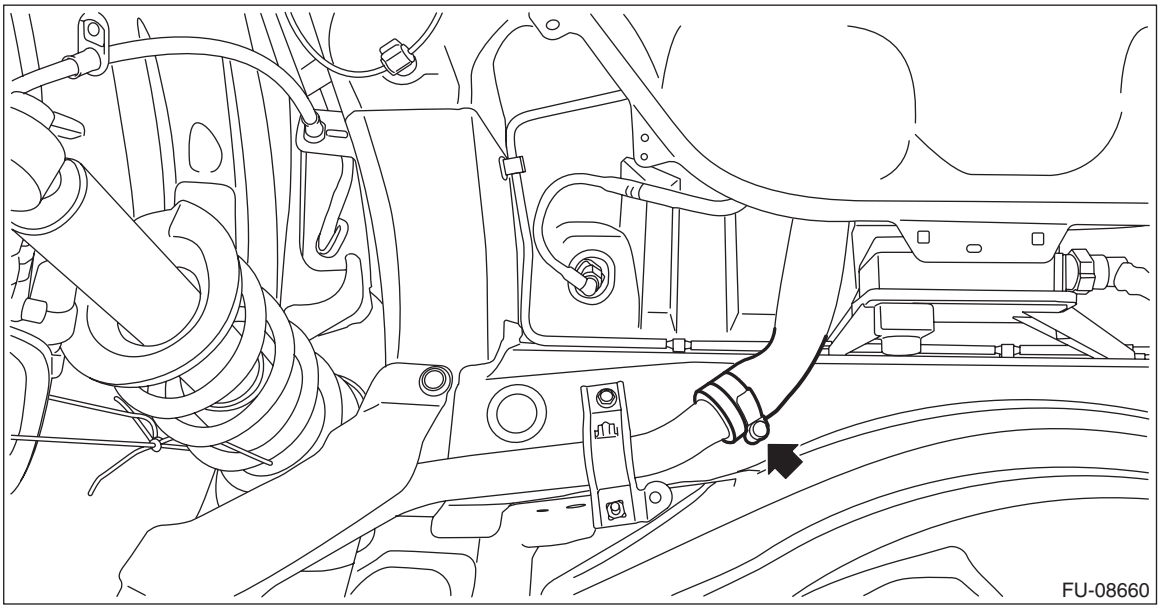
FU-08660

8) Disconnect the evaporation hose (A) from fuel filler pipe and remove the bolts and nuts securing the fuel filler pipe to the vehicle body.

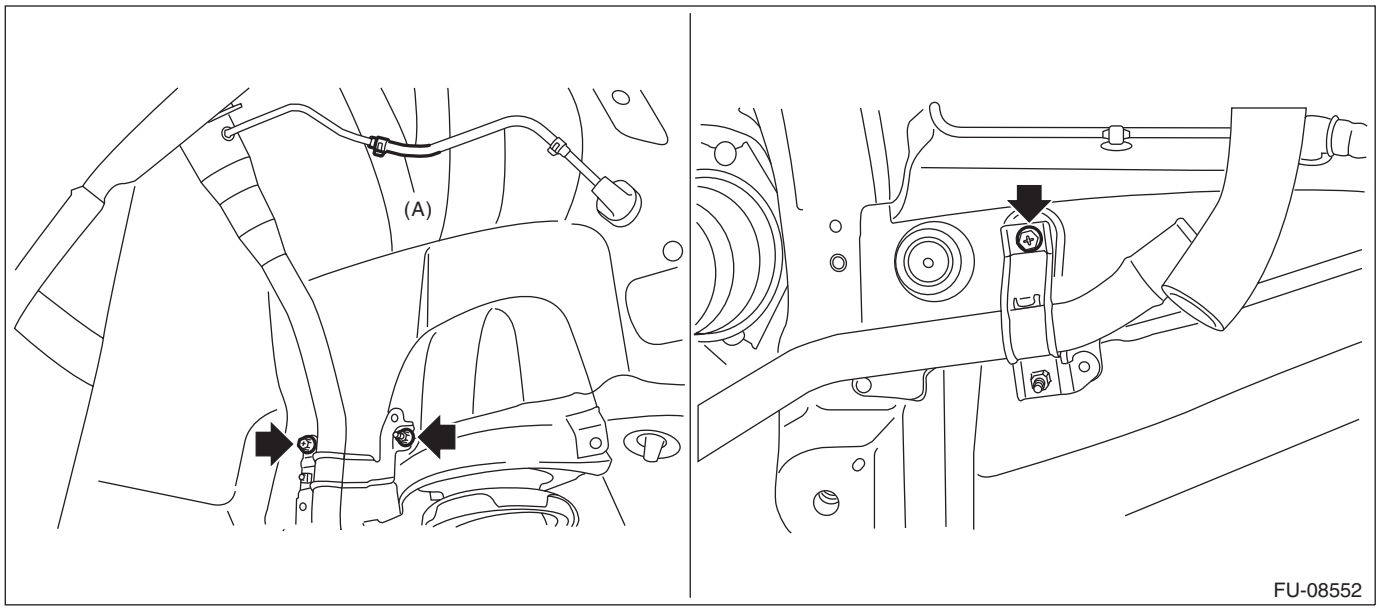

9) Remove the fuel filler pipe from the underside of the vehicle.

B: INSTALLATION

1) Open the fuel filler lid.
2) Insert the fuel filler pipe from inside of the rear fender.
3) Install the fuel filler pipe to the vehicle body and connect the evaporation hose (A) to the fuel filler pipe.

Tightening torque:
7.5 N·m (0.8 kgf-m, 5.5 ft-lb)

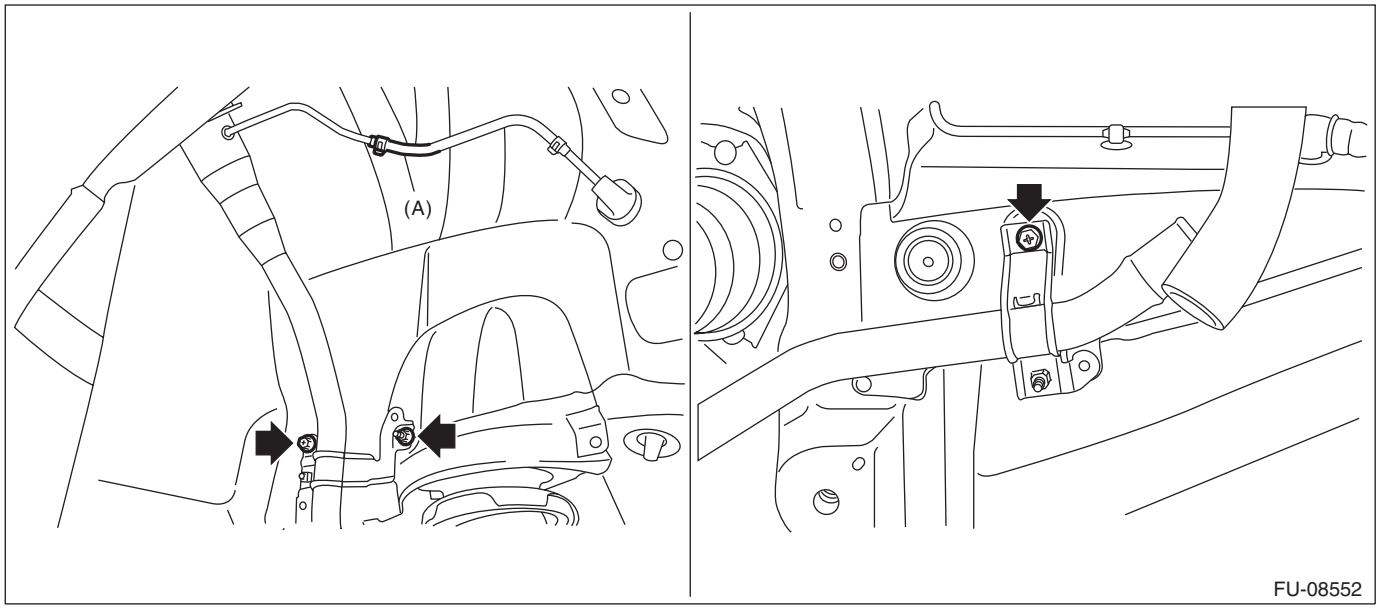

4) Align the cutout on the fuel filler pipe protector and the protrusion of the neck holder and insert them all the way, and then turn the fuel filler pipe protector in the direction of the arrow until it is locked.

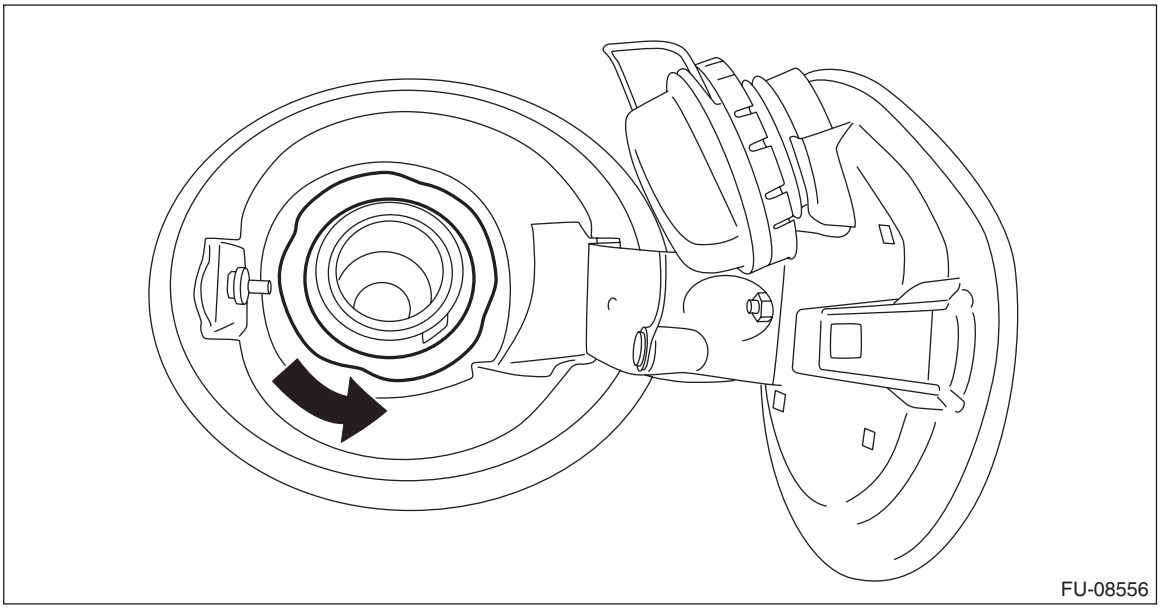

5) Correctly insert the fuel filler hose to the spool, and then install the clamp as shown.

Tightening torque:
2.5 N·m (0.3 kgf-m, 1.8 ft-lb)

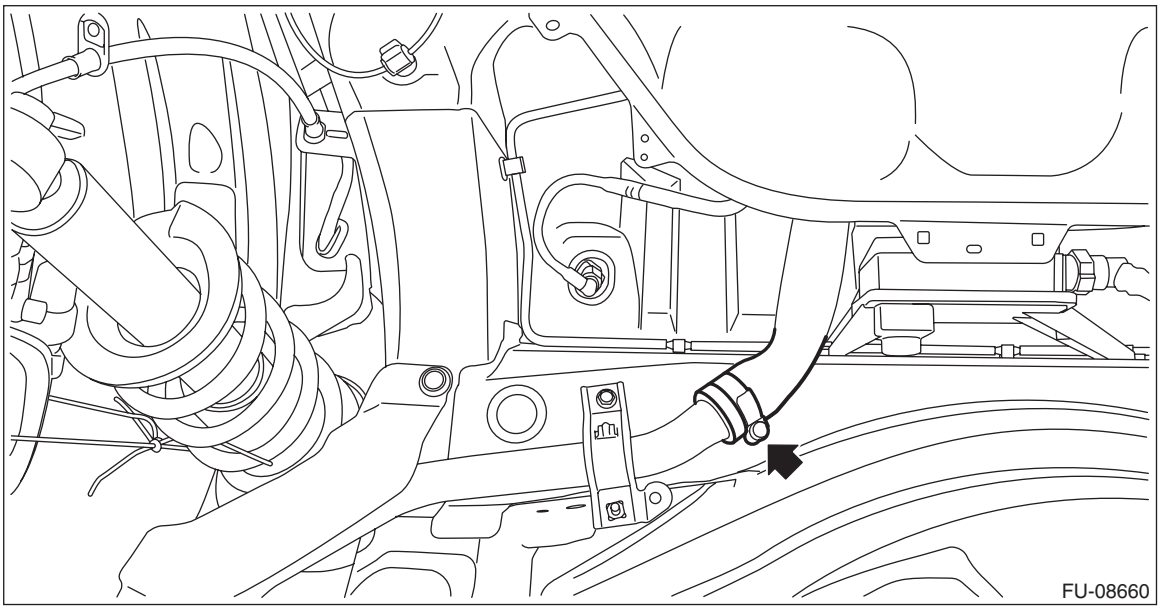

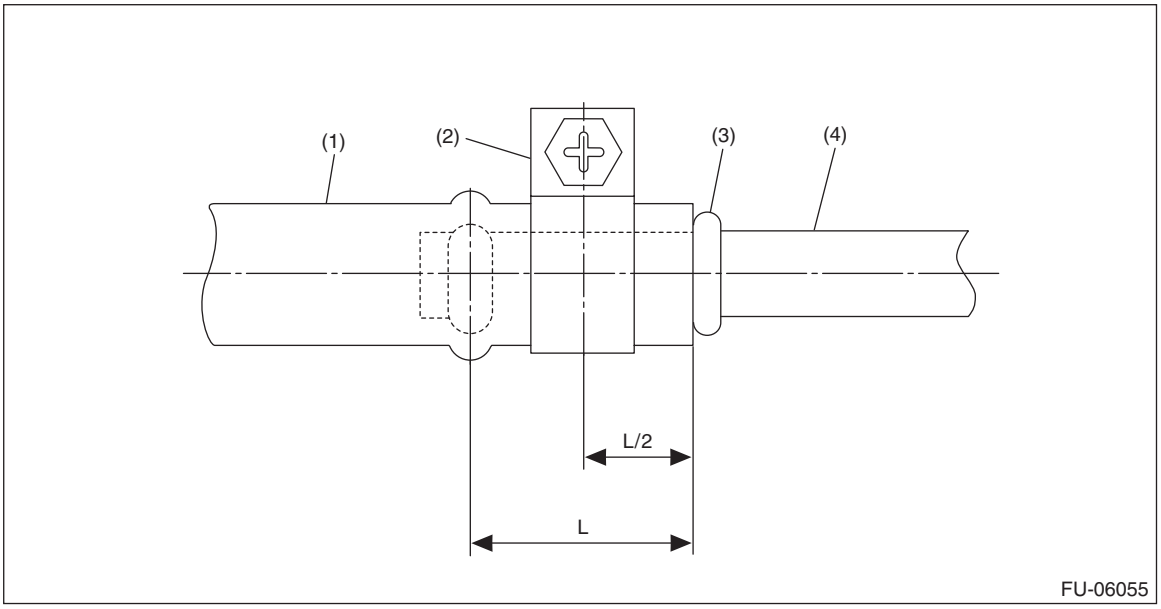

(1) Fuel filler hose
(2) Clamp
(3) Spool
(4) Fuel filler pipe

6) Install the rear mud guard RH. <Ref. to EI-29, INSTALLATION, Mud Guard.>
7) Install the rear sub frame assembly. <Ref. to RS-13, INSTALLATION, Rear Sub Frame.>

C: DISASSEMBLY

1) Using a marker pen, make alignment marks (A) on the fuel filler pipe and the fuel filler pipe bracket.
2) Remove the fuel filler pipe bracket from the fuel filler pipe.

- With protector

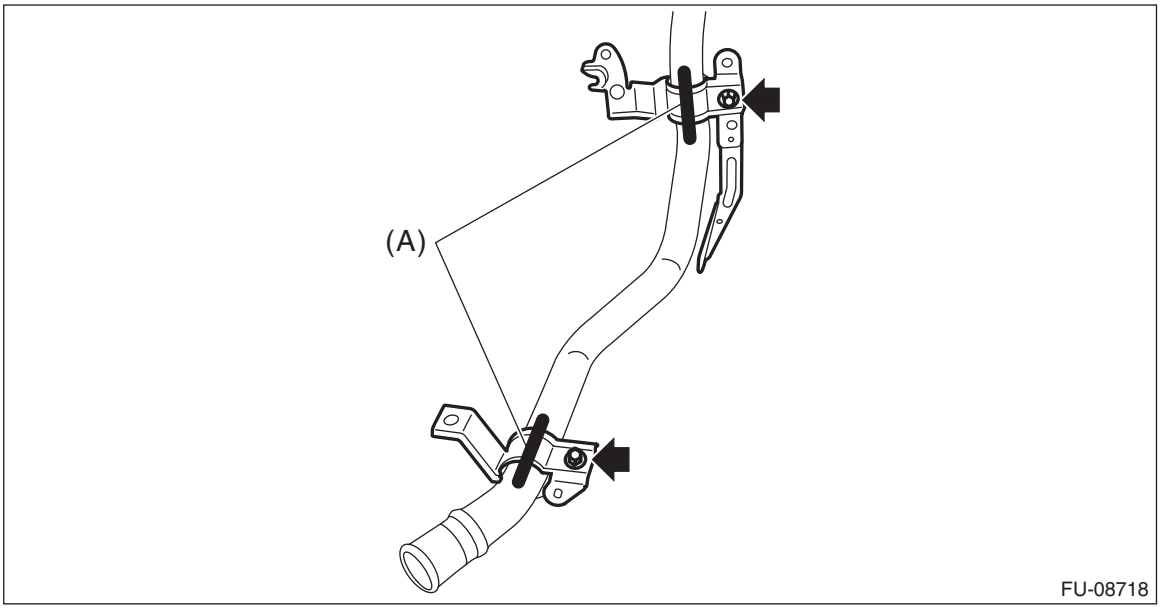

- Without protector

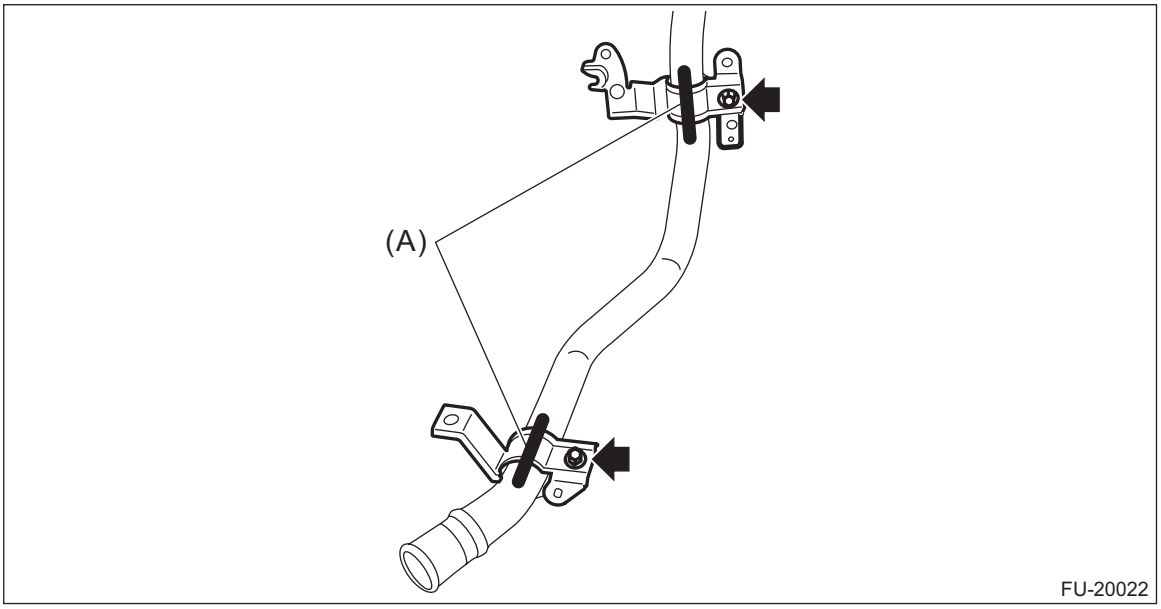

D: ASSEMBLY

Install the fuel filler pipe bracket to the fuel filler pipe by aligning the alignment marks (A).

Tightening torque:
7.35 N·m (0.7 kgf-m, 5.4 ft-lb)

- With protector

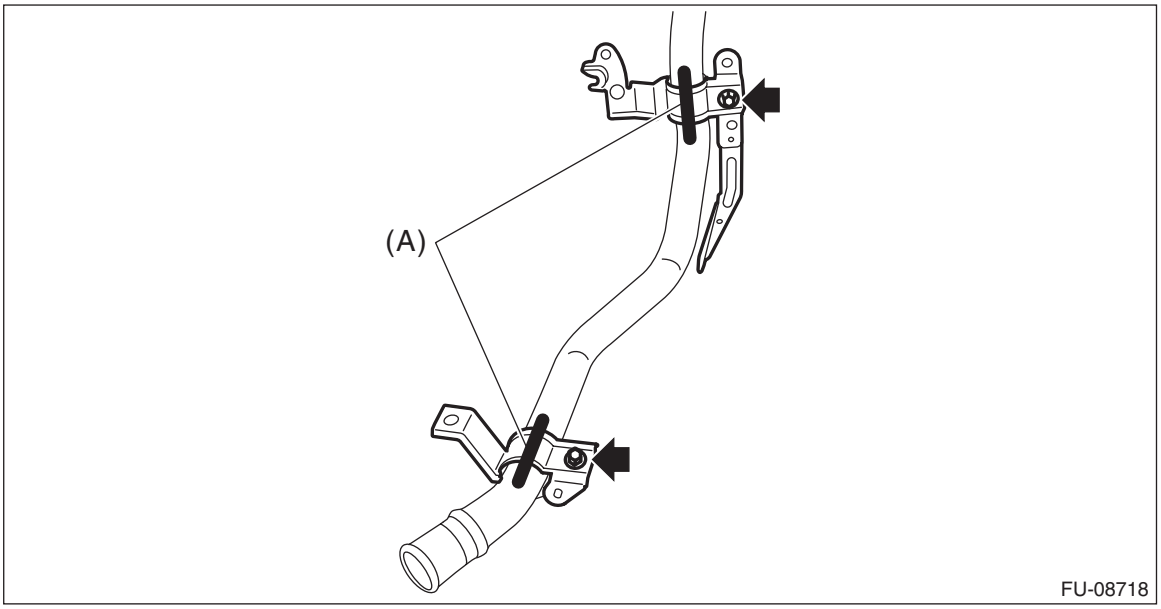

- Without protector

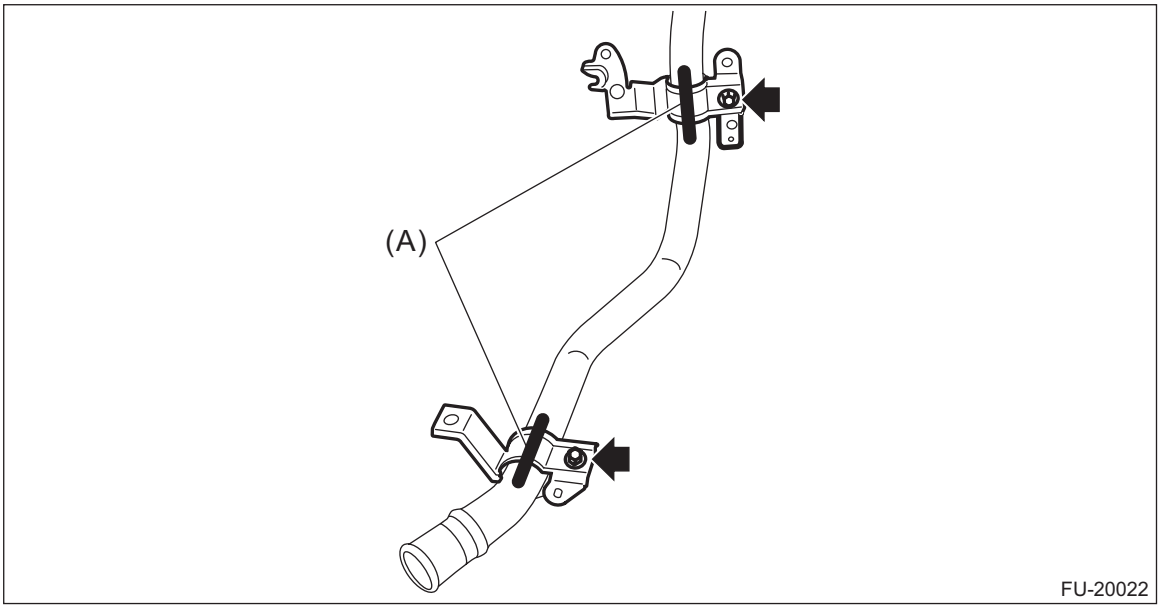

E: INSPECTION

1) Check that the fuel filler pipe does not have deformation, cracks or other damages.
2) Check that the fuel hose has no cracks, damage or loose part.

28.Fuel Pump

A: REMOVAL

WARNING:
Place “NO OPEN FLAMES” signs near the working area.

CAUTION:
- **Be careful not to spill fuel.**
- **Catch the fuel from the tubes using a container or cloth.**
- **If the fuel gauge indicates that two thirds or more of the fuel is remaining, be sure to drain fuel before starting work to avoid the fuel to spill.**

NOTE:
Fuel pump assembly consists of fuel pump, fuel filter and fuel level sensor.
1) Release the fuel pressure. <Ref. to FU(H4DO)-90, RELEASING OF FUEL PRESSURE, PROCEDURE, Fuel.>
2) Drain fuel. <Ref. to FU(H4DO)-91, DRAINING FUEL (WITH SUBARU SELECT MONITOR), PROCEDURE, Fuel.>
3) Disconnect the ground terminal from battery sensor. <Ref. to RC-4, BATTERY, NOTE, Repair Contents.>
4) Remove the rear seat cushion. <Ref. to SE-33, REMOVAL, Rear Seat.>
5) Remove the service hole cover of fuel pump.

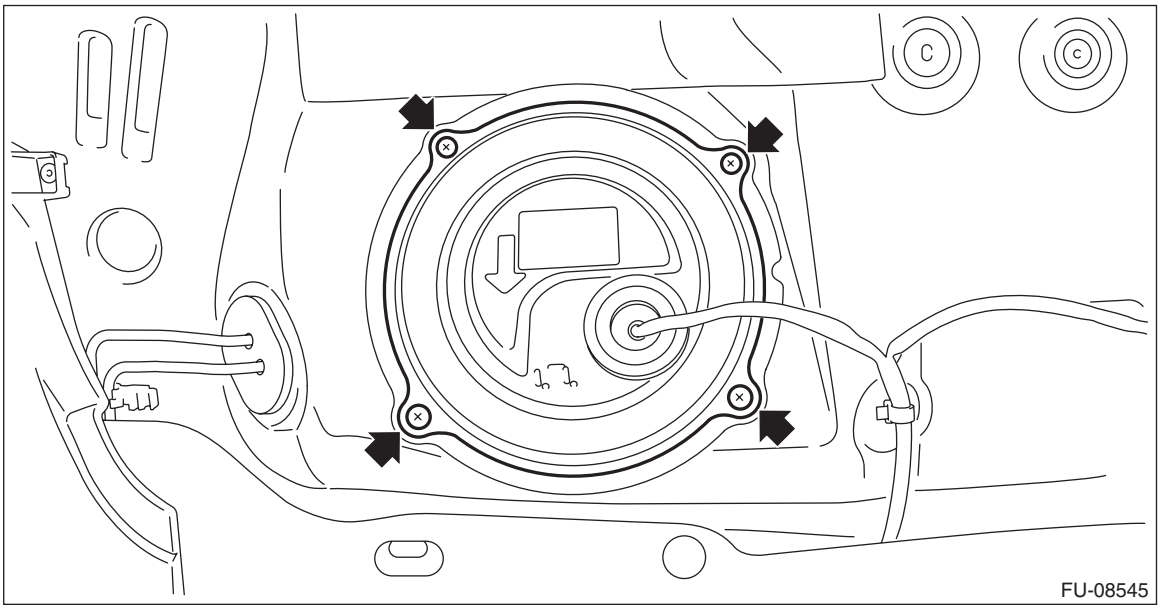

6) Disconnect connector (A) from the fuel pump, and move aside the service hole cover.
7) Disconnect the quick connectors of fuel delivery tube and fuel sub delivery tube.

NOTE:
Disconnect the quick connector as shown in the figure.

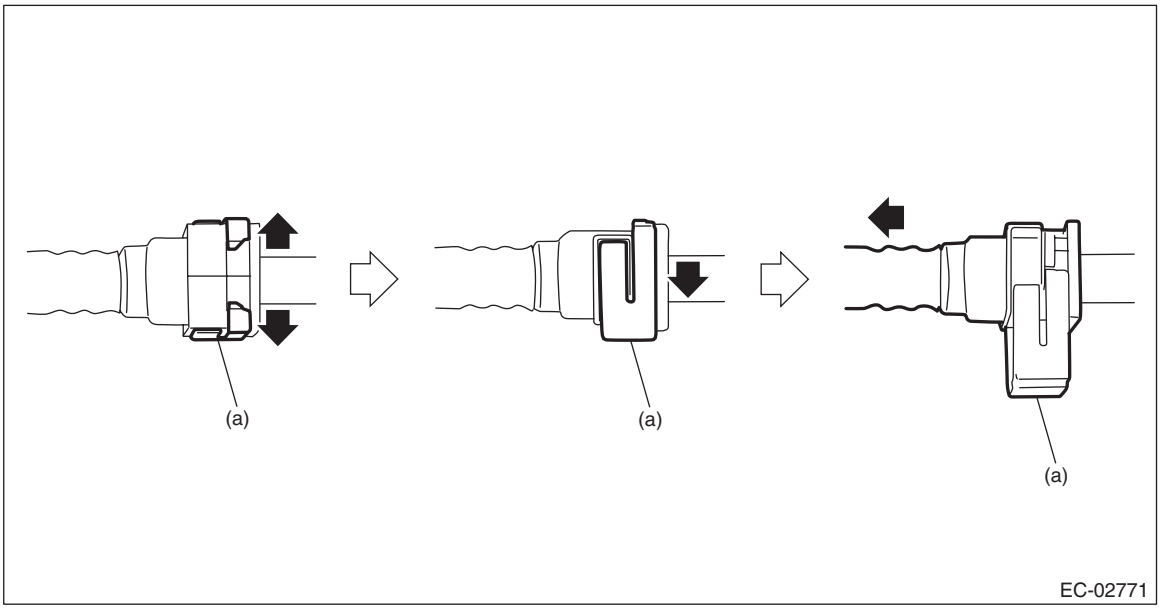

(a) Slider

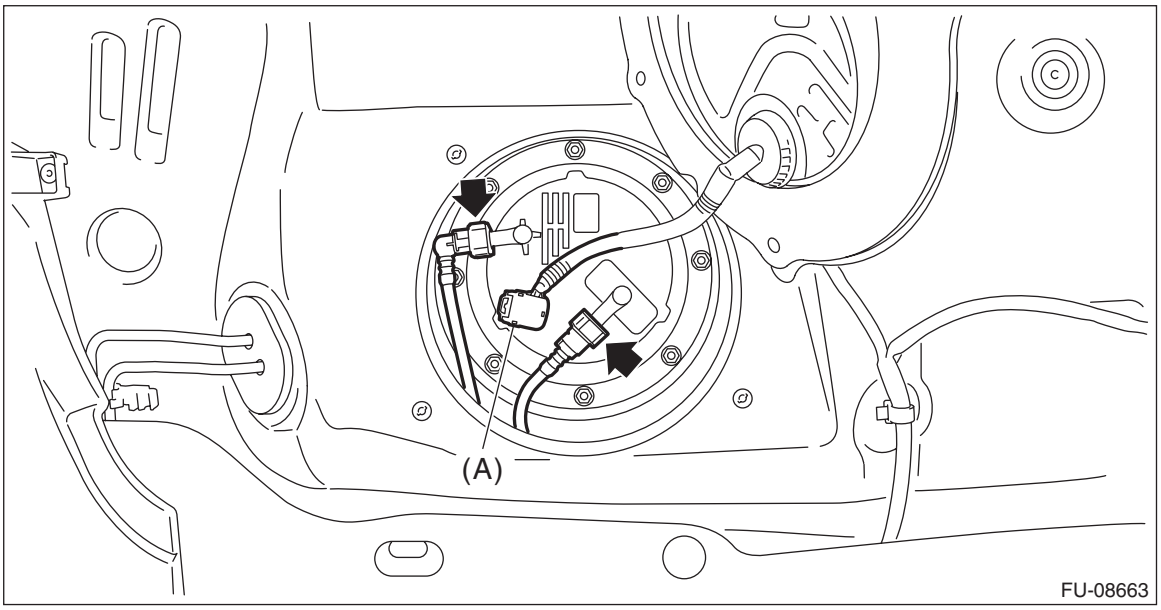

8) Remove the nuts which hold the fuel pump upper plate to the fuel tank.

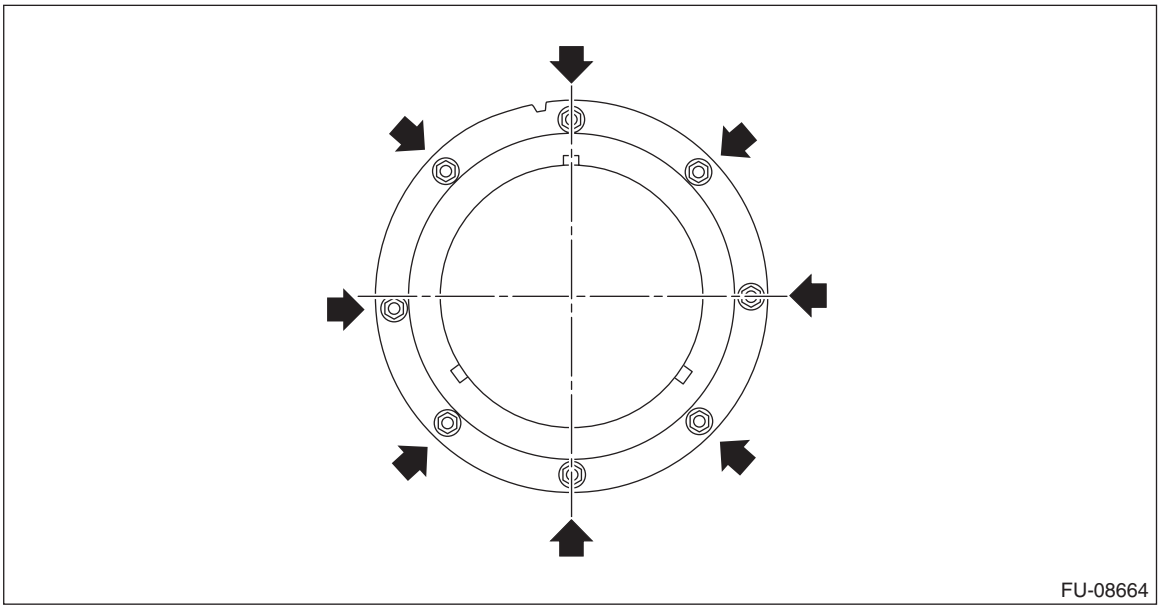

9) Remove the fuel pump assembly from the fuel tank.

CAUTION:
Be careful not to let the arm and float of fuel level sensor contact the fuel tank.

B: INSTALLATION

1) Install the fuel pump assembly to the fuel tank.

CAUTION:
Set the arm and float of the fuel level sensor while paying attention to prevent them from contacting the fuel tank. If the arm of the fuel level sensor is bent, the fuel gauge may not read correctly.

NOTE:
Use a new gasket.

(1) Make sure the sealing portion is free from fuel or foreign matter before installation.
(2) Align the recess of the fuel pump upper plate cushion to the protrusion (A) of the fuel pump assembly.
(3) Keeping the cutout (B) of the fuel pump upper plate facing toward the rear of the vehicle, align the protrusion (C) of the fuel pump upper plate cushion to the cutout.
(4) Tighten the nuts to the specified torque in the order as shown in the figure.

Tightening torque:
4.4 N·m (0.4 kgf-m, 3.2 ft-lb)

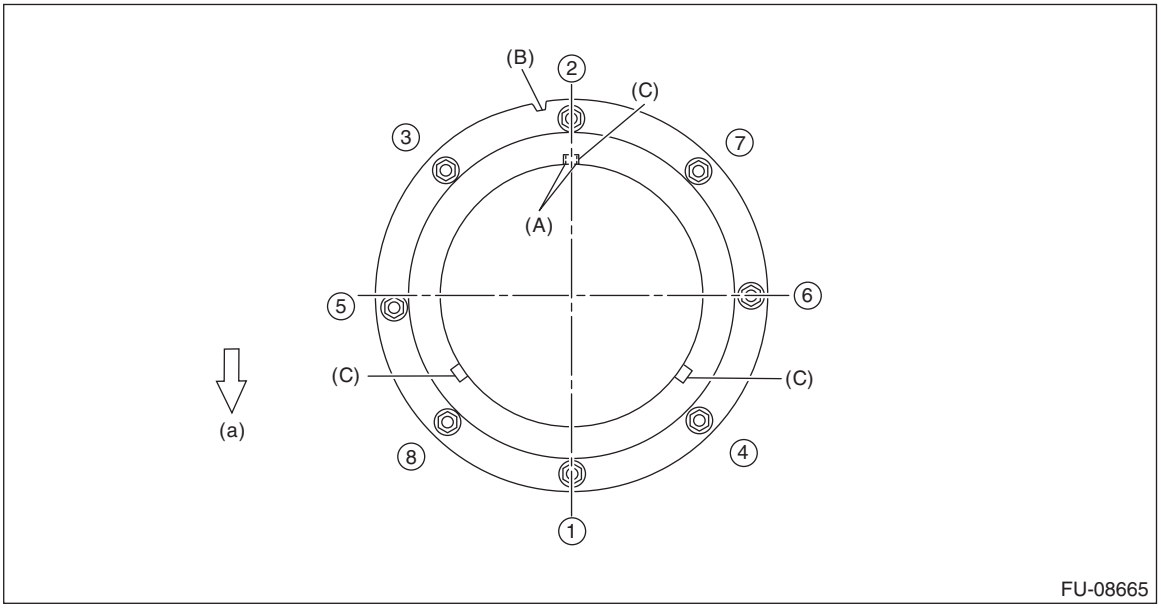

(a) Front side of vehicle

2) Connect the quick connector of the fuel delivery tube and fuel sub delivery tube.

CAUTION:
• Check that there is no damage or dust on the quick connector. If necessary, clean the seal surface of the pipe.
• When connecting the quick connector, make sure to insert it all the way in before locking the slider.
• When it is difficult to lock the slider, check that the connector is fully inserted.
• After locking the slider, check again that the quick connector is securely connected.

NOTE:
Connect the quick connector as shown in the figure.

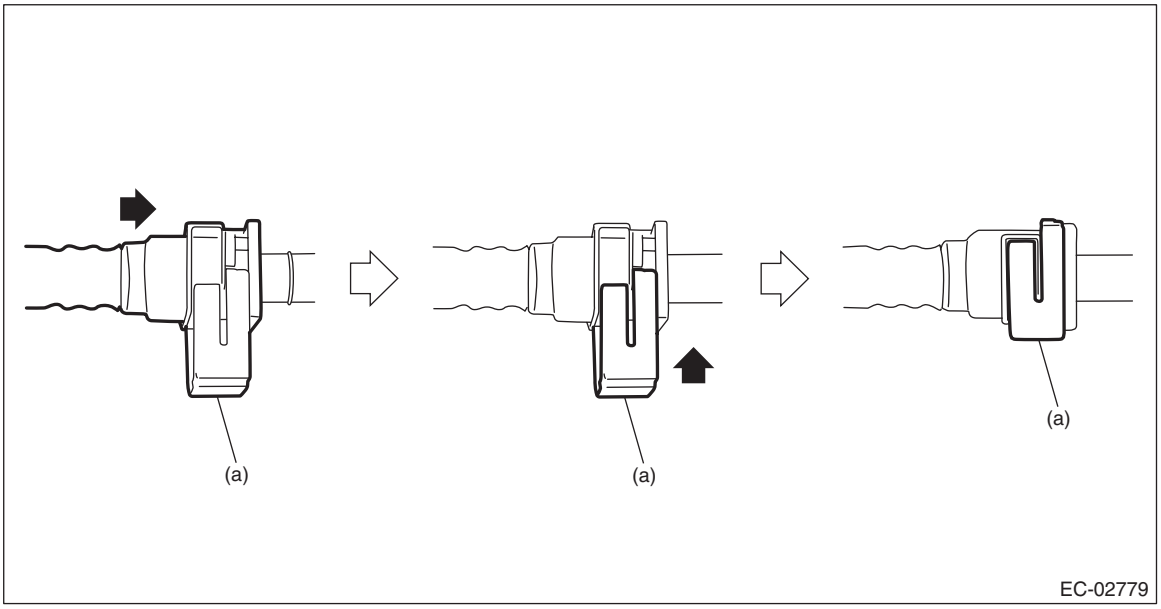

(a) Slider

3) Connect the connector (A) to the fuel pump.

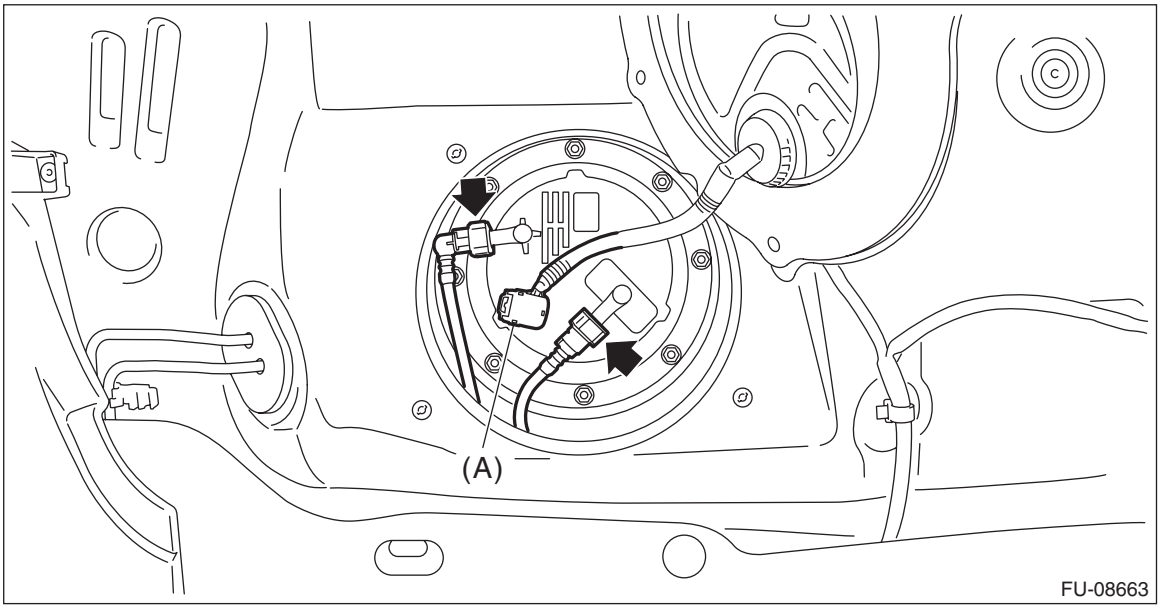

4) Install the service hole cover of fuel pump.

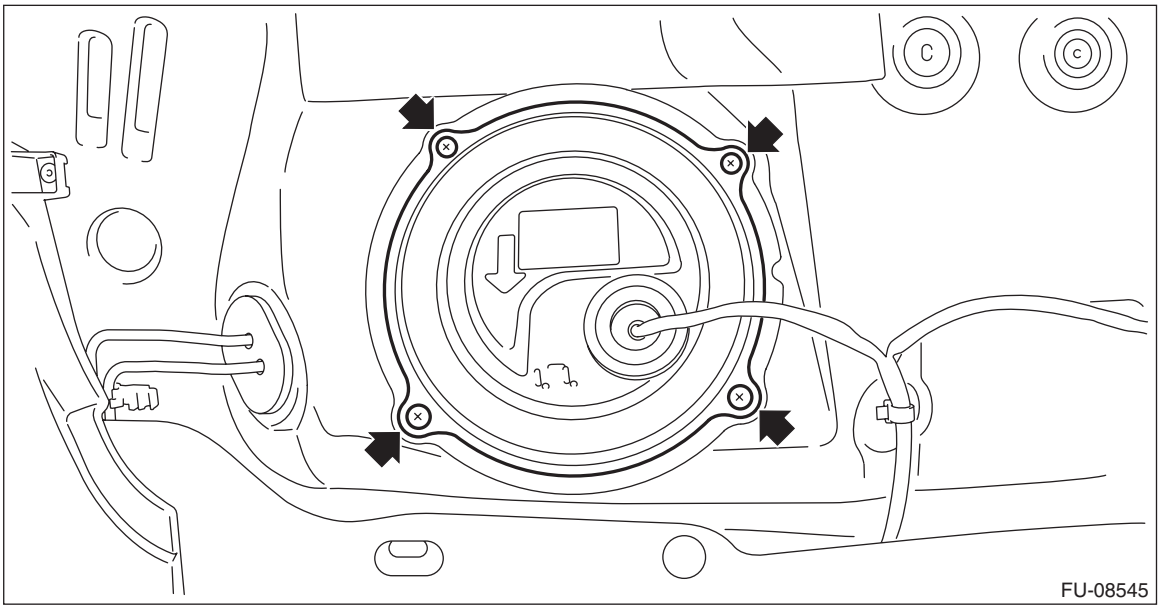

5) Install the rear seat cushion. <Ref. to SE-44, INSTALLATION, Rear Seat.>
6) Connect the ground terminal to battery sensor. <Ref. to RC-4, BATTERY, NOTE, Repair Contents.>

C: INSPECTION

1) Check that the fuel pump has no deformation, cracks or other damages.
2) Connect the battery positive terminal to terminal No. 5 and the battery ground terminal to terminal No. 6, and inspect the fuel pump operation.

WARNING:
- **Wipe off fuel completely.**
- **Keep the battery as far apart from fuel pump as possible.**
- **Do not run the fuel pump for a long time under non-load condition.**

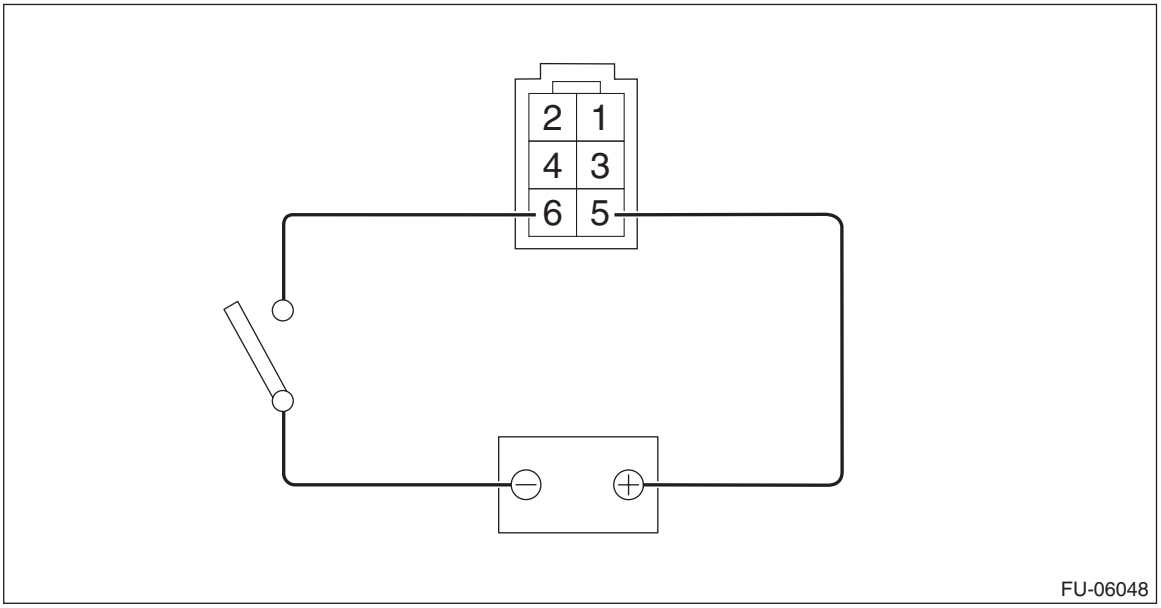

29.Fuel Level Sensor

A: REMOVAL

WARNING:
Place “NO OPEN FLAMES” signs near the working area.

CAUTION:
- **Be careful not to spill fuel.**
- **If the fuel gauge indicates that two thirds or more of the fuel is remaining, be sure to drain fuel before starting work to avoid the fuel to spill.**

NOTE:
The fuel level sensor is built in fuel pump assembly.
1) Remove the fuel pump assembly. <Ref. to FU(H4DO)-116, REMOVAL, Fuel Pump.>
2) Disconnect the connector (A) of the fuel level sensor and pull out the fuel pump harness and fuel level sensor harness from the clip.

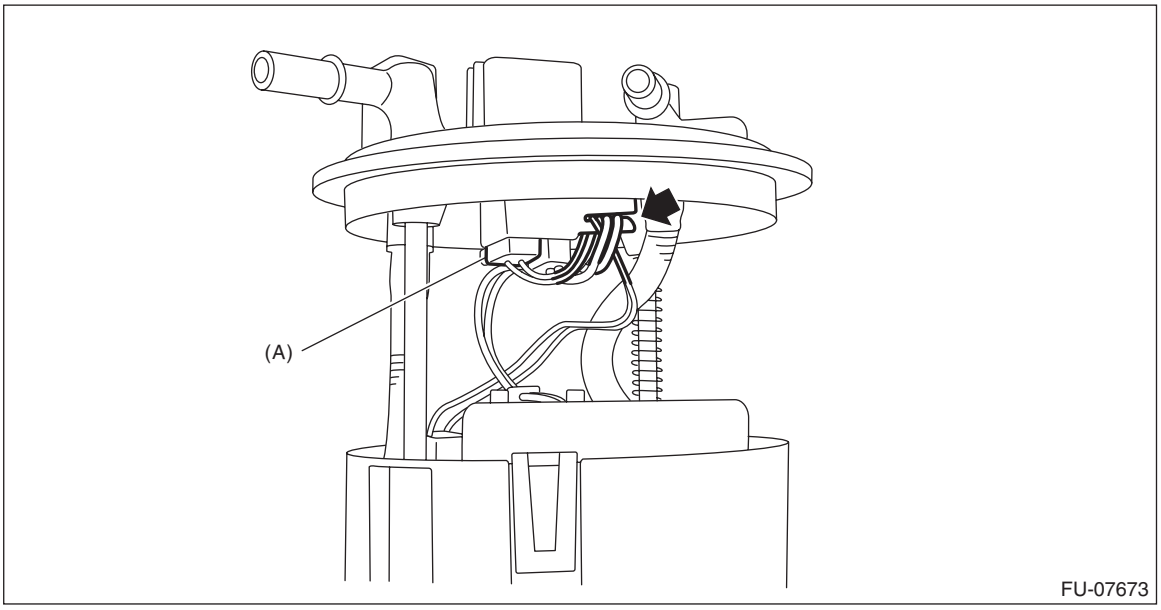

3) While pressing the claw (A) of the fuel level sensor, slide the fuel level sensor in the direction of the arrow, and remove the fuel level sensor.

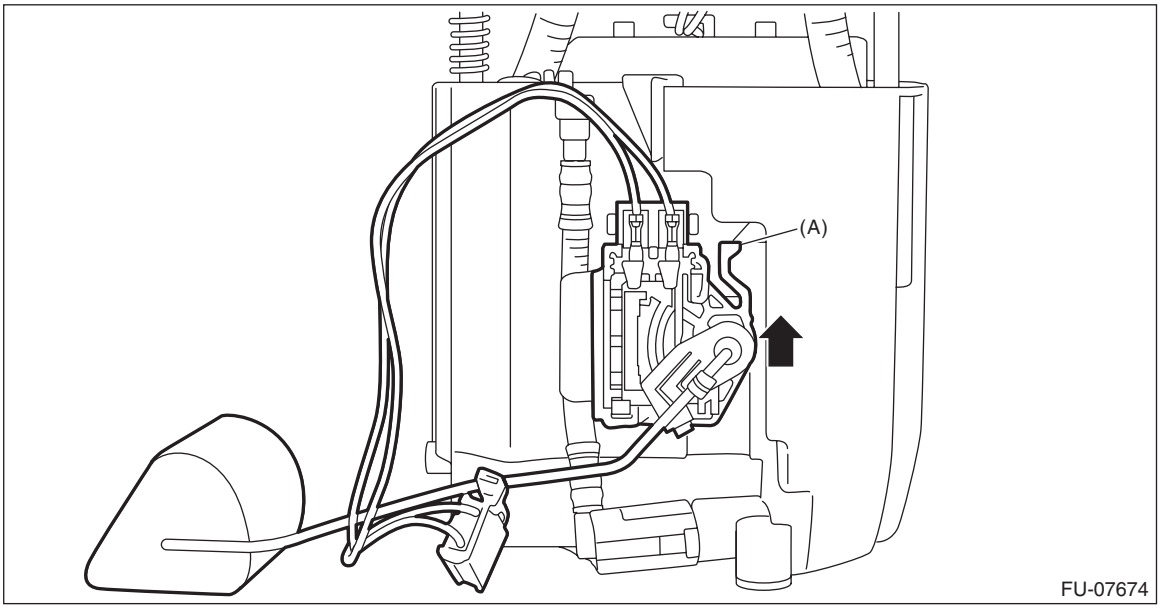

B: INSTALLATION

Install in the reverse order of removal.

CAUTION:
Be sure to install the fuel level sensor harness to the clip first, then install the fuel pump harness. Otherwise, malfunction may occur.

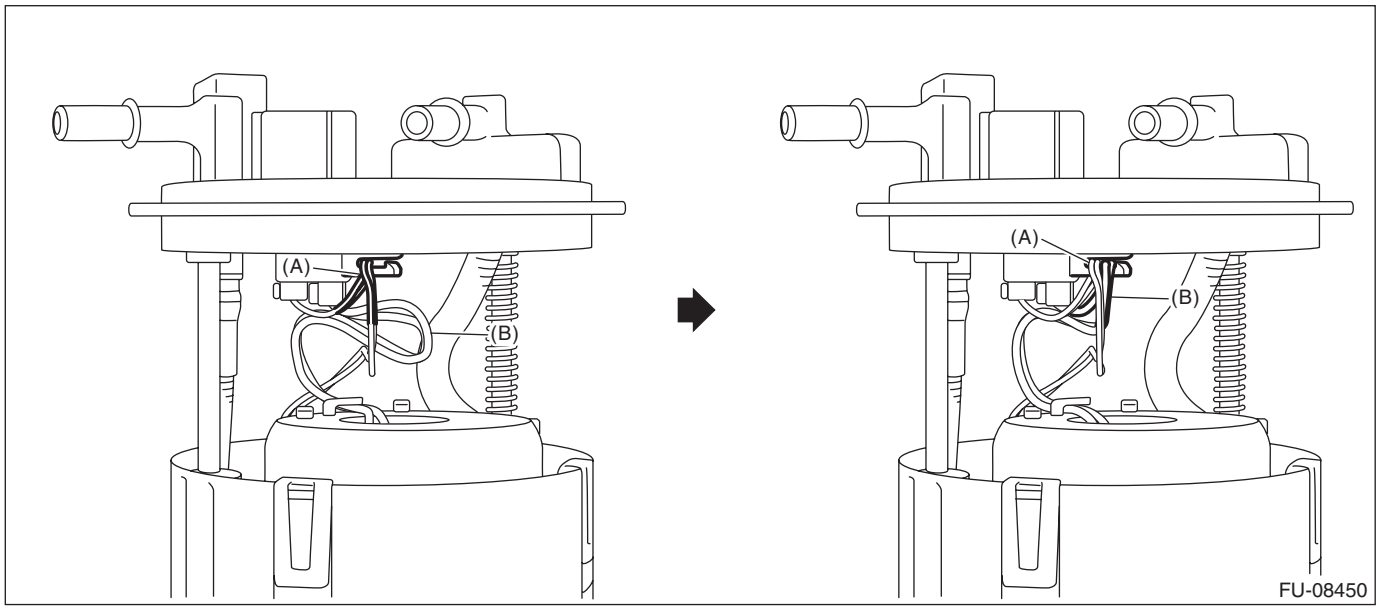

(A) Fuel level sensor harness (B) Fuel pump harness

C: INSPECTION

1) Check that the fuel level sensor has no damage.
2) Measure the fuel level sensor float position.

NOTE:
When inspecting the fuel level sensor, perform the work with the sensor installed to the fuel pump.

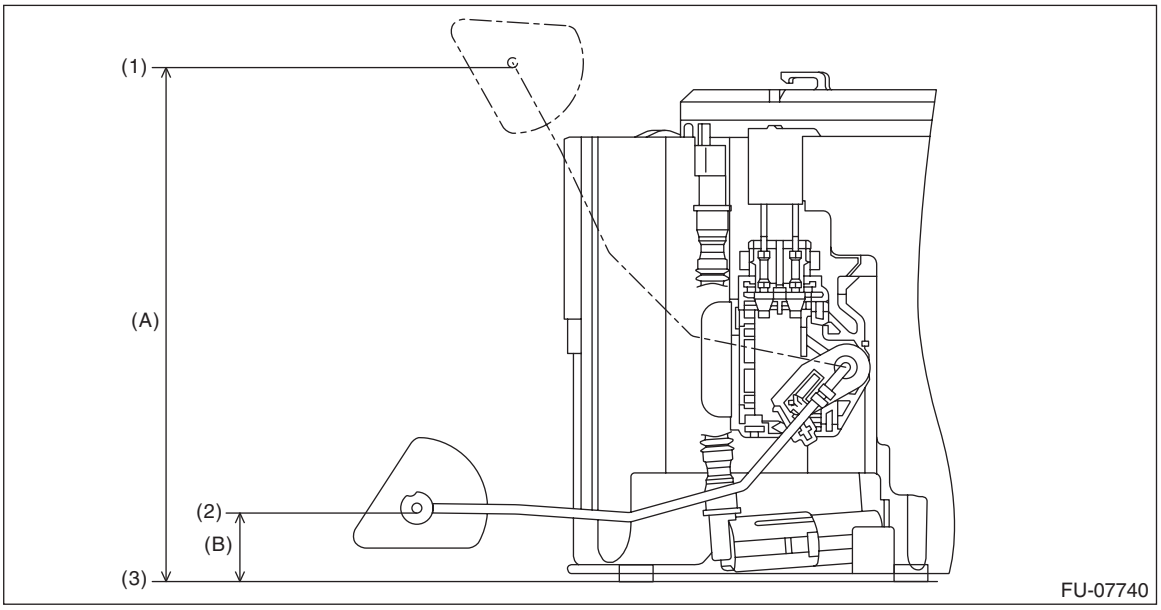

(1) FULL (2) EMPTY (3) Fuel tank seating surface

Float position	Standard
FULL to Fuel tank seating surface (A)	133.0±4 mm (5.236±0.157 in)
EMPTY to Fuel tank seating surface (B)	21.6±4 mm (0.850±0.157 in)

3) Check the resistance between fuel level sensor terminals by the connector on top of the fuel pump.

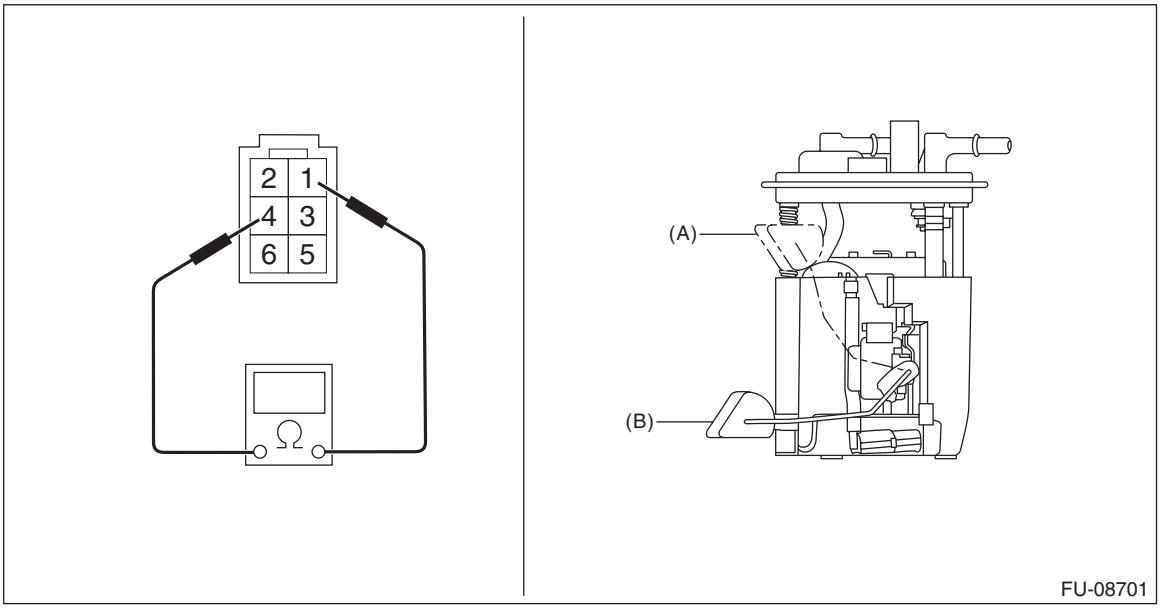

Float position	Terminal No.	Standard
FULL (A)	1 and 4	8.7±1.0 Ω
EMPTY (B)		139.1±2.0 Ω

30.Fuel Sub Level Sensor

A: REMOVAL

WARNING:
Place “NO OPEN FLAMES” signs near the working area.

CAUTION:
- **Be careful not to spill fuel.**
- **Catch the fuel from the tubes using a container or cloth.**
- **If the fuel gauge indicates that two thirds or more of the fuel is remaining, be sure to drain fuel before starting work to avoid the fuel to spill.**

1) Release the fuel pressure. <Ref. to FU(H4DO)-90, RELEASING OF FUEL PRESSURE, PROCEDURE, Fuel.>
2) Drain fuel. <Ref. to FU(H4DO)-91, DRAINING FUEL (WITH SUBARU SELECT MONITOR), PROCEDURE, Fuel.>
3) Disconnect the ground terminal from battery sensor. <Ref. to RC-4, BATTERY, NOTE, Repair Contents.>
4) Remove the rear seat cushion. <Ref. to SE-33, REMOVAL, Rear Seat.>
5) Remove the service hole cover of fuel sub level sensor.

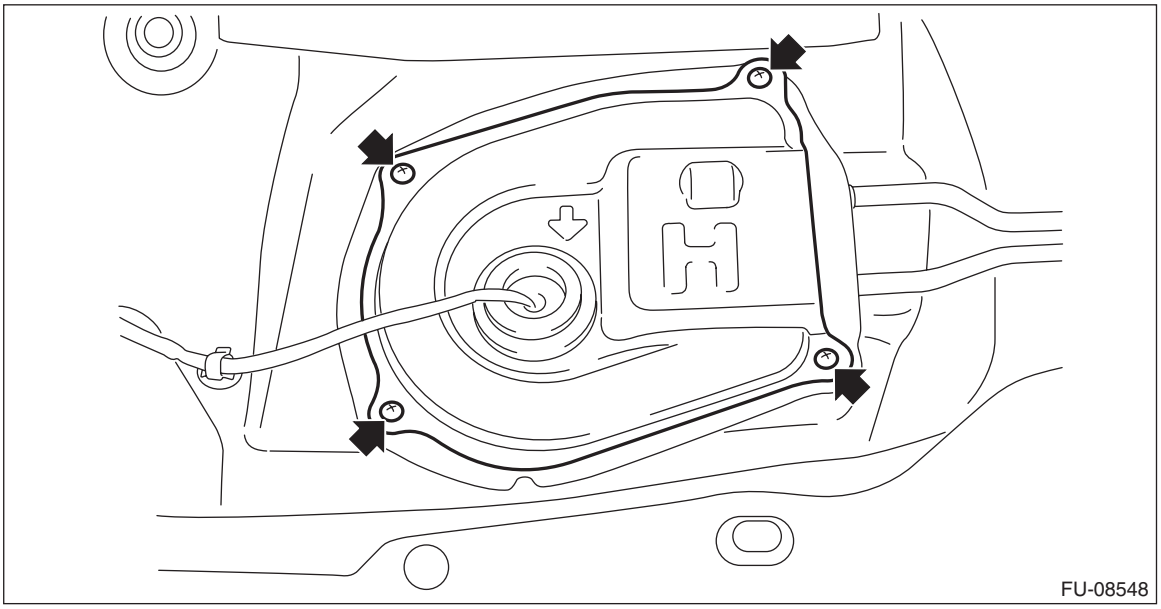

6) Disconnect the connector from the fuel sub level sensor, and move aside the service hole cover.

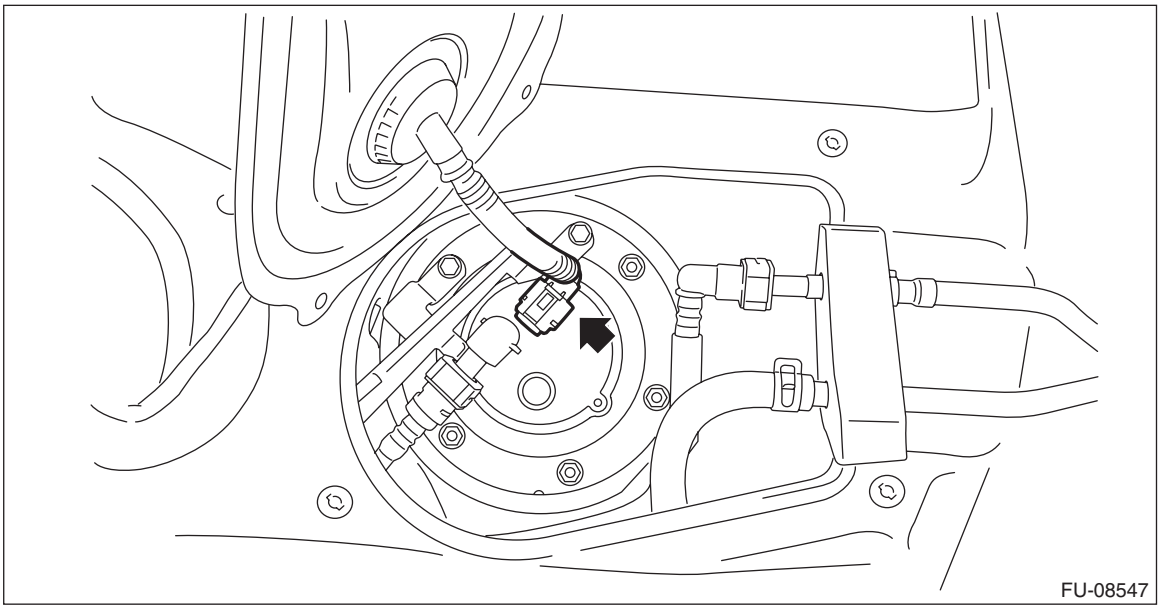

7) Disconnect the quick connector (A) of the fuel sub delivery tube, and remove the fuel sub level sensor protector.

NOTE:
Disconnect the quick connector as shown in the figure.

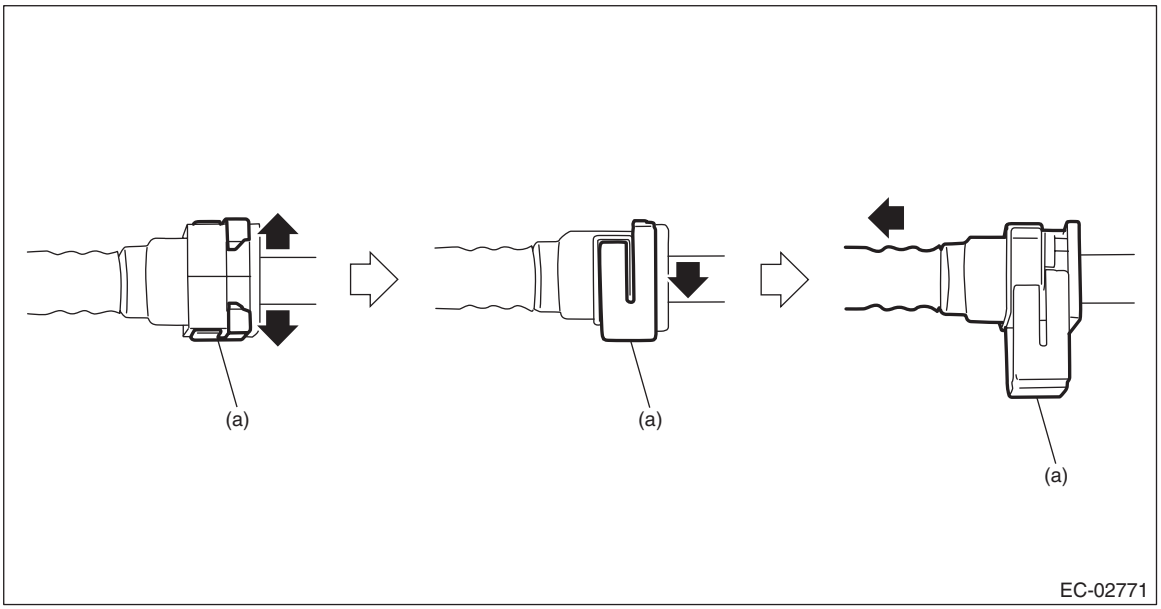

(a) Slider

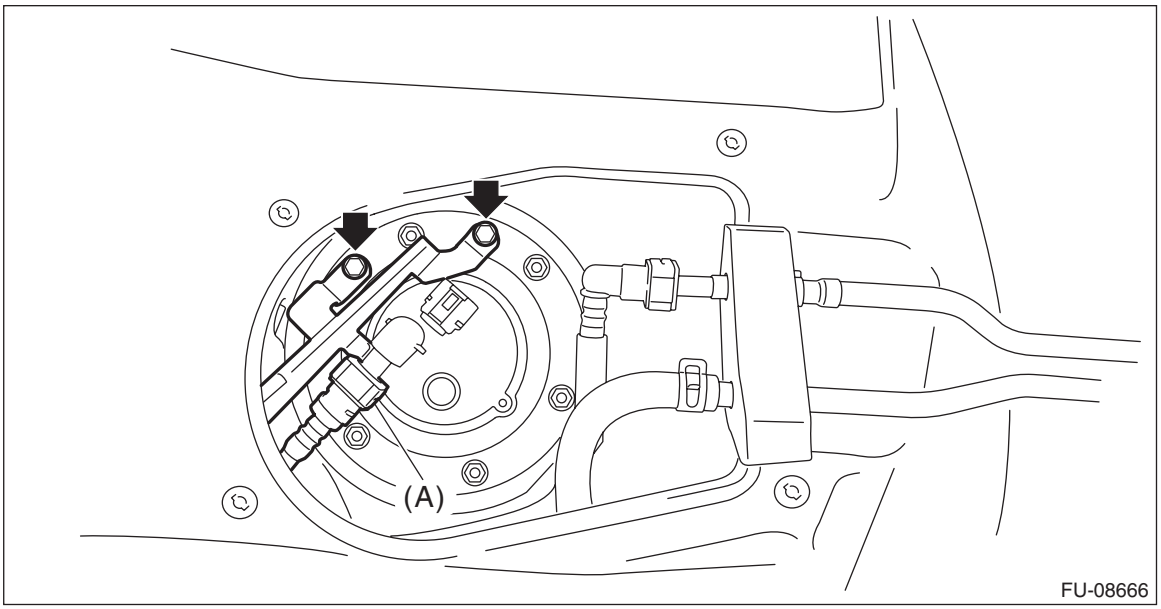

8) Remove the nuts securing the fuel sub level sensor upper plate to the fuel tank and remove the fuel sub level sensor upper plate.

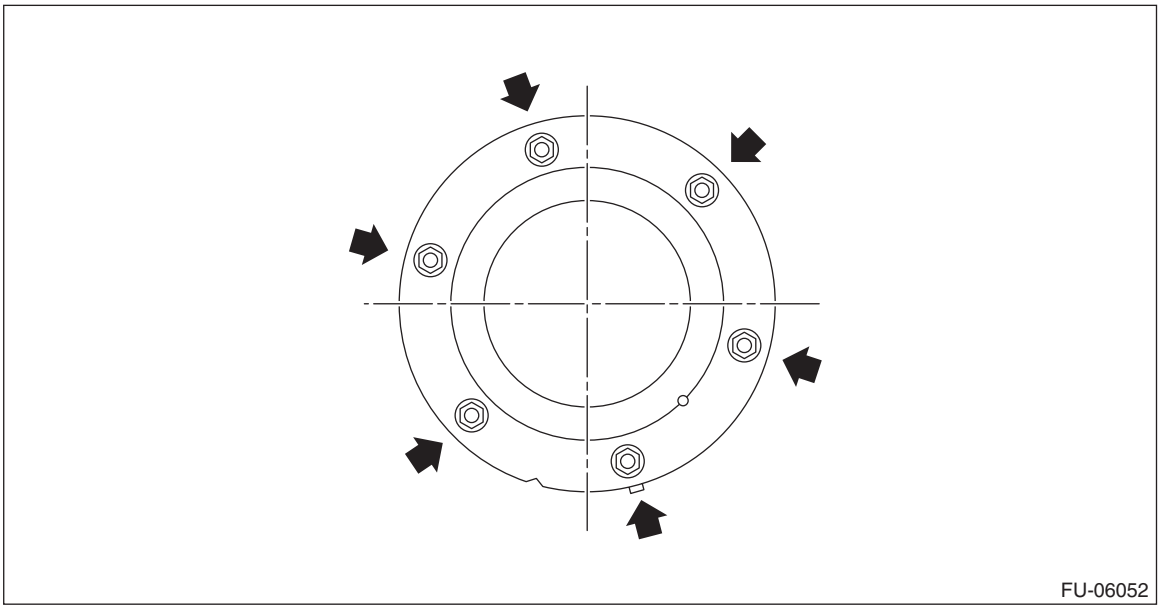

9) Remove the fuel sub level sensor from the fuel tank.

CAUTION:
Be careful not to let the arm and float of the fuel sub level sensor contact the fuel tank.

B: INSTALLATION

1) Install the fuel sub level sensor to the fuel tank.

CAUTION:
Set the arm and float of the fuel sub level sensor while paying attention to prevent them from contacting the fuel tank. If the arm of the fuel sub level sensor is bent, the fuel gauge may not read correctly.

NOTE:
Use a new gasket.

(1) Make sure the sealing portion is free from fuel or foreign matter before installation.
(2) Align protrusion (A) of the gasket to the position shown in the figure.
(3) Align the cutout of fuel sub level sensor upper plate cushion with the protrusion (B) of fuel sub level sensor.
(4) Align the protrusion (B) of fuel sub level sensor upper plate cushion with the cutout of fuel sub level sensor upper plate.
(5) Tighten the nuts to the specified torque in the order as shown in the figure.

Tightening torque:
4.4 N·m (0.4 kgf-m, 3.2 ft-lb)

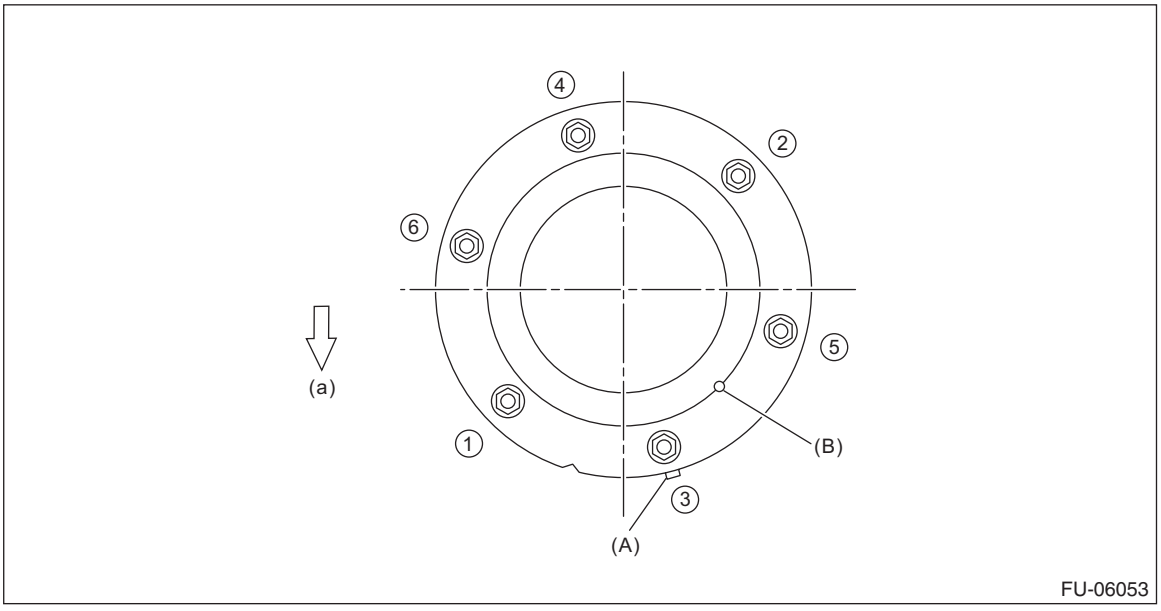

(a) Front side of vehicle

2) Install the fuel sub level sensor protector, and connect the quick connector (A) of the fuel sub delivery tube.

CAUTION:
- **Check that there is no damage or dust on the quick connector. If necessary, clean the seal surface of the pipe.**
- **When connecting the quick connector, make sure to insert it all the way in before locking the slider.**
- **When it is difficult to lock the slider, check that the connector is fully inserted.**
- **After locking the slider, check again that the quick connector is securely connected.**

NOTE:
Connect the quick connector as shown in the figure.

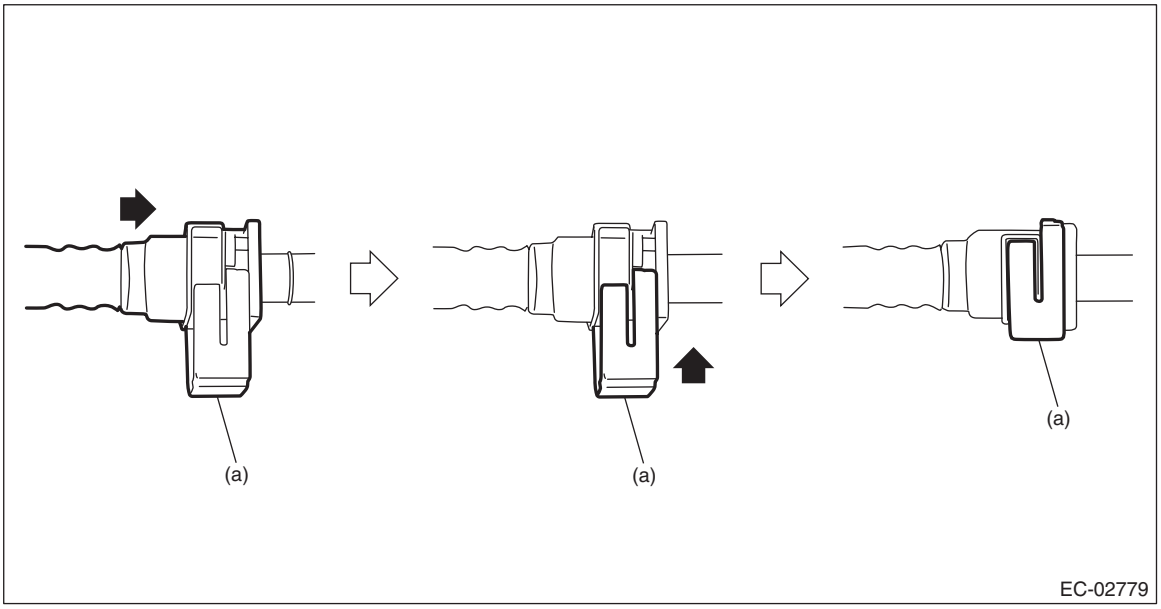

(a) Slider

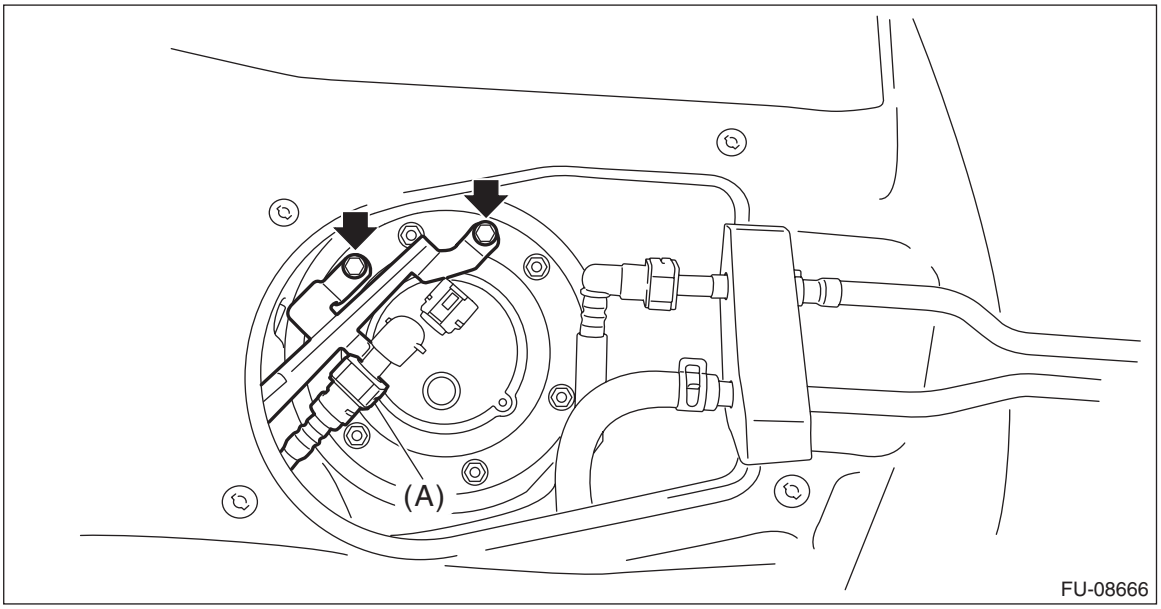

3) Connect the connector to the fuel sub level sensor.

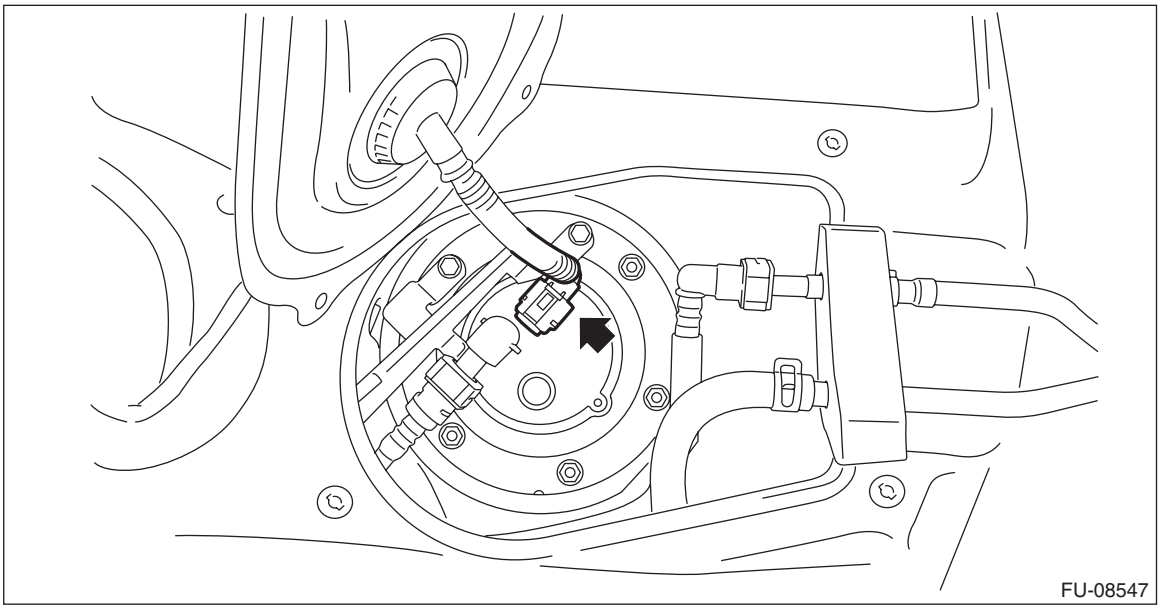

4) Install the service hole cover of fuel sub level sensor.

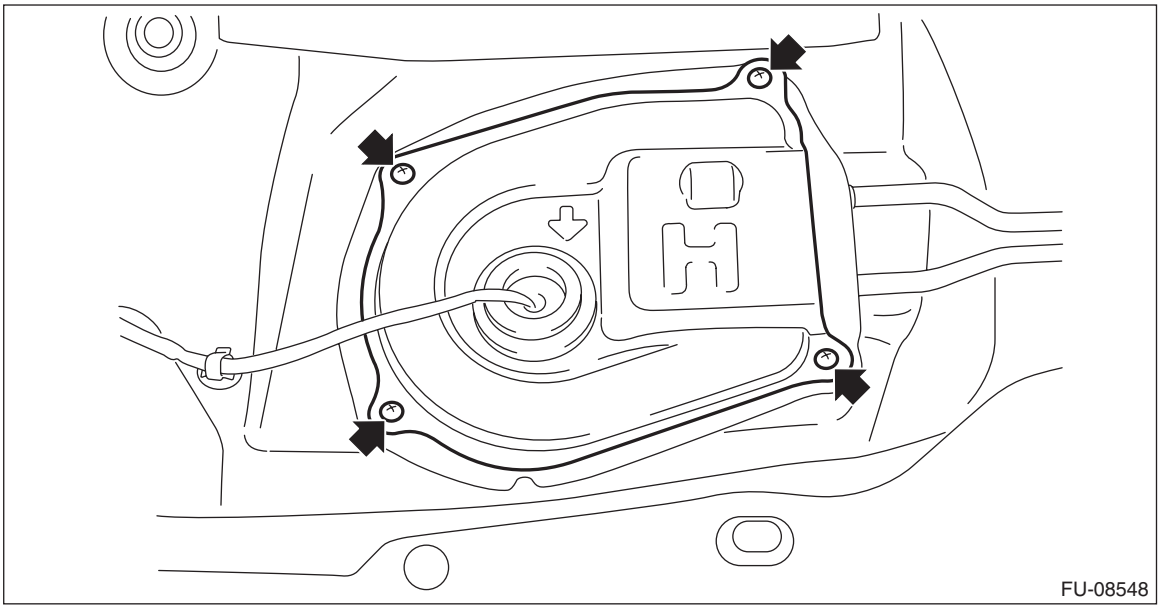

5) Install the rear seat cushion. <Ref. to SE-44, INSTALLATION, Rear Seat.>
6) Connect the ground terminal to battery sensor. <Ref. to RC-4, BATTERY, NOTE, Repair Contents.>

C: INSPECTION

1) Check that the fuel sub level sensor has no damage.
2) Measure the fuel sub level sensor float position.

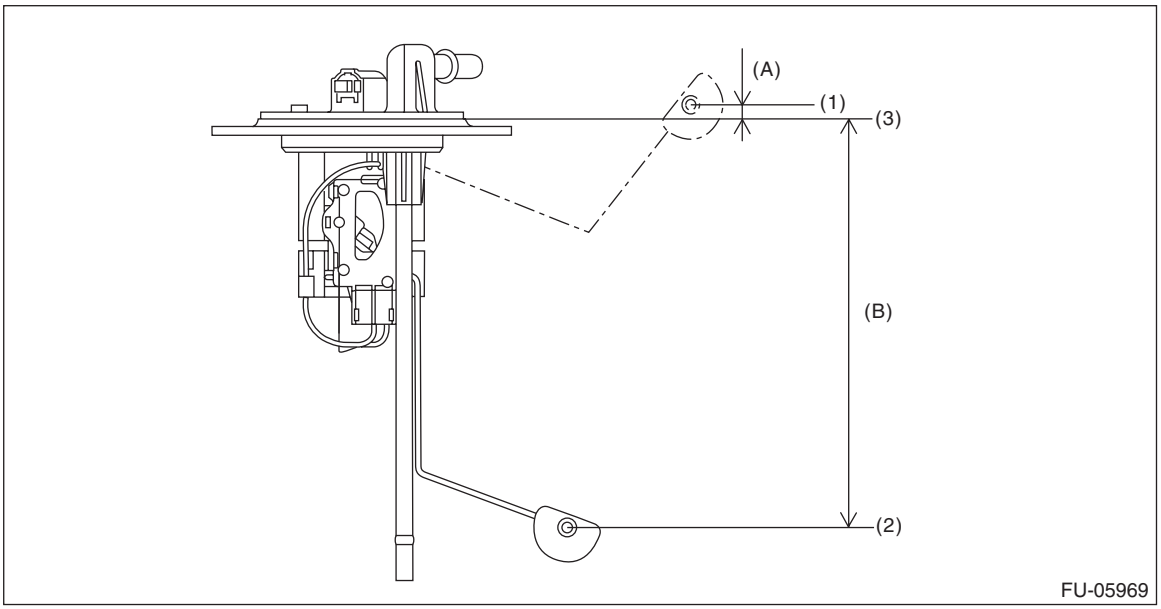

(1) FULL (2) EMPTY (3) Datum points

Float position	Standard
FULL to Datum point (A)	6.4±3.5 mm (0.252±0.138 in)
EMPTY to Datum point (B)	163.3±3.5 mm (6.429±0.138 in)

3) Measure the resistance between fuel sub level sensor terminals.

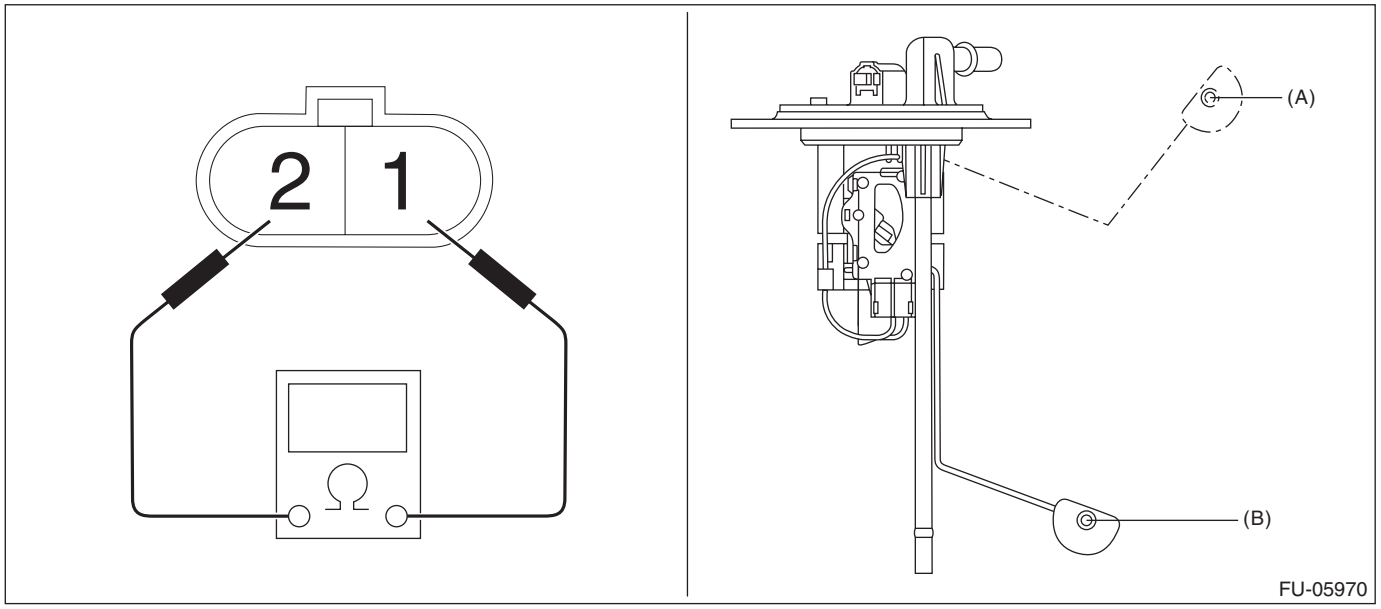

Float position	Terminal No.	Standard
FULL (A)	1 and 2	8.7±1.0 Ω
EMPTY (B)		270.9±4.0 Ω

31.Fuel Filter

A: REMOVAL

WARNING:
Place “NO OPEN FLAMES” signs near the working area.

CAUTION:
- **Be careful not to spill fuel.**
- **If the fuel gauge indicates that two thirds or more of the fuel is remaining, be sure to drain fuel before starting work to avoid the fuel to spill.**
- **Be careful not to drop or apply any impact to the fuel pump during work. This may deteriorate its performance.**

NOTE:
The fuel filter is built in fuel pump assembly.
1) Remove the fuel pump assembly. <Ref. to FU(H4DO)-116, REMOVAL, Fuel Pump.>
2) Remove the fuel level sensor. <Ref. to FU(H4DO)-122, REMOVAL, Fuel Level Sensor.>
3) Remove the fuel pump harness from the clip, and disconnect the connector (A) of the fuel pump harness.

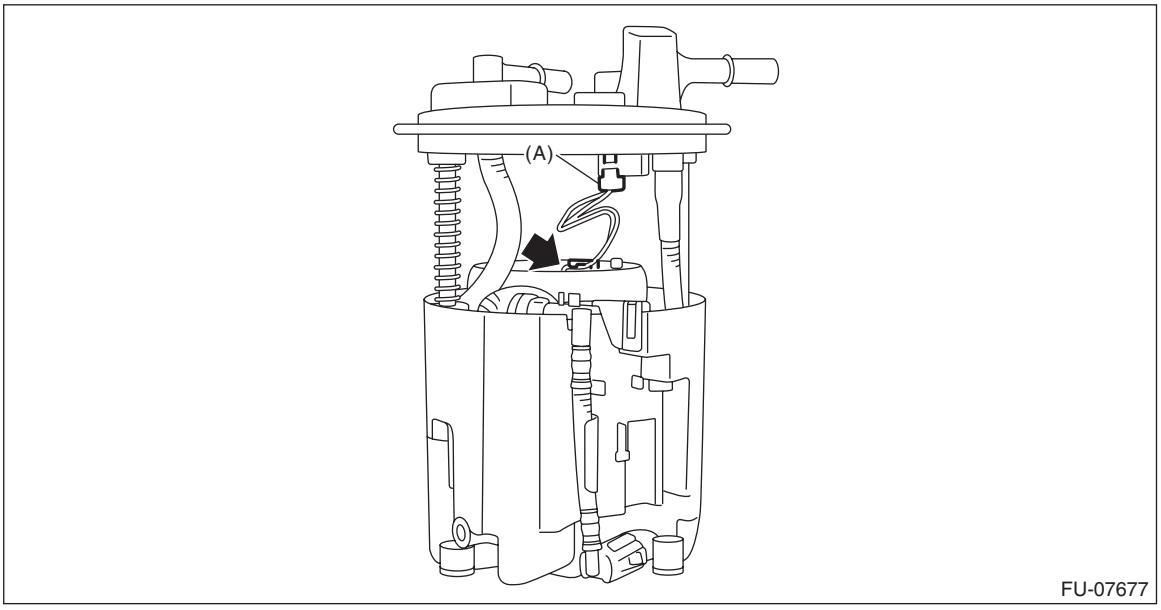

4) Push the fuel filter assembly in the direction of the arrow to compress, and detach the clip.

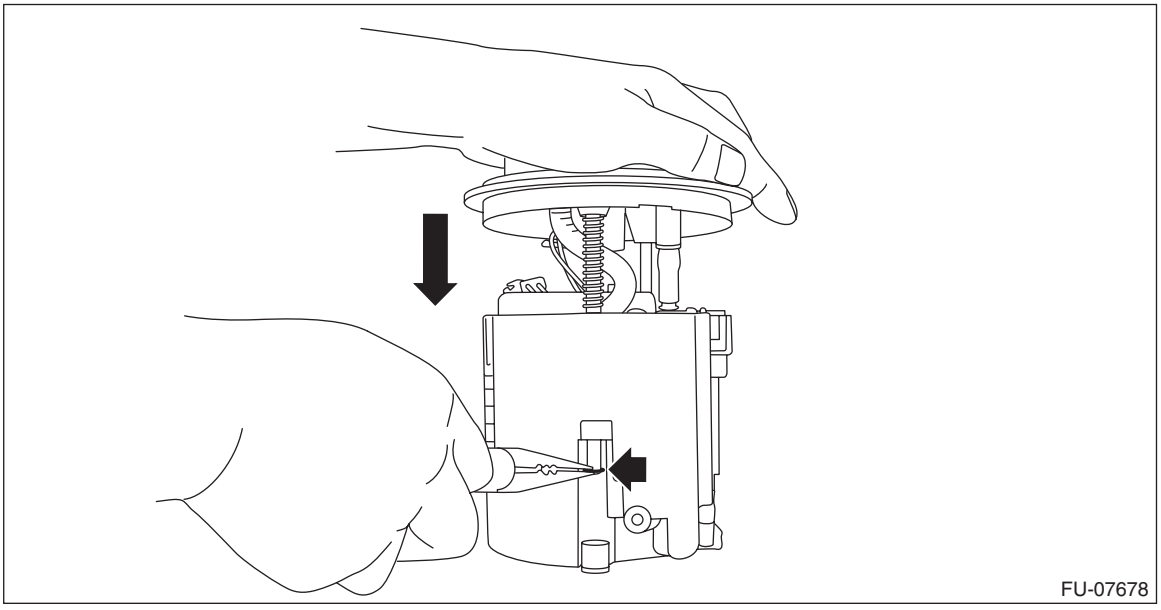

5) Release the claw of the tube assembly using a flat tip screwdriver or similar tool wrapped with a protection tape, and remove the tube assembly from the fuel chamber assembly.

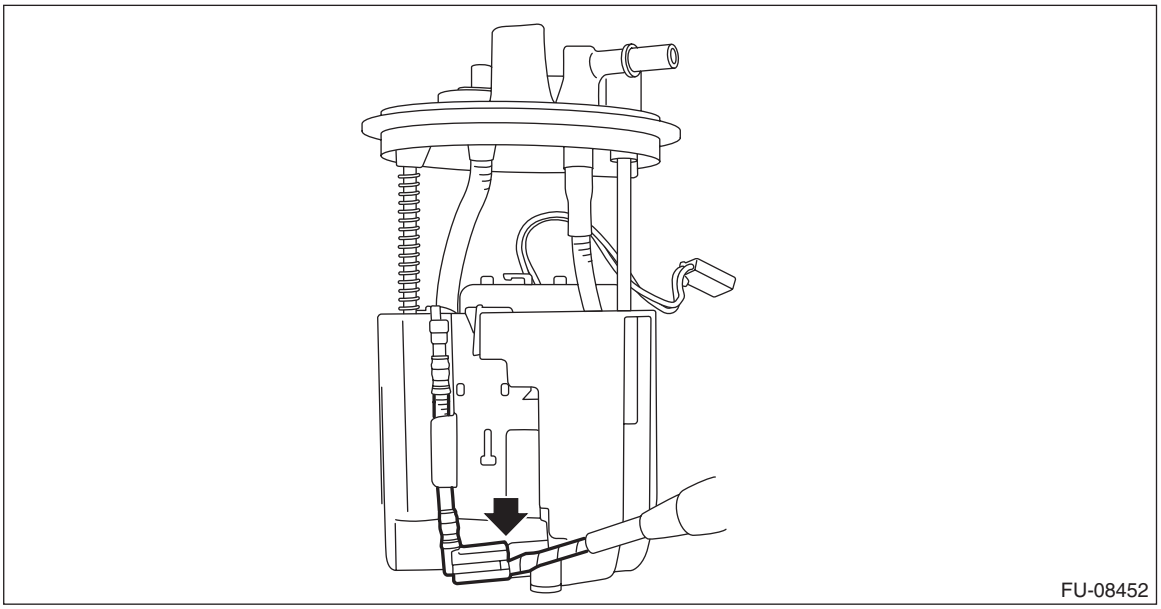

6) Release three claws on the fuel pump holder from the fuel chamber assembly, and raise the fuel filter assembly.

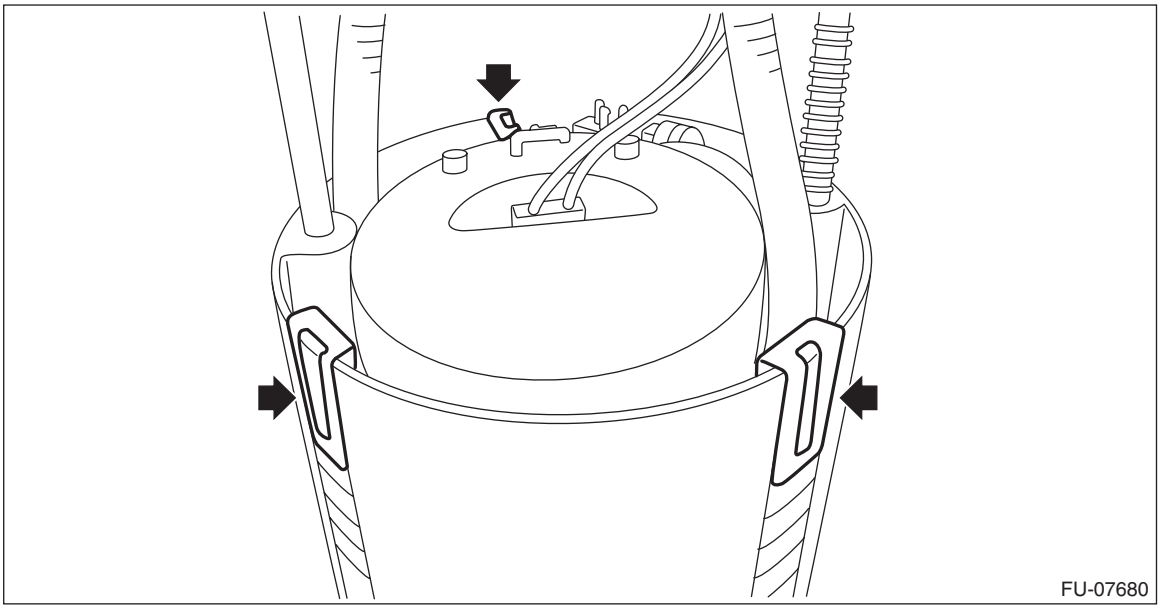

7) Using a flat tip screwdriver or similar tool wrapped with a protection tape, remove the tube assembly from the fuel chamber assembly, and separate the fuel filter assembly and fuel chamber assembly.

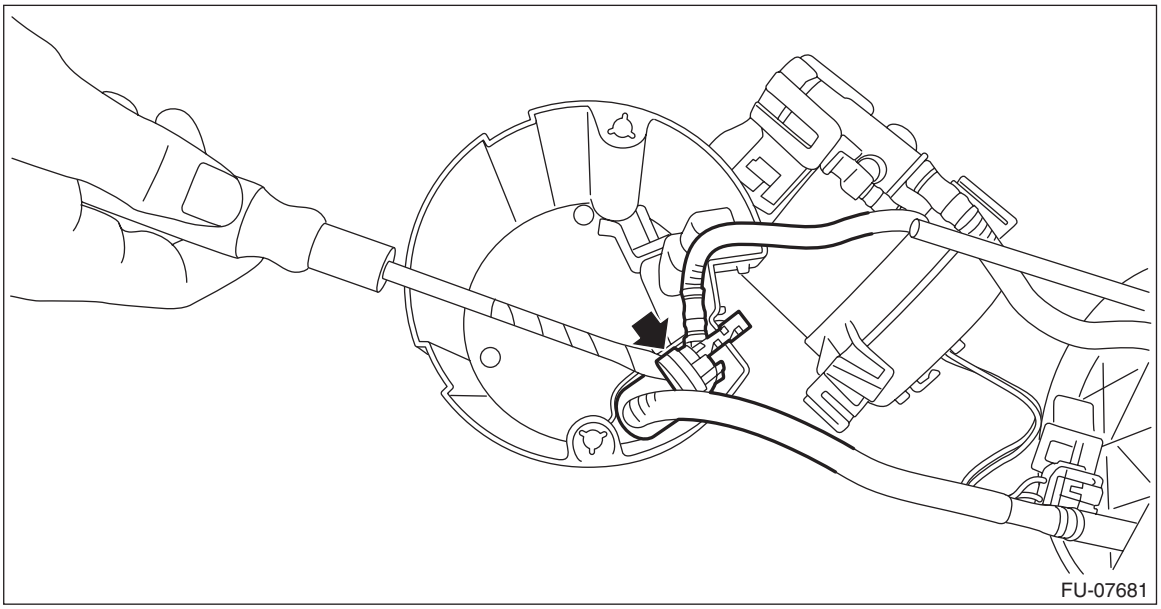

8) Using a precision driver or similar tool wrapped with a protection tape, expand the claws on the fuel pump.

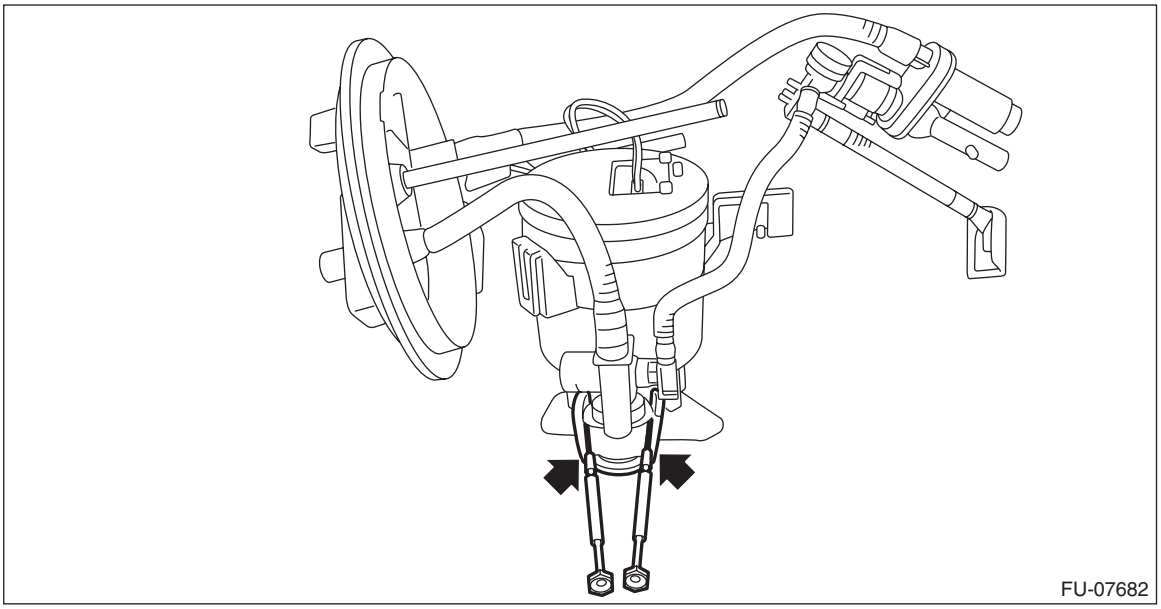

9) Release the claws on the fuel pump.

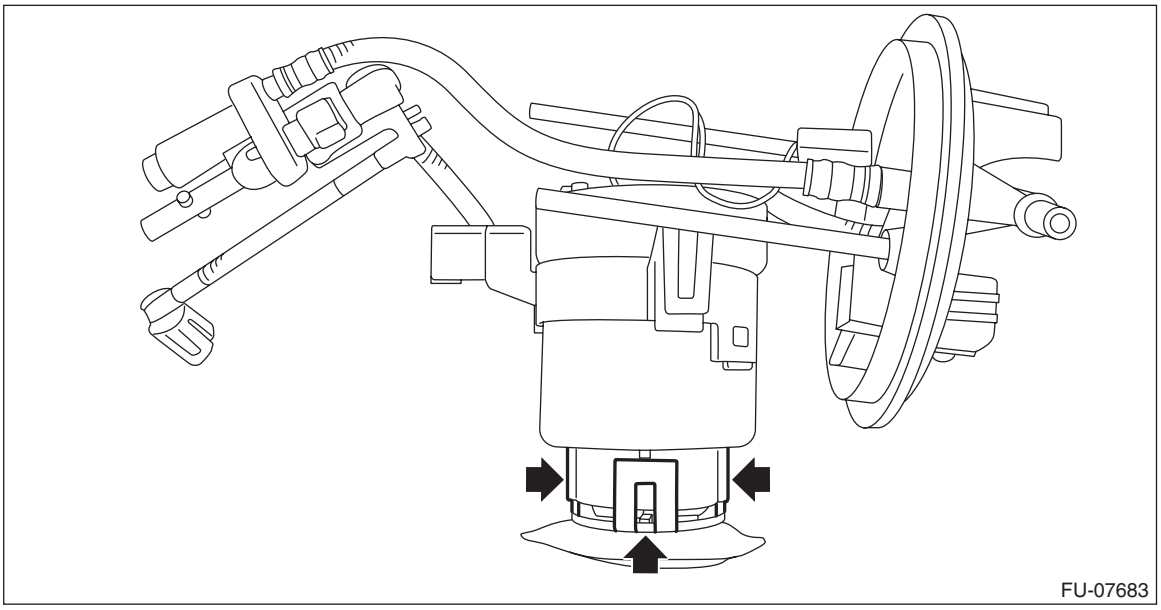

10) Using a flat tip screwdriver or similar tool wrapped with a protection tape, press on the fuel pump and remove the fuel pump together with the fuel pump holder from the fuel filter assembly.

CAUTION:
If O-rings remain on the fuel filter assembly side, carefully remove them with a precision screwdriver or similar tool wrapped with a protection tape.

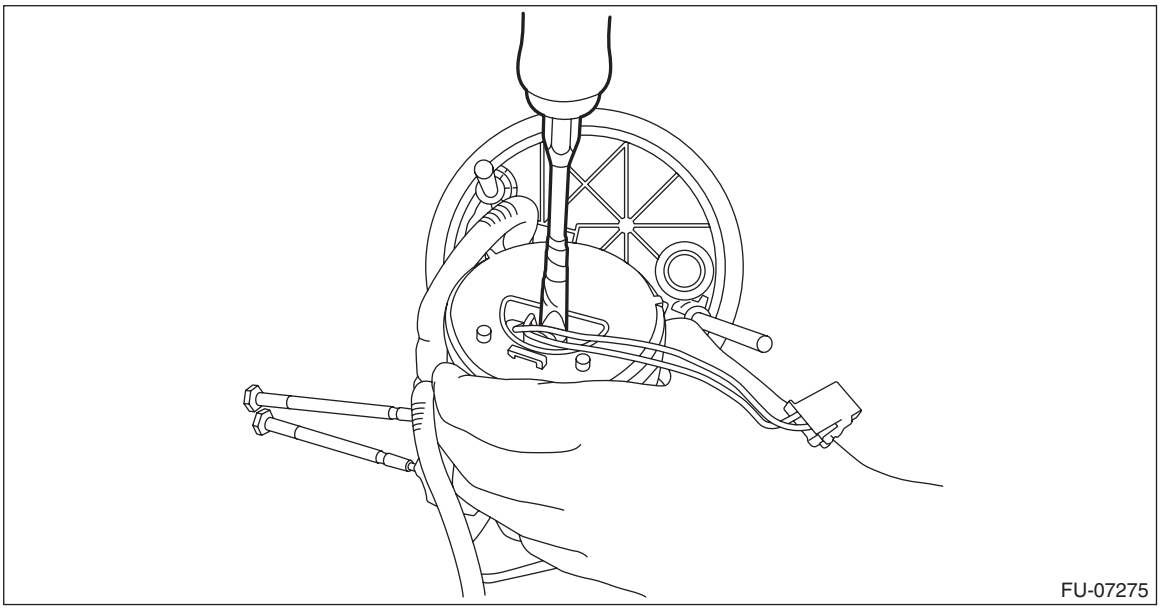

11) Remove the spacer (A) and fuel pump harness (B) from the fuel pump.

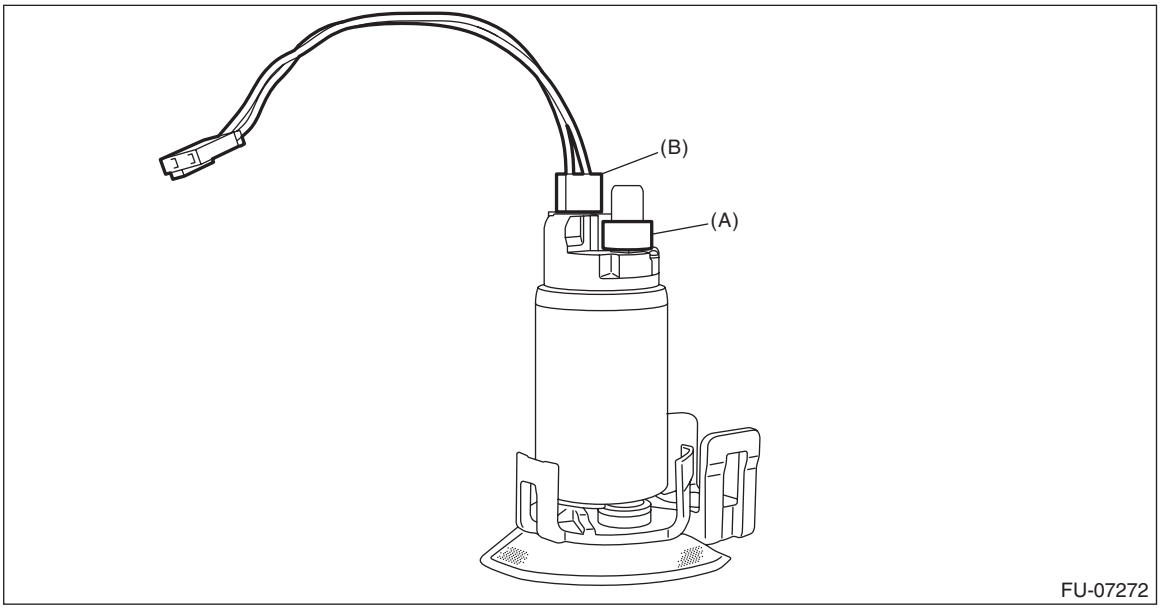

12) Remove the pressure regulator from the fuel filter assembly.

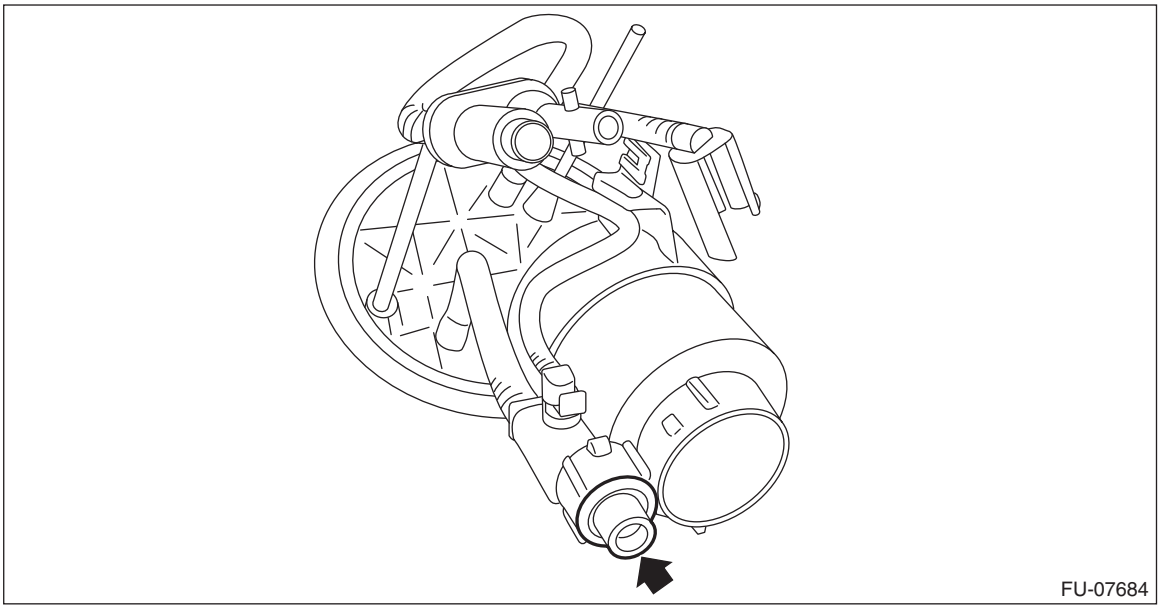

13) Remove O-ring (A), O-ring (B), and backup ring (C) from the pressure regulator.

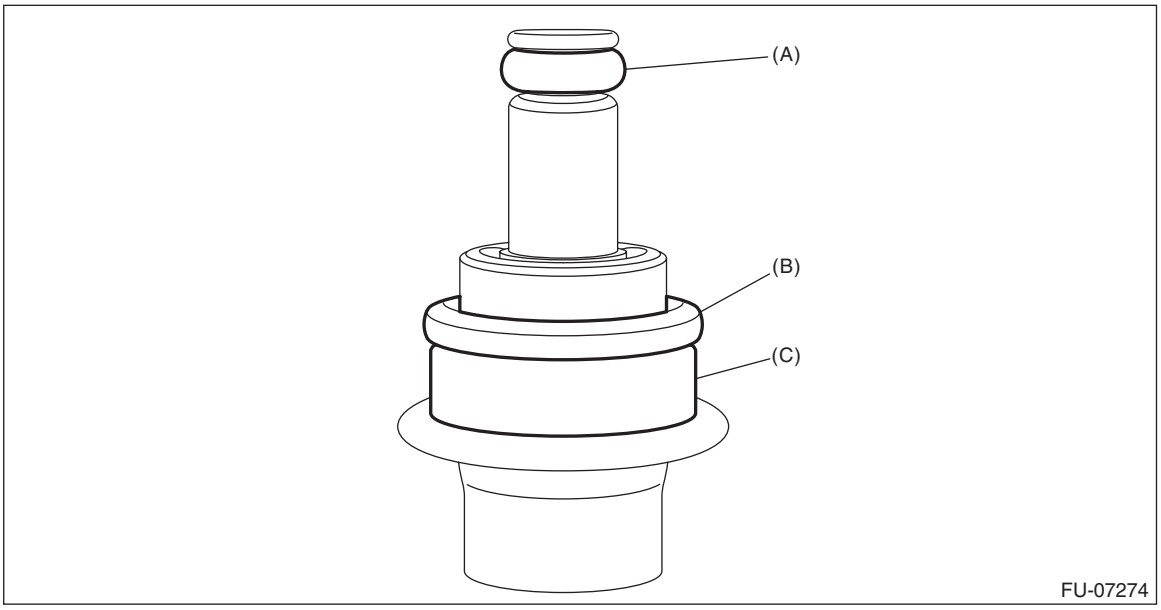

B: INSTALLATION

1) Install O-ring (A), O-ring (B), and backup ring (C) to the pressure regulator.

NOTE:
- Use new O-rings.
- Apply gasoline to the O-ring and backup ring.

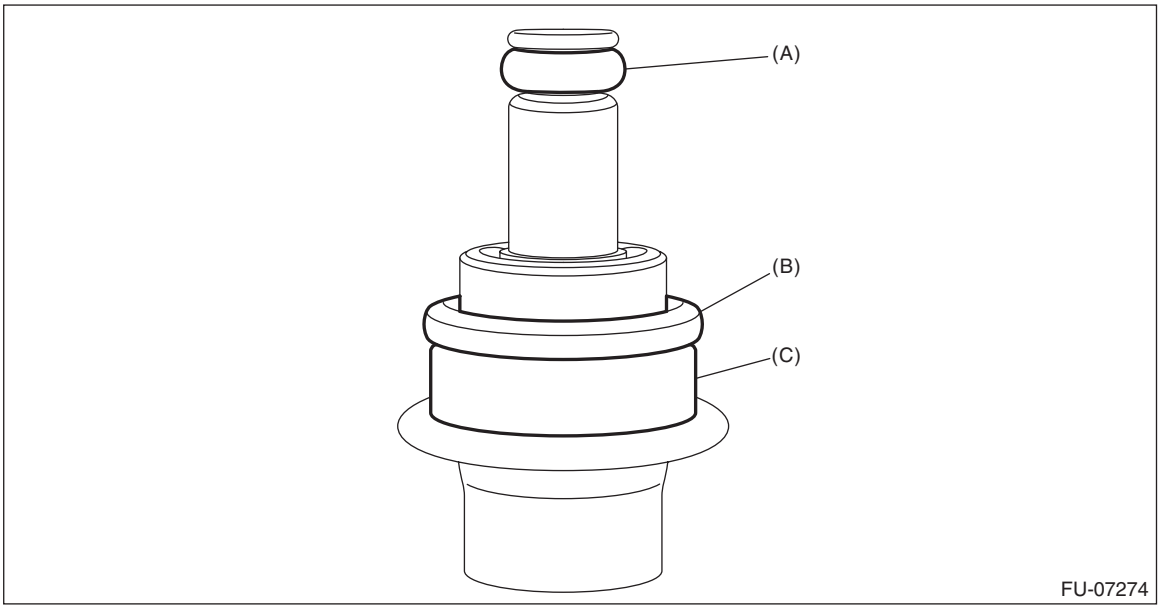

2) Install the pressure regulator to the fuel filter assembly.

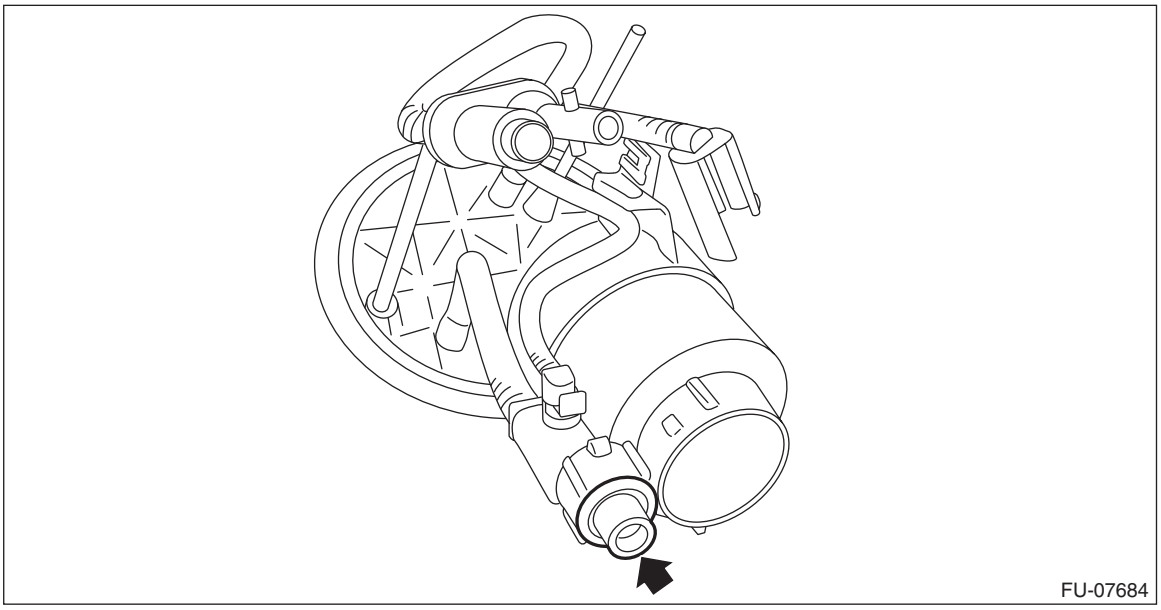

3) Install O-ring (A), spacer (B), and fuel pump harness (C) to the fuel pump.

NOTE:
- Use a new O-ring and fuel pump harness.
- Apply gasoline to the O-rings and the spacer.

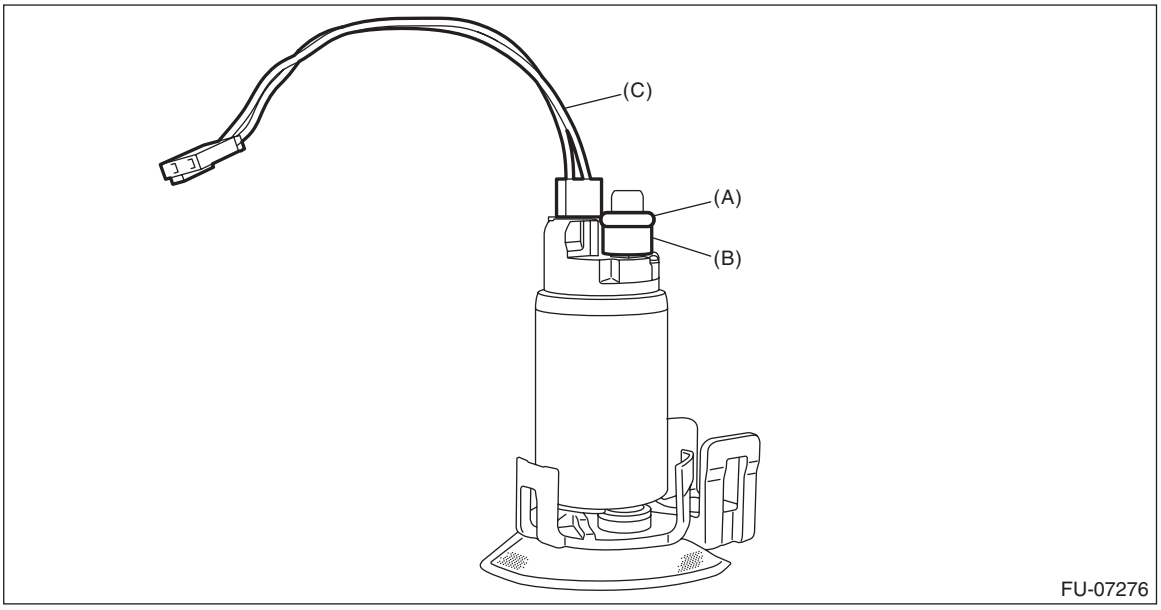

4) Install the fuel pump to the fuel filter assembly.

NOTE:
After installation, make sure five claws are correctly engaged in each position.

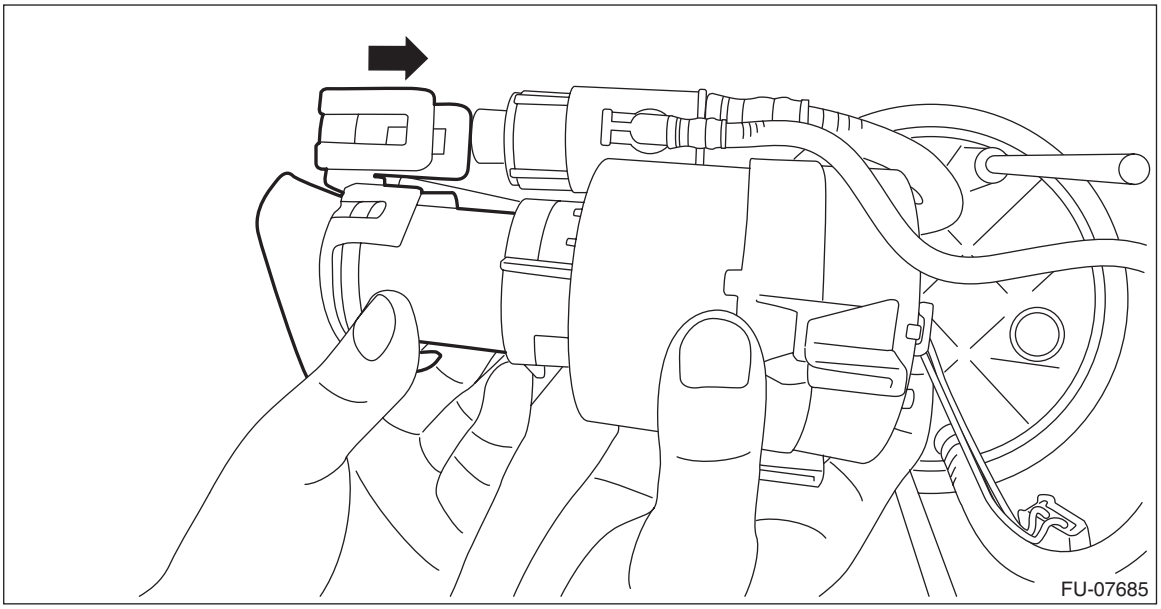

5) Check that the cushions of the fuel chamber assembly for dislocation. If any of them is dislocated, install a new cushion.

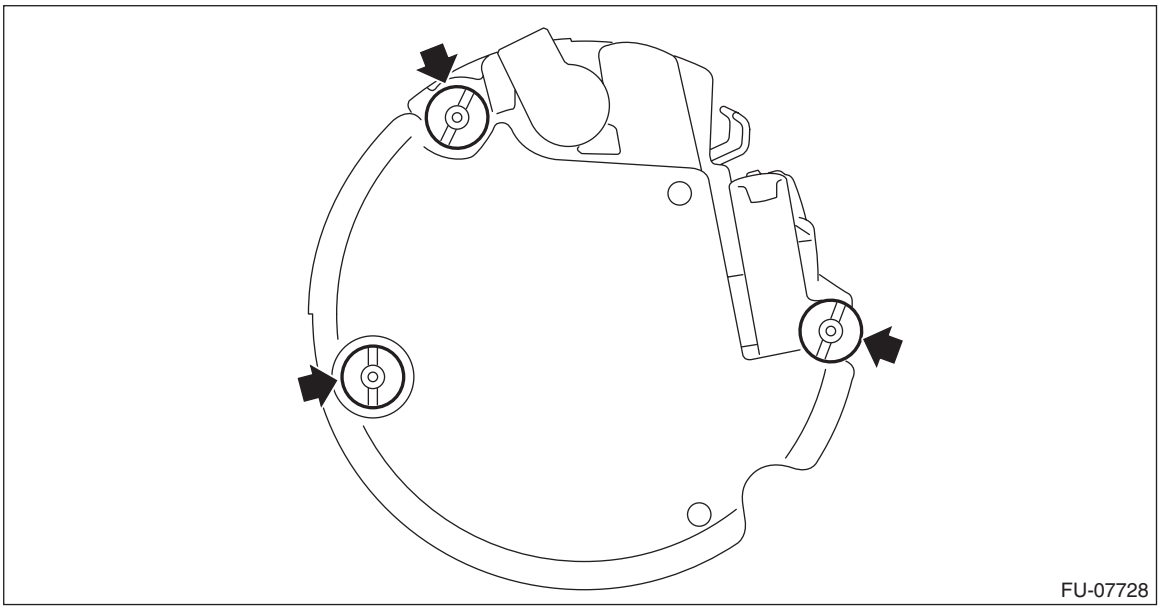

6) Slowly press in and install the tube assembly to the fuel chamber assembly until a clicking sound is heard.

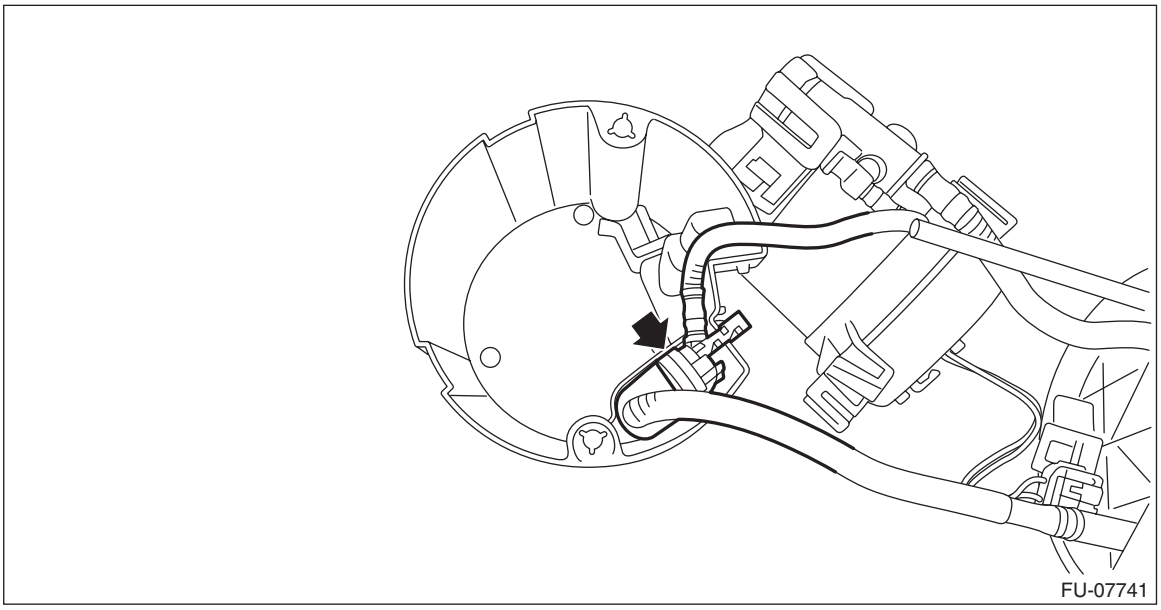

7) Install the tube assembly to the fuel chamber assembly, and connect the tube assembly to the fuel chamber assembly.

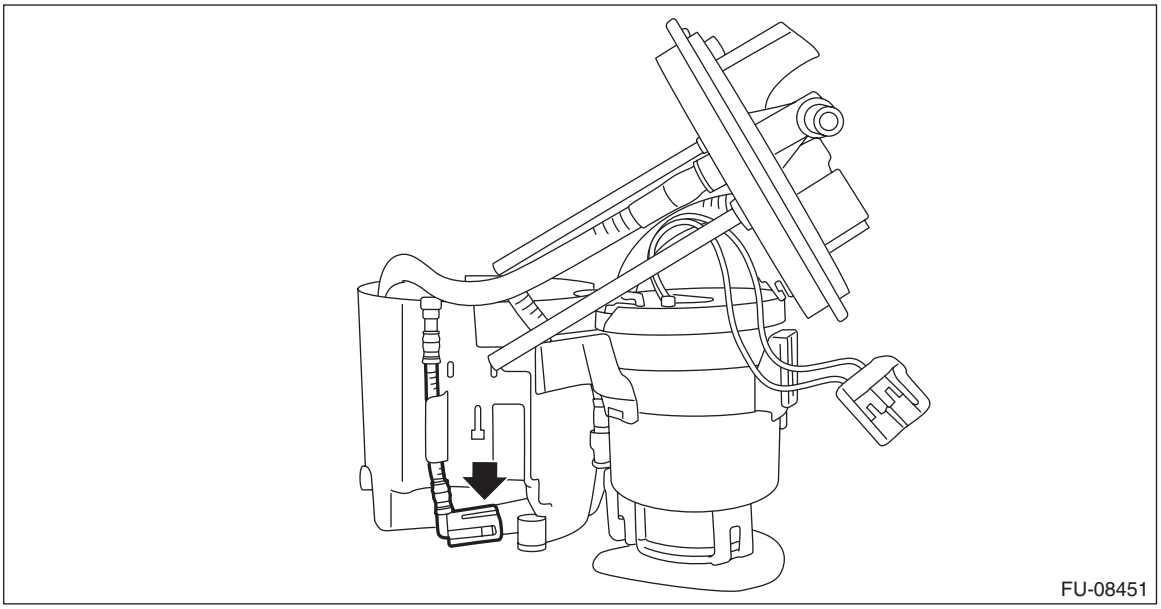

8) Install the fuel filter assembly to the fuel chamber assembly.

NOTE:

- Set the tube (A) and spring (B) for the fuel filter assembly as shown in the figure.

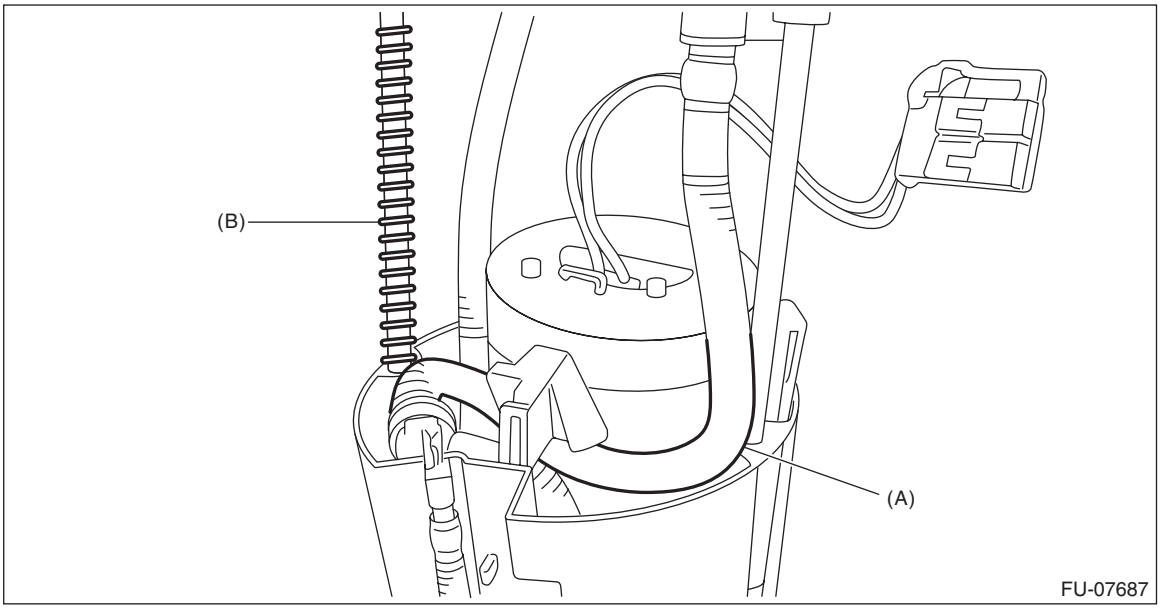

- Check that the claw connecting the fuel camber assembly and the fuel filter assembly is securely fastened.

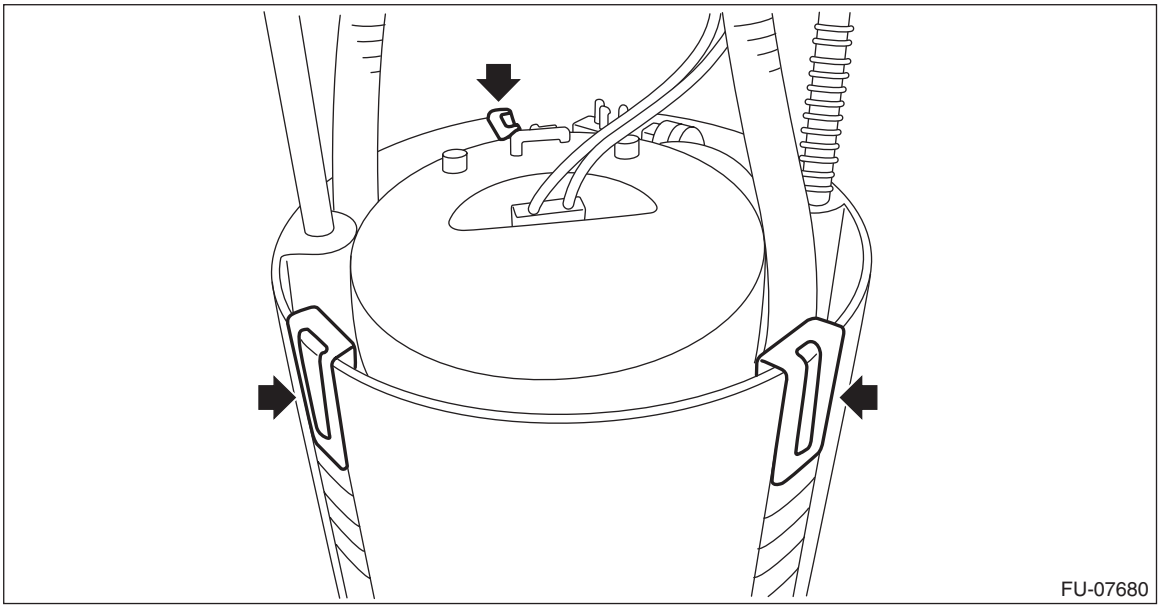

9) Push the fuel filter assembly in the direction of the arrow to compress, and attach the clip.

NOTE:
Use a new clip.

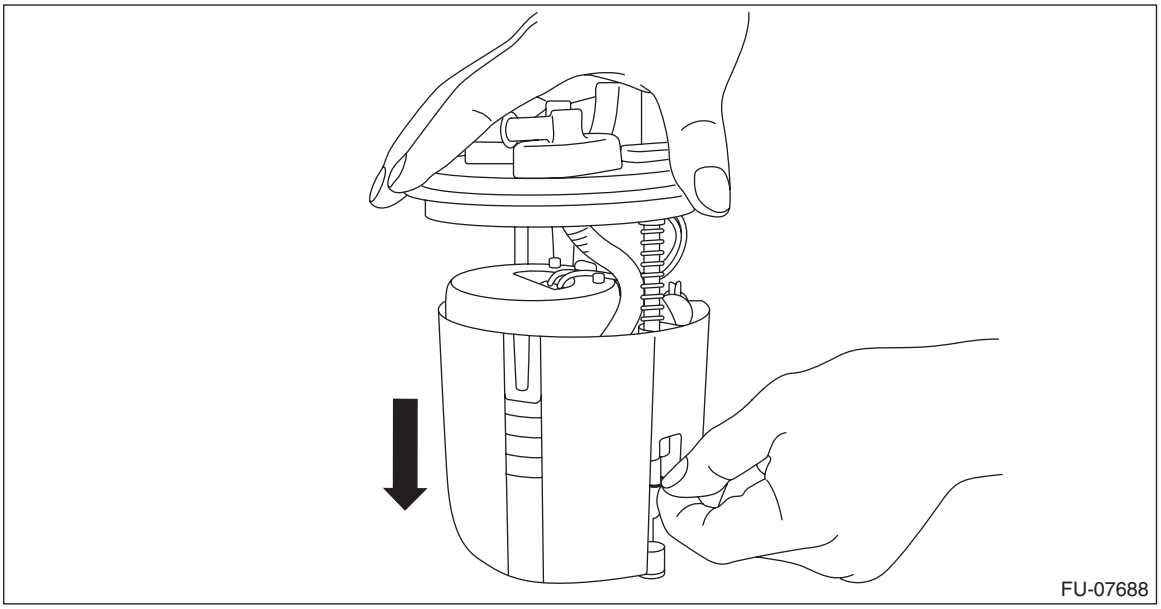

10) Secure the fuel pump harness with the clip, and connect the connector (A) of the fuel pump harness.

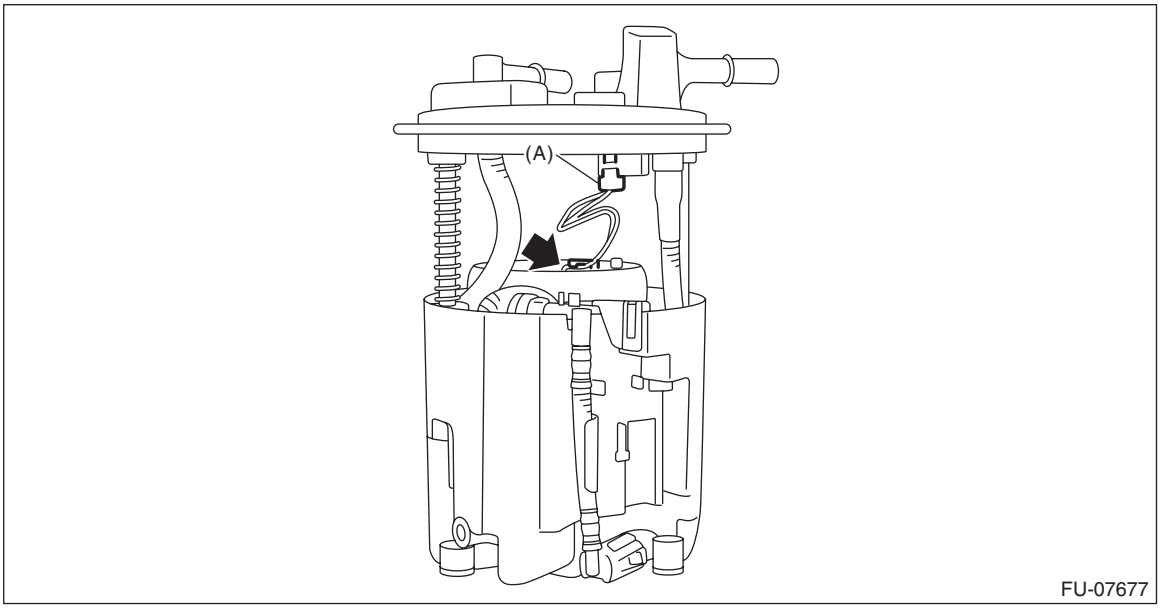

11) Install the fuel level sensor. <Ref. to FU(H4DO)-123, INSTALLATION, Fuel Level Sensor.>
12) Inspect the fuel level sensor. <Ref. to FU(H4DO)-124, INSPECTION, Fuel Level Sensor.>
13) Install the fuel pump assembly. <Ref. to FU(H4DO)-119, INSTALLATION, Fuel Pump.>

32.Fuel Delivery and Evaporation Lines

A: REMOVAL

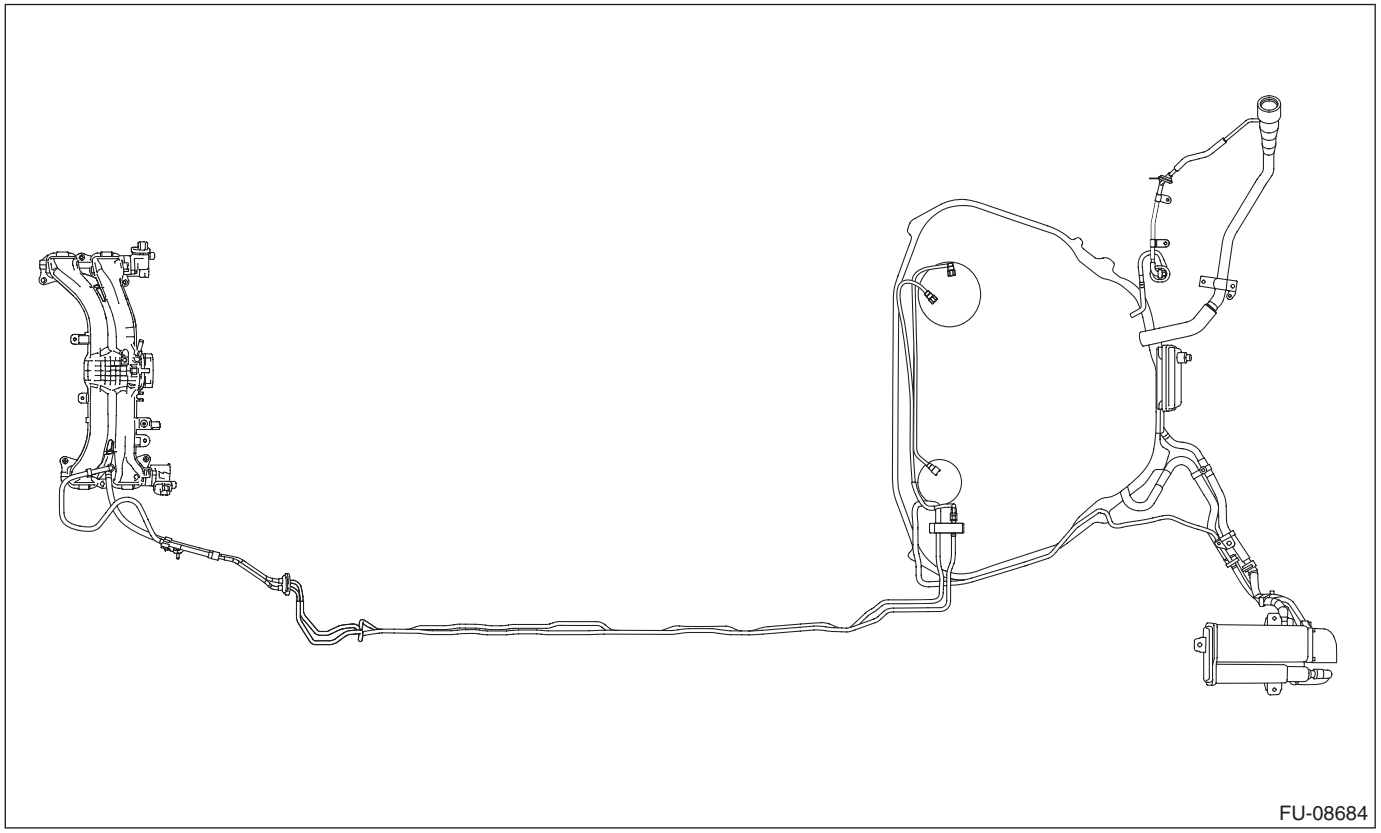

WARNING:
Place “NO OPEN FLAMES” signs near the working area.

CAUTION:
Be careful not to spill fuel.

1) Release the fuel pressure. <Ref. to FU(H4DO)-90, RELEASING OF FUEL PRESSURE, PROCEDURE, Fuel.>
2) Open the fuel filler lid and remove the fuel filler cap.

NOTE:
This operation is required to release the inner pressure of the fuel tank.

3) Remove the floor mat. <Ref. to EI-123, REMOVAL, Floor Mat.>

4) In the engine compartment, disconnect the fuel delivery tube and evaporation hose.

CAUTION:
- **Be careful not to spill fuel.**
- **Catch the fuel from hoses using a container or cloth.**

(1) Disconnect the fuel delivery tube (A).
- When using ST

1. Attach ST to the pipe and push ST in the direction of arrow mark to disconnect the quick connector.

ST 42099AE000 QUICK CONNECTOR RELEASE

CAUTION:
- **Be careful not to spill fuel.**
- **Catch the fuel from hoses using a container or cloth.**
- **Holding the portion (c) shown in the figure, pull the connector in axial direction.**
- **If the connector and pipe are sticking to each other, push and pull the connector with ST pushed, and then pull the connector after it starts moving freely.**
- **When disconnecting the connector, do not bend or twist the tube forcibly. If the tube is bent, replace with a new part.**

NOTE:
Clean the pipe and quick connector, if they are covered with dust.

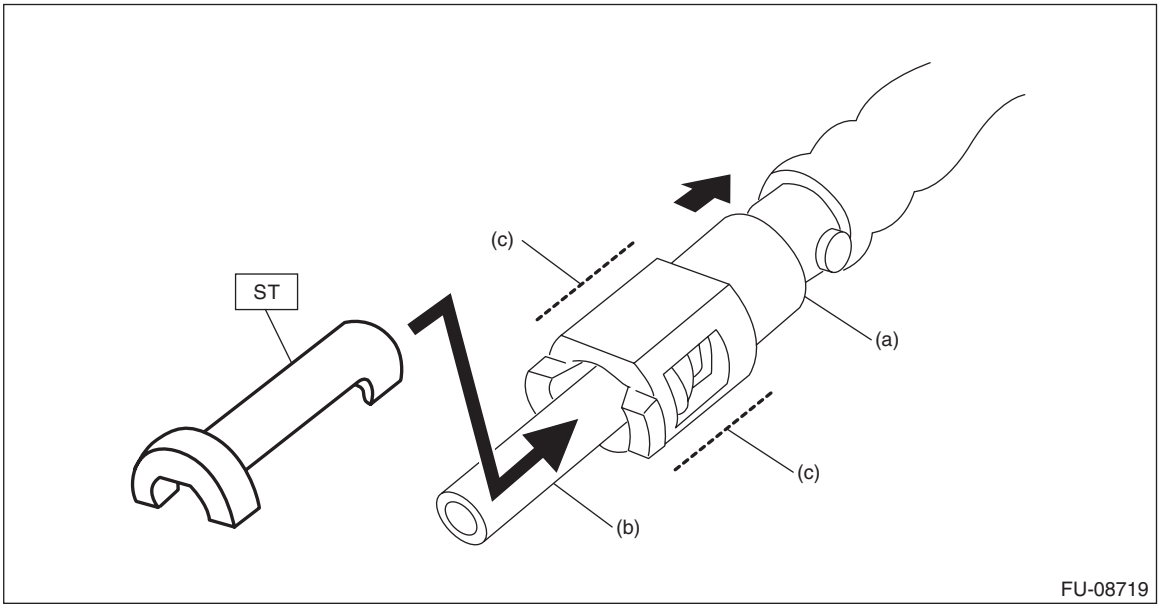

(a) Quick connector (b) Pipe (c) Connector holding position

2. To prevent from damaging or entering foreign matter, wrap the pipes and quick connectors with plastic bag etc.

CAUTION:
When reusing the retainer, do not disconnect the retainer from the connector.

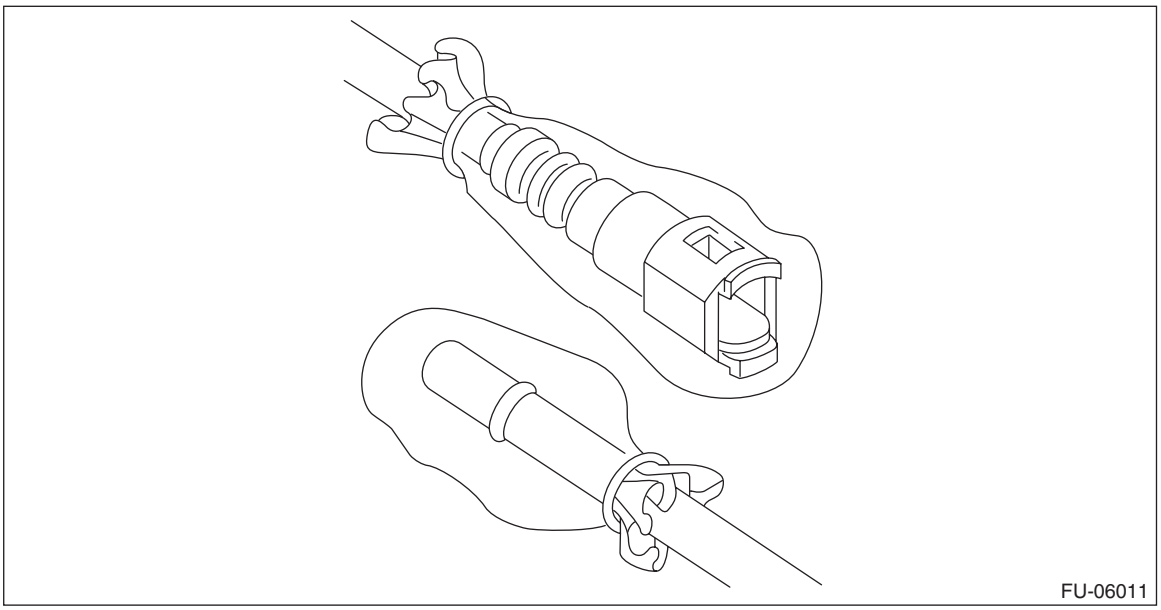

- When not using ST

1. Push the retainer in the direction of the arrow, disconnect the quick connector from pipe.

CAUTION:
- **Be careful not to spill fuel.**
- **Catch the fuel from hoses using a container or cloth.**
- **Holding the portion (d) shown in the figure, pull the connector in axial direction.**
- **If the connector and pipe are sticking to each other, push and pull the connector with the retainer pushed in the direction of the arrow, and then pull the connector after it starts moving freely.**
- **When disconnecting the connector, do not bend or twist the tube forcibly. If the tube is bent, replace with a new part.**

NOTE:
Clean the pipe and quick connector, if they are covered with dust.

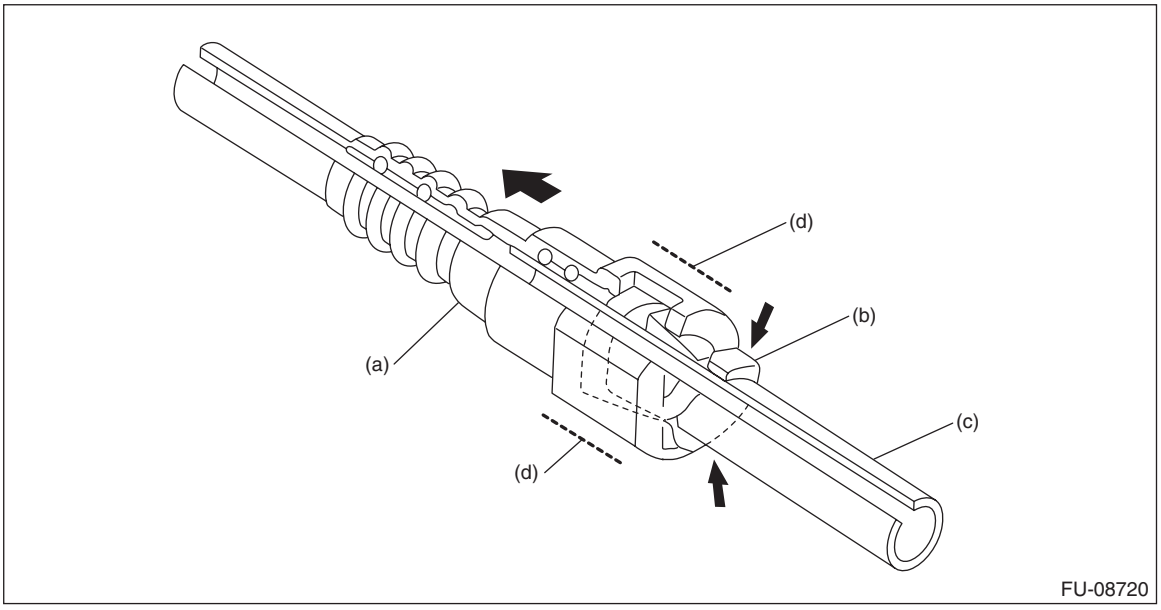

(a) Quick connector
(b) Retainer
(c) Pipe
(d) Connector holding position

2. To prevent from damaging or entering foreign matter, wrap the pipes and quick connectors with plastic bag etc.

CAUTION:
When reusing the retainer, do not disconnect the retainer from the pipe.

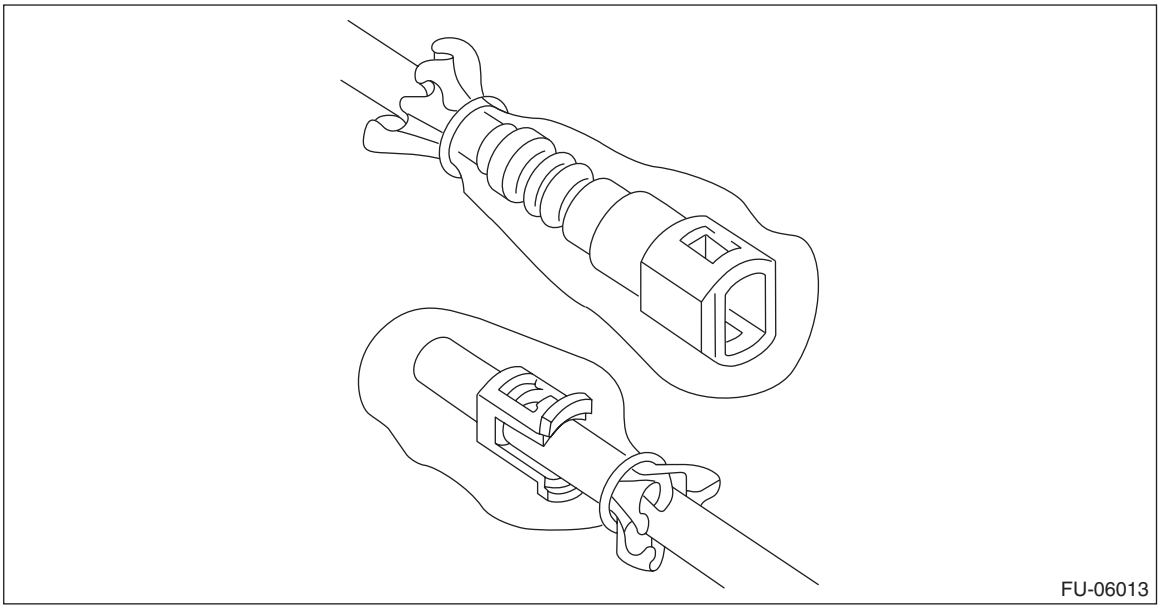

(2) Disconnect the evaporation hose (B) from the fuel pipe.

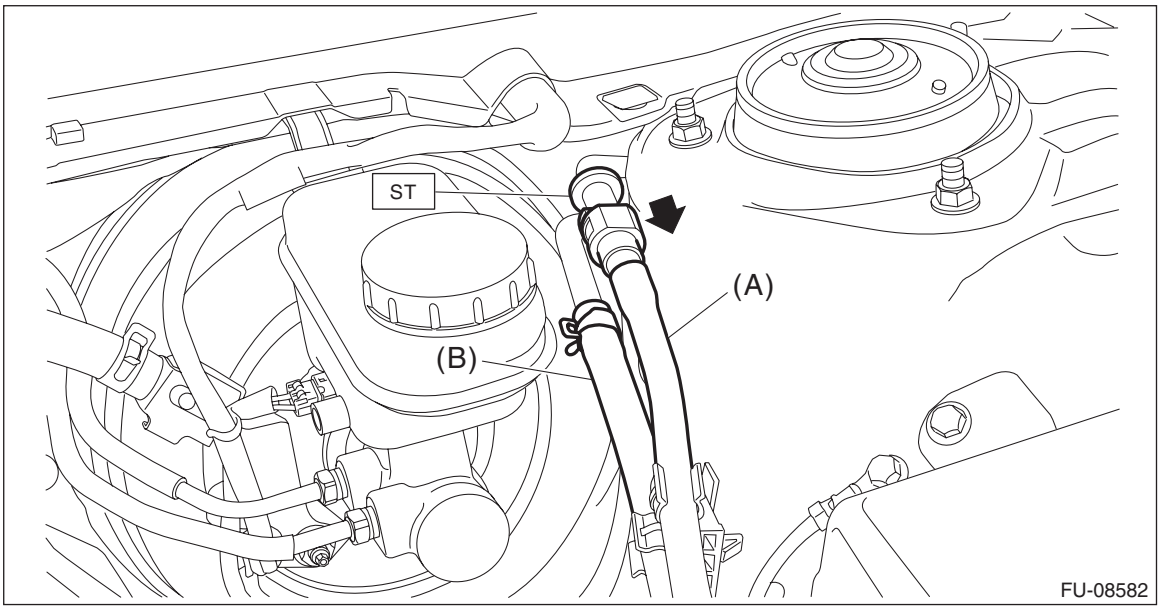

5) Remove the fuel tank. <Ref. to FU(H4DO)-97, REMOVAL, Fuel Tank.>

6) Disconnect the quick connector, and remove the fuel delivery tube and fuel sub delivery tube from the fuel tank.

CAUTION:
- **Be careful not to spill fuel.**
- **Catch the fuel from the tubes using a container or cloth.**

NOTE:
Disconnect the quick connector as shown in the figure.

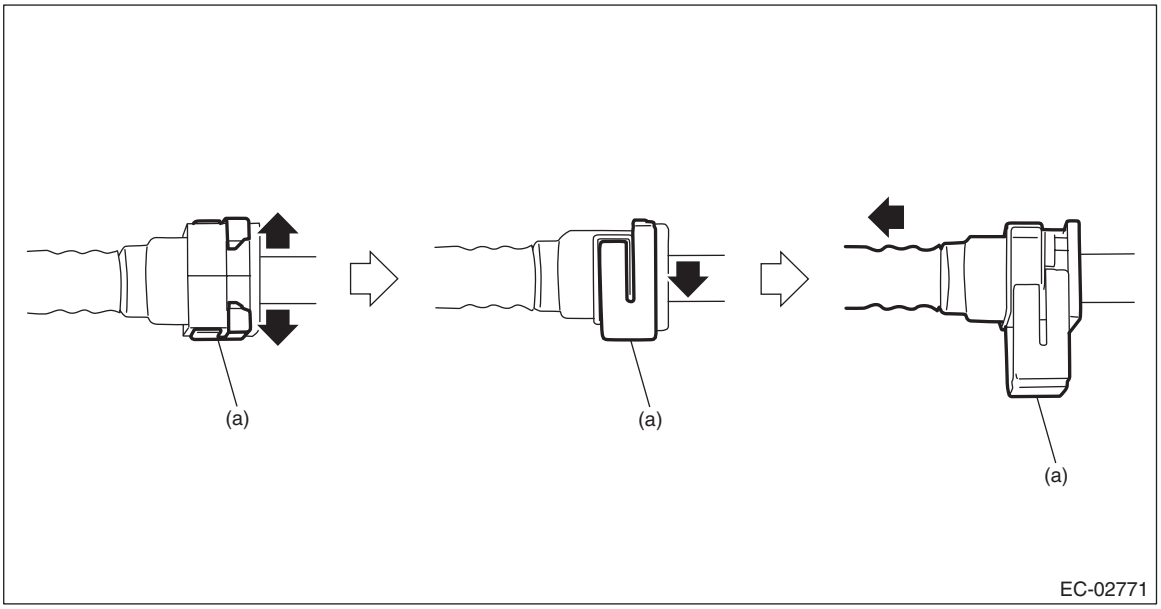

(a) Slider

7) Remove the rear mud guard LH. <Ref. to EI-29, REMOVAL, Mud Guard.>
8) Remove the purge pipe and purge hose.

NOTE:
Disconnect the quick connector as shown in the figure.

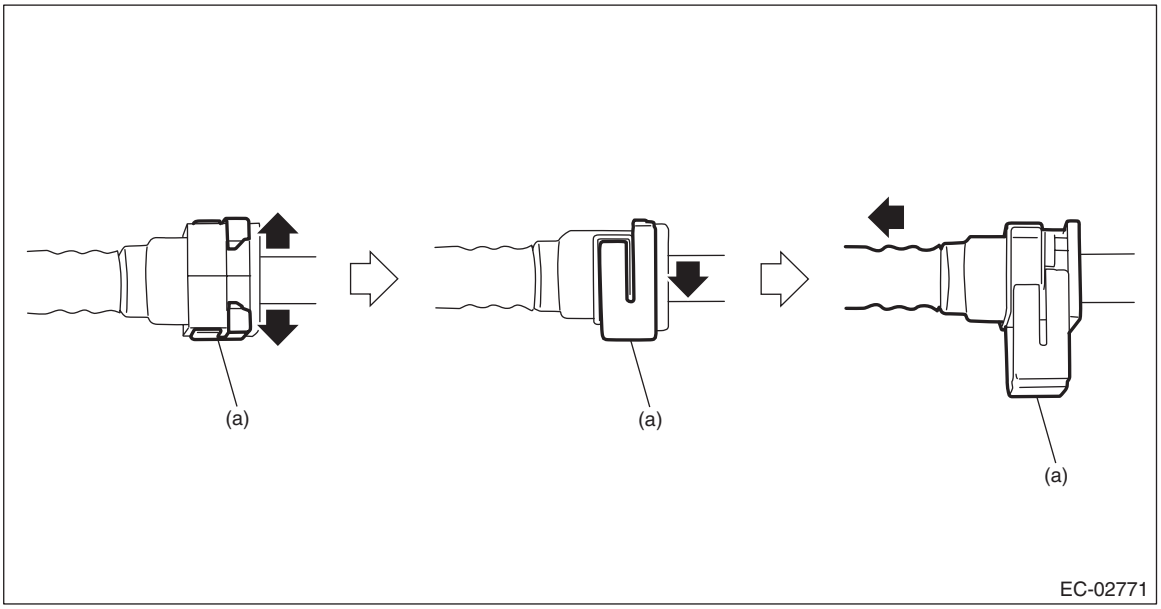

(a) Slider

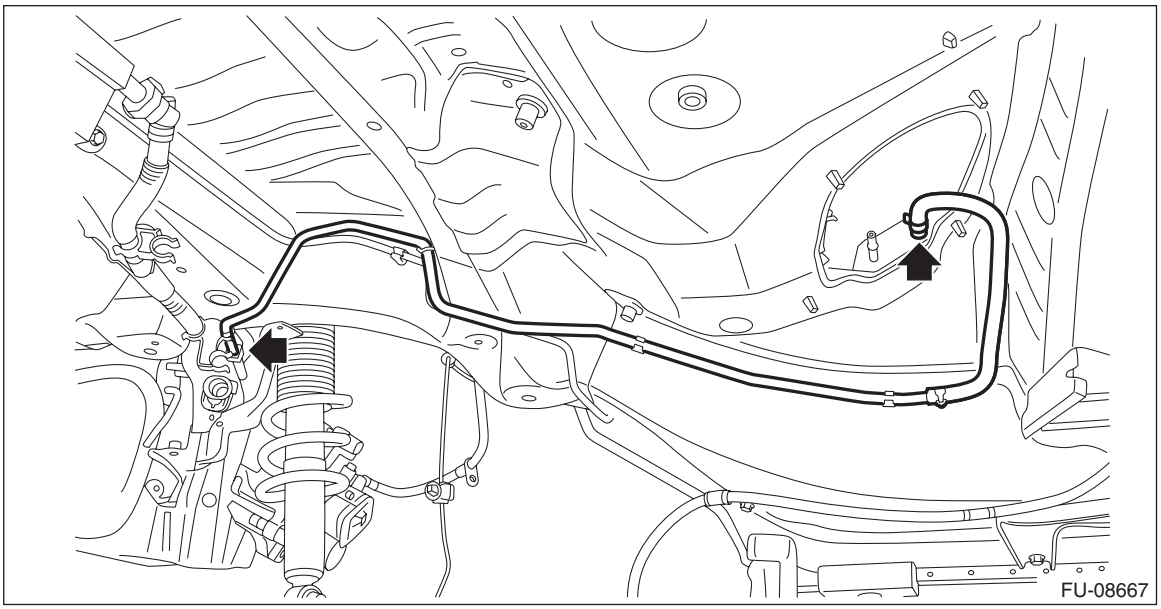

9) Remove the fuel pipe assembly from vehicle.
10) Remove the evaporation pipe.
(1) Remove the rear mud guard RH. <Ref. to EI-29, REMOVAL, Mud Guard.>
(2) Remove the evaporation hose.

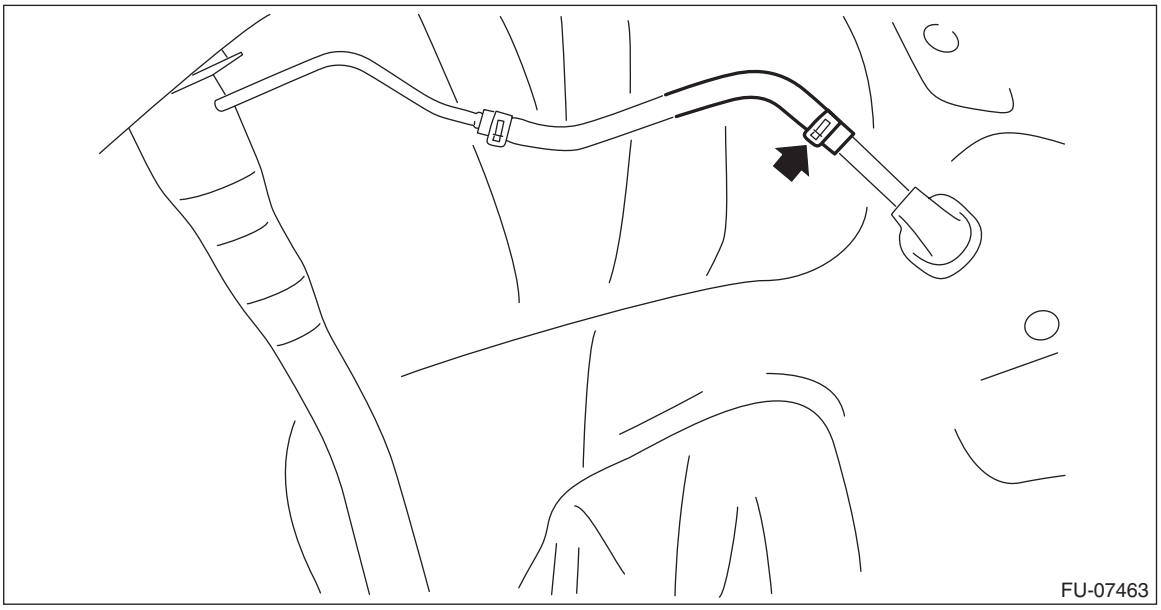

(3) Remove the trunk trim panel assembly - side on the RH side. (Sedan model) <Ref. to EI-99, REMOVAL, Rear Quarter Trim.>
(4) Remove the right side rear quarter trim. (OUTBACK model) <Ref. to EI-99, REMOVAL, Rear Quarter Trim.>

(5) Remove the evaporation pipe protector.

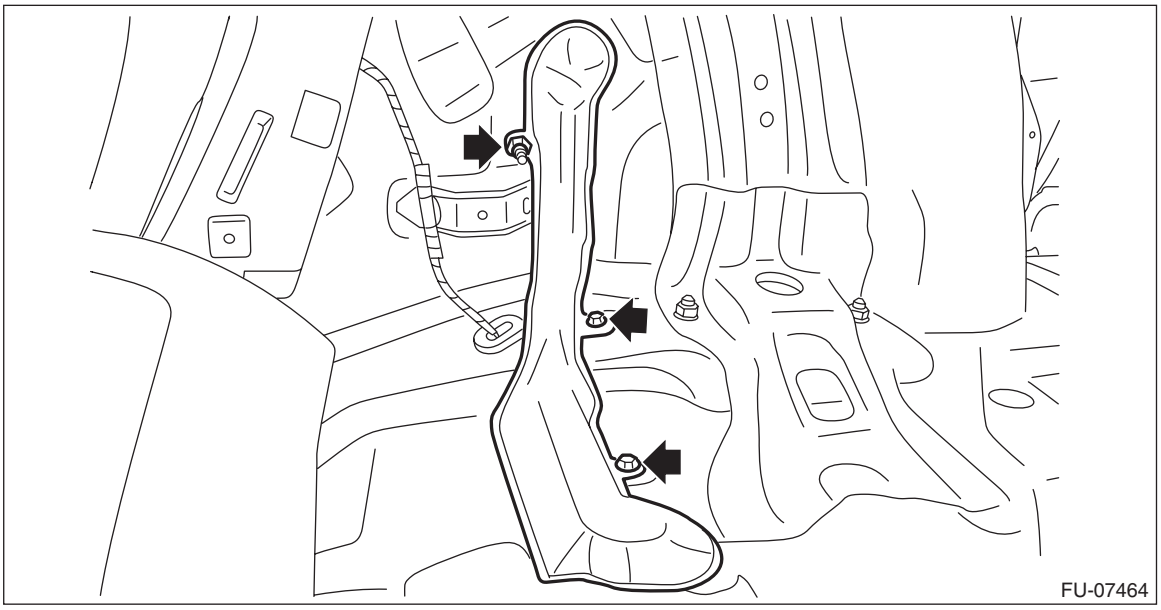

(6) Remove the evaporation pipe from vehicle.

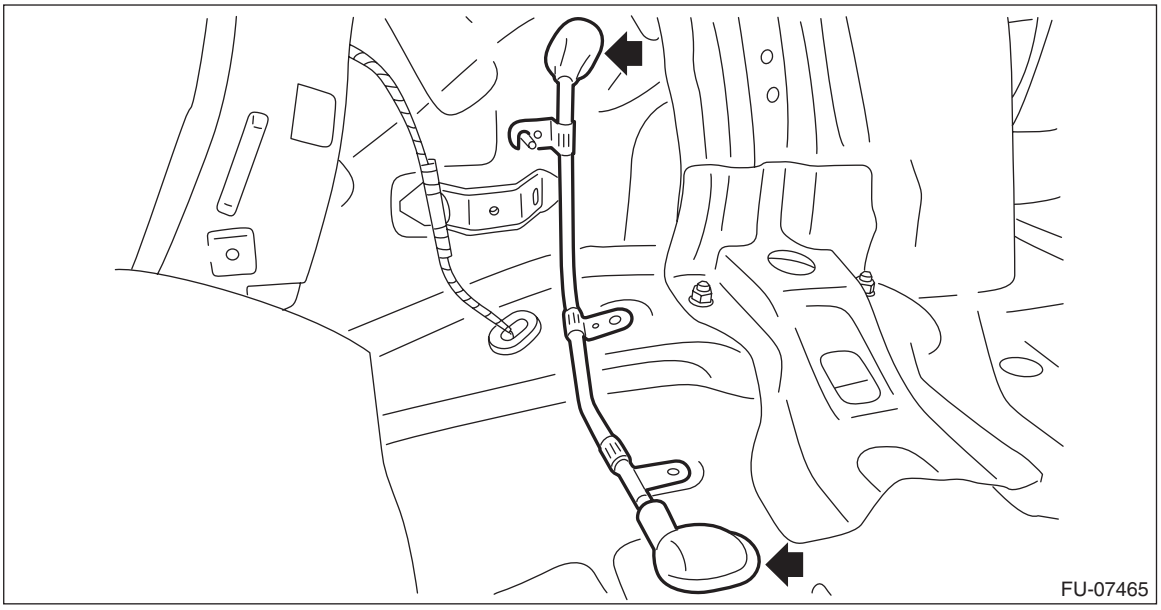

B: INSTALLATION

Install in the reverse order of removal while being careful of the following.

1. EVAPORATION PIPE INSTALLATION

1) Install the evaporation pipe to the vehicle.

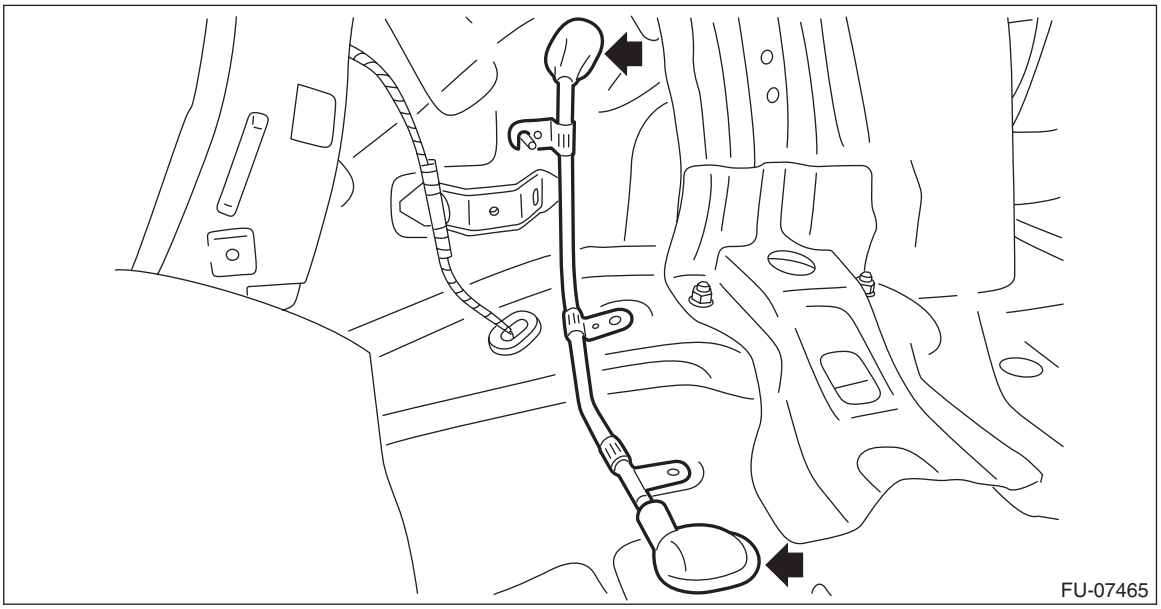

2) Install the evaporation pipe protector.

Tightening torque:
T1: 1 N·m (0.1 kgf-m, 0.7 ft-lb)
T2: 7.5 N·m (0.7 kgf-m, 5.4 ft-lb)

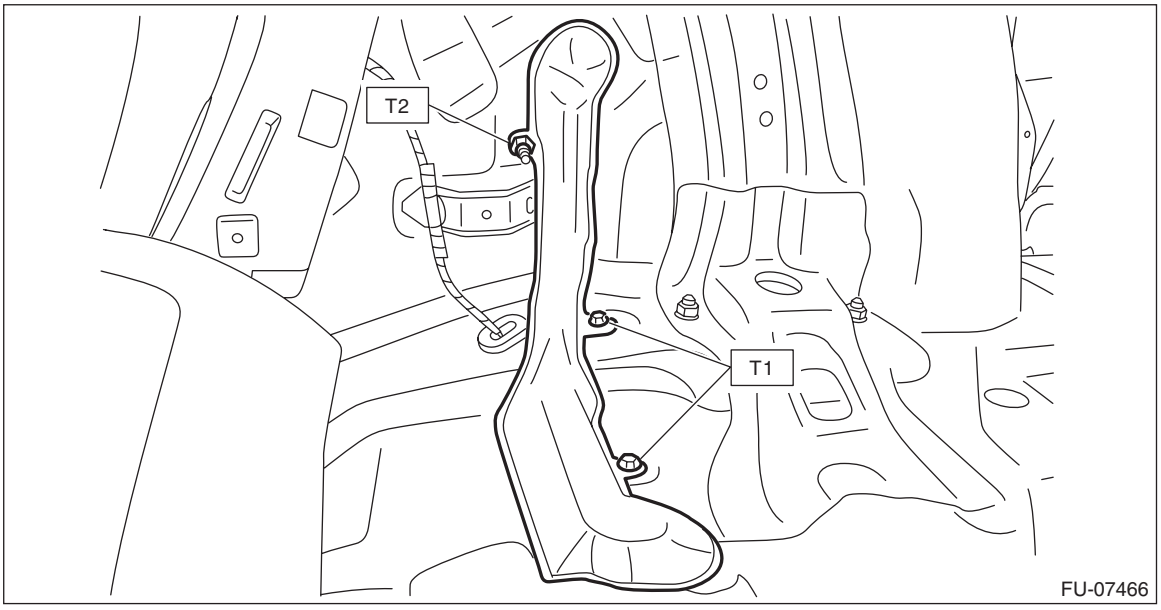

3) Install the trunk trim panel assembly - side on RH side. (Sedan model) <Ref. to EI-103, INSTALLATION, Rear Quarter Trim.>
4) Install the right side rear quarter trim. (OUTBACK model) <Ref. to EI-103, INSTALLATION, Rear Quarter Trim.>

5) Install the evaporation hose.

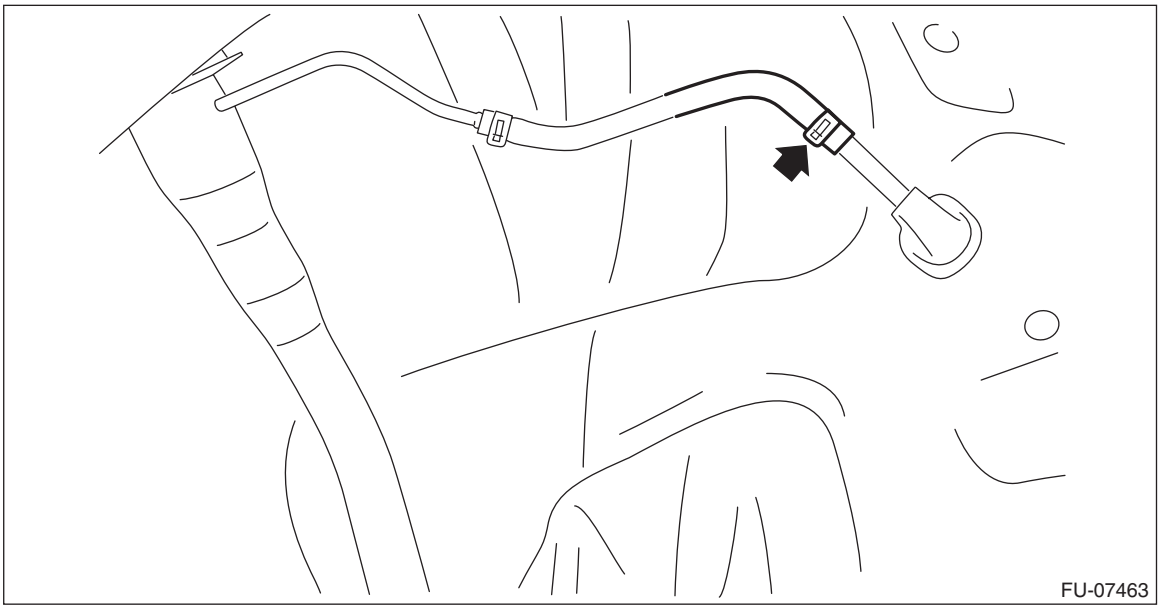

6) Install the rear mud guard RH. <Ref. to EI-29, INSTALLATION, Mud Guard.>

2. CONNECTING THE FUEL LINE QUICK CONNECTOR

CAUTION:

- **Make sure there are no damage or dust on connections. If necessary, clean seal surface of pipe.**

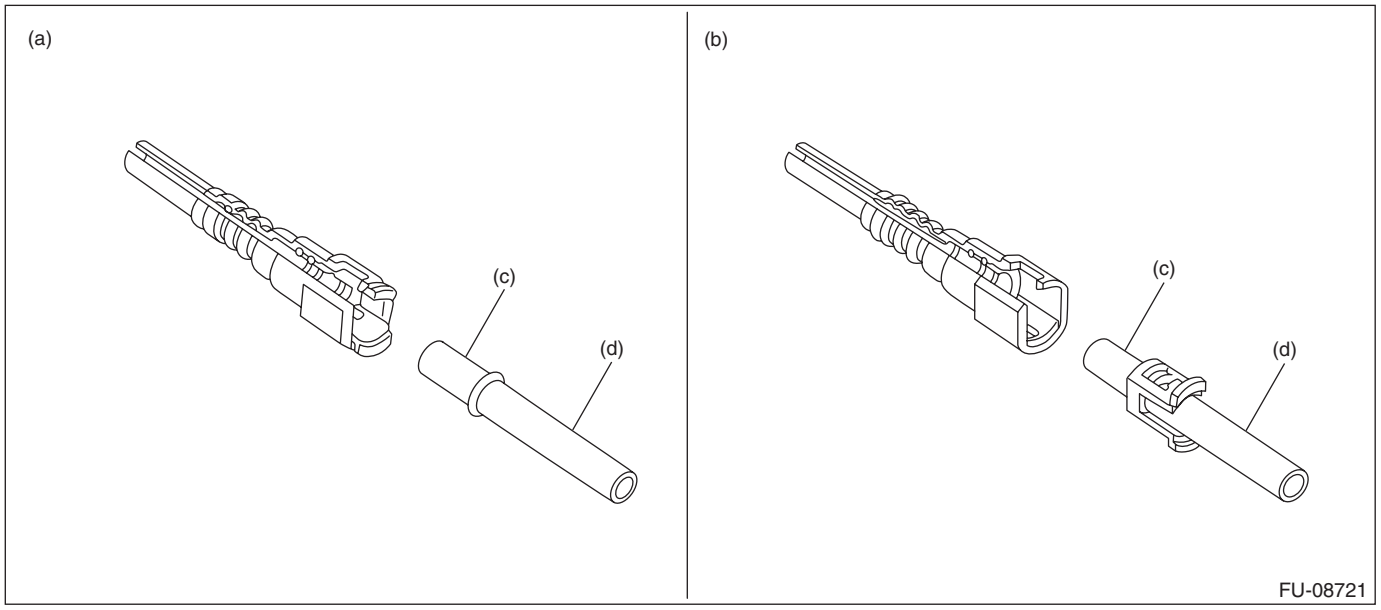

(a) When removed using the ST
(b) When removed without using the ST
(c) Seal surface
(d) Pipe

• When reusing the retainer, make sure that neither scratches nor deformation exist on the retainer. If it is faulty, use a new part.

Connect the quick connector.

CAUTION:

• Make sure that the quick connector is securely connected.

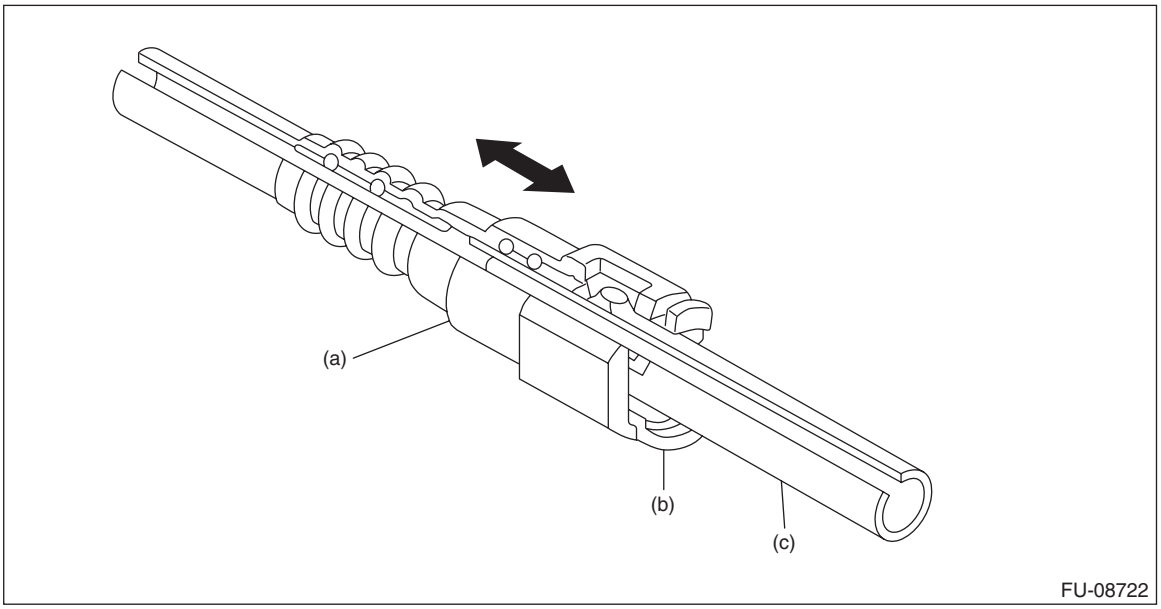

(a) Quick connector (b) Retainer (c) Pipe

• Make sure the two retainer pawls are engaged in their mating positions in the quick connector.
• Be sure to inspect tubes and their connections for any leakage of fuel.
• Holding the portion (f) shown in the figure, push in the connector in axial direction.
• When connecting the connector, do not bend or twist the tube forcibly. If the tube is bent, replace with a new part.

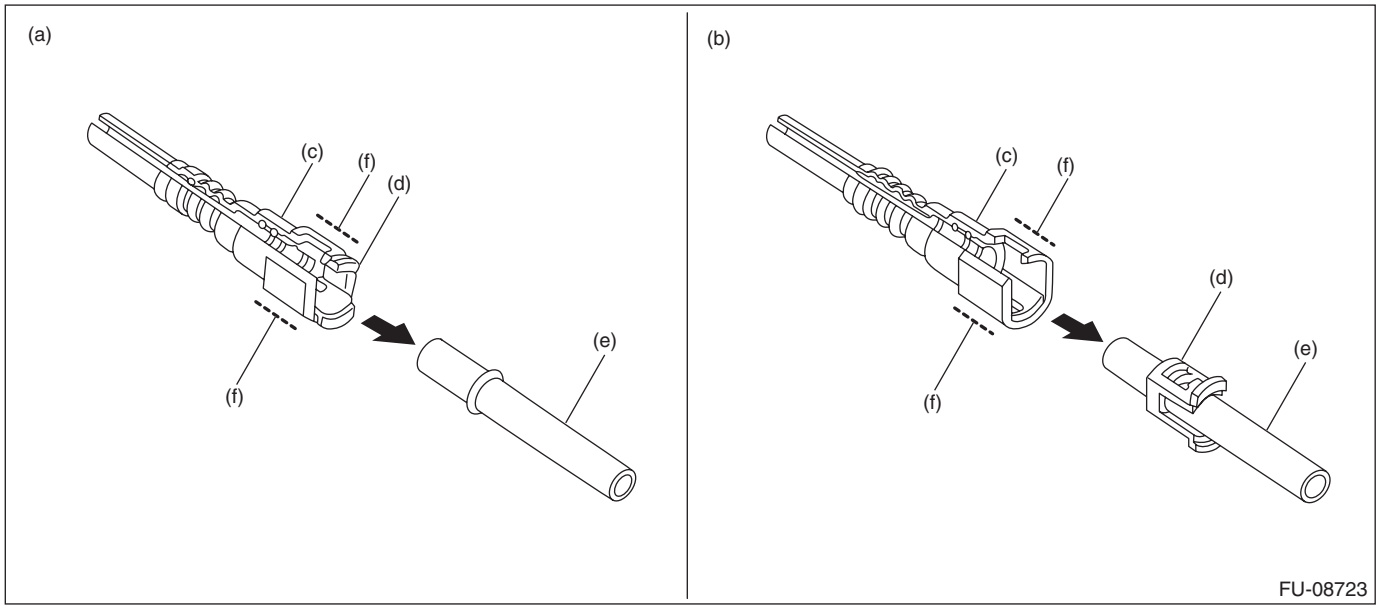

(a) When removed using the ST (c) Quick connector (e) Pipe
(b) When removed without using the ST (d) Retainer (f) Connector holding position

3. EVAPORATION HOSE CONNECTION

Connect the evaporation hose by inserting it to the pipe until the hose reaches the spool or bump.

NOTE:
If there is no spool nor bump, connect the evaporation hose by inserting it at 28 mm (1.1 in) to the pipe.

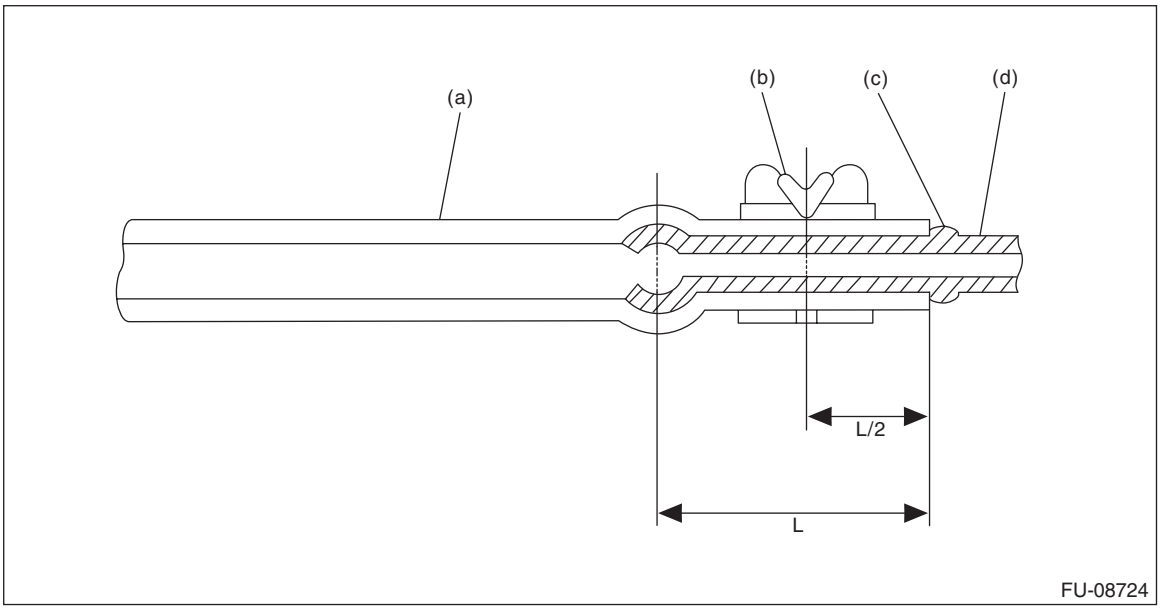

(a) Hose
(b) Clip
(c) Spool or bump
(d) Pipe

4. CONNECTING THE EVAPORATION LINE QUICK CONNECTOR

Connect the quick connector as shown in the figure.

CAUTION:
- **Check that there is no damage or dust on the quick connector. If necessary, clean the seal surface of the pipe.**
- **When connecting the quick connector, make sure to insert it all the way in before locking the slider.**
- **When it is difficult to lock the slider, check that the connector is fully inserted.**
- **After locking the slider, check again that the quick connector is securely connected.**

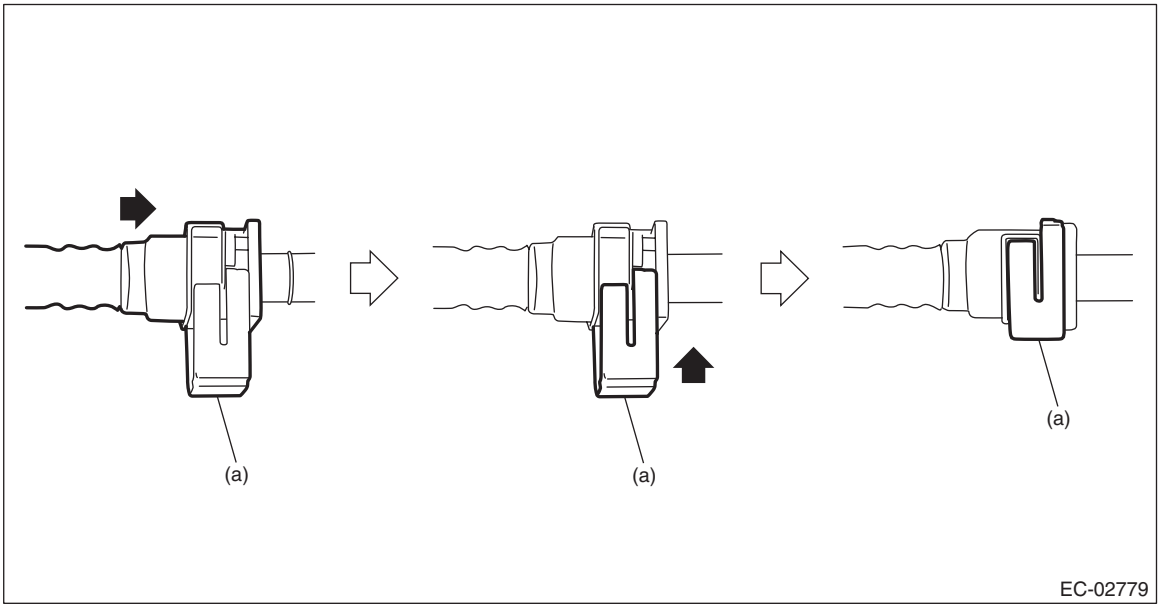

(a) Slider

C: INSPECTION

1) Check that the fuel pipe has no deformation, cracks or other damages.
2) Check that the hose and tube have no cracks, damage or loose part.

33.Fuel System Trouble in General

A: INSPECTION

Trouble	Possible cause	Corrective action
Insufficient fuel supply to fuel injector	a. Fuel pump does not operate.	
	❍ Defective terminal contact	Inspect contact, especially ground, and tighten it securely.
	❍ Trouble in electromagnetic or electronic circuit parts	Replace the faulty parts.
	b. Decline of fuel pump function	Replace the fuel pump.
	c. Clogged fuel filter	Replace the fuel filter. Clean or replace the fuel tank if necessary.
	d. Clogged or bent fuel line pipe, hose or tube	Clean, correct or replace the fuel line pipe, hose or tube.
	e. Air is mixed in fuel system.	Check the fuel line connections, correct or replace the defective part.
	f. Damaged diaphragm of pressure regulator	Replace the fuel filter assembly.
Leakage or blow out of fuel	a. Loose connections of fuel line pipe, hose or tube	Check the fuel line connections, correct or replace the defective part.
	b. Cracked fuel line pipe, hose or tube	Replace the fuel line pipe, hose or tube.
	c. Cracked fuel tank or defective welding part	Replace the fuel tank.
	d. Clogged or bent fuel line pipe, hose or tube	Clean, correct or replace the fuel line pipe, hose or tube.
Gasoline smell inside of compartment	a. Loose connections of fuel line pipe, hose or tube	Check the fuel line connections, correct or replace the defective part.
	b. Defective canister	Replace the canister.
Defective fuel gauge	a. Defective operation of fuel level sensor	Replace the fuel level sensor.
	b. Defective operation of combination meter	Replace the combination meter.
Noise	a. Large operation noise or vibration of fuel pump	Replace the fuel pump.

NOTE:
• When the vehicle is left unattended for an extended period of time, water may accumulate in the fuel tank. Fill fuel fully to prevent the problem.
• In snow-covered areas, mountainous areas, skiing areas, etc. where ambient temperatures drop to 0°C (32°F) or less throughout the winter season, use a water removing agent in the fuel system to prevent freezing fuel system and accumulating water.
• When water is accumulated in fuel filter, fill the water removing agent in the fuel tank.
• Before using water removing agent, follow the cautions noted on the bottle.

EMISSION CONTROL (AUX. EMISSION CONTROL DEVICES)

EC(H4DO)

		Page
1.	General Description	2
2.	Front Catalytic Converter	7
3.	Rear Catalytic Converter	8
4.	Canister	9
5.	Purge Control Solenoid Valve	21
6.	EGR Control Valve	26
7.	EGR Pipe	30
8.	EGR Cooler	32
9.	Fuel Level Sensor	52
10.	Fuel Sub Level Sensor	53
11.	Drain Filter	54
12.	Leak Check Valve Assembly	59
13.	PCV Hose	62
14.	PCV Valve	64

1. General Description

A: COMPONENT

1. CANISTER, PURGE CONTROL SOLENOID VALVE AND DRAIN FILTER

For components of canister, purge control solenoid valve, and drain filter, refer to FU (H4DO). <Ref. to FU(H4DO)-2, COMPONENT, General Description.>

2. EXHAUST GAS RECIRCULATION CONTROL CIRCUIT RANGE/PERFORMANCE

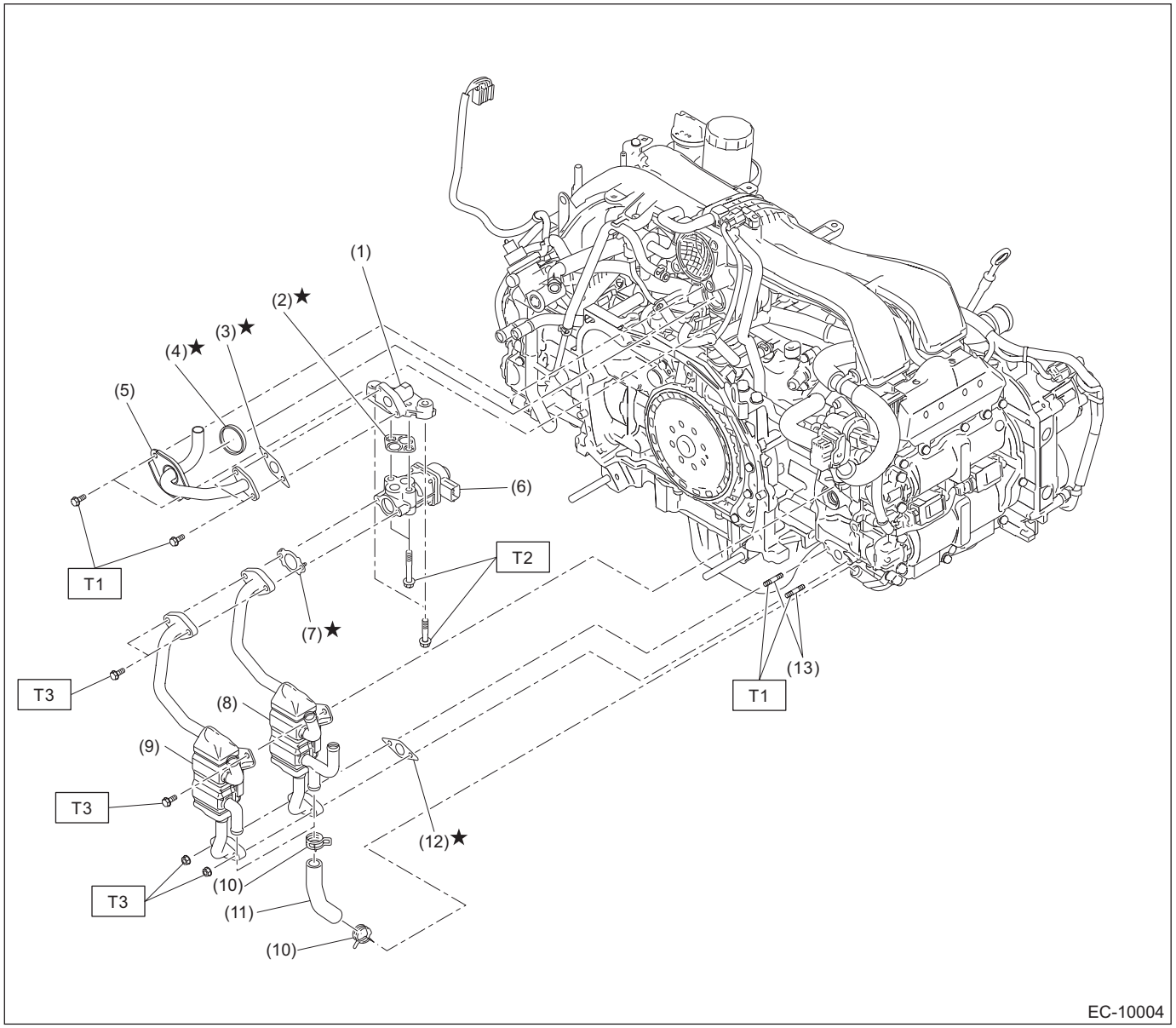

(1) EGR pipe adapter
(2) Gasket
(3) Gasket
(4) O-ring
(5) EGR pipe
(6) EGR control valve
(7) Gasket
(8) EGR cooler (CVT model)
(9) EGR cooler (MT model)
(10) Clip
(11) Engine coolant hose
(12) Gasket
(13) Stud bolt

Tightening torque: N·m (kgf-m, ft-lb)
T1: 6.4 (0.7, 4.7)
T2: 19 (1.9, 14.0)
T3: <Ref. to EC(H4DO)-43, INSTALLATION, EGR Cooler.>

3. PCV SYSTEM 1

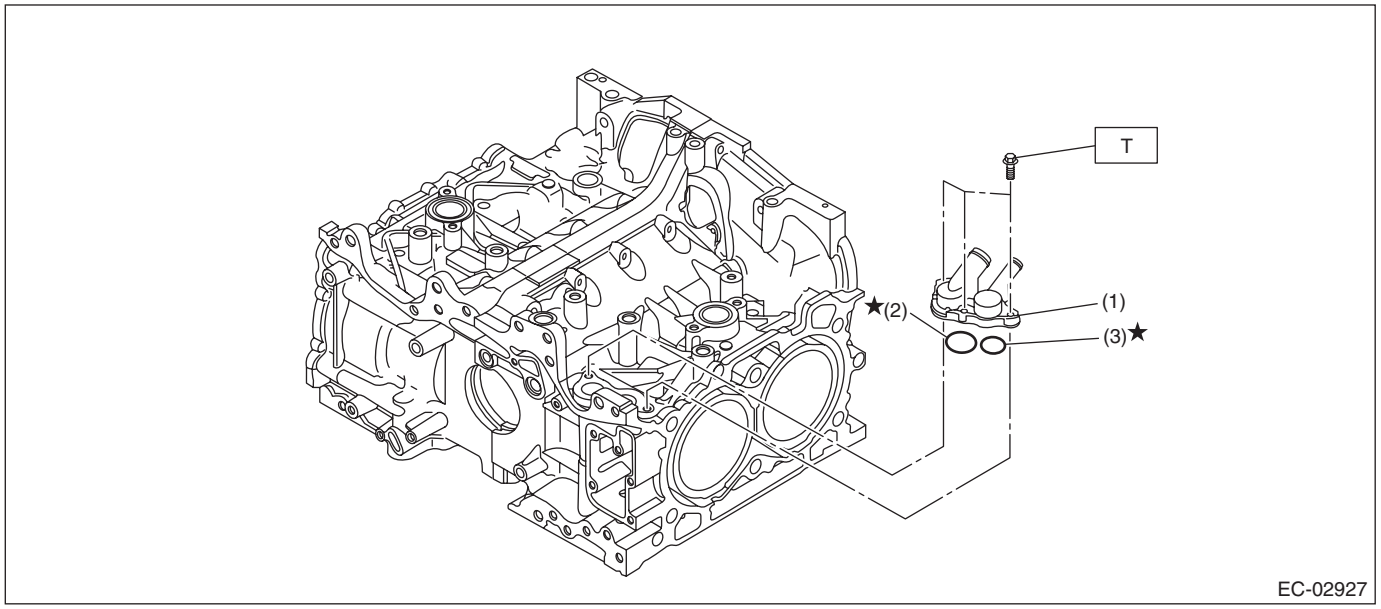

(1) PCV connector
(2) O-ring
(3) O-ring

Tightening torque: N·m (kgf-m, ft-lb)
T: 6.4 (0.7, 4.7)

4. PCV SYSTEM 2

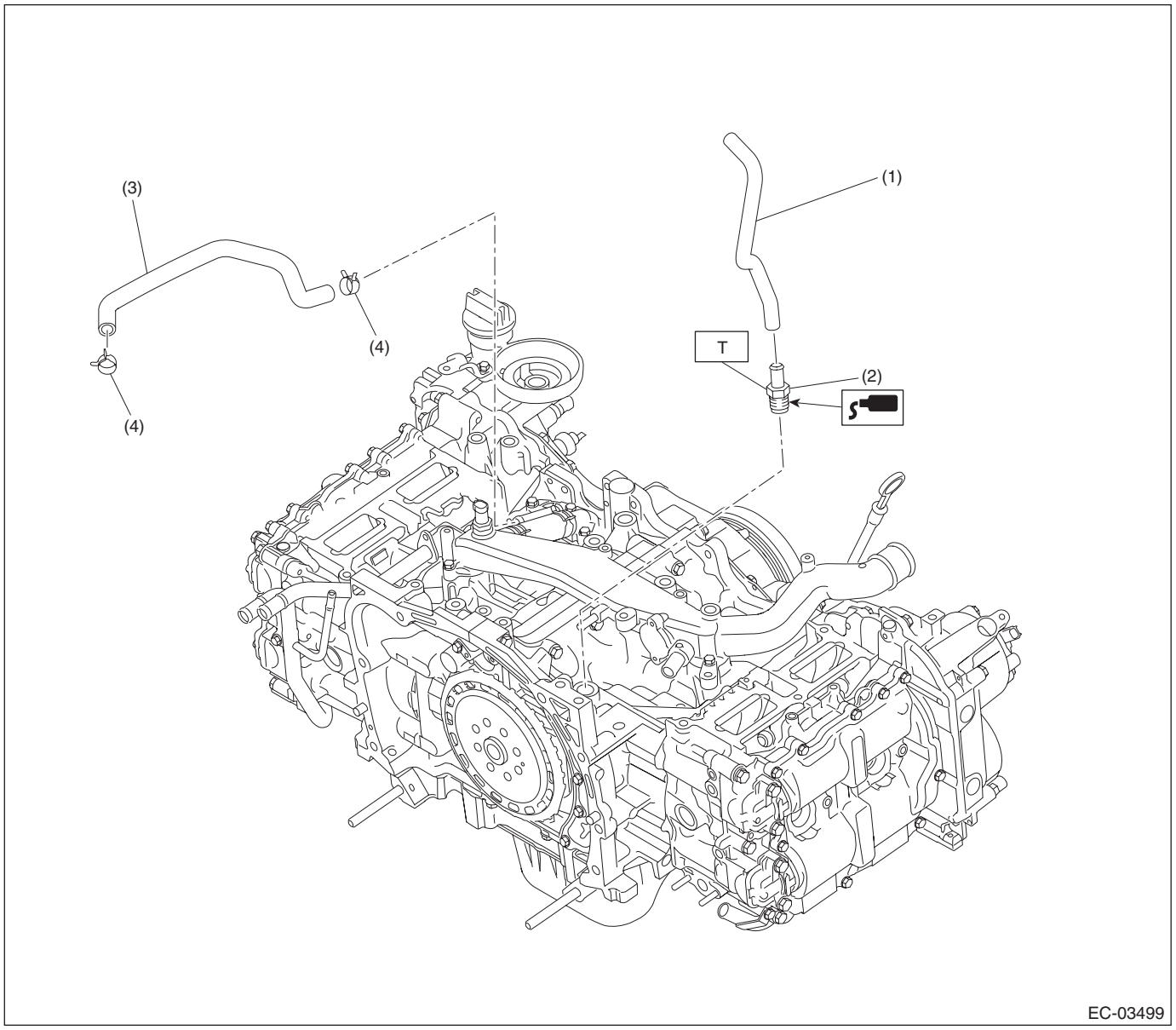

(1) PCV hose A
(2) PCV valve
(3) PCV hose B
(4) Clip

Tightening torque: N·m (kgf-m, ft-lb)
T: 25 (2.5, 18.4)

B: CAUTION

- Prior to starting work, pay special attention to the following:
  1. Always wear work clothes, a work cap, and protective shoes. Additionally, wear a helmet, protective goggles, etc. if necessary.
  2. Protect the vehicle using a seat cover, fender cover, etc.
  3. Prepare the service tools, clean cloth, containers to catch grease and oil, etc.
- Vehicle components are extremely hot immediately after driving. Be wary of receiving burns from heated parts.
- When performing a repair, identify the cause of trouble and avoid unnecessary removal, disassembly and replacement.
- Before disconnecting connectors of sensors or units, be sure to disconnect the ground cable from battery.
- Always use the jack-up point when the shop jacks or rigid racks are used to support the vehicle.
- Remove contamination including dirt and corrosion before removal, installation, disassembly or assembly.
- Keep the removed parts in order and protect them from dust and dirt.
- All removed parts, if to be reused, should be reinstalled in the original positions with attention to the correct directions, etc.
- Bolts, nuts and washers should be replaced with new parts as required.
- Be sure to tighten the fasteners including bolts and nuts to the specified torque.

C: PREPARATION TOOL

1. SPECIAL TOOL

ILLUSTRATION	TOOL NUMBER	DESCRIPTION	REMARKS
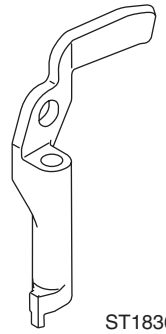 ST18360AA040	18360AA040	HANGER	• Used for removing and installing EGR cooler. • Used together with BOLT (18363AA050).
 ST18363AA050	18363AA050	BOLT	• Used for removing and installing EGR cooler. • Used together with HANGER (18360AA040).
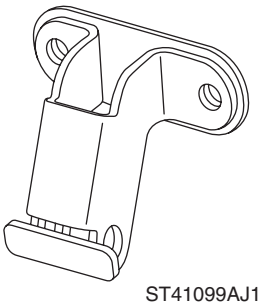 ST41099AJ130	41099AJ130	SPECIAL TOOL FB	Used for removing and installing EGR cooler.

2. GENERAL TOOL

TOOL NAME	REMARKS
Circuit tester	Used for measuring resistance, voltage and current.

2. Front Catalytic Converter

A: REMOVAL

The front catalytic converter is integrated into the front exhaust pipe; therefore, refer to “Front Exhaust Pipe” for the removal procedure. <Ref. to EX(H4DO)-5, REMOVAL, Front Exhaust Pipe.>

B: INSTALLATION

The front catalytic converter is integrated into the front exhaust pipe; therefore, refer to “Front Exhaust Pipe” for the installation procedure. <Ref. to EX(H4DO)-7, INSTALLATION, Front Exhaust Pipe.>

C: INSPECTION

1) Check the connections and welded parts for exhaust leaks.
2) Make sure there are no holes or rusting.

3. Rear Catalytic Converter

A: REMOVAL

The rear catalytic converter is integrated into the center exhaust pipe; therefore, refer to “Center Exhaust Pipe” for the removal procedure. <Ref. to EX(H4DO)-12, REMOVAL, Center Exhaust Pipe.>

B: INSTALLATION

The rear catalytic converter is integrated into the center exhaust pipe; therefore, refer to “Center Exhaust Pipe” for the installation procedure. <Ref. to EX(H4DO)-13, INSTALLATION, Center Exhaust Pipe.>

C: INSPECTION

1) Check the connections and welded parts for exhaust leaks.
2) Make sure there are no holes or rusting.

4. Canister

A: REMOVAL

1) Disconnect the ground terminal from battery sensor. <Ref. to RC-4, BATTERY, NOTE, Repair Contents.>
2) Remove the rear wheel LH. <Ref. to WT-5, REMOVAL, Tire and Wheel.>
3) Lift up the vehicle.
4) Remove the rear mud guard LH. <Ref. to EI-29, REMOVAL, Mud Guard.>
5) Disconnect the quick connectors of the vent tube (A), canister drain tube (B) and purge tube (C), and remove the tubes from tube clamp (D).

NOTE:
Disconnect the quick connector as shown in the figure.

- Vent tube (A) and canister drain tube (B) (Slider color is red or green.)

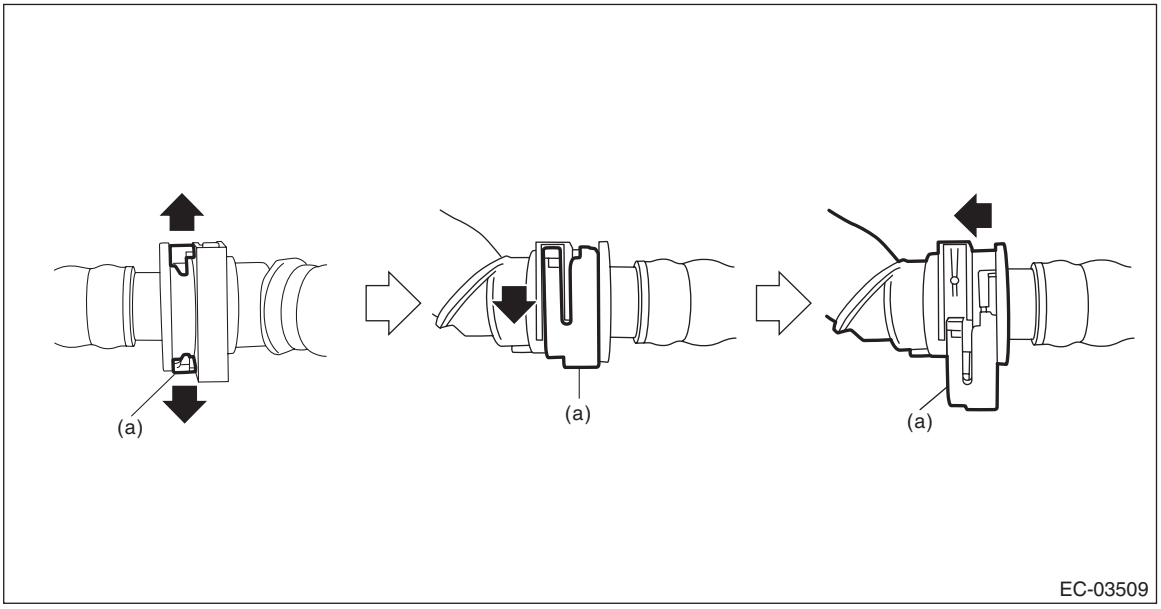

(a) Slider

- Vent tube (A) and canister drain tube (B) (Slider color is white.)

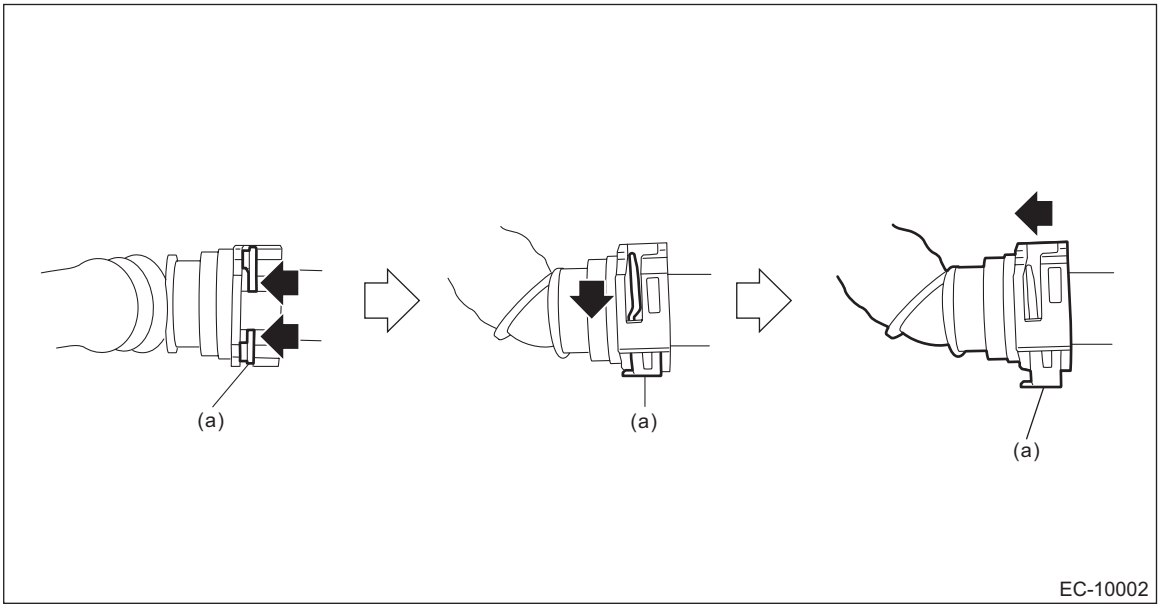

(a) Slider

- Purge tube (C)

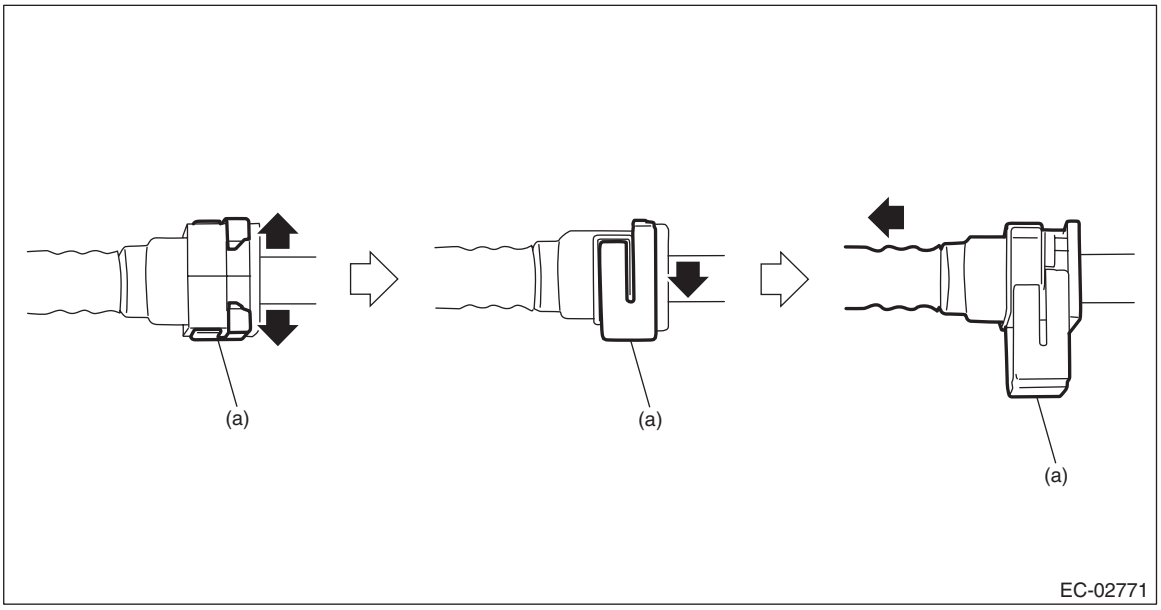

(a) Slider

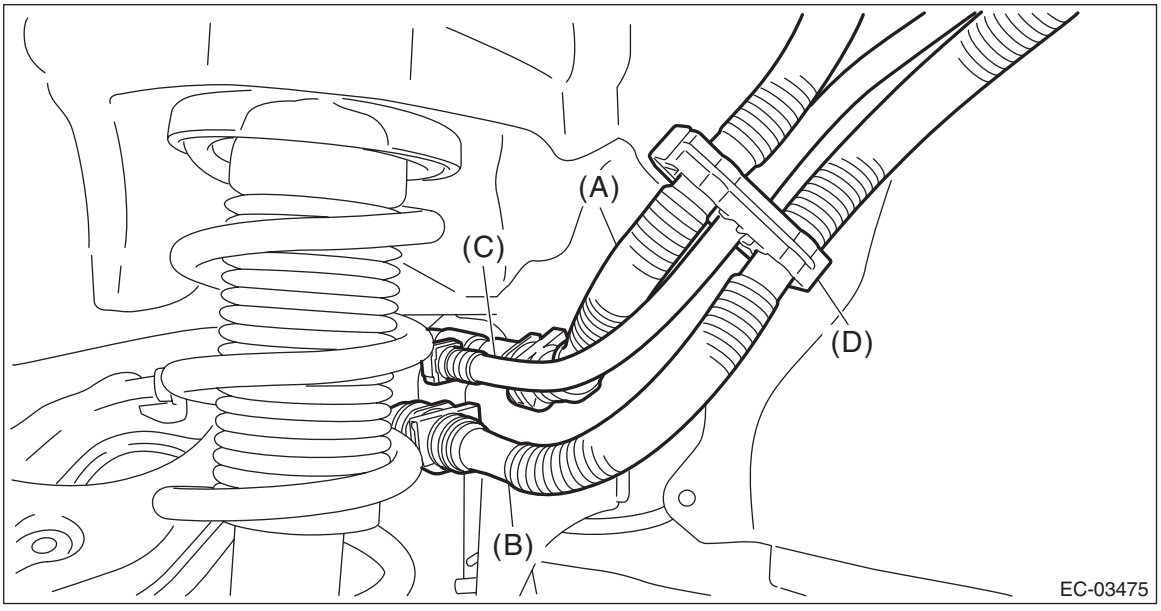

6) Disconnect the connector (A) from the canister and remove the harness clip (B).

7) Remove the canister.

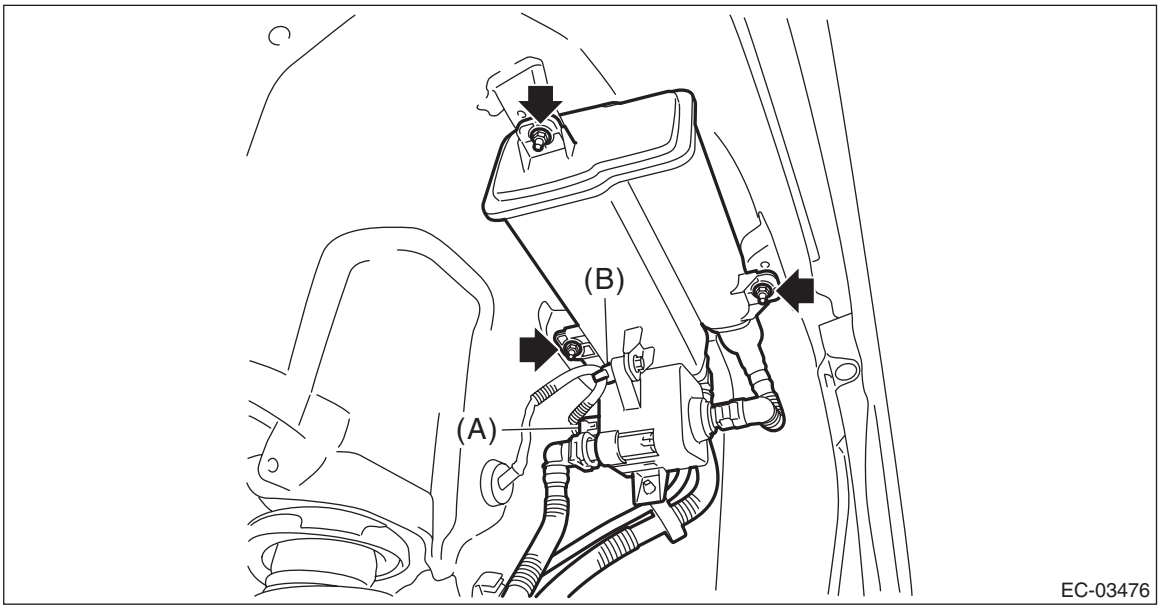

8) Remove the canister protector.

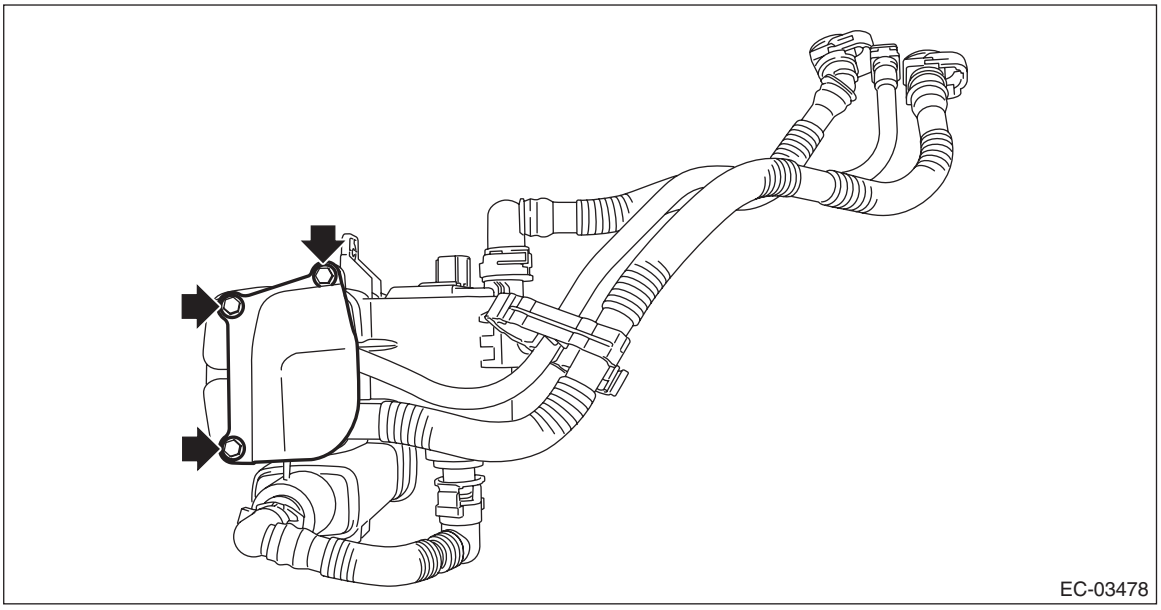

9) Disconnect the vent tube (A), canister drain tube (B) and purge tube (C).

NOTE:
Disconnect the quick connector as shown in the figure.

- Vent tube (A) and canister drain tube (B) (Slider color is red or green.)

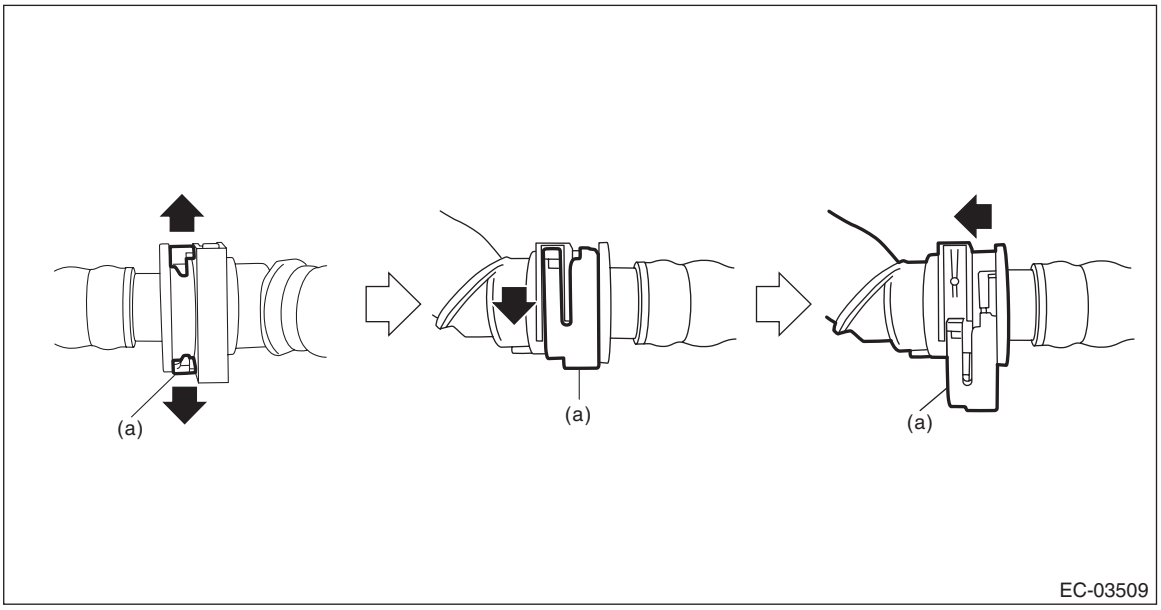

(a) Slider

- Vent tube (A) and canister drain tube (B) (Slider color is white.)

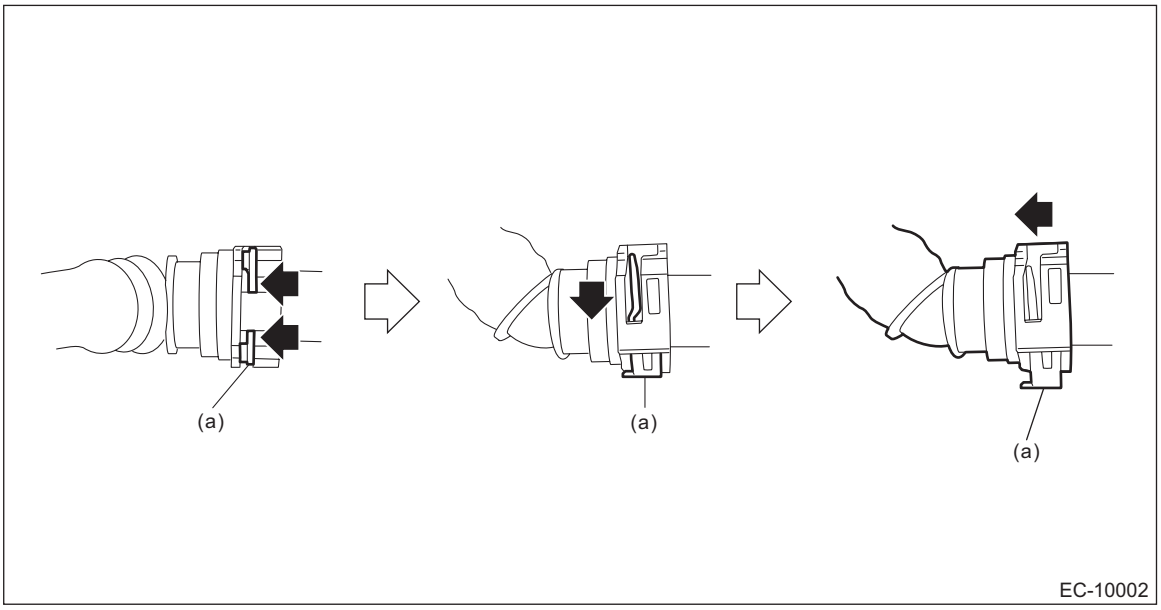

(a) Slider

- Purge tube (C)

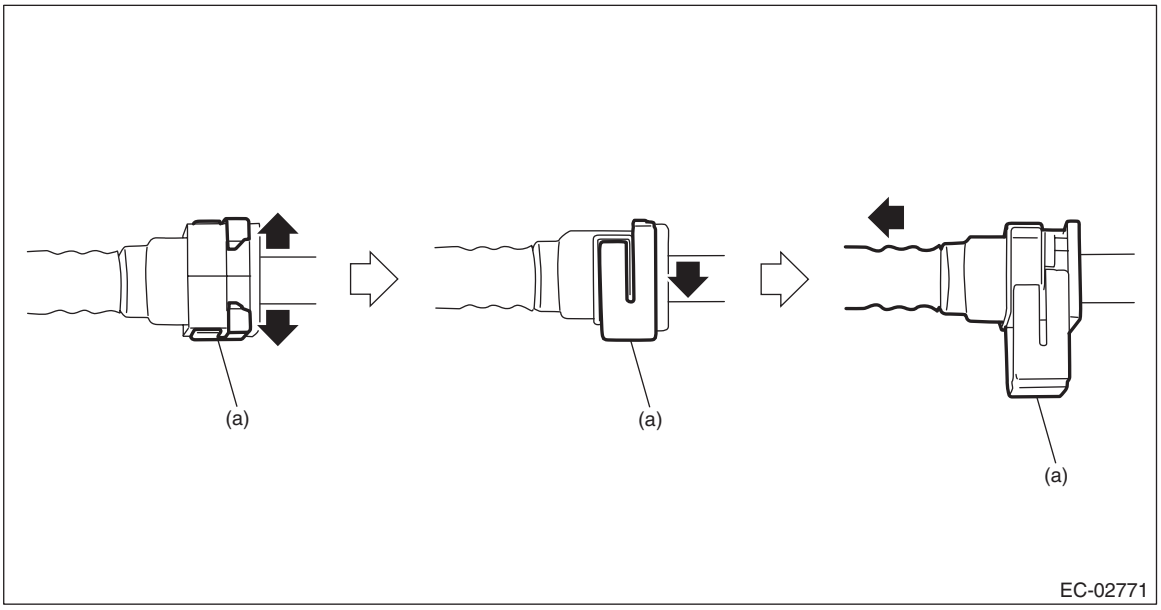

(a) Slider

10) Remove the hose clamp (D).

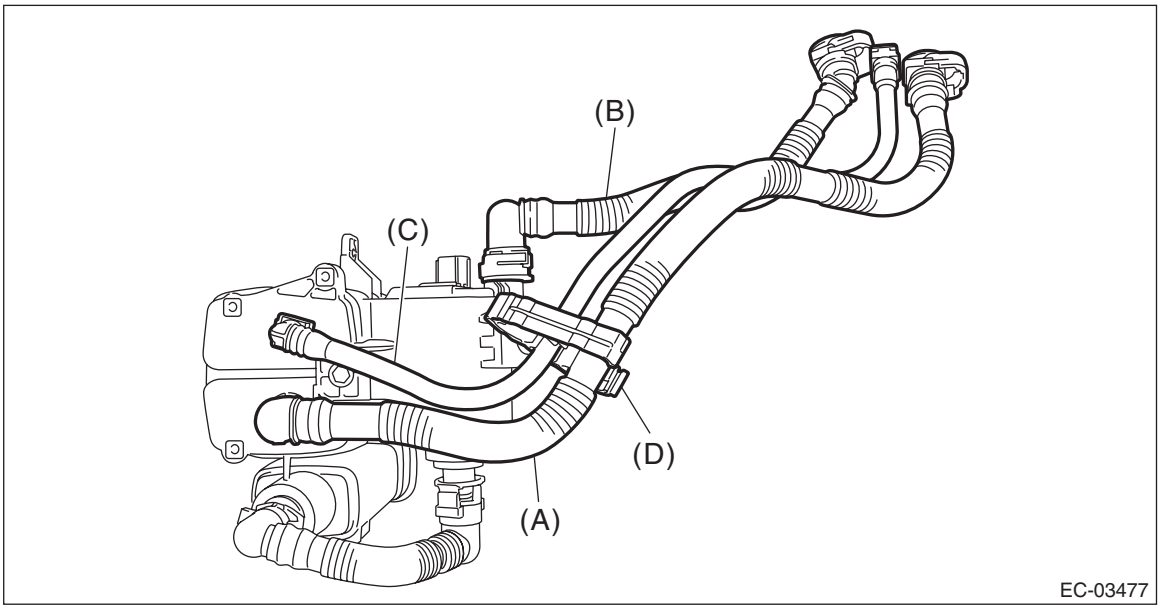

11) Disconnect the drain tube (A).

NOTE:
Disconnect the quick connector as shown in the figure.

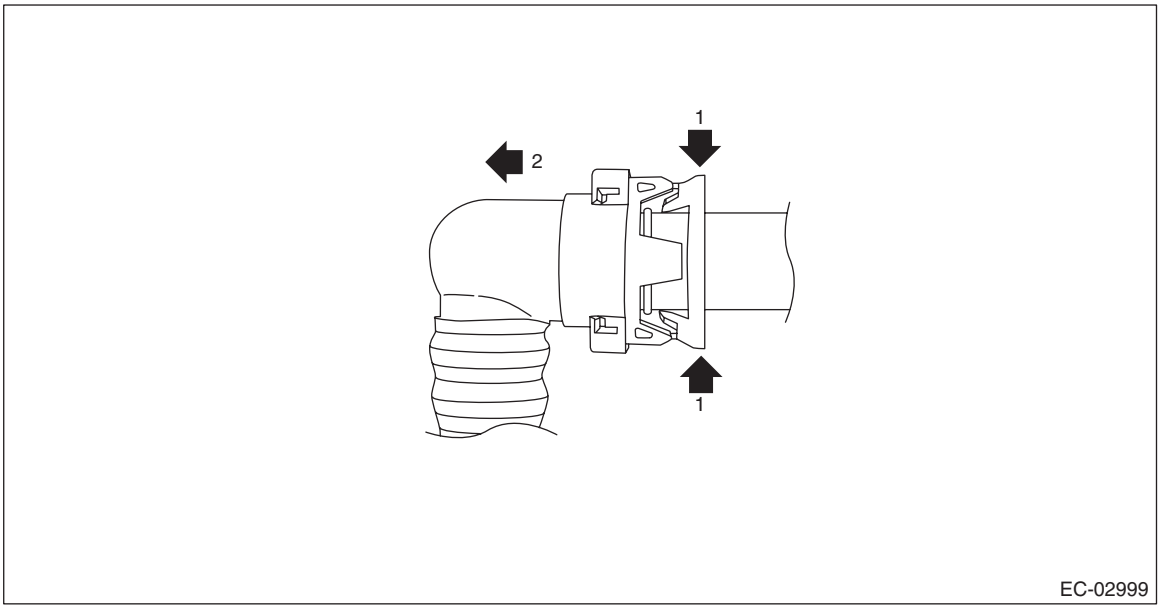

12) Remove the leak check valve assembly from the canister.

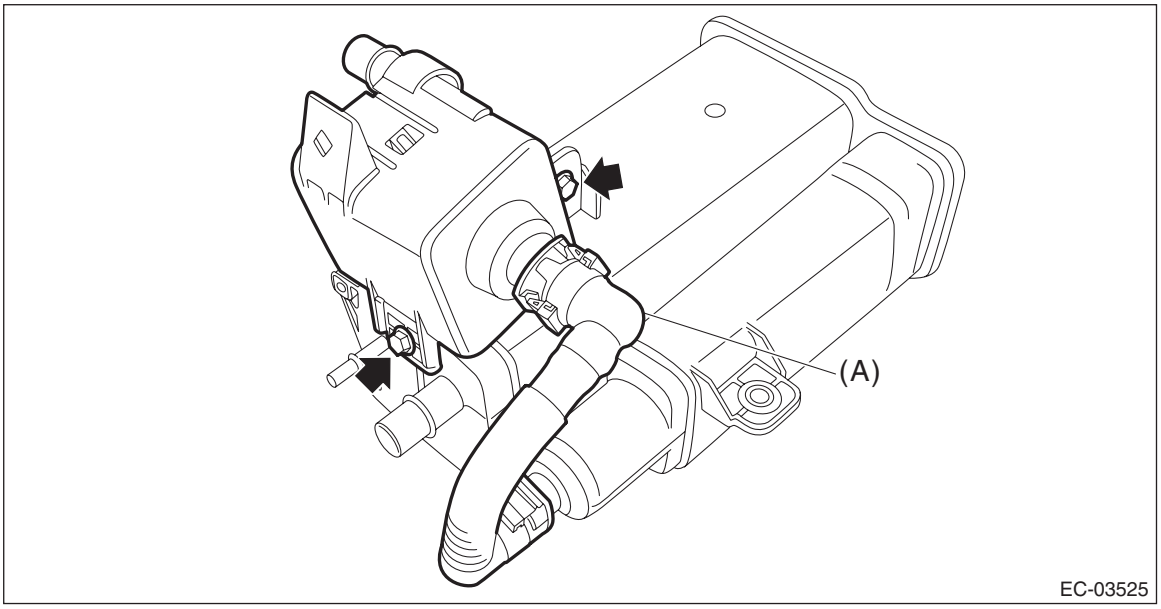

B: INSTALLATION

1) Install the leak check valve assembly to the canister.

Tightening torque:
8 N·m (0.8 kgf-m, 5.9 ft-lb)

2) Connect the drain tube (A).

CAUTION:
• Check that there is no damage or dust on the quick connector. If necessary, clean the seal surface of the pipe.
• Make sure that the quick connector is securely connected.

NOTE:
Connect the quick connector as shown in the figure.

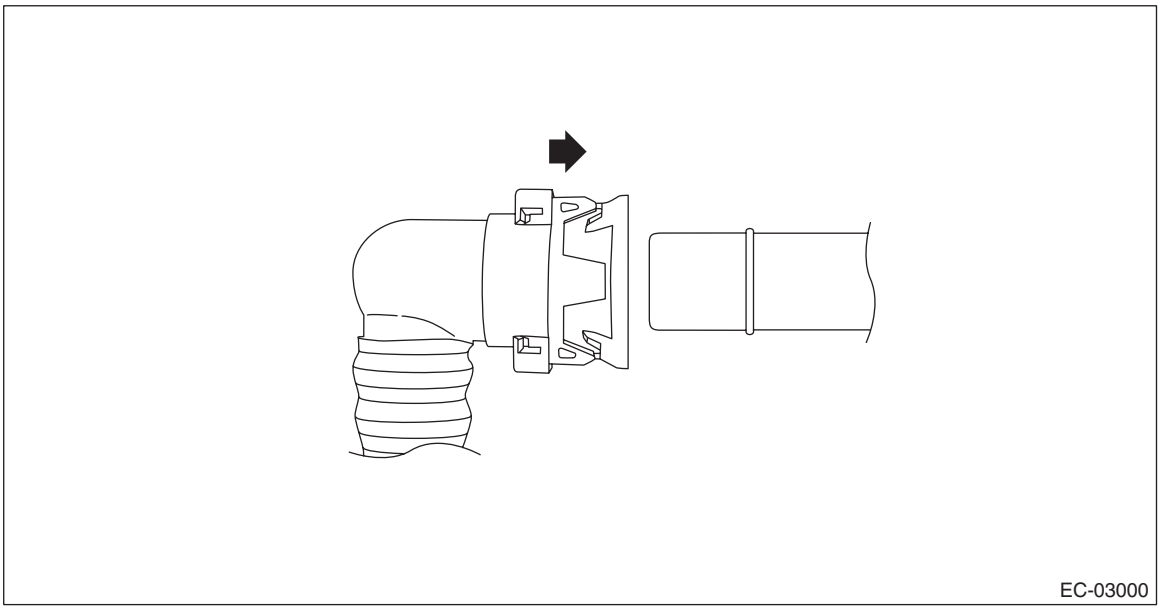
EC-03000

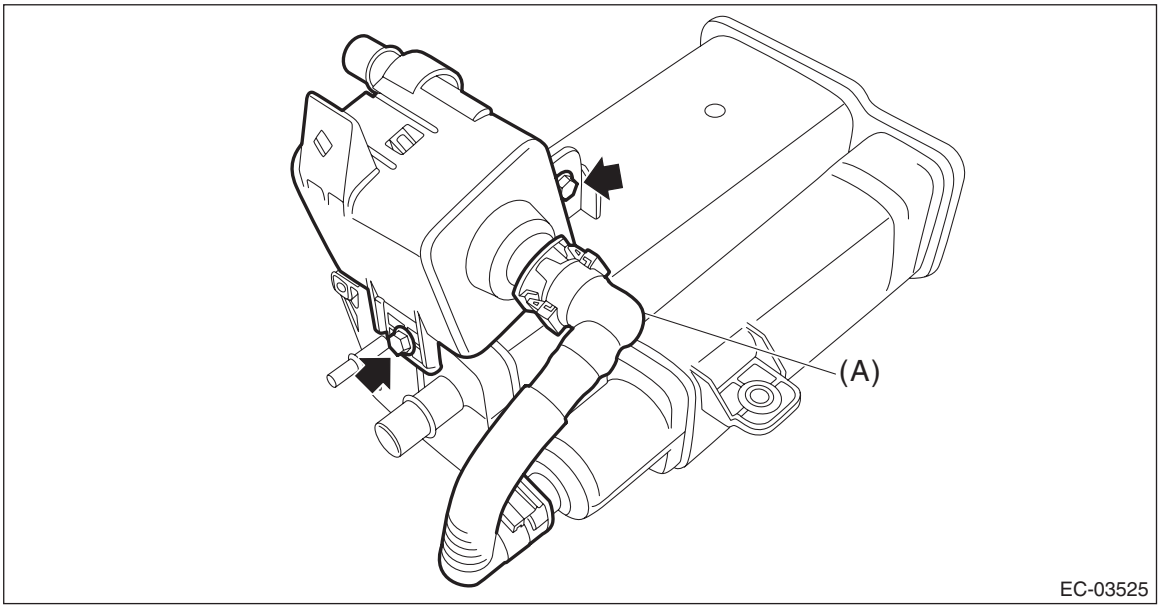

EC-03525

3) Connect the vent tube (A), canister drain tube (B) and purge tube (C), and install the hose clamp (D).

CAUTION:
- **Make sure there are no damage or dust on connections. If necessary, clean the seal surface of the pipe.**
- **Make sure that the quick connector is securely connected.**

NOTE:
Connect the quick connector as shown in the figure.
- Vent tube (A) and canister drain tube (B) (Slider color is red or green.)

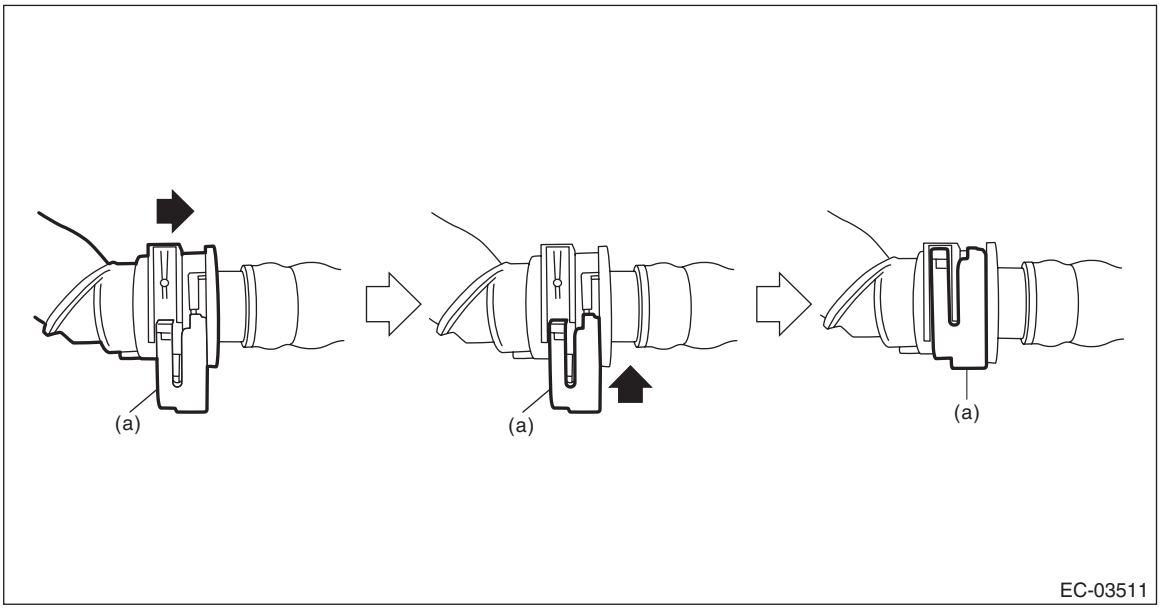

(a) Slider

- Vent tube (A) and canister drain tube (B) (Slider color is white.)

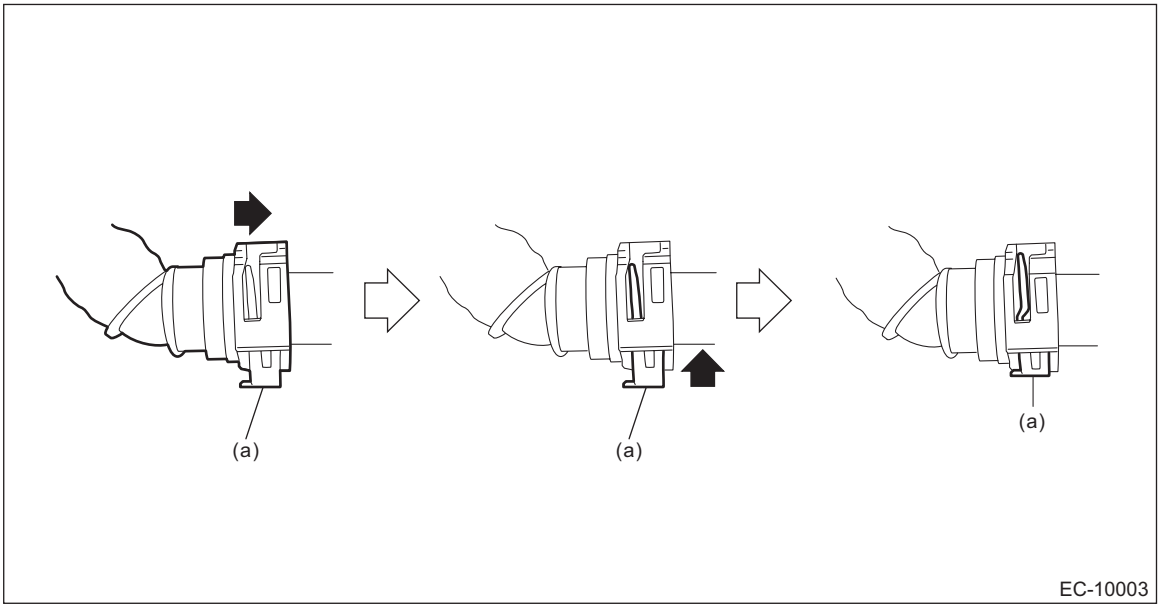

(a) Slider

- Purge tube (C)

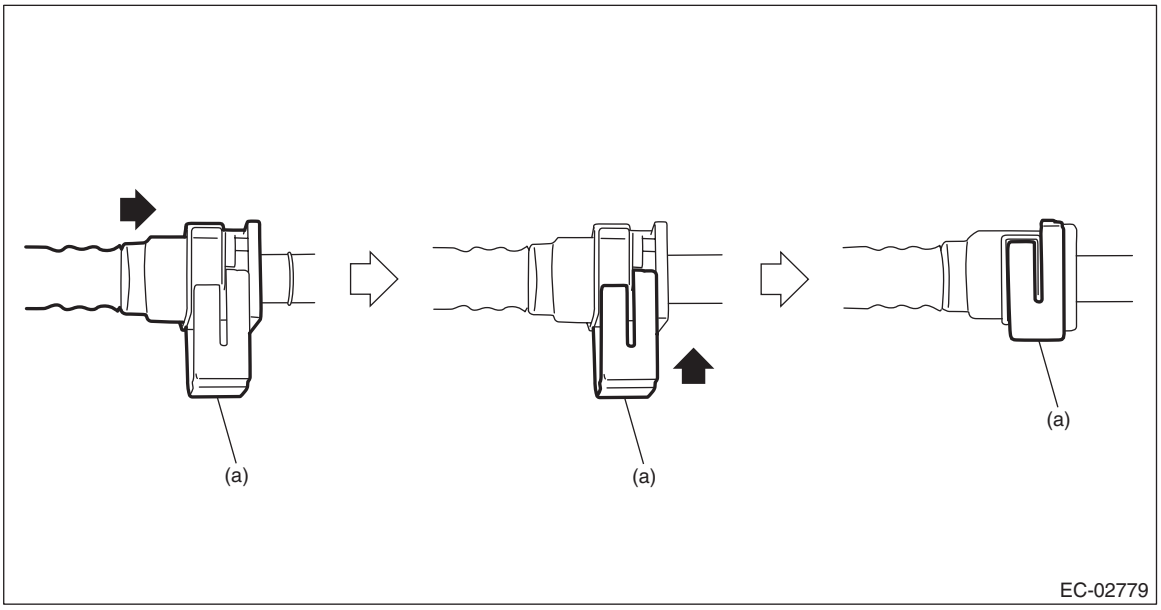

(a) Slider

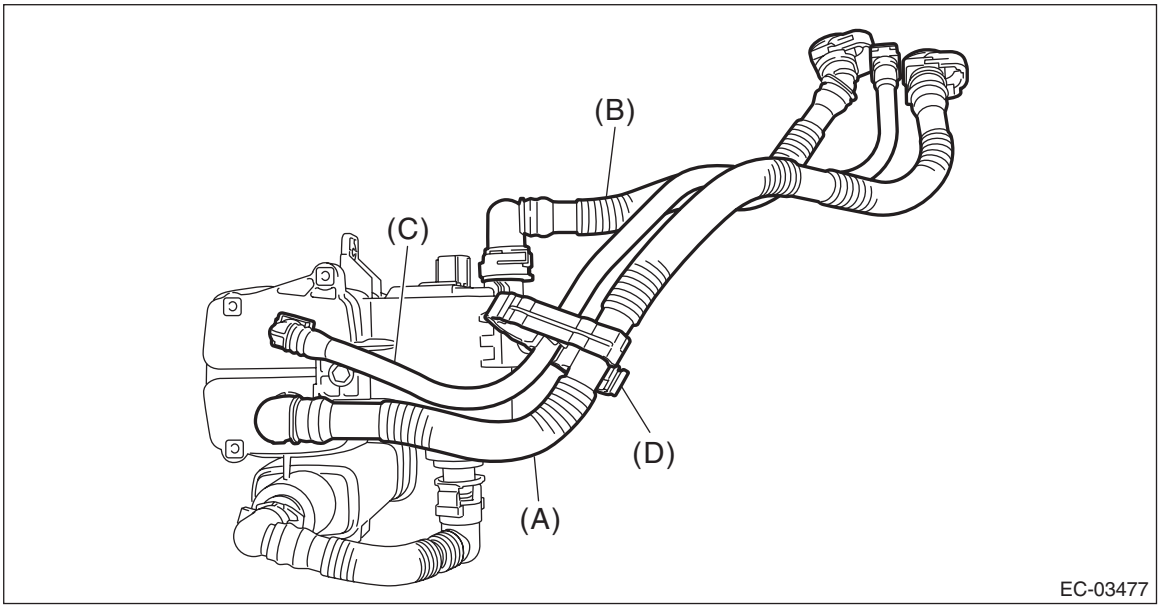

4) Install the canister protector.

Tightening torque:
8 N·m (0.8 kgf-m, 5.9 ft-lb)

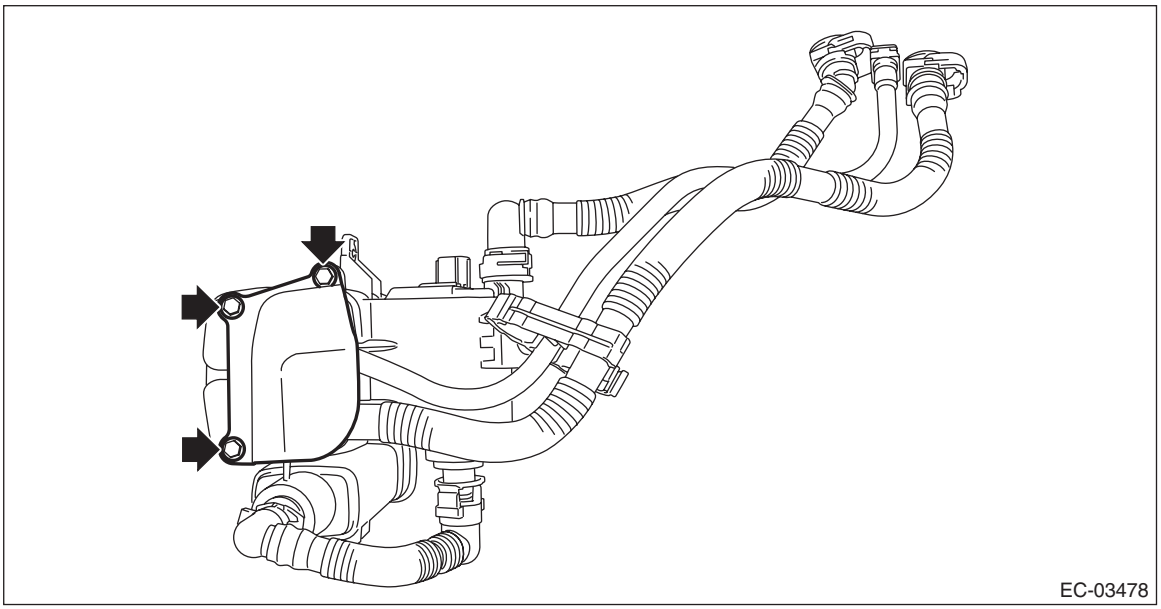

5) Install the canister.

Tightening torque:
8 N·m (0.8 kgf-m, 5.9 ft-lb)

6) Connect the connector (A) to the canister and install the harness clip (B).

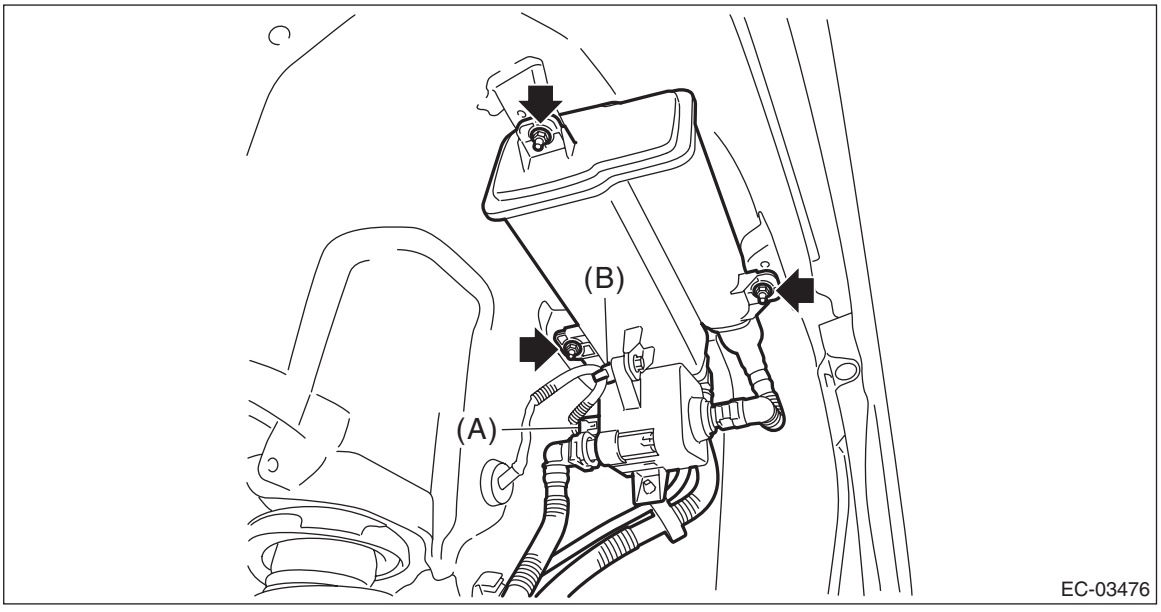

7) Connect the quick connectors of the vent tube (A), canister drain tube (B) and purge tube (C), and install the tube clamp (D).

CAUTION:
- **Make sure there are no damage or dust on connections. If necessary, clean the seal surface of the pipe.**
- **Make sure that the quick connector is securely connected.**

NOTE:
Connect the quick connector as shown in the figure.
- Vent tube (A) and canister drain tube (B) (Slider color is red or green.)

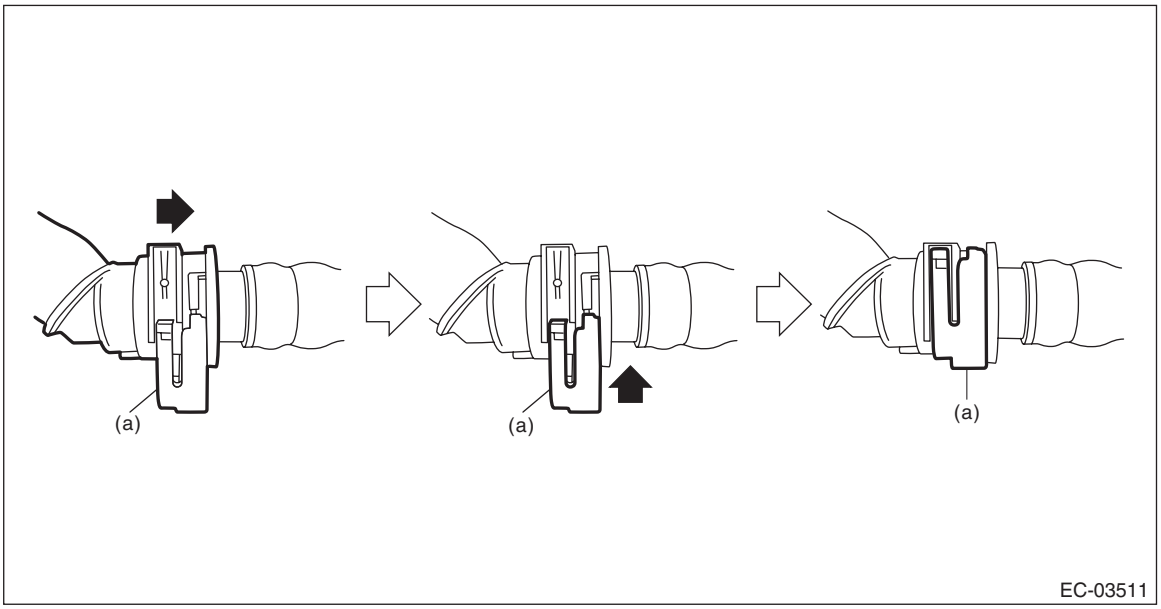

(a) Slider

- Vent tube (A) and canister drain tube (B) (Slider color is white.)

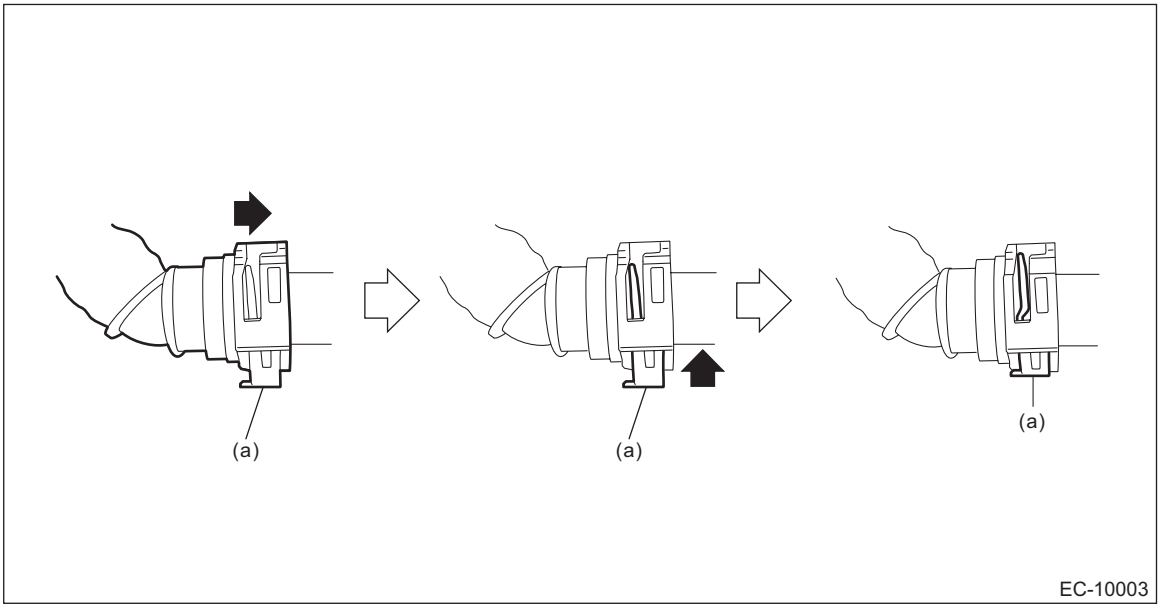

(a) Slider

- Purge tube (C)

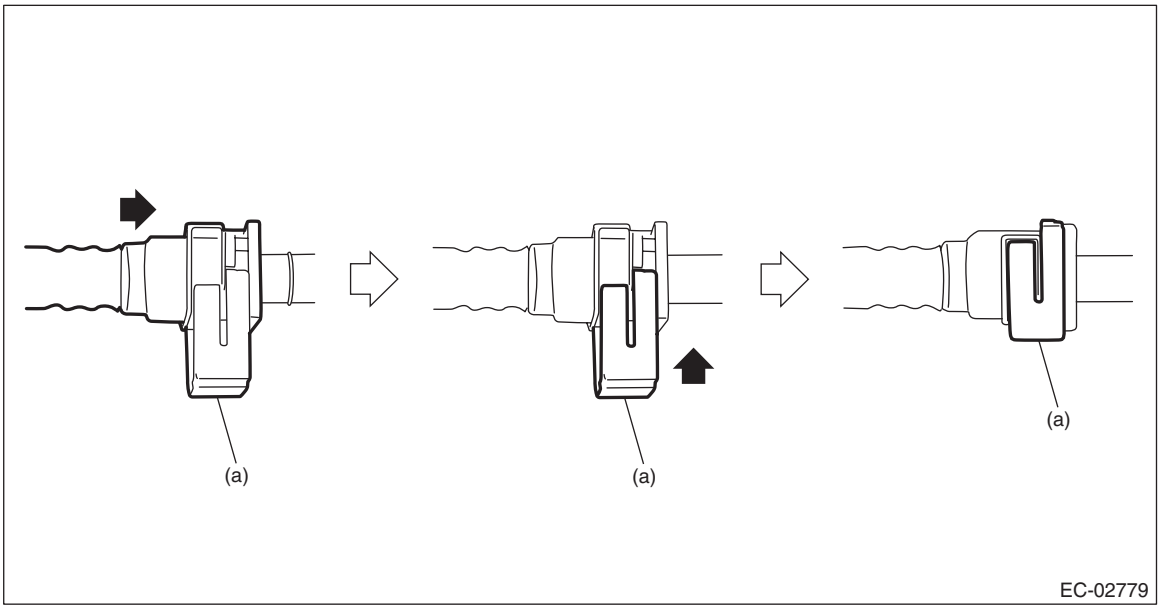

(a) Slider

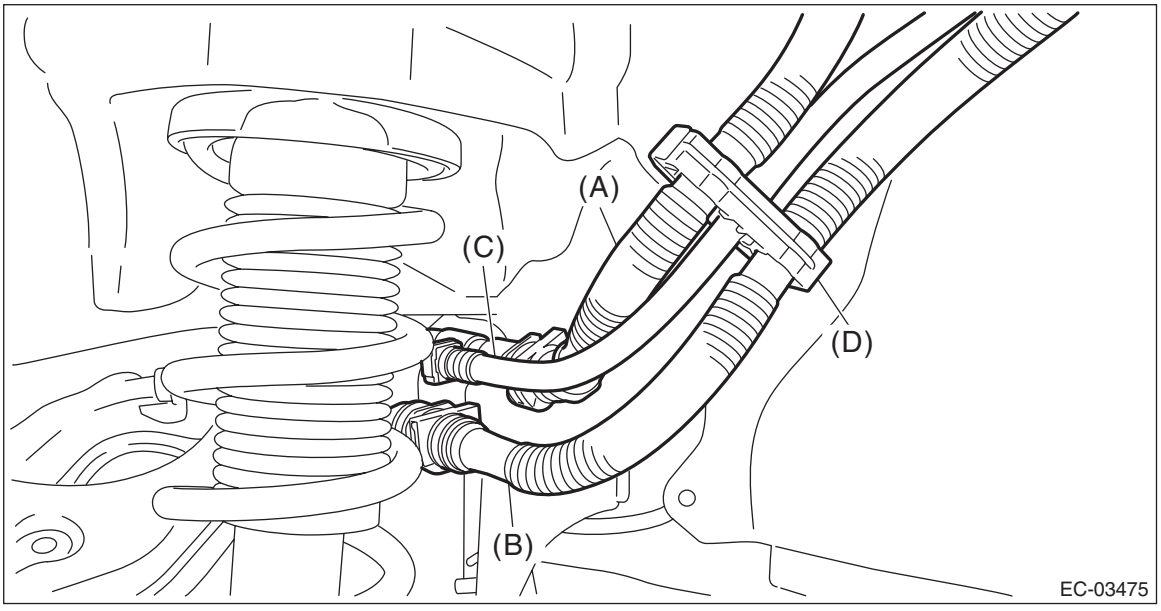

8) Install the rear mud guard LH. <Ref. to EI-29, INSTALLATION, Mud Guard.>
9) Lower the vehicle.
10) Install the rear wheel LH. <Ref. to WT-5, INSTALLATION, Tire and Wheel.>
11) Connect the ground terminal to battery sensor. <Ref. to RC-4, BATTERY, NOTE, Repair Contents.>

C: INSPECTION

1) Check that the canister has no deformation, cracks or other damages.
2) Check that the tube has no cracks, damage or loose part.

5. Purge Control Solenoid Valve

A: REMOVAL

1) Disconnect the ground terminal from battery sensor. <Ref. to RC-4, BATTERY, NOTE, Repair Contents.>
2) Remove the bolt securing the purge control solenoid valve onto intake manifold assembly.

NOTE:
Hold the purge control solenoid valve unit by hand to prevent it from rotating together.
3) Disconnect the vacuum hose from the intake manifold assembly, and remove the vacuum hose from the clip (A).

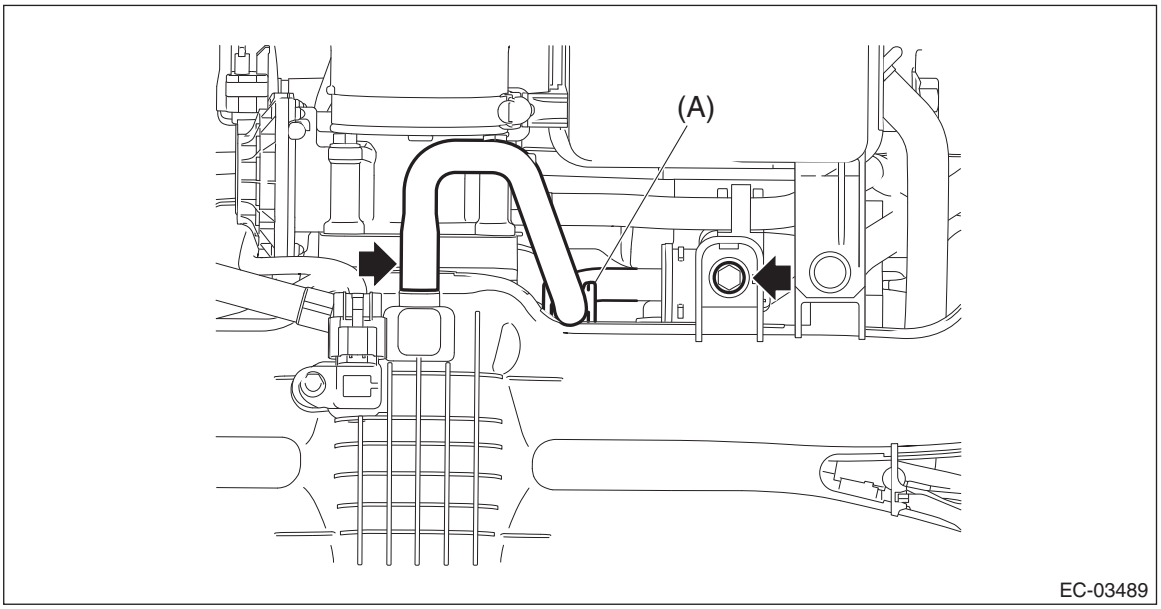

4) Disconnect the vacuum hose (A) and connector (B) from the purge control solenoid valve, and remove the purge control solenoid valve.

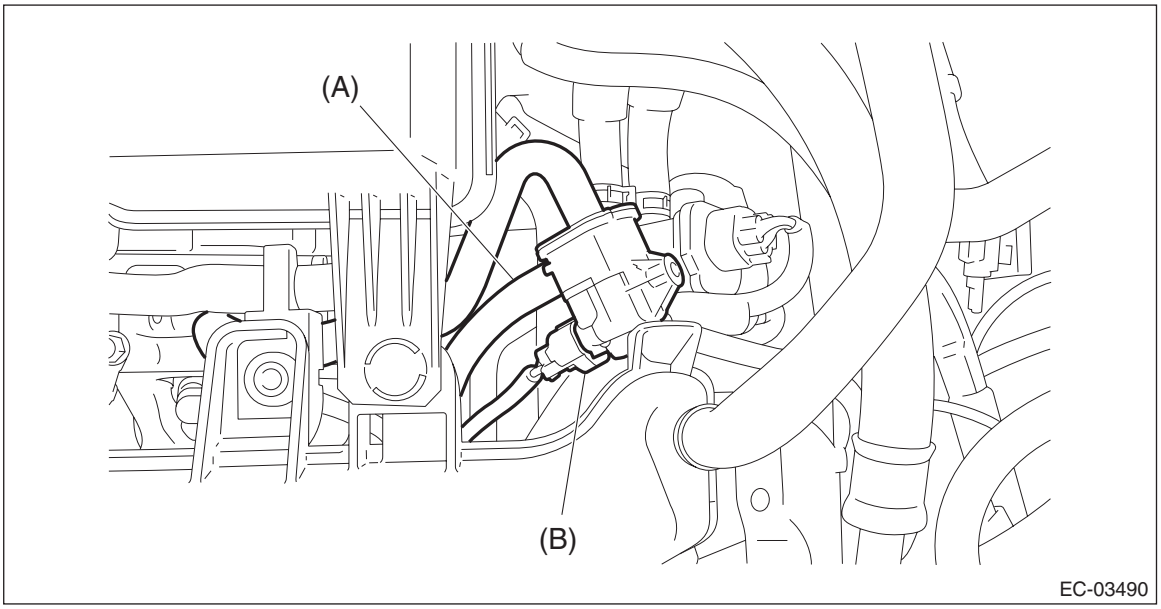

5) Remove the vacuum hose from the purge control solenoid valve.

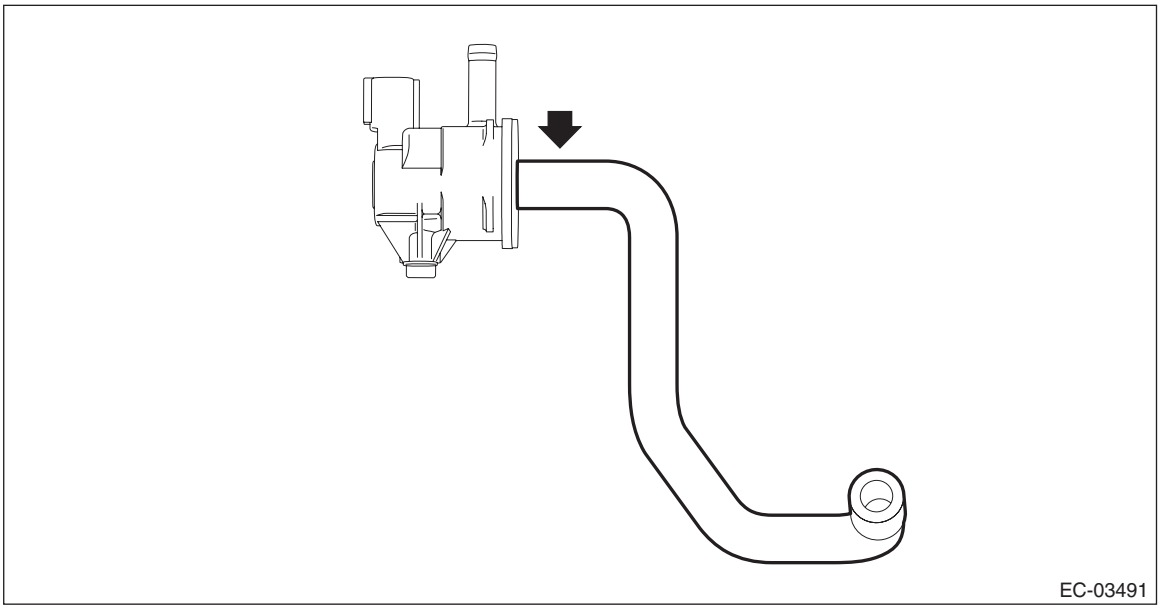

B: INSTALLATION

1) Install the vacuum hose to the purge control solenoid valve.

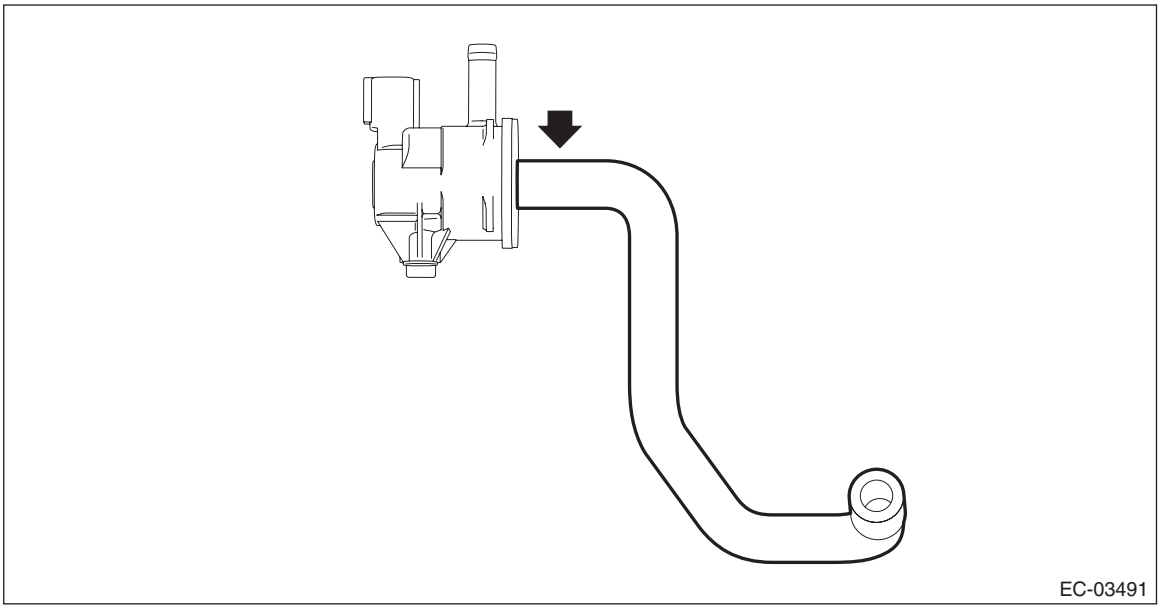

2) Connect the vacuum hose (A) and connector (B) to the purge control solenoid valve.

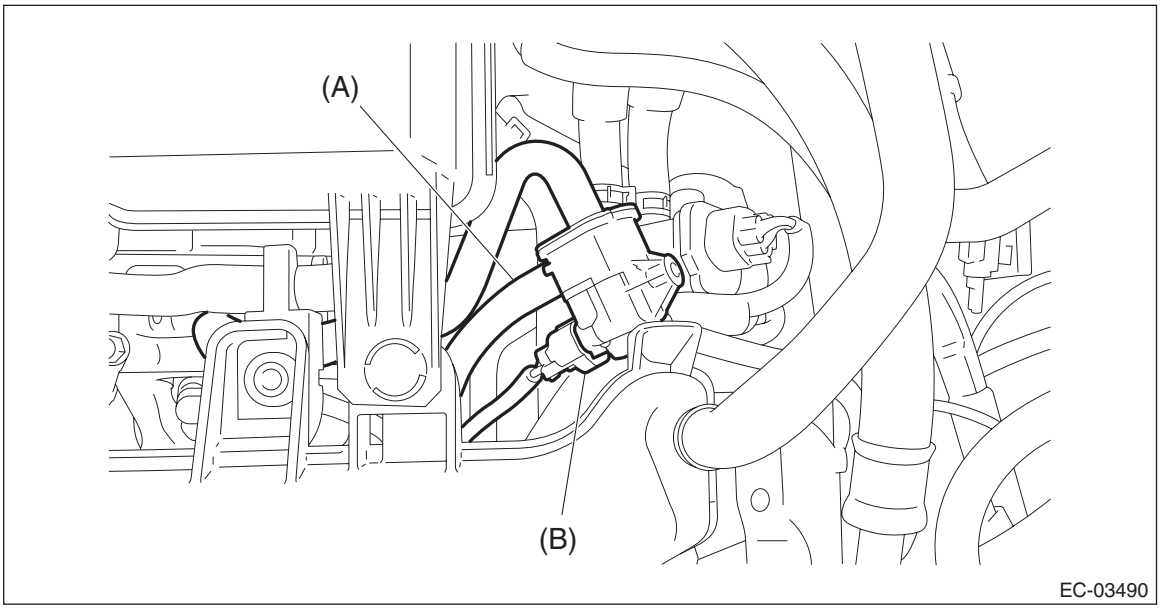

3) Install the bolt securing the purge control solenoid valve to the intake manifold assembly.

NOTE:
Hold the purge control solenoid valve unit by hand to prevent it from rotating together.

Tightening torque:
3.4 N·m (0.3 kgf-m, 2.5 ft-lb)

4) Secure the vacuum hose to the clip (A), and connect the vacuum hose to the intake manifold assembly.

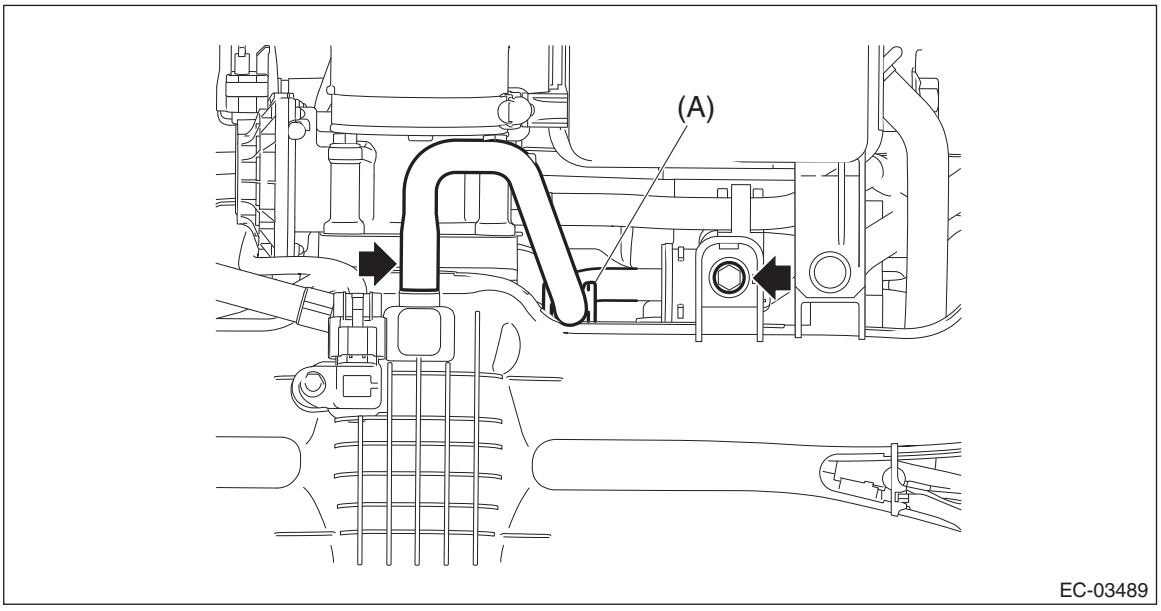

5) Connect the ground terminal to battery sensor. <Ref. to RC-4, BATTERY, NOTE, Repair Contents.>

C: INSPECTION

1. PURGE CONTROL SOLENOID VALVE

1) Check that the purge control solenoid valve has no deformation, cracks or other damages.
2) Measure the resistance between the purge control solenoid valve terminals.

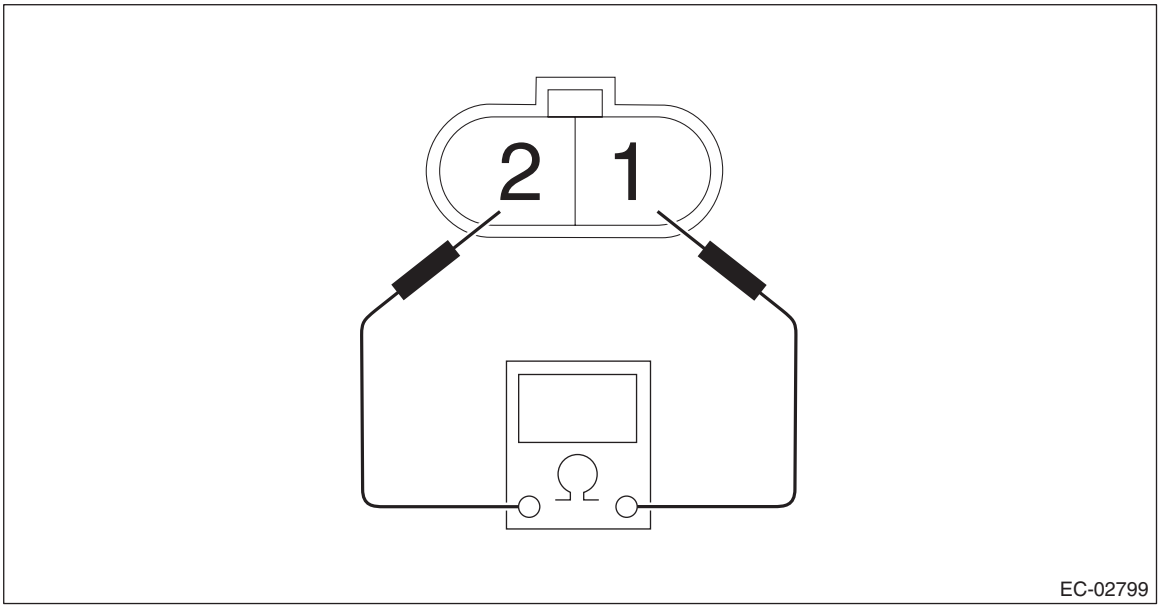

Terminal No.	Standard
1 and 2	24.5±1.5 Ω (20°C (68°F))

3) Check that air does not come out from (B) when air is blown into (A).

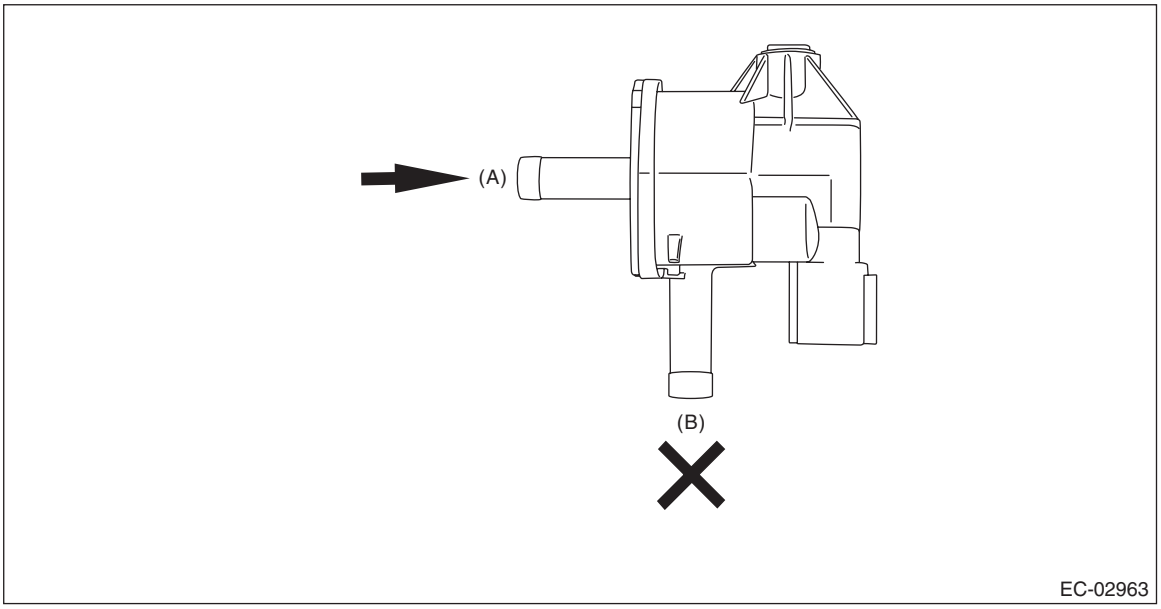

4) Connect the battery positive terminal to the terminal No. 1 and the battery negative terminal to the terminal No. 2. Check that air is discharged from (B), when supplying air to (A).

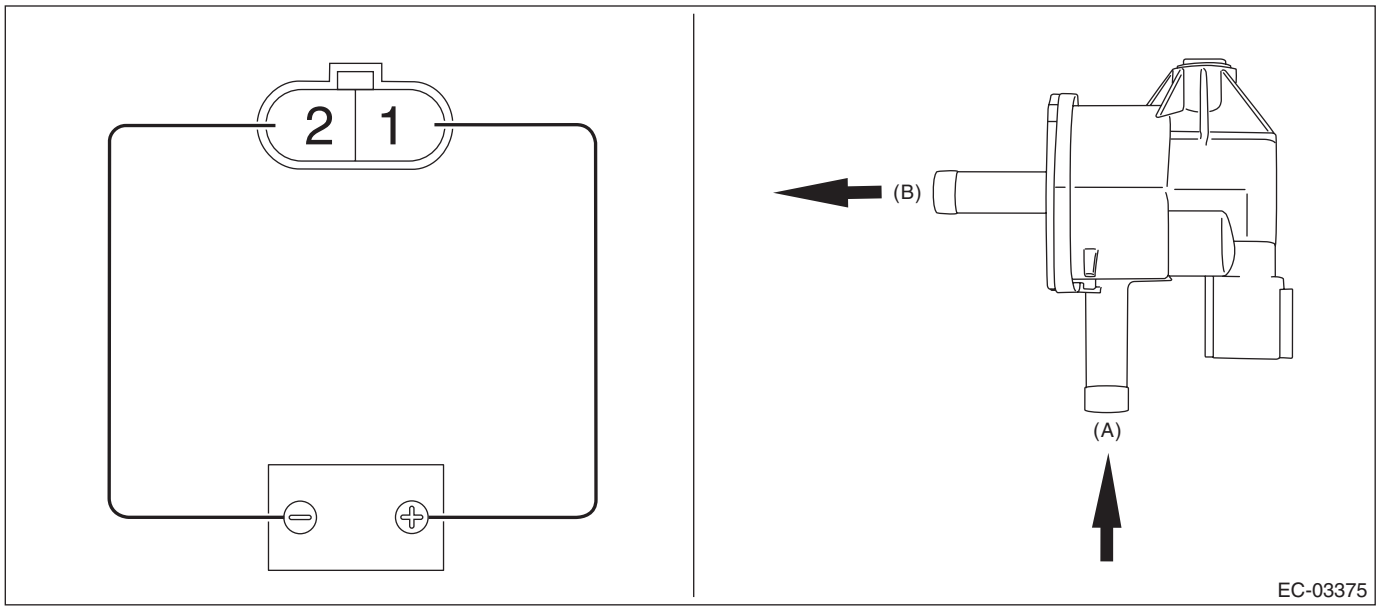

2. OTHER INSPECTIONS

Check the vacuum hose for cracks, damage or looseness.

6. EGR Control Valve

A: REMOVAL

1) Disconnect the ground terminal from battery sensor. <Ref. to RC-4, BATTERY, NOTE, Repair Contents.>
2) Remove the clip (A), and loosen the clamps (B) and (C) securing the air intake boot.

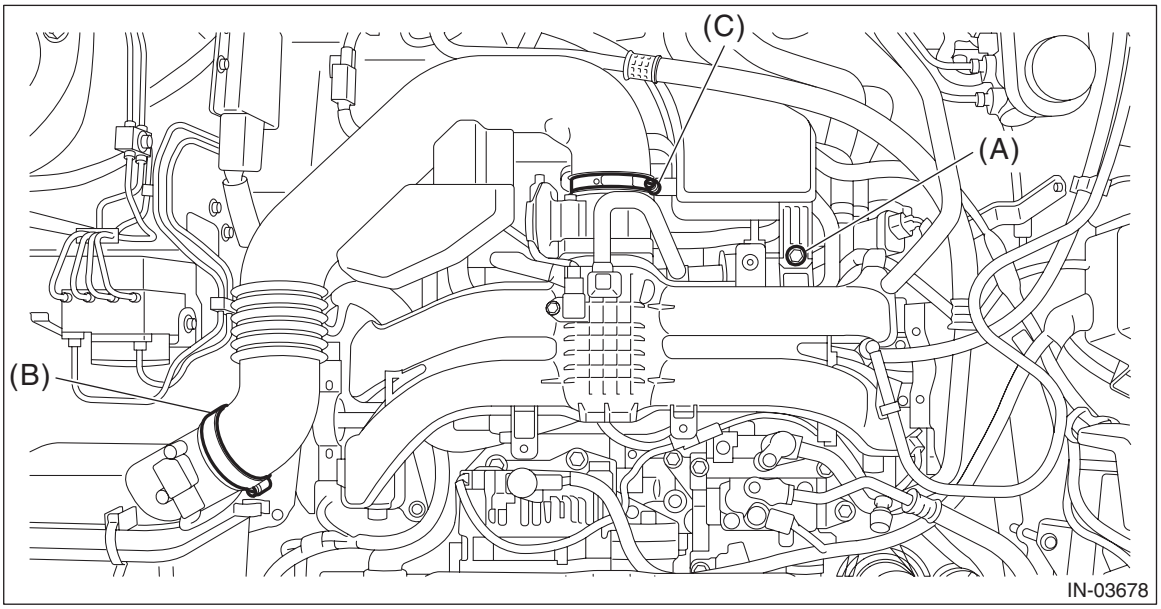

3) Remove the air intake boot from the air cleaner case (rear) and throttle body, and move it to the left side wheel apron.

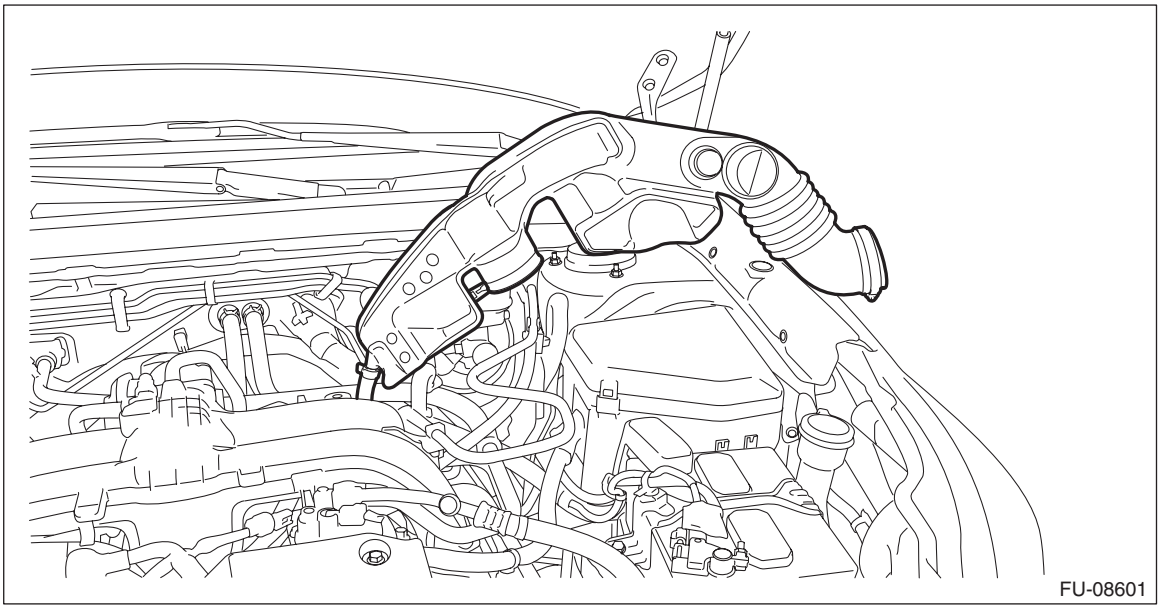

4) Loosen the bolts holding the EGR cooler to the cylinder head RH.

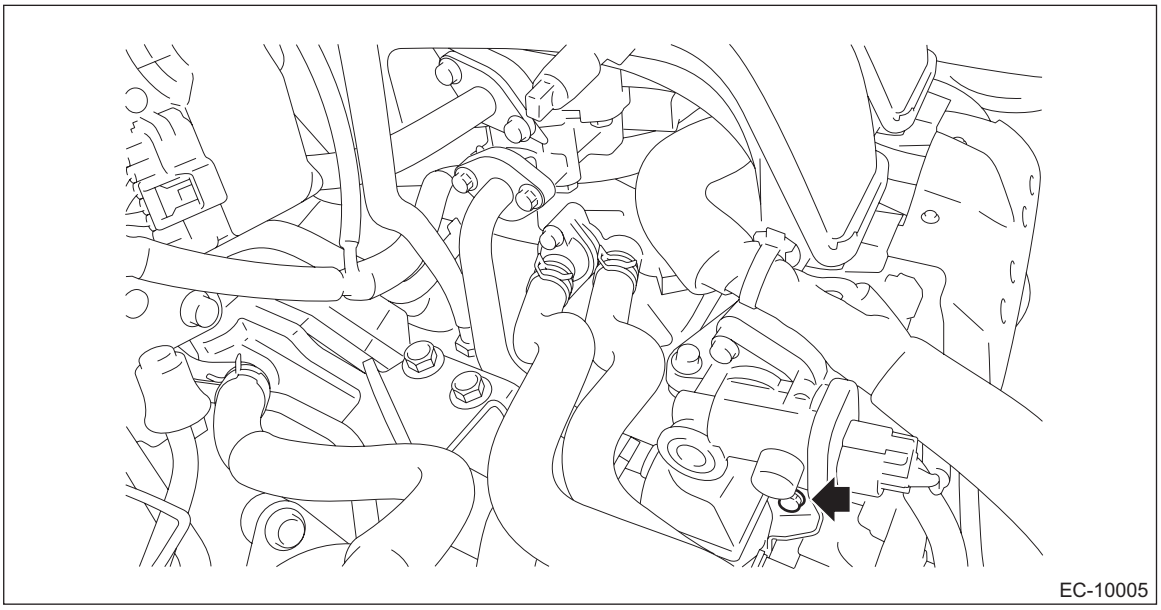

5) Remove the EGR pipe. <Ref. to EC(H4DO)-30, REMOVAL, EGR Pipe.>
6) Remove the bolts (A) securing the EGR cooler to the EGR control valve.
7) Disconnect the connector (B) from EGR control valve, and remove the EGR control valve from the intake manifold assembly.

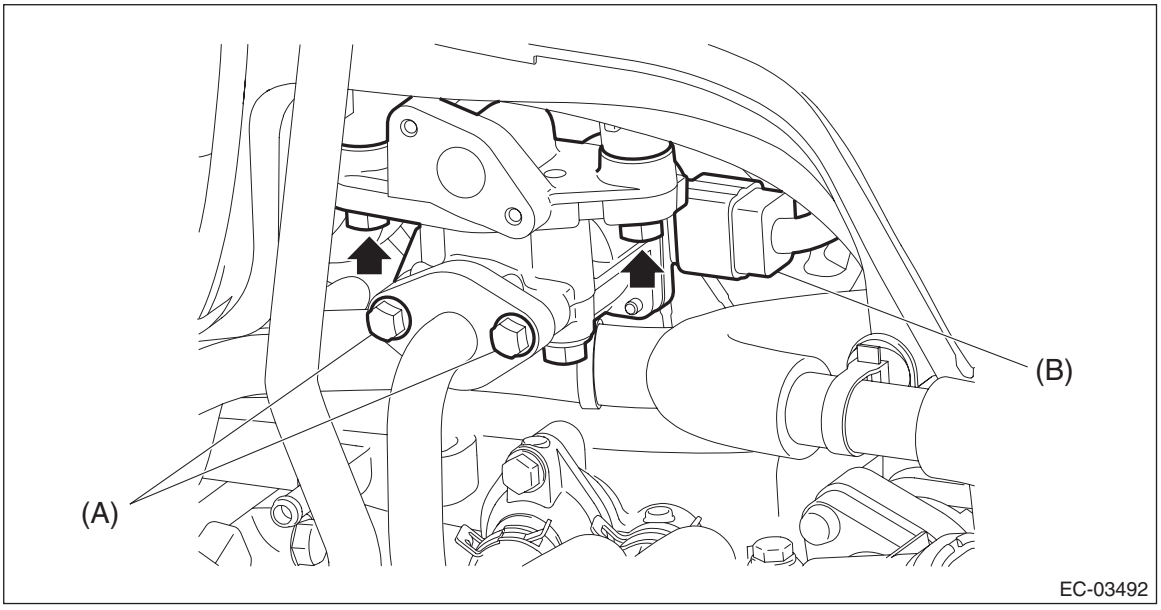

8) Remove the EGR pipe adapter from EGR control valve.

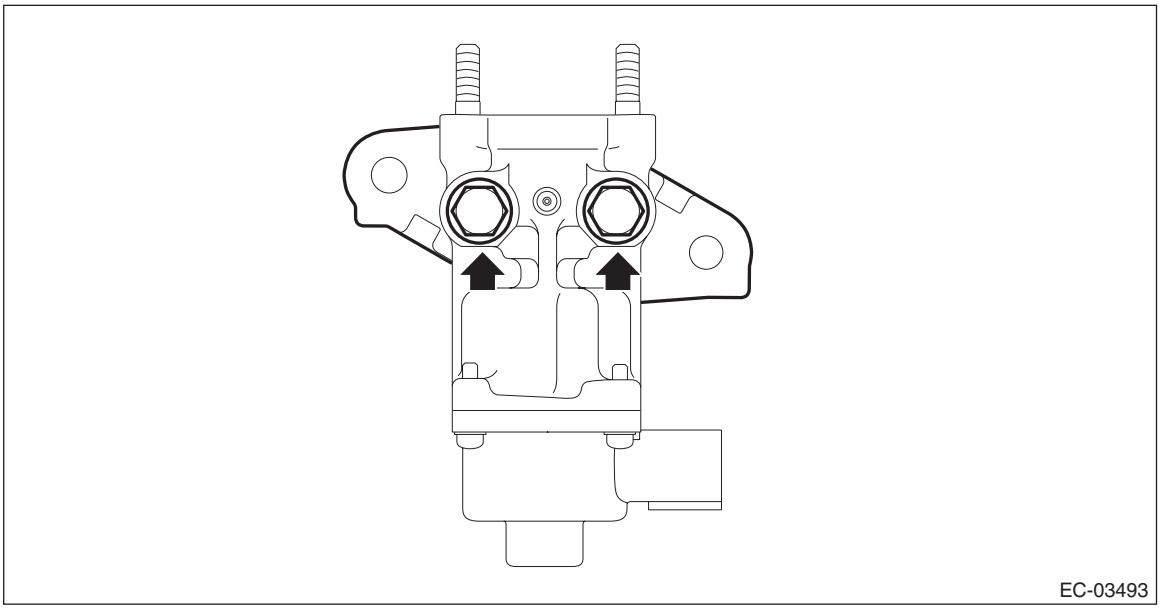

B: INSTALLATION

1) Install the EGR pipe adapter to the EGR control valve.

NOTE:
Use a new gasket.

Tightening torque:
19 N·m (1.9 kgf-m, 14.0 ft-lb)

2) Install the EGR control valve to the intake manifold assembly, and connect the connector to the EGR control valve.

Tightening torque:
19 N·m (1.9 kgf-m, 14.0 ft-lb)

3) Install the bolts securing the EGR cooler to the EGR control valve.

Tightening torque:
9 N·m (0.9 kgf-m, 6.6 ft-lb)

NOTE:
Use a new gasket.

4) Tighten the bolts holding the EGR cooler to the cylinder head RH.

Tightening torque:
6.4 N·m (0.7 kgf-m, 4.7 ft-lb)

5) Install the EGR pipe. <Ref. to EC(H4DO)-31, INSTALLATION, EGR Pipe.>
6) Install the air intake boot. <Ref. to IN(H4DO)-10, INSTALLATION, Air Intake Boot.>
7) Connect the ground terminal to battery sensor. <Ref. to RC-4, BATTERY, NOTE, Repair Contents.>

C: INSPECTION

1) Check that the EGR control valve has no deformation, cracks or other damages.
2) Measure the resistance between EGR control valve terminals.

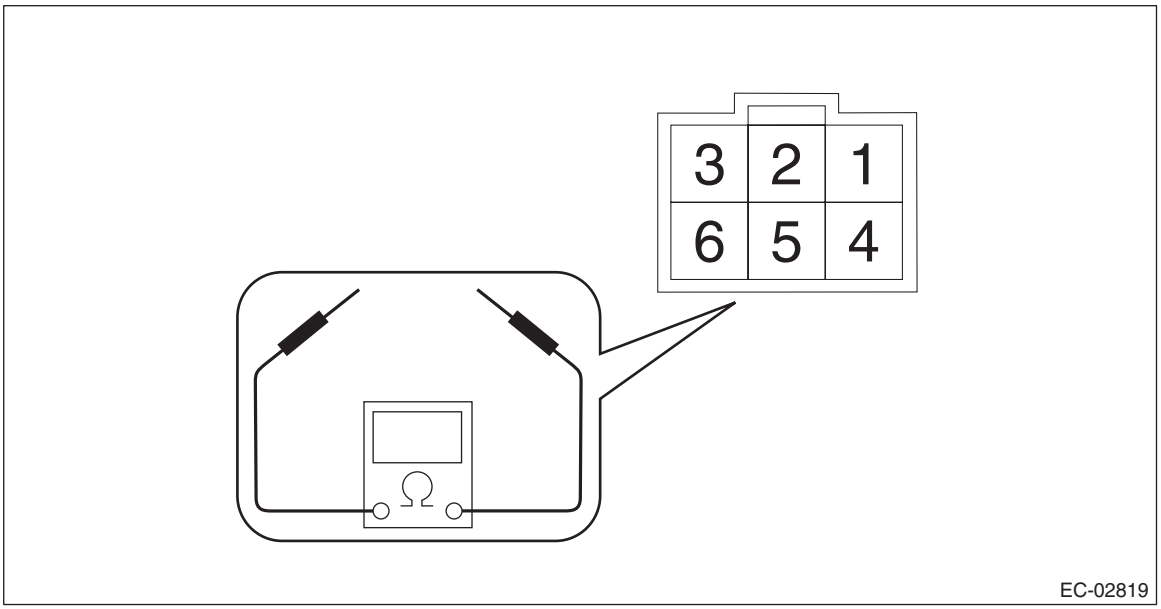

Terminal No.	Standard
2 and 1	22±2 Ω
2 and 3	22±2 Ω
5 and 4	22±2 Ω
5 and 6	22±2 Ω

7. EGR Pipe

A: REMOVAL

1) Remove the clip (A), and loosen the clamps (B) and (C) securing the air intake boot.

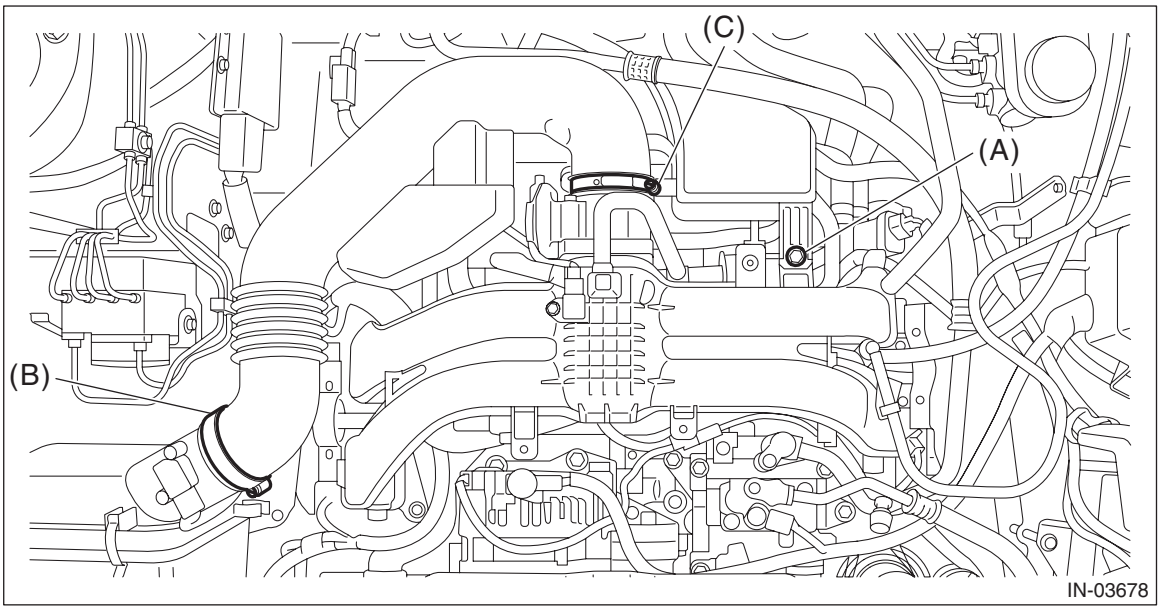

2) Remove the air intake boot from the air cleaner case (rear) and throttle body, and move it to the left side wheel apron.

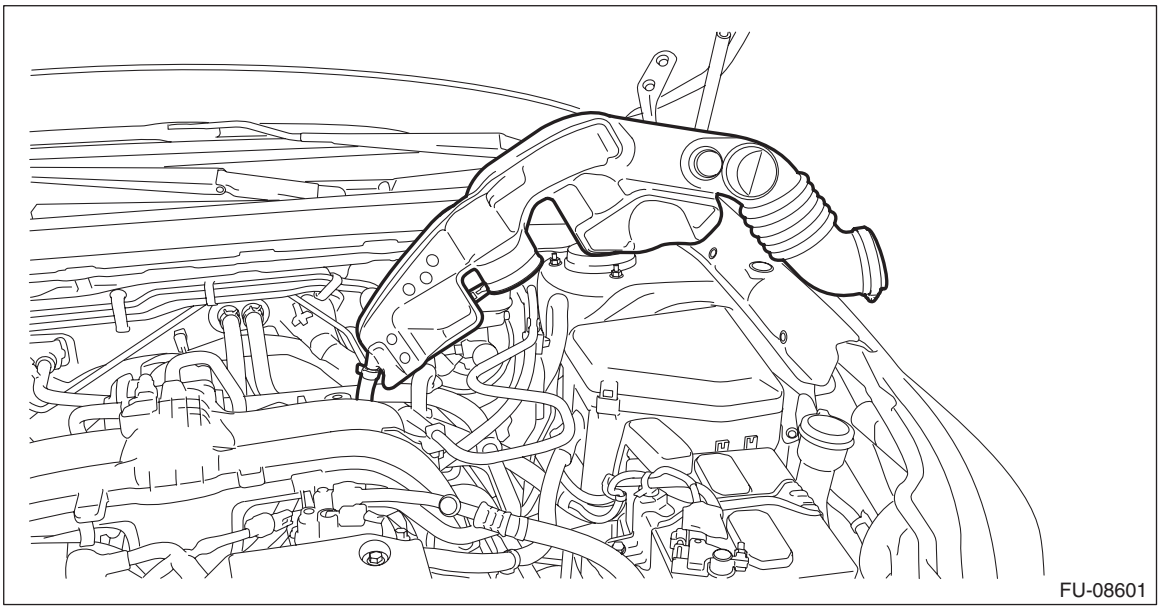

3) Remove the bolts securing the throttle body to the intake manifold assembly, and tilt the throttle body to the rear side of vehicle.

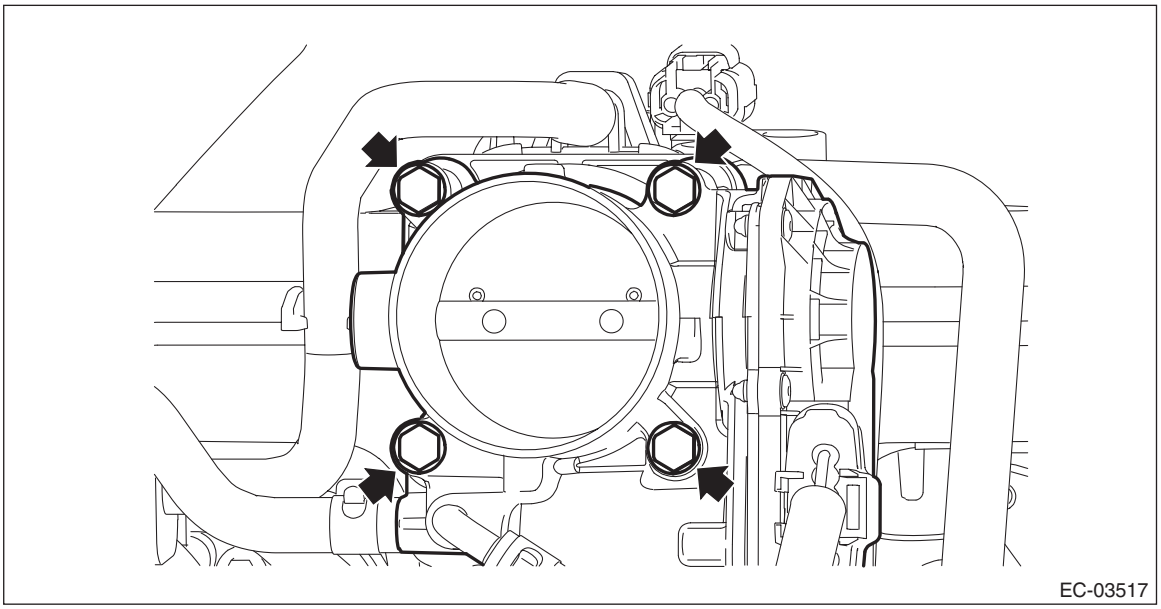

4) Remove the bolts securing the EGR pipe to the intake manifold assembly and EGR control valve, and remove the EGR pipe.

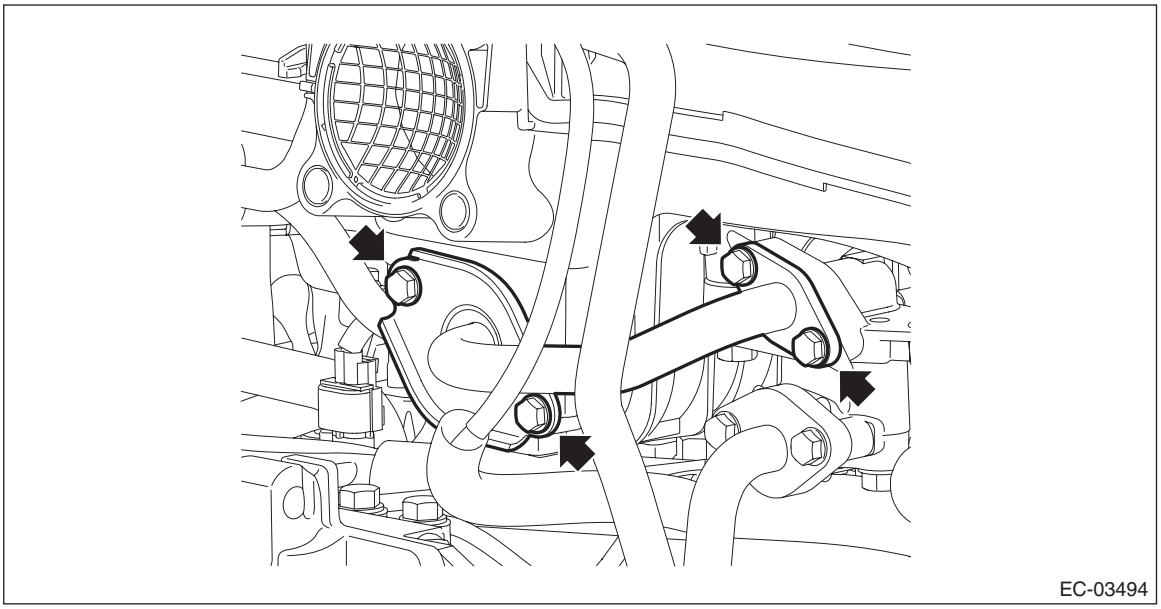

B: INSTALLATION

1) Install the EGR pipe to the intake manifold assembly and EGR control valve.

NOTE:
Use a new gasket.

Tightening torque:
6.4 N·m (0.7 kgf-m, 4.7 ft-lb)

2) Install the throttle body. <Ref. to FU(H4DO)-15, INSTALLATION, Throttle Body.>
3) Install the air intake boot. <Ref. to IN(H4DO)-10, INSTALLATION, Air Intake Boot.>

C: INSPECTION

Check that the EGR pipe has no deformation, cracks or other damages.

8. EGR Cooler

A: REMOVAL

1) Fully open the front hood. <Ref. to RC-22, FRONT HOOD DAMPER STAY, NOTE, Repair Contents.>
2) Remove the V-belt covers.

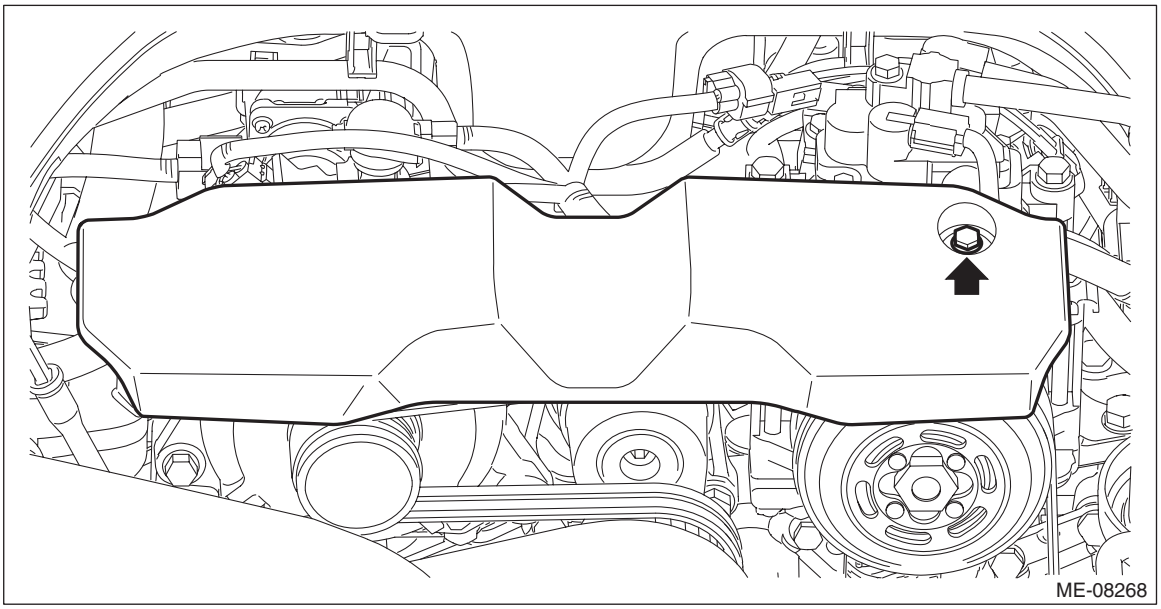

3) Remove the clip (A), and loosen the clamps (B) and (C) securing the air intake boot.

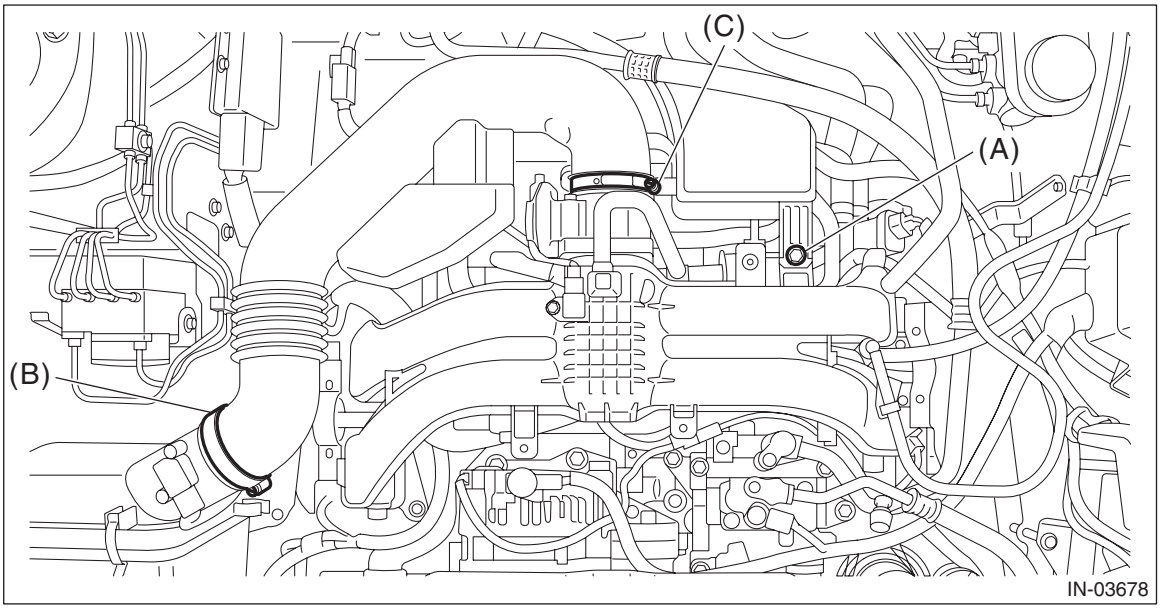

4) Remove the air intake boot from the air cleaner case (rear) and throttle body, and move it to the left side wheel apron.

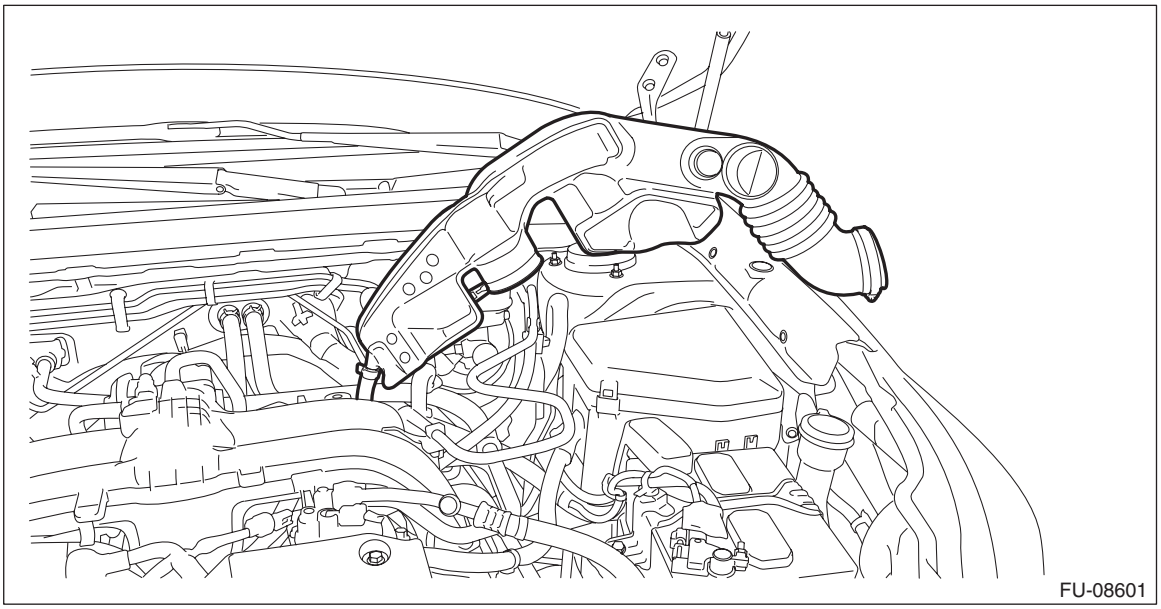
FU-08601

5) Lift up the vehicle.
6) Remove the center exhaust pipe. <Ref. to EX(H4DO)-12, REMOVAL, Center Exhaust Pipe.>
7) Drain engine coolant. <Ref. to CO(H4DO)-15, DRAINING OF ENGINE COOLANT, REPLACEMENT, Engine Coolant.>
8) Disconnect the engine coolant hose from the water pipe RH.

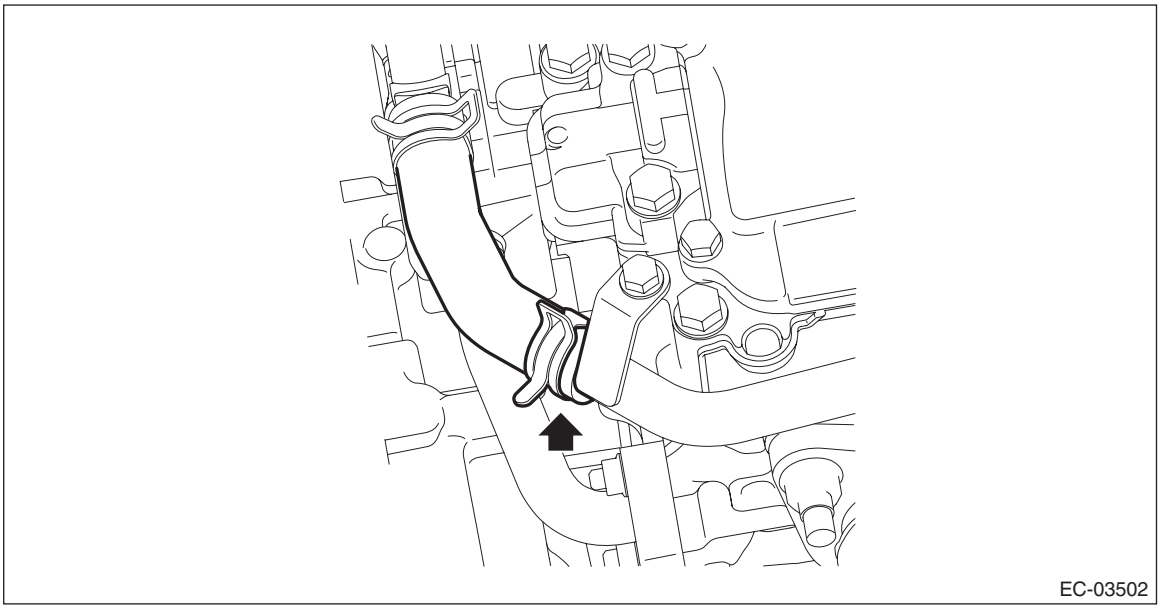
EC-03502

9) Lower the vehicle.

10) Disconnect the engine coolant hose (A) and engine coolant hose (B) from the EGR cooler. (CVT model)

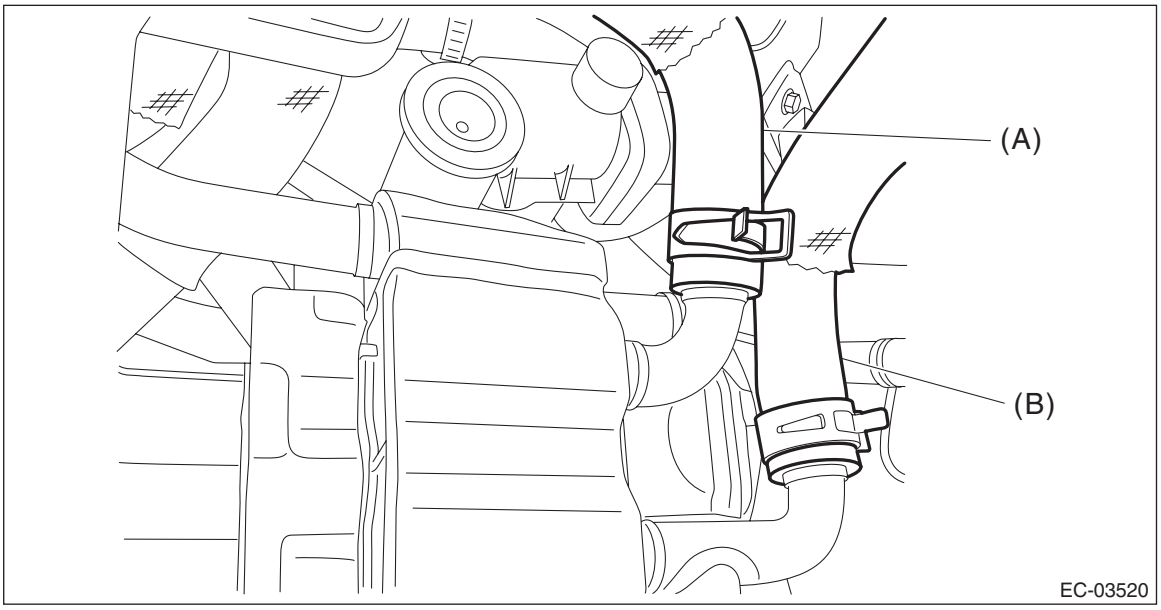

11) Disconnect the engine coolant hose from the EGR cooler. (MT model)

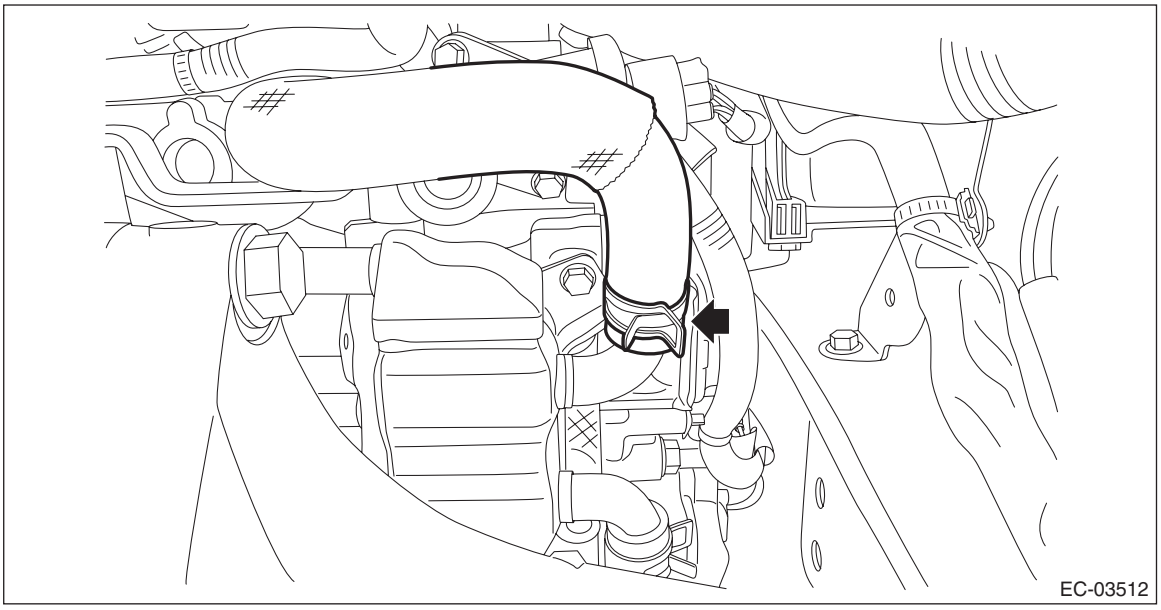

12) Remove the bolts securing the EGR cooler to the EGR control valve and the cylinder head RH.

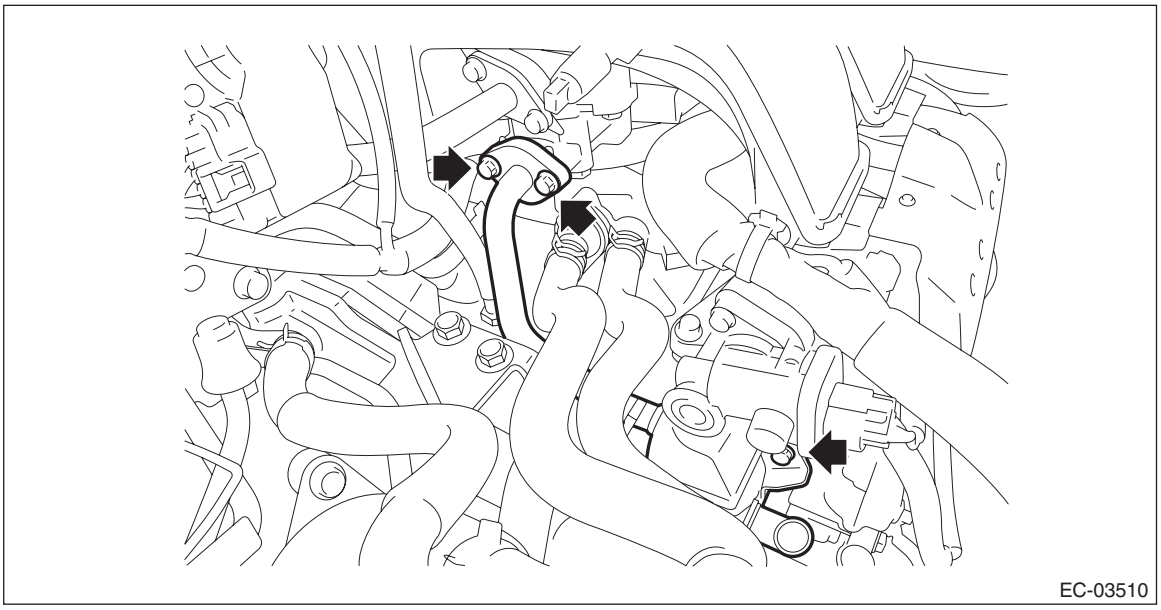

13) Using the ST1, install the ST2 to the engine unit.
ST1 18363AA050 BOLT
ST2 18360AA040 HANGER

Tightening torque:
43 N·m (4.4 kgf-m, 31.7 ft-lb)

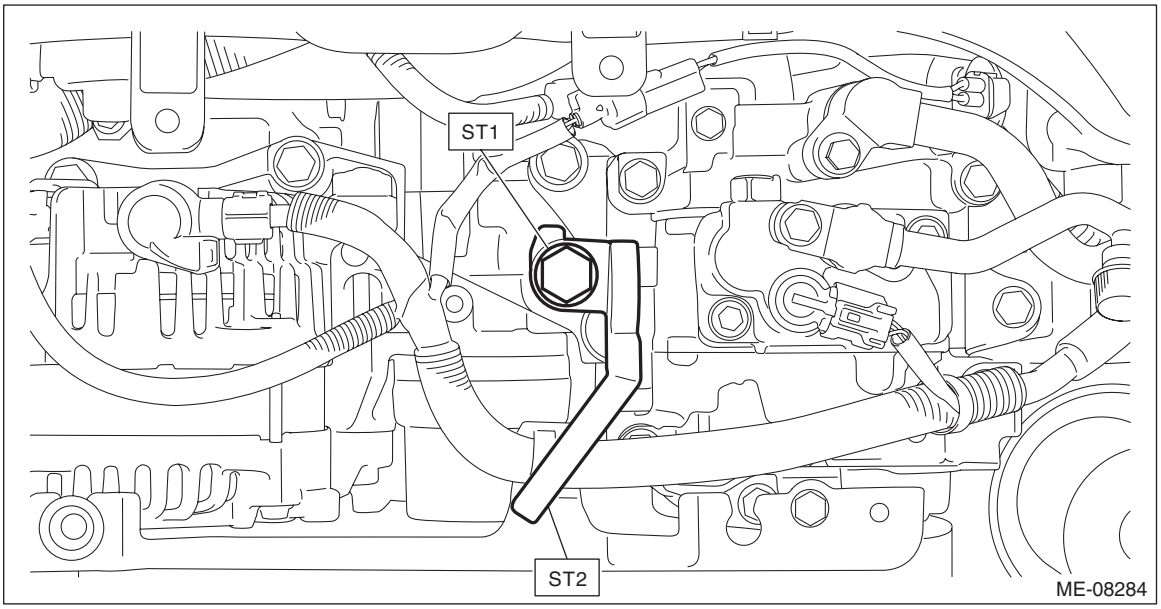

14) Support the engine with a lifting device and wire ropes.

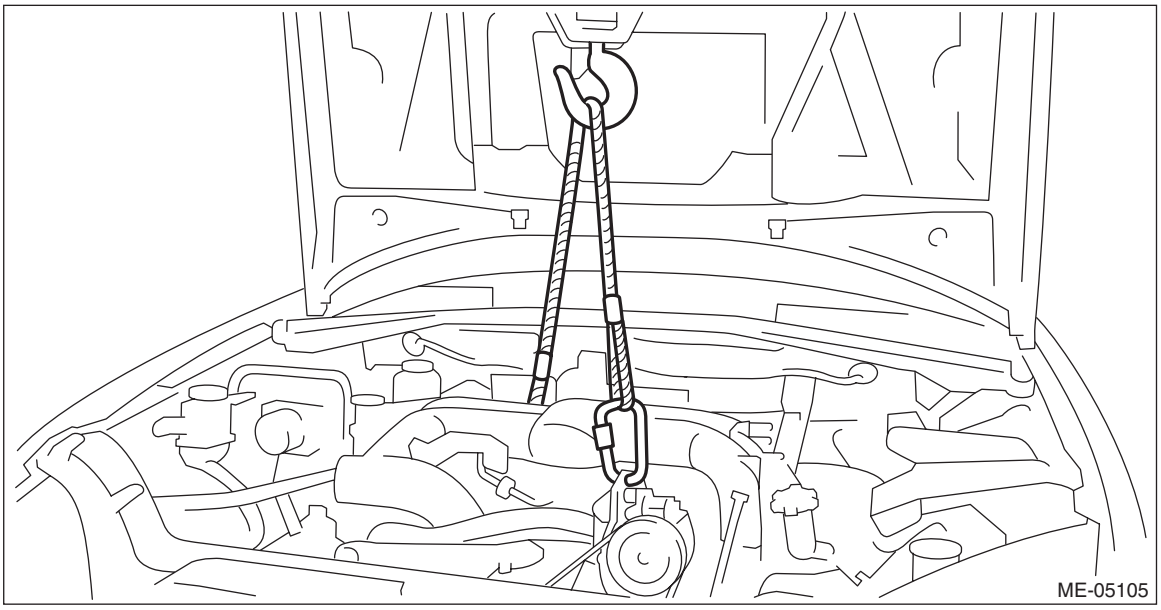

15) Remove the transmission mounting bracket RH.

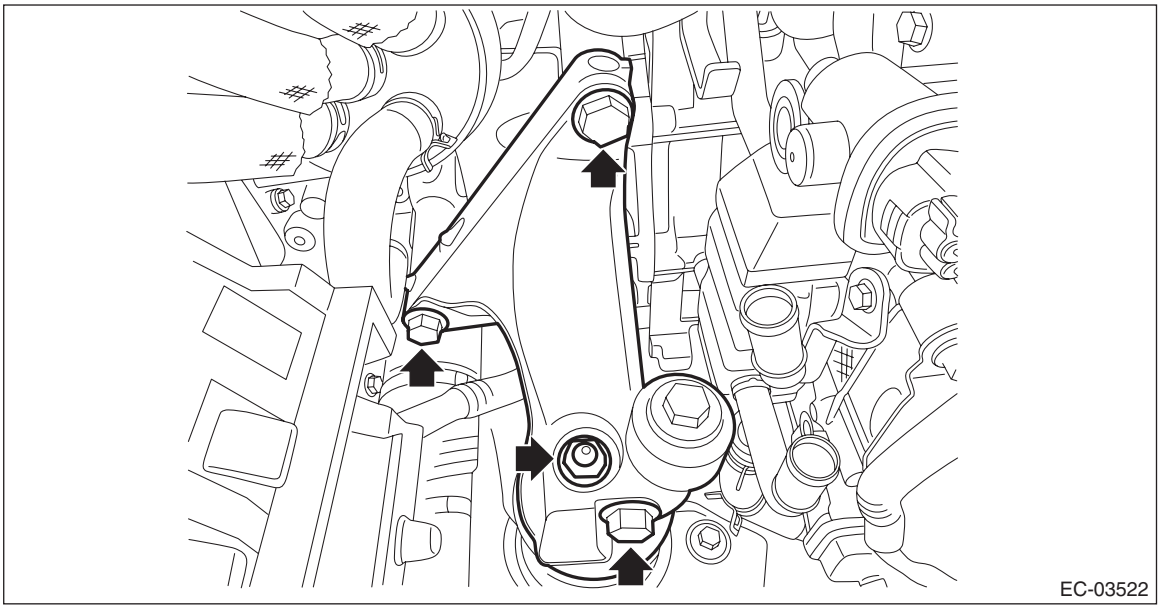

16) Remove the nuts from transmission mounting bracket LH.

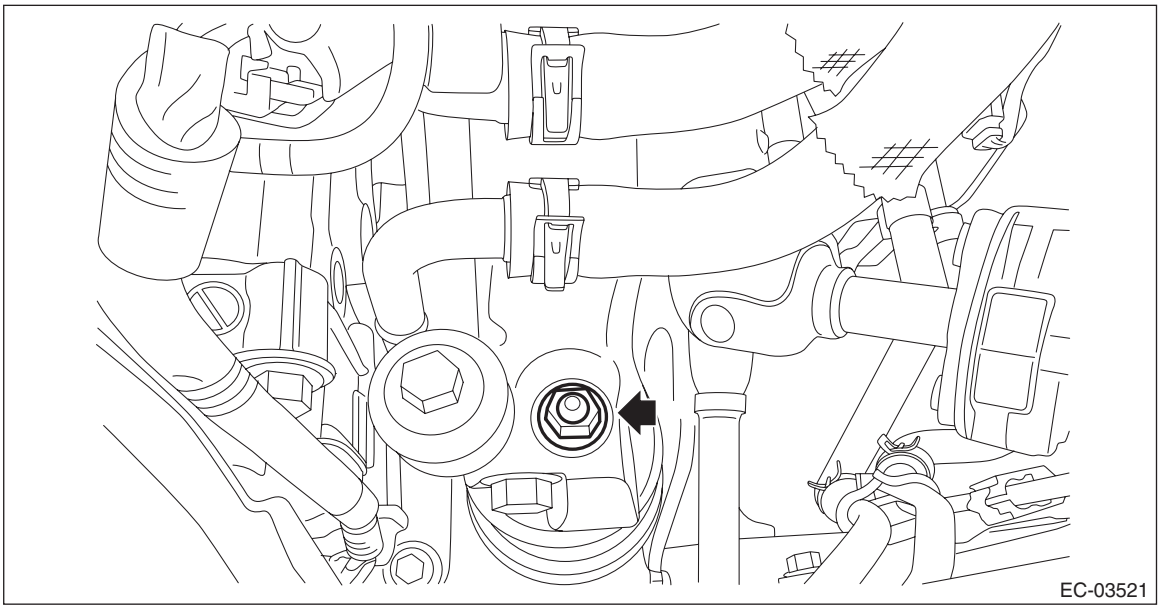

17) Remove the front cushion rubber from the front mounting bracket and engine mounting bracket.

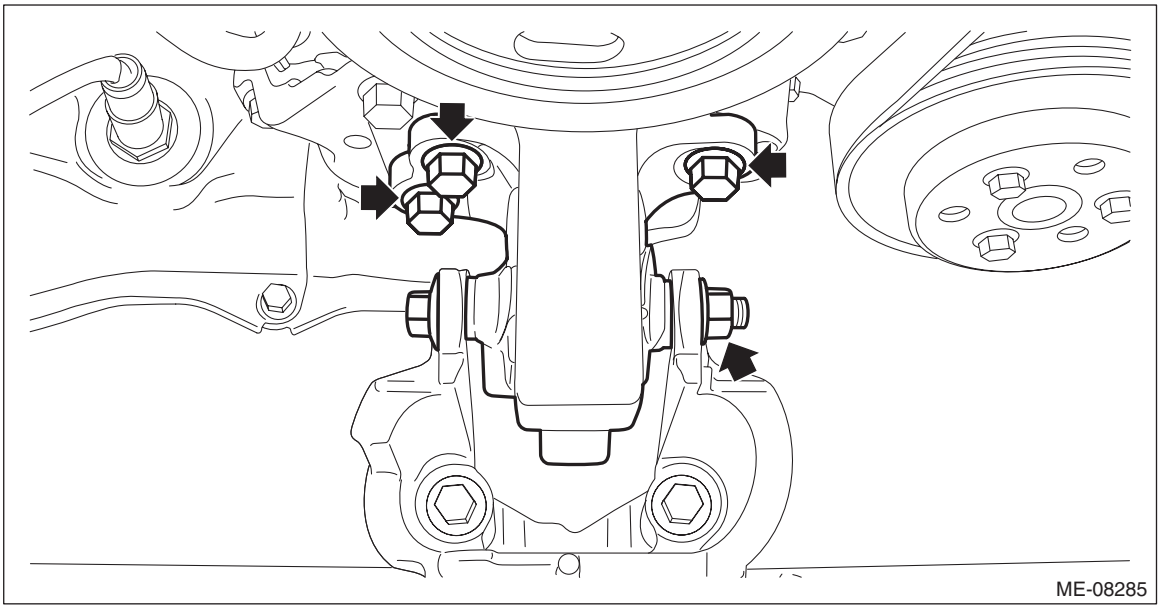

18) Temporarily attach ST by using two bolts.
ST 41099AJ130 SPECIAL TOOL FB

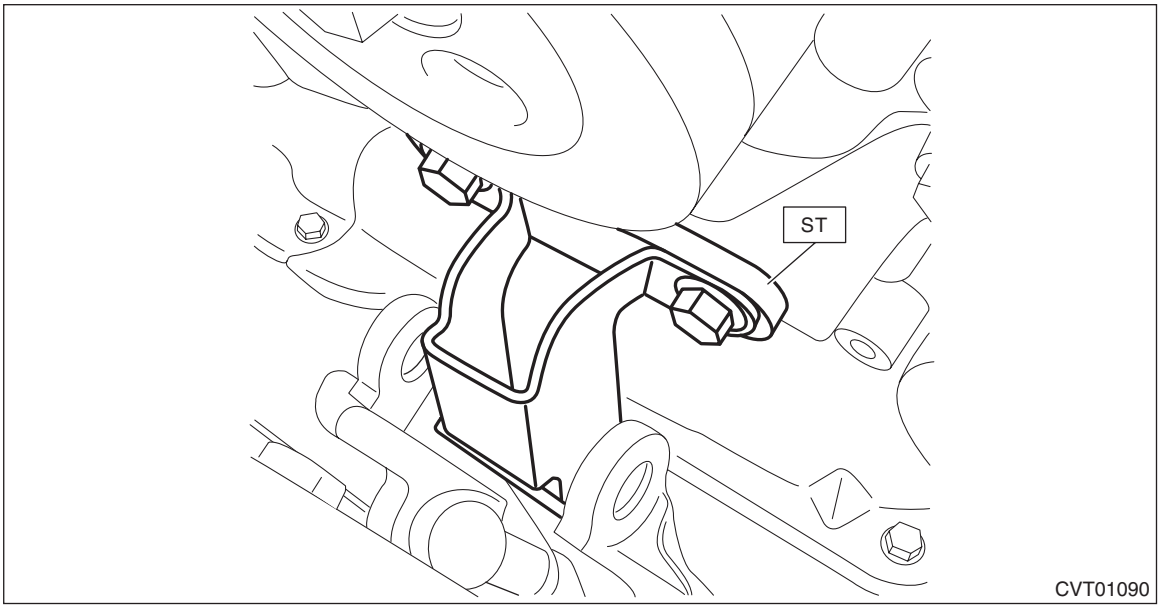

19) Lift up the engine unit high enough to install the bolt and nut.

CAUTION:
Do not lift up higher than enough level to install the ST to avoid damage to the hoses and pipes inside the engine room.

NOTE:
If it is difficult to pull out the stud bolt from transmission mounting bracket, slightly shake the engine unit while lifting up.

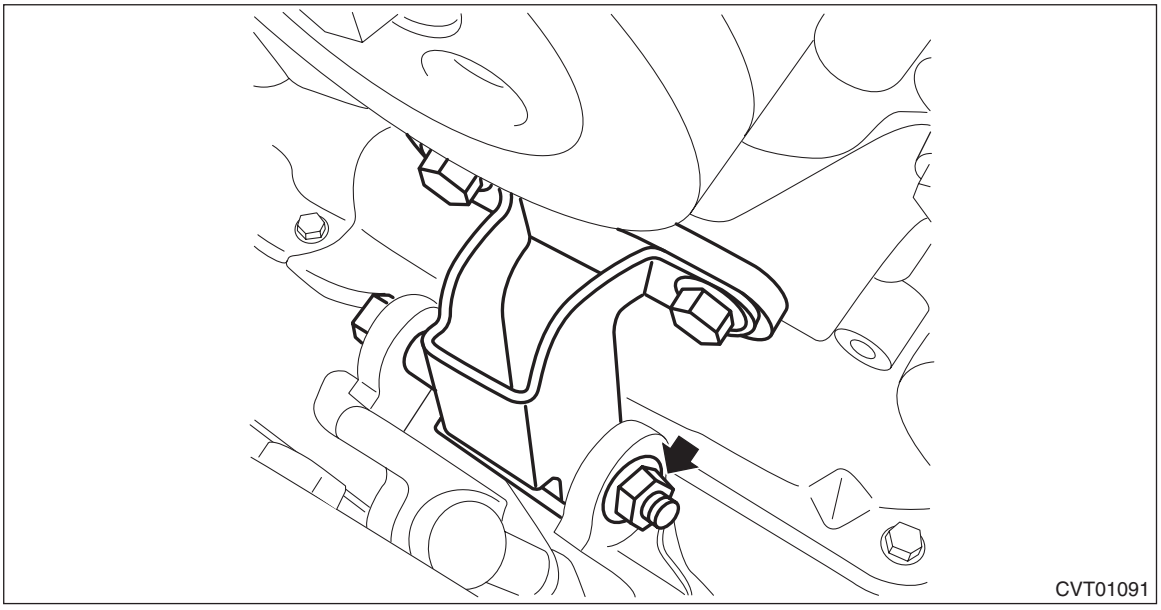

20) Tighten the mounting bolts on the engine side.

Tightening torque:
25 N·m (2.5 kgf-m, 18.4 ft-lb)

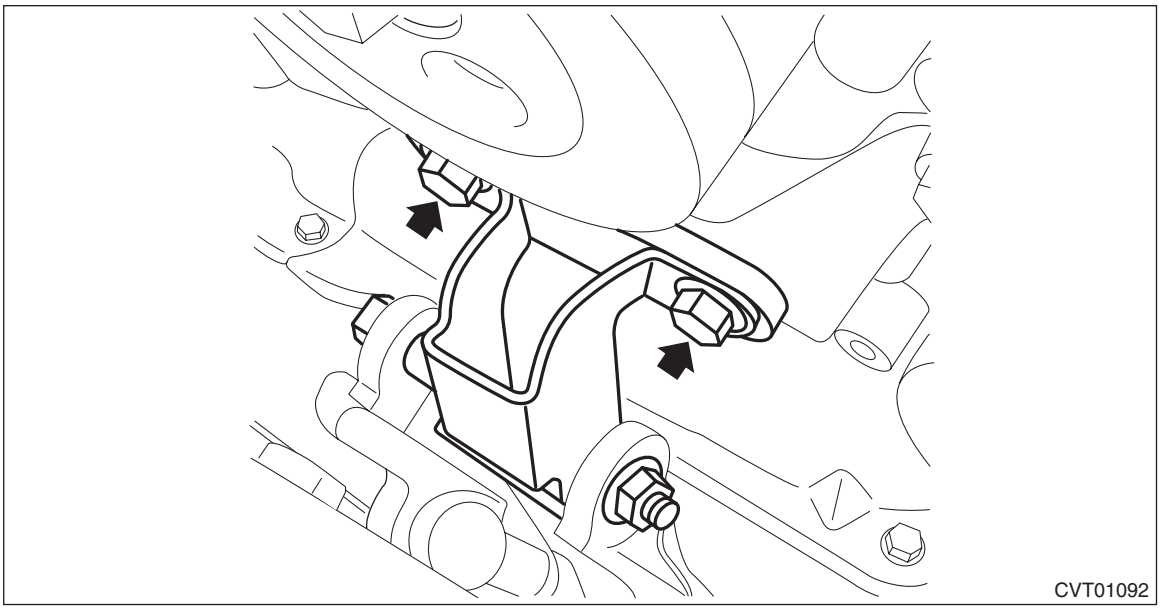

21) Remove the lifting device and wire ropes.

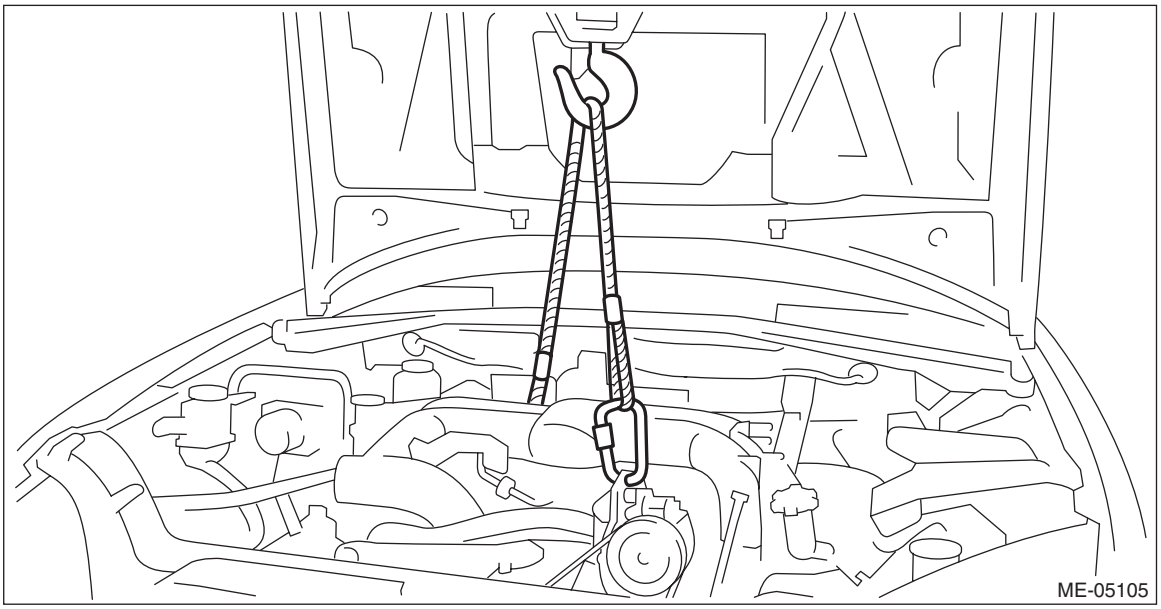

22) Remove the engine rear hanger.

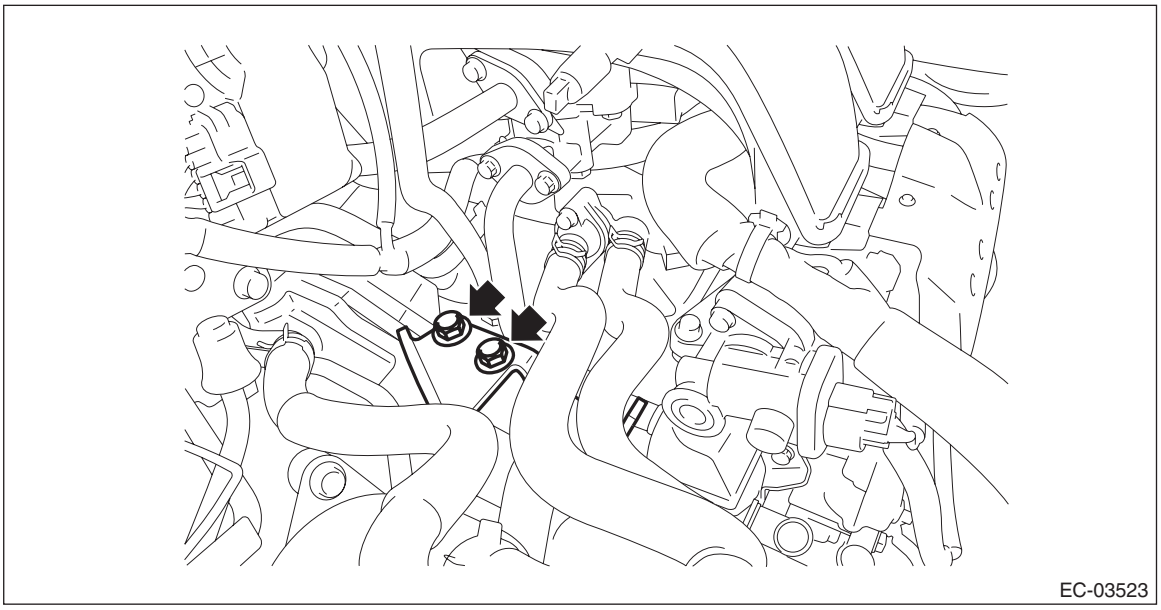

23) Remove the nuts securing the EGR cooler to the cylinder head RH, and remove the EGR cooler.

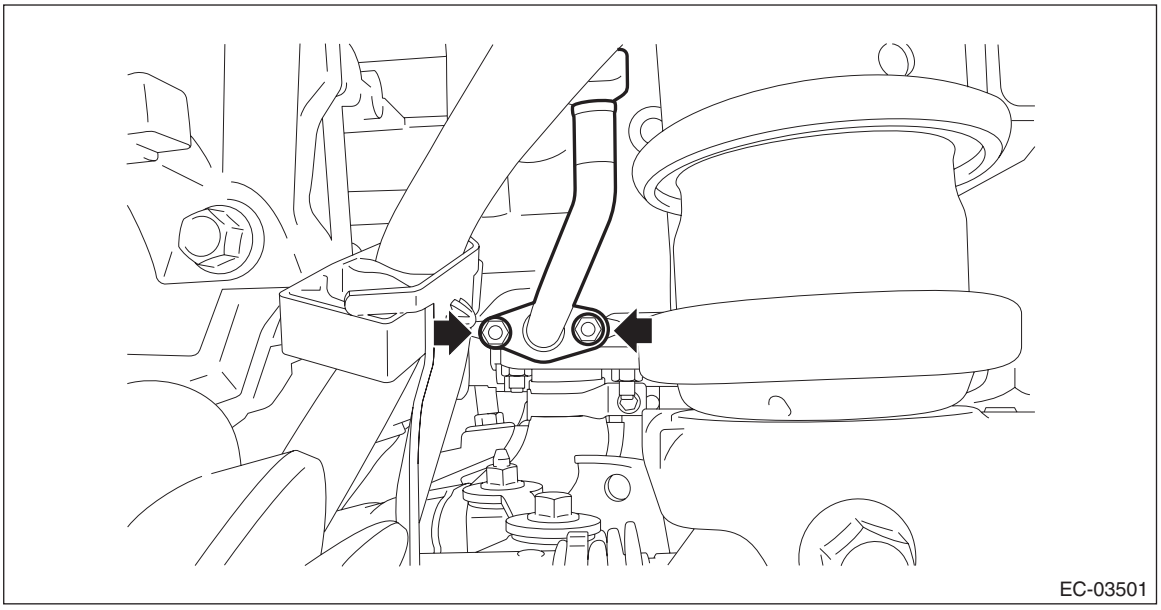

24) Remove the gasket (A) from the stud bolt.

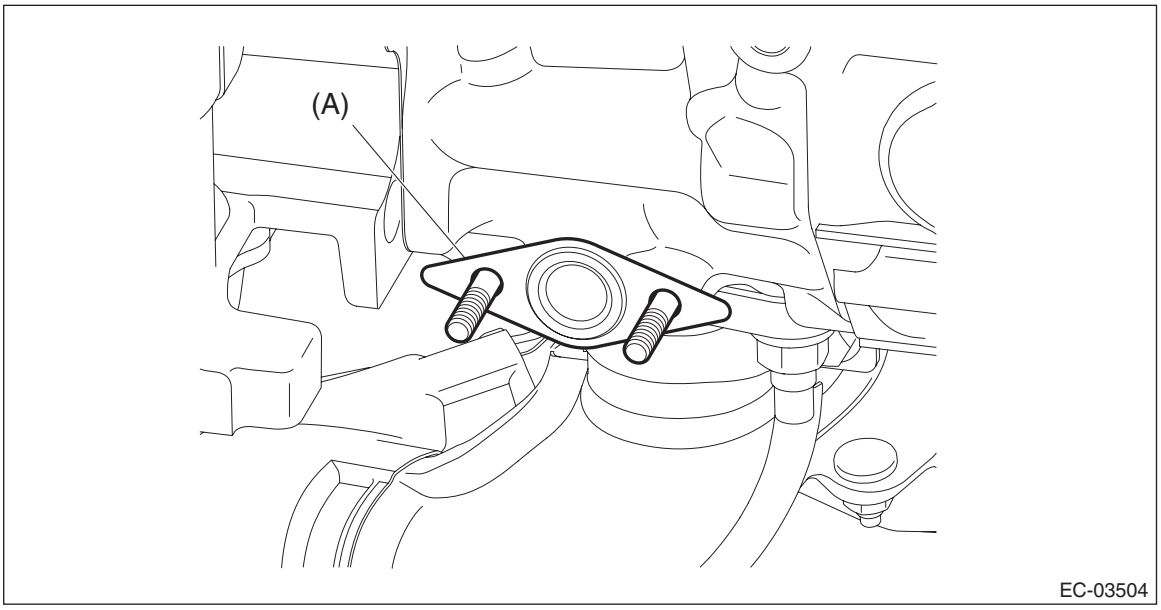

25) Remove the engine coolant hose from EGR cooler.

- CVT model

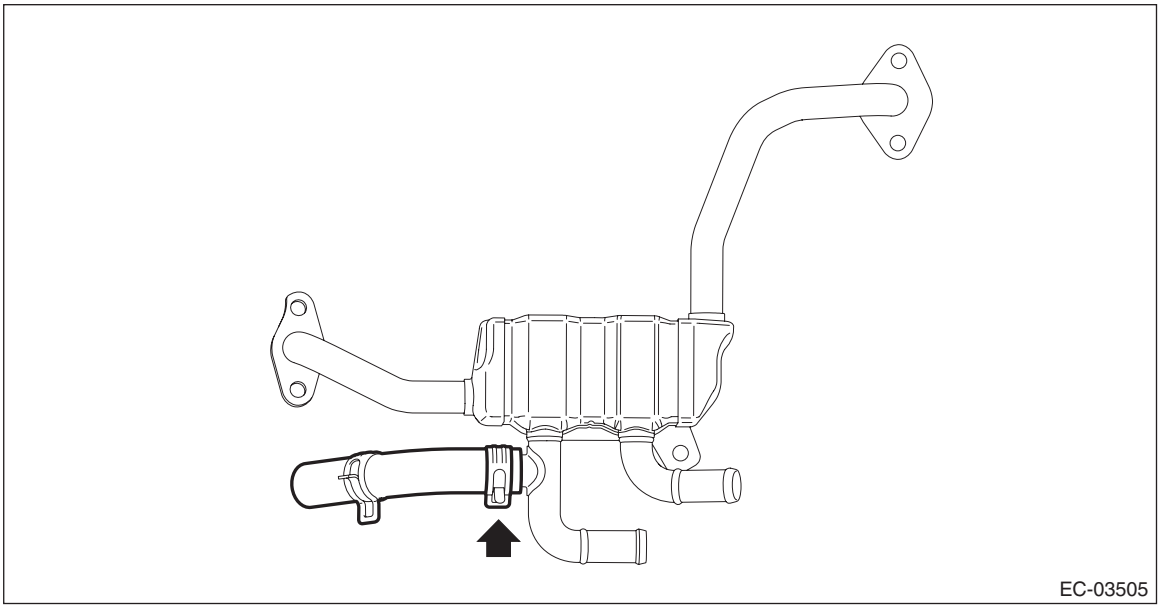

- MT model

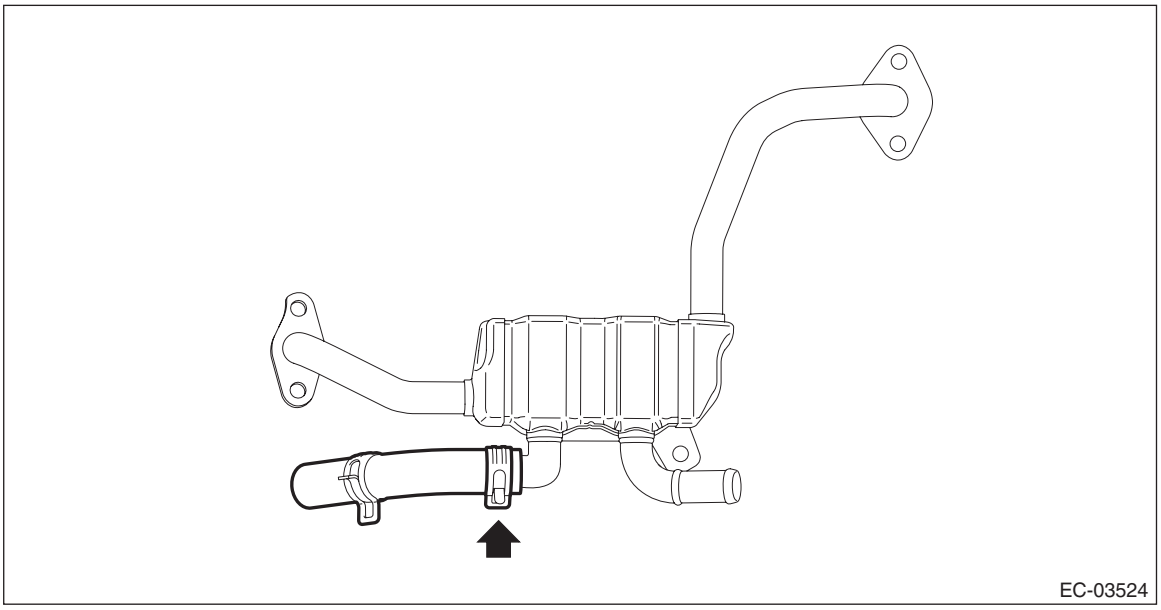

B: INSTALLATION

1) Install the engine coolant hose to the EGR cooler.

- CVT model

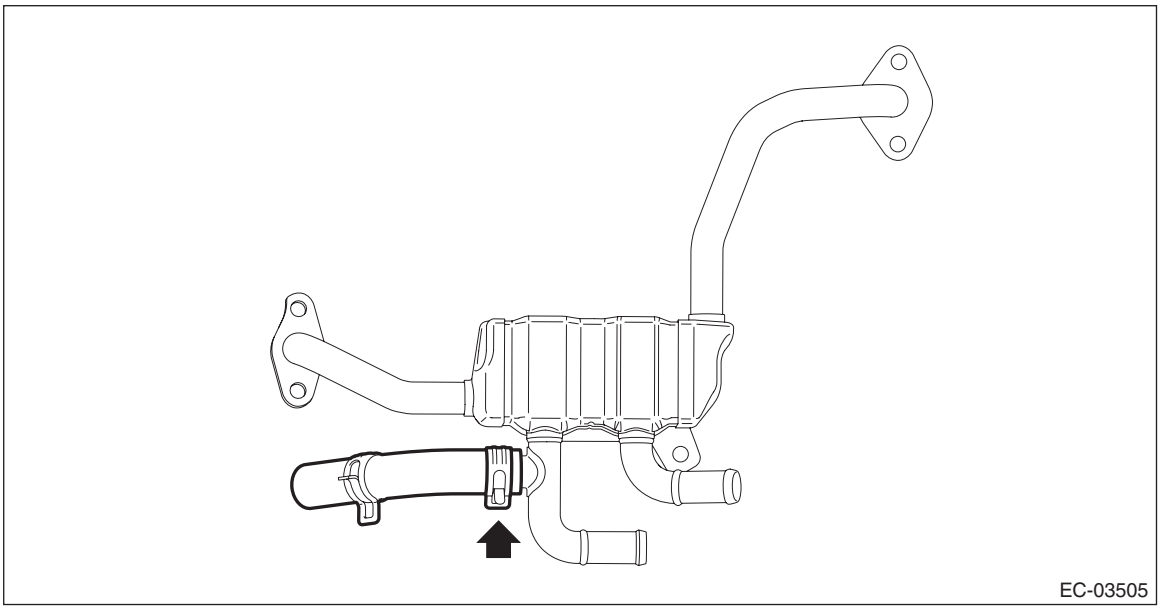

- MT model

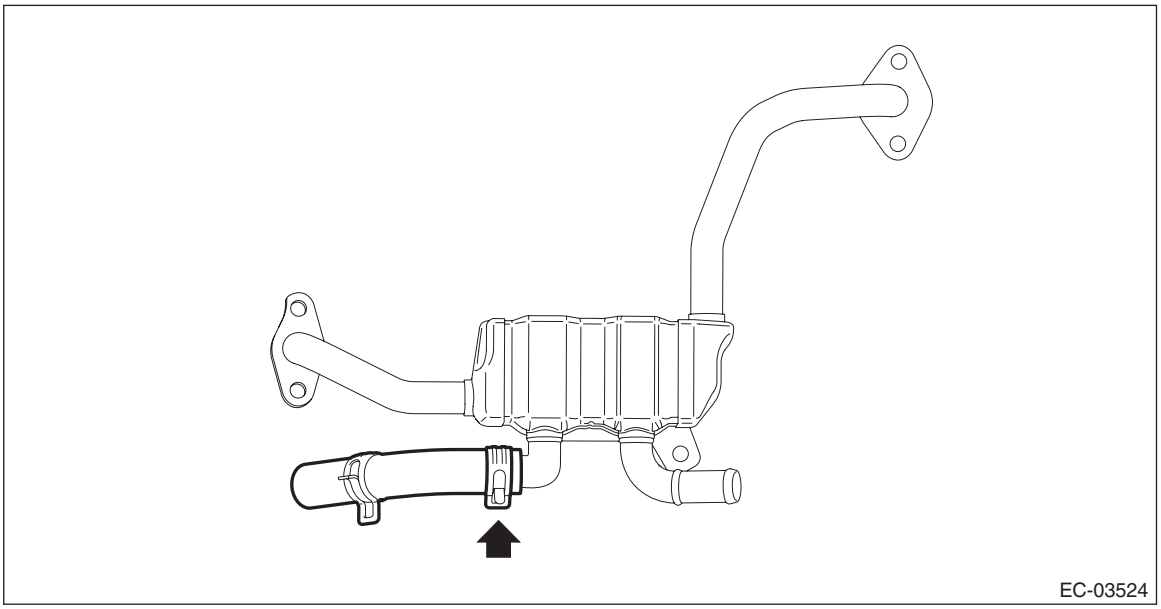

2) Install the gasket (A) to the stud bolt.

NOTE:
Use a new gasket.

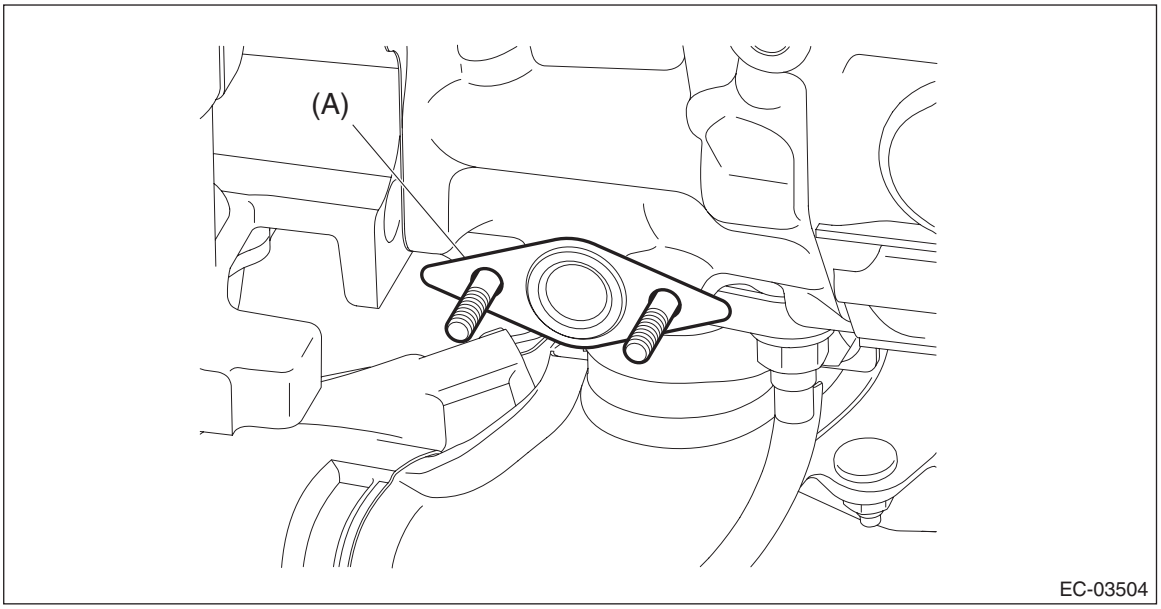

3) Set the EGR cooler, and temporarily tighten the bolts securing the EGR cooler to the EGR control valve and cylinder head RH.

NOTE:
Use a new gasket.

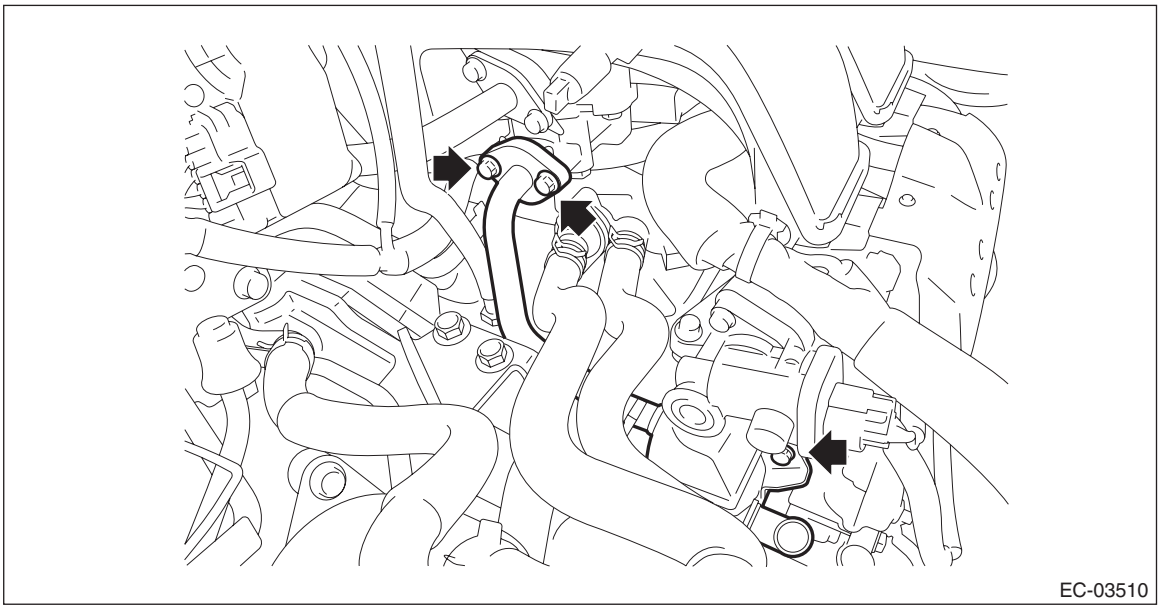

4) Install the engine rear hanger.

Tightening torque:
21 N·m (2.1 kgf-m, 15.5 ft-lb)

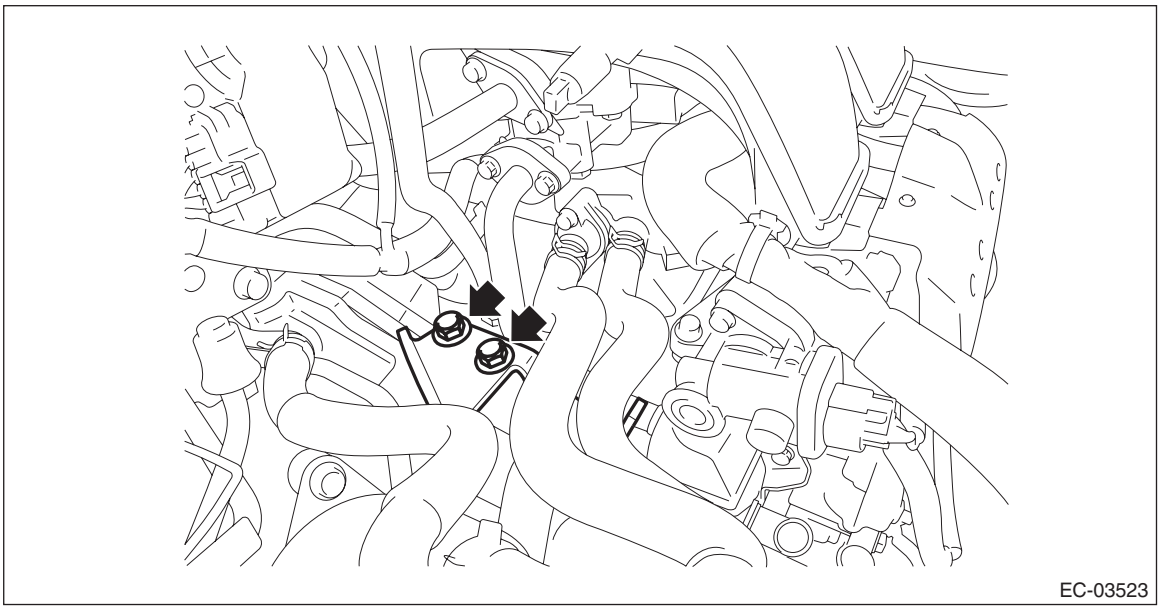

5) Install the nuts securing the EGR cooler to the cylinder head RH.

Tightening torque:
9 N·m (0.9 kgf-m, 6.6 ft-lb)

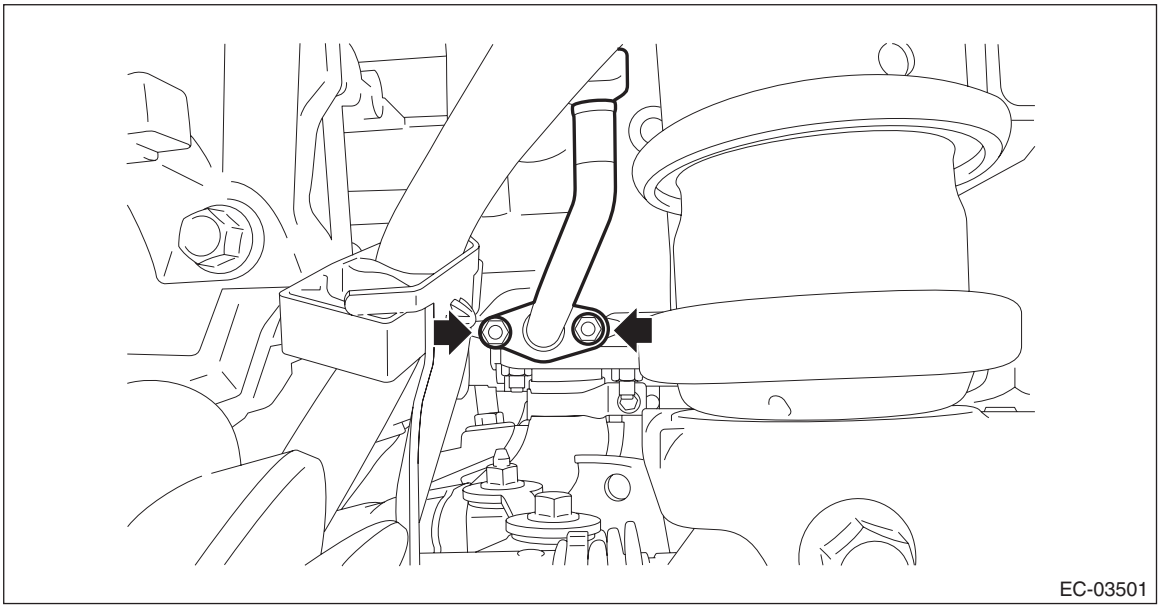

6) Tighten the bolt securing the EGR cooler to the EGR control valve.

Tightening torque:
T1: 9 N·m (0.9 kgf-m, 6.6 ft-lb)

7) Tighten the bolts holding the EGR cooler to the cylinder head RH.

Tightening torque:
T2: 6.4 N·m (0.7 kgf-m, 4.7 ft-lb)

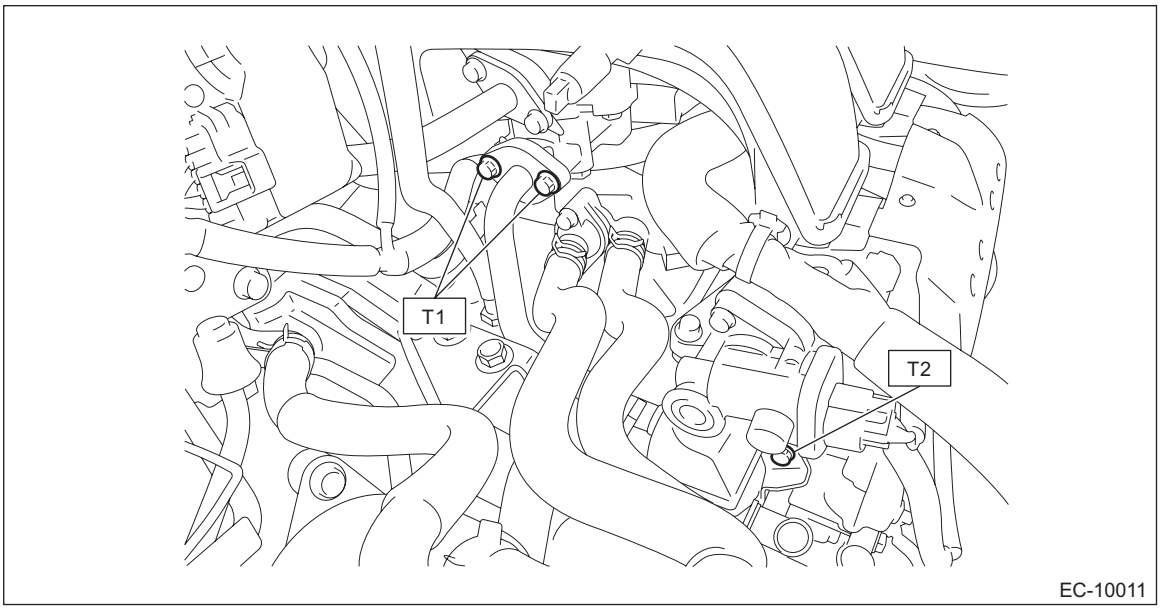

8) Support the engine with a lifting device and wire ropes.

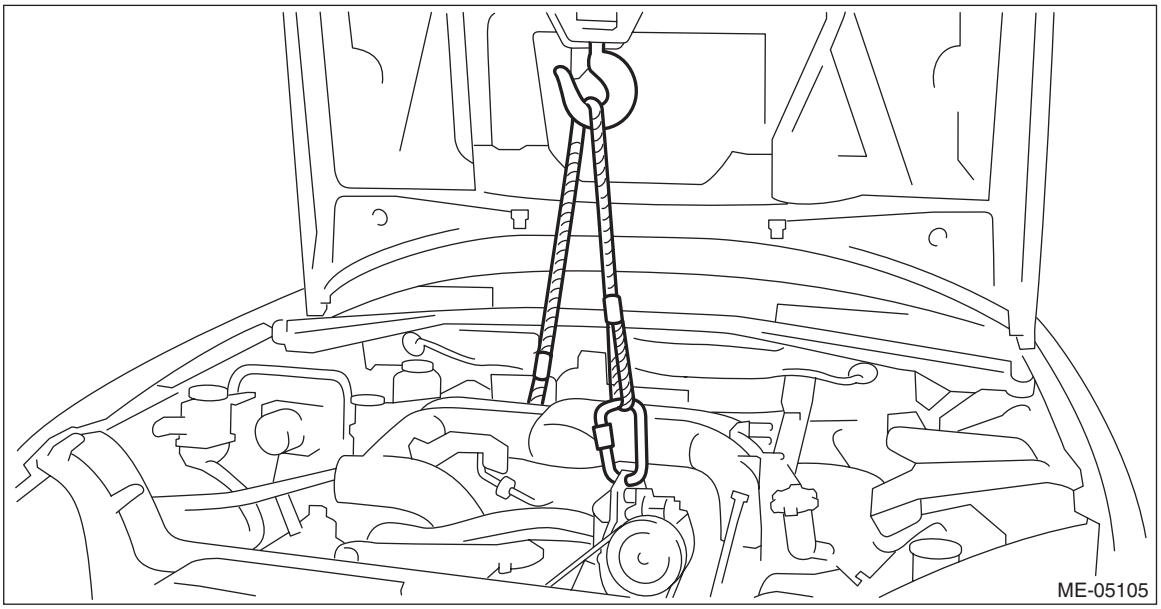

9) Remove the bolt from the ST.

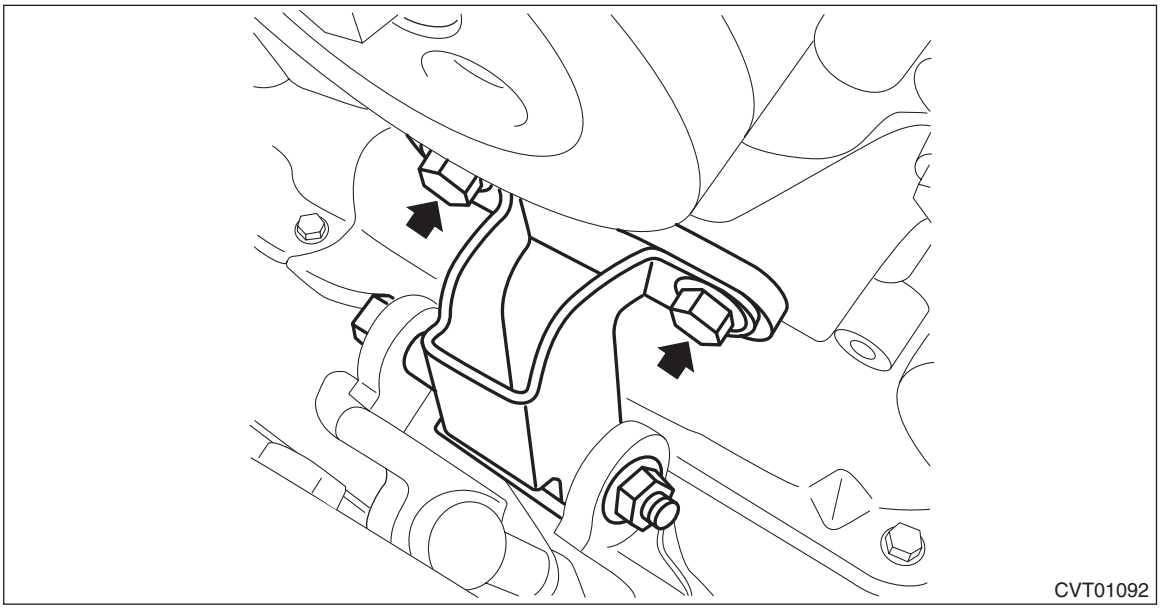

10) Remove the bolt and nut to remove ST.

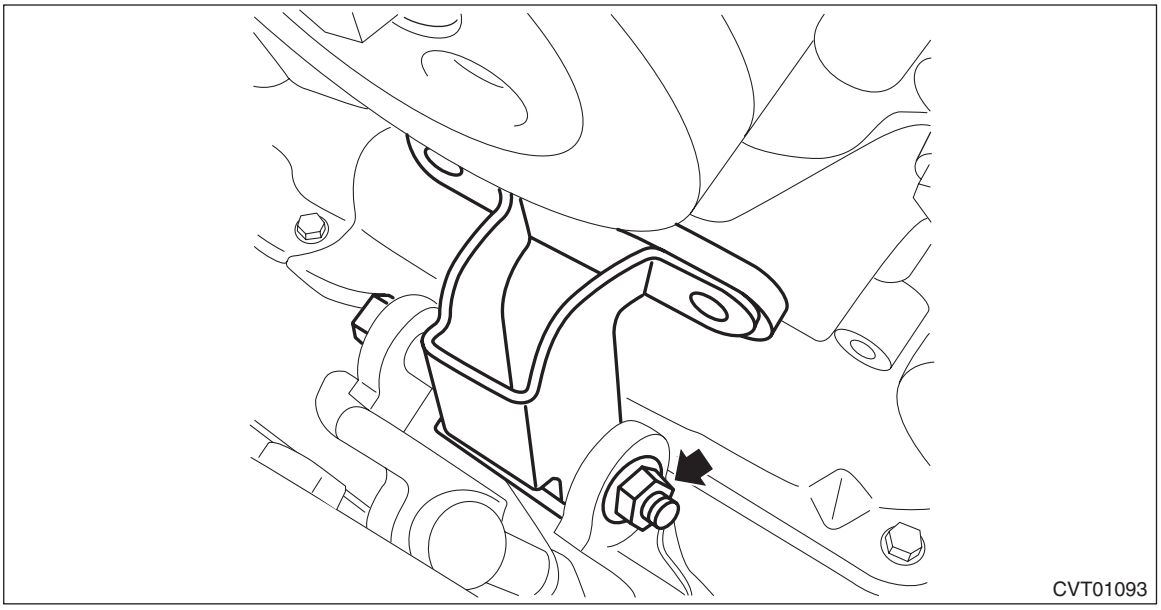

11) Install the front cushion rubber to the front mounting bracket and engine mounting bracket.

Tightening torque:
T1: 25 N·m (2.5 kgf-m, 18.4 ft-lb)
T2: 45 N·m (4.6 kgf-m, 33.2 ft-lb)

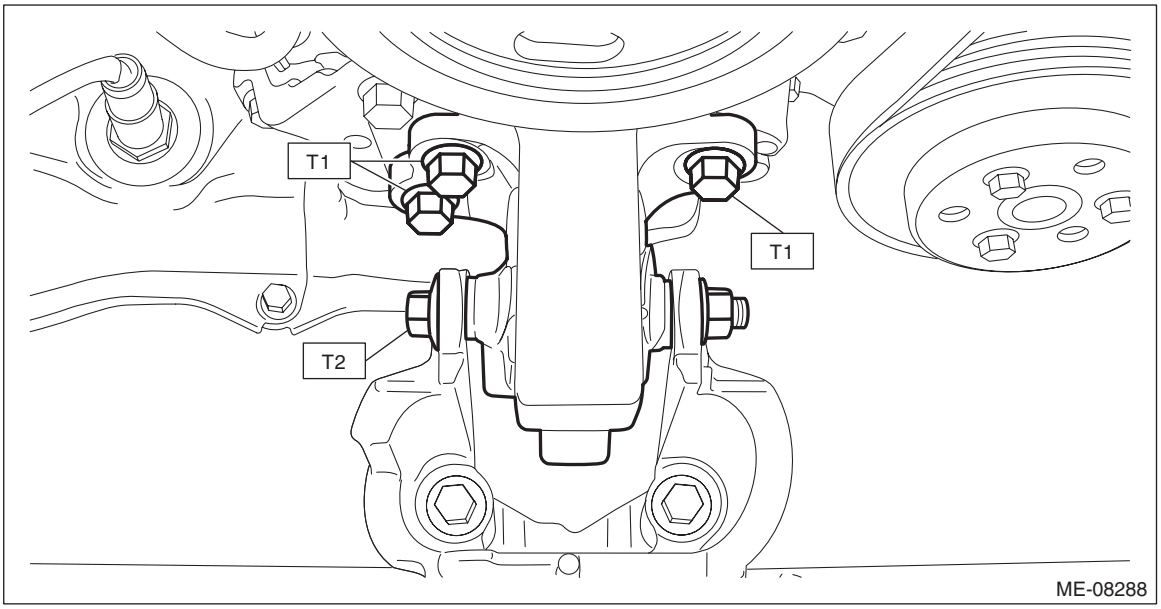

12) Install the nut to the transmission mounting bracket LH.

Tightening torque:
45 N·m (4.6 kgf-m, 33.2 ft-lb)

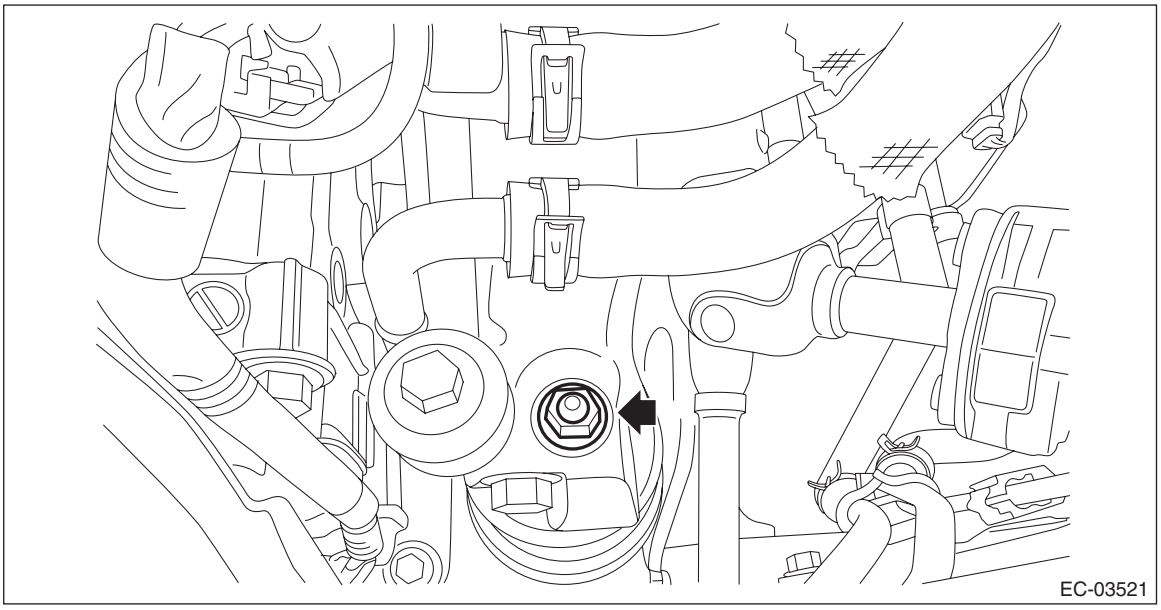

13) Install the transmission mounting bracket RH.

Tightening torque:
T1: 45 N·m (4.6 kgf-m, 33.2 ft-lb)
T2: 75 N·m (7.6 kgf-m, 55.3 ft-lb)

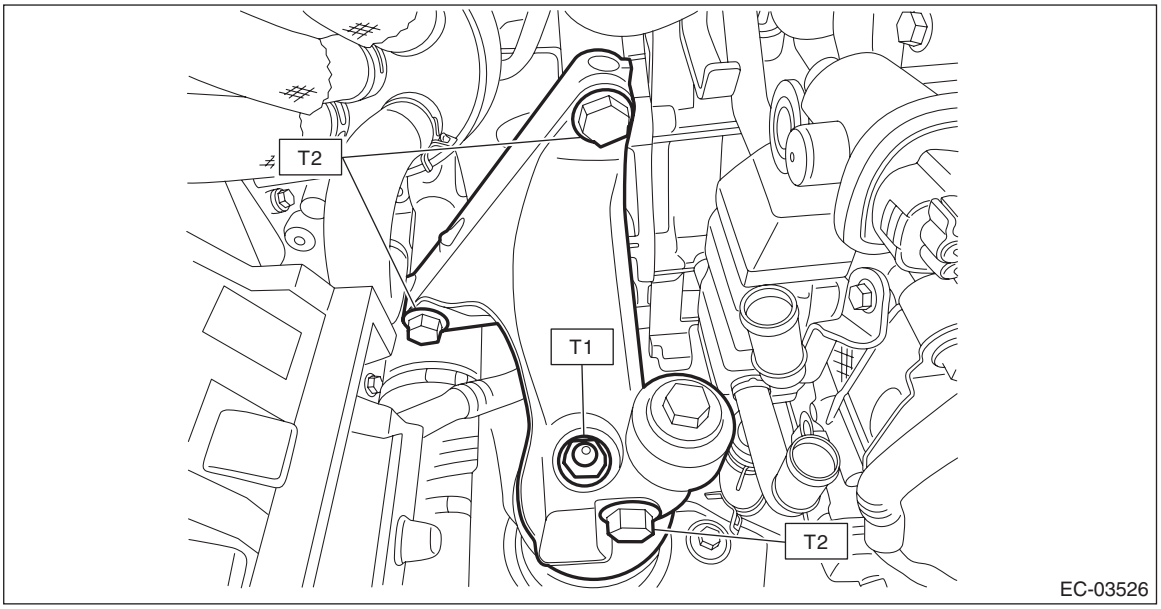

14) Remove the lifting device and wire ropes.

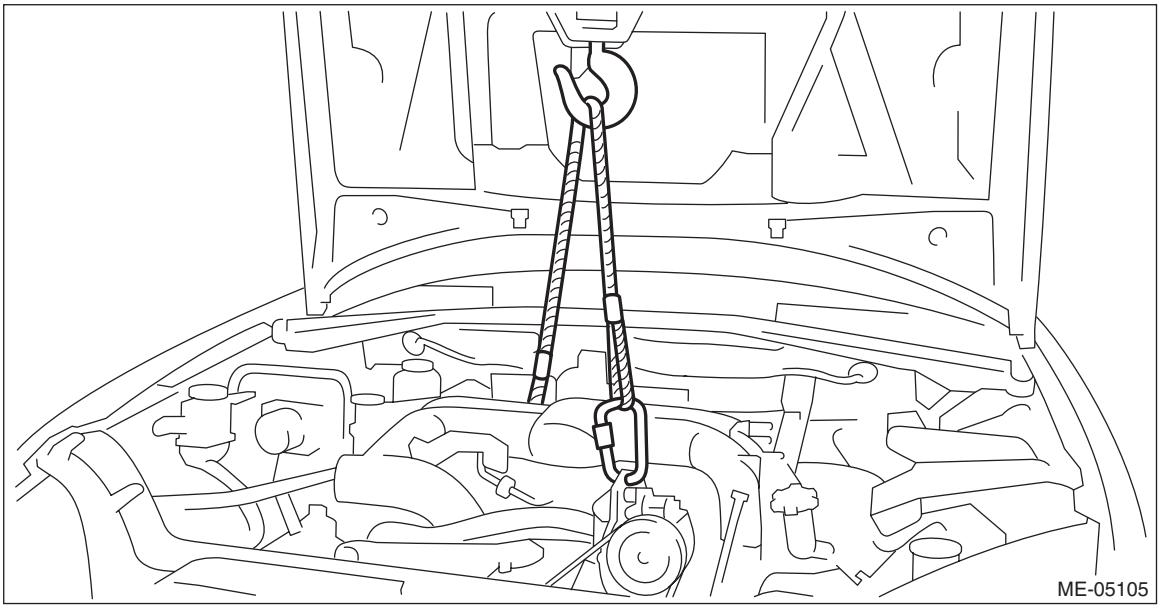

15) Remove the ST1 and ST2 from the engine unit.
ST1 18363AA050 BOLT
ST2 18360AA040 HANGER

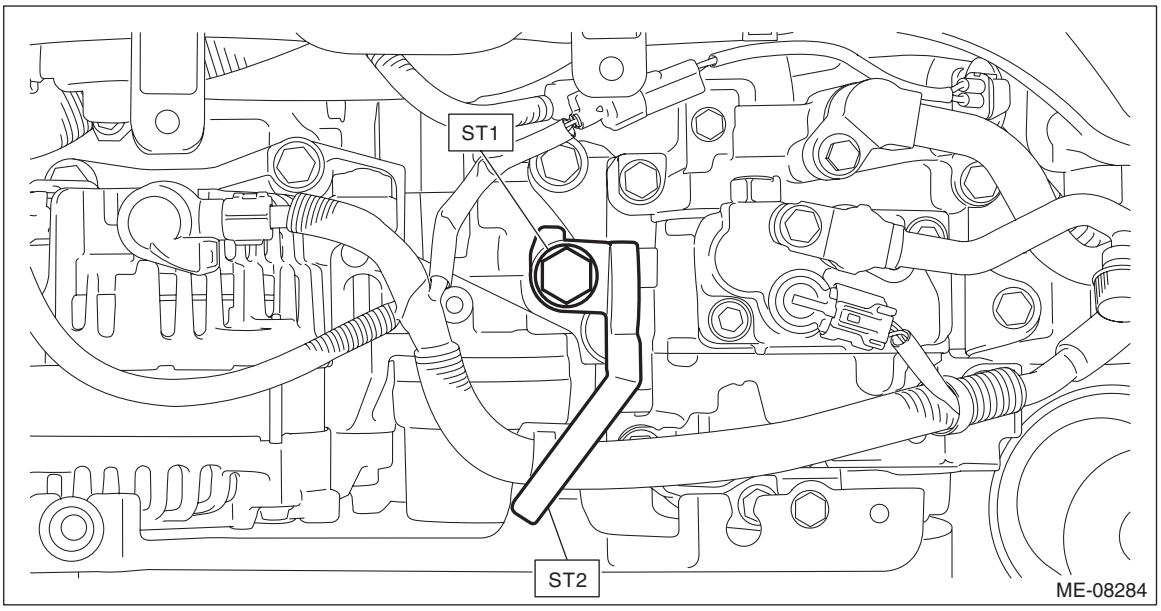

16) Connect the engine coolant hose (A) and engine coolant hose (B) to the EGR cooler. (CVT model)

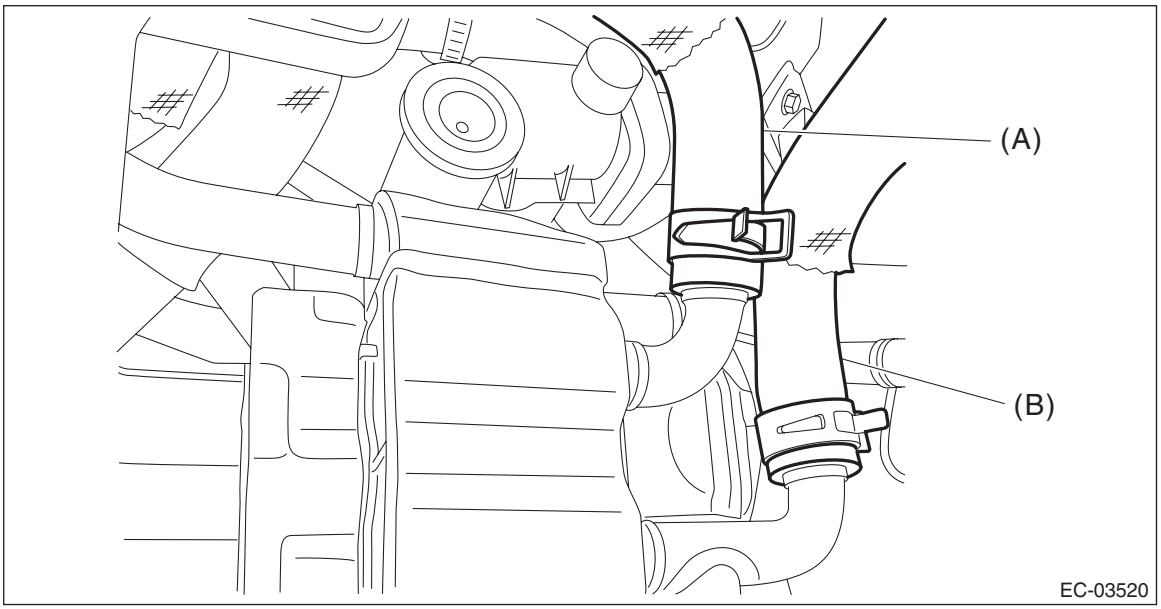

17) Connect the engine coolant hose to the EGR cooler. (MT model)

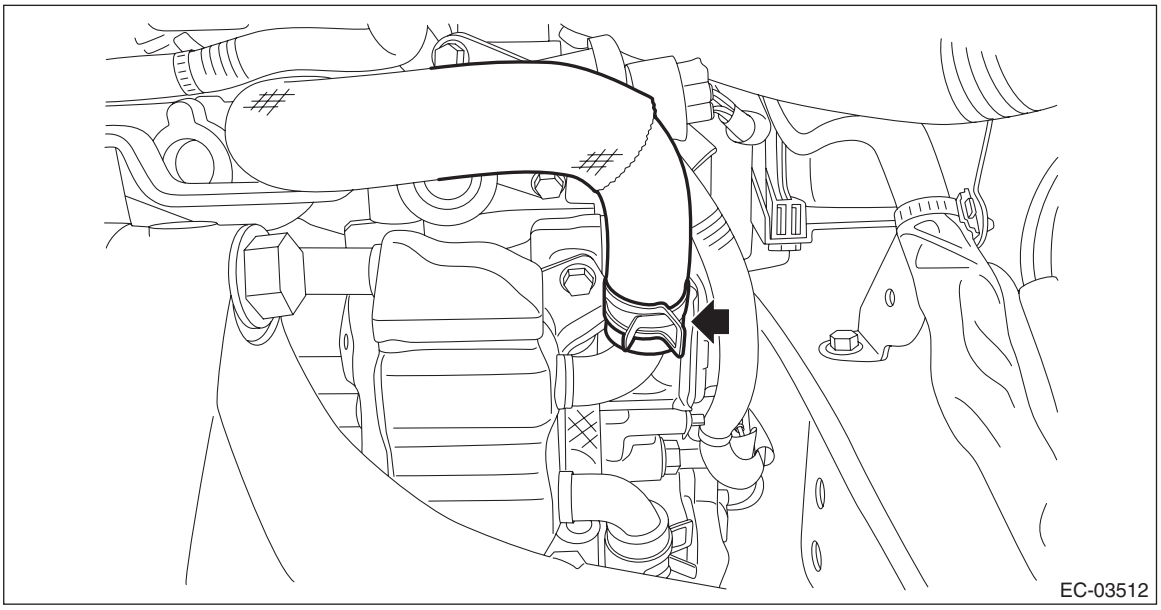

18) Lift up the vehicle.
19) Connect the engine coolant hose to the water pipe RH.

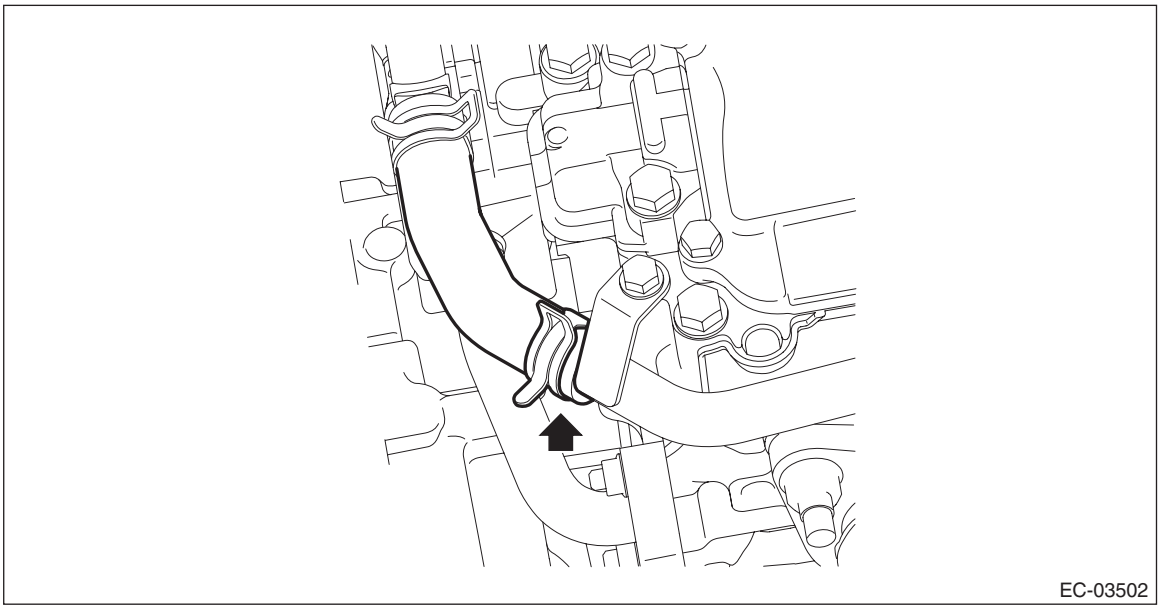

20) Install the center exhaust pipe. <Ref. to EX(H4DO)-13, INSTALLATION, Center Exhaust Pipe.>
21) Lower the vehicle.
22) Install the air intake boot. <Ref. to IN(H4DO)-10, INSTALLATION, Air Intake Boot.>
23) Install the V-belt cover.

Tightening torque:
6.5 N·m (0.7 kgf-m, 4.8 ft-lb)

24) Fill engine coolant. <Ref. to CO(H4DO)-16, FILLING OF ENGINE COOLANT, REPLACEMENT, Engine Coolant.>
25) Set the front hood to the normal position. <Ref. to RC-22, FRONT HOOD DAMPER STAY, NOTE, Repair Contents.>
26) Close the front hood.

C: INSPECTION

Check that the EGR cooler has no deformation, cracks or other damages.

9. Fuel Level Sensor

A: REMOVAL

For removal procedures, refer to the “FU(H4DO)” section. <Ref. to FU(H4DO)-122, REMOVAL, Fuel Level Sensor.>

B: INSTALLATION

For installation procedures, refer to the “FU(H4DO)” section. <Ref. to FU(H4DO)-123, INSTALLATION, Fuel Level Sensor.>

C: INSPECTION

For inspection procedures, refer to the “FU(H4DO)” section. <Ref. to FU(H4DO)-124, INSPECTION, Fuel Level Sensor.>

10.Fuel Sub Level Sensor

A: REMOVAL

For removal procedures, refer to the “FU(H4DO)” section. <Ref. to FU(H4DO)-125, REMOVAL, Fuel Sub Level Sensor.>

B: INSTALLATION

For installation procedures, refer to the “FU(H4DO)” section. <Ref. to FU(H4DO)-128, INSTALLATION, Fuel Sub Level Sensor.>

C: INSPECTION

For inspection procedures, refer to the “FU(H4DO)” section. <Ref. to FU(H4DO)-131, INSPECTION, Fuel Sub Level Sensor.>

11.Drain Filter

A: REMOVAL

1) Remove the rear differential. (Sedan model) <Ref. to DI-46, REMOVAL, Rear Differential (VA-type).> <Ref. to DI-26, REMOVAL, Rear Differential (T-type).>
2) Disconnect the drain tube (A) from the drain filter.

NOTE:
Disconnect the quick connector as shown in the figure.

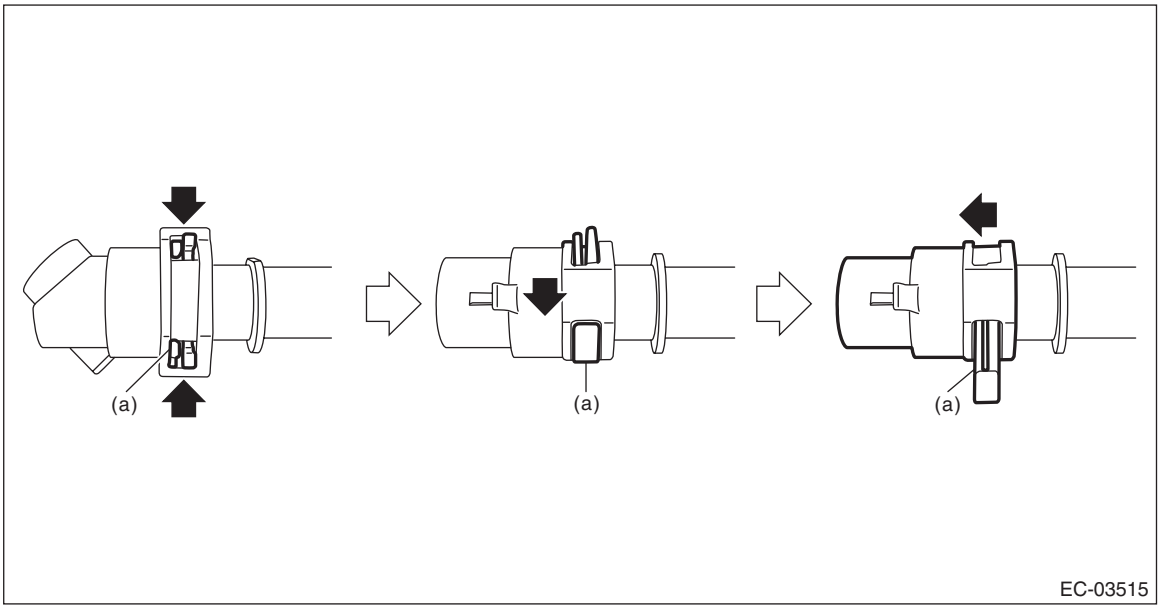

(a) Slider

3) Remove the drain filter.

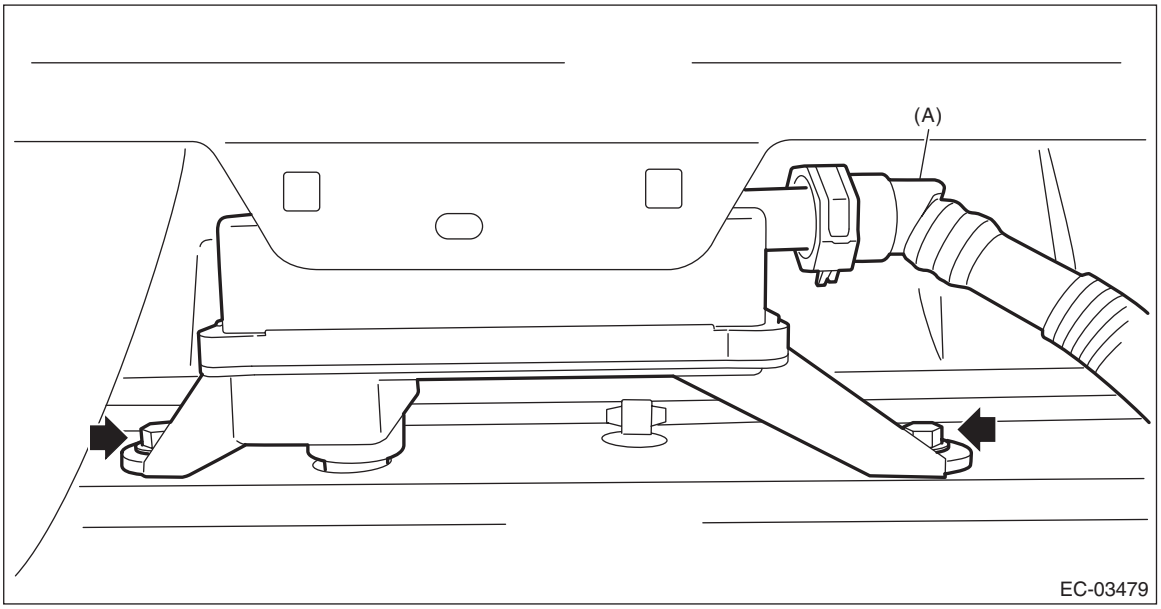

4) Disconnect the drain tube, and remove the drain tube from tube clamp (A) and tube clamp (B).

NOTE:
Disconnect the quick connector as shown in the figure.

- Color of the slider is either red or green

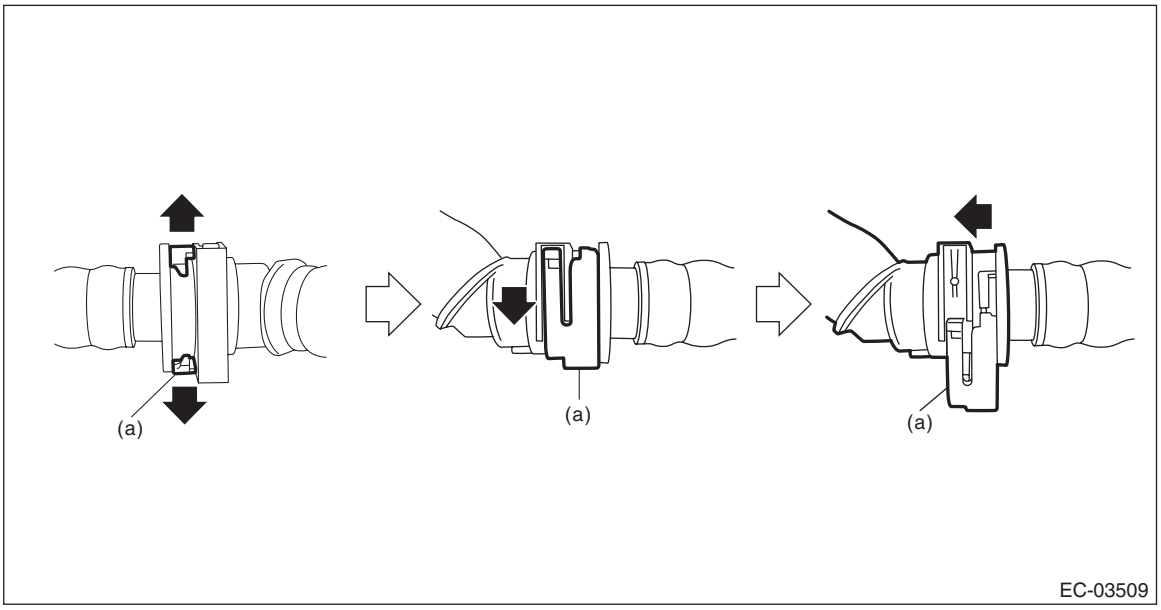

(a) Slider

- Color of the slider is white

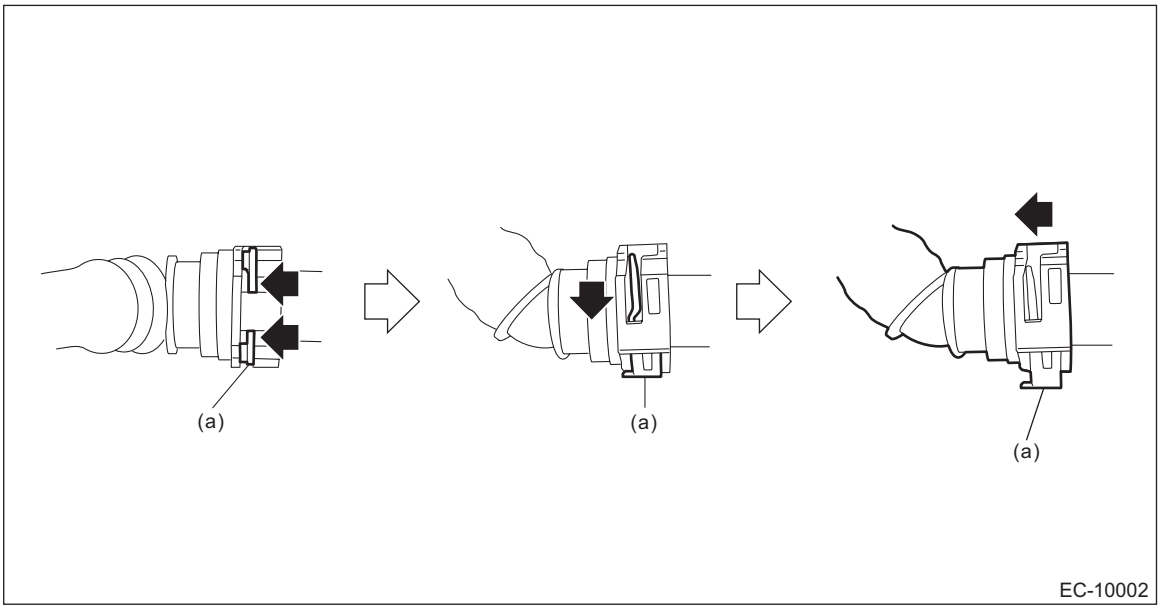

(a) Slider

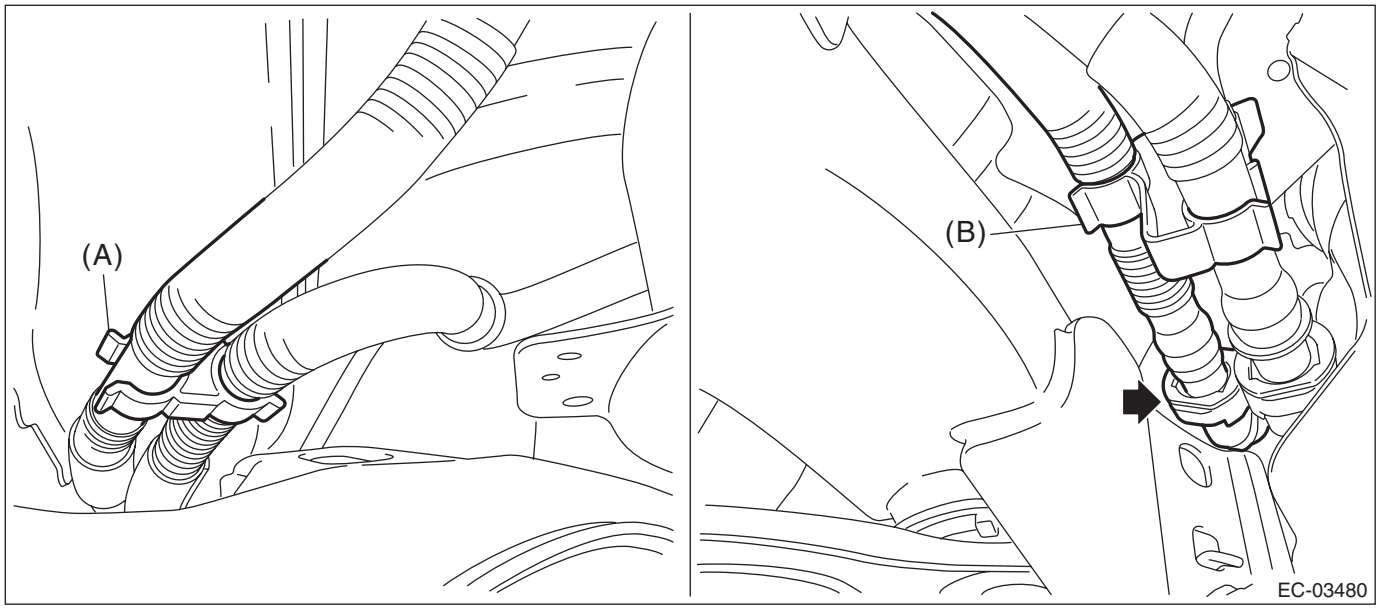

B: INSTALLATION

1) Connect the drain tube, and install the drain tube to the tube clamp (A) and tube clamp (B).

CAUTION:
- **Make sure there are no damage or dust on connections. If necessary, clean the seal surface of the pipe.**
- **Make sure that the quick connector is securely connected.**

NOTE:
Connect the quick connector as shown in the figure.
- Color of the slider is either red or green

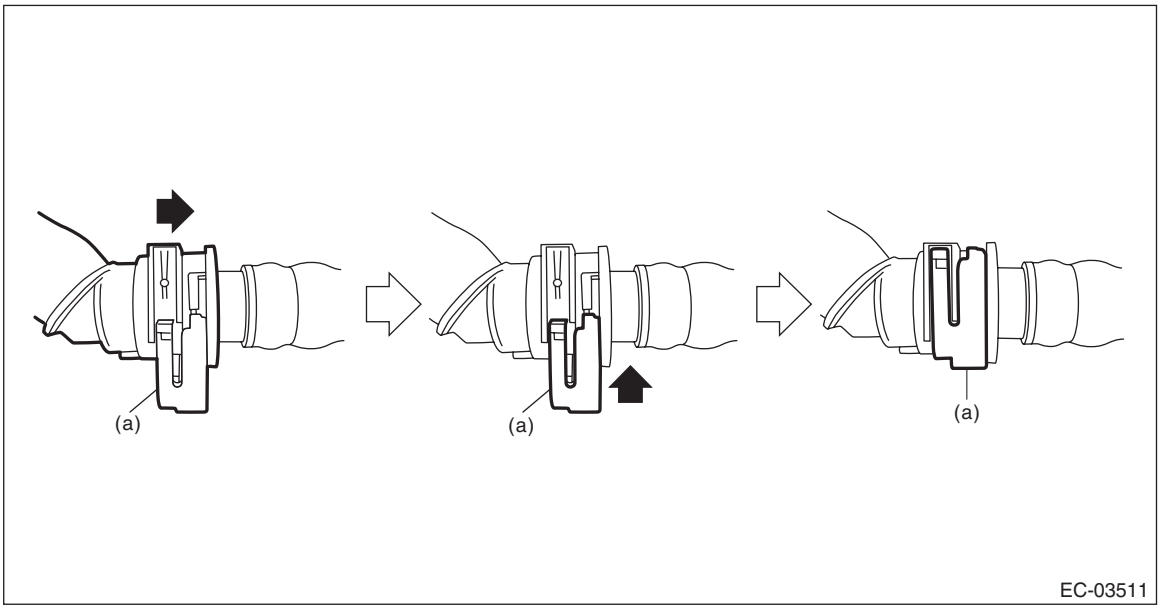

(a) Slider

- Color of the slider is white

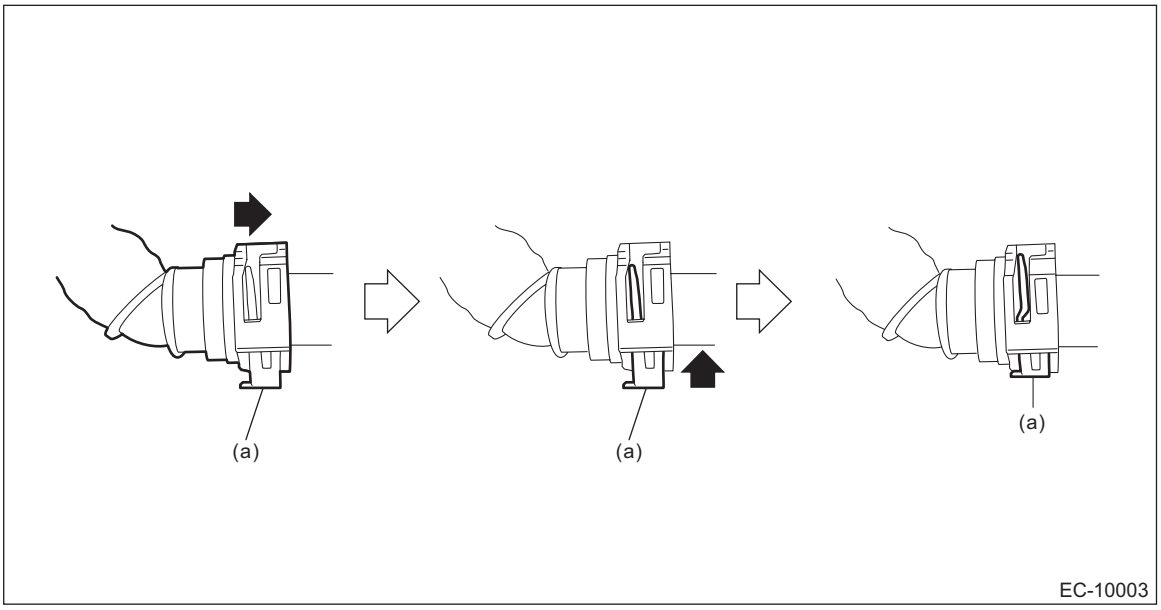

(a) Slider

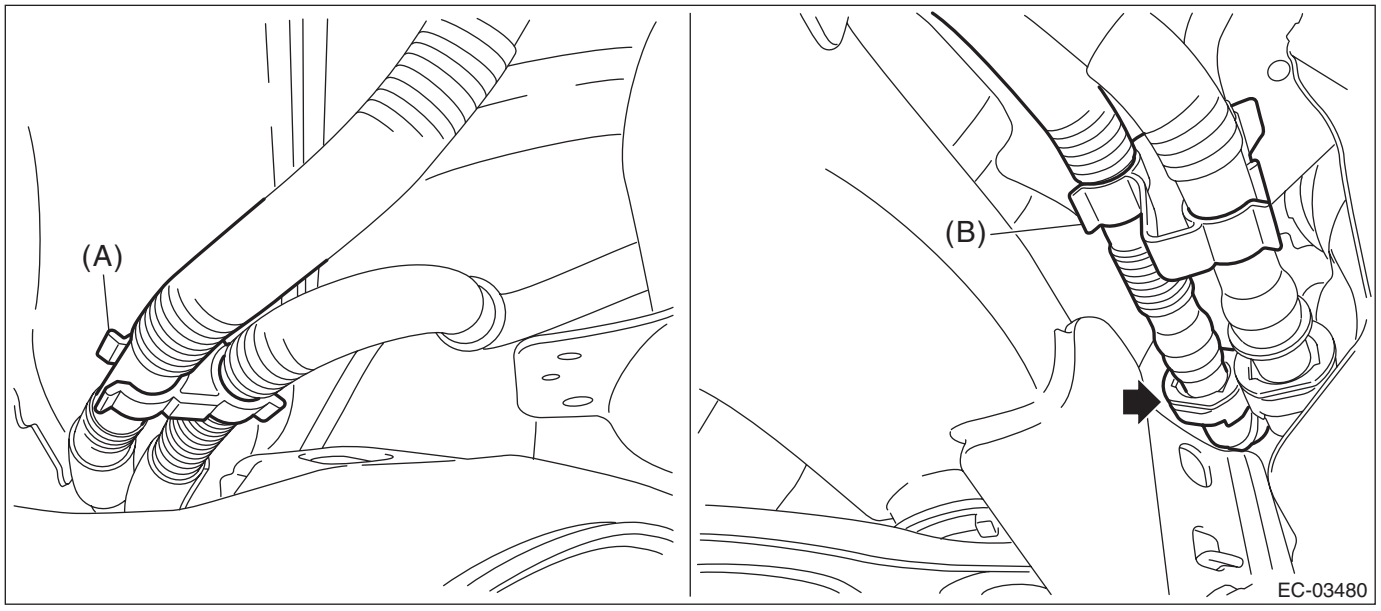

2) Install the drain filter.

Tightening torque:
7.5 N·m (0.8 kgf-m, 5.5 ft-lb)

3) Connect the drain tube (A) to the drain filter.

CAUTION:
• Make sure there are no damage or dust on connections. If necessary, clean the seal surface of the pipe.
• Make sure that the quick connector is securely connected.

NOTE:
Connect the quick connector as shown in the figure.

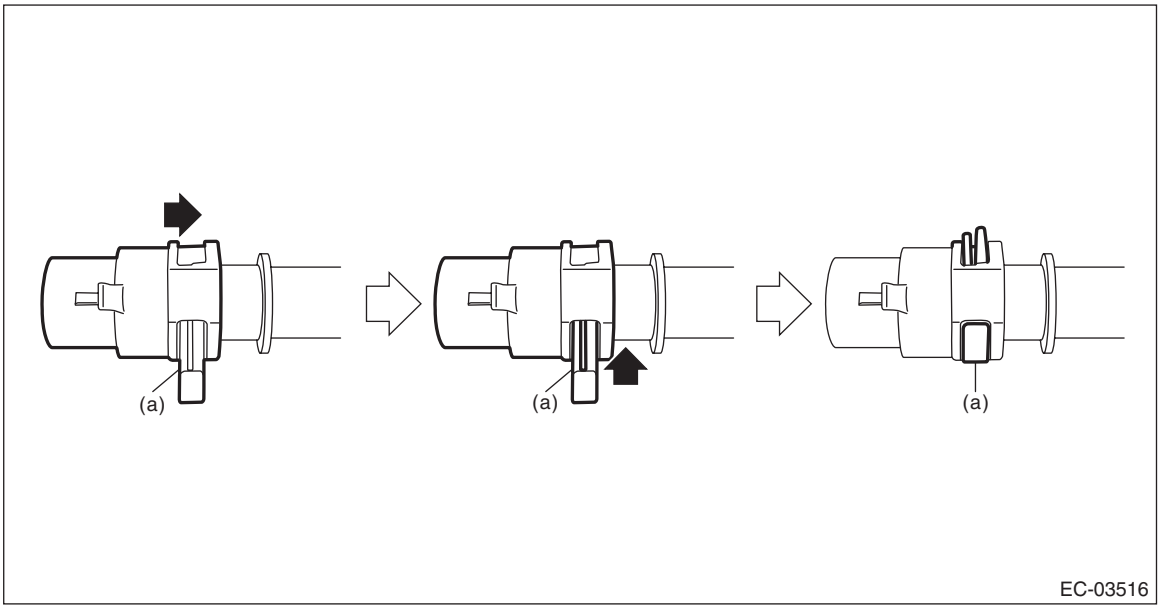

(a) Slider

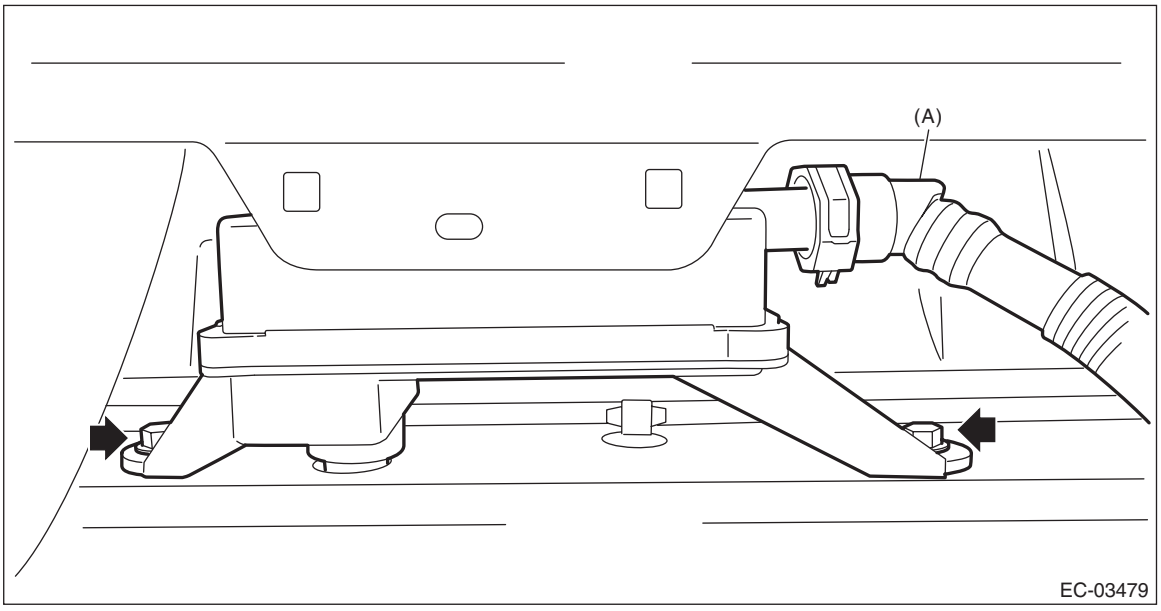

4) Install the rear differential. (Sedan model) <Ref. to DI-46, INSTALLATION, Rear Differential (VA-type).> <Ref. to DI-28, INSTALLATION, Rear Differential (T-type).>

C: INSPECTION

1) Check that the drain filter and drain tube have no deformation, cracks or other damages.
2) Check that no foreign substances are clogged in the drain filter.

12.Leak Check Valve Assembly

A: SPECIFICATION

Refer to “Canister” for removal and installation of the leak check valve assembly. <Ref. to EC(H4DO)-9, REMOVAL, Canister.> <Ref. to EC(H4DO)-15, INSTALLATION, Canister.>

B: INSPECTION

1. CHECK SWITCHING VALVE

1) Check the resistance between switching valve terminals.

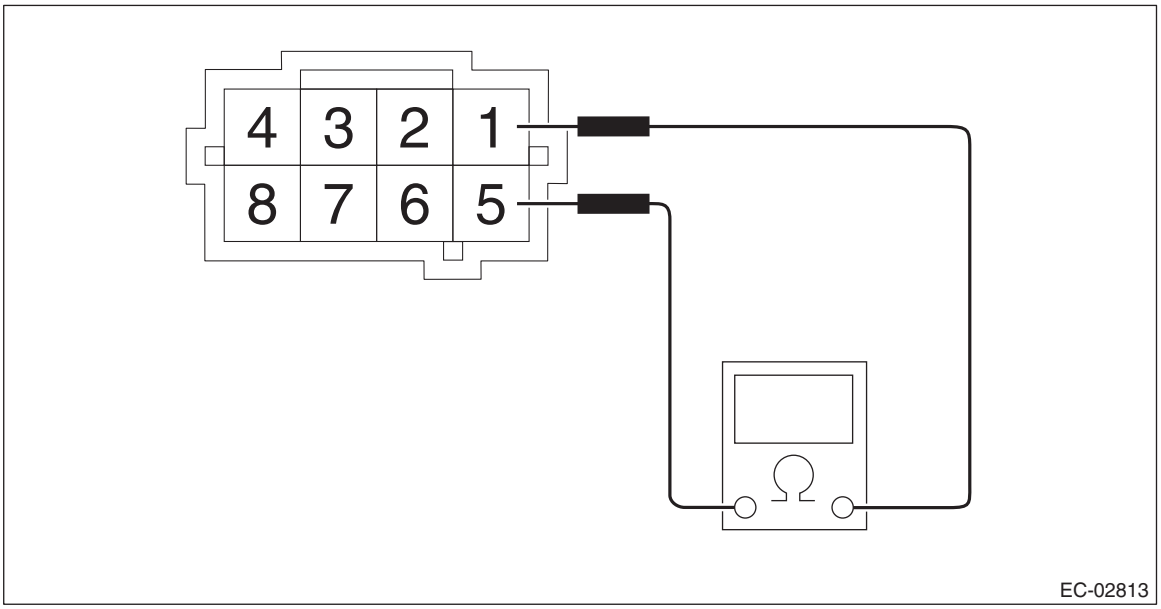

Terminal No.	Standard
1 and 5	27^{+3}_{-2} Ω (when 20°C (68°F))
	31±4 Ω (60°C (140°F))

2) Check that air is discharged from (B) when air is blown into (A).

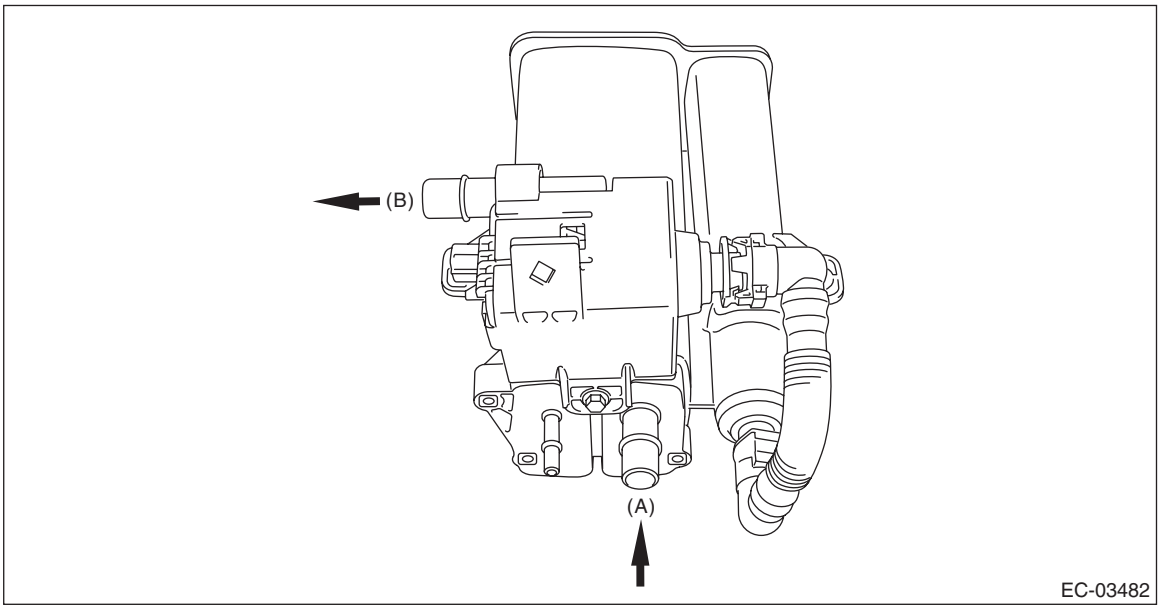

3) Connect the battery positive terminal to the terminal No. 5 and the battery negative terminal to the terminal No. 1. Check that air does not come out from (B) when air is blown into (A).

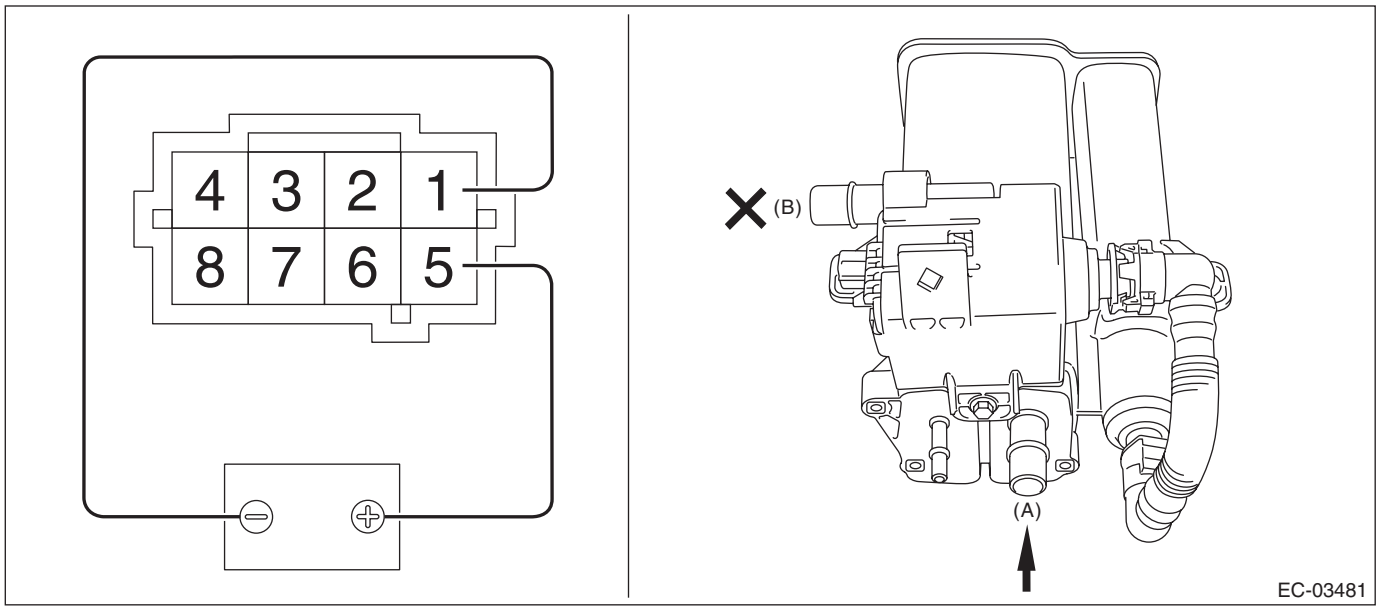

2. CHECK VACUUM PUMP

1) Connect the battery positive terminal to terminal No. 3 and the battery ground terminal to terminal No. 4, and inspect the vacuum pump operation.

CAUTION:
Do not operate the vacuum pump for 5 minutes or more.

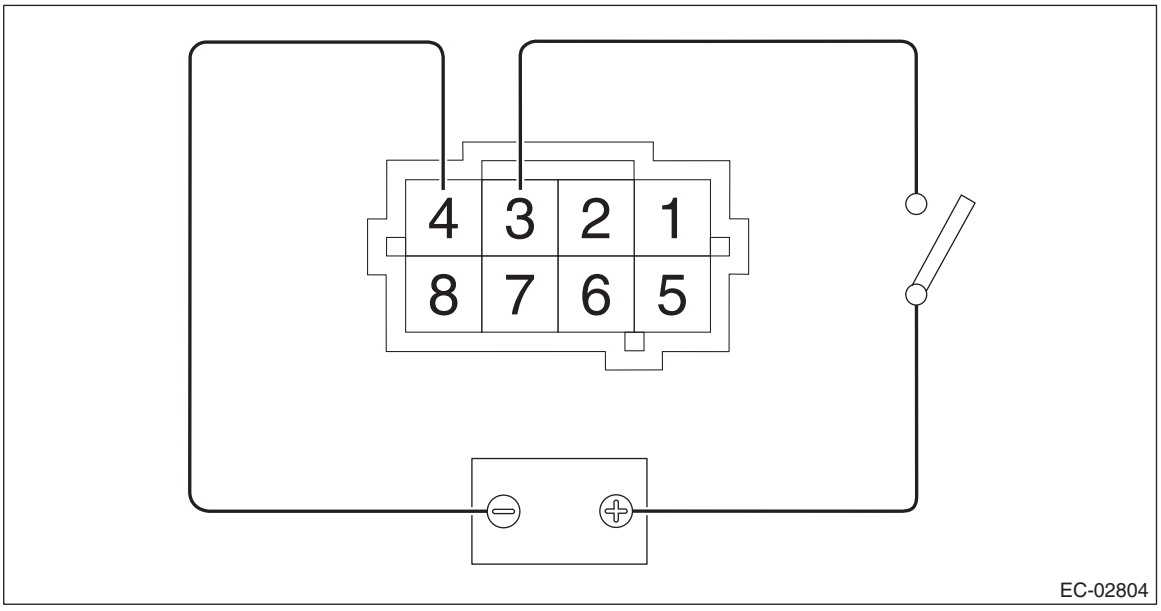

3. CHECK PRESSURE SENSOR

1) Connect dry-cell battery positive terminal to terminal No. 6 and dry-cell battery ground terminal to terminal No. 8, circuit tester positive terminal to terminal No. 7 and the circuit tester ground terminal to terminal No. 8.

NOTE:
- Use new dry-cell batteries.
- Using circuit tester, check that the initial voltage of a single dry-cell battery is 1.6 V or more. And also check that the voltage of three batteries in series is between 4.8 V and 5.2 V.

- For power supply, 5 V DC voltage source can also be used.

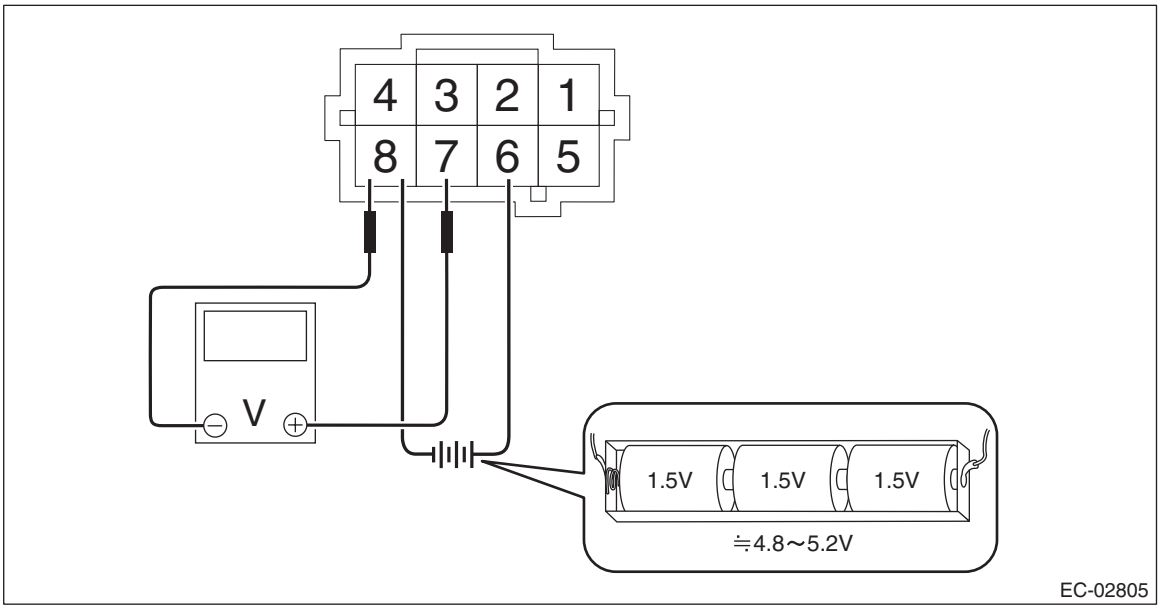

2) Check the voltage at a normal atmospheric pressure.

NOTE:
The atmospheric pressure at higher altitude is lower than normal. Therefore, the voltage is lower than the standard value.

Terminal No.	Standard
7 (+) and 8 (–)	Approx. 3.5 V (when 25°C (77°F))

3) Connect the battery positive terminal to terminal No. 3 and the battery ground terminal to terminal No. 4, and check that there is a voltage drop from the voltage measured in step 2) when the vacuum pump is operated.

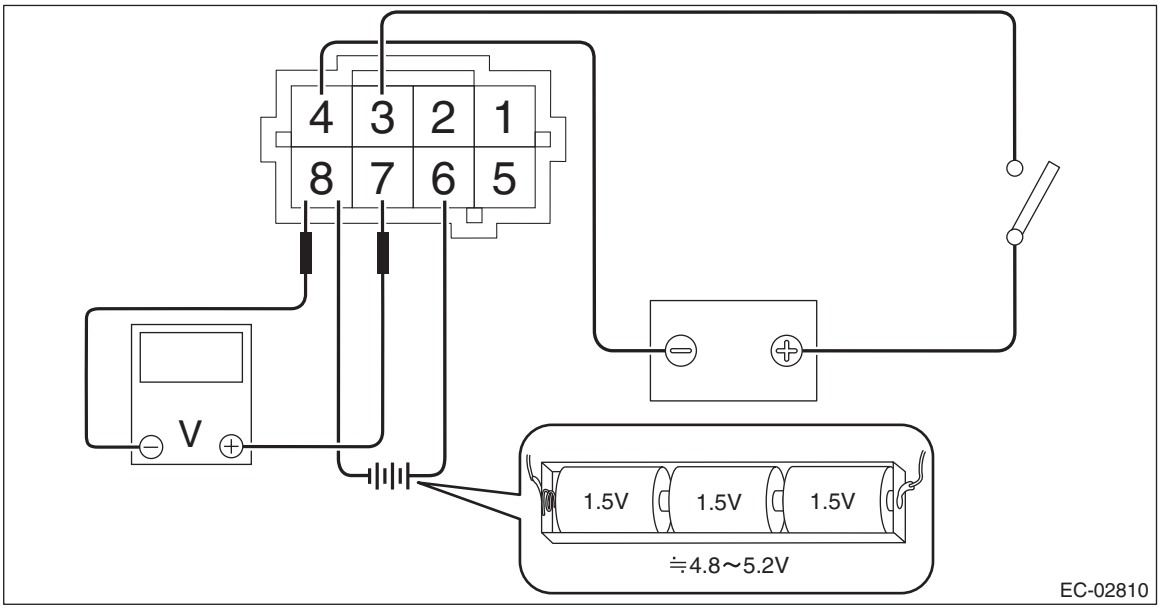

4. OTHER INSPECTIONS

Check that the leak check valve assembly has no deformation, cracks or other damages.

13.PCV Hose

A: REMOVAL

CAUTION:
Do not remove except when the PCV hose is broken.

1) Remove the clip (A), and loosen the clamps (B) and (C) securing the air intake boot.

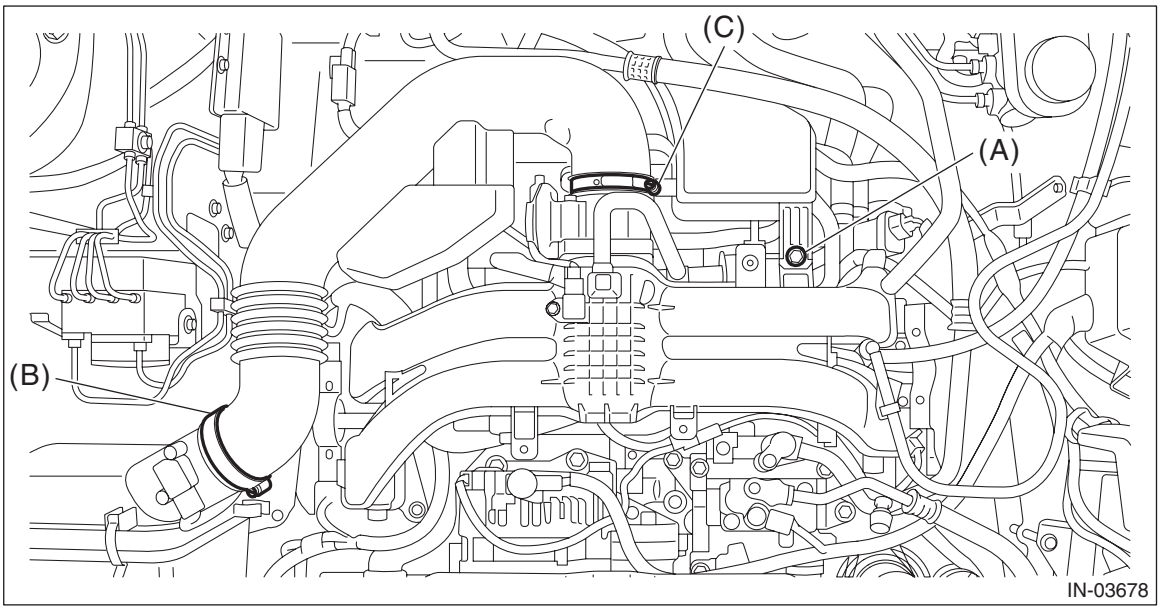

2) Remove the air intake boot from the air cleaner case (rear) and throttle body, and move it to the left side wheel apron.

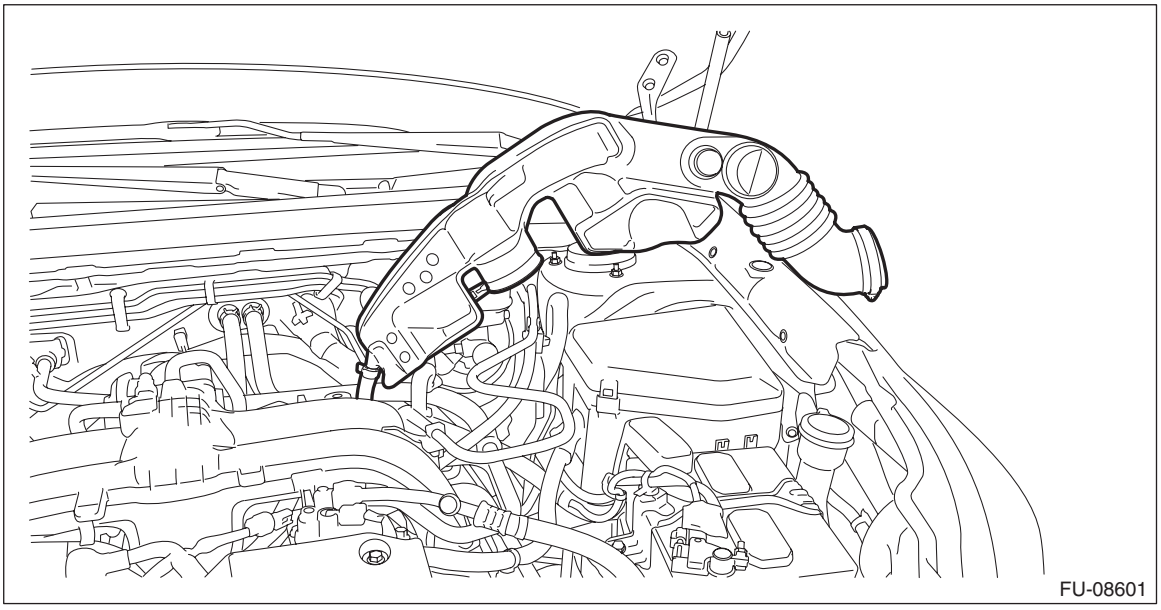

3) Disconnect the PCV hose A from the intake manifold assembly and the PCV valve, and then remove the PCV hose A.

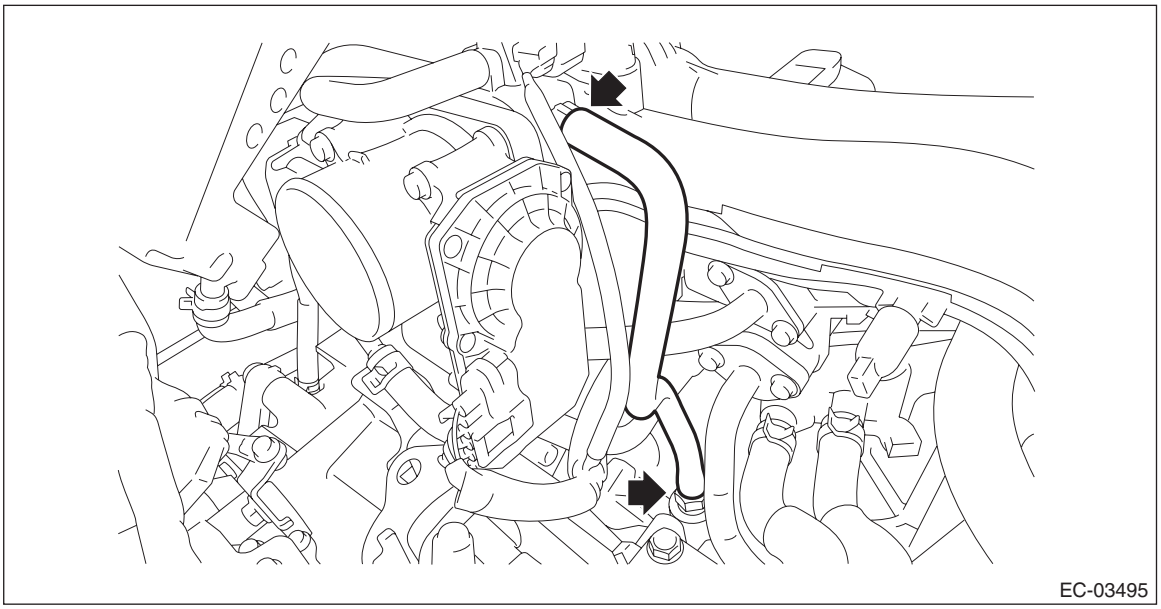

4) Remove the intake manifold assembly. <Ref. to FU(H4DO)-18, REMOVAL, Intake Manifold Assembly.>
5) Remove the PCV hose B from the PCV connector.

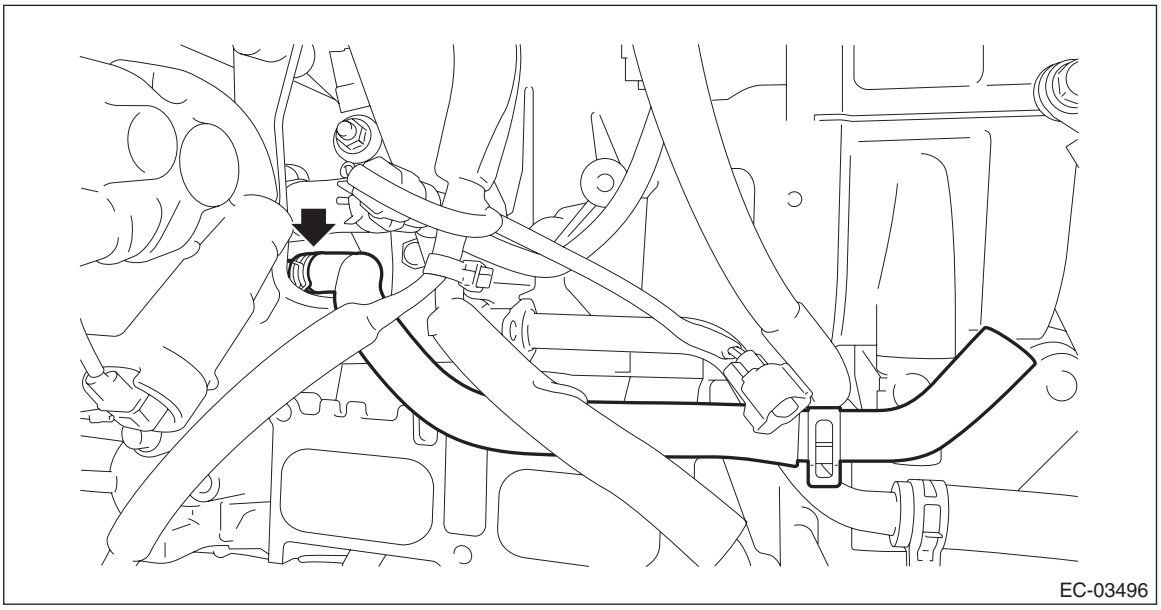

B: INSTALLATION

1) Attach the PCV hose B to the PCV connector.
2) Install the intake manifold assembly. <Ref. to FU(H4DO)-26, INSTALLATION, Intake Manifold Assembly.>
3) Connect the PCV hose A to the intake manifold assembly and the PCV valve.
4) Install the air intake boot. <Ref. to IN(H4DO)-10, INSTALLATION, Air Intake Boot.>

C: INSPECTION

Check that the PCV hose has no cracks, damage or loose part.

14.PCV Valve

A: REMOVAL

CAUTION:
Do not remove unless the PCV valve is broken.

1) Remove the clip (A), and loosen the clamps (B) and (C) securing the air intake boot.

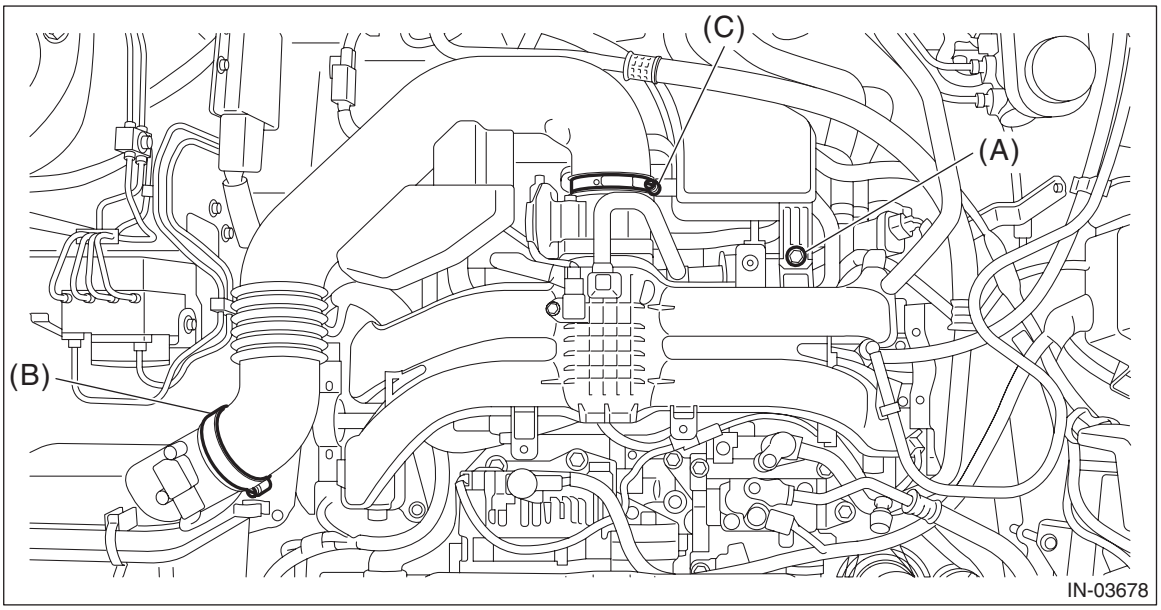

2) Remove the air intake boot from the air cleaner case (rear) and throttle body, and move it to the left side wheel apron.

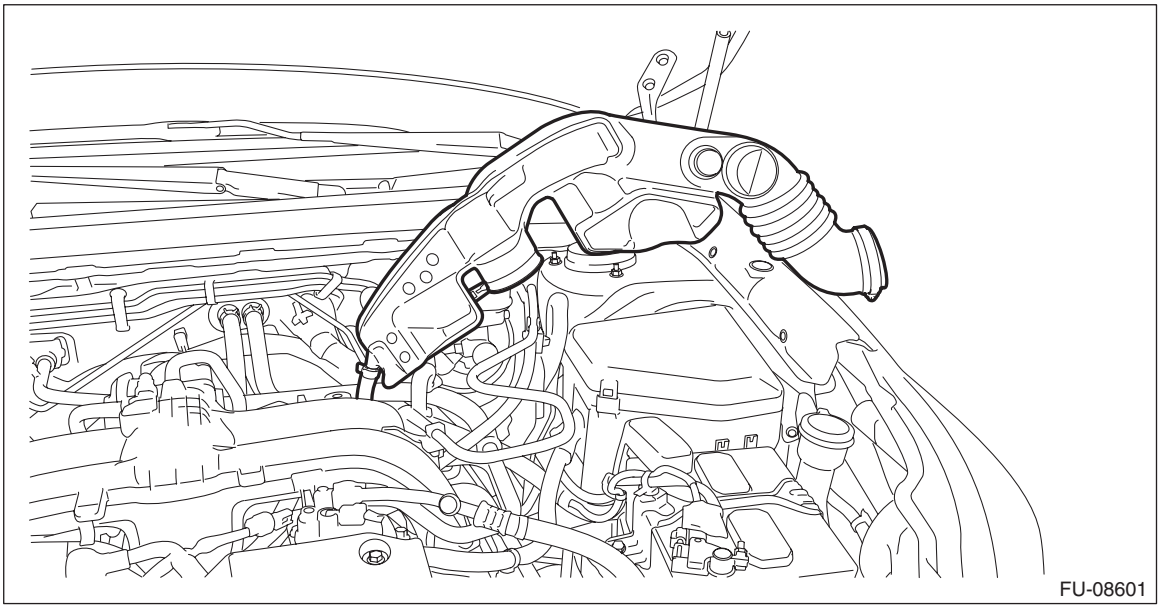

3) Disconnect the PCV hose from the intake manifold assembly and the PCV valve, and then remove the PCV hose.

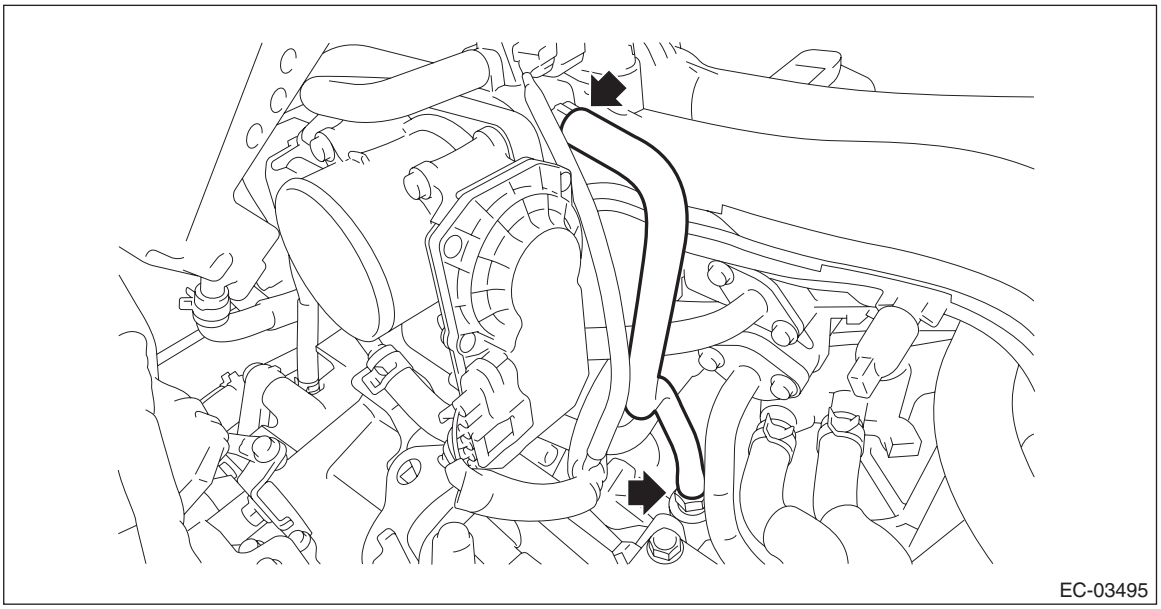

4) Remove the PCV valve from the cylinder block RH.

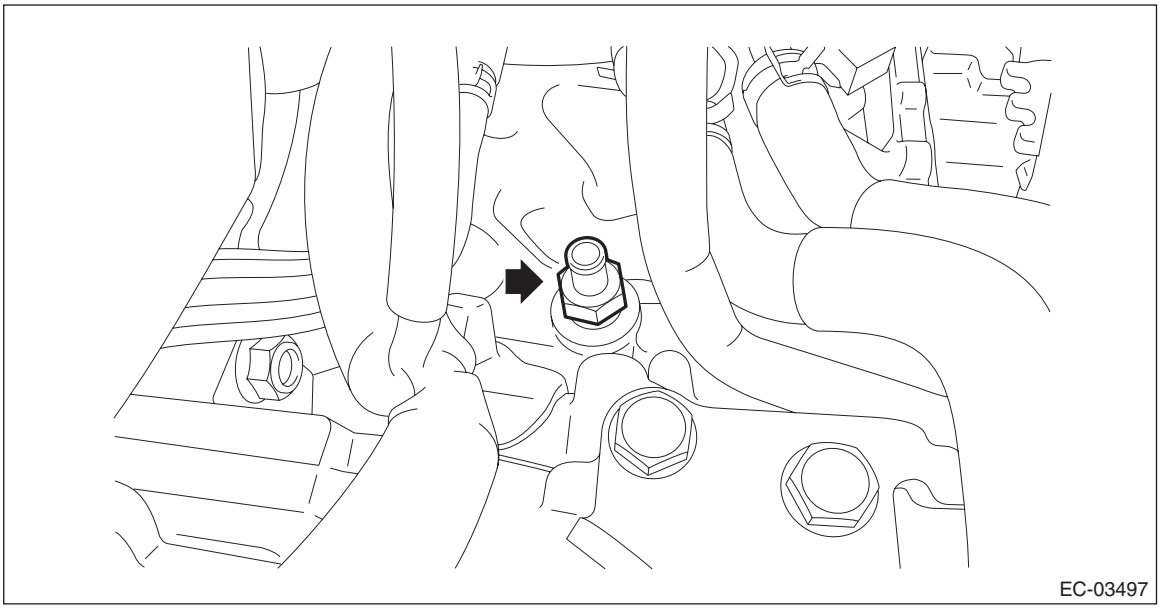

B: INSTALLATION

1) Install the PCV valve onto the cylinder block RH.

NOTE:
Apply liquid gasket to the bolt threads of PCV valve.

Liquid gasket:
THREE BOND 1324 (Part No. 004403042) or equivalent

Tightening torque:
25 N·m (2.5 kgf-m, 18.4 ft-lb)

2) Connect the PCV hose to the intake manifold assembly and the PCV valve.
3) Install the air intake boot. <Ref. to IN(H4DO)-10, INSTALLATION, Air Intake Boot.>

C: INSPECTION

1. PCV VALVE

1) Check that the PCV valve has no deformation, cracks or other damages.
2) Check that air is discharged from (B) when air is blown into (A).

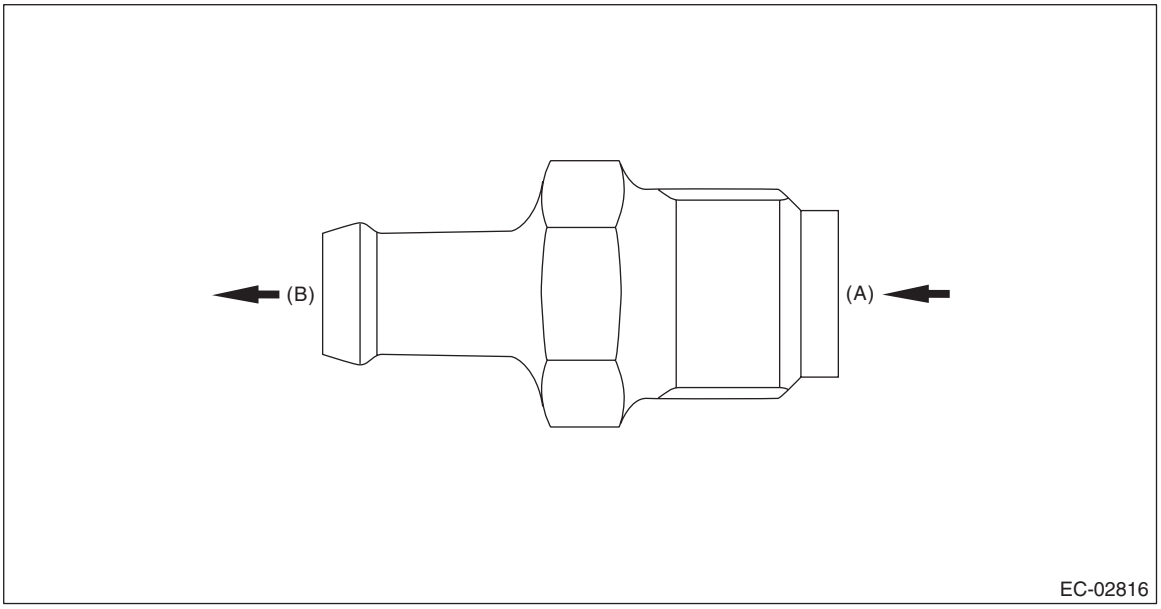

3) Check that air does not come out from (B) when air is blown into (A).

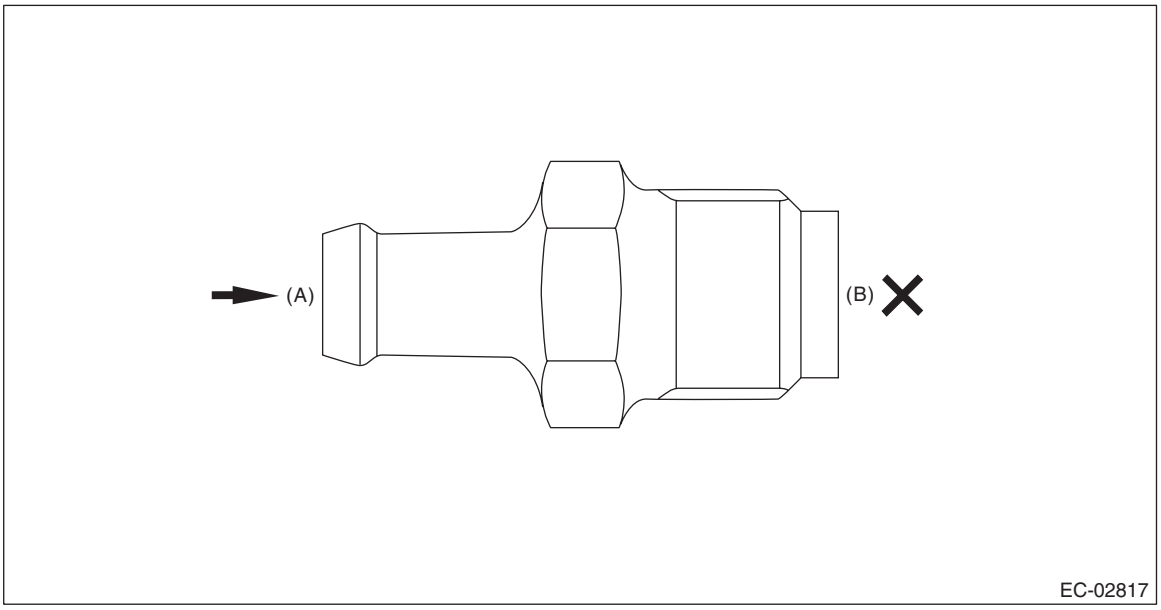

2. OTHER INSPECTIONS

Check that the PCV hose has no cracks, damage or loose part.

INTAKE (INDUCTION)

IN(H4DO)

Page

1. General Description 2
2. Air Cleaner Element 4
3. Air Cleaner Case 8
4. Air Intake Boot 10
5. Air Intake Duct 12
6. Resonator Chamber 13

1. General Description

A: COMPONENT

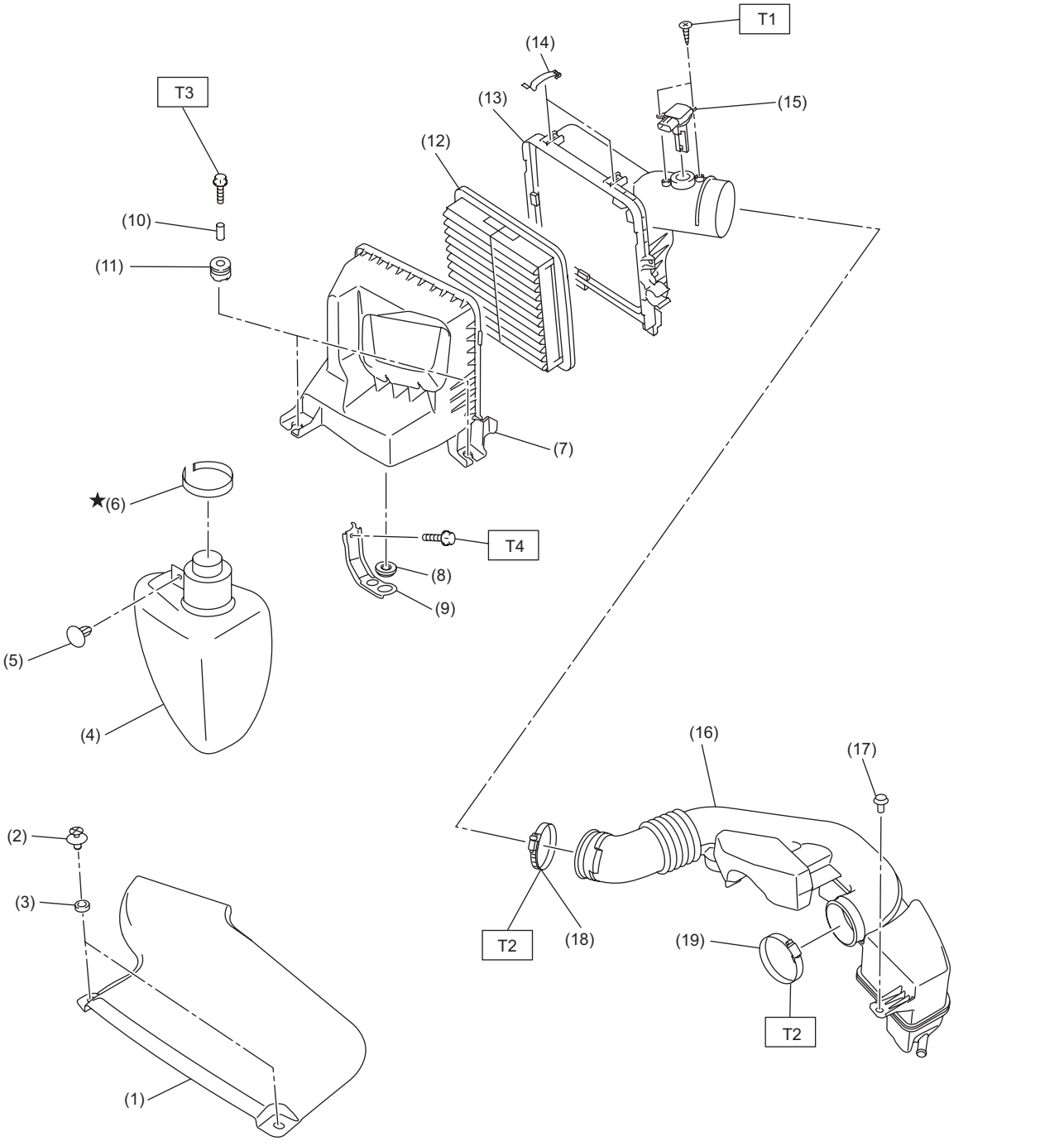

IN-10073

(1) Air intake duct
(2) Clip
(3) Cushion
(4) Resonator chamber
(5) Clip (model with clip)
(6) Cushion
(7) Air cleaner case (front)
(8) Cushion
(9) Air cleaner case bracket
(10) Spacer
(11) Cushion
(12) Air cleaner element
(13) Air cleaner case (rear)
(14) Clip
(15) Mass air flow and intake air temperature sensor
(16) Air intake boot
(17) Clip
(18) Clamp
(19) Clamp

Tightening torque: N·m (kgf-m, ft-lb)
T1: 1 (0.1, 0.7)
T2: 3 (0.3, 2.2)
T3: 6 (0.6, 4.4)
T4: 7.5 (0.8, 5.5)

B: CAUTION

- Prior to starting work, pay special attention to the following:
  1. Always wear work clothes, a work cap, and protective shoes. Additionally, wear a helmet, protective goggles, etc. if necessary.
  2. Protect the vehicle using a seat cover, fender cover, etc.
  3. Prepare the service tools, clean cloth, containers to catch grease and oil, etc.
- Vehicle components are extremely hot immediately after driving. Be wary of receiving burns from heated parts.
- When performing a repair, identify the cause of trouble and avoid unnecessary removal, disassembly and replacement.
- Before disconnecting connectors of sensors or units, be sure to disconnect the ground cable from battery.
- Always use the jack-up point when the shop jacks or rigid racks are used to support the vehicle.
- Remove contamination including dirt and corrosion before removal, installation, disassembly or assembly.
- Keep the removed parts in order and protect them from dust and dirt.
- All removed parts, if to be reused, should be reinstalled in the original positions with attention to the correct directions, etc.
- Bolts, nuts and washers should be replaced with new parts as required.
- Be sure to tighten the fasteners including bolts and nuts to the specified torque.

2. Air Cleaner Element

A: REMOVAL

1) Disconnect the ground terminal from battery sensor. <Ref. to RC-4, BATTERY, NOTE, Repair Contents.>
2) Remove the air intake duct. <Ref. to IN(H4DO)-12, REMOVAL, Air Intake Duct.>
3) Disconnect the connector (A) from the mass air flow and intake air temperature sensor, and remove the clip (B) from the air cleaner case (rear).

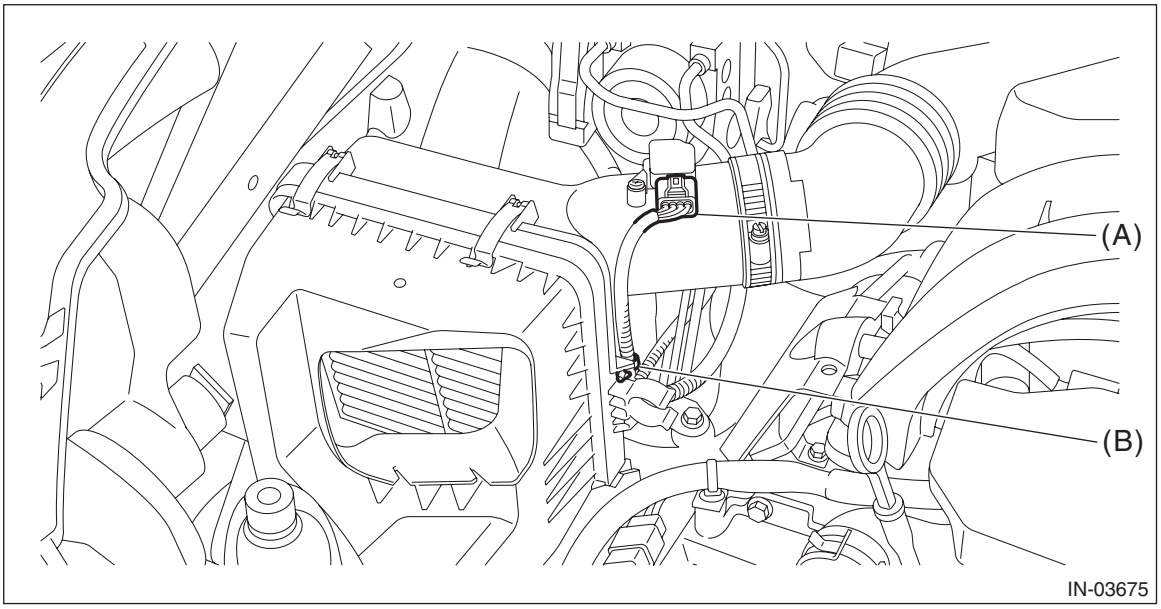

4) Loosen the clamp (A) securing the air intake boot to the air cleaner case (rear), and then remove the clip (B) from the air cleaner case (front).

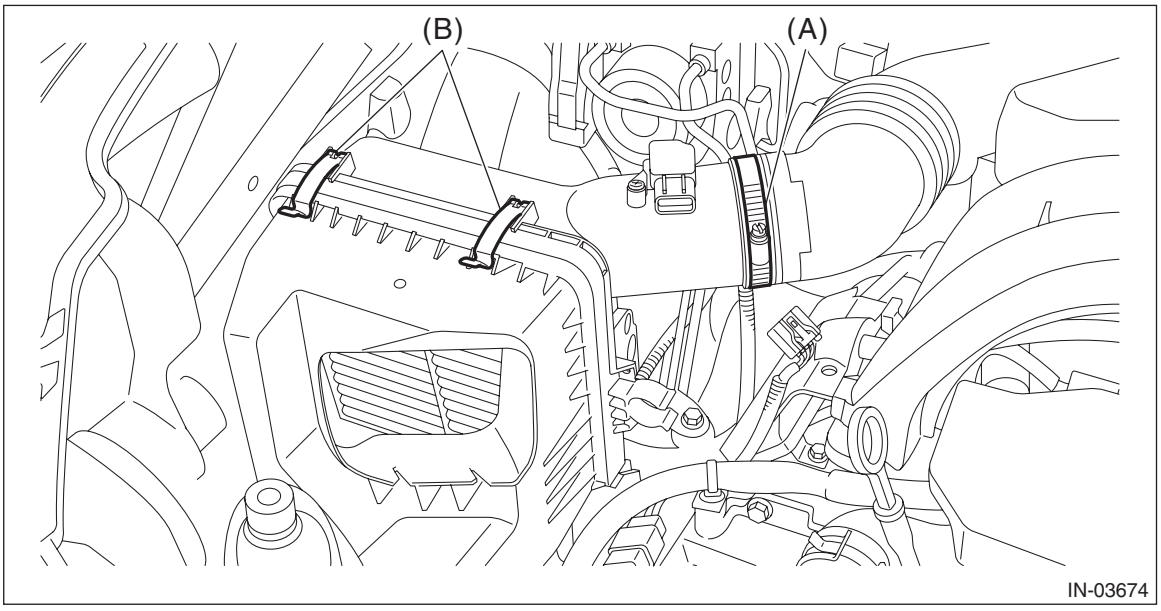

5) Remove the air cleaner case (rear) and air cleaner element.

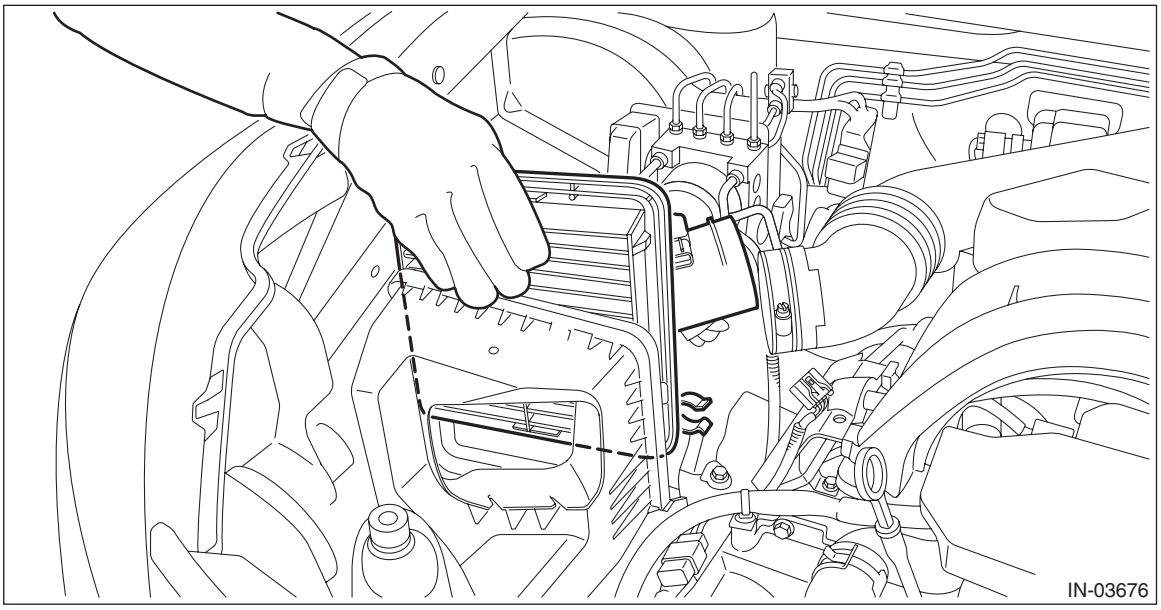

B: INSTALLATION

1) Set the air cleaner element and the air cleaner case (rear).

CAUTION:
Be sure to use SUBARU genuine air cleaner element depending on the engine type when replacing the air cleaner elements. Using other air cleaner element may affect the engine performance.

NOTE:
- Install the air cleaner element as shown in the figure.

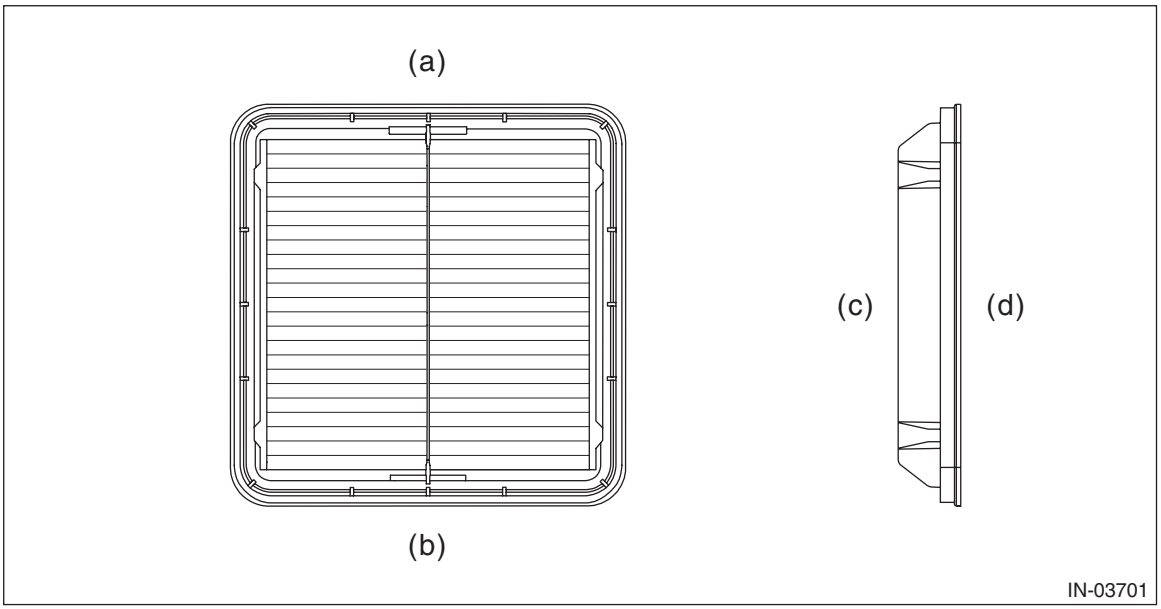

(a) Upside (b) Downside (c) Air cleaner case (front) side
(d) Air cleaner case (rear) side

- Check that there is no dirt or dust within the air cleaner case. If any dirt or dust is found, clean it.
- When setting the air cleaner case (rear), align the protrusion of the air cleaner case (rear) to the air cleaner case (front) to insert.

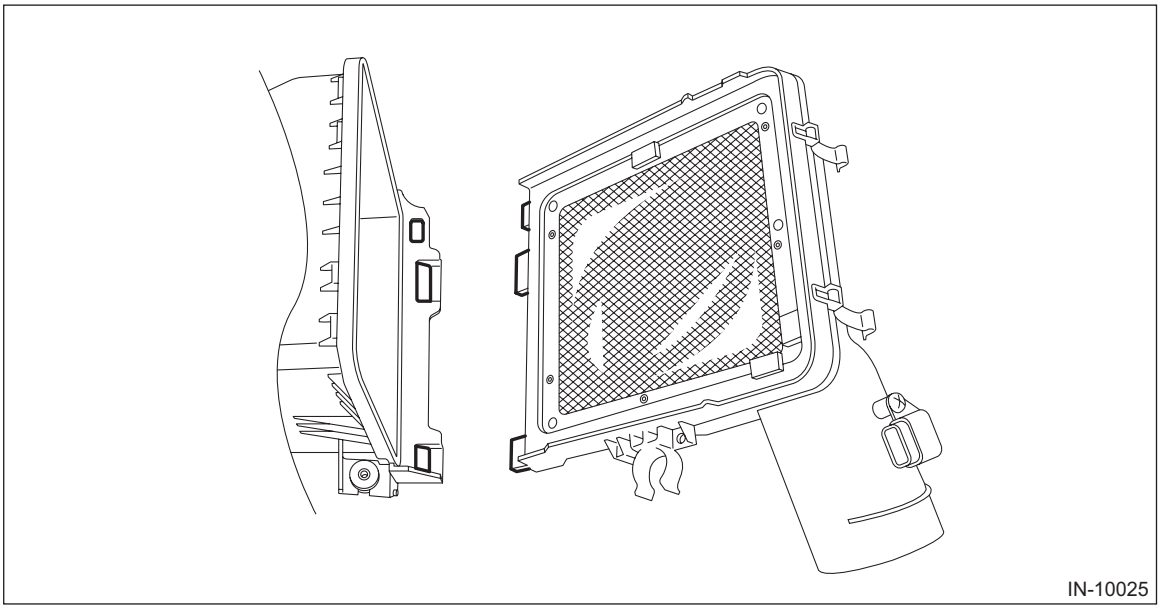

2) Install the clips (B) to the air cleaner case (front), then tighten the clamp (A) securing the air intake boot to the air cleaner case (rear).

Tightening torque:
3 N·m (0.3 kgf-m, 2.2 ft-lb)

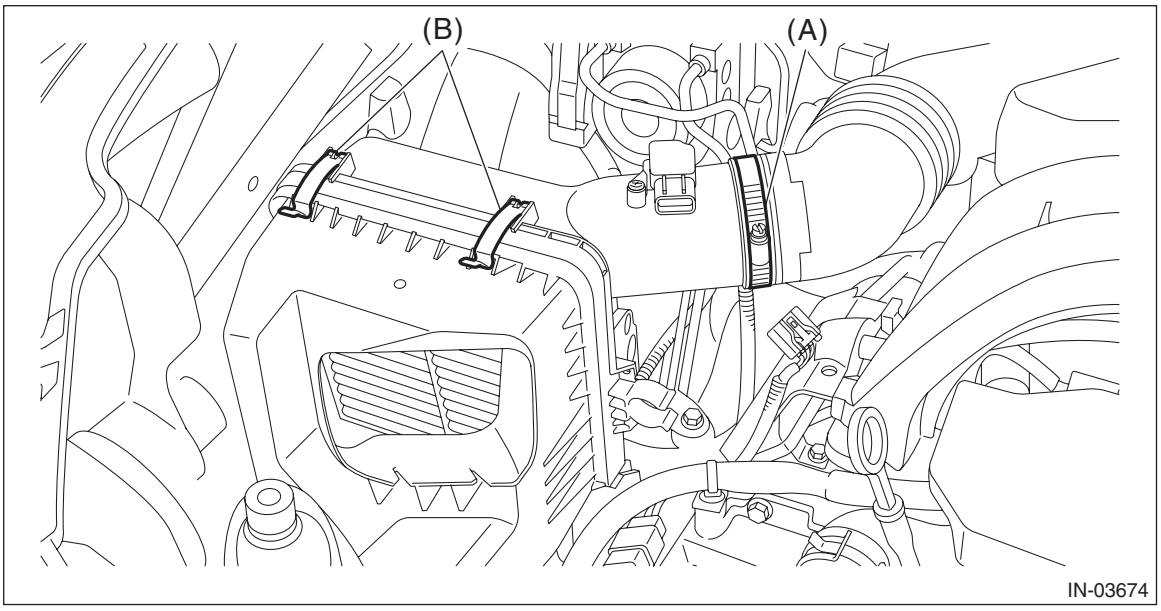

3) Connect the connector (A) to the mass air flow and intake air temperature sensor, and install the clip (B) to the air cleaner case (rear).

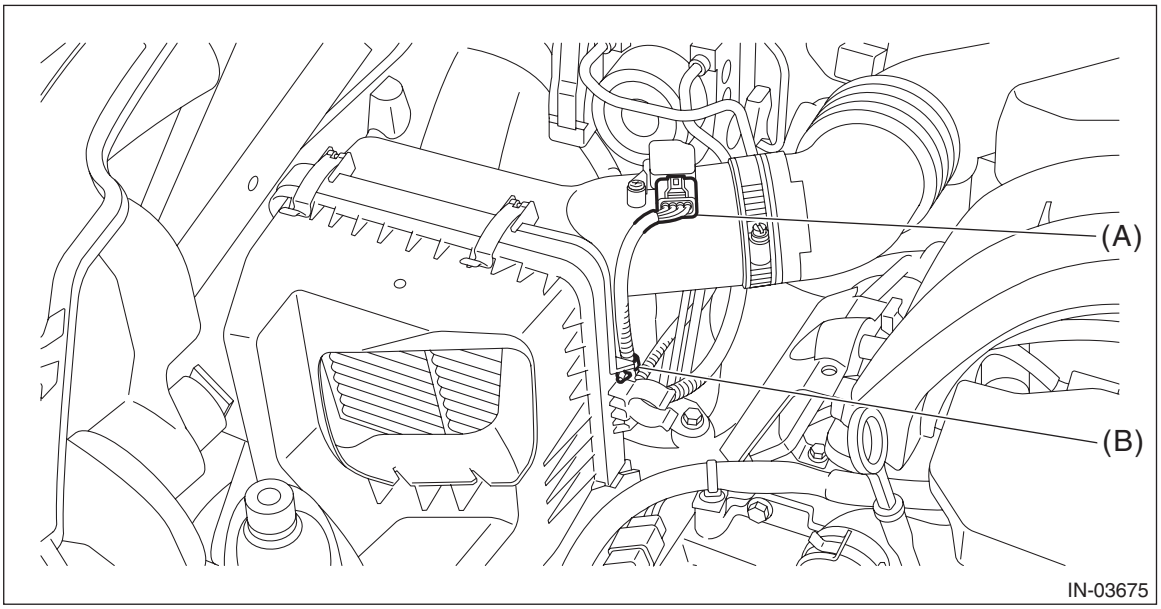

4) Install the air intake duct. <Ref. to IN(H4DO)-12, INSTALLATION, Air Intake Duct.>
5) Connect the ground terminal to battery sensor. <Ref. to RC-4, BATTERY, NOTE, Repair Contents.>

C: INSPECTION

1) Check that the air cleaner element has no deformation, cracks or other damages.
2) Check the air cleaner element for excessive dirt.
3) Replace the air cleaner case (rear) if the HC absorption filter is damaged.

3. Air Cleaner Case

A: REMOVAL

1) Remove the air cleaner element. <Ref. to IN(H4DO)-4, REMOVAL, Air Cleaner Element.>
2) Remove the bolts securing the air cleaner case (front) to the vehicle body.
3) Remove the air cleaner case (front).

NOTE:
The protrusion of the air cleaner case (front) is inserted in the cushion of the air cleaner case bracket.

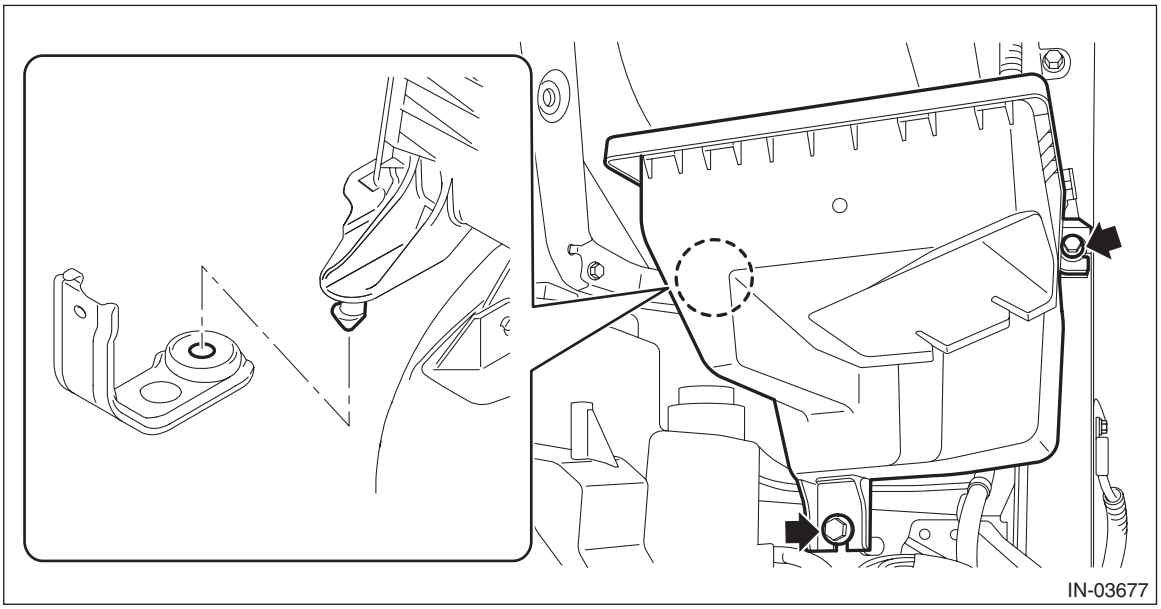

4) Remove the air cleaner case bracket from the vehicle.

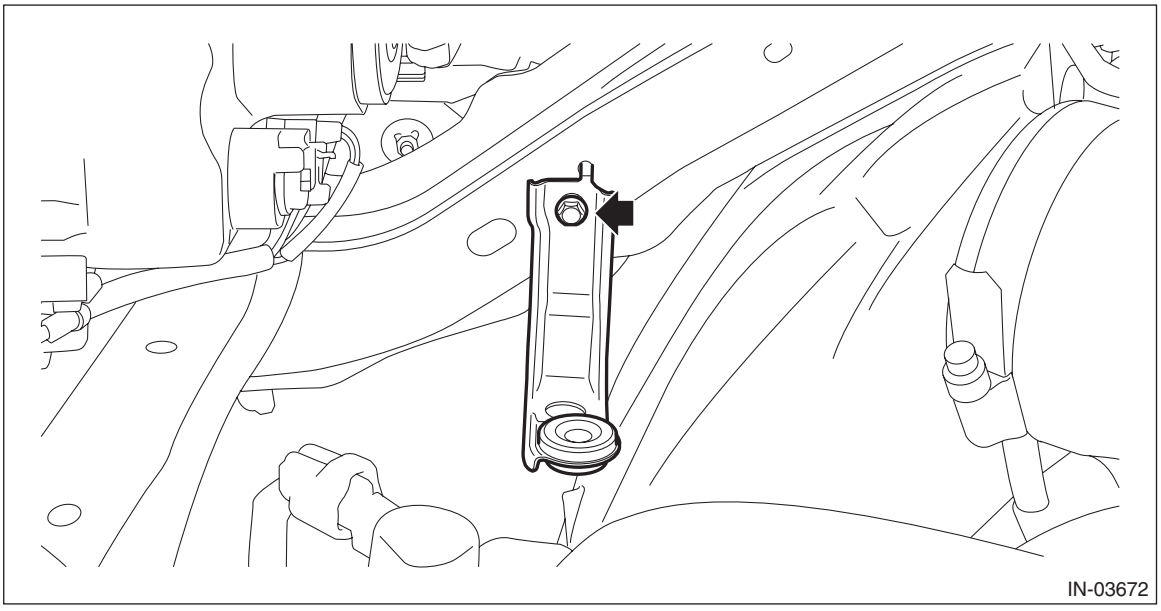

B: INSTALLATION

1) Install the air cleaner case bracket to the vehicle.

Tightening torque:
7.5 N·m (0.8 kgf-m, 5.5 ft-lb)

2) Install the air cleaner case (front) to the vehicle body and air cleaner case bracket.

NOTE:
Make sure that the protrusion of the air cleaner case (front) is inserted in the cushion of the air cleaner case bracket.

Tightening torque:
6 N·m (0.6 kgf-m, 4.4 ft-lb)

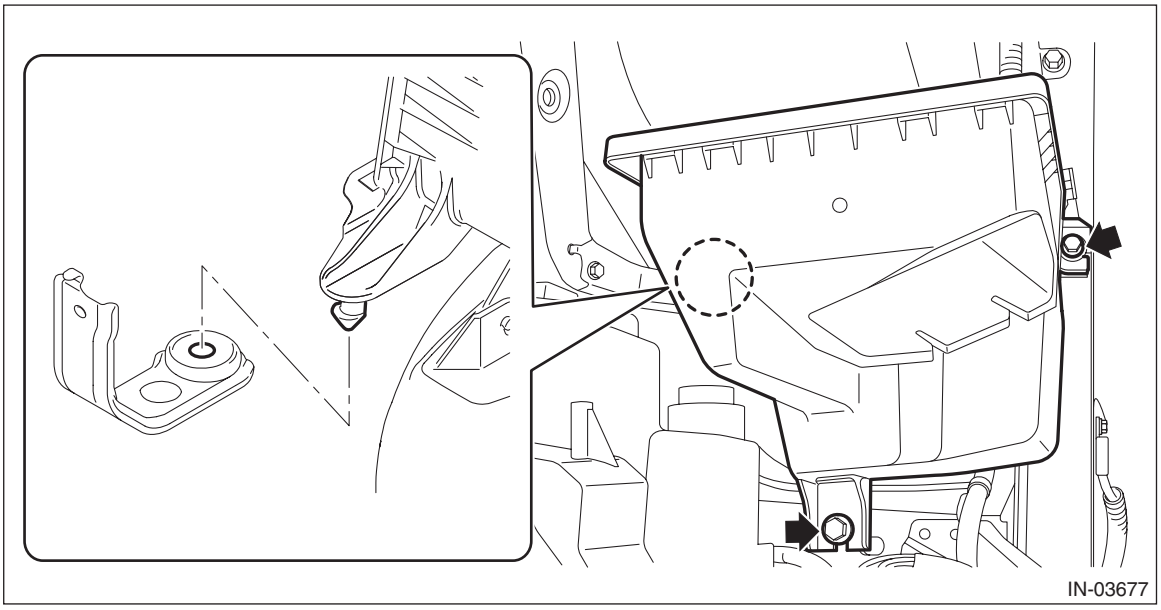

3) Install the air cleaner element. <Ref. to IN(H4DO)-6, INSTALLATION, Air Cleaner Element.>

C: INSPECTION

1) Check that the air cleaner case has no deformation, cracks or other damages.
2) Check that the air intake boot has no cracks, damage or loose part.

4. Air Intake Boot

A: REMOVAL

1) Remove the clip (A) from the air intake boot.
2) Loosen the clamp (B) securing the air cleaner case (rear) to the air intake boot.
3) Loosen the clamp (C) which secures the throttle body to the air intake boot.

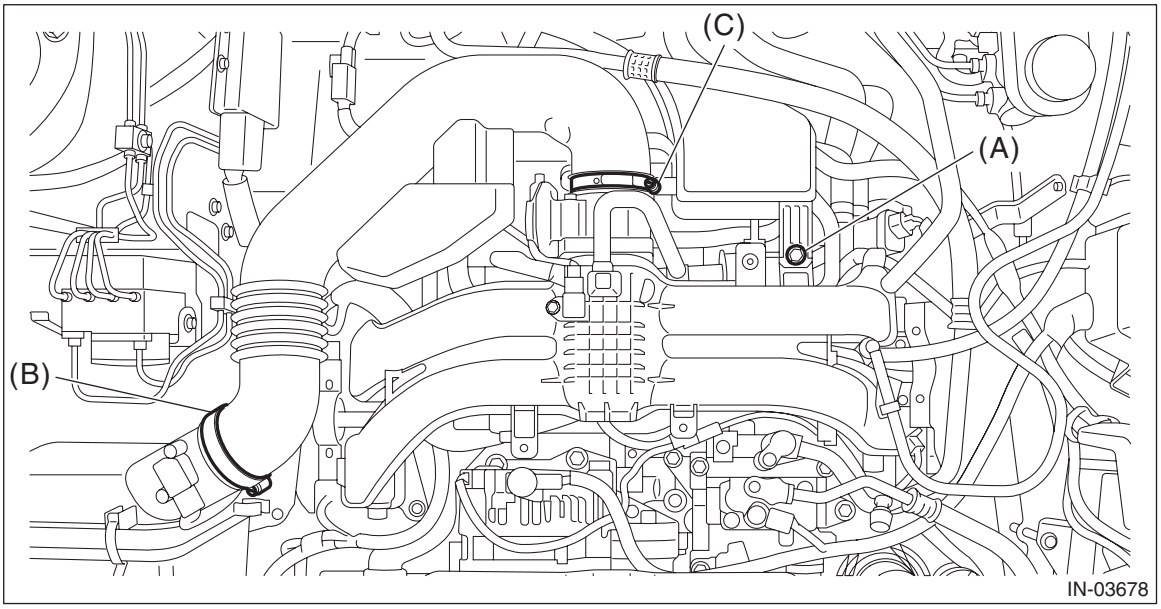

4) Disconnect the PCV hose and remove the air intake boot.

B: INSTALLATION

1) Install the air intake boot, and connect the PCV hose.
2) Tighten the clamp (C) securing the throttle body to the air intake boot.

Tightening torque:
3 N·m (0.3 kgf-m, 2.2 ft-lb)

3) Tighten the clamp (B) securing the air cleaner case (rear) to the air intake boot.

Tightening torque:
3 N·m (0.3 kgf-m, 2.2 ft-lb)

4) Install the clip (A) to the air intake boot.

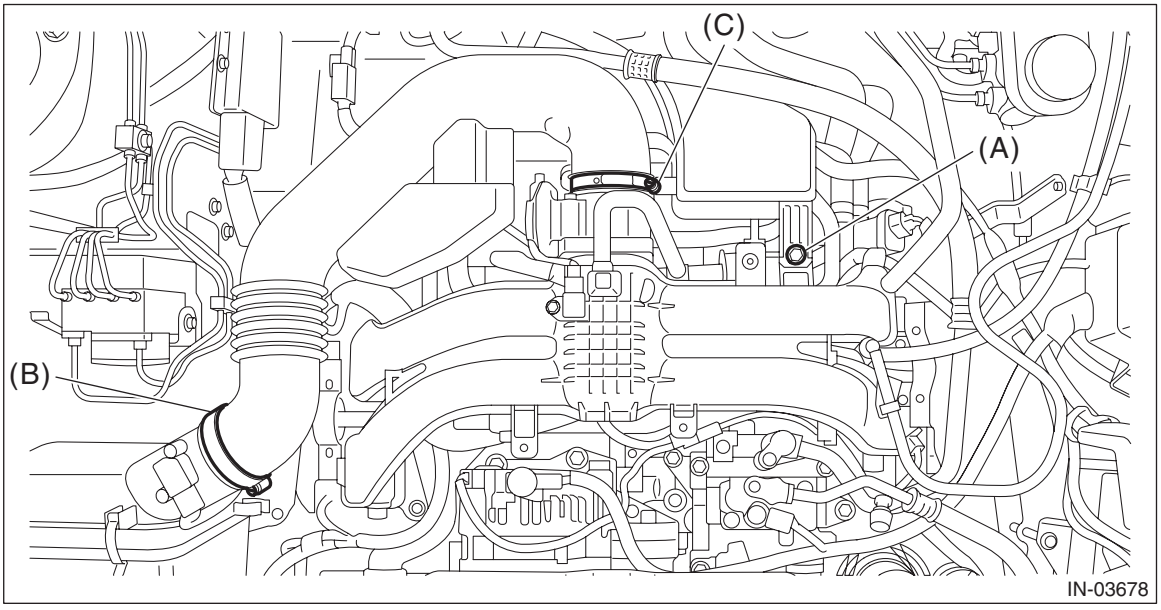

C: INSPECTION

1) Check that the air intake boot has no deformation, cracks or other damages.
2) Inspect that no foreign objects are mixed in the air intake boot.

5. Air Intake Duct

A: REMOVAL

Remove the clip which secures the air intake duct, and remove the air intake duct.

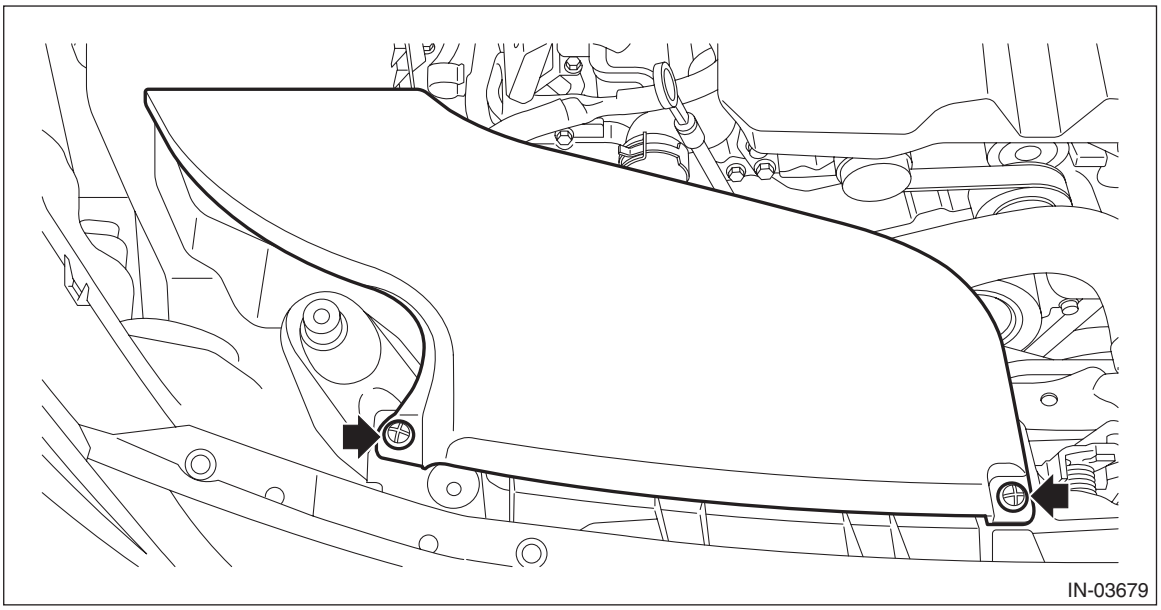

B: INSTALLATION

Install the air intake duct, and install the clips securing the air intake duct.

C: INSPECTION

1) Check that the air intake duct has no deformation, cracks or other damages.
2) Inspect that no foreign objects are mixed in the air intake duct.

6. Resonator Chamber

A: REMOVAL

The resonator chamber and air cleaner case are integrated into one unit; therefore, refer to “Air Cleaner Case” for removal procedure. <Ref. to IN(H4DO)-8, REMOVAL, Air Cleaner Case.>

B: INSTALLATION

The resonator chamber and air cleaner case are integrated into one unit; therefore, refer to “Air Cleaner Case” for installation procedure. <Ref. to IN(H4DO)-9, INSTALLATION, Air Cleaner Case.>

C: INSPECTION

Check that the resonator chamber has no deformation, cracks or other damages.

MECHANICAL

ME(H4DO)

		Page
1.	General Description	2
2.	Compression	24
3.	Idle Speed	26
4.	Ignition Timing	27
5.	Intake Manifold Vacuum	28
6.	Engine Oil Pressure	30
7.	Fuel Pressure	31
8.	Cam Clearance	34
9.	Engine Assembly	43
10.	Engine Mounting	64
11.	Preparation for Overhaul	70
12.	V-belt	71
13.	Crank Pulley	76
14.	Chain Cover	83
15.	Timing Chain Assembly	97
16.	Cam Sprocket	118
17.	Crank Sprocket	127
18.	Rocker Cover	128
19.	Camshaft	139
20.	Cam Carrier	140
21.	Cylinder Head	171
22.	Cylinder Block	211
23.	Intake and Exhaust Valve	317
24.	Piston	318
25.	Connecting Rod	319
26.	Crankshaft	320
27.	Engine Trouble in General	321
28.	Engine Noise	327

1. General Description

A: SPECIFICATION

Engine	Model			2.5 L
	Cylinder arrangement			Horizontally opposed, liquid cooled, 4-cylinder, 4-stroke gasoline engine
	Valve system mechanism			Chain driven, double overhead camshaft, 4-valve/cylinder
	Bore × Stroke mm (in)			94.0 × 90.0 (3.70 × 3.54)
	Displacement cm^3 (cu in)			2,498 (152)
	Compression ratio			10.3
	Compression pressure (at 200 — 300 r/min) kPa (kg/cm^2, psi)		Standard	1,050 — 1,400 (11 — 14, 152 — 203)
	Number of piston rings			Compression ring: 2 Oil ring: 1
	Intake valve timing	Open	Max. retard	ATDC 16°
			Min. advance	BTDC 39°
		Close	Max. retard	ABDC 80°
			Min. advance	ABDC 25°
	Exhaust valve timing		Open	BBDC 37°
			Open	ATDC 11°
	Cam clearance mm (in)	Intake	Standard	$0.13^{+0.02}_{-0.03}$ ($0.0051^{+0.0008}_{-0.0012}$)
		Exhaust	Standard	0.22±0.02 (0.0087±0.0008)
	Idle speed (For CVT model, select lever in “P” or “N” range. For MT model, gear shift lever in neutral position.) r/min	No load	Standard	CVT model: 675±100
				MT model: 650±100
		A/C ON	Standard	800 — 900±100
	Ignition order			1 → 3 → 2 → 4
	Ignition timing BTDC/{r/min}		Standard	CVT model: 5°±10°/675
				MT model: 6°±10°/650

NOTE:
OS: Oversize US: Undersize

Camshaft	Bending			Limit	0.020 (0.00079)
	Cam lobe height	Intake		Standard	40.34 — 40.44 (1.588 — 1.592)
		Exhaust		Standard	39.66 — 39.76 (1.561 — 1.565)
	Cam base circle diameter			Standard	34.0 (1.339)
	Journal outer diameter			Standard	25.946 — 25.963 (1.0215 — 1.0222)
	Thrust clearance			Standard	0.068 — 0.116 (0.0027 — 0.0047)
	Oil clearance			Standard	0.037 — 0.072 (0.0015 — 0.0028)
Cylinder head	Warpage (mating surface with cylinder block)			Limit	0.020 (0.00079)
	Grinding limit				To 98.4 (3.874)
	Height			Standard	98.5 (3.878)
Valve & valve guide	Valve overall length		Intake		104.95 (4.132)
			Exhaust		96.5 (3.799)
	Valve head edge thickness	Intake		Standard	0.8 — 1.2 (0.031 — 0.047)
		Exhaust		Standard	1.0 — 1.4 (0.039 — 0.055)
	Valve stem outer diameter	Intake		Standard	5.455 — 5.470 (0.2148 — 0.2154)
		Exhaust		Standard	5.445 — 5.460 (0.2144 — 0.2150)
	Valve guide inner diameter			Standard	5.500 — 5.512 (0.2165 — 0.2170)
	Clearance between valve and valve guide	Intake		Standard	0.030 — 0.057 (0.0012 — 0.0022)
		Exhaust		Standard	0.040 — 0.067 (0.0016 — 0.0026)
	Valve guide protrusion amount			Standard	11.4 — 11.8 (0.449 — 0.465)
Valve & valve shim	Valve stem end outer diameter	Intake		Standard	5.455 — 5.470 (0.2148 — 0.2154)
		Exhaust		Standard	5.445 — 5.460 (0.2148 — 0.2150)
	Valve shim inner diameter			Standard	5.500 — 5.560 (0.2165 — 0.2189)
	Clearance between valve and valve shim	Intake		Standard	0.030 — 0.105 (0.0012 — 0.0041)
		Exhaust		Standard	0.040 — 0.115 (0.0016 — 0.0045)
Valve seat	Seating width between valve and valve seat	Intake		Standard	0.8 — 1.6 (0.031 — 0.063)
		Exhaust		Standard	1.1 — 1.7 (0.043 — 0.067)
	Seating angle between valve and valve seat				45°
	Seating position between valve and valve seat				Valve face center
Valve spring	Free length			Standard	CVT model: 41.68 (1.641)
					MT model: 41.06 (1.617)
	Tension/spring height N (kgf, lb)/mm (in)		Set	Standard	182 — 210 (18.56 — 21.41, 40.92 — 47.22)/ 33.0 (1.299)
			Lift	Standard	CVT model: 502 — 554 (51.19 — 56.49, 112.87 — 124.56)/ 22.0 (0.866)
					MT model: 552 — 610 (56.29 — 62.20, 124.11 — 137.15)/ 22.0 (0.866)
	Squareness			Standard	2.5°, 1.8 mm (0.071 in) or less

Cylinder block & piston	Cylinder block warpage (Mating surface with cylinder head)	mm (in)		Limit	0.025 (0.00098)
	Grinding limit of cylinder block	mm (in)			To 204.9 (8.067)
	Height of cylinder block	mm (in)		Standard	205.0 (8.071)
	Inner diameter of cylinder liner	mm (in)	Cylinder bore size mark A	Standard	94.005 — 94.015 (3.7010 — 3.7014)
			Cylinder bore size mark B	Standard	93.995 — 94.005 (3.7006 — 3.7010)
	Cylindricality of cylinder liner	mm (in)		Limit	0.030 (0.0012)
	Out-of-roundness of cylinder liner	mm (in)		Limit	0.030 (0.0012)
	Piston grade point	mm (in)			13.3 (0.52)
	Piston outer diameter	mm (in)	Standard Size Grade A	Standard	93.980 — 93.990 (3.7000 — 3.7004)
			Standard Size Grade B	Standard	93.970 — 93.980 (3.6996 — 3.7000)
			0.25 (0.0098) OS	Standard	94.220 — 94.240 (3.7094 — 3.7102)
			0.50 (0.0197) OS	Standard	94.470 — 94.490 (3.7193 — 3.7201)
	Clearance between cylinder liner and piston	mm (in)		Standard	0.015 — 0.035 (0.00059 — 0.00138)
	Inner diameter of cylinder liner boring limit (diameter)	mm (in)			To 94.505 (3.7207)
Piston and piston pin	Degree of fit				Piston pin must be fitted into position with thumb at 20°C (68°F).
	Clearance between piston and piston pin	mm (in)		Standard	0.004 — 0.008 (0.0002 — 0.0003)
Piston ring	Closed gap	mm (in)	Compression ring Top ring	Standard	0.20 — 0.25 (0.0079 — 0.0098)
			Compression ring Second ring	Standard	0.25 — 0.35 (0.0098 — 0.0138)
			Oil ring (upper rail and lower rail)	Standard	0.10 — 0.35 (0.0039 — 0.0138)
	Clearance between compression ring and piston	mm (in)	Top ring	Standard	0.040 — 0.080 (0.0016 — 0.0031)
			Second ring	Standard	0.030 — 0.070 (0.0012 — 0.0028)
Connecting rod and connecting rod bearing	Bend or twist per 100 mm (3.94 in) in length	mm (in)		Limit	0.10 (0.0039)
	Thrust clearance	mm (in)		Standard	0.070 — 0.330 (0.0028 — 0.0130)
	Connecting rod bearing thickness (at center)	mm (in)	Standard size	Standard	1.492 — 1.508 (0.0587 — 0.0594)
			0.03 (0.0012) US	Standard	1.511 — 1.515 (0.0595 — 0.0596)
			0.05 (0.0020) US	Standard	1.521 — 1.525 (0.0599 — 0.0600)
			0.25 (0.0098) US	Standard	1.621 — 1.625 (0.0638 — 0.0640)
	Oil clearance	mm (in)		Standard	0.017 — 0.047 (0.0007 — 0.0019)
Piston pin & connecting rod bushing	Clearance between piston pin and connecting rod bushing	mm (in)		Standard	0.004 — 0.026 (0.0002 — 0.0010)

Crankshaft and crankshaft bearing	Bending			Limit	0.035 (0.0014)
	Crankshaft pin	Cylindricality mm (in)		Limit	0.006 (0.0002)
		Out-of-roundness mm (in)		Limit	0.005 (0.0002)
		Grinding limit (dia.) mm (in)			To 47.726 (1.8790)
	Crankshaft journal	Cylindricality mm (in)		Limit	0.006 (0.0002)
		Out-of-roundness mm (in)		Limit	0.005 (0.0002)
		Grinding limit (dia.) mm (in)			To 67.735 (2.6667)
	Crankshaft pin outer diameter mm (in)		Standard size	Standard	47.976 — 48.000 (1.8888 — 1.8898)
			0.03 (0.0012) US	Standard	47.946 — 47.970 (1.8876 — 1.8886)
			0.05 (0.0020) US	Standard	47.926 — 47.950 (1.8868 — 1.8878)
			0.25 (0.0098) US	Standard	47.726 — 47.750 (1.8790 — 1.8799)
	Crankshaft journal outer diameter mm (in)		Standard size	Standard	67.985 — 68.003 (2.6766 — 2.6773)
			0.03 (0.0012) US	Standard	67.955 — 67.979 (2.6754 — 2.6763)
			0.05 (0.0020) US	Standard	67.935 — 67.959 (2.6746 — 2.6755)
			0.25 (0.0098) US	Standard	67.735 — 67.759 (2.6667 — 2.6677)
	Crankshaft bearing thickness (at center) mm (in)	#1, #2, #3, #4	Standard size	Standard	2.498 — 2.513 (0.0983 — 0.0989)
			0.03 (0.0012) US	Standard	2.519 — 2.522 (0.0992 — 0.0993)
			0.05 (0.0020) US	Standard	2.529 — 2.532 (0.0996 — 0.0997)
			0.25 (0.0098) US	Standard	2.629 — 2.632 (0.1035 — 0.1036)
		#5	Standard size	Standard	2.496 — 2.511 (0.0983 — 0.0989)
			0.03 (0.0012) US	Standard	2.517 — 2.520 (0.0991 — 0.0992)
			0.05 (0.0020) US	Standard	2.527 — 2.530 (0.0995 — 0.0996)
			0.25 (0.0098) US	Standard	2.627 — 2.630 (0.1034 — 0.1035)
	Thrust clearance mm (in)			Standard	0.130 — 0.308 (0.00512 — 0.01213)
	Oil clearance mm (in)			Standard	0.013 — 0.031 (0.00051 — 0.00122)

B: COMPONENT

1. TIMING CHAIN AND CAMSHAFT

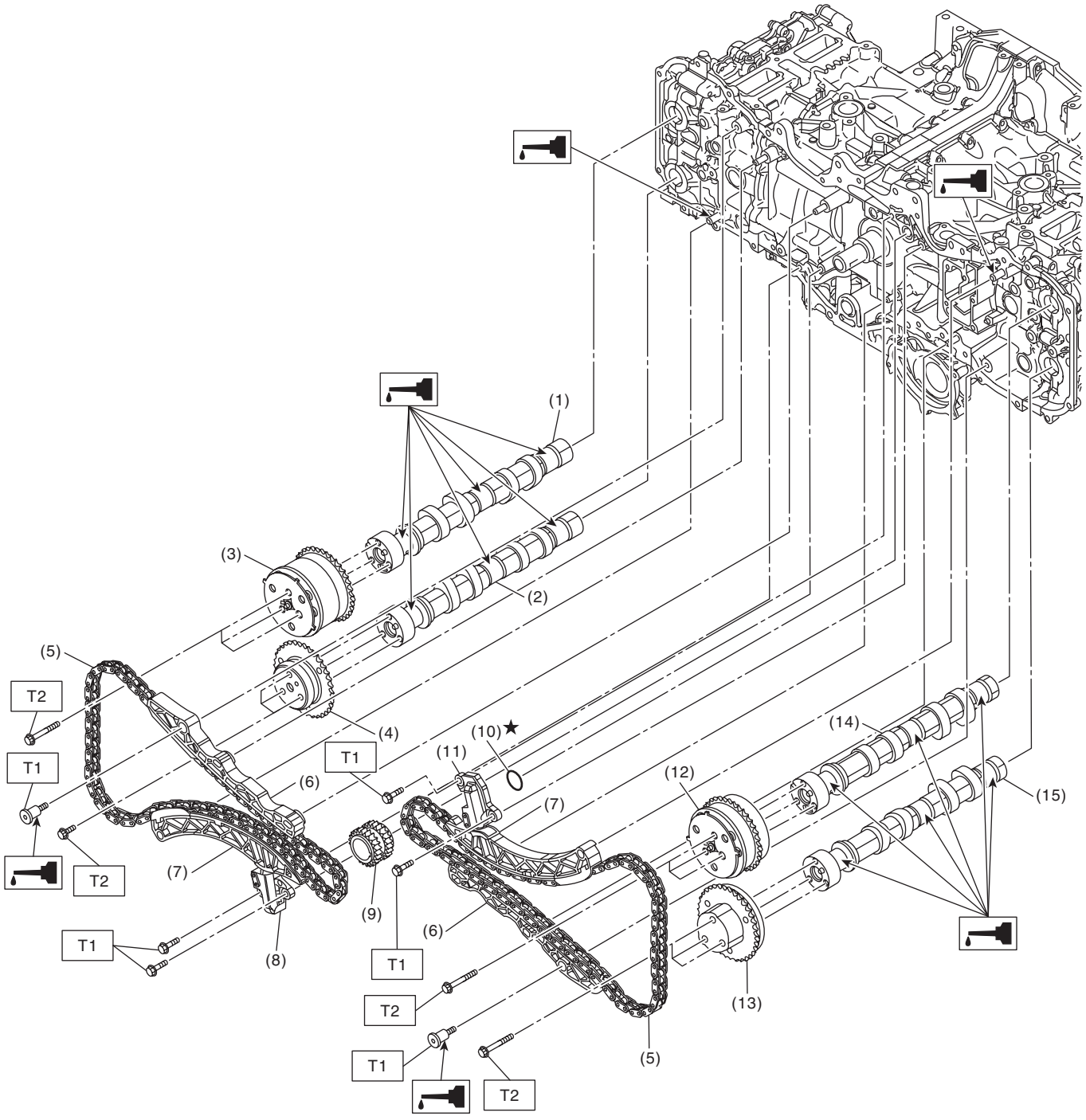

ME-08170

(1) Intake camshaft RH
(2) Exhaust camshaft RH
(3) Intake cam sprocket RH
(4) Exhaust cam sprocket RH
(5) Timing chain
(6) Chain guide
(7) Chain tension lever
(8) Chain tensioner RH
(9) Crank sprocket
(10) O-ring
(11) Chain tensioner LH
(12) Intake cam sprocket LH
(13) Exhaust cam sprocket LH
(14) Intake camshaft LH
(15) Exhaust camshaft LH

Tightening torque: N·m (kgf-m, ft-lb)
T1: 6.4 (0.7, 4.7)
T2: 18 (1.8, 13.3)

2. CHAIN COVER

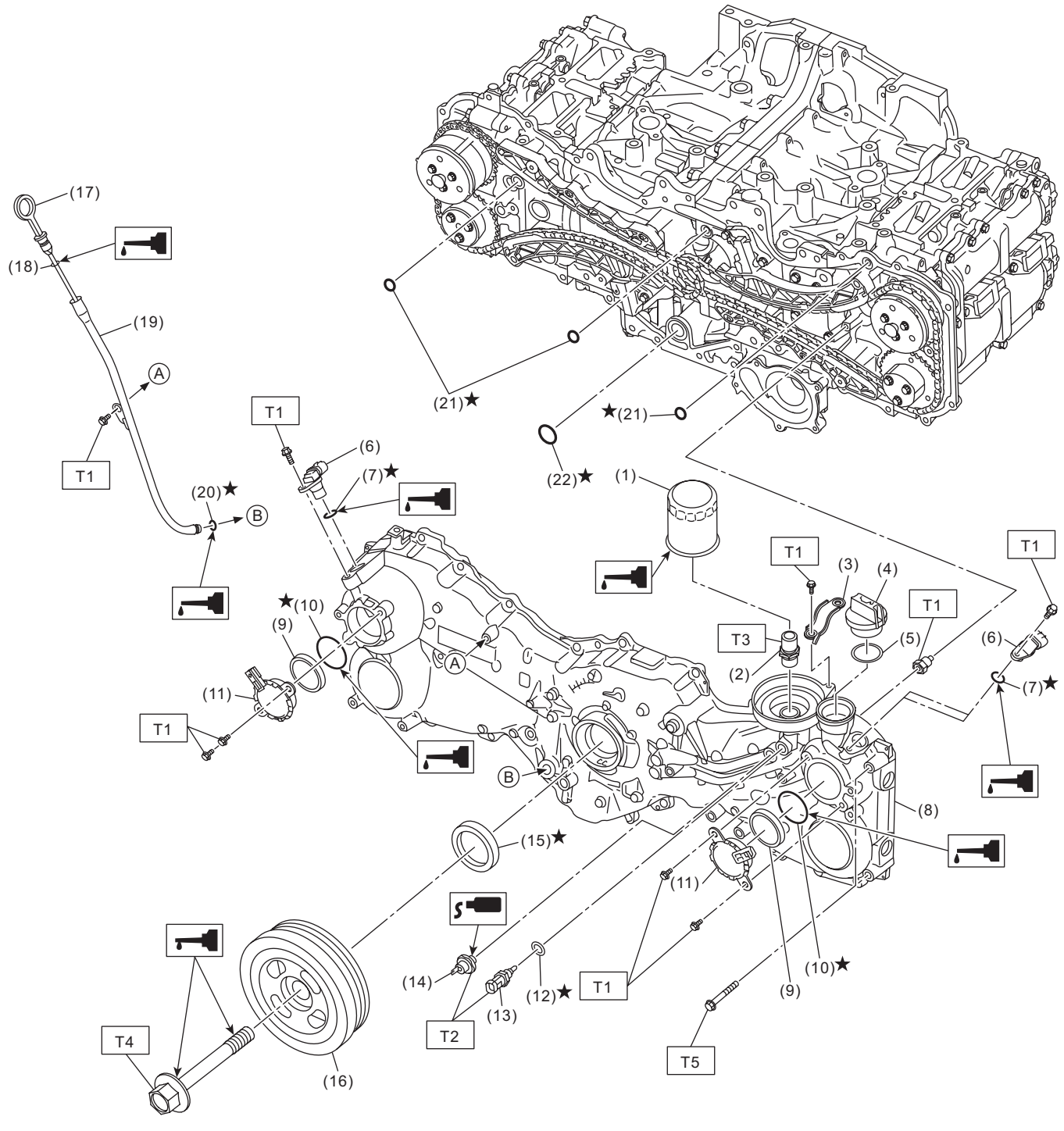

ME-20184

(1) Oil filter
(2) Oil pump union
(3) Generator cord stay
(4) Oil filler cap
(5) Gasket
(6) Camshaft position sensor
(7) O-ring
(8) Chain cover
(9) Back-up ring
(10) O-ring
(11) Oil control solenoid
(12) Gasket
(13) Engine oil temperature sensor
(14) Oil pressure switch
(15) Front oil seal
(16) Crank pulley
(17) Oil level gauge
(18) O-ring
(19) Oil level gauge guide
(20) O-ring
(21) O-ring
(22) O-ring

Tightening torque: N·m (kgf-m, ft-lb)
T1: 6.4 (0.7, 4.7)
T2: 18 (1.8, 13.3)
T3: 45 (4.6, 33.2)
T4: <Ref. to ME(H4DO)-78, INSTALLATION, Crank Pulley.>
T5: <Ref. to ME(H4DO)-88, INSTALLATION, Chain Cover.>

3. ROCKER COVER

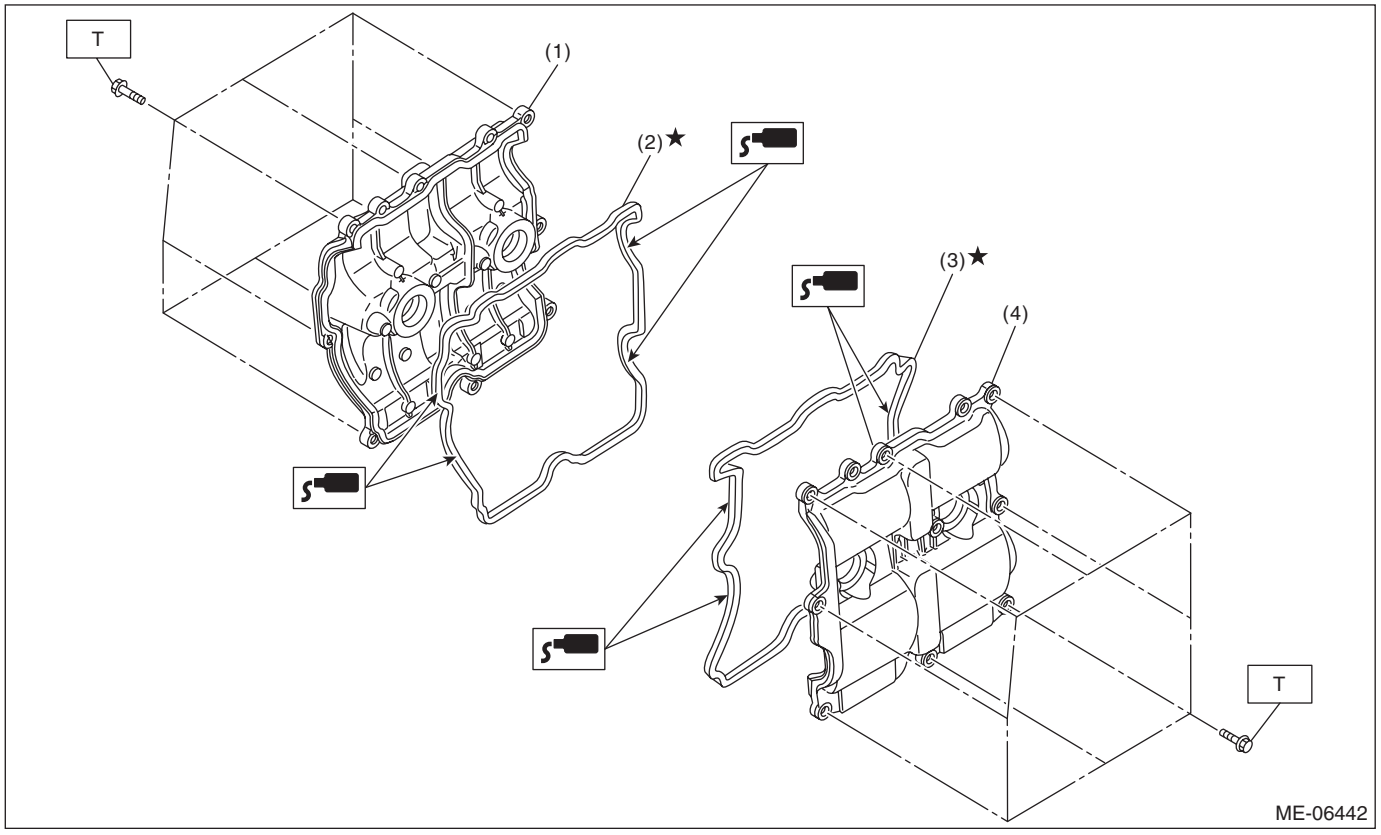

(1) Rocker cover RH
(2) Rocker cover gasket RH
(3) Rocker cover gasket LH
(4) Rocker cover LH

Tightening torque: N·m (kgf-m, ft-lb)
T: <Ref. to ME(H4DO)-133, INSTALLATION, Rocker Cover.>

4. CAM CARRIER

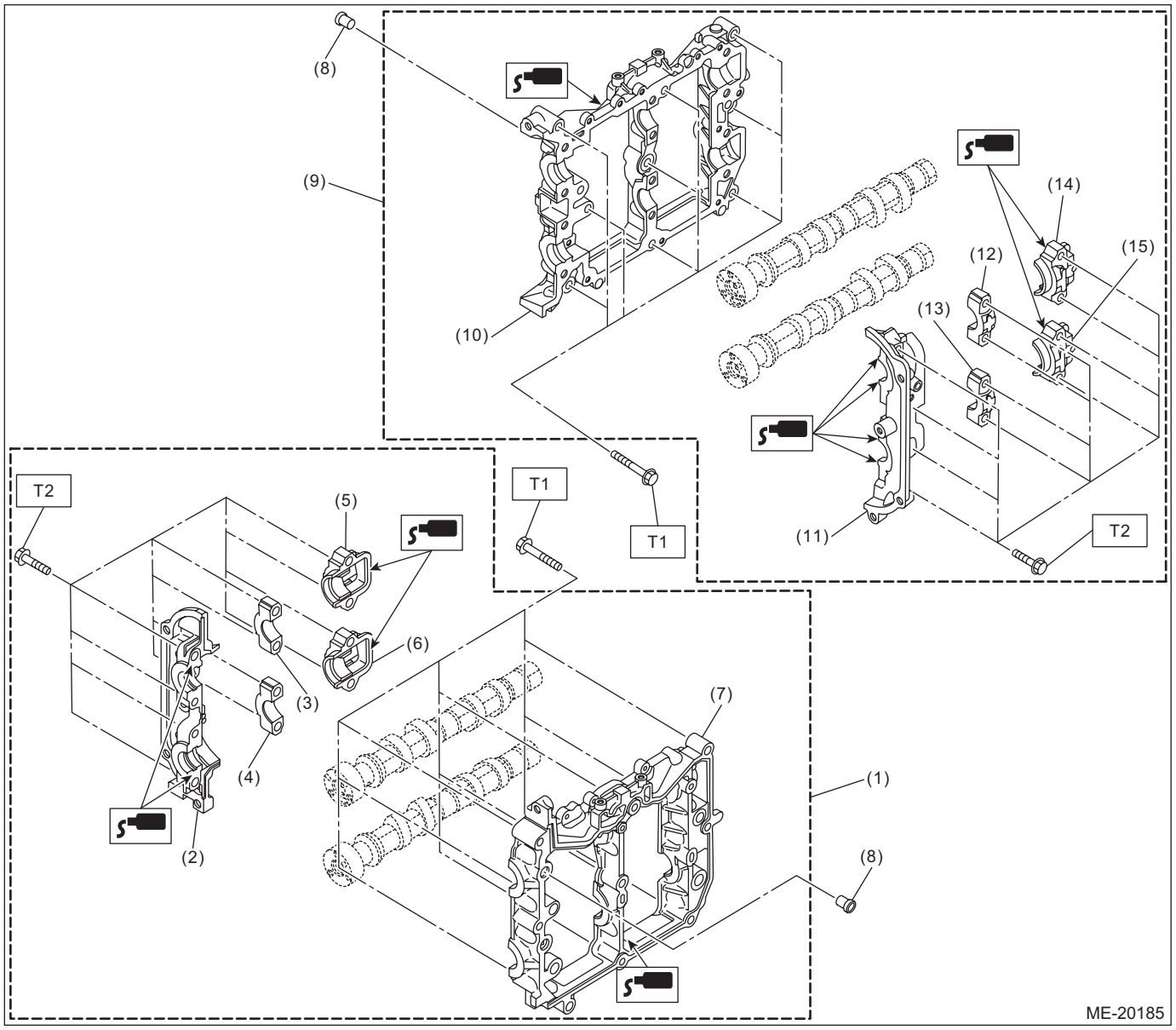

(1) Cam carrier ASSY RH
(2) Front camshaft cap RH
(3) Intake center camshaft cap RH
(4) Exhaust center camshaft cap RH
(5) Intake rear camshaft cap RH
(6) Exhaust rear camshaft cap RH
(7) Cam carrier RH
(8) Filter
(9) Cam carrier ASSY LH
(10) Cam carrier LH
(11) Front camshaft cap LH
(12) Intake center camshaft cap LH
(13) Exhaust center camshaft cap LH
(14) Intake rear camshaft cap LH
(15) Exhaust rear camshaft cap LH

Tightening torque: N·m (kgf-m, ft-lb)

T1: <Ref. to ME(H4DO)-146, INSTALLATION, Cam Carrier.>

T2: <Ref. to ME(H4DO)-162, ASSEMBLY, Cam Carrier.>

5. CYLINDER HEAD

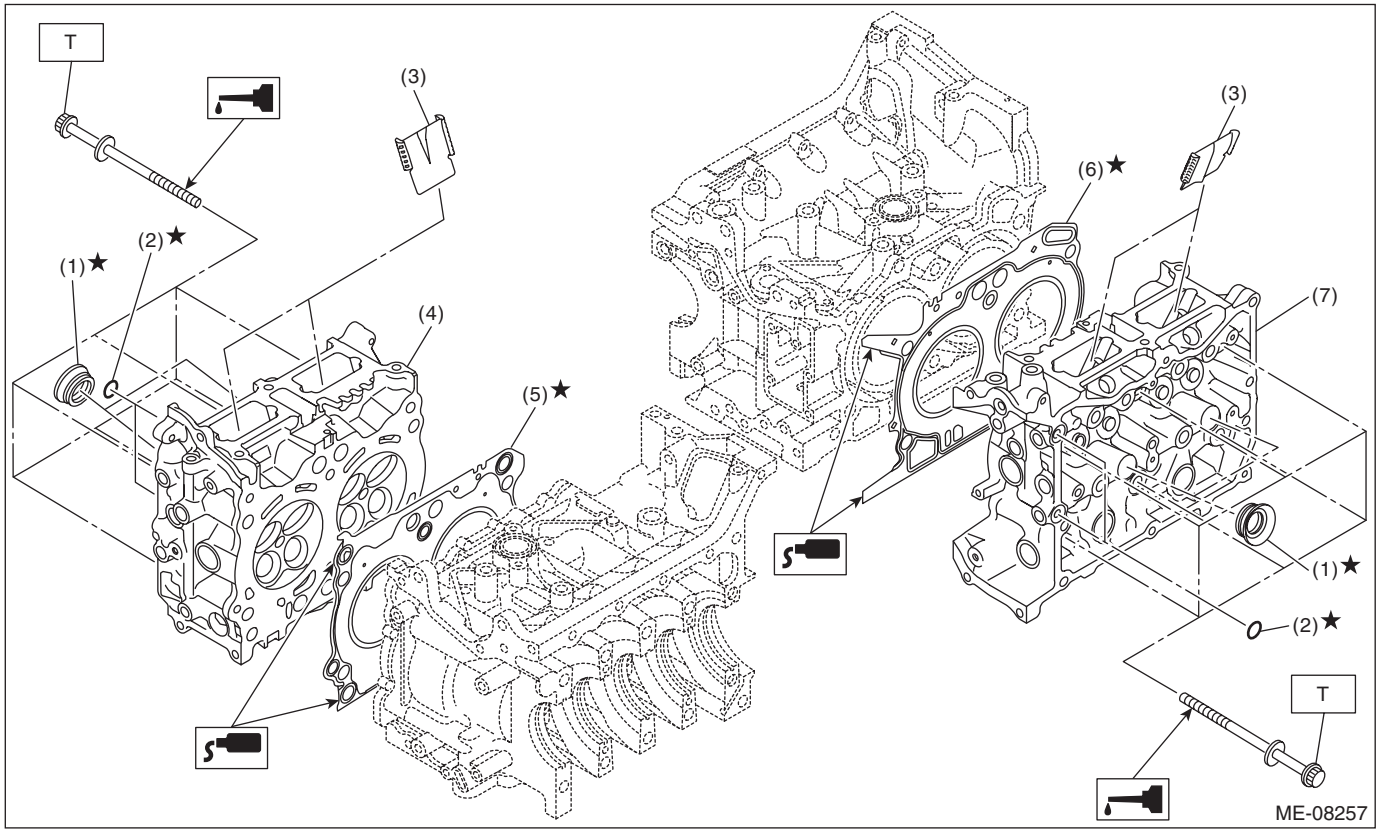

(1) Spark plug pipe gasket
(2) O-ring
(3) Cylinder head plate
(4) Cylinder head RH
(5) Cylinder head gasket RH
(6) Cylinder head gasket LH
(7) Cylinder head LH

Tightening torque: N·m (kgf-m, ft-lb)

T: <Ref. to ME(H4DO)-173, INSTALLATION, Cylinder Head.>

6. VALVE ASSEMBLY

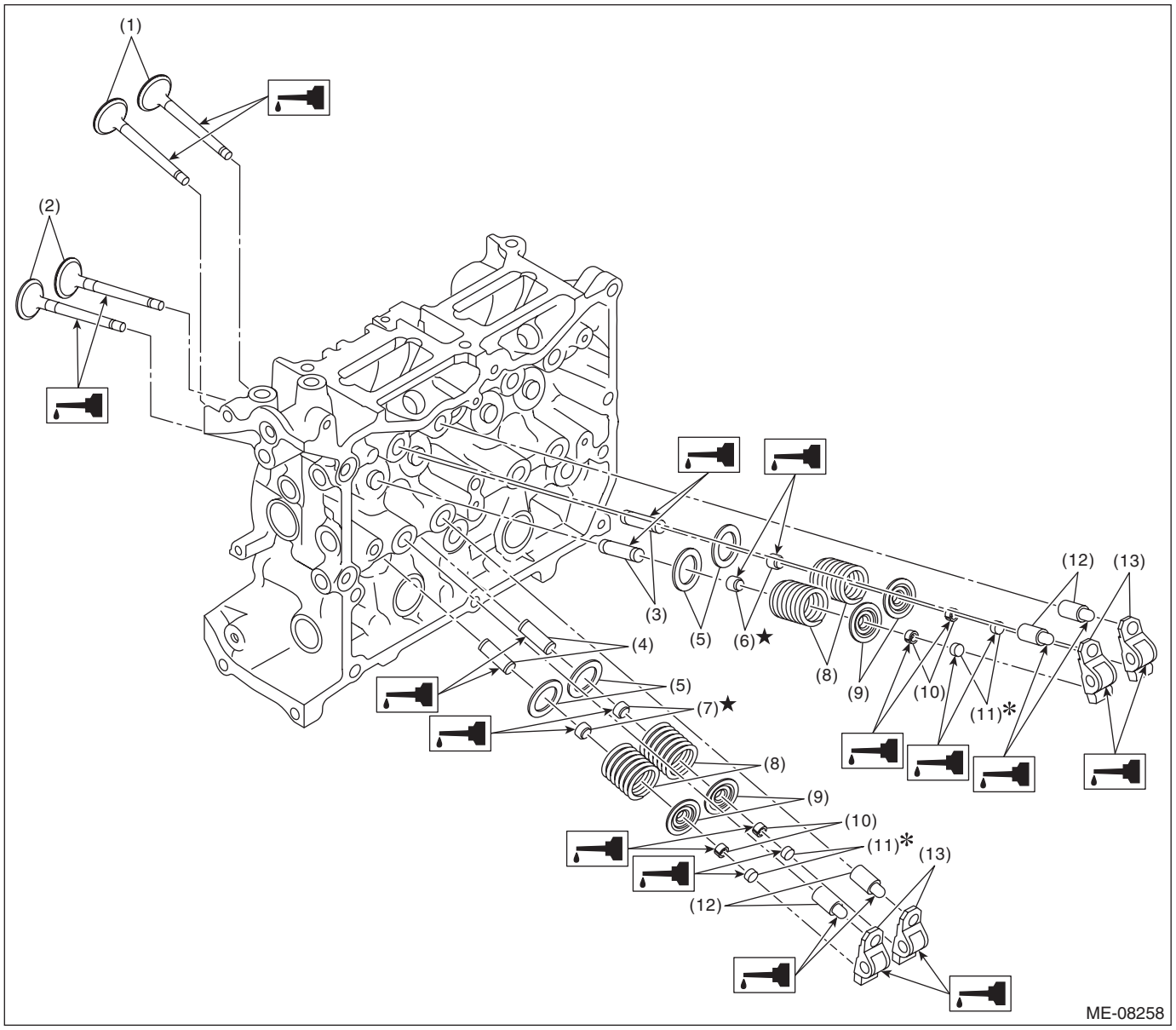

(1) Exhaust valve
(2) Intake valve
(3) Intake valve guide
(4) Exhaust valve guide
(5) Valve spring seat
(6) Intake valve oil seal
(7) Exhaust valve oil seal
(8) Valve spring
(9) Valve spring retainer
(10) Valve collet
(11) Valve shim
(12) Roller rocker arm pivot
(13) Roller rocker arm

7. CYLINDER BLOCK 1

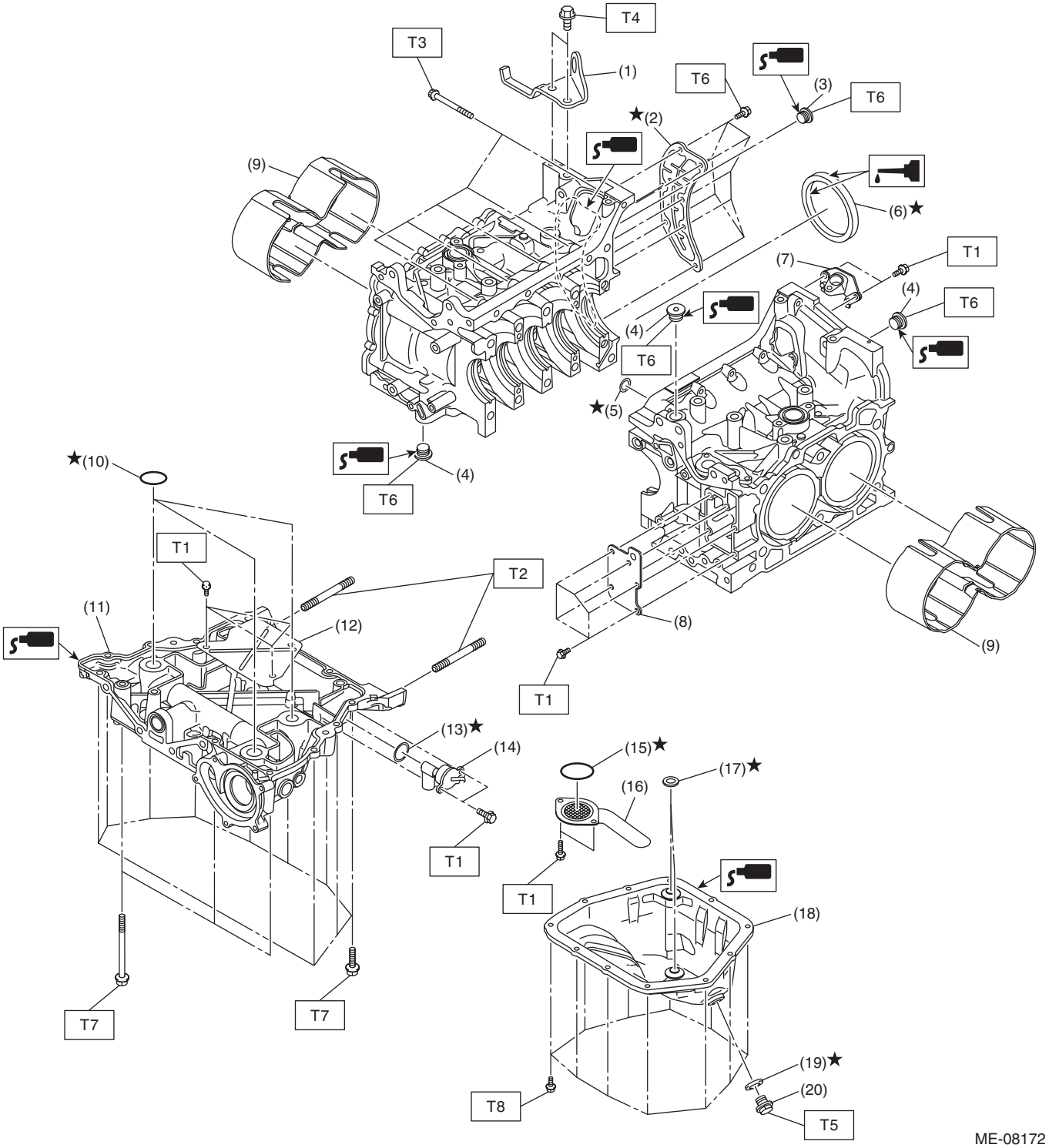

(1)	Engine rear hanger	(11)	Oil pan upper	
(2)	Oil separator cover	(12)	Baffle plate	
(3)	Cylinder block plug	(13)	O-ring	
(4)	Main gallery plug	(14)	Oil level switch	
(5)	O-ring	(15)	O-ring	
(6)	Rear oil seal	(16)	Oil strainer	
(7)	Crankshaft position sensor holder	(17)	Oil pan seal ring	
(8)	Cylinder block plate	(18)	Oil pan	
(9)	Water jacket spacer	(19)	Drain plug gasket	
(10)	O-ring	(20)	Drain plug	

Tightening torque: N·m (kgf-m, ft-lb)

T1: 6.4 (0.7, 4.7)
T2: 10 (1.0, 7.4)
T3: 25 (2.5, 18.4)
T4: 36 (3.7, 26.6)
T5: 41.7 (4.3, 30.8)
T6: <Ref. to ME(H4DO)-276, CYLINDER BLOCK, ASSEMBLY, Cylinder Block.>
T7: <Ref. to ME(H4DO)-230, INSTALLATION, Cylinder Block.>
T8: <Ref. to LU(H4DO)-15, OIL PAN AND STRAINER, INSTALLATION, Oil Pan and Strainer.>

8. CYLINDER BLOCK 2

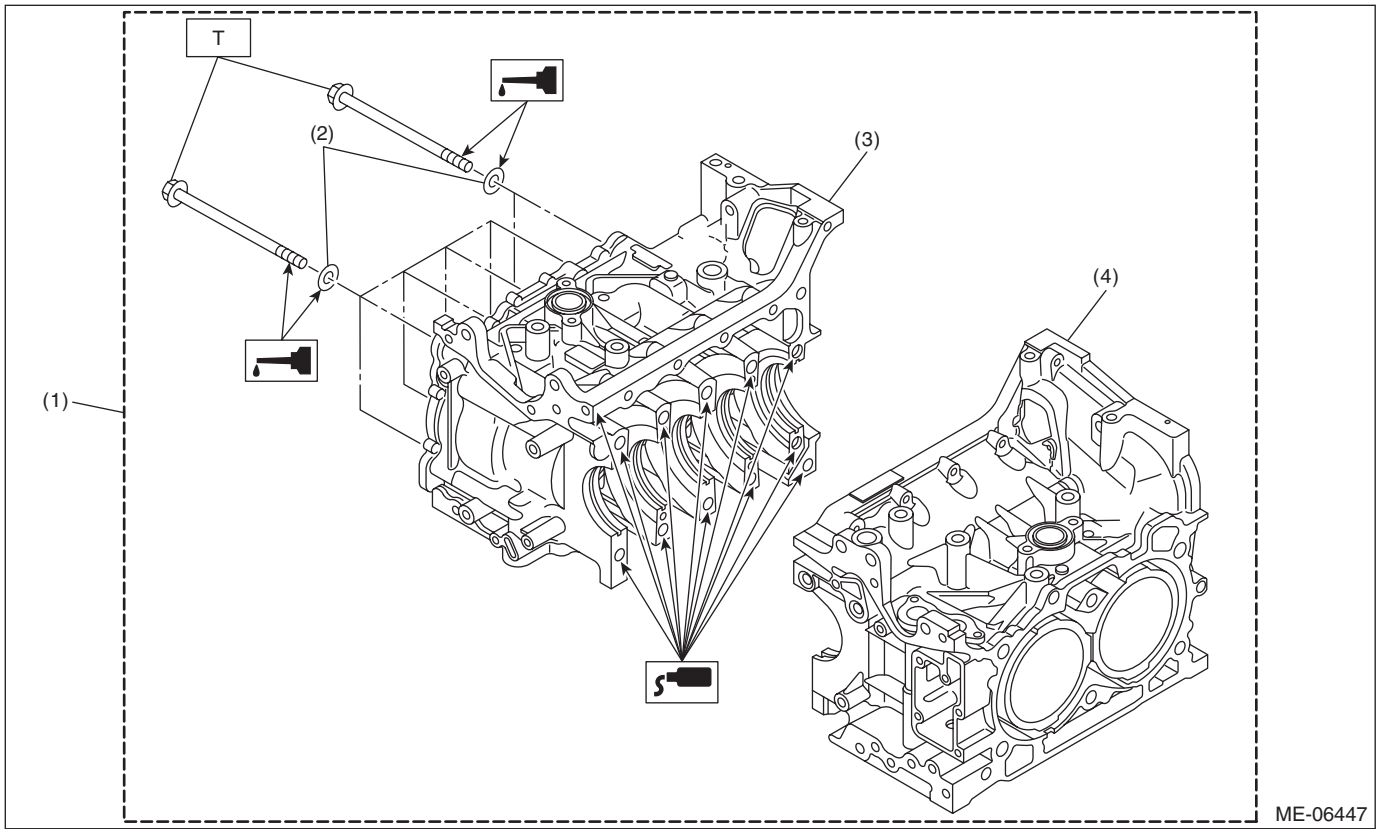

(1)	Cylinder block ASSY	(3)	Cylinder block RH
(2)	Washer	(4)	Cylinder block LH

Tightening torque: N·m (kgf-m, ft-lb)

T: <Ref. to ME(H4DO)-230, INSTALLATION, Cylinder Block.>

9. CRANKSHAFT AND PISTON

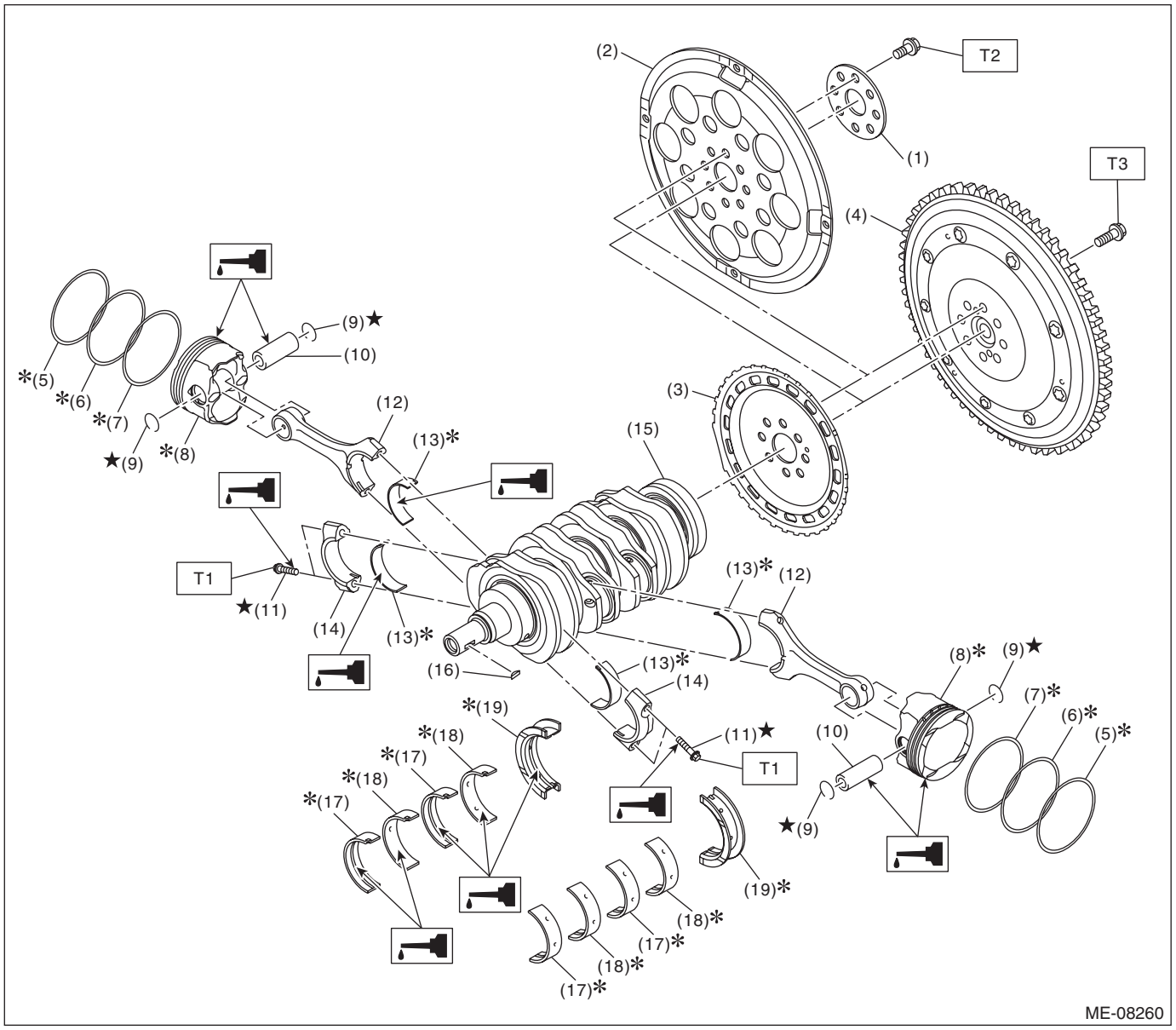

(1)	Reinforcement drive plate (CVT model)	(9)	Circlip	(17)	Crankshaft bearing #1, #3
(2)	Drive plate (CVT model)	(10)	Piston pin	(18)	Crankshaft bearing #2, #4
(3)	Crankshaft position sensor plate	(11)	Connecting rod cap bolt	(19)	Crankshaft bearing #5
(4)	Flywheel (MT model)	(12)	Connecting rod		
(5)	Top ring	(13)	Connecting rod bearing		
(6)	Second ring	(14)	Connecting rod cap		
(7)	Oil ring	(15)	Crankshaft		
(8)	Piston	(16)	Woodruff key		

Tightening torque: N·m (kgf-m, ft-lb)

T1: ***<Ref. to ME(H4DO)-230, INSTALLATION, Cylinder Block.>***

T2: ***<Ref. to CVT(TR580)-194, INSTALLATION, Drive Plate.>***

T3: ***<Ref. to CL-12, INSTALLATION, Flywheel.>***

10.ENGINE MOUNTING

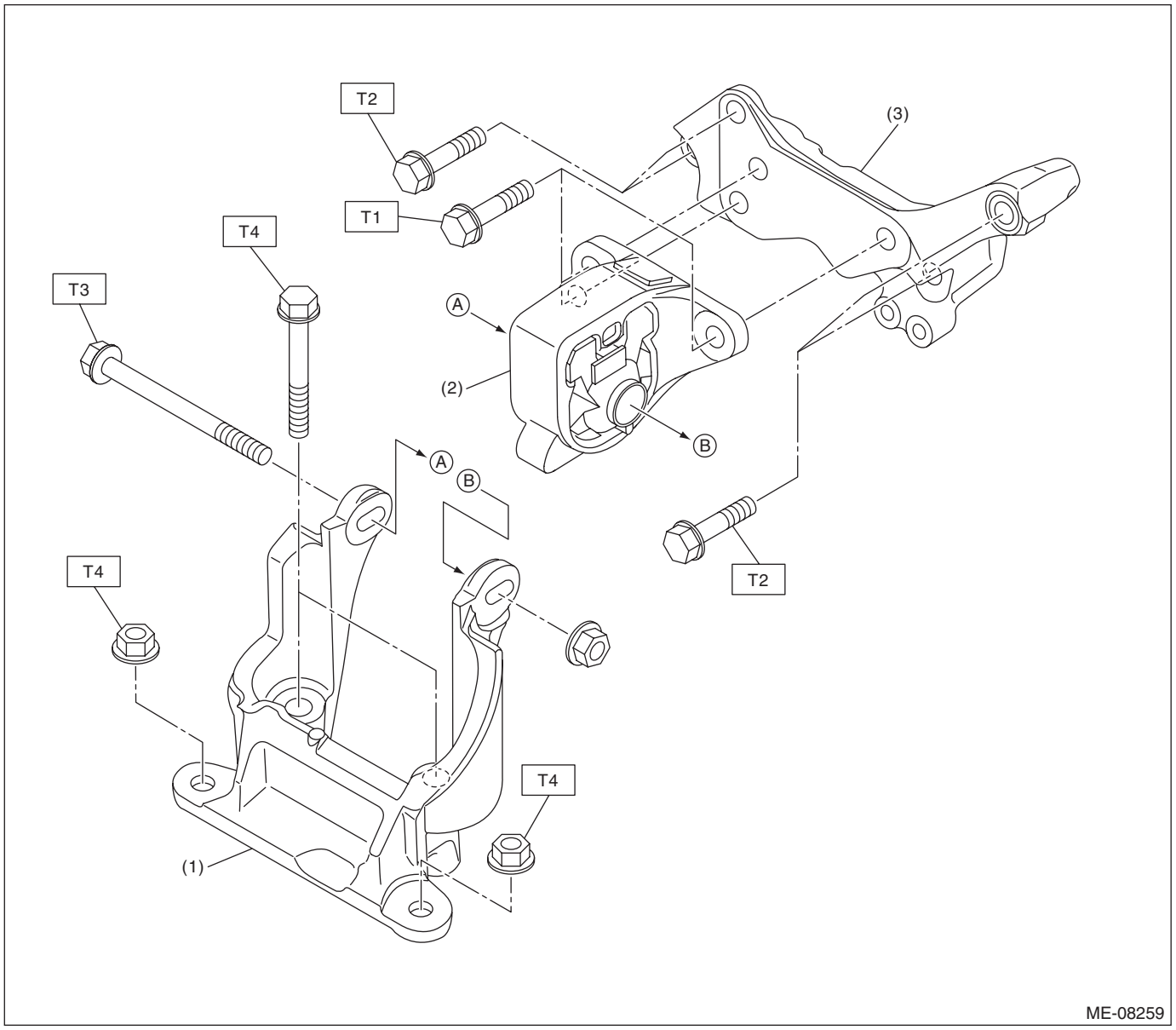

(1) Front mounting bracket
(2) Front cushion rubber
(3) Engine mounting bracket

Tightening torque: N·m (kgf-m, ft-lb)
T1: 25 (2.5, 18.4)
T2: 30 (3.1, 22.1)
T3: 45 (4.6, 33.2)
T4: 60 (6.1, 44.3)

C: CAUTION

- Prior to starting work, pay special attention to the following:
  1. Always wear work clothes, a work cap, and protective shoes. Additionally, wear a helmet, protective goggles, etc. if necessary.
  2. Protect the vehicle using a seat cover, fender cover, etc.
  3. Prepare the service tools, clean cloth, containers to catch grease and oil, etc.
- Vehicle components are extremely hot immediately after driving. Be wary of receiving burns from heated parts.
- When performing a repair, identify the cause of trouble and avoid unnecessary removal, disassembly and replacement.
- Before disconnecting connectors of sensors or units, be sure to disconnect the ground cable from battery.
- Always use the jack-up point when the shop jacks or rigid racks are used to support the vehicle.
- Remove or install the engine in an area where chain hoists, lifting devices, etc. are available for ready use. When lifting up the vehicle, make sure to support the vehicle at the jack-up points.
- Be careful not to let any oil or grease contact the clutch disc or flywheel.
- Remove contamination including dirt and corrosion before removal, installation, disassembly or assembly.
- Keep the removed parts in order and protect them from dust and dirt.
- All removed parts, if to be reused, should be reinstalled in the original positions with attention to the correct directions, etc.
- Rotating parts and sliding parts such as piston, bearing and gear should be coated with oil when being assembled.
- Bolts, nuts and washers should be replaced with new parts as required.
- Be sure to tighten the fasteners including bolts and nuts to the specified torque.

D: PREPARATION TOOL

1. SPECIAL TOOL

ILLUSTRATION	TOOL NUMBER	DESCRIPTION	REMARKS
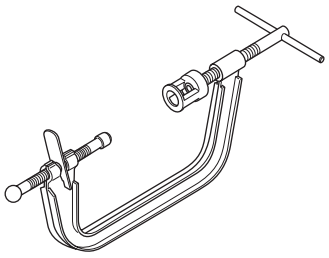 ST0920287002000	0920287002000	REMOVER AND REPLACER	Used for removing and installing valve spring.
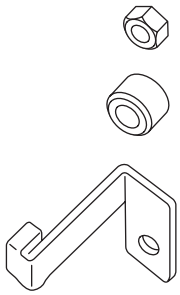 ST-498277200	498277200	STOPPER SET	Used for preventing the torque converter from falling when removing and installing the engine. (CVT model)
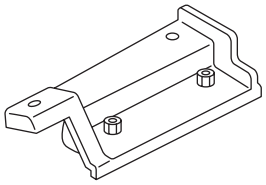 ST-498457000	498457000	ENGINE STAND ADAPTER RH	• Used for disassembling and assembling engine. • Used together with ENGINE STAND (499817100) and ADAPTER (18362AA020).
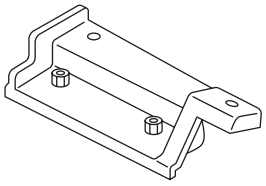 ST-498457100	498457100	ENGINE STAND ADAPTER LH	• Used for disassembling and assembling engine. • Used together with ENGINE STAND (499817100) and ADAPTER (18362AA020).

ILLUSTRATION	TOOL NUMBER	DESCRIPTION	REMARKS
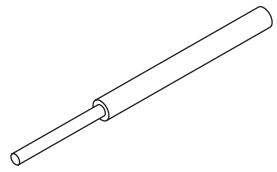 ST-499765700	499765700	VALVE GUIDE REMOVER AND INSTALLER	Used for removing and installing valve guide.
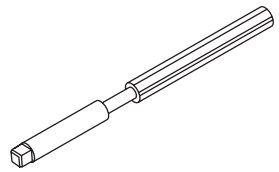 ST-499765900	499765900	VALVE GUIDE REAMER	Used for reaming valve guides.
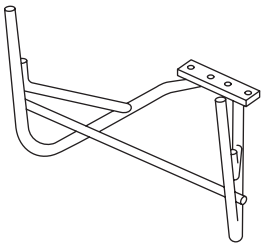 ST-499817100	499817100	ENGINE STAND	• Used for disassembling and assembling engine. • Used together with ADAPTER (18362AA020), ENGINE STAND ADAPTER RH (498457000) and LH (498457100).
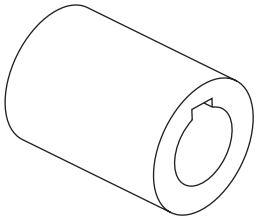 ST18252AA000	18252AA000	CRANKSHAFT SOCKET	Used for rotating crankshaft.
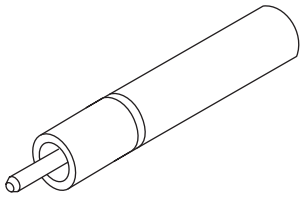 ST18261AA010	18261AA010	VALVE OIL SEAL GUIDE	Used for press-fitting of intake valve guide stem seals and exhaust valve guide stem seals.

ILLUSTRATION	TOOL NUMBER	DESCRIPTION	REMARKS
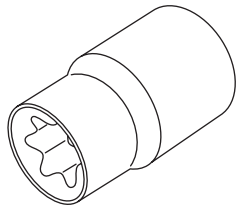 ST18270AA020	18270AA020	SOCKET	Used for removing and installing connecting rod.
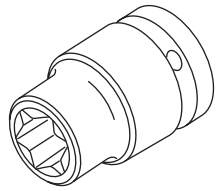 ST18270KA010	18270KA010	SOCKET	Used for installing and removing intake cam sprocket and exhaust cam sprocket.
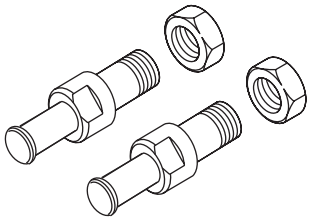 ST18334AA000	18334AA000	PULLEY WRENCH PIN SET	• Used for removing and installing the crank pulley. • Used together with PULLEY WRENCH (18355AA000).
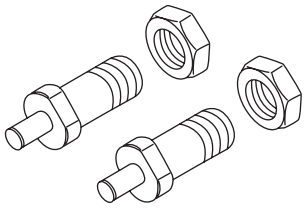 ST18334AA020	18334AA020	PULLEY WRENCH PIN SET	• Used for removing and installing cam sprocket. • Used for rotating the intake cam sprocket LH. • Used together with PULLEY WRENCH (18355AA000). • Used with the PULLEY WRENCH PIN SET (18334AA040) when removing and installing the exhaust cam sprocket.
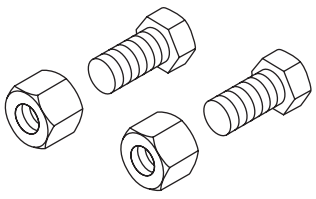 ST18334AA040	18334AA040	PULLEY WRENCH PIN SET	• Used for removing and installing exhaust cam sprocket. • Used together with PULLEY WRENCH (18355AA000) and PULLEY WRENCH PIN SET (18334AA020).

ILLUSTRATION	TOOL NUMBER	DESCRIPTION	REMARKS
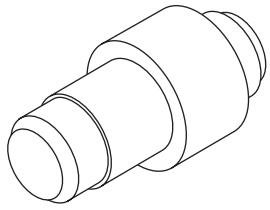 ST18350AA000	18350AA000	CONNECTING ROD BUSHING REMOVER AND INSTALLER	Used for removing and installing the connecting rod bushing at connecting rod small end.
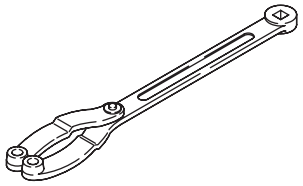 ST18355AA000	18355AA000	PULLEY WRENCH	• Used for removing and installing the crank pulley. • Used for removing and installing cam sprocket. • Used for rotating the intake cam sprocket LH. • Used together with PULLEY WRENCH PIN SET (18334AA000) or PULLEY WRENCH PIN SET (18334AA020). • Used with the PULLEY WRENCH PIN SET (18334AA040) when removing and installing the exhaust cam sprocket.
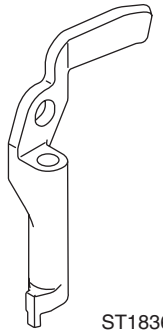 ST18360AA040	18360AA040	HANGER	• Used for removing and installing engine. • Used for removing and installing engine mounting. • Used for removing and installing chain cover. • Used together with BOLT (18363AA050).
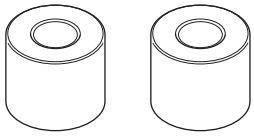 ST18362AA020	18362AA020	ADAPTER	• Used for disassembling and assembling engine. • Used together with STAND (499817100), ENGINE STAND ADAPTER RH (498457000) and LH (498457100). • Bolt used: M10 × 50 (SUBARU genuine Part No.: 010410500)
 ST18363AA050	18363AA050	BOLT	• Used for removing and installing engine. • Used for removing and installing engine mounting. • Used for removing and installing chain cover. • Used together with HANGER (18360AA040).

ILLUSTRATION	TOOL NUMBER	DESCRIPTION	REMARKS
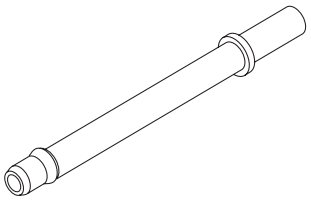 ST18471AA000	18471AA000	FUEL PIPE ADAPTER	Used for inspecting the fuel pressure.
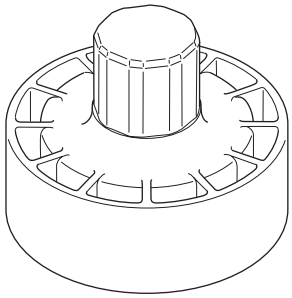 ST18657AA030	18657AA030	OIL SEAL INSTALLER	• Used for installing the rear oil seal of engine. • Used together with OIL SEAL GUIDE (18671AA020).
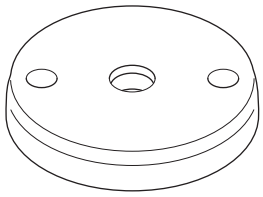 ST18671AA020	18671AA020	OIL SEAL GUIDE	• Used for installing the rear oil seal of engine. • Used together with OIL SEAL INSTALLER (18657AA030).
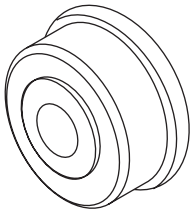 ST41399FG020	41399FG020	SPECIAL TOOL B	Used for installing the front oil seal of engine.
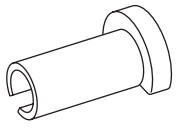 ST42099AE000	42099AE000	QUICK CONNECTOR RELEASE	Used for disconnecting the quick connector of the fuel delivery tube and FUEL HOSE (42075AG690). NOTE: FUEL HOSE (42075AG690) is used for checking the fuel pressure.

ILLUSTRATION	TOOL NUMBER	DESCRIPTION	REMARKS
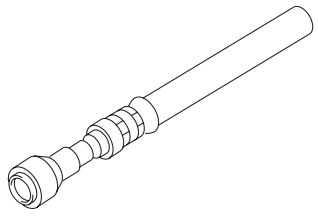 ST42075AG690	42075AG690	FUEL HOSE	Used for inspecting the fuel pressure. NOTE: This is the SUBARU genuine part.
 STSSM4	— (Newly adopted tool)	SUBARU SELECT MONITOR 4	Used for setting of each function and trouble-shooting for electrical system. NOTE: For detailed operation procedures of Subaru Select Monitor 4, refer to “Application help”.

2. GENERAL TOOL

TOOL NAME	REMARKS
Compression gauge	Used for measuring compression.
Vacuum gauge	Used for measuring intake manifold vacuum.
Oil pressure gauge	Used for measuring engine oil pressure.
Fuel pressure gauge	Used for measuring fuel pressure.
Thickness gauge	Used for various inspections.
Angle gauge	Used for angle tightening.
Piston ring compressor	Used for installing the piston into the cylinder block.
DST-i	Used together with Subaru Select Monitor 4.

2. Compression

A: INSPECTION

CAUTION:
After warming-up, engine becomes very hot. Be careful not to burn yourself during measurement.

NOTE:
• Before checking the compression pressure, the compression condition of each cylinder can be confirmed as a guide by using the compression measurement mode in Subaru Select Monitor. <Ref. to EN(H4DO)(diag)-79, OPERATION, Active Test.>
• In the compression measurement mode, the compression condition is judged by each cylinder speed. The high speed cylinder has low compression pressure and low speed cylinder has high compression pressure.
1) After warming-up the engine, turn the ignition switch to OFF.
2) Make sure that the battery is fully charged.
3) Check the starter motor for satisfactory performance and operation.
4) Remove the fuse of fuel pump from main fuse box.

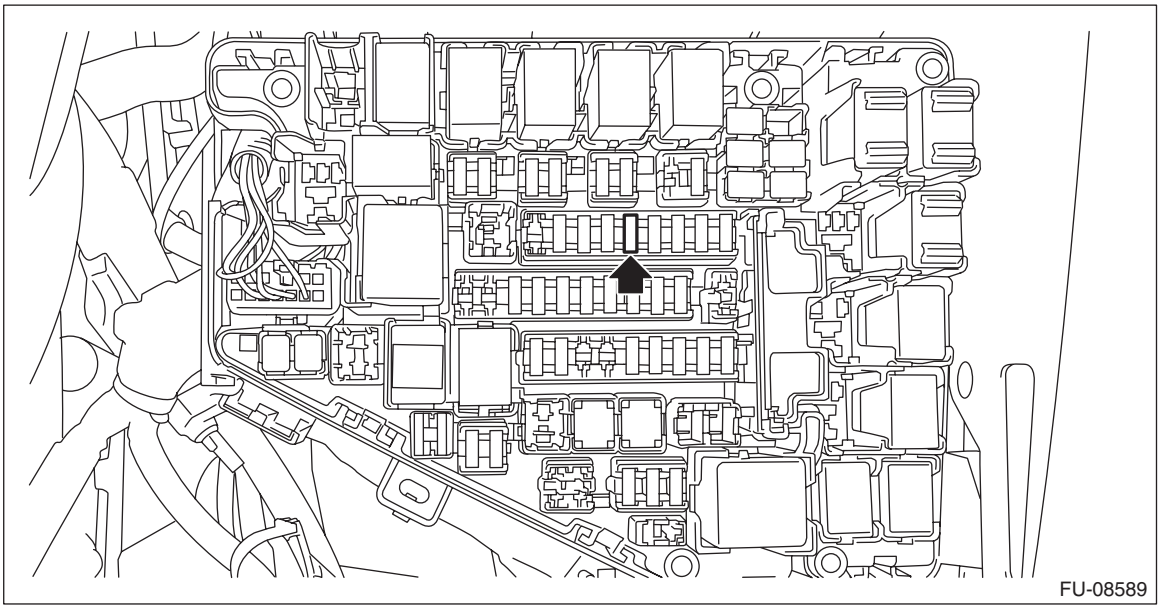
FU-08589

5) Start the engine and run it until it stalls.
6) After the engine stalls, crank it for five more seconds.
7) Turn the ignition switch to OFF.
8) Remove all spark plugs. <Ref. to IG(H4DO)-4, REMOVAL, Spark Plug.>

9) Install the compression gauge to the spark plug hole.

NOTE:
When using a screw-in type compression gauge, the screw should be less than 25 mm (0.98 in) long.

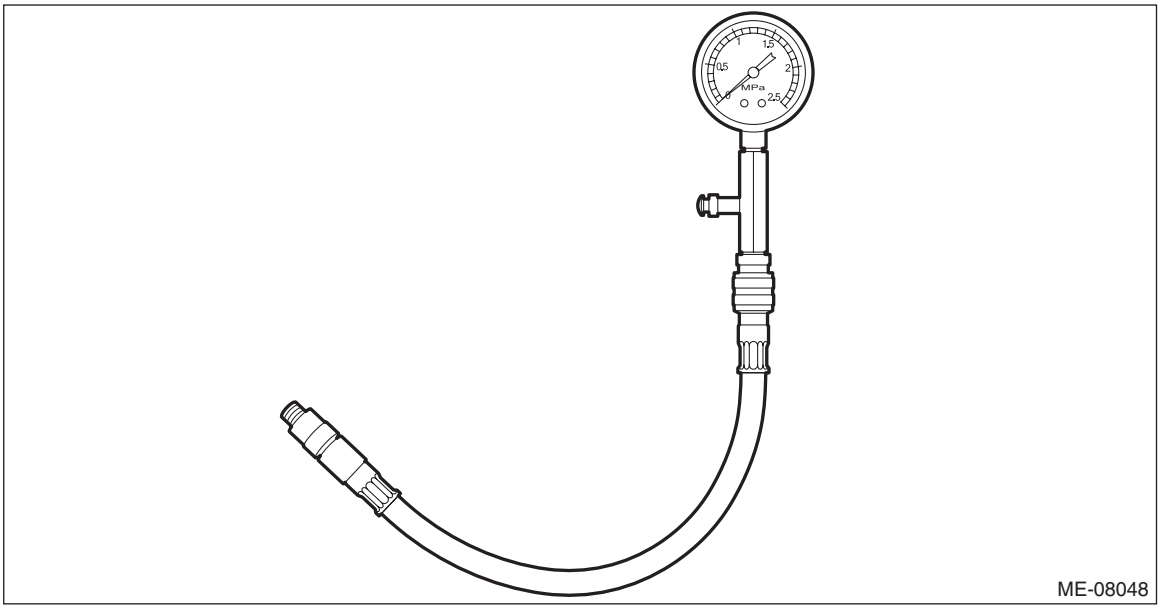

10) Install the battery. <Ref. to SC(H4DO)-64, INSTALLATION, Battery.>
11) Turn the ignition switch to ON.
12) Depress the accelerator pedal to full throttle.
13) Crank the engine by starter motor and read the value when the needle of the compression gauge becomes stable.

NOTE:
- Perform at least two measurements per cylinder, and make sure that the values are correct.
- If the compression pressure is out of standard, check or adjust the pistons, valves and cylinders.

Compression pressure (at 200 — 300 r/min):
Standard
1,050 — 1,400 kPa (11 — 14 kgf/cm^2, 152 — 203 psi)
Difference between cylinders
100 kPa (1 kgf/cm^2, 14 psi) or less

14) After inspection, install the related parts in the reverse order of removal.

3. Idle Speed

A: INSPECTION

1) Before checking the idle speed, check the following item:
   (1) Check the air cleaner element is free from clogging, ignition timing is correct, spark plugs are in good condition, and hoses are connected properly.
   (2) Check the malfunction indicator light does not illuminate.
2) Warm up the engine.
3) Read the engine idle speed using Subaru Select Monitor. <Ref. to EN(H4DO)(diag)-45, DISPLAY CURRENT ENGINE DATA, OPERATION, Subaru Select Monitor.>

NOTE:
- Idle speed cannot be adjusted manually, because the idle speed is automatically adjusted.
- If idle speed is out of standard, refer to the General Diagnosis Table under “Engine Control System”. <Ref. to EN(H4DO)(diag)-2, Basic Diagnostic Procedure.>

   (1) Check the idle speed when no-loaded. (Headlight, blower fan, rear defroster, radiator fan, A/C and etc. are OFF)

Idle speed (No load, and for CVT model, select lever in “P” or “N” range, for MT model, gear shift lever in neutral position.):
Standard
675±100 r/min (CVT model)
650±100 r/min (MT model)

   (2) Check the idle speed when loaded. (Turn the A/C switch to ON and operate the compressor for at least one minute before measurement.)

Idle speed (A/C on, and for CVT model, select lever in “P” or “N” range, for MT model, gear shift lever in neutral position.):
Standard
800 — 900±100 r/min

4. Ignition Timing

A: INSPECTION

CAUTION:
After warming-up, engine becomes very hot. Be careful not to burn yourself at measurement.

1) Before checking the ignition timing, check the following item:
   (1) Check the air cleaner element is free from clogging, spark plugs are in good condition, and hoses are connected properly.
   (2) Check the malfunction indicator light does not illuminate.
2) Warm up the engine.
3) Read the ignition timing using Subaru Select Monitor. <Ref. to EN(H4DO)(diag)-45, DISPLAY CURRENT ENGINE DATA, OPERATION, Subaru Select Monitor.>

NOTE:
If ignition timing is out of standard, check the ignition control system. Refer to “Engine Control System”. <Ref. to EN(H4DO)(diag)-2, Basic Diagnostic Procedure.>

Ignition timing [BTDC/{r/min}]:
Standard
5°±10°/675 (CVT model)
6°±10°/650 (MT model)

5. Intake Manifold Vacuum

A: INSPECTION

1) Warm up the engine.
2) Disconnect the brake booster vacuum hose from the intake manifold assembly.

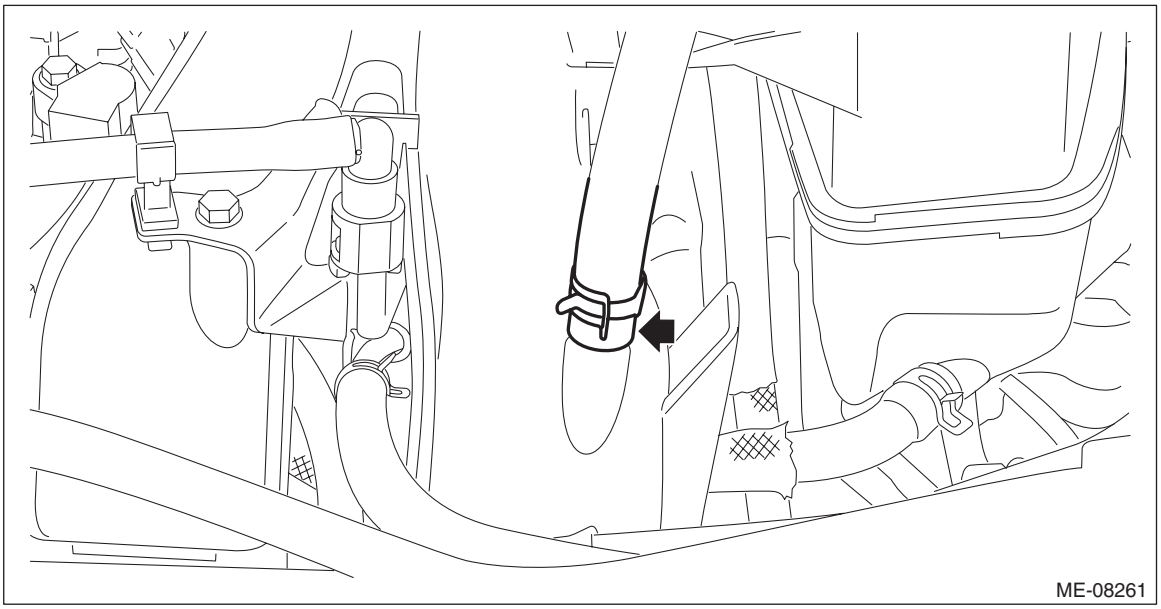

3) Connect the vacuum gauge to the installation area for the brake booster vacuum hose of the intake manifold assembly.

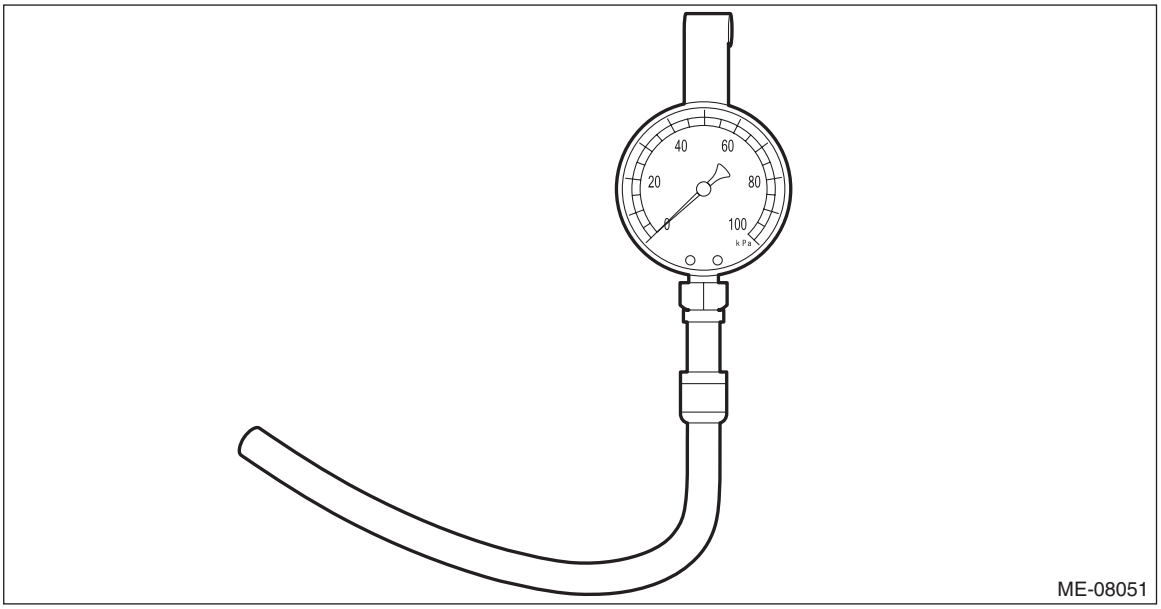

4) Keep the engine at idle speed and read the vacuum gauge indication.

NOTE:
Condition of engine inside can be diagnosed by observing the behavior of the vacuum gauge needle as described in table below.

Intake manifold vacuum (at idling, A/C OFF):
Standard
–60.0 kPa (–450 mmHg, –17.72 inHg) or more

Diagnosis of engine condition by inspection of intake manifold vacuum	
Vacuum gauge needle behavior	Possible engine condition
1. Needle is steady but lower than standard value. This tendency becomes more evident as engine temperature rises.	Leakage around intake manifold gasket, disconnection or damage of vacuum hose
2. Needle intermittently drops to position lower than standard value.	Leakage around cylinder
3. Needle drops suddenly and intermittently from standard value.	Sticky valve
4. When engine speed is gradually increased, needle begins to vibrate rapidly at certain speed, and then vibration increases as engine speed increases.	Weak or broken valve springs
5. Needle vibrates above and below standard value in narrow range.	Defective ignition system

5) After inspection, install the related parts in the reverse order of removal.

6. Engine Oil Pressure

A: INSPECTION

1) Disconnect the ground terminal from battery sensor. <Ref. to RC-4, BATTERY, NOTE, Repair Contents.>
2) Remove the oil pressure switch. <Ref. to LU(H4DO)-20, REMOVAL, Oil Pressure Switch.>
3) Install the oil pressure gauge to the installation area for the oil pressure switch of the chain cover.

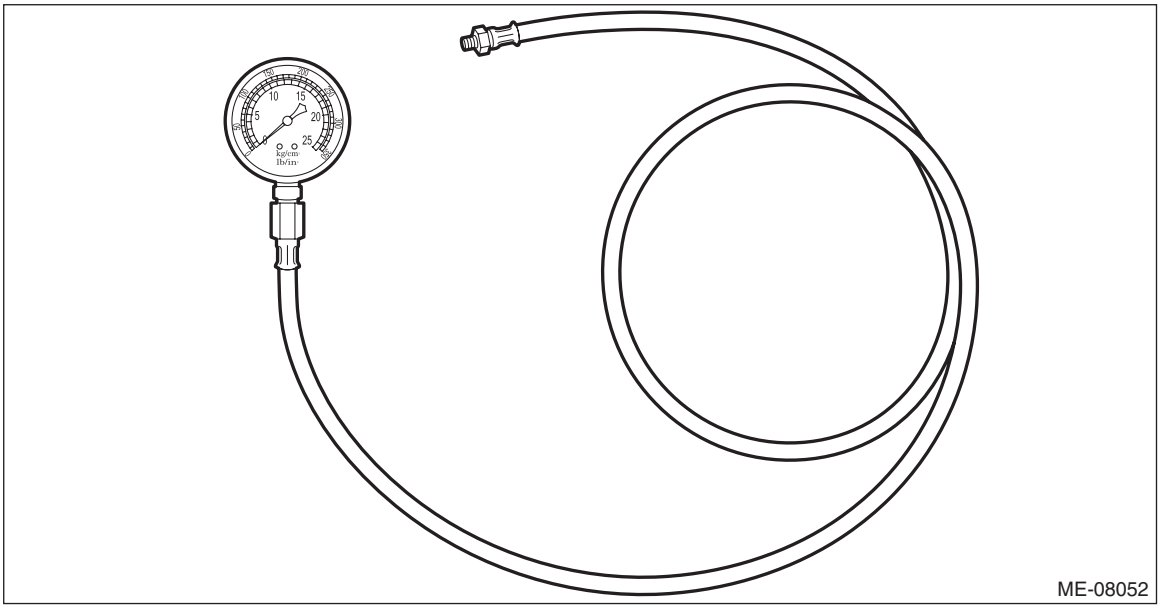

4) Connect the ground terminal to battery sensor. <Ref. to RC-4, BATTERY, NOTE, Repair Contents.>
5) Start the engine, and check the oil pressure.

NOTE:
- Standard value is based on an engine oil temperature of 80°C (176°F).
- If the oil pressure is out of specification, check oil pump, oil filter and lubrication line. <Ref. to LU(H4DO)-30, INSPECTION, Engine Lubrication System Trouble in General.>
- If the oil pressure warning light is ON and oil pressure is within standard, check the oil pressure switch. <Ref. to LU(H4DO)-30, INSPECTION, Engine Lubrication System Trouble in General.>

Engine oil pressure:
Standard
50 kPa (0.5 kgf/cm^2, 7 psi) or more (at 600 r/min)
350 kPa (3.6 kgf/cm^2, 51 psi) or more (at 6,000 r/min)

6) After inspection, install the related parts in the reverse order of removal.

7. Fuel Pressure

A: INSPECTION

1) Release the fuel pressure. <Ref. to FU(H4DO)-90, RELEASING OF FUEL PRESSURE, PROCEDURE, Fuel.>
2) Open the fuel filler lid and remove the fuel filler cap.

NOTE:
This operation is required to release the inner pressure of the fuel tank.
3) Disconnect the fuel delivery tube from the fuel delivery pipe, and connect the fuel pressure gauge.

CAUTION:
- **Be careful not to spill fuel.**
- **Catch the fuel from the tubes using a container or cloth.**

(1) Remove the clip (A) securing the fuel delivery tube to the fuel pipe assembly.
(2) Attach ST to the fuel pipe assembly and push ST in the direction of arrow mark to disconnect the quick connector of the fuel delivery tube.

ST 42099AE000 QUICK CONNECTOR RELEASE

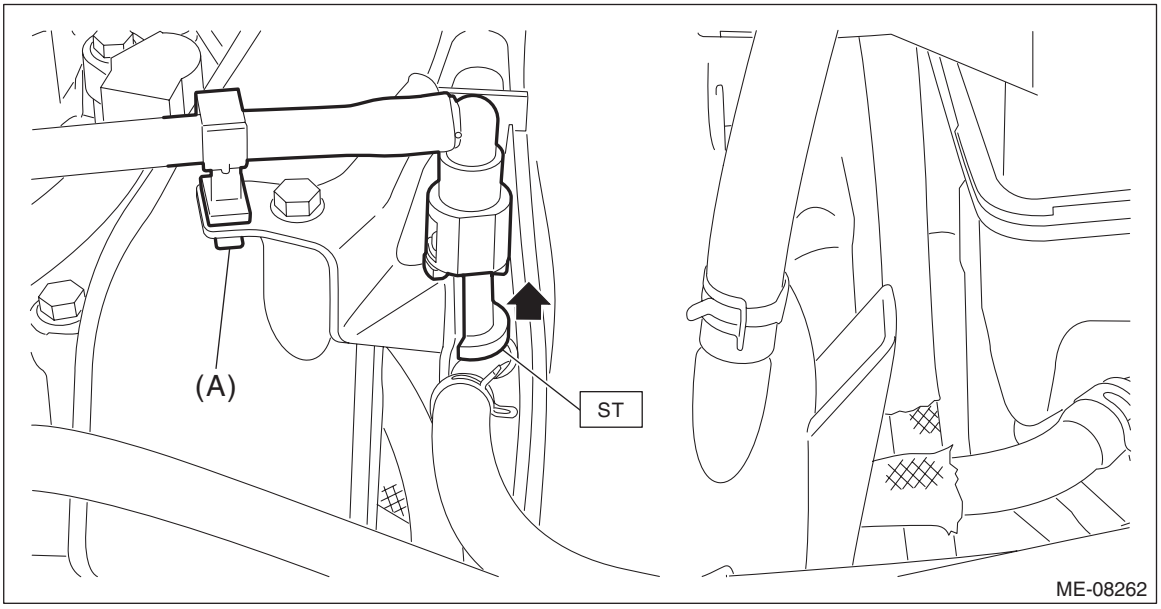

(3) Connect the fuel pressure gauge with ST1 and ST2.

CAUTION:
• Check that there is no damage or dust on the quick connector. If necessary, clean the seal surface of the pipe.
• Make sure that the quick connector is securely connected.

NOTE:
ST1 is a SUBARU genuine part.
ST1 42075AG690 FUEL HOSE
ST2 18471AA000 FUEL PIPE ADAPTER

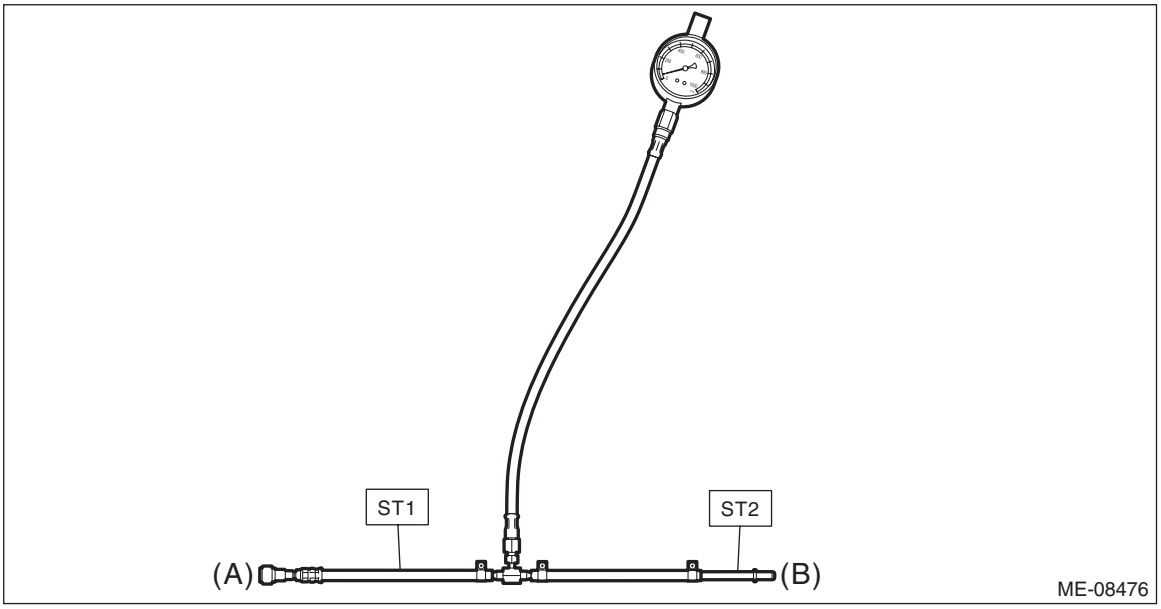

(A) Fuel pipe assembly side (B) Fuel delivery tube side

4) Start the engine.
5) Check the fuel pressure after warming up the engine.

NOTE:
• The fuel pressure gauge registers 10 to 20 kPa (0.1 to 0.2 kgf/cm^2, 1 to 3 psi) higher than standard values during high-altitude operations.
• Check or replace the fuel pump and fuel delivery line if the fuel pressure is out of the standard.

Fuel pressure:
Standard
340 — 400 kPa (3.5 — 4.1 kgf/cm^2, 49 — 58 psi)

6) After inspection, install the related parts in the reverse order of removal.

CAUTION:
- **Before removing the fuel pressure gauge, release the fuel pressure.**
- **Be careful not to spill fuel.**
- **Catch the fuel from hoses and tubes using a container or cloth.**
- **Check that there is no damage or dust on the quick connector. If necessary, clean the seal surface of the pipe.**
- **Make sure that the quick connector is securely connected.**

NOTE:
- When disconnecting the ST1 or fuel delivery tube, install the ST3 to the fuel pipe assembly or to ST2, and press the ST3 in the direction of arrow to disconnect the ST1 or the quick connector of the fuel delivery tube.

ST1 42075AG690 FUEL HOSE
ST2 18471AA000 FUEL PIPE ADAPTER
ST3 42099AE000 QUICK CONNECTOR RELEASE

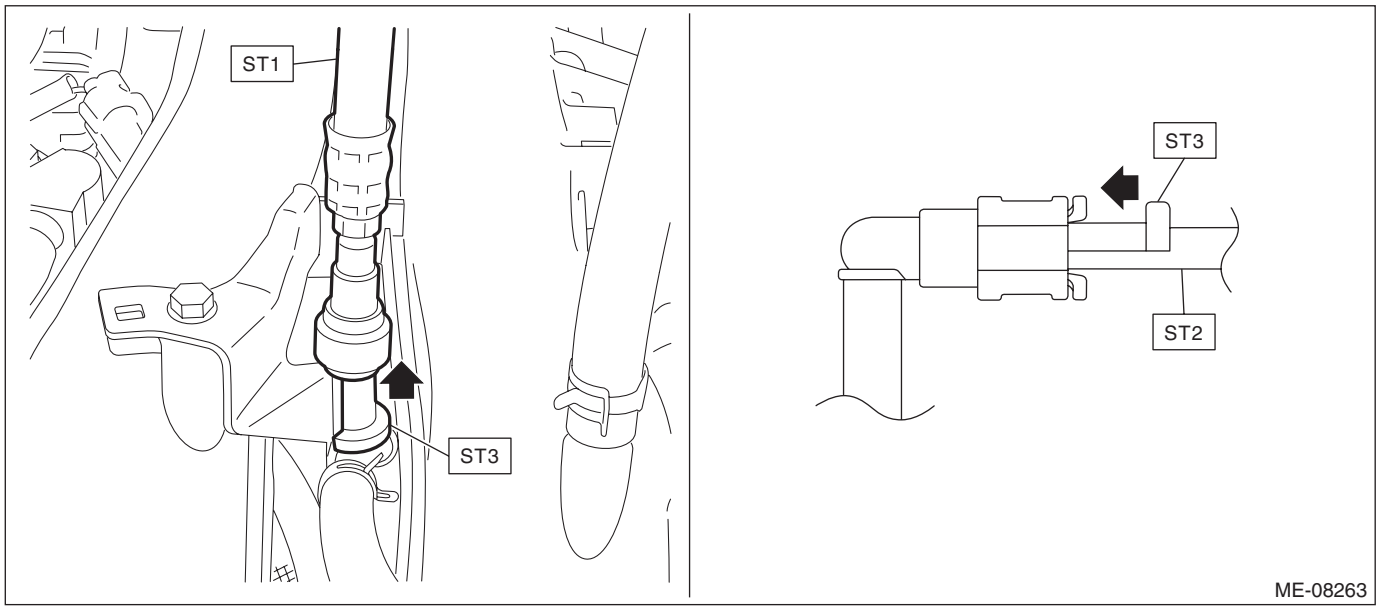

8. Cam Clearance

A: INSPECTION

1. WHEN TIMING CHAIN ASSEMBLY IS NOT REMOVED

CAUTION:
When working on the vehicle, if engine oil is spilt onto the exhaust pipe, wipe it off with cloth to avoid emission of smoke or causing a fire.

NOTE:
- Inspection of cam clearance should be performed while engine is cold.
- If the engine is removed from vehicle, performing the step 1) is not necessary.

1) Remove the air intake duct. <Ref. to IN(H4DO)-12, REMOVAL, Air Intake Duct.>
2) Remove the V-belts. <Ref. to ME(H4DO)-71, V-BELT, REMOVAL, V-belt.>
3) When inspecting #1 and #3 cylinders
   (1) Remove the rocker cover RH. <Ref. to ME(H4DO)-128, ROCKER COVER RH, REMOVAL, Rocker Cover.>

NOTE:
When working on the vehicle, place a suitable container under the vehicle.

   (2) Set #1 cylinder piston to top dead center of compression stroke by rotating the crank pulley clockwise using the socket wrench.

NOTE:
When the timing mark (B) on crank pulley is aligned to the 0° in timing gauge (A) on chain cover as shown in the figure, the #1 cylinder piston is located at TDC of compression stroke if the intake camshaft and exhaust camshaft does not depress the #1 cylinder intake side roller rocker arm (intake valve) and exhaust side roller rocker arm (exhaust valve). If roller rocker arm (valve) is depressed, turn the crank pulley by 360° in order to make #1 cylinder piston at TDC of compression stroke.

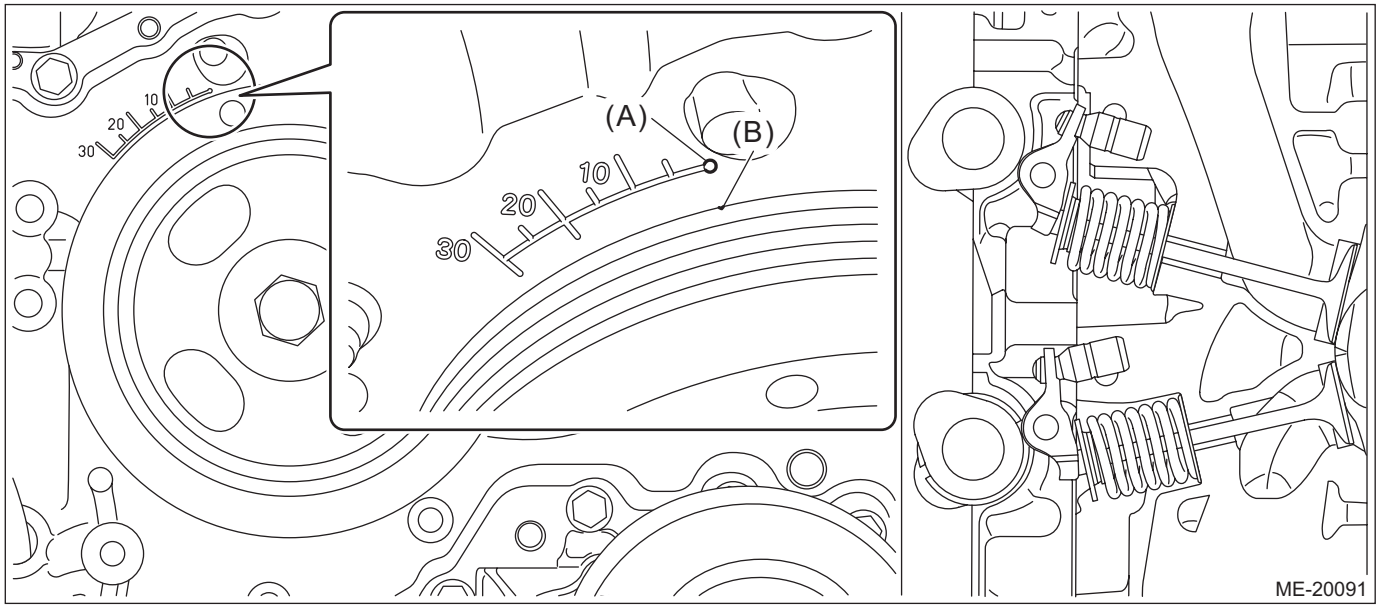

(3) Check the cam clearance for #1 cylinder intake, #1 cylinder exhaust and #3 cylinder exhaust.

NOTE:
- Measure the roller surface of cam base circle and roller rocker arm using thickness gauge (A).
- If the measured value is out of standard, take notes of the value in order to adjust the cam clearance later on.

Cam clearance:
Intake
Standard
$0.13^{+0.02}_{-0.03}$ mm ($0.0051^{+0.0008}_{-0.0012}$ in)
Exhaust
Standard
0.22±0.02 mm (0.0087±0.0008 in)

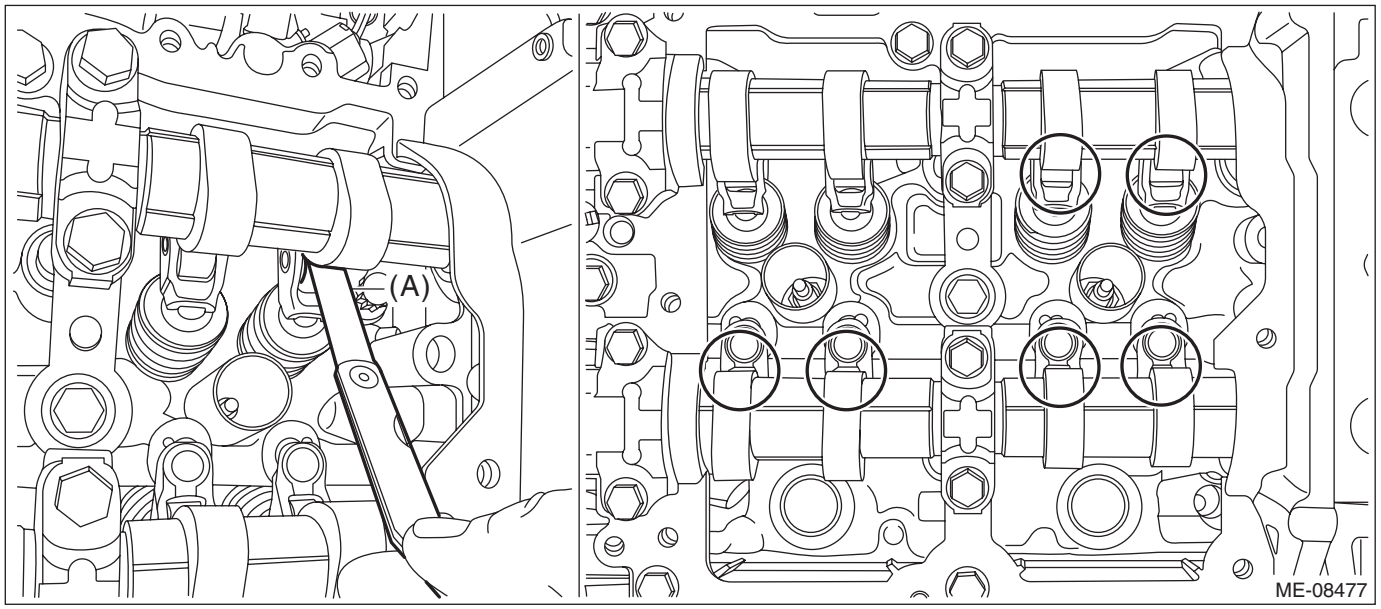

(4) Turn the crank pulley by 360°.

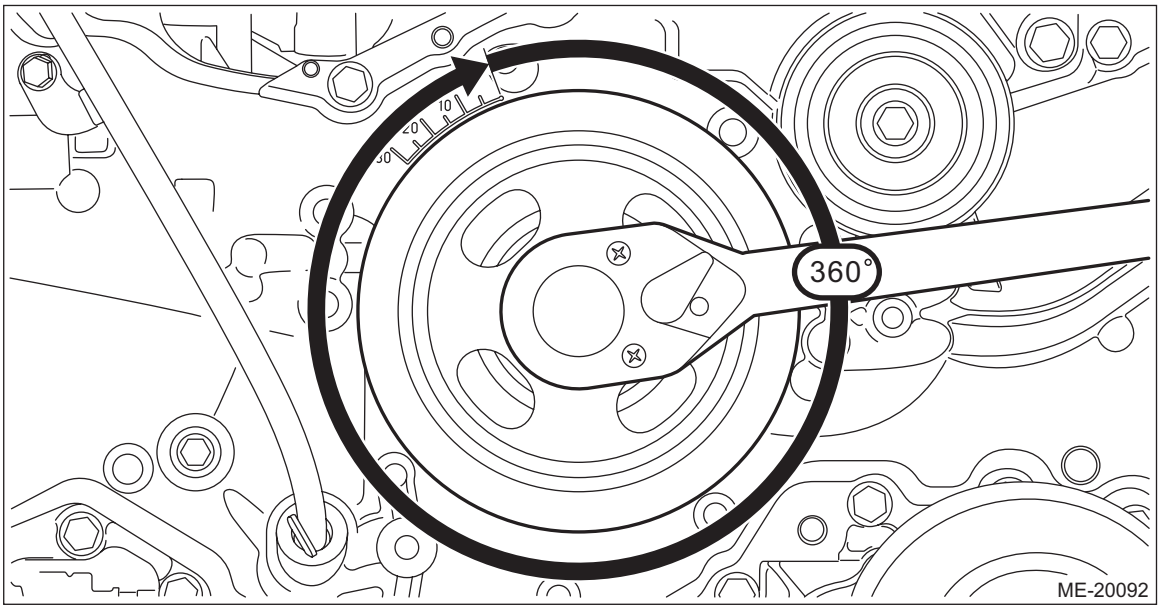

(5) Check the clearance of #3 cylinder intake.

NOTE:
- Measure the roller surface of cam base circle and roller rocker arm using thickness gauge (A).
- If the measured value is out of standard, take notes of the value in order to adjust the cam clearance later on.

Cam clearance:
Standard
$0.13^{+0.02}_{-0.03}$ mm ($0.0051^{+0.0008}_{-0.0012}$ in)

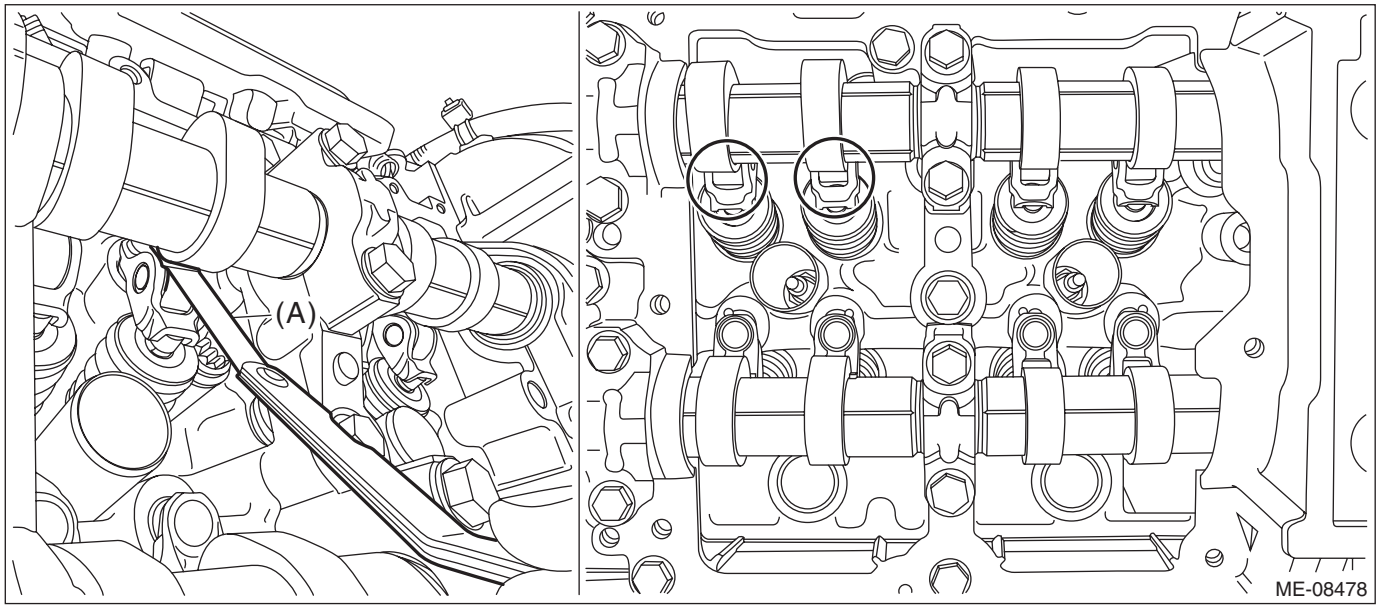

4) When inspecting #2 and #4 cylinders
(1) Remove the rocker cover LH. <Ref. to ME(H4DO)-131, ROCKER COVER LH, REMOVAL, Rocker Cover.>

NOTE:
When working on the vehicle, place a suitable container under the vehicle.
(2) Set #2 cylinder piston to top dead center of compression stroke by rotating the crank pulley clockwise using the socket wrench.

NOTE:
When the timing mark (B) on crank pulley is aligned to the 0° in timing gauge (A) on chain cover as shown in the figure, the #2 cylinder piston is located at TDC of compression stroke if the intake camshaft and exhaust camshaft does not depress the #2 cylinder intake side roller rocker arm (intake valve) and exhaust side roller rocker arm (exhaust valve). If roller rocker arm (valve) is depressed, turn the crank pulley by 360° in order to make #2 cylinder piston at TDC of compression stroke.

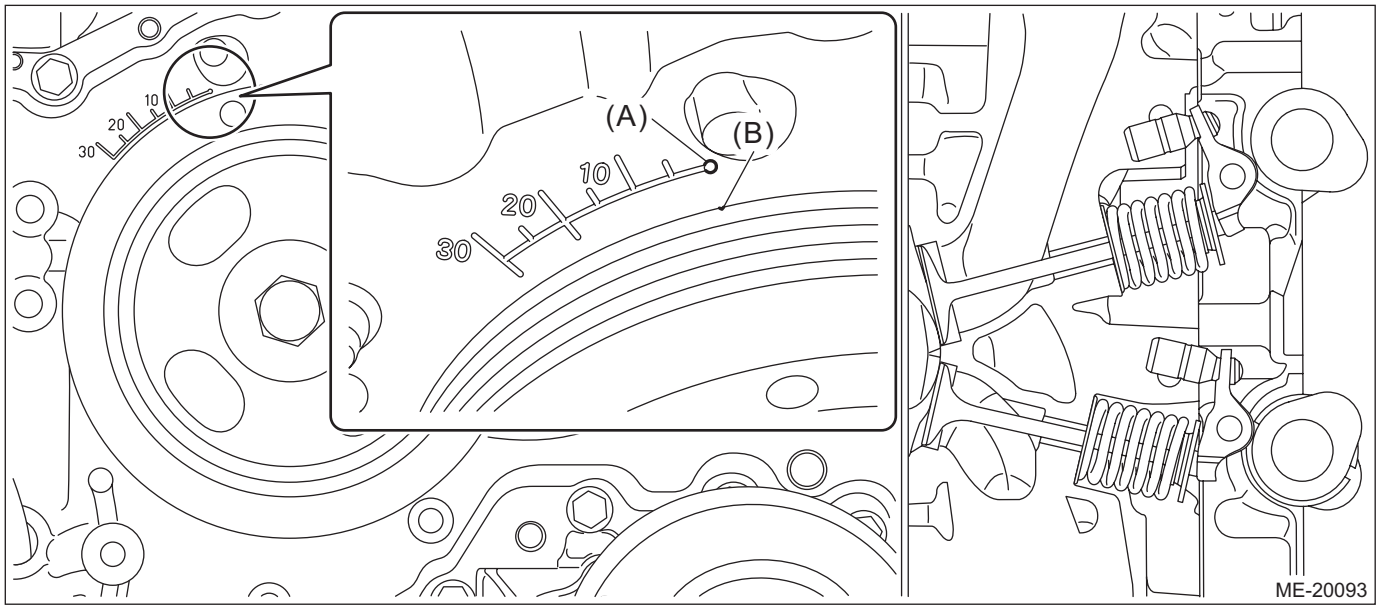

(3) Check the cam clearance for #2 cylinder intake, #2 cylinder exhaust and #4 cylinder exhaust.

NOTE:
- Measure the roller surface of cam base circle and roller rocker arm using thickness gauge (A).
- If the measured value is out of standard, take notes of the value in order to adjust the cam clearance later on.

Cam clearance:
Intake
Standard
$0.13^{+0.02}_{-0.03}$ mm ($0.0051^{+0.0008}_{-0.0012}$ in)
Exhaust
Standard
0.22±0.02 mm (0.0087±0.0008 in)

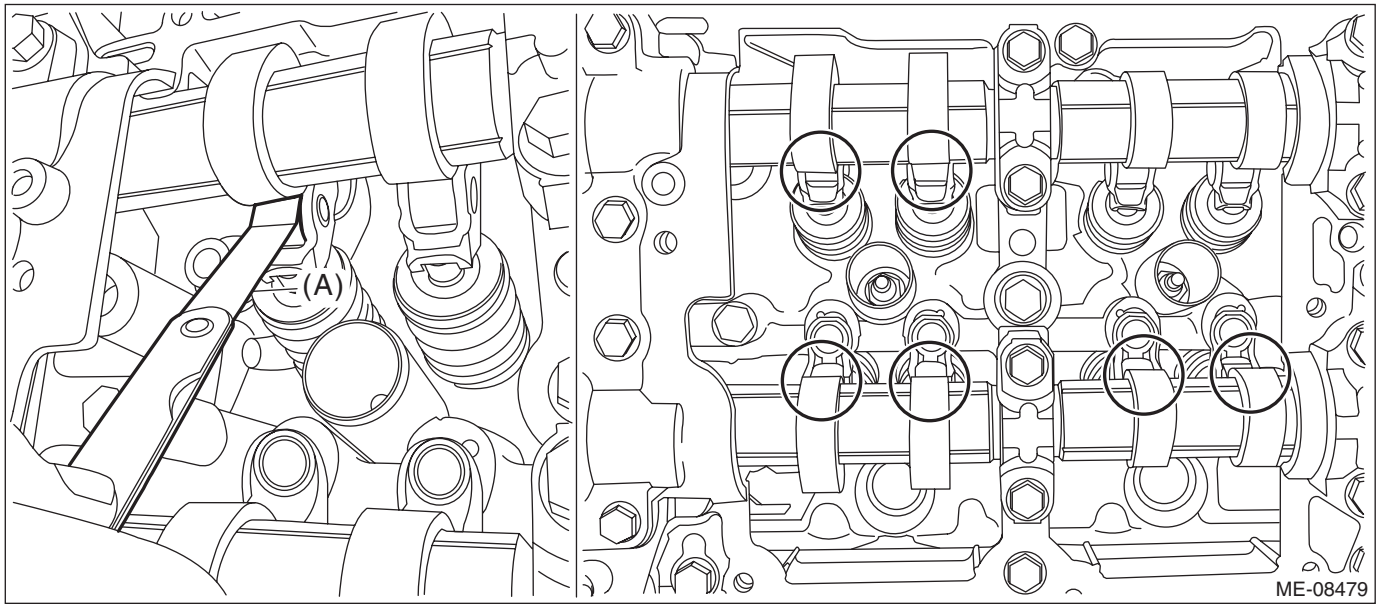

(4) Turn the crank pulley by 360°.

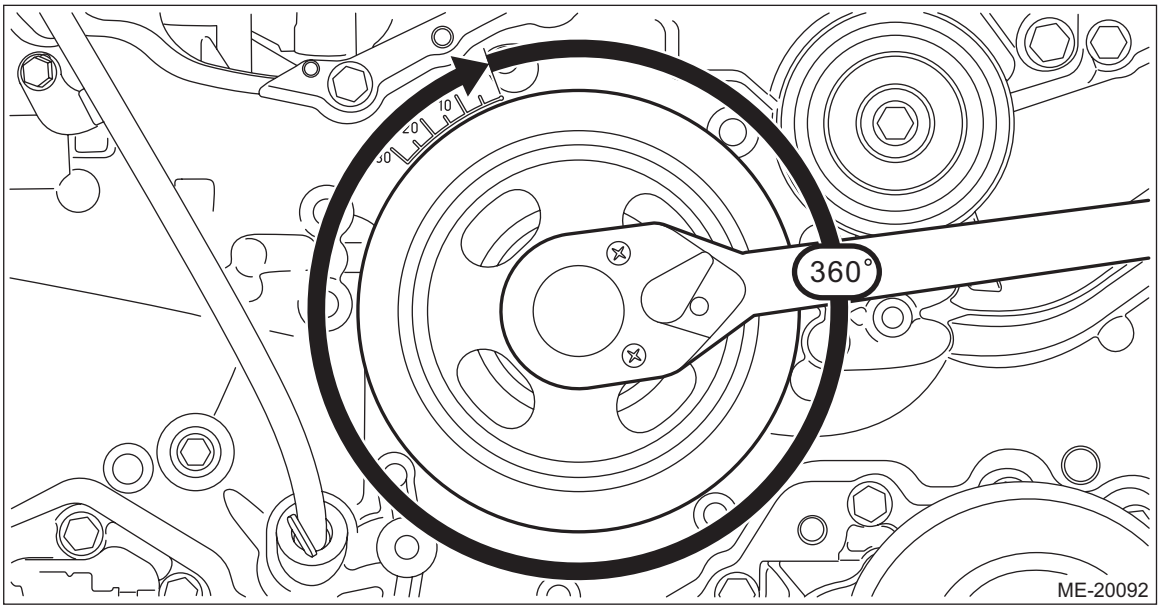

(5) Check the clearance of #4 cylinder intake.

NOTE:
- Measure the roller surface of cam base circle and roller rocker arm using thickness gauge (A).
- If the measured value is out of standard, take notes of the value in order to adjust the cam clearance later on.

Cam clearance:
Standard
$0.13^{+0.02}_{-0.03}$ mm ($0.0051^{+0.0008}_{-0.0012}$ in)

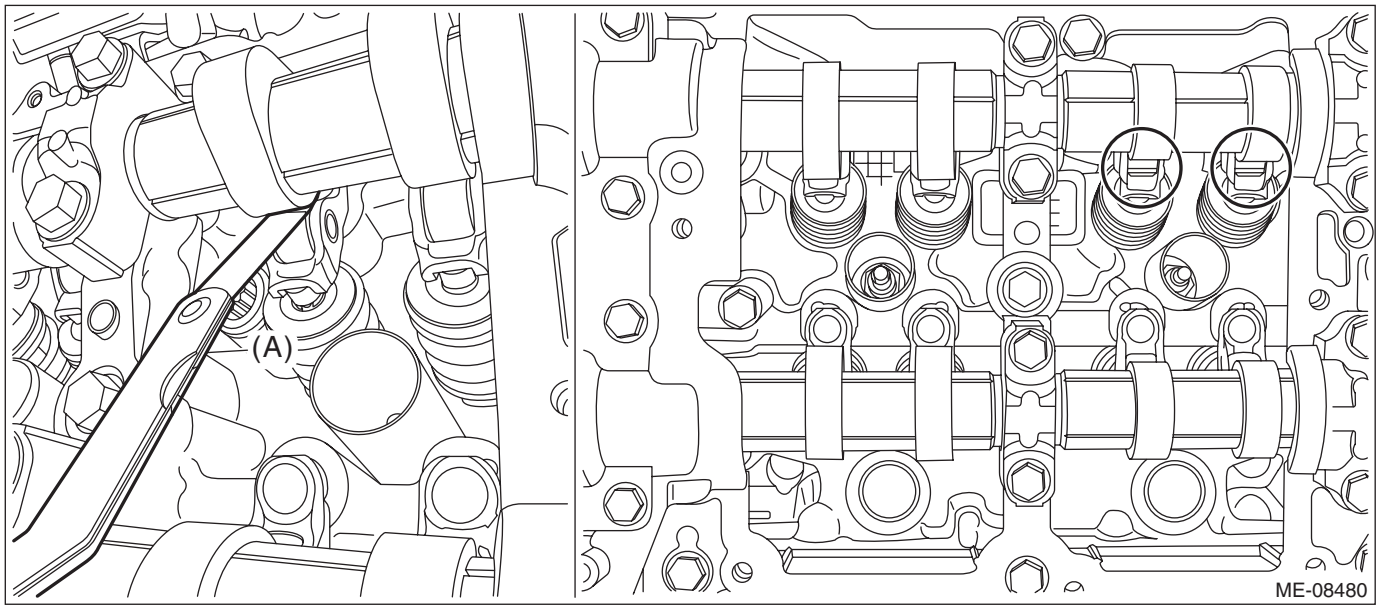

5) If necessary, adjust the cam clearance. <Ref. to ME(H4DO)-40, ADJUSTMENT, Cam Clearance.>
6) After inspection, install the related parts in the reverse order of removal.

2. WHEN TIMING CHAIN ASSEMBLY IS REMOVED

NOTE:
Inspection of cam clearance should be performed while engine is cold.

1) When inspecting #1 and #3 cylinders
   (1) Remove the rocker cover RH. <Ref. to ME(H4DO)-128, ROCKER COVER RH, REMOVAL, Rocker Cover.>

NOTE:
When working on the vehicle, place a suitable container under the vehicle.

   (2) Check the #1 and #3 cylinder cam clearance.

CAUTION:
Intake and exhaust camshafts can be independently rotated with the timing chain removed. When the intake valve and exhaust valve lift at the same time, the valve heads contact each other and valve stem may bend. Do not turn it to the outside of range of zero lift (cam base circle position) (in range where it can be turned lightly by hand).

NOTE:
- For cam clearance inspection, adjust the cam base circle position so that the thickness gauge (A) can be inserted easily by hand turning the camshaft (cam sprocket) to be measured.
- Measure the roller surface of cam base circle and roller rocker arm using thickness gauge (A).
- If the measured value is out of standard, take notes of the value in order to adjust the cam clearance later on.

Cam clearance:
Intake
Standard
$0.13^{+0.02}_{-0.03}$ mm ($0.0051^{+0.0008}_{-0.0012}$ in)
Exhaust
Standard
0.22±0.02 mm (0.0087±0.0008 in)

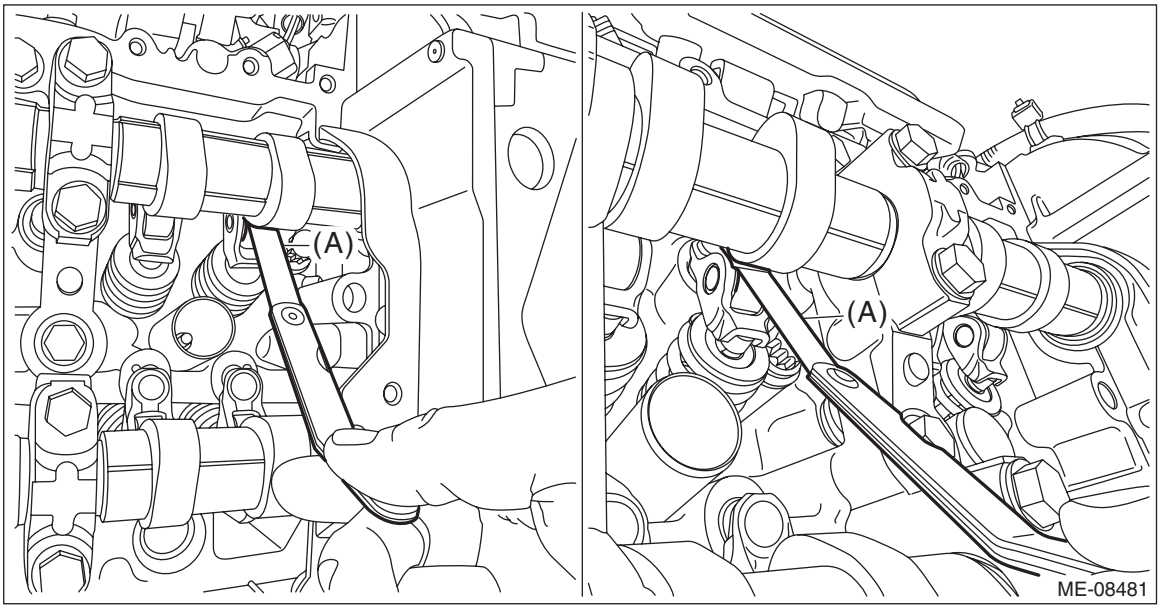

2) When inspecting #2 and #4 cylinders
(1) Remove the rocker cover LH. <Ref. to ME(H4DO)-131, ROCKER COVER LH, REMOVAL, Rocker Cover.>

NOTE:
When working on the vehicle, place a suitable container under the vehicle.
(2) Check the #2 and #4 cylinder cam clearance.

CAUTION:
Intake and exhaust camshafts can be independently rotated with the timing chain removed. When the intake valve and exhaust valve lift at the same time, the valve heads contact each other and valve stem may bend. Do not turn it to the outside of range of zero lift (cam base circle position) (in range where it can be turned lightly by hand).

NOTE:
• For cam clearance inspection, adjust the cam base circle position so that the thickness gauge (A) can be inserted easily by hand turning the camshaft (cam sprocket) to be measured.
• Measure the roller surface of cam base circle and roller rocker arm using thickness gauge (A).
• If the measured value is out of standard, take notes of the value in order to adjust the cam clearance later on.

Cam clearance:
Intake
Standard
$0.13^{+0.02}_{-0.03}$ mm ($0.0051^{+0.0008}_{-0.0012}$ in)
Exhaust
Standard
0.22±0.02 mm (0.0087±0.0008 in)

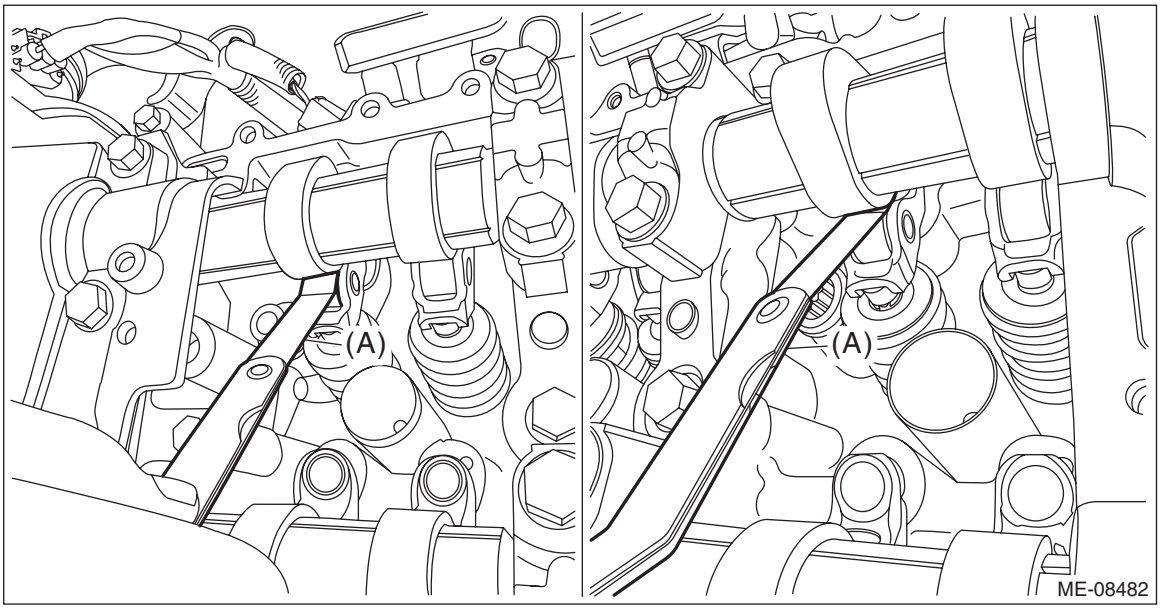

3) If necessary, adjust the cam clearance. <Ref. to ME(H4DO)-40, ADJUSTMENT, Cam Clearance.>
4) After inspection, install the related parts in the reverse order of removal.

B: ADJUSTMENT

1) Remove the engine from the vehicle. <Ref. to ME(H4DO)-43, REMOVAL, Engine Assembly.>
2) Remove the chain cover. <Ref. to ME(H4DO)-83, REMOVAL, Chain Cover.>
3) When adjusting #1 and #3 cylinders
(1) Remove the timing chain RH. <Ref. to ME(H4DO)-97, TIMING CHAIN RH, REMOVAL, Timing Chain Assembly.>
(2) Remove the cam carrier RH. <Ref. to ME(H4DO)-140, CAM CARRIER RH, REMOVAL, Cam Carrier.>

(3) Measure the thickness of valve shim using micrometer.

NOTE:
Measurement should be performed at a temperature of 20°C (68°F).

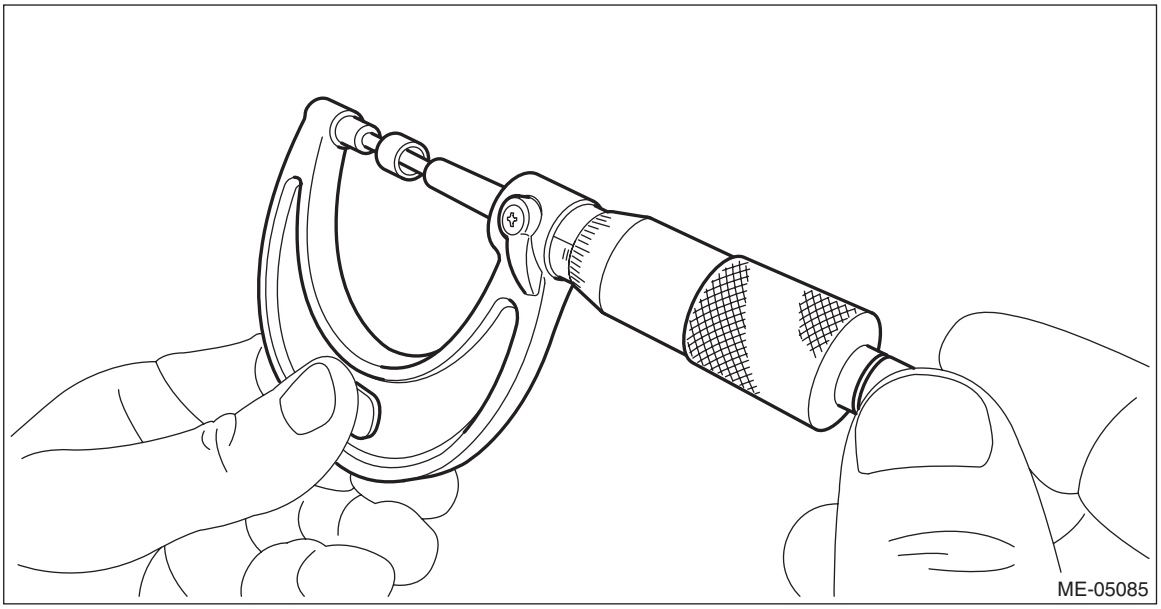

(4) Select a valve shim of suitable thickness using the measured cam clearance and valve shim thickness.

NOTE:
Use a new valve shim.

Intake side: S = T + 1.69 × (V – 0.13 mm (0.0051 in)) Exhaust side: S = T + 1.87 × (V – 0.22 mm (0.0087 in))
S: Valve shim thickness required V: Measured cam clearance T: Current valve shim thickness

(5) Install the cam carrier RH. <Ref. to ME(H4DO)-146, CAM CARRIER RH, INSTALLATION, Cam Carrier.>

(6) Check all the cam clearance of RH side at this time. If the cam clearance is not within the standard value, repeat the procedure over again from step 2).

NOTE:
When the removing/installing of cam carrier RH has been performed, cam clearance may be outside the standard value. Checking of all cam clearance of RH side is necessary. Refer to INSPECTION of “Cam Clearance” for the cam clearance inspection. <Ref. to ME(H4DO)-39, WHEN TIMING CHAIN ASSEMBLY IS REMOVED, INSPECTION, Cam Clearance.>

Cam clearance:

Intake

Standard

$0.13^{+0.02}_{-0.03}$ mm ($0.0051^{+0.0008}_{-0.0012}$ in)

Exhaust

Standard

0.22±0.02 mm (0.0087±0.0008 in)

4) When adjusting #2 and #4 cylinders
(1) Remove the timing chain LH. <Ref. to ME(H4DO)-99, TIMING CHAIN LH, REMOVAL, Timing Chain Assembly.>
(2) Remove the cam carrier LH. <Ref. to ME(H4DO)-143, CAM CARRIER LH, REMOVAL, Cam Carrier.>
(3) Measure the thickness of valve shim using micrometer.

NOTE:
Measurement should be performed at a temperature of 20°C (68°F).

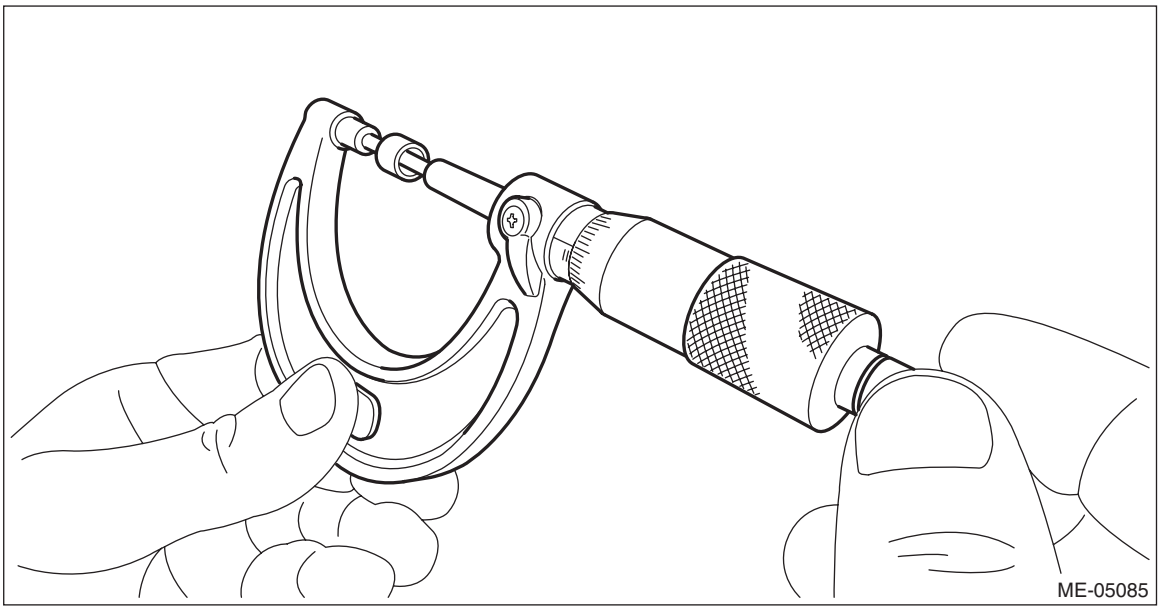

(4) Select a valve shim of suitable thickness using the measured cam clearance and valve shim thickness.

NOTE:
Use a new valve shim.

Intake side: S = T + 1.69 × (V – 0.13 mm (0.0051 in)) Exhaust side: S = T + 1.87 × (V – 0.22 mm (0.0087 in))
S: Valve shim thickness required V: Measured cam clearance T: Current valve shim thickness

(5) Install the cam carrier LH. <Ref. to ME(H4DO)-152, CAM CARRIER LH, INSTALLATION, Cam Carrier.>
(6) Check all the cam clearance of LH side at this time. If the cam clearance is not within the standard value, repeat the procedure over again from step 2).

NOTE:
When the removing/installing of cam carrier LH has been performed, cam clearance may be outside the standard value. Checking of all cam clearance of LH side is necessary. Refer to INSPECTION of “Cam Clearance” for the cam clearance inspection. <Ref. to ME(H4DO)-39, WHEN TIMING CHAIN ASSEMBLY IS REMOVED, INSPECTION, Cam Clearance.>

Cam clearance:
Intake
Standard
$0.13^{+0.02}_{-0.03}$ mm ($0.0051^{+0.0008}_{-0.0012}$ in)
Exhaust
Standard
0.22±0.02 mm (0.0087±0.0008 in)

5) After adjustment, install the related parts in the reverse order of removal.

9. Engine Assembly

A: REMOVAL

1) Fully open the front hood. <Ref. to RC-22, FRONT HOOD DAMPER STAY, NOTE, Repair Contents.>
2) Remove the V-belt covers.

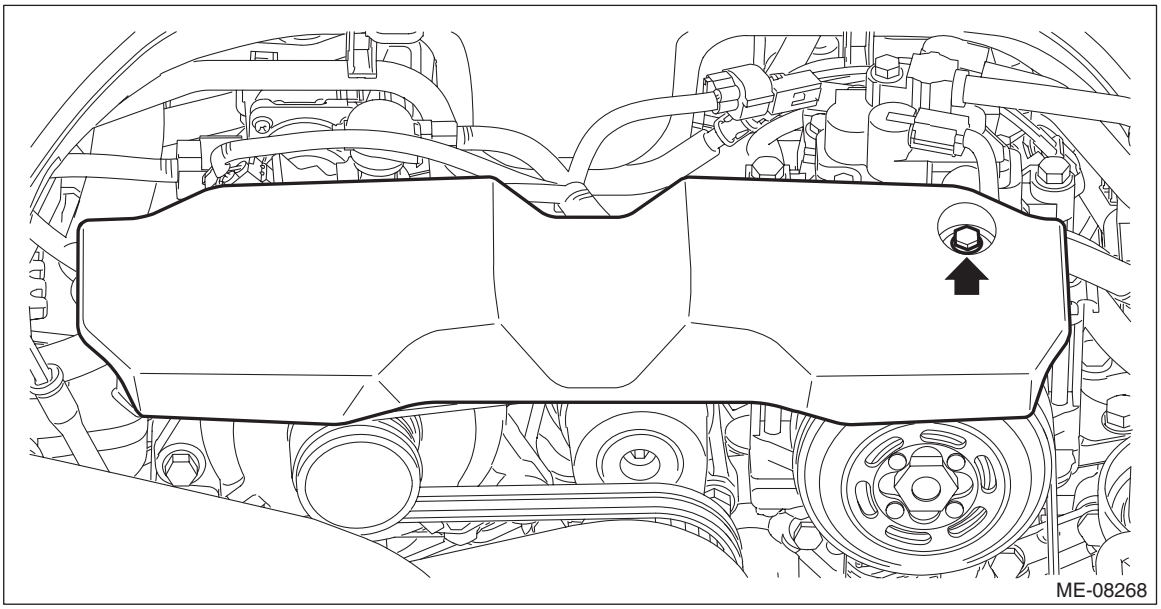

3) Collect the refrigerant. <Ref. to AC-29, Refrigerant Recovery Procedure.>
4) Release the fuel pressure. <Ref. to FU(H4DO)-90, RELEASING OF FUEL PRESSURE, PROCEDURE, Fuel.>
5) Open the fuel filler lid and remove the fuel filler cap.

NOTE:
This operation is required to release the inner pressure of the fuel tank.
6) Disconnect the ground terminal from battery sensor. <Ref. to RC-4, BATTERY, NOTE, Repair Contents.>
7) Remove the air intake duct. <Ref. to IN(H4DO)-12, REMOVAL, Air Intake Duct.>
8) Remove the air intake boot. <Ref. to IN(H4DO)-10, REMOVAL, Air Intake Boot.>
9) Remove the radiator. <Ref. to CO(H4DO)-39, REMOVAL, Radiator.>
10) Disconnect the connector (A) from the mass air flow and intake air temperature sensor, and remove the clip (B) securing the bulkhead wiring harness.
11) Remove the clip (C), and the air cleaner case (rear) together with the air cleaner element.

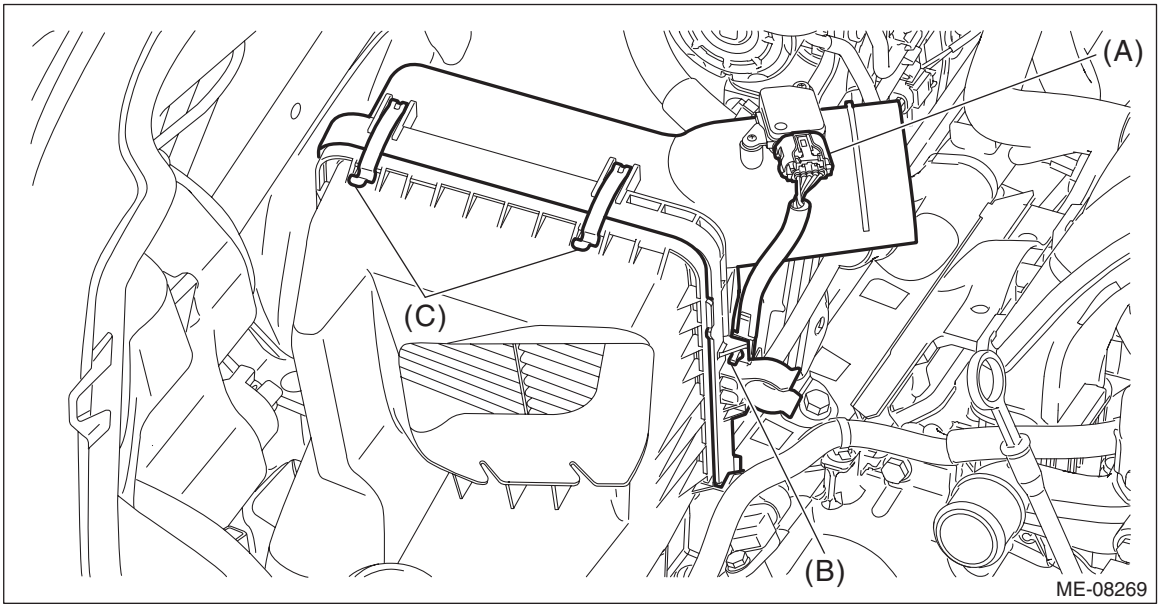

12) Disconnect the connector (A), connector (B), connector (C) and terminal (D).
13) Remove the clip (E) and clip (F) securing the generator cord.

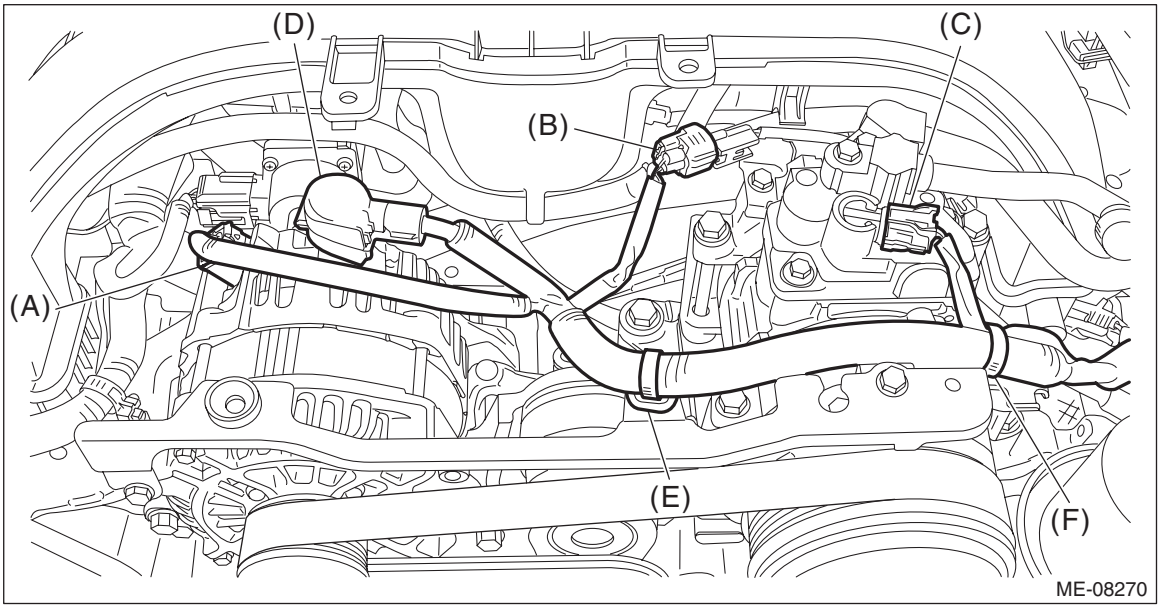

14) Remove the bolt (A) securing the generator cord stay to the chain cover, and move the generator cord to the left side wheel apron.
15) Remove the bolt (B) securing the A/C pressure hose to A/C compressor, and disconnect the A/C pressure hoses from A/C compressor. <Ref. to AC-65, REMOVAL, Hose and Pipe.>

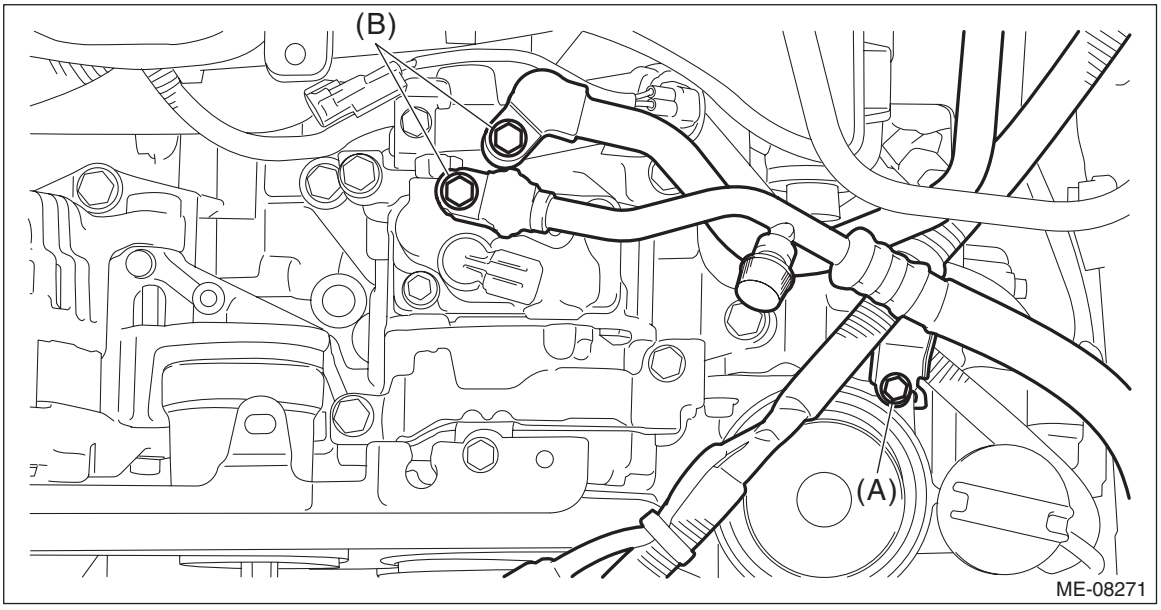

16) Disconnect the engine harness connector (A) from the main fuse box, and remove the engine harness from the claw (B) of the main fuse box.

17) Remove the engine harness from the clip (C) and move the engine harness to the engine side.

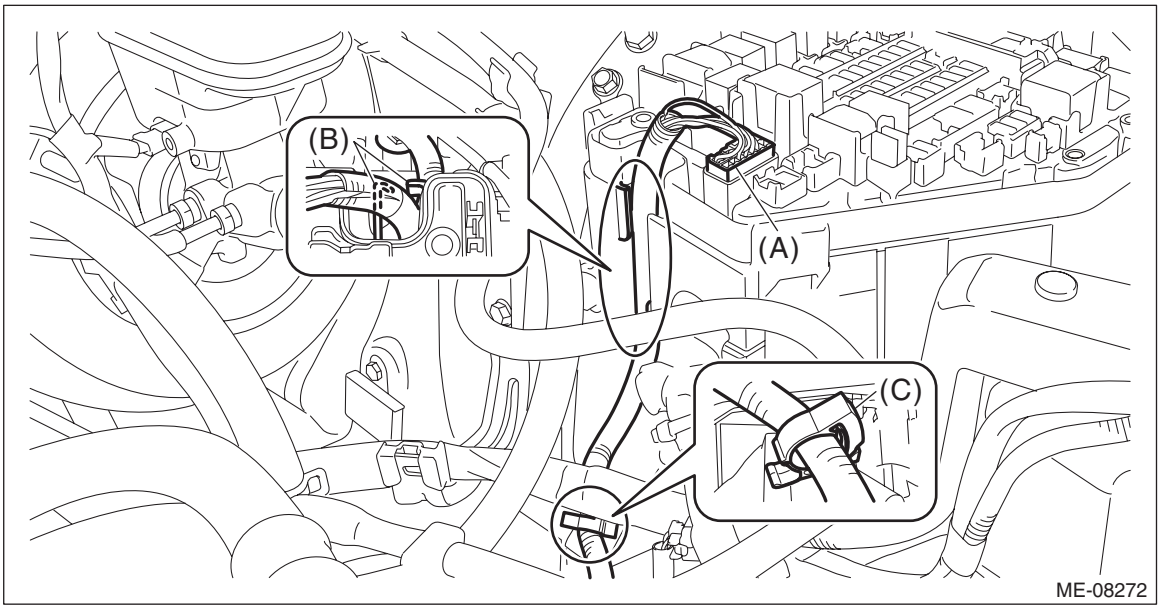

18) Disconnect the brake booster vacuum hose (A), heater inlet hose (B) and heater outlet hose (C).

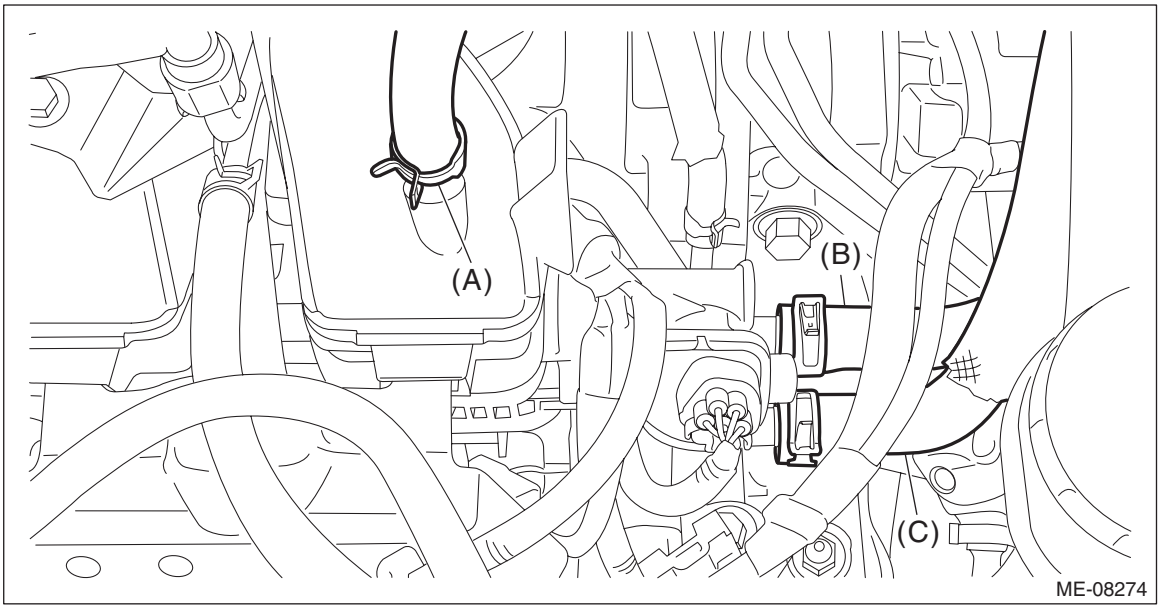

19) While pressing the area (A) shown in the figure, move the lock lever (B) in the direction of the arrow to disconnect the engine harness connector from ECM.

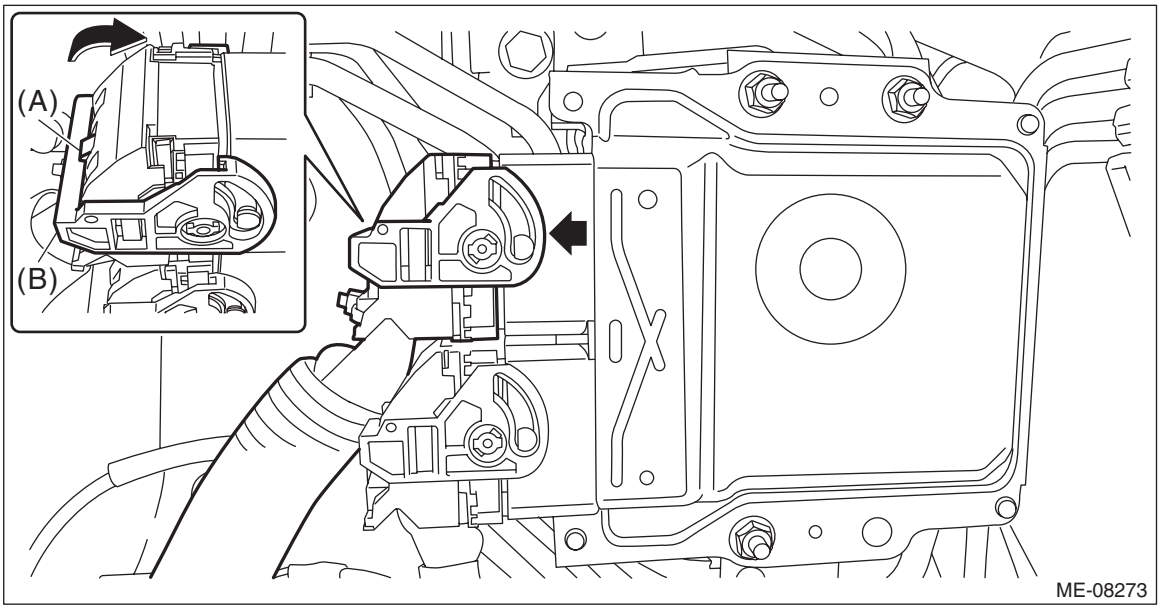

20) Disconnect the engine coolant hose from the CVTF cooler (with warmer feature) and EGR cooler. (CVT model)

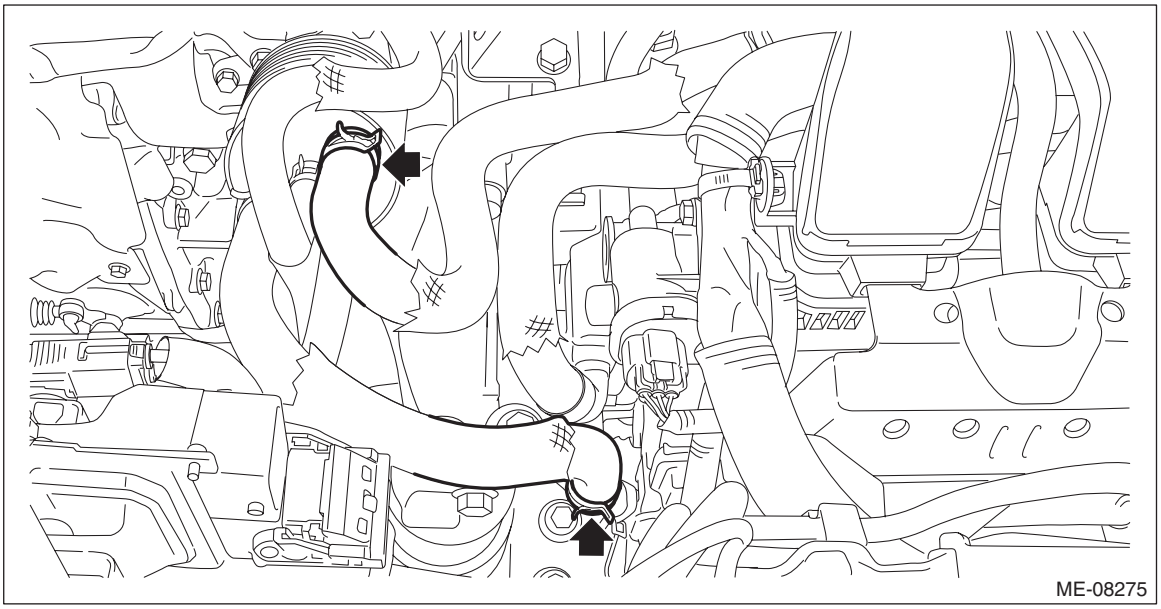

21) Lift up the vehicle.
22) Remove the front exhaust pipe. <Ref. to EX(H4DO)-5, REMOVAL, Front Exhaust Pipe.>

23) Disconnect the ground cable on the engine side.

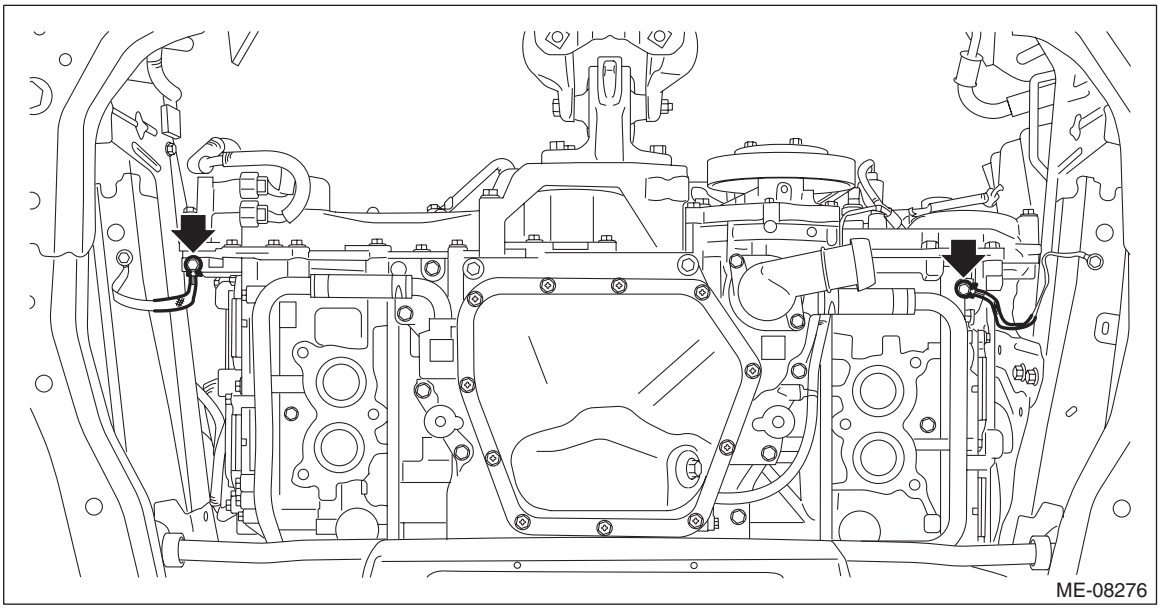

24) Remove the bolts and nuts which hold the lower side of transmission to the engine.

- CVT model

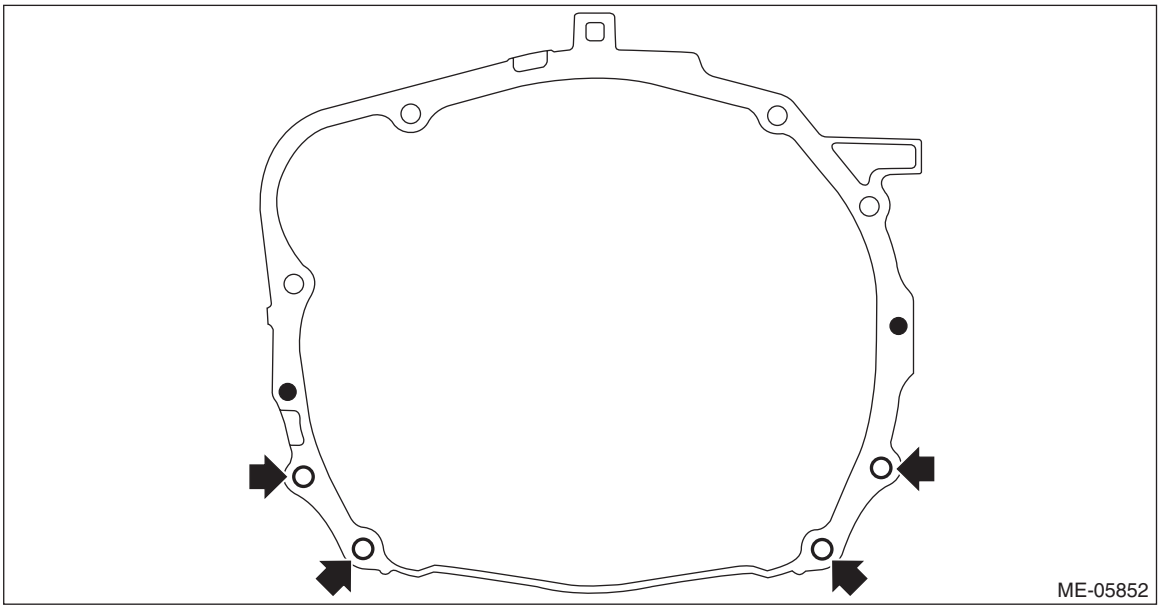

- MT model

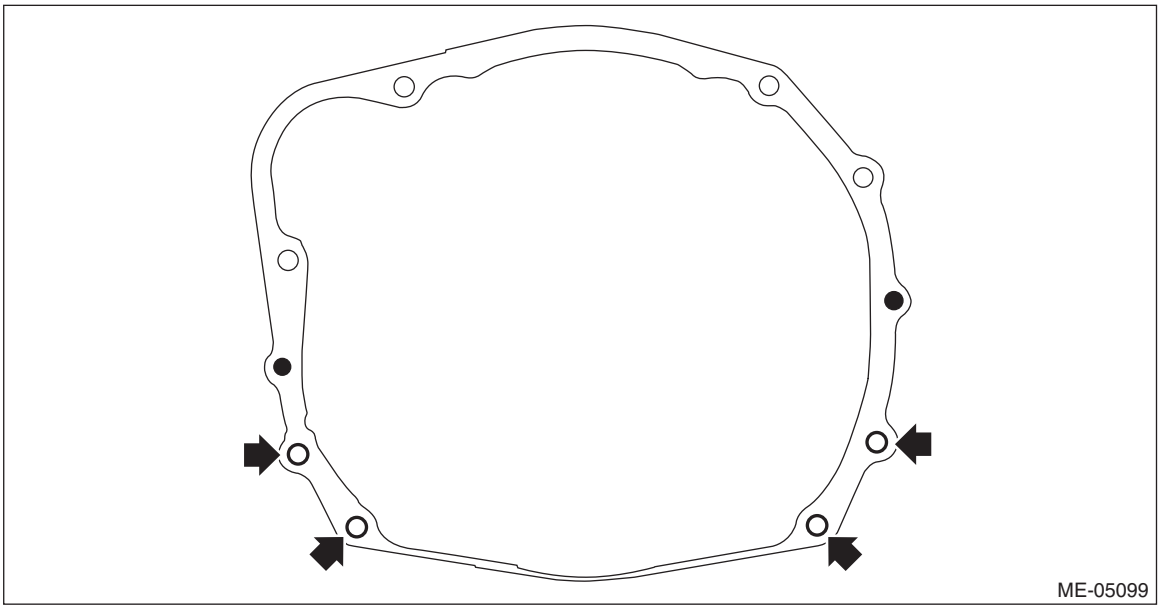

25) Lower the vehicle.
26) Remove the starter. <Ref. to SC(H4DO)-7, REMOVAL, Starter.>
27) Separate the torque converter clutch from the drive plate. (CVT model)
(1) Remove the service hole plug.
(2) Insert the wrench into the crank pulley bolt, and rotate the crank pulley to remove the four bolts securing the torque converter clutch to the drive plate.

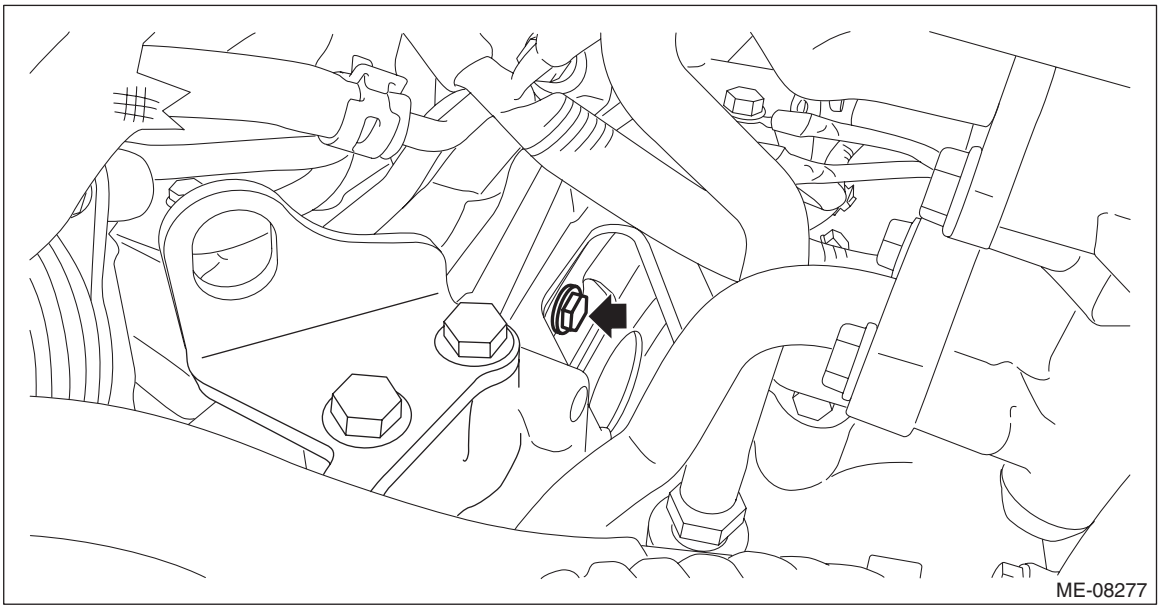

(3) Attach the ST to the torque converter clutch case.

ST 498277200 STOPPER SET

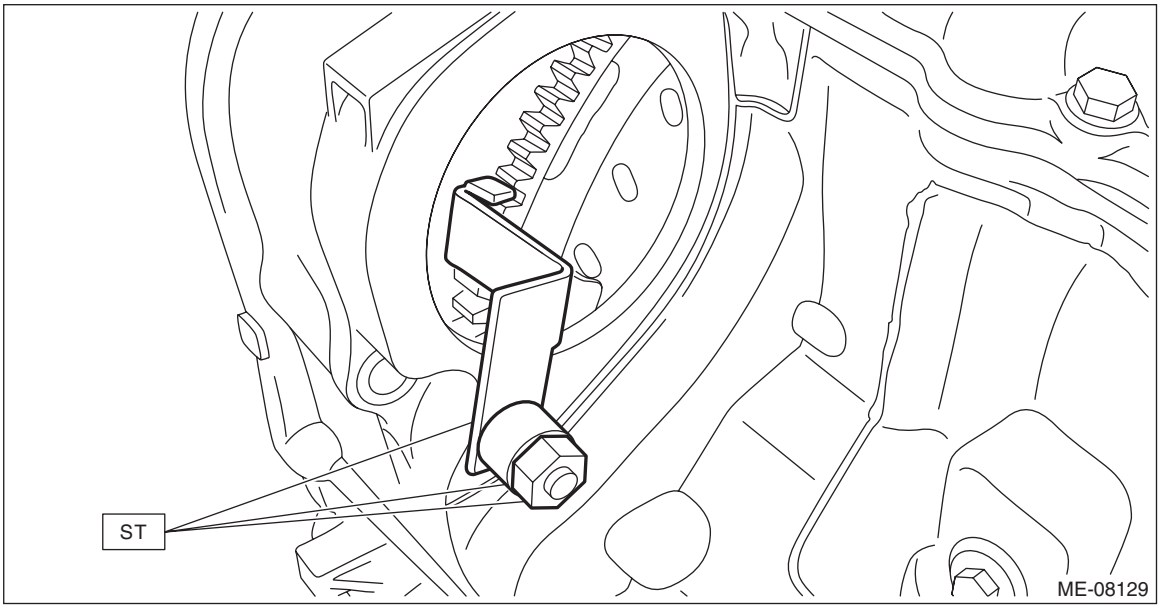

28) Disconnect the fuel delivery tube and evaporation hose.

CAUTION:
- **Be careful not to spill fuel.**
- **Catch the fuel from the tubes using a container or cloth.**

(1) Remove the clip (A) securing the fuel delivery tube to the fuel pipe assembly.

(2) Attach ST to the fuel pipe assembly and push ST in the direction of arrow mark to disconnect the quick connector of the fuel delivery tube (B).

ST 42099AE000 QUICK CONNECTOR RELEASE

(3) Disconnect the evaporation hose (C).

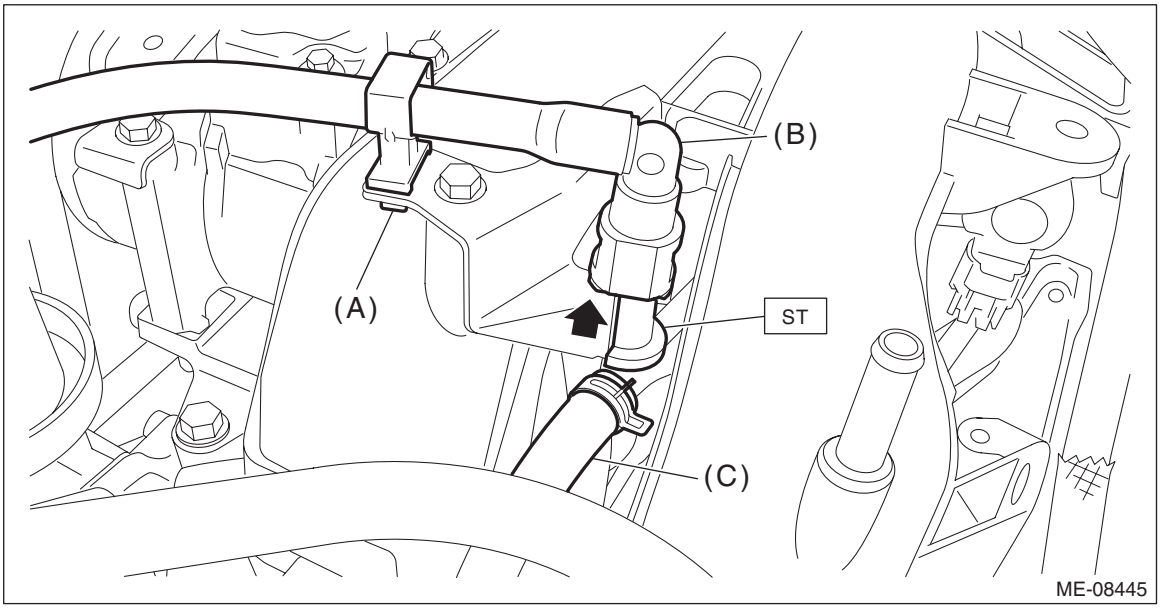

29) Using the ST1, install the ST2 to the engine unit.
ST1 18363AA050 BOLT
ST2 18360AA040 HANGER

Tightening torque:
43 N·m (4.4 kgf-m, 31.7 ft-lb)

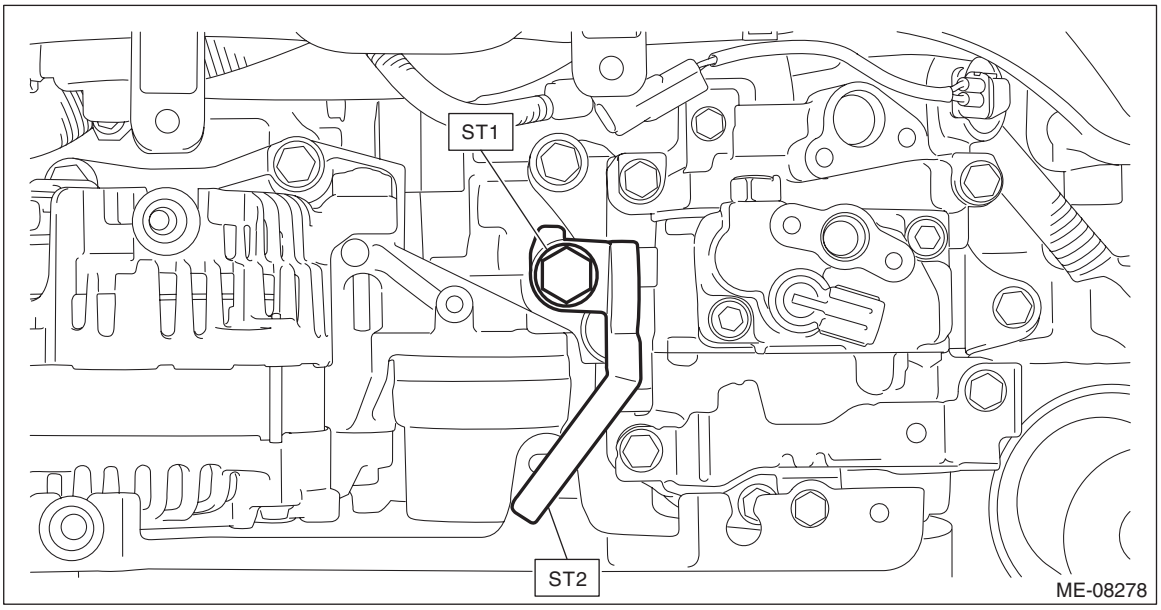

30) Support the engine with a lifting device and wire ropes.

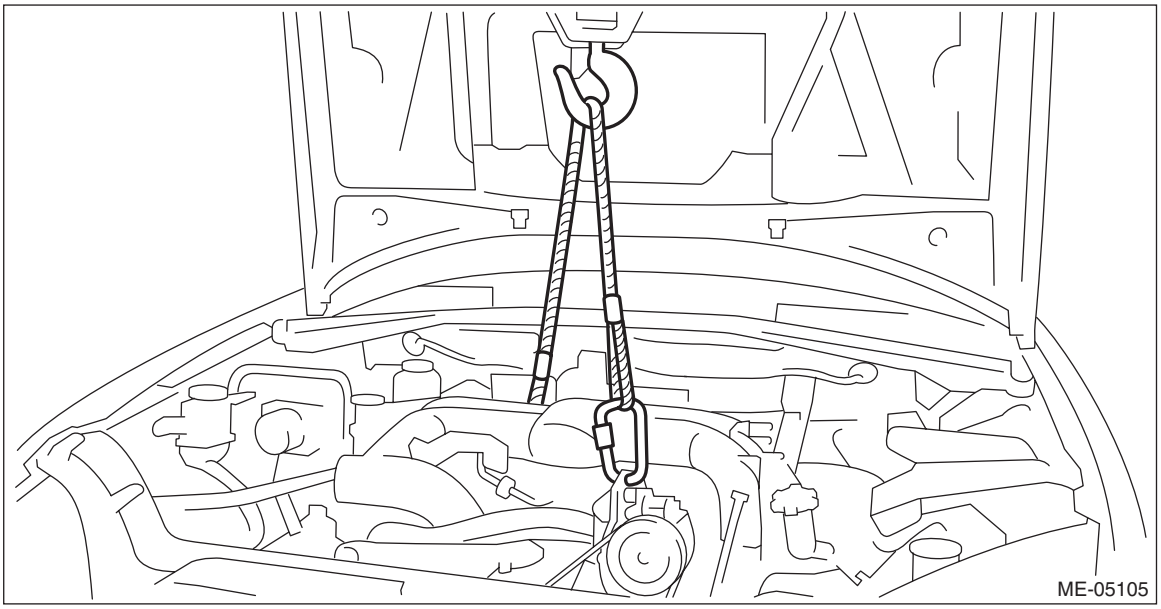

31) Remove the bolt and nut securing the front mounting bracket to the cradle, and remove the front mounting bracket and front cushion rubber together from the engine mounting bracket.

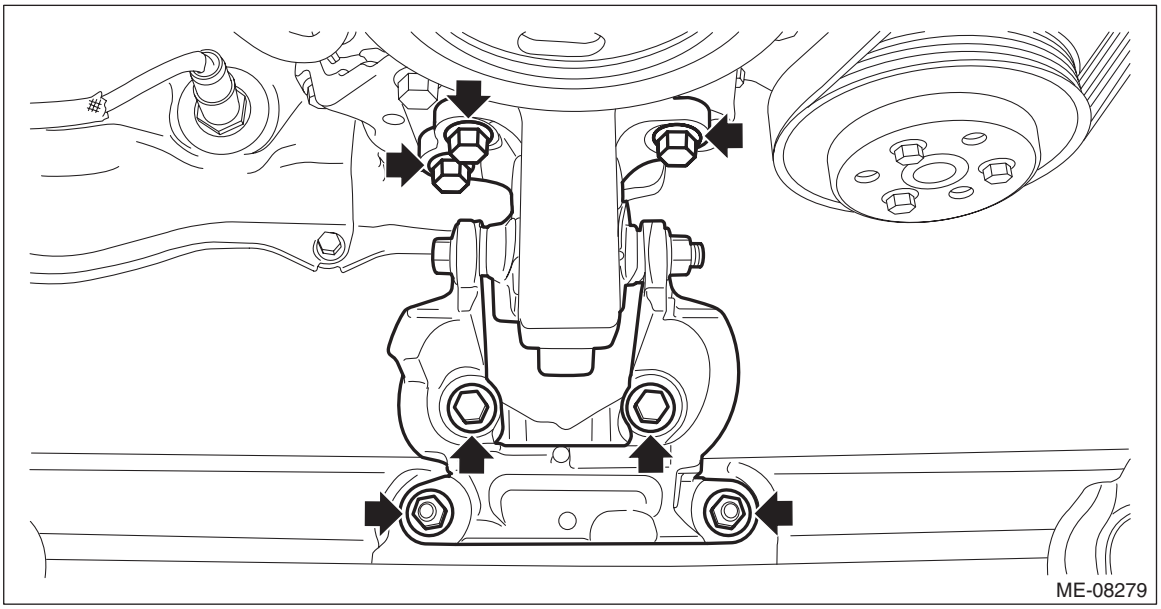

32) Remove the engine mounting bracket from the engine.

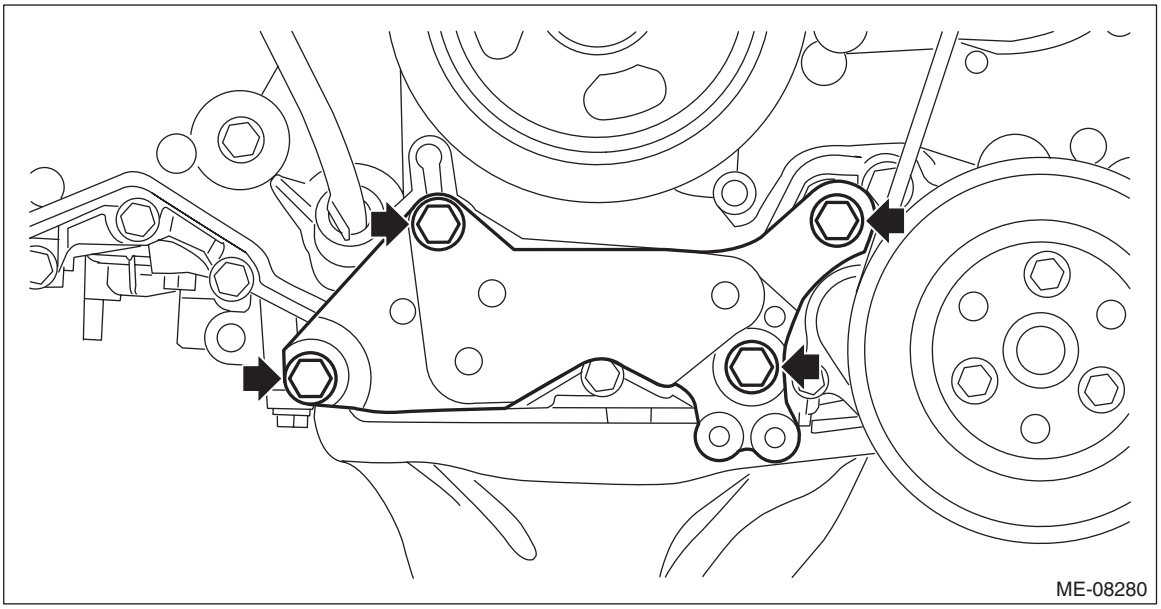

33) Remove the bolt securing the upper side of the transmission to the engine, and separate the transmission and the engine.

CAUTION:
Before removing the engine away from transmission, check to be sure no work has been overlooked.

- CVT model

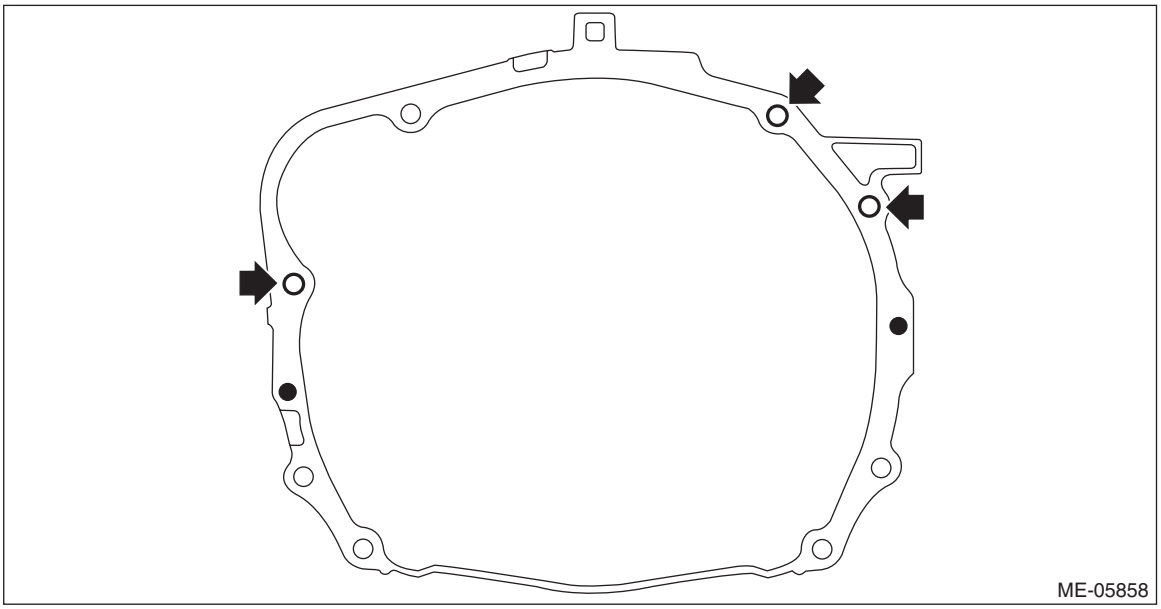

- MT model

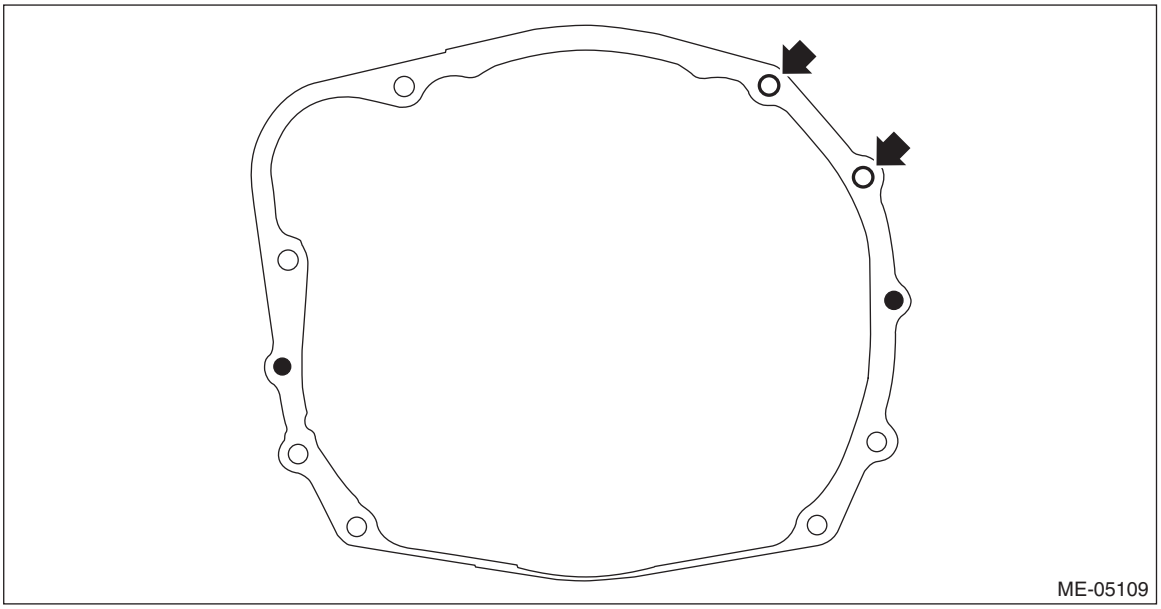

34) Remove the engine from the vehicle.

NOTE:
Be careful not to damage adjacent parts or body panels with crank pulley, oil level gauge, etc.

(1) Move the engine horizontally until engine is withdrawn from transmission. (CVT model)
(2) Move the engine horizontally until main shaft is withdrawn from clutch cover. (MT model)
(3) Slowly move the engine away from engine compartment.

B: INSTALLATION

1) Apply a small amount of grease to splines of main shaft. (MT model)

Grease:
NICHIMOLY N-130 or equivalent

2) Position the engine in engine compartment and align it with transmission.

NOTE:
Be careful not to damage adjacent parts or body panels with crank pulley, oil level gauge, etc.

3) Install the bolts which hold upper side of transmission to engine.

Tightening torque:
50 N·m (5.1 kgf-m, 36.9 ft-lb)

- CVT model

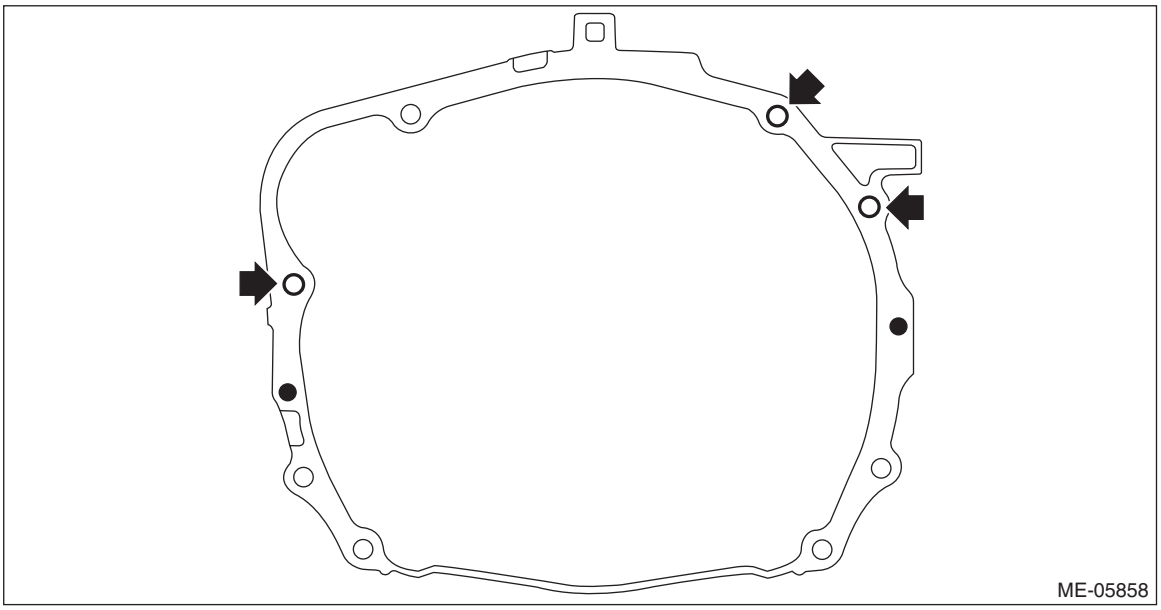

- MT model

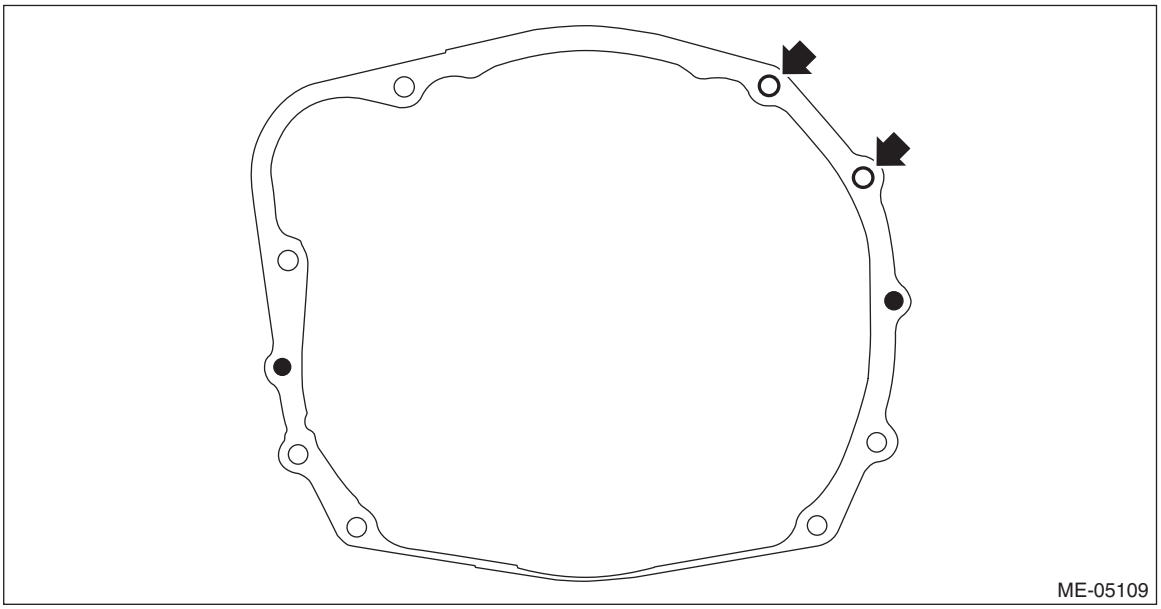

4) Install the engine mounting bracket onto the engine.

Tightening torque:
30 N·m (3.1 kgf-m, 22.1 ft-lb)

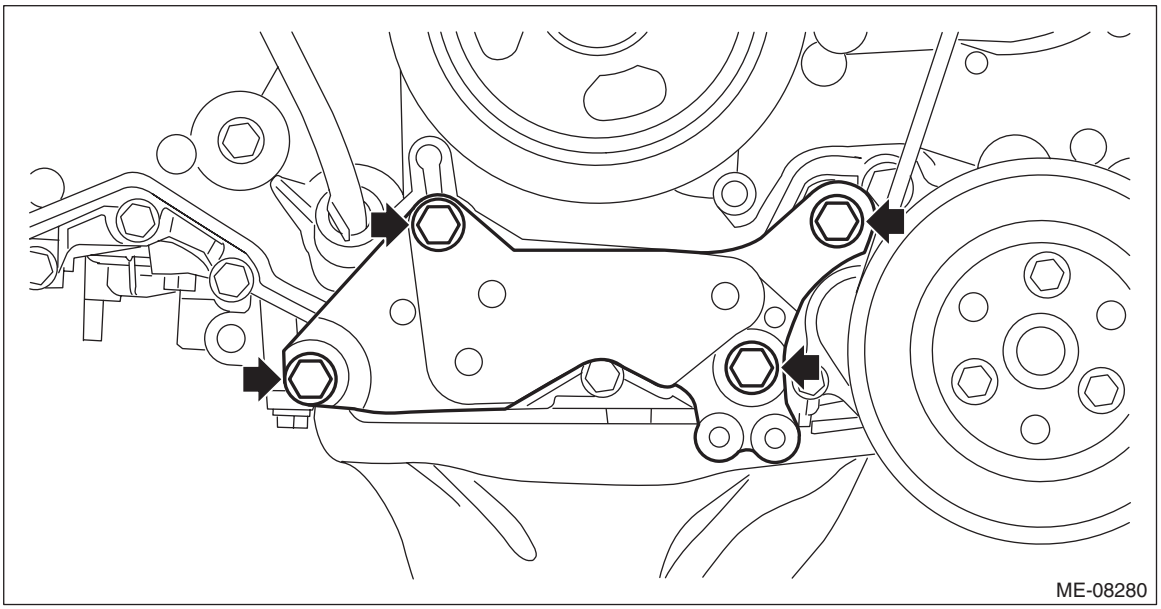

5) Place the front cushion rubber together with the front mounting bracket to the cradle, and install the front cushion rubber to the engine mounting bracket to install the front mounting bracket to the cradle.

Tightening torque:
T1: 25 N·m (2.5 kgf-m, 18.4 ft-lb)
T2: 60 N·m (6.1 kgf-m, 44.3 ft-lb)

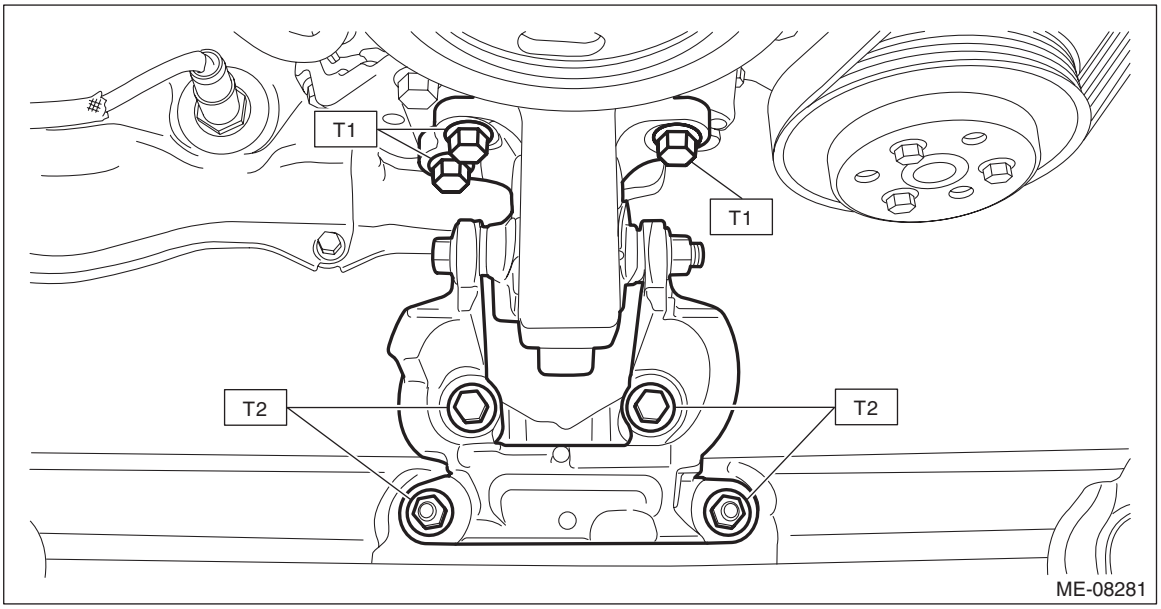

6) Remove the lifting device and wire ropes.

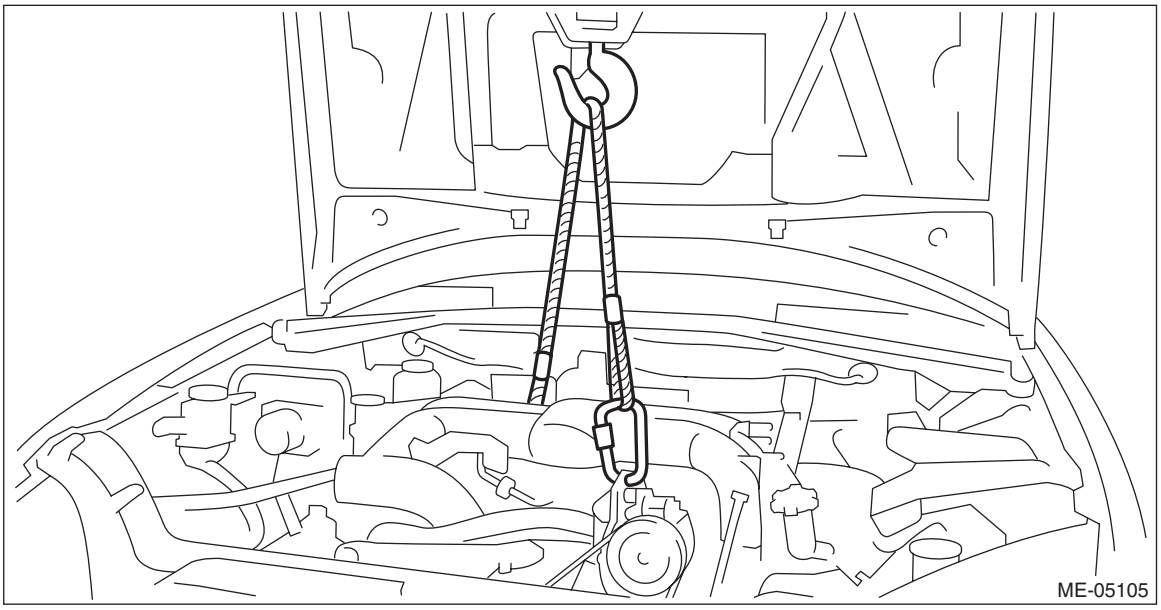

7) Remove the ST1 and ST2 from the engine unit.
ST1 18363AA050 BOLT
ST2 18360AA040 HANGER

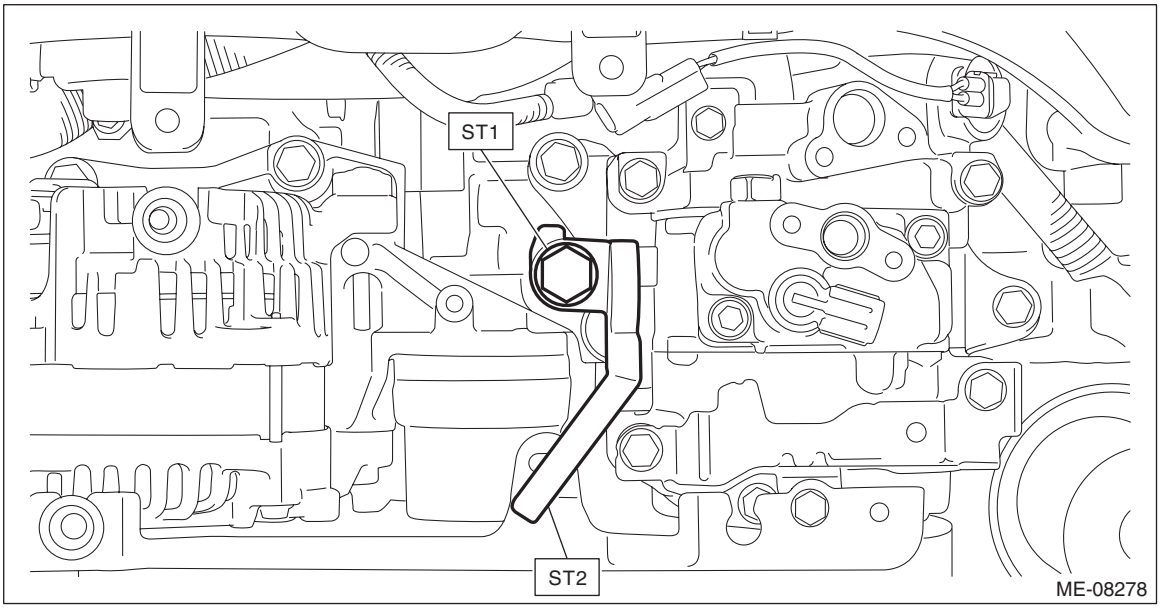

8) Install the torque converter clutch to drive plate. (CVT model)
(1) Remove the ST from torque converter clutch case.

NOTE:
Be careful not to drop the ST into the torque converter clutch case when removing the ST.
ST 498277200 STOPPER SET

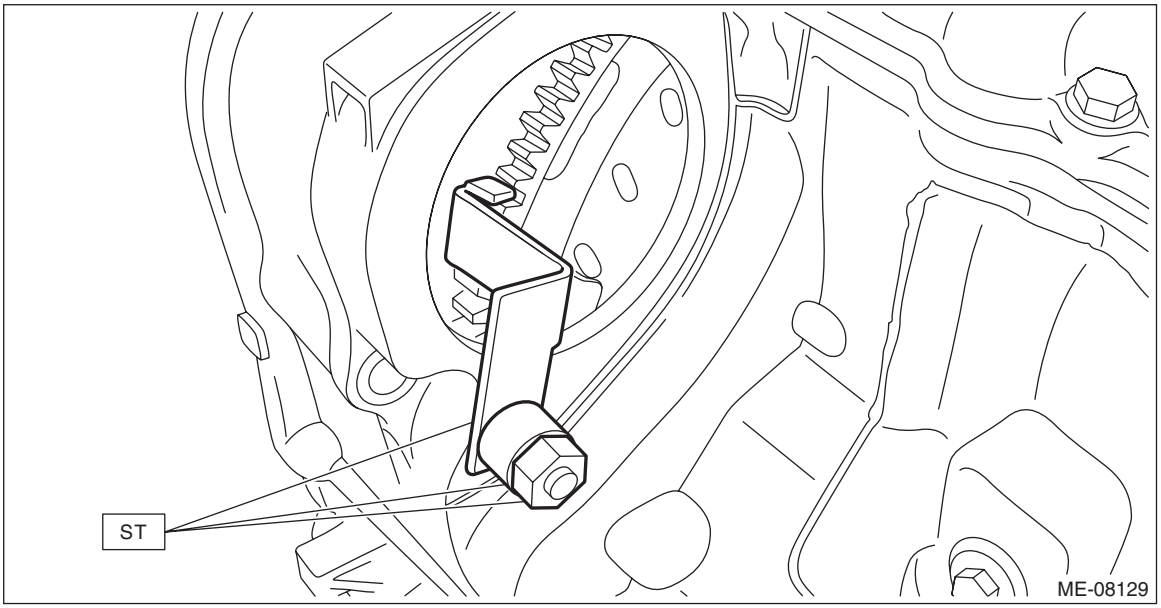

(2) Insert the wrench into the crank pulley bolt, and rotate the crank pulley to attach the four bolts securing the torque converter clutch to the drive plate.

NOTE:
Be careful not to drop bolts into the torque converter clutch case.

Tightening torque:
25 N·m (2.5 kgf-m, 18.4 ft-lb)

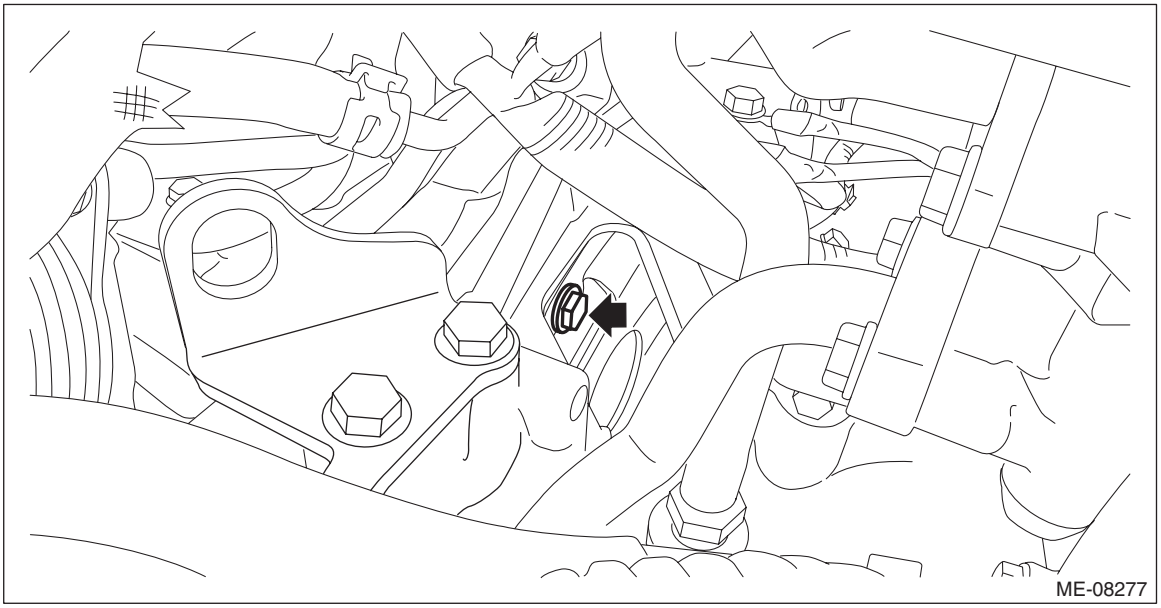

(3) Fit the plug to service hole.
9) Install the starter. <Ref. to SC(H4DO)-9, INSTALLATION, Starter.>
10) Lift up the vehicle.

11) Install the bolts and nuts which hold lower side of the transmission to engine.

Tightening torque:
50 N·m (5.1 kgf-m, 36.9 ft-lb)

- CVT model

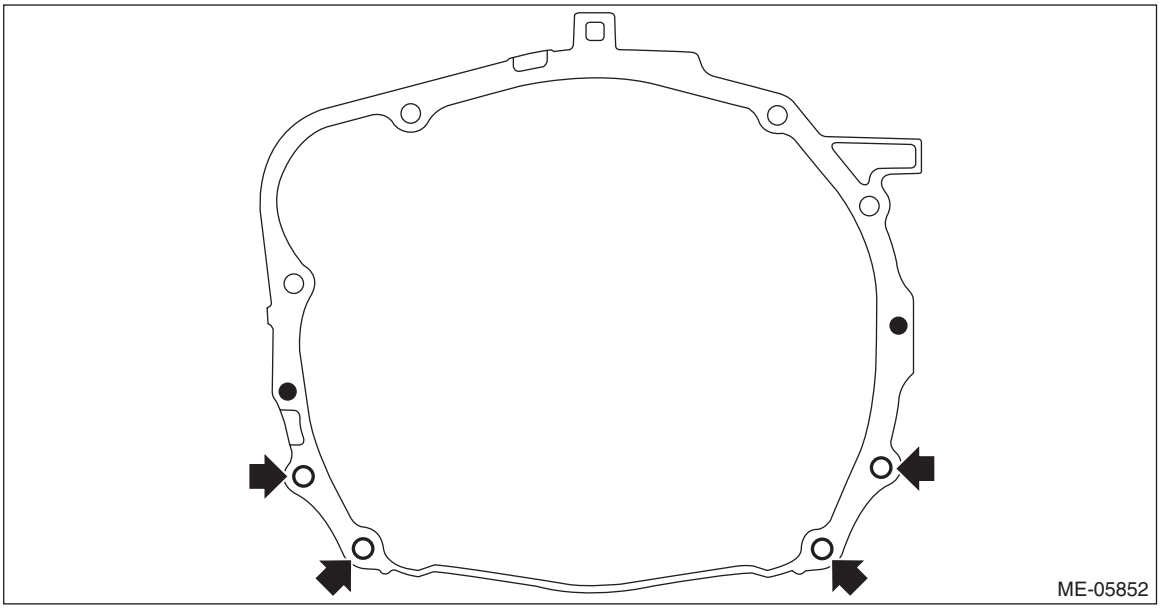

- MT model

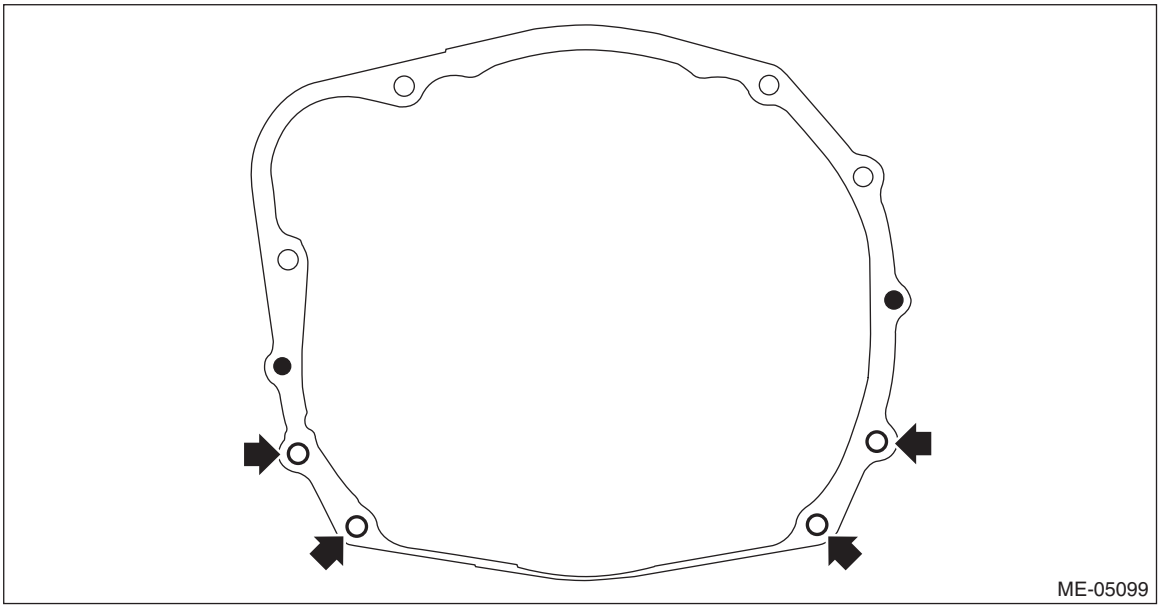

12) Connect the ground cable.

Tightening torque:
7.5 N·m (0.8 kgf-m, 5.5 ft-lb)

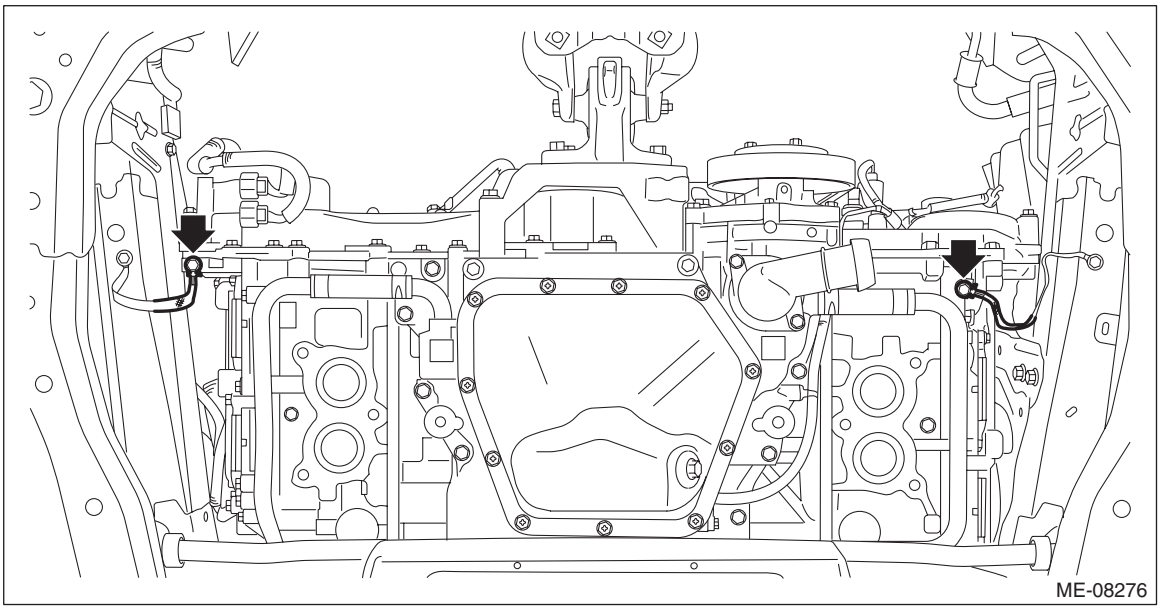

13) Install the front exhaust pipe. <Ref. to EX(H4DO)-7, INSTALLATION, Front Exhaust Pipe.>
14) Lower the vehicle.
15) Connect the fuel delivery tube and evaporation hose.
(1) Connect the evaporation hose (C).
(2) Connect the quick connector of the fuel delivery tube (B) to the fuel pipe assembly, and secure the fuel delivery tube using clip (A).

CAUTION:
• Check that there is no damage or dust on the quick connector. If necessary, clean the seal surface of the pipe.
• Make sure that the quick connector is securely connected.

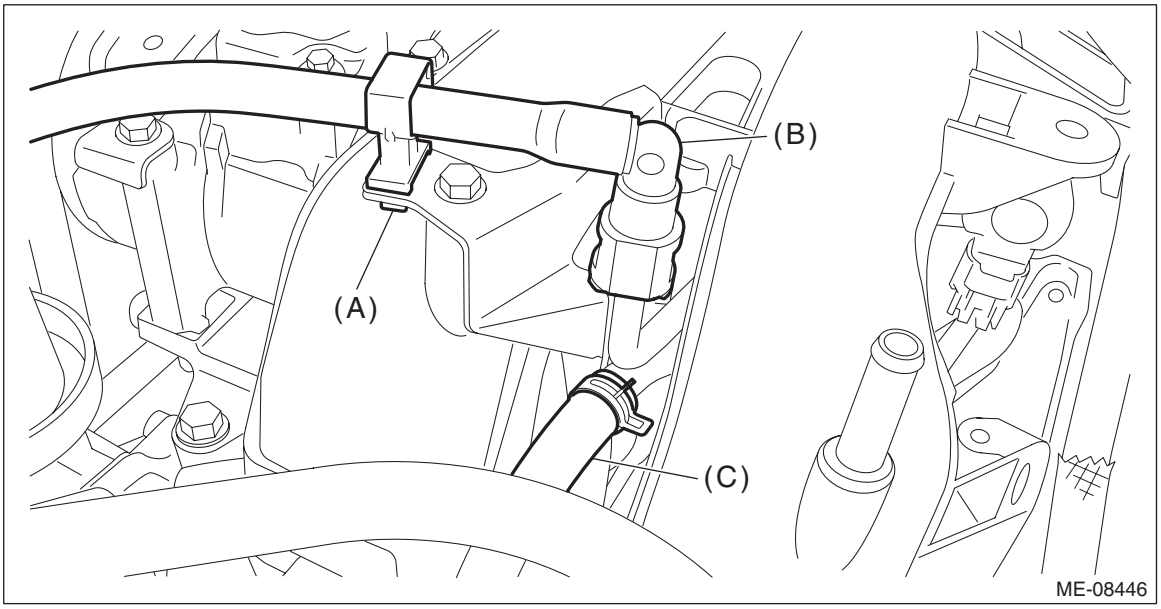

16) Connect the engine coolant hose to the CVTF cooler (with warmer feature) and EGR cooler.

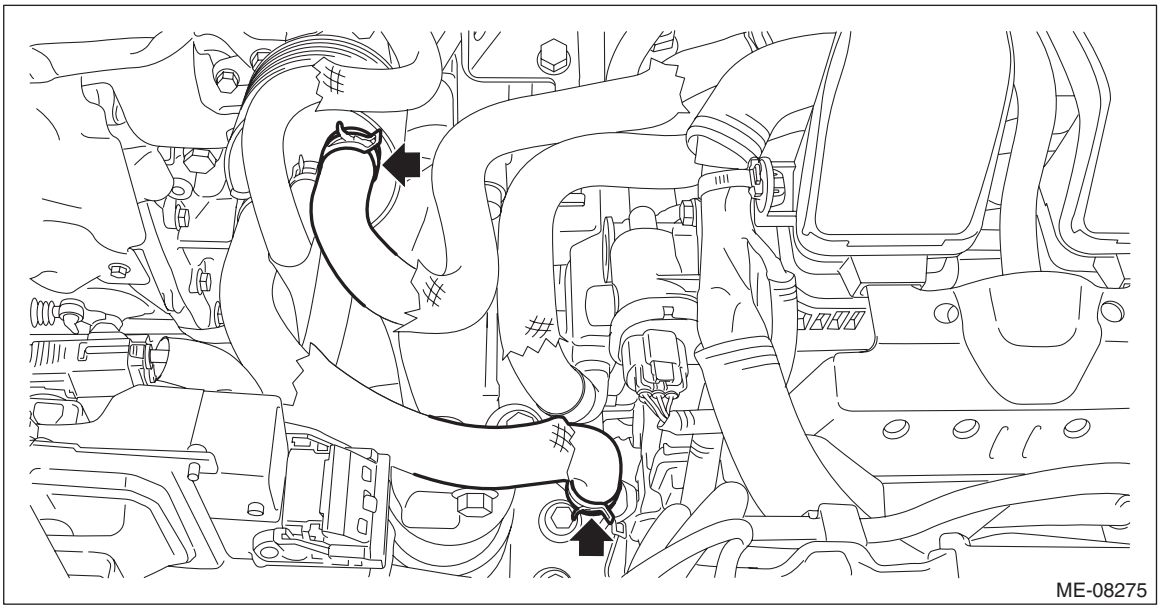

17) Move the lock lever (A) in the direction of arrow, and connect the engine harness connector to ECM.

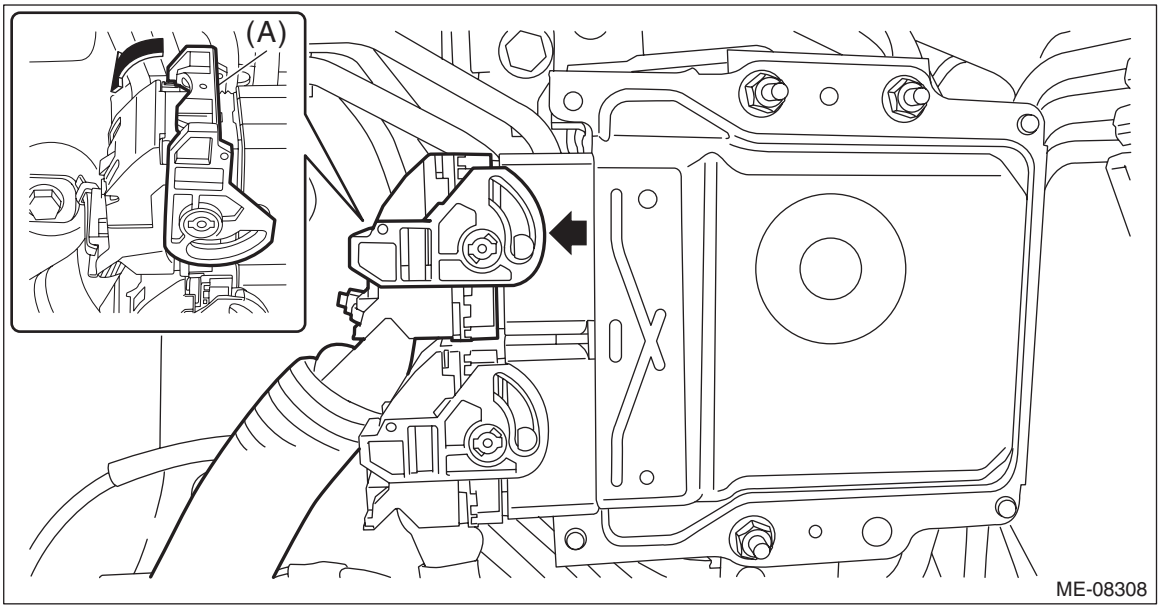

18) Connect the brake booster vacuum hose (A), heater inlet hose (B) and heater outlet hose (C).

NOTE:
Be careful not to mix up the heater inlet hose and the heater outlet hose when connecting them.

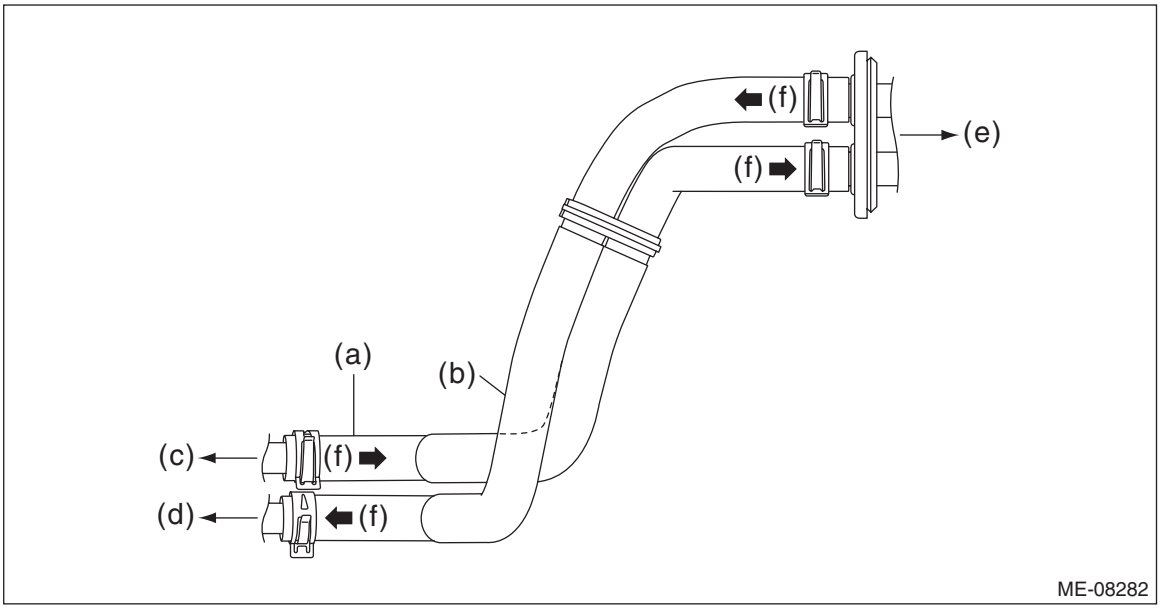

(a) Heater inlet hose
(b) Heater outlet hose
(c) To water pipe ASSY
(d) To water pipe LH
(e) To heater core ASSY
(f) Engine coolant flow

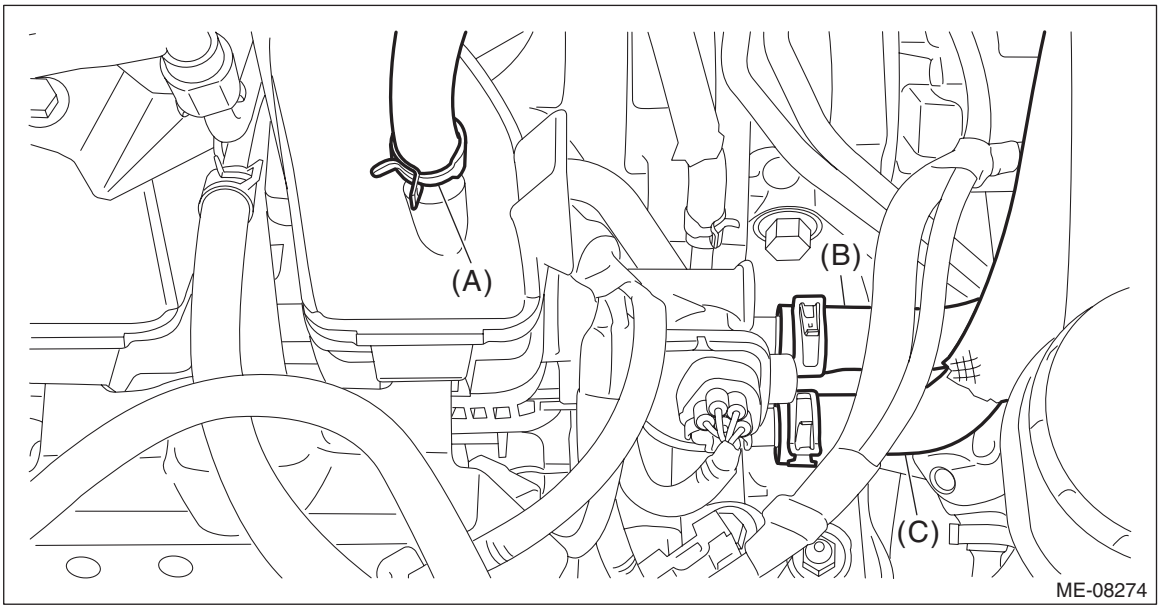

19) Place the engine harness and attach the engine harness to the clip (C).
20) Attach the engine harness to the claw (B) of the main fuse box and connect the engine harness connector (A) to the main fuse box.

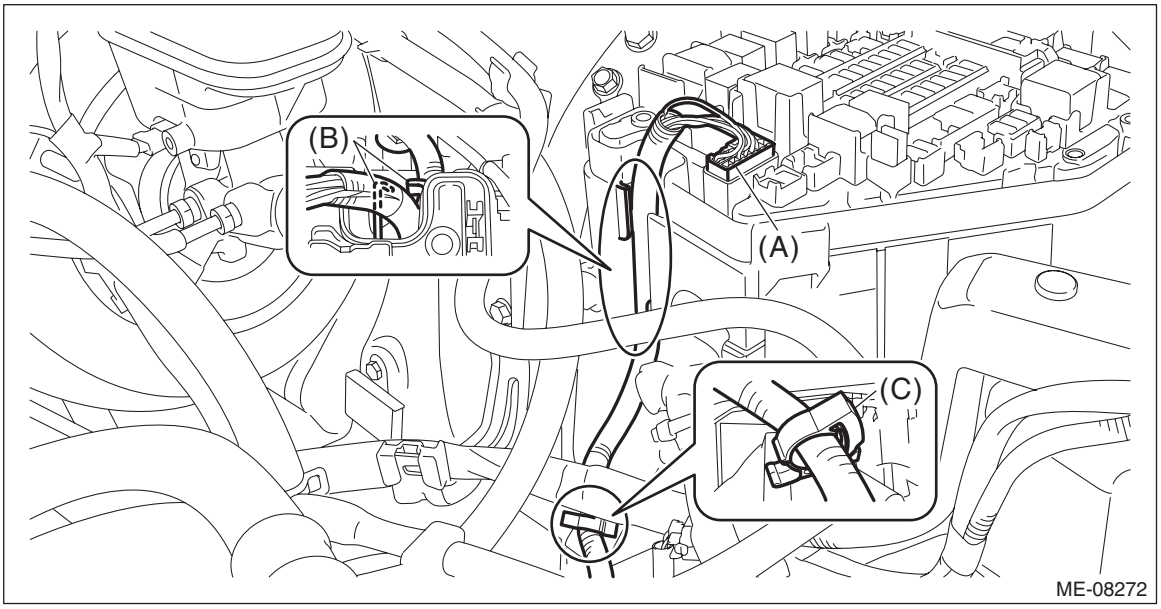

21) Connect the A/C pressure hose to A/C compressor. <Ref. to AC-68, INSTALLATION, Hose and Pipe.>
22) Place the generator cord and install the generator cord to the chain cover.

NOTE:
Install the generator cord stay so that the folded end (a) touches the chain cover boss.

Tightening torque:
6.4 N·m (0.7 kgf-m, 4.7 ft-lb)

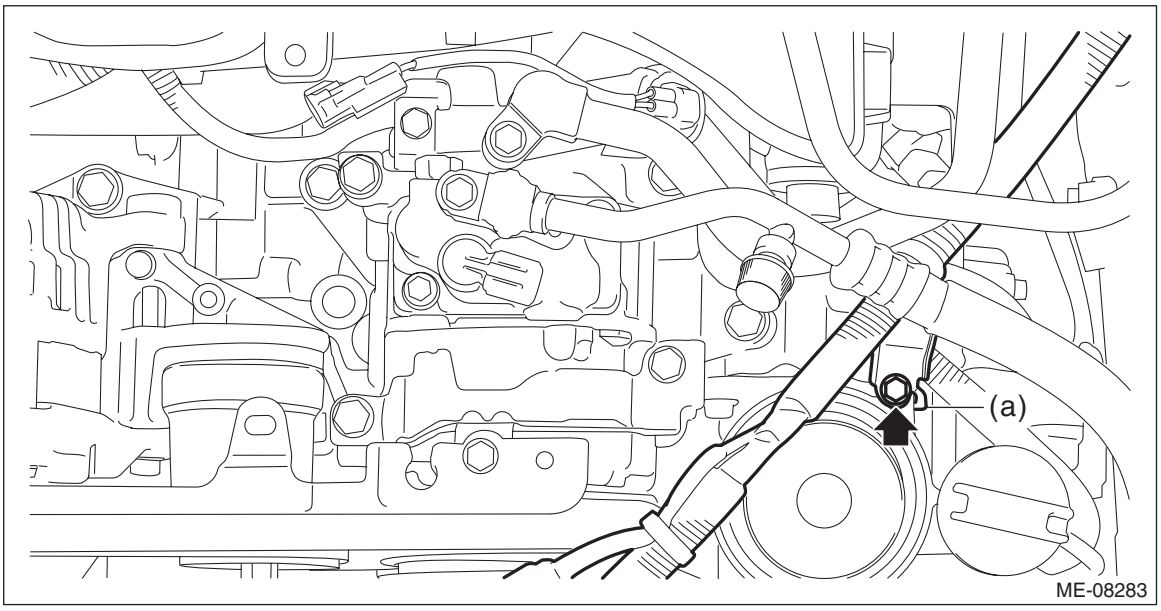

23) Secure the generator cord using the clip (E) and clip (F).
24) Connect the connector (A), connector (B), connector (C) and terminal (D).

Tightening torque:
15 N·m (1.5 kgf-m, 11.1 ft-lb)

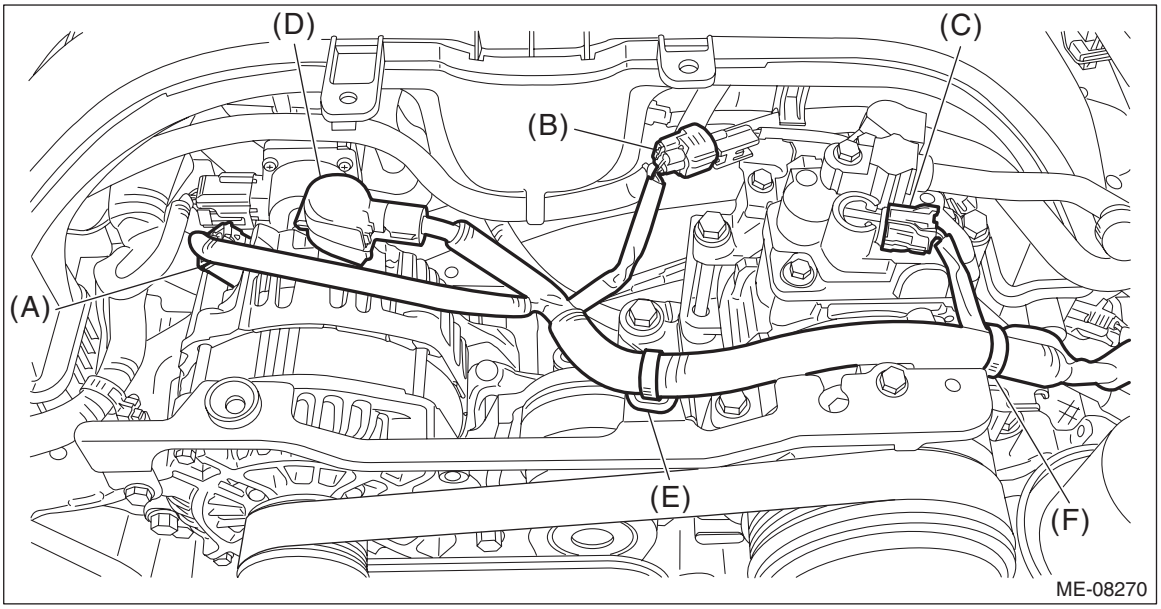

25) Install the air cleaner case (rear) together with the air cleaner element. <Ref. to IN(H4DO)-9, INSTALLATION, Air Cleaner Case.>
26) Secure the bulkhead wiring harness with clip (B) and connect the connector (A) to the mass air flow and intake air temperature sensor.

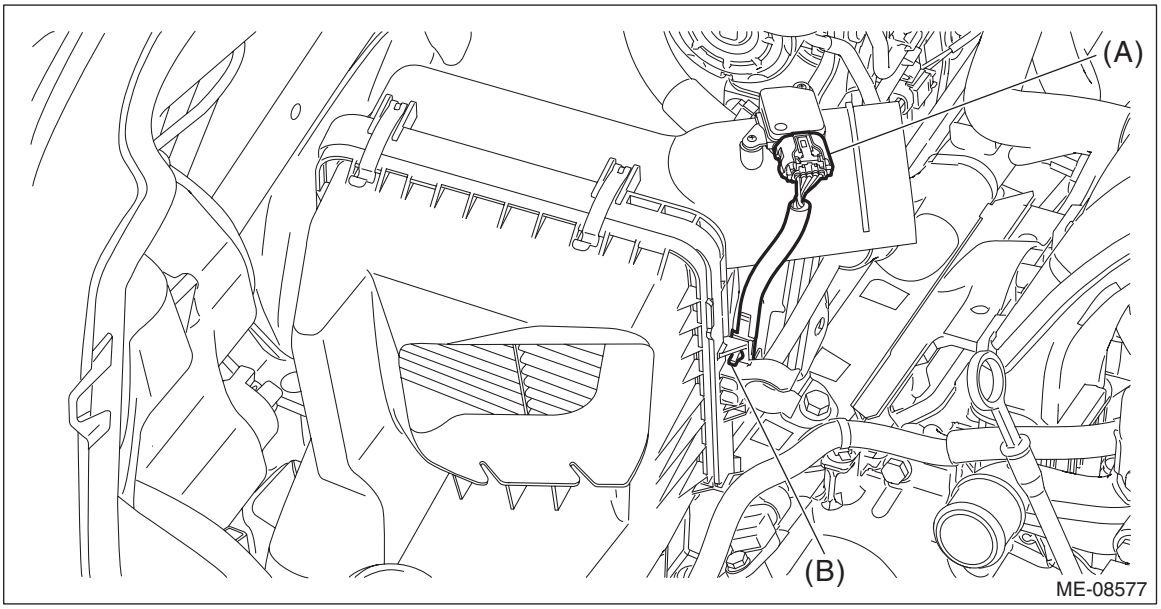

27) Install the radiator. <Ref. to CO(H4DO)-45, INSTALLATION, Radiator.>
28) Install the air intake boot. <Ref. to IN(H4DO)-10, INSTALLATION, Air Intake Boot.>
29) Install the air intake duct. <Ref. to IN(H4DO)-12, INSTALLATION, Air Intake Duct.>
30) Connect the ground terminal to battery sensor. <Ref. to RC-4, BATTERY, NOTE, Repair Contents.>
31) Fill engine coolant. <Ref. to CO(H4DO)-16, FILLING OF ENGINE COOLANT, REPLACEMENT, Engine Coolant.>
32) Charge the A/C system with refrigerant. <Ref. to AC-31, PROCEDURE, Refrigerant Charging Procedure.>

33) Install the V-belt cover.

Tightening torque:
6.5 N·m (0.7 kgf-m, 4.8 ft-lb)

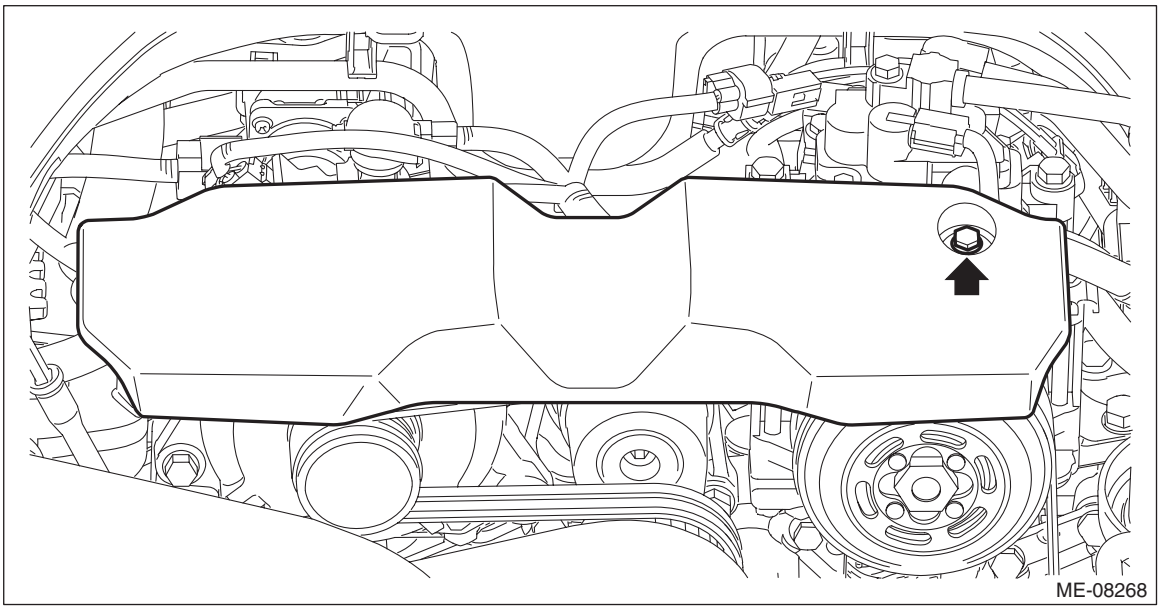

34) Set the front hood to the normal position. <Ref. to RC-22, FRONT HOOD DAMPER STAY, NOTE, Repair Contents.>
35) Close the front hood.

C: INSPECTION

1) Check that pipes, hoses, connectors and clamps are installed firmly.
2) Check the engine coolant is at specified level.
3) Start the engine and check for exhaust gas, engine coolant, leaks of fuel, etc. Also check for noise and vibrations.

10.Engine Mounting

A: REMOVAL

1. FRONT CUSHION RUBBER AND ENGINE MOUNTING BRACKET

1) Fully open the front hood. <Ref. to RC-22, FRONT HOOD DAMPER STAY, NOTE, Repair Contents.>
2) Disconnect the ground terminal from battery sensor. <Ref. to RC-4, BATTERY, NOTE, Repair Contents.>
3) Remove the air intake duct. <Ref. to IN(H4DO)-12, REMOVAL, Air Intake Duct.>
4) Remove the clip (A), and loosen the clamps (B) and (C) securing the air intake boot.

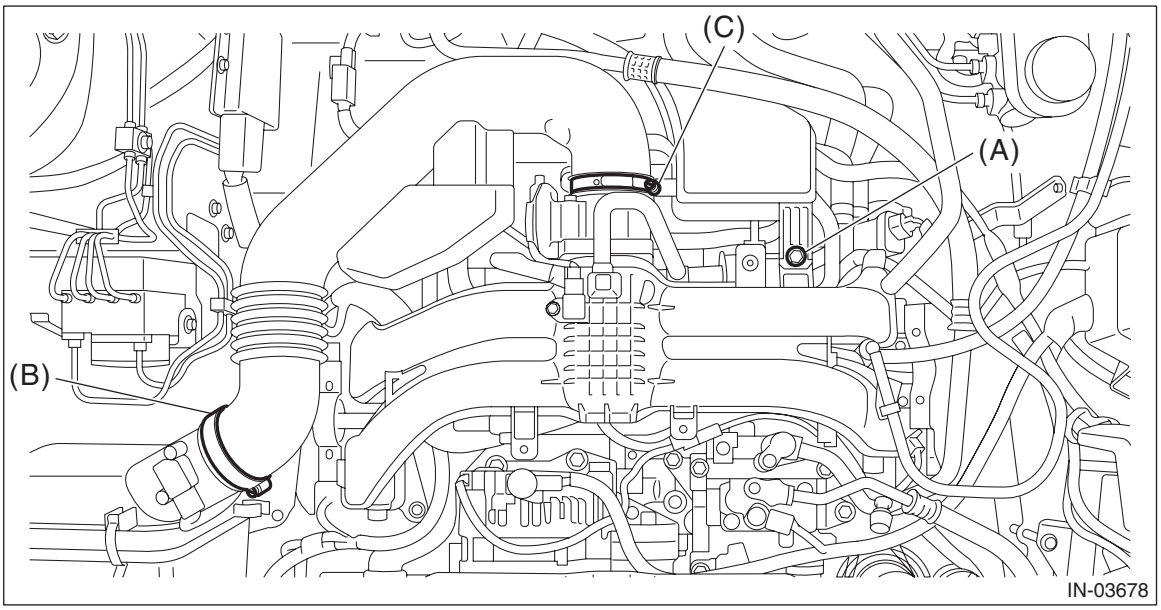

5) Remove the air intake boot from the air cleaner case (rear) and throttle body, and move it to the left side wheel apron.

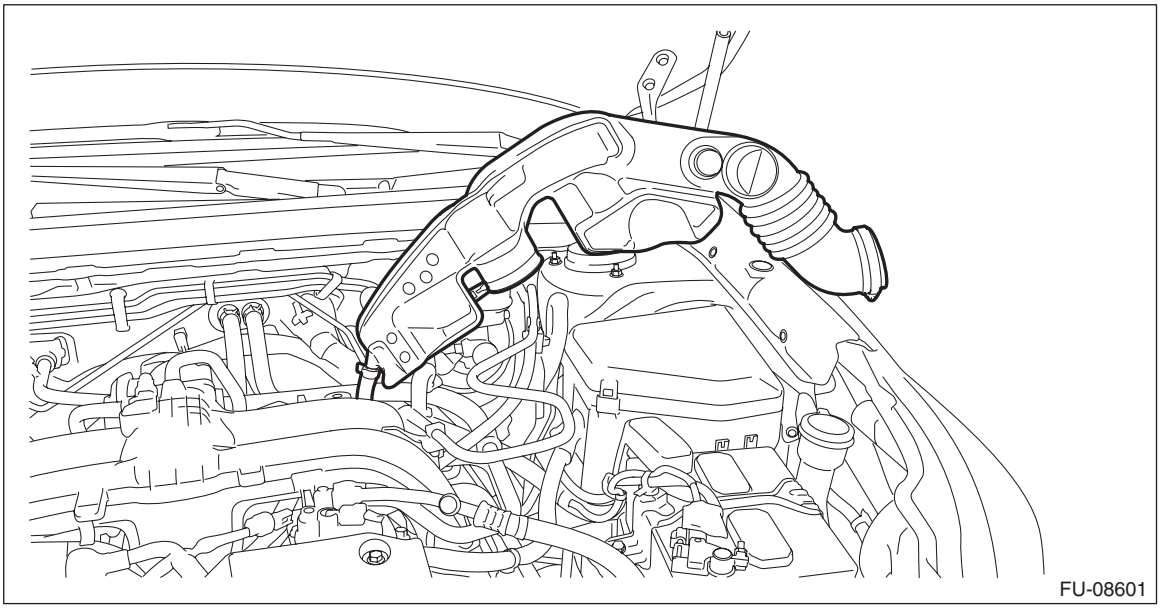

6) Remove the V-belt covers.

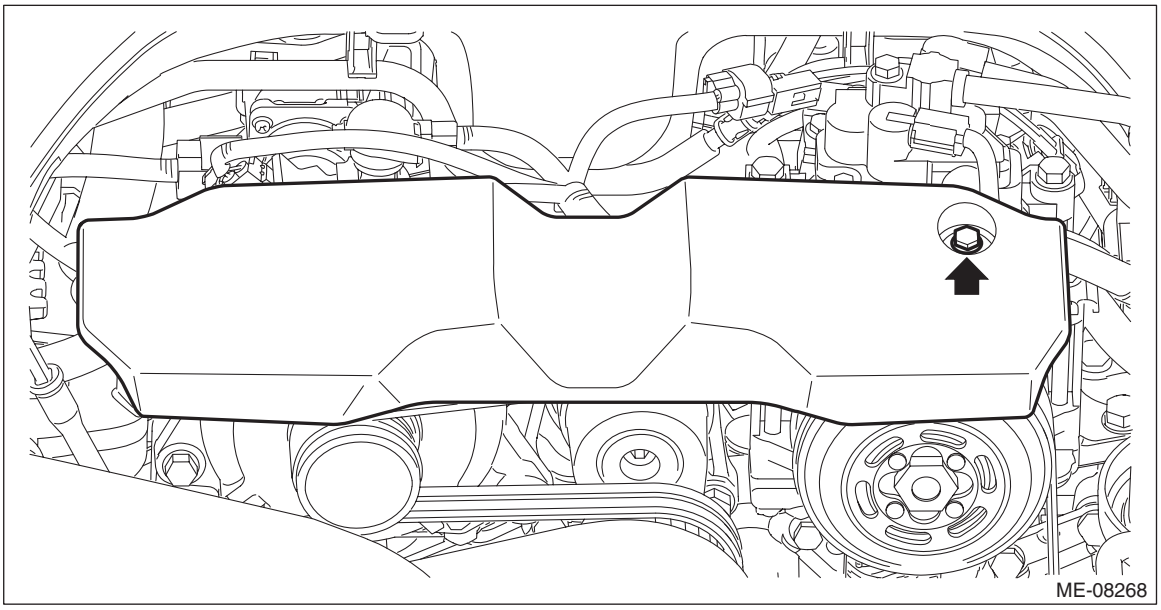

7) Using the ST1, install the ST2 to the engine unit.
ST1 18363AA050 BOLT
ST2 18360AA040 HANGER

Tightening torque:
43 N·m (4.4 kgf-m, 31.7 ft-lb)

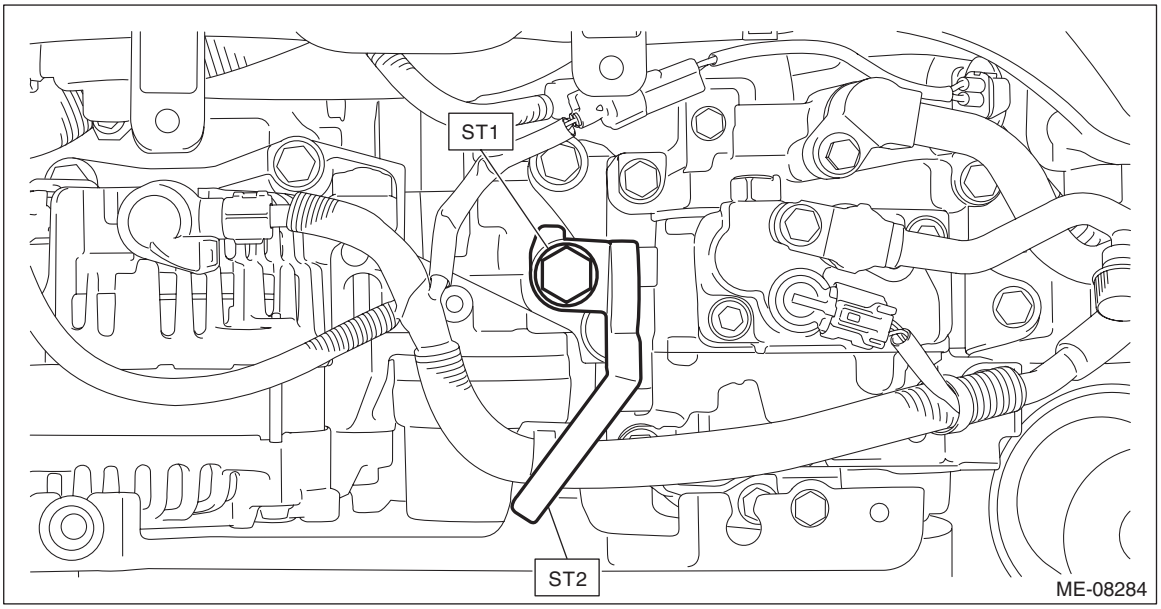

8) Support the engine with a lifting device and wire ropes.

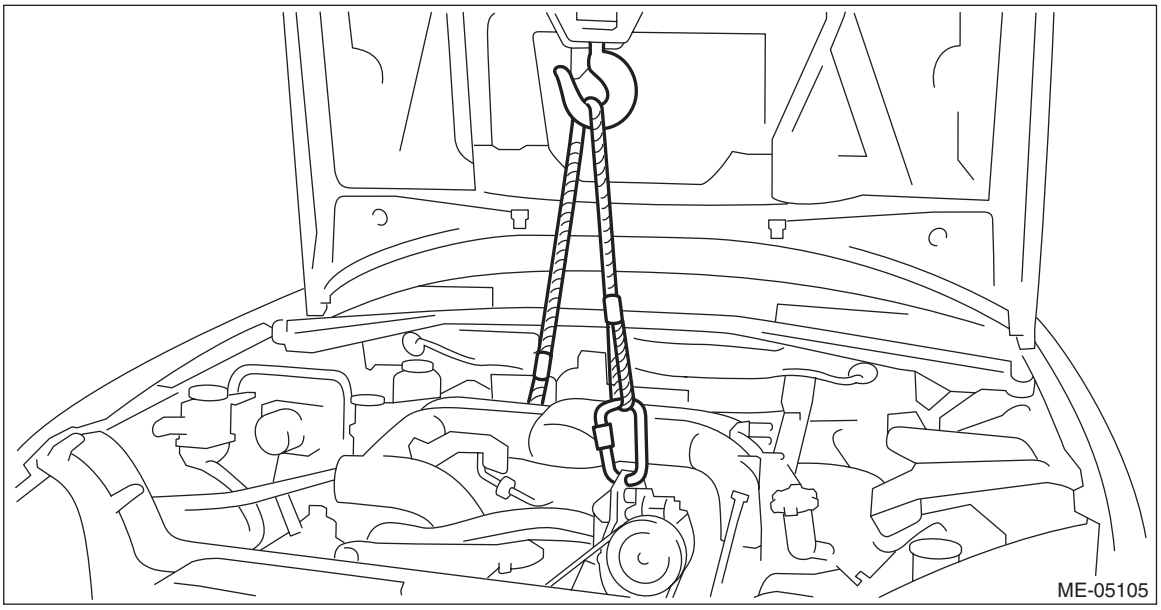

9) Remove the front cushion rubber from the front mounting bracket and engine mounting bracket.

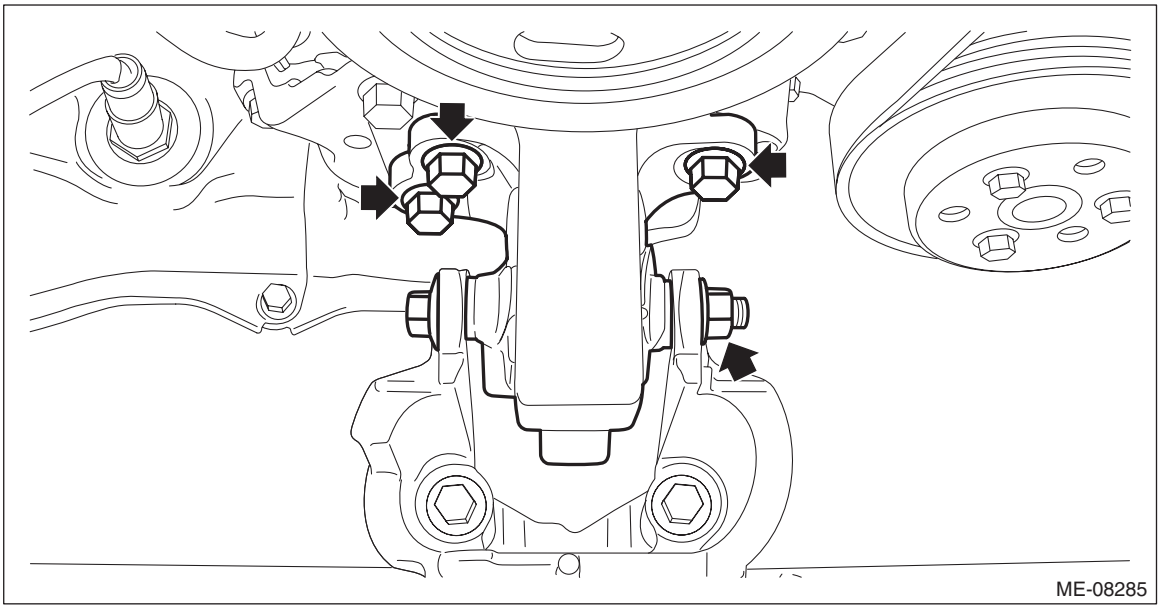

10) Remove the engine mounting bracket from the engine assembly.

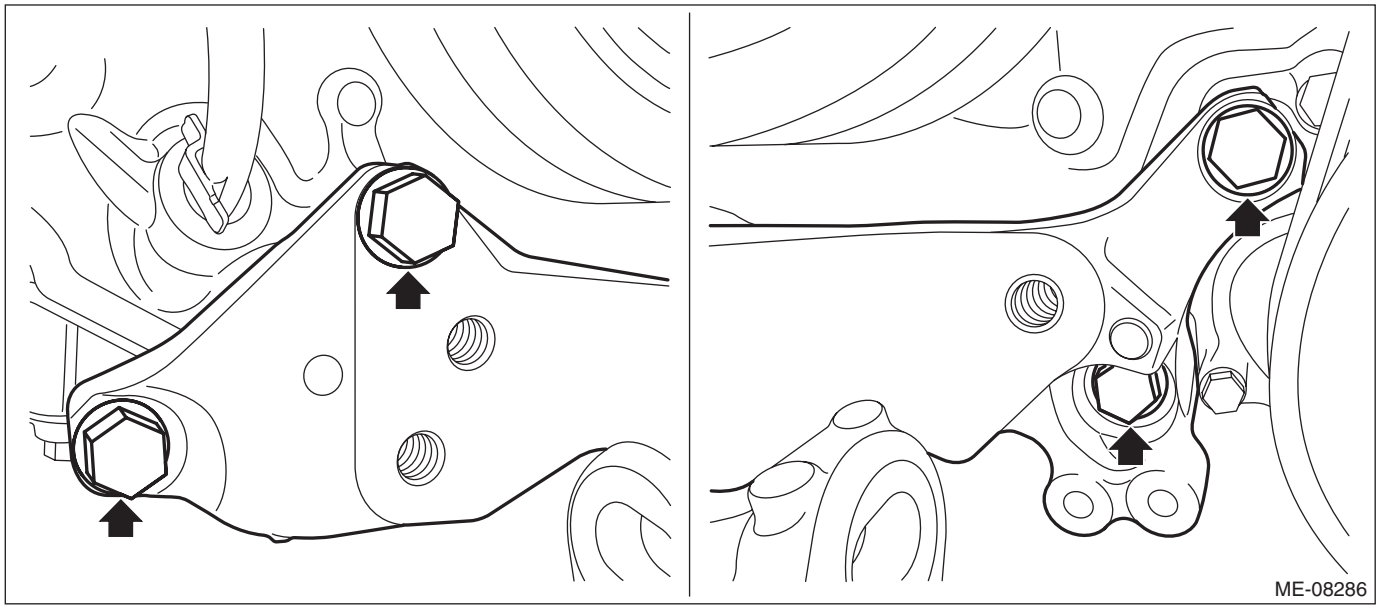

2. FRONT MOUNTING BRACKET

1) Remove the radiator fan and fan motor assembly. <Ref. to CO(H4DO)-54, REMOVAL, Radiator Fan and Fan Motor Assembly.>
2) Remove the front cushion rubbers. <Ref. to ME(H4DO)-64, FRONT CUSHION RUBBER AND ENGINE MOUNTING BRACKET, REMOVAL, Engine Mounting.>
3) Remove the front mounting bracket.

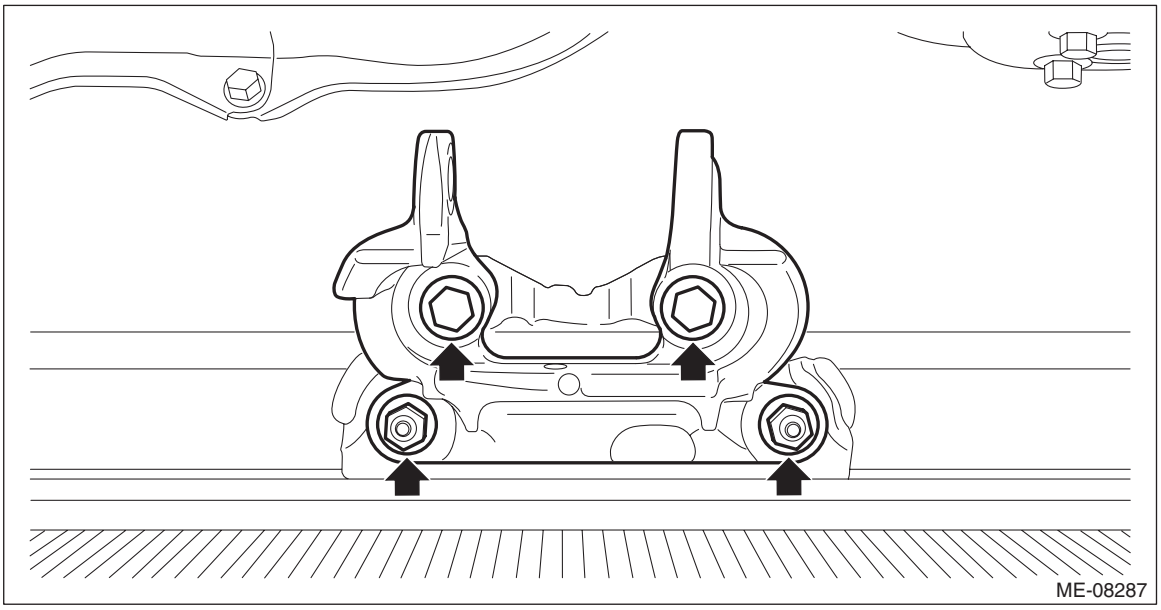

B: INSTALLATION

1. FRONT CUSHION RUBBER AND ENGINE MOUNTING BRACKET

1) Install the engine mounting bracket onto the engine.

Tightening torque:
30 N·m (3.1 kgf-m, 22.1 ft-lb)

2) Install the front cushion rubber to the front mounting bracket and engine mounting bracket.

Tightening torque:
T1: 25 N·m (2.5 kgf-m, 18.4 ft-lb)
T2: 45 N·m (4.6 kgf-m, 33.2 ft-lb)

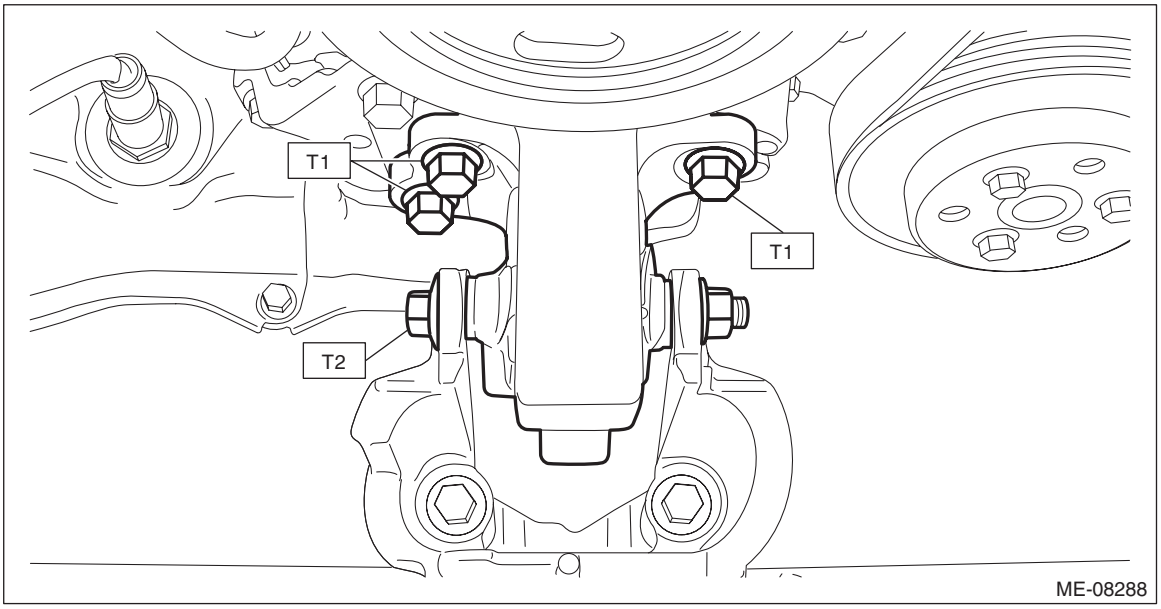

3) Remove the lifting device and wire ropes.

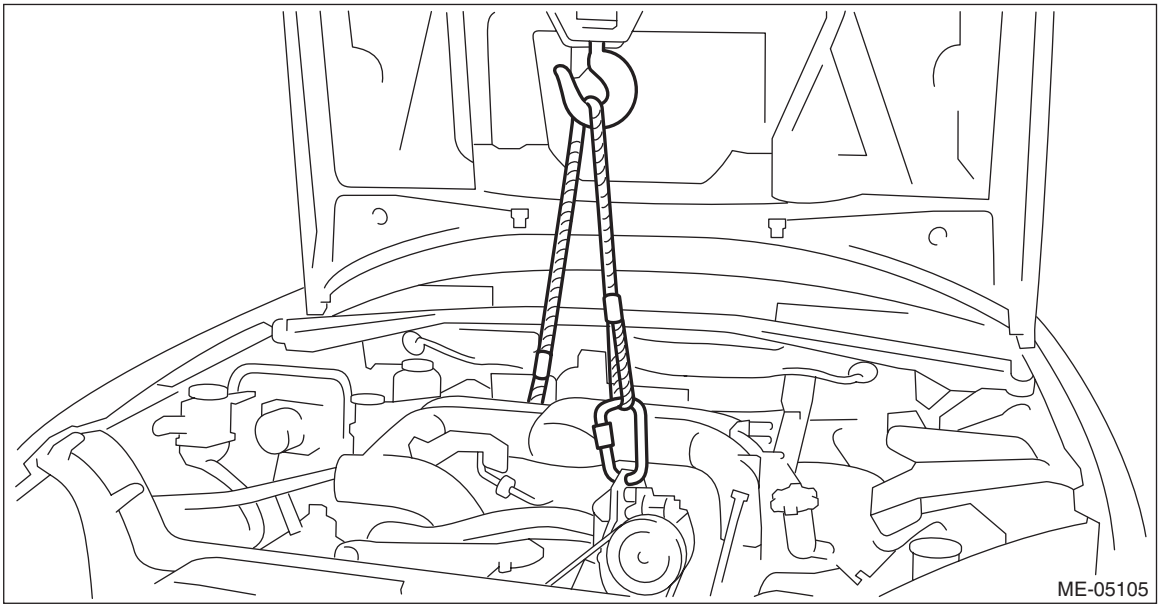

4) Remove the ST1 and ST2 from the engine unit.
ST1 18363AA050 BOLT
ST2 18360AA040 HANGER

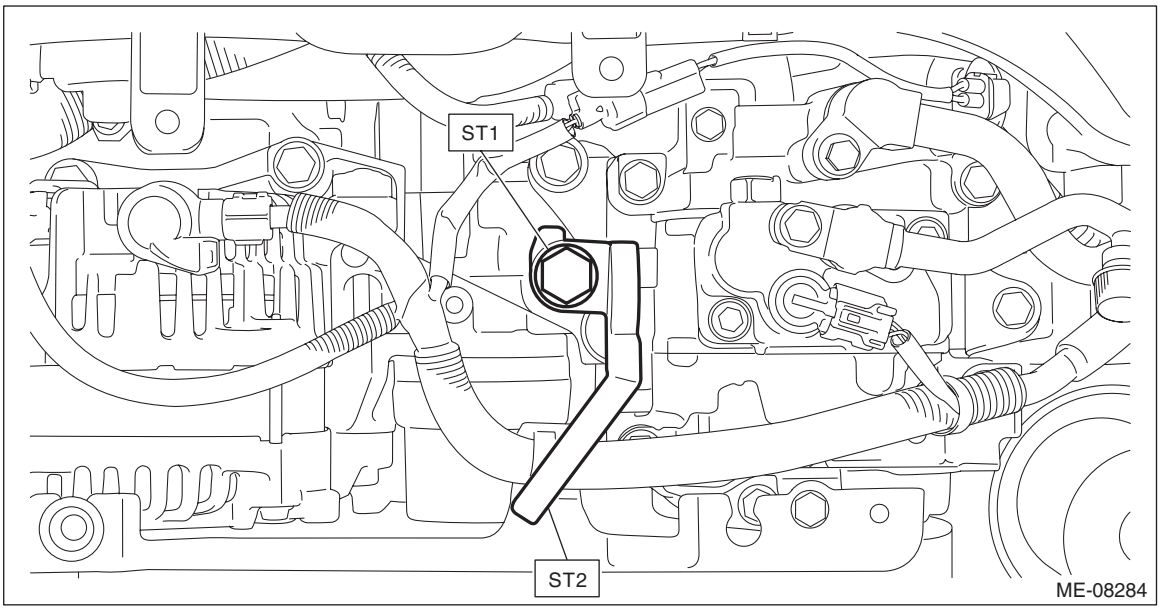

5) Install the V-belt cover.

Tightening torque:
6.5 N·m (0.7 kgf-m, 4.8 ft-lb)

6) Install the air intake boot. <Ref. to IN(H4DO)-10, INSTALLATION, Air Intake Boot.>
7) Install the air intake duct. <Ref. to IN(H4DO)-12, INSTALLATION, Air Intake Duct.>
8) Connect the ground terminal to battery sensor. <Ref. to RC-4, BATTERY, NOTE, Repair Contents.>
9) Set the front hood to the normal position. <Ref. to RC-22, FRONT HOOD DAMPER STAY, NOTE, Repair Contents.>
10) Close the front hood.

2. FRONT MOUNTING BRACKET

1) Install the front mounting bracket.

Tightening torque:
60 N·m (6.1 kgf-m, 44.3 ft-lb)

2) Install the front cushion rubber. <Ref. to ME(H4DO)-68, FRONT CUSHION RUBBER AND ENGINE MOUNTING BRACKET, INSTALLATION, Engine Mounting.>
3) Install the radiator fan and fan motor assembly. <Ref. to CO(H4DO)-56, INSTALLATION, Radiator Fan and Fan Motor Assembly.>

C: INSPECTION

Check that the engine mounting does not have deformation, cracks and any other damage.

11.Preparation for Overhaul

A: PROCEDURE

1) After removing the engine from the vehicle body, attach the ST to the engine as shown in the figure.

NOTE:
When using a commercially sold engine stand, follow the instructions of engine stand used.

Tightening torque:
35 N·m (3.6 kgf-m, 25.8 ft-lb)

ST1 498457000 ENGINE STAND ADAPTER RH
ST2 498457100 ENGINE STAND ADAPTER LH
ST3 18362AA020 ADAPTER
ST4 499817100 ENGINE STAND

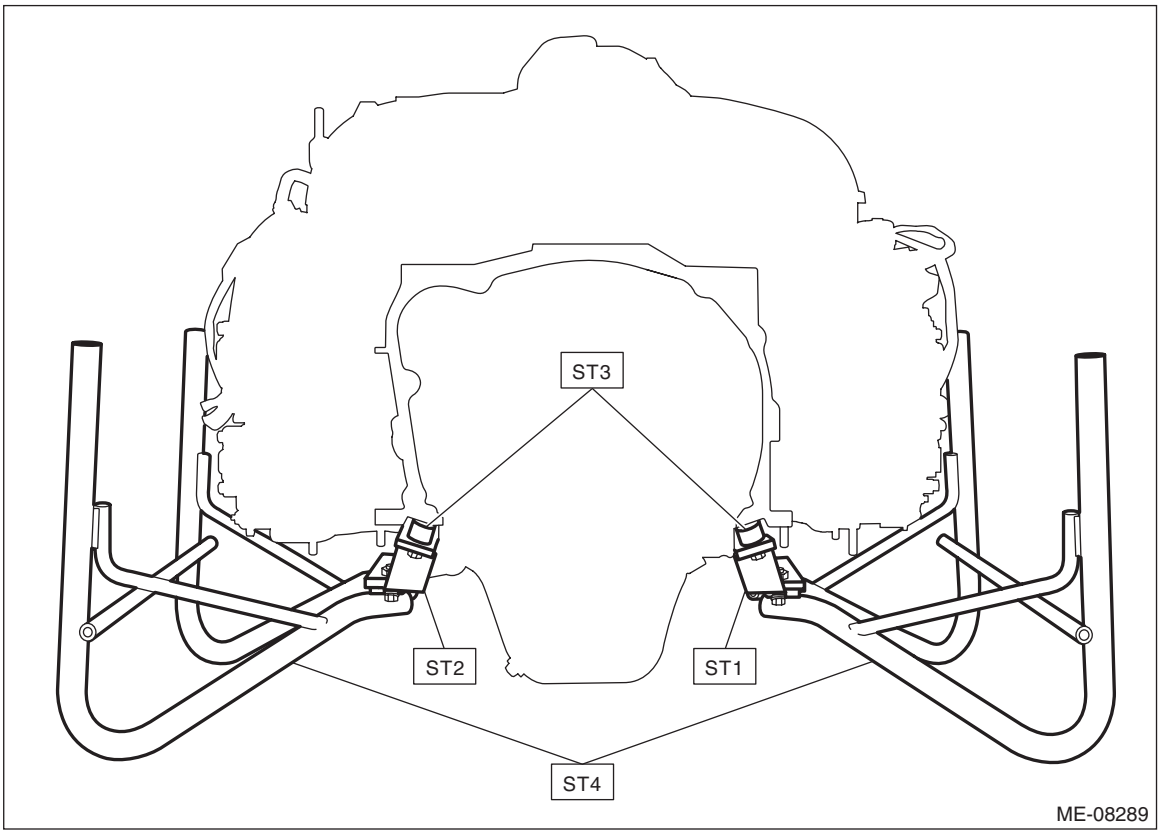

2) In this section the procedures described under each index are all connected and stated in order. The procedure for overhauling of the engine will be completed when you go through all steps in the process. Therefore, in this section, to conduct the particular procedure within the flow of a section, you need to go back and conduct the procedure described previously in order to do that particular procedure.

12.V-belt

A: REMOVAL

NOTE:
When replacing a single part, perform the work with the engine assembly installed to body.

1. V-BELT

1) When working on the vehicle

NOTE:
When working on the vehicle, perform the following steps also.
(1) Remove the V-belt covers.

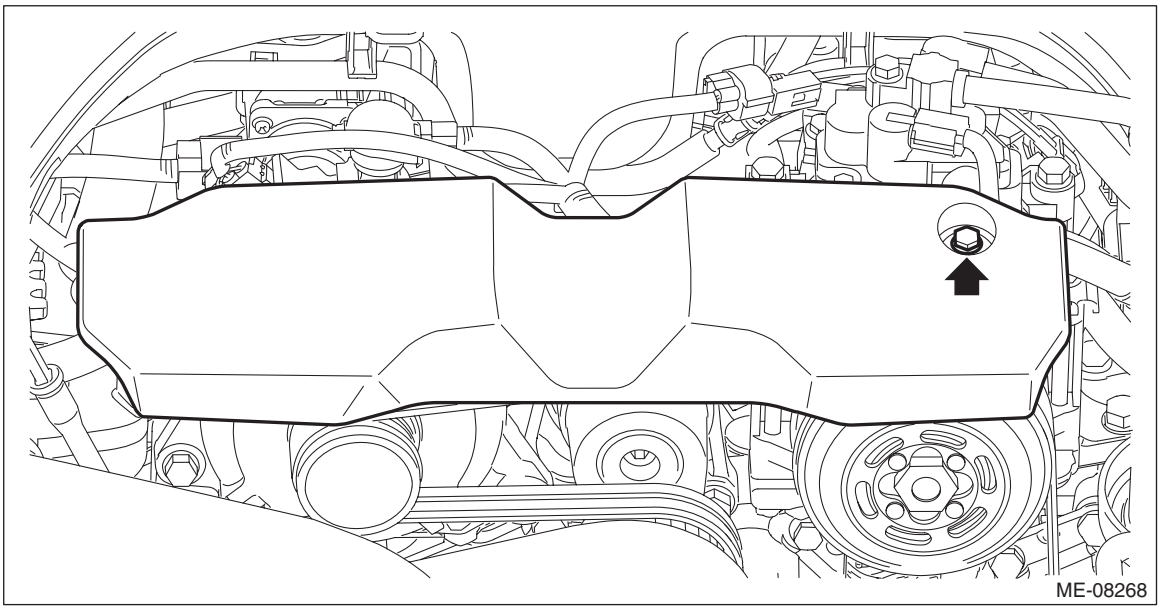

2) Attach the tool to the V-belt tensioner assembly, and rotate the tool clockwise to loosen and remove the V-belt.

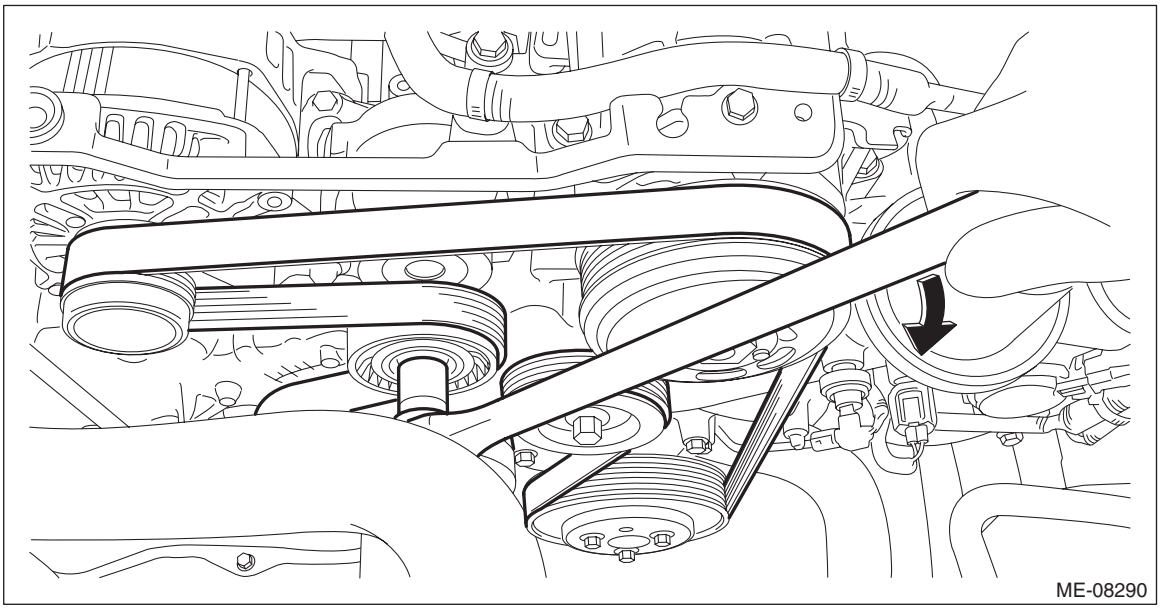

2. V-BELT TENSIONER ASSEMBLY

1) Remove the V-belts. <Ref. to ME(H4DO)-71, V-BELT, REMOVAL, V-belt.>
2) Remove the V-belt tensioner assembly.

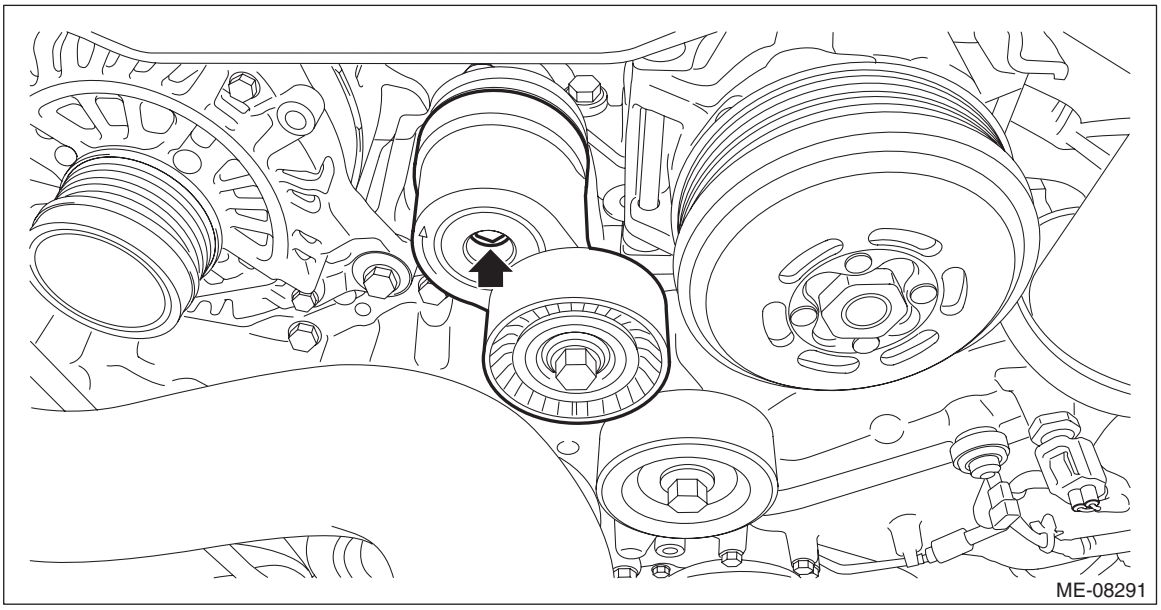

3. IDLER PULLEY

1) Remove the V-belts. <Ref. to ME(H4DO)-71, V-BELT, REMOVAL, V-belt.>
2) Remove the idler pulley.

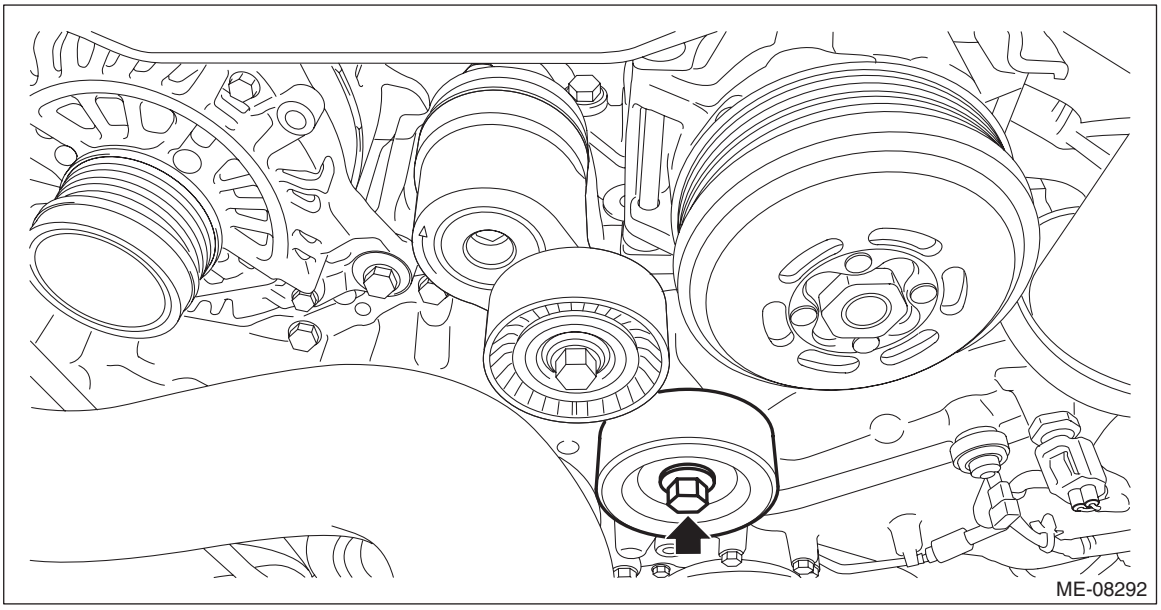

B: INSTALLATION

1. V-BELT

1) Attach the tool to the V-belt tensioner assembly, and rotate the tool clockwise to remove the V-belt as shown in the figure.

CAUTION:
- **When reusing the V-belt, wipe off dust and water with cloth.**
- **Do not use the V-belt if there is any oil, grease or coolant on the belt.**
- **Be careful not to rub the V-belt end surface with bare hands; exposed core may cause injury.**
- **Wipe off any dust, oil and water on the groove of each pulley with cloth.**

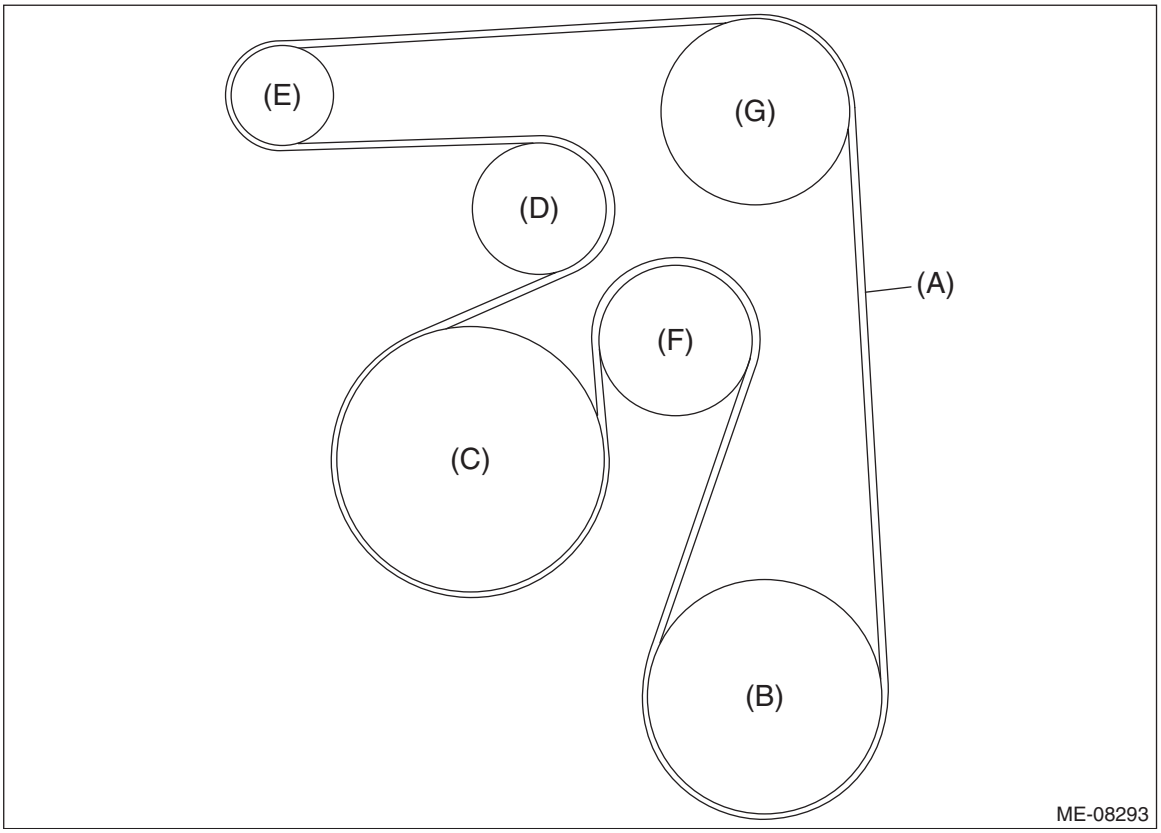

(A)	V-belt	(D)	V-belt tensioner ASSY	(G)	A/C compressor pulley
(B)	Water pump pulley	(E)	Generator pulley		
(C)	Crank pulley	(F)	Idler pulley		

2) When working on the vehicle

NOTE:
When working on the vehicle, perform the following steps also.
(1) Install the V-belt cover.

Tightening torque:
6.5 N·m (0.7 kgf-m, 4.8 ft-lb)

2. V-BELT TENSIONER ASSEMBLY

1) Install the V-belt tensioner assembly.

NOTE:
When installing the V-belt tensioner assembly, insert the protrusion of V-belt tensioner assembly into the hole for preventing rotation at the generator bracket.

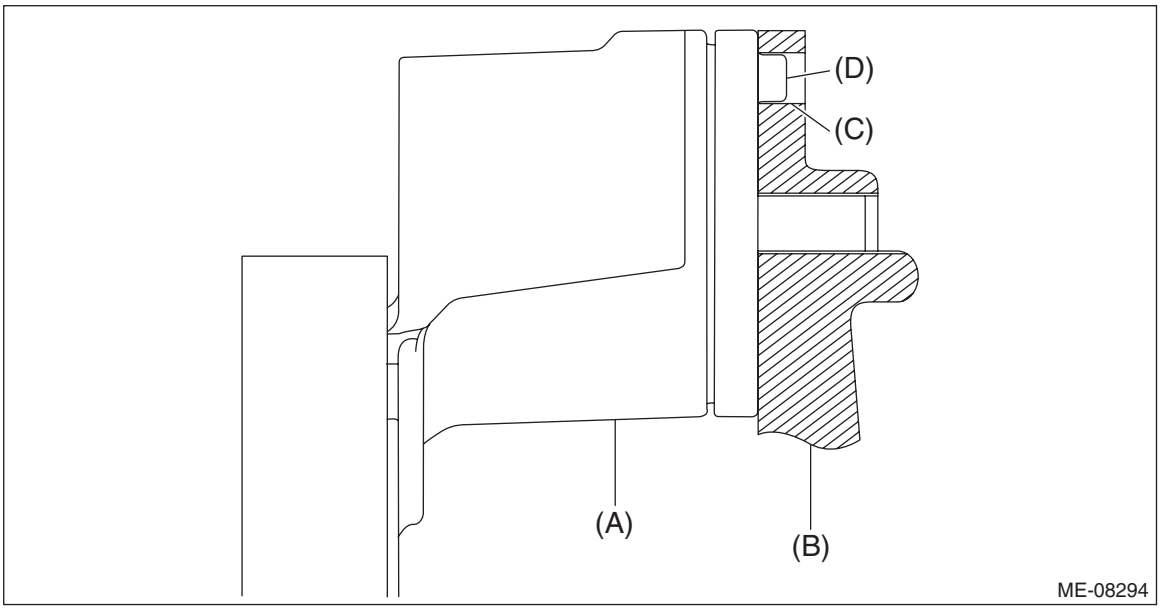

(A) V-belt tensioner ASSY
(B) Generator bracket
(C) Hole to prevent rotation
(D) Protrusion portion

Tightening torque:
25 N·m (2.5 kgf-m, 18.4 ft-lb)

2) Install the V-belts. <Ref. to ME(H4DO)-73, V-BELT, INSTALLATION, V-belt.>

3. IDLER PULLEY

1) Install the idler pulley.

NOTE:
When installing the idler pulley, be careful of the idler pulley cover direction.

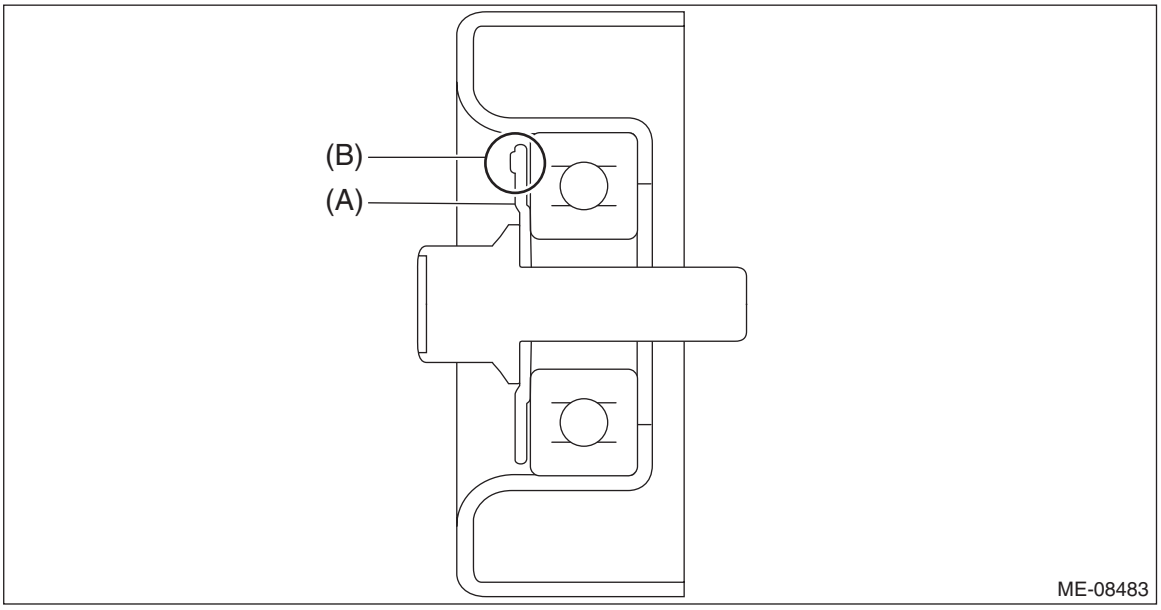

(A) Idler pulley cover
(B) Protrusion (3 places)

Tightening torque:
36 N·m (3.7 kgf-m, 26.6 ft-lb)

2) Install the V-belts. <Ref. to ME(H4DO)-73, V-BELT, INSTALLATION, V-belt.>

C: INSPECTION

1) Check the V-belt for cracks, tear or wear.
2) Check the V-belt tensioner assembly and idler pulley for deformation, cracks or other damages.
3) Check that the V-belt ribs are securely placed on the rib grooves for each pulley.

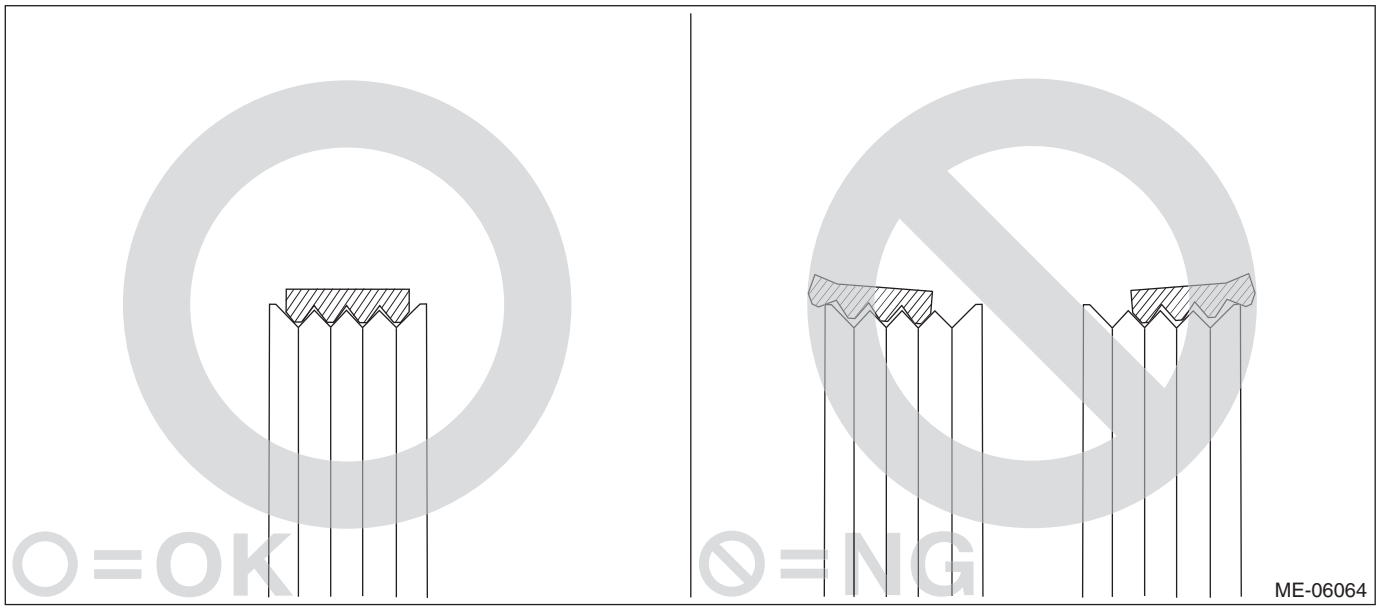

4) Check that the V-belt tensioner assembly (C) moves in the direction of arrow (D), when the V-belt (A) is pushed and released by the area indicated by the arrow (B).

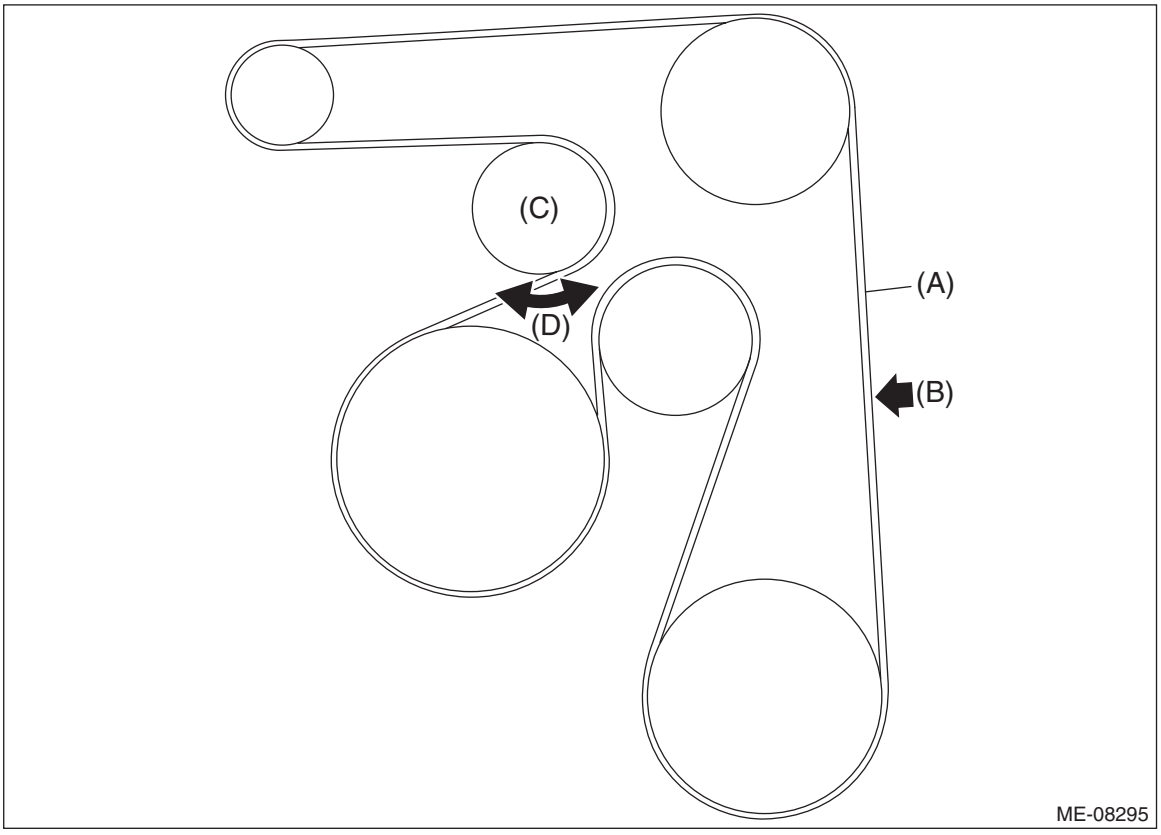

5) Start the engine and confirm that the V-belt rotates smoothly and no abnormal noise is emitted.

13.Crank Pulley

A: REMOVAL

NOTE:
When replacing a single part, perform the work with the engine assembly installed to body.
1) When working on the vehicle

NOTE:
When working on the vehicle, perform the following steps also.
(1) Remove the air intake duct. <Ref. to IN(H4DO)-12, REMOVAL, Air Intake Duct.>
2) Remove the V-belts. <Ref. to ME(H4DO)-71, V-BELT, REMOVAL, V-belt.>
3) Use the ST to lock the crank pulley, and remove the crank pulley bolt.

NOTE:
To prevent damaging ST1, attach the ST2 onto the ST1 as shown.
ST1 18355AA000 PULLEY WRENCH
ST2 18334AA000 PULLEY WRENCH PIN SET

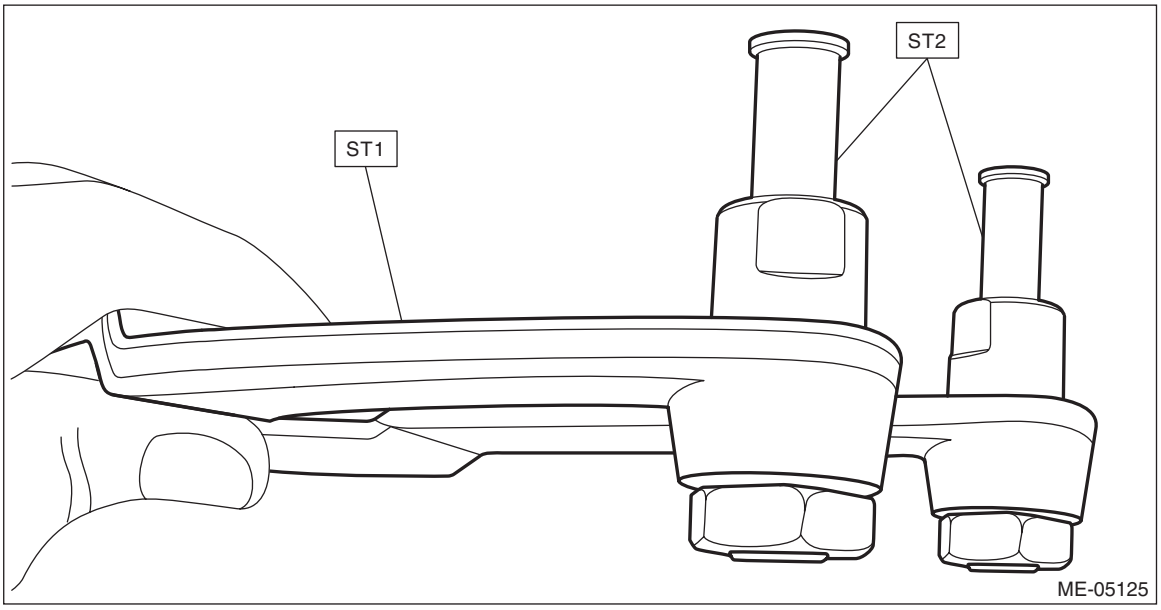

ST1 18355AA000 PULLEY WRENCH
ST2 18334AA000 PULLEY WRENCH PIN SET

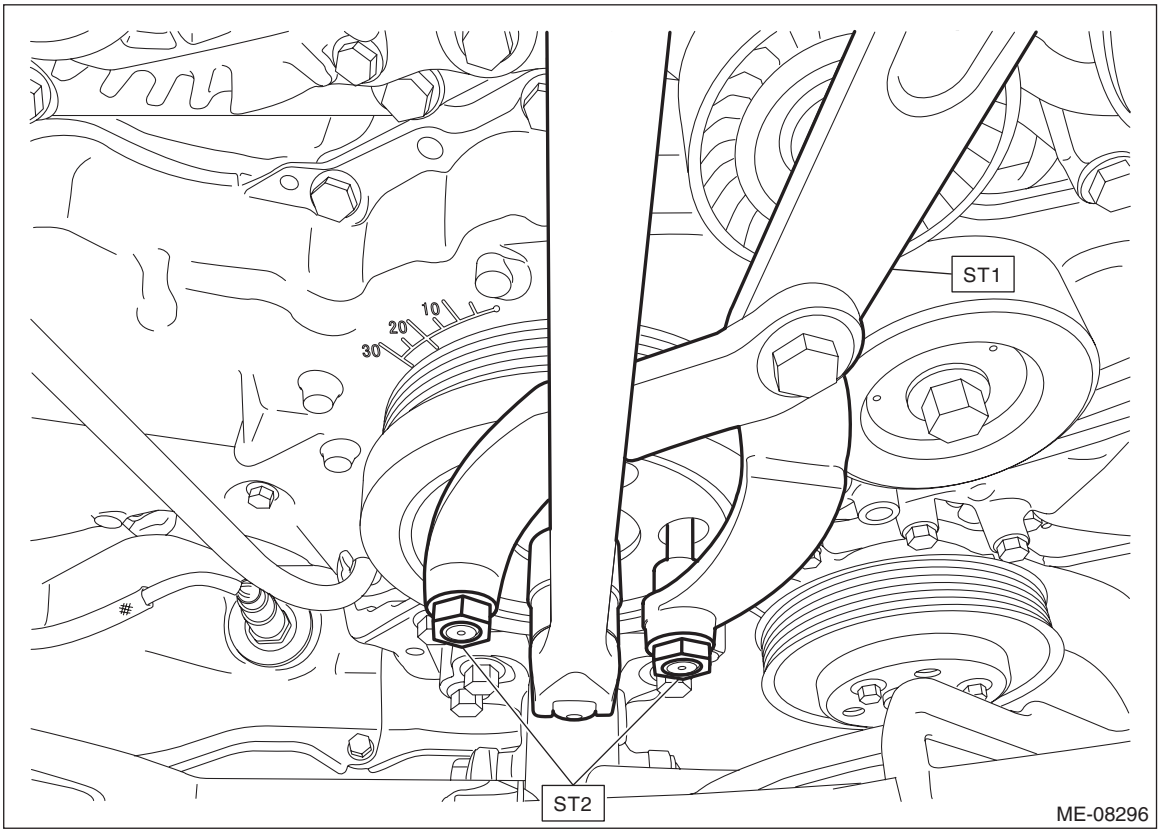

4) Remove the crank pulley.
5) Remove the front oil seal from the chain cover.

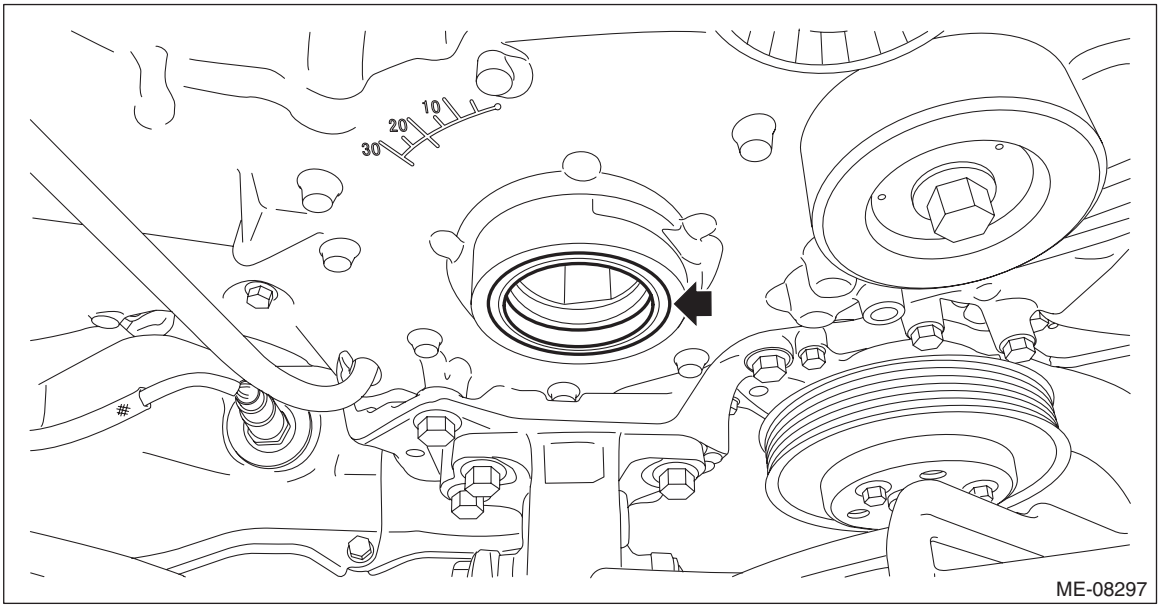

B: INSTALLATION

1) Degrease the press-fit section for the chain cover front oil seal, and install the front oil seal to the chain cover using ST.

CAUTION:
Do not apply fluid such as engine oil to the front oil seal and the chain cover; otherwise engine oil leakage may occur.

NOTE:
Use a new front oil seal.
ST 41399FG020 SPECIAL TOOL B

Front oil seal press-fit position:
1^{+0}_{-1} mm ($0.0039^{+0}_{-0.0039}$ in) position from chain cover end face

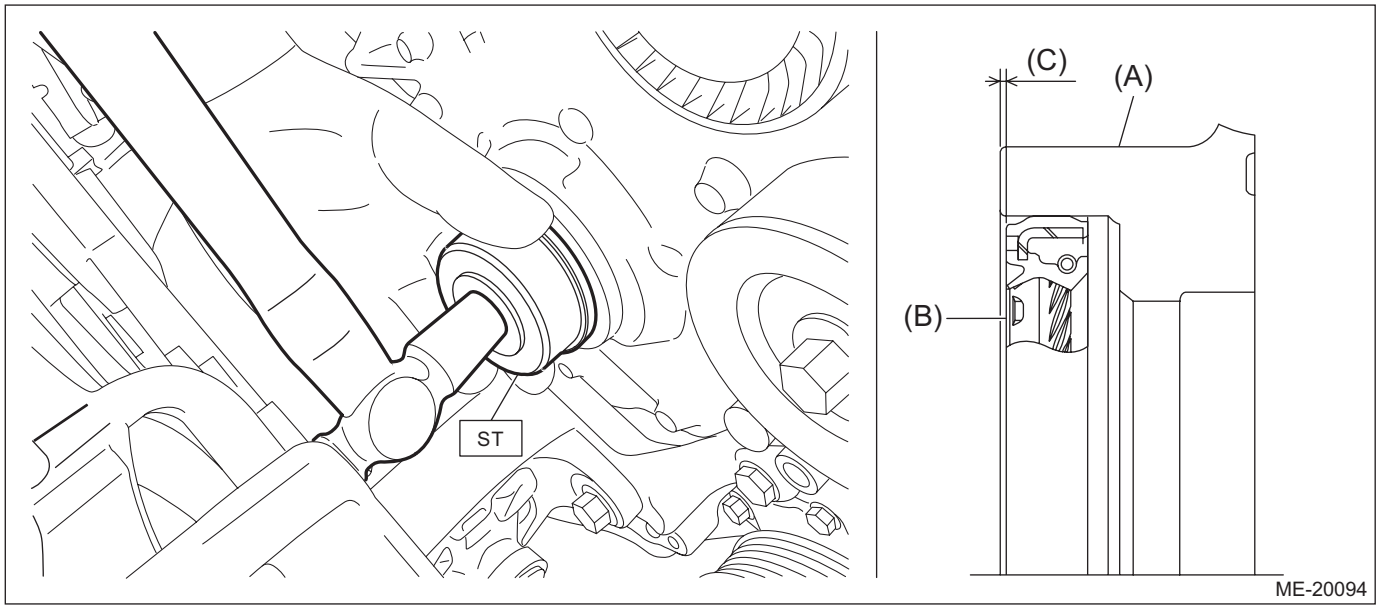

(A) Chain cover
(B) Oil seal
(C) Front oil seal press-fit position (1^{+0}_{-1} mm ($0.0039^{+0}_{-0.0039}$ in) position from chain cover end face)

2) Clean the crankshaft thread using compressed air.
3) Apply engine oil to the crank pulley bolt seat and thread.
4) Install the crank pulley.
   (1) Set the crank pulley to the chain cover.

(2) Use the ST to lock the crank pulley, and temporarily tighten the crank pulley bolt.

NOTE:
To prevent damaging ST1, attach the ST2 onto the ST1 as shown.
ST1 18355AA000 PULLEY WRENCH
ST2 18334AA000 PULLEY WRENCH PIN SET

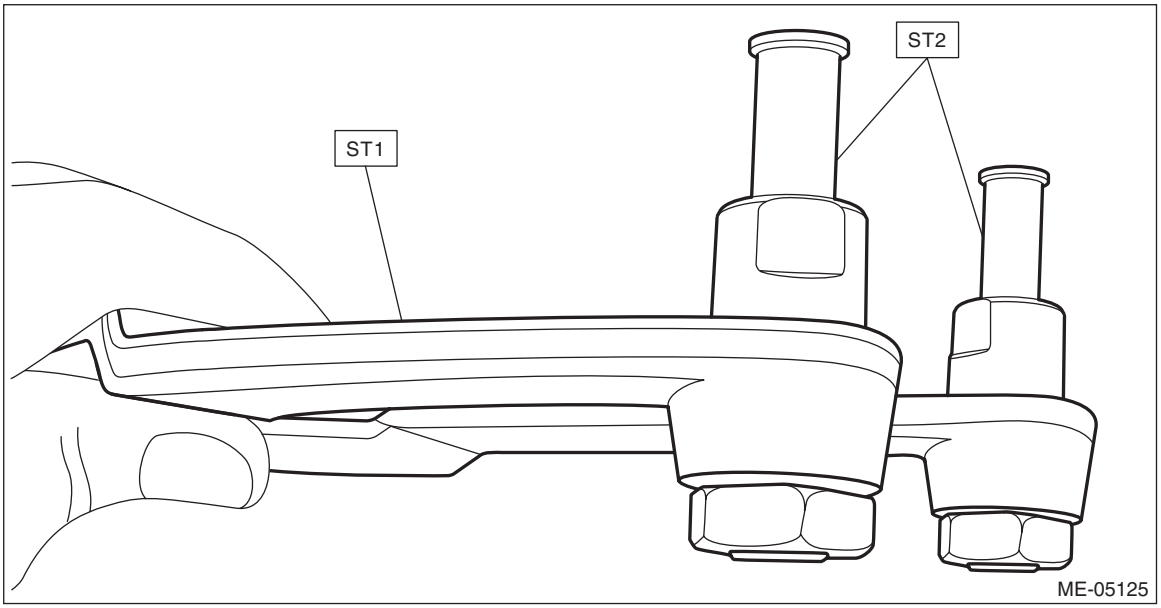

ST1 18355AA000 PULLEY WRENCH
ST2 18334AA000 PULLEY WRENCH PIN SET

Tightening torque:
60 N·m (6.1 kgf-m, 44.3 ft-lb)

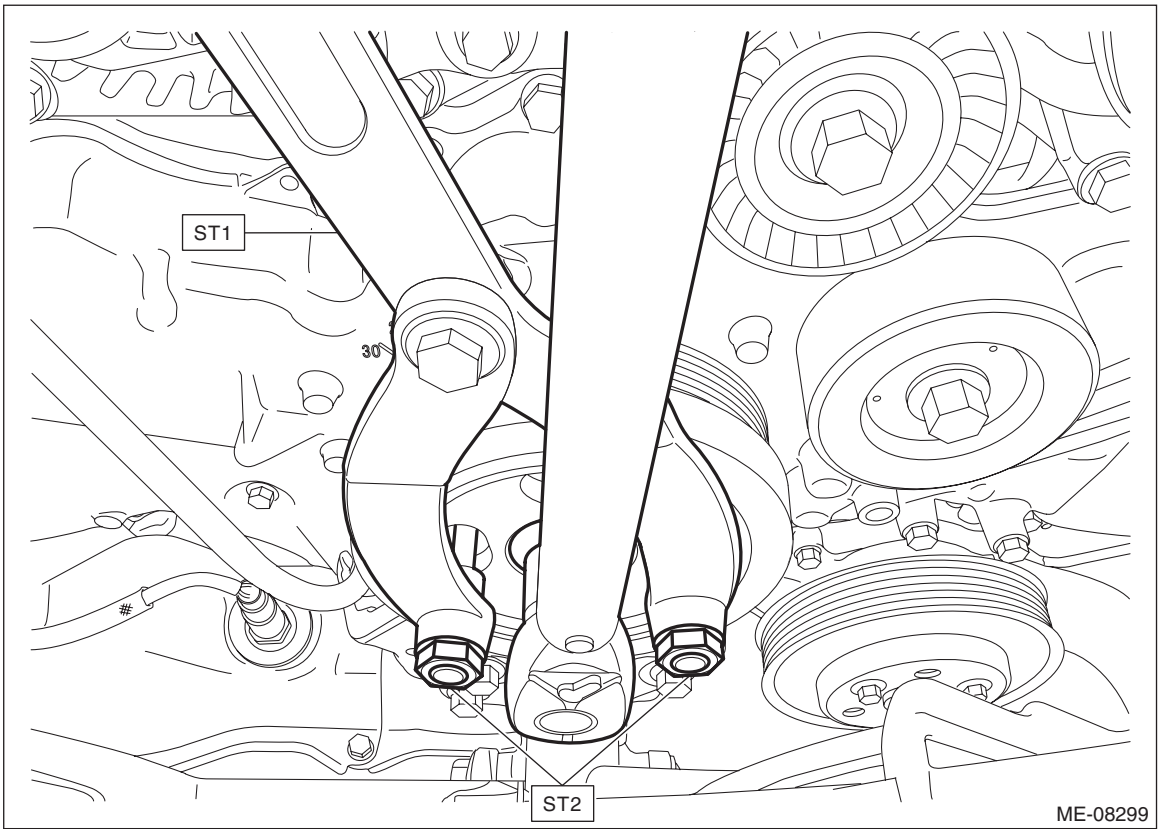

(3) Draw reference lines (A) and (B) using a marker to set the socket to the crank pulley bolt as shown in the figure.

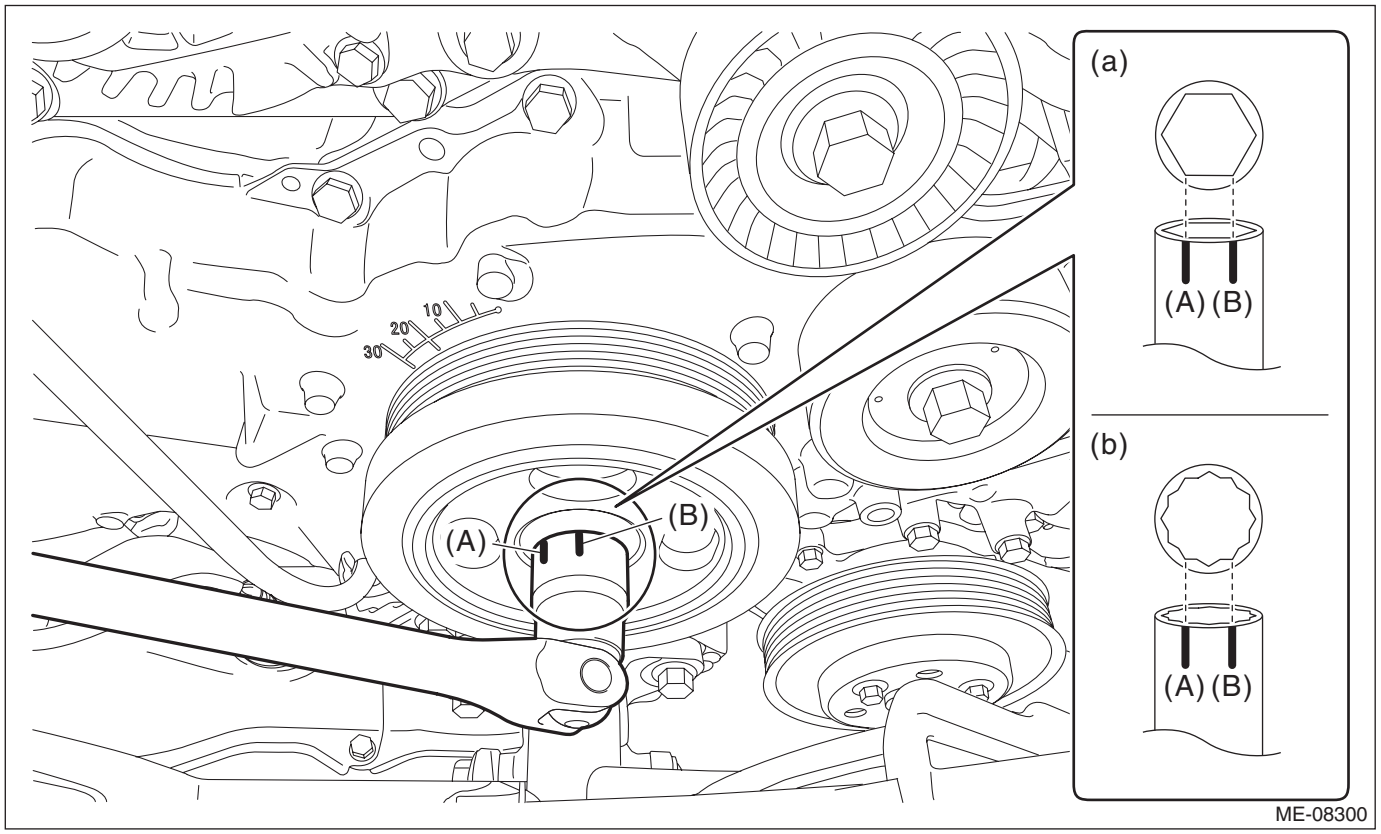

(a) When using 6-point socket (b) When using 12-point socket

(4) Draw reference lines (A) and (B) on the crank pulley bolt using a marker as shown in the figure.

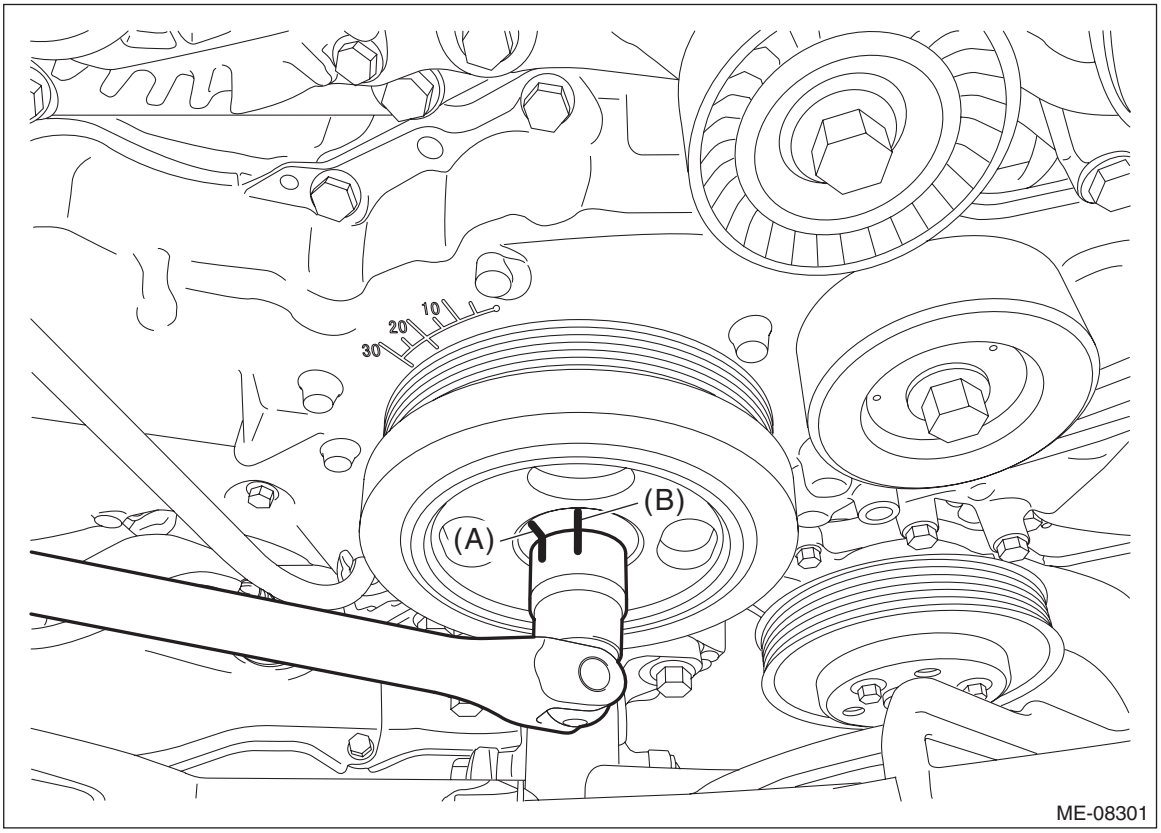

(5) Draw end line (C) on crank pulley using a marker at the same position as reference line (B) drawn on the crank pulley bolt in step (3).

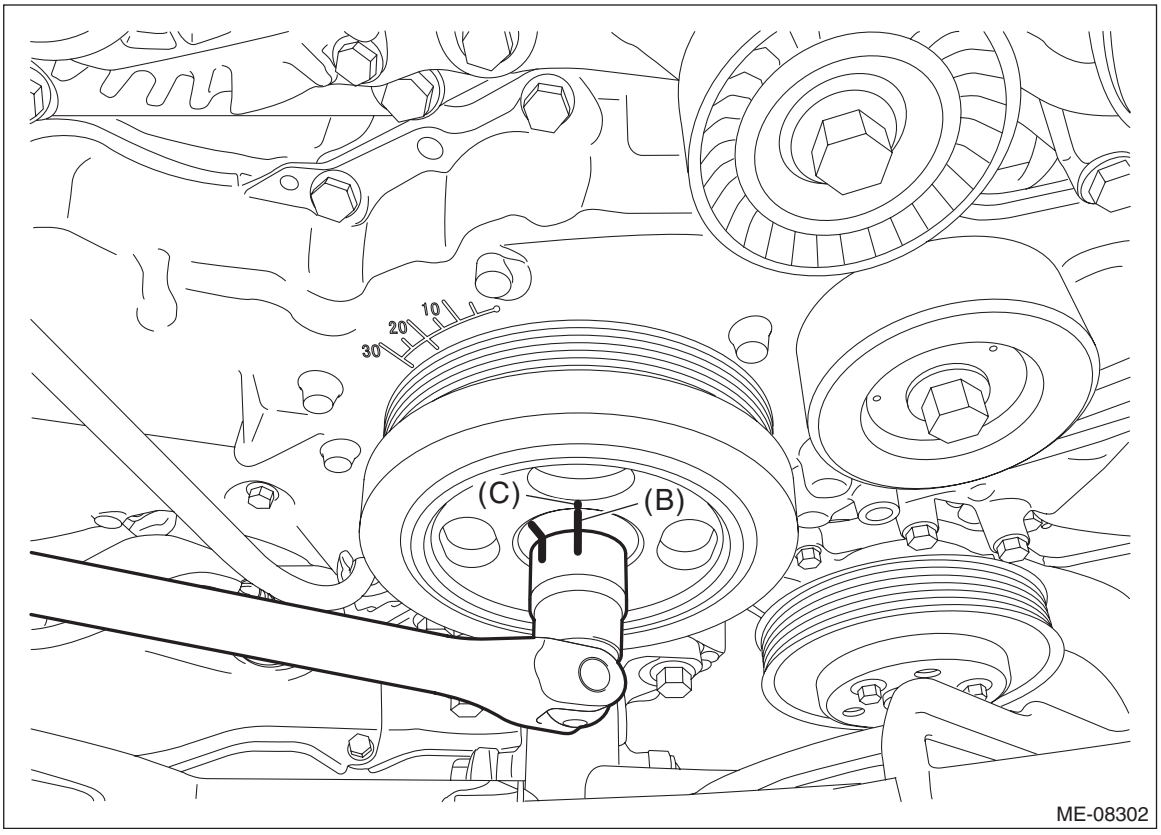

(6) Use the ST to lock the crank pulley, and tighten the crank pulley bolt to the angle where reference line (A) and end line (C) are aligned.

NOTE:
It should be approx. 60° when reference line (A) and end line (C) are aligned.
ST1 18355AA000 PULLEY WRENCH
ST2 18334AA000 PULLEY WRENCH PIN SET

Tightening angle:
60°±5°

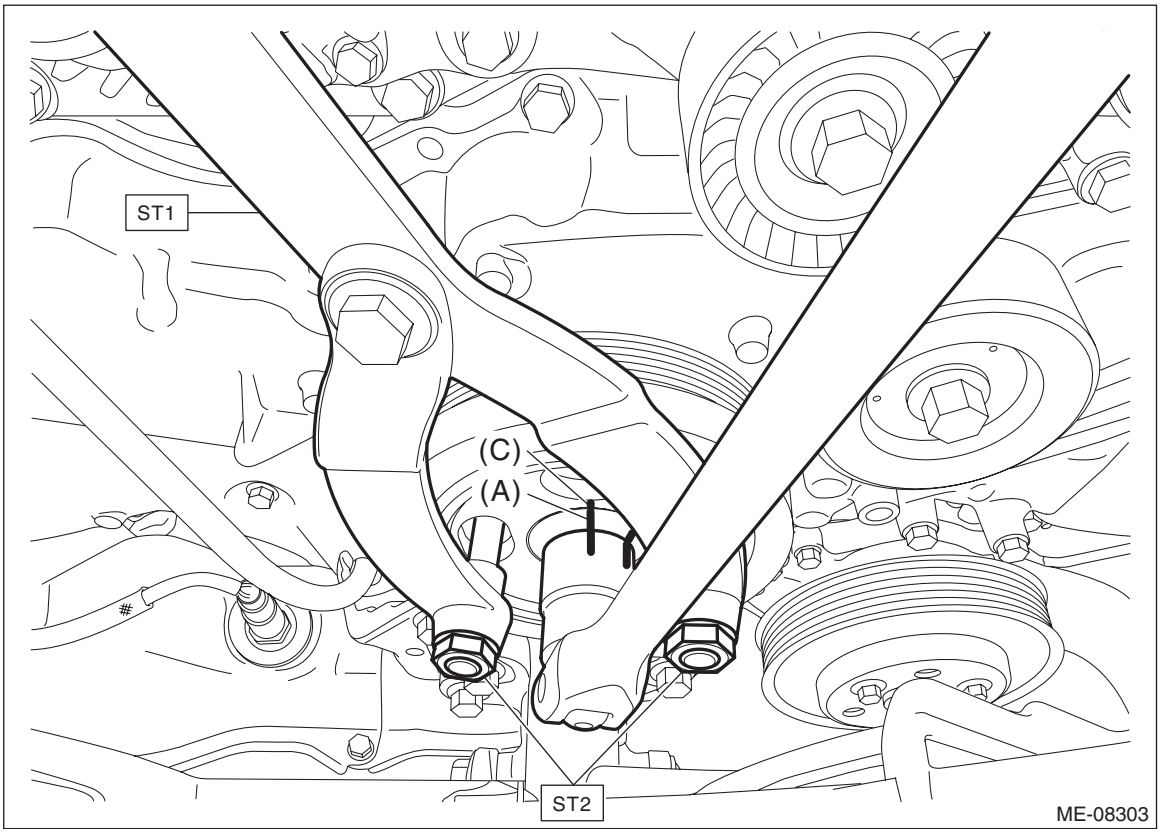

5) Install the V-belts. <Ref. to ME(H4DO)-73, V-BELT, INSTALLATION, V-belt.>
6) When working on the vehicle

NOTE:
When working on the vehicle, perform the following steps also.
(1) Install the air intake duct. <Ref. to IN(H4DO)-12, INSTALLATION, Air Intake Duct.>

C: INSPECTION

1) Check that the crank pulley has no deformation, cracks or other damages.
2) Inspect for oil leakage from the front oil seal. If there is an oil leak, replace the front oil seal with a new one. <Ref. to ME(H4DO)-76, REMOVAL, Crank Pulley.>

14.Chain Cover

A: REMOVAL

NOTE:
When replacing a single part, perform the work with the engine assembly installed to body.
1) When working on the vehicle

NOTE:
When working on the vehicle, perform the following steps also.
(1) Remove the radiator. <Ref. to CO(H4DO)-39, REMOVAL, Radiator.>
(2) Remove the front exhaust pipe. <Ref. to EX(H4DO)-5, REMOVAL, Front Exhaust Pipe.>
(3) Remove the engine mounting. <Ref. to ME(H4DO)-64, REMOVAL, Engine Mounting.>
(4) Remove the bolts which secure the generator cord stay to the chain cover.

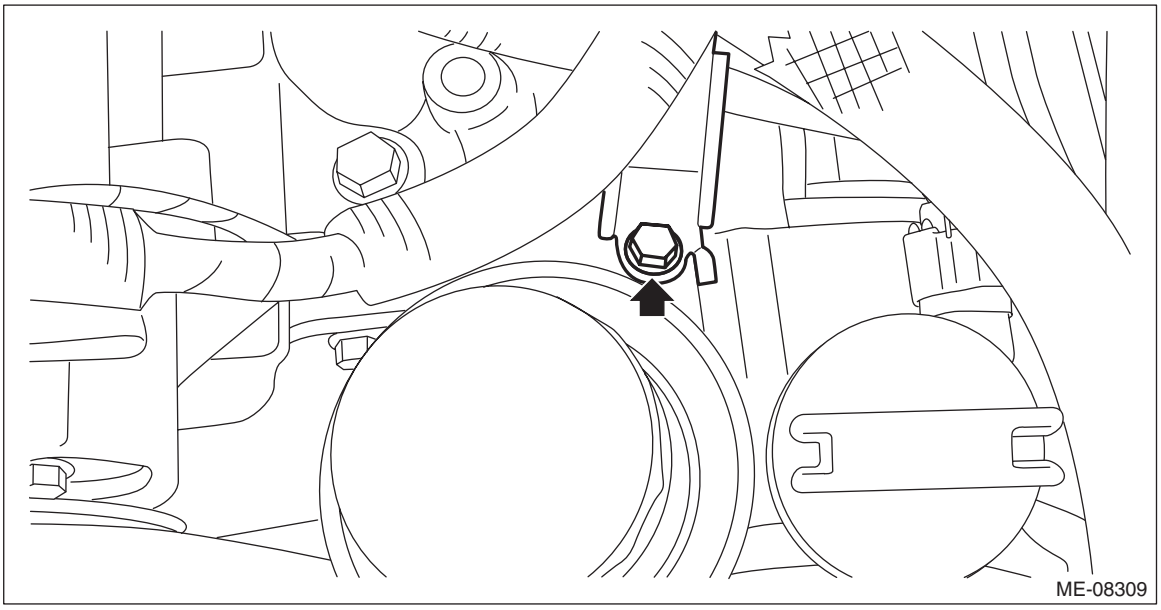

2) Drain the engine oil. <Ref. to LU(H4DO)-10, REPLACEMENT, Engine Oil.>
3) Remove the V-belts. <Ref. to ME(H4DO)-71, V-BELT, REMOVAL, V-belt.>
4) Remove the generator. <Ref. to SC(H4DO)-38, REMOVAL, Generator.>
5) Remove the water pump pulley. <Ref. to CO(H4DO)-18, WATER PUMP, REMOVAL, Water Pump.>
6) Remove the crank pulley. <Ref. to ME(H4DO)-76, REMOVAL, Crank Pulley.>
7) Remove the bolt securing the engine harness stay.

8) Disconnect the connector (A) and connector (B) to remove the clip (C) and clip (D) securing the engine harness.

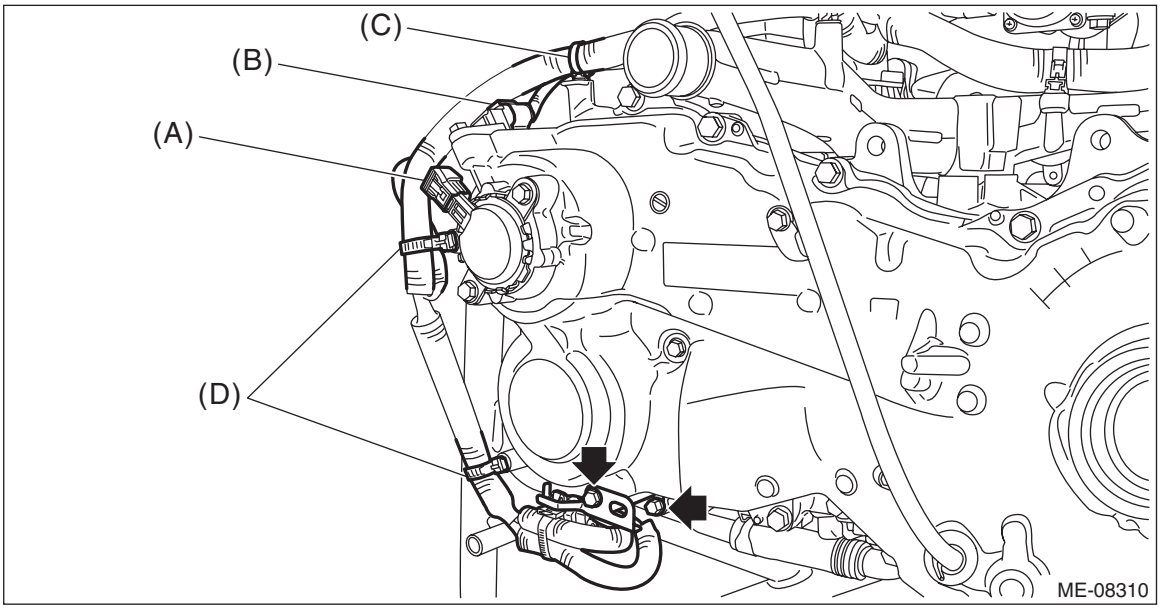

9) Disconnect the connector (A) and remove the clip (B) securing the oil level switch harness.
10) Disconnect the terminal (C), connector (D), connector (E) and connector (F), and remove the clip (G) and clip (H) securing the engine harness.

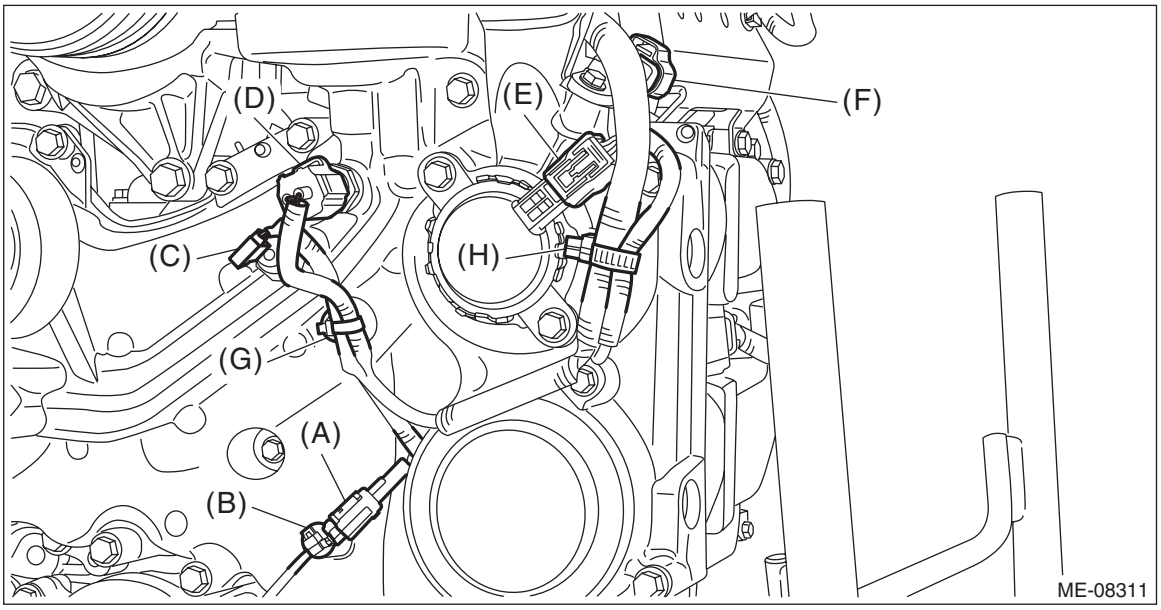

11) Pull out the oil level gauge (A), and remove the oil level gauge guide (B) and idler pulley (C).

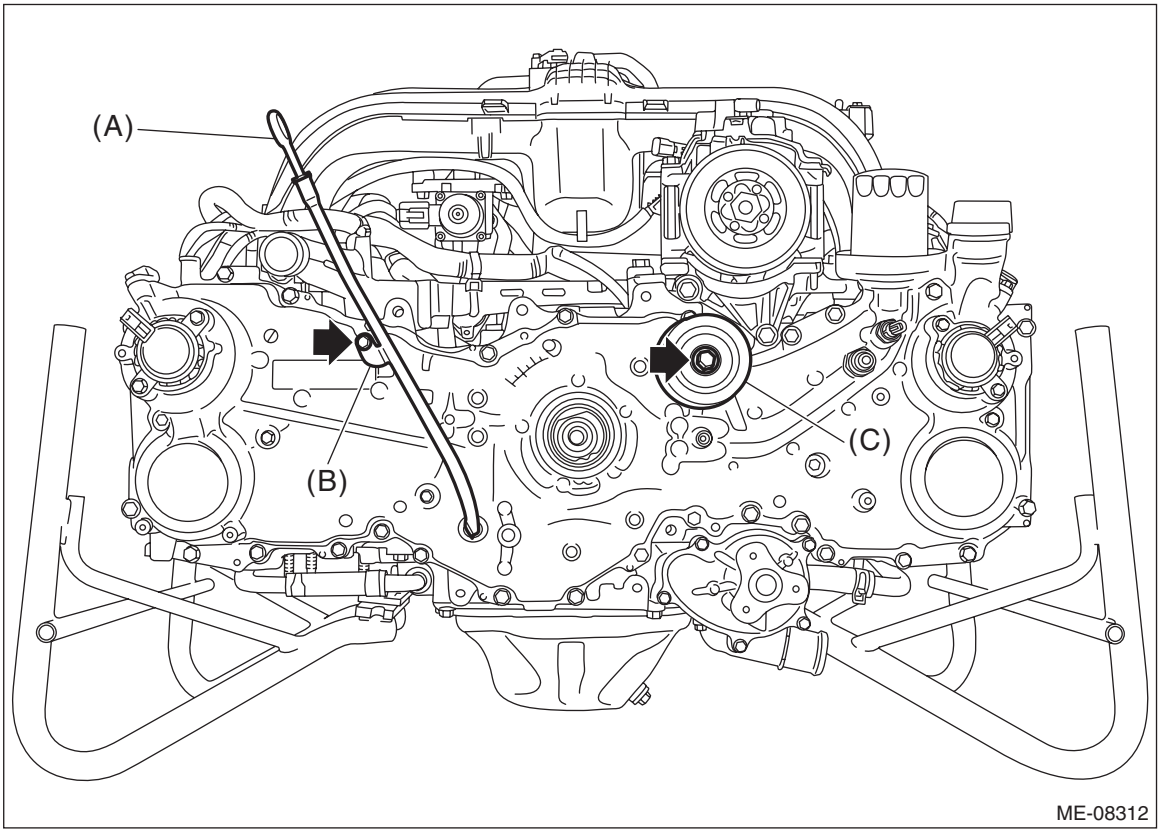

12) Remove the bolts securing the chain cover to the engine.

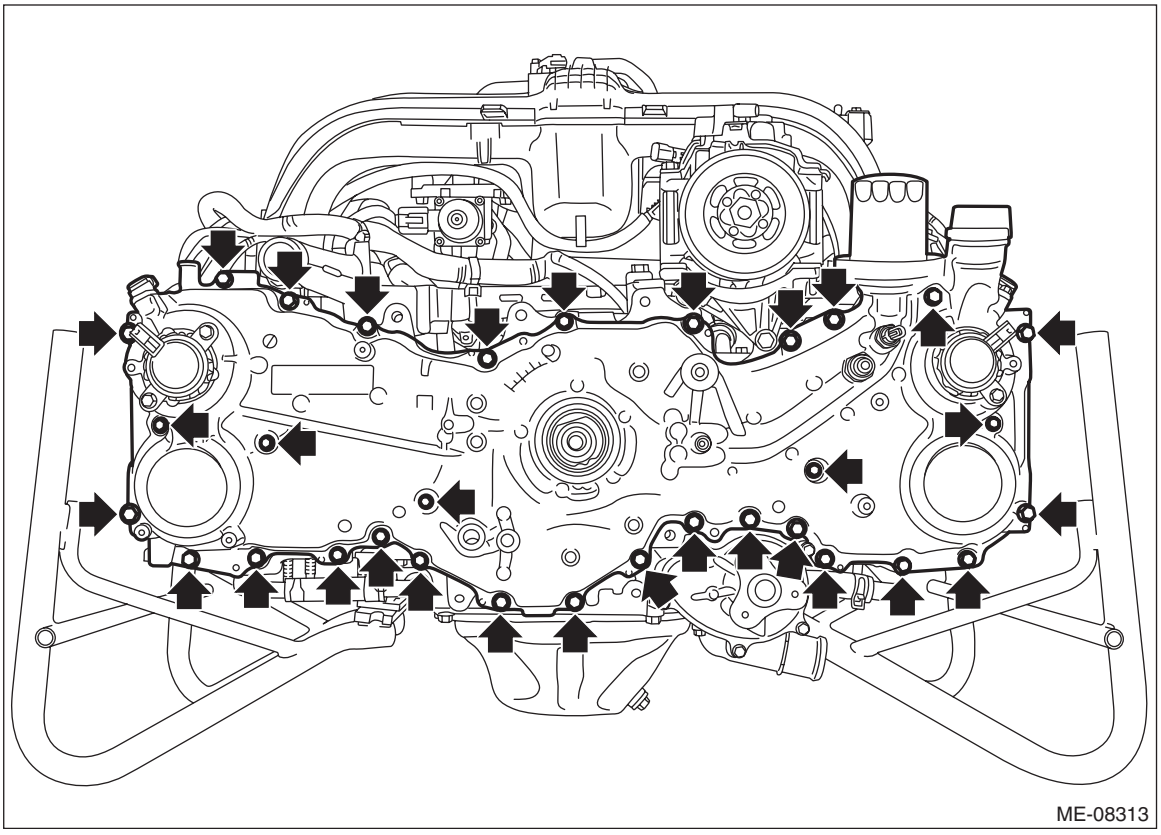

13) Expand the area shown in the figure using a crowbar or a similar tool wrapped in tape for protection, and remove the chain cover from the engine.

CAUTION:
The chain cover may contact the protrusion (a) of cam sprocket sensor plate and cause damage. When removing the chain cover, move the chain cover horizontally until it cannot contact with the cam sprocket, and then remove it carefully.

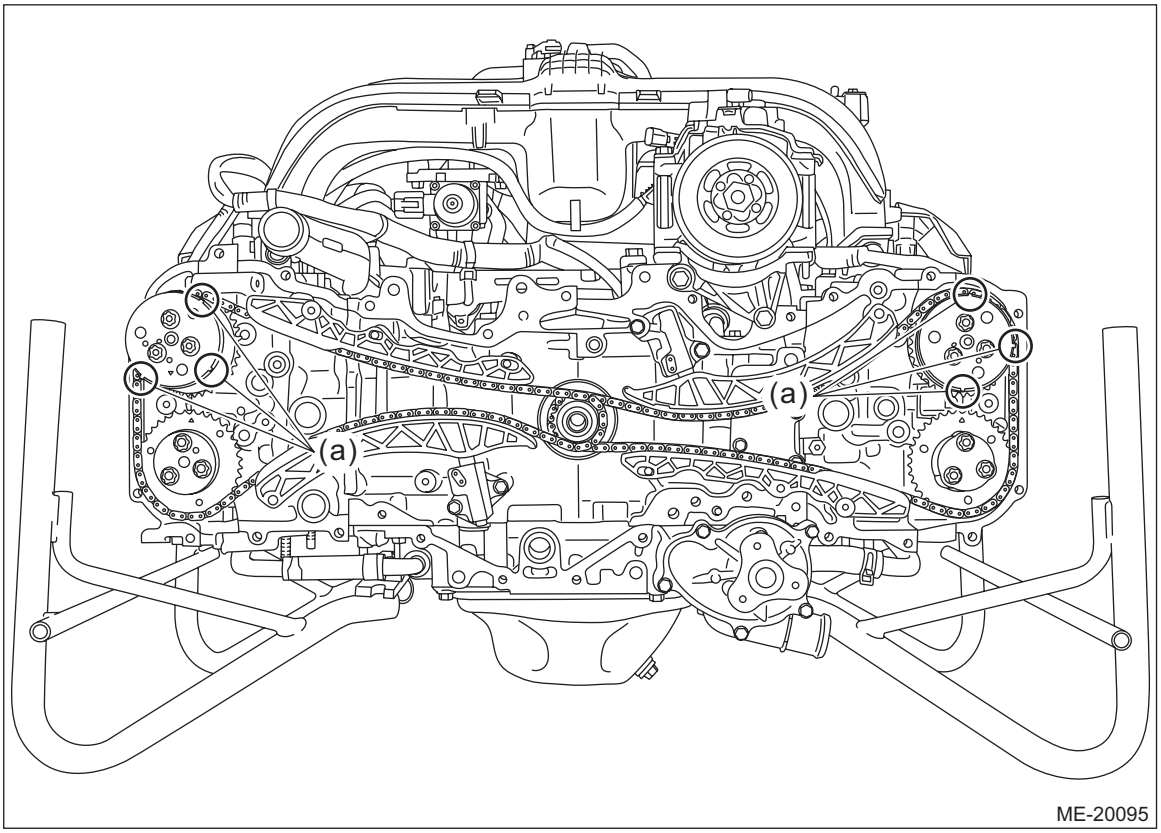

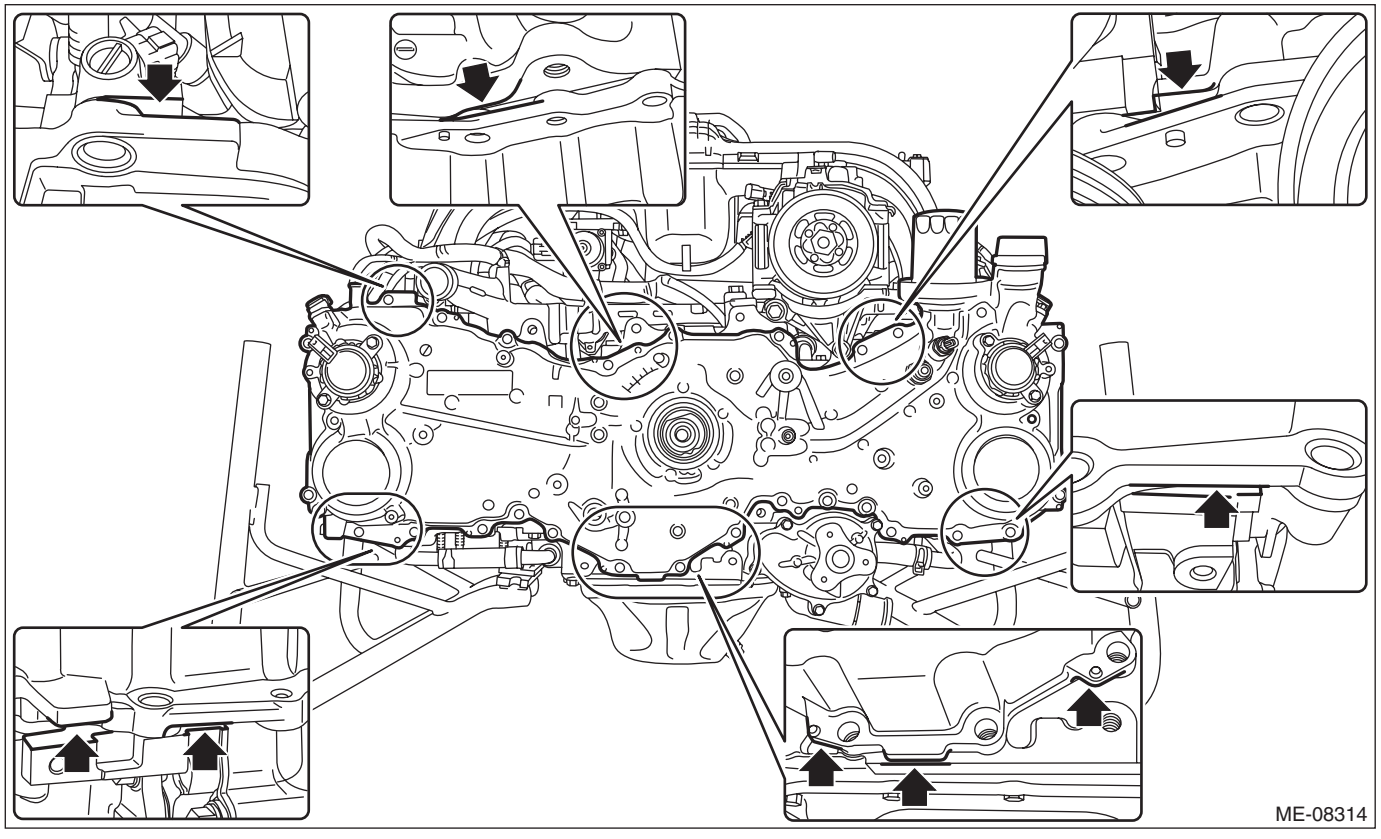

14) Remove the O-rings from cylinder head RH, cylinder head LH, cylinder block LH and oil pan upper.

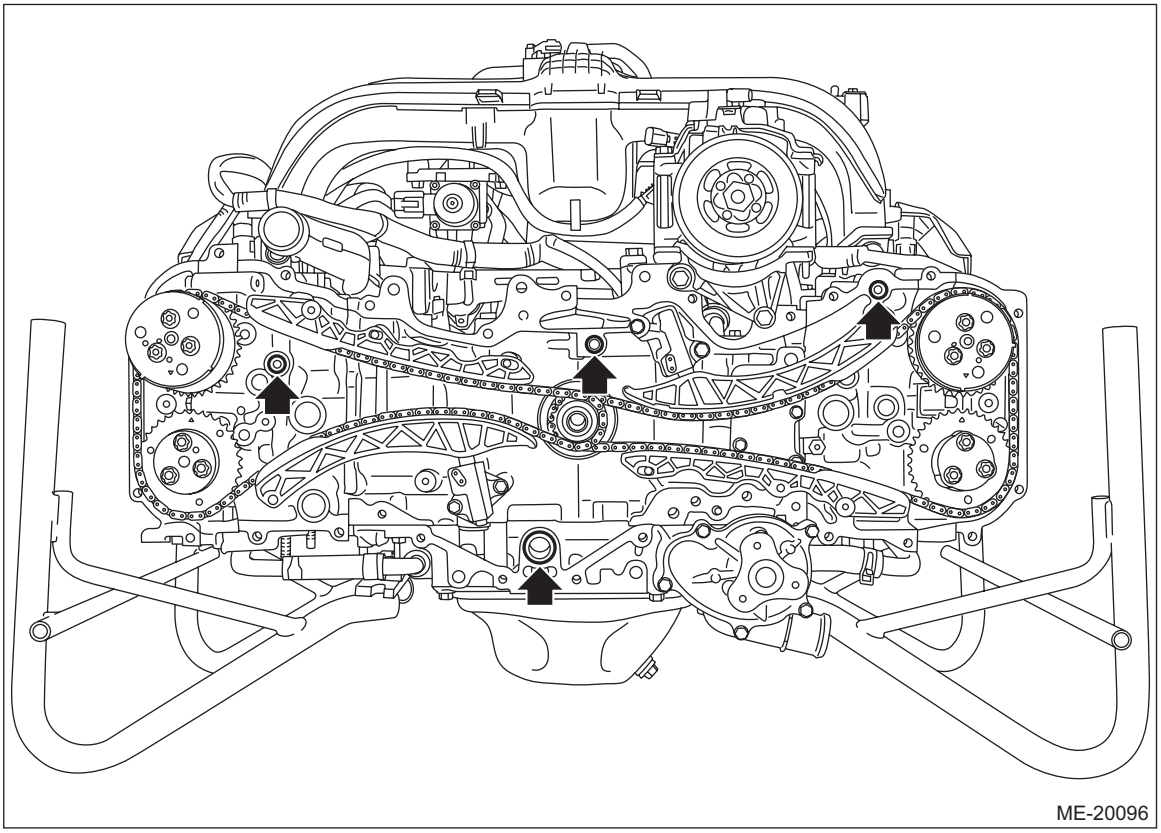

15) Remove the liquid gasket from the chain cover and engine unit.

B: INSTALLATION

1) Install the O-rings to cylinder head RH, cylinder head LH, cylinder block LH and oil pan upper.

NOTE:
- Use new O-rings.
- Apply a coat of engine oil to the O-rings.

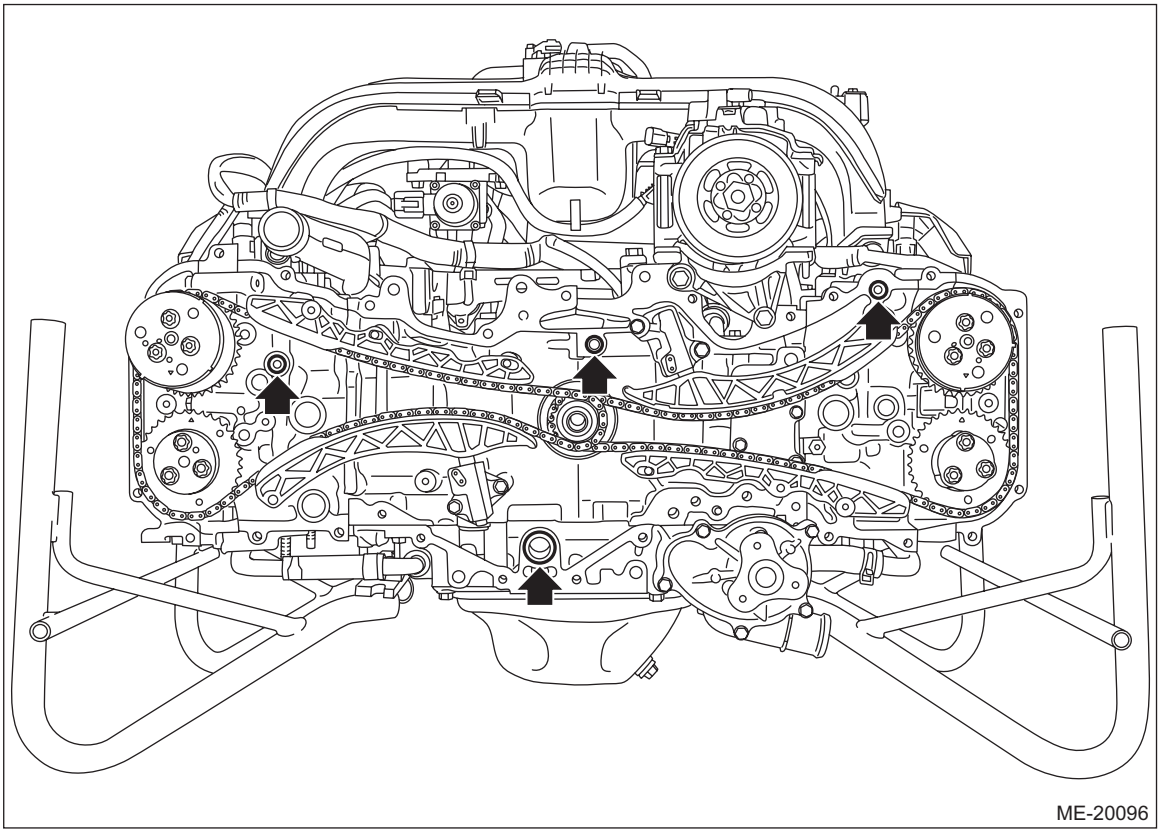

2) Apply liquid gasket if there are gaps between front camshaft cap and cam carrier (A), cam carrier and cylinder head (B), and cylinder head and cylinder block (C) as shown in the figure.

Liquid gasket:
THREE BOND 1217G (Part No. K0877Y0100), THREE BOND 1217H or equivalent

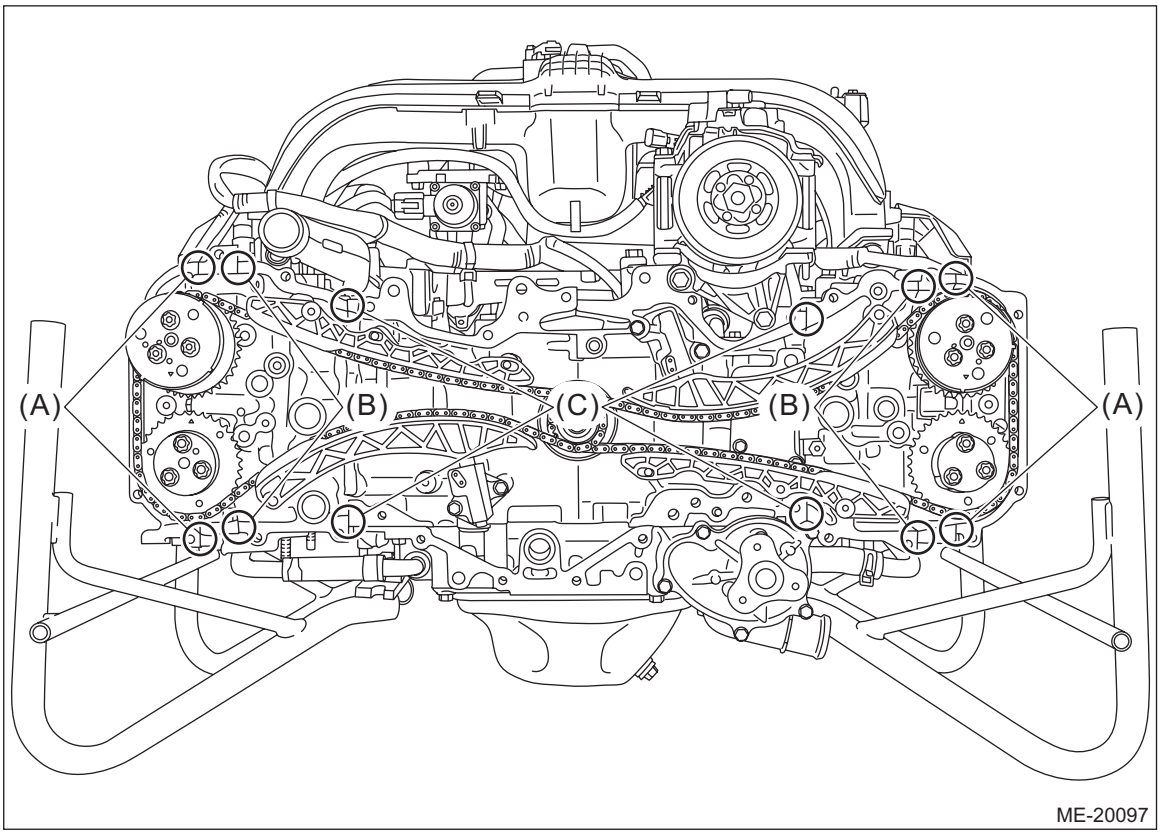

3) Apply liquid gasket to the chain cover mating surface and center boss (5 places) as shown in the figure.

NOTE:
- Before applying liquid gasket, degrease the old liquid gasket seal surface of the engine and chain cover.
- Install within 5 min. after applying liquid gasket.

Liquid gasket:
THREE BOND 1217G (Part No. K0877Y0100), THREE BOND 1217H or equivalent

Liquid gasket applying diameter:
4±0.5 mm (0.1575±0.0197 in)

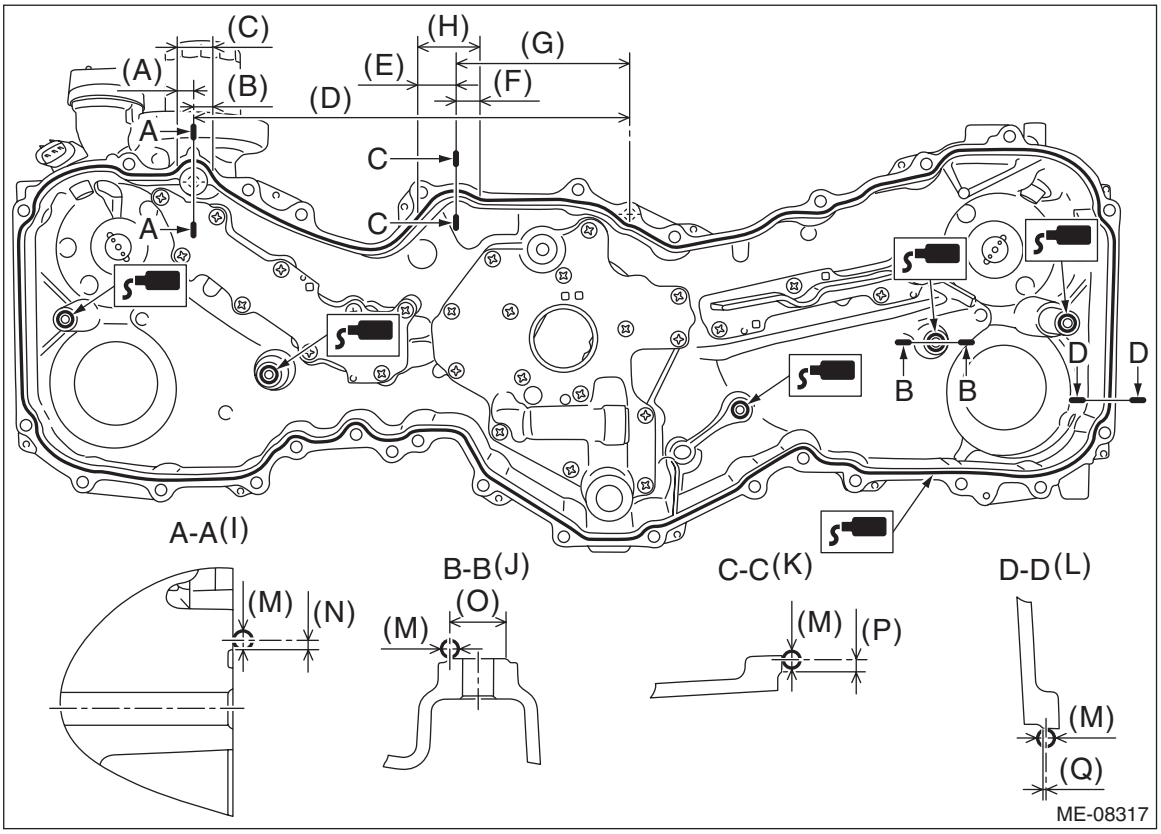

(A)	14.5 mm (0.5709 in)	(G)	127 mm (5.0000 in)	(M)	ϕ4±0.5 mm (0.1575±0.0197 in)
(B)	17.5 mm (0.6890 in)	(H)	Range B	(N)	2 mm (0.0787 in)
(C)	Range A	(I)	Liquid gasket applying position of mating surfaces of range A	(O)	ϕ12 mm (0.4724 in)
(D)	316.2 mm (12.4488 in)	(J)	Liquid gasket applying position of center boss (5 places)	(P)	2.5 mm (0.0984 in)
(E)	24.5 mm (0.9646 in)	(K)	Liquid gasket applying position of mating surfaces of range B	(Q)	0.5 mm (0.0197 in)
(F)	18.5 mm (0.7283 in)	(L)	Liquid gasket applying position of mating surfaces other than range A and range B		

4) Set the chain cover, and tighten the bolts in numerical order as shown in the figure.

CAUTION:
The chain cover may contact the protrusion (a) of cam sprocket sensor plate and cause damage. When setting the chain cover, move the chain cover horizontally and set it while taking care not to contact with the cam sprocket.

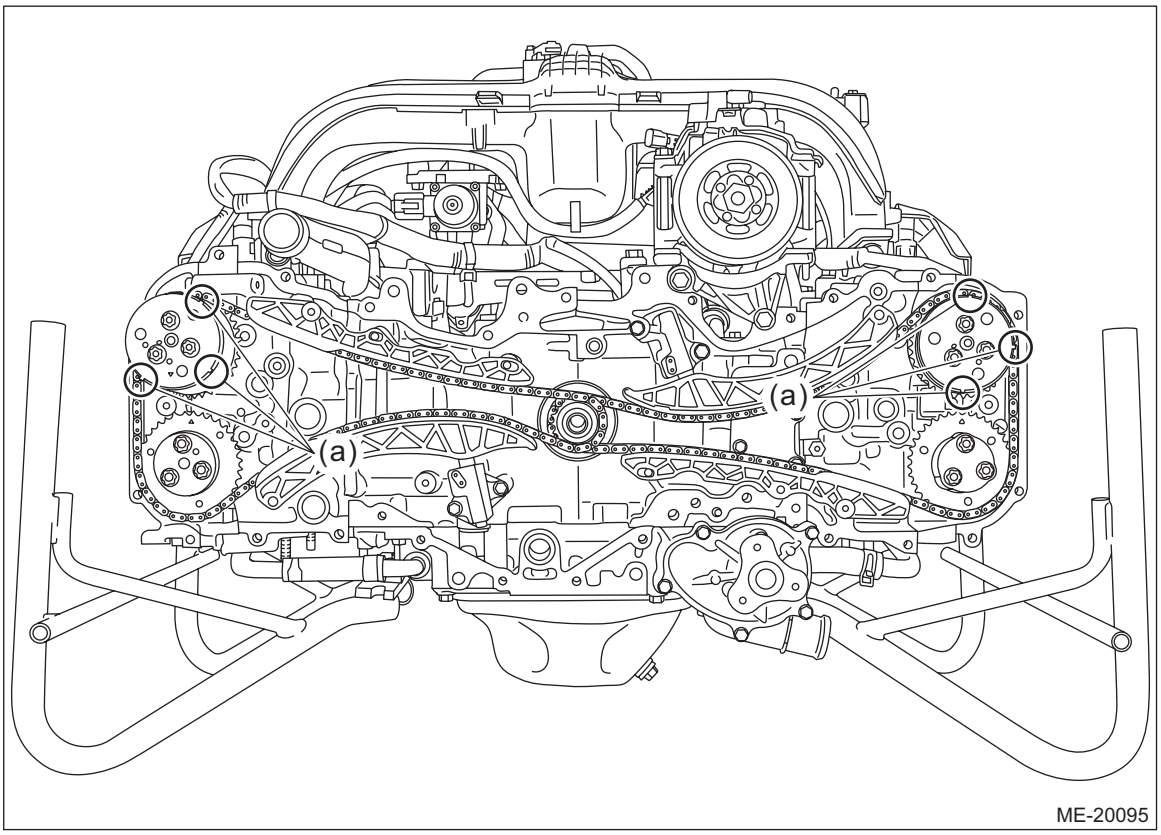

Tightening torque:
T1: 10 N·m (1.0 kgf-m, 7.4 ft-lb)
T2: 25 N·m (2.5 kgf-m, 7.4 ft-lb)

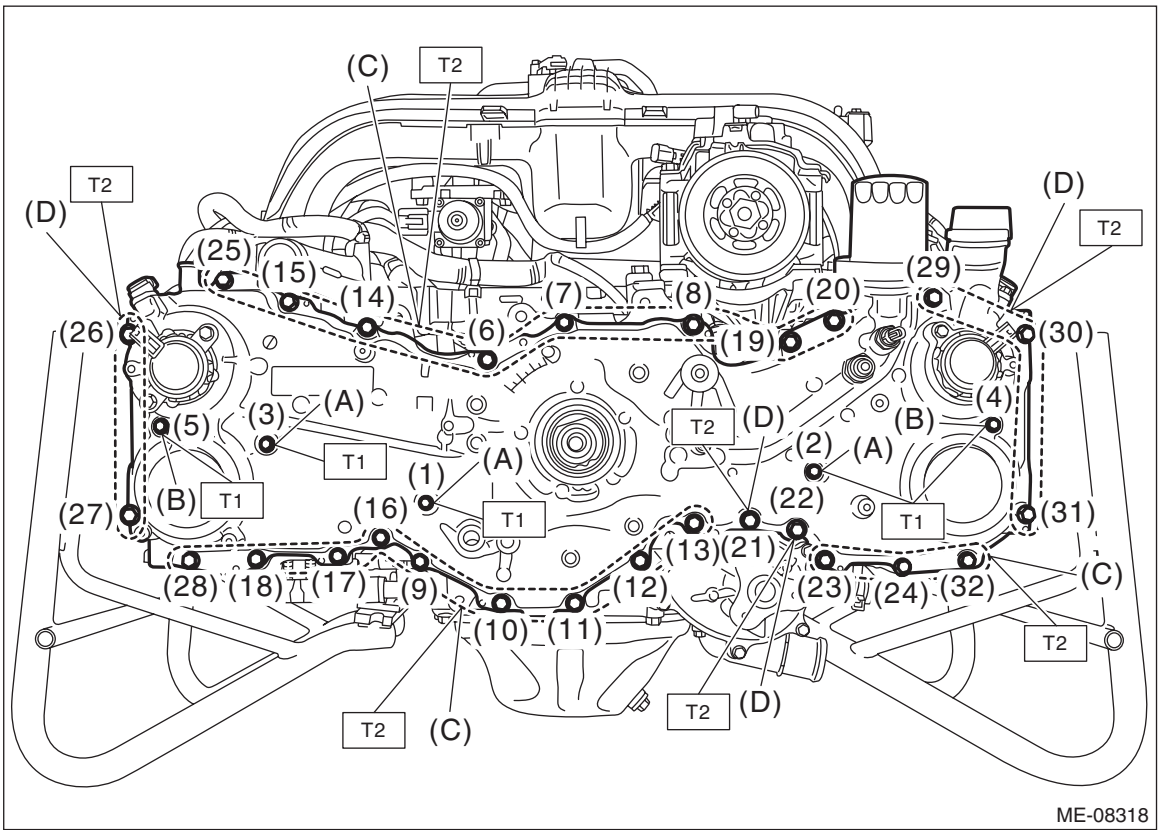

(A) M6 × 20
(B) M6 × 50
(C) M8 × 25
(D) M8 × 60

5) Install the idler pulley (C) and oil level gauge guide (B), and insert the oil level gauge (A).

NOTE:
- When installing the idler pulley, be careful of the idler pulley cover direction.

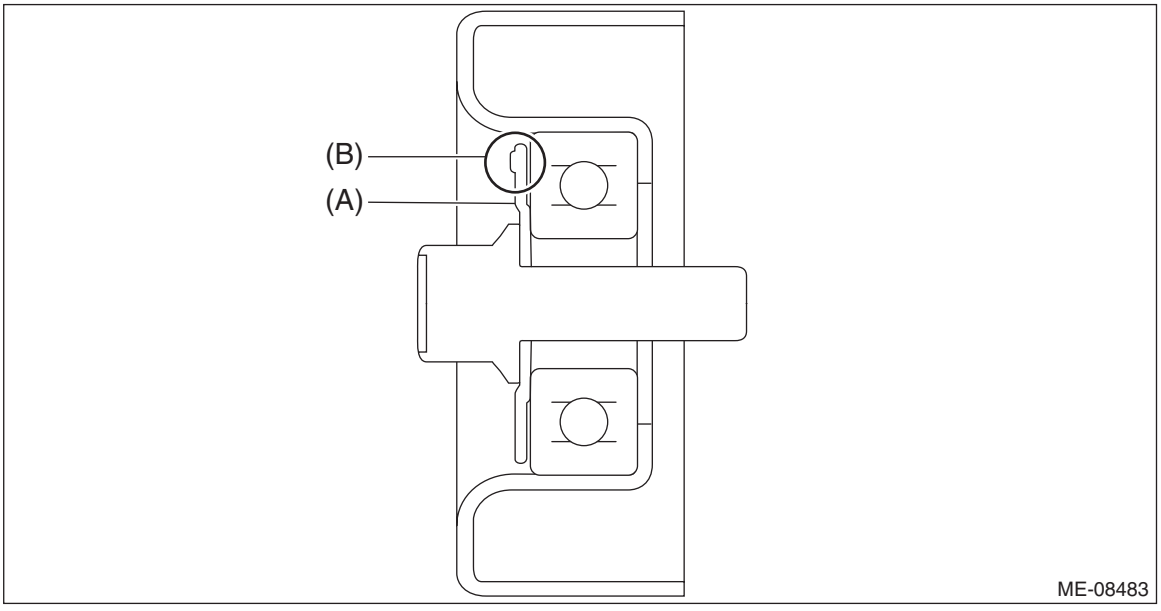

(a) Idler pulley cover
(b) Protrusion (3 places)

- Use a new O-ring to the oil level gauge guide.
- Apply a light coat of engine oil to the O-rings of the oil level gauge guide and the oil level gauge.

Tightening torque:
T1: 6.4 N·m (0.7 kgf-m, 4.7 ft-lb)
T2: 36 N·m (3.7 kgf-m, 26.6 ft-lb)

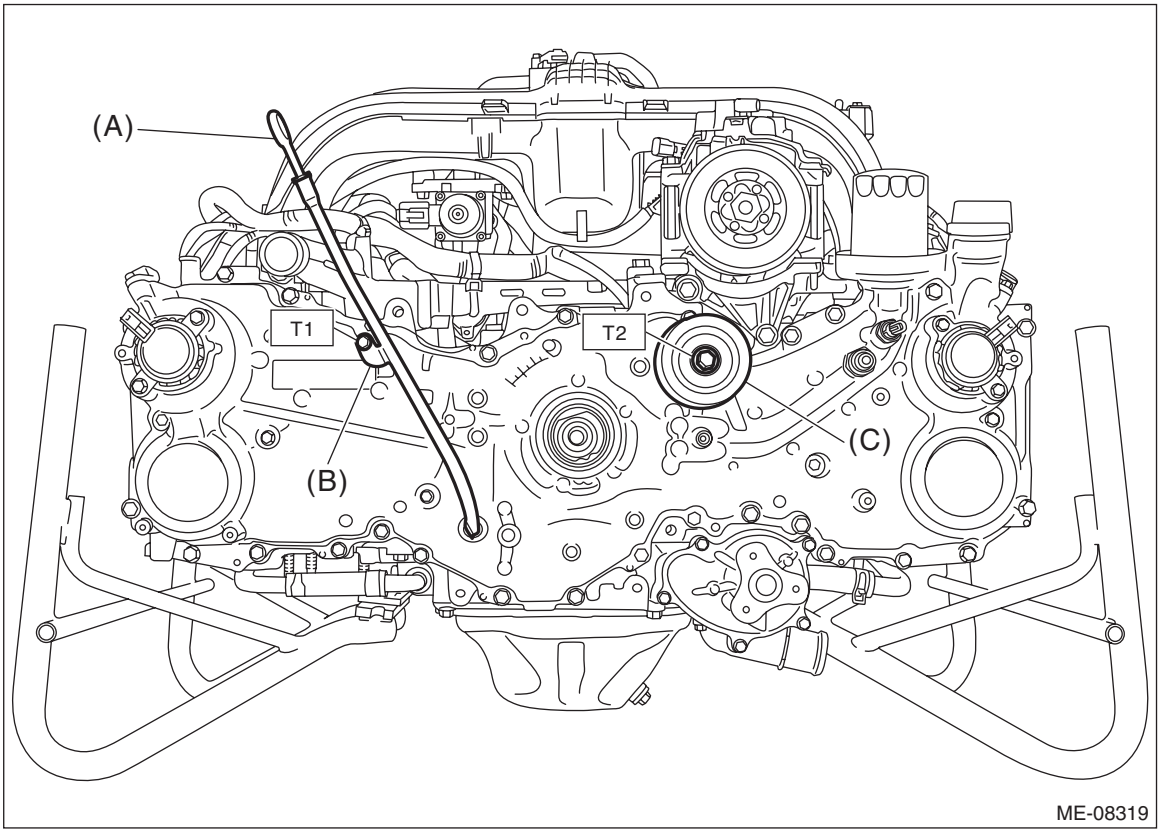

6) Connect the terminal (C), connector (D), connector (E) and connector (F), and secure the engine harness with the clip (G) and clip (H).
7) Secure the oil level switch harness with clip (B), and connect the connector (A).

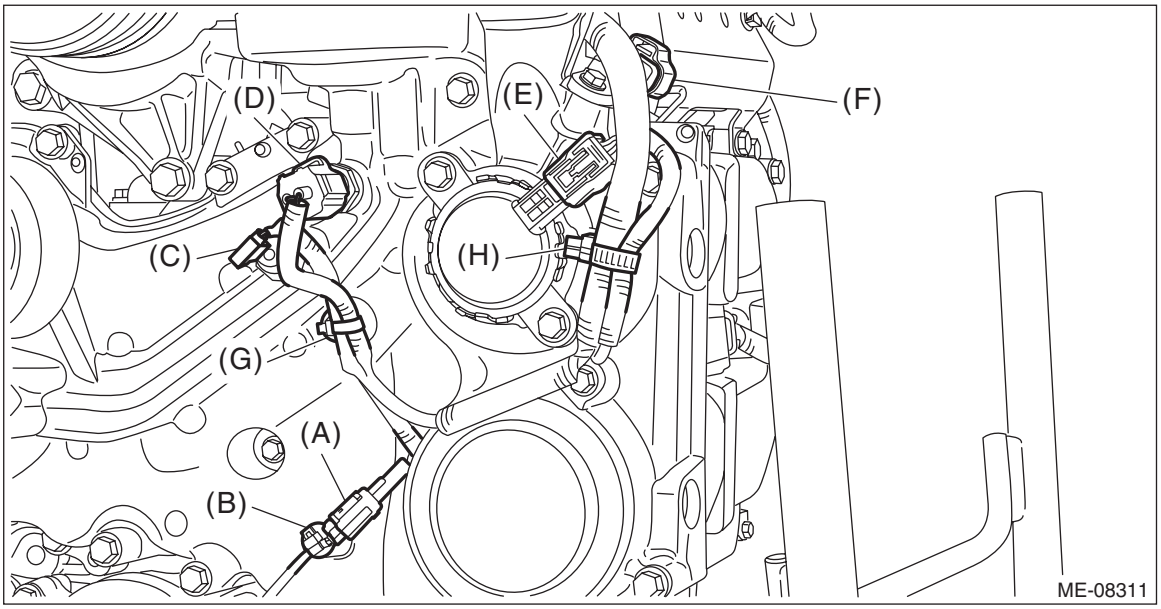

8) Connect the connector (A) and connector (B) and secure the engine harness with the clip (C) and clip (D).
9) Install the bolt securing the engine harness stay.

Tightening torque:
6.4 N·m (0.7 kgf-m, 4.7 ft-lb)

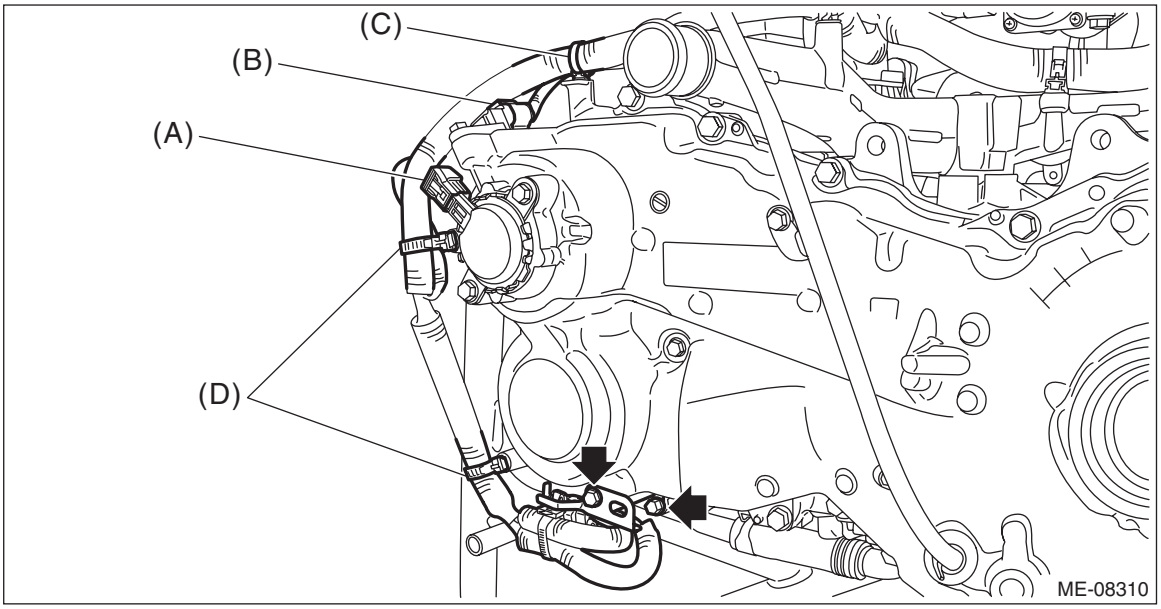

10) Install the crank pulley. <Ref. to ME(H4DO)-78, INSTALLATION, Crank Pulley.>
11) Install the water pump pulley. <Ref. to CO(H4DO)-19, WATER PUMP, INSTALLATION, Water Pump.>
12) Install the generator. <Ref. to SC(H4DO)-40, INSTALLATION, Generator.>
13) Install the V-belts. <Ref. to ME(H4DO)-73, V-BELT, INSTALLATION, V-belt.>
14) Fill engine oil. <Ref. to LU(H4DO)-10, REPLACEMENT, Engine Oil.>

15) When working on the vehicle

NOTE:
When working on the vehicle, perform the following steps also.
(1) Install the generator cord stay to the chain cover.

NOTE:
Install the generator cord stay so that the folded end (a) touches the chain cover boss.

Tightening torque:
6.4 N·m (0.7 kgf-m, 4.7 ft-lb)

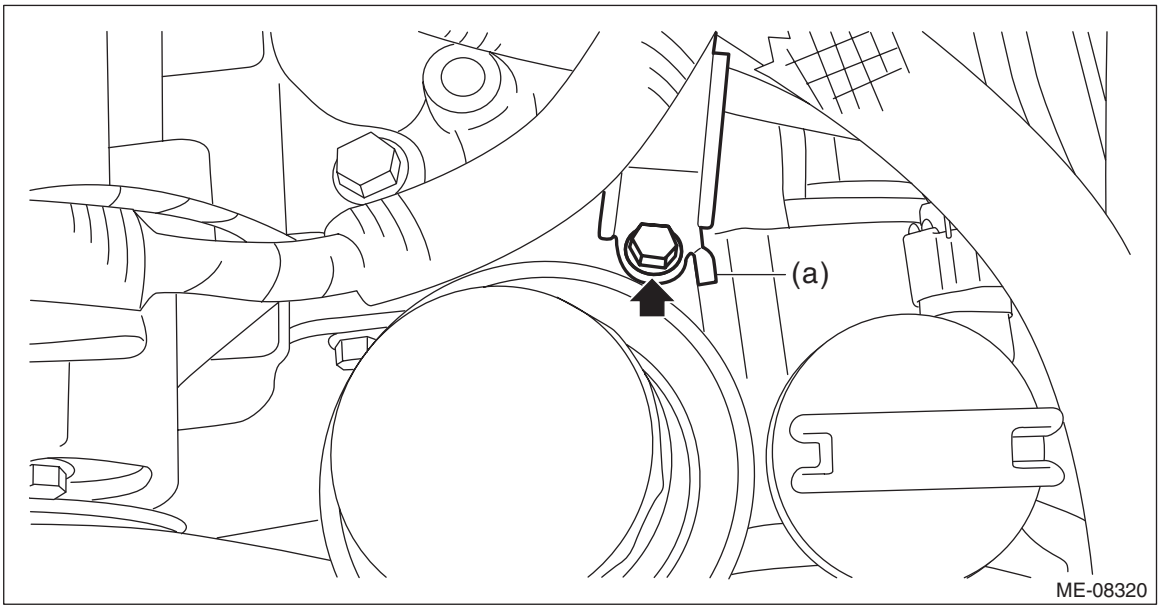

(2) Install the engine mount. <Ref. to ME(H4DO)-68, INSTALLATION, Engine Mounting.>
(3) Install the front exhaust pipe. <Ref. to EX(H4DO)-7, INSTALLATION, Front Exhaust Pipe.>
(4) Install the radiator. <Ref. to CO(H4DO)-45, INSTALLATION, Radiator.>

C: DISASSEMBLY

1) Remove the oil filler cap.

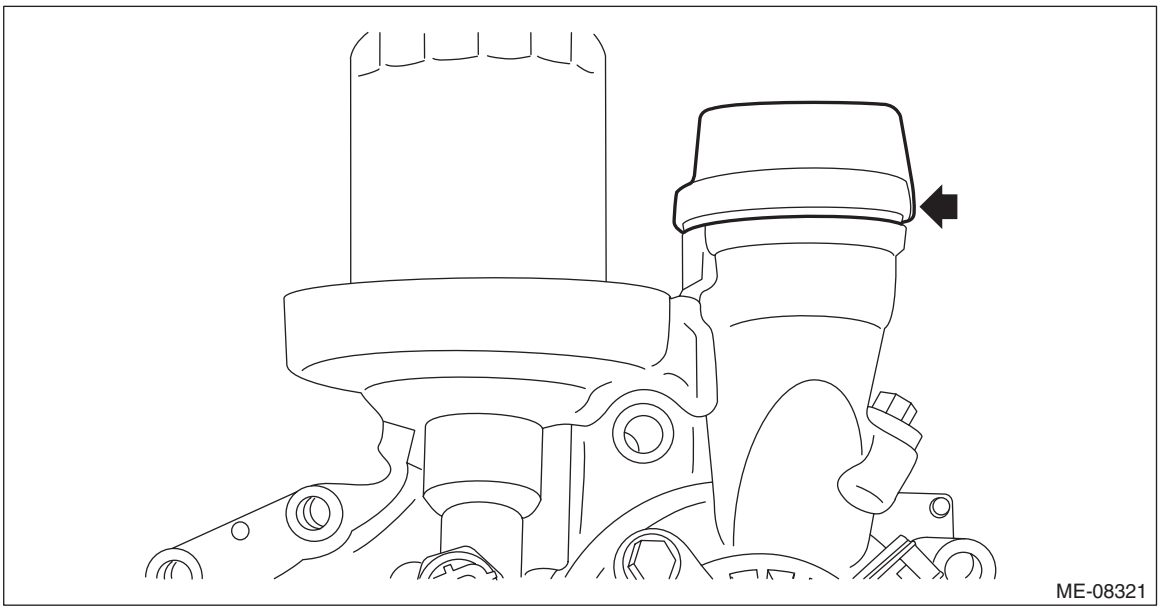

2) Remove the engine oil filter and the oil pump union. <Ref. to LU(H4DO)-22, REMOVAL, Engine Oil Filter.>
3) Remove the oil pressure switch. <Ref. to LU(H4DO)-20, REMOVAL, Oil Pressure Switch.>
4) Remove the engine oil temperature sensor. <Ref. to FU(H4DO)-45, REMOVAL, Engine Oil Temperature Sensor.>
5) Remove the oil control solenoid. <Ref. to FU(H4DO)-54, REMOVAL, Oil Control Solenoid.>
6) Remove the camshaft position sensor. <Ref. to FU(H4DO)-51, REMOVAL, Camshaft Position Sensor.>

D: ASSEMBLY

1) Install the camshaft position sensor. <Ref. to FU(H4DO)-52, INSTALLATION, Camshaft Position Sensor.>
2) Install the oil control solenoid. <Ref. to FU(H4DO)-55, INSTALLATION, Oil Control Solenoid.>
3) Install the engine oil temperature sensor. <Ref. to FU(H4DO)-45, INSTALLATION, Engine Oil Temperature Sensor.>
4) Install the oil pressure switch. <Ref. to LU(H4DO)-20, INSTALLATION, Oil Pressure Switch.>
5) Install the engine oil filter and the oil pump union. <Ref. to LU(H4DO)-23, INSTALLATION, Engine Oil Filter.>
6) Install the oil filler cap.

E: INSPECTION

Check that the chain cover does not have deformation, cracks and any other damage.

15.Timing Chain Assembly

A: REMOVAL

1. TIMING CHAIN RH

NOTE:
When replacing a single part, perform the work with the engine assembly installed to body.
1) Remove the chain cover. <Ref. to ME(H4DO)-83, REMOVAL, Chain Cover.>
2) Using ST and by turning the crankshaft, align the alignment marks of crank sprocket, intake cam sprocket RH and exhaust cam sprocket RH to the positions as shown in the figure.

NOTE:
If the alignment marks are aligned to the positions as shown in the figure, the crankshaft key is located at six o'clock position.
ST 18252AA000 CRANKSHAFT SOCKET

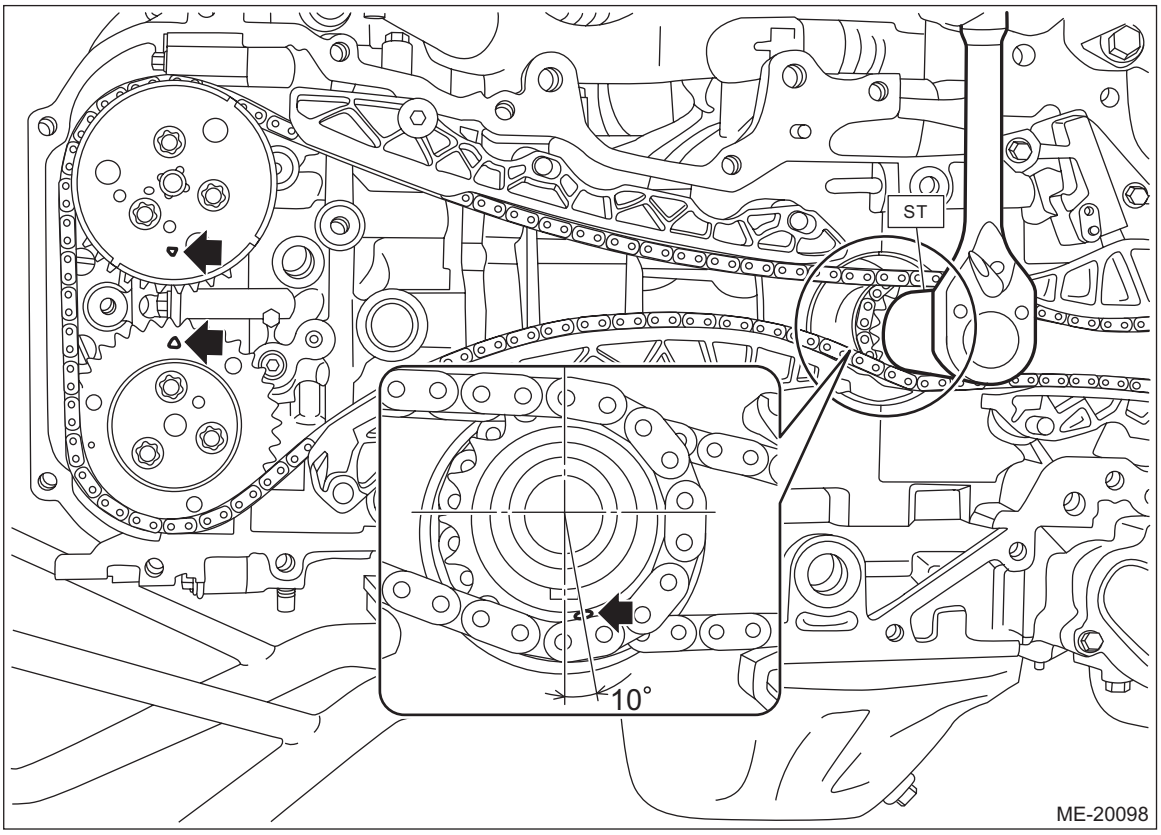

3) Push down the chain lever tensioner RH, and with a 2.5 mm (0.098 in) dia. stopper pin or a 2.5 mm dia. hex wrench inserted into the stopper pin hole in the chain tensioner RH, secure the plunger (A).

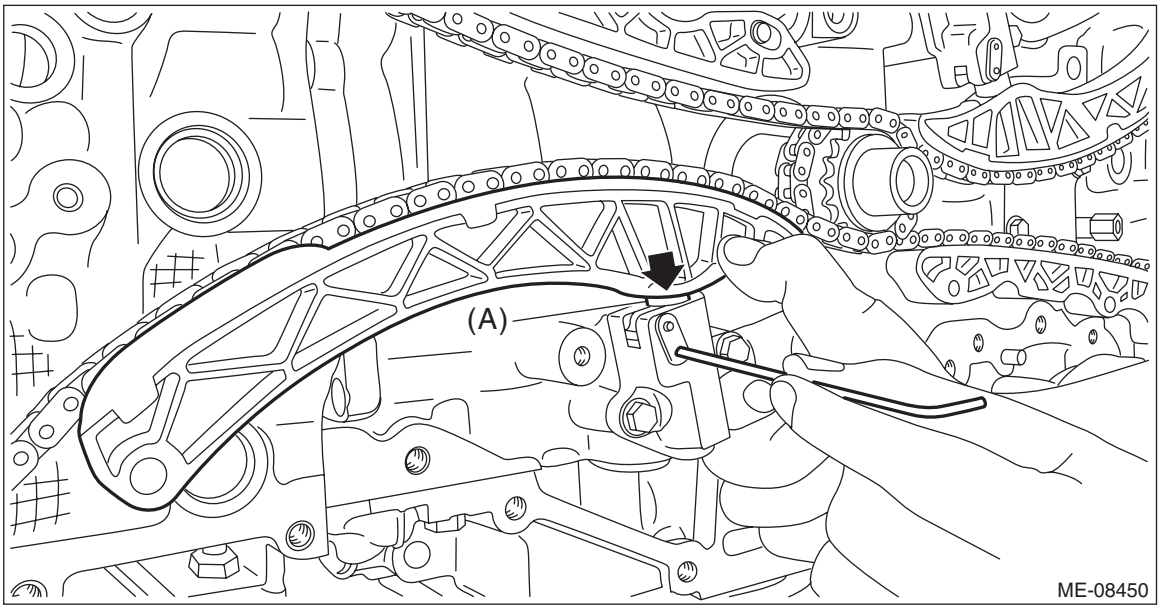

4) Remove the chain tensioner RH, and remove the chain tensioner lever RH (A).

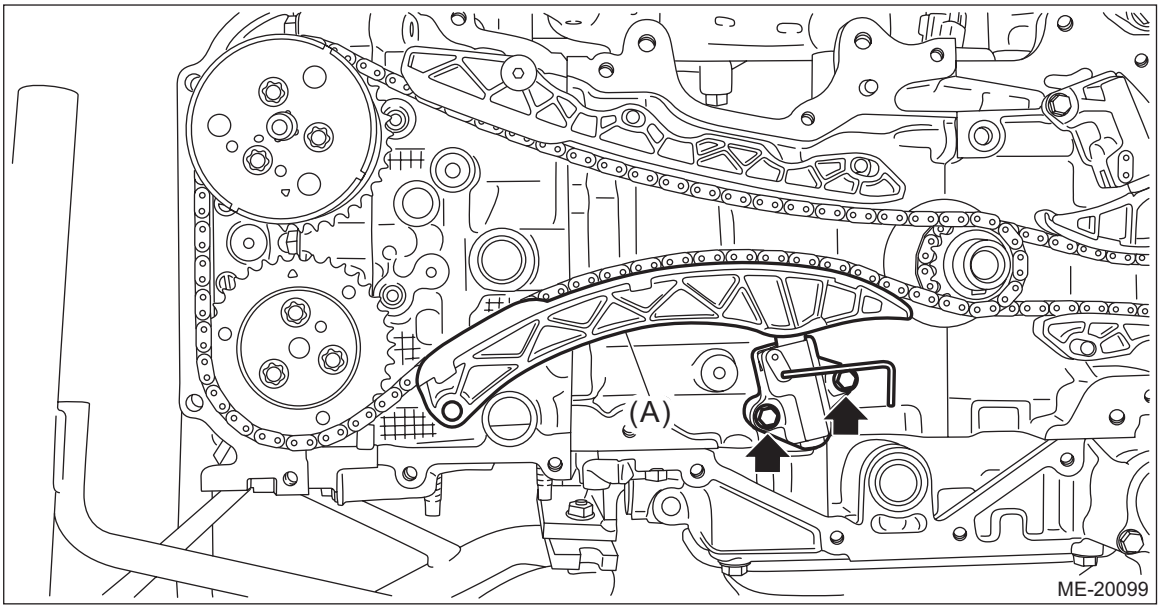

5) Remove the chain guide RH, and remove the timing chain RH (A).

CAUTION:

- **If the timing chain RH is not installed, the intake camshaft RH and exhaust camshaft RH are kept at zero-lift position. All cams on the camshaft are not pressing down the roller rocker arm (intake valve and exhaust valve). (Under this condition, all valves remain unlifted.)**
- **Intake camshaft RH and exhaust camshaft RH can be independently rotated with the timing chain RH removed. When the intake valve and exhaust valve lift at the same time, the valve heads contact each other and valve stem may bend. Do not turn it to the outside of range of zero-lift (in range where it can be turned lightly by hand).**

NOTE:
To avoid mixing with LH side, keep the removed part in order.

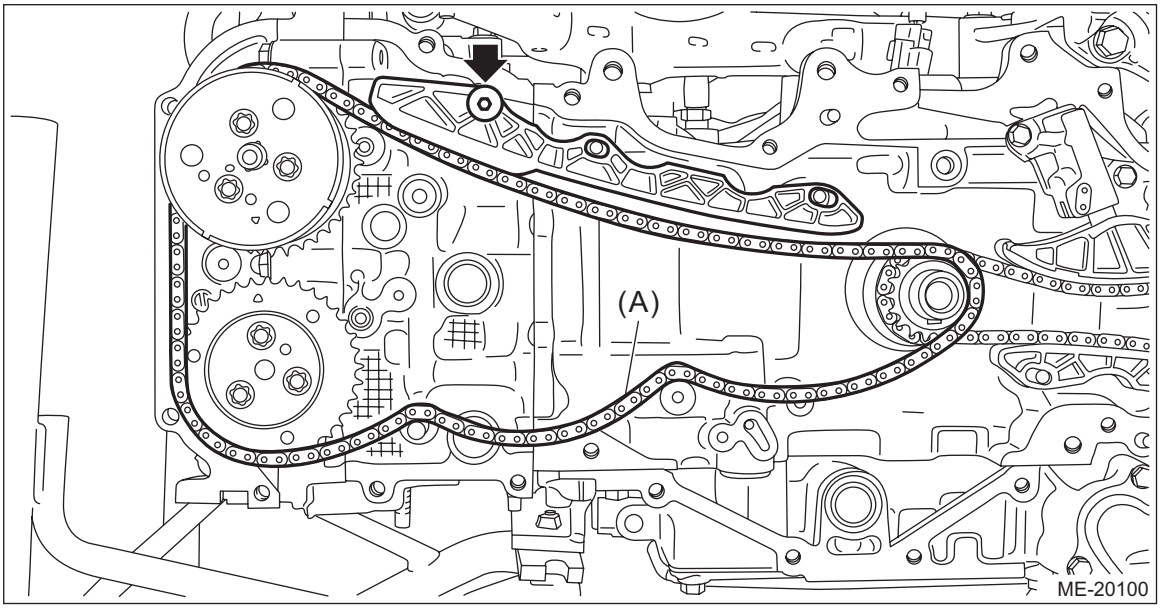

2. TIMING CHAIN LH

1) Remove the timing chain RH. <Ref. to ME(H4DO)-97, TIMING CHAIN RH, REMOVAL, Timing Chain Assembly.>
2) Using ST and by turning the crankshaft, align the alignment marks of crankshaft key, intake cam sprocket LH and exhaust cam sprocket LH to the positions as shown in the figure.
ST 18252AA000 CRANKSHAFT SOCKET

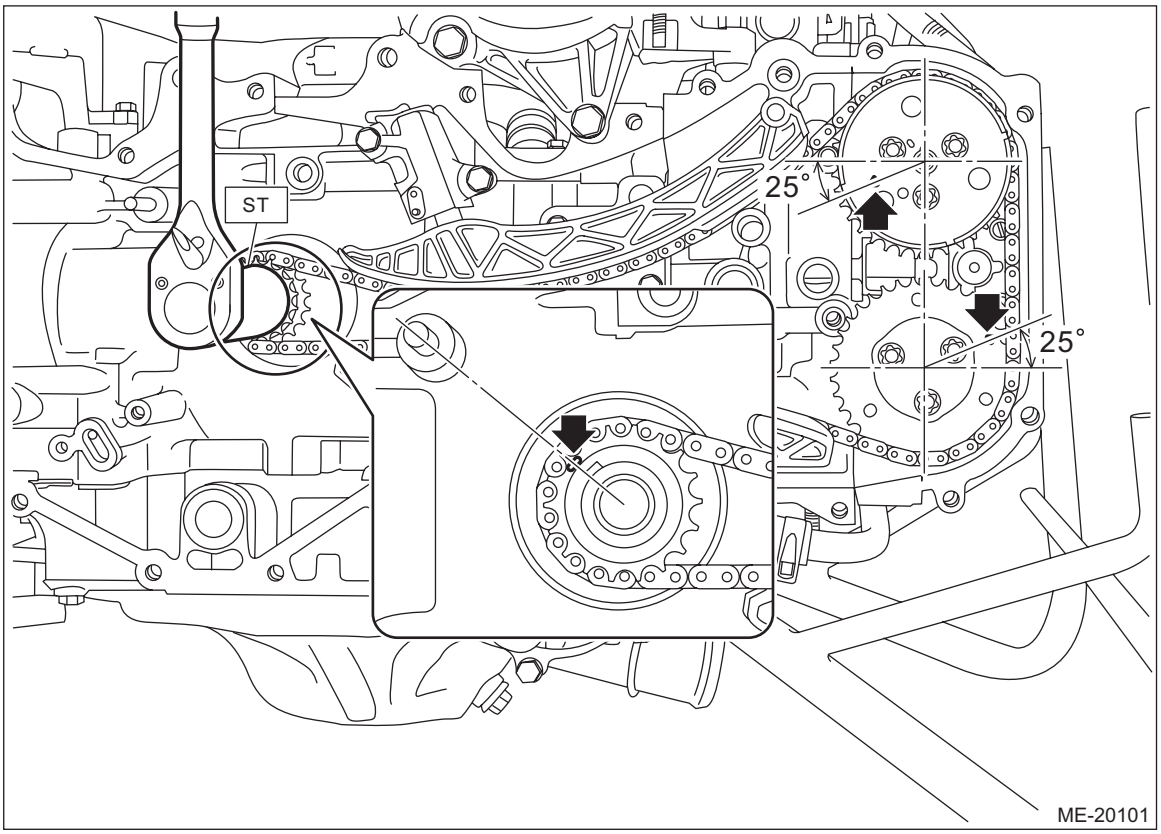

3) Push down the chain lever tensioner LH, and with a 1.3 mm (0.05 in) dia. stopper pin or a 1.3 mm dia. hex wrench inserted into the stopper pin hole in the chain tensioner LH, secure the plunger (A).

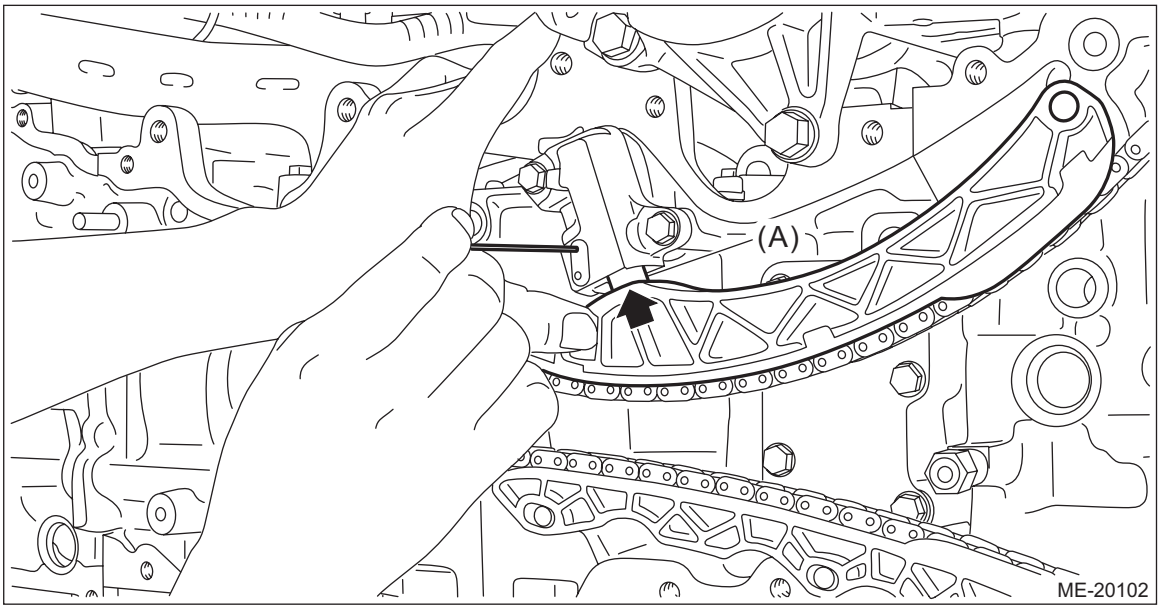

4) Remove the chain tensioner LH, and remove the chain tensioner lever LH (A).

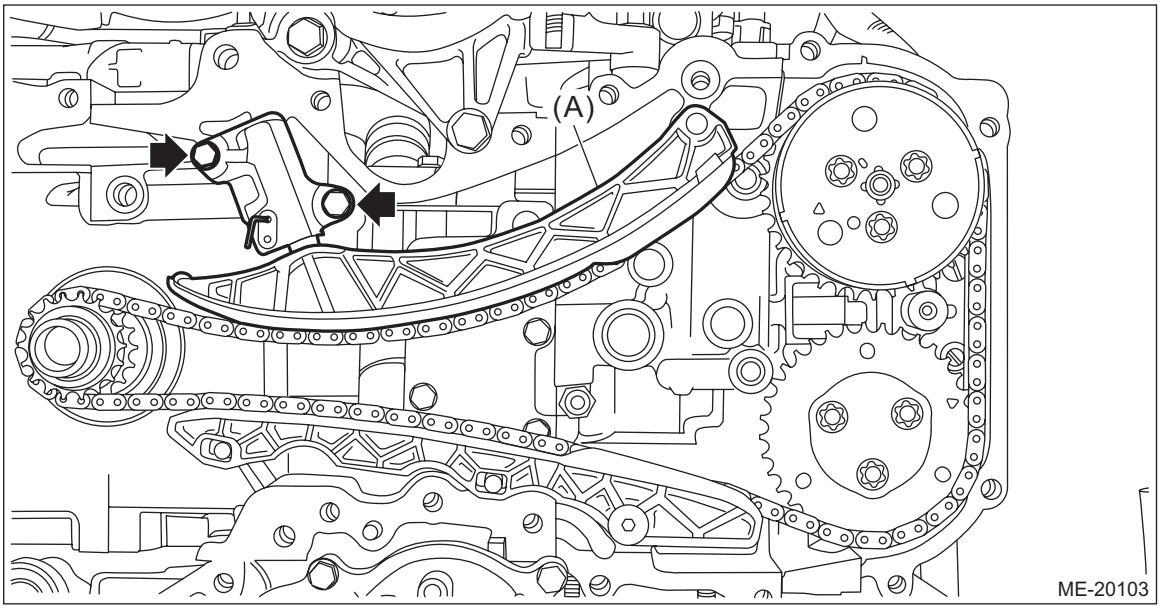

5) Remove the O-ring from the cylinder block LH.

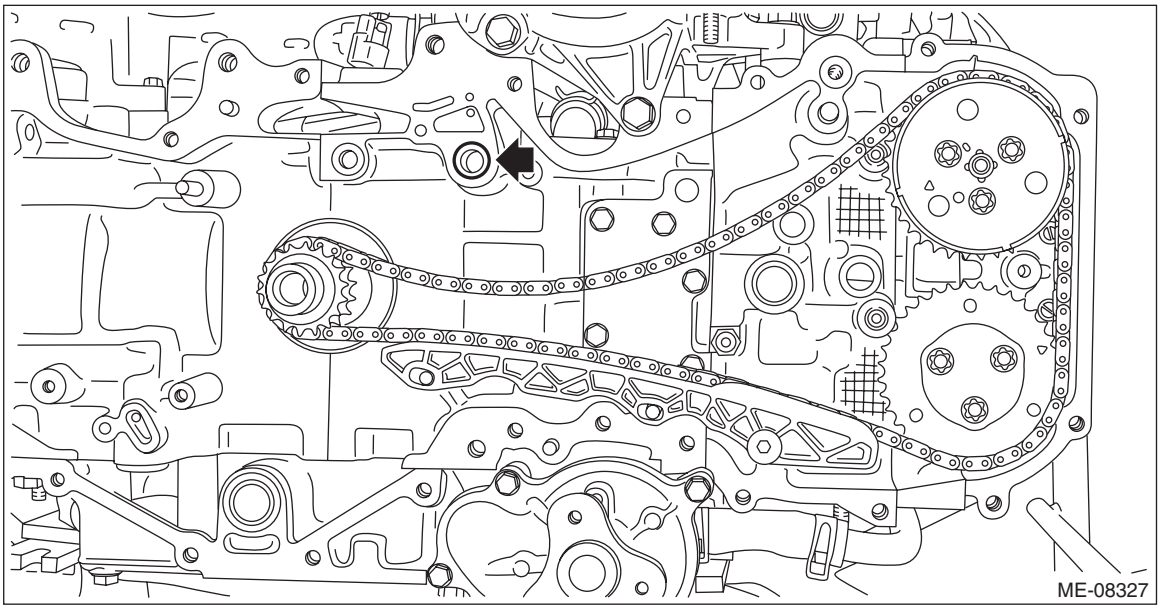

6) Remove the chain guide LH, and remove the timing chain LH (A).

CAUTION:
• If the timing chain LH is not installed, the exhaust camshaft LH is kept at zero-lift position. All cams on the exhaust camshaft LH are not pressing down the roller rocker arm (exhaust valve). (Under this condition, exhaust valves remain unlifted.)
• Intake camshaft LH is kept at lift position. All cams on the intake camshaft LH are pressing down the roller rocker arm (intake valve). (Under this condition, intake valves remain lifted.)
• Intake camshaft LH and exhaust camshaft RH can be independently rotated with the timing chain LH removed. When the exhaust camshaft LH is turned, the valve heads contact each other and valve stem may bend as described in above. Do not turn the exhaust camshaft LH to the outside of range of zero-lift (in range where it can be turned lightly by hand).
• #1 piston and #4 piston are located near TDC. If the intake camshaft LH is turned, the valve and the piston may contact and valve stem may bend. Do not turn the intake camshaft LH at this time.

NOTE:
To avoid mixing with RH side, keep the removed part in order.

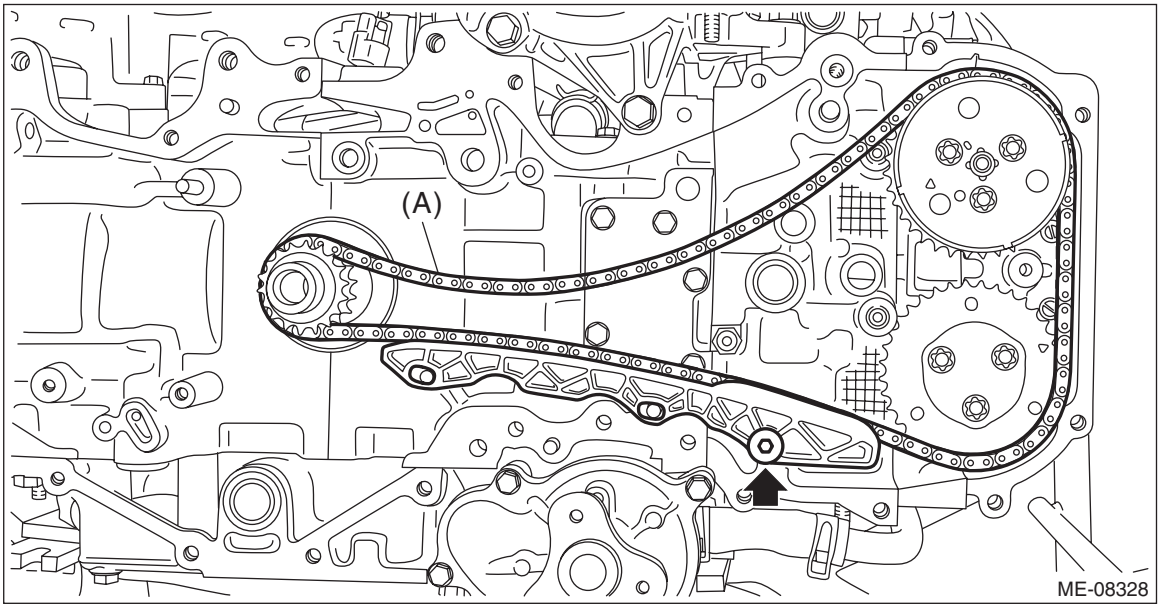

7) Using ST and by turning the crankshaft approximately 200° clockwise, align the alignment marks of crank sprocket to the positions as shown in the figure.

CAUTION:
• This procedure is required to prevent the valve and piston contacting with each other, by moving the all pistons to the middle of the cylinders.
• Never turn counterclockwise because the valve and piston may contact. Counterclockwise turn is allowed only when adjusting precisely the alignment marks, after turning the crank sprocket alignment mark clockwise near the position as shown in the figure.

ST 18252AA000 CRANKSHAFT SOCKET

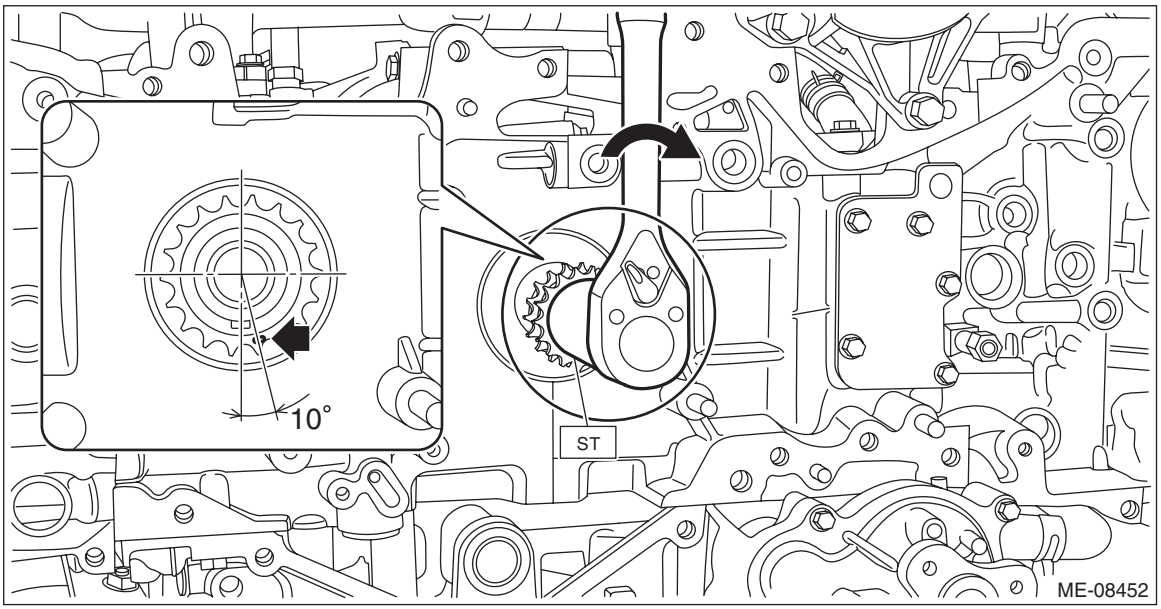

8) Using ST and by turning the intake cam sprocket LH approximately 180° clockwise, align the alignment marks of intake cam sprocket LH to the positions (zero-lift position) as shown in the figure.

CAUTION:

- **After this work, when the intake valve and exhaust valve lift at the same time, the valve heads contact each other and valve stem may bend. Do not turn the intake camshaft LH and exhaust camshaft LH to the outside of range of zero-lift (in range where it can be turned lightly by hand).**
- **Perform the operation carefully since the ST comes off easily.**

ST1 18355AA000 PULLEY WRENCH
ST2 18334AA020 PULLEY WRENCH PIN SET

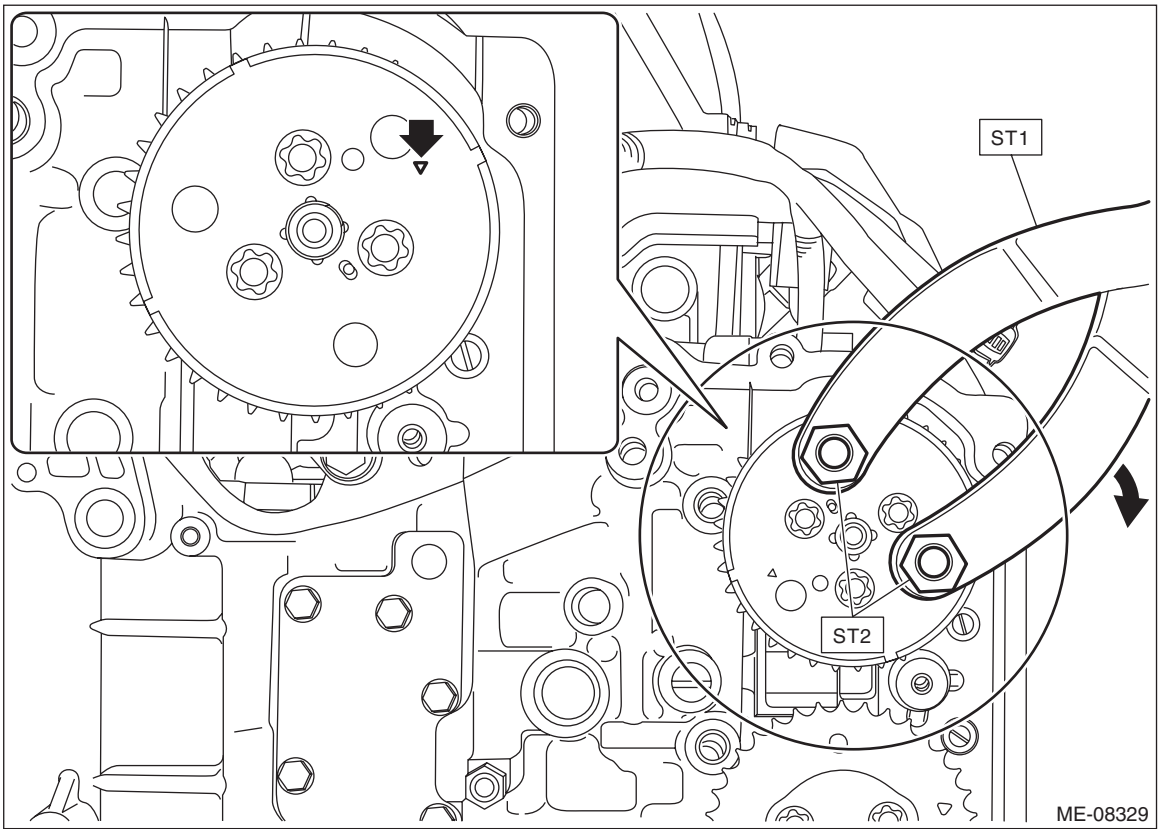

B: INSTALLATION

1. TIMING CHAIN LH

NOTE:
- Be careful that the foreign matter is not into or onto the assembled component during installation.
- Apply engine oil to all component parts of the timing chain.

1) Prepare to attach the chain tensioner LH.
   (1) Move the link plate (A) in the direction of arrow to press in the plunger (B).

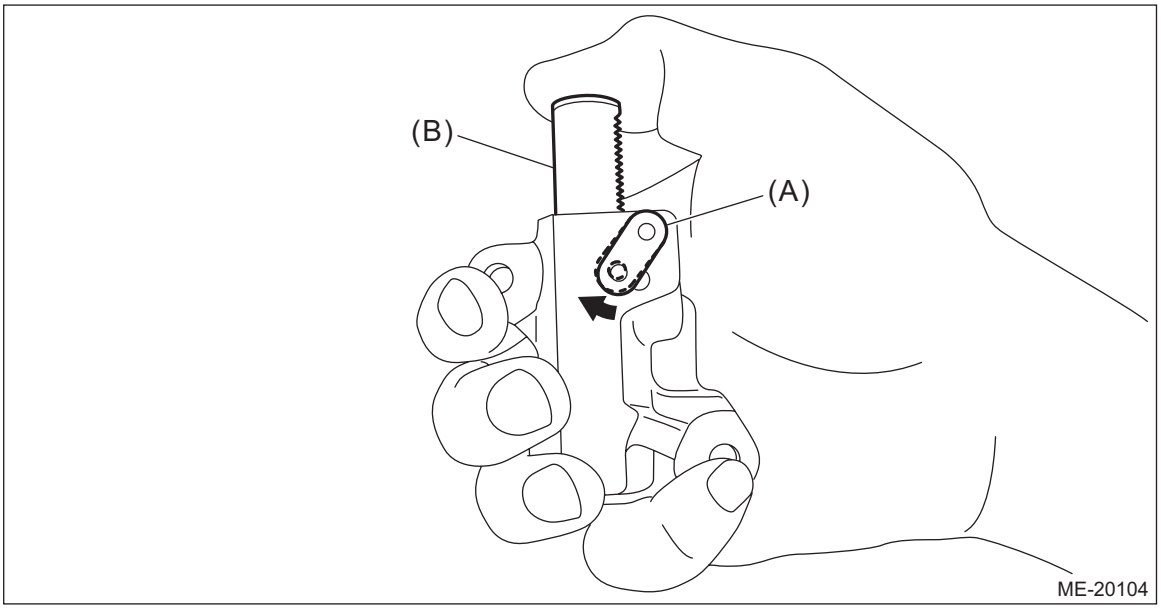

   (2) With a 1.3 mm (0.05 in) dia. stopper pin or a 1.3 mm dia. hex wrench inserted into the stopper pin hole, secure the plunger.

NOTE:
If the stopper pin hole on the link plate and the stopper pin hole on the chain tensioner are not aligned, check that the first notch of plunger rack (A) is engaged with the stopper tooth (B). If not engaged, retract the plunger a little so that the first notch of plunger rack (A) is engaged with the stopper tooth (B).

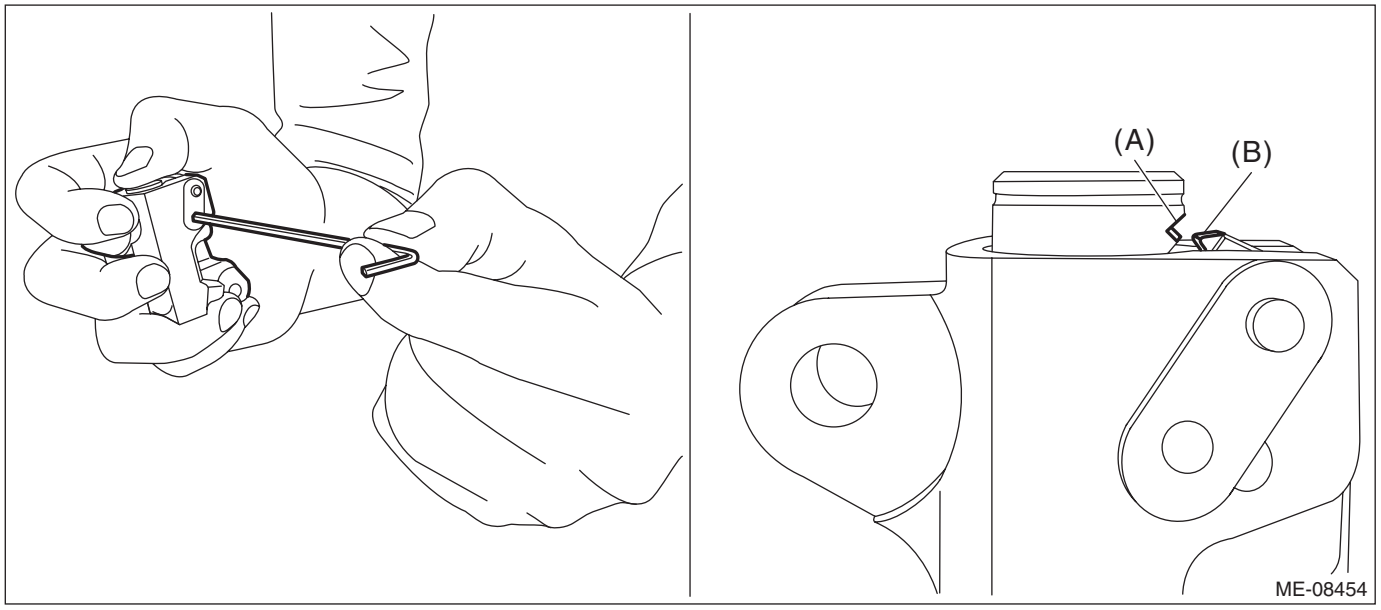

2) Check that the crank sprocket is located at the position shown in the figure. If not aligned, using ST turn the crankshaft to align the crank sprocket alignment mark to the position shown in the figure.

NOTE:
This procedure is required to prevent the valve and piston contacting with each other in the next step.
ST 18252AA000 CRANKSHAFT SOCKET

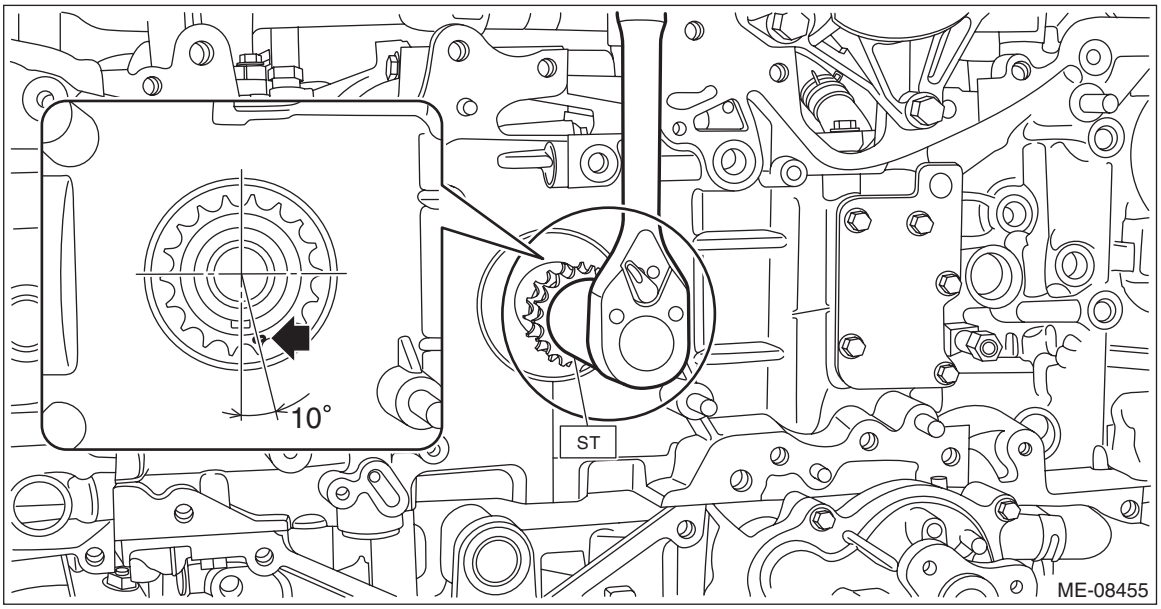

3) Using ST and by turning the intake cam sprocket LH, align the alignment marks to the positions as shown in the figure.

CAUTION:
• When the intake valve and exhaust valve lift at the same time, the valve heads contact each other and valve stem may bend. Do not turn the exhaust camshaft LH.
• Perform the operation carefully since the ST comes off easily.

ST1 18355AA000 PULLEY WRENCH
ST2 18334AA020 PULLEY WRENCH PIN SET

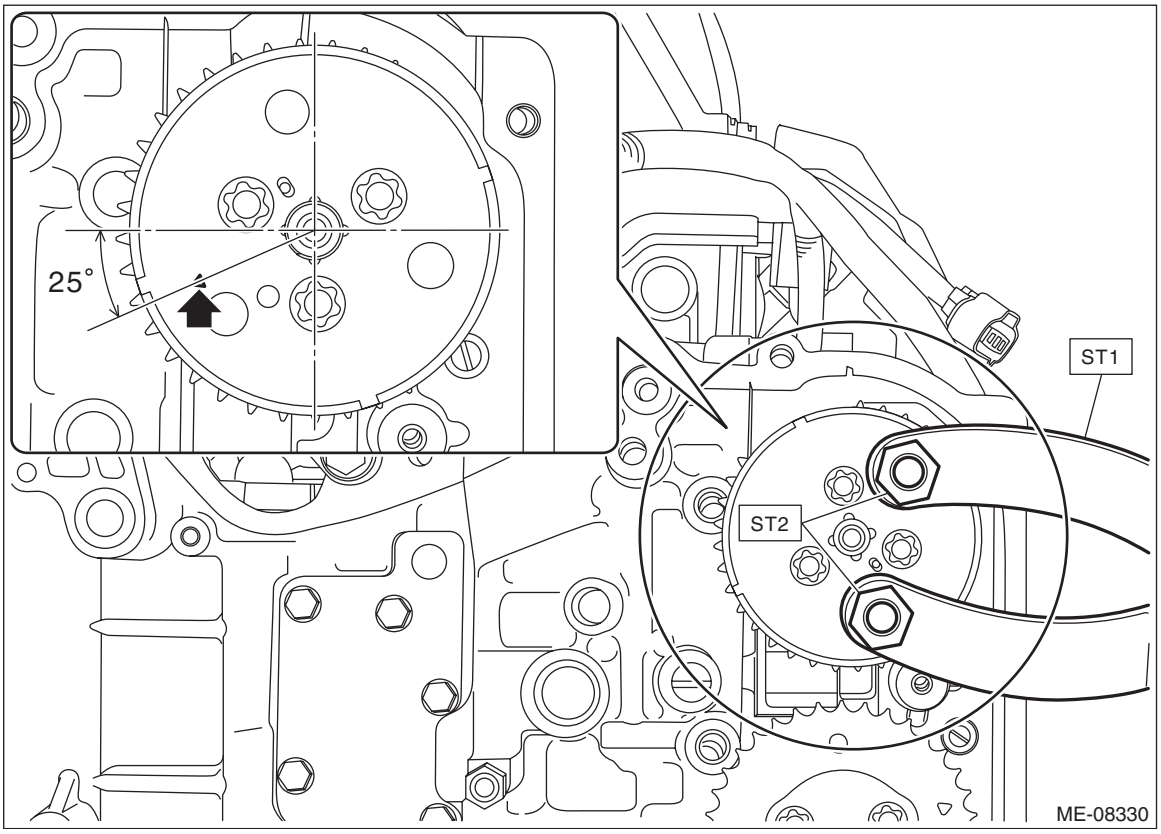

4) Using ST and by turning the crankshaft approximately 200° counterclockwise, align the alignment marks of crankshaft key to the positions as shown in the figure.

CAUTION:
Never turn clockwise because the valve and piston may contact. Clockwise turn is allowed only when adjusting the key position precisely, after turning the crankshaft counterclockwise to bring the key near the position as shown in the figure.

ST 18252AA000 CRANKSHAFT SOCKET

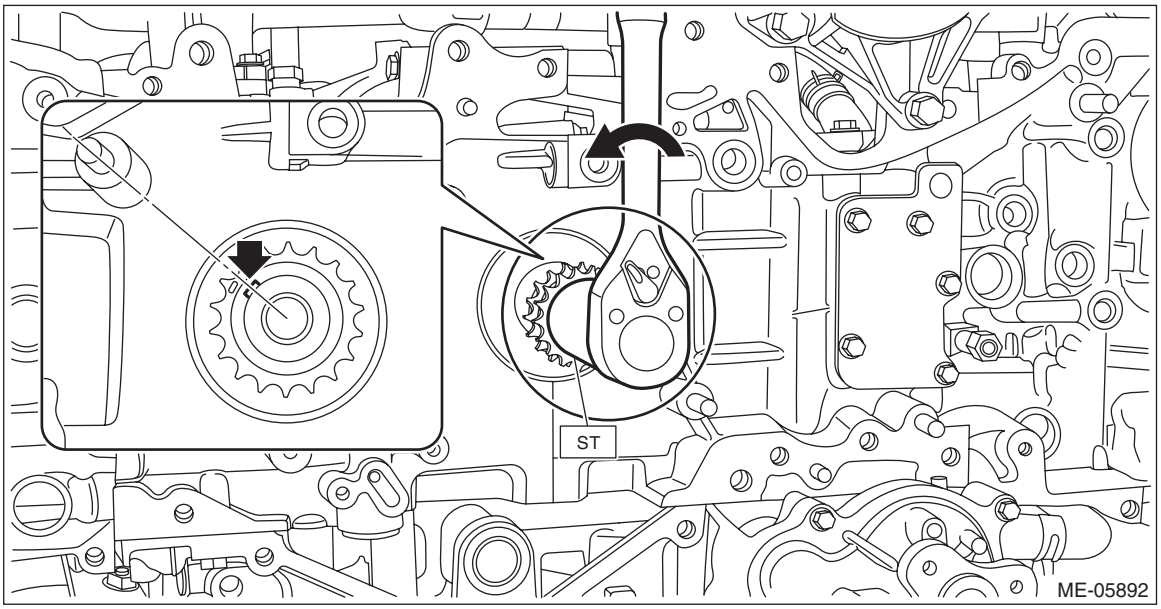

5) Align the alignment mark of exhaust cam sprocket LH to the position shown in the figure.

CAUTION:
To prevent valve damage, turn the exhaust cam sprocket LH only within the range of zero-lift (in range where it can be turned lightly by hand).

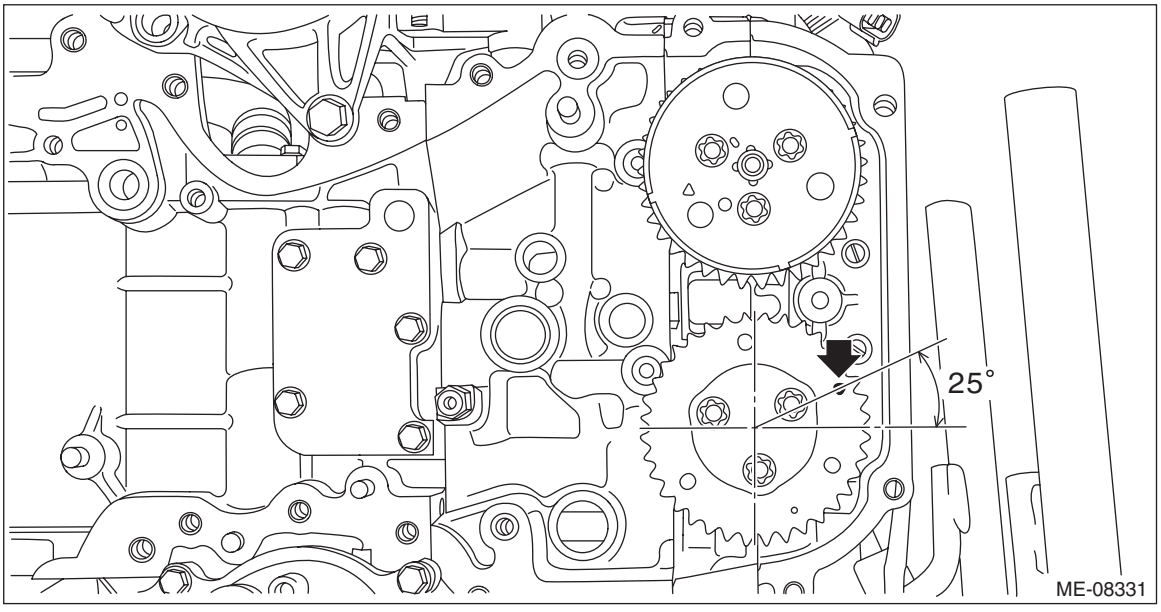

6) Install the timing chain LH and the timing chain guide LH.
   (1) Match the timing chain mark (blue) to the alignment mark of the crank sprocket.
   (2) Match the timing chain mark (pink) to the timing mark position of the intake cam sprocket LH.
   (3) Match the timing chain mark (pink) to the timing mark position of the exhaust cam sprocket LH.
   (4) Install timing chain guide LH.

Tightening torque:
6.4 N·m (0.7 kgf-m, 4.7 ft-lb)

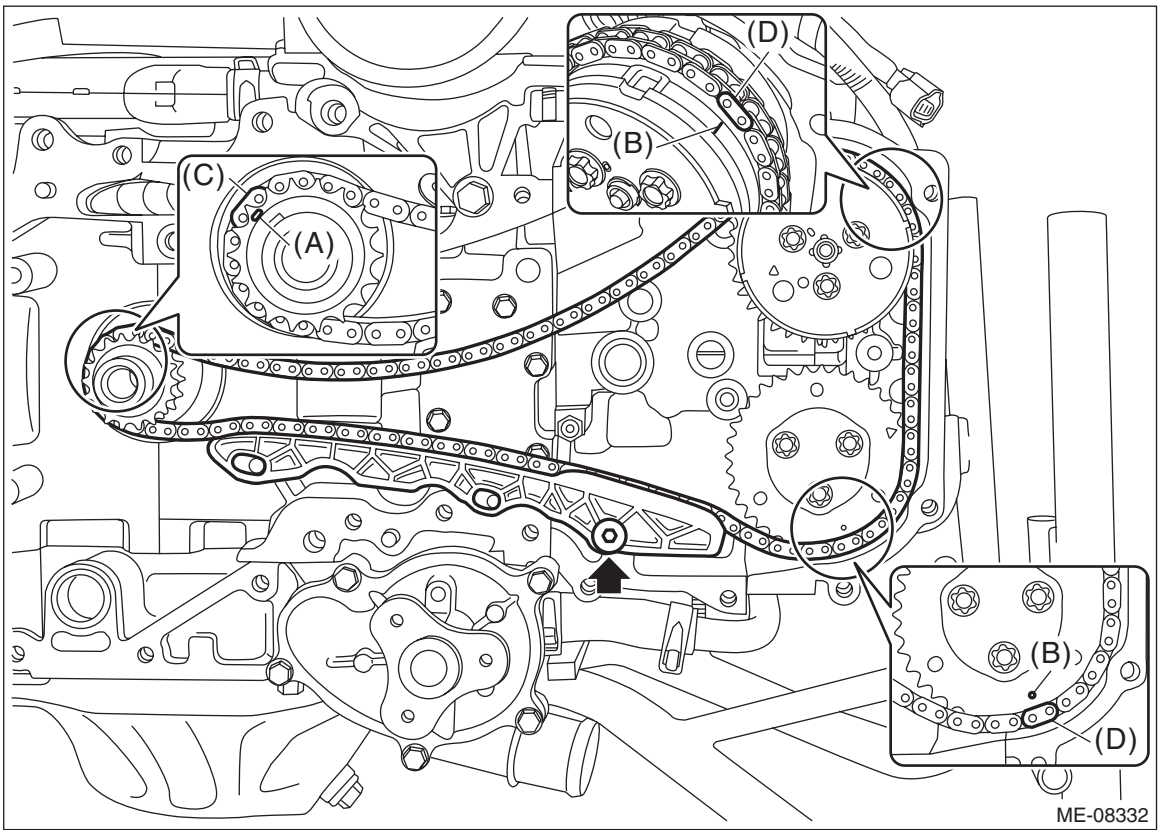

(A) Alignment mark
(B) Timing mark
(C) Blue
(D) Pink

7) Install O-rings to the cylinder block LH.

NOTE:
Use new O-rings.

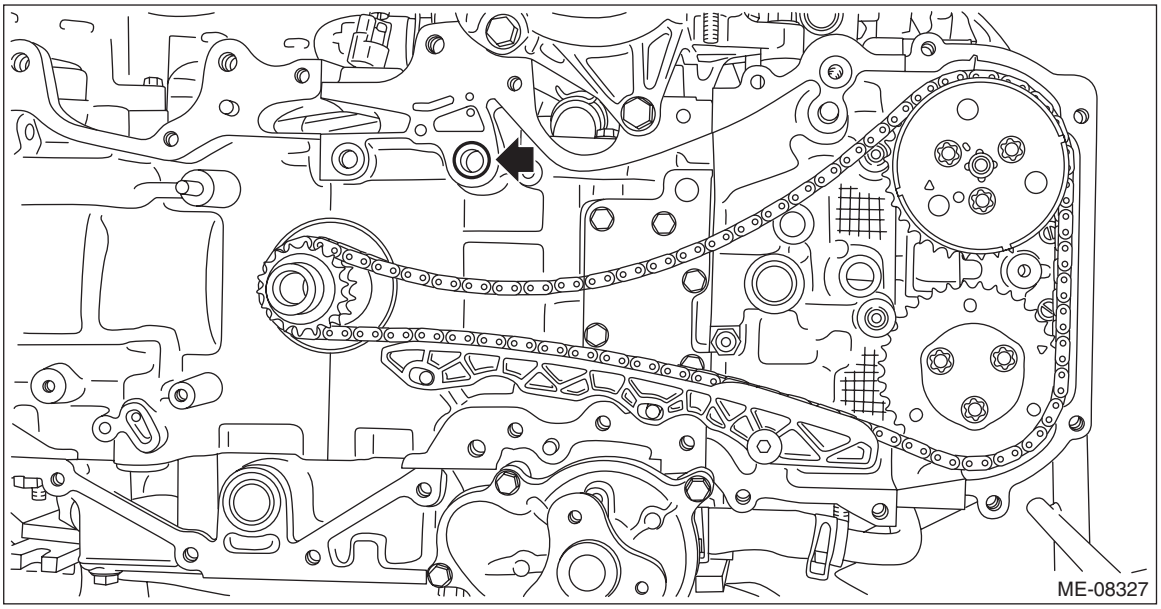

8) Install the chain tensioner lever LH (A) and chain tensioner LH.

Tightening torque:
6.4 N·m (0.7 kgf-m, 4.7 ft-lb)

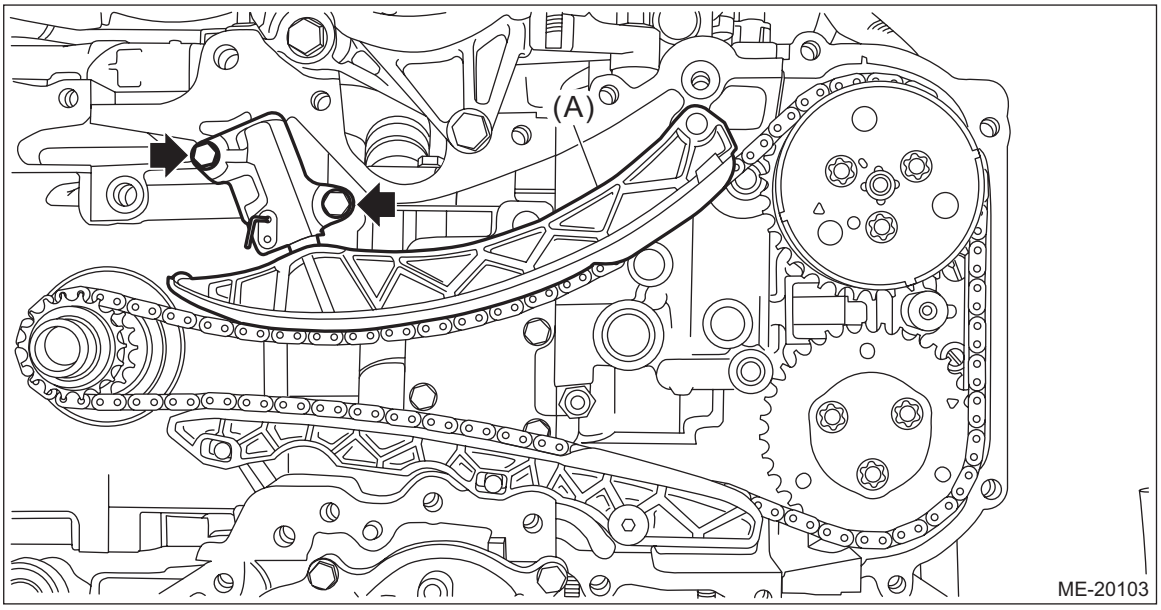

9) Pull out the stopper pin from the chain tensioner LH.

CAUTION:
Confirm the following before pulling out the stopper pin.
- **Matching of the timing chain mark (blue) to the alignment mark of the crank sprocket.**
- **Matching of the timing chain mark (pink) to the timing mark position of the intake cam sprocket LH.**
- **Matching of the timing chain mark (pink) to the timing mark position of the exhaust cam sprocket LH.**

NOTE:
If the stopper pin cannot be removed, lift the chain tension lever LH to remove as shown in the figure.

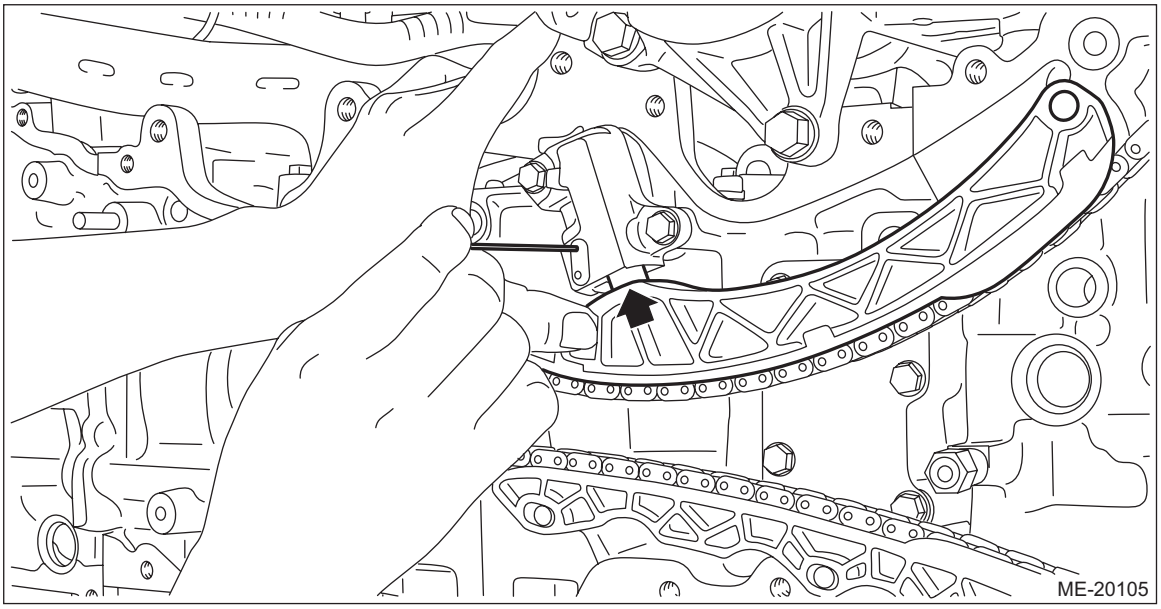

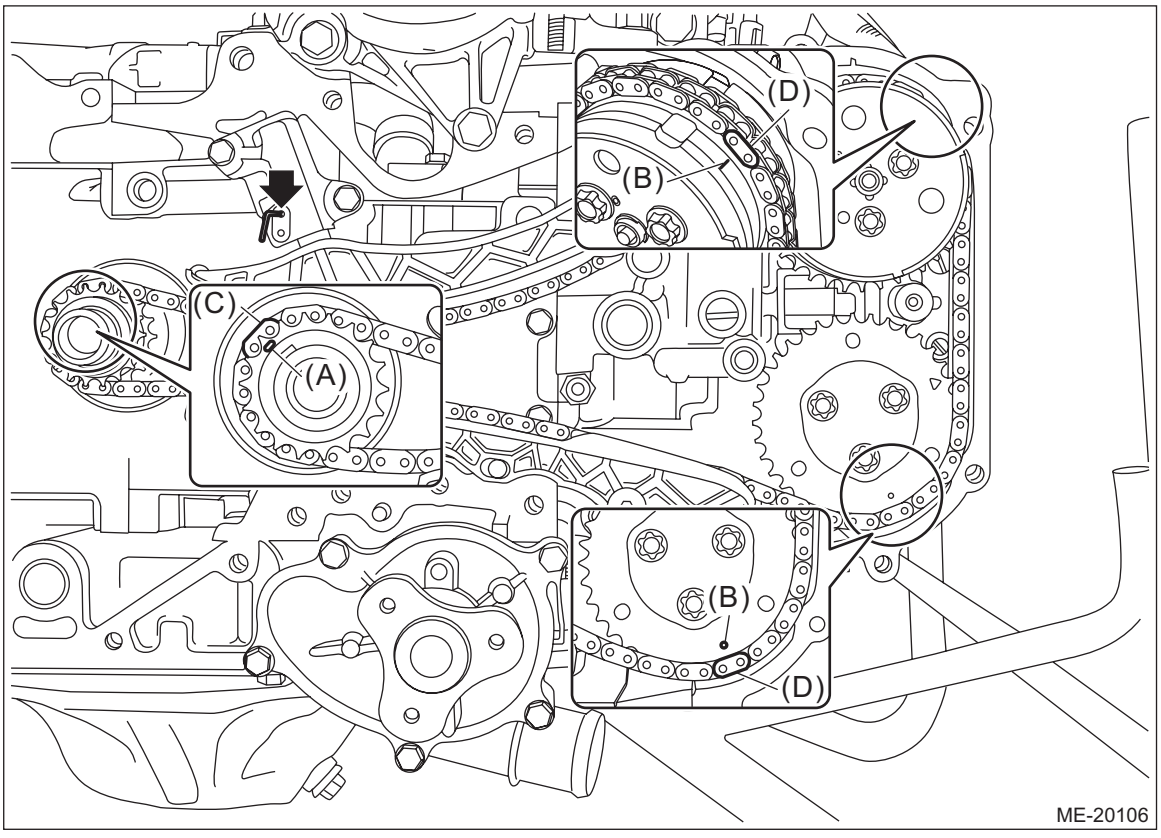

(A) Alignment mark
(B) Timing mark
(C) Blue
(D) Pink

10) Using the ST, turn the crankshaft clockwise, and make sure that there are no abnormal conditions.

CAUTION:
Always make sure to perform this confirmation.
ST 18252AA000 CRANKSHAFT SOCKET

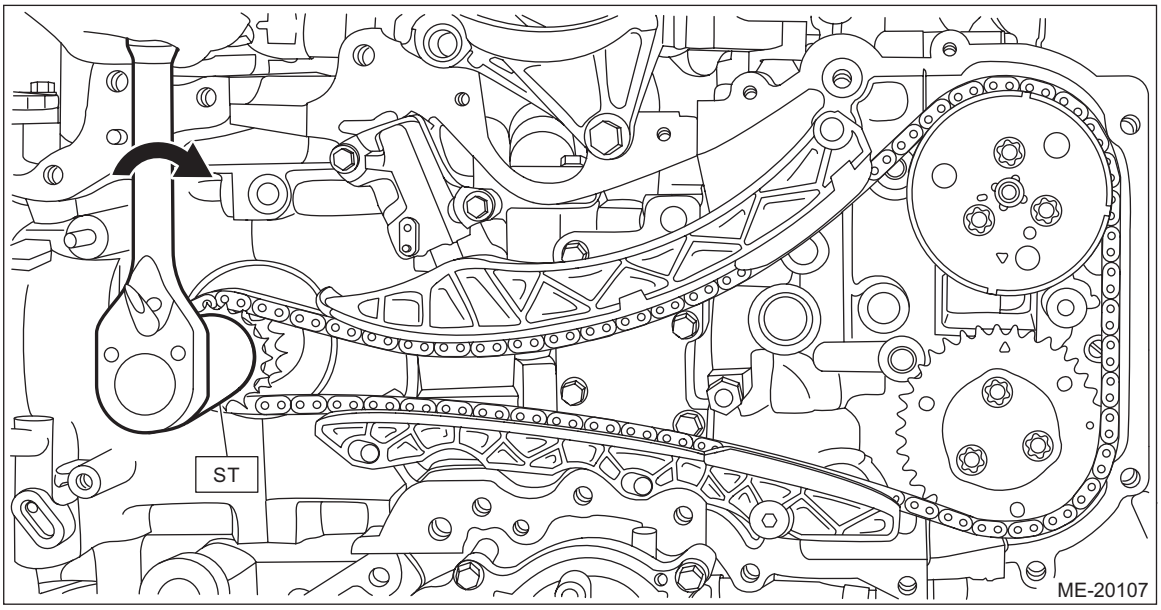

11) Using ST and by turning the crankshaft, align the alignment marks of crank sprocket, intake cam sprocket LH and exhaust cam sprocket LH to the positions as shown in the figure.

NOTE:
If the alignment marks are aligned to the positions as shown in the figure, the crankshaft key is located at six o'clock position.
ST 18252AA000 CRANKSHAFT SOCKET

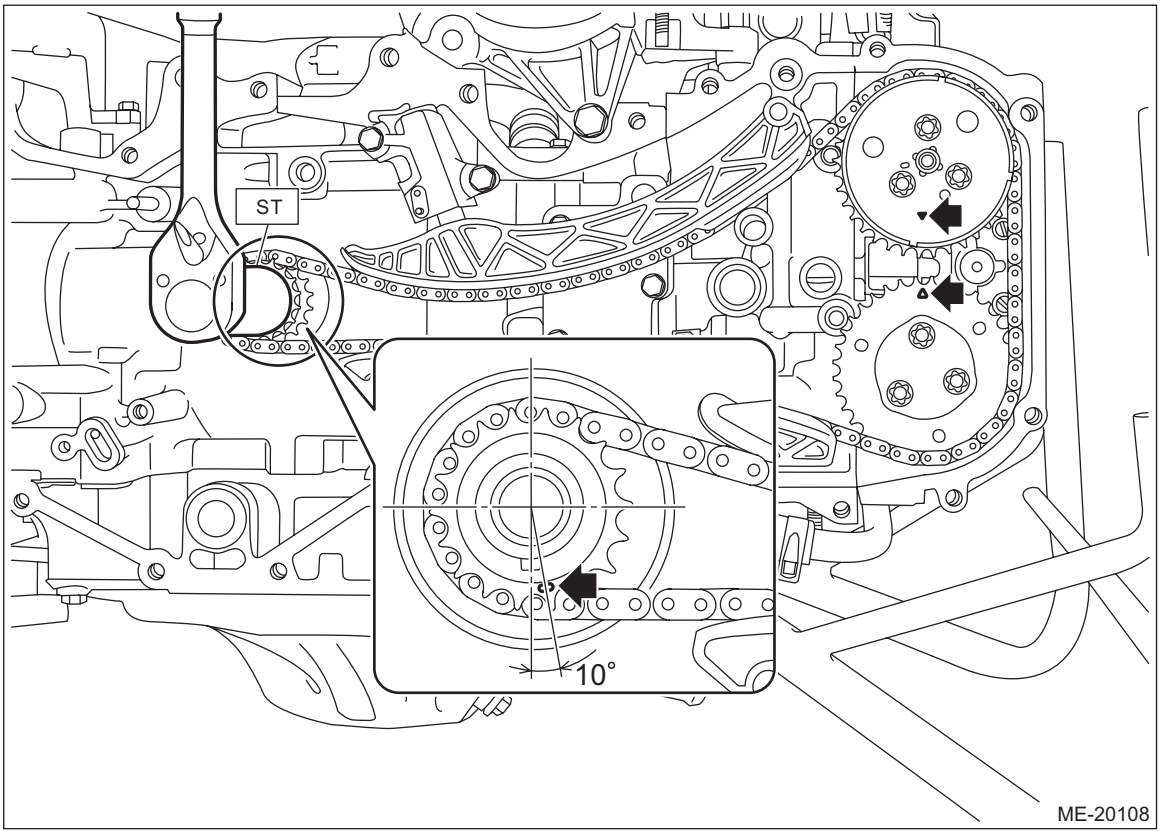

12) Install the timing chain RH. <Ref. to ME(H4DO)-112, TIMING CHAIN RH, INSTALLATION, Timing Chain Assembly.>

2. TIMING CHAIN RH

NOTE:
- Be careful that the foreign matter is not into or onto the assembled component during installation.
- Apply engine oil to all component parts of the timing chain.

1) Install timing chain LH. <Ref. to ME(H4DO)-104, TIMING CHAIN LH, INSTALLATION, Timing Chain Assembly.>
2) Prepare to attach the chain tensioner RH.
   (1) Move the link plate (A) in the direction of arrow to press in the plunger (B).

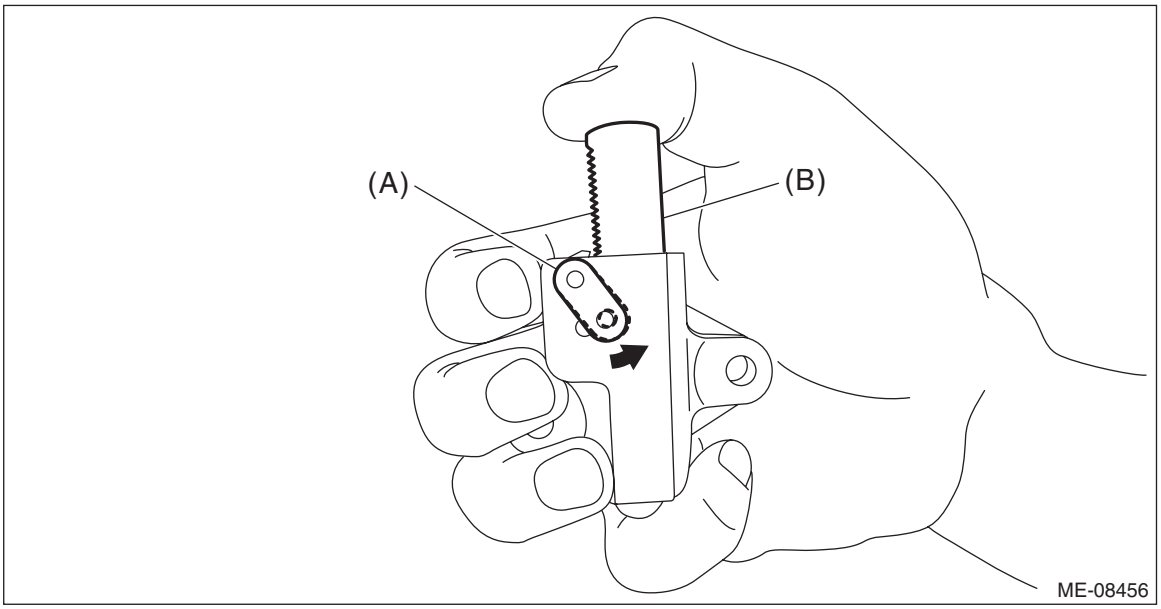

   (2) With a 2.5 mm (0.098 in) dia. stopper pin or a 2.5 mm dia. hex wrench inserted into the stopper pin hole, secure the plunger.

NOTE:
If the stopper pin hole on the link plate and the stopper pin hole on the chain tensioner are not aligned, check that the first notch of plunger rack (A) is engaged with the stopper tooth (B). If not engaged, retract the plunger a little so that the first notch of plunger rack (A) is engaged with the stopper tooth (B).

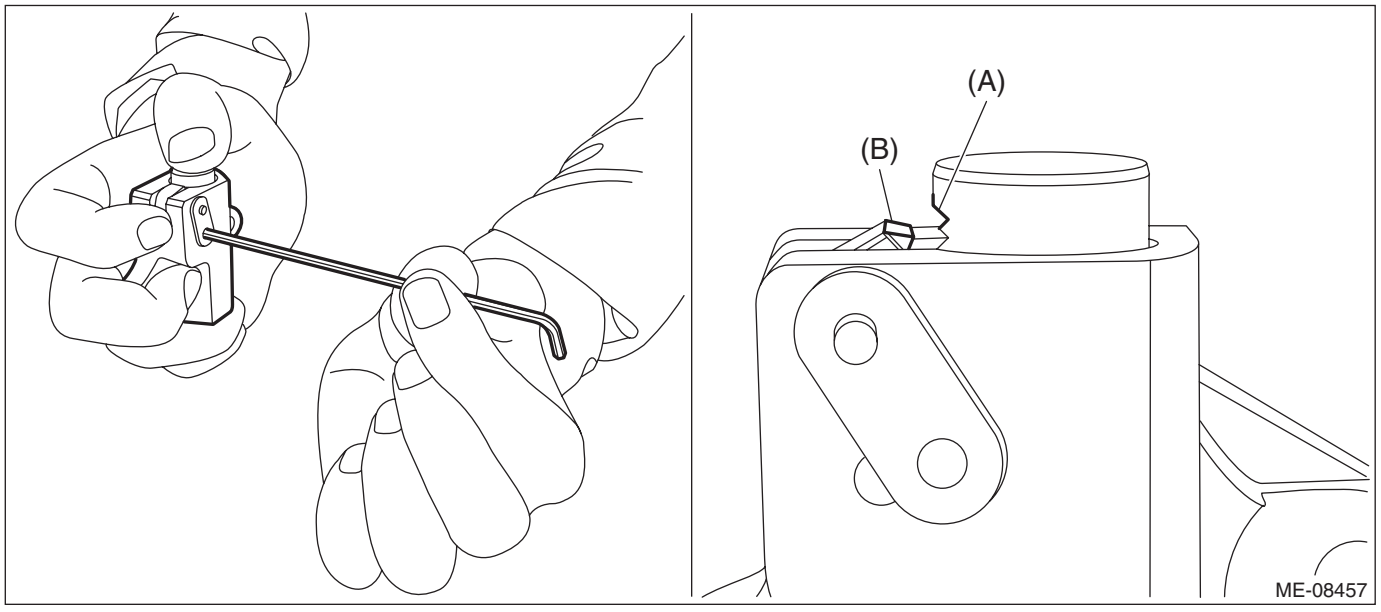

3) Make sure that the alignment marks of the crank sprocket, intake cam sprocket LH and exhaust cam sprocket LH are aligned to the positions as shown in the figure.

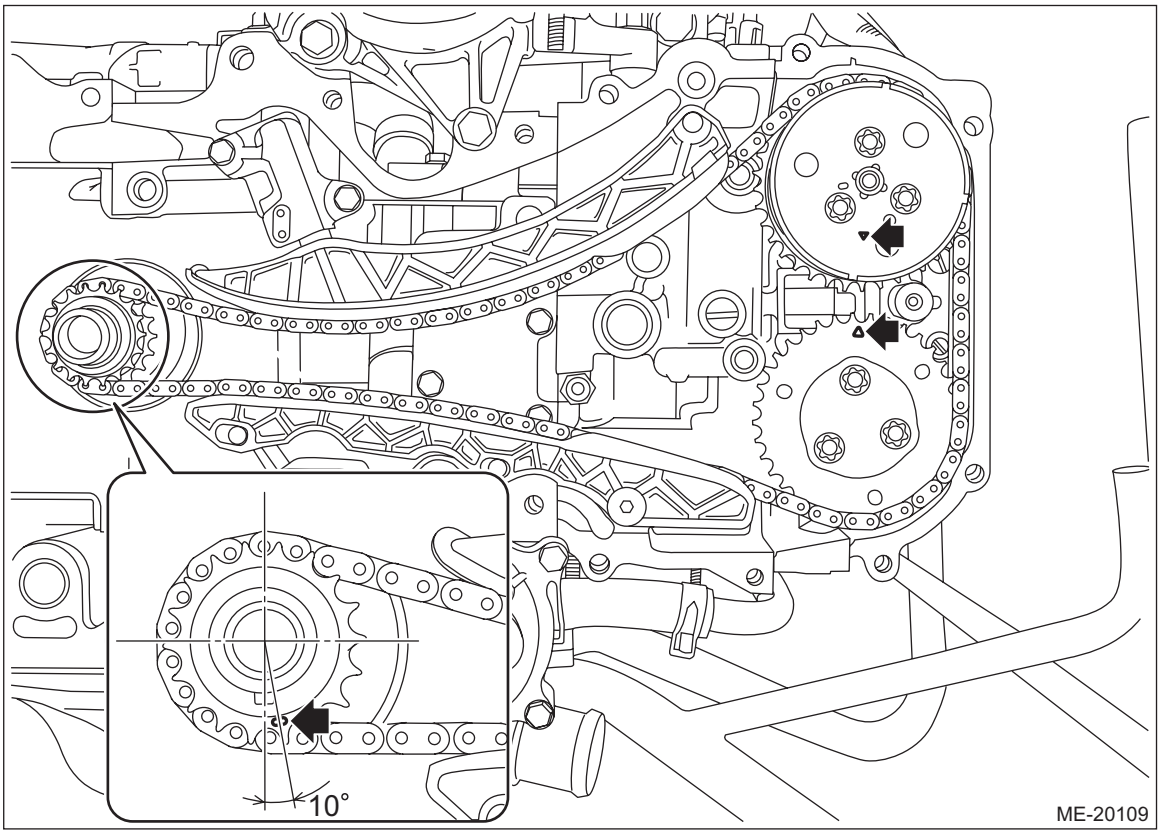

4) Align the alignment marks of intake cam sprocket RH and exhaust cam sprocket RH to the positions as shown in the figure.

CAUTION:
To prevent valve damage, turn the intake cam sprocket RH and exhaust cam sprocket RH only within the range of zero-lift (in range where it can be turned lightly by hand).

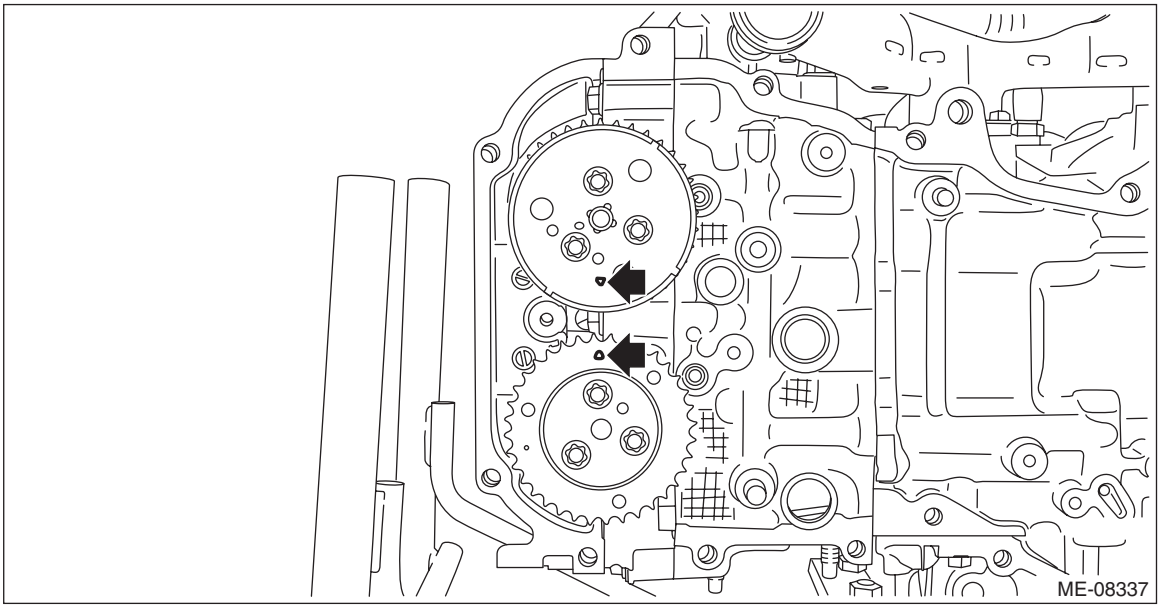

5) Install the timing chain RH and the timing chain guide RH.
(1) Match the timing chain mark (blue) to the alignment mark of the crank sprocket.
(2) Match the timing chain mark (pink) to the timing mark position of the intake cam sprocket RH.
(3) Match the timing chain mark (pink) to the timing mark position of the exhaust cam sprocket RH.

(4) Install the timing chain guide RH.

Tightening torque:
6.4 N·m (0.7 kgf-m, 4.7 ft-lb)

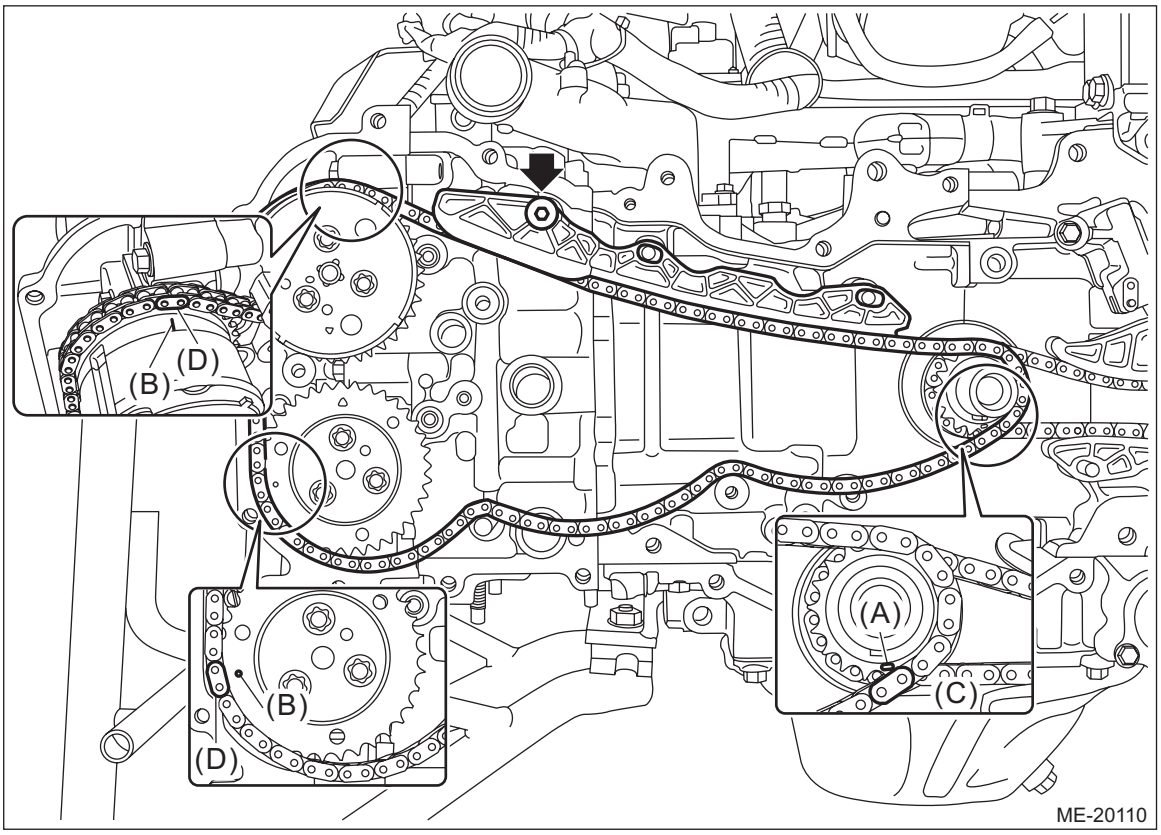

(A) Alignment mark
(B) Timing mark
(C) Blue
(D) Pink

6) Install the chain tensioner lever RH (A) and chain tensioner RH.

Tightening torque:
6.4 N·m (0.7 kgf-m, 4.7 ft-lb)

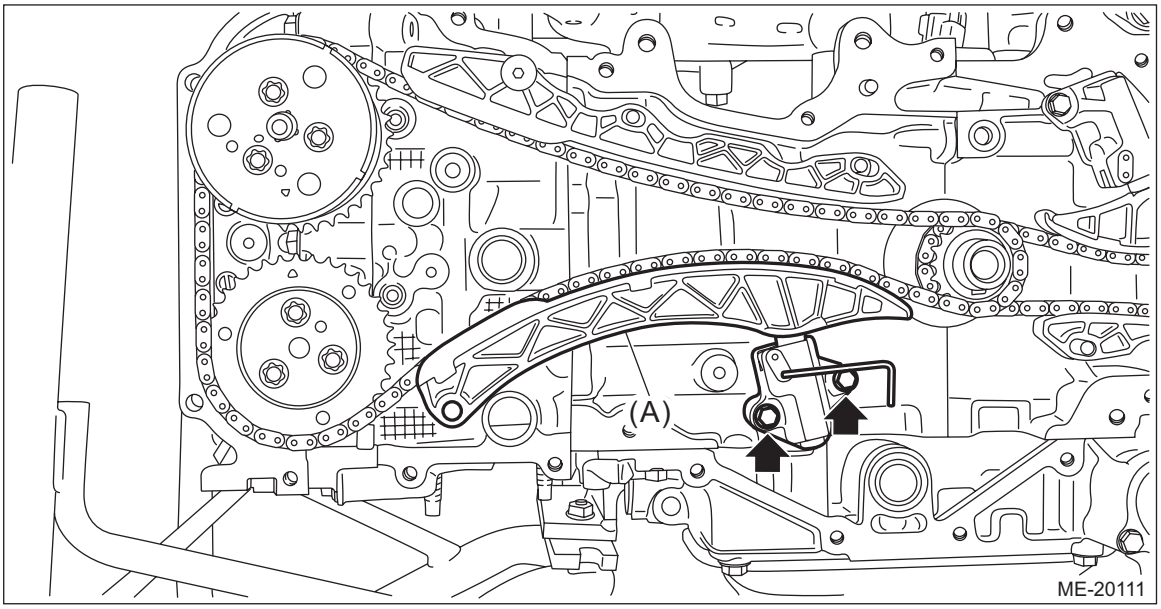

7) Pull out the stopper pin from the chain tensioner RH.

CAUTION:
Confirm the following before pulling out the stopper pin.
- **Matching of the timing chain mark (blue) to the alignment mark of the crank sprocket.**
- **Matching of the timing chain mark (pink) to the timing mark position of the intake cam sprocket RH.**
- **Matching of the timing chain mark (pink) to the timing mark position of the exhaust cam sprocket RH.**

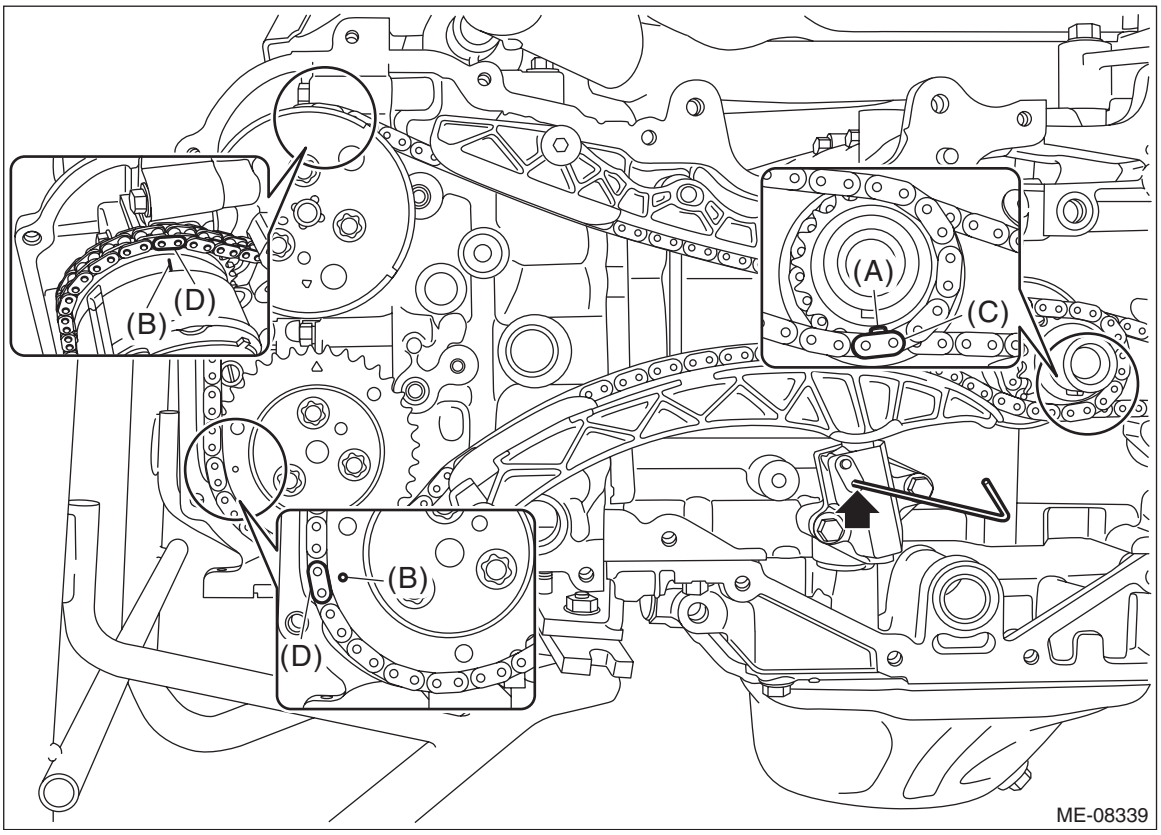

(A) Alignment mark
(B) Timing mark
(C) Blue
(D) Pink

8) Make sure that the alignment marks of the cam sprocket and crank sprocket are aligned to the positions as shown in the figure.

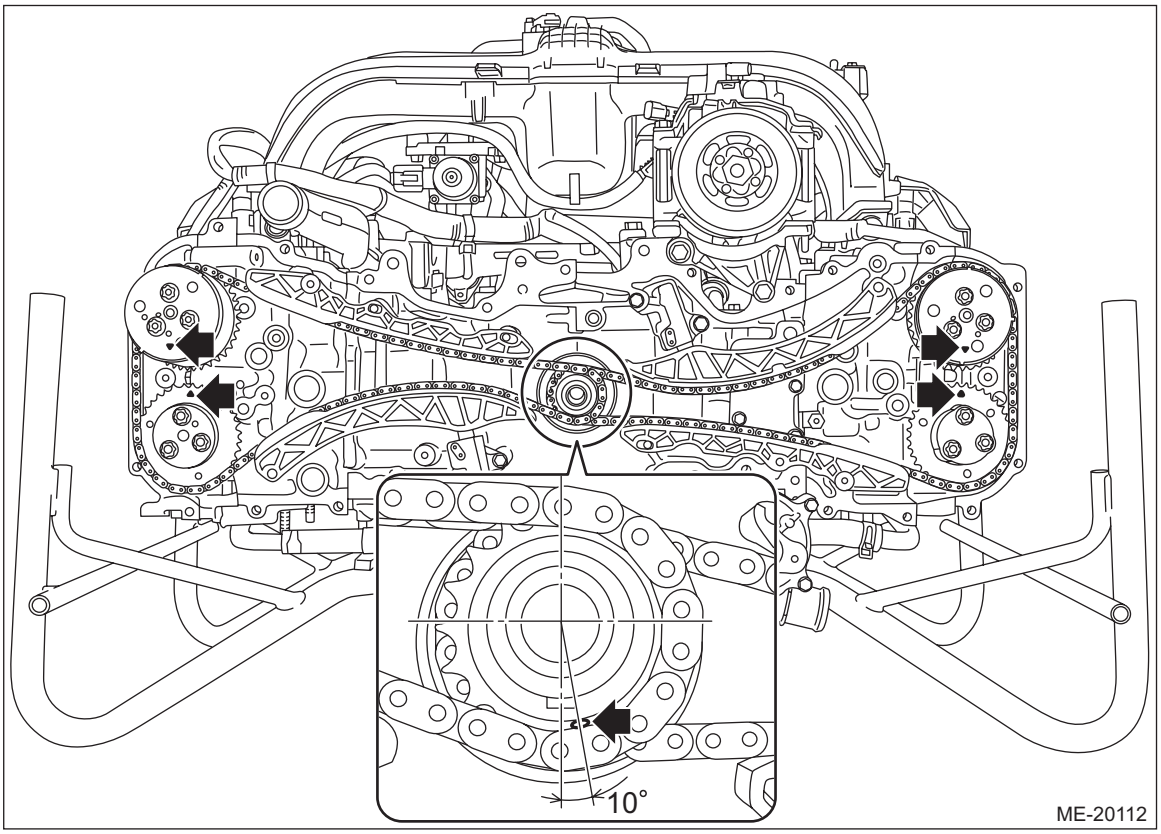

9) Using the ST, turn the crankshaft clockwise, and make sure that there are no abnormal conditions.

CAUTION:
Always make sure to perform this confirmation.
ST 18252AA000 CRANKSHAFT SOCKET

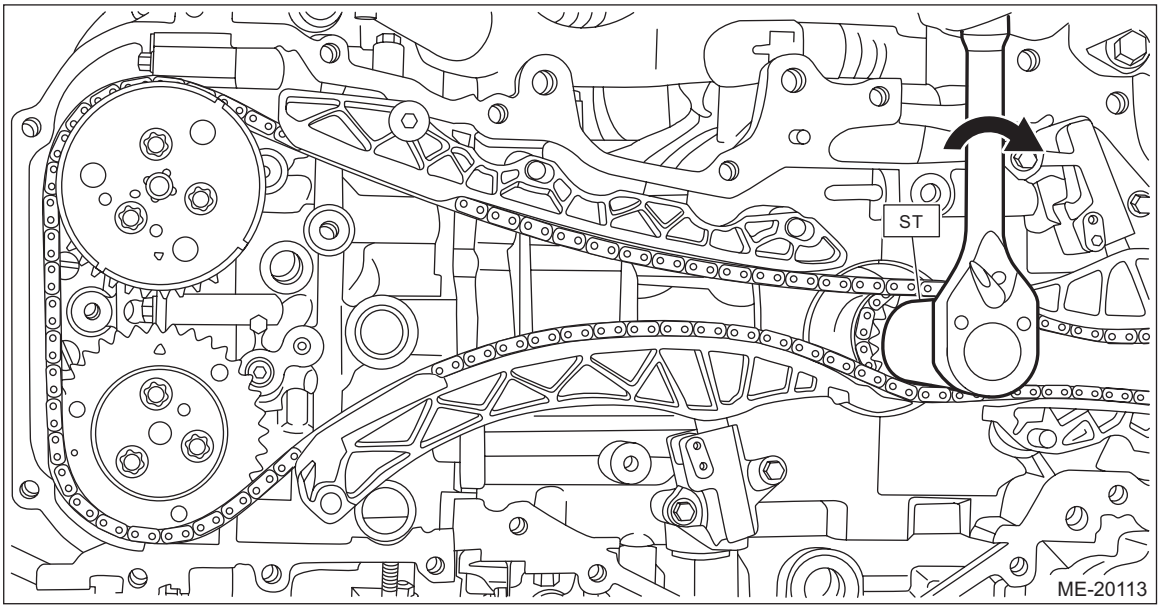

10) Install the chain cover. <Ref. to ME(H4DO)-88, INSTALLATION, Chain Cover.>

C: INSPECTION

1) Check the timing chain, chain guide, chain tensioner lever and chain tensioner for deformation, cracks or other damages.
2) Check the chain guide and chain tensioner lever for abnormal wear.

16.Cam Sprocket

A: REMOVAL

1. CAM SPROCKET RH

NOTE:
When replacing a single part, perform the work with the engine assembly installed to body.

- **Intake cam sprocket RH**

1) Remove the chain cover. <Ref. to ME(H4DO)-83, REMOVAL, Chain Cover.>
2) Remove the timing chain RH. <Ref. to ME(H4DO)-97, TIMING CHAIN RH, REMOVAL, Timing Chain Assembly.>
3) Hold the intake cam sprocket RH using the ST1 and ST2, and remove the bolts using the ST3.

CAUTION:
Perform the operation carefully since the ST comes off easily.
ST1 18355AA000 PULLEY WRENCH
ST2 18334AA020 PULLEY WRENCH PIN SET
ST3 18270KA010 SOCKET

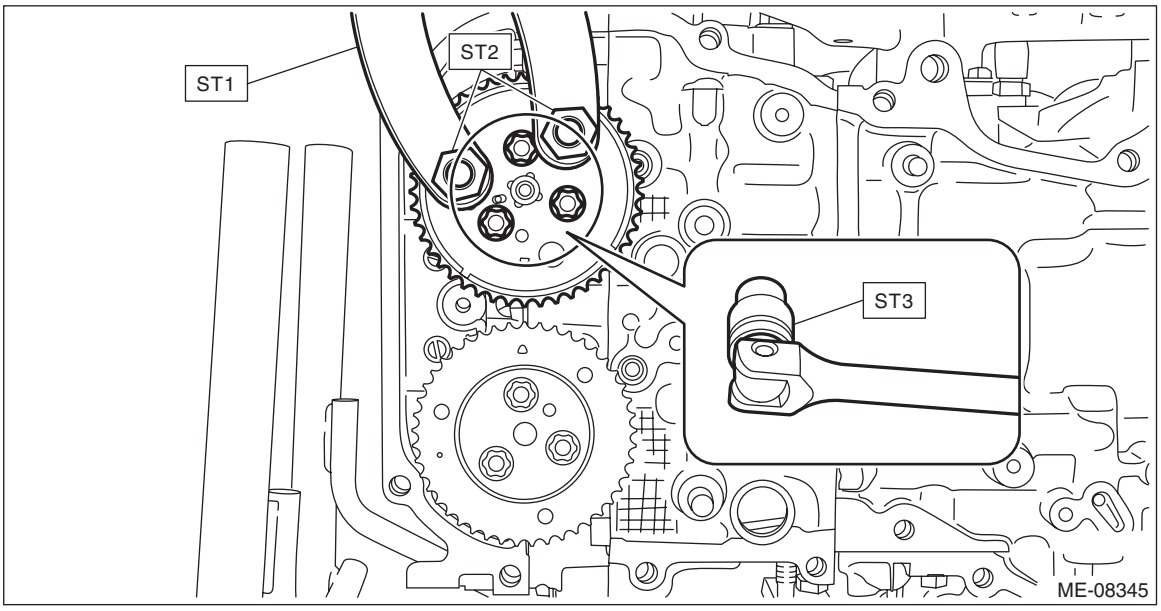

4) Remove the intake cam sprocket RH.

• Exhaust cam sprocket RH

1) Remove the chain cover. <Ref. to ME(H4DO)-83, REMOVAL, Chain Cover.>
2) Remove the timing chain RH. <Ref. to ME(H4DO)-97, TIMING CHAIN RH, REMOVAL, Timing Chain Assembly.>
3) Hold the exhaust cam sprocket RH using the ST1, ST2 and ST3, and remove the bolts using the ST4.
ST1 18355AA000 PULLEY WRENCH
ST2 18334AA040 PULLEY WRENCH PIN SET
ST3 18334AA020 PULLEY WRENCH PIN SET
ST4 18270KA010 SOCKET

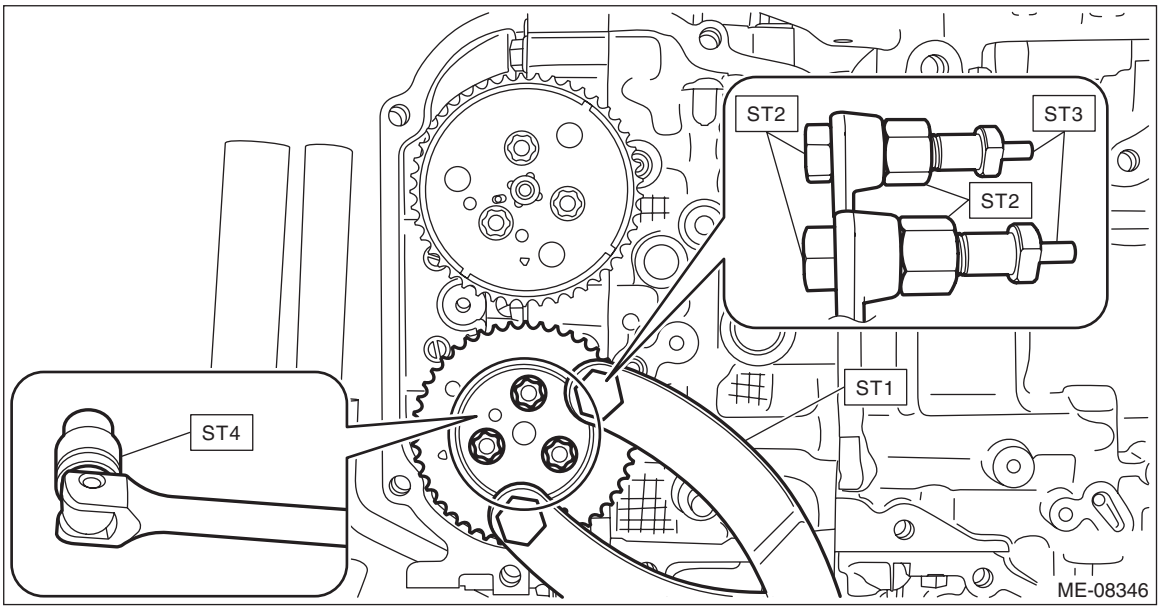

4) Remove the exhaust cam sprocket RH.

2. CAM SPROCKET LH

NOTE:
When replacing a single part, perform the work with the engine assembly installed to body.

• Intake cam sprocket LH

1) Remove the chain cover. <Ref. to ME(H4DO)-83, REMOVAL, Chain Cover.>
2) Remove the timing chain LH. <Ref. to ME(H4DO)-99, TIMING CHAIN LH, REMOVAL, Timing Chain Assembly.>

3) Hold the intake cam sprocket LH using the ST1 and ST2, and remove the bolts using the ST3.

CAUTION:
Perform the operation carefully since the ST comes off easily.

ST1 18355AA000 PULLEY WRENCH
ST2 18334AA020 PULLEY WRENCH PIN SET
ST3 18270KA010 SOCKET

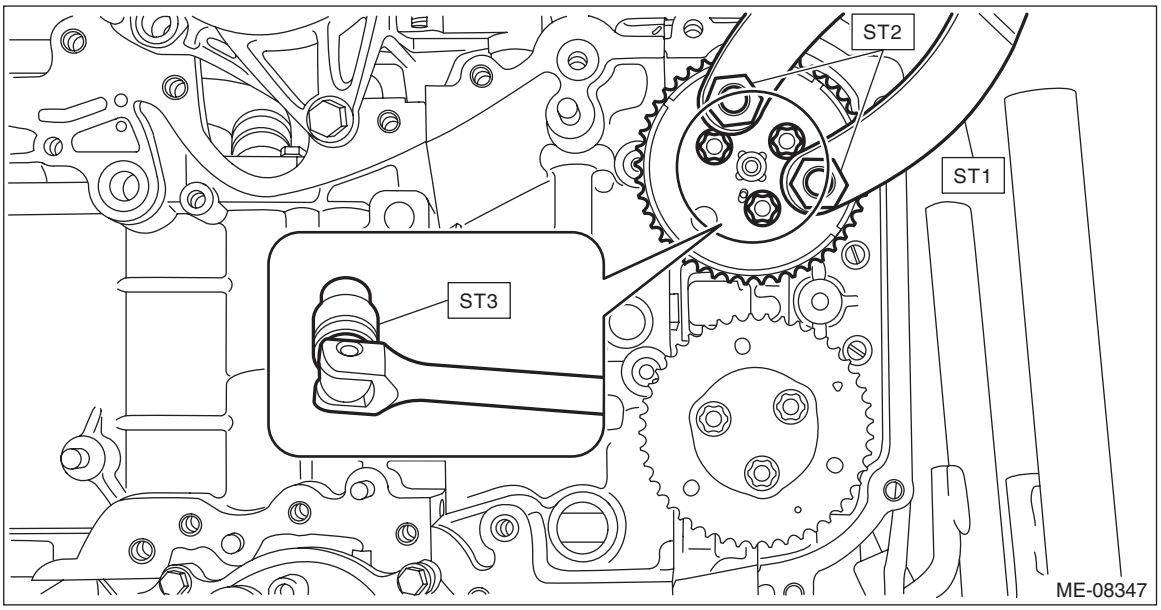

4) Remove the intake cam sprocket LH.

- **Exhaust cam sprocket LH**

1) Remove the chain cover. <Ref. to ME(H4DO)-83, REMOVAL, Chain Cover.>
2) Remove the timing chain LH. <Ref. to ME(H4DO)-99, TIMING CHAIN LH, REMOVAL, Timing Chain Assembly.>
3) Hold the exhaust cam sprocket LH using the ST1, ST2 and ST3, and remove the bolts using the ST4.

ST1 18355AA000 PULLEY WRENCH
ST2 18334AA040 PULLEY WRENCH PIN SET
ST3 18334AA020 PULLEY WRENCH PIN SET
ST4 18270KA010 SOCKET

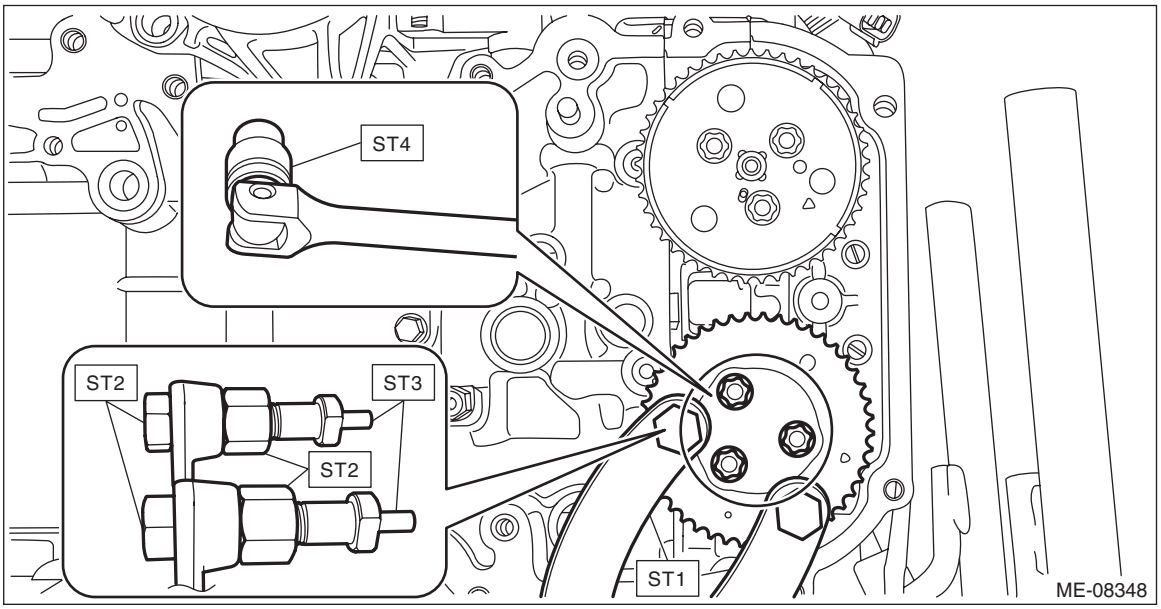

4) Remove the exhaust cam sprocket LH.

B: INSTALLATION

1. CAM SPROCKET RH

- **Intake cam sprocket RH**

1) Install the intake cam sprocket RH by aligning the knock hole (A) of intake cam sprocket RH and the knock pin (B) of intake camshaft RH.

NOTE:
Before installation, check that there is no foreign matter on the intake cam sprocket RH and intake camshaft RH.

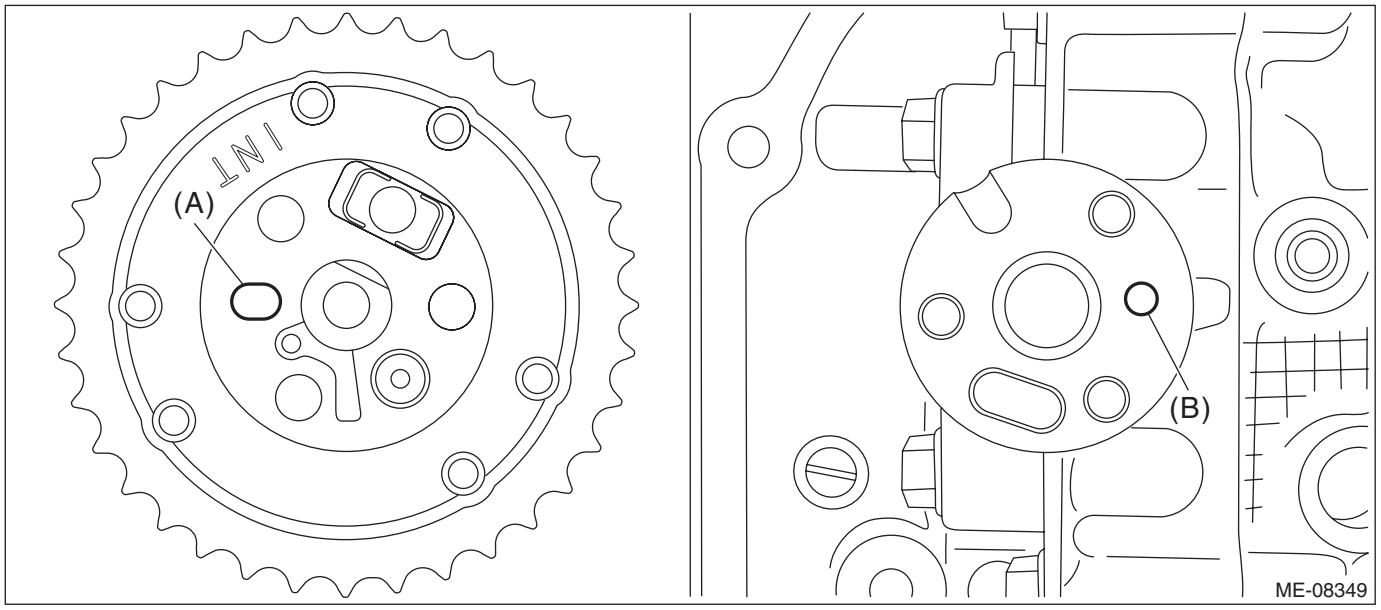

2) Hold the intake cam sprocket RH using the ST1 and ST2, and install the bolts using the ST3.

CAUTION:
Perform the operation carefully since the ST comes off easily.

ST1 18355AA000 PULLEY WRENCH
ST2 18334AA020 PULLEY WRENCH PIN SET
ST3 18270KA010 SOCKET

Tightening torque:
18 N·m (1.8 kgf-m, 13.3 ft-lb)

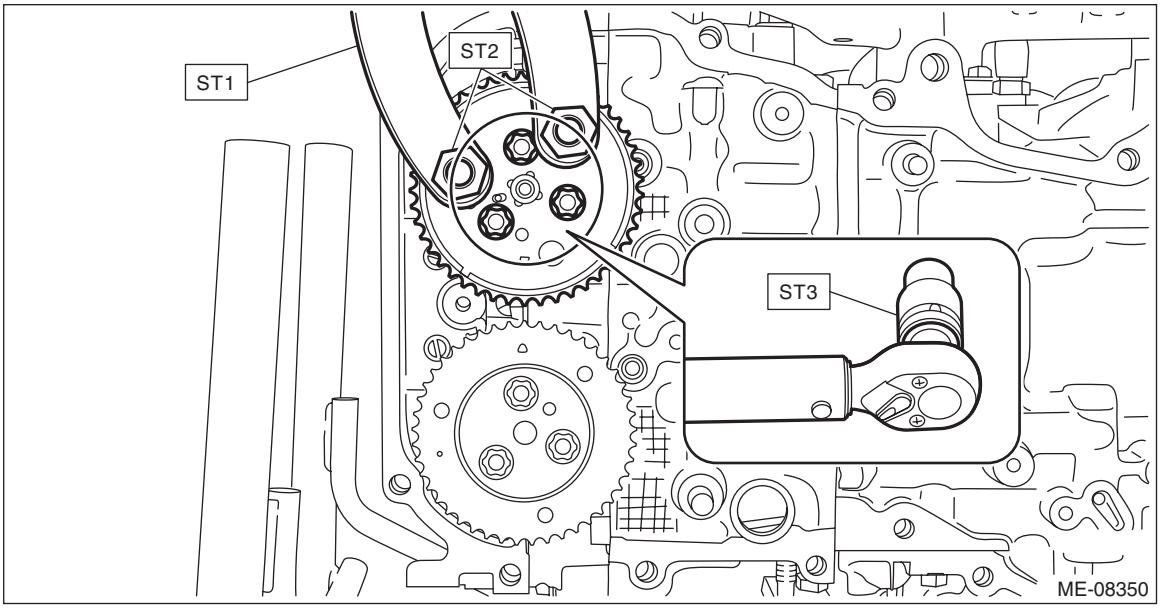

3) Install the timing chain RH. <Ref. to ME(H4DO)-112, TIMING CHAIN RH, INSTALLATION, Timing Chain Assembly.>
4) Install the chain cover. <Ref. to ME(H4DO)-88, INSTALLATION, Chain Cover.>

- **Exhaust cam sprocket RH**

1) Install the exhaust cam sprocket RH by aligning the knock hole (A) of exhaust cam sprocket RH and the knock pin (B) of exhaust camshaft RH.

NOTE:
Before installation, check that there is no foreign matter on the exhaust cam sprocket RH and exhaust camshaft RH.

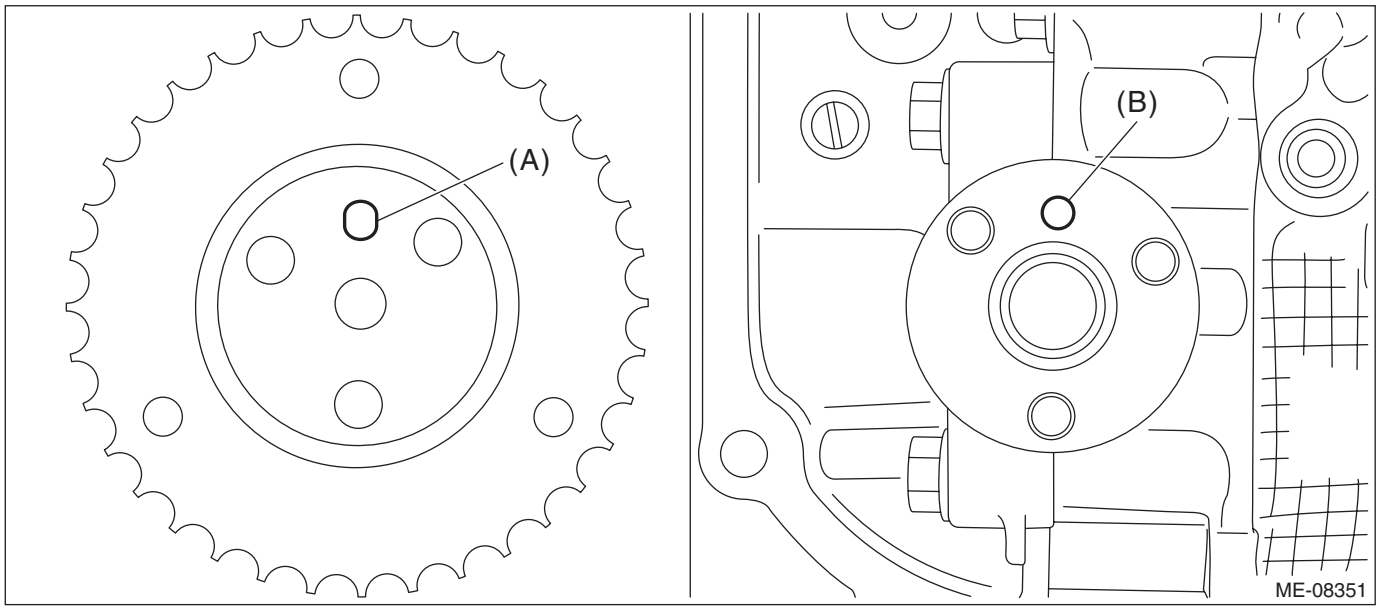

2) Hold the exhaust cam sprocket RH using the ST1, ST2 and ST3, and install the bolts using the ST4.
ST1 18355AA000 PULLEY WRENCH
ST2 18334AA040 PULLEY WRENCH PIN SET
ST3 18334AA020 PULLEY WRENCH PIN SET
ST4 18270KA010 SOCKET

Tightening torque:
18 N·m (1.8 kgf-m, 13.3 ft-lb)

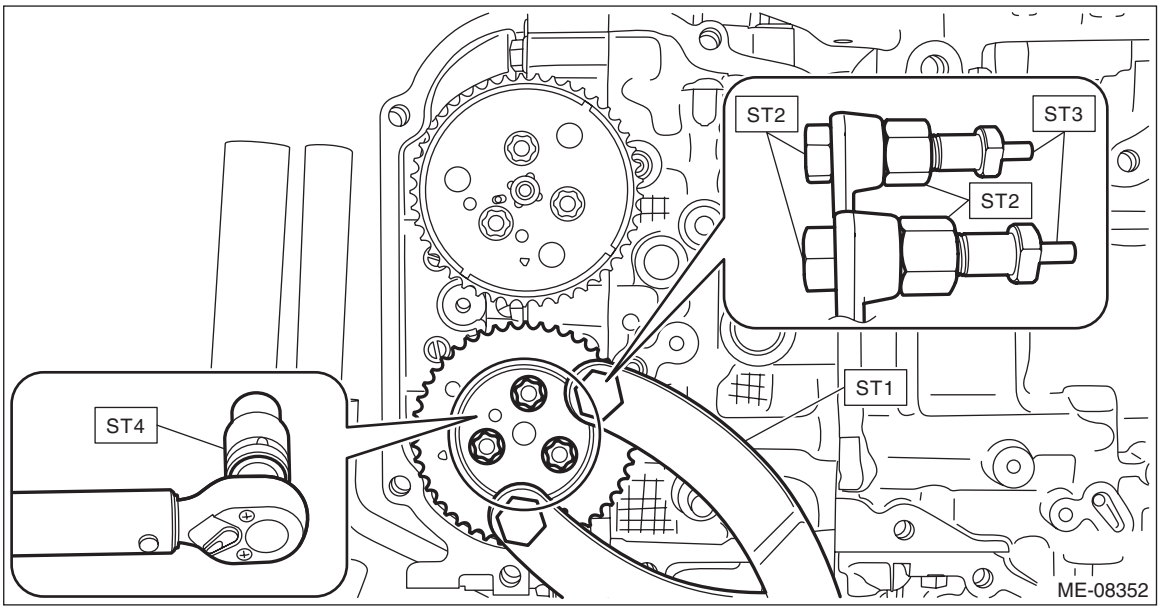

3) Install the timing chain RH. <Ref. to ME(H4DO)-112, TIMING CHAIN RH, INSTALLATION, Timing Chain Assembly.>
4) Install the chain cover. <Ref. to ME(H4DO)-88, INSTALLATION, Chain Cover.>

2. CAM SPROCKET LH

• Intake cam sprocket LH

1) Install the intake cam sprocket LH by aligning the knock hole (A) of intake cam sprocket LH and the knock pin (B) of intake camshaft LH.

NOTE:
Before installation, check that there is no foreign matter on the intake cam sprocket LH and intake camshaft LH.

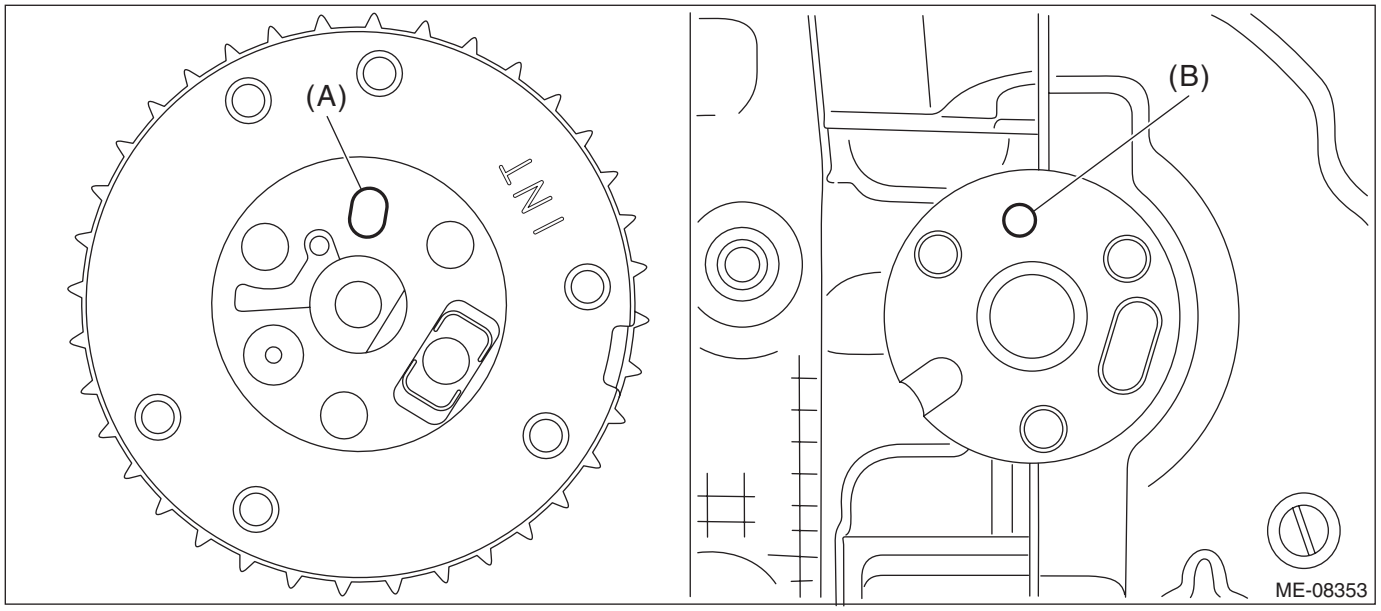

2) Hold the intake cam sprocket LH using the ST1 and ST2, and install the bolts using the ST3.

CAUTION:
Perform the operation carefully since the ST comes off easily.

ST1 18355AA000 PULLEY WRENCH
ST2 18334AA020 PULLEY WRENCH PIN SET
ST3 18270KA010 SOCKET

Tightening torque:
18 N·m (1.8 kgf-m, 13.3 ft-lb)

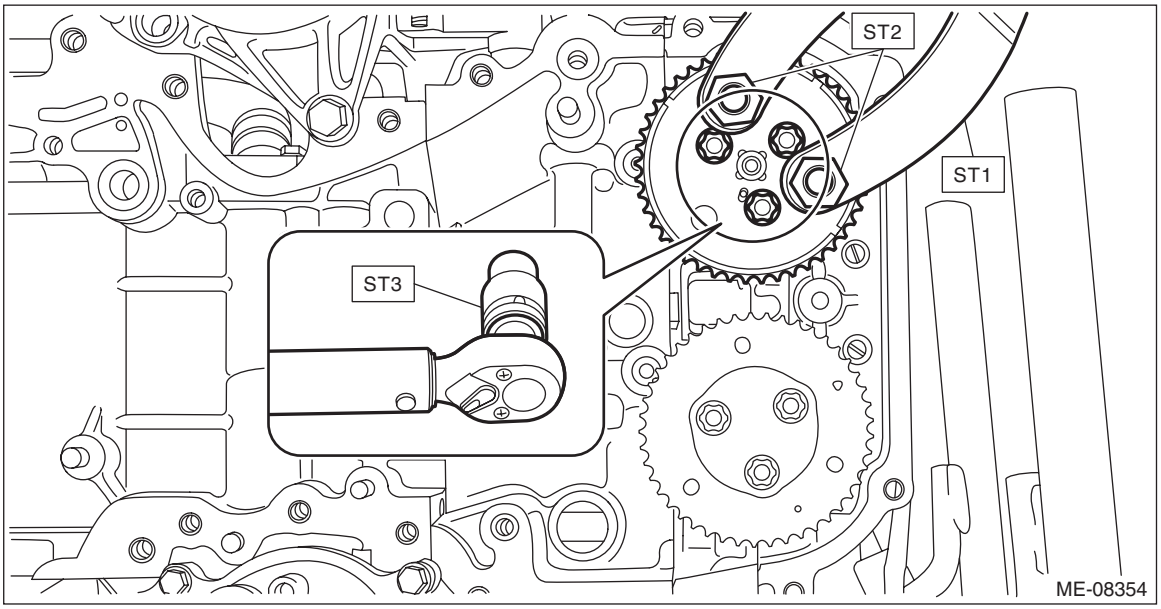

3) Install timing chain LH. <Ref. to ME(H4DO)-104, TIMING CHAIN LH, INSTALLATION, Timing Chain Assembly.>
4) Install the chain cover. <Ref. to ME(H4DO)-88, INSTALLATION, Chain Cover.>

- **Exhaust cam sprocket LH**

1) Install the exhaust cam sprocket LH by aligning the knock hole (A) of exhaust cam sprocket LH and the knock pin (B) of exhaust camshaft LH.

NOTE:
Before installation, check that there is no foreign matter on the exhaust cam sprocket LH and exhaust camshaft LH.

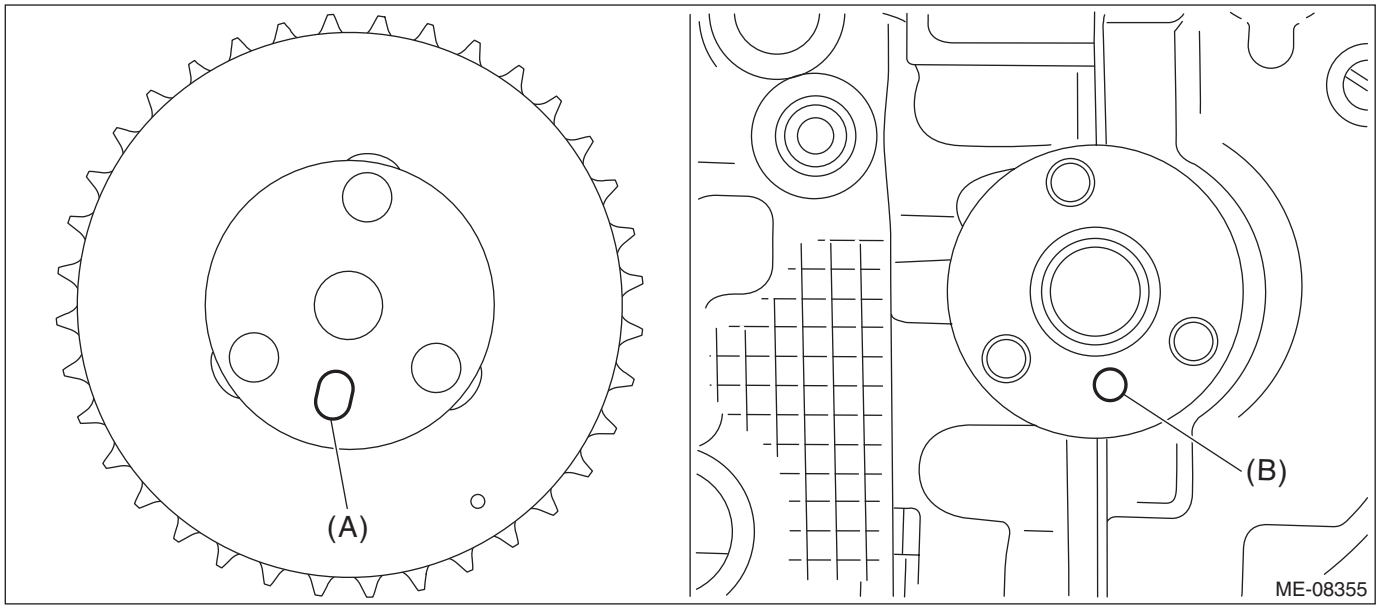

2) Hold the exhaust cam sprocket LH using the ST1, ST2 and ST3, and install the bolts using the ST4.
ST1 18355AA000 PULLEY WRENCH
ST2 18334AA040 PULLEY WRENCH PIN SET
ST3 18334AA020 PULLEY WRENCH PIN SET
ST4 18270KA010 SOCKET

Tightening torque:
18 N·m (1.8 kgf-m, 13.3 ft-lb)

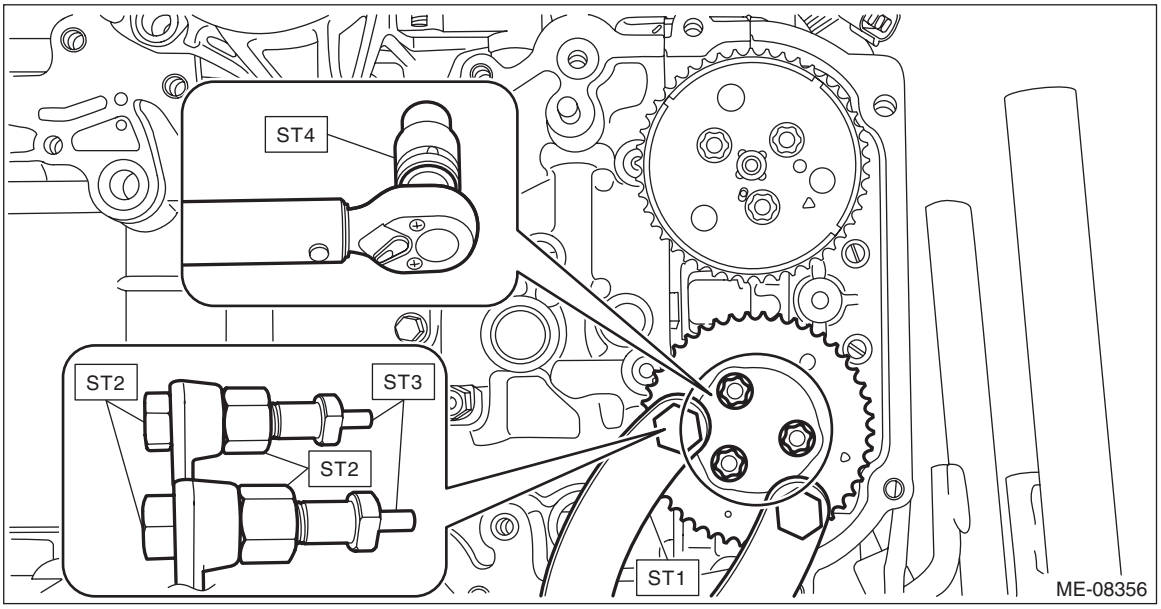

3) Install timing chain LH. <Ref. to ME(H4DO)-104, TIMING CHAIN LH, INSTALLATION, Timing Chain Assembly.>
4) Install the chain cover. <Ref. to ME(H4DO)-88, INSTALLATION, Chain Cover.>

C: INSPECTION

Check the cam sprocket teeth for abnormal wear and scratches.

17.Crank Sprocket

A: REMOVAL

NOTE:
When replacing a single part, perform the work with the engine assembly installed to body.
1) Remove the chain cover. <Ref. to ME(H4DO)-83, REMOVAL, Chain Cover.>
2) Remove the timing chain. <Ref. to ME(H4DO)-97, REMOVAL, Timing Chain Assembly.>
3) Remove the crank sprocket.

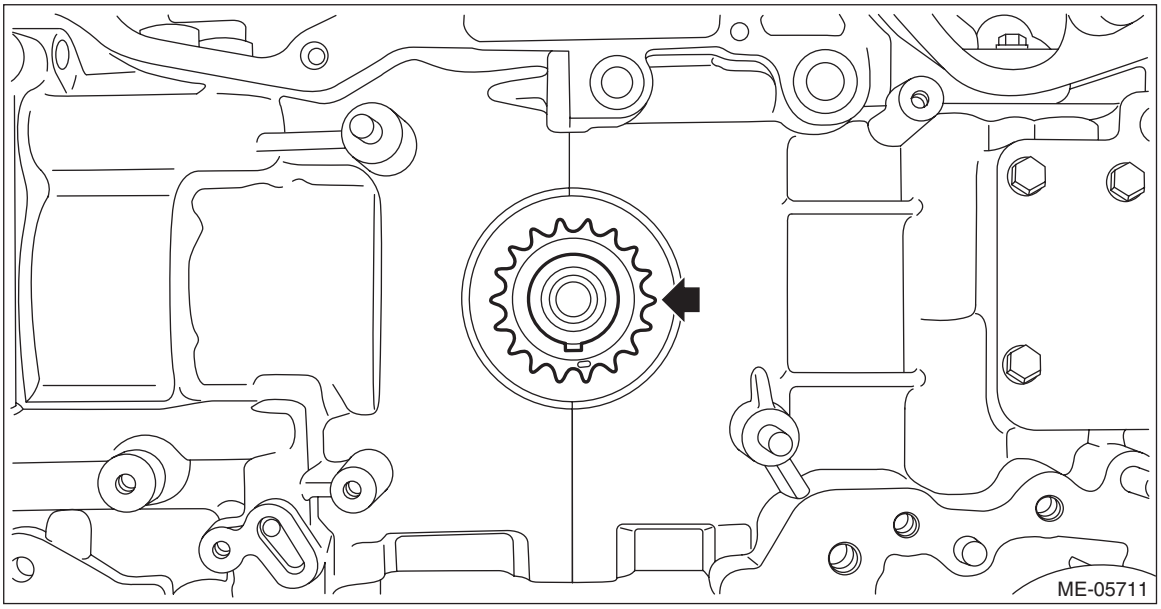

B: INSTALLATION

1) Install the crank sprocket.

NOTE:
The direction of installation is not specified for the crank sprocket.
2) Install the timing chain. <Ref. to ME(H4DO)-104, INSTALLATION, Timing Chain Assembly.>
3) Install the chain cover. <Ref. to ME(H4DO)-88, INSTALLATION, Chain Cover.>

C: INSPECTION

1) Check the crank sprocket teeth for abnormal wear and scratches.
2) Make sure there is no free play between crank sprocket and key.

18.Rocker Cover

A: REMOVAL

1. ROCKER COVER RH

NOTE:
When replacing a single part, perform the work with the engine assembly installed to body.
1) When working on the vehicle

NOTE:
When working on the vehicle, perform the following steps also.
(1) Remove the clip (A), and loosen the clamps (B) and (C) securing the air intake boot.

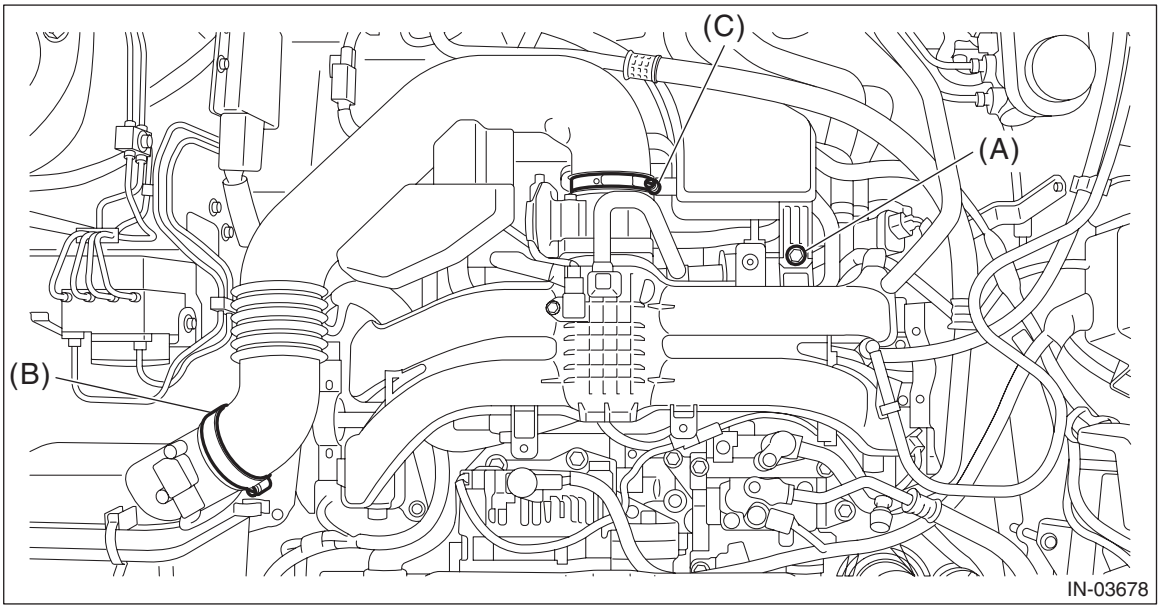

(2) Remove the air intake boot from the air cleaner case (rear) and throttle body, and move it to the left side wheel apron.

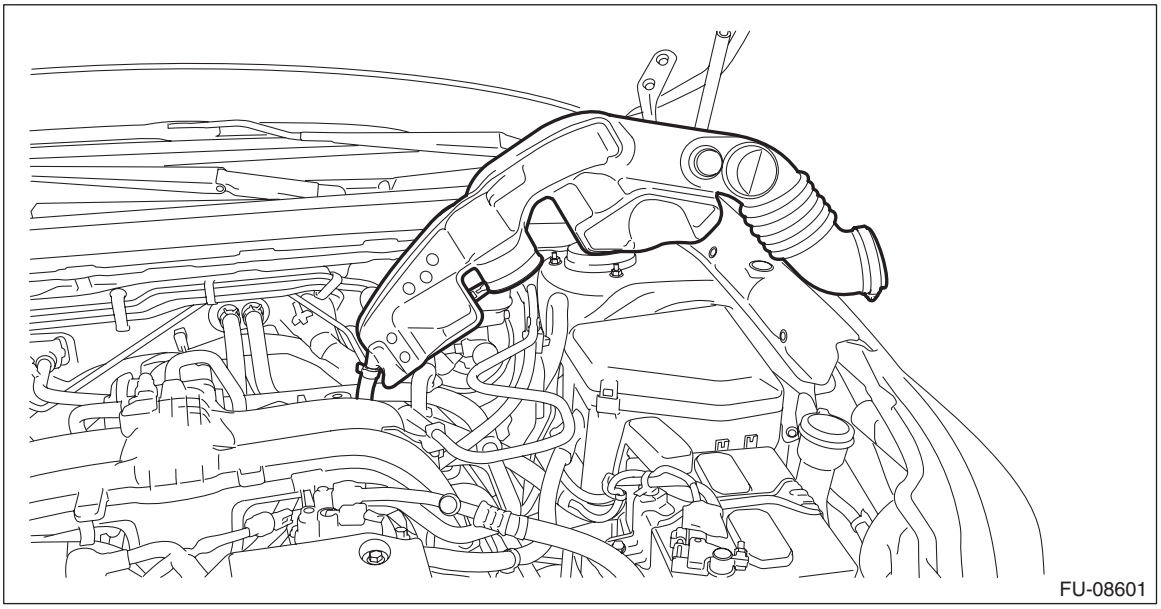

(3) Remove the air cleaner case. <Ref. to IN(H4DO)-8, REMOVAL, Air Cleaner Case.>
(4) Remove the front exhaust pipe. <Ref. to EX(H4DO)-5, REMOVAL, Front Exhaust Pipe.>
2) Remove the #1 ignition coil and the #3 ignition coil. <Ref. to IG(H4DO)-10, REMOVAL, Ignition Coil.>

3) Remove the intake manifold protector RH.

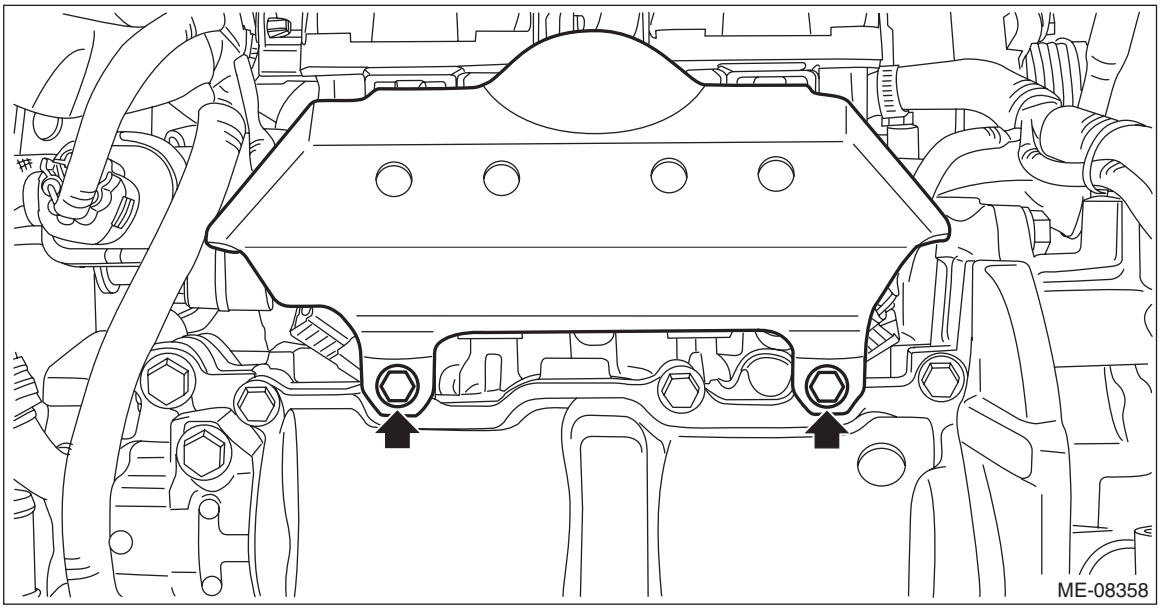

4) Remove the rocker cover RH.

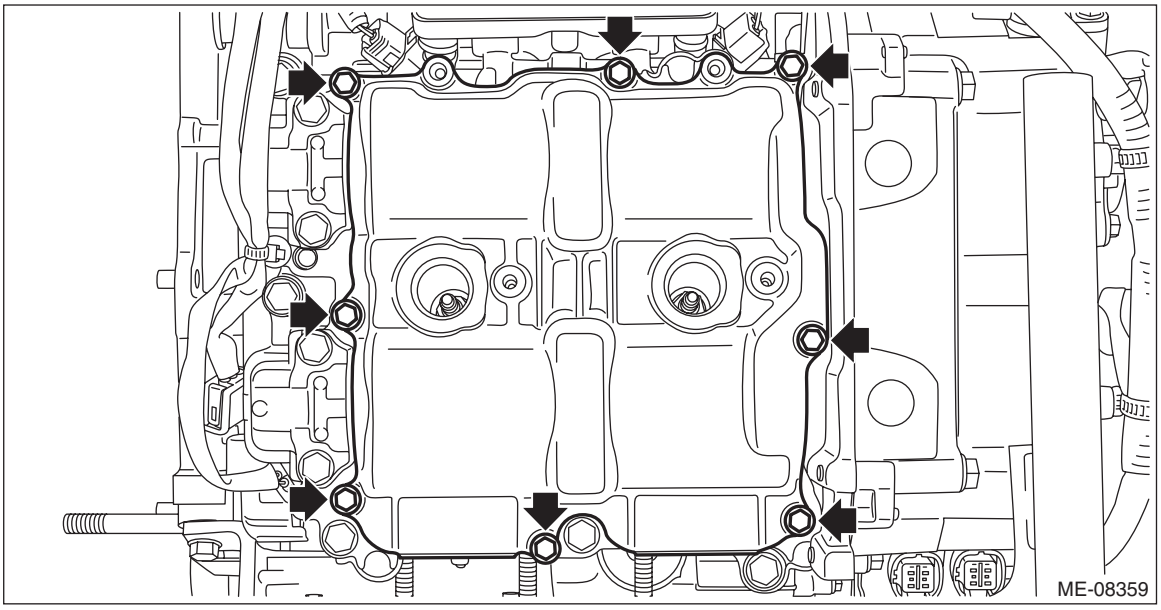

5) Remove the rocker cover gasket RH, #1 spark plug pipe gasket and #3 spark plug pipe gasket, and remove the liquid gasket.

CAUTION:
• When removing the liquid gasket from engine unit using scraper, use special care not to damage the cam lobe of camshaft RH.
• If the cam lobe of camshaft RH interferes, turn the crankshaft to the position where the scraper does not touch.

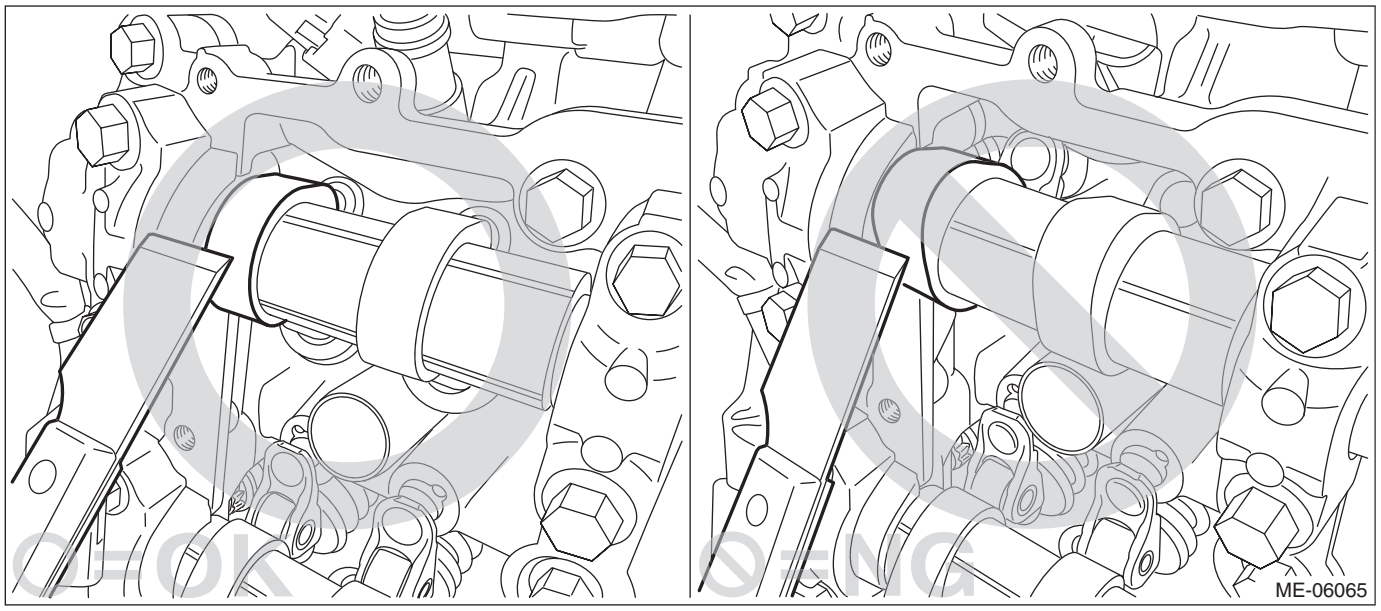

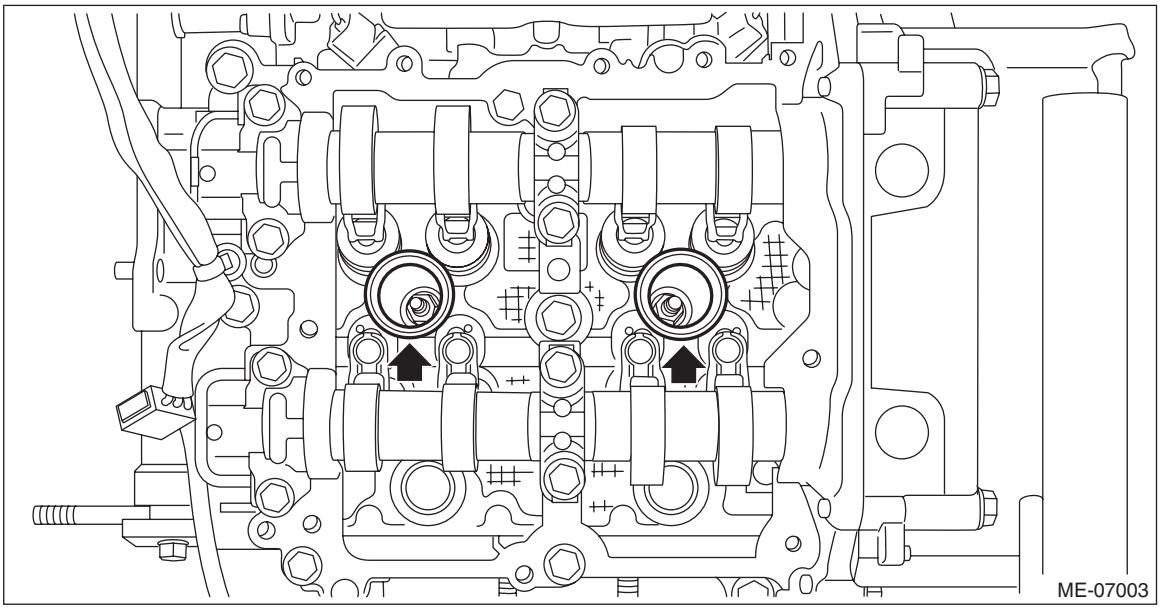

2. ROCKER COVER LH

NOTE:
When replacing a single part, perform the work with the engine assembly installed to body.
1) When working on the vehicle

NOTE:
When working on the vehicle, perform the following steps also.
(1) Remove the battery. <Ref. to SC(H4DO)-63, REMOVAL, Battery.>
(2) Remove the V-belts. <Ref. to ME(H4DO)-71, V-BELT, REMOVAL, V-belt.>
(3) Align the timing mark (B) on crank pulley to the 0° in timing gauge (A) on chain cover as shown in the figure, and turn the crankshaft by 180° clockwise from that position.

NOTE:
This procedure is required to prevent the rocker cover LH and the cam lobe of camshaft LH contacting with each other when removing the rocker cover LH.

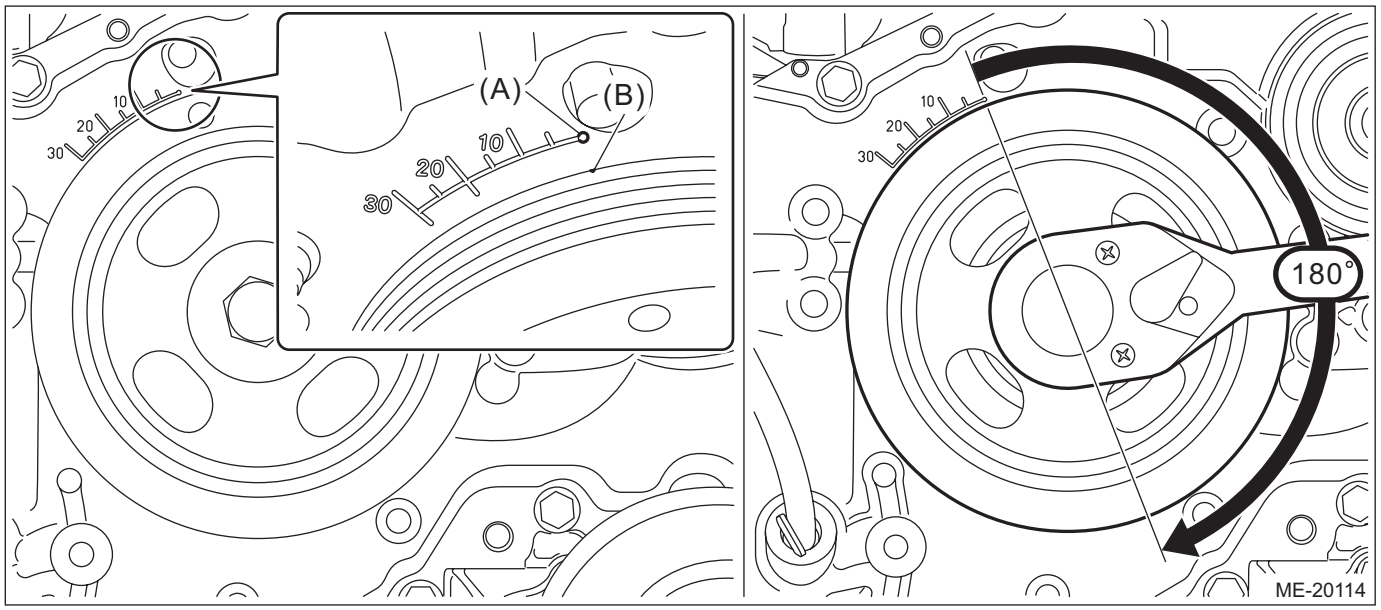

2) Remove the #2 ignition coil and the #4 ignition coil. <Ref. to IG(H4DO)-10, REMOVAL, Ignition Coil.>
3) Remove the clip (A) securing the engine harness to remove the intake manifold protector LH.

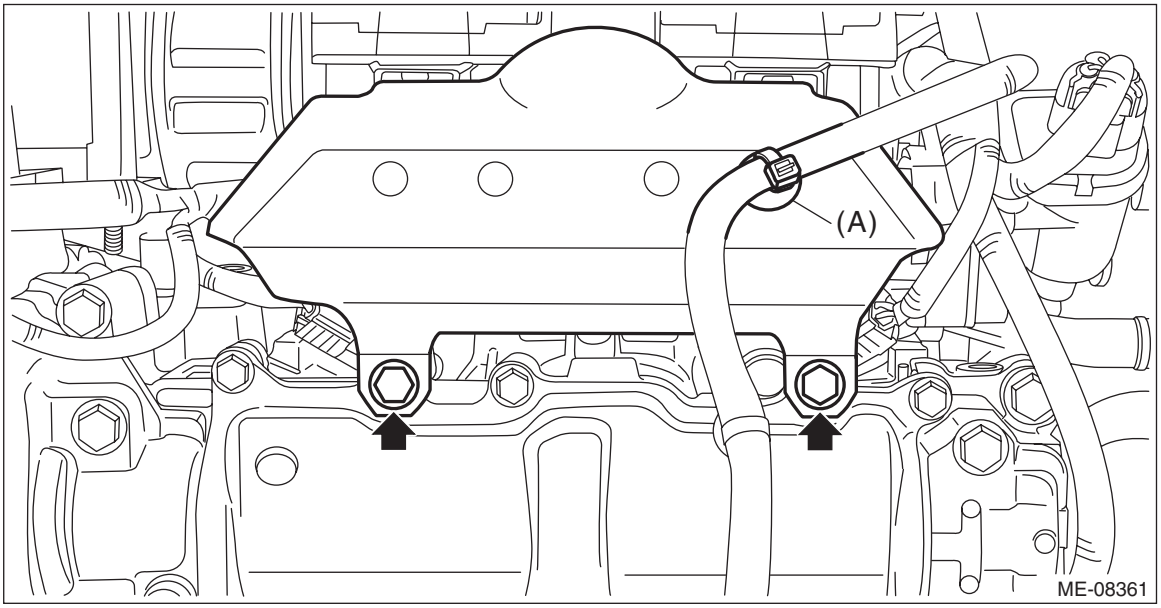

4) Remove the rocker cover LH.

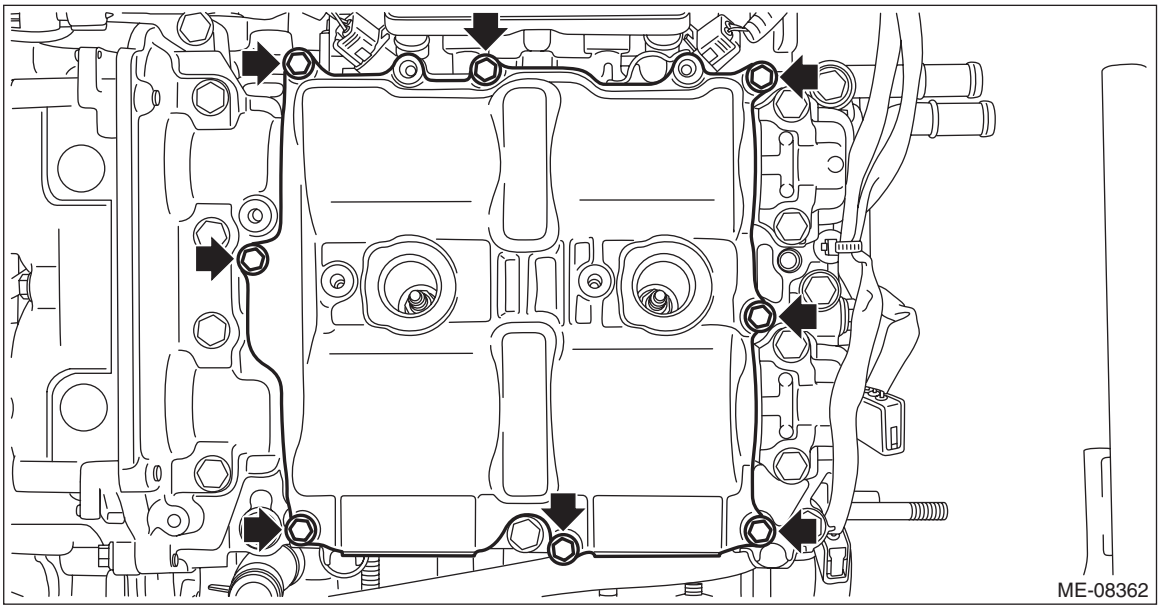

5) Remove the rocker cover gasket LH, #2 spark plug pipe gasket and #4 spark plug pipe gasket, and remove the liquid gasket.

CAUTION:
• When removing the liquid gasket from engine unit using scraper, use special care not to damage the cam lobe of camshaft LH.
• If the cam lobe of camshaft LH interferes, turn the crankshaft to the position where the scraper does not touch.

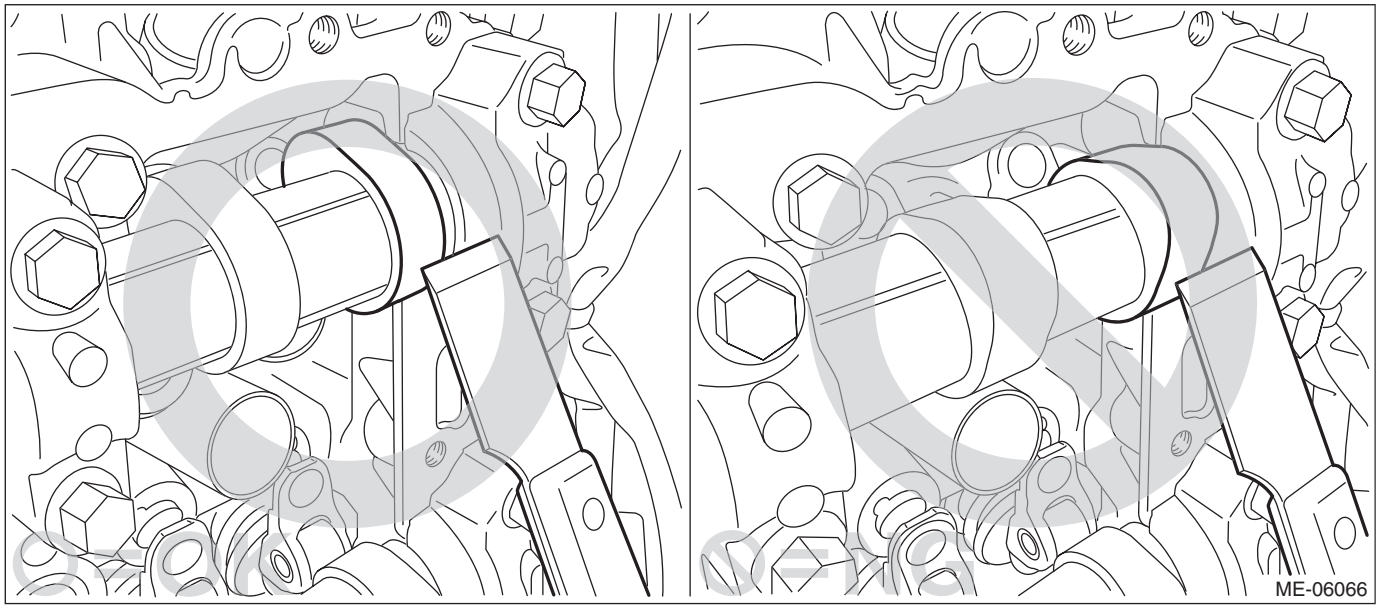

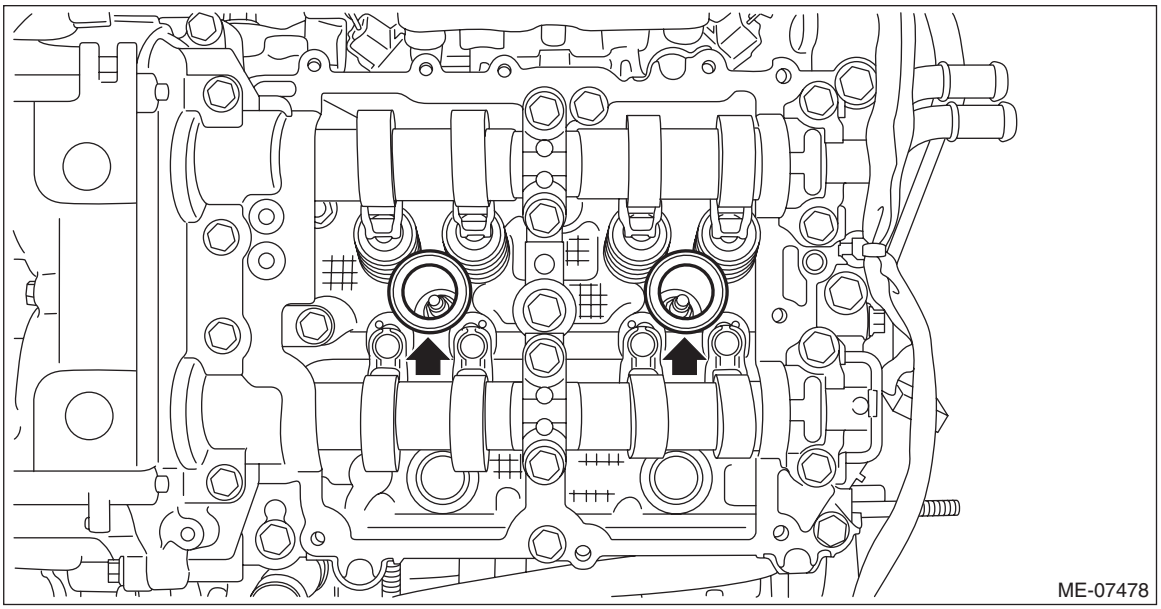

B: INSTALLATION

1. ROCKER COVER RH

1) Install the #1 spark plug pipe gasket and #3 spark plug pipe gasket to the #1 spark plug pipe and #3 spark plug pipe.

NOTE:
- Use a new #1 spark plug pipe gasket and #3 spark plug pipe gasket.
- Apply a light coat of engine oil to the #1 spark plug pipe gasket and #3 spark plug pipe gasket, and insert them onto the spark plug pipe edge (A).

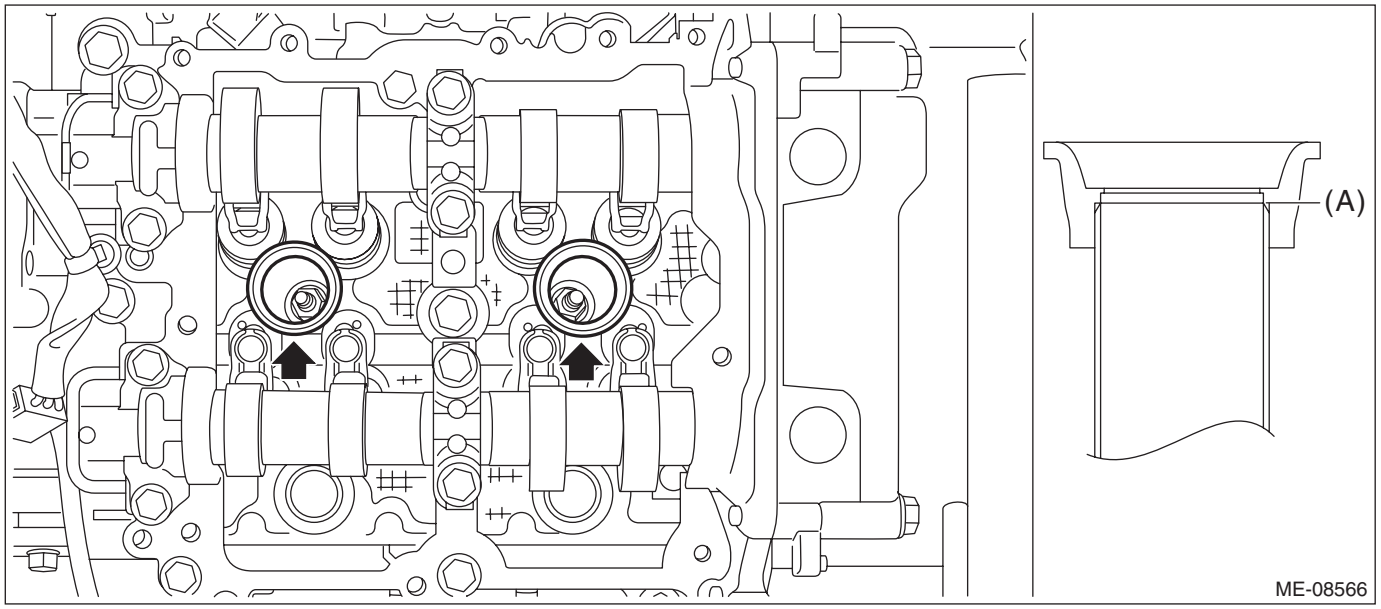

2) Install the rocker cover gasket RH to the rocker cover RH.

NOTE:
Use a new rocker cover gasket RH.

3) Apply liquid gasket to the mating surface of rocker cover RH as shown in the figure.

NOTE:
- Before applying liquid gasket, degrease the old liquid gasket seal surface of the engine.
- Be careful not to allow liquid gasket to be squeezed out from rocker cover RH.
- Install within 5 min. after applying liquid gasket.

Liquid gasket:
THREE BOND 1217G (Part No. K0877Y0100), THREE BOND 1217H or equivalent

Liquid gasket applying diameter:
3.5±0.5 mm (0.1378±0.0197 in)

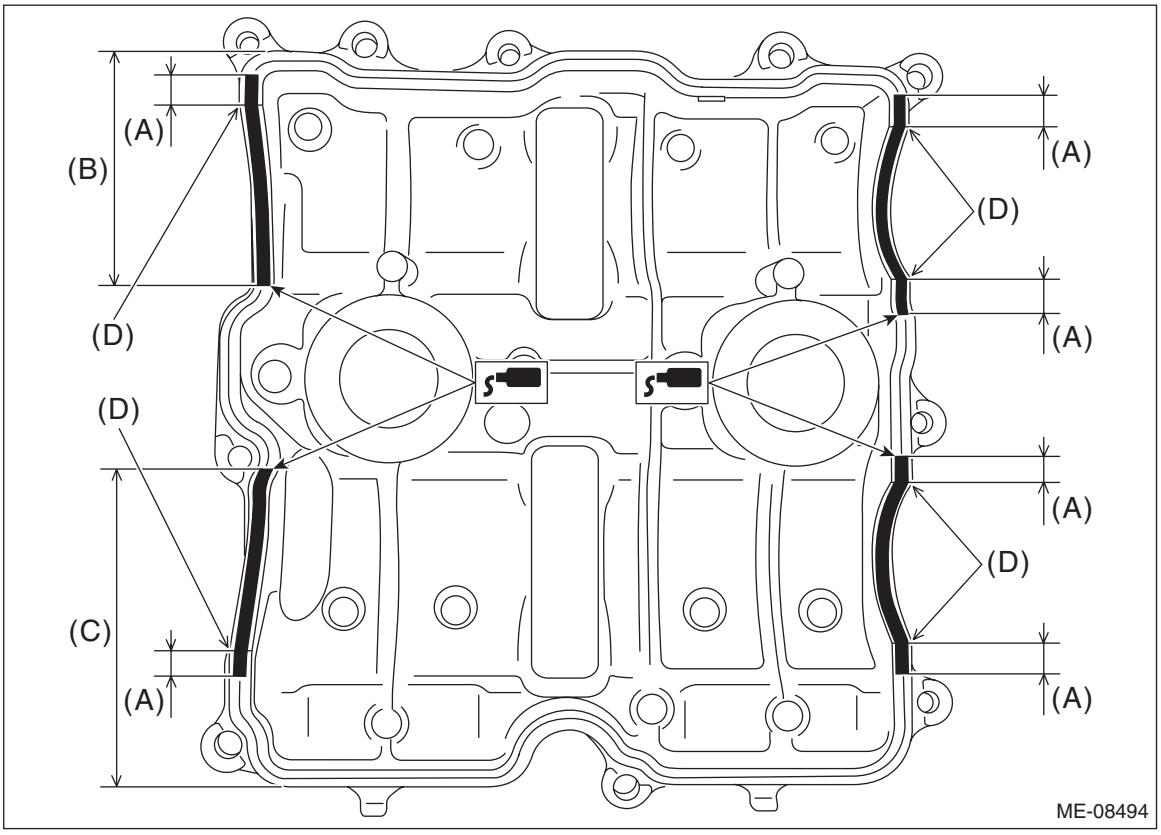

(A) 10 mm (0.394 in) or more
(B) 68 mm (2.677 in) or more
(C) 89 mm (3.504 in) or more
(D) Arch starting point

4) Set the rocker cover RH, and tighten the bolts in numerical order as shown in the figure.

Tightening torque:
6.4 N·m (0.7 kgf-m, 4.7 ft-lb)

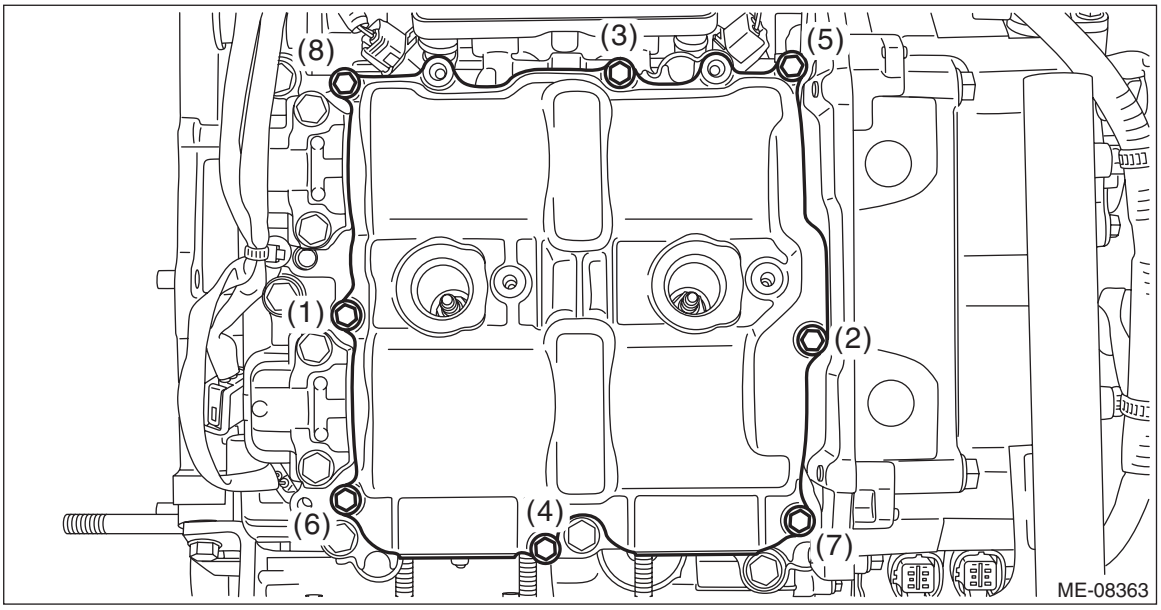

5) Install the intake manifold protector RH.

Tightening torque:
6.4 N·m (0.7 kgf-m, 4.7 ft-lb)

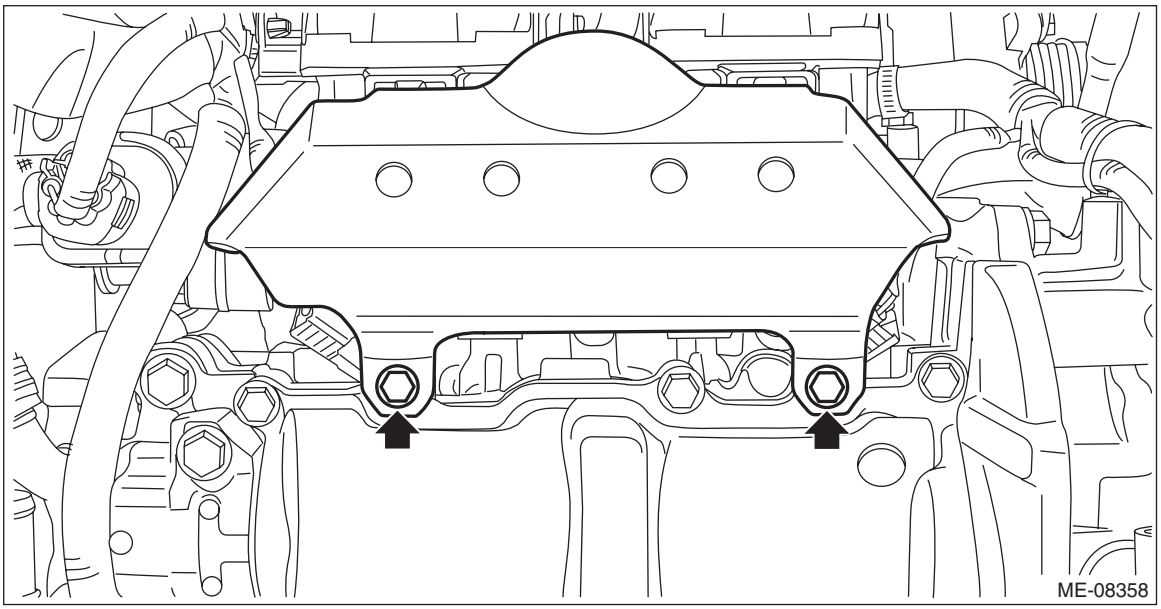

6) Install the #1 ignition coil and the #3 ignition coil. <Ref. to IG(H4DO)-10, INSTALLATION, Ignition Coil.>
7) When working on the vehicle

NOTE:
When working on the vehicle, perform the following steps also.
(1) Install the front exhaust pipe. <Ref. to EX(H4DO)-7, INSTALLATION, Front Exhaust Pipe.>
(2) Install the air cleaner case. <Ref. to IN(H4DO)-9, INSTALLATION, Air Cleaner Case.>
(3) Install the air intake boot. <Ref. to IN(H4DO)-10, INSTALLATION, Air Intake Boot.>

2. ROCKER COVER LH

1) When working on the vehicle

NOTE:
When working on the vehicle, perform the following steps also.

(1) Align the timing mark (B) on crank pulley to the 0° in timing gauge (A) on chain cover as shown in the figure, and turn the crankshaft by 180° clockwise from that position.

NOTE:
This procedure is required to prevent the rocker cover LH and the cam lobe of camshaft LH contacting with each other when installing the rocker cover LH.

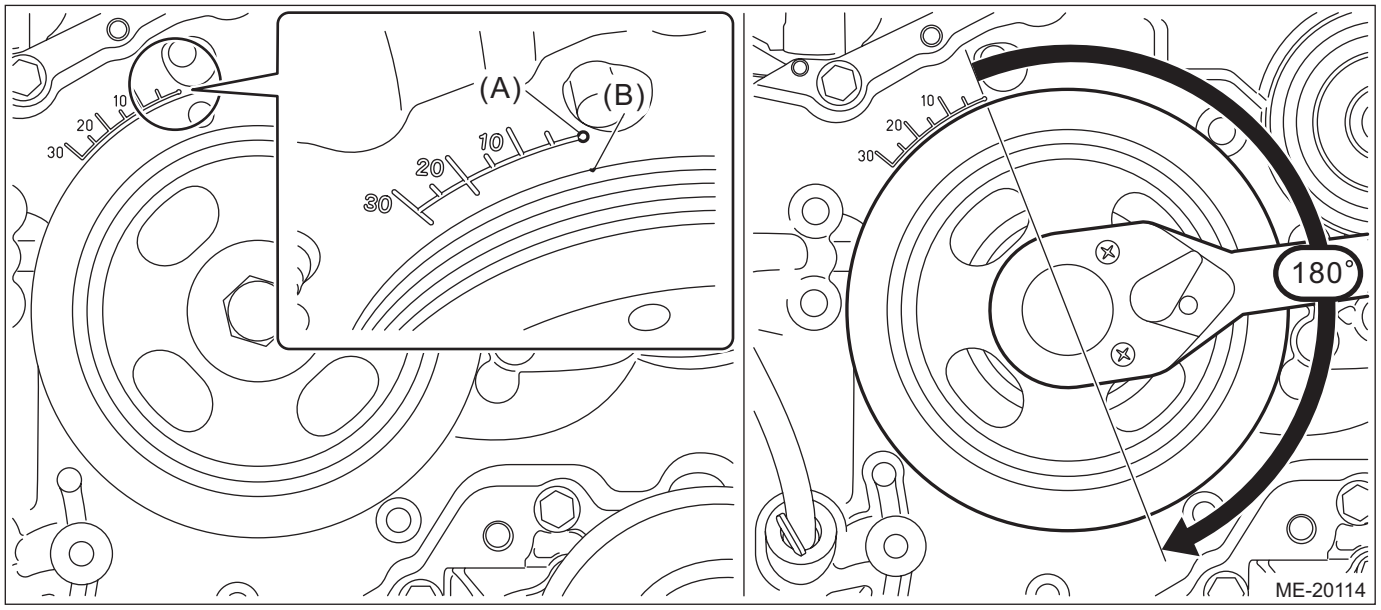

2) Install the #2 spark plug pipe gasket and #4 spark plug pipe gasket to the #2 spark plug pipe and #4 spark plug pipe.

NOTE:
- Use a new #2 spark plug pipe gasket and #4 spark plug pipe gasket.
- Apply a light coat of engine oil to the #2 spark plug pipe gasket and #4 spark plug pipe gasket, and insert them onto the spark plug pipe edge (A).

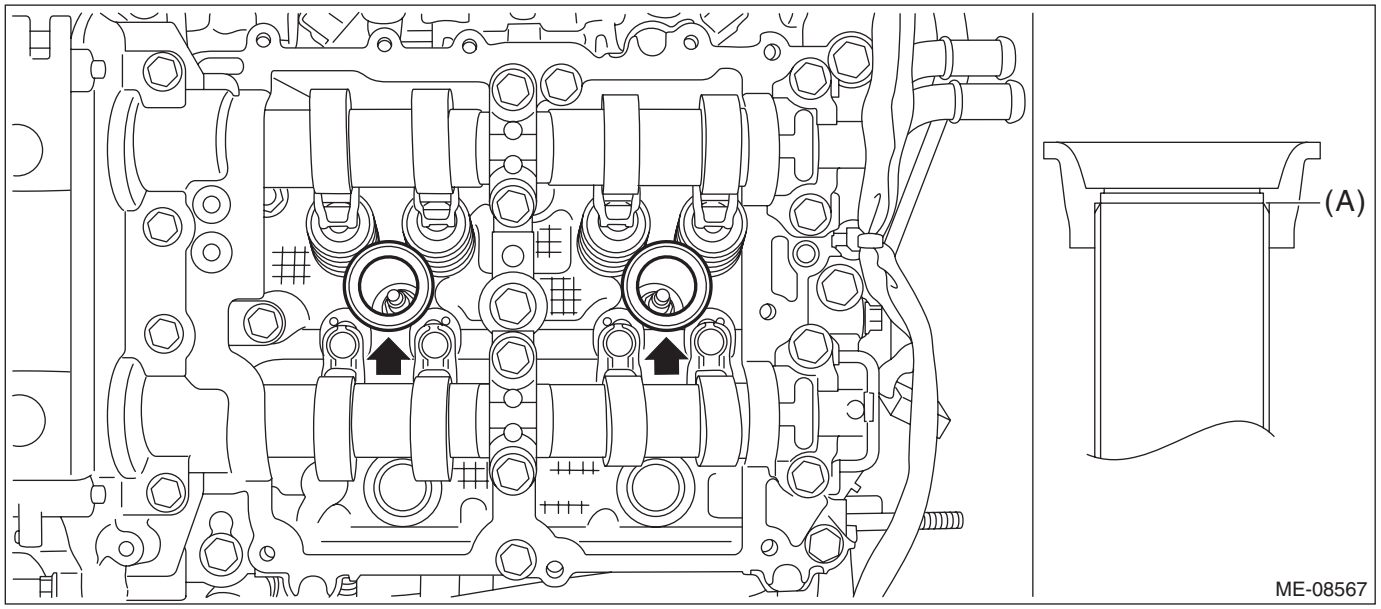

3) Install the rocker cover gasket LH to the rocker cover LH.

NOTE:
Use a new rocker cover gasket LH.

4) Apply liquid gasket to the mating surface of rocker cover LH as shown in the figure.

NOTE:
- Before applying liquid gasket, degrease the old liquid gasket seal surface of the engine.
- Be careful not to allow liquid gasket to be squeezed out from rocker cover LH.
- Install within 5 min. after applying liquid gasket.

Liquid gasket:
THREE BOND 1217G (Part No. K0877Y0100), THREE BOND 1217H or equivalent

Liquid gasket applying diameter:
3.5±0.5 mm (0.1378±0.0197 in)

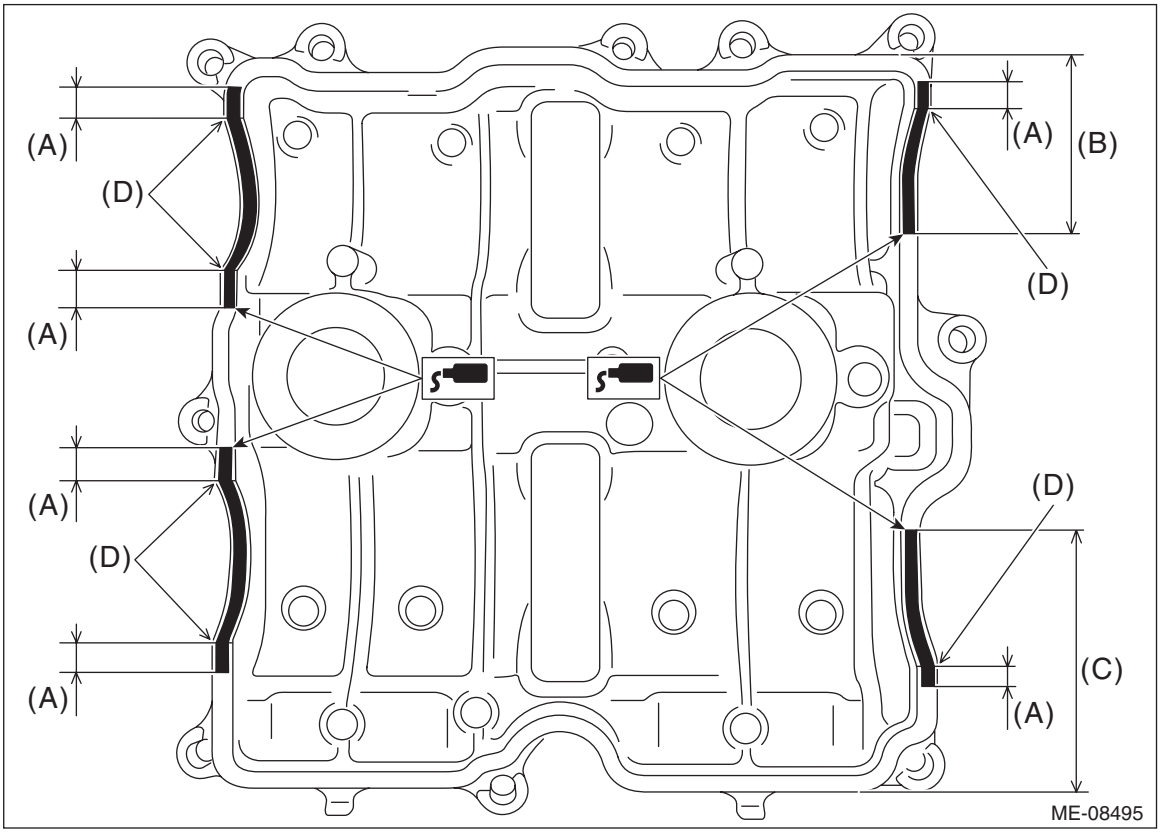

(A) 10 mm (0.394 in) or more
(B) 51 mm (2.008 in) or more
(C) 73 mm (2.874 in) or more
(D) Arch starting point

5) Set the rocker cover LH, and tighten the bolts in numerical order as shown in the figure.

Tightening torque:
6.4 N·m (0.7 kgf-m, 4.7 ft-lb)

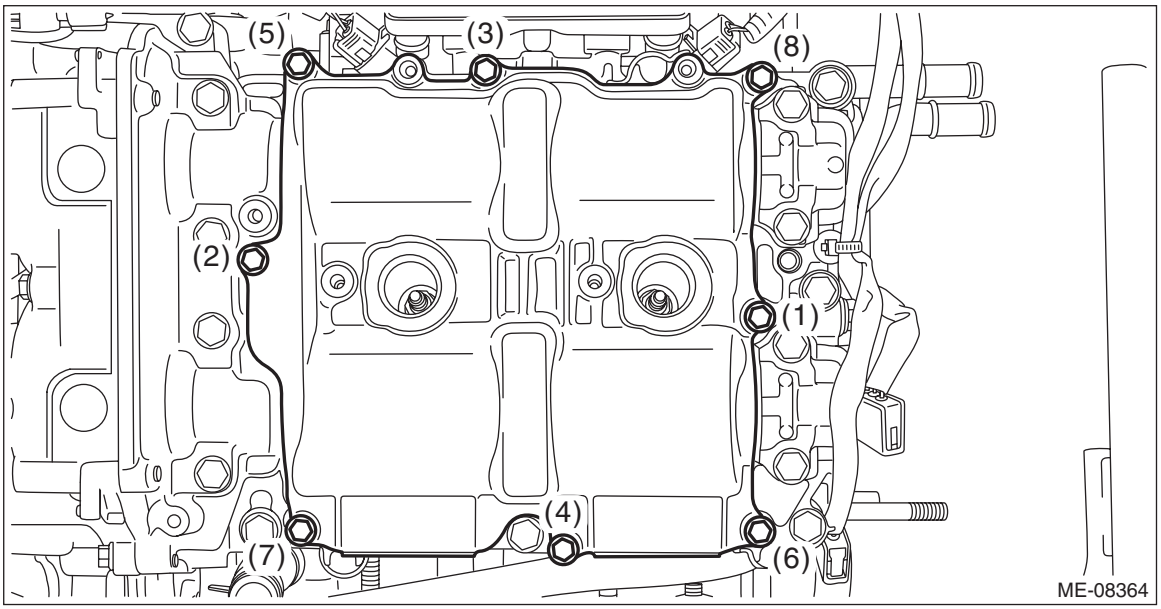

6) Install the intake manifold protector LH and secure the engine harness with the clip (A).

Tightening torque:
6.4 N·m (0.7 kgf-m, 4.7 ft-lb)

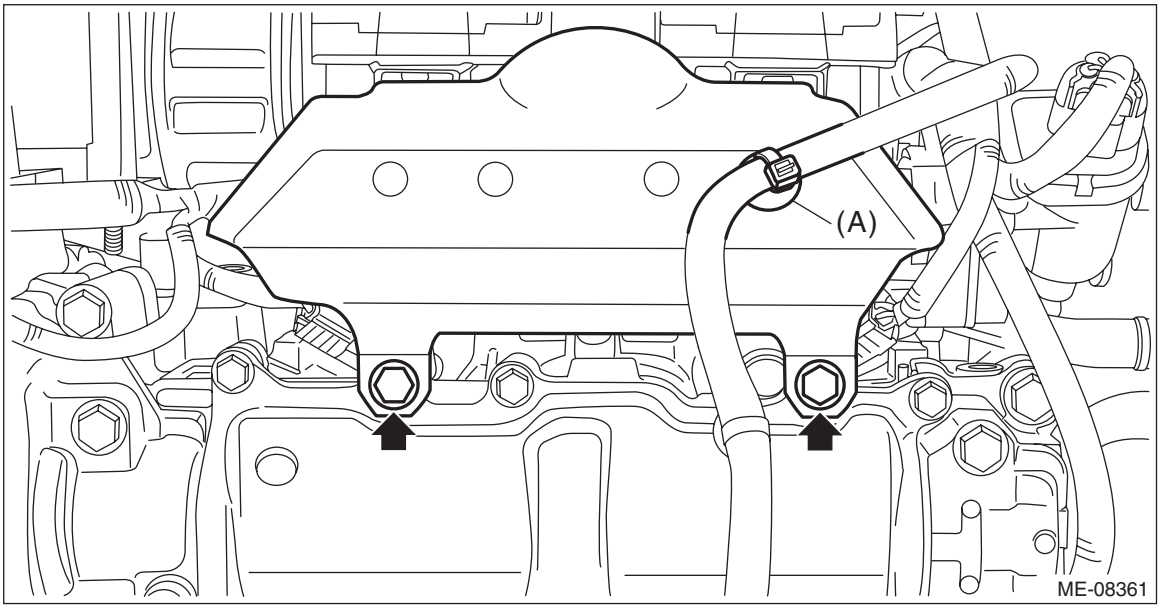

7) Install the #2 ignition coil and the #4 ignition coil. <Ref. to IG(H4DO)-10, INSTALLATION, Ignition Coil.>
8) When working on the vehicle

NOTE:
When working on the vehicle, perform the following steps also.
(1) Install the V-belts. <Ref. to ME(H4DO)-73, V-BELT, INSTALLATION, V-belt.>
(2) Install the battery. <Ref. to SC(H4DO)-64, INSTALLATION, Battery.>

C: INSPECTION

Check that the rocker cover does not have deformation, cracks and any other damage.

19.Camshaft

A: REMOVAL

1. CAMSHAFT RH

The camshaft RH and cam carrier are designed as removing as a unit. Refer to “Cam Carrier” for removal procedures of camshaft RH. <Ref. to ME(H4DO)-140, CAM CARRIER RH, REMOVAL, Cam Carrier.> <Ref. to ME(H4DO)-159, CAM CARRIER RH, DISASSEMBLY, Cam Carrier.>

2. CAMSHAFT LH

The camshaft LH and cam carrier are designed as removing as a unit. Refer to “Cam Carrier” for removal procedures of camshaft LH. <Ref. to ME(H4DO)-143, CAM CARRIER LH, REMOVAL, Cam Carrier.> <Ref. to ME(H4DO)-161, CAM CARRIER LH, DISASSEMBLY, Cam Carrier.>

B: INSTALLATION

1. CAMSHAFT RH

The camshaft RH and cam carrier are designed as installing as a unit. Refer to “Cam Carrier” for installation procedures of camshaft RH. <Ref. to ME(H4DO)-162, CAM CARRIER RH, ASSEMBLY, Cam Carrier.> <Ref. to ME(H4DO)-146, CAM CARRIER RH, INSTALLATION, Cam Carrier.>

2. CAMSHAFT LH

The camshaft LH and cam carrier are designed as installing as a unit. Refer to “Cam Carrier” for installation procedures of camshaft LH. <Ref. to ME(H4DO)-164, CAM CARRIER LH, ASSEMBLY, Cam Carrier.> <Ref. to ME(H4DO)-152, CAM CARRIER LH, INSTALLATION, Cam Carrier.>

20.Cam Carrier

A: REMOVAL

1. CAM CARRIER RH

1) Remove the engine from the vehicle. <Ref. to ME(H4DO)-43, REMOVAL, Engine Assembly.>
2) Remove the chain cover. <Ref. to ME(H4DO)-83, REMOVAL, Chain Cover.>
3) Remove the timing chain RH. <Ref. to ME(H4DO)-97, TIMING CHAIN RH, REMOVAL, Timing Chain Assembly.>
4) Remove the cam sprocket RH. <Ref. to ME(H4DO)-118, CAM SPROCKET RH, REMOVAL, Cam Sprocket.>

NOTE:
This procedure is required only when disassembling the cam carrier RH.
5) Remove the fuel injector RH. <Ref. to FU(H4DO)-66, REMOVAL, Fuel Injector.>
6) Remove the water pipe assembly RH. <Ref. to CO(H4DO)-21, WATER PIPE ASSEMBLY RH, REMOVAL, Water Pipe Assembly.>
7) Remove the rocker cover RH. <Ref. to ME(H4DO)-128, ROCKER COVER RH, REMOVAL, Rocker Cover.>
8) Remove the clip holding the engine harness from cam carrier RH.

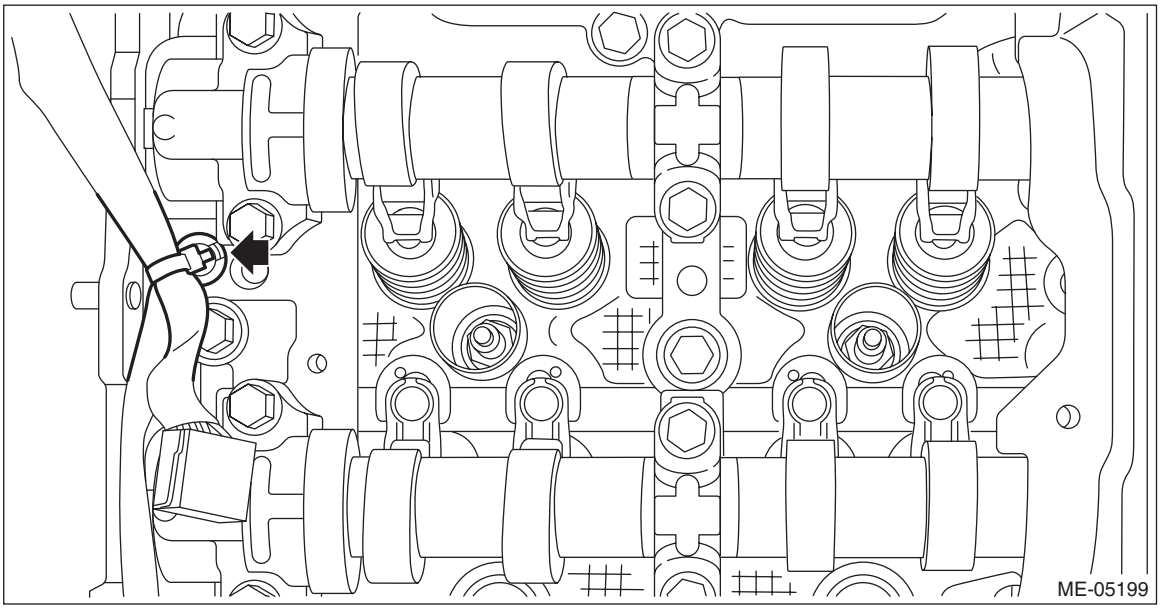

9) Insert the steel rods into ST, and set the engine so that the camshaft RH is facing up.

CAUTION:
• If the engine is standing on one side without inserting the steel rod into ST, engine may lose balance and fall down. Be sure to insert the steel rod into ST to extend the length.
• Use the steel rod with enough strength.
• Be careful not to pinch the engine harness with ST.

ST 499817100 ENGINE STAND

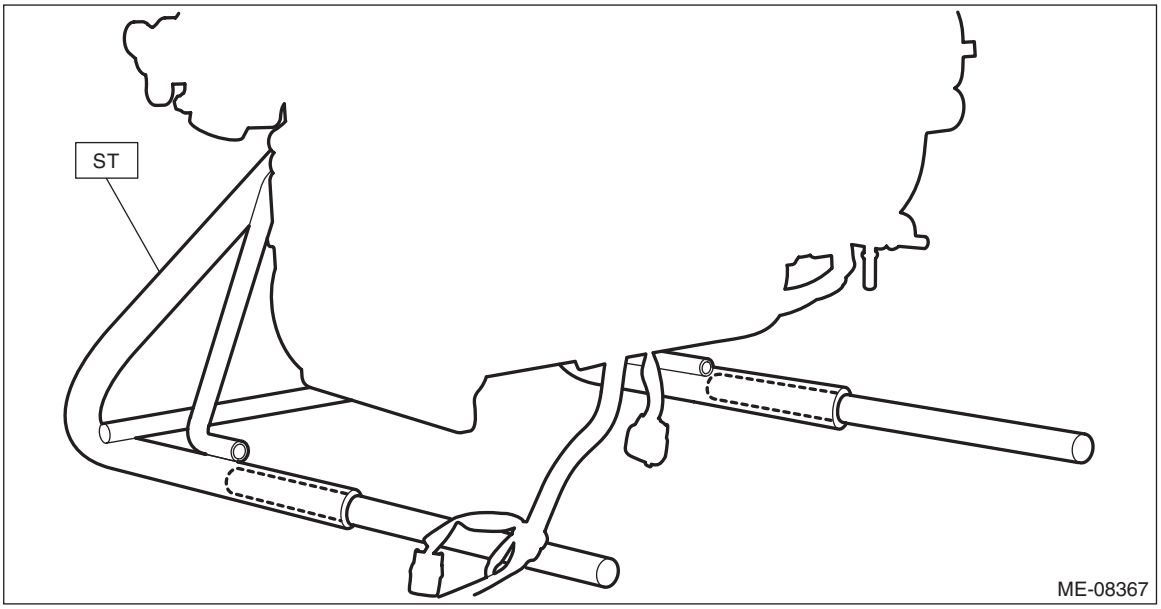

10) Loosen the bolts holding the cam carrier RH equally, a little at a time in numerical sequence as shown in the figure and remove the cam carrier RH.

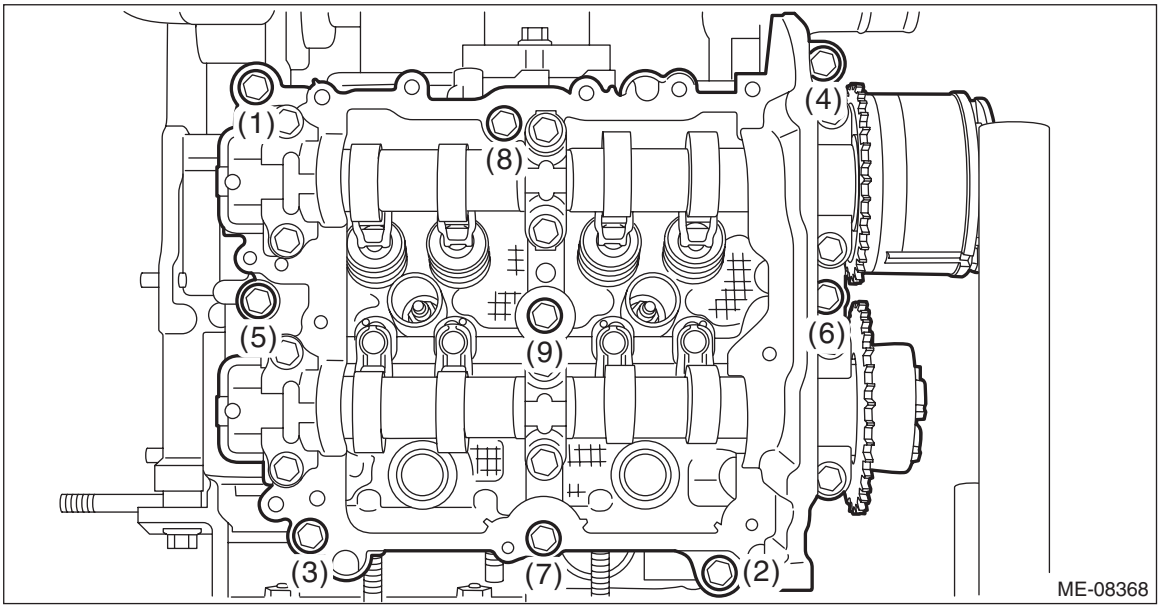

11) Remove the O-ring and the roller rocker arm from cylinder head RH.

NOTE:
Be careful not to confuse the roller rocker arms.

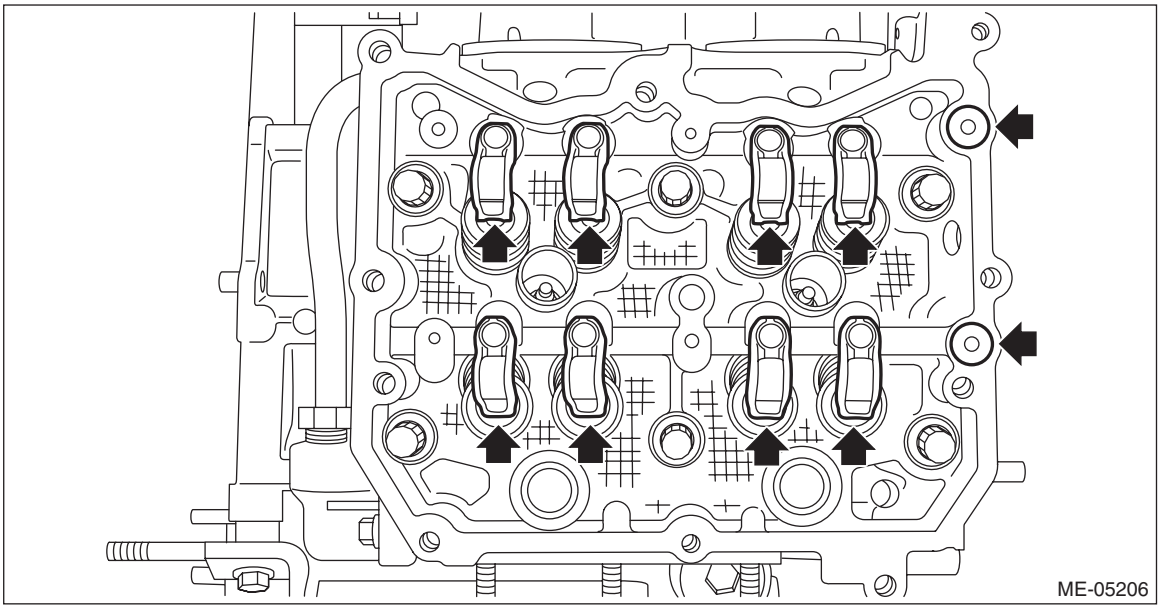

12) Remove the valve shim and the roller rocker arm pivot from cylinder head RH.

NOTE:
Be careful not to confuse the valve shim and the roller rocker arm pivot.

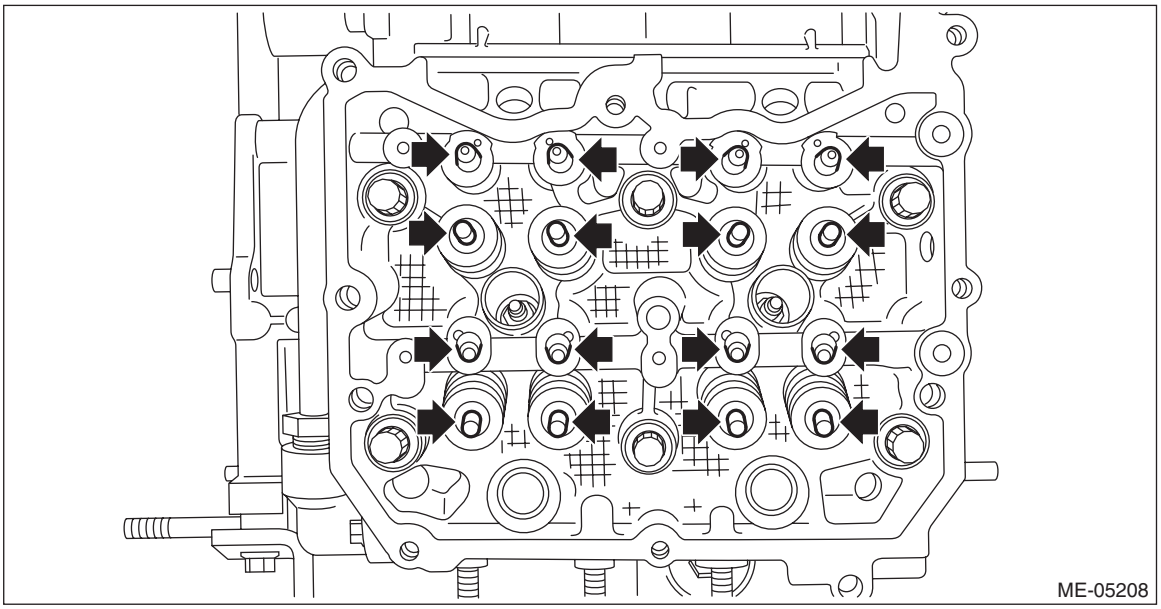

13) Remove the liquid gasket from cam carrier RH and cylinder head RH.

2. CAM CARRIER LH

1) Remove the engine from the vehicle. <Ref. to ME(H4DO)-43, REMOVAL, Engine Assembly.>
2) Remove the chain cover. <Ref. to ME(H4DO)-83, REMOVAL, Chain Cover.>
3) Remove the timing chain LH. <Ref. to ME(H4DO)-99, TIMING CHAIN LH, REMOVAL, Timing Chain Assembly.>
4) Remove the cam sprocket LH. <Ref. to ME(H4DO)-119, CAM SPROCKET LH, REMOVAL, Cam Sprocket.>

NOTE:
This procedure is required only when disassembling the cam carrier LH.
5) Remove the fuel injector LH. <Ref. to FU(H4DO)-66, REMOVAL, Fuel Injector.>
6) Remove the water pipe assembly LH. <Ref. to CO(H4DO)-22, WATER PIPE ASSEMBLY LH, REMOVAL, Water Pipe Assembly.>
7) Remove the rocker cover LH. <Ref. to ME(H4DO)-131, ROCKER COVER LH, REMOVAL, Rocker Cover.>
8) Remove the clip holding the engine harness from cam carrier LH.

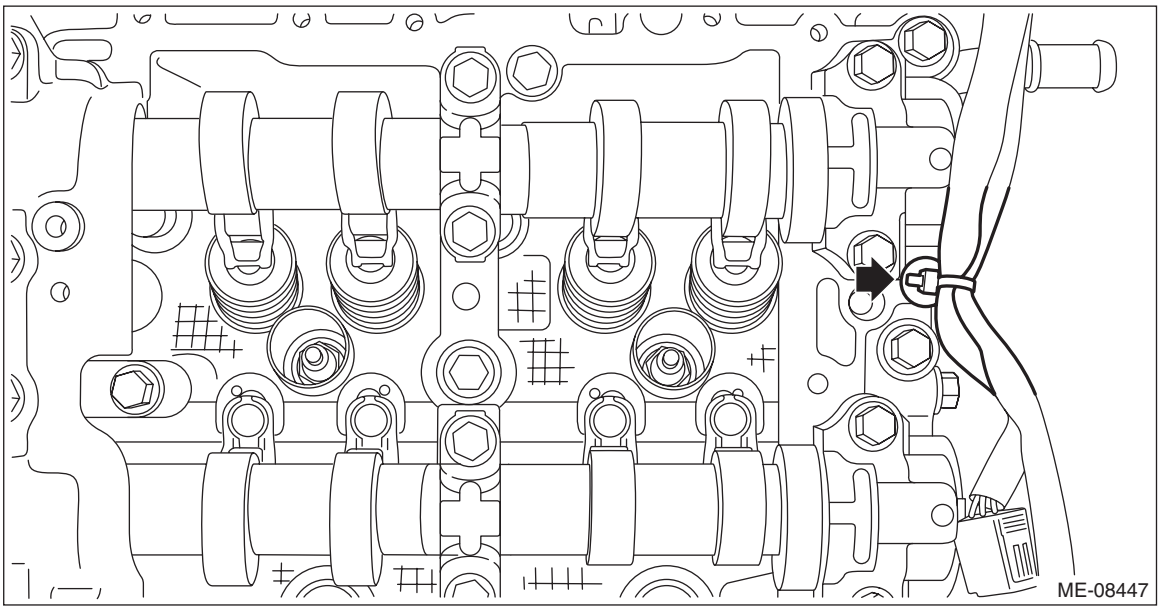

9) Insert the steel rods into ST, and set the engine so that the camshaft LH is facing up.

CAUTION:
• If the engine is standing on one side without inserting the steel rod into ST, engine may lose balance and fall down. Be sure to insert the steel rod into ST to extend the length.
• Use the steel rod with enough strength.
• Be careful not to pinch the engine harness with ST.

ST 499817100 ENGINE STAND

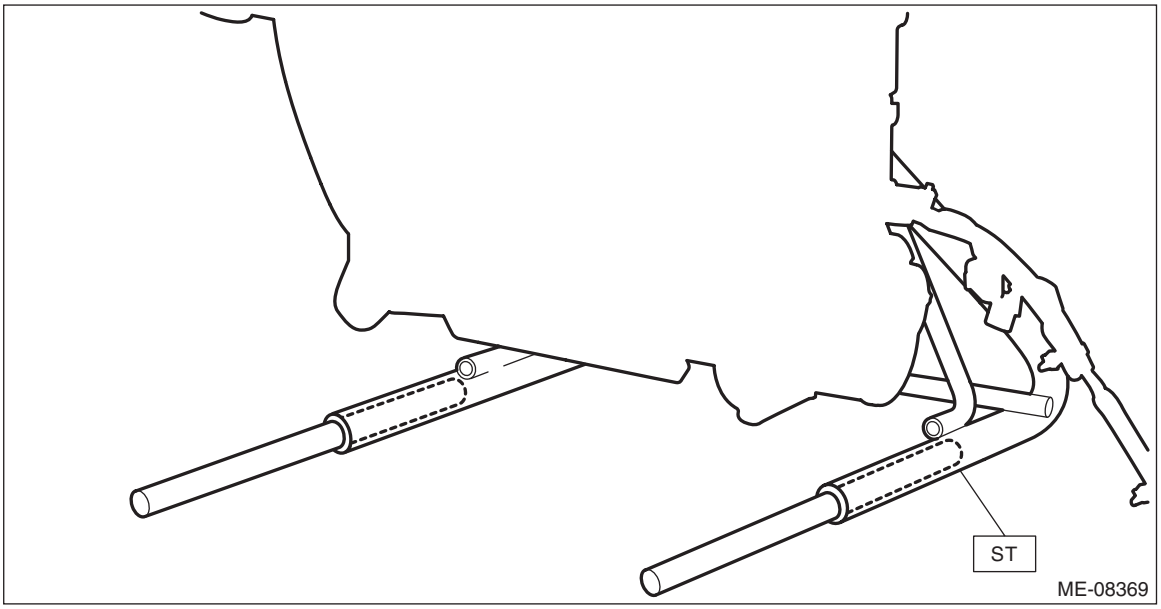

10) Loosen the bolts holding the cam carrier LH equally, a little at a time in numerical sequence as shown in the figure and remove the cam carrier LH.

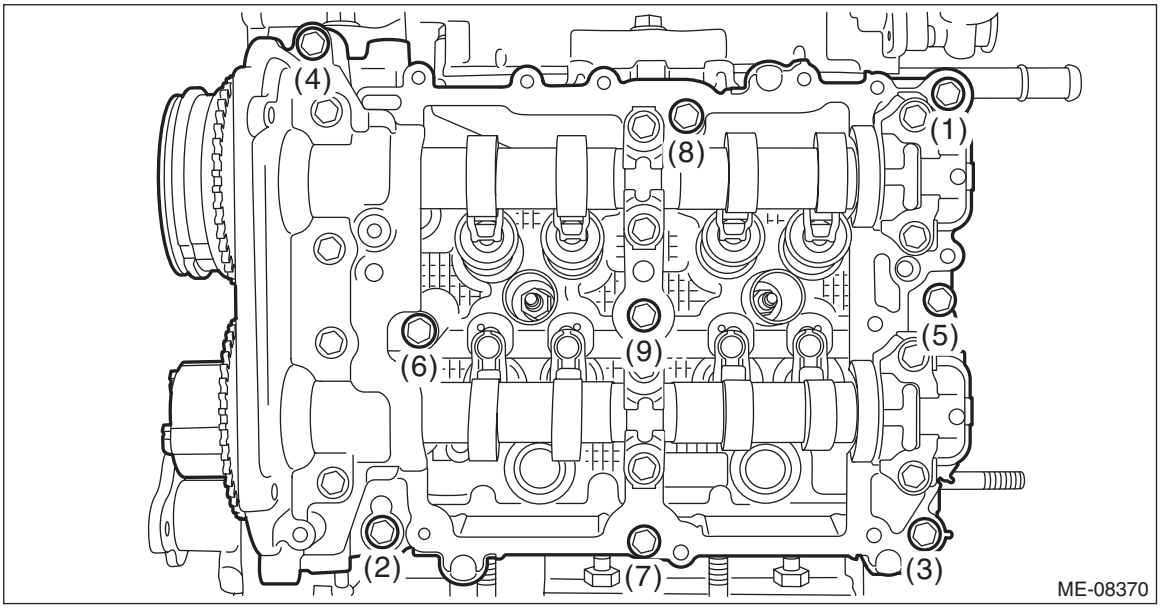

11) Remove the O-ring and the roller rocker arm from cylinder head LH.

NOTE:
Be careful not to confuse the roller rocker arms.

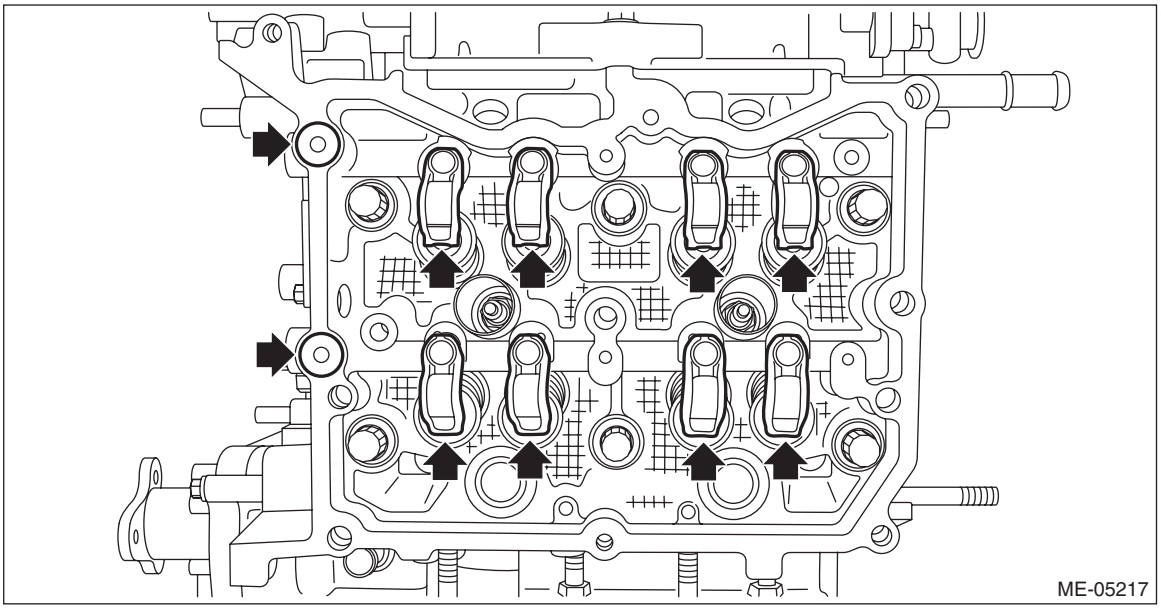

12) Remove the valve shim and the roller rocker arm pivot from cylinder head LH.

NOTE:
Be careful not to confuse the valve shim and the roller rocker arm pivot.

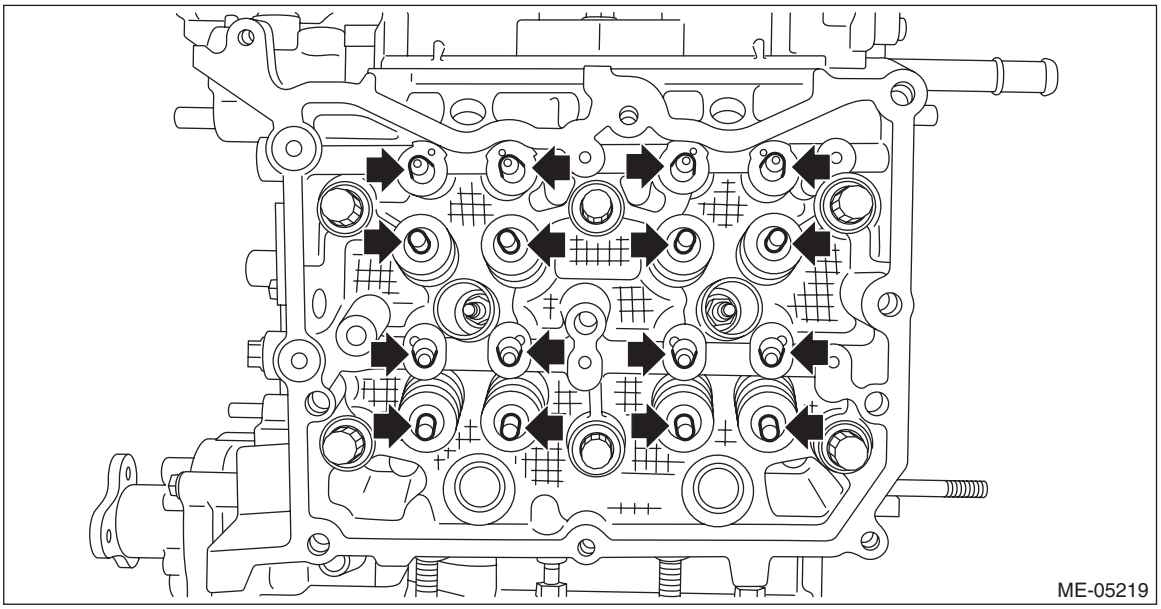

13) Remove the liquid gasket from cam carrier LH and cylinder head LH.

B: INSTALLATION

1. CAM CARRIER RH

1) Insert the steel rods into ST, and set the engine so that the camshaft RH is facing up.

CAUTION:
• If the engine is standing on one side without inserting the steel rod into ST, engine may lose balance and fall down. Be sure to insert the steel rod into ST to extend the length.
• Use the steel rod with enough strength.
• Be careful not to pinch the engine harness with ST.

ST 499817100 ENGINE STAND

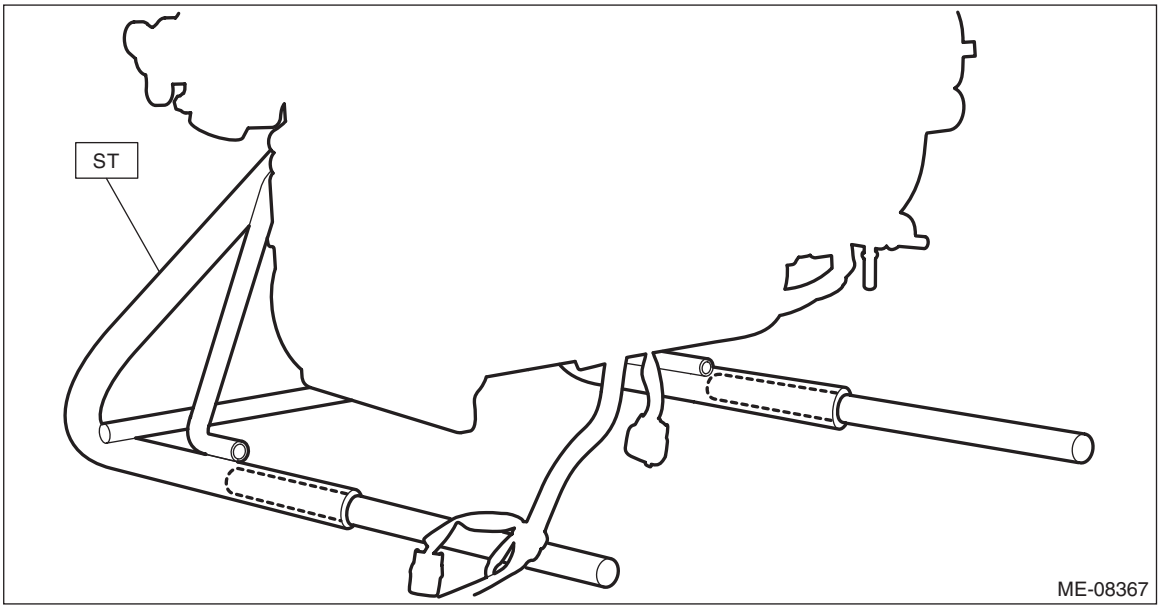

2) Apply engine oil to the valve shim and the roller rocker arm pivot, and install the valve shim and the roller rocker arm pivot to the cylinder head RH.

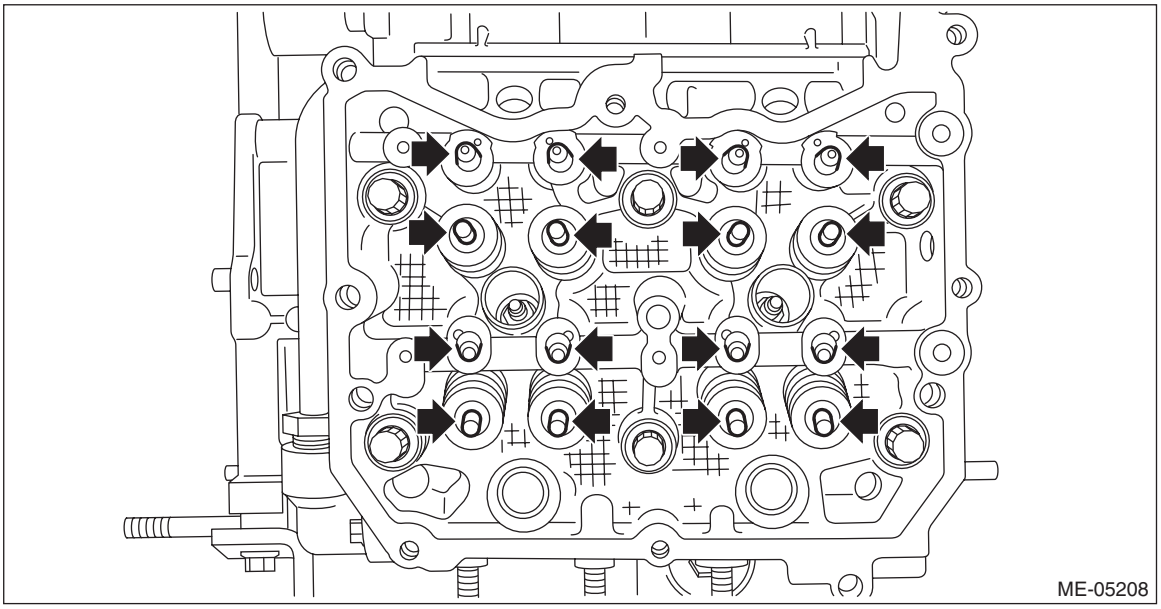

3) Apply engine oil to the O-ring and the roller rocker arm, and install the O-ring and the roller rocker arm to the cylinder head RH.

NOTE:
Use new O-rings.

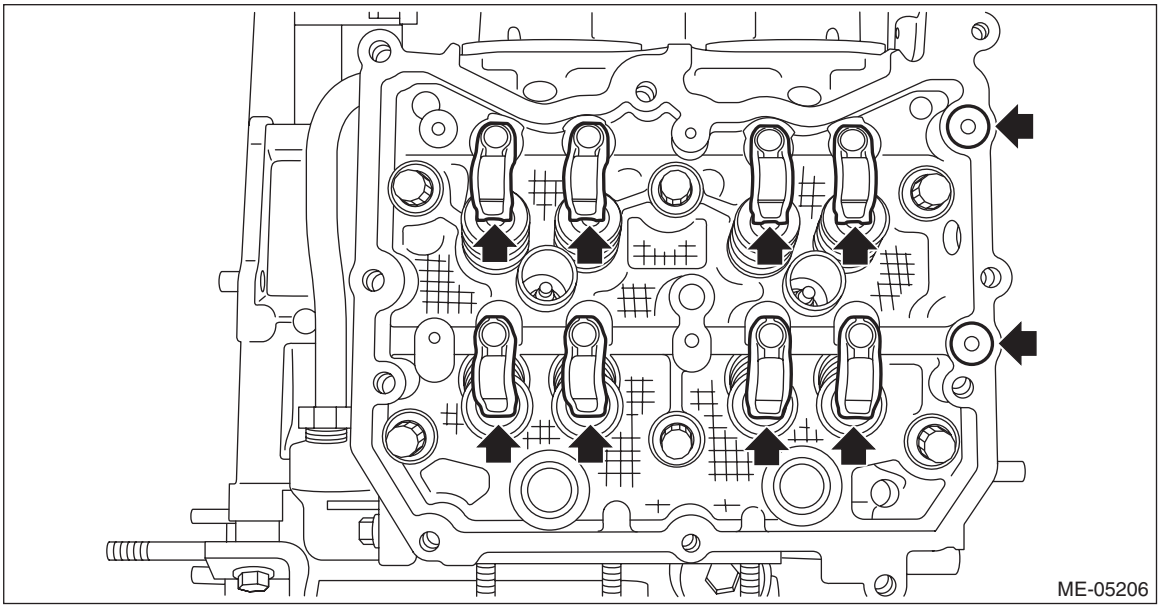

4) Apply liquid gasket to the mating surface of cam carrier RH as shown in the figure.

NOTE:
- Before applying liquid gasket, degrease the old liquid gasket seal surface of the cylinder head RH and cam carrier RH.
- Install within 5 min. after applying liquid gasket.

Liquid gasket:
THREE BOND 1217G (Part No. K0877Y0100), THREE BOND 1217H or equivalent

Liquid gasket applying diameter:
3.0±0.5 mm (0.1181±0.0197 in)

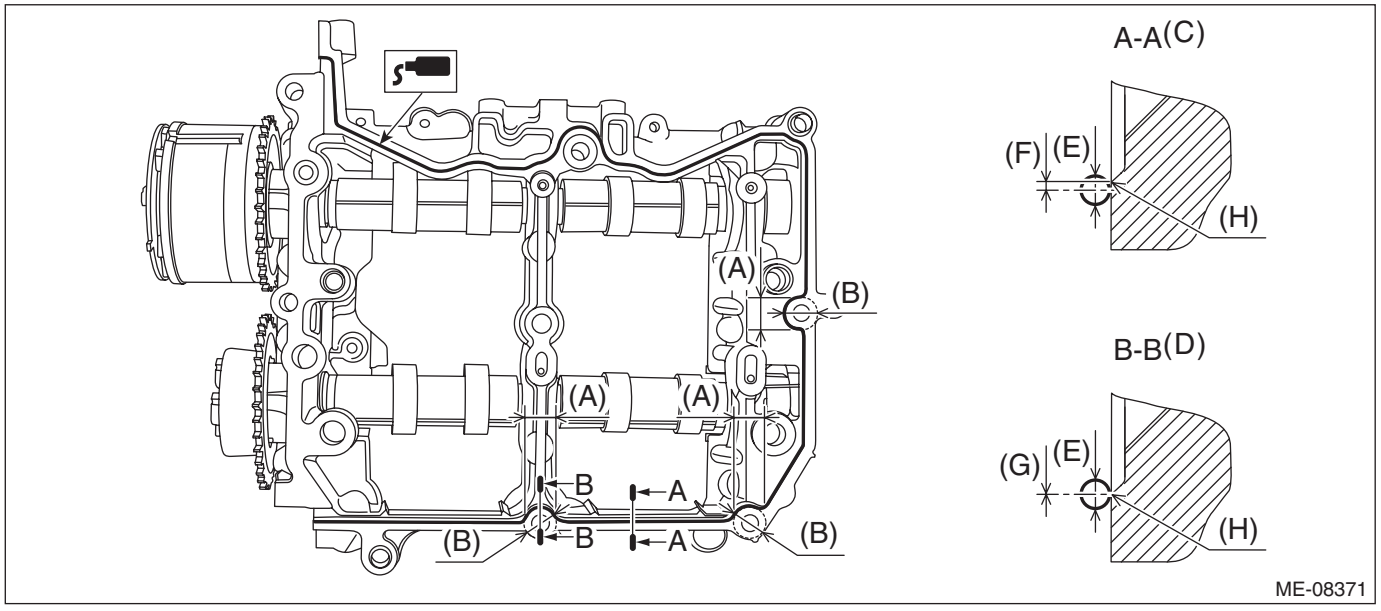

(A)	Range A	(D)	Liquid gasket applying position of mating surfaces of range A	(G)	0±0.5 mm (0±0.0197 in)
(B)	ϕ18 mm (0.7087 in)	(E)	ϕ3.0±0.5 mm (0.1181±0.0197 in)	(H)	Chamfer edge
(C)	Liquid gasket applying position of mating surfaces other than range A	(F)	1 mm (0.0394 in) or less		

5) Install the cam carrier RH to the cylinder head RH.
   (1) Mount the cam carrier RH, then tighten all bolts with a torque of 18 N·m (1.8 kgf-m, 13.3 ft-lb) in numerical order as shown in the figure.

NOTE:
Set the intake camshaft RH and the exhaust camshaft RH to the zero-lift position.

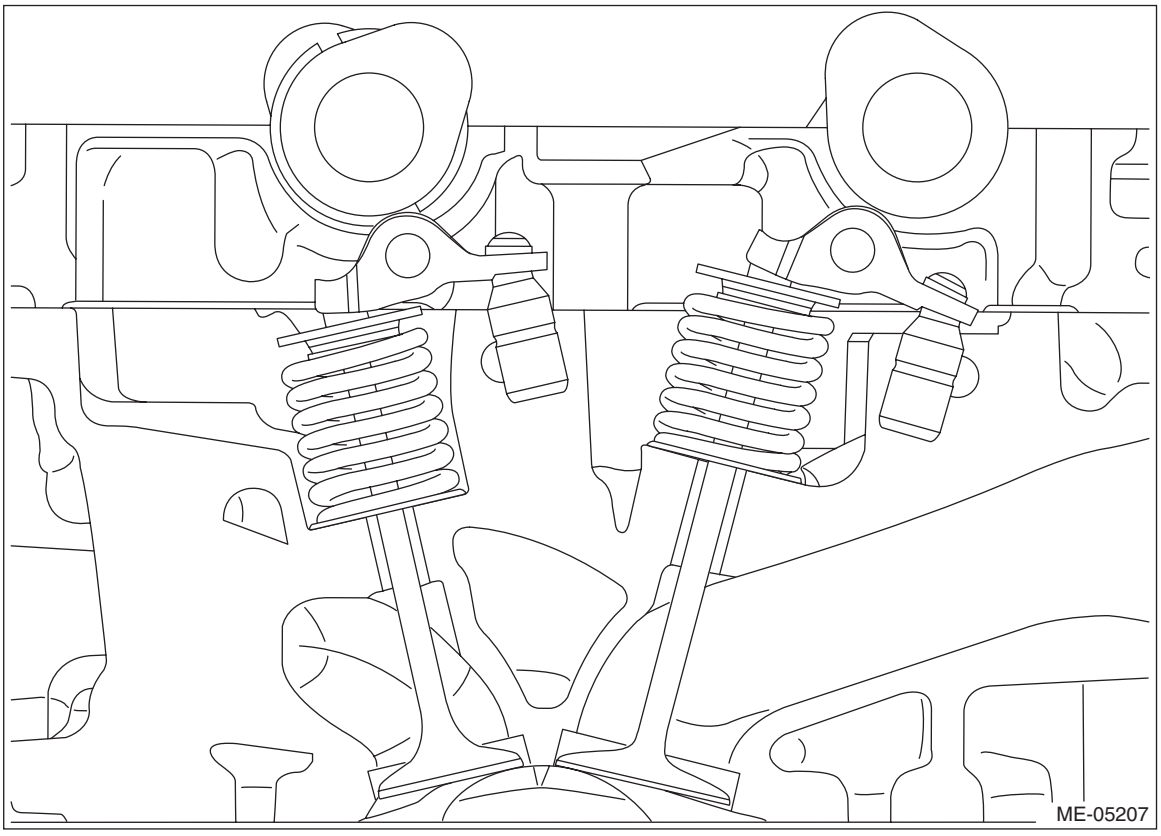

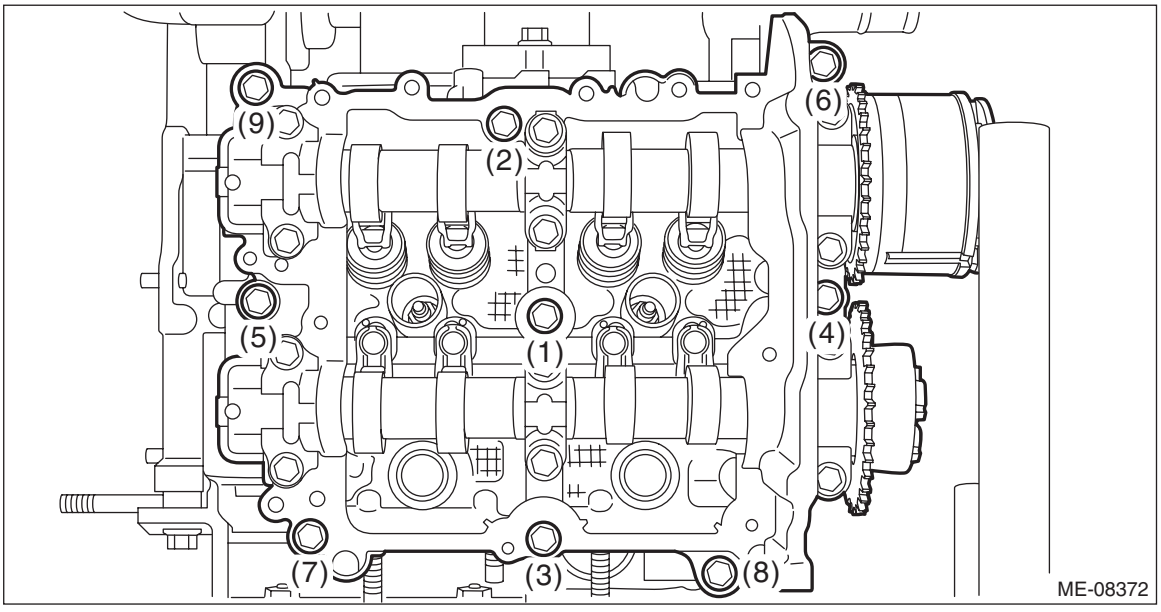

(2) Loosen the bolts (3 places) by 180° in numerical order as shown in the figure.

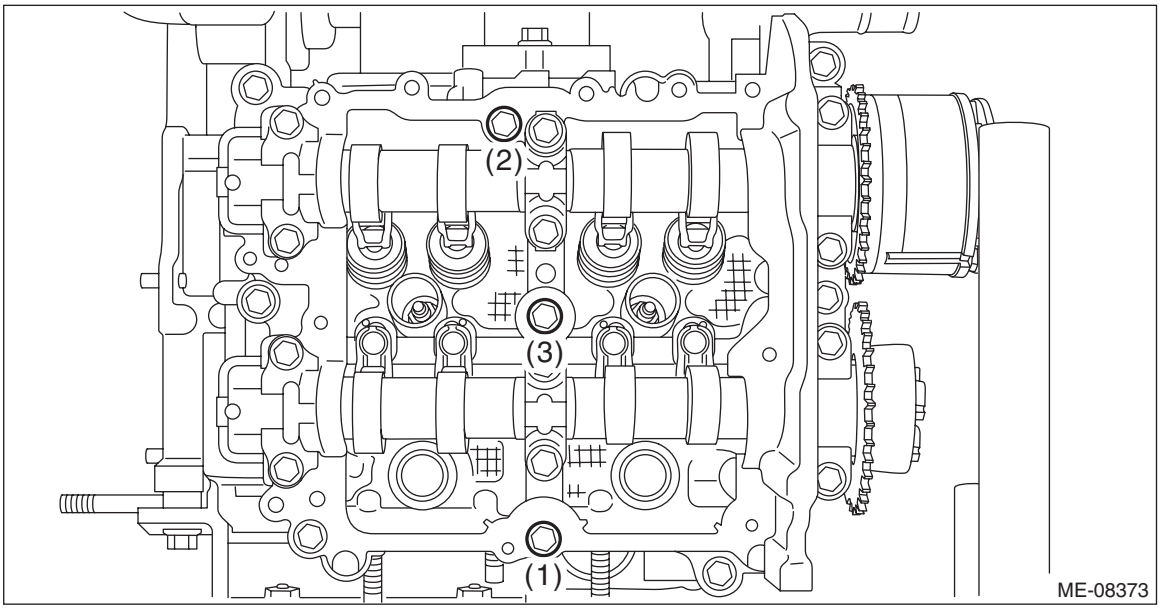

(3) Tighten the bolts (3 places) with a torque of 18 N·m (1.8 kgf-m, 13.3 ft-lb) in numerical order as shown in the figure.

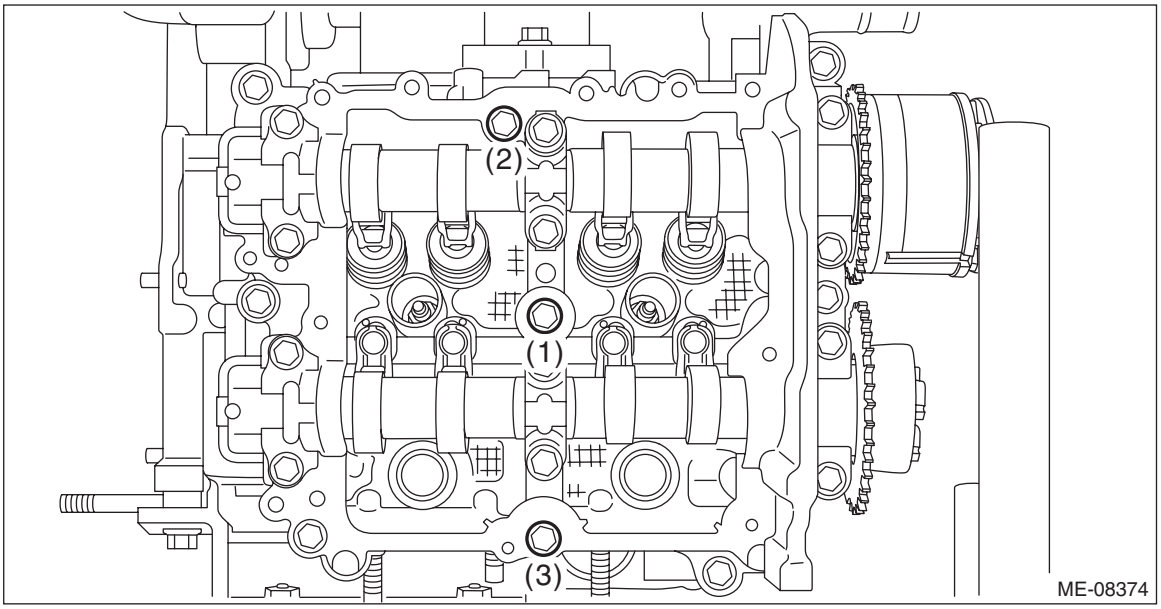

(4) Loosen the bolts (3 places) by 180° in numerical order as shown in the figure.

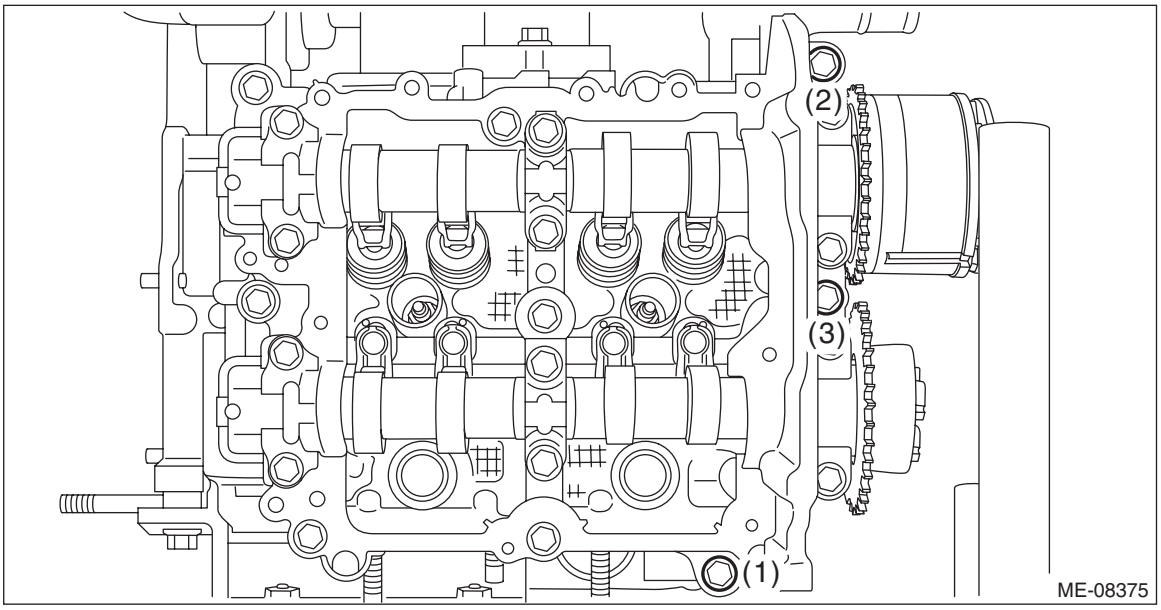

(5) Tighten the bolts (3 places) with a torque of 18 N·m (1.8 kgf-m, 13.3 ft-lb) in numerical order as shown in the figure.

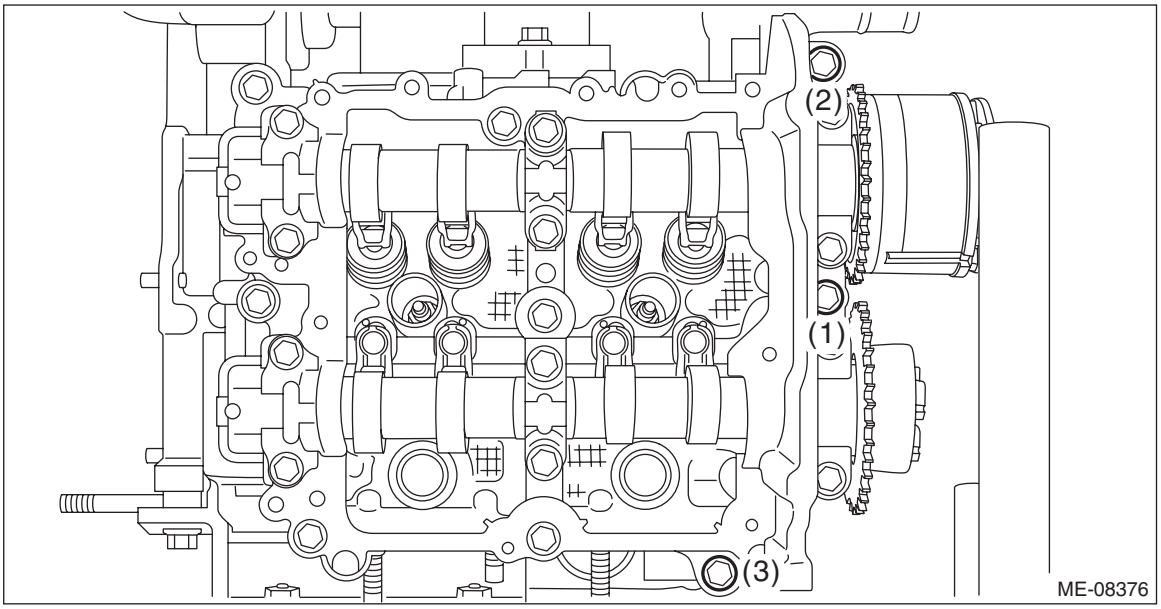

(6) Loosen the bolts (3 places) by 180° in numerical order as shown in the figure.

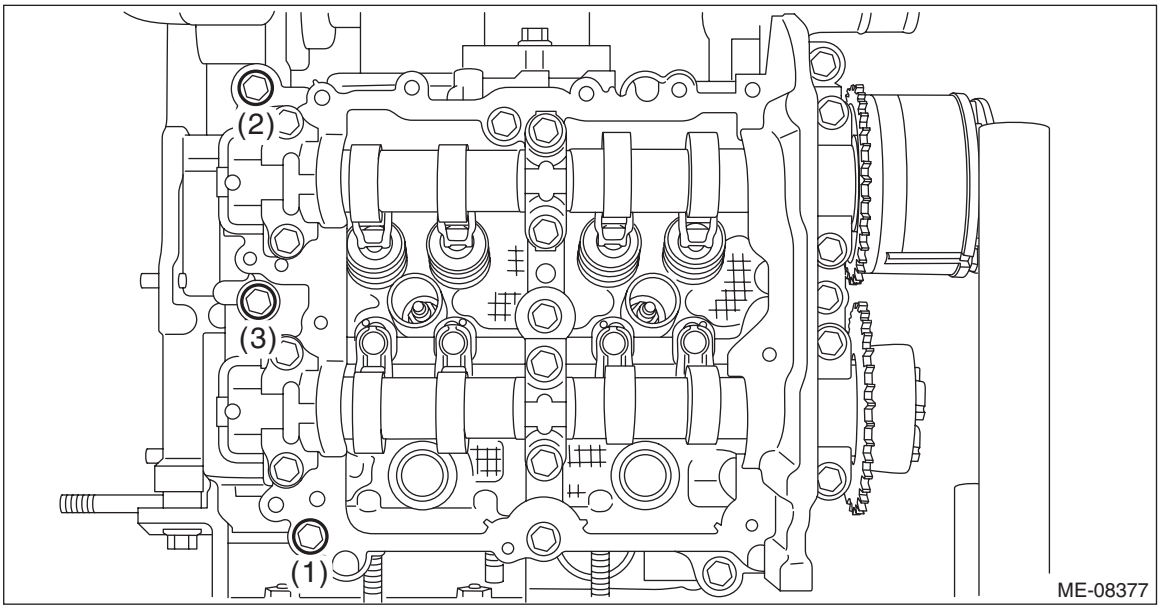

(7) Tighten the bolts (3 places) with a torque of 18 N·m (1.8 kgf-m, 13.3 ft-lb) in numerical order as shown in the figure.

NOTE:
After tightening, if the liquid gasket is squeezed out onto the seal surface of the chain cover, completely remove any squeezed-out liquid gasket.

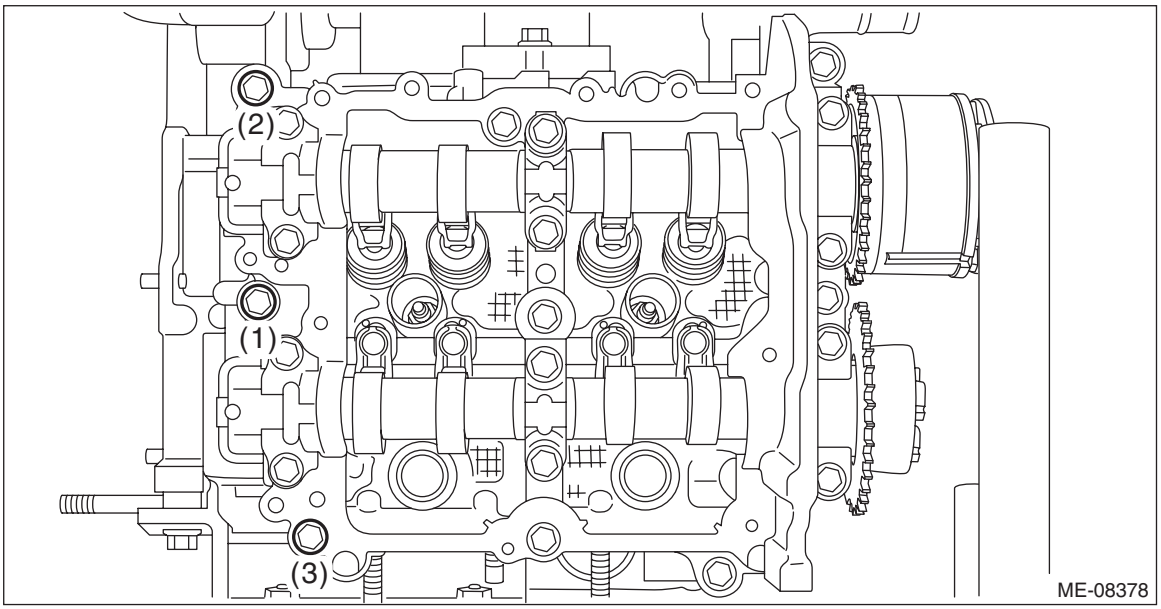

6) Set the part so that the intake manifold is on the upper side.
7) Install the cam sprocket RH. <Ref. to ME(H4DO)-121, CAM SPROCKET RH, INSTALLATION, Cam Sprocket.>

NOTE:
This procedure is required only when the cam carrier RH is removed for disassembly.
8) Check the cam clearance. <Ref. to ME(H4DO)-39, WHEN TIMING CHAIN ASSEMBLY IS REMOVED, INSPECTION, Cam Clearance.>
9) Install the timing chain RH. <Ref. to ME(H4DO)-112, TIMING CHAIN RH, INSTALLATION, Timing Chain Assembly.>

10) Secure the engine harness to the cam carrier RH with a clip.

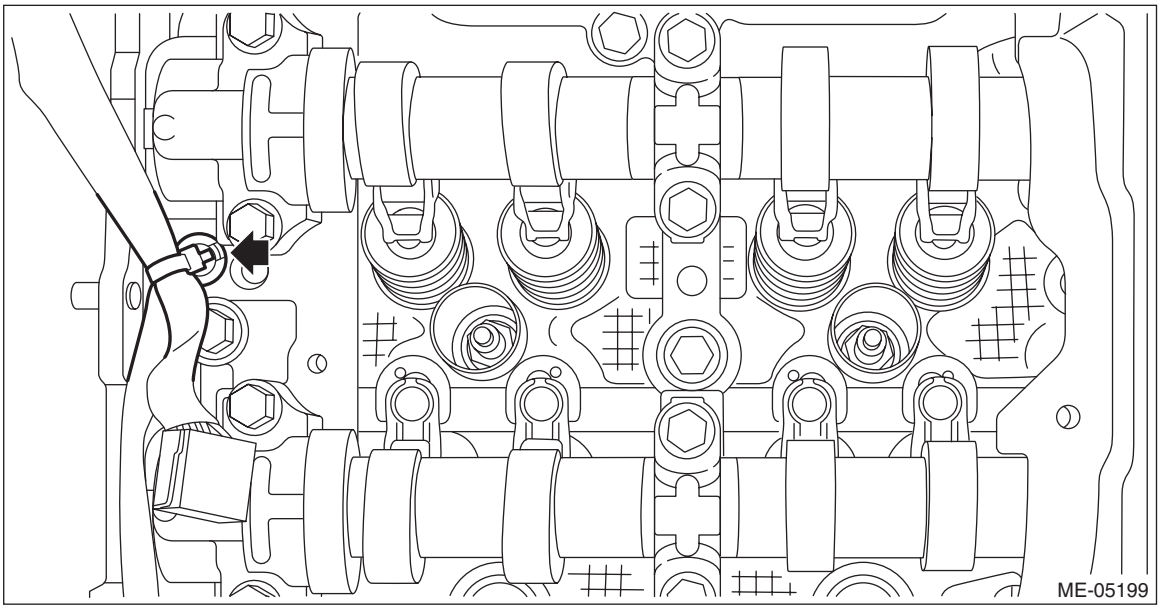

11) Install the rocker cover RH. <Ref. to ME(H4DO)-133, ROCKER COVER RH, INSTALLATION, Rocker Cover.>
12) Install the water pipe assembly RH. <Ref. to CO(H4DO)-27, WATER PIPE ASSEMBLY RH, INSTALLATION, Water Pipe Assembly.>
13) Install the fuel injector RH. <Ref. to FU(H4DO)-70, INSTALLATION, Fuel Injector.>
14) Install the chain cover. <Ref. to ME(H4DO)-88, INSTALLATION, Chain Cover.>
15) Install the engine to the vehicle. <Ref. to ME(H4DO)-53, INSTALLATION, Engine Assembly.>

2. CAM CARRIER LH

1) Insert the steel rods into ST, and set the engine so that the camshaft LH is facing up.

CAUTION:
• If the engine is standing on one side without inserting the steel rod into ST, engine may lose balance and fall down. Be sure to insert the steel rod into ST to extend the length.
• Use the steel rod with enough strength.
• Be careful not to pinch the engine harness with ST.

ST 499817100 ENGINE STAND

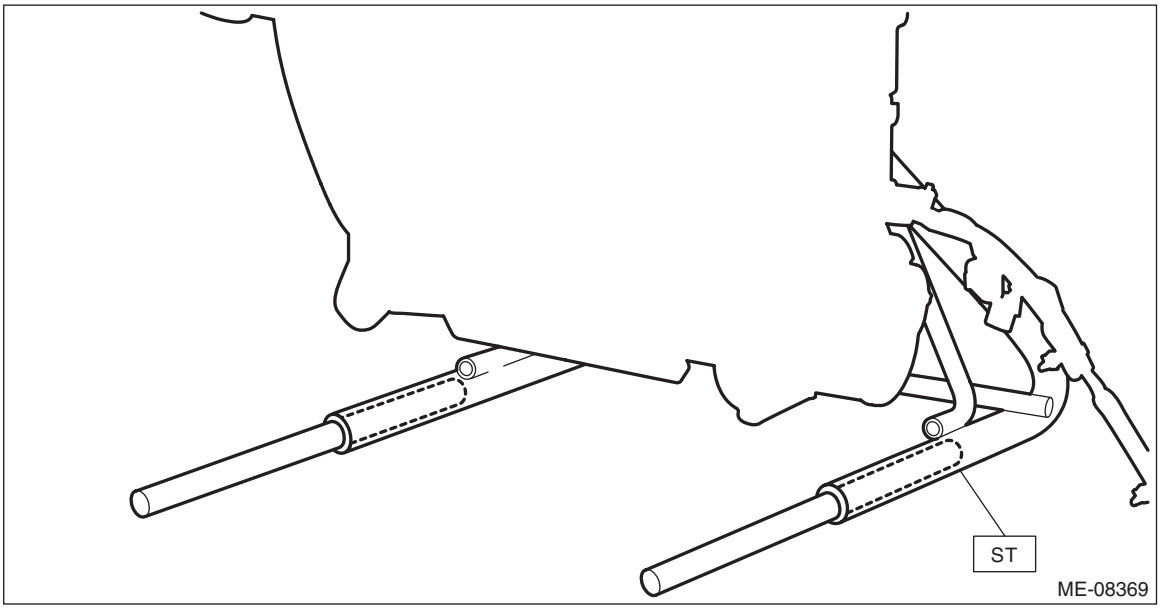

2) Apply engine oil to the valve shim and the roller rocker arm pivot, and install the valve shim and the roller rocker arm pivot to the cylinder head LH.

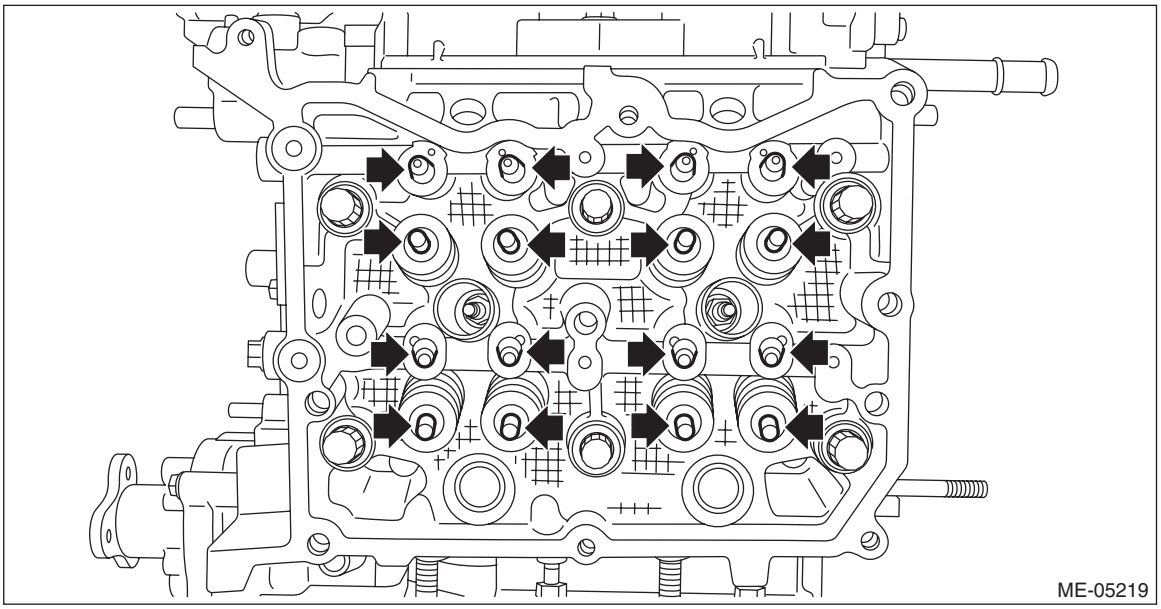

3) Apply engine oil to the O-ring and the roller rocker arm, and install the O-ring and the roller rocker arm to the cylinder head LH.

NOTE:
Use new O-rings.

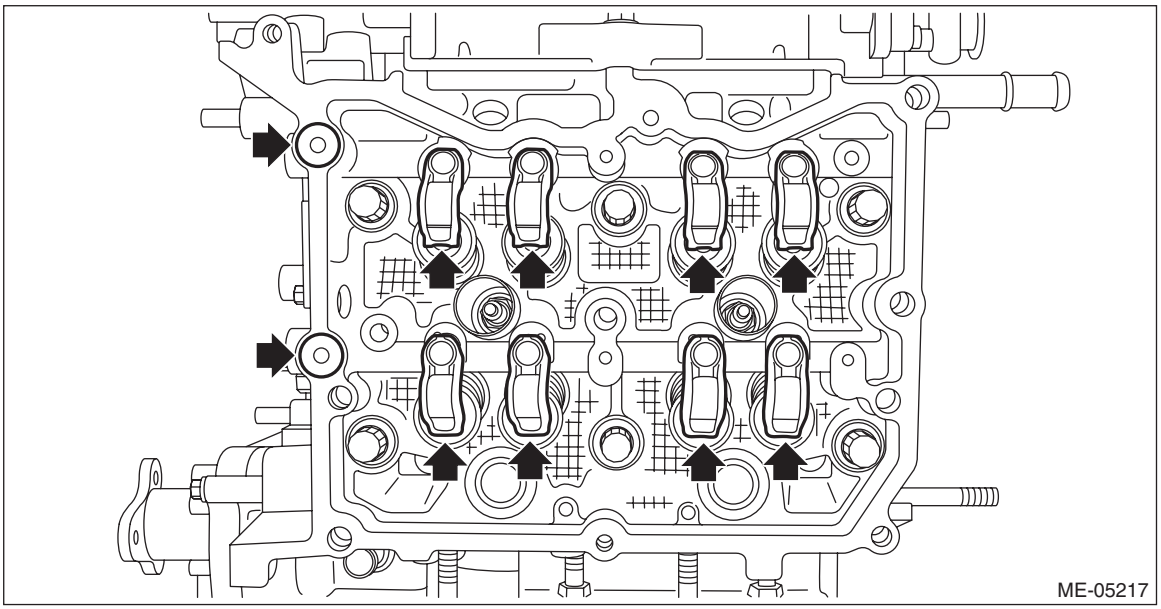

4) Apply liquid gasket to the mating surface of cam carrier LH as shown in the figure.

NOTE:
- Before applying liquid gasket, degrease the old liquid gasket seal surface of the cylinder head LH and cam carrier LH.
- Install within 5 min. after applying liquid gasket.

Liquid gasket:
THREE BOND 1217G (Part No. K0877Y0100), THREE BOND 1217H or equivalent

Liquid gasket applying diameter:
3.0±0.5 mm (0.1181±0.0197 in)

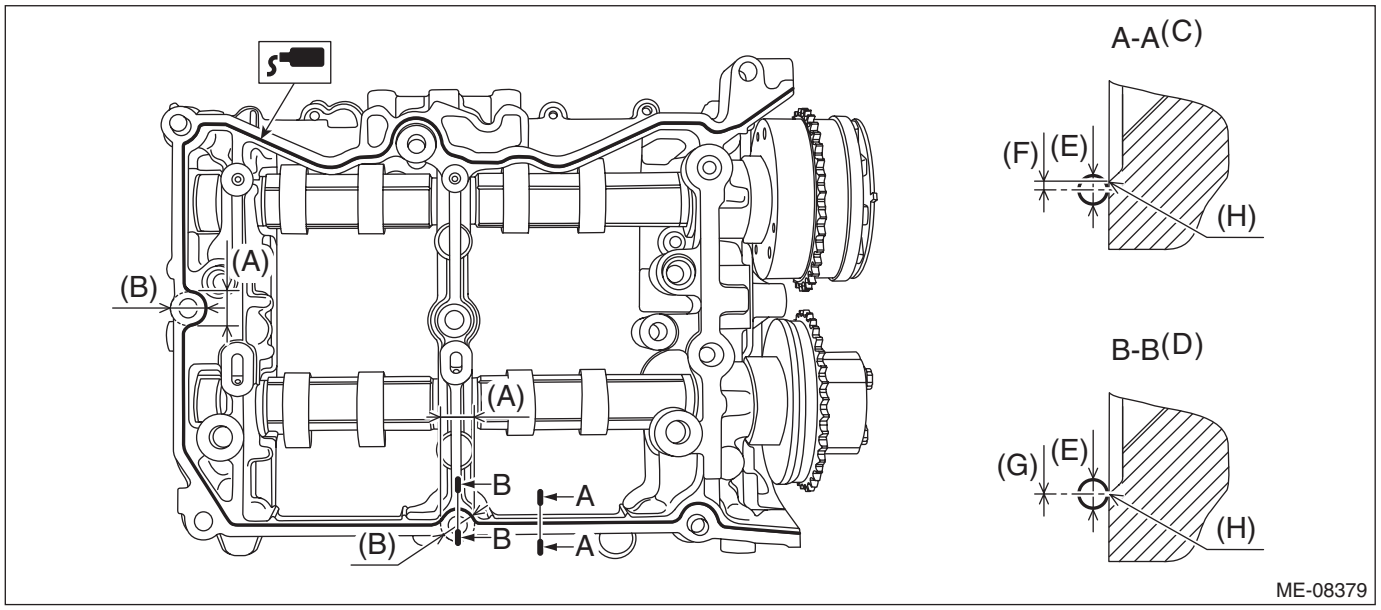

(A)	Range A	(D)	Liquid gasket applying position of mating surfaces of range A	(G)	0±0.5 mm (0±0.0197 in)
(B)	ϕ18 mm (0.7087 in)	(E)	ϕ3.0±0.5 mm (0.1181±0.0197 in)	(H)	Chamfer edge
(C)	Liquid gasket applying position of mating surfaces other than range A	(F)	1 mm (0.0394 in) or less		

5) Install the cam carrier LH to the cylinder head LH.
   (1) Mount the cam carrier LH, then tighten all bolts with a torque of 18 N·m (1.8 kgf-m, 13.3 ft-lb) in numerical order as shown in the figure.

NOTE:
Set the intake camshaft LH and the exhaust camshaft LH to the zero-lift position.

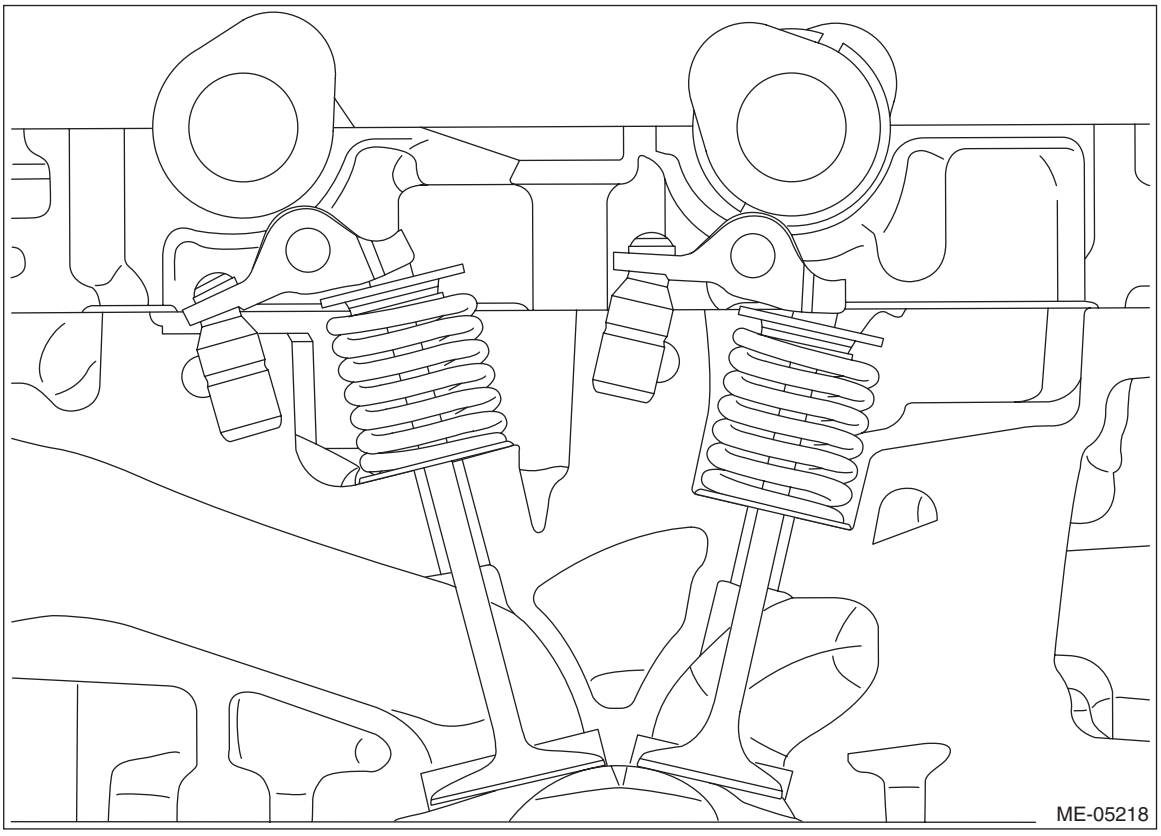

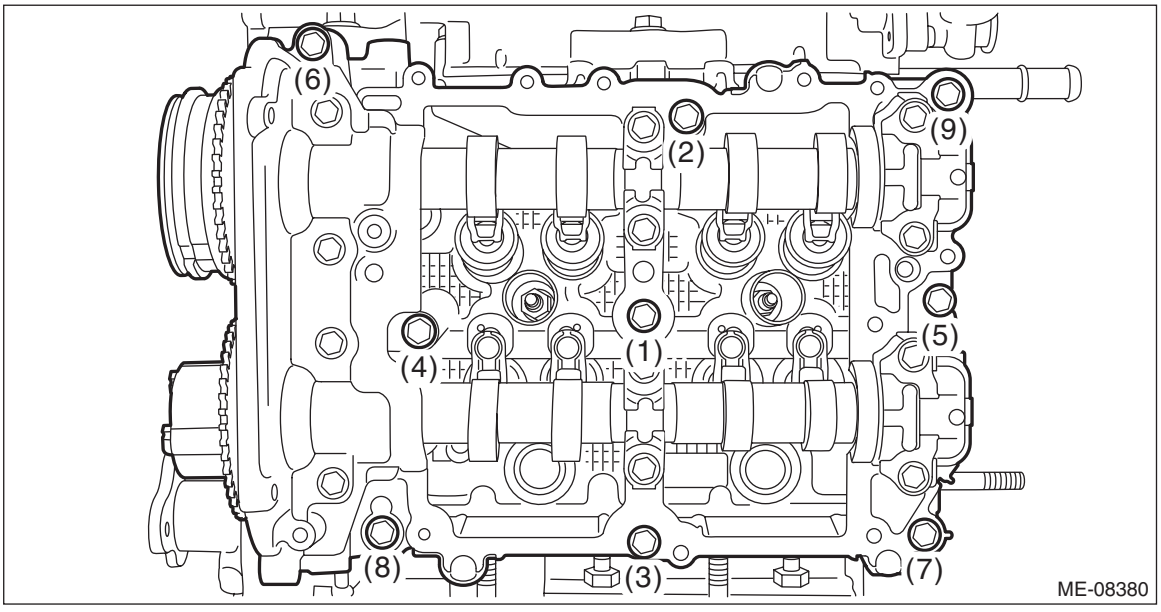

(2) Loosen the bolts (3 places) by 180° in numerical order as shown in the figure.

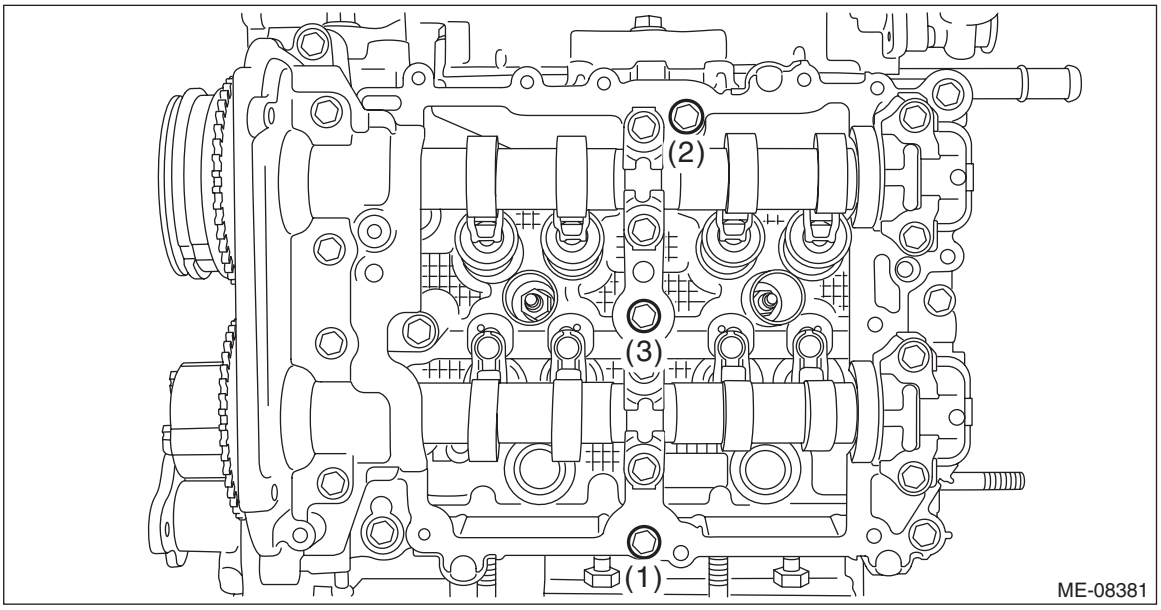

(3) Tighten the bolts (3 places) with a torque of 18 N·m (1.8 kgf-m, 13.3 ft-lb) in numerical order as shown in the figure.

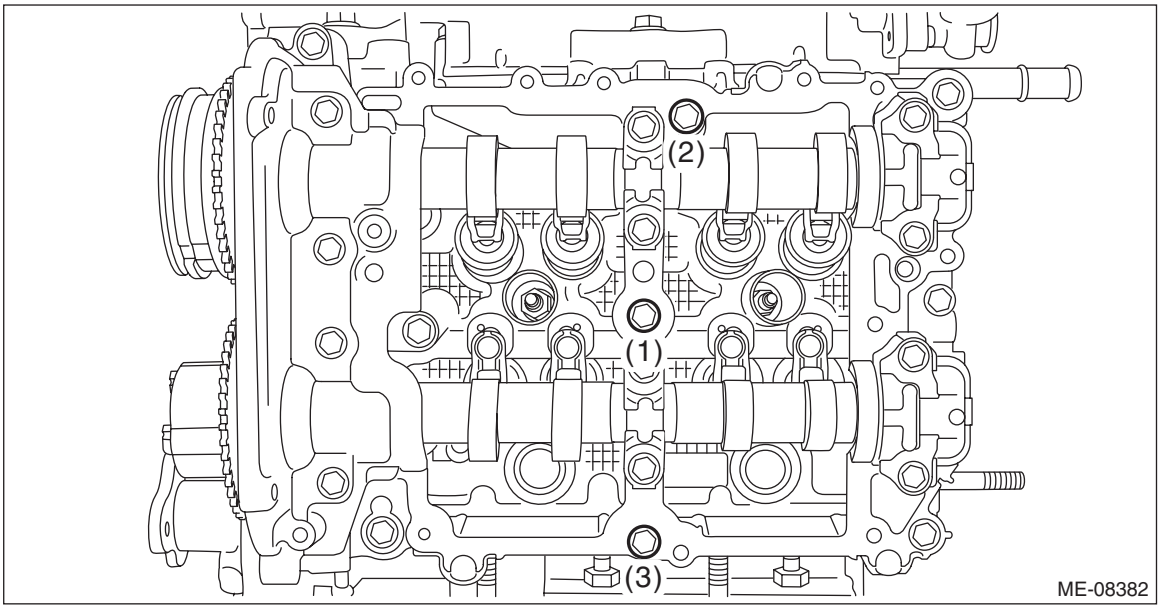

(4) Loosen the bolts (3 places) by 180° in numerical order as shown in the figure.

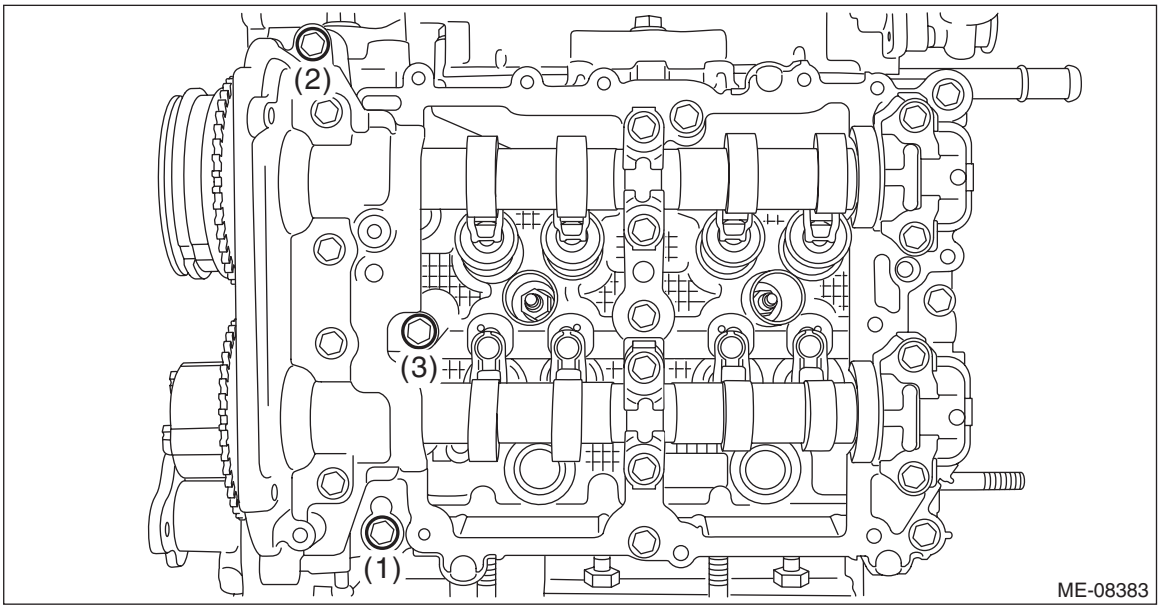

(5) Tighten the bolts (3 places) with a torque of 18 N·m (1.8 kgf-m, 13.3 ft-lb) in numerical order as shown in the figure.

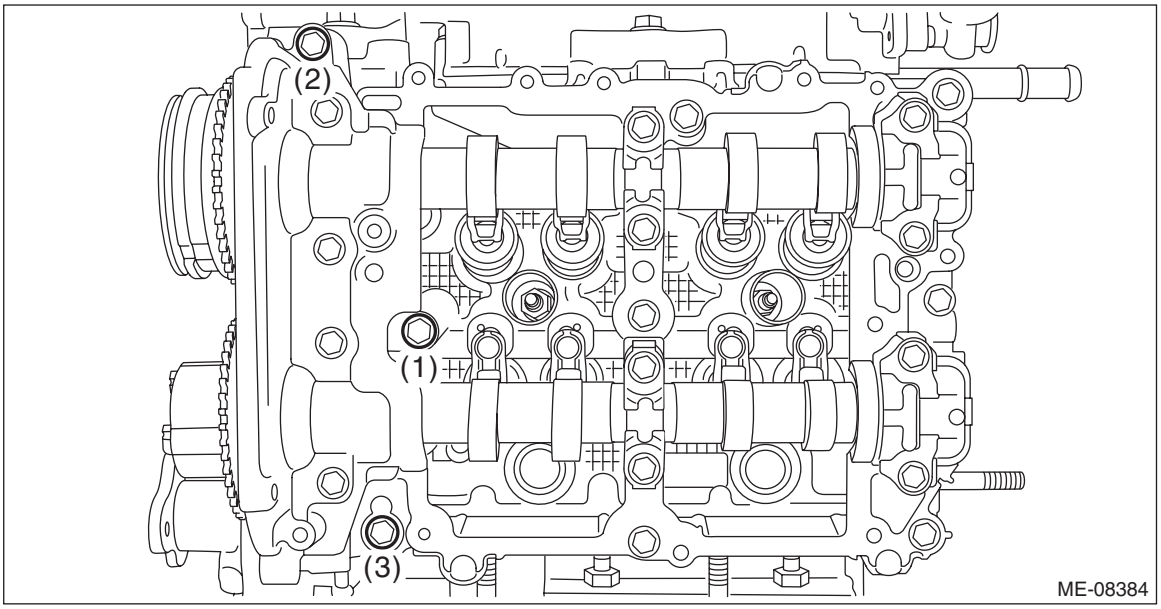

(6) Loosen the bolts (3 places) by 180° in numerical order as shown in the figure.

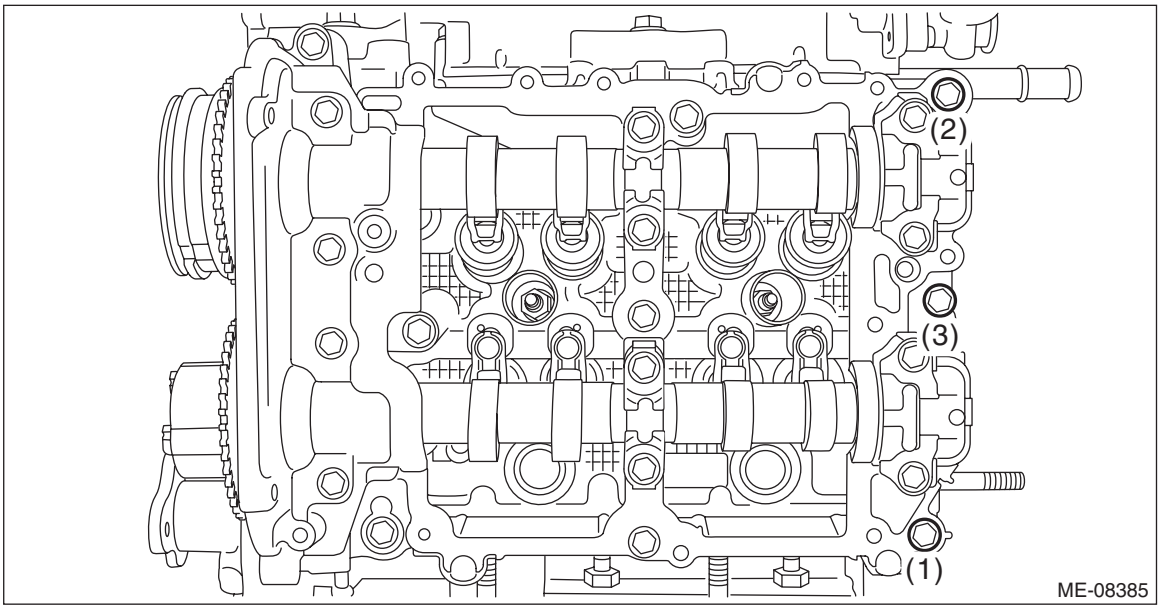

(7) Tighten the bolts (3 places) with a torque of 18 N·m (1.8 kgf-m, 13.3 ft-lb) in numerical order as shown in the figure.

NOTE:
After tightening, if the liquid gasket is squeezed out onto the seal surface of the chain cover, completely remove any squeezed-out liquid gasket.

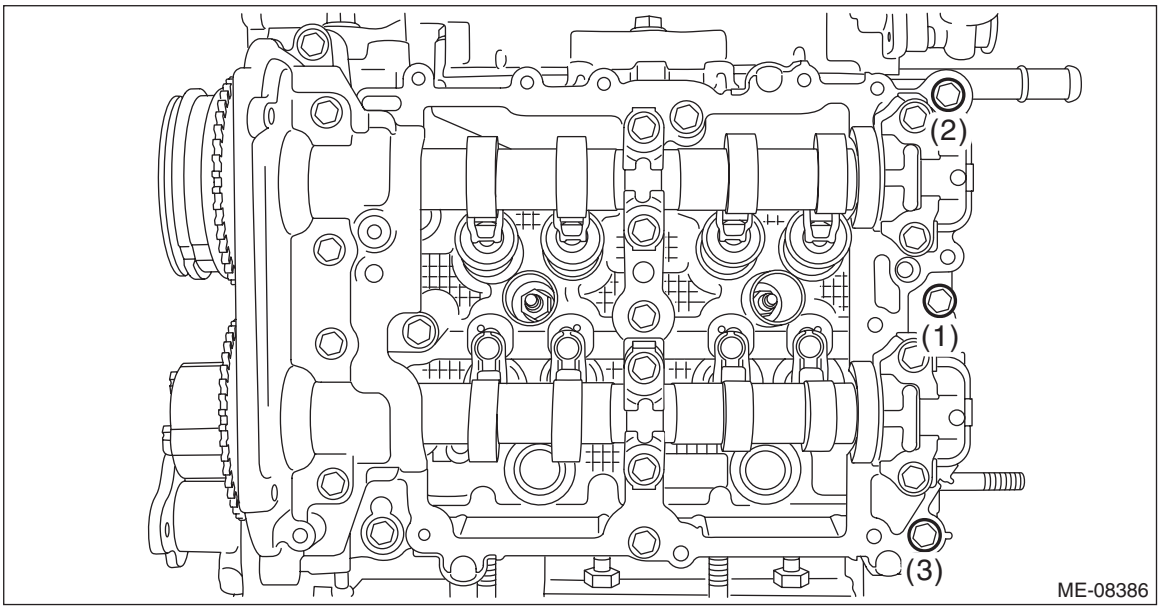

6) Set the part so that the intake manifold is on the upper side.
7) Install the cam sprocket LH. <Ref. to ME(H4DO)-124, CAM SPROCKET LH, INSTALLATION, Cam Sprocket.>

NOTE:
This procedure is required only when the cam carrier LH is removed for disassembly.
8) Check the cam clearance. <Ref. to ME(H4DO)-39, WHEN TIMING CHAIN ASSEMBLY IS REMOVED, INSPECTION, Cam Clearance.>
9) Install timing chain LH. <Ref. to ME(H4DO)-104, TIMING CHAIN LH, INSTALLATION, Timing Chain Assembly.>

10) Secure the engine harness to the cam carrier LH with a clip.

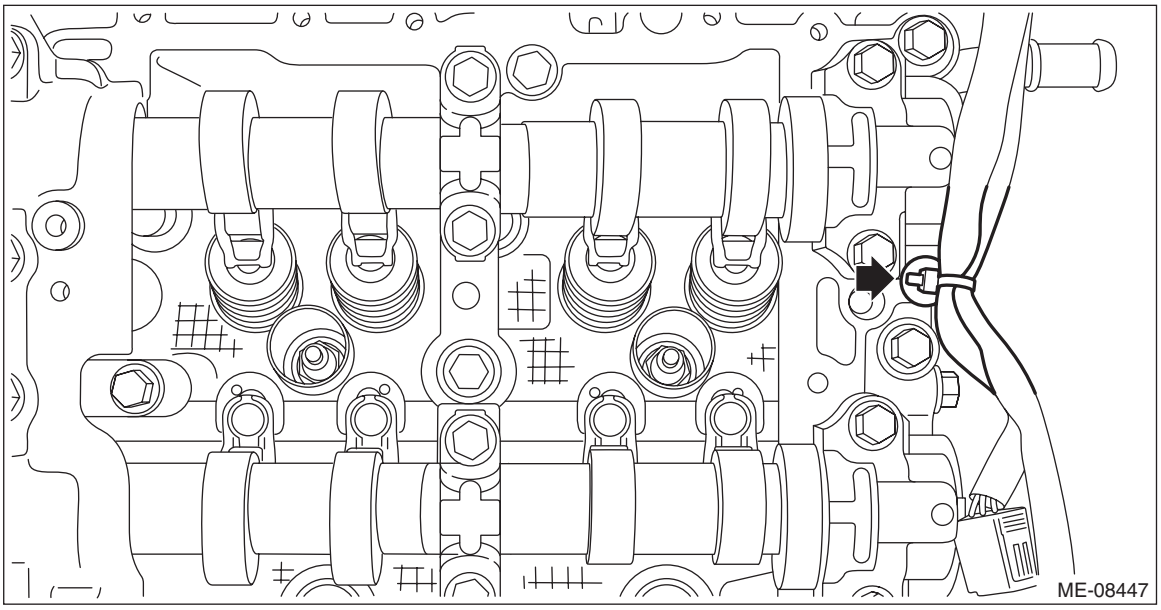

11) Install the rocker cover LH. <Ref. to ME(H4DO)-136, ROCKER COVER LH, INSTALLATION, Rocker Cover.>
12) Install the water pipe assembly LH. <Ref. to CO(H4DO)-28, WATER PIPE ASSEMBLY LH, INSTALLATION, Water Pipe Assembly.>
13) Install the fuel injector LH. <Ref. to FU(H4DO)-70, INSTALLATION, Fuel Injector.>
14) Install the chain cover. <Ref. to ME(H4DO)-88, INSTALLATION, Chain Cover.>
15) Install the engine to the vehicle. <Ref. to ME(H4DO)-53, INSTALLATION, Engine Assembly.>

C: DISASSEMBLY

1. CAM CARRIER RH

1) Loosen the bolts (front camshaft cap RH, intake center camshaft cap RH, intake rear camshaft cap RH, exhaust center camshaft cap RH, and exhaust rear camshaft cap RH) equally, a little at a time in numerical sequence as shown in the figure, and remove each camshaft cap.

NOTE:
Arrange camshaft caps in order so that they can be installed in their original positions.

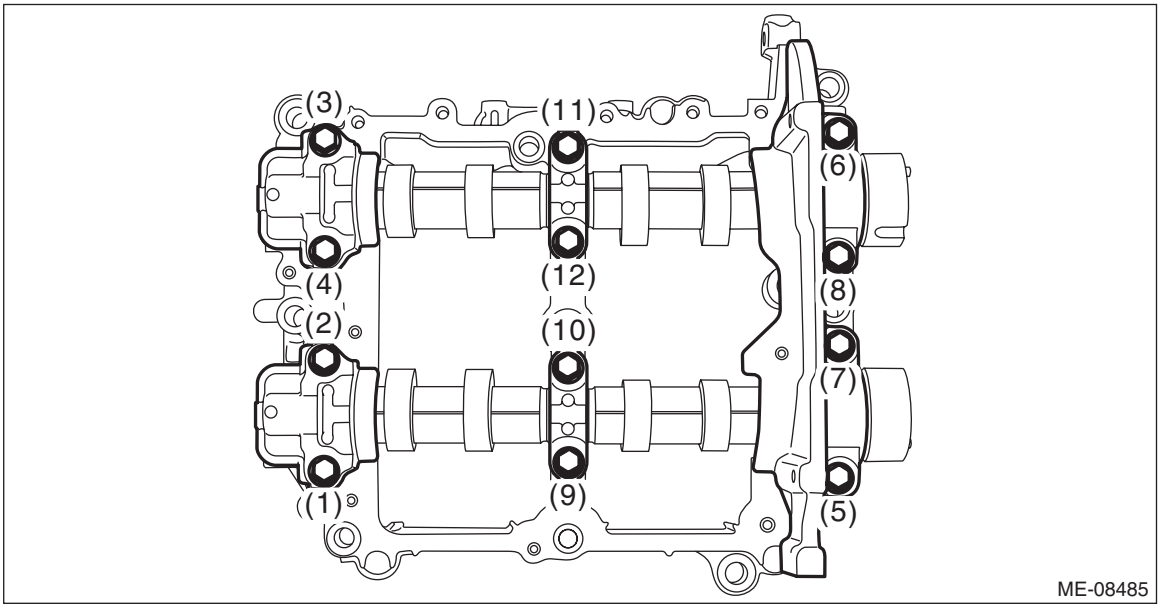

2) Remove the intake camshaft RH and the exhaust camshaft RH from cam carrier RH.

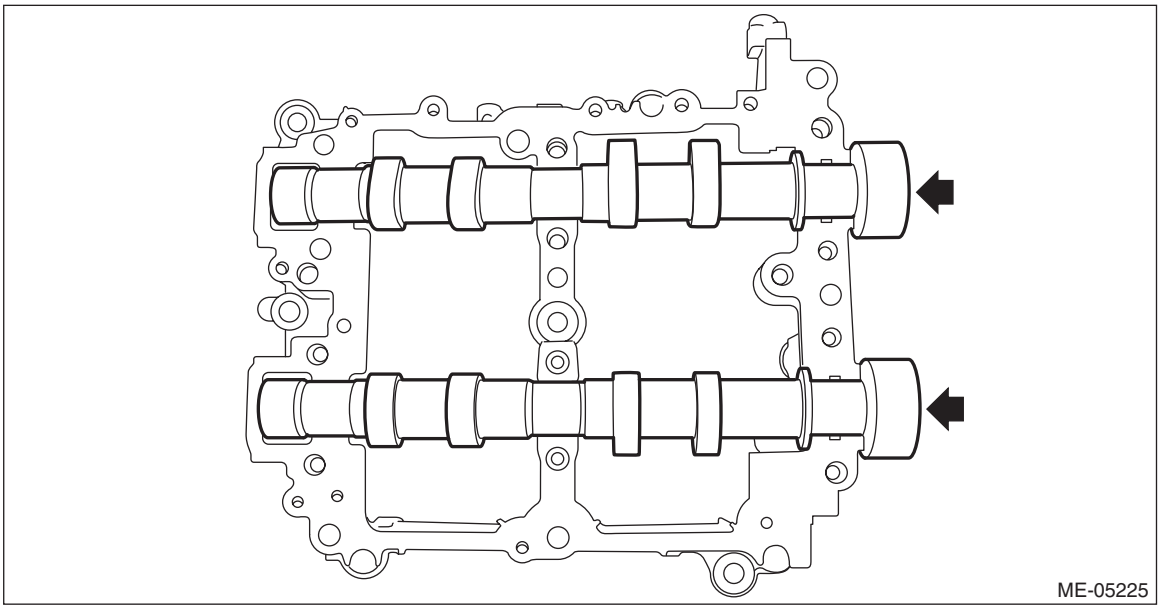

3) Remove the filter from cam carrier RH.

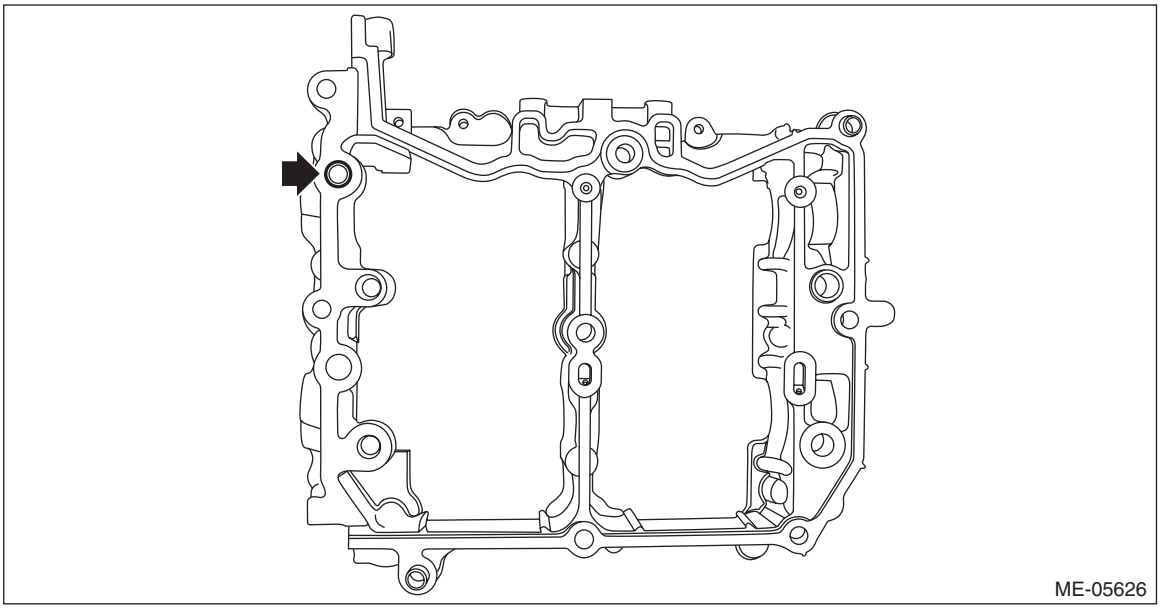

4) Remove the liquid gasket from cam carrier RH and front camshaft cap RH, intake rear camshaft cap RH and exhaust rear camshaft cap RH.

2. CAM CARRIER LH

1) Loosen the bolts (front camshaft cap LH, intake center camshaft cap LH, intake rear camshaft cap LH, exhaust center camshaft cap LH and exhaust rear camshaft cap LH) equally, a little at a time in numerical sequence as shown in the figure, and remove each camshaft cap.

NOTE:
Arrange camshaft caps in order so that they can be installed in their original positions.

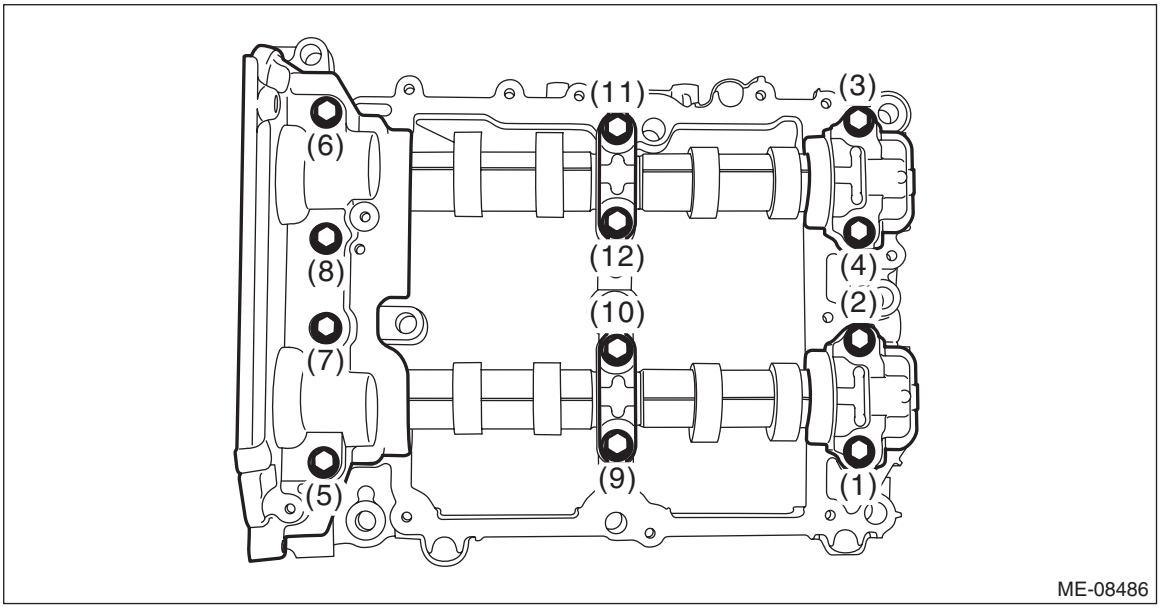

2) Remove the intake camshaft LH and the exhaust camshaft LH from cam carrier LH.

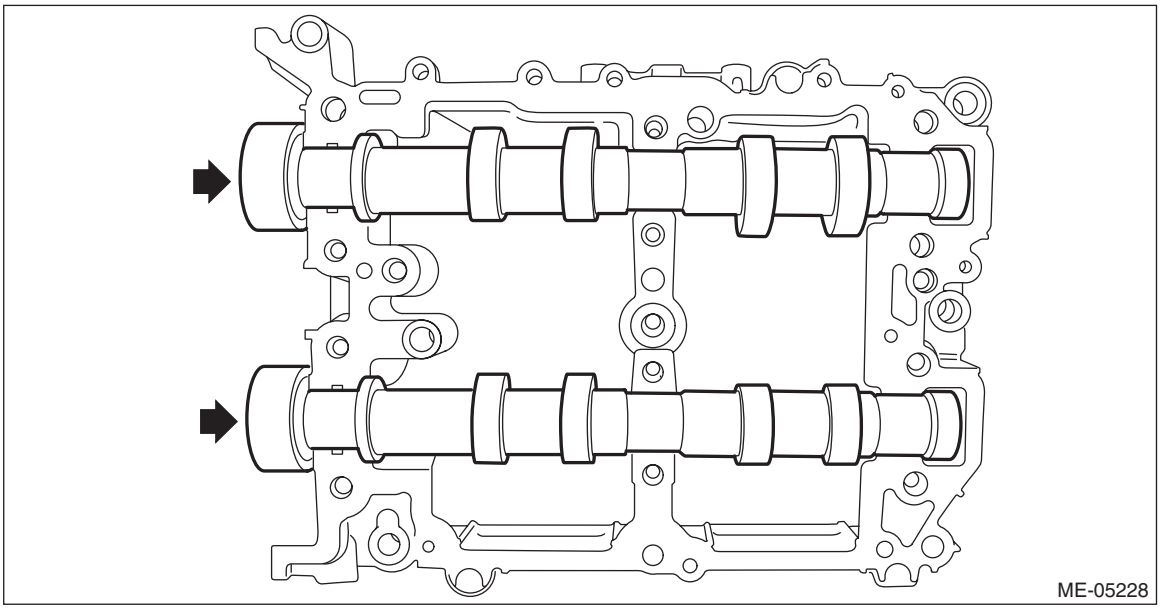

3) Remove the filter from cam carrier LH.

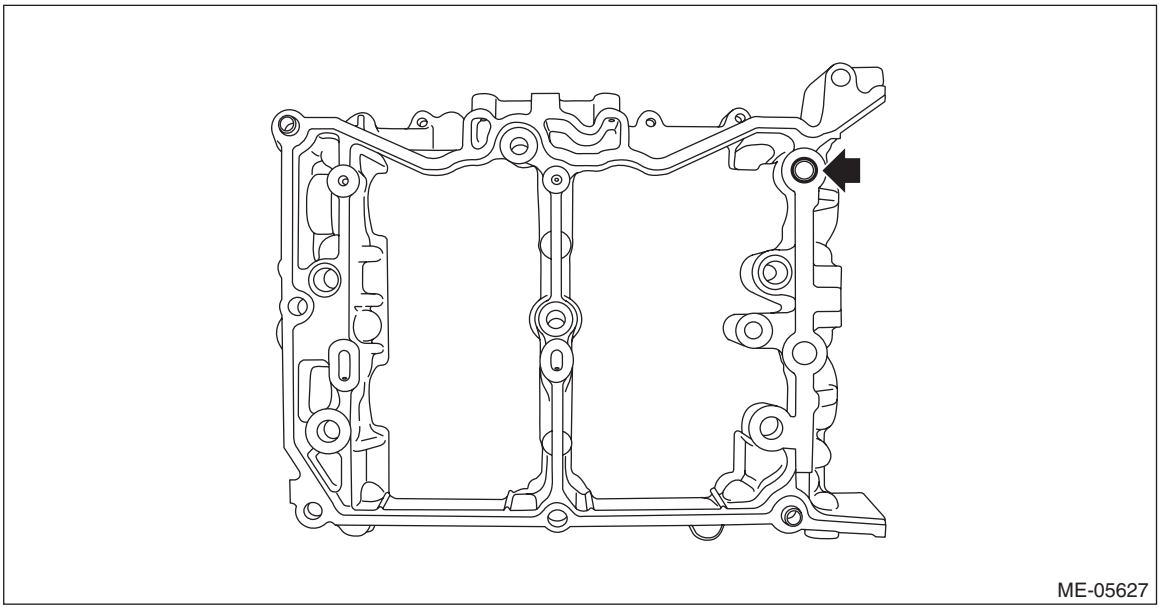

4) Remove the liquid gasket from cam carrier LH and front camshaft cap LH, intake rear camshaft cap LH and exhaust rear camshaft cap LH.

D: ASSEMBLY

1. CAM CARRIER RH

1) Install the filter to the cam carrier RH.

NOTE:
Use a new filter.

Filter insert position:
Cam carrier RH end face $0^{+0}_{-0.5}$ mm ($^{+0}_{-0.0197}$ in) position

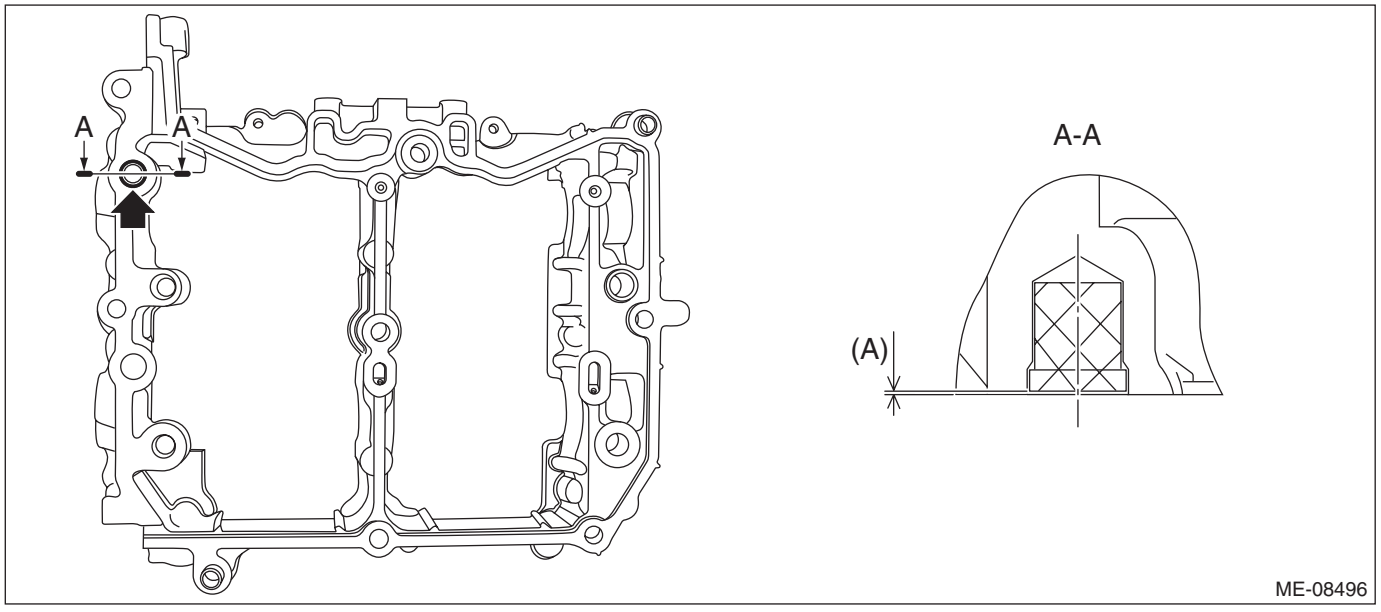

(A) 0 — 0.5 mm (0 — 0.0197 in)

2) Set the intake camshaft RH and the exhaust camshaft RH to the cam carrier RH.

NOTE:
Apply engine oil to the journals of cam carrier RH before setting the intake camshaft RH and exhaust camshaft RH.

3) Install the front camshaft cap RH, intake center camshaft cap RH, intake rear camshaft cap RH, exhaust center camshaft cap RH and exhaust rear camshaft cap RH.

(1) Apply liquid gasket to the mating surface of front camshaft cap RH, intake rear camshaft cap RH and exhaust rear camshaft cap RH as shown in the figure.

CAUTION:

• Do not apply liquid gasket excessively. Applying excessively may cause excess gasket to flow toward camshaft journal, resulting in engine seizure.

• Do not apply liquid gasket excessively to the intake center camshaft cap RH and exhaust center camshaft cap RH.

NOTE:

• Before applying liquid gasket, degrease the old liquid gasket seal surface of the front camshaft cap RH, intake rear camshaft cap RH, exhaust rear camshaft cap RH, and cam carrier RH.

• Install within 5 min. after applying liquid gasket.

Liquid gasket:

THREE BOND 1217G (Part No. K0877Y0100), THREE BOND 1217H or equivalent

Liquid gasket applying diameter:

Mating surfaces other than range A

2±0.5 mm (0.0787±0.0197 in)

Mating surfaces of range A

3.5±0.5 mm (0.1378±0.0197 in)

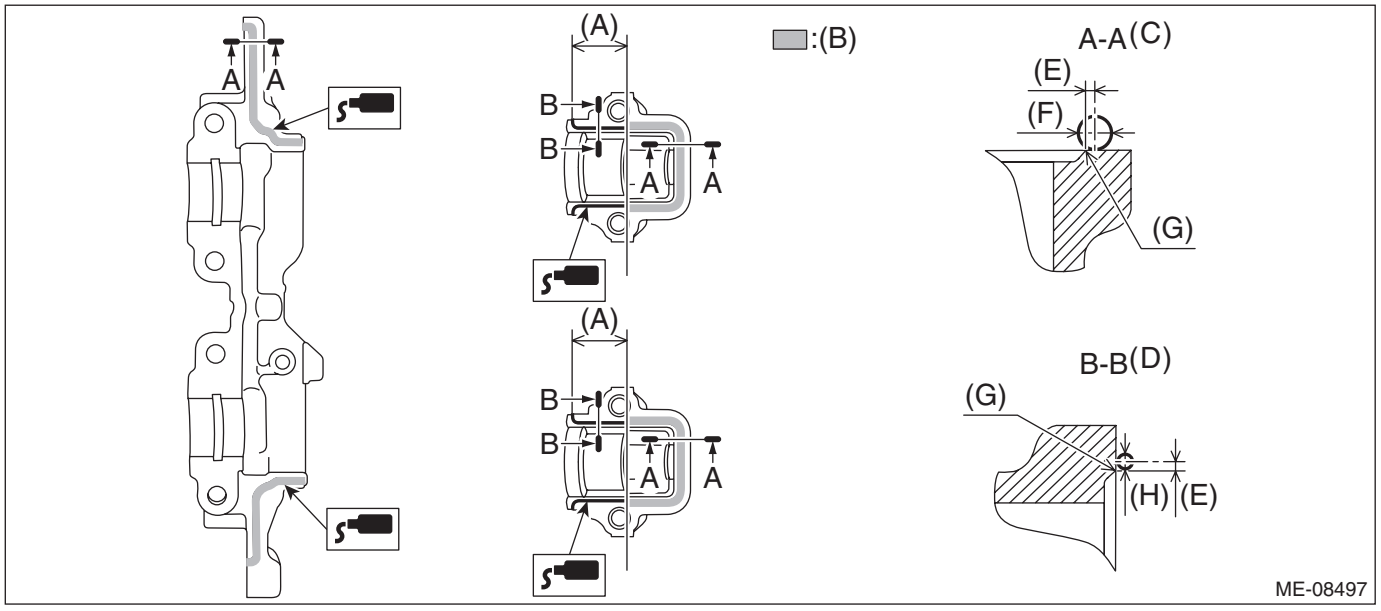

(A)	28.5 mm (1.122 in)	(D)	Liquid gasket applying position of mating surfaces other than range A	(G)	Chamfer edge
(B)	Range A	(E)	1 mm (0.0394 in) or less	(H)	ϕ2±0.5 mm (0.0787±0.0197 in)
(C)	Liquid gasket applying position of mating surfaces of range A	(F)	ϕ3.5±0.5 mm (0.1378±0.0197 in)		

(2) Apply engine oil to the journals of each camshaft cap before setting the camshaft cap.

(3) Tighten the bolts which secure front camshaft cap RH, intake center camshaft cap RH, intake rear camshaft cap RH, exhaust center camshaft cap RH and exhaust rear camshaft cap RH in numerical order as shown in the figure.

Tightening torque:
18 N·m (1.8 kgf-m, 13.3 ft-lb)

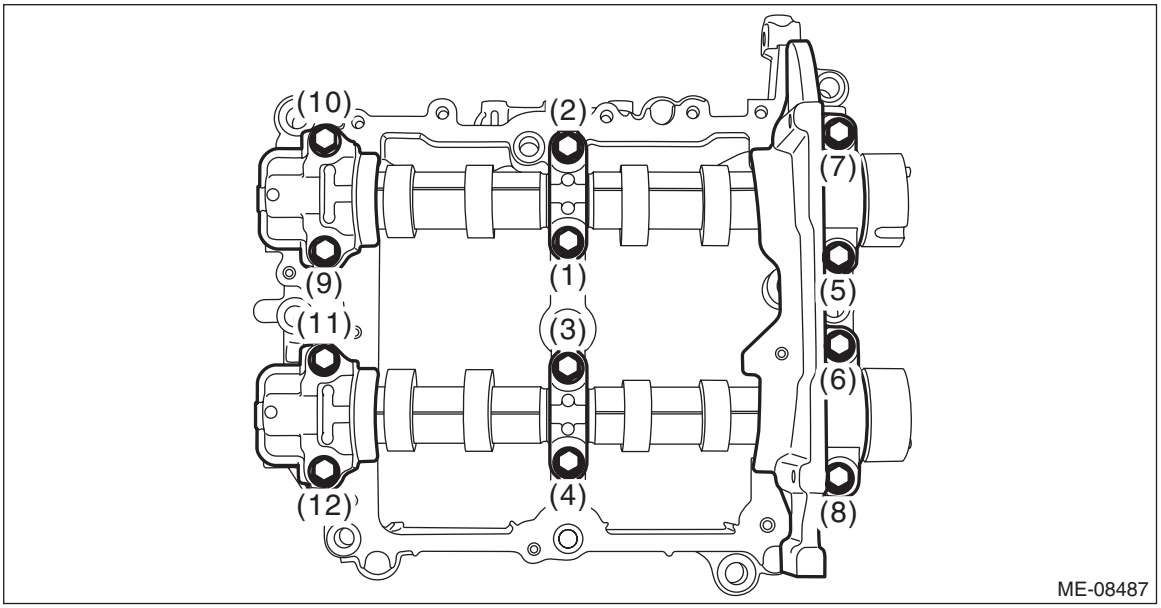

2. CAM CARRIER LH

1) Install the filter to the cam carrier LH.

NOTE:
Use a new filter.

Filter insert position:
Cam carrier LH end face $0^{+0}_{-0.5}$ mm ($^{+0}_{-0.0197}$ in) position

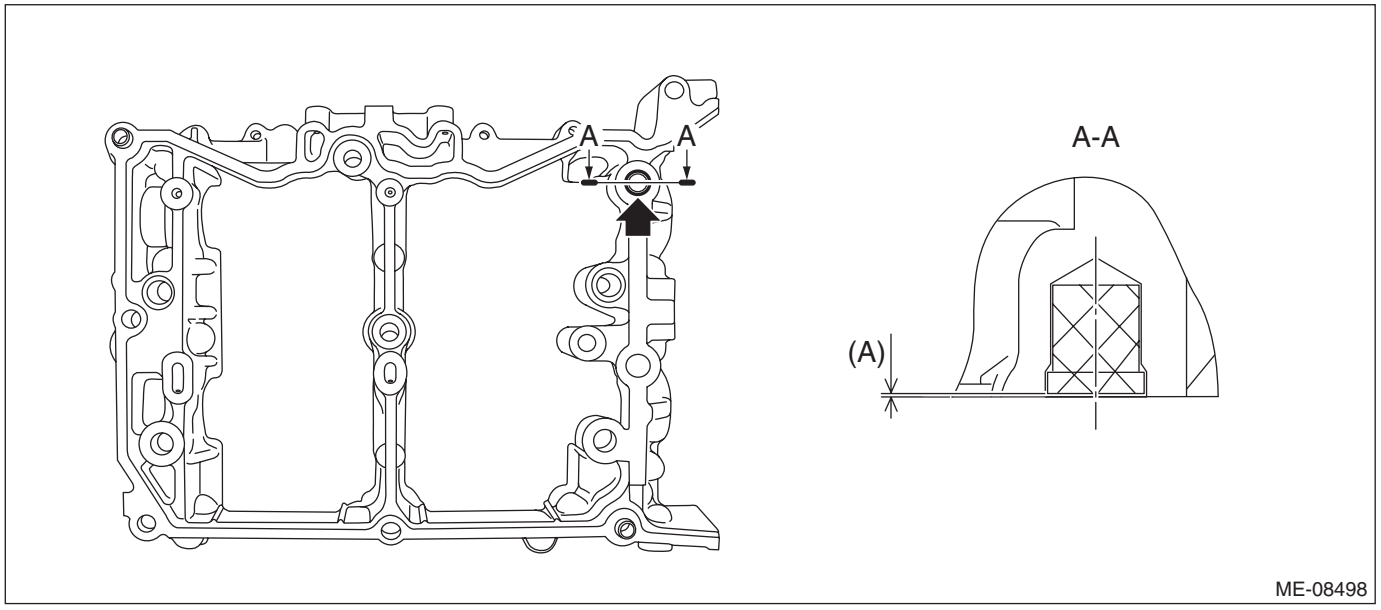

(A) 0 — 0.5 mm (0 — 0.0197 in)

2) Set the intake camshaft LH and the exhaust camshaft LH to the cam carrier LH.

NOTE:
Apply engine oil to the journals of cam carrier LH before setting the intake camshaft LH and exhaust camshaft LH.

3) Install the front camshaft cap LH, intake center camshaft cap LH, intake rear camshaft cap LH, exhaust center camshaft cap LH and exhaust rear camshaft cap LH.

(1) Apply liquid gasket to the mating surface of front camshaft cap LH, intake rear camshaft cap LH and exhaust rear camshaft cap LH as shown in the figure.

CAUTION:

• Do not apply liquid gasket excessively. Applying excessively may cause excess gasket to flow toward camshaft journal, resulting in engine seizure.

• Do not apply liquid gasket excessively to the intake center camshaft cap LH and exhaust center camshaft cap LH.

NOTE:

• Before applying liquid gasket, degrease the old liquid gasket seal surface of the front camshaft cap LH, intake rear camshaft cap LH, exhaust rear camshaft cap LH, and cam carrier LH.

• Install within 5 min. after applying liquid gasket.

Liquid gasket:

THREE BOND 1217G (Part No. K0877Y0100), THREE BOND 1217H or equivalent

Liquid gasket applying diameter:

Mating surfaces other than ranges A, B and C

2±0.5 mm (0.0787±0.0197 in)

Mating surfaces of ranges A and C

3.5±0.5 mm (0.1378±0.0197 in)

Mating surfaces of range B

$3^{+0.5}_{-0}$ mm ($0.1181^{+0.0197}_{-0}$ in)

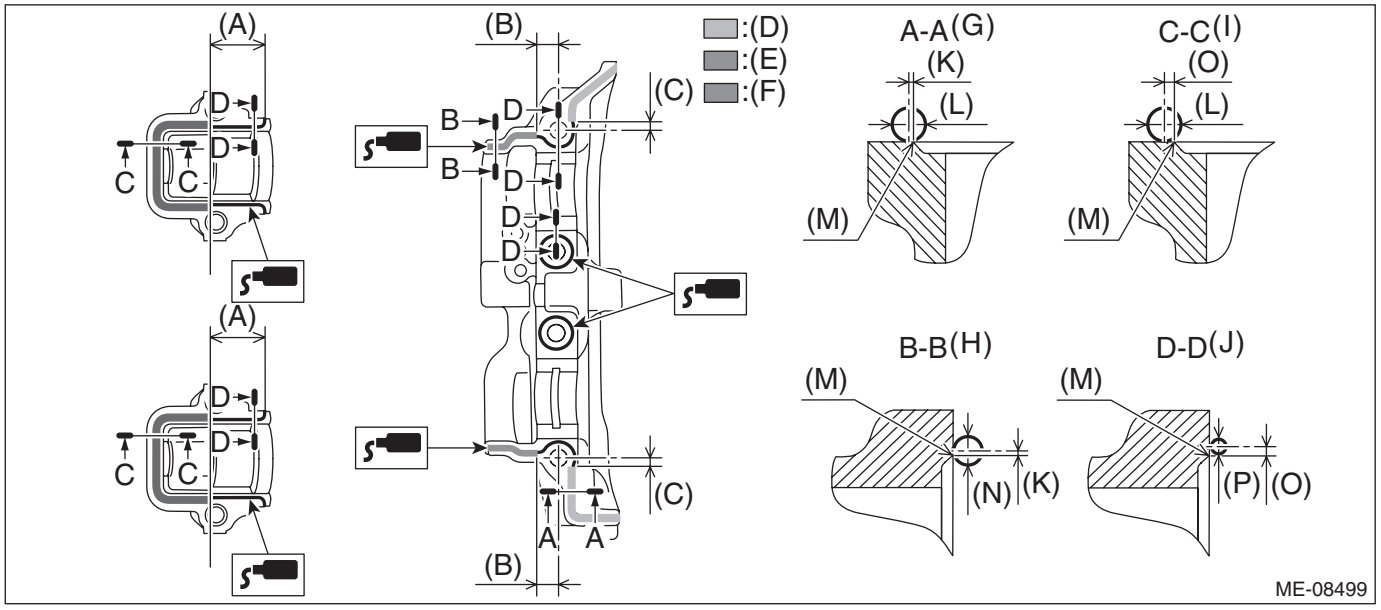

(A)	28.5 mm (1.122 in)	(G)	Liquid gasket applying position of mating surfaces of range A	(M)	Chamfer edge
(B)	11.6 mm (0.4567 in)	(H)	Liquid gasket applying position of mating surfaces of range B	(N)	$\phi 3^{+0.5}_{-0}$ mm ($0.1181^{+0.0197}_{-0}$ in)
(C)	5.1 mm (0.2008 in)	(I)	Liquid gasket applying position of mating surfaces of range C	(O)	1 mm (0.0394 in) or less
(D)	Range A	(J)	Liquid gasket applying position of mating surfaces other than range A, range B and range C	(P)	ϕ2±0.5 mm (0.0787±0.0197 in)
(E)	Range B	(K)	0.5 mm (0.0197 in)		
(F)	Range C	(L)	ϕ3.5±0.5 mm (0.1378±0.0197 in)		

(2) Apply engine oil to the journals of each camshaft cap before setting the camshaft cap.
(3) Tighten the bolts which secure front camshaft cap LH, intake center camshaft cap LH, intake rear camshaft cap LH, exhaust center camshaft cap LH and exhaust rear camshaft cap LH in numerical order as shown in the figure.

Tightening torque:
18 N·m (1.8 kgf-m, 13.3 ft-lb)

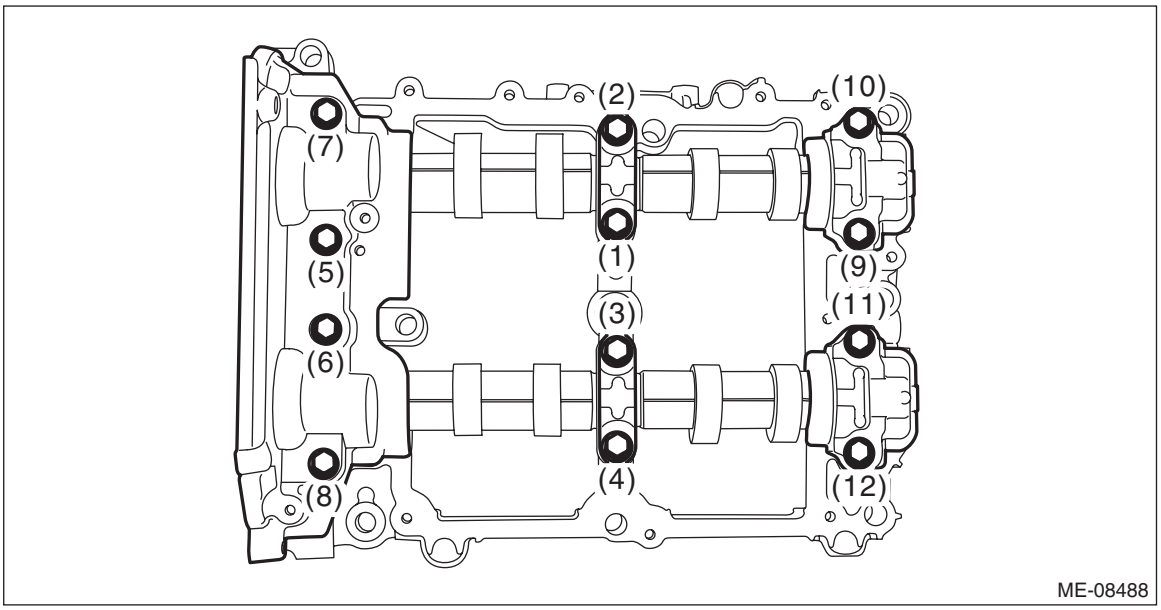

E: INSPECTION

1) Visually check the cam carrier filter, and if clogging is found, replace with a new part.

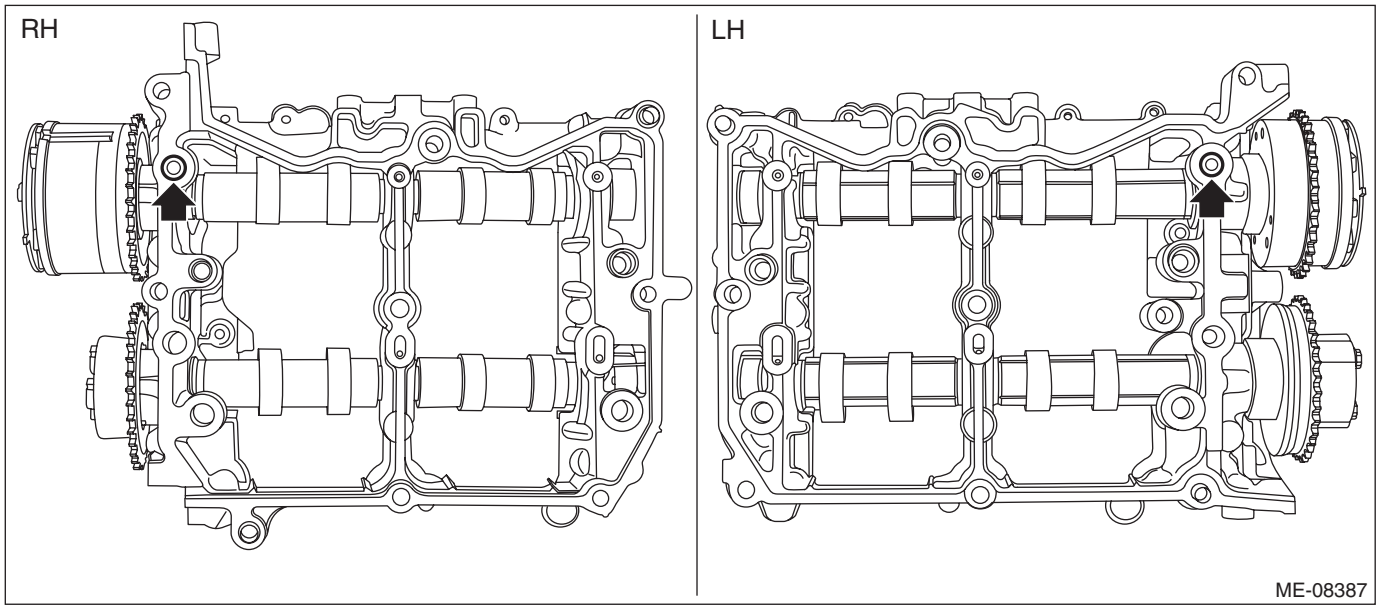

2) Check the camshaft journals for damage and wear. Replace the camshaft if faulty.
3) Check the cam face condition of camshaft, and remove the minor faults by grinding with oil stone. Replace the camshaft if uneven wear is found.
4) Using a dial gauge, check the camshaft bend. If it exceeds the limit, replace the camshaft.

NOTE:
Measurement should be performed at a temperature of 20°C (68°F).

Camshaft bend:
Limit
0.020 mm (0.00079 in)

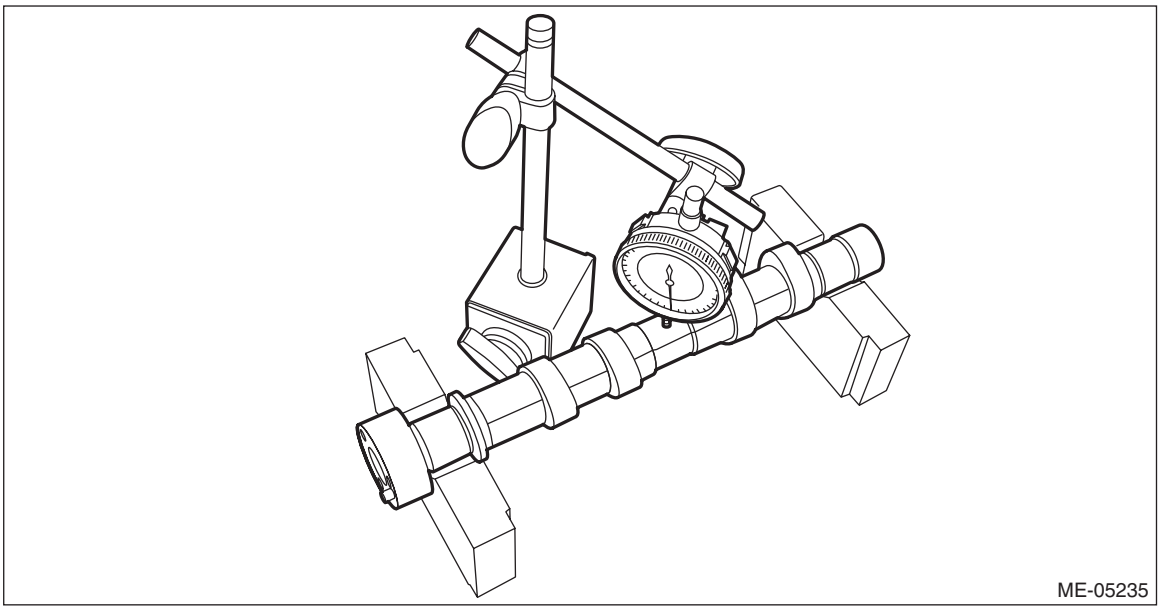

5) Check the cam lobe height “H” and cam base circle diameter “A” of camshaft as shown in the figure, using micrometer. If it is not within the standard, replace the camshaft.

NOTE:
Measurement should be performed at a temperature of 20°C (68°F).

Camshaft cam lobe overall height H:
Intake
Standard
40.34 — 40.44 mm (1.588 — 1.592 in)
Exhaust
Standard
39.66 — 39.76 mm (1.561 — 1.565 in)

Camshaft cam base circle diameter A:
Standard
34.0 mm (1.339 in)

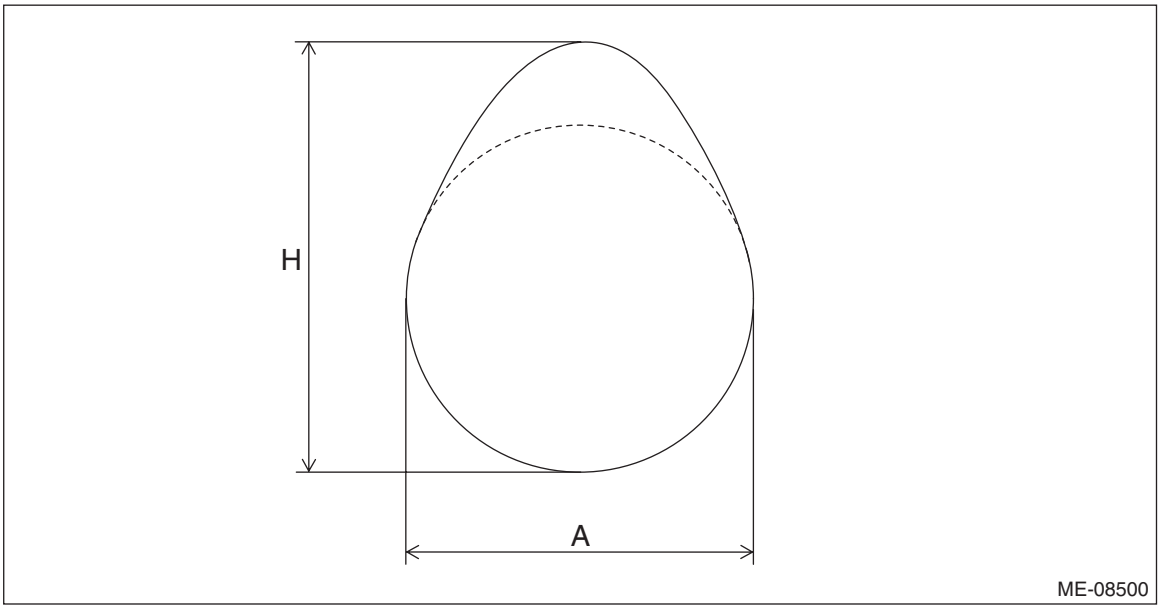

6) Check the camshaft journal outer diameter using micrometer. If it is not within the standard, replace the camshaft.

NOTE:
- Measurement should be performed at a temperature of 20°C (68°F).
- Measure outer diameter of each journal at several points, and read the value of most worn location.

Camshaft journal outer diameter:
Standard
25.946 — 25.963 mm (1.0215 — 1.0222 in)

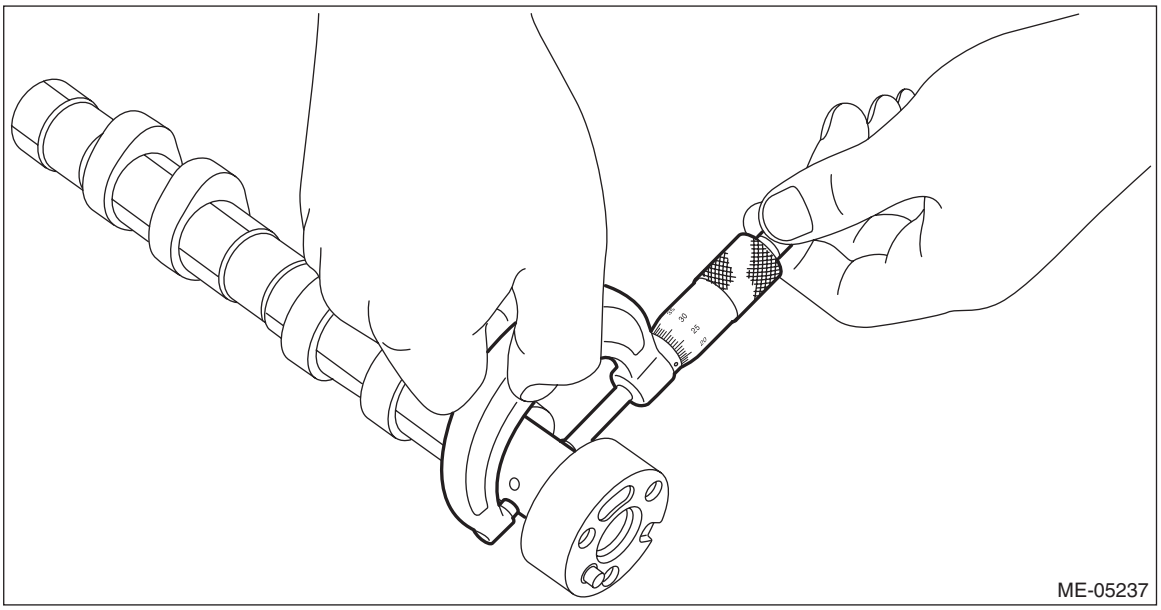

7) Using a dial gauge, check the thrust clearance of the camshaft. If it is not within the standard or if uneven wear is found, replace each camshaft cap and cam carrier as a set. If necessary replace the camshaft.

NOTE:
- Measurement should be performed at a temperature of 20°C (68°F).
- Set the dial gauge at end surface of camshaft.

Camshaft thrust clearance:
Standard
0.068 — 0.116 mm (0.0027 — 0.0047 in)

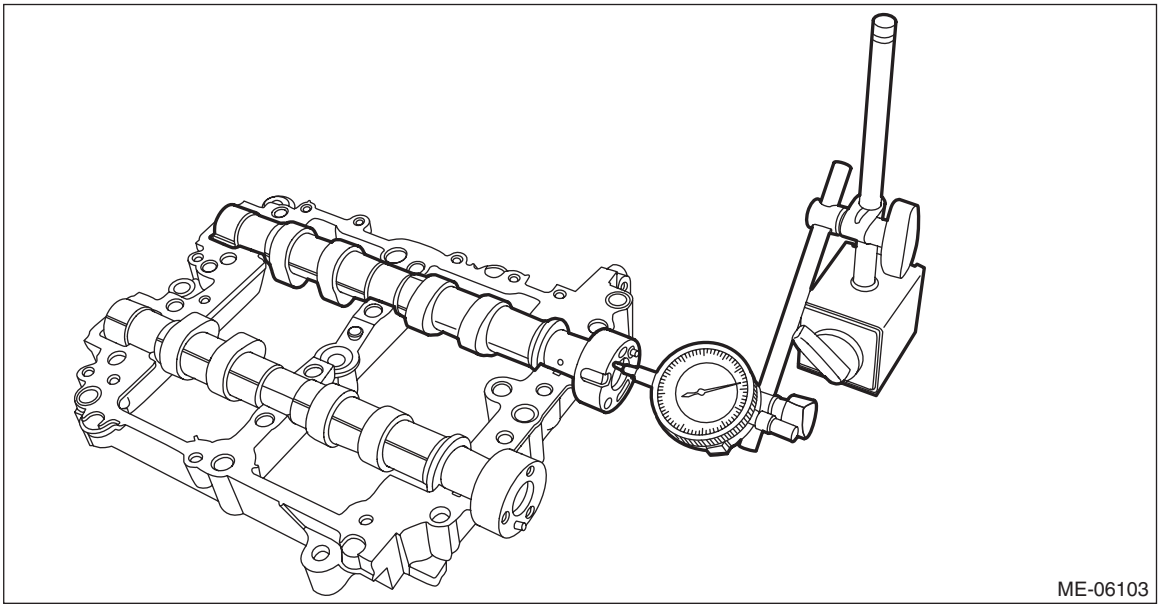

8) Check the oil clearance on the camshaft using a plastigauge.

NOTE:
Measurement should be performed at a temperature of 20°C (68°F).

(1) Remove the liquid gasket from cam carrier and front camshaft cap, intake rear camshaft cap and exhaust rear camshaft cap.
(2) Clean each camshaft cap and cam carrier journals.
(3) Set the camshaft to the cam carrier.
(4) Place a plastigauge across the camshaft journals of each camshaft and set the camshaft caps.
(5) Tighten the bolts which secure front camshaft cap, intake center camshaft cap, intake rear camshaft cap, exhaust center camshaft cap and exhaust rear camshaft cap in numerical order as shown in the figure.

Tightening torque:
18 N·m (1.8 kgf-m, 13.3 ft-lb)

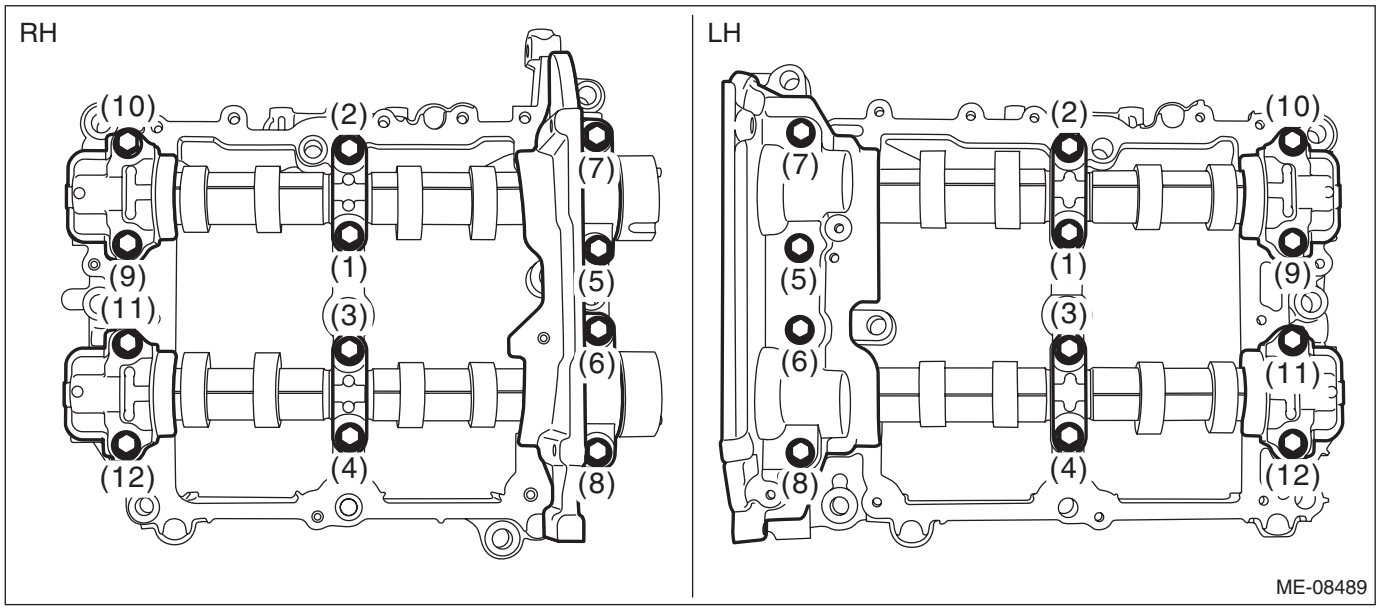

(6) Loosen the bolts (front camshaft cap, intake center camshaft cap, intake rear camshaft cap, exhaust center camshaft cap and exhaust rear camshaft cap) equally, a little at a time in numerical sequence as shown in the figure, and remove each camshaft cap.

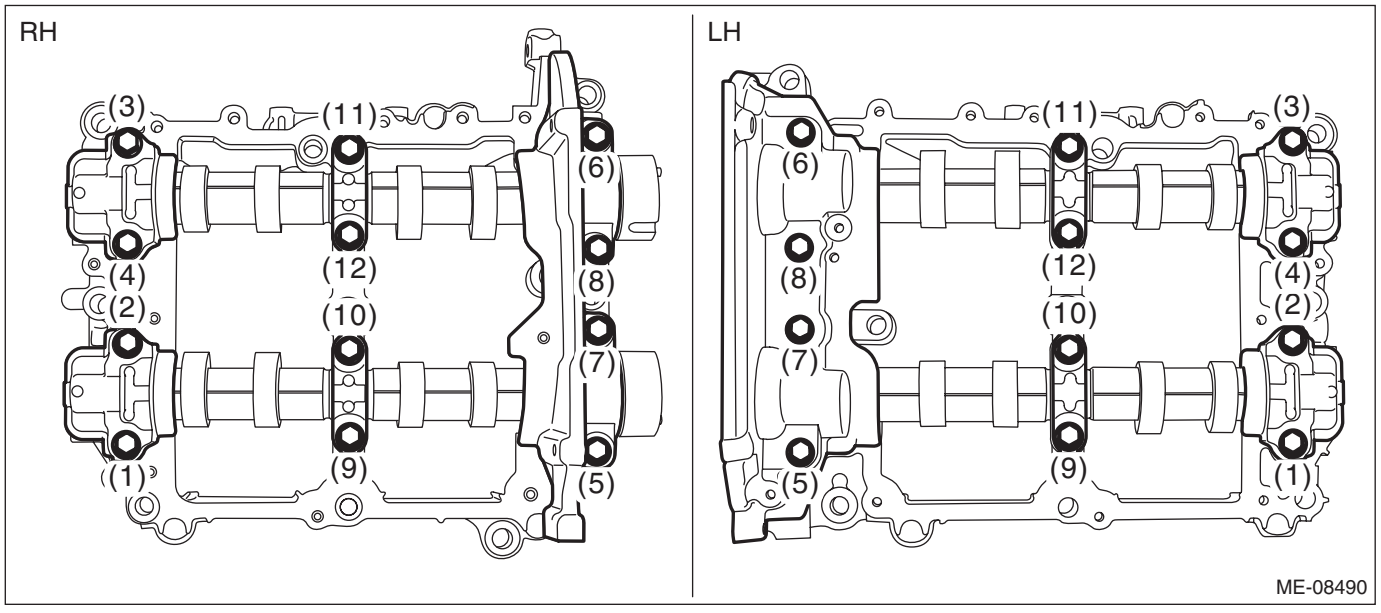

(7) Determine camshaft oil clearance by matching the widest point of plastigauge on each journal against scale printed on a package of plastigauge. If it is not within the standard, replace each camshaft cap and cam carrier as a set. If necessary replace the camshaft.

Camshaft oil clearance:
Standard
0.037 — 0.072 mm (0.0015 — 0.0028 in)

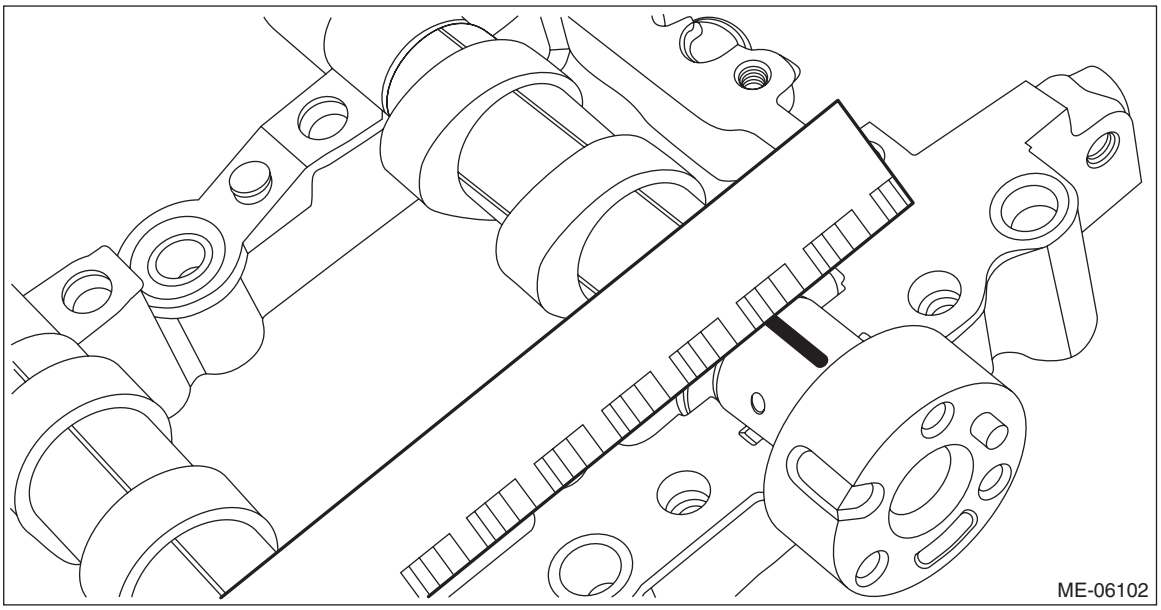

(8) Completely remove the plastigauge.

21.Cylinder Head

A: REMOVAL

1. CYLINDER HEAD RH

1) Remove the engine from the vehicle. <Ref. to ME(H4DO)-43, REMOVAL, Engine Assembly.>
2) Remove the intake manifold assembly. <Ref. to FU(H4DO)-18, REMOVAL, Intake Manifold Assembly.>
3) Remove the engine wiring harness. <Ref. to FU(H4DO)-36, REMOVAL, Engine Wiring Harness.>
4) Remove the chain cover. <Ref. to ME(H4DO)-83, REMOVAL, Chain Cover.>
5) Remove the rocker cover RH. <Ref. to ME(H4DO)-128, ROCKER COVER RH, REMOVAL, Rocker Cover.>
6) Remove the cam carrier RH. <Ref. to ME(H4DO)-140, CAM CARRIER RH, REMOVAL, Cam Carrier.>
7) Remove the EGR cooler. <Ref. to EC(H4DO)-32, REMOVAL, EGR Cooler.>
8) Loosen the bolts holding the cylinder head RH equally, a little at a time in numerical sequence as shown in the figure, and while leaving the cylinder head bolts (1) and (4) engaged by three or four threads, remove the other cylinder head bolts.

NOTE:
Leaving the cylinder head bolts (1) and (4) engaged by three or four threads prevents the cylinder head RH from falling.

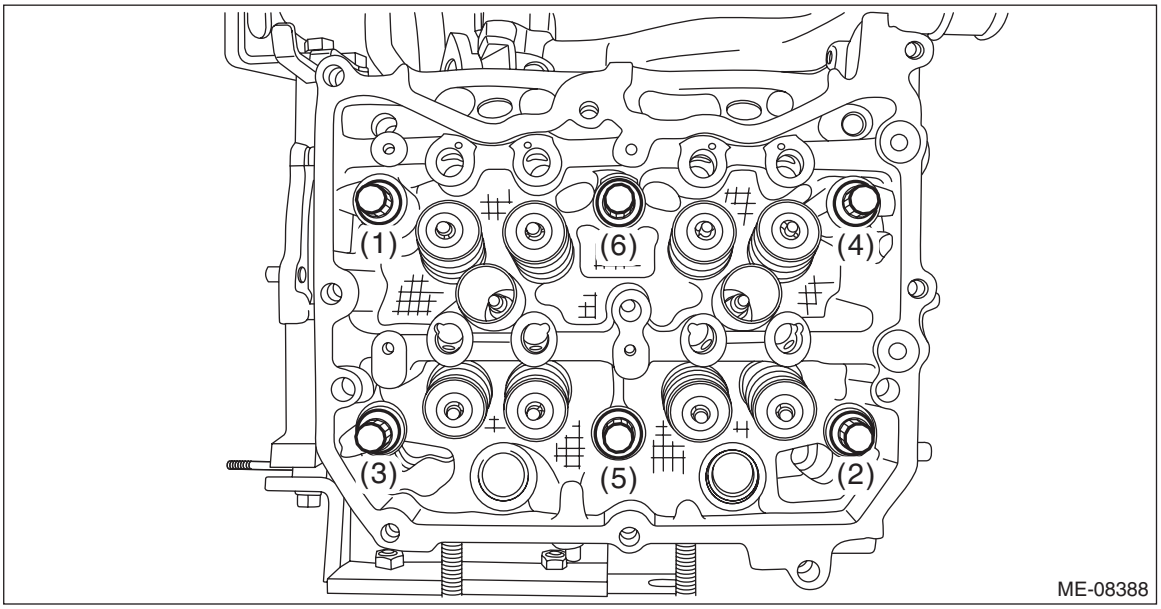

9) While tapping the cylinder head RH with a plastic hammer, separate it from cylinder block RH.
10) Remove the bolts (1) and (4) to remove cylinder head RH.
11) Remove the cylinder head gasket RH.

CAUTION:
Be careful not to scratch the mating surface of cylinder head and cylinder block.
12) Remove the liquid gasket from cylinder head RH and cam carrier RH.

2. CYLINDER HEAD LH

1) Remove the engine from the vehicle. <Ref. to ME(H4DO)-43, REMOVAL, Engine Assembly.>
2) Remove the intake manifold assembly. <Ref. to FU(H4DO)-18, REMOVAL, Intake Manifold Assembly.>
3) Remove the engine wiring harness. <Ref. to FU(H4DO)-36, REMOVAL, Engine Wiring Harness.>
4) Remove the chain cover. <Ref. to ME(H4DO)-83, REMOVAL, Chain Cover.>
5) Remove the rocker cover LH. <Ref. to ME(H4DO)-131, ROCKER COVER LH, REMOVAL, Rocker Cover.>
6) Remove the cam carrier LH. <Ref. to ME(H4DO)-143, CAM CARRIER LH, REMOVAL, Cam Carrier.>
7) Remove the A/C compressor. <Ref. to AC-50, REMOVAL, Compressor.>
8) Loosen the bolts holding the cylinder head LH equally, a little at a time in numerical sequence as shown in the figure, and while leaving the cylinder head bolts (1) and (4) engaged by three or four threads, remove the other cylinder head bolts.

NOTE:
Leaving the cylinder head bolts (1) and (4) engaged by three or four threads prevents the cylinder head LH from falling.

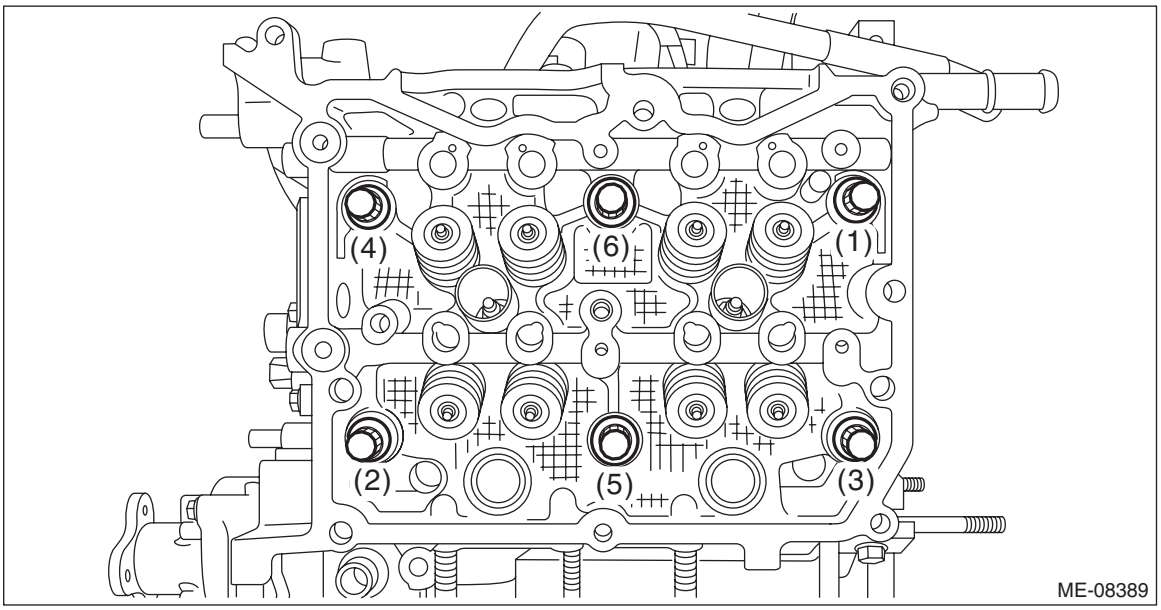

9) While tapping the cylinder head LH with a plastic hammer, separate it from cylinder block LH.
10) Remove the cylinder head bolts (1) and (4) to remove cylinder head LH.
11) Remove the cylinder head gasket LH.

CAUTION:
Be careful not to scratch the mating surface of cylinder head and cylinder block.
12) Remove the liquid gasket from cylinder head LH and cam carrier LH.

B: INSTALLATION

1. CYLINDER HEAD RH

1) Clean the bolt holes in the cylinder block RH.

CAUTION:
To avoid erroneous tightening of the bolts, clean out the bolt holes sufficiently by blowing with compressed air to eliminate engine coolant etc.

2) Apply liquid gasket to both sides of the cylinder head gasket RH as shown in the figure.

NOTE:
- Use a new cylinder head gasket RH.
- Before applying liquid gasket, degrease the mating surface of cylinder blocks RH and cylinder head RH.
- Install within 5 min. after applying liquid gasket.

Liquid gasket:
THREE BOND 1217G (Part No. K0877Y0100), THREE BOND 1217H or equivalent

Liquid gasket applying diameter:
3±1 mm (0.1181±0.0394 in)

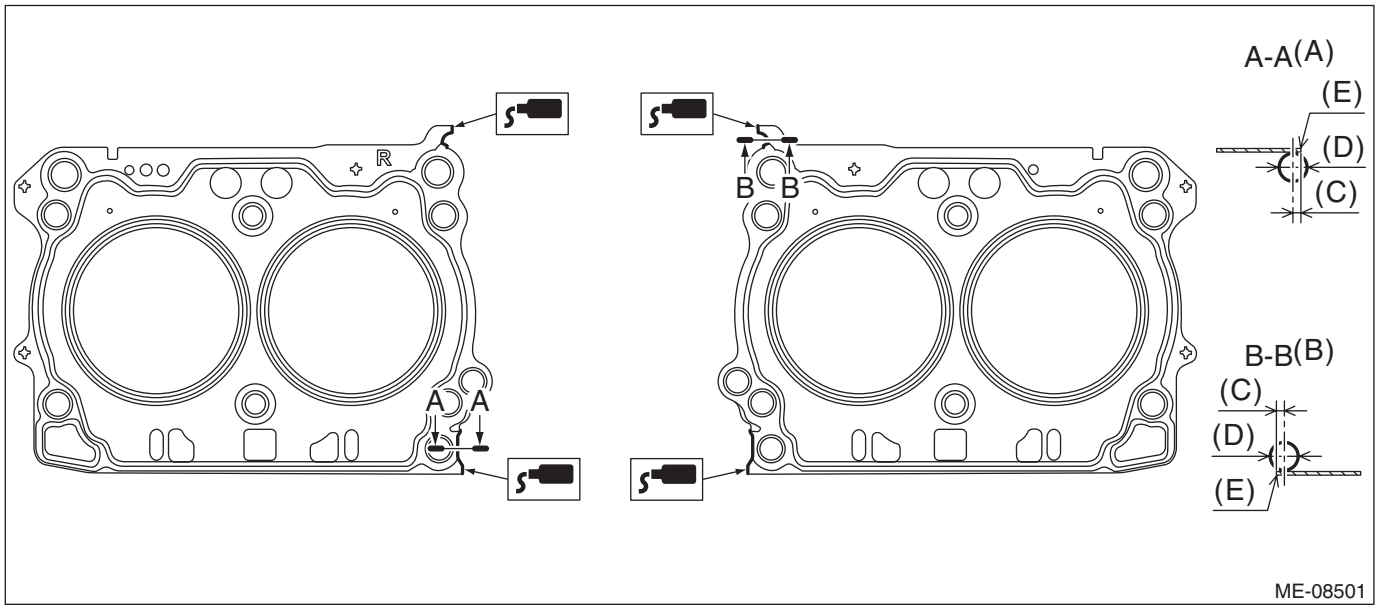

(A)	Liquid gasket applying position to the cylinder head side	(C)	1 mm (0.0394 in) or less	(E)	Cylinder head gasket edge
(B)	Liquid gasket applying position to the cylinder block side	(D)	ϕ3±1 mm (0.1181±0.0394 in)		

3) Attach the cylinder head gasket RH.

NOTE:
Check that liquid gasket RH is squeezed out from the cylinder head gasket.

4) Install the cylinder head RH to the cylinder block RH.

CAUTION:
Be careful not to scratch the mating surface of cylinder head RH and cylinder block RH.

(1) Clean the cylinder head bolt threads and apply sufficient engine oil to the washer and cylinder head bolts threads.

(2) Mount the cylinder head RH onto the cylinder block RH, and tighten all bolts with a torque of 29 N·m (3.0 kgf-m, 21.4 ft-lb) in numerical order as shown in the figure.

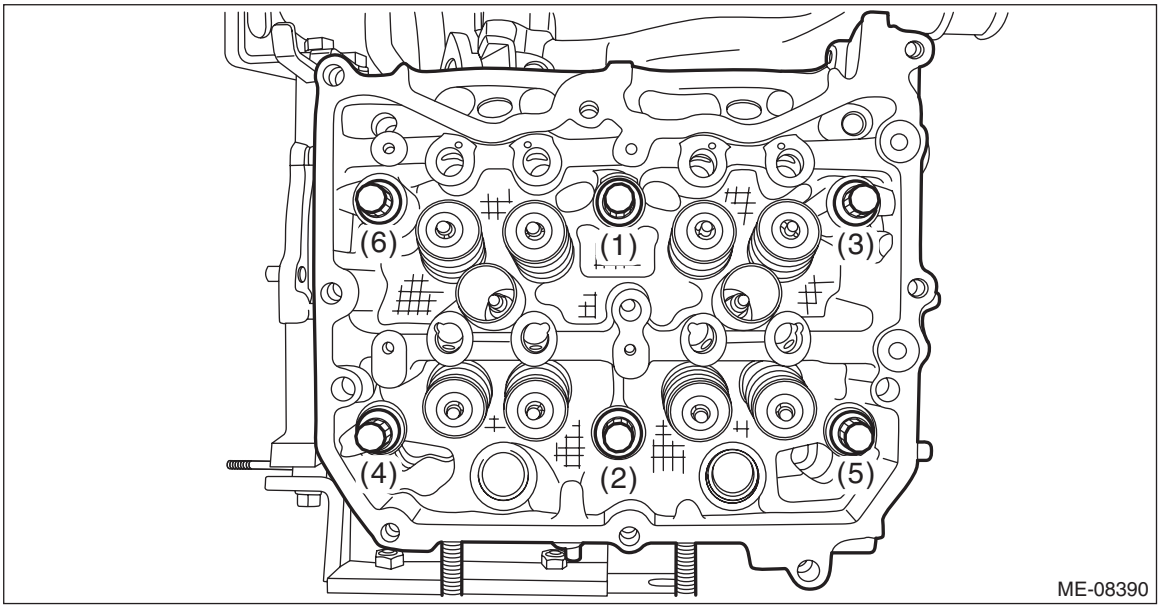

(3) Tighten all cylinder head bolts further with a torque of 100 N·m (10.2 kgf-m, 73.8 ft-lb) in numerical order as shown in the figure.

CAUTION:
If the bolt makes stick-slip sound during tightening, repeat the procedure from step 1). In that case, the cylinder head gasket RH can be reused. But it is necessary to remove liquid gasket completely from cylinder block RH, cylinder head RH and cylinder head gasket RH and re-apply to them.

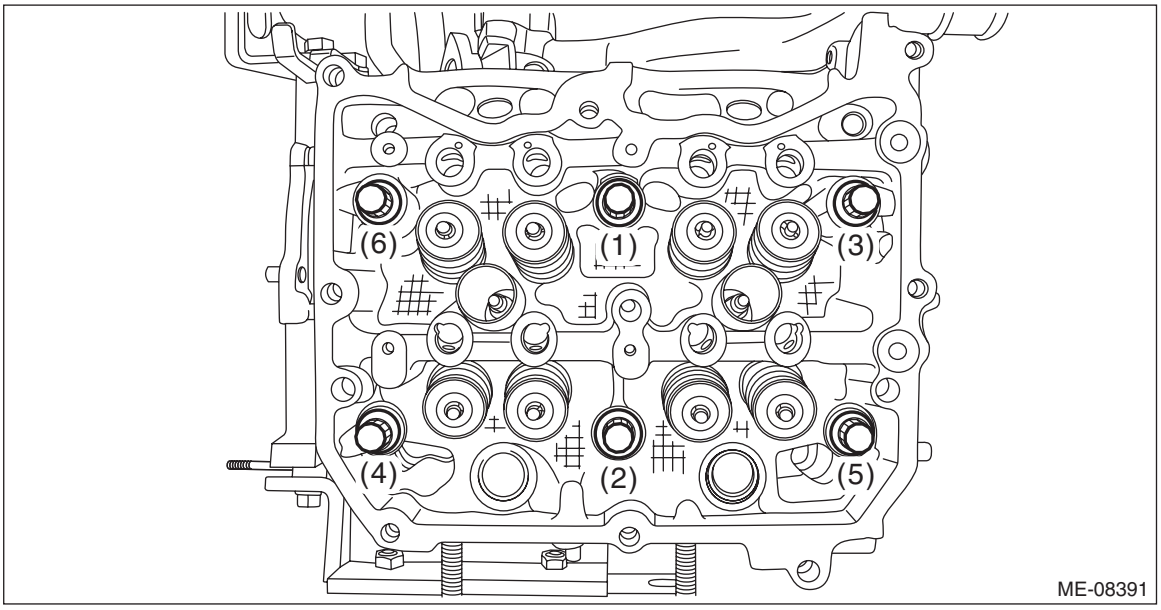

(4) Loosen all cylinder head bolts 180° in numerical order as shown in the figure, and then loosen all cylinder head bolts 180° further in numerical order as shown in the figure.

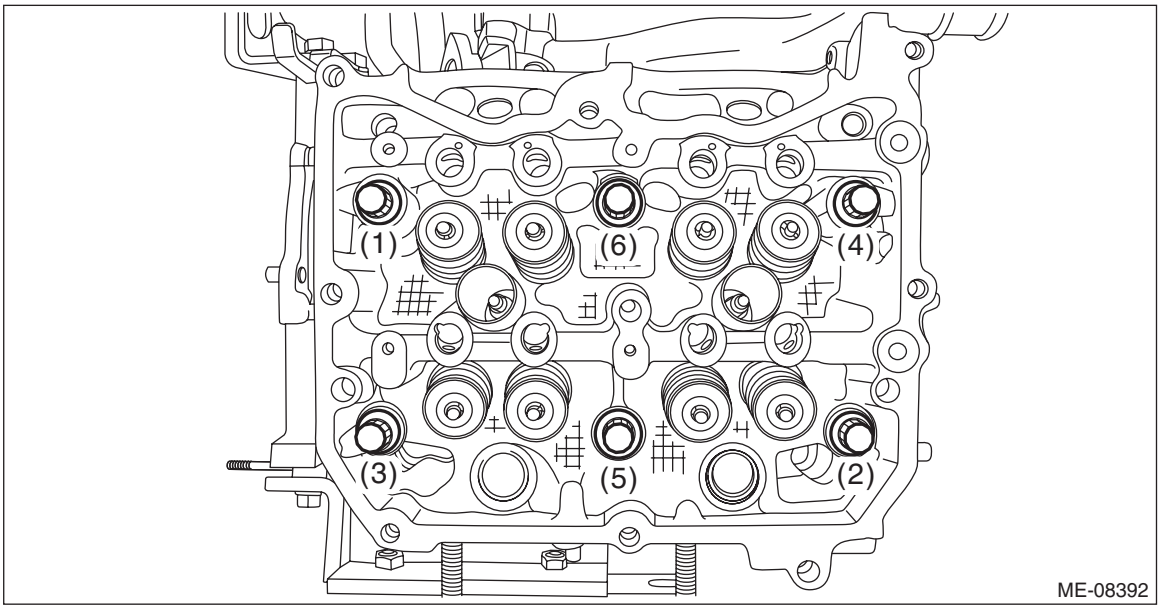

(5) Tighten all cylinder head bolts with a torque of 42 N·m (4.3 kgf-m, 31.0 ft-lb) in numerical order as shown in the figure.

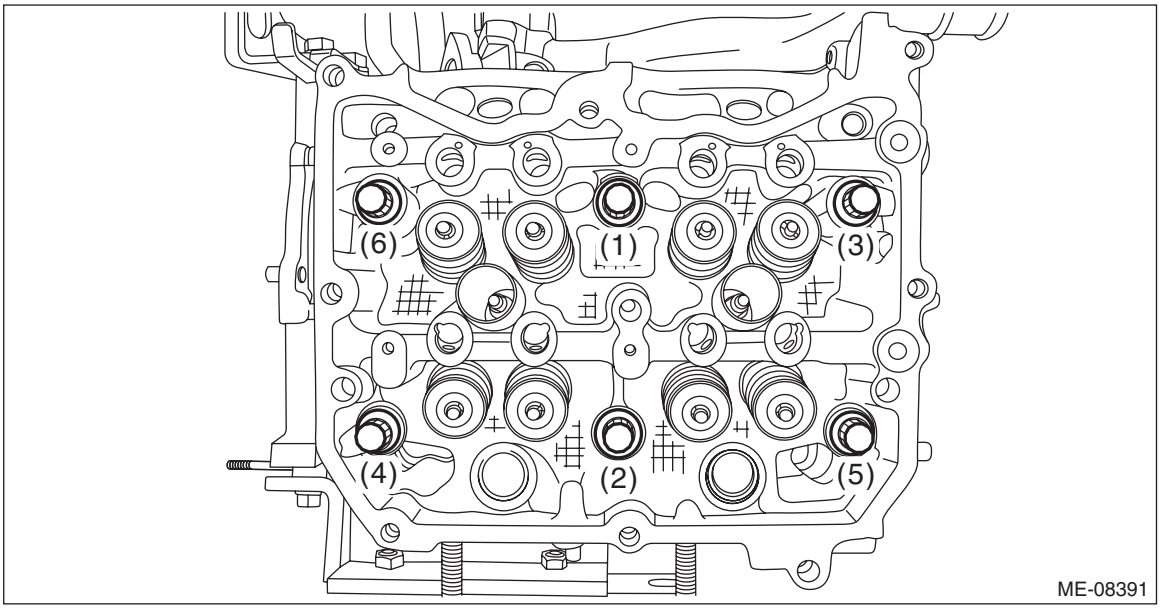

(6) Using angle gauge, tighten all cylinder head bolts with specified angle in numerical order as shown in the figure.

ST 499817100 ENGINE STAND

Tightening angle:
80°±2°

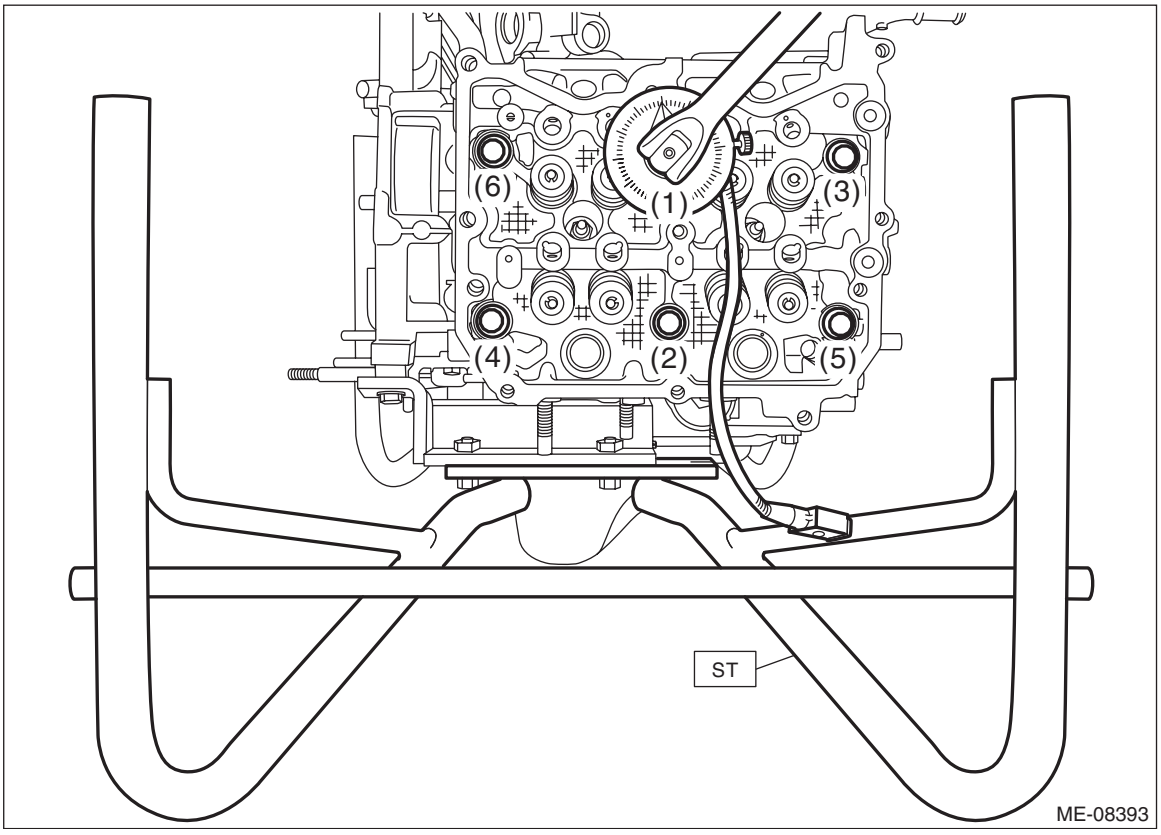

(7) Using angle gauge, tighten the cylinder head bolts (2 places) with specified angle in numerical order as shown in the figure.

ST 499817100 ENGINE STAND

Tightening angle:

75°±2°

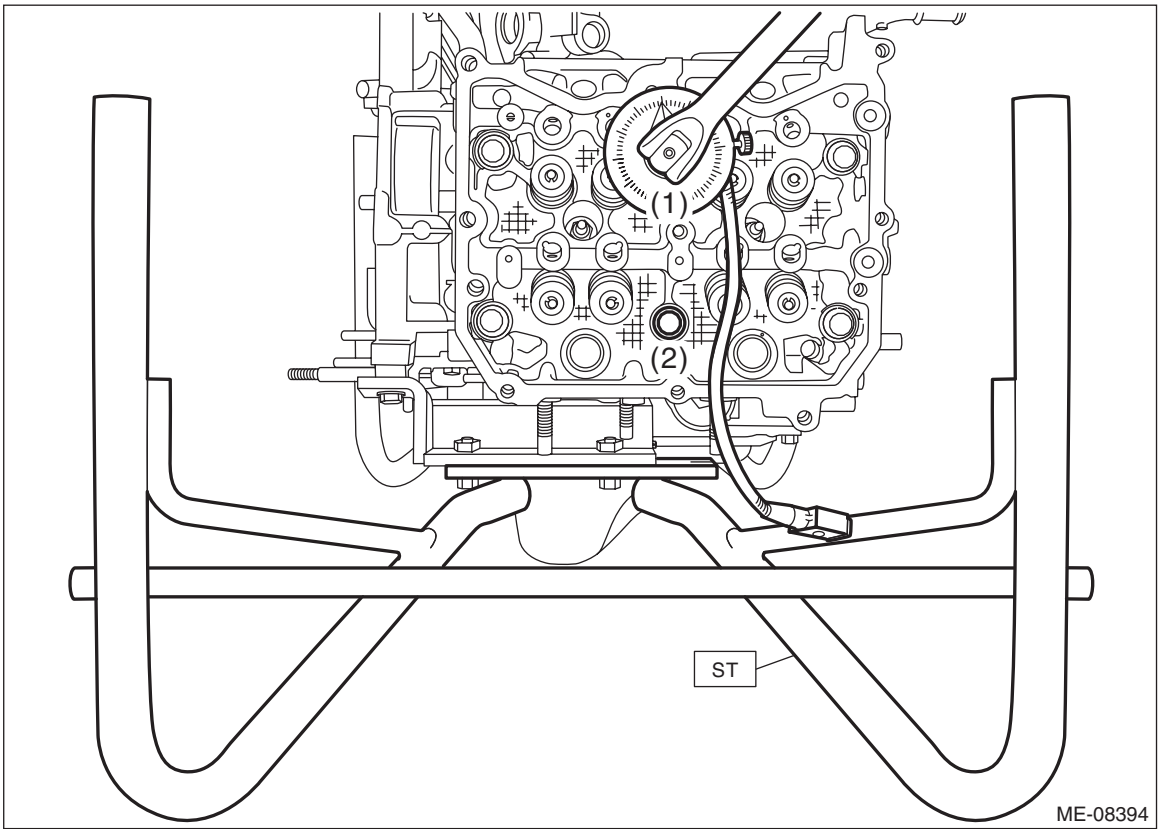

(8) Using angle gauge, tighten the cylinder head bolts (4 places) with specified angle in numerical order as shown in the figure.

NOTE:
After tightening, if the liquid gasket is squeezed out onto the seal surface of the chain cover, completely remove any squeezed-out liquid gasket.
ST 499817100 ENGINE STAND

Tightening angle:
30°±2°

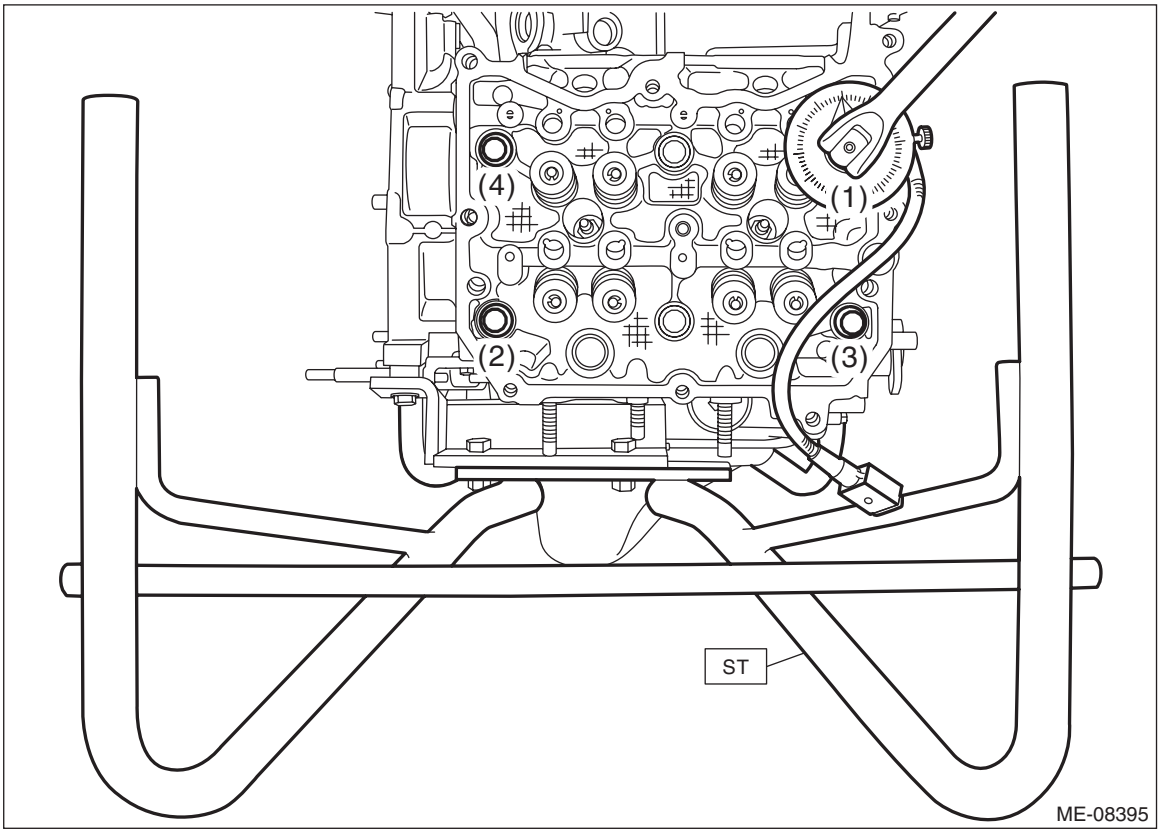

5) Install the EGR cooler. <Ref. to EC(H4DO)-43, INSTALLATION, EGR Cooler.>
6) Install the cam carrier RH. <Ref. to ME(H4DO)-146, CAM CARRIER RH, INSTALLATION, Cam Carrier.>
7) Install the rocker cover RH. <Ref. to ME(H4DO)-133, ROCKER COVER RH, INSTALLATION, Rocker Cover.>
8) Install the chain cover. <Ref. to ME(H4DO)-88, INSTALLATION, Chain Cover.>
9) Install the engine wiring harness. <Ref. to FU(H4DO)-39, INSTALLATION, Engine Wiring Harness.>
10) Install the intake manifold assembly. <Ref. to FU(H4DO)-26, INSTALLATION, Intake Manifold Assembly.>
11) Install the engine to the vehicle. <Ref. to ME(H4DO)-53, INSTALLATION, Engine Assembly.>

2. CYLINDER HEAD LH

1) Clean the bolt holes in the cylinder block LH.

CAUTION:
To avoid erroneous tightening of the bolts, clean out the bolt holes sufficiently by blowing with compressed air to eliminate engine coolant etc.

2) Apply liquid gasket to both sides of the cylinder head gasket LH as shown in the figure.

NOTE:
- Use a new cylinder head gasket LH.
- Before applying liquid gasket, degrease the mating surface of cylinder blocks LH and cylinder head LH.
- Install within 5 min. after applying liquid gasket.

Liquid gasket:
THREE BOND 1217G (Part No. K0877Y0100), THREE BOND 1217H or equivalent

Liquid gasket applying diameter:
3±1 mm (0.1181±0.0394 in)

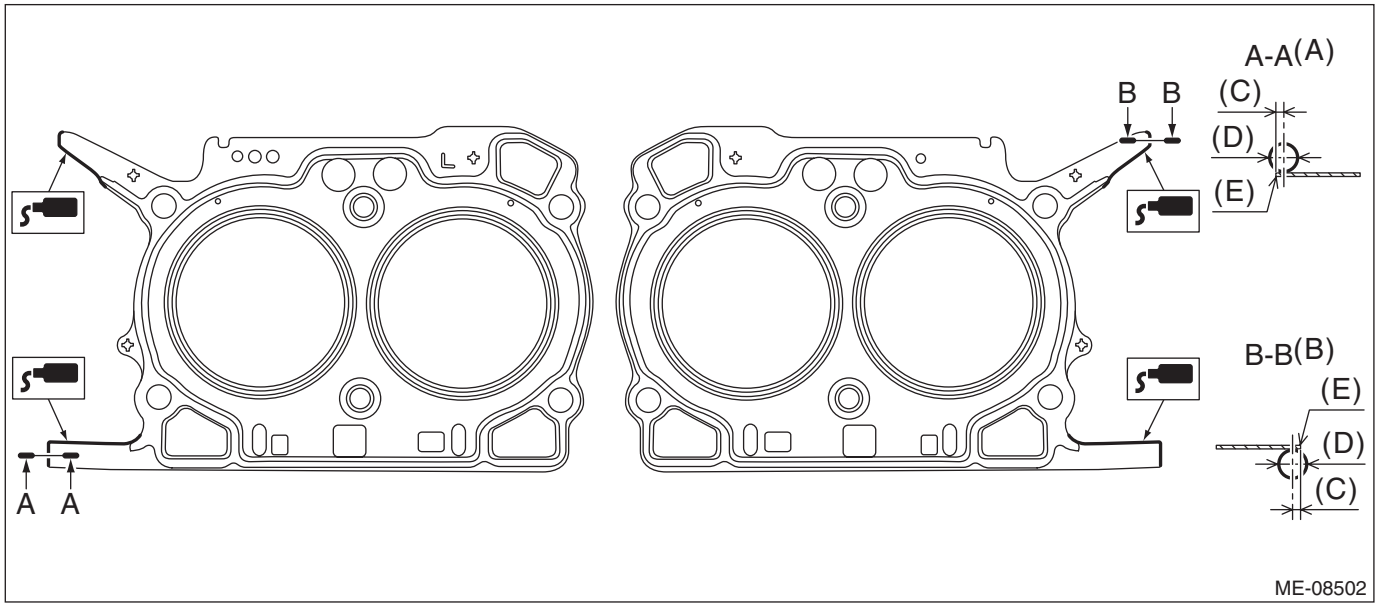

(A)	Liquid gasket applying position to the cylinder head side	(C)	1 mm (0.0394 in) or less	(E)	Cylinder head gasket edge
(B)	Liquid gasket applying position to the cylinder block side	(D)	ϕ3±1 mm (0.1181±0.0394 in)		

3) Attach the cylinder head gasket LH.

NOTE:
Check that liquid gasket is squeezed out from the cylinder head gasket LH.
4) Install the cylinder head LH to the cylinder block LH.

CAUTION:
Be careful not to scratch the mating surface of cylinder head LH and cylinder block LH.

(1) Clean the cylinder head bolt threads and apply sufficient engine oil to the washer and cylinder head bolts threads.
(2) Mount the cylinder head LH onto the cylinder block LH, then tighten all bolts with a torque of 29 N·m (3.0 kgf-m, 21.4 ft-lb) in numerical order as shown in the figure.

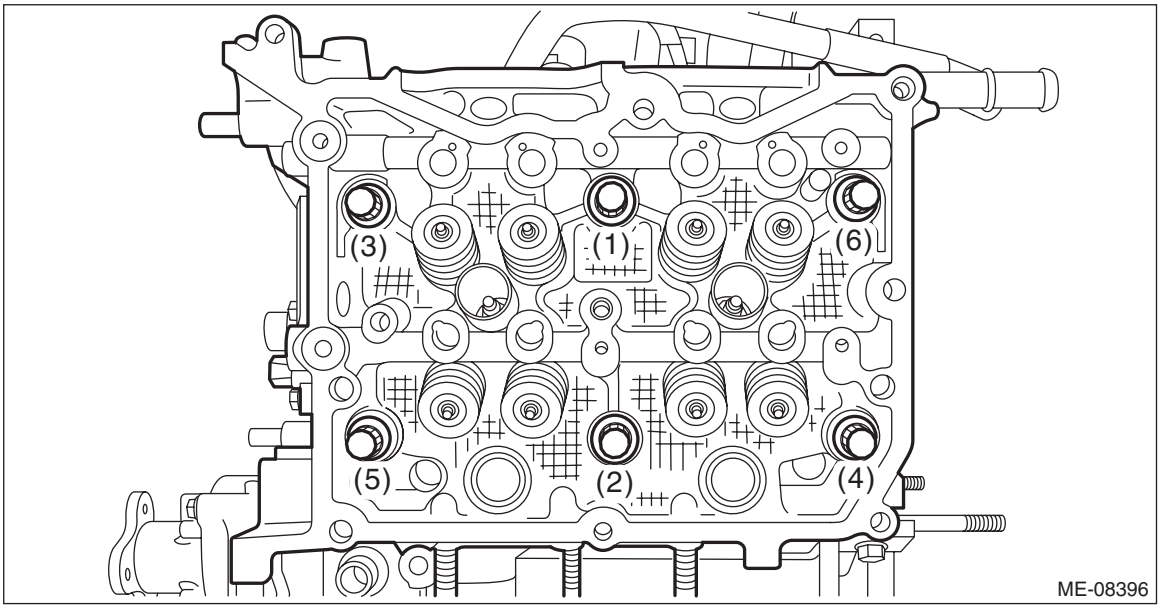

(3) Tighten all cylinder head bolts further with a torque of 100 N·m (10.2 kgf-m, 73.8 ft-lb) in numerical order as shown in the figure.

CAUTION:
If the bolt makes stick-slip sound during tightening, repeat the procedure from step 1). In that case, the cylinder head gasket LH can be reused. But it is necessary to remove liquid gasket completely from cylinder block LH, cylinder head LH and cylinder head gasket LH and re-apply to them.

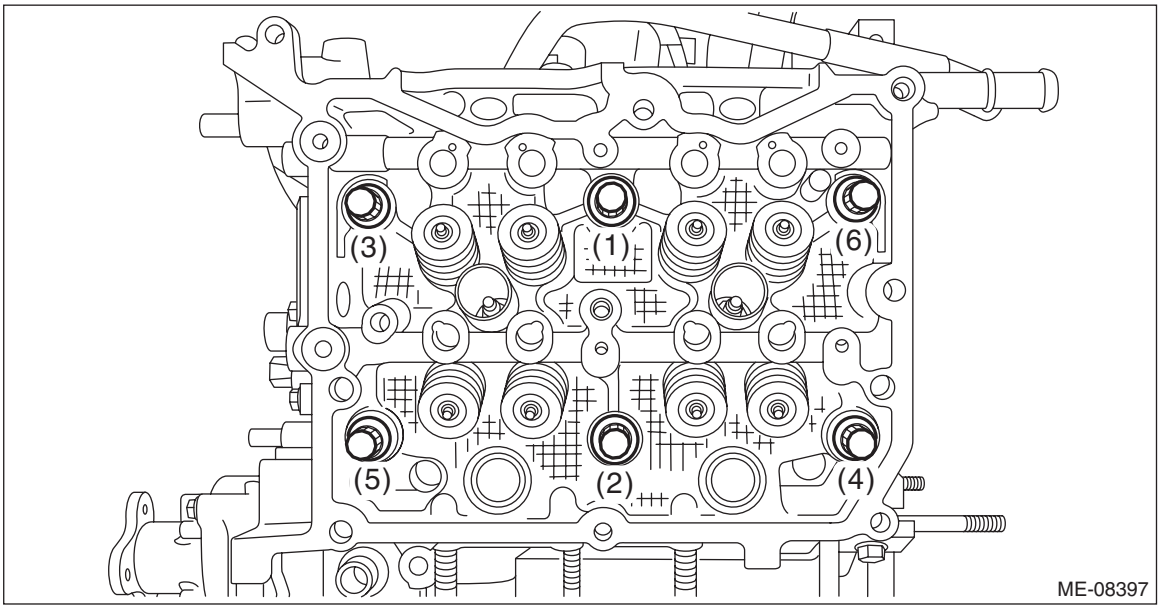

(4) Loosen all cylinder head bolts 180° in numerical order as shown in the figure, and then loosen all cylinder head bolts 180° further in numerical order as shown in the figure.

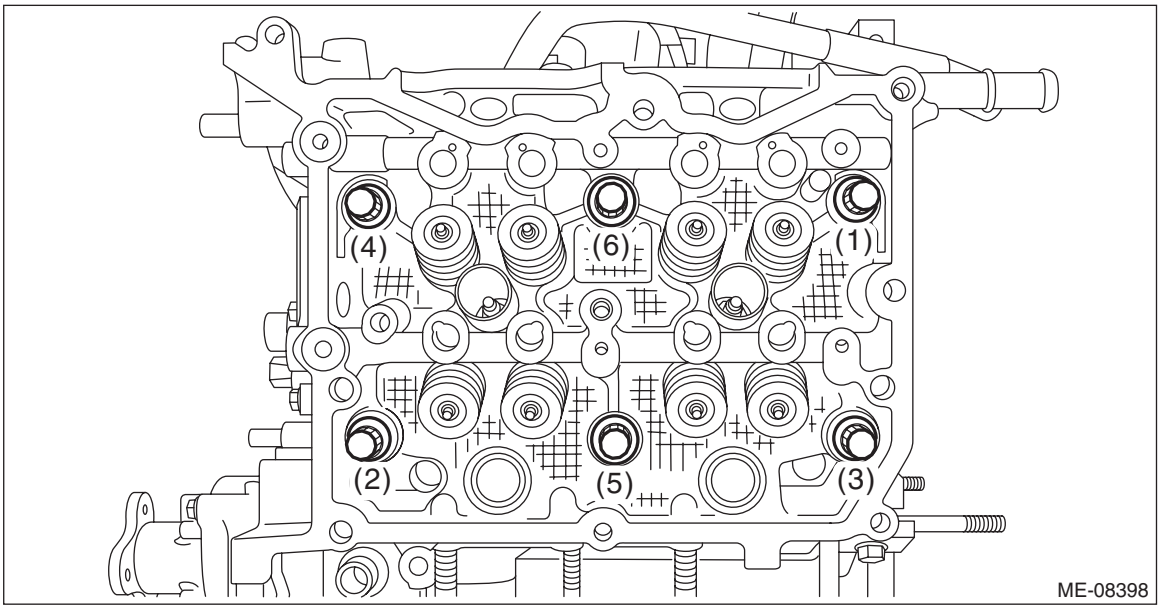

(5) Tighten all cylinder head bolts with a torque of 42 N·m (4.3 kgf-m, 31.0 ft-lb) in numerical order as shown in the figure.

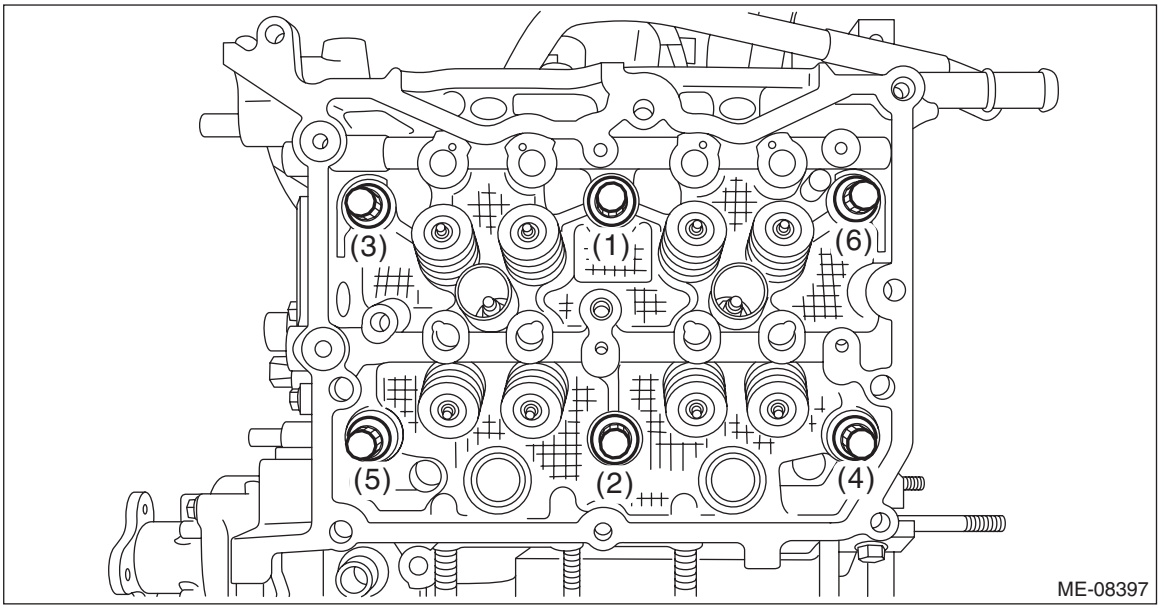

(6) Using angle gauge, tighten all cylinder head bolts with specified angle in numerical order as shown in the figure.

ST 499817100 ENGINE STAND

Tightening angle:
80°±2°

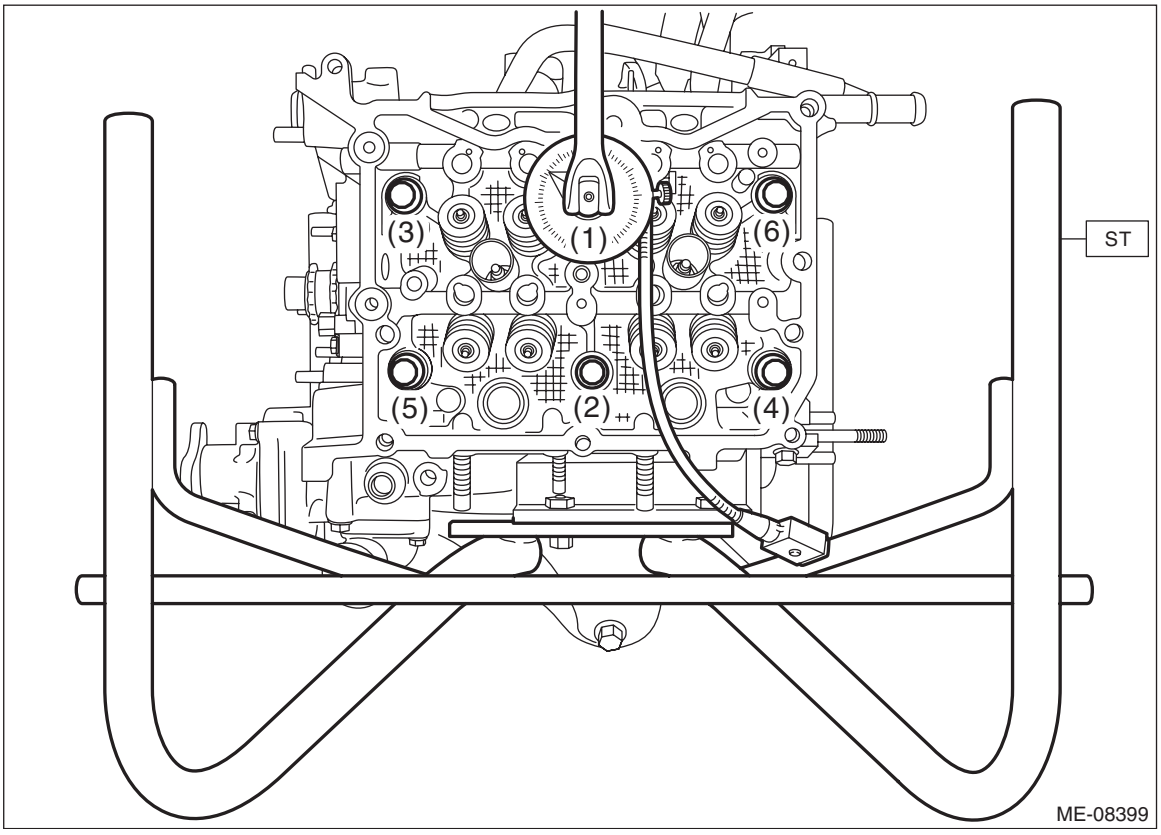

(7) Using angle gauge, tighten the cylinder head bolts (2 places) with specified angle in numerical order as shown in the figure.

ST 499817100 ENGINE STAND

Tightening angle:

75°±2°

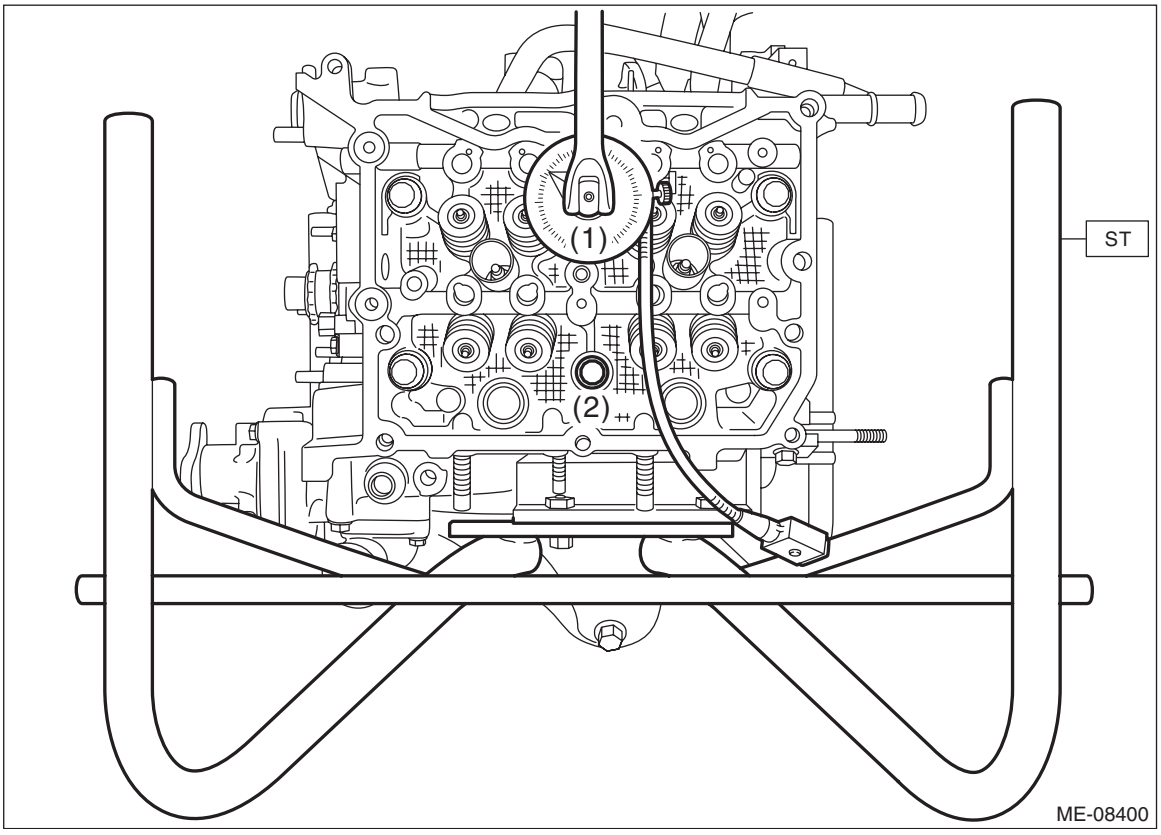

(8) Using angle gauge, tighten the cylinder head bolts (4 places) with specified angle in numerical order as shown in the figure.

NOTE:
After tightening, if the liquid gasket is squeezed out onto the seal surface of the chain cover, completely remove any squeezed-out liquid gasket.
ST 499817100 ENGINE STAND

Tightening angle:
30°±2°

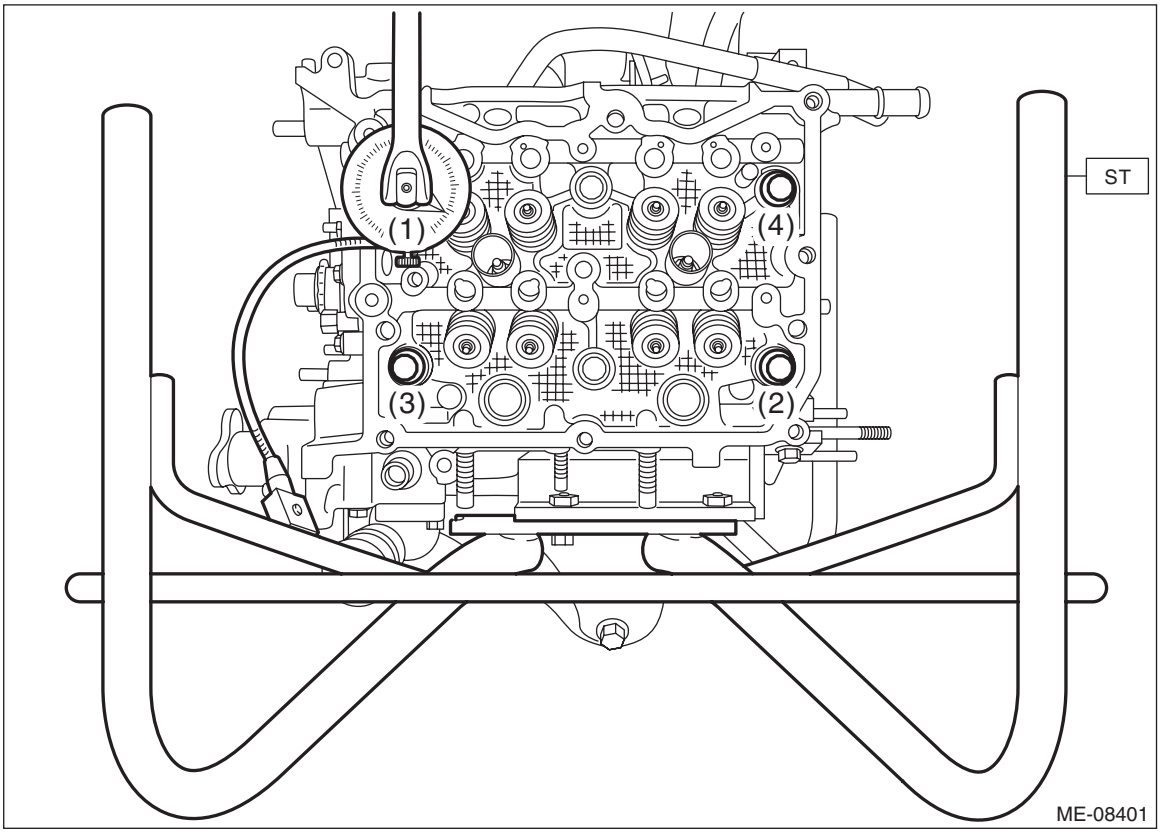

5) Install the A/C compressor. <Ref. to AC-53, INSTALLATION, Compressor.>
6) Install the cam carrier LH. <Ref. to ME(H4DO)-152, CAM CARRIER LH, INSTALLATION, Cam Carrier.>
7) Install the rocker cover LH. <Ref. to ME(H4DO)-136, ROCKER COVER LH, INSTALLATION, Rocker Cover.>
8) Install the chain cover. <Ref. to ME(H4DO)-88, INSTALLATION, Chain Cover.>
9) Install the engine wiring harness. <Ref. to FU(H4DO)-39, INSTALLATION, Engine Wiring Harness.>
10) Install the intake manifold assembly. <Ref. to FU(H4DO)-26, INSTALLATION, Intake Manifold Assembly.>
11) Install the engine to the vehicle. <Ref. to ME(H4DO)-53, INSTALLATION, Engine Assembly.>

C: DISASSEMBLY

1) Remove the chain cover securing bolt from the cylinder head LH.

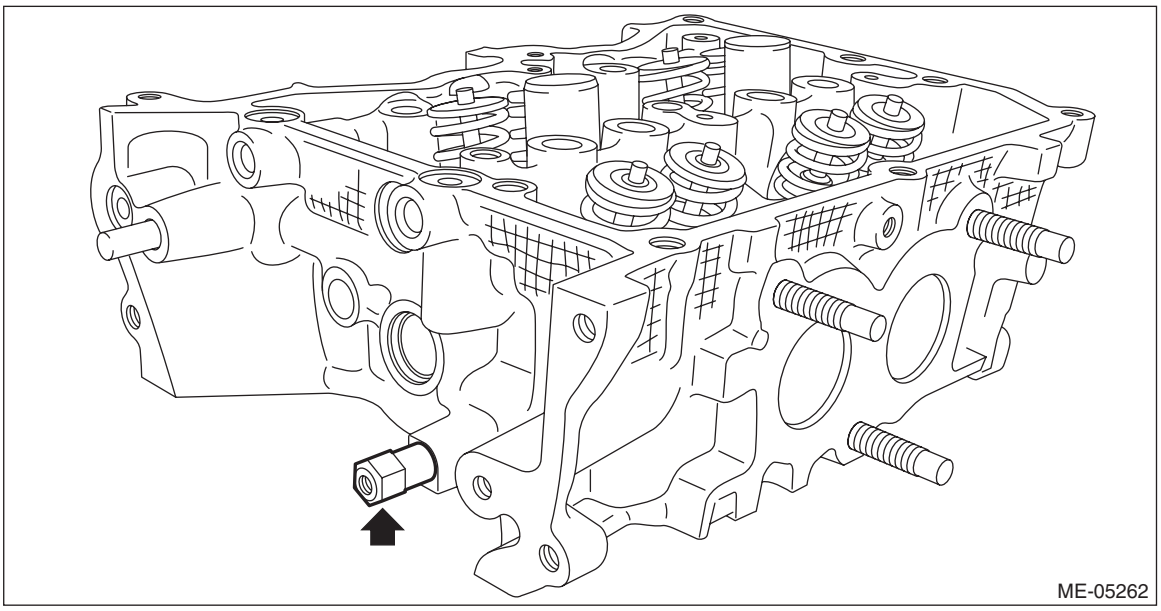

2) Remove the stud bolts from the cylinder head.

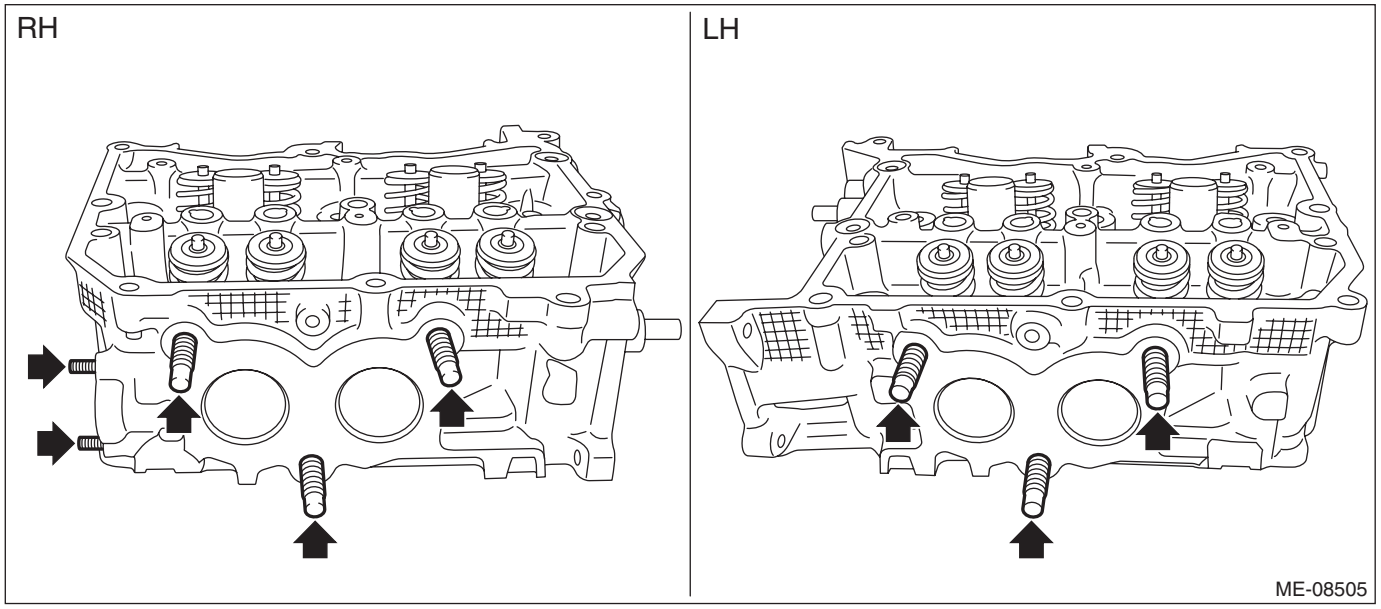

3) Remove the valve collet, valve, valve spring retainer, valve spring and valve spring seat from the cylinder head RH.

CAUTION:
During work, place a waste cloth, etc. to avoid scratching the mating surface of the cylinder head RH.

NOTE:
- Mark each part to prevent confusion.
- Keep all the removed parts in order for re-installing in their original positions.

(1) Compress the valve spring and remove the valve collet using ST.

ST 0920287002000 REMOVER AND REPLACER

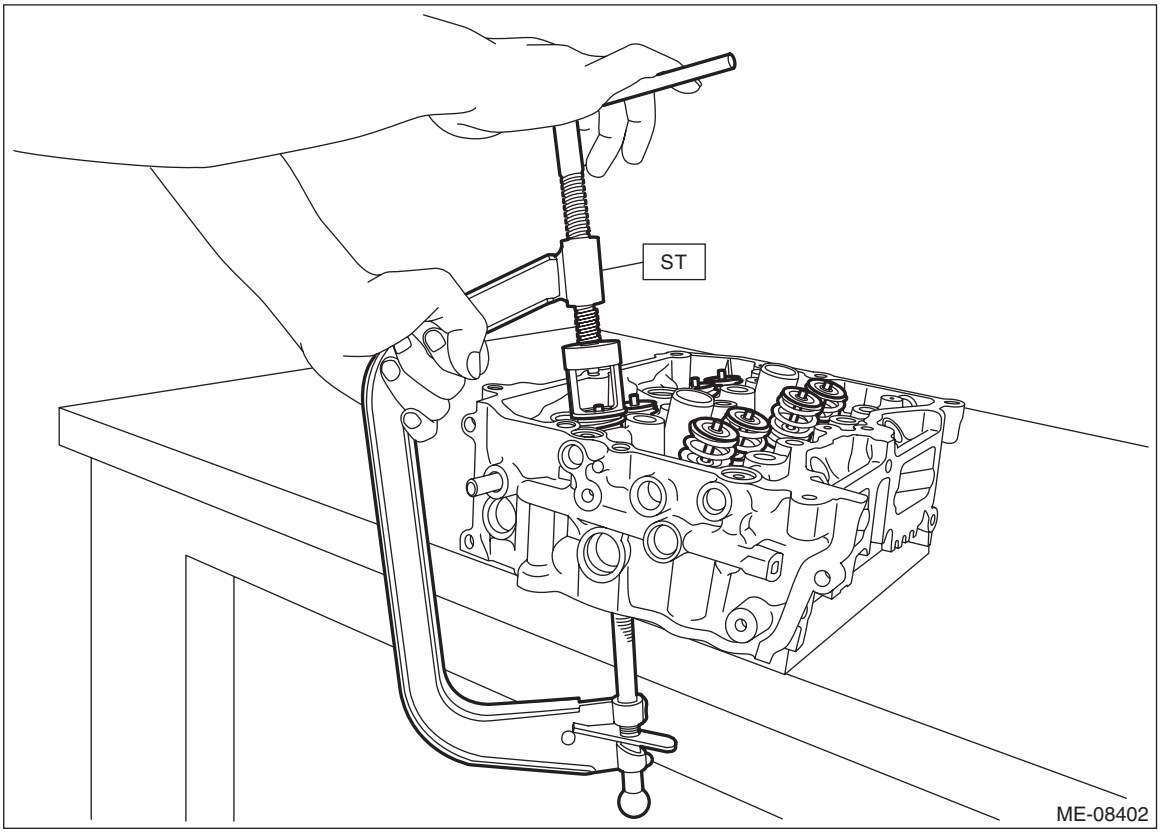

(2) Remove valve, valve spring retainer, valve spring and valve spring seat.

4) Remove the valve collet, valve, valve spring retainer, valve spring and valve spring seat from the cylinder head LH.

5) Remove the valve oil seals from valve guides of cylinder head RH.

CAUTION:
• During work, place a waste cloth, etc. to avoid scratching the mating surface of the cylinder head RH.
• Use special care not to damage the cylinder head RH and guide during work.

NOTE:
For removal of valve guide, refer to INSPECTION. <Ref. to ME(H4DO)-193, VALVE & VALVE GUIDE, INSPECTION, Cylinder Head.>

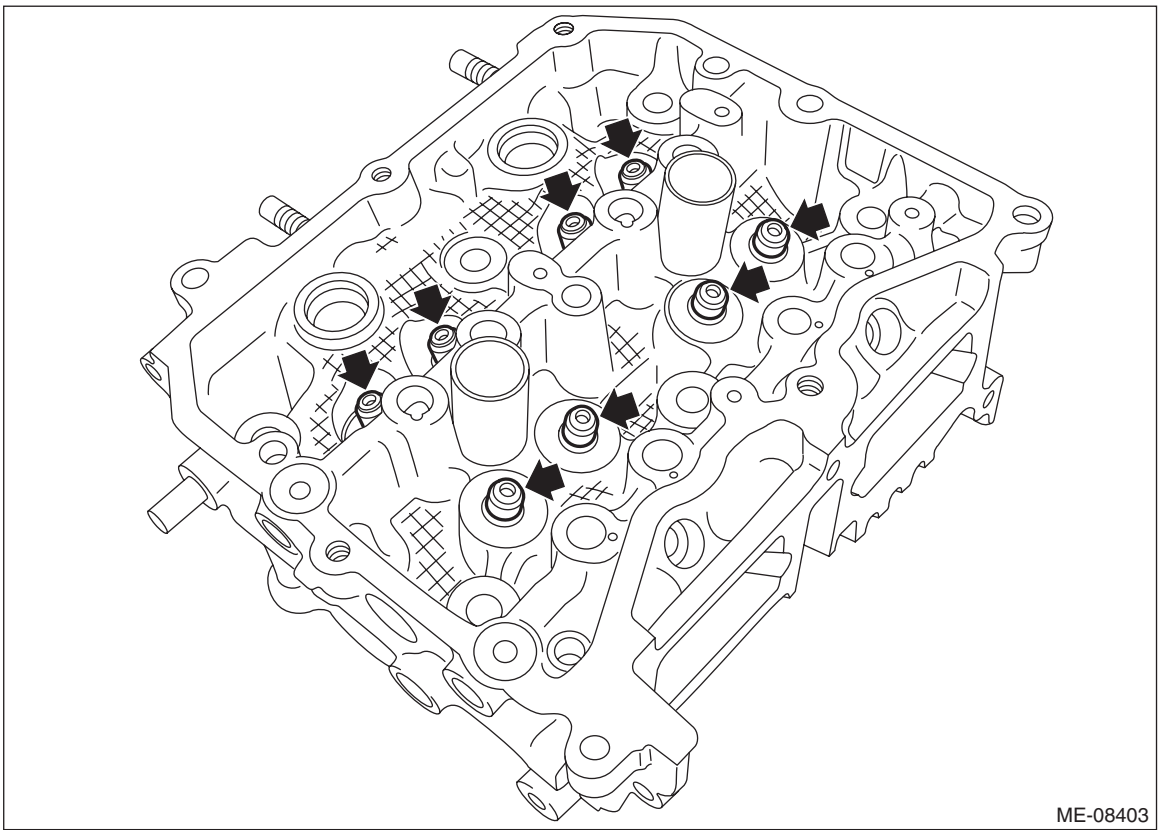

6) For cylinder head LH, remove the valve oil seal in the same manner.

D: ASSEMBLY

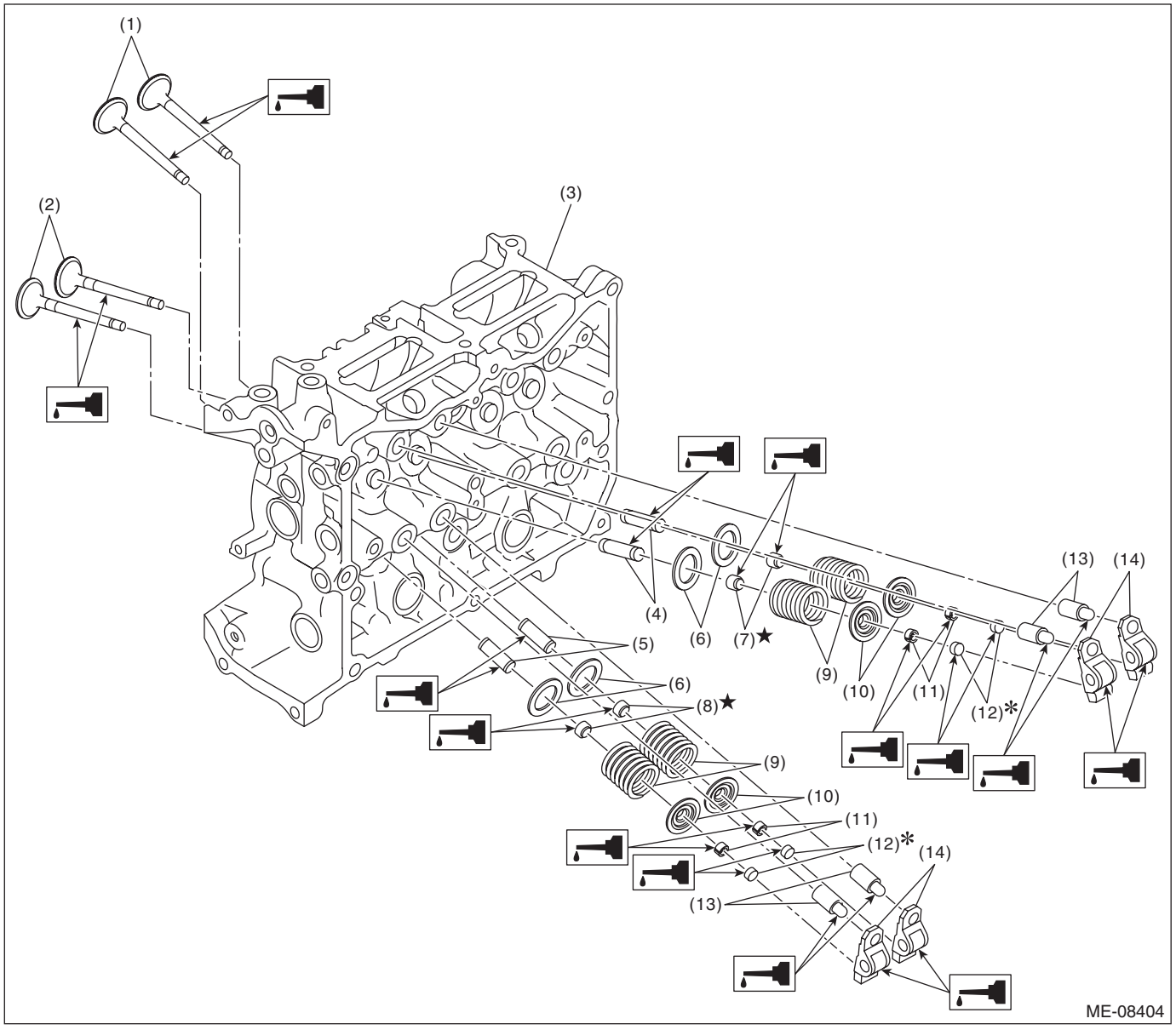

(1) Exhaust valve
(2) Intake valve
(3) Cylinder head
(4) Intake valve guide
(5) Exhaust valve guide
(6) Valve spring seat
(7) Intake valve oil seal
(8) Exhaust valve oil seal
(9) Valve spring
(10) Valve spring retainer
(11) Valve collet
(12) Valve shim
(13) Roller rocker arm pivot
(14) Roller rocker arm

1) Using the ST, install the valve oil seals to valve guides of cylinder head RH.

CAUTION:
• During work, place a waste cloth, etc. to avoid scratching the mating surface of the cylinder head RH.
• Use special care not to damage the cylinder head RH and guide during work.
• When installing the valve oil seal, press the ST with hands to install it and never drive the ST with a plastic hammer, otherwise the valve oil seal can be damaged.

NOTE:
- Use a new valve oil seal.
- Apply engine oil to valve oil seal before installing.
- The intake valve oil seals and exhaust valve oil seals are distinguished by their colors.

Identification colors:
Intake [Gray]
Exhaust [Green]

- For installation of valve guide, refer to INSPECTION. <Ref. to ME(H4DO)-193, VALVE & VALVE GUIDE, INSPECTION, Cylinder Head.>

ST 18261AA010 VALVE OIL SEAL GUIDE

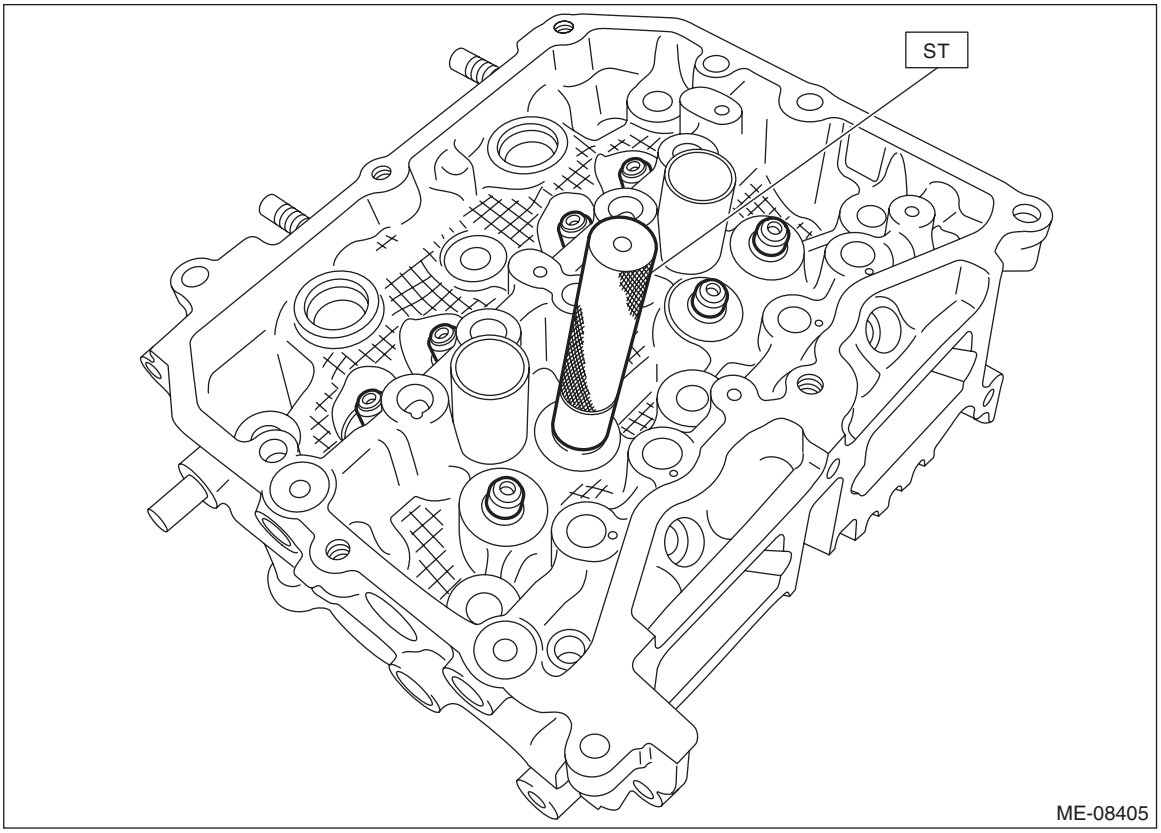

2) For cylinder head LH, install the valve oil seal in the same manner.
3) Install the valve spring seat, valve spring, valve spring retainer, valve and valve collet to the cylinder head RH.

CAUTION:
During work, place a waste cloth, etc. to avoid scratching the mating surface of the cylinder head RH.
(1) Set the valve spring seat, valve spring and valve spring retainer onto the cylinder head RH.

NOTE:
Be sure to install the valve spring with its close-coiled end facing the cylinder head side.
(2) Coat the valve stem of each valve with engine oil and insert the valve into valve guide.

NOTE:
When inserting the valve into valve guide, use special care not to damage the oil seal lip.
(3) Compress the valve spring and install the valve collet using ST.
ST 0920287002000 REMOVER AND REPLACER

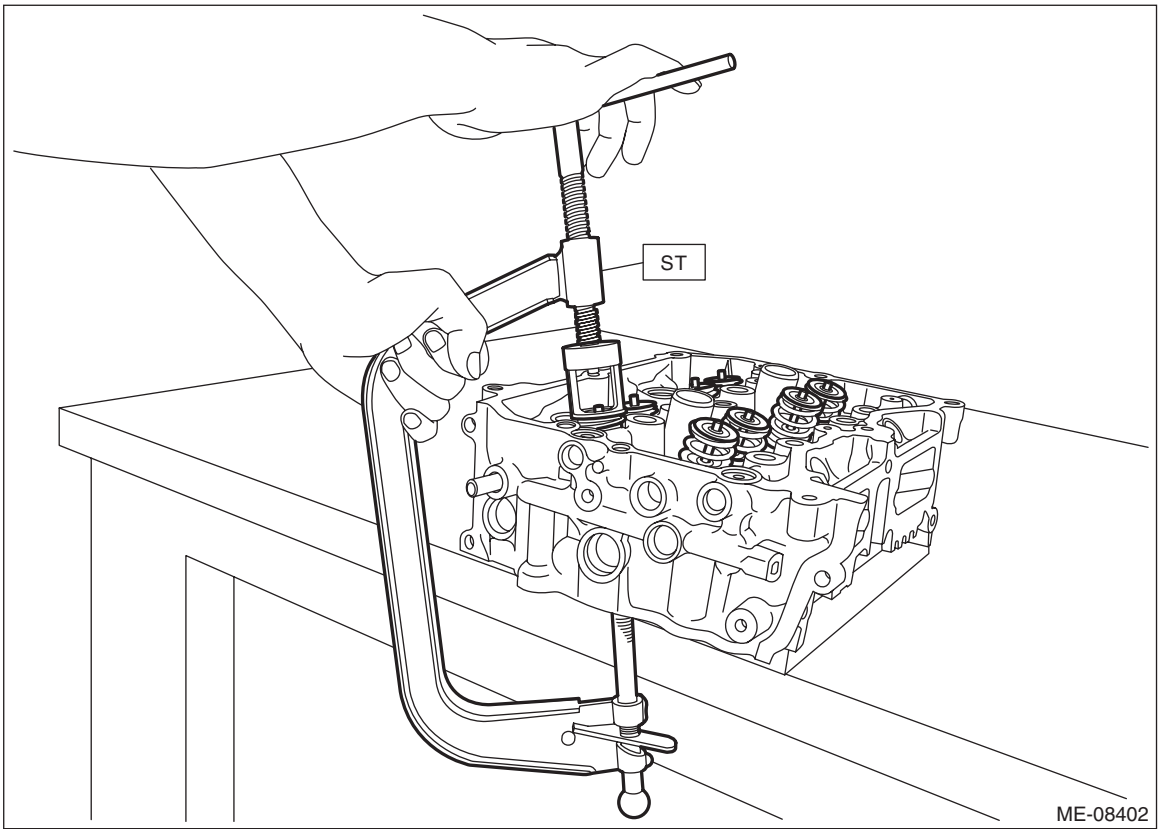

4) Install the valve spring seat, valve spring, valve spring retainer, valve and valve collet to the cylinder head LH.
5) Lightly tap the valve spring retainer with a plastic hammer, and make sure that the valve collet is securely attached.

6) Install the stud bolts onto cylinder heads.

Tightening torque:
T1: 6.4 N·m (0.7 kgf-m, 4.7 ft-lb)
T2: 18 N·m (1.8 kgf-m, 13.3 ft-lb)

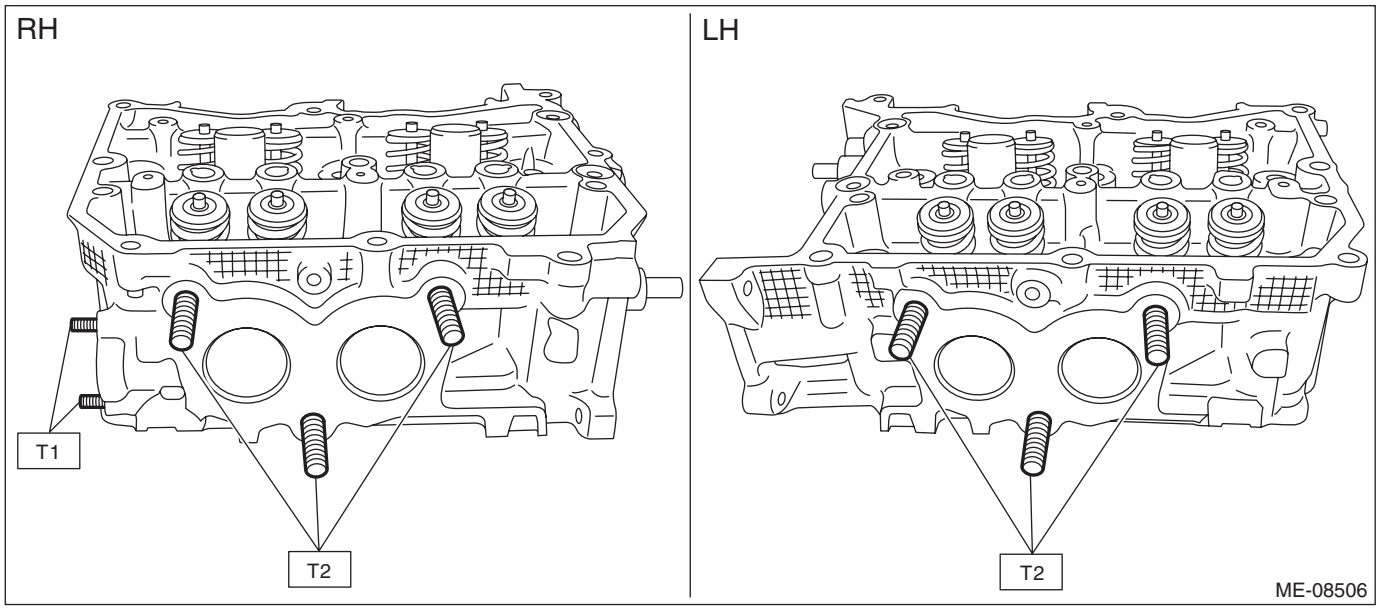

7) Install the chain cover securing bolt to the cylinder head LH.

Tightening torque:
6.4 N·m (0.7 kgf-m, 4.7 ft-lb)

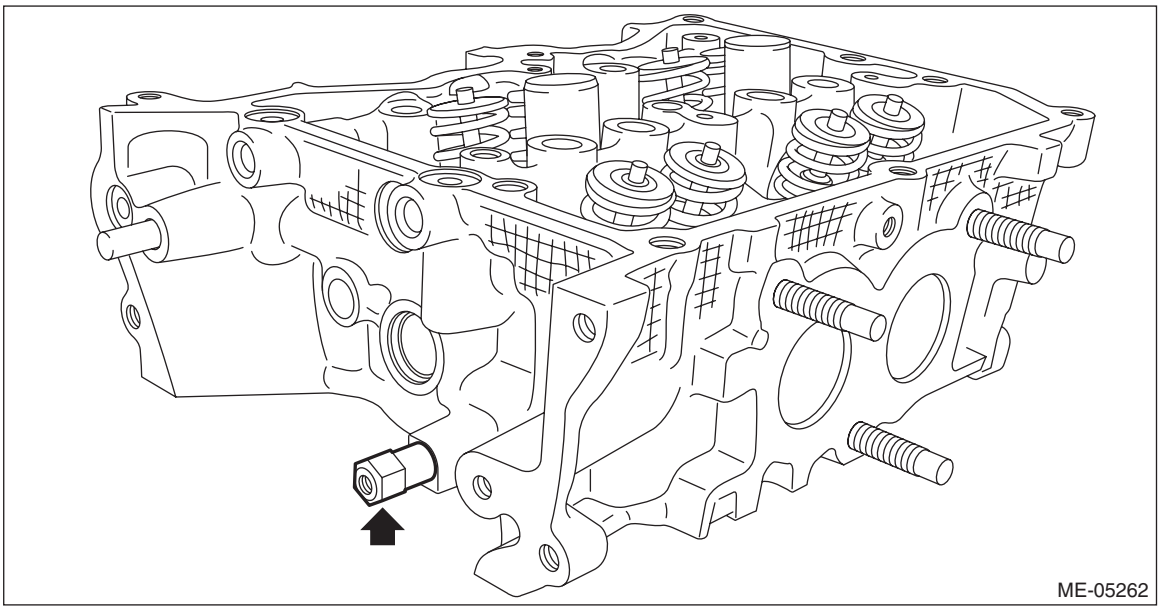

E: INSPECTION

1. CYLINDER HEAD

1) Visually inspect to make sure that there are no cracks, scratches or other damage.
2) Use liquid penetrant tester on the important sections to check for fissures.
3) Check that there are no marks of gas leaking or water leaking on gasket attachment surface.
4) Check the warping of the cylinder head mating surface that mates with cylinder block at the locations shown in the figure using a straight edge (A) and thickness gauge (B). If it exceeds the limit, correct the surface by grinding it with a surface grinder or replace the cylinder head.

NOTE:
- Measurement should be performed at a temperature of 20°C (68°F).
- If there is warpage on the cylinder head mating surface, the cylinder head bolt tightening torque and angle tightening may be improper. When installing the cylinder head, make sure that tightening torque and angle tightening work is performed precisely according to the operation procedures.
- When the cylinder head is replaced, lap each valve. Refer to “VALVE SEAT” for lapping. <Ref. to ME(H4DO)-202, VALVE SEAT, INSPECTION, Cylinder Head.>

Cylinder head warpage:
Limit
0.020 mm (0.00079 in)

Cylinder head grinding limit:
To 98.4 mm (3.874 in)

Cylinder head height:
Standard
98.5 mm (3.878 in)

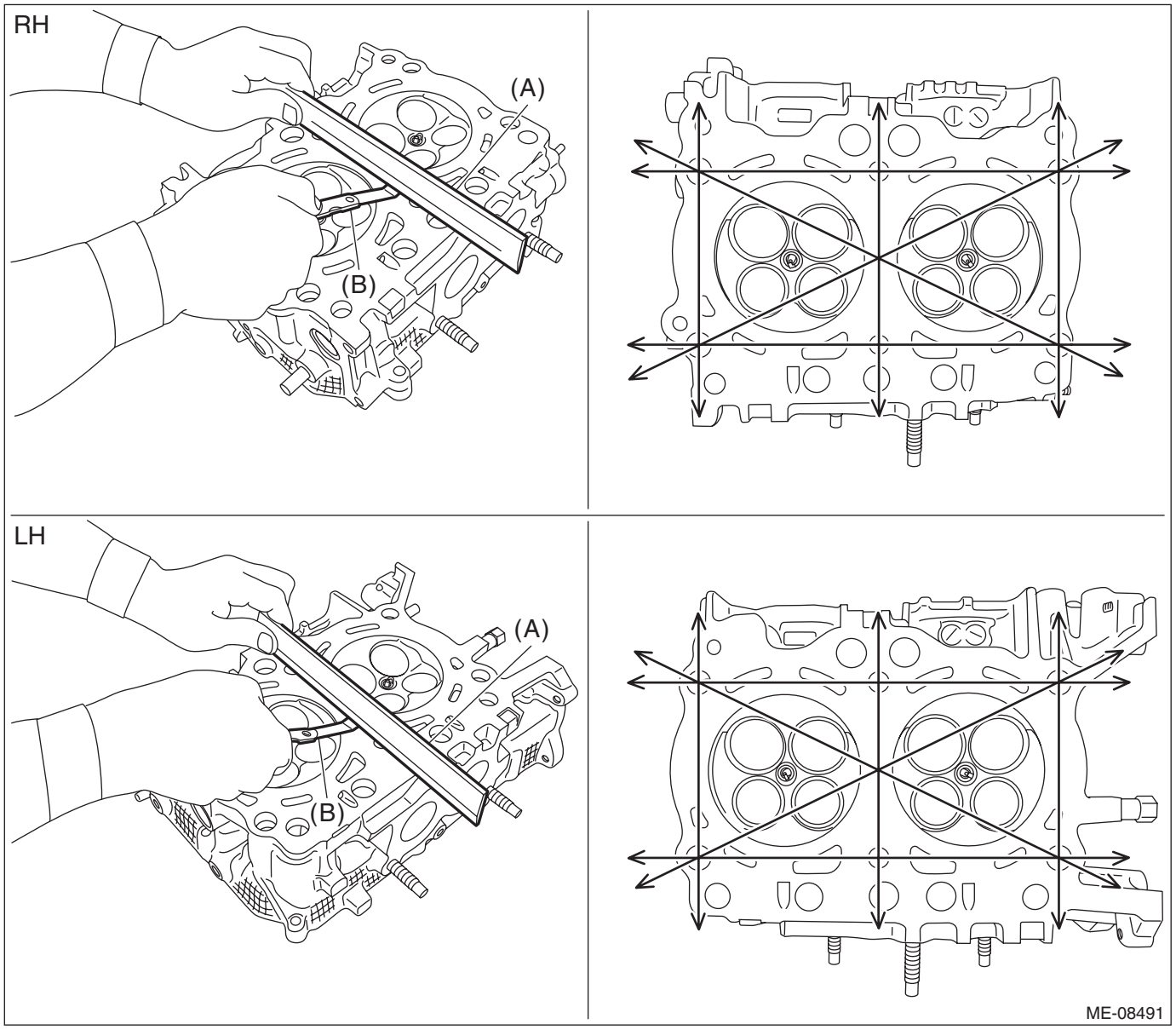

2. VALVE & VALVE GUIDE

1) Check the valve flange and stem for damage, wear or deformation.
2) Measure the thickness “H” of valve head edge as shown in the figure using a caliper gauge. If it is not within the standard, replace the valve.

NOTE:
- It is possible to differentiate between the intake valve and the exhaust valve by their overall length.

Valve overall length:
Intake
104.95 mm (4.132 in)
Exhaust
96.5 mm (3.799 in)

- When the valve is replaced, lap the valve. Refer to “VALVE SEAT” for lapping. <Ref. to ME(H4DO)-202, VALVE SEAT, INSPECTION, Cylinder Head.>

Valve head edge thickness H:
Intake (A)
Standard
0.8 — 1.2 mm (0.031 — 0.047 in)
Exhaust (B)
Standard
1.0 — 1.4 mm (0.039 — 0.055 in)

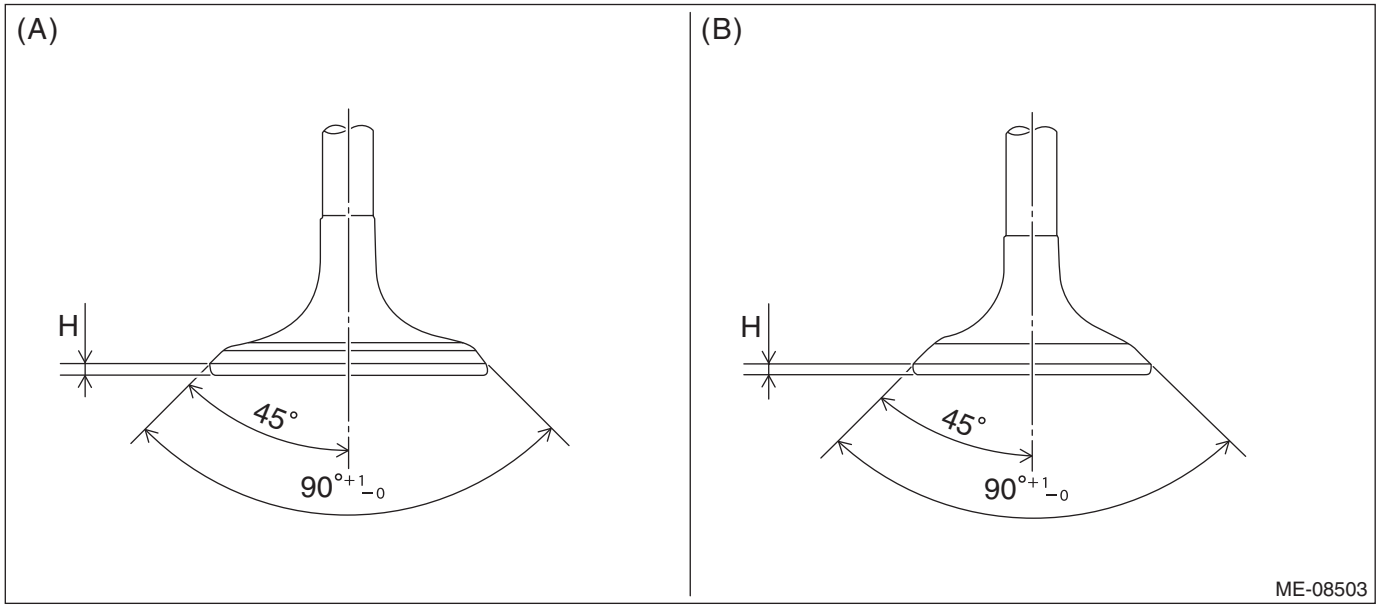

3) Check the clearance between valve and valve guide. Check the clearance between valve and valve guide by measuring the outer diameter of valve stem and the inner diameter of valve guide respectively.

(1) Measure the outer diameter of valve stem with a micrometer. If it is not within the standard, replace the valve.

NOTE:
- Measurement should be performed at a temperature of 20°C (68°F).
- Measure the outer diameter of the valve stem at the six locations as shown in the figure, and read the value of most worn location.
- When the valve is replaced, lap the valve. Refer to “VALVE SEAT” for lapping. <Ref. to ME(H4DO)-202, VALVE SEAT, INSPECTION, Cylinder Head.>

Valve stem outer diameter:

Intake

Standard

5.455 — 5.470 mm (0.2148 — 0.2154 in)

Exhaust

Standard

5.445 — 5.460 mm (0.2144 — 0.2150 in)

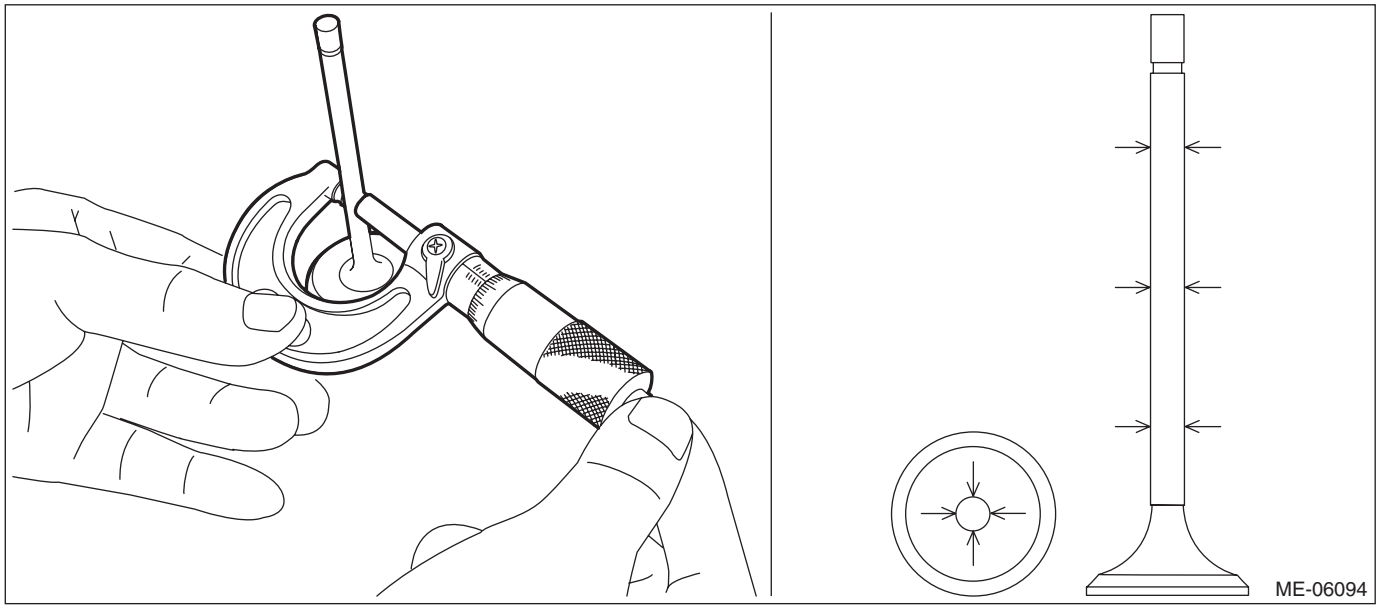

(2) Using a caliper gauge, measure the inner diameter of valve guide. If it is not within the standard, replace the valve guide. For replacement procedure, refer to step 4).

NOTE:
- Measurement should be performed at a temperature of 20°C (68°F).
- Measure the inner diameter of the valve guide at the six locations as shown in the figure, and read the value of most worn location.

Valve guide inner diameter:
Standard
5.500 — 5.512 mm (0.2165 — 0.2170 in)

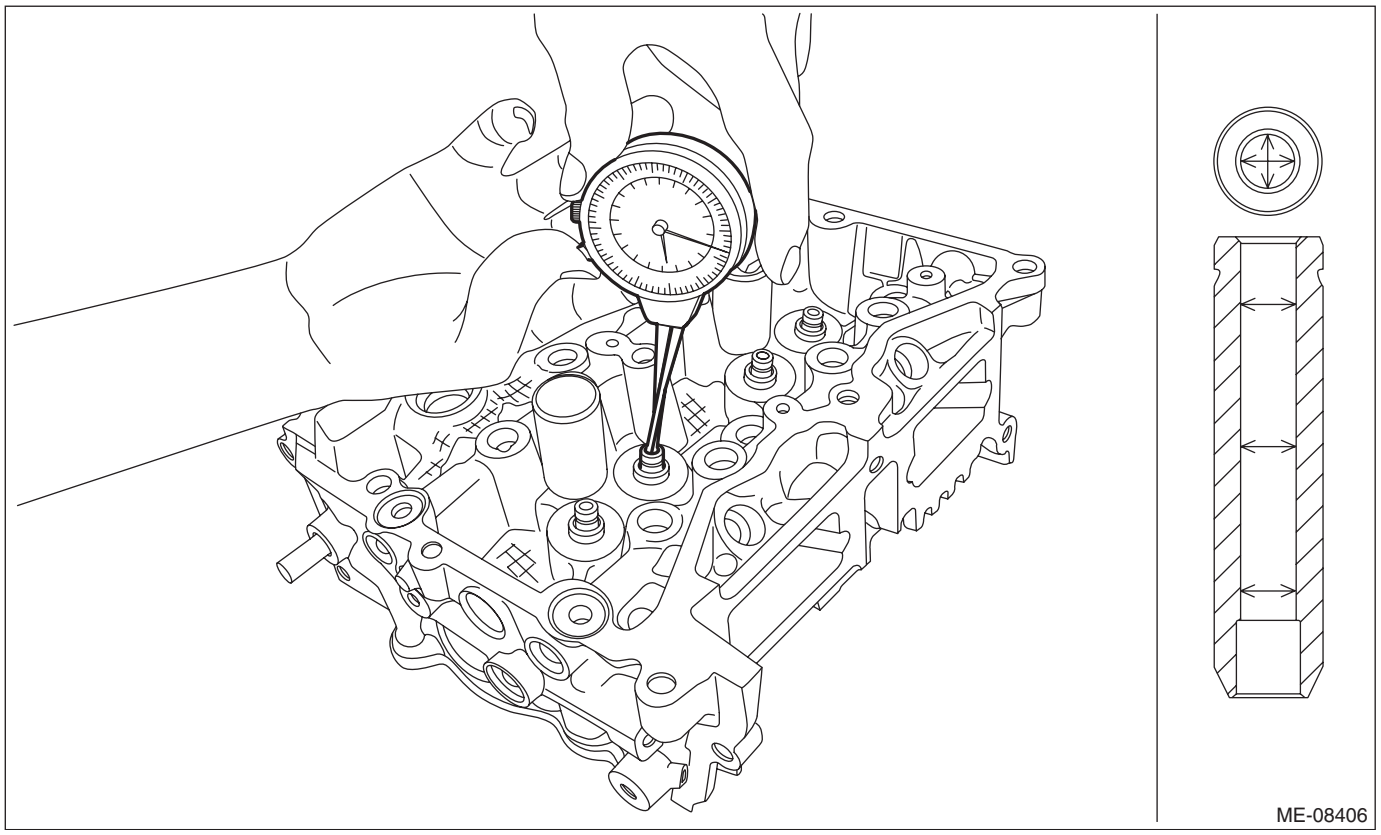

(3) Calculate the clearance between valve and valve guide.

Clearance between valve and valve guide:
Intake
Standard
0.030 — 0.057 mm (0.0012 — 0.0022 in)
Exhaust
Standard
0.040 — 0.067 mm (0.0016 — 0.0026 in)

4) If the clearance between valve and valve guide exceeds the standard, replace the valve or valve guide, whichever shows the greater amount of wear or damage. For replacement procedure of valve guide, refer to the following.

NOTE:
When the valve is replaced, lap the valve. Refer to “VALVE SEAT” for lapping. <Ref. to ME(H4DO)-202, VALVE SEAT, INSPECTION, Cylinder Head.>

(1) Insert ST into the valve guide with the combustion chamber upward and remove the valve guide using plastic hammer.

CAUTION:
- **Place a wood board wrapped with a waste cloth to stabilize the cylinder head before work.**
- **Use special care not to damage the cylinder head during work.**

- **Always strike the ST vertically with a plastic hammer. Otherwise, the ST can be damaged.**

ST 499765700 VALVE GUIDE REMOVER AND INSTALLER

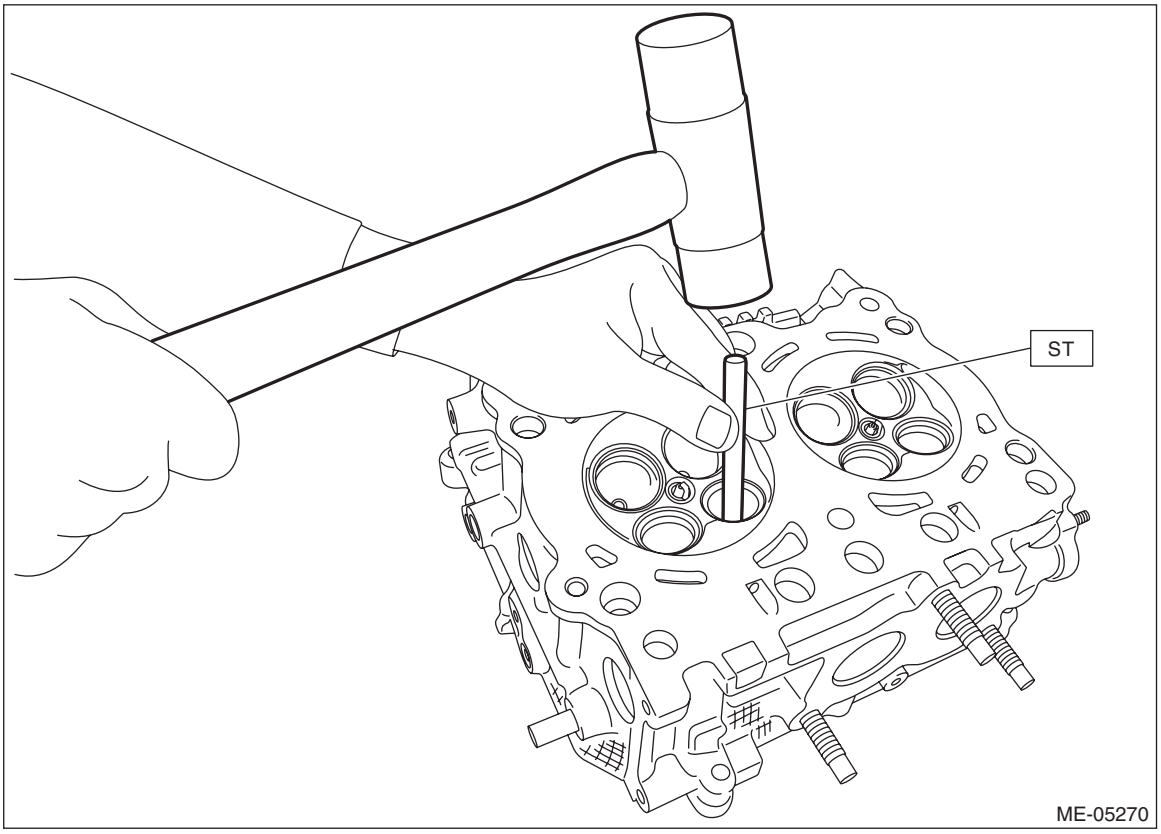

(2) Before installing the valve guide, make sure that neither scratches nor damages exist on the inner surface of valve guide installation holes of cylinder head.

(3) Draw a reference line (A) for insert on the valve guide using a marker as shown in the figure.

NOTE:
- Use a new valve guide.
- A reference line for insert is used as a guide when tapping-in the valve guide.

Valve guide inserting reference line position L:
15 mm (0.5906 in)

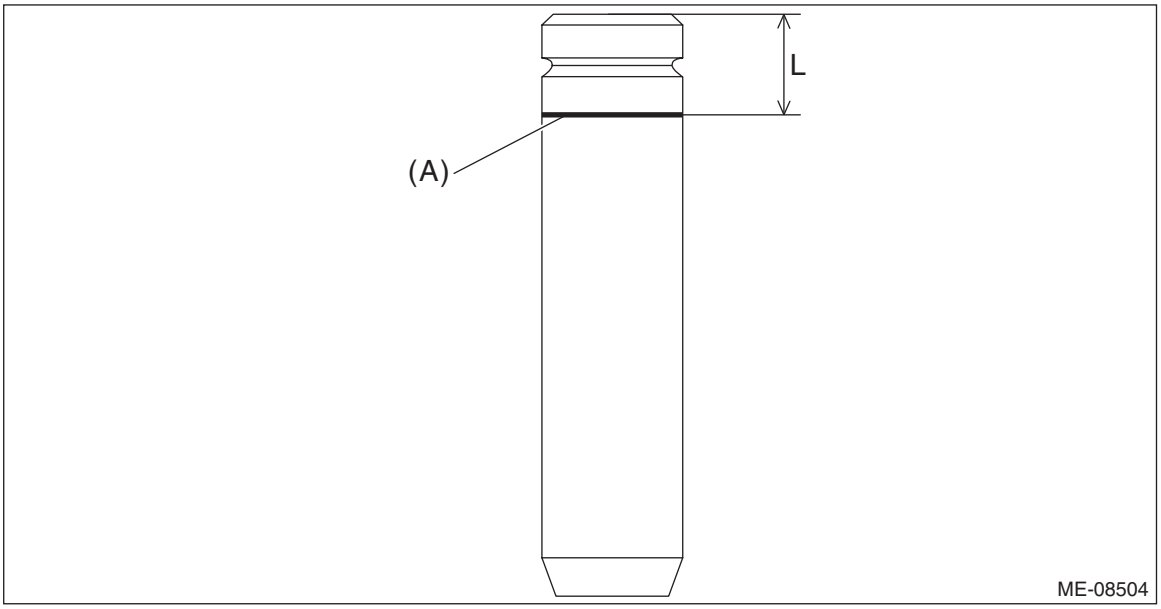

(4) Apply a enough coat of engine oil to the valve guide, and set the valve guide on the cylinder head with the combustion chamber downward.
(5) Insert the ST into the valve guide, and tap-in the valve guide to the reference line (A) for insert using plastic hammer.

CAUTION:
- **During work, place a waste cloth, etc. to avoid scratching the mating surface of the cylinder head.**
- **Use special care not to damage the cylinder head during work.**
- **Always strike the ST vertically with a plastic hammer. Otherwise, the ST can be damaged.**

ST 499765700 VALVE GUIDE REMOVER AND INSTALLER

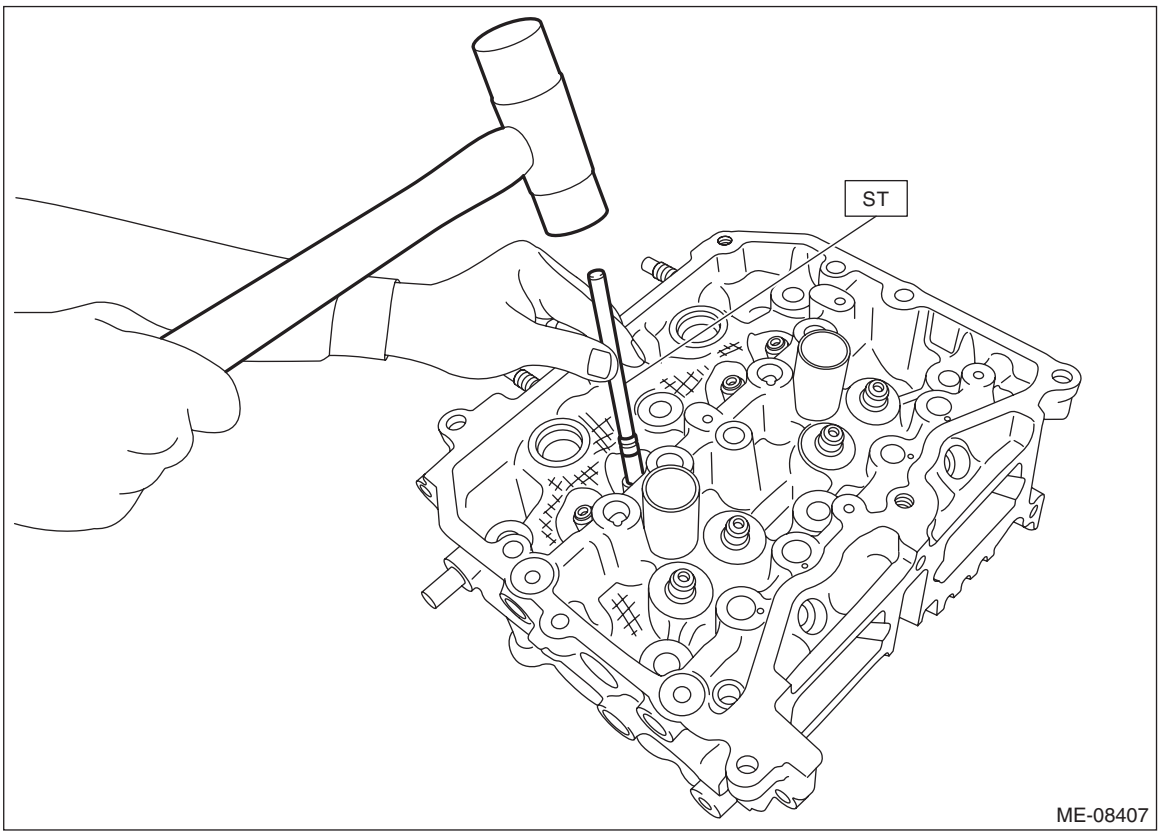

(6) Measure the valve guide protrusion amount “L” as shown in the figure using a caliper gauge. Insert the ST into the valve guide again, and tap-in the valve guide so that it is positioned within standard by referring to the measured value using plastic hammer.

CAUTION:
- **During work, place a waste cloth, etc. to avoid scratching the mating surface of the cylinder head.**
- **Use special care not to damage the cylinder head during work.**
- **Always strike the ST vertically with a plastic hammer. Otherwise, the ST can be damaged.**

NOTE:
Be careful not to tap-in excessively by repeating the steps of Tapping-in → Measurement → Tapping-in → Measurement … when installing the valve guide.
ST 499765700 VALVE GUIDE REMOVER AND INSTALLER

Valve guide protrusion amount L:
Standard
11.4 — 11.8 mm (0.449 — 0.465 in)

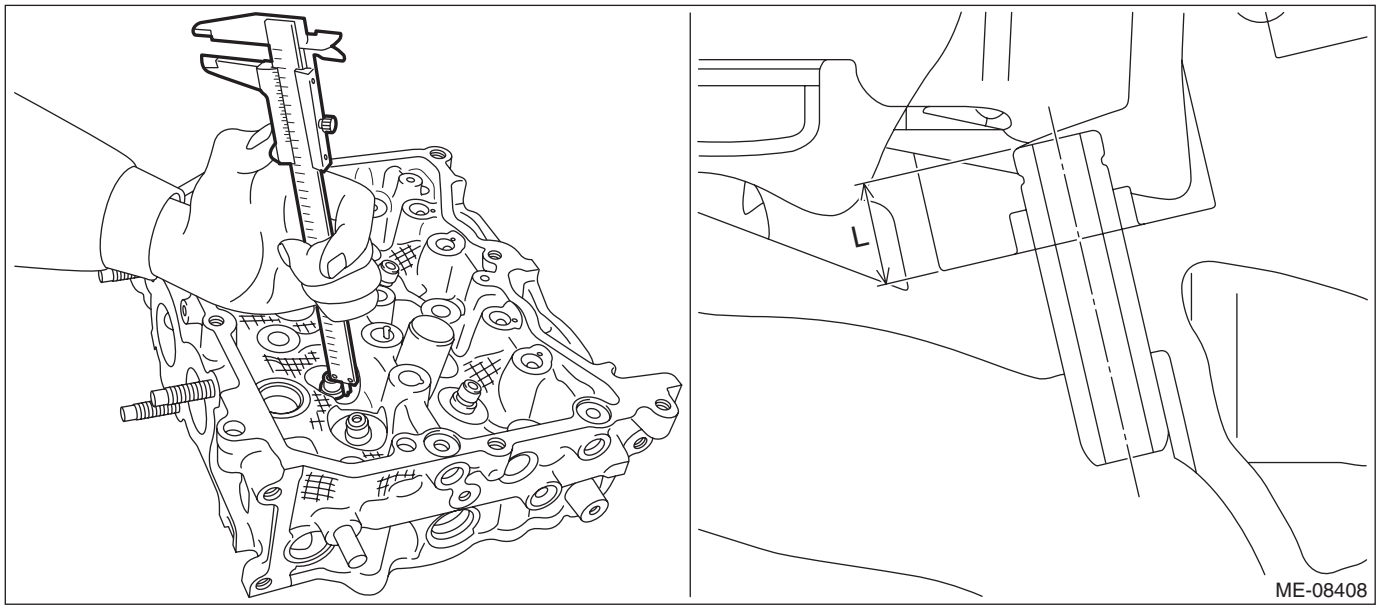

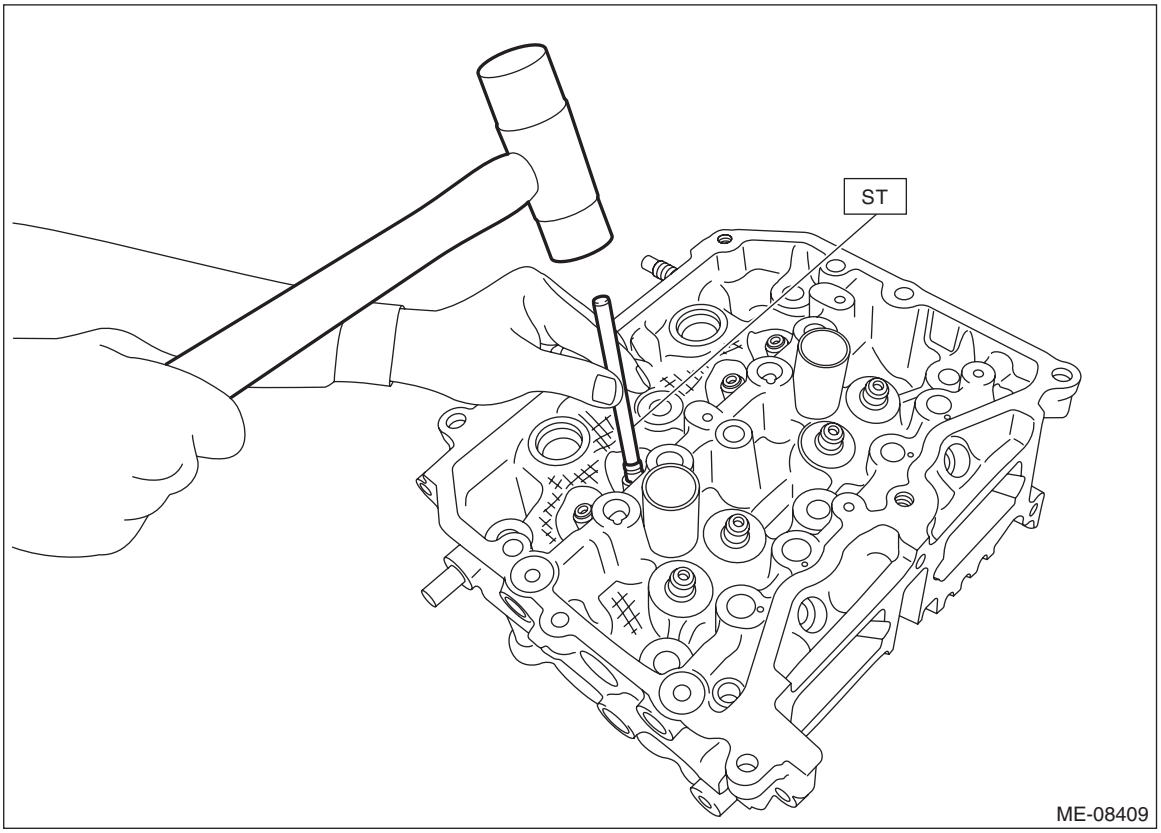

(7) Ream the inside of valve guide with the combustion chamber upward using the ST. Put the ST in valve guide, and rotate the ST slowly clockwise while pushing it lightly. Bring the ST back while rotating it clockwise.

CAUTION:
- **Place a wood board wrapped with a waste cloth to stabilize the cylinder head before work.**
- **Use special care not to damage the cylinder head during work.**

NOTE:
- Apply engine oil to the ST.
- If the inner surface of valve guide is damaged, the edge of ST should be slightly ground with oil stone.
- If the inner surface of valve guide becomes lustrous and the ST does not chip, use a new ST or remedy the ST.

ST 499765900 VALVE GUIDE REAMER

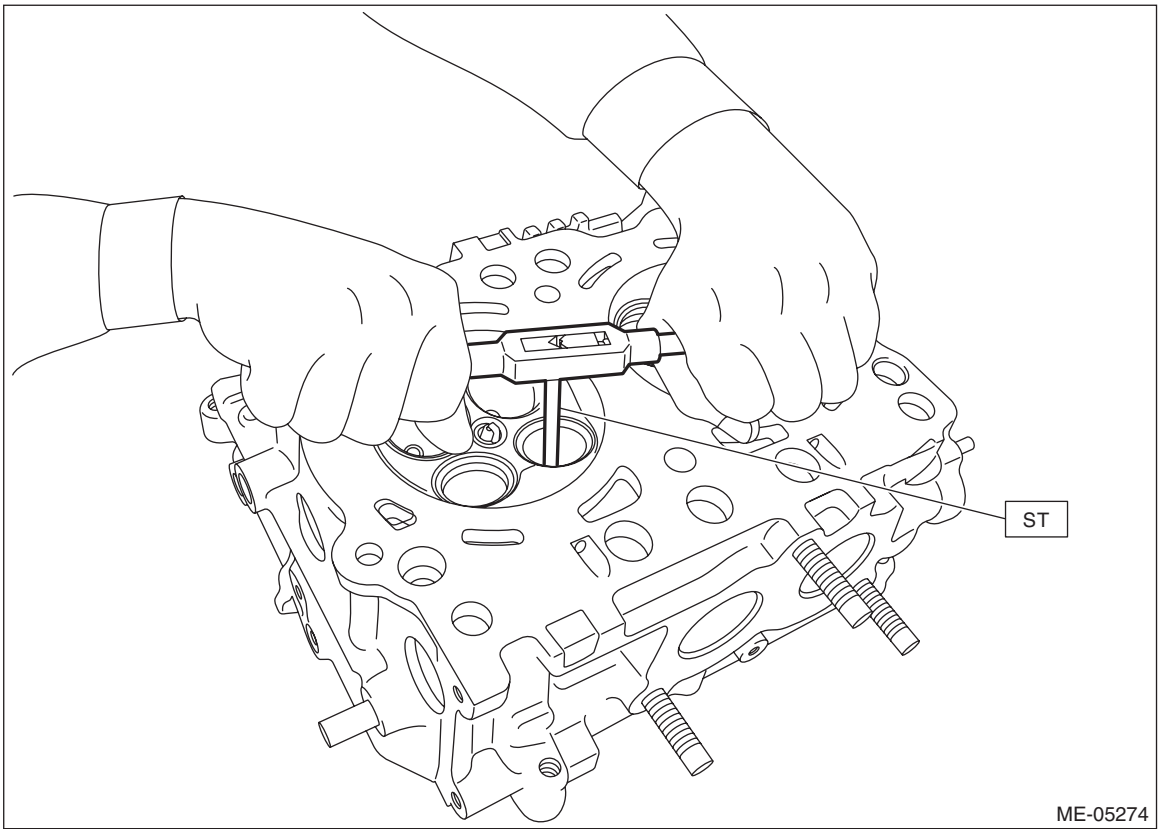

(8) After reaming, clean the valve guide to remove chips.
(9) Check the seating width between valve and valve seat. <Ref. to ME(H4DO)-202, VALVE SEAT, INSPECTION, Cylinder Head.>

3. VALVE & VALVE SHIM

1) Visually check the valve shim for damage.
2) Check the clearance between valve and valve shim. Check the clearance between valve and valve shim by measuring the outer diameter of valve stem end and the inner diameter of valve shim respectively.
   (1) Measure the outer diameter of valve stem end with a micrometer. If it is not within the standard, replace the valve.

NOTE:
- Measurement should be performed at a temperature of 20°C (68°F).
- Measure the outer diameter of the valve stem end at the two locations as shown in the figure, and read the value of most worn location.
- When the valve is replaced, lap the valve. Refer to “VALVE SEAT” for lapping. <Ref. to ME(H4DO)-202, VALVE SEAT, INSPECTION, Cylinder Head.>

Valve stem end outer diameter:
Intake
Standard
5.455 — 5.470 mm (0.2148 — 0.2154 in)
Exhaust
Standard
5.445 — 5.460 mm (0.2144 — 0.2150 in)

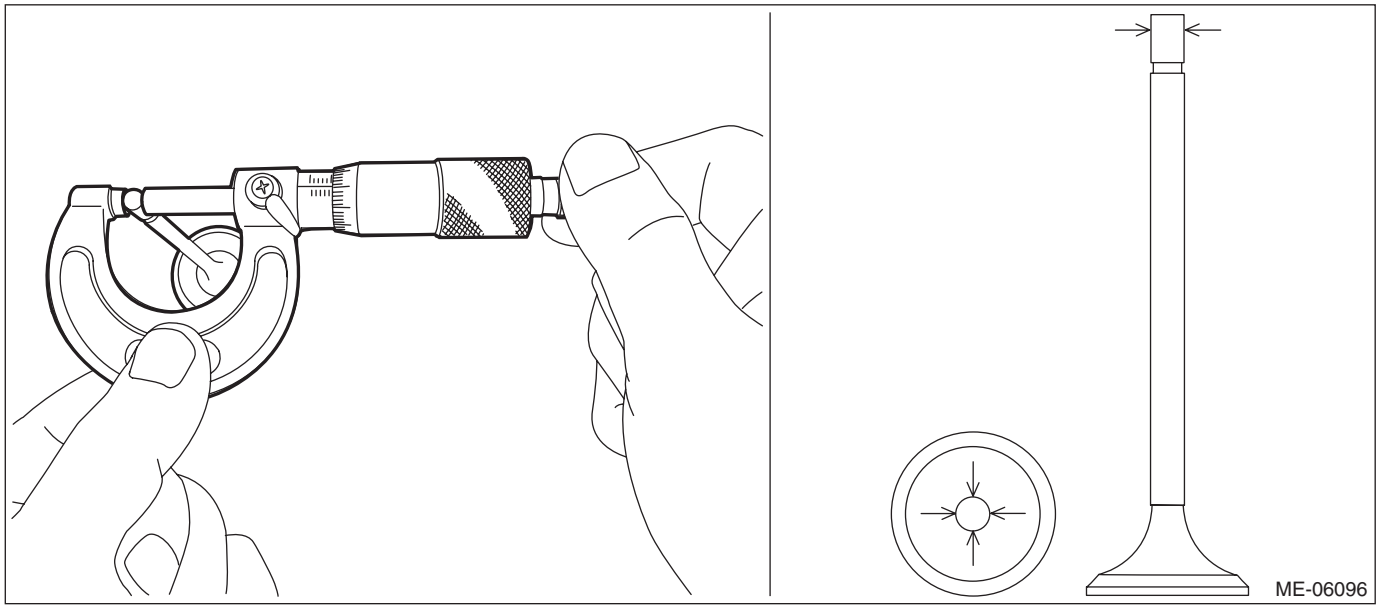

(2) Using a caliper gauge, measure the inner diameter of valve shim. If it is not within the standard, replace the valve shim.

NOTE:
• Measurement should be performed at a temperature of 20°C (68°F).
• Measure the inner diameter of the valve shim at the two locations as shown in the figure, and read the value of most worn location.
• If the valve shim has to be replaced, check the cam clearance and replace with the suitable valve shim. <Ref. to ME(H4DO)-39, WHEN TIMING CHAIN ASSEMBLY IS REMOVED, INSPECTION, Cam Clearance.>

Valve shim inner diameter:
Standard
5.500 — 5.560 mm (0.2165 — 0.2189 in)

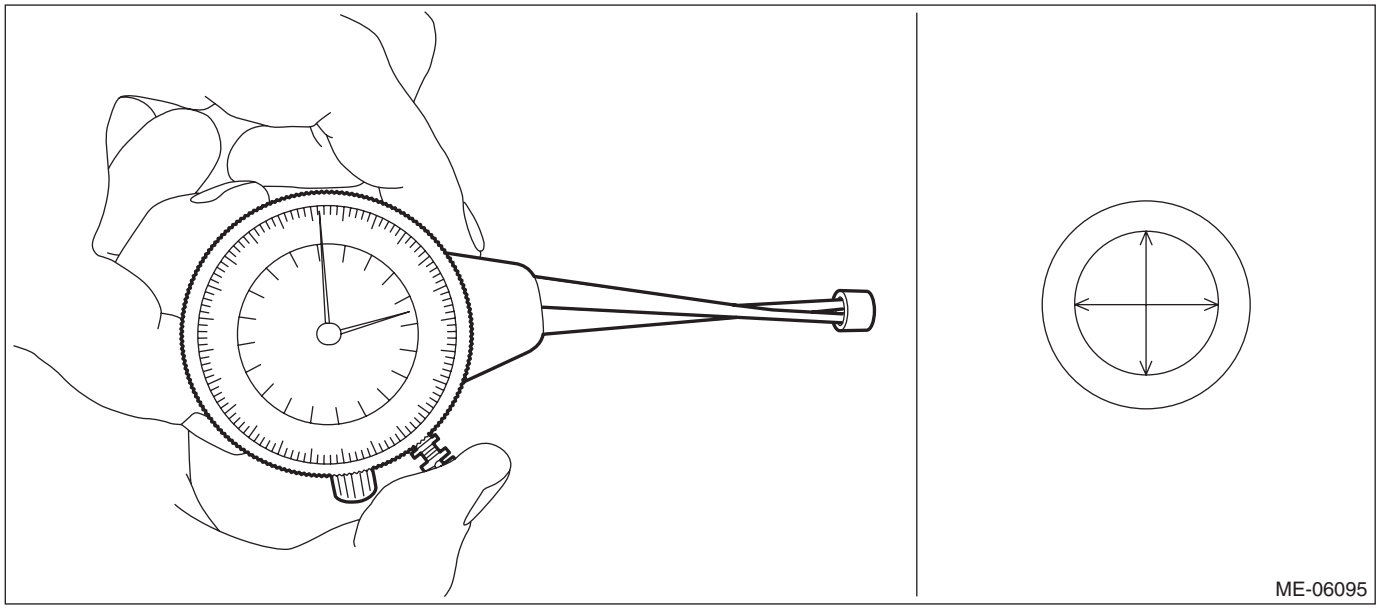

(3) Calculate the clearance between valve and valve shim. If the clearance exceeds the standard, replace the valve or valve shim, whichever shows the greater amount of wear or damage.

NOTE:
• When the valve is replaced, lap the valve. Refer to “VALVE SEAT” for lapping. <Ref. to ME(H4DO)-202, VALVE SEAT, INSPECTION, Cylinder Head.>
• If the valve shim has to be replaced, check the cam clearance and replace with the suitable valve shim. <Ref. to ME(H4DO)-39, WHEN TIMING CHAIN ASSEMBLY IS REMOVED, INSPECTION, Cam Clearance.>

Clearance between valve and valve shim:
Intake
Standard
0.030 — 0.105 mm (0.0012 — 0.0041 in)
Exhaust
Standard
0.040 — 0.115 mm (0.0016 — 0.0045 in)

4. VALVE SEAT

1) Check the valve seat for damage and deformation.
2) Check the seating width and seating position between valve and valve seat for the intake valve seat and exhaust valve seat.
   (1) Clean the valve and valve seat.
   (2) Coat the stem (A) of the valve lightly with engine oil and apply red dye evenly on the valve face (B).

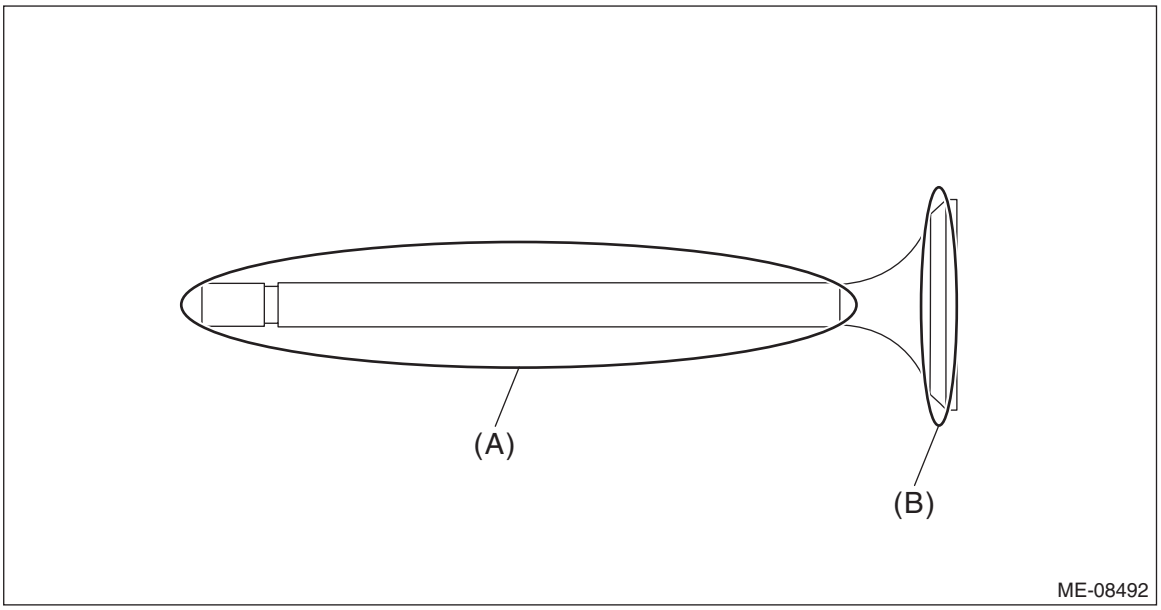

   (3) Using the valve lapper, slowly insert the valve with red dye applied into the valve guide. Lightly press the valve against the valve seat without turning the valve, and then slowly pull out the valve.

(4) Check the seating width “W” of valve seat as shown in the figure, using a caliper gauge. Check the seating width “W” between valve and valve seat by measuring the width of red dye on the seating surface of valve seat. If the seating width “W” between valve and valve seat is out of the standard, correct the seating surface of valve seat using the valve seat cutter. For correcting procedures of the valve seat seating surface, refer to step 3).

NOTE:
• When the red dye does not appear seamlessly on the valve seat seating surface, lap the valve. For lapping procedure, refer to step 4).
• When the red dye does not appear seamlessly on the valve seat seating surface even after lapping the valve, correct the valve seat seating surface using the valve seat cutter. For correcting procedures of the valve seat seating surface, refer to step 3).

Seating width W between valve and valve seat:
Intake
Standard
0.8 — 1.6 mm (0.031 — 0.063 in)
Exhaust
Standard
1.1 — 1.7 mm (0.043 — 0.067 in)

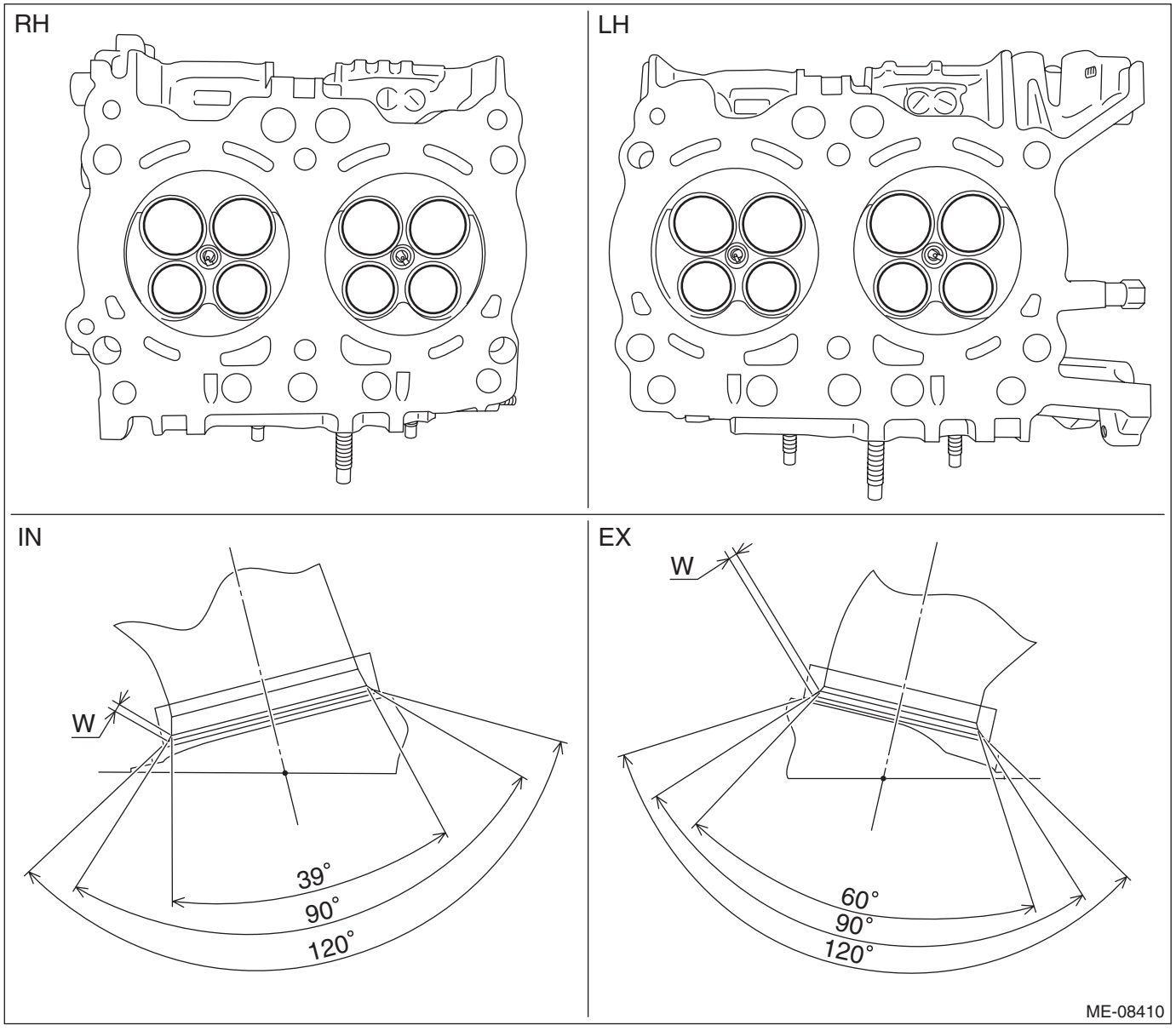

(5) Wipe off the red dye on the valve and valve seat completely.
(6) Coat the stem (A) of the valve lightly with engine oil and apply red dye evenly on the seating surface (B) between valve and valve seat.

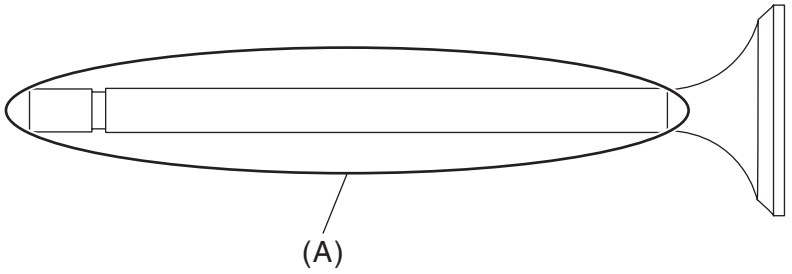

IN

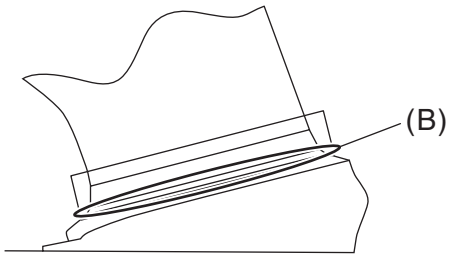

EX

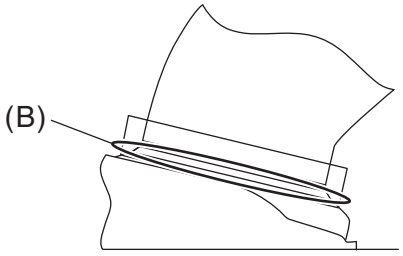

ME-08493

(7) Using the valve lapper, slowly insert the valve into the valve guide. Lightly press the valve against the valve seat without turning the valve, and then slowly pull out the valve.
(8) Check the seating position between valve and valve seat. Check the seating position between valve and valve seat by checking the position of red dye on the valve face. If the seating position between valve and valve seat is not at the center of valve face, correct the seating surface of valve seat using the valve seat cutter. For correcting procedures of the valve seat seating surface, refer to step 3).

Seating position between valve and valve seat:
Valve face center

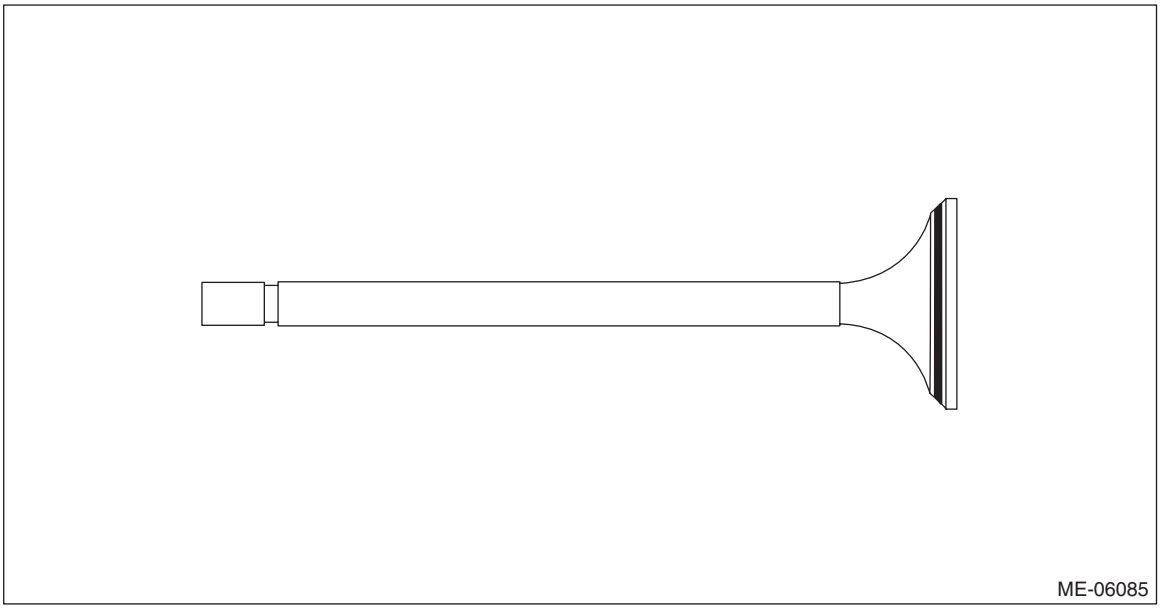

(9) After inspection, wipe off the red dye completely.

3) When correcting the seating surfaces of valve seat
(1) Correct the seating angle between valve and valve seat using the 45° valve seat cutter.

NOTE:
• Select the size of the valve seat cutter by referring to the outer diameters of the intake valve head and exhaust valve head.

Valve head outer diameter:
Intake
Standard
35.9 — 36.1 mm (1.413 — 1.421 in)
Exhaust
Standard
27.9 — 28.1 mm (1.098 — 1.106 in)

• Grind the seating surface so that the seating width between valve and valve seat becomes slightly larger than the standard value.
• Gradually reduce pressure at the end of grinding process in order to avoid creating a gap on the valve seat correcting surface.

Seating angle between valve and valve seat:
45°

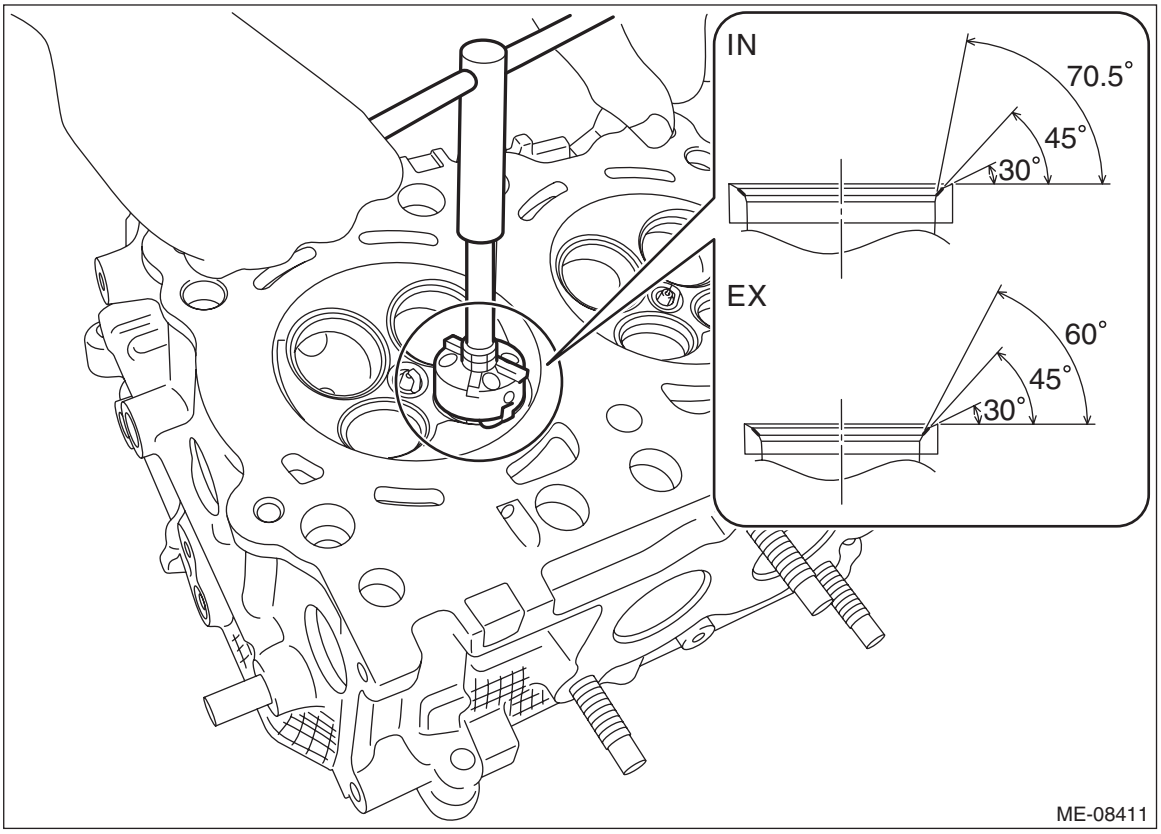

(2) Lap the valve. For lapping procedure of the valve, refer to step 4).
(3) Check the seating position between valve and valve seat. For inspection of the seating position between valve and valve seat, refer to step 2).

NOTE:
This procedure is necessary to select a seat cutter to be used in step (4).

(4) Using a seat cutter, correct the valve seat so that the seating width between valve and valve seat becomes the standard value.

NOTE:
- Select a proper valve seat cutter according to the following table.

Seating position between valve and valve seat	Seat cutter selection
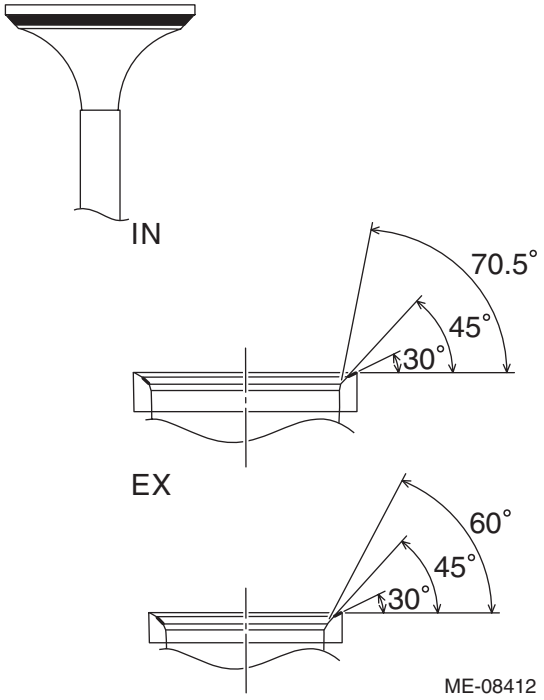	When the seating position of valve face is high, grind the surface using the 30° seat cutter until seating width between valve and valve seat becomes the standard value.
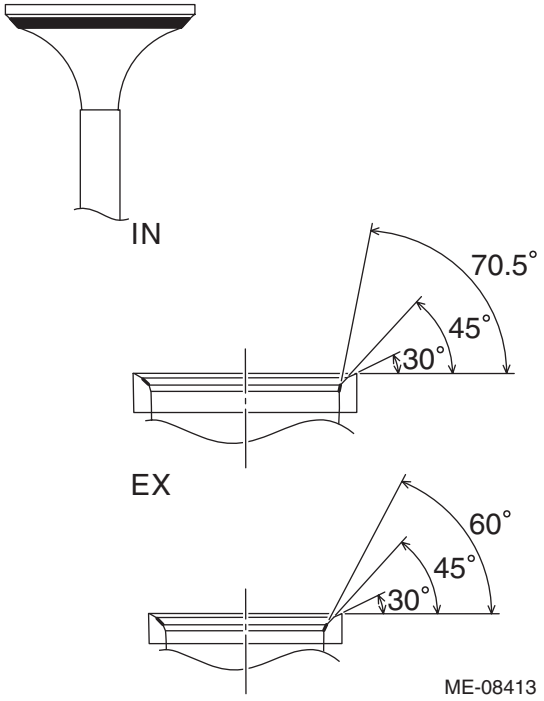	When the seating position of valve face is low, grind the surface using the 70.5° (IN) or 60° (EX) seat cutter until seating width between valve and valve seat becomes the standard value.

Seating position between valve and valve seat	Seat cutter selection
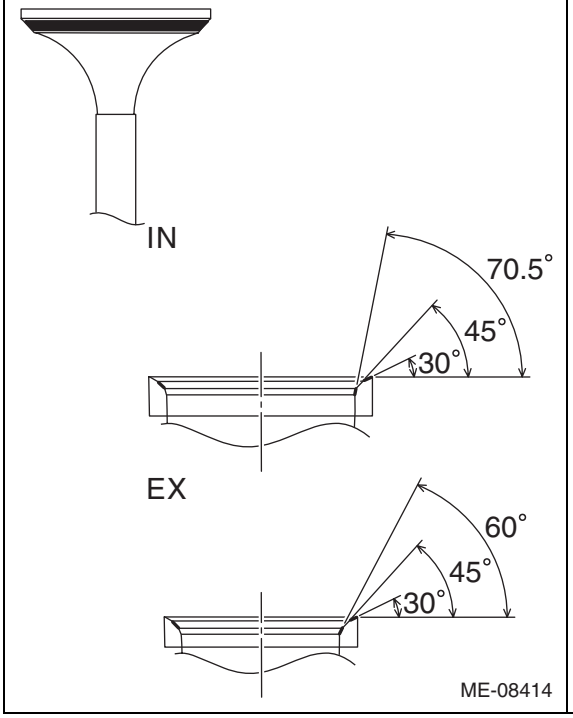	When the seating position of valve face is at center, grind the surface evenly using the 30°, 70.5° (IN) or 60° (EX) seat cutters until seating width between valve and valve seat becomes the standard value.

• Gradually reduce pressure at the end of grinding process in order to avoid creating a gap on the valve seat correcting surface.

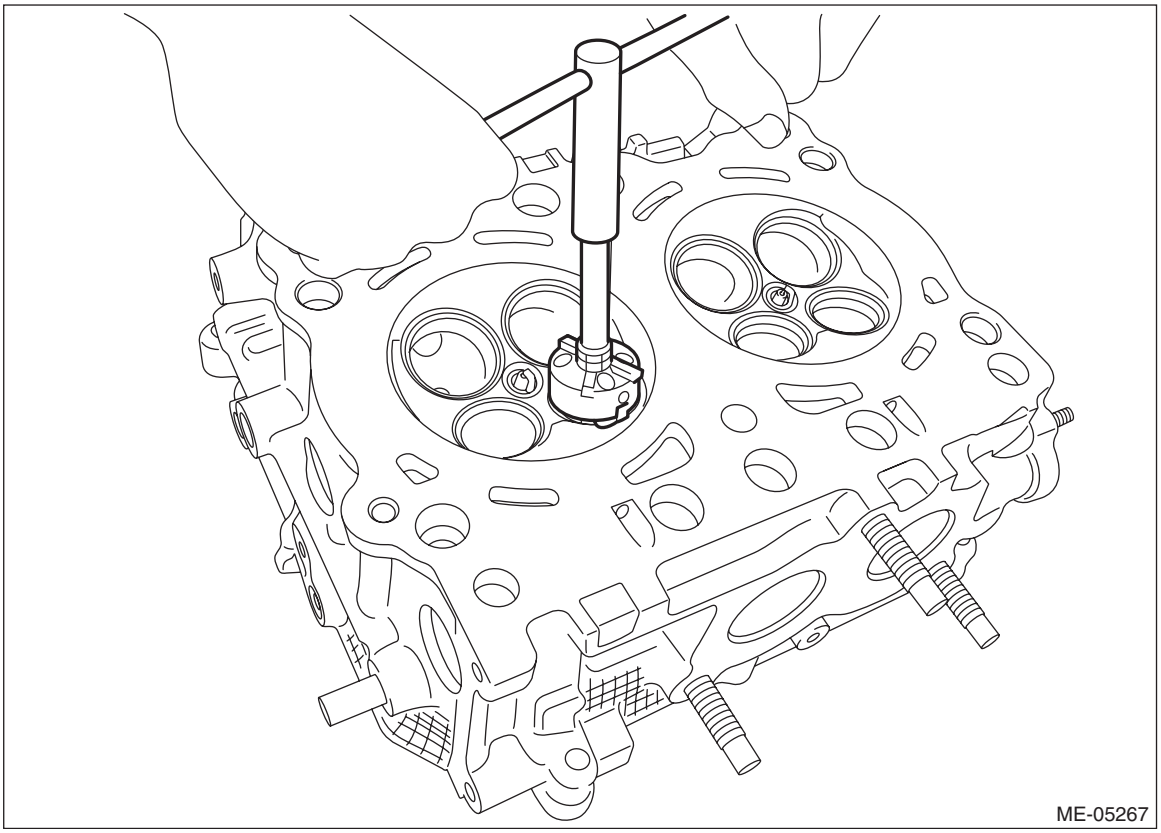

(5) Lap the valve. For lapping procedure of the valve, refer to step 4).

4) When lapping the valve

(1) Coat the stem (A) of the valve lightly with engine oil and put a small amount of valve compound evenly on the valve face (B).

NOTE:

- Be careful not to put the valve compound more than necessary.
- To avoid damaging the valve guide and valve stem, be careful not to let the valve compound contact the valve stem.

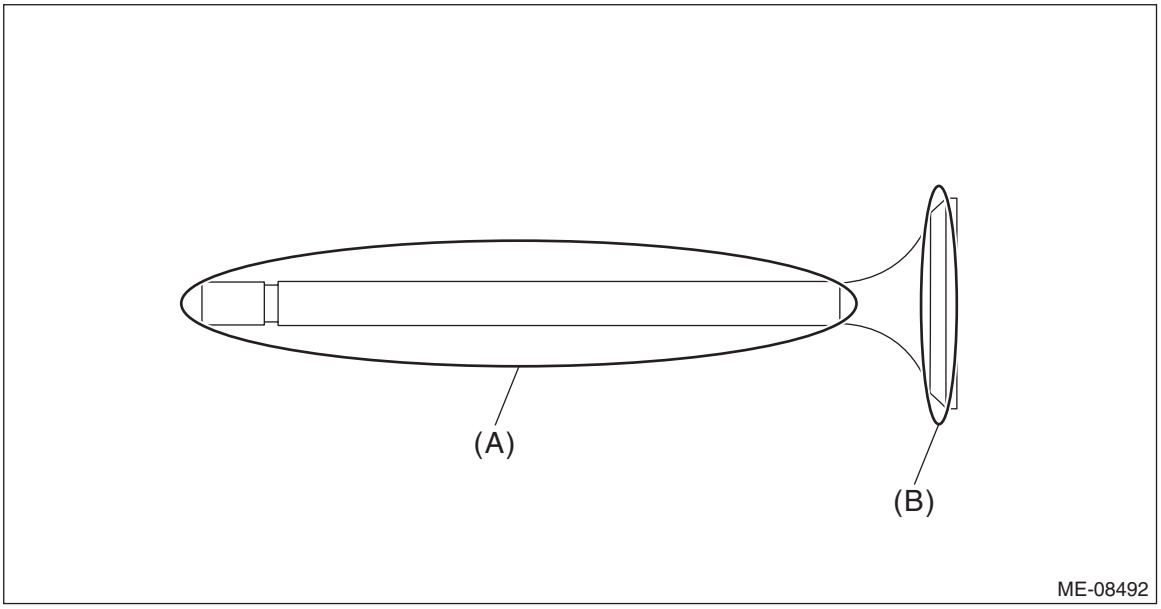

(2) Using the valve lapper, slowly insert the valve with the valve compound applied into the valve guide, and lap the seating surface between valve and valve seat. First, lift the valve and strike it against the valve seat twice, and then slightly turn the valve once. Repeat these steps as one set.

NOTE:

- To prevent the seating width between valve and valve seat from exceeding the standard value, be careful not to keep turning the valve while pressing it against the valve seat during lapping.
- Be careful not to lift the valve too far during lapping in order to prevent the valve from coming off the valve guide.

(3) Wipe off the valve compound on the valve and valve seat completely after lapping.

NOTE:

Be careful not to leave any valve compound in order to avoid malfunction.

(4) Check the seating width and seating position between valve and valve seat.

5. VALVE SPRING

1) Check the valve spring for damage and deformation.
2) Using a caliper gauge, valve spring tester, surface plate and try square, check the valve spring free length, tension/spring height and squareness. If it is not within the standard, replace the valve spring.

NOTE:
- Measurement should be performed at a temperature of 20°C (68°F).
- To check the squareness of the valve spring, stand the valve spring on a surface plate and check its deflection at the top of the valve spring using a try square.

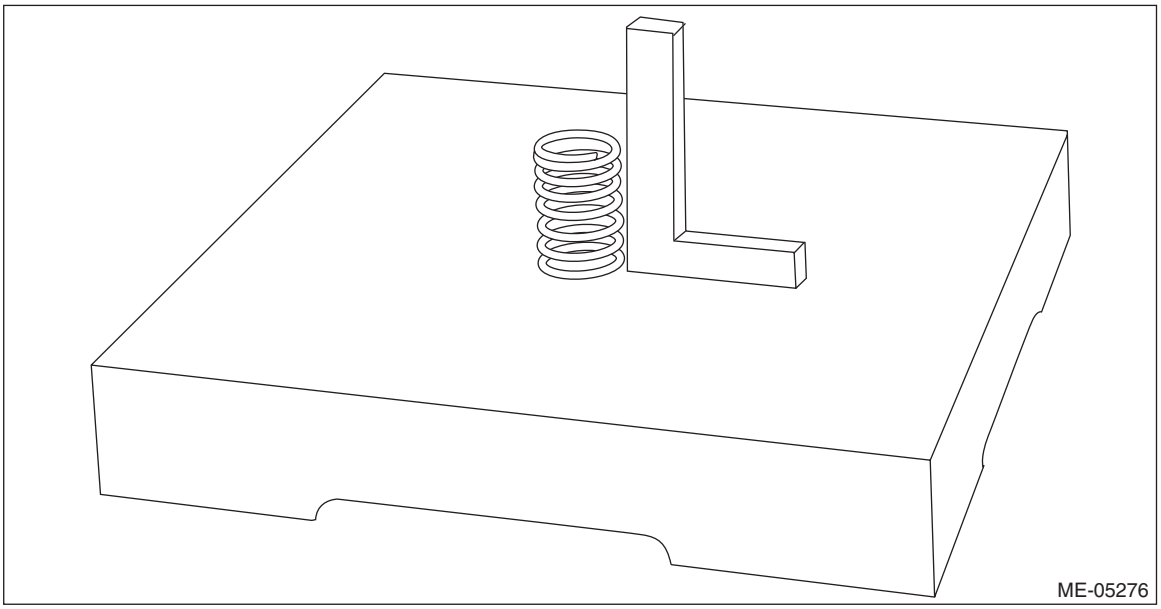

Valve spring free length:

CVT model
Standard
41.68 mm (1.641 in)

MT model
Standard
41.06 mm (1.617 in)

Valve spring tension/spring height:

CVT model
Set
Standard
182 — 210 N (18.56 — 21.41 kgf, 40.92 — 47.22 lbf)/33.0 mm (1.299 in)
Lift
Standard
502 — 554 N (51.19 — 56.49 kgf, 112.87 — 124.56 lbf)/22.0 mm (0.866 in)

MT model
Set
Standard
182 — 210 N (18.56 — 21.41 kgf, 40.92 — 47.22 lbf)/33.0 mm (1.299 in)
Lift
Standard
552 — 610 N (56.29 — 62.20 kgf, 124.11 — 137.15 lbf)/22.0 mm (0.866 in)

Valve spring squareness:
Standard
2.5°, 1.8 mm (0.071 in) or less

22.Cylinder Block

A: REMOVAL

1) Remove the engine from the vehicle. <Ref. to ME(H4DO)-43, REMOVAL, Engine Assembly.>
2) Remove the intake manifold assembly. <Ref. to FU(H4DO)-18, REMOVAL, Intake Manifold Assembly.>
3) Remove the engine wiring harness. <Ref. to FU(H4DO)-36, REMOVAL, Engine Wiring Harness.>
4) Remove the chain cover. <Ref. to ME(H4DO)-83, REMOVAL, Chain Cover.>
5) Remove the rocker cover. <Ref. to ME(H4DO)-128, REMOVAL, Rocker Cover.>
6) Remove the cam carrier. <Ref. to ME(H4DO)-140, REMOVAL, Cam Carrier.>
7) Remove the cylinder head. <Ref. to ME(H4DO)-171, REMOVAL, Cylinder Head.>
8) Remove the crank sprocket. <Ref. to ME(H4DO)-127, REMOVAL, Crank Sprocket.>
9) Remove the engine rear hanger from cylinder block RH.

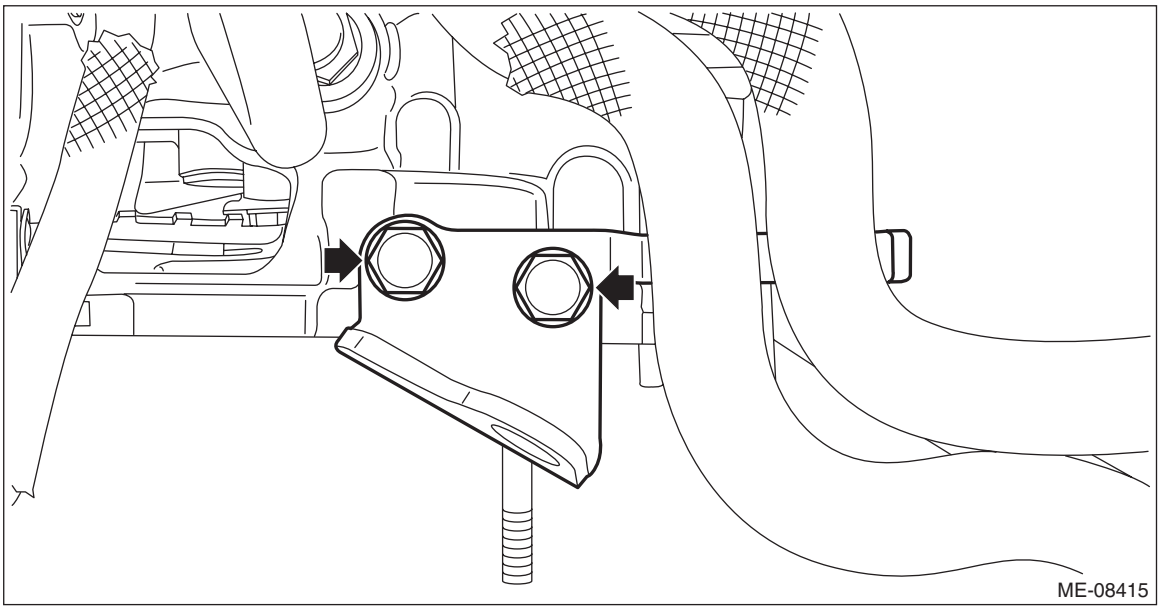

10) Remove the bolts securing the water pipe assembly and PCV connector to the cylinder block, and remove the water pipe assembly and PCV connector as a set from cylinder block.

- CVT model

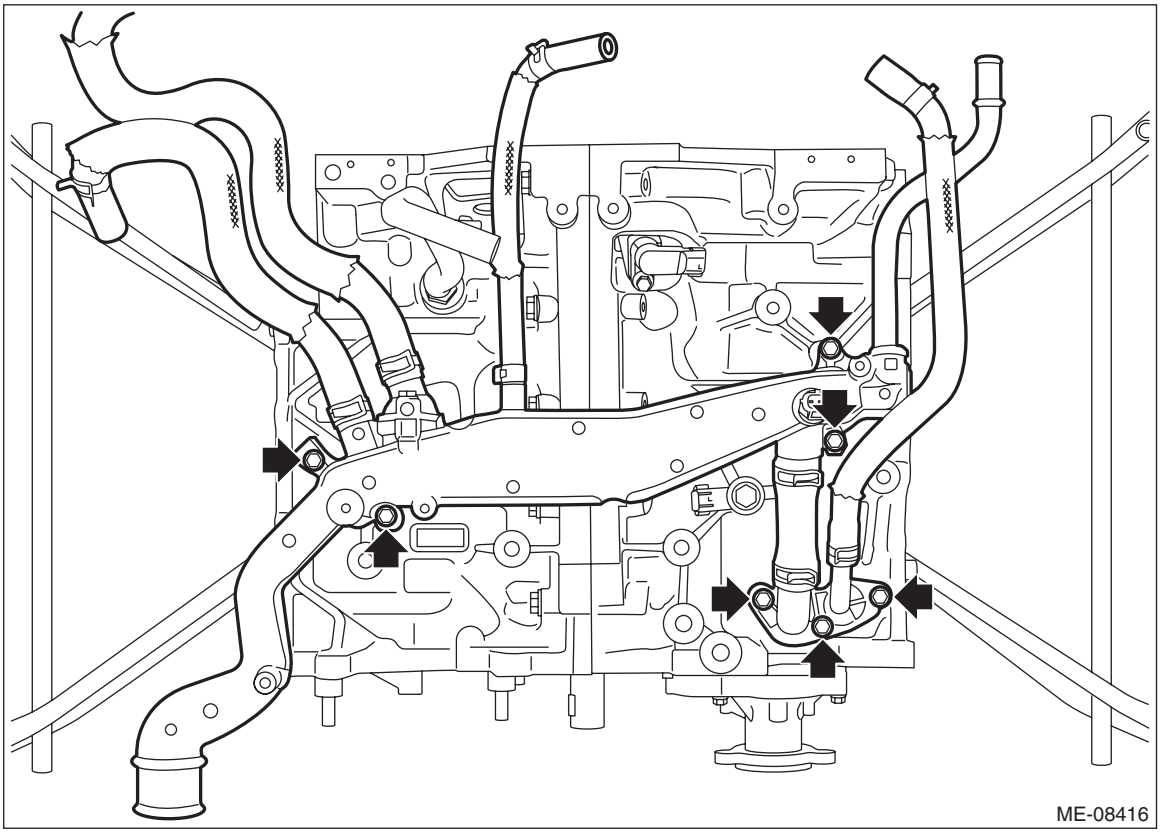

- MT model

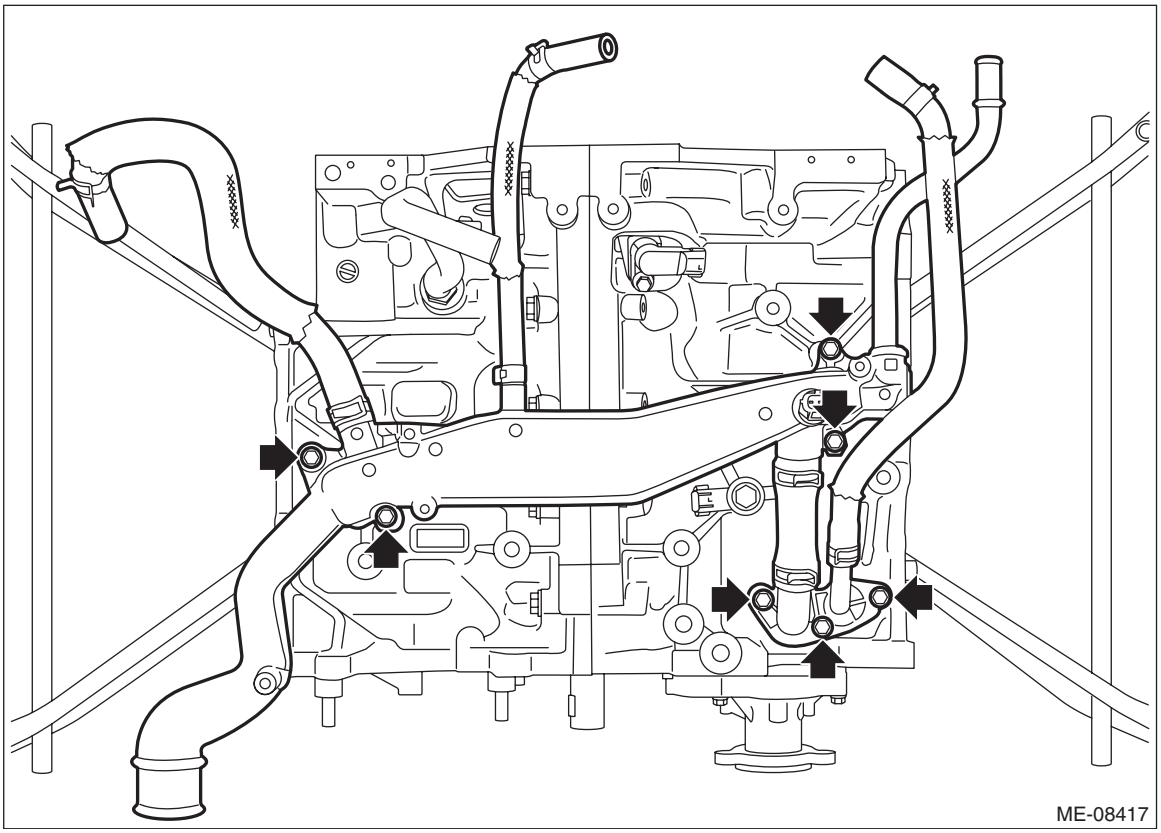

11) Remove the O-ring from the cylinder block and PCV connector.

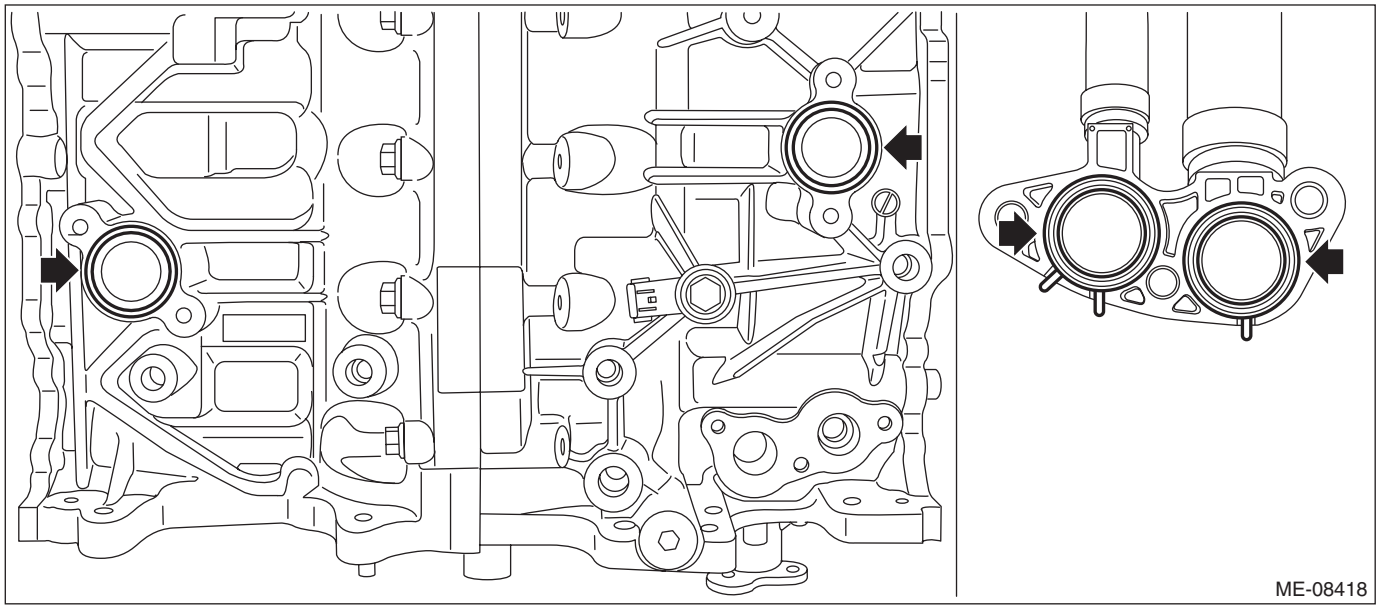

12) Remove the knock sensor. <Ref. to FU(H4DO)-56, REMOVAL, Knock Sensor.>
13) Remove the PCV valve. <Ref. to EC(H4DO)-64, REMOVAL, PCV Valve.>
14) Remove the crankshaft position sensor plate with drive plate. (CVT model) <Ref. to CVT(TR580)-194, REMOVAL, Drive Plate.>
15) Remove the clutch disc and cover. (MT model) <Ref. to CL-9, REMOVAL, Clutch Disc and Cover.>
16) Remove the crankshaft position sensor plate with flywheel. (MT model) <Ref. to CL-12, REMOVAL, Flywheel.>
17) Remove the bolts securing the crankshaft position sensor holder from the cylinder block LH, and remove the crankshaft position sensor with crankshaft position sensor holder.

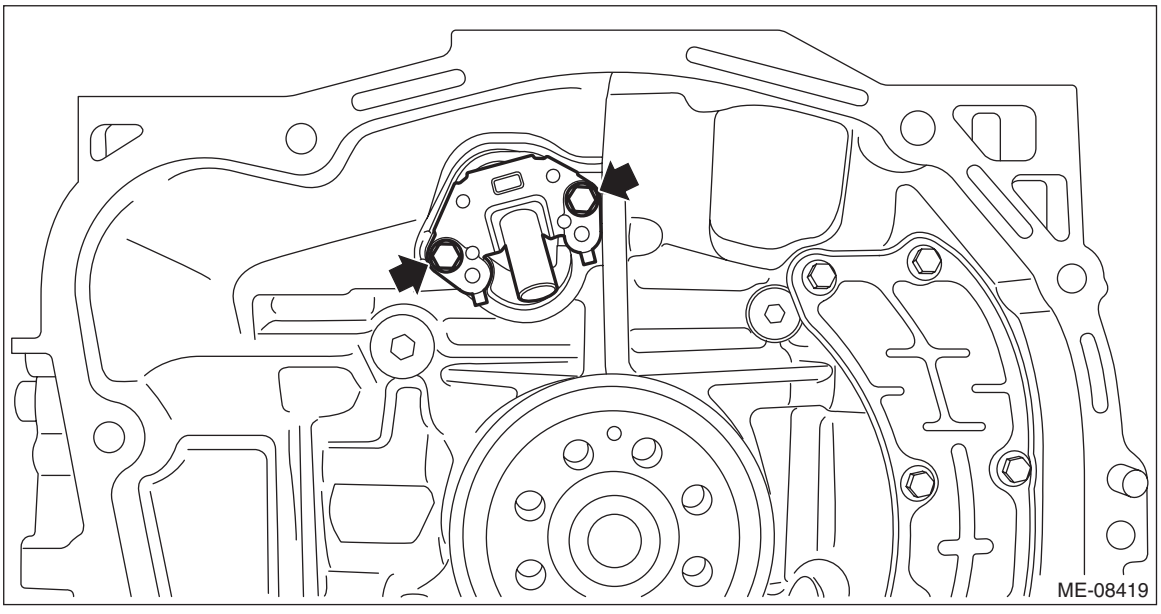

18) Remove the water jacket spacer from the cylinder block RH and cylinder block LH.

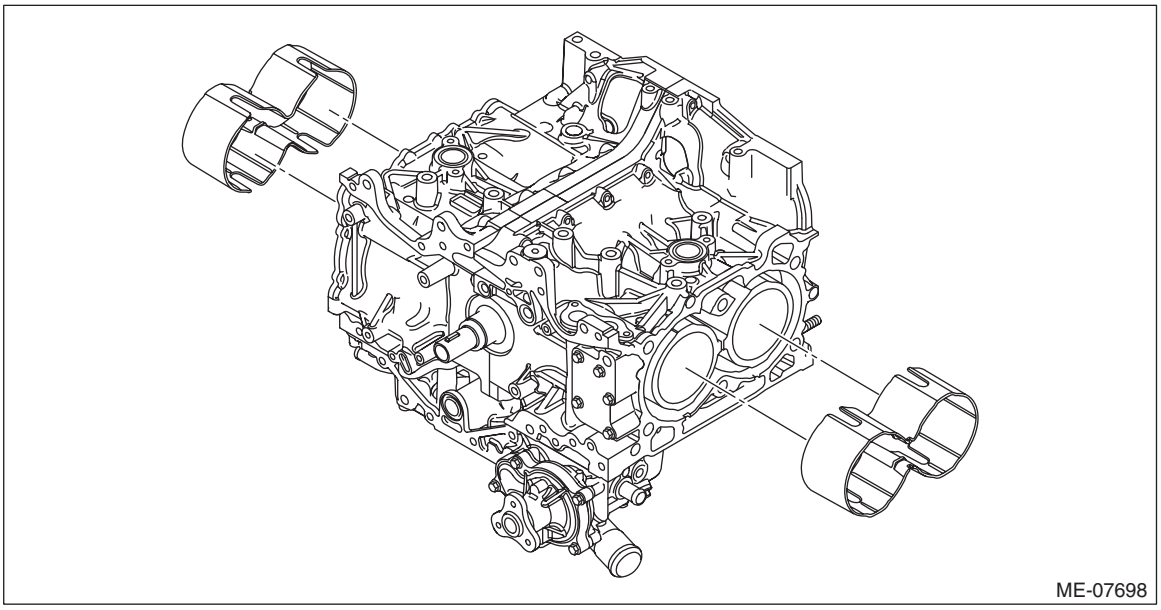

19) Set the cylinder block so that the oil pan is on the upper side, remove the ST1, ST2, ST3 and ST4 from cylinder block and oil pan upper.

ST1 498457000 ENGINE STAND ADAPTER RH
ST2 498457100 ENGINE STAND ADAPTER LH
ST3 18362AA020 ADAPTER
ST4 499817100 ENGINE STAND

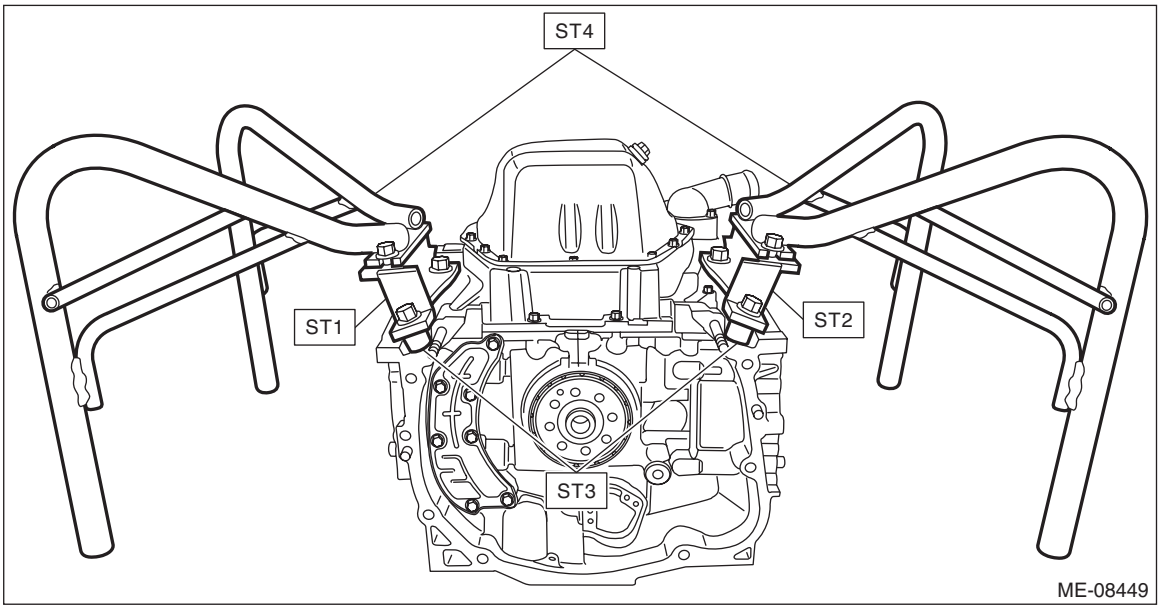

20) Remove the thermostat cover from oil pan upper, and then remove the thermostat.

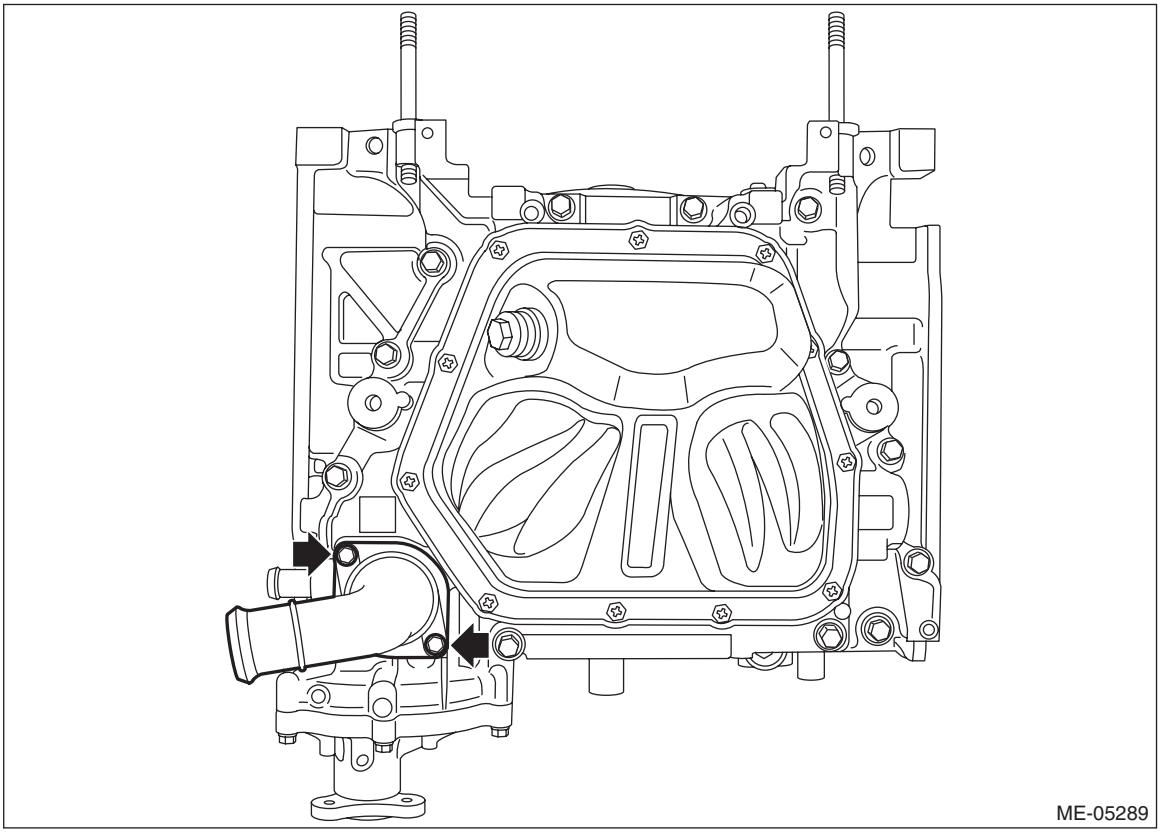

21) Remove the oil pan upper with oil pan from cylinder block.

NOTE:
Pry the points shown in the figure with a crowbar wrapped by protective tape, and then remove the oil pan upper.

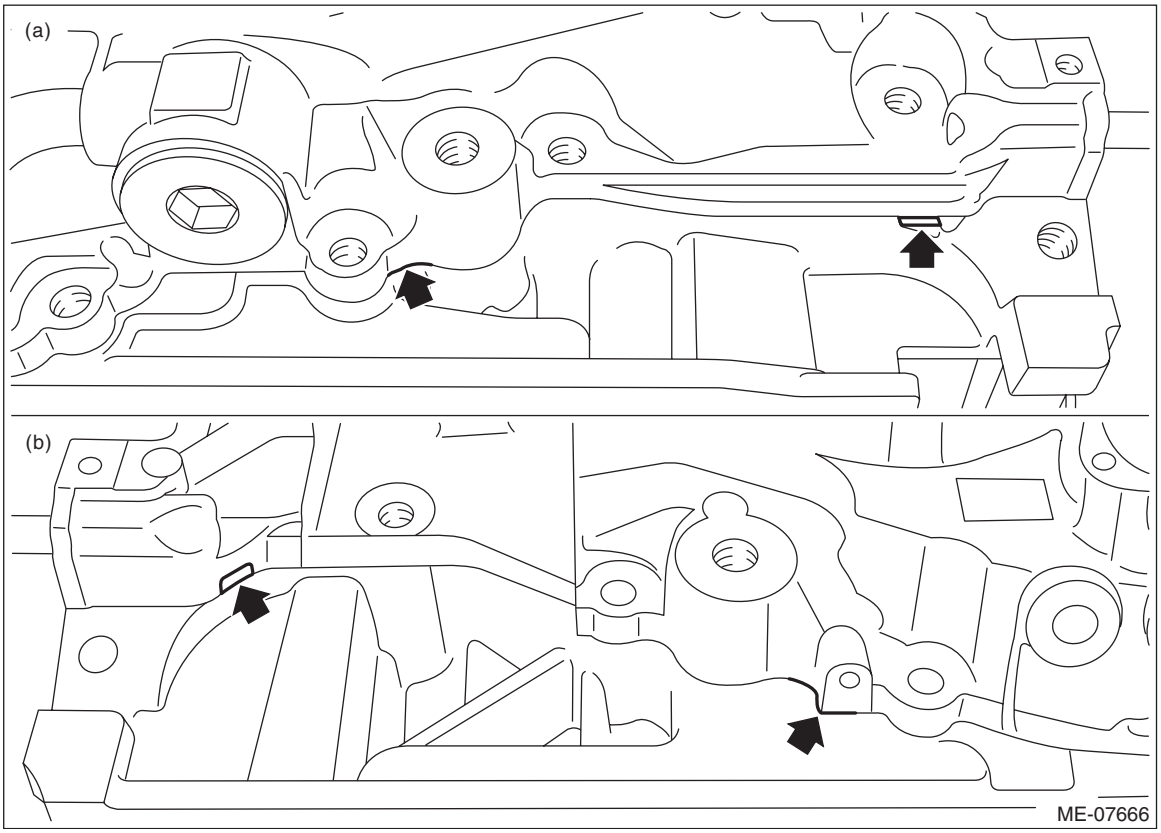

(a) RH side (b) LH side

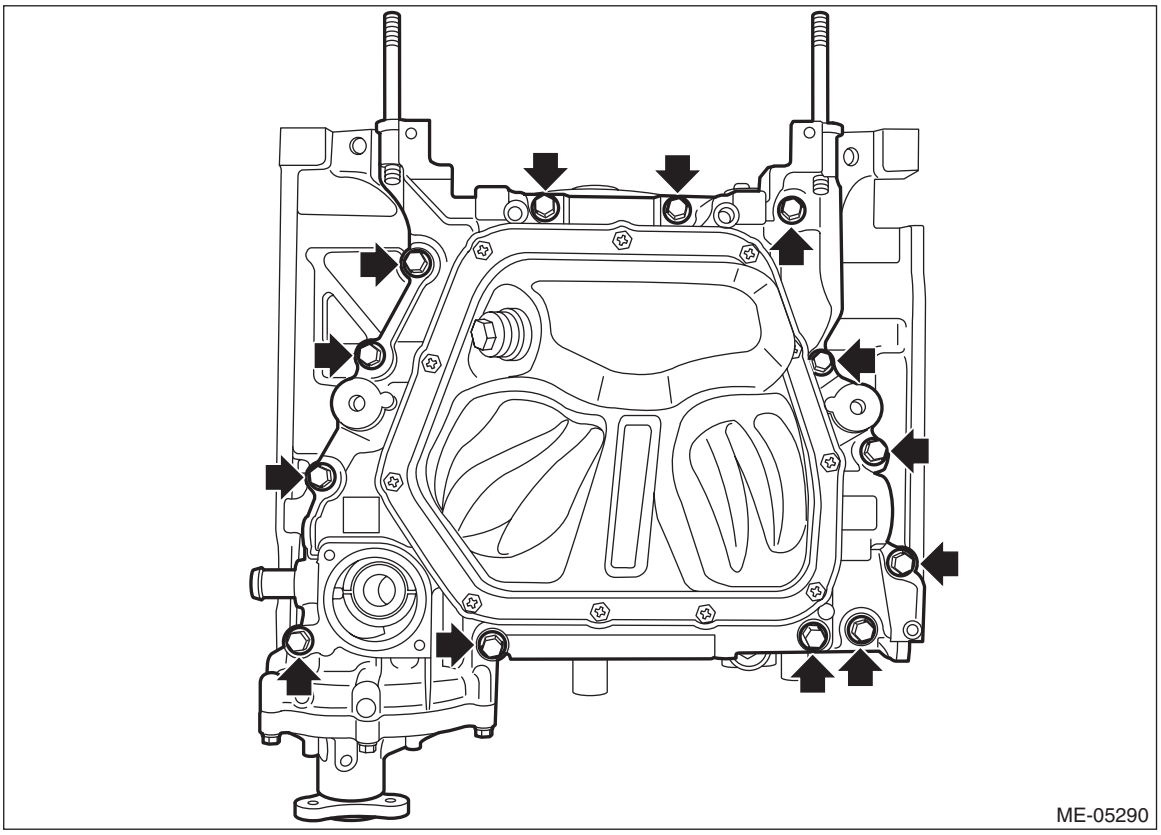

22) Remove the O-ring from the cylinder block.

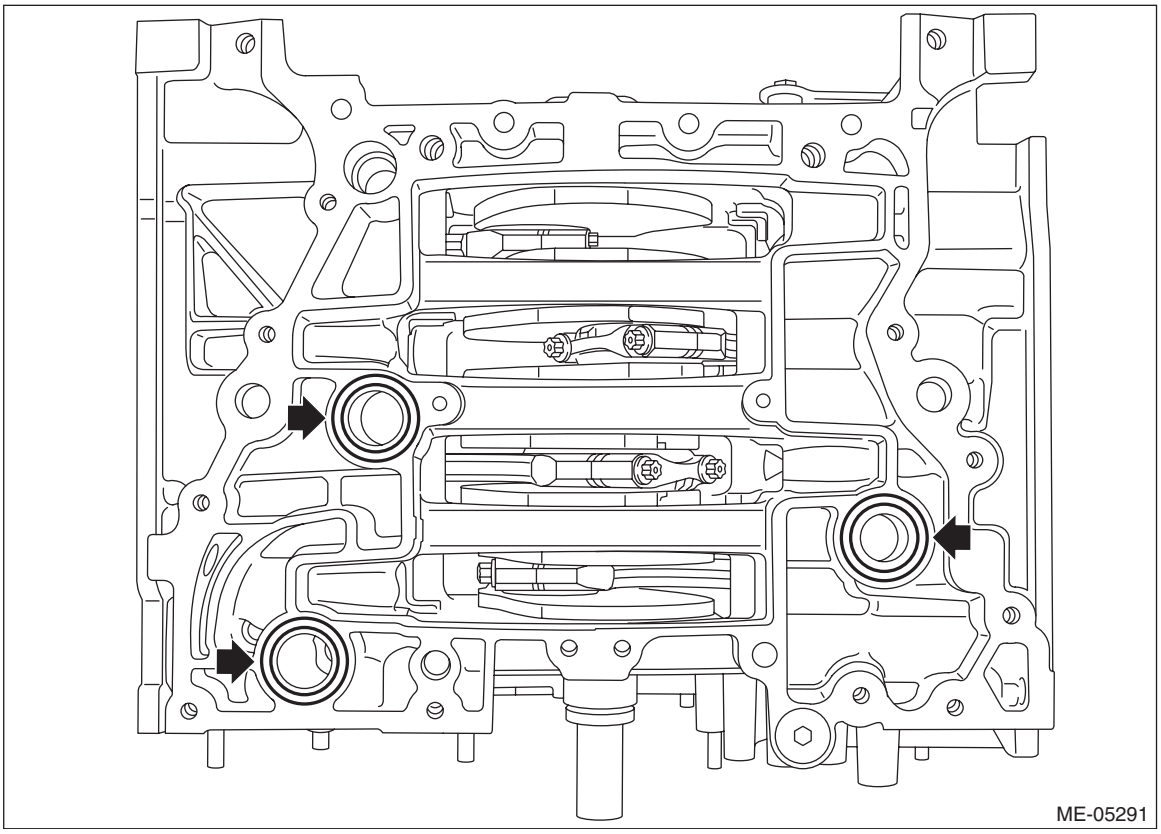

23) Install a bolt of suitable length (M10 × P1.25) at the locations shown in the figure.

NOTE:
- This procedure is required to prevent the knock pin damage when the cylinder block is raised in the next step.
- Use the same length of bolt for the four bolts.

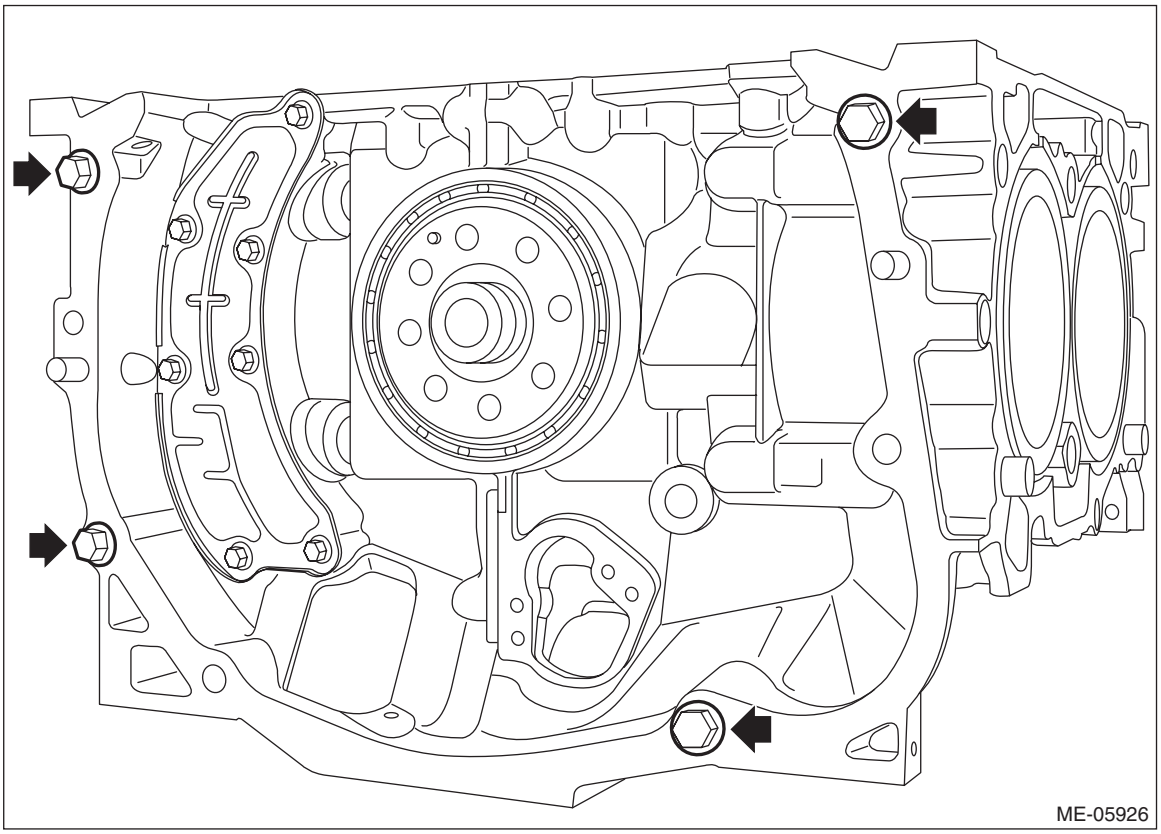

24) Raise the cylinder block so that the rear oil seal is on the lower side.
25) Remove the #1 and #4 connecting rod caps and pistons from the cylinder block.

NOTE:
Mark each connecting rod cap and piston with a cylinder number.

(1) Turn the crankshaft so that the #1 connecting rod cap (A) and #4 connecting rod cap (B) is located at the position shown in the figure using ST.

ST 18252AA000 CRANKSHAFT SOCKET

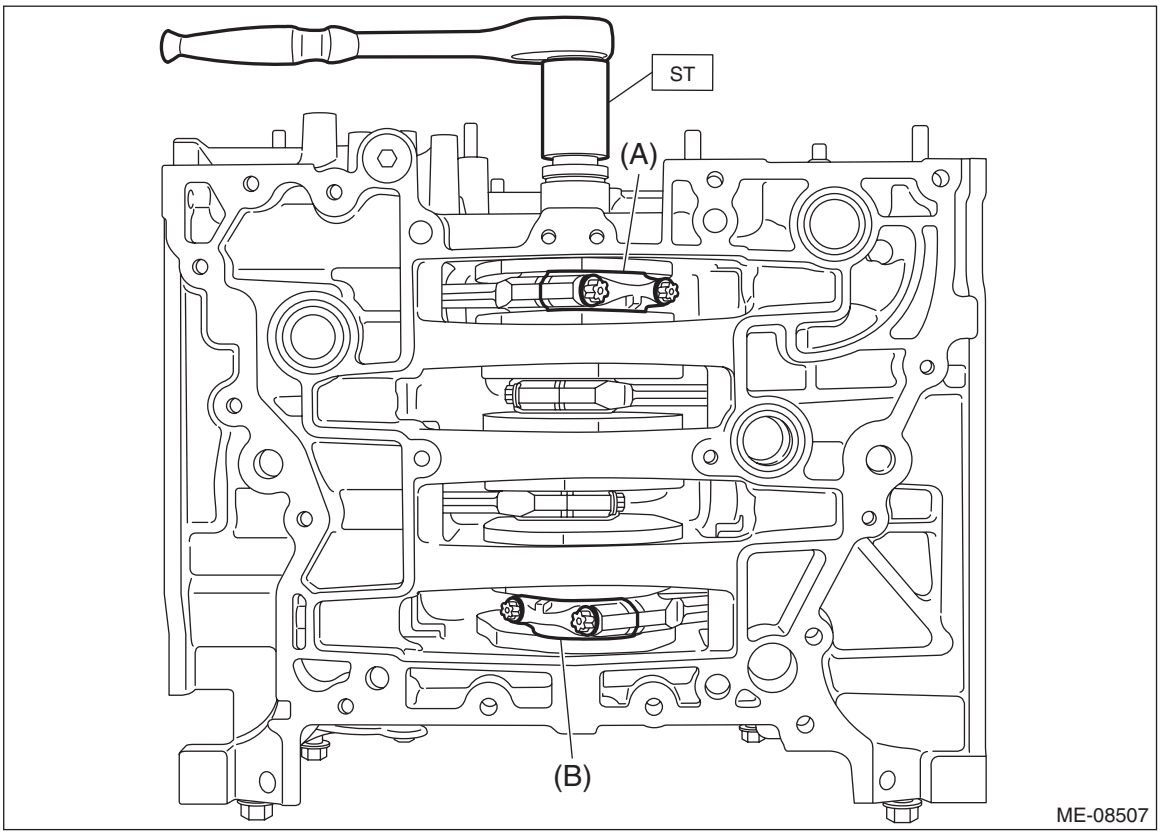

(2) Using ST, loosen the #1 connecting rod cap bolt, and remove the #1 connecting rod cap bolt and #1 connecting rod cap.

ST 18270AA020 SOCKET

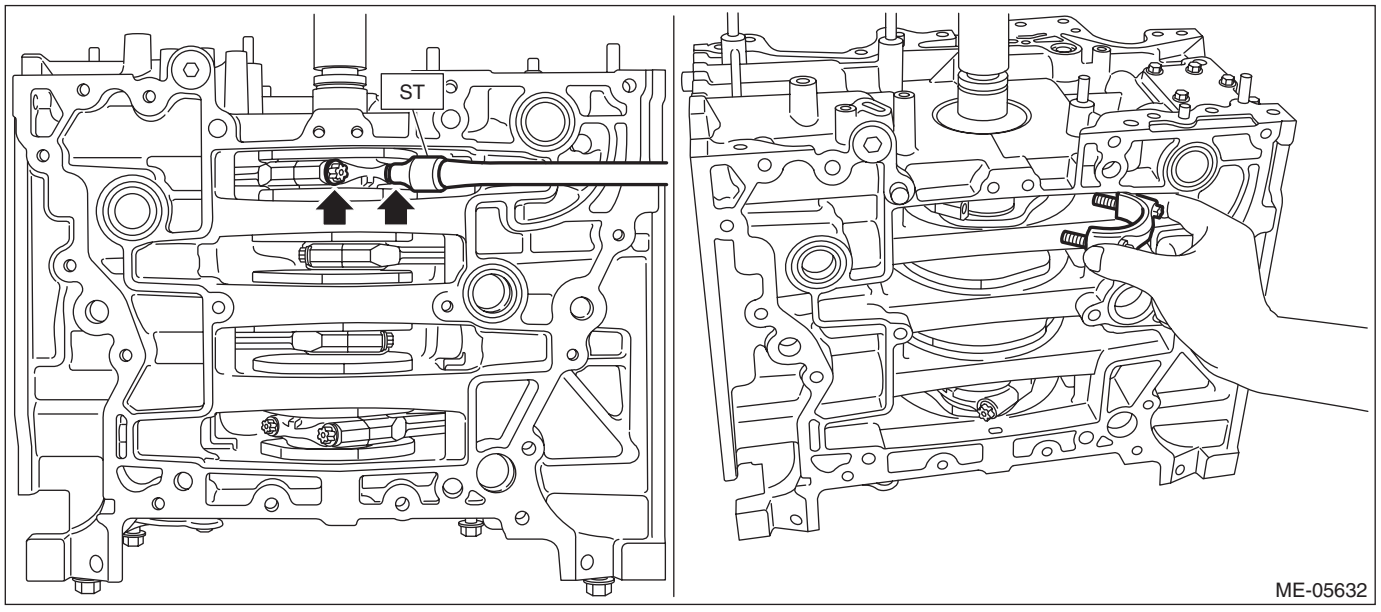

(3) Using ST, loosen the #4 connecting rod cap bolt, and remove the #4 connecting rod cap bolt and #4 connecting rod cap.

ST 18270AA020 SOCKET

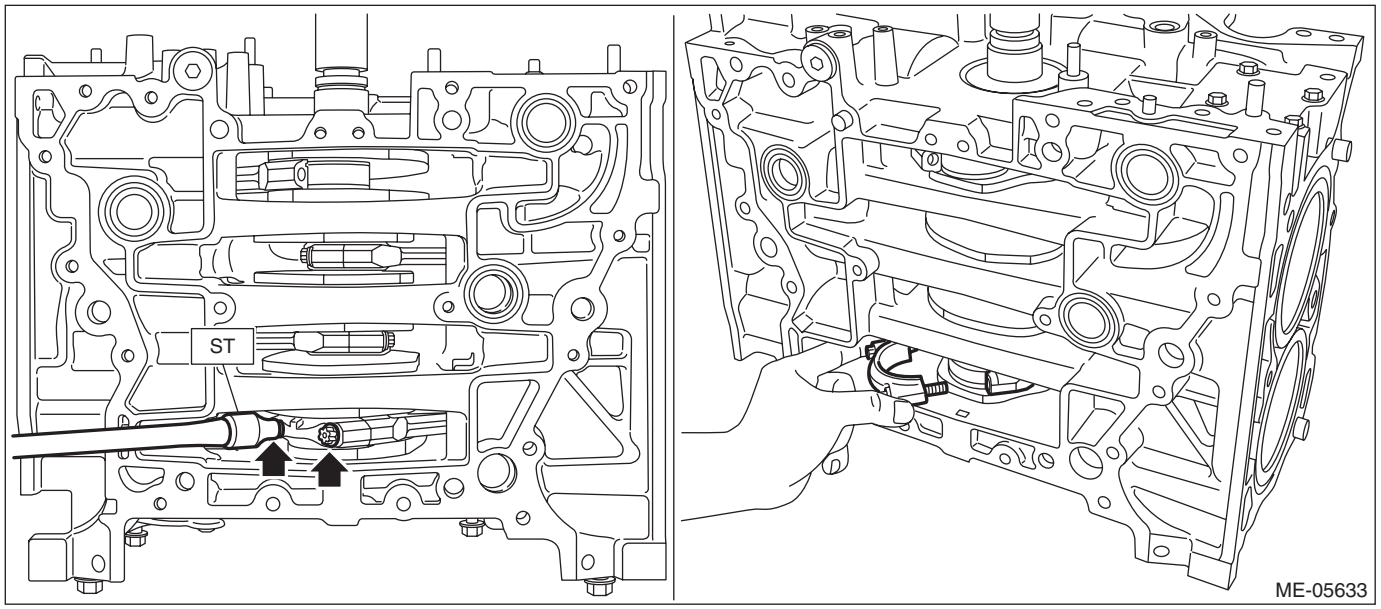

(4) Using the ST, turn the crankshaft counterclockwise and separate the positions of the #1 pin (A) of crankshaft and the large end (B) of #1 connecting rod.

ST 18252AA000 CRANKSHAFT SOCKET

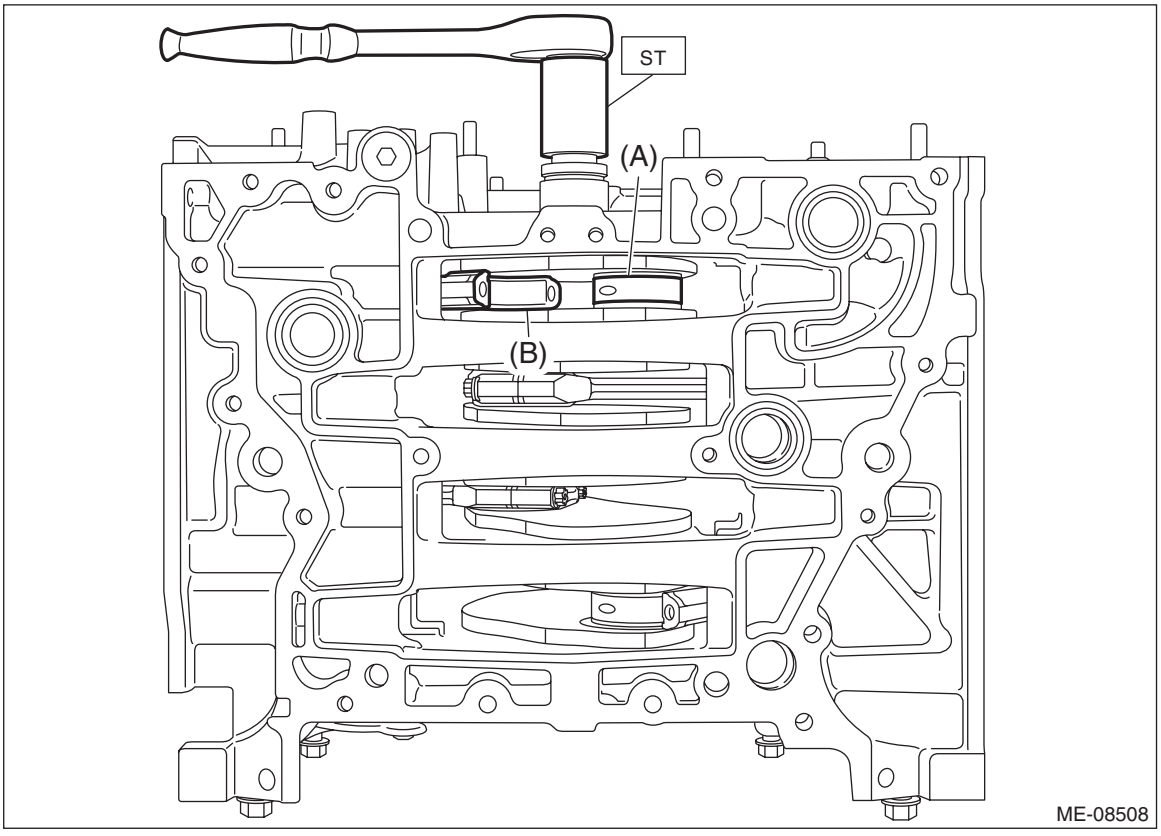

(5) Push the #1 connecting rod in the direction of the arrow, and remove the #1 piston with #1 connecting rod from the cylinder block.

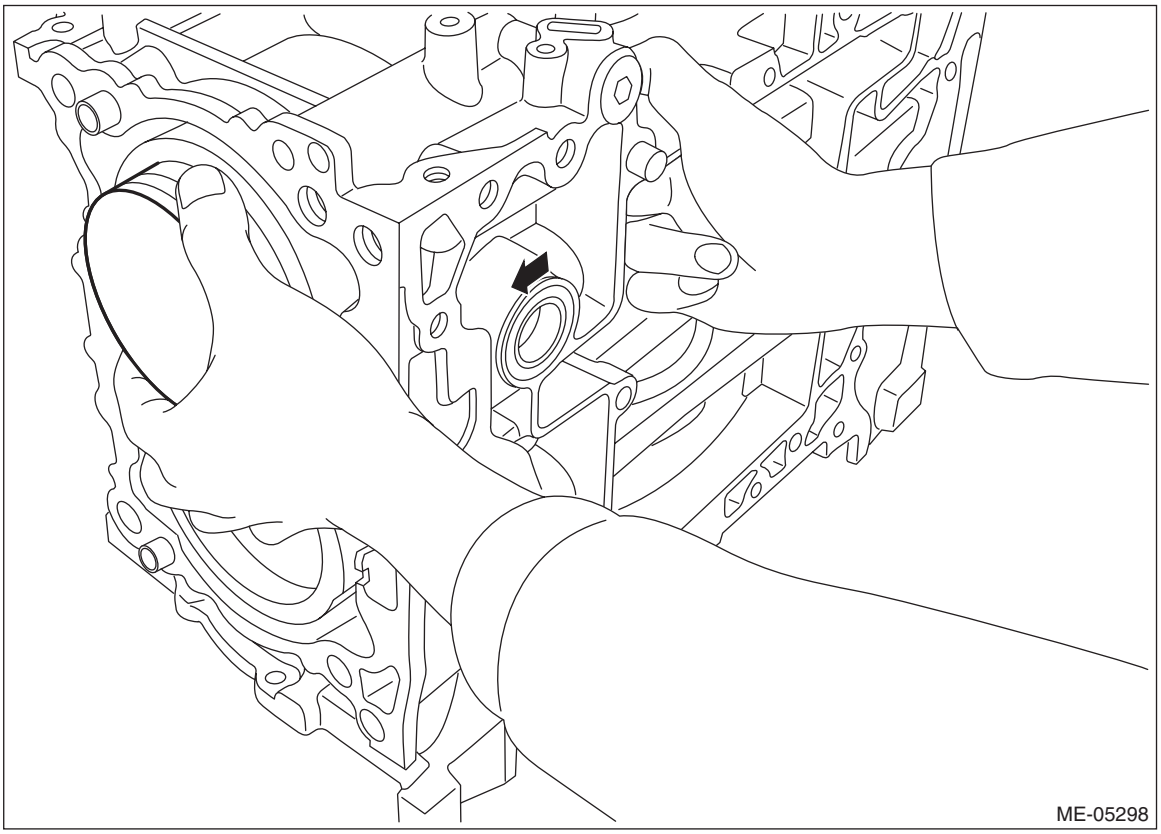

(6) Using the ST, turn the crankshaft clockwise and separate the positions of the #4 pin (A) of crankshaft and the large end (B) of #4 connecting rod.

ST 18252AA000 CRANKSHAFT SOCKET

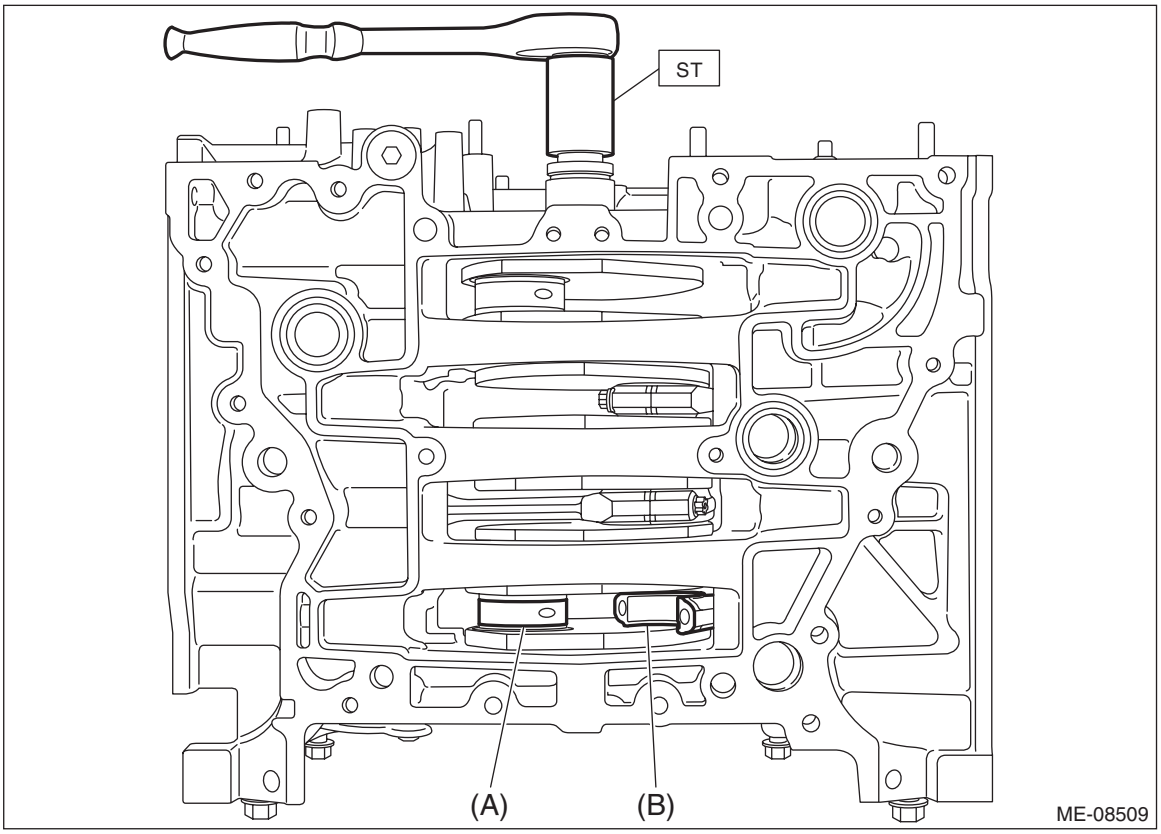

(7) Push the #4 connecting rod in the direction of the arrow, and remove the #4 piston with #4 connecting rod from the cylinder block.

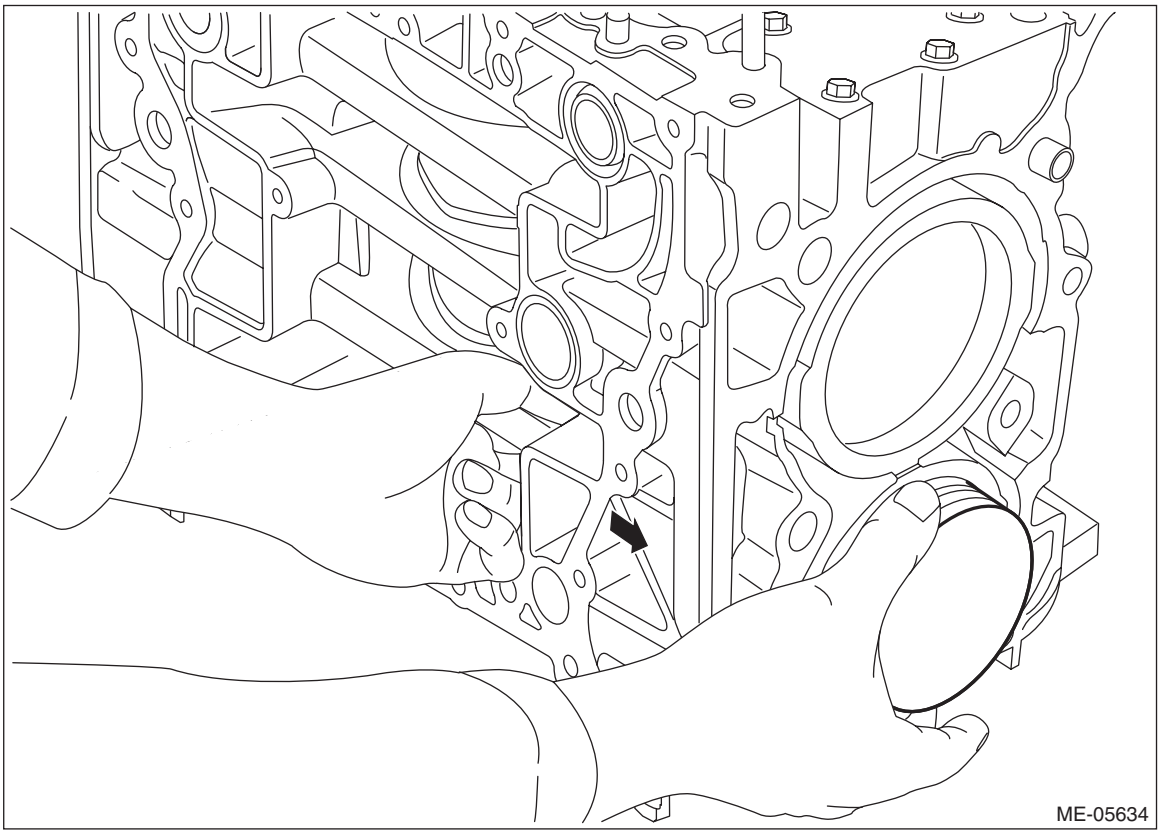

26) Remove the #2 and #3 connecting rod caps and pistons from the cylinder block.

NOTE:
Mark each connecting rod cap and piston with a cylinder number.

(1) Turn the crankshaft so that the #2 connecting rod cap (A) and #3 connecting rod cap (B) is located at the position shown in the figure using ST.

ST 18252AA000 CRANKSHAFT SOCKET

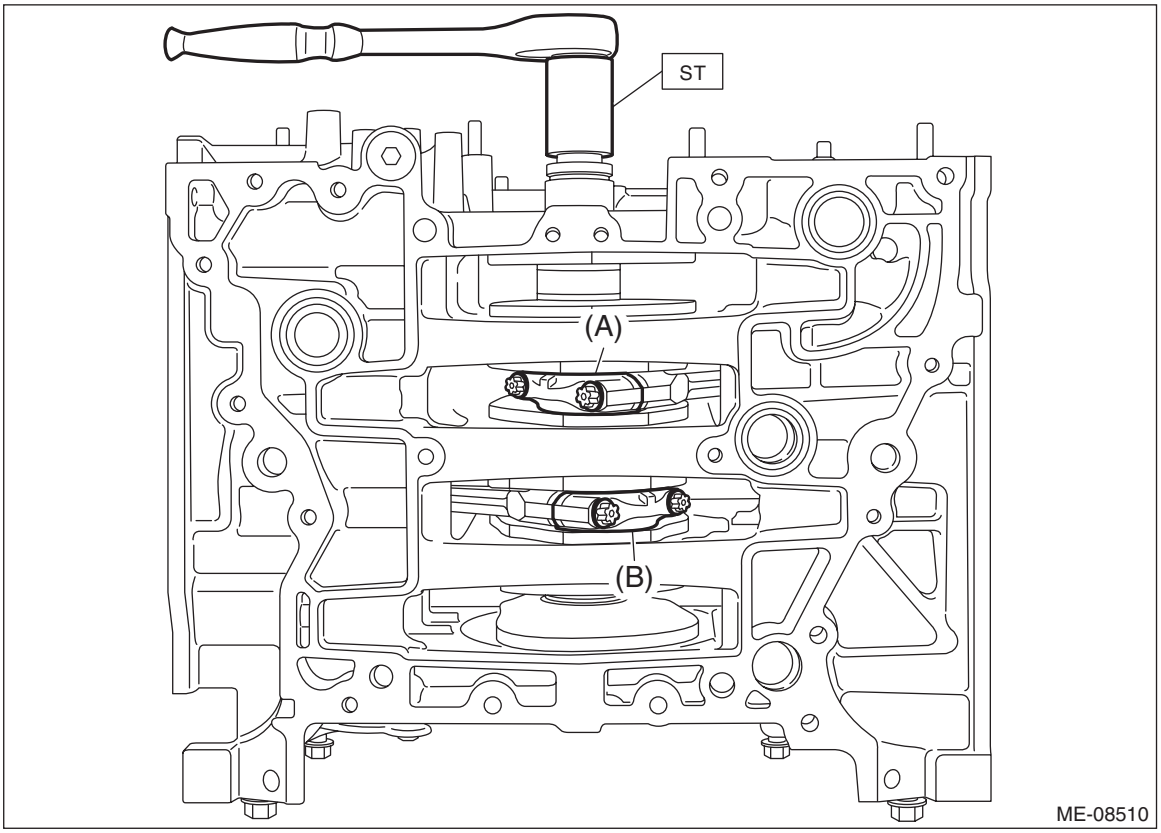

(2) Using ST, loosen the #2 connecting rod cap bolt, and remove the #2 connecting rod cap bolt and #2 connecting rod cap.

ST 18270AA020 SOCKET

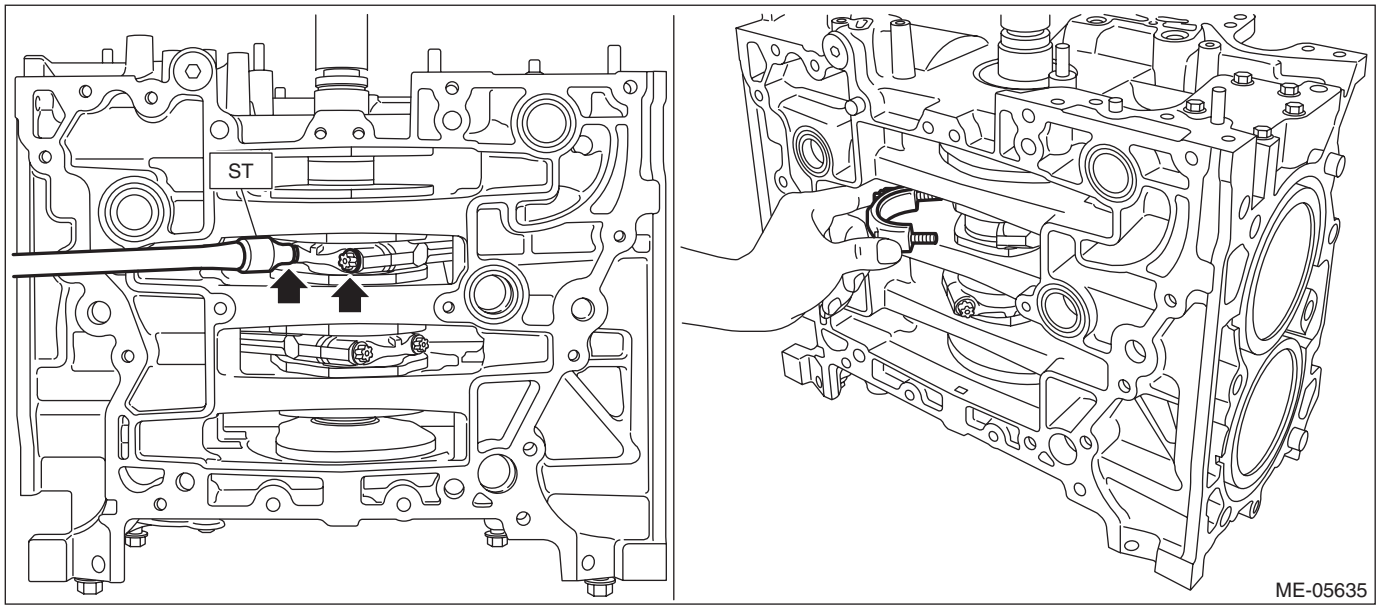

(3) Using ST, loosen the #3 connecting rod cap bolt, and remove the #3 connecting rod cap bolt and #3 connecting rod cap.

ST 18270AA020 SOCKET

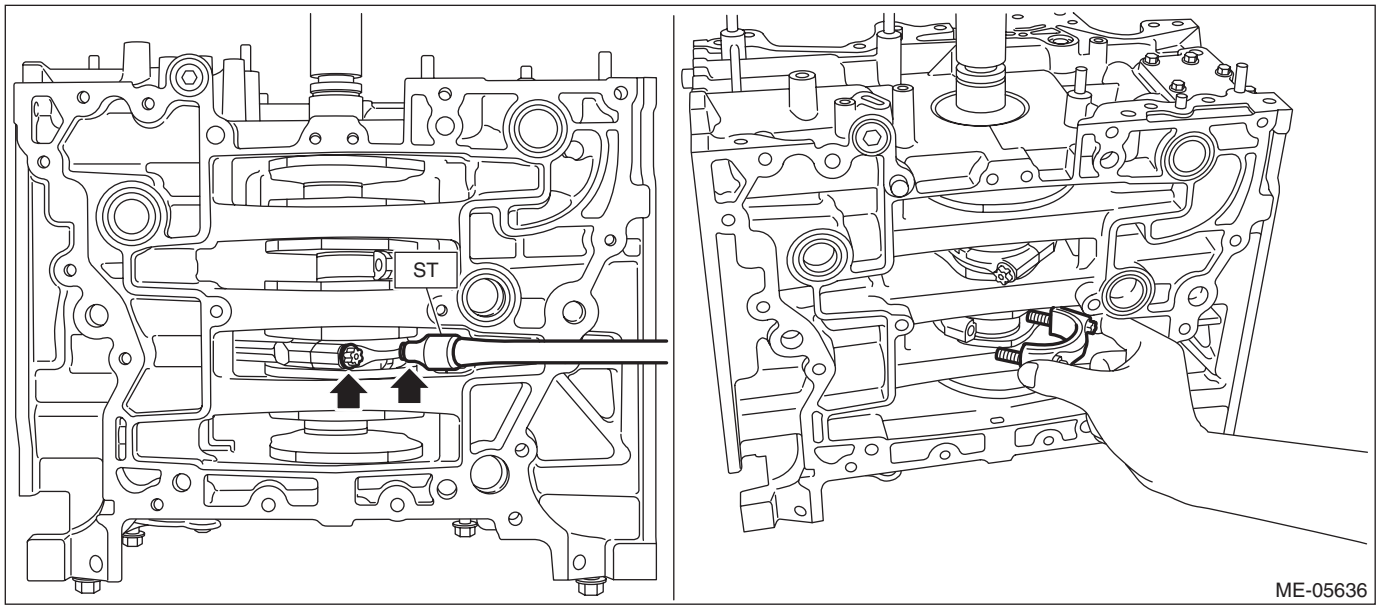

(4) Using the ST, turn the crankshaft clockwise and separate the positions of the #2 pin (A) of crankshaft and the large end (B) of #2 connecting rod.

ST 18252AA000 CRANKSHAFT SOCKET

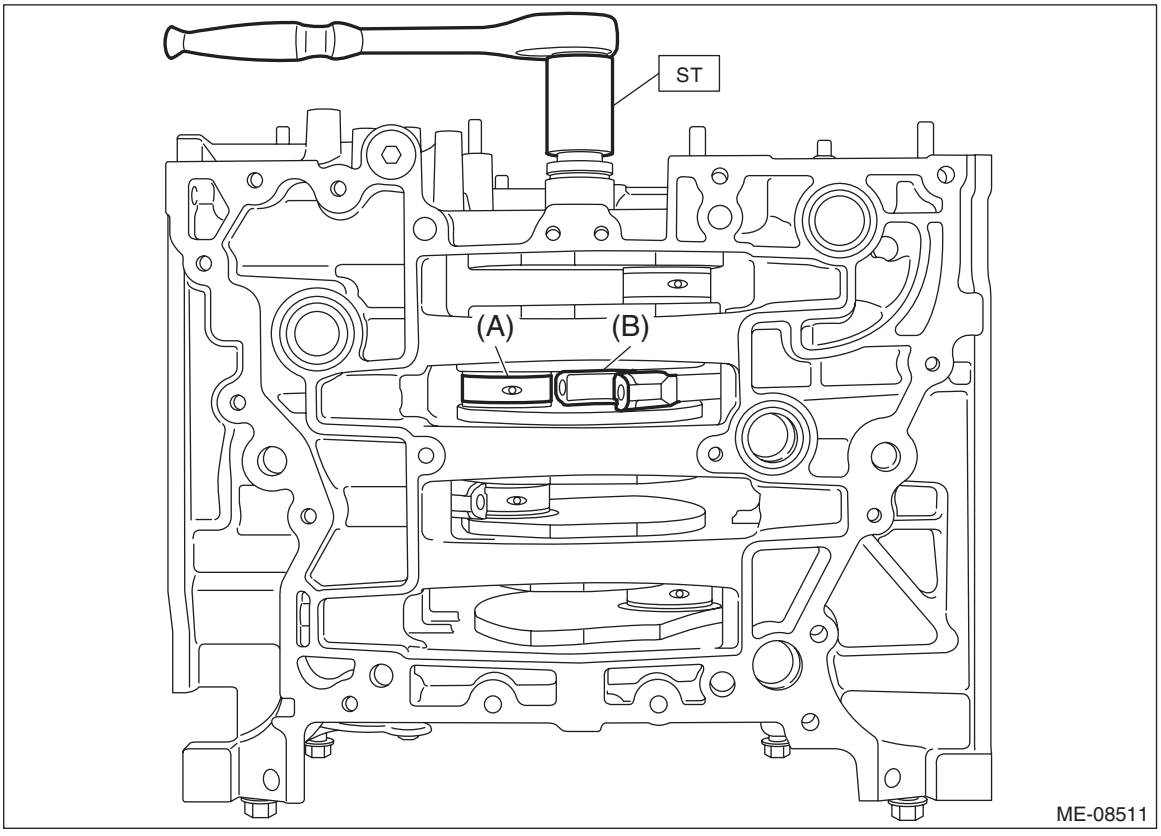

(5) Push the #2 connecting rod in the direction of the arrow, and remove the #2 piston with #2 connecting rod from the cylinder block.

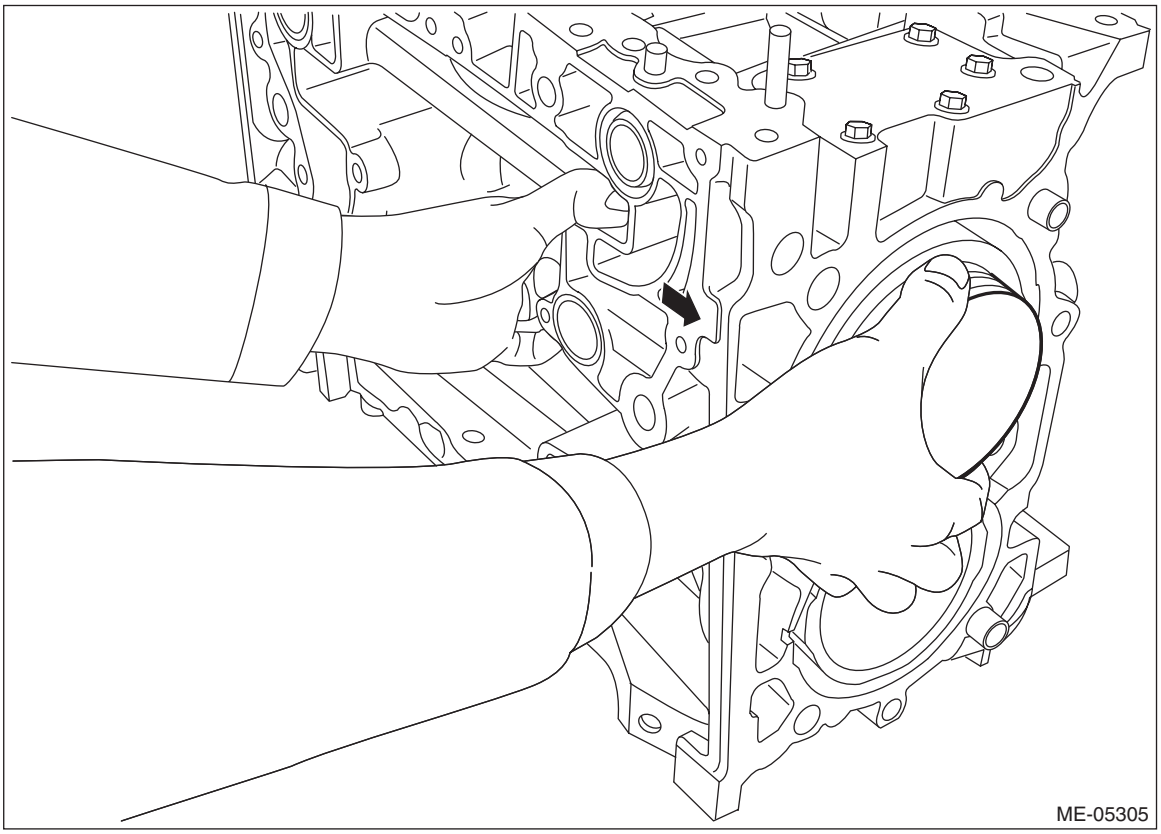

(6) Using the ST, turn the crankshaft counterclockwise and separate the positions of the #3 pin (A) of crankshaft and the large end (B) of #3 connecting rod.

ST 18252AA000 CRANKSHAFT SOCKET

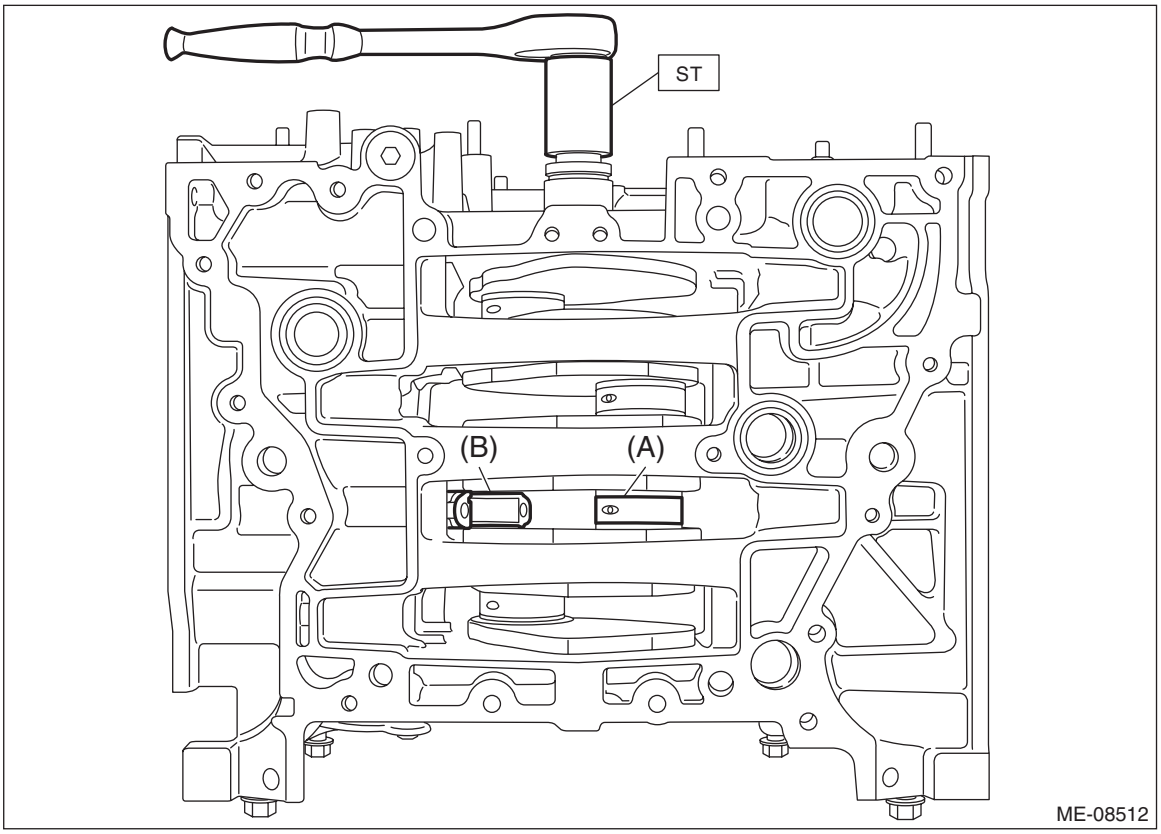

(7) Push the #3 connecting rod in the direction of the arrow, and remove the #3 piston with #3 connecting rod from the cylinder block.

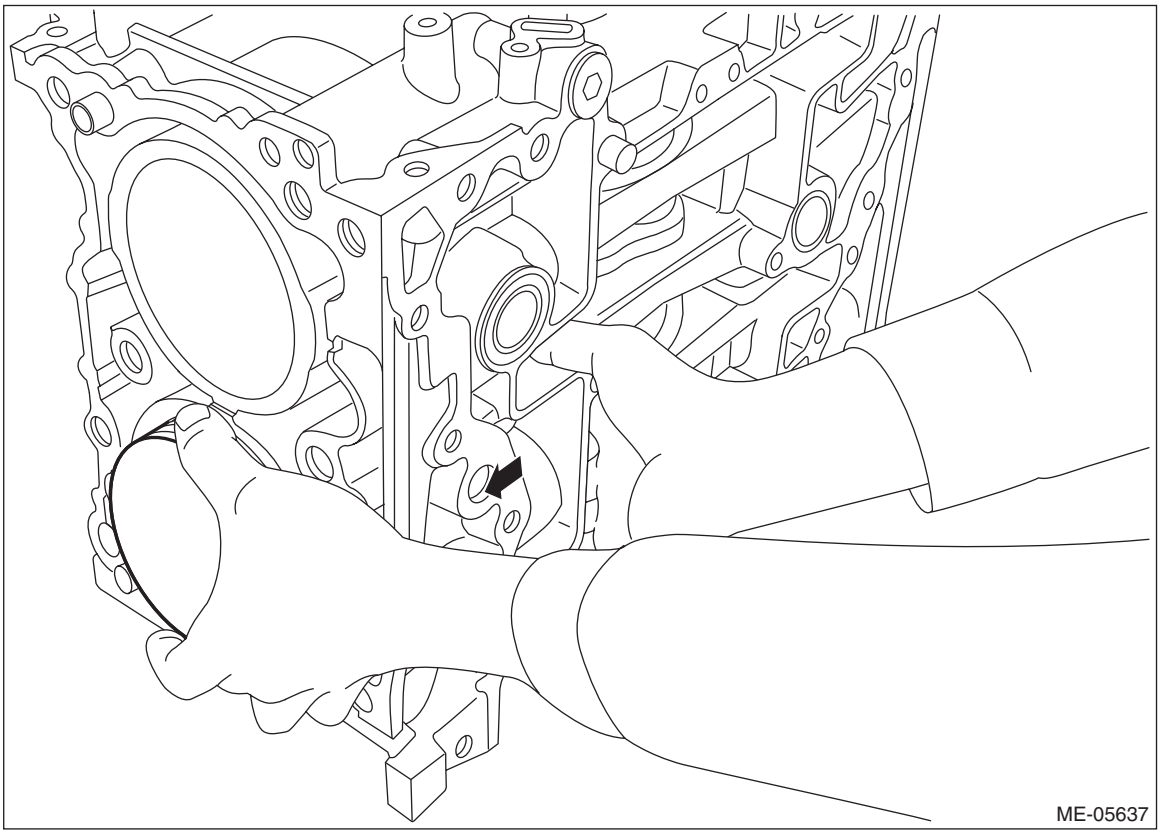

27) Set the cylinder block so that the oil pan side of the block faces upward, and remove the mounting bolts attached to the locations shown in the figure.

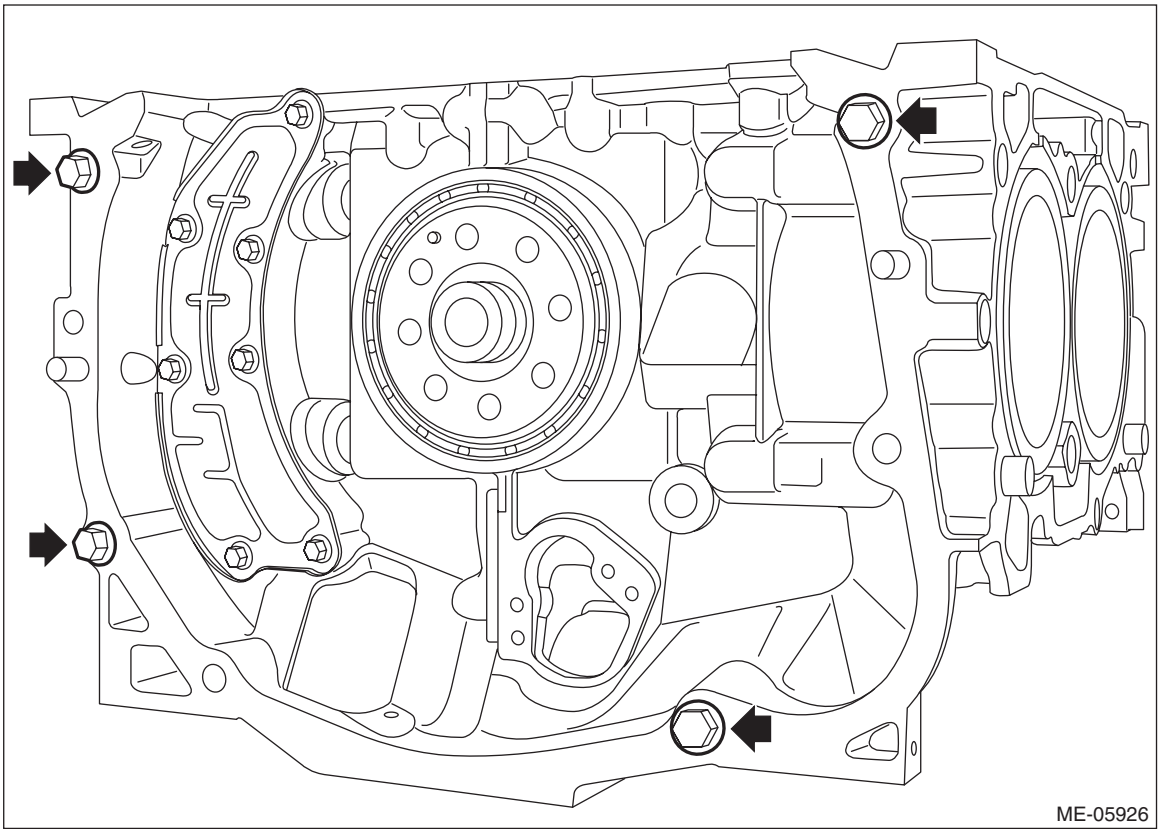

28) Set the part so that the cylinder block RH is on the upper side, and separate the cylinder block.

CAUTION:
• Place a wood board wrapped with a waste cloth to prevent the knock pin damage and to stabilize the cylinder block before work.
• Be careful not to scratch the mating surface of cylinder block during work.

(1) Remove the bolt shown in the figure.

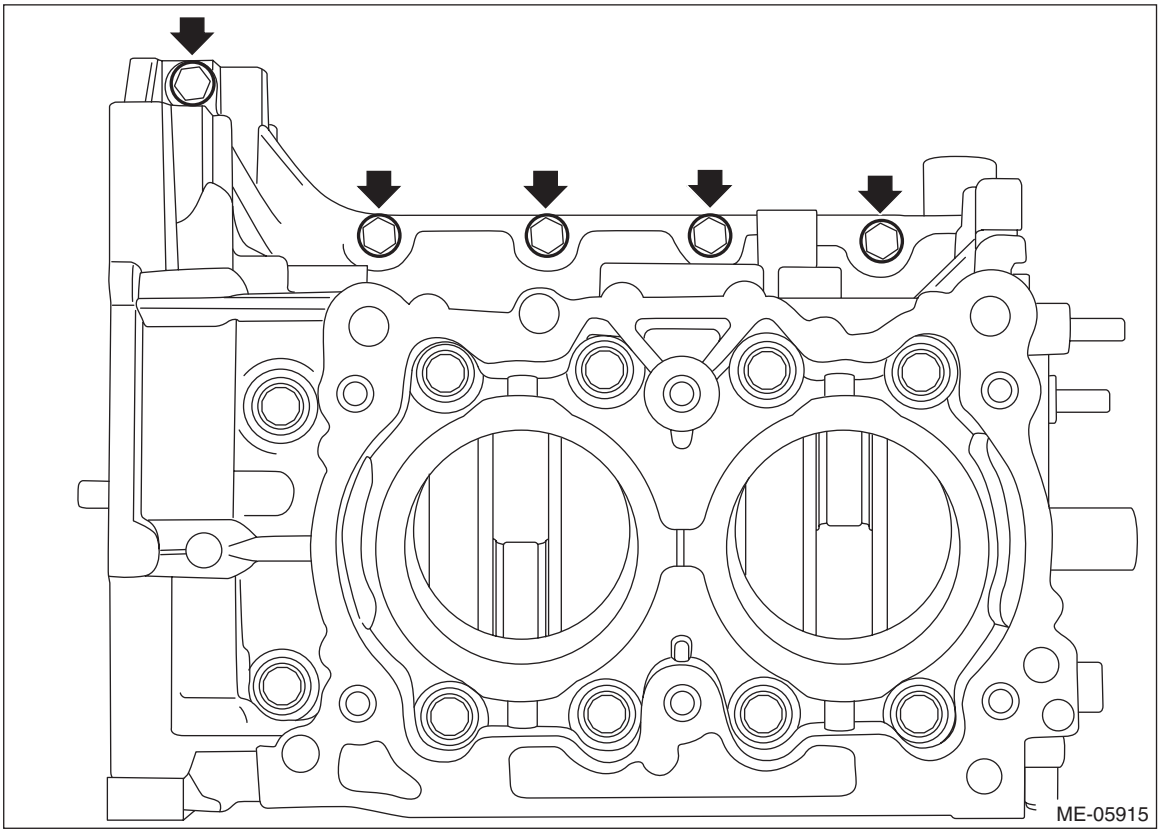

(2) Loosen the cylinder block mounting bolts in numerical order as shown in the figure, and separate the cylinder block RH and LH.

NOTE:
Lift the cylinder block RH slightly, and confirm that the crankshaft is remaining in the cylinder block LH. If the cylinder block RH is lifted carelessly when separating, the crankshaft may stick to cylinder block RH, then fall off.

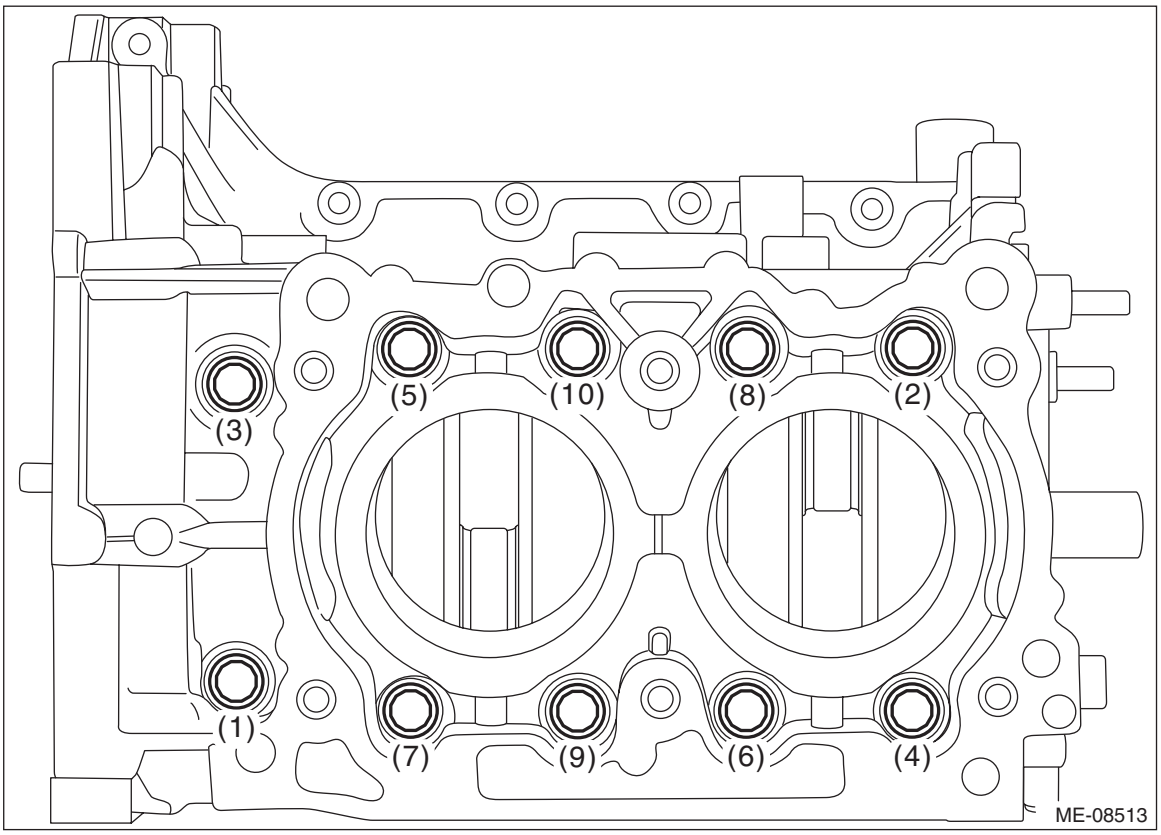

29) Remove the crankshaft from cylinder block LH, and remove the rear oil seal.

30) Remove the O-ring from the cylinder block LH.

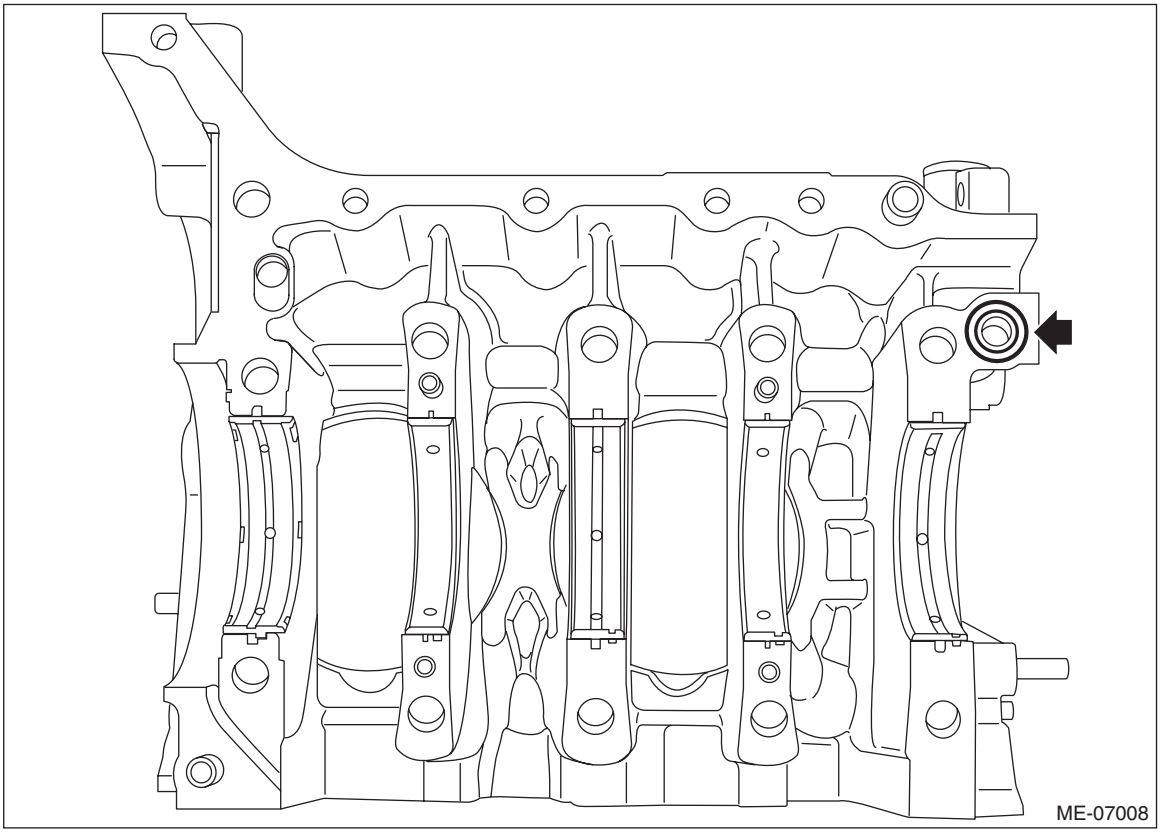

31) Remove the crankshaft bearings from the cylinder block.

NOTE:
- Be careful not to confuse the crankshaft bearing combination.
- Press the bearing at the end opposite to locking lip (A).

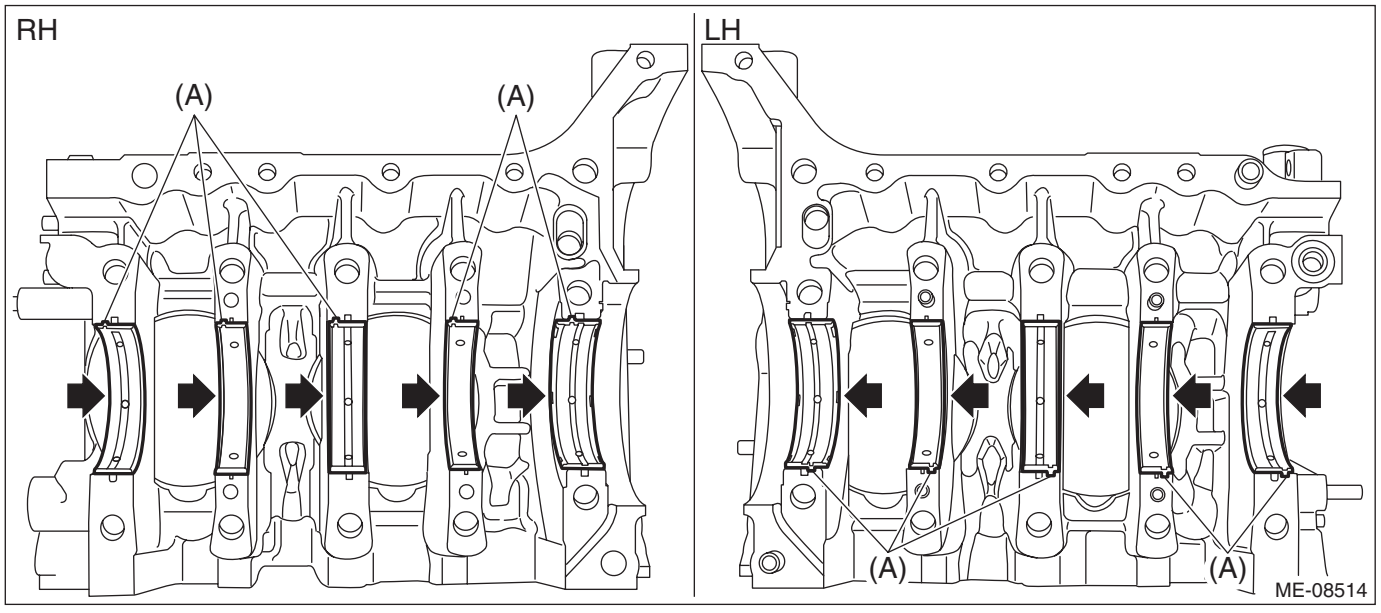

32) Remove the liquid gasket from cylinder block.

B: INSTALLATION

1) Apply engine oil to the crankshaft bearing, and install the crankshaft bearing to the cylinder block.

CAUTION:
• Place a wood board wrapped with a waste cloth to prevent the knock pin damage and to stabilize the cylinder block before work.
• Be careful not to scratch the mating surface of cylinder block during work.

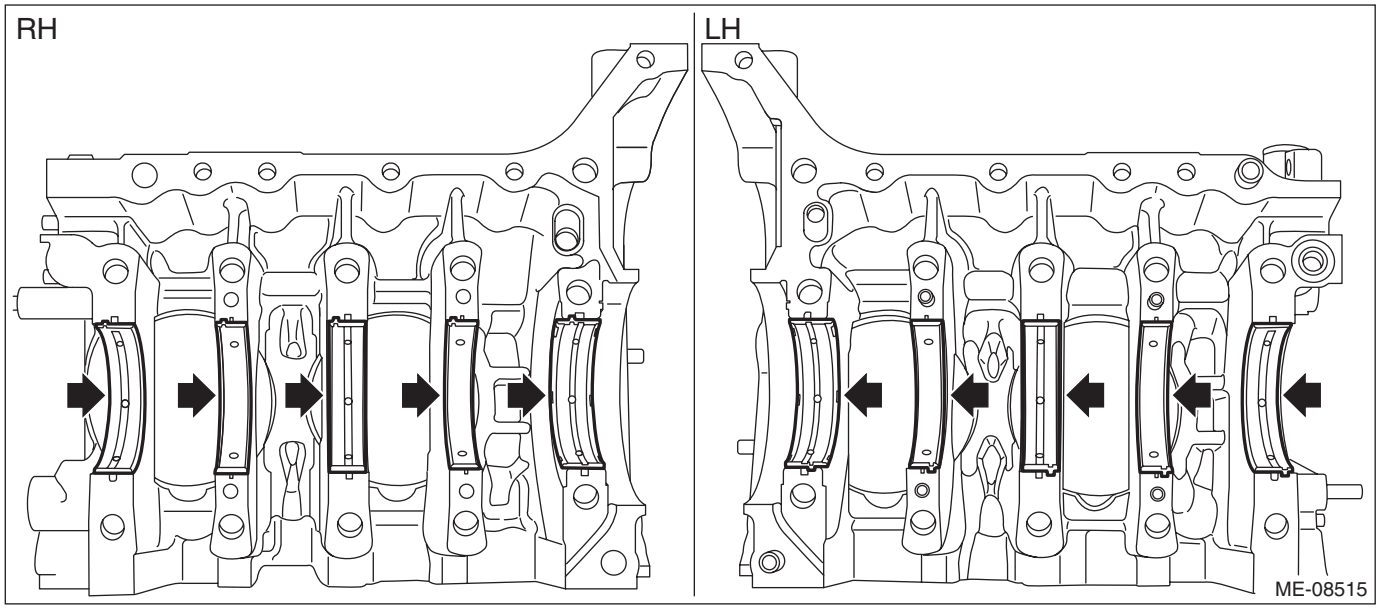

2) Install O-rings to the cylinder block LH.

NOTE:
Use new O-rings.

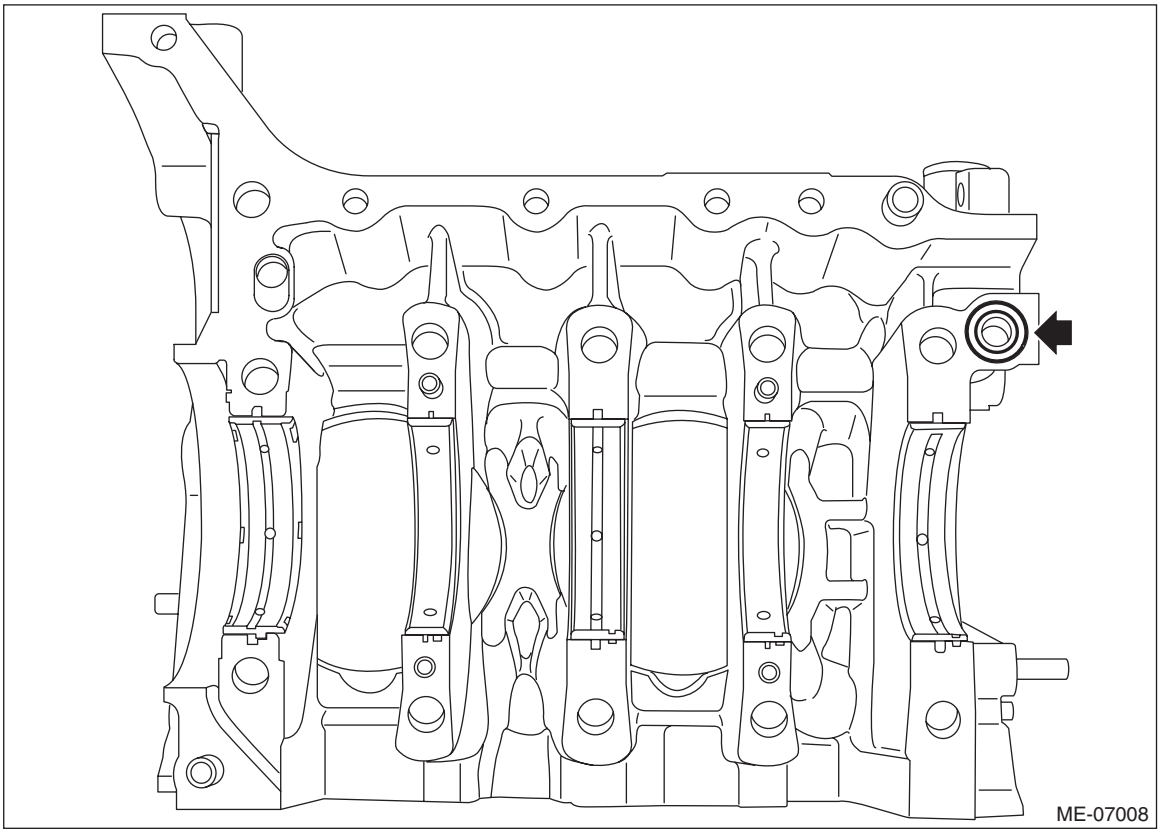

3) Apply engine oil to the crankshaft journal, and set the crankshaft to cylinder block LH.

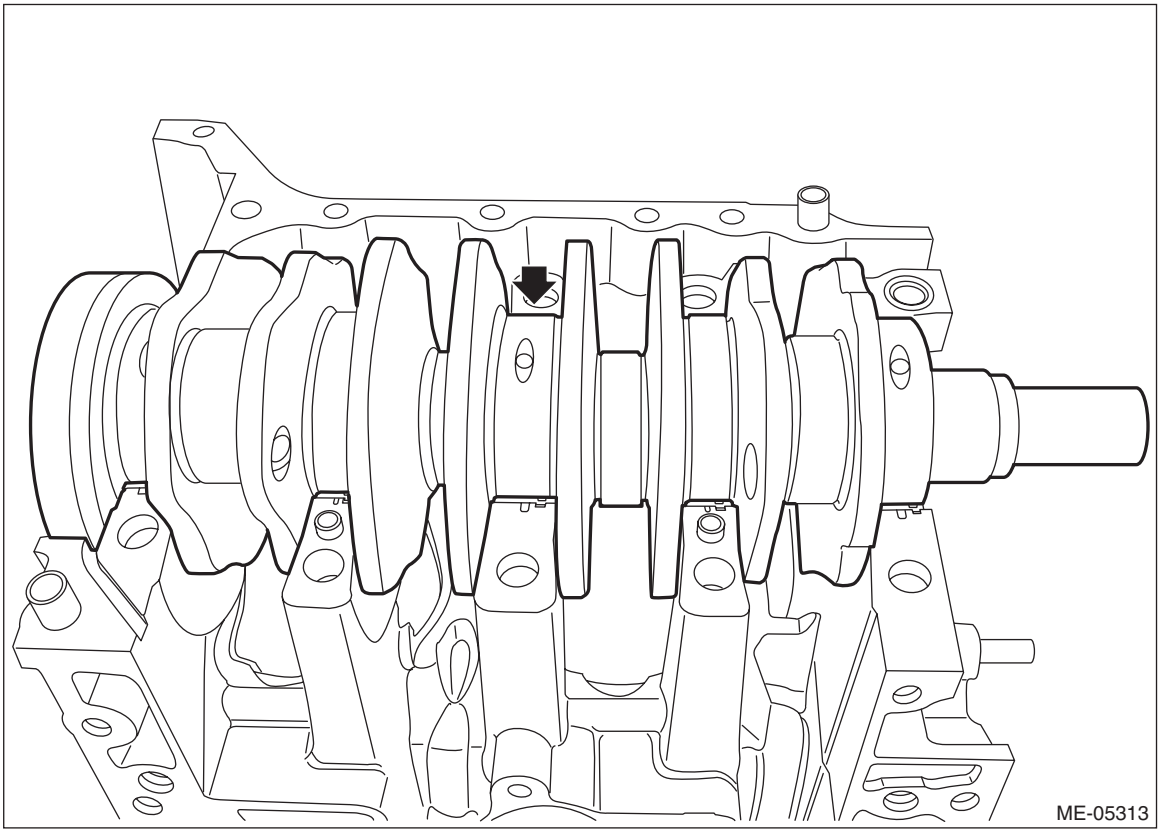

4) Apply liquid gasket to the mating surface of cylinder block RH as shown in the figure.

CAUTION:
Do not let the liquid gasket overflow to the oil passage and crankshaft bearing portions, because the engine seizure may result.

NOTE:
• Before applying liquid gasket, degrease the old liquid gasket seal surface of the cylinder block RH and cylinder block LH.
• Install within 5 min. after applying liquid gasket.

Liquid gasket:
THREE BOND 1217G (Part No. K0877Y0100), THREE BOND 1217H or equivalent

Liquid gasket applying diameter:
Mating surfaces other than ranges A, B and C
1±0.5 mm (0.0394±0.0197 in)
Mating surfaces of ranges A and C
4±0.5 mm (0.1575±0.0197 in)
Mating surfaces of range B
3.2±0.5 mm (0.1260±0.0197 in)

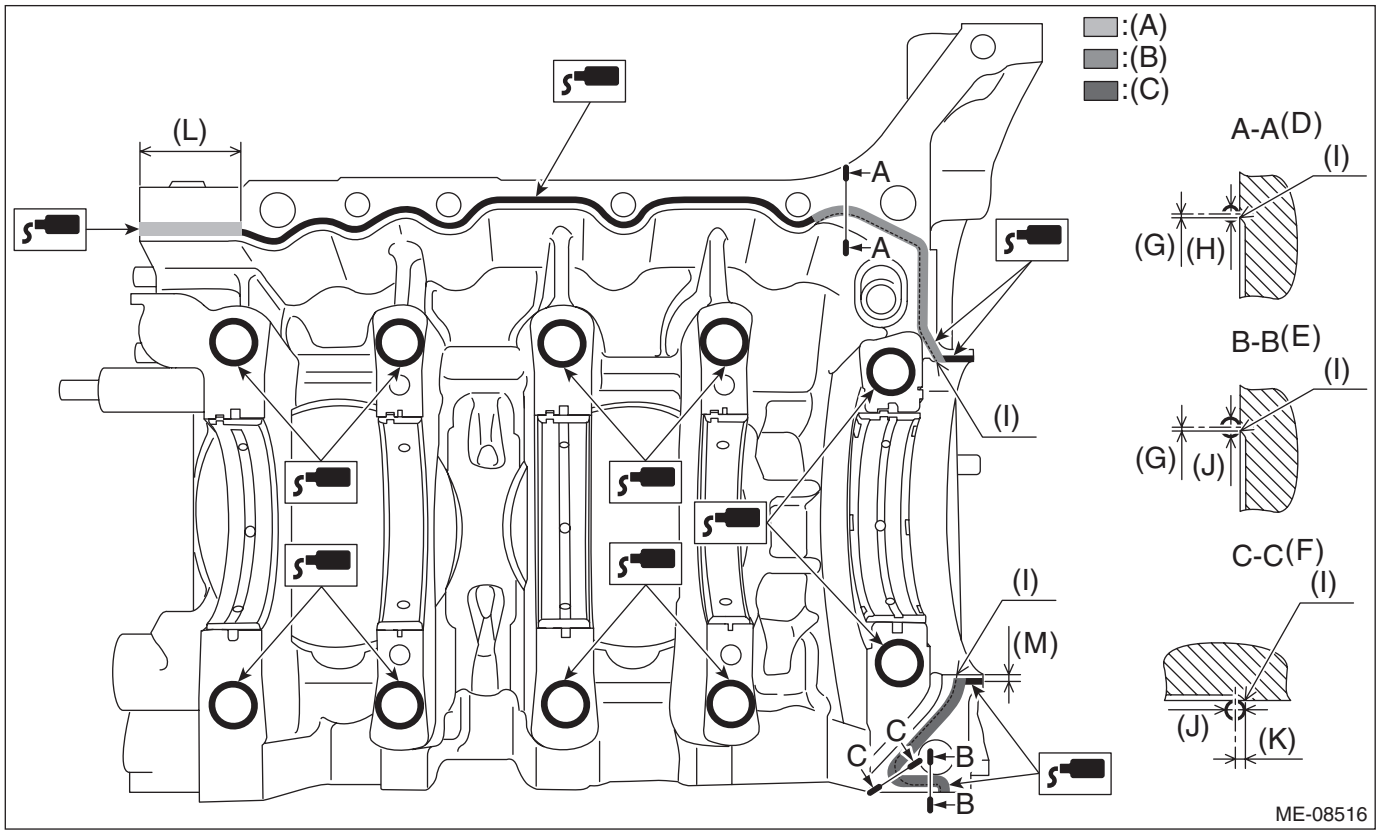

(A)	Range A	(F)	Liquid gasket applying position of mating surfaces (the edge) of range C	(K)	2 mm (0.0787 in)
(B)	Range B	(G)	1 mm (0.0394 in) or less	(L)	36 mm (1.4173 in)
(C)	Range C	(H)	ϕ3.2±0.5 mm (0.1260±0.0197 in)	(M)	2.5 mm (0.0984 in)
(D)	Liquid gasket applying position of mating surfaces of range B	(I)	Chamfer edge		
(E)	Liquid gasket applying position of mating surfaces (other than the edge) of range C	(J)	ϕ4±0.5 mm (0.1575±0.0197 in)		

5) Install the cylinder block RH to the cylinder block LH.
6) Join the cylinder blocks.
(1) Apply a coat of engine oil to the washers and cylinder block mounting bolt threads.

NOTE:
To prevent mixture of engine oil into the water jacket, do not apply a large amount.
(2) Install the cylinder head bolt at the locations shown in the figure.

NOTE:
This procedure is required to tighten the cylinder block mounting bolts with specified angle using angle gauge.

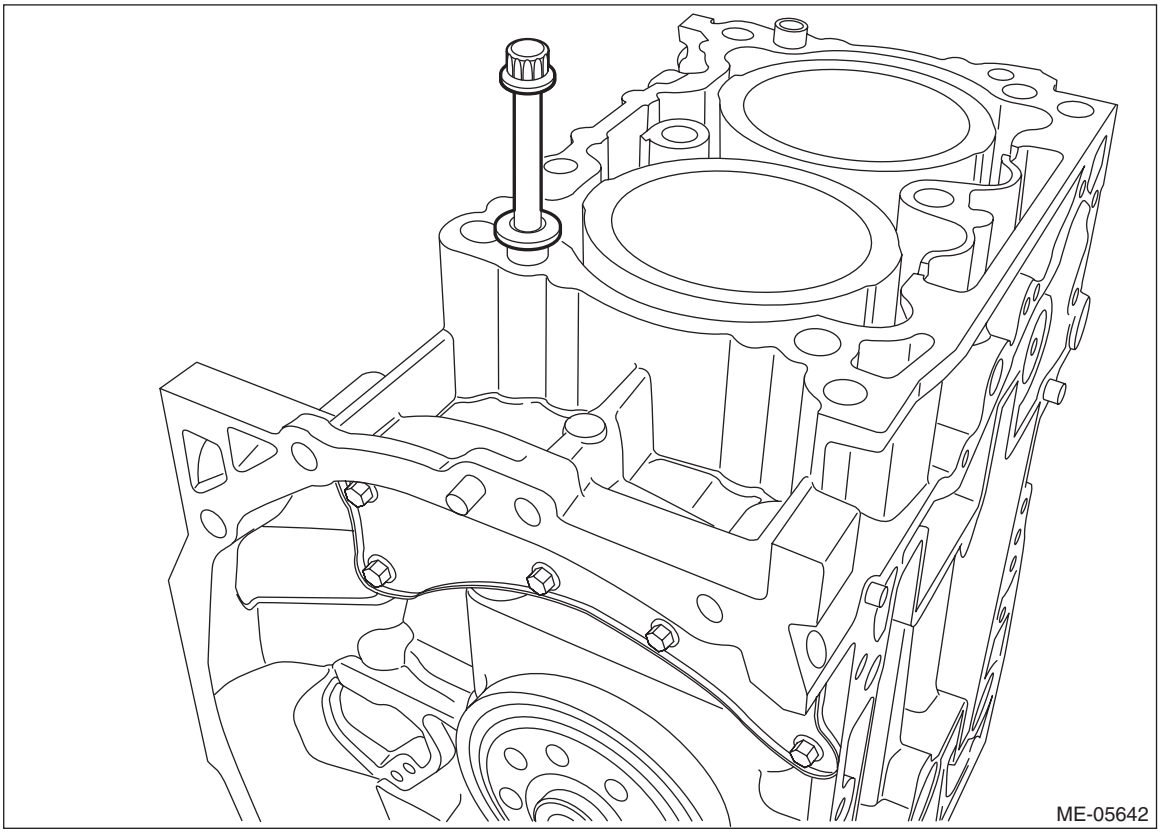

(3) Tighten all mounting bolts with a torque of 35 N·m (3.6 kgf-m, 25.8 ft-lb) in numerical order as shown in the figure.

CAUTION:
When tightening the mounting bolts with specified torque, hold the cylinder block LH while not holding the cylinder block RH to ensure the joint accuracy of the cylinder block.

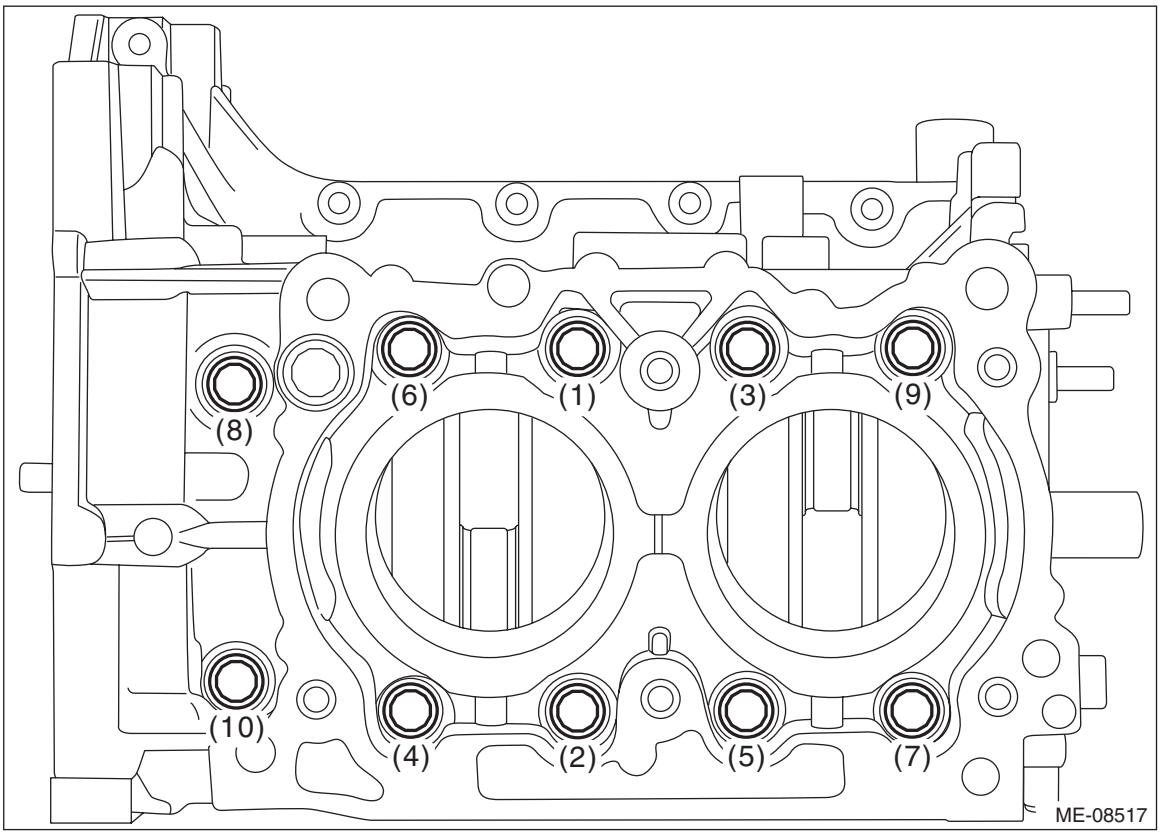

(4) Loosen all mounting bolts by 180° in numerical order as shown in the figure.

CAUTION:
When loosening the mounting bolts, hold the cylinder block LH while not holding the cylinder block RH to ensure the joint accuracy of the cylinder block.

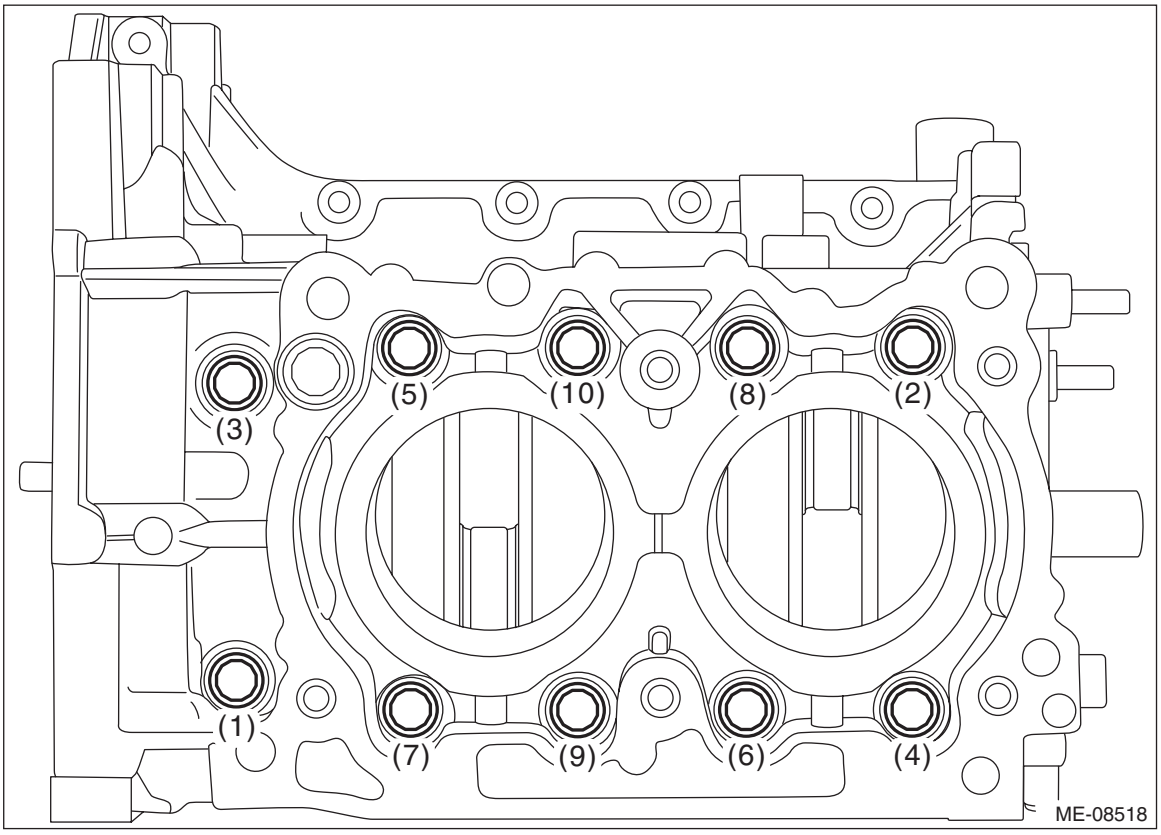

(5) Tighten all mounting bolts with a torque of 35 N·m (3.6 kgf-m, 25.8 ft-lb) in numerical order as shown in the figure.

CAUTION:
When tightening the mounting bolts with specified torque, hold the cylinder block LH while not holding the cylinder block RH to ensure the joint accuracy of the cylinder block.

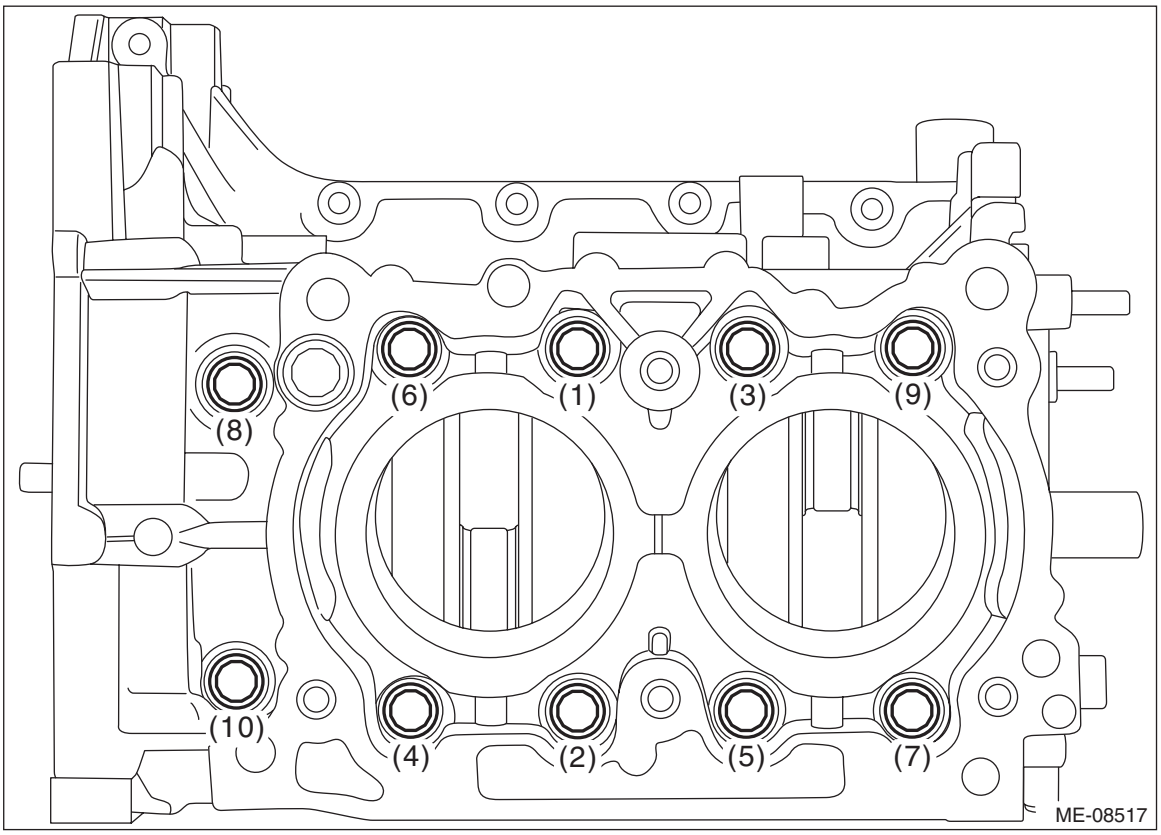

(6) Loosen the mounting bolts (4 places) by 180° in numerical order as shown in the figure.

CAUTION:
When loosening the mounting bolts, hold the cylinder block LH while not holding the cylinder block RH to ensure the joint accuracy of the cylinder block.

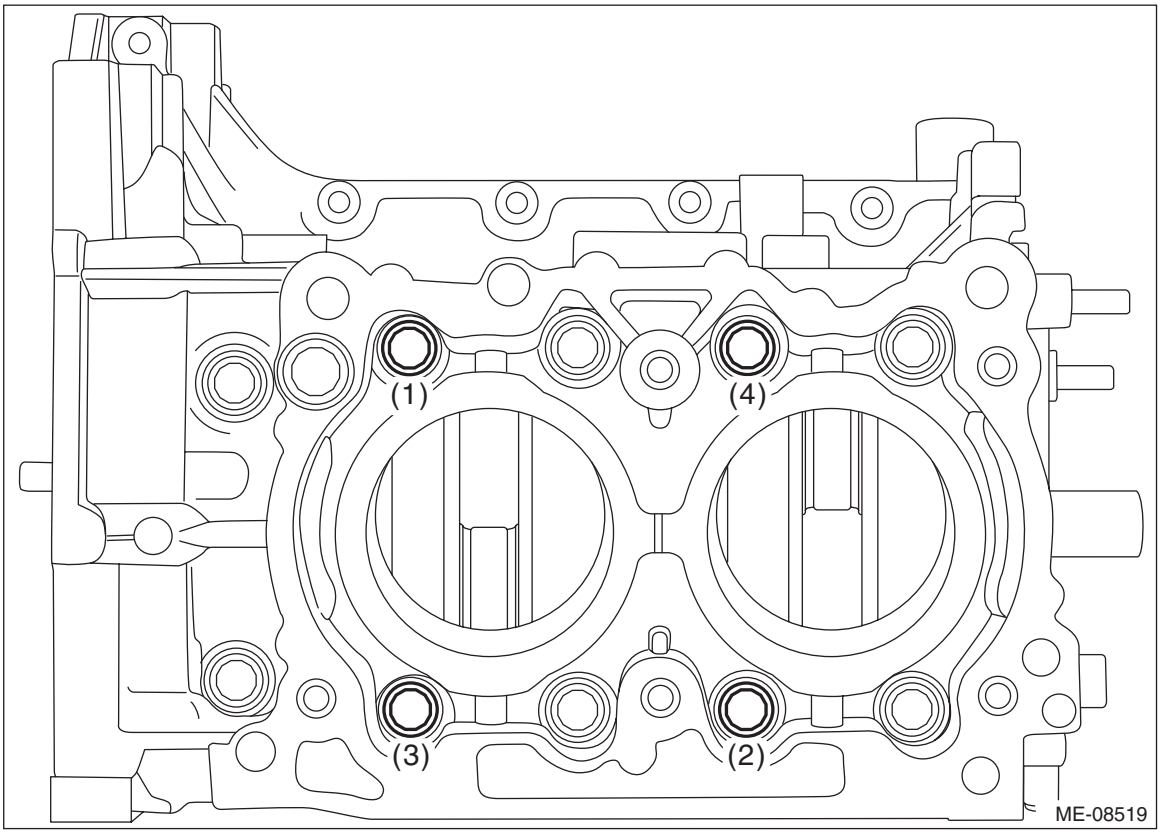

(7) Tighten the mounting bolts (4 places) with a torque of 17 N·m (1.7 kgf-m, 12.5 ft-lb) in numerical order as shown in the figure.

CAUTION:
When tightening the mounting bolts with specified torque, hold the cylinder block LH while not holding the cylinder block RH to ensure the joint accuracy of the cylinder block.

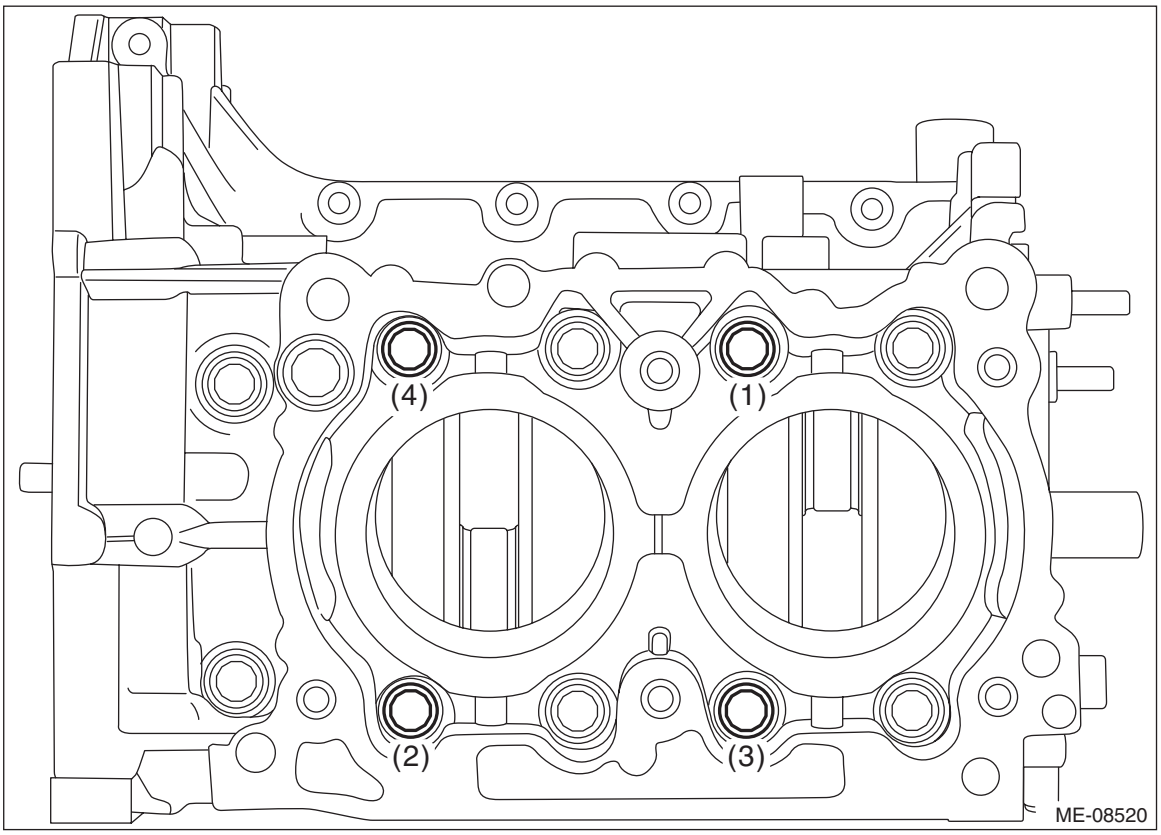

(8) Using angle gauge, tighten the mounting bolts (4 places) with specified angle in numerical order as shown in the figure.

CAUTION:
When tightening the mounting bolts with specified angle, hold the cylinder block LH while not holding the cylinder block RH to ensure the joint accuracy of the cylinder block.

Tightening angle:
60°±2°

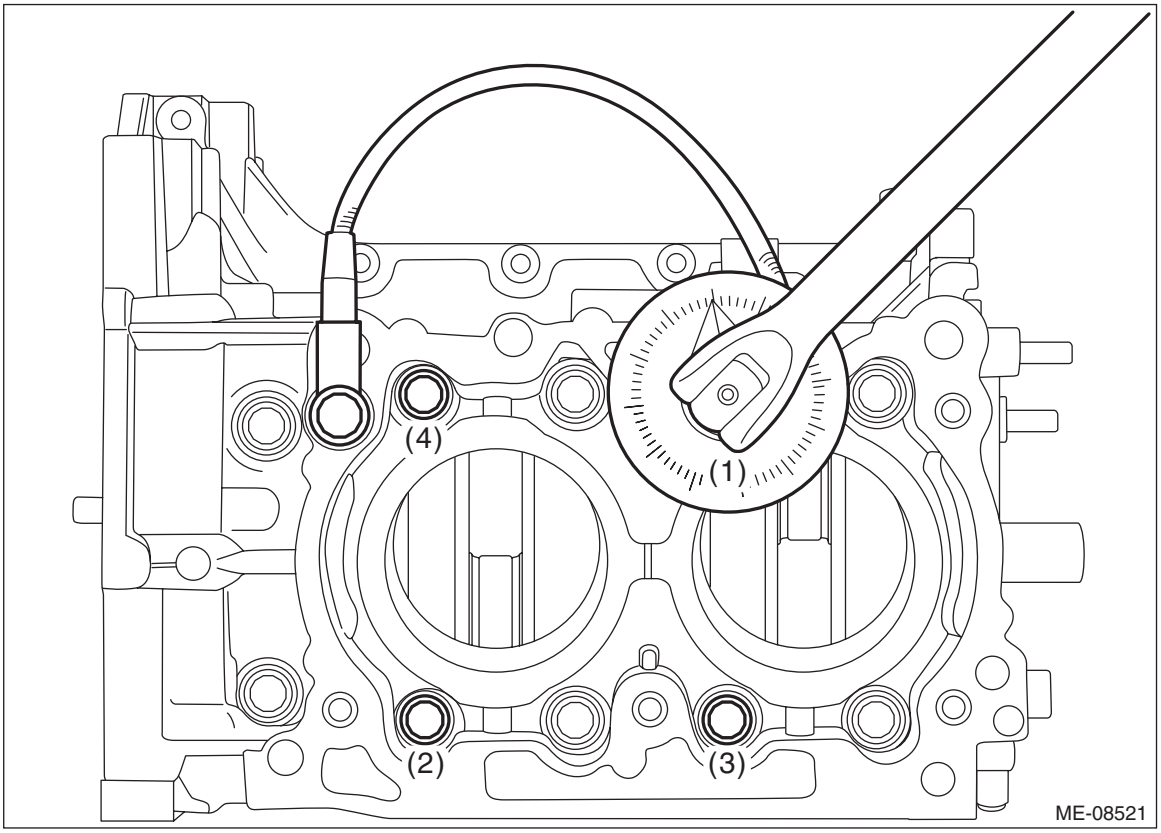

(9) Loosen the mounting bolts (6 places) by 180° in numerical order as shown in the figure.

CAUTION:
When loosening the mounting bolts, hold the cylinder block LH while not holding the cylinder block RH to ensure the joint accuracy of the cylinder block.

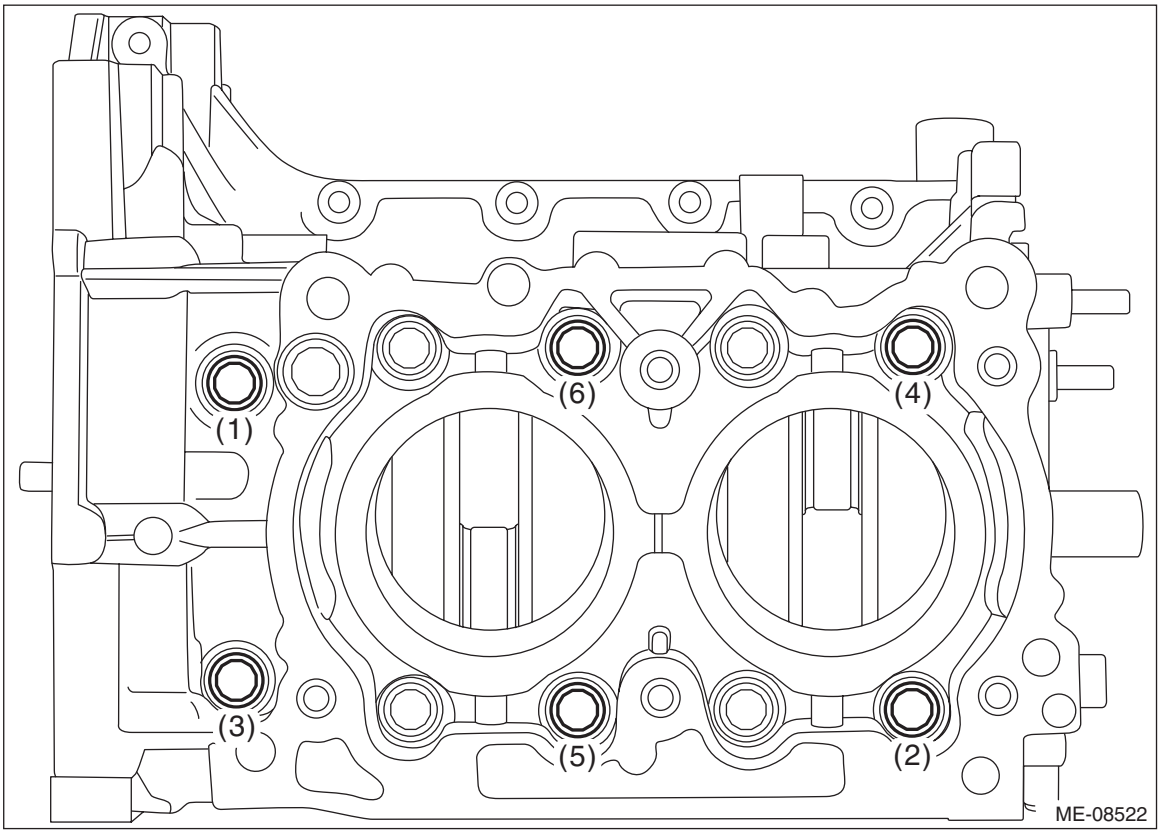

(10) Tighten the mounting bolts (6 places) with a torque of 17 N·m (1.7 kgf-m, 12.5 ft-lb) in numerical order as shown in the figure.

CAUTION:
When tightening the mounting bolts with specified torque, hold the cylinder block LH while not holding the cylinder block RH to ensure the joint accuracy of the cylinder block.

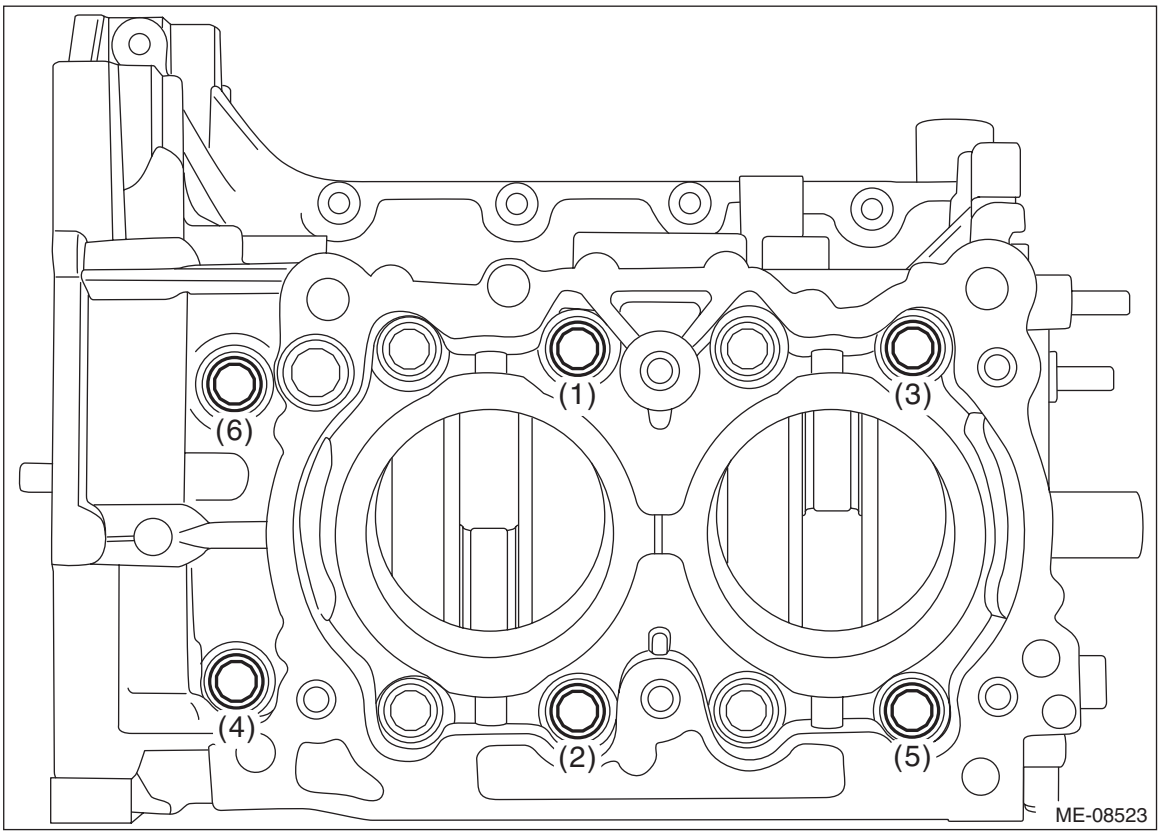

(11) Using angle gauge, tighten the mounting bolts (6 places) with specified angle in numerical order as shown in the figure.

CAUTION:
When tightening the mounting bolts with specified angle, hold the cylinder block LH while not holding the cylinder block RH to ensure the joint accuracy of the cylinder block.

Tightening angle:
60°±2°

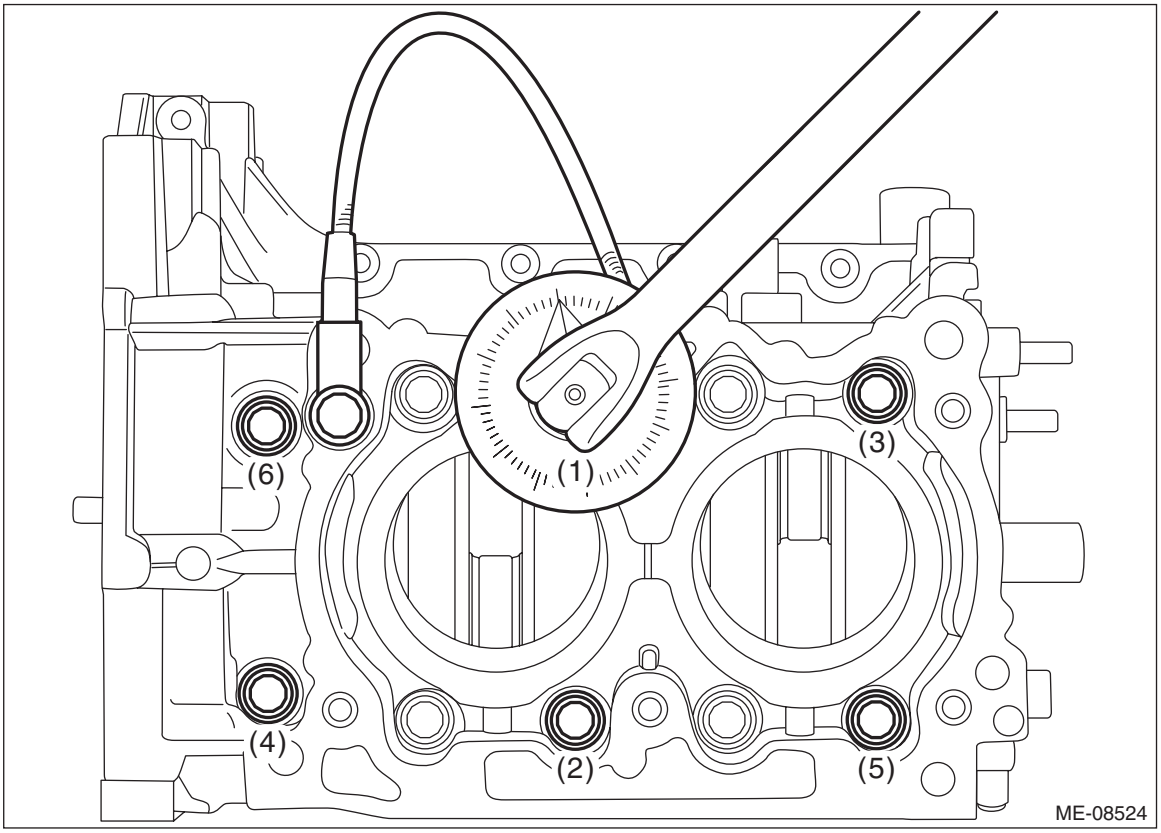

(12) Remove the cylinder head bolt attached at the locations shown in the figure.

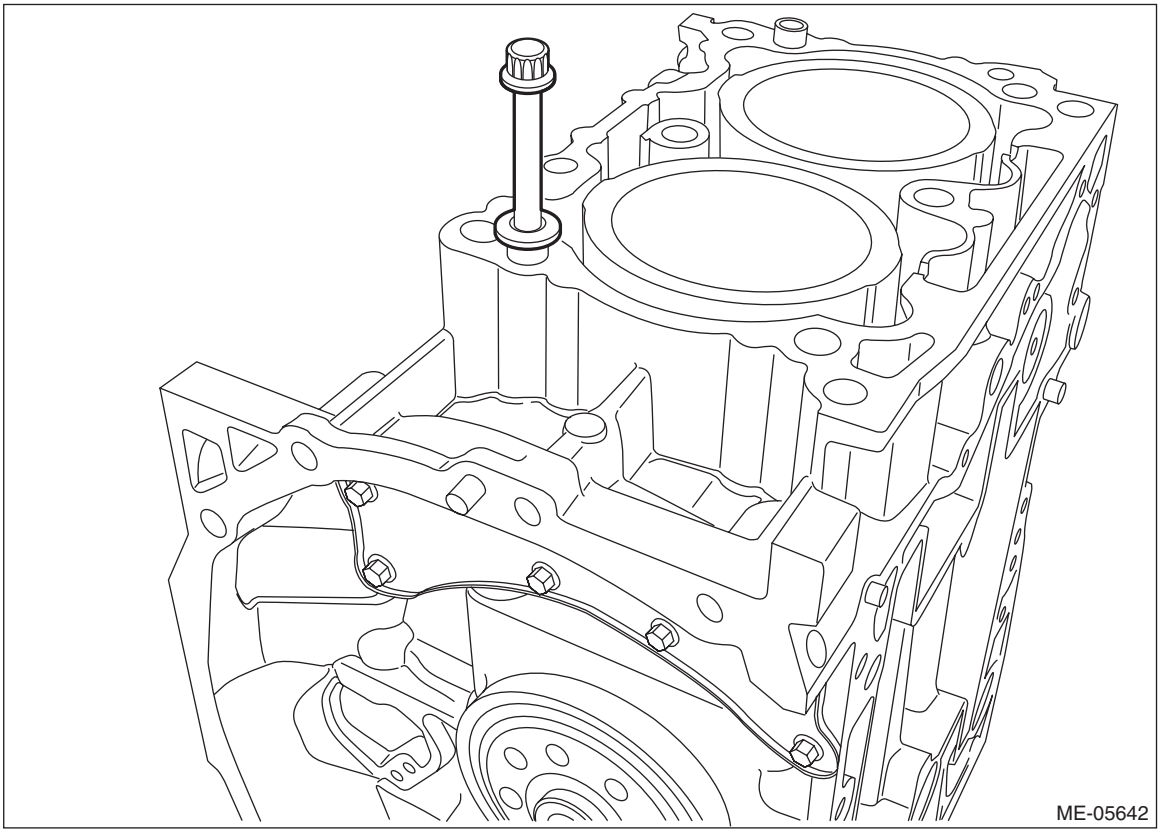

(13) Install the bolt shown in the figure.

NOTE:
After tightening, if the liquid gasket is squeezed out in the seal surface area of the chain cover and oil pan upper, completely remove any liquid gasket that is squeezed out. Any liquid gasket on the chamfer area, however, should not be removed.

Tightening torque:
25 N·m (2.5 kgf-m, 18.4 ft-lb)

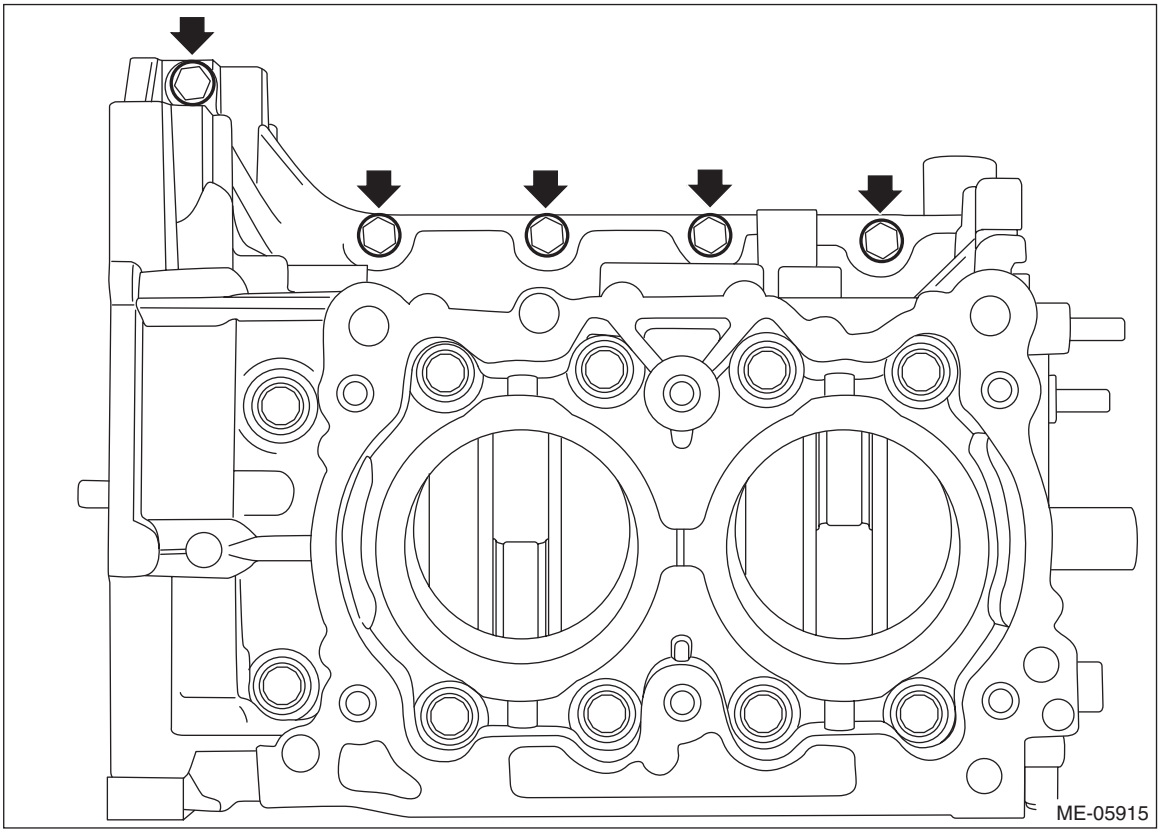

7) Set the part so that the oil pan side of cylinder block is on the upper side.
8) Apply a coat of engine oil to the oil seal inner periphery and outer periphery, and install the rear oil seal using ST1 and ST2.

NOTE:
Use a new rear oil seal.
ST1 18671AA020 OIL SEAL GUIDE
ST2 18657AA030 OIL SEAL INSTALLER

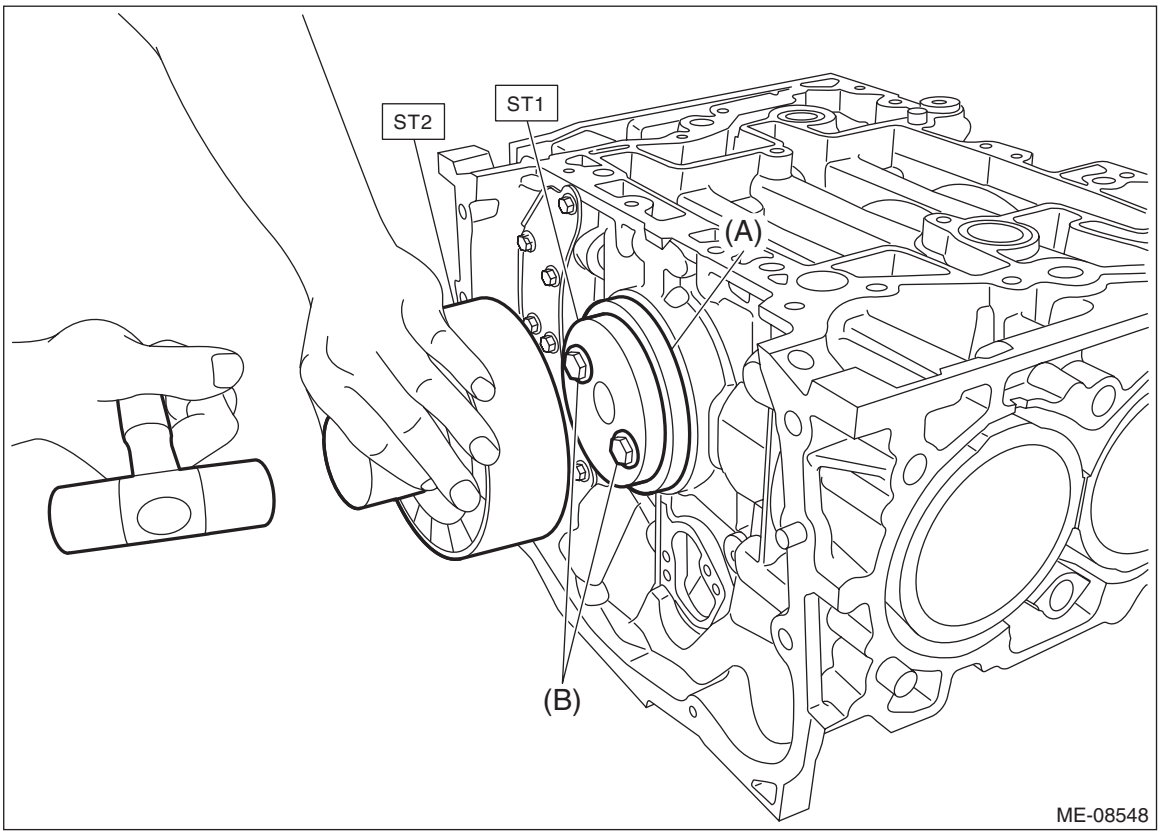

(A) Rear oil seal
(B) Drive plate or flywheel mounting bolt

9) Install a bolt of suitable length (M10 × P1.25) at the locations shown in the figure.

NOTE:
• This procedure is required to prevent the knock pin damage when the cylinder block is raised in the next step.
• Use the same length of bolt for the four bolts.

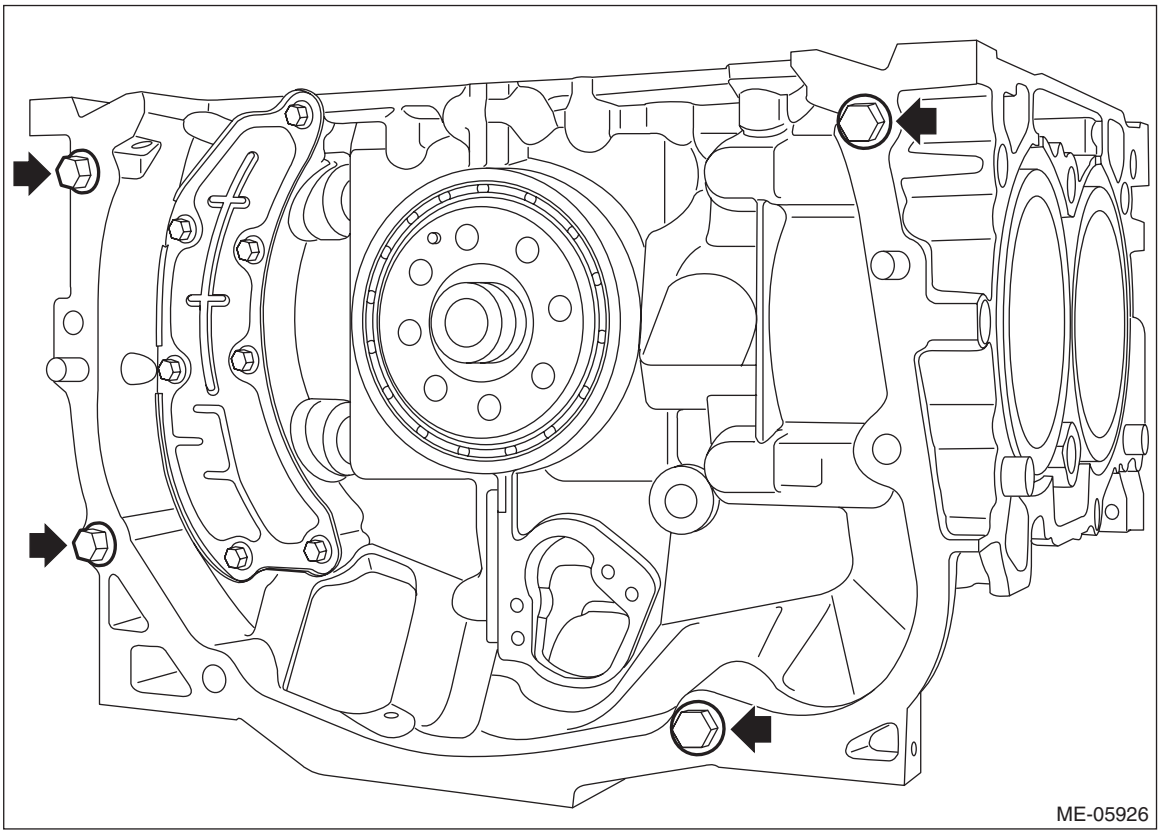

10) Raise the cylinder block so that the rear oil seal is on the lower side.
11) Adjust the positions of piston ring gap for each piston.

NOTE:
Check that the piston ring mark of compression ring faces the top side of the piston.
(1) Set the ring gap of the top ring to the position (A) in the figure.

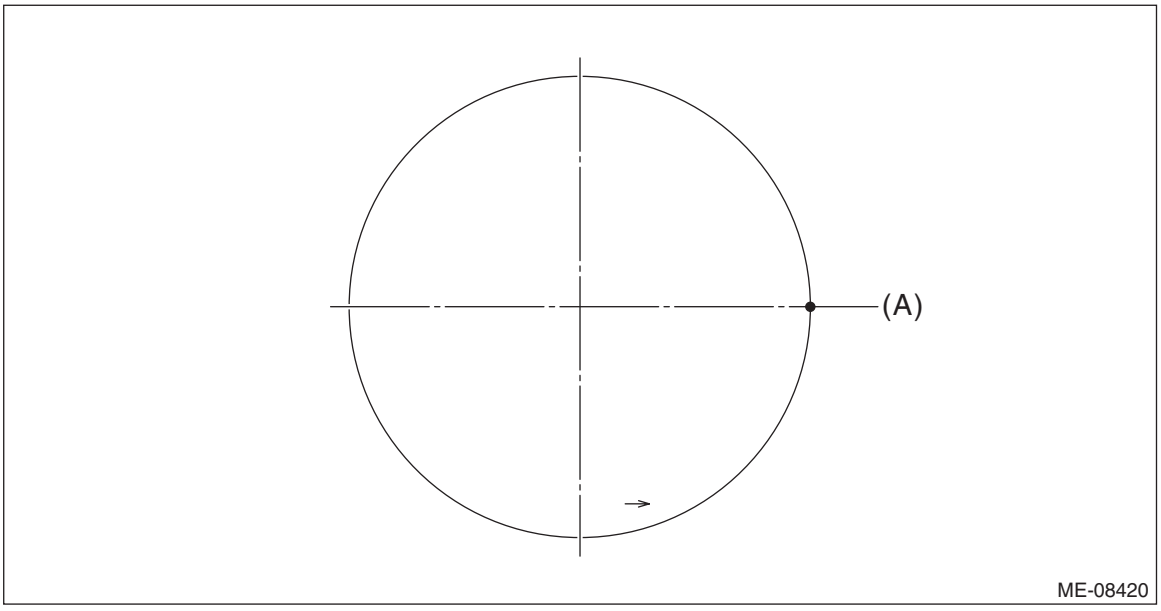

(2) Position the ring gap of second ring at (B) in the figure on the 180° opposite direction of (A).

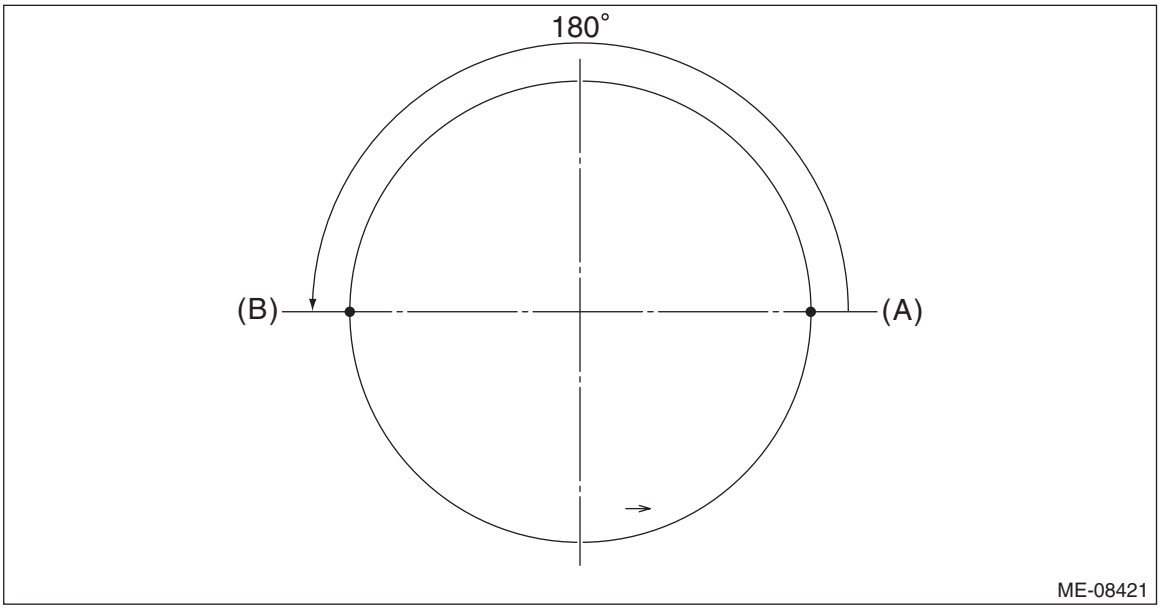

(3) Set the ring gap of the upper rail to the position (C) in the figure.

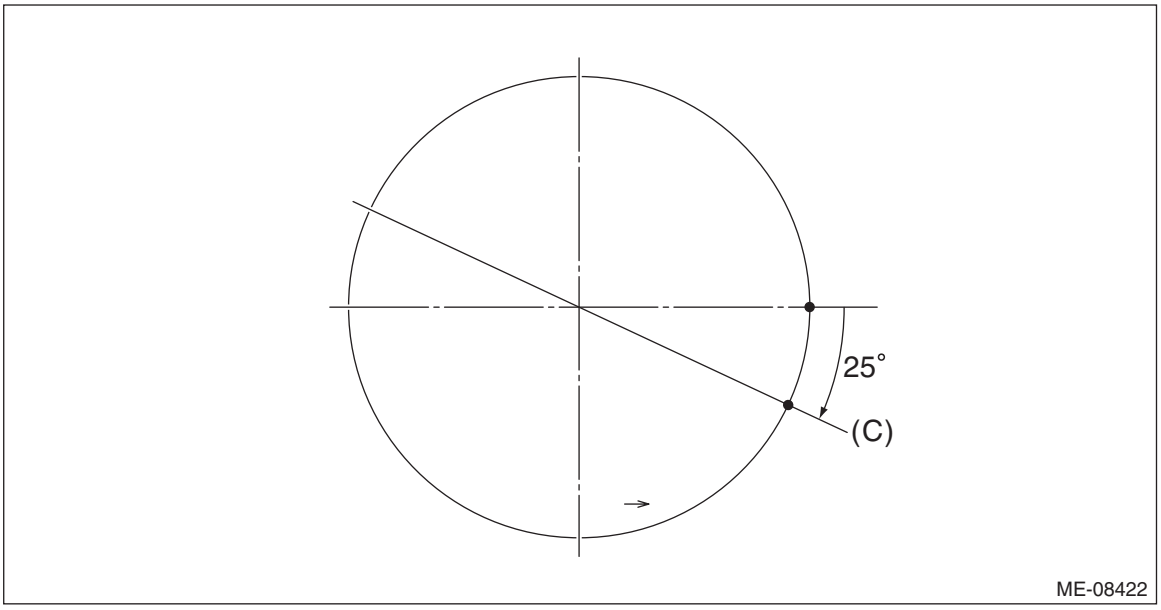

(4) Align the upper rail spin stopper (E) to the side hole (D) on the piston.

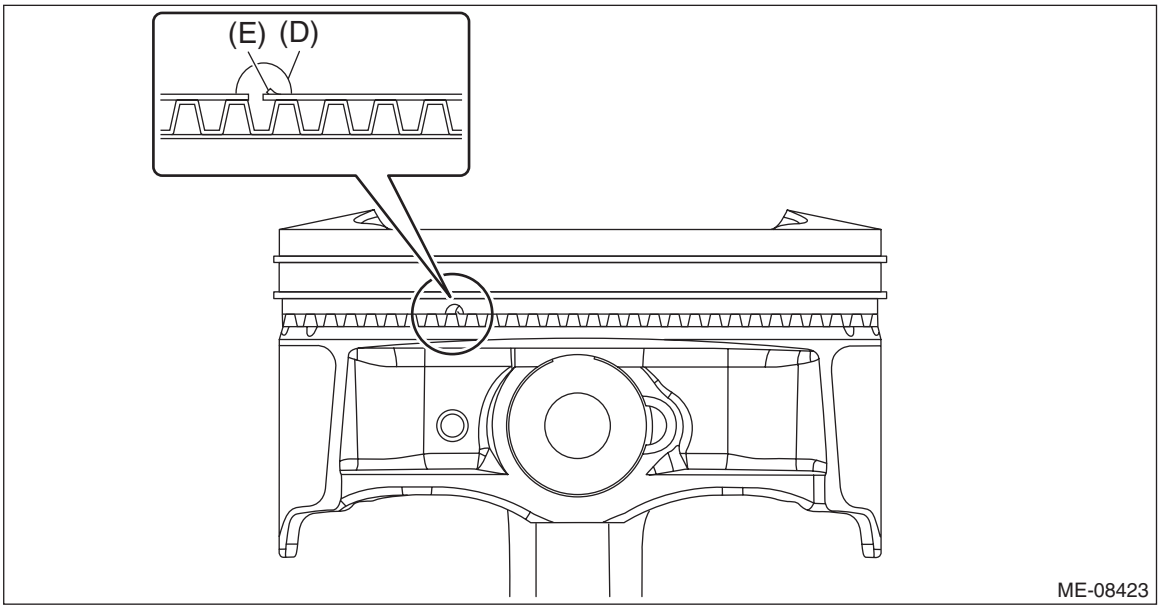

(5) Position the ring gap of expander at (F) in the figure on the 180° opposite direction of (C).

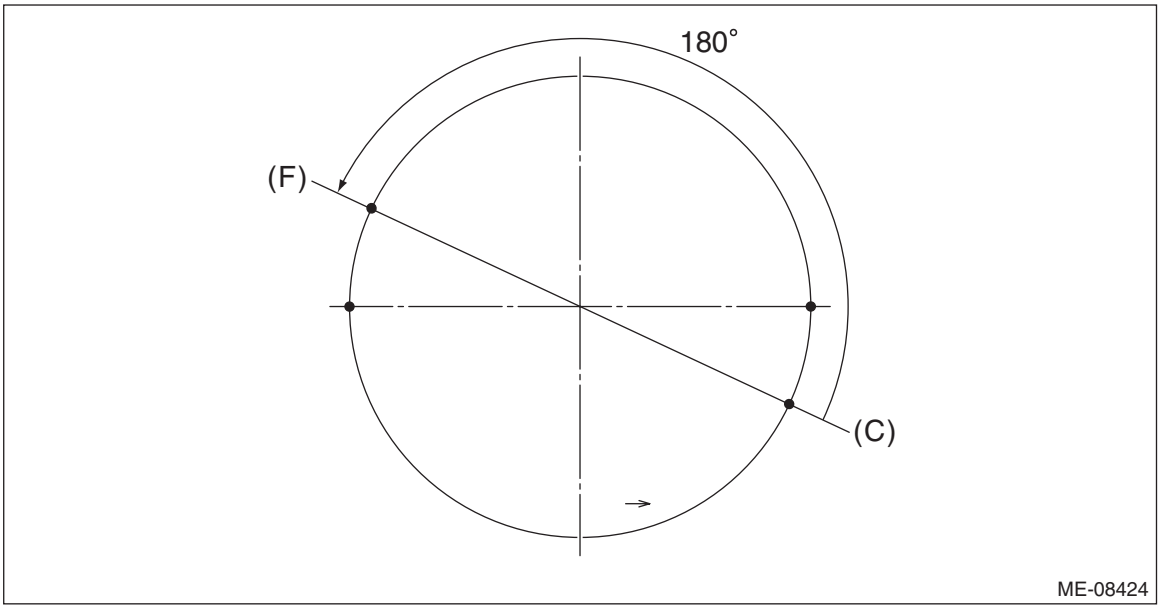

(6) Set the ring gap of lower rail at position (G), located 120° clockwise from (C) in the figure.

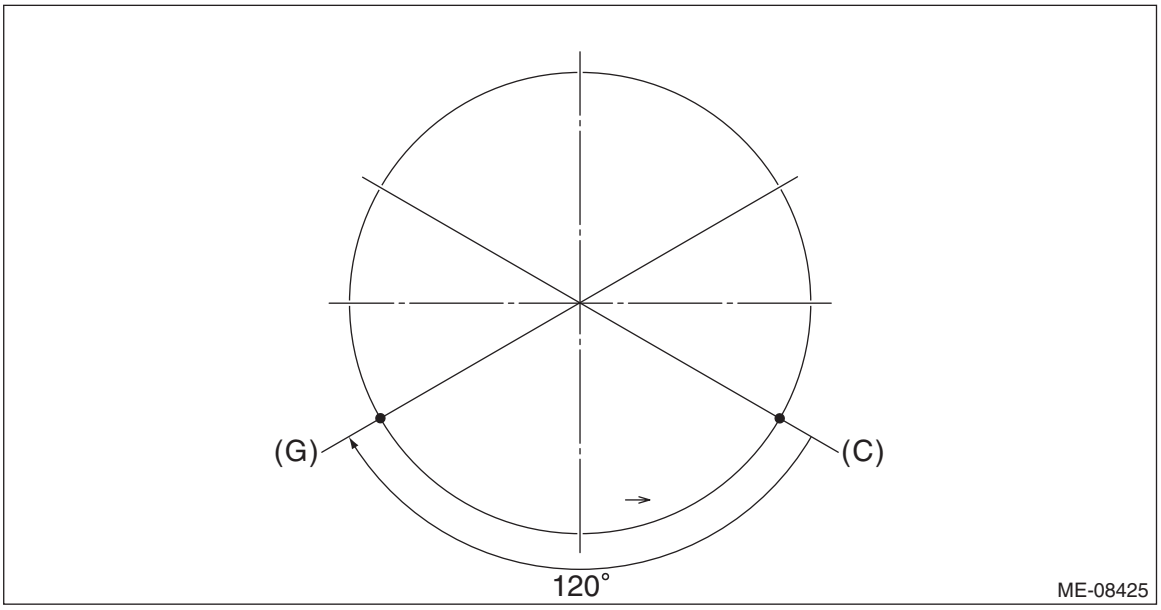

(7) Check that the positions of piston ring gap are properly adjusted.

NOTE:
When checking the positions of piston ring gap, also check that the piston ring gaps are not positioned within the range of piston skirt extended line.

12) Install the piston and connecting rod to the cylinder block.
(1) Apply engine oil to the outer circumference of each piston, crankshaft pin, and in the cylinder block.
(2) Turn the crankshaft so that the #1 pin (A) of crankshaft is positioned at TDC using ST.

ST 18252AA000 CRANKSHAFT SOCKET

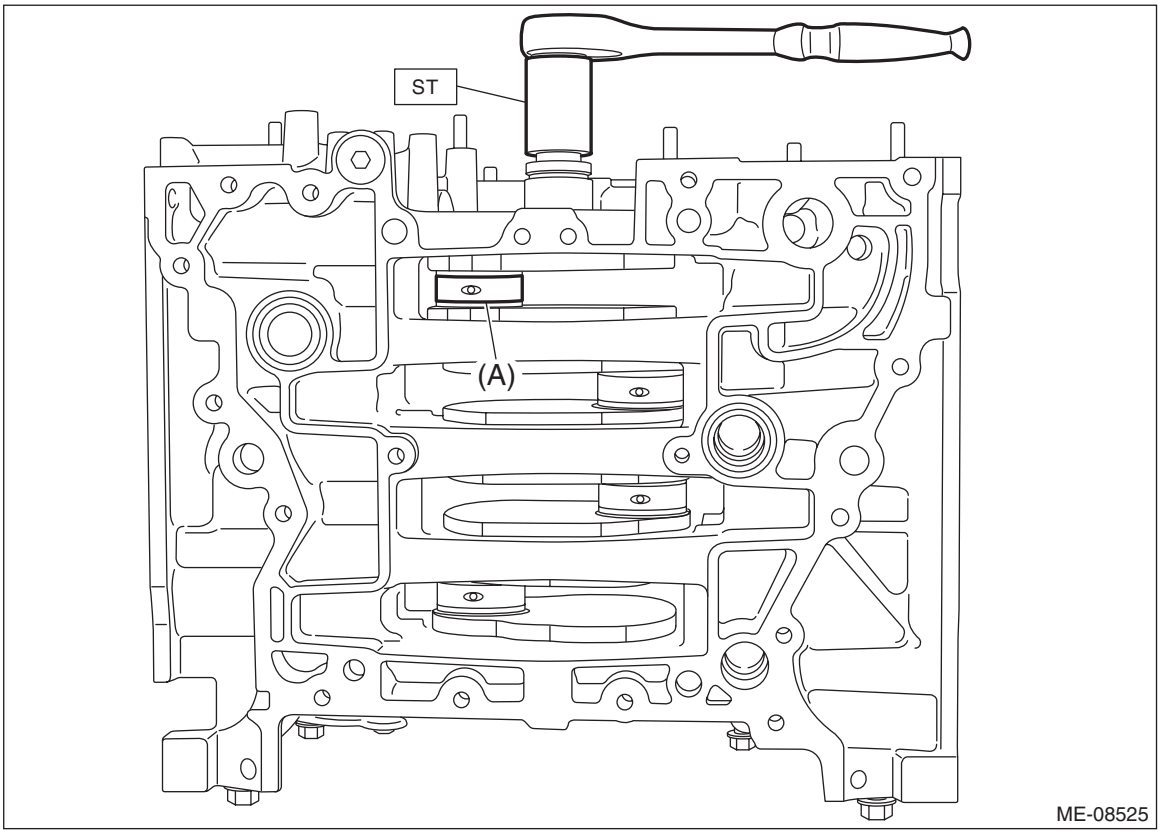

(3) Compress the piston ring using piston ring compressor, and insert the #1 connecting rod with #1 piston into cylinder block.

CAUTION:
• Be careful not to damage the cylinder liner and #1 pin of crankshaft by the #1 connecting rod large end.
• Be careful not to apply strong impact when inserting to prevent connecting rod bearing from falling off.

NOTE:
• Face the piston front mark (arrow) towards the front of the engine.

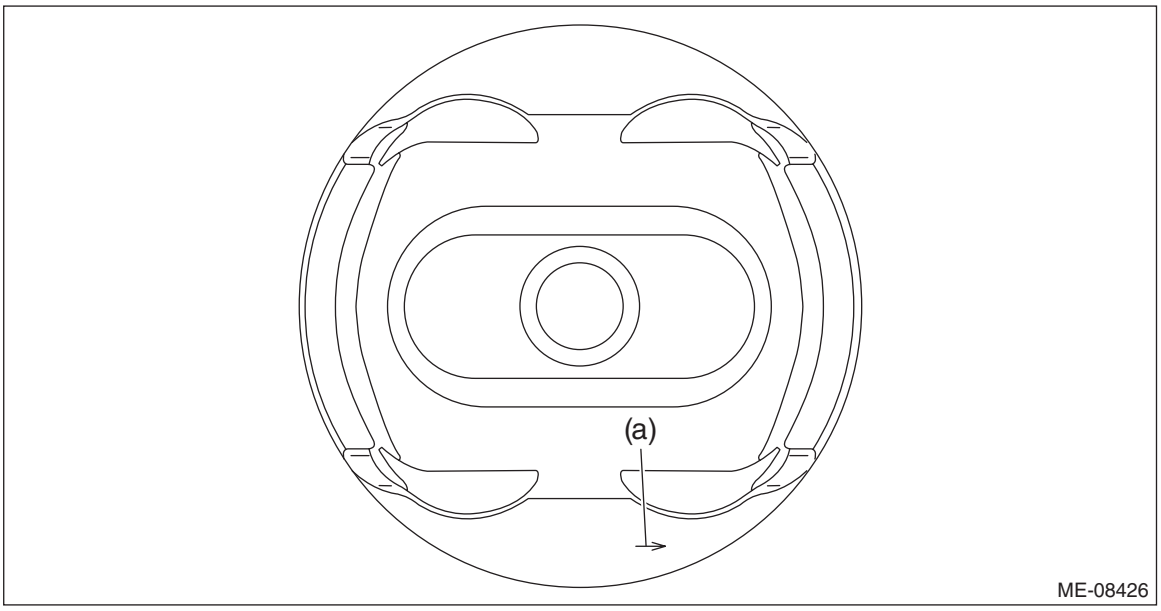

(a) Front mark

• Insert while lightly tapping the crown of the piston with the handle of a plastic hammer.

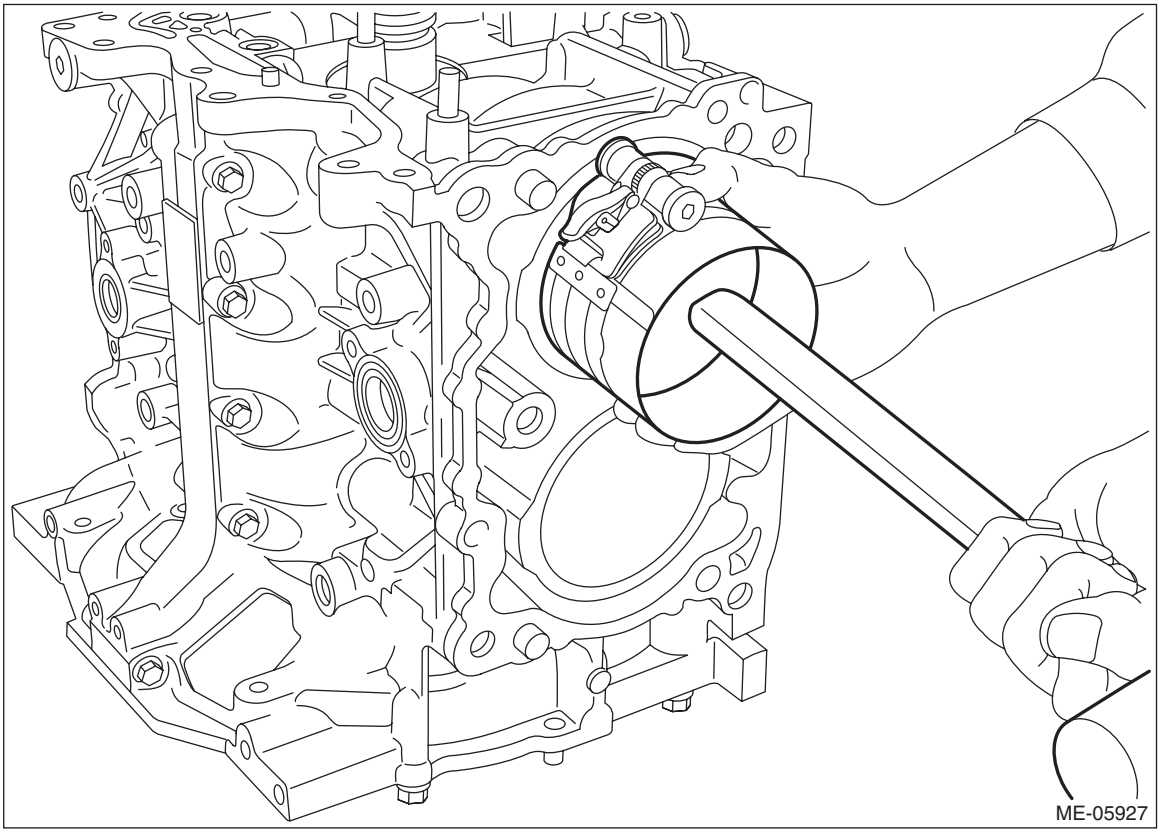

(4) Turn the crankshaft counterclockwise so that the #1 pin of crankshaft and the large end (A) of #1 connecting rod are positioned as shown in the figure using ST, while pressing the #1 piston crown, and then set the #1 connecting rod cap and #1 connecting rod cap bolt.

NOTE:
• Each connecting rod has its own mating cap. Make sure that they are assembled correctly by checking their matching symbol.
• Use a new connecting rod cap bolt.
• Apply a coat of engine oil to the #1 connecting rod cap seat and the connecting rod cap bolt threads.
ST 18252AA000 CRANKSHAFT SOCKET

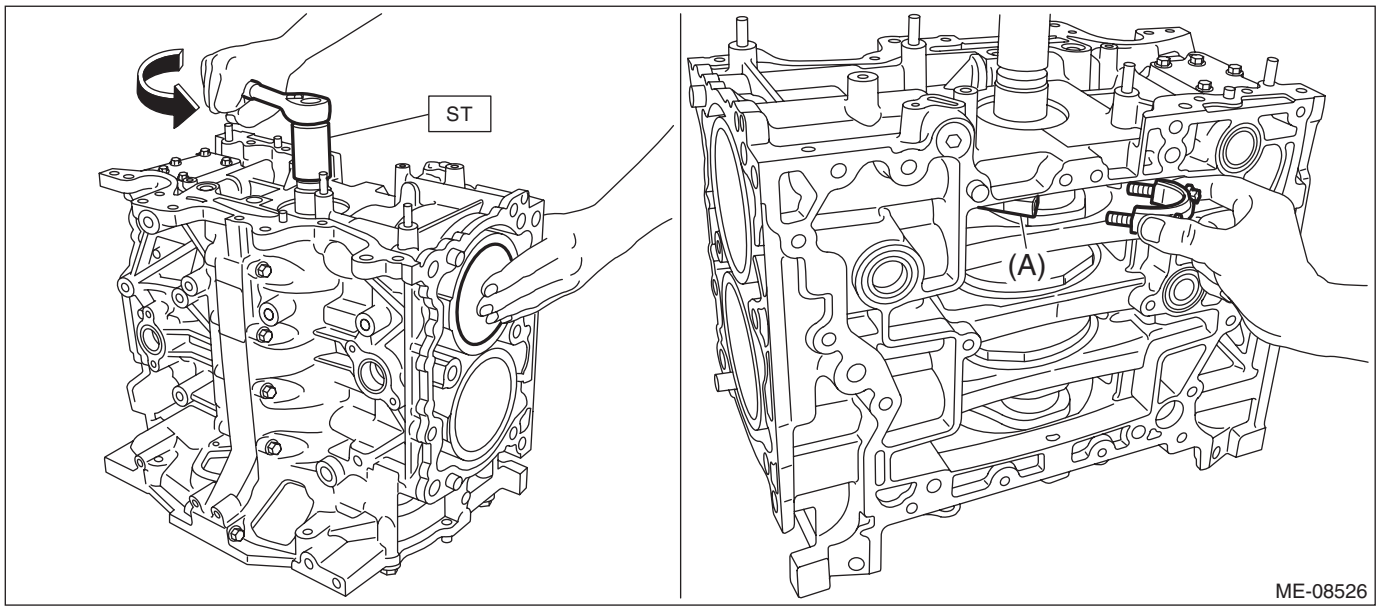

(5) Using ST, tighten the #1 connecting rod cap bolts to 10 N·m (1.0 kgf-m, 7.4 ft-lb) in numerical order as shown in the figure, then retighten the bolts to 22 N·m (2.2 kgf-m, 16.2 ft-lb) in numerical order as shown in the figure.

ST 18270AA020 SOCKET

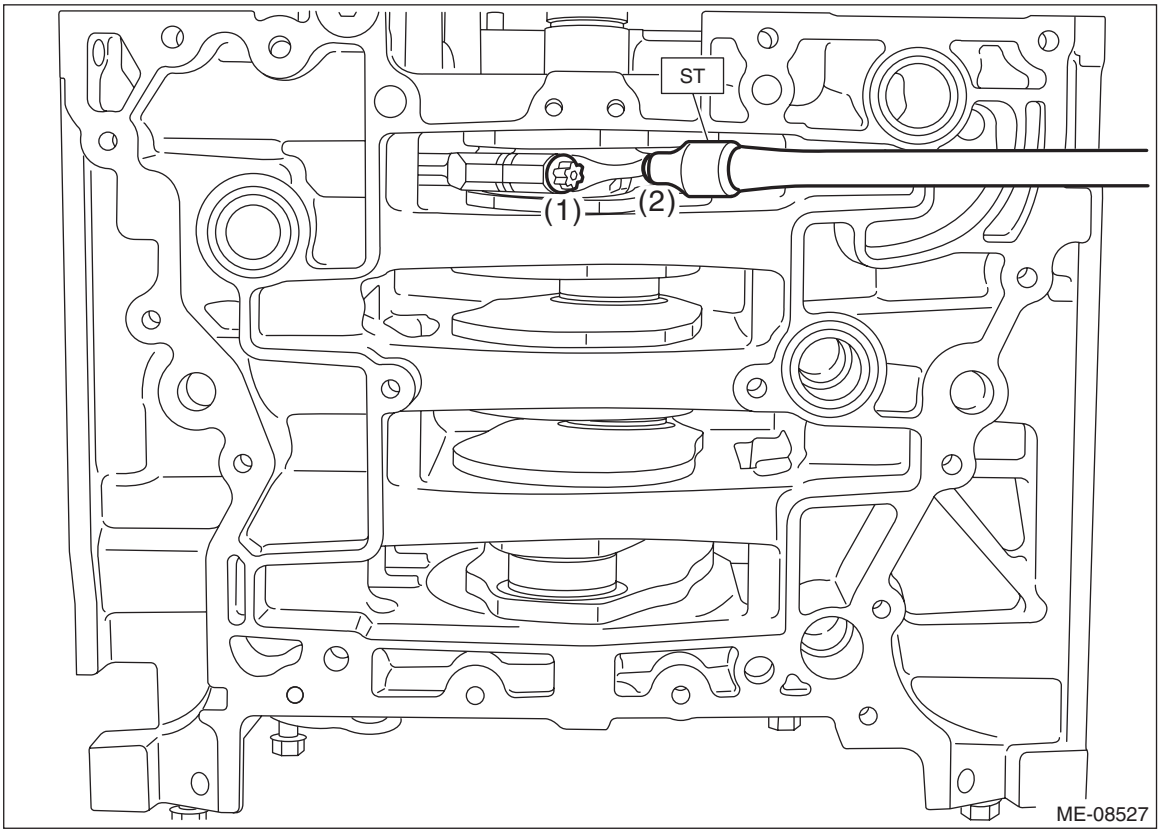

(6) Turn the crankshaft clockwise so that the #2 pin (A) of crankshaft is positioned at TDC using ST.

ST 18252AA000 CRANKSHAFT SOCKET

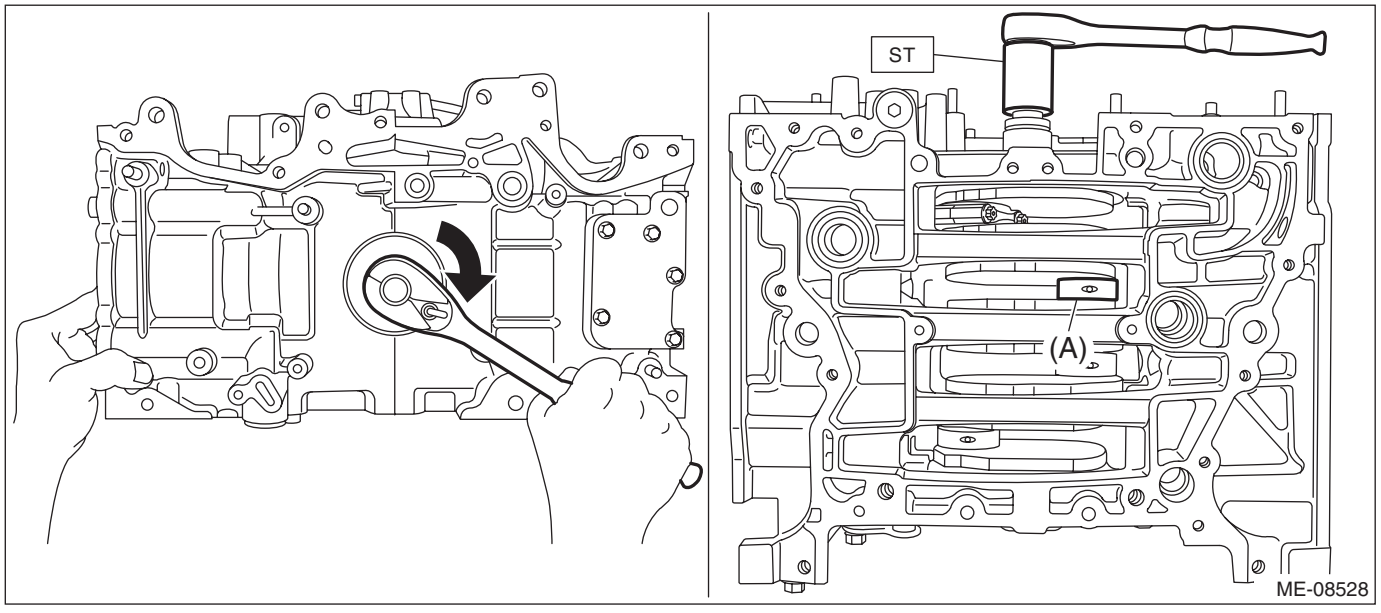

(7) Compress the piston ring using piston ring compressor, and insert the #2 connecting rod with #2 piston into cylinder block.

CAUTION:
• Be careful not to damage the cylinder liner and #2 pin of crankshaft by the #2 connecting rod large end.
• Be careful not to apply strong impact when inserting to prevent connecting rod bearing from falling off.

NOTE:
• Face the piston front mark (arrow) towards the front of the engine.

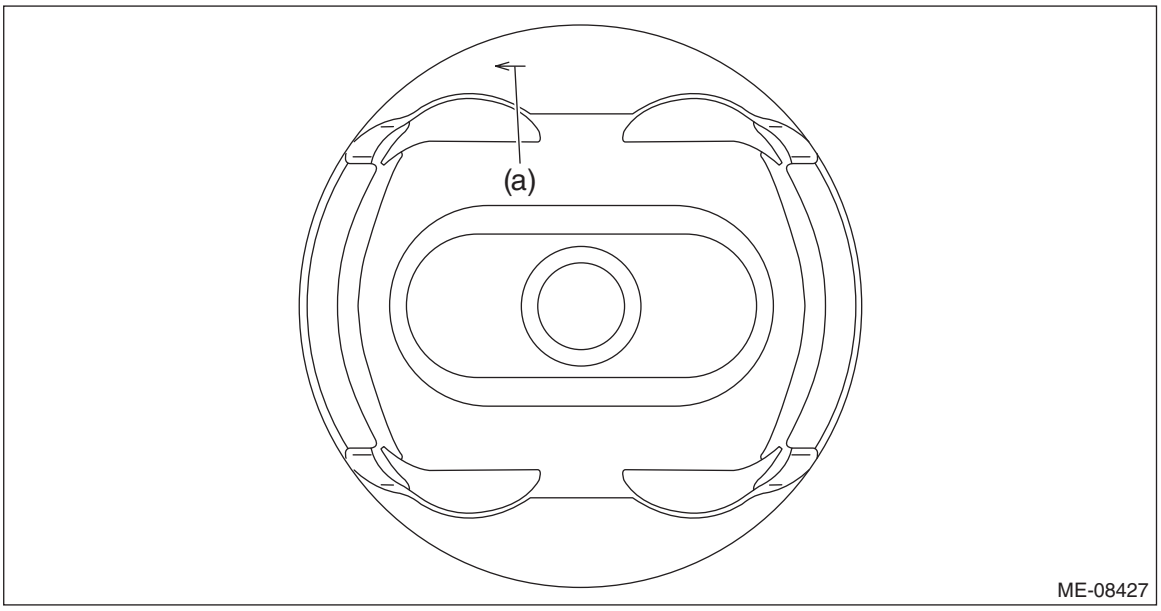

(a) Front mark

- Insert while lightly tapping the crown of the piston with the handle of a plastic hammer.

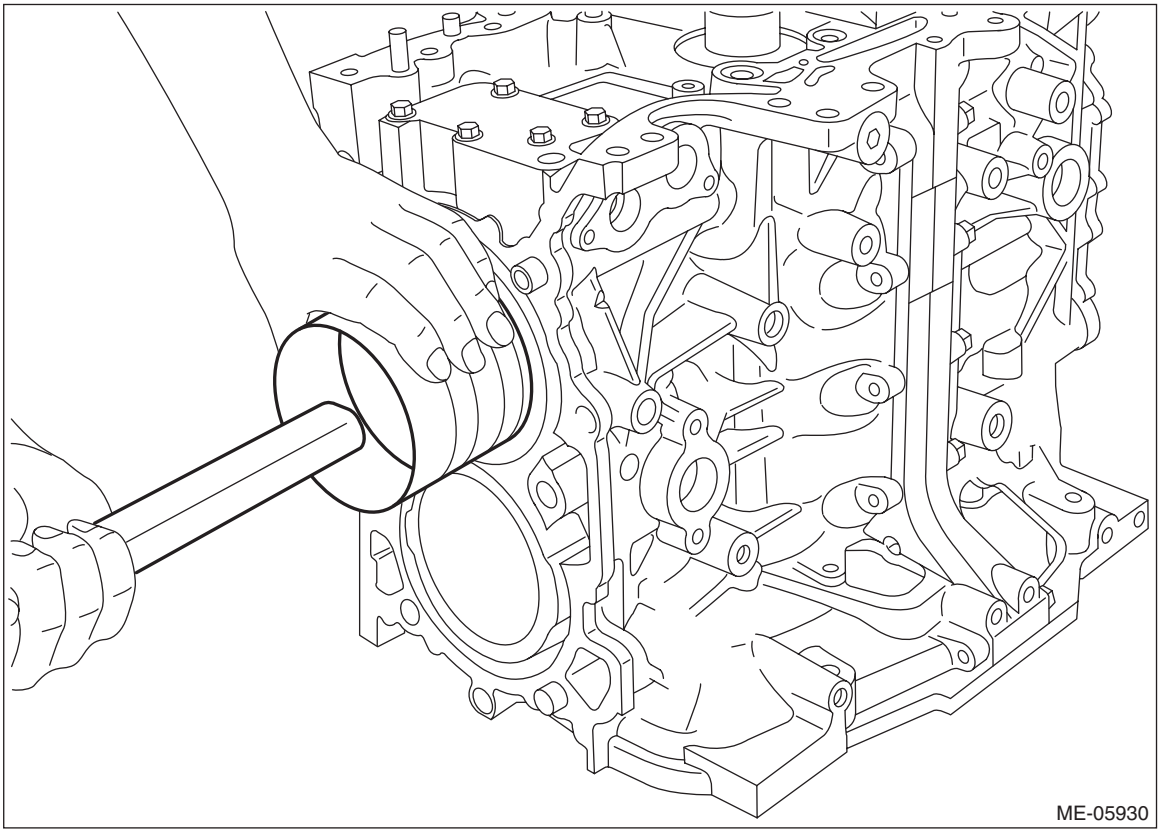

(8) Turn the crankshaft clockwise so that the #2 pin of crankshaft and the large end (A) of #2 connecting rod are positioned as shown in the figure using ST, while pressing the #2 piston crown, and then set the #2 connecting rod cap and #2 connecting rod cap bolt.

NOTE:
- Each connecting rod has its own mating cap. Make sure that they are assembled correctly by checking their matching symbol.
- Use a new connecting rod cap bolt.
- Apply a coat of engine oil to the #2 connecting rod cap seat and the connecting rod cap bolt threads.

ST 18252AA000 CRANKSHAFT SOCKET

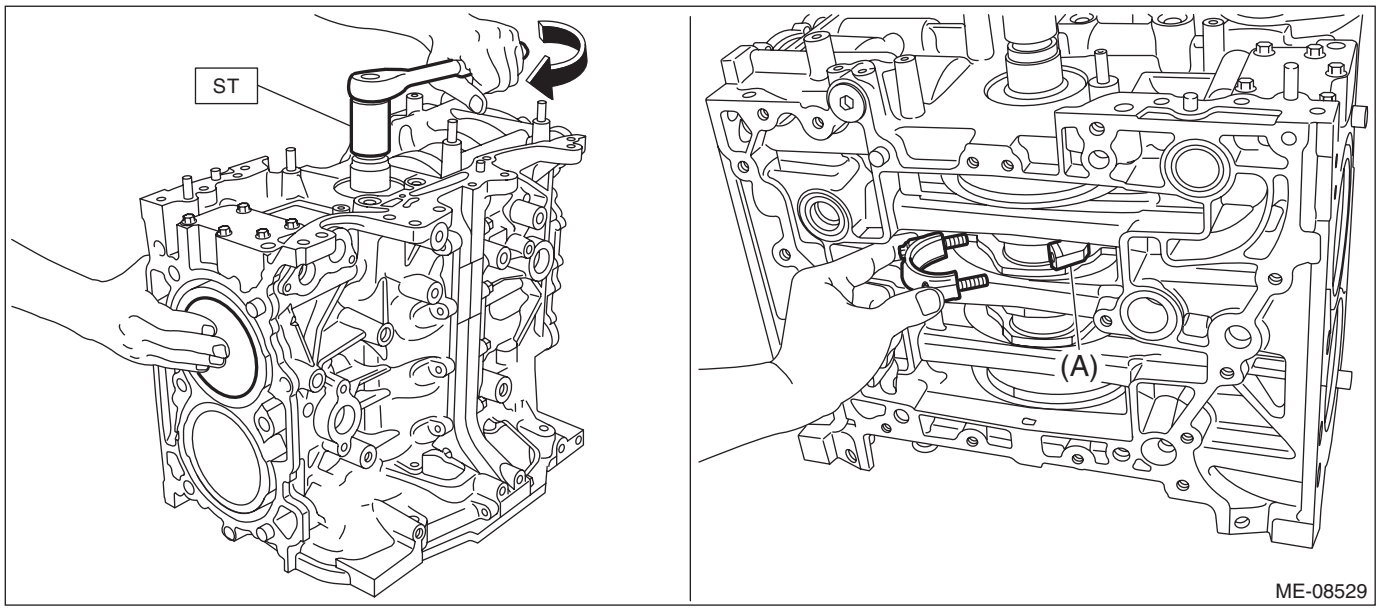

(9) Using ST, tighten the #2 connecting rod cap bolts to 10 N·m (1.0 kgf-m, 7.4 ft-lb) in numerical order as shown in the figure, then retighten the bolts to 22 N·m (2.2 kgf-m, 16.2 ft-lb) in numerical order as shown in the figure.

ST 18270AA020 SOCKET

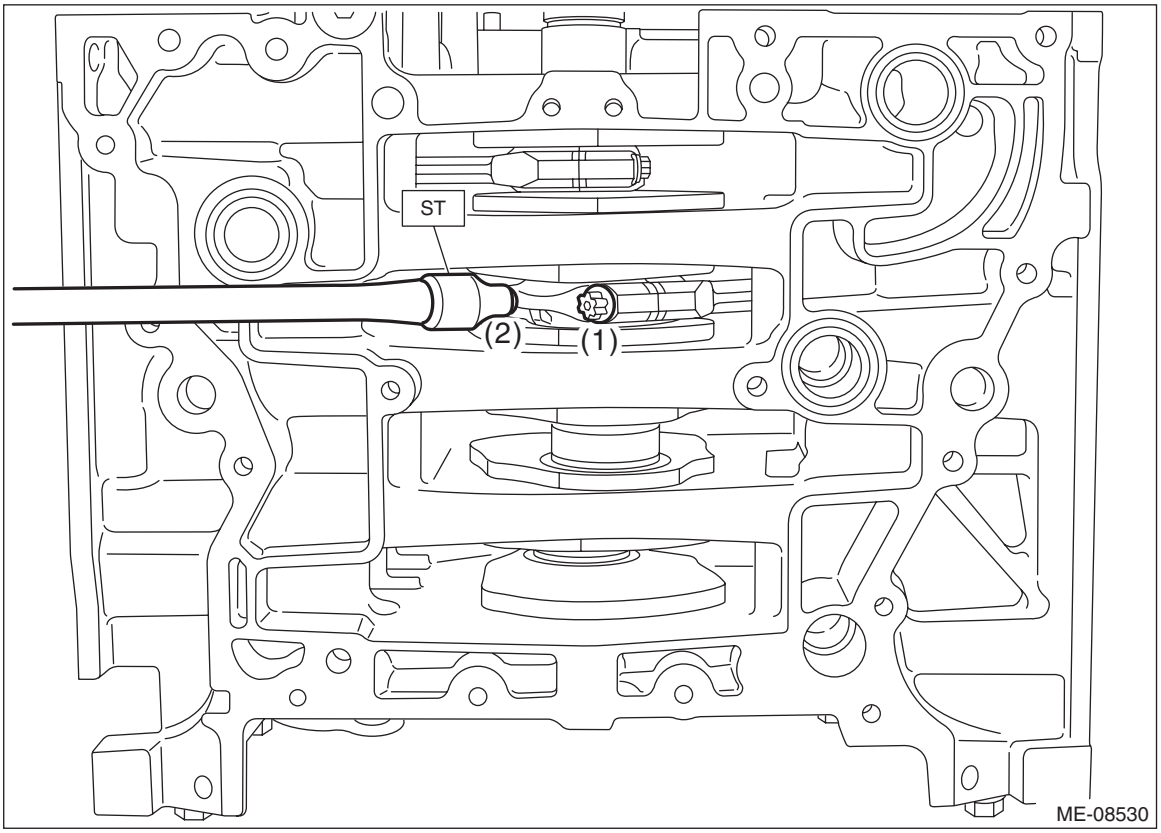

(10) Turn the crankshaft clockwise so that the #3 pin (A) of crankshaft is positioned at TDC using ST.

ST 18252AA000 CRANKSHAFT SOCKET

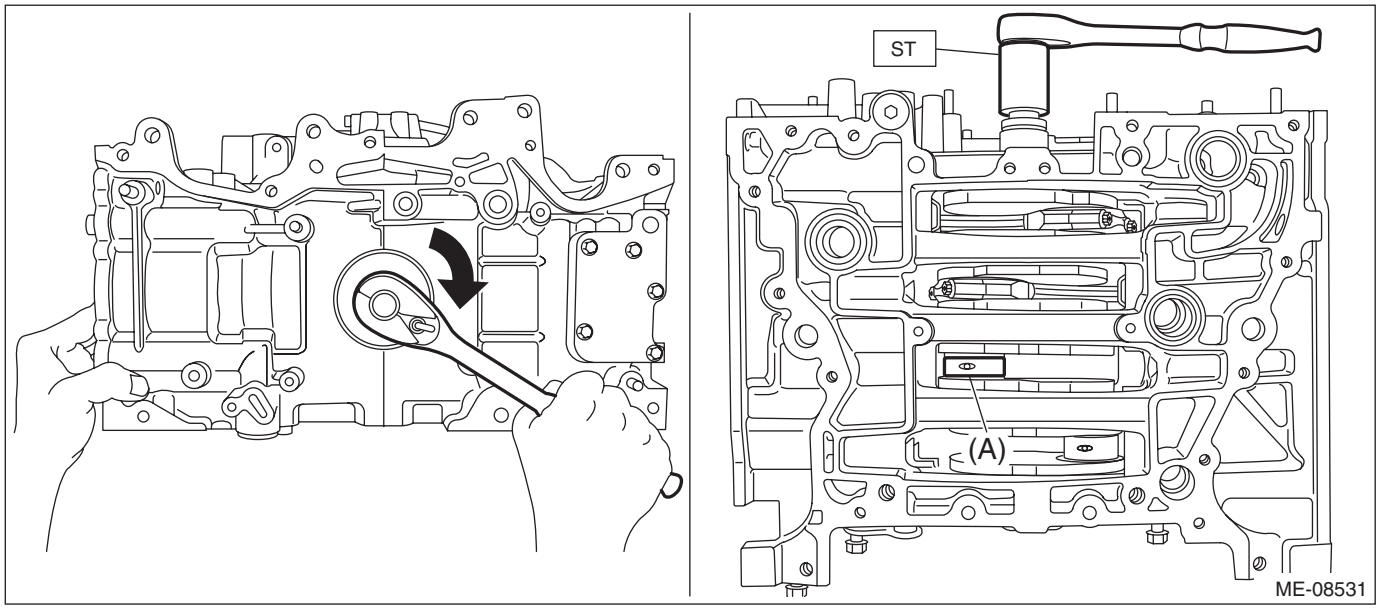

(11) Compress the piston ring using piston ring compressor, and insert the #3 connecting rod with #3 piston into cylinder block.

CAUTION:
• Be careful not to damage the cylinder liner and #3 pin of crankshaft by the #3 connecting rod large end.
• Be careful not to apply strong impact when inserting to prevent connecting rod bearing from falling off.

NOTE:
• Face the piston front mark (arrow) towards the front of the engine.

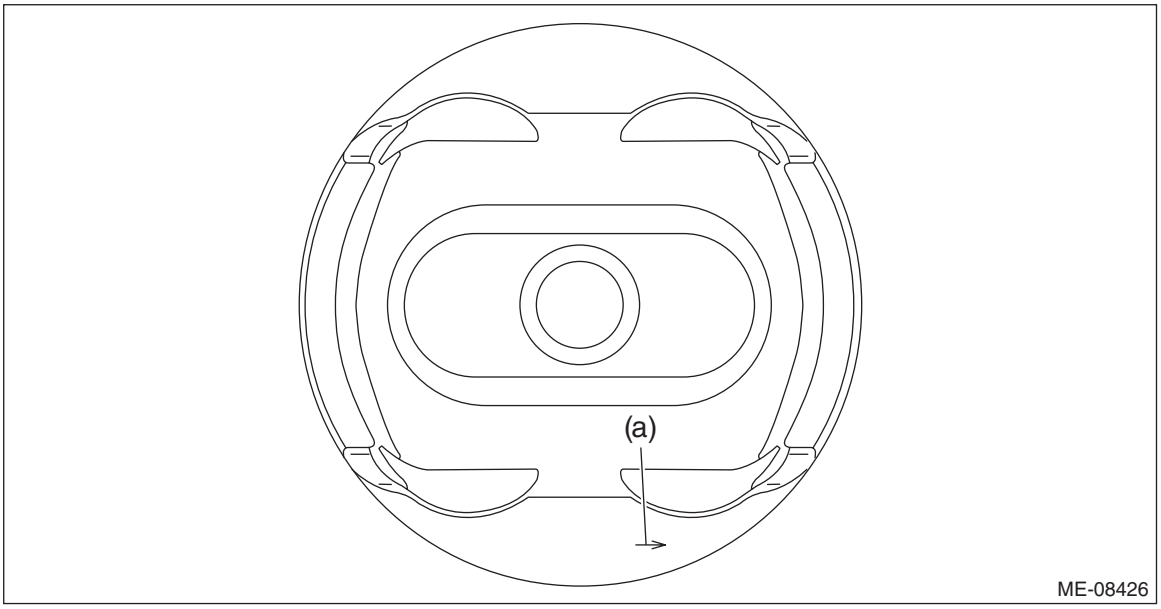

(a) Front mark

• Insert while lightly tapping the crown of the piston with the handle of a plastic hammer.

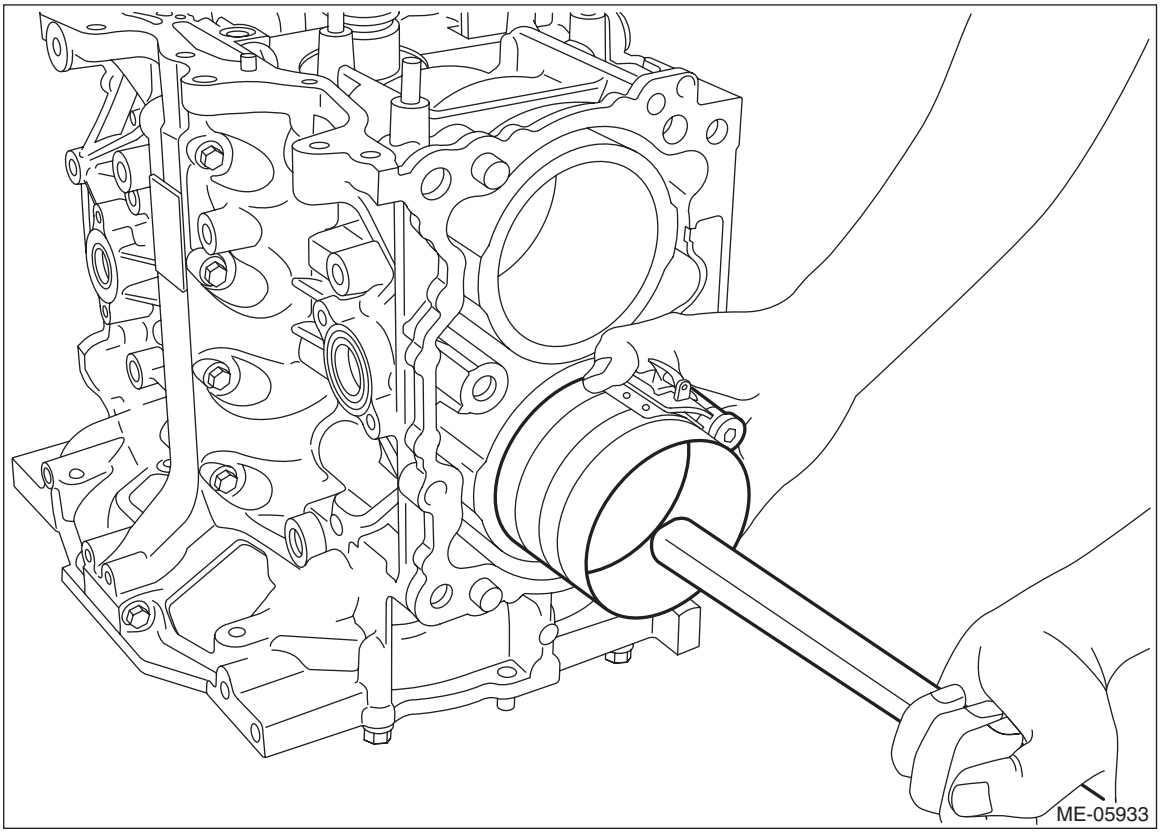

(12) Turn the crankshaft counterclockwise so that the #3 pin of crankshaft and the large end (A) of #3 connecting rod are positioned as shown in the figure using ST, while pressing the #3 piston crown, and then set the #3 connecting rod cap and #3 connecting rod cap bolt.

NOTE:
• Each connecting rod has its own mating cap. Make sure that they are assembled correctly by checking their matching symbol.
• Use a new connecting rod cap bolt.
• Apply a coat of engine oil to the #3 connecting rod cap seat and the connecting rod cap bolt threads.
ST 18252AA000 CRANKSHAFT SOCKET

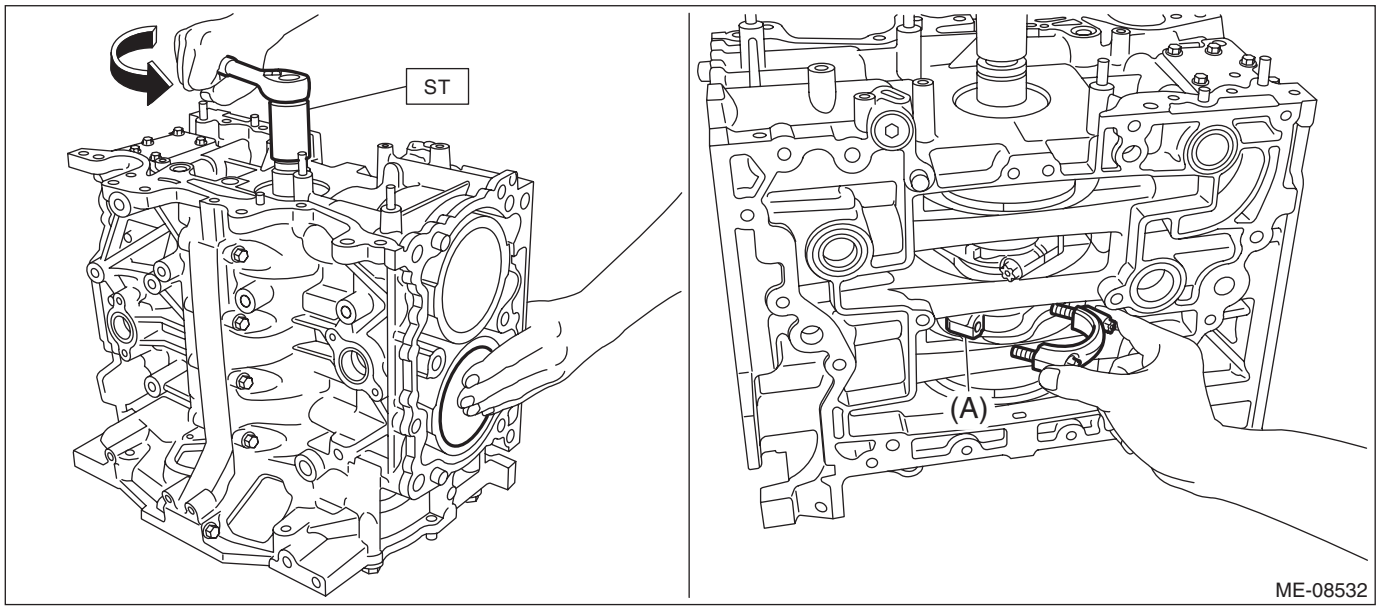

(13) Using ST, tighten the #3 connecting rod cap bolts to 10 N·m (1.0 kgf-m, 7.4 ft-lb) in numerical order as shown in the figure, then retighten the bolts to 22 N·m (2.2 kgf-m, 16.2 ft-lb) in numerical order as shown in the figure.

ST 18270AA020 SOCKET

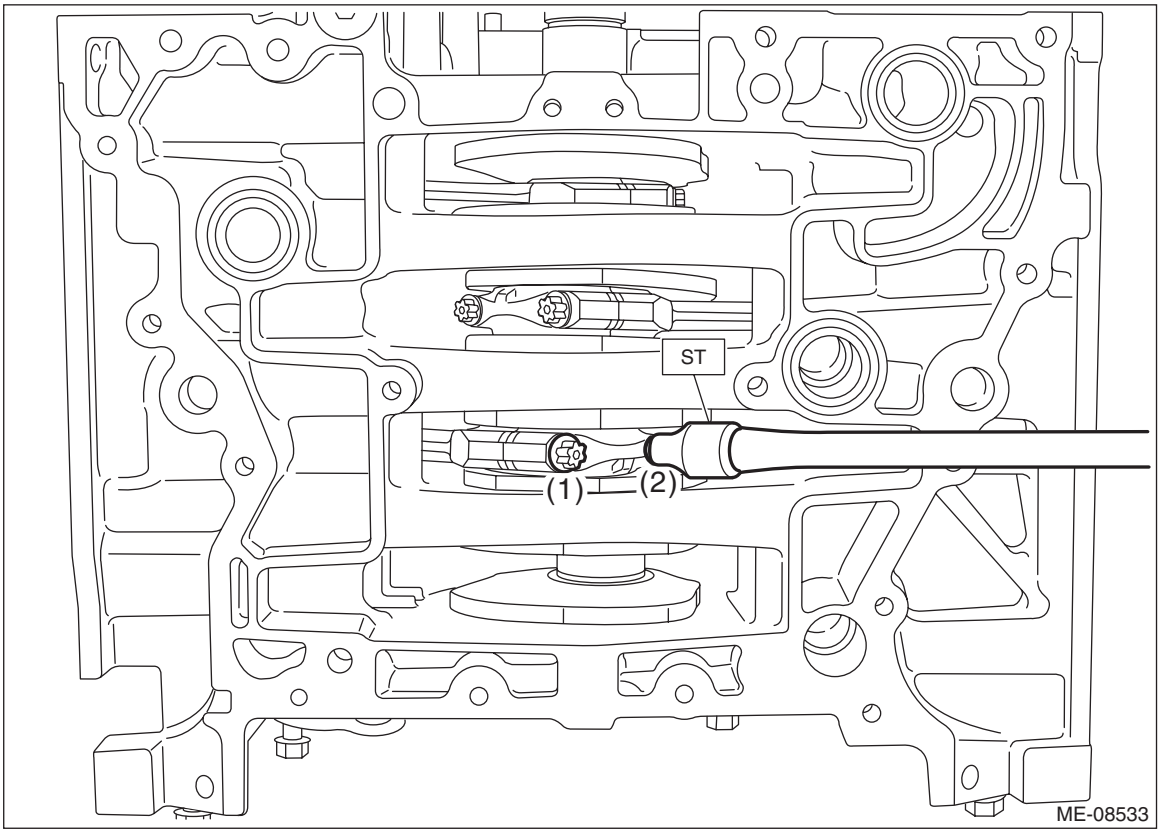

(14) Turn the crankshaft clockwise so that the #4 pin (A) of crankshaft is positioned at TDC using ST.

ST 18252AA000 CRANKSHAFT SOCKET

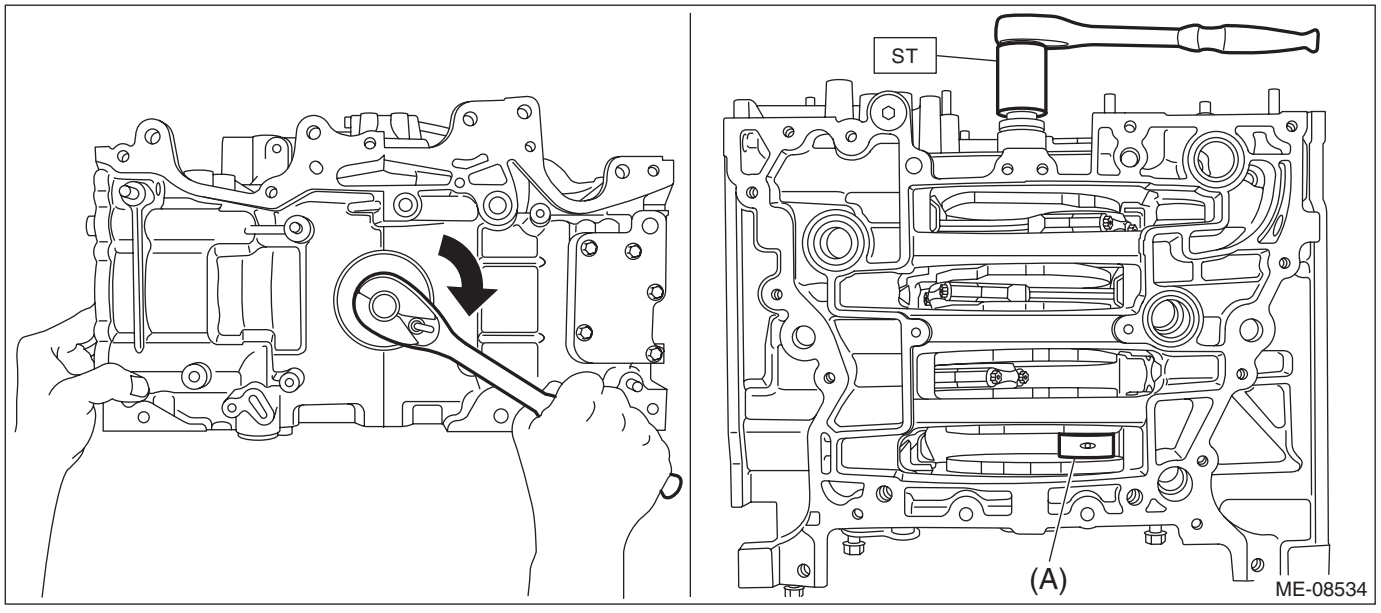

(15) Compress the piston ring using piston ring compressor, and insert the #4 connecting rod with #4 piston into cylinder block.

CAUTION:
• Be careful not to damage the cylinder liner and #4 pin of crankshaft by the #4 connecting rod large end.
• Be careful not to apply strong impact when inserting to prevent connecting rod bearing from falling off.

NOTE:
• Face the piston front mark (arrow) towards the front of the engine.

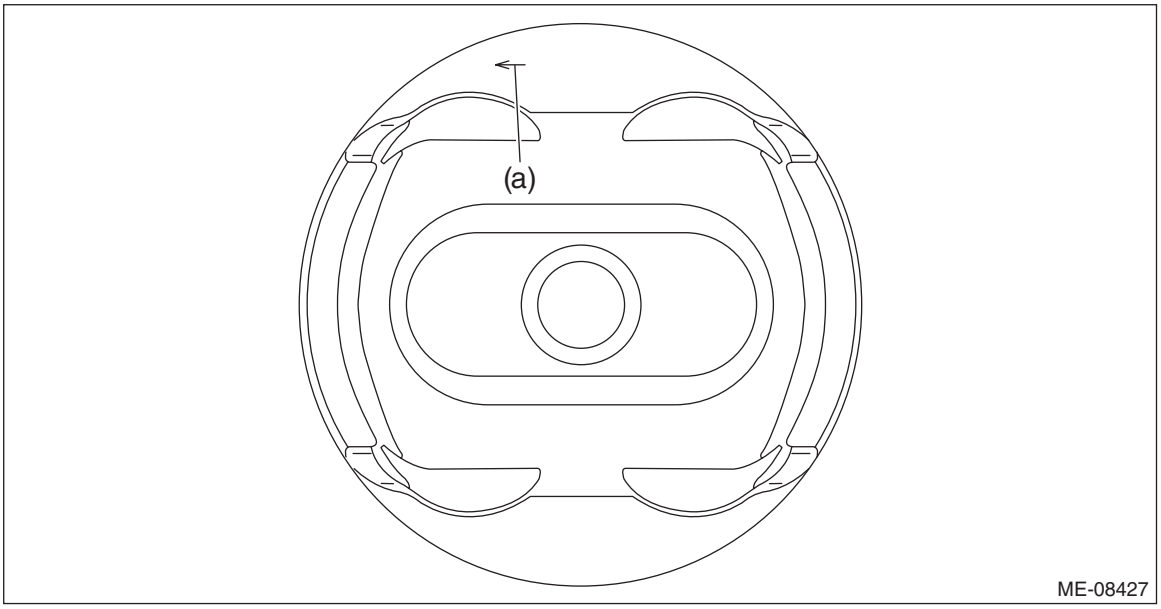

(a) Front mark

• Insert while lightly tapping the crown of the piston with the handle of a plastic hammer.

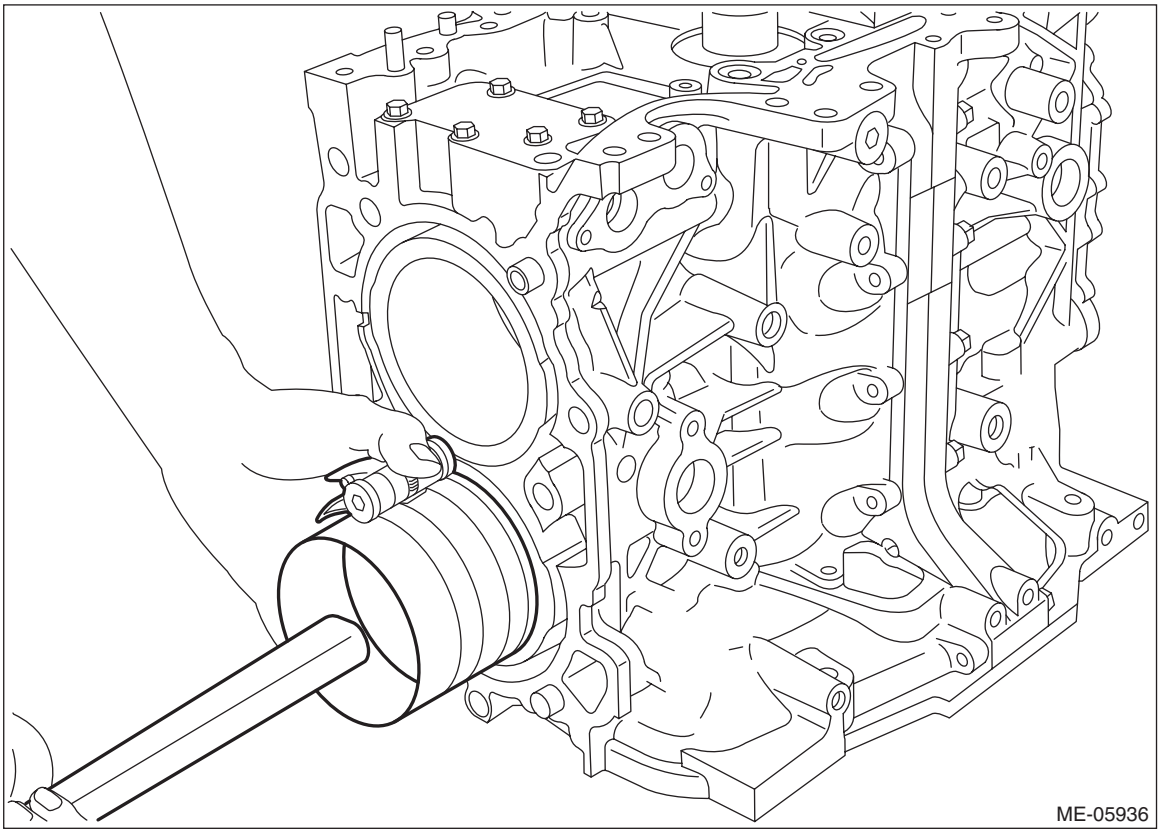

(16) Turn the crankshaft clockwise so that the #4 pin of crankshaft and the large end (A) of #4 connecting rod are positioned as shown in the figure using ST, while pressing the #4 piston crown, and then set the #4 connecting rod cap and #4 connecting rod cap bolt.

NOTE:
• Each connecting rod has its own mating cap. Make sure that they are assembled correctly by checking their matching symbol.
• Use a new connecting rod cap bolt.
• Apply a coat of engine oil to the #4 connecting rod cap seat and the connecting rod cap bolt threads.
ST 18252AA000 CRANKSHAFT SOCKET

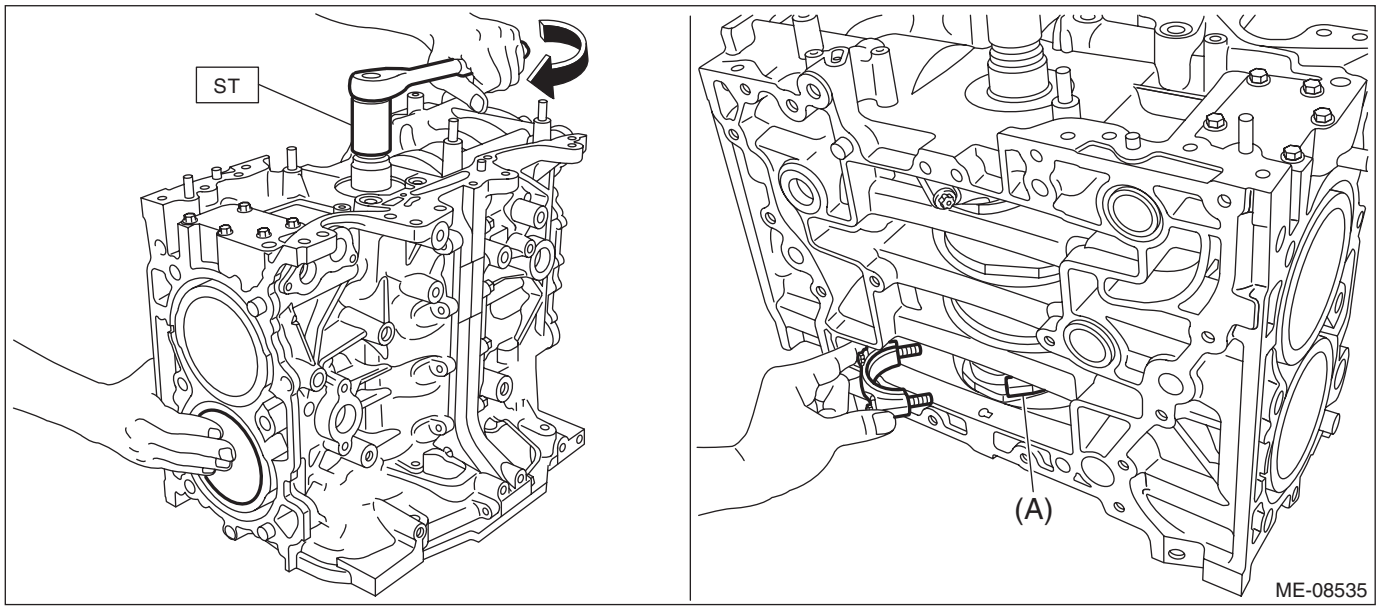

(17) Using ST, tighten the #4 connecting rod cap bolts to 10 N·m (1.0 kgf-m, 7.4 ft-lb) in numerical order as shown in the figure, then retighten the bolts to 22 N·m (2.2 kgf-m, 16.2 ft-lb) in numerical order as shown in the figure.

ST 18270AA020 SOCKET

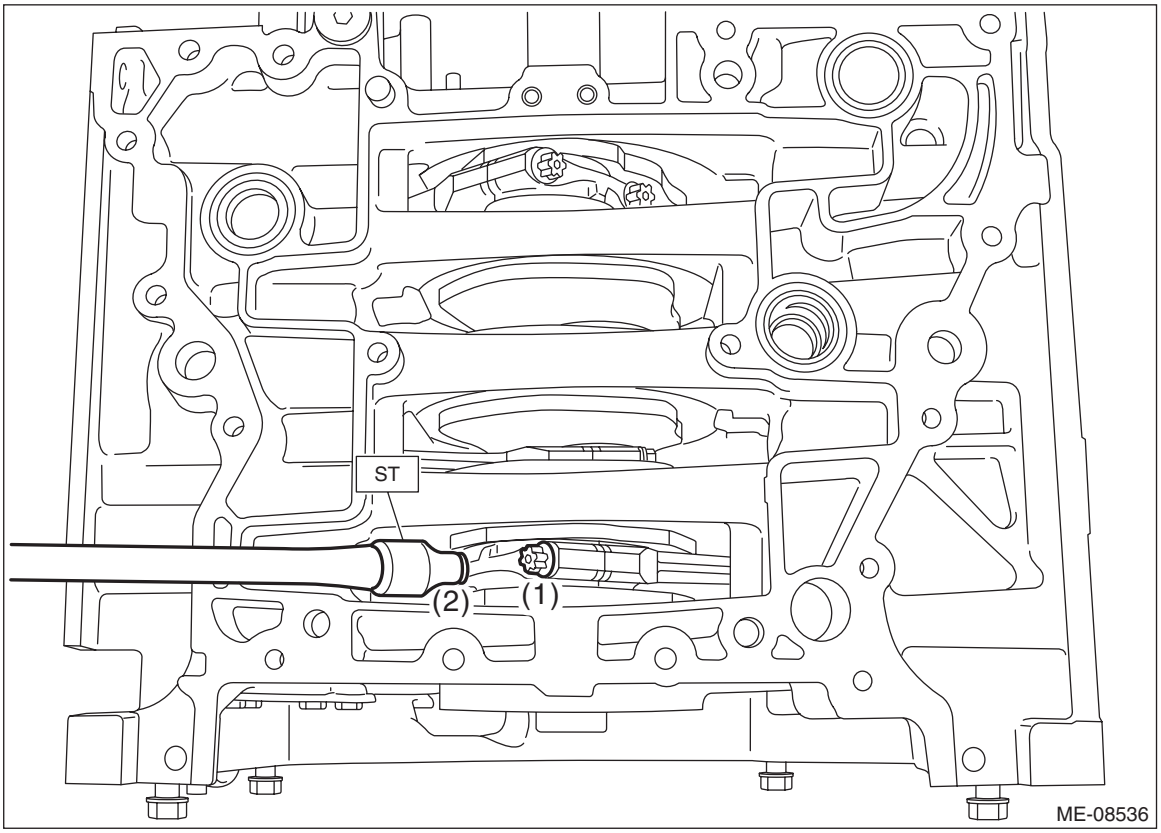

(18) Install the cam carrier mounting bolts at the locations shown in the figure.

NOTE:
This procedure is required to tighten the connecting rod cap bolts with specified angle using angle gauge.

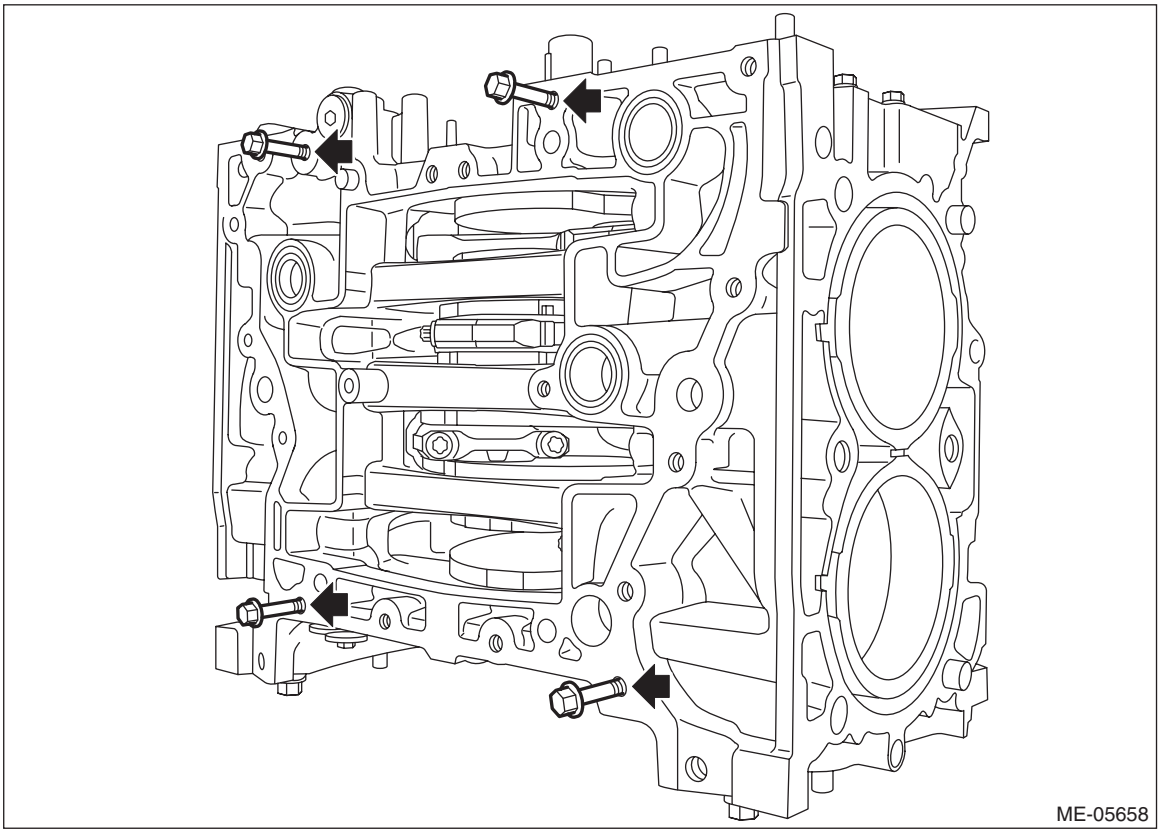

(19) Turn the crankshaft so that the #1 connecting rod cap (A) and #4 connecting rod cap (B) is located at the position shown in the figure using ST.

ST 18252AA000 CRANKSHAFT SOCKET

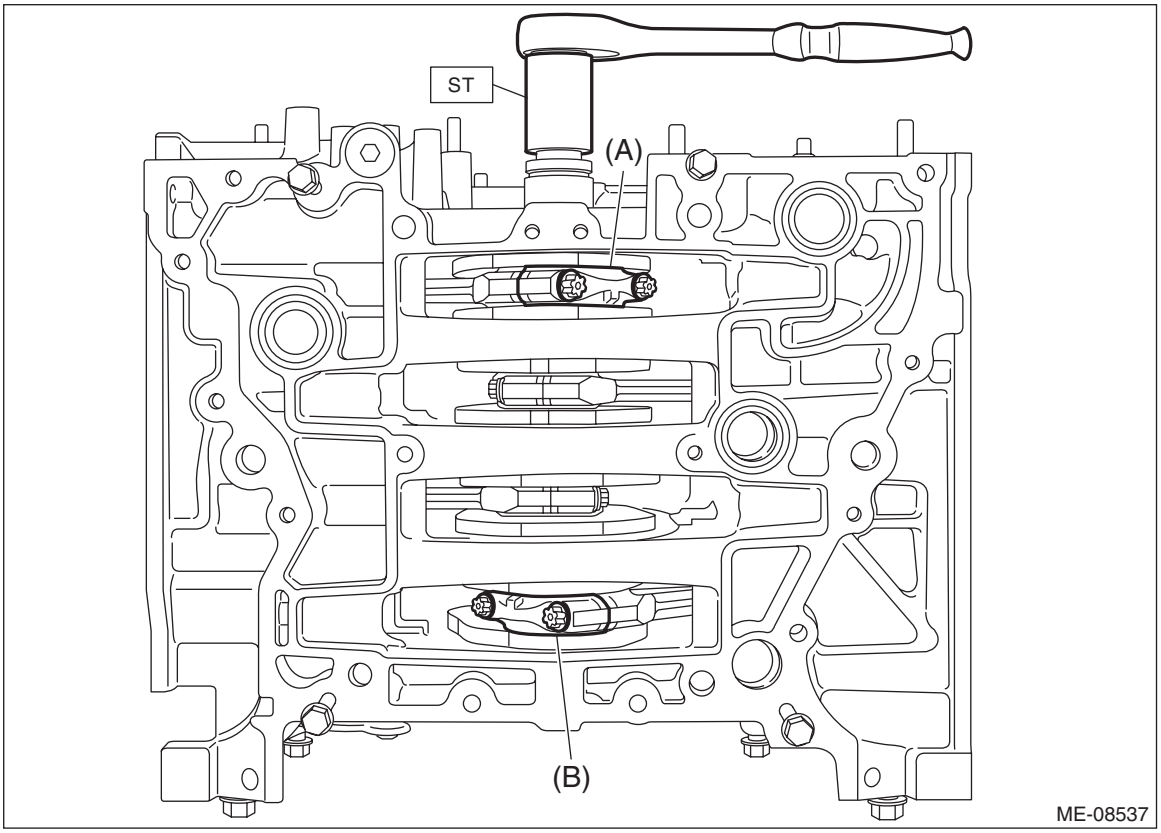

(20) Using ST and angle gauge, tighten the #1 connecting rod cap bolts and #4 connecting rod cap bolts with specified angle in numerical order as shown in the figure.

ST 18270AA020 SOCKET

Tightening angle:

$137^{\circ}{}^{+3^{\circ}}_{-2^{\circ}}$

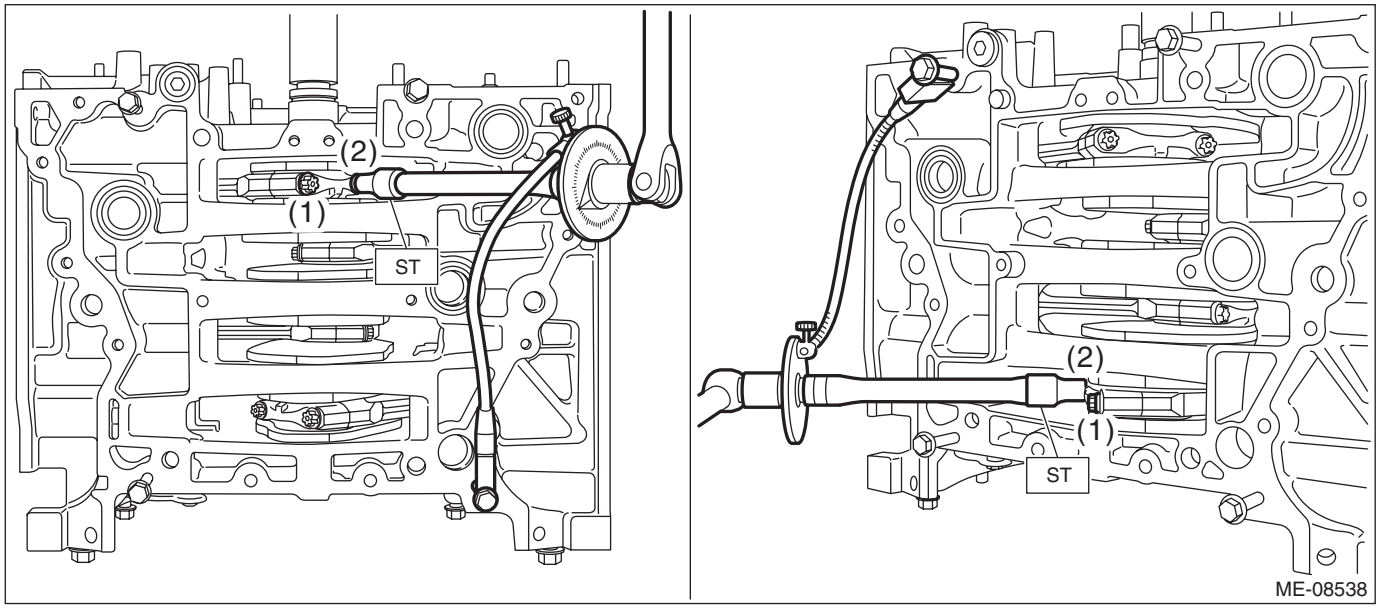

(21) Turn the crankshaft so that the #2 connecting rod cap (A) and #3 connecting rod cap (B) is located at the position shown in the figure using ST.

ST 18252AA000 CRANKSHAFT SOCKET

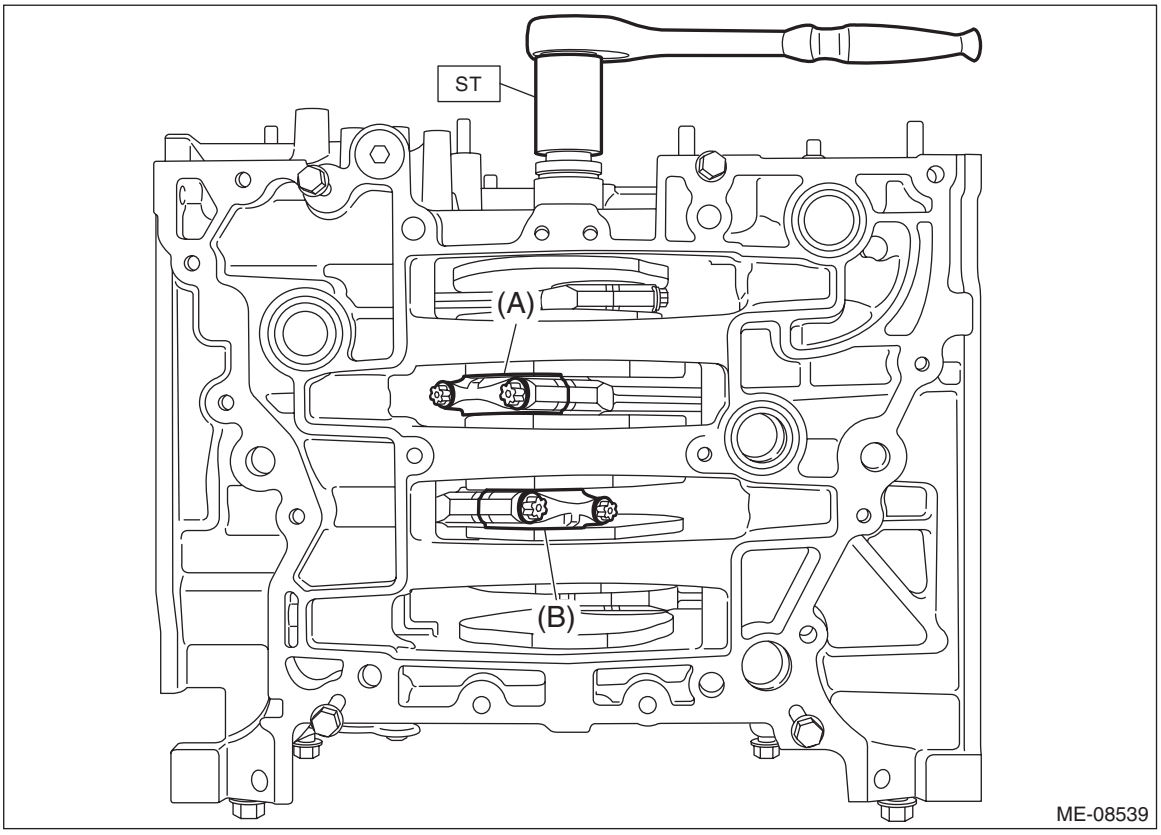

(22) Using ST and angle gauge, tighten the #2 connecting rod cap bolts and #3 connecting rod cap bolts with specified angle in numerical order as shown in the figure.

ST 18270AA020 SOCKET

Tightening angle:
137°+3° –2°

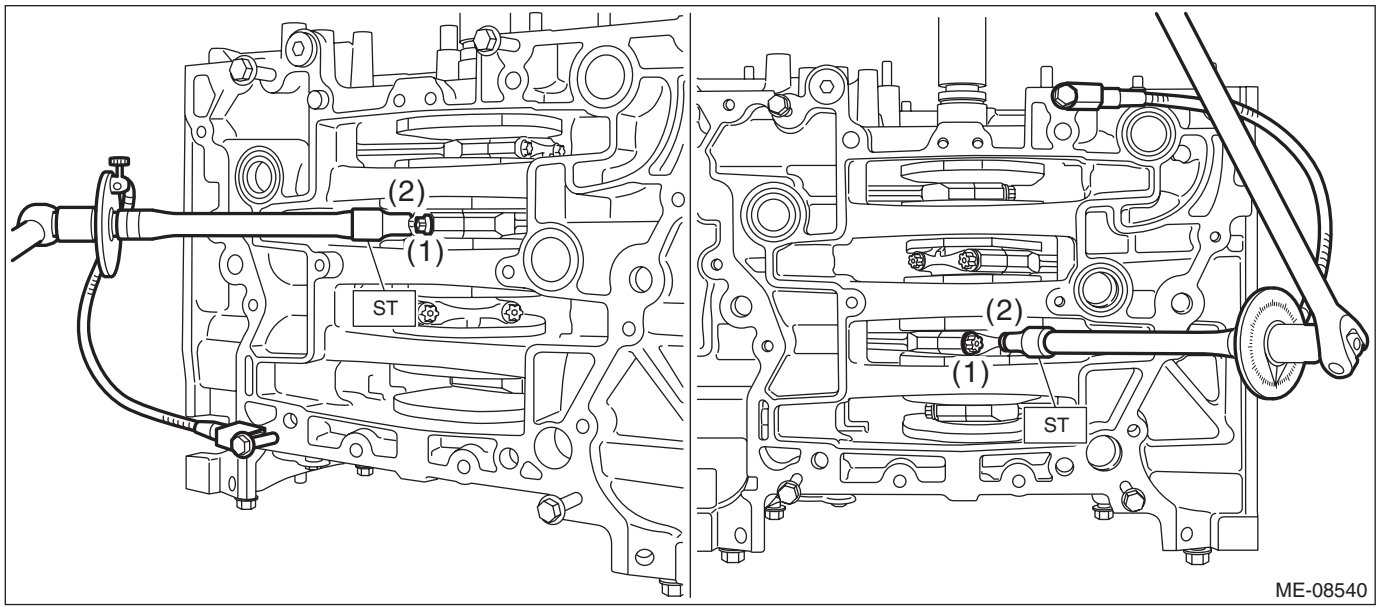

(23) Remove the cam carrier mounting bolts attached at the locations shown in the figure.

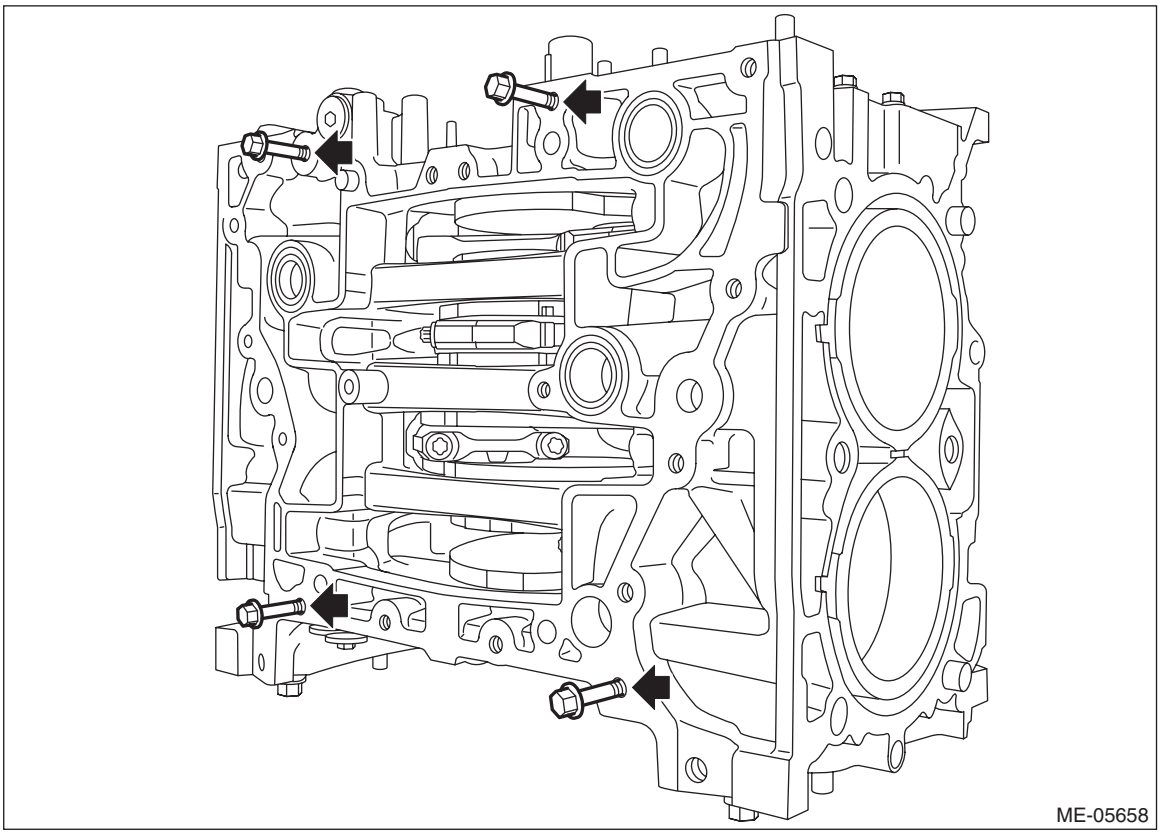

13) Set the cylinder block so that the oil pan side of the block faces upward, and remove the mounting bolts attached to the locations shown in the figure.

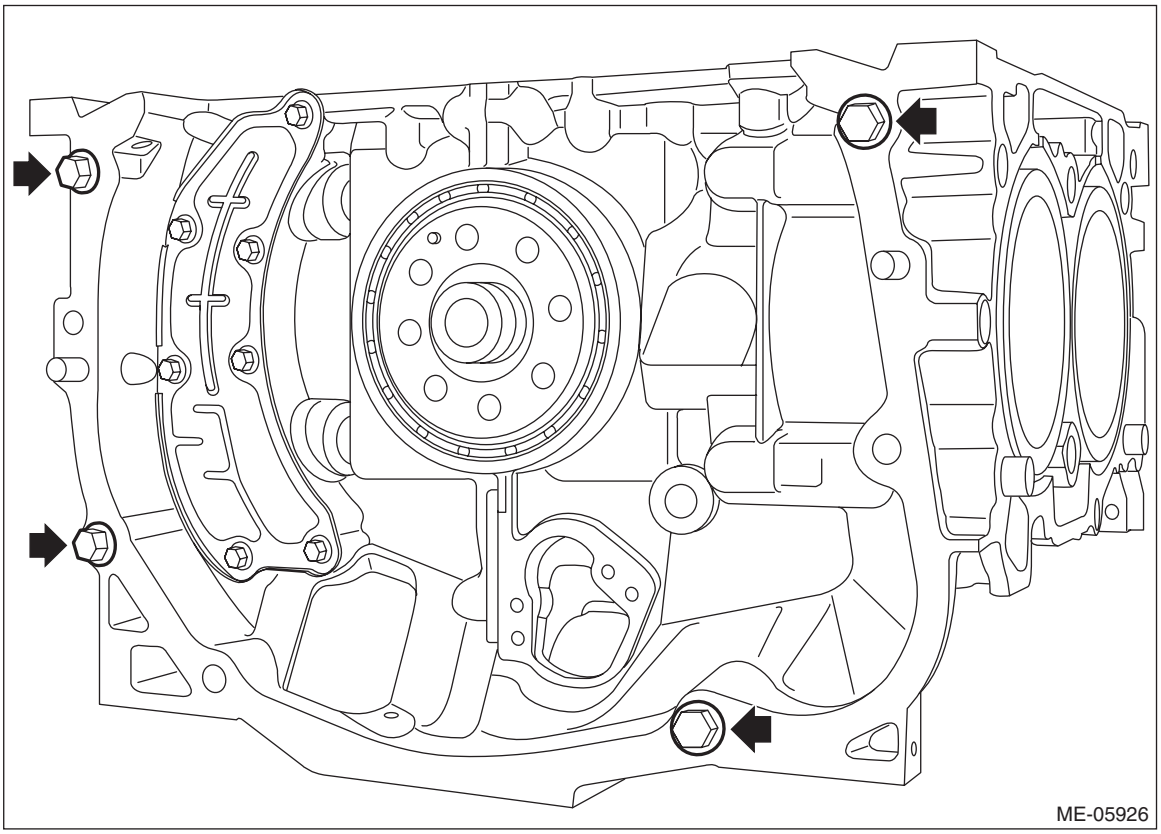

14) Install the oil pan upper with oil pan to the cylinder block.
(1) Apply liquid gasket to the mating surface of oil pan upper as shown in the figure.

NOTE:
• Before applying liquid gasket, degrease the old liquid gasket seal surface of the cylinder block and the oil pan upper.
• Install within 5 min. after applying liquid gasket.
• Apply liquid gasket 1.5 mm (0.0591 in) outside from the chamfer surface. However, application of liquid gasket on the chamfer surface around the bolt hole is allowed.

Liquid gasket:
THREE BOND 1217G (Part No. K0877Y0100), THREE BOND 1217H or equivalent

Liquid gasket applying diameter:
5±1 mm (0.1969±0.0394 in)

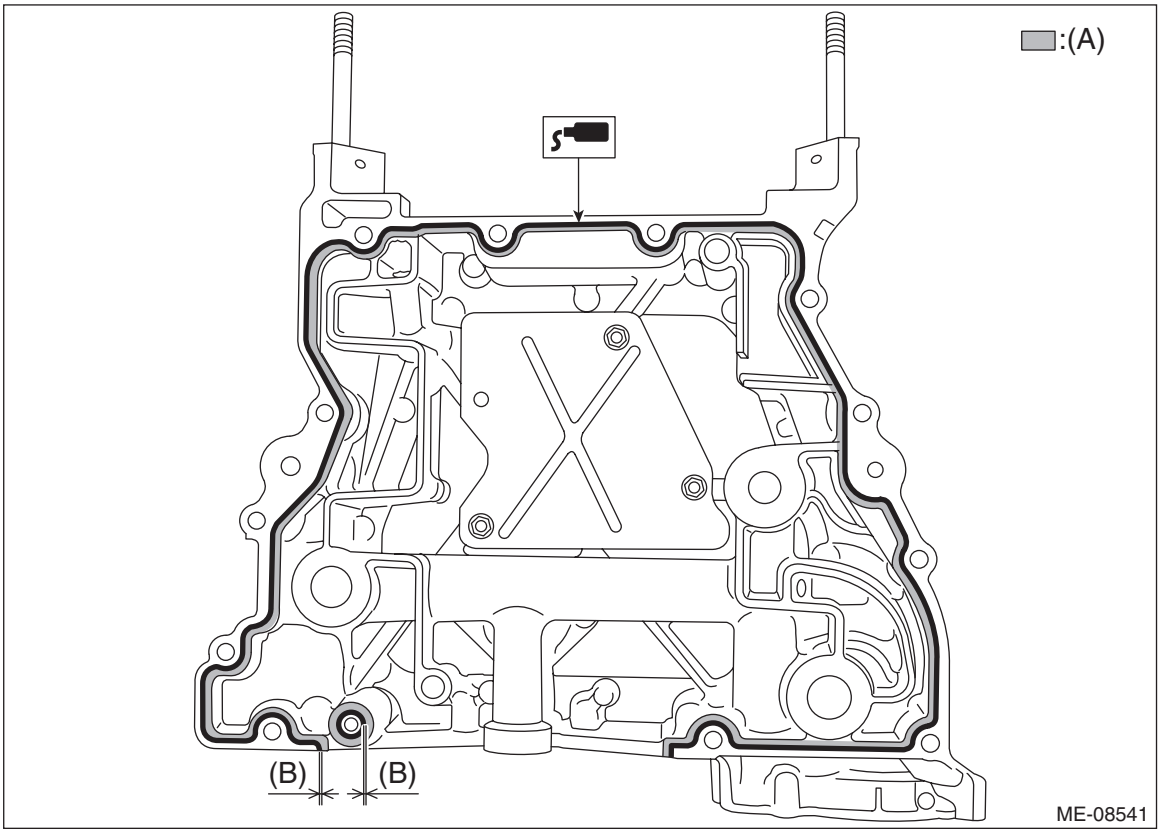

(A) Chamfer surface (B) 1.5 mm (0.0591 in)

(2) Install the O-ring to the cylinder block.

NOTE:
Use new O-rings.

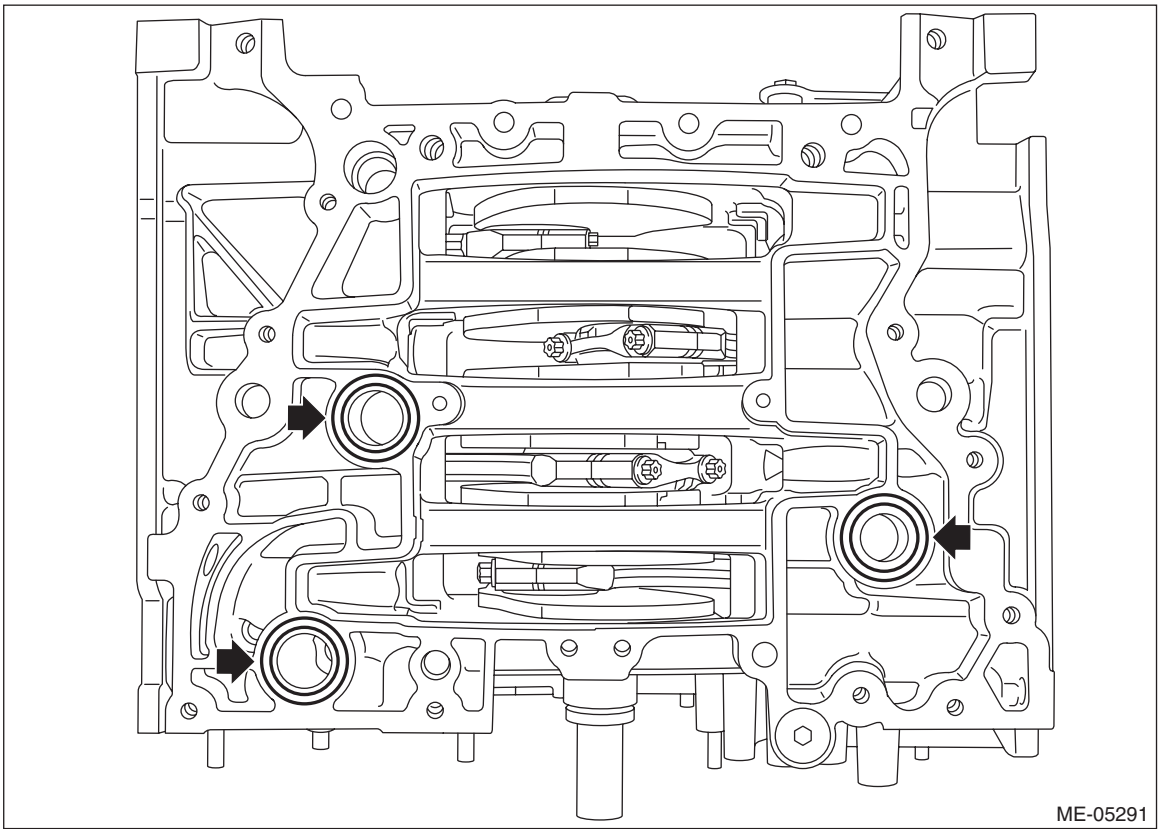

(3) Set the oil pan with oil pan upper to the cylinder block, and tighten the bolts in numerical order as shown in the figure.

NOTE:
After tightening, if the liquid gasket is squeezed out onto the seal surface of the chain cover, completely remove any squeezed-out liquid gasket.

Tightening torque:
18 N·m (1.8 kgf-m, 13.3 ft-lb)

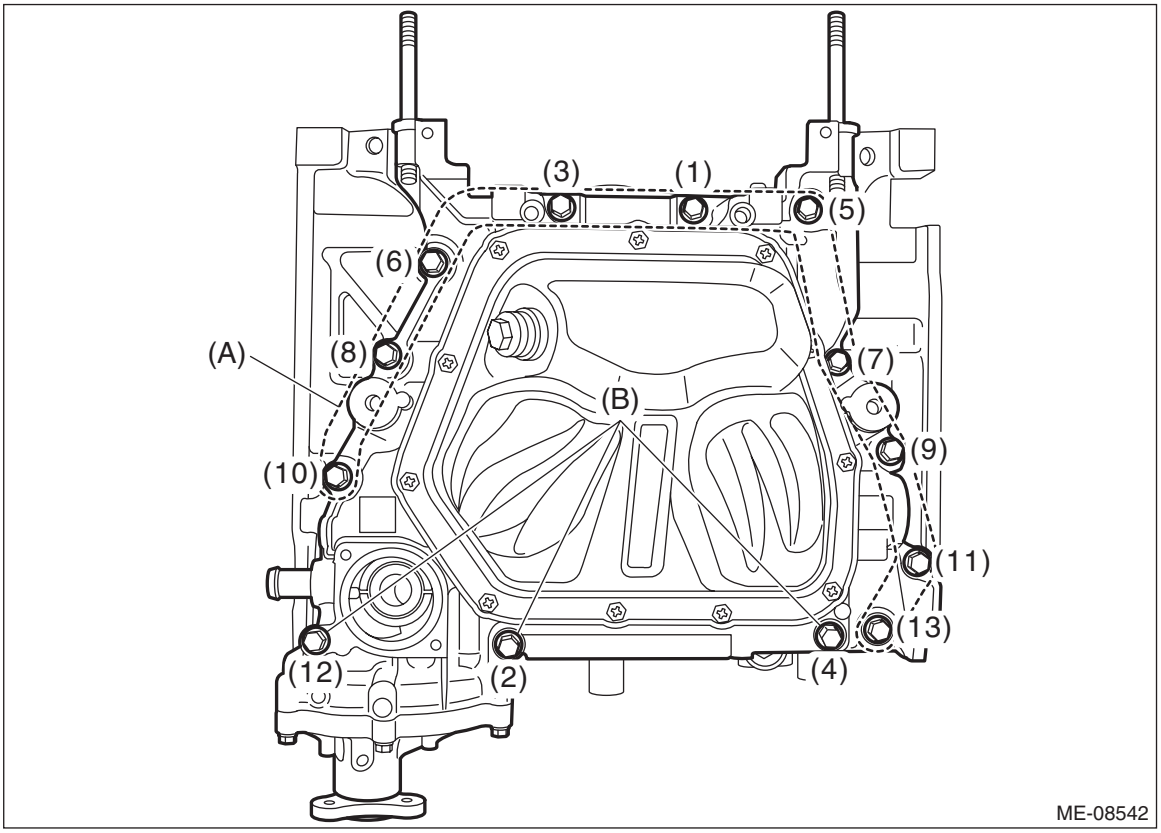

(A) M8 × 25 (B) M8 × 75

15) Set the thermostat to the oil pan upper, and install the thermostat cover.

NOTE:
Use a new gasket.

Tightening torque:
6.4 N·m (0.7 kgf-m, 4.7 ft-lb)

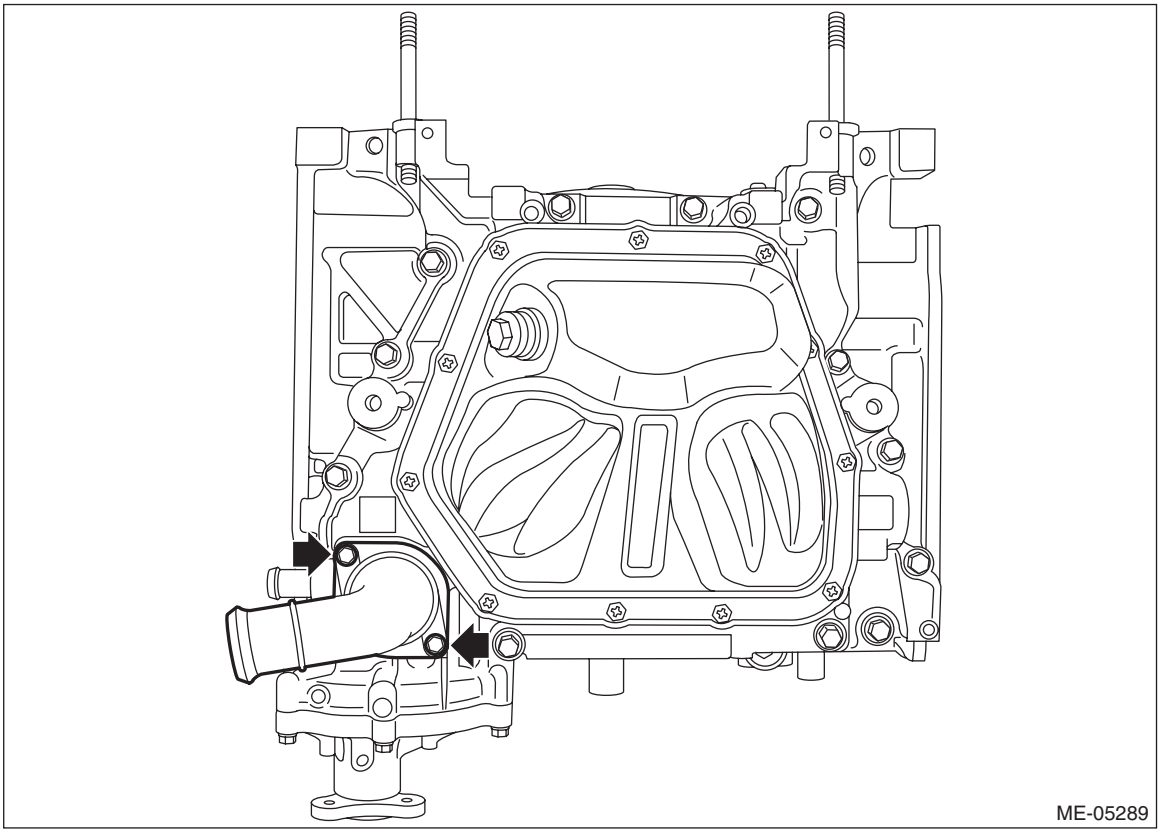

16) Install the ST1, ST2, ST3 and ST4 to the cylinder block and oil pan upper.
ST1 498457000 ENGINE STAND ADAPTER RH
ST2 498457100 ENGINE STAND ADAPTER LH
ST3 18362AA020 ADAPTER
ST4 499817100 ENGINE STAND

Tightening torque:
35 N·m (3.6 kgf-m, 25.8 ft-lb)

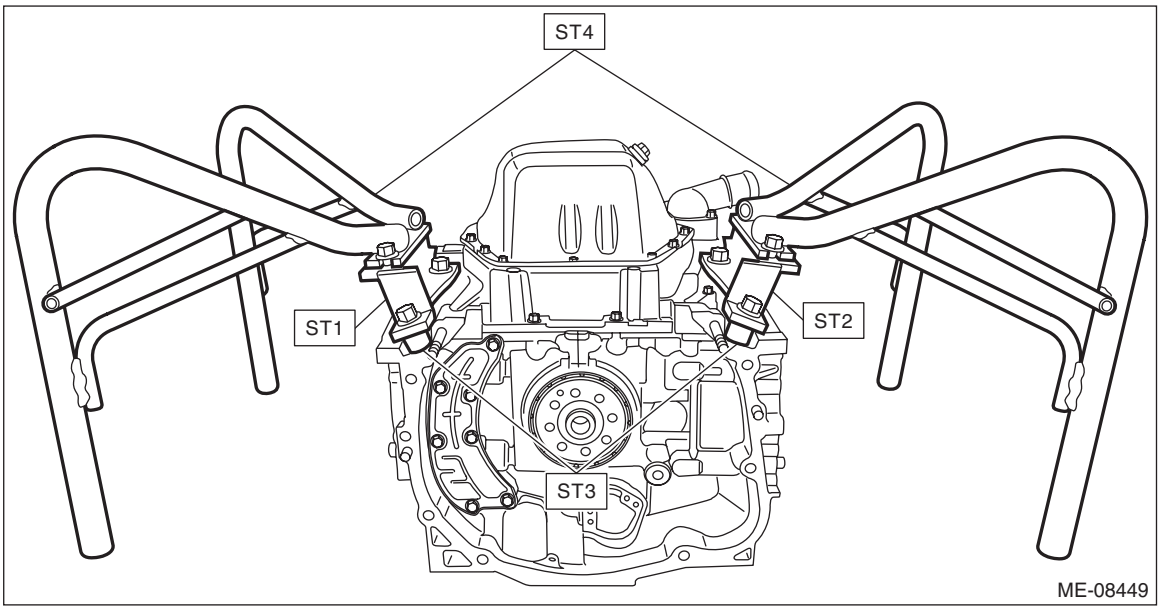

17) Install the water jacket spacer to the cylinder block RH and cylinder block LH.

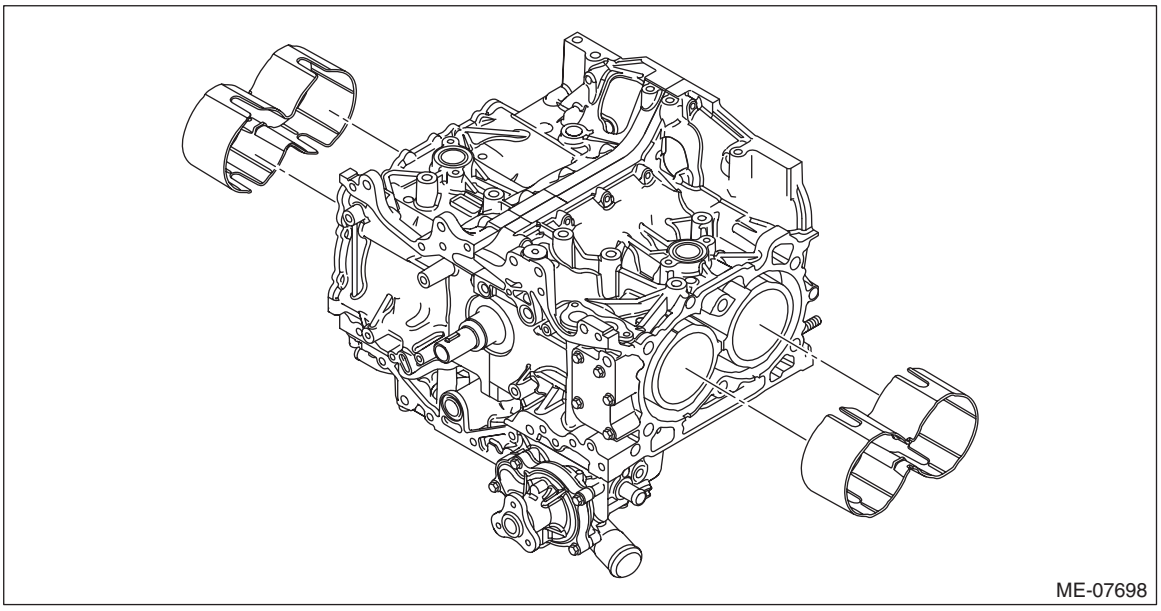

18) Install the crankshaft position sensor with crankshaft position sensor holder to the cylinder block LH.

Tightening torque:
6.4 N·m (0.7 kgf-m, 4.7 ft-lb)

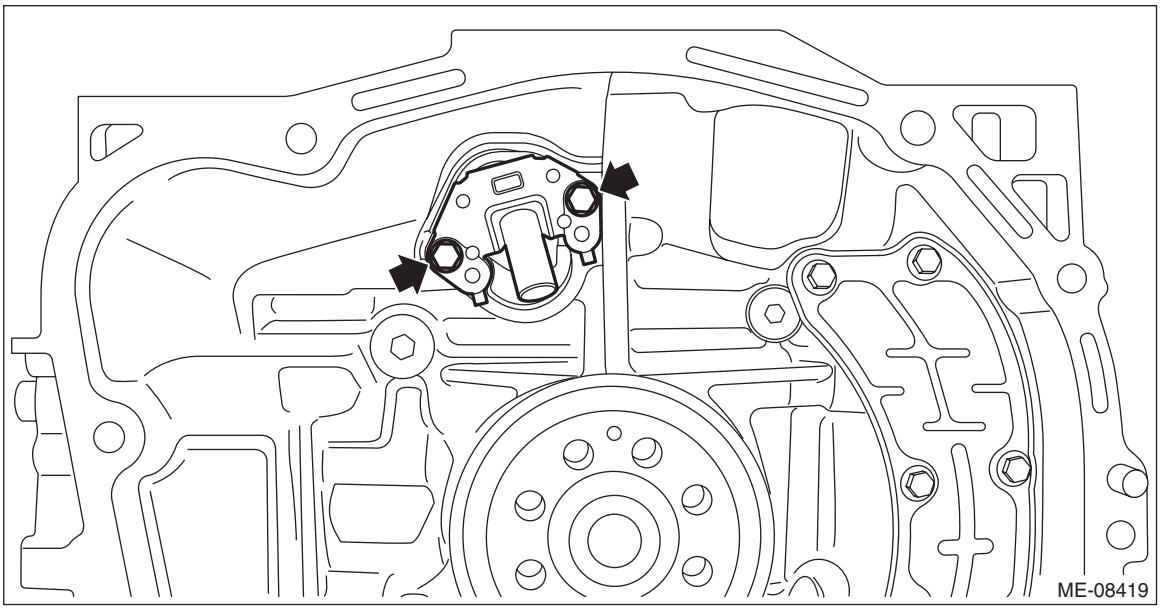

19) Install the crankshaft position sensor plate with drive plate. (CVT model) <Ref. to CVT(TR580)-194, INSTALLATION, Drive Plate.>
20) Install the crankshaft position sensor plate with flywheel. (MT model) <Ref. to CL-12, INSTALLATION, Flywheel.>
21) Install the clutch disc and cover. (MT model) <Ref. to CL-9, INSTALLATION, Clutch Disc and Cover.>
22) Install the PCV valve. <Ref. to EC(H4DO)-65, INSTALLATION, PCV Valve.>
23) Install the knock sensor. <Ref. to FU(H4DO)-57, INSTALLATION, Knock Sensor.>
24) Install the O-ring to the cylinder block and PCV connector.

NOTE:
Use new O-rings.

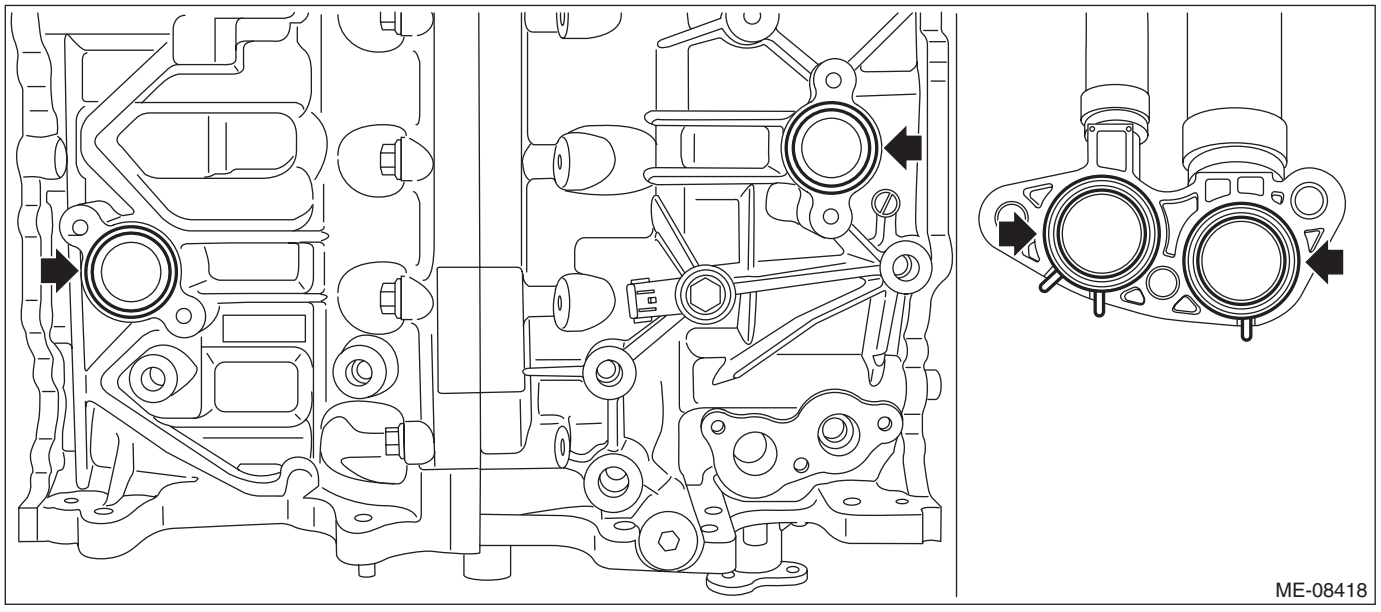

25) Set the water pipe assembly and PCV connector to the cylinder block, and install the bolts which secure the water pipe assembly and PCV connector to the cylinder block.

Tightening torque:
6.4 N·m (0.7 kgf-m, 4.7 ft-lb)

- CVT model

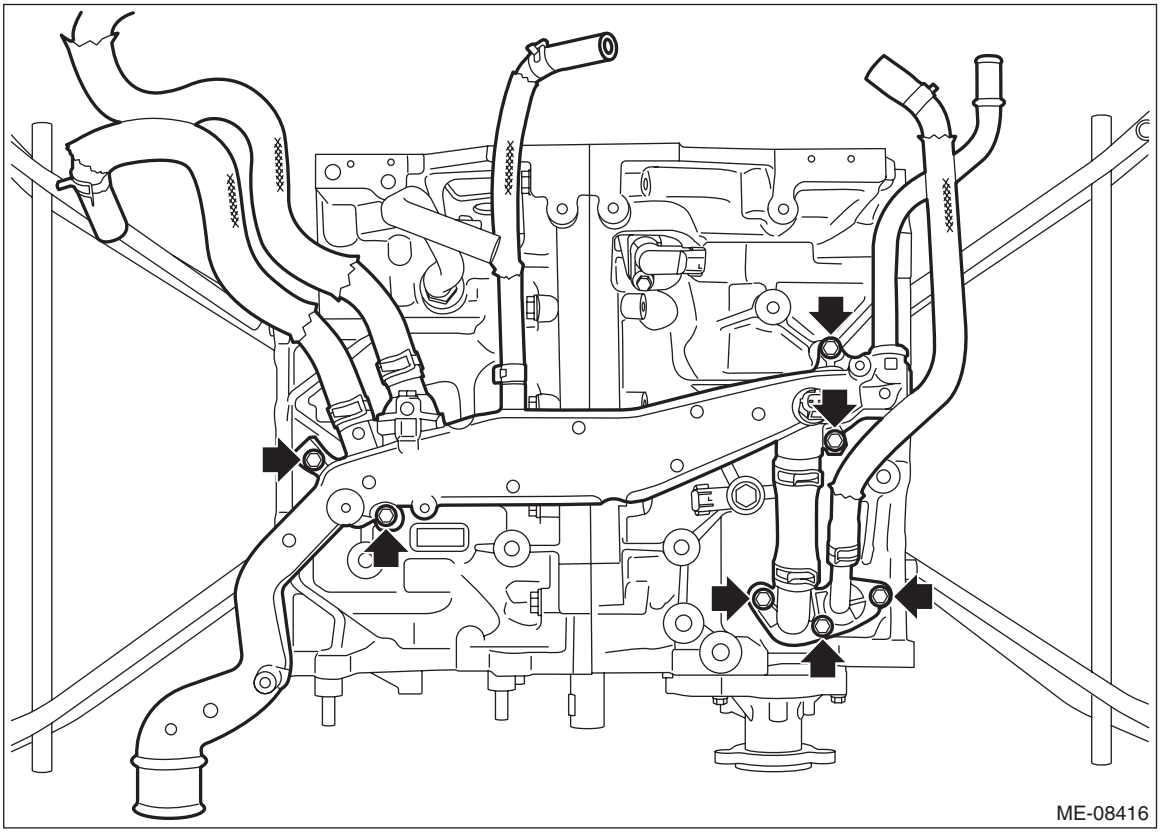

- MT model

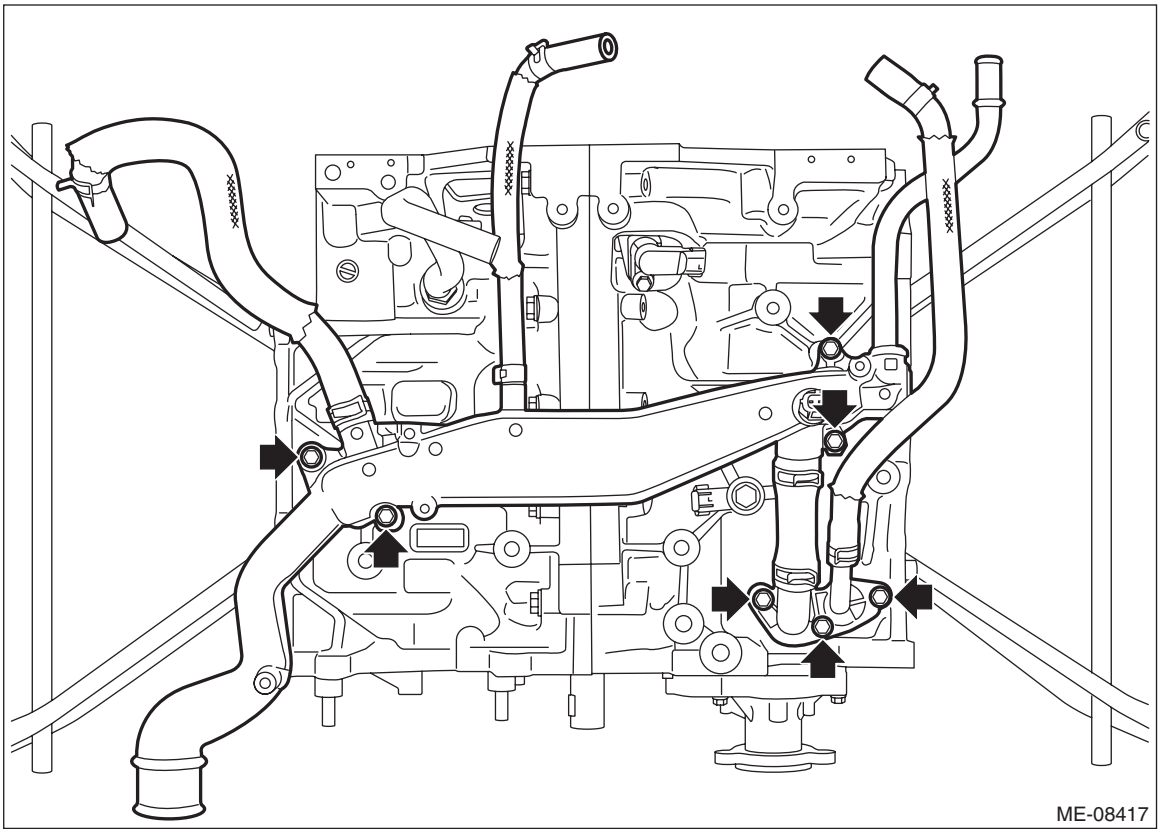

26) Install the engine rear hanger to the cylinder block RH.

Tightening torque:
36 N·m (3.7 kgf-m, 26.6 ft-lb)

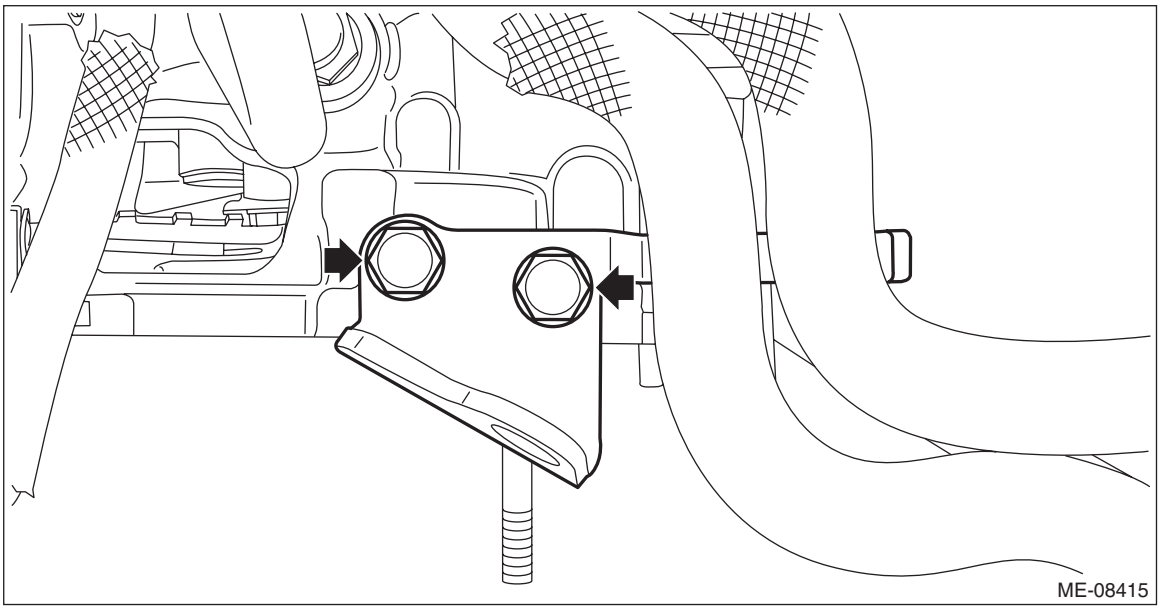

27) Install the crank sprocket. <Ref. to ME(H4DO)-127, INSTALLATION, Crank Sprocket.>
28) Install the cylinder head. <Ref. to ME(H4DO)-173, INSTALLATION, Cylinder Head.>
29) Install the cam carrier. <Ref. to ME(H4DO)-146, INSTALLATION, Cam Carrier.>
30) Install the rocker cover. <Ref. to ME(H4DO)-133, INSTALLATION, Rocker Cover.>
31) Install the chain cover. <Ref. to ME(H4DO)-88, INSTALLATION, Chain Cover.>
32) Install the engine wiring harness. <Ref. to FU(H4DO)-39, INSTALLATION, Engine Wiring Harness.>
33) Install the intake manifold assembly. <Ref. to FU(H4DO)-26, INSTALLATION, Intake Manifold Assembly.>
34) Install the engine to the vehicle. <Ref. to ME(H4DO)-53, INSTALLATION, Engine Assembly.>

C: DISASSEMBLY

1. CYLINDER BLOCK

1) Remove the oil separator cover from cylinder block RH.

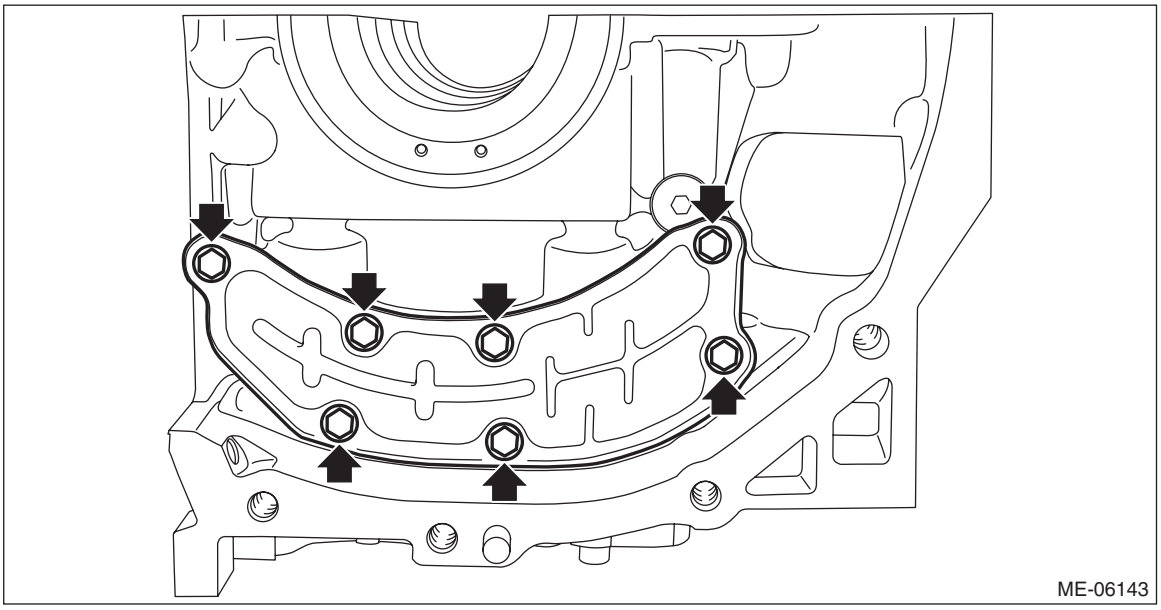

2) Remove the liquid gasket from cylinder block RH.
3) Remove the cylinder block plug (A) and the main gallery plug (B) from cylinder block RH.

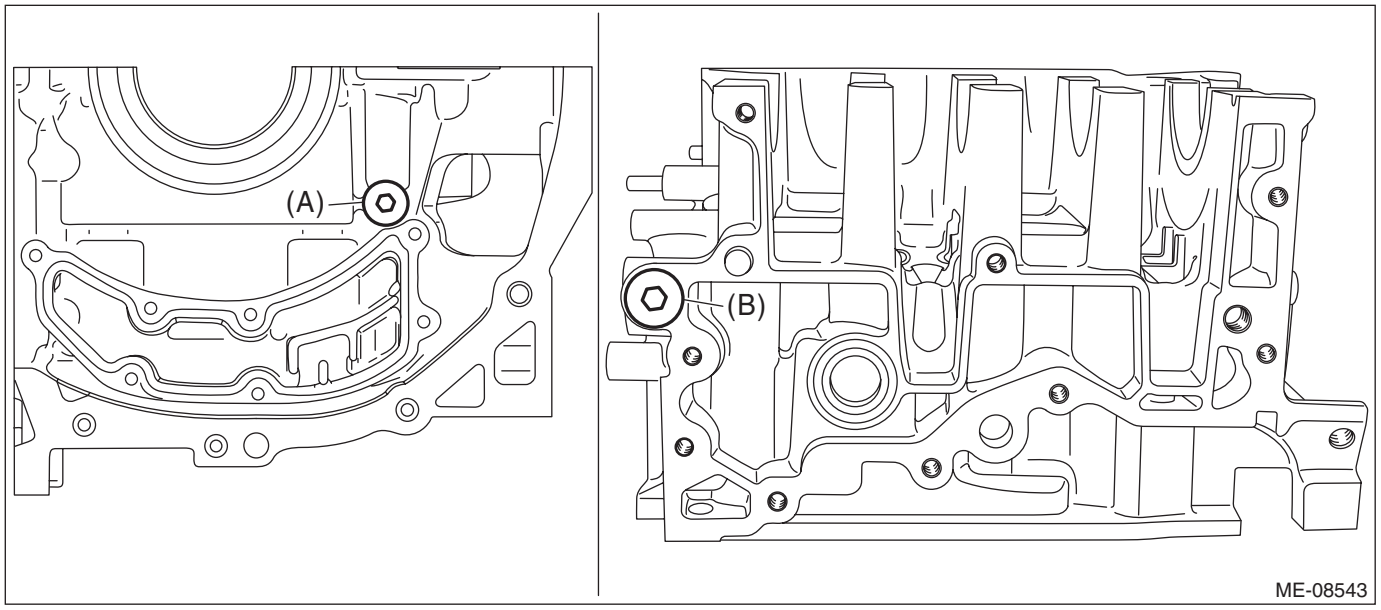

4) Remove the liquid gasket from the thread holes of the cylinder block RH, and from the threaded portions of cylinder block plug and main gallery plug.
5) Remove the cylinder block plate from cylinder block LH.

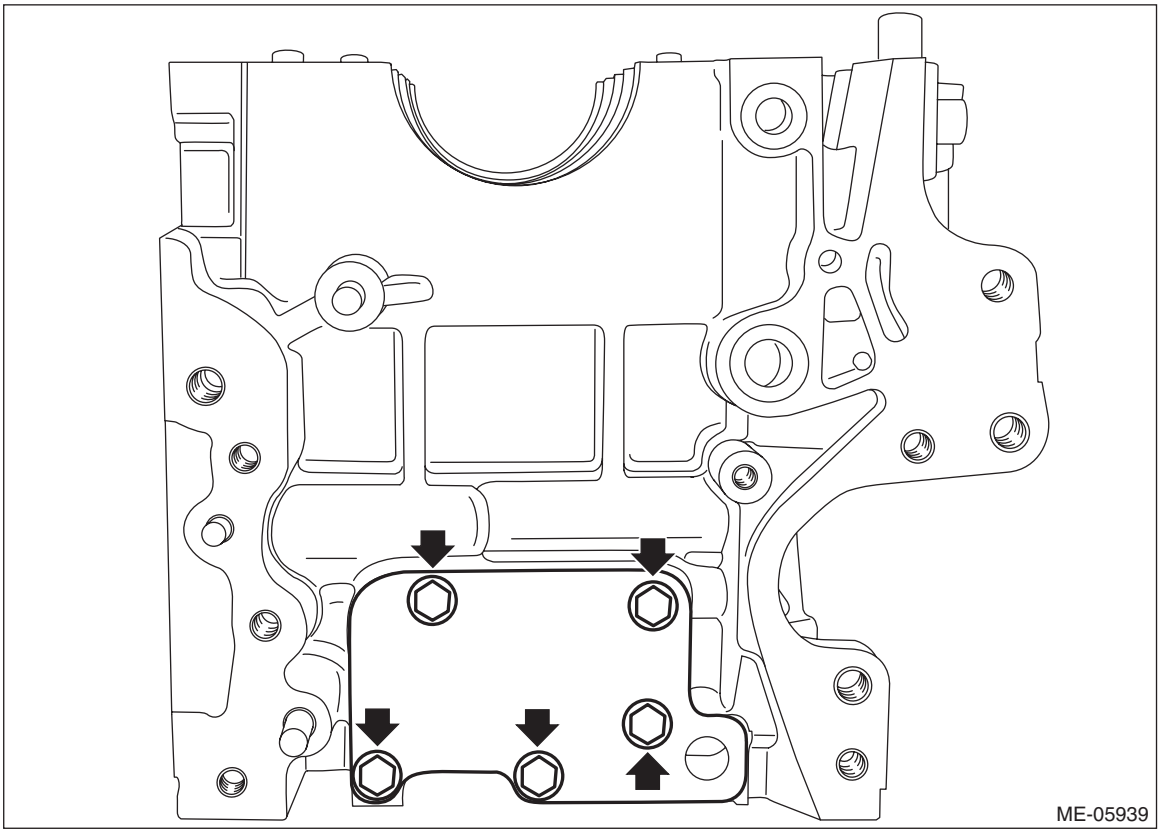

6) Remove the main gallery plug from cylinder block LH.

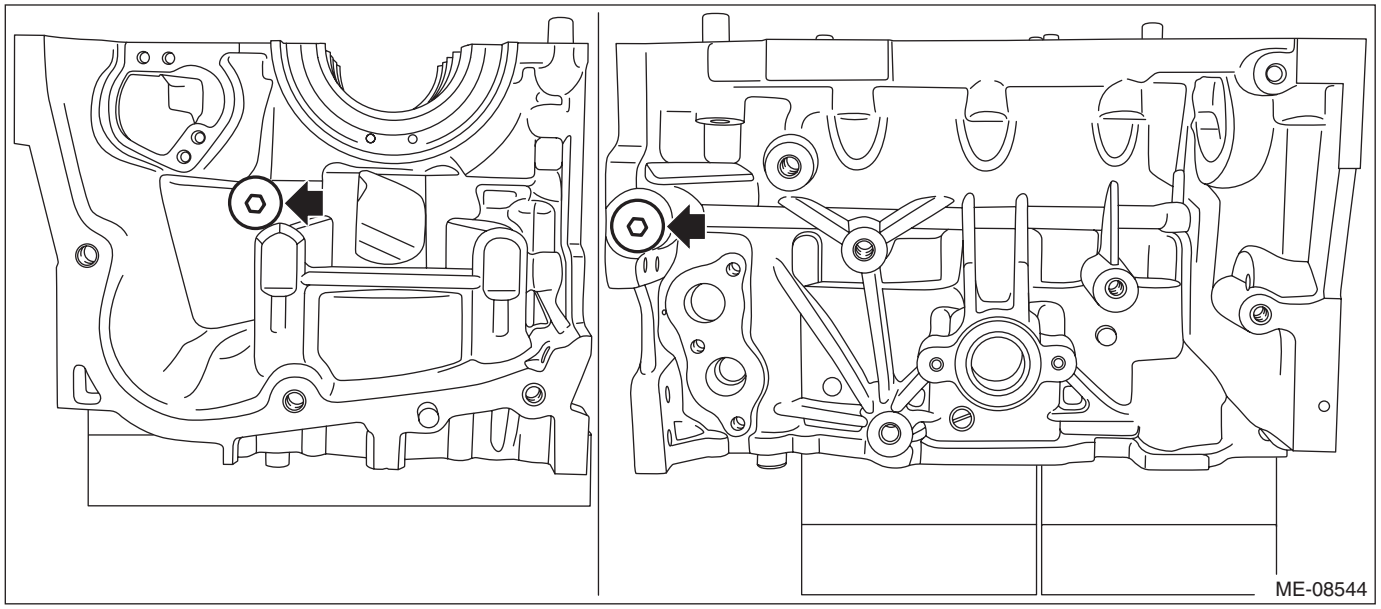

7) Remove the liquid gasket from the thread holes of the cylinder block LH and main gallery plug.

2. PISTON AND CONNECTING ROD

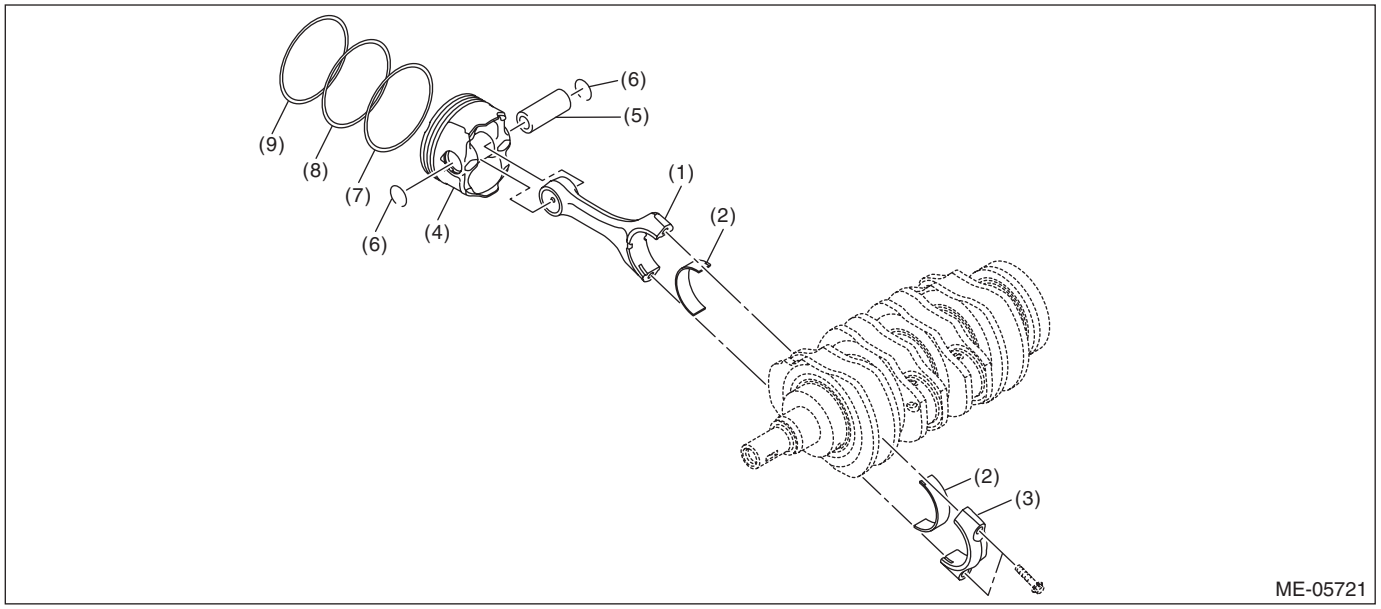

(1) Connecting rod
(2) Connecting rod bearing
(3) Connecting rod cap
(4) Piston
(5) Piston pin
(6) Circlip
(7) Oil ring
(8) Second ring
(9) Top ring

NOTE:
To prevent confusion of various parts, mark each part.
1) Remove the connecting rod bearing from connecting rod and connecting rod cap.
2) Remove the piston rings from the piston.

NOTE:
Arrange the piston rings in order so that they can be installed in their original positions without confusion.
(1) Remove the compression rings in the order of top ring and second ring, using piston ring expander.
(2) Remove the oil rings in the order of upper rail, lower rail and expander by hand.
3) Remove the circlip on one end from the piston using a flat tip screwdriver.

NOTE:
Be careful not damage the piston and piston pin, by wrapping the tip of flat tip screwdriver with tape.
4) Remove the piston pin from piston, and remove the connecting rod from piston.
5) Remove the circlip on other end from the piston using a flat tip screwdriver.

NOTE:
Be careful not damage the piston and piston pin, by wrapping the tip of flat tip screwdriver with tape.

D: ASSEMBLY

1. CYLINDER BLOCK

1) Apply liquid gasket to the threaded portion of the main gallery plug, and install the main gallery plug to the cylinder block LH.

NOTE:
Before applying liquid gasket, degrease the thread holes of the cylinder block LH and main gallery plug.

Liquid gasket:
THREE BOND 1105 (Part No. 004403010) or equivalent

Tightening torque:
37 N·m (3.8 kgf-m, 27.3 ft-lb)

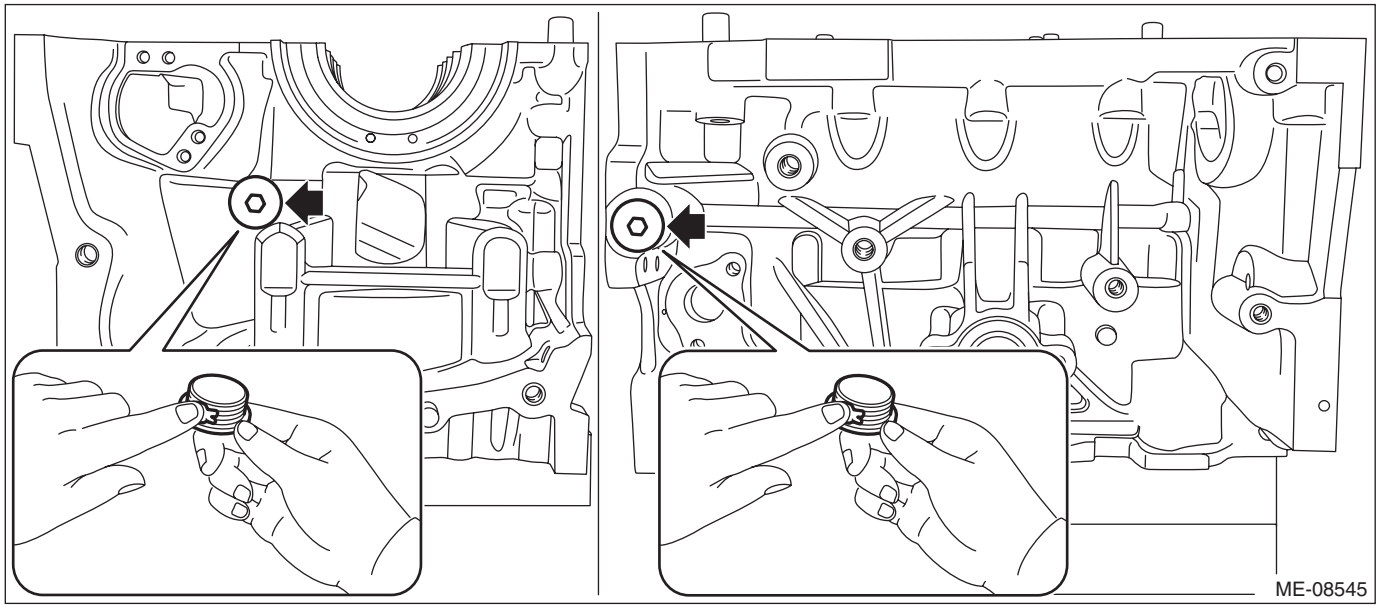

2) Install the cylinder block plate onto cylinder block LH.

Tightening torque:
6.4 N·m (0.7 kgf-m, 4.7 ft-lb)

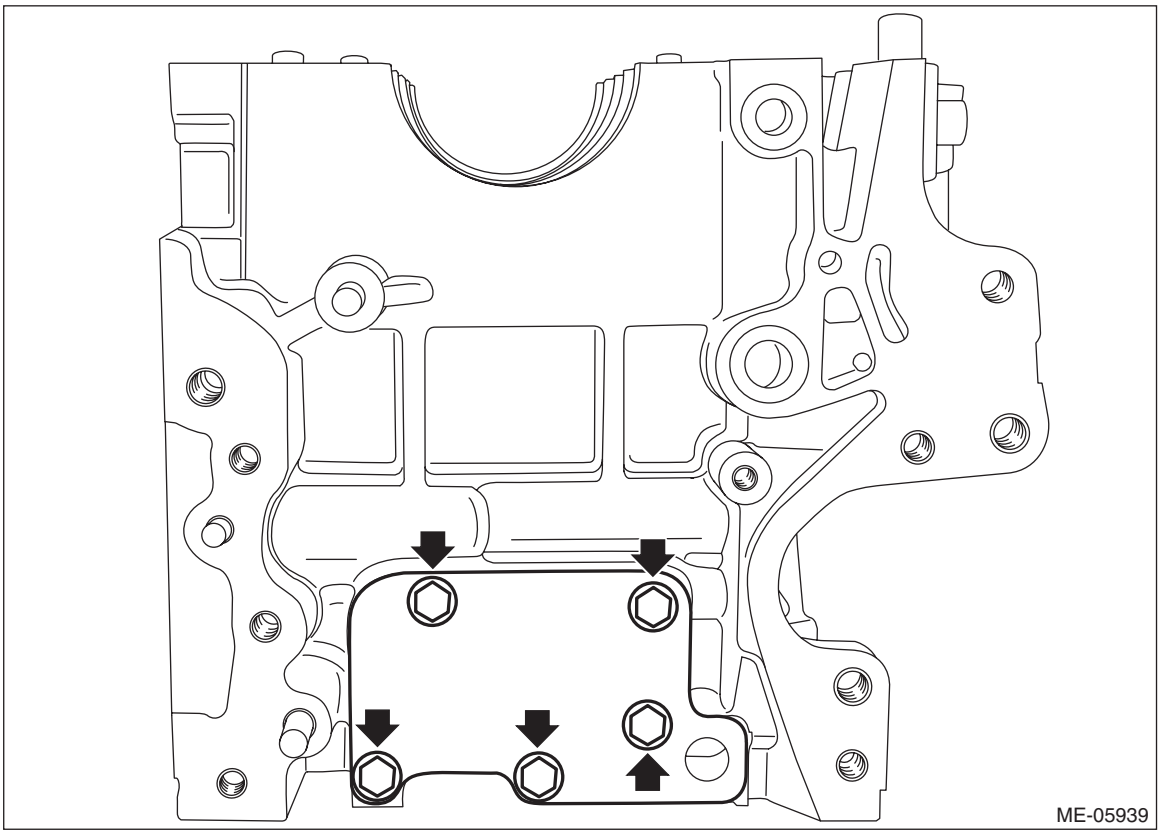

3) Apply liquid gasket to the threaded portions of cylinder block plug and main gallery plug, and install the cylinder block plug (A) and main gallery plug (B) to cylinder block RH.

NOTE:
Before applying liquid gasket, degrease the thread holes of the cylinder block RH, and the threaded portions of cylinder block plug and main gallery plug.

Liquid gasket:
THREE BOND 1105 (Part No. 004403010) or equivalent

Tightening torque:
T1: 16 N·m (1.6 kgf-m, 11.8 ft-lb)
T2: 37 N·m (3.8 kgf-m, 27.3 ft-lb)

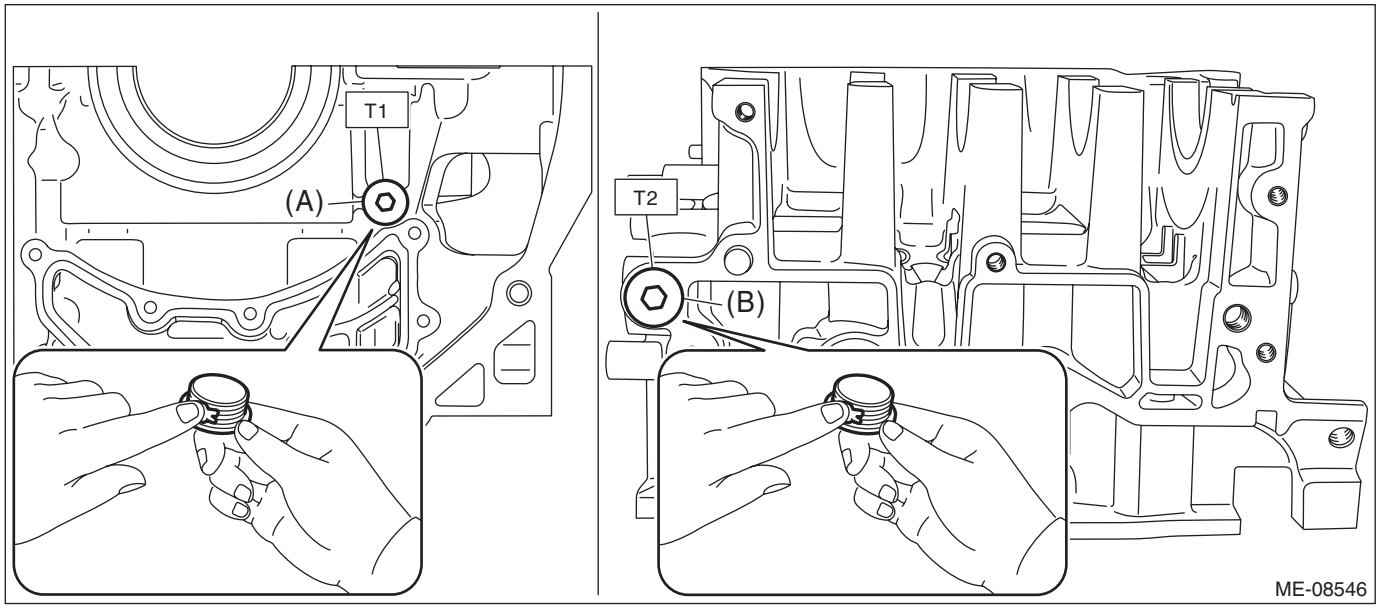

4) Install the oil separator cover to the cylinder block RH.
(1) Apply liquid gasket to the mating surfaces of oil separator cover.

NOTE:
- Use new oil separator cover.
- Before applying liquid gasket, degrease the old liquid gasket seal surface of cylinder block RH.
- Install within 5 min. after applying liquid gasket.

Liquid gasket:
Mating surface
THREE BOND 1217G (Part No. K0877Y0100), THREE BOND 1217H or equivalent

Liquid gasket applying diameter:
4±1 mm (0.1772±0.0197 in)

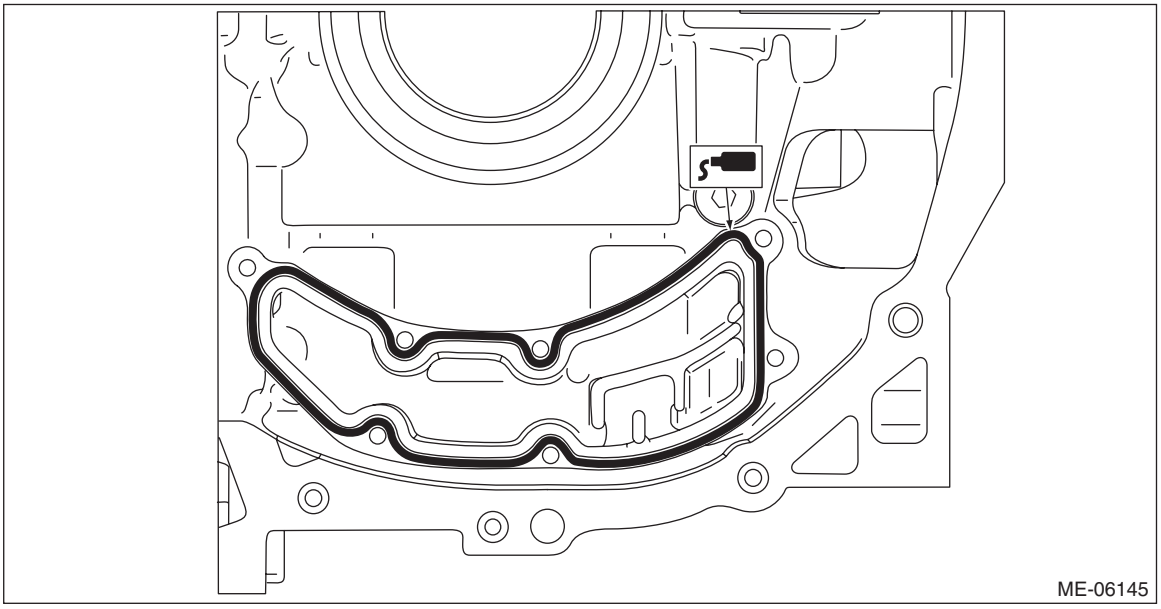

(2) Install the oil separator cover to the cylinder block RH, and tighten the oil separator cover bolts in numerical order as shown in the figure.

Tightening torque:
6.4 N·m (0.7 kgf-m, 4.7 ft-lb)

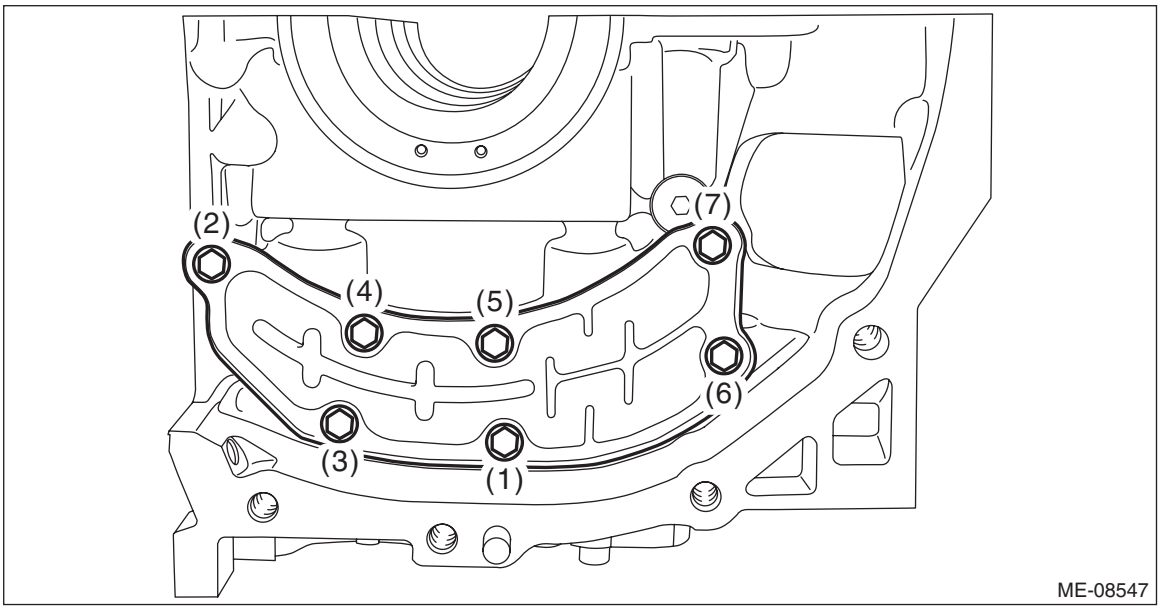

2. PISTON AND CONNECTING ROD

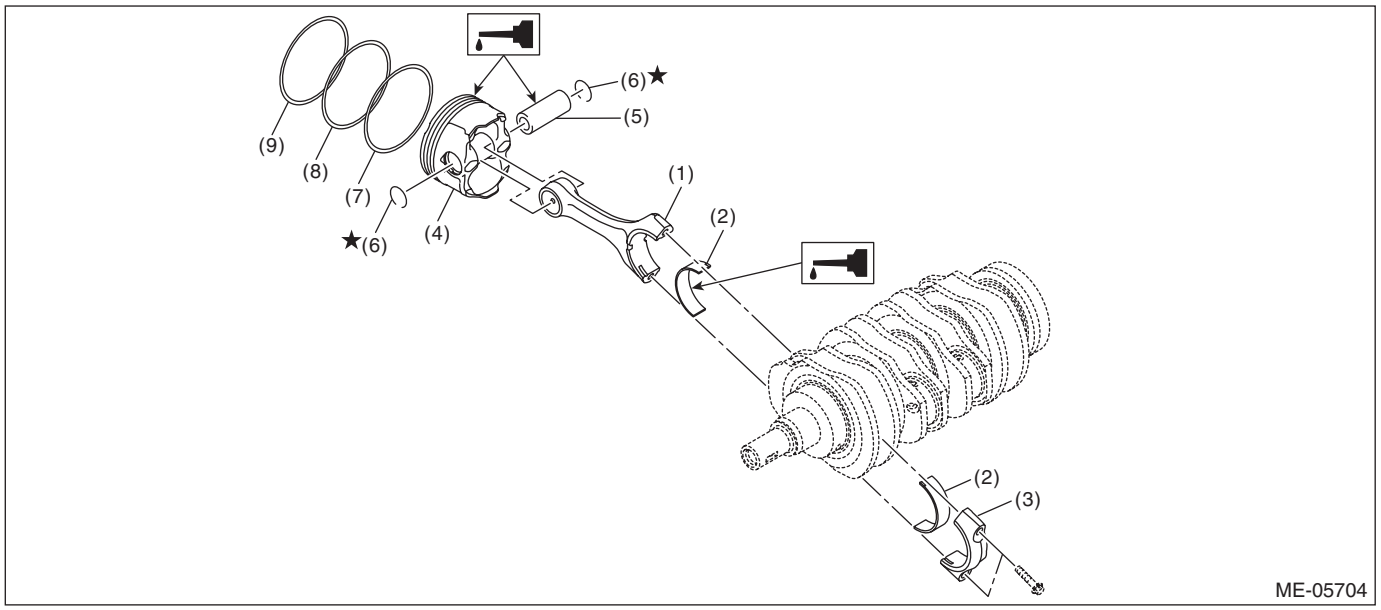

(1)	Connecting rod	(4)	Piston	(7)	Oil ring
(2)	Connecting rod bearing	(5)	Piston pin	(8)	Second ring
(3)	Connecting rod cap	(6)	Circlip	(9)	Top ring

1) Install the connecting rod bearing to the connecting rod and connecting rod cap.

2) Install the circlip on one end of the piston using a flat tip screwdriver.

NOTE:
- Be careful not damage the piston, by wrapping the tip of flat tip screwdriver with tape.
- Make sure the circlip is firmly inserted into the circlip groove.
- After installing the circlip, rotate the circlip so that its end part (a) and the cutout portion of circlip groove (b) do not match.

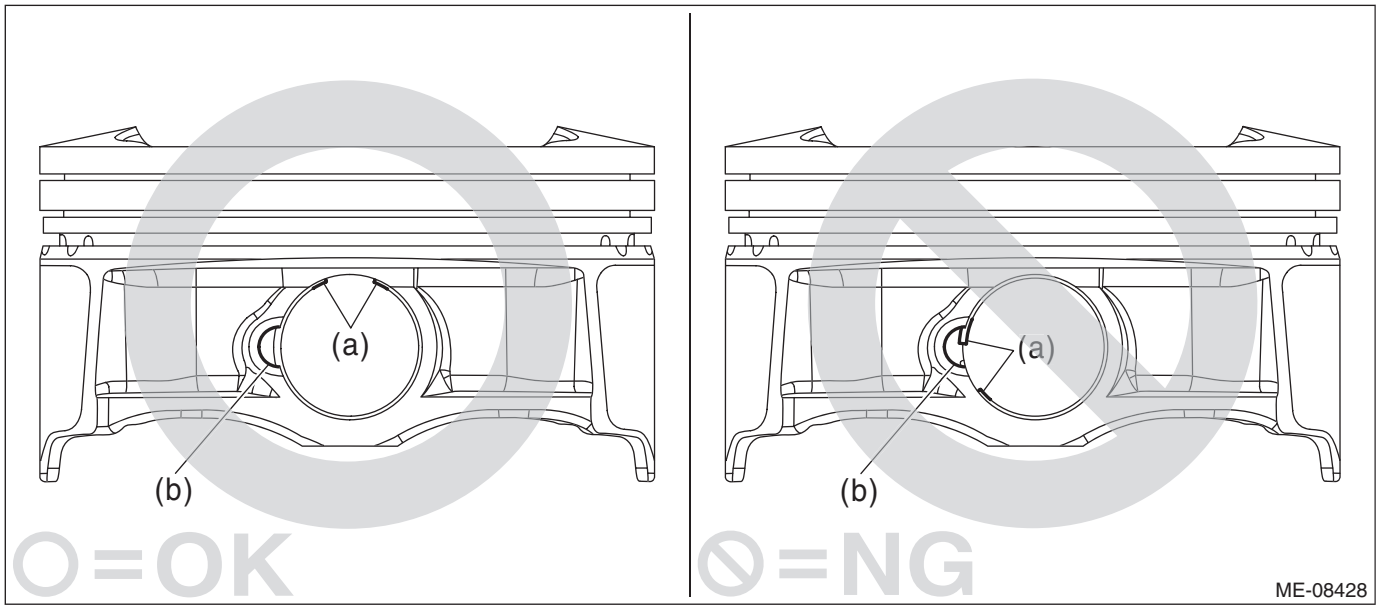

3) Set the piston to the connecting rod.

NOTE:
Align the front mark of piston and the connecting rod direction correctly as shown in the figure.

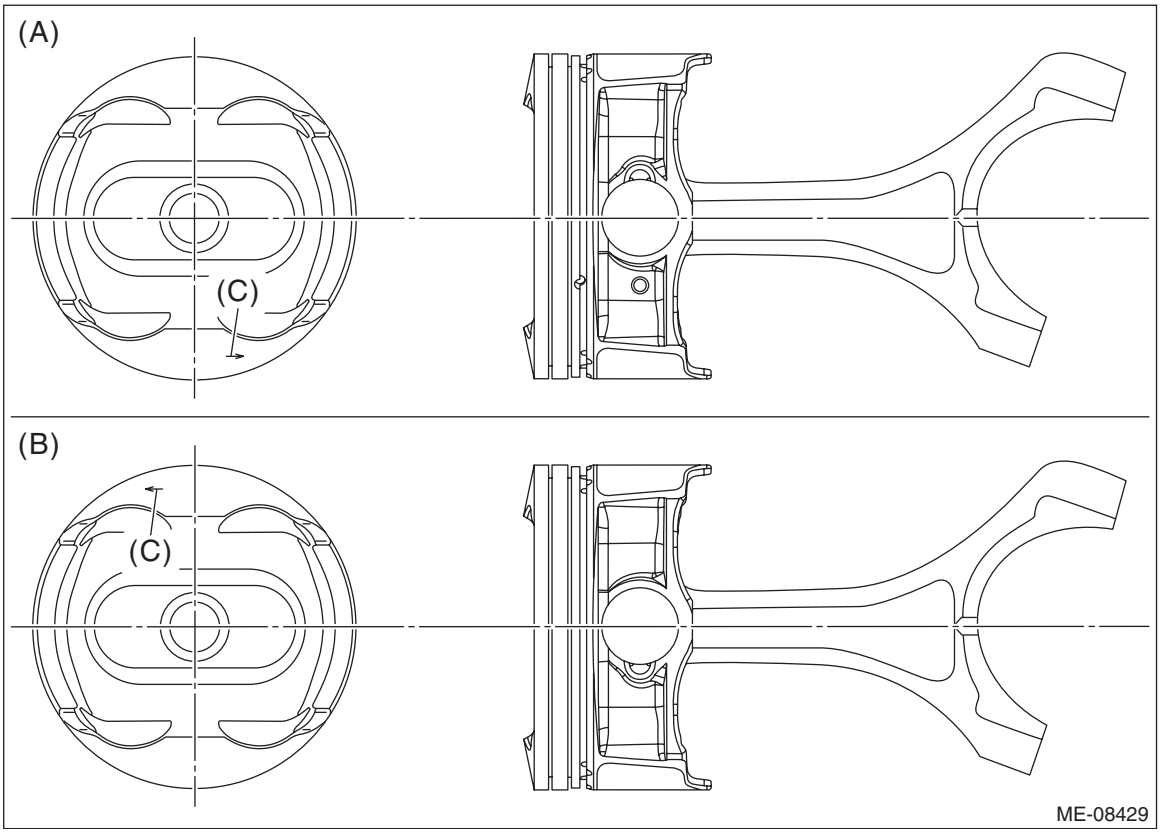

(A) RH side (#1 and #3) (B) LH side (#2 and #4) (C) Front mark

4) Apply engine oil to the piston pin, and attach the piston pin.
5) Install the circlip on the piston using a flat tip screwdriver.

NOTE:
- Be careful not damage the piston and piston pin, by wrapping the tip of flat tip screwdriver with tape.
- Make sure the circlip is firmly inserted into the circlip groove.
- After installing the circlip, rotate the circlip so that its end part (a) and the cutout portion of circlip groove (b) do not match.

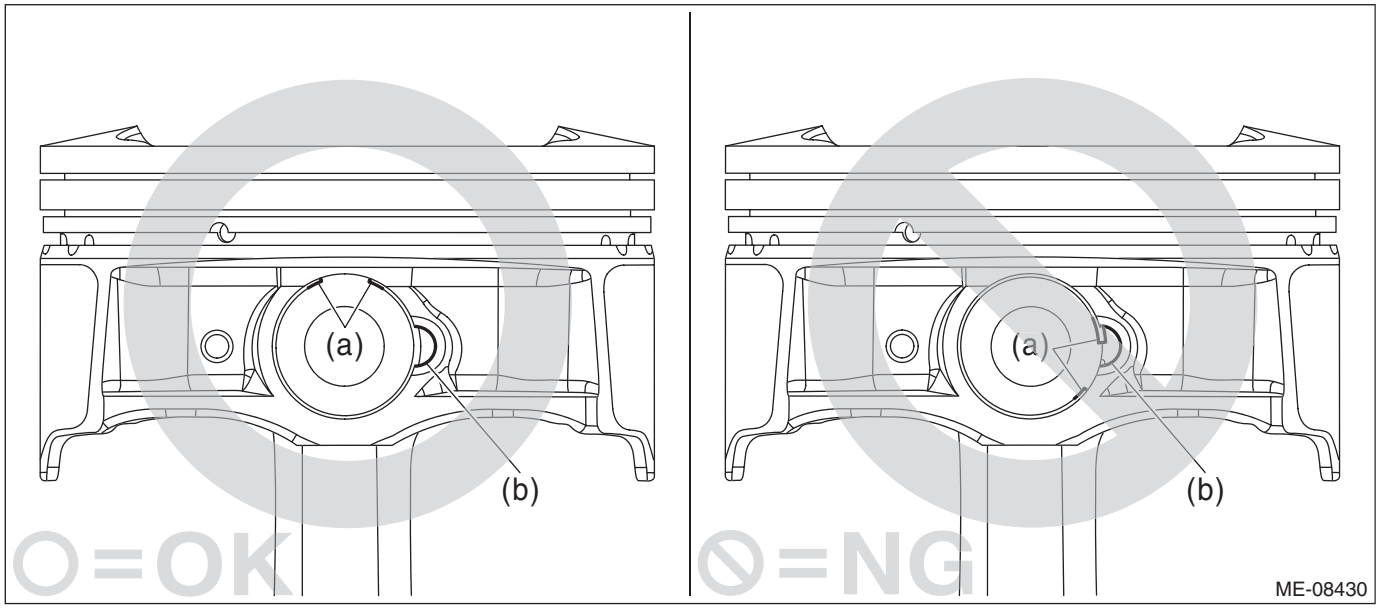

6) Install the piston rings onto the piston.
(1) Install the oil rings in the order of expander, lower rail and upper rail by hand.

NOTE:
Oil ring consists of the upper rail, expander and lower rail.

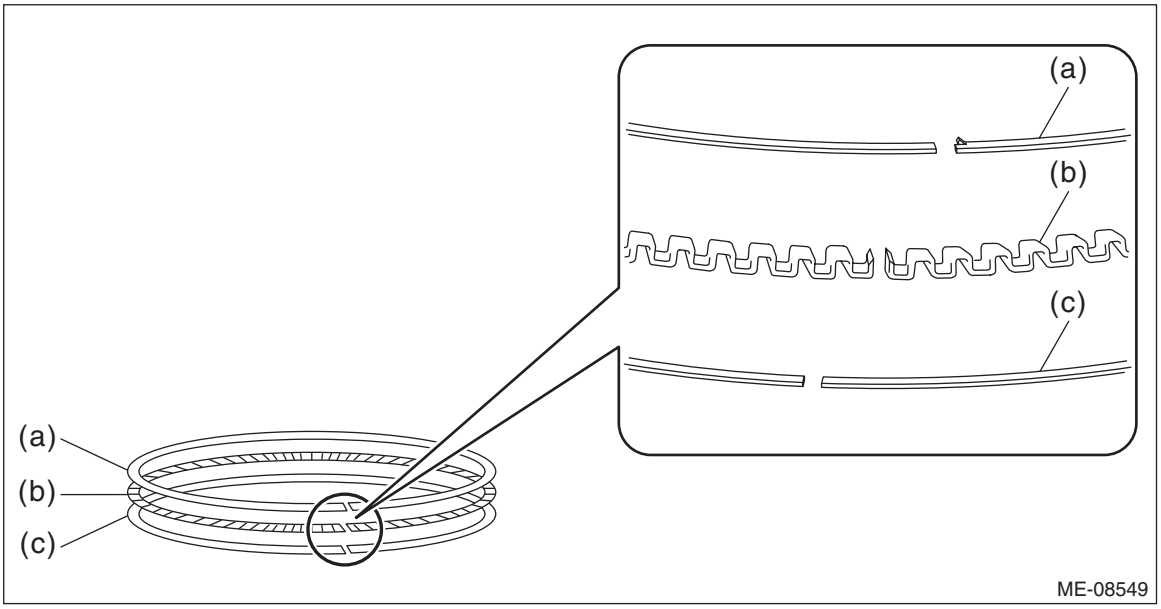

(a) Upper rail (b) Expander (c) Lower rail

(2) Install the compression rings in the order of second ring and top ring, using piston ring expander.

NOTE:
Install so that the compression ring mark faces the top side of the piston.

E: INSPECTION

1. CYLINDER BLOCK & PISTON

1) Visually inspect to make sure that there are no cracks, scratches or other damage.
2) Use liquid penetrant tester on the important sections to check for fissures.
3) Check that there are no traces of gas leaking or water leaking on the gasket attachment surface.
4) Check the oil passages for clogging.
5) Check for warpage of mating surfaces of the cylinder block that contacts cylinder head using a straight edge and thickness gauge. If it exceeds the limit, correct the surface by grinding it with a surface grinder or replace the cylinder block.

NOTE:
Measurement should be performed at a temperature of 20°C (68°F).

Cylinder block warpage:
Limit
0.025 mm (0.00098 in)

Grinding limit of cylinder block :
To 204.9 mm (8.067 in)

Height of cylinder block:
Standard
205.0 mm (8.071 in)

6) Using a cylinder bore gauge, check the cylindricality and out-of-roundness of cylinder liner. If it is not within the standard, perform reboring (including honing), or replace the cylinder block and piston as a set. For reboring and honing procedure, refer to step 8).

NOTE:
- Measure the cylinder liner with cylinder blocks separated (into cylinder block RH and cylinder block LH).
- Measurement should be performed at a temperature of 20°C (68°F).
- Write down all measurement values as the values are used in the next procedure.
- Measure the inner diameter of each cylinder liner in both the thrust and piston pin directions at the heights as shown in the figure.

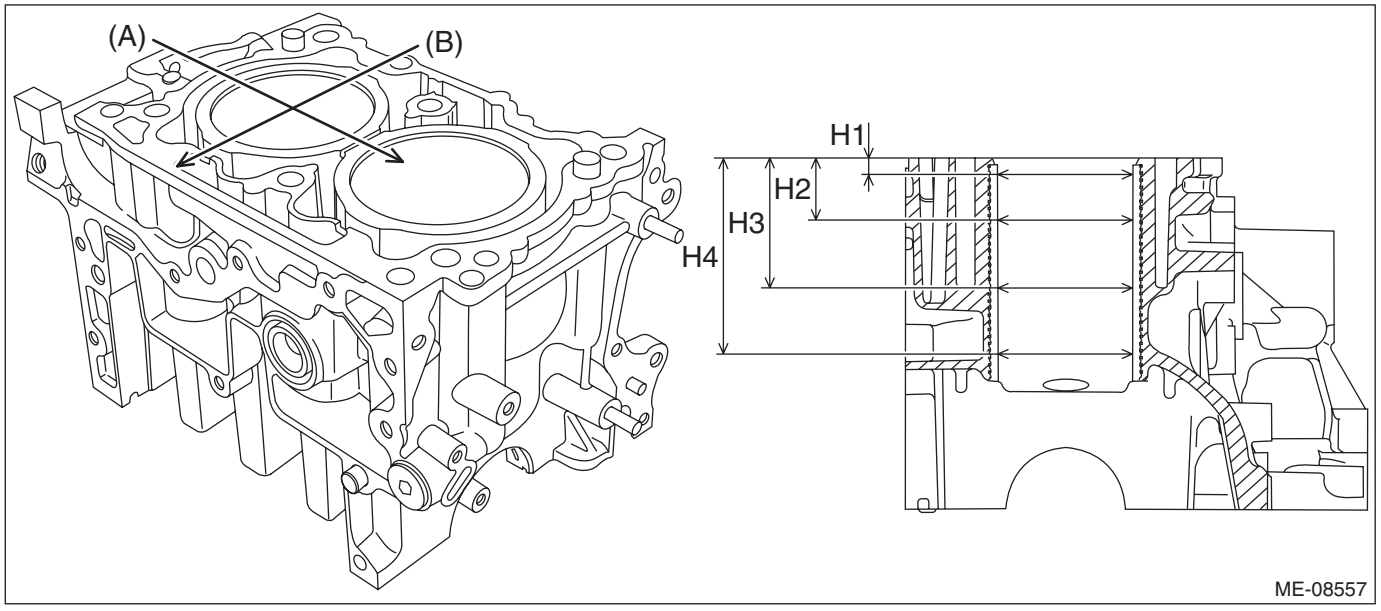

(A) Piston pin direction
(B) Thrust direction
H1: 10 mm (0.3937 in)
H2: 45 mm (1.7717 in)
H3: 80 mm (3.1496 in)
H4: 105 mm (4.1339 in)

• Calculate the cylindricality of cylinder liner by using the following formula.

Calculation formula
C = The larger value between the calculation values C' and C'' C' = (D (a)–D (b))/2 C'' = (D (c)–D (d))/2
C: Cylindricality of cylinder liner D (a): The largest value of all the values obtained by measuring the cylinder liner inner diameter in the direction of the piston pin D (b): The smallest value of all the values obtained by measuring the cylinder liner inner diameter in the direction of the piston pin D (c): The largest value of all the values obtained by measuring the cylinder liner inner diameter in the thrust direction D (d): The smallest value of all the values obtained by measuring the cylinder liner inner diameter in the thrust direction

• Calculate the out-of-roundness of cylinder liner at each measurement height by using the following formula.

Calculation formula
R = (D(e)–D(f))/2
R: Out-of-roundness of cylinder liner D(e): The larger value between the measurement values in the piston pin direction and in the thrust direction of cylinder liner inner diameter D(f): The smaller value between the measurement values in the piston pin direction and in the thrust direction of cylinder liner inner diameter

Cylindricality of cylinder liner:

Limit

0.030 mm (0.0012 in)

Out-of-roundness of cylinder liner:

Limit

0.030 mm (0.0012 in)

7) Check the clearance between cylinder liner and piston. Check the clearance between cylinder liner and piston by measuring the inner diameter of cylinder liner and the outer diameter of piston respectively.

(1) Measure the inner diameter of cylinder liner. If it is not within the standard, perform reboring (including honing), or replace the cylinder block and piston as a set. For reboring and honing procedure, refer to step 8).

NOTE:
- Measure the cylinder liner with cylinder blocks separated (into cylinder block RH and cylinder block LH).
- Measurement should be performed at a temperature of 20°C (68°F).
- The cylinder bore size mark is stamped on the upper face of the cylinder block.

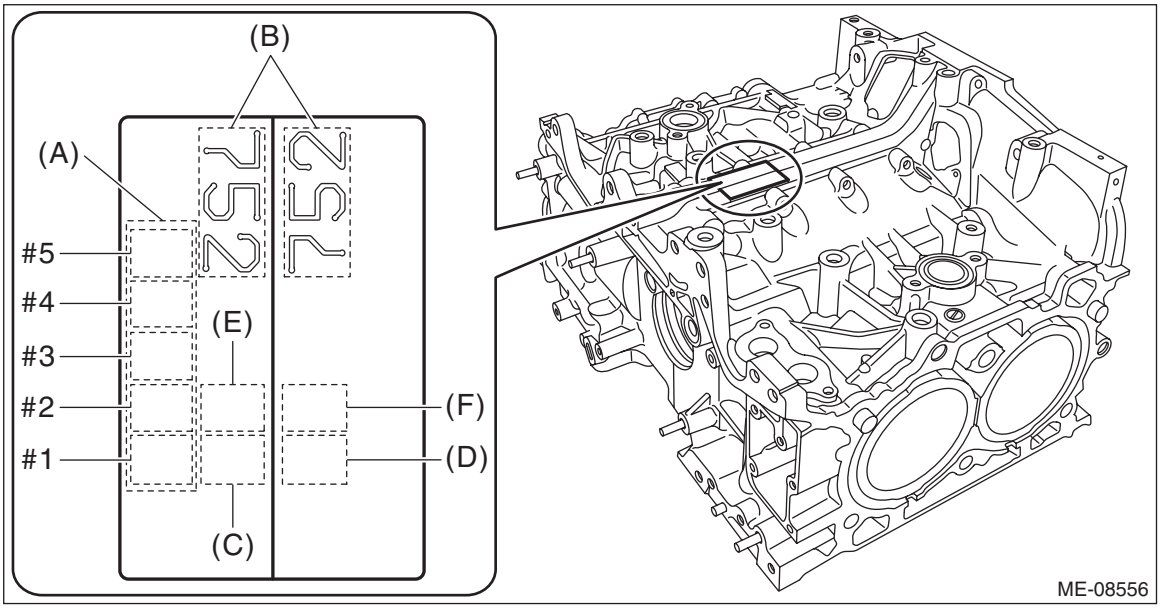

(A) Main journal size mark
(B) Cylinder block (RH) – (LH) combination mark
(C) #1 cylinder bore size mark
(D) #2 cylinder bore size mark
(E) #3 cylinder bore size mark
(F) #4 cylinder bore size mark

- Measure the inner diameter of each cylinder liner in both the thrust and piston pin directions at the heights as shown in the figure and read the value of the most worn location.

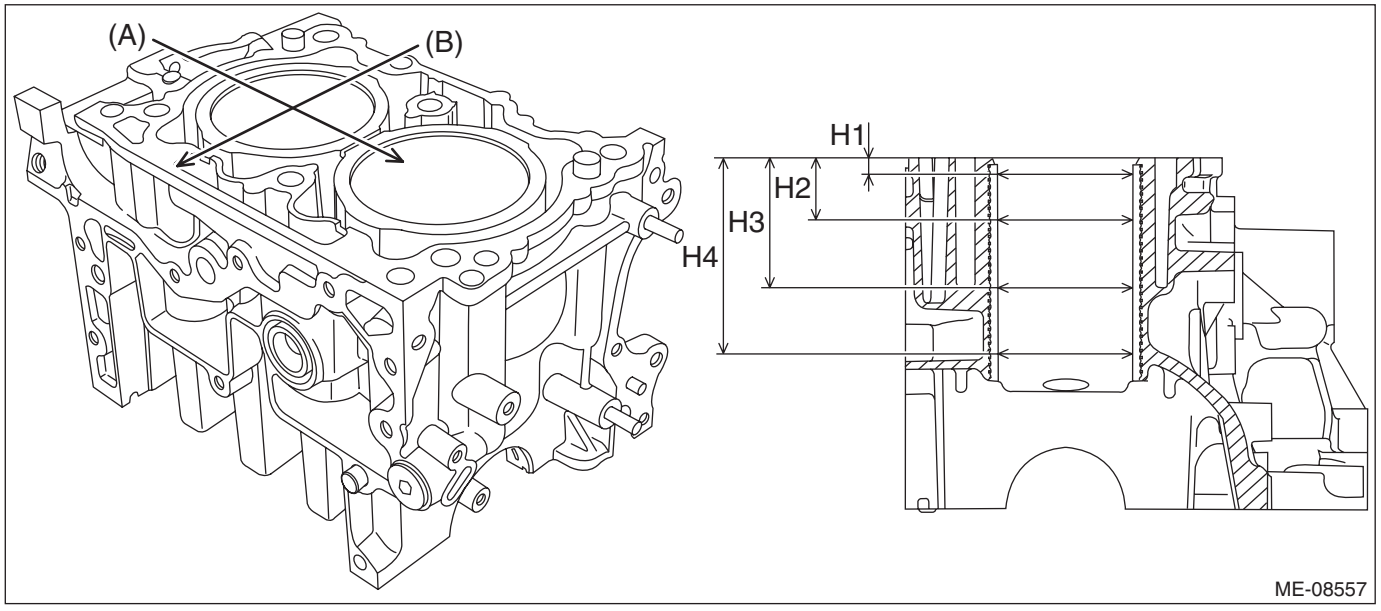

(A) Piston pin direction
(B) Thrust direction

H1: 10 mm (0.3937 in)
H2: 45 mm (1.7717 in)
H3: 80 mm (3.1496 in)
H4: 105 mm (4.1339 in)

Inner diameter of cylinder liner:
Cylinder bore size mark A
Standard
94.005 — 94.015 mm (3.7010 — 3.7014 in)
Cylinder bore size mark B
Standard
93.995 — 94.005 mm (3.7006 — 3.7010 in)

(2) Check the outer diameter of piston with a micrometer. If it is not within the standard, replace the piston.

NOTE:
- Measurement should be performed at a temperature of 20°C (68°F).
- Measure the outer diameter of each piston in thrust direction at the height as shown in the figure.
- Standard sized pistons are classified into two grades, “A” and “B”. These grades should be used as guide lines in selecting a standard piston.
- The grade can be judged by the stamp of cylinder bore size mark on the upper face of the cylinder block.

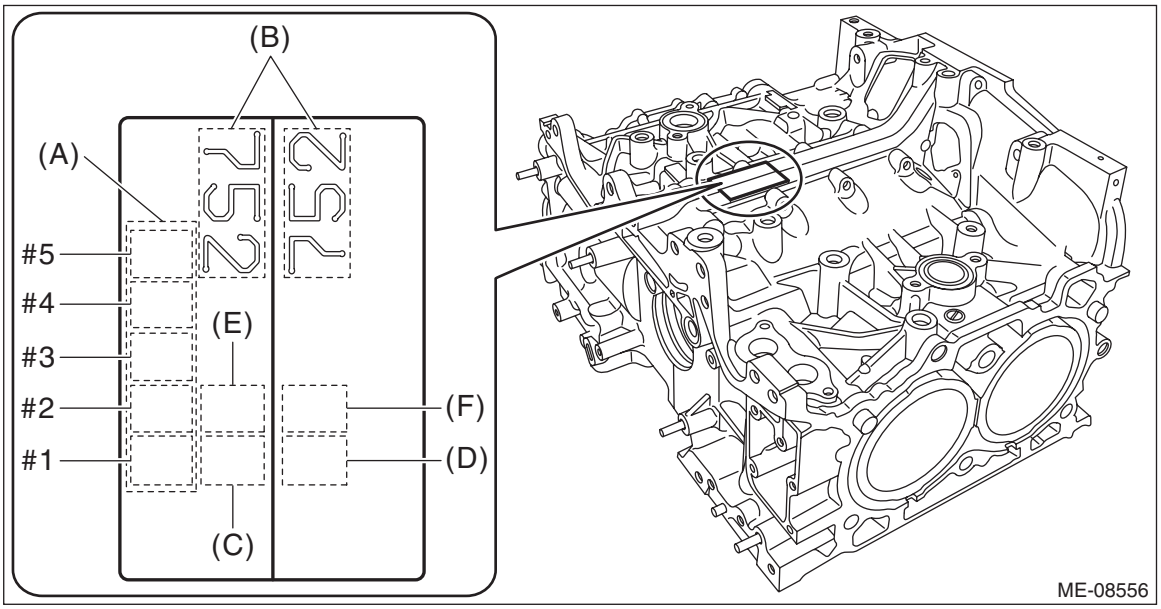

(A)	Main journal size mark	(C)	#1 cylinder bore size mark	(E)	#3 cylinder bore size mark
(B)	Cylinder block (RH) – (LH) combination mark	(D)	#2 cylinder bore size mark	(F)	#4 cylinder bore size mark

• If the piston is replaced, check the clearance between cylinder liner and piston in the step (3), and select a suitable sized piston.

Piston grade point H:
13.3 mm (0.52 in)

Piston outer diameter:
Standard size (grade A = cylinder bore size mark A)
Standard
93.980 — 93.990 mm (3.7000 — 3.7004 in)
Standard size (grade B = cylinder bore size mark B)
Standard
93.970 — 93.980 mm (3.6996 — 3.7000 in)

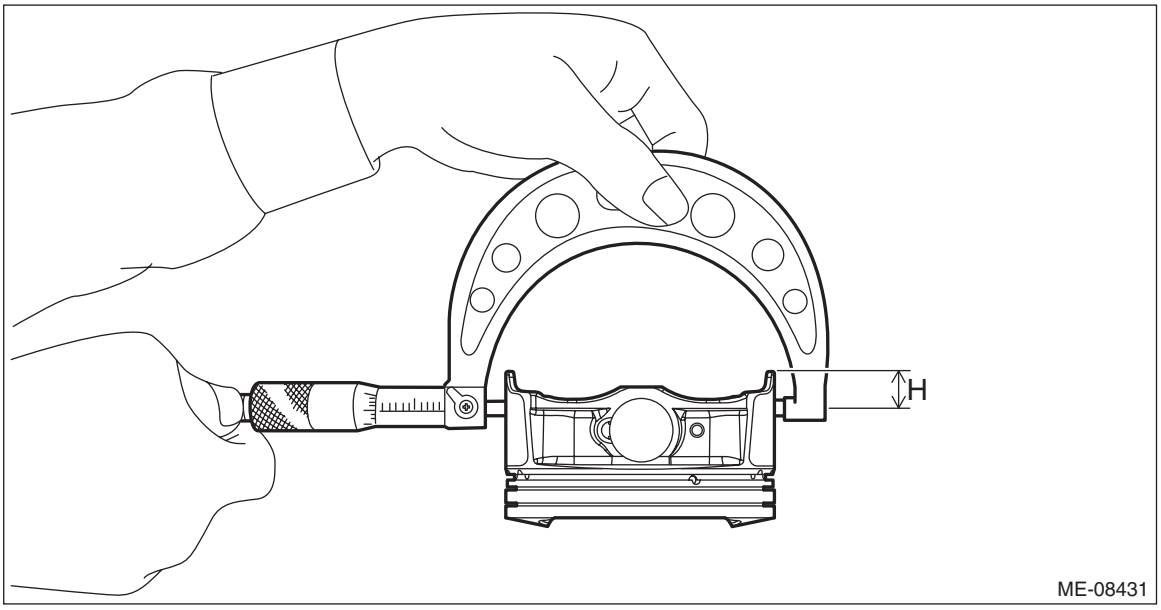

(3) Calculate the clearance between cylinder liner and piston. If it is not within the standard, perform reboring (including honing), or replace the cylinder block and piston as a set. For reboring and honing procedure, refer to step 8).

NOTE:
The clearance between cylinder liner and piston is decided by matching the cylinder block bore size mark and the grade of piston outer diameter (grade A or B).

Clearance between cylinder liner and piston:
Standard
0.015 — 0.035 mm (0.00059 — 0.00138 in)

8) Reboring and honing
(1) If any of the cylindricality, out-of-roundness, inner diameter or clearance between cylinder liner and piston is out of standard or if there is any damage on the cylinder liner, perform reboring (including honing).

CAUTION:
When any of the cylinder liner needs reboring, all other cylinder liners must be rebored at the same time, and replaced with proper size pistons.

Oversize piston outer diameter:
0.25 mm (0.0098 in) oversize
Standard
94.220 — 94.240 mm (3.7094 — 3.7102 in)
0.50 mm (0.0197 in) oversize
Standard
94.470 — 94.490 mm (3.7193 — 3.7201 in)

(2) If the inner diameter of cylinder liner exceeds the limit after reboring (including honing), replace the cylinder block and piston as a set.

NOTE:
• Immediately after reboring (including honing), the inner diameter of cylinder liner may differ from its real diameter due to temperature rise. Thus, when measuring the inner diameter of cylinder liner, wait until the temperature has cooled to 20°C (68°F).
• For the measurement of the inner diameter of cylinder liner, refer to step 7).

Inner diameter of cylinder liner boring limit (diameter):
To 94.505 mm (3.7207 in)

2. PISTON AND PISTON PIN

1) Check the piston and piston pin for wear or crack.
2) Check the snap ring for distortion or wear.
3) Check the piston ring groove for damage.
4) Check the circlip groove (A) for burr.

NOTE:
If the burr is found, remove the burr from groove.

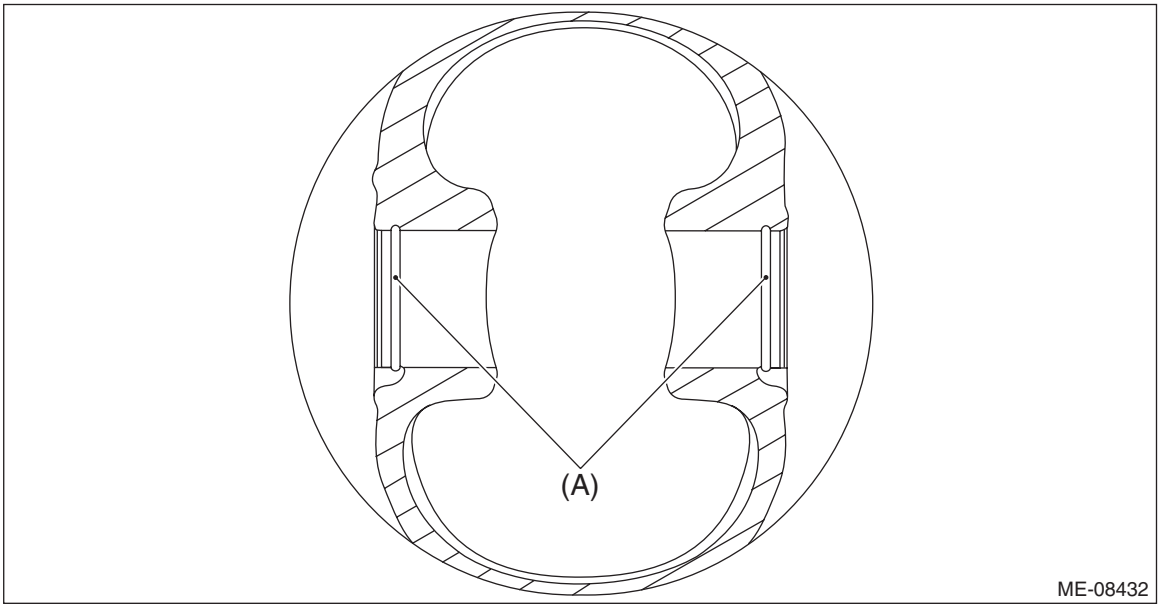

5) Check that the piston pin can be inserted into the piston with a thumb at 20°C (68°F).
6) Check the clearance between piston and piston pin. Check the clearance between piston and piston pin by measuring the inner diameter of piston pin hole and the outer diameter of piston pin respectively.
(1) Using a caliper gauge, measure the inner diameter of piston pin hole.

NOTE:
- Measurement should be performed at a temperature of 20°C (68°F).
- Measure the inner diameter of the piston pin hole at the four locations as shown in the figure, and read the value of most worn location.
- Record the measured value.

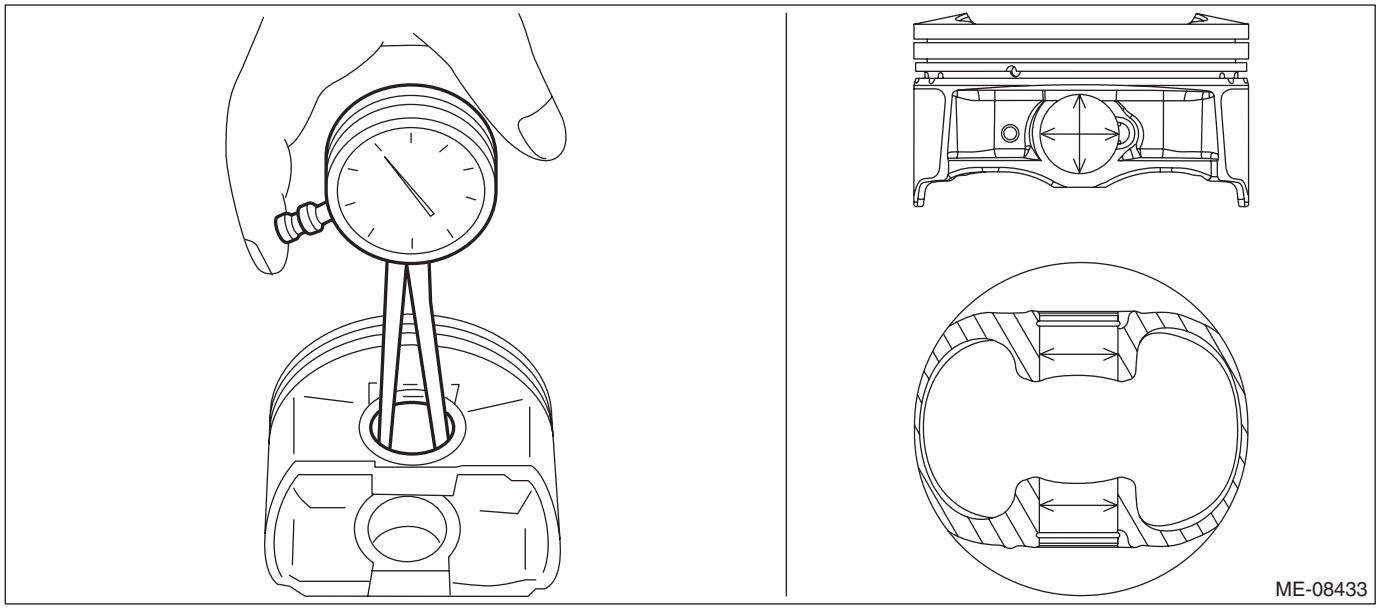

(2) Measure the outer diameter of piston pin with a micrometer.

NOTE:
- Measurement should be performed at a temperature of 20°C (68°F).
- Measure the outer diameter of the piston pin at the four locations as shown in the figure, and read the value of most worn location.
- Record the measured value.

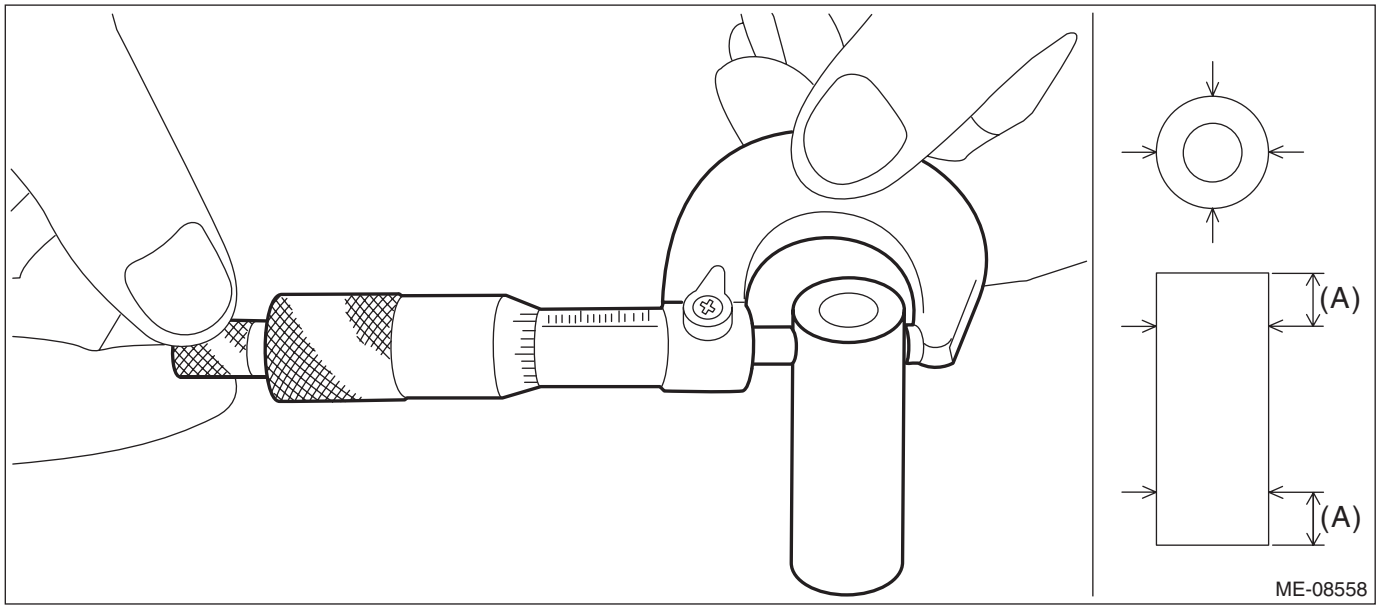

(A) 10 mm (0.394 in)

(3) Calculate the clearance between piston and piston pin. If it is not within the standard, replace the piston and piston pin as a set.

Clearance between piston and piston pin:
Standard
0.004 — 0.008 mm (0.0002 — 0.0003 in)

3. PISTON RING

1) Make sure the piston ring is not broken or damaged.
2) Using a cylindrical guide, insert the piston ring into the cylinder liner so that they are perpendicular to the cylinder wall, and check the piston ring gap using a thickness gauge. If it is not within the standard, replace the piston ring.

NOTE:
- Measurement should be performed at a temperature of 20°C (68°F).
- Use piston ring with same size as piston when replacing piston ring.

Piston ring gap:
Compression ring (top ring)
Standard
0.20 — 0.25 mm (0.0079 — 0.0098 in)
Compression ring (second ring)
Standard
0.25 — 0.35 mm (0.0098 — 0.0138 in)
Oil ring (upper rail and lower rail)
Standard
0.10 — 0.35 mm (0.0039 — 0.0138 in)

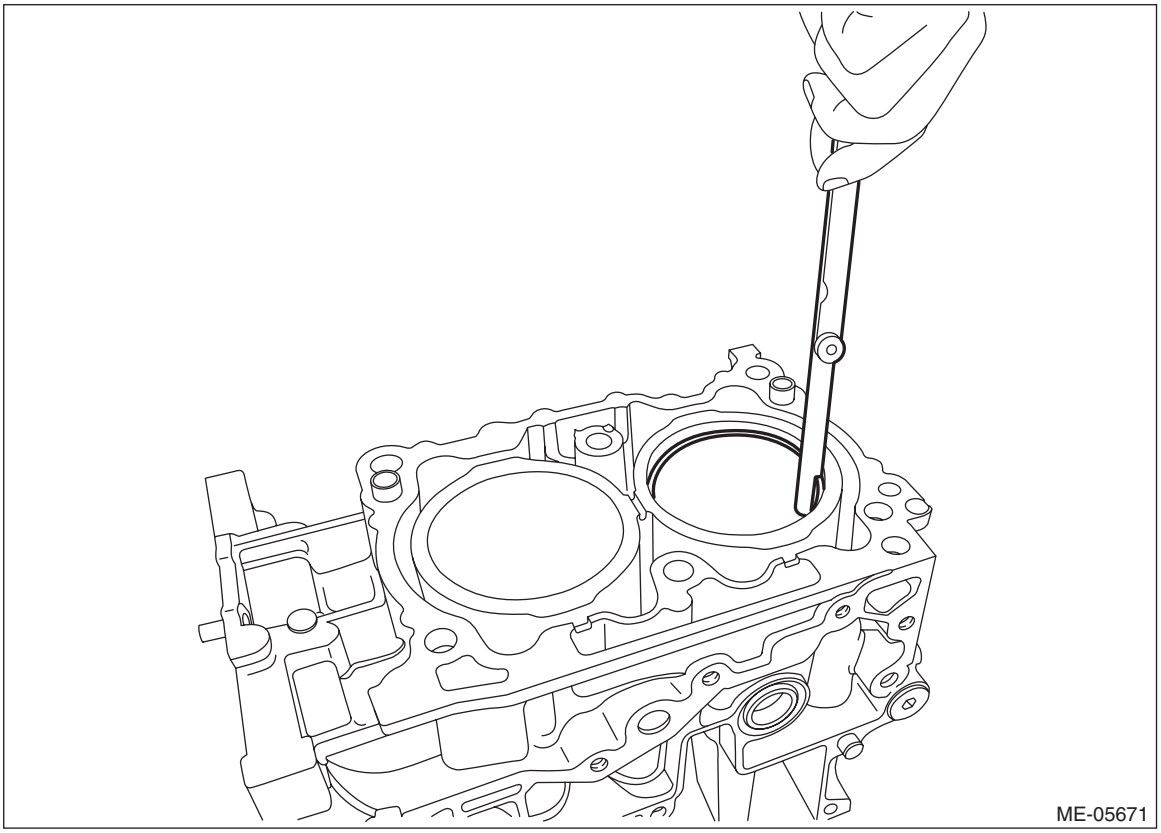

3) Fit the compression ring straight into the piston ring groove, then check the clearance between compression ring and piston with a thickness gauge. If it is not within the standard, replace the compression ring.

NOTE:
- Measurement should be performed at a temperature of 20°C (68°F).
- Before inspecting the clearance, clean the piston ring groove and compression ring.
- Use compression ring with same size as piston when replacing compression ring.

Clearance between compression ring and piston:
Top ring
Standard
0.040 — 0.080 mm (0.0016 — 0.0031 in)
Second ring
Standard
0.030 — 0.070 mm (0.0012 — 0.0028 in)

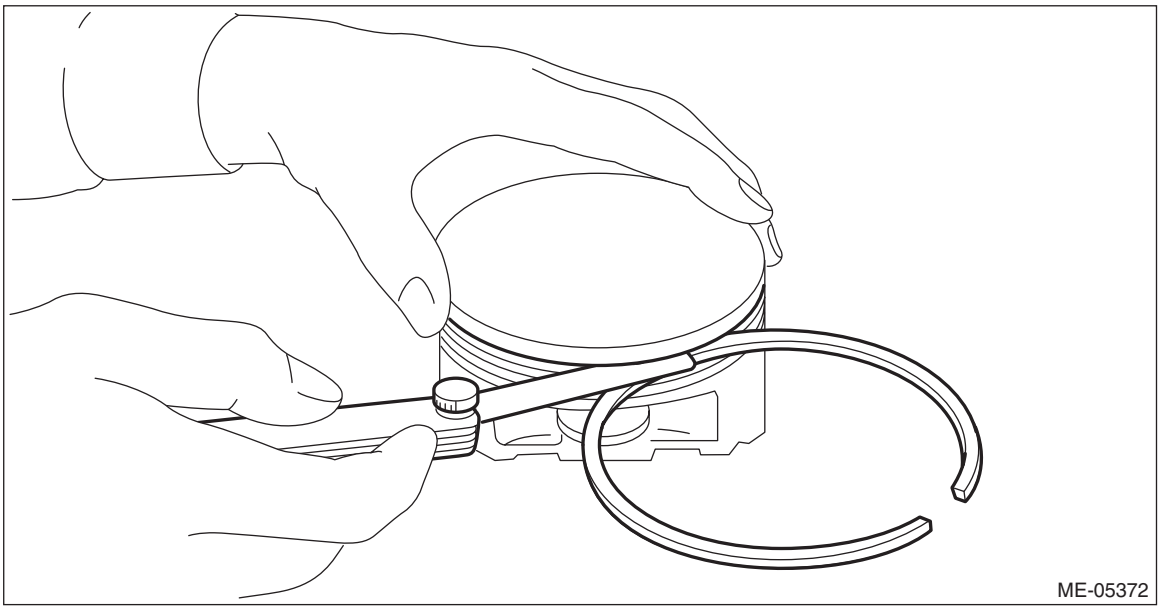

4. CONNECTING ROD AND CONNECTING ROD BEARING

1) Check for bend or twist using a connecting rod aligner. If it exceeds the limit, replace the connecting rod.

NOTE:
Measurement should be performed at a temperature of 20°C (68°F).

Bend or twist per 100 mm (3.94 in) in length:
Limit
0.10 mm (0.0039 in)

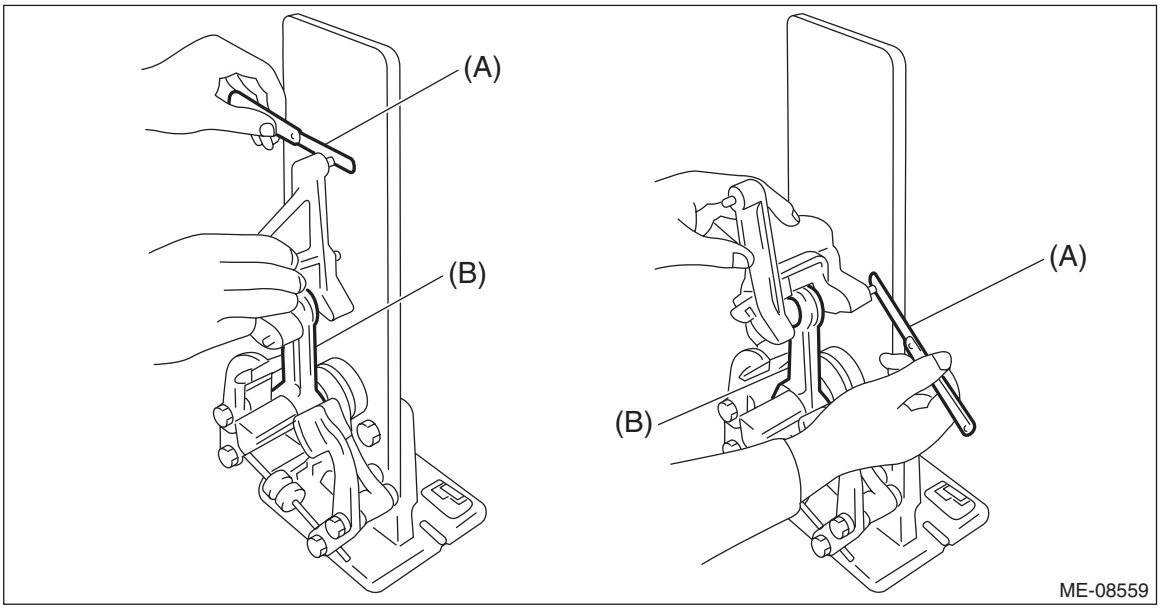

(A) Thickness gauge (B) Connecting rod

2) Check that the large or small end thrust surface of each connecting rod is not damaged.
3) Remove carbon and sludge adhering to the inner wall of each connecting rod large end.
4) Check each connecting rod bearing for scar, peeling, seizure, melting or wear, etc.
5) Check the thrust clearance of each connecting rod using a thickness gauge.

NOTE:
Measurement should be performed at a temperature of 20°C (68°F).

(1) Clean the #1 connecting rod bearing and the #1 pin of crankshaft, and apply engine oil to the #1 pin of crankshaft.
(2) Set the #1 connecting rod bearing to the #1 connecting rod and #1 connecting rod cap.
(3) Set the #1 connecting rod, #1 connecting rod cap and #1 connecting rod cap bolt to the #1 pin of crankshaft.

NOTE:
• Each connecting rod has its own mating cap. Make sure that they are assembled correctly by checking their matching symbol.
• Use a new connecting rod cap bolt.
• Apply a coat of engine oil to the #1 connecting rod cap bolt thread.

(4) Using ST, tighten the #1 connecting rod cap bolts to 10 N·m (1.0 kgf-m, 7.4 ft-lb) in numerical order as shown in the figure, then retighten the bolts to 22 N·m (2.2 kgf-m, 16.2 ft-lb) in numerical order as shown in the figure.

CAUTION:
- **Make sure to hold the crankshaft securely during work.**
- **When holding the crankshaft, be careful not to damage the crankshaft.**

ST 18270AA020 SOCKET

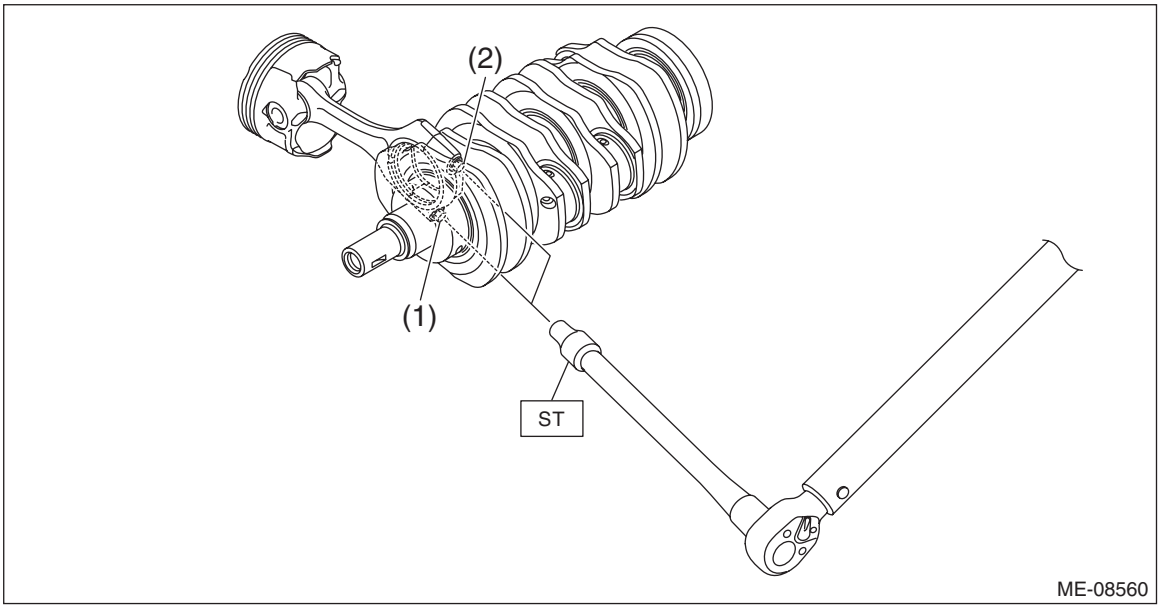

(5) Using ST and angle gauge, tighten the #1 connecting rod cap bolts with specified angle in numerical order as shown in the figure.

CAUTION:
- **Make sure to hold the crankshaft securely during work.**
- **When holding the crankshaft, be careful not to damage the crankshaft.**

ST 18270AA020 SOCKET

Tightening angle:
137°$^{+3°}_{-2°}$

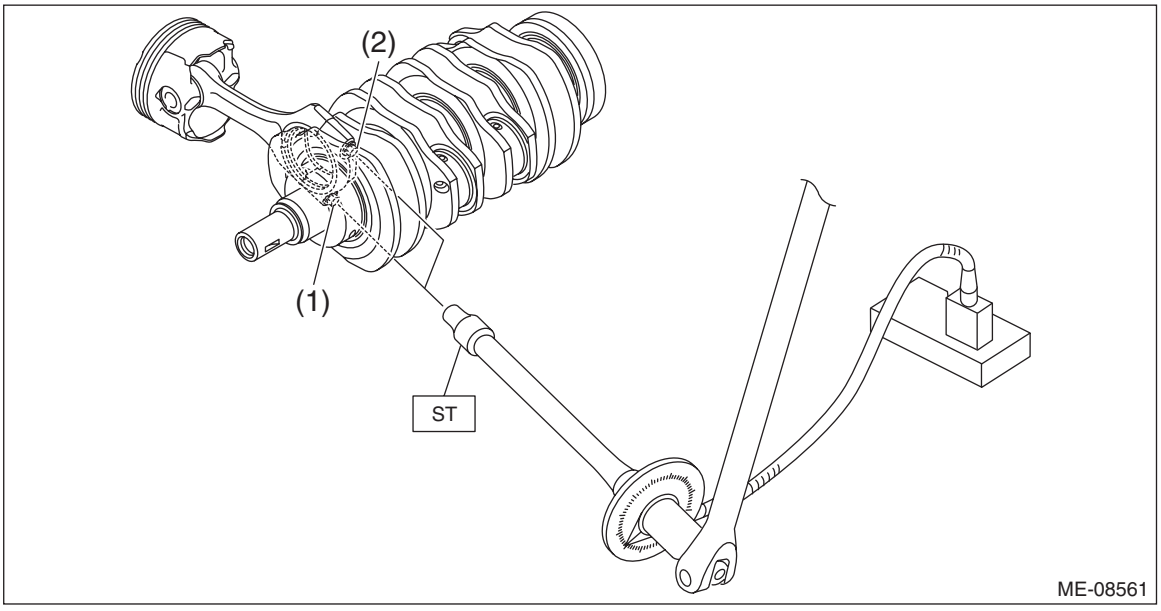

(6) In the same manner, install the #2, #3 and #4 connecting rods.
(7) Check the thrust clearance of each connecting rod using a thickness gauge. If it is not within the standard, replace the connecting rod.

NOTE:
Measure the thrust clearance of each connecting rod at several points, and replace the connecting rod if there is uneven wear.

Connecting rod thrust clearance:
Standard
0.070 — 0.330 mm (0.0028 — 0.0130 in)

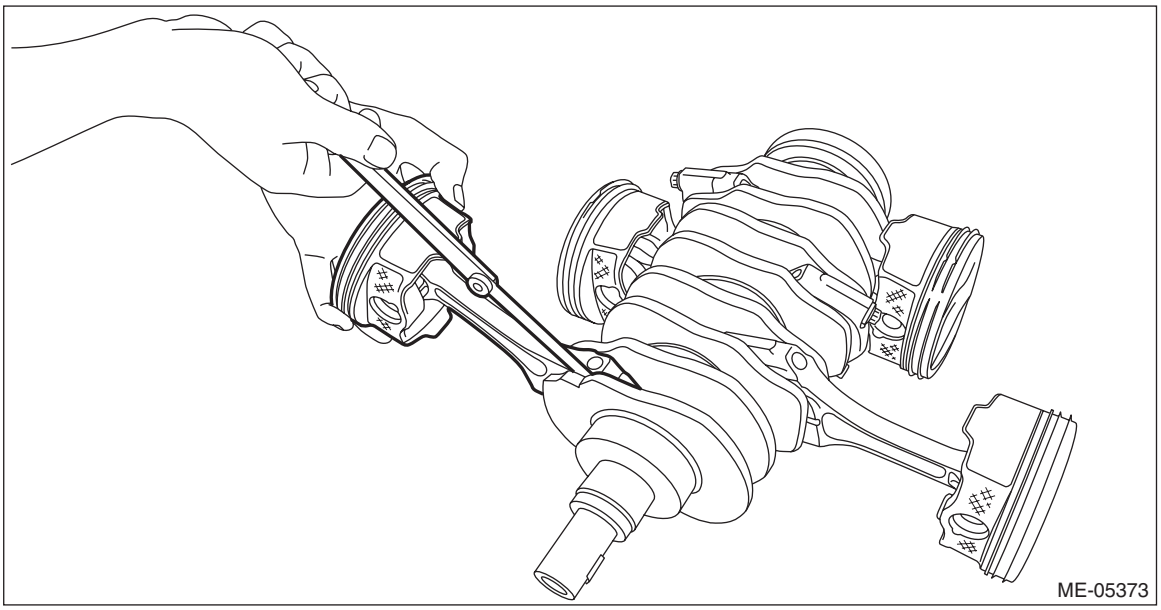

6) Check the oil clearance on each connecting rod bearing using plastigauge.

NOTE:
Measurement should be performed at a temperature of 20°C (68°F).
(1) Clean the #1 connecting rod bearing and the #1 pin of crankshaft.
(2) Set the #1 connecting rod bearing to the #1 connecting rod and #1 connecting rod cap.
(3) Place a plastigauge across the #1 pin of crankshaft, and set the #1 connecting rod, #1 connecting rod cap and #1 connecting rod cap bolt to the #1 pin of crankshaft.

NOTE:
• Each connecting rod has its own mating cap. Make sure that they are assembled correctly by checking their matching symbol.
• Use a new connecting rod cap bolt.
• Apply a coat of engine oil to the #1 connecting rod cap bolt thread.

(4) Using ST, tighten the #1 connecting rod cap bolts to 10 N·m (1.0 kgf-m, 7.4 ft-lb) in numerical order as shown in the figure, then retighten the bolts to 22 N·m (2.2 kgf-m, 16.2 ft-lb) in numerical order as shown in the figure.

CAUTION:
- **Make sure to hold the crankshaft securely during work.**
- **When holding the crankshaft, be careful not to damage the crankshaft.**
- **During tightening, be careful not to move the #1 connecting rod and the #1 connecting rod cap.**

ST 18270AA020 SOCKET

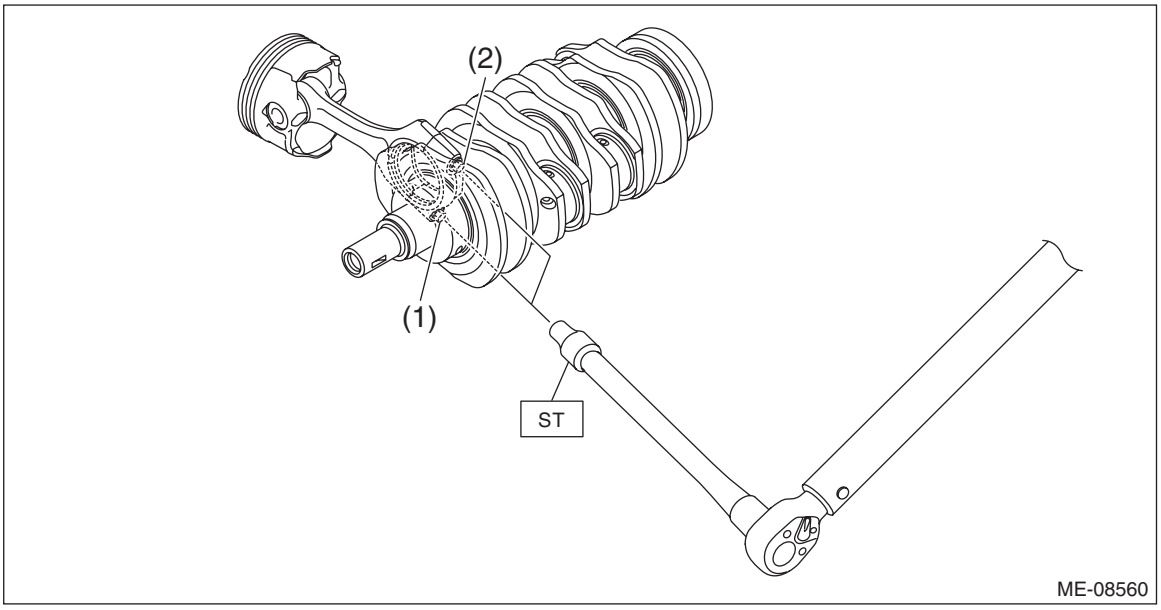

(5) Using ST and angle gauge, tighten the #1 connecting rod cap bolts with specified angle in numerical order as shown in the figure.

CAUTION:
- **Make sure to hold the crankshaft securely during work.**
- **When holding the crankshaft, be careful not to damage the crankshaft.**
- **During tightening, be careful not to move the #1 connecting rod and the #1 connecting rod cap.**

ST 18270AA020 SOCKET

Tightening angle:
137°$^{+3°}_{-2°}$

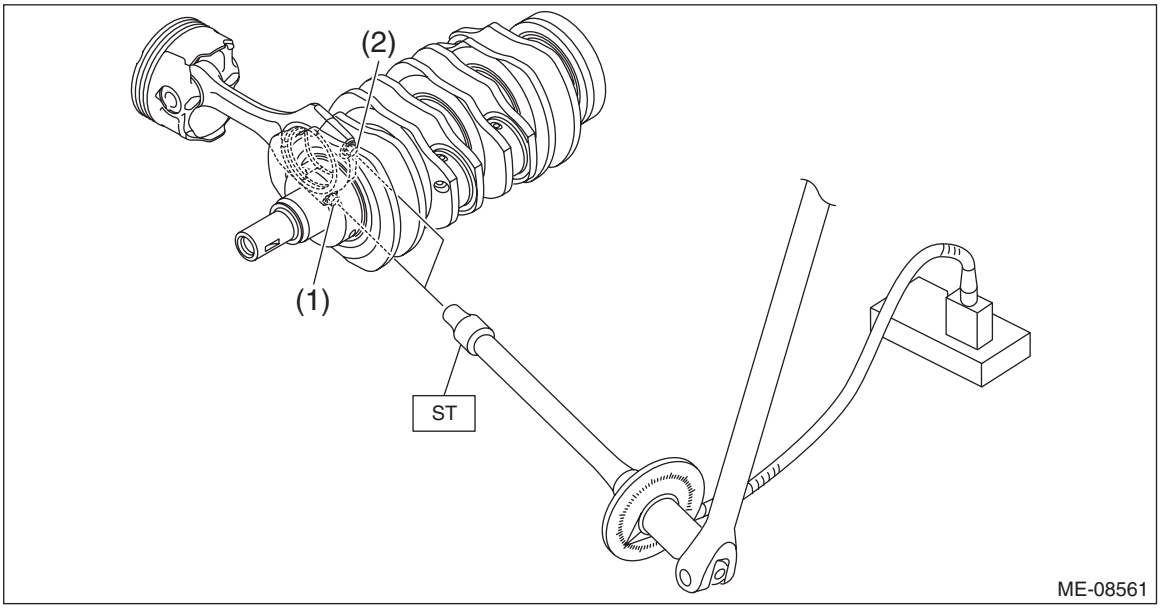

(6) Using ST, loosen the #1 connecting rod cap bolt, and remove the #1 connecting rod cap bolt and #1 connecting rod cap.

CAUTION:
- **Make sure to hold the crankshaft securely during work.**
- **When holding the crankshaft, be careful not to damage the crankshaft.**
- **During removal, be careful not to move the #1 connecting rod and the #1 connecting rod cap.**

ST 18270AA020 SOCKET

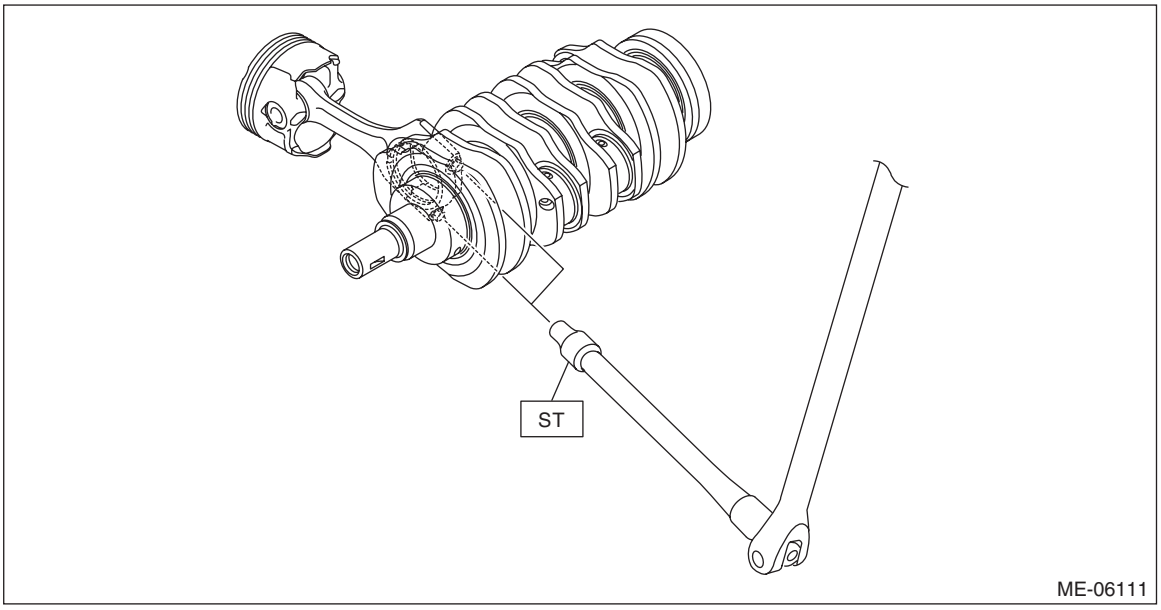

(7) Determine oil clearance of the #1 connecting rod bearing by matching the widest point of the plastigauge on #1 pin of crankshaft against scale printed on a package of the plastigauge. If it is not within the standard, replace the #1 connecting rod bearing.

NOTE:
Measure the outer diameter of crankshaft pin using micrometer, and select the suitable size connecting rod bearing when replacing the connecting rod bearing.

Unit: mm (in)

Bearing	Connecting rod bearing thickness (at center)	Crankshaft pin outer diameter
	Standard	Standard
Standard size	1.492 — 1.508 (0.0587 — 0.0594)	47.976 — 48.000 (1.8888 — 1.8898)
0.03 (0.0012) Undersize	1.511 — 1.515 (0.0595 — 0.0596)	47.946 — 47.970 (1.8876 — 1.8886)
0.05 (0.0020) Undersize	1.521 — 1.525 (0.0599 — 0.0600)	47.926 — 47.950 (1.8868 — 1.8878)
0.25 (0.0098) Undersize	1.621 — 1.625 (0.0638 — 0.0640)	47.726 — 47.750 (1.8790 — 1.8799)

Connecting rod bearing oil clearance:
Standard
0.017 — 0.047 mm (0.0007 — 0.0019 in)

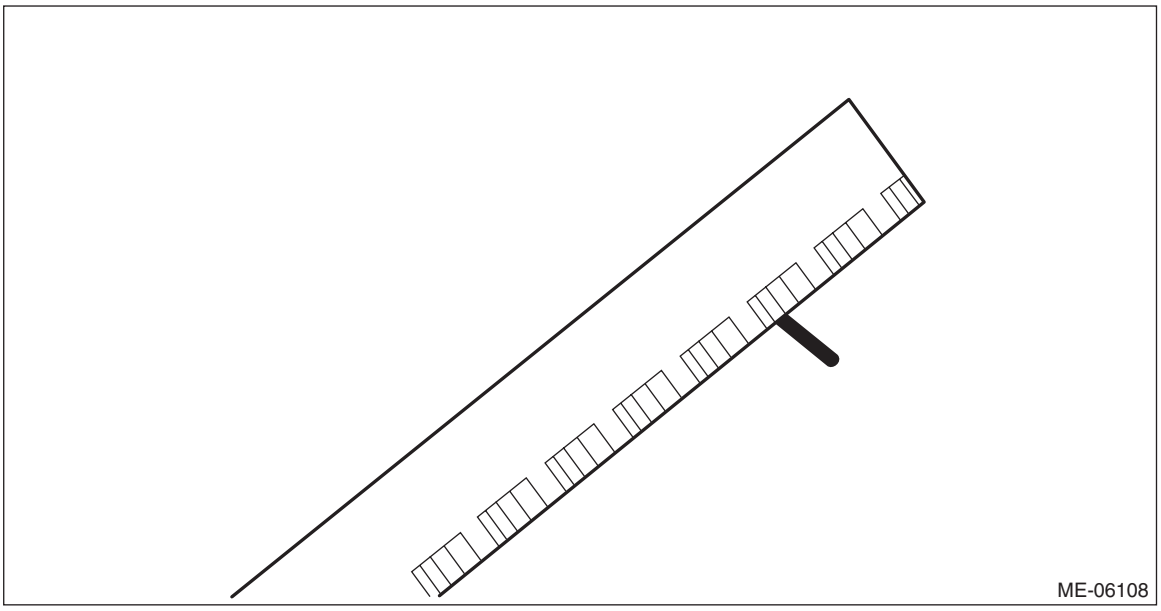

(8) Completely remove the plastigauge.
(9) In the same manner, check oil clearance of the #2, #3 and #4 connecting rod bearings.

5. PISTON PIN & CONNECTING ROD BUSHING

1) Check that the connecting rod bushing is not damaged.
2) Check the clearance between piston pin and connecting rod bushing. Check the clearance between piston pin and connecting rod bushing by measuring the outer diameter of piston pin and the inner diameter of connecting rod bushing respectively.
(1) Measure the outer diameter of piston pin with a micrometer.

NOTE:
- Measurement should be performed at a temperature of 20°C (68°F).
- Measure the outer diameter of the piston pin at the two locations as shown in the figure, and read the value of most worn location.
- Record the measured value.

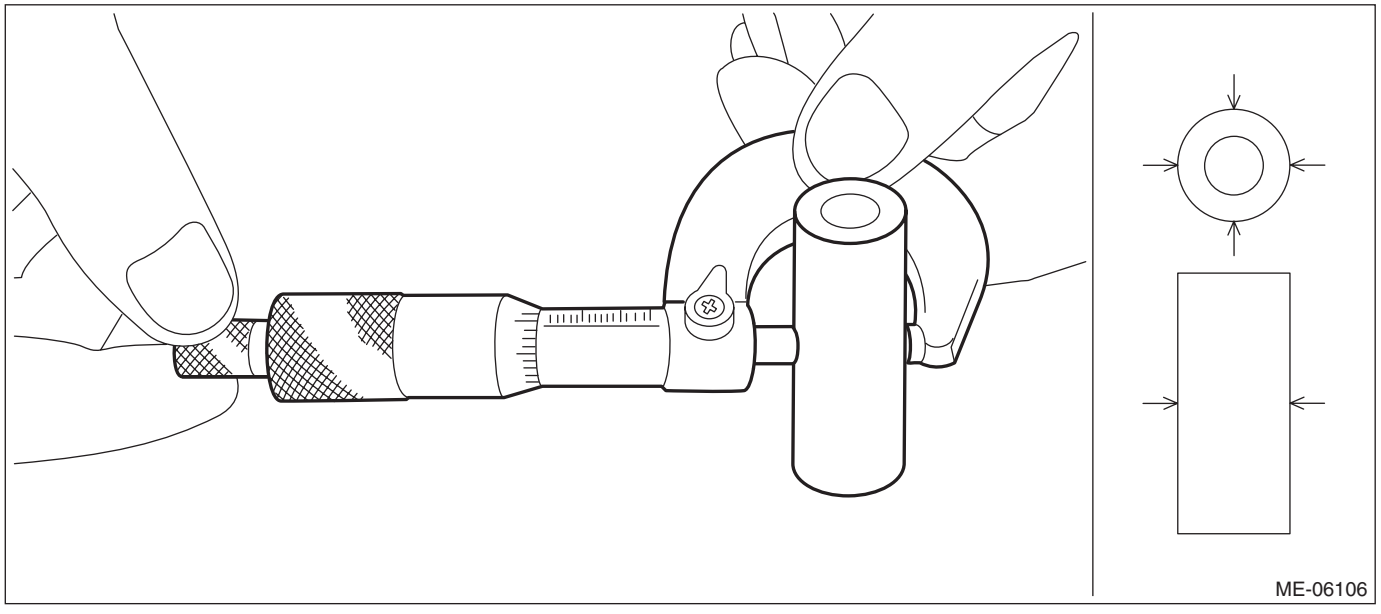

(2) Using a caliper gauge, measure the inner diameter of connecting rod bushing.

NOTE:
- Measurement should be performed at a temperature of 20°C (68°F).
- Measure the inner diameter of the connecting rod bushing at the two locations as shown in the figure, and read the value of most worn location.
- Record the measured value.

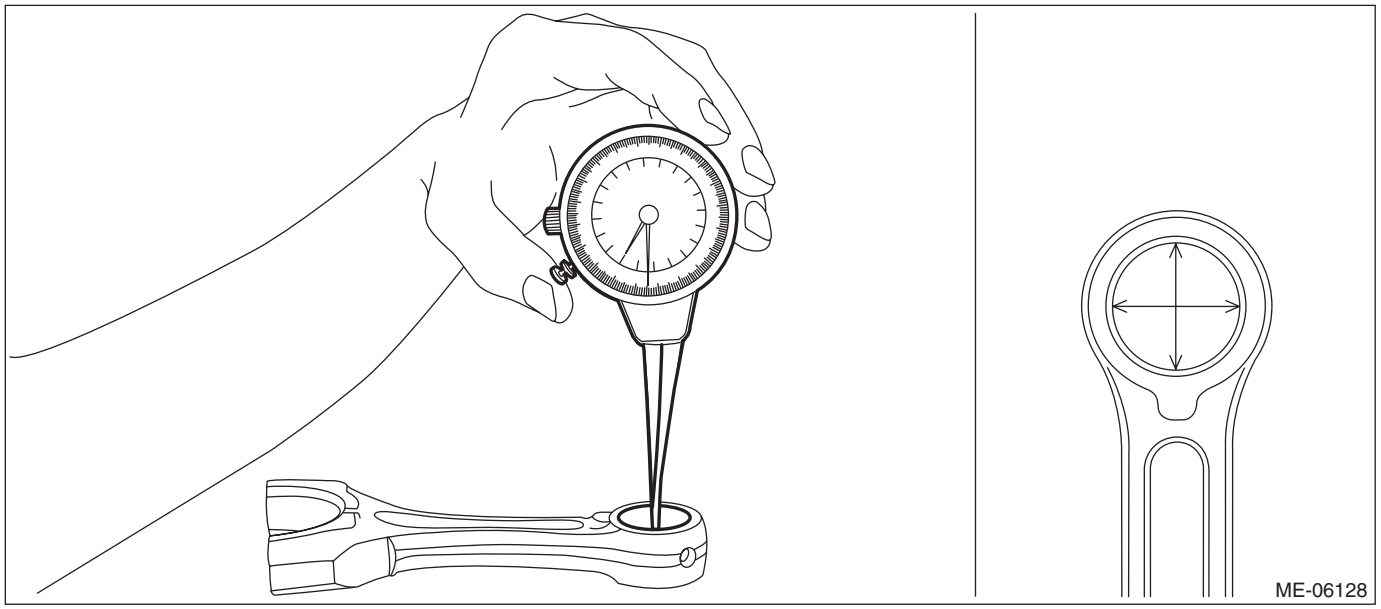

(3) Calculate the clearance between piston pin and connecting rod bushing.

Clearance between piston pin and connecting rod bushing:
Standard
0.004 — 0.026 mm (0.0002 — 0.0010 in)

3) If the clearance between piston pin and connecting rod bushing is not within the standard, replace the connecting rod bushing and piston pin as a set. For replacement procedure of connecting rod bushing, refer to the following.

(1) Using the ST and a press, pull out the connecting rod bushing from the small end of the connecting rod.

NOTE:
The direction of ST for pulling out and for press fitting is different. Therefore, attention must be paid to the direction of usage for ST.
ST 18350AA000 CONNECTING ROD BUSHING REMOVER AND INSTALLER

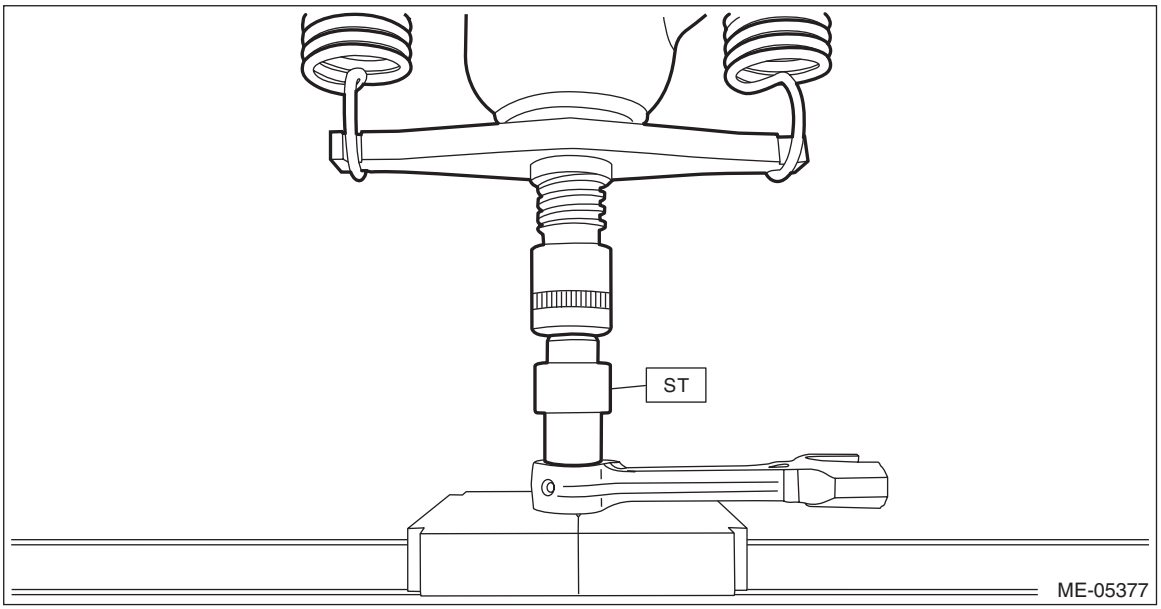

(2) Press the connecting rod bushing with ST and the press, after applying engine oil on the periphery of connecting rod bushing.

NOTE:
- Clinch area of the connecting rod bushing is as shown in the figure.

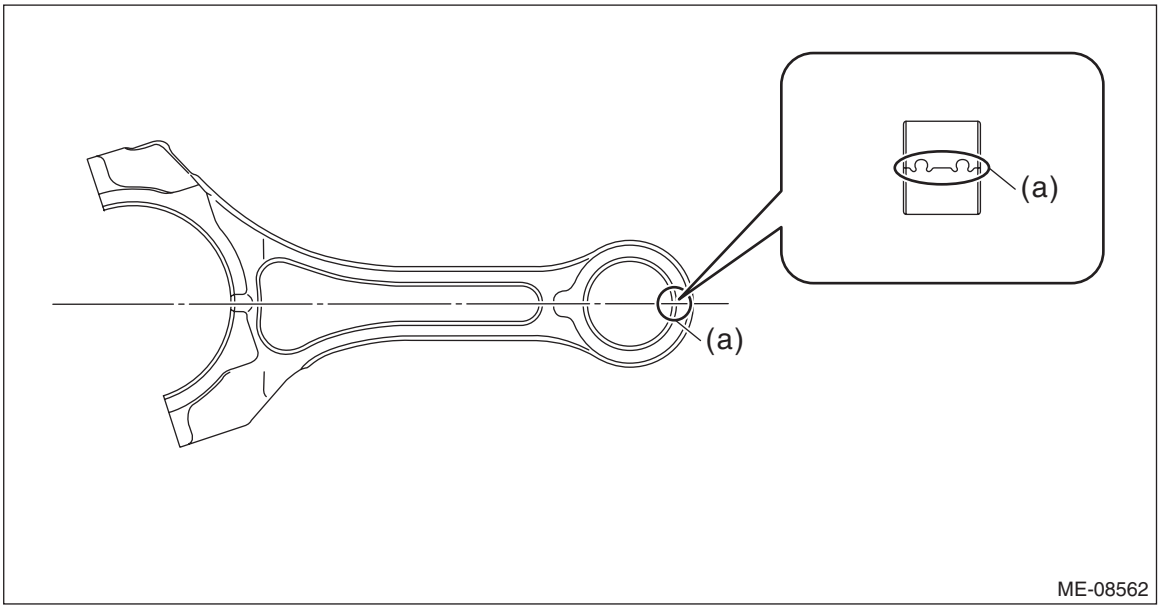

(a) Clinch area of connecting rod bushing

• The direction of ST for pulling out and for press fitting is different. Therefore, attention must be paid to the direction of usage for ST.

ST 18350AA000 CONNECTING ROD BUSHING REMOVER AND INSTALLER

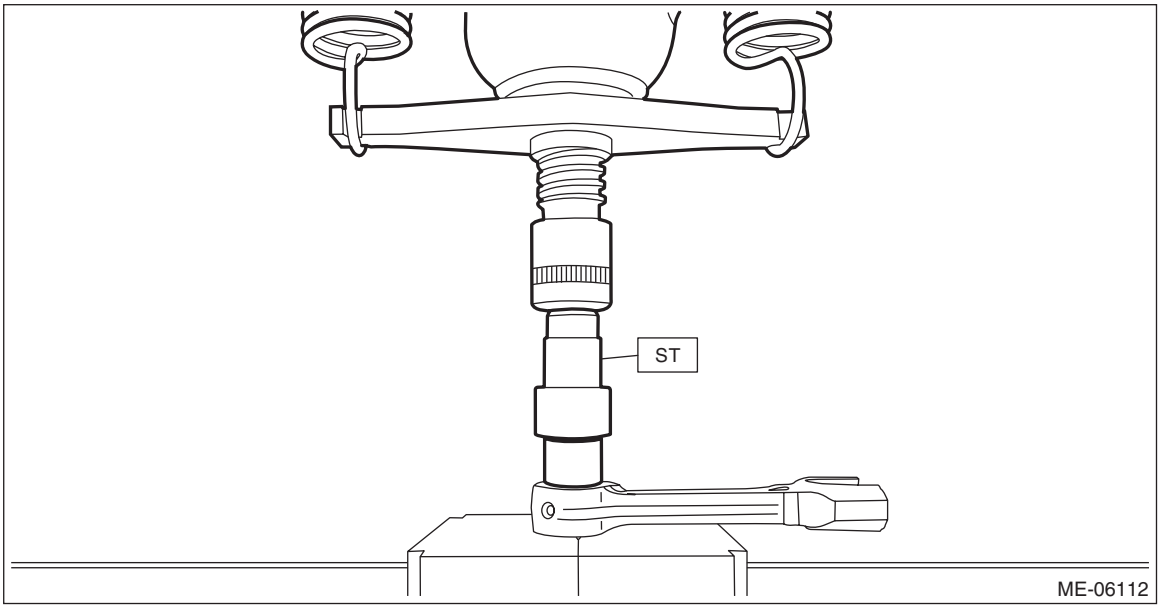

(3) Make two 3 mm (0.12 in) holes in the pressed connecting rod bushing by aligning with the pre-manufactured holes provided on the small end of the connecting rod.

(4) Using a reamer, ream the inside surface of the connecting rod bushing. Insert the reamer in the connecting rod bushing, and turn slowly clockwise while pushing lightly. Bring the reamer back while rotating it clockwise.

NOTE:

• Use a reamer with a diameter of ϕ22.
• Apply engine oil to the reamer.
• If the inner surface of connecting rod bushing is damaged, the edge of reamer should be slightly ground with oil stone.
• If the inner surface of connecting rod bushing becomes lustrous and the reamer does not chip, use a new reamer or remedy the reamer.

(5) After completion of reaming, clean the connecting rod bushing to remove chips.

6. CRANKSHAFT AND CRANKSHAFT BEARING

1) Clean the crankshaft completely, and check it for cracks using liquid penetrant tester.
2) Using a dial gauge, check the crankshaft bend. If it exceeds the limit, grind to correct the crankshaft journal or replace the crankshaft.

NOTE:
- Measurement should be performed at a temperature of 20°C (68°F).
- If a suitable V-block is not available, using just the #1 and #5 crankshaft bearings on cylinder block, position the crankshaft on cylinder block. Then, measure the crankshaft bend using a dial gauge.
- When grinding to correct the crankshaft journal, refer to step 3).

Crankshaft bend:
Limit
0.035 mm (0.0014 in)

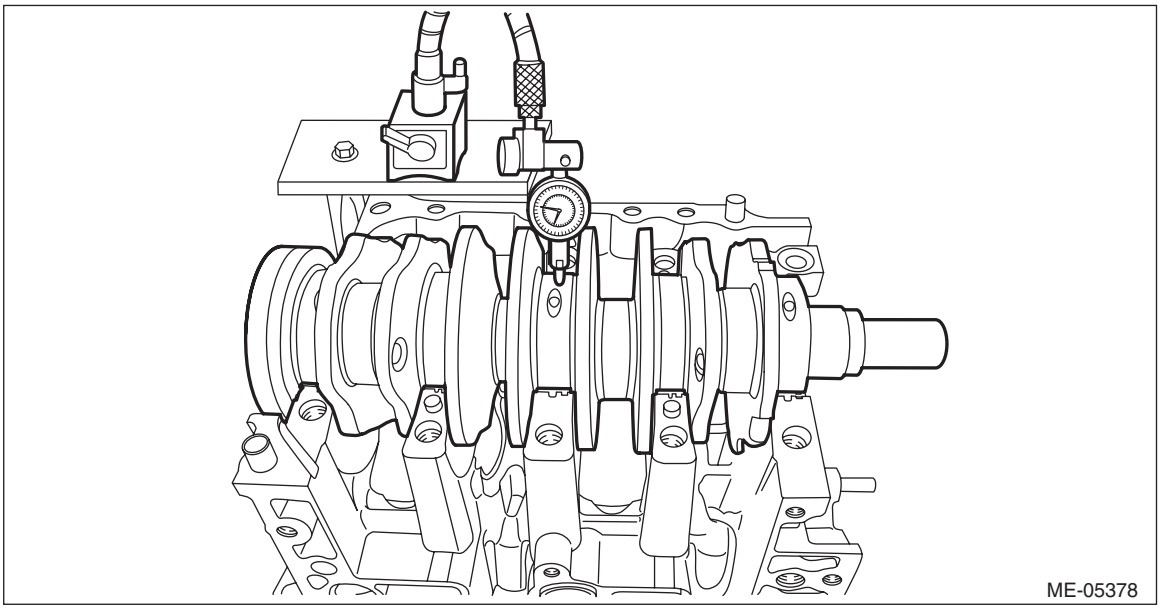

3) Using a micrometer, check the outer diameter of crankshaft pin, outer diameter of journal, cylindricality, and out-of-roundness. If it is not within the standard, replace the connecting rod bearing or crankshaft bearing, and grind to correct the crankshaft pin or journal or replace the crankshaft as required.

NOTE:
- Measurement should be performed at a temperature of 20°C (68°F).
- Select the suitable size connecting rod bearing or crankshaft bearing when replacing the connecting rod bearing or crankshaft bearing.
- When grinding to correct the crankshaft pin or journal, finish them to the suitable outer diameter as shown in the table below according to the undersize bearing to be used.

Unit: mm (in)

Bearing	Connecting rod bearing thickness (at center)	Crankshaft pin outer diameter	Crankshaft bearing thickness (at center)		Crankshaft journal outer diameter
			#1, #2, #3, #4	#5	
	Standard	Standard	Standard	Standard	Standard
Standard size	1.492 — 1.508 (0.0587 — 0.0594)	47.976 — 48.000 (1.8888 — 1.8898)	2.498 — 2.513 (0.0983 — 0.0989)	2.496 — 2.511 (0.0983 — 0.0989)	67.985 — 68.003 (2.6766 — 2.6773)
0.03 (0.0012) Undersize	1.511 — 1.515 (0.0595 — 0.0596)	47.946 — 47.970 (1.8876 — 1.8886)	2.519 — 2.522 (0.0992 — 0.0993)	2.517 — 2.520 (0.0991 — 0.0992)	67.955 — 67.979 (2.6754 — 2.6763)
0.05 (0.0020) Undersize	1.521 — 1.525 (0.0599 — 0.0600)	47.926 — 47.950 (1.8868 — 1.8878)	2.529 — 2.532 (0.0996 — 0.0997)	2.527 — 2.530 (0.0995 — 0.0996)	67.935 — 67.959 (2.6746 — 2.6755)
0.25 (0.0098) Undersize	1.621 — 1.625 (0.0638 — 0.0640)	47.726 — 47.750 (1.8790 — 1.8799)	2.629 — 2.632 (0.1035 — 0.1036)	2.627 — 2.630 (0.1034 — 0.1035)	67.735 — 67.759 (2.6667 — 2.6677)

Crankshaft pin:
Cylindricality
Limit
0.006 mm (0.0002 in)
Out-of-roundness
Limit
0.005 mm (0.0002 in)
Grinding limit (dia.)
To 47.726 mm (1.8790 in)

Crankshaft journal:
Cylindricality
Limit
0.006 mm (0.0002 in)
Out-of-roundness
Limit
0.005 mm (0.0002 in)
Grinding limit (dia.)
To 67.735 mm (2.6667 in)

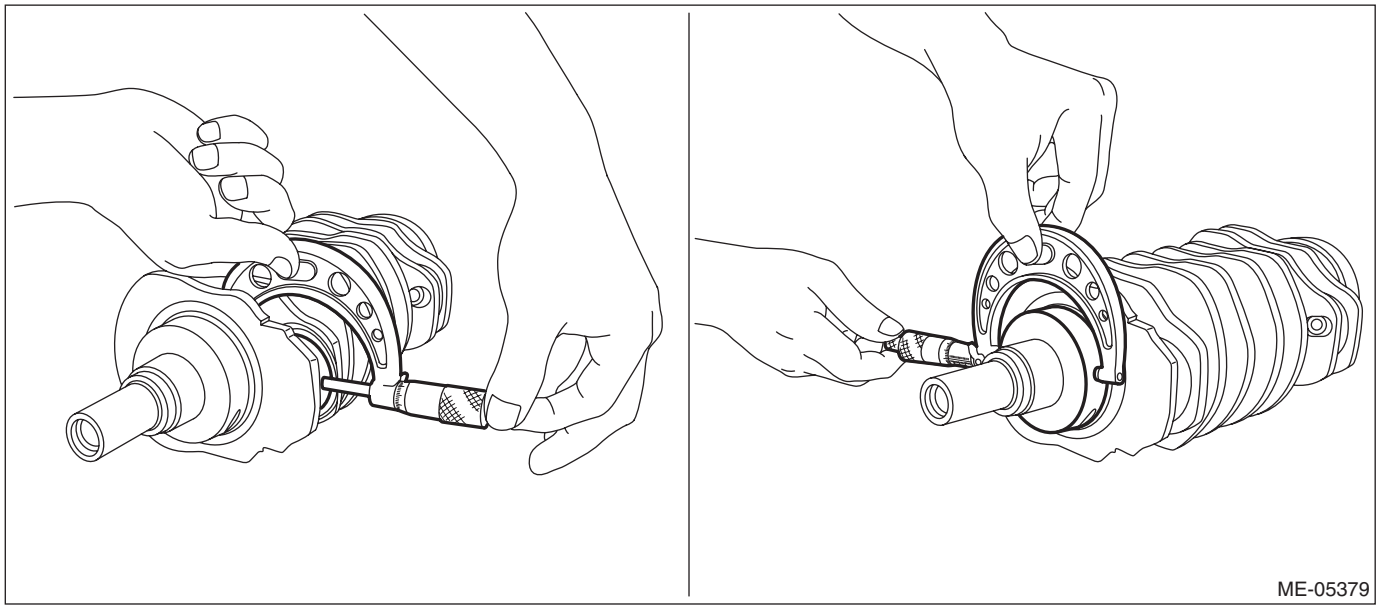

4) Inspect the crankshaft bearing for scar, peeling, seizure, melting or wear, etc.

5) Use a thickness gauge to check the thrust clearance of crankshaft at thrust of #5 crankshaft bearing. If it is not within the standard, replace the #5 crankshaft bearing.

NOTE:
- Measurement should be performed at a temperature of 20°C (68°F).
- Set all the crankshaft bearings onto the cylinder block, then mount the crankshaft on the cylinder block, and use a thickness gauge to measure the thrust clearance of crankshaft.
- Select the #5 crankshaft bearing of suitable size by referring to step 3) when replacing #5 crankshaft bearing.

Crankshaft thrust clearance:
Standard
0.130 — 0.308 mm (0.00512 — 0.01213 in)

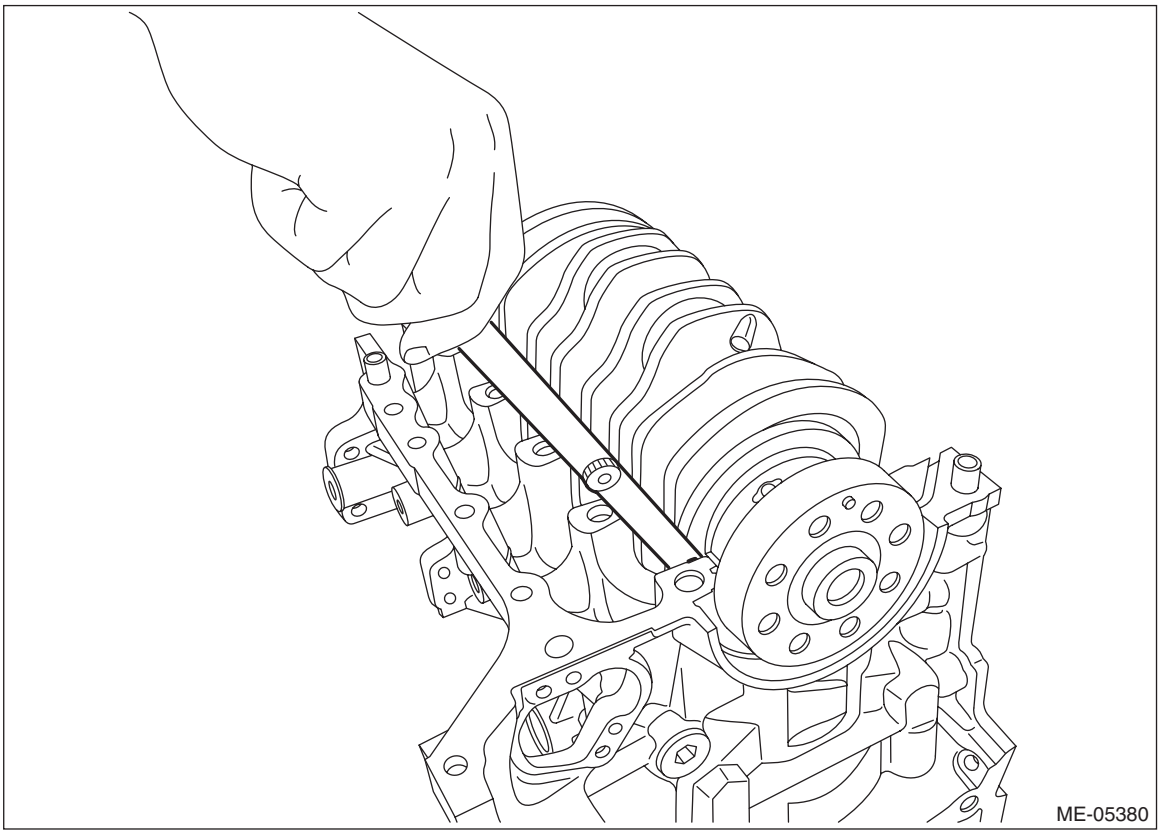

6) Check the oil clearance on each crankshaft bearing using plastigauge.

NOTE:
Measurement should be performed at a temperature of 20°C (68°F).

(1) Remove the liquid gasket from cylinder block.
(2) Clean each crankshaft bearing and crankshaft journal.
(3) Set each crankshaft bearing to the cylinder block.

CAUTION:
• Place a wood board wrapped with a waste cloth to prevent the knock pin damage and to stabilize the cylinder block before work.
• Be careful not to scratch the mating surface of cylinder block during work.

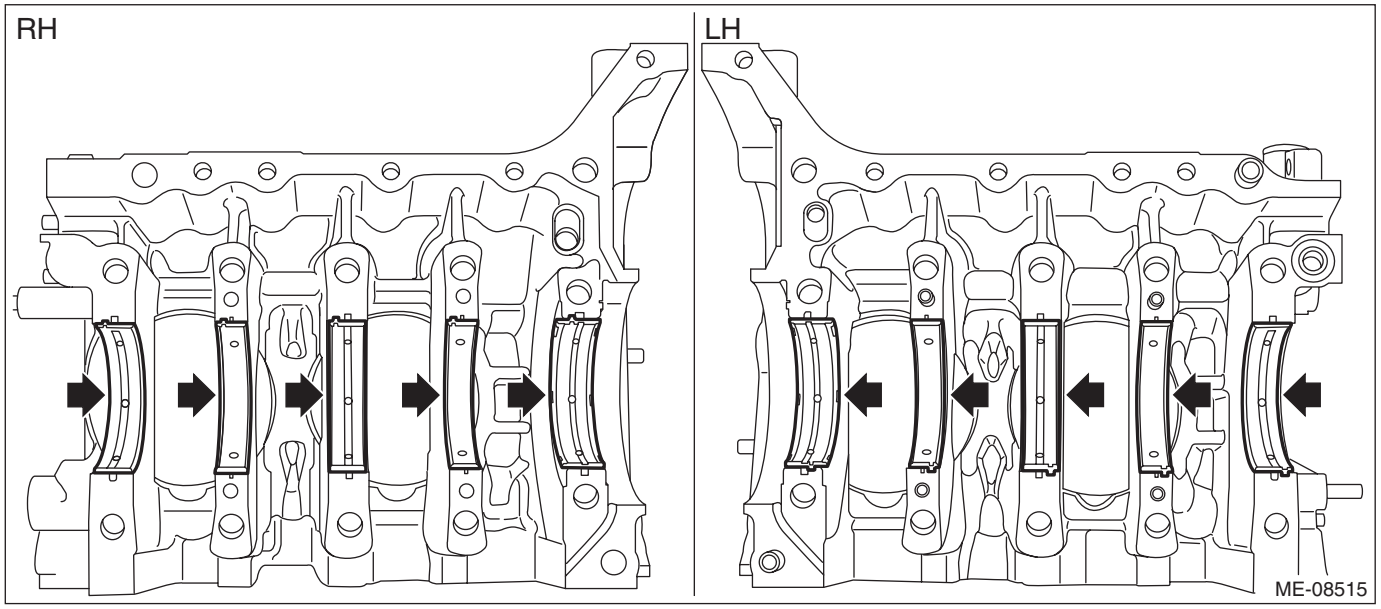

(4) Set the crankshaft to the cylinder block LH.

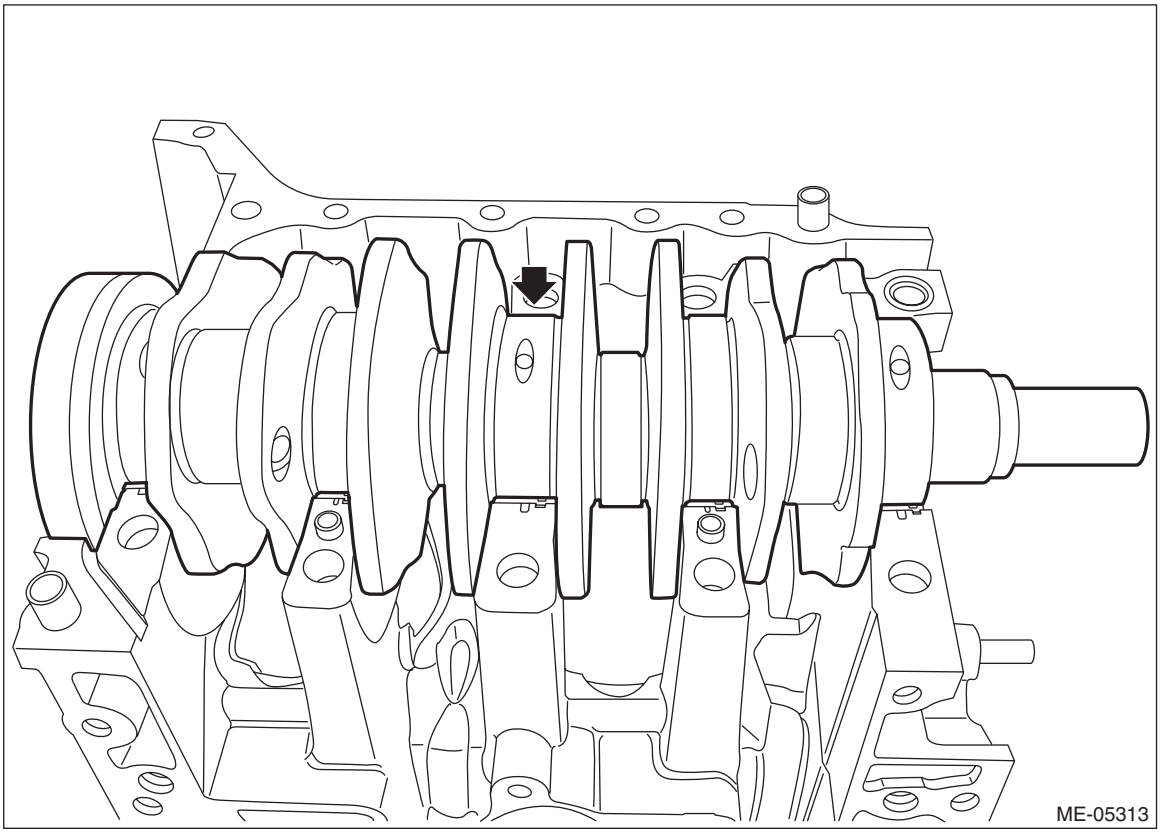

(5) Place a plastigauge across the crankshaft journals and set the cylinder block RH to the cylinder block LH.
(6) Apply a coat of engine oil to the washers and cylinder block mounting bolt threads.

NOTE:
To prevent mixture of engine oil into the water jacket, do not apply a large amount.

(7) Install the cylinder head bolt at the locations shown in the figure.

NOTE:
This procedure is required to tighten the cylinder block mounting bolts with specified angle using angle gauge.

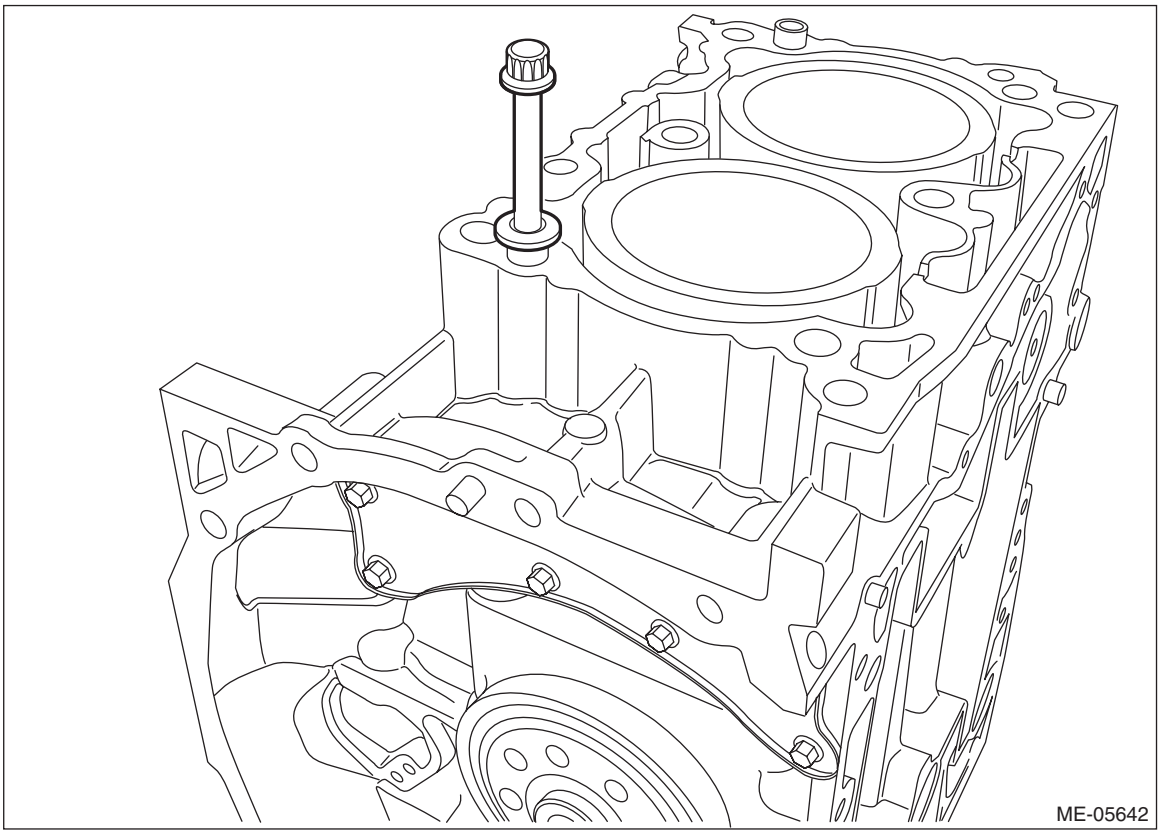

(8) Tighten all mounting bolts with a torque of 35 N·m (3.6 kgf-m, 25.8 ft-lb) in numerical order as shown in the figure.

CAUTION:
When tightening the mounting bolts with specified torque, hold the cylinder block LH while not holding the cylinder block RH to ensure the joint accuracy of the cylinder block.

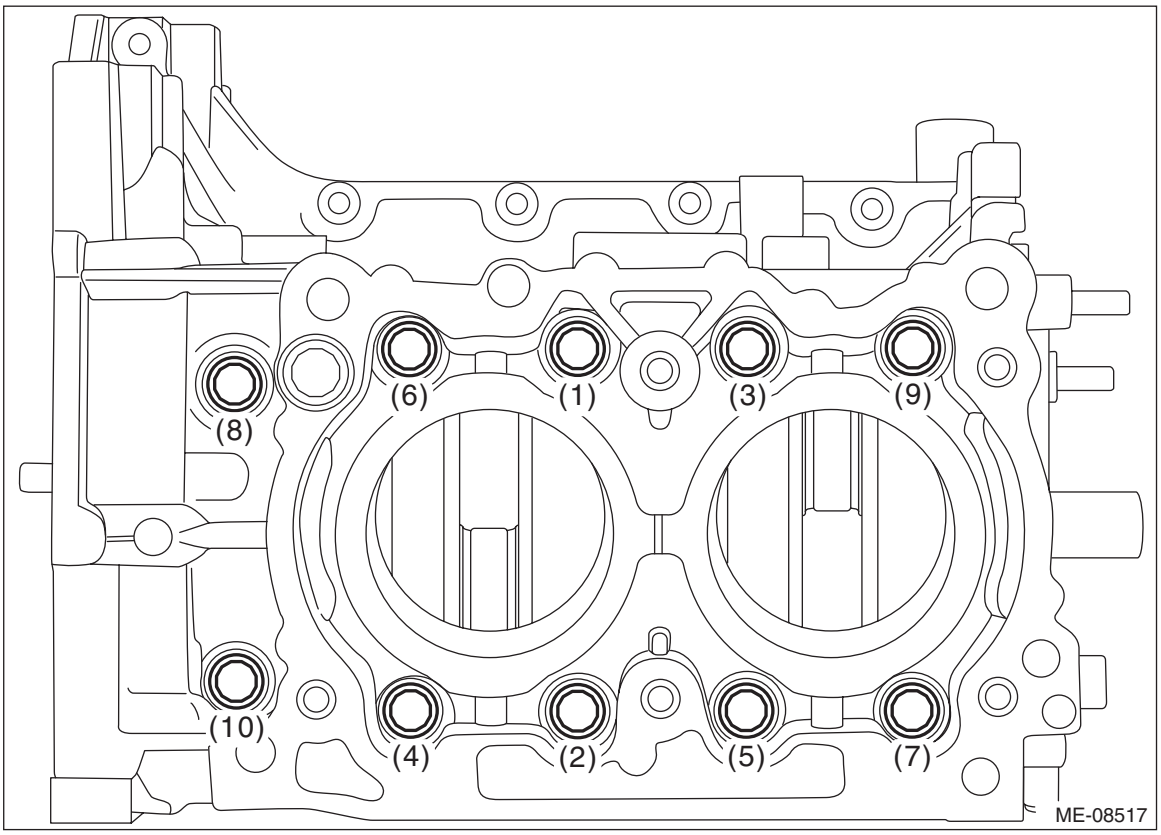

(9) Loosen all mounting bolts by 180° in numerical order as shown in the figure.

CAUTION:
When loosening the mounting bolts, hold the cylinder block LH while not holding the cylinder block RH to ensure the joint accuracy of the cylinder block.

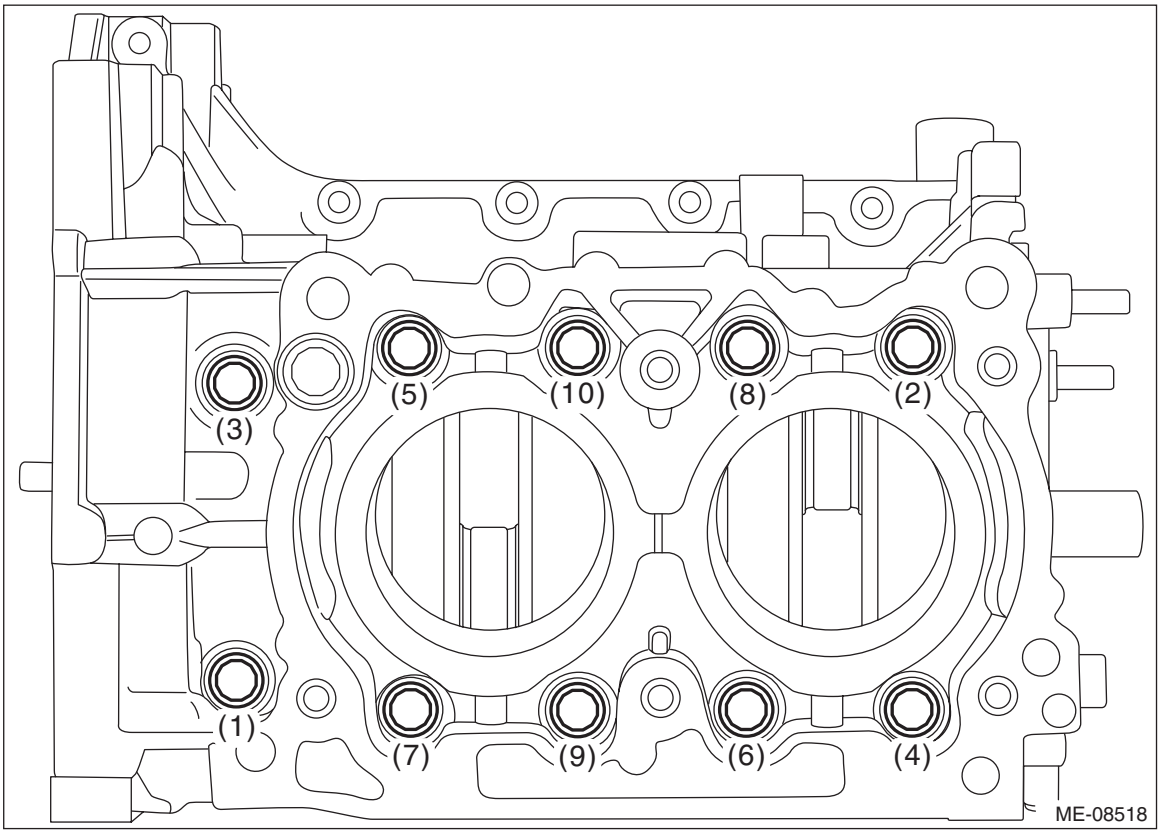

(10) Tighten all mounting bolts with a torque of 35 N·m (3.6 kgf-m, 25.8 ft-lb) in numerical order as shown in the figure.

CAUTION:
When tightening the mounting bolts with specified torque, hold the cylinder block LH while not holding the cylinder block RH to ensure the joint accuracy of the cylinder block.

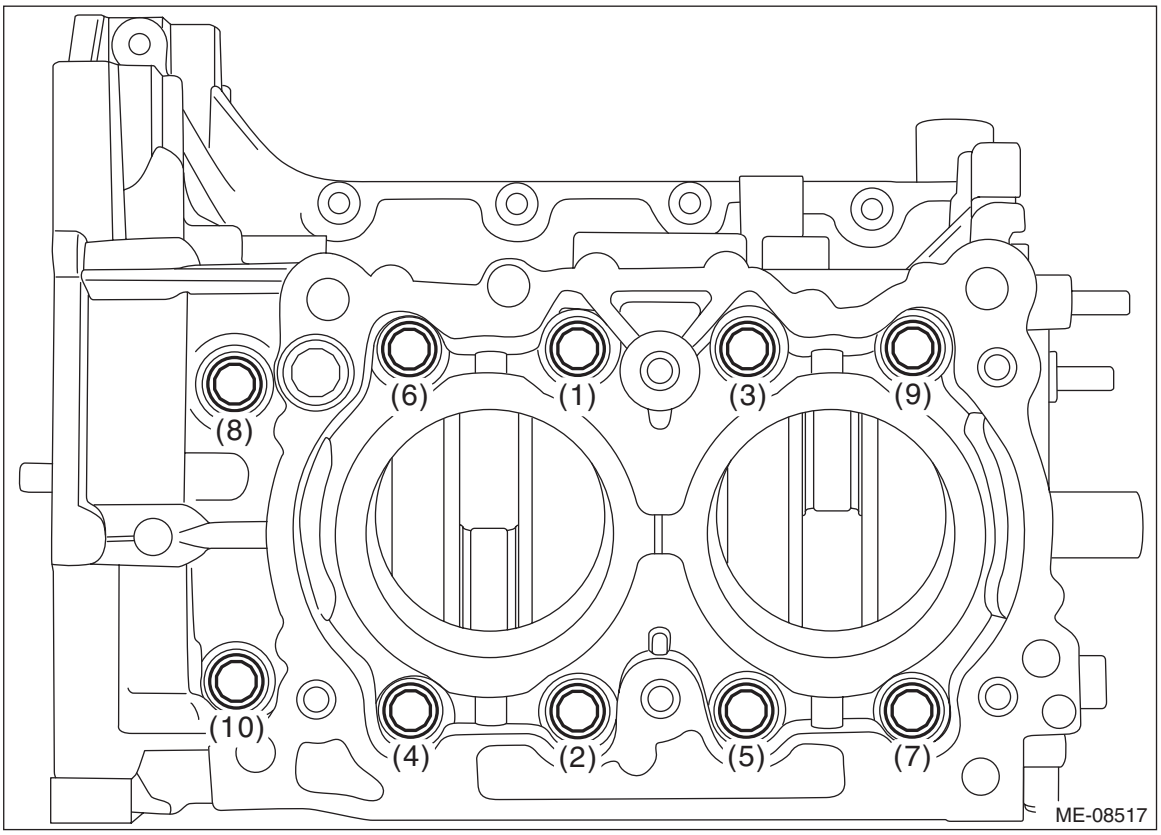

(11) Loosen the mounting bolts (4 places) by 180° in numerical order as shown in the figure.

CAUTION:
When loosening the mounting bolts, hold the cylinder block LH while not holding the cylinder block RH to ensure the joint accuracy of the cylinder block.

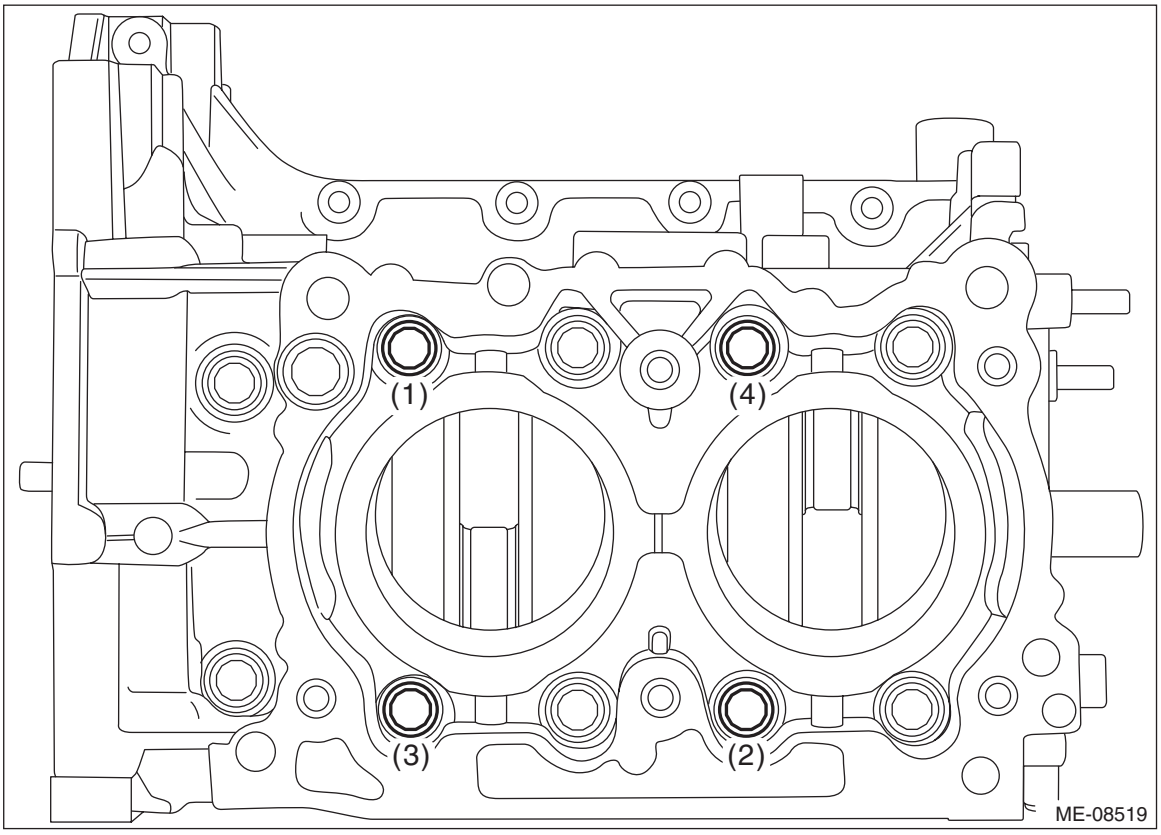

(12) Tighten the mounting bolts (4 places) with a torque of 17 N·m (1.7 kgf-m, 12.5 ft-lb) in numerical order as shown in the figure.

CAUTION:
When tightening the mounting bolts with specified torque, hold the cylinder block LH while not holding the cylinder block RH to ensure the joint accuracy of the cylinder block.

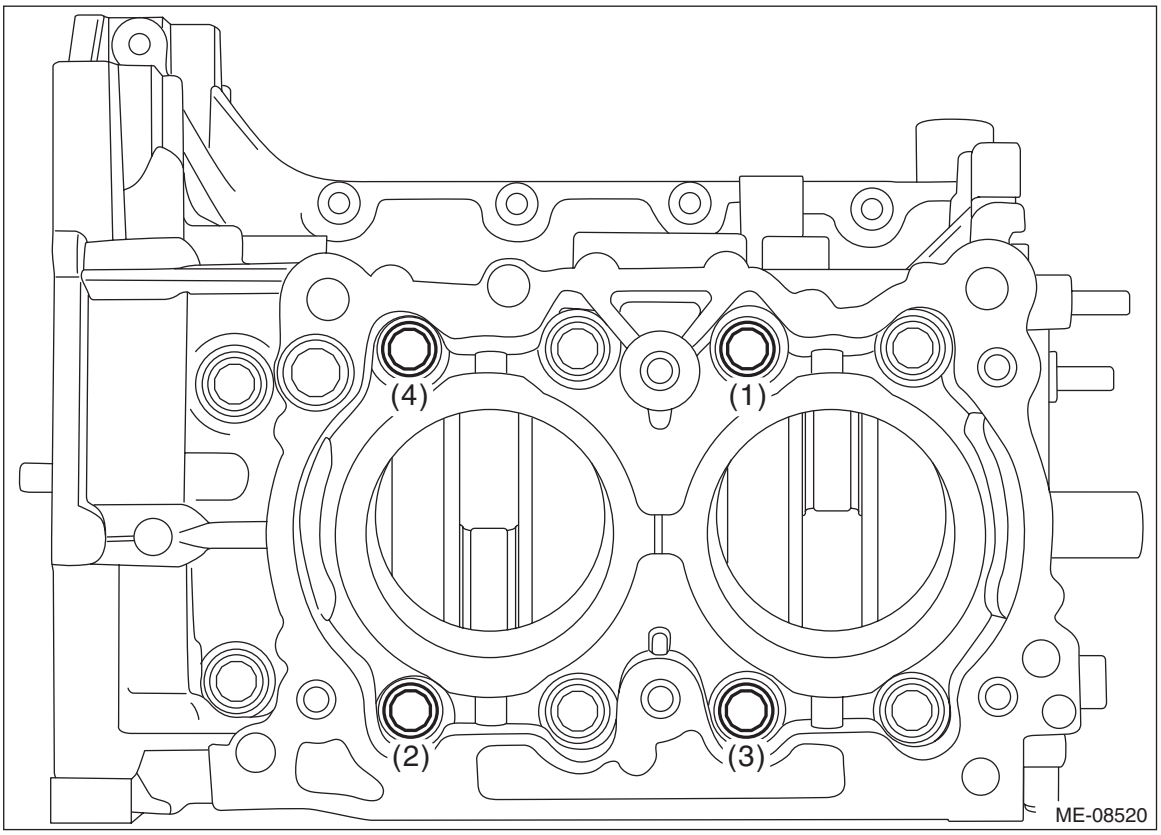

(13) Using angle gauge, tighten the mounting bolts (4 places) with specified angle in numerical order as shown in the figure.

CAUTION:
When tightening the mounting bolts with specified angle, hold the cylinder block LH while not holding the cylinder block RH to ensure the joint accuracy of the cylinder block.

Tightening angle:
60°±2°

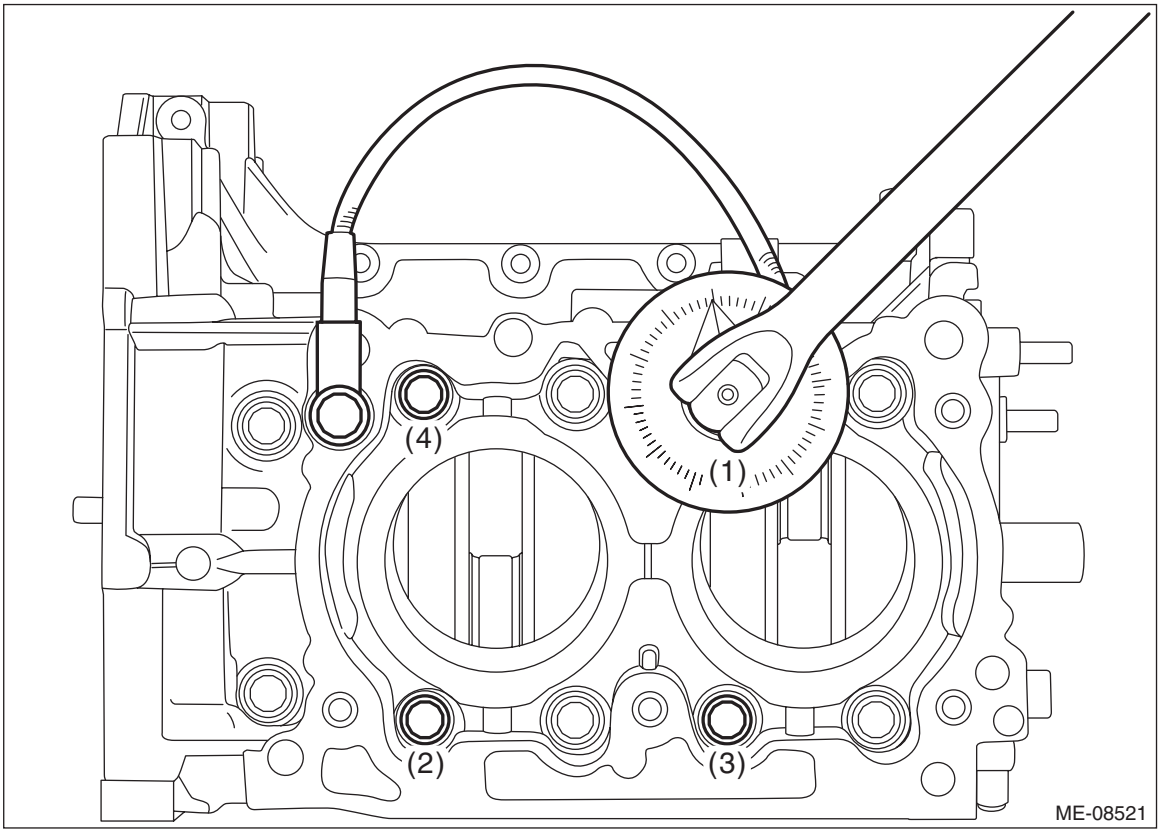

(14) Loosen the mounting bolts (6 places) by 180° in numerical order as shown in the figure.

CAUTION:
When loosening the mounting bolts, hold the cylinder block LH while not holding the cylinder block RH to ensure the joint accuracy of the cylinder block.

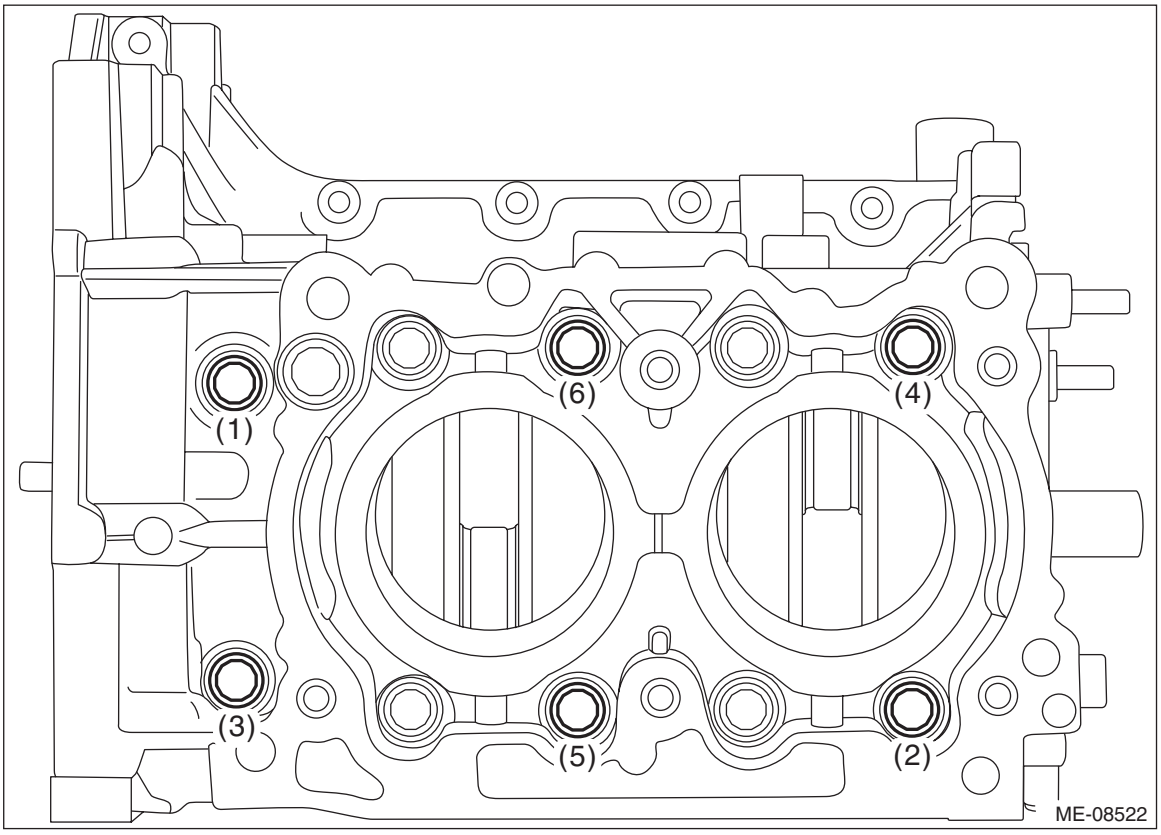

(15) Tighten the mounting bolts (6 places) with a torque of 17 N·m (1.7 kgf-m, 12.5 ft-lb) in numerical order as shown in the figure.

CAUTION:
When tightening the mounting bolts with specified torque, hold the cylinder block LH while not holding the cylinder block RH to ensure the joint accuracy of the cylinder block.

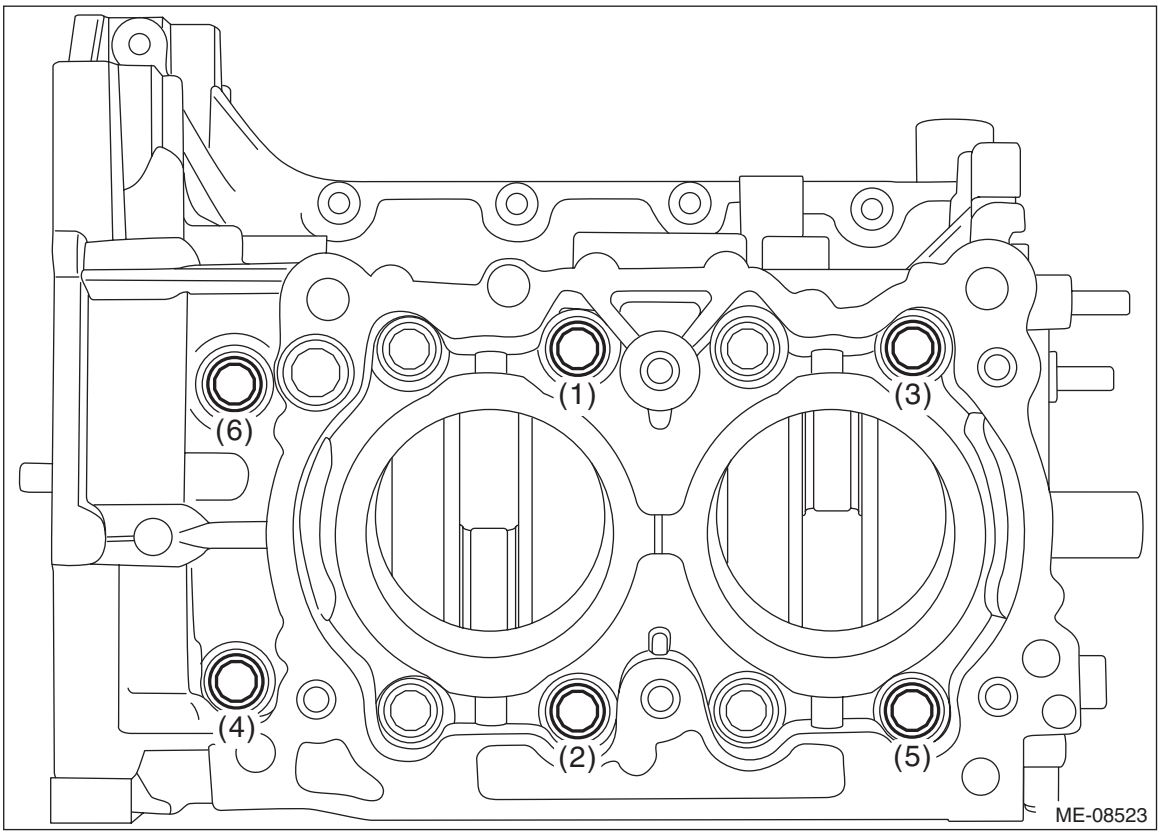

(16) Using angle gauge, tighten the mounting bolts (6 places) with specified angle in numerical order as shown in the figure.

CAUTION:
When tightening the mounting bolts with specified angle, hold the cylinder block LH while not holding the cylinder block RH to ensure the joint accuracy of the cylinder block.

Tightening angle:
60°±2°

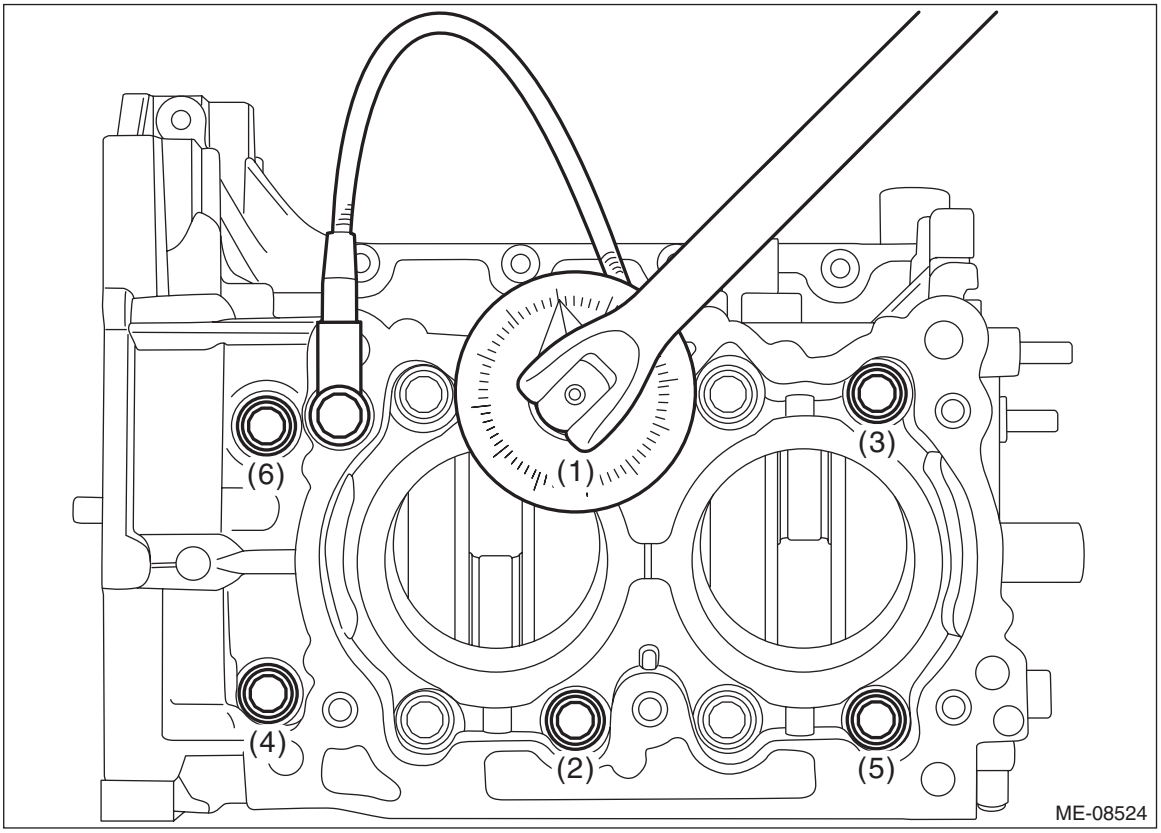

(17) Remove the cylinder head bolt attached at the locations shown in the figure.

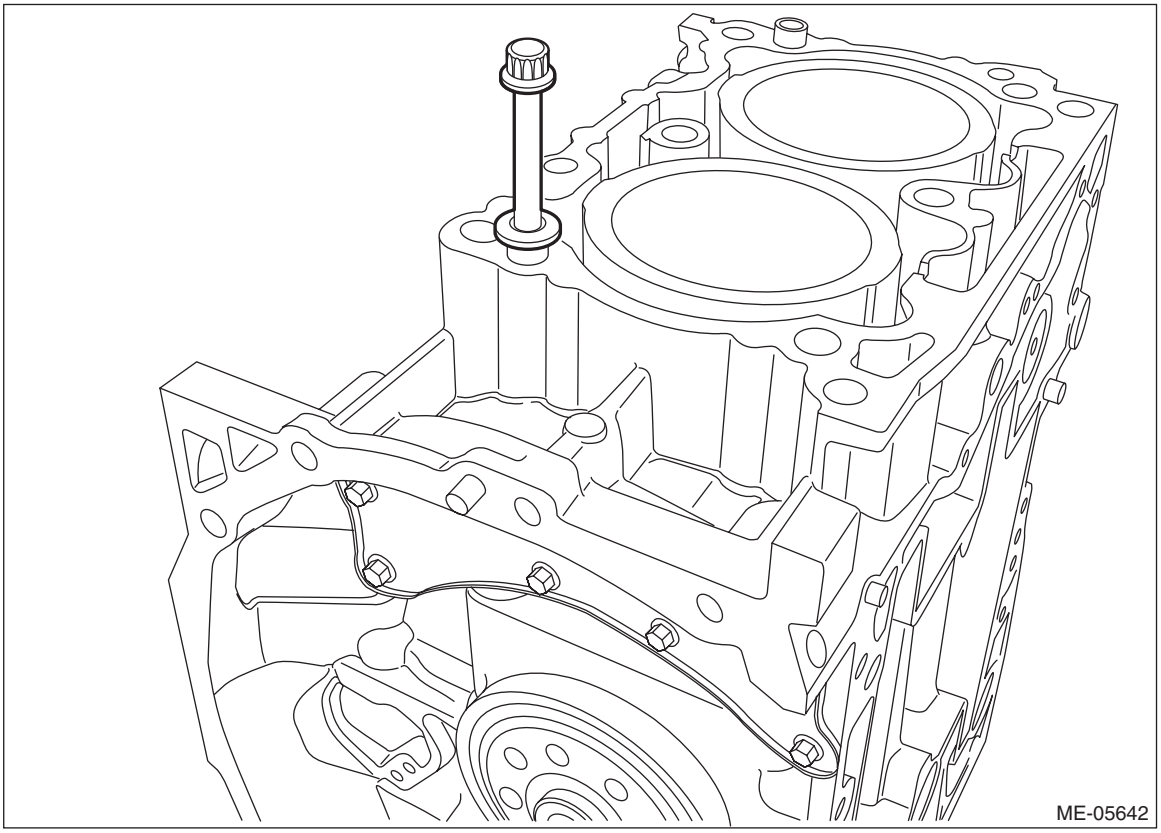

(18) Loosen the cylinder block mounting bolts in numerical order as shown in the figure, and separate the cylinder block RH and LH.

NOTE:
Lift the cylinder block RH slightly, and confirm that the crankshaft is remaining in the cylinder block LH. If the cylinder block RH is lifted carelessly when separating, the crankshaft may stick to cylinder block RH, then fall off.

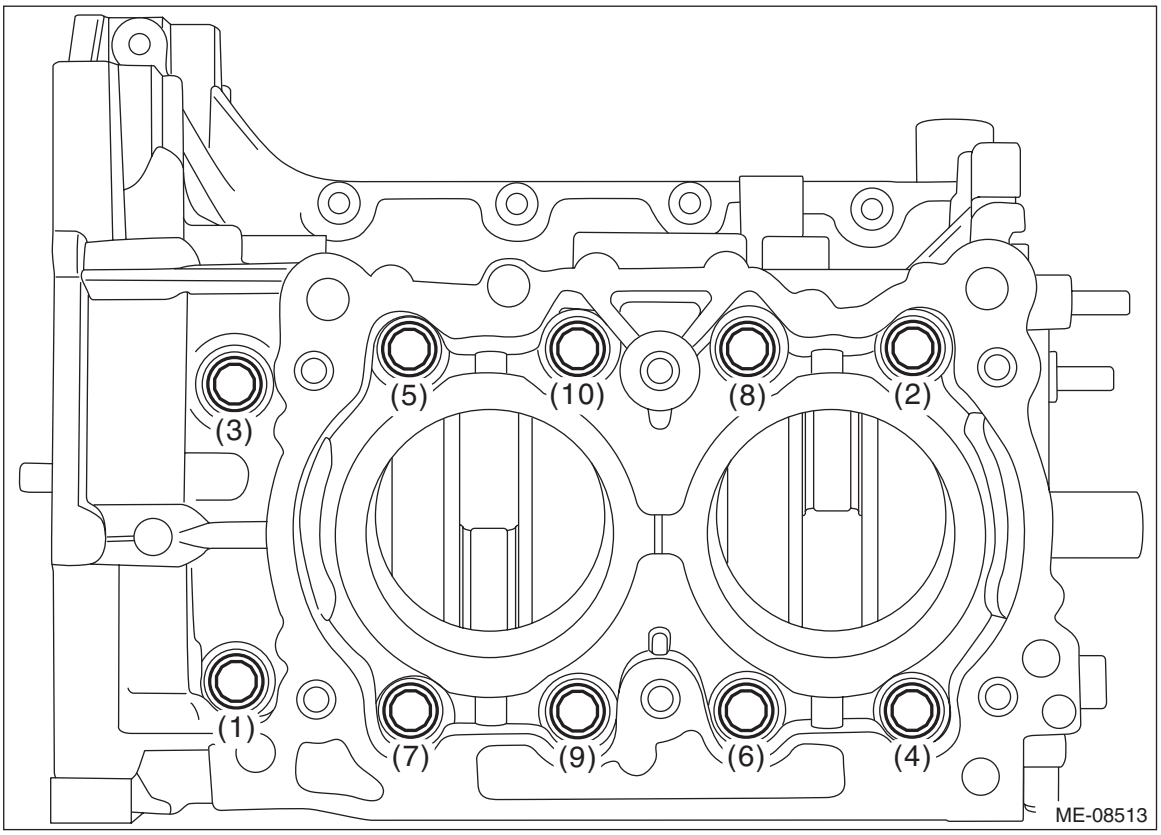

(19) Determine the crankshaft oil clearance by matching the widest point of the plastigauge on each journal against scale printed on a package of the plastigauge. If it is not within the standard, replace the crankshaft bearing, and grind to correct the crankshaft journal or replace the crankshaft as required.

NOTE:
- Select the crankshaft bearing of suitable size by referring to step 3) when replacing crankshaft bearing.
- When grinding to correct the crankshaft journal, finish it to the suitable outer diameter by referring to step 3) according to the undersize bearing to be used.

Crankshaft oil clearance:
Standard
0.013 — 0.031 mm (0.00051 — 0.00122 in)

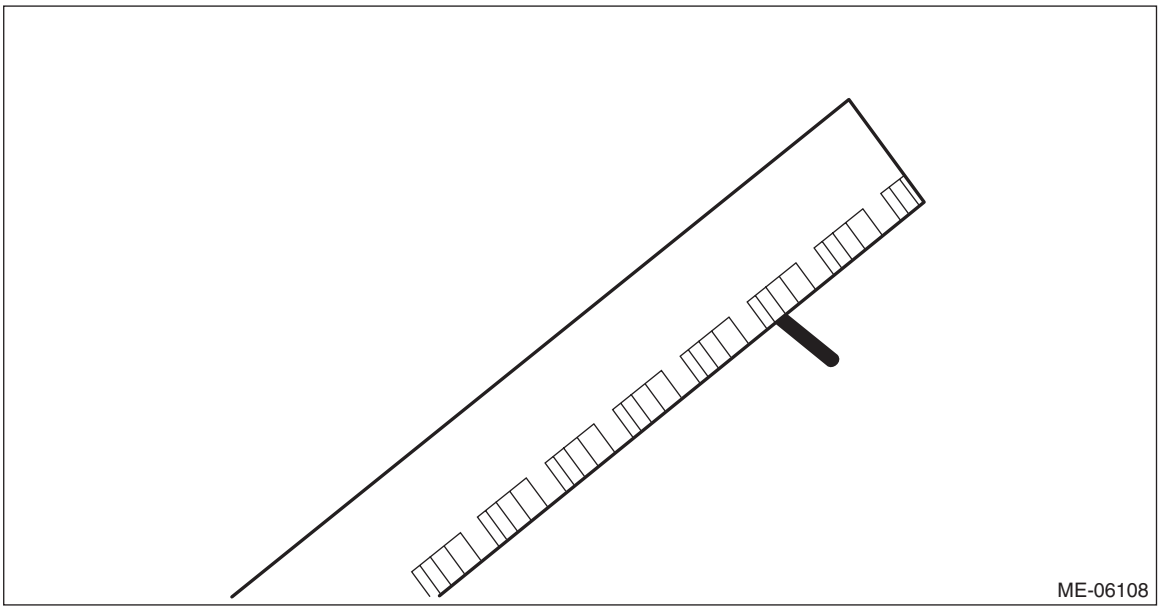

(20) Completely remove the plastigauge.

23.Intake and Exhaust Valve

A: SPECIFICATION

Refer to “Cylinder Head” for removal and installation procedures of the intake and exhaust valves. <Ref. to ME(H4DO)-171, REMOVAL, Cylinder Head.> <Ref. to ME(H4DO)-173, INSTALLATION, Cylinder Head.>

24.Piston

A: SPECIFICATION

Refer to “Cylinder Block” for removal and installation procedures of pistons. <Ref. to ME(H4DO)-211, REMOVAL, Cylinder Block.> <Ref. to ME(H4DO)-230, INSTALLATION, Cylinder Block.>

25.Connecting Rod

A: SPECIFICATION

Refer to “Cylinder Block” for removal and installation procedures of connecting rod.
<Ref. to ME(H4DO)-211, REMOVAL, Cylinder Block.> <Ref. to ME(H4DO)-230, INSTALLATION, Cylinder Block.>

26.Crankshaft

A: SPECIFICATION

Refer to “Cylinder Block” for removal and installation procedures of the crankshaft. <Ref. to ME(H4DO)-211, REMOVAL, Cylinder Block.> <Ref. to ME(H4DO)-230, INSTALLATION, Cylinder Block.>

27.Engine Trouble in General

A: INSPECTION

NOTE:
The “RANK” shown in the chart shows the possibilities of the cause of trouble in order from “Very often” to “Rarely”.
A — Very often
B — Sometimes
C — Rarely

Symptoms	Problem parts etc.	Possible cause	RANK
1. Engine does not start.			
1) Starter does not turn.	Starter	Defective battery-to-starter harness	B
		Defective starter switch	C
		Defective relay	C
		Defective inhibitor switch	C
		Defective starter	B
	Battery	Improper connection of terminal	A
		Run-down battery	A
		Defective charging system	B
	Friction	Seizure of crankshaft and connecting rod bearing	C
		Seized camshaft	C
		Seized or stuck piston and cylinder	C
	Immobilizer system <Ref. to IM(diag)-2, Basic Diagnostic Procedure.>		A
2) Initial combustion does not occur.	Starter	Defective starter	C
	Engine control system <Ref. to EN(H4DO)(diag)-2, Basic Diagnostic Procedure.>		A
	Fuel line	Defective fuel pump and relay	A
		Clogged fuel line	C
		Lack of fuel or insufficient fuel	B
	Timing chain	Trouble	B
		Defective timing	B
	Compression	Incorrect cam clearance	C
		Loosened spark plug or defective gasket	C
		Loosened cylinder head bolt or defective cylinder head gasket	C
		Improper valve sealing	C
		Defective valve stem	C
		Worn or broken valve spring	B
		Worn or stuck piston rings, cylinder liner and piston	C
		Incorrect valve timing	B
		Improper engine oil (low viscosity)	B

Symptoms	Problem parts etc.	Possible cause	RANK
3) Initial combustion occurs.	Engine control system <Ref. to EN(H4DO)(diag)-2, Basic Diagnostic Procedure.>		A
	Intake system	Defective intake manifold gasket	B
		Defective throttle body gasket	B
	Fuel line	Defective fuel pump and relay	C
		Clogged fuel line	C
		Lack of fuel or insufficient fuel	B
	Timing chain	Trouble	B
		Defective timing	B
	Compression	Incorrect cam clearance	C
		Loosened spark plug or defective gasket	C
		Loosened cylinder head bolt or defective cylinder head gasket	C
		Improper valve sealing	C
		Defective valve stem	C
		Worn or broken valve spring	B
		Worn or stuck piston rings, cylinder liner and piston	C
		Incorrect valve timing	B
		Improper engine oil (low viscosity)	B
4) Engine stalls after initial combustion.	Engine control system <Ref. to EN(H4DO)(diag)-2, Basic Diagnostic Procedure.>		A
	Intake system	Loosened or cracked intake duct	B
		Loosened or cracked PCV hose	C
		Loosened or cracked vacuum hose	C
		Defective intake manifold gasket	B
		Defective throttle body gasket	B
		Dirty air cleaner element	C
	Fuel line	Clogged fuel line	C
		Lack of fuel or insufficient fuel	B
	Timing chain	Trouble	B
		Defective timing	B
	Compression	Incorrect cam clearance	C
		Loosened spark plug or defective gasket	C
		Loosened cylinder head bolt or defective cylinder head gasket	C
		Improper valve sealing	C
		Defective valve stem	C
		Worn or broken valve spring	B
		Worn or stuck piston rings, cylinder and piston	C
		Incorrect valve timing	B
		Improper engine oil (low viscosity)	B

Symptoms	Problem parts etc.	Possible cause	RANK
2. Rough idle and engine stall	Engine control system <Ref. to EN(H4DO)(diag)-2, Basic Diagnostic Procedure.>		A
	Intake system	Loosened or cracked intake duct	A
		Loosened or cracked PCV hose	A
		Loosened or cracked vacuum hose	A
		Defective intake manifold gasket	B
		Defective throttle body gasket	B
		Defective PCV valve	C
		Loosened oil filler cap	B
		Dirty air cleaner element	C
	Fuel line	Defective fuel pump and relay	C
		Clogged fuel line	C
		Lack of fuel or insufficient fuel	B
	Timing chain	Defective timing	C
	Compression	Incorrect cam clearance	B
		Loosened spark plug or defective gasket	B
		Loosened cylinder head bolt or defective cylinder head gasket	B
		Improper valve sealing	B
		Defective valve stem	C
		Worn or broken valve spring	B
		Worn or stuck piston rings, cylinder and piston	B
		Incorrect valve timing	A
		Improper engine oil (low viscosity)	B
	Lubrication system	Incorrect oil pressure	B
		Defective rocker cover gasket	C
	Cooling system	Over-heating	C
	Other	Evaporative emission control system malfunction	A
		Stuck or damaged throttle valve	B

Symptoms	Problem parts etc.	Possible cause	RANK
3. Low output, hesitation and poor acceleration	Engine control system <Ref. to EN(H4DO)(diag)-2, Basic Diagnostic Procedure.>		A
	Intake system	Loosened or cracked intake duct	A
		Loosened or cracked PCV hose	A
		Loosened or cracked vacuum hose	B
		Defective intake manifold gasket	B
		Defective throttle body gasket	B
		Defective PCV valve	B
		Loosened oil filler cap	B
		Dirty air cleaner element	A
	Fuel line	Defective fuel pump and relay	B
		Clogged fuel line	B
		Lack of fuel or insufficient fuel	C
	Timing chain	Defective timing	B
	Compression	Incorrect cam clearance	B
		Loosened spark plug or defective gasket	B
		Loosened cylinder head bolt or defective cylinder head gasket	B
		Improper valve sealing	B
		Defective valve stem	C
		Worn or broken valve spring	B
		Worn or stuck piston rings, cylinder and piston	C
		Incorrect valve timing	A
		Improper engine oil (low viscosity)	B
	Lubrication system	Incorrect oil pressure	B
	Cooling system	Over-heating	C
		Over-cooling	C
	Other	Evaporative emission control system malfunction	A

Symptoms	Problem parts etc.	Possible cause	RANK
4. Surging	Engine control system <Ref. to EN(H4DO)(diag)-2, Basic Diagnostic Procedure.>		A
	Intake system	Loosened or cracked intake duct	A
		Loosened or cracked PCV hose	A
		Loosened or cracked vacuum hose	A
		Defective intake manifold gasket	B
		Defective throttle body gasket	B
		Defective PCV valve	B
		Loosened oil filler cap	B
		Dirty air cleaner element	B
	Fuel line	Defective fuel pump and relay	B
		Clogged fuel line	B
		Lack of fuel or insufficient fuel	C
	Timing chain	Defective timing	B
	Compression	Incorrect cam clearance	B
		Loosened spark plug or defective gasket	C
		Loosened cylinder head bolt or defective cylinder head gasket	C
		Improper valve sealing	C
		Defective valve stem	C
		Worn or broken valve spring	C
		Worn or stuck piston rings, cylinder and piston	C
		Incorrect valve timing	A
		Improper engine oil (low viscosity)	B
	Cooling system	Over-heating	B
	Other	Evaporative emission control system malfunction	C
5. Engine does not return to idle.	Engine control system <Ref. to EN(H4DO)(diag)-2, Basic Diagnostic Procedure.>		A
	Intake system	Loosened or cracked vacuum hose	A
	Other	Stuck or damaged throttle valve	A
6. Dieseling (run-on)	Engine control system <Ref. to EN(H4DO)(diag)-2, Basic Diagnostic Procedure.>		A
	Cooling system	Over-heating	B
	Other	Evaporative emission control system malfunction	B
7. After burning in exhaust system	Engine control system <Ref. to EN(H4DO)(diag)-2, Basic Diagnostic Procedure.>		A
	Intake system	Loosened or cracked intake duct	C
		Loosened or cracked PCV hose	C
		Loosened or cracked vacuum hose	B
		Defective PCV valve	B
		Loosened oil filler cap	C
	Timing chain	Defective timing	B
	Compression	Incorrect cam clearance	B
		Loosened spark plug or defective gasket	C
		Loosened cylinder head bolt or defective cylinder head gasket	C
		Improper valve sealing	B
		Defective valve stem	C
		Worn or broken valve spring	C
		Worn or stuck piston rings, cylinder and piston	C
		Incorrect valve timing	A
	Lubrication system	Incorrect oil pressure	C
	Cooling system	Over-cooling	C
	Other	Evaporative emission control system malfunction	C

Symptoms	Problem parts etc.	Possible cause	RANK
8. Knocking	Engine control system <Ref. to EN(H4DO)(diag)-2, Basic Diagnostic Procedure.>		A
	Intake system	Loosened oil filler cap	B
	Timing chain	Defective timing	B
	Compression	Incorrect cam clearance	C
		Incorrect valve timing	B
	Cooling system	Over-heating	A
9. Excessive engine oil consumption	Intake system	Loosened or cracked PCV hose	A
		Defective PCV valve	B
		Loosened oil filler cap	C
	Compression	Defective valve stem	A
		Worn or stuck piston rings, cylinder and piston	A
	Lubrication system	Loosened chain cover attaching bolts and defective gasket	B
		Defective oil filter gasket	B
		Defective crankshaft oil seal	B
		Defective rocker cover gasket	B
		Loosened oil drain plug or defective gasket	B
		Loosened oil pan mounting bolt or defective oil pan	B
10. Excessive fuel consumption	Engine control system <Ref. to EN(H4DO)(diag)-2, Basic Diagnostic Procedure.>		A
	Intake system	Dirty air cleaner element	A
	Timing chain	Defective timing	B
	Compression	Incorrect cam clearance	B
		Loosened spark plug or defective gasket	C
		Loosened cylinder head bolt or defective cylinder gasket	C
		Improper valve sealing	B
		Defective valve stem	C
		Worn or broken valve spring	C
		Worn or stuck piston rings, cylinder and piston	B
		Incorrect valve timing	B
	Lubrication system	Incorrect oil pressure	C
	Cooling system	Over-cooling	C

28.Engine Noise

A: INSPECTION

Type of sound	Condition	Possible cause
Regular clicking sound	Sound increases as engine speed increases.	• Valve mechanism is defective • Incorrect cam clearance • Worn camshaft • Broken valve spring • Defective valve shim
Heavy and dull clank	Oil pressure is low.	• Worn crankshaft bearing • Worn connecting rod bearing
	Oil pressure is normal.	• Loosened flywheel mounting bolt • Damaged engine mounting
High-pitched clank	Sound is noticeable when accelerating with an overload condition.	• Ignition timing advanced • Accumulation of carbon inside combustion chamber • Wrong heat range of spark plug • Improper octane value gasoline
Clank noise when engine speed is between 1,000 and 2,000 r/min	Sound is reduced when the fuel injector connector of the noisy cylinder is disconnected.*	• Worn crankshaft bearing • Worn connecting rod bearing
Knocking sound when engine is operating under idling speed and engine is warm	Sound is reduced when the fuel injector connector of the noisy cylinder is disconnected.*	• Worn cylinder liner and piston ring • Broken or stuck piston ring • Worn piston pin and piton pin hole of piston
	Sound is not reduced if each fuel injector connector is disconnected in turn.*	• Unusually worn valve rocker • Unusually worn valve shim • Worn cam sprocket • Worn journal of cam carrier and camshaft cap
Squeaky sound	—	• Insufficient generator lubrication
Rubbing sound	—	• Poor contact of generator brush and rotor
Gear scream when starting engine	—	• Defective ignition starter switch • Worn gear and starter pinion
Sound like polishing glass with a dry cloth	—	• Defective automatic belt tensioner adjuster assembly (loose V-belt) • Defective water pump shaft
Hissing sound	—	• Insufficient compression • Air leakage in air intake system, hose, connection or manifold
Timing chain noise	—	• Loose timing chain • Timing chain contacting with adjacent part
Valve noise	—	• Incorrect cam clearance

* When disconnecting the fuel injector connector, the malfunction indicator light illuminates and DTC is stored in ECM memory. Therefore, perform the Clear Memory Mode <Ref. to EN(H4DO)(diag)-78, OPERATION, Clear Memory Mode.> and Inspection Mode <Ref. to EN(H4DO)(diag)-64, PROCEDURE, Inspection Mode.> after connecting the fuel injector connector.

EXHAUST

EX(H4DO)

Page

1. General Description 2
2. Front Exhaust Pipe 5
3. Center Exhaust Pipe 12
4. Rear Exhaust Pipe 16
5. Muffler 19

1. General Description

A: COMPONENT

1. FRONT EXHAUST PIPE AND CENTER EXHAUST PIPE

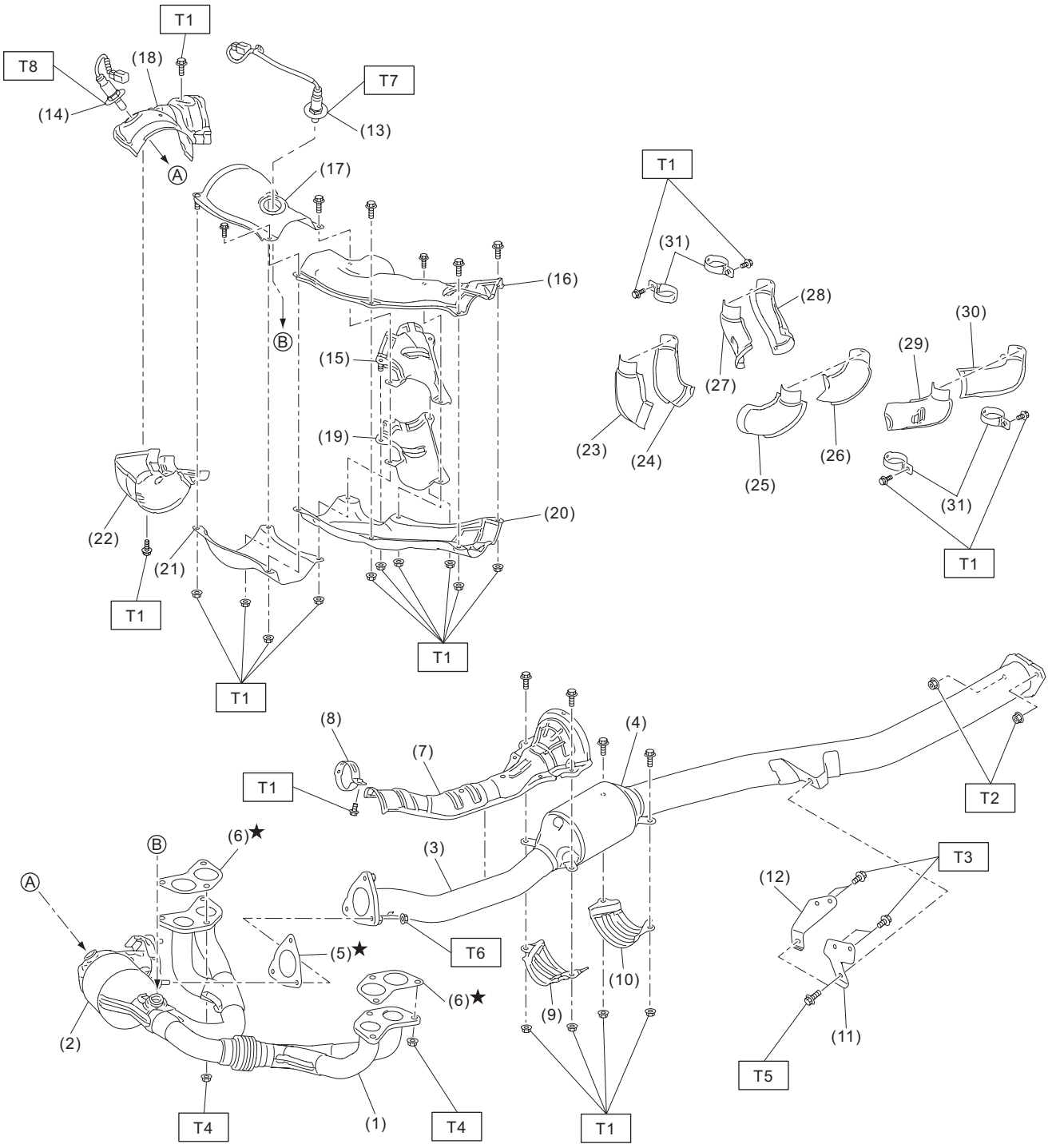

EX-10013

(1) Front exhaust pipe
(2) Front catalytic converter
(3) Center exhaust pipe
(4) Rear catalytic converter
(5) Gasket
(6) Gasket
(7) Center exhaust pipe upper cover
(8) Band
(9) Center exhaust pipe lower cover A
(10) Center exhaust pipe lower cover B
(11) Hanger bracket (CVT model)
(12) Hanger bracket (MT model)
(13) Front oxygen (A/F) sensor
(14) Rear oxygen sensor
(15) Front exhaust pipe upper cover A
(16) Front exhaust pipe upper cover B
(17) Front exhaust pipe upper cover C
(18) Front exhaust pipe upper cover D
(19) Front exhaust pipe lower cover A
(20) Front exhaust pipe lower cover B
(21) Front exhaust pipe lower cover C
(22) Front exhaust pipe lower cover D
(23) Front exhaust pipe side cover A
(24) Front exhaust pipe side cover B
(25) Front exhaust pipe side cover C
(26) Front exhaust pipe side cover D
(27) Front exhaust pipe side cover E
(28) Front exhaust pipe side cover F
(29) Front exhaust pipe side cover G
(30) Front exhaust pipe side cover H
(31) Band

Tightening torque: N·m (kgf-m, ft-lb)
T1: 13 (1.3, 9.6)
T2: 18 (1.8, 13.3)
T3: 23 (2.3, 17.0)
T4: 30 (3.1, 22.1)
T5: 35 (3.6, 25.8)
T6: 42.5 (4.3, 31.3)
T7: <Ref. to FU(H4DO)-77, INSTALLATION, Front Oxygen (A/F) Sensor.>
T8: <Ref. to FU(H4DO)-80, INSTALLATION, Rear Oxygen Sensor.>

2. REAR EXHAUST PIPE AND MUFFLER

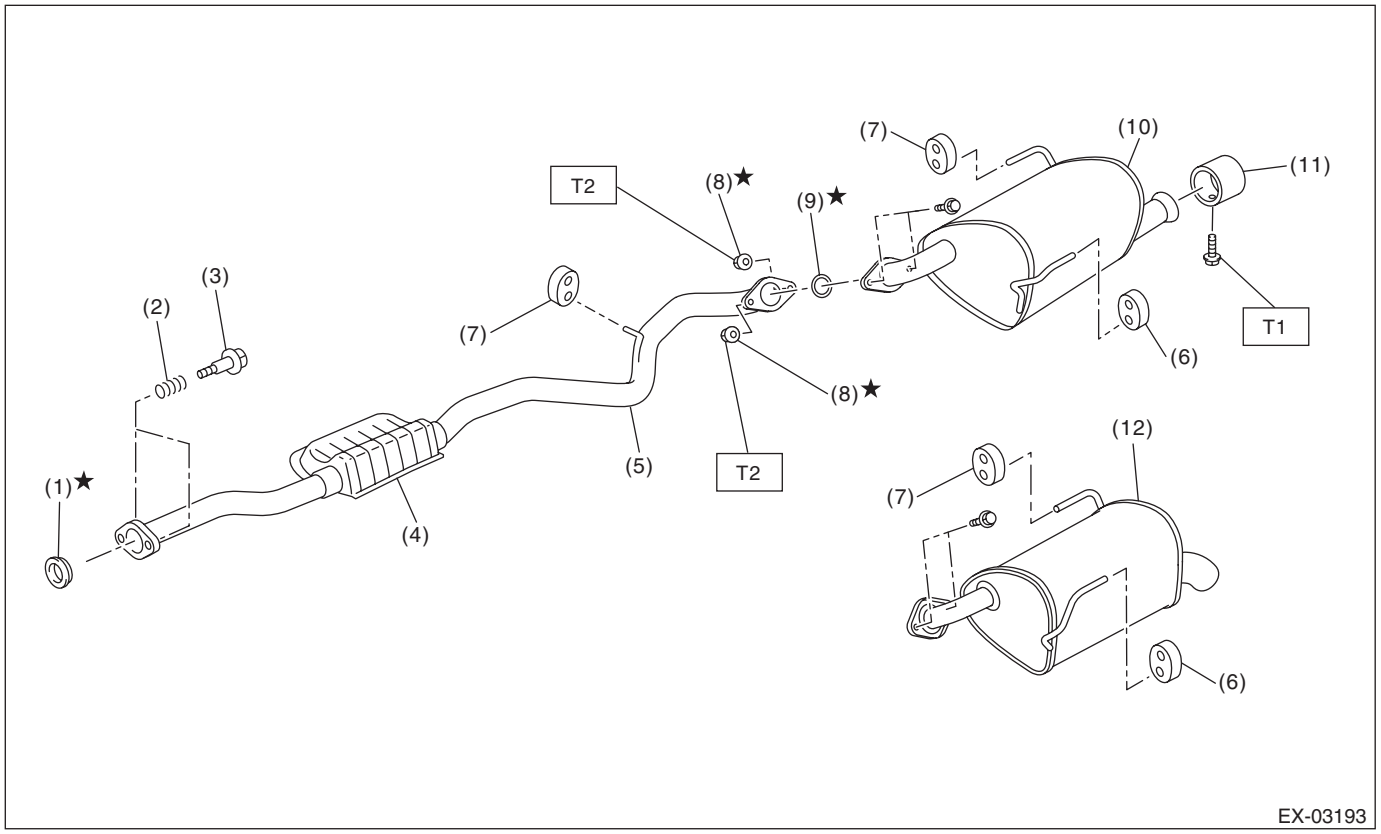

(1) Gasket
(2) Spring
(3) Bolt
(4) Chamber
(5) Rear exhaust pipe
(6) Cushion rubber (with protrusion)
(7) Cushion rubber (without protrusion)
(8) Self-locking nut
(9) Gasket
(10) Muffler (sedan model)
(11) Muffler cutter (sedan model)
(12) Muffler (OUTBACK model)

Tightening torque: N·m (kgf-m, ft-lb)
T1: 7.5 (0.8, 5.5)
T2: 48 (4.9, 35.4)

3. HEAT SHIELD COVER

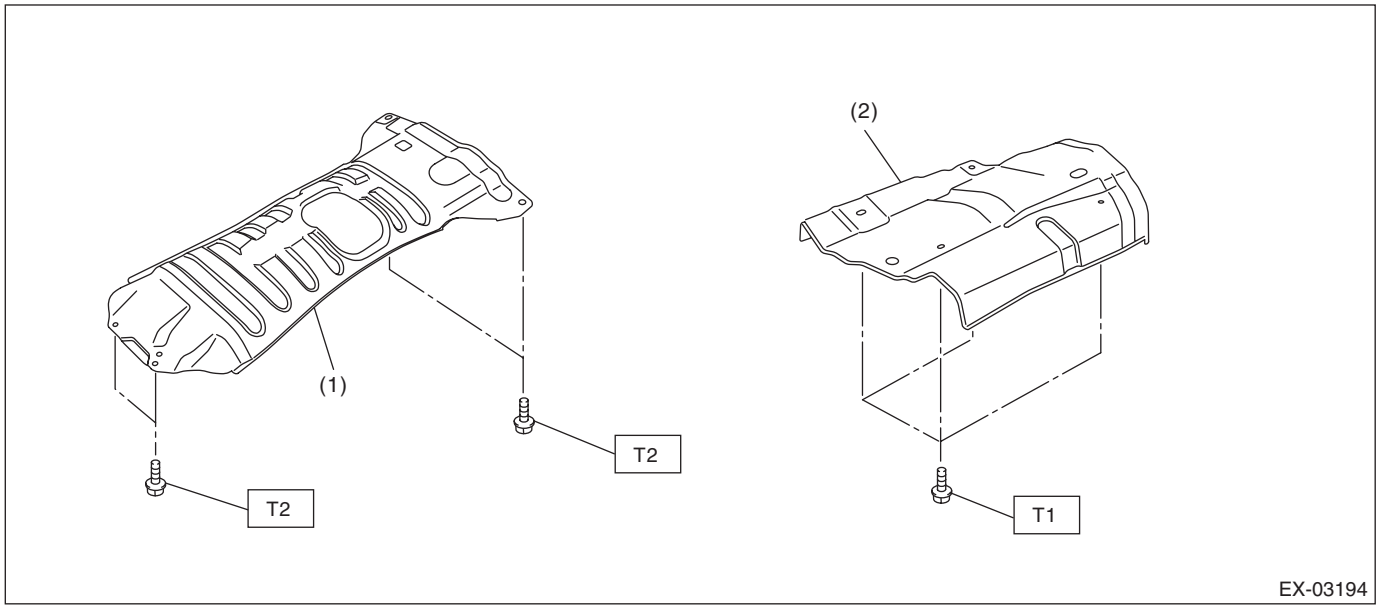

(1) Center exhaust cover
(2) Rear exhaust cover

Tightening torque: N·m (kgf-m, ft-lb)
T1: 10 (1.0, 7.4)
T2: 18 (1.8, 13.3)

B: CAUTION

- Prior to starting work, pay special attention to the following:
  1. Always wear work clothes, a work cap, and protective shoes. Additionally, wear a helmet, protective goggles, etc. if necessary.
  2. Protect the vehicle using a seat cover, fender cover, etc.
  3. Prepare the service tools, clean cloth, containers to catch grease and oil, etc.
- Vehicle components are extremely hot immediately after driving. Be wary of receiving burns from heated parts.
- When performing a repair, identify the cause of trouble and avoid unnecessary removal, disassembly and replacement.
- Before disconnecting connectors of sensors or units, be sure to disconnect the ground cable from battery.
- Always use the jack-up point when the shop jacks or rigid racks are used to support the vehicle.
- Remove contamination including dirt and corrosion before removal, installation, disassembly or assembly.
- Keep the removed parts in order and protect them from dust and dirt.
- All removed parts, if to be reused, should be reinstalled in the original positions with attention to the correct directions, etc.
- Bolts, nuts and washers should be replaced with new parts as required.
- Be sure to tighten the fasteners including bolts and nuts to the specified torque.
- If any grease adheres to the exhaust pipe, wipe it off. Otherwise a fire may happen.

2. Front Exhaust Pipe

A: REMOVAL

CAUTION:
Vehicle components are extremely hot after driving. Be wary of receiving burns from heated parts.
1) Disconnect the ground terminal from battery sensor. <Ref. to RC-4, BATTERY, NOTE, Repair Contents.>
2) Lift up the vehicle.
3) Remove the under cover. <Ref. to EI-28, REMOVAL, Front Under Cover.>
4) Disconnect the front oxygen (A/F) sensor connector (A) and rear oxygen sensor connector (B) and remove the clip (C) fastening the harness.

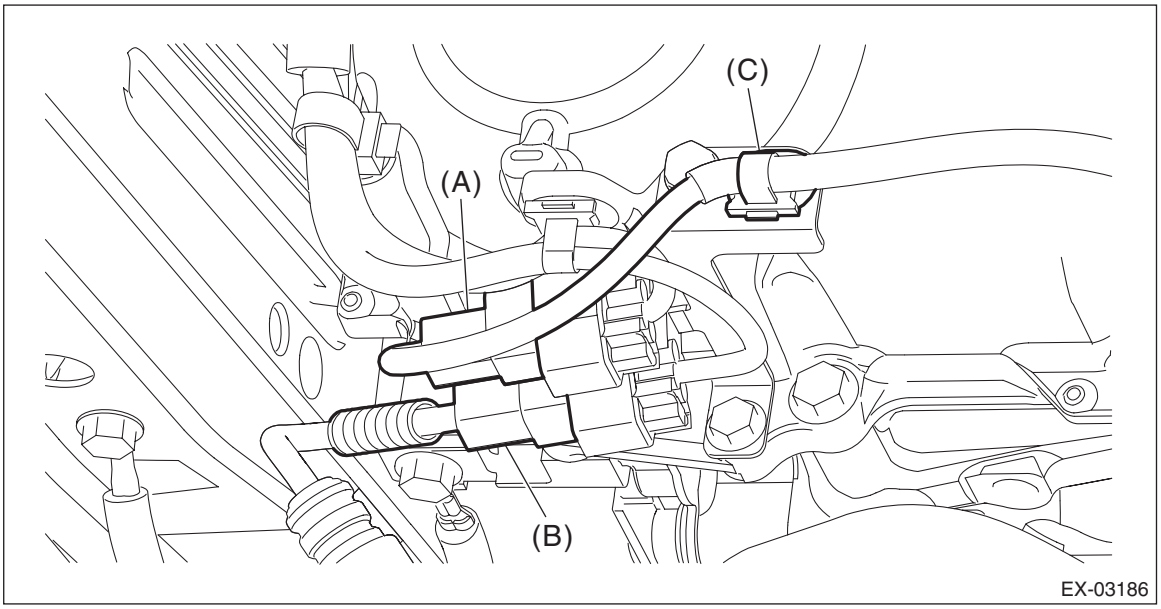

5) Remove the bolts, springs, and nuts securing the rear exhaust pipe to the center exhaust pipe.

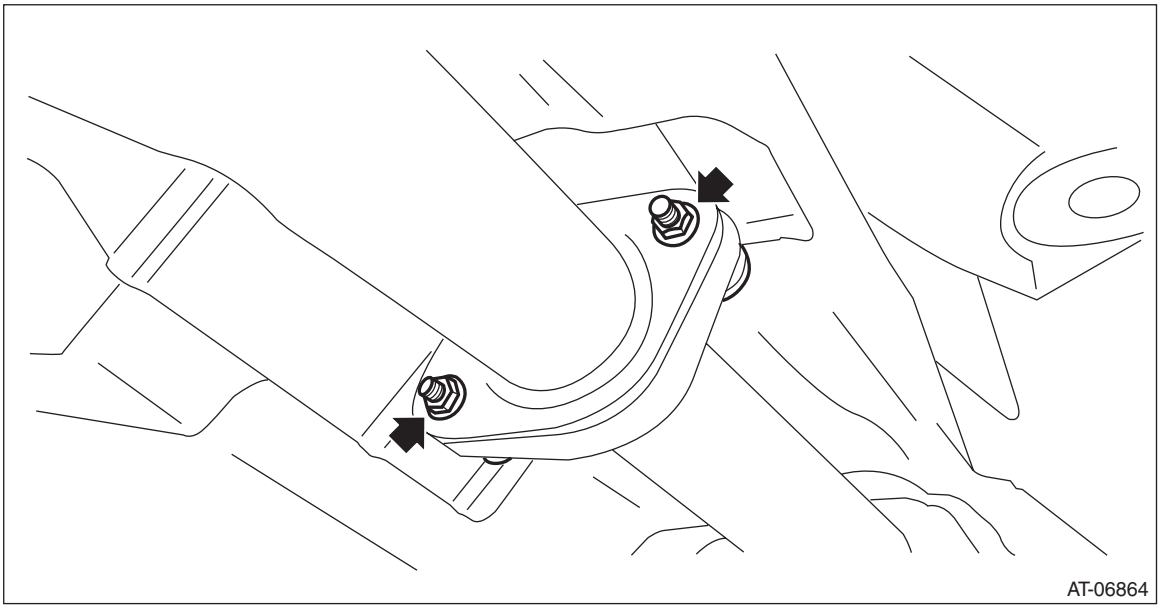

6) Remove the bolt which holds center exhaust pipe to hanger bracket.

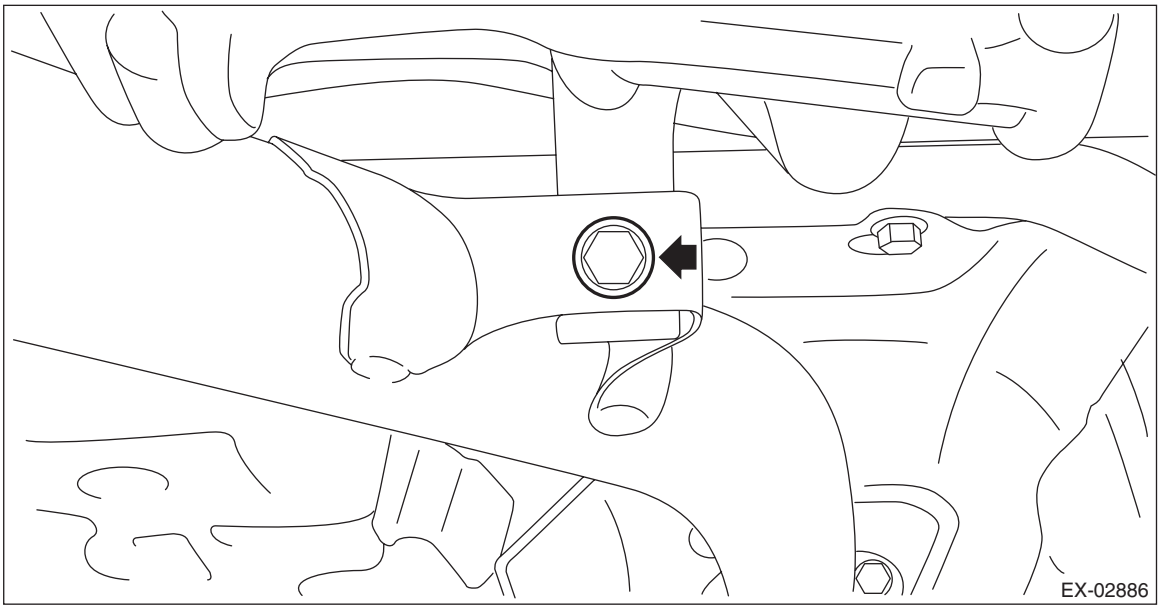

7) Remove the nuts which hold front exhaust pipe onto cylinder heads.

CAUTION:
Be careful not to drop the front exhaust pipe and center exhaust pipe assembly.

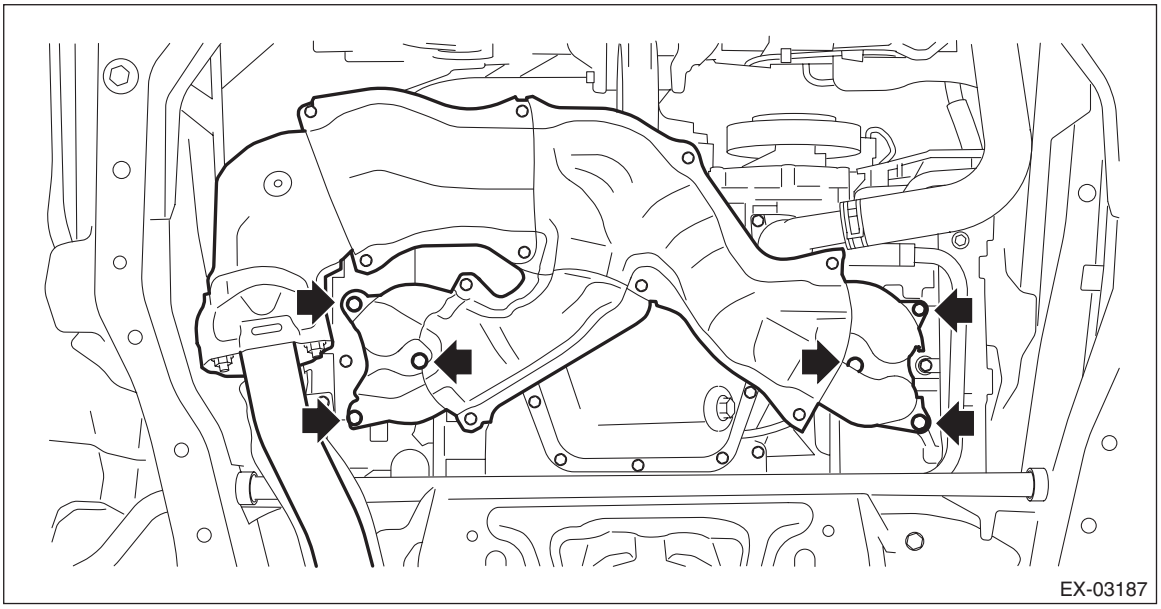

8) Remove the front exhaust pipe and center exhaust pipe from vehicle as a unit.

CAUTION:
• The front exhaust pipe and center exhaust pipe assembly are very heavy. Be careful not to drop the exhaust pipes when removing.
• After removing the front exhaust pipe and center exhaust pipe assembly, do not pull the rear exhaust pipe with excessive force.

B: INSTALLATION

1) Install the front exhaust pipe and center exhaust pipe as a unit to the vehicle.

NOTE:
Use a new gasket.

2) Temporarily tighten the nuts which hold front exhaust pipe to cylinder heads.

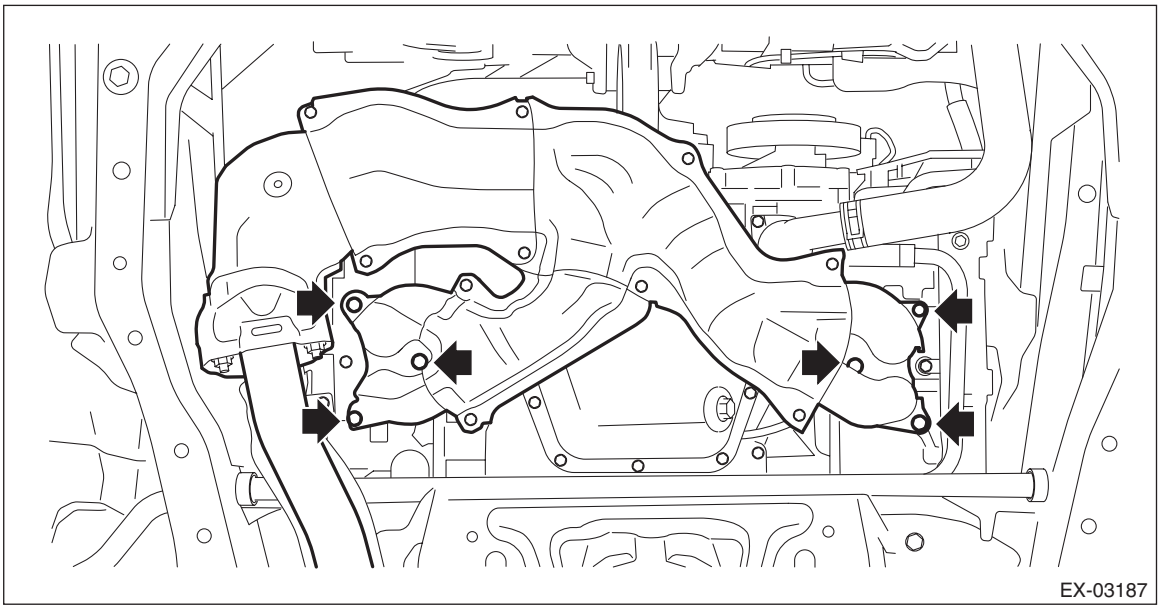

3) Install the bolts, springs, and nuts which secure the rear exhaust pipe to the center exhaust pipe.

NOTE:
Use a new gasket.

Tightening torque:
18 N·m (1.8 kgf-m, 13.3 ft-lb)

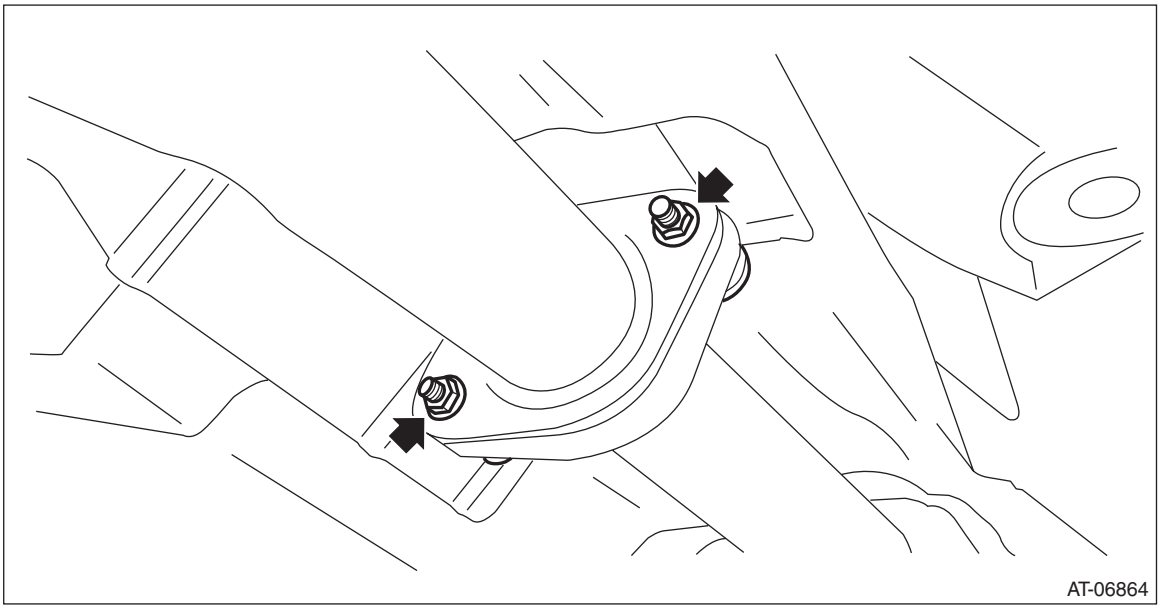

4) Tighten the bolts which secure the center exhaust pipe to the hanger bracket.

Tightening torque:
35 N·m (3.6 kgf-m, 25.8 ft-lb)

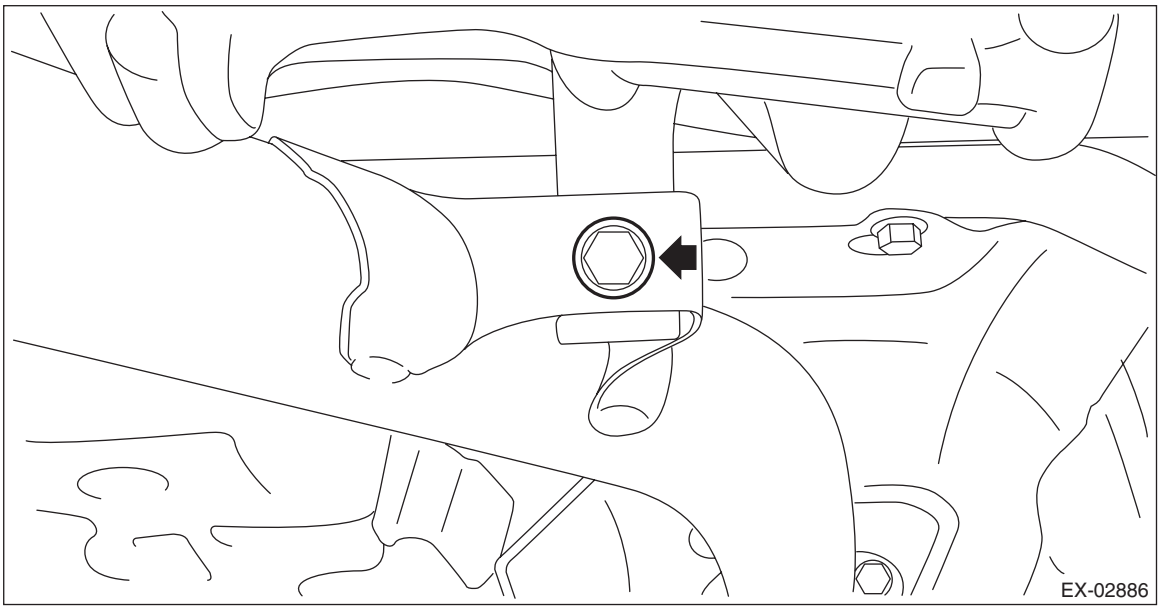

5) Tighten the nuts which hold front exhaust pipe to cylinder heads.

Tightening torque:
30 N·m (3.1 kgf-m, 22.1 ft-lb)

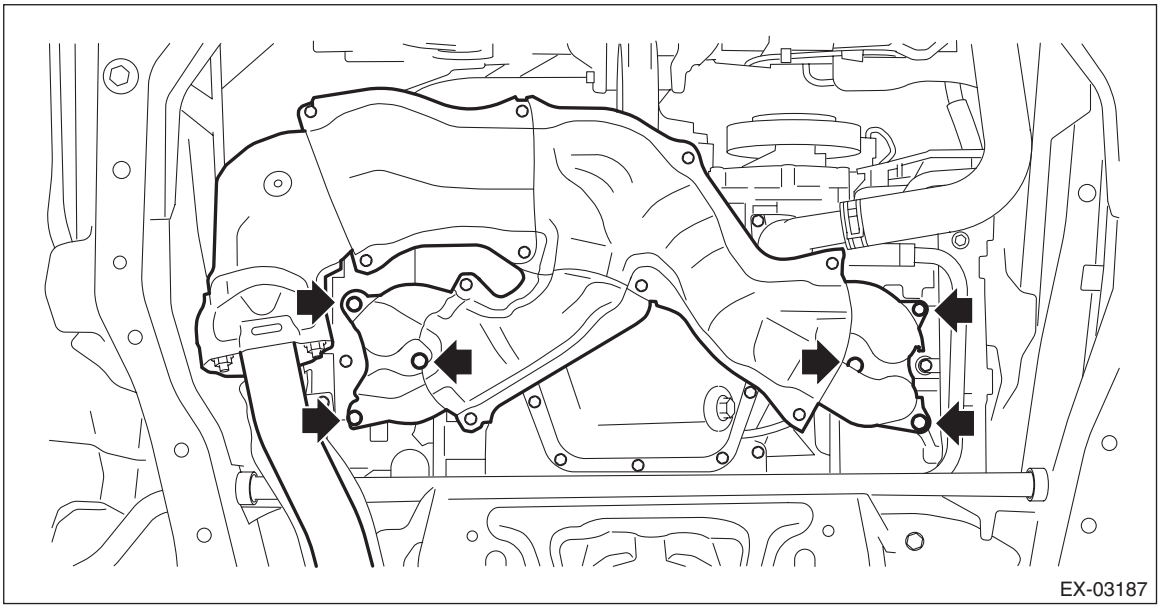

6) Connect the front oxygen (A/F) sensor connector (A) and rear oxygen sensor connector (B), and fasten the harness with the clip (C).

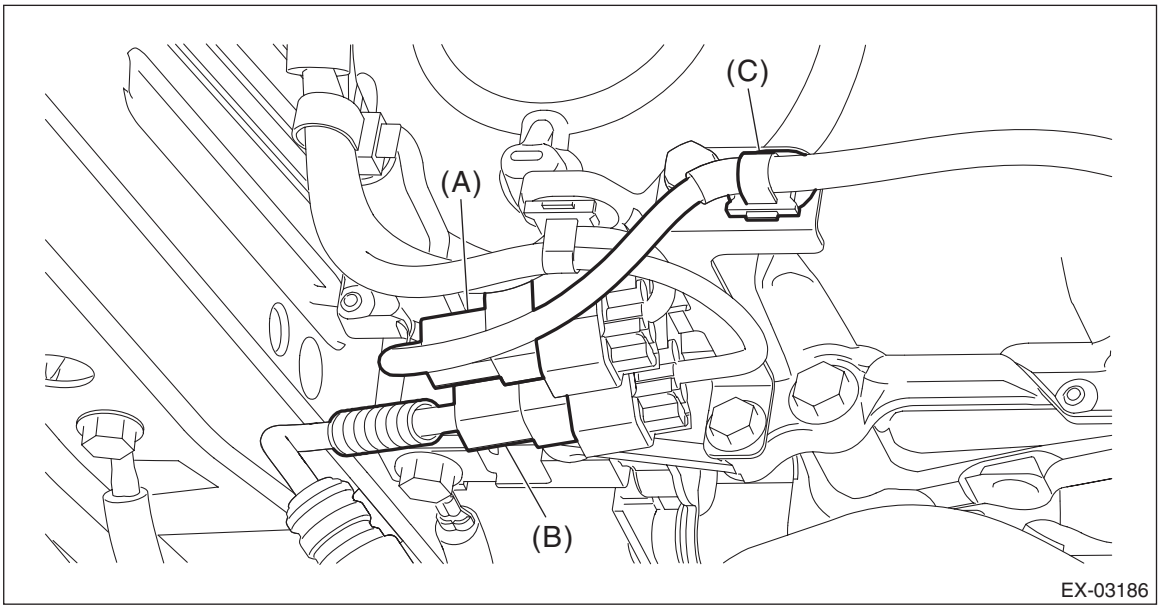

7) Install the under cover. <Ref. to EI-28, INSTALLATION, Front Under Cover.>
8) Lower the vehicle.
9) Connect the ground terminal to battery sensor. <Ref. to RC-4, BATTERY, NOTE, Repair Contents.>

C: DISASSEMBLY

1) Remove the front oxygen (A/F) sensor and rear oxygen sensor from front exhaust pipe. <Ref. to FU(H4DO)-76, REMOVAL, Front Oxygen (A/F) Sensor.> <Ref. to FU(H4DO)-79, REMOVAL, Rear Oxygen Sensor.>
2) Remove the center exhaust pipe from the front exhaust pipe.

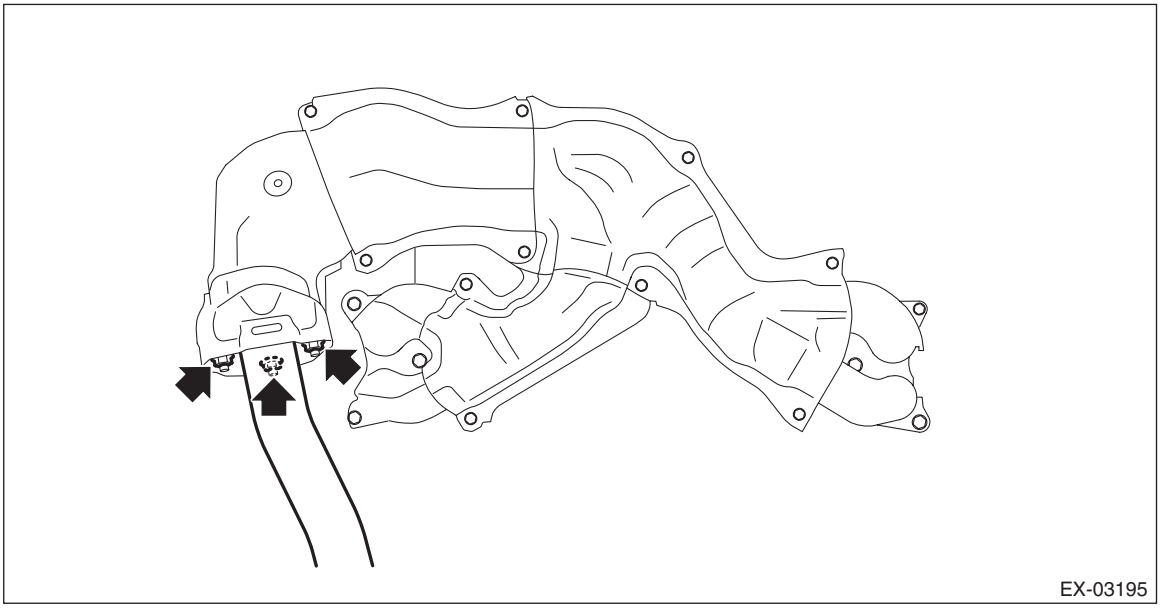

3) Remove each cover from the front exhaust pipe.

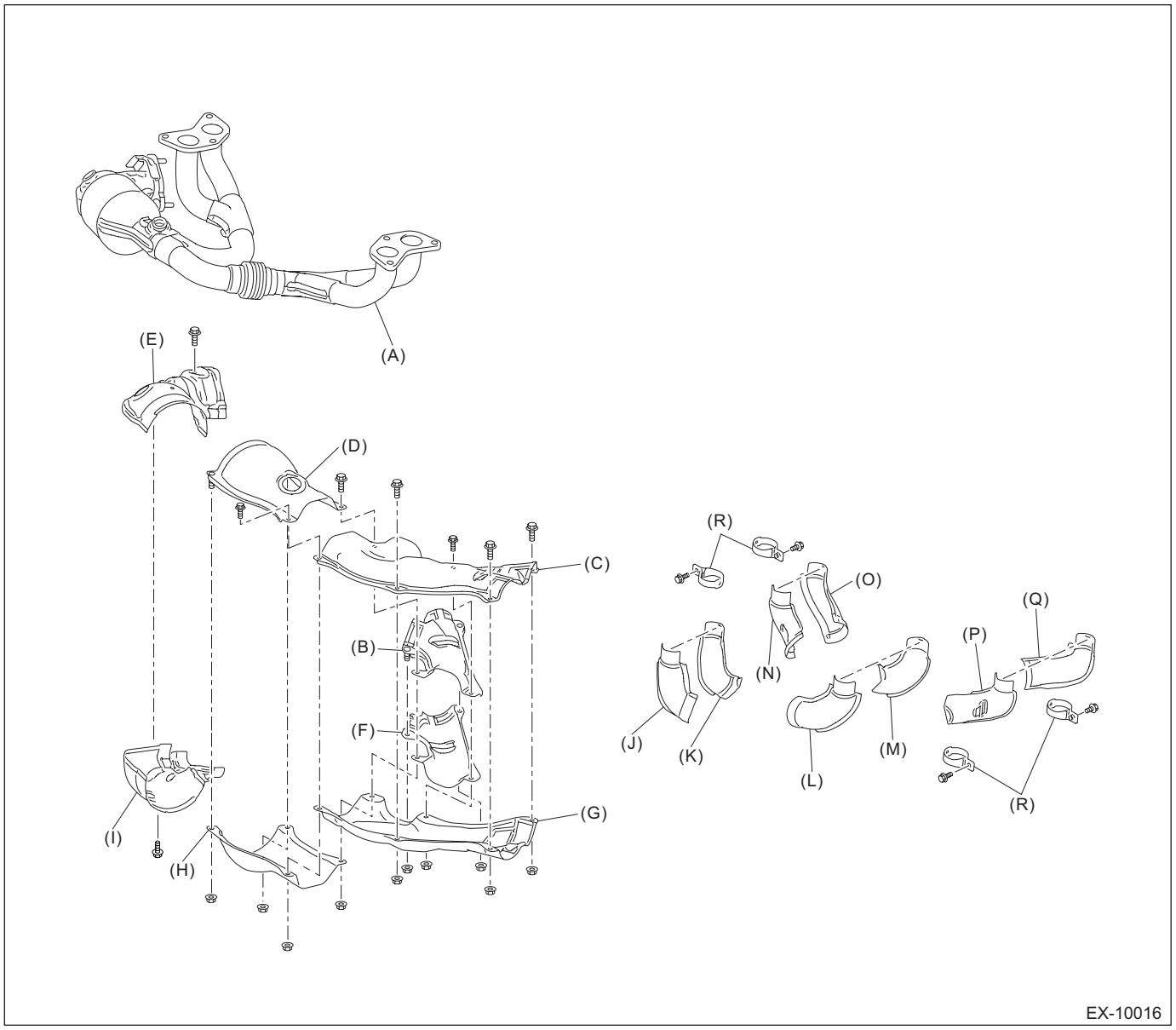

(A)	Front exhaust pipe	(G)	Front exhaust pipe lower cover B	(M)	Front exhaust pipe side cover D
(B)	Front exhaust pipe upper cover A	(H)	Front exhaust pipe lower cover C	(N)	Front exhaust pipe side cover E
(C)	Front exhaust pipe upper cover B	(I)	Front exhaust pipe lower cover D	(O)	Front exhaust pipe side cover F
(D)	Front exhaust pipe upper cover C	(J)	Front exhaust pipe side cover A	(P)	Front exhaust pipe side cover G
(E)	Front exhaust pipe upper cover D	(K)	Front exhaust pipe side cover B	(Q)	Front exhaust pipe side cover H
(F)	Front exhaust pipe lower cover A	(L)	Front exhaust pipe side cover C	(R)	Band

D: ASSEMBLY

1) Install each cover to the front exhaust pipe.

Tightening torque:
13 N·m (1.3 kgf-m, 9.6 ft-lb)

2) Install the center exhaust pipe to front exhaust pipe.

NOTE:
Use a new gasket.

Tightening torque:
42.5 N·m (4.3 kgf-m, 31.3 ft-lb)

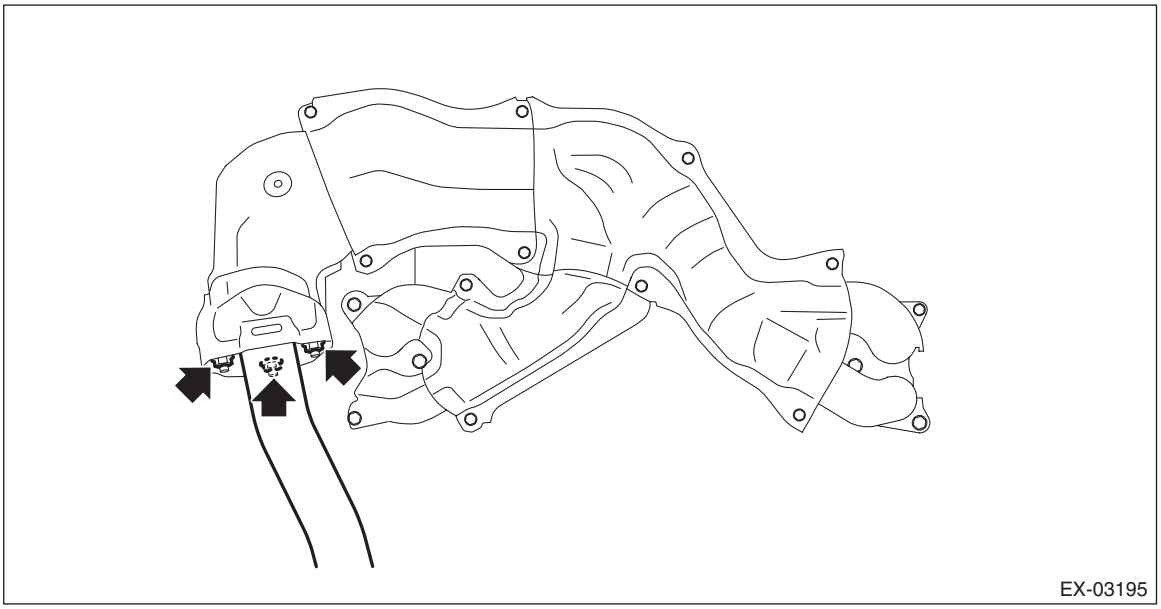

3) Install the front oxygen (A/F) sensor and rear oxygen sensor to the front exhaust pipe. <Ref. to FU(H4DO)-77, INSTALLATION, Front Oxygen (A/F) Sensor.> <Ref. to FU(H4DO)-80, INSTALLATION, Rear Oxygen Sensor.>

E: INSPECTION

1) Check the connections and welded parts for exhaust leaks.
2) Make sure there are no holes or rusting.

3. Center Exhaust Pipe

A: REMOVAL

1) Lift up the vehicle.
2) Remove the bolts, springs, and nuts securing the rear exhaust pipe to the center exhaust pipe.

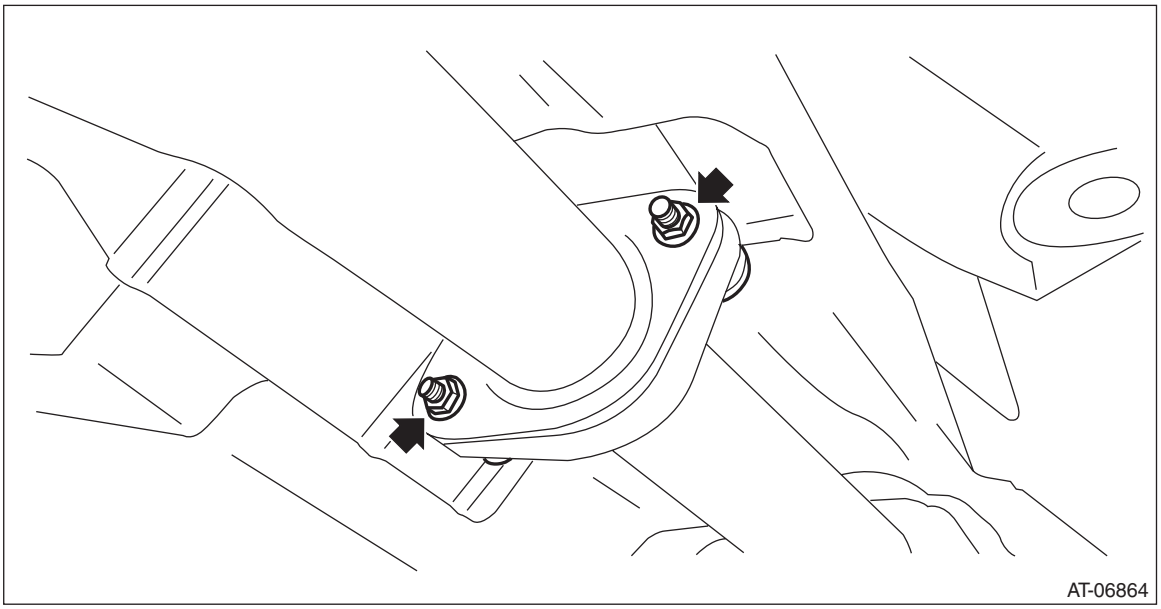

3) Remove the bolt which holds center exhaust pipe to hanger bracket.

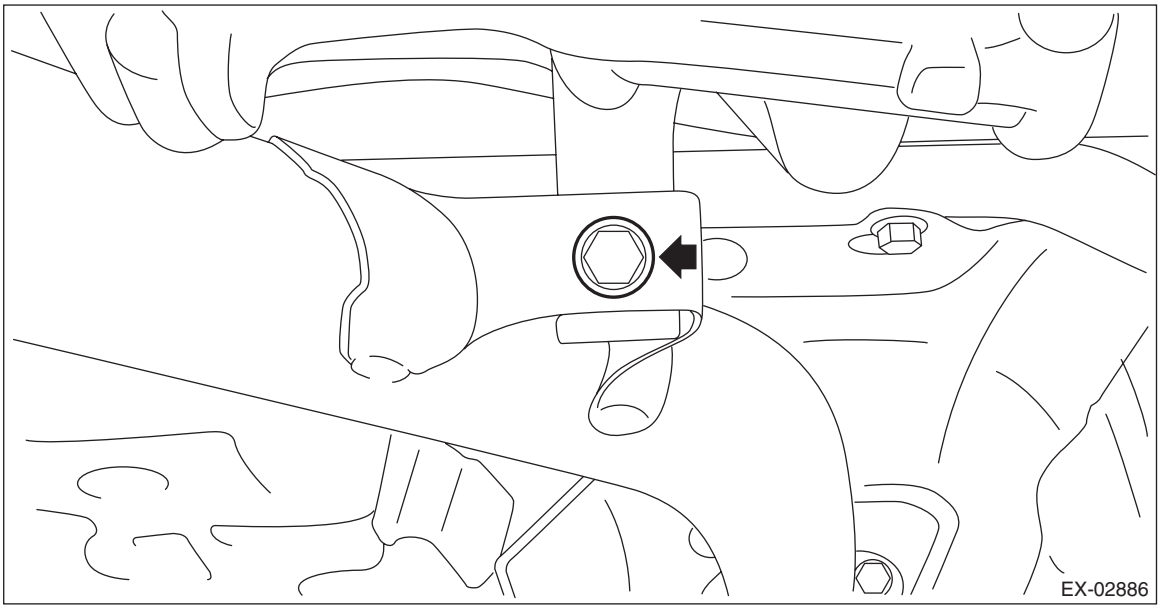

4) Remove the center exhaust pipe from the front exhaust pipe.

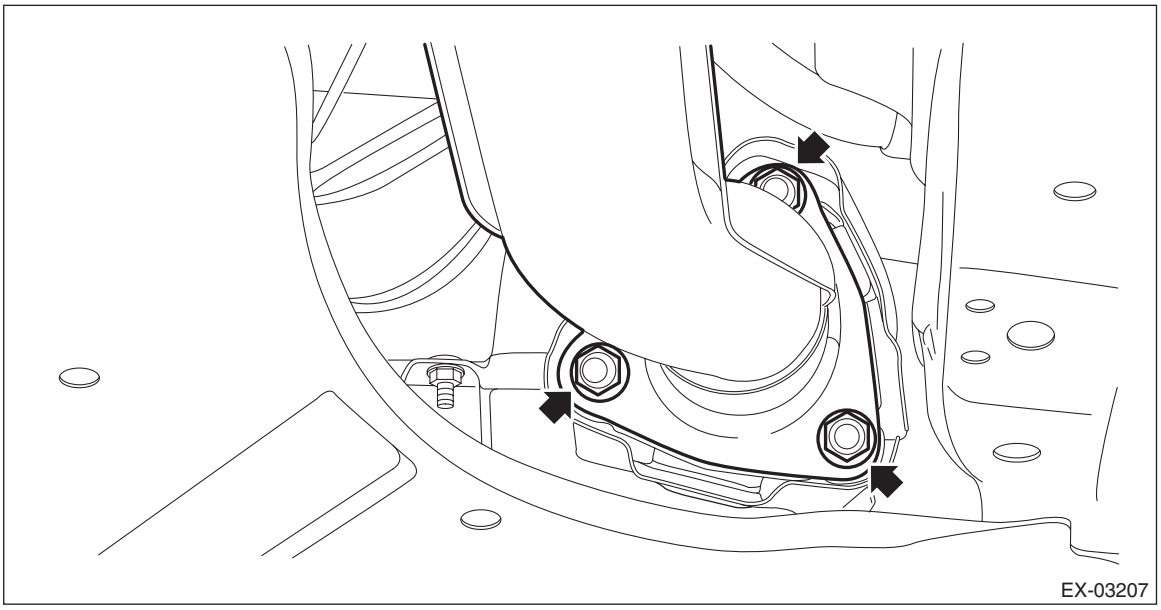

B: INSTALLATION

1) Temporarily tighten the nuts which secure the center exhaust pipe to the front exhaust pipe.

NOTE:
Use a new gasket.

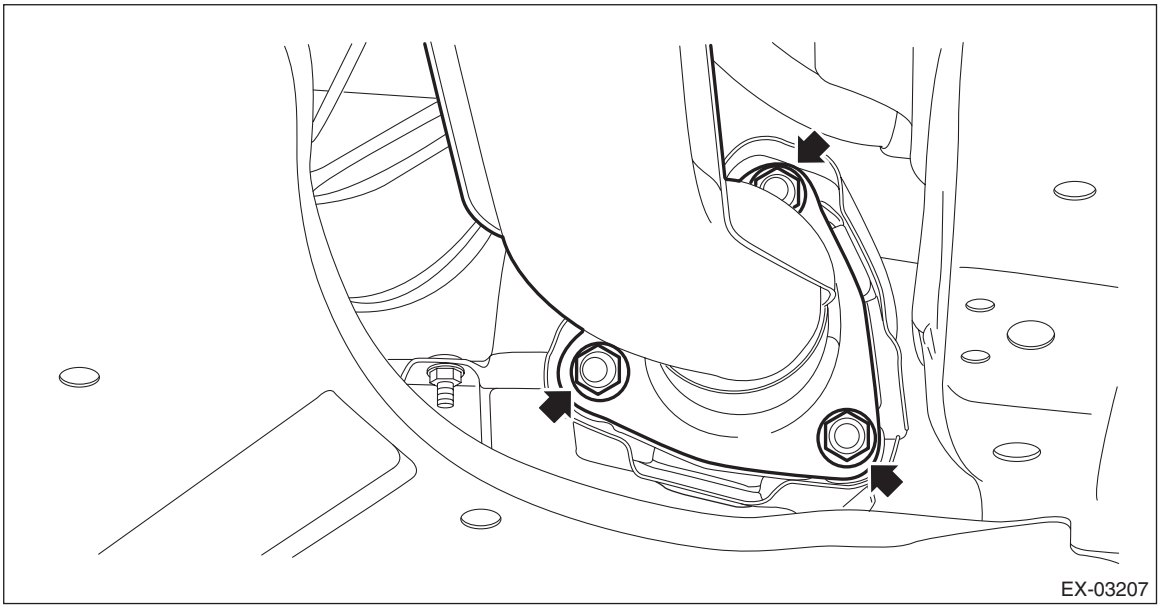

2) Install the bolts, springs, and nuts which secure the rear exhaust pipe to the center exhaust pipe.

NOTE:
Use a new gasket.

Tightening torque:
18 N·m (1.8 kgf-m, 13.3 ft-lb)

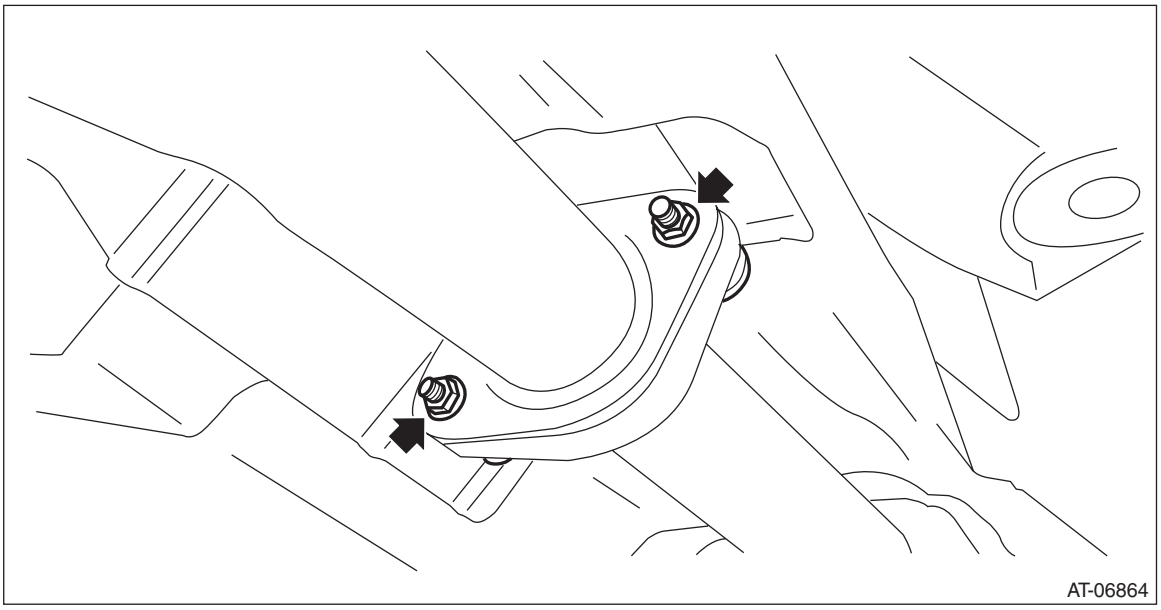

3) Tighten the bolts which secure the center exhaust pipe to the hanger bracket.

Tightening torque:
35 N·m (3.6 kgf-m, 25.8 ft-lb)

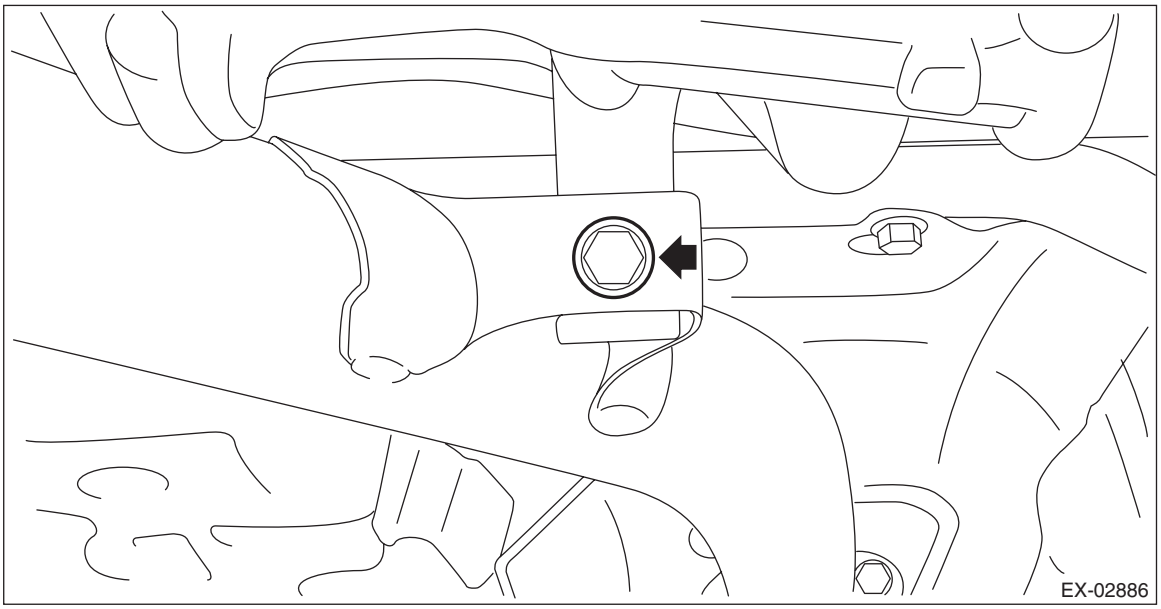

4) Tighten the nuts which secure the center exhaust pipe to the front exhaust pipe.

Tightening torque:
42.5 N·m (4.3 kgf-m, 31.3 ft-lb)

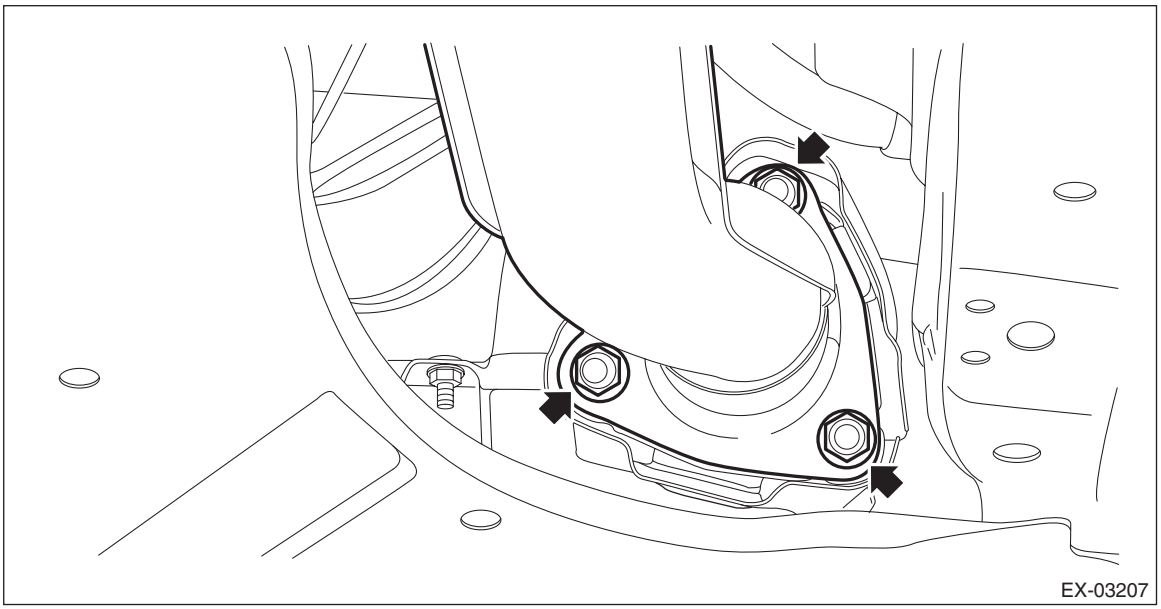

C: DISASSEMBLY

Remove each cover from the center exhaust pipe.

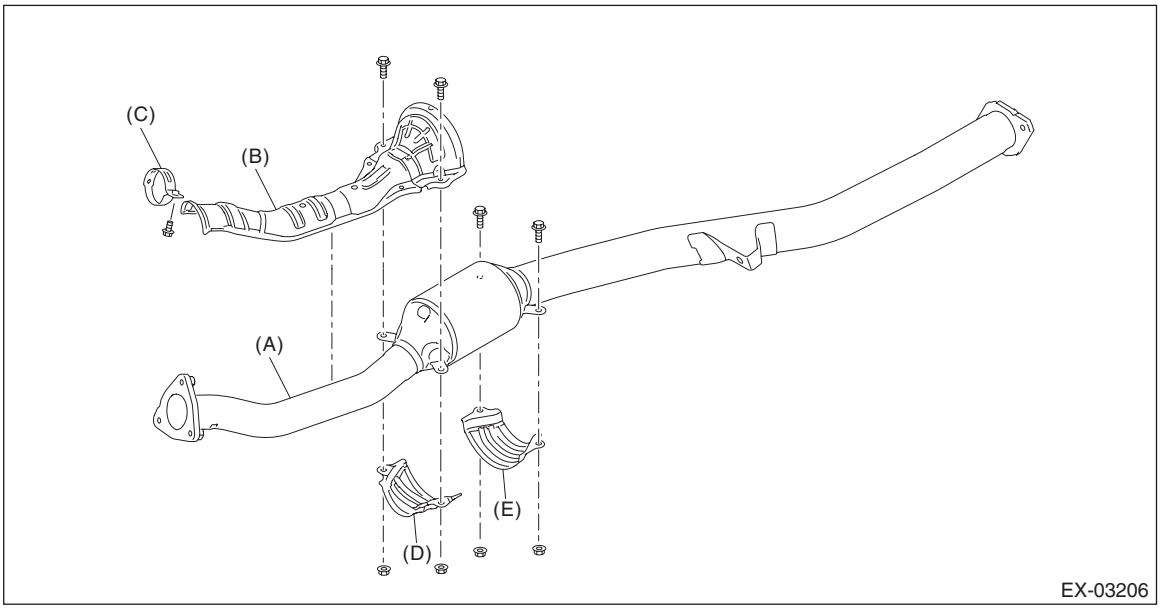

(A) Center exhaust pipe
(B) Center exhaust pipe upper cover
(C) Band
(D) Center exhaust pipe lower cover A
(E) Center exhaust pipe lower cover B

D: ASSEMBLY

Install each cover to the center exhaust pipe.

Tightening torque:
13 N·m (1.3 kgf-m, 9.6 ft-lb)

E: INSPECTION

1) Check the connections and welded parts for exhaust leaks.
2) Make sure there are no holes or rusting.

4. Rear Exhaust Pipe

A: REMOVAL

CAUTION:
Vehicle components are extremely hot after driving. Be wary of receiving burns from heated parts.
1) Lift up the vehicle.
2) Remove the bolts, springs, and nuts securing the center exhaust pipe to the rear exhaust pipe.

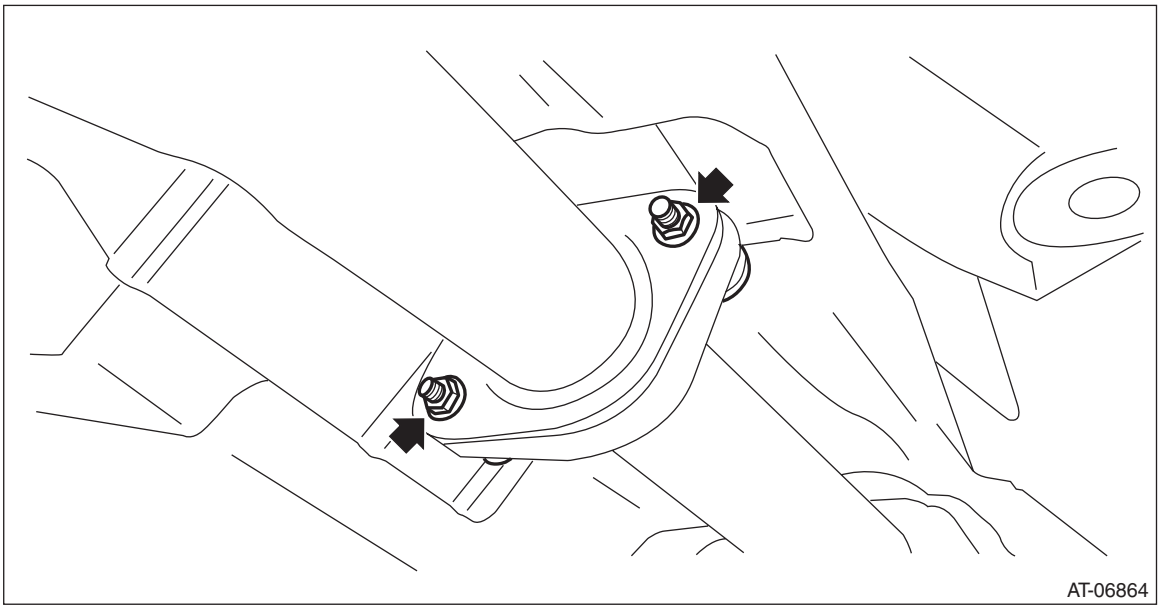

3) Remove the bolts and self-locking nuts securing the mufflers to the rear exhaust pipes.

CAUTION:
Be careful not to drop the rear exhaust pipe.

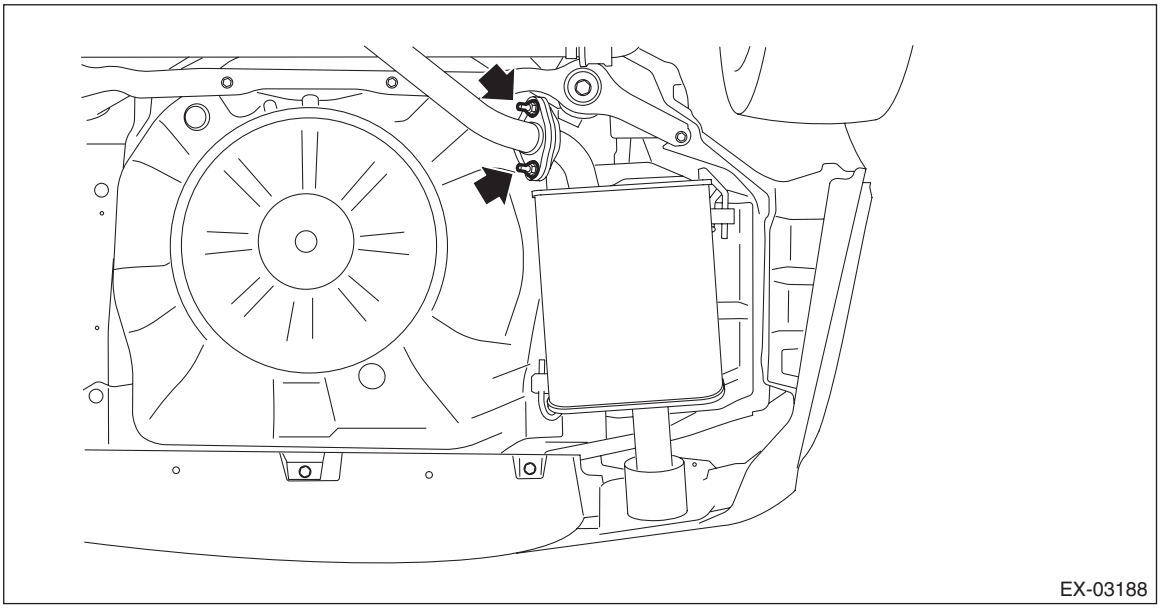

4) Apply a coat of spray type lubricant to the mating area of cushion rubber.
5) Remove the rear exhaust pipe from the cushion rubber.

CAUTION:
Be careful not to let the muffler contact the rear bumper.

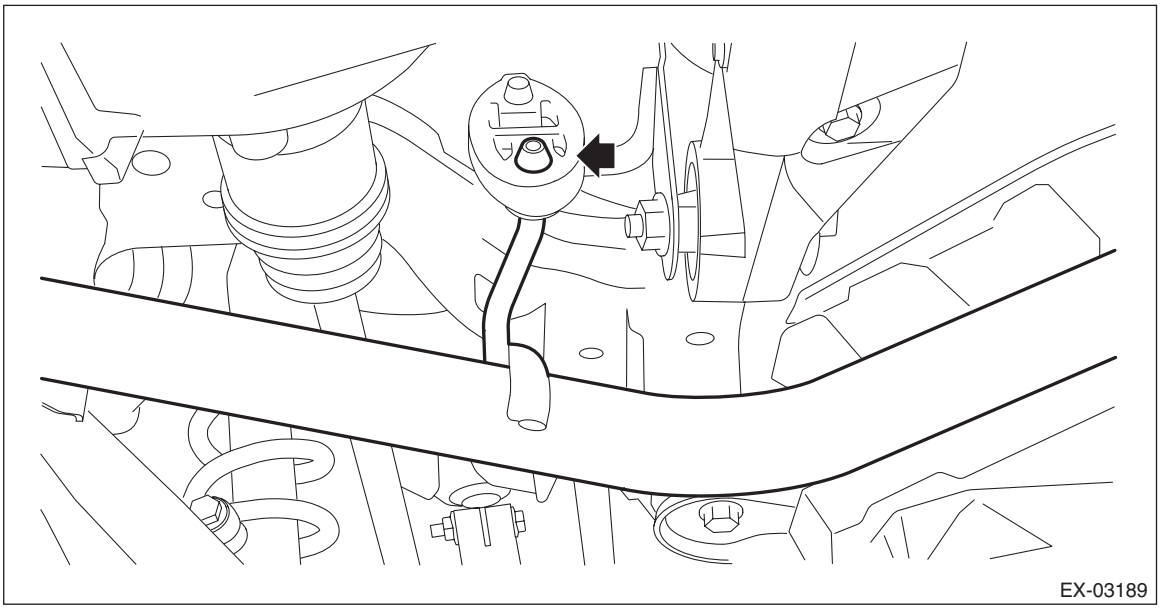

B: INSTALLATION

1) Apply a coat of spray type lubricant to the mating area of cushion rubber.
2) Install the rear exhaust pipe to cushion rubber.

NOTE:
After assembling, degrease the lubricant which was applied to the cushion rubber while removing/installing.

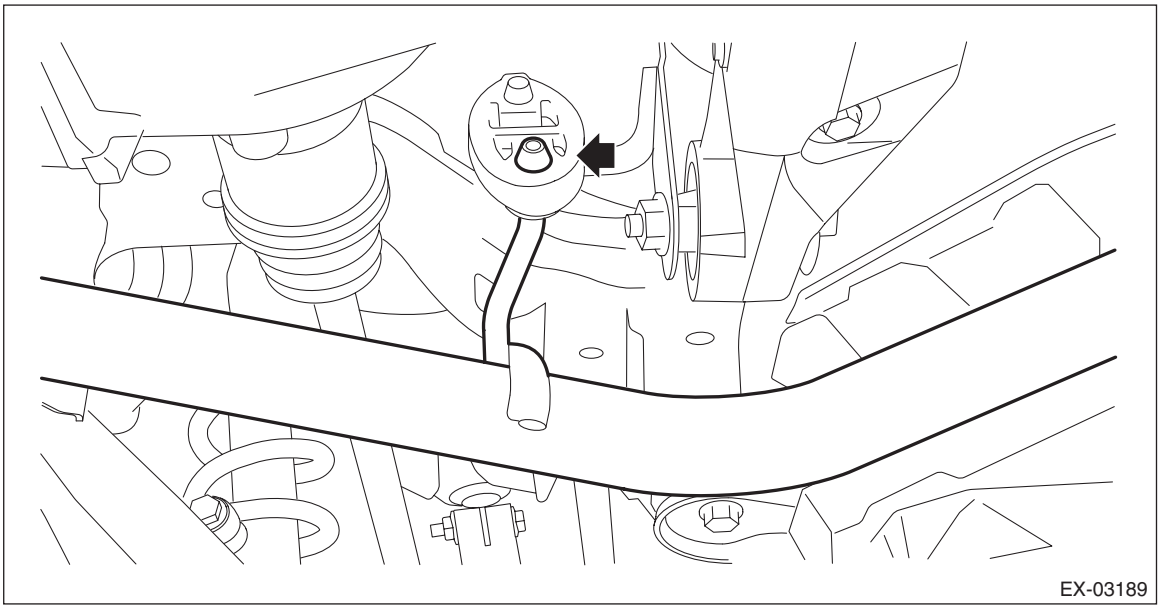

3) Install the bolts and self-locking nuts which secure the muffler to the rear exhaust pipe.

NOTE:
Use a new gasket and self-locking nut.

Tightening torque:
48 N·m (4.9 kgf-m, 35.4 ft-lb)

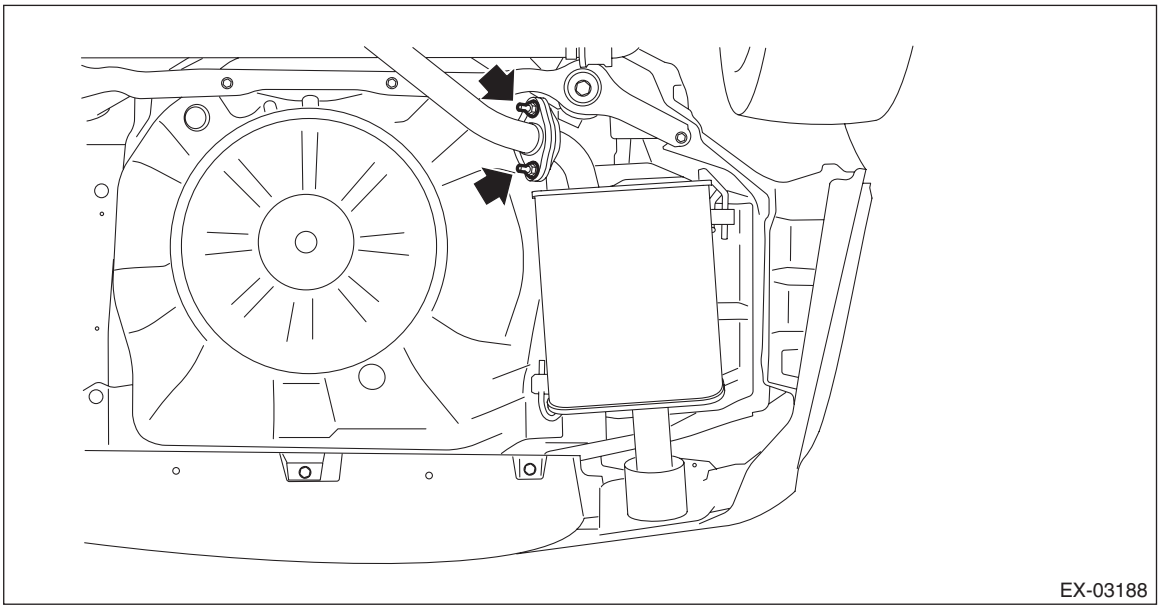

4) Install the bolts, springs, and nuts which secure the center exhaust pipe to the rear exhaust pipe.

NOTE:
Use a new gasket.

Tightening torque:
18 N·m (1.8 kgf-m, 13.3 ft-lb)

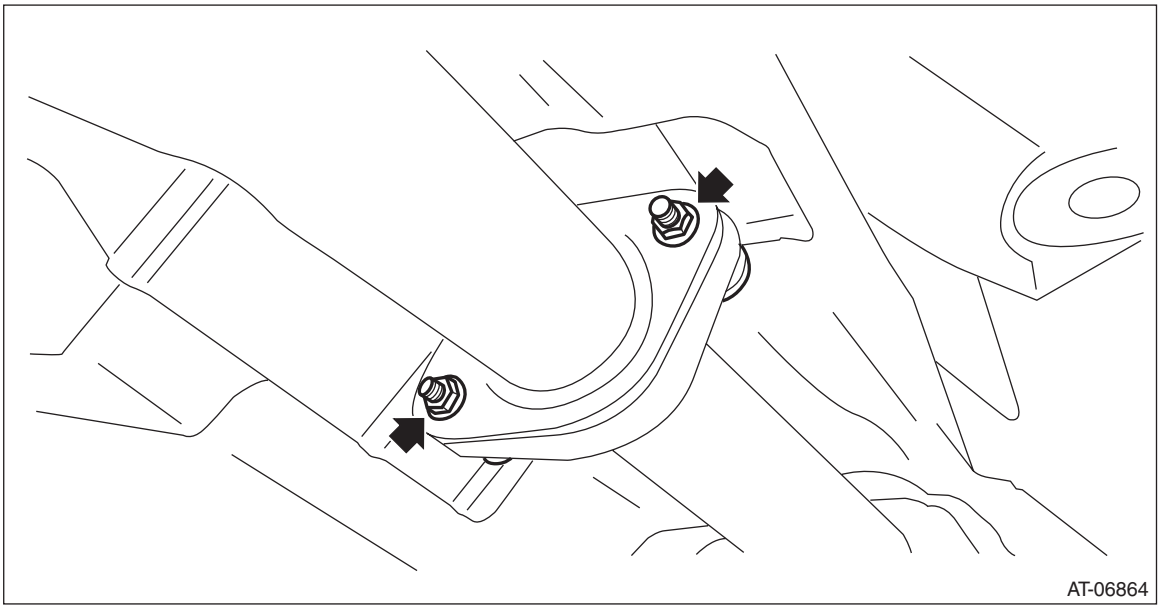

5) Lower the vehicle.

C: INSPECTION

1) Check the connections and welded parts for exhaust leaks.
2) Make sure there are no holes or rusting.
3) Check the cushion rubber for wear or crack.

5. Muffler

A: REMOVAL

CAUTION:
Vehicle components are extremely hot after driving. Be wary of receiving burns from heated parts.
1) Lift up the vehicle.
2) Apply a coat of spray type lubricant to the mating area of cushion rubber.
3) Remove the bolts and self-locking nuts which secure the rear exhaust pipe to the muffler.
4) Remove the muffler from the cushion rubber.

CAUTION:
Be careful not to drop the muffler during removal.

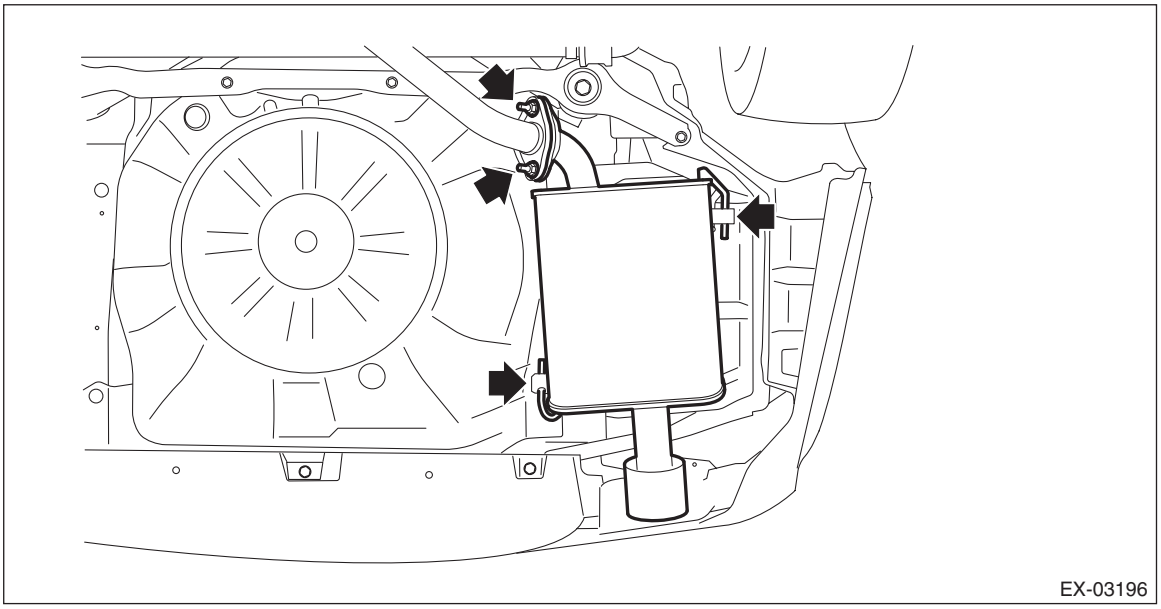

5) Remove the cushion rubber and heat shield cover from the vehicle body.

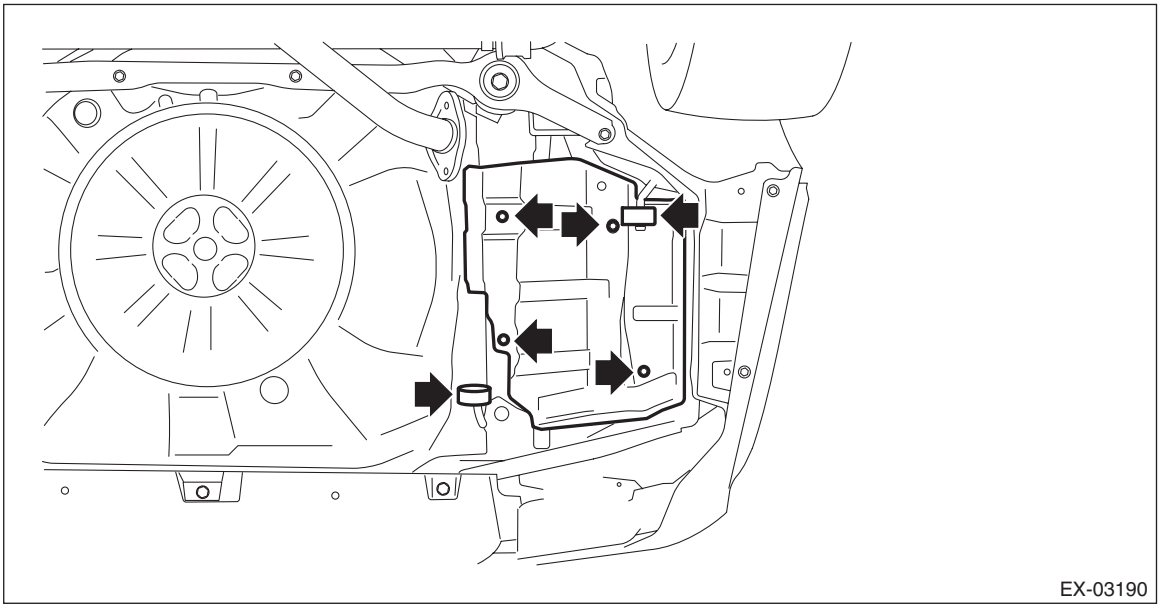

B: INSTALLATION

1) Install the cushion rubber and the heat shield cover to the vehicle body.

Tightening torque:
10 N·m (1.0 kgf-m, 7.4 ft-lb)

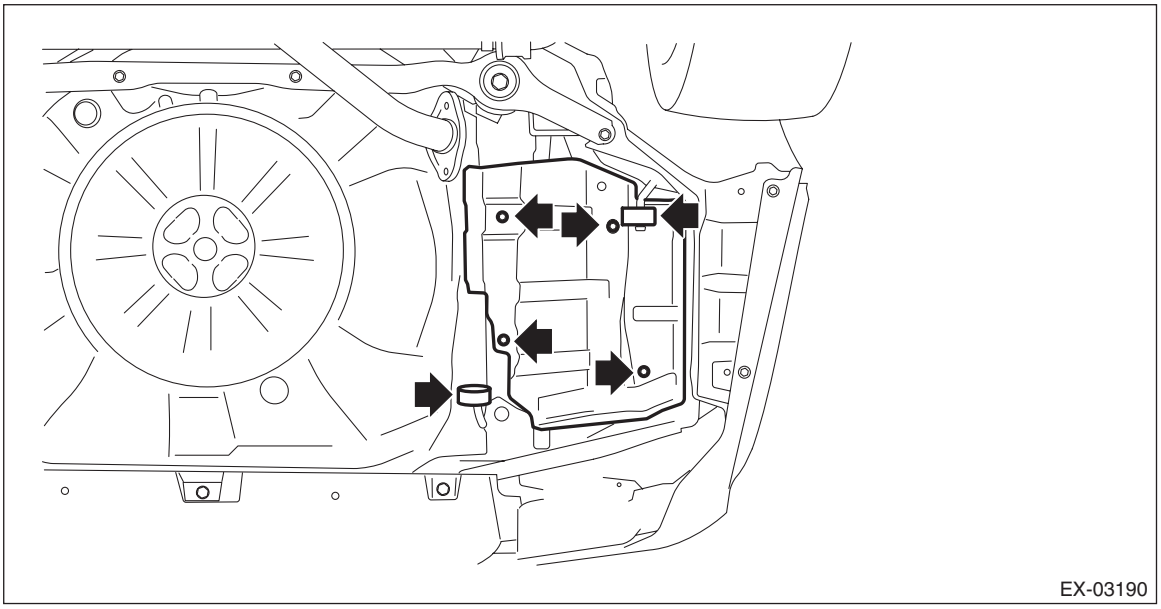

2) Install the muffler to the cushion rubber.
3) Install the bolts and self-locking nuts securing the rear exhaust pipe to the muffler.

NOTE:
- Use a new gasket and self-locking nut.
- After assembling, degrease the lubricant which was applied to the cushion rubber while removing/installing.

Tightening torque:
48 N·m (4.9 kgf-m, 35.4 ft-lb)

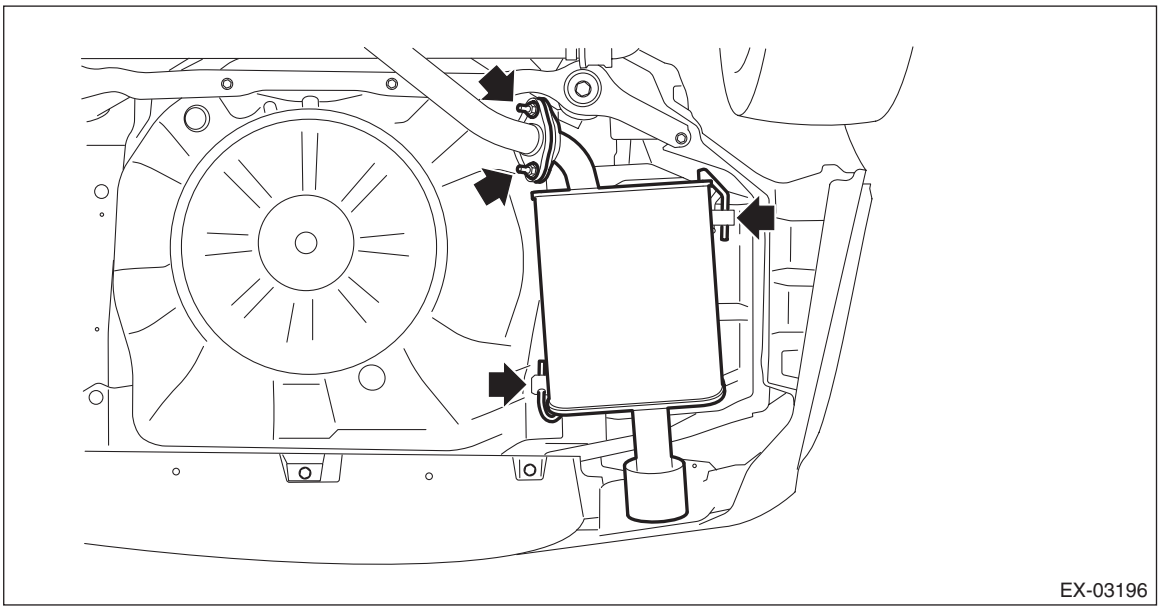

4) Lower the vehicle.

C: INSPECTION

1) Check the connections and welded parts for exhaust leaks.
2) Make sure there are no holes or rusting.
3) Check the cushion rubber for wear or crack.

COOLING

CO(H4DO)

Page

1. General Description 2
2. Radiator Fan System 8
3. Engine Coolant 15
4. Water Pump 18
5. Water Pipe Assembly 21
6. Thermostat 33
7. Radiator 39
8. Radiator Cap 53
9. Radiator Fan and Fan Motor Assembly 54
10. Reservoir Tank 61
11. Active Grille Shutter 63
12. Engine Cooling System Trouble in General 65

1. General Description

A: SPECIFICATION

Cooling system					Electric fan + Forced engine coolant circulation system
Total engine coolant capacity L (US qt, Imp qt)			CVT model		Approx. 7.8 (8.2, 6.9)
			MT model		Approx. 7.6 (8.0, 6.7)
Water pump	Type				Centrifugal impeller type
	Discharge performance	Discharge rate L (US gal, Imp gal)/min			230 (60.8, 50.6)
		Pump speed — Discharge pressure			6,600 r/min — 211.0 kPa (22 mAq)
		Engine coolant temperature			80°C (176°F)
	Impeller diameter mm (in)				60 (2.36)
	Number of impeller vanes				7
	Pump pulley diameter mm (in)				130 (5.12)
Thermostat	Type				Wax pellet type
	Starting temperature to open	Engine side			90 — 94°C (194 — 201°F)
		CVTF cooler (with warmer feature) side (CVT model)			48 — 52°C (118 — 126°F)
	Fully opens	Engine side			100°C (212°F)
		CVTF cooler (with warmer feature) side (CVT model)			63°C (145°F)
	Valve lift mm (in)	Engine side			8.0 (0.315) or more
		CVTF cooler (with warmer feature) side (CVT model)			6.0 (0.236) or more
	Valve opening size mm (in)	Engine side			32 (1.26)
		CVTF cooler (with warmer feature) side (CVT model)			22 (0.87)
Radiator fan	Motor input	Main fan W			120
		Sub fan W			120
	Fan diameter / Blade	Main fan			320 mm (12.6 in)/5
		Sub fan			320 mm (12.6 in)/7
Radiator	Type				Down flow, pressure type
	Core dimensions	Width × Height × Thickness mm (in)			702.6 × 349.2 × 16 (27.66 × 13.75 × 0.63)
	Pressure range in which cap valve is open kPa (kg/cm^2, psi)		Positive pressure side	Standard	93 — 123 (0.95 — 1.25, 14 — 18)
				Limit	83 (0.85, 12)
			Negative pressure side	Standard	–1.0 to –4.9 or less (–0.01 — –0.05, –0.1 — –0.7)
	Fins				Corrugated fin type
Reservoir tank	Capacity L (US qt, Imp qt)				0.45 (0.48, 0.40)

	Recommended materials	Item number	Alternative
Coolant	SUBARU SUPER COOLANT (concentrated type)	—	—
	SUBARU SUPER COOLANT (diluted type)	K0670Y0001	
Water for dilution	Distilled water	—	Soft water or tap water
Cooling system protective agent	Cooling system conditioner	SOA345001	—

B: COMPONENT

1. WATER PUMP

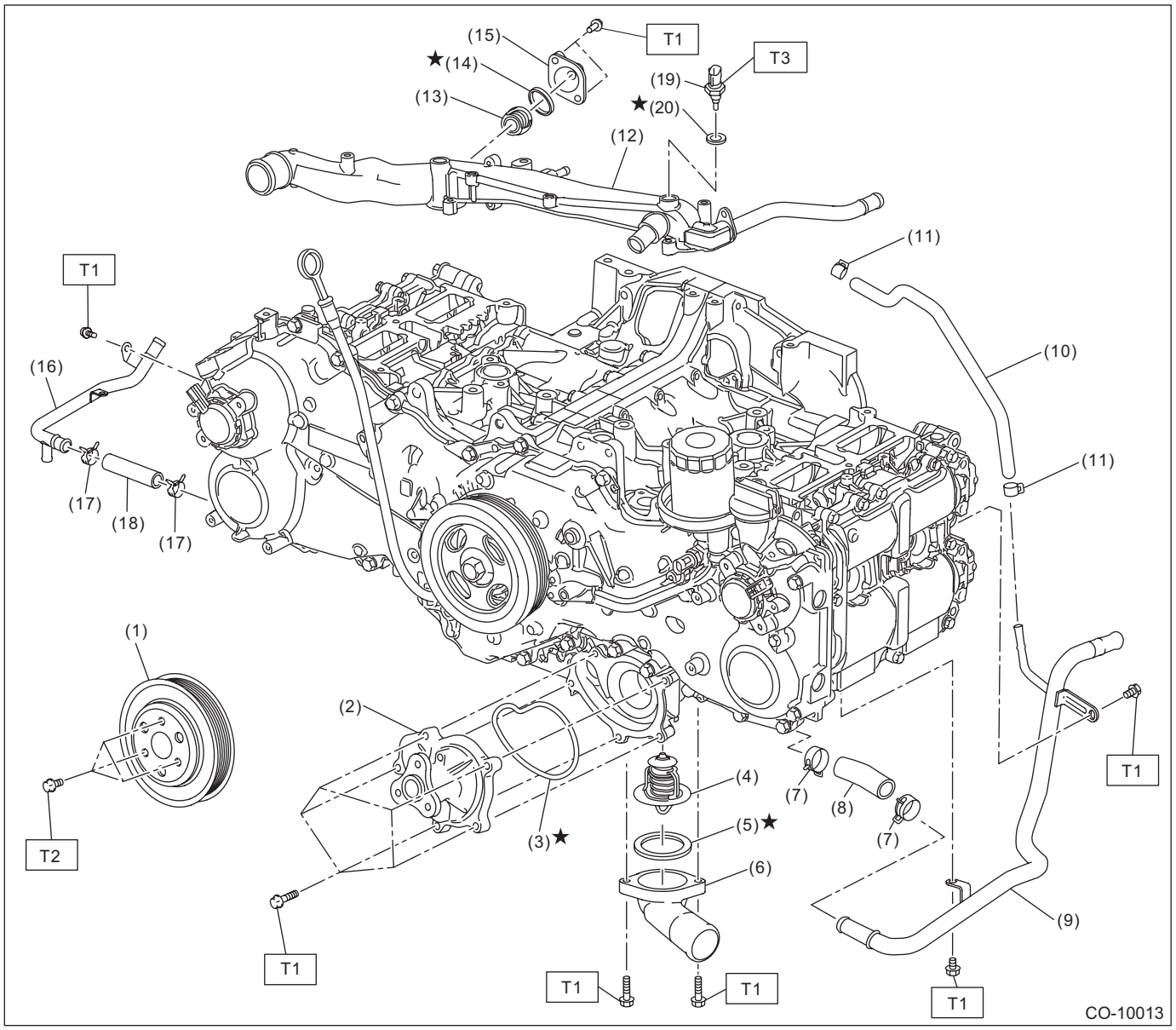

(1)	Water pump pulley	(10)	Preheater hose	(19)	Engine coolant temperature sensor
(2)	Water pump ASSY	(11)	Clip	(20)	Gasket
(3)	Gasket	(12)	Water pipe ASSY		
(4)	Thermostat (engine side)	(13)	Thermostat (CVTF cooler (with warmer feature) side)	***Tightening torque: N·m (kgf-m, ft-lb)***	
(5)	Gasket (engine side)	(14)	Gasket (CVTF cooler (with warmer feature) side)	***T1:***	***6.4 (0.7, 4.7)***
(6)	Thermostat cover (engine side)	(15)	Thermostat cover (CVTF cooler (with warmer feature) side)	***T2:***	***14 (1.4, 10.3)***
(7)	Clip	(16)	Water pipe RH	***T3:***	***18 (1.8, 13.3)***
(8)	Water pipe hose LH	(17)	Clip		
(9)	Water pipe LH	(18)	Water pipe hose RH		

2. RADIATOR & RADIATOR FAN

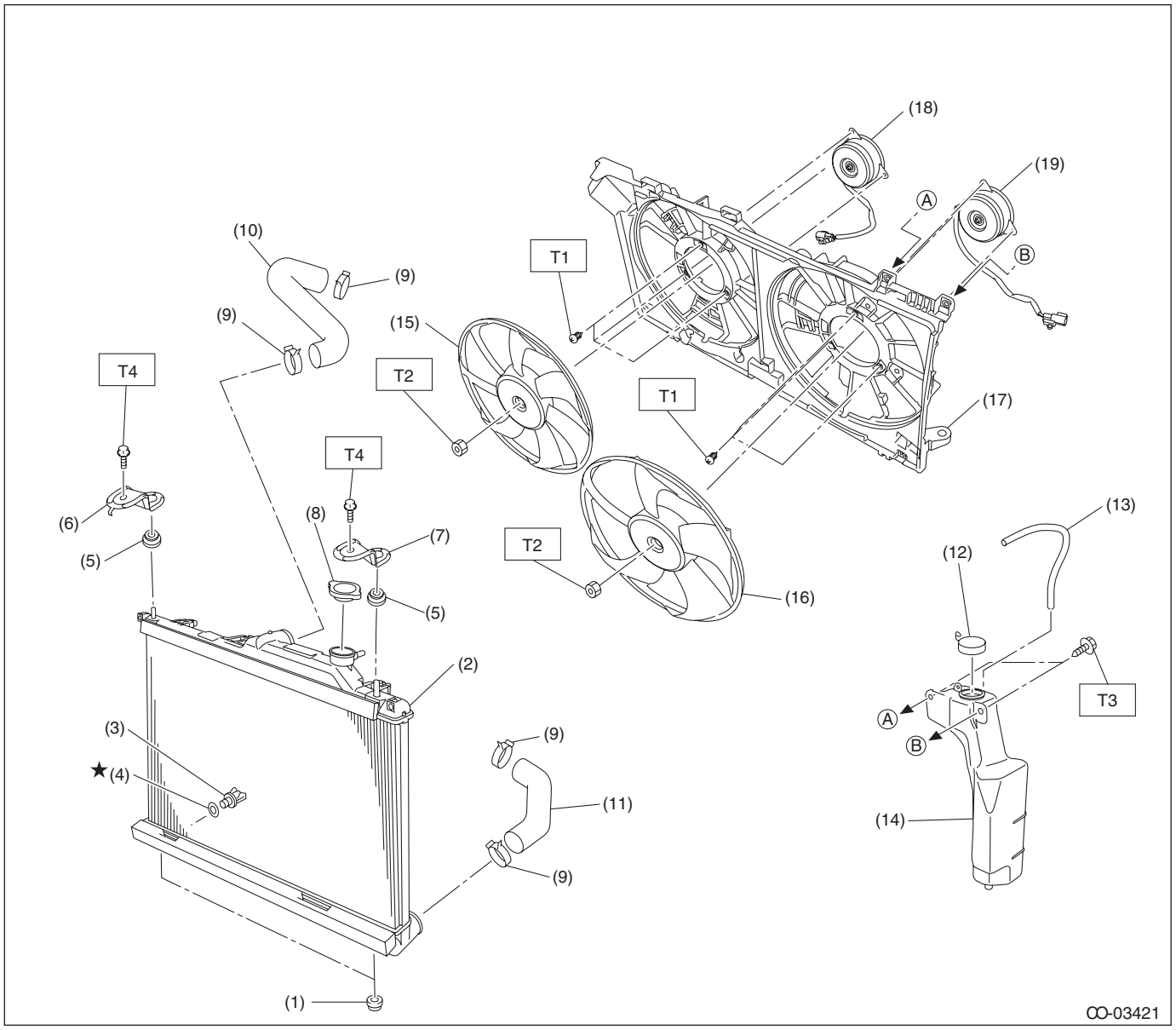

(1) Radiator lower cushion
(2) Radiator
(3) Radiator drain plug
(4) O-ring
(5) Radiator upper cushion
(6) Radiator upper bracket RH
(7) Radiator upper bracket LH
(8) Radiator cap
(9) Clip
(10) Radiator inlet hose
(11) Radiator outlet hose
(12) Engine coolant reservoir tank cap
(13) Over flow hose
(14) Engine coolant reservoir tank
(15) Radiator sub fan
(16) Radiator main fan
(17) Radiator fan shroud
(18) Radiator sub fan motor
(19) Radiator main fan motor

Tightening torque: N·m (kgf-m, ft-lb)
T1: 3.9 (0.4, 2.9)
T2: 6.4 (0.7, 4.7)
T3: 7.5 (0.8, 5.5)
T4: 12 (1.2, 8.9)

3. ACTIVE GRILLE SHUTTER

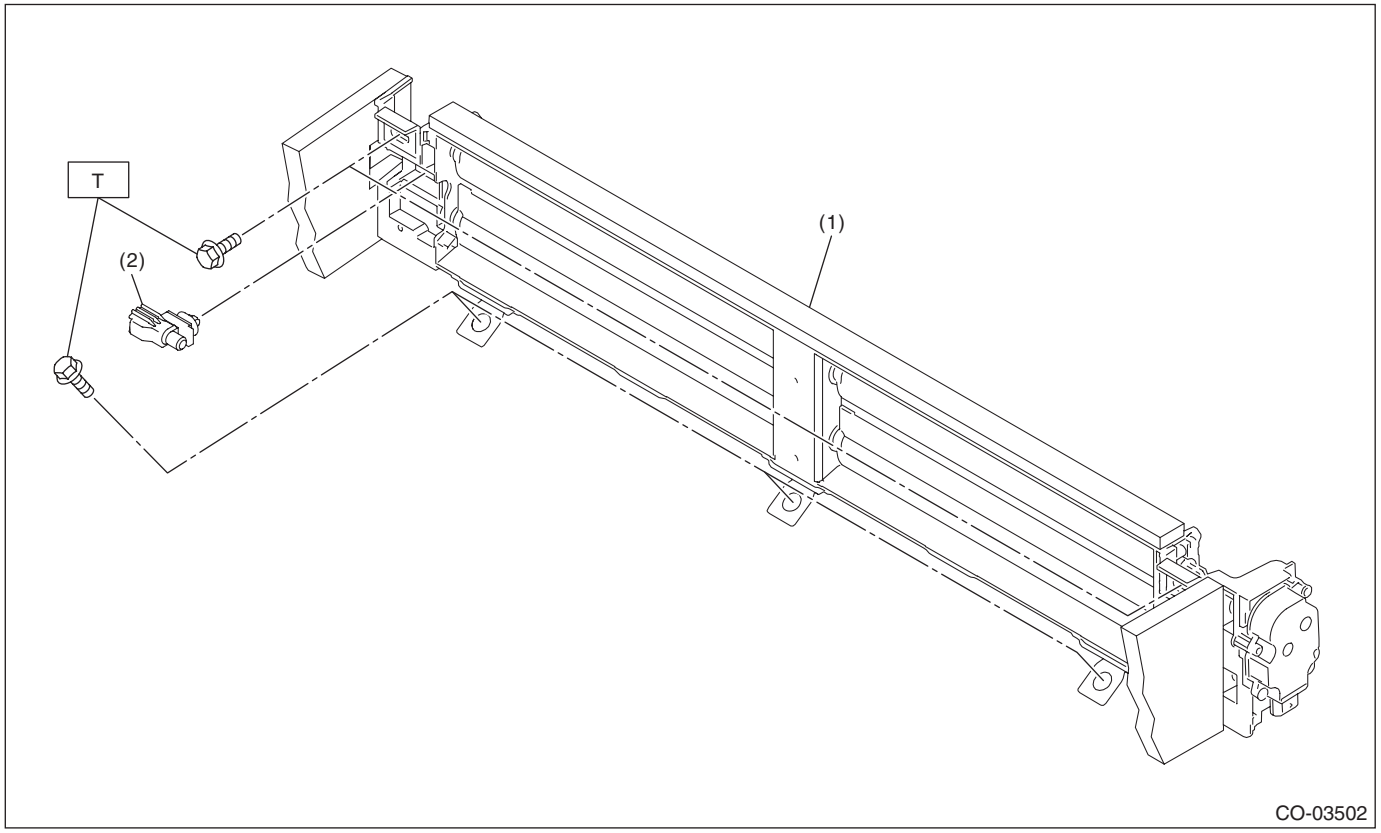

(1) Active grille shutter (2) Ambient sensor

Tightening torque: N·m (kgf-m, ft-lb)
T: 7.5 (0.8, 5.5)

C: CAUTION

- Prior to starting work, pay special attention to the following:
  1. Always wear work clothes, a work cap, and protective shoes. Additionally, wear a helmet, protective goggles, etc. if necessary.
  2. Protect the vehicle using a seat cover, fender cover, etc.
  3. Prepare the service tools, clean cloth, containers to catch grease and oil, etc.
- Prepare a container and cloth to prevent scattering of engine coolant when performing work where engine coolant can be spilled. If the oil spills, wipe it off immediately to prevent from penetrating into floor or flowing out for environmental protection.
- Vehicle components are extremely hot immediately after driving. Be wary of receiving burns from heated parts.
- When performing a repair, identify the cause of trouble and avoid unnecessary removal, disassembly and replacement.
- Before disconnecting connectors of sensors or units, be sure to disconnect the ground cable from battery.
- Always use the jack-up point when the shop jacks or rigid racks are used to support the vehicle.
- Remove contamination including dirt and corrosion before removal, installation, disassembly or assembly.
- Keep the removed parts in order and protect them from dust and dirt.
- All removed parts, if to be reused, should be reinstalled in the original positions with attention to the correct directions, etc.
- Bolts, nuts and washers should be replaced with new parts as required.
- Be sure to tighten the fasteners including bolts and nuts to the specified torque.
- Follow all government and local regulations concerning disposal of refuse when disposing engine coolant.

D: PREPARATION TOOL

1. SPECIAL TOOL

ILLUSTRATION	TOOL NUMBER	DESCRIPTION	REMARKS
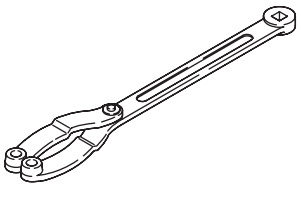 ST18355AA000	18355AA000	PULLEY WRENCH	• Used for removing and installing water pump pulley. • Used with PULLEY WRENCH PIN SET (18334AA030).
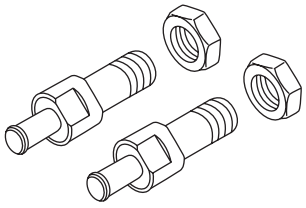 ST18334AA030	18334AA030	PULLEY WRENCH PIN SET	• Used for removing and installing water pump pulley. • Used together with PULLEY WRENCH (18355AA000).
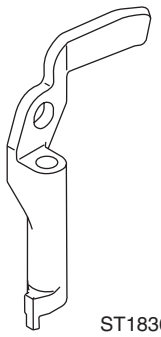 ST18360AA040	18360AA040	HANGER	• Used for removing and installing the water pipe assembly LH. • Used together with BOLT (18363AA050).
 ST18363AA050	18363AA050	BOLT	• Used for removing and installing the water pipe assembly LH. • Used together with HANGER (18360AA040).

ILLUSTRATION	TOOL NUMBER	DESCRIPTION	REMARKS
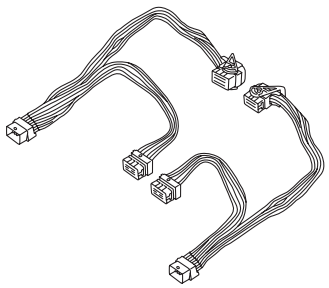 ST18460AA050	18460AA050	CHECK BOARD	Used for inspecting the radiator fan system.
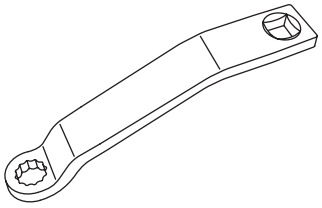 ST73099SG000	73099SG000	SPECIAL TOOL CONDENSER	Used for removing and installing the radiator.
 STSSM4	— (Newly adopted tool)	SUBARU SELECT MONITOR 4	Used for setting of each function and trouble-shooting for electrical system. NOTE: For detailed operation procedures of Subaru Select Monitor 4, refer to “Application help”.

2. GENERAL TOOL

TOOL NAME	REMARKS
Circuit tester	Used for measuring resistance, voltage and current.
Radiator cap tester	Used for checking radiator and radiator cap.
DST-i	Used together with Subaru Select Monitor 4.

2. Radiator Fan System

A: WIRING DIAGRAM

Radiator fan system <Ref. to WI-312, WIRING DIAGRAM, Radiator Fan System.>

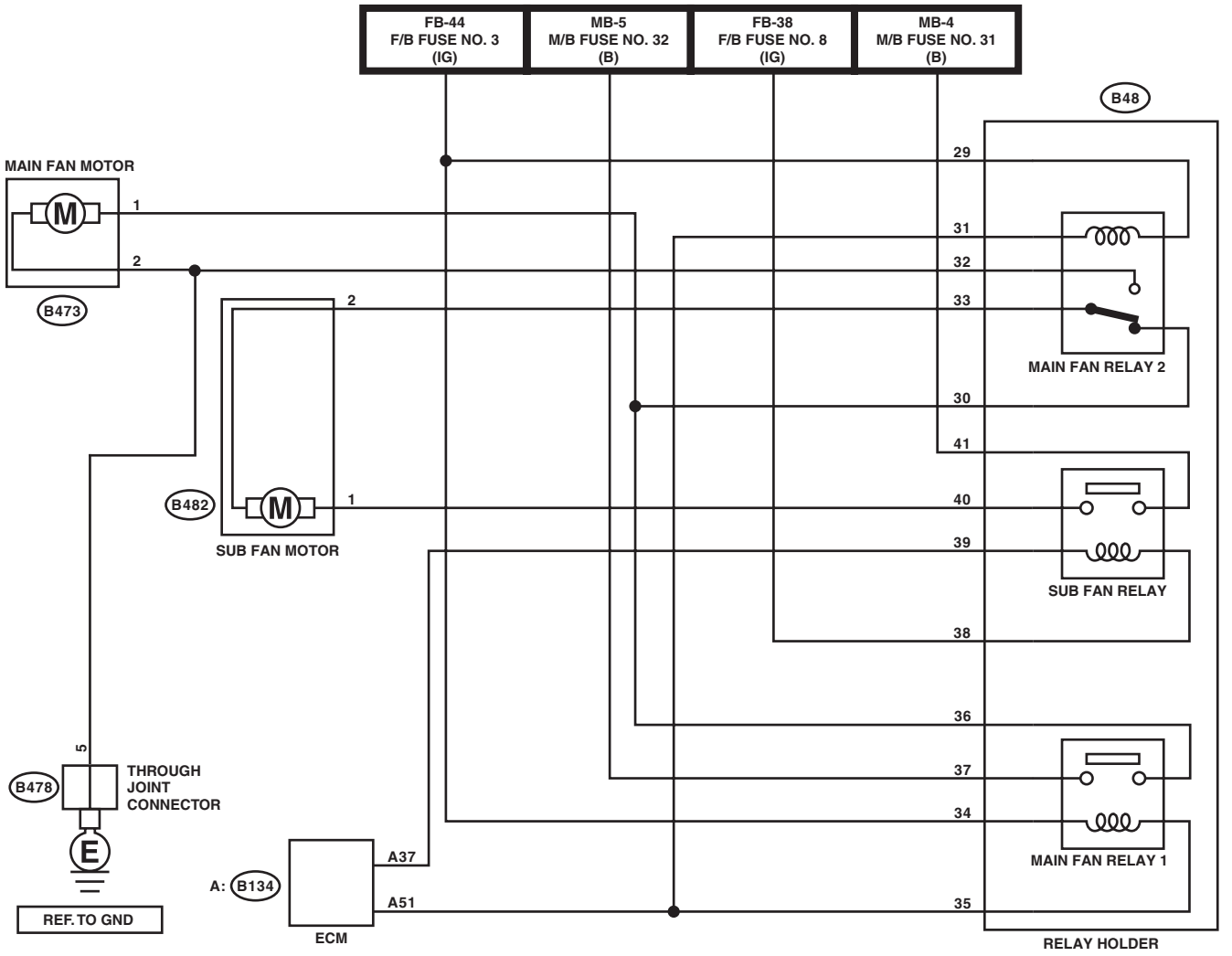

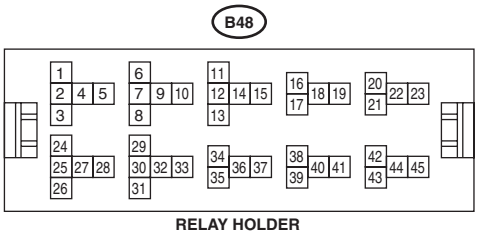

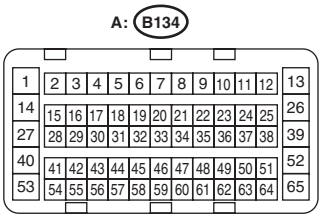

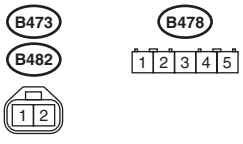

CO-03477

B: INSPECTION

Operating condition:

Radiator fan operates depending on the radiator fan operation mode related to engine coolant temperature or the radiator fan operation mode related to A/C compressor load, whichever is higher as an operation mode.

- Radiator fan operation mode related to engine coolant temperature

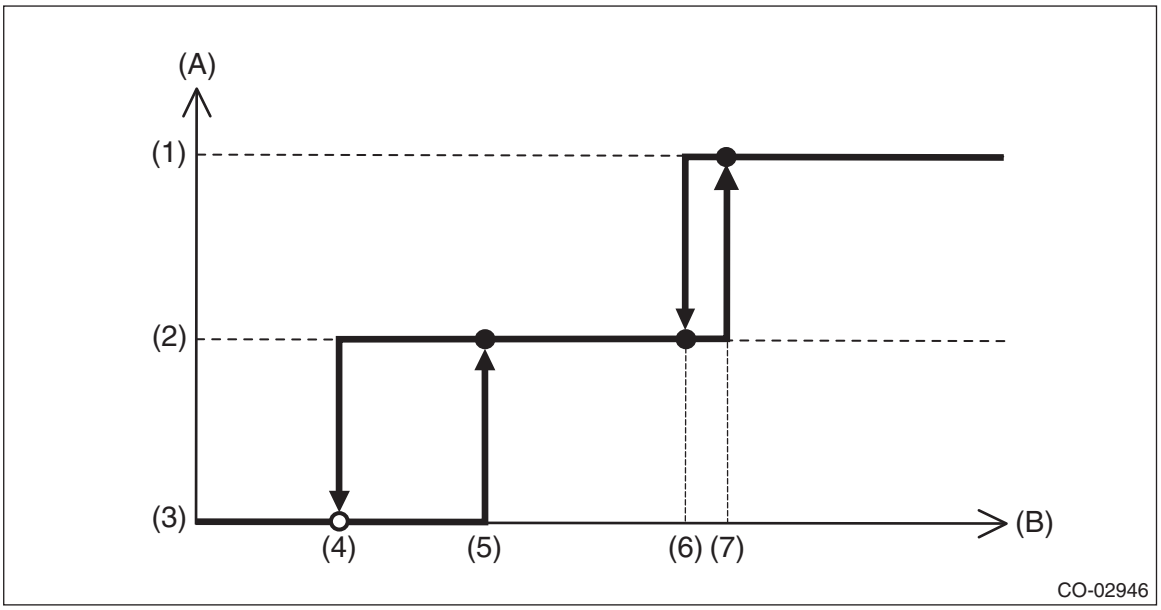

(A)	Radiator fan operation mode	(B)	Engine coolant temperature		
(1)	High-Speed	(4)	96°C (205°F)	(7)	105°C (221°F)
(2)	Low-Speed	(5)	99°C (210°F)		
(3)	OFF	(6)	102°C (216°F)		

- Radiator fan operation mode related to A/C compressor load

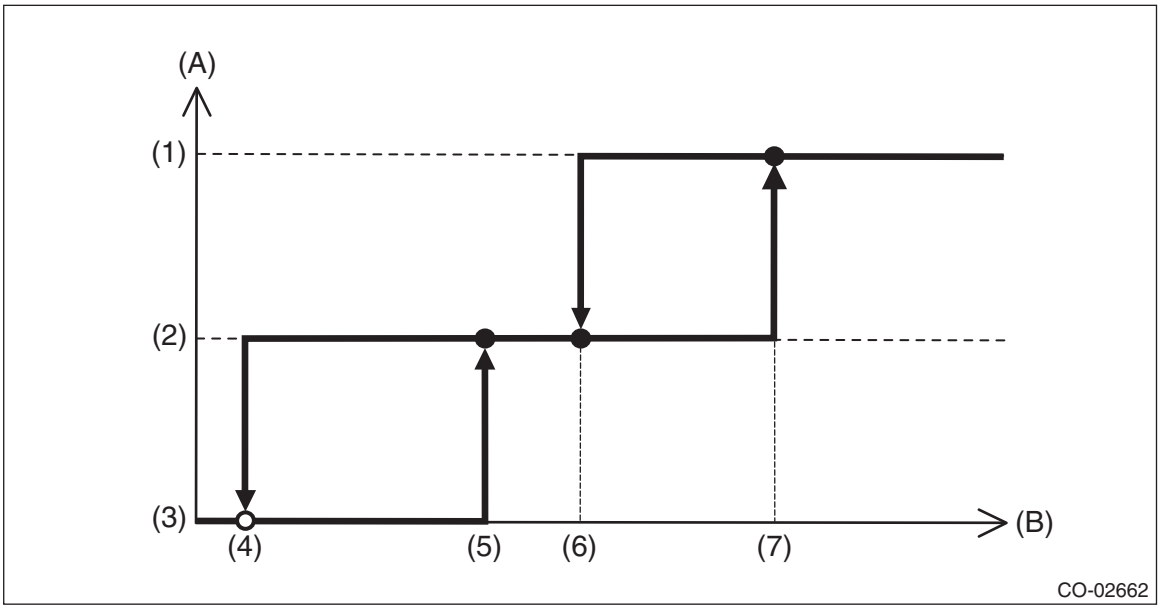

(A) Radiator fan operation mode
(B) A/C compressor refrigerant pressure
(1) High-Speed
(2) Low-Speed
(3) OFF
(4) 0.8 MPa (8.16 kg/cm^2, 116 psi)
(5) 1.1 MPa (11.22 kg/cm^2, 159 psi)
(6) 1.2 MPa (12.24 kg/cm^2, 174 psi)
(7) 1.4 MPa (14.28 kg/cm^2, 203 psi)

DIAGNOSIS:
Radiator main fan and radiator sub fan do not rotate under the above operating conditions.

	Step	Check	Yes	No
1	**CHECK OPERATION OF RADIATOR FAN.** 1) Install the delivery mode fuse. 2) Turn the ignition switch to ON. 3) Using the Subaru Select Monitor, perform the compulsory operation check for the radiator fan relay. NOTE: • When performing the compulsory operation check for the radiator fan relay using the Subaru Select Monitor, the radiator main fan and radiator sub fan will repeat low speed revolution → high speed revolution → OFF in this order. • Subaru Select Monitor For detailed operation procedures, refer to “PC application help for Subaru Select Monitor”.	Do the radiator main fans and radiator sub fans rotate at low speed?	Go to step **2**.	Go to step **3**.

	Step	Check	Yes	No
2	**CHECK OPERATION OF RADIATOR FAN.** 1) Install the delivery mode fuse. 2) Turn the ignition switch to ON. 3) Using the Subaru Select Monitor, perform the compulsory operation check for the radiator fan relay. NOTE: • When performing the compulsory operation check for the radiator fan relay using the Subaru Select Monitor, the radiator main fan and radiator sub fan will repeat low speed revolution → high speed revolution → OFF in this order. • Subaru Select Monitor For detailed operation procedures, refer to "PC application help for Subaru Select Monitor".	Do the radiator main fans and radiator sub fans rotate at high speed?	Radiator main fan system is normal.	Go to step **27**.
3	**CHECK POWER SUPPLY TO SUB FAN RELAY.** 1) Turn the ignition switch to OFF. 2) Remove the sub fan relay from the relay holder. 3) Measure the voltage between the sub fan relay terminal and chassis ground. ***Terminals*** ***(B48) No. 41 (+) — Chassis ground (–):***	Is the voltage 10 V or more?	Go to step **4**.	Go to step **5**.
4	**CHECK POWER SUPPLY TO SUB FAN RELAY.** 1) Turn the ignition switch to ON. 2) Measure the voltage between the sub fan relay terminal and chassis ground. ***Terminals*** ***(B48) No. 38 (+) — Chassis ground (–):***	Is the voltage 10 V or more?	Go to step **7**.	Go to step **6**.
5	**CHECK FUSE.** 1) Turn the ignition switch to OFF. 2) Remove the fuse No. 31. 3) Check the condition of fuse.	Is the fuse blown out?	Replace the fuse.	Repair the power supply line.
6	**CHECK FUSE.** 1) Turn the ignition switch to OFF. 2) Remove the fuse No. 8. 3) Check the condition of fuse.	Is the fuse blown out?	Replace the fuse.	Repair the power supply line.
7	**CHECK SUB FAN RELAY.** 1) Turn the ignition switch to OFF. 2) Measure the resistance between sub fan relay terminals. ***Terminals*** ***No. 40 — No. 41:***	Is the resistance 1 MΩ or more?	Go to step **8**.	Replace the sub fan relay. <Ref. to AC-36, Relay and Fuse.>
8	**CHECK SUB FAN RELAY.** 1) Connect the battery to terminals No. 38 and No. 39 of the sub fan relay. 2) Measure the resistance between sub fan relay terminals. ***Terminals*** ***No. 40 — No. 41:***	Is the resistance less than 1 Ω?	Go to step **9**.	Replace the sub fan relay. <Ref. to AC-36, Relay and Fuse.>

	Step	Check	Yes	No
9	**CHECK HARNESS BETWEEN SUB FAN RELAY AND SUB FAN MOTOR CONNECTOR.** 1) Disconnect the connector from the sub fan motor. 2) Measure the resistance of harness between the sub fan relay terminal and sub fan motor connector. ***Connector & terminal*** ***(B482) No. 1 — (B48) No. 40:***	Is the resistance less than 1 Ω?	Go to step **10**.	Repair the open circuit of harness between sub fan relay terminal and sub fan motor connector.
10	**CHECK HARNESS BETWEEN SUB FAN MOTOR CONNECTOR AND MAIN FAN RELAY 2 CONNECTOR.** 1) Remove main fan relay 2 from the relay holder. 2) Measure the resistance of harness between sub fan motor connector and main fan relay 2 connector. ***Connector & terminal*** ***(B482) No. 2 — (B48) No. 33:***	Is the resistance less than 1 Ω?	Go to step **11**.	Repair the open circuit of the harness between sub fan motor connector and main fan relay 2 connector.
11	**CHECK FOR POOR CONTACT.** Check poor contact of sub fan motor connector.	Is there poor contact of the sub fan motor connector?	Repair the poor contact of sub fan motor connector.	Go to step **12**.
12	**CHECK SUB FAN MOTOR.** Connect the battery positive (+) terminal to terminal No. 1 of the sub fan motor, and the ground (–) terminal to terminal No. 2.	Does the radiator sub fan rotate?	Go to step **13**.	Replace the sub fan motor. <Ref. to CO(H4DO)-54, Radiator Fan and Fan Motor Assembly.>
13	**CHECK MAIN FAN RELAY 2.** Measure the resistance of main fan relay 2. ***Terminals*** ***No. 30 — No. 33:***	Is the resistance less than 1 Ω?	Go to step **14**.	Replace the main fan relay 2. <Ref. to AC-36, Relay and Fuse.>
14	**CHECK HARNESS BETWEEN MAIN FAN RELAY 2 AND MAIN FAN MOTOR CONNECTOR.** 1) Disconnect the connector from the main fan motor. 2) Measure the resistance of the harness between main fan relay 2 and main fan motor connector. ***Connector & terminal*** ***(B473) No. 1 — (B48) No. 30:***	Is the resistance less than 1 Ω?	Go to step **15**.	Repair the open circuit of the harness between main fan relay 2 and main fan motor connector.
15	**CHECK GROUND CIRCUIT OF MAIN FAN MOTOR.** Measure the resistance between main fan motor connector and chassis ground. ***Connector & terminal*** ***(B473) No. 2 — Chassis ground:***	Is the resistance less than 5 Ω?	Go to step **16**.	Repair the open circuit of the harness between the main fan motor connector and chassis ground or poor contact of the joint connector.
16	**CHECK FOR POOR CONTACT.** Check poor contact of main fan motor connector.	Is there poor contact of the main fan motor connector?	Repair the poor contact of main fan motor connector.	Go to step **17**.
17	**CHECK MAIN FAN MOTOR.** Connect the battery positive (+) terminal to terminal No. 1 of the main fan motor, and the ground (–) terminal to terminal No. 2.	Does the radiator main fan rotate?	Go to step **18**.	Replace the main fan motor. <Ref. to CO(H4DO)-54, Radiator Fan and Fan Motor Assembly.>

	Step	Check	Yes	No
18	**CHECK HARNESS BETWEEN SUB FAN RELAY AND ECM.** 1) Disconnect the connector from ECM. 2) Set the ST between the engine control module (ECM) and engine harness. <Ref. to EN(H4DO)(diag)-6, CAUTION, General Description.> 3) Measure the resistance between the sub fan relay terminal and engine harness. ***Connector & terminal*** ***(B134) No. 37 — (B48) No. 39:***	Is the resistance less than 1 Ω?	Go to step **19**.	Repair the open circuit of harness between sub fan relay terminal and ECM.
19	**CHECK FOR POOR CONTACT.** Check for poor contact of ECM connector.	Is there poor contact of ECM connector?	Repair the poor contact of ECM connector.	Check the DTC. Repair the trouble cause. <Ref. to EN(H4DO)(diag)-63, Read Diagnostic Trouble Code (DTC).>
20	**CHECK MAIN FAN RELAY 1.** 1) Turn the ignition switch to OFF. 2) Remove main fan relay 1 from the relay holder. 3) Measure the resistance between terminals of main fan relay 1 switch. ***Terminals*** ***No. 36 — No. 37:***	Is the resistance 1 MΩ or more?	Go to step **21**.	Replace the main fan relay 1. <Ref. to AC-36, Relay and Fuse.>
21	**CHECK MAIN FAN RELAY 1.** 1) Connect terminals No. 34 and No. 35 of the main fan relay 1 to the battery. 2) Measure the resistance between terminals of main fan relay 1 switch. ***Terminals*** ***No. 36 — No. 37:***	Is the resistance less than 1 Ω?	Go to step **22**.	Replace the main fan relay 1. <Ref. to AC-36, Relay and Fuse.>
22	**CHECK HARNESS BETWEEN MAIN FAN RELAY 1 AND MAIN FAN MOTOR CONNECTOR.** 1) Disconnect the connector from the main fan motor. 2) Measure the resistance of the harness between main fan relay 1 and main fan motor connector. ***Connector & terminal*** ***(B473) No. 1 — (B48) No. 36:***	Is the resistance less than 1 Ω?	Go to step **23**.	Repair the open circuit of the harness between main fan relay 1 connector and main fan motor connector.
23	**CHECK HARNESS BETWEEN MAIN FAN RELAY 1 AND ECM.** 1) Disconnect the connector from ECM. 2) Set the ST between the engine control module (ECM) and engine harness. <Ref. to EN(H4DO)(diag)-6, CAUTION, General Description.> 3) Measure the resistance between main fan relay 1 terminal and engine harness. ***Connector & terminal*** ***(B134) No. 51 — (B48) No. 35:***	Is the resistance less than 1 Ω?	Go to step **24**.	Repair the open circuit of the harness between main fan relay 1 terminal and ECM.
24	**CHECK HARNESS BETWEEN MAIN FAN RELAY 2 AND ECM.** Measure the resistance between main fan relay 2 terminal and engine harness. ***Connector & terminal*** ***(B134) No. 51 — (B48) No. 31:***	Is the resistance less than 1 Ω?	Go to step **25**.	Repair the open circuit of the harness between main fan relay 2 terminal and ECM.

Step		Check	Yes	No
25	**CHECK FUSE.** 1) Remove the ST, and connect all the connectors. 2) Remove the fuse No. 3 and No. 32. 3) Check the condition of fuse.	Is the fuse blown out?	Replace the fuse.	Go to step **26**.
26	**CHECK FOR POOR CONTACT.** Check for poor contact of ECM connector.	Is there poor contact of ECM connector?	Repair the poor contact of ECM connector.	Repair the power supply circuit to the main fuse box.
27	**CHECK OPERATION OF RADIATOR FAN.** If the both fans do not rotate at high speed in the condition of step 2, check whether the radiator sub fan is rotating.	Does the radiator sub fan rotate?	Go to step **20**.	Go to step **28**.
28	**CHECK GROUND CIRCUIT OF MAIN FAN RELAY 2.** 1) Remove main fan relay 2 from the relay holder. 2) Measure the resistance between main fan relay 2 terminal and chassis ground. ***Connector & terminal*** ***(B48) No. 32 — Chassis ground:***	Is the resistance less than 1 Ω?	Go to step **29**.	Repair the open circuit of the harness between main fan relay 2 and chassis ground or poor contact of the joint connector.
29	**CHECK POWER SUPPLY TO MAIN FAN RELAY 2.** 1) Turn the ignition switch to ON. 2) Measure the voltage between main fan relay 2 terminal and chassis ground. ***Connector & terminal*** ***(B48) No. 29 (+) — Chassis ground (–):***	Is the voltage 10 V or more?	Go to step **30**.	Repair the power supply line.
30	**CHECK MAIN FAN RELAY 2.** 1) Turn the ignition switch to OFF. 2) Remove the main fan relay 2. 3) Measure the resistance of main fan relay 2. ***Terminals*** ***No. 32 — No. 33:***	Is the resistance 1 MΩ or more?	Go to step **31**.	Replace the main fan relay 2. <Ref. to AC-36, Relay and Fuse.>
31	**CHECK MAIN FAN RELAY 2.** 1) Connect the battery to terminals No. 29 and No. 31 of the main fan relay 2. 2) Measure the resistance of main fan relay 2. ***Terminals*** ***No. 32 — No. 33:***	Is the resistance less than 1 Ω?	Go to step **23**.	Replace the main fan relay 2. <Ref. to AC-36, Relay and Fuse.>

3. Engine Coolant

A: INSPECTION

NOTE:
When adding the engine coolant, always use SUBARU Super Coolant.
1) Park the vehicle on a level surface.
2) Check the engine coolant amount, and if the coolant level is low, check for the coolant leakage, and then add the engine coolant.
   (1) Make sure the engine coolant level in the reservoir tank is between “FULL” and “LOW” with the engine in a cold condition.
   (2) Open the radiator cap and make sure that the radiator is filled with the engine coolant up to its filler neck position.

B: REPLACEMENT

1. DRAINING OF ENGINE COOLANT

1) Lift up the vehicle.
2) Remove the under cover. <Ref. to EI-28, REMOVAL, Front Under Cover.>
3) Connect a hose with inner diameter of ϕ8 mm (0.315 in) to the drain outlet of the radiator.
4) Loosen the drain plug to drain engine coolant into a container.

NOTE:
Remove the radiator cap so that engine coolant will drain faster.

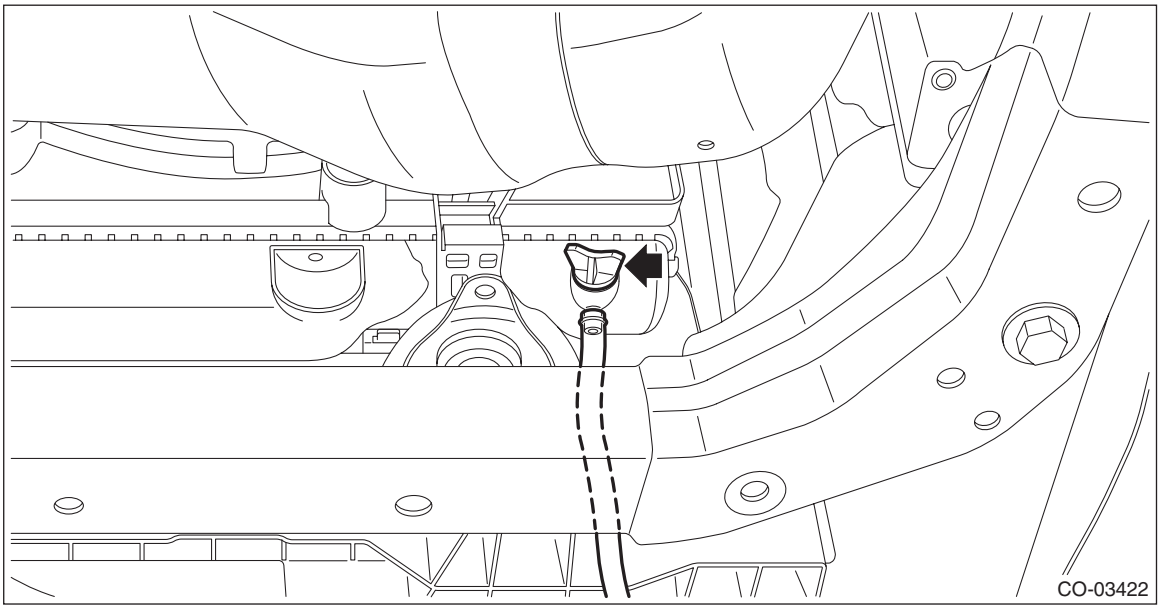

5) Tighten the drain plug.

NOTE:
Use new O-rings.
6) Remove the hose from the drain outlet of the radiator.
7) Install the under cover. <Ref. to EI-28, INSTALLATION, Front Under Cover.>

2. FILLING OF ENGINE COOLANT

CAUTION:
For CVT models, set the select lever to "P" or "N" range (for MT models, the shift lever in neutral) during work, and do not shift the lever.

1) Pour cooling system conditioner through the filler neck.

Cooling system protective agent:
Refer to "SPECIFICATION" for cooling system protective agent. <Ref. to CO(H4DO)-2, SPECIFICATION, General Description.>

2) Pour engine coolant into the radiator up to the filler neck position.

Recommended engine coolant:
Refer to "SPECIFICATION" for recommended engine coolant. <Ref. to CO(H4DO)-2, SPECIFICATION, General Description.>

Engine coolant level:
Refer to "SPECIFICATION" for engine coolant level. <Ref. to CO(H4DO)-2, SPECIFICATION, General Description.>

Engine coolant concentration:
Refer to "ADJUSTMENT" for the recommended engine coolant concentration. <Ref. to CO(H4DO)-17, ADJUSTMENT, Engine Coolant.>

NOTE:
The SUBARU Super Coolant contains anti-freeze and anti-rust agents, and is especially made for Subaru engines with an aluminum cylinder block. Be sure to use SUBARU Super Coolant, since other coolant may cause corrosion.

3) Fill engine coolant into the reservoir tank up to "FULL" level.

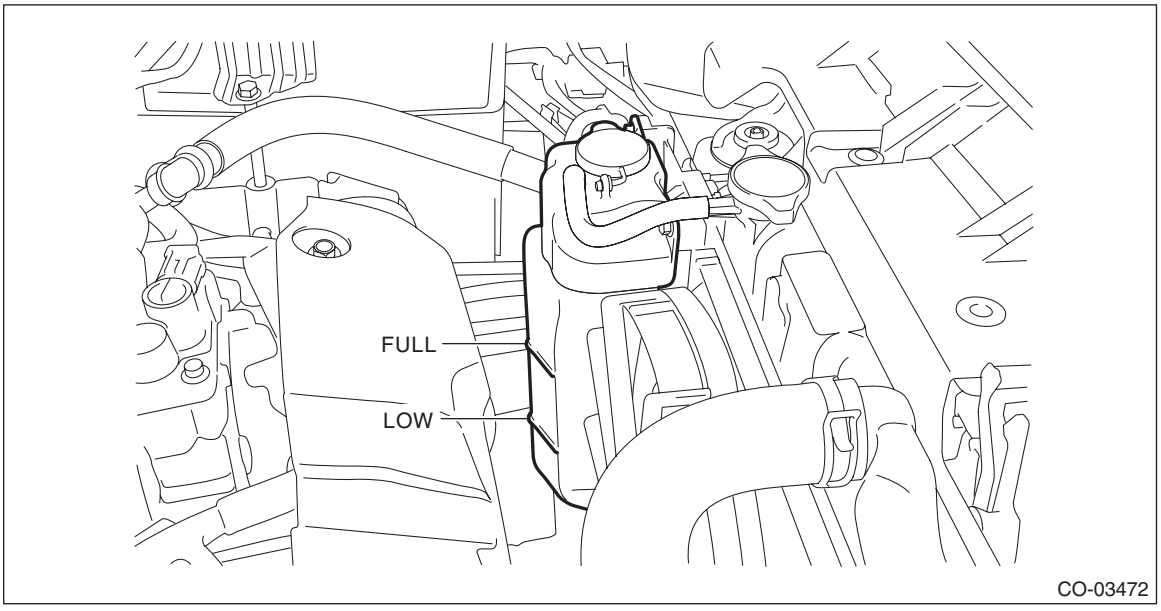

4) Close the radiator cap and start the engine. Race 5 to 6 times at 3,000 r/min or less, then stop the engine. (Complete this operation within 40 seconds.)
5) Wait for one minute after the engine stops, and open the radiator cap. If the engine coolant level drops, add engine coolant into radiator up to the filler neck position.
6) Perform the procedures 4) and 5) again.
7) Attach the radiator cap and reservoir tank cap properly.
8) Start the engine and operate the heater at maximum hot position and the blower speed setting to "LO".
9) Run the engine at 3,000 r/min or less until radiator fan starts and stops.

NOTE:
Be careful with the engine coolant temperature to prevent overheating.

10) Stop the engine and wait until the engine coolant temperature lowers to 30°C (86°F) or less.

11) Open the radiator cap. If the engine coolant level drops, add engine coolant into the radiator up to the filler neck position and the reservoir tank to “FULL” level.
12) Attach the radiator cap and reservoir tank cap properly.
13) Set the heater setting to maximum hot position and the blower speed setting to “LO” and start the engine. Perform racing at 3,000 r/min or less. If the flowing sound is heard from heater core at this time, perform the procedures from 9) again.

C: ADJUSTMENT

1. PROCEDURE TO ADJUST THE SUBARU SUPER COOLANT CONCENTRATION

CAUTION:
Use the SUBARU Super Coolant with a 50 — 60% concentration in order to obtain maximum anti-freeze and anti-rust performance.
To adjust the concentration of SUBARU Super Coolant according to temperature, find the proper SUBARU Super Coolant concentration in the table, and add dilution water to the SUBARU Super Coolant (concentrated type) until it reaches the proper dilution.

Relationship of SUBARU Super Coolant concentration and freezing temperature			
SUBARU Super Coolant concentration	50%	55%	60%
Freezing temperature	–36°C (–33°F)	–41°C (–42°F)	–50°C (–58°F)

Engine coolant and diluting water:
Refer to “SPECIFICATION” for recommended engine coolant and diluting water. <Ref. to CO(H4DO)-2, SPECIFICATION, General Description.>

4. Water Pump

A: REMOVAL

1. WATER PUMP PULLEY

1) Remove the V-belts. <Ref. to ME(H4DO)-71, REMOVAL, V-belt.>
2) Remove the water pump pulley using the ST.
ST1 18355AA000 PULLEY WRENCH
ST2 18334AA030 PULLEY WRENCH PIN SET

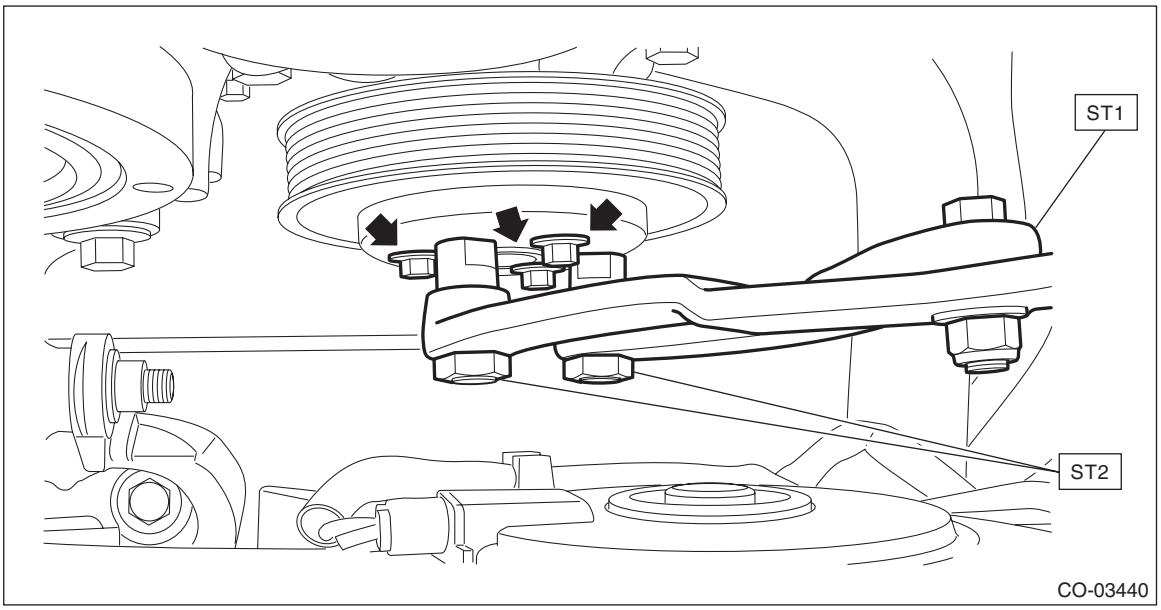

2. WATER PUMP

1) Remove the water pump pulley. <Ref. to CO(H4DO)-18, WATER PUMP PULLEY, REMOVAL, Water Pump.>
2) Drain engine coolant. <Ref. to CO(H4DO)-15, DRAINING OF ENGINE COOLANT, REPLACEMENT, Engine Coolant.>
3) Remove the water pump from the oil pan upper.

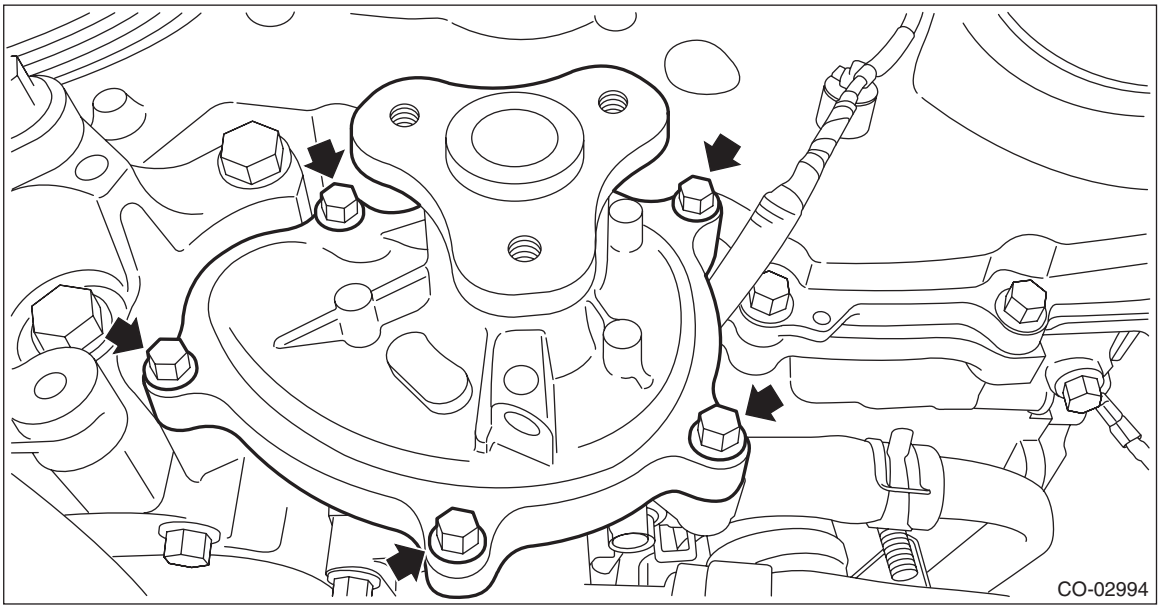

B: INSTALLATION

1. WATER PUMP PULLEY

1) Using the ST, install the water pump pulley.
ST1 18355AA000 PULLEY WRENCH
ST2 18334AA030 PULLEY WRENCH PIN SET

Tightening torque:
14 N·m (1.4 kgf-m, 10.3 ft-lb)

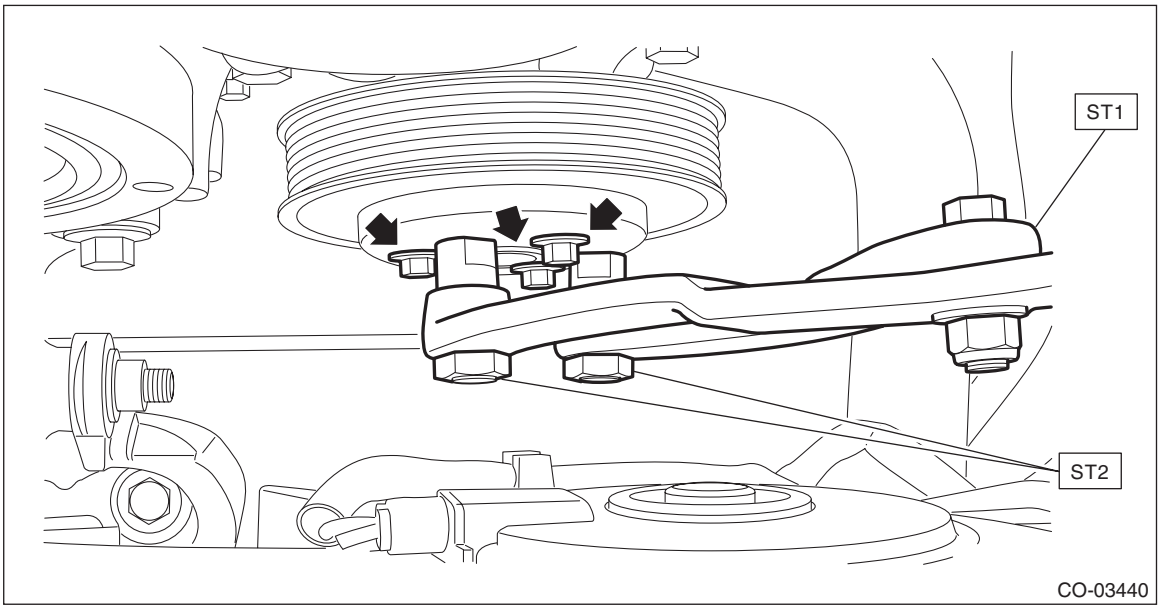

2) Install the V-belts. <Ref. to ME(H4DO)-73, INSTALLATION, V-belt.>

2. WATER PUMP

1) Install the water pump to oil pan upper.

NOTE:
Use a new gasket.

Tightening torque:
6.4 N·m (0.7 kgf-m, 4.7 ft-lb)

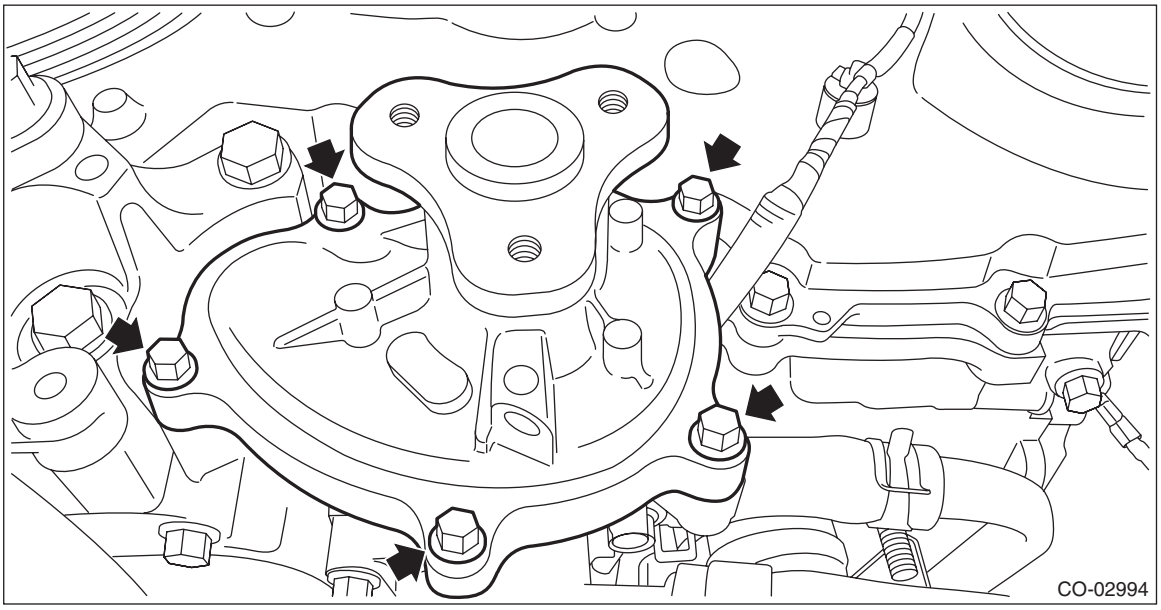

2) Install the under cover. <Ref. to EI-28, INSTALLATION, Front Under Cover.>

3) Lower the vehicle.
4) Install the water pump pulley. <Ref. to CO(H4DO)-19, WATER PUMP PULLEY, INSTALLATION, Water Pump.>
5) Fill engine coolant. <Ref. to CO(H4DO)-16, FILLING OF ENGINE COOLANT, REPLACEMENT, Engine Coolant.>

C: INSPECTION

1) Check that the water pump pulley does not have deformation, cracks and any other damage.
2) Check the water pump bearing for smooth rotation.
3) Make sure the impeller is not abnormally deformed or damaged.

5. Water Pipe Assembly

A: REMOVAL

1. WATER PIPE ASSEMBLY RH

1) Disconnect the ground terminal from battery sensor. <Ref. to RC-4, BATTERY, NOTE, Repair Contents.>
2) Drain engine coolant. <Ref. to CO(H4DO)-15, DRAINING OF ENGINE COOLANT, REPLACEMENT, Engine Coolant.>
3) Remove the front exhaust pipe. <Ref. to EX(H4DO)-5, REMOVAL, Front Exhaust Pipe.>
4) Disconnect the engine coolant hose (A) from the water pipe assembly RH, and remove the bolt (B) securing the water pipe assembly RH to the cam carrier RH.
5) Disconnect the water pipe hose RH (C) from the oil pan.
6) Remove the bolt (D) securing the water pipe assembly RH to the cam carrier RH to remove the water pipe assembly RH.

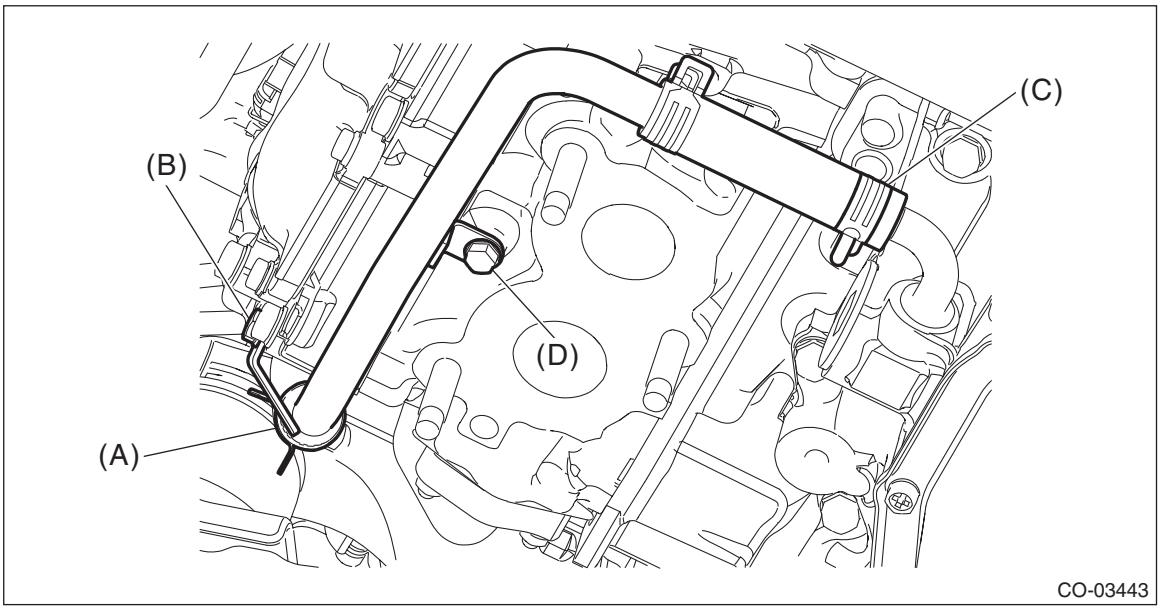

2. WATER PIPE ASSEMBLY LH

1) Disconnect the ground terminal from battery sensor. <Ref. to RC-4, BATTERY, NOTE, Repair Contents.>
2) Fully open the front hood. <Ref. to RC-22, FRONT HOOD DAMPER STAY, NOTE, Repair Contents.>
3) Remove the air intake duct. <Ref. to IN(H4DO)-12, REMOVAL, Air Intake Duct.>
4) Remove the clip (A), and loosen the clamps (B) and (C) securing the air intake boot.

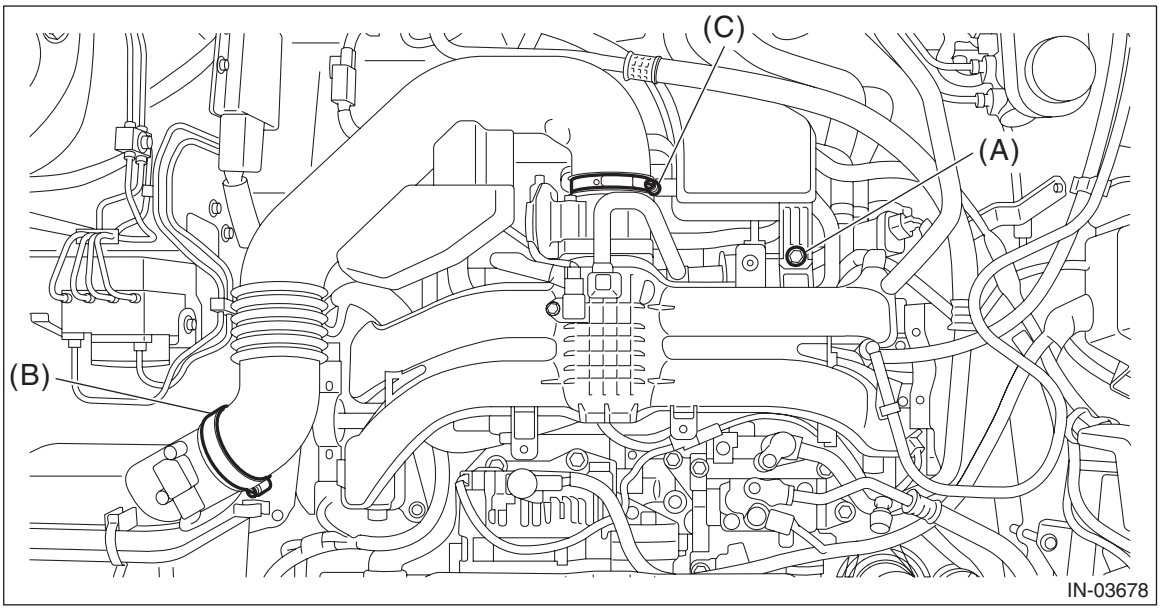

5) Remove the air intake boot from the air cleaner case (rear) and throttle body, and move it to the left side wheel apron.

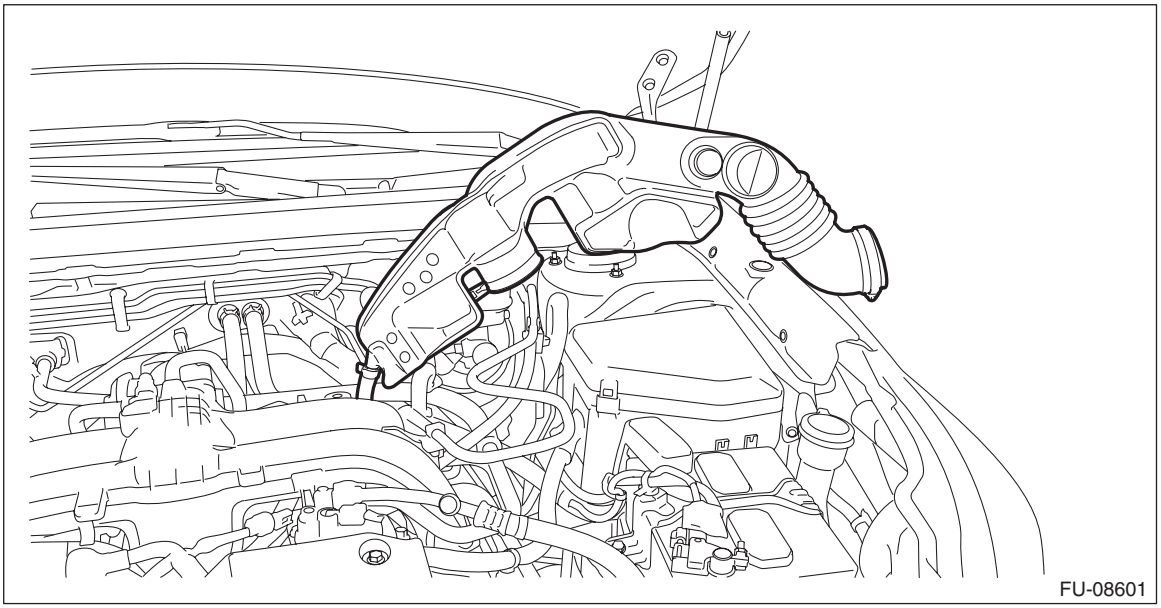

6) Remove the V-belt covers.

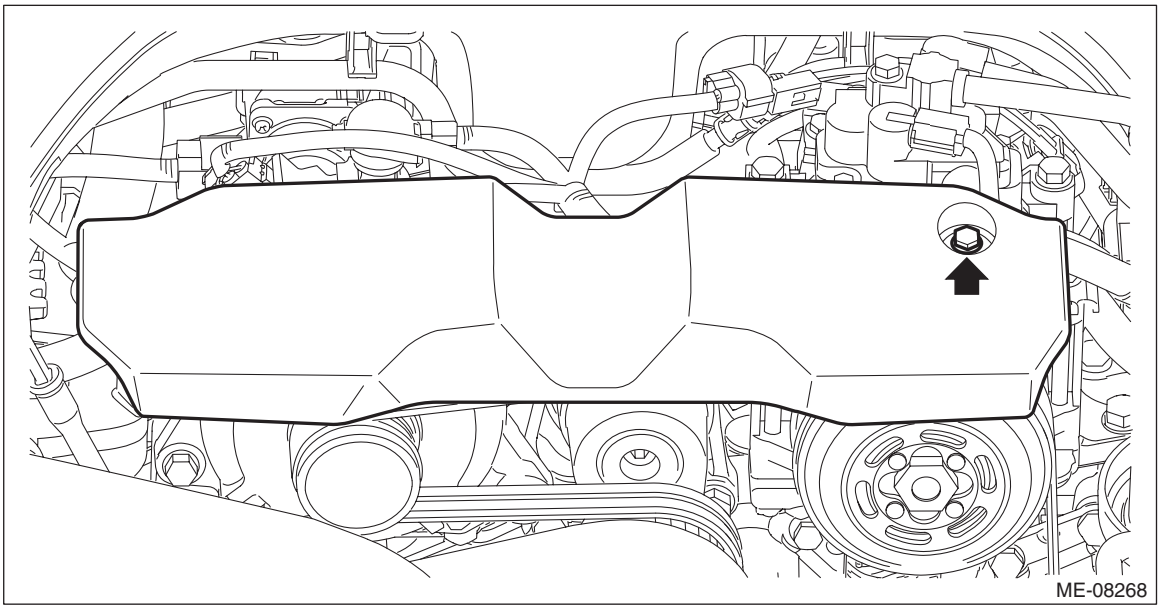

7) Drain engine coolant. <Ref. to CO(H4DO)-15, DRAINING OF ENGINE COOLANT, REPLACEMENT, Engine Coolant.>
8) Remove the front exhaust pipe. <Ref. to EX(H4DO)-5, REMOVAL, Front Exhaust Pipe.>
9) Lower the vehicle.
10) Remove the universal joint. <Ref. to PS-14, REMOVAL, Universal Joint.>
11) Disconnect the heater inlet hose (A), heater outlet hose (B) and water pipe (C).

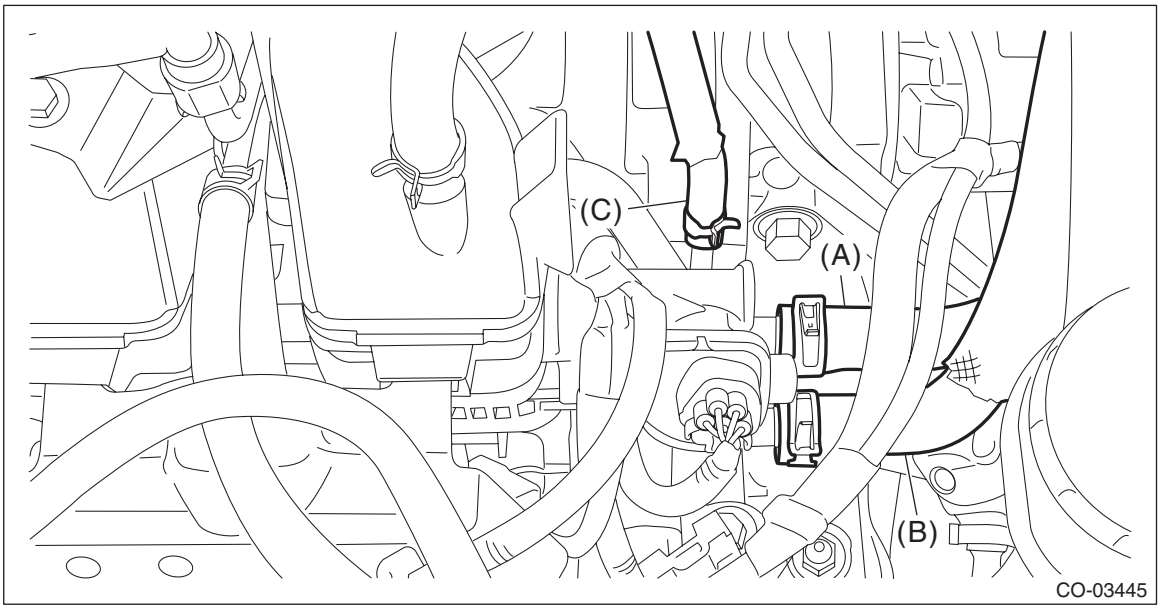

12) Using the ST1, install the ST2 to the engine unit.
ST1 18363AA050 BOLT
ST2 18360AA040 HANGER

Tightening torque:
43 N·m (4.4 kgf-m, 31.7 ft-lb)

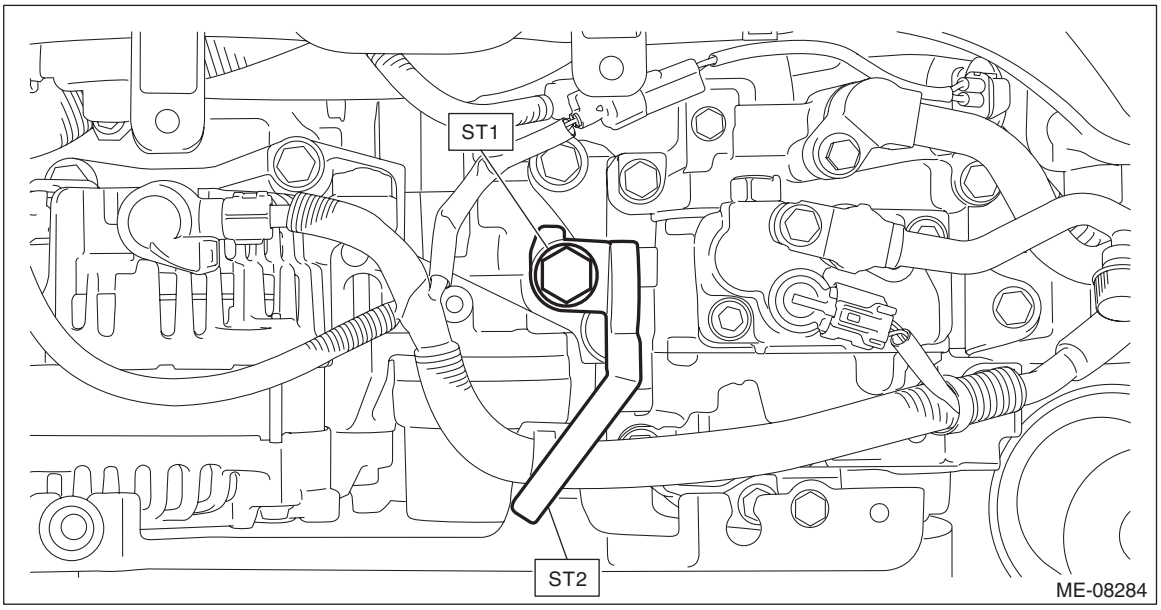

13) Support the engine with a lifting device and wire ropes.

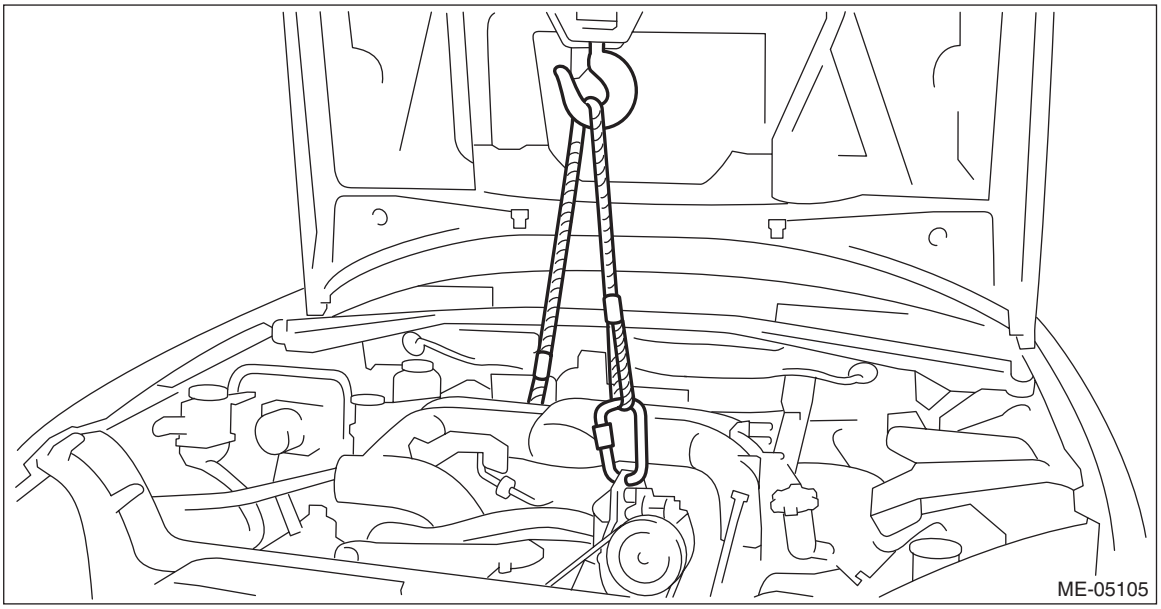

14) Remove the nuts from the transmission mounting bracket RH.

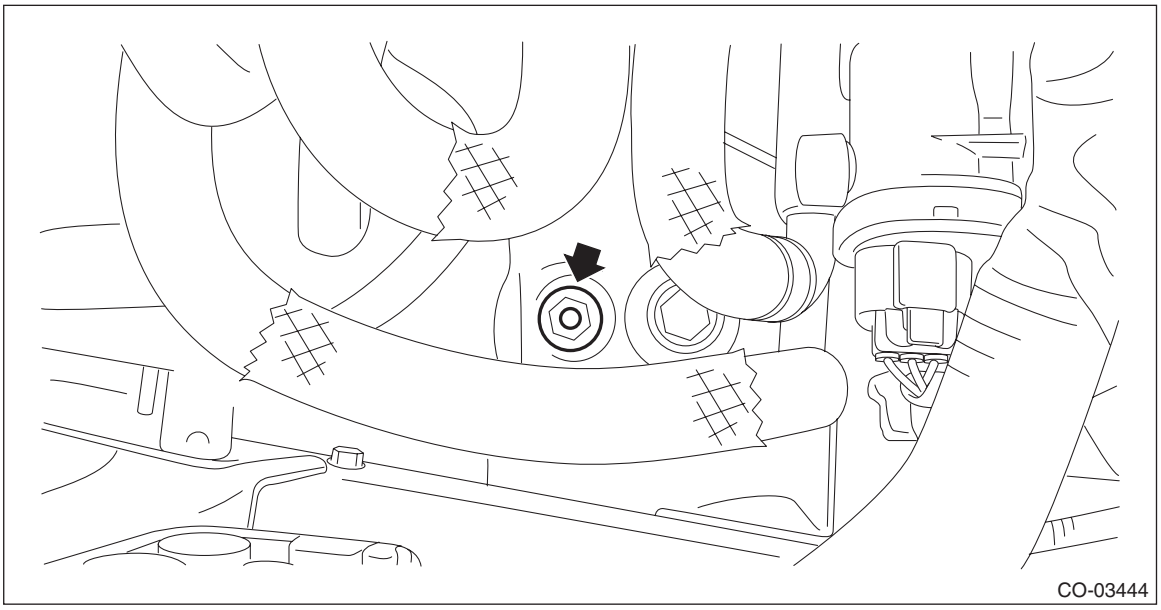

15) Remove the bolts and nuts that connect the front mounting bracket and engine mounting bracket.

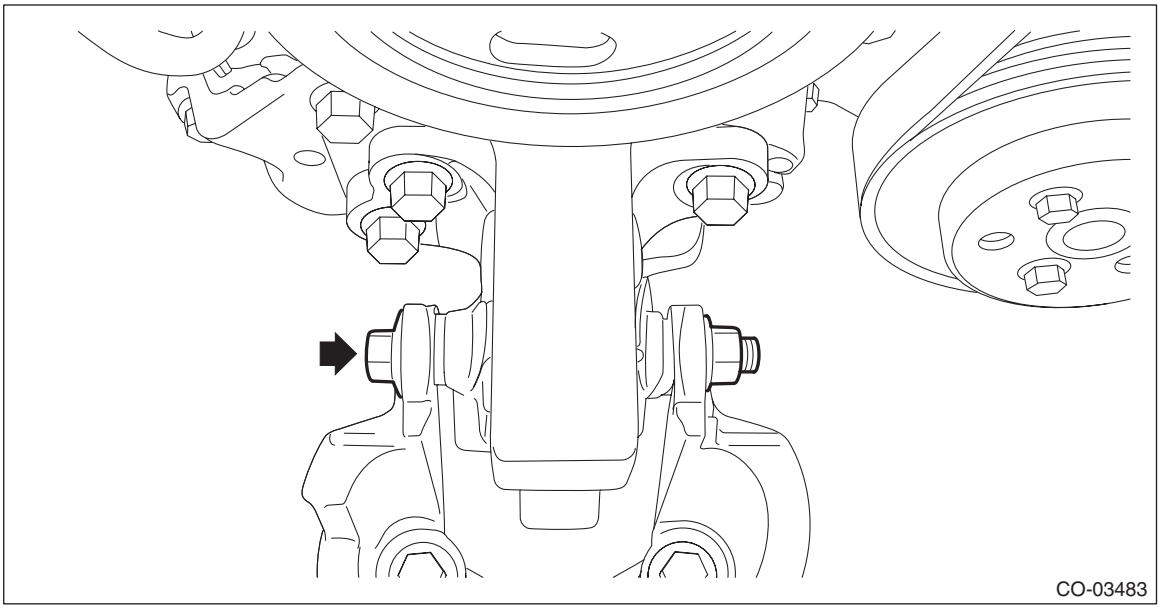

16) Remove the transmission mounting bracket LH.

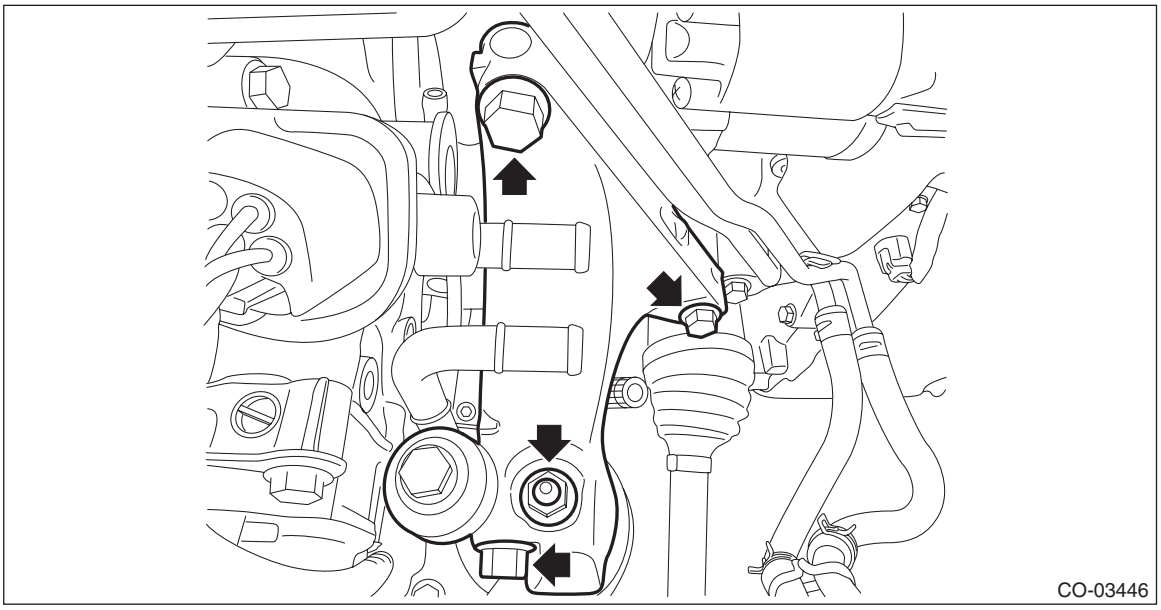

17) Remove the bolt from the water pipe assembly LH.

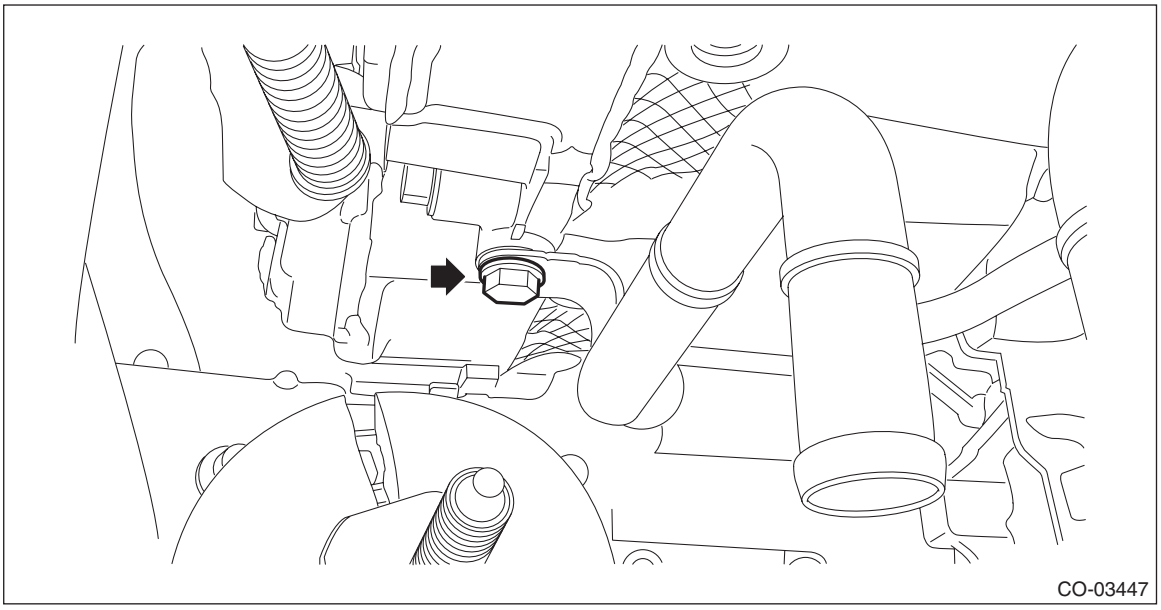

18) While raising the engine unit slightly, remove the bolt from the water pipe assembly LH.

CAUTION:
When lifting up the engine, pay attention to the clearance of each part and be careful not to lift the engine too much, in order to prevent damaging the vehicle.

19) Disconnect the water pipe hose LH, and remove the water pipe assembly LH.

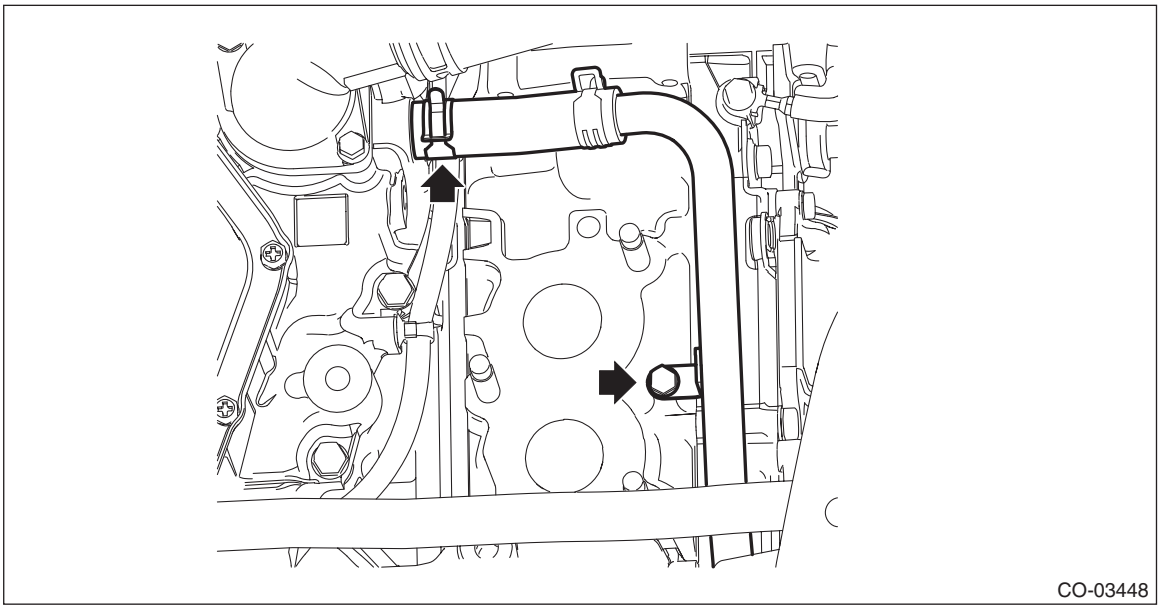

B: INSTALLATION

1. WATER PIPE ASSEMBLY RH

1) Position the water pipe assembly RH, and install the bolt (D) securing the water pipe assembly RH to the cam carrier RH.
2) Connect the water pipe hose RH (C) to the oil pan.
3) Install the bolt (B) securing the water pipe assembly RH to the cam carrier RH, and connect the engine coolant hose (A) to the water pipe assembly RH.

Tightening torque:
6.4 N·m (0.7 kgf-m, 4.7 ft-lb)

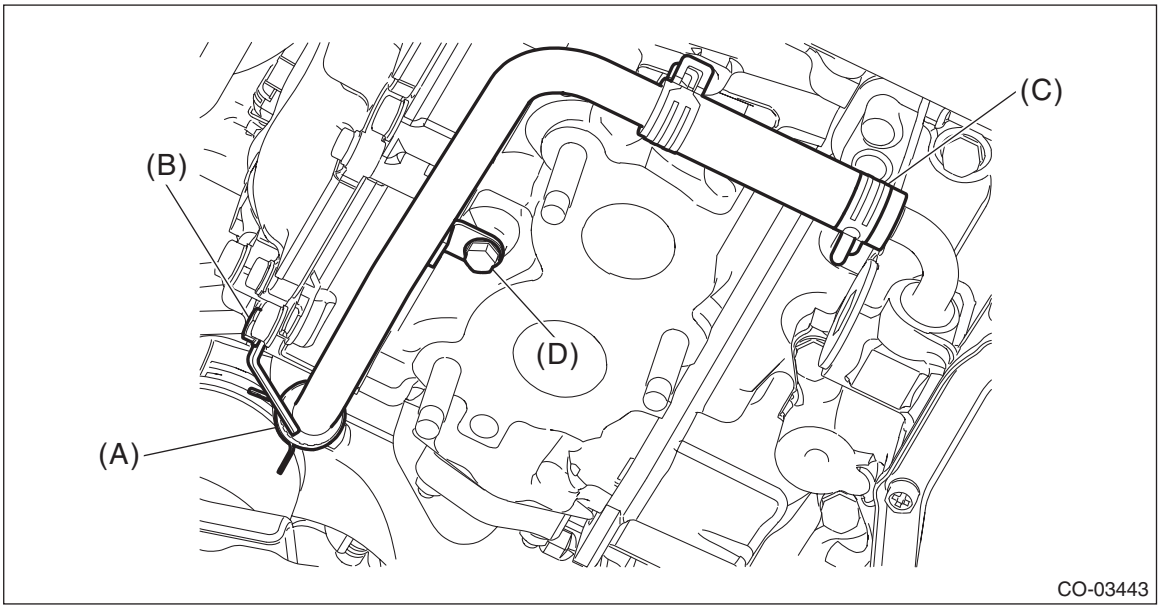

4) Install the front exhaust pipe. <Ref. to EX(H4DO)-7, INSTALLATION, Front Exhaust Pipe.>
5) Connect the ground terminal to battery sensor. <Ref. to RC-4, BATTERY, NOTE, Repair Contents.>
6) Fill engine coolant. <Ref. to CO(H4DO)-16, FILLING OF ENGINE COOLANT, REPLACEMENT, Engine Coolant.>

2. WATER PIPE ASSEMBLY LH

1) Connect the water pipe hose LH, and install the bolt to the water pipe assembly LH.

Tightening torque:
6.4 N·m (0.7 kgf-m, 4.7 ft-lb)

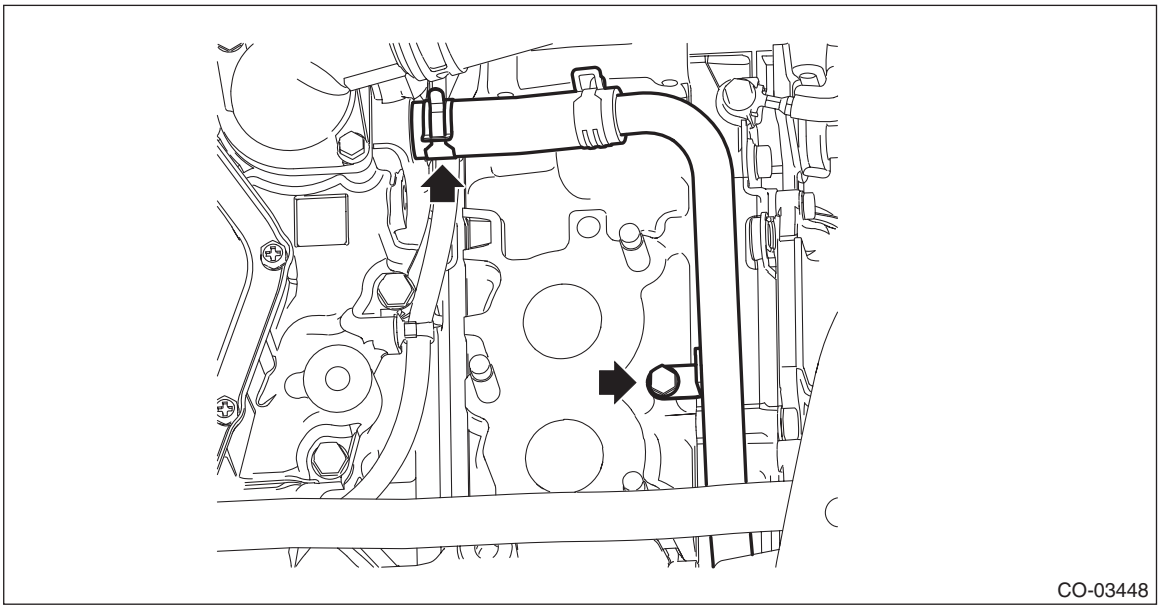

2) Lower the engine unit to install the bolt to the water pipe assembly LH.

Tightening torque:
6.4 N·m (0.7 kgf-m, 4.7 ft-lb)

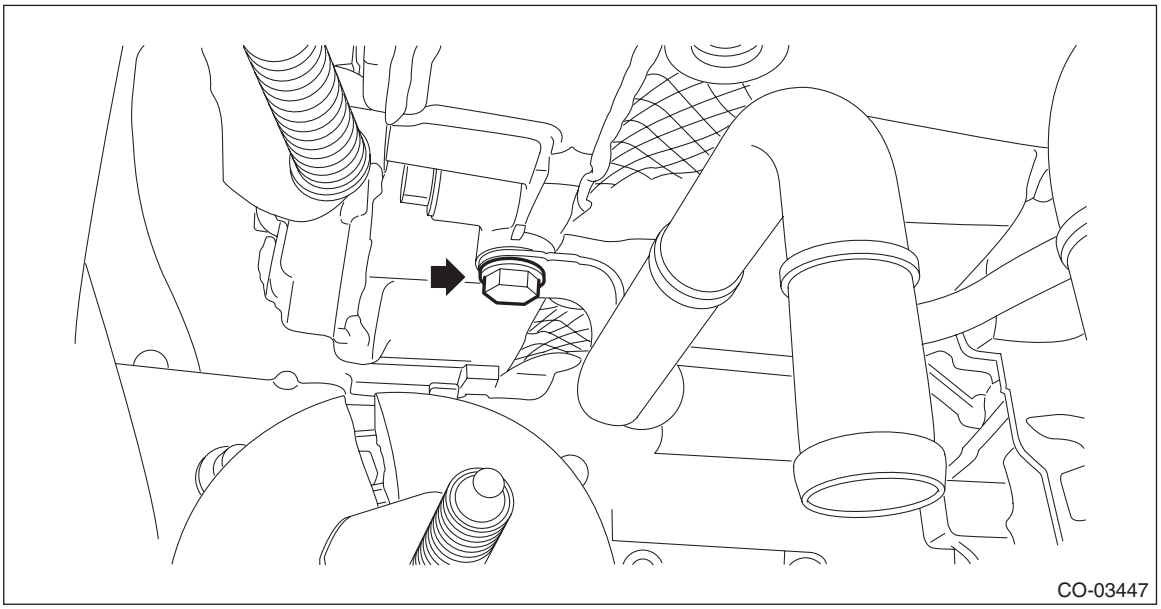

3) Install the transmission mounting bracket LH, and install the bolts and nuts to the transmission mounting bracket LH.

Tightening torque:
T1: 45 N·m (4.6 kgf-m, 33.2 ft-lb)
T2: 75 N·m (7.6 kgf-m, 55.3 ft-lb)

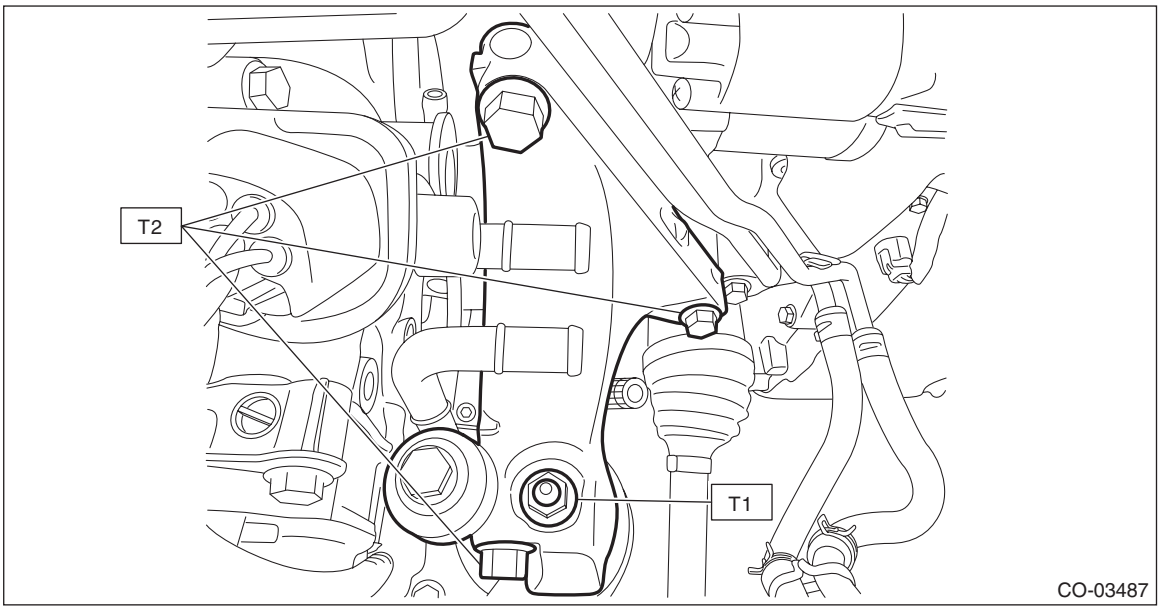

4) Install the bolts and nuts that connect the front mounting bracket and engine mounting bracket.

Tightening torque:
45 N·m (4.6 kgf-m, 33.2 ft-lb)

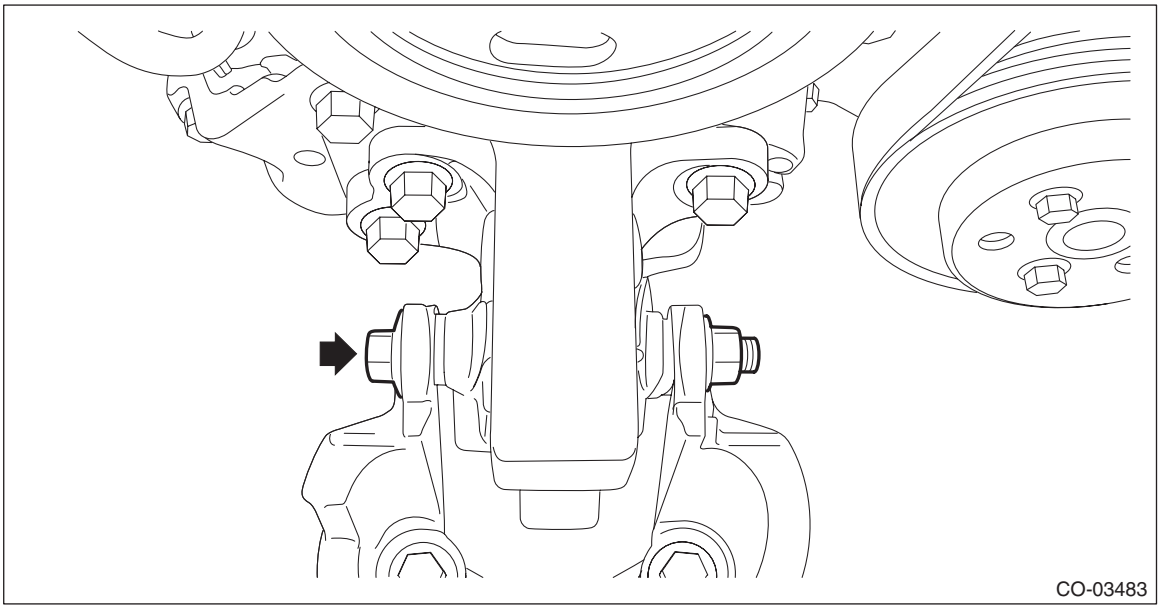

5) Install the nuts to the transmission mounting bracket RH.

Tightening torque:
45 N·m (4.6 kgf-m, 33.2 ft-lb)

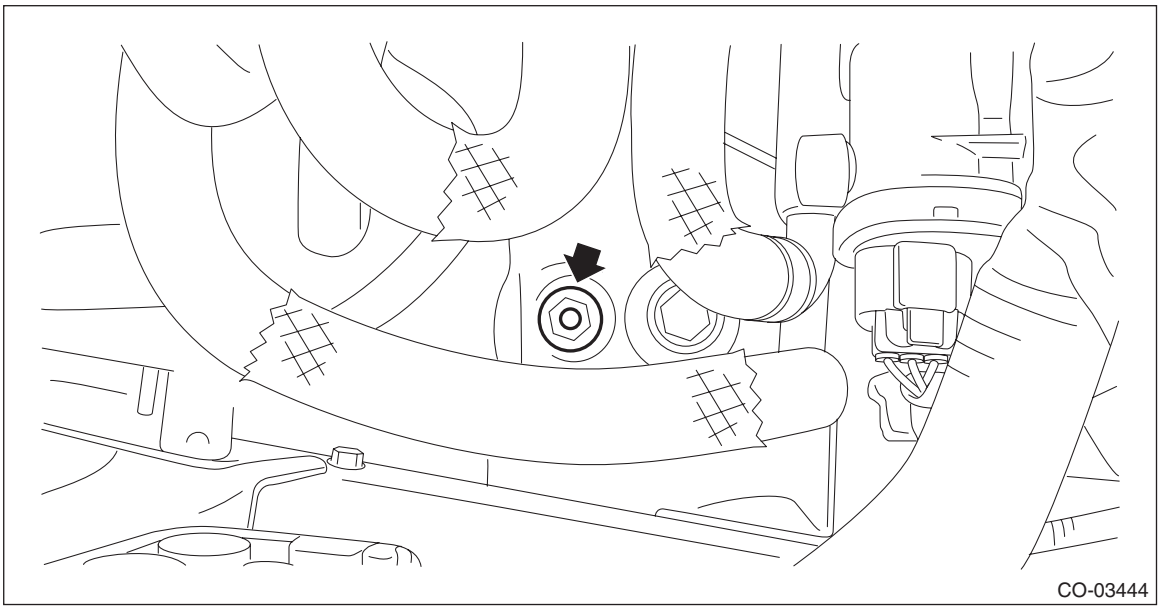

6) Remove the lifting device and wire ropes.

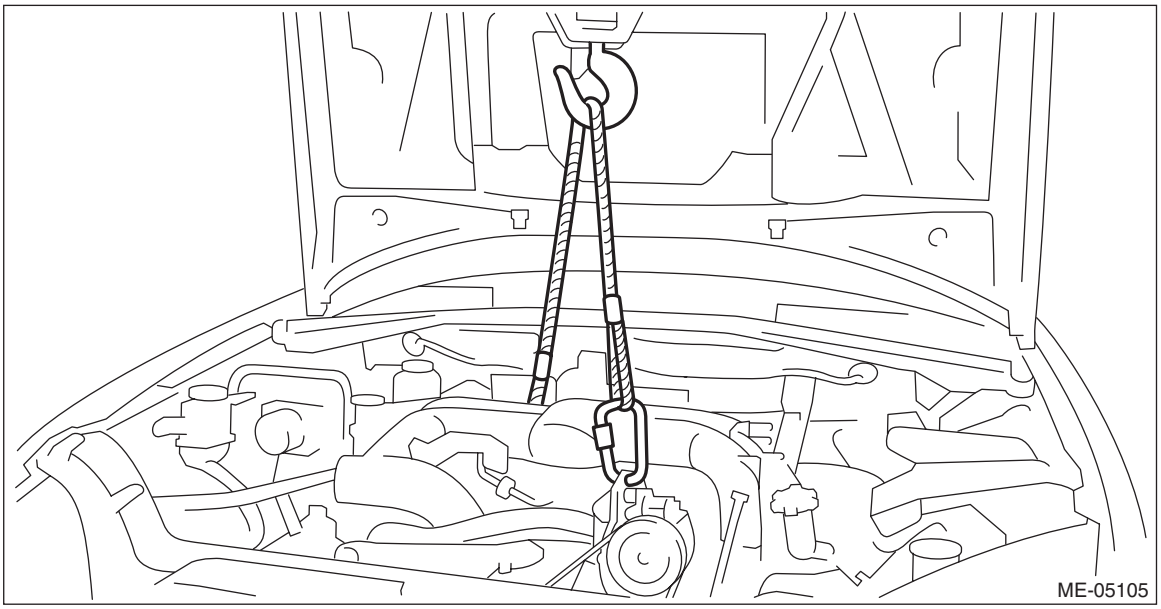

7) Remove the ST1 and ST2 from the engine unit.
ST1 18363AA050 BOLT
ST2 18360AA040 HANGER

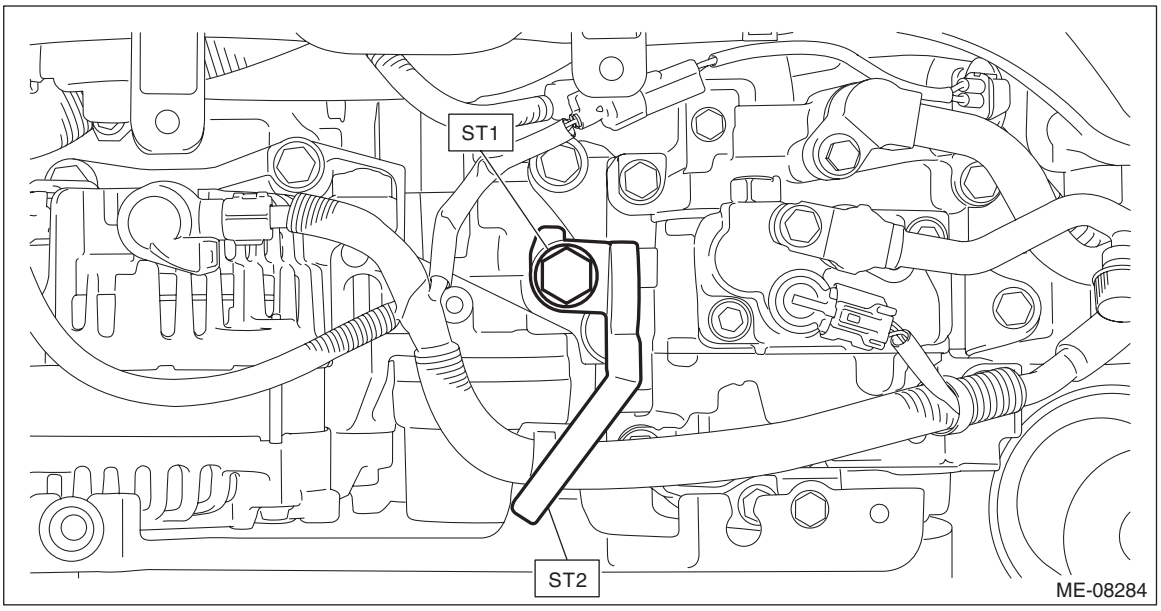

8) Connect the water pipe (C), heater outlet hose (B) and heater inlet hose (A).

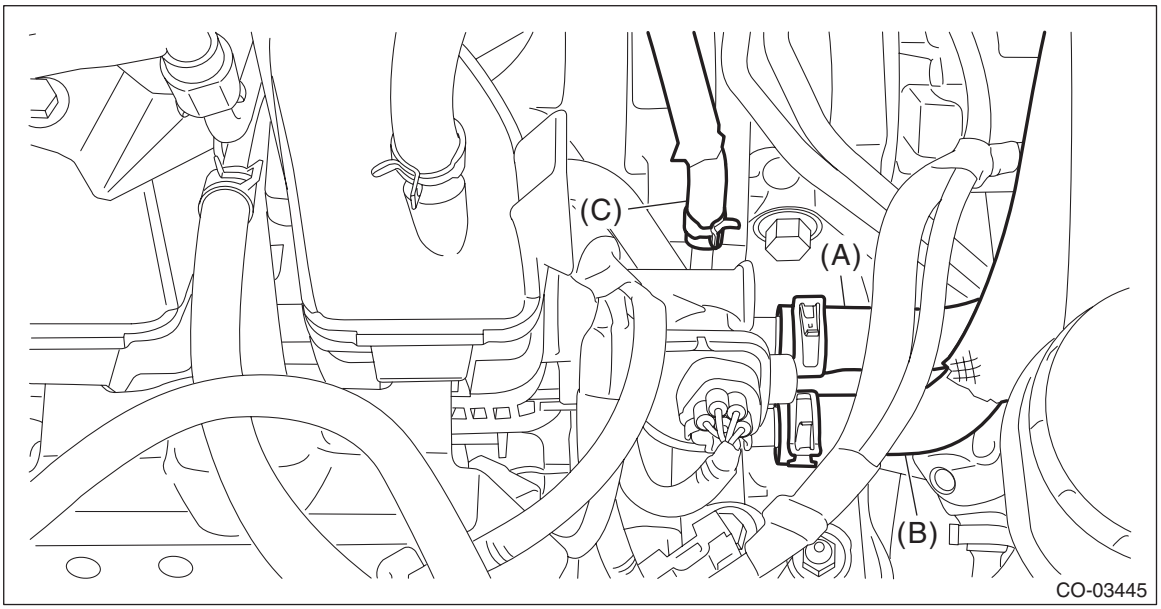

9) Install the universal joint. <Ref. to PS-15, INSTALLATION, Universal Joint.>
10) Lift up the vehicle.
11) Install the front exhaust pipe. <Ref. to EX(H4DO)-7, INSTALLATION, Front Exhaust Pipe.>

12) Install the V-belt cover.

Tightening torque:
6.5 N·m (0.8 kgf-m, 4.8 ft-lb)

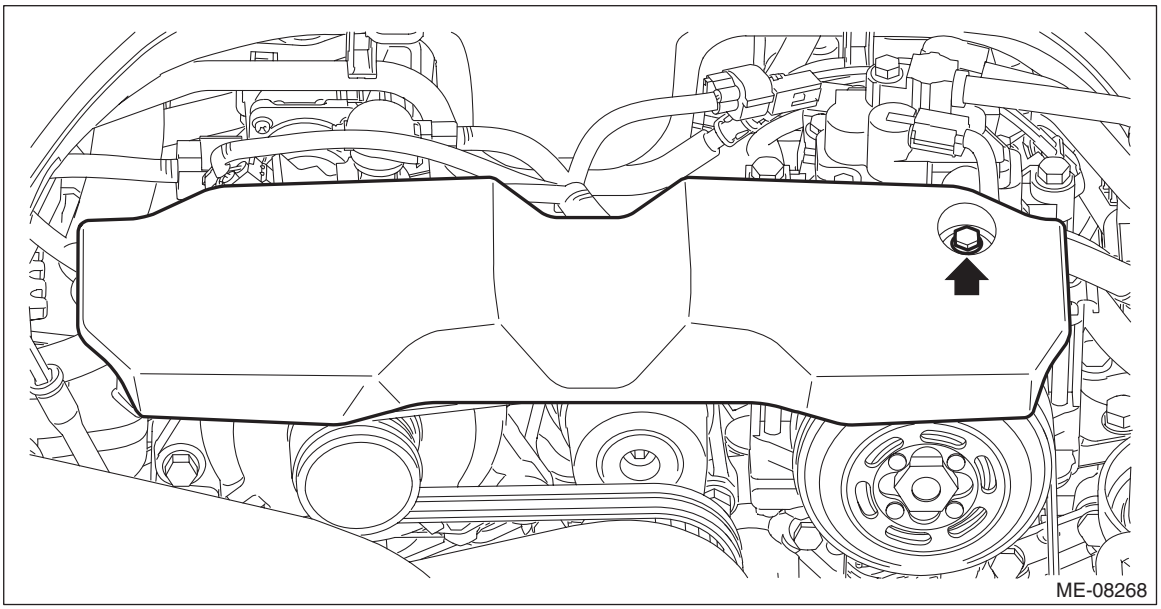

13) Install the air intake boot. <Ref. to IN(H4DO)-10, INSTALLATION, Air Intake Boot.>
14) Install the air intake duct. <Ref. to IN(H4DO)-12, INSTALLATION, Air Intake Duct.>
15) Connect the ground terminal to battery sensor. <Ref. to RC-4, BATTERY, NOTE, Repair Contents.>
16) Set the front hood to the normal position. <Ref. to RC-22, FRONT HOOD DAMPER STAY, NOTE, Repair Contents.>
17) Fill engine coolant. <Ref. to CO(H4DO)-16, FILLING OF ENGINE COOLANT, REPLACEMENT, Engine Coolant.>

C: INSPECTION

1) Check that the water pipe assembly has no deformation, cracks or other damages.
2) Check that the hose has no cracks, damage or loose part.

6. Thermostat

A: REMOVAL

1. ENGINE SIDE

1) Disconnect the ground terminal from battery sensor. <Ref. to RC-4, BATTERY, NOTE, Repair Contents.>
2) Drain engine coolant. <Ref. to CO(H4DO)-15, DRAINING OF ENGINE COOLANT, REPLACEMENT, Engine Coolant.>
3) Remove the front exhaust pipe. <Ref. to EX(H4DO)-5, REMOVAL, Front Exhaust Pipe.>
4) Disconnect the radiator outlet hose from thermostat cover.

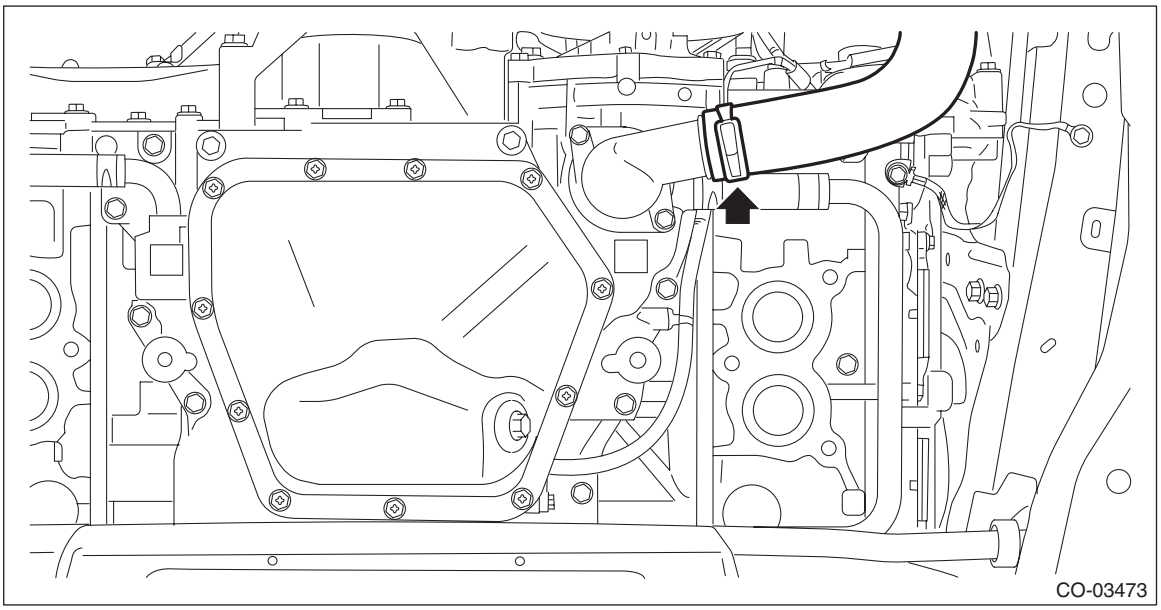

5) Remove the thermostat cover, and then remove the gasket and thermostat.

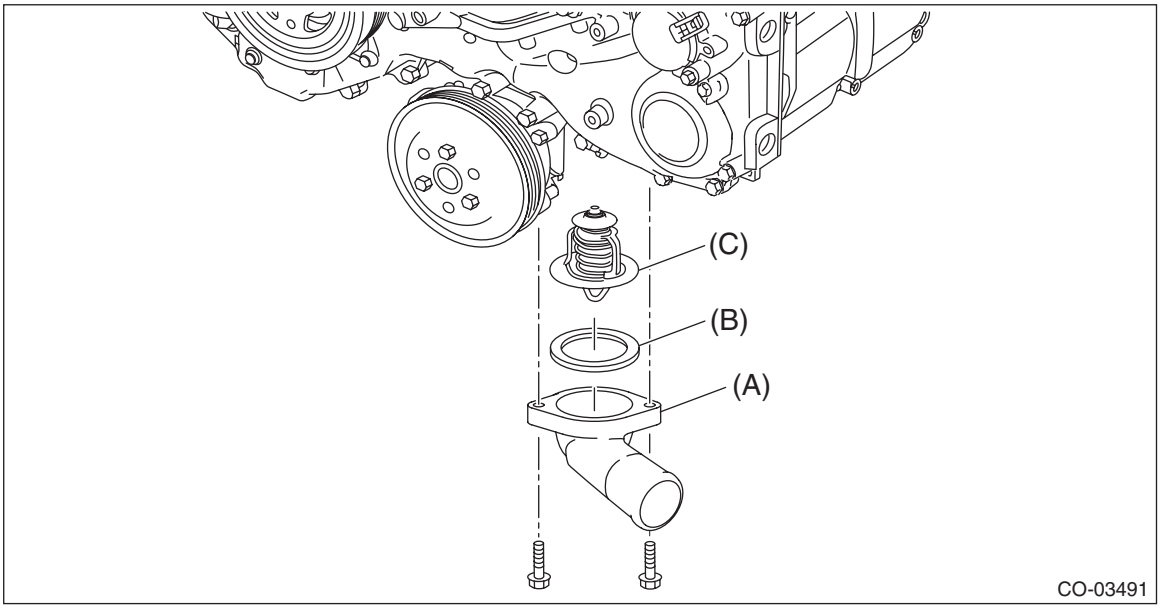

(A) Thermostat cover (B) Gasket (C) Thermostat

2. CVTF COOLER (WITH WARMER FEATURE) SIDE

NOTE:
Thermostat on the CVTF cooler (with warmer feature) side is featured on CVT models.
1) Disconnect the ground terminal from battery sensor. <Ref. to RC-4, BATTERY, NOTE, Repair Contents.>
2) Drain engine coolant. <Ref. to CO(H4DO)-15, DRAINING OF ENGINE COOLANT, REPLACEMENT, Engine Coolant.>
3) Lower the vehicle.
4) Remove the clip (A), and loosen the clamps (B) and (C) securing the air intake boot.

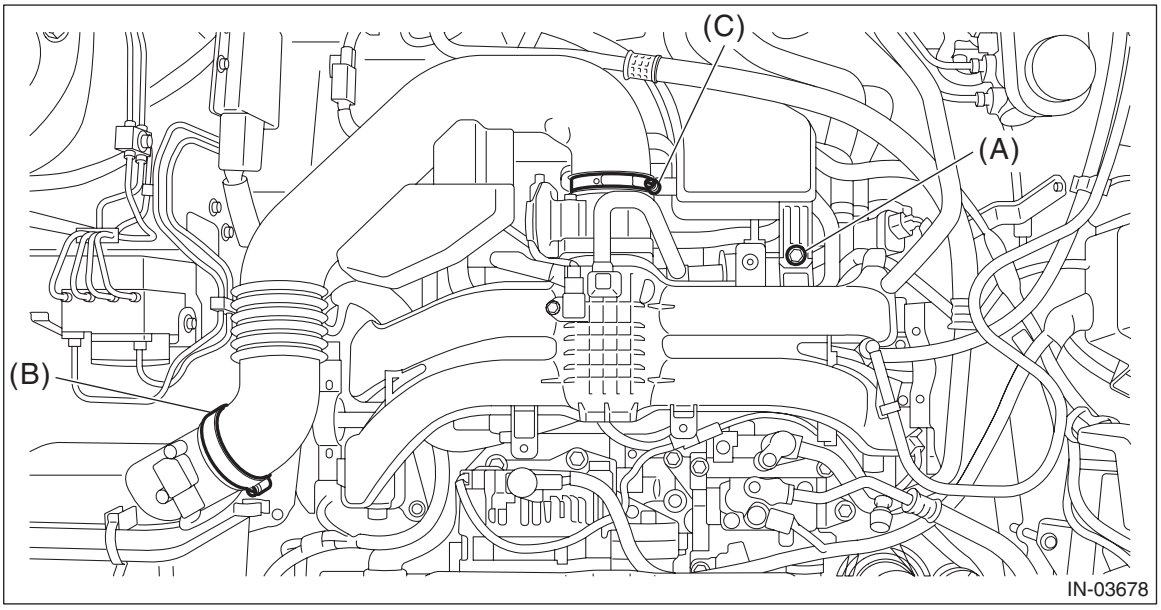

5) Remove the air intake boot from the air cleaner case (rear) and throttle body, and move it to the left side wheel apron.

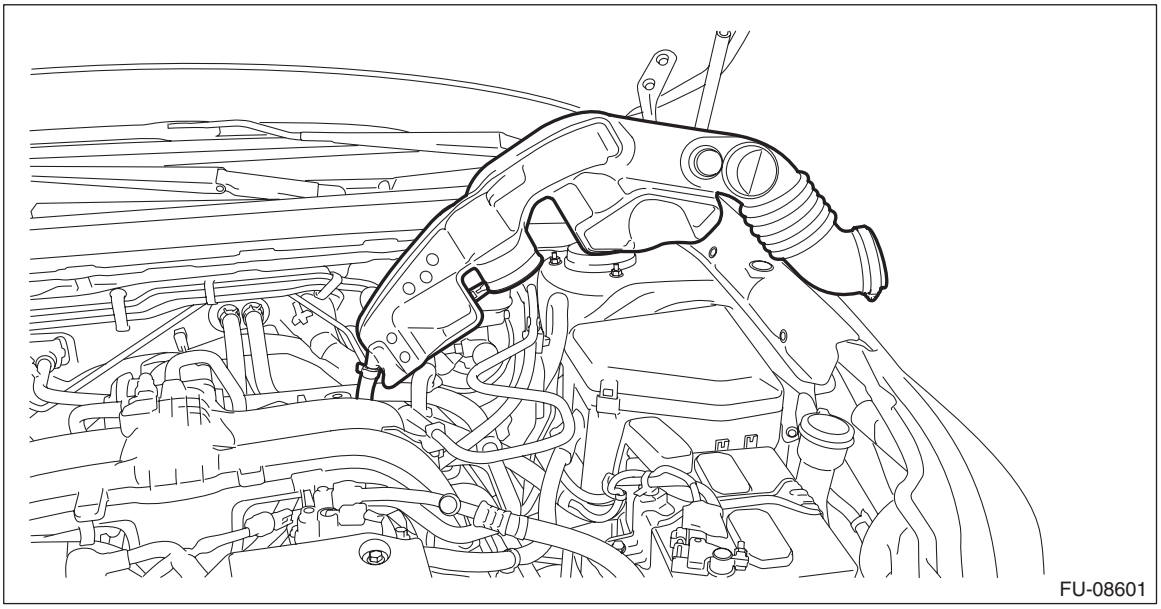

6) Disconnect the engine coolant hose from the thermostat cover.

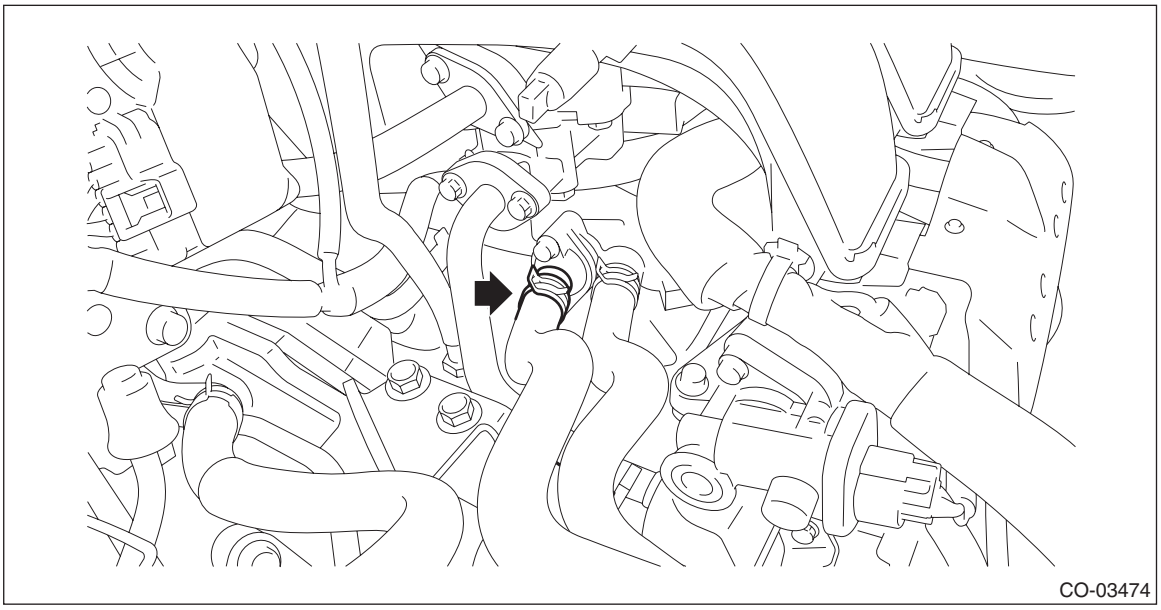

7) Remove the thermostat cover, and then remove the gasket and thermostat.

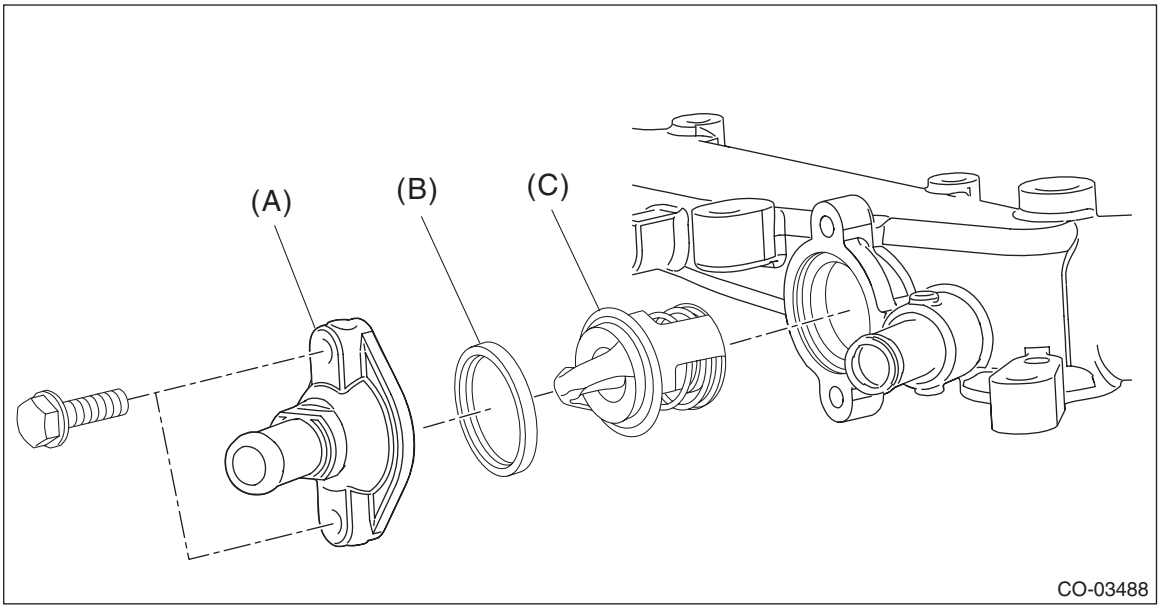

(A) Thermostat cover (B) Gasket (C) Thermostat

B: INSTALLATION

1. ENGINE SIDE

1) Install a gasket to thermostat.

NOTE:
Use a new gasket.

2) Install the thermostat and thermostat cover.

Tightening torque:
6.4 N·m (0.7 kgf-m, 4.7 ft-lb)

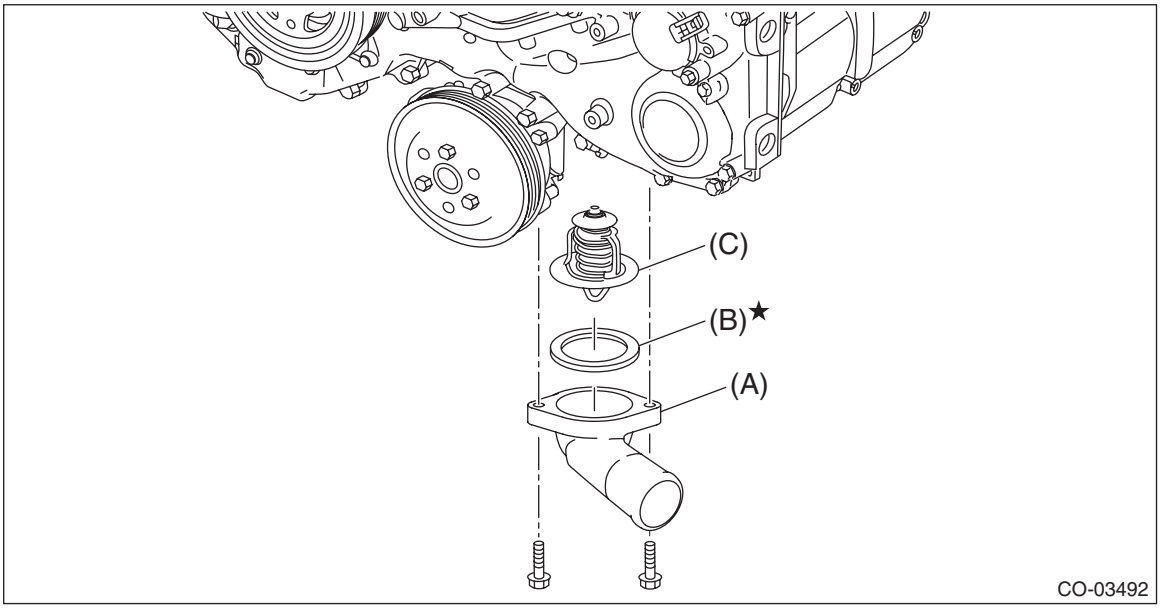

(A) Thermostat cover (B) Gasket (C) Thermostat

3) Connect the radiator outlet hose to thermostat cover.

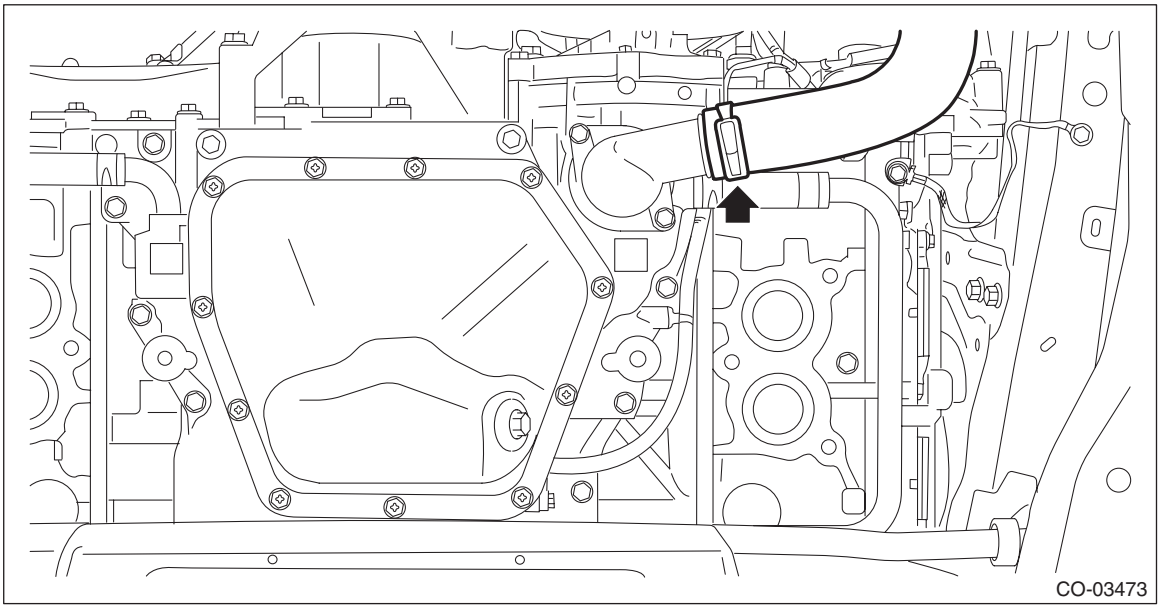

4) Install the front exhaust pipe. <Ref. to EX(H4DO)-7, INSTALLATION, Front Exhaust Pipe.>
5) Connect the ground terminal to battery sensor. <Ref. to RC-4, BATTERY, NOTE, Repair Contents.>
6) Fill engine coolant. <Ref. to CO(H4DO)-16, FILLING OF ENGINE COOLANT, REPLACEMENT, Engine Coolant.>

2. CVTF COOLER (WITH WARMER FEATURE) SIDE

1) Install a gasket to thermostat.

NOTE:
Use a new gasket.

2) Install the thermostat and thermostat cover.

NOTE:
Install the parts with the air vent hole facing upward.

Tightening torque:
6.4 N·m (0.7 kgf-m, 4.7 ft-lb)

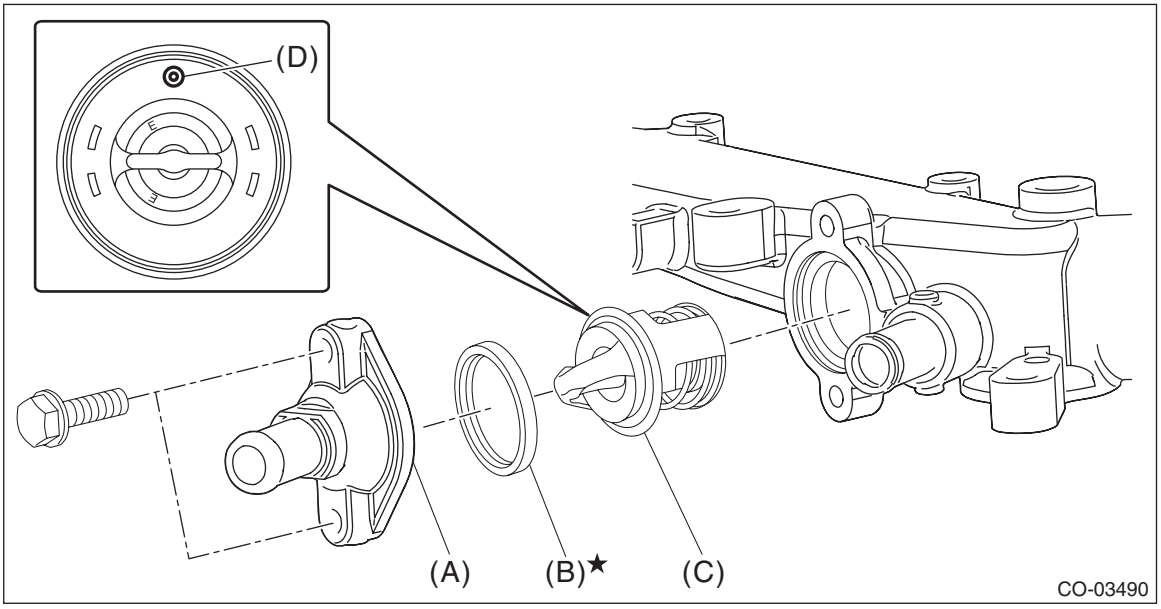

(A) Thermostat cover (B) Gasket (C) Thermostat
(D) Air vent hole

3) Connect the engine coolant hose to the thermostat cover.

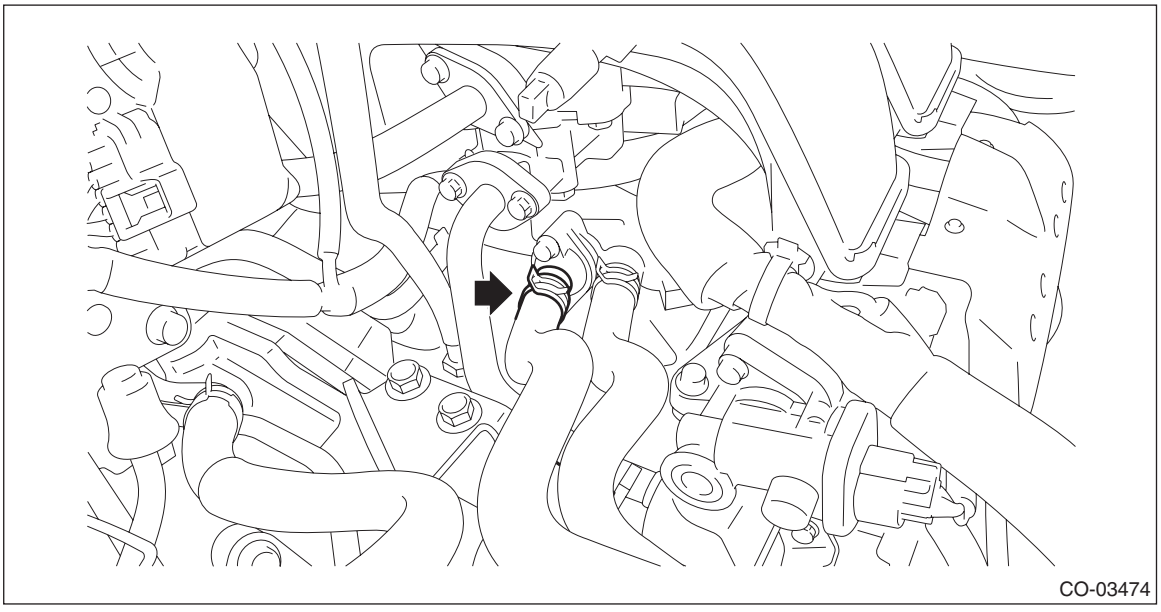

4) Install the air intake boot. <Ref. to IN(H4DO)-10, INSTALLATION, Air Intake Boot.>
5) Connect the ground terminal to battery sensor. <Ref. to RC-4, BATTERY, NOTE, Repair Contents.>
6) Fill engine coolant. <Ref. to CO(H4DO)-16, FILLING OF ENGINE COOLANT, REPLACEMENT, Engine Coolant.>

C: INSPECTION

1) Check that the thermostat does not have deformation, cracks or damage.
2) Check that the thermostat valve closes completely at an ambient temperature.
3) Immerse the thermostat and a thermometer in water. Raise water temperature gradually, and check the temperature and valve lift when the valve begins to open and when the valve is fully opened. Replace the thermostat if faulty.

NOTE:
- During the test, agitate the water for even temperature distribution.
- Leave the thermostat in the boiling water for five minutes or more before measuring the valve lift.
- Hold the thermostat with a wire or the like to avoid contacting with container bottom.

Starting temperature to open:
Engine side
90 — 94°C (194 — 201°F)
CVTF cooler (with warmer feature) side (CVT model)
48 — 52°C (118 — 126°F)

Full open temperature:
Engine side
100°C (212°F)
CVTF cooler (with warmer feature) side (CVT model)
63°C (145°F)

Total valve lift:
Engine side
8.0 mm (0.315 in) or more
CVTF cooler (with warmer feature) side (CVT model)
6.0 mm (0.236 in) or more

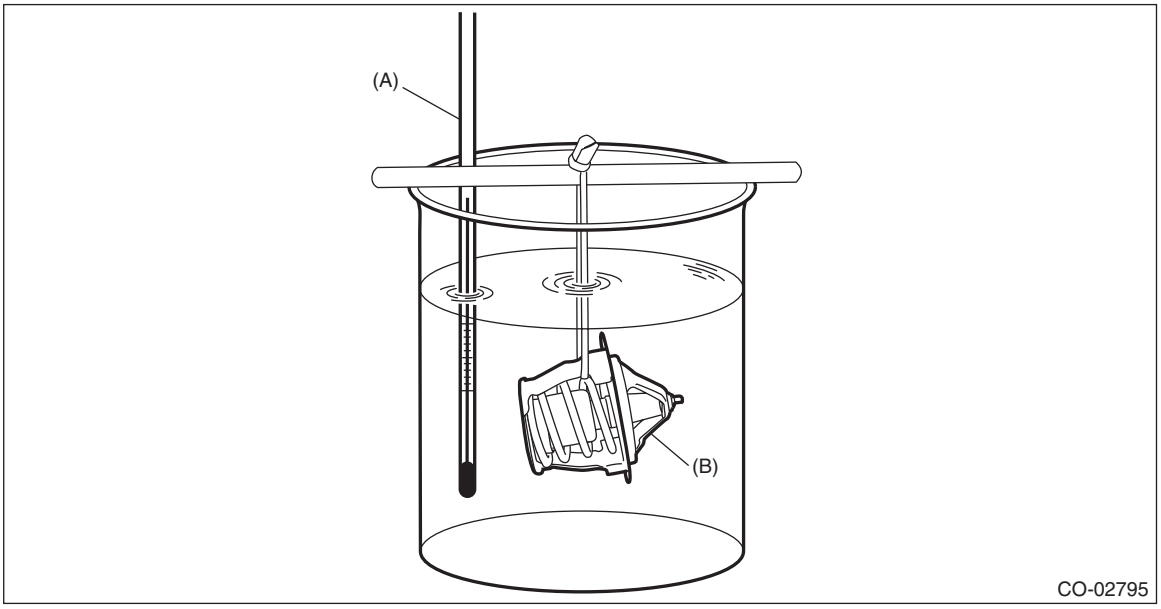

(A) Thermometer
(B) Thermostat

7. Radiator

A: REMOVAL

CAUTION:
The radiator is pressurized when the engine and radiator are hot. Wait until engine and radiator cool down before working on the radiator.

1) Disconnect the ground terminal from battery sensor. <Ref. to RC-4, BATTERY, NOTE, Repair Contents.>
2) Remove the air intake duct. <Ref. to IN(H4DO)-12, REMOVAL, Air Intake Duct.>
3) Remove the front bumper. <Ref. to EI-34, REMOVAL, Front Bumper.>
4) Remove the active grille shutter. <Ref. to CO(H4DO)-63, REMOVAL, Active Grille Shutter.>
5) Remove the grille bracket.

NOTE:
Remove six clips when removing the grille bracket.

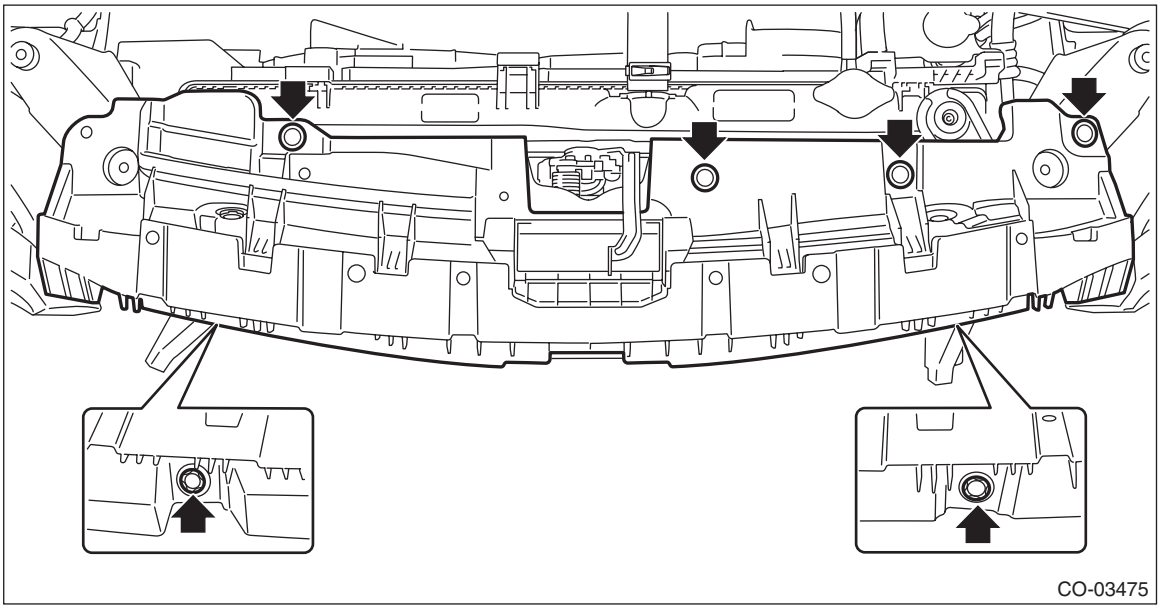

6) Drain engine coolant. <Ref. to CO(H4DO)-15, DRAINING OF ENGINE COOLANT, REPLACEMENT, Engine Coolant.>
7) Remove the front exhaust pipe. <Ref. to EX(H4DO)-5, REMOVAL, Front Exhaust Pipe.>
8) Disconnect the radiator outlet hose from thermostat cover.

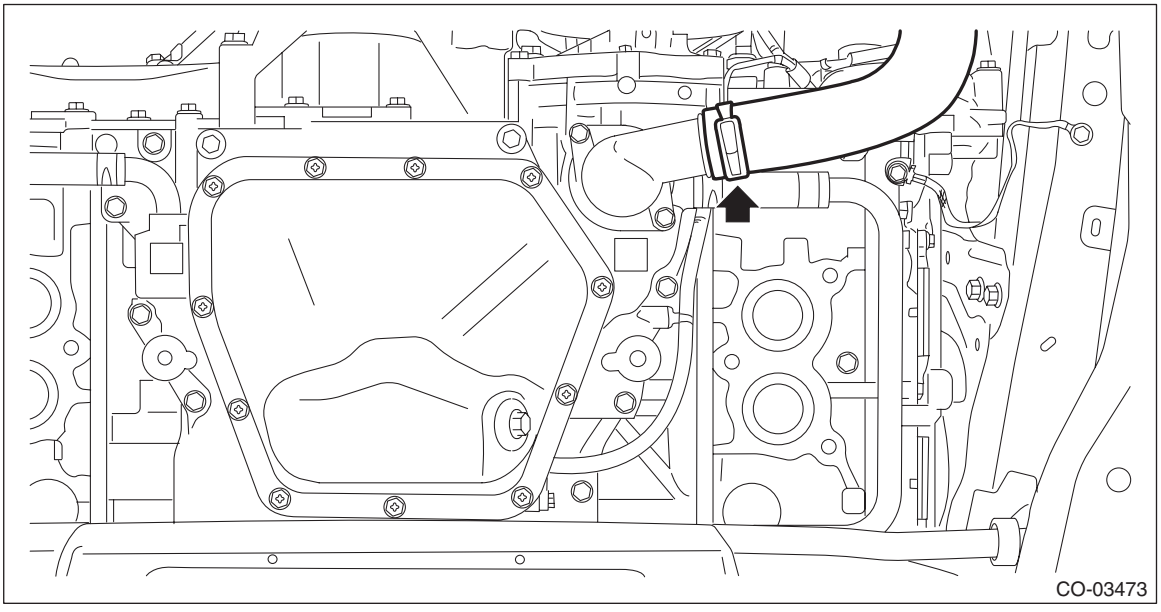

9) Lower the vehicle.
10) Remove the reservoir tank. <Ref. to CO(H4DO)-61, REMOVAL, Reservoir Tank.>
11) Disconnect the connector (A) from the radiator main fan motor and the connector (B) from the radiator sub fan motor.

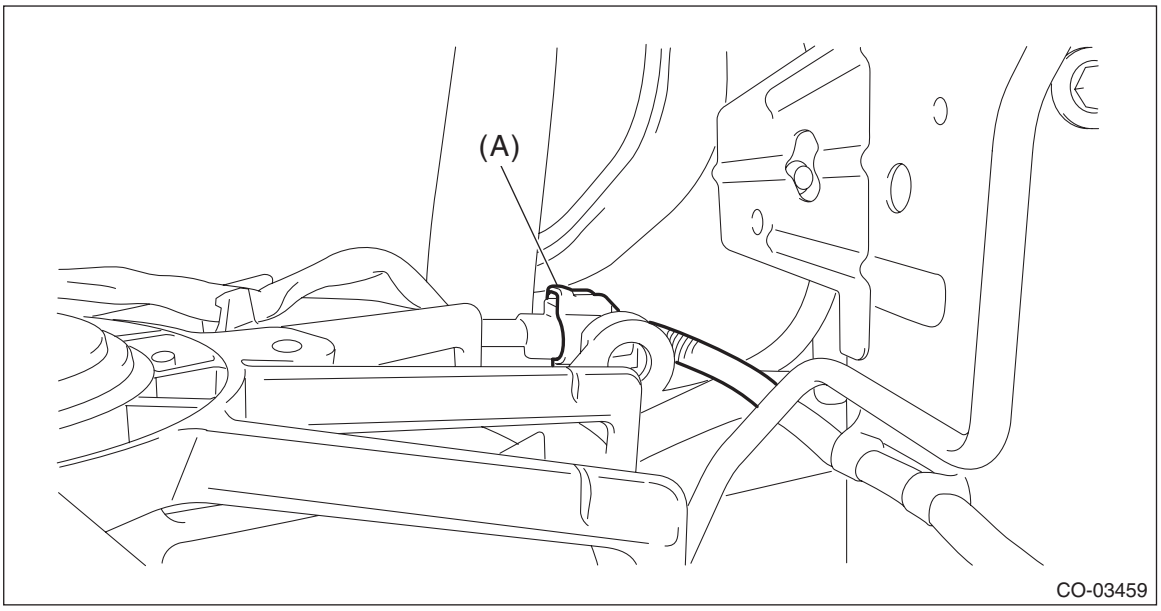

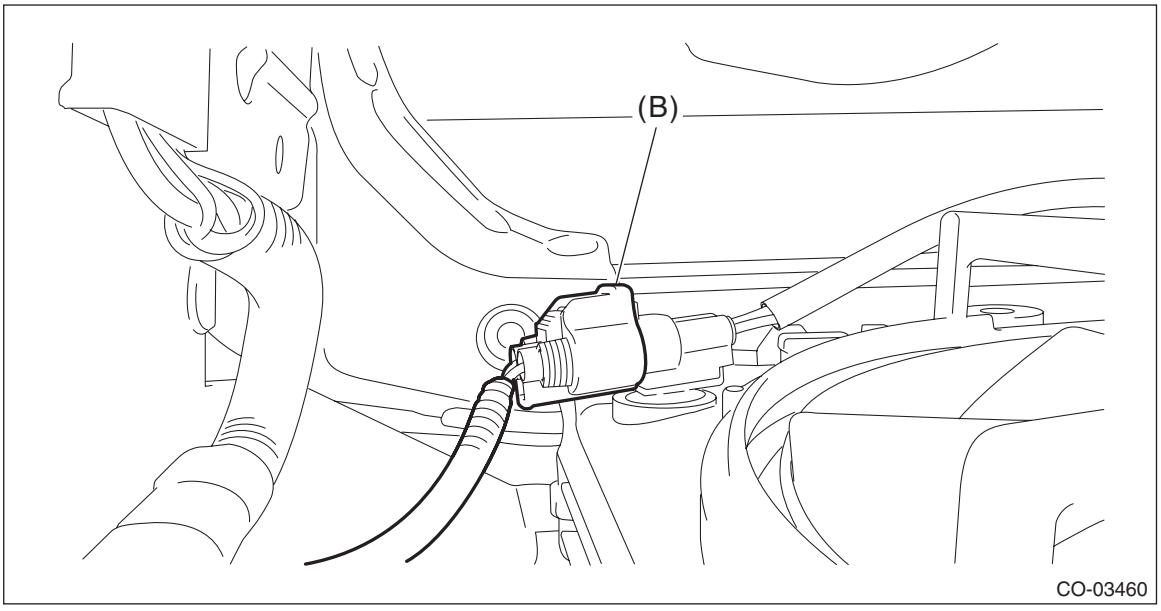

12) Disconnect the radiator inlet hose from the water pipe assembly.

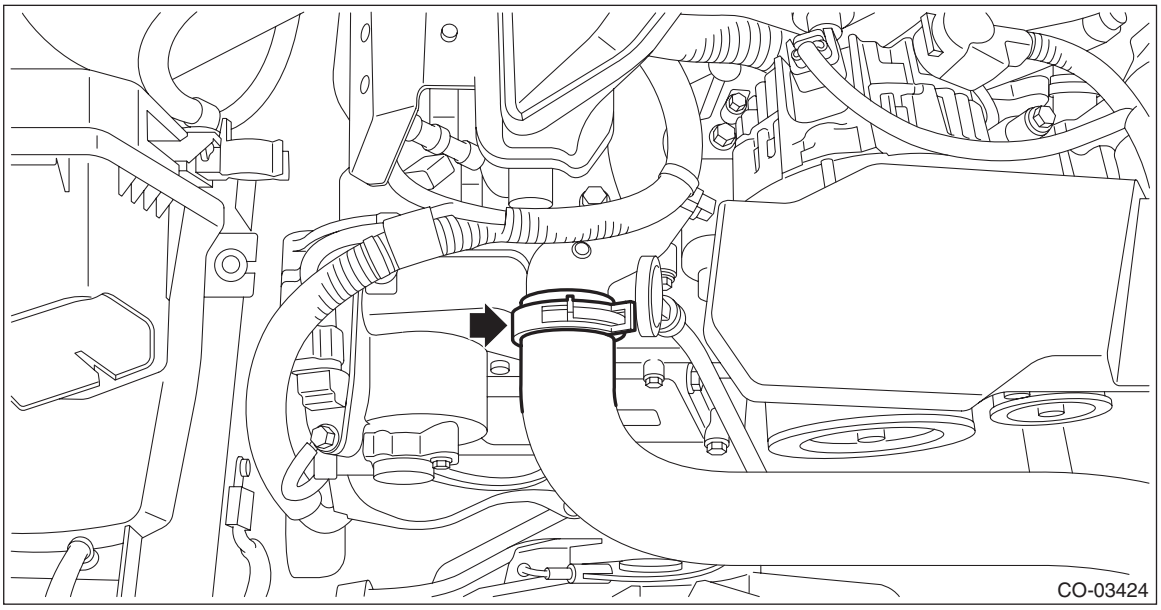

13) Remove the radiator upper brackets.

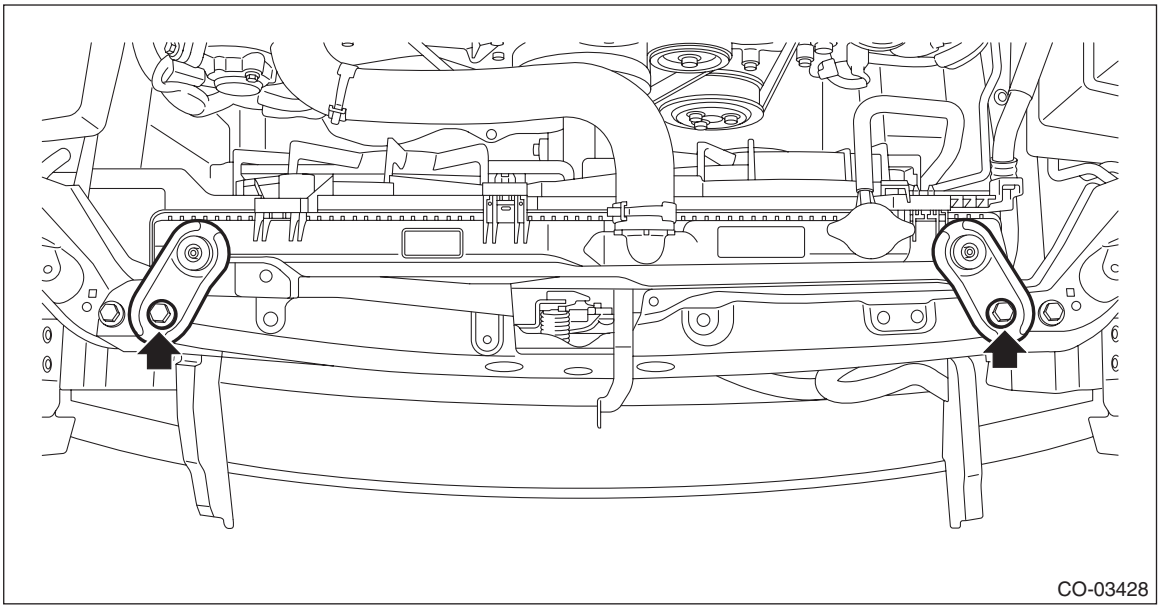

14) Using the ST, remove the bolts securing the condenser lower bracket to the radiator.
ST 73099SG000 SPECIAL TOOL CONDENSER

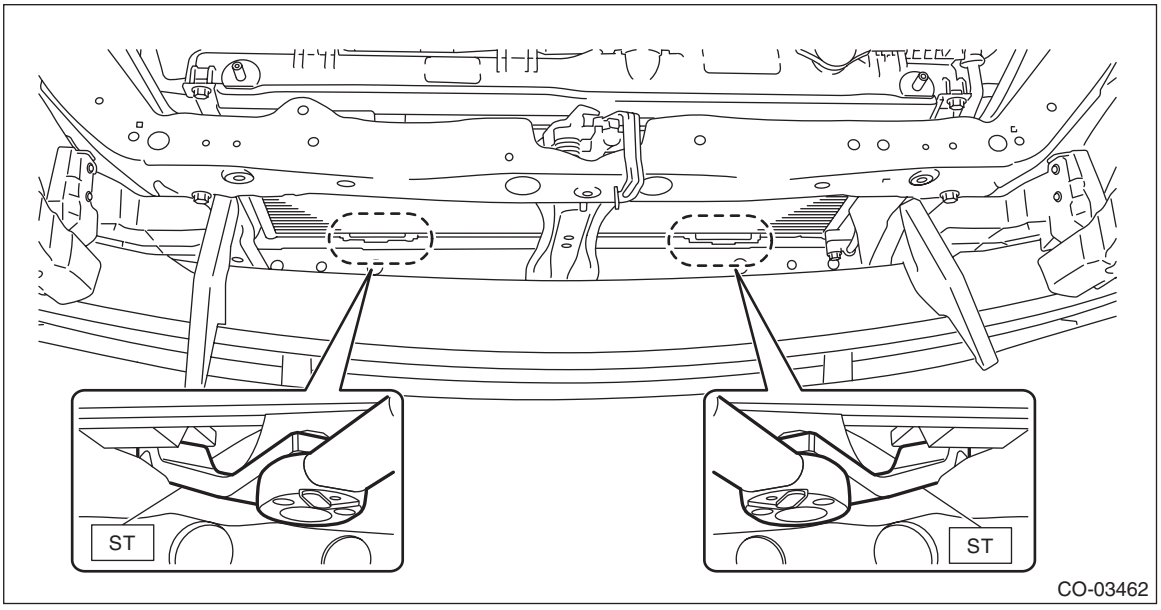

15) Remove the bolts securing the condenser lower bracket to the condenser, and remove the condenser lower bracket.

NOTE:
This procedure is required to prevent the lower gasket from being damaged when removing the radiator.

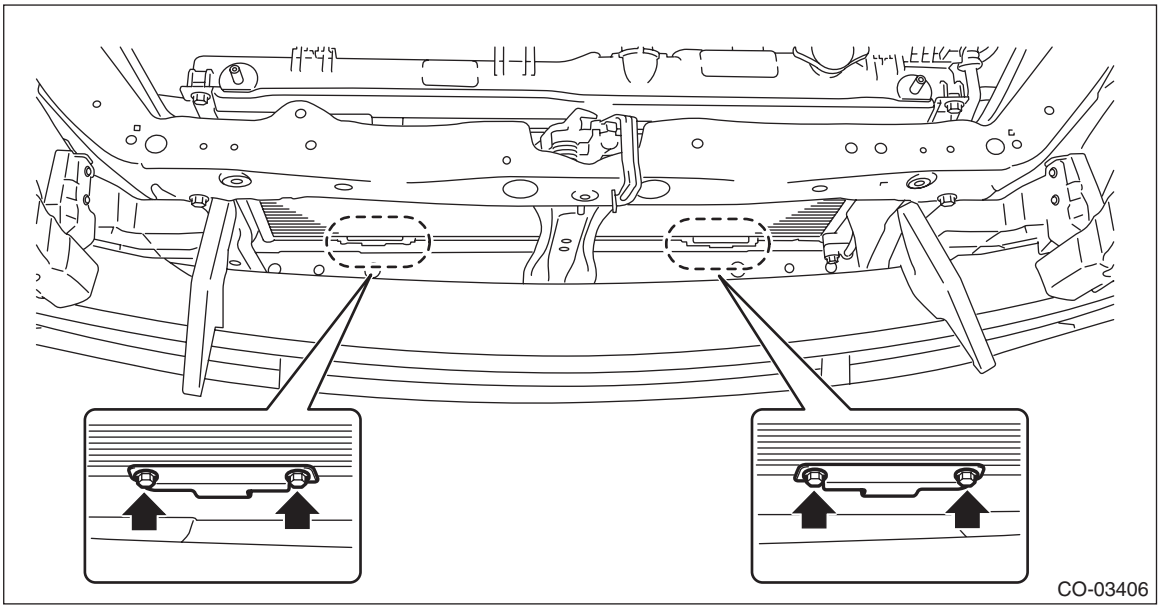

16) Remove the bolts securing the condenser upper bracket to the radiator.

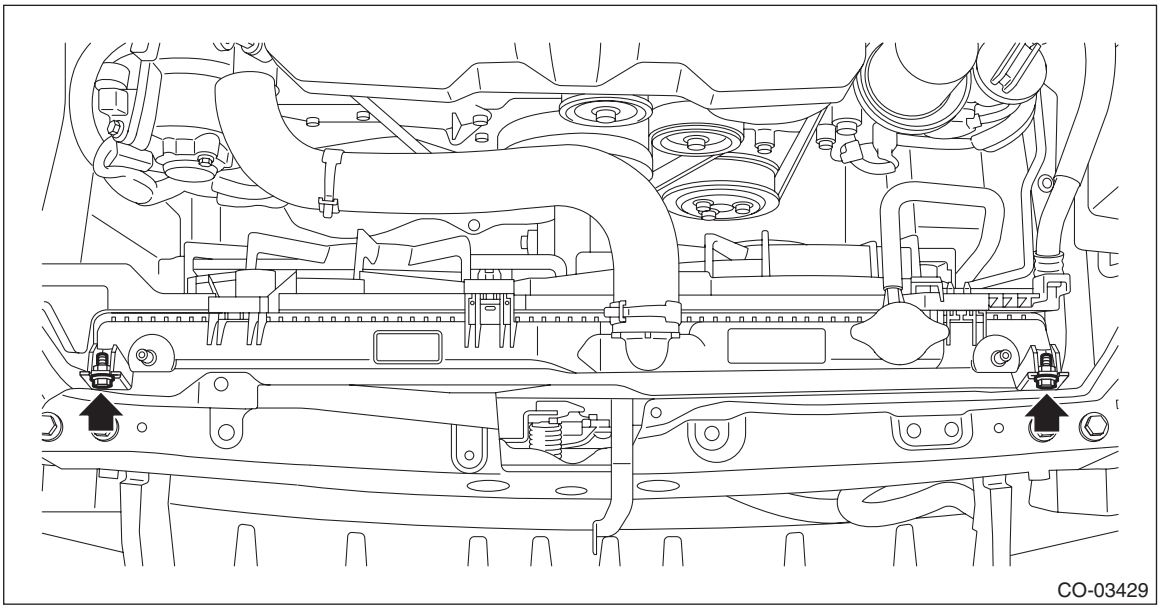

17) Secure the condenser to the vehicle using ropes or other means.

NOTE:
This procedure is required to prevent the condenser from dropping off and also damage to the air conditioner pipes.

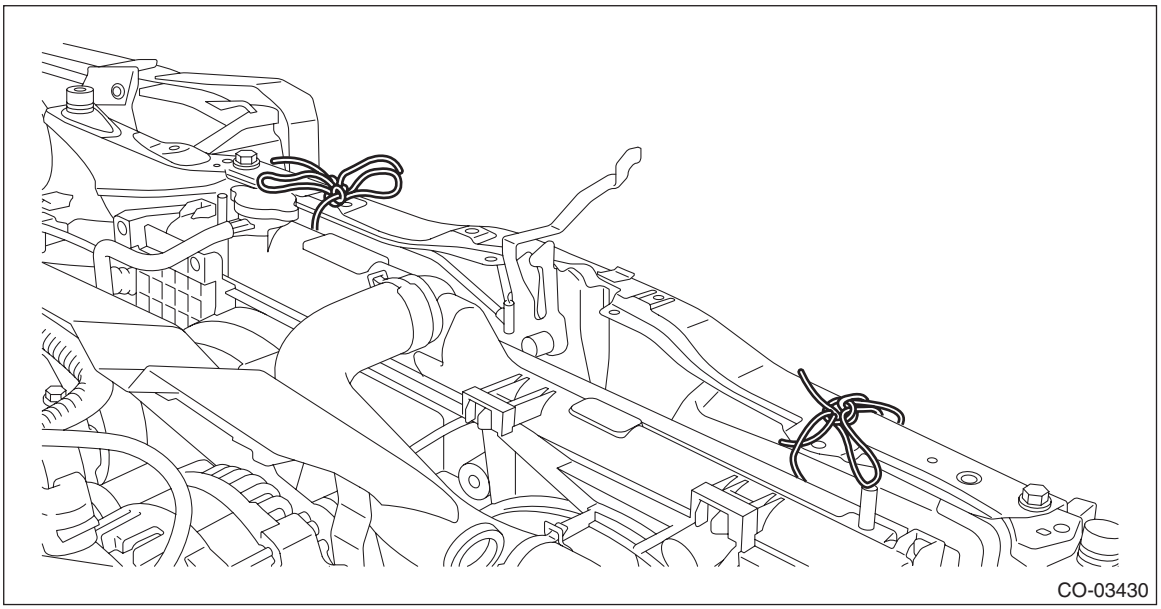

18) Lift the radiator up and away from vehicle.

19) Remove the radiator lower cushion from the vehicle body.

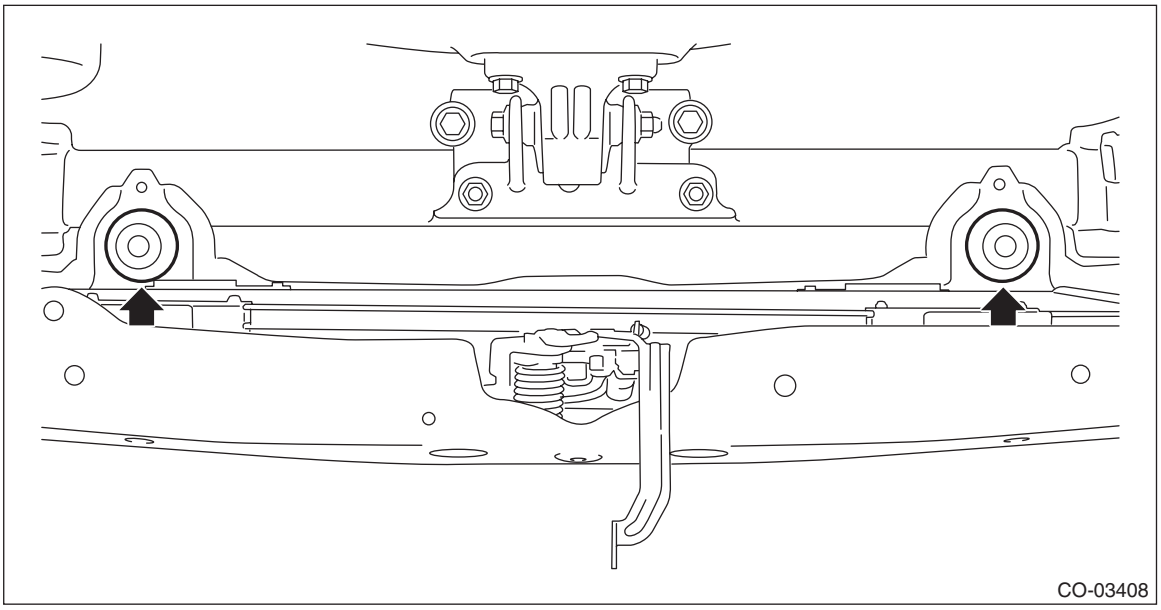

B: INSTALLATION

1) Install the radiator lower cushion to the vehicle body.

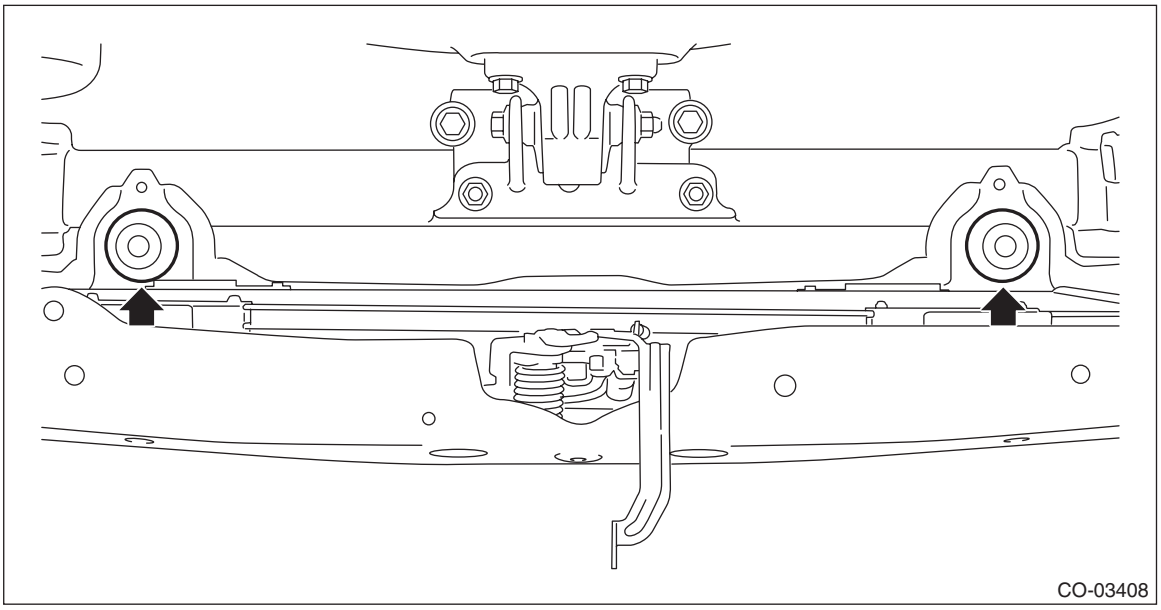

2) Install the radiator to vehicle.

NOTE:
Make pins on the lower side of radiator be fitted into the radiator lower cushions.

3) Remove the ropes or other means used to secure the condenser to the vehicle.

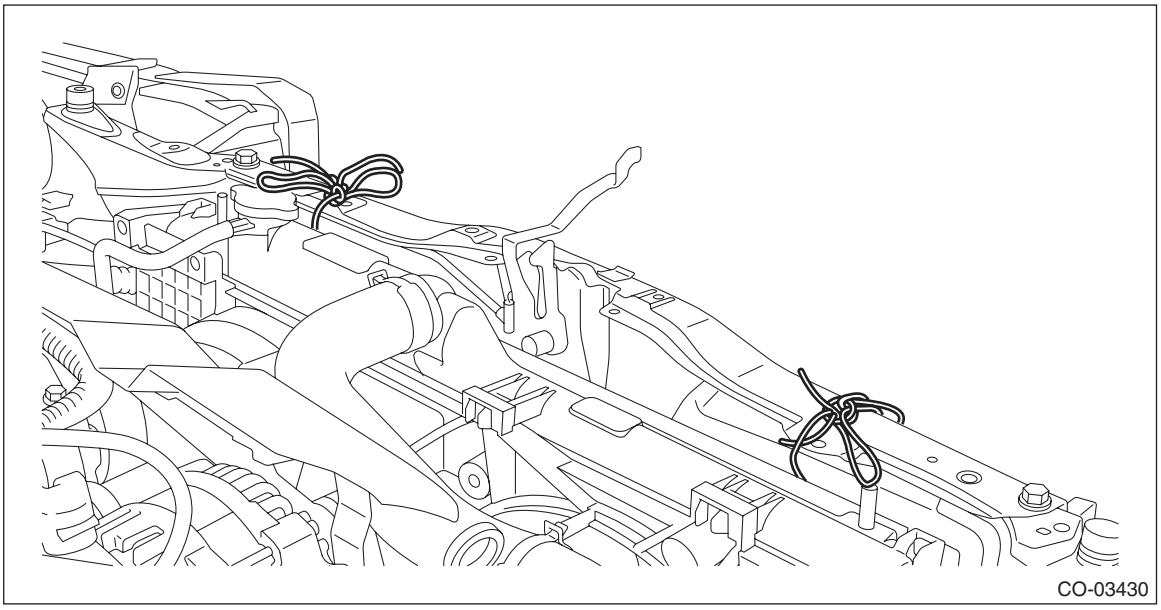

4) Temporarily tighten the bolts securing the condenser upper bracket to the radiator.

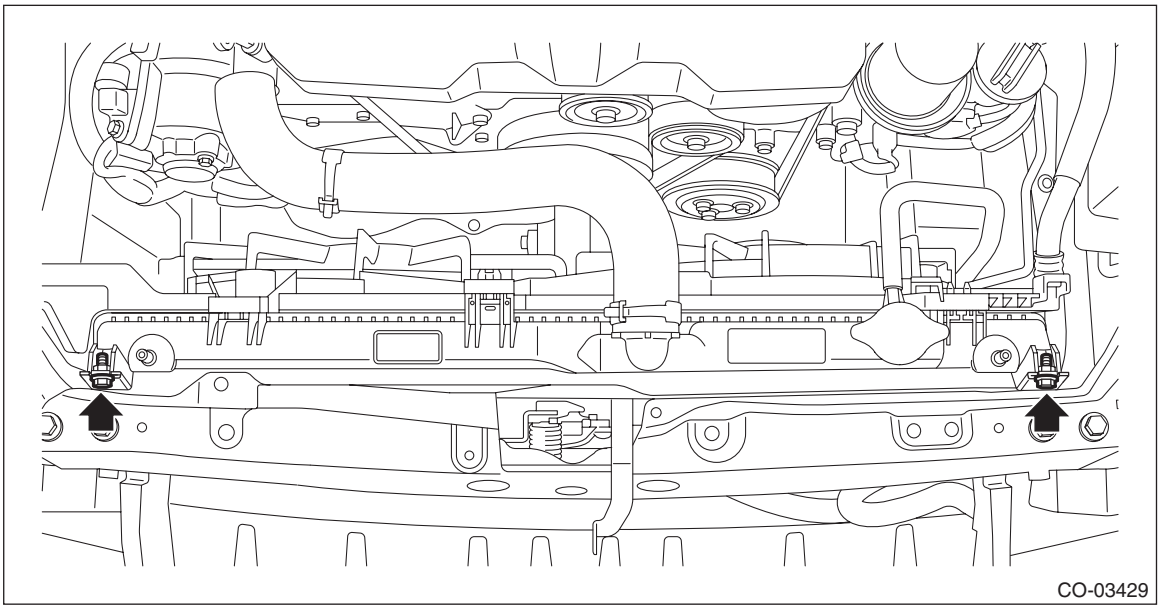

5) Position the condenser lower bracket, and install the bolts securing the condenser lower bracket to the condenser.

Tightening torque:
3.9 N·m (0.4 kgf-m, 2.9 ft-lb)

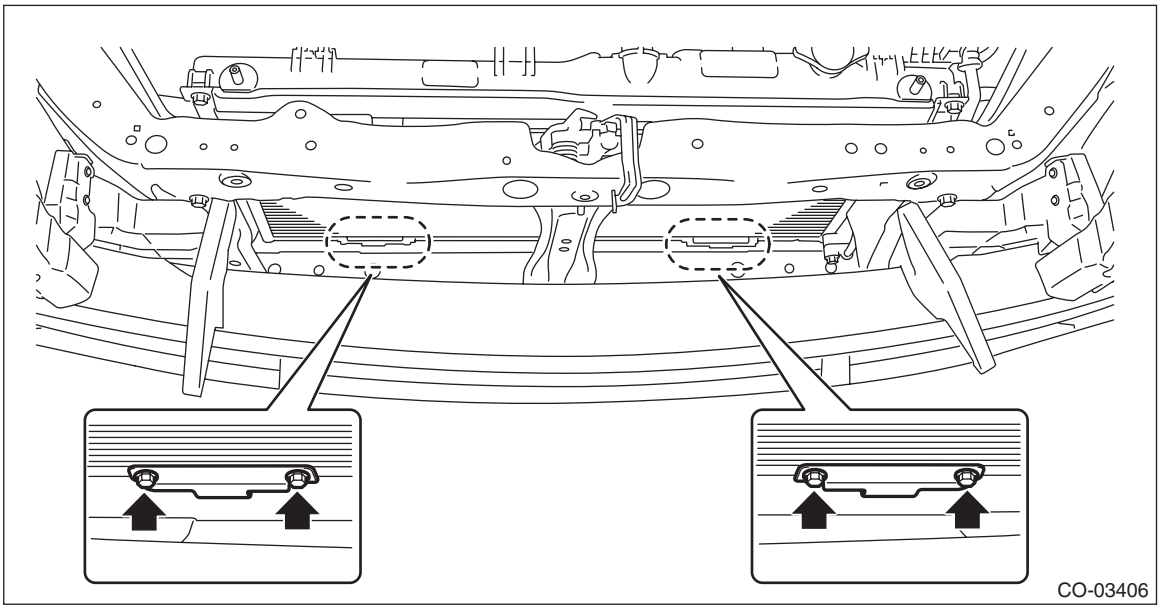

6) Using the ST, tighten the bolts securing the condenser lower bracket to the radiator.
ST 73099SG000 SPECIAL TOOL CONDENSER

Tightening torque:

Calculation formula
T = L/(100 mm (3.94 in) + L) × 7.5 N·m (0.8 kgf-m, 5.5 ft-lb)

T: Tightening torque
L: Effective length of torque wrench

NOTE:
If the effective length of the torque wrench used is unknown, consult the manufacturer of the torque wrench.

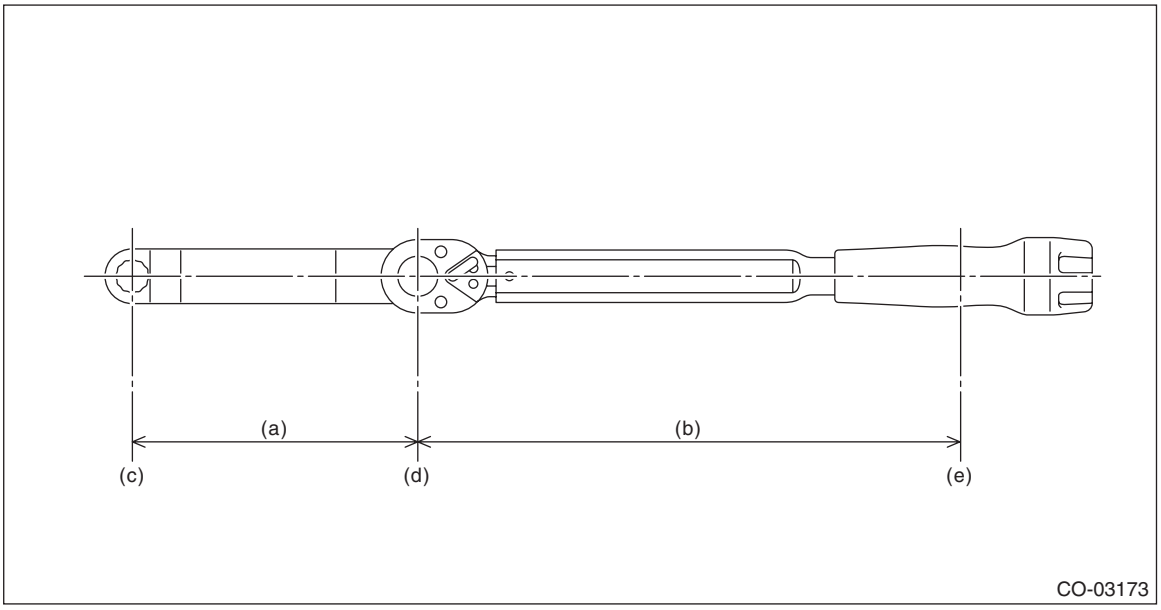

(a) Effective length of the ST
(b) Effective length of the torque wrench
(c) Center of drive angle of the ST
(d) Center of drive angle of the torque wrench
(e) Center of the position where a force is applied by hand

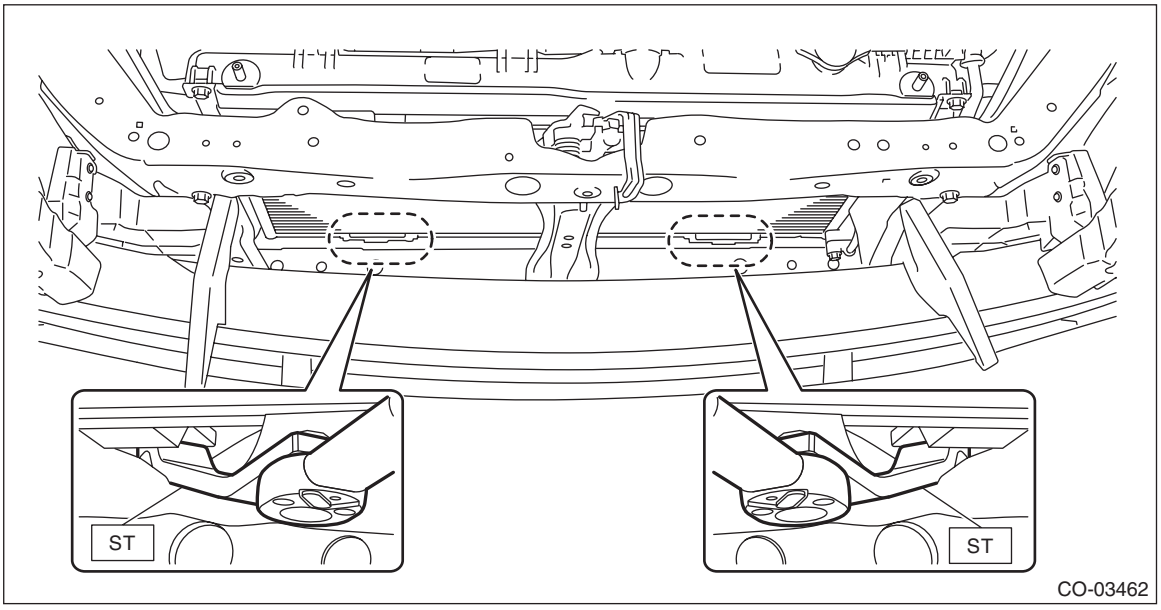

7) Tighten the bolts securing the condenser upper bracket to the radiator.

Tightening torque:
7.5 N·m (0.8 kgf-m, 5.5 ft-lb)

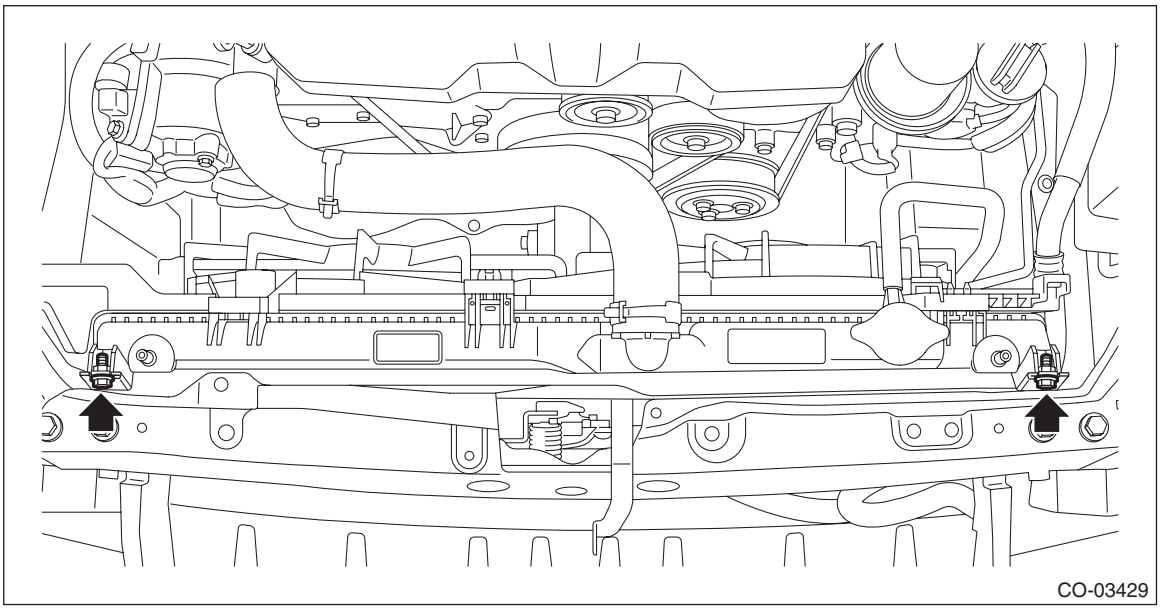

8) Install the radiator upper brackets.

Tightening torque:
12 N·m (1.2 kgf-m, 8.9 ft-lb)

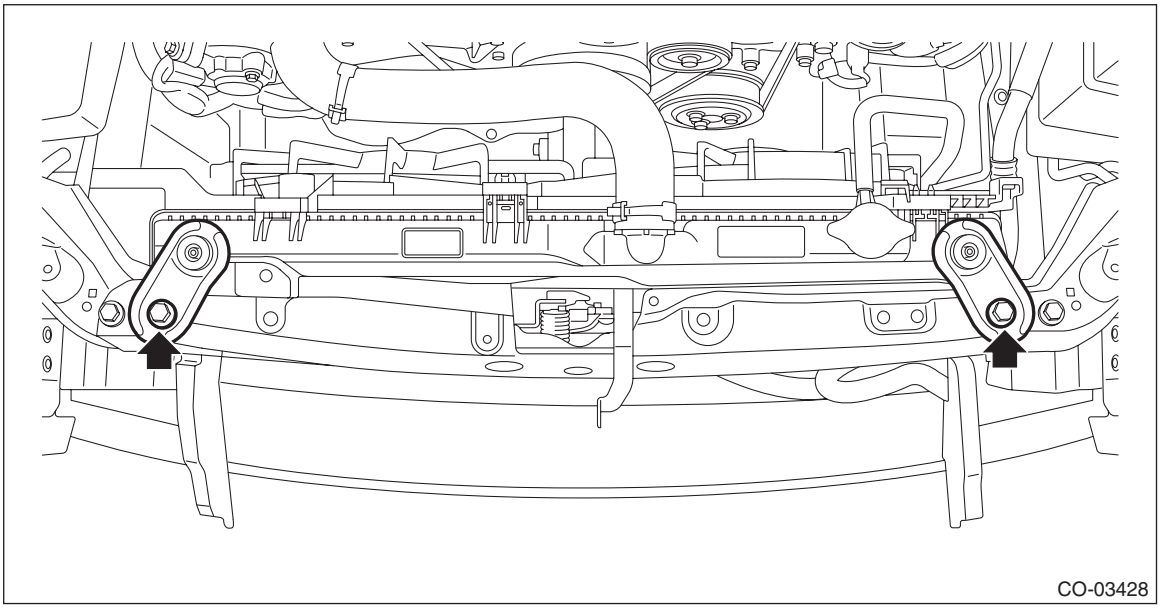

9) Connect the radiator inlet hose to the water pipe assembly.

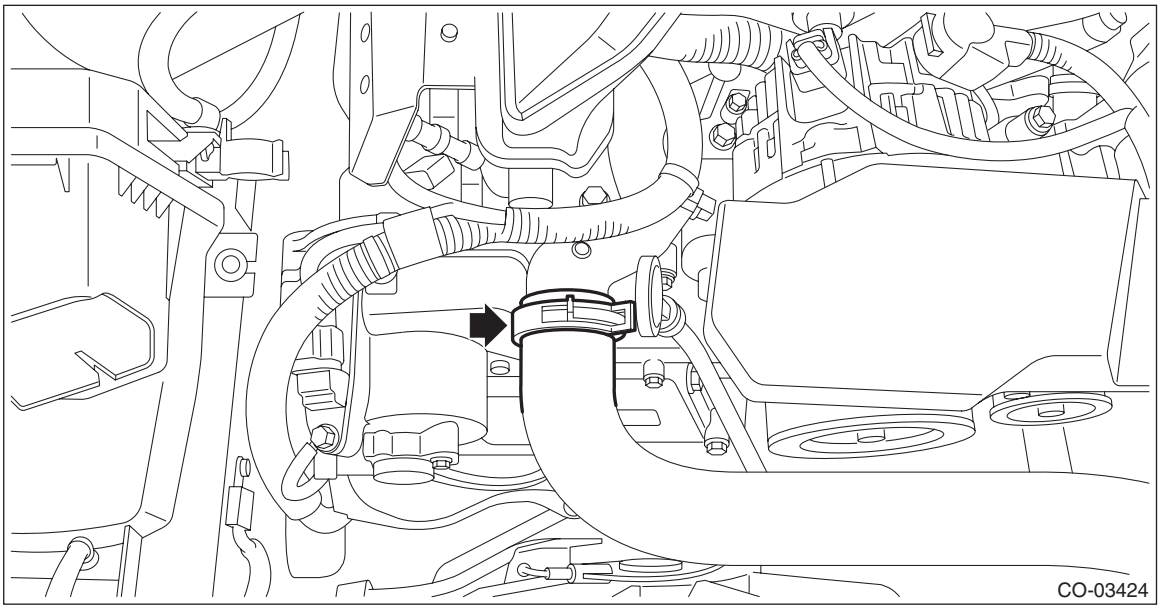

10) Connect the connector (A) to the radiator main fan motor and the connector (B) to the radiator sub fan motor connector.

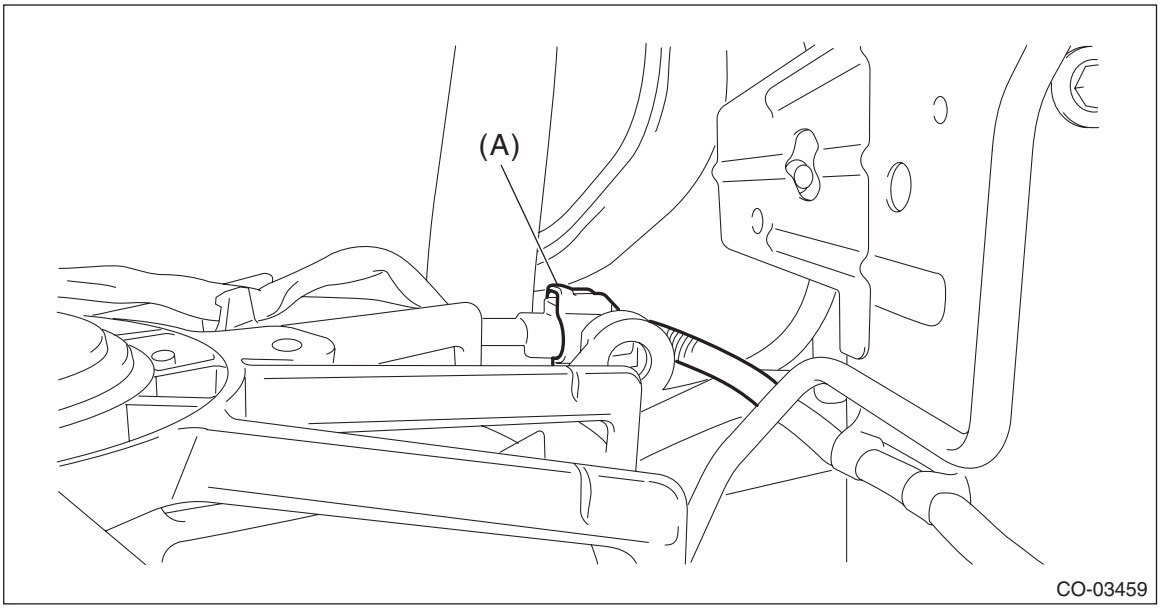

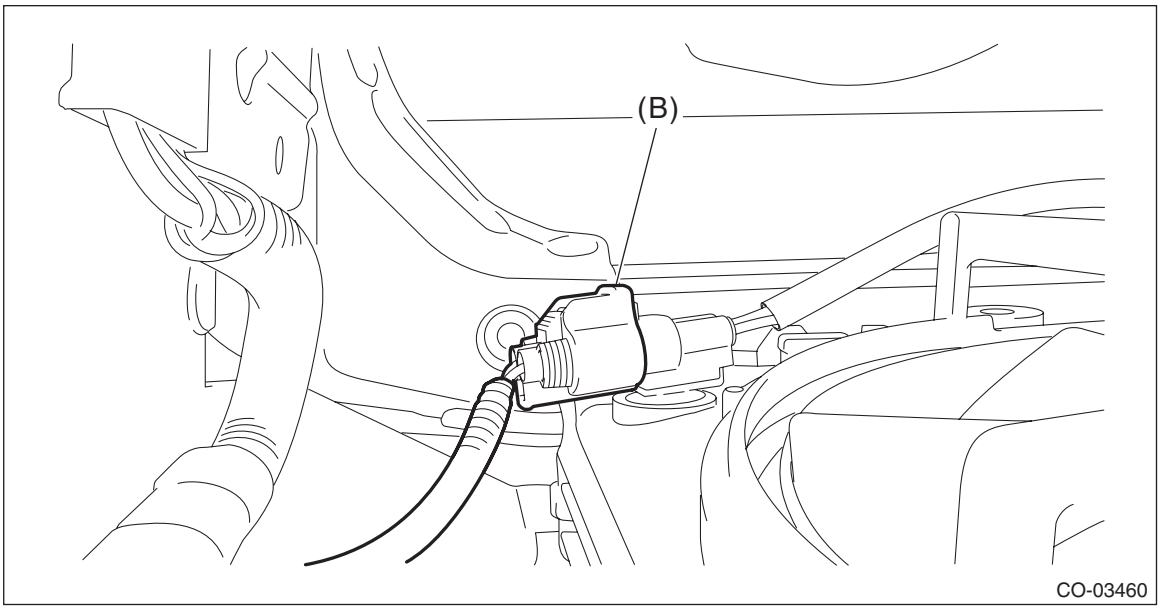

11) Install the reservoir tank. <Ref. to CO(H4DO)-61, INSTALLATION, Reservoir Tank.>
12) Lift up the vehicle.
13) Connect the radiator outlet hose.

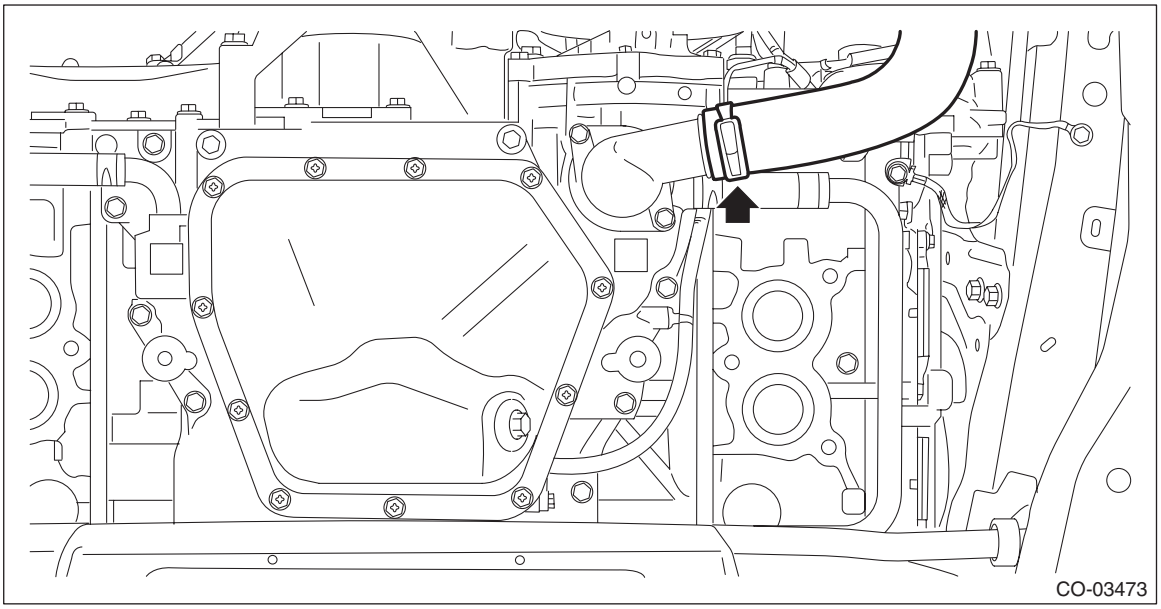

14) Install the front exhaust pipe. <Ref. to EX(H4DO)-7, INSTALLATION, Front Exhaust Pipe.>

15) Attach the grille bracket.

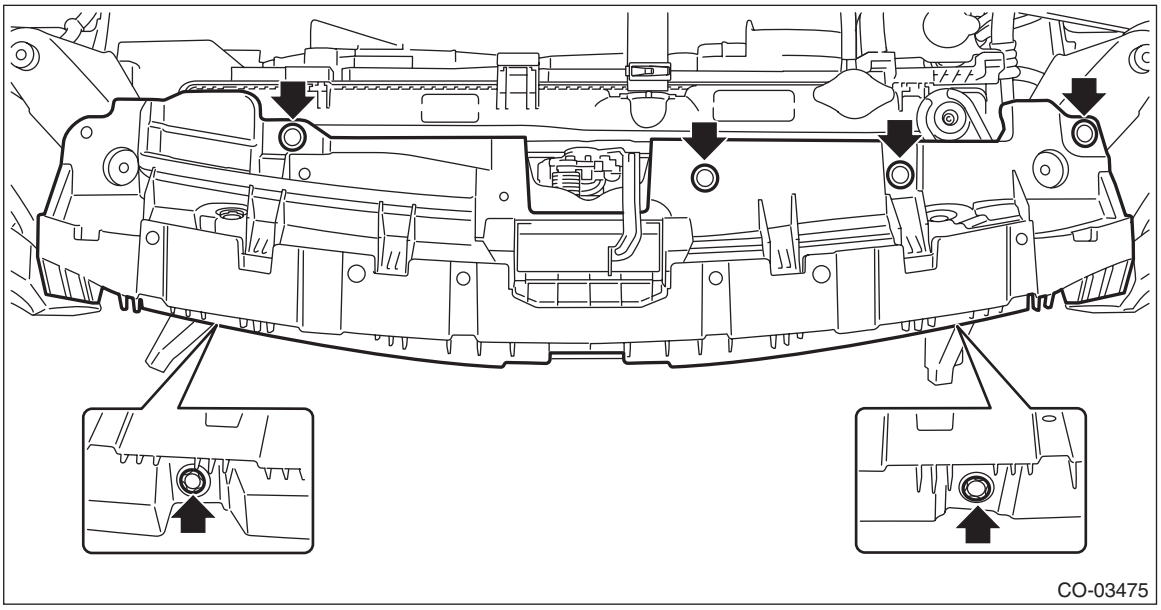

16) Install the active grille shutter. <Ref. to CO(H4DO)-64, INSTALLATION, Active Grille Shutter.>
17) Install the front bumper. <Ref. to EI-38, INSTALLATION, Front Bumper.>
18) Install the air intake duct. <Ref. to IN(H4DO)-12, INSTALLATION, Air Intake Duct.>
19) Connect the ground terminal to battery sensor. <Ref. to RC-4, BATTERY, NOTE, Repair Contents.>
20) Fill engine coolant. <Ref. to CO(H4DO)-16, FILLING OF ENGINE COOLANT, REPLACEMENT, Engine Coolant.>

C: INSPECTION

1) Check that the radiator does not have deformation, cracks or damage.
2) Check that the hose has no cracks, damage or loose part.
3) Remove the radiator cap, fill the radiator with engine coolant, and then install the radiator cap tester to the filler neck of radiator.

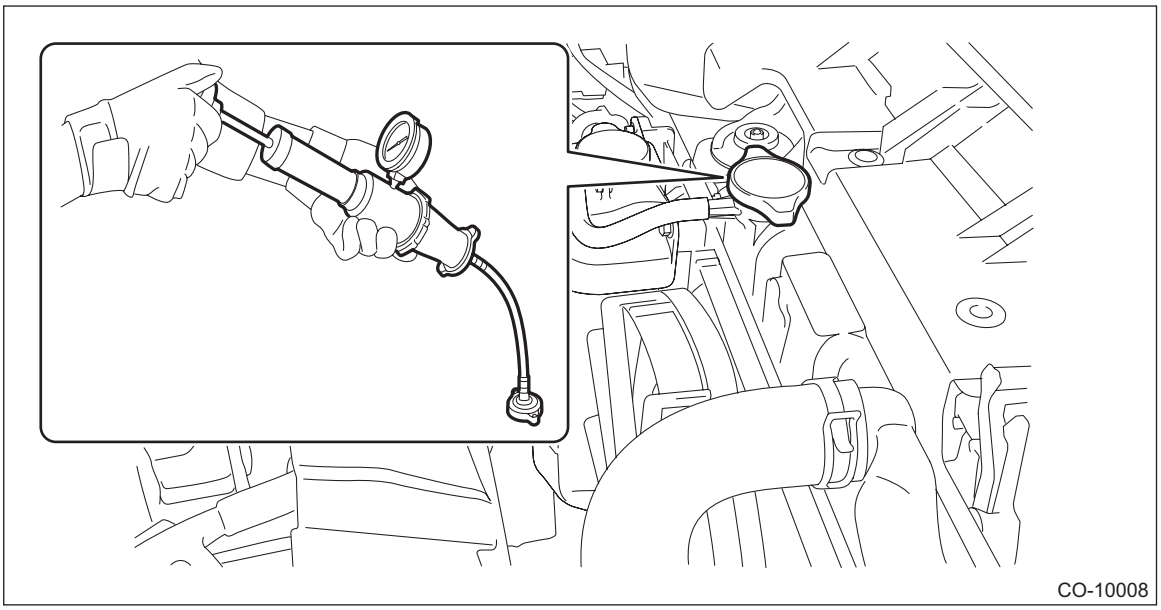

4) Apply a pressure of 157 kPa (1.6 kg/cm^2, 23 psi) to the radiator and check the following points:
- Leakage from the radiator or its vicinity
- Leakage from the hose or its connections

CAUTION:
- **Engine should be turned off.**
- **Clean the check points.**
- **Be careful not to deform the filler neck of radiator when installing and removing the radiator cap tester.**
- **Be careful of engine coolant from spurting out when removing the radiator cap tester.**

8. Radiator Cap

A: INSPECTION

1) Check that the radiator cap does not have deformation, cracks or damage.
2) Attach the radiator cap tester to radiator cap.
3) Check the maximum pressure while pumping the radiator cap tester several times. Replace the radiator cap if its valve opens at less than the service limit.

CAUTION:
• Be sure to remove foreign matter and rust from the cap in advance. Otherwise, results of pressure test will be incorrect.
• For this inspection, tilt the radiator cap tester by at least 30°.

NOTE:
• Pumping interval is one second at a time.
• If the radiator cap cannot retain the maximum pressure at times, this is not malfunction.

Standard:
93 — 123 kPa (0.95 — 1.25 kg/cm^2, 14 — 18 psi)

Service limit:
83 kPa (0.85 kg/cm^2, 12 psi)

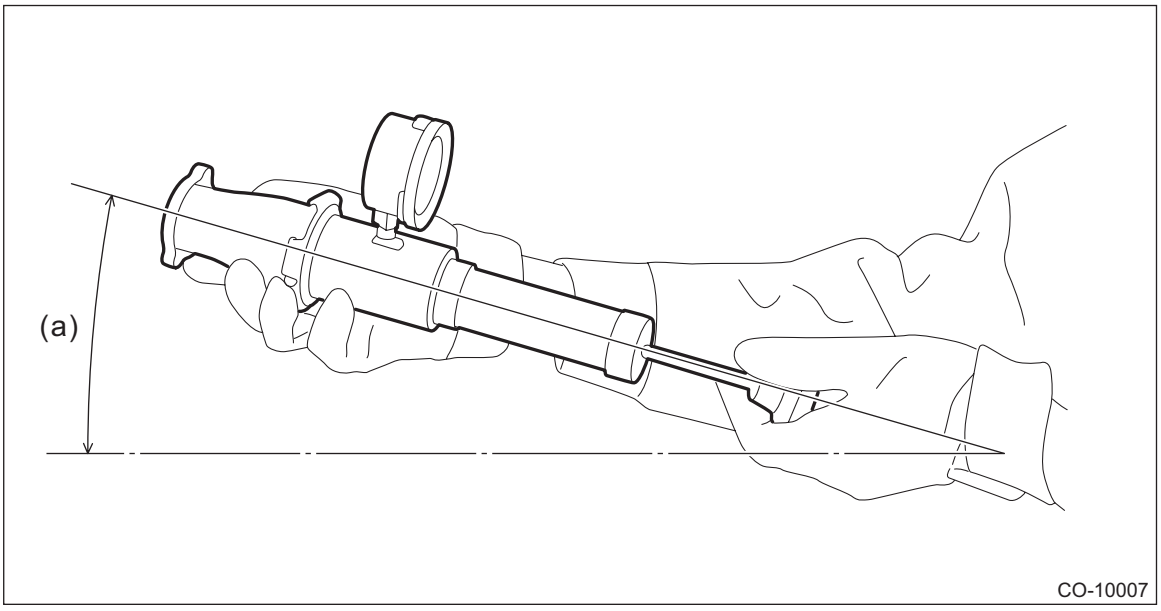

(a) 30° or more

9. Radiator Fan and Fan Motor Assembly

A: REMOVAL

1) Disconnect the ground terminal from battery sensor. <Ref. to RC-4, BATTERY, NOTE, Repair Contents.>
2) Drain approximately 3.0 L (3.2 US qt, 2.6 Imp qt) of coolant. <Ref. to CO(H4DO)-15, DRAINING OF ENGINE COOLANT, REPLACEMENT, Engine Coolant.>
3) Lower the vehicle.
4) Remove the air intake duct. <Ref. to IN(H4DO)-12, REMOVAL, Air Intake Duct.>
5) Disconnect the radiator inlet hose from the radiator.

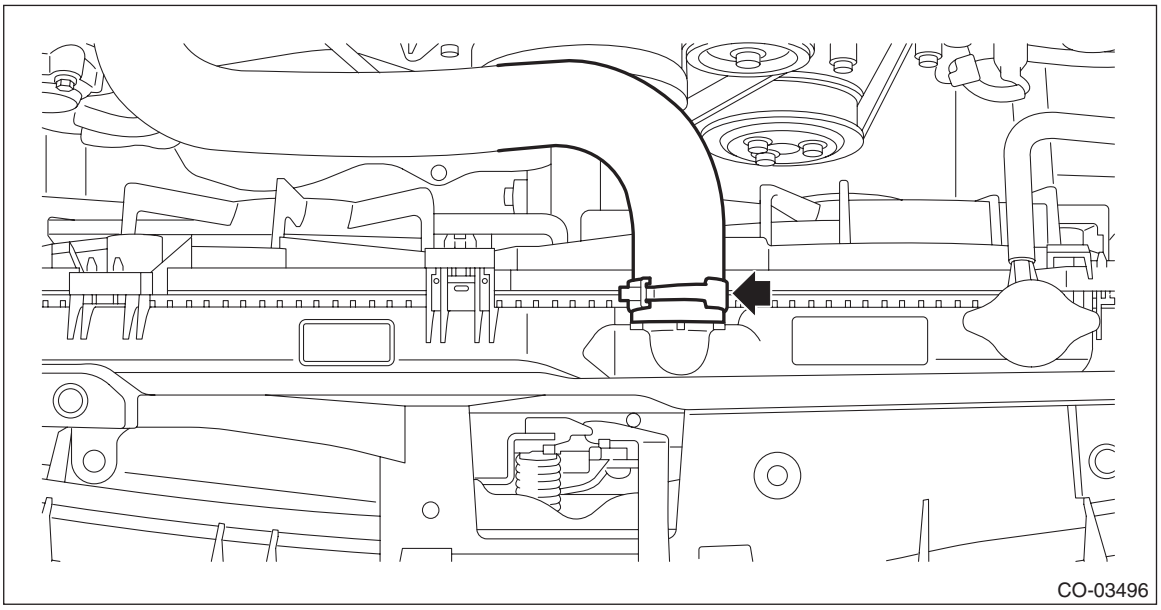

6) Remove the reservoir tank. <Ref. to CO(H4DO)-61, REMOVAL, Reservoir Tank.>

7) Disconnect the connector (A) from the radiator main fan motor and the connector (B) from the radiator sub fan motor.

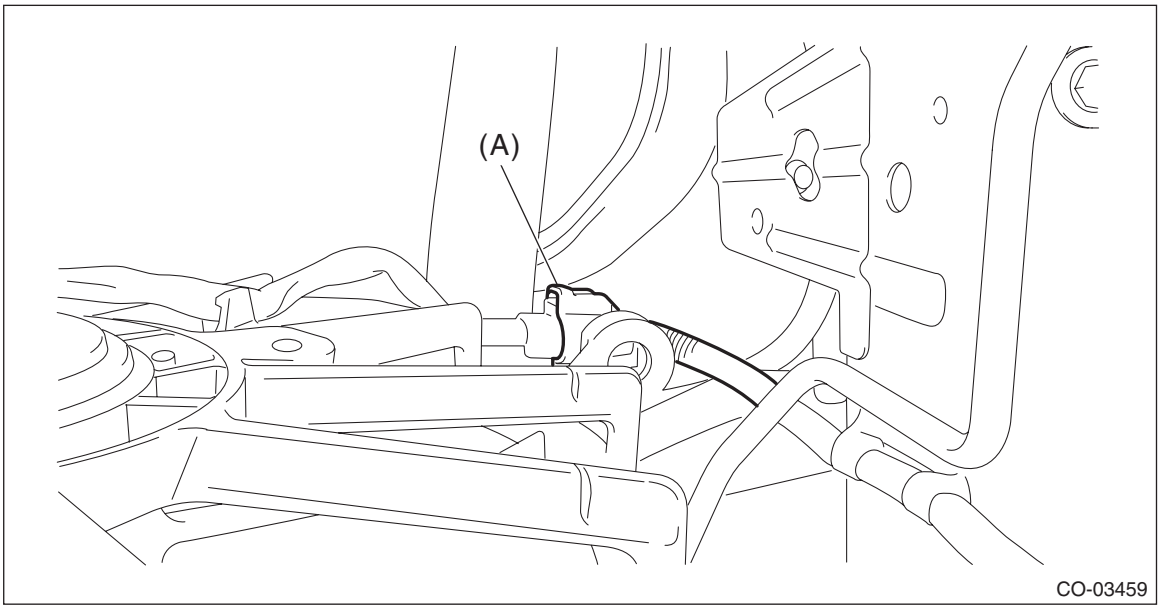

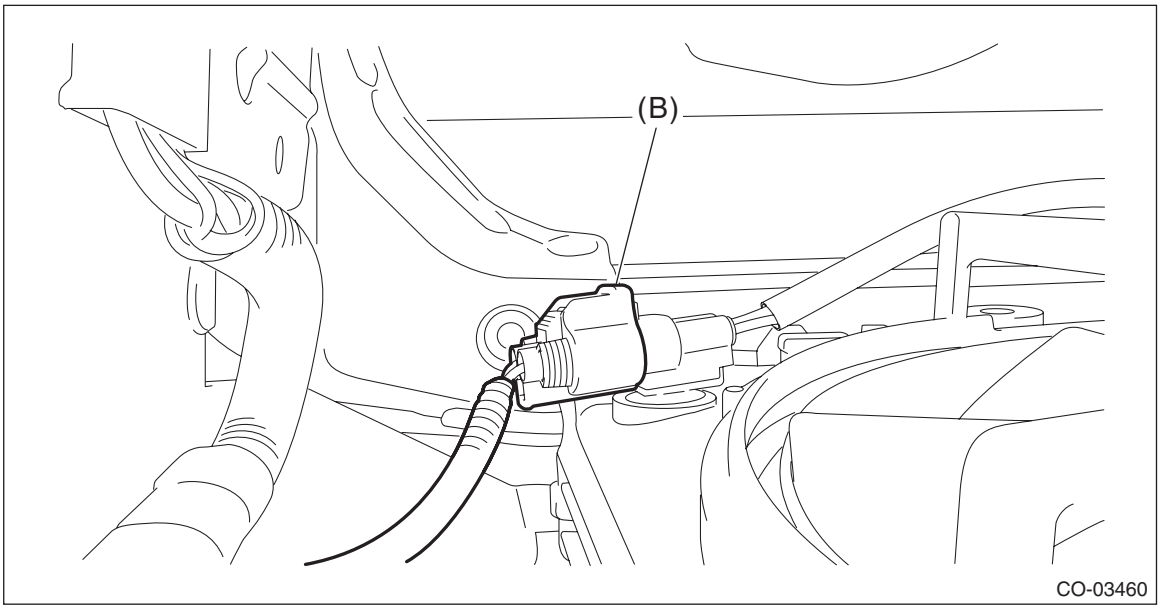

8) Release the claw (A) on the radiator upper side, and incline the top of the radiator fan & fan motor assembly to the engine side.

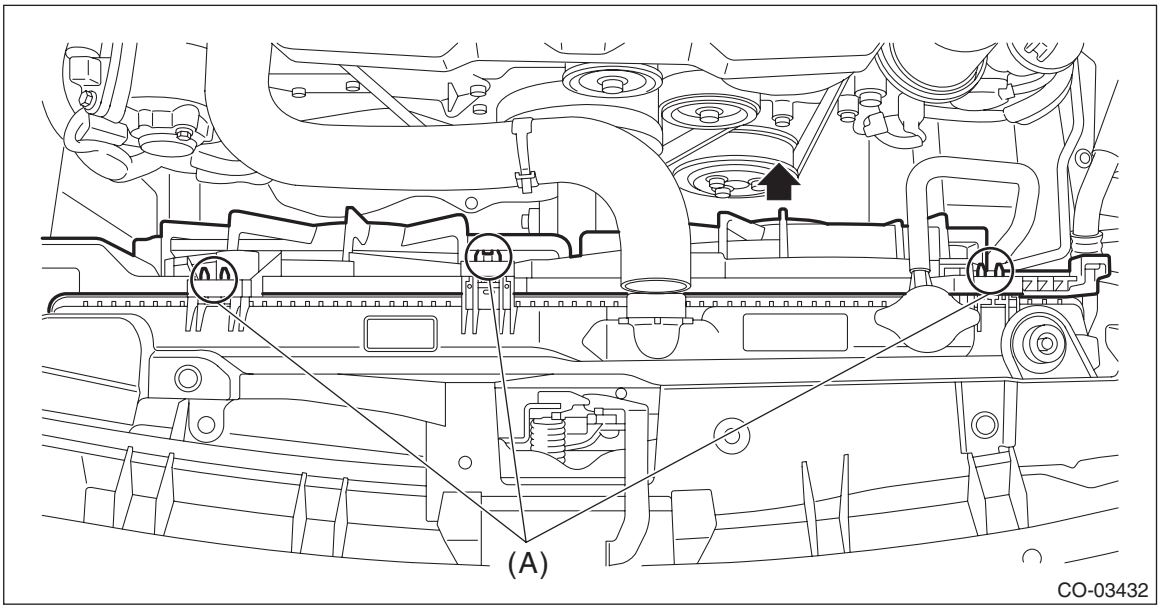

9) Remove the radiator fan & fan motor assembly from vehicle body.

B: INSTALLATION

1) Position the radiator fan & fan motor assembly, and install the radiator fan & fan motor assembly to the claw on the radiator upper side.
2) Connect the connector to the radiator main fan motor, as well as the connector to the radiator sub fan motor.
3) Install the reservoir tank. <Ref. to CO(H4DO)-61, INSTALLATION, Reservoir Tank.>
4) Connect the radiator inlet hose to the radiator.
5) Install the air intake duct. <Ref. to IN(H4DO)-12, INSTALLATION, Air Intake Duct.>
6) Lift up the vehicle.
7) Install the under cover. <Ref. to EI-28, INSTALLATION, Front Under Cover.>
8) Lower the vehicle.
9) Connect the ground terminal to battery sensor. <Ref. to RC-4, BATTERY, NOTE, Repair Contents.>
10) Fill engine coolant. <Ref. to CO(H4DO)-16, FILLING OF ENGINE COOLANT, REPLACEMENT, Engine Coolant.>

C: DISASSEMBLY

1. RADIATOR MAIN FAN AND MAIN FAN MOTOR

1) Disengage the clip securing the connector of the radiator main fan motor to the radiator fan shroud, and remove the radiator main fan motor harness from the clips (A).

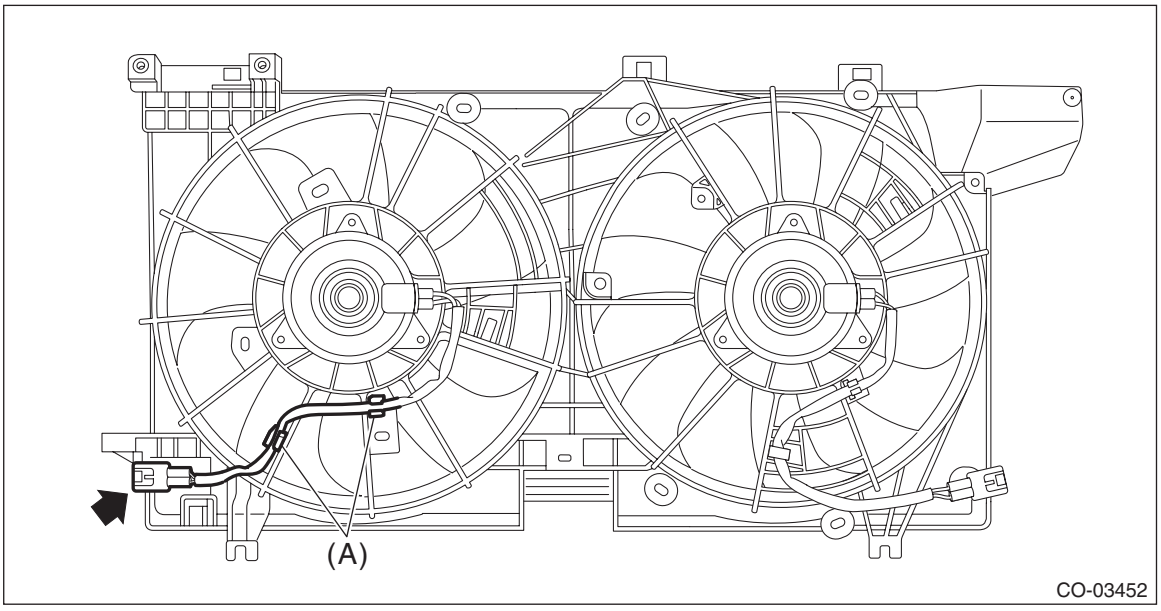

2) Remove the radiator main fan from the radiator main fan motor.

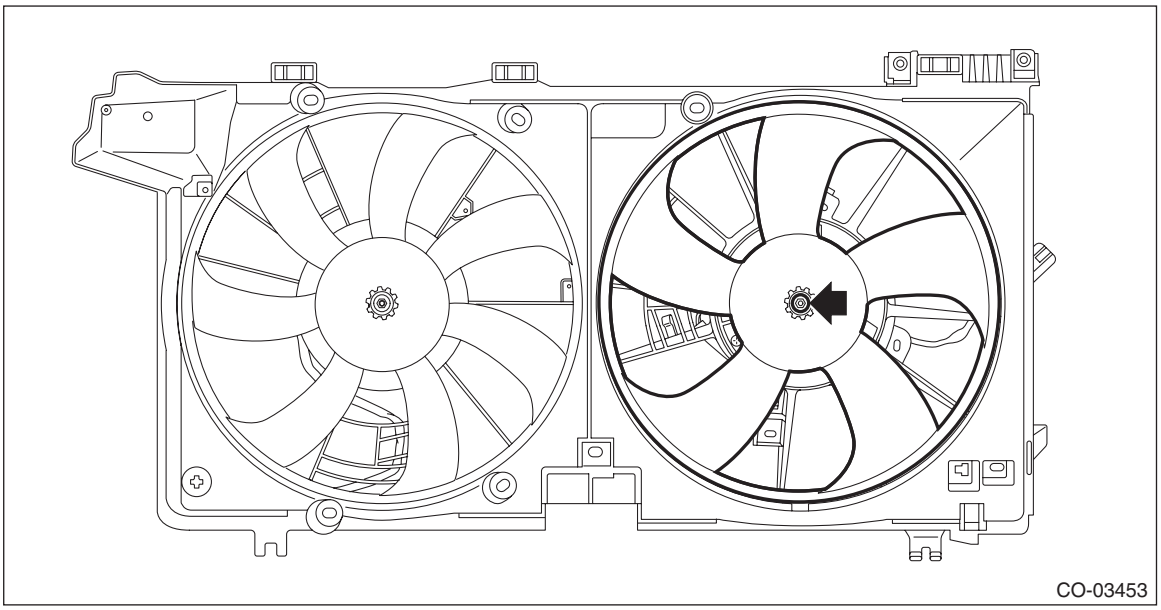

3) Remove the radiator main fan motor from the radiator fan shroud.

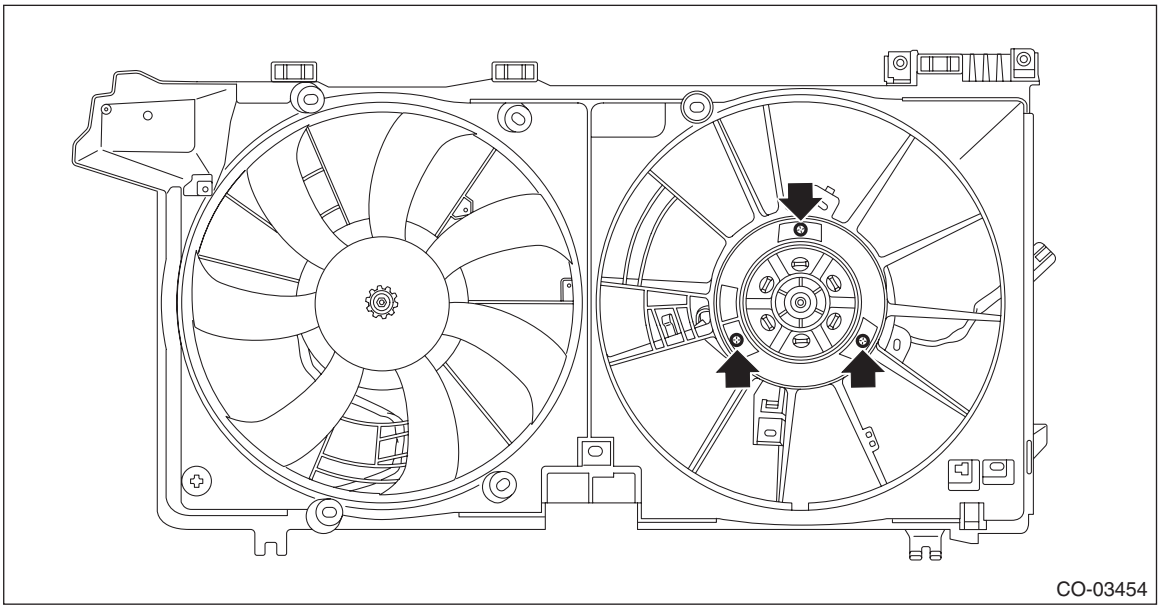

2. RADIATOR SUB FAN AND RADIATOR SUB FAN MOTOR

1) Disengage the clip securing the connector of the radiator sub fan motor to the radiator fan shroud, and remove the radiator sub fan motor harness from the clips (A).

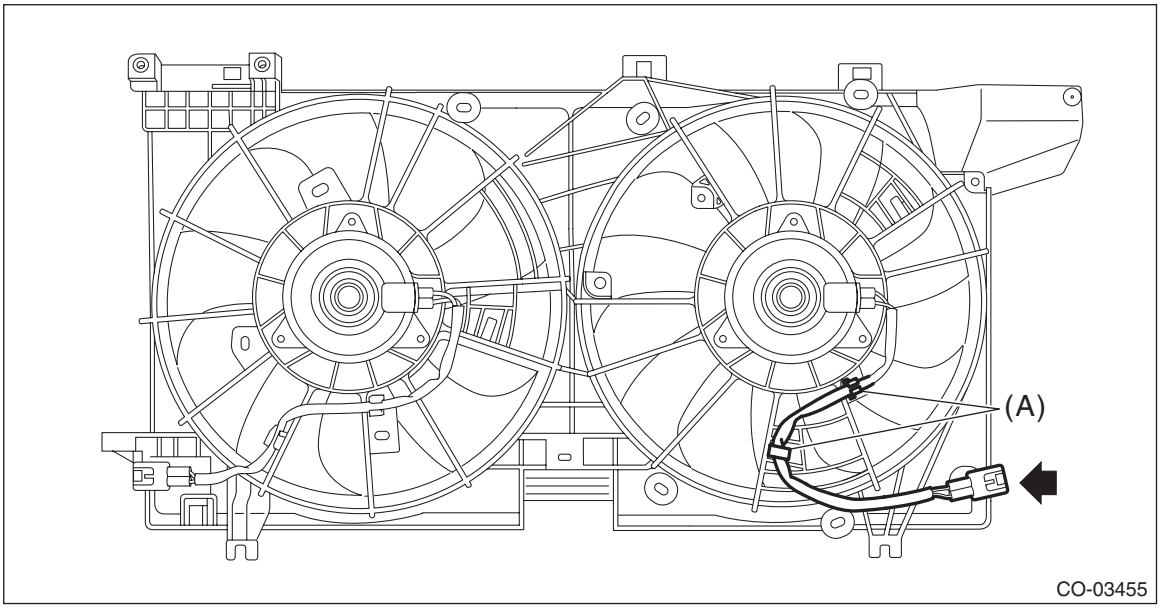

2) Remove the radiator sub fan from the radiator sub fan motor.

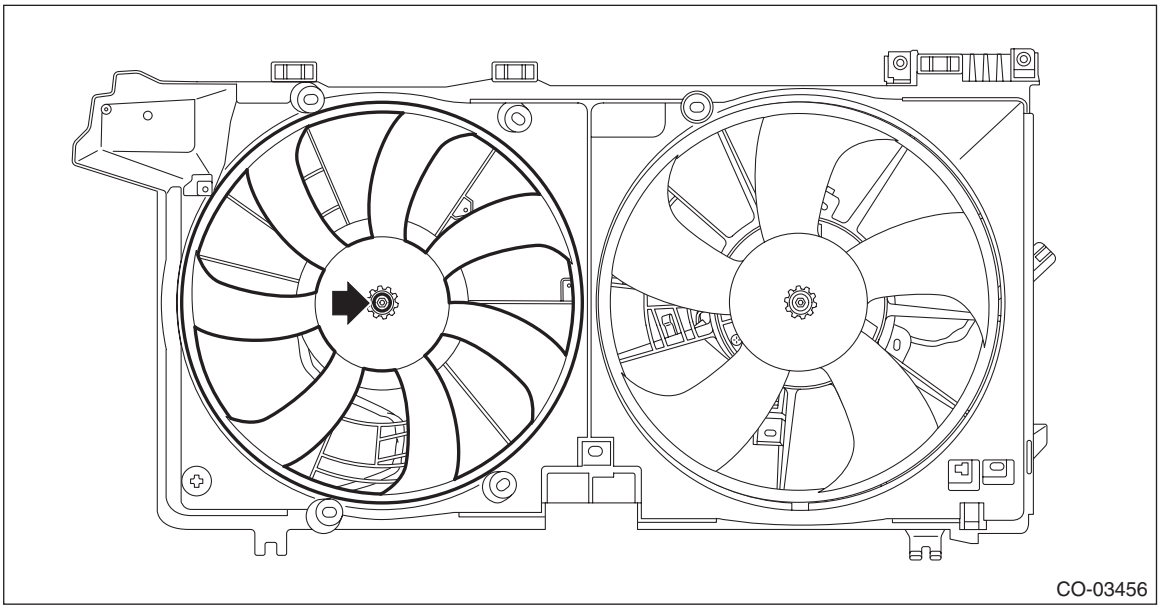

3) Remove the radiator sub fan motor from the radiator fan shroud.

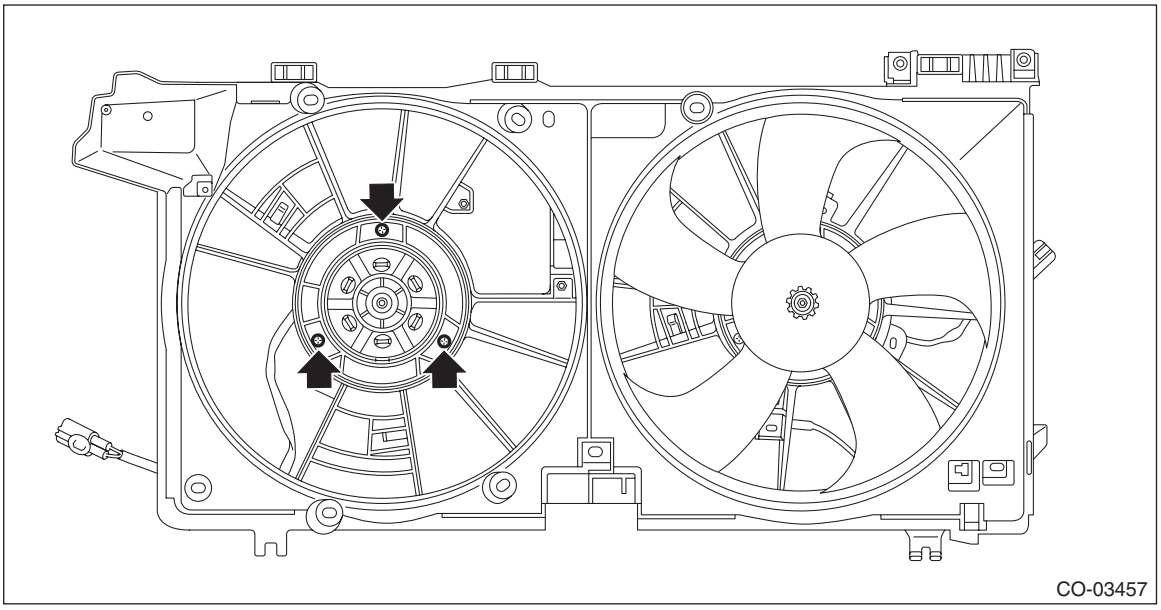

3. RADIATOR FAN SHROUD

1) Remove the radiator main fan and radiator main fan motor. <Ref. to CO(H4DO)-57, RADIATOR MAIN FAN AND MAIN FAN MOTOR, DISASSEMBLY, Radiator Fan and Fan Motor Assembly.>
2) Remove the radiator sub fan and radiator sub fan motor. <Ref. to CO(H4DO)-58, RADIATOR SUB FAN AND RADIATOR SUB FAN MOTOR, DISASSEMBLY, Radiator Fan and Fan Motor Assembly.>

D: ASSEMBLY

1. RADIATOR MAIN FAN AND RADIATOR MAIN FAN MOTOR

1) Install the radiator main fan motor to the radiator fan shroud.

Tightening torque:
3.9 N·m (0.4 kgf-m, 2.9 ft-lb)

2) Install the radiator main fan to the radiator main fan motor.

Tightening torque:
6.4 N·m (0.7 kgf-m, 4.7 ft-lb)

3) Install the clip securing the connector of the radiator main fan motor to the radiator fan shroud.

2. RADIATOR SUB FAN AND RADIATOR SUB FAN MOTOR

1) Install the radiator sub fan motor to the radiator fan shroud.

Tightening torque:
3.9 N·m (0.4 kgf-m, 2.9 ft-lb)

2) Install the radiator sub fan to the radiator sub fan motor.

Tightening torque:
6.4 N·m (0.7 kgf-m, 4.7 ft-lb)

3) Install the clip securing the connector of the radiator sub fan motor to the radiator fan shroud.

3. RADIATOR FAN SHROUD

1) Install the radiator main fan and the radiator main fan motor. <Ref. to CO(H4DO)-60, RADIATOR MAIN FAN AND RADIATOR MAIN FAN MOTOR, ASSEMBLY, Radiator Fan and Fan Motor Assembly.>
2) Install the radiator sub fan and the radiator sub fan motor. <Ref. to CO(H4DO)-60, RADIATOR SUB FAN AND RADIATOR SUB FAN MOTOR, ASSEMBLY, Radiator Fan and Fan Motor Assembly.>

E: INSPECTION

Check that the radiator fan, radiator fan shroud and fan motor do not have deformation, cracks or damage.

10.Reservoir Tank

A: REMOVAL

1) Disconnect the over flow hose (A) connected to the radiator filler neck from the reservoir tank.
2) Remove bolts which secure the reservoir tank, and remove the reservoir tank.

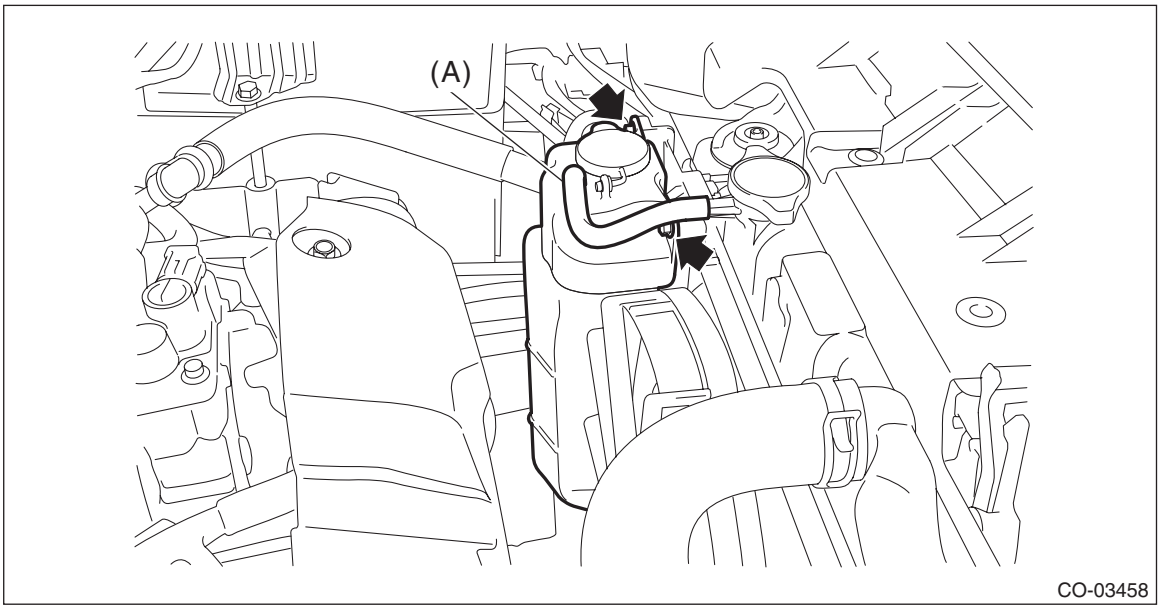

B: INSTALLATION

1) Install the bolts securing the reservoir tank to the radiator fan shroud.

Tightening torque:
7.5 N·m (0.8 kgf-m, 5.5 ft-lb)

2) Insert the over flow hose (A) connected to the radiator filler neck into the reservoir tank.

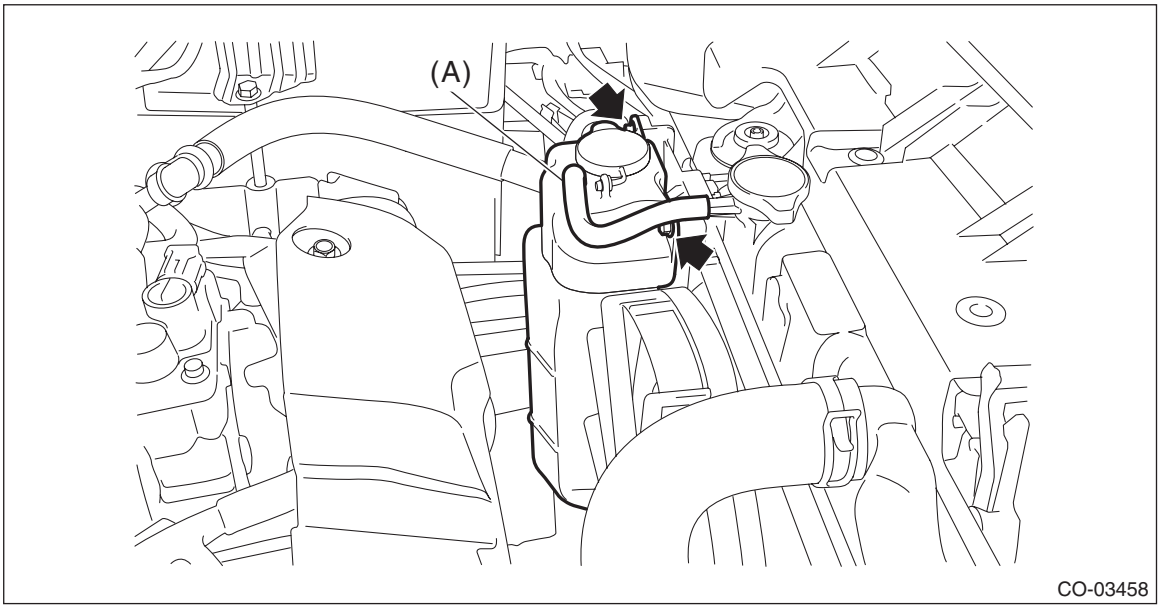

C: INSPECTION

1) Check that the reservoir tank does not have deformation, cracks or damage.
2) Make sure the over flow hoses are not cracked, damaged or loose.
3) Make sure the engine coolant level is between “FULL” and “LOW”.

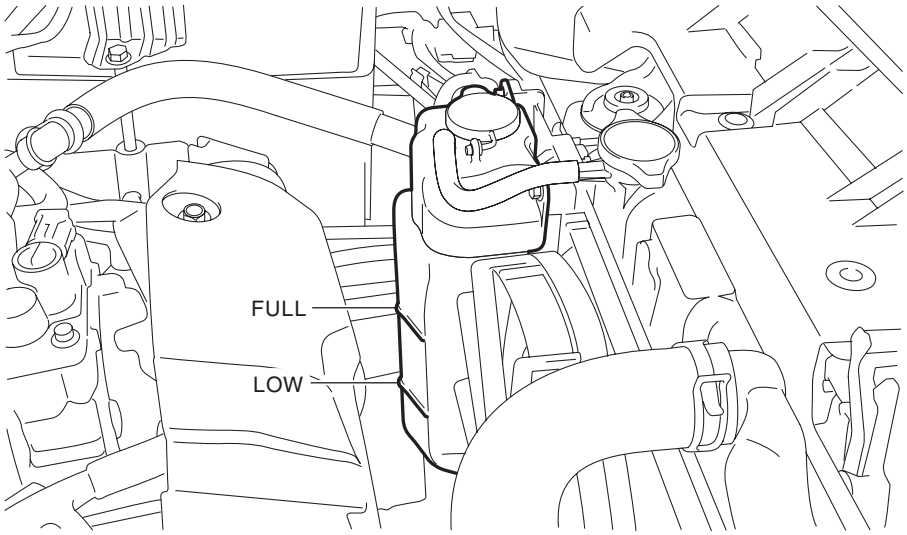

11.Active Grille Shutter

A: REMOVAL

1) Disconnect the ground terminal from battery sensor. <Ref. to RC-4, BATTERY, NOTE, Repair Contents.>
2) Remove the front bumper. <Ref. to EI-34, REMOVAL, Front Bumper.>
3) Disconnect the connector from ambient sensor.

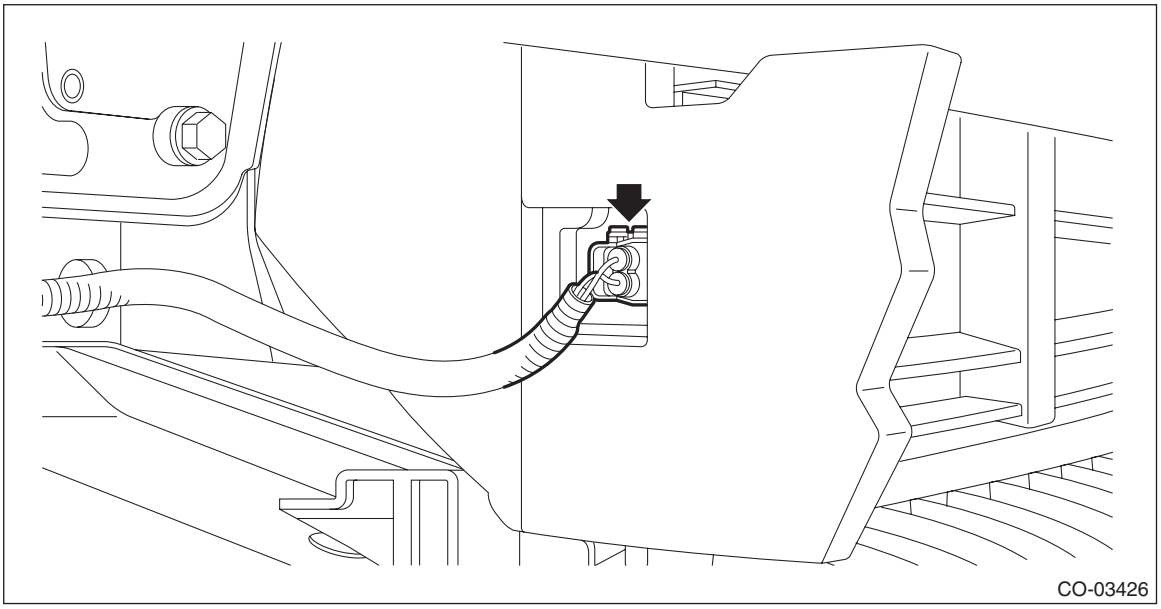

4) Disconnect the connector from the active grille shutter actuator.

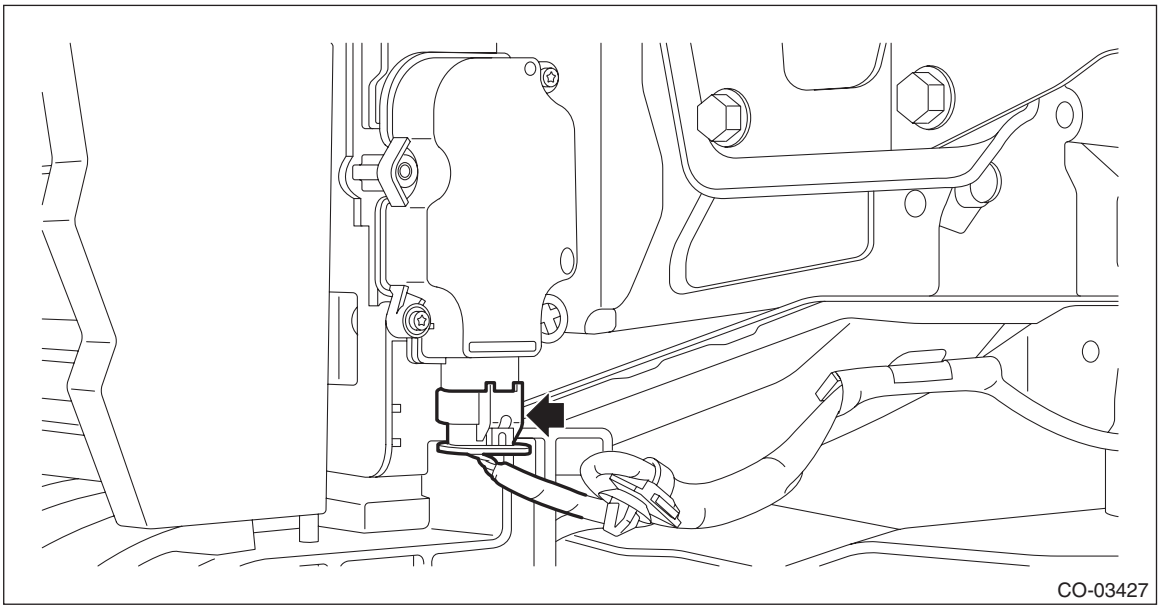

5) Remove the bolts securing the active grille shutter to remove the active grille shutter.

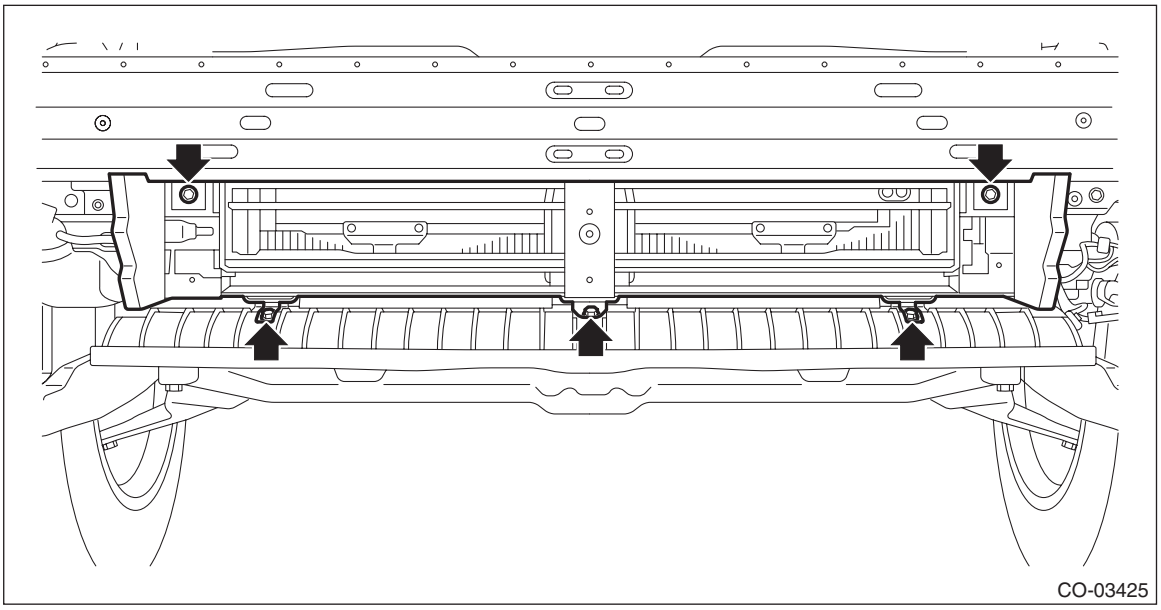

6) Remove the clip (A) to remove the ambient sensor.

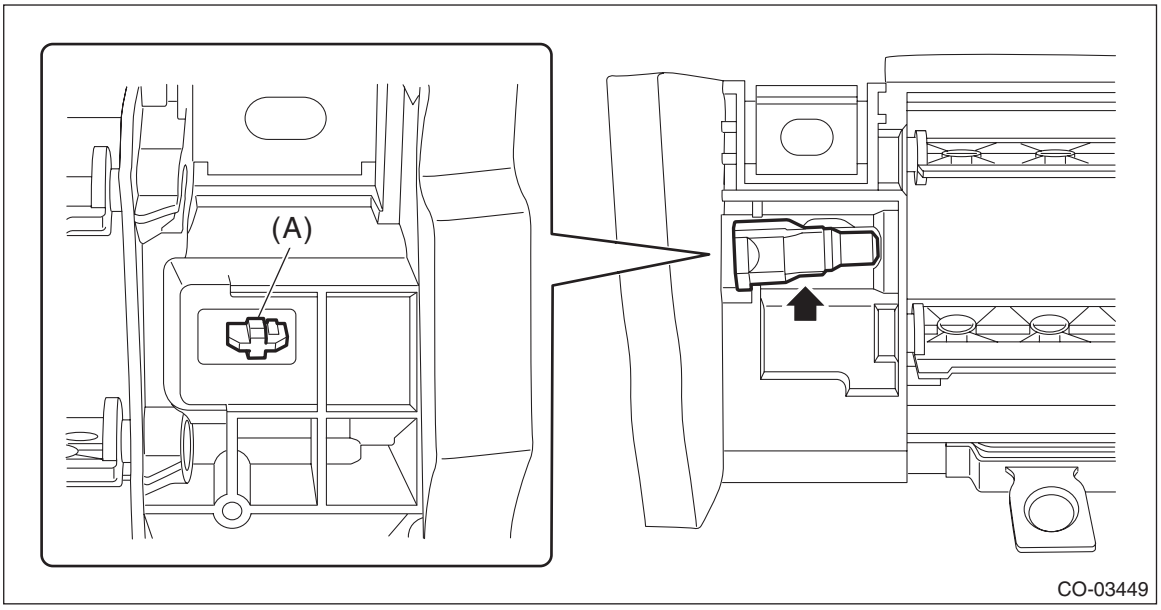

B: INSTALLATION

1) Install the ambient sensor.
2) Install the active grille shutter using the bolts securing the active grille shutter.

Tightening torque:
7.5 N·m (0.8 kgf-m, 5.5 ft-lb)

3) Connect the connector to the active grille shutter actuator.
4) Connect the connector to the ambient sensor.
5) Install the front bumper. <Ref. to EI-38, INSTALLATION, Front Bumper.>
6) Connect the ground terminal to battery sensor. <Ref. to RC-4, BATTERY, NOTE, Repair Contents.>
7) When the active grille shutter has been replaced, perform the calibration (execute the system operation check for ACTGS control). <Ref. to EN(H4DO)(diag)-79, OPERATION, Active Test.>

C: INSPECTION

Check that the active grille shutter does not have deformation, cracks and any other damage.

12.Engine Cooling System Trouble in General

A: INSPECTION

Trouble	Possible cause	Corrective action
Over-heating	a. Insufficient engine coolant	Replenish engine coolant, inspect for leakage, and repair it if necessary.
	b. Defective thermostat	Replace.
	c. Malfunction of water pump	Replace.
	d. Clogged engine coolant passage	Clean.
	e. Improper ignition timing	Inspect and repair ignition control system. <Ref. to EN(H4DO)(diag)-2, Basic Diagnostic Procedure.>
	f. Clogged or leaking radiator	Clean, repair or replace.
	g. Defective radiator cap	Replace.
	h. Improper engine oil in engine coolant	Replace the engine coolant. If ineffective, check, repair or replace engine components.
	i. Air/fuel mixture ratio too lean	Inspect and repair the fuel injection system. <Ref. to EN(H4DO)(diag)-2, Basic Diagnostic Procedure.>
	j. Excessive back pressure in exhaust system	Clean or replace.
	k. Insufficient clearance between piston and cylinder	Adjust or replace.
	l. Slipping clutch	Repair or replace.
	m. Dragging brake	Adjust.
	n. Malfunction of radiator fan	Inspect the radiator fan relay, engine coolant temperature sensor or fan motor and replace them.
Over-cooling	a. Ambient temperature extremely low	Partly cover radiator front area.
	b. Defective thermostat	Replace.
Engine coolant leaks	a. Loosened or damaged connecting units on hoses	Repair or replace.
	b. Leakage from water pump	Replace.
	c. Leakage from water pipe	Repair or replace.
	d. Leakage around cylinder head gasket	Retighten cylinder head bolts or replace cylinder head gasket.
	e. Damaged or cracked cylinder head and cylinder block	Repair or replace.
	f. Damaged or cracked thermostat cover	Repair or replace.
	g. Leakage from radiator	Repair or replace.
Noise	a. Defective radiator fan	Replace.
	b. Defective water pump bearing	Replace water pump.
	c. Defective water pump mechanical seal	Replace water pump.

LUBRICATION

LU(H4DO)

Page

1. General Description 2
2. Oil Pressure System 7
3. Engine Oil 9
4. Oil Pump 12
5. Oil Pan and Strainer 13
6. Oil Pressure Switch 20
7. Engine Oil Filter 22
8. Oil Level Switch 24
9. Engine Lubrication System Trouble in General 30

1. General Description

A: SPECIFICATION

Lubrication method					Forced lubrication
Oil pump	Pump type				Trochoid type
	Number of teeth	Inner rotor			11
		Outer rotor			12
	Outer rotor diameter × Thickness			mm (in)	77 × 12 (3.03 × 0.47)
	Performance (Oil temperature 120°C (248°F))	600 r/min	Discharge pressure	kPa (kg/cm^2, psi)	40 (0.4, 5.8)
			Discharge rate	L (US qt, Imp qt)/min	5.8 (6.1, 5.1) or more
		6,000 r/min	Discharge pressure	kPa (kg/cm^2, psi)	323 (3.3, 46.8)
			Discharge rate	L (US qt, Imp qt)/min	55 (58.1, 48.4) or more
	Relief valve working pressure (2-step relief)	1st opening pressure		kPa (kg/cm^2, psi)	150 (1.5, 21.7)
		Main opening pressure		kPa (kg/cm^2, psi)	570 (5.8, 82.6)
Oil filter	Filter type				Full-flow filter type
	Filtration area			cm^2 (sq in)	867 (134.3)
	By-pass valve opening pressure			kPa (kg/cm^2, psi)	160 (1.6, 23.2)
	Outer diameter × Width			mm (in)	67.4 × 87.1 (2.65 × 3.43)
	Installation screw specifications				M 20 × 1.5
Oil pressure switch	Type				Immersed contact point type
	Operating voltage				12 V
	Warning light operating pressure			kPa (kg/cm^2, psi)	14.7 (0.1, 2.1)
	Proof pressure			kPa (kg/cm^2, psi)	981 (10, 142.2)
Engine oil	Total capacity (at overhaul)			L (US qt, Imp qt)	5.7 (6.0, 5.0)
	When replacing engine oil and oil filter			L (US qt, Imp qt)	4.8 (5.1, 4.2)
	When replacing engine oil only			L (US qt, Imp qt)	4.6 (4.9, 4.0)

Specified oil:

CAUTION:
- **Use 0W-20 (synthetic oil).**
- **It is acceptable to fill an engine with oil of another brand when replacing the oil, but make sure to use the following engine oil specified by Subaru.**

Engine oil standard		SAE viscosity No.
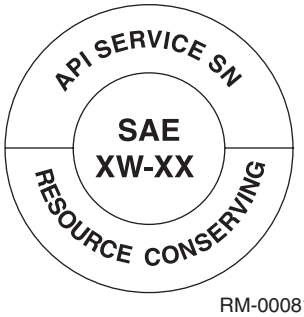 RM-00081 Those with SN "Resource Conserving" logo in case of API standard.	or	 RM-00002 Those with GF-5 "starburst mark" displayed on top of the container in case of ILSAC standard.	0W-20 (synthetic oil)

NOTE:
The proper viscosity oil helps the engine maintain its ideal temperature, and cranking speed increased by reducing viscosity friction in hot condition.

B: COMPONENT

1. OIL PAN AND STRAINER

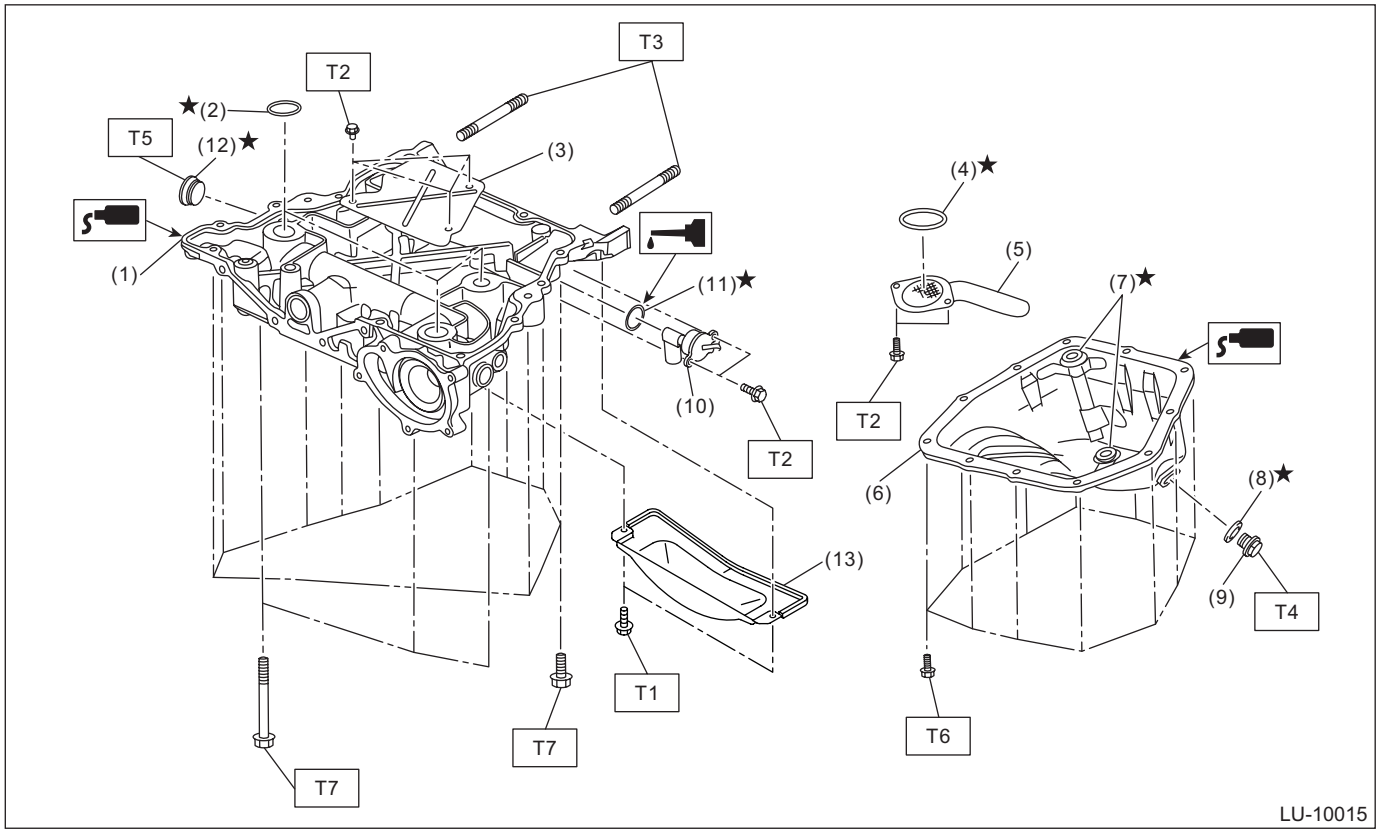

(1) Oil pan upper
(2) O-ring
(3) Baffle plate
(4) O-ring
(5) Oil strainer
(6) Oil pan
(7) Oil pan seal ring
(8) Drain plug gasket
(9) Drain plug
(10) Oil level switch
(11) O-ring
(12) Plug
(13) Clutch housing cover (MT model)

Tightening torque: N·m (kgf-m, ft-lb)

T1: 5 (0.5, 3.7)
T2: 6.4 (0.7, 4.7)
T3: 10 (1.0, 7.4)
T4: 41.7 (4.3, 30.8)
T5: 90 (9.2, 66.4)
T6: <Ref. to LU(H4DO)-15, OIL PAN AND STRAINER, INSTALLATION, Oil Pan and Strainer.>
T7: <Ref. to LU(H4DO)-17, OIL PAN UPPER, INSTALLATION, Oil Pan and Strainer.>

2. OIL FILTER AND OIL LEVEL GAUGE

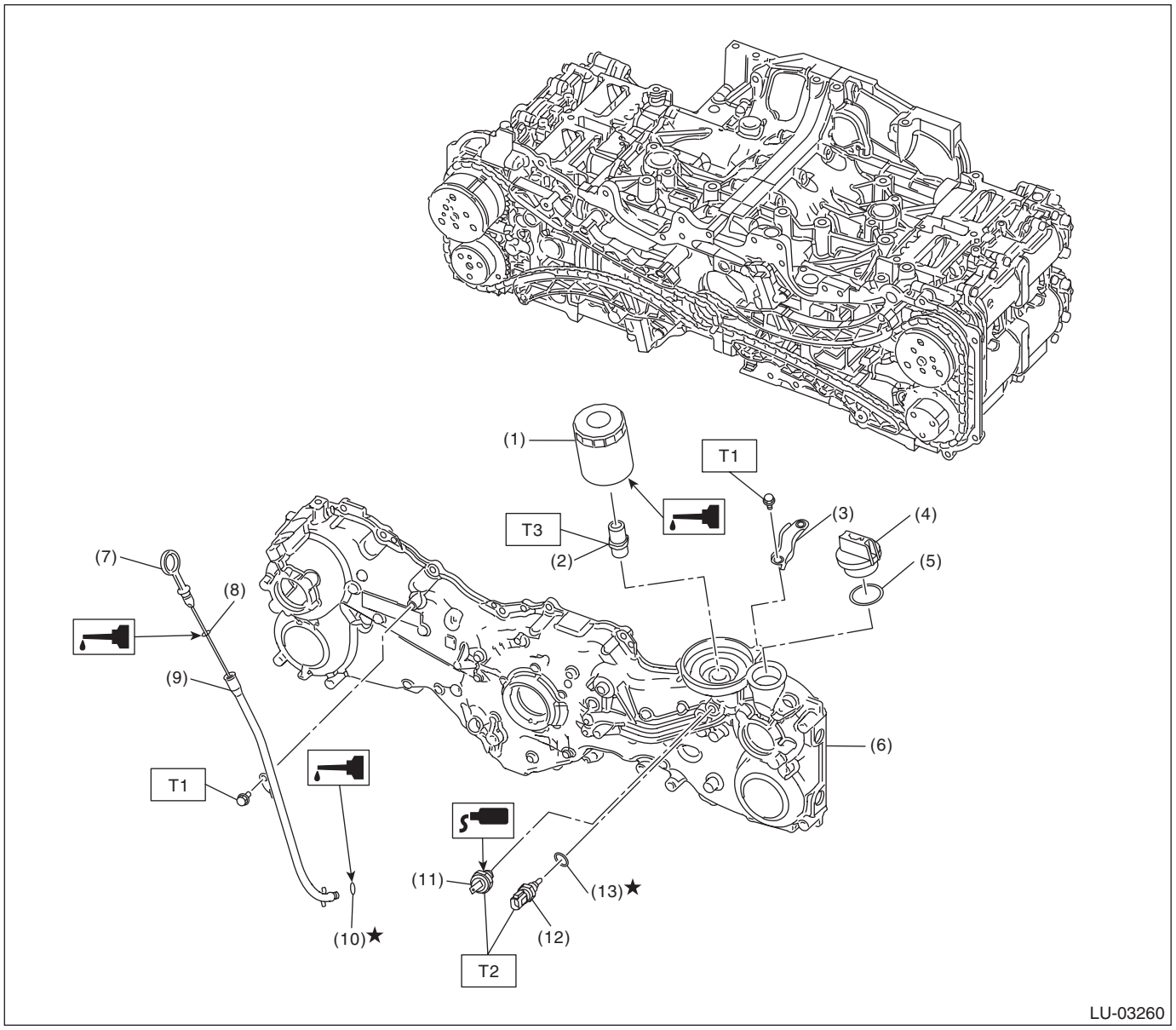

(1) Oil filter
(2) Oil pump union
(3) Generator cord stay
(4) Oil filler cap
(5) Gasket
(6) Chain cover
(7) Oil level gauge
(8) O-ring
(9) Oil level gauge guide
(10) O-ring
(11) Oil pressure switch
(12) Engine oil temperature sensor
(13) Gasket

Tightening torque: N·m (kgf-m, ft-lb)
T1: 6.4 (0.7, 4.7)
T2: 18 (1.8, 13.3)
T3: 45 (4.6, 33.2)

C: CAUTION

- Prior to starting work, pay special attention to the following:
  1. Always wear work clothes, a work cap, and protective shoes. Additionally, wear a helmet, protective goggles, etc. if necessary.
  2. Protect the vehicle using a seat cover, fender cover, etc.
  3. Prepare the service tools, clean cloth, containers to catch grease and oil, etc.
- Prepare a container and cloth when performing work which oil possibly spills. If oil spills, wipe it off immediately to prevent from penetrating into floor or flowing out for environmental protection.
- Vehicle components are extremely hot immediately after driving. Be wary of receiving burns from heated parts.
- When performing a repair, identify the cause of trouble and avoid unnecessary removal, disassembly and replacement.
- Before disconnecting connectors of sensors or units, be sure to disconnect the ground cable from battery.
- Always use the jack-up point when the shop jacks or rigid racks are used to support the vehicle.
- Remove contamination including dirt and corrosion before removal, installation, disassembly or assembly.
- Keep the removed parts in order and protect them from dust and dirt.
- All removed parts, if to be reused, should be reinstalled in the original positions with attention to the correct directions, etc.
- Bolts, nuts and washers should be replaced with new parts as required.
- Be sure to tighten the fasteners including bolts and nuts to the specified torque.
- If the engine oil is spilt over exhaust pipe or the under cover, wipe it off with cloth to avoid emission of smoke or causing a fire.
- Follow all government and local regulations concerning disposal of refuse when disposing of oil.

D: PREPARATION TOOL

1. SPECIAL TOOL

ILLUSTRATION	TOOL NUMBER	DESCRIPTION	REMARKS
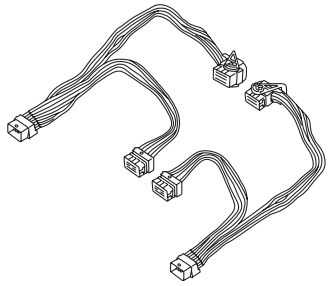 ST18460AA050	18460AA050	CHECK BOARD	Used for inspecting the oil level switch.
 STSSM4	— (Newly adopted tool)	SUBARU SELECT MONITOR 4	Used for setting of each function and trouble-shooting for electrical system. NOTE: For detailed operation procedures of Subaru Select Monitor 4, refer to “Application help”.

2. GENERAL TOOL

TOOL NAME	REMARKS
Oil filter wrench (65/67 mm 14 Flutes)	Used for removing and installing oil filter.
Circuit tester	Used for measuring resistance, voltage and current.
DST-i	Used together with Subaru Select Monitor 4.

2. Oil Pressure System

A: WIRING DIAGRAM

Oil pressure warning system <Ref. to WI-293, WIRING DIAGRAM, Oil Pressure Warning Light System.>

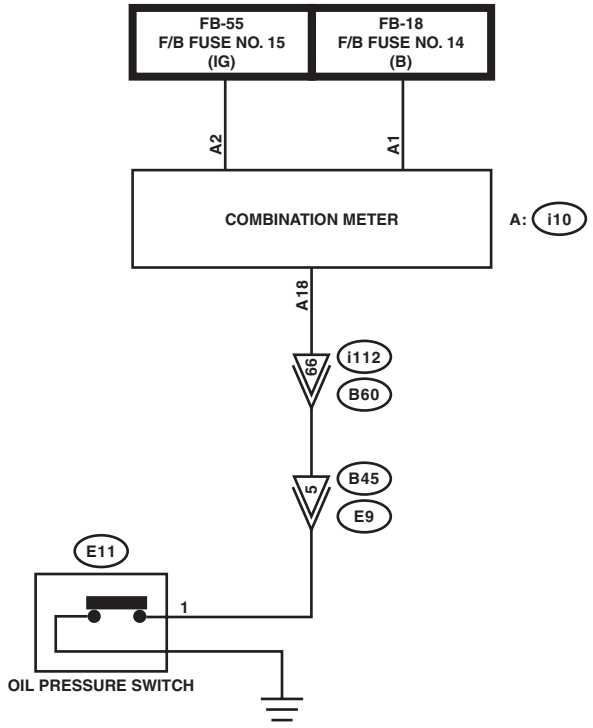

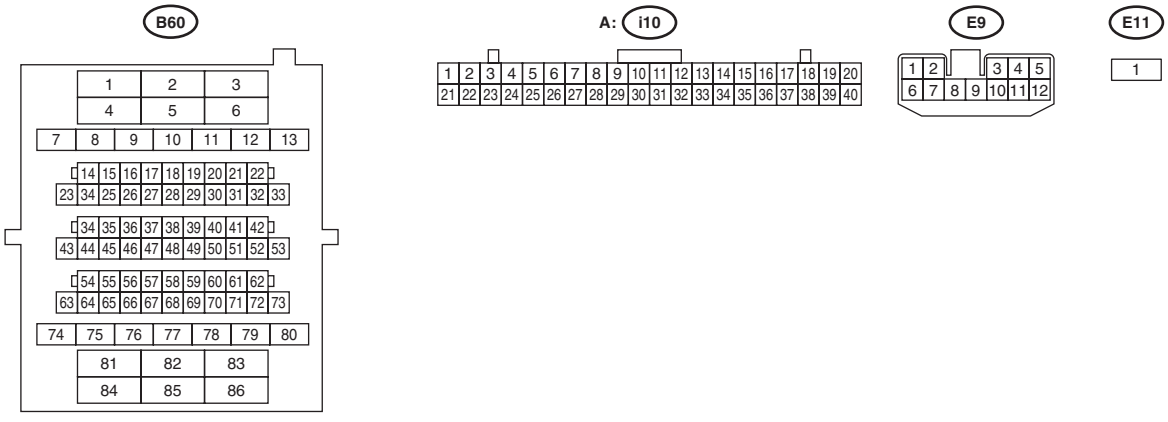

LU-03265

B: INSPECTION

Step		Check	Yes	No
1	**CHECK DTC.**	Is engine DTC displayed? <Ref. to EN(H4DO)(diag)-63, Read Diagnostic Trouble Code (DTC).>	Check the appropriate DTC using the "List of Diagnostic Trouble Code (DTC)". <Ref. to EN(H4DO)(diag)-102, List of Diagnostic Trouble Code (DTC).>	Go to step **2**.
2	**CHECK COMBINATION METER.** 1) Turn the ignition switch to ON. (Engine OFF) 2) Check the warning light in the combination meter.	Does the warning light illuminate?	Go to step **3**.	Repair or replace the combination meter. <Ref. to IDI-10, INSPECTION, Combination Meter System.>
3	**CHECK POWER SUPPLY TO OIL PRESSURE SWITCH.** 1) Turn the ignition switch to OFF. 2) Disconnect the terminal from oil pressure switch. 3) Turn the ignition switch to ON. 4) Measure the voltage of harness between oil pressure switch harness terminal and chassis ground. ***Terminals*** ***(E11) No. 1 (+) — Chassis ground (–):***	Is the voltage 10 V or more?	Replace the oil pressure switch. <Ref. to LU(H4DO)-20, Oil Pressure Switch.>	Go to step **4**.
4	**CHECK COMBINATION METER.** Perform the self-diagnosis of combination meter to check if there are any faults in the combination meter. <Ref. to IDI-6, OPERATION, Combination Meter System.>	Is combination meter OK?	Repair the harness and connector. NOTE: In this case, repair the following item: • Open circuit of harness between combination meter and oil pressure switch • Poor contact of combination meter connector • Poor contact of oil pressure switch terminal • Poor contact of coupling connector	Repair or replace the combination meter. <Ref. to IDI-10, INSPECTION, Combination Meter System.>

3. Engine Oil

A: INSPECTION

CAUTION:
If the engine oil is spilt over exhaust pipe or the under cover, wipe it off with cloth to avoid emission of smoke or causing a fire.

1) Park the vehicle on a level surface.
2) Remove the oil level gauge and wipe away the oil.
3) Reinsert the oil level gauge all the way. Be sure that the oil level gauge is correctly inserted and properly orientated.
4) Pull out the oil level gauge again, and check both sides of the oil level gauge. Use a lower side to determine the engine oil level. If the engine oil level is below “L” line, check for oil leakage from engine and add oil to bring the level up to “F” line.
5) Start the engine to circulate the oil in engine.
6) After turning off the engine, wait a few minutes for the oil to return to the oil pan before checking the level.

NOTE:
- To prevent overfilling of engine oil, do not add oil above “F” line when the engine is cold.
- As the oil level gauge is used for daily maintenance, “F” line and “L” line is set assuming that the engine is cold.

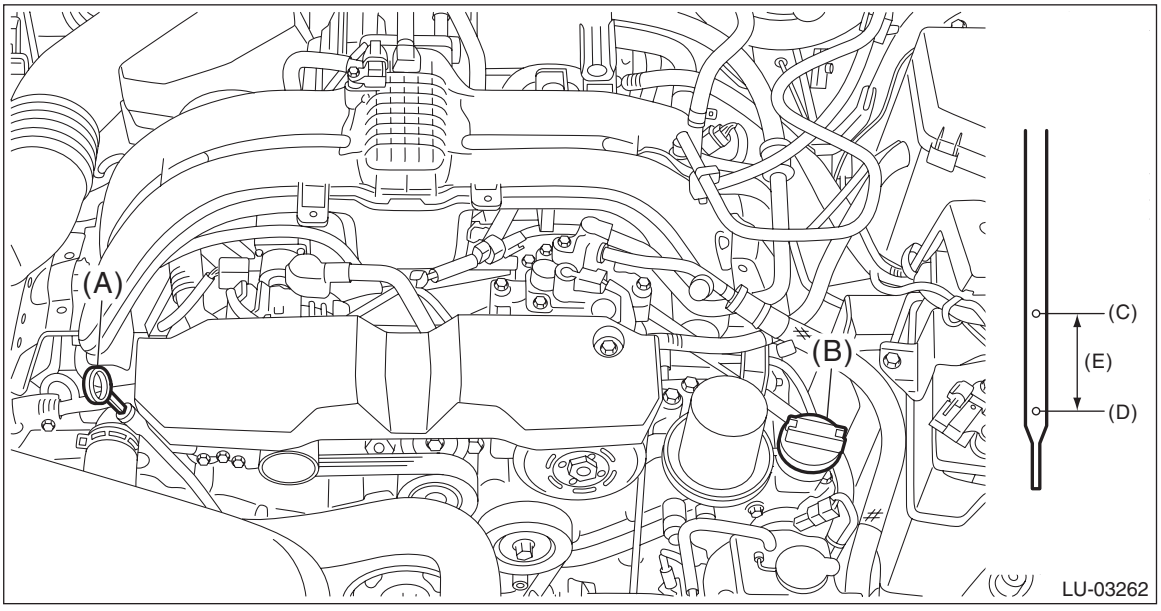

(A) Oil level gauge
(B) Oil filler cap
(C) “F” line
(D) “L” line
(E) Approx. 1.0 L (1.1 US qt, 0.9 Imp qt)

B: REPLACEMENT

CAUTION:
If the engine oil is spilt over exhaust pipe or the under cover, wipe it off with cloth to avoid emission of smoke or causing a fire.

1) Open the oil filler cap for quick draining of engine oil.
2) Lift up the vehicle.
3) Drain engine oil by loosening the drain plug.

NOTE:
Prepare the container for draining of engine oil.

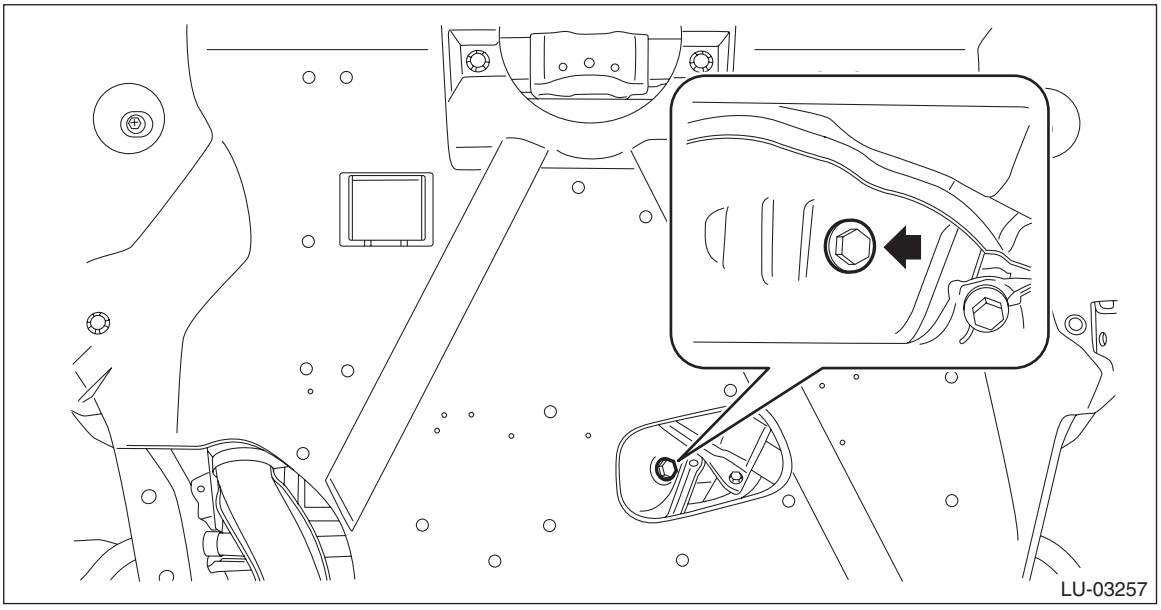

4) After draining the engine oil, tighten the engine oil drain plug.

NOTE:
Use a new drain plug gasket.

Tightening torque:
41.7 N·m (4.3 kgf-m, 30.8 ft-lb)

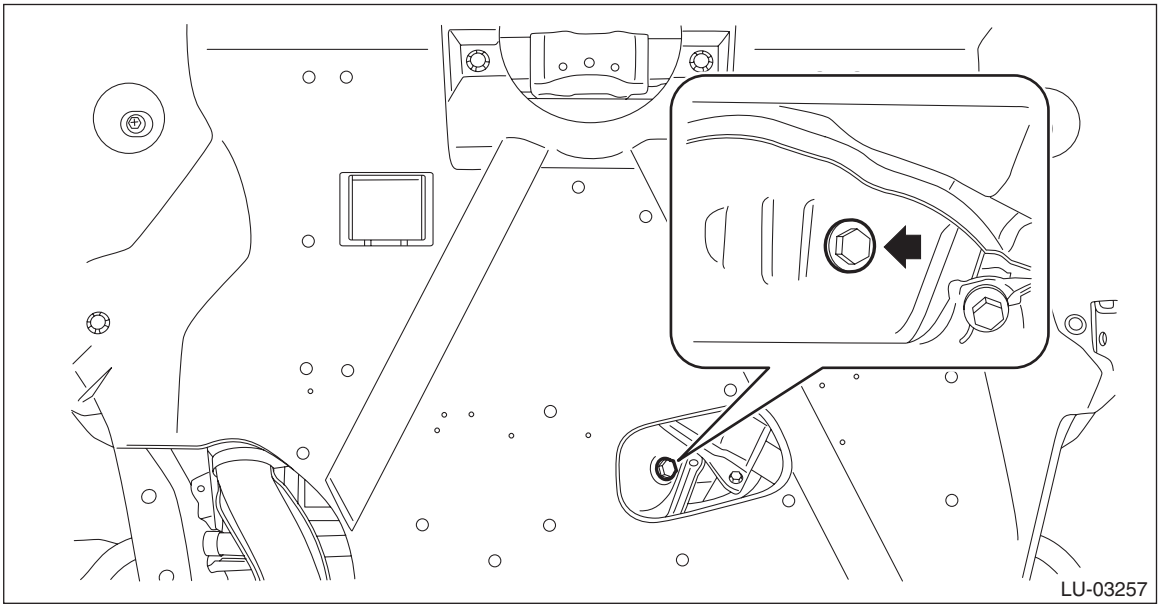

5) Lower the vehicle.

6) Select engine oil of adequate quality and viscosity and fill it through the chain cover to the “F” line on the oil level gauge. Make sure that the vehicle is parked on a level surface when checking oil level.

Recommended oil:

Refer to “SPECIFICATION” for recommended oil. <Ref. to LU(H4DO)-2, SPECIFICATION, General Description.>

Engine oil capacity:

Refer to “SPECIFICATION” for engine oil capacity. <Ref. to LU(H4DO)-2, SPECIFICATION, General Description.>

7) Close the oil filler cap.
8) Start the engine to circulate the oil in engine.
9) Stop the engine and pull out the oil level gauge again, and check both sides of the oil level gauge. Use a lower side to check the engine oil level. If necessary, add engine oil up to the “F” line on oil level gauge.

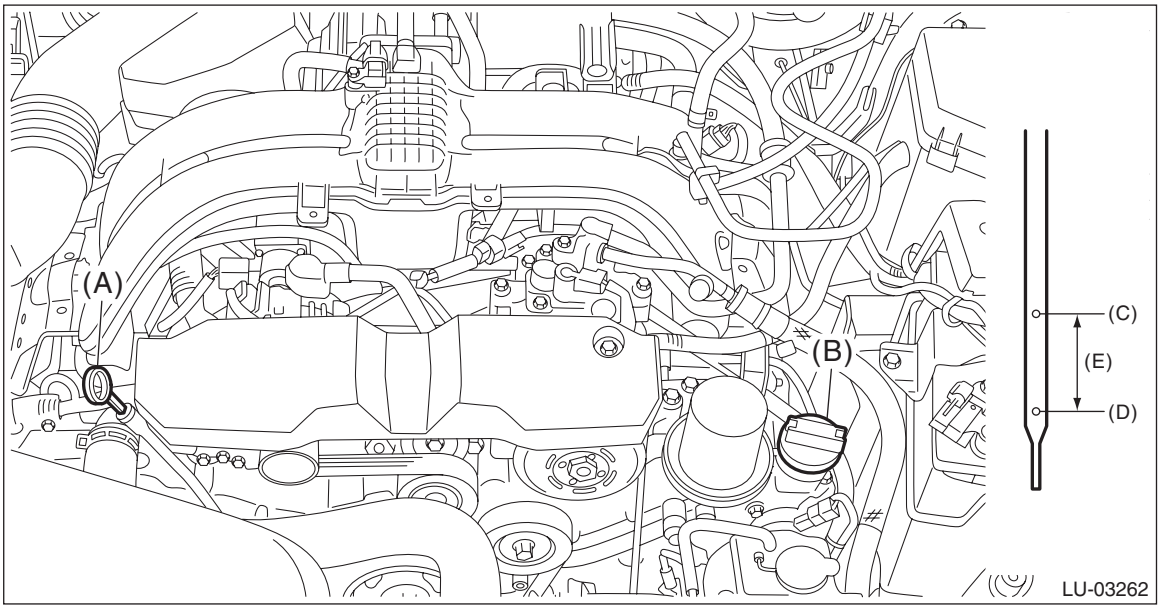

(A) Oil level gauge
(B) Oil filler cap
(C) “F” line
(D) “L” line
(E) Approx. 1.0 L (1.1 US qt, 0.9 Imp qt)

4. Oil Pump

A: SPECIFICATION

The oil pump cannot be disassembled.
Refer to “Chain Cover” for removal and installation procedures. <Ref. to ME(H4DO)-83, REMOVAL, Chain Cover.> <Ref. to ME(H4DO)-88, INSTALLATION, Chain Cover.>

5. Oil Pan and Strainer

A: REMOVAL

1. OIL PAN AND STRAINER

1) Disconnect the ground terminal from battery sensor. <Ref. to RC-4, BATTERY, NOTE, Repair Contents.>
2) Lift up the vehicle.
3) Drain the engine oil. <Ref. to LU(H4DO)-10, REPLACEMENT, Engine Oil.>
4) Remove the front exhaust pipe. <Ref. to EX(H4DO)-5, REMOVAL, Front Exhaust Pipe.>
5) Remove the bolts which secure oil pan to oil pan upper.

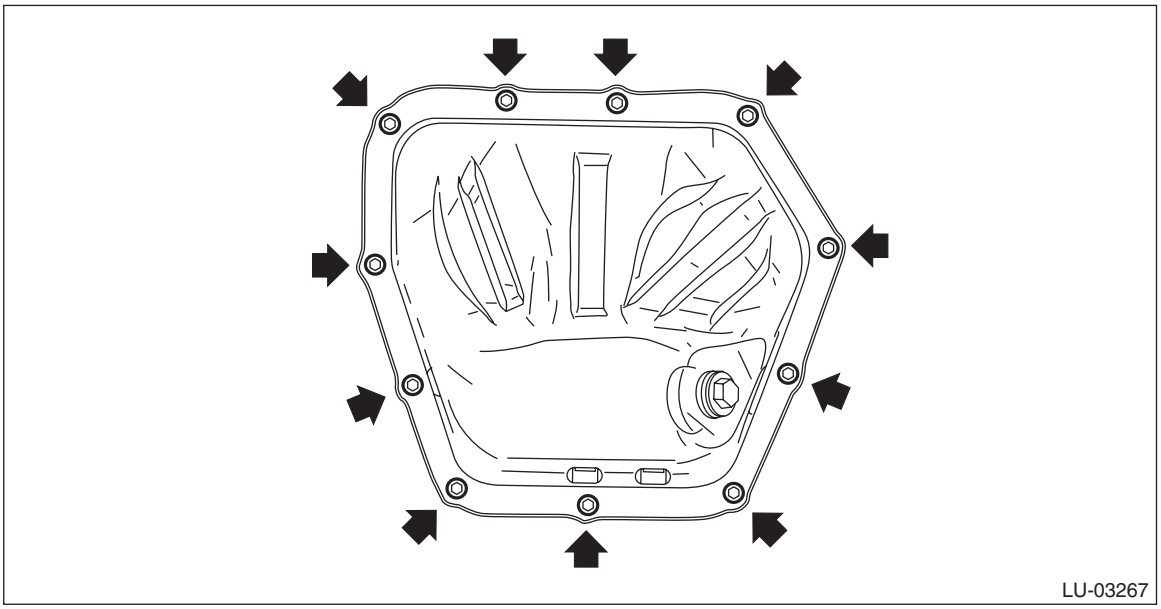
LU-03267

6) Insert an oil pan cutter blade into the gap between oil pan upper and oil pan, and remove the oil pan.

CAUTION:
Do not use a screwdriver or similar tool in place of oil pan cutter.

7) Remove the oil strainer from the oil pan upper.

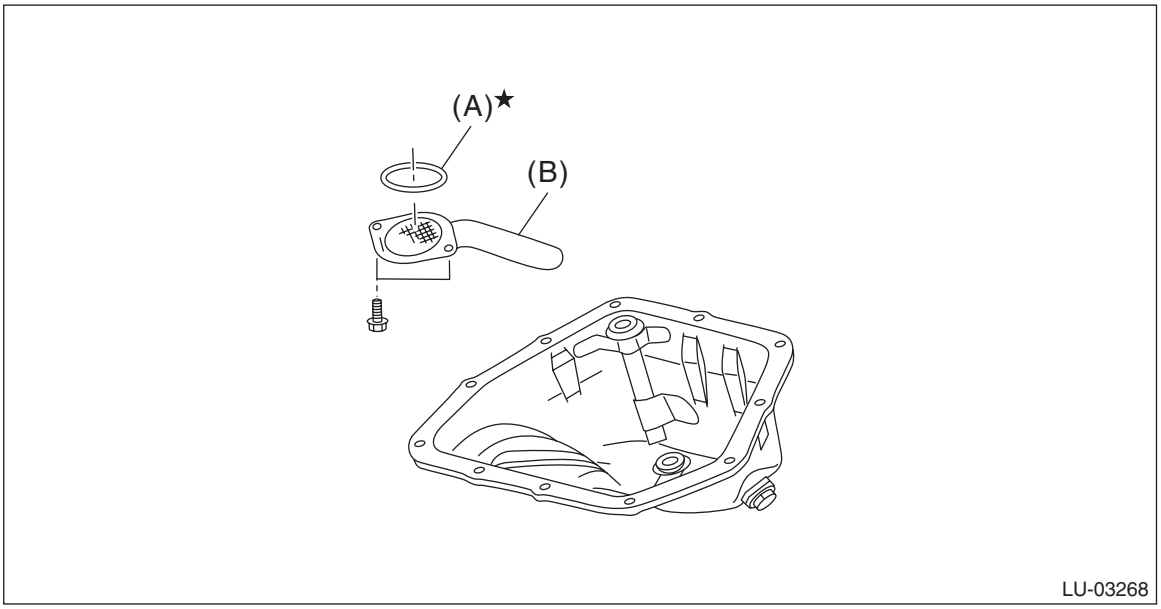

LU-03268

(A) O-ring
(B) Oil strainer

2. OIL PAN UPPER

1) Remove the engine from the vehicle. <Ref. to ME(H4DO)-43, REMOVAL, Engine Assembly.>
2) Remove the water pump. <Ref. to CO(H4DO)-18, REMOVAL, Water Pump.>
3) Remove the thermostat cover. <Ref. to CO(H4DO)-33, REMOVAL, Thermostat.>
4) Remove the water pipe assembly. <Ref. to CO(H4DO)-21, REMOVAL, Water Pipe Assembly.>
5) Remove the chain cover. <Ref. to ME(H4DO)-83, REMOVAL, Chain Cover.>
6) Remove the oil pan. <Ref. to LU(H4DO)-13, OIL PAN AND STRAINER, REMOVAL, Oil Pan and Strainer.>
7) Remove the oil level switch. <Ref. to LU(H4DO)-24, REMOVAL, Oil Level Switch.>
8) Remove the bolts which secure oil pan upper to cylinder block, and remove the oil pan upper.

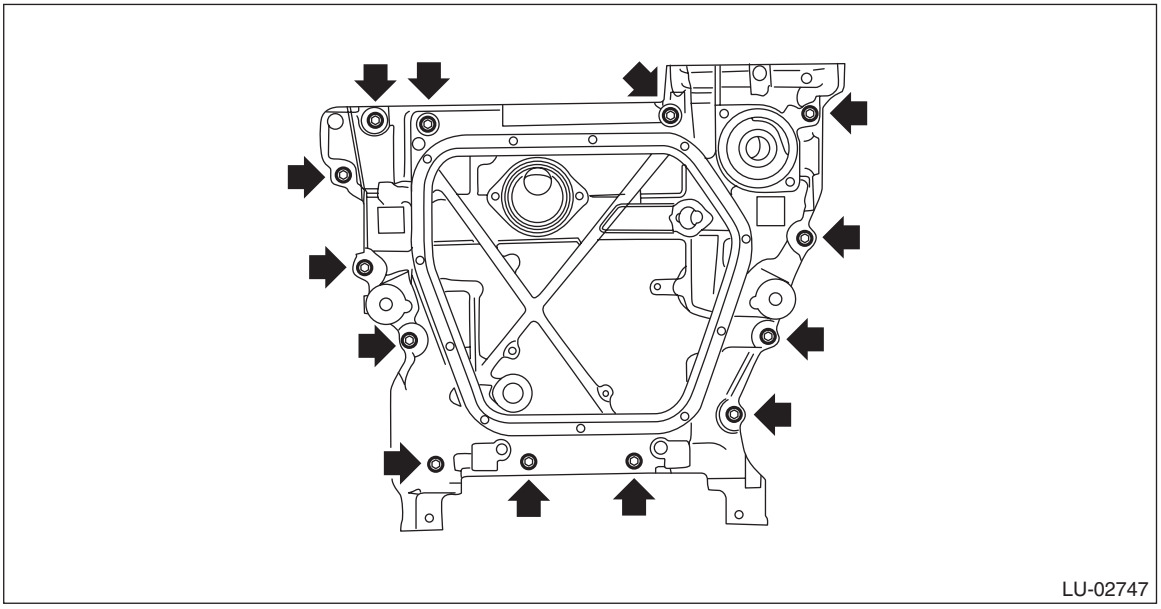
LU-02747

9) Remove the baffle plate from the oil pan upper.
10) Remove stud bolts from the oil pan upper.
11) Remove the O-ring from the cylinder block.
12) Remove the clutch housing cover from the oil pan upper. (MT model)

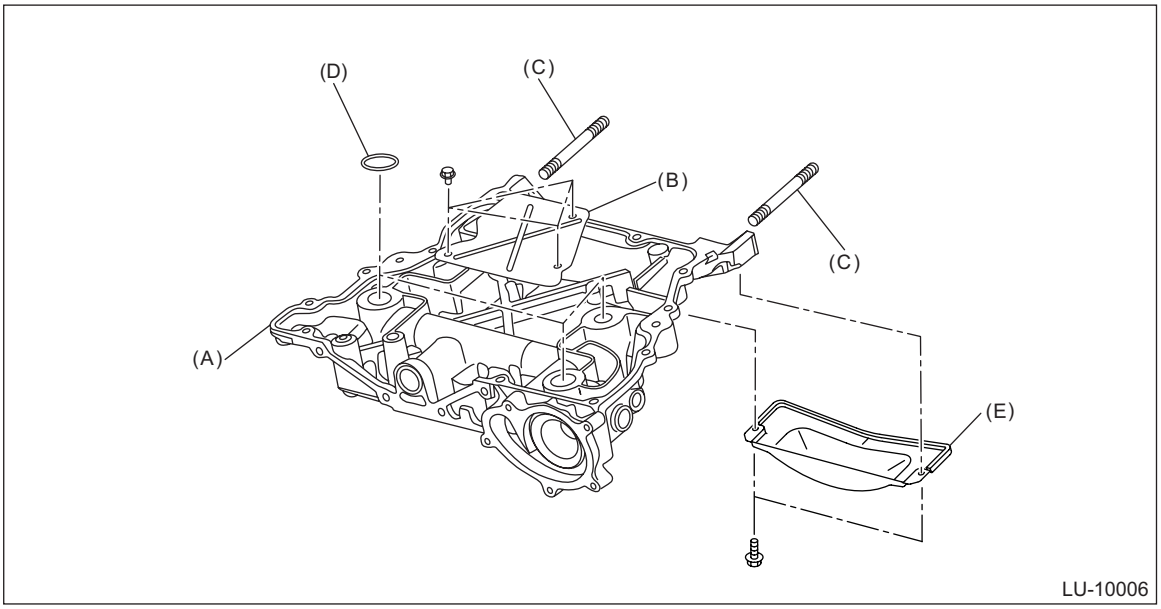

LU-10006

(A) Oil pan upper
(B) Baffle plate
(C) Stud bolt
(D) O-ring
(E) Clutch housing cover (MT model)

B: INSTALLATION

1. OIL PAN AND STRAINER

1) Attach the oil strainer to the oil pan upper.

NOTE:
Use new O-rings.

Tightening torque:
6.4 N·m (0.7 kgf-m, 4.7 ft-lb)

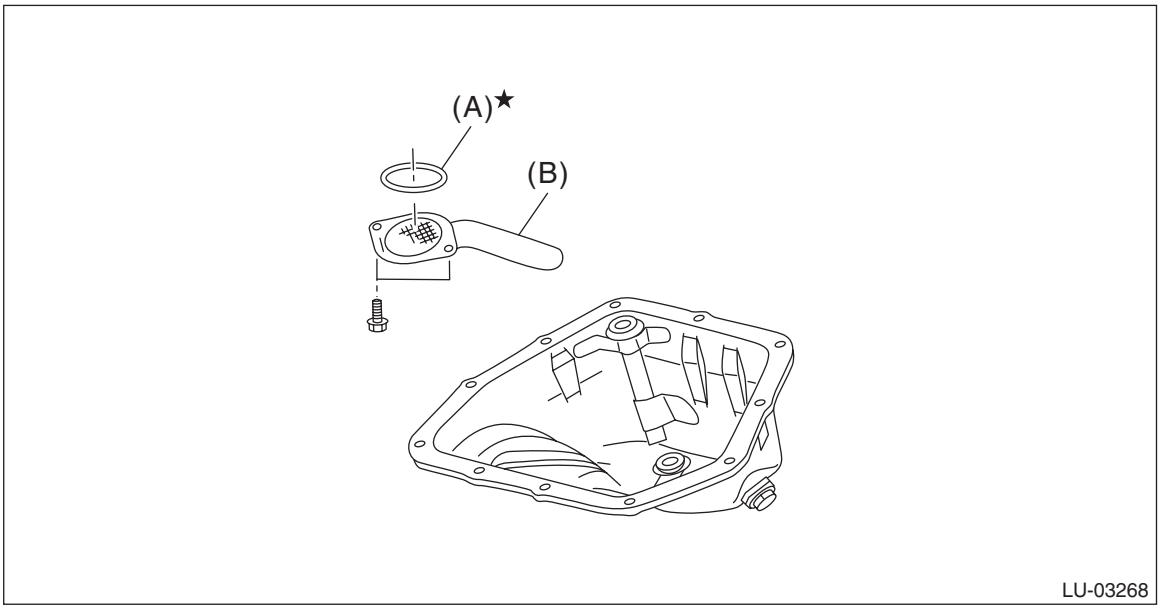

(A) O-ring
(B) Oil strainer

2) Apply liquid gasket to the mating surfaces of oil pan upper, and install the oil pan.

NOTE:
- Before installing the oil pan, wipe and clean the mating surface of oil pan and oil pan upper.
- Use a new oil pan seal ring.
- Install within 5 min. after applying liquid gasket.

Liquid gasket:
THREE BOND 1217G (Part No. K0877Y0100), THREE BOND 1217H or equivalent

Liquid gasket applying diameter:
5±1 mm (0.1969±0.0394 in)

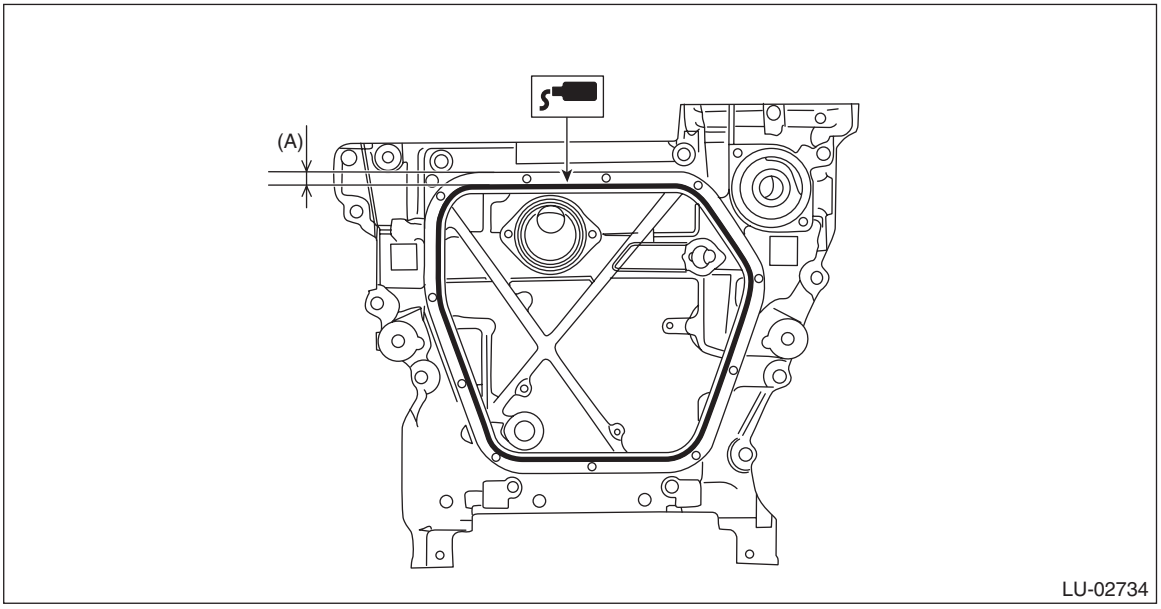

(A) 7.5 mm (0.295 in)

3) Tighten the bolts to secure the oil pan to the oil pan upper in the numerical order.

Tightening torque:
6.4 N·m (0.7 kgf-m, 4.7 ft-lb)

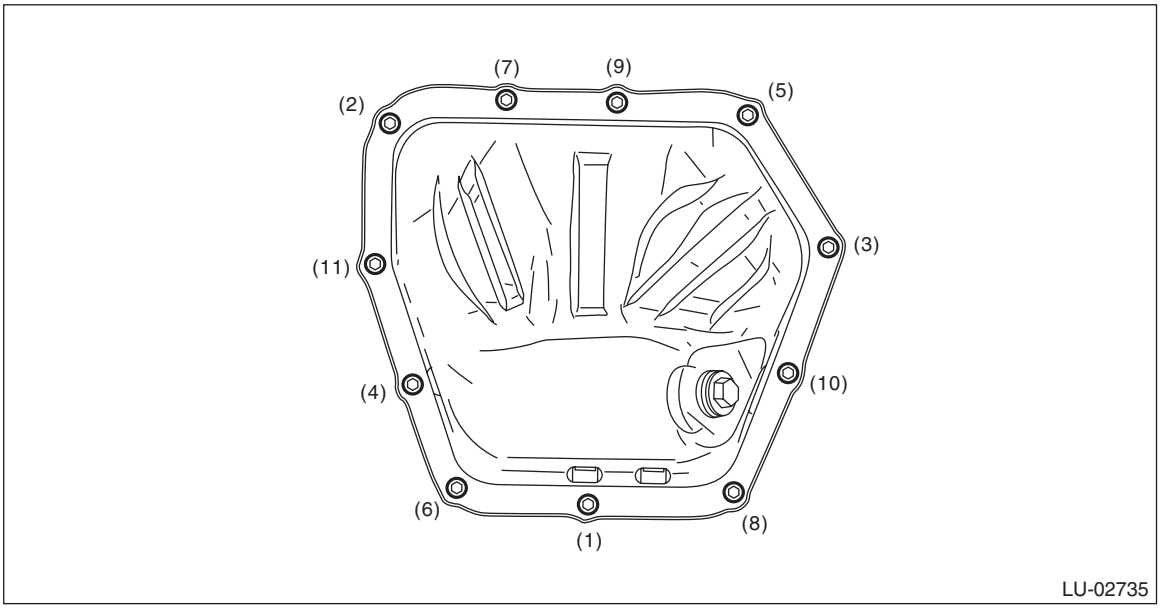

4) Install the front exhaust pipe. <Ref. to EX(H4DO)-7, INSTALLATION, Front Exhaust Pipe.>
5) Lower the vehicle.

6) Connect the ground terminal to battery sensor. <Ref. to RC-4, BATTERY, NOTE, Repair Contents.>
7) Refill the engine oil. <Ref. to LU(H4DO)-10, REPLACEMENT, Engine Oil.>

2. OIL PAN UPPER

NOTE:
Before installing the oil pan upper, clean the mating surface of oil pan upper and cylinder block.
1) Attach the clutch housing cover to the oil pan upper. (MT model)
2) Install the O-ring to the cylinder block.

NOTE:
Use new O-rings.
3) Attach the stud bolts to the oil pan upper.
4) Attach the baffle plate to the oil pan upper.

Tightening torque:
T1: 5 N·m (0.5 kgf-m, 3.7 ft-lb)
T2: 6.4 N·m (0.7 kgf-m, 4.7 ft-lb)
T3: 10 N·m (1.0 kgf-m, 7.4 ft-lb)

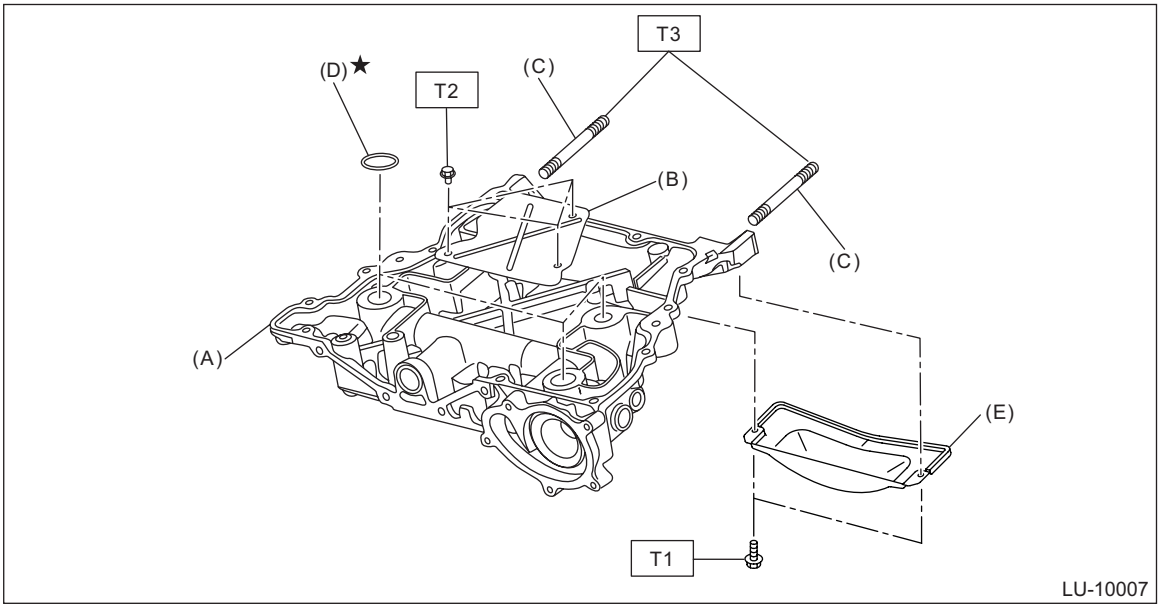

(A) Oil pan upper
(B) Baffle plate
(C) Stud bolt
(D) O-ring
(E) Clutch housing cover (MT model)

5) Apply liquid gasket to the mating surface of the oil pan upper as shown in the figure, and install the oil pan upper to the cylinder block.

CAUTION:
Be careful not to apply any liquid gasket to the O-ring.

NOTE:
- Install within 5 min. after applying liquid gasket.
- Apply liquid gasket 1.5 mm (0.0591 in) outside from the chamfer surface. However, application of liquid gasket on the chamfer surface around the bolt hole is allowed.

Liquid gasket:
THREE BOND 1217G (Part No. K0877Y0100), THREE BOND 1217H or equivalent

Liquid gasket applying diameter:
5±1 mm (0.1969±0.0394 in)

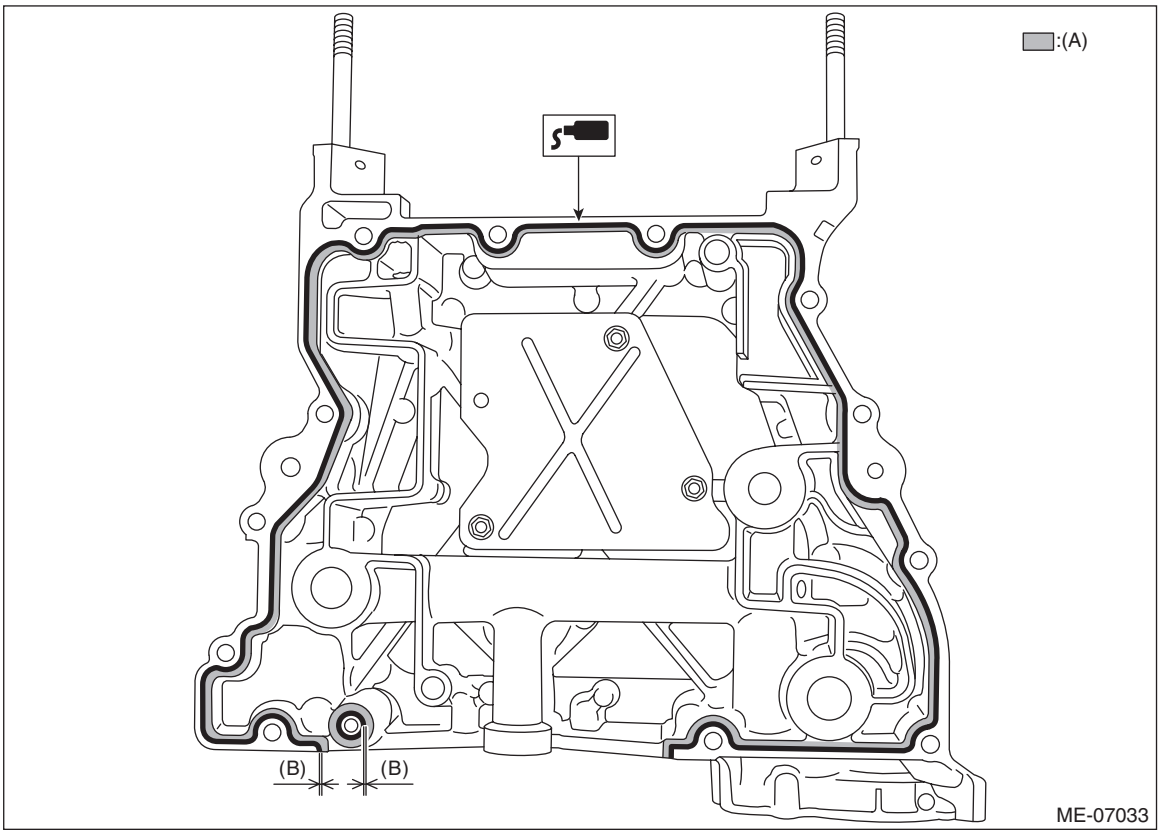

(A) Chamfer surface (B) 1.5 mm (0.0591 in)

6) Tighten the bolts to secure the oil pan upper to the cylinder block in the numerical order.

NOTE:
After tightening, if the liquid gasket is squeezed out onto the seal surface of the chain cover, completely remove any squeezed-out liquid gasket.

Tightening torque:
18 N·m (1.8 kgf-m, 13.3 ft-lb)

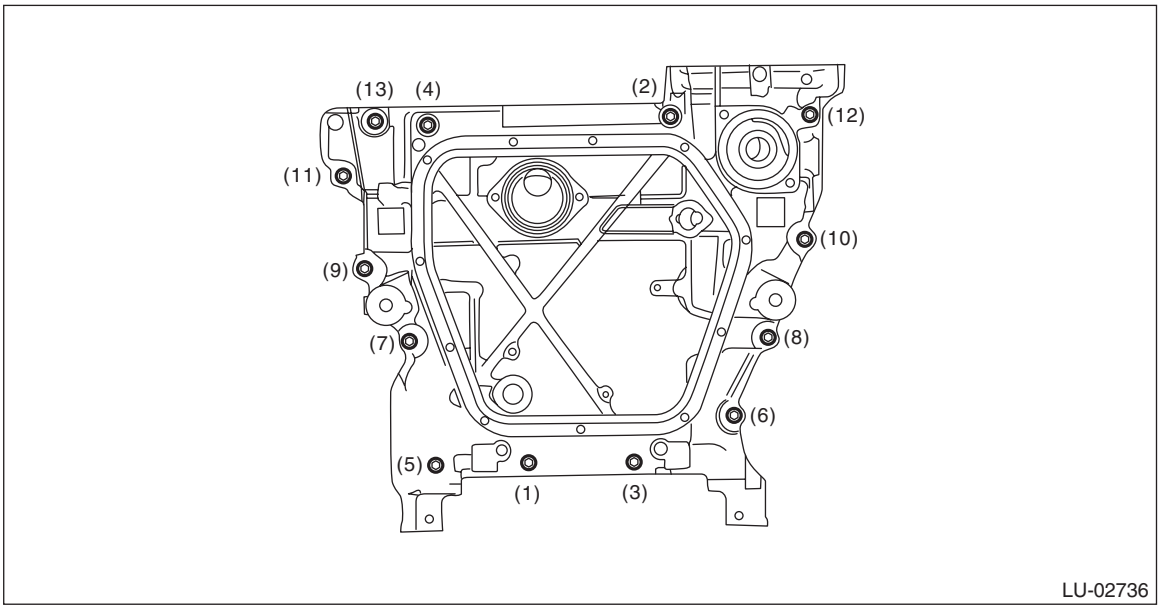

7) Install the oil level switch. <Ref. to LU(H4DO)-25, INSTALLATION, Oil Level Switch.>
8) Install the oil pan. <Ref. to LU(H4DO)-15, OIL PAN AND STRAINER, INSTALLATION, Oil Pan and Strainer.>
9) Install the chain cover. <Ref. to ME(H4DO)-88, INSTALLATION, Chain Cover.>
10) Install the water pipe assembly. <Ref. to CO(H4DO)-27, INSTALLATION, Water Pipe Assembly.>
11) Install the thermostat cover. <Ref. to CO(H4DO)-36, INSTALLATION, Thermostat.>
12) Install the water pump. <Ref. to CO(H4DO)-19, INSTALLATION, Water Pump.>
13) Refill the engine oil. <Ref. to LU(H4DO)-10, REPLACEMENT, Engine Oil.>
14) Install the engine to the vehicle. <Ref. to ME(H4DO)-53, INSTALLATION, Engine Assembly.>

C: INSPECTION

Check that the oil pan, oil pan upper, oil strainer and baffle plate do not have deformation, cracks or damage.

6. Oil Pressure Switch

A: REMOVAL

CAUTION:
If the engine oil is spilt over exhaust pipe or the under cover, wipe it off with cloth to avoid emission of smoke or causing a fire.

1) Disconnect the ground terminal from battery sensor. <Ref. to RC-4, BATTERY, NOTE, Repair Contents.>
2) Disconnect the connector (A) from the oil pressure switch, and remove the oil pressure switch from the chain cover.

CAUTION:
Catch the engine oil using cloth to prevent it from splashing.

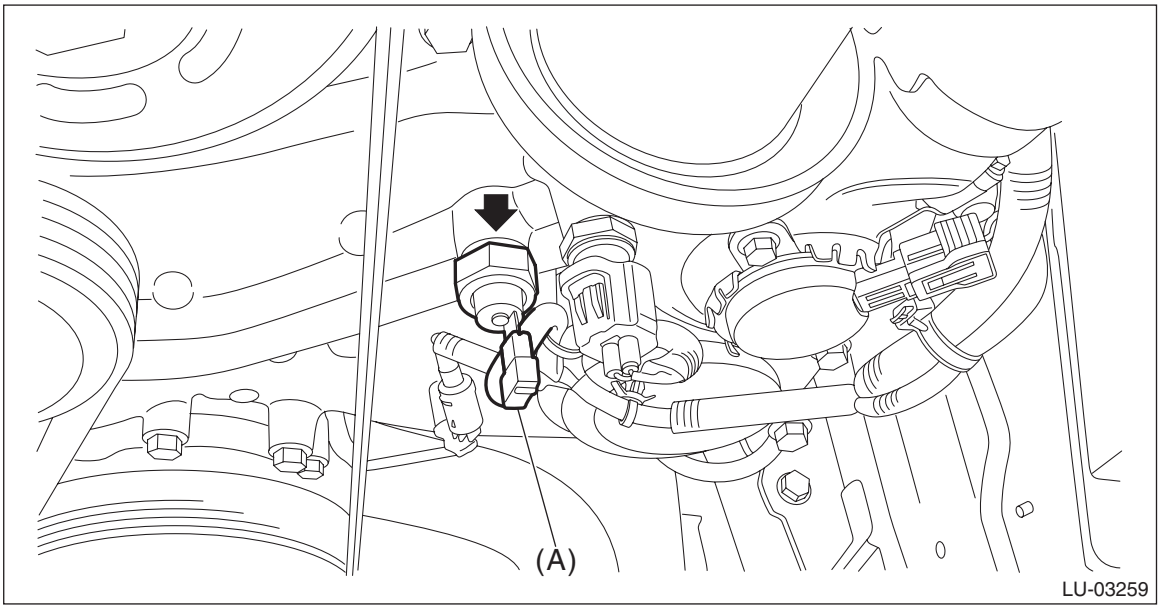

B: INSTALLATION

1) Apply liquid gasket to the oil pressure switch threads.

Liquid gasket:
THREE BOND 1324 (Part No. 004403042) or equivalent

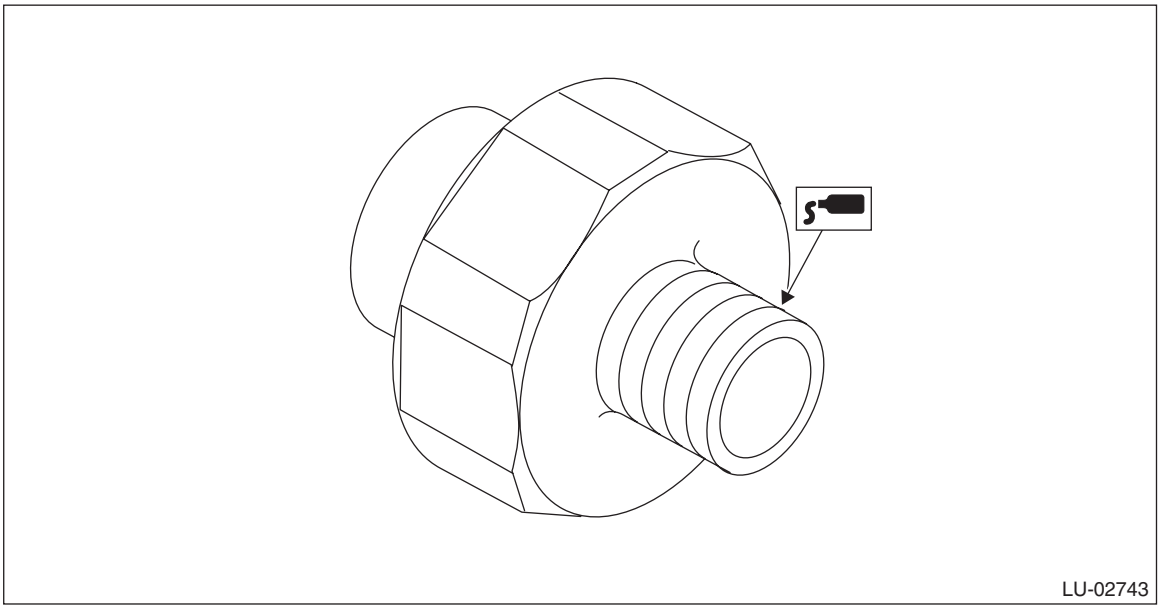

2) Install the oil pressure switch to the chain cover, and connect the connector to the oil pressure switch.

Tightening torque:
18 N·m (1.8 kgf-m, 13.3 ft-lb)

3) Connect the ground terminal to battery sensor. <Ref. to RC-4, BATTERY, NOTE, Repair Contents.>

C: INSPECTION

1) Check that the oil pressure switch does not have deformation, cracks or damage.
2) Check the oil pressure switch installation portion for oil leakage and oil seepage.

7. Engine Oil Filter

A: REMOVAL

1. OIL FILTER

CAUTION:
If the engine oil is spilt over exhaust pipe or the under cover, wipe it off with cloth to avoid emission of smoke or causing a fire.

NOTE:
Clean off water or dust from the oil element mating surface using air.
Remove the oil filter using a general tool (65/67 mm 14 Flutes).

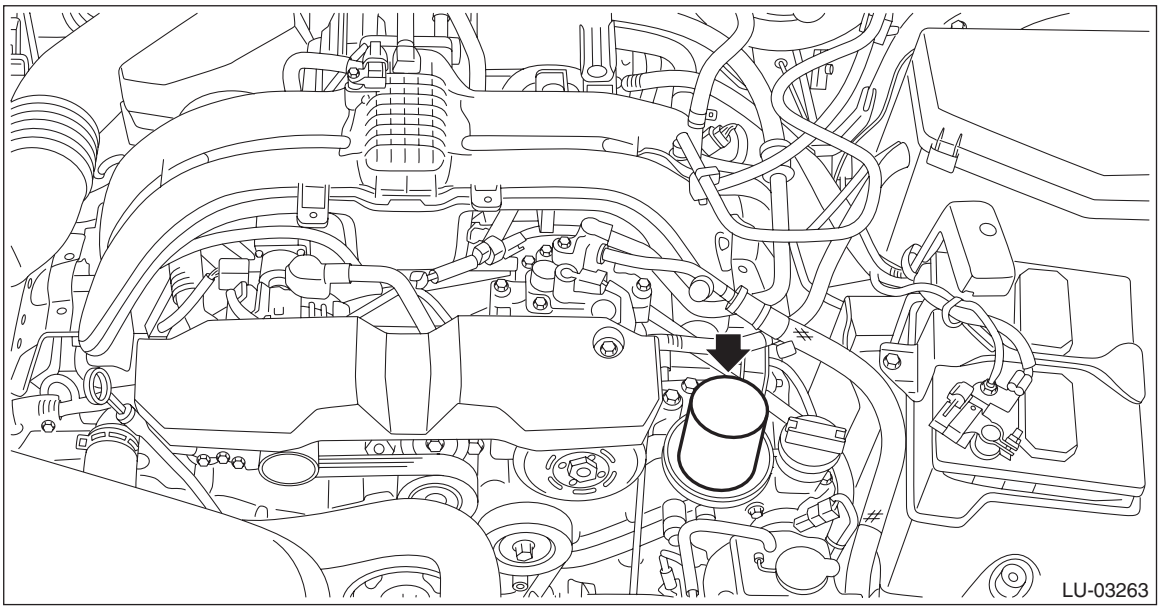

2. OIL PUMP UNION

1) Remove the oil filter. <Ref. to LU(H4DO)-22, OIL FILTER, REMOVAL, Engine Oil Filter.>
2) Remove the oil pump union from the chain cover.

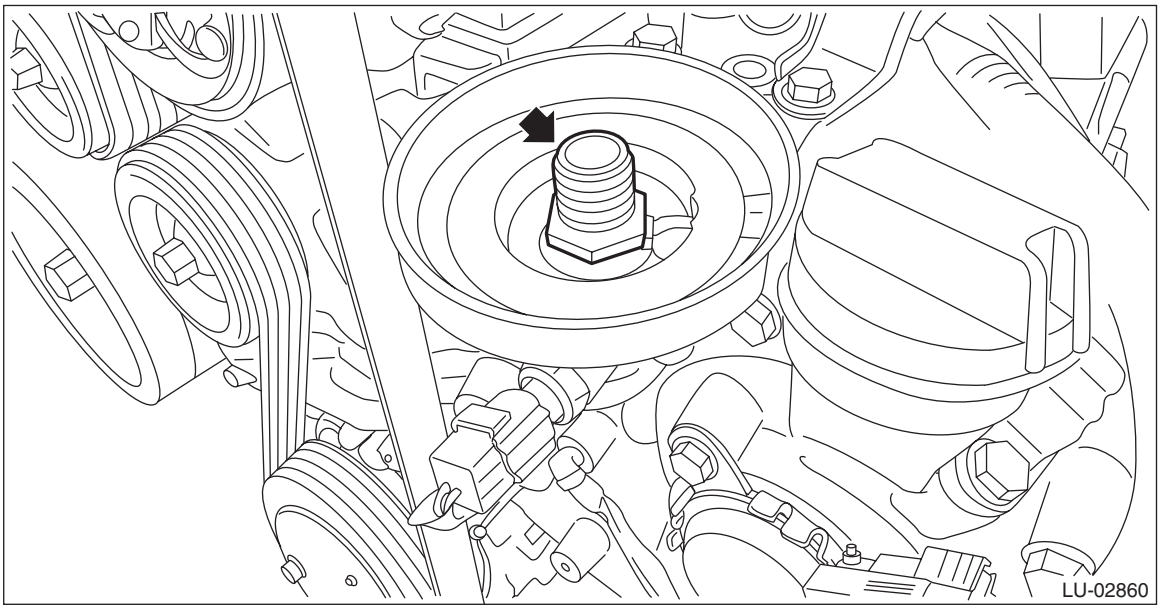

B: INSTALLATION

1. OIL FILTER

CAUTION:
Do not tighten excessively, or oil may leak.
1) Clean the oil filter installing surface on the chain cover.
2) Obtain a new oil filter and apply a thin coat of engine oil to the seal rubber.
3) Install the oil filter by turning it by hand, being careful not to damage the seal rubber of the oil filter.
4) Tighten further (approx. 7/8 turn) after the seal rubber contacts the chain cover. When using a torque wrench, tighten it to 12 N·m (1.2 kgf-m, 8.9 ft-lb).
5) After installing, check the engine oil level and replenish it if necessary. <Ref. to LU(H4DO)-9, INSPECTION, Engine Oil.>

2. OIL PUMP UNION

1) Install the oil pump union to the chain cover.

Tightening torque:
45 N·m (4.6 kgf-m, 33.2 ft-lb)
2) Install the oil filter. <Ref. to LU(H4DO)-23, OIL FILTER, INSTALLATION, Engine Oil Filter.>

C: INSPECTION

1) After installing the oil filter, run the engine and check for oil leakage.

NOTE:
The filter element and filter case are permanently jointed; therefore, interior cleaning is not necessary.
2) Check the engine oil level. <Ref. to LU(H4DO)-9, INSPECTION, Engine Oil.>

8. Oil Level Switch

A: REMOVAL

1) Disconnect the ground terminal from battery sensor. <Ref. to RC-4, BATTERY, NOTE, Repair Contents.>
2) Remove the under cover. <Ref. to EI-28, REMOVAL, Front Under Cover.>
3) Drain the engine oil. <Ref. to LU(H4DO)-10, REPLACEMENT, Engine Oil.>
4) Disconnect the oil level switch connector from the engine harness, and remove the clip (A) securing the harness.

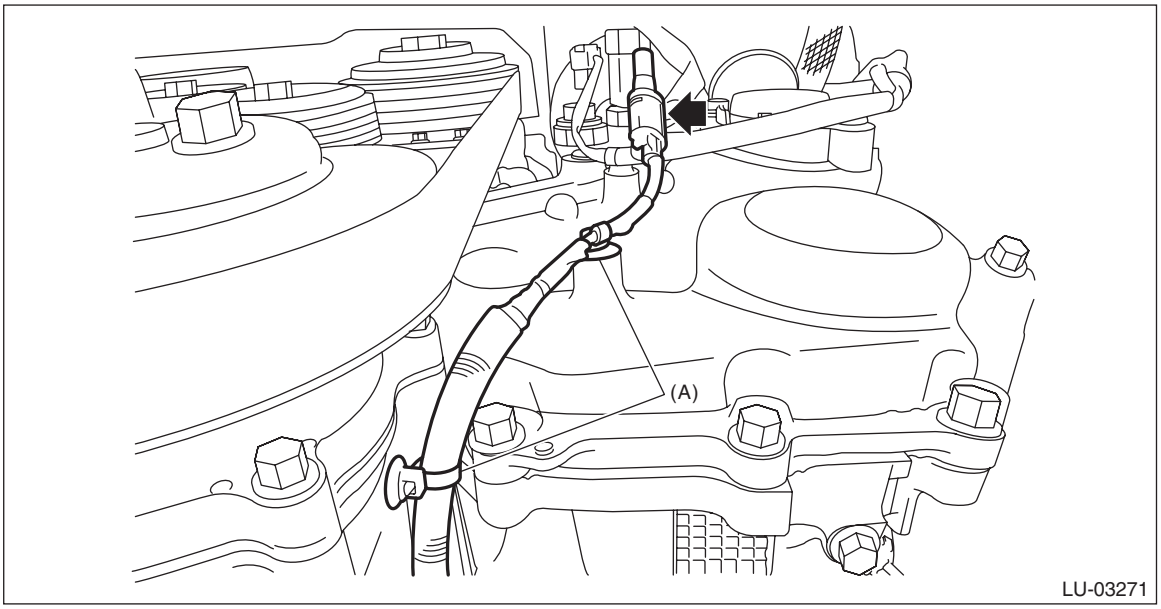

5) Remove clip (A) from the oil pan upper, and remove the oil level switch.

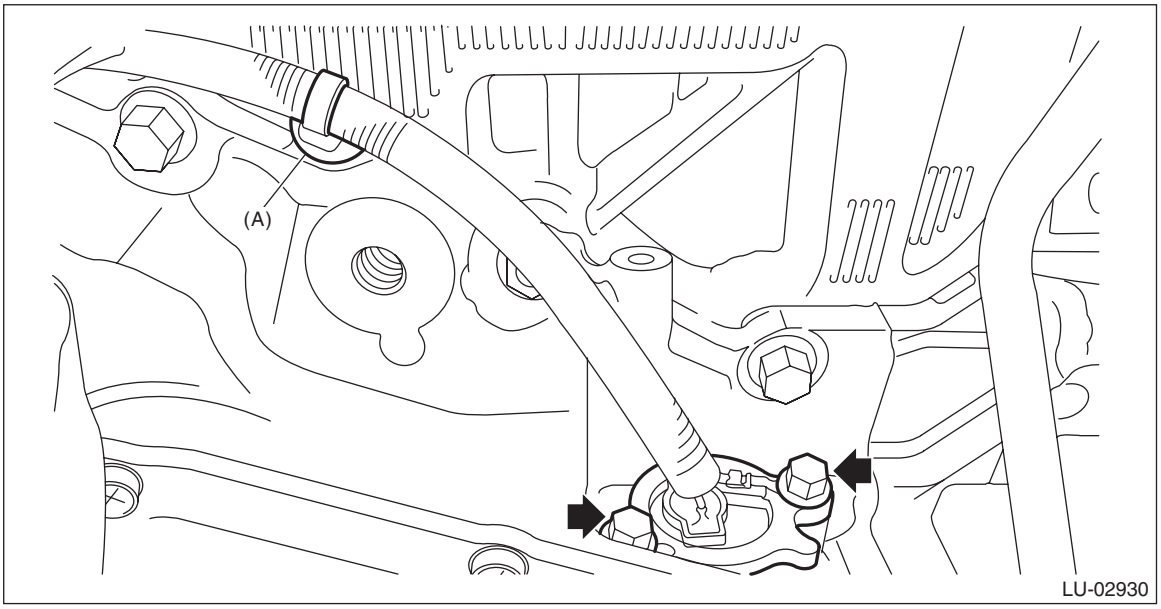

B: INSTALLATION

1) Install the oil level switch, and install the clip (A) to the oil pan upper.

NOTE:
- Use new O-rings.
- Apply a coat of engine oil to the O-rings.

Tightening torque:
6.4 N·m (0.7 kgf-m, 4.7 ft-lb)

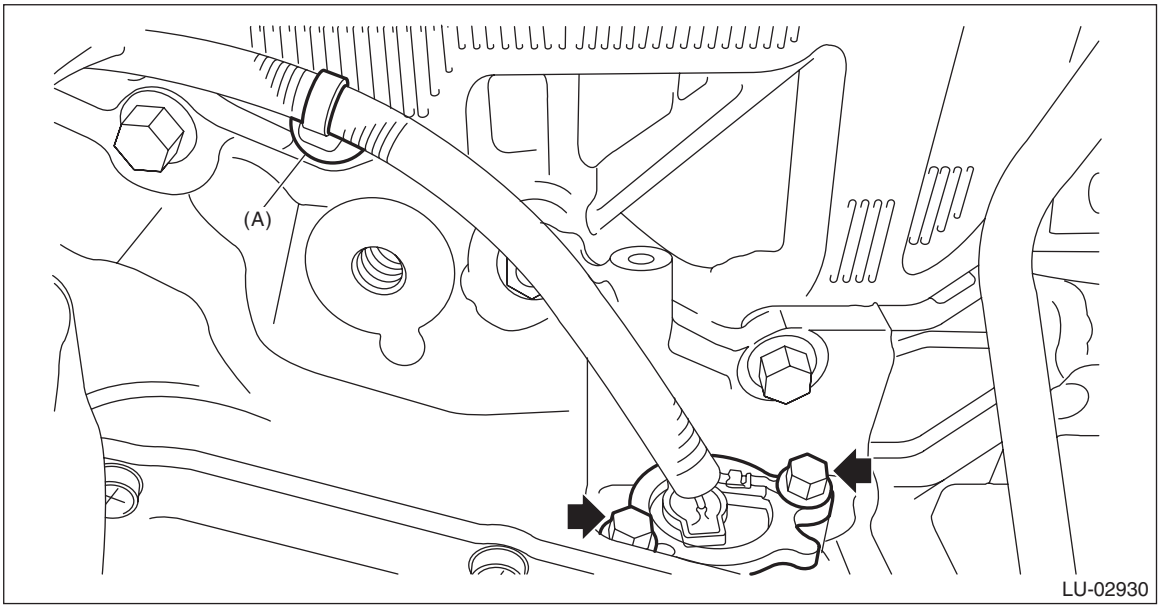

2) Attach the clip (A) securing the harness, and connect the connector of the oil level switch to the engine harness.

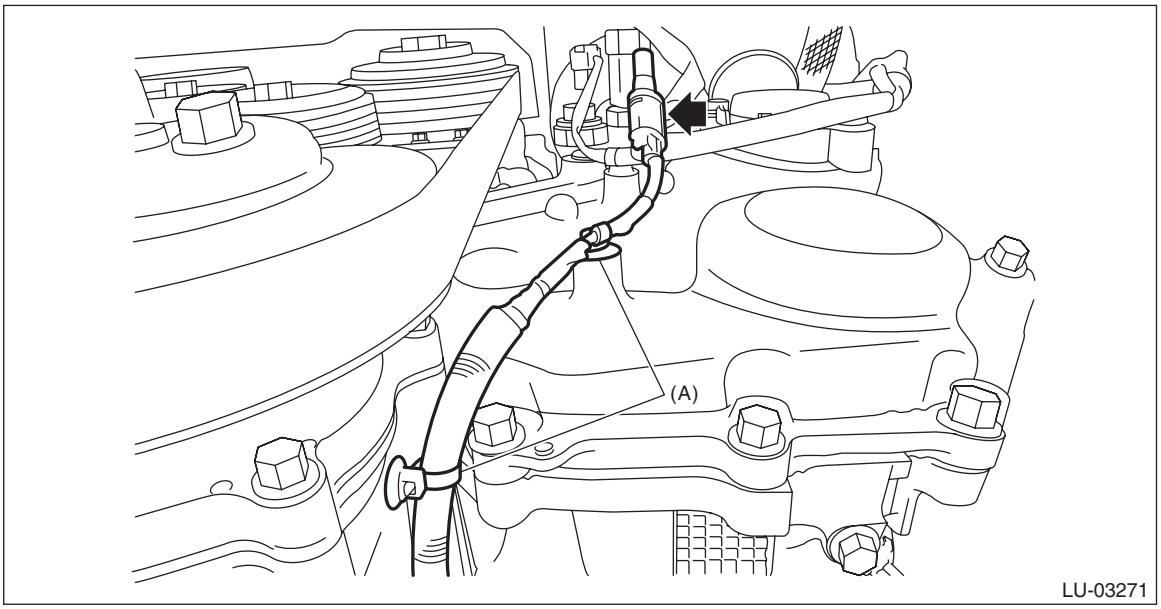

3) Install the under cover. <Ref. to EI-28, INSTALLATION, Front Under Cover.>
4) Lower the vehicle.
5) Connect the ground terminal to battery sensor. <Ref. to RC-4, BATTERY, NOTE, Repair Contents.>
6) Fill engine oil. <Ref. to LU(H4DO)-10, REPLACEMENT, Engine Oil.>

C: WIRING DIAGRAM

- Engine electrical system <Ref. to WI-170, WIRING DIAGRAM, Engine Electrical System.>
- CAN communication system <Ref. to WI-132, WIRING DIAGRAM, CAN Communication System.>

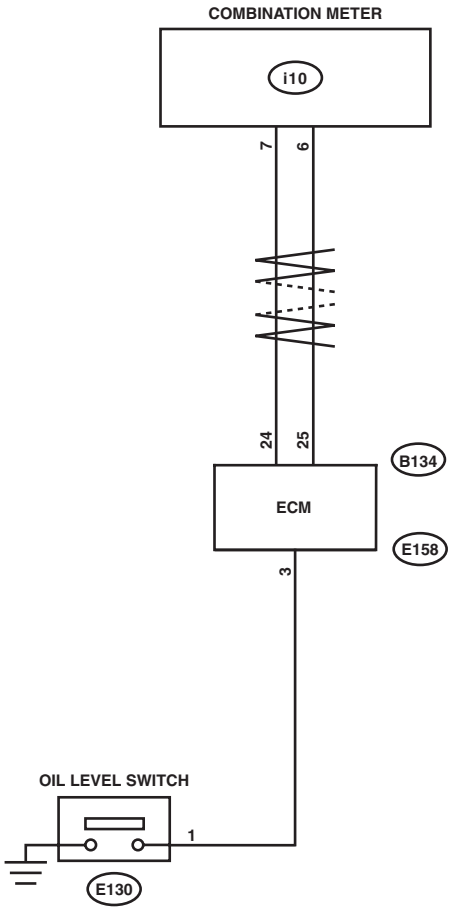

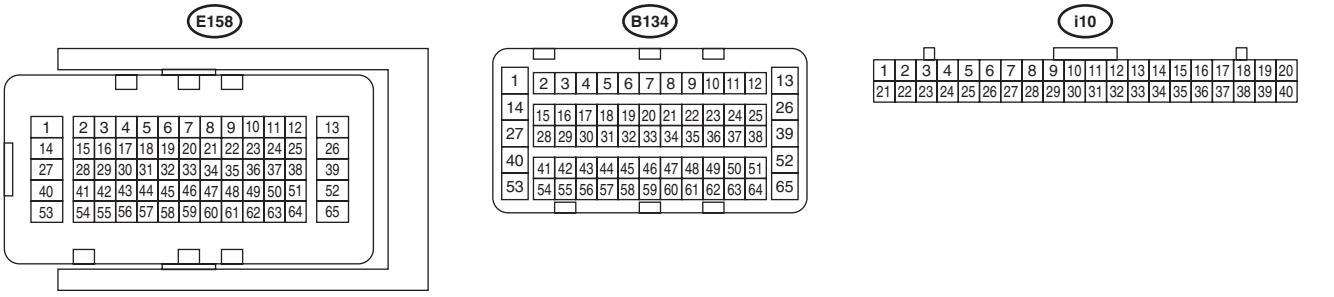

LU-03264

D: INSPECTION

1. INSPECTION WHEN LOW ENGINE OIL WARNING LIGHT ILLUMINATES ON LCD

Step		Check	Yes	No
1	**CHECK ENGINE OIL LEVEL.**	Is engine oil level normal?	Go to step **2**.	Replace engine oil or refill, and check again while the oil level is normal condition. <Ref. to LU(H4DO)-10, REPLACEMENT, Engine Oil.> To disable the low engine oil warning, install the spare fuse at the delivery mode fuse in the main fuse box. Then turn the ignition switch to ON (engine off) again, to confirm the low engine oil warning is not displayed. Remove the spare fuse installed to finish. NOTE: The engine oil level switch is normal if the low engine oil level warning is not displayed with the delivery mode fuse inserted.
2	**CHECK LAN SYSTEM.**	Has a DTC of the LAN system been input?	Perform the diagnosis according to DTC.	Go to step **3**.
3	**CHECK OIL LEVEL SWITCH CIRCUIT.** 1) Turn the ignition switch to ON (engine OFF). 2) Read the current data for engine in the Subaru Select Monitor to confirm the item for “Oil level switch”. <Ref. to EN(H4DO)(diag)-45, DISPLAY CURRENT ENGINE DATA, OPERATION, Subaru Select Monitor.>	Is the “Oil level switch” signal displayed in Subaru Select Monitor HIGH?	To disable the low engine oil warning, install the spare fuse at the delivery mode fuse in the main fuse box. Then turn the ignition switch to ON (engine off) again, to confirm the low engine oil warning is not displayed. Remove the spare fuse installed to finish. NOTE: The engine oil level switch is normal if the low engine oil level warning is not displayed with the delivery mode fuse inserted.	Go to step **4**.

	Step	Check	Yes	No
4	**CHECK COMBINATION METER.** Perform the self-diagnosis of combination meter to check if there are any faults in the combination meter. <Ref. to IDI-6, OPERATION, Combination Meter System.>	Is combination meter OK?	Go to step **5**.	Replace the combination meter. <Ref. to IDI-11, REMOVAL, Combination Meter.>
5	**CHECK SECURE CONNECTION OF CONNECTOR BETWEEN ENGINE HARNESS AND OIL LEVEL SWITCH.**	Is there any insecure connection?	Repair the connection condition. Then, to disable the low engine oil warning display, install the spare fuse at the delivery mode fuse in the main fuse box. Then turn the ignition switch to ON (engine OFF) again to confirm the low engine oil warning is not displayed. Remove the spare fuse installed to finish. NOTE: The engine oil level switch is normal if the low engine oil level warning is not displayed with the delivery mode fuse inserted.	Go to step **6**.
6	**CHECK OIL LEVEL SWITCH.** 1) Deliberately short circuits by connecting the engine harness connector terminal and chassis ground. 2) Turn the ignition switch to ON (engine OFF). 3) Read the current data for engine in the Subaru Select Monitor to confirm the item for “Oil level switch”. <Ref. to EN(H4DO)(diag)-45, DISPLAY CURRENT ENGINE DATA, OPERATION, Subaru Select Monitor.> ***Connector & terminal*** ***(E130) No. 1 — Chassis ground:***	Is the “Oil level switch” signal displayed in Subaru Select Monitor HIGH?	Replace the oil level switch. <Ref. to LU(H4DO)-24, REMOVAL, Oil Level Switch.>	Go to step **7**.

	Step	Check	Yes	No
7	**CHECK SECURE CONNECTION OF CONNECTOR BETWEEN ENGINE CONTROL MODULE (ECM) AND ENGINE HARNESS.**	Is there any insecure connection?	Repair the connection condition. Then, to disable the low engine oil warning display, install the spare fuse at the delivery mode fuse in the main fuse box. Then turn the ignition switch to ON (engine OFF) again to confirm the low engine oil warning is not displayed. Remove the spare fuse installed to finish. NOTE: The engine oil level switch is normal if the low engine oil level warning is not displayed with the delivery mode fuse inserted.	Go to step **8**.
8	**CHECK ENGINE HARNESS.** 1) Disconnect the engine control module (ECM) side connector. 2) Set the ST between the engine control module (ECM) and engine harness. <Ref. to EN(H4DO)(diag)-6, CAUTION, General Description.> 3) Disconnect the connector between the engine harness and the oil level switch. 4) Measure the resistance between connector terminals. ***Connector & terminal*** ***(B158) No. 3 — (B130) No. 1:***	Is the resistance less than 1 Ω?	Replace the engine control module (ECM). <Ref. to FU(H4DO)-82, REMOVAL, Engine Control Module (ECM).>	Repair or replace the open circuit of engine harness.

2. OTHER INSPECTIONS

1) Check that the oil level switch does not have deformation, cracks, or damage.
2) Check the oil level switch installation part for oil leakage and oil seepage.

9. Engine Lubrication System Trouble in General

A: INSPECTION

Before performing diagnostics, make sure that the engine oil level is correct and no oil leakage exists.

Trouble	Possible cause	Corrective action
Warning light remains ON.	a. Oil pressure switch failure	
	❍ Cracked diaphragm or oil leakage within switch	Replace.
	❍ Broken spring or seized contacts	Replace.
	b. Low oil pressure	
	❍ Clogging of oil filter	Replace.
	❍ Malfunction of oil by-pass valve in oil filter	Replace.
	❍ Clogged oil passage	Clean.
	❍ Excessive tip clearance and side clearance of oil pump rotor	Replace.
	❍ Clogged oil strainer or broken pipe	Clean or replace.
	c. No oil pressure	
	❍ Insufficient engine oil (degradation, etc.)	Replace.
	❍ Broken pipe of oil strainer	Replace.
	❍ Stuck oil pump rotor	Replace.
Warning light does not illuminate.	a. Malfunction of combination meter	Replace.
	b. Poor contact of switch contact points	Replace.
	c. Disconnection of wiring	Repair.
Warning light flickers momentarily.	a. Defective terminal contact	Repair.
	b. Defective wiring harness	Repair.
	c. Oil pressure switch failure	
	❍ Cracked diaphragm or oil leakage within switch	Replace.
	❍ Broken spring or seized contacts	Replace.
	d. Low oil pressure	
	❍ Clogging of oil filter	Replace.
	❍ Malfunction of oil by-pass valve in oil filter	Replace.
	❍ Clogged oil passage	Clean.
	❍ Excessive tip clearance and side clearance of oil pump rotor	Replace.
	❍ Clogged oil strainer or broken pipe	Clean or replace.

SPEED CONTROL SYSTEMS

SP(H4DO)

Page

1. General Description 2
2. Accelerator Pedal 4

1. General Description

A: SPECIFICATION

Accelerator pedal	Stroke	At pedal pad	50 — 59 mm (1.97 — 2.32 in)

B: COMPONENT

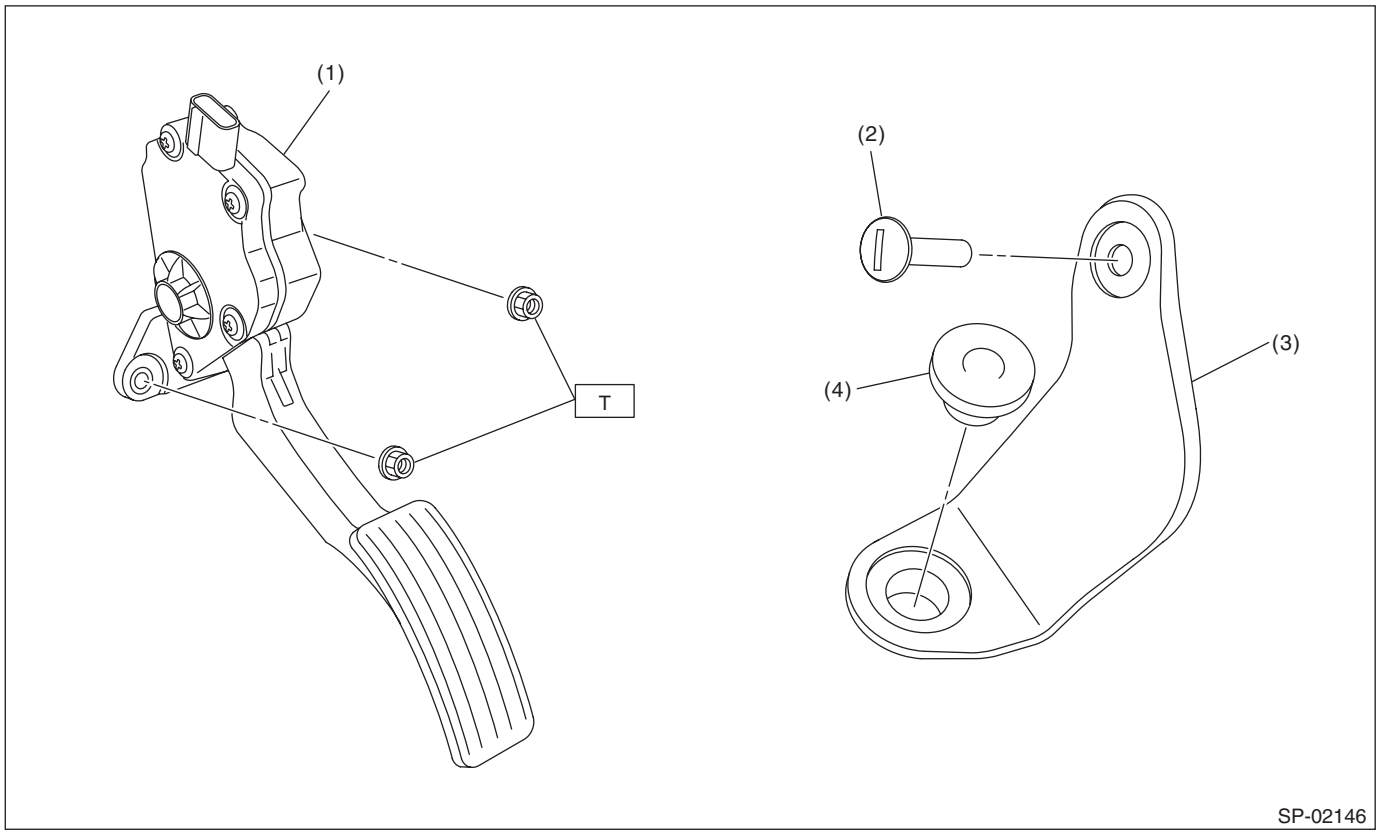

(1) Accelerator pedal ASSY
(2) Clip
(3) Accelerator plate
(4) Accelerator stopper

Tightening torque: N·m (kgf-m, ft-lb)
T: 7.5 (0.8, 5.5)

C: CAUTION

- Prior to starting work, pay special attention to the following:
  1. Always wear work clothes, a work cap, and protective shoes. Additionally, wear a helmet, protective goggles, etc. if necessary.
  2. Protect the vehicle using a seat cover, fender cover, etc.
  3. Prepare the service tools, clean cloth, containers to catch grease and oil, etc.
- Vehicle components are extremely hot immediately after driving. Be wary of receiving burns from heated parts.
- When performing a repair, identify the cause of trouble and avoid unnecessary removal, disassembly and replacement.
- Before disconnecting connectors of sensors or units, be sure to disconnect the ground cable from battery.
- Always use the jack-up point when the shop jacks or rigid racks are used to support the vehicle.
- Remove contamination including dirt and corrosion before removal, installation, disassembly or assembly.
- Keep the removed parts in order and protect them from dust and dirt.
- All removed parts, if to be reused, should be reinstalled in the original positions with attention to the correct directions, etc.
- Bolts, nuts and washers should be replaced with new parts as required.
- Be sure to tighten the fasteners including bolts and nuts to the specified torque.

D: PREPARATION TOOL

1. SPECIAL TOOL

ILLUSTRATION	TOOL NUMBER	DESCRIPTION	REMARKS
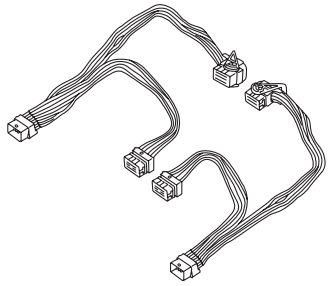 ST18460AA050	18460AA050	CHECK BOARD	Used for inspecting the accelerator pedal.
 STSSM4	— (Newly adopted tool)	SUBARU SELECT MONITOR 4	Used for setting of each function and trouble-shooting for electrical system. NOTE: For detailed operation procedures of Subaru Select Monitor 4, refer to “Application help”.

2. GENERAL TOOL

TOOL NAME	REMARKS
Circuit tester	Used for measuring resistance, voltage and current.
DST-i	Used together with Subaru Select Monitor 4.

2. Accelerator Pedal

A: REMOVAL

1) Disconnect the ground terminal from battery sensor. <Ref. to RC-4, BATTERY, NOTE, Repair Contents.>
2) Disconnect the connector (A).
3) Remove the nut (B) securing accelerator pedal assembly, and remove the accelerator pedal assembly.

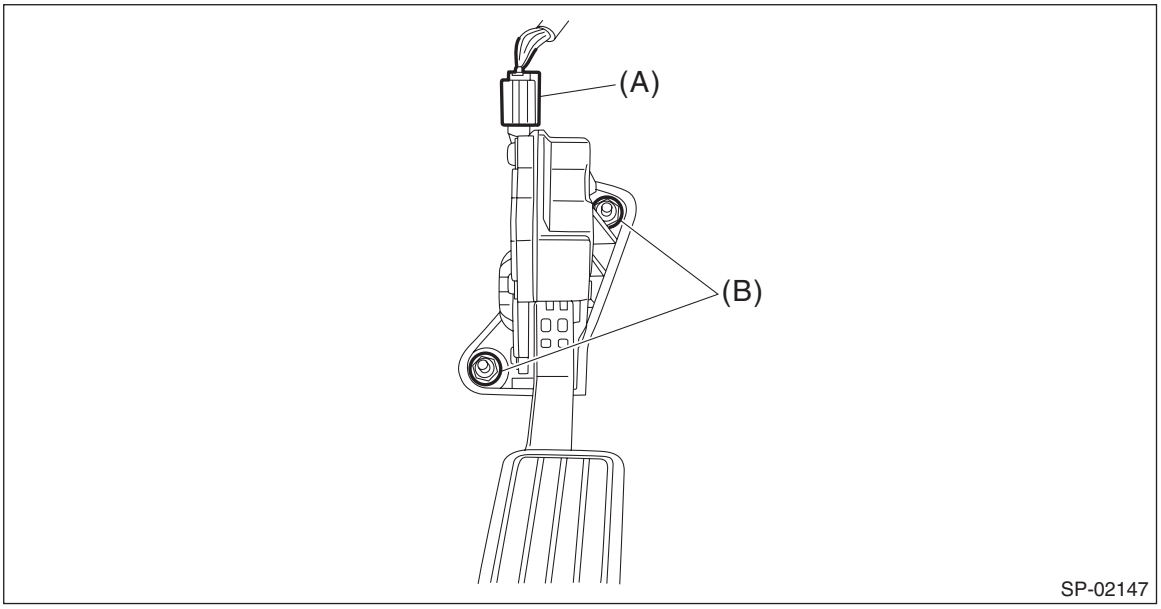

B: INSTALLATION

1) Install the accelerator pedal assembly, and connect the connector.

Tightening torque:
7.5 N·m (0.8 kgf-m, 5.5 ft-lb)
2) Connect the ground terminal to battery sensor. <Ref. to RC-4, BATTERY, NOTE, Repair Contents.>

C: DISASSEMBLY

NOTE:
The accelerator pedal cannot be disassembled.

D: INSPECTION

1. CHECK ACCELERATOR PEDAL SENSOR AREA (METHOD WITH CIRCUIT TESTER)

1) Disconnect the ground terminal from battery sensor. <Ref. to RC-4, BATTERY, NOTE, Repair Contents.>
2) Remove the ECM. <Ref. to FU(H4DO)-82, REMOVAL, Engine Control Module (ECM).> <Ref. to FU(H6DO)-83, REMOVAL, Engine Control Module (ECM).>
3) Install the ST between the ECM and bulkhead harness and the engine harness. <Ref. to EN(H4DO)(diag)-6, CAUTION, General Description.> <Ref. to EN(H6DO)(diag)-6, CAUTION, General Description.>
ST 18460AA050 CHECK BOARD
4) Connect the ground terminal to battery sensor. <Ref. to RC-4, BATTERY, NOTE, Repair Contents.>
5) Turn the ignition switch to ON. (Engine OFF)
6) Measure the voltage between ECM connector terminals using ST.

- Main sensor side

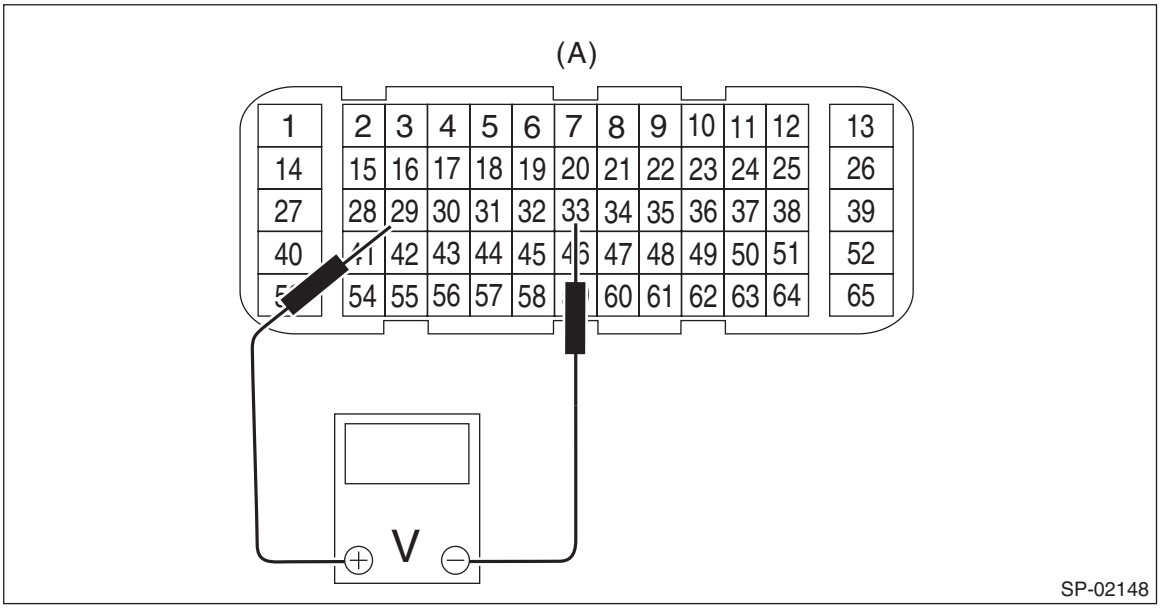

(A) To the check board connector (ECM connector)

- Sub sensor side

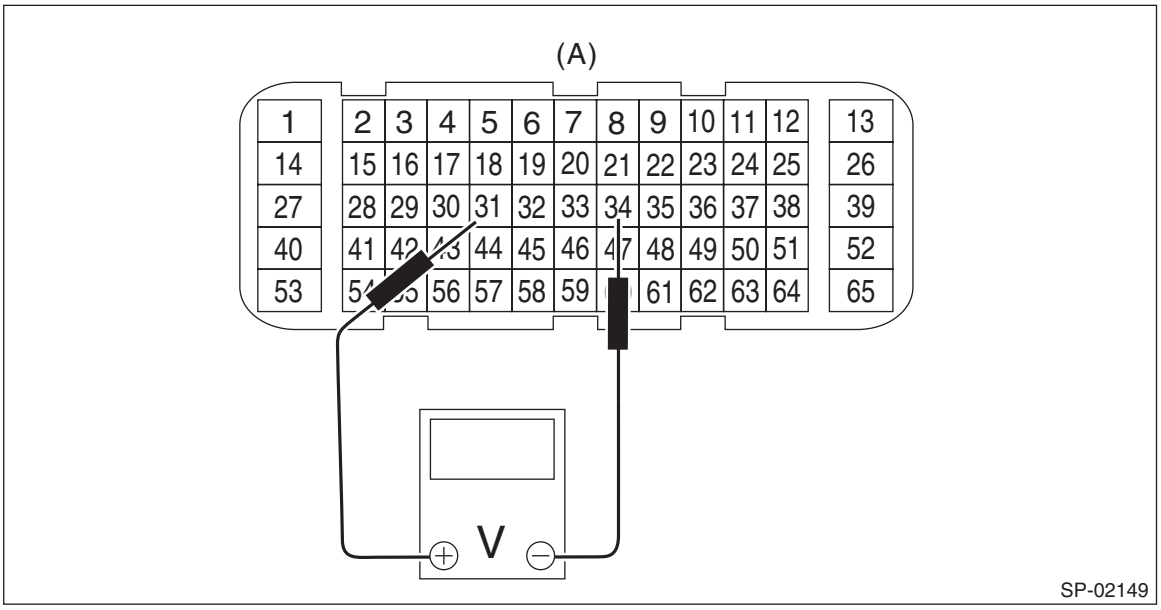

(A) To the check board connector (ECM connector)

Accelerator pedal sensor	Accelerator pedal	Terminal No.	Standard
Main	Not depressed (full closed)	29 (+) and 33 (–)	0.3 — 1.1 V
	Depressed (full opened)		2.3 — 3.8 V
Sub	Not depressed (full closed)	31 (+) and 34 (–)	0.3 — 1.1 V
	Depressed (full opened)		2.3 — 3.8 V

7) After inspection, install the related parts in the reverse order of removal.

2. CHECK ACCELERATOR PEDAL SENSOR AREA (METHOD WITH SUBARU SELECT MONITOR)

1) Turn the ignition switch to ON. (Engine OFF)
2) Read the accelerator pedal opening angle signal and voltage of accelerator pedal sensor using Subaru Select Monitor. <Ref. to EN(H4DO)(diag)-45, DISPLAY CURRENT ENGINE DATA, OPERATION, Subaru Select Monitor.> <Ref. to EN(H6DO)(diag)-50, DISPLAY CURRENT ENGINE DATA, OPERATION, Subaru Select Monitor.>

Accelerator pedal sensor	Accelerator pedal opening angle signal	Standard
Main	0.0%	0.3 — 1.1 V
	100.0%	2.3 — 3.8 V
Sub	0.0%	0.3 — 1.1 V
	100.0%	2.3 — 3.8 V

3. OTHER INSPECTIONS

1) Check that the accelerator pedal does not have deformation, cracks or damage.
2) Check for smooth operation when the accelerator pedal is depressed.
3) Check if the accelerator pedal returns to its original position smoothly when the pedal is released.

IGNITION

IG(H4DO)

Page

1. General Description 2
2. Spark Plug 4
3. Ignition Coil 10

1. General Description

A: SPECIFICATION

Item			Specifications
Ignition coil	Type		FK0463
	Ignition system		Independent ignition coil
	Manufacturer		Diamond Electric
Spark plug	Manufacturer and type		NGK: SILZKAR7B11
	Thread size (diameter, pitch, length) mm		12, 1.25, 26.5
	Spark plug gap mm (in)	Standard	1.0 — 1.1 (0.039 — 0.043)
	Electrode		Iridium

B: COMPONENT

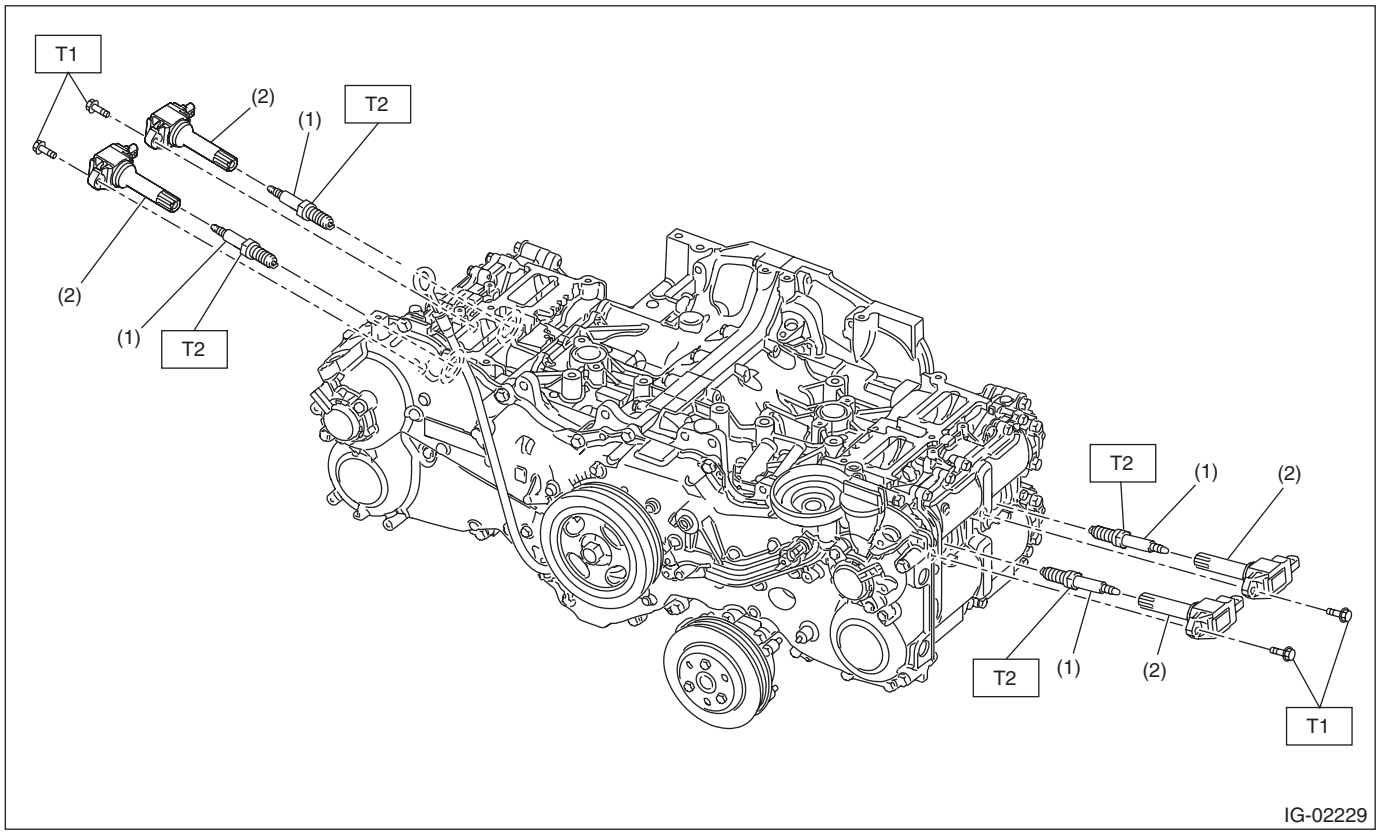

(1) Spark plug
(2) Ignition coil

Tightening torque: N·m (kgf-m, ft-lb)
T1: 8.0 (0.8, 5.9)
T2: 18 (1.8, 13.3)

C: CAUTION

- Prior to starting work, pay special attention to the following:
  1. Always wear work clothes, a work cap, and protective shoes. Additionally, wear a helmet, protective goggles, etc. if necessary.
  2. Protect the vehicle using a seat cover, fender cover, etc.
  3. Prepare the service tools, clean cloth, containers to catch grease and oil, etc.
- Vehicle components are extremely hot immediately after driving. Be wary of receiving burns from heated parts.
- When performing a repair, identify the cause of trouble and avoid unnecessary removal, disassembly and replacement.
- Before disconnecting connectors of sensors or units, be sure to disconnect the ground cable from battery.
- Always use the jack-up point when the shop jacks or rigid racks are used to support the vehicle.
- Remove contamination including dirt and corrosion before removal, installation, disassembly or assembly.
- Keep the removed parts in order and protect them from dust and dirt.
- All removed parts, if to be reused, should be reinstalled in the original positions with attention to the correct directions, etc.
- Bolts, nuts and washers should be replaced with new parts as required.
- Be sure to tighten the fasteners including bolts and nuts to the specified torque.

2. Spark Plug

A: REMOVAL

Spark plug:

Refer to "SPECIFICATION" for spark plug. <Ref. to IG(H4DO)-2, SPECIFICATION, General Description.>

1. RH SIDE

1) Disconnect the ground terminal from battery sensor. <Ref. to RC-4, BATTERY, NOTE, Repair Contents.>
2) Remove the air cleaner element and the air cleaner case (rear). <Ref. to IN(H4DO)-4, REMOVAL, Air Cleaner Element.>
3) Disconnect the connector from ignition coil.

NOTE:
While pressing the spring (a) shown in the figure, slide it in the direction of the arrow with a clip remover.

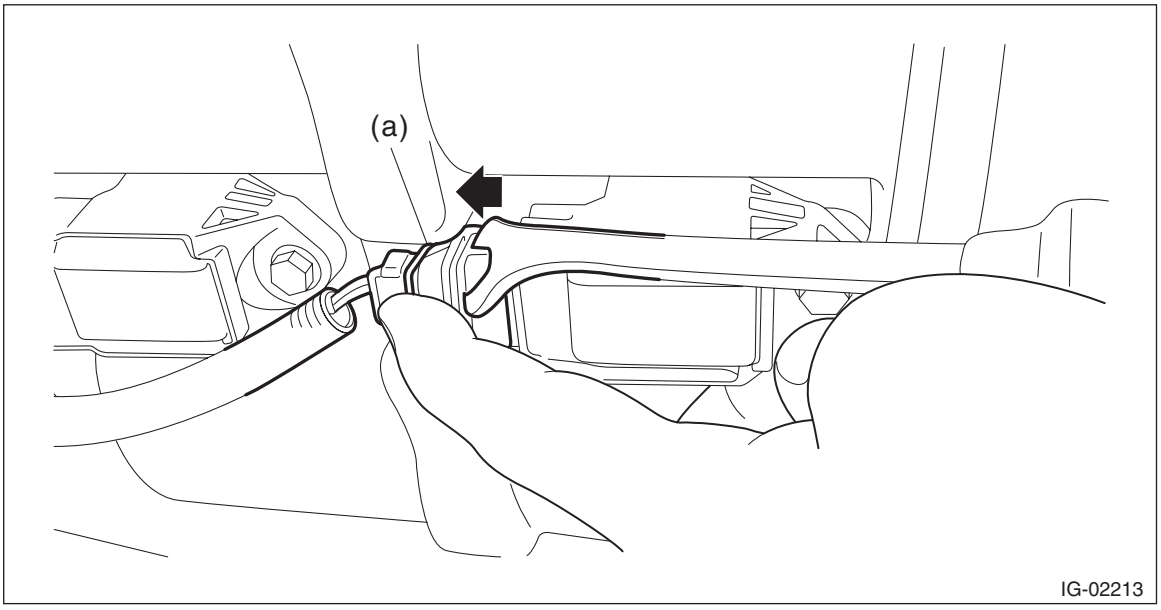

4) Remove the ignition coil.

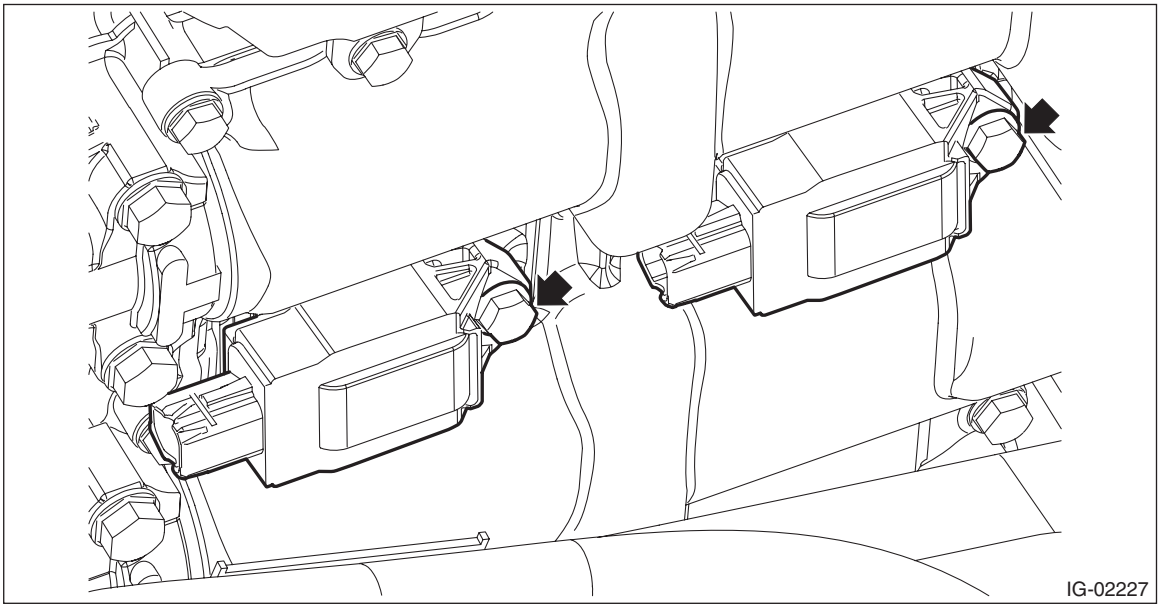

5) Remove the spark plug with a spark plug socket.

2. LH SIDE

1) Remove the battery. <Ref. to SC(H4DO)-63, REMOVAL, Battery.>
2) Disconnect the connector from ignition coil.

NOTE:
While pressing the spring (a) shown in the figure, slide it in the direction of the arrow with a clip remover.

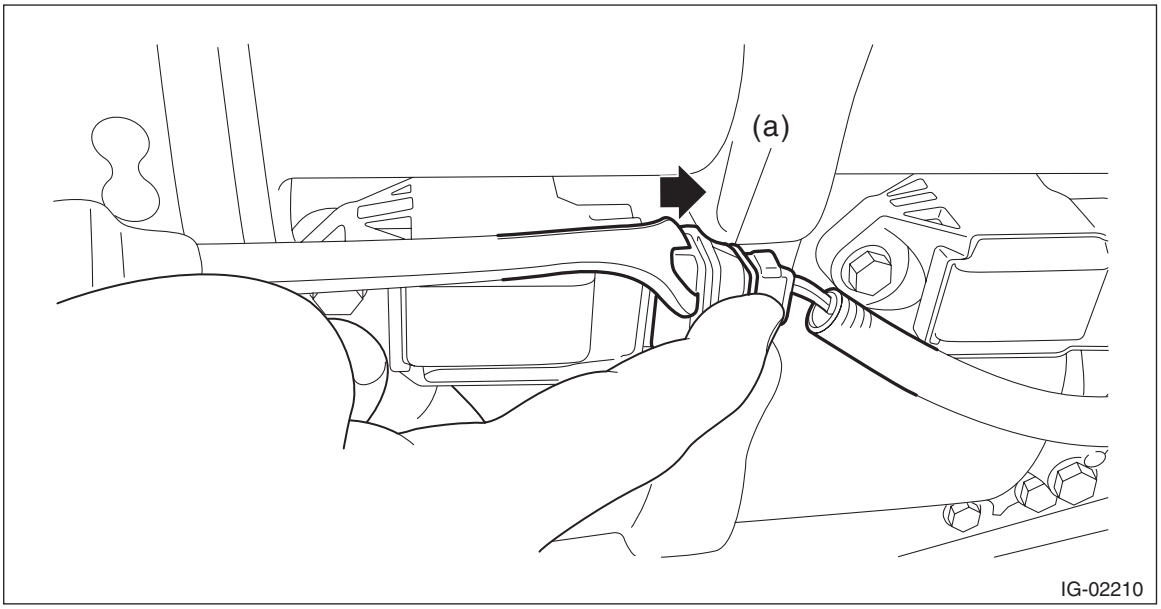

3) Remove the ignition coil.

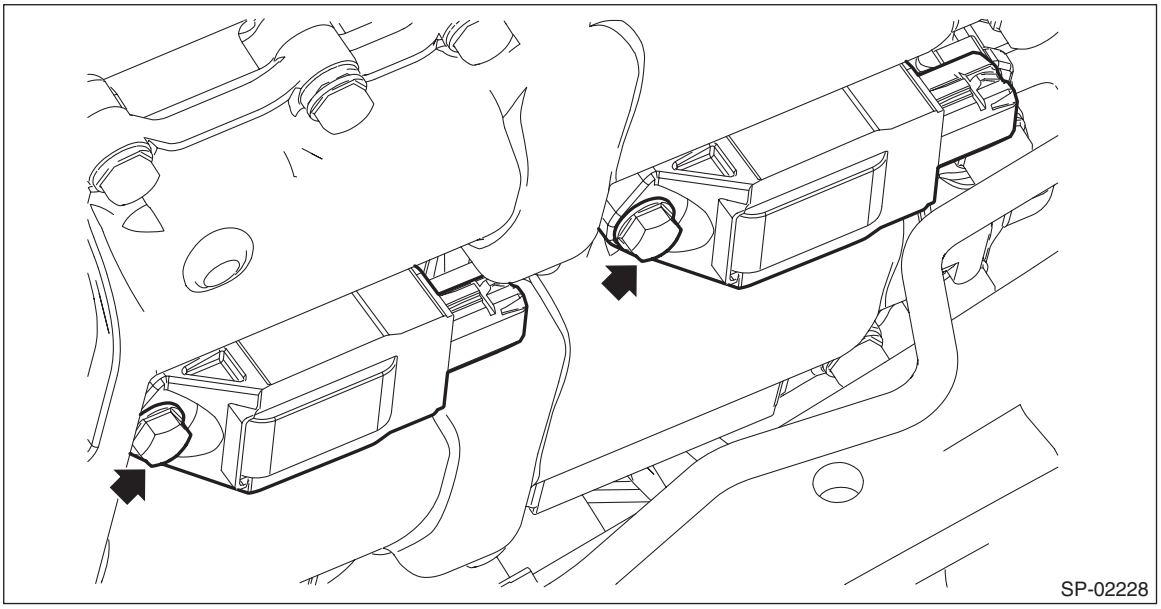

4) Remove the spark plug with a spark plug socket.

B: INSTALLATION

1. RH SIDE

1) Install the spark plugs using a spark plug socket.

Tightening torque:
18 N·m (1.8 kgf-m, 13.3 ft-lb)

2) Install the ignition coil.

CAUTION:
Degrease the ignition coil fixing portion and the ignition coil mounting bolt.

Tightening torque:
8.0 N·m (0.8 kgf-m, 5.9 ft-lb)

3) Connect the connector to the ignition coil.
4) Install the air cleaner element and air cleaner case (rear). <Ref. to IN(H4DO)-6, INSTALLATION, Air Cleaner Element.>
5) Connect the ground terminal to battery sensor. <Ref. to RC-4, BATTERY, NOTE, Repair Contents.>

2. LH SIDE

1) Install the spark plugs using a spark plug socket.

Tightening torque:
18 N·m (1.8 kgf-m, 13.3 ft-lb)

2) Install the ignition coil.

CAUTION:
Degrease the ignition coil fixing portion and the ignition coil mounting bolt.

Tightening torque:
8.0 N·m (0.8 kgf-m, 5.9 ft-lb)

3) Connect the connector to the ignition coil.
4) Install the battery. <Ref. to SC(H4DO)-64, INSTALLATION, Battery.>

C: INSPECTION

1) Check the spark plug for abnormalities. If defective, replace the spark plug.

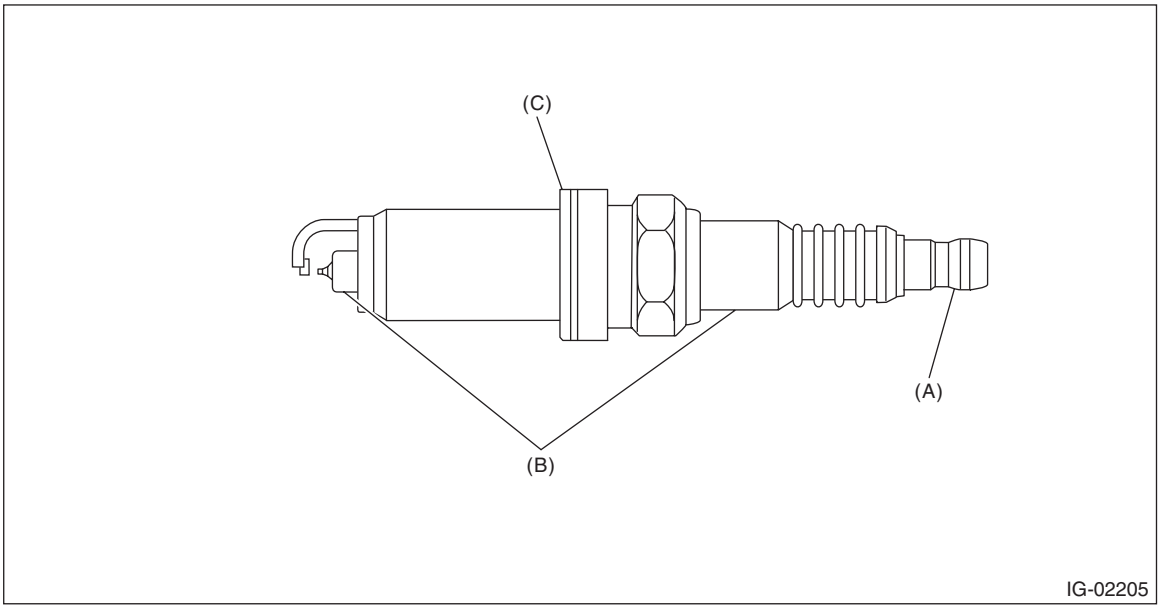

(A) Terminal damage (B) Crack or damage in insulator (C) Damaged gasket

2) Check the spark plug electrode and condition of the insulator. If abnormal, check and repair the cause and replace the spark plug.

(1) Normal:

Brown to grayish-tan deposits and slight electrode wear indicate correct spark plug heat range.

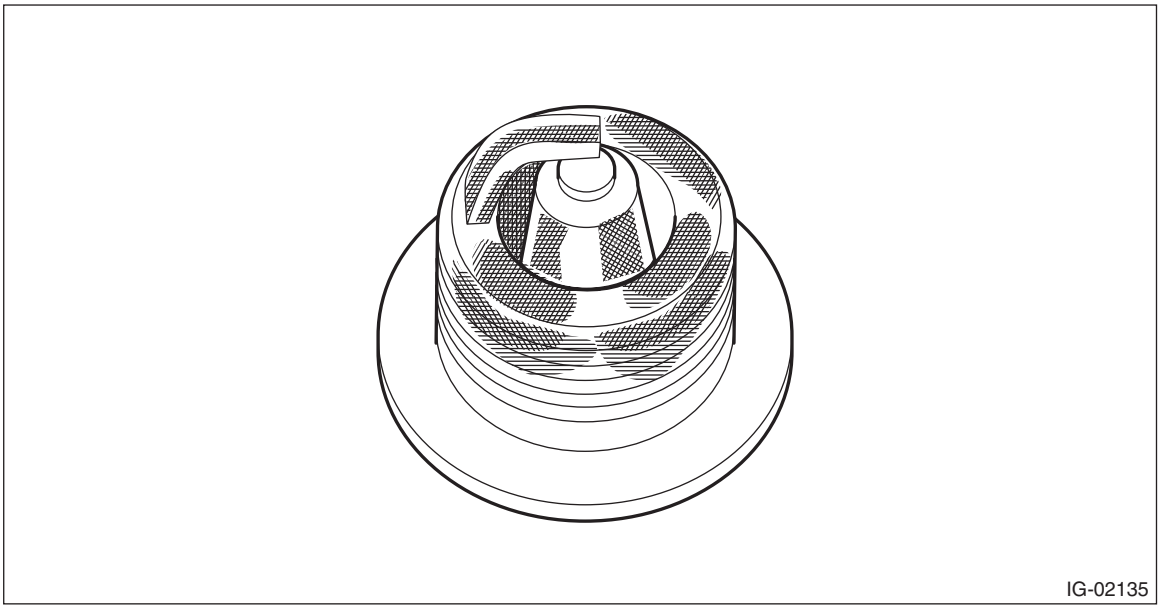

(2) Carbon fouled:

Dry fluffy carbon deposits on the insulator and electrode are mostly caused by slow-speed driving in town, weak ignition, too rich fuel mixture, etc.

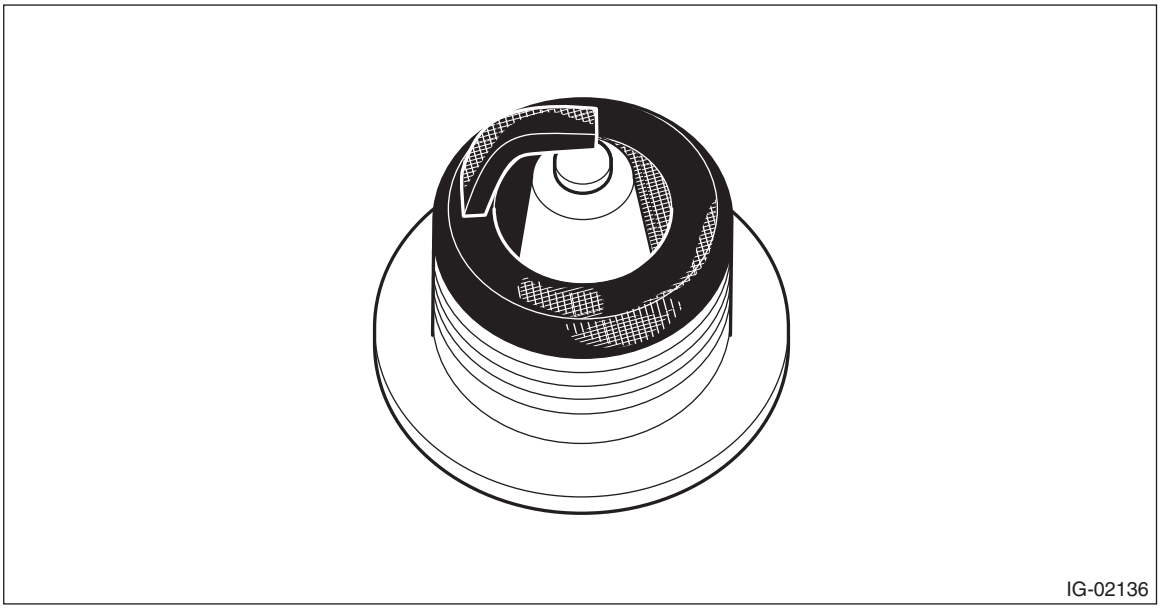

(3) Oil fouled:
Wet black deposits show oil entrance into combustion chamber through worn piston rings or increased clearance between valve guides and valve stems.

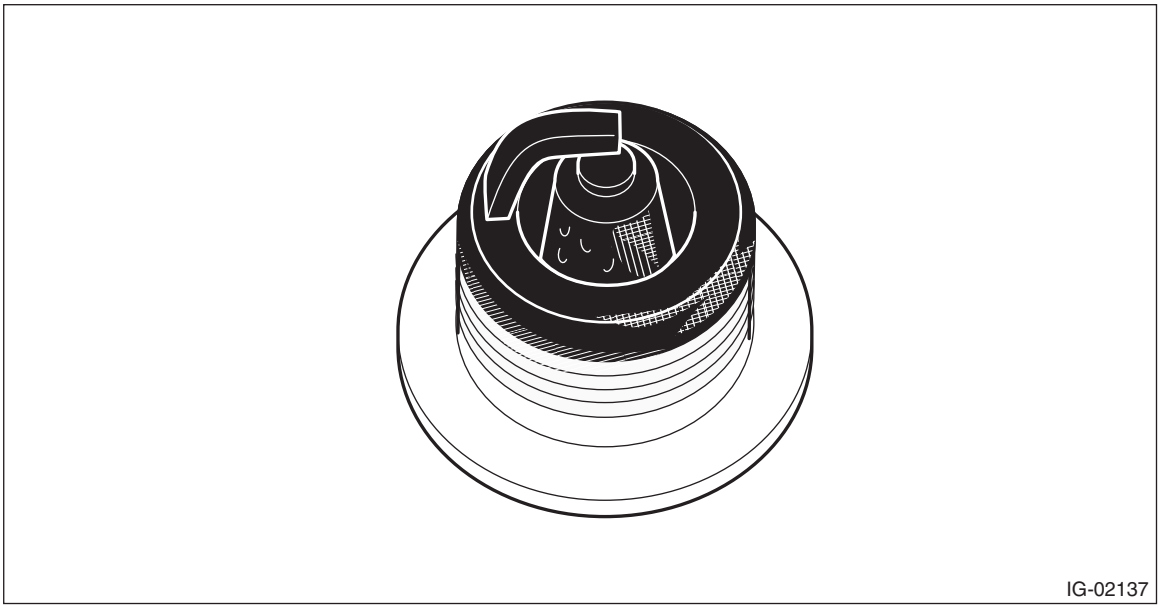

(4) Overheating:
A white or light gray insulator with black or brown spots and bluish burnt electrodes indicate engine overheating, wrong selection of fuel, or loose spark plugs.

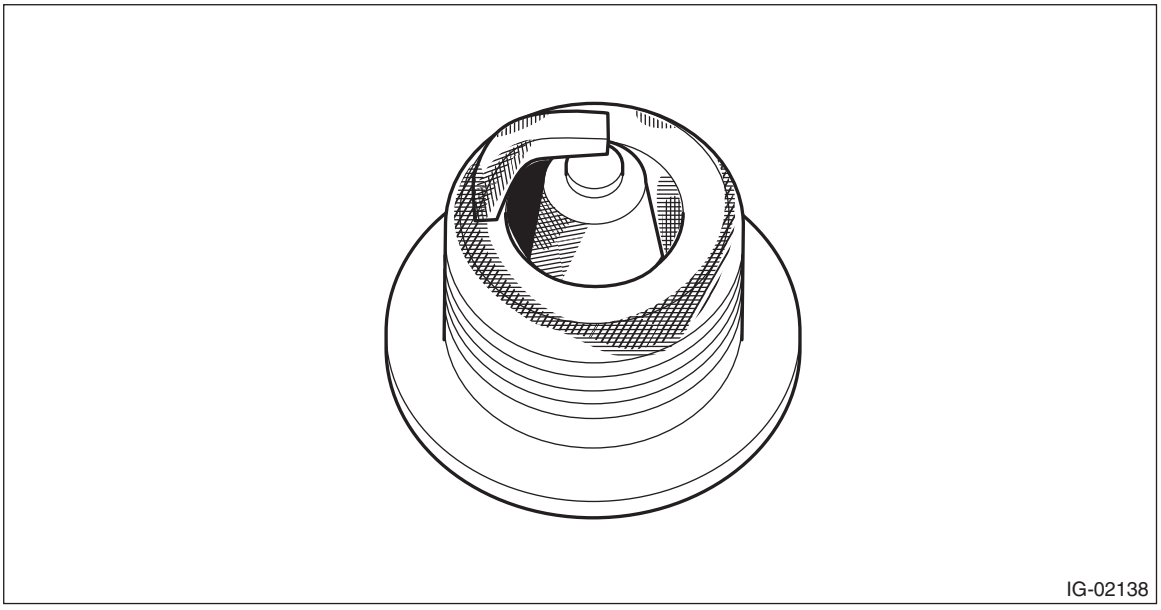

3) Using a nylon brush, etc., clean and remove the carbon or oxide deposits from the spark plug. If deposits are too stubborn, replace the spark plugs. After cleaning the spark plugs, check the spark plug gap “L” using a gap gauge. If it is not within the standard, replace the spark plug.

NOTE:
- Never use a plug cleaner.
- Do not use a metal brush as it may damage the electrode area.

Spark plug gap L:
Standard
1.0 — 1.1 mm (0.039 — 0.043 in)

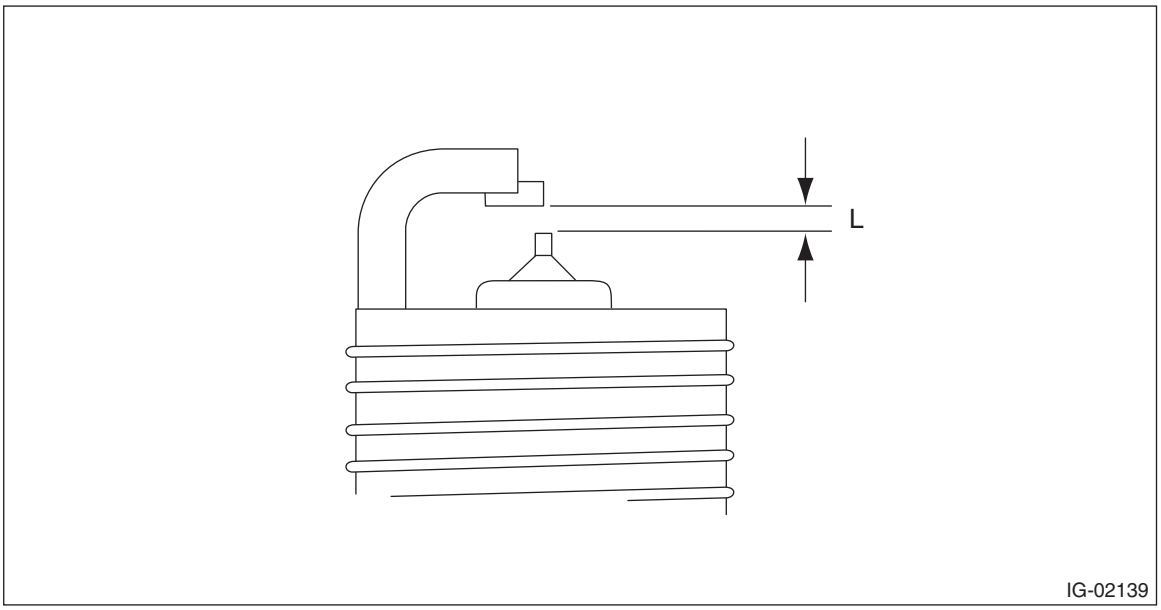

3. Ignition Coil

A: REMOVAL

Direct ignition type is adopted. Refer to “Spark Plug” for removal procedure. <Ref. to IG(H4DO)-4, REMOVAL, Spark Plug.>

B: INSTALLATION

Direct ignition type is adopted. Refer to “Spark Plug” for the installation procedure. <Ref. to IG(H4DO)-6, INSTALLATION, Spark Plug.>

C: INSPECTION

For inspection procedure, refer to “Diagnostics for Engine Starting Failure”. <Ref. to EN(H4DO)(diag)-96, IGNITION CONTROL SYSTEM, Diagnostics for Engine Starting Failure.>

STARTING/CHARGING SYSTEMS

SC(H4DO)

Page

1. General Description 2
2. Starter 7
3. Starter Relay 36
4. Generator 38
5. Battery 63
6. Battery Sensor 72

1. General Description

A: SPECIFICATION

Item			Specifications	
Vehicle model			CVT	MT
Starter	Type		Reduction type	
	Model		M000T38571ZC	M000T33176ZC
	Manufacturer		Mitsubishi Electric	
	Voltage and output		12 V — 1.2 kW	12 V — 1.0 kW
	Direction of rotation		Counterclockwise (when observed from pinion)	
	Number of pinion teeth		9	8
	Armature commutator runout	Standard	0.05 mm (0.0020 in)	
		Limit	0.10 mm (0.0039 in)	
	Armature depth of segment mold	Standard	0.5 mm (0.020 in)	
	Brush length	Standard	12.3 mm (0.484 in)	
		Limit	7.0 mm (0.276 in)	
	Brush spring force	Standard	15.9 — 19.5 N (1.62 — 1.99 kgf, 3.57 — 4.38 lbf)	
		Limit	2.5 N (0.25 kgf, 0.56 lbf)	
	No-load characteristics	Voltage	11 V	
		Current	90 A or less	95 A or less
Generator	Type		Rotating-field three-phase type, voltage regulator built-in type, with load response control system	
	Model		A2TX3382AC	
	Manufacturer		Mitsubishi Electric	
	Voltage and output		12 V — 130 A	
	Polarity on ground side		Negative	
	Direction of rotation		Clockwise (when observed from pulley side)	
	Stator connection		3-phase △ type	
	Output current		1,500 r/min — 50 A or more 2,500 r/min — 111 A or more 5,000 r/min — 133 A or more	
	Regulated voltage		14.1 — 14.8 V [20°C (68°F)]	
	Rotor slip ring outer diameter	Standard	22.7 mm (0.894 in)	
		Limit	22.1 mm (0.870 in)	
	Brush length	Standard	22.5 mm (0.886 in)	
		Limit	5.0 mm (0.197 in)	
Battery	Type and capacity		12 V — 48 AH (55D23R)	
	CCA		356 A	

B: COMPONENT

1. STARTER

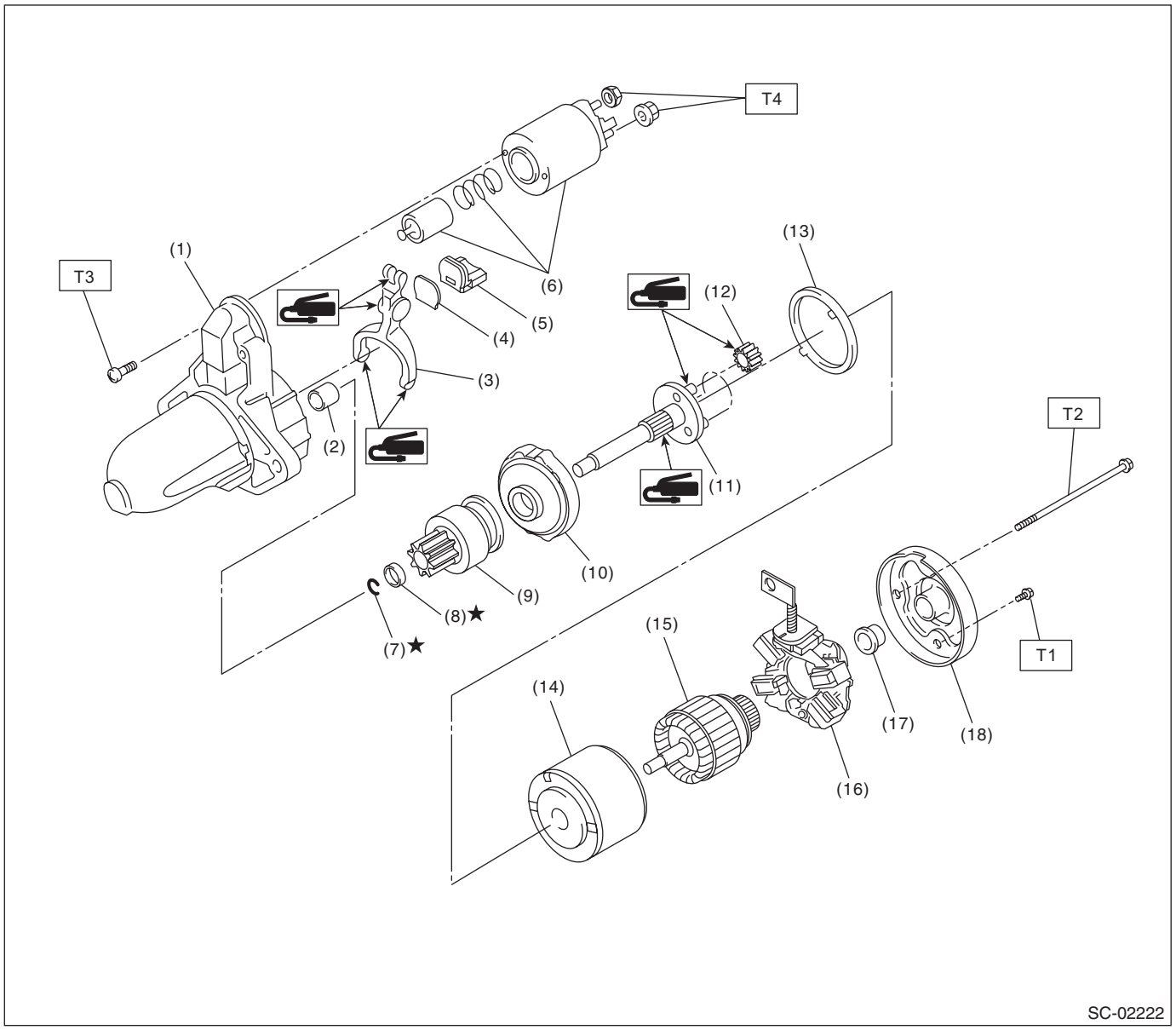

(1)	Starter housing ASSY	(9)	Overrunning clutch	(17)	Sleeve bearing
(2)	Sleeve bearing	(10)	Internal gear ASSY	(18)	Starter cover ASSY
(3)	Shift lever	(11)	Shaft		
(4)	Plate	(12)	Pinion gear	***Tightening torque: N·m (kgf-m, ft-lb)***	
(5)	Seal rubber	(13)	Seal rubber	***T1:***	***1.4 (0.1, 1.0)***
(6)	Magnet switch ASSY	(14)	Yoke ASSY	***T2:***	***6 (0.6, 4.4)***
(7)	Snap ring	(15)	Armature ASSY	***T3:***	***7.5 (0.8, 5.5)***
(8)	Stopper	(16)	Brush holder ASSY	***T4:***	***10 (1.0, 7.4)***

2. GENERATOR

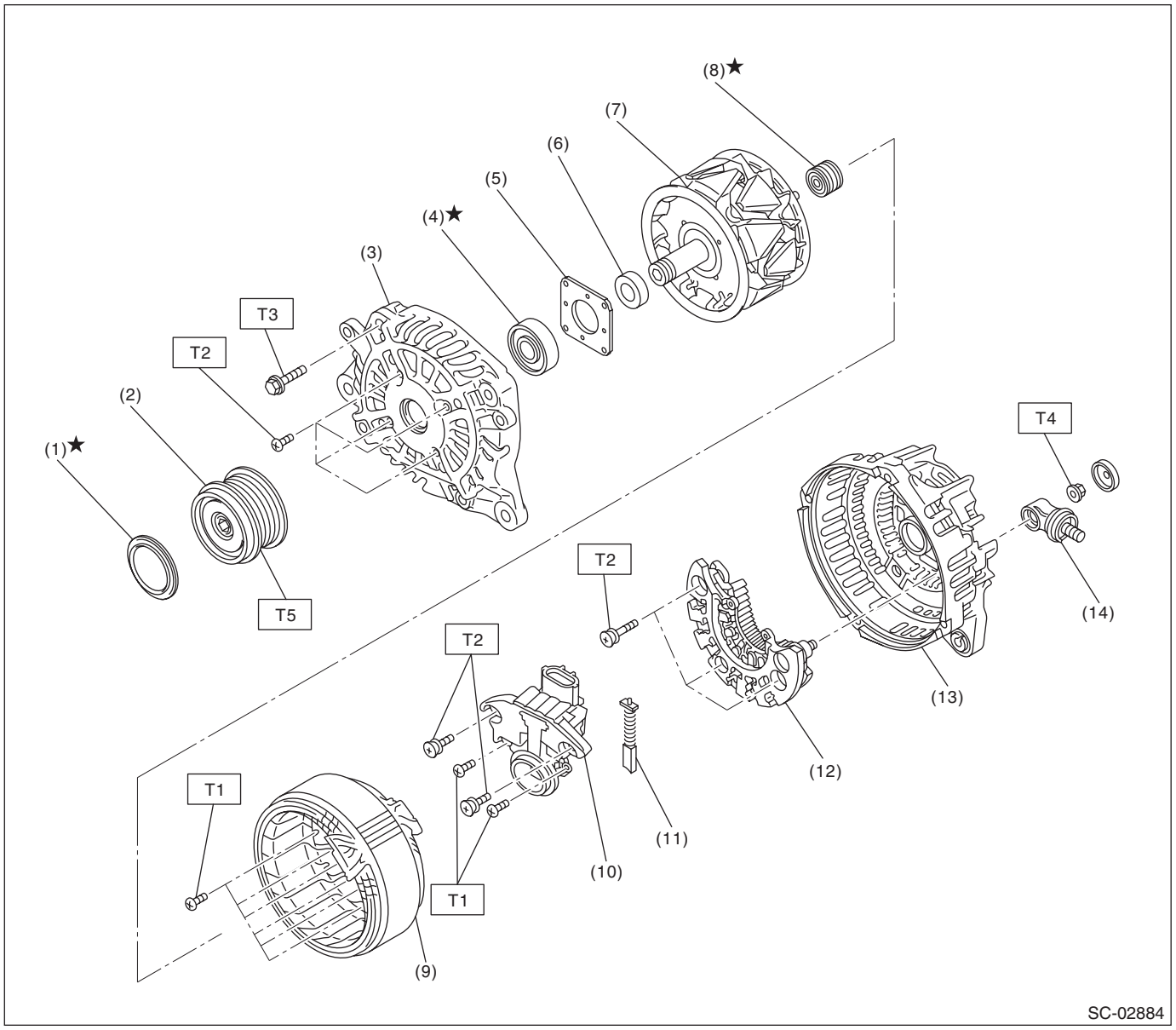

(1)	Cap	(8)	Bearing
(2)	Pulley	(9)	Stator coil
(3)	Front cover	(10)	IC regulator
(4)	Ball bearing	(11)	Brush
(5)	Bearing retainer	(12)	Rectifier
(6)	Spacer	(13)	Rear cover
(7)	Rotor	(14)	Terminal B

Tightening torque: N·m (kgf-m, ft-lb)
T1: 2 (0.2, 1.5)
T2: 3.9 (0.4, 2.9)
T3: 4.4 (0.4, 3.2)
T4: 8.9 (0.9, 6.6)
T5: 108 (11.0, 79.8)

3. GENERATOR BRACKET

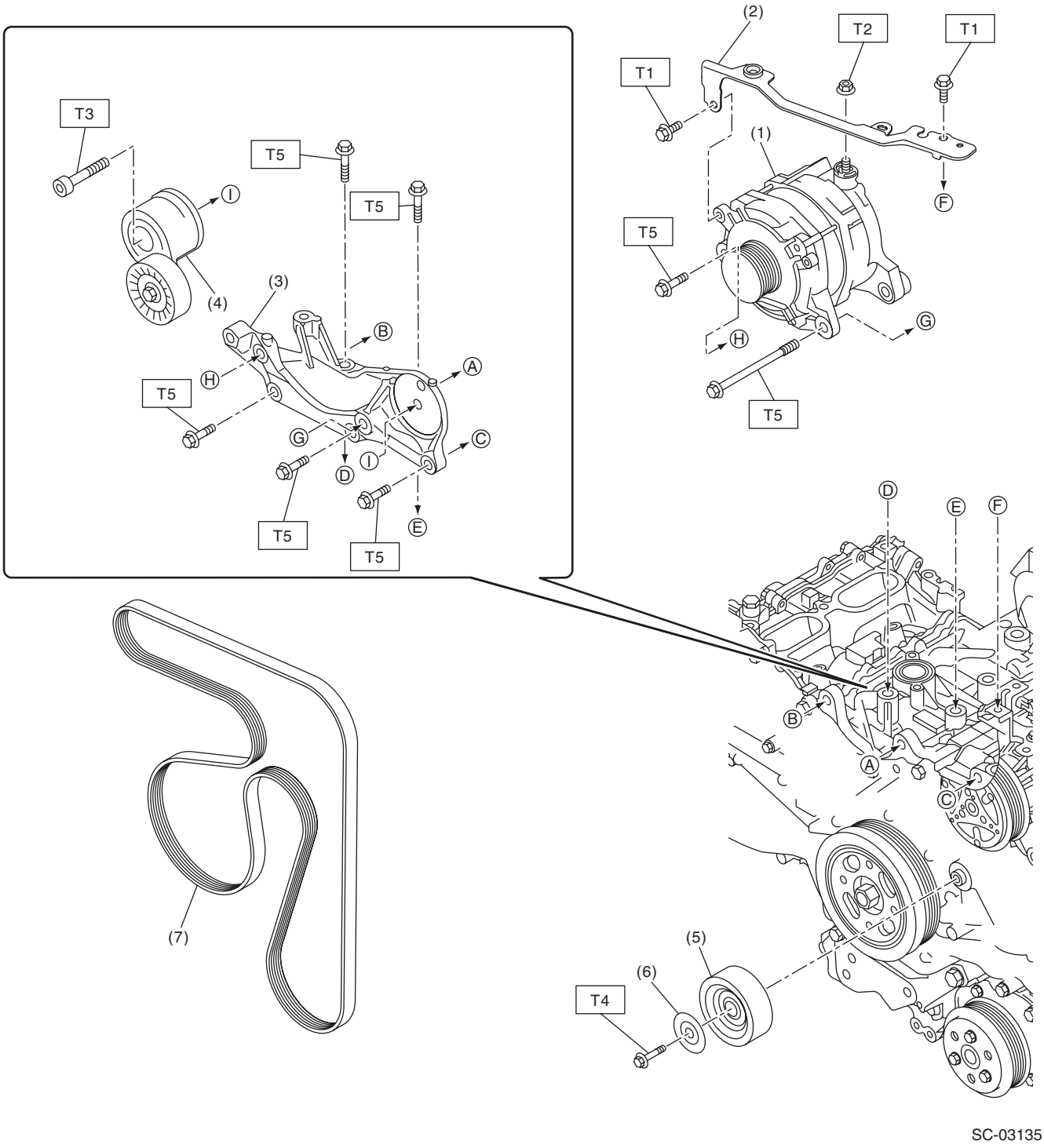

SC-03135

(1) Generator
(2) V-belt cover bracket
(3) Generator bracket
(4) V-belt tensioner ASSY
(5) Idler pulley
(6) Idler pulley cover
(7) V-belt

Tightening torque: N·m (kgf-m, ft-lb)
T1: 6.4 (0.7, 4.7)
T2: 15 (1.5, 11.1)
T3: 25 (2.5, 18.4)
T4: 36 (3.7, 26.6)
T5: <Ref. to SC(H4DO)-40, INSTALLATION, Generator.>

4. BATTERY SENSOR

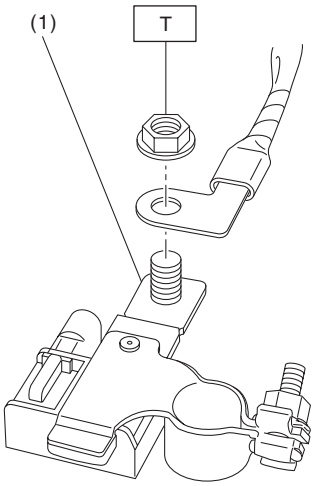

SC-03067

(1) Battery sensor

Tightening torque: N·m (kgf-m, ft-lb)
T: 7.5 (0.8, 5.5)

C: CAUTION

- Prior to starting work, pay special attention to the following:
  1. Always wear work clothes, a work cap, and protective shoes. Additionally, wear a helmet, protective goggles, etc. if necessary.
  2. Protect the vehicle using a seat cover, fender cover, etc.
  3. Prepare the service tools, clean cloth, containers to catch grease and oil, etc.
- Vehicle components are extremely hot immediately after driving. Be wary of receiving burns from heated parts.
- When performing a repair, identify the cause of trouble and avoid unnecessary removal, disassembly and replacement.
- Before disconnecting connectors of sensors or units, be sure to disconnect the ground cable from battery.
- Always use the jack-up point when the shop jacks or rigid racks are used to support the vehicle.
- Remove contamination including dirt and corrosion before removal, installation, disassembly or assembly.
- Keep the removed parts in order and protect them from dust and dirt.
- All removed parts, if to be reused, should be reinstalled in the original positions with attention to the correct directions, etc.
- Bolts, nuts and washers should be replaced with new parts as required.
- Be sure to tighten the fasteners including bolts and nuts to the specified torque.

D: PREPARATION TOOL

1. GENERAL TOOL

TOOL NAME	REMARKS
Circuit tester	Used for measuring resistance, voltage and current. NOTE: • When measuring the standby current, prepare a circuit tester which can measure down to 1 mA. • When measuring the standby current for models with keyless access function, prepare an analog type.

2. Starter

A: REMOVAL

1) Disconnect the ground terminal from battery sensor. <Ref. to RC-4, BATTERY, NOTE, Repair Contents.>
2) Remove the clip (A), and loosen the clamps (B) and (C) securing the air intake boot.

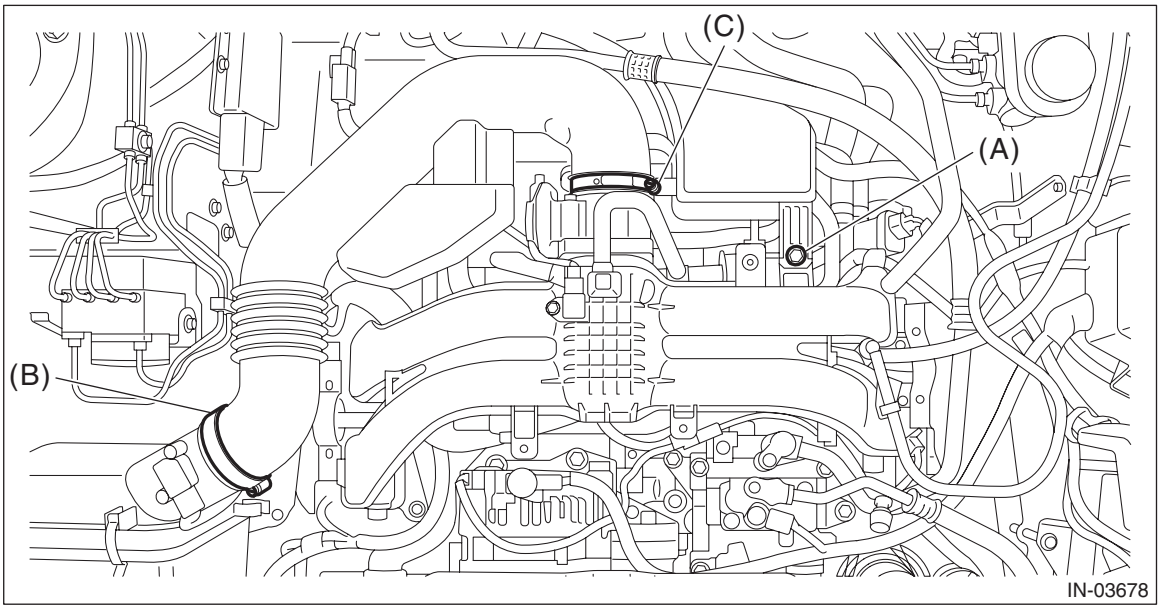

3) Remove the air intake boot from the air cleaner case (rear) and throttle body, and move it to the left side wheel apron.

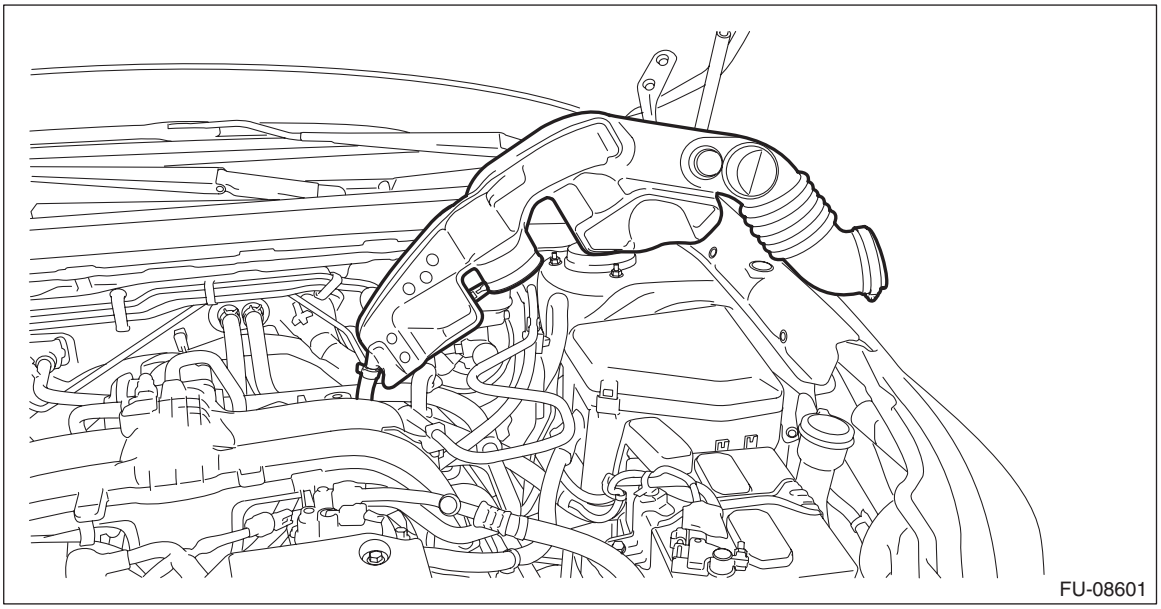

4) Disconnect the connector (A) from the starter, and remove the terminal (B).

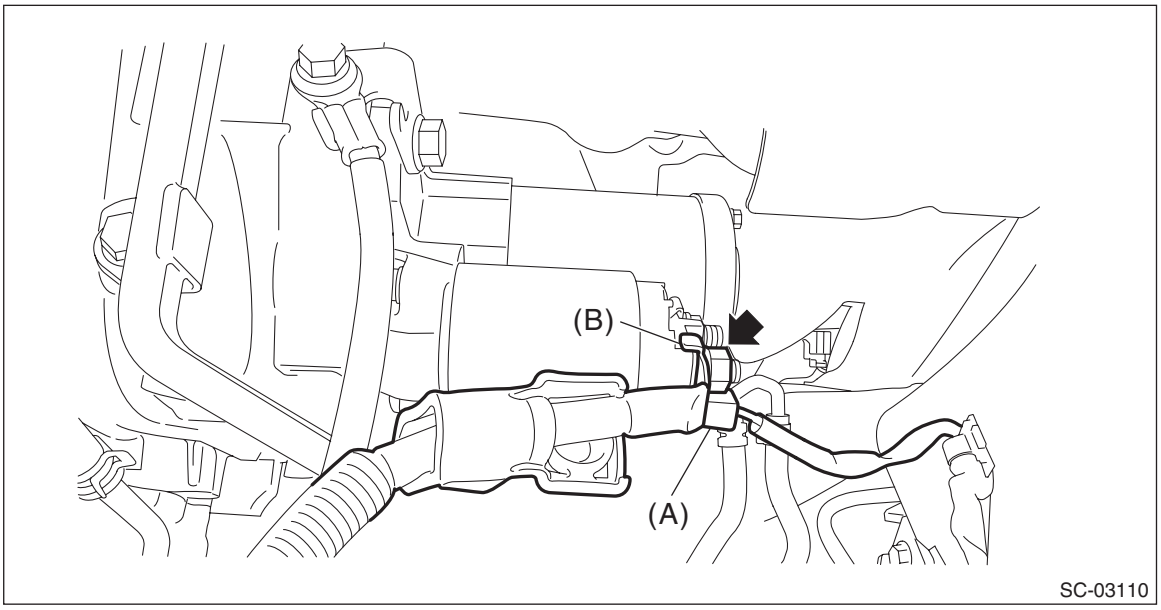

5) Remove the bolts or nuts securing the starter, and remove the starter from the transmission.

NOTE:
For the MT model, a bolt is used at (a).

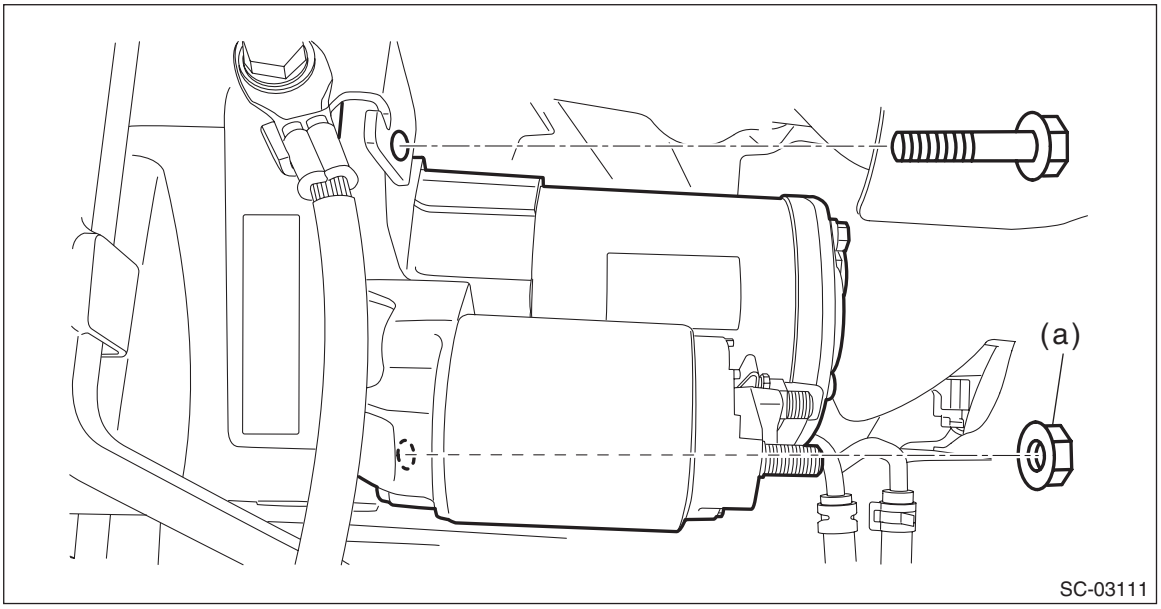

B: INSTALLATION

1) Install the starter to the transmission, and install the bolts or nuts securing the starter.

NOTE:
- For the MT model, a bolt is used at (a).
- Tighten the starter and bracket (b) together using the upper bolt securing the starter.

Tightening torque:
50 N·m (5.1 kgf-m, 36.9 ft-lb)

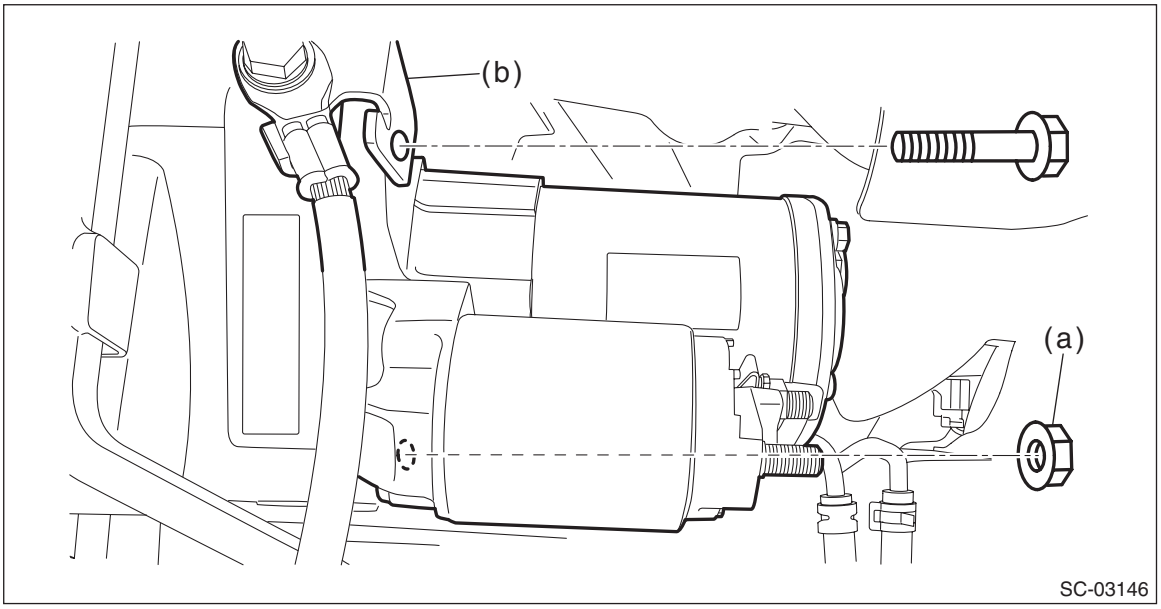

2) Install the terminal (B) to the starter, and connect the connector (A).

Tightening torque:
10 N·m (1.0 kgf-m, 7.4 ft-lb)

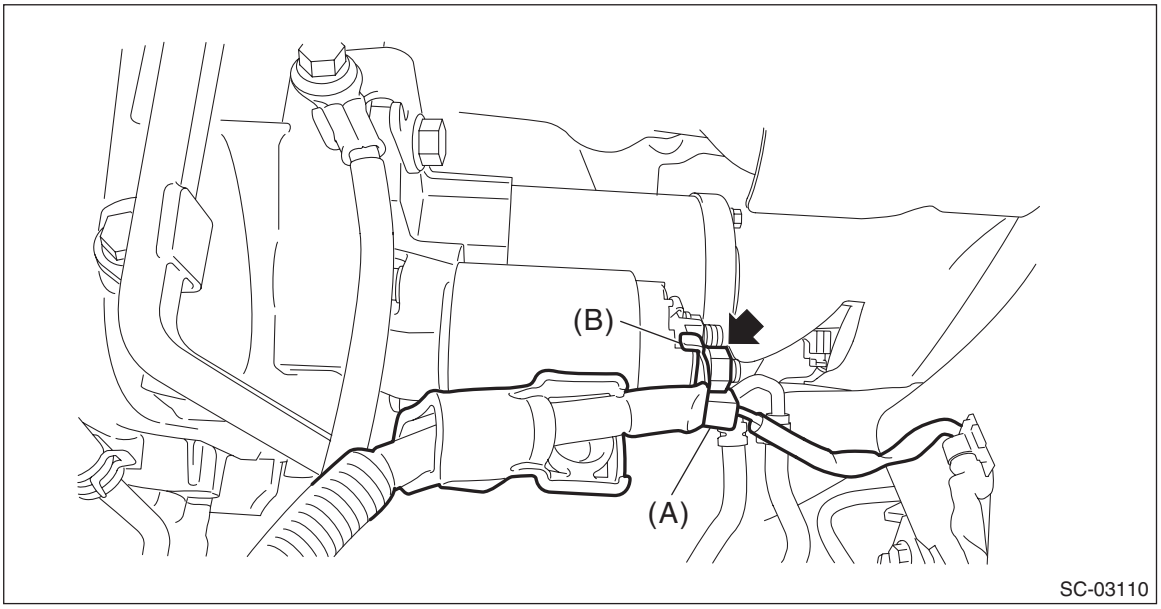

3) Install the air intake boot. <Ref. to IN(H4DO)-10, INSTALLATION, Air Intake Boot.>
4) Connect the ground terminal to battery sensor. <Ref. to RC-4, BATTERY, NOTE, Repair Contents.>

C: DISASSEMBLY

1) Disconnect the terminal M from the magnet switch assembly.

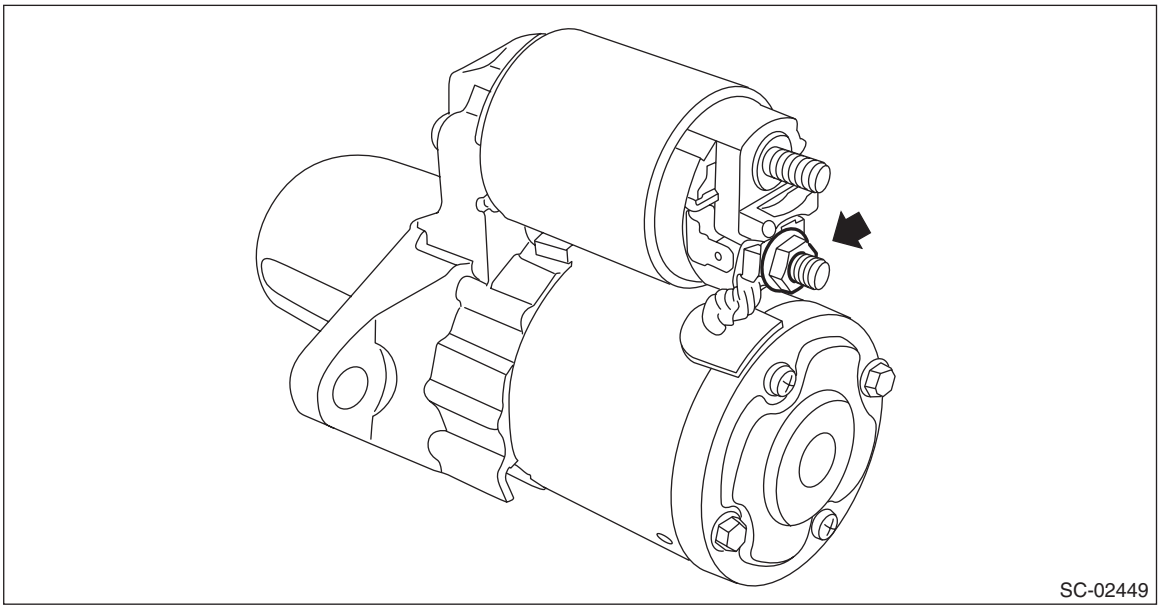

2) Remove the magnet switch assembly from the starter housing assembly.

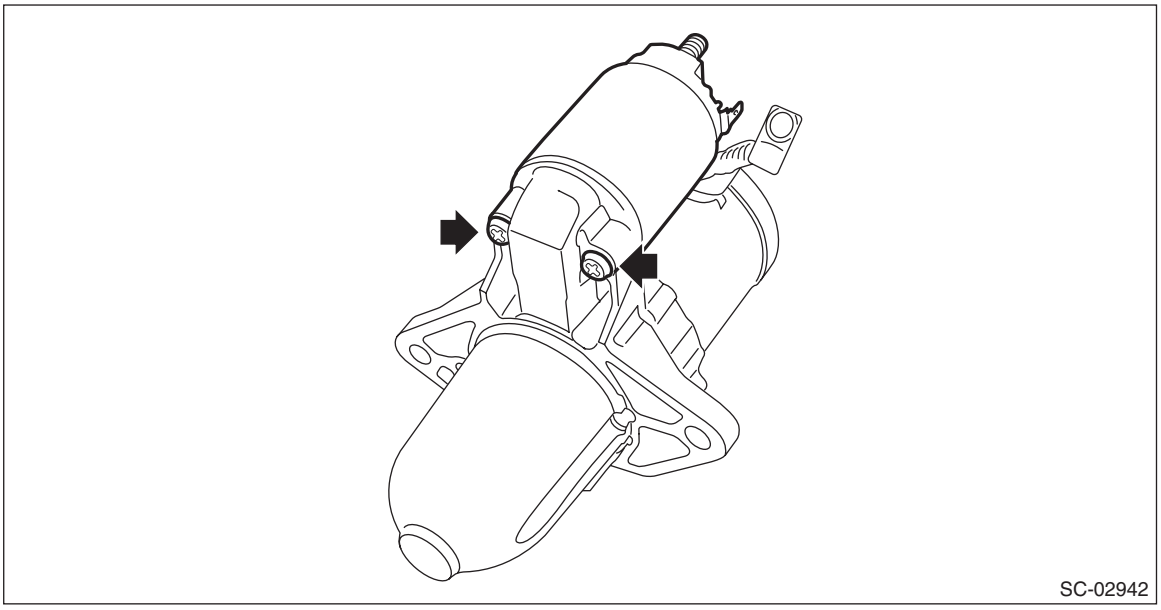

3) Remove screws (A) and bolts (B) of the brush holder assembly, and remove the starter cover assembly.

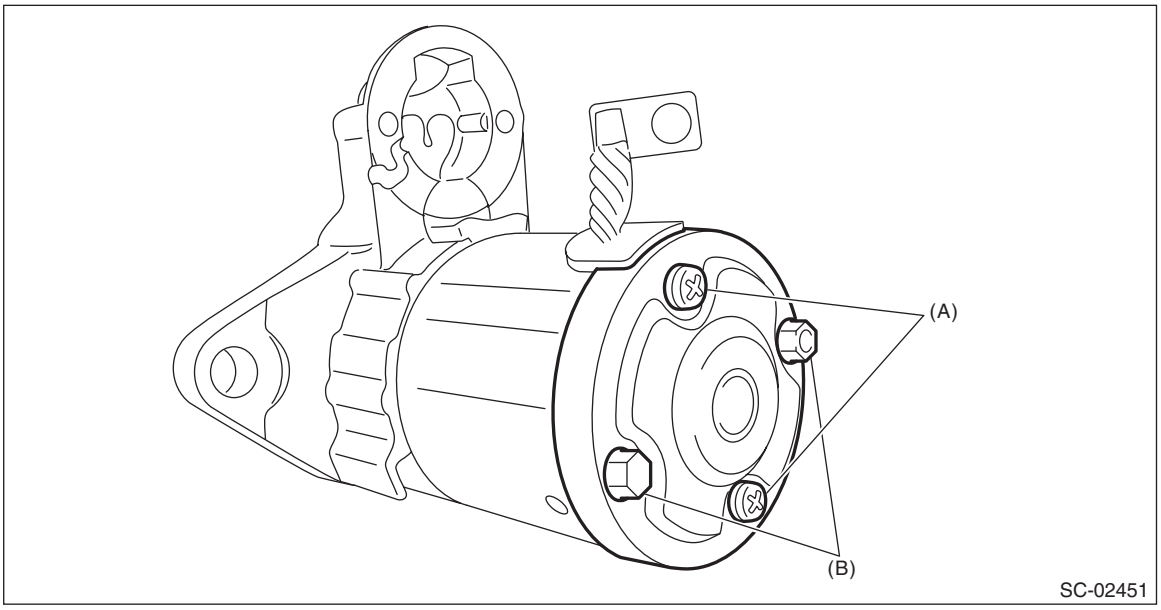

4) Remove the brush holder assembly from the armature assembly.

NOTE:
Hold the brush with your fingers so that the brush spring does not come flying out.

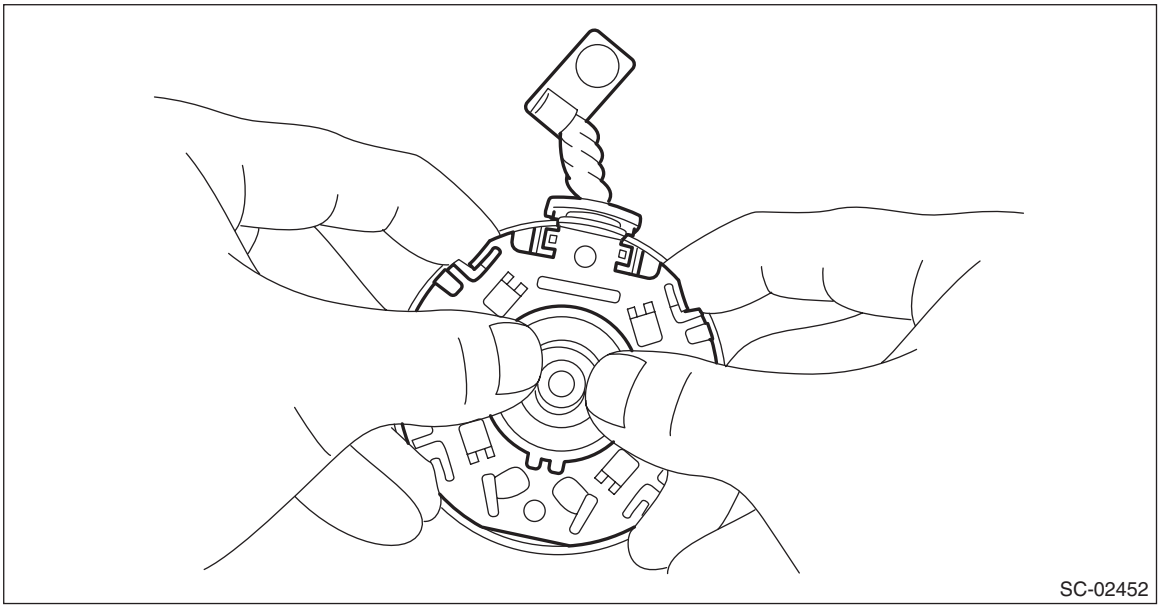

5) Remove the armature assembly and yoke assembly from the starter housing assembly together as a single unit.

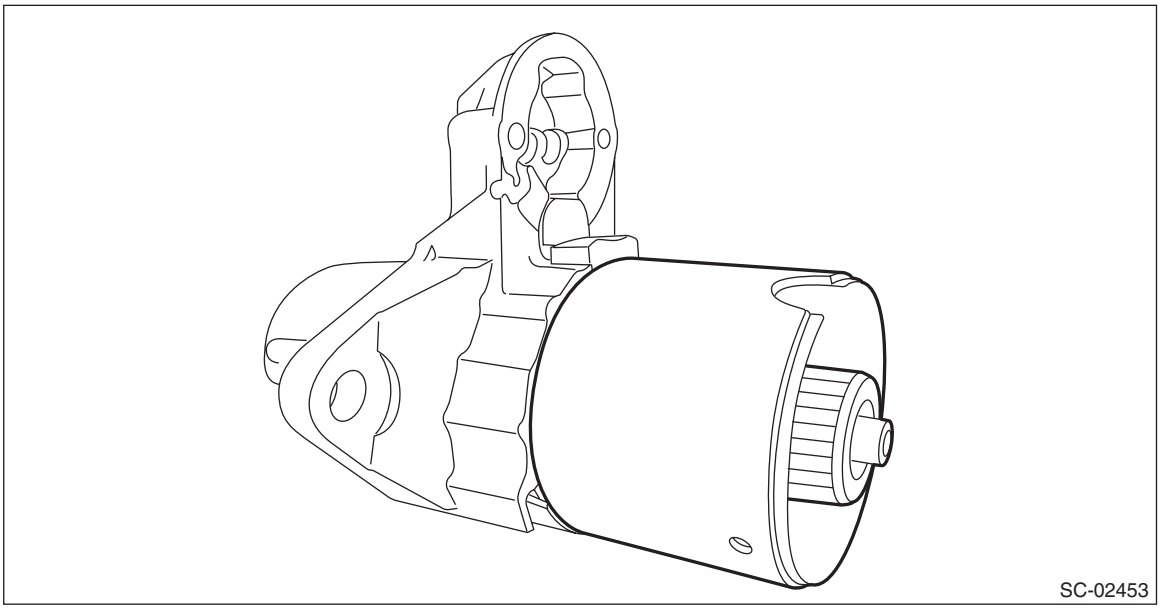
SC-02453

6) Separate the armature assembly and yoke assembly.

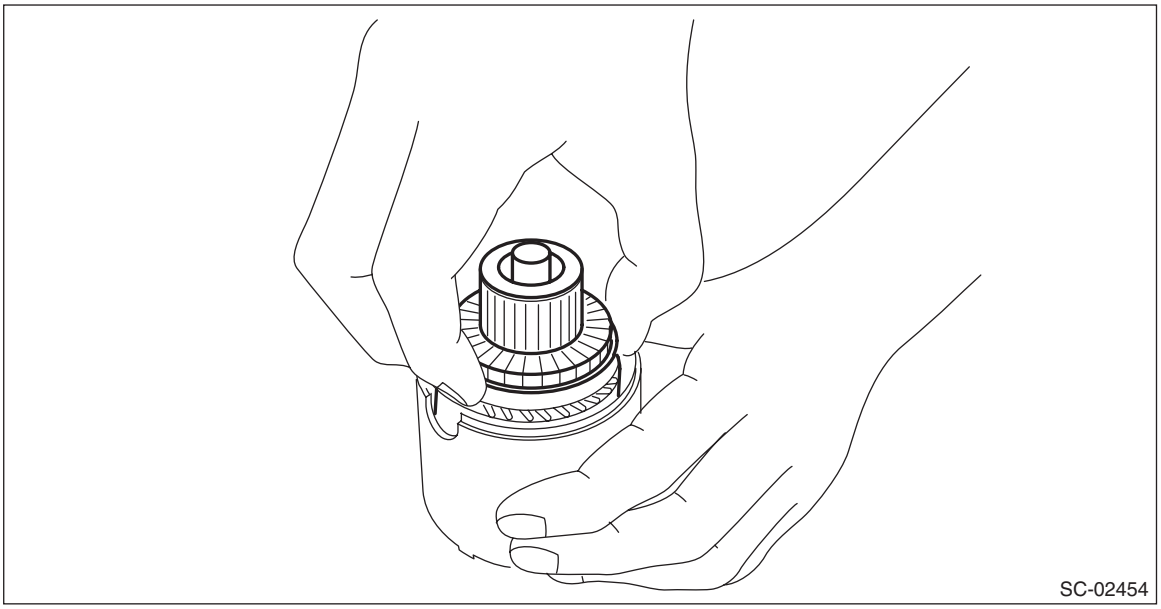
SC-02454

7) Remove the pinion gear from the internal gear assembly.

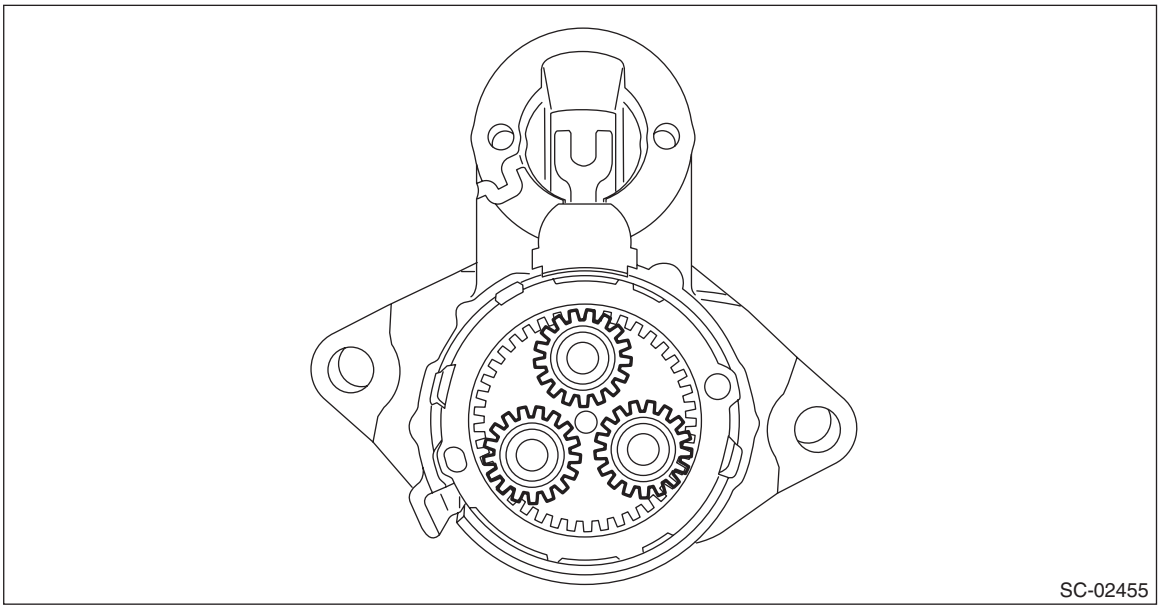

8) Remove seal rubber (A), plate (B), and seal rubber (C).

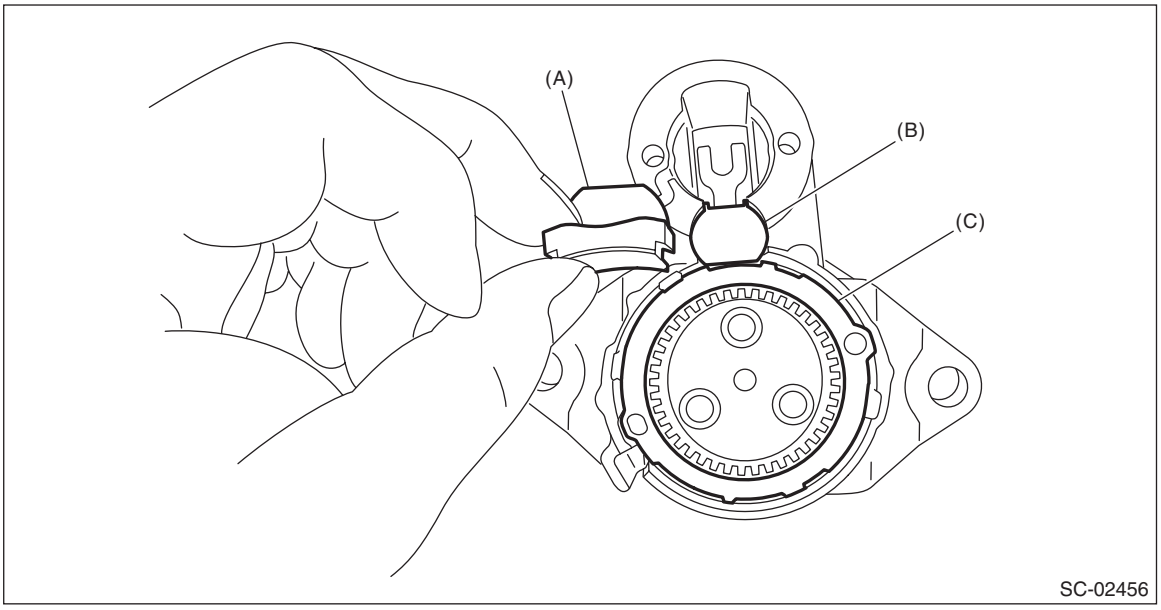

9) Lightly tap the starter housing assembly with a plastic hammer as shown in the figure, and remove the overrunning clutch, internal gear assembly, shaft and shift lever together as one unit.

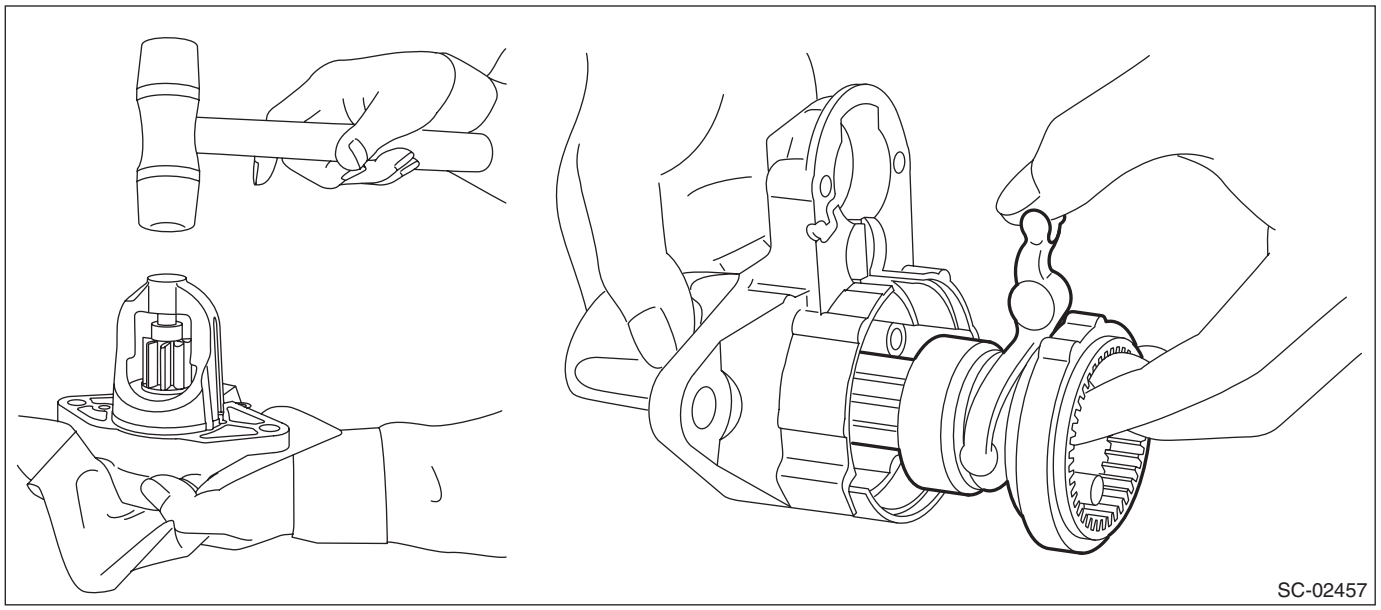
SC-02457

10) Use the following procedures to remove the overrunning clutch from the shaft.
(1) Use an appropriate tool (such as a fit socket wrench), and remove the stopper from snap ring by lightly tapping the stopper with a plastic hammer.

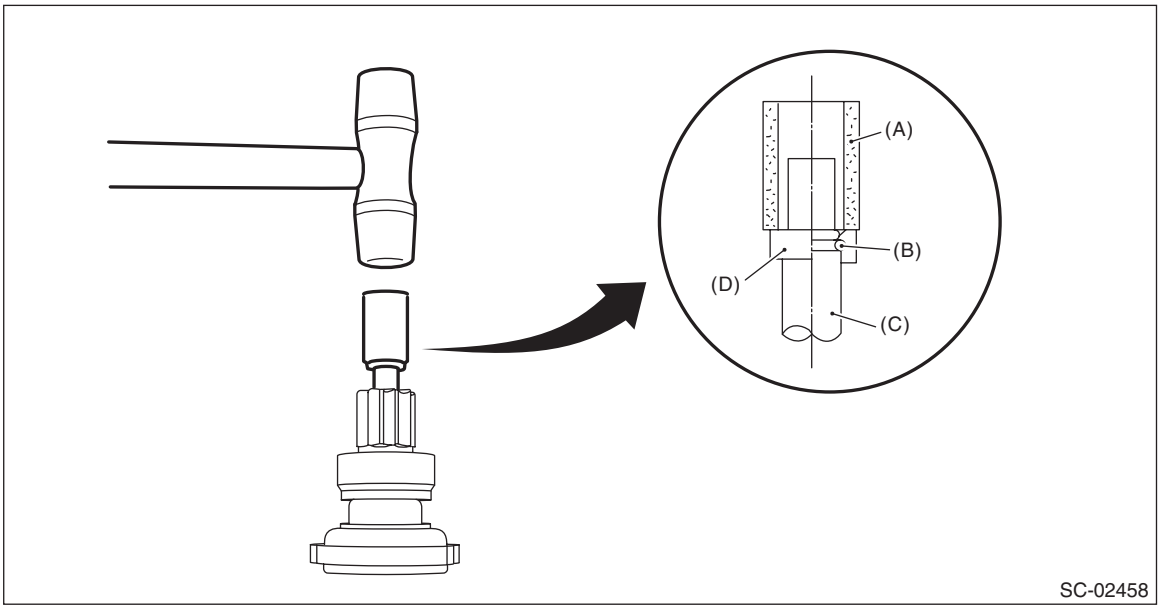

SC-02458

(A) Appropriate tool (B) Snap ring (C) Shaft
(D) Stopper

(2) Remove snap ring (A) from the shaft, and remove stopper (B).

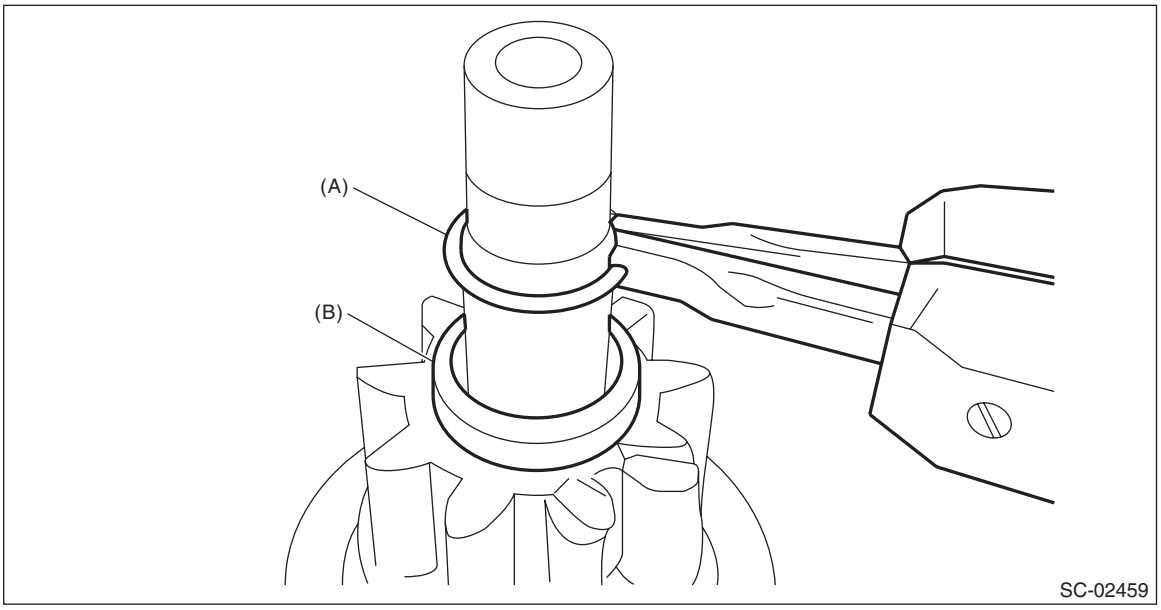

(3) Remove the overrunning clutch from the shaft.

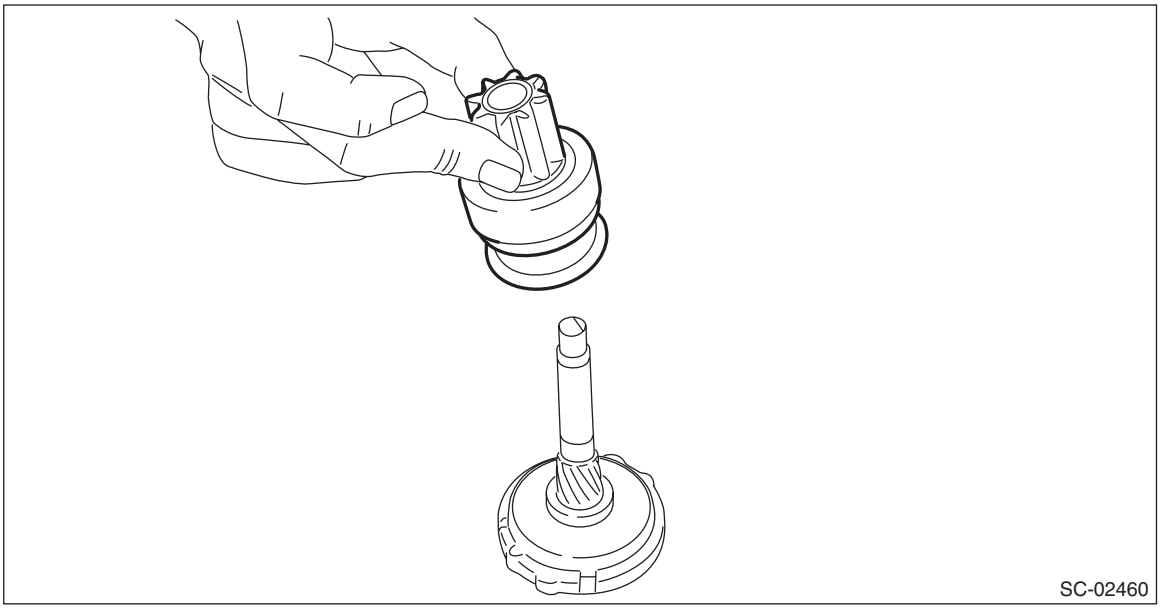

11) Separate the internal gear assembly and shaft.

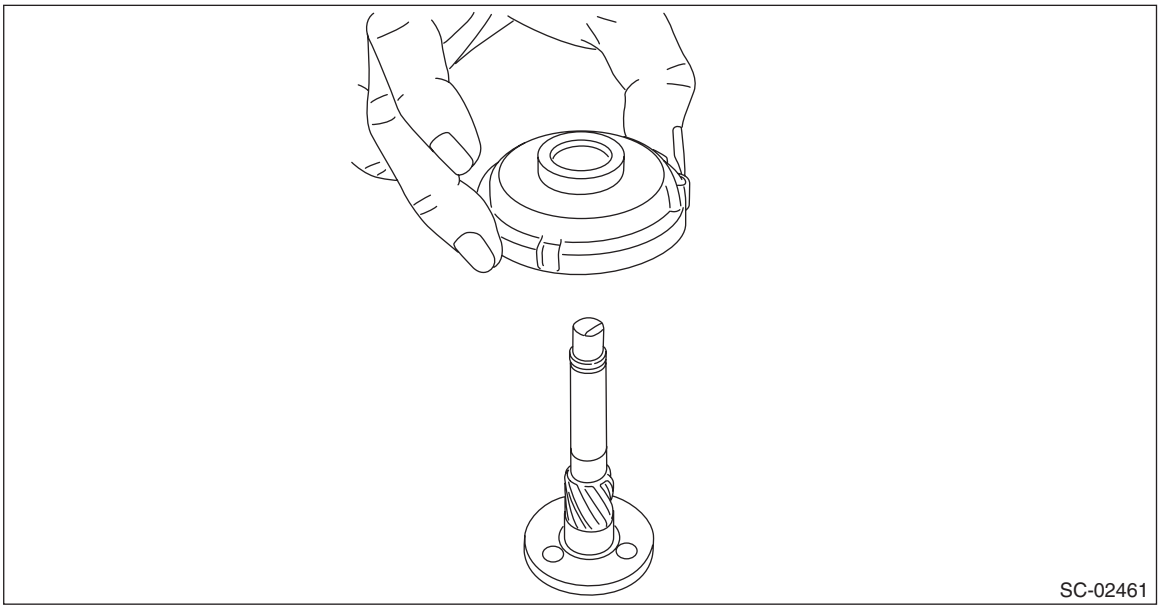

D: ASSEMBLY

1) Apply grease to the shaft sliding surfaces of the internal gear assembly.

Grease:
Multemp #6129 or equivalent

2) Assemble the shaft to the internal gear assembly.

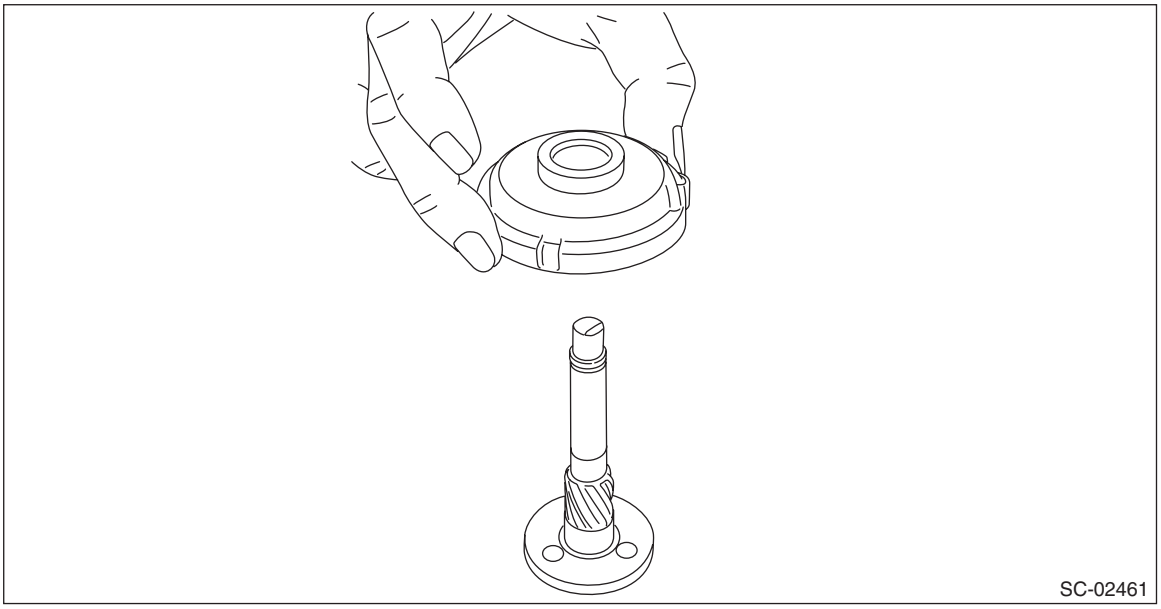

3) Assemble the overrunning clutch as follows:
(1) Apply grease to the spline portion of the shaft.

Grease:
Multemp #6129 or equivalent

(2) Install the overrunning clutch to shaft.

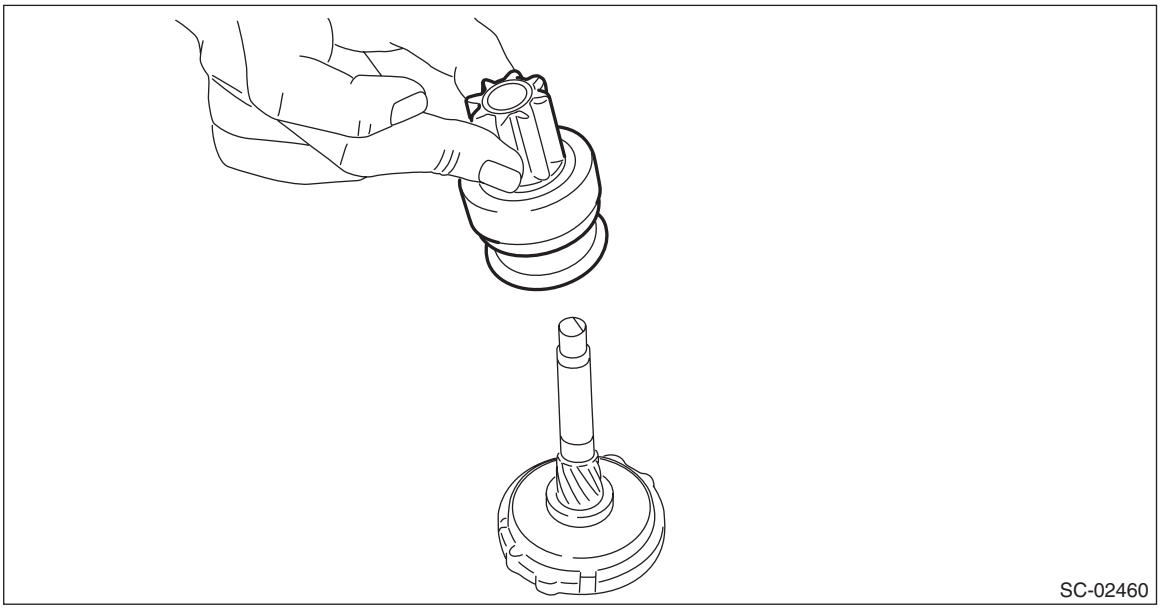

(3) Pass stopper (B) through the shaft assembly, and attach snap ring (A).

NOTE:
Use new stoppers and snap rings.

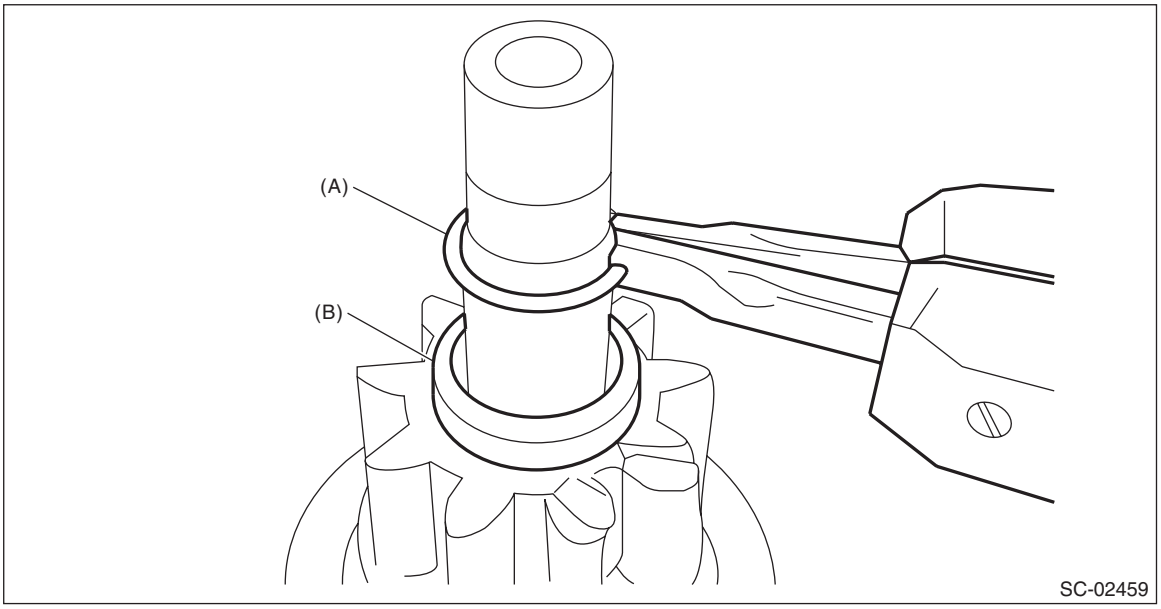

(4) Using a press, pressure fit stopper (B) into snap ring (A).

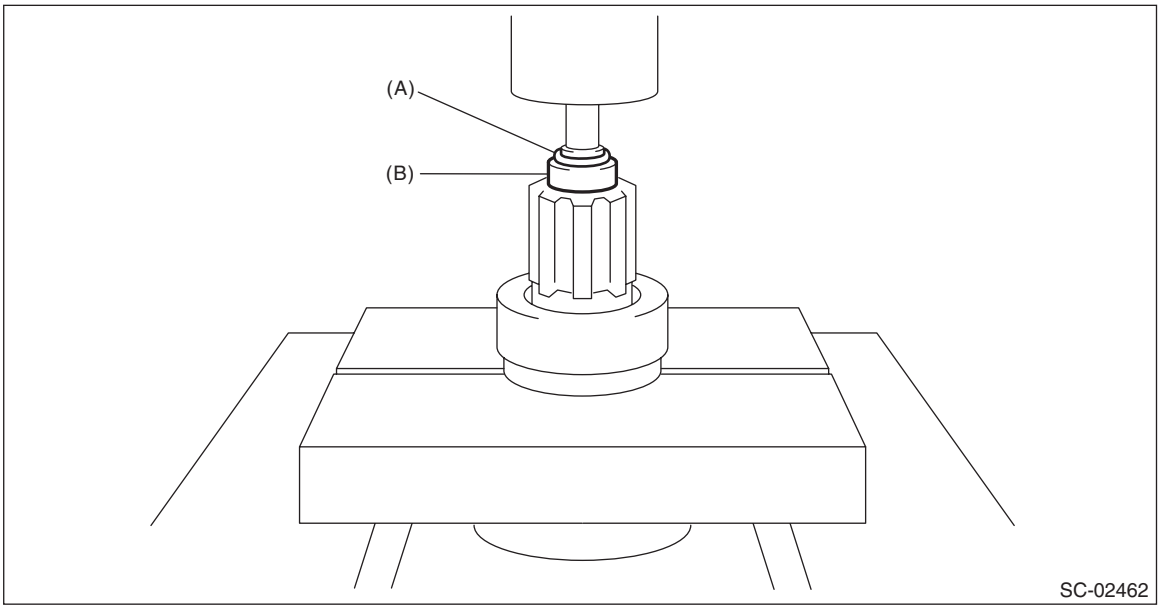

4) Assemble the overrunning clutch, internal gear assembly, shaft and shift lever as a single unit into the starter housing assembly.

NOTE:
Apply grease to the moving parts of the shift lever.

Grease:
Multemp #6129 or equivalent

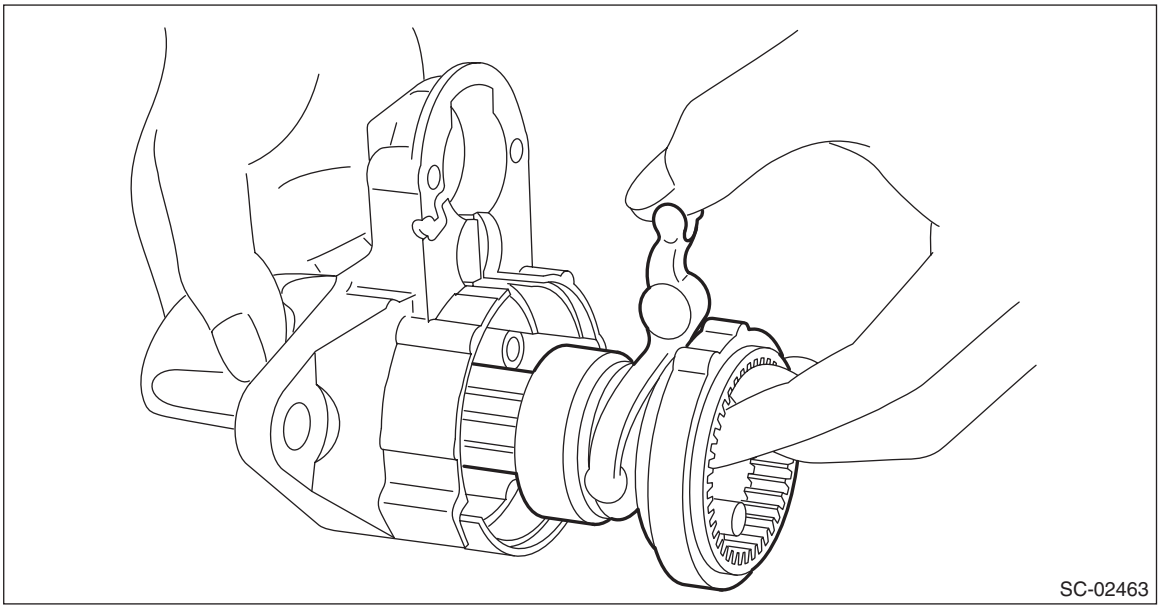

5) Apply grease to the inside of the internal gear assembly and pinion gear, and attach the pinion gear to the internal gear assembly.

NOTE:
- Apply grease evenly to the contact surfaces of each gear.
- Be careful that no debris becomes attached.

Grease:
Molykote® AG650 or equivalent

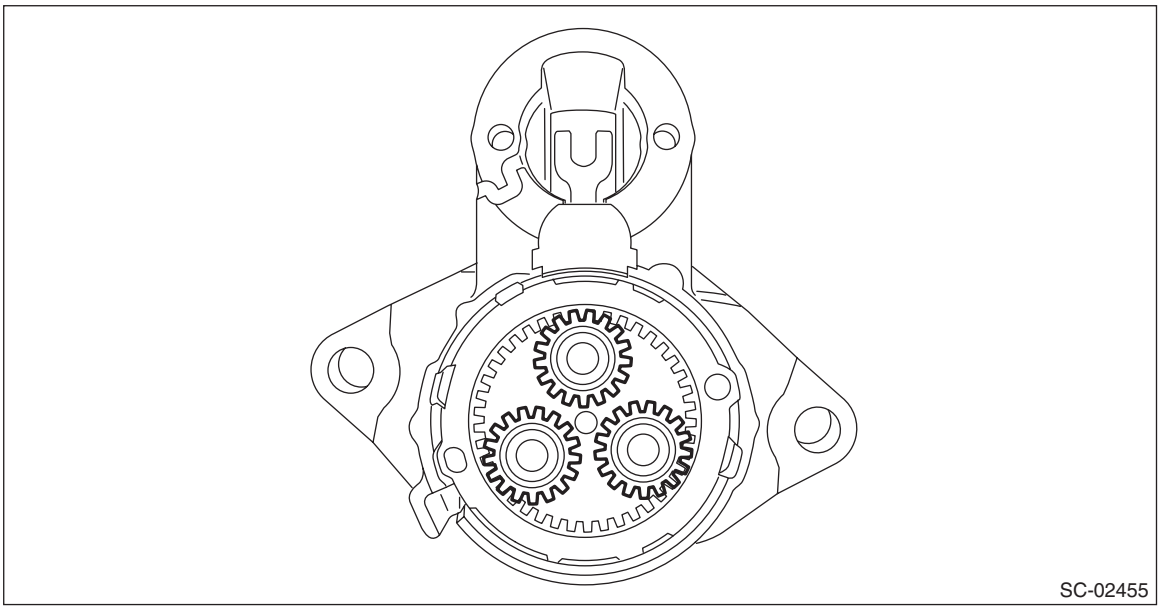

6) Install seal rubber (A), plate (B), and seal rubber (C).

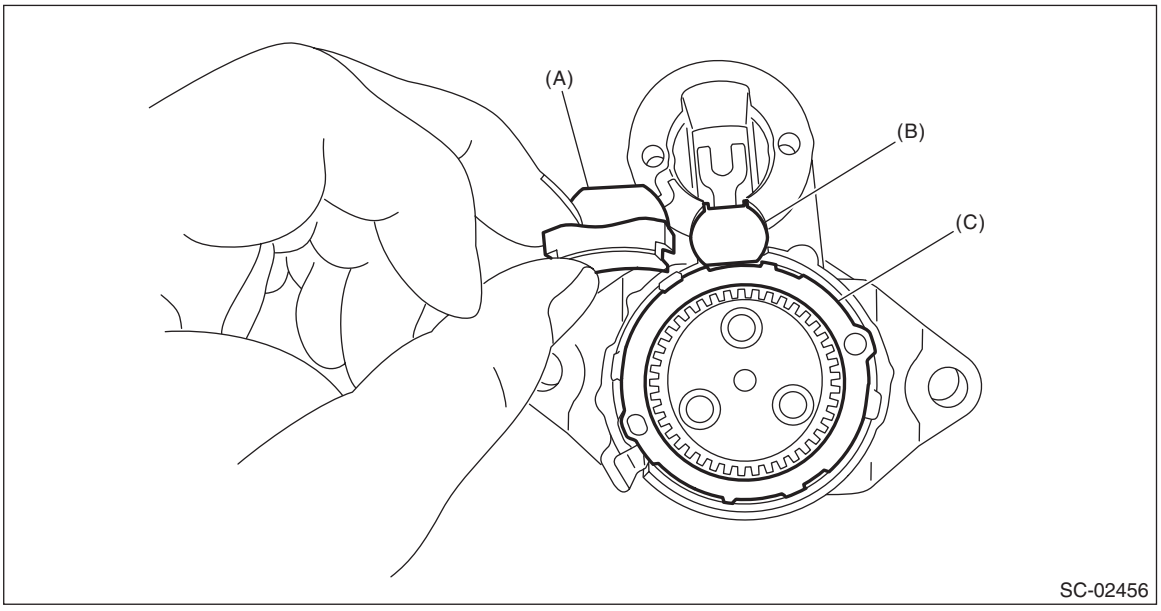

7) Assemble the armature assembly to the yoke assembly.

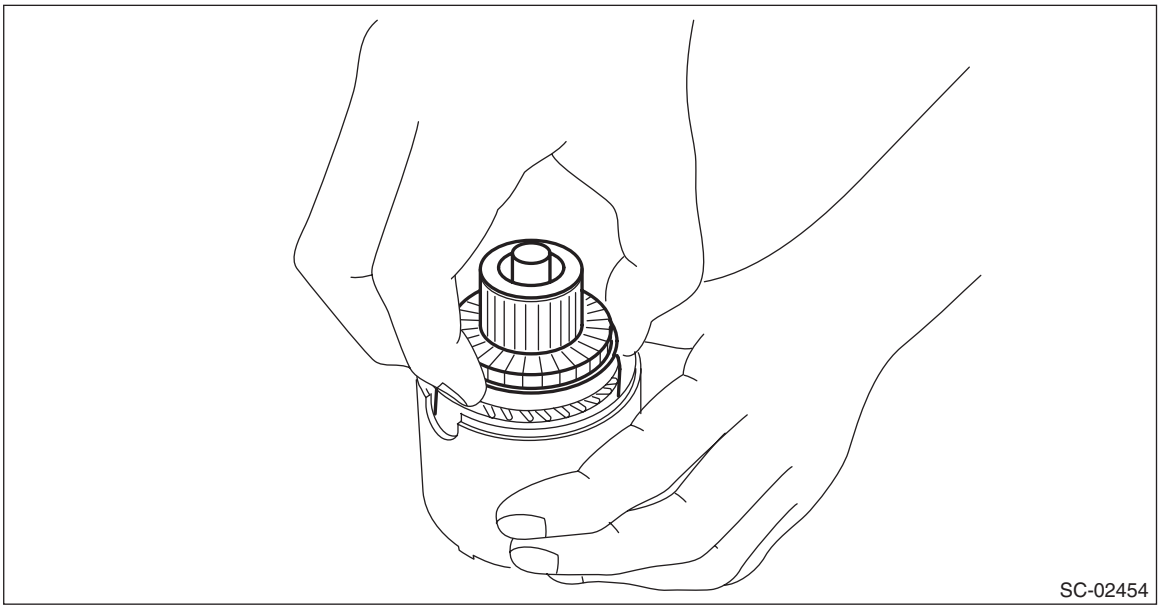

8) Attach the armature assembly and yoke assembly to the starter housing assembly together as a single unit.

NOTE:
As shown in the figure, match the protrusion of the yoke assembly to the cut out of the starter housing assembly.

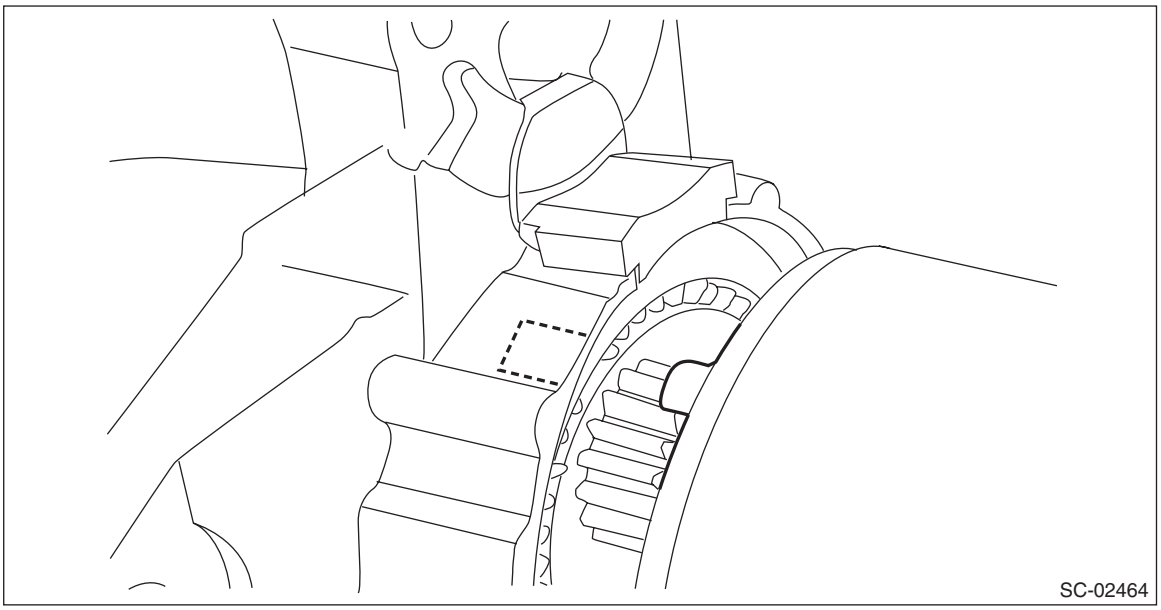
SC-02464

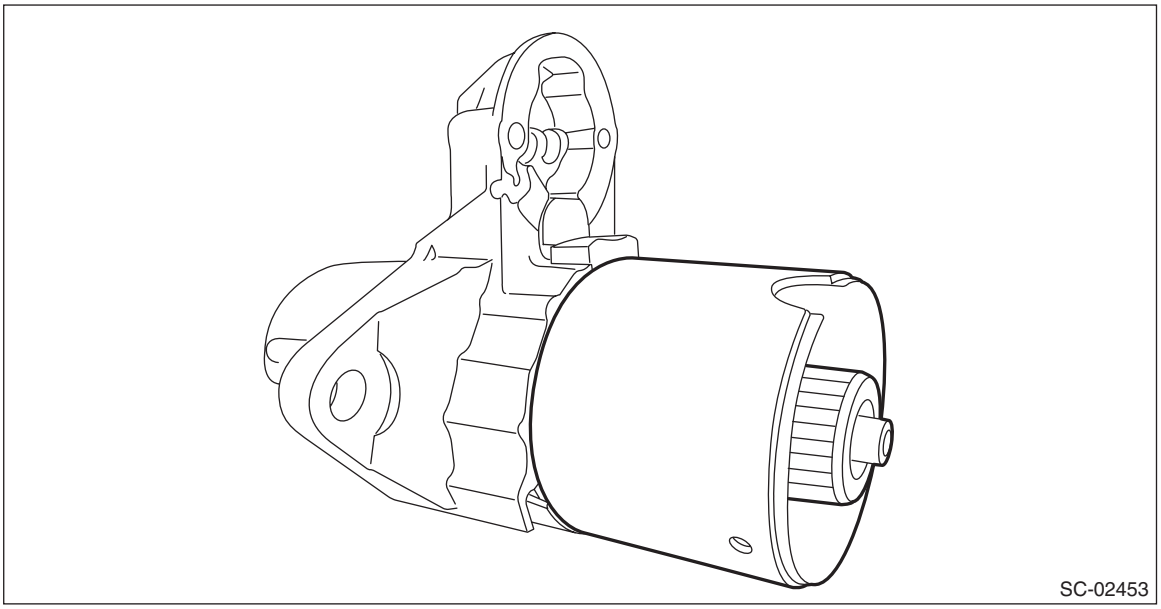
SC-02453

9) Use an appropriate tool (such as correctly sized socket wrenches) and attach the brush holder assembly to the armature assembly.

NOTE:
Be careful not to damage the brushes.

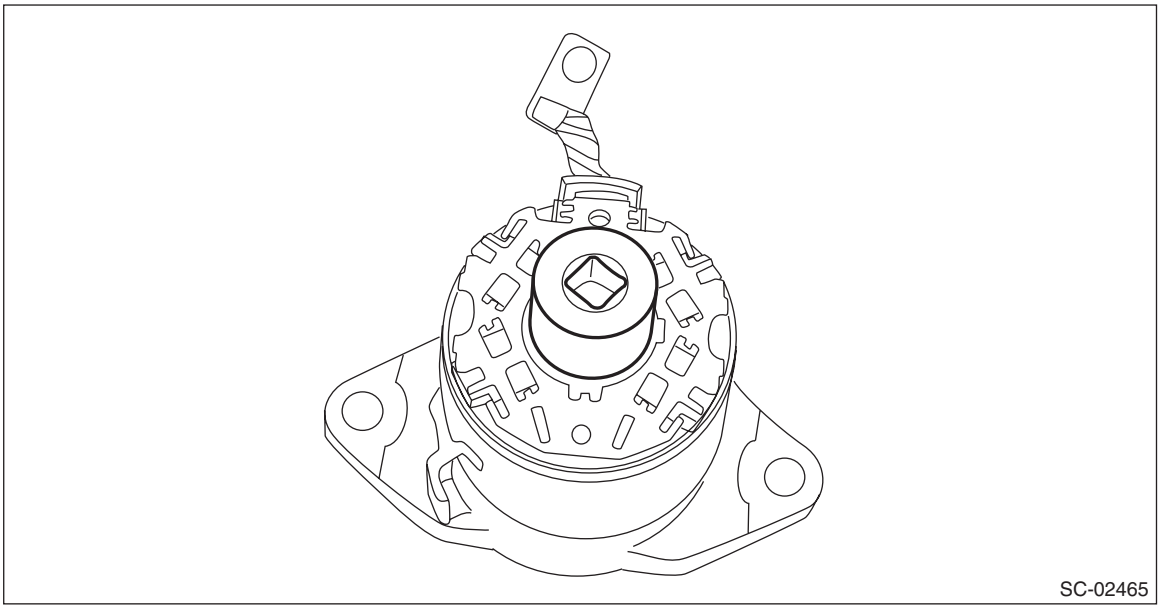

10) Secure starter cover assembly to the brush holder assembly with screws (A).

Tightening torque:
1.4 N·m (0.1 kgf-m, 1.0 ft-lb)

11) Tighten the bolts (B).

Tightening torque:
6 N·m (0.6 kgf-m, 4.4 ft-lb)

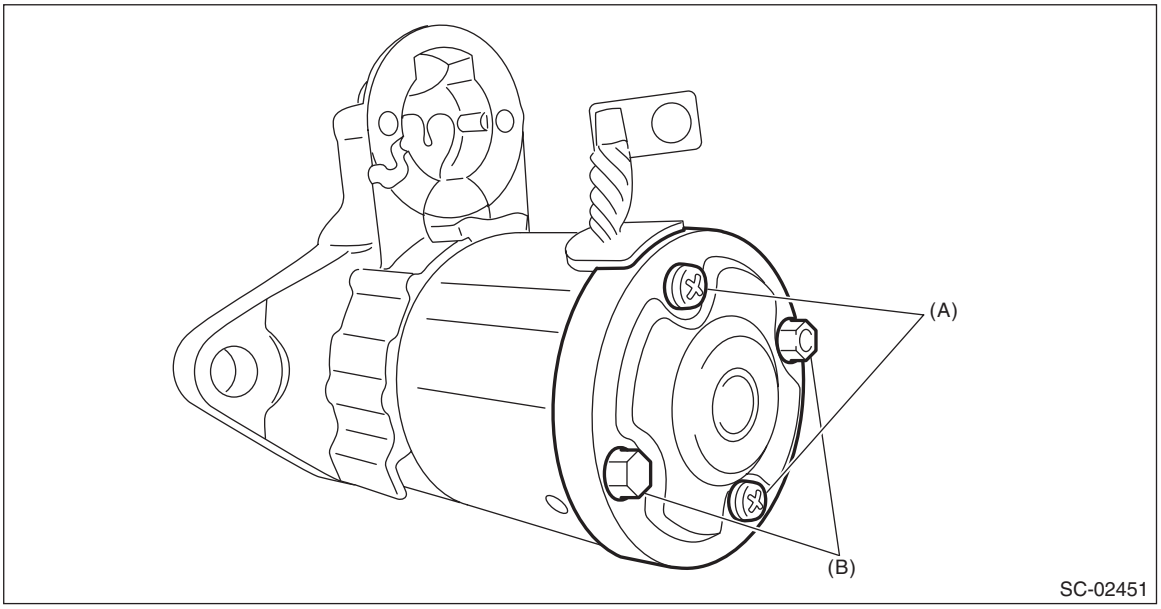

12) Attach the magnet switch assembly to the starter housing assembly.

Tightening torque:
7.5 N·m (0.8 kgf-m, 5.5 ft-lb)

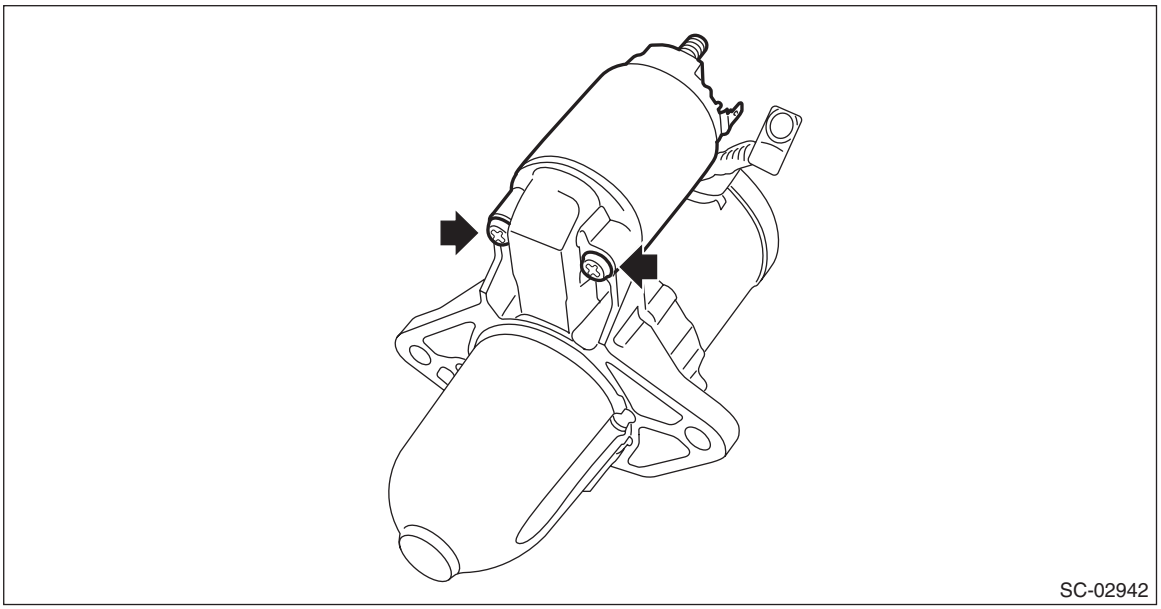

13) Attach the cable to the terminal M of the magnet switch assembly, and secure with nuts.

Tightening torque:
10 N·m (1.0 kgf-m, 7.4 ft-lb)

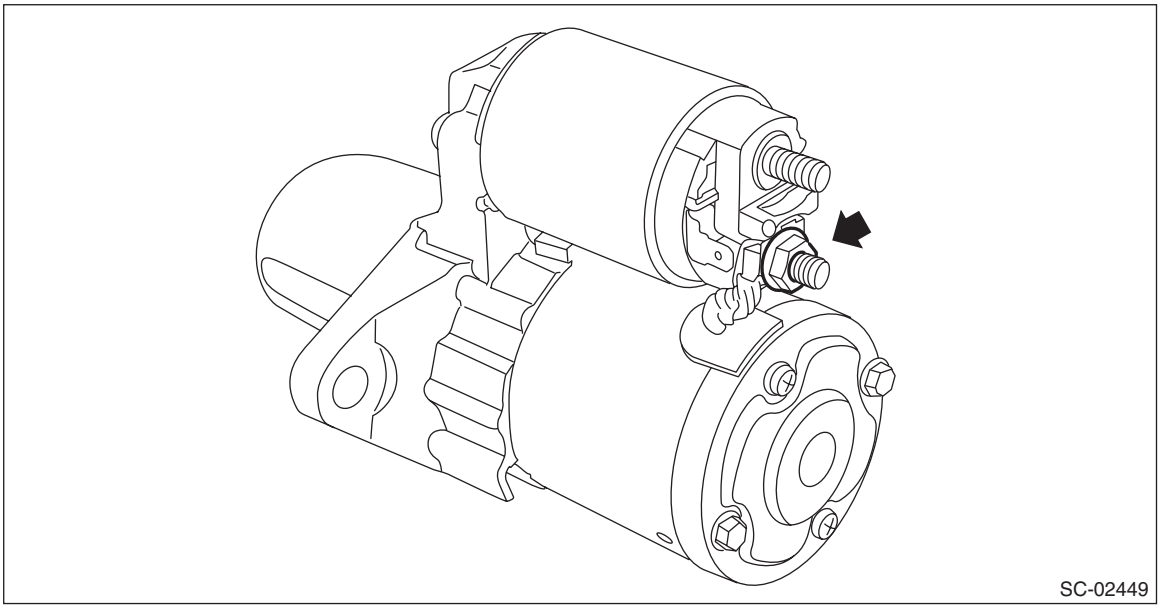

E: INSPECTION

1. ARMATURE

1) Check the commutator for signs of seizure or stepped wear caused by roughness of the surface. If there is light wear, use sandpaper to repair.
2) Check for runout on the commutator. If excessive, replace the armature.

Commutator runout:
Standard
0.05 mm (0.0020 in)
Limit
0.10 mm (0.0039 in)

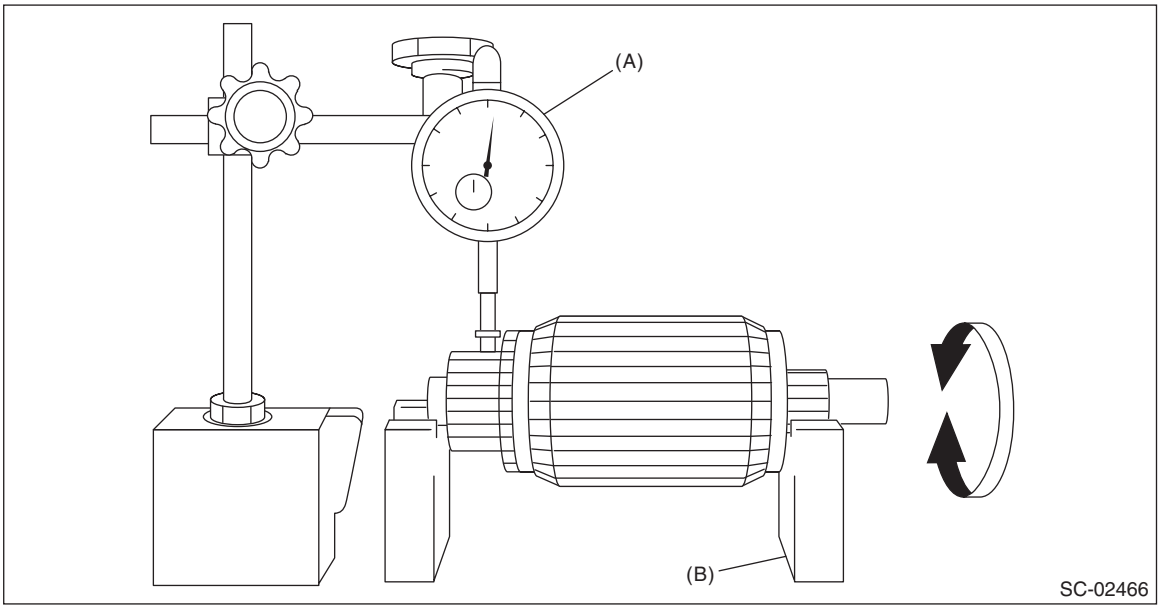

(A) Dial gauge
(B) V-block

3) Check the depth of the segment mold. If it is not within the standard, replace the armature.

Depth of segment mold:
Standard
0.50 mm (0.020 in)

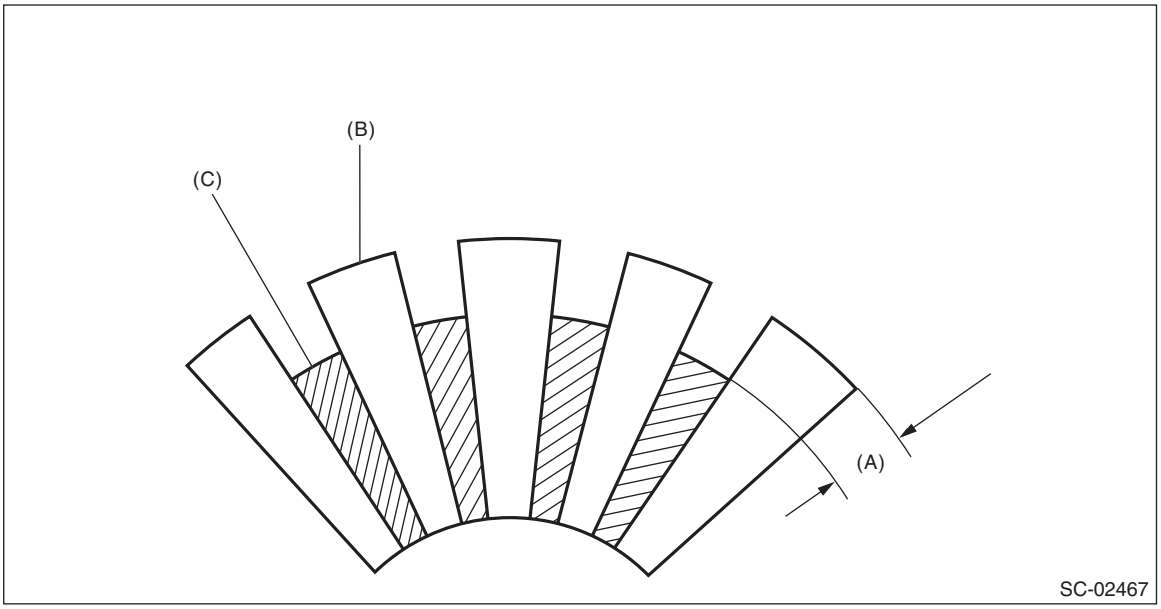

(A) Depth of mold (B) Segment (C) Mold

4) Place the armature on the growler tester to check for short circuits. While slowly turning the armature, support the steel sheet for the armature core. If the circuit of the armature is shorted, the steel sheet will vibrate, causing it to move towards the core. When the steel sheet has moved or vibrated, replace the armature.

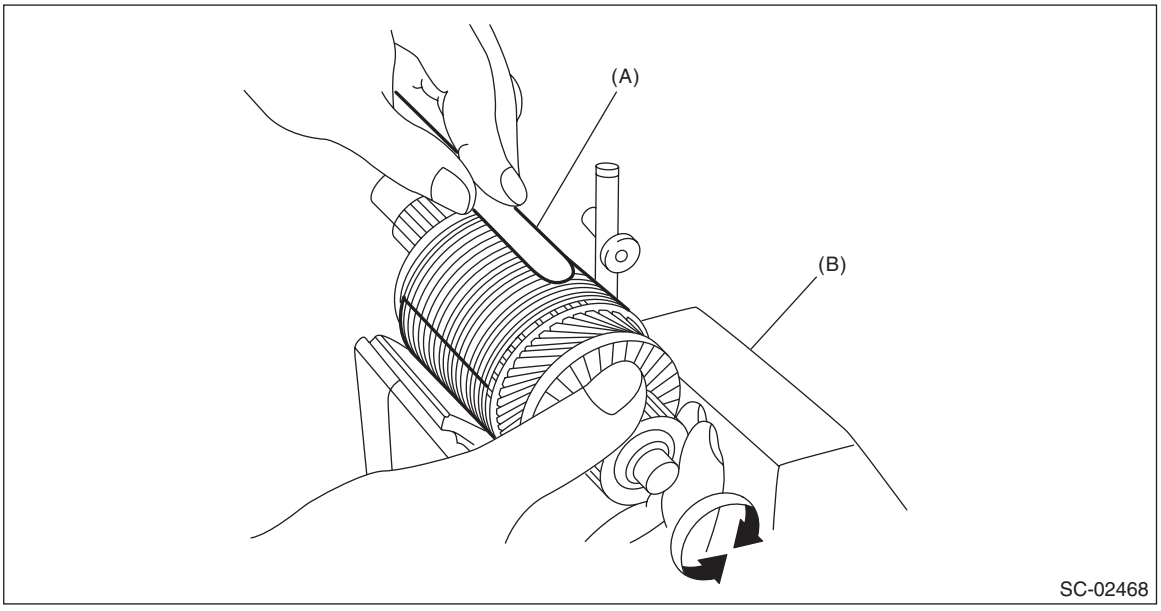

(A) Steel sheet (B) Growler tester

5) Use a circuit tester to touch the probe of one side to the commutator segment, and the other probe to the shaft. If there is continuity, replace the armature.

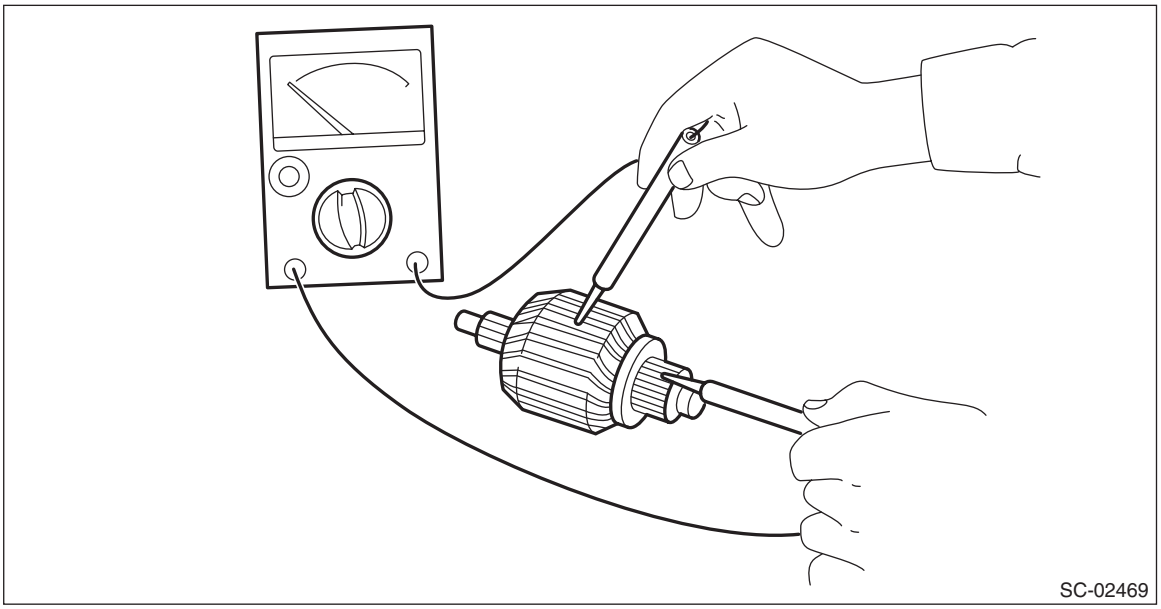

2. YOKE

Make sure that the pole is set at the predetermined position.

3. OVERRUNNING CLUTCH

Inspect the pinion, and if there is any wear or damage, replace the overrunning clutch. Also, check that the pinion rotates counterclockwise smoothly and does not rotate clockwise. If there is any fault, replace the overrunning clutch.

CAUTION:
To prevent spilling of grease, do not clean the overrunning clutch with oil.

4. BRUSH AND BRUSH HOLDER

1) Visually check the brush. If there is any abnormal wear or cracks, replace the brush.
2) Measure the length of the brush. If it exceeds service limits, replace the brush.

Brush length:
Standard
12.3 mm (0.484 in)
Limit
7.0 mm (0.276 in)

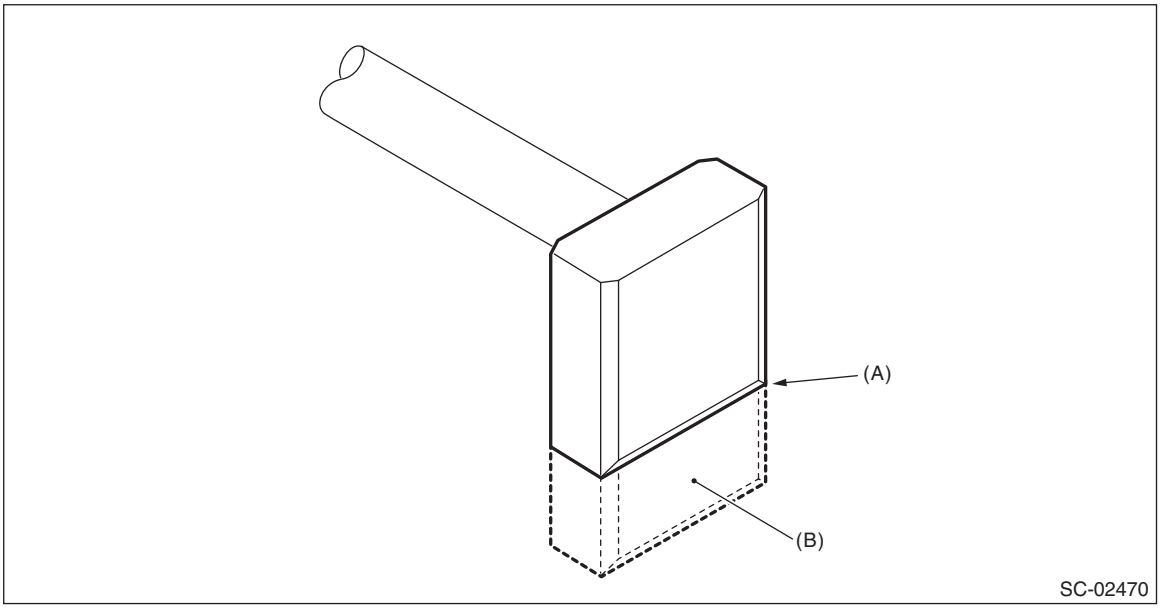

(A) Service limit line (B) Brush

3) Check that the brush moves smoothly in the brush holder.
4) Measure the brush spring force with a spring scale. Replace the brush holder if below the service limit.

Brush spring force:

Standard
15.9 — 19.5 N (1.62 — 1.99 kgf, 3.57 — 4.38 lbf) (when new)

Limit
2.5 N (0.25 kgf, 0.56 lbf)

5. SWITCH ASSEMBLY

- Model without Auto Start Stop

Using a circuit tester, check there is continuity between S terminal and M terminal, and between S terminal and ground. Also, check that there is no continuity between M terminal and B terminal.

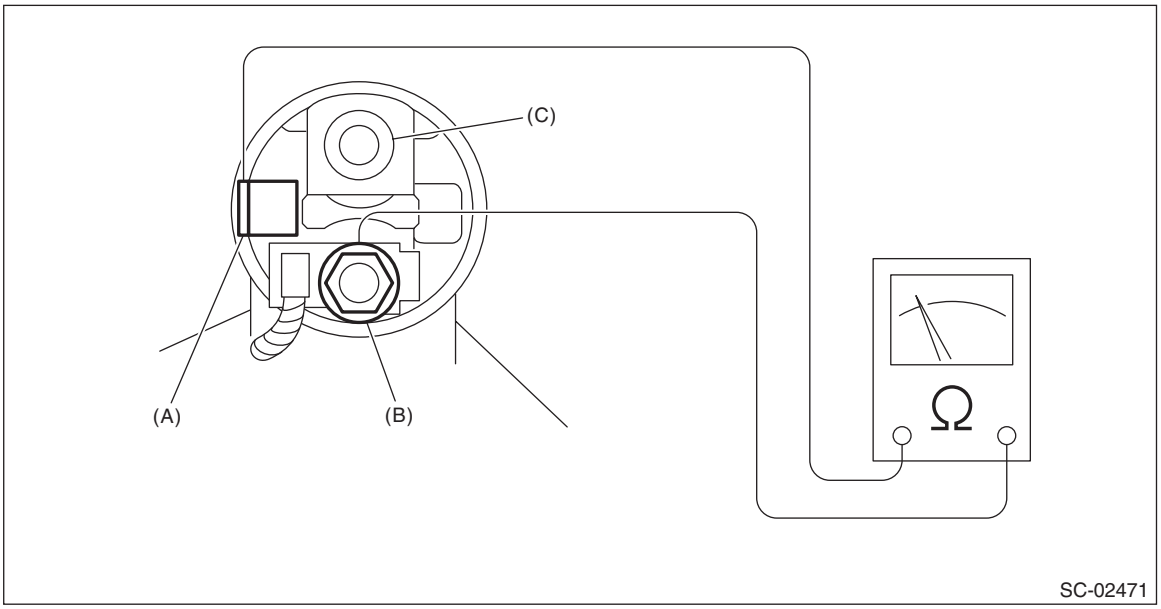

(A) Terminal S (B) Terminal M (C) Terminal B

Terminals	Standard
Terminal S — terminal M	1 Ω or less
Terminal S — Ground	1 Ω or less
Terminal M — terminal B	1 MΩ or more

- Model with Auto Start Stop

1) Disconnect the harness from the M terminal.

CAUTION:
Hold the disconnected harness so that it does not contact the terminal or wiring.

2) Using a circuit tester, check there is continuity between SL1 (pinion terminal) and ground, and between SL2 (contact terminal) and ground.

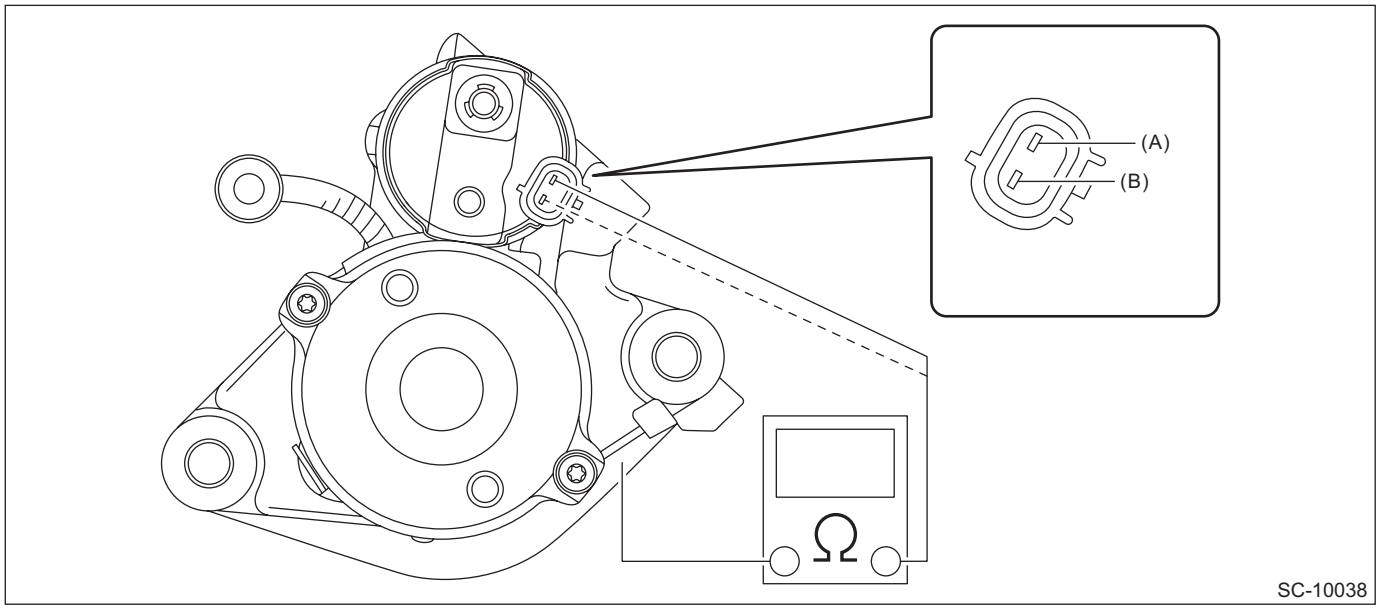

(A) SL1 (pinion terminal) (B) SL2 (contact terminal)

Terminals	Standard
SL1 (pinion terminal) — Ground	1 Ω or less
SL2 (contact terminal) — Ground	1 Ω or less

3) Using a circuit tester, check there is no continuity between SL1 (pinion terminal) and M terminal, between SL2 (contact terminal) and M terminal, and between M terminal and B terminal.

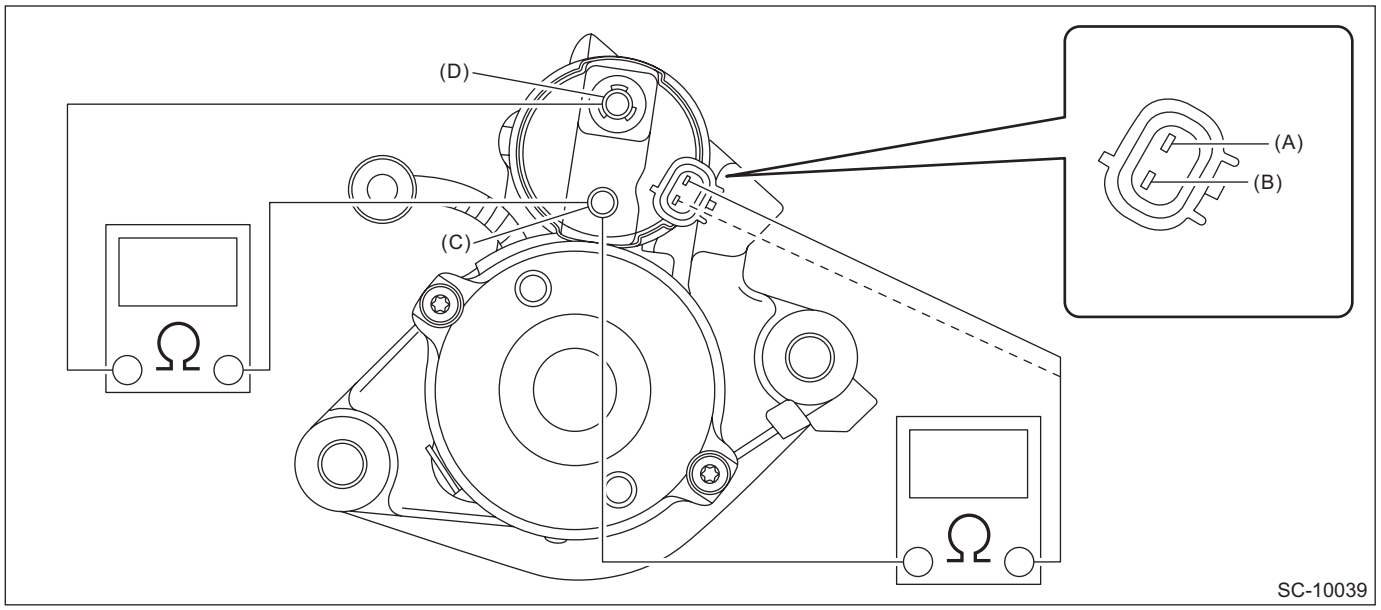

(A) SL1 (pinion terminal) (B) SL2 (contact terminal) (C) Terminal M
(D) Terminal B

Terminals	Standard
SL1 (pinion terminal) — M terminal	1 MΩ or more
SL2 (contact terminal) — M terminal	1 MΩ or more
Terminal M — terminal B	1 MΩ or more

6. SWITCH ASSEMBLY OPERATION

CAUTION:
Perform the inspection in a short period of time. (Within 3 to 5 seconds)

- Model without Auto Start Stop

1) Loosen the nut which holds the M terminal to the starter body.

NOTE:
This procedure is required to facilitate the harness removal from the M terminal.

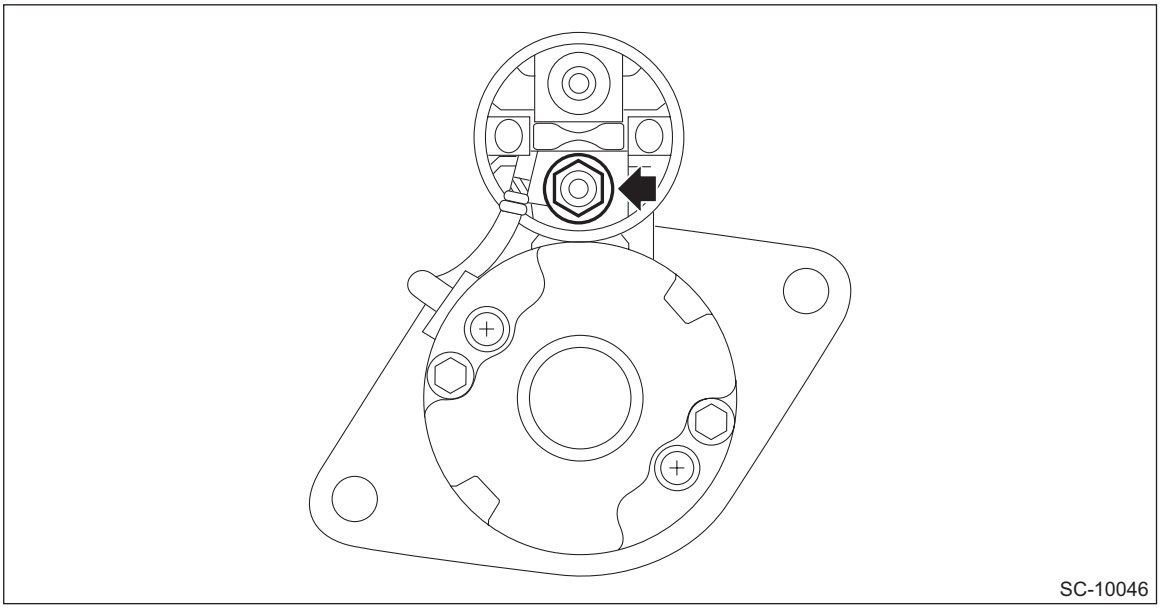

2) Connect the battery positive terminal to the switch assembly S terminal, and connect the battery negative terminal to the starter body. Then, if the pinion protrudes, it is normal.

NOTE:
The starter motor may rotate while the pinion protrudes. This occurs due to current that flows to the motor via pull-in coil. This is not a problem.

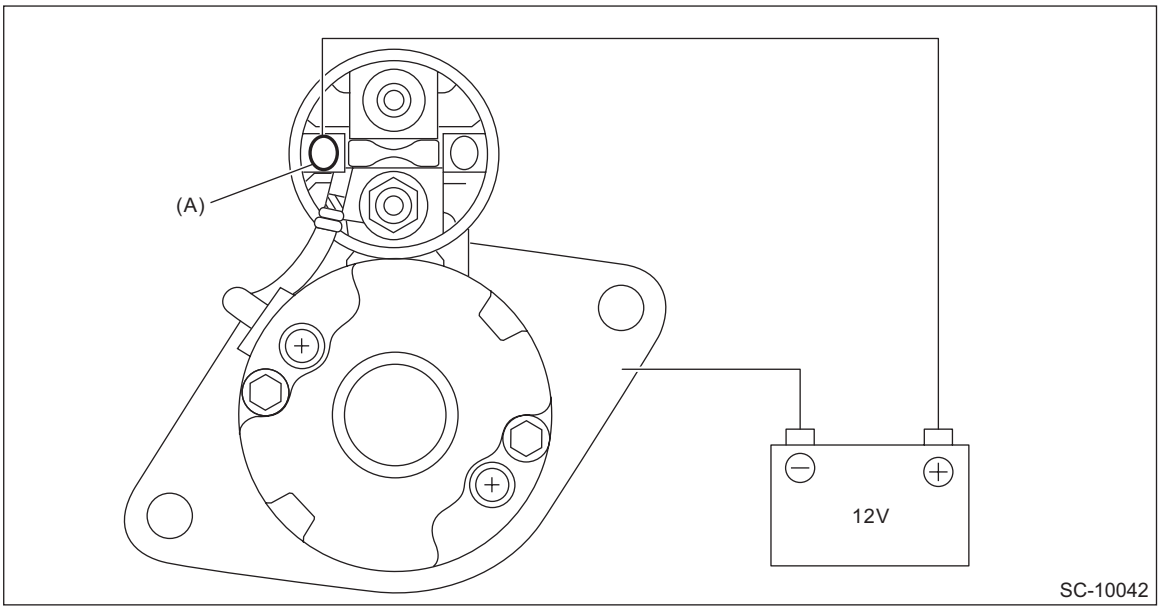

(A) Terminal S

3) Disconnect the harness from the M terminal. Check that the pinion is being protruded at this time.

CAUTION:
Hold the disconnected harness so that it does not contact the terminal or wiring.
4) Disconnect the battery negative terminal from the starter body. Then, if the pinion returns to its original position, it is normal.

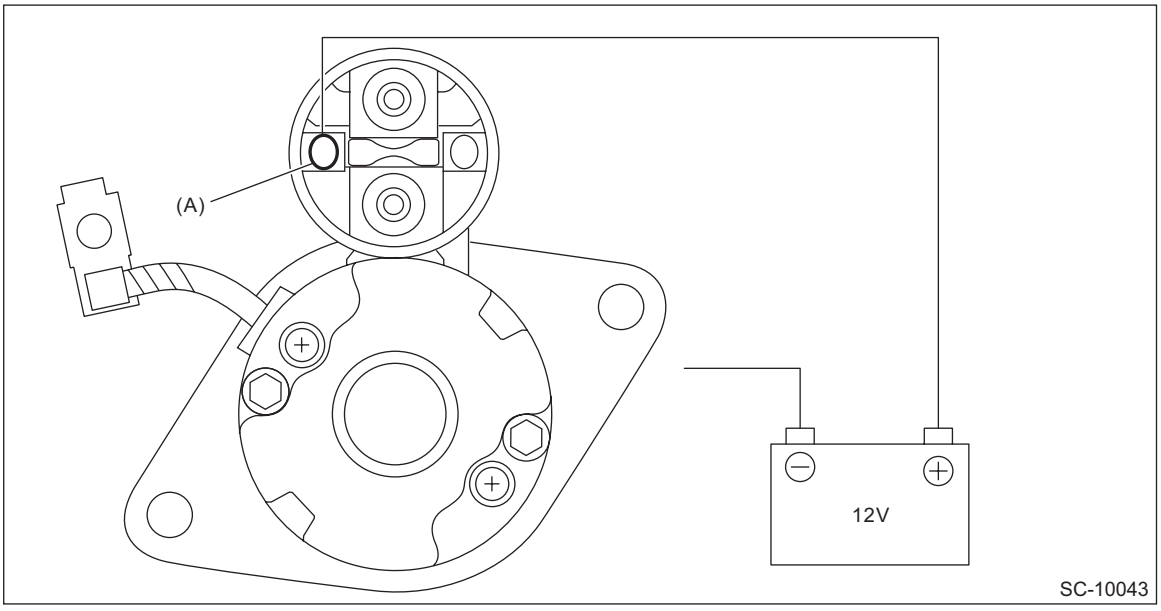

(A) Terminal S

- Model with Auto Start Stop

1) Connect the battery positive terminal to the switch assembly SL1 (pinion terminal), and connect the battery negative terminal to the starter body. Then, if the pinion protrudes, it is normal.
2) Connect the battery positive terminal to the switch assembly SL2 (contact terminal) and connect the battery negative terminal to the starter body. Then, if a click sound is heard inside the magnet switch and there is continuity between B terminal and M terminal, it is normal.

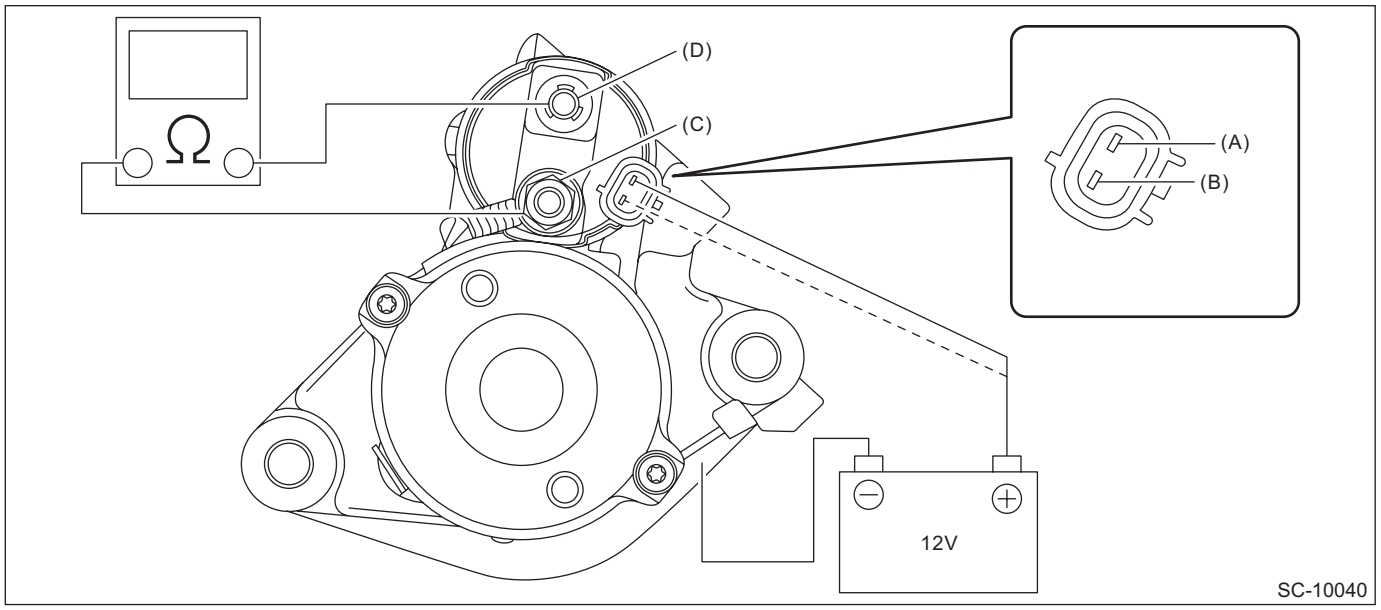

(A) SL1 (pinion terminal)
(B) SL2 (contact terminal)
(C) Terminal M
(D) Terminal B

7. NO-LOAD TEST

The starter should be placed through a no-load test whenever it has been overhauled.
For no-load test, use the circuit shown in figure.

CAUTION:

- **Use a thick cable due to large current flowing through the cable.**
  - **For B terminal and ground, it is recommended that the cross-section area of continuity part (shaded part) should be 20 mm^2 (0.00310 sq in) or more. For S terminal, 1.25 mm^2 (0.00194 sq in) or more.**

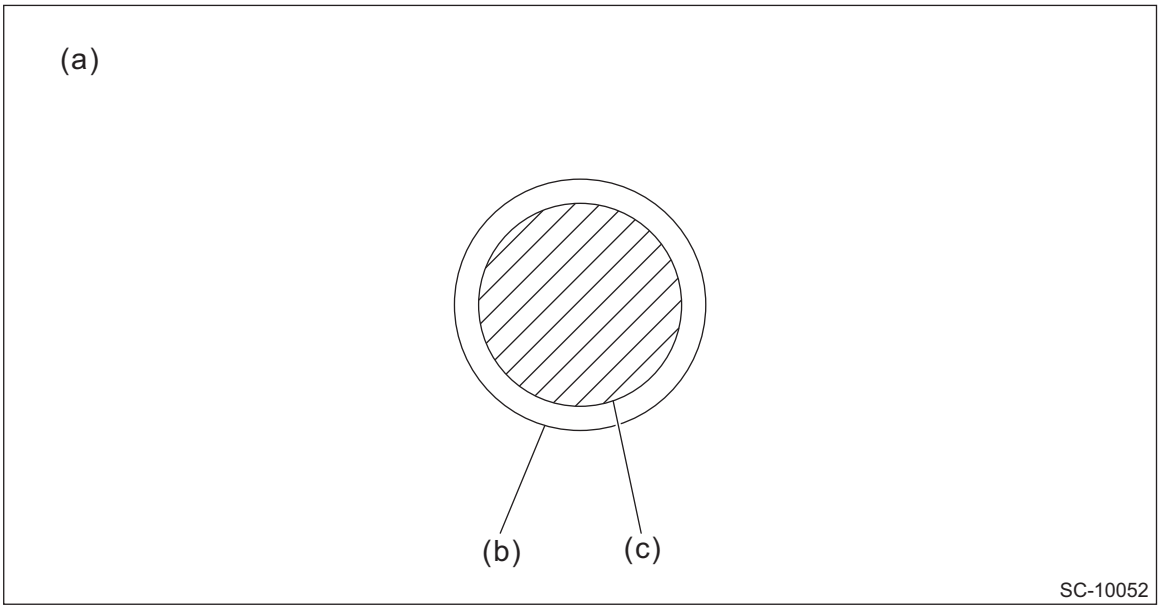

(a) Cable cross-section (b) Cable shield part (c) Cable continuity part

  - **It is possible to use a booster cable instead of wiring.**
- **Be careful not to burn yourself and cause a fire due to heat.**
- **Perform the no-load test in a short period of time. (Within 3 to 5 seconds)**

- Model without Auto Start Stop

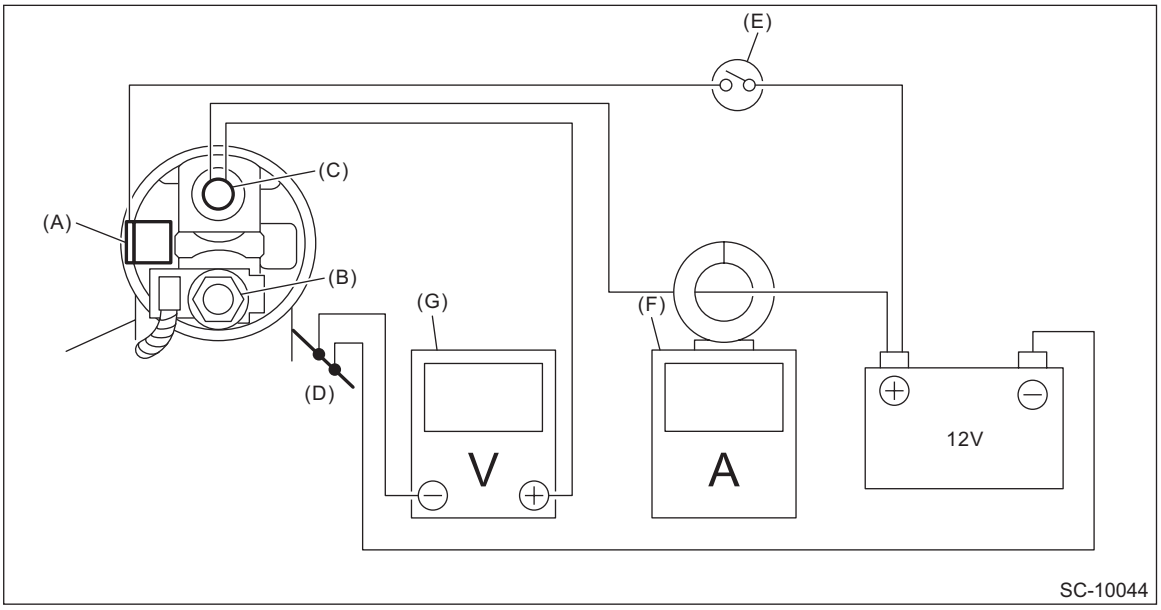

(A) Terminal S
(B) Terminal M
(C) Terminal B
(D) Magnet switch
(E) Switch
(F) Circuit tester with clamp-type ammeter
(G) Circuit tester

1) Using a vise, secure the starter.

CAUTION:
Be careful not to deform or damage the starter.
2) Turn the switch ON, and check that the pinion protrudes rapidly into the specified position and rotates powerfully without noise.
3) Check the current and voltage after its rotation speed stabilizes.

Current/Voltage
CVT model
90 A or less (approx. 11 V)
MT model
95 A or less (approx. 11 V)

- Model with Auto Start Stop

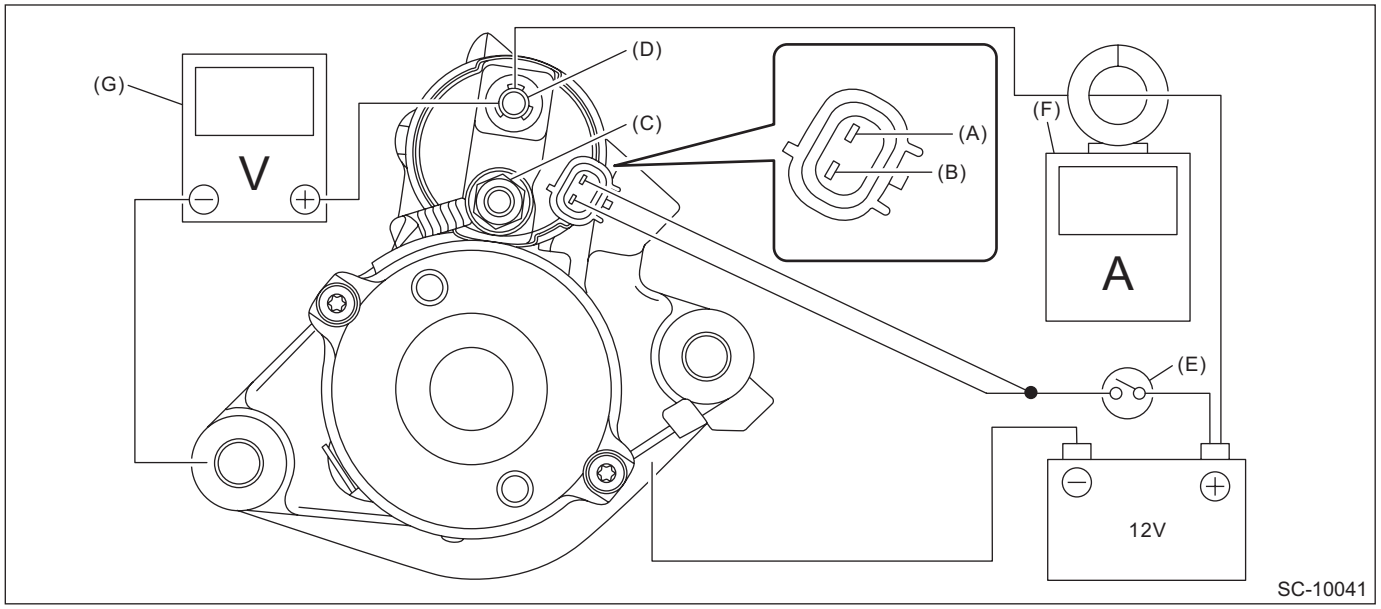

(A) SL1 (pinion terminal)
(B) SL2 (contact terminal)
(C) Terminal M
(D) Terminal B
(E) Switch
(F) Circuit tester with clamp-type ammeter
(G) Circuit tester

1) Using a vise, secure the starter.

CAUTION:
Be careful not to deform or damage the starter.
2) Turn the switch ON, and check that the pinion protrudes rapidly into the specified position and rotates powerfully without noise.
3) Check the current and voltage after its rotation speed stabilizes.

Current/Voltage
130 A or less (approx. 11.5 V)

8. OTHER INSPECTIONS

Check that the starter does not have deformation, cracks and any other damage.

3. Starter Relay

A: REMOVAL

1) Disconnect the ground terminal from battery sensor. <Ref. to RC-4, BATTERY, NOTE, Repair Contents.>
2) Remove the instrument panel lower cover. <Ref. to EI-75, REMOVAL, Instrument Panel Lower Cover.>
3) Remove the starter relay from relay block.

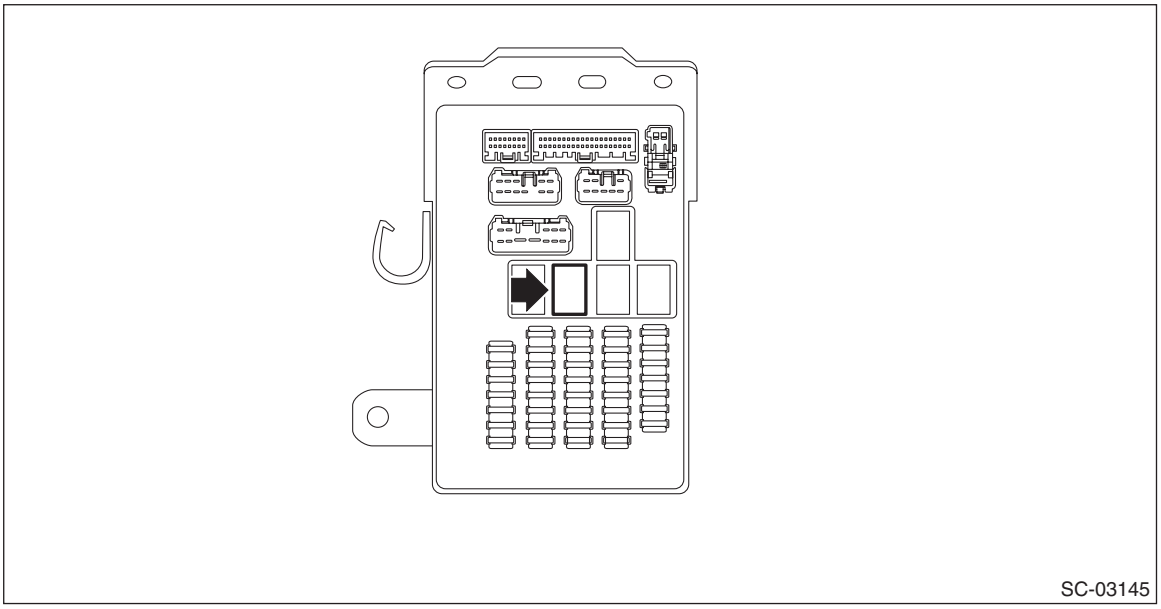

B: INSTALLATION

1) Install the starter relay to the relay block.
2) Install the instrument panel lower cover. <Ref. to EI-76, INSTALLATION, Instrument Panel Lower Cover.>
3) Connect the ground terminal to battery sensor. <Ref. to RC-4, BATTERY, NOTE, Repair Contents.>

C: INSPECTION

1) Check that the starter relay does not have deformation, cracks and any other damage.
2) Measure the resistance between starter relay terminals.

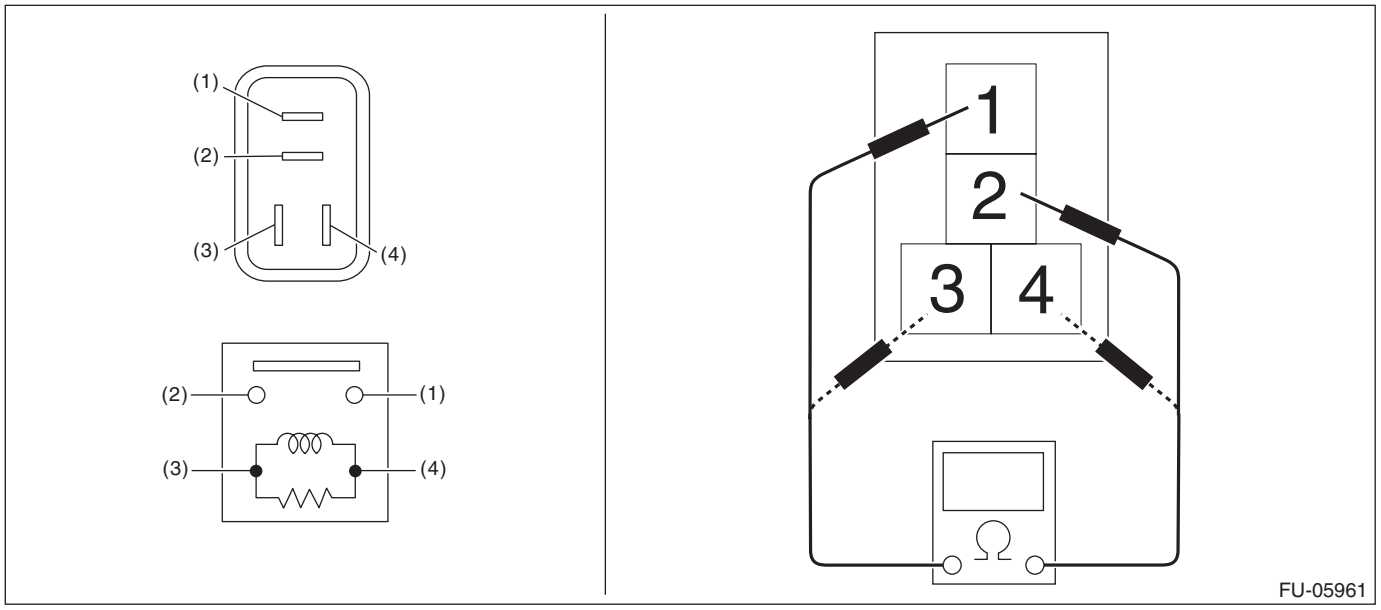

Terminal No.	Standard
1 and 2	1 MΩ or more
3 and 4	128.07 — 156.53 Ω (when 20°C (68°F))

3) Connect battery positive terminal to terminal No. 3 and battery ground terminal to terminal No. 4, and measure the resistance between the starter relay terminals.

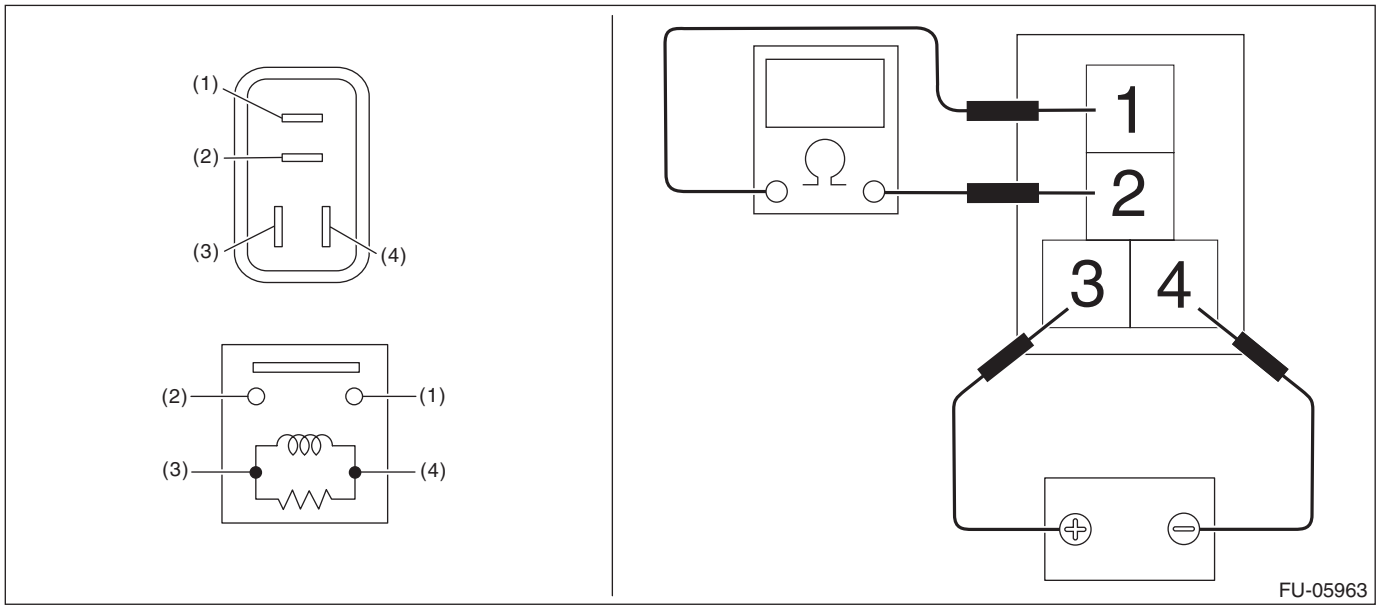

Terminal No.	Standard
1 and 2	Less than 1 Ω

4. Generator

A: REMOVAL

1) Disconnect the ground terminal from battery sensor. <Ref. to RC-4, BATTERY, NOTE, Repair Contents.>
2) Remove the V-belts. <Ref. to ME(H4DO)-71, REMOVAL, V-belt.>
3) Disconnect the connector (A) and terminal (B) from the generator, and remove the clip (C).

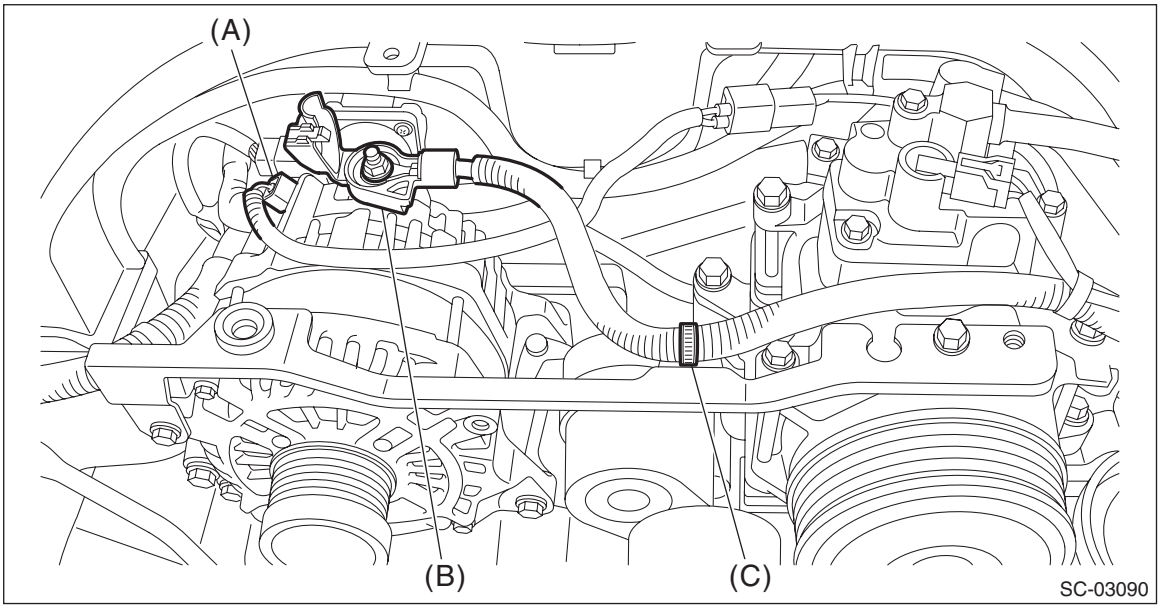

4) Remove the V-belt cover bracket.

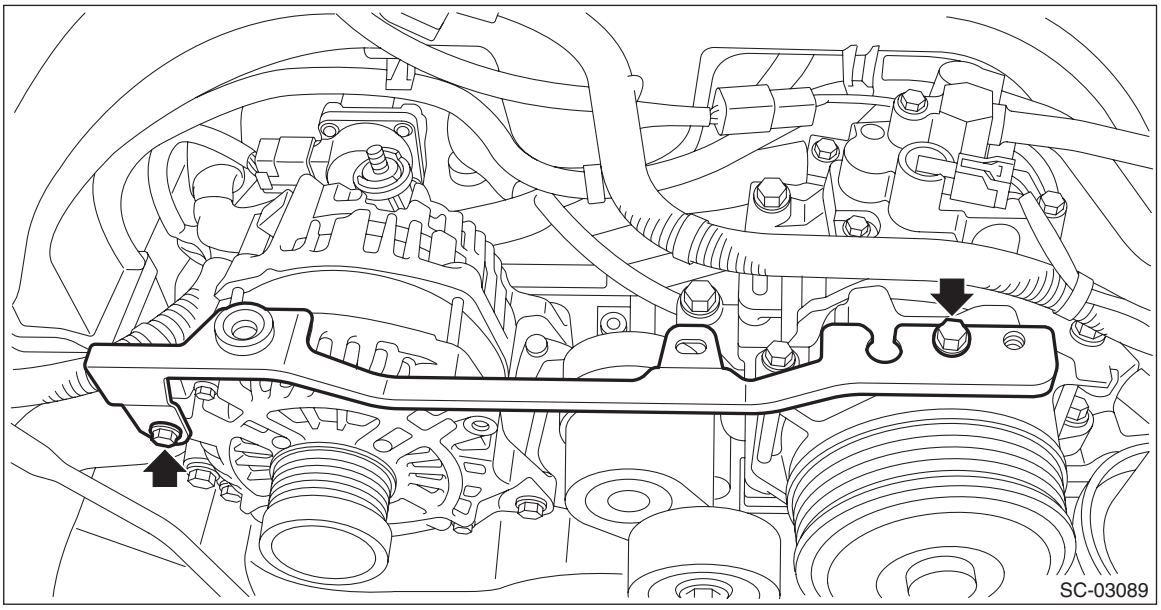

5) Remove the generator from the generator bracket.

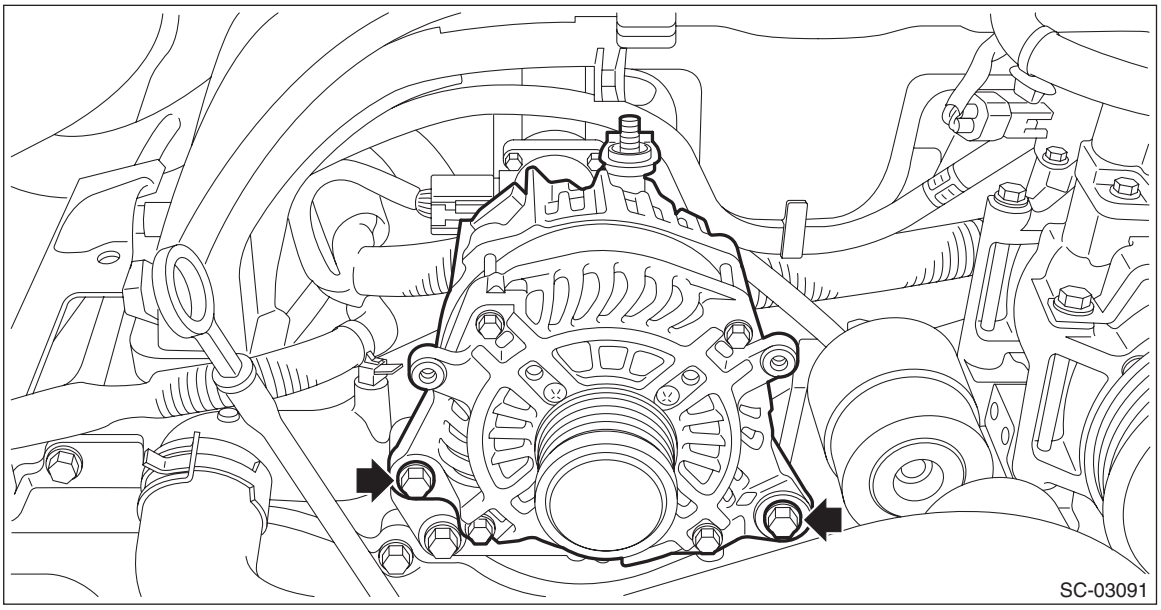

6) Remove the V-belt tensioner. <Ref. to ME(H4DO)-72, V-BELT TENSIONER ASSEMBLY, REMOVAL, V-belt.>

7) Remove the generator bracket from the engine.

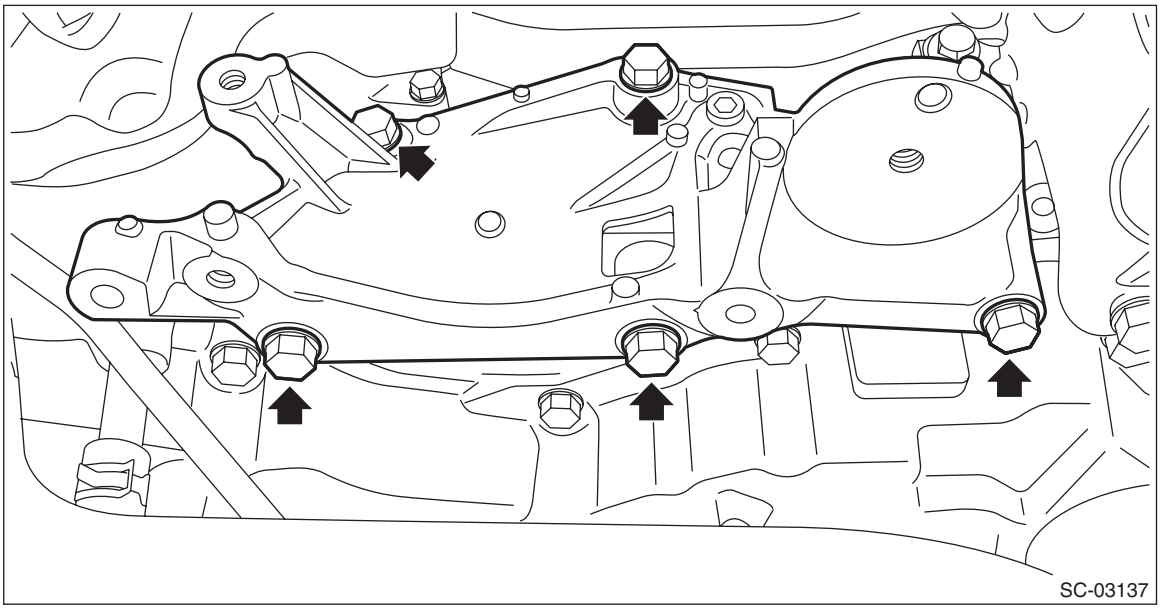

B: INSTALLATION

1) Temporarily install the generator bracket to the engine and tighten the bolts in the numerical order.

Tightening torque:
36 N·m (3.7 kgf-m, 26.6 ft-lb)

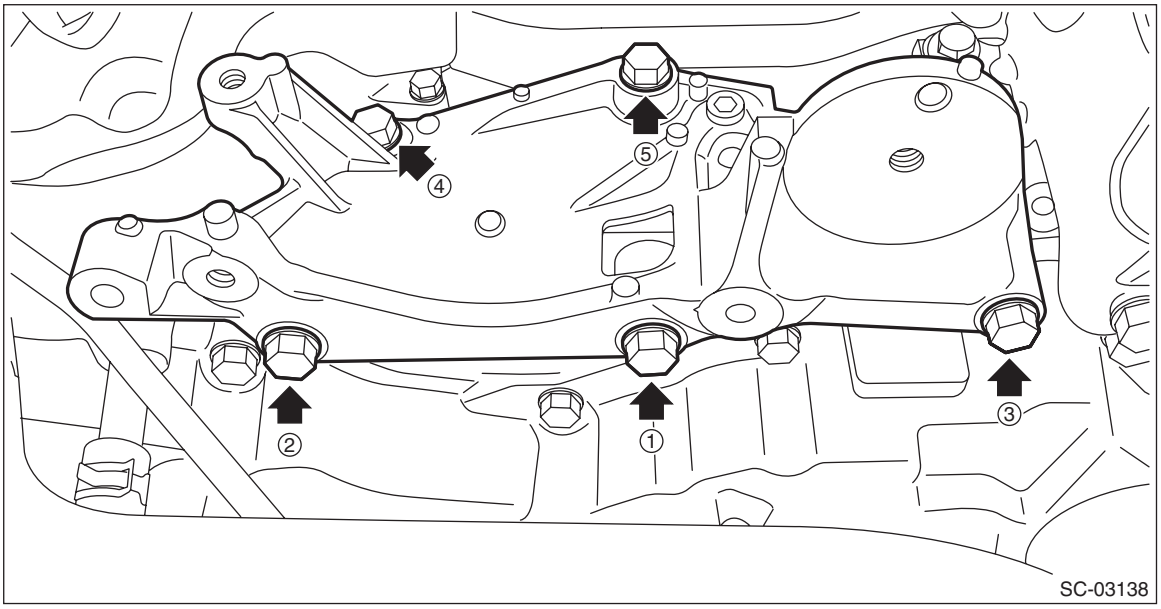

2) Install the V-belt tensioner. <Ref. to ME(H4DO)-74, V-BELT TENSIONER ASSEMBLY, INSTALLATION, V-belt.>
3) Temporarily install the generator bracket to the generator and tighten the bolts in the numerical order.

Tightening torque:
25 N·m (2.5 kgf-m, 18.4 ft-lb)

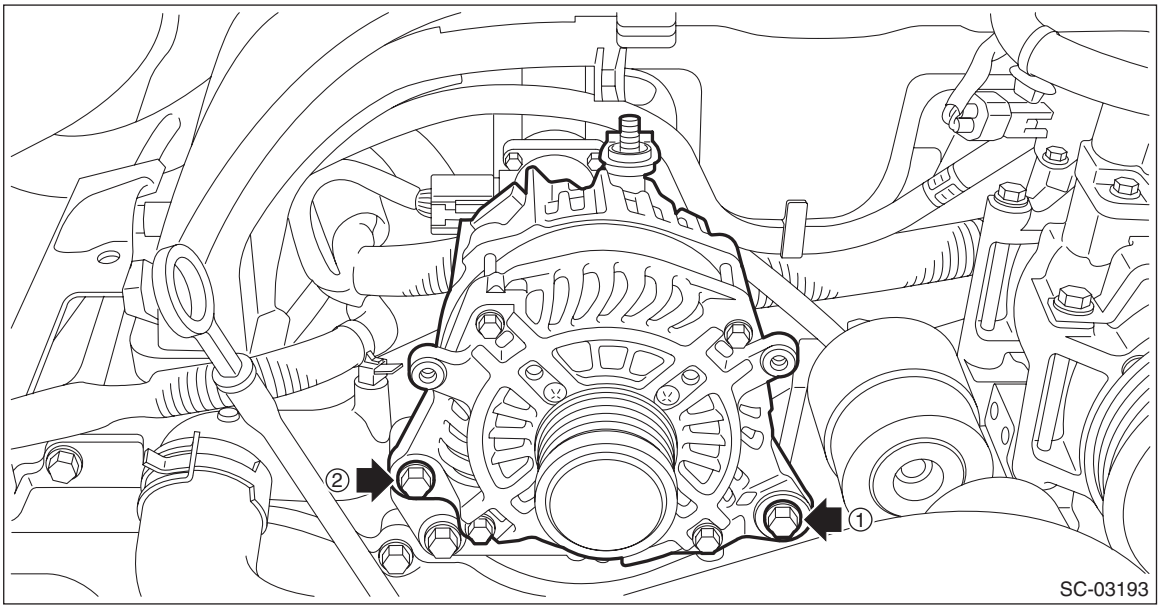

4) Install the V-belt cover bracket.

Tightening torque:
6.4 N·m (0.7 kgf-m, 4.7 ft-lb)

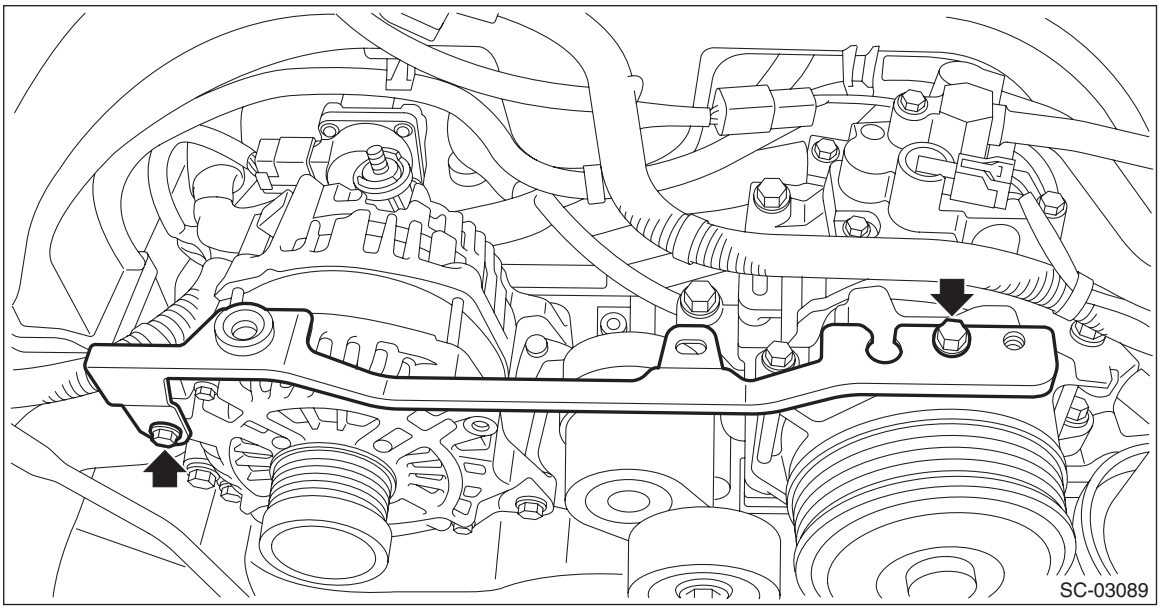

5) Connect the connector (A) and terminal (B) to the generator, and attach the clip (C).

Tightening torque:
15 N·m (1.5 kgf-m, 11.1 ft-lb)

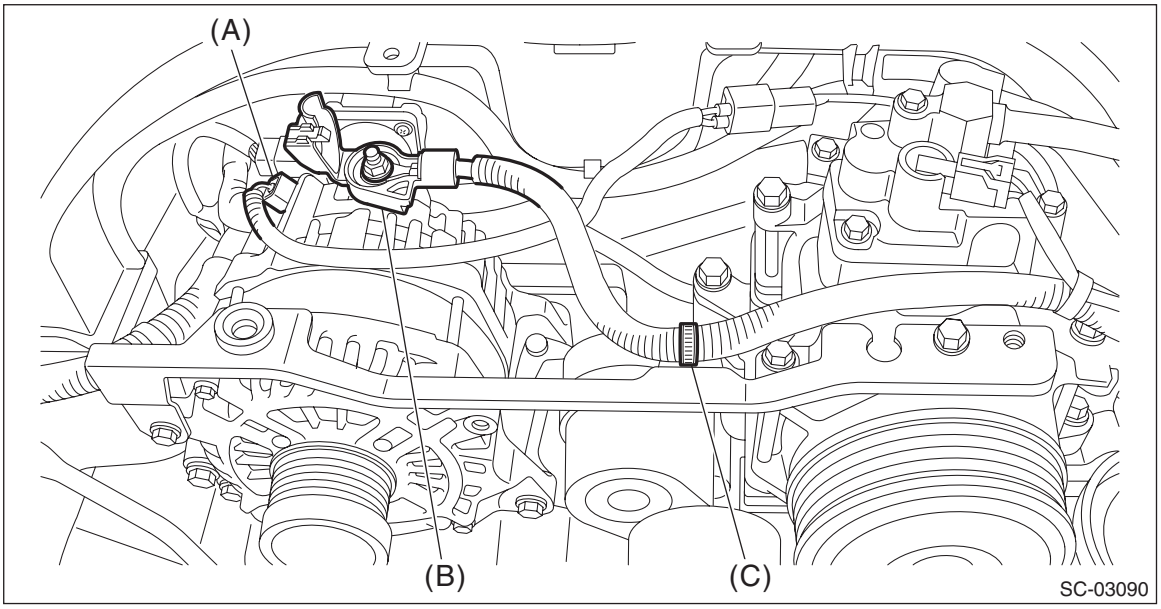

6) Install the V-belts. <Ref. to ME(H4DO)-73, INSTALLATION, V-belt.>
7) Connect the ground terminal to battery sensor. <Ref. to RC-4, BATTERY, NOTE, Repair Contents.>

C: DISASSEMBLY

1) Remove the cap from the generator.

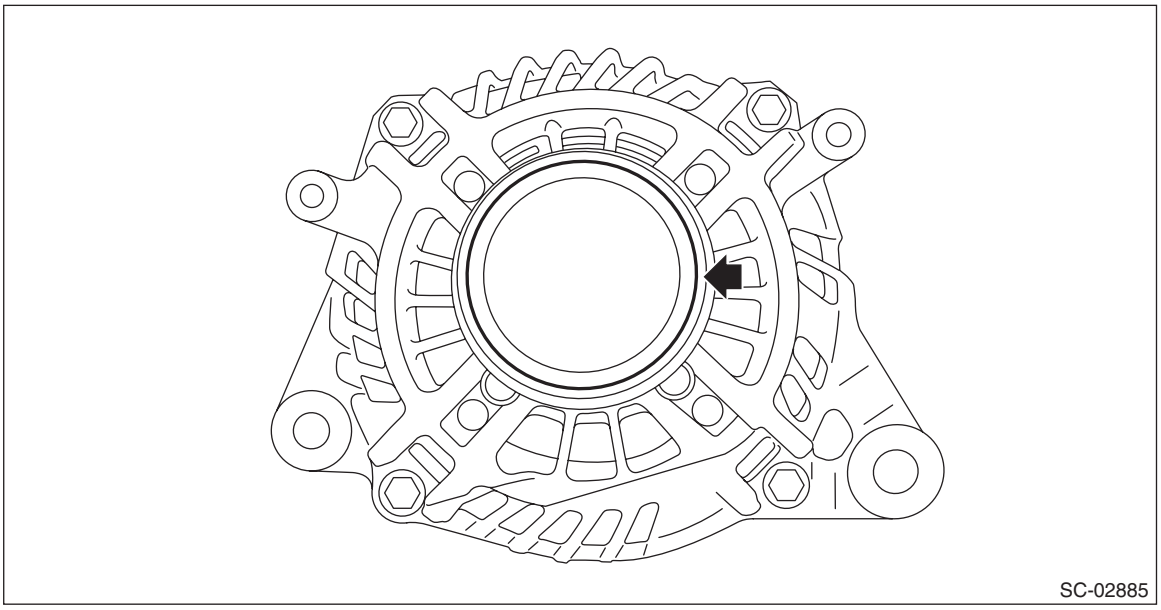

2) Remove four bolts.

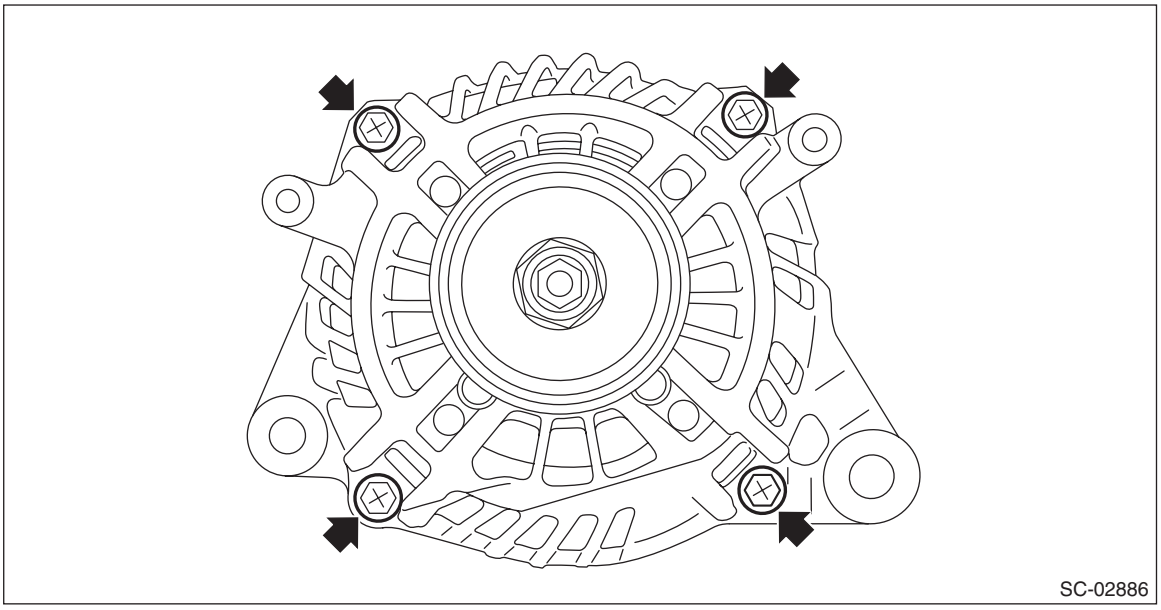

3) Use a drier to heat the rear cover (A) portion to 50 — 60°C (122 — 140°F).

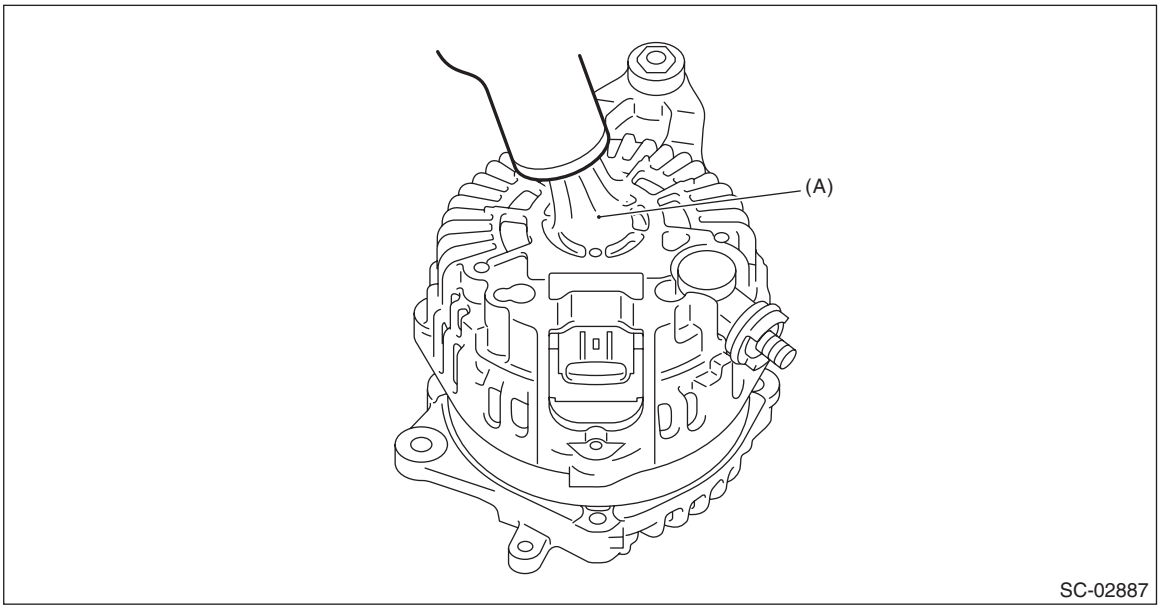

4) Insert a flat tip screwdriver or similar tool wrapped with protective tape into the gap between stator core and the front cover to disassemble.

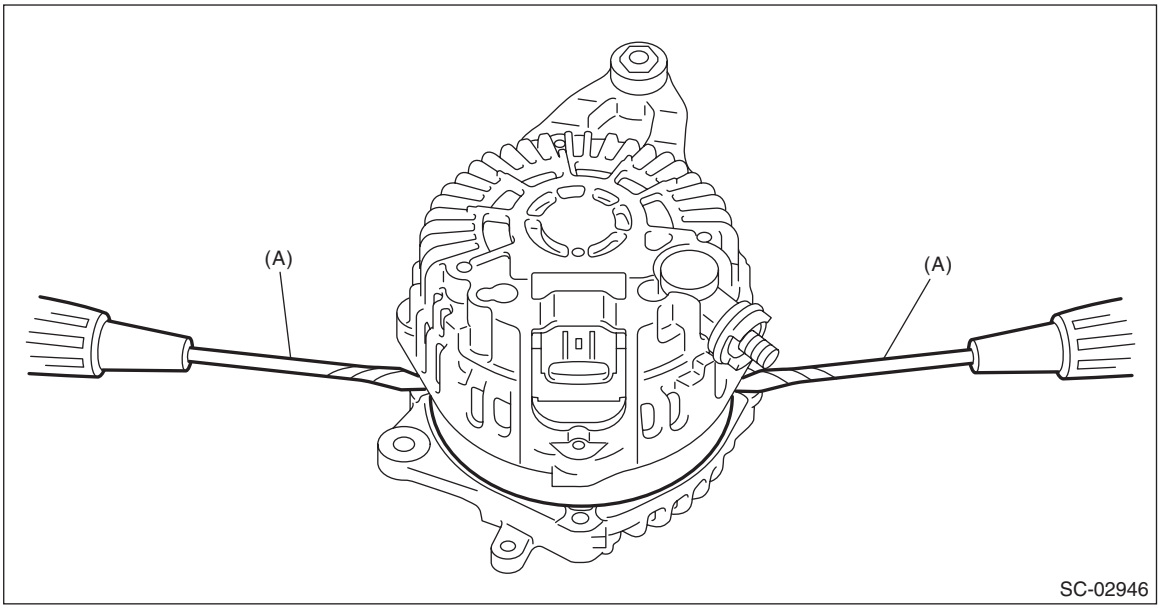

(A) Flat tip screwdriver

5) Hold the rotor on a vise and remove the pulley.

CAUTION:
When holding the rotor with a vise, place aluminum plates or wooden pieces on the vise jaws to prevent rotor from damage.

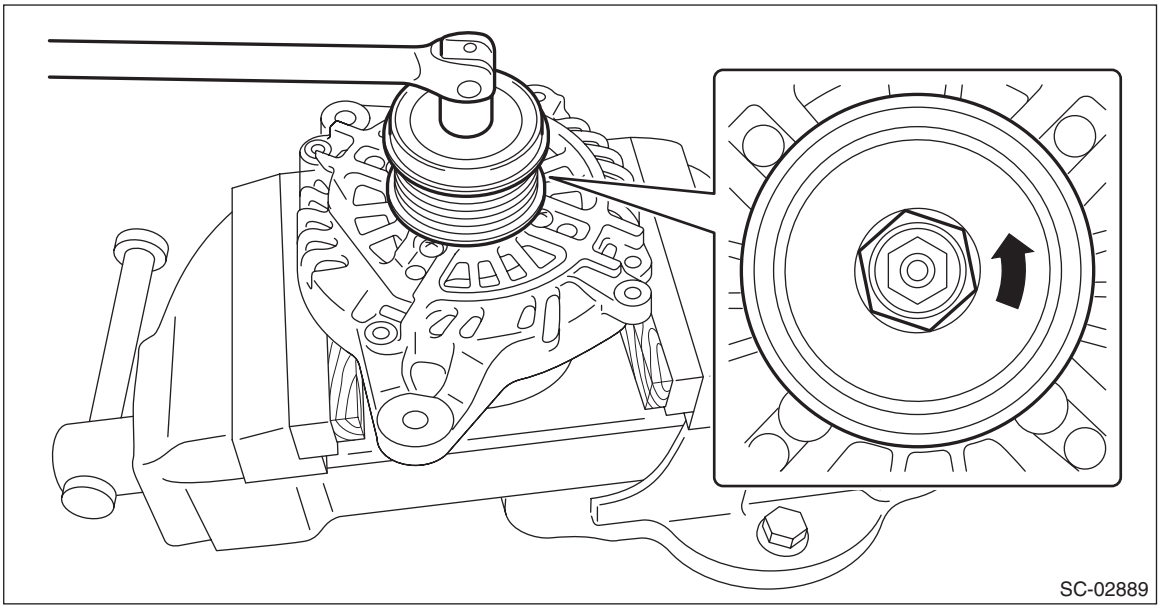

6) Remove the rotor from the front cover.

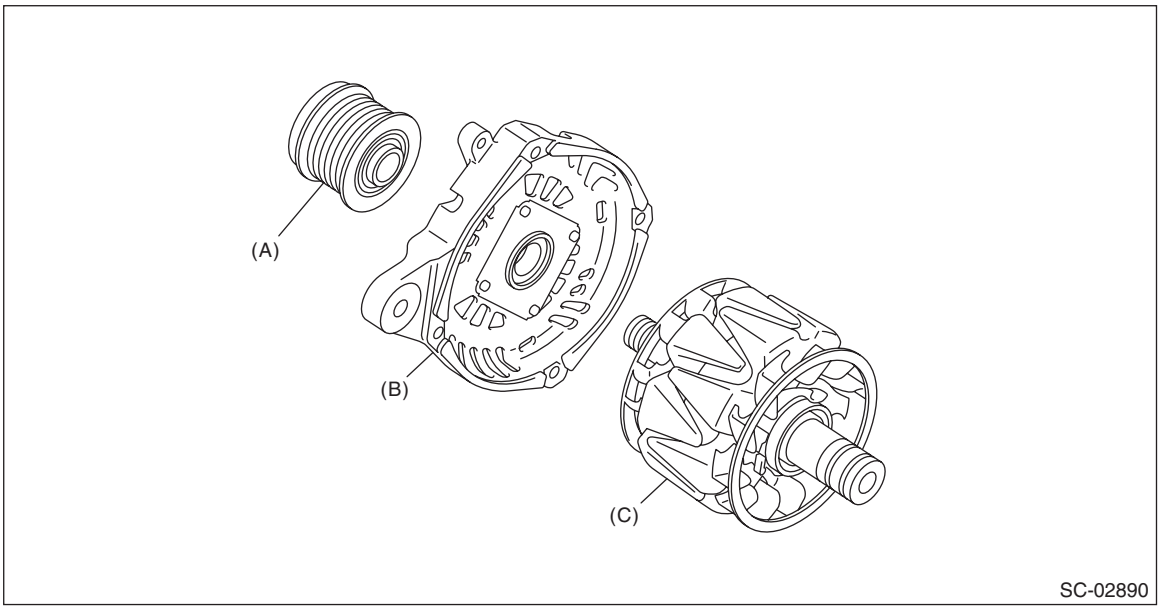

(A) Pulley (B) Front cover (C) Rotor

7) Use the following procedures to remove the ball bearings.
(1) Remove the bolt, and then detach the bearing retainer.

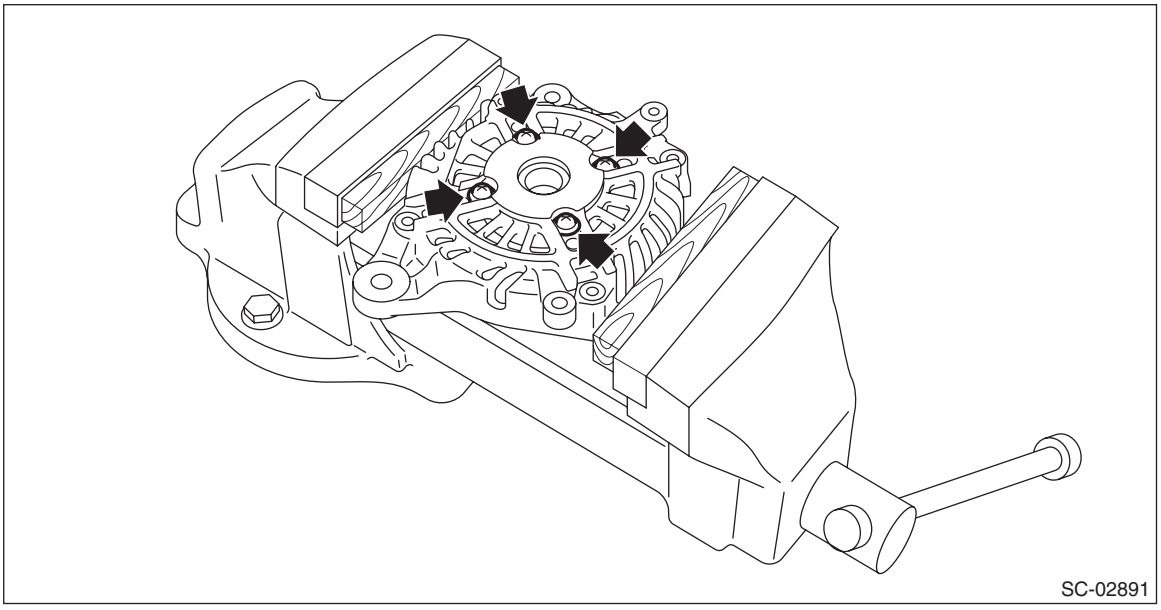
SC-02891

(2) Firmly attach an appropriate tool (such as a correct size socket wrench) to the bearing inner race.

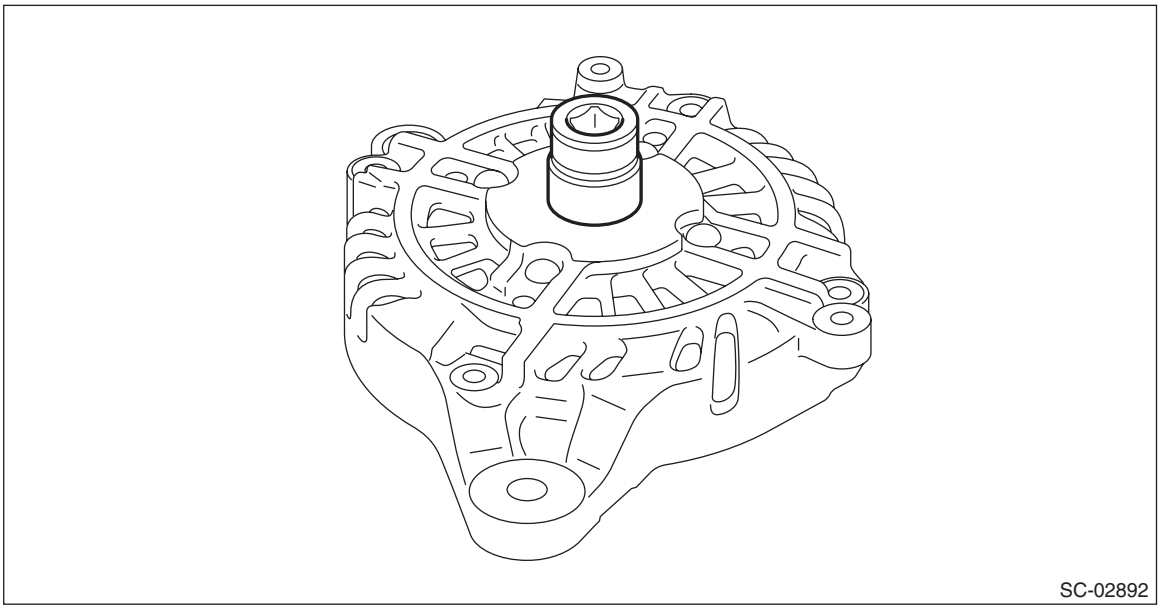
SC-02892

(3) Use the press to push the ball bearings out from the front cover.

8) Using the bearing puller, remove the bearings from the rotor.

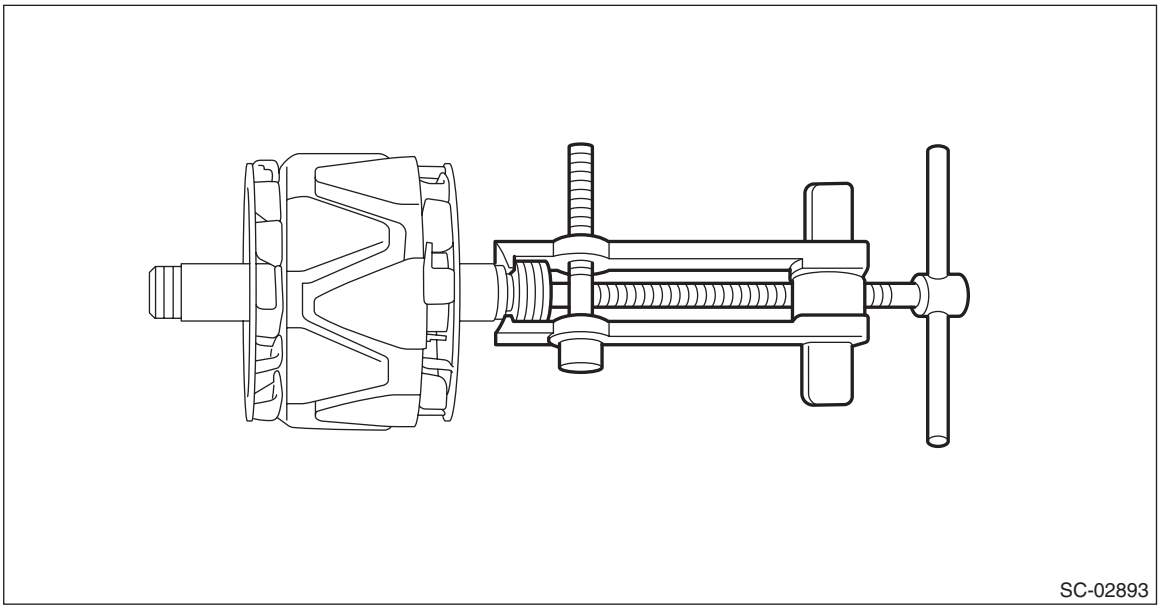
SC-02893

9) Remove six bolts which connect the rectifier and stator coil, then remove the stator coil.

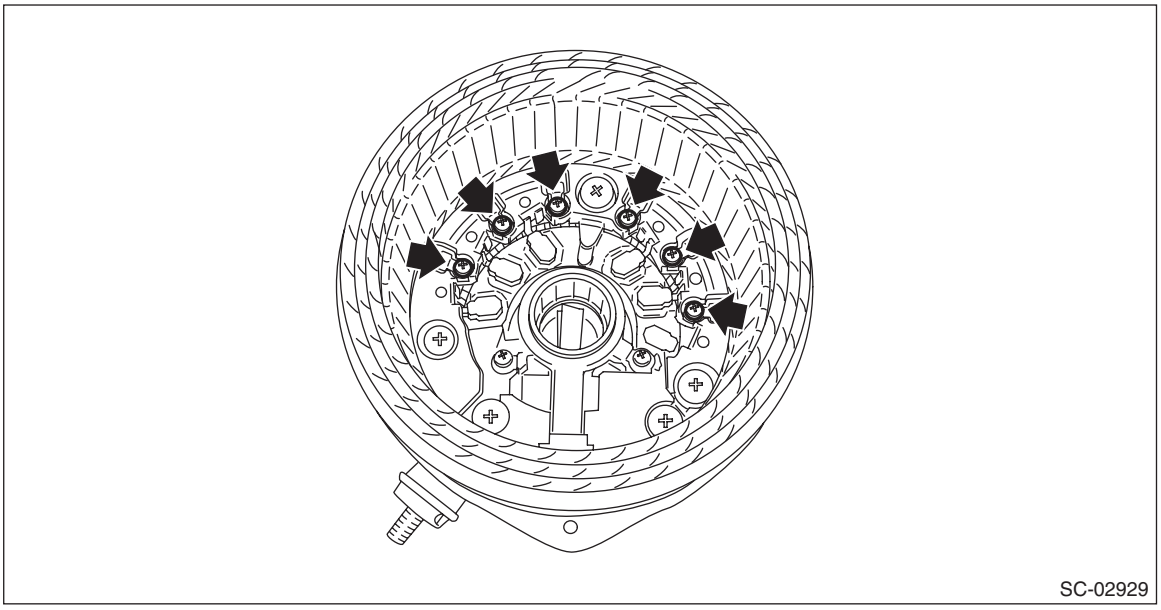
SC-02929

10) Remove four screws which secure the IC regulator to the rear cover, then remove the IC regulator.

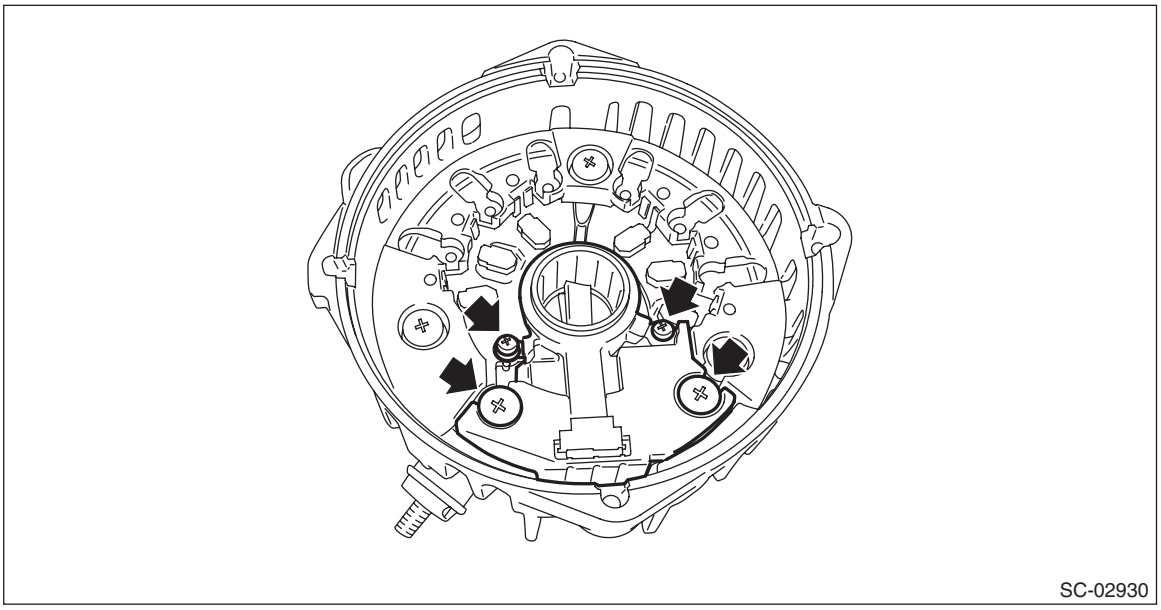
SC-02930

11) Use the following procedures to remove the brush.
(1) Remove the cover A.

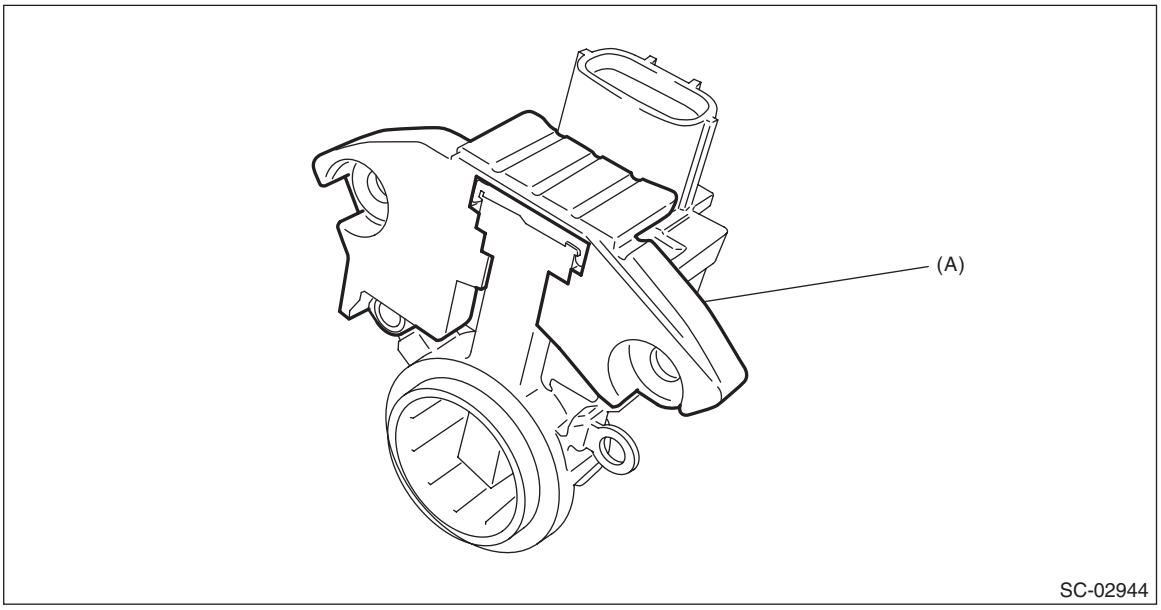

SC-02944

(A) Cover A

(2) Remove the cover B.

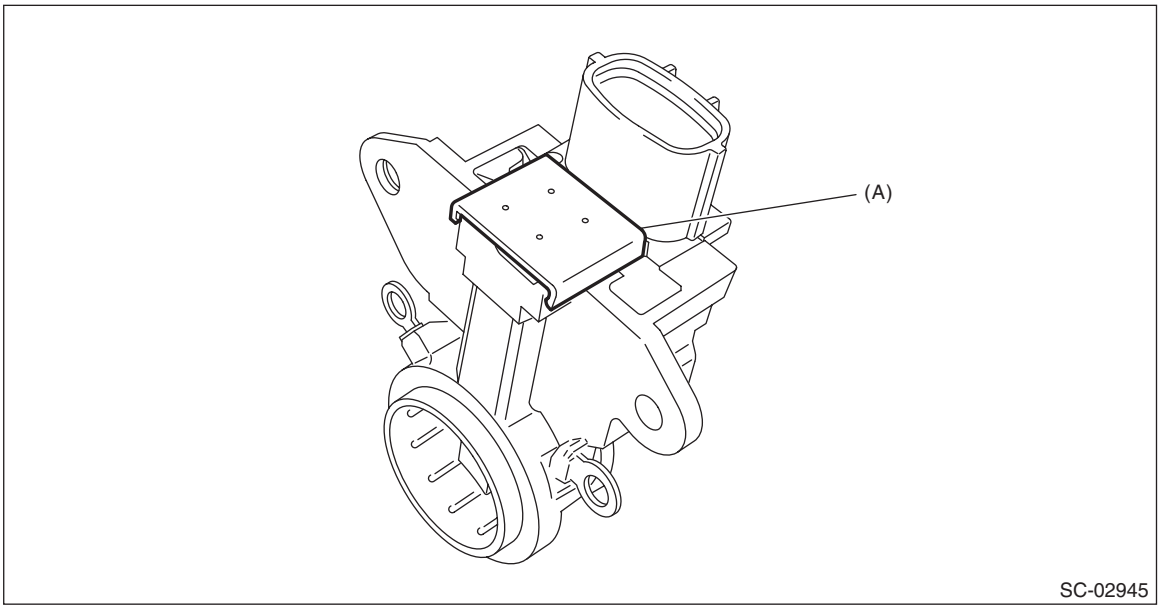

(A) Cover B

(3) Disconnect the connection and remove the brush.

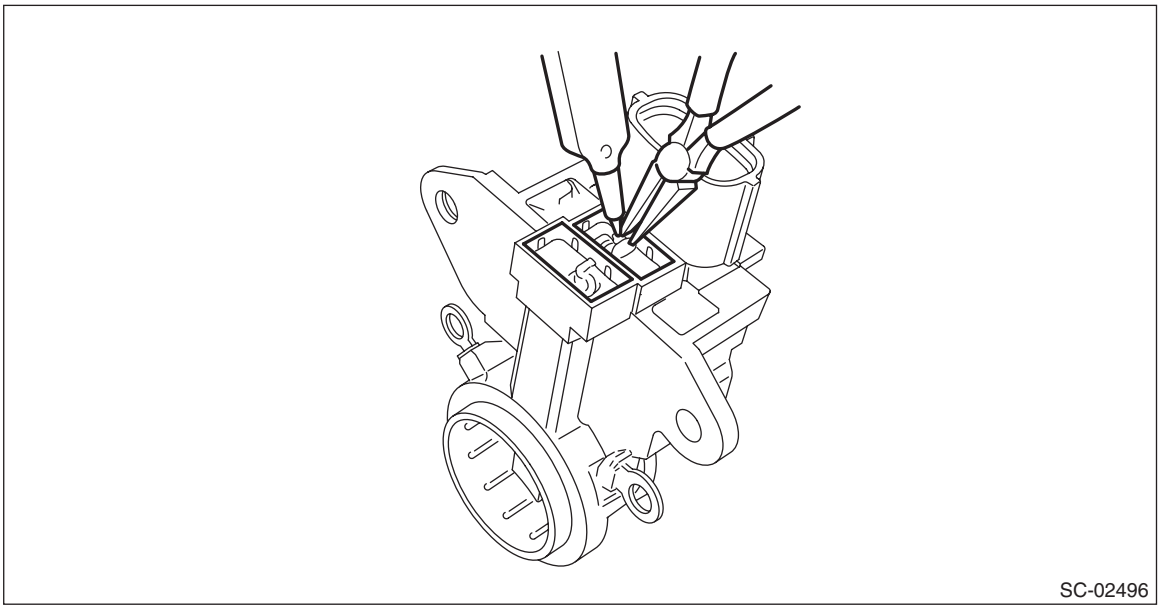

12) Remove the rectifier as follows.
(1) Remove the cover on terminal B.

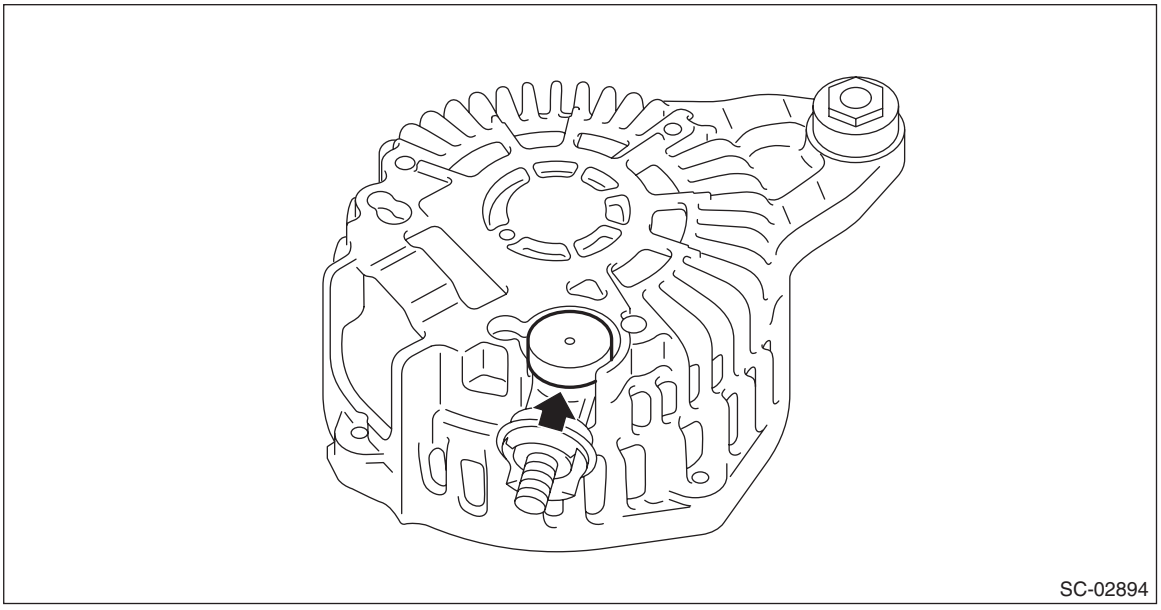
SC-02894

(2) Remove the nut on terminal B.

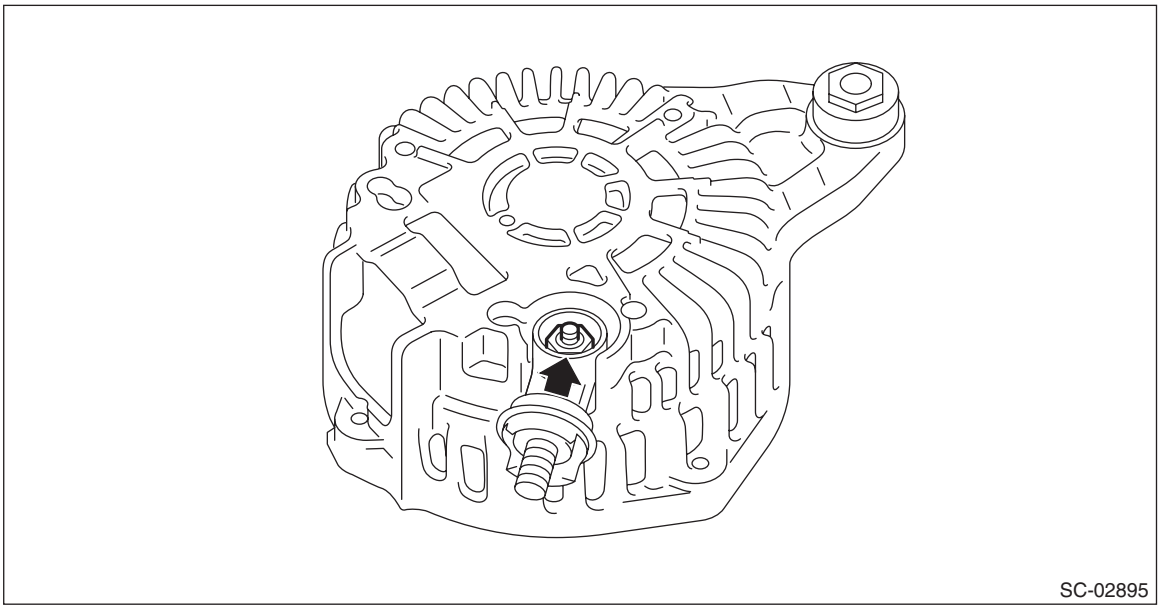
SC-02895

(3) Remove the bolts which secure the rectifier, and remove the rectifier.

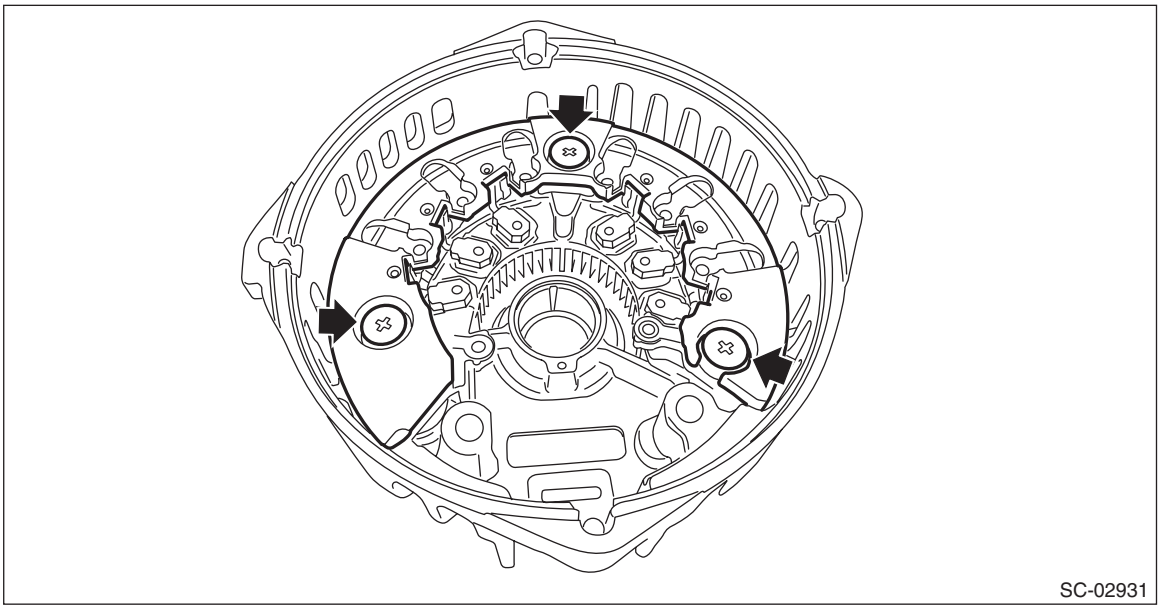

D: ASSEMBLY

NOTE:
After assembling, manually turn the pulley to check that the rotor rotates smoothly.

1) Use the following procedures to install the rectifier.
   (1) Remove old silicone grease on the mating surface of rear cover and rectifier and apply new silicone grease.

CAUTION:
Do not apply silicone grease to the attachment threads of rectifier.

   (2) Install the rectifier and secure it using bolts.

Tightening torque:
3.9 N·m (0.4 kgf-m, 2.9 ft-lb)

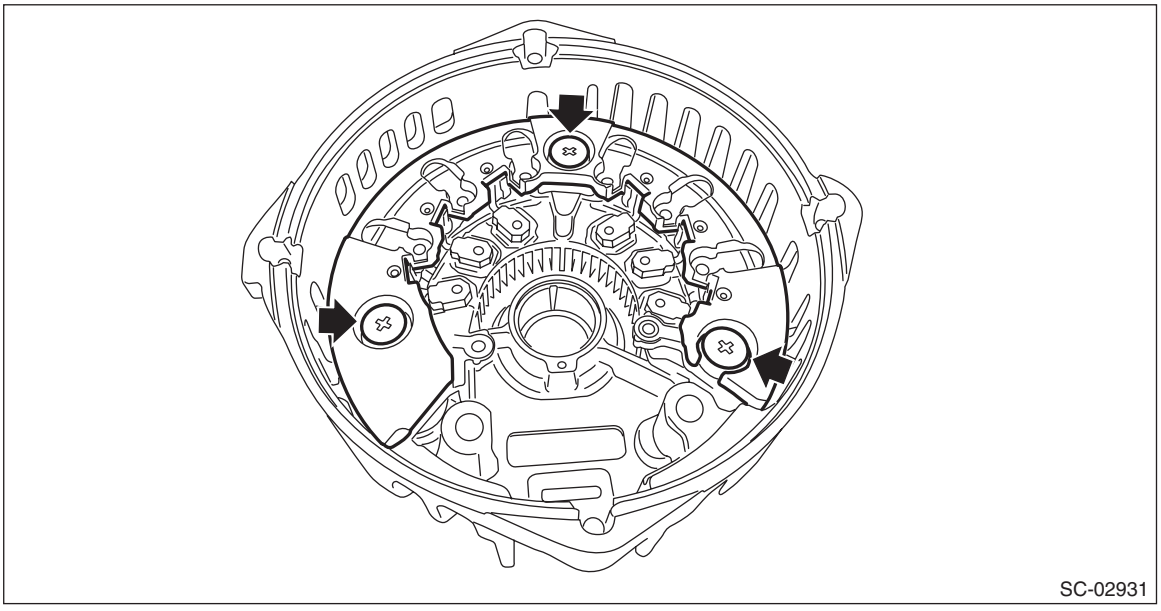

(3) Install the nut on terminal B.

Tightening torque:
8.9 N·m (0.9 kgf-m, 6.6 ft-lb)

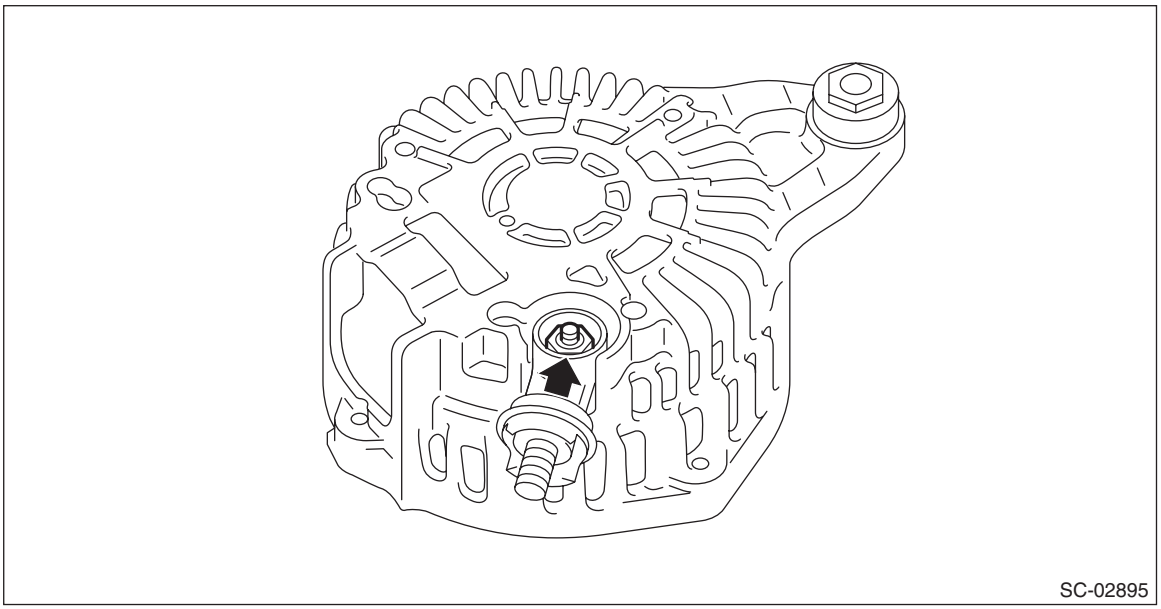
SC-02895

(4) Install the cover on terminal B.

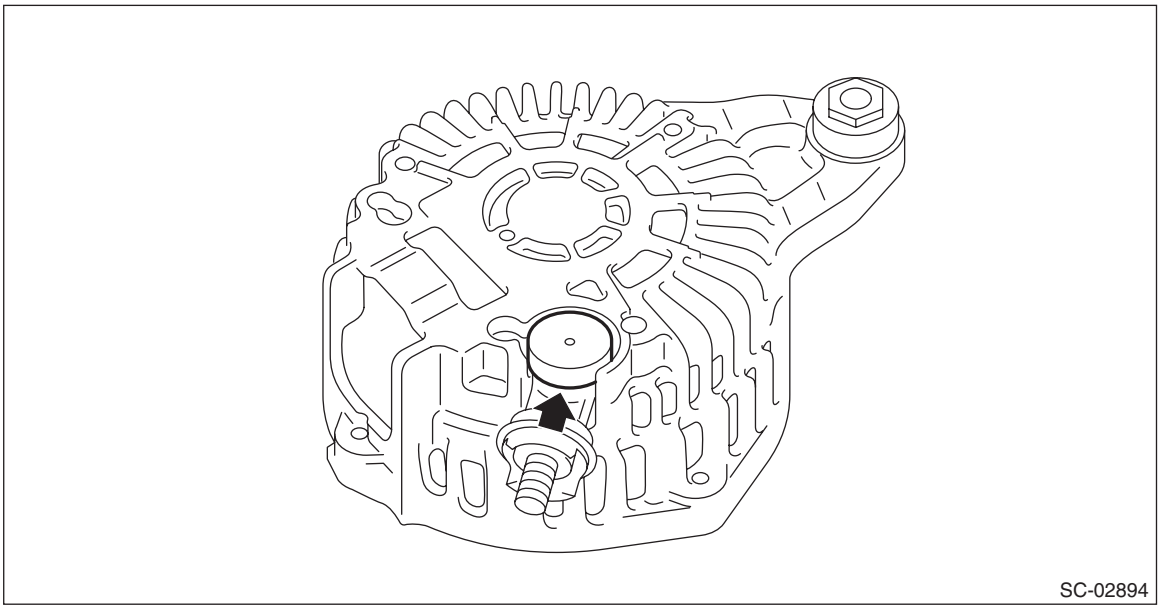
SC-02894

2) Use the following procedures to install the brush.
(1) Install the brush and connect the connection.

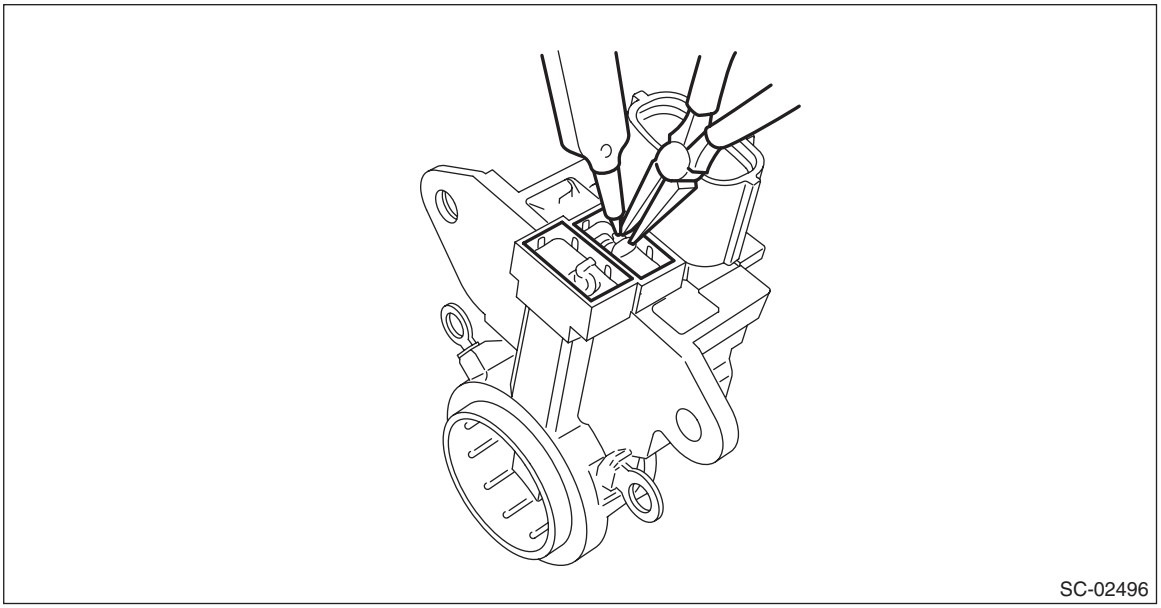
SC-02496

(2) Install the cover B.

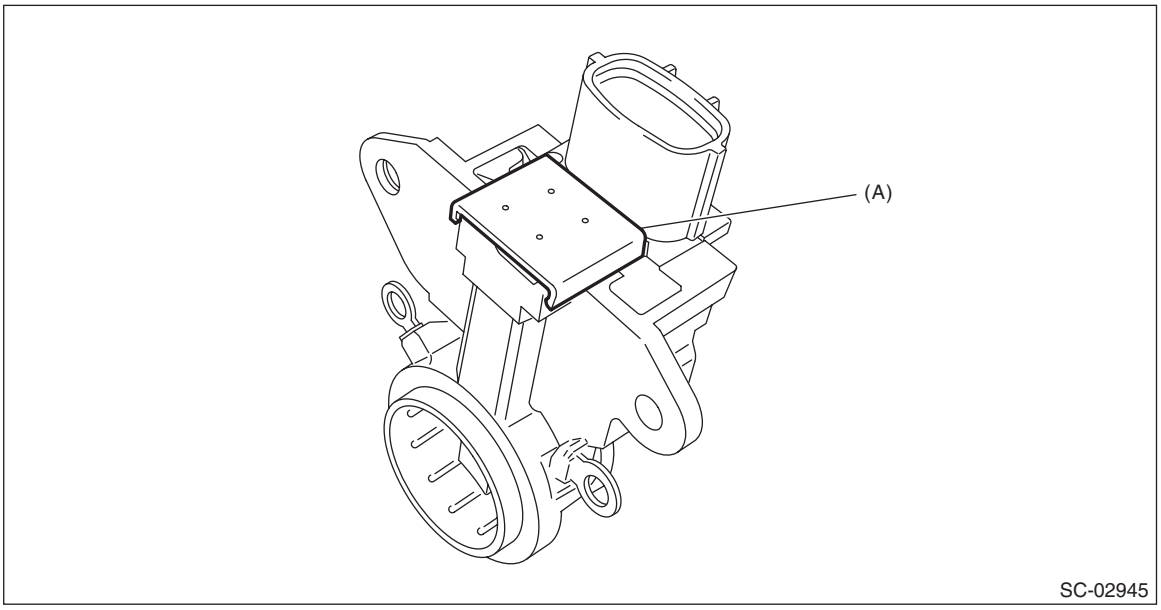

SC-02945

(A) Cover B

(3) Install the cover A.

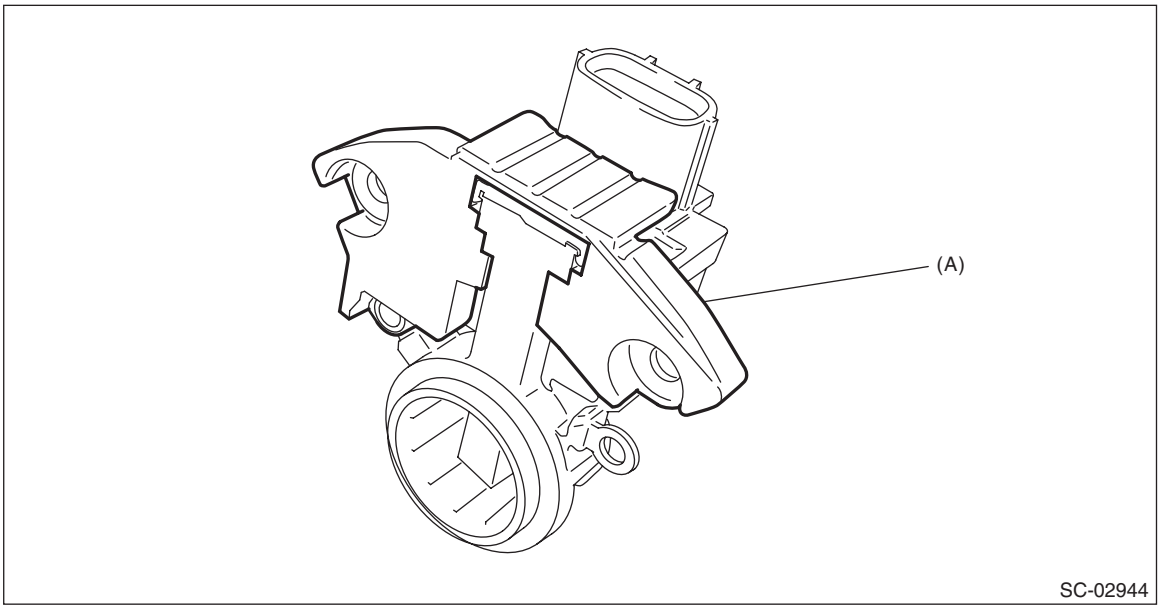

(A) Cover A

3) Install the IC regulator, and secure it to the rear cover using the four screws.

Tightening torque:
T1: 2 N·m (0.2 kgf-m, 1.5 ft-lb)
T2: 3.9 N·m (0.4 kgf-m, 2.9 ft-lb)

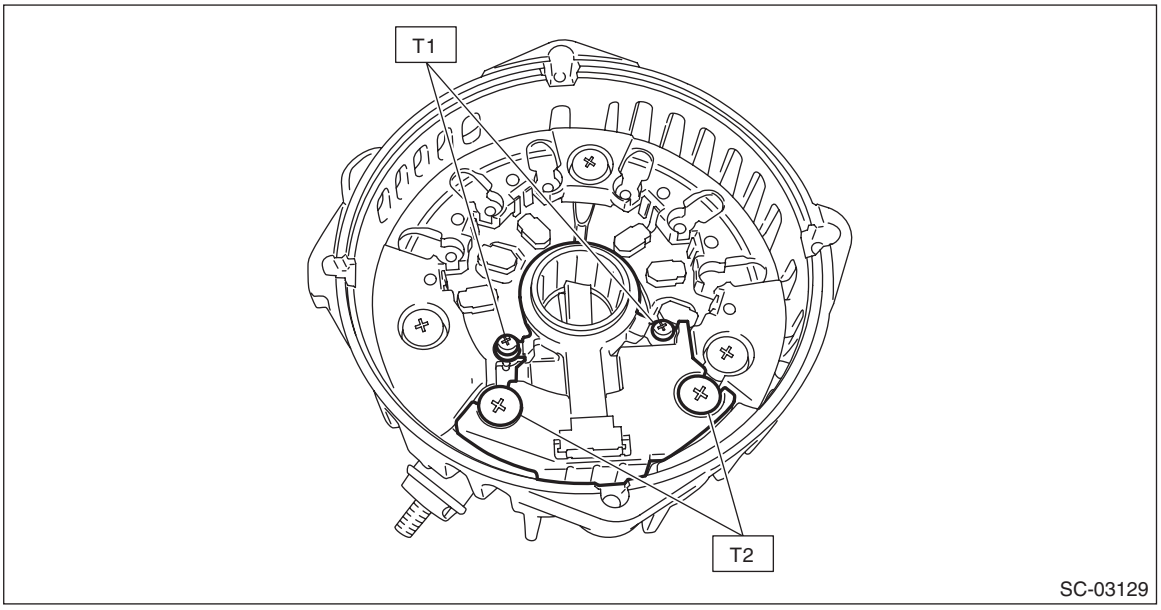

4) Install the stator coil, and secure it together with the rectifier using six bolts.

Tightening torque:
2 N·m (0.2 kgf-m, 1.5 ft-lb)

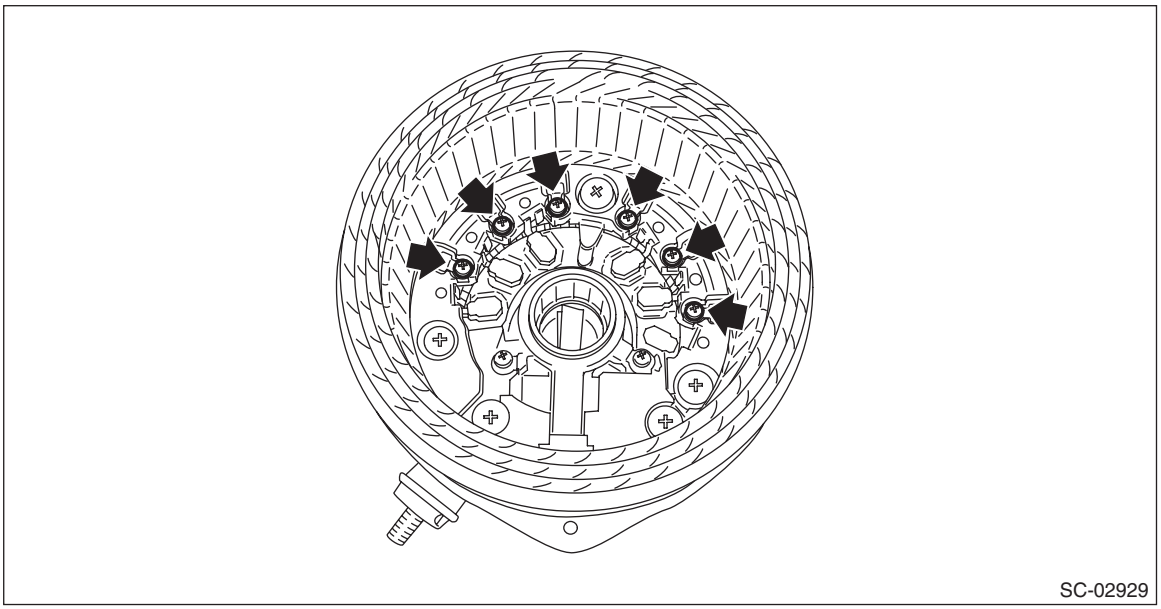

5) Install the ball bearings.
(1) Set the ball bearings in the front cover, then securely install an appropriate tool (such as a socket wrench of proper size) to the bearing outer race.
(2) Using a press to press the ball bearings into the specified location.
(3) Install the bearing retainer.

Tightening torque:
3.9 N·m (0.4 kgf-m, 2.9 ft-lb)

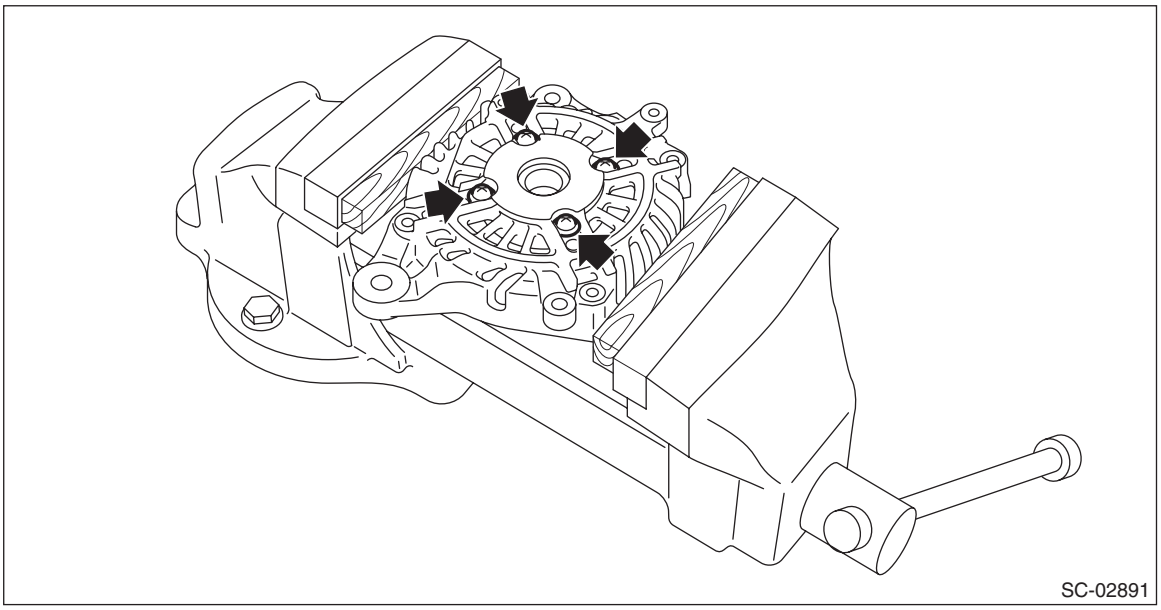

6) Use a press to install the bearings to the rotor shaft.
7) Install the rotor to the front cover, and install the pulley holding the rotor using a vise.

CAUTION:
When holding the rotor with a vise, place aluminum plates or wooden pieces on the vise jaws to prevent rotor from damage.

Tightening torque:
108 N·m (11.0 kgf-m, 79.8 ft-lb)

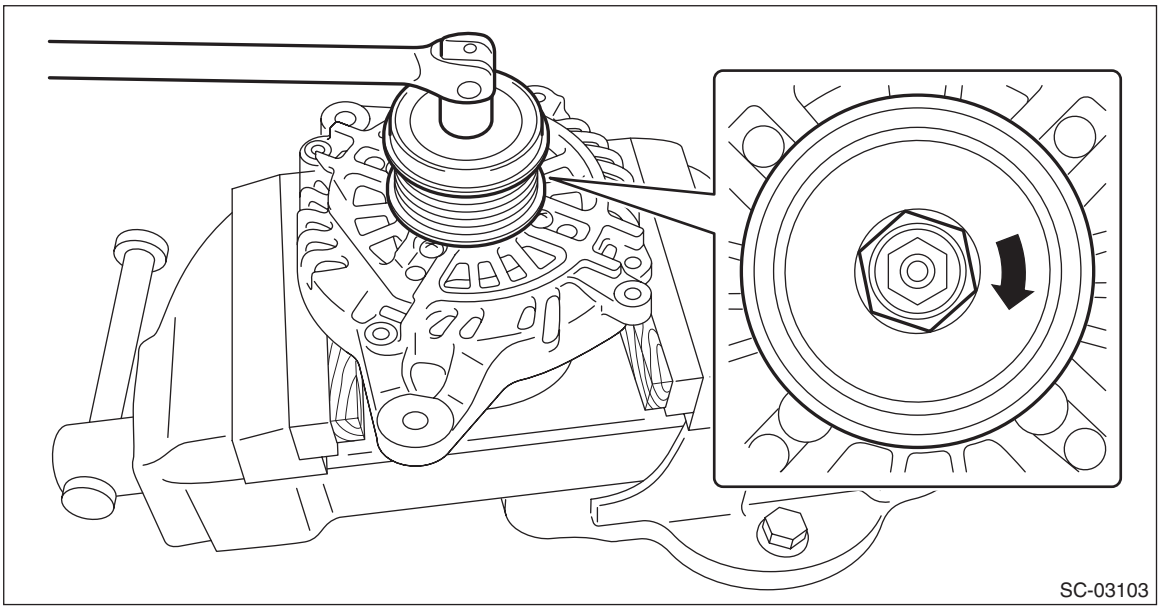
SC-03103

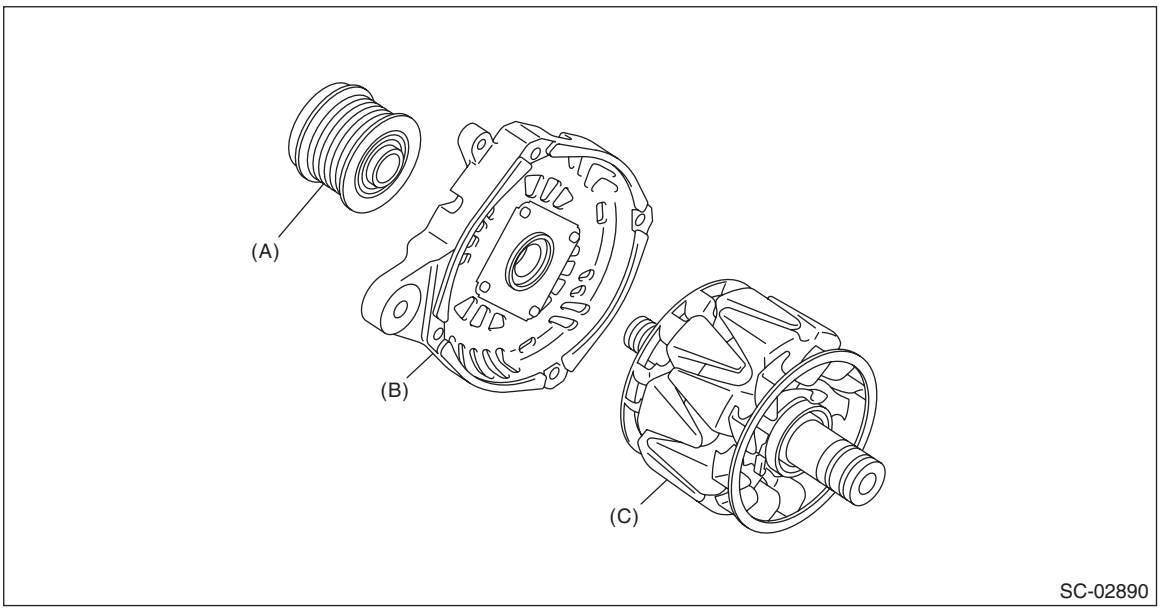

SC-02890

(A) Pulley (B) Front cover (C) Rotor

8) Press the brush into the brush holder, then fix the brush in that position by inserting a [1 mm (0.0394 in) dia., 40 — 50 mm (1.5748 — 1.9685 in) long] wire through the hole as shown in the figure.

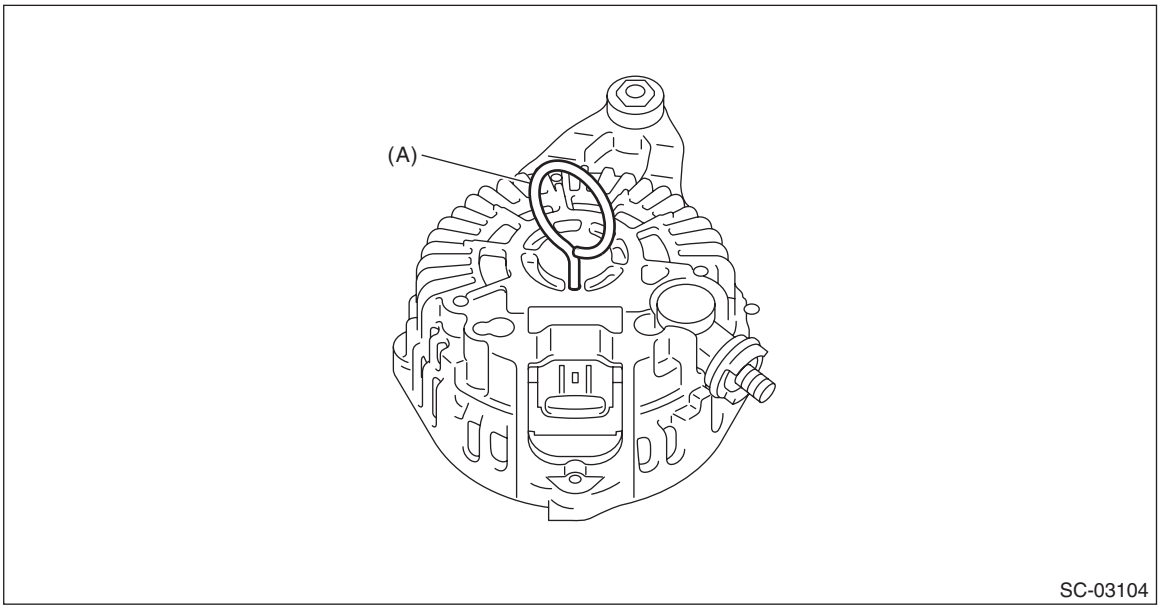

(A) Wire

9) Heat the bearing box in rear cover at 50 to 60°C (122 to 140°F), and then press the bearing into rear cover.

CAUTION:
Do not apply grease to the bearings. If there is any oil on the bearing box, remove it completely.

10) Remove the wire.

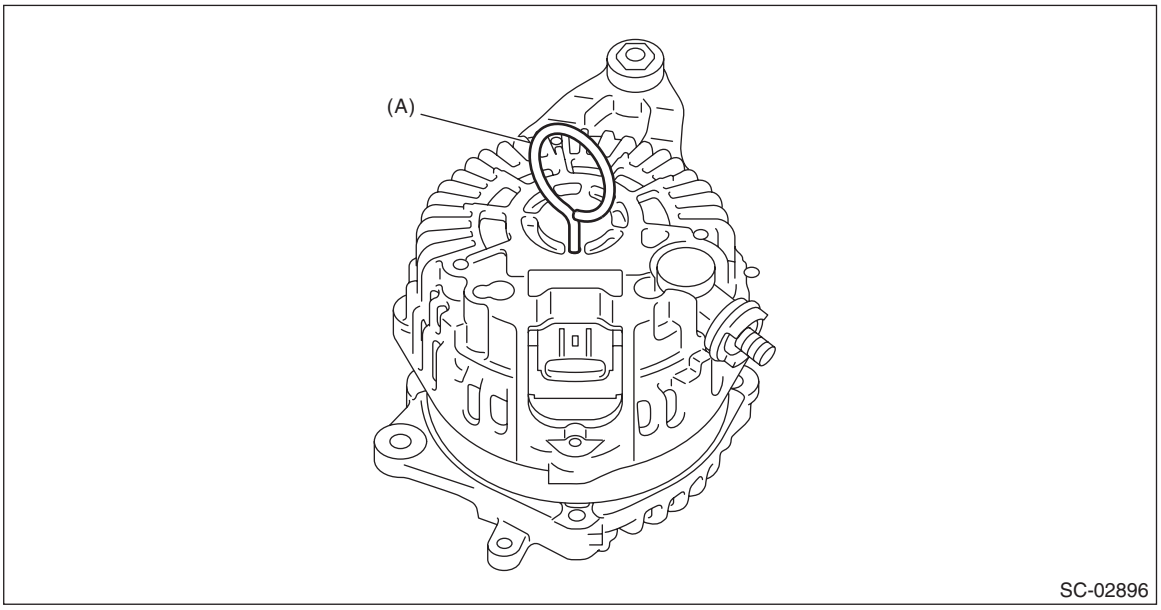

(A) Wire

11) Install the four bolts.

Tightening torque:
4.4 N·m (0.4 kgf-m, 3.2 ft-lb)

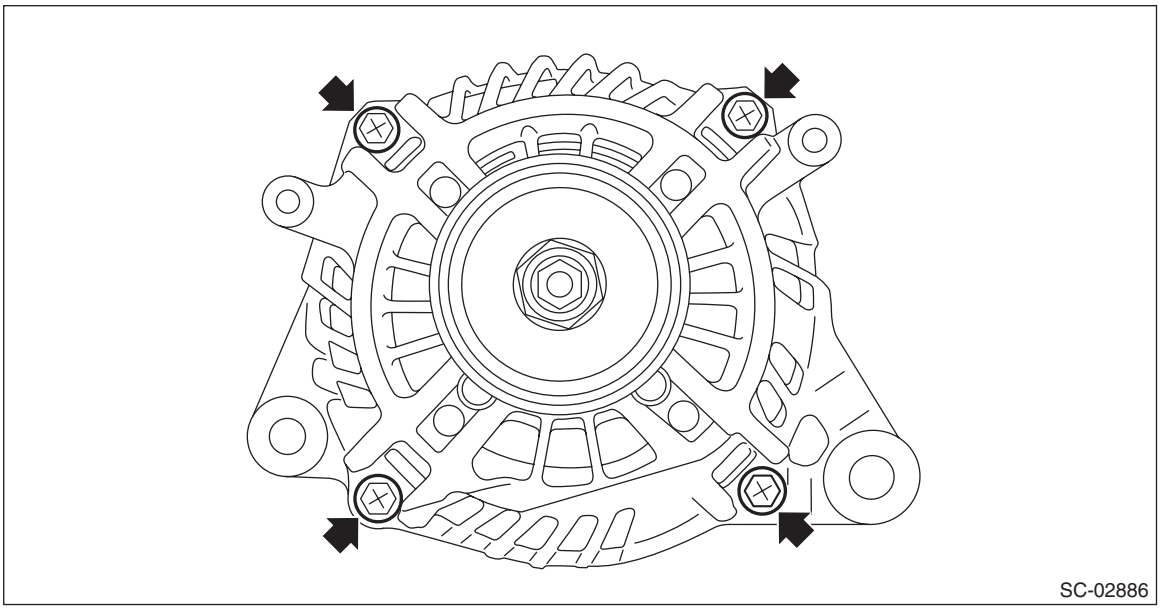
SC-02886

12) Install the cap to the generator.

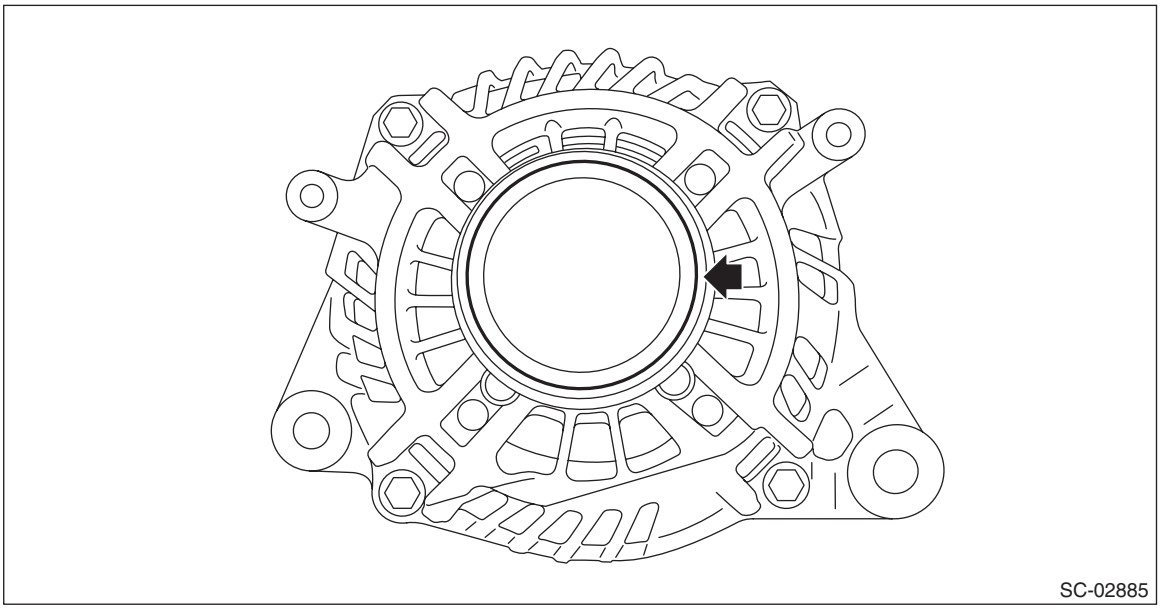
SC-02885

E: INSPECTION

1. DIODE

CAUTION:
There is the possibility of damaging the diodes if a mega-tester (used to measure high voltages) or a similar measuring instrument is used. Never use a mega tester or equivalent for this test.
1) Check for continuity between the diode lead and terminal E or B. If continuity is not as shown in the table, replace the rectifier.
- At analog type tester

Tester lead		Continuity
–lead	+lead	
E	P1, P2, P3, P4, P5, P6	Yes
B		None
P1, P2, P3, P4, P5, P6	E	None
	B	Yes

- At digital type tester

Tester lead		Continuity
–lead	+lead	
E	P1, P2, P3, P4, P5, P6	None
B		Yes
P1, P2, P3, P4, P5, P6	E	Yes
	B	None

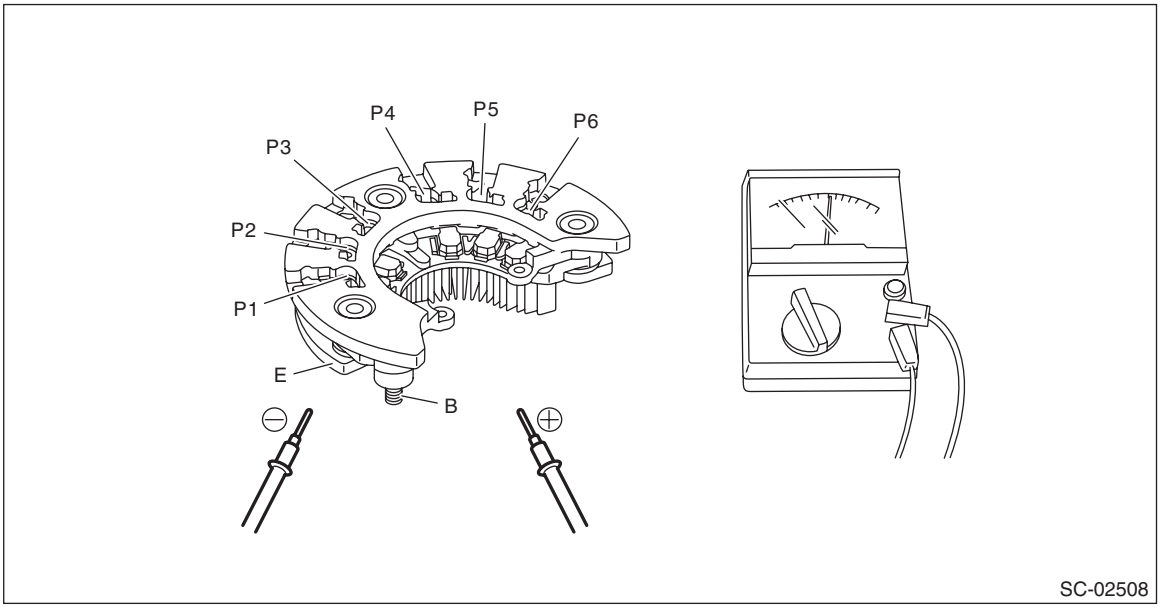

2. ROTOR

1) Slip ring surface
Inspect the slip rings for contamination or any roughness on the sliding surface. Repair the slip ring surface using a lathe or sand paper.
2) Slip ring outer diameter
Measure the slip ring outer diameter. Replace the rotor if the slip ring is worn.

Slip ring outer diameter:
Standard
22.7 mm (0.894 in)
Limit
22.1 mm (0.870 in)
3) Continuity test
Using a circuit tester, check the resistance between slip rings. If the resistance is not within the standard, replace the rotor.

Standard:
Approx. 2.0 — 2.4 Ω

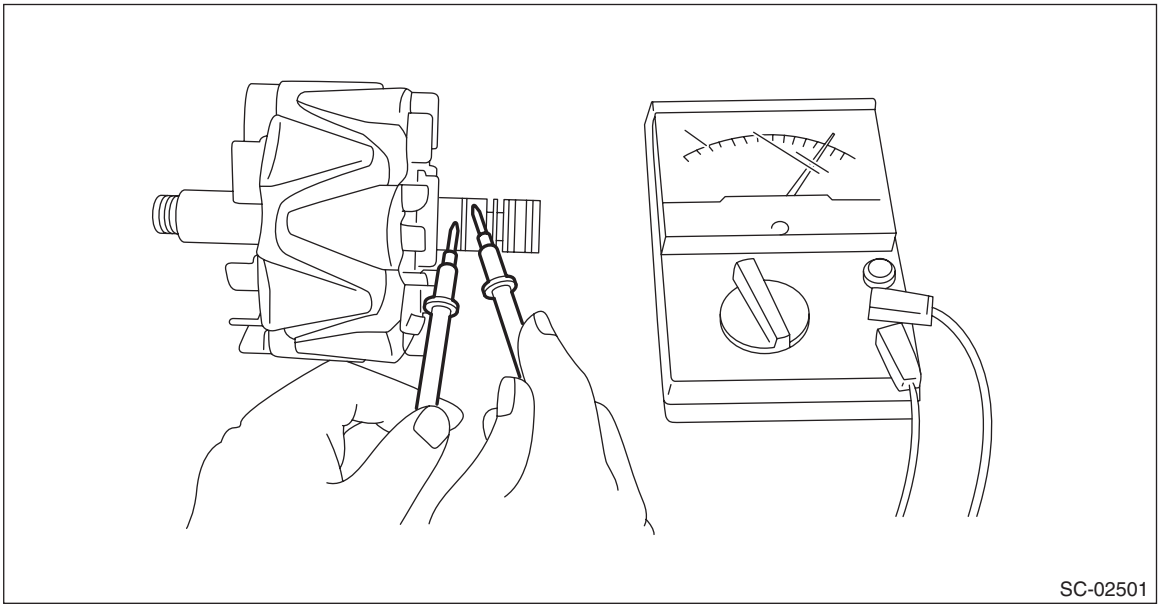
SC-02501

4) Insulation test
Check the continuity between slip ring and rotor core or shaft. If there is continuity, replace the rotor because the rotor coil is grounded.

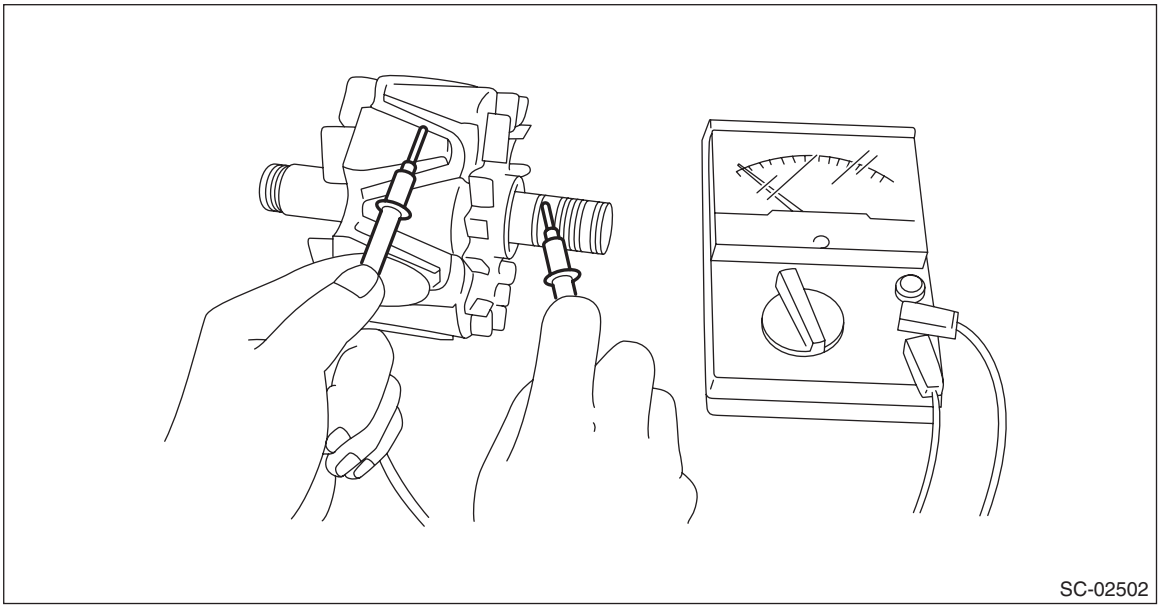
SC-02502

5) Bearing
Check the bearings. If there is any noise, or the rotor does not rotate smoothly, replace the bearings.

3. STATOR COIL

1) Continuity test
Inspect the continuity between the stator coil terminals. If continuity is not as shown in the table, replace the stator coil.

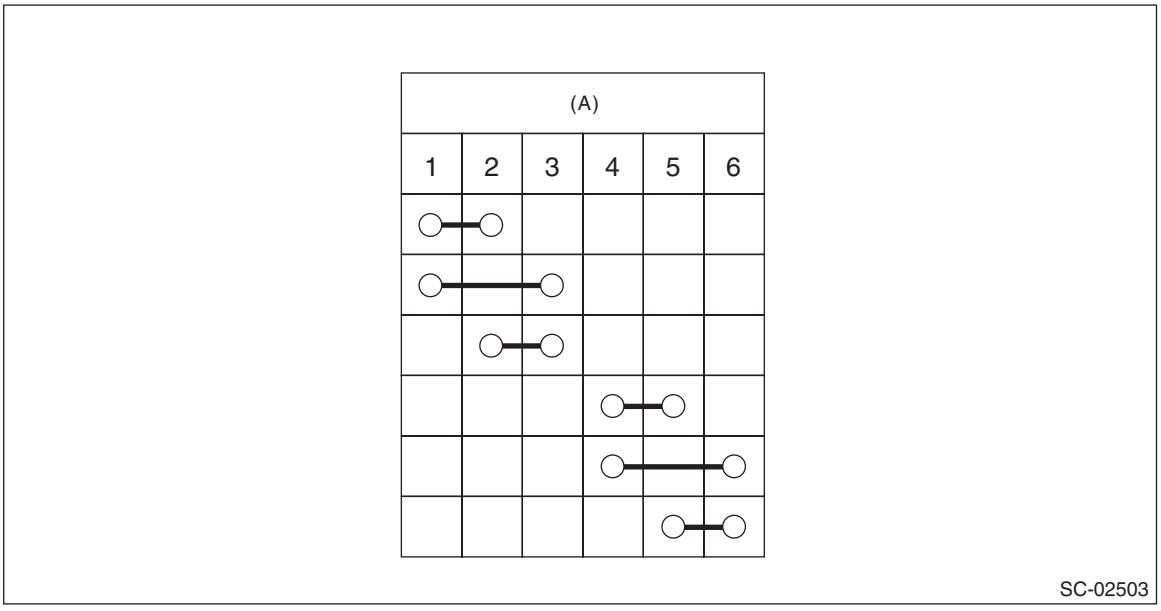

SC-02503

(A) Terminals

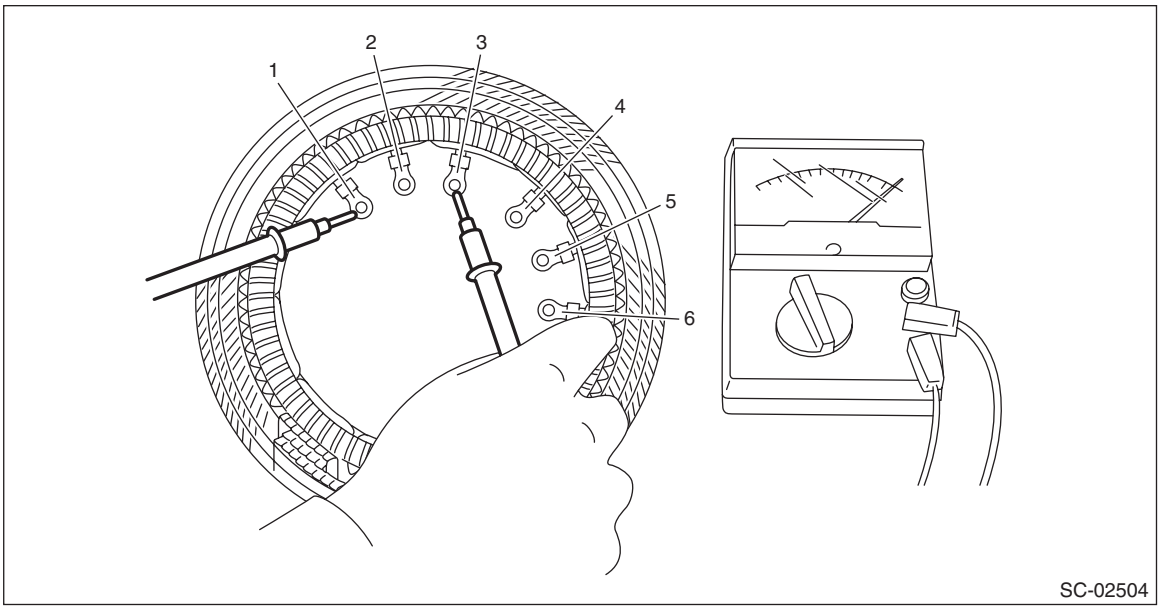

2) Insulation test
Inspect the continuity between the stator coil stator core and lead wire terminals. If there is continuity, replace the stator coil because the stator coil is grounded.

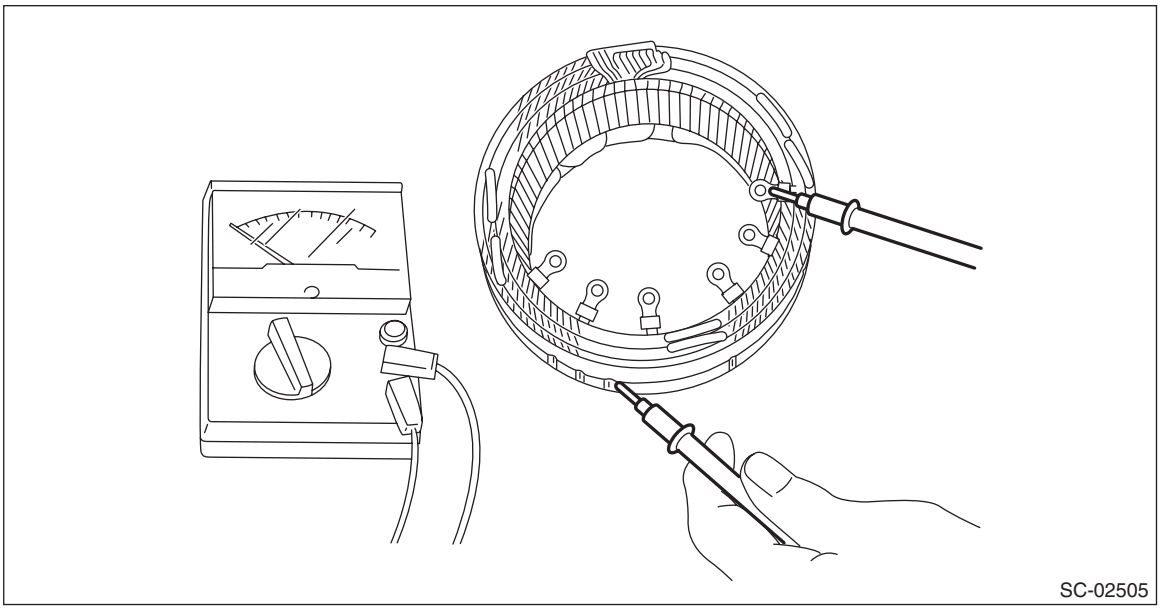

4. BRUSH

1) Measure the length of each brush. Replace the brush if wear exceeds service limits. There is a service limit mark (A) on each brush.

Brush length:
Standard (1)
22.5 mm (0.886 in)
Limit (2)
5.0 mm (0.197 in)

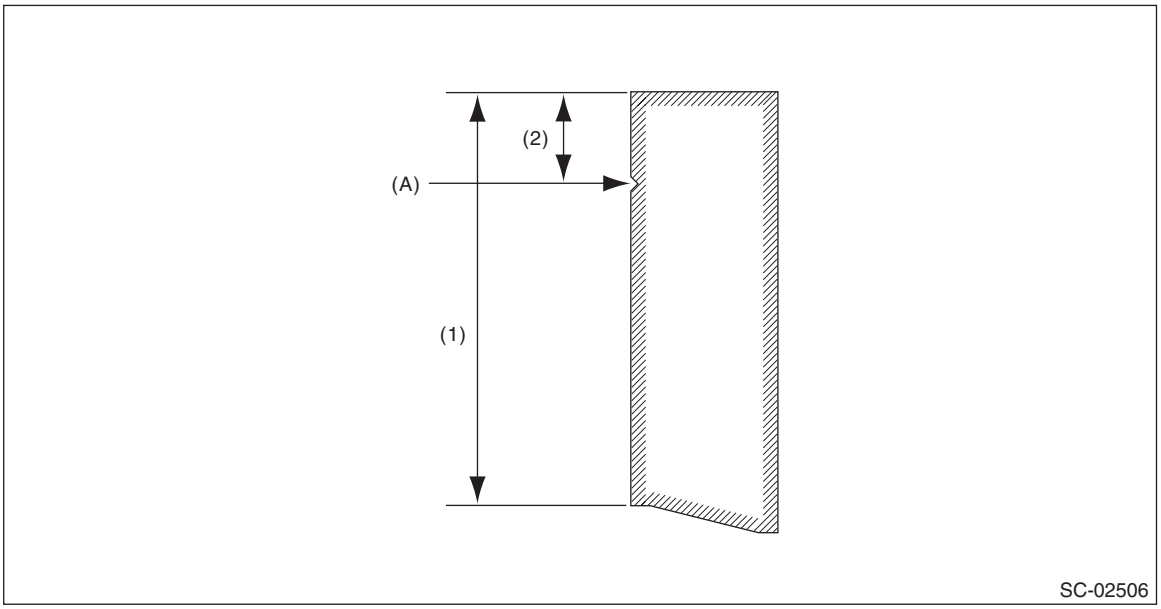

2) Check that there is appropriate pressure on the brush spring. Using a spring pressure indicator, push the brush into the brush holder until its tip protrudes 2 mm (0.0787 in). Then measure the pressure of brush spring. If the pressure is 1.7 N (173 gf, 6.11 ozf) or less, replace the brush spring. 4.1 — 5.3 N (418 — 540 gf, 14.75 — 19.06 ozf) pressure is required on the new spring.

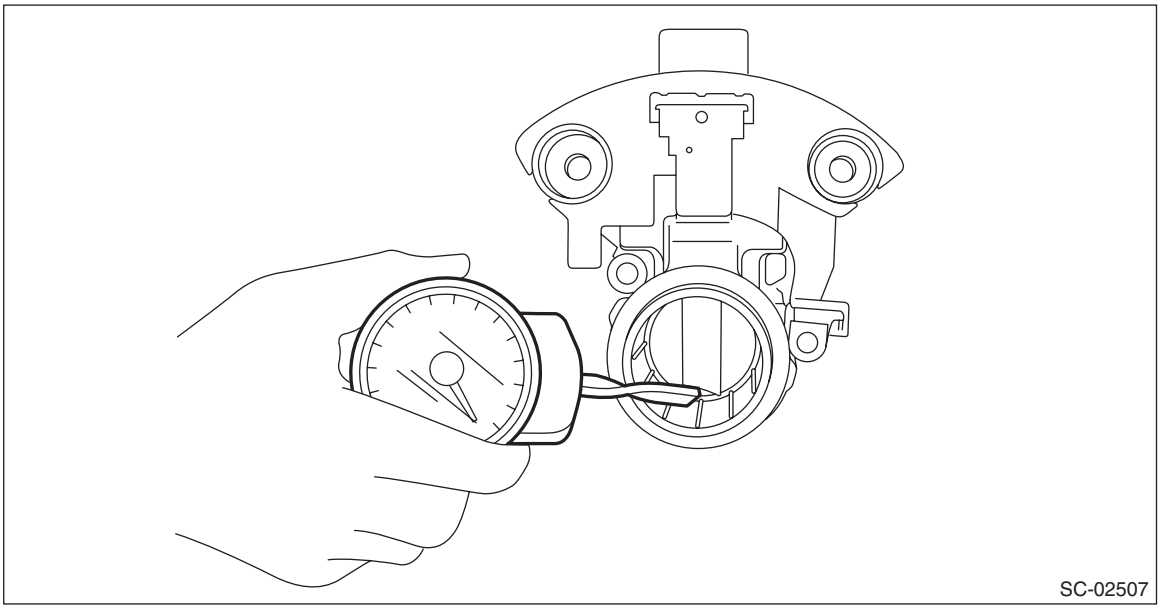

5. BALL BEARING

Check the ball bearings. Replace the ball bearings if there is resistance in the rotation, or if there is any abnormal noise.

5. Battery

A: REMOVAL

1. BATTERY

1) Disconnect the ground terminal from battery sensor. <Ref. to RC-4, BATTERY, NOTE, Repair Contents.>
2) Remove the battery sensor. <Ref. to SC(H4DO)-72, REMOVAL, Battery Sensor.>
3) Disconnect the positive terminal of battery.
4) Remove the battery holder from the battery box.

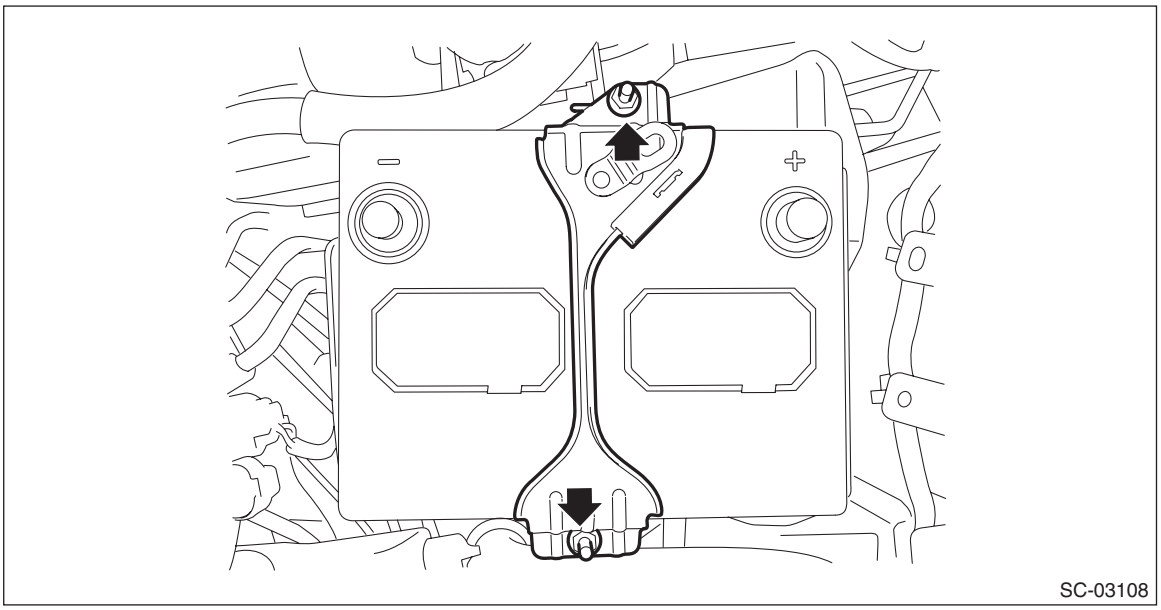

5) Remove the battery and battery pan.

2. BATTERY BOX

1) Remove the battery. <Ref. to SC(H4DO)-63, BATTERY, REMOVAL, Battery.>
2) Remove the battery box.

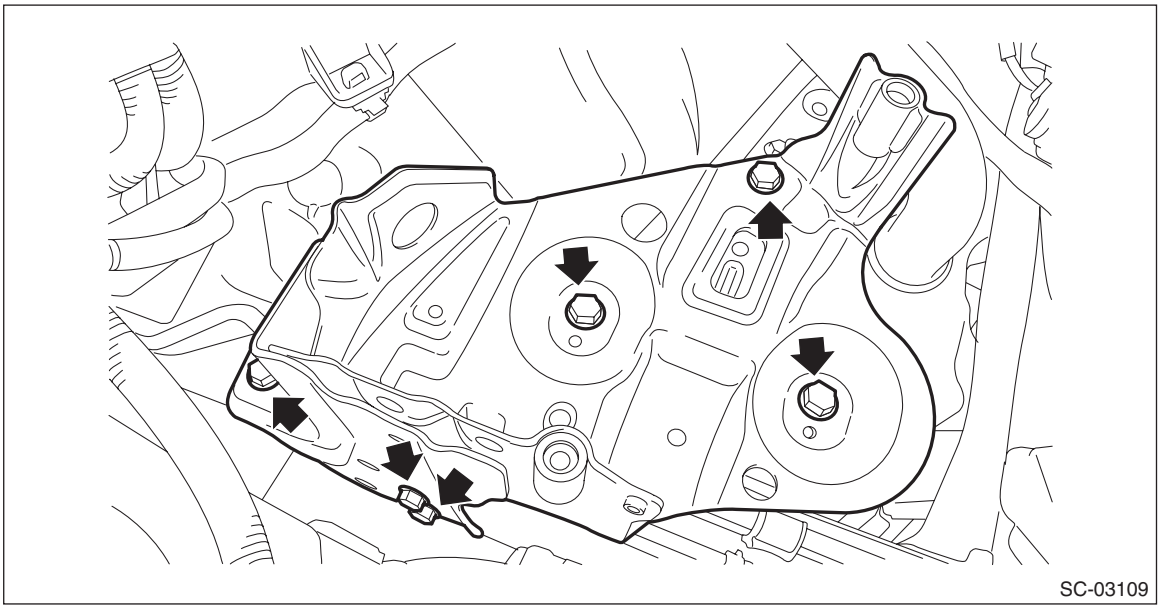

B: INSTALLATION

1. BATTERY

1) Install the battery and battery pan.
2) Install the battery holder, and install the bolts to the battery box.

NOTE:
Check that the rod (b) of the battery holder is inserted into the hole (a) on the battery box and battery pan.

Tightening torque:
7.5 N·m (0.8 kgf-m, 5.5 ft-lb)

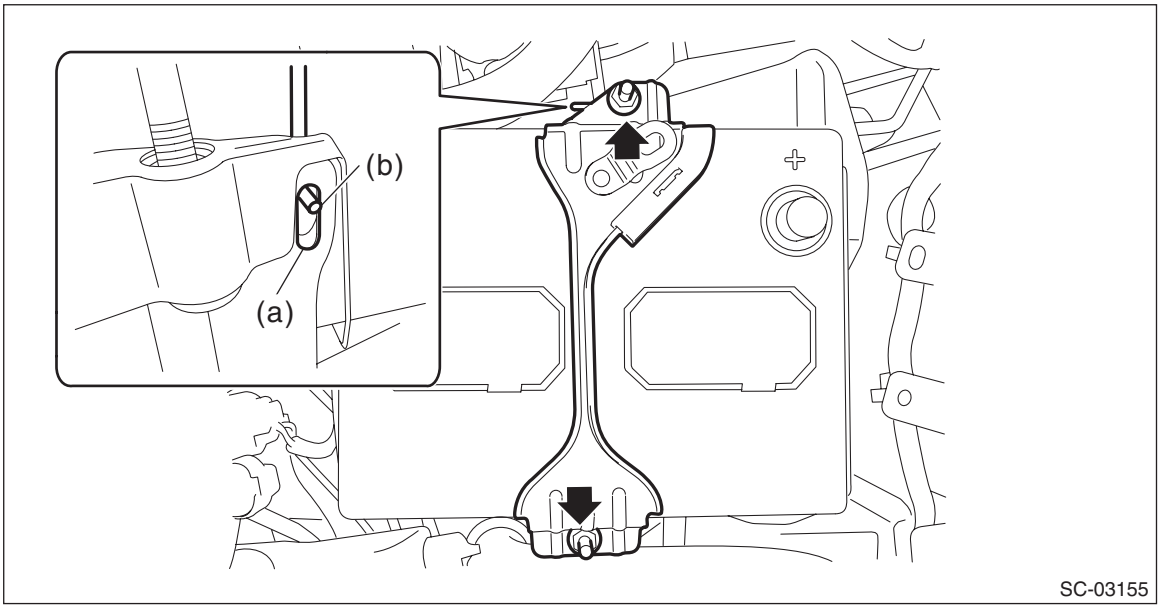

3) Connect the battery positive terminal.
4) Install the battery sensor. <Ref. to SC(H4DO)-72, INSTALLATION, Battery Sensor.>
5) Connect the ground terminal to battery sensor. <Ref. to RC-4, BATTERY, NOTE, Repair Contents.>

2. BATTERY BOX

1) Install the battery box.

Tightening torque:
37 N·m (3.8 kgf-m, 27.3 ft-lb)
2) Install the battery. <Ref. to SC(H4DO)-64, BATTERY, INSTALLATION, Battery.>

C: INSPECTION

WARNING:
- **As batteries produce flammable gases, be careful not to bring an open flame close to the batteries.**
- **Ventilate sufficiently when using or charging battery in enclosed space.**
- **Electrolyte is corrosive acid, and has toxicity; be careful of handling the fluid.**
- **For safety, in case an explosion does occur, wear eye protection or shield your eyes when working near any battery. In addition, never lean over the battery.**
- **Be careful that the electrode does not come into contact with skin, eyes or clothing. Especially at contact with eyes, flush with water for 15 minutes and get prompt medical attention.**
- **Be careful not to let the electrode contact with the coated parts.**
- **Before starting work, remove rings, metal watch-bands, and other metal jewelry.**
- **Be careful not to let the metal tools contact the positive battery terminal and anything connected to it. When the operation using a metal tool to the positive terminal or anything connected to it is required, disconnect the battery ground terminal before starting the operation.**

1. APPEARANCE

Check the battery case, top cover and terminal posts for dirt or cracks, and perform the following work as necessary.
- Clean the battery with water and wipe with a dry cloth.
- Apply a thin coat of grease on the terminal posts to prevent corrosion.

Check

- ***Normal → Go to the check item 2.***
- ***Abnormal → Replace the battery.***

2. ELECTROLYTE LEVEL

Check the electrolyte level in each cell.

CAUTION:
Do not fill beyond MAX level.

NOTE:
If the level is below the middle point between MIN level and MAX level, pour distilled water into the battery cell to bring the level to MAX.

Check

- ***MAX level → Go to the check item 3.***
- ***Below the middle point between MIN level and MAX level → Fill → Go to the check item 3.***

3. SPECIFIC GRAVITY OF ELECTROLYTE

Check the specific gravity of the electrolyte using a hydrometer and a thermometer.

NOTE:
- Specific gravity varies with temperature of electrolyte so that it must be corrected at 20°C (68°F) using the following calculation:

$$S_{20} = St + 0.0007 \times (t - 20)$$

S_{20}: Specific gravity corrected at electrolyte temperature of 20°C
St: Measured specific gravity
t: Measured temperature (°C)

- When measuring in a simplified manner using the battery terminal voltage, calculate the specific gravity by the following formula.

Specific gravity = [0.187 × battery terminal voltage (V)] – 1.1

Perform the steps 1) and 2) before measuring the voltage in order to stabilize the voltage.
1) Turn the ignition switch to OFF and illuminate the headlight for 30 seconds.

2) After turning off the headlight, leave the vehicle for one minute.
• Measuring the specific gravity of the electrolyte in the battery will disclose the state of charge of the battery. The relation between specific gravity and state of charge is as shown in the figure.

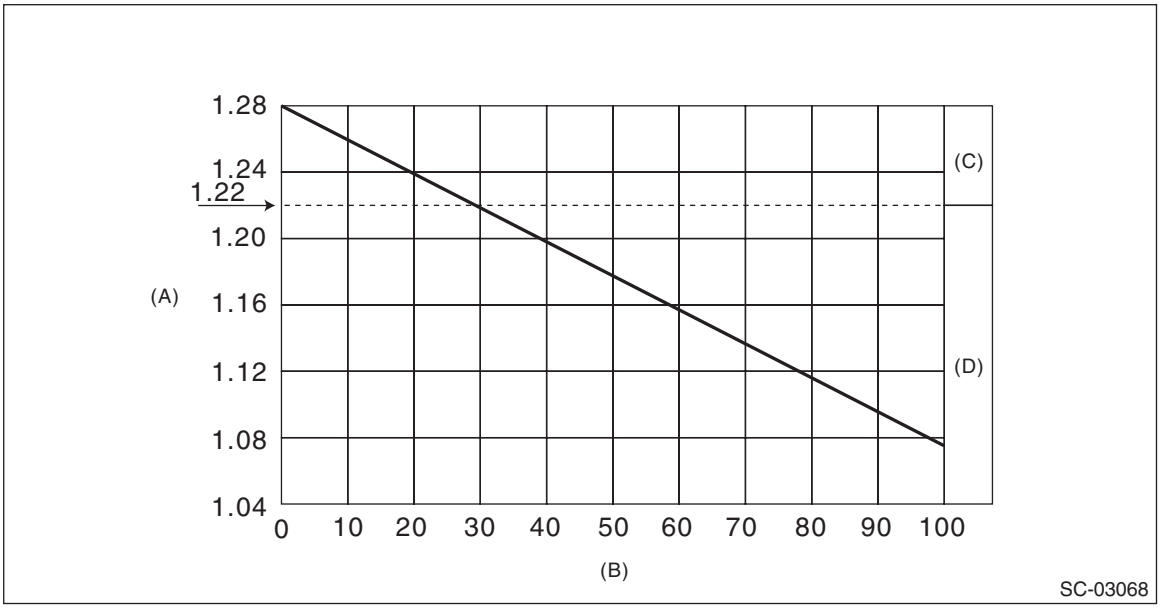

(A) Specific gravity [20°C (68°F)] (B) Amount of discharge (%) (C) Good
(D) Need to charge or replace

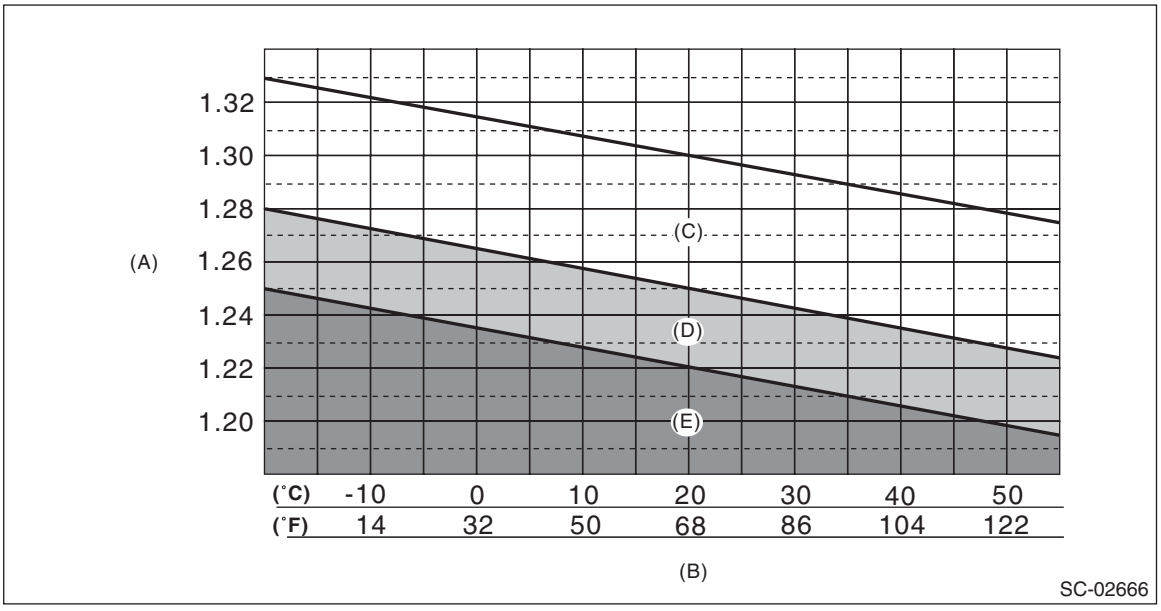

(A) Specific gravity [20°C (68°F)] (B) Electrolyte temperature (C) Good
(D) Caution (E) Need charging

Check

- ***Specific gravity: 1.250 — 1.290, and difference between cells is 0.04 or less → Battery is normal***
- ***Specific gravity: Less than 1.250, or difference between cells is 0.04 or more → Battery needs to be charged or replaced***

4. STANDBY CURRENT

1) Prepare the circuit tester which can measure down to 1 mA.

NOTE:
For model with keyless access function, the standby current changes regularly. Therefore, prepare the analog type circuit tester.

2) Using the circuit tester, check the standby current.

(1) Check the battery. <Ref. to SC(H4DO)-65, APPEARANCE, INSPECTION, Battery.> <Ref. to SC(H4DO)-65, ELECTROLYTE LEVEL, INSPECTION, Battery.> <Ref. to SC(H4DO)-65, SPECIFIC GRAVITY OF ELECTROLYTE, INSPECTION, Battery.>

NOTE:
The standby current may be displayed lower than the actual value if the battery is weak, so be sure to check the battery. Charge or replace if necessary.

(2) Check that the fuse is not blown out and is properly inserted.

(3) When non-genuine electrical parts (including parts sold in authorized workshops) are installed, remove all parts except for genuine electrical parts.

(4) Check that back-up fuse is inserted. <Ref. to PI-5, FUSE, PRE-DELIVERY INSPECTION (PDI) PROCEDURE, Pre-delivery Inspection.>

(5) Start the engine, and set the switch positions for each system as shown in the following table.

NOTE:
Some of the listed systems are not equipped depending on the vehicle. Set only the systems equipped on the vehicle to the positions as shown.

System	Position
Headlight	ON or Auto
Fog light	ON
Wiper (front and rear)	ON or Low speed
Audio and navigation system	ON
Rear defogger	ON
Room light	DOOR
Luggage light	DOOR
Map light	OFF
Auto A/C	ON (AUTO)
Manual A/C	ON (Speed 1)
Electronic parking brake	ON
Electrical parts other than listed above (electrical parts that users can confirm the operation with the key removed)	OFF

(6) Turn the ignition switch to OFF.

(7) Operate the front hood lock release lever to unlock the front hood.

(8) Close all the doors (including rear gate and trunk lid) and then lock the doors. (Security alarm is in set condition)

NOTE:
For model with keyless access function, take the access key 1.5 m or more away from the vehicle after the door lock. And do not put the access key close to the vehicle while measuring the standby current.

(9) Wait for 5 minutes after door lock until the standby current stabilizes.

(10) Loosen the nut which holds the ground terminal to the battery.

NOTE:
Do not remove the ground terminal.

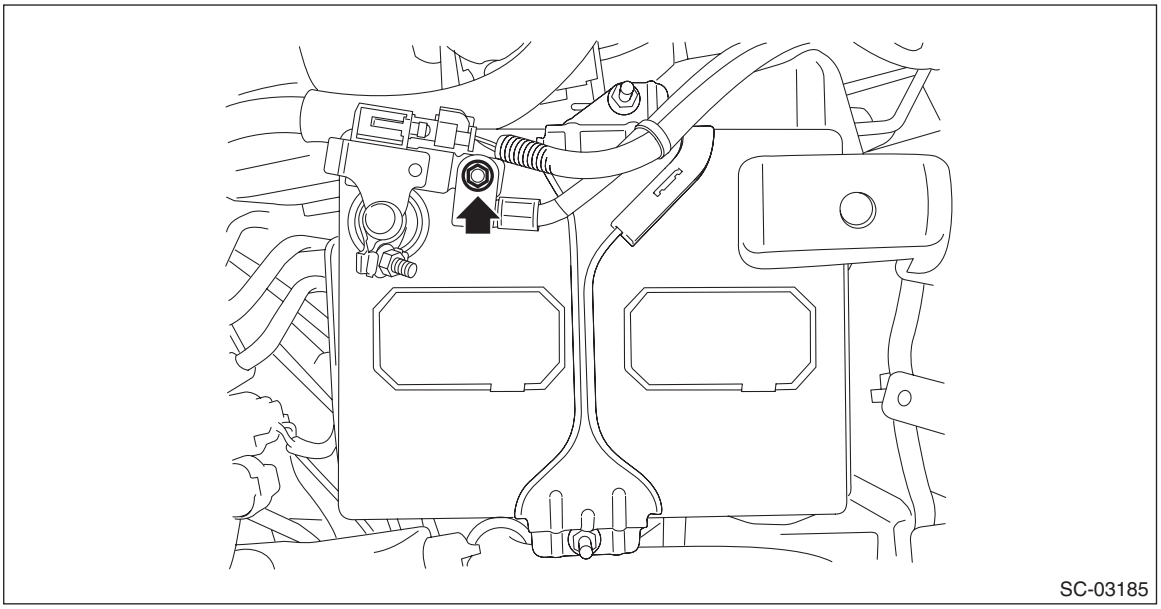

(11) Connect the circuit tester positive terminal to the ground terminal.

NOTE:
To prevent the damage to the circuit tester, set the circuit tester range to a large value first, then gradually change it to smaller values.

(12) Connect the circuit tester negative terminal to the ground terminal installation part of the battery.

(13) While connecting the circuit tester positive terminal with the ground terminal as shown in the figure below, remove the ground terminal from the battery.

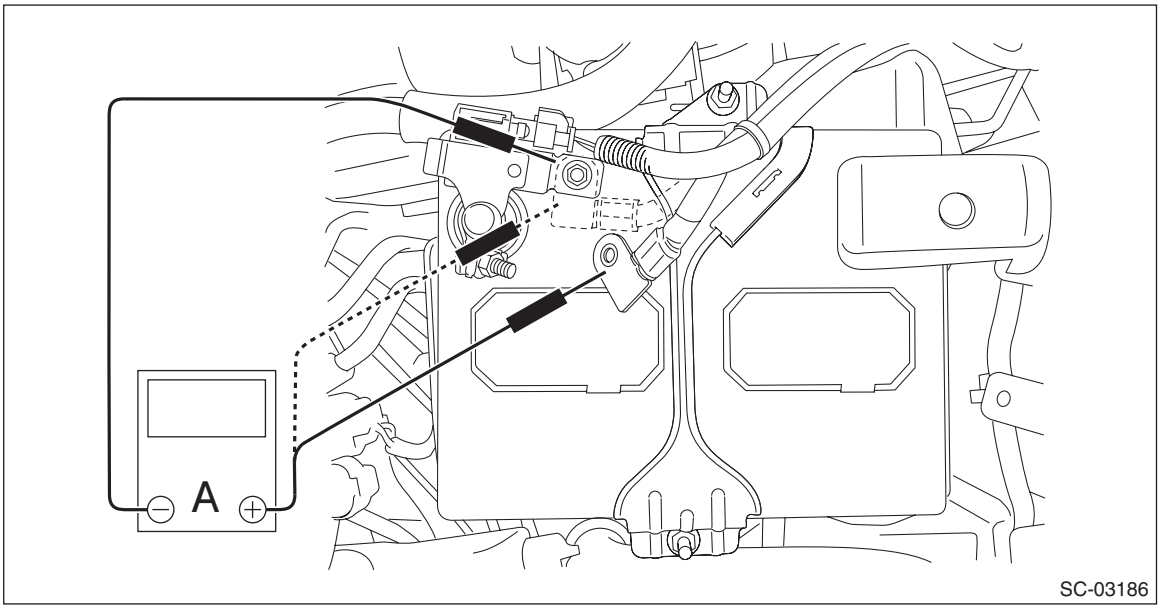

(14) Check the standby current.

NOTE:
• For model with keyless access function, the standby current changes periodically because the keyless access system continuously searches the access key (polling).
• When measuring the standby current, the reading of the circuit tester oscillates. Therefore, read the average value (median value).
• The standby current may become large when the vehicle system is activated 5 times at 30-minute intervals or 5 hours after turning the ignition switch to OFF. Therefore, the measurement should be completed in 20 minutes. If it takes more than 20 minutes, start the engine once, stop the engine, then perform the inspection.

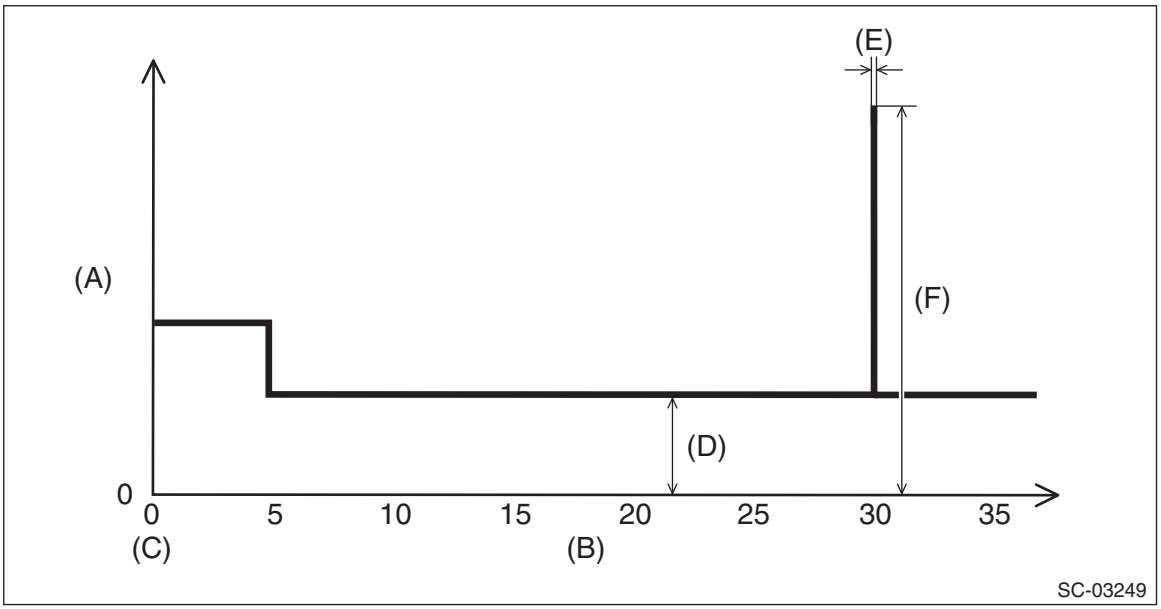

(A)	Current/mA	(B)	Time/min	(C)	Ignition OFF
(D)	Less than 70 mA	(E)	5 seconds (system operation)	(F)	300 mA or more

Check

- ***When the maximum measurement value is less than 70 mA → Standby current is normal.***
- ***When the maximum measurement value is 70 mA or more → Go to step (15).***

(15) Remove all fuses one by one to identify which system changes the standby current value significantly. <Ref. to WI-19, Fuse And Relay.>
(16) Check the harness and connector of the system whose standby current has changed significantly.

D: CHARGE

WARNING:
- **Do not bring an open flame close to the battery when working.**

CAUTION:
- **Prior to charging, corroded terminals should be cleaned with a brush and common caustic soda solution.**
- **Be careful while charging the battery because it produces flammable gasses.**
- **Observe instructions when handling the battery charger.**
- **Before charging the battery on the vehicle, disconnect the battery ground terminal to prevent damage of generator diodes or other electrical units.**

1. NORMAL CHARGE (CONSTANT CURRENT CHARGE)

Charge the battery with the current value specified by manufacturer or with approximately 1/10 of battery's rating capacity. (See the table below.)

Battery size	Charging current (A)	CCA(A)
55D23R	4.0 — 5.0	356

CAUTION:
- **The charge control feature and specifications for judgment of charge completion depend on the device. Follow the instruction manual of the charger used.**
- **Keep the electrolyte temperature at 45°C (113°F) or less while charging. Stop charging when the temperature exceeds this value.**

NOTE:
The characteristics of typical charging methods are as follows.
- Constant current charging

This method makes it easy to charge to 100%, since the electrolyte is agitated by the gassing occurred at the end of charging. However, the time for charging is comparatively long because the current value is kept constant.
- Constant voltage charging

This method completes charging in a short period of time due to the large current. However, it is difficult to charge to 100% because no gassing occurred at the end of charging and the electrolyte is not agitated. Therefore, the combined use with the constant current charging is preferable.
- Quasi-constant voltage charging

This method is widely used for commercially available chargers.
Compared to the constant voltage charging whose charging current at the beginning of charging becomes large, it reduces the charging current by lowering the voltage at the initial stage, resulting in battery load reduction. The time for charging is comparatively long. However, this type of chargers can be manufactured comparatively inexpensive due to the simple control circuit (or manual settings). After the initial stage of charging is completed, it gradually raises the charging voltage so that the charging current is within the specification, until the battery is fully charged.
- Constant voltage/current charging

In addition to the constant voltage charging, this method controls the upper limit of the current.
The constant current charging is applied at the beginning of charging, and the constant voltage charging is applied at the end. This makes battery charge comparatively efficient in a short period of time. Charging by generators is similar to this method.
Judgment of charge completion
1) Specific gravity of electrolyte should be held within the specific range of 1.250 — 1.290 for one hour or more.
2) Voltage while charging should be held within the specified range of 15.0 — 16.8 V for one hour or more.
3) Gas is actively generated in all cells.
4) The amount of charge reaches 1.2 — 1.5 times of the amount of discharge.

NOTE:
The amount of discharge/charge can be calculated by the following formula.
Amount of discharge (Ah) = Remaining capacity (%) calculated by specific gravity × 5 hour rate capacity (Ah)
Amount of charge (Ah) = Charging current value (A) × Time for charging

2. QUICK CHARGING

Charge the battery in a short period of time with a relatively large current by using a quick charger.
Charge the battery with the current value at approximately 1/2 of battery's rating capacity. (See the table below.)

CAUTION:
• Quick charging is accompanied by a large amount of heat generation. Charging should be completed in up to 30 minutes regardless of battery size.
• Quick charging is used to recover the battery until it can start the vehicle. For full charging, use the normal charging method.
• Keep the electrolyte temperature at 55°C (131°F) or less while quick charging. Stop charging when the temperature exceeds this value.

Battery size	Charging current (A)	CCA (A)
55D23R	20.0 — 25.0	356

6. Battery Sensor

A: REMOVAL

1) Disconnect the ground terminal from battery sensor. <Ref. to RC-4, BATTERY, NOTE, Repair Contents.>
2) Remove the clip (A) from the battery holder.
3) Disconnect the connector (B) from the battery sensor, and remove the battery sensor.

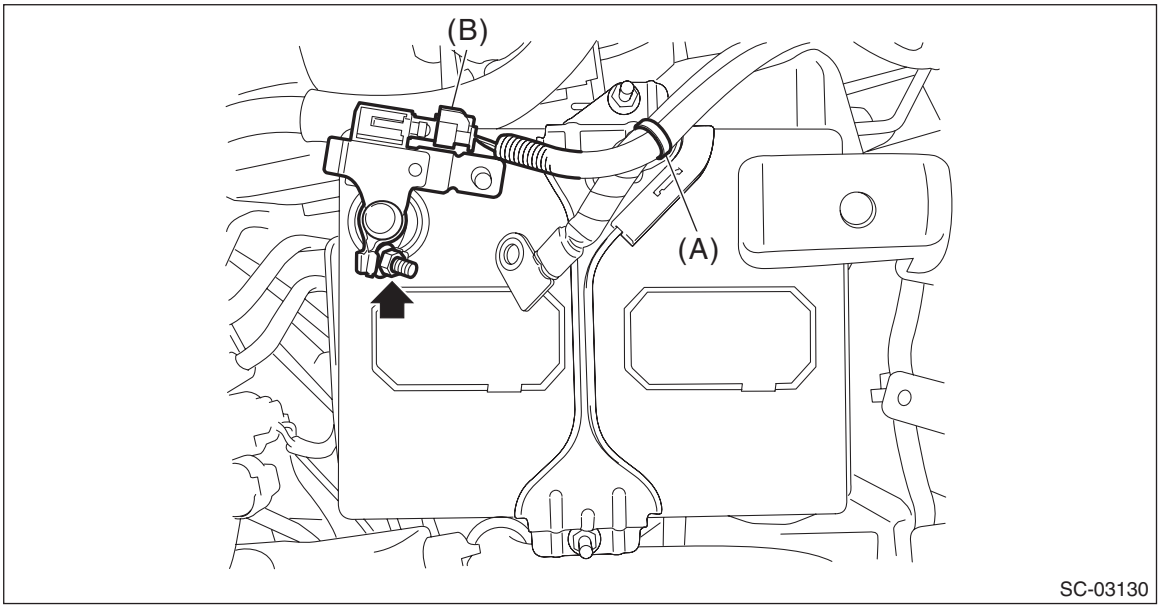

B: INSTALLATION

1) Install the battery sensor, and connect the connector (B) to the battery sensor.

Tightening torque:
6 N·m (0.6 kgf-m, 4.4 ft-lb)

2) Attach the clip (A) to the battery holder.

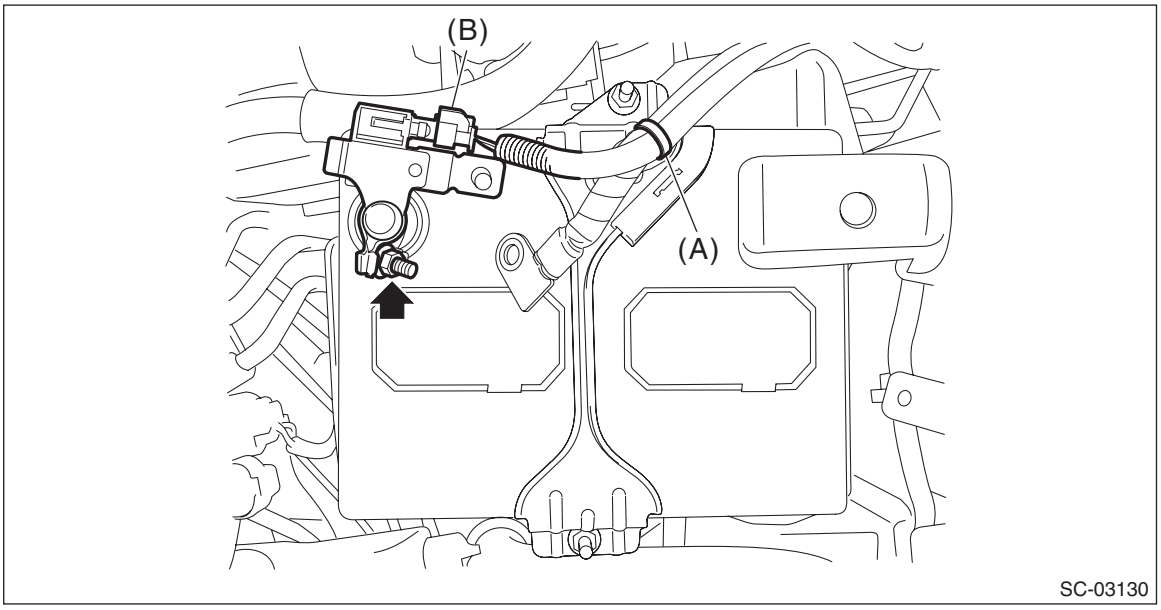

3) Connect the ground terminal to battery sensor. <Ref. to RC-4, BATTERY, NOTE, Repair Contents.>

C: INSPECTION

Check the battery sensor for deformation, cracks and any other damage.

ENGINE (DIAGNOSTICS)

EN(H4DO)(diag)

		Page
1.	Basic Diagnostic Procedure	2
2.	Check List for Interview	4
3.	General Description	6
4.	Electrical Component Location	11
5.	Engine Control Module (ECM) I/O Signal	20
6.	Data Link Connector	39
7.	General Scan Tool	40
8.	Subaru Select Monitor	45
9.	Read Diagnostic Trouble Code (DTC)	63
10.	Inspection Mode	64
11.	Drive Cycle	67
12.	Clear Memory Mode	78
13.	Active Test	79
14.	Malfunction Indicator Light	80
15.	Diagnostics for Engine Starting Failure	83
16.	List of Diagnostic Trouble Code (DTC)	102
17.	Diagnostic Procedure with Diagnostic Trouble Code (DTC)	111
18.	General Diagnostic Table	608

1. Basic Diagnostic Procedure

A: PROCEDURE

1. ENGINE

	Step	Check	Yes	No
1	**CHECK ENGINE START FAILURE.** 1) Ask the customer when and how the trouble occurred using the interview check list. <Ref. to EN(H4DO)(diag)-4, CHECK, Check List for Interview.> 2) Start the engine.	Does the engine start?	Go to step **2**.	Inspection using "Diagnostics for Engine Starting Failure" <Ref. to EN(H4DO)(diag)-83, Diagnostics for Engine Starting Failure.>
2	**CHECK ILLUMINATION OF MALFUNCTION INDICATOR LIGHT.**	Does the malfunction indicator light illuminate?	Go to step **3**.	Inspection using "General Diagnostic Table". <Ref. to EN(H4DO)(diag)-608, INSPECTION, General Diagnostic Table.>
3	**CHECK COMMUNICATION STATUS.** 1) Turn the ignition switch to OFF. 2) Connect the Subaru Select Monitor or general scan tool to the data link connector. 3) Turn the ignition switch to ON, and run the Subaru Select Monitor or general scan tool. NOTE: • Subaru Select Monitor For detailed operation procedures, refer to the "Subaru Select Monitor". <Ref. to EN(H4DO)(diag)-45, Subaru Select Monitor.> • General scan tool For detailed operation procedures, refer to the general scan tool operation manual.	Does Subaru Select Monitor or general scan tool communicate with vehicle normally?	Go to step **4**.	Inspection using "Basic Diagnostic Procedure" of LAN system <Ref. to LAN(diag)-2, Basic Diagnostic Procedure.>
4	**CHECK DTC.** Read DTC using Subaru Select Monitor or general scan tool. NOTE: • Subaru Select Monitor For detailed operation procedures, refer to "Read Diagnostic Trouble Code (DTC)". <Ref. to EN(H4DO)(diag)-63, Read Diagnostic Trouble Code (DTC).> • General scan tool For detailed operation procedures, refer to the general scan tool operation manual.	Is DTC displayed on Subaru Select Monitor or general scan tool?	Record DTC and freeze frame data, then repair the trouble cause. <Ref. to EN(H4DO)(diag)-102, List of Diagnostic Trouble Code (DTC).> After repair, go to the next step. Go to step **5**.	Repair the related parts. NOTE: If DTC is not shown on display although the malfunction indicator light illuminates, perform the diagnosis of malfunction indicator light circuit or combination meter. <Ref. to EN(H4DO)(diag)-80, Malfunction Indicator Light.>

Step		Check	Yes	No
5	**PERFORM DIAGNOSIS.** 1) Perform the Clear Memory Mode. <Ref. to EN(H4DO)(diag)-78, Clear Memory Mode.> 2) Perform the Inspection Mode or Drive Cycle. <Ref. to EN(H4DO)(diag)-64, Inspection Mode.> <Ref. to EN(H4DO)(diag)-67, Drive Cycle.>	Is DTC displayed on Subaru Select Monitor or general scan tool?	Inspect using "Diagnostic Procedure with Diagnostic Trouble Code (DTC)". <Ref. to EN(H4DO)(diag)-111, Diagnostic Procedure with Diagnostic Trouble Code (DTC).>	Finish the diagnosis.

2. Check List for Interview

A: CHECK

1. CHECK LIST NO. 1

Check the following item when problem has occurred.

NOTE:
Use copies of this page for interviewing customers.

Customer's name		Engine No.	
Date of purchase		Fuel type	
Date of repair		Odometer reading	km
V.I.N.			miles
Weather	❑ Fine ❑ Cloudy ❑ Rainy ❑ Snowy ❑ Various/Others:		
Ambient air temperature	°C (°F)		
	❑ Hot ❑ Warm ❑ Cool ❑ Cold		
Place	❑ Highway ❑ Suburbs ❑ Inner city ❑ Uphill ❑ Downhill ❑ Rough road ❑ Others:		
Engine temperature	❑ Cold ❑ Warming-up ❑ After warming-up ❑ Any temperature ❑ Others:		
Engine speed	rpm		
Vehicle speed	km/h (MPH)		
Driving conditions	❑ Not affected ❑ At starting ❑ While idling ❑ At racing ❑ While accelerating ❑ While cruising ❑ While decelerating ❑ While turning (RH/LH)		
Headlight	❑ ON/❑ OFF	Rear defogger	❑ ON/❑ OFF
Blower	❑ ON/❑ OFF	Audio	❑ ON/❑ OFF
A/C compressor	❑ ON/❑ OFF	Rear entertainment system	❑ ON/❑ OFF
Radiator fan	❑ ON/❑ OFF	Car phone	❑ ON/❑ OFF
Front wiper	❑ ON/❑ OFF	Wireless device	❑ ON/❑ OFF
Rear wiper	❑ ON/❑ OFF		

2. CHECK LIST NO. 2

Check the following item about the vehicle's state when the malfunction indicator light turns on.

NOTE:
Use copies of this page for interviewing customers.

a) Other warning lights or indicators illuminate: ❑ Yes / ❑ No
❑ Fuel level warning light ❑ Charge warning light ❑ Engine coolant temperature warning light ❑ Oil pressure warning light ❑ ATF temperature warning light or SPORT indicator light ❑ Driver's control center differential indicator light ❑ ABS warning light ❑ VDC warning light ❑ Cruise indicator light ❑ SI-CRUISE warning light ❑ Immobilizer indicator light ❑ STEERING warning light ❑ Electronic parking brake warning light ❑ Glow indicator light ❑ Sedimenter warning light ❑ Others:
b) Fuel level
• Lack of fuel: ❑ Yes / ❑ No • Indicator position of fuel gauge: • Experienced running out of fuel: ❑ Yes / ❑ No
c) Intentional connecting or disconnecting of harness connectors or spark plug cords: ❑ Yes / ❑ No
• What:
d) Intentional connecting or disconnecting of hoses: ❑ Yes / ❑ No
• What:
e) Installing of other parts except genuine parts: ❑ Yes / ❑ No
• What: • Where:
f) Occurrence of noise: ❑ Yes / ❑ No
• From where: • What kind:
g) Occurrence of smell: ❑ Yes / ❑ No
• From where: • What kind:
h) Intrusion of water into engine compartment or passenger compartment: ❑ Yes / ❑ No
i) Troubles occurred
❑ Engine does not start. ❑ Engine stalls during idling. ❑ Engine stalls while driving. ❑ Engine speed decreases. ❑ Engine speed does not decrease. ❑ Rough idling ❑ Poor acceleration ❑ Back fire ❑ After fire ❑ Does not shift. ❑ Excessive shift shock

3. General Description

A: CAUTION

1) Airbag system wiring harness is routed near the ECM, main relay and fuel pump relay.

CAUTION:
- **Do not use electrical test equipment on the airbag system circuits.**
- **Be careful not to damage the airbag system wiring harness when servicing the ECM, TCM, main relay and fuel pump relay.**

2) Never connect the battery in reverse polarity. Doing so will damage the ECM instantly, and other parts will also be damaged.
3) Do not disconnect the battery terminals while the engine is running. A large counter electromotive force will be generated in the generator, and this voltage may damage electronic parts such as ECM etc.
4) After connecting the battery terminals, wait for at least 10 seconds before tuning the ignition switch to ON. <Ref. to RC-4, BATTERY, NOTE, Repair Contents.>
5) When disconnecting the connectors of the electrical components, always be sure to turn the ignition switch to OFF. Perform the Clear Memory Mode after connecting the connectors. <Ref. to EN(H4DO)(diag)-78, Clear Memory Mode.>
6) When measuring the voltage or resistance of individual sensor or all electrical control modules, use a tapered pin with a diameter of 0.6 mm (0.024 in) or less and touch it to the tip of terminal.

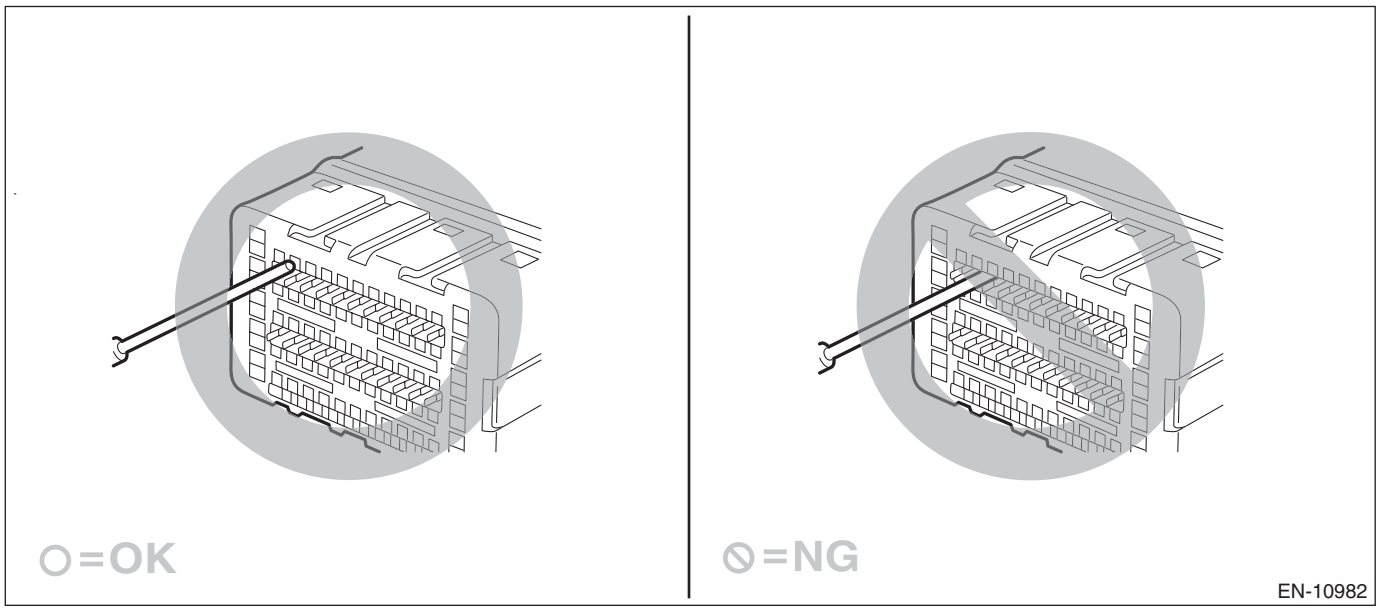

Never insert the tapered pin into the terminal because it deforms inside which may lead to a malfunction.

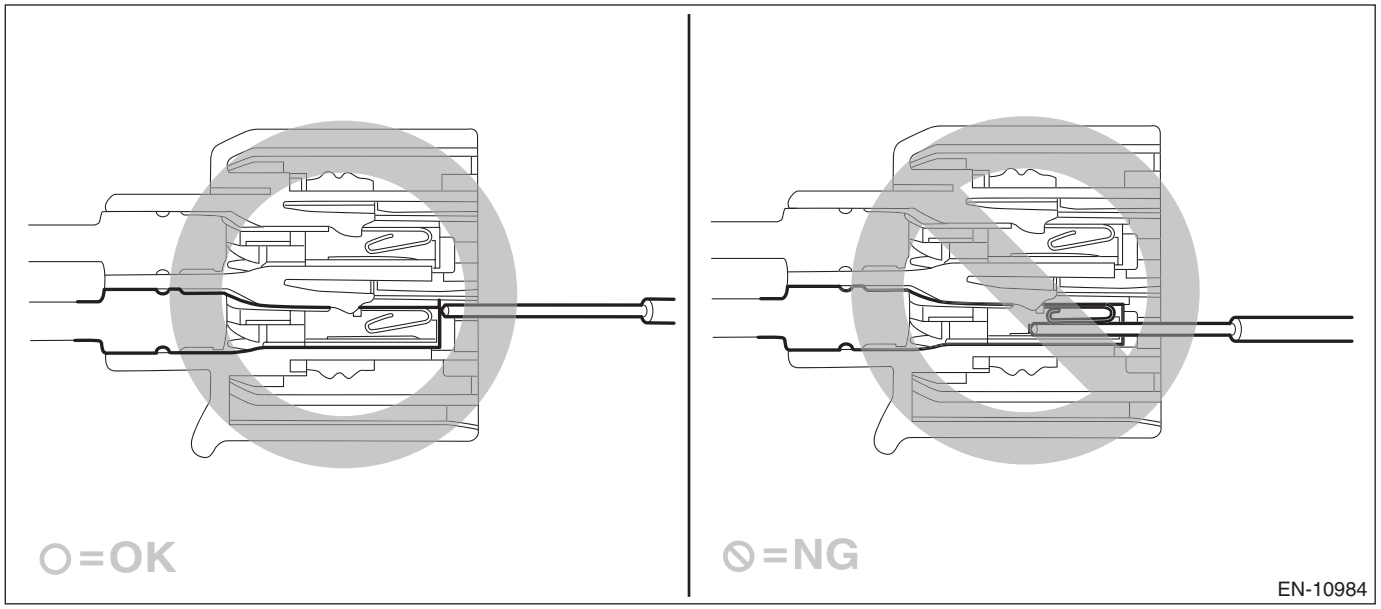

CAUTION:
When replacing the ECM, be careful not to use the ECM of wrong specification to avoid any damage on the fuel injection system.

NOTE:
When replacing the ECM of the models with immobilizer, immobilizer system must be registered. For detailed operation procedure, refer to the “REGISTRATION MANUAL FOR IMMOBILIZER”.
7) Take care not to allow water to get into the connectors when servicing or washing the vehicle in rainy weather. Avoid exposure to water even if the connectors are waterproof.
8) Use ECM mounting stud bolts for the grounding point when measuring voltage and resistance inside the passenger compartment.

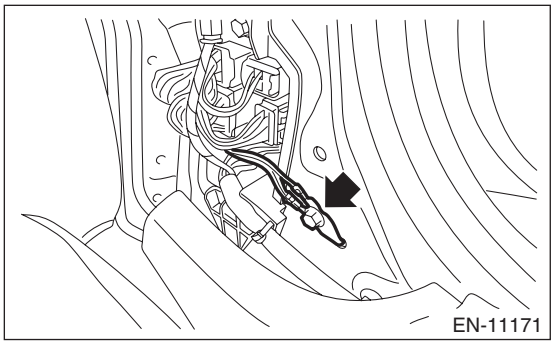

9) Use the engine ground terminal or engine assembly for the grounding point when measuring the voltage and resistance in engine compartment.

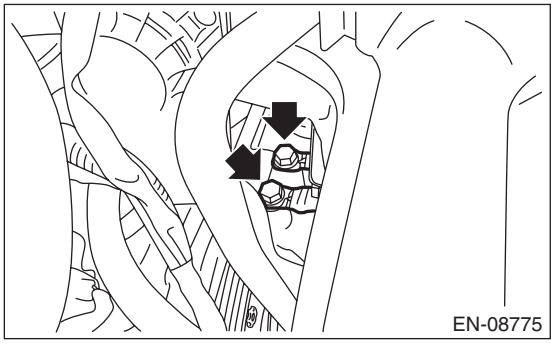

10) All parts related to the engine control system are precision parts. Do not drop or otherwise apply impact. Do not reuse the parts that are dropped accidentally.

11) Observe the following cautions when installing a radio in vehicle.

CAUTION:
• The antenna must be kept as far apart as possible from the ECM. <Ref. to EN(H4DO)(diag)-11, CONTROL MODULE, LOCATION, Electrical Component Location.>
• The antenna feeder must be placed as far apart as possible from the ECM and engine control system harness.
• Carefully adjust the antenna for correct matching.
• When mounting a large power type radio, pay special attention to the three items mentioned above.
• Incorrect installation of the radio may affect the operation of ECM.

12) When disconnecting the fuel tube, release the fuel pressure. <Ref. to FU(H4DO)-90, RELEASING OF FUEL PRESSURE, PROCEDURE, Fuel.>
13) Warning lights may illuminate when performing driving test with jacked-up or lifted-up condition, but this is not a system malfunction. The reason for this is the rotating speed difference between the front and rear wheels. When engine control system diagnosis is finished, perform the VDC memory clearance procedure of self-diagnosis function. <Ref. to VDC(diag)-27, Clear Memory Mode.>

B: INSPECTION

Before performing diagnostics, check the following item which might affect engine problems.

1. BATTERY

1) Check the battery. <Ref. to SC(H4DO)-65, INSPECTION, Battery.>
2) Check the condition of the main and other fuses, and harnesses and connectors. Also check for proper grounding.

2. ENGINE GROUND

Make sure that the engine ground terminal has no contamination, corrosion or looseness and is properly connected to the engine.

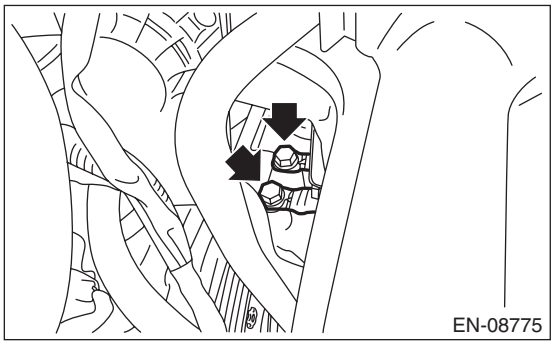

C: NOTE

• The on-board diagnostic (OBD) system detects and indicates a fault in various inputs and outputs of the complex electronic control. Malfunction indicator light in the combination meter indicates occurrence of a fault or trouble.
• Further, against any failure of sensors that would cause the vehicle to stop running, the fail-safe function is provided to ensure the minimal drivability.
• The OBD system incorporated with the vehicles within this type of engine complies with OBD-II regulations. The OBD system monitors the components and the system malfunction listed in “Engine Section” which affects on emissions.
• When the system decides that a malfunction occurs, malfunction indicator light illuminates. At the same time of the malfunction indicator light illumination or blinking, a DTC and a freeze frame engine conditions are stored into on-board computer.
• The OBD system stores freeze frame engine condition data (engine load, engine coolant temperature, fuel trim, engine speed and vehicle speed, etc.) into on-board computer when it detects a malfunction.
• Freeze frame engine condition data are stored until the DTCs are cleared. However when such malfunctions as fuel trim fault and misfire are detected with the freeze frame engine condition data stored, they are rewritten into those related to the fuel trim fault and misfire.
• When the malfunction does not occur again for three consecutive driving cycles*, malfunction indicator light is turned off, but DTC remains at on-board computer.
*: One driving cycle means the period between the ignition switch ON and the ignition switch OFF after driving.
• When performing diagnosis, connect the Subaru Select Monitor or general scan tool to the vehicle.
• When the ignition is turned ON or the engine is started immediately after replacing the battery or connecting the terminals, DTCs may be detected. <Ref. to RC-4, BATTERY, NOTE, Repair Contents.>
Confirm this by asking the user.

D: PREPARATION TOOL

1. SPECIAL TOOL

ILLUSTRATION	TOOL NUMBER	DESCRIPTION	REMARKS
 STSSM4	— (Newly adopted tool)	SUBARU SELECT MONITOR 4	Used for setting of each function and trouble-shooting for electrical system. NOTE: For detailed operation procedures of Subaru Select Monitor 4, refer to “Application help”.
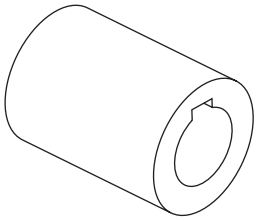 ST18252AA000	18252AA000	CRANKSHAFT SOCKET	Used for rotating crankshaft.
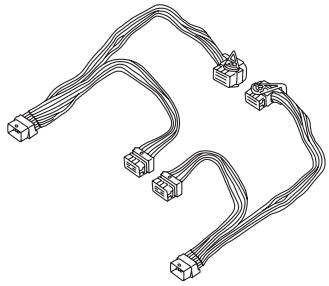 ST18460AA050	18460AA050	CHECK BOARD	Used for measuring ECM terminal voltage.

2. GENERAL TOOL

TOOL NAME	REMARKS
Circuit tester	Used for measuring resistance, voltage and current.
Oscilloscope	Used for measuring the sensor.
DST-i	Used together with Subaru Select Monitor 4.

4. Electrical Component Location

A: LOCATION

1. CONTROL MODULE

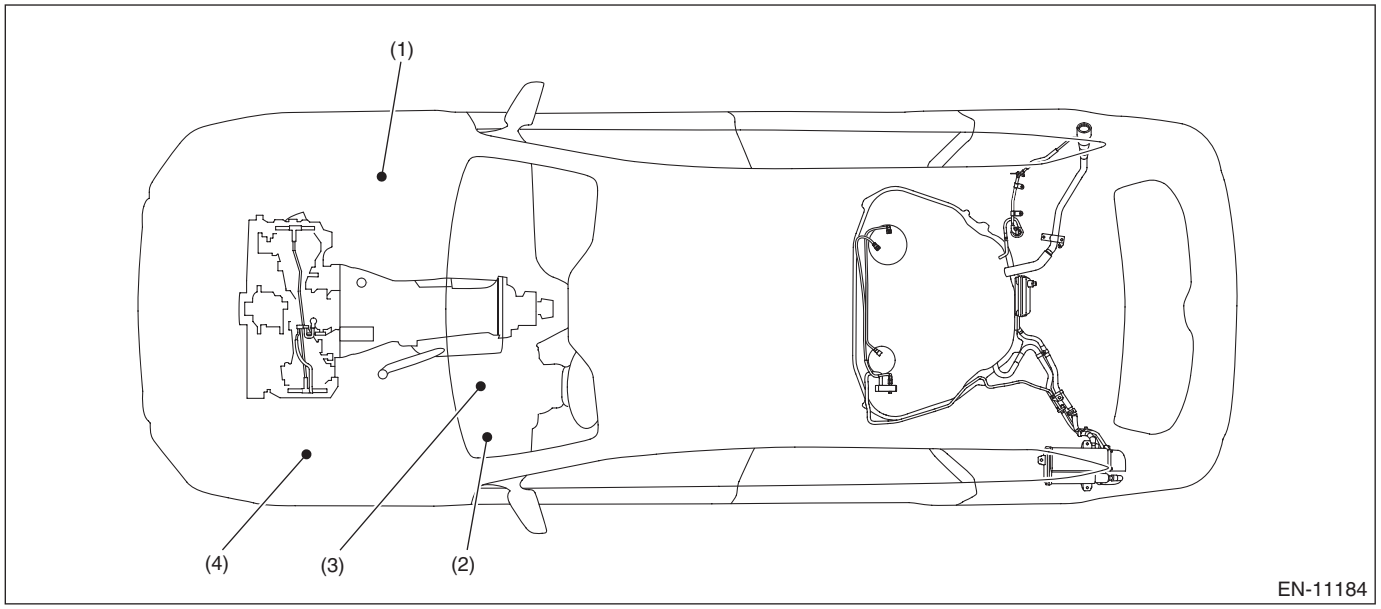

(1) Engine control module (ECM)
(2) Data link connector
(3) Malfunction indicator light
(4) Delivery (test) mode fuse

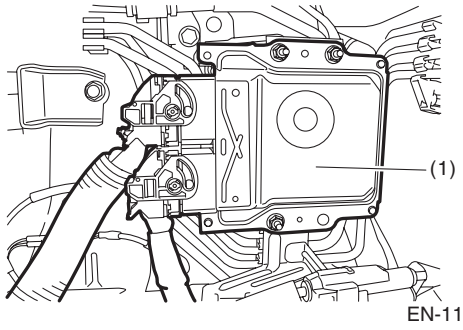

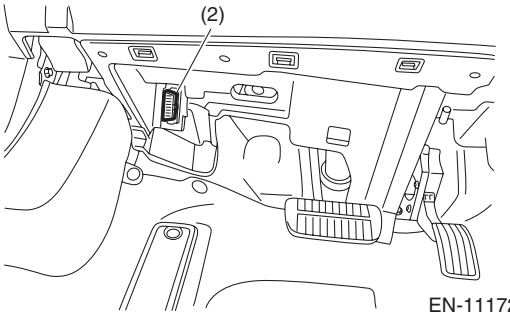

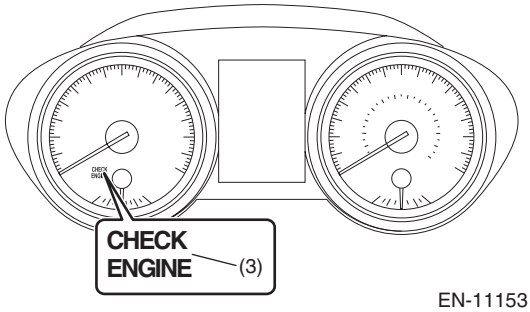

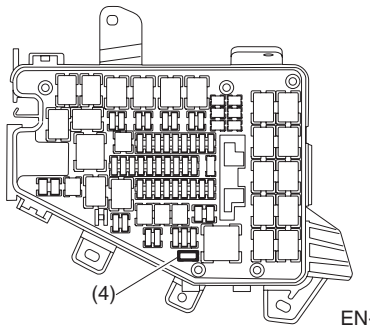

2. SENSOR

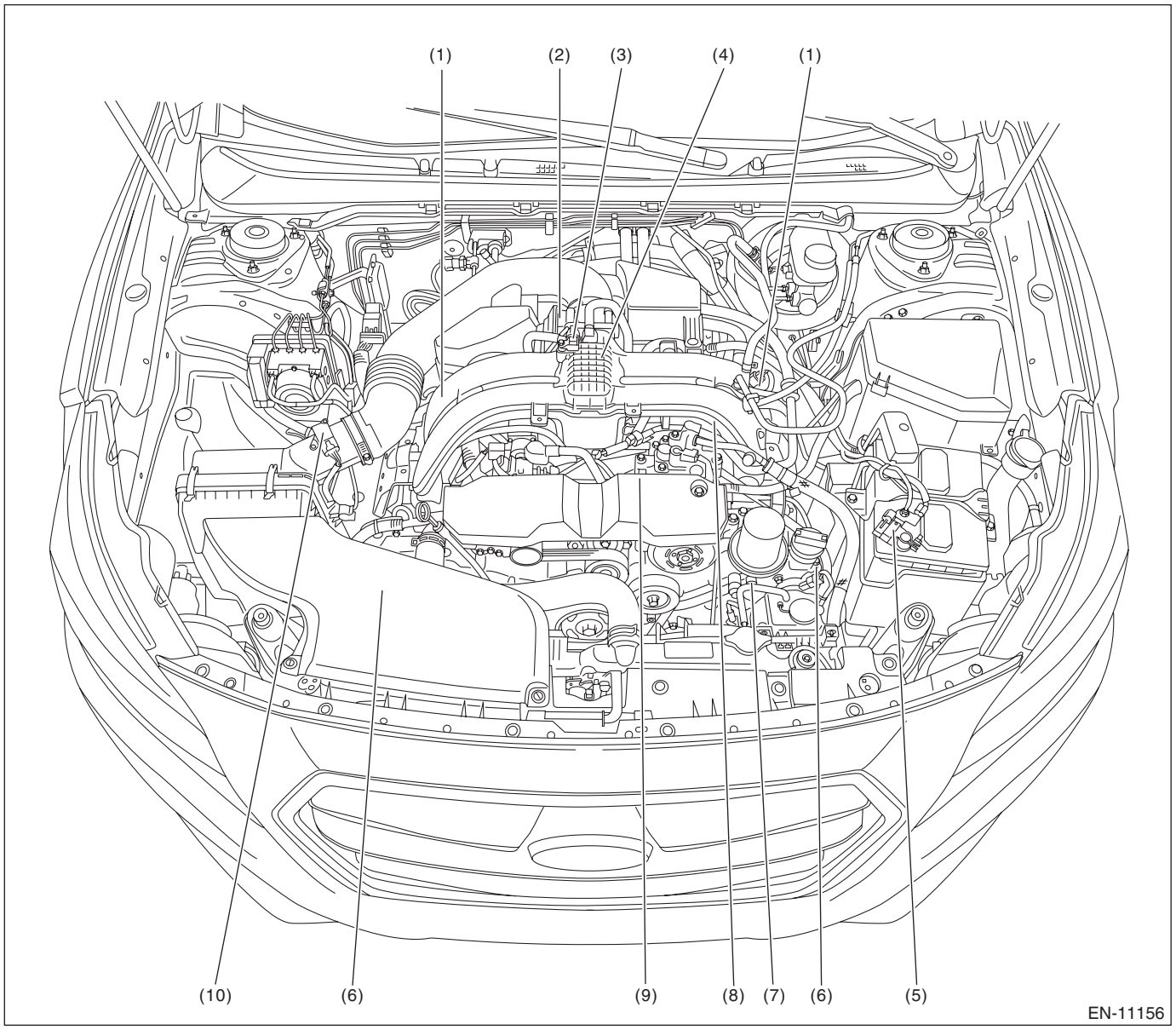

(1) Tumble generator valve actuators (with built-in opening angle switch)
(2) Electronic throttle control
(3) Manifold absolute pressure sensor
(4) Crankshaft position sensor
(5) Battery sensor
(6) Intake camshaft position sensor
(7) Engine oil temperature sensor
(8) Engine coolant temperature sensor
(9) Knock sensor
(10) Mass air flow and intake air temperature sensor

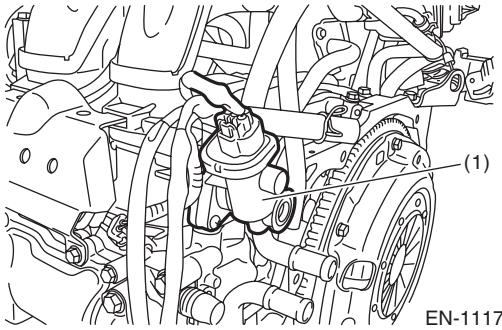
(1)
EN-11174

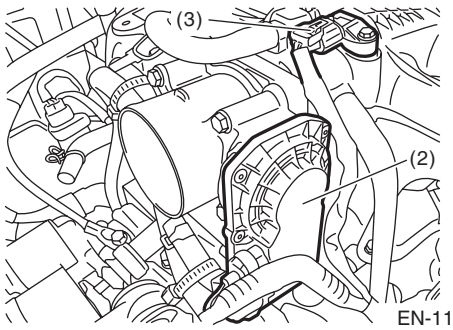
(3)
(2)
EN-11185

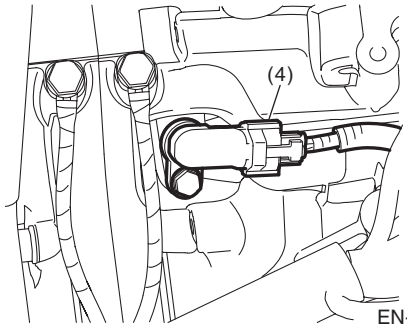
(4)
EN-11186

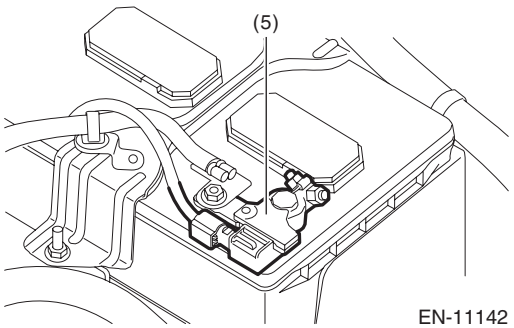
(5)
EN-11142

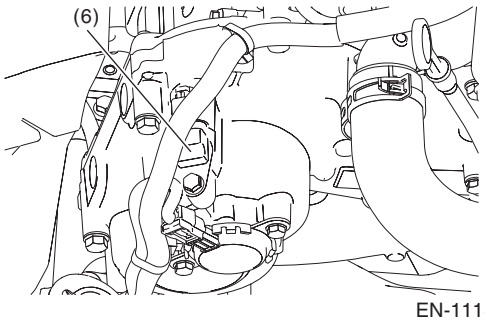
(6)
EN-11141

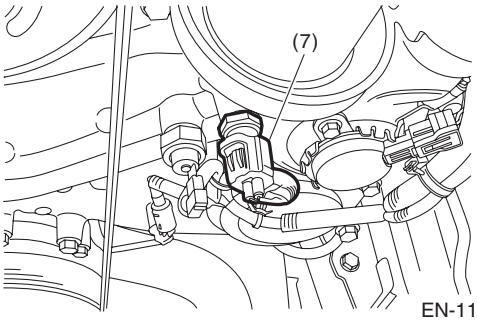
(7)
EN-11151

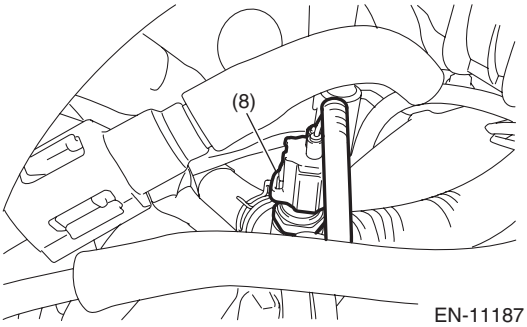
(8)
EN-11187

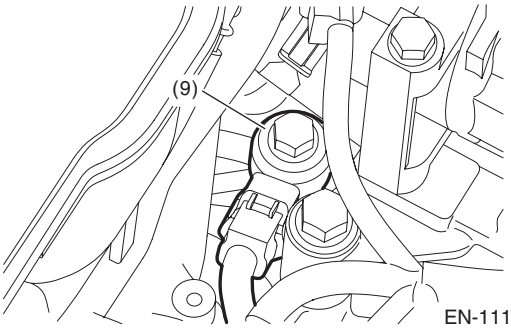
(9)
EN-11143

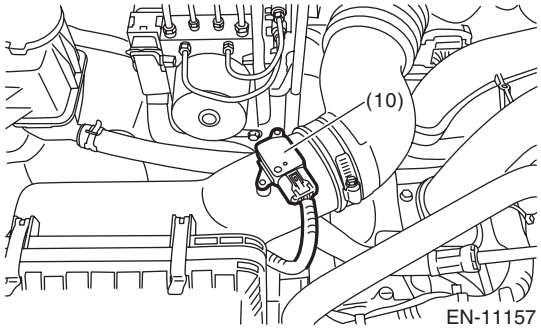
(10)
EN-11157

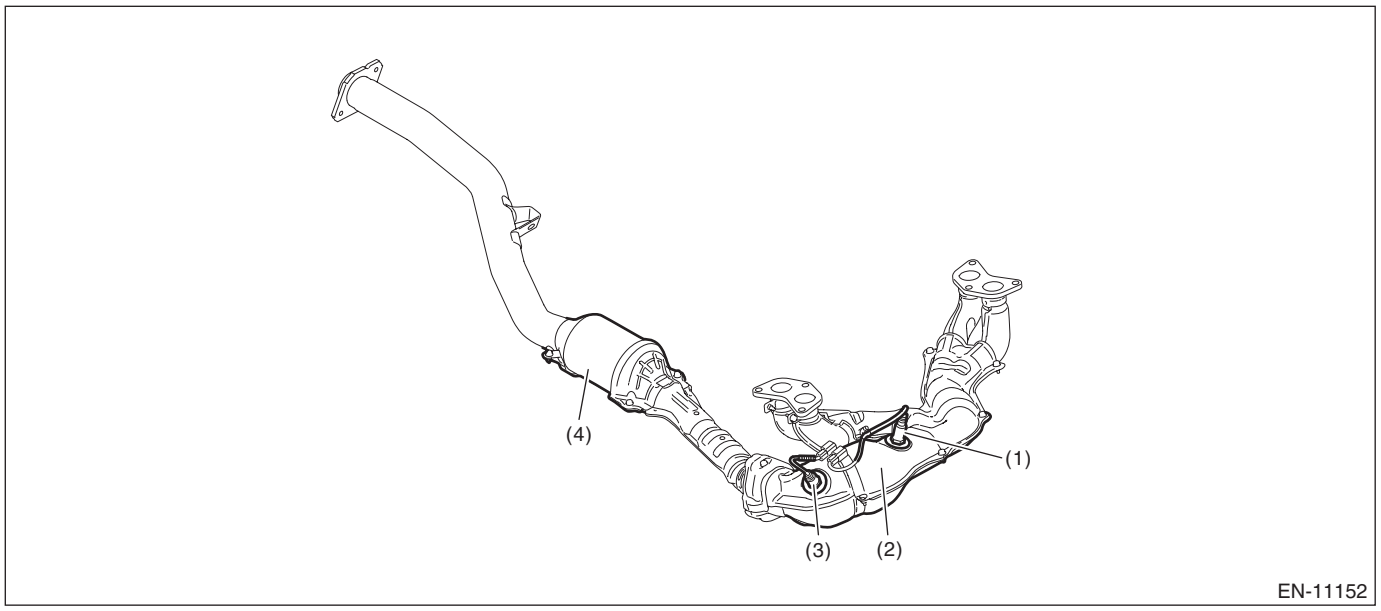

(1) Front oxygen (A/F) sensor
(2) Front catalytic converter
(3) Rear oxygen sensor
(4) Rear catalytic converter

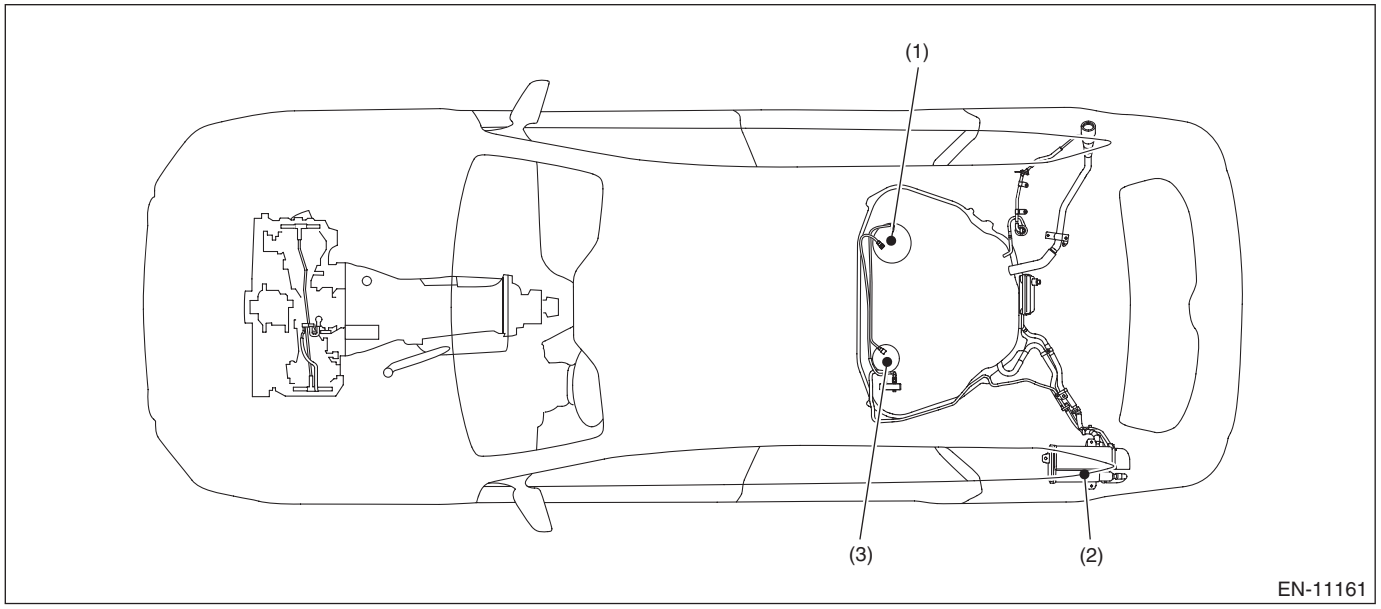

(1) Fuel level sensor
(2) Leak check valve ASSY (with built-in pressure sensor)
(3) Fuel sub level sensor

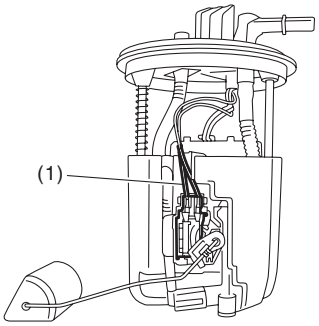

EN-11182

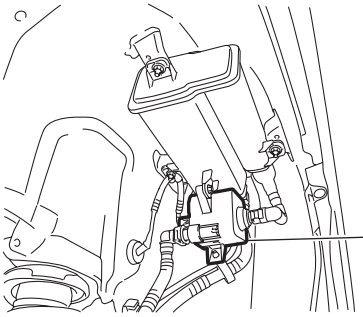

EN-11162

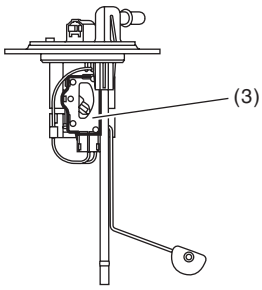

EN-08790

3. SOLENOID VALVE, ACTUATOR, EMISSION CONTROL SYSTEM PARTS AND IGNITION SYSTEM PARTS

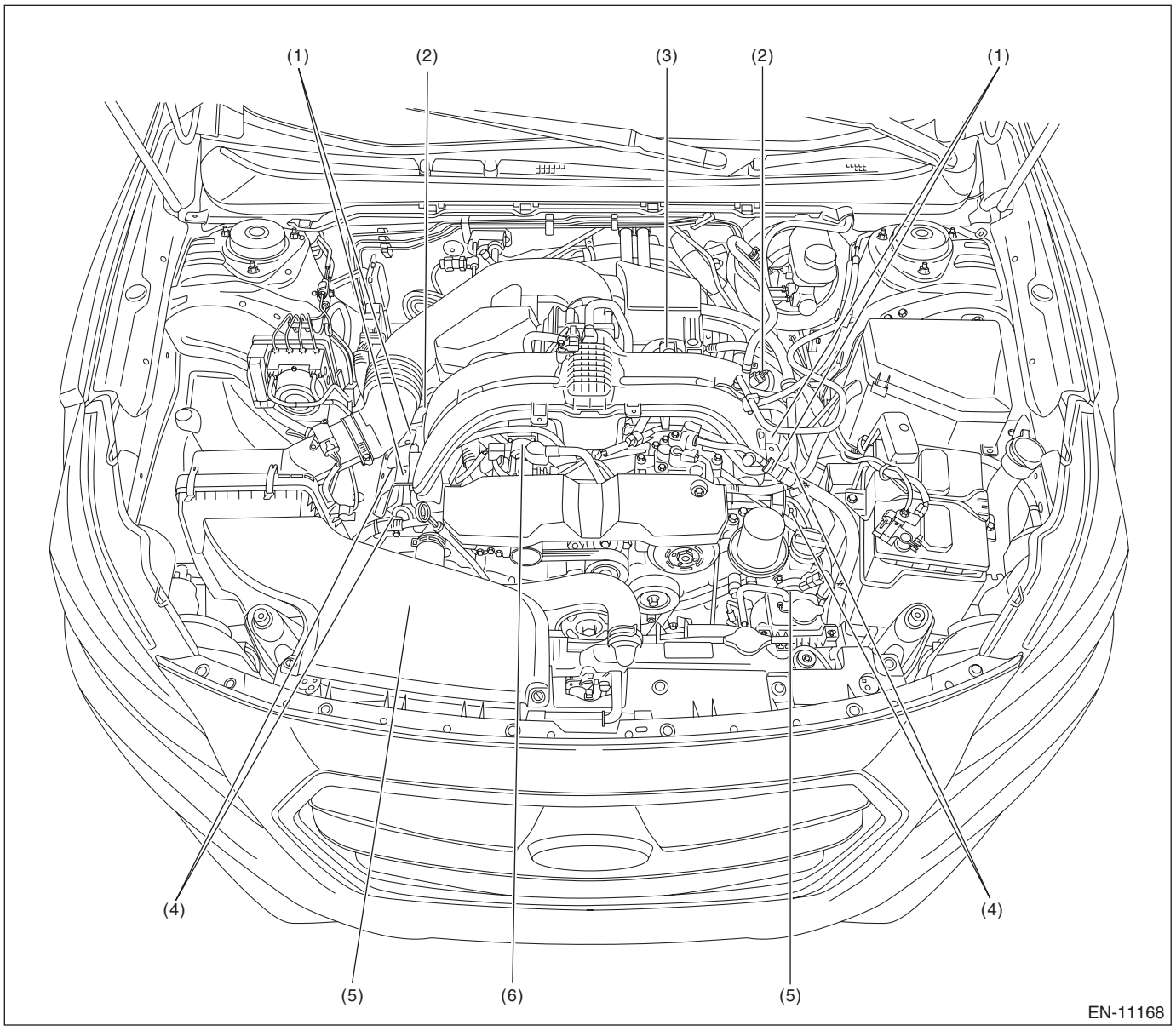

(1) Fuel injector
(2) Tumble generator valve actuator
(3) Purge control solenoid valve
(4) Ignition coil
(5) Intake oil control solenoid
(6) EGR control valve

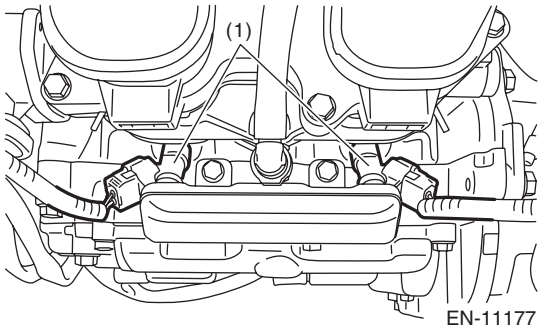

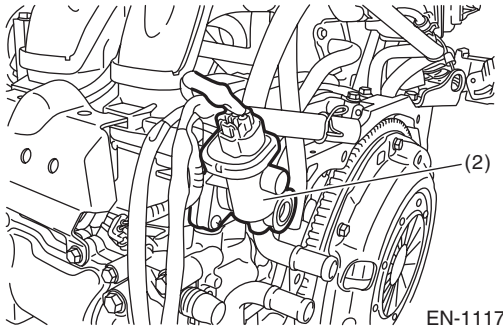

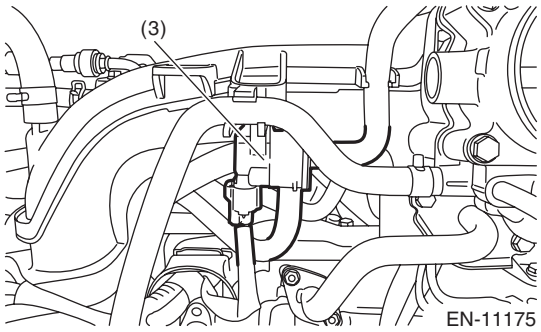

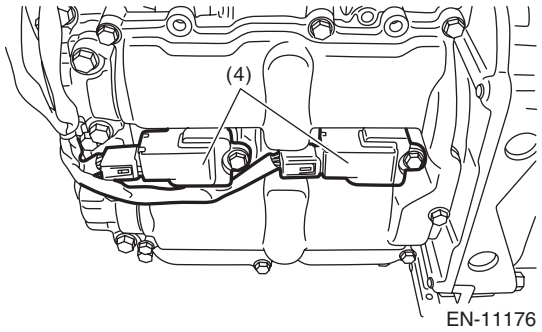

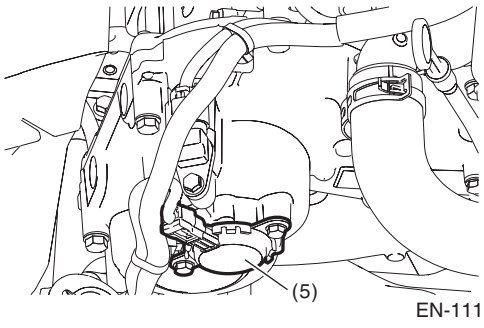

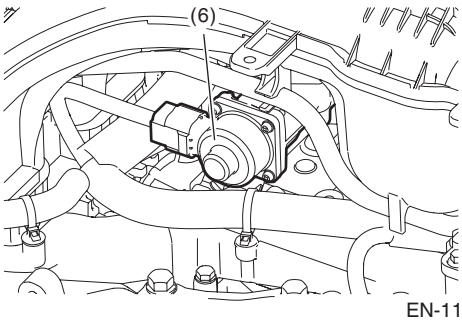

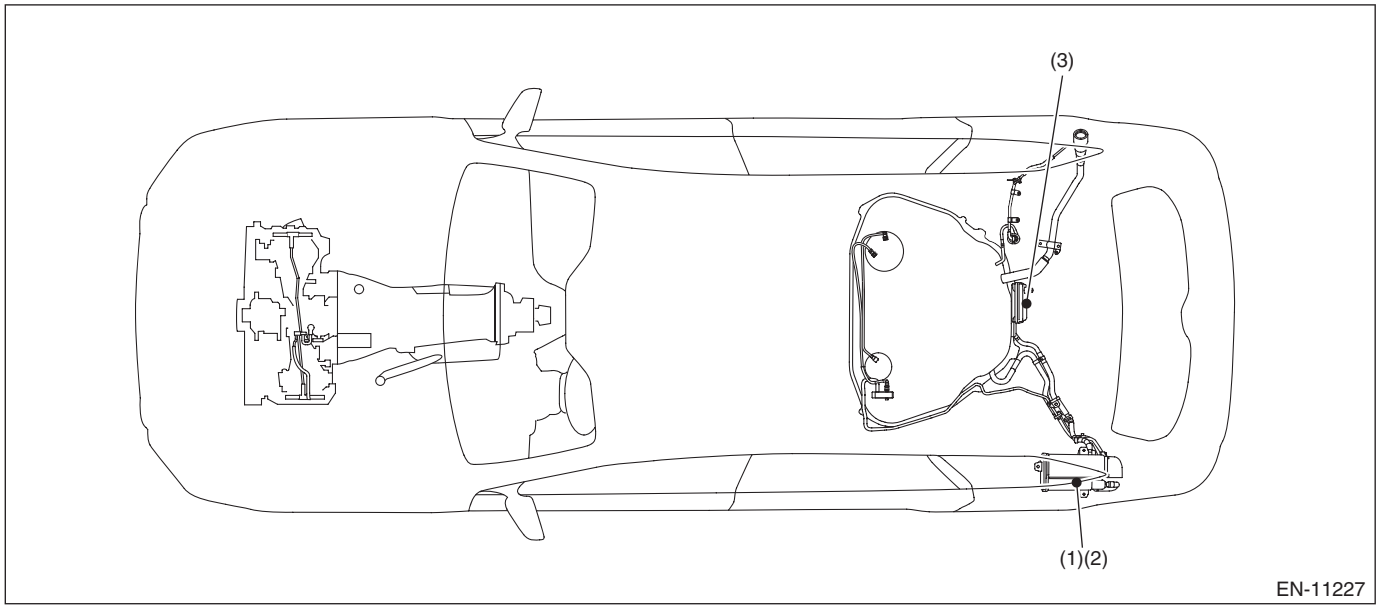

(1) Leak check valve ASSY (2) Canister (3) Drain filter

Electrical Component Location

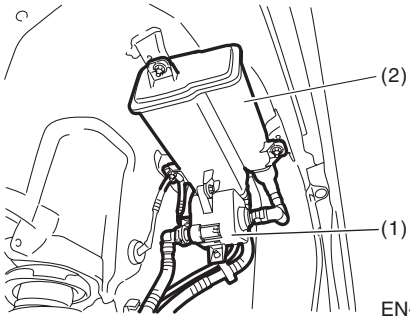

EN-11147

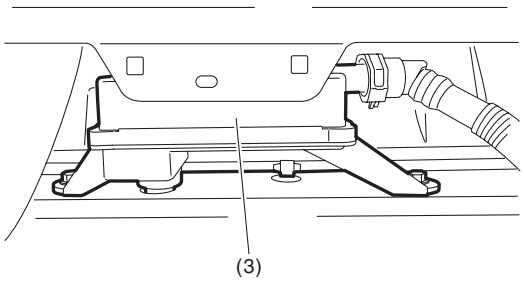

EN-11148

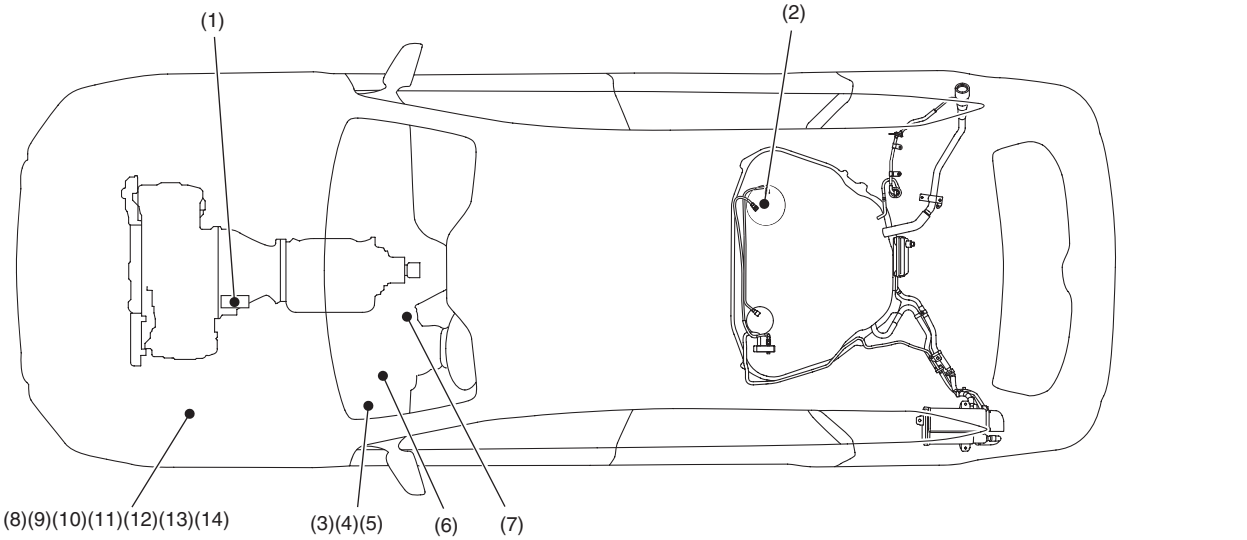

EN-11181

(1) Starter
(2) Fuel pump
(3) IG1 relay
(4) Starter relay
(5) IG2 relay
(6) Starter cut relay
(7) Push button ignition switch
(8) Radiator main fan relay 2
(9) Radiator main fan relay 1
(10) Radiator sub fan relay
(11) Electronic throttle control relay
(12) Fuel pump relay
(13) Main relay
(14) IG1 relay (push button start)

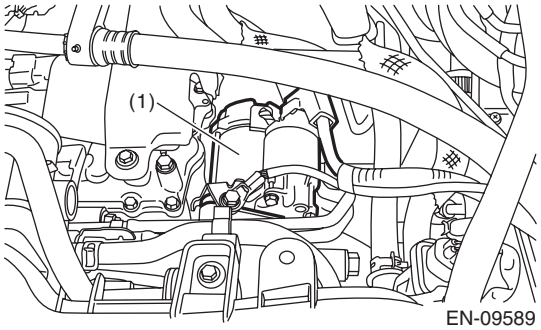

EN-09589

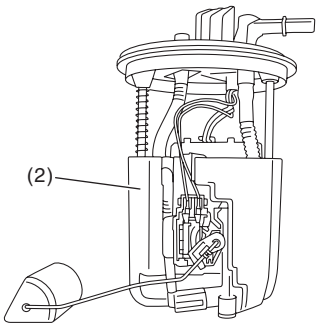

EN-11226

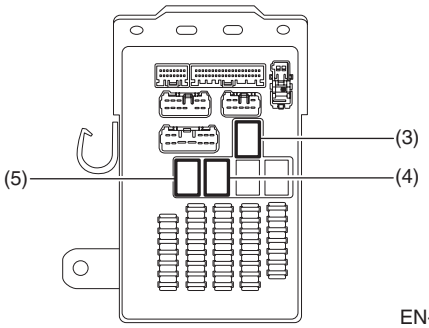

EN-11165

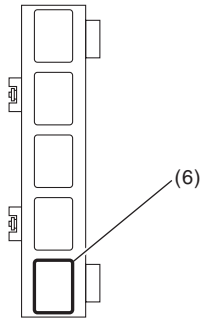

EN-11163

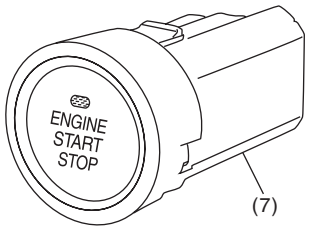

EN-11189

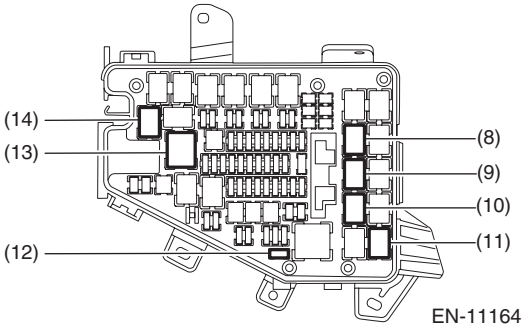

EN-11164

4. TRANSMISSION

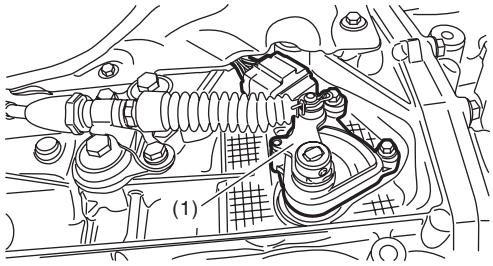

EN-09591

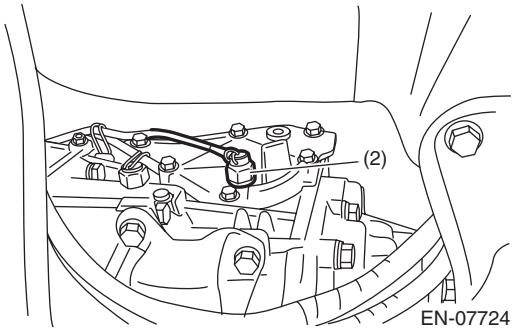

EN-07724

(1) Inhibitor switch (CVT model)
(2) Neutral position switch (MT model)

5. Engine Control Module (ECM) I/O Signal

A: ELECTRICAL SPECIFICATION

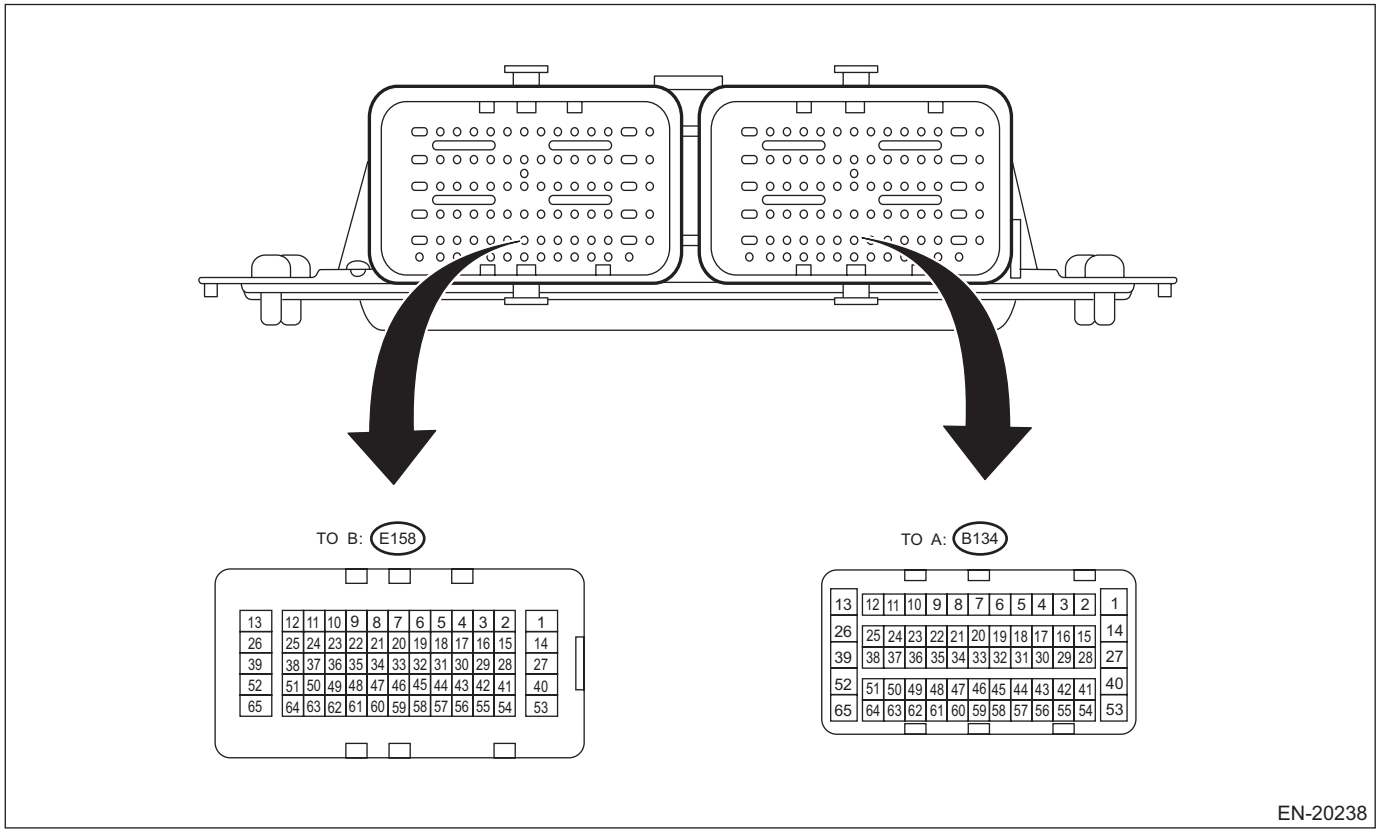

Description		Connector No.	Terminal No.	Signal (V)		Note
				Ignition SW ON After warm-up (at engine OFF)	Engine ON After warm-up (at idle)	
Crankshaft position sensor	+ signal	E158	40	0	–7 — +7	Waveform 1
	– signal	E158	27	0	0	—
	Shield	E158	53	0	0	—
Intake camshaft position sensor RH		E158	54	0 or 5	0 or 5	Waveform 1
Intake camshaft position sensor LH		E158	41	0 or 5	0 or 5	Waveform 1
Camshaft position sensor ground		E158	42	0	0	—
Front oxygen (A/F) sensor	+ signal	E158	46	2.8 — 3.2	2.8 — 3.2	Waveform 2
	– signal	E158	33	1.3 — 3.1	2.4 — 2.7	—
	Heater signal	E158	5	Battery voltage	0 or battery voltage	Waveform 4
Rear oxygen sensor	+ signal	E158	57	0.1 — 0.3	0.2 — 2.1	—
	– signal	E158	56	1.4 — 1.5	1.1 — 1.7	Waveform 3
	Heater signal	E158	10	Battery voltage	0 or battery voltage	Waveform 4
Oxygen sensor shield		E158	58	0	0	—
Air flow sensor	Signal	B134	16	0.6 — 1	0.3 — 4.5	—
	Ground	B134	17	0	0	—
	Shield	B134	3	0	0	—

Description		Connector No.	Terminal No.	Signal (V)		Note
				Ignition SW ON After warm-up (at engine OFF)	Engine ON After warm-up (at idle)	
Intake air temperature sensor signal		B134	15	0.3 — 4.6	0.3 — 4.6	—
Engine coolant temperature sensor signal		E158	43	1 — 1.4	1 — 1.4	—
Engine oil temperature sensor signal		E158	18	1 — 1.4	1 — 1.4	—
Manifold absolute pressure sensor signal		E158	15	3.5 — 4.8	1.4 — 2.1	—
Knock sensor	Signal	E158	30	2.4 — 2.6	2.1 — 2.8	—
	Shield	E158	17	0	0	—
Accelerator pedal position sensor	Main sensor signal	B134	29	Fully closed: 0.3 — 1.1 Fully opened: 2.3 — 3.8	Fully closed: 0.3 — 1.4 Fully opened: 2.4 — 3.8	—
	Main sensor power supply	B134	30	5	5	—
	Main sensor ground	B134	33	0	0	—
	Sub sensor signal	B134	31	Fully closed: 0.3 — 1.1 Fully opened: 2.3 — 3.8	Fully closed: 0.3 — 1.4 Fully opened: 2.3 — 3.8	—
	Sub sensor power supply	B134	28	5	5	—
	Sub sensor ground	B134	34	0	0	—
Tumble generator valve RH	Position signal	E158	47	Waveform	Waveform	Waveform 5
	Motor open	E158	52	Waveform	Waveform	Waveform 5
	Motor closed	E158	13	Waveform	Waveform	Waveform 5
Tumble generator valve LH	Position signal	E158	59	Waveform	Waveform	Waveform 6
	Motor open	E158	26	Waveform	Waveform	Waveform 6
	Motor closed	E158	39	Waveform	Waveform	Waveform 6
Intake oil control solenoid RH		E158	20	Battery voltage	0 or battery voltage	Waveform 7
Intake oil control solenoid LH		E158	6	Battery voltage	0 or battery voltage	Waveform 7
Purge control solenoid valve		E158	51	Battery voltage	Battery voltage	Waveform 7 Operating: 0
ELCM	Switching valve	B134	61	Battery voltage	Battery voltage	Operating: 0
	Pressure sensor	B134	21	1 — 4	1 — 4	When ignition switch is turned to ON: atmospheric pressure
	Vacuum pump	B134	9	Battery voltage	Battery voltage	Operating: 0
Ignition coil	#1	E158	37	0	0 or 5	Waveform 8
	#2	E158	35	0	0 or 5	Waveform 8
	#3	E158	38	0	0 or 5	Waveform 8
	#4	E158	36	0	0 or 5	Waveform 8

Description		Connector No.	Terminal No.	Signal (V)		Note
				Ignition SW ON After warm-up (at engine OFF)	Engine ON After warm-up (at idle)	
Fuel injector	#1	E158	23	Battery voltage	0 or battery voltage	Waveform 9
	#2	E158	8	Battery voltage	0 or battery voltage	Waveform 9
	#3	E158	9	Battery voltage	0 or battery voltage	Waveform 9
	#4	E158	22	Battery voltage	0 or battery voltage	Waveform 9
EGR control valve	Signal 1	E158	12	0 or battery voltage	0 or battery voltage	—
	Signal 2	E158	48	0 or battery voltage	0 or battery voltage	—
	Signal 3	E158	25	0 or battery voltage	0 or battery voltage	—
	Signal 4	E158	49	0 or battery voltage	0 or battery voltage	—
Electronic throttle control	Main sensor signal	E158	29	Approx. 0.7	Approx. 0.6 — 1.2	Fully closed: Approx. 0.6 — 1.2 Fully opened: Approx. 3.8 — 4.4
	Sub sensor signal	E158	31	Approx. 1.6	Approx. 1.5 — 1.7	Fully closed: Approx. 1.4 — 2.0 Fully opened: Approx. 4.0 — 4.6
	Shield	E158	19	0	0	—
	Motor (+)	E158	14	0 or battery voltage	0 or battery voltage	Drive frequency: 500 Hz Waveform 7
	Motor (–)	E158	1	Duty waveform	Duty waveform	Drive frequency: 500 Hz
Electronic throttle control motor power supply		B134	13	Battery voltage	Battery voltage	—
Electronic throttle relay control		B134	65	ON: 0	ON: 0	—
Self-shutoff relay control		B134	60	0	0	—
Starter relay control		B134	62	Waveform	Waveform	Model without push button start Waveform 12 Model with push button start Waveform 10
Starter cut relay control		B134	49	Waveform	Waveform	Model without push button start Waveform 12 Model with push button start Waveform 10
Fuel pump relay control		B134	63	Battery voltage	0	ON: 0 OFF:
Main fan relay control		B134	51	Battery voltage	Battery voltage	ON: 0
Sub fan relay control		B134	37	Battery voltage	Battery voltage	ON: 0
Ignition switch		B134	2	Battery voltage	Battery voltage	—
Neutral position switch		B134	5	ON: 0 OFF: Battery voltage	ON: 0 OFF: Battery voltage	—
Delivery mode switch		B134	6	Battery voltage	Battery voltage	When fuse is installed: 0
Oil level switch		E158	3	0	0	Oil level LOW: Battery voltage
Starter switch		B134	46	Waveform	Waveform	Model without push button start Waveform 12 Model with push button start Waveform 10

Description	Connector No.	Terminal No.	Signal (V)		Note
			Ignition SW ON After warm-up (at engine OFF)	Engine ON After warm-up (at idle)	
Starter switch 2	B134	58	Waveform	Waveform	Model without push button start Waveform 12 Model with push button start Waveform 10
Accessory cut request	B134	64	Waveform	Waveform	Model without push button start Waveform 12 Model with push button start Waveform 11
Engine speed output	B134	10	0	0 or battery voltage	Model without push button start Waveform 12 Model with push button start Waveform 11
Clutch switch	B134	42	When clutch pedal is depressed: 0 When clutch pedal is released: Battery voltage	When clutch pedal is depressed: 0 When clutch pedal is released: Battery voltage	MT model
Brake switch 1 (Brake switch)	B134	59	When brake pedal is depressed: 0 When brake pedal is released: Battery voltage	When brake pedal is depressed: 0 When brake pedal is released: Battery voltage	—
Brake switch 2 (Stop light switch)	B134	48	When brake pedal is depressed: Battery voltage When brake pedal is released: 0	When brake pedal is depressed: Battery voltage When brake pedal is released: 0	—
Cruise control main switch	B134	44	ON: 0 OFF: 5	ON: 0 OFF: 5	Model without EyeSight
Cruise control command switch	B134	22	When operating nothing: 3.5 — 4.5 When operating RES/ACC: 2.5 — 3.5 When operating SET/COAST: 0.5 — 1.5 When operating CANCEL: 0 — 0.5	When operating nothing: 3.5 — 4.5 When operating RES/ACC: 2.5 — 3.5 When operating SET/COAST: 0.5 — 1.5 When operating CANCEL: 0 — 0.5	Model without EyeSight
Generator control	B134	23	0 or 6.5	0 or 6.5	—
LIN communication	B134	55	—	—	—
Immobilizer communication	B134	38	—	—	—
CAN communication HI	B134	25	—	—	—
CAN communication LO	B134	24	—	—	—
Control module power supply	B134	1	Battery voltage	Battery voltage	—
	B134	14	Battery voltage	Battery voltage	—
Backup power supply	B134	27	Battery voltage	Battery voltage	Ignition switch OFF: Battery voltage
Sensor power supply	B134	35	5	5	—
	E158	32	5	5	—

Description		Connector No.	Terminal No.	Signal (V)		Note
				Ignition SW ON After warm-up (at engine OFF)	Engine ON After warm-up (at idle)	
Ground	Body	B134	53	0	0	—
	Sensor	B134	32	0	0	—
		E158	34	0	0	—
	Engine 1	E158	65	0	0	—
	Engine 2	E158	64	0	0	—
	Engine 3	E158	63	0	0	—
	Engine 4	E158	62	0	0	—
	Engine 5	E158	61	0	0	—

NOTE:
- After engine is warmed up, attach the check board for measurement.
- Set the select lever in “P” range or “N” range, or the shift lever in neutral.
- Turn the A/C to OFF.
- Turn all the accessory switches to OFF.
- Waveforms vary depending on a measurement environment and vehicle condition.

1. Waveform 1

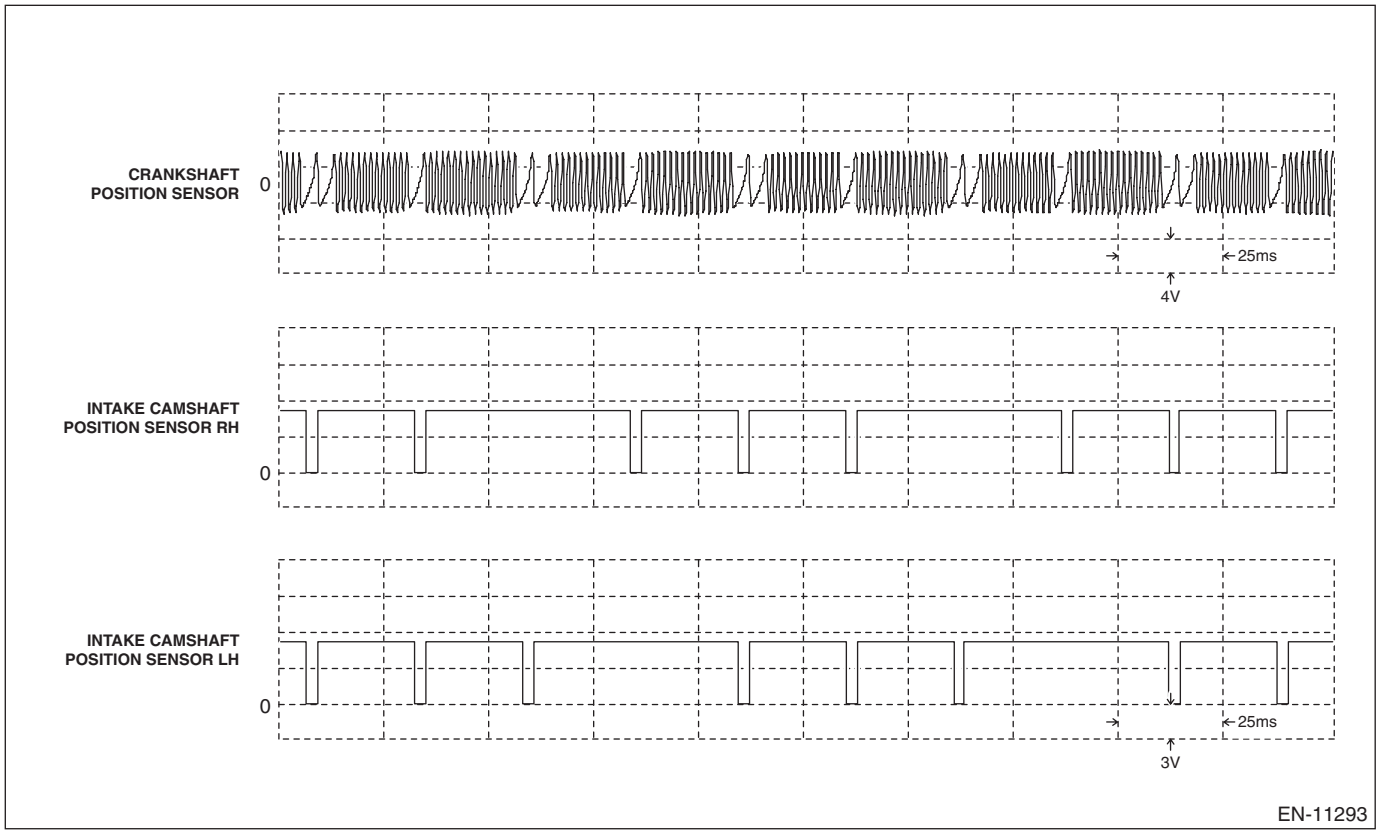

Measured terminal	Crankshaft position sensor (E158) No. 40 — Engine ground 3 (E158) No. 63:
	Camshaft position sensor RH (E158) No. 54 — Engine ground 3 (E158) No. 63:
	Camshaft position sensor LH (E158) No. 41 — Engine ground 3 (E158) No. 63:
Measuring condition	While engine idling

2. Waveform 2

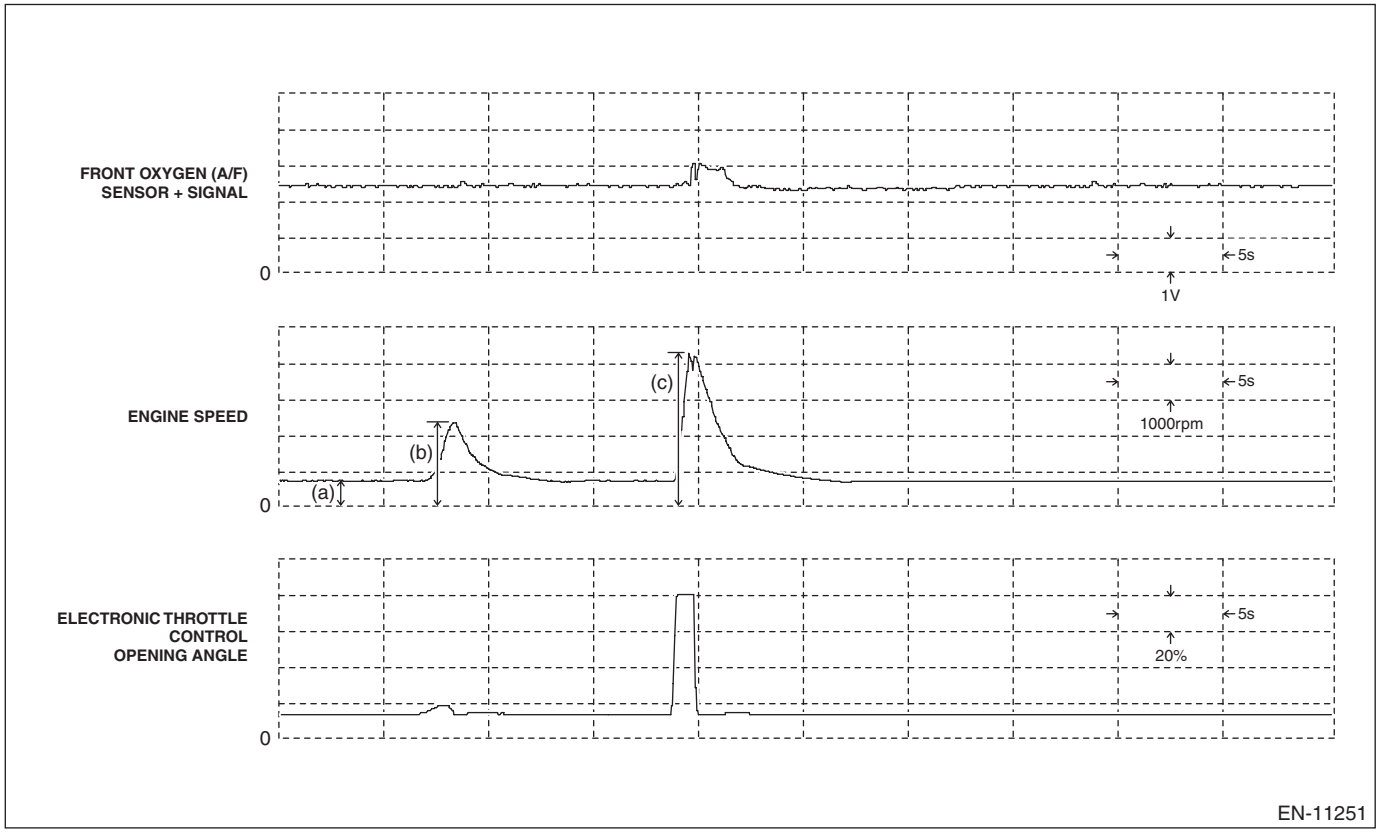

Measured terminal	Front oxygen (A/F) sensor (E158) No. 46 (+) — Engine ground 3 (E158) No. 63:
	Engine speed
	Throttle valve opening angle
Measuring condition	(a) accelerator pedal fully closed (b) accelerator pedal half open (c) accelerator pedal fully opened

3. Waveform 3

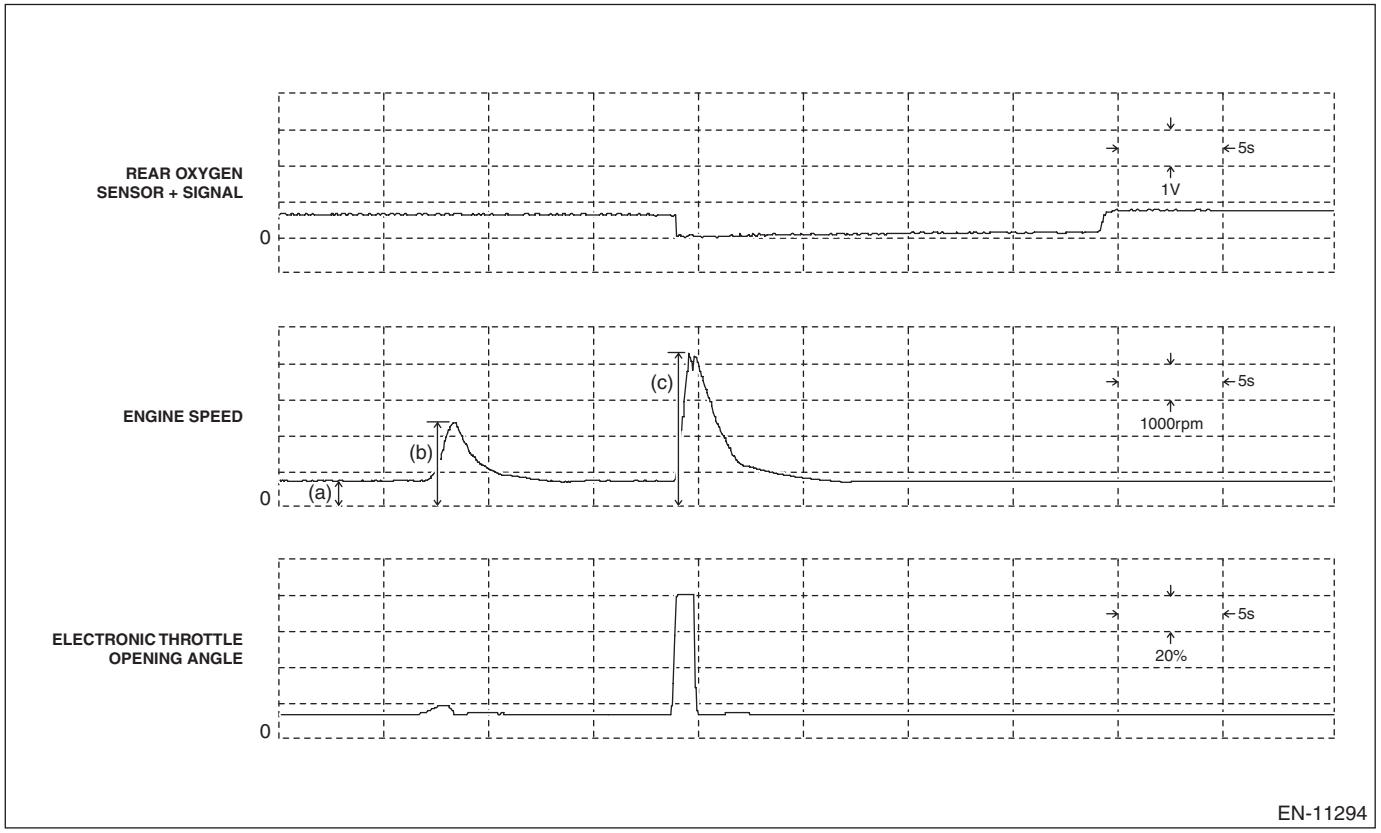

Measured terminal	Rear oxygen sensor (E158) No. 57 (+) — (E158) No. 56 (–):
	Engine speed
	Throttle valve opening angle
Measuring condition	(a) accelerator pedal fully closed (b) accelerator pedal half open (c) accelerator pedal fully opened

4. Waveform 4

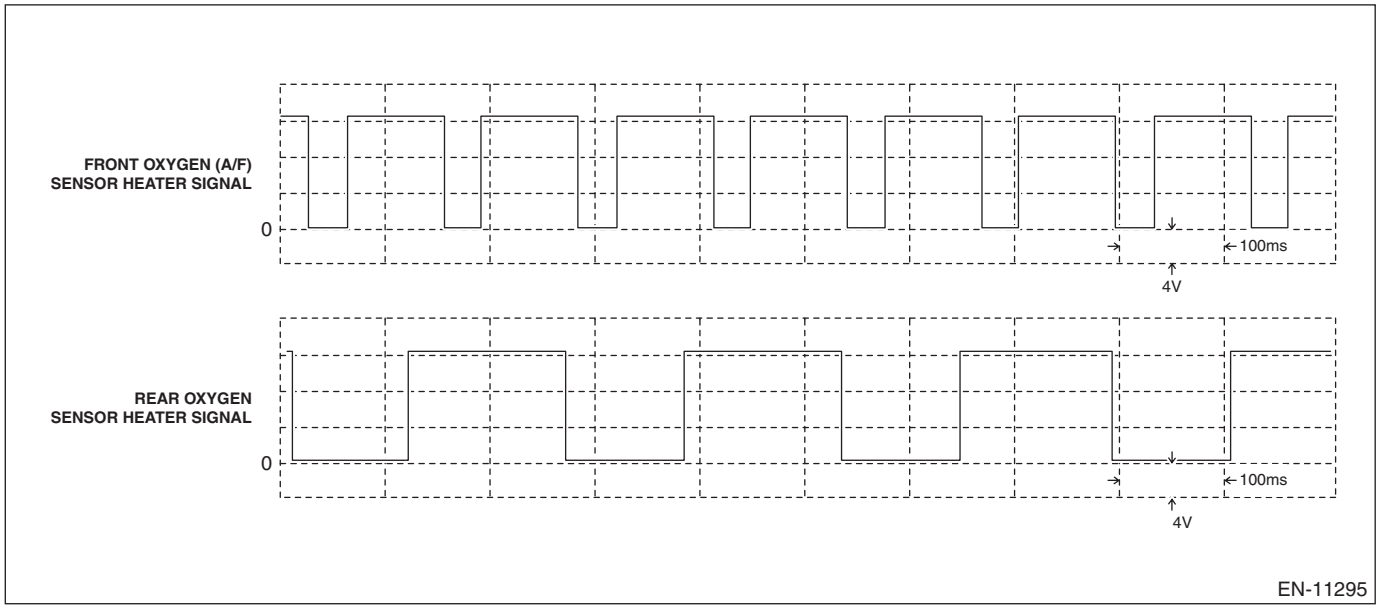

Measured terminal	Front oxygen (A/F) sensor heater (E158) No. 5 (+) — Engine ground 3 (E158) No. 63:
	Rear oxygen sensor heater (E158) No. 10 (+) — Engine ground 3 (E158) No. 63:
Measuring condition	While engine idling

5. Waveform 5

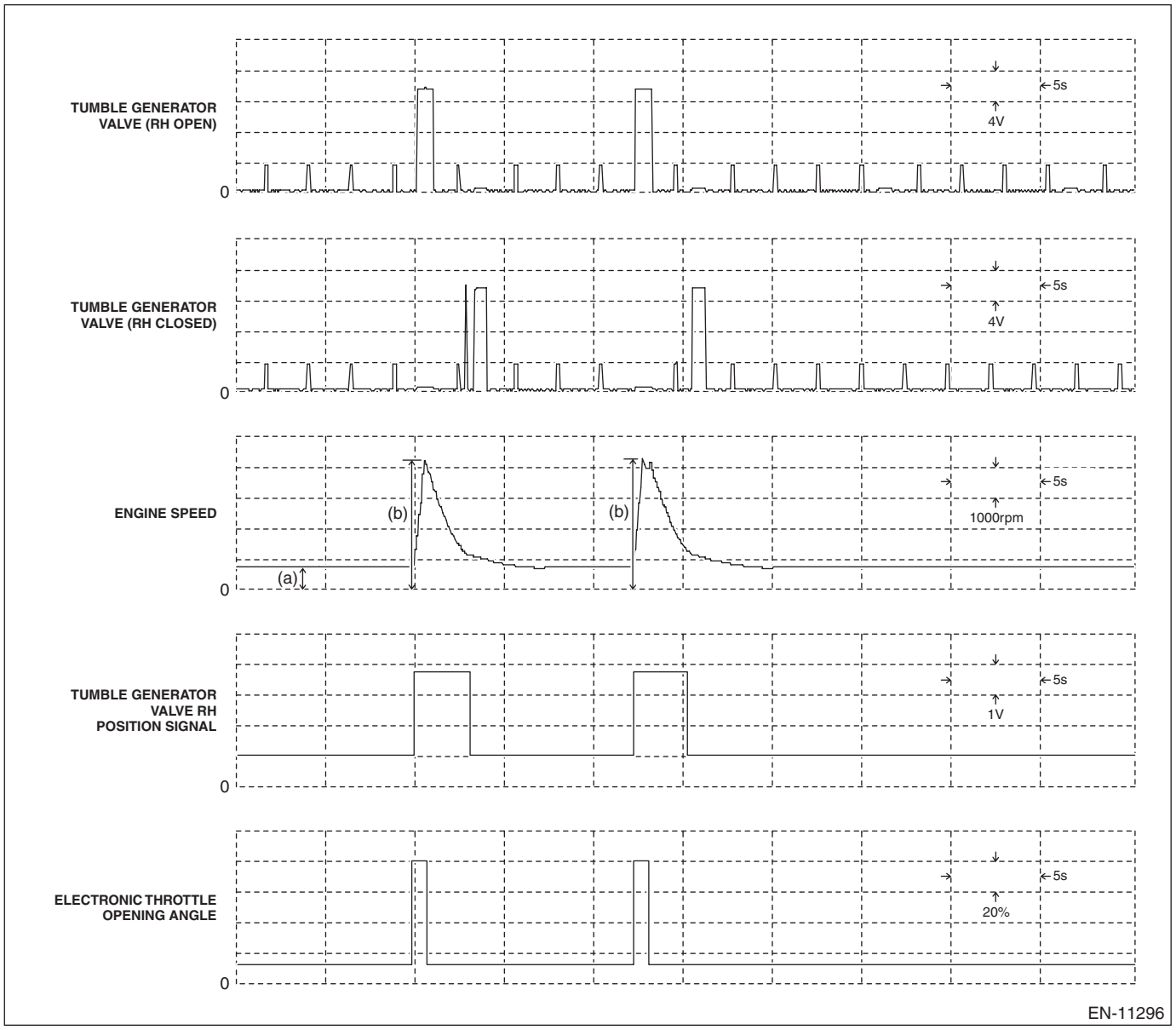

Measured terminal	Tumble generator valve RH motor open (E158) No. 52 (+) — Engine ground 3 (E158) No. 63:
	Tumble generator valve RH motor closed (E158) No. 13 (+) — Engine ground 3 (E158) No. 63:
	Engine speed
	Tumble generator valve RH position signal (E158) No. 47 (+) — Engine ground 3 (E158) No. 63:
	Throttle valve opening angle
Measuring condition	(a) accelerator pedal fully closed (b) accelerator pedal fully opened

6. Waveform 6

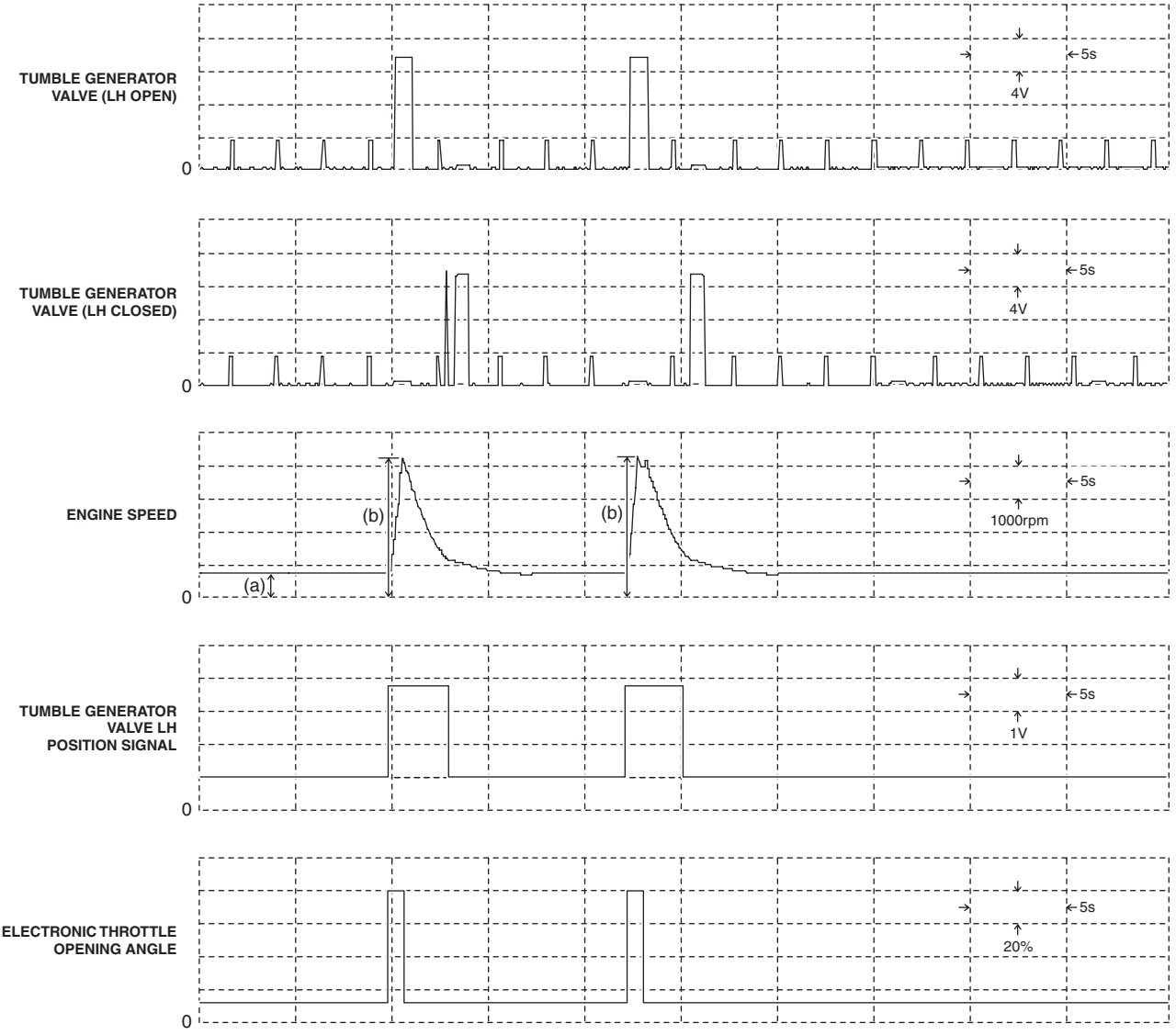

EN-11297

Measured terminal	Tumble generator valve LH motor open (E158) No. 26 (+) — Engine ground 3 (E158) No. 63:
	Tumble generator valve LH motor closed (E158) No. 39 (+) — Engine ground 3 (E158) No. 63:
	Engine speed
	Tumble generator valve LH position signal (E158) No. 59 (+) — Engine ground 3 (E158) No. 63:
	Throttle valve opening angle
Measuring condition	(a) accelerator pedal fully closed (b) accelerator pedal fully opened

7. Waveform 7

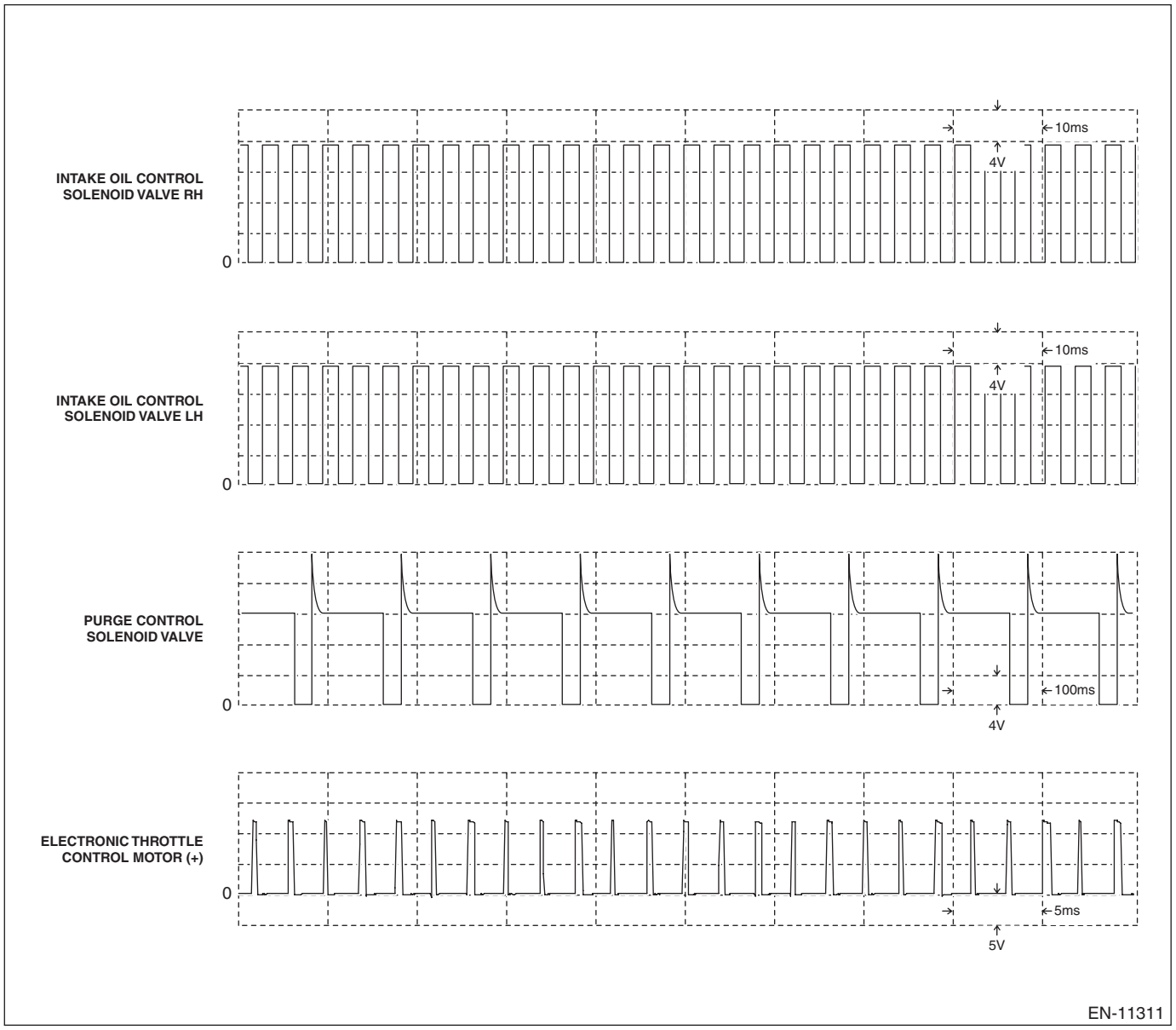

Measured terminal	Intake oil control solenoid valve RH (E158) No. 20 (+) — Engine ground 3 (E158) No. 63:
	Intake oil control solenoid valve LH (E158) No. 6 (+) — Engine ground 3 (E158) No. 63:
	Purge control solenoid valve (E158) No. 51 (+) — Engine ground 3 (E158) No. 63:
	Electronic throttle control motor (E158) No. 14 (+) — Engine ground 3 (E158) No. 63:
Measuring condition	While engine idling Purge control solenoid valve: At 2000 rpm (during evaporative purge control)

8. Waveform 8

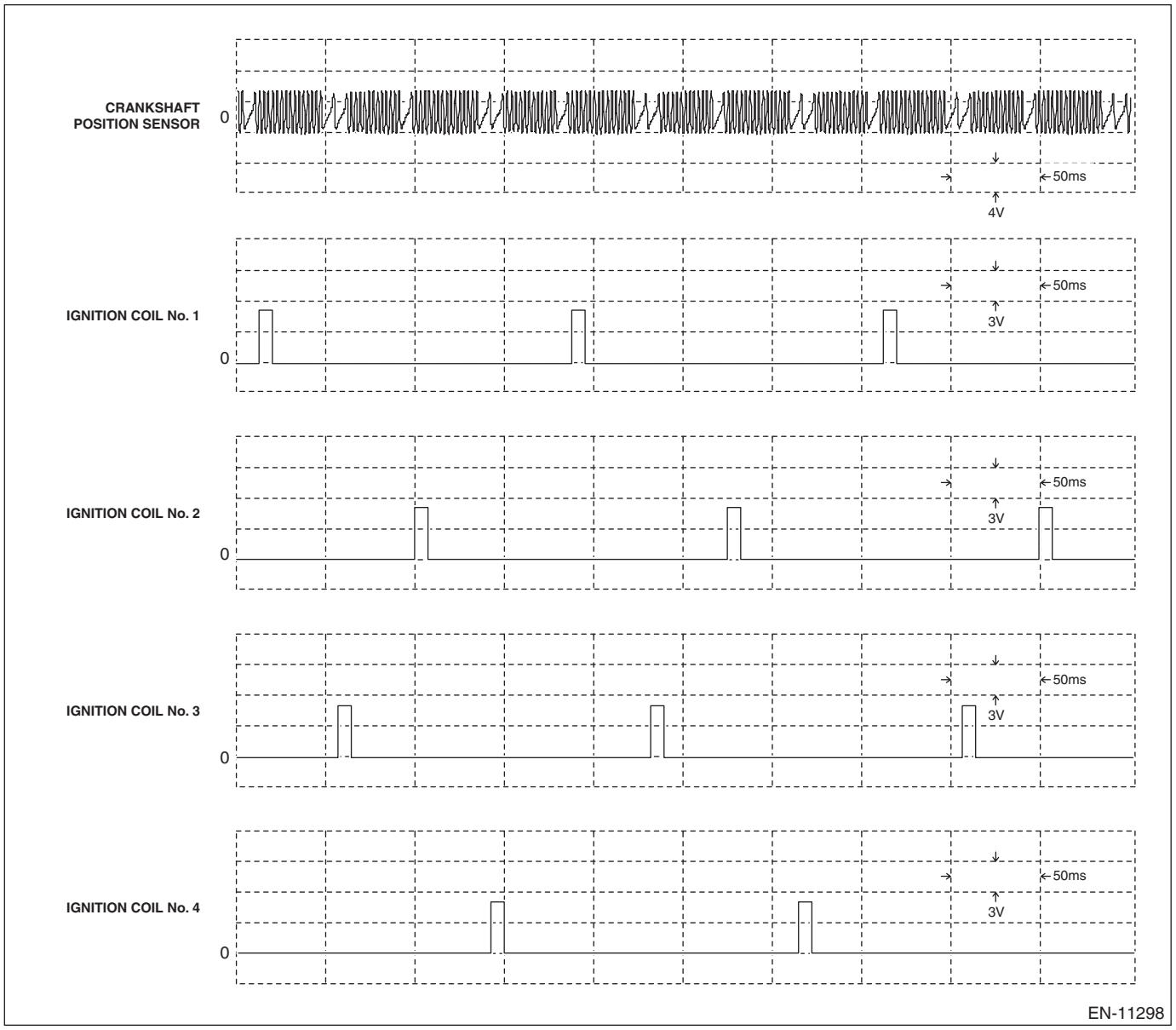

Measured terminal	Crankshaft position sensor (E158) No. 40 (+) — Engine ground 3 (E158) No. 63:
	Ignition coil #1 (E158) No. 37 (+) — Engine ground 3 (E158) No. 63:
	Ignition coil #2 (E158) No. 35 (+) — Engine ground 3 (E158) No. 63:
	Ignition coil #3 (E158) No. 38 (+) — Engine ground 3 (E158) No. 63:
	Ignition coil #4 (E158) No. 36 (+) — Engine ground 3 (E158) No. 63:
Measuring condition	While engine idling

9. Waveform 9

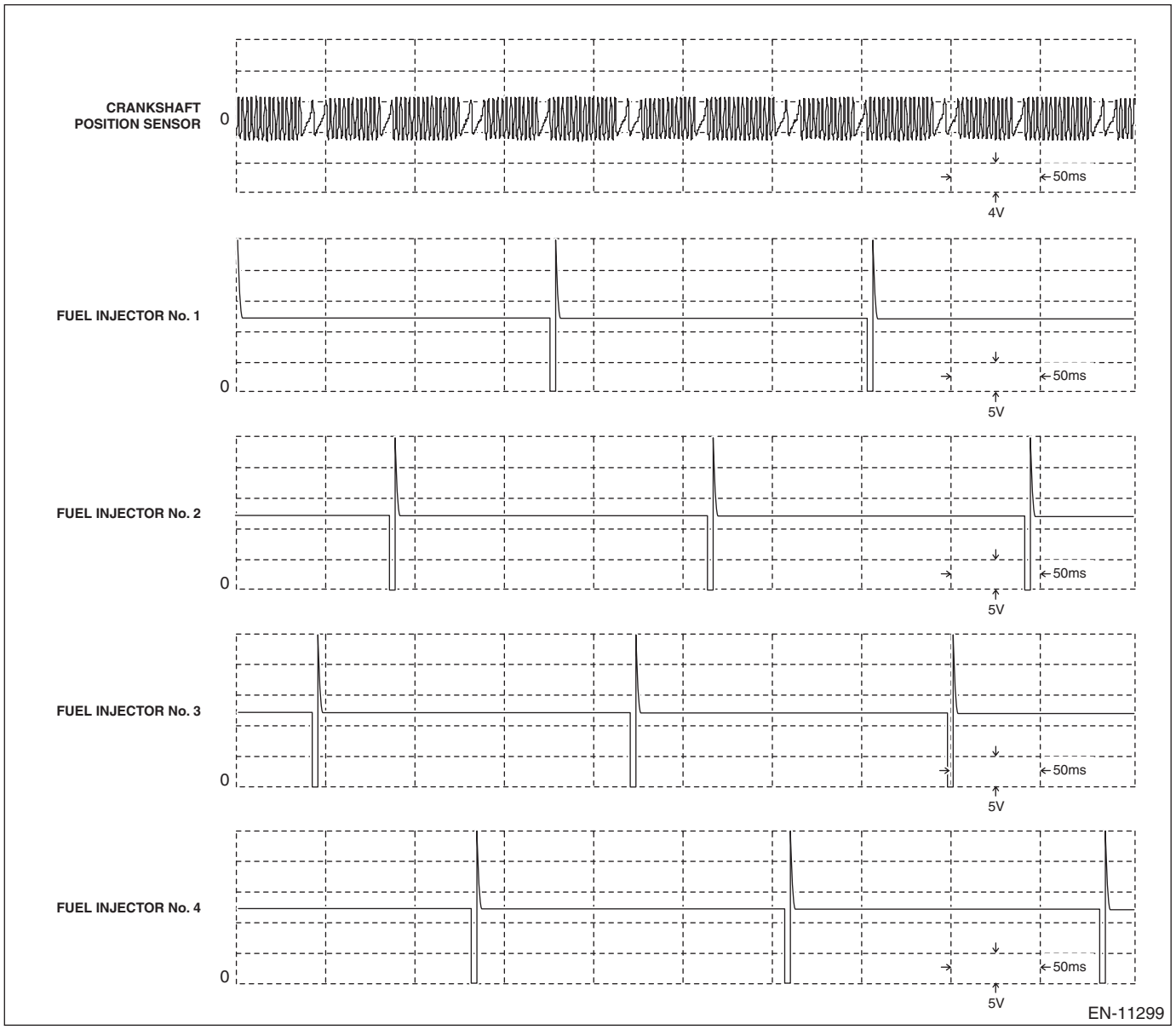

Measured terminal	Crankshaft position sensor (E158) No. 40 (+) — Engine ground 3 (E158) No. 63:
	Fuel injector #1 (E158) No. 23 (+) — Engine ground 3 (E158) No. 63:
	Fuel injector #2 (E158) No. 8 (+) — Engine ground 3 (E158) No. 63:
	Fuel injector #3 (E158) No. 9 (+) — Engine ground 3 (E158) No. 63:
	Fuel injector #4 (E158) No. 22 (+) — Engine ground 3 (E158) No. 63:
Measuring condition	While engine idling

10.Waveform 10

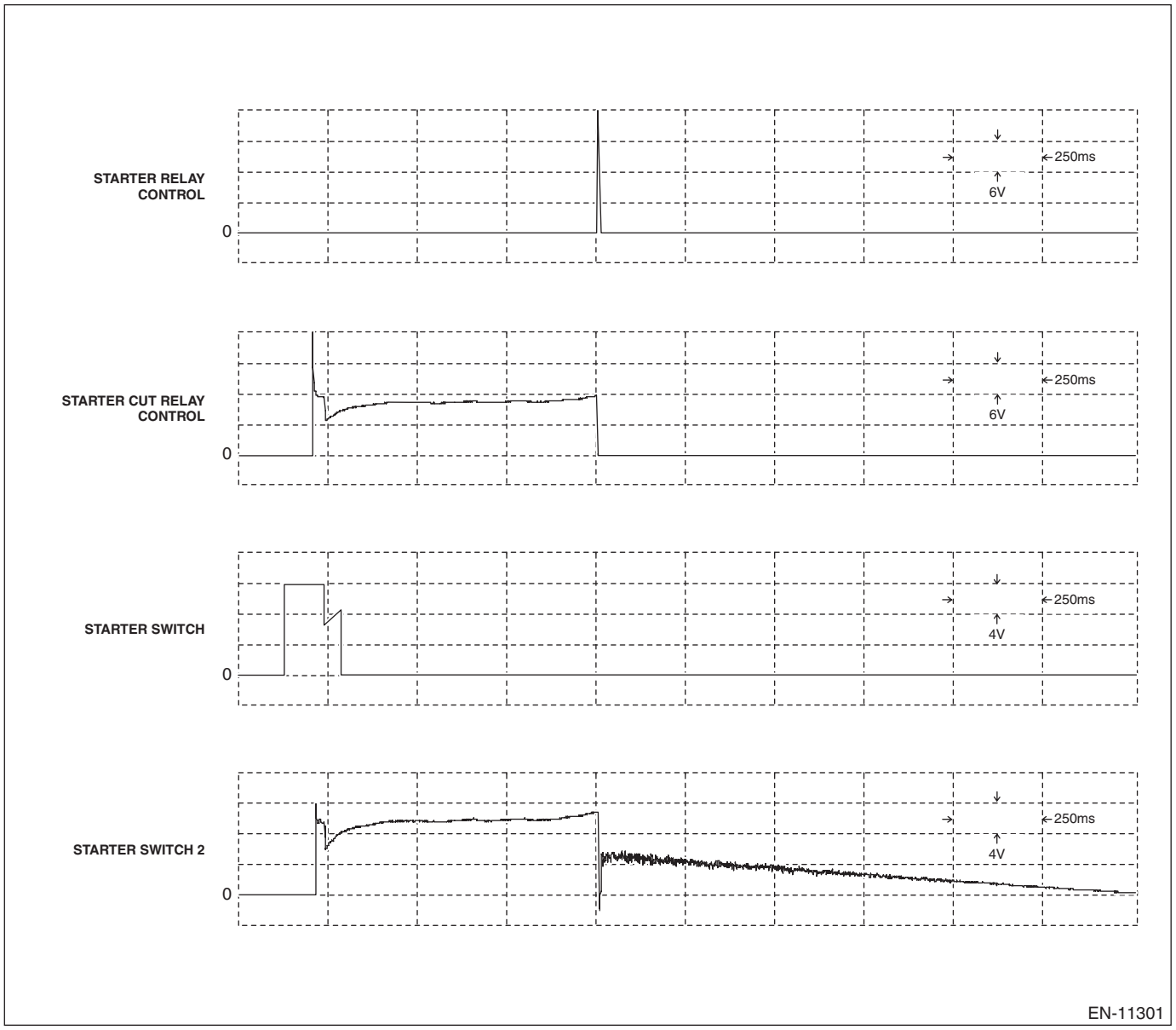

Measured terminal	Starter relay control (E134) No. 62 (+) — Engine ground 3 (E158) No. 63:
	Starter cut relay control (E134) No. 49 (+) — Engine ground 3 (E158) No. 63:
	Starter switch (E134) No. 46 (+) — Engine ground 3 (E158) No. 63:
	Starter switch 2 (E134) No. 58 (+) — Engine ground 3 (E158) No. 63:
Measuring condition	When engine is started

11.Waveform 11

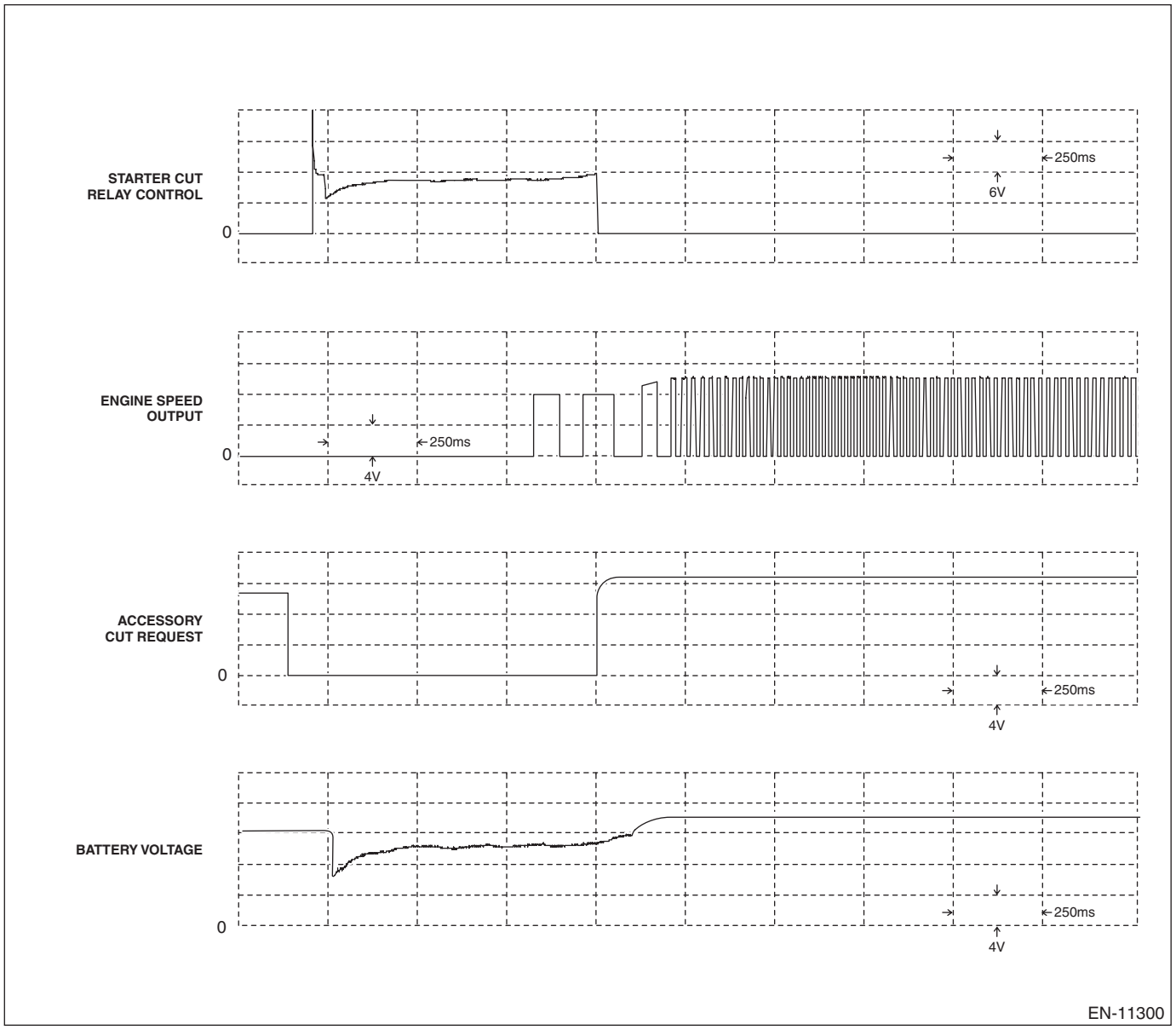

Measured terminal	Starter cut relay control (E134) No. 49 (+) — Engine ground 3 (E158) No. 63:
	Engine speed output (E134) No. 10 (+) — Engine ground 3 (E158) No. 63:
	Accessory cut request (E134) No. 64 (+) — Engine ground 3 (E158) No. 63:
	Battery voltage (battery terminal) (+) — Engine ground 3 (E158) No. 63:
Measuring condition	When engine is started

12.Waveform 12

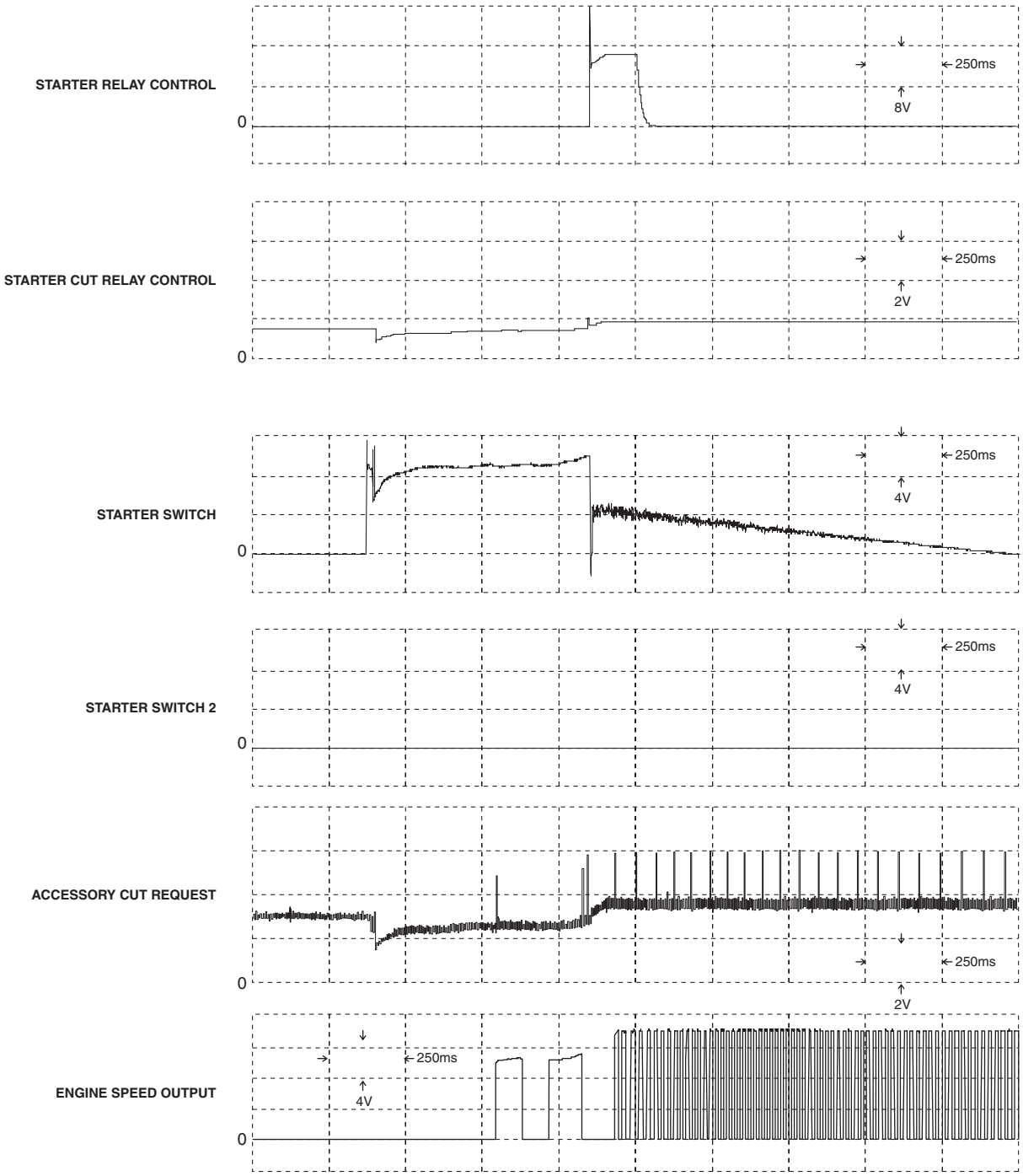

EN-11275

Measured terminal	Starter relay control (B134) No. 62 (+) — Engine ground 3 (E158) No. 63:
	Starter cut relay control (B134) No. 49 (+) — Engine ground 3 (E158) No. 63:
	Starter switch (B134) No. 46 (+) — Engine ground 3 (E158) No. 63:
	Starter switch 2 (B134) No. 58 (+) — Engine ground 3 (E158) No. 63:
	Accessory cut request (B134) No. 64 (+) — Engine ground 3 (E158) No. 63:
	Engine speed output (B134) No. 10 (+) — Engine ground 3 (E158) No. 63:
Measuring condition	When engine is started

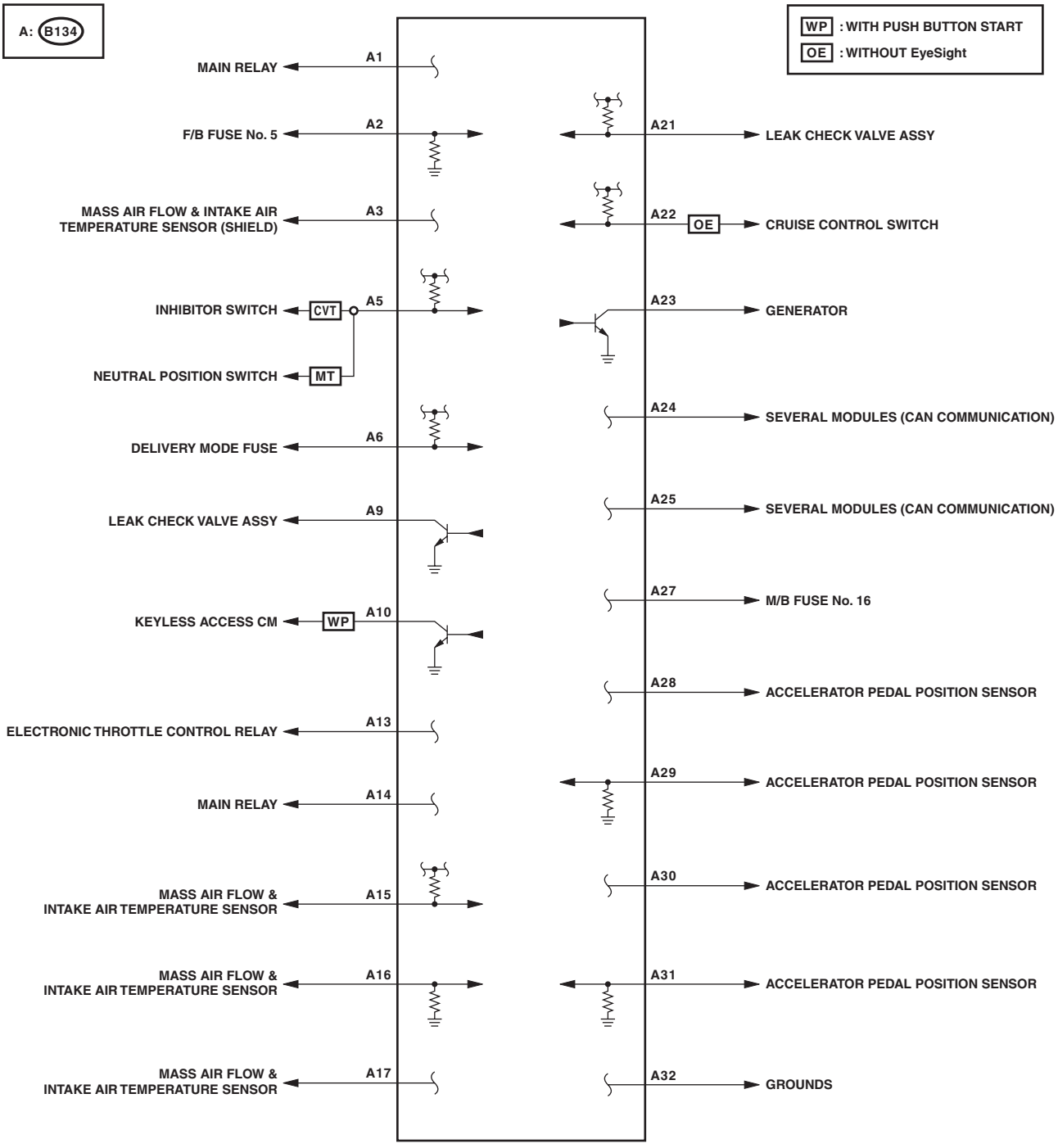
A: B134
WP : WITH PUSH BUTTON START
OE : WITHOUT EyeSight
MAIN RELAY
A1
F/B FUSE No. 5
A2
MASS AIR FLOW & INTAKE AIR TEMPERATURE SENSOR (SHIELD)
A3
INHIBITOR SWITCH
CVT
A5
NEUTRAL POSITION SWITCH
MT
DELIVERY MODE FUSE
A6
LEAK CHECK VALVE ASSY
A9
KEYLESS ACCESS CM
WP
A10
ELECTRONIC THROTTLE CONTROL RELAY
A13
MAIN RELAY
A14
MASS AIR FLOW & INTAKE AIR TEMPERATURE SENSOR
A15
MASS AIR FLOW & INTAKE AIR TEMPERATURE SENSOR
A16
MASS AIR FLOW & INTAKE AIR TEMPERATURE SENSOR
A17
A21
LEAK CHECK VALVE ASSY
A22
OE
CRUISE CONTROL SWITCH
A23
GENERATOR
A24
SEVERAL MODULES (CAN COMMUNICATION)
A25
SEVERAL MODULES (CAN COMMUNICATION)
A27
M/B FUSE No. 16
A28
ACCELERATOR PEDAL POSITION SENSOR
A29
ACCELERATOR PEDAL POSITION SENSOR
A30
ACCELERATOR PEDAL POSITION SENSOR
A31
ACCELERATOR PEDAL POSITION SENSOR
A32
GROUNDS

EN-11052

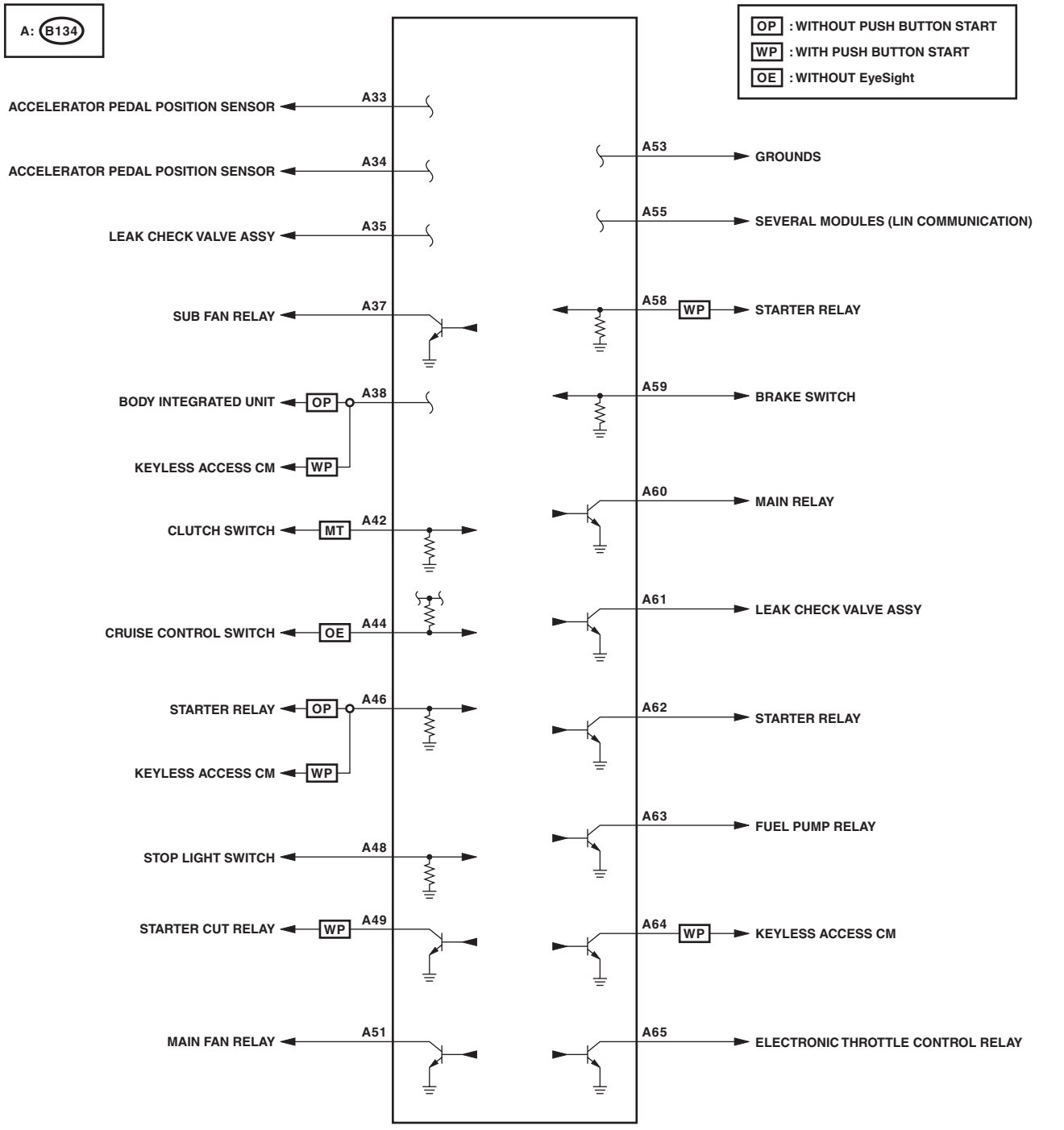
A: B134
OP : WITHOUT PUSH BUTTON START
WP : WITH PUSH BUTTON START
OE : WITHOUT EyeSight
ACCELERATOR PEDAL POSITION SENSOR
A33
ACCELERATOR PEDAL POSITION SENSOR
A34
LEAK CHECK VALVE ASSY
A35
SUB FAN RELAY
A37
BODY INTEGRATED UNIT
OP
A38
KEYLESS ACCESS CM
WP
CLUTCH SWITCH
MT
A42
CRUISE CONTROL SWITCH
OE
A44
STARTER RELAY
OP
A46
KEYLESS ACCESS CM
WP
STOP LIGHT SWITCH
A48
STARTER CUT RELAY
WP
A49
MAIN FAN RELAY
A51
A53
GROUNDS
A55
SEVERAL MODULES (LIN COMMUNICATION)
A58
WP
STARTER RELAY
A59
BRAKE SWITCH
A60
MAIN RELAY
A61
LEAK CHECK VALVE ASSY
A62
STARTER RELAY
A63
FUEL PUMP RELAY
A64
WP
KEYLESS ACCESS CM
A65
ELECTRONIC THROTTLE CONTROL RELAY

EN-11053

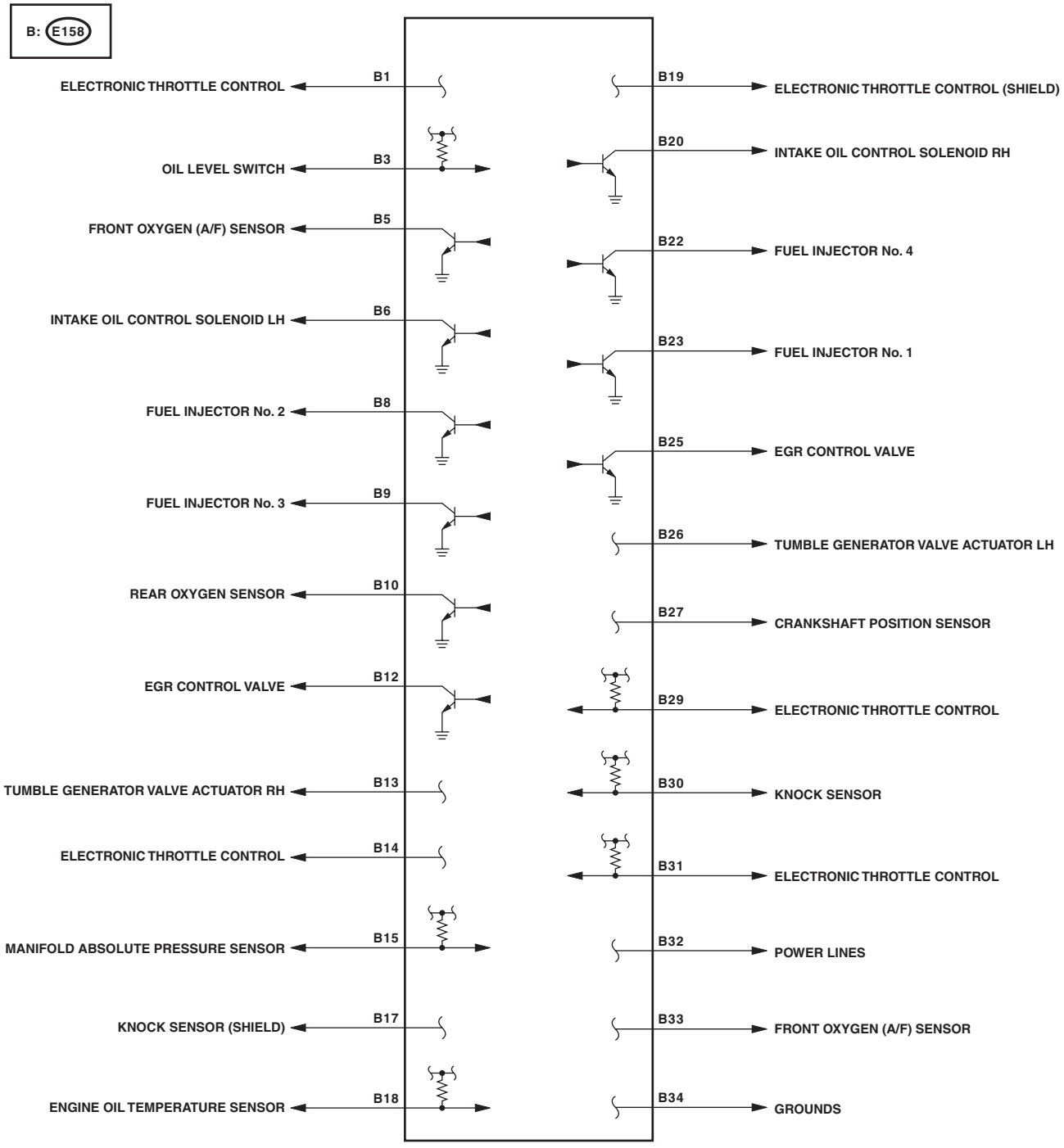
B: E158
ELECTRONIC THROTTLE CONTROL
B1
OIL LEVEL SWITCH
B3
FRONT OXYGEN (A/F) SENSOR
B5
INTAKE OIL CONTROL SOLENOID LH
B6
FUEL INJECTOR No. 2
B8
FUEL INJECTOR No. 3
B9
REAR OXYGEN SENSOR
B10
EGR CONTROL VALVE
B12
TUMBLE GENERATOR VALVE ACTUATOR RH
B13
ELECTRONIC THROTTLE CONTROL
B14
MANIFOLD ABSOLUTE PRESSURE SENSOR
B15
KNOCK SENSOR (SHIELD)
B17
ENGINE OIL TEMPERATURE SENSOR
B18
B19
ELECTRONIC THROTTLE CONTROL (SHIELD)
B20
INTAKE OIL CONTROL SOLENOID RH
B22
FUEL INJECTOR No. 4
B23
FUEL INJECTOR No. 1
B25
EGR CONTROL VALVE
B26
TUMBLE GENERATOR VALVE ACTUATOR LH
B27
CRANKSHAFT POSITION SENSOR
B29
ELECTRONIC THROTTLE CONTROL
B30
KNOCK SENSOR
B31
ELECTRONIC THROTTLE CONTROL
B32
POWER LINES
B33
FRONT OXYGEN (A/F) SENSOR
B34
GROUNDS

EN-11054

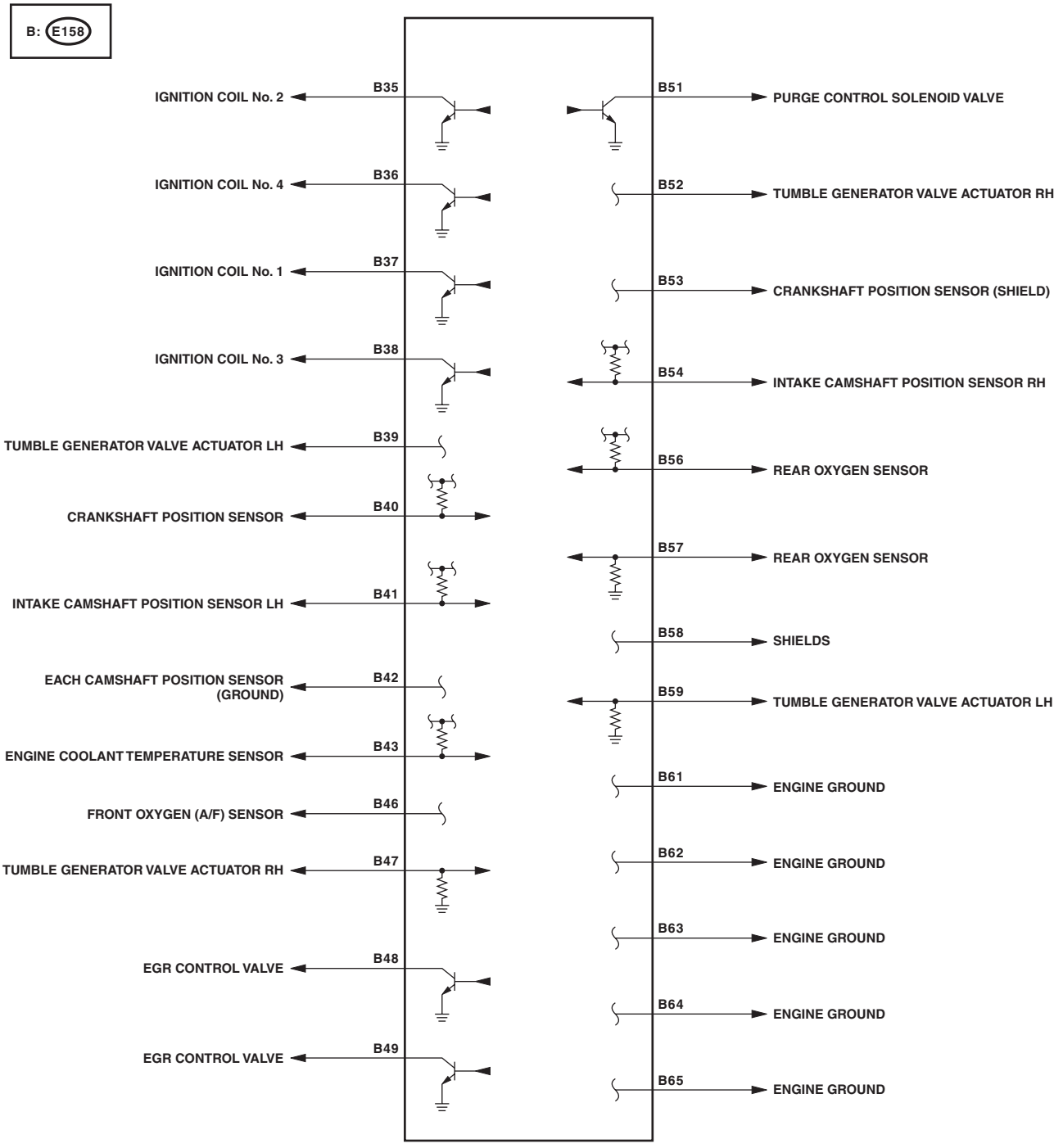
B: E158
IGNITION COIL No. 2
B35
IGNITION COIL No. 4
B36
IGNITION COIL No. 1
B37
IGNITION COIL No. 3
B38
TUMBLE GENERATOR VALVE ACTUATOR LH
B39
CRANKSHAFT POSITION SENSOR
B40
INTAKE CAMSHAFT POSITION SENSOR LH
B41
EACH CAMSHAFT POSITION SENSOR (GROUND)
B42
ENGINE COOLANT TEMPERATURE SENSOR
B43
FRONT OXYGEN (A/F) SENSOR
B46
TUMBLE GENERATOR VALVE ACTUATOR RH
B47
EGR CONTROL VALVE
B48
EGR CONTROL VALVE
B49
B51
PURGE CONTROL SOLENOID VALVE
B52
TUMBLE GENERATOR VALVE ACTUATOR RH
B53
CRANKSHAFT POSITION SENSOR (SHIELD)
B54
INTAKE CAMSHAFT POSITION SENSOR RH
B56
REAR OXYGEN SENSOR
B57
REAR OXYGEN SENSOR
B58
SHIELDS
B59
TUMBLE GENERATOR VALVE ACTUATOR LH
B61
ENGINE GROUND
B62
ENGINE GROUND
B63
ENGINE GROUND
B64
ENGINE GROUND
B65
ENGINE GROUND

EN-11055

6. Data Link Connector

A: NOTE

This connector is used for Subaru Select Monitor.

CAUTION:
Do not connect any scan tools other than Subaru Select Monitor or general scan tool because the circuit for Subaru Select Monitor may be damaged.

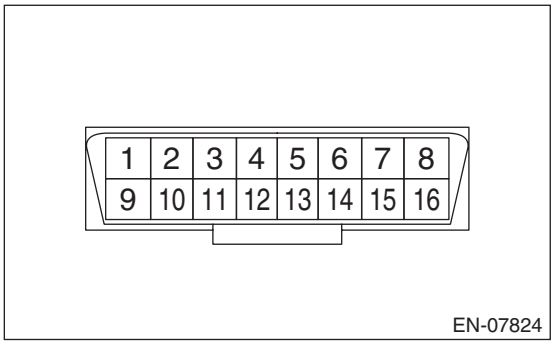

Terminal No.	Contents	Terminal No.	Contents
1	Blank	9	Blank
2	Blank	10	Blank
3	Blank	11	Blank
4	Ground	12	Blank
5	Ground	13	Blank
6	CAN communication (Hi)	14	CAN communication (Lo)
7	Blank	15	Blank
8	Blank	16	Power supply

7. General Scan Tool

A: OPERATION

1. HOW TO USE GENERAL SCAN TOOL

1) Prepare a scan tool (general scan tool) required by SAE J1978.
2) Connect the general scan tool to data link connector located in the lower portion of the instrument panel (on the driver's side).

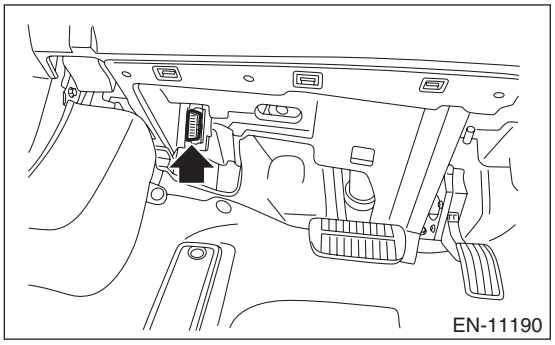

3) Using the general scan tool, call up each data. General scan tool functions consist of:
   (1) MODE $01: Current powertrain diagnostic data
   (2) MODE $02: Powertrain freeze frame data
   (3) MODE $03: Emission-related powertrain DTC
   (4) MODE $04: Clear/Reset emission-related diagnostic information
   (5) MODE $06: Request on-board monitoring test results for intermittently monitored systems
   (6) MODE $07: Initial emission-related powertrain DTC
   (7) MODE $08: Request control for on-board system, test, and component
   (8) MODE $09: Request vehicle information
4) Read out the data according to repair procedures. (For detailed operation procedures, refer to the general scan tool operation manual.)

NOTE:
For details concerning DTC, refer to "List of Diagnostic Trouble Code (DTC)". <Ref. to EN(H4DO)(diag)-102, List of Diagnostic Trouble Code (DTC).>

2. MODE $01: (CURRENT POWERTRAIN DIAGNOSTIC DATA)

Refer to data denoting the current operating condition of analog input/output, digital input/output or the powertrain system.
A list of the support data and PID (Parameter Identification) codes are shown in the following table.

PID	Data	Unit of measure
$01	Number of emission-related powertrain DTC, and malfunction indicator light status and diagnosis support information	—
$03	Fuel system control status	—
$04	Calculated engine load value	%
$05	Engine coolant temperature	°C
$06	Short term fuel trim	%
$07	Long term fuel trim	%
$0B	Intake manifold absolute pressure	kPa
$0C	Engine speed	rpm
$0D	Vehicle speed	MPH
$0E	Ignition timing advance	°
$0F	Intake air temperature	°C
$10	Intake air amount	g/s
$11	Throttle valve opening angle	%
$13	Air fuel ratio sensor	—
$15	Oxygen sensor output voltage and short term fuel trim associated with oxygen sensor (bank 1 sensor 2)	V and %
$1C	Supporting OBD system	—
$1F	Elapsed time after starting the engine	sec
$21	Travel distance after the malfunction indicator light illuminates	miles
$24	A/F value and A/F sensor output voltage (bank 1 sensor 1)	— and V
$2C	Target EGR	%
$2D	EGR deviation	%
$2E	Evaporative purge	%
$2F	Fuel level	%
$30	Number of warm ups after DTC clear	Time
$31	Travel distance after DTC clear	miles
$33	Barometric pressure	kPa
$34	A/F value and A/F sensor current (bank 1 sensor 1)	— and mA
$3C	Catalyst temperature #1	°C
$41	Diagnostic monitor of each drive cycle	—
$42	ECM power voltage	V
$43	Absolute load	%
$44	A/F target lambda	—
$45	Relative throttle opening angle	%
$46	Ambient temperature	°C
$47	Absolute throttle opening angle 2	%
$49	Absolute accelerator opening angle 1	%
$4A	Absolute accelerator opening angle 2	%
$4C	Target throttle opening angle	%
$4D	Engine operating time while malfunction indicator lit	min
$4E	Elapsed time after DTC clear	min
$51	Fuel used	—
$53	ELCM pressure	kPa
$56	Learning value of sub feedback compensation level	—
$5A	Relative accelerator opening angle	%
$5C	Engine oil temperature	°C
$65	Neutral status	—

NOTE:
Refer to general scan tool manufacturer's operation manual to access current powertrain diagnostic data (MODE $01).

3. MODE $02 (POWERTRAIN FREEZE FRAME DATA)

Refer to data denoting the operating condition when trouble is detected by on-board diagnosis system.
A list of the support data and PID (Parameter Identification) codes are shown in the following table.

PID	Data	Unit of measure
$02	DTC that caused freeze frame data to be stored	—
$03	Fuel system control status	—
$04	Calculated engine load value	%
$05	Engine coolant temperature	°C
$06	Short term fuel trim (bank 1 sensor 1)	%
$07	Long term fuel trim (bank 1 sensor 1)	%
$0B	Intake manifold absolute pressure	kPa
$0C	Engine speed	rpm
$0D	Vehicle speed	MPH
$0E	Ignition timing advance	°
$0F	Intake air temperature	°C
$10	Intake air amount	g/s
$11	Throttle valve opening angle	%
$13	Air fuel ratio sensor	—
$15	Oxygen sensor output voltage and short term fuel trim associated with oxygen sensor (bank 1 sensor 2)	V and %
$1C	Supporting OBD system	—
$1F	Elapsed time after starting the engine	sec
$2C	Target EGR	%
$2D	EGR deviation	%
$2E	Evaporative purge	%
$2F	Fuel level	%
$33	Barometric pressure	kPa
$42	ECM power voltage	V
$43	Absolute load	%
$44	A/F target lambda	—
$45	Relative throttle opening angle	%
$46	Ambient temperature	°C
$47	Absolute throttle opening angle 2	%
$49	Absolute accelerator opening angle 1	%
$4A	Absolute accelerator opening angle 2	%
$4C	Target throttle opening angle	%
$51	Applicable fuel	—
$65	Neutral status	—

NOTE:
Refer to general scan tool manufacturer's instruction manual to access freeze frame data (MODE $02).

4. MODE $03 (EMISSION-RELATED POWERTRAIN DTC)

Refer to "List of Diagnostic Trouble Code (DTC)" for information about data denoting emission-related powertrain DTC. <Ref. to EN(H4DO)(diag)-102, List of Diagnostic Trouble Code (DTC).>

5. MODE $04 (CLEAR/RESET EMISSION-RELATED DIAGNOSTIC INFORMATION)

Refer to the mode used to clear or reset emission-related diagnostic information.

NOTE:
- Refer to general scan tool manufacturer's instruction manual to clear the emission-related diagnostic information (MODE $04).
- Initial diagnosis of electronic throttle control is performed after memory clearance. Wait for 10 seconds or more after turning the ignition switch to ON, and then start the engine.

6. MODE $06

Refer to diagnostic value of troubleshooting and data of test limit indicated on the support data bit sequence table. A list of the support data is shown in the following table.

NOTE:
Some items are not displayed according to the specifications.

OBDMID	TID	SID	Diagnostic item
$01	$84	$1E	A/F sensor range failure (Bank 1 Sensor 1)
	$85	$1E	
	$86	$20	A/F sensor response failure (Bank 1 Sensor 1)
	$91	$20	
	$92	$10	
	$A3	$20	
	$A4	$10	
	$AC	$10	
	$AD	$10	
	$AE	$10	
	$AF	$10	
	$CD	$20	
	$CF	$20	
	$DF	$10	
$02	$07	$0B	Oxygen sensor drop failure (Bank 1 Sensor 2)
	$08	$0B	
	$A5	$0B	
	$05	$10	Oxygen sensor response failure (Bank 1 Sensor 2)
	$06	$10	
	$BD	$10	
	$D1	$10	Oxygen sensor delay failure (Bank 1 Sensor 2)
	$D2	$01	
$21	$89	$20	Catalyst deterioration diagnosis (Bank 1)
$31	$8A	$FD	EGR system diagnosis
$35	$8B	$9D	VVT monitor (Bank 1)
	$8C	$9D	
	$D3	$9D	
	$D5	$9D	
$36	$8B	$9D	VVT monitor (Bank 2)
	$8C	$9D	
	$D3	$9D	
	$D5	$9D	

OBDMID	TID	SID	Diagnostic item
$3C	$C1	$FE	Evaporative emission control system (0.02 inch leak)
	$C2	$FE	
	$C3	$FE	
	$C4	$FE	
	$C5	$FE	
	$C6	$35	
	$C7	$FE	
	$C8	$FE	
	$C9	$FE	
	$CA	$FE	
$3D	$E2	$FE	ELCM purge flow
$41	$9B	$14	A/F sensor heater characteristics failure (Bank 1 Sensor 1)
$42	$A2	$24	Oxygen sensor heater characteristics failure (Bank 1 Sensor 2)
$A1	$0B	$24	Misfire monitoring (all cylinders)
	$0C	$24	
$A2	$0B	$24	Misfire monitoring (#1 cylinder)
	$0C	$24	
$A3	$0B	$24	Misfire monitoring (#2 cylinder)
	$0C	$24	
$A4	$0B	$24	Misfire monitoring (#3 cylinder)
	$0C	$24	
$A5	$0B	$24	Misfire monitoring (#4 cylinder)
	$0C	$24	

7. MODE $07

Refer to the data of DTC (pending code) for troubleshooting result about emission in the first time.

8. MODE $08 (REQUEST CONTROL FOR ON-BOARD SYSTEM, TEST, AND COMPONENT)

Perform “Active Test” of the on-board system.

9. MODE $09

Refer to the data of the vehicle specification.

8. Subaru Select Monitor

A: OPERATION

1. HOW TO USE SUBARU SELECT MONITOR

NOTE:
For detailed operation procedures, refer to “Application help”.

2. DISPLAY CURRENT ENGINE DATA

NOTE:
- For detailed operation procedures, refer to “Application help”.
- A list of the support data is shown in the following table.

1) On «Start» display, select «Diagnosis».
2) On «Vehicle selection» display, input the vehicle information and select «Confirmed».
3) On «Main Menu» display, select «Each System Check».
4) On «Select System» display, select «Engine Control System» and then select «Enter».
5) On «Select Function» display, select «Data monitor» and then select «Enter».

Display	Contents	Note (at idling)	Remarks
Engine Speed	Calculated from crankshaft position sensor signal.	675 rpm	rpm
Mass Air Flow	Amount of intake air calculated from air flow sensor output value.	2.5 g/s	g/s or lb/m
Vehicle Speed	Value calculated from vehicle speed sensor output value.	0 km/h	km/h or MPH
Throttle Opening Angle	Throttle valve opening angle (in percentage) calculated from throttle position sensor output value.	13%	%
Accel opening angle	Accelerator pedal opening angle (in percentage) calculated from accelerator pedal position sensor output value.	0.0%	%
A/F Sensor #1	Actual lambda value calculated from front A/F sensor output value.	1.0	—
Ignition timing adv. #1	Ignition timing control value for No. 1 cylinder. Calculated from rotation speed, intake manifold pressure, intake air temperature, water temperature, and data from knock sensor etc.	5.5°	°
Engine Coolant Temperature	Value calculated from engine coolant temperature sensor output value.	96°C	°C or °F
Fuel Injection #1 Pulse	Control value of fuel injection time by engine control module. (RH bank)	2.56 ms	ms
Short Term Fuel Trim-Bank1	Air fuel ratio correction control value for the front.	0.8%	%
Long Term Fuel Trim-Bank1	Air fuel ratio learning control value for the front.	1.6%	%
Learned Ignition Timing	Ignition timing learning value. Advance or retard angle amount when knocking occurs.	0.0 deg	deg
Intake Manifold Absolute Pressure	Value calculated from the intake manifold pressure sensor output.	32 kPa	kPa, mmHg, inHg or psig
Oxygen sensor #12	Rear oxygen sensor output voltage.	0.7 V	V
VVT Adv. Ang. Amount R	Intake AVCS advance angle amount. (RH bank)	0 deg	deg
VVT Advance Target Angle Amount R	AVCS target advance angle amount for the RH bank on the intake side. This value is compared with the AVCS advance angle amount R to judge if the intake AVCS is operating properly. Response delays during the transition time.	0 deg	deg
VVT Adv. Ang. Amount L	Intake AVCS advance angle amount. (LH bank)	0 deg	deg
VVT Advance Target Angle Amount L	AVCS target advance angle amount for the LH bank on the intake side. This value is compared with the AVCS advance angle amount L to judge if the intake AVCS is operating properly. Response delays during the transition time.	0 deg	deg

Display	Contents	Note (at idling)	Remarks
VVT Initial Position Learning Value #1	AVCS initial position learning value for the RH bank on the intake side. Controls the angle against a standard angle. Deviation learning is performed based on this standard value.	29.9°CA	°CA
VVT Initial Position Learning Value #2	AVCS initial position learning value for the LH bank on the intake side. Controls the angle against a standard angle. Deviation learning is performed based on this standard value.	27.7°CA	°CA
ECU ACC	ECM input power supply voltage.	14.176 V	V
Target engine speed	ECM target engine speed.	675 rpm	rpm
Target Equivalence Ratio	Target air fuel ratio. (Lambda) It usually becomes 1.0 aiming at a theoretical air fuel ratio.	0.996	—
Engine Oil Temperature	Value calculated from the VVL system engine oil temperature and the oil temperature sensor output.	96°C	°C or °F
Intake Air Temperature	Intake air temperature calculated from the intake air temperature sensor output value.	50°C	°C or °F
Ambient Temperature	Ambient temperature that ECM estimates by input values from the engine coolant temperature sensor or the intake air temperature sensor etc.	Ambient Temp for A/C	°C or °F
Ambient Temperature Sensor Signal	Data value of the ambient sensor input from the combination meter via CAN. Ambient temperature used for diagnosis.	—	°C or °F
Ambient Temperature for Control	Data value of the ambient sensor input from the combination meter via CAN. Ambient temperature used for control.	—	°C or °F
Calculated load value	Current rate of air amount. Value assuming that the air amount at the current engine speed with the throttle fully open is 100%.	15.3%	%
Absolute Load Value	Percentage of current intake air amount against the maximum air intake amount of the engine. For non-turbo engine, the value can be close to 95%, but will never be 100%. For turbo engine, this value may exceed 100% due to a boost pressure.	14.9%	%
Atmosphere Pressure	Atmospheric pressure calculated from atmospheric pressure sensor output value.	101 kPa	kPa, mmHg, inHg or psig
Mani. Relative Pressure	Pressure value calculated from manifold pressure sensor output value. (Absolute value) (Air intake absolute pressure – Atmospheric pressure)	–69	kPa, mmHg, inHg or psig
Target Throttle Opening Angle	Target throttle opening angle calculated by ECM.	16 deg	deg
Actual Throttle Opening Angle	Actual throttle opening angle. Calculated by ECM based on the throttle sensor input value.	16 deg	deg
Target Throttle Opening Angle	Control value of the target throttle opening angle calculated by ECM. Shows the target value of opening angle in percentage when 0% means fully closed and 100% means fully open.	0.0%	%
Relative Throttle Pos.	Current throttle opening angle in percentage against the throttle voltage (full range) that has reflected the full close point learning value. The value will be approx. 70% at full open.	1.6%	%
Throttle Motor Voltage	Power supply voltage of the throttle motor. ECM input value.	14.2 V	V
Main-Throttle Sensor	Voltage value of the main throttle position sensor. ECM input value.	0.66 V	V
Sub-Throttle Sensor	Voltage value of the sub throttle position sensor. ECM input value.	1.52 V	V
Throttle Motor Duty	Throttle motor control duty ratio. ECM output value.	–14%	%

Display	Contents	Note (at idling)	Remarks
Main-Accelerator Sensor	Voltage value of the main accelerator pedal position sensor. ECM input value.	0.66 V	V
Sub-Accelerator Sensor	Voltage value of the sub accelerator pedal position sensor. ECM input value.	0.66 V	V
Idle Mass Air Flow	Air volume correction value to maintain the target rotation speed in each water temperature. Corrects air volume when the water temperature changes. It includes values of the feedback correction amount and the learning value.	3.00 g/s	g/s
Idle Mass Air Flow Feedback correct	Air volume compensation value of ISC as a feedback correction to stabilize the idling speed.	0.00 g/s	g/s
ISC Learning Value	Learning control value of ISC. After warming up, learning control is executed to reduce the ISC feedback correction to zero, in order to stabilize the engine speed.	0.55 g/s	g/s
Idle A/C load correct	Air volume correction when the air conditioner is turned on. ECM corrects the air volume against the target rotation speed when the air conditioner is turned ON.	0.86 g/s	g/s
Electric Load Feedback Val	Air volume correction when an electric load is turned on. ECM corrects the air volume against the set target rotation speed when the electric load is turned ON.	0.10 g/s	g/s
Idle dirty throttle correct	Calculates the ISC learning values on a long-term basis, and judges as an ISC dirty throttle correction when the learning value increases gradually. When carbon or other dirt accumulates on the ISC throttle and make the throttle dirty, air volume decreases when the throttle is fully closed. The ECM increases the amount of compensation air to keep the rotation speed.	0 g/s	g/s
Air Flow Sensor Voltage	Air flow sensor output value. Input value to ECM.	1.2 V	V
Fuel Level	Fuel level sensor output value. ECM input value. Total value of main and sub.	—	%
Fuel level resistance	Fuel level sensor resistance value. ECM input value.	—	Ω
Commanded Evap Purge	Evaporative purge rate displayed by the OBD.	0%	%
CPC Valve Duty Ratio	Purge control solenoid valve control duty ratio. ECM output value.	0%	%
Purge Density Learn Value	Leaning value of the evaporation gas density purged from the canister. ECM displays the estimated leaning value.	0.0%	%
Evap Purge Flow	Purge ratio when the evaporation gas is purged from the canister. ECM performs a DUTY drive to the purge solenoid valve. The amount of gas actually purged will vary depending on the vacuum pressure difference before/after the solenoid valve. Purge ratio displayed here shows current purge amount in percentage against the maximum purge amount when the maximum vacuum pressure is applied.	0.0%	%
ALT Duty	Electric power generation voltage is calculated by the ECM. Indicator voltage value from ECM to alternator is under a DUTY control.	69%	%

Display	Contents	Note (at idling)	Remarks
Alternator control mode	Control mode of the electric power generation voltage by the alternator. Low: Mode that controls the battery charge Mid: Mode where the battery is not charged and discharged High: Mode that fixes the voltage when the battery is charged or when an electric load is turned on ExHigh: Mode where the battery is charged during deceleration	High/Mid/Low	—
Battery Terminal Voltage	Voltage value between battery terminals input from the battery sensor.	14.0 V	V
Battery Charge/Discharge Current	Battery charge/discharge current value input from the battery sensor. When the value is positive: The current flows to a direction that the battery is charged. When the value is negative: The current flows to a direction that the battery is discharged.	3.6 A	A
Estimated Battery Temperature	Battery temperature input from the battery sensor.	45°C	°C
Remaining Battery Capacity	Remaining amount of battery estimated by ECM.	89.0%	%
Knocking Correction	Retard angle amount when knocking occurs. Partially learning value of ignition timing learning value.	0.0 deg	deg
Fuel system for Bank 1	Feedback status of air fuel ratio. Open: Feedback is stopped Closed: Feedback control is being performed	Cl_normal	—
A/F Sensor #1 Current	Front A/F sensor output current value. ECM input value.	–0.2 — 0.2 mA	mA
A/F Sensor #1 Resistance	Front A/F sensor resistance value calculated from the front A/F sensor output value.	50 Ω	Ω
A/F Correction #3	Sub correction value of A/F feedback control.	0.00%	%
No. of EGR steps	Number of EGR valve steps. Number of stepping motor steps. ECM output value.	0 STEP	STEP
Commanded EGR	EGR setting value is calculated by ECM and the target value is displayed.	0%	%
EGR Error	Percentage of the difference in actual EGR steps as compared to the target EGR steps. Both a positive value and a negative value mean that it doesn't fulfill the target. When the value is positive, it opens more than the target value. When the value is negative, it opens smaller than the target value.	0%	%
TGV Position Sensor R	Tumble generator valve position sensor RH output value. ECM input value.	3.12 V	V
TGV Position Sensor L	Tumble generator valve position sensor LH output value. ECM input value.	0.82 V	V
TGV Output	Drive signal to tumble generator valve motor. Set to “ON” when the tumble generator valve is activated (when the duty output is other than 0%). ECM output value.	OFF	—
TGV Drive	Display of tumble generator valve drive status. Set to “Open” when the tumble generator valve is open. ECM control status.	Close	—
OCV Duty R	Oil control solenoid control duty ratio. (RH bank) ECM output value.	40 — 60%	%
OCV Duty L	Oil control solenoid control duty ratio. (LH bank) ECM output value.	40 — 60%	%
OCV Current R	Actual current value of the oil control solenoid. (RH bank) ECM input value.	550 — 850 mA	mA

Display	Contents	Note (at idling)	Remarks
OCV Current L	Actual current value of the oil control solenoid. (LH bank) ECM input value.	550 — 850 mA	mA
Roughness Monitor #1	#1 cylinder roughness monitor count value.	0	—
Roughness Monitor #2	#2 cylinder roughness monitor count value.	0	—
Roughness Monitor #3	#3 cylinder roughness monitor count value.	0	—
Roughness Monitor #4	#4 cylinder roughness monitor count value.	0	—
Cylinder Monitor #1	Calculates the #1 cylinder rotation speed between predefined angles. If the rotation speed is low compared to monitor values of other cylinders, it means that the combustion is not ideal in that cylinder.	—	rpm
Cylinder Monitor #2	Calculates the #2 cylinder rotation speed between predefined angles. If the rotation speed is low compared to monitor values of other cylinders, it means that the combustion is not ideal in that cylinder.	—	rpm
Cylinder Monitor #3	Calculates the #3 cylinder rotation speed between predefined angles. If the rotation speed is low compared to monitor values of other cylinders, it means that the combustion is not ideal in that cylinder.	—	rpm
Cylinder Monitor #4	Calculates the #4 cylinder rotation speed between predefined angles. If the rotation speed is low compared to monitor values of other cylinders, it means that the combustion is not ideal in that cylinder.	—	rpm
Active Grille Shutter Position	Displays the active grille shutter position. Counts the pulse and displays as 100% at full open and 0% at fully closed.	—	—
Active Grille Shutter Mechanical Break Status	Displays mechanical error status of the active grille shutter. During the calibration procedure, if a linkage of the active grille shutter is off, calibration is not performed. Judgment is done by the active grille shutter and the status is sent to ECM.	Normal	—
Active Grille Shutter Sensor Error Status	Judges a malfunction of the active grille shutter opening angle sensor. Judges the sensor malfunction on the pulse counter. Judgment is done by the active grille shutter and the status is sent to ECM.	Normal	—
Active Grille Shutter Voltage Error Status	Judges a malfunction of the power source voltage supplied to the active grille shutter. Judgment is done by the active grille shutter and the status is sent to ECM.	Normal	—
Active Grille Shutter Control Circuit Error Status	Judges a malfunction of the active grille shutter internal circuit (drive motor). Judgment is done by the active grille shutter and the status is sent to ECM.	Normal	—
Active Grille Shutter Stuck Error Status	Judges an abnormal stuck of the active grille shutter. Active grille shutter detects the status where the operation failed because of any foreign matter or ice clogging.	Normal	—
Active Grille Shutter Temperature Error Status	Detects internal temperature of the active grille shutter. Shows the status where the judgment is performed to check if the temperature is excessively high. Judgment is done by the active grille shutter and the status is sent to ECM.	Normal	—
Active Grille Shutter Communication Error Status	Communication is performed between the active grille shutter and ECM, and judges the abnormality of the communication status.	Normal	—
Active Grille Shutter Position Commanded Status	Shutter open/close command is sent from ECM to the active grille shutter, and the status of that command is displayed.	—	—
Active Grille Shutter Calibration in progress	Displays the calibration status of the active grille shutter. Active grille shutter performs the calibration when the ignition is ON. Set to ON when the calibration was performed.	OFF	—
Active Grille Shutter Calibration Commanded Status	Displays commands from ECM to the active grille shutter.	OFF	—

Display	Contents	Note (at idling)	Remarks
Active Grille Shutter Calibration Status	Shows the status where the calibration of the active grille shutter has completed or not completed. Always completed when there is no abnormality in the active grille shutter.	Complete	—
Active Grille Shutter Warning Status	Warning signal of the active grille shutter. When the active grille shutter has a malfunction, signal is sent to the combination meter to illuminate the warning light.	OFF	—
Active Grille Shutter Control Status 1	Shows the status such as operating factors (air conditioner, radiator fan etc.) or frozen judgment of the active grille shutter controlled by the ECM.	—	—
Active Grille Shutter Control Status 2	Shows the status such as operating factors (air conditioner, radiator fan etc.) or frozen judgment of the active grille shutter controlled by the ECM.	—	—
Ignition SW ON Count	Time stamp information. Number of times the ignition is ON since the vehicle was manufactured. The number of ignition ON is also recorded when a trouble code is recorded, so the comparison with that number will show you how many times the ignition has turned on since the diagnostic code was recorded.	—	times
Count	Time stamp information. Each unit individually counts the elapsed time since the ignition is turned ON. Master integrated unit and ECM synchronize with the master time. When synchronized: “Common” When not synchronized: “Originally”	Common	—
Time Count	Time stamp information. Elapsed time after ignition ON. When a trouble code is recorded, the elapsed time after ignition ON is also recorded.	—	ms
Time Since Engine Start	Elapsed time after starting the engine.	—	sec
Elapsed Time After Engine Run	Elapsed time after starting the engine. This value is used for control.	—	sec
Accumulation Time After Engine Run	Cumulative time after starting the engine. For models with Auto Start Stop, cumulative time after the first engine start. Time is not accumulated while the engine stops due to the Auto Start Stop system.	—	sec
Initial Engine Oil Temp.	Oil temperature when starting the engine, which is input to ECM from the oil temperature sensor.	—	°C
Initial Engine Coolant Temp.	Water temperature when starting the engine, which is input to ECM from the water temperature sensor.	—	°C
Initial Intake Air Temp.	Intake air temperature when starting the engine, which is input to ECM from the intake air temperature sensor.	—	°C
Engine Starting Time	Time needed since the cranking started till the judgment of engine start is complete.	—	ms
Start Mask Control Check 1	Information that shows whether the start prohibition control is executed on the engine side when starting. Values other than zero means that the control is executed to prohibit the engine start.	—	—
Soak Time	The time the vehicle has been left since the engine stopped. This value can be used to check how long the vehicle has left, by turning the ignition switch to ON after the engine stopped.	—	sec
Meter since DTC cleared	Travel distance after DTC clear.	—	km or mile
Time while MIL lighted	Engine operating time from when the malfunction indicator light illuminated till when it went off.	—	min
Time since DTC cleared	Elapsed time after DTC clear.	—	min

Display	Contents	Note (at idling)	Remarks
Number of warm-ups since DTCs cleared	Number of warm ups after DTC clear. 1 cycle is the time from the cold start till warmed up and stop. (Engine start after a warm-up is not counted.)	—	times
Lighted MI lamp history	Travel distance after the warning light illuminated.	—	km or mile
Odometer	ECM calculates the total cumulative travel distance from the vehicle speed, separately from the odometer in the combination meter. Small difference from the odometer will be possible, but if there is a big difference, ECM or the combination meter may need to be replaced.	—	km
Fuel Cut Elps Time	Elapsed time after experienced high rotation speed.	0 sec	sec
Memorized Cruise Speed	Cruise control system target vehicle speed. (Set speed)	0 km/h	km/h or MPH
Catalyst Temperature #11	Estimated temperature of the front catalytic converter.	305.1	°C or °F
Type of fuel	Fuel information recorded in the ECM. Not the fuel information currently used.	GAS	—
AT drive status	Neutral condition. Information input from the inhibitor switch. (CVT model)	NEUT	—
MT gear status	Neutral condition. Information input from the neutral switch. (MT model)	NEUT	—
Absolute Evap Sys. Pressure	Measured value of the evaporative emission system pressure. Pressure sensor input value.	101.43	kPa
X Mode	X mode ON or OFF status.	OFF	—
Neutral switch	Neutral switch signal. Signal when in neutral (MT) or in P or N range (AT). Value input to ECM.	Neutral	—
ETC Motor Relay	Drive signal to the electronic throttle motor relay. Set to ON when drive signal is output. ECM output value.	ON	—
Clutch switch	Clutch switch signal. (MT model) Set to ON when the clutch pedal is depressed. ECM input value.	OFF	—
Stop Light Switch	Stop light switch signal. Set to ON when the stop light illuminates. ECM input value.	OFF (when OFF)	—
Brake Switch	Brake switch signal. Set to ON when the brake pedal is depressed. ECM input value.	OFF (when OFF)	—
Idle Switch Signal	Idle signal. Set to “Idle” while idling.	Idle	—
Ignition switch	Ignition switch signal. Set to ON when the ignition switch is ON.	ON	—
A/C Compressor Signal	A/C compressor drive signal. Set to “ON” when the drive signal is output. ECM output value.	OFF (when OFF)	—
Radiator Fan Relay #1	Radiator fan relay drive signal. Set to “ON” when the drive signal is output. ECM output value.	OFF (when OFF)	—
Radiator Fan Relay #2	Radiator fan relay drive signal. Set to “ON” when the drive signal is output. ECM output value.	OFF (when OFF)	—
A/C Switch	Air conditioner switch signal. Set to “ON” when the air conditioner switch of the heater control is ON. ECM input value.	OFF (when OFF)	—
Variable Load Compressor Torque Value	Load value of the variable capacity air compressor that ECM inputs. The value that the air conditioner CM estimates and outputs.	—	Nm

Display	Contents	Note (at idling)	Remarks
Starter Switch	Starter switch signal. Set to “ON” when the starter is ON. ECM input value.	OFF	—
Rear Defogger SW	Rear defogger switch input signal. Set to “ON” when the switch is ON. ECM input value.	OFF (when OFF)	—
Blower Fan SW	Blower fan switch input signal. Set to “ON” when the switch is ON. ECM input value.	OFF (when OFF)	—
Light Switch	Light switch input signal. Set to “ON” when the switch is ON. ECM input value.	OFF (when OFF)	—
Wiper Switch	Wiper switch input signal. Set to “ON” when the switch is ON. ECM input value.	OFF (when OFF)	—
Delivery Mode Connector	Delivery mode terminal fuse installation status.	OFF	—
Rear O2 Rich Signal	Rear oxygen sensor output value. Displays “Rich” when the air fuel ratio of rear oxygen sensor is rich, and displays “Lean” when lean.	ON/OFF	—
Knocking Signal	Knock sensor output signal. Judges if a knocking occurs or not.	OFF	—
Crankshaft Position Sig.	Crankshaft position sensor output signal. Set to “ON” when the engine is running. ECM input signal.	ON	—
Camshaft Position Sig.	Camshaft position sensor output signal. Set to “ON” when the engine is running. ECM input signal.	ON	—
Ban of Torque Down VDC	Torque down prohibition notification signal to the vehicle dynamics control (VDC) module. Set to “OFF” when the prohibition signal is output. ECM output value.	ON	—
Request Torque Down VDC	Torque down request signal transmitted from the vehicle dynamics control (VDC) module. Set to “ON” when the request signal is sent. ECM input signal.	OFF	—
Torque Permission Signal	Torque down permission notification signal to the transmission control module. (CVT model) Set to “ON” when the permission signal is output. ECM output value.	ON	—
SET/COAST Switch	Cruise control system SET/COAST SW signal. Set to “ON” when the switch is operated. ECM input signal.	OFF (when OFF)	—
SET/COAST Switch (Deep)	Cruise control system SET/COAST SW signal. Set to ON when the SET/COAST SW is pressed and held. ECM input value.	OFF	—
RESUME/ACCEL Switch	Cruise control system RESUME/ACCEL SW signal. Set to “ON” when the switch is operated. ECM input signal.	OFF (when OFF)	—
RESUME/ACCEL Switch (Deep)	Cruise control system RESUME/ACCEL SW signal. Set to ON when the RESUME/ACCEL SW is pressed and held. ECM input value.	OFF	—
Main switch	Cruise control system main switch signal. Set to “ON” when the switch is operated. ECM input signal.	OFF (when OFF)	—
Distance Change Switch Signal	ON/OFF status of the following distance setting switch used by ADA cruise control is displayed. (Model with EyeSight)	OFF (when OFF)	—

Display	Contents	Note (at idling)	Remarks
Cruise Control Cancel Switch Signal	Cruise control cancel switch signal of the cruise control system. Set to “ON” when the switch is operated. ECM input signal.	OFF (when OFF)	—
Fuel Pump Relay	Fuel pump relay drive signal. Set to “ON” when the drive signal is output. ECM output value.	ON	—
All Cylinders Fuel cut	Status under the fuel injection amount control where the fuel injection is cut off in all cylinders.	OFF	—
Immobilizer Fuel Cut Status	Status where the fuel injection is cut off by the command from immobilizer.	OFF	—
Shift Pattern Demand for Low Water Temperature	Shift pattern request sent from ECM to the transmission CM. When the water temperature is low, shift pattern change to the low speed side is requested to raise the catalyst temperature faster.	OFF	—
Oil level switch	Oil level switch signal. Set to “LOW level” when the amount of engine oil decreases. ECM input signal.	HIGH level	—
ELCM switching valve	ELCM switching valve drive signal. Set to “Close” when closing the switching valve. ECM output value.	Open	—
ELCM pump	ELCM pump drive signal. Set to “ON” when ELCM decompression pump is activated. ECM output value.	OFF	—
AT turbine speed	Turbine rotation speed of the transmission. Turbine rotation speed is input from the transmission CM via CAN. (CVT model)	900	—
Lock Up Status	Lock-up status of the transmission. Lock up status is input from the transmission CM via CAN. (CVT model)	OPEN	—
P/N Signal	P/N status of the transmission. P/N range status is input from the transmission CM via CAN. (CVT model)	—	—
Trailer signal	Trailer towing status. Signal that indicates the trailer towing is input via the integrated unit.	—	—
Ignition Control Check 1	Detailed status of the engine ignition control information.	90	—
Ignition Control Check 2	Detailed status of the engine ignition control information.	75	—
Alternator control check 1	Detailed status of charge control.	91	—
Alternator control check 2	Detailed status of charge control.	90.1	—
Alternator control check 3	Detailed status of charge control.	10.350	—
Alternator control check 4	Detailed status of charge control.	8.970	—
Alternator control check 5	Detailed status of charge control.	100	—
Alternator control check 6	Detailed status of charge control.	0	—
Alternator control check 7	Detailed status of charge control.	14.2	—
Alternator control check 8	Detailed status of charge control.	64	—
Alternator control check 9	Detailed status of charge control.	0	—
Alternator control check 10	Detailed status of charge control.	2	—
Imbalance Check 1 #1	Detailed information of diagnosis for dispersion between cylinders. (Compliance with OBD regulations)	—	—
Imbalance Check 1 #2	Detailed information of diagnosis for dispersion between cylinders. (Compliance with OBD regulations)	—	—
Imbalance Check 1 #3	Detailed information of diagnosis for dispersion between cylinders. (Compliance with OBD regulations)	—	—
Imbalance Check 1 #4	Detailed information of diagnosis for dispersion between cylinders. (Compliance with OBD regulations)	—	—
Imbalance Check 2 #1	Detailed information of diagnosis for dispersion between cylinders. (Compliance with OBD regulations)	—	—

Display	Contents	Note (at idling)	Remarks
Imbalance Check 2 #2	Detailed information of diagnosis for dispersion between cylinders. (Compliance with OBD regulations)	—	—
Imbalance Check 2 #3	Detailed information of diagnosis for dispersion between cylinders. (Compliance with OBD regulations)	—	—
Imbalance Check 2 #4	Detailed information of diagnosis for dispersion between cylinders. (Compliance with OBD regulations)	—	—
Imbalance Check 3 R	Detailed information of diagnosis for dispersion between cylinders. (Compliance with OBD regulations)	—	—
Imbalance Check 4 R	Detailed information of diagnosis for dispersion between cylinders. (Compliance with OBD regulations)	—	—
MIL Status	Malfunction indicator light illumination status. When judged as abnormal, an illumination command signal is sent from ECM to the combination meter.	OFF	—
Number of Diagnostic Code(s):	The number of trouble codes recorded in the ECM.	0	—
(Oxygen sensor #11)	Installation status of the front oxygen sensor.	Support	—
(Oxygen sensor #12)	Installation status of the rear oxygen sensor.	Support	—
Short term fuel trim #12	Air fuel ratio correction control value for the rear.	0.0%	%
A/F Sensor #11	Air fuel ratio calculated from the front A/F sensor output value. (Lambda)	1.001	—
A/F Sensor #11	Output voltage of the front A/F sensor.	2.193 V	V
A/F Sensor #11	Air fuel ratio calculated from the front A/F sensor output value. (Lambda)	1.001	—
A/F Sensor #11	Front A/F sensor current value.	0.00	mA
Absolute Throttle Pos.#2	Shows the sub throttle sensor voltage value in % against the full-range 5 V throttle sensor output voltage.	30.6%	%
Accelerator Pedal Pos.#1	Shows the main accelerator sensor voltage value in % against the full-range 5 V.	13.3%	%
Accelerator Pedal Pos.#2	Shows the sub accelerator sensor voltage value in % against the full-range 5 V.	13.3%	%
Relative Accelerator Pos.	Shows the accelerator opening angle with a full close point learning value taken into consideration.	0%	%
Misfire monitoring(Supp)	Shows the support status of misfire diagnosis.	YES	—
Misfire monitoring(Rdy)	Status of the misfire diagnosis. YES or N/A: Diagnosis is completed or not supported. NO: Diagnosis is not completed.	YES	—
Fuel system monitoring(Supp)	Shows the support status of fuel system diagnosis.	YES	—
Fuel system monitoring(Rdy)	Status of the fuel system diagnosis. YES or N/A: Diagnosis is completed or not supported. NO: Diagnosis is not completed.	YES	—
Component monitoring(Supp)	Shows the support status of component diagnosis.	YES	—
Component monitoring(Rdy)	Status of the component diagnosis. YES or N/A: Diagnosis is completed or not supported. NO: Diagnosis is not completed.	YES	—
Catalyst Diagnosis(Supp)	Shows the support status of catalyst diagnosis.	YES	—
Catalyst Diagnosis(Rdy)	Status of the catalyst diagnosis. YES or N/A: Diagnosis is completed or not supported. NO: Diagnosis is not completed.	NO	—
Heated catalyst(Supp)	Shows the support status of heated catalyst diagnosis.	NO	—
Heated catalyst(Rdy)	Status of the heated catalyst diagnosis. YES or N/A: Diagnosis is completed or not supported. NO: Diagnosis is not completed.	N/A	—

Display	Contents	Note (at idling)	Remarks
Evaporative purge system(Supp)	Shows the support status of evaporative purge system diagnosis.	NO	—
Evaporative purge system(Rdy)	Status of the evaporative purge system diagnosis. YES or N/A: Diagnosis is completed or not supported. NO: Diagnosis is not completed.	N/A	—
Secondary air system(Supp)	Shows the support status of the secondary air system diagnosis.	NO	—
Secondary air system(Rdy)	Status of the secondary air system diagnosis. YES or N/A: Diagnosis is completed or not supported. NO: Diagnosis is not completed.	N/A	—
A/C system refrigerant(Supp)	Shows the support status of A/C system refrigerant diagnosis.	NO	—
A/C system refrigerant(Rdy)	Status of the A/C system refrigerant diagnosis. YES or N/A: Diagnosis is completed or not supported. NO: Diagnosis is not completed.	N/A	—
Oxygen sensor(Supp)	Shows the support status of oxygen sensor diagnosis.	YES	—
Oxygen sensor(Rdy)	Status of the oxygen sensor diagnosis. YES or N/A: Diagnosis is completed or not supported. NO: Diagnosis is not completed.	NO	—
O2 Heater Diagnosis(Supp)	Shows the support status of oxygen sensor heater diagnosis.	YES	—
O2 Heater Diagnosis(Rdy)	Status of the oxygen sensor heater diagnosis. YES or N/A: Diagnosis is completed or not supported. NO: Diagnosis is not completed.	YES	—
EGR system(Supp)	Shows the support status of EGR diagnosis.	YES	—
EGR system(Rdy)	Status of the EGR diagnosis. YES or N/A: Diagnosis is completed or not supported. NO: Diagnosis is not completed.	NO	—
Misfire monitoring(Enable)	Shows whether or not the execution condition of misfire diagnosis is met. YES: Diagnosis can be executed. NO or N/A: Diagnosis cannot be executed or is not supported.	YES	—
Misfire monitoring(Comp)	Shows whether or not the continuous misfire diagnosis is completed. YES or N/A: Diagnosis is completed or not supported. NO: Diagnosis is not completed.	NO	—
Fuel system monitoring(Enable)	Shows whether or not the execution condition of fuel system diagnosis is met. YES: Diagnosis can be executed. NO or N/A: Diagnosis cannot be executed or is not supported.	YES	—
Fuel system monitoring(Comp)	Shows whether or not the fuel system diagnosis is completed. YES or N/A: Diagnosis is completed or not supported. NO: Diagnosis is not completed.	NO	—
Component monitoring(Enable)	Shows whether or not the execution condition of component diagnosis is met. YES: Diagnosis can be executed. NO or N/A: Diagnosis cannot be executed or is not supported.	YES	—
Component monitoring(Comp)	Shows whether or not the component diagnosis is completed. YES or N/A: Diagnosis is completed or not supported. NO: Diagnosis is not completed.	NO	—
Catalyst Diagnosis(Enable)	Shows whether or not the execution condition of catalyst diagnosis is met. YES: Diagnosis can be executed. NO or N/A: Diagnosis cannot be executed or is not supported.	YES	—
Catalyst Diagnosis(Comp)	Shows whether or not the catalyst diagnosis is completed. YES or N/A: Diagnosis is completed or not supported. NO: Diagnosis is not completed.	NO	—

Display	Contents	Note (at idling)	Remarks
Heated catalyst(Enable)	Shows whether or not the execution condition of heated catalyst diagnosis is met. YES: Diagnosis can be executed. NO or N/A: Diagnosis cannot be executed or is not supported.	N/A	—
Heated catalyst(Comp)	Shows whether or not the heated catalyst diagnosis is completed. YES or N/A: Diagnosis is completed or not supported. NO: Diagnosis is not completed.	N/A	—
Evaporative purge system(Enable)	Shows whether or not the execution condition of evaporative purge system diagnosis is met. YES: Diagnosis can be executed. NO or N/A: Diagnosis cannot be executed or is not supported.	N/A	—
Evaporative purge system(Comp)	Shows whether or not the evaporative purge system diagnosis is completed. YES or N/A: Diagnosis is completed or not supported. NO: Diagnosis is not completed.	N/A	—
Secondary air system(Enable)	Shows whether or not the execution condition of the secondary air system diagnosis is met. YES: Diagnosis can be executed. NO or N/A: Diagnosis cannot be executed or is not supported.	N/A	—
Secondary air system(Comp)	Shows whether or not the secondary air system diagnosis is completed. YES or N/A: Diagnosis is completed or not supported. NO: Diagnosis is not completed.	N/A	—
A/C system refrigerant(Enable)	Shows whether or not the execution condition of A/C system refrigerant diagnosis is met. YES: Diagnosis can be executed. NO or N/A: Diagnosis cannot be executed or is not supported.	N/A	—
A/C system refrigerant(Comp)	Shows whether or not the A/C system refrigerant diagnosis is completed. YES or N/A: Diagnosis is completed or not supported. NO: Diagnosis is not completed.	N/A	—
Oxygen sensor(Enable)	Shows whether or not the execution condition of oxygen sensor diagnosis is met. YES: Diagnosis can be executed. NO or N/A: Diagnosis cannot be executed or is not supported.	YES	—
Oxygen sensor(Comp)	Shows whether or not the oxygen sensor diagnosis is completed. YES or N/A: Diagnosis is completed or not supported. NO: Diagnosis is not completed.	NO	—
O2 Heater Diagnosis(Enable)	Shows whether or not the execution condition of oxygen heater diagnosis is met. YES: Diagnosis can be executed. NO or N/A: Diagnosis cannot be executed or is not supported.	YES	—
O2 Heater Diagnosis(Comp)	Shows whether or not the oxygen heater diagnosis is completed. YES or N/A: Diagnosis is completed or not supported. NO: Diagnosis is not completed.	NO	—
EGR system(Enable)	Shows whether or not the execution condition of EGR diagnosis is met. YES: Diagnosis can be executed. NO or N/A: Diagnosis cannot be executed or is not supported.	YES	—
EGR system(Comp)	Shows whether or not the EGR diagnosis is completed. YES or N/A: Diagnosis is completed or not supported. NO: Diagnosis is not completed.	NO	—
OBD System	Shows the OBD regulation to be followed. This is the information recorded in the ECM, and it does not mean that the unit automatically judges the compliance to the OBD regulations.	OBD/OBD2	—

3. DISPLAY OF ENGINE FREEZE FRAME DATA

NOTE:
• ECM updates the freeze frame data every 0.5 seconds, and always keeps the last three records. Time-series freeze frame data includes the last three freeze frame data and the freeze frame data when the DTC is detected.
• In the time-series freeze frame data, the following freeze frame data are displayed: «Detect», «History1», «History2», and «History3».
• Time lag between the freeze frame data of «Detect» and the freeze frame data of «History1» changes within the range of 0 — 0.5 seconds. This is because the freeze frame data of «Detect» is recorded when the DTC is actually detected, while the freeze frame data of «History1» is updated every 0.5 seconds.

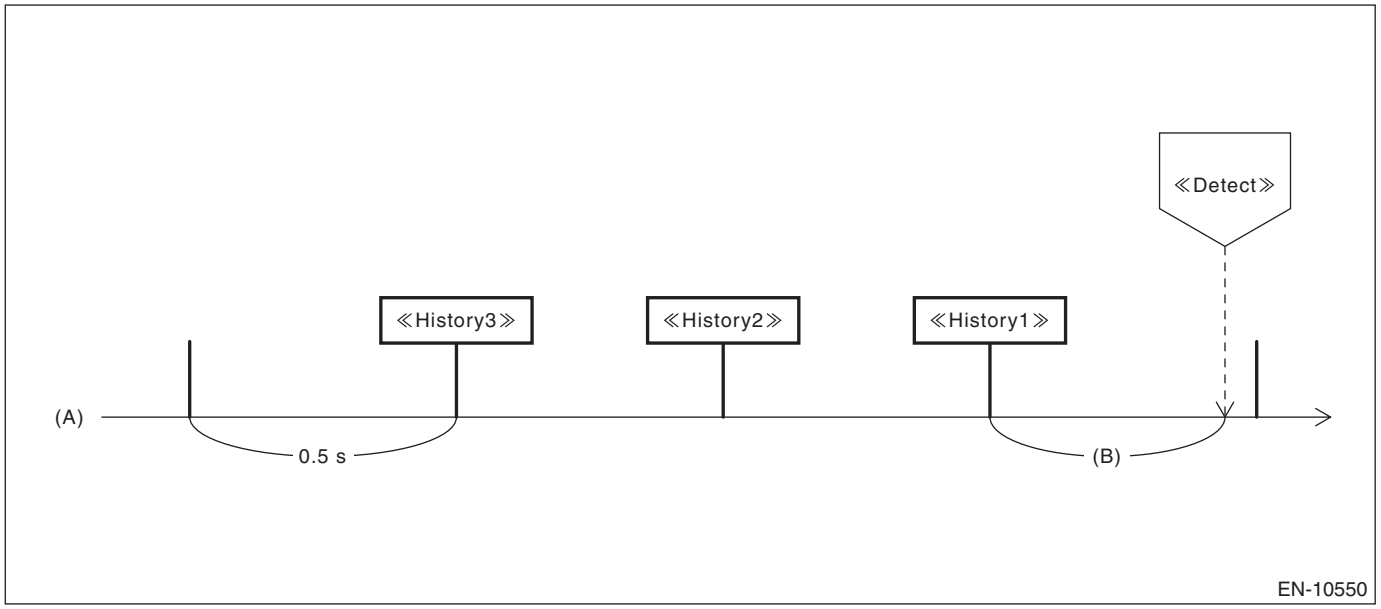

(A) 0.5 seconds timer
(B) Changes within the range of 0 — 0.5 seconds, depending on the timing of DTC detection.

• When more than one DTCs are recorded, the time-series freeze frame data is recorded only for the first-detected DTC, and for the next DTC, just the freeze frame data of «Detect» is recorded. And for the subsequent DTCs, no freeze frame data is recorded.
• When performing diagnosis, you can utilize the time-series freeze frame data to guess the vehicle status when the DTC was detected.
• For detailed operation procedures, refer to “Application help”.
• A list of the support data is shown in the following table.
1) On «Start» display, select «Diagnosis».
2) On «Vehicle selection» display, input the vehicle information and select «Confirmed».
3) On «Main Menu» display, select «Each System Check».
4) On «Select System» display, select «Engine Control System».
5) On «Select Function» display, select «Data Monitor».

Display	Contents	Remarks
Engine Speed	Calculated from crankshaft position sensor signal.	rpm
Mass Air Flow	Amount of intake air calculated from air flow sensor output value.	g/s or lb/m
Vehicle Speed	Value calculated from vehicle speed sensor output value.	km/h or MPH
Throttle Opening Angle	Throttle opening angle in percentage. Calculated from throttle position sensor output value.	%
Ignition timing adv. #1	Ignition timing control value for No. 1 cylinder. Calculated from rotation speed, intake manifold pressure, intake air temperature, water temperature, and data from knock sensor etc.	°

Display	Contents	Remarks
Engine Coolant Temperature	Value calculated from engine coolant temperature sensor output value.	°C or °F
Short Term Fuel Trim-Bank1	Main correction value of A/F feedback control.	%
Long Term Fuel Trim-Bank1	Main learning value of A/F feedback control.	%
Intake Manifold Absolute Pressure	Value after subtracting atmospheric pressure from intake manifold absolute pressure. [(Intake manifold absolute pressure) – (atmospheric pressure)]	kPa, mmHg, inHg or psig
Oxygen sensor #12	Rear oxygen sensor voltage value.	V
VVT Adv. Ang. Amount R	Intake AVCS advance angle amount. (RH bank)	deg
VVT Advance Target Angle Amount R	AVCS target advance angle amount for the RH bank on the intake side. This value is compared with the AVCS advance angle amount R to judge if the AVCS is operating properly. Response delays during the transition time.	deg
VVT Adv. Ang. Amount L	Intake AVCS advance angle amount. (LH bank)	deg
VVT Advance Target Angle Amount L	AVCS target advance angle amount for the LH bank on the intake side. This value is compared with the AVCS advance angle amount L to judge if the AVCS is operating properly. Response delays during the transition time.	deg
ECU ACC	ECM input power supply voltage.	V
Target Equivalence Ratio	Target air fuel ratio. (Lambda) It usually becomes 1.0 aiming at a theoretical air fuel ratio.	—
Intake Air Temperature	Intake air temperature calculated from the intake air temperature sensor output value.	°C or °F
Ambient Temperature	Ambient temperature that ECM estimates by input values from the engine coolant temperature sensor or the intake air temperature sensor etc.	°C or °F
Ambient Temperature Sensor Signal	Data value of the ambient sensor input from the combination meter via CAN. Ambient temperature used for diagnosis.	°C or °F
Ambient Temperature for Control	Data value of the ambient sensor input from the combination meter via CAN. Ambient temperature used for control.	°C or °F
Calculated load value	Current rate of air amount. Value assuming that the air amount at the current engine speed with the throttle fully open is 100%.	%
Absolute Load Value	Percentage of current intake air amount against the maximum air intake amount of the engine. For non-turbo engine, the value can be close to 95%, but will never be 100%. For turbo engine, this value may exceed 100% due to a boost pressure.	%
Atmosphere Pressure	Atmospheric pressure calculated from atmospheric pressure sensor output value.	kPa, mmHg, inHg or psig
Actual Throttle Opening Angle	Actual throttle opening angle. Calculated by ECM based on the throttle sensor input value.	deg
Target Throttle Opening Angle	Control value of the target throttle opening angle calculated by ECM. Shows the target value of opening angle in percentage when 0% means fully closed and 100% means fully open.	%
Relative Throttle Pos.	Current throttle opening angle in percentage against the throttle voltage (full range) that has reflected the full close point learning value. The value will be approx. 70% at full open.	%
Idle Mass Air Flow	Air volume correction value to maintain the target rotation speed in each water temperature. Corrects air volume when the water temperature changes. It includes values of the feedback correction amount and the learning value.	g/s
Idle Mass Air Flow Feedback correct	Air volume compensation value of ISC as a feedback correction to stabilize the idling speed.	g/s
ISC Learning Value	Learning control value of ISC. After warming up, learning control is executed to reduce the ISC feedback correction to zero, in order to stabilize the engine speed.	g/s
Idle A/C load correct	Air volume correction when the air conditioner is turned on. ECM corrects the air volume against the set target rotation speed when the air conditioner is turned ON.	g/s

Display	Contents	Remarks
Electric Load Feedback Val	Air volume correction when an electric load is turned on. ECM corrects the air volume against the set target rotation speed when the electric load is turned ON.	g/s
Idle dirty throttle correct	Calculates the ISC learning values on a long-term basis, and judges as an ISC dirty throttle correction when the learning value increases gradually. When carbon or other dirt accumulates and make the throttle dirty, air volume decreases when the throttle is fully closed. The ECM increases the amount of compensation air to keep the rotation speed.	g/s
Fuel Level	Fuel level sensor output value. ECM input value. Total value of main and sub.	%
Fuel level resistance	Fuel level sensor resistance value. ECM input value.	Ω
Commanded Evap Purge	Evaporative purge rate displayed by the OBD.	%
Purge Density Learn Value	Leaning value of the evaporation gas density purged from the canister. ECM displays the estimated leaning value.	%
Evap Purge Flow	Purge ratio when the evaporation gas is purged from the canister. ECM performs a DUTY drive to the purge solenoid valve. The amount of gas actually purged will vary depending on the vacuum pressure difference before/after the solenoid valve. Purge ratio displayed here shows current purge amount in percentage against the maximum purge amount when the maximum vacuum pressure is applied.	%
Alternator control mode	Control mode of the electric power generation voltage by the alternator. Low: Mode that controls the battery charge Mid: Mode where the battery is not charged and discharged High: Mode that fixes the voltage when the battery is charged or when an electric load is turned on ExHigh: Mode where the battery is charged during deceleration	—
Battery Terminal Voltage	Voltage value between battery terminals input from the battery sensor.	V
Battery Charge/Discharge Current	Battery charge/discharge current value input from the battery sensor. When the value is positive, the current flows to a direction that the battery is charged. And when the value is negative, the current flows to a direction that the battery is discharged.	A
Estimated Battery Temperature	Battery temperature input from the battery sensor.	°C
Remaining Battery Capacity	Remaining amount of battery estimated by ECM.	%
Fuel system for Bank 1	Feedback status of air fuel ratio. Open: Feedback is stopped Closed: Feedback control is being performed	—
A/F Sensor #1 Resistance	Front A/F sensor resistance value calculated from the front A/F sensor output value.	Ω
Commanded EGR	EGR setting value is calculated by ECM and the target value is displayed.	%
EGR Error	Percentage of the difference in actual EGR steps as compared to the target EGR steps. Both a positive value and a negative value mean that it doesn't fulfill the target. When the value is positive, it opens more than the target value. When the value is negative, it opens smaller than the target value.	%
Cylinder Monitor #1	Calculates the rotation speed between certain angles on the #1 cylinder. If the rotation speed is low compared to monitor values of other cylinders, it means that the combustion is not ideal in that cylinder.	rpm
Cylinder Monitor #2	Calculates the rotation speed between certain angles on the #2 cylinder. If the rotation speed is low compared to monitor values of other cylinders, it means that the combustion is not ideal in that cylinder.	rpm
Cylinder Monitor #3	Calculates the rotation speed between certain angles on the #3 cylinder. If the rotation speed is low compared to monitor values of other cylinders, it means that the combustion is not ideal in that cylinder.	rpm

Display	Contents	Remarks
Cylinder Monitor #4	Calculates the rotation speed between certain angles on the #4 cylinder. If the rotation speed is low compared to monitor values of other cylinders, it means that the combustion is not ideal in that cylinder.	rpm
Active Grille Shutter Position	Displays the active grille shutter position. Counts the pulse and displays as 100% at full open and 0% at fully closed.	—
Active Grille Shutter Mechanical Break Status	Displays mechanical error status of the active grille shutter. During the calibration procedure, if a linkage of the active grille shutter is off, calibration is not performed. Judgment is done by the active grille shutter and the status is sent to ECM.	—
Active Grille Shutter Sensor Error Status	Judges a malfunction of the active grille shutter opening angle sensor. Judges the sensor malfunction on the pulse counter. Judgment is done by the active grille shutter and the status is sent to ECM.	—
Active Grille Shutter Voltage Error Status	Judges a malfunction of the power source voltage supplied to the active grille shutter. Judgment is done by the active grille shutter and the status is sent to ECM.	—
Active Grille Shutter Control Circuit Error Status	Judges a malfunction of the active grille shutter internal circuit (drive motor). Judgment is done by the active grille shutter and the status is sent to ECM.	—
Active Grille Shutter Stuck Error Status	Judges an abnormal stuck of the active grille shutter. Active grille shutter detects the status where the operation failed because of any foreign matter or ice clogging.	—
Active Grille Shutter Temperature Error Status	Detects internal temperature of the active grille shutter. Shows the status where the judgment is performed to check if the temperature is excessively high. Judgment is done by the active grille shutter and the status is sent to ECM.	—
Active Grille Shutter Communication Error Status	Communication is performed between the active grille shutter and ECM, and judges the abnormality of the communication status.	—
Active Grille Shutter Position Commanded Status	Shutter open/close command is sent from ECM to the active grille shutter, and the status of that command is displayed.	—
Active Grille Shutter Calibration in progress	Displays the calibration status of the active grille shutter. Active grille shutter performs the calibration when the ignition is ON, and displays the calibration status. Set to ON when the calibration was performed.	—
Active Grille Shutter Calibration Commanded Status	Displays commands from ECM to the active grille shutter.	—
Active Grille Shutter Calibration Status	Shows the status where the calibration of the active grille shutter has completed or not completed. Always completed when there is no abnormality in the active grille shutter.	—
Active Grille Shutter Warning Status	Warning signal of the active grille shutter. When the active grille shutter has a malfunction, signal is sent to the meter CM to illuminate the warning light.	—
Active Grille Shutter Control Status 1	Shows the status such as operating factors (air conditioner, radiator fan etc.) or frozen judgment of the active grille shutter controlled by the ECM.	—
Active Grille Shutter Control Status 2	Shows the status such as operating factors (air conditioner, radiator fan etc.) or frozen judgment of the active grille shutter controlled by the ECM.	—
Ignition SW ON Count	Time stamp information. Shows the number of times the ignition is turned ON since the vehicle was manufactured. The number of ignition ON is also recorded when a trouble code is recorded, so the comparison with that number will show you how many times the ignition has turned on since the diagnostic code was recorded.	times
Count	Time stamp information. Each unit individually counts the elapsed time since the ignition is turned ON. Master integrated unit and ECM synchronize with the master time. When synchronized: “Common” When not synchronized: “Originally”	—

Display	Contents	Remarks
Time Count	Time stamp information. Elapsed time after ignition ON. When a trouble code is recorded, the elapsed time after ignition ON is also recorded.	ms
Time Since Engine Start	Elapsed time after starting the engine.	sec
Initial Engine Oil Temp.	Oil temperature when starting the engine, which is input to ECM from the oil temperature sensor.	°C
Initial Engine Coolant Temp.	Water temperature when starting the engine, which is input to ECM from the water temperature sensor.	°C
Initial Intake Air Temp.	Intake air temperature when starting the engine, which is input to ECM from the intake air temperature sensor.	°C
Engine Starting Time	Time needed since the cranking started till the judgment of engine start is complete.	ms
Start Mask Control Check 1	Information that shows whether the start prohibition control is executed on the engine side when starting. Values other than zero means that the control is executed to prohibit the engine start.	—
Soak Time	The time the vehicle has been left since the engine stopped. This value can be used to check how long the vehicle has left, by turning the ignition switch to ON after the engine stopped.	sec
Fuel Cut Elps Time	Shows the elapsed time after experienced high rotation speed.	sec
AT drive status	Neutral condition. Information input from the inhibitor switch. (CVT model)	—
MT gear status	Neutral condition. Information input from the neutral switch. (MT model)	—
X Mode	Shows X mode ON or OFF status.	—
Clutch switch	Clutch switch signal. (MT model) Set to “ON” when the clutch pedal is depressed. ECM input value.	—
Stop Light Switch	Stop light switch signal. Set to ON when the stop light illuminates. Engine control module input value.	—
Ignition switch	Ignition switch signal. Set to ON when the ignition switch is ON.	—
A/C Compressor Signal	A/C compressor drive signal. Set to “ON” when the drive signal is output. ECM output value.	—
Variable Load Compressor Torque Value	Load value of the variable capacity air compressor that ECM inputs. The value that the air conditioner CM estimates and outputs.	Nm
Starter Switch	Starter switch signal. Set to ON when the starter is ON. ECM input value.	—
AT turbine speed	Shows turbine rotation speed of the transmission. Turbine rotation speed is input from the transmission CM via CAN. (CVT model)	—
Lock Up Status	Shows lock-up status of the transmission. Lock up status is input from the transmission CM via CAN. (CVT model)	—
P/N Signal	Shows P/N status of the transmission. P/N range status is input from the transmission CM via CAN. (CVT model)	—
Trailer signal	Shows trailer towing status. Signal that indicates the trailer towing is input via the integrated unit.	—
Imbalance Check 1 #1	Detailed information of diagnosis for dispersion between cylinders. (Compliance with OBD regulations)	—
Imbalance Check 1 #2	Detailed information of diagnosis for dispersion between cylinders. (Compliance with OBD regulations)	—

Display	Contents	Remarks
Imbalance Check 1 #3	Detailed information of diagnosis for dispersion between cylinders. (Compliance with OBD regulations)	—
Imbalance Check 1 #4	Detailed information of diagnosis for dispersion between cylinders. (Compliance with OBD regulations)	—
Imbalance Check 2 #1	Detailed information of diagnosis for dispersion between cylinders. (Compliance with OBD regulations)	—
Imbalance Check 2 #2	Detailed information of diagnosis for dispersion between cylinders. (Compliance with OBD regulations)	—
Imbalance Check 2 #3	Detailed information of diagnosis for dispersion between cylinders. (Compliance with OBD regulations)	—
Imbalance Check 2 #4	Detailed information of diagnosis for dispersion between cylinders. (Compliance with OBD regulations)	—
Imbalance Check 3 R	Detailed information of diagnosis for dispersion between cylinders. (Compliance with OBD regulations)	—
Imbalance Check 4 R	Detailed information of diagnosis for dispersion between cylinders. (Compliance with OBD regulations)	—
(Oxygen sensor #11)	Front oxygen sensor is installed.	—
(Oxygen sensor #12)	Rear oxygen sensor is installed.	—
Short term fuel trim #12	Air fuel ratio correction control value for the rear.	%
Absolute Throttle Pos.#2	Shows the sub throttle sensor voltage value in % against the full-range 5 V throttle sensor output voltage.	%
Accelerator Pedal Pos.#1	Shows the main accelerator sensor voltage value in % against the full-range 5 V.	%
Accelerator Pedal Pos.#2	Shows the sub accelerator sensor voltage value in % against the full-range 5 V.	%
OBD System	Shows the OBD regulation to be followed. This is the information recorded in the ECM, and it does not mean that the unit automatically judges the compliance to the OBD regulations.	—

4. V.I.N REGISTRATION

1) On «Start» display, select «Diagnosis».
2) On «Vehicle selection» display, input the vehicle information and select «Confirmed».
3) On «Main Menu» display, select «Each System Check».
4) On «Select System» display, select «Engine Control System».
5) On «Select Function» display, select «Work Support».
6) On «Work Support» display, select «Entry VIN».
7) Perform the procedures shown on the display screen.

9. Read Diagnostic Trouble Code (DTC)

A: OPERATION

1. SUBARU SELECT MONITOR

1) On «Start» display, select «Diagnosis».
2) On «Vehicle selection» display, input the target vehicle information and select «Confirmed».
3) On «Main Menu» display, select «Each System».
4) On «Select System» display, select «Engine Control System» and then «Enter».
5) On «Select Function» display, select «DTC».

NOTE:
- For detailed operation procedures, refer to “Application help”.
- For details concerning DTC, refer to “List of Diagnostic Trouble Code (DTC)”. <Ref. to EN(H4DO)(diag)-102, List of Diagnostic Trouble Code (DTC).>

2. GENERAL SCAN TOOL

Refer to data denoting emission-related powertrain DTC.
For details concerning DTC, refer to “List of Diagnostic Trouble Code (DTC)”. <Ref. to EN(H4DO)(diag)-102, List of Diagnostic Trouble Code (DTC).>

NOTE:
Refer to general scan tool manufacturer’s instruction manual to access powertrain DTC (MODE $03).

10.Inspection Mode

A: PROCEDURE

Perform the diagnosis shown in the following DTC table.
When performing the diagnosis not listed in “List of Diagnostic Trouble Code (DTC)”, refer to the item on the drive cycle. <Ref. to EN(H4DO)(diag)-67, Drive Cycle.>

DTC	Item	Condition
B1570	ANTENNA	—
B1571	REFERENCE CODE INCOMPATIBILITY (IMMOBILIZER CM TO ECM)	—
B1572	IMM CIRCUIT EXCEPT ANTENNA CIRCUIT	—
B1574	KEY COMMUNICATION	—
B1575	INCORRECT IMMOBILIZER KEY	—
B1576	EGI CONTROL MODULE EEPROM	—
B1577	IMM CONTROL MODULE EEPROM	—
B1578	METER	—
P0010	"A" CAMSHAFT POSITION ACTUATOR CONTROL CIRCUIT/OPEN BANK 1	—
P0020	"A" CAMSHAFT POSITION ACTUATOR CONTROL CIRCUIT/OPEN BANK 2	—
P0031	A/F / O2 HEATER CONTROL CIRCUIT LOW BANK 1 SENSOR 1	—
P0032	A/F / O2 HEATER CONTROL CIRCUIT HIGH BANK 1 SENSOR 1	—
P0037	A/F / O2 HEATER CONTROL CIRCUIT LOW BANK 1 SENSOR 2	—
P0038	A/F / O2 HEATER CONTROL CIRCUIT HIGH BANK 1 SENSOR 2	—
P0072	AMBIENT AIR TEMPERATURE SENSOR CIRCUIT "A" LOW	—
P0073	AMBIENT AIR TEMPERATURE SENSOR CIRCUIT "A" HIGH	—
P0102	MASS OR VOLUME AIR FLOW SENSOR "A" CIRCUIT LOW	—
P0103	MASS OR VOLUME AIR FLOW SENSOR "A" CIRCUIT HIGH	—
P0107	MANIFOLD ABSOLUTE PRESSURE/BAROMETRIC PRESSURE SENSOR CIRCUIT LOW	—
P0108	MANIFOLD ABSOLUTE PRESSURE/BAROMETRIC PRESSURE SENSOR CIRCUIT HIGH	—
P0112	INTAKE AIR TEMPERATURE SENSOR 1 CIRCUIT LOW BANK 1	—
P0113	INTAKE AIR TEMPERATURE SENSOR 1 CIRCUIT HIGH BANK 1	—
P0117	ENGINE COOLANT TEMPERATURE SENSOR 1 CIRCUIT LOW	—
P0118	ENGINE COOLANT TEMPERATURE SENSOR 1 CIRCUIT HIGH	—
P0122	THROTTLE/PEDAL POSITION SENSOR/SWITCH "A" CIRCUIT LOW	—
P0123	THROTTLE/PEDAL POSITION SENSOR/SWITCH "A" CIRCUIT HIGH	—
P0131	A/F / O2 SENSOR CIRCUIT LOW VOLTAGE BANK 1 SENSOR 1	—
P0132	A/F / O2 SENSOR CIRCUIT HIGH VOLTAGE BANK 1 SENSOR 1	—
P0197	ENGINE OIL TEMPERATURE SENSOR "A" CIRCUIT LOW	—
P0198	ENGINE OIL TEMPERATURE SENSOR "A" CIRCUIT HIGH	—
P0201	CYLINDER 1 INJECTOR "A" CIRCUIT	—
P0202	CYLINDER 2 INJECTOR "A" CIRCUIT	—
P0203	CYLINDER 3 INJECTOR "A" CIRCUIT	—
P0204	CYLINDER 4 INJECTOR "A" CIRCUIT	—
P0222	THROTTLE/PEDAL POSITION SENSOR/SWITCH "B" CIRCUIT LOW	—
P0223	THROTTLE/PEDAL POSITION SENSOR/SWITCH "B" CIRCUIT HIGH	—
P0327	KNOCK/COMBUSTION VIBRATION SENSOR 1 CIRCUIT LOW BANK 1 OR SINGLE SENSOR	—
P0328	KNOCK/COMBUSTION VIBRATION SENSOR 1 CIRCUIT HIGH BANK 1 OR SINGLE SENSOR	—
P0335	CRANKSHAFT POSITION SENSOR "A" CIRCUIT	—
P0336	CRANKSHAFT POSITION SENSOR "A" CIRCUIT RANGE/PERFORMANCE	—
P0340	CAMSHAFT POSITION SENSOR "A" CIRCUIT BANK 1 OR SINGLE SENSOR	—
P0341	CAMSHAFT POSITION SENSOR "A" CIRCUIT RANGE/PERFORMANCE BANK 1 OR SINGLE SENSOR	—
P0345	CAMSHAFT POSITION SENSOR "A" CIRCUIT BANK 2	—

DTC	Item	Condition
P0346	CAMSHAFT POSITION SENSOR "A" CIRCUIT RANGE/PERFORMANCE BANK 2	—
P0351	IGNITION COIL "A" PRIMARY CONTROL CIRCUIT/OPEN	—
P0352	IGNITION COIL "B" PRIMARY CONTROL CIRCUIT/OPEN	—
P0353	IGNITION COIL "C" PRIMARY CONTROL CIRCUIT/OPEN	—
P0354	IGNITION COIL "D" PRIMARY CONTROL CIRCUIT/OPEN	—
P0452	EVAP SYSTEM (CPC) PRESSURE SENSOR/SWITCH CIRCUIT LOW	—
P0453	EVAP SYSTEM (CPC) PRESSURE SENSOR/SWITCH CIRCUIT HIGH	—
P0458	EVAP SYSTEM (CPC) PURGE CONTROL VALVE "A" CIRCUIT LOW	—
P0462	FUEL LEVEL SENSOR "A" CIRCUIT LOW	—
P0463	FUEL LEVEL SENSOR "A" CIRCUIT HIGH	—
P0512	STARTER (SWITCH) REQUEST CIRCUIT	—
P0560	SYSTEM VOLTAGE	—
P0604	INTERNAL CONTROL MODULE RANDOM ACCESS MEMORY (RAM) ERROR	—
P0605	INTERNAL CONTROL MODULE READ ONLY MEMORY (ROM) ERROR	—
P0606	CONTROL MODULE PROCESSOR	—
P060A	INTERNAL CONTROL MODULE MONITORING PROCESSOR PERFORMANCE	—
P060B	INTERNAL CONTROL MODULE A/D PROCESSING PERFORMANCE	—
P0616	STARTER RELAY "A" CIRCUIT LOW	—
P0617	STARTER RELAY "A" CIRCUIT HIGH	—
P062F	INTERNAL CONTROL MODULE EEPROM ERROR	—
P0685	ECM/PCM POWER RELAY CONTROL CIRCUIT/OPEN	—
P081A	STARTER DISABLE CIRCUIT LOW	—
P1160	THROTTLE RETURN SPRING	—
P1C00	BATTERY MONITOR MODULE "A" PERFORMANCE	—
P2008	TGV CONTROL CIRCUIT/OPEN BANK 1	—
P2009	TGV CONTROL CIRCUIT LOW BANK 1	—
P2011	TGV CONTROL CIRCUIT/OPEN BANK 2	—
P2012	TGV CONTROL CIRCUIT LOW BANK 2	—
P2016	TGV POSITION SENSOR/SWITCH CIRCUIT LOW BANK 1	—
P2017	TGV POSITION SENSOR/SWITCH CIRCUIT HIGH BANK 1	—
P2021	TGV POSITION SENSOR/SWITCH CIRCUIT LOW BANK 2	—
P2022	TGV POSITION SENSOR/SWITCH CIRCUIT HIGH BANK 2	—
P2101	THROTTLE ACTUATOR "A" CONTROL MOTOR CIRCUIT RANGE/PERFORMANCE	—
P2102	THROTTLE ACTUATOR "A" CONTROL MOTOR CIRCUIT LOW	—
P2103	THROTTLE ACTUATOR "A" CONTROL MOTOR CIRCUIT HIGH	—
P2109	THROTTLE/PEDAL POSITION SENSOR "A" MINIMUM STOP PERFORMANCE	—
P2119	THROTTLE ACTUATOR "A" CONTROL THROTTLE BODY RANGE/PERFORMANCE	—
P2122	THROTTLE/PEDAL POSITION SENSOR/SWITCH "D" CIRCUIT LOW	—
P2123	THROTTLE/PEDAL POSITION SENSOR/SWITCH "D" CIRCUIT HIGH	—
P2127	THROTTLE/PEDAL POSITION SENSOR/SWITCH "E" CIRCUIT LOW	—
P2128	THROTTLE/PEDAL POSITION SENSOR/SWITCH "E" CIRCUIT HIGH	—
P2135	THROTTLE/PEDAL POSITION SENSOR/SWITCH "A"/"B" VOLTAGE CORRELATION	—
P2138	THROTTLE/PEDAL POSITION SENSOR/SWITCH "D"/"E" VOLTAGE CORRELATION	—
P2401	EVAP SYSTEM LEAK DETECTION PUMP CONTROL CIRCUIT LOW	«Coolant Temp.»: 5 — 45°C (41 — 113°F) «IAT Sensor #11»: 5 — 50°C (41 — 122°F)
P2419	EVAP SYSTEM SWITCHING VALVE CONTROL CIRCUIT LOW	
P2530	IGNITION SWITCH RUN POSITION CIRCUIT	—
U0073	CAN FAILURE, BUS ‘OFF’ DETECTION	—

DTC	Item	Condition
U0077	LIN COMMUNICATION BUS "ECM/PCM" OFF	—
U0101	LOST COMMUNICATION WITH TCM	—
U0122	LOST COMMUNICATION WITH VEHICLE DYNAMICS CONTROL MODULE	—
U0155	LOST COMMUNICATION WITH INSTRUMENT PANEL CLUSTER (IPC) CONTROL MODULE	—
U0284	LOST COMMUNICATION WITH ACTIVE GRILLE SHUTTER MODULE "A"	—
U0402	INVALID DATA RECEIVED FROM TCM	—
U0416	INVALID DATA RECEIVED FROM VEHICLE DYNAMICS CONTROL MODULE	—
U0423	INVALID DATA RECEIVED FROM INSTRUMENT PANEL CLUSTER CONTROL MODULE	—
U1712	LOST LIN COMMUNICATION WITH BATTERY "1" MONITOR MODULE	—

1. PREPARATION FOR THE INSPECTION MODE

Check that the battery voltage is 12 V or more and fuel remains approx. half [20 — 40 L (5.3 — 10.6 US gal, 4.4 — 8.8 Imp gal)].

2. SUBARU SELECT MONITOR

1) Perform the Clear Memory Mode. <Ref. to EN(H4DO)(diag)-78, Clear Memory Mode.>
2) Read the diagnostic trouble code (DTC) and check that no DTC is displayed. <Ref. to EN(H4DO)(diag)-63, Read Diagnostic Trouble Code (DTC).>

NOTE:
If the DTC is displayed on the screen, the trouble is still present. Perform the diagnosis using “Diagnostic Procedure with Diagnostic Trouble Code (DTC)”. <Ref. to EN(H4DO)(diag)-111, Diagnostic Procedure with Diagnostic Trouble Code (DTC).> After solving the DTC, repeat from step 1).
3) Start the engine, and run the engine at idle for 10 seconds or more.
4) Read the diagnostic trouble code (DTC) and check the DTC. <Ref. to EN(H4DO)(diag)-63, Read Diagnostic Trouble Code (DTC).>

NOTE:
If the DTC is displayed on the screen, the trouble is still present. Perform the diagnosis using “Diagnostic Procedure with Diagnostic Trouble Code (DTC)”. <Ref. to EN(H4DO)(diag)-111, Diagnostic Procedure with Diagnostic Trouble Code (DTC).> After solving the DTC, repeat from step 1).

3. GENERAL SCAN TOOL

NOTE:
For detailed operation procedures, refer to the general scan tool operation manual.
1) Perform the Clear Memory Mode. <Ref. to EN(H4DO)(diag)-43, MODE $04 (CLEAR/RESET EMISSION-RELATED DIAGNOSTIC INFORMATION), OPERATION, General Scan Tool.>
2) Read the diagnostic trouble code (DTC) and check that no DTC is displayed. <Ref. to EN(H4DO)(diag)-44, MODE $07, OPERATION, General Scan Tool.>

NOTE:
If the DTC is displayed on the screen, the trouble is still present. Perform the diagnosis using “Diagnostic Procedure with Diagnostic Trouble Code (DTC)”. <Ref. to EN(H4DO)(diag)-111, Diagnostic Procedure with Diagnostic Trouble Code (DTC).> After solving the DTC, repeat from step 1).
3) Start the engine, and run the engine at idle for 10 seconds or more.
4) Read the diagnostic trouble code (DTC) and check the DTC. <Ref. to EN(H4DO)(diag)-44, MODE $07, OPERATION, General Scan Tool.>

NOTE:
If the DTC is displayed on the screen, the trouble is still present. Perform the diagnosis using “Diagnostic Procedure with Diagnostic Trouble Code (DTC)”. <Ref. to EN(H4DO)(diag)-111, Diagnostic Procedure with Diagnostic Trouble Code (DTC).> After solving the DTC, repeat from step 1).

11.Drive Cycle

A: PROCEDURE

It is necessary to perform the drive cycle listed below if DTC is not found in the Inspection Mode. It is possible to complete diagnosis of the DTC by performing the indicated drive cycle. After the repair for the DTC, perform a necessary drive cycle and make sure the function recovers and the DTC is recorded.

1. PREPARATION FOR DRIVE CYCLE

1) Check that the battery voltage is 12 V or more and fuel remains approx. half [20 — 40 L (5.3 — 10.6 US gal, 4.4 — 8.8 Imp gal)].
2) After performing the diagnostics and Clear Memory Mode, check that no DTC remains. <Ref. to EN(H4DO)(diag)-78, Clear Memory Mode.>

NOTE:
Perform the drive cycle after warming up the engine except when the engine coolant temperature at engine start is specified.

2. DRIVE CYCLE A

DTC	Item	Condition
P0128	COOLANT THERMOSTAT (ENGINE COOLANT TEMPERATURE BELOW THERMOSTAT REGULATING TEMPERATURE)	—
P0141	O2 SENSOR HEATER CIRCUIT BANK 1 SENSOR 2	—
P014C	A/F / O2 SENSOR SLOW RESPONSE - RICH TO LEAN BANK 1 SENSOR 1	—
P014D	A/F / O2 SENSOR SLOW RESPONSE - LEAN TO RICH BANK 1 SENSOR 1	—
P015A	A/F / O2 SENSOR DELAYED RESPONSE - RICH TO LEAN BANK 1 SENSOR 1	—
P015B	A/F / O2 SENSOR DELAYED RESPONSE - LEAN TO RICH BANK 1 SENSOR 1	—
P0171	SYSTEM TOO LEAN BANK 1	Complete diagnosis with drive cycle B or C as well.
P0172	SYSTEM TOO RICH BANK 1	Complete diagnosis with drive cycle B or C as well.
P0300	RANDOM/MULTIPLE CYLINDER MISFIRE DETECTED	Complete diagnosis with drive cycle B or C as well.
P0301	CYLINDER 1 MISFIRE DETECTED	Complete diagnosis with drive cycle B or C as well.
P0302	CYLINDER 2 MISFIRE DETECTED	Complete diagnosis with drive cycle B or C as well.
P0303	CYLINDER 3 MISFIRE DETECTED	Complete diagnosis with drive cycle B or C as well.
P0304	CYLINDER 4 MISFIRE DETECTED	Complete diagnosis with drive cycle B or C as well.
P0420	CATALYST SYSTEM EFFICIENCY BELOW THRESHOLD BANK 1	—
P0459	EVAP SYSTEM (CPC) PURGE CONTROL VALVE "A" CIRCUIT HIGH	—
P2096	POST CATALYST FUEL TRIM SYSTEM TOO LEAN BANK 1	Complete diagnosis with drive cycle B or C as well.
P2097	POST CATALYST FUEL TRIM SYSTEM TOO RICH BANK 1	Complete diagnosis with drive cycle B or C as well.
P2195	A/F /O2 SENSOR SIGNAL BIASED/STUCK LEAN BANK 1 SENSOR 1	—
P2196	A/F /O2 SENSOR SIGNAL BIASED/STUCK RICH BANK 1 SENSOR 1	—

Diagnostic procedure:
1) Drive for 20 minutes or more at a constant speed of 80 km/h (50 MPH) or more.
2) Stop the vehicle and idle for one minute.
3) Read the temporary code using the Subaru Select Monitor or general scan tool. <Ref. to EN(H4DO)(diag)-63, OPERATION, Read Diagnostic Trouble Code (DTC).>

3. DRIVE CYCLE B

DTC	Item	Condition
P0125	INSUFFICIENT COOLANT TEMPERATURE FOR CLOSED LOOP FUEL CONTROL	«Coolant Temp.» at engine start: Less than –15°C (5°F)
P0137	O2 SENSOR CIRCUIT LOW VOLTAGE BANK 1 SENSOR 2	—
P0138	O2 SENSOR CIRCUIT HIGH VOLTAGE BANK 1 SENSOR 2	—
P0171	SYSTEM TOO LEAN BANK 1	Complete diagnosis with drive cycle A or C as well.
P0172	SYSTEM TOO RICH BANK 1	Complete diagnosis with drive cycle A or C as well.
P0300	RANDOM/MULTIPLE CYLINDER MISFIRE DETECTED	Complete diagnosis with drive cycle A or C as well.
P0301	CYLINDER 1 MISFIRE DETECTED	Complete diagnosis with drive cycle A or C as well.
P0302	CYLINDER 2 MISFIRE DETECTED	Complete diagnosis with drive cycle A or C as well.
P0303	CYLINDER 3 MISFIRE DETECTED	Complete diagnosis with drive cycle A or C as well.
P0304	CYLINDER 4 MISFIRE DETECTED	Complete diagnosis with drive cycle A or C as well.
P0500	VEHICLE SPEED SENSOR "A" CIRCUIT	—
P0506	IDLE CONTROL SYSTEM RPM - LOWER THAN EXPECTED	—
P0507	IDLE CONTROL SYSTEM RPM - HIGHER THAN EXPECTED	—
P059A	ACTIVE GRILLE AIR SHUTTER "A" POSITION SENSOR CIRCUIT	«Ambient Temperature»: 3 — 33°C (37.4 — 91.4°F)
P059F	ACTIVE GRILLE AIR SHUTTER "A" PERFORMANCE/STUCK OFF	
P05A0	ACTIVE GRILLE AIR SHUTTER "A" STUCK ON	
P05A1	ACTIVE GRILLE AIR SHUTTER "A" POSITION SENSOR MINIMUM/MAXIMUM STOP PERFORMANCE	
P05A2	ACTIVE GRILLE AIR SHUTTER "A" CONTROL CIRCUIT/OPEN	
P05A6	ACTIVE GRILLE AIR SHUTTER "A" SUPPLY VOLTAGE CIRCUIT/OPEN	
P05C0	ACTIVE GRILLE AIR SHUTTER MODULE "A" OVER TEMPERATURE	
P0700	TRANSMISSION CONTROL SYSTEM (MIL REQUEST)	—
P2006	TGV CONTROL STUCK CLOSED BANK 1	—
P2007	TGV CONTROL STUCK CLOSED BANK 2	—
P2096	POST CATALYST FUEL TRIM SYSTEM TOO LEAN BANK 1	Complete diagnosis with drive cycle A or C as well.
P2097	POST CATALYST FUEL TRIM SYSTEM TOO RICH BANK 1	Complete diagnosis with drive cycle A or C as well.

Diagnostic procedure:
1) Drive at 10 km/h (6 MPH) or more.
2) Stop the vehicle and idle for ten minutes.
3) Read the temporary code using the Subaru Select Monitor or general scan tool. <Ref. to EN(H4DO)(diag)-63, OPERATION, Read Diagnostic Trouble Code (DTC).>

4. DRIVE CYCLE C

DTC	Item	Condition
P000A	"A" CAMSHAFT POSITION SLOW RESPONSE BANK 1	—
P000C	"A" CAMSHAFT POSITION SLOW RESPONSE BANK 2	—
P0011	"A" CAMSHAFT POSITION - TIMING OVER-ADVANCED OR SYSTEM PERFORMANCE BANK 1	—
P0021	"A" CAMSHAFT POSITION - TIMING OVER-ADVANCED OR SYSTEM PERFORMANCE BANK 2	—
P0030	A/F / O2 HEATER CONTROL CIRCUIT BANK 1 SENSOR 1	—
P0068	MAP/MAF - THROTTLE POSITION CORRELATION	—
P0101	MASS OR VOLUME AIR FLOW SENSOR "A" CIRCUIT RANGE/PERFORMANCE	—
P0134	A/F / O2 SENSOR CIRCUIT NO ACTIVITY DETECTED BANK 1 SENSOR 1	—
P013A	O2 SENSOR SLOW RESPONSE - RICH TO LEAN BANK 1 SENSOR 2	—
P013B	O2 SENSOR SLOW RESPONSE - LEAN TO RICH BANK 1 SENSOR 2	—
P013E	O2 SENSOR DELAYED RESPONSE - RICH TO LEAN BANK 1 SENSOR 2	—
P013F	O2 SENSOR DELAYED RESPONSE - LEAN TO RICH BANK 1 SENSOR 2	—
P0171	SYSTEM TOO LEAN BANK 1	Complete diagnosis with drive cycle A or B as well.
P0172	SYSTEM TOO RICH BANK 1	Complete diagnosis with drive cycle A or B as well.
P0300	RANDOM/MULTIPLE CYLINDER MISFIRE DETECTED	Complete diagnosis with drive cycle A or B as well.
P0301	CYLINDER 1 MISFIRE DETECTED	Complete diagnosis with drive cycle A or B as well.
P0302	CYLINDER 2 MISFIRE DETECTED	Complete diagnosis with drive cycle A or B as well.
P0303	CYLINDER 3 MISFIRE DETECTED	Complete diagnosis with drive cycle A or B as well.
P0304	CYLINDER 4 MISFIRE DETECTED	Complete diagnosis with drive cycle A or B as well.
P0400	EGR "A" FLOW	—
P0851	PARK/NEUTRAL SWITCH INPUT CIRCUIT LOW	—
P0852	PARK/NEUTRAL SWITCH INPUT CIRCUIT HIGH	—
P1449	EVAP SYSTEM CLOG DETECTED (AIR FILTER)	—
P1492	COIL 1 EGR "A" CONTROL CIRCUIT LOW	—
P1493	COIL 1 EGR "A" CONTROL CIRCUIT HIGH	—
P1494	COIL 2 EGR "A" CONTROL CIRCUIT LOW	—
P1495	COIL 2 EGR "A" CONTROL CIRCUIT HIGH	—
P1496	COIL 3 EGR "A" CONTROL CIRCUIT LOW	—
P1497	COIL 3 EGR "A" CONTROL CIRCUIT HIGH	—
P1498	COIL 4 EGR "A" CONTROL CIRCUIT LOW	—
P1499	COIL 4 EGR "A" CONTROL CIRCUIT HIGH	—
P2004	TGV CONTROL STUCK OPEN BANK 1	—
P2005	TGV CONTROL STUCK OPEN BANK 2	—
P2096	POST CATALYST FUEL TRIM SYSTEM TOO LEAN BANK 1	Complete diagnosis with drive cycle A or B as well.
P2097	POST CATALYST FUEL TRIM SYSTEM TOO RICH BANK 1	Complete diagnosis with drive cycle A or B as well.
P219C	CYLINDER 1 AIR-FUEL RATIO IMBALANCE	—
P219D	CYLINDER 2 AIR-FUEL RATIO IMBALANCE	—
P219E	CYLINDER 3 AIR-FUEL RATIO IMBALANCE	—
P219F	CYLINDER 4 AIR-FUEL RATIO IMBALANCE	—

DTC	Item	Condition
P2270	O2 SENSOR SIGNAL BIASED/STUCK LEAN BANK 1 SENSOR 2	—
P2271	O2 SENSOR SIGNAL BIASED/STUCK RICH BANK 1 SENSOR 2	—

Diagnostic procedure:
1) Drive according to the drive pattern described below.

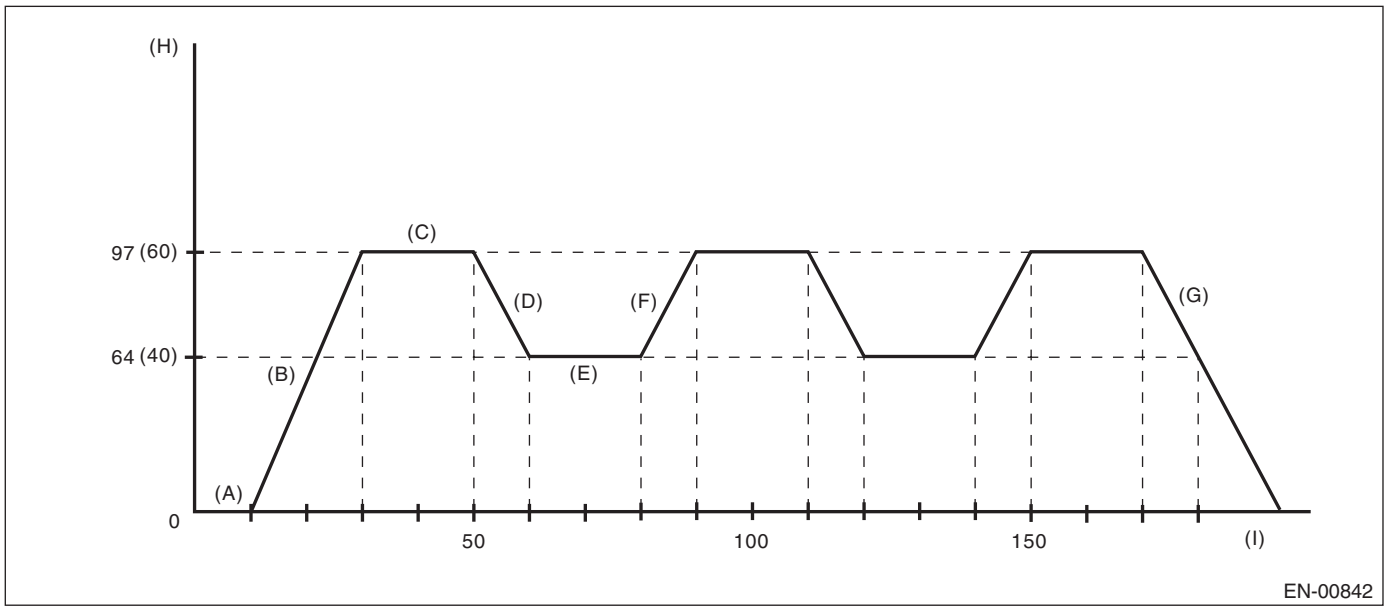

(A)	Shift the select lever to “P” range or the shift lever to the neutral position, and let the engine idle for 10 seconds or more.	(D)	Decelerate with fully closed throttle to 64 km/h (40 MPH) or less.	(G)	Stop vehicle with the throttle fully closed.
(B)	Accelerate to 97 km/h (60 MPH) or more within 20 seconds.	(E)	Drive for 20 seconds or more at 64 km/h (40 MPH) or less.	(H)	Vehicle speed km/h (MPH)
(C)	Drive for 20 seconds or more at 97 km/h (60 MPH) or more.	(F)	Accelerate to 97 km/h (60 MPH) or more within 10 seconds.	(I)	Sec.

2) Read the temporary code using the Subaru Select Monitor or general scan tool. <Ref. to EN(H4DO)(diag)-63, OPERATION, Read Diagnostic Trouble Code (DTC).>

NOTE:
After driving, use the Subaru Select Monitor to check that “Imbalance Check 3 R” indicates “1” and read the temporary code. If “Imbalance Check 3 R” indicates “0”, the diagnosis has not been completed. In this case, repeat driving until the reading is “1”.

5. DRIVE CYCLE E

DTC	Item	Condition
P0461	FUEL LEVEL SENSOR "A" CIRCUIT RANGE/PERFORMANCE	—

Diagnostic procedure:
1) Make sure that the battery voltage is 10.9 V or more.
2) Perform the Clear Memory Mode. <Ref. to EN(H4DO)(diag)-78, Clear Memory Mode.>
3) Drive for approximately 30 L (7.9 US gal, 6.6 Imp gal) of fuel.

NOTE:
- It is acceptable to drive the vehicle intermittently.
- Do not disconnect the battery terminals while diagnosing. (Data will be cleared by disconnecting the battery terminals.)

4) Read the temporary code using the Subaru Select Monitor or general scan tool. <Ref. to EN(H4DO)(diag)-63, OPERATION, Read Diagnostic Trouble Code (DTC).>

6. DRIVE CYCLE F

DTC	Item	Condition
P0111	INTAKE AIR TEMPERATURE SENSOR 1 CIRCUIT RANGE/PERFORMANCE BANK 1	• 6 hours have elapsed since ignition switch is OFF under a completely warmed up condition. • For models with block heater, at least 6 hours must have elapsed without operating the block heater.

Diagnostic procedure:
1) With the ignition switch ON (engine stopped), read the values in «Coolant Temp.» and «Intake Air Temp.». <Ref. to EN(H4DO)(diag)-45, DISPLAY CURRENT ENGINE DATA, OPERATION, Subaru Select Monitor.>
2) If the values from step 1) satisfy the following conditions, idle the engine for two minutes or more.

Condition:
|Engine coolant temperature — Intake air temperature| ≤ 5°C (9°F)

NOTE:
- If the conditions are not satisfied, turn the ignition switch to OFF and wait until the parameters are satisfied.
- Hold the select lever in “P” range or “N” range at idling.

3) Drive according to the drive pattern described below.

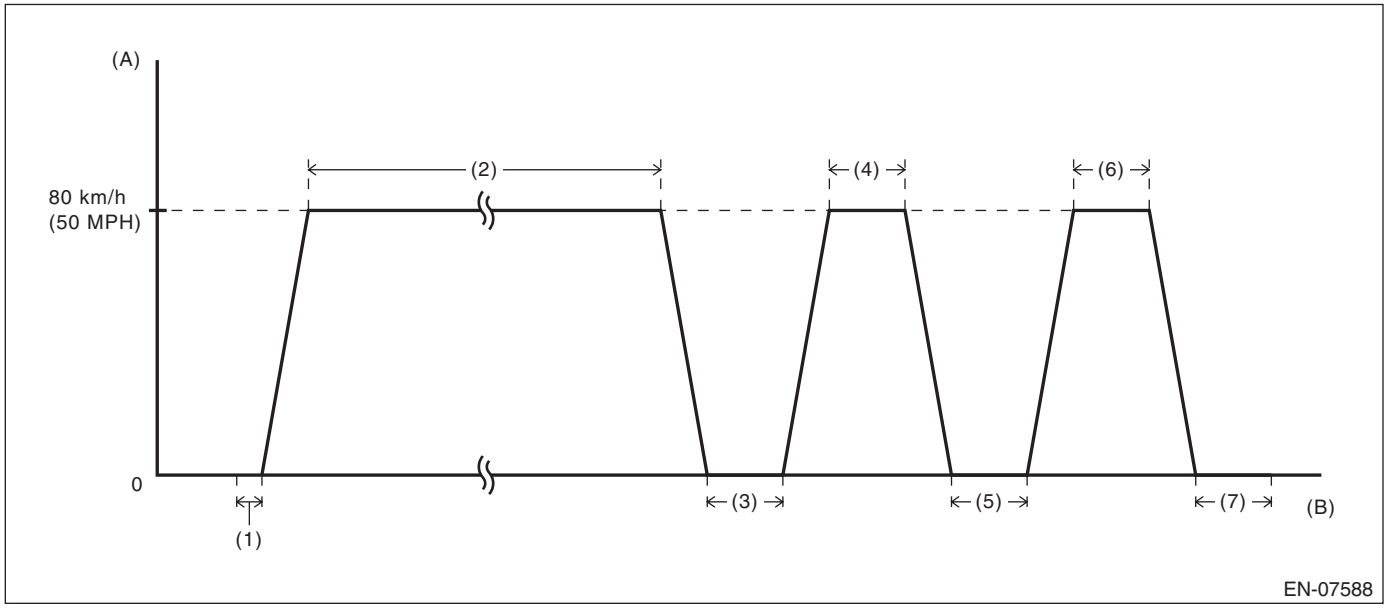

(A) Vehicle speed
(B) Elapsed time
(1) Idle the engine for 2 minutes or more.
(2) Drive for a total period of 15 minutes or more at a speed of 80 km/h (50 MPH) or more.
(3) Stop the vehicle and idle for 30 seconds or more.
(4) Drive for 30 seconds or more at a constant speed of 80 km/h (50 MPH) or more.
(5) Stop the vehicle and idle for 30 seconds or more.
(6) Drive for 30 seconds or more at a constant speed of 80 km/h (50 MPH) or more.
(7) Stop the vehicle and idle for 30 seconds.

NOTE:
• In pattern (2), it is acceptable to decelerate to less than 80 km/h (50 MPH) or to stop the vehicle depending on the traffic conditions. Drive the vehicle at 80 km/h (50 MPH) or more until the total driving time reaches or exceeds 15 minutes.
• There is no given transition time between idling and cruising.
• Driving at constant speed only on a downhill causes smaller engine load and may result in failure to obtain a right diagnostic result.
• If the ignition switch is turned to OFF during driving cycle F, perform this driving cycle again after satisfying the conditions listed in the table.
4) Read the temporary code using the Subaru Select Monitor or general scan tool. <Ref. to EN(H4DO)(diag)-63, OPERATION, Read Diagnostic Trouble Code (DTC).>

7. DRIVE CYCLE H

DTC	Item	Condition
P0071	AMBIENT AIR TEMPERATURE SENSOR CIRCUIT "A" RANGE/PERFORMANCE	• 6 hours have elapsed since ignition switch is OFF under a completely warmed up condition. • For models with block heater, at least 6 hours must have elapsed without operating the block heater.
P0116	ENGINE COOLANT TEMPERATURE SENSOR 1 CIRCUIT RANGE/PERFORMANCE	• 6 hours have elapsed since ignition switch is OFF under a completely warmed up condition. • For models with block heater, at least 6 hours must have elapsed without operating the block heater.
P0196	ENGINE OIL TEMPERATURE SENSOR "A" RANGE/PERFORMANCE	• 6 hours have elapsed since ignition switch is OFF under a completely warmed up condition. • For models with block heater, at least 6 hours must have elapsed without operating the block heater.
P0451	EVAP SYSTEM (CPC) PRESSURE SENSOR/SWITCH CIRCUIT RANGE/PERFORMANCE	60 seconds have elapsed since ignition switch is OFF.
P050A	COLD START IDLE CONTROL SYSTEM PERFORMANCE	—
P050B	COLD START IGNITION TIMING PERFORMANCE	—

Diagnostic procedure:
1) With the ignition switch ON (engine stopped), read the values in «Coolant Temp.» and «Intake Air Temp.». <Ref. to EN(H4DO)(diag)-45, DISPLAY CURRENT ENGINE DATA, OPERATION, Subaru Select Monitor.>
2) If the values from step 1) satisfy the following conditions, idle the engine for two minutes or more.

Condition:
|Engine coolant temperature — Intake air temperature| ≤ 5°C (9°F)

NOTE:
• If the conditions are not satisfied, turn the ignition switch to OFF and wait until the parameters are satisfied.
• Hold the select lever in “P” range or “N” range at idling.
3) Read the temporary code using the Subaru Select Monitor or general scan tool. <Ref. to EN(H4DO)(diag)-63, OPERATION, Read Diagnostic Trouble Code (DTC).>

8. DRIVE CYCLE I

DTC	Item	Condition
P0455	EVAP SYSTEM (CPC) LEAK DETECTED (LARGE LEAK)	«Coolant Temp.»: 5 — 45°C (41 — 113°F) «Intake Air Temp.»: 5 — 50°C (41 — 122°F)
P0456	EVAP SYSTEM (CPC) LEAK DETECTED (VERY SMALL LEAK)	
P1451	EVAP SYSTEM CLOG DETECTED (PIPE)	
P2402	EVAP SYSTEM LEAK DETECTION PUMP CONTROL CIRCUIT HIGH	
P2404	EVAP SYSTEM LEAK DETECTION PUMP SENSE CIRCUIT RANGE/PERFORMANCE	
P2420	EVAP SYSTEM SWITCHING VALVE CONTROL CIRCUIT HIGH	

CAUTION:
Be careful of the state of the battery when performing the drive cycle I consecutively. Performing the drive cycle I consecutively without the engine running may cause a low battery voltage and battery discharge.

NOTE:
- If it is necessary to perform drive cycle I consecutively, drive the vehicle under the following conditions to release accumulated evaporating gas. Performing the drive cycle I consecutively without starting the engine causes a large amount of evaporating gas to accumulate in the canister, which hinders an accurate diagnosis.
  - After engine is warmed up.
  - Drive for 10 minutes or more at a speed of 48 km/h (30 MPH) or more (duration of drive can be an accumulation)
- To obtain an accurate diagnostic result, perform the procedures according to the following points.
  - Do not refuel gas immediately before performing drive cycle I. There will be a large amount of evaporating gas immediately after refuel, which may cause a less accurate diagnostic performance.
  - Do not shake the vehicle while performing drive cycle I. Shaking the vehicle causes evaporating gas to increase inside the fuel tank, which may cause a less accurate diagnostic performance.
  - Do not perform any service operation including installation or removal of parts or connectors while performing drive cycle I. Performing service operation could affect on the functions of related parts, which may cause a less accurate diagnostic performance.
- Perform MODE $08 when using a general scan tool.

Diagnostic procedure:
1) Prepare the Subaru Select Monitor kit. <Ref. to EN(H4DO)(diag)-10, PREPARATION TOOL, General Description.>
2) Prepare PC with Subaru Select Monitor installed.
3) Connect the USB cable to the DST-i and the USB port on the personal computer (dedicated port for the Subaru Select Monitor).

NOTE:
The dedicated port for the Subaru Select Monitor means the USB port which was used to install the Subaru Select Monitor.
4) Connect the diagnosis cable to DST-i.

5) Connect the DST-i to the data link connector located in the lower portion of the instrument panel (on the driver's side).

CAUTION:
Do not connect the scan tools except for Subaru Select Monitor and general scan tool.

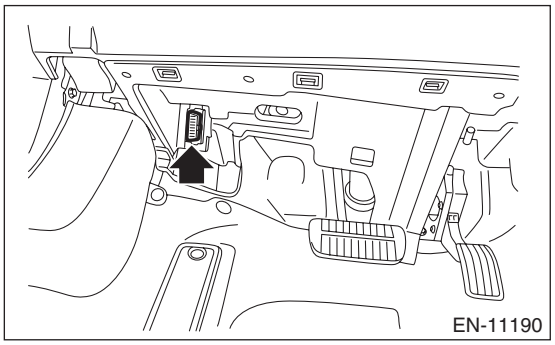

6) Start the PC.
7) Turn the ignition switch to ON (engine OFF) and run the "PC application for Subaru Select Monitor".
8) On «Start» display, select «OBD System».
9) On «Select System» display, select «Evaporative System Leak Test».
10) On «Evaporative System Leak Test» display, select «Evaporative System Leak Test».
11) On «Evaporative System Leak Test is running. Press Cancel to exit this function.» display, click the [OK] button to perform evaporative system leak test.
12) When «Conditions have been enabled to control this function. Turn the ignition switch off to terminate the test.» display appears, wait for 30 minutes without clicking the [OK] button.

CAUTION:
Do not leave the vehicle for an extended period of time after the test is complete. This may cause early deterioration of the battery or discharged battery.

NOTE:
• Clicking the [OK] button bring the «Evaporative System Leak Test» display back, although the test is continuing.
• The Subaru Select Monitor screen does not change after the evaporative system leak test is complete or when the test is aborted by turning off the ignition switch.
• If «Test conditions are not correct» display appears, use Subaru Select Monitor to check that the values in «Coolant Temp.» and «Intake Air Temp.» are within the specified range. If the conditions are satisfied, make the necessary preparation for the drive cycle again. <Ref. to EN(H4DO)(diag)-67, PREPARATION FOR DRIVE CYCLE, PROCEDURE, Drive Cycle.>
13) After 30 minutes passed from the start of step 14), click the [OK] button to return to the «Evaporative System Leak Test» display.
14) Return to the «OBD Menu» display, then select «Result of on-board monitor test».
15) In the «Result of on-board monitor test», check TID $C1 — $CA of MID $3C.

NOTE:
Perform MODE $06 and check when using a general scan tool.

Result of on-board monitor test

Display	Details	Remarks
$0000 is stored in all Val.	During the evaporative system leak test, the test conditions were not met and the test was canceled.	Once the test conditions are met, perform the test again.
All Val. are stored with values and OK is set to all the results.	Evaporative system leak test is completed correctly.	While the ignition switch is ON, read the pending code using the Subaru Select Monitor.
Some results were no good.	The evaporative system leak test completed successfully but the results were faulty.	While the ignition switch is ON, read the pending code using the Subaru Select Monitor.

16) When the evaporative system leak test is completed correctly, read the pending code with the ignition switch turned to ON position. If the DTC is recorded, check the appropriate DTC. <Ref. to EN(H4DO)(diag)-63, OPERATION, Read Diagnostic Trouble Code (DTC).>

NOTE:
- Perform MODE $07 when using a general scan tool.
- The pending code will be cleared by turning ignition switch to OFF.

9. DRIVE CYCLE J

DTC	Item	Condition
P2610	ECM/PCM ENGINE OFF TIMER PERFORMANCE	—

Diagnostic procedure:
1) Idle the engine for 15 minutes or more.
2) Turn the ignition switch to OFF.
3) After at least 10 hours passed from the start of step 2), read the temporary code using the Subaru Select Monitor or general scan tool. <Ref. to EN(H4DO)(diag)-63, OPERATION, Read Diagnostic Trouble Code (DTC).>

10.DRIVE CYCLE N

DTC	Item	Condition
P0016	CRANKSHAFT POSITION - CAMSHAFT POSITION CORRELATION BANK 1 SENSOR A	«Coolant Temp.»: 80°C (176°F) or more
P0018	CRANKSHAFT POSITION - CAMSHAFT POSITION CORRELATION BANK 2 SENSOR A	

WARNING:
When performing drive cycle N on a public road, pay sufficient attention to the traffic condition and give the highest priority to safe driving.
1) Check the data in condition column of table by using the Subaru Select Monitor or general scan tool.

NOTE:
- Subaru Select Monitor

For detailed operation procedures, refer to “Read Current Data For Engine”. <Ref. to EN(H4DO)(diag)-45, DISPLAY CURRENT ENGINE DATA, OPERATION, Subaru Select Monitor.>
- General scan tool

For detailed operation procedures, refer to the general scan tool operation manual.
2) While the conditions in the list are satisfied, race the engine at the speed of approx. 2,500 rpm for 40 seconds or more.
3) Start the vehicle, then accelerate the vehicle to 50 km/h (31.1 MPH) or more.
4) When the speed reaches 50 km/h (31.1 MPH) or more, release the accelerator pedal, the brake pedal and the clutch pedal (MT model) to decelerate the vehicle without shifting the gear. At this time, select an appropriate gear beforehand so that the engine speed can decrease from 2,500 rpm to 1,900 rpm for 5 seconds or more.

NOTE:
- The vehicle speed does not matter so long as the engine speed can maintain from 2,500 rpm to 1,900 rpm for 5 seconds or more.

Example: On a downhill grade, it can be performed with a low speed gear and at a low vehicle speed.
- When it is performed with the electrical load such as the air conditioner, etc. turned OFF or the vehicle driven on a downhill grade, the engine speed decreases slowly. Therefore, the continuous time can be maintained easily.

5) Bring the vehicle to a stop in a safe place, and idle it for 5 minutes or more.

NOTE:
Driving method while vehicle is driven to a stop at safe place is not restricted.

6) With the vehicle idling, read the temporary diagnostic code of DTC using Subaru Select Monitor or general scan tool.

NOTE:
- For detailed operation procedures, refer to “Read Diagnostic Trouble Code (DTC)”. <Ref. to EN(H4DO)(diag)-63, Read Diagnostic Trouble Code (DTC).>
- In the step 6), if the DTC is not displayed on the Subaru Select Monitor or general scan tool display screen, the trouble is resolved.

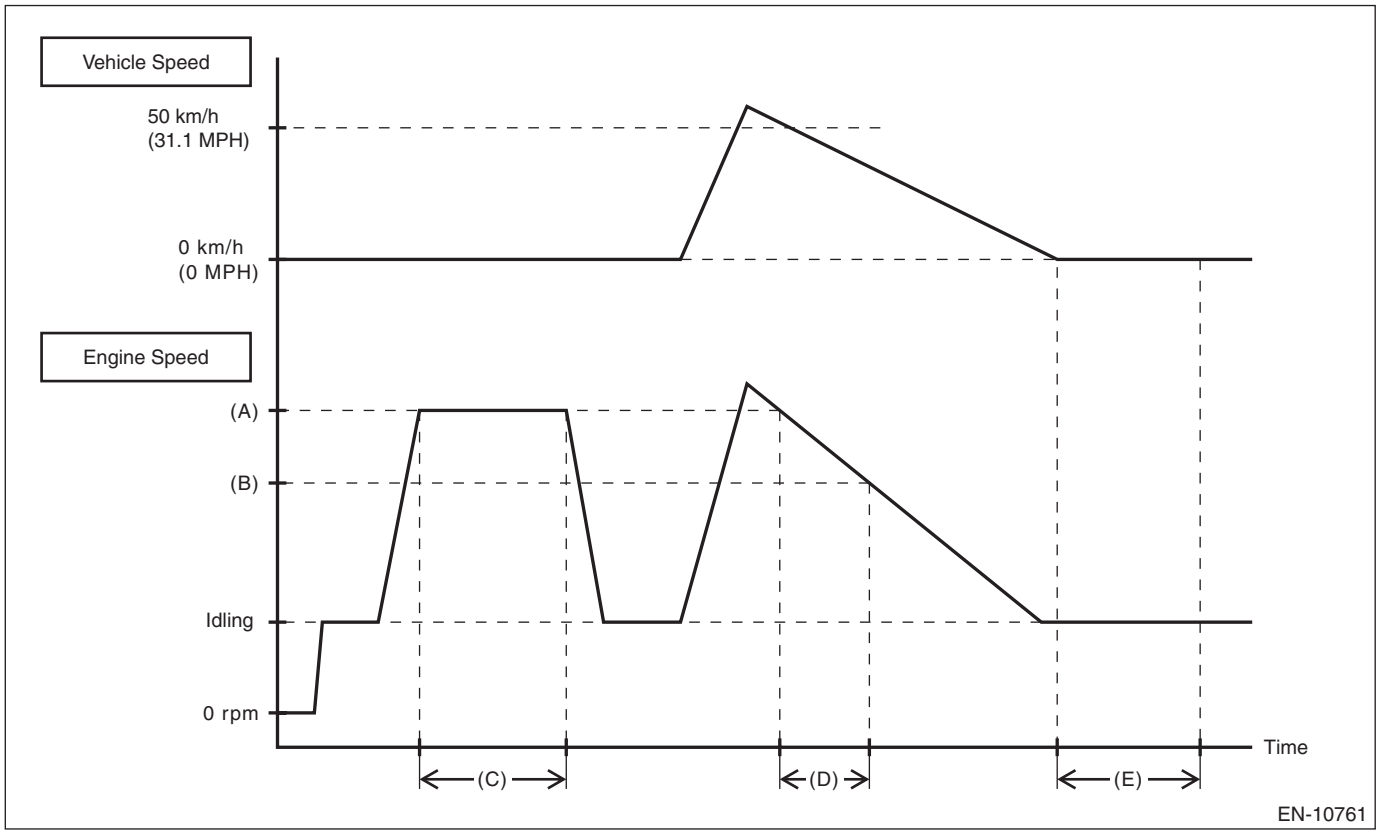

(A) 2500 rpm
(B) 1900 rpm
(C) 40 seconds or more
(D) 5 seconds or more
(E) 5 minutes or more

11.DRIVE CYCLE O

DTC	Item	Condition
P0441	EVAP SYSTEM (CPC) INCORRECT PURGE FLOW	—

Diagnostic procedure:

WARNING:
When performing drive cycle O on a public road, pay sufficient attention to the traffic condition and give the highest priority to safe driving.

1) Drive according to the drive pattern described below.

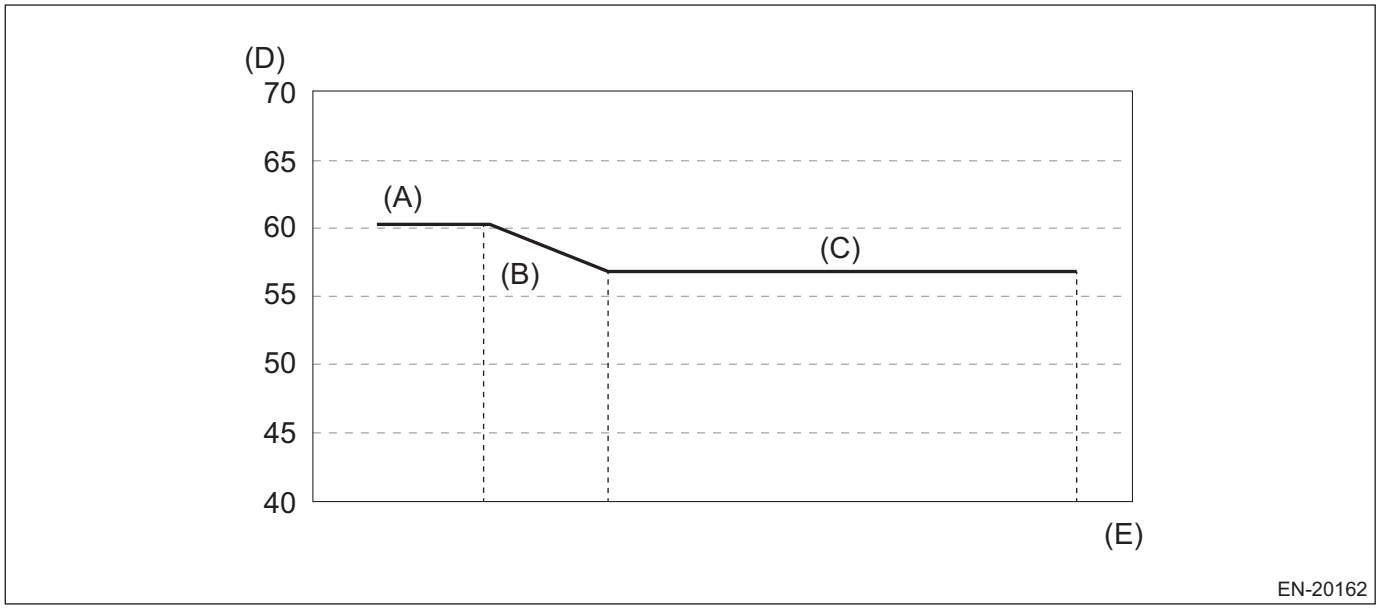

(A) Drive the vehicle at 60 km/h (37 MPH) or faster for at least 5 minutes in fully warm-up condition.
(B) Decelerate with the throttle fully closed for at least 3 seconds.
(C) Drive the vehicle at a constant vehicle speed by depressing the accelerator pedal for at least 30 seconds.
(D) Vehicle speed km/h (MPH)
(E) Sec.

2) Park the vehicle on a safe place.

NOTE:
Driving method while vehicle is driven to a stop at safe place is not restricted.

3) With the vehicle idling, read the temporary diagnostic code of DTC using Subaru Select Monitor or general scan tool.

NOTE:
• For detailed operation procedures, refer to “Read Diagnostic Trouble Code (DTC)”. <Ref. to EN(H4DO)(diag)-63, Read Diagnostic Trouble Code (DTC).>
• In the step 3), if the DTC is not displayed on the Subaru Select Monitor or general scan tool display screen, the trouble is resolved.

12.Clear Memory Mode

A: OPERATION

1. SUBARU SELECT MONITOR

1) On «Start» display, select «Diagnosis».
2) On «Vehicle selection» display, input the target vehicle information and select «Confirmed».
3) On «Main Menu» display, select «Each System».
4) On «Select System» display, select «Engine Control System» and then «Enter».
5) On «Select Function» display, select «DTC».
6) On «DTC» display, select «Clear Memory».

NOTE:
- Initial diagnosis of electronic throttle control is performed after memory clearance. Wait for 10 seconds or more after turning the ignition switch to ON, and then start the engine.
- For detailed operation procedures, refer to “Application help”.

2. GENERAL SCAN TOOL

For clear memory procedures using the general scan tool, refer to “General Scan Tool Instruction Manual”.

NOTE:
Initial diagnosis of electronic throttle control is performed after memory clearance. Wait for 10 seconds or more after turning the ignition switch to ON, and then start the engine.

13.Active Test

A: OPERATION

CAUTION:
After executing the system operation check mode, execute the Clear Memory Mode <Ref. to EN(H4DO)(diag)-78, OPERATION, Clear Memory Mode.>.

NOTE:
- *: After replacing ECM or active grille shutter, be sure to perform this procedure.
- For detailed operation procedures, refer to “Application help”.

1) On «Start» display, select «Diagnosis».
2) On «Vehicle selection» display, input the vehicle information and select «Confirmed».
3) On «Main Menu» display, select «Each System Check».
4) On «Select System» display, select «Engine Control System».
5) On «Select Function» display, select «Active Test».

Item		SSM display		Execution condition
Activating the actuator ON/OFF	Activating the fuel pump ON/OFF	Fuel Pump Relay	ON ←→ OFF	Ignition switch is ON (engine OFF)
	Activating the purge control solenoid valve ON/OFF	CPC Solenoid Valve	ON ←→ OFF	
	Activating the radiator fan relay ON/OFF	Radiator Fan Relay	ON ←→ OFF	
	Activating the ELCM switching valve ON/OFF	ELCM switching valve	ON ←→ OFF	
	Activating the ELCM vacuum pump ON/OFF	ELCM pump	ON ←→ OFF	
Fuel pump control	Fuel pump OFF operation	OFF Drive	OFF	At idling
Fixing the timing of idle ignition		Fixed Idle Ignition Timing	16.0°	At idling
Idle speed control		Idle Speed Control	500 — 2000 rpm	At idling
Injector control	Stopping fuel injection (Cylinder selection)	Injection Stop Mode	Injector 1 Injector 2 Injector 3 Injector 4	At idling
	Fuel injection amount control (All cylinders)	Injection Quantity Control	–13 — 20%	At idling
EGR control valve control		EGR Valve Control	0 — 255 STEP	At idling
Alternator control		Alternator control	Low mode Middle mode High mode ExHigh mode	At idling
Active grille shutter control*		Active Grille Shutter Control	Open Close	• Ignition switch is ON (engine OFF) • Experienced 20 seconds or more of the elapsed time after starting engine (when replacing ECM)
Compression measurement		Compression monitor	—	• Ignition switch is ON (engine OFF) • Accelerator pedal is fully depressed

14.Malfunction Indicator Light

A: PROCEDURE

1. Activation of malfunction indicator light <Ref. to EN(H4DO)(diag)-80, ACTIVATION OF MALFUNCTION INDICATOR LIGHT, Malfunction Indicator Light.>
↓
2. Malfunction indicator light does not come on <Ref. to EN(H4DO)(diag)-82, MALFUNCTION INDICATOR LIGHT DOES NOT COME ON, Malfunction Indicator Light.>
↓
3. Malfunction indicator light does not go off <Ref. to EN(H4DO)(diag)-82, MALFUNCTION INDICATOR LIGHT DOES NOT GO OFF, Malfunction Indicator Light.>

B: ACTIVATION OF MALFUNCTION INDICATOR LIGHT

1) When the ignition switch is turned to ON (engine OFF), the malfunction indicator light (A) in the combination meter illuminates.

NOTE:
If the malfunction indicator light does not illuminate, perform diagnostics of the malfunction indicator light circuit or the combination meter circuit. <Ref. to EN(H4DO)(diag)-82, MALFUNCTION INDICATOR LIGHT DOES NOT COME ON, Malfunction Indicator Light.>

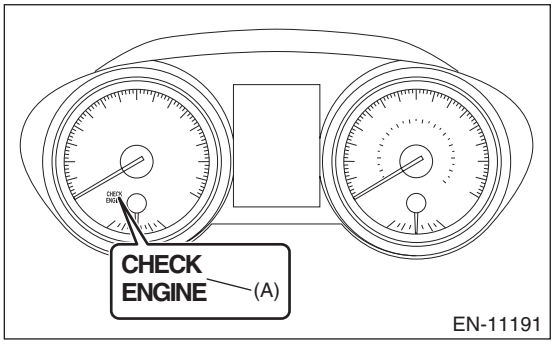

2) After starting the engine, the malfunction indicator light goes out. If it does not go off, any of the engine and emission control system has malfunction.

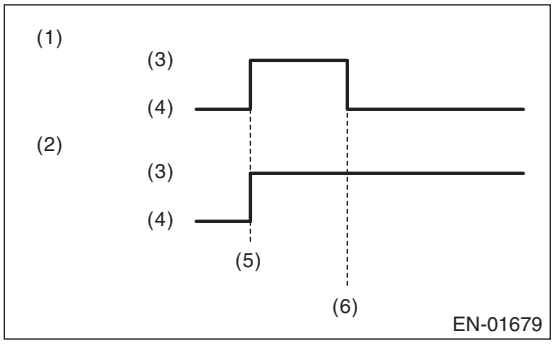

(1) No faulty
(2) Trouble occurs
(3) ON
(4) OFF
(5) Ignition switch ON
(6) Engine start

3) If the diagnostic system detects a misfire which could damage the catalyst, the malfunction indicator light will blink at a cycle of 1 Hz.

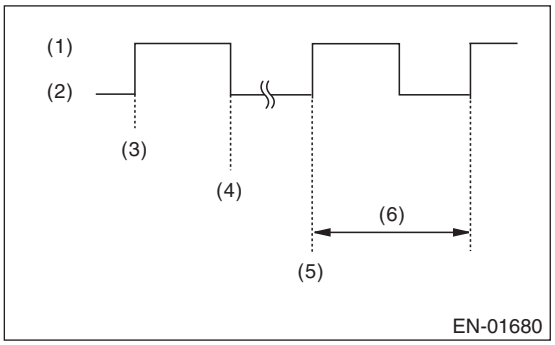

(1) ON
(2) OFF
(3) Ignition switch ON
(4) Engine start
(5) Misfire start
(6) 1 second

C: MALFUNCTION INDICATOR LIGHT DOES NOT COME ON

TROUBLE SYMPTOM:
When the ignition switch is turned to ON (engine OFF), malfunction indicator light does not illuminate.

	Step	Check	Yes	No
1	**CHECK DTC.**	Is DTC of LAN system displayed? <Ref. to LAN(diag)-33, OPERATION, Read Diagnostic Trouble Code (DTC).>	Check the appropriate DTC using the "List of Diagnostic Trouble Code (DTC)". <Ref. to LAN(diag)-86, List of Diagnostic Trouble Code (DTC).>	Replace the meter case assembly of combination meter. <Ref. to IDI-11, Combination Meter.>

D: MALFUNCTION INDICATOR LIGHT DOES NOT GO OFF

DIAGNOSIS:
The malfunction indicator light circuit is shorted.
TROUBLE SYMPTOM:
Although malfunction indicator light comes on when the engine runs, DTC is not shown on the Subaru Select Monitor or general scan tool display.

	Step	Check	Yes	No
1	**CHECK DTC.**	Is DTC of engine or LAN system displayed? <Ref. to EN(H4DO)(diag)-63, OPERATION, Read Diagnostic Trouble Code (DTC).>	Check the appropriate DTC using the "List of Diagnostic Trouble Code (DTC)". <Ref. to EN(H4DO)(diag)-102, List of Diagnostic Trouble Code (DTC).> <Ref. to LAN(diag)-86, List of Diagnostic Trouble Code (DTC).>	Go to step **2**.
2	**CHECK COMBINATION METER.** Perform the self-diagnosis for combination meter system. <Ref. to IDI-6, SELF-DIAGNOSIS DISPLAY MODE, OPERATION, Combination Meter System.>	Does the malfunction indicator light illuminate and go off normally?	Replace the ECM. <Ref. to FU(H4DO)-82, Engine Control Module (ECM).>	Replace the meter case assembly of combination meter. <Ref. to IDI-11, Combination Meter.>

15.Diagnostics for Engine Starting Failure

A: PROCEDURE

1. Check of the fuel amount
↓
2. Inspection of starter motor circuit <Ref. to EN(H4DO)(diag)-84, STARTER MOTOR CIRCUIT, Diagnostics for Engine Starting Failure.>
↓
3. Inspection of ECM power supply and ground line <Ref. to EN(H4DO)(diag)-94, CHECK POWER SUPPLY AND GROUND LINE OF ENGINE CONTROL MODULE (ECM), Diagnostics for Engine Starting Failure.>
↓
4. Inspection of ignition control system <Ref. to EN(H4DO)(diag)-96, IGNITION CONTROL SYSTEM, Diagnostics for Engine Starting Failure.>
↓
5. Inspection of fuel pump circuit <Ref. to EN(H4DO)(diag)-98, FUEL PUMP CIRCUIT, Diagnostics for Engine Starting Failure.>
↓
6. Inspection of fuel injector circuit <Ref. to EN(H4DO)(diag)-100, FUEL INJECTOR CIRCUIT, Diagnostics for Engine Starting Failure.>

B: STARTER MOTOR CIRCUIT

1. MODEL WITHOUT PUSH BUTTON START

CAUTION:
After servicing or replacing faulty parts, perform Clear Memory Mode <Ref. to EN(H4DO)(diag)-78, Clear Memory Mode.>, and Inspection Mode <Ref. to EN(H4DO)(diag)-64, Inspection Mode.>.
WIRING DIAGRAM:
Engine Electrical System ENGINE TYPE FB (WITHOUT PUSH BUTTON START) <Ref. to WI-170, ENGINE TYPE FB (WITHOUT PUSH BUTTON START), WIRING DIAGRAM, Engine Electrical System.>

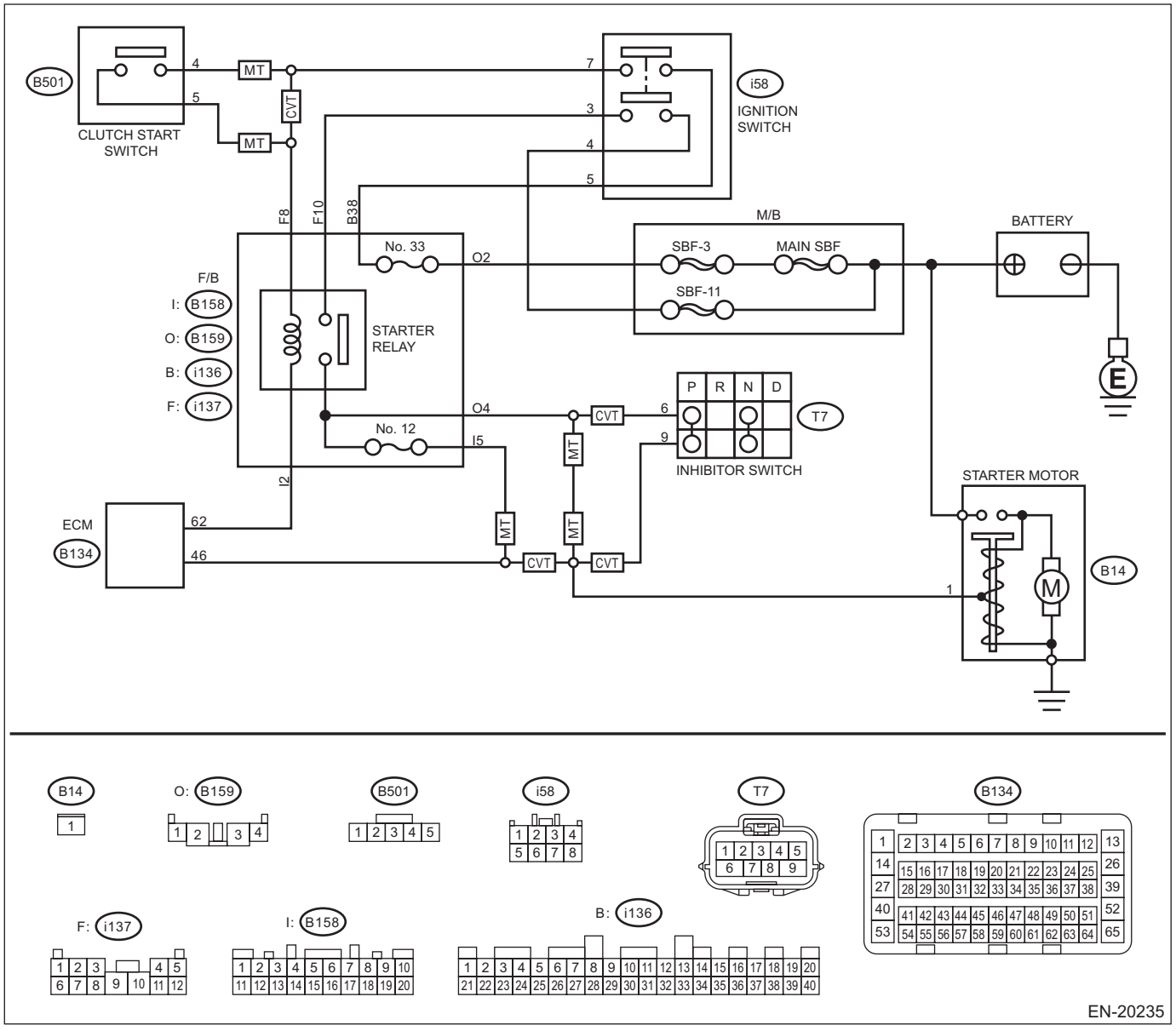

Step		Check	Yes	No
1	**CHECK BATTERY.** Check the battery. <Ref. to SC(H4DO)-63, Battery.>	Is the battery OK?	Go to step **2**.	Charge or replace the battery. <Ref. to SC(H4DO)-63, Battery.>
2	**CHECK OPERATION OF STARTER MOTOR.**	Does the starter motor operate?	Go to step **3**.	Go to step **4**.

	Step	Check	Yes	No
3	**CHECK DTC.**	Is DTC displayed? <Ref. to EN(H4DO)(diag)-63, OPERATION, Read Diagnostic Trouble Code (DTC).>	Check the appropriate DTC using the "List of Diagnostic Trouble Code (DTC)". <Ref. to EN(H4DO)(diag)-102, List of Diagnostic Trouble Code (DTC).>	Check ignition control system. <Ref. to EN(H4DO)(diag)-96, IGNITION CONTROL SYSTEM, Diagnostics for Engine Starting Failure.>
4	**CHECK INPUT SIGNAL FOR STARTER MOTOR.** 1) Turn the ignition switch to OFF. 2) Disconnect the connector from starter motor. 3) Turn the ignition switch to START. 4) Measure the voltage between the starter motor connector and the engine ground. ***Connector & terminal*** ***(B14) No. 1 (+) — Engine ground (–):*** NOTE: • For CVT model, place the select lever in "P" range or "N" range. • For MT model, depress the clutch pedal.	Is the voltage 10 V or more?	Check the starter motor. <Ref. to SC(H4DO)-7, Starter.>	Go to step **5**.
5	**CHECK HARNESS BETWEEN BATTERY AND IGNITION SWITCH CONNECTOR.** 1) Turn the ignition switch to OFF. 2) Disconnect the connector from ignition switch. 3) Measure the power supply voltage between ignition switch connector and chassis ground. ***Connector & terminal*** ***(i58) No. 4 (+) — Chassis ground (–):*** ***(B159) No. 2 (+) — Chassis ground (–):*** ***(i136) No. 38 (+) — Chassis ground (–):*** ***(i58) No. 5 (+) — Chassis ground (–):***	Is the voltage 10 V or more?	Go to step **6**.	Check the harnesses and connectors, and repair or replace them if necessary. NOTE: In this case, repair the following item: • Open circuit of harness between battery and ignition switch connector • Blown out of fuse • Replacement of F/B
6	**CHECK IGNITION SWITCH.** Measure the resistance between ignition switch terminals after turning the ignition switch to START position. ***Terminals*** ***No. 4 — No. 3:*** ***No. 5 — No. 7:***	Is the resistance less than 1 Ω?	Go to step **7**.	Replace the ignition switch. <Ref. to SL-68, REPLACEMENT, Ignition Key Lock.>

	Step	Check	Yes	No
7	**CHECK INPUT VOLTAGE OF STARTER RELAY.** 1) Turn the ignition switch to OFF. 2) Remove the starter relay. 3) Connect the connector to ignition switch. 4) Turn the ignition switch to START position, and measure the voltage between F/B (starter relay) connector and chassis ground. ***Connector & terminal*** ***(i137) No. 8 (+) — Chassis ground (–):*** ***(i137) No. 10 (+) — Chassis ground (–):*** NOTE: For MT model, depress the clutch pedal.	Is the voltage 10 V or more?	Go to step **8**.	Check the following item and repair if necessary. • Blown out of fuse • Open circuit or short circuit to ground in harness between F/B (starter relay) and ignition switch connector • Poor contact of the clutch start switch connector (MT model) • Clutch start switch trouble (MT model)
8	**CHECK STARTER RELAY.** Check the starter relay. <Ref. to SC(H4DO)-36, Starter Relay.>	Is the relay OK?	Go to step **9**.	Replace the F/B (starter relay).
9	**CHECK VOLTAGE OF F/B (STARTER RELAY) CONNECTOR.** 1) Turn the ignition switch to START. 2) Measure the voltage between F/B (starter relay) connector and engine ground. ***Connector & terminal*** ***CVT model*** ***(B159) No. 4 (+) — Chassis ground (–):*** ***MT model*** ***(B158) No. 5 (+) — Chassis ground (–):*** NOTE: • For CVT model, place the select lever in “P” range or “N” range. • For MT model, depress the clutch pedal.	Is the voltage 10 V or more?	Go to step **10**.	Replace the F/B.
10	**CHECK HARNESS BETWEEN ECM AND STARTER RELAY CONNECTOR.** 1) Turn the ignition switch to OFF. 2) Disconnect the connector from ECM. 3) Measure the resistance of harness between ECM connector and F/B (starter relay) connector. ***Connector & terminal*** ***(B134) No. 62 — (B158) No. 2:***	Is the resistance less than 1 Ω?	Go to step **11**.	Repair the open circuit of harness between ECM connector and starter relay connector.
11	**CHECK TRANSMISSION TYPE.**	Is the transmission type CVT?	Go to step **12**.	Go to step **15**.
12	**CHECK HARNESS BETWEEN STARTER RELAY AND INHIBITOR SWITCH CONNECTOR.** 1) Turn the ignition switch to OFF. 2) Disconnect the connector from inhibitor switch. 3) Measure the resistance of harness between F/B (starter relay) connector and inhibitor switch connector. ***Connector & terminal*** ***(B159) No. 4 — (T7) No. 6:***	Is the resistance less than 1 Ω?	Go to step **13**.	Repair the harness and connector. NOTE: In this case, repair the following item: • Open circuit in harness between F/B (starter relay) connector and inhibitor switch connector • Poor contact of coupling connector

	Step	Check	Yes	No
13	**CHECK HARNESS BETWEEN INHIBITOR SWITCH AND STARTER MOTOR.** Measure the resistance of harness between the inhibitor switch connector and starter motor. ***Connector & terminal*** ***(T7) No. 9 — (B14) No. 1:***	Is the resistance less than 1 Ω?	Go to step **14**.	Repair the harness and connector. NOTE: In this case, repair the following item: • Open circuit in harness between inhibitor switch connector and starter motor • Poor contact of coupling connector
14	**CHECK INHIBITOR SWITCH.** 1) Place the select lever in "P" range and "N" range. 2) Measure the resistance between inhibitor switch terminals. ***Terminals*** ***No. 6 — No. 9:***	Is the resistance less than 1 Ω?	Check the engine control module (ECM) power supply and ground line. <Ref. to EN(H4DO)(diag)-94, CHECK POWER SUPPLY AND GROUND LINE OF ENGINE CONTROL MODULE (ECM), Diagnostics for Engine Starting Failure.>	Replace the inhibitor switch. <Ref. to CVT(TR690)-102, Inhibitor Switch.>
15	**CHECK HARNESS BETWEEN STARTER RELAY AND STARTER MOTOR.** Measure the resistance of harness between F/B (starter relay) connector and starter motor. ***Connector & terminal*** ***(B159) No. 4 — (B14) No. 1:***	Is the resistance less than 1 Ω?	Check the engine control module (ECM) power supply and ground line. <Ref. to EN(H4DO)(diag)-94, CHECK POWER SUPPLY AND GROUND LINE OF ENGINE CONTROL MODULE (ECM), Diagnostics for Engine Starting Failure.>	Repair the open circuit of harness between F/B (starter relay) connector and starter motor.

2. MODEL WITH PUSH BUTTON START

CAUTION:
After servicing or replacing faulty parts, perform Clear Memory Mode <Ref. to EN(H4DO)(diag)-78, Clear Memory Mode.>, and Inspection Mode <Ref. to EN(H4DO)(diag)-64, Inspection Mode.>.

WIRING DIAGRAM:
Engine Electrical System ENGINE TYPE FB (WITH PUSH BUTTON START) <Ref. to WI-184, ENGINE TYPE FB (WITH PUSH BUTTON START), WIRING DIAGRAM, Engine Electrical System.>

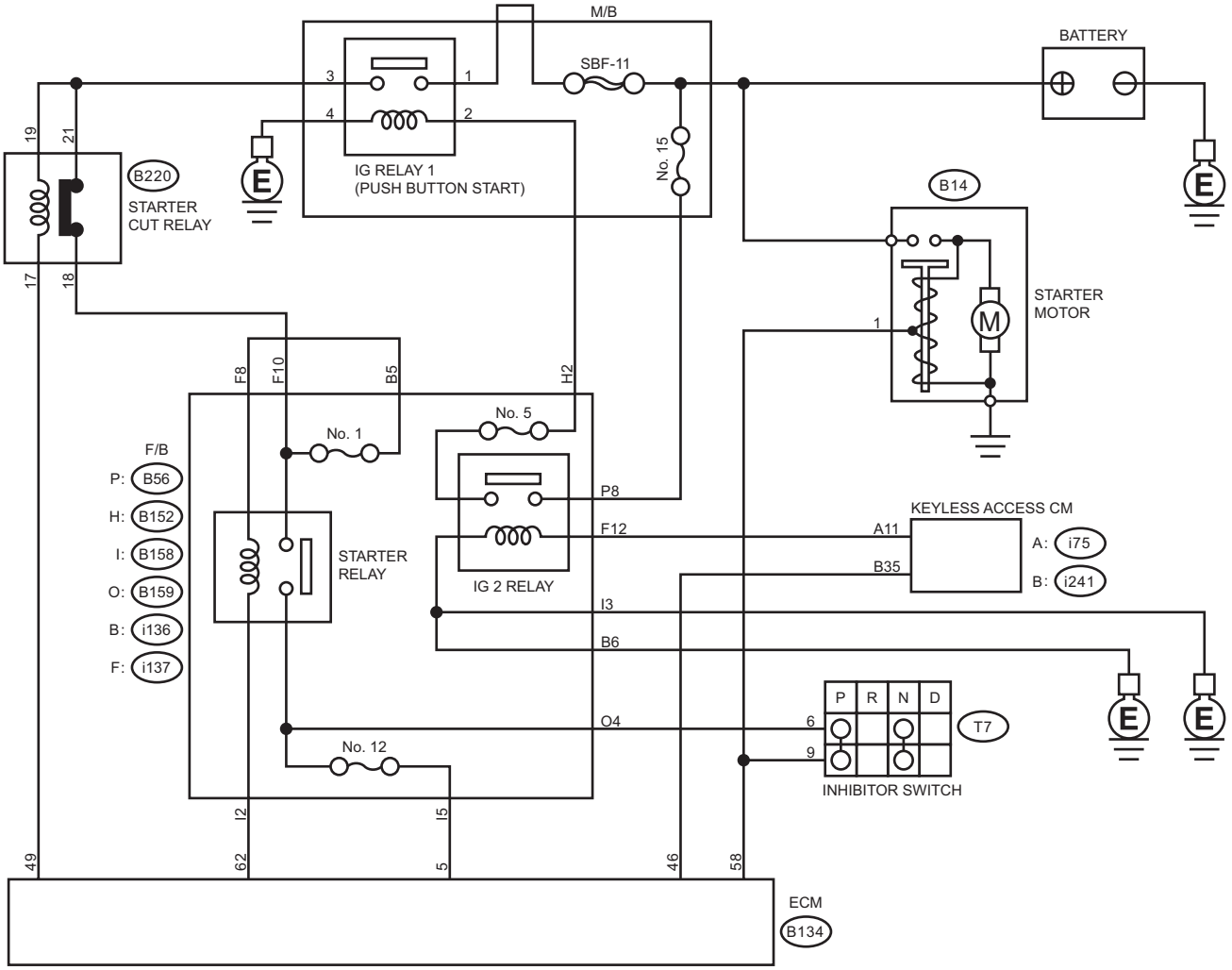

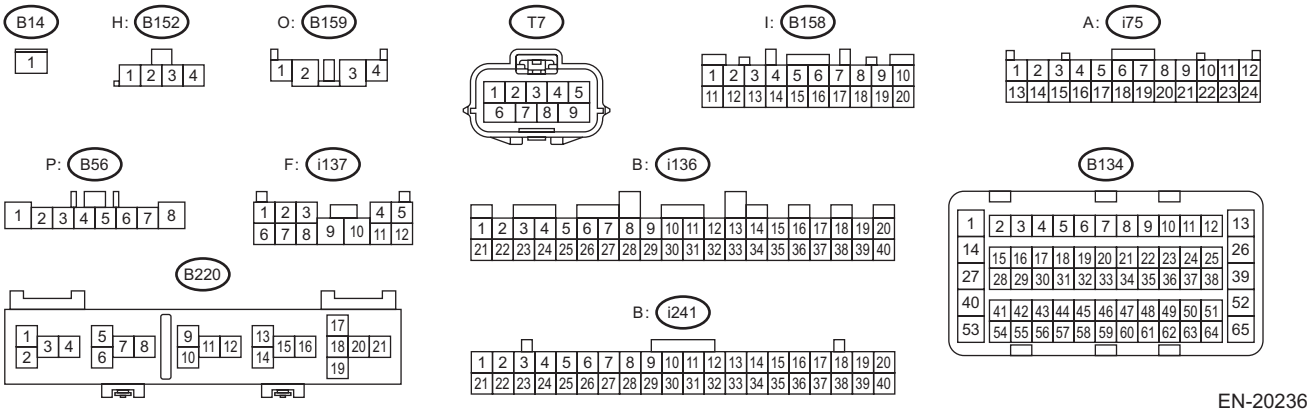

EN-20236

Step		Check	Yes	No
1	**CHECK BATTERY.** Check the battery. <Ref. to SC(H4DO)-63, Battery.>	Is the battery OK?	Go to step **2**.	Charge or replace the battery. <Ref. to SC(H4DO)-63, Battery.>

	Step	Check	Yes	No
2	**CHECK OPERATION OF STARTER MOTOR.**	Does the starter motor operate?	Go to step **3**.	Go to step **4**.
3	**CHECK DTC.**	Is DTC displayed? <Ref. to EN(H4DO)(diag)-63, OPERATION, Read Diagnostic Trouble Code (DTC).>	Check the appropriate DTC using the "List of Diagnostic Trouble Code (DTC)". <Ref. to EN(H4DO)(diag)-102, List of Diagnostic Trouble Code (DTC).>	Check ignition control system. <Ref. to EN(H4DO)(diag)-96, IGNITION CONTROL SYSTEM, Diagnostics for Engine Starting Failure.>
4	**CHECK PUSH BUTTON IGNITION SWITCH.** Press the push button ignition switch twice with the ignition OFF (ACC OFF). NOTE: Release the brake pedal.	Does the ignition turn to ON?	Go to step **5**.	Check the push button start system. <Ref. to KPS(diag)-107, INSPECTION, General Diagnostic Table.>
5	**CHECK PUSH BUTTON IGNITION SWITCH.** 1) Depress the brake pedal. NOTE: Shift the select lever to "P" range. 2) Check the push button ignition switch indicator.	Does the indicator turn to green?	Go to step **6**.	Check the push button start system. <Ref. to KPS(diag)-107, INSPECTION, General Diagnostic Table.>
6	**CHECK START SWITCH SIGNAL.** 1) Read the waveform of «Starter SW» using the Subaru Select Monitor. NOTE: For detailed operation procedures, refer to "Read Current Data For Engine". <Ref. to EN(H4DO)(diag)-45, Subaru Select Monitor.> 2) Press the push button ignition switch once with the brake pedal depressed.	Does waveform of the «Starter SW» occur?	Go to step **10**.	Go to step **7**.
7	**CHECK HARNESS BETWEEN ECM AND KEYLESS ACCESS CM.** 1) Turn the ignition to OFF. 2) Disconnect the connectors from ECM and keyless access CM. 3) Measure the resistance of harness between ECM connector and keyless access CM. ***Connector & terminal*** ***(B134) No. 46 — (i241) No. 35:***	Is the resistance less than 1 Ω?	Go to step **8**.	Repair the harness and connector. NOTE: In this case, repair the following item: • Open circuit of harness between ECM connector and keyless access CM connector • Poor contact of coupling connector
8	**CHECK HARNESS BETWEEN ECM AND KEYLESS ACCESS CM.** Measure the resistance between ECM connector and chassis ground. ***Connector & terminal*** ***(B134) No. 46 — Chassis ground:***	Is the resistance 1 MΩ or more?	Go to step **9**.	Repair the short circuit to ground in harness between ECM connector and keyless access CM connector.

	Step	Check	Yes	No
9	**CHECK START SWITCH SIGNAL.** 1) Connect the connector to ECM and keyless access CM. 2) Read the waveform of start switch signal using an oscilloscope. 3) Press the push button ignition switch once with the brake pedal depressed. ***Connector & terminal*** ***(B134) No. 46 (+) — Chassis ground (–):***	Does waveform of the start switch signal occur?	Repair the poor contact of ECM connector.	Repair the poor contact of keyless access CM connector.
10	**CHECK INPUT SIGNAL FOR STARTER MOTOR.** 1) Turn the ignition to OFF. 2) Disconnect the connector from starter motor. 3) Place the select lever in “P” range or “N” range. 4) Press the push button ignition switch once with the brake pedal depressed. 5) Measure the voltage between the starter motor connector and the engine ground. ***Connector & terminal*** ***(B14) No. 1 (+) — Engine ground (–):***	Is the voltage 10 V or more?	Check the starter motor. <Ref. to SC(H4DO)-7, Starter.>	Go to step **11**.
11	**CHECK POWER SUPPLY OF IG2 RELAY.** 1) Remove the IG2 relay. 2) Turn the ignition to ON. 3) Measure the voltage between F/B (IG2 relay) terminal and chassis ground. ***Connector & terminal*** ***(B56) No. 8 (+) — Chassis ground (–):*** ***(i137) No. 12 (+) — Chassis ground (–):***	Is the voltage 10 V or more?	Go to step **12**.	Check the following item and repair or replace if necessary. • Blown out of fuse (F/B No. 26) • Open circuit or short circuit to ground in harness between F/B (IG2 relay) terminal and power supply circuit • Open circuit or short circuit to ground in harness between F/B (IG2 relay) terminal and keyless access CM • Poor contact of coupling connector • Blown out of fuse
12	**CHECK F/B (IG2 RELAY).** Check the F/B (IG2 relay). <Ref. to SL-9, Relay and Fuse.>	Is the resistance less than 1 Ω?	Go to step **13**.	Replace the IG2 relay. <Ref. to SL-9, Relay and Fuse.>
13	**CHECK POWER SUPPLY OF F/B (IG2 RELAY) CONNECTOR.** 1) Install the F/B (IG2 relay). 2) Remove the F/B (IG2 relay) connectors (B158) and (i136). 3) Measure the voltage between F/B (IG2 relay) terminal and chassis ground. ***Connector & terminal*** ***(B158) No. 3 (+) — Chassis ground (–):*** ***(i136) No. 6 (+) — Chassis ground (–):***	Is the voltage 10 V or more?	Go to step **14**.	Replace the F/B unit. <Ref. to VDC-8, VDC Control Module and Hydraulic Control Unit (VDCCM&H/U).>

	Step	Check	Yes	No
14	**CHECK HARNESS BETWEEN F/B (IG2 RELAY) TERMINAL AND CHASSIS GROUND.** 1) Turn the ignition to OFF. 2) Measure the resistance of harness between the F/B (IG2 relay) connectors (B158) and (i136) and the chassis ground. ***Connector & terminal*** ***(B158) No. 3 — Chassis ground:*** ***(i136) No. 6 — Chassis ground:***	Is the resistance less than 5 Ω?	Go to step **15**.	Repair the open circuit of the harness between F/B (IG2 relay) connector and chassis ground.
15	**CHECK POWER SUPPLY OF IG1 RELAY (PUSH BUTTON START).** 1) Remove the M/B IG1 relay (push button start). 2) Turn the ignition to ON. 3) Measure the voltage between the M/B IG1 relay (push button start) terminals No. 1 and No. 2 and the chassis ground. ***Terminals*** ***No. 1 (+) — Chassis ground (–):*** ***No. 2 (+) — Chassis ground (–):***	Is the voltage 10 V or more?	Go to step **16**.	Check the following item and repair or replace if necessary. • Blown out of fuse • Open circuit or short circuit to ground in harness between M/B IG1 relay (push button start) connector and F/B connector • Open circuit or short circuit to ground in harness between M/B IG1 relay (push button start) connector and battery
16	**CHECK HARNESS BETWEEN M/B IG1 RELAY (PUSH BUTTON START) TERMINAL AND CHASSIS GROUND.** 1) Turn the ignition to OFF. 2) Measure the resistance of the harness between M/B IG1 relay (push button start) terminal and chassis ground. ***Terminals*** ***No. 4 — Chassis ground:***	Is the resistance less than 5 Ω?	Go to step **17**.	Repair the open circuit of the harness between M/B IG1 relay (push button start) connector and chassis ground.
17	**CHECK M/B IG1 RELAY (PUSH BUTTON START).** 1) Connect the battery to M/B IG1 relay (push button start) terminals No. 2 and No. 4. 2) Measure the resistance between M/B IG1 relay (push button start) terminals. ***Terminals*** ***No. 1 — No. 3:***	Is the resistance less than 1 Ω?	Go to step **18**.	Replace the M/B IG1 relay (push button start). <Ref. to SL-9, Relay and Fuse.>
18	**CHECK HARNESS BETWEEN ECM AND STARTER CUT RELAY CONNECTOR.** 1) Disconnect the connectors from ECM and starter cut relay. 2) Measure the resistance between starter cut relay connector and chassis ground. ***Connector & terminal*** ***(B220) No. 17 — Chassis ground:***	Is the resistance 1 MΩ or more?	Go to step **19**.	Repair the short circuit to ground in harness between ECM connector and starter cut relay connector.
19	**CHECK STARTER CUT RELAY.** Measure the resistance between starter cut relay terminals. ***Terminals*** ***No. 18 — No. 21:***	Is the resistance less than 1 Ω?	Go to step **20**.	Replace the starter cut relay. <Ref. to SL-9, Relay and Fuse.>

	Step	Check	Yes	No
20	**CHECK HARNESS BETWEEN STARTER CUT RELAY CONNECTOR AND F/B (STARTER RELAY) CONNECTOR.** 1) Remove the starter relay. 2) Measure the resistance of harness between starter cut relay connector and starter relay connector. ***Connector & terminal*** ***(B220) No. 18 — (i137) No. 8:***	Is the resistance less than 1 Ω?	Go to step **21**.	Check the following item and repair or replace if necessary. • Blown out of fuse (F/B No. 26) • Open circuit of harness between starter cut relay connector and F/B (starter relay) connector
21	**CHECK F/B (STARTER RELAY).** Check the F/B (starter relay). <Ref. to SC(H4DO)-36, Starter Relay.>	Is the resistance less than 1 Ω?	Go to step **22**.	Replace the starter relay (push button start). <Ref. to SC(H4DO)-36, Starter Relay.>
22	**CHECK HARNESS BETWEEN ECM AND F/B (STARTER RELAY) CONNECTOR.** Measure the resistance of harness between ECM connector and starter relay connector. ***Connector & terminal*** ***(B134) No. 62 — (B158) No. 2:***	Is the resistance less than 1 Ω?	Go to step **23**.	Repair the open circuit of harness between ECM connector and starter relay connector.
23	**CHECK HARNESS BETWEEN F/B (STARTER RELAY) CONNECTORS (B158) AND (B159).** 1) Remove the F/B (starter relay). 2) Measure the resistance between F/B (starter relay) connector (B158) and (B159). ***Terminals*** ***(B158) No. 5 — (B159) No. 4:***	Is the resistance less than 1 Ω?	Go to step **24**.	Check the fuse (F/B No. 12). If a fault is not found, replace the F/B unit. <Ref. to VDC-8, VDC Control Module and Hydraulic Control Unit (VDCCM&H/U).>
24	**CHECK HARNESS BETWEEN STARTER RELAY CONNECTOR AND INHIBITOR SWITCH CONNECTOR.** 1) Disconnect the connector from inhibitor switch. 2) Measure the resistance of harness between starter relay connector and inhibitor switch connector. ***Connector & terminal*** ***(B159) No. 4 — (T7) No. 6:***	Is the resistance less than 1 Ω?	Go to step **25**.	Repair the harness and connector. NOTE: In this case, repair the following item: • Open circuit in harness between starter relay connector and inhibitor switch connector • Poor contact of coupling connector
25	**CHECK INHIBITOR SWITCH.** 1) Place the select lever in “P” range or “N” range. 2) Measure the resistance between inhibitor switch terminals. ***Terminals*** ***No. 6 — No. 9:***	Is the resistance less than 1 Ω?	Go to step **26**.	Replace the inhibitor switch. <Ref. to CVT(TR690)-102, Inhibitor Switch.>

	Step	Check	Yes	No
26	**CHECK HARNESS BETWEEN ECM AND INHIBITOR SWITCH CONNECTOR.** 1) Disconnect the connector from ECM. 2) Measure the resistance of harness between ECM connector and inhibitor switch connector. ***Connector & terminal*** ***(B134) No. 5 — (T7) No. 6:***	Is the resistance less than 1 Ω?	Go to step **27**.	Repair the harness and connector. NOTE: In this case, repair the following item: • Open circuit in harness between ECM connector and inhibitor switch connector • Poor contact of coupling connector
27	**CHECK NEUTRAL POSITION SWITCH SIGNAL.** 1) Connect all relays and connectors to their proper positions. 2) Read the value of «Neutral Position Switch» using the Subaru Select Monitor. NOTE: For detailed operation procedures, refer to “Read Current Data For Engine”. <Ref. to EN(H4DO)(diag)-45, Subaru Select Monitor.> 3) Turn the ignition to ON. 4) Place the select lever in “P” range or “N” range.	Is «Neutral» displayed?	Check the engine control module (ECM) power supply and ground line. <Ref. to EN(H4DO)(diag)-94, CHECK POWER SUPPLY AND GROUND LINE OF ENGINE CONTROL MODULE (ECM), Diagnostics for Engine Starting Failure.>	Repair the harness and connector. NOTE: In this case, repair the following item: • Open circuit in harness between inhibitor switch connector and starter motor connector • Poor contact of coupling connector

C: CHECK POWER SUPPLY AND GROUND LINE OF ENGINE CONTROL MODULE (ECM)

CAUTION:
After servicing or replacing faulty parts, perform Clear Memory Mode <Ref. to EN(H4DO)(diag)-78, OPERATION, Clear Memory Mode.>, and Inspection Mode <Ref. to EN(H4DO)(diag)-64, PROCEDURE, Inspection Mode.>.
WIRING DIAGRAM:

- Engine Electrical System ENGINE TYPE FB (WITHOUT PUSH BUTTON START) <Ref. to WI-170, ENGINE TYPE FB (WITHOUT PUSH BUTTON START), WIRING DIAGRAM, Engine Electrical System.>
- Engine Electrical System ENGINE TYPE FB (WITH PUSH BUTTON START) <Ref. to WI-184, ENGINE TYPE FB (WITH PUSH BUTTON START), WIRING DIAGRAM, Engine Electrical System.>

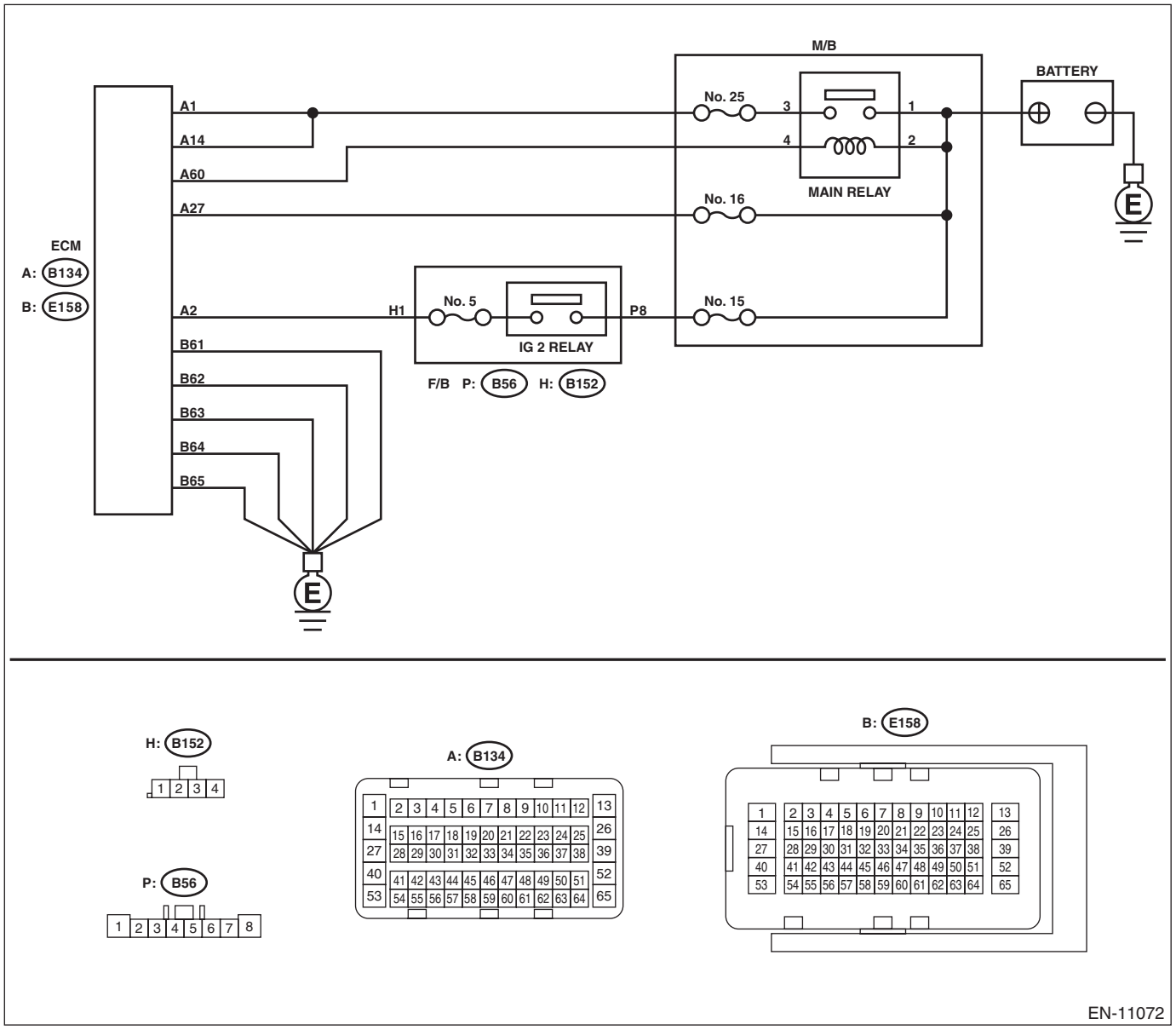

	Step	Check	Yes	No
1	**CHECK M/B (MAIN RELAY).** 1) Turn the ignition switch to OFF. 2) Remove the M/B (main relay). 3) Connect the battery to M/B (main relay) terminals No. 2 and No. 4. 4) Measure the resistance between M/B (main relay) terminals. ***Terminals*** ***No. 1 — No. 3:***	Is the resistance less than 1 Ω?	Go to step **2**.	Replace the M/B (main relay). <Ref. to FU(H4DO)-84, Main Relay.>
2	**CHECK GROUND CIRCUIT FOR ECM.** 1) Disconnect the connector from ECM. 2) Measure the resistance of harness between ECM connector and chassis ground. ***Connector & terminal*** ***(E158) No. 61 — Chassis ground:*** ***(E158) No. 62 — Chassis ground:*** ***(E158) No. 63 — Chassis ground:*** ***(E158) No. 64 — Chassis ground:*** ***(E158) No. 65 — Chassis ground:***	Is the resistance less than 5 Ω?	Go to step **3**.	Open circuit of harness between ECM connector and engine ground terminal
3	**CHECK INPUT VOLTAGE OF ECM.** 1) Turn the ignition switch to ON. 2) Measure the voltage between ECM connector and chassis ground. ***Connector & terminal*** ***(B134) No. 2 (+) — Chassis ground (–):*** ***(B134) No. 27 (+) — Chassis ground (–):***	Is the voltage 10 V or more?	Go to step **4**.	Repair the open or ground short in the harness of power supply circuit.
4	**CHECK M/B (MAIN RELAY) INPUT VOLTAGE.** Measure the voltage between M/B (main relay) terminal and chassis ground. ***Terminals*** ***No. 1 (+) — Chassis ground (–):*** ***No. 2 (+) — Chassis ground (–):***	Is the voltage 10 V or more?	Go to step **5**.	Repair the open or ground short in the harness of power supply circuit.
5	**CHECK INPUT VOLTAGE OF ECM.** 1) Turn the ignition switch to OFF. 2) Install the M/B (main relay). 3) Turn the ignition switch to ON. 4) Measure the voltage between ECM connector and chassis ground. ***Connector & terminal*** ***(B134) No. 60 (+) — Chassis ground (–):***	Is the voltage 10 V or more?	Go to step **6**.	Repair the open circuit of harness between ECM connector and M/B (main relay) terminal.
6	**CHECK INPUT VOLTAGE OF ECM.** 1) Turn the ignition switch to OFF. 2) Connect the connector to ECM. 3) Turn the ignition switch to ON. 4) Measure the voltage between ECM connector and chassis ground. ***Connector & terminal*** ***(B134) No. 1 (+) — Chassis ground (–):*** ***(B134) No. 14 (+) — Chassis ground (–):***	Is the voltage 10 V or more?	Check ignition control system. <Ref. to EN(H4DO)(diag)-96, IGNITION CONTROL SYSTEM, Diagnostics for Engine Starting Failure.>	Repair the harness and connector. NOTE: In this case, repair the following item: • Open circuit of harness between ECM connector and M/B (main relay) connector • Poor contact of M/B (main relay) connector • Poor contact of ECM connector

D: IGNITION CONTROL SYSTEM

CAUTION:
After servicing or replacing faulty parts, perform Clear Memory Mode <Ref. to EN(H4DO)(diag)-78, Clear Memory Mode.>, and Inspection Mode <Ref. to EN(H4DO)(diag)-64, Inspection Mode.>.
WIRING DIAGRAM:

- Engine Electrical System ENGINE TYPE FB (WITHOUT PUSH BUTTON START) <Ref. to WI-170, ENGINE TYPE FB (WITHOUT PUSH BUTTON START), WIRING DIAGRAM, Engine Electrical System.>
- Engine Electrical System ENGINE TYPE FB (WITH PUSH BUTTON START) <Ref. to WI-184, ENGINE TYPE FB (WITH PUSH BUTTON START), WIRING DIAGRAM, Engine Electrical System.>

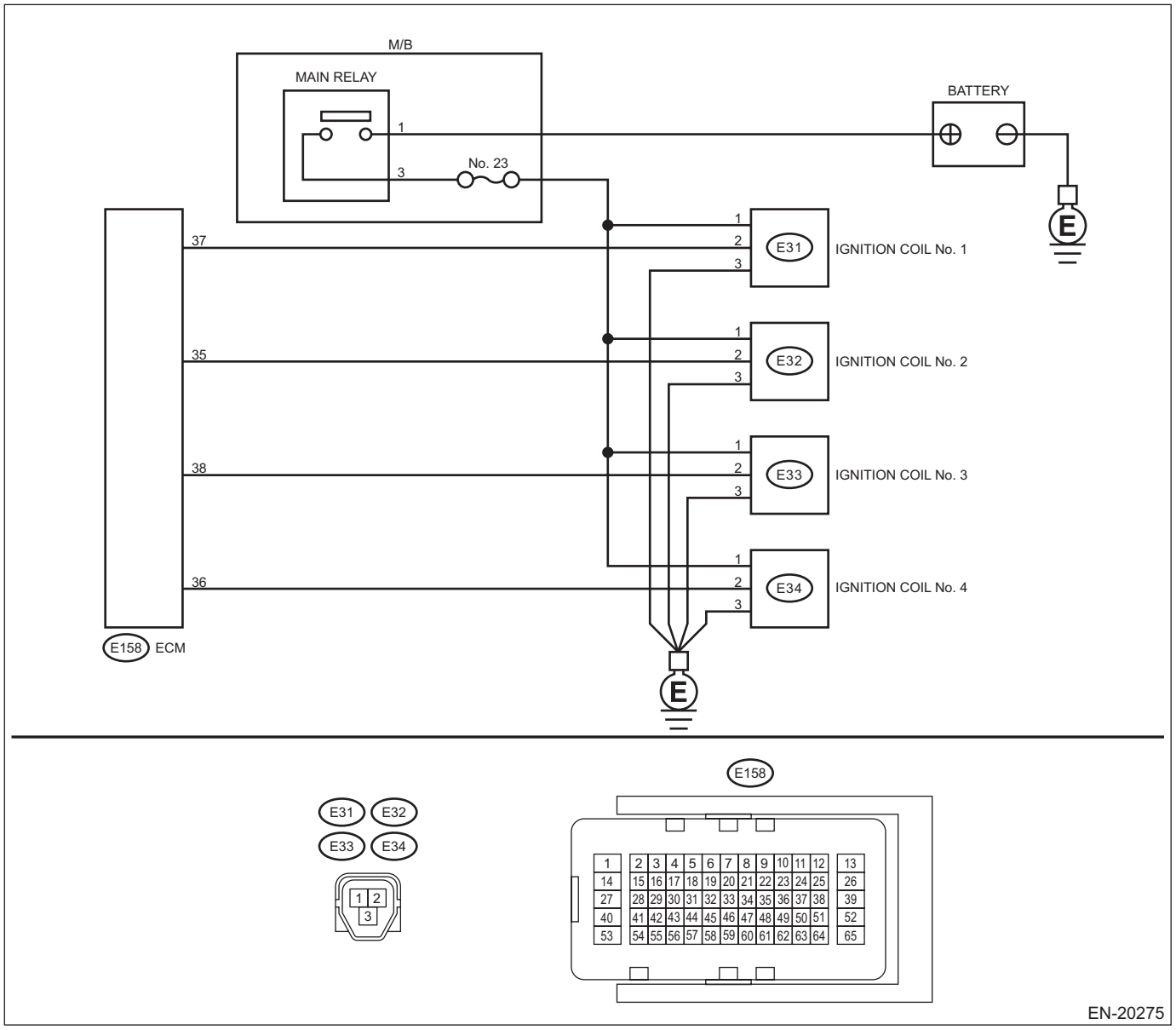

Step		Check	Yes	No
1	**CHECK SPARK PLUG CONDITION.** 1) Remove the spark plug. <Ref. to IG(H4DO)-4, REMOVAL, Spark Plug.> 2) Check the spark plug condition. <Ref. to IG(H4DO)-6, INSPECTION, Spark Plug.>	Is the spark plug condition normal?	Go to step **2**.	Replace the spark plug. <Ref. to IG(H4DO)-4, Spark Plug.>

	Step	Check	Yes	No
2	**CHECK IGNITION SYSTEM FOR SPARKS.** 1) Connect the spark plug to ignition coil. 2) Release the fuel pressure. <Ref. to FU(H4DO)-90, RELEASING OF FUEL PRESSURE, PROCEDURE, Fuel.> 3) Contact the spark plug thread portion to engine. 4) While opening the throttle valve fully, crank the engine to check that spark occurs at each cylinder.	Does spark occur at each cylinder?	Check fuel pump system. <Ref. to EN(H4DO)(diag)-98, FUEL PUMP CIRCUIT, Diagnostics for Engine Starting Failure.>	Go to step **3**.
3	**CHECK IGNITION COIL POWER SUPPLY CIRCUIT.** 1) Turn the ignition switch to OFF. 2) Disconnect the connector from ignition coil. 3) Turn the ignition switch to ON. 4) Measure the voltage between ignition coil connector and engine ground. ***Connector & terminal*** ***(E31) No. 1 (+) — Engine ground (–):*** ***(E32) No. 1 (+) — Engine ground (–):*** ***(E33) No. 1 (+) — Engine ground (–):*** ***(E34) No. 1 (+) — Engine ground (–):***	Is the voltage 10 V or more?	Go to step **4**.	Repair the harness and connector. NOTE: In this case, repair the following item: • Open or short to ground in harness of power supply circuit • Poor contact of coupling connector • Blown out of fuse
4	**CHECK HARNESS OF IGNITION COIL GROUND CIRCUIT.** 1) Turn the ignition switch to OFF. 2) Measure the resistance of harness between ignition coil connector and engine ground. ***Connector & terminal*** ***(E31) No. 3 — Engine ground:*** ***(E32) No. 3 — Engine ground:*** ***(E33) No. 3 — Engine ground:*** ***(E34) No. 3 — Engine ground:***	Is the resistance less than 5 Ω?	Go to step **5**.	Repair the open circuit in harness between ignition coil connector and engine grounding terminal.
5	**CHECK HARNESS BETWEEN ECM AND IGNITION COIL CONNECTOR.** 1) Disconnect the connector from ECM. 2) Measure the resistance of harness between ECM connector and ignition coil connector. ***Connector & terminal*** ***(E158) No. 37 — (E31) No. 2:*** ***(E158) No. 35 — (E32) No. 2:*** ***(E158) No. 38 — (E33) No. 2:*** ***(E158) No. 36 — (E34) No. 2:***	Is the resistance less than 1 Ω?	Go to step **6**.	Repair the open circuit in harness between ECM connector and ignition coil connector.
6	**CHECK HARNESS BETWEEN ECM AND IGNITION COIL CONNECTOR.** Measure the resistance of harness between ECM connector and engine ground. ***Connector & terminal:*** ***(E158) No. 37 — Engine ground:*** ***(E158) No. 35 — Engine ground:*** ***(E158) No. 38 — Engine ground:*** ***(E158) No. 36 — Engine ground:***	Is the resistance 1 MΩ or more?	Go to step **7**.	Repair the ground short circuit of harness between ECM connector and ignition coil connector.
7	**CHECK FOR POOR CONTACT.** Check for poor contact of ECM connector.	Is there poor contact of ECM connector?	Repair the poor contact of ECM connector.	Replace the ignition coil. <Ref. to IG(H4DO)-10, Ignition Coil.>

E: FUEL PUMP CIRCUIT

CAUTION:
After servicing or replacing faulty parts, perform Clear Memory Mode <Ref. to EN(H4DO)(diag)-78, OPERATION, Clear Memory Mode.>, and Inspection Mode <Ref. to EN(H4DO)(diag)-64, PROCEDURE, Inspection Mode.>.
WIRING DIAGRAM:

- Engine Electrical System ENGINE TYPE FB (WITHOUT PUSH BUTTON START) <Ref. to WI-170, ENGINE TYPE FB (WITHOUT PUSH BUTTON START), WIRING DIAGRAM, Engine Electrical System.>
- Engine Electrical System ENGINE TYPE FB (WITH PUSH BUTTON START) <Ref. to WI-184, ENGINE TYPE FB (WITH PUSH BUTTON START), WIRING DIAGRAM, Engine Electrical System.>

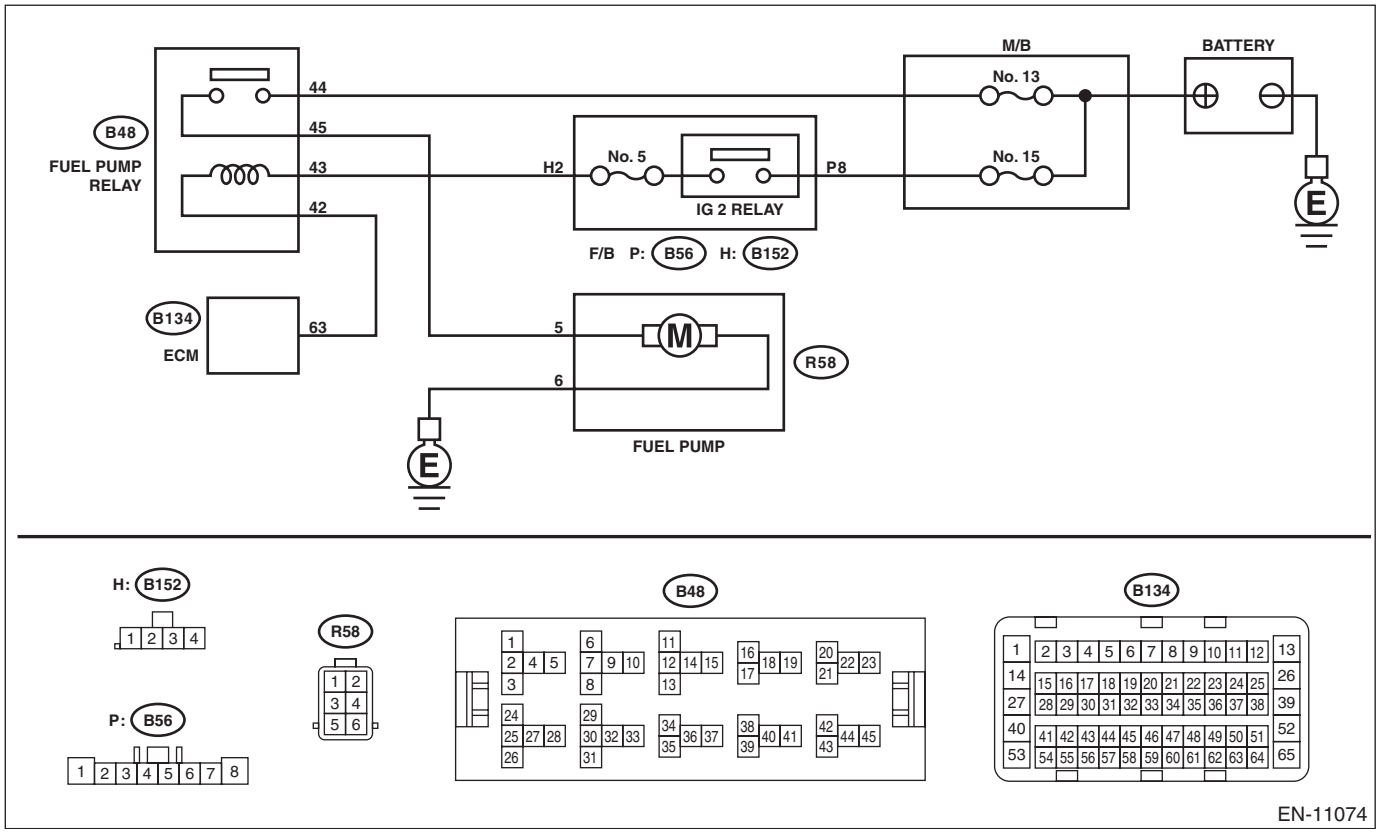

Step		Check	Yes	No
1	**CHECK OPERATING SOUND OF FUEL PUMP.** Check if the fuel pump operates for two seconds when turning the ignition switch to ON. NOTE: Fuel pump operation can be executed using the Subaru Select Monitor. Refer to "Active Test" for the procedures. <Ref. to EN(H4DO)(diag)-79, Active Test.>	Does the fuel pump emit operating sound?	Check the fuel injector circuit. <Ref. to EN(H4DO)(diag)-100, FUEL INJECTOR CIRCUIT, Diagnostics for Engine Starting Failure.>	Go to step **2**.
2	**CHECK GROUND CIRCUIT OF FUEL PUMP.** 1) Turn the ignition switch to OFF. 2) Remove the fuel pump access hole lid. 3) Disconnect the connector from fuel pump. 4) Measure the resistance of harness between fuel pump and chassis ground. ***Connector & terminal*** ***(R58) No. 6 — Chassis ground:***	Is the resistance less than 5 Ω?	Go to step **3**.	Repair the open circuit in harness between fuel pump connector and chassis ground terminal.

	Step	Check	Yes	No
3	**CHECK POWER SUPPLY TO FUEL PUMP.** 1) Turn the ignition switch to ON. 2) Measure the voltage of power supply circuit between fuel pump connector and chassis ground. ***Connector & terminal*** ***(R58) No. 5 (+) — Chassis ground (–):***	Is the voltage 10 V or more?	Replace the fuel pump. <Ref. to FU(H4DO)-116, Fuel Pump.>	Go to step **4**.
4	**CHECK HARNESS BETWEEN FUEL PUMP AND FUEL PUMP RELAY CONNECTOR.** 1) Turn the ignition switch to OFF. 2) Measure the resistance of harness between fuel pump connector and fuel pump relay connector. ***Connector & terminal*** ***(R58) No. 5 — (B48) No. 45:***	Is the resistance less than 1 Ω?	Go to step **5**.	Repair the harness and connector. NOTE: In this case, repair the following item: • Open circuit in harness between fuel pump connector and fuel pump relay connector • Poor contact of coupling connector
5	**CHECK HARNESS BETWEEN FUEL PUMP AND FUEL PUMP RELAY CONNECTOR.** Measure the resistance of harness between fuel pump connector and fuel pump relay connector. ***Connector & terminal*** ***(R58) No. 5 — Chassis ground:***	Is the resistance 1 MΩ or more?	Go to step **6**.	Repair the short circuit to ground in harness between fuel pump connector and fuel pump relay connector.
6	**CHECK FUEL PUMP RELAY.** 1) Remove the fuel pump relay. 2) Connect the battery to fuel pump relay terminals No. 43 and No. 42. 3) Measure the resistance between fuel pump relay terminals. ***Terminals*** ***No. 44 — No. 45:***	Is the resistance less than 1 Ω?	Go to step **7**.	Replace the fuel pump relay. <Ref. to FU(H4DO)-88, Fuel Pump Relay.>
7	**CHECK HARNESS BETWEEN ECM AND FUEL PUMP RELAY CONNECTOR.** 1) Disconnect the connector from ECM. 2) Measure the resistance of harness between ECM connector and fuel pump relay connector. ***Connector & terminal*** ***(B134) No. 63 — (B48) No. 42:***	Is the resistance less than 1 Ω?	Go to step **8**.	Repair the open circuit of harness between ECM connector and fuel pump relay connector.
8	**CHECK POWER SUPPLY OF FUEL PUMP RELAY.** 1) Turn the ignition switch to ON. 2) Measure the voltage between fuel pump relay connector and chassis ground. ***Connector & terminal*** ***(B48) No. 43 (+) — Chassis ground (–):*** ***(B48) No. 22 (+) — Chassis ground (–):***	Is the voltage 10 V or more?	Repair the poor contact of ECM connector.	Repair the open or ground short in the harness of power supply circuit.

F: FUEL INJECTOR CIRCUIT

CAUTION:
- **Check or repair only faulty parts.**
- **After servicing or replacing faulty parts, perform Clear Memory Mode <Ref. to EN(H4DO)(diag)-78, OPERATION, Clear Memory Mode.>, and Inspection Mode <Ref. to EN(H4DO)(diag)-64, PROCEDURE, Inspection Mode.>.**

WIRING DIAGRAM:
- Engine Electrical System ENGINE TYPE FB (WITHOUT PUSH BUTTON START) <Ref. to WI-170, ENGINE TYPE FB (WITHOUT PUSH BUTTON START), WIRING DIAGRAM, Engine Electrical System.>
- Engine Electrical System ENGINE TYPE FB (WITH PUSH BUTTON START) <Ref. to WI-184, ENGINE TYPE FB (WITH PUSH BUTTON START), WIRING DIAGRAM, Engine Electrical System.>

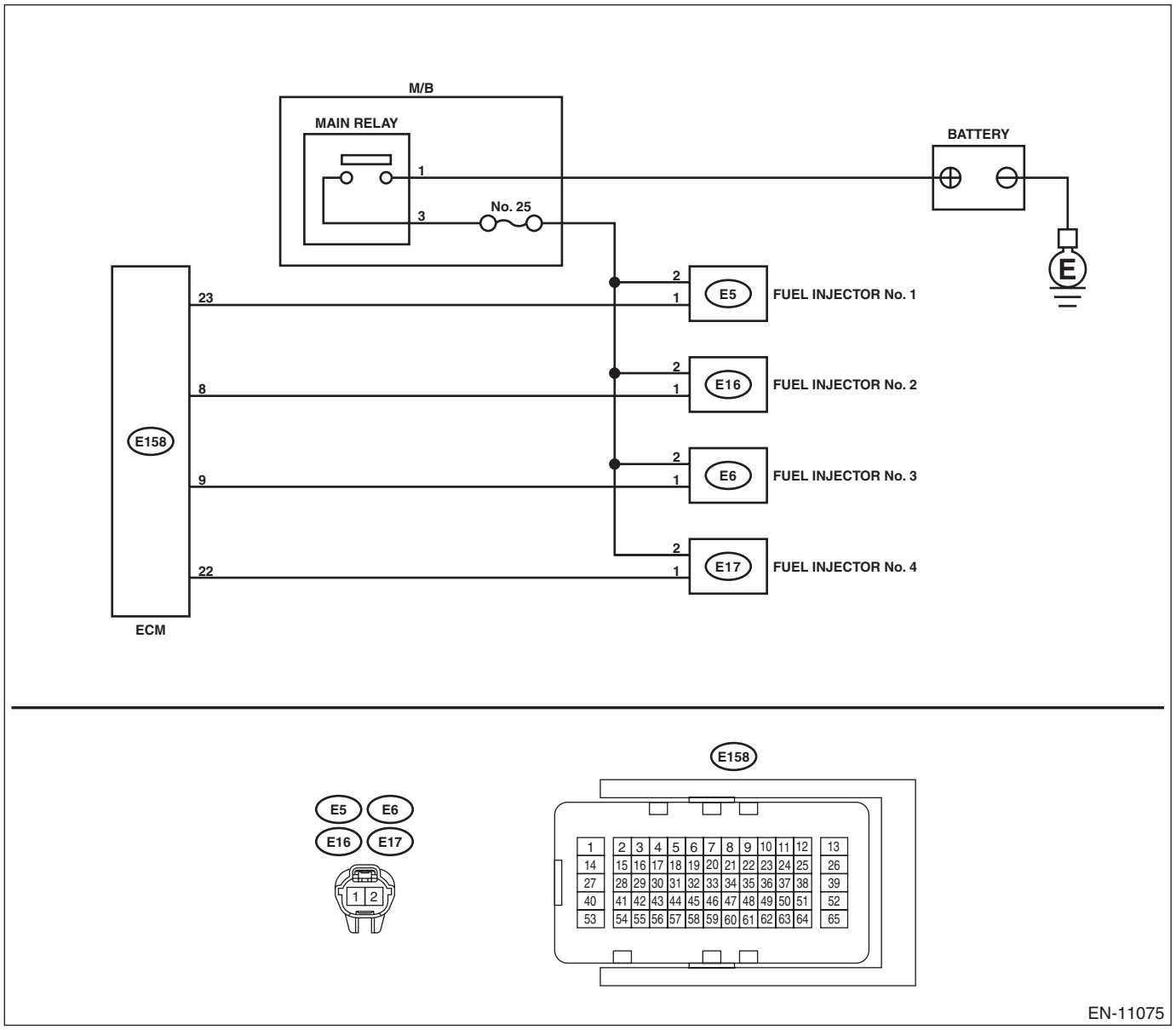

Step		Check	Yes	No
1	**CHECK OPERATION OF EACH FUEL INJECTOR.** While cranking the engine, check each fuel injector emits operating sound. Use a sound scope or attach a screwdriver to the injector to listen to sounds for this check.	Does the fuel injector emit operating sound?	Check the fuel pressure. <Ref. to ME(H4DO)-31, INSPECTION, Fuel Pressure.>	Go to step **2**.

	Step	Check	Yes	No
2	**CHECK POWER SUPPLY TO EACH FUEL INJECTOR.** 1) Turn the ignition switch to OFF. 2) Disconnect the connector from fuel injector. 3) Turn the ignition switch to ON. 4) Measure the power supply voltage between fuel injector terminal and engine ground. ***Connector & terminal*** ***#1 (E5) No. 2 (+) — Engine ground (–):*** ***#2 (E16) No. 2 (+) — Engine ground (–):*** ***#3 (E6) No. 2 (+) — Engine ground (–):*** ***#4 (E17) No. 2 (+) — Engine ground (–):***	Is the voltage 10 V or more?	Go to step **3**.	Repair the harness and connector. NOTE: In this case, repair the following item: • Open circuit in harness between main relay connector and fuel injector connector • Poor contact of main relay connector • Poor contact of coupling connector
3	**CHECK HARNESS BETWEEN ECM AND FUEL INJECTOR CONNECTOR.** 1) Turn the ignition switch to OFF. 2) Disconnect the connector from ECM. 3) Measure the resistance of harness between ECM connector and fuel injector connector. ***Connector & terminal*** ***#1 (E158) No. 23 — (E5) No. 1:*** ***#2 (E158) No. 8 — (E16) No. 1:*** ***#3 (E158) No. 9 — (E6) No. 1:*** ***#4 (E158) No. 22 — (E17) No. 1:***	Is the resistance less than 1 Ω?	Go to step **4**.	Repair the harness and connector. NOTE: In this case, repair the following item: • Open circuit in harness between ECM connector and fuel injector connector • Poor contact of coupling connector
4	**CHECK HARNESS BETWEEN ECM AND FUEL INJECTOR CONNECTOR.** Measure the resistance between ECM connector and chassis ground. ***Connector & terminal*** ***#1 (E158) No. 23 — Chassis ground:*** ***#2 (E158) No. 8 — Chassis ground:*** ***#3 (E158) No. 9 — Chassis ground:*** ***#4 (E158) No. 22 — Chassis ground:***	Is the resistance 1 MΩ or more?	Go to step **5**.	Repair the short circuit to ground in harness between ECM connector and fuel injector connector.
5	**CHECK EACH FUEL INJECTOR.** Measure the resistance between each fuel injector terminals. ***Terminals*** ***No. 1 — No. 2:***	Is the resistance 5 — 20 Ω?	Go to step **6**.	Replace the faulty fuel injector. <Ref. to FU(H4DO)-66, Fuel Injector.>
6	**CHECK FOR POOR CONTACT.** Check for poor contact of ECM connector.	Is there poor contact of ECM connector?	Repair the poor contact of ECM connector.	Inspection using “General Diagnostic Table” <Ref. to EN(H4DO)(diag)-608, INSPECTION, General Diagnostic Table.>

16.List of Diagnostic Trouble Code (DTC)

A: LIST

DTC	Item	Note
B1570	ANTENNA	<Ref. to IM(diag)-30, DTC B1570 ANTENNA, Diagnostic Procedure with Diagnostic Trouble Code (DTC).>
B1571	REFERENCE CODE INCOMPATIBILITY (IMMOBILIZER CM TO ECM)	<Ref. to IM(diag)-34, DTC B1571 REFERENCE CODE INCOMPATIBILITY (IMMOBILIZER CM TO ECM), Diagnostic Procedure with Diagnostic Trouble Code (DTC).> <Ref. to KPS(diag)-99, DTC B1571 REFERENCE CODE INCOMPATIBILITY (IMMOBILIZER CM TO ECM), Diagnostic Procedure with Diagnostic Trouble Code (DTC).>
B1572	IMM CIRCUIT EXCEPT ANTENNA CIRCUIT	<Ref. to IM(diag)-36, DTC B1572 IMM CIRCUIT EXCEPT ANTENNA CIRCUIT, Diagnostic Procedure with Diagnostic Trouble Code (DTC).> <Ref. to KPS(diag)-100, DTC B1572 IMM CIRCUIT EXCEPT ANTENNA CIRCUIT, Diagnostic Procedure with Diagnostic Trouble Code (DTC).>
B1574	KEY COMMUNICATION	<Ref. to IM(diag)-42, DTC B1574 KEY COMMUNICATION, Diagnostic Procedure with Diagnostic Trouble Code (DTC).>
B1575	INCORRECT IMMOBILIZER KEY	<Ref. to IM(diag)-44, DTC B1575 INCORRECT IMMOBILIZER KEY, Diagnostic Procedure with Diagnostic Trouble Code (DTC).>
B1576	EGI CONTROL MODULE EEPROM	<Ref. to IM(diag)-46, DTC B1576 EGI CONTROL MODULE EEPROM, Diagnostic Procedure with Diagnostic Trouble Code (DTC).> <Ref. to KPS(diag)-104, DTC B1576 EGI CONTROL MODULE EEPROM, Diagnostic Procedure with Diagnostic Trouble Code (DTC).>
B1577	IMM CONTROL MODULE EEPROM	<Ref. to IM(diag)-47, DTC B1577 IMM CONTROL MODULE EEPROM, Diagnostic Procedure with Diagnostic Trouble Code (DTC).> <Ref. to KPS(diag)-105, DTC B1577 IMM CONTROL MODULE EEPROM, Diagnostic Procedure with Diagnostic Trouble Code (DTC).>
B1578	METER	<Ref. to IM(diag)-48, DTC B1578 METER, Diagnostic Procedure with Diagnostic Trouble Code (DTC).>
P000A	"A" CAMSHAFT POSITION SLOW RESPONSE BANK 1	<Ref. to EN(H4DO)(diag)-111, DTC P000A "A" CAMSHAFT POSITION SLOW RESPONSE BANK 1, Diagnostic Procedure with Diagnostic Trouble Code (DTC).>
P000C	"A" CAMSHAFT POSITION SLOW RESPONSE BANK 2	<Ref. to EN(H4DO)(diag)-111, DTC P000C "A" CAMSHAFT POSITION SLOW RESPONSE BANK 2, Diagnostic Procedure with Diagnostic Trouble Code (DTC).>
P0010	"A" CAMSHAFT POSITION ACTUATOR CONTROL CIRCUIT/OPEN BANK 1	<Ref. to EN(H4DO)(diag)-112, DTC P0010 "A" CAMSHAFT POSITION ACTUATOR CONTROL CIRCUIT/OPEN BANK 1, Diagnostic Procedure with Diagnostic Trouble Code (DTC).>
P0011	"A" CAMSHAFT POSITION - TIMING OVER-ADVANCED OR SYSTEM PERFORMANCE BANK 1	<Ref. to EN(H4DO)(diag)-115, DTC P0011 "A" CAMSHAFT POSITION - TIMING OVER-ADVANCED OR SYSTEM PERFORMANCE BANK 1, Diagnostic Procedure with Diagnostic Trouble Code (DTC).>
P0016	CRANKSHAFT POSITION - CAMSHAFT POSITION CORRELATION BANK 1 SENSOR A	<Ref. to EN(H4DO)(diag)-117, DTC P0016 CRANKSHAFT POSITION - CAMSHAFT POSITION CORRELATION BANK 1 SENSOR A, Diagnostic Procedure with Diagnostic Trouble Code (DTC).>
P0018	CRANKSHAFT POSITION - CAMSHAFT POSITION CORRELATION BANK 2 SENSOR A	<Ref. to EN(H4DO)(diag)-119, DTC P0018 CRANKSHAFT POSITION - CAMSHAFT POSITION CORRELATION BANK 2 SENSOR A, Diagnostic Procedure with Diagnostic Trouble Code (DTC).>
P0020	"A" CAMSHAFT POSITION ACTUATOR CONTROL CIRCUIT/OPEN BANK 2	<Ref. to EN(H4DO)(diag)-121, DTC P0020 "A" CAMSHAFT POSITION ACTUATOR CONTROL CIRCUIT/OPEN BANK 2, Diagnostic Procedure with Diagnostic Trouble Code (DTC).>
P0021	"A" CAMSHAFT POSITION - TIMING OVER-ADVANCED OR SYSTEM PERFORMANCE BANK 2	<Ref. to EN(H4DO)(diag)-123, DTC P0021 "A" CAMSHAFT POSITION - TIMING OVER-ADVANCED OR SYSTEM PERFORMANCE BANK 2, Diagnostic Procedure with Diagnostic Trouble Code (DTC).>
P0030	A/F / O2 HEATER CONTROL CIRCUIT BANK 1 SENSOR 1	<Ref. to EN(H4DO)(diag)-124, DTC P0030 A/F / O2 HEATER CONTROL CIRCUIT BANK 1 SENSOR 1, Diagnostic Procedure with Diagnostic Trouble Code (DTC).>
P0031	A/F / O2 HEATER CONTROL CIRCUIT LOW BANK 1 SENSOR 1	<Ref. to EN(H4DO)(diag)-127, DTC P0031 A/F / O2 HEATER CONTROL CIRCUIT LOW BANK 1 SENSOR 1, Diagnostic Procedure with Diagnostic Trouble Code (DTC).>

DTC	Item	Note
P0032	A/F / O2 HEATER CONTROL CIRCUIT HIGH BANK 1 SENSOR 1	<Ref. to EN(H4DO)(diag)-130, DTC P0032 A/F / O2 HEATER CONTROL CIRCUIT HIGH BANK 1 SENSOR 1, Diagnostic Procedure with Diagnostic Trouble Code (DTC).>
P0037	A/F / O2 HEATER CONTROL CIRCUIT LOW BANK 1 SENSOR 2	<Ref. to EN(H4DO)(diag)-133, DTC P0037 A/F / O2 HEATER CONTROL CIRCUIT LOW BANK 1 SENSOR 2, Diagnostic Procedure with Diagnostic Trouble Code (DTC).>
P0038	A/F / O2 HEATER CONTROL CIRCUIT HIGH BANK 1 SENSOR 2	<Ref. to EN(H4DO)(diag)-136, DTC P0038 A/F / O2 HEATER CONTROL CIRCUIT HIGH BANK 1 SENSOR 2, Diagnostic Procedure with Diagnostic Trouble Code (DTC).>
P0068	MAP/MAF - THROTTLE POSITION CORRELATION	<Ref. to EN(H4DO)(diag)-139, DTC P0068 MAP/MAF - THROTTLE POSITION CORRELATION, Diagnostic Procedure with Diagnostic Trouble Code (DTC).>
P0071	AMBIENT AIR TEMPERATURE SENSOR CIRCUIT "A" RANGE/PERFORMANCE	<Ref. to EN(H4DO)(diag)-142, DTC P0071 AMBIENT AIR TEMPERATURE SENSOR CIRCUIT "A" RANGE/PERFORMANCE, Diagnostic Procedure with Diagnostic Trouble Code (DTC).>
P0072	AMBIENT AIR TEMPERATURE SENSOR CIRCUIT "A" LOW	<Ref. to EN(H4DO)(diag)-144, DTC P0072 AMBIENT AIR TEMPERATURE SENSOR CIRCUIT "A" LOW, Diagnostic Procedure with Diagnostic Trouble Code (DTC).>
P0073	AMBIENT AIR TEMPERATURE SENSOR CIRCUIT "A" HIGH	<Ref. to EN(H4DO)(diag)-146, DTC P0073 AMBIENT AIR TEMPERATURE SENSOR CIRCUIT "A" HIGH, Diagnostic Procedure with Diagnostic Trouble Code (DTC).>
P0101	MASS OR VOLUME AIR FLOW SENSOR "A" CIRCUIT RANGE/PERFORMANCE	<Ref. to EN(H4DO)(diag)-147, DTC P0101 MASS OR VOLUME AIR FLOW SENSOR "A" CIRCUIT RANGE/PERFORMANCE, Diagnostic Procedure with Diagnostic Trouble Code (DTC).>
P0102	MASS OR VOLUME AIR FLOW SENSOR "A" CIRCUIT LOW	<Ref. to EN(H4DO)(diag)-150, DTC P0102 MASS OR VOLUME AIR FLOW SENSOR "A" CIRCUIT LOW, Diagnostic Procedure with Diagnostic Trouble Code (DTC).>
P0103	MASS OR VOLUME AIR FLOW SENSOR "A" CIRCUIT HIGH	<Ref. to EN(H4DO)(diag)-153, DTC P0103 MASS OR VOLUME AIR FLOW SENSOR "A" CIRCUIT HIGH, Diagnostic Procedure with Diagnostic Trouble Code (DTC).>
P0107	MANIFOLD ABSOLUTE PRESSURE/BAROMETRIC PRESSURE SENSOR CIRCUIT LOW	<Ref. to EN(H4DO)(diag)-156, DTC P0107 MANIFOLD ABSOLUTE PRESSURE/BAROMETRIC PRESSURE SENSOR CIRCUIT LOW, Diagnostic Procedure with Diagnostic Trouble Code (DTC).>
P0108	MANIFOLD ABSOLUTE PRESSURE/BAROMETRIC PRESSURE SENSOR CIRCUIT HIGH	<Ref. to EN(H4DO)(diag)-159, DTC P0108 MANIFOLD ABSOLUTE PRESSURE/BAROMETRIC PRESSURE SENSOR CIRCUIT HIGH, Diagnostic Procedure with Diagnostic Trouble Code (DTC).>
P0111	INTAKE AIR TEMPERATURE SENSOR 1 CIRCUIT RANGE/PERFORMANCE BANK 1	<Ref. to EN(H4DO)(diag)-162, DTC P0111 INTAKE AIR TEMPERATURE SENSOR 1 CIRCUIT RANGE/PERFORMANCE BANK 1, Diagnostic Procedure with Diagnostic Trouble Code (DTC).>
P0112	INTAKE AIR TEMPERATURE SENSOR 1 CIRCUIT LOW BANK 1	<Ref. to EN(H4DO)(diag)-166, DTC P0112 INTAKE AIR TEMPERATURE SENSOR 1 CIRCUIT LOW BANK 1, Diagnostic Procedure with Diagnostic Trouble Code (DTC).>
P0113	INTAKE AIR TEMPERATURE SENSOR 1 CIRCUIT HIGH BANK 1	<Ref. to EN(H4DO)(diag)-169, DTC P0113 INTAKE AIR TEMPERATURE SENSOR 1 CIRCUIT HIGH BANK 1, Diagnostic Procedure with Diagnostic Trouble Code (DTC).>
P0116	ENGINE COOLANT TEMPERATURE SENSOR 1 CIRCUIT RANGE/PERFORMANCE	<Ref. to EN(H4DO)(diag)-172, DTC P0116 ENGINE COOLANT TEMPERATURE SENSOR 1 CIRCUIT RANGE/PERFORMANCE, Diagnostic Procedure with Diagnostic Trouble Code (DTC).>
P0117	ENGINE COOLANT TEMPERATURE SENSOR 1 CIRCUIT LOW	<Ref. to EN(H4DO)(diag)-174, DTC P0117 ENGINE COOLANT TEMPERATURE SENSOR 1 CIRCUIT LOW, Diagnostic Procedure with Diagnostic Trouble Code (DTC).>
P0118	ENGINE COOLANT TEMPERATURE SENSOR 1 CIRCUIT HIGH	<Ref. to EN(H4DO)(diag)-177, DTC P0118 ENGINE COOLANT TEMPERATURE SENSOR 1 CIRCUIT HIGH, Diagnostic Procedure with Diagnostic Trouble Code (DTC).>
P0122	THROTTLE/PEDAL POSITION SENSOR/SWITCH "A" CIRCUIT LOW	<Ref. to EN(H4DO)(diag)-180, DTC P0122 THROTTLE/PEDAL POSITION SENSOR/SWITCH "A" CIRCUIT LOW, Diagnostic Procedure with Diagnostic Trouble Code (DTC).>

DTC	Item	Note
P0123	THROTTLE/PEDAL POSITION SENSOR/SWITCH "A" CIRCUIT HIGH	<Ref. to EN(H4DO)(diag)-183, DTC P0123 THROTTLE/PEDAL POSITION SENSOR/SWITCH "A" CIRCUIT HIGH, Diagnostic Procedure with Diagnostic Trouble Code (DTC).>
P0125	INSUFFICIENT COOLANT TEMPERATURE FOR CLOSED LOOP FUEL CONTROL	<Ref. to EN(H4DO)(diag)-186, DTC P0125 INSUFFICIENT COOLANT TEMPERATURE FOR CLOSED LOOP FUEL CONTROL, Diagnostic Procedure with Diagnostic Trouble Code (DTC).>
P0128	COOLANT THERMOSTAT (ENGINE COOLANT TEMPERATURE BELOW THERMOSTAT REGULATING TEMPERATURE)	<Ref. to EN(H4DO)(diag)-188, DTC P0128 COOLANT THERMOSTAT (ENGINE COOLANT TEMPERATURE BELOW THERMOSTAT REGULATING TEMPERATURE), Diagnostic Procedure with Diagnostic Trouble Code (DTC).>
P0131	A/F / O2 SENSOR CIRCUIT LOW VOLTAGE BANK 1 SENSOR 1	<Ref. to EN(H4DO)(diag)-192, DTC P0131 A/F / O2 SENSOR CIRCUIT LOW VOLTAGE BANK 1 SENSOR 1, Diagnostic Procedure with Diagnostic Trouble Code (DTC).>
P0132	A/F / O2 SENSOR CIRCUIT HIGH VOLTAGE BANK 1 SENSOR 1	<Ref. to EN(H4DO)(diag)-195, DTC P0132 A/F / O2 SENSOR CIRCUIT HIGH VOLTAGE BANK 1 SENSOR 1, Diagnostic Procedure with Diagnostic Trouble Code (DTC).>
P0134	A/F / O2 SENSOR CIRCUIT NO ACTIVITY DETECTED BANK 1 SENSOR 1	<Ref. to EN(H4DO)(diag)-198, DTC P0134 A/F / O2 SENSOR CIRCUIT NO ACTIVITY DETECTED BANK 1 SENSOR 1, Diagnostic Procedure with Diagnostic Trouble Code (DTC).>
P0137	O2 SENSOR CIRCUIT LOW VOLTAGE BANK 1 SENSOR 2	<Ref. to EN(H4DO)(diag)-201, DTC P0137 O2 SENSOR CIRCUIT LOW VOLTAGE BANK 1 SENSOR 2, Diagnostic Procedure with Diagnostic Trouble Code (DTC).>
P0138	O2 SENSOR CIRCUIT HIGH VOLTAGE BANK 1 SENSOR 2	<Ref. to EN(H4DO)(diag)-205, DTC P0138 O2 SENSOR CIRCUIT HIGH VOLTAGE BANK 1 SENSOR 2, Diagnostic Procedure with Diagnostic Trouble Code (DTC).>
P013A	O2 SENSOR SLOW RESPONSE - RICH TO LEAN BANK 1 SENSOR 2	<Ref. to EN(H4DO)(diag)-208, DTC P013A O2 SENSOR SLOW RESPONSE - RICH TO LEAN BANK 1 SENSOR 2, Diagnostic Procedure with Diagnostic Trouble Code (DTC).>
P013B	O2 SENSOR SLOW RESPONSE - LEAN TO RICH BANK 1 SENSOR 2	<Ref. to EN(H4DO)(diag)-212, DTC P013B O2 SENSOR SLOW RESPONSE - LEAN TO RICH BANK 1 SENSOR 2, Diagnostic Procedure with Diagnostic Trouble Code (DTC).>
P013E	O2 SENSOR DELAYED RESPONSE - RICH TO LEAN BANK 1 SENSOR 2	<Ref. to EN(H4DO)(diag)-214, DTC P013E O2 SENSOR DELAYED RESPONSE - RICH TO LEAN BANK 1 SENSOR 2, Diagnostic Procedure with Diagnostic Trouble Code (DTC).>
P013F	O2 SENSOR DELAYED RESPONSE - LEAN TO RICH BANK 1 SENSOR 2	<Ref. to EN(H4DO)(diag)-216, DTC P013F O2 SENSOR DELAYED RESPONSE - LEAN TO RICH BANK 1 SENSOR 2, Diagnostic Procedure with Diagnostic Trouble Code (DTC).>
P0141	O2 SENSOR HEATER CIRCUIT BANK 1 SENSOR 2	<Ref. to EN(H4DO)(diag)-218, DTC P0141 O2 SENSOR HEATER CIRCUIT BANK 1 SENSOR 2, Diagnostic Procedure with Diagnostic Trouble Code (DTC).>
P014C	A/F / O2 SENSOR SLOW RESPONSE - RICH TO LEAN BANK 1 SENSOR 1	<Ref. to EN(H4DO)(diag)-219, DTC P014C A/F / O2 SENSOR SLOW RESPONSE - RICH TO LEAN BANK 1 SENSOR 1, Diagnostic Procedure with Diagnostic Trouble Code (DTC).>
P014D	A/F / O2 SENSOR SLOW RESPONSE - LEAN TO RICH BANK 1 SENSOR 1	<Ref. to EN(H4DO)(diag)-221, DTC P014D A/F / O2 SENSOR SLOW RESPONSE - LEAN TO RICH BANK 1 SENSOR 1, Diagnostic Procedure with Diagnostic Trouble Code (DTC).>
P015A	A/F / O2 SENSOR DELAYED RESPONSE - RICH TO LEAN BANK 1 SENSOR 1	<Ref. to EN(H4DO)(diag)-222, DTC P015A A/F / O2 SENSOR DELAYED RESPONSE - RICH TO LEAN BANK 1 SENSOR 1, Diagnostic Procedure with Diagnostic Trouble Code (DTC).>
P015B	A/F / O2 SENSOR DELAYED RESPONSE - LEAN TO RICH BANK 1 SENSOR 1	<Ref. to EN(H4DO)(diag)-224, DTC P015B A/F / O2 SENSOR DELAYED RESPONSE - LEAN TO RICH BANK 1 SENSOR 1, Diagnostic Procedure with Diagnostic Trouble Code (DTC).>
P0171	SYSTEM TOO LEAN BANK 1	<Ref. to EN(H4DO)(diag)-225, DTC P0171 SYSTEM TOO LEAN BANK 1, Diagnostic Procedure with Diagnostic Trouble Code (DTC).>
P0172	SYSTEM TOO RICH BANK 1	<Ref. to EN(H4DO)(diag)-226, DTC P0172 SYSTEM TOO RICH BANK 1, Diagnostic Procedure with Diagnostic Trouble Code (DTC).>
P0196	ENGINE OIL TEMPERATURE SENSOR "A" RANGE/PERFORMANCE	<Ref. to EN(H4DO)(diag)-229, DTC P0196 ENGINE OIL TEMPERATURE SENSOR "A" RANGE/PERFORMANCE, Diagnostic Procedure with Diagnostic Trouble Code (DTC).>

DTC	Item	Note
P0197	ENGINE OIL TEMPERATURE SENSOR "A" CIRCUIT LOW	<Ref. to EN(H4DO)(diag)-232, DTC P0197 ENGINE OIL TEMPERATURE SENSOR "A" CIRCUIT LOW, Diagnostic Procedure with Diagnostic Trouble Code (DTC).>
P0198	ENGINE OIL TEMPERATURE SENSOR "A" CIRCUIT HIGH	<Ref. to EN(H4DO)(diag)-235, DTC P0198 ENGINE OIL TEMPERATURE SENSOR "A" CIRCUIT HIGH, Diagnostic Procedure with Diagnostic Trouble Code (DTC).>
P0201	CYLINDER 1 INJECTOR "A" CIRCUIT	<Ref. to EN(H4DO)(diag)-238, DTC P0201 CYLINDER 1 INJECTOR "A" CIRCUIT, Diagnostic Procedure with Diagnostic Trouble Code (DTC).>
P0202	CYLINDER 2 INJECTOR "A" CIRCUIT	<Ref. to EN(H4DO)(diag)-241, DTC P0202 CYLINDER 2 INJECTOR "A" CIRCUIT, Diagnostic Procedure with Diagnostic Trouble Code (DTC).>
P0203	CYLINDER 3 INJECTOR "A" CIRCUIT	<Ref. to EN(H4DO)(diag)-241, DTC P0203 CYLINDER 3 INJECTOR "A" CIRCUIT, Diagnostic Procedure with Diagnostic Trouble Code (DTC).>
P0204	CYLINDER 4 INJECTOR "A" CIRCUIT	<Ref. to EN(H4DO)(diag)-241, DTC P0204 CYLINDER 4 INJECTOR "A" CIRCUIT, Diagnostic Procedure with Diagnostic Trouble Code (DTC).>
P0222	THROTTLE/PEDAL POSITION SENSOR/SWITCH "B" CIRCUIT LOW	<Ref. to EN(H4DO)(diag)-242, DTC P0222 THROTTLE/PEDAL POSITION SENSOR/SWITCH "B" CIRCUIT LOW, Diagnostic Procedure with Diagnostic Trouble Code (DTC).>
P0223	THROTTLE/PEDAL POSITION SENSOR/SWITCH "B" CIRCUIT HIGH	<Ref. to EN(H4DO)(diag)-245, DTC P0223 THROTTLE/PEDAL POSITION SENSOR/SWITCH "B" CIRCUIT HIGH, Diagnostic Procedure with Diagnostic Trouble Code (DTC).>
P0300	RANDOM/MULTIPLE CYLINDER MISFIRE DETECTED	<Ref. to EN(H4DO)(diag)-248, DTC P0300 RANDOM/MULTIPLE CYLINDER MISFIRE DETECTED, Diagnostic Procedure with Diagnostic Trouble Code (DTC).>
P0301	CYLINDER 1 MISFIRE DETECTED	<Ref. to EN(H4DO)(diag)-252, DTC P0301 CYLINDER 1 MISFIRE DETECTED, Diagnostic Procedure with Diagnostic Trouble Code (DTC).>
P0302	CYLINDER 2 MISFIRE DETECTED	<Ref. to EN(H4DO)(diag)-262, DTC P0302 CYLINDER 2 MISFIRE DETECTED, Diagnostic Procedure with Diagnostic Trouble Code (DTC).>
P0303	CYLINDER 3 MISFIRE DETECTED	<Ref. to EN(H4DO)(diag)-262, DTC P0303 CYLINDER 3 MISFIRE DETECTED, Diagnostic Procedure with Diagnostic Trouble Code (DTC).>
P0304	CYLINDER 4 MISFIRE DETECTED	<Ref. to EN(H4DO)(diag)-263, DTC P0304 CYLINDER 4 MISFIRE DETECTED, Diagnostic Procedure with Diagnostic Trouble Code (DTC).>
P0327	KNOCK/COMBUSTION VIBRATION SENSOR 1 CIRCUIT LOW BANK 1 OR SINGLE SENSOR	<Ref. to EN(H4DO)(diag)-267, DTC P0327 KNOCK/COMBUSTION VIBRATION SENSOR 1 CIRCUIT LOW BANK 1 OR SINGLE SENSOR, Diagnostic Procedure with Diagnostic Trouble Code (DTC).>
P0328	KNOCK/COMBUSTION VIBRATION SENSOR 1 CIRCUIT HIGH BANK 1 OR SINGLE SENSOR	<Ref. to EN(H4DO)(diag)-270, DTC P0328 KNOCK/COMBUSTION VIBRATION SENSOR 1 CIRCUIT HIGH BANK 1 OR SINGLE SENSOR, Diagnostic Procedure with Diagnostic Trouble Code (DTC).>
P0335	CRANKSHAFT POSITION SENSOR "A" CIRCUIT	<Ref. to EN(H4DO)(diag)-273, DTC P0335 CRANKSHAFT POSITION SENSOR "A" CIRCUIT, Diagnostic Procedure with Diagnostic Trouble Code (DTC).>
P0336	CRANKSHAFT POSITION SENSOR "A" CIRCUIT RANGE/PERFORMANCE	<Ref. to EN(H4DO)(diag)-277, DTC P0336 CRANKSHAFT POSITION SENSOR "A" CIRCUIT RANGE/PERFORMANCE, Diagnostic Procedure with Diagnostic Trouble Code (DTC).>
P0340	CAMSHAFT POSITION SENSOR "A" CIRCUIT BANK 1 OR SINGLE SENSOR	<Ref. to EN(H4DO)(diag)-280, DTC P0340 CAMSHAFT POSITION SENSOR "A" CIRCUIT BANK 1 OR SINGLE SENSOR, Diagnostic Procedure with Diagnostic Trouble Code (DTC).>
P0341	CAMSHAFT POSITION SENSOR "A" CIRCUIT RANGE/PERFORMANCE BANK 1 OR SINGLE SENSOR	<Ref. to EN(H4DO)(diag)-284, DTC P0341 CAMSHAFT POSITION SENSOR "A" CIRCUIT RANGE/PERFORMANCE BANK 1 OR SINGLE SENSOR, Diagnostic Procedure with Diagnostic Trouble Code (DTC).>
P0345	CAMSHAFT POSITION SENSOR "A" CIRCUIT BANK 2	<Ref. to EN(H4DO)(diag)-285, DTC P0345 CAMSHAFT POSITION SENSOR "A" CIRCUIT BANK 2 , Diagnostic Procedure with Diagnostic Trouble Code (DTC).>
P0346	CAMSHAFT POSITION SENSOR "A" CIRCUIT RANGE/PERFORMANCE BANK 2	<Ref. to EN(H4DO)(diag)-287, DTC P0346 CAMSHAFT POSITION SENSOR "A" CIRCUIT RANGE/PERFORMANCE BANK 2, Diagnostic Procedure with Diagnostic Trouble Code (DTC).>
P0351	IGNITION COIL "A" PRIMARY CONTROL CIRCUIT/OPEN	<Ref. to EN(H4DO)(diag)-288, DTC P0351 IGNITION COIL "A" PRIMARY CONTROL CIRCUIT/OPEN, Diagnostic Procedure with Diagnostic Trouble Code (DTC).>

List of Diagnostic Trouble Code (DTC)

DTC	Item	Note
P0352	IGNITION COIL "B" PRIMARY CONTROL CIRCUIT/OPEN	<Ref. to EN(H4DO)(diag)-290, DTC P0352 IGNITION COIL "B" PRIMARY CONTROL CIRCUIT/OPEN, Diagnostic Procedure with Diagnostic Trouble Code (DTC).>
P0353	IGNITION COIL "C" PRIMARY CONTROL CIRCUIT/OPEN	<Ref. to EN(H4DO)(diag)-290, DTC P0353 IGNITION COIL "C" PRIMARY CONTROL CIRCUIT/OPEN, Diagnostic Procedure with Diagnostic Trouble Code (DTC).>
P0354	IGNITION COIL "D" PRIMARY CONTROL CIRCUIT/OPEN	<Ref. to EN(H4DO)(diag)-290, DTC P0354 IGNITION COIL "D" PRIMARY CONTROL CIRCUIT/OPEN, Diagnostic Procedure with Diagnostic Trouble Code (DTC).>
P0400	EGR "A" FLOW	<Ref. to EN(H4DO)(diag)-291, DTC P0400 EGR "A" FLOW, Diagnostic Procedure with Diagnostic Trouble Code (DTC).>
P0420	CATALYST SYSTEM EFFICIENCY BELOW THRESHOLD BANK 1	<Ref. to EN(H4DO)(diag)-294, DTC P0420 CATALYST SYSTEM EFFICIENCY BELOW THRESHOLD BANK 1, Diagnostic Procedure with Diagnostic Trouble Code (DTC).>
P0441	EVAP SYSTEM (CPC) INCORRECT PURGE FLOW	<Ref. to EN(H4DO)(diag)-302, DTC P0441 EVAP SYSTEM (CPC) INCORRECT PURGE FLOW, Diagnostic Procedure with Diagnostic Trouble Code (DTC).>
P0451	EVAP SYSTEM (CPC) PRESSURE SENSOR/SWITCH CIRCUIT RANGE/PERFORMANCE	<Ref. to EN(H4DO)(diag)-306, DTC P0451 EVAP SYSTEM (CPC) PRESSURE SENSOR/SWITCH CIRCUIT RANGE/PERFORMANCE, Diagnostic Procedure with Diagnostic Trouble Code (DTC).>
P0452	EVAP SYSTEM (CPC) PRESSURE SENSOR/SWITCH CIRCUIT LOW	<Ref. to EN(H4DO)(diag)-308, DTC P0452 EVAP SYSTEM (CPC) PRESSURE SENSOR/SWITCH CIRCUIT LOW, Diagnostic Procedure with Diagnostic Trouble Code (DTC).>
P0453	EVAP SYSTEM (CPC) PRESSURE SENSOR/SWITCH CIRCUIT HIGH	<Ref. to EN(H4DO)(diag)-311, DTC P0453 EVAP SYSTEM (CPC) PRESSURE SENSOR/SWITCH CIRCUIT HIGH, Diagnostic Procedure with Diagnostic Trouble Code (DTC).>
P0455	EVAP SYSTEM (CPC) LEAK DETECTED (LARGE LEAK)	<Ref. to EN(H4DO)(diag)-314, DTC P0455 EVAP SYSTEM (CPC) LEAK DETECTED (LARGE LEAK), Diagnostic Procedure with Diagnostic Trouble Code (DTC).>
P0456	EVAP SYSTEM (CPC) LEAK DETECTED (VERY SMALL LEAK)	<Ref. to EN(H4DO)(diag)-321, DTC P0456 EVAP SYSTEM (CPC) LEAK DETECTED (VERY SMALL LEAK), Diagnostic Procedure with Diagnostic Trouble Code (DTC).>
P0458	EVAP SYSTEM (CPC) PURGE CONTROL VALVE "A" CIRCUIT LOW	<Ref. to EN(H4DO)(diag)-322, DTC P0458 EVAP SYSTEM (CPC) PURGE CONTROL VALVE "A" CIRCUIT LOW, Diagnostic Procedure with Diagnostic Trouble Code (DTC).>
P0459	EVAP SYSTEM (CPC) PURGE CONTROL VALVE "A" CIRCUIT HIGH	<Ref. to EN(H4DO)(diag)-325, DTC P0459 EVAP SYSTEM (CPC) PURGE CONTROL VALVE "A" CIRCUIT HIGH, Diagnostic Procedure with Diagnostic Trouble Code (DTC).>
P0461	FUEL LEVEL SENSOR "A" CIRCUIT RANGE/PERFORMANCE	<Ref. to EN(H4DO)(diag)-327, DTC P0461 FUEL LEVEL SENSOR "A" CIRCUIT RANGE/PERFORMANCE, Diagnostic Procedure with Diagnostic Trouble Code (DTC).>
P0462	FUEL LEVEL SENSOR "A" CIRCUIT LOW	<Ref. to EN(H4DO)(diag)-329, DTC P0462 FUEL LEVEL SENSOR "A" CIRCUIT LOW, Diagnostic Procedure with Diagnostic Trouble Code (DTC).>
P0463	FUEL LEVEL SENSOR "A" CIRCUIT HIGH	<Ref. to EN(H4DO)(diag)-330, DTC P0463 FUEL LEVEL SENSOR "A" CIRCUIT HIGH, Diagnostic Procedure with Diagnostic Trouble Code (DTC).>
P0500	VEHICLE SPEED SENSOR "A" CIRCUIT	<Ref. to EN(H4DO)(diag)-332, DTC P0500 VEHICLE SPEED SENSOR "A" CIRCUIT, Diagnostic Procedure with Diagnostic Trouble Code (DTC).>
P0506	IDLE CONTROL SYSTEM RPM - LOWER THAN EXPECTED	<Ref. to EN(H4DO)(diag)-333, DTC P0506 IDLE CONTROL SYSTEM RPM - LOWER THAN EXPECTED, Diagnostic Procedure with Diagnostic Trouble Code (DTC).>
P0507	IDLE CONTROL SYSTEM RPM - HIGHER THAN EXPECTED	<Ref. to EN(H4DO)(diag)-335, DTC P0507 IDLE CONTROL SYSTEM RPM - HIGHER THAN EXPECTED, Diagnostic Procedure with Diagnostic Trouble Code (DTC).>
P050A	COLD START IDLE CONTROL SYSTEM PERFORMANCE	<Ref. to EN(H4DO)(diag)-337, DTC P050A COLD START IDLE CONTROL SYSTEM PERFORMANCE, Diagnostic Procedure with Diagnostic Trouble Code (DTC).>

DTC	Item	Note
P050B	COLD START IGNITION TIMING PERFORMANCE	<Ref. to EN(H4DO)(diag)-348, DTC P050B COLD START IGNITION TIMING PERFORMANCE, Diagnostic Procedure with Diagnostic Trouble Code (DTC).>
P0512	STARTER (SWITCH) REQUEST CIRCUIT	<Ref. to EN(H4DO)(diag)-349, DTC P0512 STARTER (SWITCH) REQUEST CIRCUIT, Diagnostic Procedure with Diagnostic Trouble Code (DTC).>
P0560	SYSTEM VOLTAGE	<Ref. to EN(H4DO)(diag)-352, DTC P0560 SYSTEM VOLTAGE, Diagnostic Procedure with Diagnostic Trouble Code (DTC).>
P059A	ACTIVE GRILLE AIR SHUTTER "A" POSITION SENSOR CIRCUIT	<Ref. to EN(H4DO)(diag)-354, DTC P059A ACTIVE GRILLE AIR SHUTTER "A" POSITION SENSOR CIRCUIT, Diagnostic Procedure with Diagnostic Trouble Code (DTC).>
P059F	ACTIVE GRILLE AIR SHUTTER "A" PERFORMANCE/STUCK OFF	<Ref. to EN(H4DO)(diag)-356, DTC P059F ACTIVE GRILLE AIR SHUTTER "A" PERFORMANCE/STUCK OFF, Diagnostic Procedure with Diagnostic Trouble Code (DTC).>
P05A0	ACTIVE GRILLE AIR SHUTTER "A" STUCK ON	<Ref. to EN(H4DO)(diag)-359, DTC P05A0 ACTIVE GRILLE AIR SHUTTER "A" STUCK ON, Diagnostic Procedure with Diagnostic Trouble Code (DTC).>
P05A1	ACTIVE GRILLE AIR SHUTTER "A" POSITION SENSOR MINIMUM/MAXIMUM STOP PERFORMANCE	<Ref. to EN(H4DO)(diag)-361, DTC P05A1 ACTIVE GRILLE AIR SHUTTER "A" POSITION SENSOR MINIMUM/MAXIMUM STOP PERFORMANCE, Diagnostic Procedure with Diagnostic Trouble Code (DTC).>
P05A2	ACTIVE GRILLE AIR SHUTTER "A" CONTROL CIRCUIT/OPEN	<Ref. to EN(H4DO)(diag)-363, DTC P05A2 ACTIVE GRILLE AIR SHUTTER "A" CONTROL CIRCUIT/OPEN, Diagnostic Procedure with Diagnostic Trouble Code (DTC).>
P05A6	ACTIVE GRILLE AIR SHUTTER "A" SUPPLY VOLTAGE CIRCUIT/OPEN	<Ref. to EN(H4DO)(diag)-365, DTC P05A6 ACTIVE GRILLE AIR SHUTTER "A" SUPPLY VOLTAGE CIRCUIT/OPEN, Diagnostic Procedure with Diagnostic Trouble Code (DTC).>
P05C0	ACTIVE GRILLE AIR SHUTTER MODULE "A" OVER TEMPERATURE	<Ref. to EN(H4DO)(diag)-368, DTC P05C0 ACTIVE GRILLE AIR SHUTTER MODULE "A" OVER TEMPERATURE, Diagnostic Procedure with Diagnostic Trouble Code (DTC).>
P0604	INTERNAL CONTROL MODULE RANDOM ACCESS MEMORY (RAM) ERROR	<Ref. to EN(H4DO)(diag)-370, DTC P0604 INTERNAL CONTROL MODULE RANDOM ACCESS MEMORY (RAM) ERROR, Diagnostic Procedure with Diagnostic Trouble Code (DTC).>
P0605	INTERNAL CONTROL MODULE READ ONLY MEMORY (ROM) ERROR	<Ref. to EN(H4DO)(diag)-371, DTC P0605 INTERNAL CONTROL MODULE READ ONLY MEMORY (ROM) ERROR, Diagnostic Procedure with Diagnostic Trouble Code (DTC).>
P0606	CONTROL MODULE PROCESSOR	<Ref. to EN(H4DO)(diag)-372, DTC P0606 CONTROL MODULE PROCESSOR, Diagnostic Procedure with Diagnostic Trouble Code (DTC).>
P060A	INTERNAL CONTROL MODULE MONITORING PROCESSOR PERFORMANCE	<Ref. to EN(H4DO)(diag)-376, DTC P060A INTERNAL CONTROL MODULE MONITORING PROCESSOR PERFORMANCE, Diagnostic Procedure with Diagnostic Trouble Code (DTC).>
P060B	INTERNAL CONTROL MODULE A/D PROCESSING PERFORMANCE	<Ref. to EN(H4DO)(diag)-378, DTC P060B INTERNAL CONTROL MODULE A/D PROCESSING PERFORMANCE, Diagnostic Procedure with Diagnostic Trouble Code (DTC).>
P0616	STARTER RELAY "A" CIRCUIT LOW	<Ref. to EN(H4DO)(diag)-380, DTC P0616 STARTER RELAY "A" CIRCUIT LOW, Diagnostic Procedure with Diagnostic Trouble Code (DTC).>
P0617	STARTER RELAY "A" CIRCUIT HIGH	<Ref. to EN(H4DO)(diag)-384, DTC P0617 STARTER RELAY "A" CIRCUIT HIGH, Diagnostic Procedure with Diagnostic Trouble Code (DTC).>
P062F	INTERNAL CONTROL MODULE EEPROM ERROR	<Ref. to EN(H4DO)(diag)-389, DTC P062F INTERNAL CONTROL MODULE EEPROM ERROR, Diagnostic Procedure with Diagnostic Trouble Code (DTC).>
P0685	ECM/PCM POWER RELAY CONTROL CIRCUIT/OPEN	<Ref. to EN(H4DO)(diag)-391, DTC P0685 ECM/PCM POWER RELAY CONTROL CIRCUIT/OPEN, Diagnostic Procedure with Diagnostic Trouble Code (DTC).>
P0700	TRANSMISSION CONTROL SYSTEM (MIL REQUEST)	<Ref. to EN(H4DO)(diag)-393, DTC P0700 TRANSMISSION CONTROL SYSTEM (MIL REQUEST), Diagnostic Procedure with Diagnostic Trouble Code (DTC).>
P081A	STARTER DISABLE CIRCUIT LOW	<Ref. to EN(H4DO)(diag)-394, DTC P081A STARTER DISABLE CIRCUIT LOW, Diagnostic Procedure with Diagnostic Trouble Code (DTC).>
P0851	PARK/NEUTRAL SWITCH INPUT CIRCUIT LOW	<Ref. to EN(H4DO)(diag)-397, DTC P0851 PARK/NEUTRAL SWITCH INPUT CIRCUIT LOW, Diagnostic Procedure with Diagnostic Trouble Code (DTC).>

DTC	Item	Note
P0852	PARK/NEUTRAL SWITCH INPUT CIRCUIT HIGH	<Ref. to EN(H4DO)(diag)-401, DTC P0852 PARK/NEUTRAL SWITCH INPUT CIRCUIT HIGH, Diagnostic Procedure with Diagnostic Trouble Code (DTC).>
P1160	THROTTLE RETURN SPRING	<Ref. to EN(H4DO)(diag)-406, DTC P1160 THROTTLE RETURN SPRING, Diagnostic Procedure with Diagnostic Trouble Code (DTC).>
P1449	EVAP SYSTEM CLOG DETECTED (AIR FILTER)	<Ref. to EN(H4DO)(diag)-407, DTC P1449 EVAP SYSTEM CLOG DETECTED (AIR FILTER), Diagnostic Procedure with Diagnostic Trouble Code (DTC).>
P1451	EVAP SYSTEM CLOG DETECTED (PIPE)	<Ref. to EN(H4DO)(diag)-410, DTC P1451 EVAP SYSTEM CLOG DETECTED (PIPE), Diagnostic Procedure with Diagnostic Trouble Code (DTC).>
P1492	COIL 1 EGR "A" CONTROL CIRCUIT LOW	<Ref. to EN(H4DO)(diag)-411, DTC P1492 COIL 1 EGR "A" CONTROL CIRCUIT LOW, Diagnostic Procedure with Diagnostic Trouble Code (DTC).>
P1493	COIL 1 EGR "A" CONTROL CIRCUIT HIGH	<Ref. to EN(H4DO)(diag)-412, DTC P1493 COIL 1 EGR "A" CONTROL CIRCUIT HIGH, Diagnostic Procedure with Diagnostic Trouble Code (DTC).>
P1494	COIL 2 EGR "A" CONTROL CIRCUIT LOW	<Ref. to EN(H4DO)(diag)-413, DTC P1494 COIL 2 EGR "A" CONTROL CIRCUIT LOW, Diagnostic Procedure with Diagnostic Trouble Code (DTC).>
P1495	COIL 2 EGR "A" CONTROL CIRCUIT HIGH	<Ref. to EN(H4DO)(diag)-413, DTC P1495 COIL 2 EGR "A" CONTROL CIRCUIT HIGH, Diagnostic Procedure with Diagnostic Trouble Code (DTC).>
P1496	COIL 3 EGR "A" CONTROL CIRCUIT LOW	<Ref. to EN(H4DO)(diag)-413, DTC P1496 COIL 3 EGR "A" CONTROL CIRCUIT LOW, Diagnostic Procedure with Diagnostic Trouble Code (DTC).>
P1497	COIL 3 EGR "A" CONTROL CIRCUIT HIGH	<Ref. to EN(H4DO)(diag)-413, DTC P1497 COIL 3 EGR "A" CONTROL CIRCUIT HIGH, Diagnostic Procedure with Diagnostic Trouble Code (DTC).>
P1498	COIL 4 EGR "A" CONTROL CIRCUIT LOW	<Ref. to EN(H4DO)(diag)-414, DTC P1498 COIL 4 EGR "A" CONTROL CIRCUIT LOW, Diagnostic Procedure with Diagnostic Trouble Code (DTC).>
P1499	COIL 4 EGR "A" CONTROL CIRCUIT HIGH	<Ref. to EN(H4DO)(diag)-416, DTC P1499 COIL 4 EGR "A" CONTROL CIRCUIT HIGH, Diagnostic Procedure with Diagnostic Trouble Code (DTC).>
P1603	ENGINE STALL HISTORY	<Ref. to EN(H4DO)(diag)-418, DTC P1603 ENGINE STALL HISTORY, Diagnostic Procedure with Diagnostic Trouble Code (DTC).>
P1604	STARTABILITY MALFUNCTION	<Ref. to EN(H4DO)(diag)-441, DTC P1604 STARTABILITY MALFUNCTION, Diagnostic Procedure with Diagnostic Trouble Code (DTC).>
P1C00	BATTERY MONITOR MODULE "A" PERFORMANCE	<Ref. to EN(H4DO)(diag)-470, DTC P1C00 BATTERY MONITOR MODULE "A" PERFORMANCE, Diagnostic Procedure with Diagnostic Trouble Code (DTC).>
P2004	TGV CONTROL STUCK OPEN BANK 1	<Ref. to EN(H4DO)(diag)-471, DTC P2004 TGV CONTROL STUCK OPEN BANK 1, Diagnostic Procedure with Diagnostic Trouble Code (DTC).>
P2005	TGV CONTROL STUCK OPEN BANK 2	<Ref. to EN(H4DO)(diag)-472, DTC P2005 TGV CONTROL STUCK OPEN BANK 2, Diagnostic Procedure with Diagnostic Trouble Code (DTC).>
P2006	TGV CONTROL STUCK CLOSED BANK 1	<Ref. to EN(H4DO)(diag)-473, DTC P2006 TGV CONTROL STUCK CLOSED BANK 1, Diagnostic Procedure with Diagnostic Trouble Code (DTC).>
P2007	TGV CONTROL STUCK CLOSED BANK 2	<Ref. to EN(H4DO)(diag)-474, DTC P2007 TGV CONTROL STUCK CLOSED BANK 2, Diagnostic Procedure with Diagnostic Trouble Code (DTC).>
P2008	TGV CONTROL CIRCUIT/OPEN BANK 1	<Ref. to EN(H4DO)(diag)-475, DTC P2008 TGV CONTROL CIRCUIT/OPEN BANK 1, Diagnostic Procedure with Diagnostic Trouble Code (DTC).>
P2009	TGV CONTROL CIRCUIT LOW BANK 1	<Ref. to EN(H4DO)(diag)-478, DTC P2009 TGV CONTROL CIRCUIT LOW BANK 1, Diagnostic Procedure with Diagnostic Trouble Code (DTC).>
P2011	TGV CONTROL CIRCUIT/OPEN BANK 2	<Ref. to EN(H4DO)(diag)-480, DTC P2011 TGV CONTROL CIRCUIT/OPEN BANK 2, Diagnostic Procedure with Diagnostic Trouble Code (DTC).>
P2012	TGV CONTROL CIRCUIT LOW BANK 2	<Ref. to EN(H4DO)(diag)-482, DTC P2012 TGV CONTROL CIRCUIT LOW BANK 2, Diagnostic Procedure with Diagnostic Trouble Code (DTC).>
P2016	TGV POSITION SENSOR/SWITCH CIRCUIT LOW BANK 1	<Ref. to EN(H4DO)(diag)-483, DTC P2016 TGV POSITION SENSOR/SWITCH CIRCUIT LOW BANK 1, Diagnostic Procedure with Diagnostic Trouble Code (DTC).>
P2017	TGV POSITION SENSOR/SWITCH CIRCUIT HIGH BANK 1	<Ref. to EN(H4DO)(diag)-486, DTC P2017 TGV POSITION SENSOR/SWITCH CIRCUIT HIGH BANK 1, Diagnostic Procedure with Diagnostic Trouble Code (DTC).>
P2021	TGV POSITION SENSOR/SWITCH CIRCUIT LOW BANK 2	<Ref. to EN(H4DO)(diag)-489, DTC P2021 TGV POSITION SENSOR/SWITCH CIRCUIT LOW BANK 2, Diagnostic Procedure with Diagnostic Trouble Code (DTC).>

DTC	Item	Note
P2022	TGV POSITION SENSOR/ SWITCH CIRCUIT HIGH BANK 2	<Ref. to EN(H4DO)(diag)-491, DTC P2022 TGV POSITION SENSOR/SWITCH CIRCUIT HIGH BANK 2, Diagnostic Procedure with Diagnostic Trouble Code (DTC).>
P2096	POST CATALYST FUEL TRIM SYSTEM TOO LEAN BANK 1	<Ref. to EN(H4DO)(diag)-493, DTC P2096 POST CATALYST FUEL TRIM SYSTEM TOO LEAN BANK 1, Diagnostic Procedure with Diagnostic Trouble Code (DTC).>
P2097	POST CATALYST FUEL TRIM SYSTEM TOO RICH BANK 1	<Ref. to EN(H4DO)(diag)-500, DTC P2097 POST CATALYST FUEL TRIM SYSTEM TOO RICH BANK 1, Diagnostic Procedure with Diagnostic Trouble Code (DTC).>
P2101	THROTTLE ACTUATOR "A" CONTROL MOTOR CIRCUIT RANGE/PERFORMANCE	<Ref. to EN(H4DO)(diag)-507, DTC P2101 THROTTLE ACTUATOR "A" CONTROL MOTOR CIRCUIT RANGE/PERFORMANCE, Diagnostic Procedure with Diagnostic Trouble Code (DTC).>
P2102	THROTTLE ACTUATOR "A" CONTROL MOTOR CIRCUIT LOW	<Ref. to EN(H4DO)(diag)-513, DTC P2102 THROTTLE ACTUATOR "A" CONTROL MOTOR CIRCUIT LOW, Diagnostic Procedure with Diagnostic Trouble Code (DTC).>
P2103	THROTTLE ACTUATOR "A" CONTROL MOTOR CIRCUIT HIGH	<Ref. to EN(H4DO)(diag)-516, DTC P2103 THROTTLE ACTUATOR "A" CONTROL MOTOR CIRCUIT HIGH, Diagnostic Procedure with Diagnostic Trouble Code (DTC).>
P2109	THROTTLE/PEDAL POSITION SENSOR "A" MINIMUM STOP PERFORMANCE	<Ref. to EN(H4DO)(diag)-519, DTC P2109 THROTTLE/PEDAL POSITION SENSOR "A" MINIMUM STOP PERFORMANCE, Diagnostic Procedure with Diagnostic Trouble Code (DTC).>
P2119	THROTTLE ACTUATOR "A" CONTROL THROTTLE BODY RANGE/PERFORMANCE	<Ref. to EN(H4DO)(diag)-520, DTC P2119 THROTTLE ACTUATOR "A" CONTROL THROTTLE BODY RANGE/PERFORMANCE, Diagnostic Procedure with Diagnostic Trouble Code (DTC).>
P2122	THROTTLE/PEDAL POSITION SENSOR/SWITCH "D" CIRCUIT LOW	<Ref. to EN(H4DO)(diag)-523, DTC P2122 THROTTLE/PEDAL POSITION SENSOR/SWITCH "D" CIRCUIT LOW, Diagnostic Procedure with Diagnostic Trouble Code (DTC).>
P2123	THROTTLE/PEDAL POSITION SENSOR/SWITCH "D" CIRCUIT HIGH	<Ref. to EN(H4DO)(diag)-526, DTC P2123 THROTTLE/PEDAL POSITION SENSOR/SWITCH "D" CIRCUIT HIGH, Diagnostic Procedure with Diagnostic Trouble Code (DTC).>
P2127	THROTTLE/PEDAL POSITION SENSOR/SWITCH "E" CIRCUIT LOW	<Ref. to EN(H4DO)(diag)-529, DTC P2127 THROTTLE/PEDAL POSITION SENSOR/SWITCH "E" CIRCUIT LOW, Diagnostic Procedure with Diagnostic Trouble Code (DTC).>
P2128	THROTTLE/PEDAL POSITION SENSOR/SWITCH "E" CIRCUIT HIGH	<Ref. to EN(H4DO)(diag)-532, DTC P2128 THROTTLE/PEDAL POSITION SENSOR/SWITCH "E" CIRCUIT HIGH, Diagnostic Procedure with Diagnostic Trouble Code (DTC).>
P2135	THROTTLE/PEDAL POSITION SENSOR/SWITCH "A"/"B" VOLTAGE CORRELATION	<Ref. to EN(H4DO)(diag)-535, DTC P2135 THROTTLE/PEDAL POSITION SENSOR/SWITCH "A"/"B" VOLTAGE CORRELATION, Diagnostic Procedure with Diagnostic Trouble Code (DTC).>
P2138	THROTTLE/PEDAL POSITION SENSOR/SWITCH "D"/"E" VOLTAGE CORRELATION	<Ref. to EN(H4DO)(diag)-539, DTC P2138 THROTTLE/PEDAL POSITION SENSOR/SWITCH "D"/"E" VOLTAGE CORRELATION, Diagnostic Procedure with Diagnostic Trouble Code (DTC).>
P2195	A/F /O2 SENSOR SIGNAL BIASED/STUCK LEAN BANK 1 SENSOR 1	<Ref. to EN(H4DO)(diag)-543, DTC P2195 A/F /O2 SENSOR SIGNAL BIASED/ STUCK LEAN BANK 1 SENSOR 1, Diagnostic Procedure with Diagnostic Trouble Code (DTC).>
P2196	A/F /O2 SENSOR SIGNAL BIASED/STUCK RICH BANK 1 SENSOR 1	<Ref. to EN(H4DO)(diag)-546, DTC P2196 A/F /O2 SENSOR SIGNAL BIASED/ STUCK RICH BANK 1 SENSOR 1, Diagnostic Procedure with Diagnostic Trouble Code (DTC).>
P219C	CYLINDER 1 AIR-FUEL RATIO IMBALANCE	<Ref. to EN(H4DO)(diag)-549, DTC P219C CYLINDER 1 AIR-FUEL RATIO IMBALANCE, Diagnostic Procedure with Diagnostic Trouble Code (DTC).>
P219D	CYLINDER 2 AIR-FUEL RATIO IMBALANCE	<Ref. to EN(H4DO)(diag)-565, DTC P219D CYLINDER 2 AIR-FUEL RATIO IMBALANCE, Diagnostic Procedure with Diagnostic Trouble Code (DTC).>
P219E	CYLINDER 3 AIR-FUEL RATIO IMBALANCE	<Ref. to EN(H4DO)(diag)-565, DTC P219E CYLINDER 3 AIR-FUEL RATIO IMBALANCE, Diagnostic Procedure with Diagnostic Trouble Code (DTC).>
P219F	CYLINDER 4 AIR-FUEL RATIO IMBALANCE	<Ref. to EN(H4DO)(diag)-565, DTC P219F CYLINDER 4 AIR-FUEL RATIO IMBALANCE, Diagnostic Procedure with Diagnostic Trouble Code (DTC).>

List of Diagnostic Trouble Code (DTC)

DTC	Item	Note
P2270	O2 SENSOR SIGNAL BIASED/ STUCK LEAN BANK 1 SENSOR 2	<Ref. to EN(H4DO)(diag)-566, DTC P2270 O2 SENSOR SIGNAL BIASED/STUCK LEAN BANK 1 SENSOR 2, Diagnostic Procedure with Diagnostic Trouble Code (DTC).>
P2271	O2 SENSOR SIGNAL BIASED/ STUCK RICH BANK 1 SENSOR 2	<Ref. to EN(H4DO)(diag)-569, DTC P2271 O2 SENSOR SIGNAL BIASED/STUCK RICH BANK 1 SENSOR 2, Diagnostic Procedure with Diagnostic Trouble Code (DTC).>
P2401	EVAP SYSTEM LEAK DETECTION PUMP CONTROL CIRCUIT LOW	<Ref. to EN(H4DO)(diag)-572, DTC P2401 EVAP SYSTEM LEAK DETECTION PUMP CONTROL CIRCUIT LOW, Diagnostic Procedure with Diagnostic Trouble Code (DTC).>
P2402	EVAP SYSTEM LEAK DETECTION PUMP CONTROL CIRCUIT HIGH	<Ref. to EN(H4DO)(diag)-575, DTC P2402 EVAP SYSTEM LEAK DETECTION PUMP CONTROL CIRCUIT HIGH, Diagnostic Procedure with Diagnostic Trouble Code (DTC).>
P2404	EVAP SYSTEM LEAK DETECTION PUMP SENSE CIRCUIT RANGE/PERFORMANCE	<Ref. to EN(H4DO)(diag)-577, DTC P2404 EVAP SYSTEM LEAK DETECTION PUMP SENSE CIRCUIT RANGE/PERFORMANCE, Diagnostic Procedure with Diagnostic Trouble Code (DTC).>
P2419	EVAP SYSTEM SWITCHING VALVE CONTROL CIRCUIT LOW	<Ref. to EN(H4DO)(diag)-580, DTC P2419 EVAP SYSTEM SWITCHING VALVE CONTROL CIRCUIT LOW, Diagnostic Procedure with Diagnostic Trouble Code (DTC).>
P2420	EVAP SYSTEM SWITCHING VALVE CONTROL CIRCUIT HIGH	<Ref. to EN(H4DO)(diag)-583, DTC P2420 EVAP SYSTEM SWITCHING VALVE CONTROL CIRCUIT HIGH, Diagnostic Procedure with Diagnostic Trouble Code (DTC).>
P2530	IGNITION SWITCH RUN POSITION CIRCUIT	<Ref. to EN(H4DO)(diag)-585, DTC P2530 IGNITION SWITCH RUN POSITION CIRCUIT, Diagnostic Procedure with Diagnostic Trouble Code (DTC).>
P2610	ECM/PCM ENGINE OFF TIMER PERFORMANCE	<Ref. to EN(H4DO)(diag)-587, DTC P2610 ECM/PCM ENGINE OFF TIMER PERFORMANCE, Diagnostic Procedure with Diagnostic Trouble Code (DTC).>
U0073	CAN FAILURE, BUS ‘OFF’ DETECTION	<Ref. to EN(H4DO)(diag)-596, DTC U0073 CONTROL MODULE COMMUNICATION BUS OFF, Diagnostic Procedure with Diagnostic Trouble Code (DTC).>
U0077	LIN COMMUNICATION BUS "ECM/PCM" OFF	<Ref. to EN(H4DO)(diag)-597, DTC U0077 LIN COMMUNICATION BUS "ECM/PCM" OFF, Diagnostic Procedure with Diagnostic Trouble Code (DTC).>
U0101	LOST COMMUNICATION WITH TCM	<Ref. to EN(H4DO)(diag)-601, DTC U0101 LOST COMMUNICATION WITH TCM, Diagnostic Procedure with Diagnostic Trouble Code (DTC).>
U0122	LOST COMMUNICATION WITH VEHICLE DYNAMICS CONTROL MODULE	<Ref. to EN(H4DO)(diag)-601, DTC U0122 LOST COMMUNICATION WITH VEHICLE DYNAMICS CONTROL MODULE, Diagnostic Procedure with Diagnostic Trouble Code (DTC).>
U0155	LOST COMMUNICATION WITH INSTRUMENT PANEL CLUSTER (IPC) CONTROL MODULE	<Ref. to EN(H4DO)(diag)-601, DTC U0155 LOST COMMUNICATION WITH INSTRUMENT PANEL CLUSTER (IPC) CONTROL MODULE, Diagnostic Procedure with Diagnostic Trouble Code (DTC).>
U0284	LOST COMMUNICATION WITH ACTIVE GRILLE SHUTTER MODULE "A"	<Ref. to EN(H4DO)(diag)-602, DTC U0284 LOST COMMUNICATION WITH ACTIVE GRILLE SHUTTER MODULE "A", Diagnostic Procedure with Diagnostic Trouble Code (DTC).>
U0402	INVALID DATA RECEIVED FROM TCM	<Ref. to EN(H4DO)(diag)-605, DTC U0402 INVALID DATA RECEIVED FROM TCM, Diagnostic Procedure with Diagnostic Trouble Code (DTC).>
U0416	INVALID DATA RECEIVED FROM VEHICLE DYNAMICS CONTROL MODULE	<Ref. to EN(H4DO)(diag)-605, DTC U0416 INVALID DATA RECEIVED FROM VEHICLE DYNAMICS CONTROL MODULE, Diagnostic Procedure with Diagnostic Trouble Code (DTC).>
U0423	INVALID DATA RECEIVED FROM INSTRUMENT PANEL CLUSTER CONTROL MODULE	<Ref. to EN(H4DO)(diag)-605, DTC U0423 INVALID DATA RECEIVED FROM INSTRUMENT PANEL CLUSTER CONTROL MODULE, Diagnostic Procedure with Diagnostic Trouble Code (DTC).>
U1712	LOST LIN COMMUNICATION WITH BATTERY "1" MONITOR MODULE	<Ref. to EN(H4DO)(diag)-606, DTC U1712 LOST LIN COMMUNICATION WITH BATTERY "1" MONITOR MODULE, Diagnostic Procedure with Diagnostic Trouble Code (DTC).>

17.Diagnostic Procedure with Diagnostic Trouble Code (DTC)

A: DTC P000A "A" CAMSHAFT POSITION SLOW RESPONSE BANK 1

NOTE:
For the diagnostic procedure, refer to DTC P0011. <Ref. to EN(H4DO)(diag)-115, DTC P0011 "A" CAMSHAFT POSITION - TIMING OVER-ADVANCED OR SYSTEM PERFORMANCE BANK 1, Diagnostic Procedure with Diagnostic Trouble Code (DTC).>

1. OUTLINE OF DIAGNOSIS

Detect the AVCS system malfunction.
Judge NG when the amount of AVCS actual timing advance does not approach to the amount of AVCS target timing advance.

2. EXECUTION CONDITION

Secondary Parameters	Execution condition
Battery voltage	≥ 10.9 V
AVCS control	Operation
Absolute value	
Target timing advance change amount (per 64 ms)	< 3.2°CA

3. GENERAL DRIVING CYCLE

Perform the diagnosis continuously while AVCS is operating.

4. DIAGNOSTIC METHOD

When the differences of target timing advance amount and actual timing advance amount is calculated during AVCS control, and the difference per predetermined time is the specified value or larger.
Judge as NG when the following conditions are established within the predetermined time.

Judgment Value

Malfunction Criteria	Threshold Value
Absolute value	
Σ(Target position – Actual position)	> 4000 °CA (Bank 1) > 4000 °CA (Bank 2)

Time Needed for Diagnosis: 25000 ms
Malfunction Indicator Light Illumination: Illuminates when malfunction occurs in 2 continuous driving cycles.

B: DTC P000C "A" CAMSHAFT POSITION SLOW RESPONSE BANK 2

NOTE:
For the diagnostic procedure, refer to DTC P0021. <Ref. to EN(H4DO)(diag)-123, DTC P0021 "A" CAMSHAFT POSITION - TIMING OVER-ADVANCED OR SYSTEM PERFORMANCE BANK 2, Diagnostic Procedure with Diagnostic Trouble Code (DTC).>

1. OUTLINE OF DIAGNOSIS

NOTE:
For the detection standard, refer to P000A. <Ref. to EN(H4DO)(diag)-111, DTC P000A "A" CAMSHAFT POSITION SLOW RESPONSE BANK 1, Diagnostic Procedure with Diagnostic Trouble Code (DTC).>

C: DTC P0010 "A" CAMSHAFT POSITION ACTUATOR CONTROL CIRCUIT/ OPEN BANK 1

DTC DETECTING CONDITION:
Immediately at fault recognition
TROUBLE SYMPTOM:
Improper idling

CAUTION:
After servicing or replacing faulty parts, perform Clear Memory Mode <Ref. to EN(H4DO)(diag)-78, OPERATION, Clear Memory Mode.>, and Inspection Mode <Ref. to EN(H4DO)(diag)-64, PROCEDURE, Inspection Mode.>.
WIRING DIAGRAM:
• Engine Electrical System ENGINE TYPE FB (WITHOUT PUSH BUTTON START) <Ref. to WI-170, ENGINE TYPE FB (WITHOUT PUSH BUTTON START), WIRING DIAGRAM, Engine Electrical System.>
• Engine Electrical System ENGINE TYPE FB (WITH PUSH BUTTON START) <Ref. to WI-184, ENGINE TYPE FB (WITH PUSH BUTTON START), WIRING DIAGRAM, Engine Electrical System.>

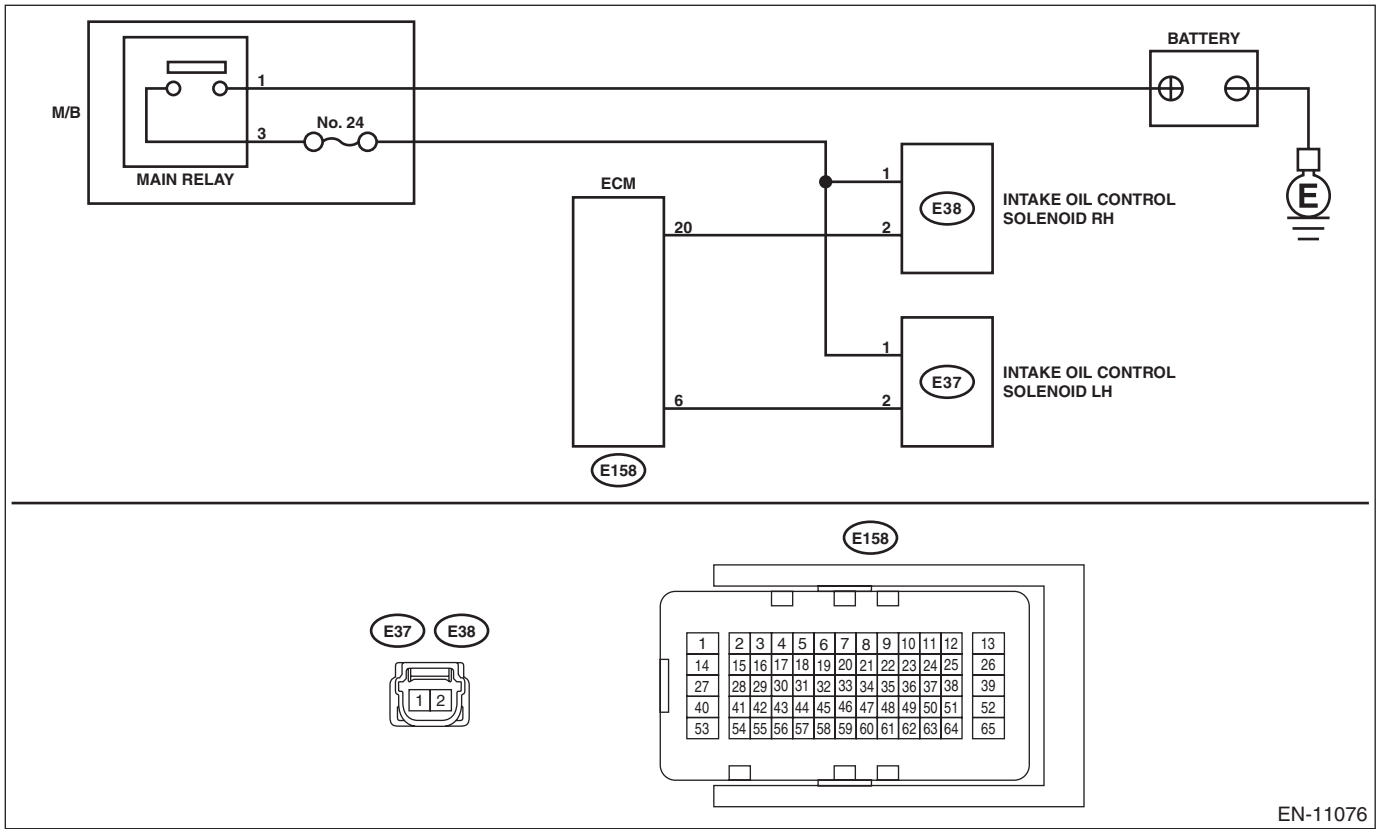

Step		Check	Yes	No
1	**CHECK OUTPUT SIGNAL OF ECM.** 1) Turn the ignition switch to ON. 2) Measure the voltage between ECM connector and chassis ground. ***Connector & terminal*** ***(E158) No. 20 (+) — Chassis ground (–):***	Is the voltage 10 V or more?	Go to step **2**.	Go to step **3**.

	Step	Check	Yes	No
2	**CHECK FOR POOR CONTACT.** Check for poor contact of ECM connector.	Is there poor contact of ECM connector?	Repair the poor contact of ECM connector.	Even if DTC is detected, the circuit has returned to a normal condition at this time. Reproduce the failure, and then perform the diagnosis again. NOTE: In this case, temporary poor contact of connector, temporary open or short circuit of harness may be the cause.
3	**CHECK POWER SUPPLY TO THE INTAKE OIL CONTROL SOLENOID RH.** Measure the voltage between intake oil control solenoid RH connector and engine ground. ***Connector & terminal*** ***(E38) No. 1 (+) — Engine ground (–):***	Is the voltage 10 V or more?	Go to step **4**.	Repair the power supply circuit.
4	**CHECK HARNESS BETWEEN ECM AND INTAKE OIL CONTROL SOLENOID RH CONNECTOR.** 1) Turn the ignition switch to OFF. 2) Disconnect the connectors from the ECM and intake oil control solenoid RH. 3) Measure the resistance between intake oil control solenoid RH connector and engine ground. ***Connector & terminal*** ***(E38) No. 2 — Engine ground:***	Is the resistance 1 MΩ or more?	Go to step **5**.	Repair the short circuit to ground in harness between ECM connector and intake oil control solenoid RH connector.
5	**CHECK HARNESS BETWEEN ECM AND INTAKE OIL CONTROL SOLENOID RH CONNECTOR.** Measure the resistance of harness between ECM connector and intake oil control solenoid RH. ***Connector & terminal*** ***(E158) No. 20 — (E38) No. 2:***	Is the resistance less than 1 Ω?	Go to step **6**.	Repair the open circuit in harness between ECM connector and intake oil control solenoid RH connector.
6	**CHECK INTAKE OIL CONTROL SOLENOID RH.** Measure the resistance between intake oil control solenoid RH terminals. ***Terminals*** ***No. 1 — No. 2:***	Is the resistance 6 — 12 Ω?	Repair the poor contact of intake oil control solenoid RH connector.	Replace the intake oil control solenoid RH. <Ref. to FU(H4DO)-54, Oil Control Solenoid.>

1. OUTLINE OF DIAGNOSIS

Detect open or short circuit of the oil control solenoid.
Judge as NG when the current is small even though the duty signal is large.

2. EXECUTION CONDITION

Secondary Parameters	Execution condition
Battery voltage	≥ 10.9 V
Oil control solenoid control duty	≥ 99.61 %

3. GENERAL DRIVING CYCLE

Always perform the diagnosis continuously.

4. DIAGNOSTIC METHOD

If the duration of time while the following conditions are met is longer than the time indicated, judge as NG.

Judgment Value

Malfunction Criteria	Threshold Value
Oil control solenoid control present current	< 0.306 A

Time Needed for Diagnosis: 2000 ms
Malfunction Indicator Light Illumination: Illuminates as soon as a malfunction occurs.

D: DTC P0011 "A" CAMSHAFT POSITION - TIMING OVER-ADVANCED OR SYSTEM PERFORMANCE BANK 1

DTC DETECTING CONDITION:
Detected when two consecutive driving cycles with fault occur.
TROUBLE SYMPTOM:
- Engine stalls.
- Improper idling

CAUTION:
After servicing or replacing faulty parts, perform Clear Memory Mode <Ref. to EN(H4DO)(diag)-78, OPERATION, Clear Memory Mode.>, and Inspection Mode <Ref. to EN(H4DO)(diag)-64, PROCEDURE, Inspection Mode.>.

	Step	Check	Yes	No
1	**IDENTIFYING FAULTY PART.** 1) Perform the Clear Memory Mode. <Ref. to EN(H4DO)(diag)-78, Clear Memory Mode.> 2) Replace the defective oil control solenoid by the other (RH or LH, intake side or exhaust side) oil control solenoid. 3) Perform appropriate drive cycle. <Ref. to EN(H4DO)(diag)-67, Drive Cycle.> 4) Make sure that the fault occurrence (DTC and incorrect advancing) has shifted to the other location.	Did the detected DTC shift to the location where the oil control solenoid was replaced?	Replace the faulty oil control solenoid.	Go to step **2**.
2	**CHECK CURRENT DATA.** 1) Start the engine and let it idle. 2) Read the value of «VVT Adv. Ang. Amount R» using the Subaru Select Monitor. NOTE: For detailed operation procedures, refer to “Read Current Data For Engine”. <Ref. to EN(H4DO)(diag)-45, Subaru Select Monitor.>	Is the value of «VVT Adv. Ang. Amount R» approx. 0 deg?	Go to step **3**.	Check the following item and repair or replace if necessary. • Intake cam sprocket (clog or dirt of oil routing, setting of spring) • Intake camshaft (dirt, damage of camshaft)
3	**CHECK CURRENT DATA.** 1) Drive with acceleration and deceleration at 80 km/h (50 MPH) or less. NOTE: Drive to an extent that the duty output of oil flow control solenoid valve increases. 2) Read the values of «OCV Duty R» and «VVT Adv. Ang. Amount R» using the Subaru Select Monitor. NOTE: For detailed operation procedures, refer to “Read Current Data For Engine”. <Ref. to EN(H4DO)(diag)-45, Subaru Select Monitor.>	When the value of «OCV Duty R» increases more than 10%, is the value of «VVT Adv. Ang. Amount R» approx. 0 deg?	Check the following item and repair or replace if necessary. • Intake cam sprocket (clog or dirt of oil routing, setting of spring) • Intake camshaft (dirt, damage of camshaft)	Perform the following procedures, and clean the oil routing. Replace the engine oil and idle the engine for 5 minutes, and then replace the oil filter and engine oil. <Ref. to LU(H4DO)-10, REPLACEMENT, Engine Oil.> <Ref. to LU(H4DO)-22, Engine Oil Filter.>

1. OUTLINE OF DIAGNOSIS

Detect the AVCS system malfunction.
Judge NG when the amount of AVCS actual timing advance does not approach to the amount of AVCS target timing advance.

2. EXECUTION CONDITION

Secondary Parameters	Execution condition
Battery voltage	≥ 10.9 V
AVCS control	Operation

3. GENERAL DRIVING CYCLE

Perform the diagnosis continuously while AVCS is operating.

4. DIAGNOSTIC METHOD

When the conditions during which the differences of AVCS target timing advance amount and AVCS actual timing advance amount is large continues for certain amount of time.
Judge as NG when the following conditions are established within the predetermined time.

Judgment Value

Malfunction Criteria	Threshold Value
(Target position – Actual position)	> 10 °CA or < –10 °CA

Time Needed for Diagnosis: 5000 ms
Malfunction Indicator Light Illumination: Illuminates when malfunction occurs in 2 continuous driving cycles.

E: DTC P0016 CRANKSHAFT POSITION - CAMSHAFT POSITION CORRELATION BANK 1 SENSOR A

DTC DETECTING CONDITION:
Detected when two consecutive driving cycles with fault occur.
TROUBLE SYMPTOM:
- Engine stalls.
- Improper idling

CAUTION:
After servicing or replacing faulty parts, perform Clear Memory Mode <Ref. to EN(H4DO)(diag)-78, OPERATION, Clear Memory Mode.>, and Inspection Mode <Ref. to EN(H4DO)(diag)-64, PROCEDURE, Inspection Mode.>.

	Step	Check	Yes	No
1	**CHECK FOR ANY OTHER DTC ON DISPLAY.**	Is DTC other than P0016 and P0018 displayed?	Check the appropriate DTC using the "List of Diagnostic Trouble Code (DTC)". <Ref. to EN(H4DO)(diag)-102, List of Diagnostic Trouble Code (DTC).>	Go to step **2**.
2	**CHECK INTAKE OIL CONTROL SOLENOID RH.** Check the intake oil control solenoid RH. <Ref. to FU(H4DO)-55, INSPECTION, Oil Control Solenoid.>	Is the intake oil control solenoid RH normal?	Go to step **3**.	Replace the intake oil control solenoid RH. <Ref. to FU(H4DO)-54, Oil Control Solenoid.>
3	**CHECK INSTALLATION CONDITION OF TIMING CHAIN.** Using ST and by turning the crankshaft, align the alignment marks of crank sprocket, intake cam sprocket and exhaust cam sprocket. <Ref. to ME(H4DO)-97, Timing Chain Assembly.> ST 18252AA000 CRANKSHAFT SOCKET	Is the timing chain installed in the proper position?	Go to step **4**.	Correct the installation condition of timing chain. <Ref. to ME(H4DO)-97, Timing Chain Assembly.>
4	**CHECK CAM CARRIER FILTER.** Check the filter installed to the cam carrier. <Ref. to ME(H4DO)-166, INSPECTION, Cam Carrier.>	Is the cam carrier filter normal?	Replace the intake cam sprocket RH. <Ref. to ME(H4DO)-118, Cam Sprocket.> After the operation is complete, go to the next step. Go to step **5**.	Replace the cam carrier filter. <Ref. to ME(H4DO)-140, Cam Carrier.>
5	**CHECK DTC.** 1) Clear the memory using the Subaru Select Monitor or general scan tool. <Ref. to EN(H4DO)(diag)-78, OPERATION, Clear Memory Mode.> 2) Perform drive cycle N. <Ref. to EN(H4DO)(diag)-75, DRIVE CYCLE N, PROCEDURE, Drive Cycle.>	Is the same DTC as current diagnosis output?	Replace the ECM. <Ref. to FU(H4DO)-82, Engine Control Module (ECM).>	End.

1. OUTLINE OF DIAGNOSIS

Detect the AVCS system malfunction.
Judge as NG when standard timing advance amount is far from learning angle.

2. EXECUTION CONDITION

Secondary Parameters	Execution condition
Battery voltage	≥ 10.9 V
Elapsed time after the neutral position switch changed	≥ 3000 ms
AVCS learning	In operation

3. GENERAL DRIVING CYCLE

Perform the diagnosis continuously after starting engine and while AVCS is not operating.

4. DIAGNOSTIC METHOD

Judge as NG when the absolute value of the difference between cam signal input position and learning value is out of specification.

Diagnosis 1

If the duration of time while the following conditions are met is longer than the time indicated, judge as NG.

Judgment Value

Malfunction Criteria	Threshold Value
|Crankshaft position when camshaft position sensor signal is input – Learning value|	> 10 °CA

Time Needed for Diagnosis: 5000 ms

Diagnosis 2

Judgment Value

Malfunction Criteria	Threshold Value
Camshaft position sensor signal input position	< –2.119 °CA or > 61.77 °CA

Time Needed for Diagnosis: 5000 ms

Malfunction Indicator Light Illumination: Illuminates when malfunction occurs in 2 continuous driving cycles.

NOTE:
Initial standard learning value is the value of crank angle initially input at the production plant. And then it will be updated every time normal judgment has been completed. Learning value will not be updated if NG judgment occurs because timing belt or chain derails suddenly in process or because wrong assembly occurs during servicing.

F: DTC P0018 CRANKSHAFT POSITION - CAMSHAFT POSITION CORRELATION BANK 2 SENSOR A

DTC DETECTING CONDITION:
Detected when two consecutive driving cycles with fault occur.
TROUBLE SYMPTOM:
- Engine stalls.
- Improper idling

CAUTION:
After servicing or replacing faulty parts, perform Clear Memory Mode <Ref. to EN(H4DO)(diag)-78, OPERATION, Clear Memory Mode.>, and Inspection Mode <Ref. to EN(H4DO)(diag)-64, PROCEDURE, Inspection Mode.>.

	Step	Check	Yes	No
1	**CHECK FOR ANY OTHER DTC ON DISPLAY.**	Is DTC other than P0016 and P0018 displayed?	Check the appropriate DTC using the "List of Diagnostic Trouble Code (DTC)". <Ref. to EN(H4DO)(diag)-102, List of Diagnostic Trouble Code (DTC).>	Go to step **2**.
2	**CHECK INTAKE OIL CONTROL SOLENOID LH.** Check the intake oil control solenoid LH. <Ref. to FU(H4DO)-55, INSPECTION, Oil Control Solenoid.>	Is the intake oil control solenoid LH normal?	Go to step **3**.	Replace the intake oil control solenoid LH. <Ref. to FU(H4DO)-54, Oil Control Solenoid.>
3	**CHECK INSTALLATION CONDITION OF TIMING CHAIN.** Using ST and by turning the crankshaft, align the alignment marks of crank sprocket, intake cam sprocket and exhaust cam sprocket. <Ref. to ME(H4DO)-97, Timing Chain Assembly.> ST 18252AA000 CRANKSHAFT SOCKET	Is the timing chain installed in the proper position?	Go to step **4**.	Correct the installation condition of timing chain. <Ref. to ME(H4DO)-97, Timing Chain Assembly.>
4	**CHECK CAM CARRIER FILTER.** Check the filter installed to the cam carrier. <Ref. to ME(H4DO)-166, INSPECTION, Cam Carrier.>	Is the cam carrier filter normal?	Replace the intake cam sprocket LH. <Ref. to ME(H4DO)-118, Cam Sprocket.> After the operation is complete, go to the next step. Go to step **5**.	Replace the cam carrier filter. <Ref. to ME(H4DO)-140, Cam Carrier.>
5	**CHECK DTC.** 1) Clear the memory using the Subaru Select Monitor or general scan tool. <Ref. to EN(H4DO)(diag)-78, OPERATION, Clear Memory Mode.> 2) Perform drive cycle N. <Ref. to EN(H4DO)(diag)-75, DRIVE CYCLE N, PROCEDURE, Drive Cycle.>	Is the same DTC as current diagnosis output?	Replace the ECM. <Ref. to FU(H4DO)-82, Engine Control Module (ECM).>	End.

1. OUTLINE OF DIAGNOSIS

NOTE:
For the detection standard, refer to DTC P0016. <Ref. to EN(H4DO)(diag)-117, DTC P0016 CRANKSHAFT POSITION - CAMSHAFT POSITION CORRELATION BANK 1 SENSOR A, Diagnostic Procedure with Diagnostic Trouble Code (DTC).>

G: DTC P0020 "A" CAMSHAFT POSITION ACTUATOR CONTROL CIRCUIT/ OPEN BANK 2

DTC DETECTING CONDITION:
Immediately at fault recognition
TROUBLE SYMPTOM:
Improper idling

CAUTION:
After servicing or replacing faulty parts, perform Clear Memory Mode <Ref. to EN(H4DO)(diag)-78, OPERATION, Clear Memory Mode.>, and Inspection Mode <Ref. to EN(H4DO)(diag)-64, PROCEDURE, Inspection Mode.>.
WIRING DIAGRAM:
• Engine Electrical System ENGINE TYPE FB (WITHOUT PUSH BUTTON START) <Ref. to WI-170, ENGINE TYPE FB (WITHOUT PUSH BUTTON START), WIRING DIAGRAM, Engine Electrical System.>
• Engine Electrical System ENGINE TYPE FB (WITH PUSH BUTTON START) <Ref. to WI-184, ENGINE TYPE FB (WITH PUSH BUTTON START), WIRING DIAGRAM, Engine Electrical System.>

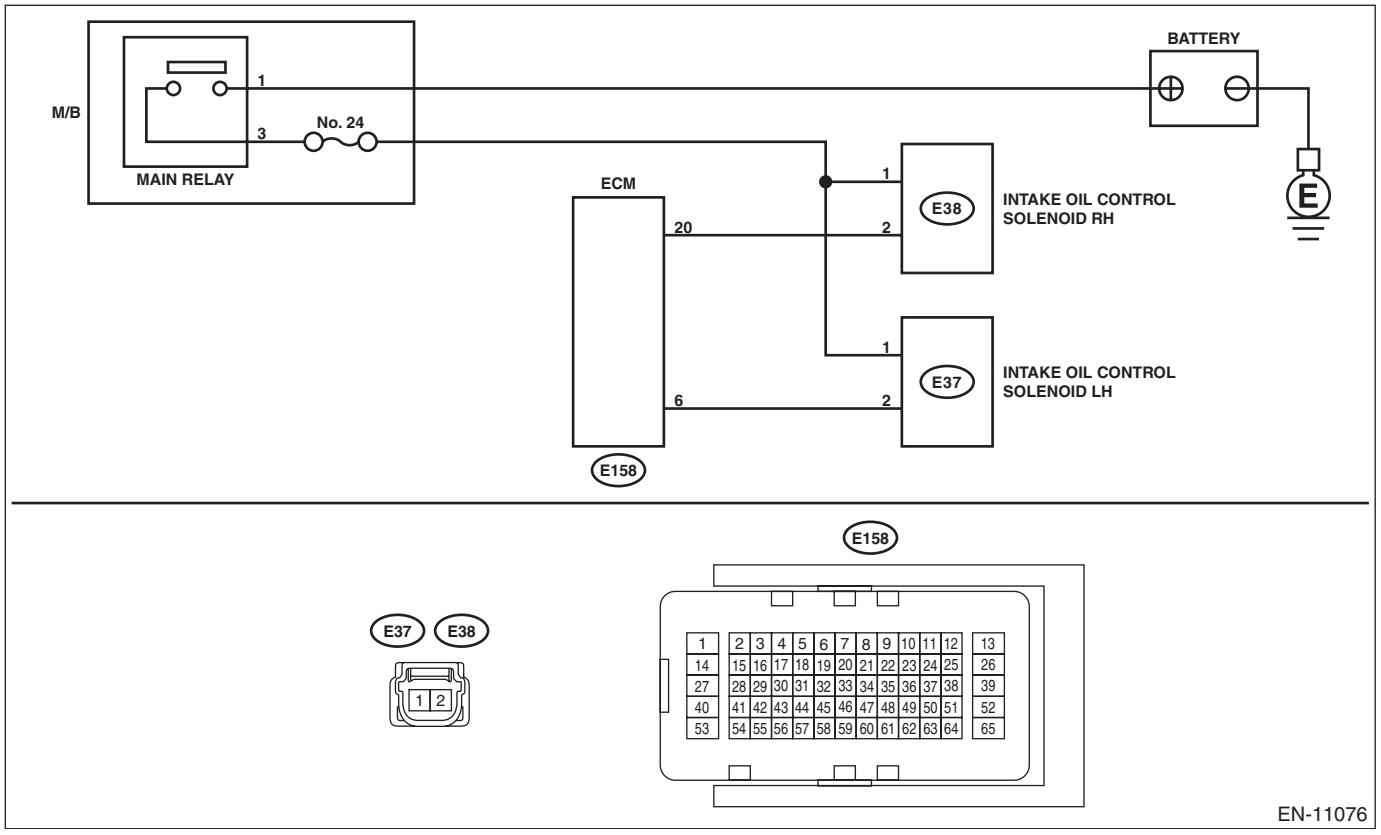

Step		Check	Yes	No
1	**CHECK OUTPUT SIGNAL OF ECM.** 1) Turn the ignition switch to ON. 2) Measure the voltage between ECM connector and chassis ground. ***Connector & terminal*** ***(B158) No. 6 (+) — Chassis ground (–):***	Is the voltage 10 V or more?	Go to step **2**.	Go to step **3**.

	Step	Check	Yes	No
2	**CHECK FOR POOR CONTACT.** Check for poor contact of ECM connector.	Is there poor contact of ECM connector?	Repair the poor contact of ECM connector.	Even if DTC is detected, the circuit has returned to a normal condition at this time. Reproduce the failure, and then perform the diagnosis again. NOTE: In this case, temporary poor contact of connector, temporary open or short circuit of harness may be the cause.
3	**CHECK POWER SUPPLY TO THE INTAKE OIL CONTROL SOLENOID LH.** Measure the voltage between intake oil control solenoid LH connector and engine ground. ***Connector & terminal*** ***(E37) No. 1 (+) — Engine ground (–):***	Is the voltage 10 V or more?	Go to step **4**.	Repair the power supply circuit.
4	**CHECK HARNESS BETWEEN ECM AND INTAKE OIL CONTROL SOLENOID LH CONNECTOR.** 1) Turn the ignition switch to OFF. 2) Disconnect the connectors from ECM and intake oil control solenoid LH. 3) Measure the resistance between intake oil control solenoid LH connector and engine ground. ***Connector & terminal*** ***(E37) No. 2 — Engine ground:***	Is the resistance 1 MΩ or more?	Go to step **5**.	Repair the short circuit to ground in harness between ECM connector and intake oil control solenoid LH connector.
5	**CHECK HARNESS BETWEEN ECM AND INTAKE OIL CONTROL SOLENOID LH CONNECTOR.** Measure the resistance of harness between ECM connector and intake oil control solenoid LH. ***Connector & terminal*** ***(E158) No. 6 — (E37) No. 2:***	Is the resistance less than 1 Ω?	Go to step **6**.	Repair the open circuit in harness between ECM connector and intake oil control solenoid LH connector.
6	**CHECK INTAKE OIL CONTROL SOLENOID LH.** Measure the resistance between intake oil control solenoid LH terminals. ***Terminals*** ***No. 1 — No. 2:***	Is the resistance 6 — 12 Ω?	Repair the poor contact of intake oil control solenoid LH connector.	Replace the intake oil control solenoid LH. <Ref. to FU(H4DO)-54, Oil Control Solenoid.>

1. OUTLINE OF DIAGNOSIS

NOTE:
For the detection standard, refer to DTC P0010. <Ref. to EN(H4DO)(diag)-112, DTC P0010 "A" CAMSHAFT POSITION ACTUATOR CONTROL CIRCUIT/OPEN BANK 1, Diagnostic Procedure with Diagnostic Trouble Code (DTC).>

H: DTC P0021 "A" CAMSHAFT POSITION - TIMING OVER-ADVANCED OR SYSTEM PERFORMANCE BANK 2

DTC DETECTING CONDITION:
Detected when two consecutive driving cycles with fault occur.
TROUBLE SYMPTOM:
- Engine stalls.
- Improper idling

CAUTION:
After servicing or replacing faulty parts, perform Clear Memory Mode <Ref. to EN(H4DO)(diag)-78, OPERATION, Clear Memory Mode.>, and Inspection Mode <Ref. to EN(H4DO)(diag)-64, PROCEDURE, Inspection Mode.>.

	Step	Check	Yes	No
1	**IDENTIFYING FAULTY PART.** 1) Perform the Clear Memory Mode. <Ref. to EN(H4DO)(diag)-78, Clear Memory Mode.> 2) Replace the defective oil control solenoid by the other (RH or LH, intake side or exhaust side) oil control solenoid. 3) Perform appropriate drive cycle. <Ref. to EN(H4DO)(diag)-67, Drive Cycle.> 4) Make sure that the fault occurrence (DTC and incorrect advancing) has shifted to the other location.	Did the detected DTC shift to the location where the oil control solenoid was replaced?	Replace the faulty oil control solenoid.	Go to step **2**.
2	**CHECK CURRENT DATA.** 1) Start the engine and let it idle. 2) Read the value of «VVT Adv. Ang. Amount L» using the Subaru Select Monitor. NOTE: For detailed operation procedures, refer to "Read Current Data For Engine". <Ref. to EN(H4DO)(diag)-45, Subaru Select Monitor.>	Is the value of «VVT Adv. Ang. Amount L» approx. 0 deg?	Go to step **3**.	Check the following item and repair or replace if necessary. • Intake cam sprocket (clog or dirt of oil routing, setting of spring) • Intake camshaft (dirt, damage of camshaft)
3	**CHECK CURRENT DATA.** 1) Drive with acceleration and deceleration at 80 km/h (50 MPH) or less. NOTE: Drive to an extent that the duty output of oil flow control solenoid valve increases. 2) Read the values of «OCV Duty L» and «VVT Adv. Ang. Amount L» using the Subaru Select Monitor. NOTE: For detailed operation procedures, refer to "Read Current Data For Engine". <Ref. to EN(H4DO)(diag)-45, Subaru Select Monitor.>	When the value of «OCV Duty L» increases more than 10%, is the value of «VVT Adv. Ang. Amount L» approx. 0 deg?	Check the following item and repair or replace if necessary. • Intake cam sprocket (clog or dirt of oil routing, setting of spring) • Intake camshaft (dirt, damage of camshaft)	Perform the following procedures, and clean the oil routing. Replace the engine oil and idle the engine for 5 minutes, and then replace the oil filter and engine oil. <Ref. to LU(H4DO)-10, REPLACEMENT, Engine Oil.> <Ref. to LU(H4DO)-22, Engine Oil Filter.>

1. OUTLINE OF DIAGNOSIS

NOTE:
For the detection standard, refer to DTC P0011. <Ref. to EN(H4DO)(diag)-115, DTC P0011 "A" CAMSHAFT POSITION - TIMING OVER-ADVANCED OR SYSTEM PERFORMANCE BANK 1, Diagnostic Procedure with Diagnostic Trouble Code (DTC).>

I: DTC P0030 A/F / O2 HEATER CONTROL CIRCUIT BANK 1 SENSOR 1

DTC DETECTING CONDITION:

Detected when two consecutive driving cycles with fault occur.

CAUTION:

After servicing or replacing faulty parts, perform Clear Memory Mode <Ref. to EN(H4DO)(diag)-78, OPERATION, Clear Memory Mode.>, and Inspection Mode <Ref. to EN(H4DO)(diag)-64, PROCEDURE, Inspection Mode.>.

WIRING DIAGRAM:

- Engine Electrical System ENGINE TYPE FB (WITHOUT PUSH BUTTON START) <Ref. to WI-170, ENGINE TYPE FB (WITHOUT PUSH BUTTON START), WIRING DIAGRAM, Engine Electrical System.>
- Engine Electrical System ENGINE TYPE FB (WITH PUSH BUTTON START) <Ref. to WI-184, ENGINE TYPE FB (WITH PUSH BUTTON START), WIRING DIAGRAM, Engine Electrical System.>

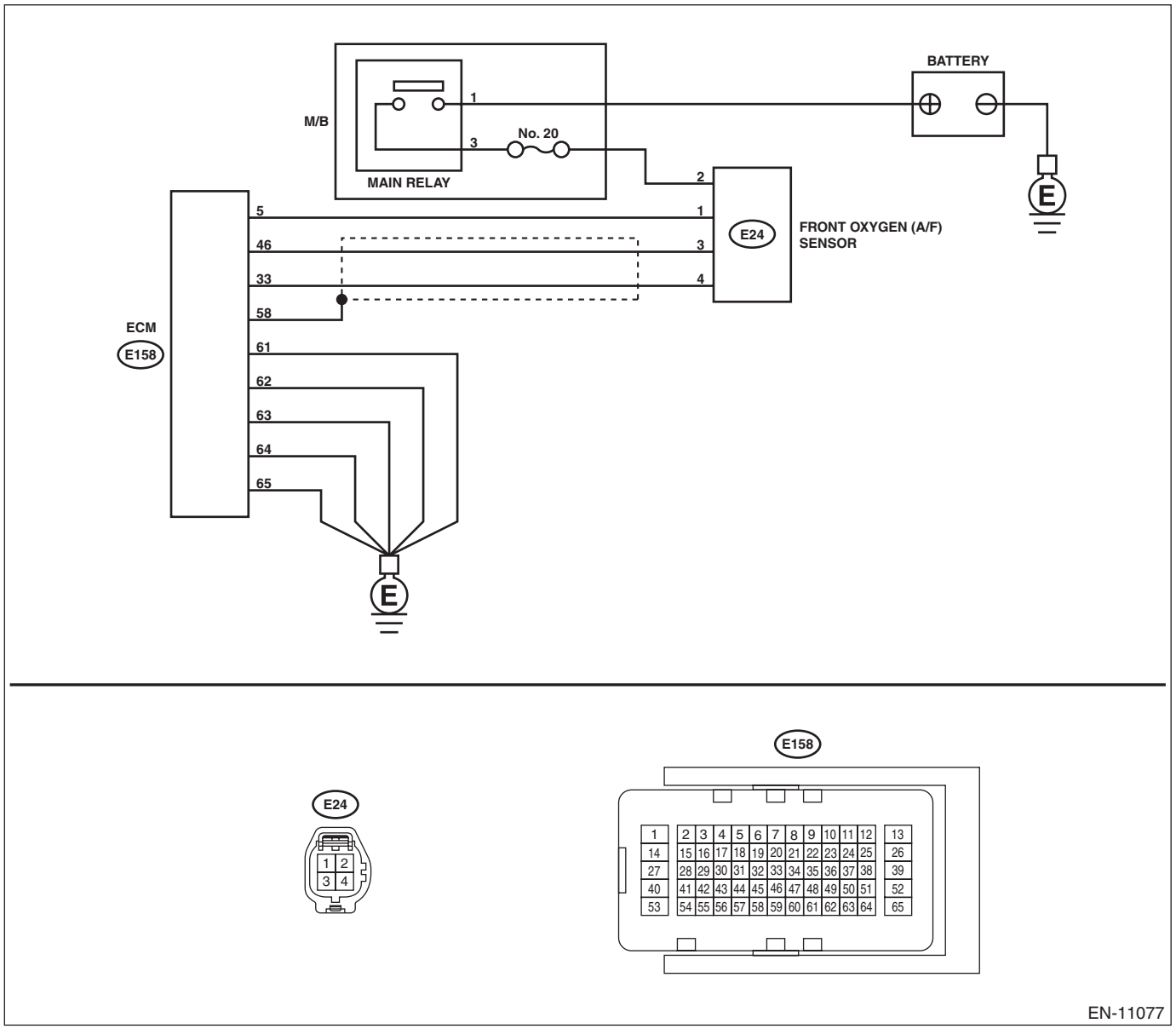

	Step	Check	Yes	No
1	**CHECK HARNESS BETWEEN ECM AND FRONT OXYGEN (A/F) SENSOR CONNECTOR.** 1) Start and warm up the engine. 2) Turn the ignition switch to OFF. 3) Disconnect the connectors from ECM and front oxygen (A/F) sensor. 4) Measure the resistance of harness between ECM connector and front oxygen (A/F) sensor connector. ***Connector & terminal*** ***(B158) No. 5 — (E24) No. 1:*** ***(B158) No. 46 — (E24) No. 3:*** ***(B158) No. 33 — (E24) No. 4:***	Is the resistance less than 1 Ω?	Go to step **2**.	Repair the open circuit of harness between ECM connector and front oxygen (A/F) sensor connector.
2	**CHECK FRONT OXYGEN (A/F) SENSOR.** Measure the resistance between front oxygen (A/F) sensor terminals. ***Terminals*** ***No. 1 — No. 2:***	Is the resistance 2 — 3 Ω?	Go to step **3**.	Replace the front oxygen (A/F) sensor. <Ref. to FU(H4DO)-76, Front Oxygen (A/F) Sensor.>
3	**CHECK FOR POOR CONTACT.** Check for poor contact of ECM and front oxygen (A/F) sensor connector.	Is there poor contact of ECM or front oxygen (A/F) sensor connector?	Repair the poor contact of ECM or front oxygen (A/F) sensor connector.	Replace the front oxygen (A/F) sensor. <Ref. to FU(H4DO)-76, Front Oxygen (A/F) Sensor.>

1. OUTLINE OF DIAGNOSIS

Detect functional errors of the front oxygen (A/F) sensor heater.
Judge as NG when it is determined that the front oxygen (A/F) sensor impedance is large when looking at engine status such as deceleration fuel cut.

2. COMPONENT DESCRIPTION

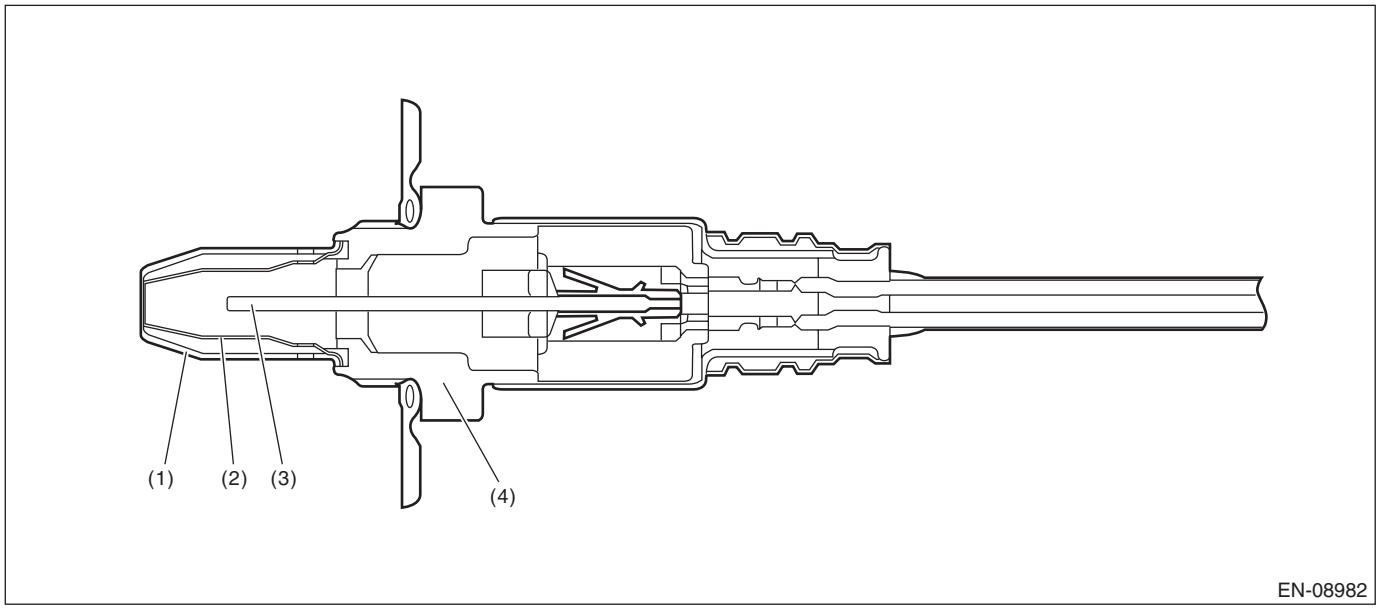

(1) Element cover (outer)
(2) Element cover (inner)
(3) Sensor element
(4) Sensor housing

3. EXECUTION CONDITION

Secondary Parameters	Execution condition
Battery voltage	≥ 10.9 V
Front oxygen (A/F) sensor heater control duty	> 17 %
After fuel cut	≥ 20000 ms

4. GENERAL DRIVING CYCLE

Perform the diagnosis continuously when 20000 ms have elapsed since the fuel cut was initiated after starting the heater control.

5. DIAGNOSTIC METHOD

If the duration of time while the following conditions are met is longer than the time indicated, judge as NG.

Judgment Value

Malfunction Criteria	Threshold Value
Front oxygen (A/F) sensor impedance	> 82 Ω

Time Needed for Diagnosis: 10000 ms
Malfunction Indicator Light Illumination: Illuminates when malfunction occurs in 2 continuous driving cycles.

J: DTC P0031 A/F / O2 HEATER CONTROL CIRCUIT LOW BANK 1 SENSOR 1

DTC DETECTING CONDITION:
Immediately at fault recognition

CAUTION:
After servicing or replacing faulty parts, perform Clear Memory Mode <Ref. to EN(H4DO)(diag)-78, OPERATION, Clear Memory Mode.>, and Inspection Mode <Ref. to EN(H4DO)(diag)-64, PROCEDURE, Inspection Mode.>.

WIRING DIAGRAM:

- Engine Electrical System ENGINE TYPE FB (WITHOUT PUSH BUTTON START) <Ref. to WI-170, ENGINE TYPE FB (WITHOUT PUSH BUTTON START), WIRING DIAGRAM, Engine Electrical System.>
- Engine Electrical System ENGINE TYPE FB (WITH PUSH BUTTON START) <Ref. to WI-184, ENGINE TYPE FB (WITH PUSH BUTTON START), WIRING DIAGRAM, Engine Electrical System.>

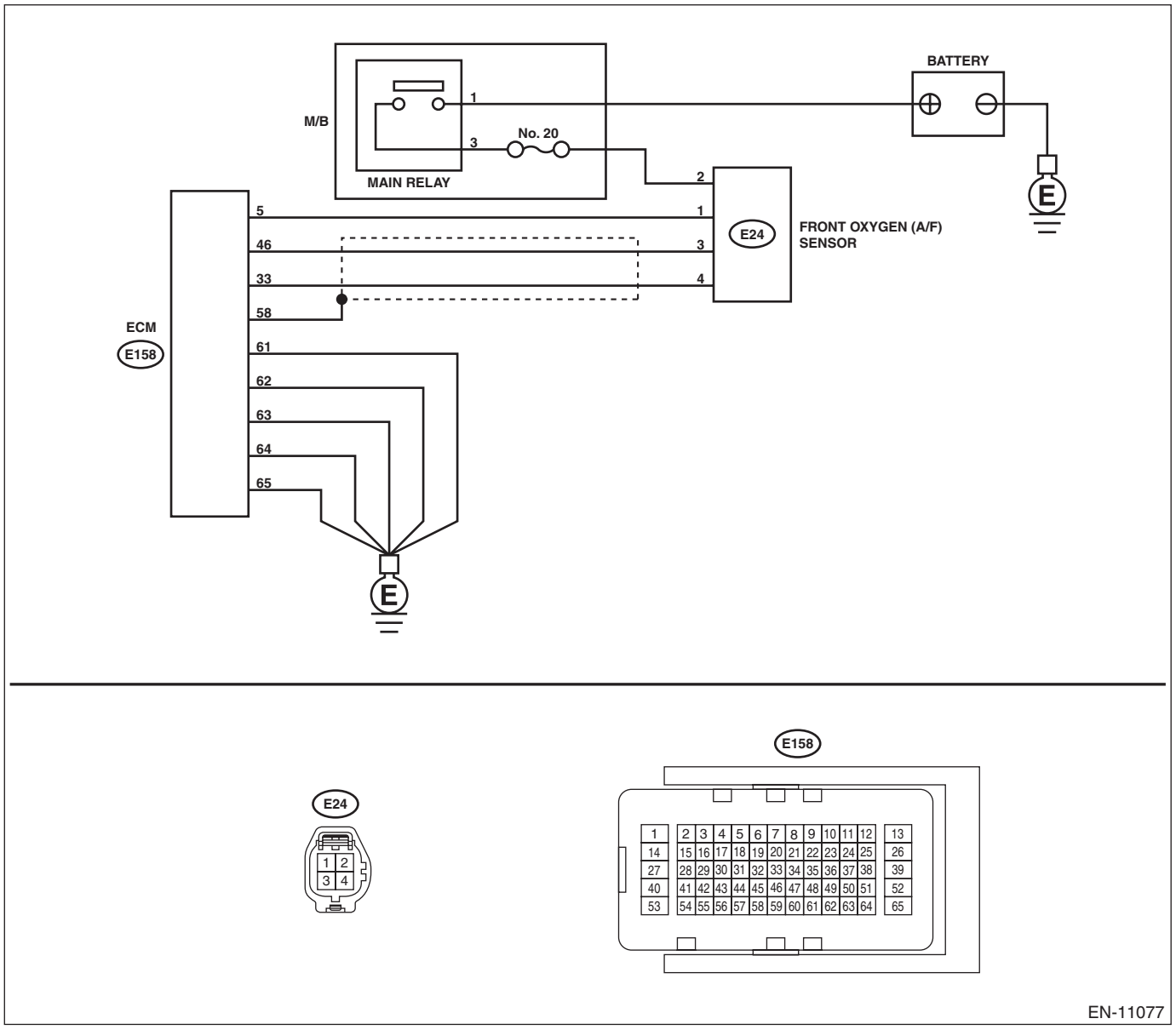

	Step	Check	Yes	No
1	**CHECK POWER SUPPLY TO FRONT OXYGEN (A/F) SENSOR.** 1) Turn the ignition switch to OFF. 2) Disconnect the connectors from front oxygen (A/F) sensor. 3) Turn the ignition switch to ON. 4) Measure the voltage between front oxygen (A/F) sensor connector and engine ground. ***Connector & terminal*** ***(E24) No. 2 (+) — Engine ground (–):***	Is the voltage 10 V or more?	Go to step **2**.	Repair the power supply line. NOTE: In this case, repair the following item: • Open circuit in harness between A/F, oxygen sensor relay connector and front oxygen (A/F) sensor connector • Poor contact of A/F, oxygen sensor relay connector • Poor contact of coupling connector • Malfunction of A/F, oxygen sensor relay
2	**CHECK HARNESS BETWEEN ECM AND FRONT OXYGEN (A/F) SENSOR CONNECTOR.** 1) Turn the ignition switch to OFF. 2) Disconnect the connector from ECM. 3) Measure the resistance between ECM connector and front oxygen (A/F) sensor connector. ***Connector & terminal*** ***(B158) No. 5 — (E24) No. 1:***	Is the resistance less than 1 Ω?	Go to step **3**.	Repair the open circuit of harness between ECM connector and front oxygen (A/F) sensor connector.
3	**CHECK GROUND CIRCUIT FOR ECM.** Measure the resistance of harness between ECM connector and chassis ground. ***Connector & terminal*** ***(E158) No. 61 — Chassis ground:*** ***(E158) No. 62 — Chassis ground:*** ***(E158) No. 63 — Chassis ground:*** ***(E158) No. 64 — Chassis ground:*** ***(E158) No. 65 — Chassis ground:***	Is the resistance less than 5 Ω?	Go to step **4**.	Repair the open circuit in harness between ECM connector and engine ground.
4	**CHECK FRONT OXYGEN (A/F) SENSOR.** Measure the resistance between front oxygen (A/F) sensor terminals. ***Terminals*** ***No. 1 — No. 2:***	Is the resistance 2 — 3 Ω?	Repair the poor contact of ECM connector.	Replace the front oxygen (A/F) sensor. <Ref. to FU(H4DO)-76, Front Oxygen (A/F) Sensor.>

1. OUTLINE OF DIAGNOSIS

Detect front oxygen (A/F) sensor heater open or short circuit.
The front oxygen (A/F) sensor heater performs duty control, and the output terminal voltage at ON is 0 V, and the output terminal voltage at OFF is the battery voltage.
Judge as NG when the terminal voltage remains Low.

2. COMPONENT DESCRIPTION

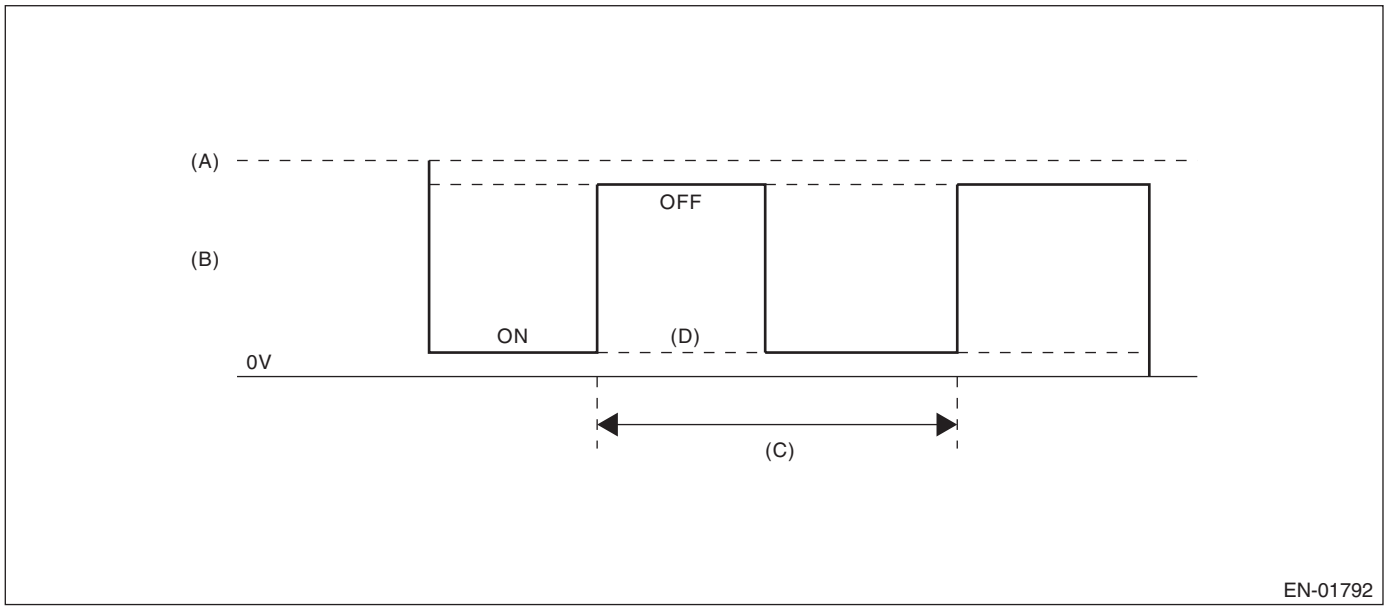

(A) Battery voltage
(B) Front oxygen (A/F) sensor heater output voltage
(C) 128 ms
(D) Low error

3. EXECUTION CONDITION

Secondary Parameters	Execution condition
Battery voltage	≥ 10.9 V
Front oxygen (A/F) sensor heater control duty	< 87.5 %

4. GENERAL DRIVING CYCLE

Perform the diagnosis continuously after the enable conditions have been established.

5. DIAGNOSTIC METHOD

If the duration of time while the following conditions are met is longer than the time indicated, judge as NG.

Judgment Value

Malfunction Criteria	Threshold Value
Output voltage	< 0.66 V

Time Needed for Diagnosis: 1 second
Malfunction Indicator Light Illumination: Illuminates as soon as a malfunction occurs.

K: DTC P0032 A/F / O2 HEATER CONTROL CIRCUIT HIGH BANK 1 SENSOR 1

DTC DETECTING CONDITION:
Immediately at fault recognition

CAUTION:
After servicing or replacing faulty parts, perform Clear Memory Mode <Ref. to EN(H4DO)(diag)-78, OPERATION, Clear Memory Mode.>, and Inspection Mode <Ref. to EN(H4DO)(diag)-64, PROCEDURE, Inspection Mode.>.

WIRING DIAGRAM:

- Engine Electrical System ENGINE TYPE FB (WITHOUT PUSH BUTTON START) <Ref. to WI-170, ENGINE TYPE FB (WITHOUT PUSH BUTTON START), WIRING DIAGRAM, Engine Electrical System.>
- Engine Electrical System ENGINE TYPE FB (WITH PUSH BUTTON START) <Ref. to WI-184, ENGINE TYPE FB (WITH PUSH BUTTON START), WIRING DIAGRAM, Engine Electrical System.>

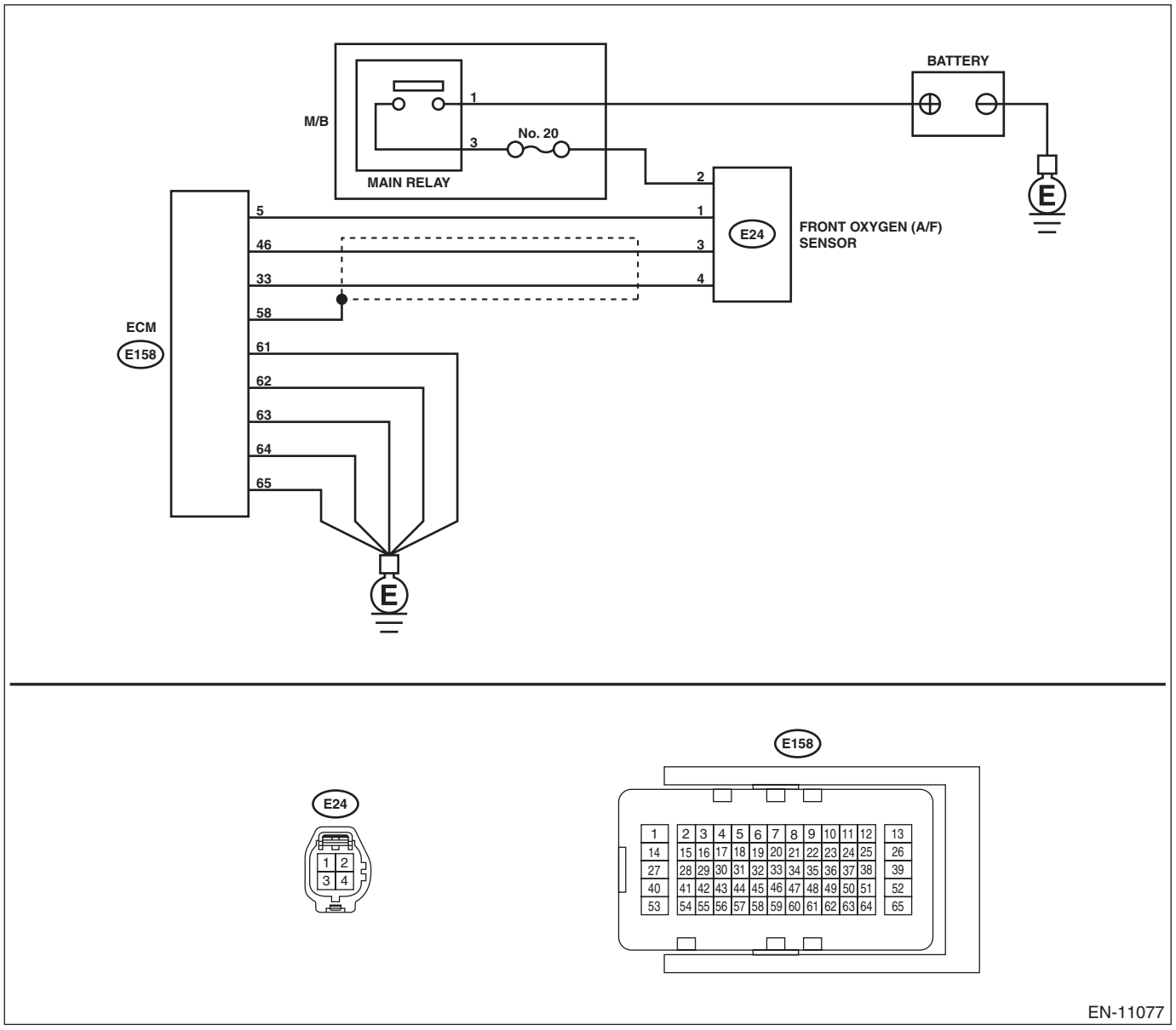

	Step	Check	Yes	No
1	**CHECK HARNESS BETWEEN ECM AND FRONT OXYGEN (A/F) SENSOR CONNECTOR.** 1) Turn the ignition switch to OFF. 2) Measure the voltage between ECM connector and chassis ground. ***Connector & terminal*** ***(E158) No. 5 (+) — Chassis ground (–):***	Is the voltage 10 V or more?	Repair the short circuit to power in the harness between ECM connector and front oxygen (A/F) sensor connector.	Go to step **2**.
2	**CHECK GROUND CIRCUIT FOR ECM.** 1) Disconnect the connector from ECM. 2) Measure the resistance between ECM connector and chassis ground. ***Connector & terminal*** ***(E158) No. 61 — Chassis ground:*** ***(E158) No. 62 — Chassis ground:*** ***(E158) No. 63 — Chassis ground:*** ***(E158) No. 64 — Chassis ground:*** ***(E158) No. 65 — Chassis ground:***	Is the resistance less than 5 Ω?	Repair the poor contact of ECM connector.	Repair the open circuit in harness between ECM connector and engine ground.

1. OUTLINE OF DIAGNOSIS

Detect front oxygen (A/F) sensor heater open or short circuit.
The front oxygen (A/F) sensor heater performs duty control, and the output terminal voltage at ON is 0 V, and the output terminal voltage at OFF is the battery voltage.
Judge as NG when the terminal voltage remains High.

2. COMPONENT DESCRIPTION

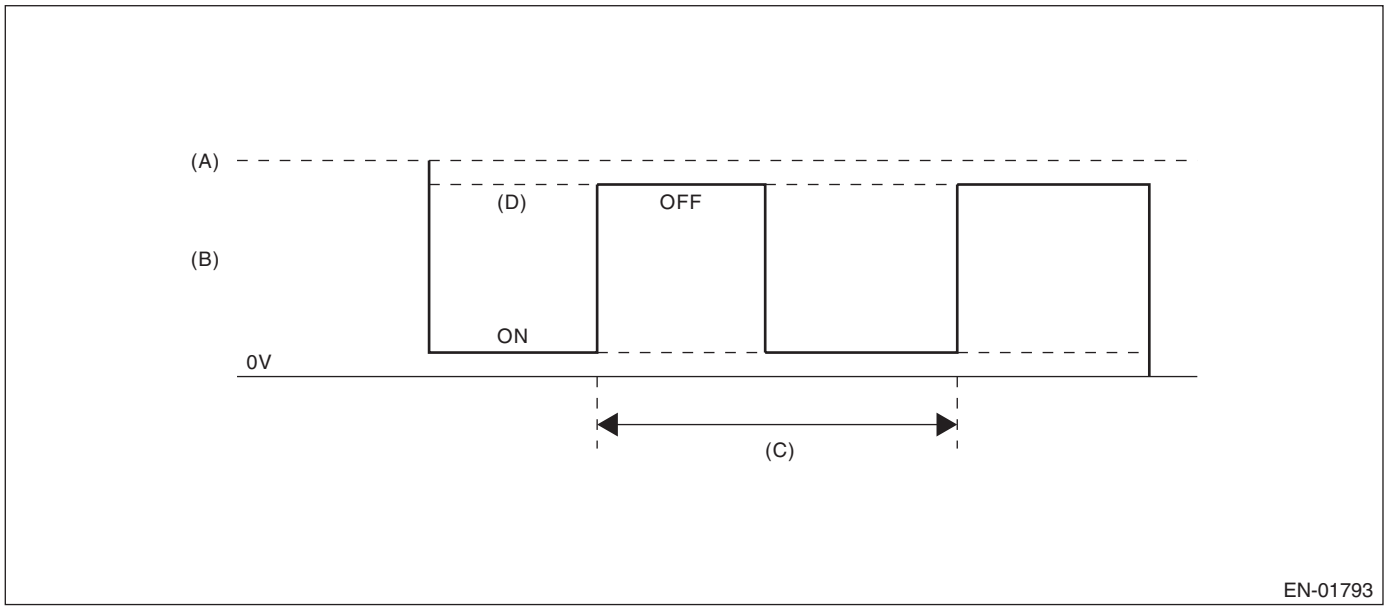

(A) Battery voltage
(B) Front oxygen (A/F) sensor heater output voltage
(C) 128 ms
(D) High error

3. EXECUTION CONDITION

Secondary Parameters	Execution condition
Battery voltage	≥ 10.9 V
Front oxygen (A/F) sensor heater control duty	> 12.5 %

4. GENERAL DRIVING CYCLE

Perform the diagnosis continuously after the enable conditions have been established.

5. DIAGNOSTIC METHOD

If the duration of time while the following conditions are met is longer than the time indicated, judge as NG.

Judgment Value

Malfunction Criteria	Threshold Value
Output voltage	≥ 5.62 V

Time Needed for Diagnosis: 2 seconds
Malfunction Indicator Light Illumination: Illuminates as soon as a malfunction occurs.

L: DTC P0037 A/F / O2 HEATER CONTROL CIRCUIT LOW BANK 1 SENSOR 2

DTC DETECTING CONDITION:

Detected when two consecutive driving cycles with fault occur.

CAUTION:

After servicing or replacing faulty parts, perform Clear Memory Mode <Ref. to EN(H4DO)(diag)-78, OPERATION, Clear Memory Mode.>, and Inspection Mode <Ref. to EN(H4DO)(diag)-64, PROCEDURE, Inspection Mode.>.

WIRING DIAGRAM:

- Engine Electrical System ENGINE TYPE FB (WITHOUT PUSH BUTTON START) <Ref. to WI-170, ENGINE TYPE FB (WITHOUT PUSH BUTTON START), WIRING DIAGRAM, Engine Electrical System.>
- Engine Electrical System ENGINE TYPE FB (WITH PUSH BUTTON START) <Ref. to WI-184, ENGINE TYPE FB (WITH PUSH BUTTON START), WIRING DIAGRAM, Engine Electrical System.>

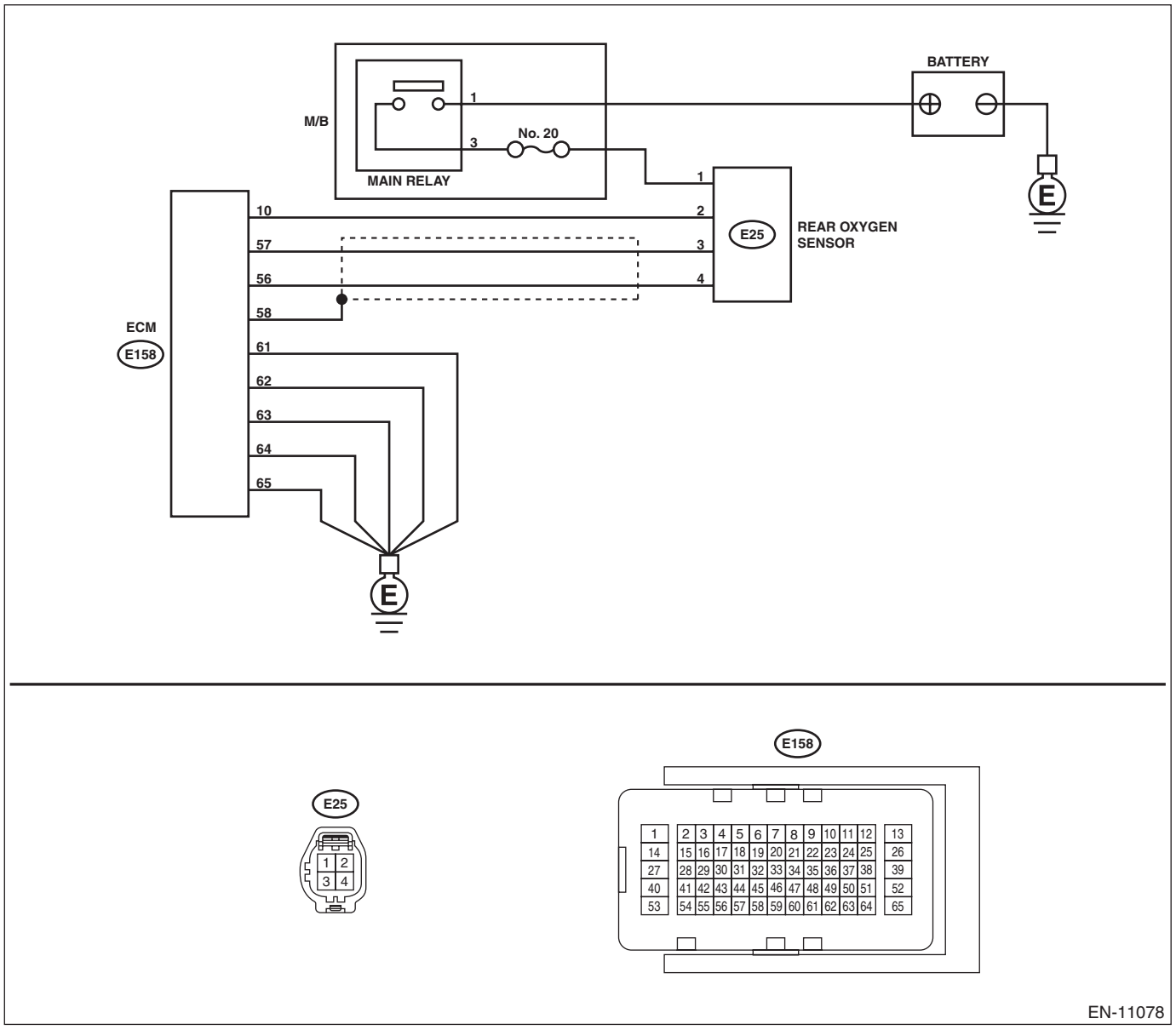

	Step	Check	Yes	No
1	**CHECK POWER SUPPLY TO REAR OXYGEN SENSOR.** 1) Turn the ignition switch to OFF. 2) Disconnect the connector from rear oxygen sensor. 3) Turn the ignition switch to ON. 4) Measure the voltage between rear oxygen sensor connector and engine ground. ***Connector & terminal*** ***(E25) No. 1 (+) — Engine ground (–):***	Is the voltage 10 V or more?	Go to step **2**.	Repair the power supply line. Or replace the main relay. NOTE: In this case, repair the following item: • Open circuit in harness between A/F, oxygen sensor relay connector and rear oxygen sensor connector • Poor contact of A/F, oxygen sensor relay connector • Poor contact of coupling connector • Malfunction of A/F, oxygen sensor relay
2	**CHECK HARNESS BETWEEN ECM AND REAR OXYGEN SENSOR CONNECTOR.** 1) Turn the ignition switch to OFF. 2) Disconnect the connector from ECM. 3) Measure the resistance between ECM connector and oxygen sensor connector. ***Connector & terminal*** ***(E158) No. 10 — (E25) No. 2:***	Is the resistance less than 1 Ω?	Go to step **3**.	Repair the open circuit of harness between ECM connector and rear oxygen sensor connector.
3	**CHECK GROUND CIRCUIT FOR ECM.** Measure the resistance of harness between ECM connector and chassis ground. ***Connector & terminal*** ***(E158) No. 61 — Chassis ground:*** ***(E158) No. 62 — Chassis ground:*** ***(E158) No. 63 — Chassis ground:*** ***(E158) No. 64 — Chassis ground:*** ***(E158) No. 65 — Chassis ground:***	Is the resistance less than 5 Ω?	Go to step **4**.	Repair the open circuit in harness between ECM connector and engine ground.
4	**CHECK REAR OXYGEN SENSOR.** Measure the resistance between rear oxygen sensor terminals. ***Terminals*** ***No. 2 — No. 1:***	Is the resistance 5 — 7 Ω?	Repair the poor contact of ECM connector.	Replace the rear oxygen sensor. <Ref. to FU(H4DO)-79, Rear Oxygen Sensor.>

1. OUTLINE OF DIAGNOSIS

Detect the rear oxygen sensor heater open or short circuit.
The rear oxygen sensor heater performs duty control, and the output terminal voltage at ON is 0 V, and the output terminal voltage at OFF is the battery voltage.
Judge as NG when the terminal voltage remains Low.

2. COMPONENT DESCRIPTION

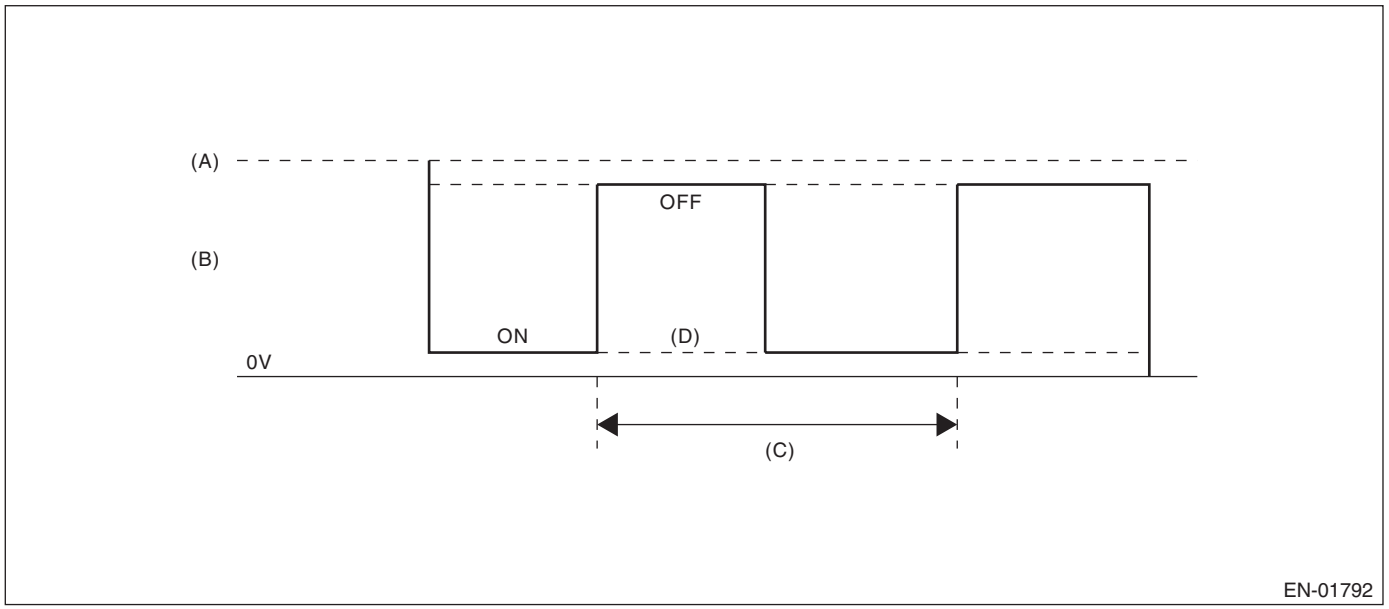

(A) Battery voltage
(B) Output voltage of the rear oxygen sensor heater
(C) 256 ms (cycles)
(D) Low error

3. EXECUTION CONDITION

Secondary Parameters	Execution condition
Battery voltage	≥ 10.9 V
Rear oxygen sensor heater control duty	< 75 %

4. GENERAL DRIVING CYCLE

Perform the diagnosis continuously after the enable conditions have been established.

5. DIAGNOSTIC METHOD

If the duration of time while the following conditions are met is longer than the time indicated, judge as NG.

Judgment Value

Malfunction Criteria	Threshold Value
Output voltage	< Battery voltage × 0.2

Time Needed for Diagnosis: 10 seconds
Malfunction Indicator Light Illumination: Illuminates when malfunction occurs in 2 continuous driving cycles.

M: DTC P0038 A/F / O2 HEATER CONTROL CIRCUIT HIGH BANK 1 SENSOR 2

DTC DETECTING CONDITION:

Detected when two consecutive driving cycles with fault occur.

CAUTION:

After servicing or replacing faulty parts, perform Clear Memory Mode <Ref. to EN(H4DO)(diag)-78, OPERATION, Clear Memory Mode.>, and Inspection Mode <Ref. to EN(H4DO)(diag)-64, PROCEDURE, Inspection Mode.>.

WIRING DIAGRAM:

- Engine Electrical System ENGINE TYPE FB (WITHOUT PUSH BUTTON START) <Ref. to WI-170, ENGINE TYPE FB (WITHOUT PUSH BUTTON START), WIRING DIAGRAM, Engine Electrical System.>
- Engine Electrical System ENGINE TYPE FB (WITH PUSH BUTTON START) <Ref. to WI-184, ENGINE TYPE FB (WITH PUSH BUTTON START), WIRING DIAGRAM, Engine Electrical System.>

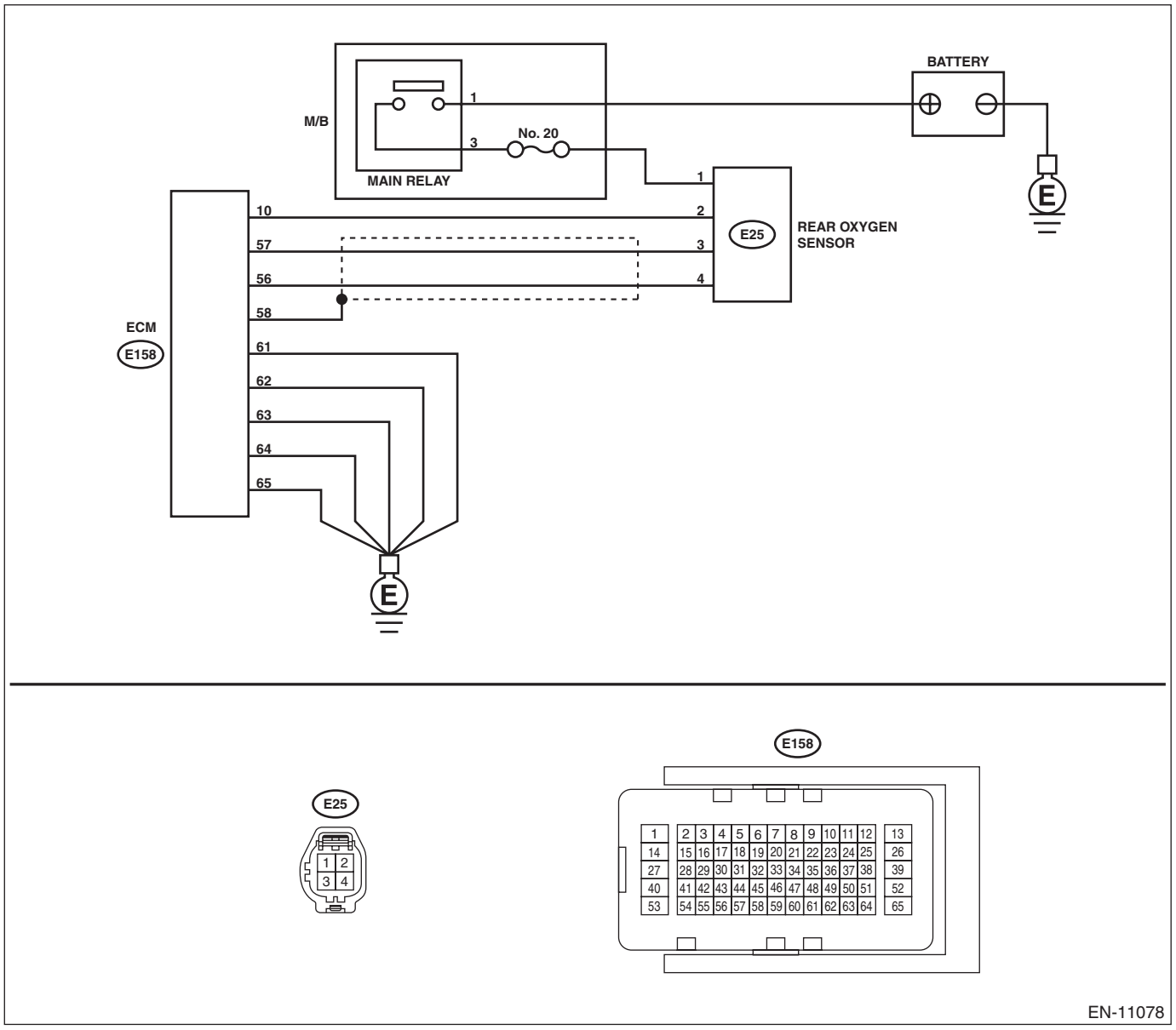

	Step	Check	Yes	No
1	**CHECK HARNESS BETWEEN ECM AND REAR OXYGEN SENSOR CONNECTOR.** 1) Turn the ignition switch to OFF. 2) Measure the voltage between ECM connector and chassis ground. ***Connector & terminal*** ***(E158) No. 10 (+) — Chassis ground (–):***	Is the voltage 10 V or more?	Repair the short circuit to power in the harness between ECM connector and rear oxygen sensor connector.	Go to step **2**.
2	**CHECK GROUND CIRCUIT FOR ECM.** 1) Disconnect the connector from ECM. 2) Measure the resistance between ECM connector and chassis ground. ***Connector & terminal*** ***(E158) No. 61 — Chassis ground:*** ***(E158) No. 62 — Chassis ground:*** ***(E158) No. 63 — Chassis ground:*** ***(E158) No. 64 — Chassis ground:*** ***(E158) No. 65 — Chassis ground:***	Is the resistance less than 5 Ω?	Repair the poor contact of ECM connector.	Repair the open circuit in harness between ECM connector and engine ground.

1. OUTLINE OF DIAGNOSIS

Detect the rear oxygen sensor heater open or short circuit.
The rear oxygen sensor heater performs duty control, and the output terminal voltage at ON is 0 V, and the output terminal voltage at OFF is the battery voltage.
Judge as NG when the terminal voltage remains High.

2. COMPONENT DESCRIPTION

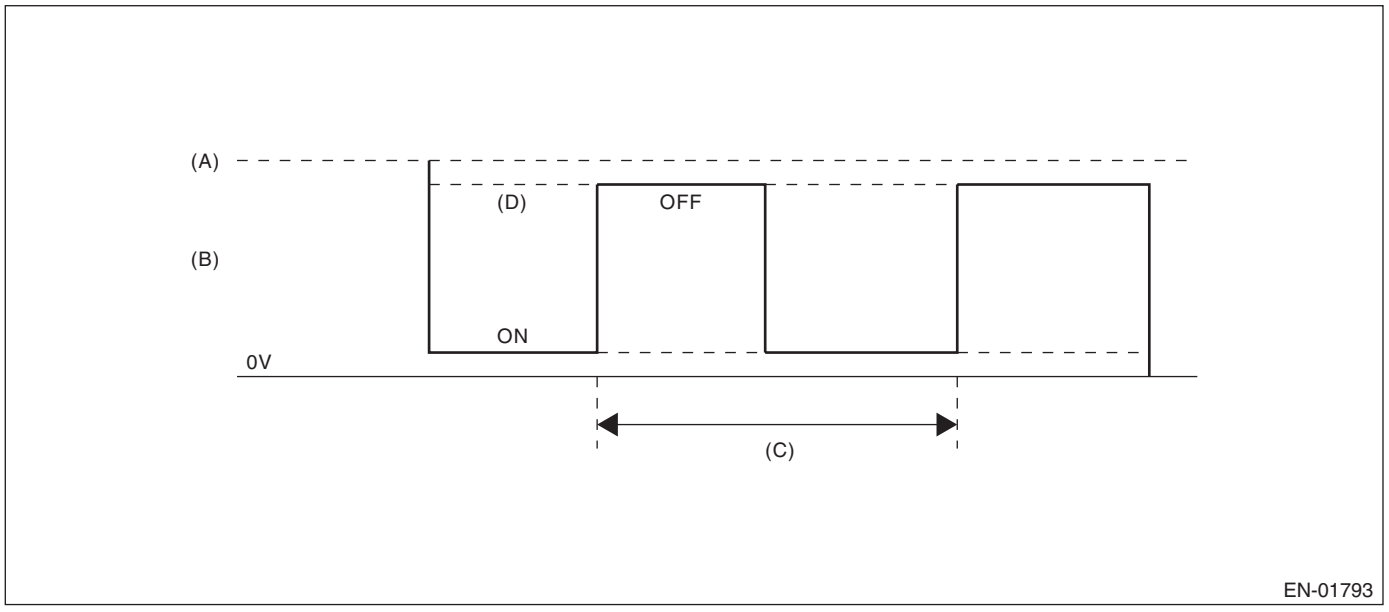

(A) Battery voltage
(B) Output voltage of the rear oxygen sensor heater
(C) 256 ms (cycles)
(D) High error

3. EXECUTION CONDITION

Secondary Parameters	Execution condition
Battery voltage	≥ 10.9 V
Rear oxygen sensor heater control duty	≥ 20 %

4. GENERAL DRIVING CYCLE

Perform the diagnosis continuously after the enable conditions have been established.

5. DIAGNOSTIC METHOD

If the duration of time while the following conditions are met is longer than the time indicated, judge as NG.

Judgment Value

Malfunction Criteria	Threshold Value
Output voltage	> Battery voltage × 0.3

Time Needed for Diagnosis: 2.56 seconds
Malfunction Indicator Light Illumination: Illuminates when malfunction occurs in 2 continuous driving cycles.

N: DTC P0068 MAP/MAF - THROTTLE POSITION CORRELATION

DTC DETECTING CONDITION:
Detected when two consecutive driving cycles with fault occur.

CAUTION:
After servicing or replacing faulty parts, perform Clear Memory Mode <Ref. to EN(H4DO)(diag)-78, OPERATION, Clear Memory Mode.>, and Inspection Mode <Ref. to EN(H4DO)(diag)-64, PROCEDURE, Inspection Mode.>.

	Step	Check	Yes	No
1	**CHECK AIR INTAKE SYSTEM.**	Are there holes, loose bolts or disconnection of hose on air intake system?	Repair the air intake system.	Go to step **2**.
2	**CHECK MANIFOLD ABSOLUTE PRESSURE SENSOR.** 1) Start the engine and warm up engine until coolant temperature is higher than 75°C (167°F). 2) For CVT models, set the select lever to "P" range or "N" range, and for MT models, place the shift lever in the neutral position. 3) Turn the A/C switch to OFF. 4) Turn all the accessory switches to OFF. 5) Read the value of «Mani. Absolute Pressure» using the Subaru Select Monitor or a general scan tool. NOTE: • Subaru Select Monitor For detailed operation procedures, refer to "Read Current Data For Engine". <Ref. to EN(H4DO)(diag)-45, Subaru Select Monitor.> • General scan tool For detailed operation procedures, refer to the general scan tool operation manual.	Is the value in «Mani. Absolute Pressure» 73.3 — 106.6 kPa (550 — 800 mmHg, 21.65 — 31.50 inHg) when the ignition is turned ON, and 20.0 — 46.7 kPa (150 — 350 mmHg, 5.91 — 13.78 inHg) during idling?	Go to step **3**.	Replace the manifold absolute pressure sensor. <Ref. to FU(H4DO)-63, Manifold Absolute Pressure Sensor.>
3	**CHECK THROTTLE OPENING ANGLE.** Using the Subaru Select Monitor or a general scan tool, read the value in «Throttle Opening Angle». NOTE: • Subaru Select Monitor For detailed operation procedures, refer to "Read Current Data For Engine". <Ref. to EN(H4DO)(diag)-45, Subaru Select Monitor.> • General scan tool For detailed operation procedures, refer to the general scan tool operation manual.	Is the value in «Throttle Opening Angle» with the throttle fully closed less than 5%?	Go to step **4**.	Replace the electronic throttle control. <Ref. to FU(H4DO)-14, Throttle Body.>
4	**CHECK THROTTLE OPENING ANGLE.**	Is the value in «Throttle Opening Angle» with the throttle fully open 85% or more?	Replace the manifold absolute pressure sensor. <Ref. to FU(H4DO)-63, Manifold Absolute Pressure Sensor.>	Replace the electronic throttle control. <Ref. to FU(H4DO)-14, Throttle Body.>

1. OUTLINE OF DIAGNOSIS

Detect problems in the intake manifold pressure sensor output properties.
Judge as NG when the intake air pressure AD value is Low whereas it seemed to be High from the viewpoint of engine condition, or when it is High whereas it seemed to be Low from the engine condition.

2. COMPONENT DESCRIPTION

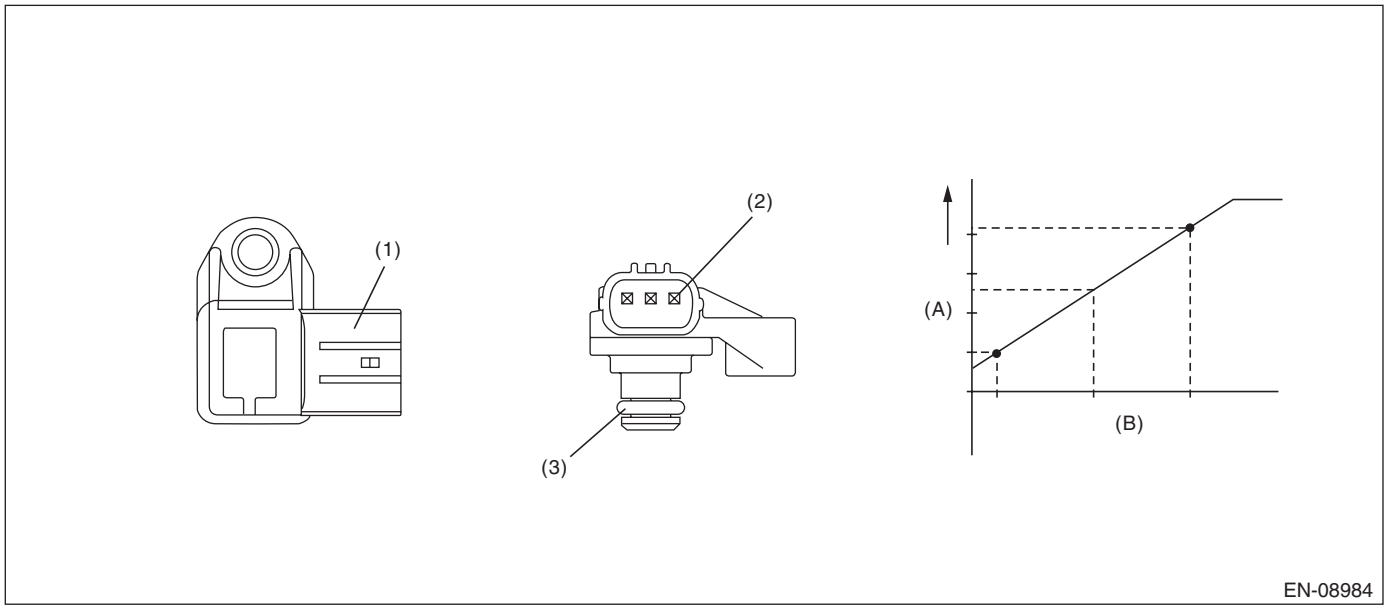

(A) Output voltage
(B) Absolute pressure
(1) Connector
(2) Terminals
(3) O-ring

3. EXECUTION CONDITION

Secondary Parameters	Execution condition
Low	
Engine coolant temperature	≥ 60 °C (140 °F)
Engine speed	< 2500 rpm
Throttle position	≥ 12 ° (CVT model) ≥ 10 ° (MT model)
Engine load	> 0.6 g/rev (0.02 oz/rev) (CVT model) > 0.5 g/rev (0.02 oz/rev) (MT model)
High	
Engine coolant temperature	≥ 60 °C (140 °F)
Engine speed	525 rpm — 875 rpm (CVT model) 550 rpm — 850 rpm (MT model)
Throttle position	< 5.7 °
Engine load	< 0.44 g/rev (0.02 oz/rev)

4. GENERAL DRIVING CYCLE

Perform the diagnosis continuously after idling.

5. DIAGNOSTIC METHOD

Judge as NG when Low side or High side becomes NG.
If the duration of time while the following conditions are met is longer than the time indicated, judge as NG.

Judgment Value

Malfunction Criteria	Threshold Value
Low	
Output voltage	< 1.46 V (CVT model) < 1.17 V (MT model)
High	
Output voltage	≥ 3.5 V

Time Needed for Diagnosis:
Low side: 5000 ms
High side: 5000 ms
Malfunction Indicator Light Illumination: Illuminates when malfunction occurs in 2 continuous driving cycles.

O: DTC P0071 AMBIENT AIR TEMPERATURE SENSOR CIRCUIT "A" RANGE/ PERFORMANCE

DTC DETECTING CONDITION:
Detected when two consecutive driving cycles with fault occur.

CAUTION:
After servicing or replacing faulty parts, perform Clear Memory Mode <Ref. to EN(H4DO)(diag)-78, OPERATION, Clear Memory Mode.>, and Inspection Mode <Ref. to EN(H4DO)(diag)-64, PROCEDURE, Inspection Mode.>.

	Step	Check	Yes	No
1	**CHECK FOR ANY OTHER DTC ON DISPLAY.**	Is any other DTC displayed?	Check the appropriate DTC using the “List of Diagnostic Trouble Code (DTC)”. <Ref. to EN(H4DO)(diag)-102, List of Diagnostic Trouble Code (DTC).>	Go to step **2**.
2	**CHECK CURRENT DATA.** 1) Turn the ignition switch to ON. 2) Read the value of «Ambient Air Temperature» using the Subaru Select Monitor or a general scan tool. NOTE: • Subaru Select Monitor For detailed operation procedures, refer to “Current Data Display For HVAC System”. <Ref. to AC(diag)-47, Read Current Data.> • General scan tool For detailed operation procedures, refer to the general scan tool operation manual. 3) Read the change of the value in «Ambient Air Temperature» while heating and cooling the ambient sensor using a hair dryer. **CAUTION:** **Do not heat the part to the temperature where you cannot touch it with your bare hand in order to prevent burning yourself and protect the part.**	Does the value of «Ambient Air Temperature» change between heating and cooling?	Repair the poor contact of ECM connector.	Replace the ambient sensor. <Ref. to AC-71, Ambient Sensor.>

1. OUTLINE OF DIAGNOSIS

Detect the malfunction of ambient temperature sensor characteristics.
After the engine starts after the specified period of soaking time has elapsed, judge by correlation between ambient temperature sensor value, intake air temperature sensor value and engine coolant temperature sensor value. Judge as NG when the differences are both above the specified value by comparing between ambient air temperature and intake air temperature, ambient air temperature and engine coolant temperature.

2. COMPONENT DESCRIPTION

Ambient temperature sensor is connected to combination meter. ECM receives the data of ambient temperature sensor via CAN communication with combination meter.

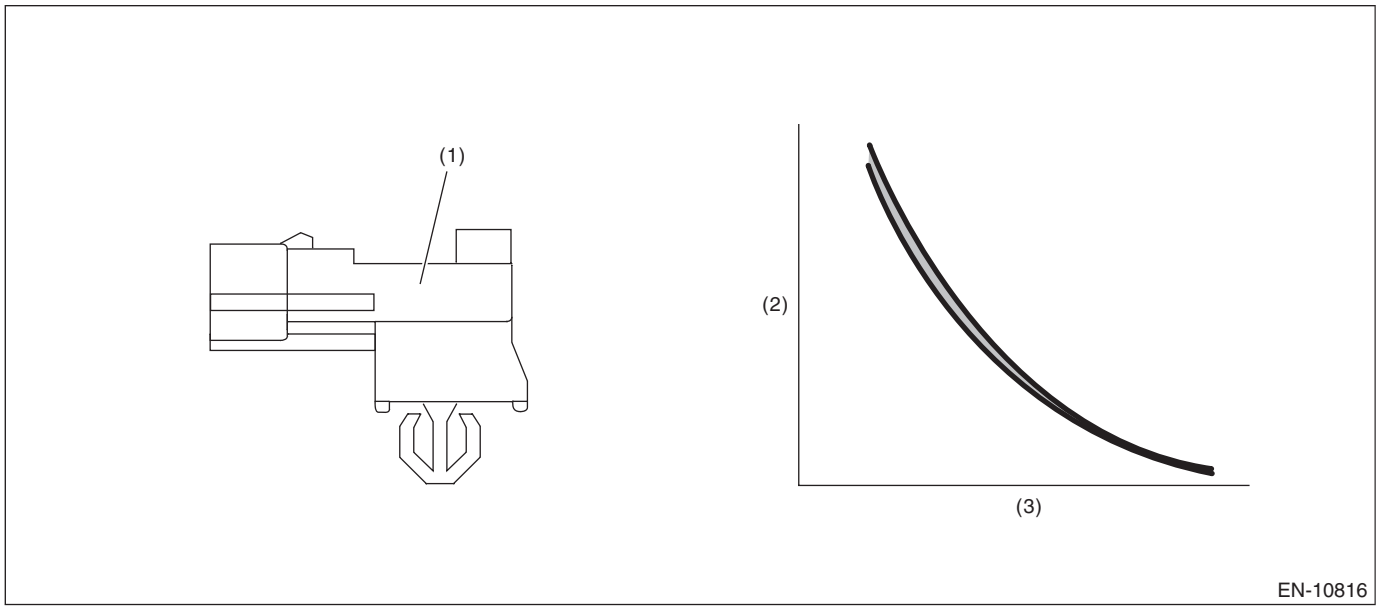

(1) Ambient sensor (2) Resistance value (kΩ) (3) Ambient air temperature (°C (°F))

3. EXECUTION CONDITION

Secondary Parameters	Execution condition
Soaking time	≥ 21600 s
Block heater judgment	Completed
Block heater operation	Not in operation

4. GENERAL DRIVING CYCLE

Perform the diagnosis only once after the engine starts after a certain period of soaking time.

5. DIAGNOSTIC METHOD

If the duration of time while the following conditions are met is longer than the time indicated, judge as NG.

Judgment Value

Malfunction Criteria	Threshold Value
|Ambient air temperature 30 sec. after engine start – Intake air temperature 30 sec. after engine start|	> Value from Map
|Ambient air temperature at engine start – Engine coolant temperature at engine start|	> 25 °C (45°F)

Map

Ambient temperature °C (°F)	–30 (–22)	30 (86)	45 (113)	60 (140)
|Ambient air temperature 30 sec. after engine start – Intake air temperature 30 sec. after engine start| °C (°F)	20 (36°F)	20 (36°F)	32 (57.6°F)	32 (57.6°F)

Time Needed for Diagnosis: Less than 1 second
Malfunction Indicator Light Illumination: Illuminates when malfunction occurs in 2 continuous driving cycles.

P: DTC P0072 AMBIENT AIR TEMPERATURE SENSOR CIRCUIT "A" LOW

DTC DETECTING CONDITION:

Immediately at fault recognition

	Step	Check	Yes	No
1	**CHECK DTC.** Check for DTC. <Ref. to EN(H4DO)(diag)-63, Read Diagnostic Trouble Code (DTC).>	Is P0072 or P0073 displayed in «Present fault»?	Go to step **2**.	Even if DTC is detected, the circuit has returned to a normal condition at this time. Reproduce the failure, and then perform the diagnosis again. NOTE: In this case, temporary poor contact of connector, temporary open or short circuit of harness may be the cause.
2	**CHECK COMBINATION METER.** Check the combination meter system. <Ref. to MET(diag)-2, Basic Diagnostic Procedure.>	Is the combination meter system normal?	Repair the poor contact of ECM connector.	Replace the combination meter system. <Ref. to IDI-11, Combination Meter.>

1. OUTLINE OF DIAGNOSIS

Detect the open or short circuit of ambient temperature sensor.
Judge as NG if out of specification.

2. COMPONENT DESCRIPTION

Ambient temperature sensor is connected to combination meter. ECM receives the data of ambient temperature sensor via CAN communication with combination meter.

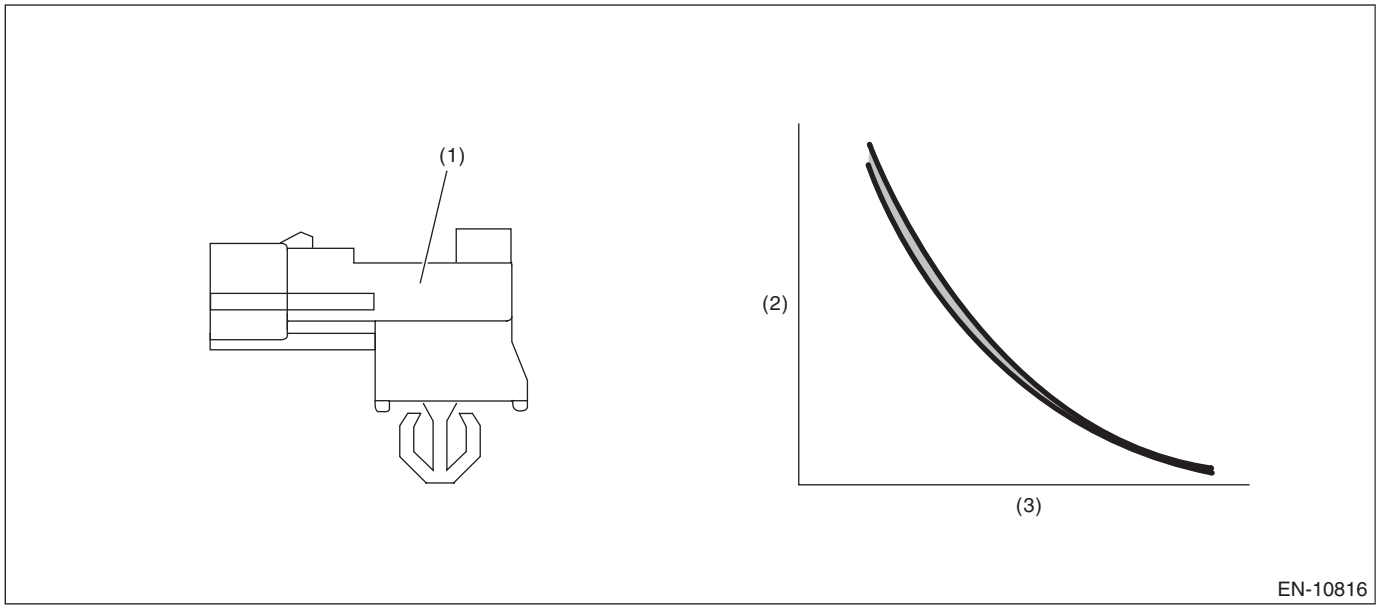

(1) Ambient sensor (2) Resistance value (kΩ) (3) Ambient air temperature (°C (°F))

3. EXECUTION CONDITION

Secondary Parameters	Execution condition
Battery voltage	≥ 10.9 V

4. GENERAL DRIVING CYCLE

Always perform the diagnosis continuously.

5. DIAGNOSTIC METHOD

If the duration of time while the following conditions are met is longer than the time indicated, judge as NG.

Judgment Value

Malfunction Criteria	Threshold Value
Output voltage	< 0.42 V

Time Needed for Diagnosis: 2500 ms
Malfunction Indicator Light Illumination: Illuminates as soon as a malfunction occurs.

Q: DTC P0073 AMBIENT AIR TEMPERATURE SENSOR CIRCUIT "A" HIGH

NOTE:
For the diagnostic procedure, refer to DTC P0072. <Ref. to EN(H4DO)(diag)-144, DTC P0072 AMBIENT AIR TEMPERATURE SENSOR CIRCUIT "A" LOW, Diagnostic Procedure with Diagnostic Trouble Code (DTC).>

1. OUTLINE OF DIAGNOSIS

Detect the open or short circuit of ambient temperature sensor.
Judge as NG if out of specification.

2. COMPONENT DESCRIPTION

Ambient temperature sensor is connected to combination meter. ECM receives the data of ambient temperature sensor via CAN communication with combination meter.

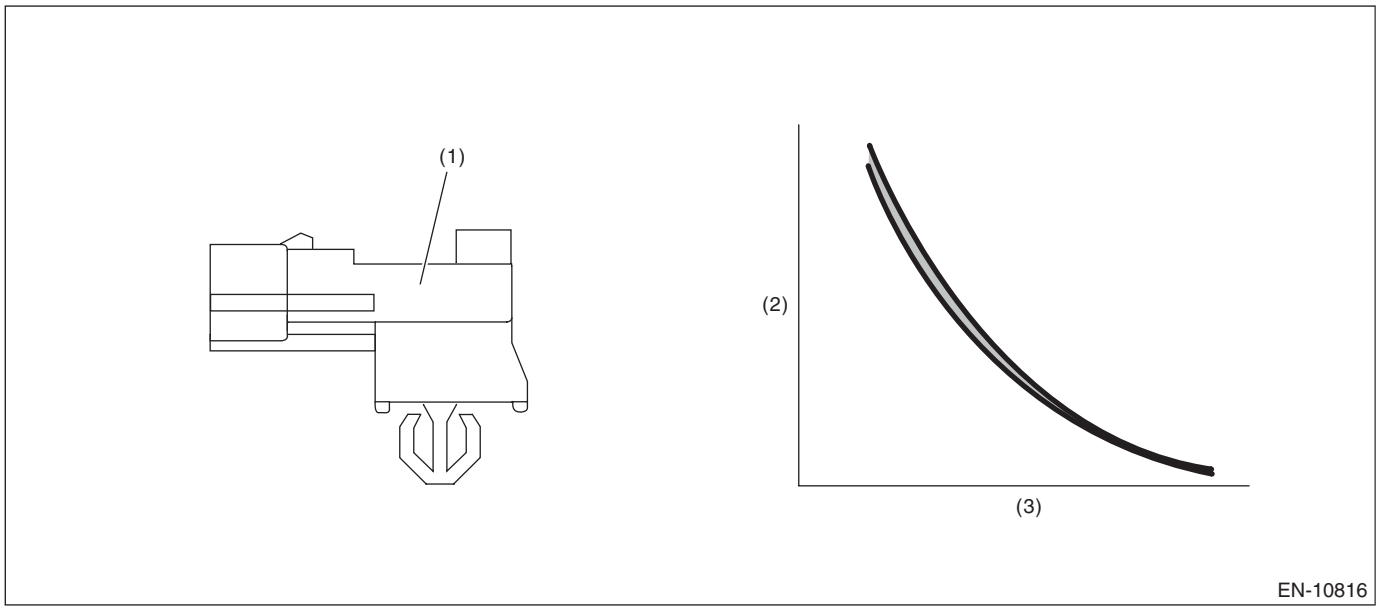

(1) Ambient sensor (2) Resistance value (kΩ) (3) Ambient air temperature (°C (°F))

3. EXECUTION CONDITION

Secondary Parameters	Execution condition
Battery voltage	≥ 10.9 V

4. GENERAL DRIVING CYCLE

Always perform the diagnosis continuously.

5. DIAGNOSTIC METHOD

If the duration of time while the following conditions are met is longer than the time indicated, judge as NG.

Judgment Value

Malfunction Criteria	Threshold Value
Output voltage	> 4.88 V

Time Needed for Diagnosis: 2500 ms
Malfunction Indicator Light Illumination: Illuminates as soon as a malfunction occurs.

R: DTC P0101 MASS OR VOLUME AIR FLOW SENSOR "A" CIRCUIT RANGE/ PERFORMANCE

DTC DETECTING CONDITION:
Detected when two consecutive driving cycles with fault occur.
TROUBLE SYMPTOM:
- Improper idling
- Engine stalls.
- Poor driving performance

CAUTION:
After servicing or replacing faulty parts, perform Clear Memory Mode <Ref. to EN(H4DO)(diag)-78, OPERATION, Clear Memory Mode.>, and Inspection Mode <Ref. to EN(H4DO)(diag)-64, PROCEDURE, Inspection Mode.>.

Step		Check	Yes	No
1	**CHECK FOR ANY OTHER DTC ON DISPLAY.**	Is any other DTC displayed?	Check the appropriate DTC using the "List of Diagnostic Trouble Code (DTC)". <Ref. to EN(H4DO)(diag)-102, List of Diagnostic Trouble Code (DTC).>	Replace the mass air flow and intake air temperature sensor. <Ref. to FU(H4DO)-60, Mass Air Flow and Intake Air Temperature Sensor.>

1. OUTLINE OF DIAGNOSIS

Detect the malfunction of air flow sensor output properties.
Judge as a low side NG when the air flow voltage indicates a small value regardless of running in a state where the air flow voltage increases. Judge as a high side NG when the air flow voltage indicates a large value regardless of running in a state where the air flow voltage decreases. Judge air flow sensor property NG when the Low side or High side becomes NG.

2. COMPONENT DESCRIPTION

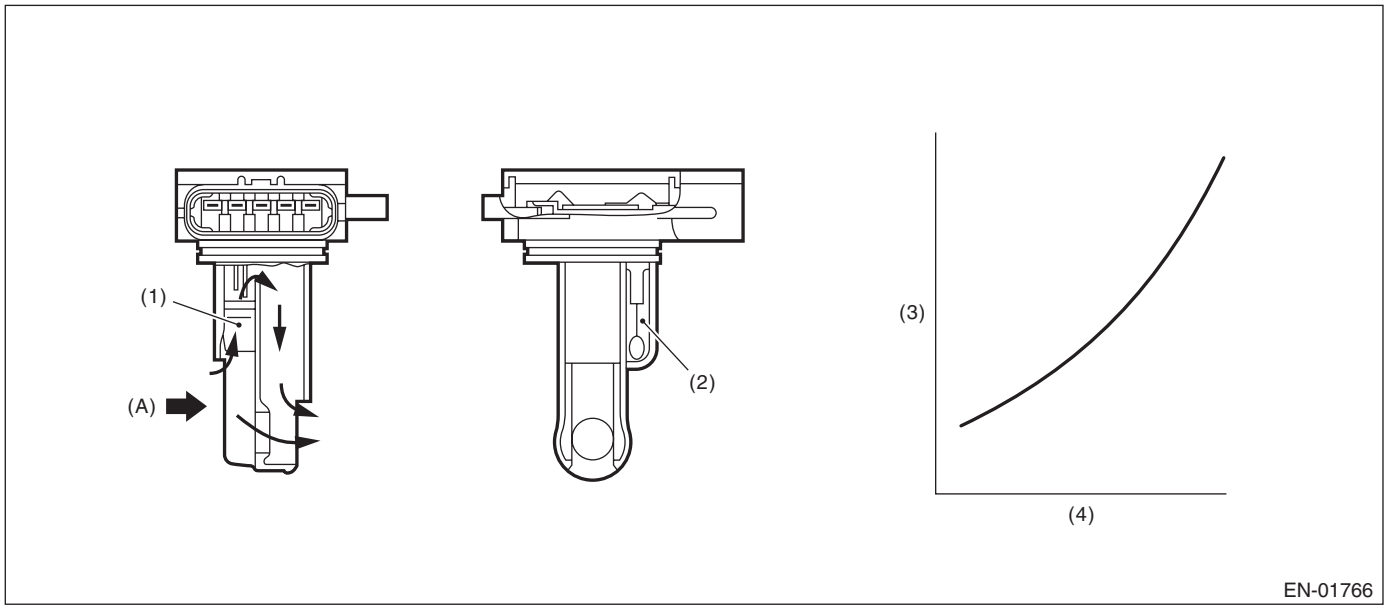

(A) Air

(1) Air flow sensor
(2) Intake air temperature sensor
(3) Voltage (V)
(4) Amount of intake air (kg (lb)/s)

3. EXECUTION CONDITION

Secondary Parameters	Execution condition
Low	
Engine coolant temperature	≥ 60 °C (140 °F)
Engine speed	≥ 1500 rpm
Throttle valve opening angle	≥ 12 ° (CVT model) ≥ 10 ° (MT model)
Intake manifold pressure	≥ 73.3 kPa (550 mmHg, 21.7 inHg) (CVT model) ≥ 66.7 kPa (500 mmHg, 19.7 inHg) (MT model)
High	
Engine coolant temperature	≥ 60 °C (140 °F)
Engine speed	525 rpm — 875 rpm (CVT model) 550 rpm — 850 rpm (MT model)
Throttle valve opening angle	< 5.7 °
Intake manifold pressure	≥ 58.7 kPa (440 mmHg, 17.3 inHg)

4. GENERAL DRIVING CYCLE

Perform the diagnosis continuously after idling.

5. DIAGNOSTIC METHOD

Judge as NG when Low side or High side becomes NG.
If the duration of time while the following conditions are met is longer than the time indicated, judge as NG.

Judgment Value

Malfunction Criteria	Threshold Value
Low	
Output voltage	< 1.22 V (CVT model) < 1.17 V (MT model)
High	
Output voltage	≥ 2.1 V

Time Needed for Diagnosis:
Low: 5000 ms
High: 5000 ms
Malfunction Indicator Light Illumination: Illuminates when malfunction occurs in 2 continuous driving cycles.

S: DTC P0102 MASS OR VOLUME AIR FLOW SENSOR "A" CIRCUIT LOW

DTC DETECTING CONDITION:
Immediately at fault recognition
TROUBLE SYMPTOM:

- Improper idling
- Engine stalls.
- Poor driving performance

CAUTION:
After servicing or replacing faulty parts, perform Clear Memory Mode <Ref. to EN(H4DO)(diag)-78, OPERATION, Clear Memory Mode.>, and Inspection Mode <Ref. to EN(H4DO)(diag)-64, PROCEDURE, Inspection Mode.>.
WIRING DIAGRAM:

- Engine Electrical System ENGINE TYPE FB (WITHOUT PUSH BUTTON START) <Ref. to WI-170, ENGINE TYPE FB (WITHOUT PUSH BUTTON START), WIRING DIAGRAM, Engine Electrical System.>
- Engine Electrical System ENGINE TYPE FB (WITH PUSH BUTTON START) <Ref. to WI-184, ENGINE TYPE FB (WITH PUSH BUTTON START), WIRING DIAGRAM, Engine Electrical System.>

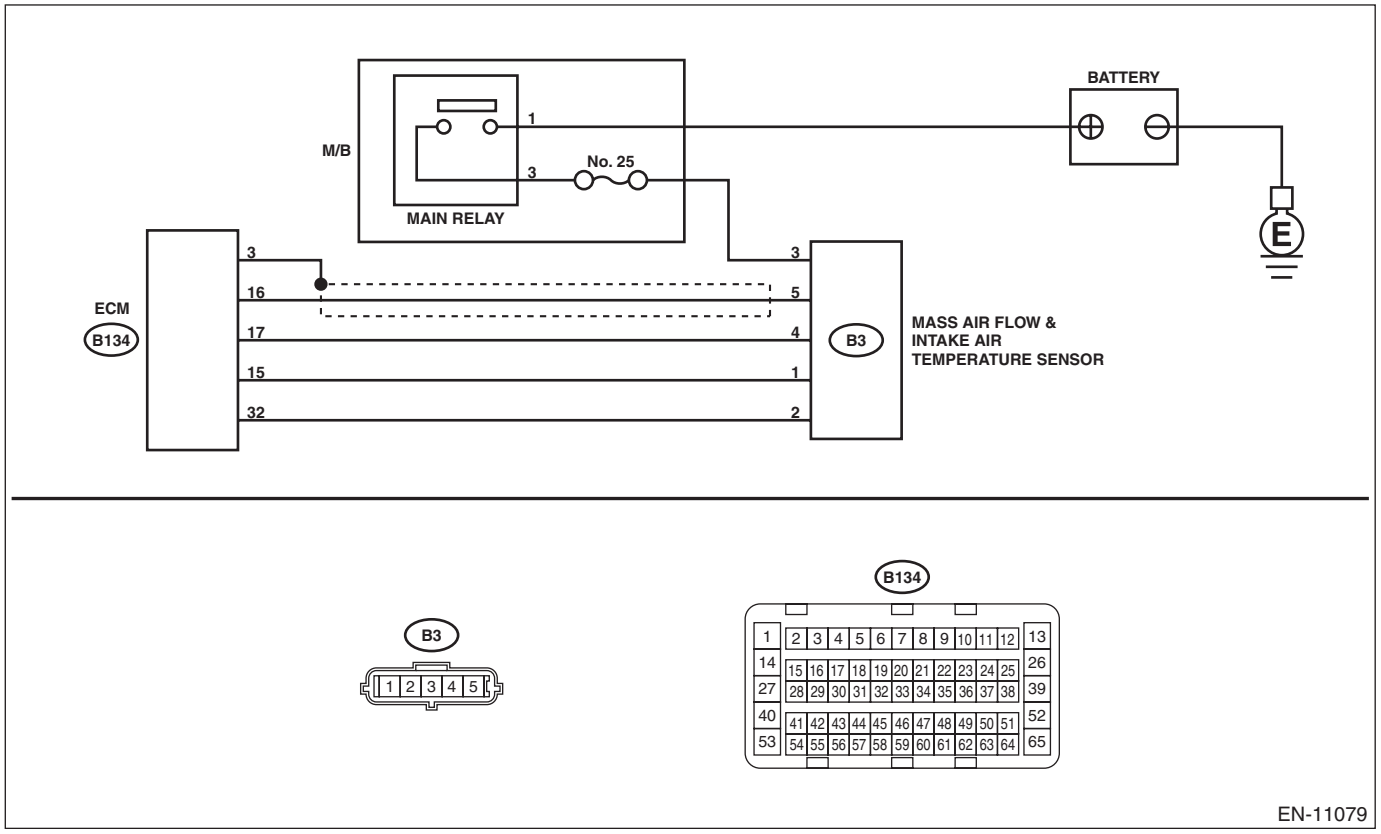

	Step	Check	Yes	No
1	**CHECK CURRENT DATA.** 1) Start the engine. 2) Read the value of «Air Flow Sensor Voltage» using Subaru Select Monitor. NOTE: For detailed operation procedures, refer to "Read Current Data For Engine". <Ref. to EN(H4DO)(diag)-45, Subaru Select Monitor.>	Is the value of «Air Flow Sensor Voltage» less than 0.2 V?	Go to step **2**.	Even if DTC is detected, the circuit has returned to a normal condition at this time. Reproduce the failure, and then perform the diagnosis again. NOTE: In this case, temporary poor contact of connector, temporary open or short circuit of harness may be the cause.
2	**CHECK POWER SUPPLY OF MASS AIR FLOW AND INTAKE AIR TEMPERATURE SENSOR.** 1) Turn the ignition switch to OFF. 2) Disconnect the connectors from the mass air flow and intake air temperature sensor. 3) Turn the ignition switch to ON. 4) Measure the voltage between mass air flow and intake air temperature sensor connector and engine ground. ***Connector & terminal*** ***(B3) No. 3 (+) — Engine ground (–):***	Is the voltage 10 V or more?	Go to step **3**.	Repair the harness and connector. NOTE: In this case, repair the following item: • Open circuit in harness between main relay and mass air flow and intake air temperature sensor connector • Poor contact of main relay connector
3	**CHECK HARNESS BETWEEN ECM AND MASS AIR FLOW AND INTAKE AIR TEMPERATURE SENSOR CONNECTOR.** 1) Turn the ignition switch to OFF. 2) Disconnect the connector from ECM. 3) Measure the resistance of harness between ECM connector and the mass air flow and intake air temperature sensor connector. ***Connector & terminal*** ***(B134) No. 16 — (B3) No. 5:***	Is the resistance less than 1 Ω?	Go to step **4**.	Repair the open circuit of harness between ECM connector and the mass air flow and intake air temperature sensor connector.
4	**CHECK HARNESS BETWEEN ECM AND MASS AIR FLOW AND INTAKE AIR TEMPERATURE SENSOR CONNECTOR.** Measure the resistance between ECM connector and chassis ground. ***Connector & terminal*** ***(B134) No. 16 — Chassis ground:***	Is the resistance 1 MΩ or more?	Go to step **5**.	Repair the ground short circuit of harness between ECM connector and the mass air flow and intake air temperature sensor connector.
5	**CHECK FOR POOR CONTACT.** Check for poor contact of ECM and mass air flow and intake air temperature sensor connector.	Is there poor contact of ECM or mass air flow and intake air temperature sensor connector?	Repair the poor contact of ECM or mass air flow and intake air temperature sensor connector.	Replace the mass air flow and intake air temperature sensor. <Ref. to FU(H4DO)-60, Mass Air Flow and Intake Air Temperature Sensor.>

1. OUTLINE OF DIAGNOSIS

Detect open or short circuits of the air flow sensor.
Judge as NG if out of specification.

2. COMPONENT DESCRIPTION

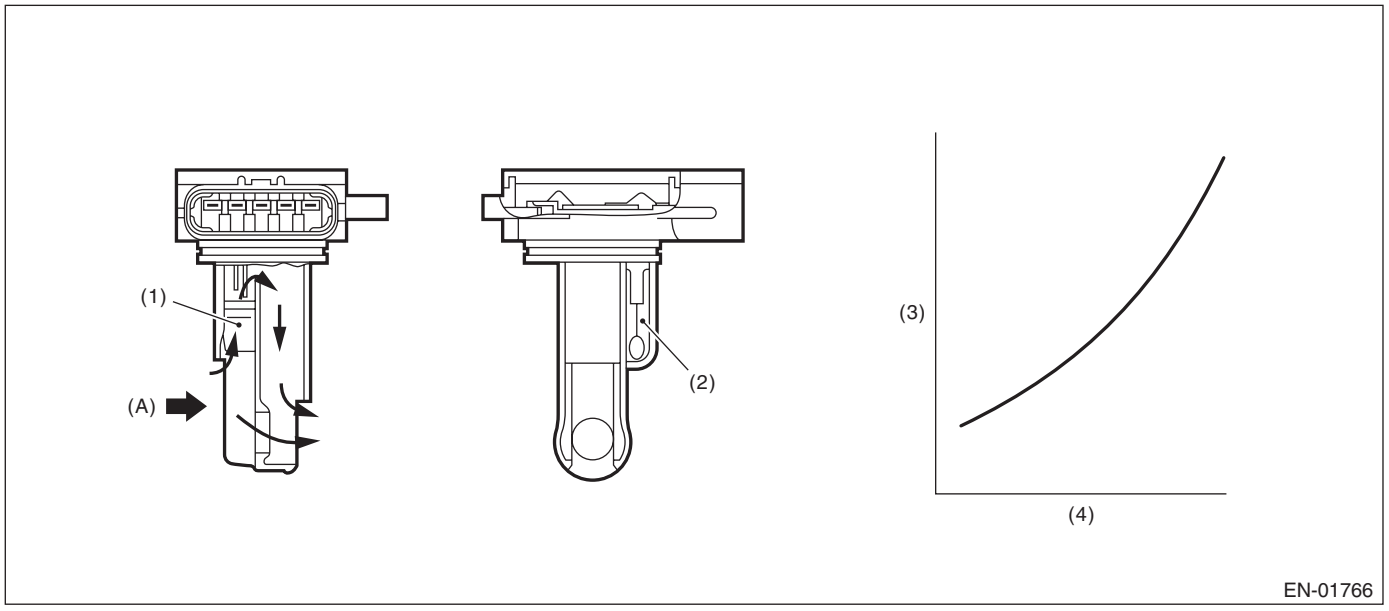

(A) Air

(1) Air flow sensor
(2) Intake air temperature sensor
(3) Voltage (V)
(4) Amount of intake air (kg (lb)/s)

3. EXECUTION CONDITION

Secondary Parameters	Execution condition
None	

4. GENERAL DRIVING CYCLE

Always perform the diagnosis continuously.

5. DIAGNOSTIC METHOD

If the duration of time while the following conditions are met is longer than the time indicated, judge as NG.

Judgment Value

Malfunction Criteria	Threshold Value
Output voltage	< 0.22 V

Time Needed for Diagnosis: 500 ms
Malfunction Indicator Light Illumination: Illuminates as soon as a malfunction occurs.

T: DTC P0103 MASS OR VOLUME AIR FLOW SENSOR "A" CIRCUIT HIGH

DTC DETECTING CONDITION:
Immediately at fault recognition
TROUBLE SYMPTOM:
- Improper idling
- Engine stalls.
- Poor driving performance

CAUTION:
After servicing or replacing faulty parts, perform Clear Memory Mode <Ref. to EN(H4DO)(diag)-78, OPERATION, Clear Memory Mode.>, and Inspection Mode <Ref. to EN(H4DO)(diag)-64, PROCEDURE, Inspection Mode.>.
WIRING DIAGRAM:
- Engine Electrical System ENGINE TYPE FB (WITHOUT PUSH BUTTON START) <Ref. to WI-170, ENGINE TYPE FB (WITHOUT PUSH BUTTON START), WIRING DIAGRAM, Engine Electrical System.>
- Engine Electrical System ENGINE TYPE FB (WITH PUSH BUTTON START) <Ref. to WI-184, ENGINE TYPE FB (WITH PUSH BUTTON START), WIRING DIAGRAM, Engine Electrical System.>

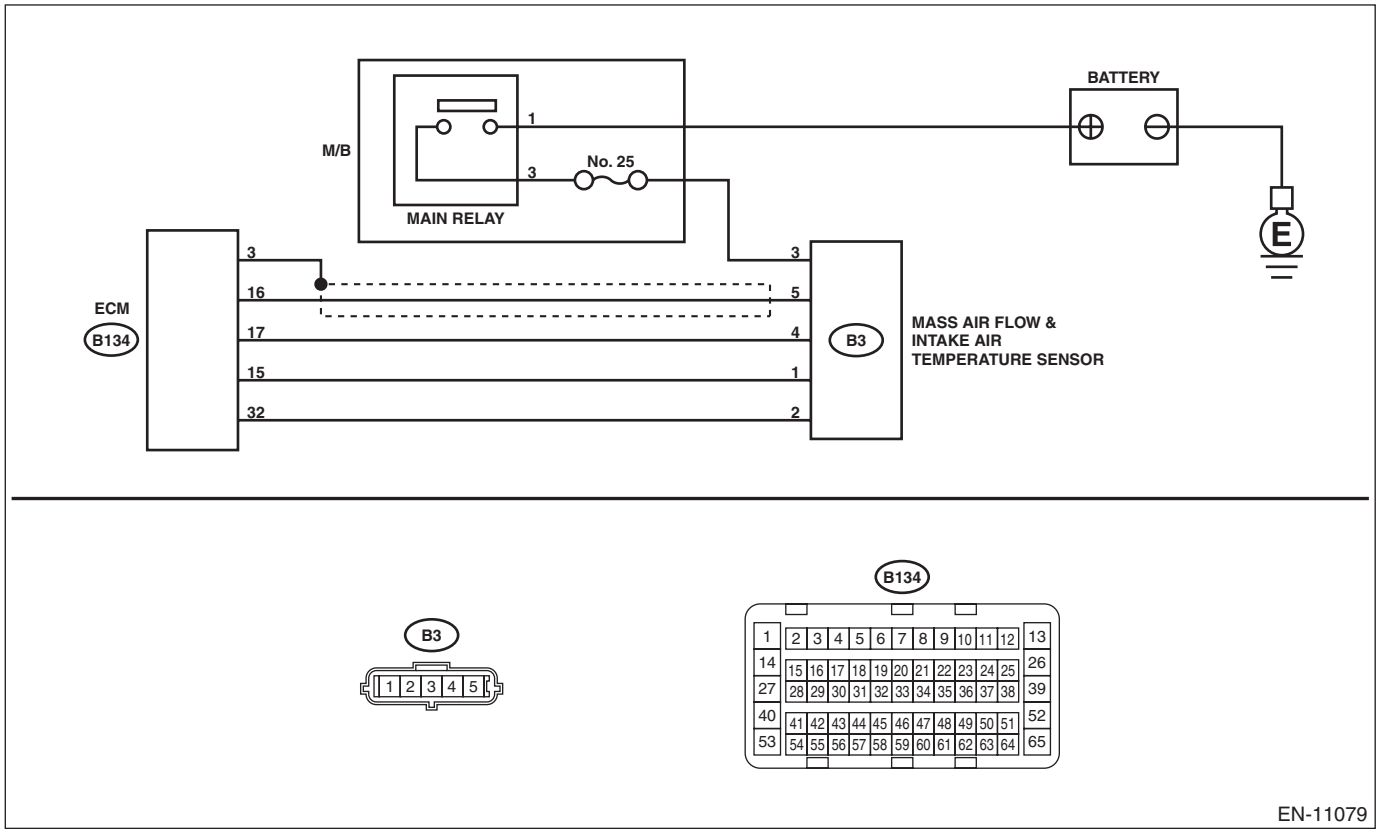

	Step	Check	Yes	No
1	**CHECK CURRENT DATA.** 1) Start the engine. 2) Read the value of «Air Flow Sensor Voltage» using Subaru Select Monitor. NOTE: For detailed operation procedures, refer to "Read Current Data For Engine". <Ref. to EN(H4DO)(diag)-45, Subaru Select Monitor.>	Is the value of «Air Flow Sensor Voltage» 5 V or more?	Go to step **2**.	Even if DTC is detected, the circuit has returned to a normal condition at this time. Reproduce the failure, and then perform the diagnosis again. NOTE: In this case, temporary poor contact of connector, temporary open or short circuit of harness may be the cause.
2	**CHECK HARNESS BETWEEN ECM AND MASS AIR FLOW AND INTAKE AIR TEMPERATURE SENSOR CONNECTOR.** 1) Turn the ignition switch to OFF. 2) Disconnect the connectors from the mass air flow and intake air temperature sensor. 3) Start the engine. 4) Read the value of «Air Flow Sensor Voltage» using Subaru Select Monitor. NOTE: For detailed operation procedures, refer to "Read Current Data For Engine". <Ref. to EN(H4DO)(diag)-45, Subaru Select Monitor.>	Is the value of «Air Flow Sensor Voltage» 5 V or more?	Repair the short circuit of harness to power supply between ECM connector and the mass air flow and intake air temperature sensor connector.	Go to step **3**.
3	**CHECK HARNESS BETWEEN ECM AND MASS AIR FLOW AND INTAKE AIR TEMPERATURE SENSOR CONNECTOR.** 1) Turn the ignition switch to OFF. 2) Measure the resistance of harness between mass air flow and intake air temperature sensor connector and engine ground. ***Connector & terminal*** ***(B3) No. 4 — Engine ground:***	Is the resistance less than 5 Ω?	Go to step **4**.	Repair the harness and connector. NOTE: In this case, repair the following item: • Open circuit in harness between ECM connector and the mass air flow and intake air temperature sensor connector • Poor contact of ECM connector
4	**CHECK FOR POOR CONTACT.** Check for poor contact of mass air flow and intake air temperature sensor connector.	Is there poor contact of mass air flow and intake air temperature sensor connector?	Repair the poor contact of mass air flow and intake air temperature sensor connector.	Replace the mass air flow and intake air temperature sensor. <Ref. to FU(H4DO)-60, Mass Air Flow and Intake Air Temperature Sensor.>

1. OUTLINE OF DIAGNOSIS

Detect open or short circuits of the air flow sensor.
Judge as NG if out of specification.

2. COMPONENT DESCRIPTION

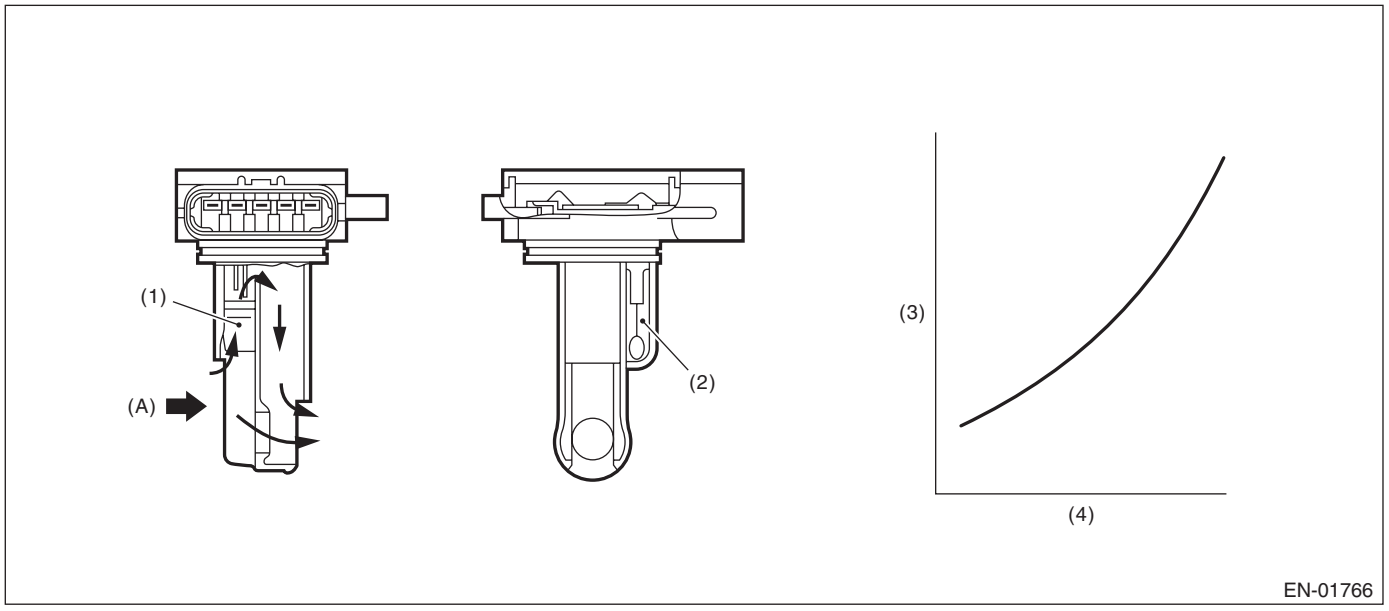

(A) Air

(1) Air flow sensor
(2) Intake air temperature sensor
(3) Voltage (V)
(4) Amount of intake air (kg (lb)/s)

3. EXECUTION CONDITION

Secondary Parameters	Execution condition
None	

4. GENERAL DRIVING CYCLE

Always perform the diagnosis continuously.

5. DIAGNOSTIC METHOD

If the duration of time while the following conditions are met is longer than the time indicated, judge as NG.

Judgment Value

Malfunction Criteria	Threshold Value
Output voltage	≥ 4.441 V

Time Needed for Diagnosis: 500 ms
Malfunction Indicator Light Illumination: Illuminates as soon as a malfunction occurs.

U: DTC P0107 MANIFOLD ABSOLUTE PRESSURE/BAROMETRIC PRESSURE SENSOR CIRCUIT LOW

DTC DETECTING CONDITION:
Immediately at fault recognition

CAUTION:
After servicing or replacing faulty parts, perform Clear Memory Mode <Ref. to EN(H4DO)(diag)-78, OPERATION, Clear Memory Mode.>, and Inspection Mode <Ref. to EN(H4DO)(diag)-64, PROCEDURE, Inspection Mode.>.

WIRING DIAGRAM:

- Engine Electrical System ENGINE TYPE FB (WITHOUT PUSH BUTTON START) <Ref. to WI-170, ENGINE TYPE FB (WITHOUT PUSH BUTTON START), WIRING DIAGRAM, Engine Electrical System.>
- Engine Electrical System ENGINE TYPE FB (WITH PUSH BUTTON START) <Ref. to WI-184, ENGINE TYPE FB (WITH PUSH BUTTON START), WIRING DIAGRAM, Engine Electrical System.>

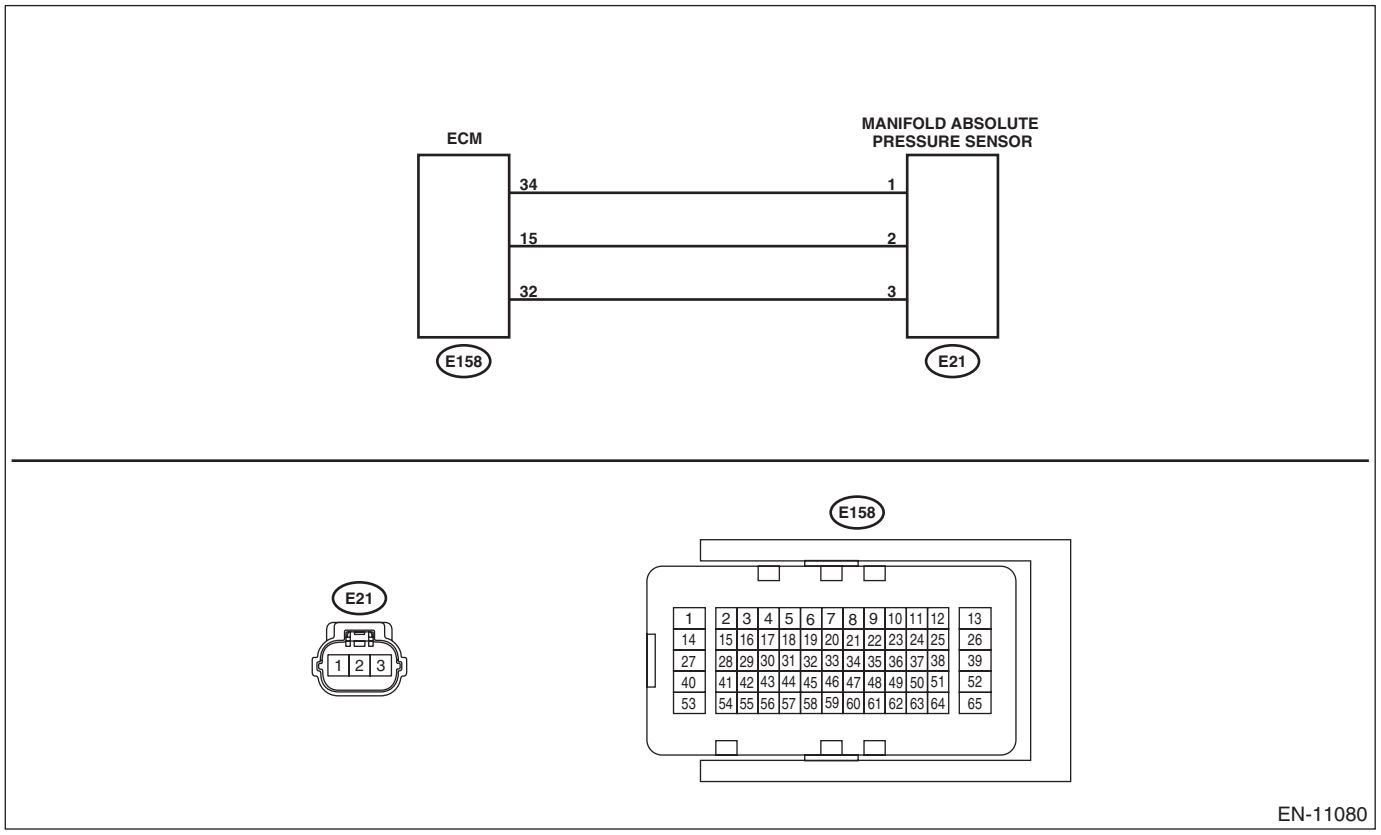

	Step	Check	Yes	No
1	**CHECK CURRENT DATA.** 1) Start the engine. 2) Read the value of «Mani. Absolute Pressure» using the Subaru Select Monitor or a general scan tool. NOTE: • Subaru Select Monitor For detailed operation procedures, refer to "Read Current Data For Engine". <Ref. to EN(H4DO)(diag)-45, Subaru Select Monitor.> • General scan tool For detailed operation procedures, refer to the general scan tool operation manual.	Is the value of «Mani. Absolute Pressure» less than 13.3 kPa (100 mmHg, 3.94 inHg)?	Go to step **2**.	Even if DTC is detected, the circuit has returned to a normal condition at this time. Reproduce the failure, and then perform the diagnosis again. NOTE: In this case, temporary poor contact of connector, temporary open or short circuit of harness may be the cause.
2	**CHECK POWER SUPPLY OF MANIFOLD ABSOLUTE PRESSURE SENSOR.** 1) Turn the ignition switch to OFF. 2) Disconnect the connector from manifold absolute pressure sensor. 3) Turn the ignition switch to ON. 4) Measure the voltage between manifold absolute pressure sensor connector and engine ground. ***Connector & terminal*** ***(E21) No. 3 (+) — Engine ground (–):***	Is the voltage 4.5 V or more?	Go to step **3**.	Repair the harness and connector. NOTE: In this case, repair the following item: • Open circuit of harness between ECM connector and manifold absolute pressure sensor connector • Poor contact of ECM connector
3	**CHECK HARNESS BETWEEN ECM AND MANIFOLD ABSOLUTE PRESSURE SENSOR CONNECTOR.** 1) Turn the ignition switch to OFF. 2) Disconnect the connector from ECM. 3) Measure the resistance of harness between ECM connector and manifold absolute pressure sensor connector. ***Connector & terminal*** ***(B158) No. 15 — (E21) No. 2:***	Is the resistance less than 1 Ω?	Go to step **4**.	Repair the harness and connector. NOTE: In this case, repair the following item: • Open circuit of harness between ECM connector and manifold absolute pressure sensor connector
4	**CHECK HARNESS BETWEEN ECM AND MANIFOLD ABSOLUTE PRESSURE SENSOR CONNECTOR.** Measure the resistance between ECM connector and chassis ground. ***Connector & terminal*** ***(E158) No. 15 — Chassis ground:***	Is the resistance 1 MΩ or more?	Go to step **5**.	Repair short circuit to ground in harness between ECM connector and manifold absolute pressure sensor connector.
5	**CHECK FOR POOR CONTACT.** Check for poor contact of ECM and manifold absolute pressure sensor connector.	Is there poor contact of ECM or manifold absolute pressure sensor connector?	Repair the poor contact of ECM or manifold absolute pressure sensor connector.	Replace the manifold absolute pressure sensor. <Ref. to FU(H4DO)-63, Manifold Absolute Pressure Sensor.>

1. OUTLINE OF DIAGNOSIS

Detect the open or short circuit of intake manifold pressure sensor.
Judge as NG if out of specification.

2. COMPONENT DESCRIPTION

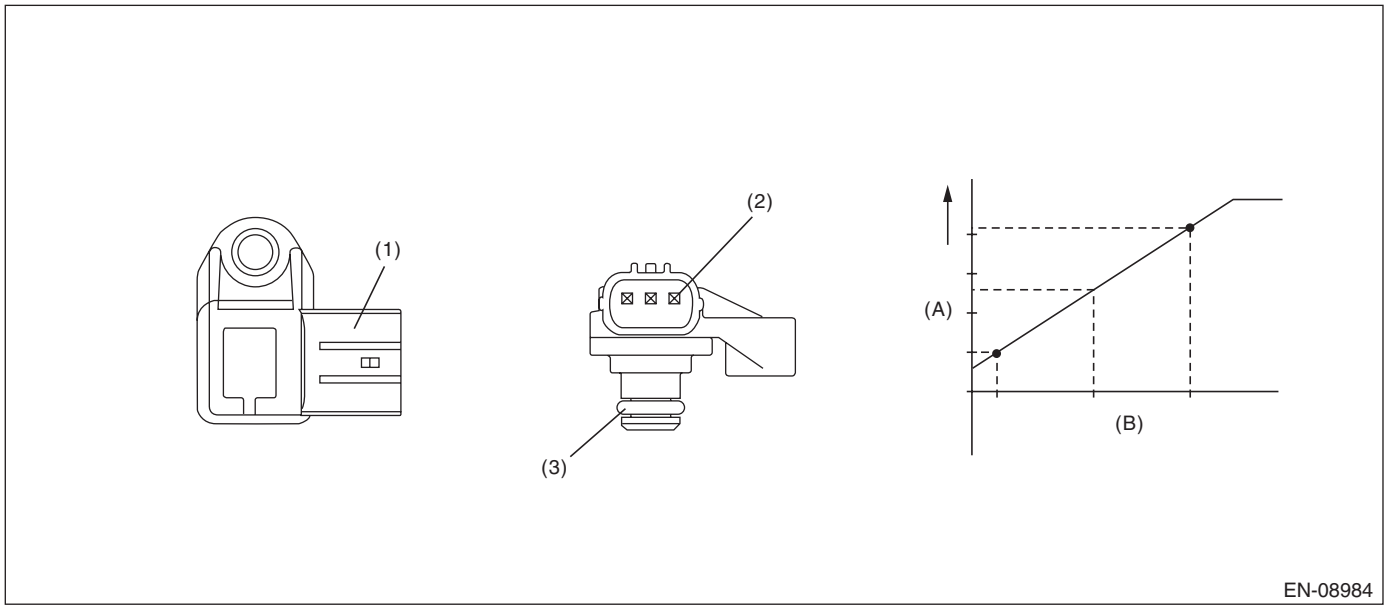

(A) Output voltage
(B) Absolute pressure
(1) Connector
(2) Terminals
(3) O-ring

3. EXECUTION CONDITION

Secondary Parameters	Execution condition
None	

4. GENERAL DRIVING CYCLE

Always perform the diagnosis continuously.

5. DIAGNOSTIC METHOD

If the duration of time while the following conditions are met is longer than the time indicated, judge as NG.

Judgment Value

Malfunction Criteria	Threshold Value
Output voltage	< 0.608 V

Time Needed for Diagnosis: 2000 ms
Malfunction Indicator Light Illumination: Illuminates as soon as a malfunction occurs.

V: DTC P0108 MANIFOLD ABSOLUTE PRESSURE/BAROMETRIC PRESSURE SENSOR CIRCUIT HIGH

DTC DETECTING CONDITION:
Immediately at fault recognition

CAUTION:
After servicing or replacing faulty parts, perform Clear Memory Mode <Ref. to EN(H4DO)(diag)-78, OPERATION, Clear Memory Mode.>, and Inspection Mode <Ref. to EN(H4DO)(diag)-64, PROCEDURE, Inspection Mode.>.

WIRING DIAGRAM:

- Engine Electrical System ENGINE TYPE FB (WITHOUT PUSH BUTTON START) <Ref. to WI-170, ENGINE TYPE FB (WITHOUT PUSH BUTTON START), WIRING DIAGRAM, Engine Electrical System.>
- Engine Electrical System ENGINE TYPE FB (WITH PUSH BUTTON START) <Ref. to WI-184, ENGINE TYPE FB (WITH PUSH BUTTON START), WIRING DIAGRAM, Engine Electrical System.>

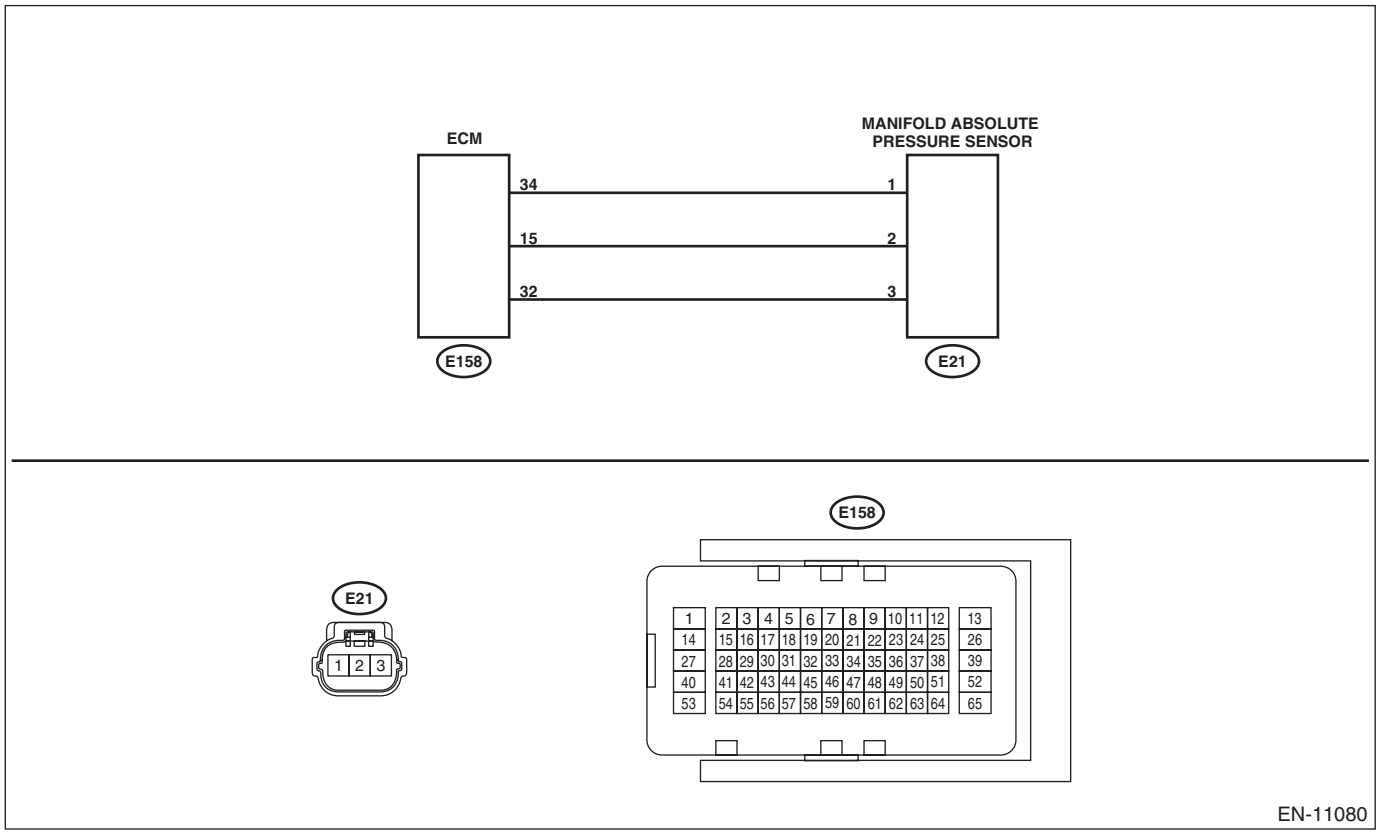

	Step	Check	Yes	No
1	**CHECK CURRENT DATA.** 1) Start the engine. 2) Read the value of «Mani. Absolute Pressure» using the Subaru Select Monitor or a general scan tool. NOTE: • Subaru Select Monitor For detailed operation procedures, refer to "Read Current Data For Engine". <Ref. to EN(H4DO)(diag)-45, Subaru Select Monitor.> • General scan tool For detailed operation procedures, refer to the general scan tool operation manual.	Is the value of «Mani. Absolute Pressure» 119.5 kPa (896.5 mmHg, 35.29 inHg) or more?	Go to step **2**.	Even if DTC is detected, the circuit has returned to a normal condition at this time. Reproduce the failure, and then perform the diagnosis again. NOTE: In this case, temporary poor contact of connector, temporary open or short circuit of harness may be the cause.
2	**CHECK HARNESS BETWEEN ECM AND MANIFOLD ABSOLUTE PRESSURE SENSOR CONNECTOR.** 1) Turn the ignition switch to OFF. 2) Disconnect the connector from manifold absolute pressure sensor. 3) Start the engine. 4) Read the value of «Mani. Absolute Pressure» using the Subaru Select Monitor or a general scan tool. NOTE: • Subaru Select Monitor For detailed operation procedures, refer to "Read Current Data For Engine". <Ref. to EN(H4DO)(diag)-45, Subaru Select Monitor.> • General scan tool For detailed operation procedures, refer to the general scan tool operation manual.	Is the value of «Mani. Absolute Pressure» 119.5 kPa (896.5 mmHg, 35.29 inHg) or more?	Repair the short circuit to power in harness between ECM connector and manifold absolute pressure sensor connector.	Go to step **3**.
3	**CHECK HARNESS BETWEEN ECM AND MANIFOLD ABSOLUTE PRESSURE SENSOR CONNECTOR.** 1) Turn the ignition switch to OFF. 2) Measure the resistance of harness between manifold absolute pressure sensor connector and engine ground. ***Connector & terminal*** ***(E21) No. 1 — Engine ground:***	Is the resistance less than 5 Ω?	Go to step **4**.	Repair the harness and connector. NOTE: In this case, repair the following item: • Open circuit of harness between ECM connector and manifold absolute pressure sensor connector • Poor contact of ECM connector
4	**CHECK FOR POOR CONTACT.** Check for poor contact of manifold absolute pressure sensor connector.	Is there poor contact of manifold absolute pressure sensor connector?	Repair the poor contact of manifold absolute pressure sensor connector.	Replace the manifold absolute pressure sensor. <Ref. to FU(H4DO)-63, Manifold Absolute Pressure Sensor.>

1. OUTLINE OF DIAGNOSIS

Detect the open or short circuit of intake manifold pressure sensor.
Judge as NG if out of specification.

2. COMPONENT DESCRIPTION

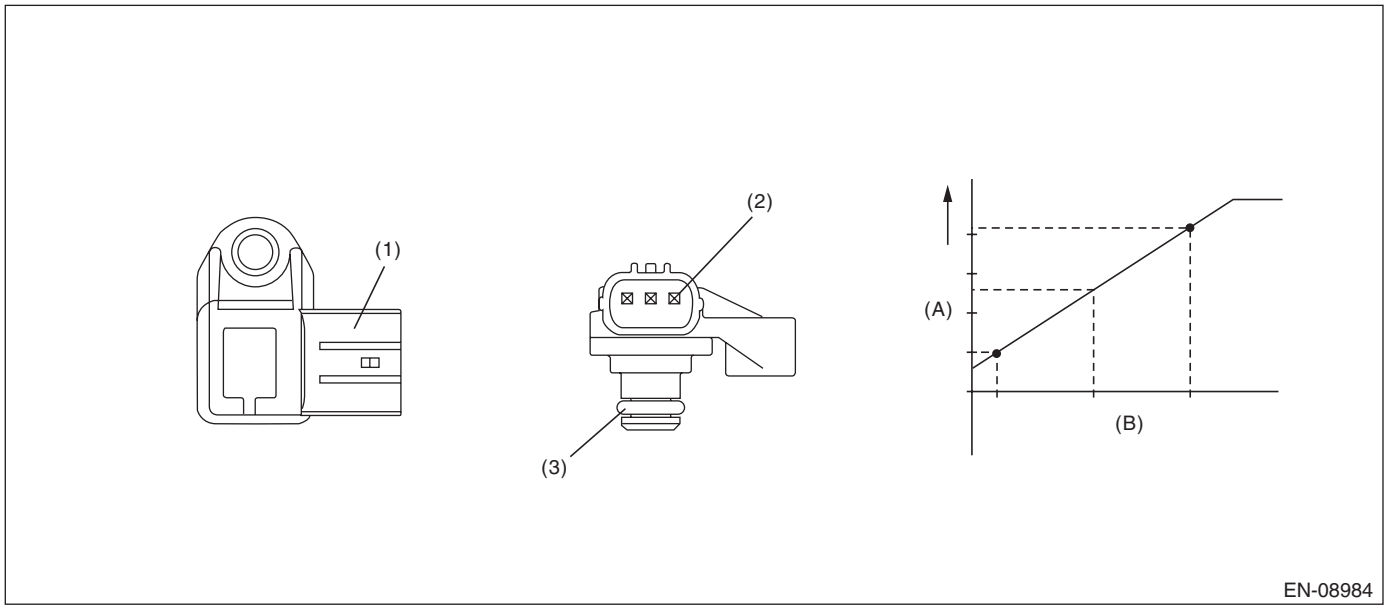

(A) Output voltage
(B) Absolute pressure
(1) Connector
(2) Terminals
(3) O-ring

3. EXECUTION CONDITION

Secondary Parameters	Execution condition
None	

4. GENERAL DRIVING CYCLE

Always perform the diagnosis continuously.

5. DIAGNOSTIC METHOD

If the duration of time while the following conditions are met is longer than the time indicated, judge as NG.

Judgment Value

Malfunction Criteria	Threshold Value
Output voltage	≥ 3.906 V

Time Needed for Diagnosis: 2000 ms
Malfunction Indicator Light Illumination: Illuminates as soon as a malfunction occurs.

W: DTC P0111 INTAKE AIR TEMPERATURE SENSOR 1 CIRCUIT RANGE/PERFORMANCE BANK 1

DTC DETECTING CONDITION:
Detected when two consecutive driving cycles with fault occur.
TROUBLE SYMPTOM:
- Improper idling
- Poor driving performance

CAUTION:
After servicing or replacing faulty parts, perform Clear Memory Mode <Ref. to EN(H4DO)(diag)-78, OPERATION, Clear Memory Mode.>, and Inspection Mode <Ref. to EN(H4DO)(diag)-64, PROCEDURE, Inspection Mode.>.

	Step	Check	Yes	No
1	**CHECK ENGINE COOLANT TEMPERATURE.** 1) Start the engine and warm up completely. 2) Read the value of «Coolant Temp.» using the Subaru Select Monitor or a general scan tool. NOTE: • Subaru Select Monitor For detailed operation procedures, refer to “Read Current Data For Engine”. <Ref. to EN(H4DO)(diag)-45, Subaru Select Monitor.> • General scan tool For detailed operation procedures, refer to the general scan tool operation manual.	Is the value of «Coolant Temp.» 75°C (167°F) or more?	Replace the mass air flow and intake air temperature sensor. <Ref. to FU(H4DO)-60, Mass Air Flow and Intake Air Temperature Sensor.>	Check for DTC P0125. <Ref. to EN(H4DO)(diag)-186, DTC P0125 INSUFFICIENT COOLANT TEMPERATURE FOR CLOSED LOOP FUEL CONTROL, Diagnostic Procedure with Diagnostic Trouble Code (DTC).>

1. OUTLINE OF DIAGNOSIS

Detect the malfunction of the intake air temperature sensor output properties. Using the following two diagnoses, judge as NG when either is NG.

- **Diagnosis 1 (correlation diagnosis):** After the engine starts after the specified period of soaking time has elapsed, diagnose by correlation between intake air temperature sensor value, engine coolant temperature sensor value and ambient temperature sensor value. Judge as NG when the differences are both above the specified value by comparing between intake air temperature and engine coolant temperature, intake air temperature and ambient air temperature.
- **Diagnosis 2 (stuck diagnosis):** Judge as NG when intake air temperature does not change under the driving condition where it should change, considering engine condition.

2. COMPONENT DESCRIPTION

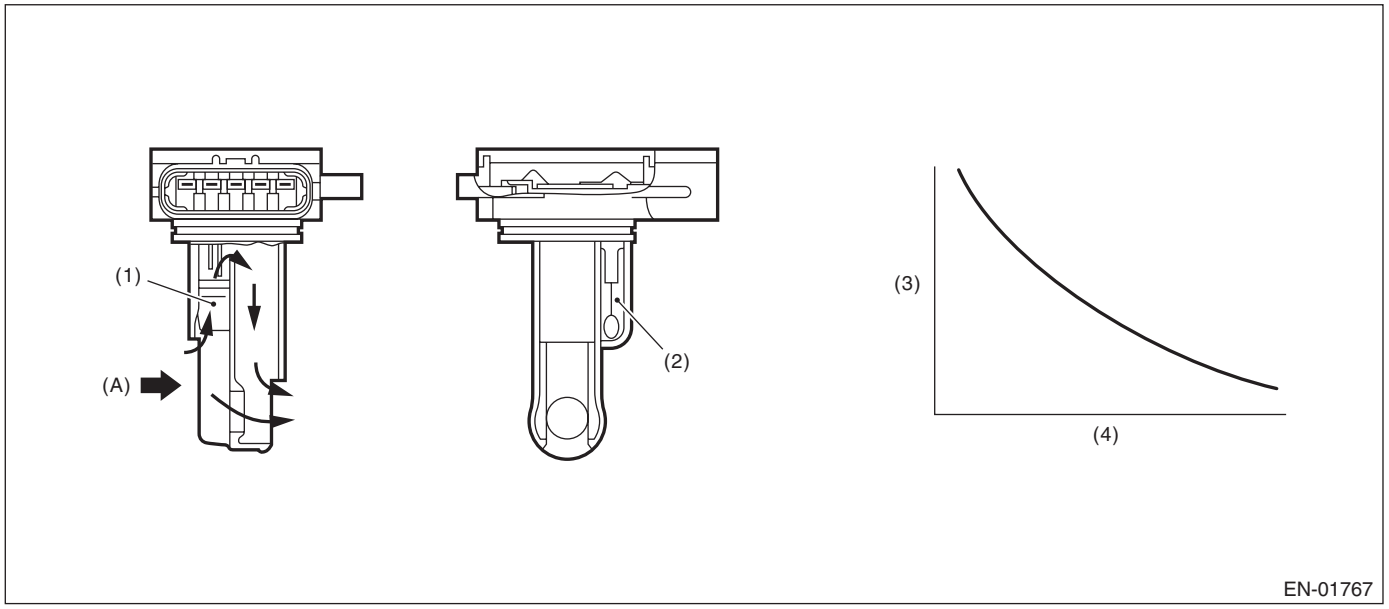

(A) Air

(1) Air flow sensor
(2) Intake air temperature sensor
(3) Resistance value (Ω)
(4) Intake air temperature °C (°F)

3. EXECUTION CONDITION

Diagnosis 1

Secondary Parameters	Execution condition
Soaking time	≥ 21600 s
Block heater judgment	Completed
Block heater operation	Not in operation

Diagnosis 2

Secondary Parameters	Execution condition
Battery voltage	≥ 10.9 V
Engine coolant temperature	≥ 60 °C (140 °F)
Intake air amount sum value	≥ Value of Map 1
Number of experiences under conditions below	≥ 3 time(s)
• Continuous time when vehicle speed is less than 4 km/h (2.5 MPH)	≥ Value from Map 2
• Continuous time when vehicle speed is 40 km/h (24.9 MPH) or more, and intake air amount is 10 g/s (0.35 oz/s) or more	≥ 15 s

Map 1

Engine coolant temperature °C (°F)	–30 (–22)	–10 (14)	0 (32)	10 (50)	25 (77)
Intake air amount sum value (g (oz))	30500 (1075.74)	24000 (846.48)	20500 (723.04)	15000 (529.05)	6800 (239.84)

Map 2

Engine coolant temperature °C (°F)	–30 (–22)	0 (32)	10 (50)	25 (77)
Continuous time (s) when vehicle speed is less than 4 km/h (2.5 MPH)	250	40	32	24

4. GENERAL DRIVING CYCLE

- **Diagnosis 1:** Perform the diagnosis only once after the engine starts after a certain period of soaking time.
- **Diagnosis 2:** Perform the diagnosis when the vehicle speed condition is met after warming up from a cold condition.

5. DIAGNOSTIC METHOD

Judge as NG when Diagnosis 1 or Diagnosis 2 becomes NG.

Diagnosis 1

If the duration of time while the following conditions are met is longer than the time indicated, judge as NG.

Judgment Value

Malfunction Criteria	Threshold Value
|Intake air temperature 30 sec. after engine start – Engine coolant temperature at engine start|	> Value of Map 3
|Intake air temperature 30 sec. after engine start – Ambient air temperature 30 sec. after engine start|	> Value of Map 4

Map 3

Ambient temperature °C (°F)	–30 (–22)	30 (86)	45 (113)	60 (140)
|Intake air temperature 30 sec. after engine start – Engine coolant temperature at engine start| °C (°F)	12 (21.6°F)	12 (21.6°F)	22 (39.6°F)	22 (39.6°F)

Map 4

Ambient temperature °C (°F)	–30 (–22)	30 (86)	45 (113)	60 (140)
|Intake air temperature 30 sec. after engine start – Ambient air temperature 30 sec. after engine start| °C (°F)	20 (36°F)	20 (36°F)	32 (57.6°F)	32 (57.6°F)

Time Needed for Diagnosis: Less than 1 second

Diagnosis 2

Judge as NG when the following conditions are established.

Judgment Value

Malfunction Criteria	Threshold Value
Output voltage difference between Max. and Min.	< 0.02 V (Equivalent to approximately 0.5°C (0.9°F) near 25°C (77°F)) (Equivalent to approximately 0.9°C (1.6°F) near –7°C (19.4°F))

Time Needed for Diagnosis: Less than 1 second

Malfunction Indicator Light Illumination: Illuminates when malfunction occurs in 2 continuous driving cycles.

X: DTC P0112 INTAKE AIR TEMPERATURE SENSOR 1 CIRCUIT LOW BANK 1

DTC DETECTING CONDITION:
Immediately at fault recognition
TROUBLE SYMPTOM:
- Improper idling
- Poor driving performance

CAUTION:
After servicing or replacing faulty parts, perform Clear Memory Mode <Ref. to EN(H4DO)(diag)-78, OPERATION, Clear Memory Mode.>, and Inspection Mode <Ref. to EN(H4DO)(diag)-64, PROCEDURE, Inspection Mode.>.
WIRING DIAGRAM:
- Engine Electrical System ENGINE TYPE FB (WITHOUT PUSH BUTTON START) <Ref. to WI-170, ENGINE TYPE FB (WITHOUT PUSH BUTTON START), WIRING DIAGRAM, Engine Electrical System.>
- Engine Electrical System ENGINE TYPE FB (WITH PUSH BUTTON START) <Ref. to WI-184, ENGINE TYPE FB (WITH PUSH BUTTON START), WIRING DIAGRAM, Engine Electrical System.>

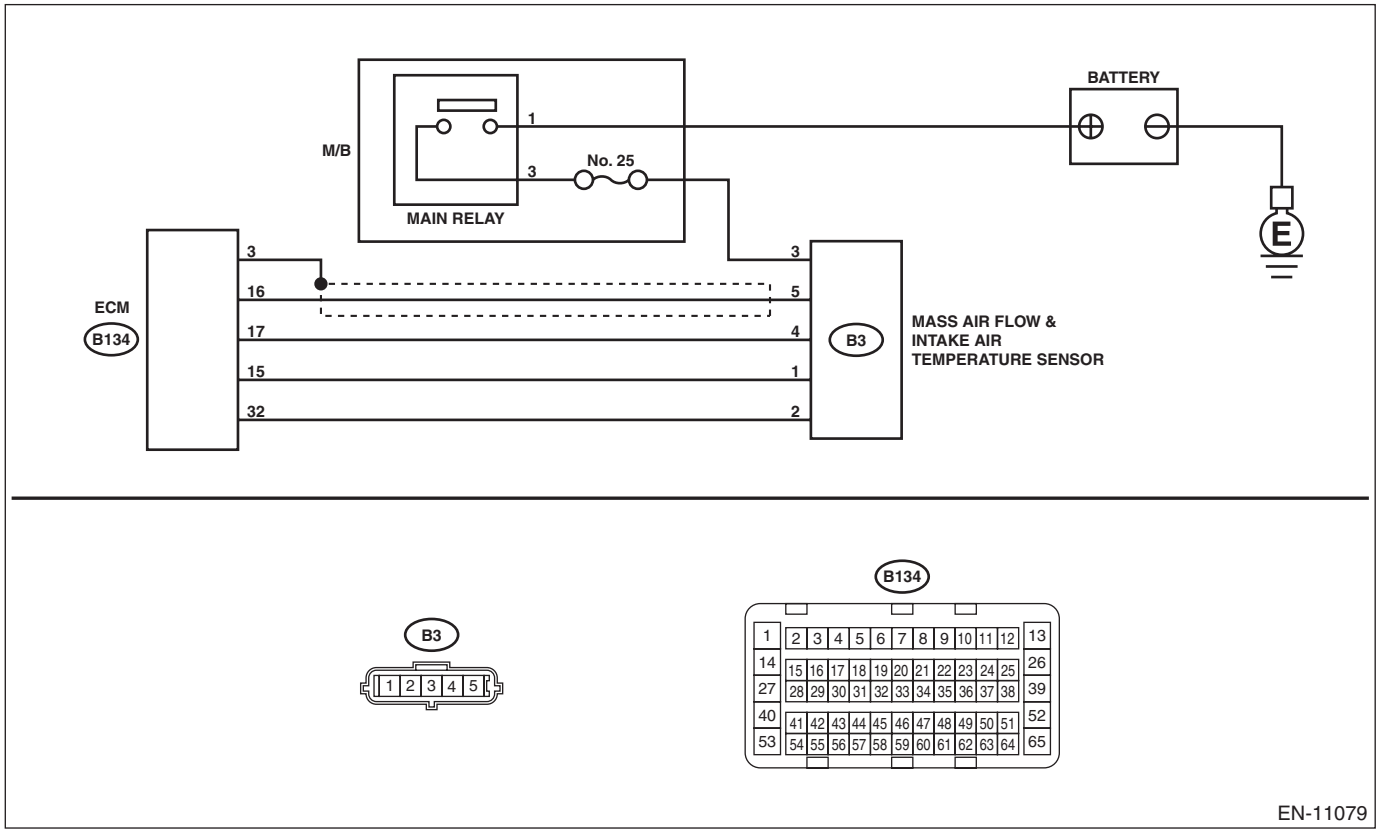

	Step	Check	Yes	No
1	**CHECK CURRENT DATA.** 1) Start the engine. 2) Read the value of «Intake Air Temp.» using the Subaru Select Monitor or a general scan tool. NOTE: • Subaru Select Monitor For detailed operation procedures, refer to “Read Current Data For Engine”. <Ref. to EN(H4DO)(diag)-45, Subaru Select Monitor.> • General scan tool For detailed operation procedures, refer to the general scan tool operation manual.	Is the value of «Intake Air Temp.» 120°C (248°F) or more?	Go to step **2**.	Even if DTC is detected, the circuit has returned to a normal condition at this time. Reproduce the failure, and then perform the diagnosis again. NOTE: In this case, temporary poor contact of connector, temporary open or short circuit of harness may be the cause.
2	**CHECK HARNESS BETWEEN ECM AND MASS AIR FLOW AND INTAKE AIR TEMPERATURE SENSOR CONNECTOR.** 1) Turn the ignition switch to OFF. 2) Disconnect the connector from ECM and the mass air flow and intake air temperature sensor. 3) Measure the resistance between ECM connector and chassis ground. ***Connector & terminal*** ***(B134) No. 15 — Chassis ground:***	Is the resistance 1 MΩ or more?	Replace the mass air flow and intake air temperature sensor. <Ref. to FU(H4DO)-60, Mass Air Flow and Intake Air Temperature Sensor.>	Repair the ground short circuit of harness between ECM connector and the mass air flow and intake air temperature sensor connector.

1. OUTLINE OF DIAGNOSIS

Detect open or short circuit of the intake air temperature sensor.
Judge as NG if out of specification.

2. COMPONENT DESCRIPTION

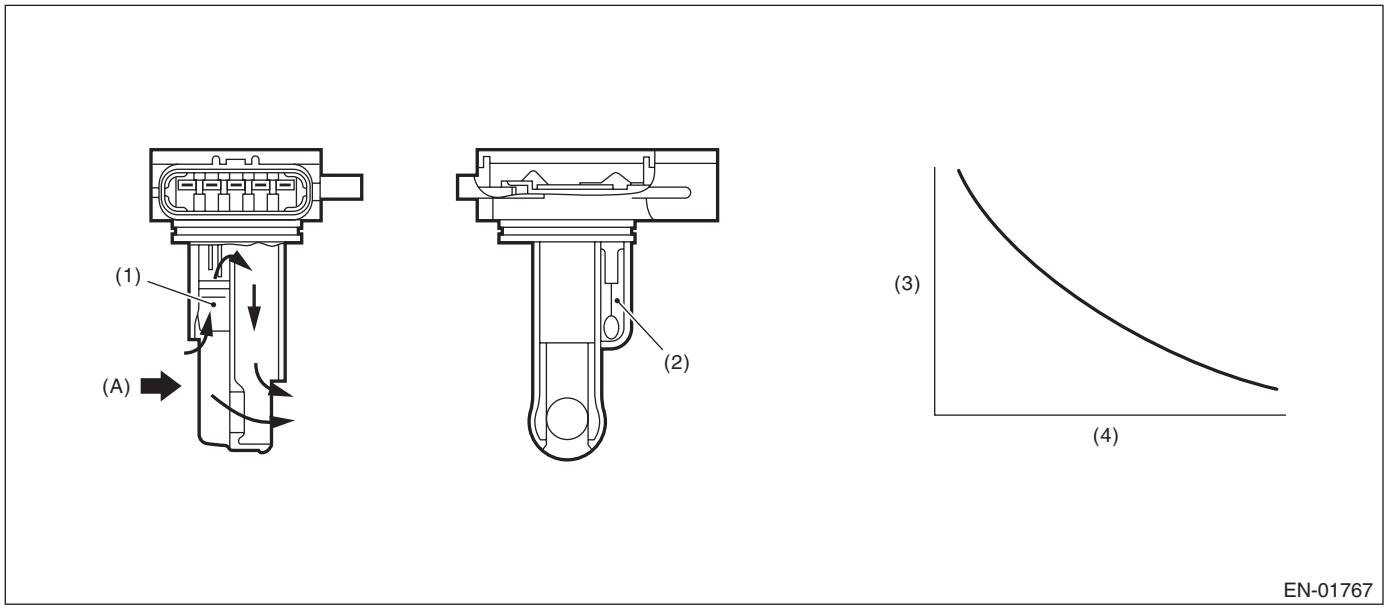

(A) Air

(1) Air flow sensor
(2) Intake air temperature sensor
(3) Resistance value (Ω)
(4) Intake air temperature °C (°F)

3. EXECUTION CONDITION

Secondary Parameters	Execution condition
None	

4. GENERAL DRIVING CYCLE

Always perform the diagnosis continuously.

5. DIAGNOSTIC METHOD

If the duration of time while the following conditions are met is longer than the time indicated, judge as NG.

Judgment Value

Malfunction Criteria	Threshold Value
Output voltage	< 0.4 V

Time Needed for Diagnosis: 500 ms
Malfunction Indicator Light Illumination: Illuminates as soon as a malfunction occurs.

Y: DTC P0113 INTAKE AIR TEMPERATURE SENSOR 1 CIRCUIT HIGH BANK 1

DTC DETECTING CONDITION:
Immediately at fault recognition
TROUBLE SYMPTOM:
- Improper idling
- Poor driving performance

CAUTION:
After servicing or replacing faulty parts, perform Clear Memory Mode <Ref. to EN(H4DO)(diag)-78, OPERATION, Clear Memory Mode.>, and Inspection Mode <Ref. to EN(H4DO)(diag)-64, PROCEDURE, Inspection Mode.>.
WIRING DIAGRAM:
- Engine Electrical System ENGINE TYPE FB (WITHOUT PUSH BUTTON START) <Ref. to WI-170, ENGINE TYPE FB (WITHOUT PUSH BUTTON START), WIRING DIAGRAM, Engine Electrical System.>
- Engine Electrical System ENGINE TYPE FB (WITH PUSH BUTTON START) <Ref. to WI-184, ENGINE TYPE FB (WITH PUSH BUTTON START), WIRING DIAGRAM, Engine Electrical System.>

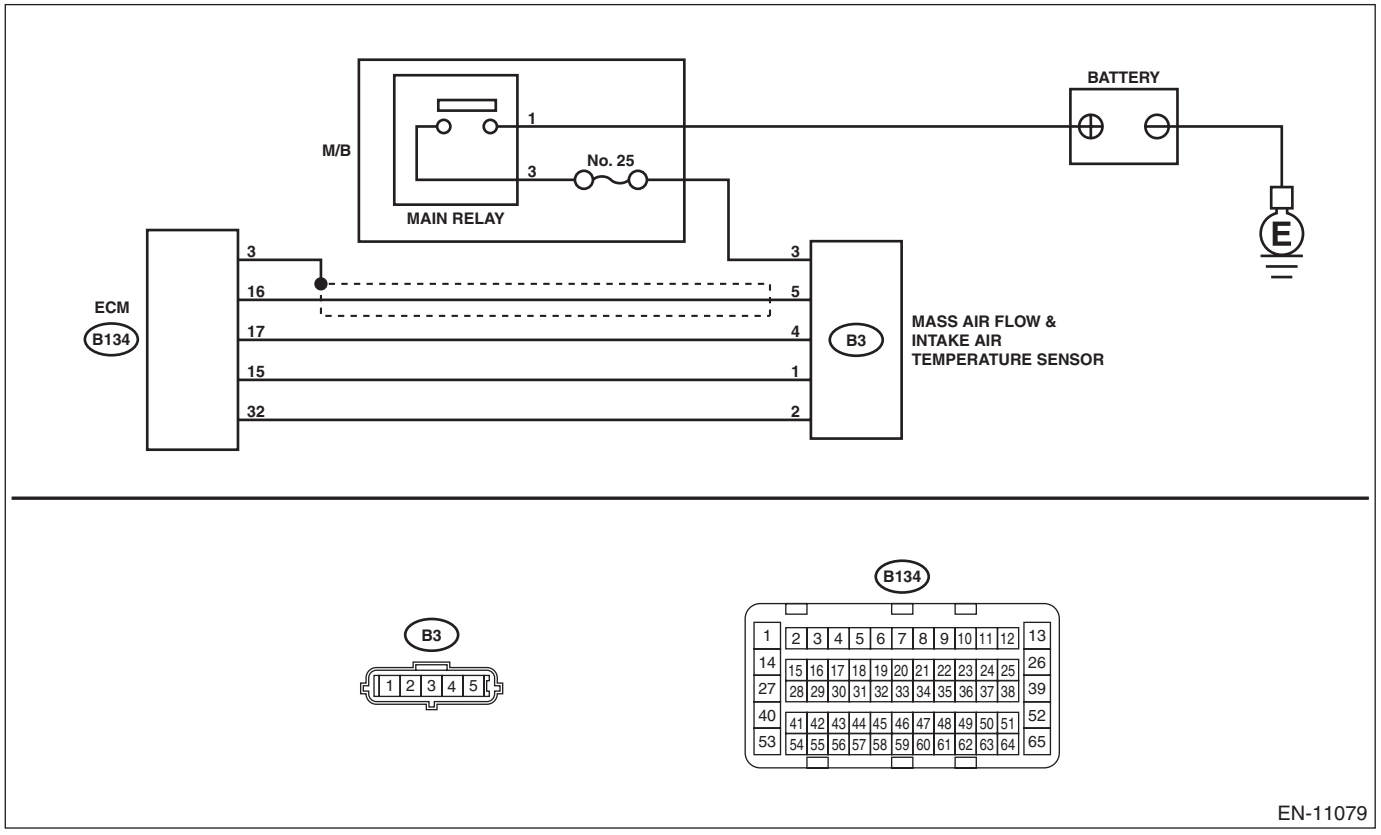

	Step	Check	Yes	No
1	**CHECK CURRENT DATA.** 1) Start the engine. 2) Read the value of «Intake Air Temp.» using the Subaru Select Monitor or a general scan tool. NOTE: • Subaru Select Monitor For detailed operation procedures, refer to "Read Current Data For Engine". <Ref. to EN(H4DO)(diag)-45, Subaru Select Monitor.> • General scan tool For detailed operation procedures, refer to the general scan tool operation manual.	Is the value of «Intake Air Temp.» –40°C (–40°F) or less?	Go to step **2**.	Even if DTC is detected, the circuit has returned to a normal condition at this time. Reproduce the failure, and then perform the diagnosis again. NOTE: In this case, temporary poor contact of connector, temporary open or short circuit of harness may be the cause.
2	**CHECK FOR POOR CONTACT.** Check for poor contact of ECM and mass air flow and intake air temperature sensor connector.	Is there poor contact of ECM or mass air flow and intake air temperature sensor connector?	Repair the poor contact of ECM or mass air flow and intake air temperature sensor connector.	Go to step **3**.
3	**CHECK HARNESS BETWEEN ECM AND MASS AIR FLOW AND INTAKE AIR TEMPERATURE SENSOR CONNECTOR.** 1) Turn the ignition switch to OFF. 2) Disconnect the connector from ECM and the mass air flow and intake air temperature sensor. 3) Measure the resistance of harness between ECM connector and the mass air flow and intake air temperature sensor connector. ***Connector & terminal*** ***(B134) No. 15 — (B3) No. 1:*** ***(B134) No. 32 — (B3) No. 2:***	Is the resistance less than 1 Ω?	Go to step **4**.	Repair the harness and connector. NOTE: In this case, repair the following item: • Open circuit in harness between ECM connector and the mass air flow and intake air temperature sensor connector • Poor contact of joint connector
4	**CHECK HARNESS BETWEEN ECM AND MASS AIR FLOW AND INTAKE AIR TEMPERATURE SENSOR CONNECTOR.** 1) Connect all connectors. 2) Turn the ignition switch to ON. 3) Measure the voltage between ECM connector and chassis ground. ***Connector & terminal*** ***(B134) No. 15 (+) — Chassis ground (–):***	Is the voltage 5 V or more?	Repair the short circuit of harness to power supply between ECM connector and the mass air flow and intake air temperature sensor connector.	Replace the mass air flow and intake air temperature sensor. <Ref. to FU(H4DO)-60, Mass Air Flow and Intake Air Temperature Sensor.>

1. OUTLINE OF DIAGNOSIS

Detect open or short circuit of the intake air temperature sensor.
Judge as NG if out of specification.

2. COMPONENT DESCRIPTION

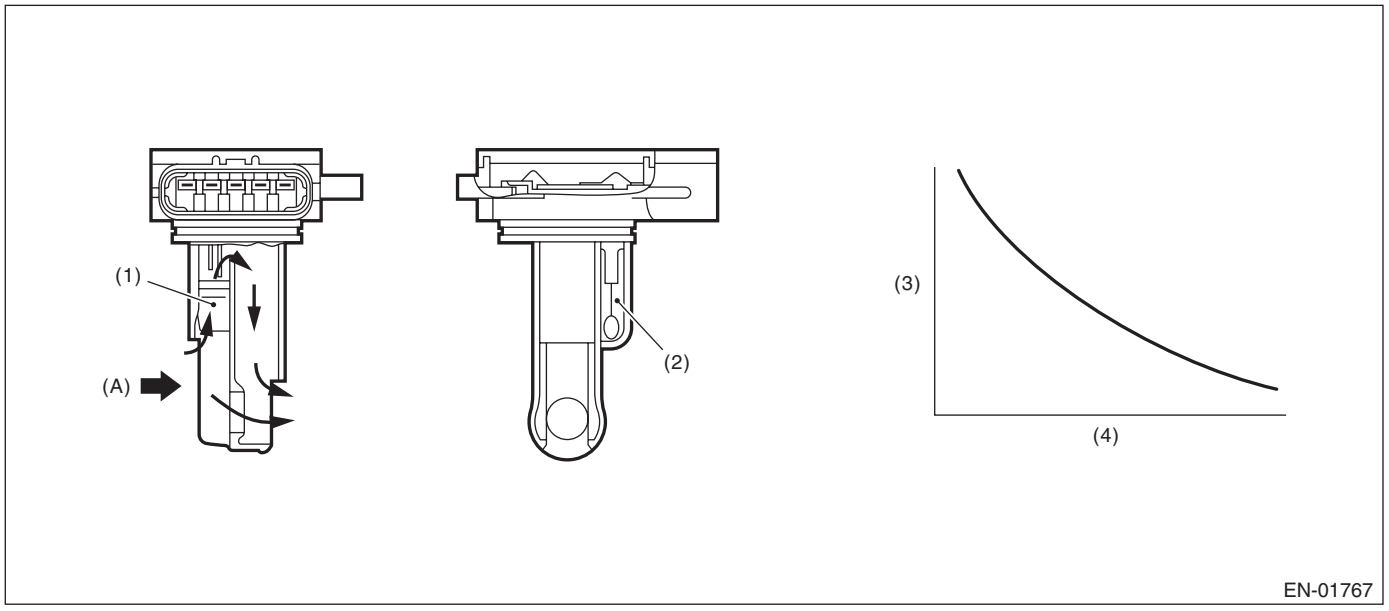

(A) Air

(1) Air flow sensor
(2) Intake air temperature sensor
(3) Resistance value (Ω)
(4) Intake air temperature °C (°F)

3. EXECUTION CONDITION

Secondary Parameters	Execution condition
None	

4. GENERAL DRIVING CYCLE

Always perform the diagnosis continuously.

5. DIAGNOSTIC METHOD

If the duration of time while the following conditions are met is longer than the time indicated, judge as NG.

Judgment Value

Malfunction Criteria	Threshold Value
Output voltage	≥ 4.707 V

Time Needed for Diagnosis: 500 ms
Malfunction Indicator Light Illumination: Illuminates as soon as a malfunction occurs.

Z: DTC P0116 ENGINE COOLANT TEMPERATURE SENSOR 1 CIRCUIT RANGE/PERFORMANCE

DTC DETECTING CONDITION:
Detected when two consecutive driving cycles with fault occur.
TROUBLE SYMPTOM:
- Hard to start
- Improper idling
- Poor driving performance

CAUTION:
After servicing or replacing faulty parts, perform Clear Memory Mode <Ref. to EN(H4DO)(diag)-78, OPERATION, Clear Memory Mode.>, and Inspection Mode <Ref. to EN(H4DO)(diag)-64, PROCEDURE, Inspection Mode.>.

	Step	Check	Yes	No
1	**CHECK FOR ANY OTHER DTC ON DISPLAY.**	Is any other DTC displayed?	Check the appropriate DTC using the "List of Diagnostic Trouble Code (DTC)". <Ref. to EN(H4DO)(diag)-102, List of Diagnostic Trouble Code (DTC).>	Go to step **2**.
2	**CHECK ENGINE COOLANT TEMPERATURE SENSOR.** 1) Disconnect the connectors from the engine coolant temperature sensor. 2) Measure the resistance between engine coolant temperature sensor terminals when the engine coolant is cold and after warmed up. ***Terminals*** ***No. 1 — No. 2:***	Is the resistance of engine coolant temperature sensor different between when engine coolant is cold and after warmed up?	Repair the poor contact of ECM connector.	Replace the engine coolant temperature sensor. <Ref. to FU(H4DO)-43, Engine Coolant Temperature Sensor.>

1. OUTLINE OF DIAGNOSIS

Detect the malfunction of the engine coolant temperature sensor characteristics.
After the engine starts after the specified period of soaking time has elapsed, diagnose by correlation between engine coolant temperature sensor value, intake air temperature sensor value and ambient temperature sensor value. Judge as NG when the differences are both above the specified value by comparing between engine coolant temperature and ambient air temperature, engine coolant temperature and intake air temperature.

2. COMPONENT DESCRIPTION

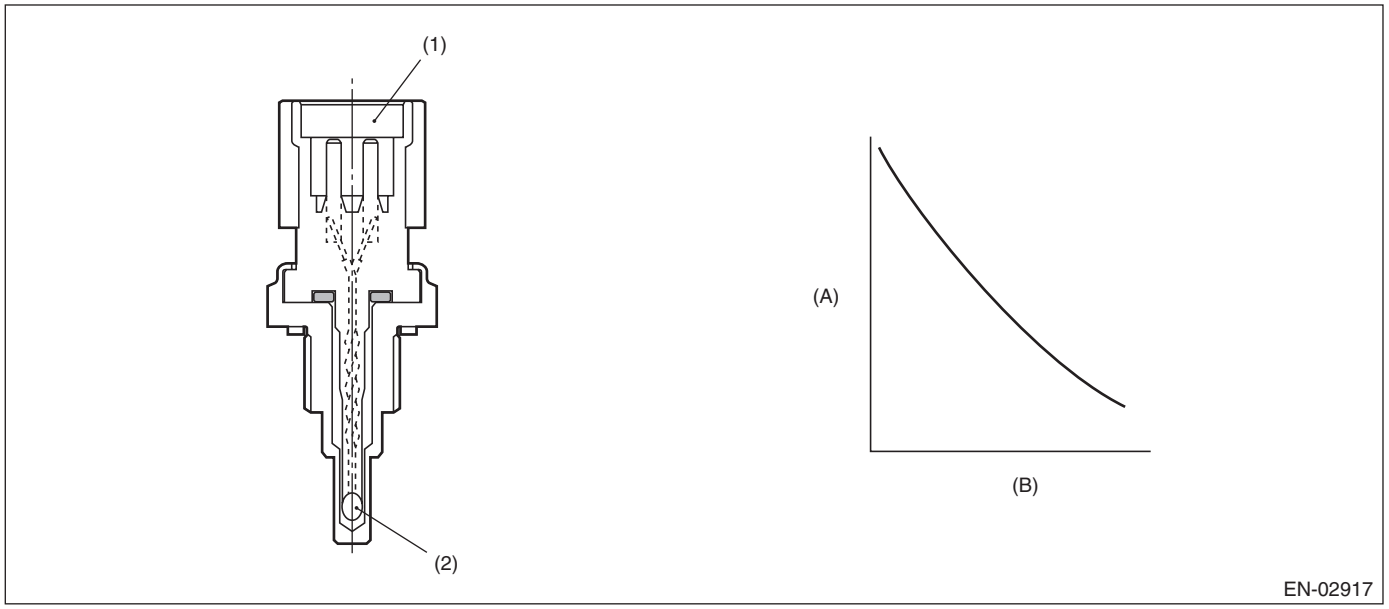

(A) Resistance value (kΩ)
(B) Temperature °C (°F)
(1) Connector
(2) Thermistor element

3. EXECUTION CONDITION

Secondary Parameters	Execution condition
Soaking time	≥ 21600 s
Block heater judgment	Completed
Block heater operation	Not in operation

4. GENERAL DRIVING CYCLE

Perform the diagnosis only once after the engine starts after a certain period of soaking time.

5. DIAGNOSTIC METHOD

If the duration of time while the following conditions are met is longer than the time indicated, judge as NG.

Judgment Value

Malfunction Criteria	Threshold Value
|Engine coolant temperature at engine start – Intake air temperature 30 sec. after engine start|	> Value from Map
|Engine coolant temperature at engine start – Ambient air temperature at engine start|	> 25 °C (45°F)

Map

Ambient temperature °C (°F)	–30 (–22)	30 (86)	45 (113)	60 (140)
|Engine coolant temperature at engine start – Intake air temperature 30 sec. after engine start| °C (°F)	12 (21.6°F)	12 (21.6°F)	22 (39.6°F)	22 (39.6°F)

Time Needed for Diagnosis: Less than 1 second
Malfunction Indicator Light Illumination: Illuminates when malfunction occurs in 2 continuous driving cycles.

AA:DTC P0117 ENGINE COOLANT TEMPERATURE SENSOR 1 CIRCUIT LOW

DTC DETECTING CONDITION:
Immediately at fault recognition
TROUBLE SYMPTOM:

- Hard to start
- Improper idling
- Poor driving performance

CAUTION:
After servicing or replacing faulty parts, perform Clear Memory Mode <Ref. to EN(H4DO)(diag)-78, OPERATION, Clear Memory Mode.>, and Inspection Mode <Ref. to EN(H4DO)(diag)-64, PROCEDURE, Inspection Mode.>.
WIRING DIAGRAM:

- Engine Electrical System ENGINE TYPE FB (WITHOUT PUSH BUTTON START) <Ref. to WI-170, ENGINE TYPE FB (WITHOUT PUSH BUTTON START), WIRING DIAGRAM, Engine Electrical System.>
- Engine Electrical System ENGINE TYPE FB (WITH PUSH BUTTON START) <Ref. to WI-184, ENGINE TYPE FB (WITH PUSH BUTTON START), WIRING DIAGRAM, Engine Electrical System.>

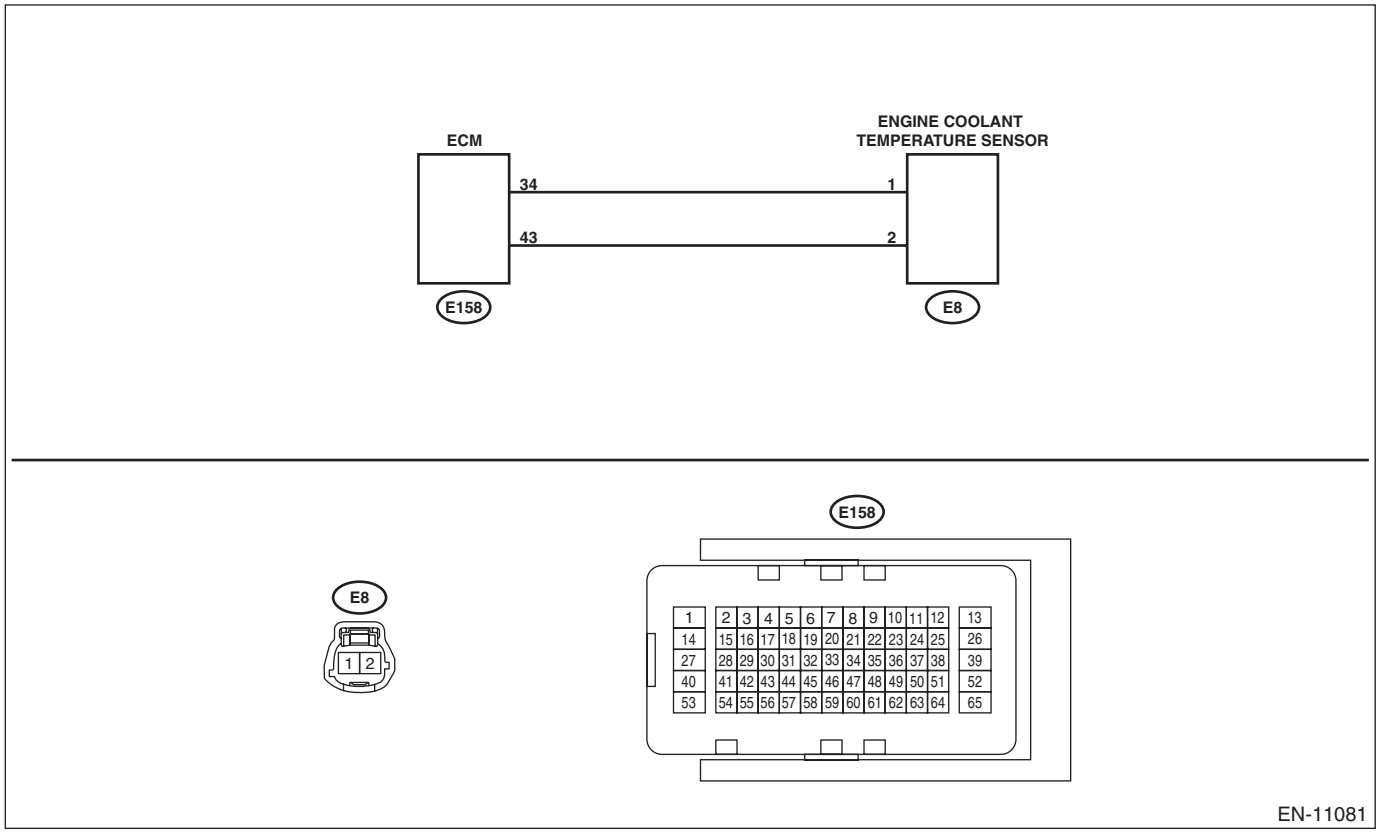

	Step	Check	Yes	No
1	**CHECK CURRENT DATA.** 1) Start the engine. 2) Read the value of «Coolant Temp.» using the Subaru Select Monitor or a general scan tool. NOTE: • Subaru Select Monitor For detailed operation procedures, refer to “Read Current Data For Engine”. <Ref. to EN(H4DO)(diag)-45, Subaru Select Monitor.> • General scan tool For detailed operation procedures, refer to the general scan tool operation manual.	Is the value of «Coolant Temp.» 120°C (248°F) or more?	Go to step **2**.	Even if DTC is detected, the circuit has returned to a normal condition at this time. Reproduce the failure, and then perform the diagnosis again. NOTE: In this case, temporary poor contact of connector, temporary open or short circuit of harness may be the cause.
2	**CHECK HARNESS BETWEEN ECM AND ENGINE COOLANT TEMPERATURE SENSOR CONNECTOR.** 1) Turn the ignition switch to OFF. 2) Disconnect the connectors from ECM and engine coolant temperature sensor. 3) Measure the resistance between ECM connector and chassis ground. ***Connector & terminal*** ***(E158) No. 43 — Chassis ground:***	Is the resistance 1 MΩ or more?	Replace the engine coolant temperature sensor. <Ref. to FU(H4DO)-43, Engine Coolant Temperature Sensor.>	Repair the short circuit to ground in harness between ECM connector and engine coolant temperature sensor connector.

1. OUTLINE OF DIAGNOSIS

Detect the open or short circuit of the engine coolant temperature sensor.
Judge as NG if out of specification.

2. COMPONENT DESCRIPTION

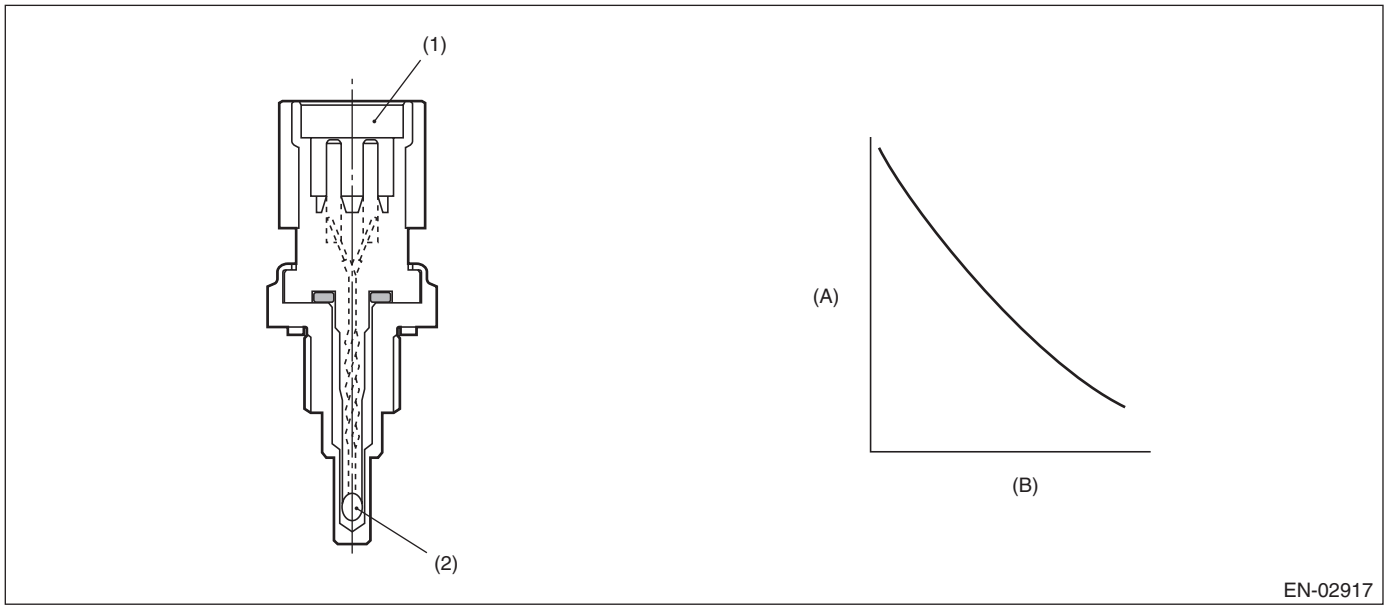

(A) Resistance value (kΩ)
(B) Temperature °C (°F)
(1) Connector
(2) Thermistor element

3. EXECUTION CONDITION

Secondary Parameters	Execution condition
None	

4. GENERAL DRIVING CYCLE

Always perform the diagnosis continuously.

5. DIAGNOSTIC METHOD

If the duration of time while the following conditions are met is longer than the time indicated, judge as NG.

Judgment Value

Malfunction Criteria	Threshold Value
Output voltage	< 0.349 V

Time Needed for Diagnosis: 500 ms
Malfunction Indicator Light Illumination: Illuminates as soon as a malfunction occurs.

AB:DTC P0118 ENGINE COOLANT TEMPERATURE SENSOR 1 CIRCUIT HIGH

DTC DETECTING CONDITION:
Immediately at fault recognition
TROUBLE SYMPTOM:
- Hard to start
- Improper idling
- Poor driving performance

CAUTION:
After servicing or replacing faulty parts, perform Clear Memory Mode <Ref. to EN(H4DO)(diag)-78, OPERATION, Clear Memory Mode.>, and Inspection Mode <Ref. to EN(H4DO)(diag)-64, PROCEDURE, Inspection Mode.>.
WIRING DIAGRAM:
- Engine Electrical System ENGINE TYPE FB (WITHOUT PUSH BUTTON START) <Ref. to WI-170, ENGINE TYPE FB (WITHOUT PUSH BUTTON START), WIRING DIAGRAM, Engine Electrical System.>
- Engine Electrical System ENGINE TYPE FB (WITH PUSH BUTTON START) <Ref. to WI-184, ENGINE TYPE FB (WITH PUSH BUTTON START), WIRING DIAGRAM, Engine Electrical System.>

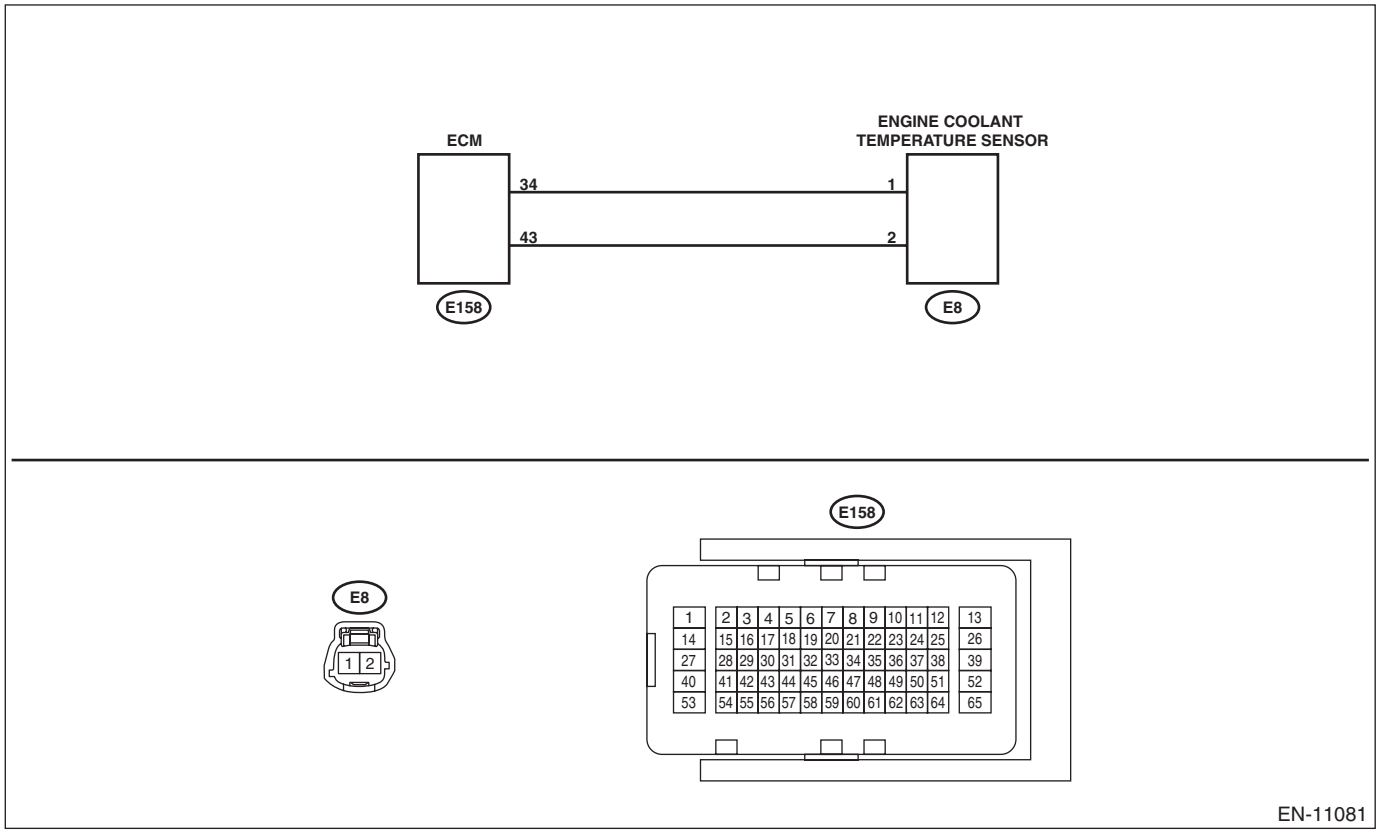

	Step	Check	Yes	No
1	**CHECK CURRENT DATA.** 1) Start the engine. 2) Read the value of «Coolant Temp.» using the Subaru Select Monitor or a general scan tool. NOTE: • Subaru Select Monitor For detailed operation procedures, refer to "Read Current Data For Engine". <Ref. to EN(H4DO)(diag)-45, Subaru Select Monitor.> • General scan tool For detailed operation procedures, refer to the general scan tool operation manual.	Is the value of «Coolant Temp.» –40°C (–40°F) or less?	Go to step **2**.	Even if DTC is detected, the circuit has returned to a normal condition at this time. Reproduce the failure, and then perform the diagnosis again. NOTE: In this case, temporary poor contact of connector, temporary open or short circuit of harness may be the cause.
2	**CHECK FOR POOR CONTACT.** Check for poor contact of ECM and engine coolant temperature sensor connector.	Is there poor contact of ECM or engine coolant temperature sensor connector?	Repair the poor contact of ECM or engine coolant temperature sensor connector.	Go to step **3**.
3	**CHECK HARNESS BETWEEN ECM AND ENGINE COOLANT TEMPERATURE SENSOR CONNECTOR.** 1) Turn the ignition switch to OFF. 2) Disconnect the connectors from ECM and engine coolant temperature sensor. 3) Measure the resistance of harness between ECM connector and engine coolant temperature sensor connector. ***Connector & terminal*** ***(E158) No. 43 — (E8) No. 2:*** ***(E158) No. 34 — (E8) No. 1:***	Is the resistance less than 1 Ω?	Go to step **4**.	Repair the open circuit of the harness between the ECM connector and engine coolant temperature sensor connector.
4	**CHECK HARNESS BETWEEN ECM AND ENGINE COOLANT TEMPERATURE SENSOR CONNECTOR.** 1) Connect all connectors. 2) Turn the ignition switch to ON. 3) Measure the voltage between ECM connector and chassis ground. ***Connector & terminal*** ***(E158) No. 43 (+) — Chassis ground (–):***	Is the voltage 5 V or more?	Repair the short circuit of harness to power supply between ECM connector and engine coolant temperature sensor connector.	Replace the engine coolant temperature sensor. <Ref. to FU(H4DO)-43, Engine Coolant Temperature Sensor.>

1. OUTLINE OF DIAGNOSIS

Detect the open or short circuit of the engine coolant temperature sensor.
Judge as NG if out of specification.

2. COMPONENT DESCRIPTION

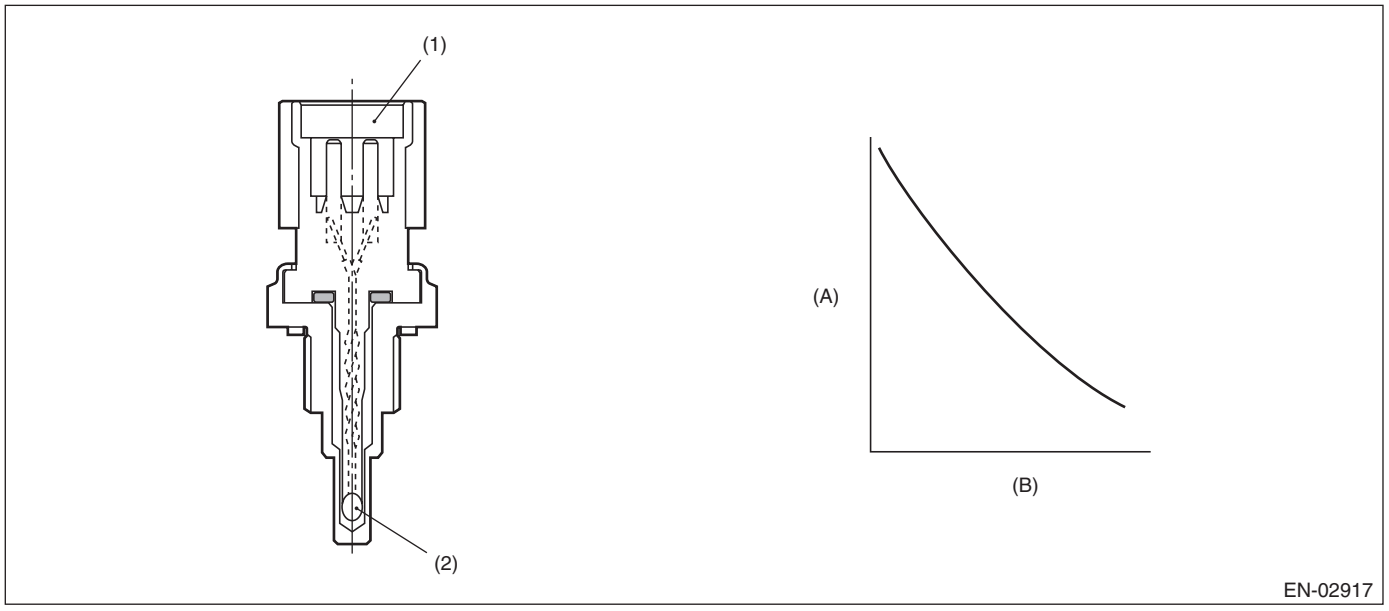

(A) Resistance value (kΩ)
(B) Temperature °C (°F)
(1) Connector
(2) Thermistor element

3. EXECUTION CONDITION

Secondary Parameters	Execution condition
None	

4. GENERAL DRIVING CYCLE

Always perform the diagnosis continuously.

5. DIAGNOSTIC METHOD

If the duration of time while the following conditions are met is longer than the time indicated, judge as NG.

Judgment Value

Malfunction Criteria	Threshold Value
Output voltage	≥ 4.698 V

Time Needed for Diagnosis: 500 ms
Malfunction Indicator Light Illumination: Illuminates as soon as a malfunction occurs.

AC:DTC P0122 THROTTLE/PEDAL POSITION SENSOR/SWITCH "A" CIRCUIT LOW

DTC DETECTING CONDITION:
Immediately at fault recognition
TROUBLE SYMPTOM:
- Improper idling
- Engine stalls.
- Poor driving performance

CAUTION:
After servicing or replacing faulty parts, perform Clear Memory Mode <Ref. to EN(H4DO)(diag)-78, OPERATION, Clear Memory Mode.>, and Inspection Mode <Ref. to EN(H4DO)(diag)-64, PROCEDURE, Inspection Mode.>.
WIRING DIAGRAM:
- Engine Electrical System ENGINE TYPE FB (WITHOUT PUSH BUTTON START) <Ref. to WI-170, ENGINE TYPE FB (WITHOUT PUSH BUTTON START), WIRING DIAGRAM, Engine Electrical System.>
- Engine Electrical System ENGINE TYPE FB (WITH PUSH BUTTON START) <Ref. to WI-184, ENGINE TYPE FB (WITH PUSH BUTTON START), WIRING DIAGRAM, Engine Electrical System.>

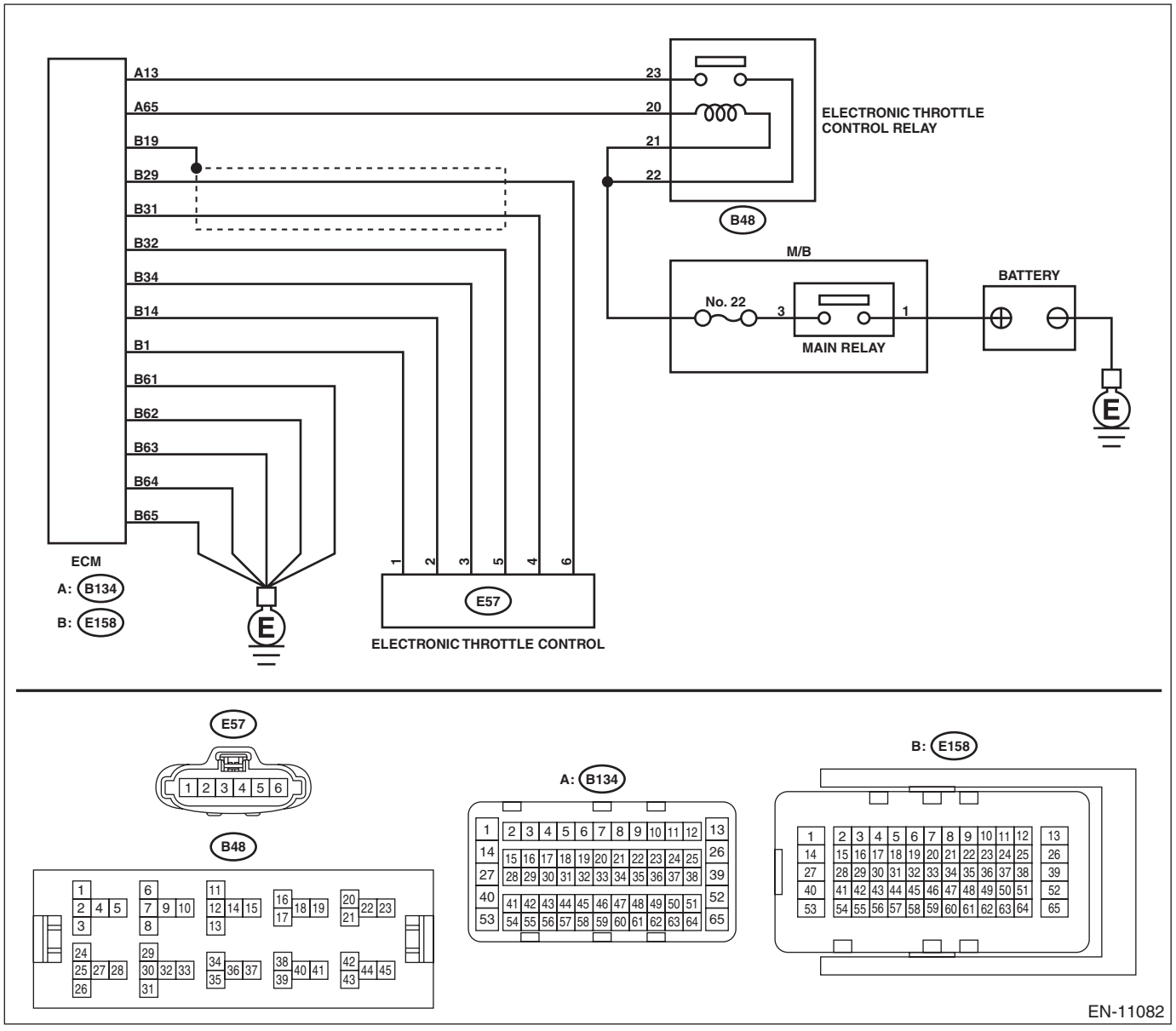

	Step	Check	Yes	No
1	**CHECK HARNESS BETWEEN ECM AND ELECTRONIC THROTTLE CONTROL CONNECTOR.** 1) Turn the ignition switch to OFF. 2) Disconnect the connectors from ECM and electronic throttle control. 3) Measure the resistance between ECM connector and chassis ground. ***Connector & terminal*** ***(E158) No. 32 — Chassis ground:*** ***(E158) No. 29 — Chassis ground:*** ***(E158) No. 29 — (E158) No. 19:***	Is the resistance 1 MΩ or more?	Go to step **2**.	Repair the ground short circuit of harness between ECM connector and electronic throttle control connector.
2	**CHECK SHORT CIRCUIT INSIDE THE ECM.** 1) Connect the connector to ECM. 2) Measure the resistance between electronic throttle control connector and engine ground. ***Connector & terminal*** ***(E57) No. 6 — Engine ground:***	Is the resistance 1 MΩ or more?	Replace the electronic throttle control. <Ref. to FU(H4DO)-14, Throttle Body.>	Repair the ground short circuit of harness between ECM connector and electronic throttle control connector. Replace the ECM if defective. <Ref. to FU(H4DO)-82, Engine Control Module (ECM).>

1. OUTLINE OF DIAGNOSIS

Detect the open or short circuit of throttle position sensor 1.
Judge as NG if out of specification.

2. COMPONENT DESCRIPTION

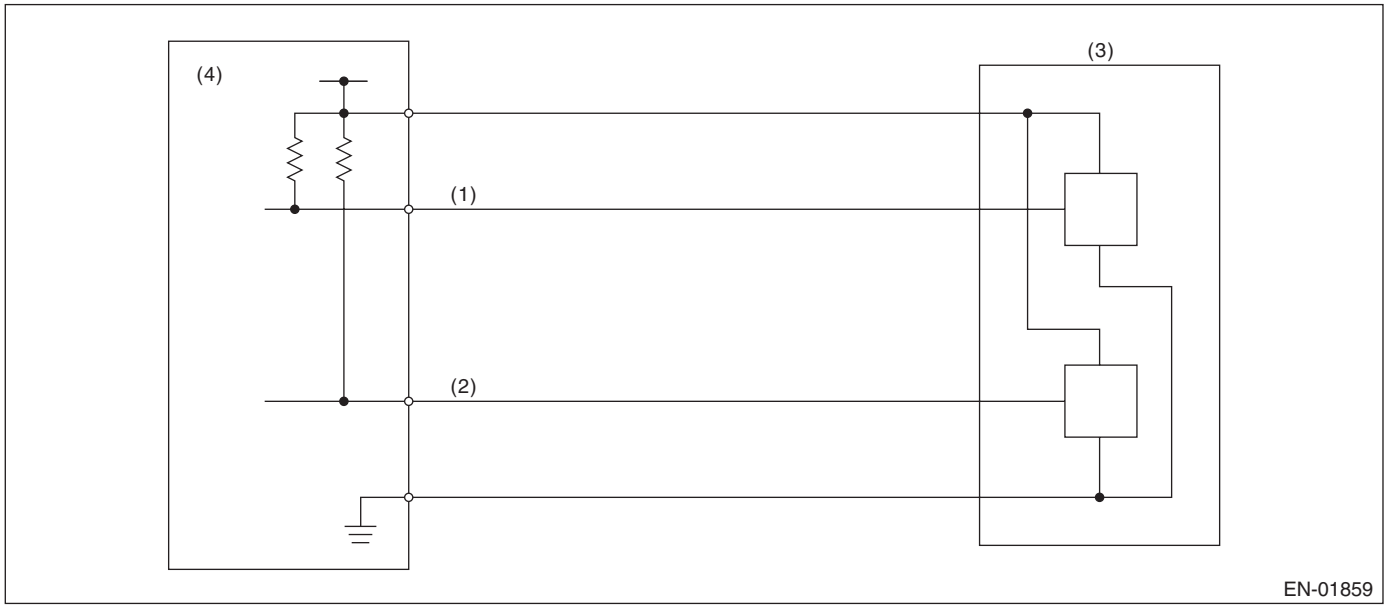

(1) Throttle position sensor 1 signal
(2) Throttle position sensor 2 signal
(3) Throttle position sensor
(4) Engine control module (ECM)

3. EXECUTION CONDITION

Secondary Parameters	Execution condition
Battery voltage	≥ 6 V

4. GENERAL DRIVING CYCLE

Always perform the diagnosis continuously.

5. DIAGNOSTIC METHOD

If the duration of time while the following conditions are met is longer than the time indicated, judge as NG.

Judgment Value

Malfunction Criteria	Threshold Value
Sensor 1 input voltage	≤ 0.267 V

Time Needed for Diagnosis: 24 ms
Malfunction Indicator Light Illumination: Illuminates as soon as a malfunction occurs.

AD:DTC P0123 THROTTLE/PEDAL POSITION SENSOR/SWITCH "A" CIRCUIT HIGH

DTC DETECTING CONDITION:
Immediately at fault recognition
TROUBLE SYMPTOM:
- Improper idling
- Engine stalls.
- Poor driving performance

CAUTION:
After servicing or replacing faulty parts, perform Clear Memory Mode <Ref. to EN(H4DO)(diag)-78, OPERATION, Clear Memory Mode.>, and Inspection Mode <Ref. to EN(H4DO)(diag)-64, PROCEDURE, Inspection Mode.>.
WIRING DIAGRAM:
- Engine Electrical System ENGINE TYPE FB (WITHOUT PUSH BUTTON START) <Ref. to WI-170, ENGINE TYPE FB (WITHOUT PUSH BUTTON START), WIRING DIAGRAM, Engine Electrical System.>
- Engine Electrical System ENGINE TYPE FB (WITH PUSH BUTTON START) <Ref. to WI-184, ENGINE TYPE FB (WITH PUSH BUTTON START), WIRING DIAGRAM, Engine Electrical System.>

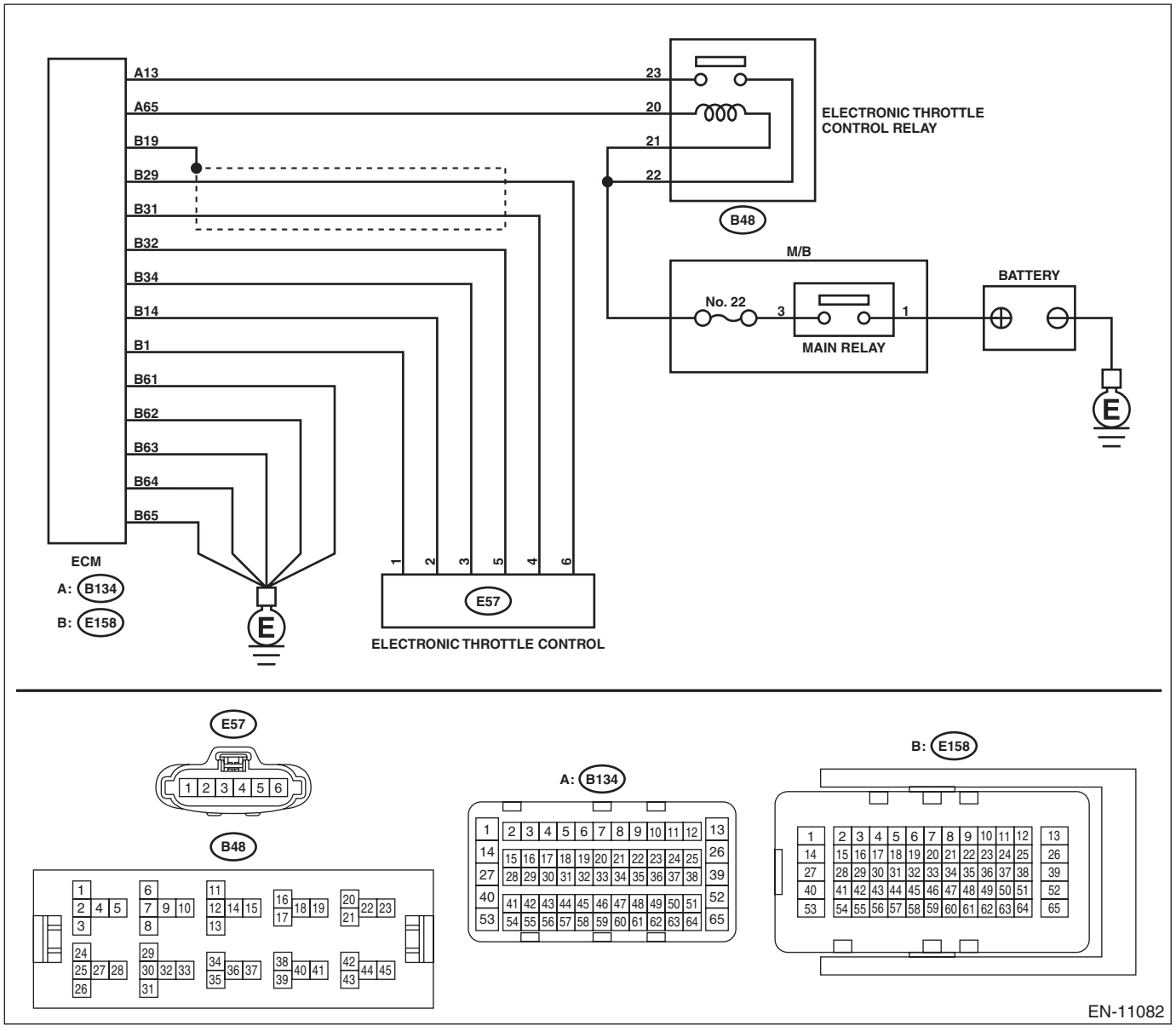

	Step	Check	Yes	No
1	**CHECK HARNESS BETWEEN ECM AND ELECTRONIC THROTTLE CONTROL CONNECTOR.** 1) Turn the ignition switch to OFF. 2) Disconnect the connectors from ECM and electronic throttle control. 3) Measure the resistance of harness between ECM connector and electronic throttle control connector. ***Connector & terminal*** ***(E158) No. 29 — (E57) No. 6:*** ***(E158) No. 34 — (E57) No. 3:***	Is the resistance less than 1 Ω?	Go to step **2**.	Repair the open circuit of harness between ECM connector and electronic throttle control connector.
2	**CHECK HARNESS BETWEEN ECM AND ELECTRONIC THROTTLE CONTROL CONNECTOR.** 1) Connect the connector to ECM. 2) Measure the resistance between electronic throttle control connector and engine ground. ***Connector & terminal*** ***(E57) No. 3 — Engine ground:***	Is the resistance less than 5 Ω?	Go to step **3**.	Repair the harness and connector. NOTE: In this case, repair the following item: • Open circuit of harness between ECM connector and engine ground • Poor contact of ECM connector
3	**CHECK HARNESS BETWEEN ECM AND ELECTRONIC THROTTLE CONTROL CONNECTOR.** 1) Turn the ignition switch to ON. 2) Measure the voltage between electronic throttle control connector and engine ground. ***Connector & terminal*** ***(E57) No. 6 (+) — Engine ground (–):***	Is the voltage 5 V or more?	Repair the short circuit to power in the harness between ECM connector and electronic throttle control connector.	Go to step **4**.
4	**CHECK HARNESS BETWEEN ECM AND ELECTRONIC THROTTLE CONTROL CONNECTOR.** 1) Turn the ignition switch to OFF. 2) Disconnect the connector from ECM. 3) Measure the resistance between ECM connectors. ***Connector & terminal*** ***(E158) No. 32 — (E158) No. 29:***	Is the resistance 1 MΩ or more?	Repair the poor contact of electronic throttle control connector. Replace the electronic throttle control if defective. <Ref. to FU(H4DO)-14, Throttle Body.>	Repair the short circuit to power in the harness between ECM connector and electronic throttle control connector.

1. OUTLINE OF DIAGNOSIS

Detect the open or short circuit of throttle position sensor 1.
Judge as NG if out of specification.

2. COMPONENT DESCRIPTION

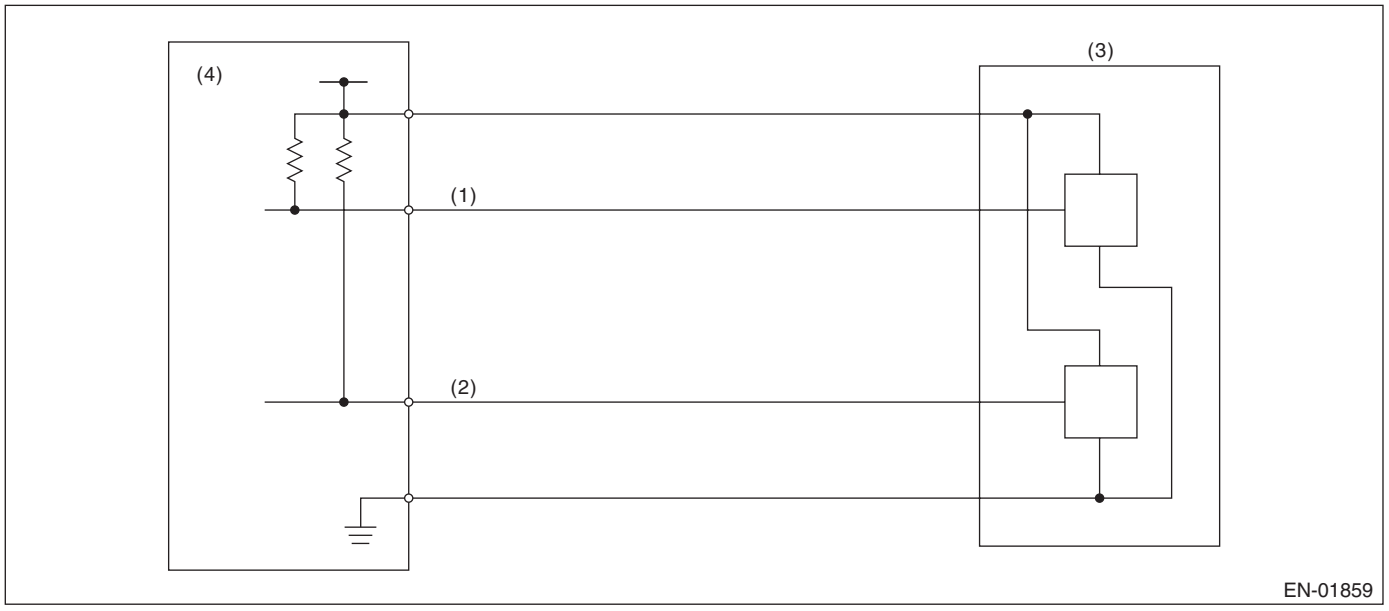

(1) Throttle position sensor 1 signal
(2) Throttle position sensor 2 signal
(3) Throttle position sensor
(4) Engine control module (ECM)

3. EXECUTION CONDITION

Secondary Parameters	Execution condition
Battery voltage	≥ 6 V

4. GENERAL DRIVING CYCLE

Always perform the diagnosis continuously.

5. DIAGNOSTIC METHOD

If the duration of time while the following conditions are met is longer than the time indicated, judge as NG.

Judgment Value

Malfunction Criteria	Threshold Value
Sensor 1 input voltage	≥ 4.725 V

Time Needed for Diagnosis: 24 ms
Malfunction Indicator Light Illumination: Illuminates as soon as a malfunction occurs.

AE:DTC P0125 INSUFFICIENT COOLANT TEMPERATURE FOR CLOSED LOOP FUEL CONTROL

DTC DETECTING CONDITION:
Detected when two consecutive driving cycles with fault occur.
TROUBLE SYMPTOM:
Engine does not return to idle.

CAUTION:
After servicing or replacing faulty parts, perform Clear Memory Mode <Ref. to EN(H4DO)(diag)-78, OPERATION, Clear Memory Mode.>, and Inspection Mode <Ref. to EN(H4DO)(diag)-64, PROCEDURE, Inspection Mode.>.

	Step	Check	Yes	No
1	**CHECK TIRE SIZE.**	Is the tire size as specified and the same size as three other wheels?	Go to step **2**.	Replace the tire.
2	**CHECK ENGINE COOLANT.** Check the following items: • Amount of engine coolant • Engine coolant freeze • Contamination of engine coolant	Is the engine coolant normal?	Go to step **3**.	Fill or replace the engine coolant. <Ref. to CO(H4DO)-15, REPLACEMENT, Engine Coolant.>
3	**CHECK THERMOSTAT.**	Does the thermostat remain opened?	Replace the thermostat. <Ref. to CO(H4DO)-33, Thermostat.>	Replace the engine coolant temperature sensor. <Ref. to FU(H4DO)-43, Engine Coolant Temperature Sensor.>

1. OUTLINE OF DIAGNOSIS

Detect the malfunction of engine coolant temperature output property.
Judge as NG when engine coolant temperature does not rise to the specified value after predetermined time has elapsed since engine start.

2. COMPONENT DESCRIPTION

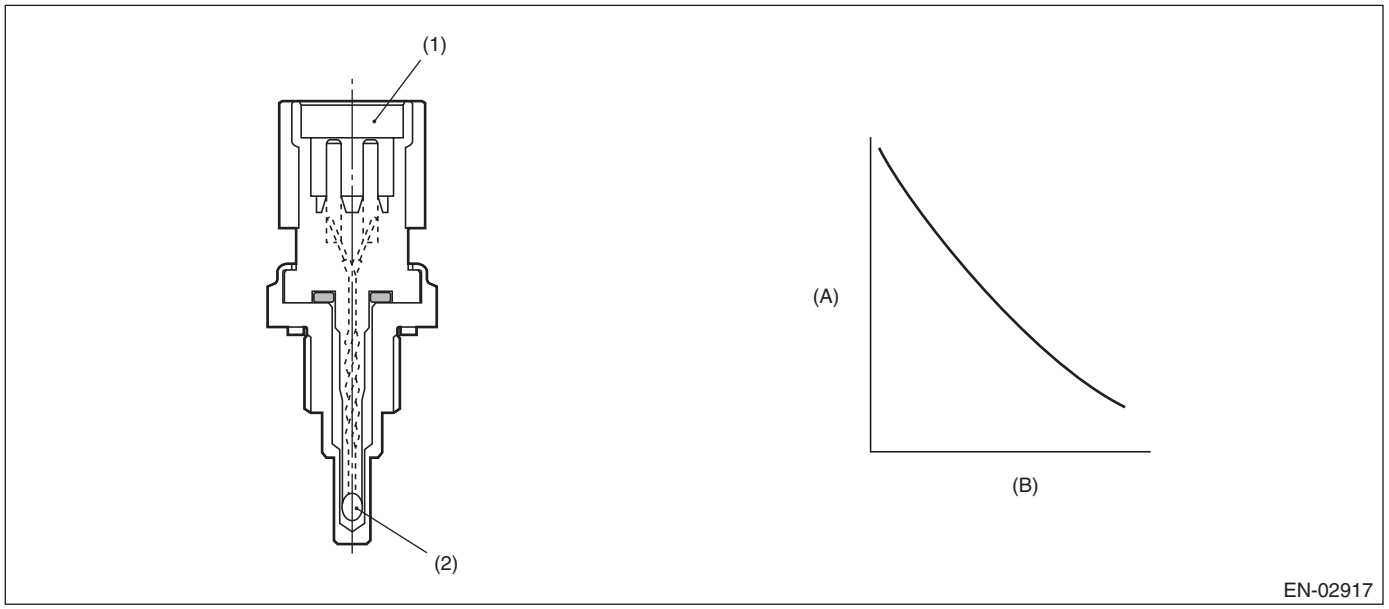

(A) Resistance value (kΩ)
(B) Temperature °C (°F)
(1) Connector
(2) Thermistor element

3. EXECUTION CONDITION

Secondary Parameters	Execution condition
Engine coolant temperature at engine start	< –15 °C (5 °F)
Engine speed	> 500 rpm

4. GENERAL DRIVING CYCLE

Perform the diagnosis only once after starting the engine from cold condition.

5. DIAGNOSTIC METHOD

If the duration of time while the following conditions are met is longer than the time indicated, judge as NG.

Judgment Value

Malfunction Criteria	Threshold Value
Engine coolant temperature	< –15 °C (5 °F)
Elapsed time after starting the engine	
(At the time of (The smaller value of either Engine coolant temperature or Intake air temperature at engine start) ≥ –23.3°C (–9.9°F))	≥ 120 s
or	
(At the time of (The smaller value of either Engine coolant temperature or Intake air temperature at engine start) < –23.3°C (–9.9°F))	≥ 300 s

Time Needed for Diagnosis: 120 or 300 seconds
Malfunction Indicator Light Illumination: Illuminates when malfunction occurs in 2 continuous driving cycles.

AF:DTC P0128 COOLANT THERMOSTAT (ENGINE COOLANT TEMPERATURE BELOW THERMOSTAT REGULATING TEMPERATURE)

DTC DETECTING CONDITION:
Detected when two consecutive driving cycles with fault occur.
TROUBLE SYMPTOM:
Thermostat remains open.

CAUTION:
After servicing or replacing faulty parts, perform Clear Memory Mode <Ref. to EN(H4DO)(diag)-78, OPERATION, Clear Memory Mode.>, and Inspection Mode <Ref. to EN(H4DO)(diag)-64, PROCEDURE, Inspection Mode.>.

	Step	Check	Yes	No
1	**CHECK FOR ANY OTHER DTC ON DISPLAY.**	Is any other DTC displayed?	Check the appropriate DTC using the "List of Diagnostic Trouble Code (DTC)". <Ref. to EN(H4DO)(diag)-102, List of Diagnostic Trouble Code (DTC).>	Go to step **2**.
2	**CHECK ENGINE COOLANT.**	Is the engine coolant amount normal?	Go to step **3**.	Refill the engine coolant. <Ref. to CO(H4DO)-15, Engine Coolant.>
3	**CHECK RADIATOR FAN.** 1) Start the engine. 2) Check the radiator fan operation.	Does the radiator fan continuously rotate for 3 minutes or more during idling?	Repair radiator fan circuit. <Ref. to CO(H4DO)-54, Radiator Fan and Fan Motor Assembly.>	Replace the thermostat. <Ref. to CO(H4DO)-33, Thermostat.>

1. OUTLINE OF DIAGNOSIS

Detect malfunctions of the thermostat function.
Judge as NG when any one of the following conditions is established.

- When the actual engine coolant temperature does not reach the maximum temperature necessary to perform other OBDII diagnosis and Σ (Estimated engine coolant temperature – actual engine coolant temperature) exceeded the predetermined value. (Judgment 1)
- When the actual engine coolant temperature does not reach the range within –11°C (–19.8°F) from the regulated temperature and Σ (Estimated engine coolant temperature – actual engine coolant temperature) exceeded the predetermined value. (Judgment 2)
- When the difference between the estimated coolant temperature and the actual engine coolant temperature exceeds the predetermined value, and Σ (Estimated engine coolant temperature – actual engine coolant temperature) exceeded the predetermined value. (Judgment 3)

2. COMPONENT DESCRIPTION

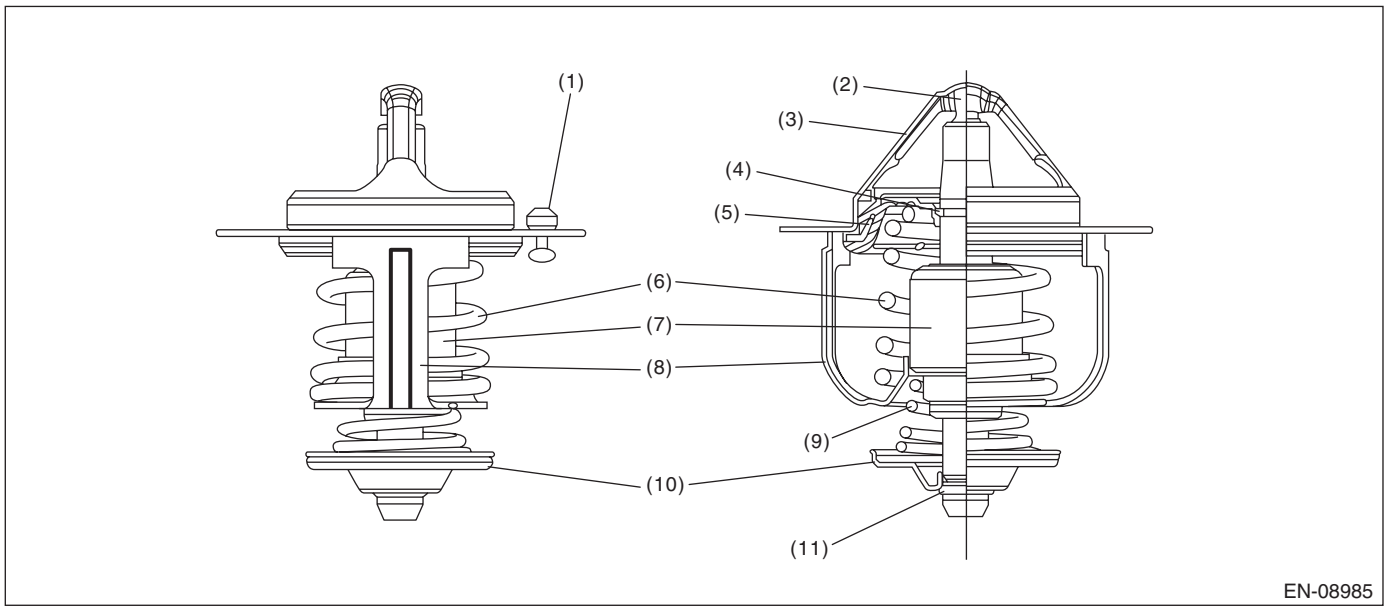

(1) Jiggle valve
(2) Piston
(3) Flange
(4) Stop ring
(5) Dust seal
(6) Main spring
(7) Wax element
(8) Frame
(9) Bypass spring
(10) Bypass valve
(11) Stop ring

3. EXECUTION CONDITION

Secondary Parameters	Execution condition
<Judgment 1>	
Battery voltage	≥ 10.9 V
Ambient air temperature	≥ –7 °C (19.4 °F)
Vehicle speed	≥ 30 km/h (18.6 MPH)
Estimated coolant temperature	≥ Value of Map 1
Engine coolant temperature at engine starting	< 63 °C (145.4 °F)
<Judgment 2>	
Battery voltage	≥ 10.9 V
Ambient air temperature	≥ –7 °C (19.4 °F)
Vehicle speed	≥ 30 km/h (18.6 MPH)
Estimated coolant temperature	≥ Value from Map 2
Engine coolant temperature at engine starting	< 63 °C (145.4 °F)
<Judgment 3>	
Battery voltage	≥ 10.9 V
Ambient air temperature	≥ –7 °C (19.4 °F)
Vehicle speed	≥ 30 km/h (18.6 MPH)
Estimated coolant temperature	≥ Value from Map 3
Engine coolant temperature at engine starting	< 63 °C (145.4 °F)

Map 1

Engine coolant temperature at engine starting °C (°F)	–7 (19.4)	8 (46.4)	10 (50)	25 (77)
Estimated coolant temperature °C (°F)	60 (140)	60 (140)	60 (140)	60 (140)

Map 2

Engine coolant temperature at engine starting °C (°F)	–7 (19.4)	8 (46.4)	10 (50)	25 (77)
Estimated coolant temperature °C (°F)	73.5 (164.3)	82.7 (180.9)	82.7 (180.9)	82.7 (180.9)

Map 3

Engine coolant temperature at engine starting °C (°F)	–7 (19.4)	10 (50)	25 (77)	33.5 (92.3)
Estimated coolant temperature °C (°F)	46 (114.8)	57 (134.6)	72 (161.6)	82.7 (180.9)

4. GENERAL DRIVING CYCLE

Perform the diagnosis only once after starting the engine.

5. DIAGNOSTIC METHOD

If the duration of time while the following conditions are met is longer than the time indicated, judge as NG.

Judgment Value

Malfunction Criteria	Threshold Value
When any one of the followings is established:	
<Judgment 1>	
Actual engine coolant temperature and Σ (Estimated engine coolant temperature – actual engine coolant temperature)	< Value of Map 4 > Value of Map 5
<Judgment 2>	
Actual engine coolant temperature and Σ (Estimated engine coolant temperature – actual engine coolant temperature)	< Regulated temperature – Value of Map 6 > Value of Map 7
<Judgment 3>	
Estimated engine coolant temperature – actual engine coolant temperature and Σ (Estimated engine coolant temperature – actual engine coolant temperature)	> Value of Map 8 > Value of Map 9

Map 4

Estimate ambient temperature °C (°F)	–7 (19.4)	8 (46.4)	10 (50)	25 (77)
Threshold Value °C (°F)	60 (140)	60 (140)	60 (140)	60 (140)

Map 5

Engine coolant temperature at engine starting °C (°F)	–7 (19.4)	0 (32)	8 (46.4)	10 (50)	30 (86)	40 (104)
Threshold Value °C (°F)	1731.6 (3116.9)	1731.6 (3116.9)	1731.6 (3116.9)	1731.6 (3116.9)	1731.6 (3116.9)	1200 (2160)

Map 6

Estimate ambient temperature °C (°F)	–7 (19.4)	8 (46.4)	10 (50)	25 (77)
Threshold Value °C (°F)	20.3 (36.5)	11.1 (20)	11.1 (20)	11.1 (20)

Map 7

Engine coolant temperature at engine starting °C (°F)	–7 (19.4)	0 (32)	8 (46.4)	10 (50)	30 (86)	35 (95)
Threshold Value °C (°F)	1731.6 (3116.9)	1731.6 (3116.9)	1731.6 (3116.9)	1731.6 (3116.9)	1731.6 (3116.9)	1500 (2700)

Map 8

Estimate ambient temperature °C (°F)	–7 (19.4)	8 (46.4)	10 (50)	25 (77)
Threshold Value °C (°F)	11.1 (20)	11.1 (20)	11.1 (20)	11.1 (20)

Map 9

Engine coolant temperature at engine starting °C (°F)	–7 (19.4)	8 (46.4)	10 (50)	25 (77)
Threshold Value °C (°F)	1731.6 (3116.9)	1731.6 (3116.9)	1731.6 (3116.9)	1731.6 (3116.9)

Time Needed for Diagnosis: Less than 1 second
Malfunction Indicator Light Illumination: Illuminates when malfunction occurs in 2 continuous driving cycles.

AG:DTC P0131 A/F / O2 SENSOR CIRCUIT LOW VOLTAGE BANK 1 SENSOR 1

DTC DETECTING CONDITION:
Immediately at fault recognition

CAUTION:
After servicing or replacing faulty parts, perform Clear Memory Mode <Ref. to EN(H4DO)(diag)-78, OPERATION, Clear Memory Mode.>, and Inspection Mode <Ref. to EN(H4DO)(diag)-64, PROCEDURE, Inspection Mode.>.

WIRING DIAGRAM:

- Engine Electrical System ENGINE TYPE FB (WITHOUT PUSH BUTTON START) <Ref. to WI-170, ENGINE TYPE FB (WITHOUT PUSH BUTTON START), WIRING DIAGRAM, Engine Electrical System.>
- Engine Electrical System ENGINE TYPE FB (WITH PUSH BUTTON START) <Ref. to WI-184, ENGINE TYPE FB (WITH PUSH BUTTON START), WIRING DIAGRAM, Engine Electrical System.>

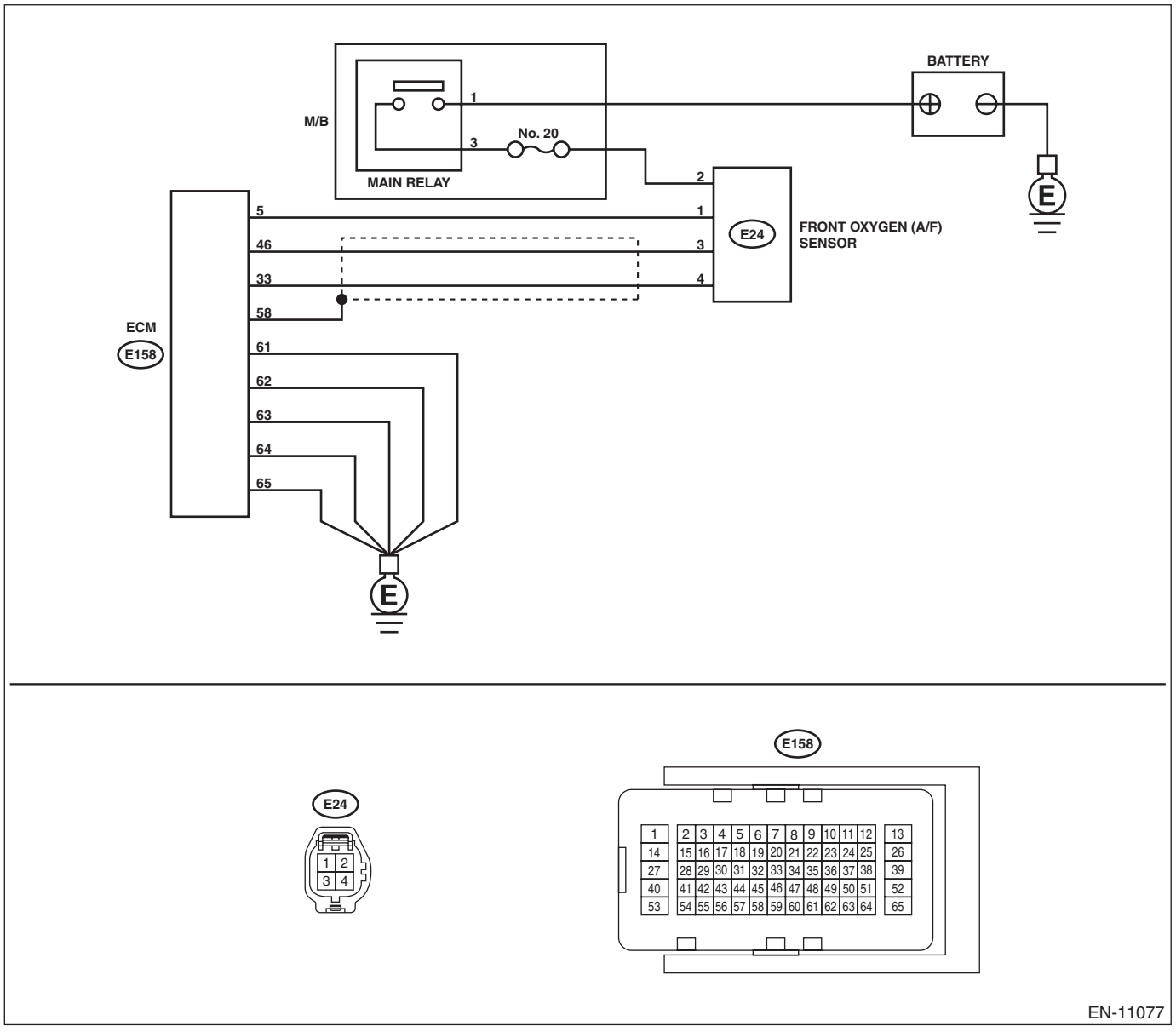

Step		Check	Yes	No
1	**CHECK FRONT OXYGEN (A/F) SENSOR CONNECTOR AND COUPLING CONNECTOR.**	Has water entered the connector?	Completely remove any water inside.	Go to step **2**.

	Step	Check	Yes	No
2	**CHECK HARNESS BETWEEN ECM AND FRONT OXYGEN (A/F) SENSOR CONNECTOR.** 1) Turn the ignition switch to OFF. 2) Disconnect the connectors from ECM and front oxygen (A/F) sensor. 3) Measure the resistance between ECM connector and chassis ground. ***Connector & terminal*** ***(E158) No. 46 — Chassis ground:*** ***(E158) No. 33 — Chassis ground:***	Is the resistance 1 MΩ or more?	Go to step **3**.	Repair the short circuit to ground in harness between ECM connector and front oxygen (A/F) sensor connector.
3	**CHECK FOR POOR CONTACT.** Check for poor contact of the front oxygen (A/F) sensor connector.	Is there poor contact of front oxygen (A/F) sensor connector?	Repair the poor contact of front oxygen (A/F) sensor connector.	Replace the front oxygen (A/F) sensor. <Ref. to FU(H4DO)-76, Front Oxygen (A/F) Sensor.>

1. OUTLINE OF DIAGNOSIS

Detect the open or short circuit of sensor.
Judge as NG, when the element voltage is out of the specified range.

2. COMPONENT DESCRIPTION

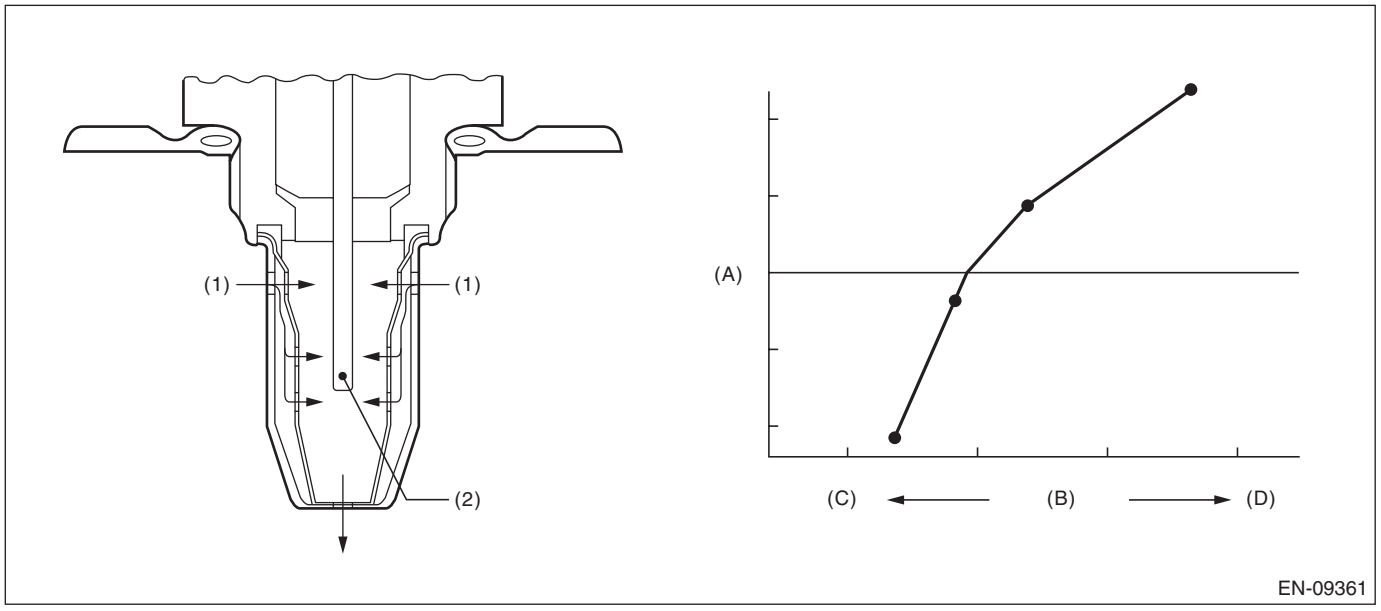

(A) Electromotive force (B) Air fuel ratio (C) Rich
(D) Lean

(1) Exhaust gas (2) ZrO_2

3. EXECUTION CONDITION

Secondary Parameters	Execution condition
Battery voltage	≥ 10.9 V

4. GENERAL DRIVING CYCLE

Always perform the diagnosis continuously.

5. DIAGNOSTIC METHOD

If the duration of time while the following conditions are met is longer than the time indicated, judge as NG.

Judgment Value

Malfunction Criteria	Threshold Value
Input voltage (+) or Input voltage (–) or |Input voltage (+) – Input voltage (–)| and 3.8 V < Input voltage (–) < 4.7 V	< 0.4 V < 0.4 V < 0.1 V

Time Needed for Diagnosis:
1000 ms
1000 ms
1000 ms
Malfunction Indicator Light Illumination: Illuminates as soon as a malfunction occurs.

AH:DTC P0132 A/F / O2 SENSOR CIRCUIT HIGH VOLTAGE BANK 1 SENSOR 1

DTC DETECTING CONDITION:
Immediately at fault recognition

CAUTION:
After servicing or replacing faulty parts, perform Clear Memory Mode <Ref. to EN(H4DO)(diag)-78, OPERATION, Clear Memory Mode.>, and Inspection Mode <Ref. to EN(H4DO)(diag)-64, PROCEDURE, Inspection Mode.>.

WIRING DIAGRAM:

- Engine Electrical System ENGINE TYPE FB (WITHOUT PUSH BUTTON START) <Ref. to WI-170, ENGINE TYPE FB (WITHOUT PUSH BUTTON START), WIRING DIAGRAM, Engine Electrical System.>
- Engine Electrical System ENGINE TYPE FB (WITH PUSH BUTTON START) <Ref. to WI-184, ENGINE TYPE FB (WITH PUSH BUTTON START), WIRING DIAGRAM, Engine Electrical System.>

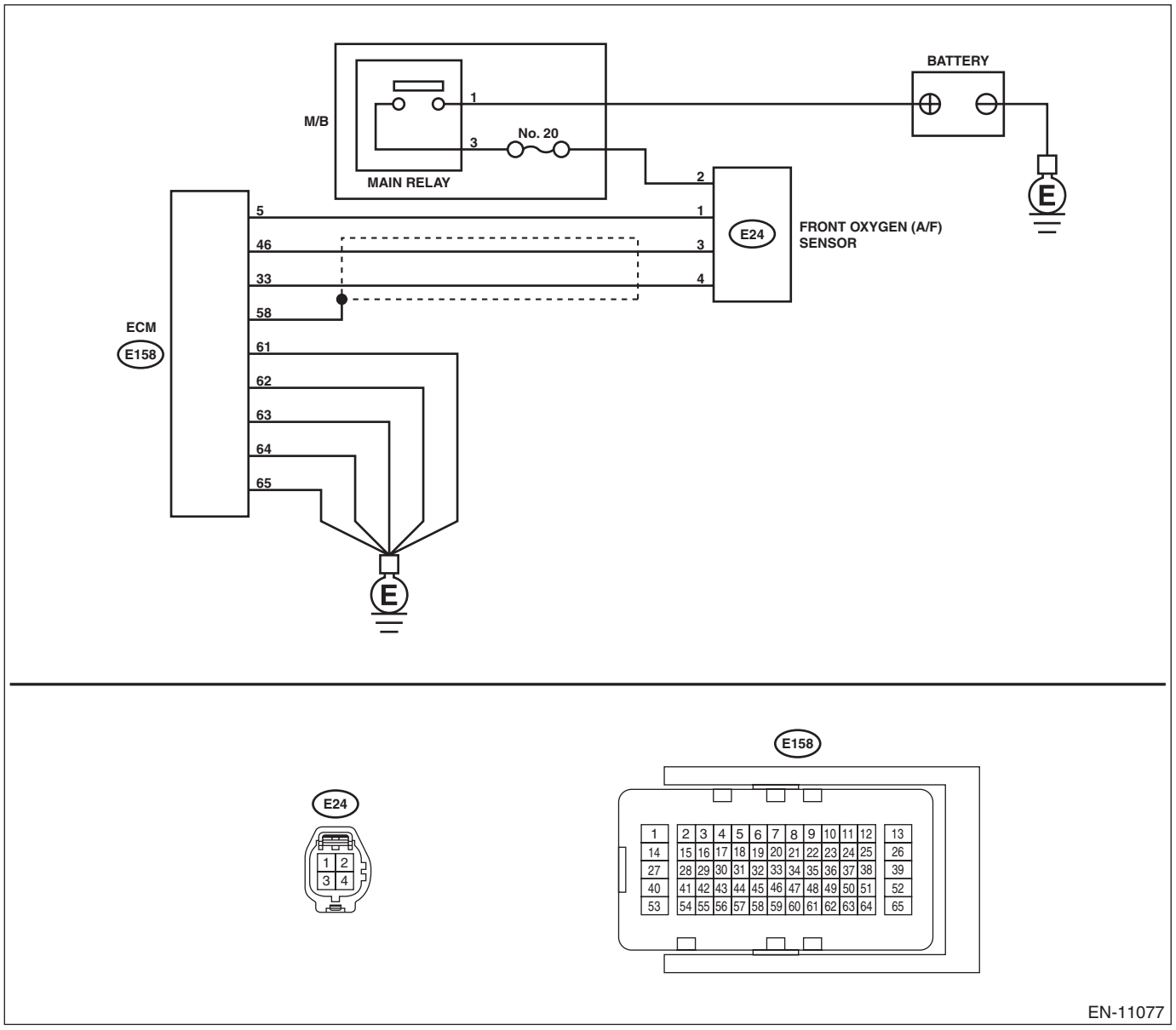

Step		Check	Yes	No
1	**CHECK FRONT OXYGEN (A/F) SENSOR CONNECTOR AND COUPLING CONNECTOR.**	Has water entered the connector?	Completely remove any water inside.	Go to step **2**.

	Step	Check	Yes	No
2	**CHECK HARNESS BETWEEN ECM AND FRONT OXYGEN (A/F) SENSOR CONNECTOR.** 1) Turn the ignition switch to OFF. 2) Disconnect the connectors from front oxygen (A/F) sensor. 3) Turn the ignition switch to ON. 4) Measure the voltage between ECM connector and chassis ground. ***Connector & terminal*** ***(E158) No. 46 (+) — Chassis ground (–):*** ***(E158) No. 33 (+) — Chassis ground (–):***	Is the voltage 8 V or more?	Repair the short circuit to power in the harness between ECM connector and front oxygen (A/F) sensor connector.	Replace the front oxygen (A/F) sensor. <Ref. to FU(H4DO)-76, Front Oxygen (A/F) Sensor.>

1. OUTLINE OF DIAGNOSIS

Detect the open or short circuit of sensor.
Judge as NG, when the element voltage is out of the specified range.

2. COMPONENT DESCRIPTION

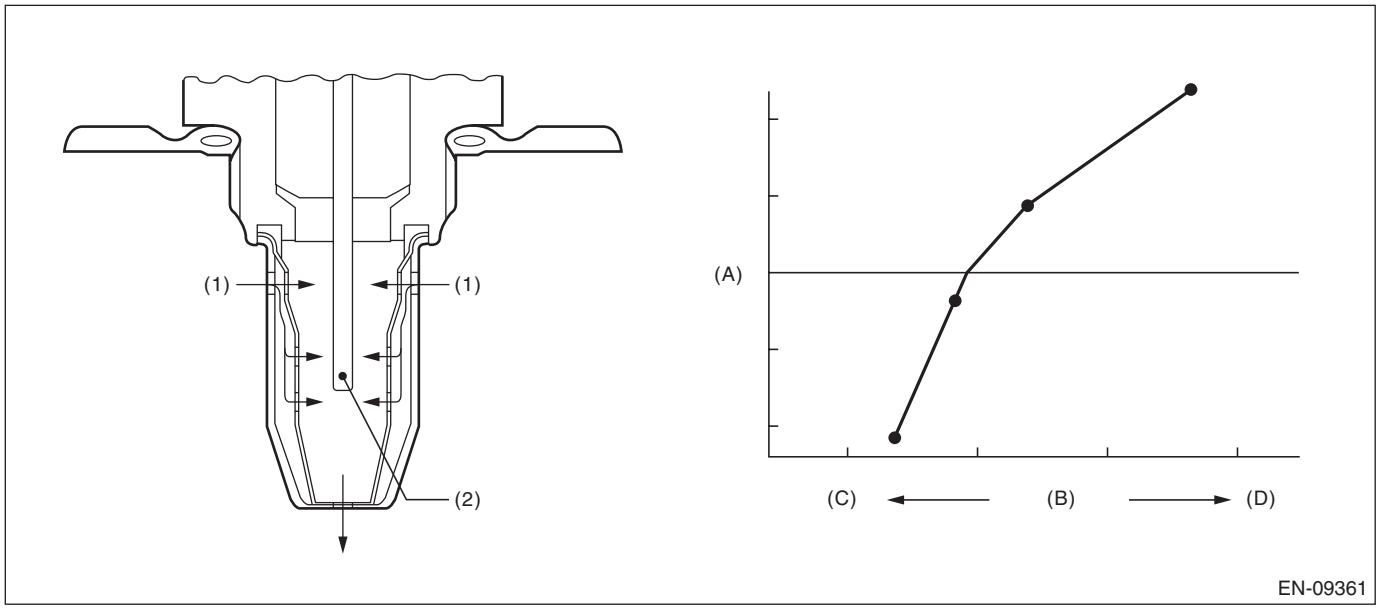

(A) Electromotive force
(B) Air fuel ratio
(C) Rich
(D) Lean

(1) Exhaust gas
(2) ZrO_2

3. EXECUTION CONDITION

Secondary Parameters	Execution condition
Battery voltage	≥ 10.9 V

4. GENERAL DRIVING CYCLE

Always perform the diagnosis continuously.

5. DIAGNOSTIC METHOD

If the duration of time while the following conditions are met is longer than the time indicated, judge as NG.

Judgment Value

Malfunction Criteria	Threshold Value
(1) Input voltage (+) or (2) Input voltage (–)	> 4.7 V > 4.7 V

Time Needed for Diagnosis:
(1): 1000 ms
(2): 1000 ms
Malfunction Indicator Light Illumination: Illuminates as soon as a malfunction occurs.

AI: DTC P0134 A/F / O2 SENSOR CIRCUIT NO ACTIVITY DETECTED BANK 1 SENSOR 1

DTC DETECTING CONDITION:
Immediately at fault recognition

CAUTION:
After servicing or replacing faulty parts, perform Clear Memory Mode <Ref. to EN(H4DO)(diag)-78, OPERATION, Clear Memory Mode.>, and Inspection Mode <Ref. to EN(H4DO)(diag)-64, PROCEDURE, Inspection Mode.>.

WIRING DIAGRAM:

- Engine Electrical System ENGINE TYPE FB (WITHOUT PUSH BUTTON START) <Ref. to WI-170, ENGINE TYPE FB (WITHOUT PUSH BUTTON START), WIRING DIAGRAM, Engine Electrical System.>
- Engine Electrical System ENGINE TYPE FB (WITH PUSH BUTTON START) <Ref. to WI-184, ENGINE TYPE FB (WITH PUSH BUTTON START), WIRING DIAGRAM, Engine Electrical System.>

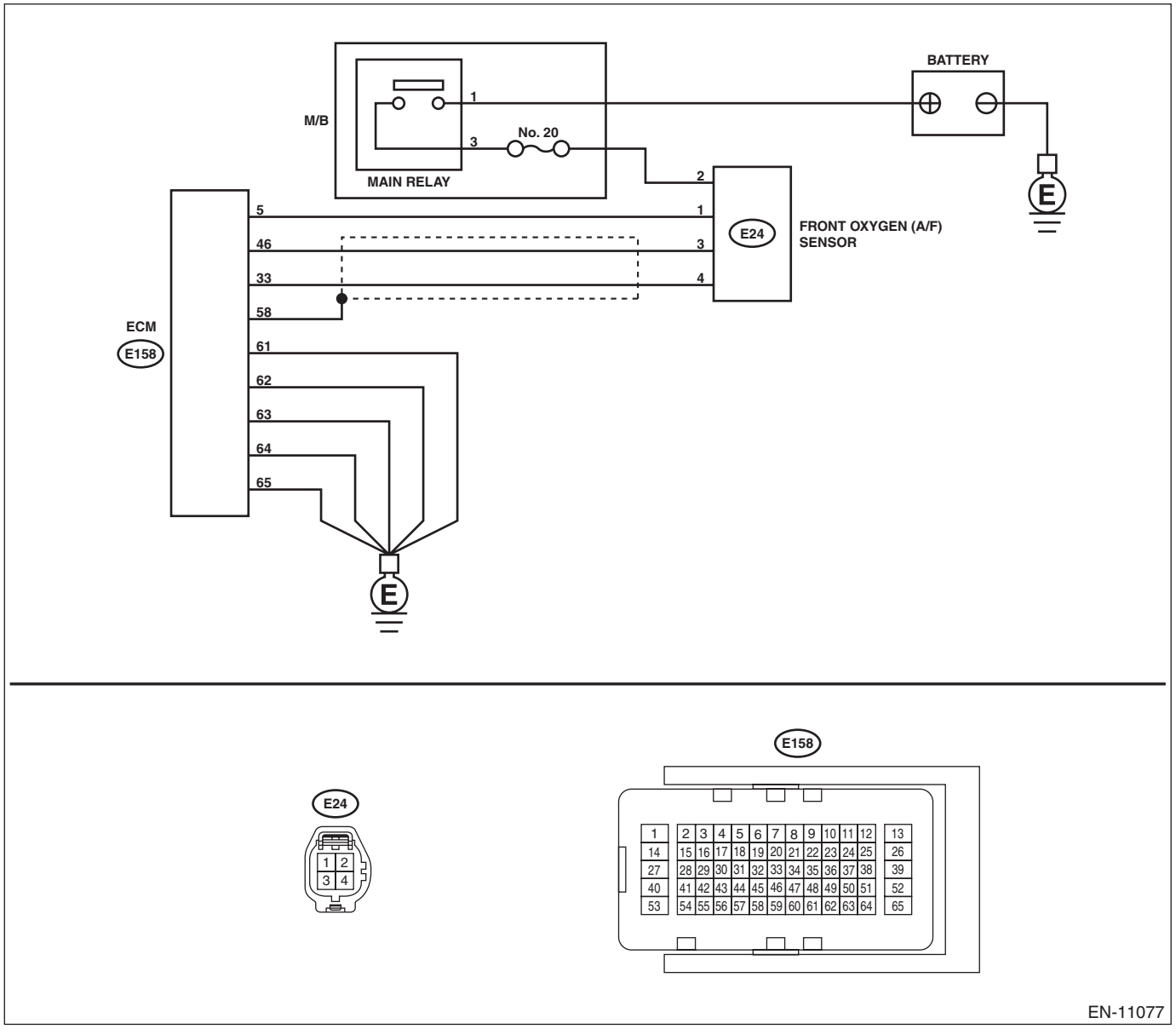

	Step	Check	Yes	No
1	**CHECK HARNESS BETWEEN ECM AND FRONT OXYGEN (A/F) SENSOR CONNECTOR.** 1) Turn the ignition switch to OFF. 2) Disconnect the connectors from ECM and front oxygen (A/F) sensor. 3) Measure the resistance of harness between ECM connector and front oxygen (A/F) sensor connector. ***Connector & terminal*** ***(E158) No. 46 — (E24) No. 3:*** ***(E158) No. 33 — (E24) No. 4:***	Is the resistance less than 1 Ω?	Go to step **2**.	Repair the open circuit of harness between ECM connector and front oxygen (A/F) sensor connector.
2	**CHECK FOR POOR CONTACT.** Check for poor contact of ECM and front oxygen (A/F) sensor connector.	Is there poor contact of ECM or front oxygen (A/F) sensor connector?	Repair the poor contact of ECM or front oxygen (A/F) sensor connector.	Replace the front oxygen (A/F) sensor. <Ref. to FU(H4DO)-76, Front Oxygen (A/F) Sensor.>

1. OUTLINE OF DIAGNOSIS

Detect open circuits of the sensor.
Judge as NG when the impedance of the element is large.

2. COMPONENT DESCRIPTION

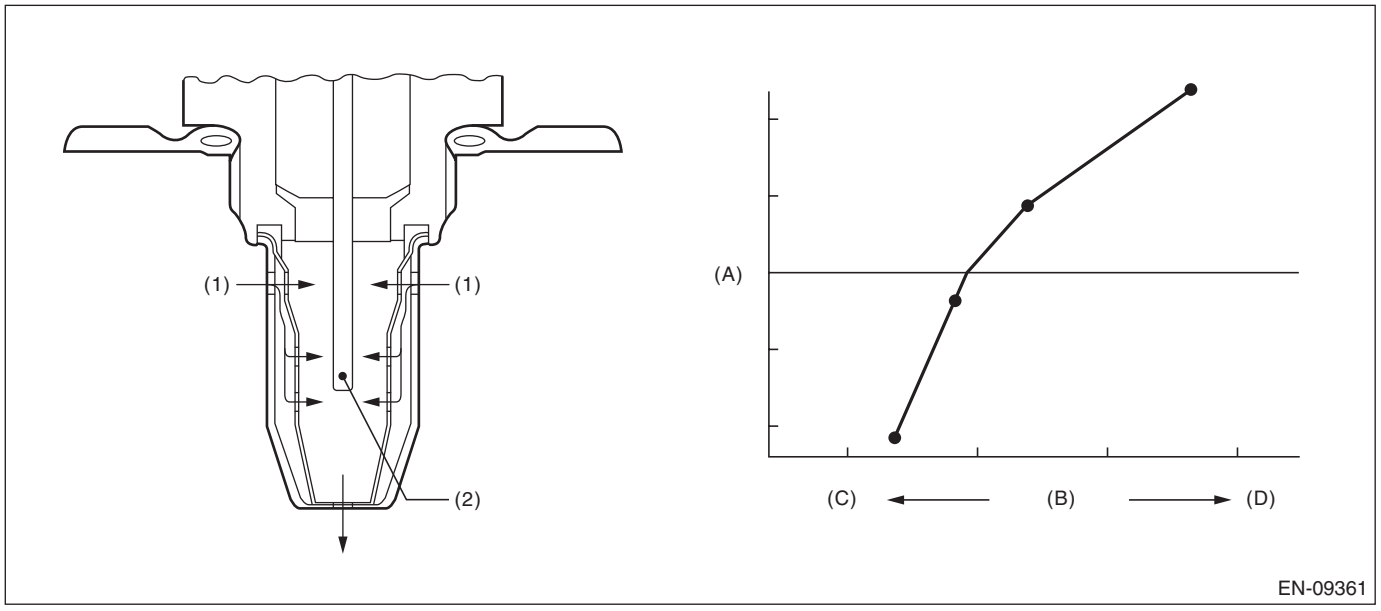

(A) Electromotive force (B) Air fuel ratio (C) Rich
(D) Lean

(1) Exhaust gas (2) ZrO_2

3. EXECUTION CONDITION

Secondary Parameters	Execution condition
Battery voltage	≥ 10.9 V
Time of heater control duty at 70 % or more	≥ 36000 ms

4. GENERAL DRIVING CYCLE

Perform the diagnosis continuously after the enable conditions have been established.

5. DIAGNOSTIC METHOD

If the duration of time while the following conditions are met is longer than the time indicated, judge as NG.

Judgment Value

Malfunction Criteria	Threshold Value
Front oxygen (A/F) sensor impedance	> 450 Ω

Time Needed for Diagnosis: 5000 ms
Malfunction Indicator Light Illumination: Illuminates as soon as a malfunction occurs.

AJ:DTC P0137 O2 SENSOR CIRCUIT LOW VOLTAGE BANK 1 SENSOR 2

DTC DETECTING CONDITION:

Detected when two consecutive driving cycles with fault occur.

CAUTION:

After servicing or replacing faulty parts, perform Clear Memory Mode <Ref. to EN(H4DO)(diag)-78, OPERATION, Clear Memory Mode.>, and Inspection Mode <Ref. to EN(H4DO)(diag)-64, PROCEDURE, Inspection Mode.>.

WIRING DIAGRAM:

- Engine Electrical System ENGINE TYPE FB (WITHOUT PUSH BUTTON START) <Ref. to WI-170, ENGINE TYPE FB (WITHOUT PUSH BUTTON START), WIRING DIAGRAM, Engine Electrical System.>
- Engine Electrical System ENGINE TYPE FB (WITH PUSH BUTTON START) <Ref. to WI-184, ENGINE TYPE FB (WITH PUSH BUTTON START), WIRING DIAGRAM, Engine Electrical System.>

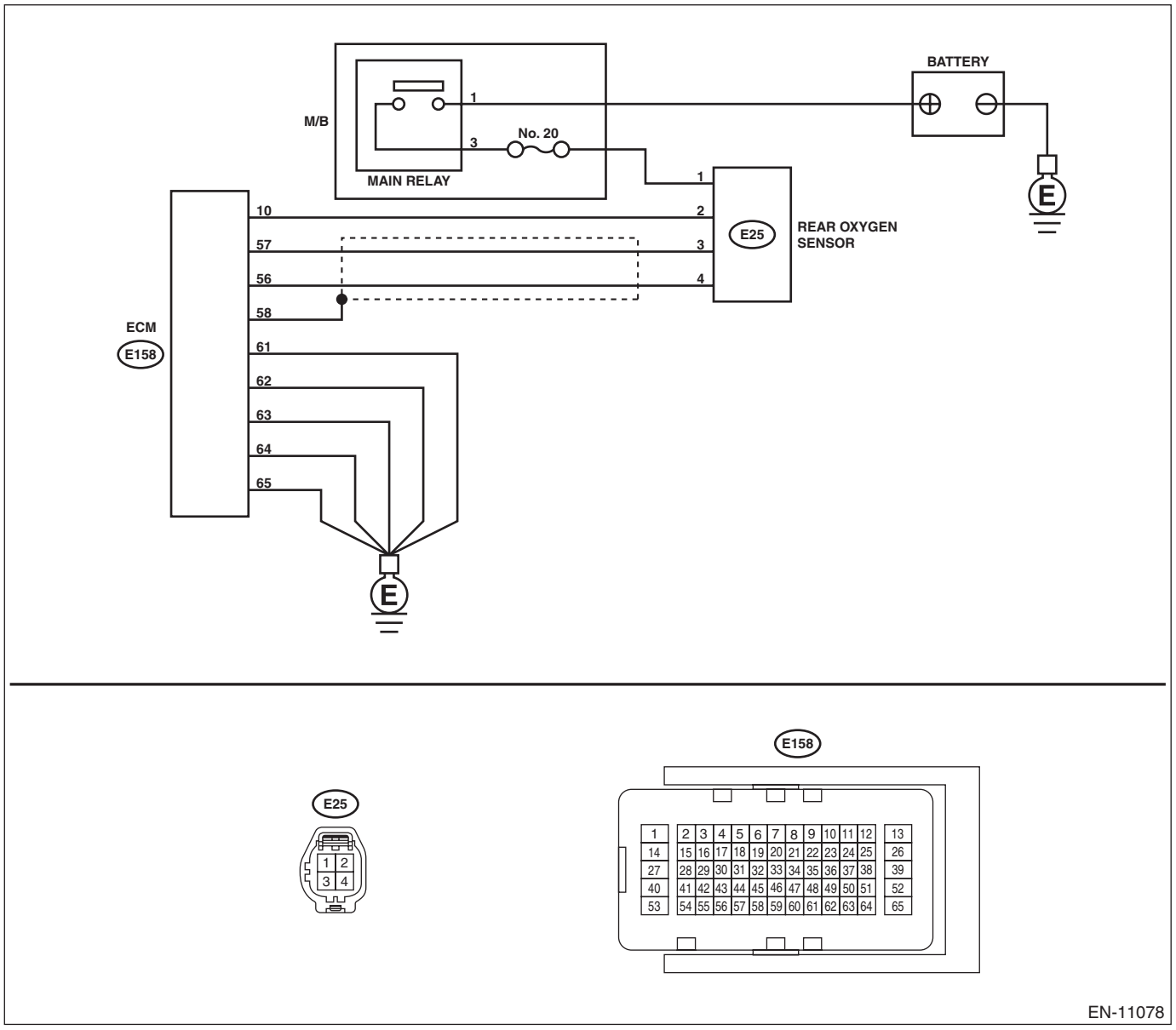

	Step	Check	Yes	No
1	**CHECK REAR OXYGEN SENSOR DATA.** 1) Warm up the engine until engine coolant temperature is higher than 75°C (167°F), and keep the engine speed at 3,000 rpm. (2 minutes maximum) 2) Keep the engine speed at idle. (One minute) 3) Read the value of «Oxygen sensor #12» using the Subaru Select Monitor or a general scan tool. NOTE: • Subaru Select Monitor For detailed operation procedures, refer to "Read Current Data For Engine". <Ref. to EN(H4DO)(diag)-45, Subaru Select Monitor.> • General scan tool For detailed operation procedures, refer to the general scan tool operation manual.	Is the value of «Oxygen sensor #12» 0.490 V or more?	Go to step **5**.	Go to step **2**.
2	**CHECK REAR OXYGEN SENSOR CONNECTOR AND COUPLING CONNECTOR.**	Has water entered the connector?	Completely remove any water inside.	Go to step **3**.
3	**CHECK HARNESS BETWEEN ECM AND REAR OXYGEN SENSOR CONNECTOR.** 1) Turn the ignition switch to OFF. 2) Disconnect the connector from ECM and rear oxygen sensor. 3) Measure the resistance of harness between ECM connector and rear oxygen sensor connector. ***Connector & terminal*** ***(E158) No. 57 — (E25) No. 3:*** ***(E158) No. 56 — (E25) No. 4:***	Is the resistance less than 1 Ω?	Go to step **4**.	Repair the open circuit of harness between ECM connector and rear oxygen sensor connector.
4	**CHECK HARNESS BETWEEN ECM AND REAR OXYGEN SENSOR CONNECTOR.** 1) Connect the connector to ECM. 2) Turn the ignition switch to ON. 3) Measure the voltage between rear oxygen sensor connector and chassis ground. ***Connector & terminal*** ***(E25) No. 4 (+) — Chassis ground (–):***	Is the voltage 1.18 V or more?	Replace the rear oxygen sensor. <Ref. to FU(H4DO)-79, Rear Oxygen Sensor.>	Replace the ECM. <Ref. to FU(H4DO)-82, Engine Control Module (ECM).>
5	**CHECK EXHAUST SYSTEM.** Check exhaust system parts. NOTE: Check the following items. • Looseness and improper fitting of exhaust system parts • Damage (crack, hole etc.) of parts • Loose part and improper installation between front oxygen (A/F) sensor and rear oxygen sensor	Is there any fault in exhaust system?	Repair or replace faulty parts.	Replace the rear oxygen sensor. <Ref. to FU(H4DO)-79, Rear Oxygen Sensor.>

1. OUTLINE OF DIAGNOSIS

Detect for NG of the rear oxygen sensor continuity.
Judge as NG if the rear oxygen sensor voltage is not within the possible range.

2. COMPONENT DESCRIPTION

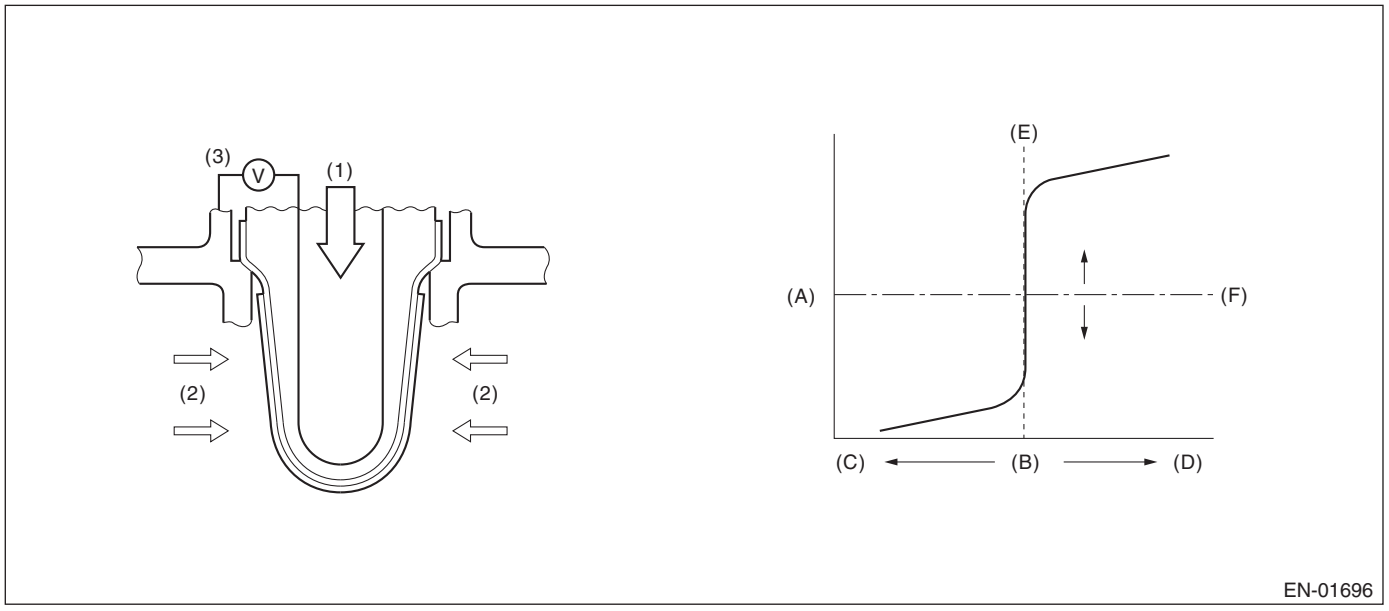

(A)	Electromotive force	(B)	Air fuel ratio	(C)	Rich
(D)	Lean	(E)	Theoretical air fuel ratio	(F)	Comparative voltage
(1)	Atmosphere	(2)	Exhaust gas	(3)	Electromotive force

3. EXECUTION CONDITION

Secondary Parameters	Execution condition
Judgment 1	
Battery voltage	≥ 10.9 V
Judgment 2,3	
Battery voltage	≥ 10.9 V
Estimated secondary oxygen sensor element temperature	≥ 500 °C (932 °F)
Rear oxygen sensor offset voltage	≥ 1.28 V and > 1.68 V
Accumulated duty ratio of the rear oxygen sensor heater operation since engine started	≥ Value from Map

Map

Engine coolant temperature at engine starting °C (°F)	–40 (–40)	–30 (–22)	–20 (–4)	–10 (14)	0 (32)	10 (50)	20 (68)	30 (86)
Accumulated duty ratio of the rear oxygen sensor heater operation since engine started %	10500	10500	10500	10500	10500	10500	10500	10500

Engine coolant temperature at engine starting °C (°F)	40 (104)	50 (122)	60 (140)	70 (158)	80 (176)	90 (194)	100 (212)	110 (230)
Accumulated duty ratio of the rear oxygen sensor heater operation since engine started %	10500	10500	10500	10500	10500	10500	10500	10500

4. GENERAL DRIVING CYCLE

Perform the diagnosis continuously after the enable conditions have been established.

5. DIAGNOSTIC METHOD

If the duration of time while the following conditions are met is longer than the time indicated, judge as NG.

Judgment Value

Malfunction Criteria	Threshold Value
Judgment 1: Short to ground	
Secondary oxygen sensor offset signal	< 1.28 V
Judgment 2: Circuit open	
Secondary oxygen sensor signal	< 1.18 V
Judgment 3: Out of range	
Secondary oxygen sensor output voltage	< –0.22 V

Time Needed for Diagnosis: 1000 ms
Malfunction Indicator Light Illumination: Illuminates when malfunction occurs in 2 continuous driving cycles.

AK:DTC P0138 O2 SENSOR CIRCUIT HIGH VOLTAGE BANK 1 SENSOR 2

DTC DETECTING CONDITION:

Detected when two consecutive driving cycles with fault occur.

CAUTION:

After servicing or replacing faulty parts, perform Clear Memory Mode <Ref. to EN(H4DO)(diag)-78, OPERATION, Clear Memory Mode.>, and Inspection Mode <Ref. to EN(H4DO)(diag)-64, PROCEDURE, Inspection Mode.>.

WIRING DIAGRAM:

- Engine Electrical System ENGINE TYPE FB (WITHOUT PUSH BUTTON START) <Ref. to WI-170, ENGINE TYPE FB (WITHOUT PUSH BUTTON START), WIRING DIAGRAM, Engine Electrical System.>
- Engine Electrical System ENGINE TYPE FB (WITH PUSH BUTTON START) <Ref. to WI-184, ENGINE TYPE FB (WITH PUSH BUTTON START), WIRING DIAGRAM, Engine Electrical System.>

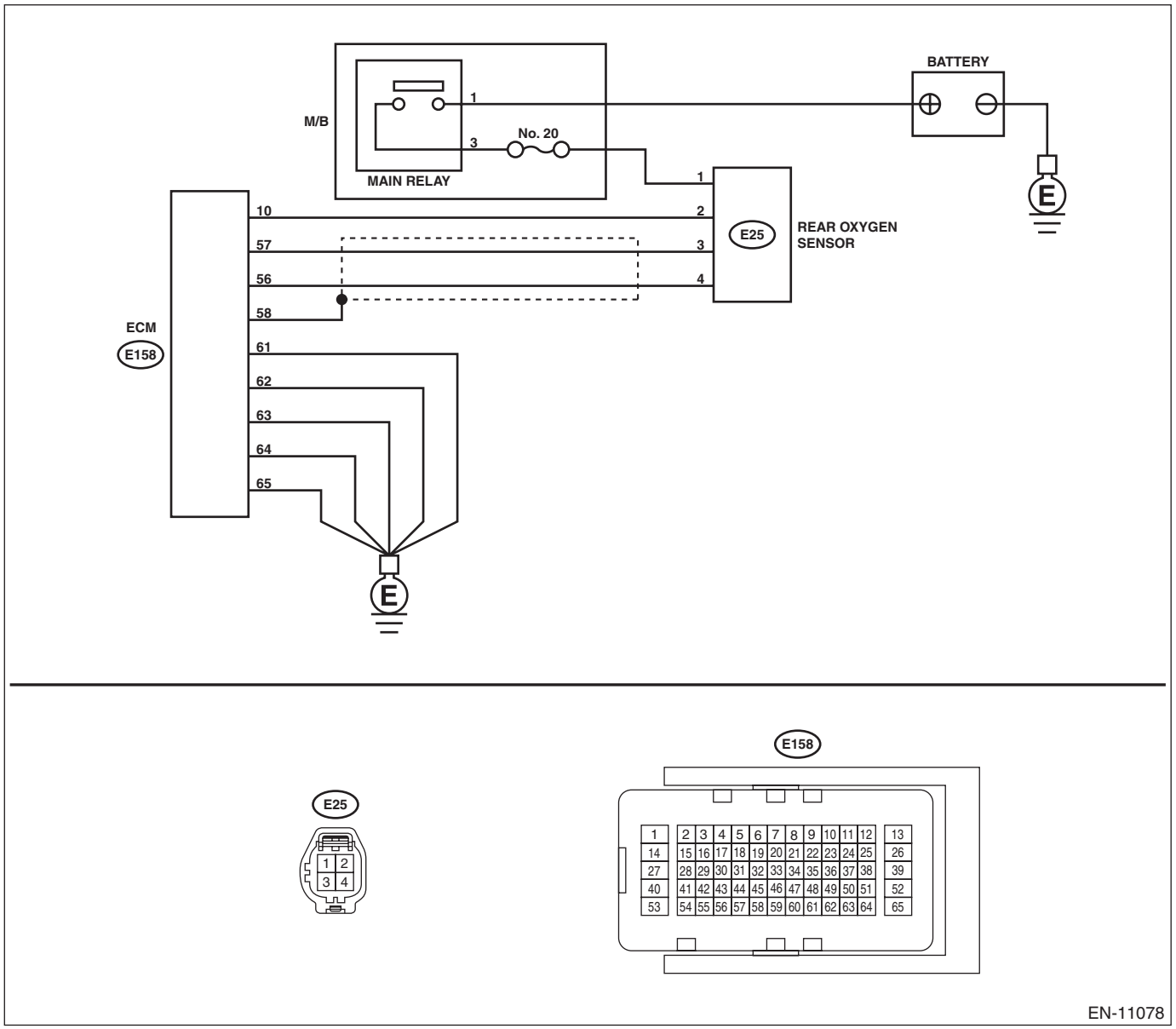

	Step	Check	Yes	No
1	**CHECK REAR OXYGEN SENSOR DATA.** 1) Warm up the engine until engine coolant temperature is higher than 75°C (167°F), and rapidly reduce the engine speed from 3,000 rpm. 2) Read the value of «Oxygen sensor #12» using the Subaru Select Monitor or a general scan tool. NOTE: • Subaru Select Monitor For detailed operation procedures, refer to "Read Current Data For Engine". <Ref. to EN(H4DO)(diag)-45, Subaru Select Monitor.> • General scan tool For detailed operation procedures, refer to the general scan tool operation manual.	Is the value of «Oxygen sensor #12» 0.250 V or less?	Go to step **5**.	Go to step **2**.
2	**CHECK REAR OXYGEN SENSOR CONNECTOR AND COUPLING CONNECTOR.**	Has water entered the connector?	Completely remove any water inside.	Go to step **3**.
3	**CHECK HARNESS BETWEEN ECM AND REAR OXYGEN SENSOR CONNECTOR.** 1) Turn the ignition switch to OFF. 2) Disconnect the connector from ECM and rear oxygen sensor. 3) Measure the resistance of harness between ECM connector and rear oxygen sensor connector. ***Connector & terminal*** ***(E158) No. 57 — (E25) No. 3:*** ***(E158) No. 56 — (E25) No. 4:***	Is the resistance less than 1 Ω?	Go to step **4**.	Repair the harness and connector. NOTE: In this case, repair the following item: • Open circuit in harness between ECM connector and rear oxygen sensor connector
4	**CHECK HARNESS BETWEEN ECM AND REAR OXYGEN SENSOR CONNECTOR.** 1) Connect the connector to ECM. 2) Turn the ignition switch to ON. 3) Measure the voltage between rear oxygen sensor connector and chassis ground. ***Connector & terminal*** ***(E25) No. 3 (+) — Chassis ground (–):***	Is the voltage 1.78 V or less?	Replace the rear oxygen sensor. <Ref. to FU(H4DO)-79, Rear Oxygen Sensor.>	Replace the ECM.
5	**CHECK EXHAUST SYSTEM.** Check exhaust system parts. NOTE: Check the following items. • Looseness and improper fitting of exhaust system parts • Damage (crack, hole etc.) of parts • Loose part and improper installation between front oxygen (A/F) sensor and rear oxygen sensor	Is there any fault in exhaust system?	Repair or replace faulty parts.	Replace the rear oxygen sensor. <Ref. to FU(H4DO)-79, Rear Oxygen Sensor.>

1. OUTLINE OF DIAGNOSIS

Detect for NG of the rear oxygen sensor continuity.
Judge as NG if the rear oxygen sensor voltage is not within the possible range.

2. COMPONENT DESCRIPTION

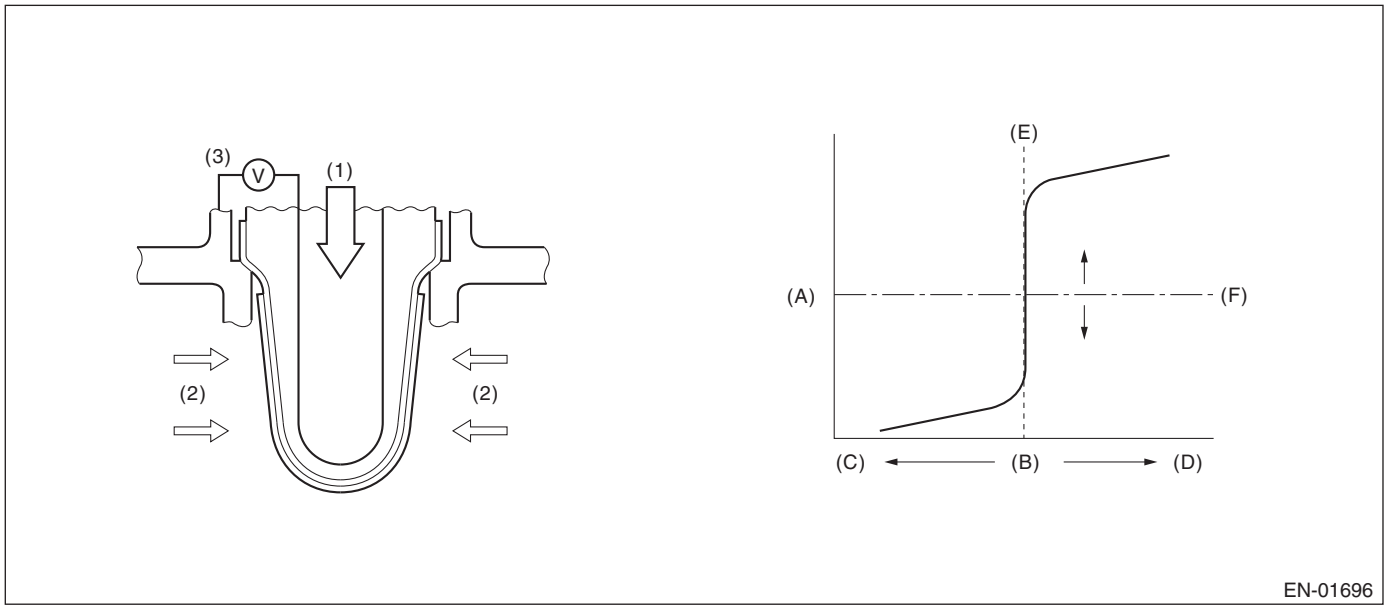

(A) Electromotive force
(B) Air fuel ratio
(C) Rich
(D) Lean
(E) Theoretical air fuel ratio
(F) Comparative voltage

(1) Atmosphere
(2) Exhaust gas
(3) Electromotive force

3. EXECUTION CONDITION

Secondary Parameters	Execution condition
Battery voltage	≥ 10.9 V

4. GENERAL DRIVING CYCLE

Always perform the diagnosis continuously.

5. DIAGNOSTIC METHOD

If the duration of time while the following conditions are met is longer than the time indicated, judge as NG.

Judgment Value

Malfunction Criteria	Threshold Value
Judgment 1: Short to battery	
Secondary oxygen sensor offset signal	≥ 1.68 V
Judgment 2: Short to battery	
Secondary oxygen sensor signal	≥ 2.73 V
Judgment 3: Out of range	
Secondary oxygen sensor output voltage	≥ 1.2 V

Time Needed for Diagnosis: 1000 ms
Malfunction Indicator Light Illumination: Illuminates when malfunction occurs in 2 continuous driving cycles.

AL:DTC P013A O2 SENSOR SLOW RESPONSE - RICH TO LEAN BANK 1 SENSOR 2

DTC DETECTING CONDITION:

Detected when two consecutive driving cycles with fault occur.

CAUTION:

After servicing or replacing faulty parts, perform Clear Memory Mode <Ref. to EN(H4DO)(diag)-78, OPERATION, Clear Memory Mode.>, and Inspection Mode <Ref. to EN(H4DO)(diag)-64, PROCEDURE, Inspection Mode.>.

WIRING DIAGRAM:

- Engine Electrical System ENGINE TYPE FB (WITHOUT PUSH BUTTON START) <Ref. to WI-170, ENGINE TYPE FB (WITHOUT PUSH BUTTON START), WIRING DIAGRAM, Engine Electrical System.>
- Engine Electrical System ENGINE TYPE FB (WITH PUSH BUTTON START) <Ref. to WI-184, ENGINE TYPE FB (WITH PUSH BUTTON START), WIRING DIAGRAM, Engine Electrical System.>

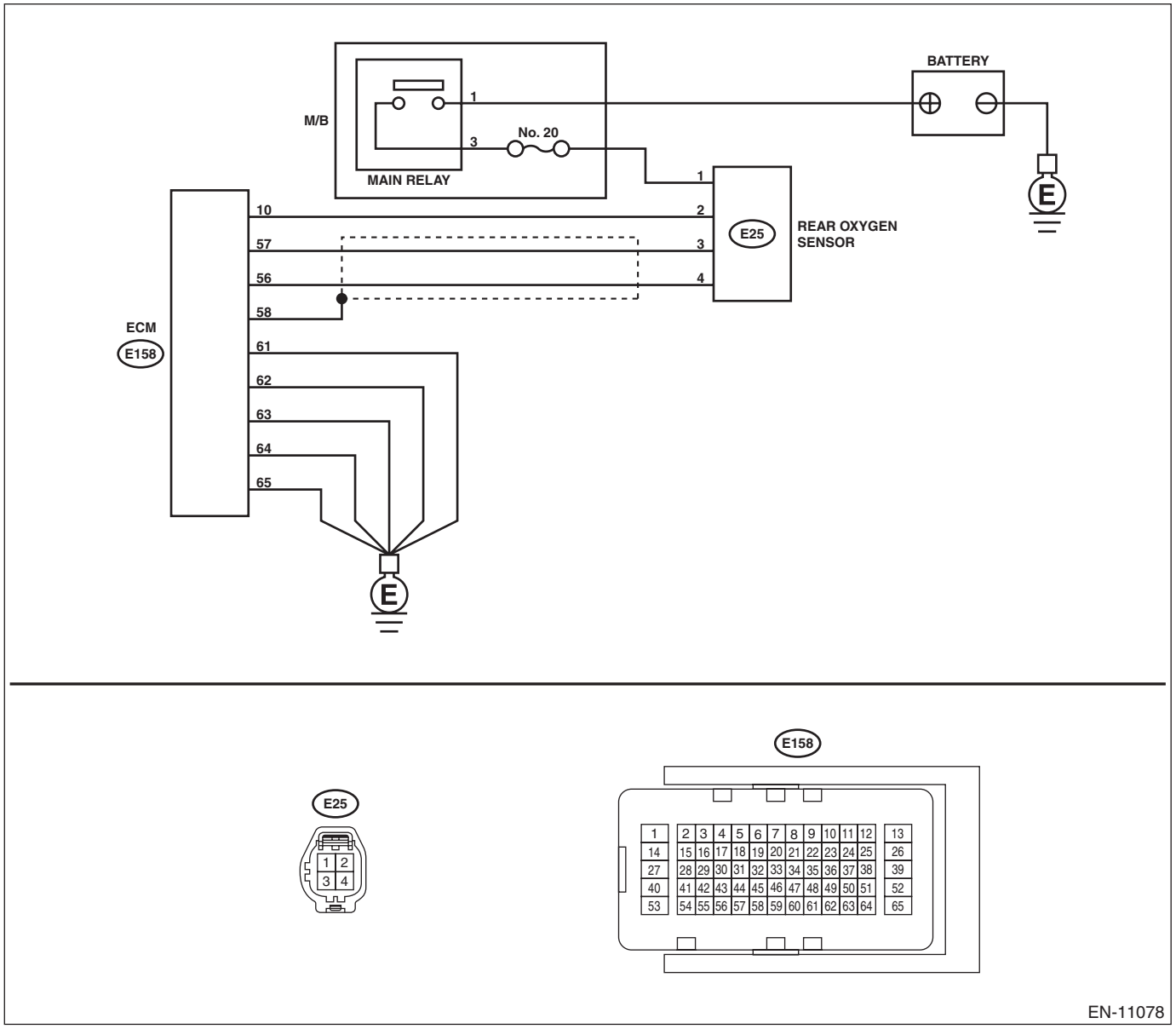

	Step	Check	Yes	No
1	**CHECK HARNESS BETWEEN ECM AND REAR OXYGEN SENSOR CONNECTOR.** 1) Turn the ignition switch to OFF. 2) Disconnect the connector from ECM and rear oxygen sensor. 3) Measure the resistance of harness between ECM connector and rear oxygen sensor connector. ***Connector & terminal*** ***(E158) No. 57 — (E25) No. 3:***	Is the resistance less than 1 Ω?	Go to step **2**.	Repair the open circuit of harness between ECM connector and rear oxygen sensor connector.
2	**CHECK HARNESS BETWEEN ECM AND REAR OXYGEN SENSOR CONNECTOR.** Measure the resistance between rear oxygen sensor connector and chassis ground. ***Connector & terminal*** ***(E25) No. 3 — Chassis ground:***	Is the resistance 1 MΩ or more?	Go to step **3**.	Repair the short circuit to ground in harness between ECM connector and rear oxygen sensor connector.
3	**CHECK REAR OXYGEN SENSOR.** Measure the resistance between rear oxygen sensor terminals. ***Terminals*** ***No. 3 — No. 4***	Is the resistance less than 1 Ω?	Replace the rear oxygen sensor. <Ref. to FU(H4DO)-79, Rear Oxygen Sensor.>	Even if DTC is detected, the circuit has returned to a normal condition at this time. Reproduce the failure, and then perform the diagnosis again. NOTE: In this case, temporary poor contact of connector, temporary open or short circuit of harness may be the cause.

1. OUTLINE OF DIAGNOSIS

Detect the slow response of rich → lean for rear oxygen sensor output.
When the deceleration fuel cut has occurred, detect the trouble by calculating the time when the rear oxygen sensor output passes through the predetermined range of voltages.
Judge as NG when the response time is larger than the threshold value.

2. COMPONENT DESCRIPTION

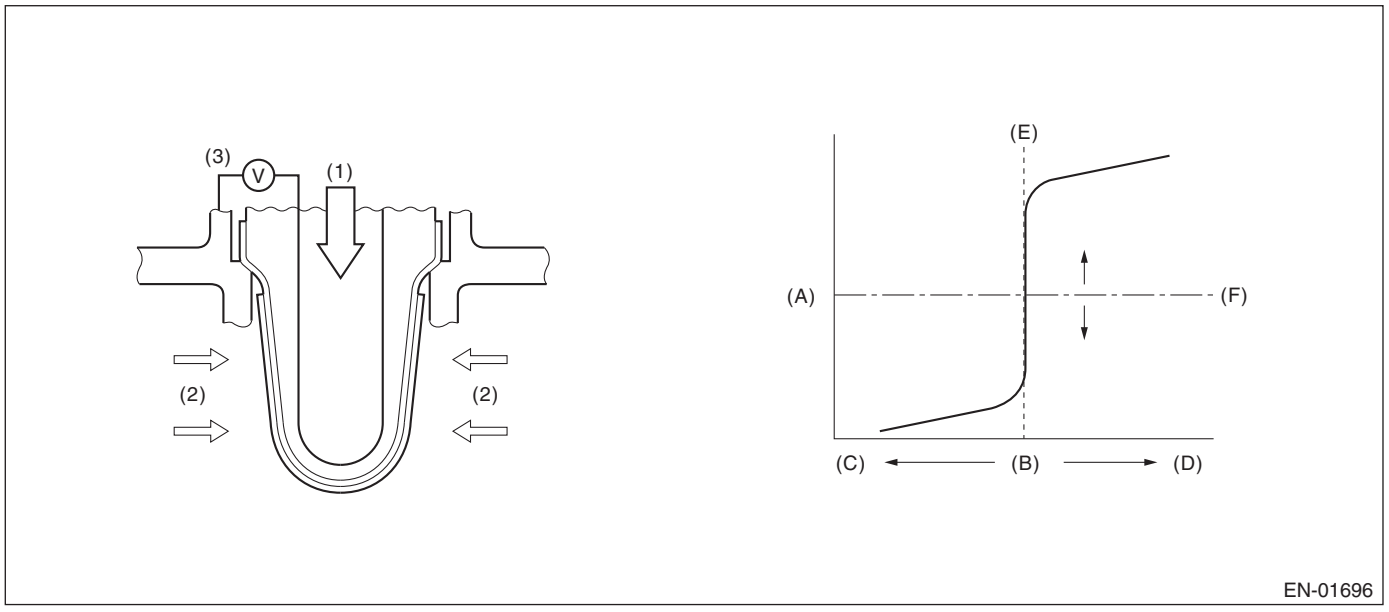

(A) Electromotive force
(B) Air fuel ratio
(C) Rich
(D) Lean
(E) Theoretical air fuel ratio
(F) Comparative voltage

(1) Atmosphere
(2) Exhaust gas
(3) Electromotive force

3. EXECUTION CONDITION

Secondary Parameters	Execution condition
Battery voltage	> 10.9 V
Current calculation time of the rear oxygen sensor heater after starting	≥ 180000 ms
Rear oxygen sensor voltage when fuel cut starts	≥ 0.55 V
Estimated temperature of rear oxygen sensor element when fuel cut starts	≥ 500 °C (932 °F)
Status of fuel system	= Fuel cut

4. GENERAL DRIVING CYCLE

Perform the diagnosis only once when the deceleration fuel cut is activated from a high and constant speed driving.

5. DIAGNOSTIC METHOD

Detect the trouble by calculating the response time of the rear oxygen sensor during fuel cut.

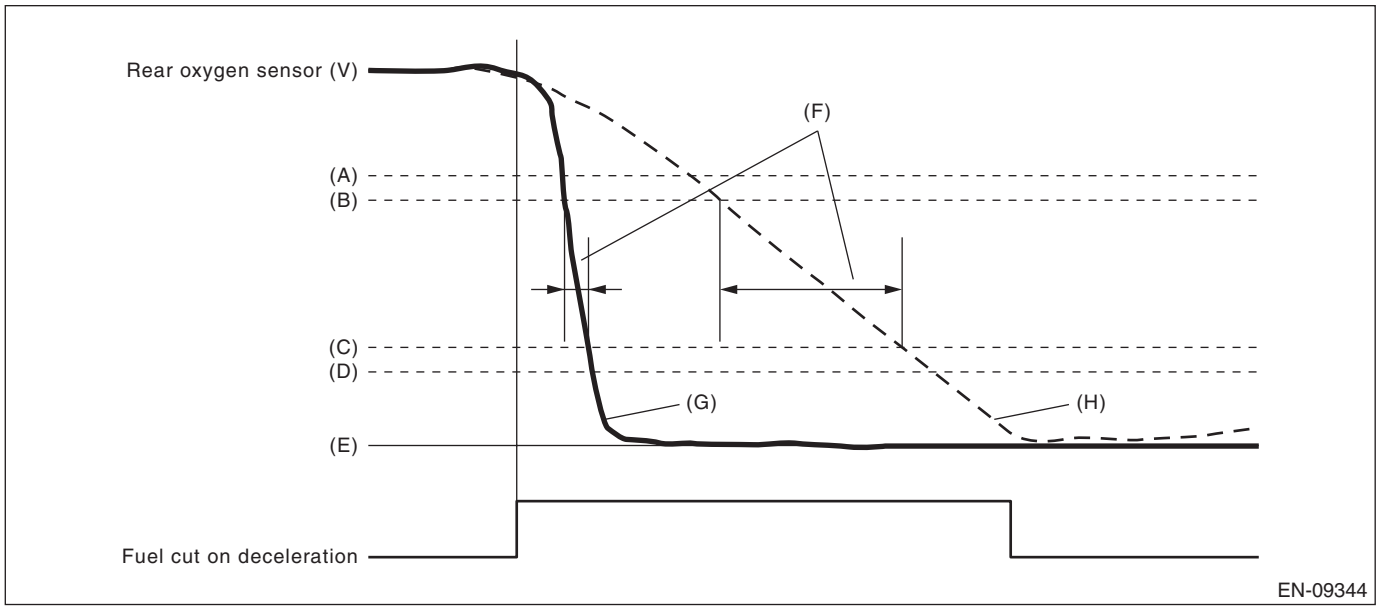

(A) 0.55 V
(B) 0.50 V
(C) 0.20 V
(D) 0.15 V
(E) 0 V
(F) Diagnostic parameter
(G) Normal
(H) Malfunction

Judge as NG when the following conditions are established.

Judgment Value

Malfunction Criteria	Threshold Value
Time needed for rear oxygen sensor voltage to change from 0.5 V to 0.2 V	> 491 ms

Time Needed for Diagnosis: 5000 ms
Malfunction Indicator Light Illumination: Illuminates when malfunction occurs in 2 continuous driving cycles.

AM:DTC P013B O2 SENSOR SLOW RESPONSE - LEAN TO RICH BANK 1 SENSOR 2

NOTE:
For the diagnostic procedure, refer to DTC P013A. <Ref. to EN(H4DO)(diag)-208, DTC P013A O2 SENSOR SLOW RESPONSE - RICH TO LEAN BANK 1 SENSOR 2, Diagnostic Procedure with Diagnostic Trouble Code (DTC).>

1. OUTLINE OF DIAGNOSIS

Detect the slow response of lean → rich for rear oxygen sensor output.
After the deceleration fuel cut has occurred, detect the trouble by calculating the time when the rear oxygen sensor output passes through the predetermined range of voltages.
Judge as NG when the response time is larger than the threshold value.

2. COMPONENT DESCRIPTION

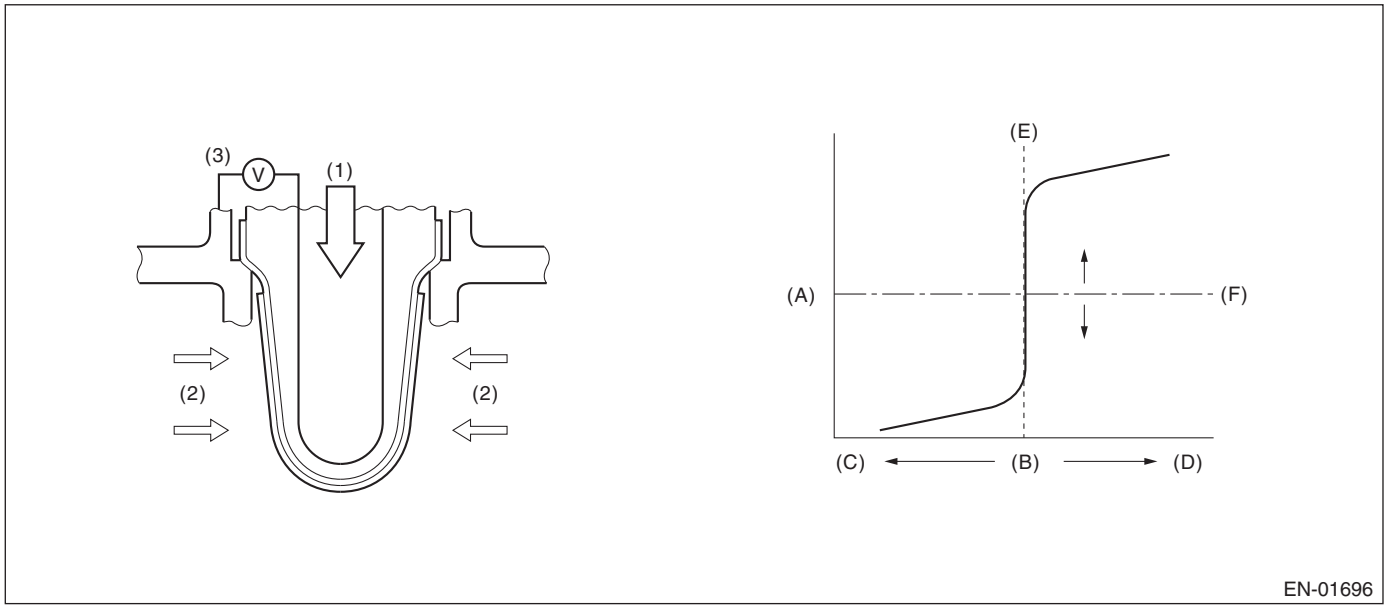

(A)	Electromotive force	(B)	Air fuel ratio	(C)	Rich
(D)	Lean	(E)	Theoretical air fuel ratio	(F)	Comparative voltage
(1)	Atmosphere	(2)	Exhaust gas	(3)	Electromotive force

3. EXECUTION CONDITION

Secondary Parameters	Execution condition
Battery voltage	> 10.9 V
Front oxygen (A/F) sensor closed loop control	Operation
((Fuel system status	= Fuel cut
for time)	≥ 5000 ms
followed by fuel system status)	≠ Fuel cut

4. GENERAL DRIVING CYCLE

Perform diagnosis only once after recovering from a deceleration fuel cut continued for more than predetermined time.

5. DIAGNOSTIC METHOD

Detect the trouble by calculating the response time of the rear oxygen sensor after fuel cut.

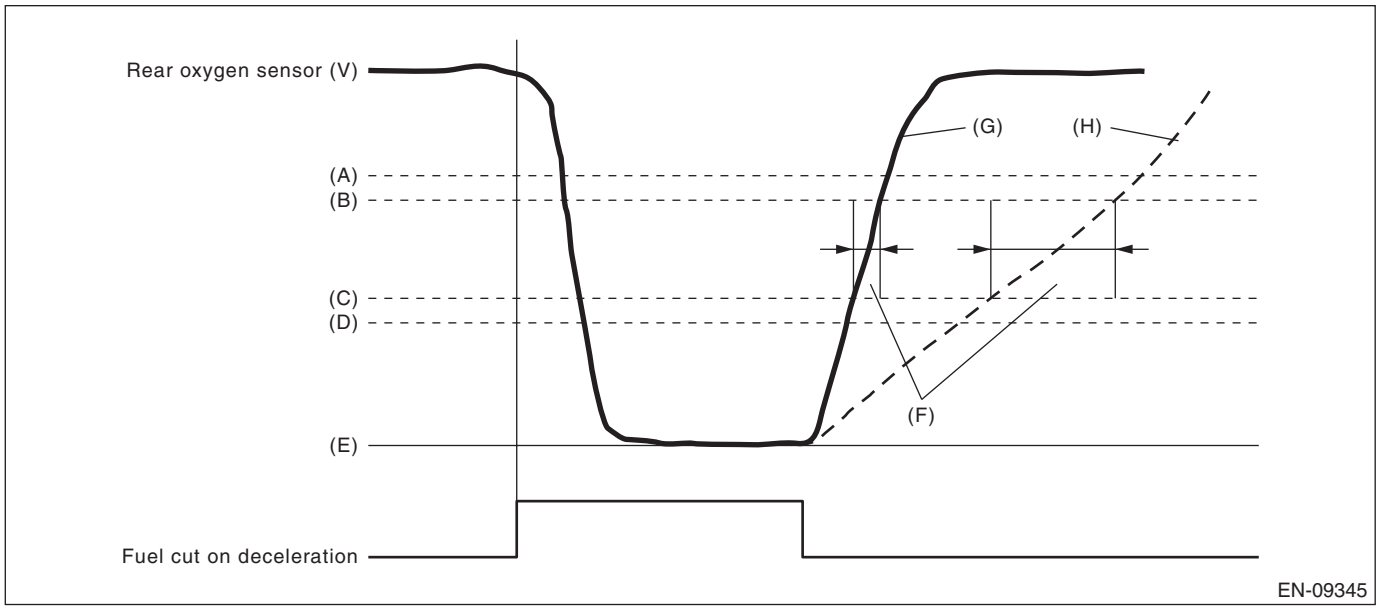

(A) 0.55 V
(B) 0.50 V
(C) 0.30 V
(D) 0.25 V
(E) 0 V
(F) Diagnostic parameter
(G) Normal
(H) Malfunction

Judge as NG when the following conditions are established.

Judgment Value

Malfunction Criteria	Threshold Value
Time when rear oxygen sensor voltage changed from 0.3 V to 0.5 V	> 4000 ms

Time Needed for Diagnosis: 4000 ms
Malfunction Indicator Light Illumination: Illuminates when malfunction occurs in 2 continuous driving cycles.

AN:DTC P013E O2 SENSOR DELAYED RESPONSE - RICH TO LEAN BANK 1 SENSOR 2

NOTE:
For the diagnostic procedure, refer to DTC P013A. <Ref. to EN(H4DO)(diag)-208, DTC P013A O2 SENSOR SLOW RESPONSE - RICH TO LEAN BANK 1 SENSOR 2, Diagnostic Procedure with Diagnostic Trouble Code (DTC).>

1. OUTLINE OF DIAGNOSIS

Detect the delayed response of rear oxygen sensor output for rich → lean.
After the deceleration fuel cut has started, detect the trouble by calculating the time when the rear oxygen sensor output decreases to the predetermined voltages.
Judge as NG when the response time is larger than the threshold value.

2. COMPONENT DESCRIPTION

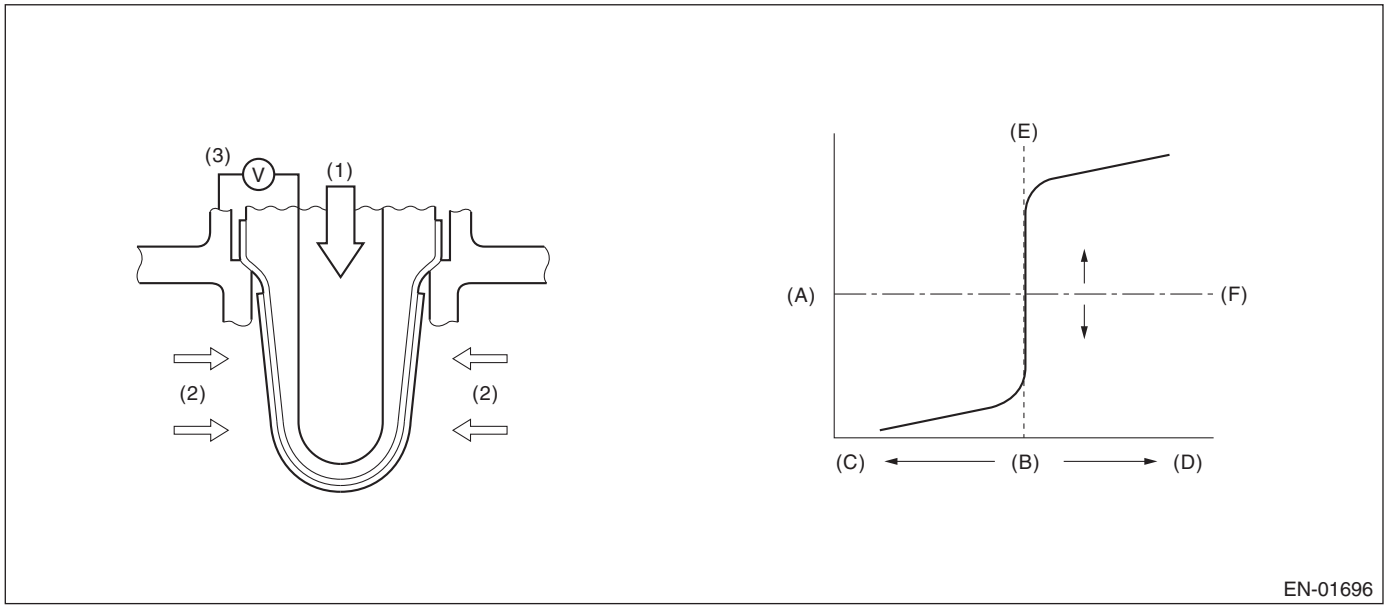

(A)	Electromotive force	(B)	Air fuel ratio	(C)	Rich
(D)	Lean	(E)	Theoretical air fuel ratio	(F)	Comparative voltage
(1)	Atmosphere	(2)	Exhaust gas	(3)	Electromotive force

3. EXECUTION CONDITION

Secondary Parameters	Execution condition
Battery voltage	> 10.9 V
Rear oxygen sensor voltage when fuel cut starts	≥ 0.55 V
Estimated temperature of rear oxygen sensor element when fuel cut starts	≥ 500 °C (932 °F)
Status of fuel system	= Fuel cut

4. GENERAL DRIVING CYCLE

Perform the diagnosis only once when the deceleration fuel cut is activated from a high and constant speed driving.

5. DIAGNOSTIC METHOD

Detect the trouble by calculating the time from the beginning of the fuel cut to the beginning of the rear oxygen sensor voltage starting to drop.

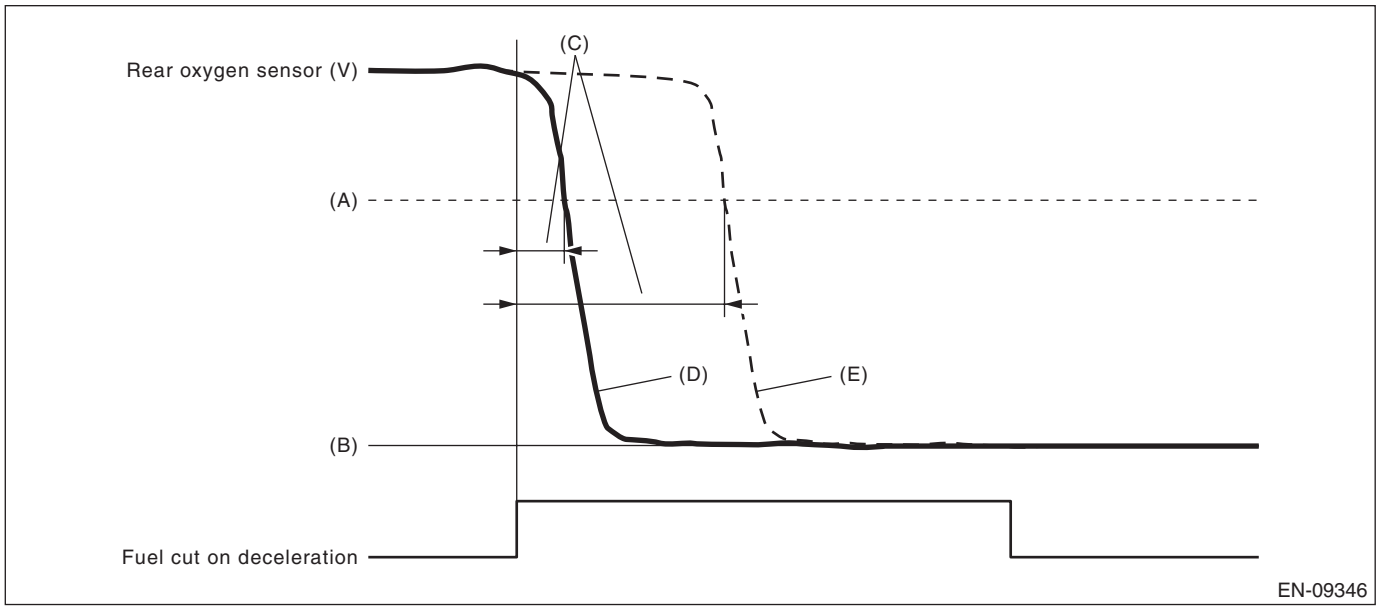

(A) 0.5 V
(B) 0 V
(C) Diagnostic parameter
(D) Normal
(E) Malfunction

Judge as NG when the following conditions are established.

Judgment Value

Malfunction Criteria	Threshold Value
Time when rear oxygen sensor voltage changed to 0.5 V after the fuel cut started	> 4000 ms

Time Needed for Diagnosis: 5000 ms
Malfunction Indicator Light Illumination: Illuminates when malfunction occurs in 2 continuous driving cycles.

AO:DTC P013F O2 SENSOR DELAYED RESPONSE - LEAN TO RICH BANK 1 SENSOR 2

NOTE:
For the diagnostic procedure, refer to DTC P013A. <Ref. to EN(H4DO)(diag)-208, DTC P013A O2 SENSOR SLOW RESPONSE - RICH TO LEAN BANK 1 SENSOR 2, Diagnostic Procedure with Diagnostic Trouble Code (DTC).>

1. OUTLINE OF DIAGNOSIS

Detect the delayed response of rear oxygen sensor output for lean → rich.
After the deceleration fuel cut has completed, detect the trouble by calculating the time when the rear oxygen sensor output increases to the predetermined voltages.
Judge as NG when the response time is larger than the threshold value.

2. COMPONENT DESCRIPTION

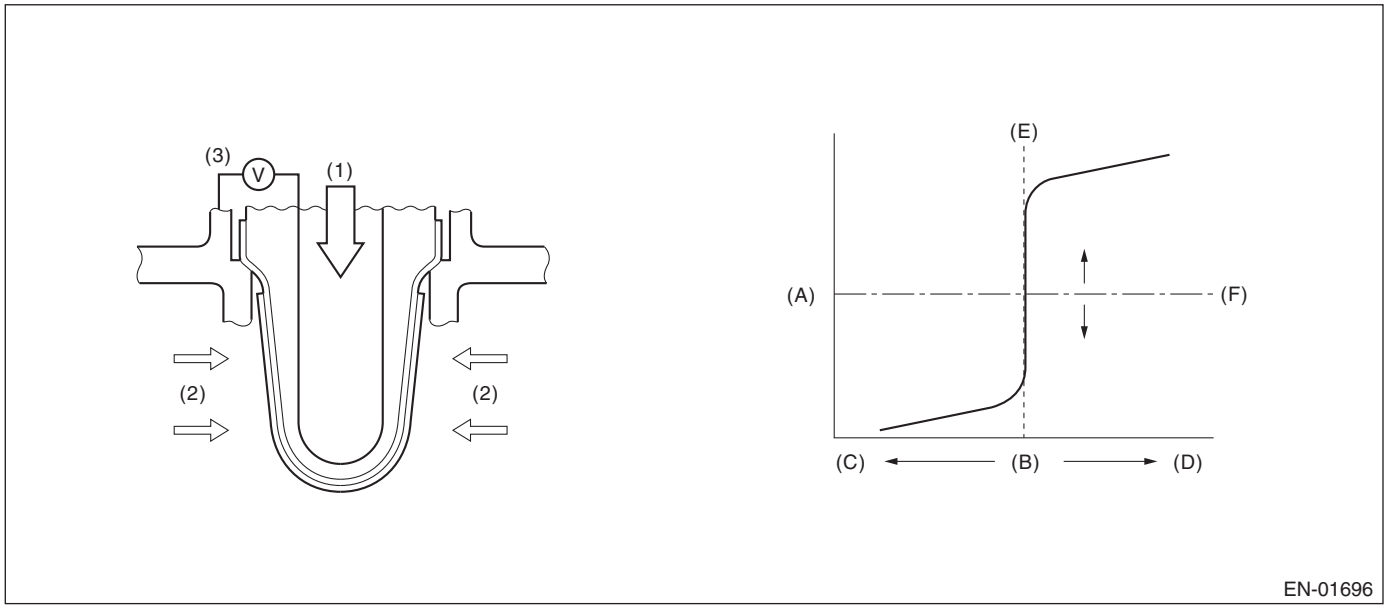

(A)	Electromotive force	(B)	Air fuel ratio	(C)	Rich
(D)	Lean	(E)	Theoretical air fuel ratio	(F)	Comparative voltage
(1)	Atmosphere	(2)	Exhaust gas	(3)	Electromotive force

3. EXECUTION CONDITION

Secondary Parameters	Execution condition
Battery voltage	> 10.9 V
Front oxygen (A/F) sensor closed loop control	Operation
Rear oxygen sensor voltage when fuel cut has completed	< 0.15 V
Estimated element temperature of rear oxygen sensor when fuel cut has completed	≥ 500 °C (932 °F)
Fuel cut time	≥ 5000 ms

4. GENERAL DRIVING CYCLE

Perform diagnosis only once when recovering from the deceleration fuel cut continued for more than predetermined time with the rear oxygen sensor warmed up sufficiently.

5. DIAGNOSTIC METHOD

Detect the trouble by calculating the time from the completion of the fuel cut to the beginning of the rear oxygen sensor voltage starting to rise.

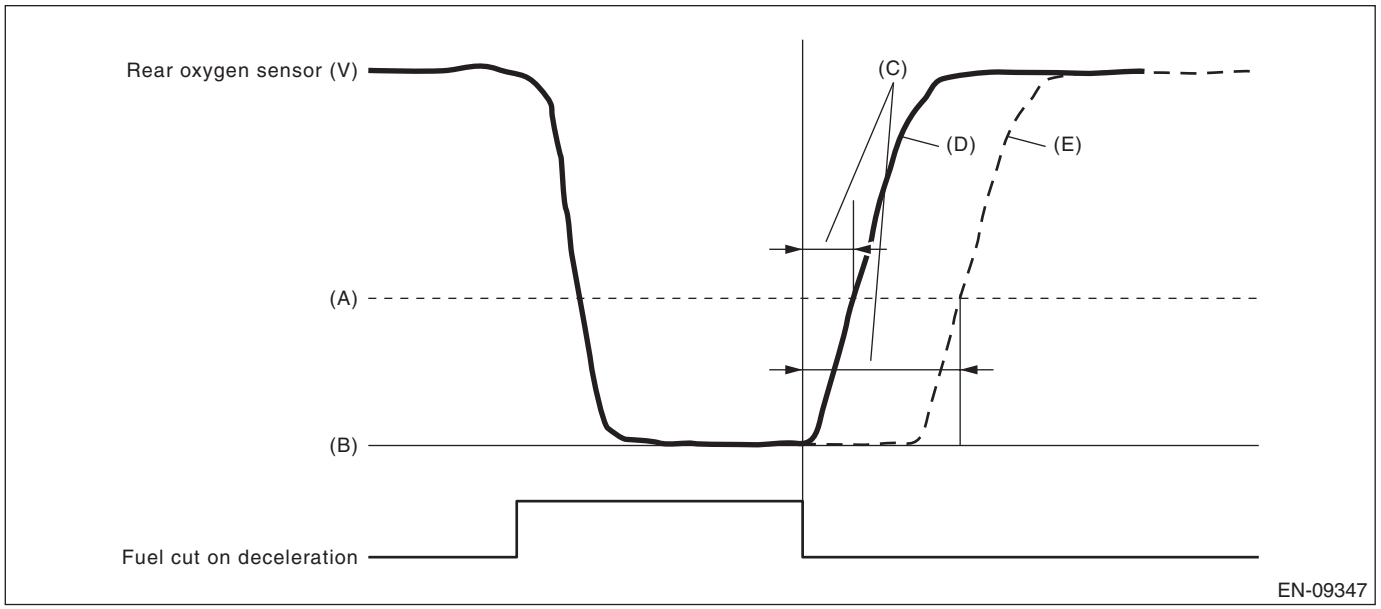

(A) 0.3 V
(B) 0 V
(C) Diagnostic parameter
(D) Normal
(E) Malfunction

Judge as NG when the following conditions are established.

Judgment Value

Malfunction Criteria	Threshold Value
Time needed for the rear oxygen sensor voltage to change up to 0.3 V after the fuel cut was deactivated	> 3750 time(s) × 32 ms

Time Needed for Diagnosis: 3750 time(s) × 32 ms
Malfunction Indicator Light Illumination: Illuminates when malfunction occurs in 2 continuous driving cycles.

AP:DTC P0141 O2 SENSOR HEATER CIRCUIT BANK 1 SENSOR 2

Refer to DTC P0037 for diagnostic procedure. <Ref. to EN(H4DO)(diag)-133, DTC P0037 A/F / O2 HEATER CONTROL CIRCUIT LOW BANK 1 SENSOR 2, Diagnostic Procedure with Diagnostic Trouble Code (DTC).>

1. OUTLINE OF DIAGNOSIS

Detect malfunction of the rear oxygen sensor heater.
Judge as NG if it is determined that the rear oxygen sensor impedance is large by observing the engine conditions.

2. COMPONENT DESCRIPTION

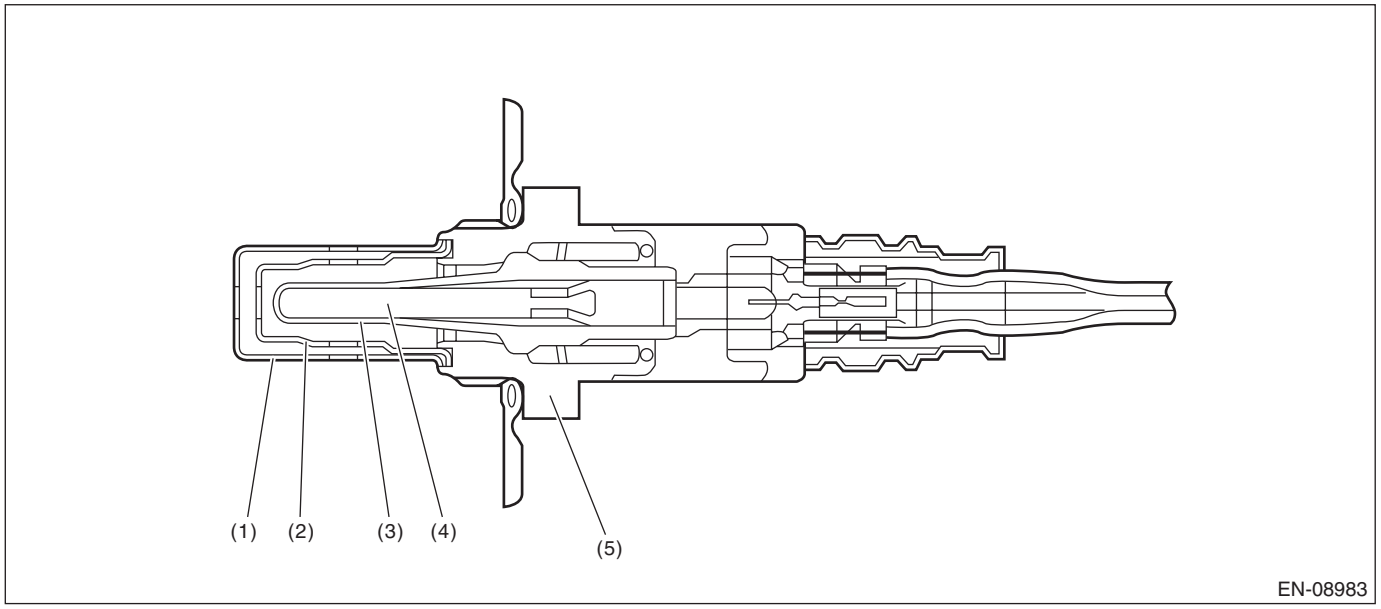

(1) Element cover (outer)
(2) Element cover (inner)
(3) Sensor element
(4) Ceramic heater
(5) Sensor housing

3. EXECUTION CONDITION

Secondary Parameters	Execution condition
Battery voltage	≥ 10.9 V
Elapsed time after starting the engine	≥ 1000 ms
A/F sensor element impedance	≤ 82 Ω
Rear oxygen sensor heater control duty	< 70 %
A/F sensor heater control duty	≤ 75 %

4. GENERAL DRIVING CYCLE

Perform the diagnosis continuously after the enable conditions have been established.

5. DIAGNOSTIC METHOD

If the duration of time while the following conditions are met is longer than the time indicated, judge as NG.

Judgment Value

Malfunction Criteria	Threshold Value
Output voltage	< Battery voltage × 0.91

Time Needed for Diagnosis: 4 ms × 2500 time(s)
Malfunction Indicator Light Illumination: Illuminates when malfunction occurs in 2 continuous driving cycles.

AQ:DTC P014C A/F / O2 SENSOR SLOW RESPONSE - RICH TO LEAN BANK 1 SENSOR 1

DTC DETECTING CONDITION:
Detected when two consecutive driving cycles with fault occur.

CAUTION:
After servicing or replacing faulty parts, perform Clear Memory Mode <Ref. to EN(H4DO)(diag)-78, OPERATION, Clear Memory Mode.>, and Inspection Mode <Ref. to EN(H4DO)(diag)-64, PROCEDURE, Inspection Mode.>.

	Step	Check	Yes	No
1	**CHECK EXHAUST SYSTEM.** NOTE: Check the following items. • Loose installation of front portion of exhaust pipe onto cylinder heads • Loose connection between front exhaust pipe and front catalytic converter • Damage of exhaust pipe resulting in a hole	Is there any fault in exhaust system?	Repair the exhaust system.	Replace the front oxygen (A/F) sensor. <Ref. to FU(H4DO)-76, Front Oxygen (A/F) Sensor.>

1. OUTLINE OF DIAGNOSIS

Detect the slow response of front oxygen (A/F) sensor.
For diagnosis, detect the trouble by processing the λ waveform in normal driving without forcibly changing the target air fuel ratio.

2. COMPONENT DESCRIPTION

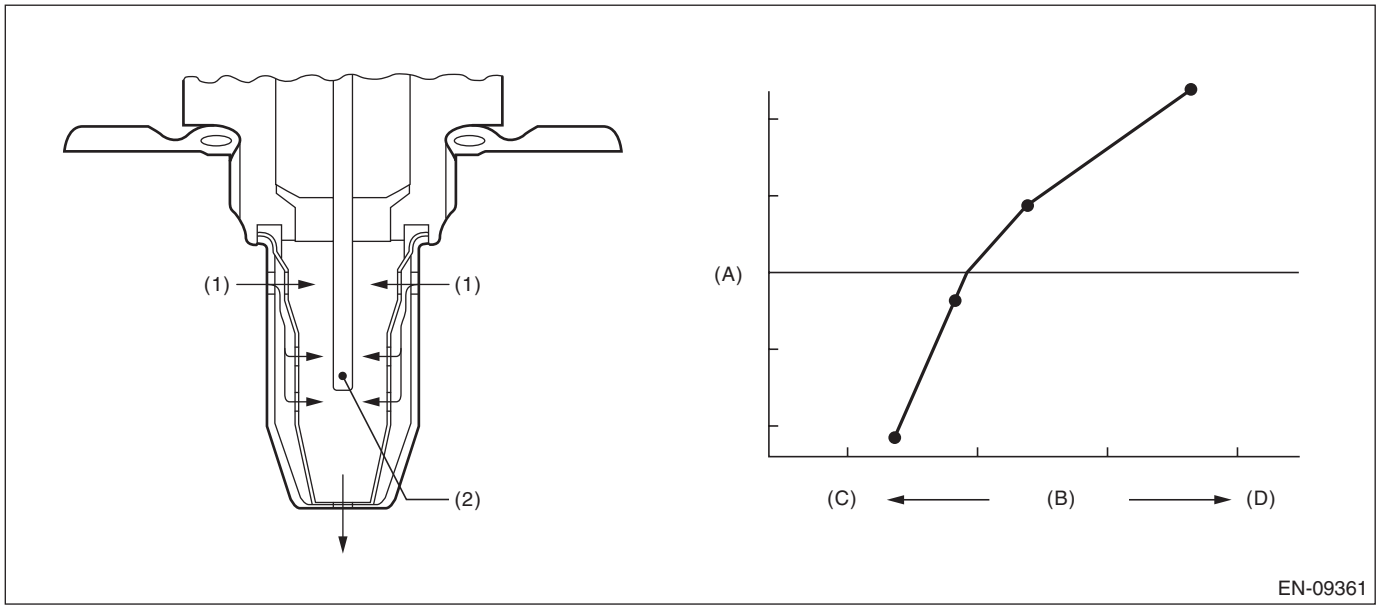

(A) Electromotive force
(B) Air fuel ratio
(C) Rich
(D) Lean

(1) Exhaust gas
(2) ZrO_2

3. EXECUTION CONDITION

Secondary Parameters	Execution condition
Battery voltage	> 10.9 V
Closed loop control with main feedback (3000 ms or more)	Operation
Engine speed	≥ 1000 rpm
Intake air amount	≥ 10 g/s (0.35 oz/s)

4. GENERAL DRIVING CYCLE

Perform diagnosis only once in a city driving including normal acceleration and deceleration.

5. DIAGNOSTIC METHOD 1

Detect the malfunction by checking “Cumulative value of time when λ changes from lean → rich” in comparison to “Time during which diagnosis is in progress”.

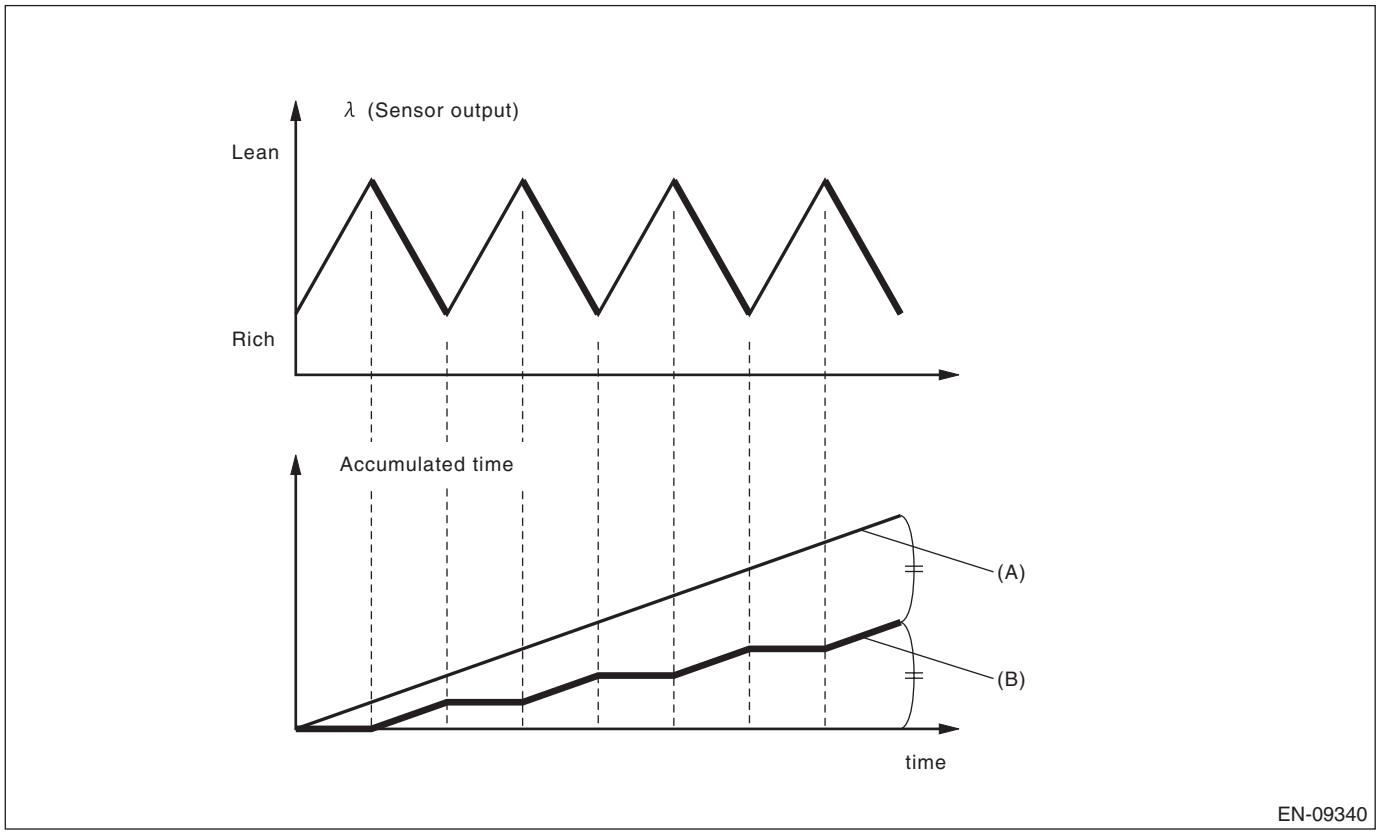

(A) Time during which diagnosis is in progress

(B) Cumulative value of time when λ changes from lean → rich

Judge as NG when the following conditions are established.

Judgment Value

Malfunction Criteria	Threshold Value	DTC
(Cumulative value of time when λ changes from lean → rich) / (Time during which diagnosis is in progress)	< 0.35	P014C
	> 0.65	P014D

Time Needed for Diagnosis: 70000 ms

Malfunction Indicator Light Illumination: Illuminates when malfunction occurs in 2 continuous driving cycles.

6. DIAGNOSTIC METHOD 2

Detect the malfunction by the cumulative value obtained from the amount of variation in λ change.

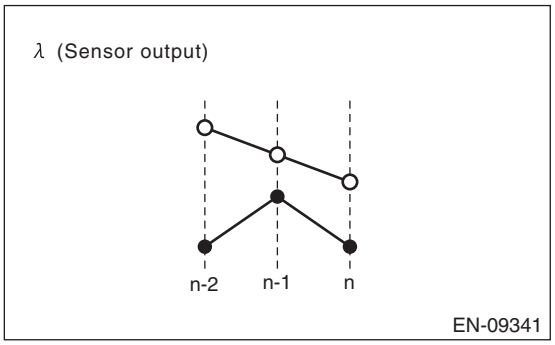

Judge as NG when the following conditions are established.

Judgment Value

Malfunction Criteria	Threshold Value	DTC
Cumulative value obtained from the amount of variation in λ change Σ |(lambda(n) – lambda(n-1)) – (lambda(n-1) – lambda(n-2))|	< Value from Map	P014C and P014D

Map

Cumulative value obtained from the amount of variation in λ Σ |lambda(n) – lambda(n-1)|	0.00	3.50
Cumulative value obtained from the amount of variation in λ change	0.00	3.50

Time Needed for Diagnosis: 70000 ms
Malfunction Indicator Light Illumination: Illuminates when malfunction occurs in 2 continuous driving cycles.

AR:DTC P014D A/F / O2 SENSOR SLOW RESPONSE - LEAN TO RICH BANK 1 SENSOR 1

NOTE:
For the diagnostic procedure, refer to DTC P014C. <Ref. to EN(H4DO)(diag)-219, DTC P014C A/F / O2 SENSOR SLOW RESPONSE - RICH TO LEAN BANK 1 SENSOR 1, Diagnostic Procedure with Diagnostic Trouble Code (DTC).>

1. OUTLINE OF DIAGNOSIS

NOTE:
For the detection standard, refer to DTC P014C. <Ref. to EN(H4DO)(diag)-219, DTC P014C A/F / O2 SENSOR SLOW RESPONSE - RICH TO LEAN BANK 1 SENSOR 1, Diagnostic Procedure with Diagnostic Trouble Code (DTC).>

AS:DTC P015A A/F / O2 SENSOR DELAYED RESPONSE - RICH TO LEAN BANK 1 SENSOR 1

NOTE:
For the diagnostic procedure, refer to DTC P014C. <Ref. to EN(H4DO)(diag)-219, DTC P014C A/F / O2 SENSOR SLOW RESPONSE - RICH TO LEAN BANK 1 SENSOR 1, Diagnostic Procedure with Diagnostic Trouble Code (DTC).>

1. OUTLINE OF DIAGNOSIS

Detect the slow response of front oxygen (A/F) sensor.
For diagnosis, detect the trouble by processing the λ waveform in normal driving without forcibly changing the target air fuel ratio.

2. COMPONENT DESCRIPTION

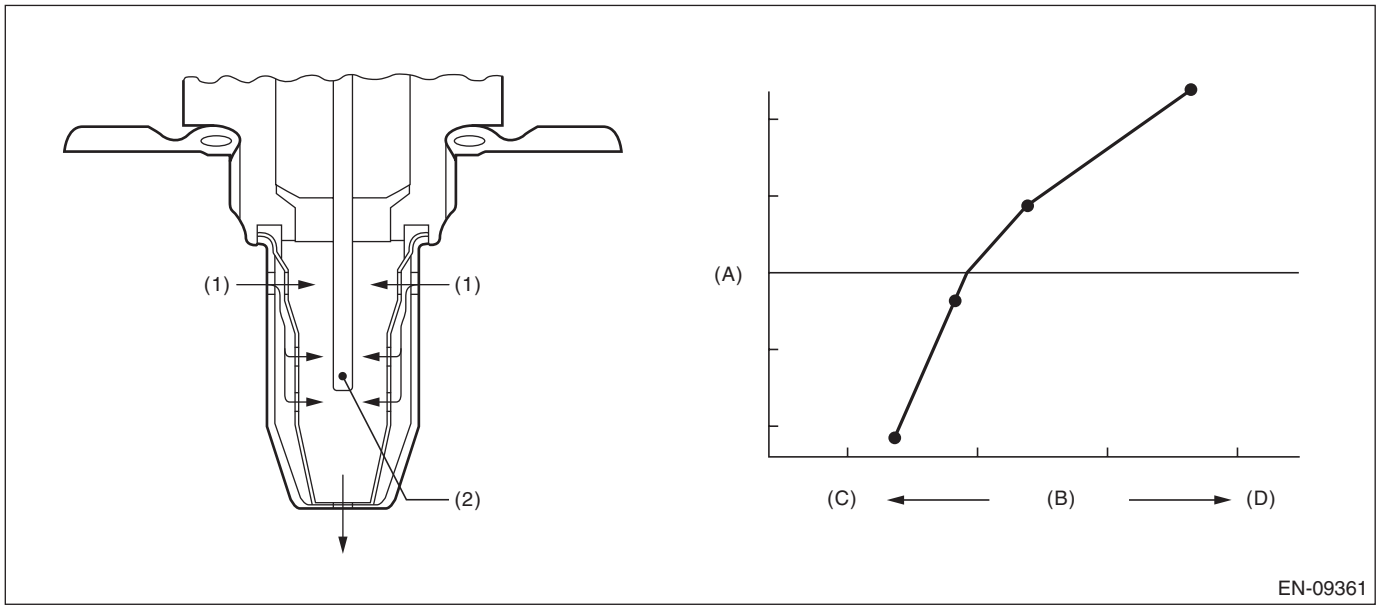

(A) Electromotive force
(B) Air fuel ratio
(C) Rich
(D) Lean

(1) Exhaust gas
(2) ZrO_2

3. EXECUTION CONDITION

Diagnostic method 1 and 2

Secondary Parameters	Execution condition
Battery voltage	> 10.9 V
Closed loop control with main feedback (3000 ms or more)	Operation
Engine speed	≥ 1000 rpm
Intake air amount	≥ 10 g/s (0.35 oz/s)

4. GENERAL DRIVING CYCLE

Perform diagnosis only once in a city driving including normal acceleration and deceleration.

5. DIAGNOSTIC METHOD 1

Detect the malfunction depending on the average value of time necessary for λ to inverse the air fuel ratio from “Lean → Rich → Lean” to “Rich → Lean → Rich”.

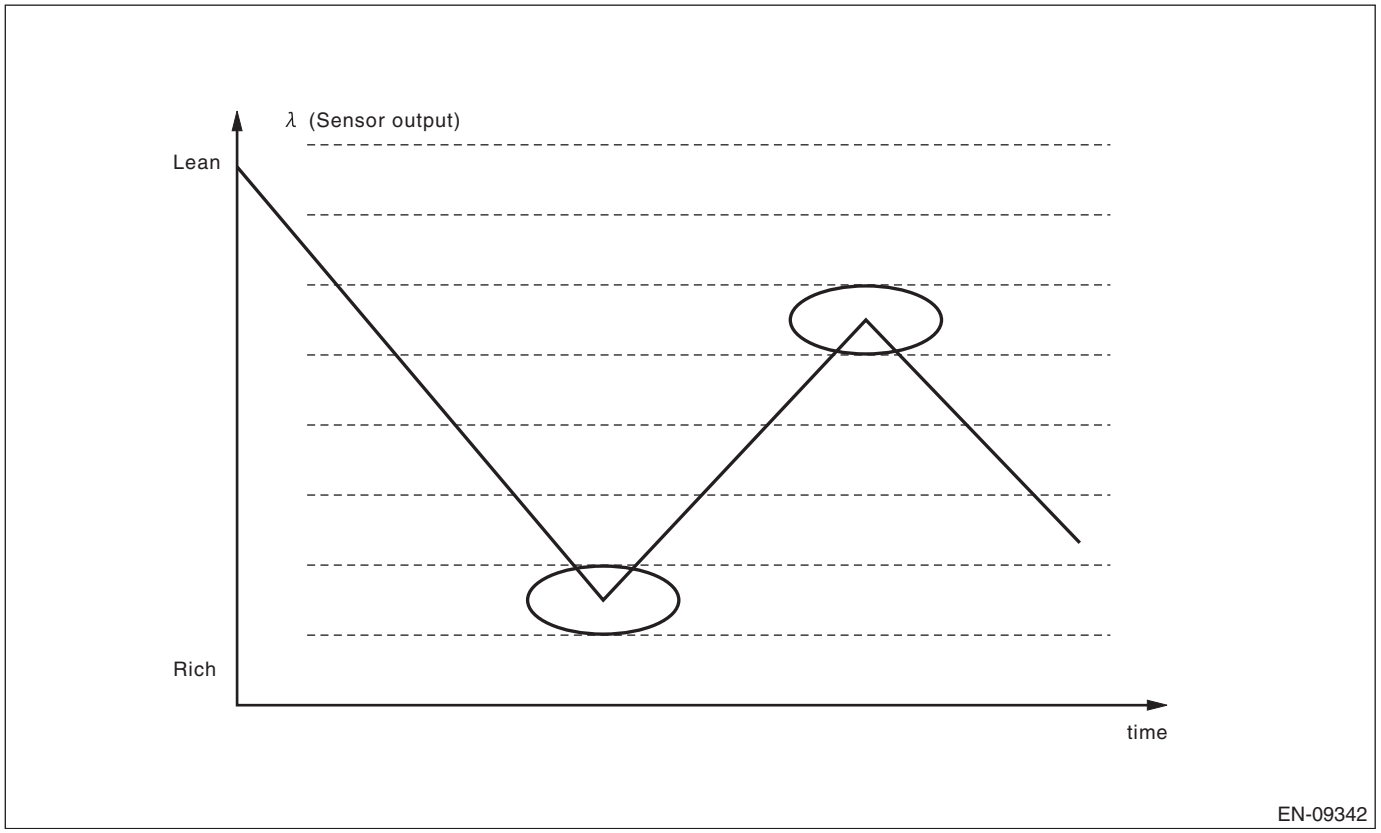

Judge as NG when the following conditions are established.

Judgment Value

Malfunction Criteria	Threshold Value	DTC
Average value of time necessary for λ to inverse the air fuel ratio to Lean → Rich → Lean	> 80 ms (CVT model) > 120 ms (MT model)	P015A
Average value of time necessary for λ to inverse the air fuel ratio to Rich → Lean → Rich	> 200 ms	P015B

Time Needed for Diagnosis: 70000 ms
Malfunction Indicator Light Illumination: Illuminates when malfunction occurs in 2 continuous driving cycles.

6. DIAGNOSTIC METHOD 2

Detect the malfunction by calculating the average amplitude of λ.

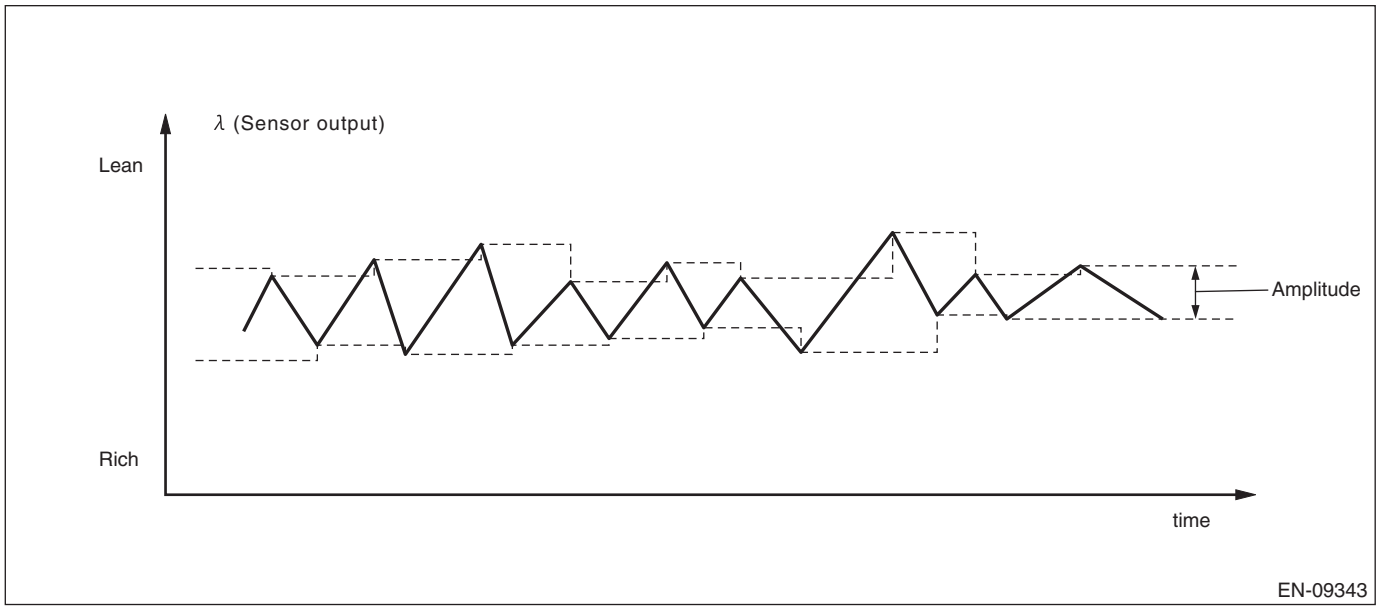

Judge as NG when the following conditions are established.

Judgment Value

Malfunction Criteria	Threshold Value	DTC
Average value for λ amplitude	> 0.07 (CVT model) > 0.09 (MT model)	P015A and P015B

Time Needed for Diagnosis: 70000 ms
Malfunction Indicator Light Illumination: Illuminates when malfunction occurs in 2 continuous driving cycles.

AT:DTC P015B A/F / O2 SENSOR DELAYED RESPONSE - LEAN TO RICH BANK 1 SENSOR 1

NOTE:
For the diagnostic procedure, refer to DTC P014C. <Ref. to EN(H4DO)(diag)-219, DTC P014C A/F / O2 SENSOR SLOW RESPONSE - RICH TO LEAN BANK 1 SENSOR 1, Diagnostic Procedure with Diagnostic Trouble Code (DTC).>

1. OUTLINE OF DIAGNOSIS

NOTE:
For the detection standard, refer to DTC P015A. <Ref. to EN(H4DO)(diag)-222, DTC P015A A/F / O2 SENSOR DELAYED RESPONSE - RICH TO LEAN BANK 1 SENSOR 1, Diagnostic Procedure with Diagnostic Trouble Code (DTC).>

AU:DTC P0171 SYSTEM TOO LEAN BANK 1

Refer to DTC P0172 for diagnostic procedure. <Ref. to EN(H4DO)(diag)-226, DTC P0172 SYSTEM TOO RICH BANK 1, Diagnostic Procedure with Diagnostic Trouble Code (DTC).>

1. OUTLINE OF DIAGNOSIS

Detect fuel system malfunction by the amount of main feedback control.

2. EXECUTION CONDITION

Secondary Parameters	Execution condition
Closed loop control with main feedback	Operation

3. GENERAL DRIVING CYCLE

Perform the diagnosis continuously during the closed loop.

4. DIAGNOSTIC METHOD

Compare the diagnostic value (fsobd) with the threshold value, and if a condition meeting the malfunction criteria listed below continues for 10 s × 3 time(s) or more, judge that there is a fault in the fuel system.

Judgment Value

Malfunction Criteria	Threshold Value
fsobd = (sglmd – tglmda) + faf + flaf In this case: sglmd = measured lambda tglmda = target lambda faf = main feedback compensation coefficient (every 64 milliseconds) flaf = main feedback learning compensation coefficient	≥ Value from Map

Map

Amount of air (g (oz)/s)	0 (0)	3.2 (0.11)	6.4 (0.23)	9.6 (0.34)	12.8 (0.45)	16 (0.56)	19.2 (0.68)
fsobdL1 (%)	1.33	1.33	1.33	1.33	1.33	1.33	1.33

Time Needed for Diagnosis: 10 s × 3 time(s)
Malfunction Indicator Light Illumination: Illuminates when malfunction occurs in 2 continuous driving cycles.

AV:DTC P0172 SYSTEM TOO RICH BANK 1

DTC DETECTING CONDITION:
Detected when two consecutive driving cycles with fault occur.
TROUBLE SYMPTOM:
- Improper idling
- Engine stalls.
- Poor driving performance

CAUTION:
After servicing or replacing faulty parts, perform Clear Memory Mode <Ref. to EN(H4DO)(diag)-78, OPERATION, Clear Memory Mode.>, and Inspection Mode <Ref. to EN(H4DO)(diag)-64, PROCEDURE, Inspection Mode.>.

	Step	Check	Yes	No
1	**CHECK EXHAUST SYSTEM.**	Are there holes or loose bolts on exhaust system?	Repair the exhaust system.	Go to step **2**.
2	**CHECK AIR INTAKE SYSTEM.**	Are there holes, loose bolts or disconnection of hose on air intake system?	Repair the air intake system.	Go to step **3**.
3	**CHECK FUEL PRESSURE.** **WARNING:** **Place "NO OPEN FLAMES" signs near the working area.** **CAUTION:** **Be careful not to spill fuel.** Measure the fuel pressure. <Ref. to ME(H4DO)-31, INSPECTION, Fuel Pressure.> **CAUTION:** **Before attaching/detaching a fuel pressure gauge, release the fuel pressure.**	Is the measured value 340 — 400 kPa (3.5 — 4.1 kg/cm^2, 49 — 58 psi)?	Go to step **4**.	Check the fuel pump and fuel delivery line. <Ref. to FU(H4DO)-121, INSPECTION, Fuel Pump.> <Ref. to FU(H4DO)-154, INSPECTION, Fuel Delivery and Evaporation Lines.>
4	**CHECK ENGINE COOLANT TEMPERATURE SENSOR.** 1) Start the engine and warm up completely. 2) Read the value of «Coolant Temp.» using the Subaru Select Monitor or a general scan tool. NOTE: • Subaru Select Monitor For detailed operation procedures, refer to "Read Current Data For Engine". <Ref. to EN(H4DO)(diag)-45, Subaru Select Monitor.> • General scan tool For detailed operation procedures, refer to the general scan tool operation manual.	Is the value of «Coolant Temp.» 75°C (167°F) or more?	Go to step **5**.	Replace the engine coolant temperature sensor. <Ref. to FU(H4DO)-43, Engine Coolant Temperature Sensor.>

	Step	Check	Yes	No
5	**CHECK MASS AIR FLOW AND INTAKE AIR TEMPERATURE SENSOR.** 1) Start the engine and warm up engine until coolant temperature is higher than 75°C (167°F). 2) For CVT models, set the select lever to "P" range or "N" range, and for MT models, place the shift lever in the neutral position. 3) Turn the A/C switch to OFF. 4) Turn all the accessory switches to OFF. 5) Read the value of «Mass Air Flow» using the Subaru Select Monitor or a general scan tool. NOTE: • Subaru Select Monitor For detailed operation procedures, refer to "Read Current Data For Engine". <Ref. to EN(H4DO)(diag)-45, Subaru Select Monitor.> • General scan tool For detailed operation procedures, refer to the general scan tool operation manual.	Is the value of «Mass Air Flow» 2.0 — 5.0 g/s (0.26 — 0.66 lb/m)?	Go to step **6**.	Replace the mass air flow and intake air temperature sensor. <Ref. to FU(H4DO)-60, Mass Air Flow and Intake Air Temperature Sensor.>
6	**CHECK MASS AIR FLOW AND INTAKE AIR TEMPERATURE SENSOR.** 1) Start the engine and warm up engine until coolant temperature is higher than 75°C (167°F). 2) For CVT models, set the select lever to "P" range or "N" range, and for MT models, place the shift lever in the neutral position. 3) Turn the A/C switch to OFF. 4) Turn all the accessory switches to OFF. 5) Open the front hood. 6) Measure the ambient temperature. 7) Read the value of «Intake Air Temp.» using the Subaru Select Monitor or a general scan tool. NOTE: • Subaru Select Monitor For detailed operation procedures, refer to "Read Current Data For Engine". <Ref. to EN(H4DO)(diag)-45, Subaru Select Monitor.> • General scan tool For detailed operation procedures, refer to the general scan tool operation manual.	Subtract ambient temperature from «Intake Air Temp.». Is the obtained value –10 — 50°C (–18 — 90°F)?	Repair the poor contact of ECM connector.	Check the mass air flow and intake air temperature sensor. <Ref. to FU(H4DO)-60, Mass Air Flow and Intake Air Temperature Sensor.>

1. OUTLINE OF DIAGNOSIS

Detect fuel system malfunction by the amount of main feedback control.

2. EXECUTION CONDITION

Secondary Parameters	Execution condition
A/F main feedback function	In operation

3. GENERAL DRIVING CYCLE

Perform the diagnosis continuously during the closed loop.

4. DIAGNOSTIC METHOD

Compare the diagnostic value (fsobd) with the threshold value, and if a condition meeting the malfunction criteria listed below continues for 10 s × 3 time(s) or more, judge that there is a fault in the fuel system.

Judgment Value

Malfunction Criteria	Threshold Value
fsobd = (sglmd – tglmda) + faf + flaf In this case: sglmd = measured lambda tglmda = target lambda faf = main feedback compensation coefficient (every 64 milliseconds) flaf = main feedback learning compensation coefficient	< Value from Map

Map

Warm-up increase compensation coefficient	0.000	0.102	0.199	0.301
Threshold Value	0.67 – 0.000	0.67 – 0.102	0.67 – 0.175	0.67 – 0.237

Warm-up increase compensation coefficient	0.398	0.465
Threshold Value	0.67 – 0.289	0.67 – 0.319

Time Needed for Diagnosis: 10 s × 3 time(s)
Malfunction Indicator Light Illumination: Illuminates when malfunction occurs in 2 continuous driving cycles.

AW:DTC P0196 ENGINE OIL TEMPERATURE SENSOR "A" RANGE/PERFORMANCE

DTC DETECTING CONDITION:
Detected when two consecutive driving cycles with fault occur.
TROUBLE SYMPTOM:
- Hard to start
- Improper idling
- Poor driving performance

CAUTION:
After servicing or replacing faulty parts, perform Clear Memory Mode <Ref. to EN(H4DO)(diag)-78, OPERATION, Clear Memory Mode.>, and Inspection Mode <Ref. to EN(H4DO)(diag)-64, PROCEDURE, Inspection Mode.>.

Step		Check	Yes	No
1	**CHECK FOR ANY OTHER DTC ON DISPLAY.**	Is any other DTC displayed?	Check the appropriate DTC using the “List of Diagnostic Trouble Code (DTC)”. <Ref. to EN(H4DO)(diag)-102, List of Diagnostic Trouble Code (DTC).>	Replace the engine oil temperature sensor. <Ref. to FU(H4DO)-45, Engine Oil Temperature Sensor.>

1. OUTLINE OF DIAGNOSIS

Detect the malfunction of the engine oil temperature sensor output properties. Using the following two diagnoses, judge as NG when either is NG.

- **Diagnosis 1 (correlation diagnosis):** After the engine starts after the specified period of soaking time has elapsed, diagnose by correlation between engine oil temperature sensor value, engine coolant temperature sensor value and intake air temperature sensor value. Judge as NG when the differences are both above the specified value by comparing between engine oil temperature and engine coolant temperature, engine oil temperature and intake air temperature.
- **Diagnosis 2 (function diagnosis):** Judge as NG when engine oil temperature does not rise to the specified value regardless of an engine running condition that clears certain conditions.

2. COMPONENT DESCRIPTION

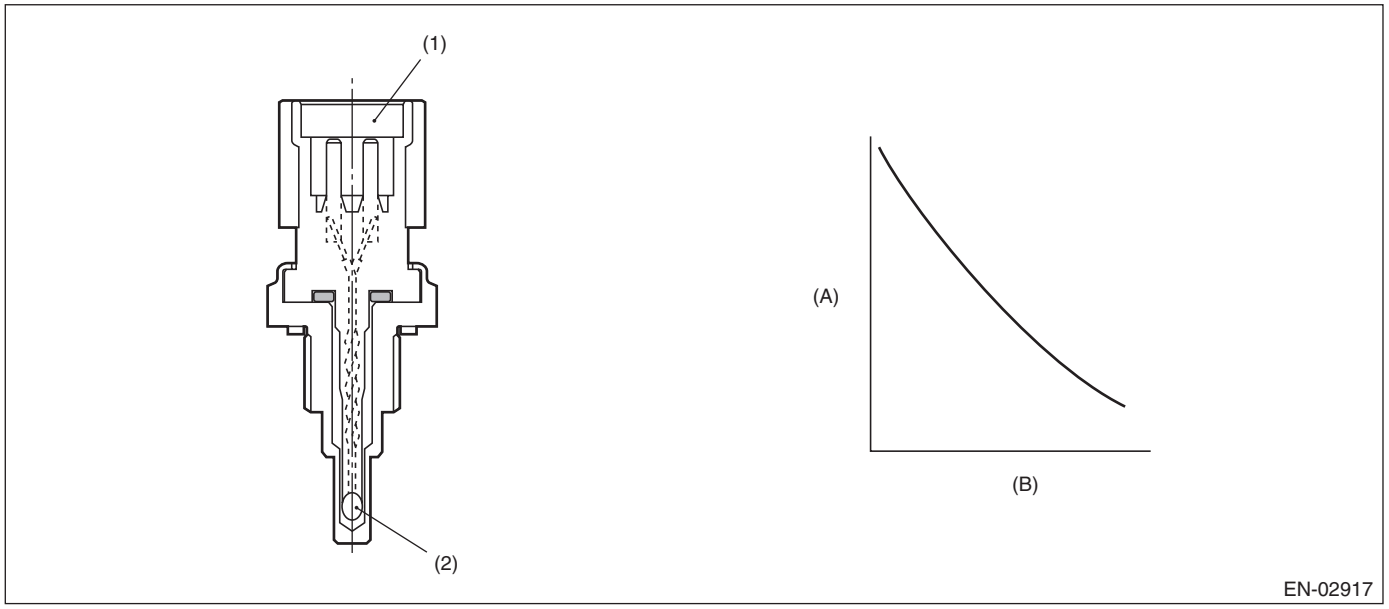

(A) Resistance value (kΩ)
(B) Temperature °C (°F)
(1) Connector
(2) Thermistor element

3. EXECUTION CONDITION

Diagnosis 1

Secondary Parameters	Execution condition
Soaking time	≥ 21600 s
Block heater judgment	Completed
Block heater operation	Not in operation

Diagnosis 2

Secondary Parameters	Execution condition
Engine oil temperature at engine starting	< 40 °C (104 °F)
Engine speed	> 500 rpm
Percentage of idling	≤ 0.5 × 100

4. GENERAL DRIVING CYCLE

- **Diagnosis 1:** Perform the diagnosis only once after the engine starts after a certain period of soaking time.
- **Diagnosis 2:** Perform the diagnosis only once after starting the engine from cold condition.

5. DIAGNOSTIC METHOD

Judge as NG when Diagnosis 1 or Diagnosis 2 becomes NG.
If the duration of time while the following conditions are met is longer than the time indicated, judge as NG.

Diagnosis 1

Judgment Value

Malfunction Criteria	Threshold Value
|Engine oil temperature at engine start – Engine coolant temperature at engine start|	> 10 °C (18°F)
|Engine oil temperature at engine start – Intake air temperature 30 sec. after engine start|	> Value of Map 1

Map 1

Ambient temperature °C (°F)	–30 (–22)	30 (86)	45 (113)	60 (140)
|Engine oil temperature at engine start – Intake air temperature 30 sec. after engine start| °C (°F)	10 (18°F)	10 (18°F)	22 (39.6°F)	22 (39.6°F)

Time Needed for Diagnosis: Less than 1 second

Diagnosis 2

Judgment Value

Malfunction Criteria	Threshold Value
Engine oil temperature	< 40 °C (104 °F)
Elapsed time after starting the engine	≥ Value from Map 2

Map 2

		Intake air temperature at engine start °C (°F)							
		–30 (–22)	–20 (–4)	–10 (14)	0 (32)	10 (50)	20 (68)	30 (86)	40 (104)
Percentage of time when engine is at stop against time elapsed since engine start	0.0	1800000	1500000	1200000	850000	600000	450000	350000	300000
	0.3	1800000	1500000	1200000	850000	600000	450000	350000	300000
	0.6	1800000	1500000	1200000	850000	600000	450000	350000	300000
	1.0	1800000	1500000	1200000	850000	600000	450000	350000	300000
ms									

Time Needed for Diagnosis: Value of Map 2

Malfunction Indicator Light Illumination: Illuminates when malfunction occurs in 2 continuous driving cycles.

AX:DTC P0197 ENGINE OIL TEMPERATURE SENSOR "A" CIRCUIT LOW

DTC DETECTING CONDITION:
Immediately at fault recognition
TROUBLE SYMPTOM:

- Hard to start
- Improper idling
- Poor driving performance

CAUTION:
After servicing or replacing faulty parts, perform Clear Memory Mode <Ref. to EN(H4DO)(diag)-78, OPERATION, Clear Memory Mode.>, and Inspection Mode <Ref. to EN(H4DO)(diag)-64, PROCEDURE, Inspection Mode.>.
WIRING DIAGRAM:

- Engine Electrical System ENGINE TYPE FB (WITHOUT PUSH BUTTON START) <Ref. to WI-170, ENGINE TYPE FB (WITHOUT PUSH BUTTON START), WIRING DIAGRAM, Engine Electrical System.>
- Engine Electrical System ENGINE TYPE FB (WITH PUSH BUTTON START) <Ref. to WI-184, ENGINE TYPE FB (WITH PUSH BUTTON START), WIRING DIAGRAM, Engine Electrical System.>

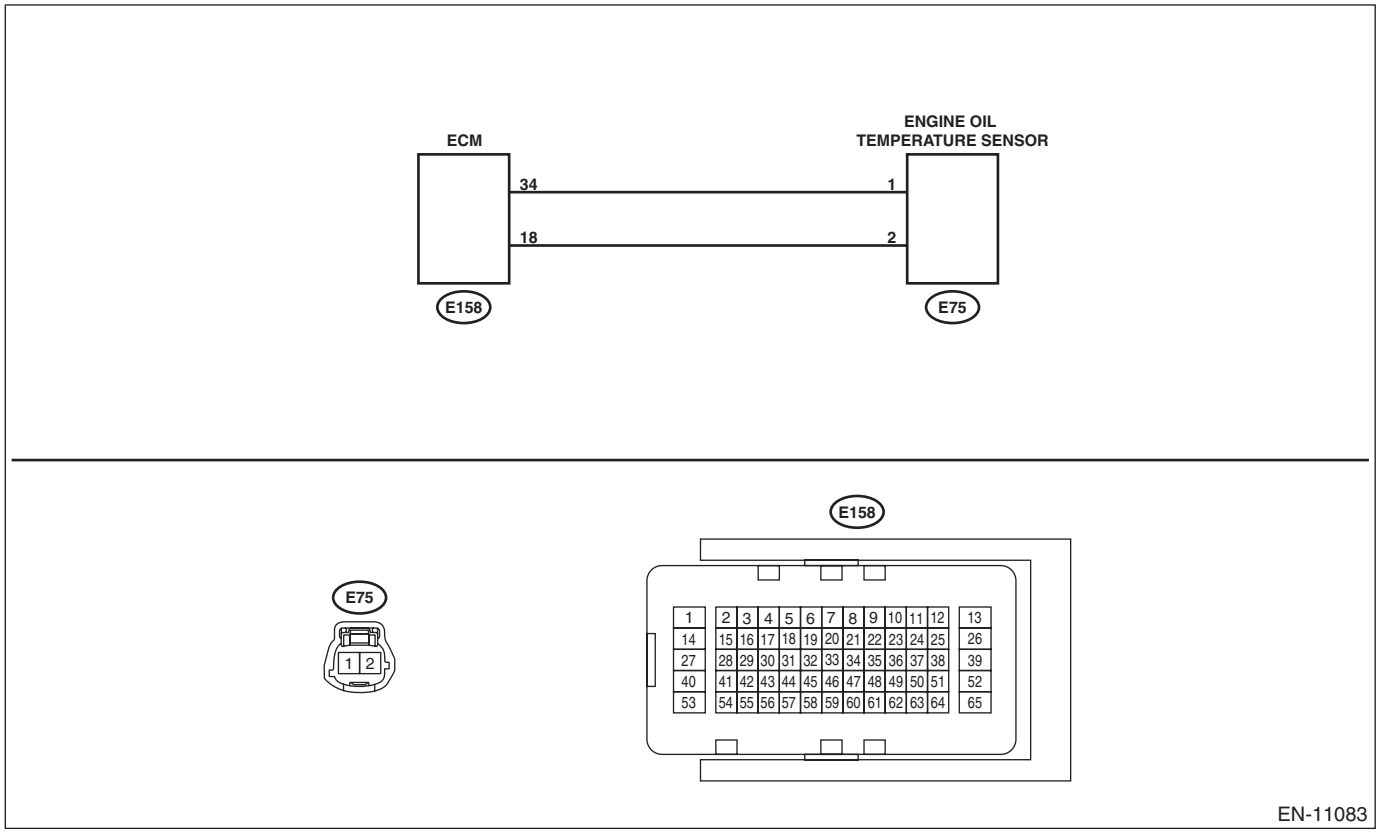

	Step	Check	Yes	No
1	**CHECK CURRENT DATA.** 1) Start the engine. 2) Read the value of «Oil Temperature» using Subaru Select Monitor. NOTE: For detailed operation procedures, refer to "Read Current Data For Engine". <Ref. to EN(H4DO)(diag)-45, Subaru Select Monitor.>	Is the value of «Oil Temperature» 150°C (302°F) or more?	Go to step **2**.	Even if DTC is detected, the circuit has returned to a normal condition at this time. Reproduce the failure, and then perform the diagnosis again. NOTE: In this case, temporary poor contact of connector, temporary open or short circuit of harness may be the cause.
2	**CHECK HARNESS BETWEEN ECM AND ENGINE OIL TEMPERATURE SENSOR CONNECTOR.** 1) Turn the ignition switch to OFF. 2) Disconnect the connectors from the ECM and engine oil temperature sensor. 3) Measure the resistance between ECM connector and chassis ground. ***Connector & terminal*** ***(E158) No. 18 — Chassis ground:***	Is the resistance 1 MΩ or more?	Replace the engine oil temperature sensor. <Ref. to FU(H4DO)-45, Engine Oil Temperature Sensor.>	Repair the short circuit to ground in the harness between the ECM connector and engine oil temperature sensor connector.

1. OUTLINE OF DIAGNOSIS

Detect the open or short circuit of the oil temperature sensor.
Judge as NG when outside of the judgment value.

2. COMPONENT DESCRIPTION

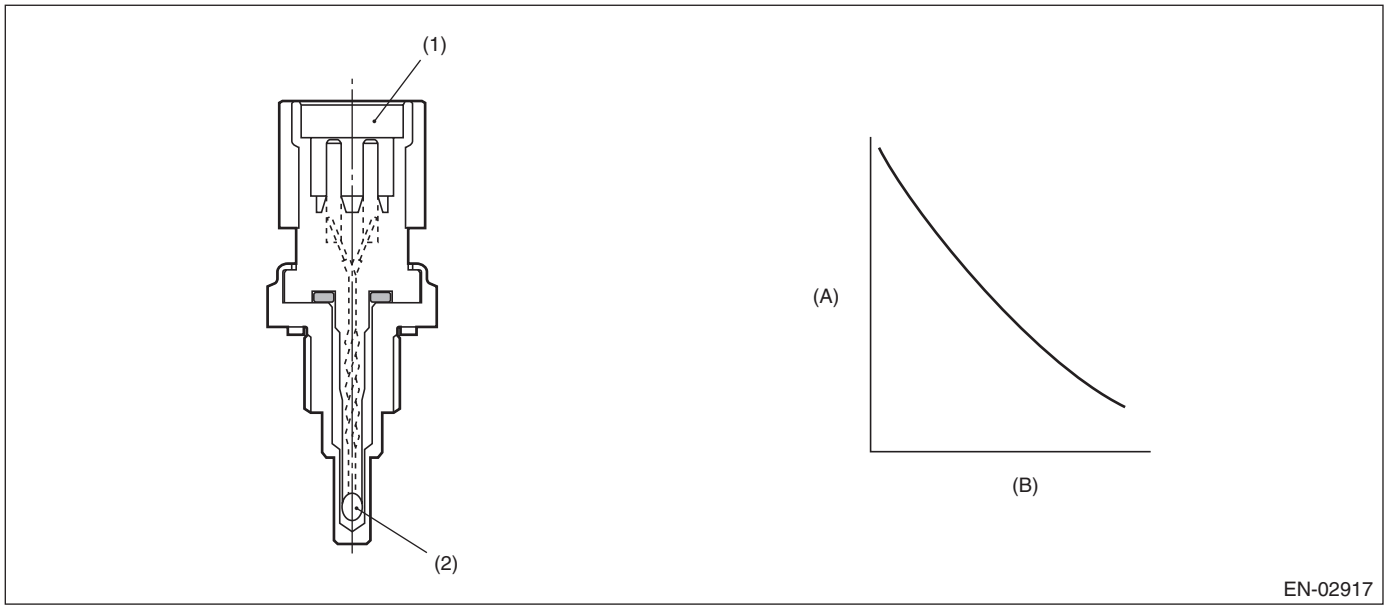

(A) Resistance value (kΩ)
(B) Temperature °C (°F)
(1) Connector
(2) Thermistor element

3. EXECUTION CONDITION

Secondary Parameters	Execution condition
None	

4. GENERAL DRIVING CYCLE

Always perform the diagnosis continuously.

5. DIAGNOSTIC METHOD

If the duration of time while the following conditions are met is longer than the time indicated, judge as NG.

Judgment Value

Malfunction Criteria	Threshold Value
Output voltage	< 0.203 V

Time Needed for Diagnosis: 500 ms
Malfunction Indicator Light Illumination: Illuminates as soon as a malfunction occurs.

AY:DTC P0198 ENGINE OIL TEMPERATURE SENSOR "A" CIRCUIT HIGH

DTC DETECTING CONDITION:
Immediately at fault recognition
TROUBLE SYMPTOM:
- Hard to start
- Improper idling
- Poor driving performance

CAUTION:
After servicing or replacing faulty parts, perform Clear Memory Mode <Ref. to EN(H4DO)(diag)-78, OPERATION, Clear Memory Mode.>, and Inspection Mode <Ref. to EN(H4DO)(diag)-64, PROCEDURE, Inspection Mode.>.
WIRING DIAGRAM:
- Engine Electrical System ENGINE TYPE FB (WITHOUT PUSH BUTTON START) <Ref. to WI-170, ENGINE TYPE FB (WITHOUT PUSH BUTTON START), WIRING DIAGRAM, Engine Electrical System.>
- Engine Electrical System ENGINE TYPE FB (WITH PUSH BUTTON START) <Ref. to WI-184, ENGINE TYPE FB (WITH PUSH BUTTON START), WIRING DIAGRAM, Engine Electrical System.>

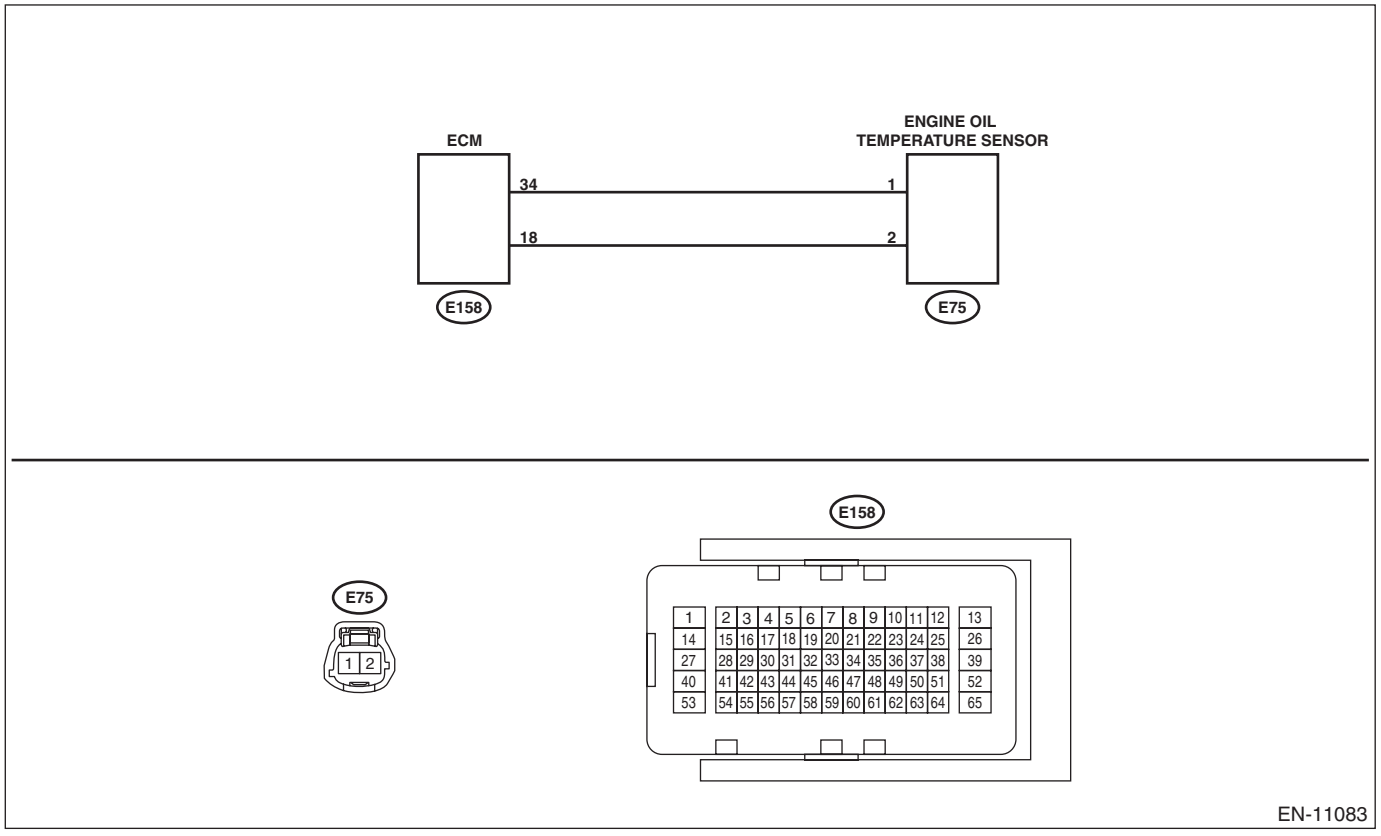

	Step	Check	Yes	No
1	**CHECK CURRENT DATA.** 1) Start the engine. 2) Read the value of «Oil Temperature» using Subaru Select Monitor. NOTE: For detailed operation procedures, refer to "Read Current Data For Engine". <Ref. to EN(H4DO)(diag)-45, Subaru Select Monitor.>	Is the value of «Oil Temperature» –40°C (–40°F) or less?	Go to step **2**.	Even if DTC is detected, the circuit has returned to a normal condition at this time. Reproduce the failure, and then perform the diagnosis again. NOTE: In this case, temporary poor contact of connector, temporary open or short circuit of harness may be the cause.
2	**CHECK FOR POOR CONTACT.** Check for poor contact between the ECM and engine oil temperature sensor connectors.	Is there poor contact of the ECM or engine oil temperature sensor connectors?	Repair the poor contact of ECM or engine oil temperature sensor connector.	Go to step **3**.
3	**CHECK HARNESS BETWEEN ECM AND ENGINE OIL TEMPERATURE SENSOR CONNECTOR.** 1) Turn the ignition switch to OFF. 2) Disconnect the connectors from the ECM and engine oil temperature sensor. 3) Measure the resistance of the harness between the ECM connector and engine oil temperature sensor connector. ***Connector & terminal*** ***(E158) No. 18 — (E75) No. 2:*** ***(E158) No. 34 — (E75) No. 1:***	Is the resistance less than 1 Ω?	Go to step **4**.	Repair the open circuit in the harness between ECM connector and engine oil temperature sensor connector.
4	**CHECK HARNESS BETWEEN ECM AND ENGINE OIL TEMPERATURE SENSOR CONNECTOR.** 1) Connect all connectors. 2) Turn the ignition switch to ON. 3) Measure the voltage between ECM connector and chassis ground. ***Connector & terminal*** ***(E158) No. 18 (+) — Chassis ground (–):***	Is the voltage 5 V or more?	Repair the short circuit to power in harness between ECM connector and engine oil temperature sensor connector.	Replace the engine oil temperature sensor. <Ref. to FU(H4DO)-45, Engine Oil Temperature Sensor.>

1. OUTLINE OF DIAGNOSIS

Detect the open or short circuit of the oil temperature sensor.
Judge as NG when outside of the judgment value.

2. COMPONENT DESCRIPTION

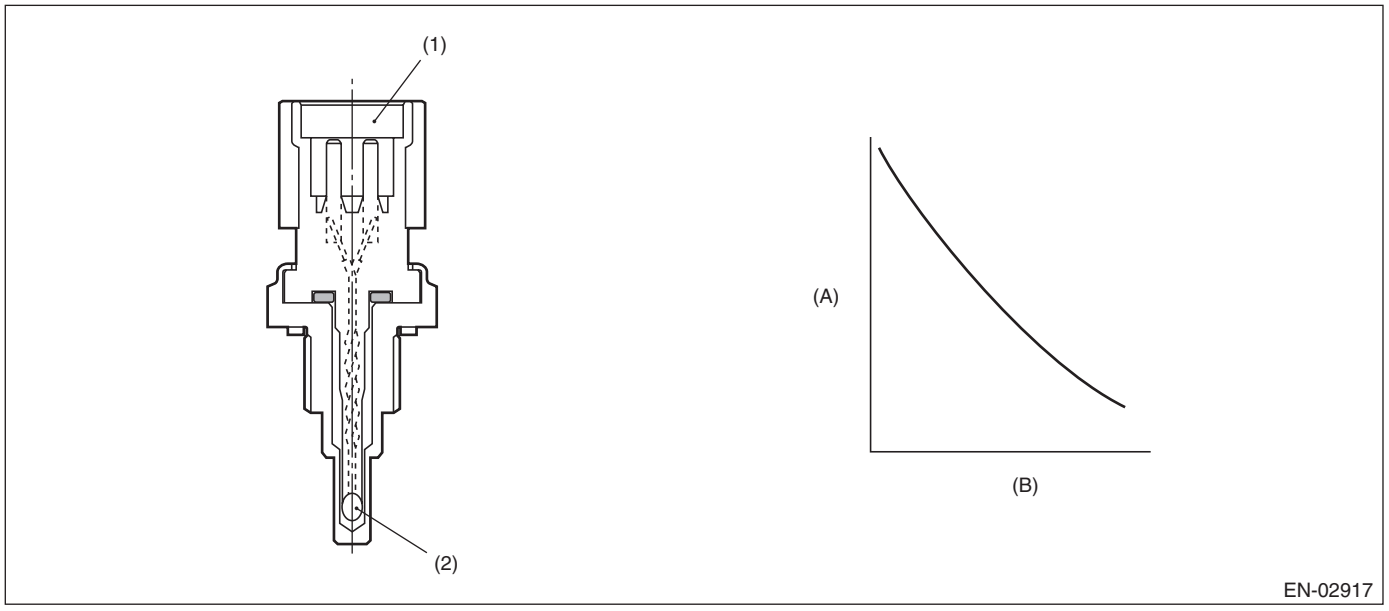

(A) Resistance value (kΩ)
(B) Temperature °C (°F)
(1) Connector
(2) Thermistor element

3. EXECUTION CONDITION

Secondary Parameters	Execution condition
None	

4. GENERAL DRIVING CYCLE

Always perform the diagnosis continuously.

5. DIAGNOSTIC METHOD

If the duration of time while the following conditions are met is longer than the time indicated, judge as NG.

Judgment Value

Malfunction Criteria	Threshold Value
Output voltage	≥ 4.698 V

Time Needed for Diagnosis: 500 ms
Malfunction Indicator Light Illumination: Illuminates as soon as a malfunction occurs.

AZ:DTC P0201 CYLINDER 1 INJECTOR "A" CIRCUIT

DTC DETECTING CONDITION:
Immediately at fault recognition
TROUBLE SYMPTOM:
- Improper idling
- Poor driving performance

CAUTION:
After servicing or replacing faulty parts, perform Clear Memory Mode <Ref. to EN(H4DO)(diag)-78, OPERATION, Clear Memory Mode.>, and Inspection Mode <Ref. to EN(H4DO)(diag)-64, PROCEDURE, Inspection Mode.>.
WIRING DIAGRAM:
- Engine Electrical System ENGINE TYPE FB (WITHOUT PUSH BUTTON START) <Ref. to WI-170, ENGINE TYPE FB (WITHOUT PUSH BUTTON START), WIRING DIAGRAM, Engine Electrical System.>
- Engine Electrical System ENGINE TYPE FB (WITH PUSH BUTTON START) <Ref. to WI-184, ENGINE TYPE FB (WITH PUSH BUTTON START), WIRING DIAGRAM, Engine Electrical System.>

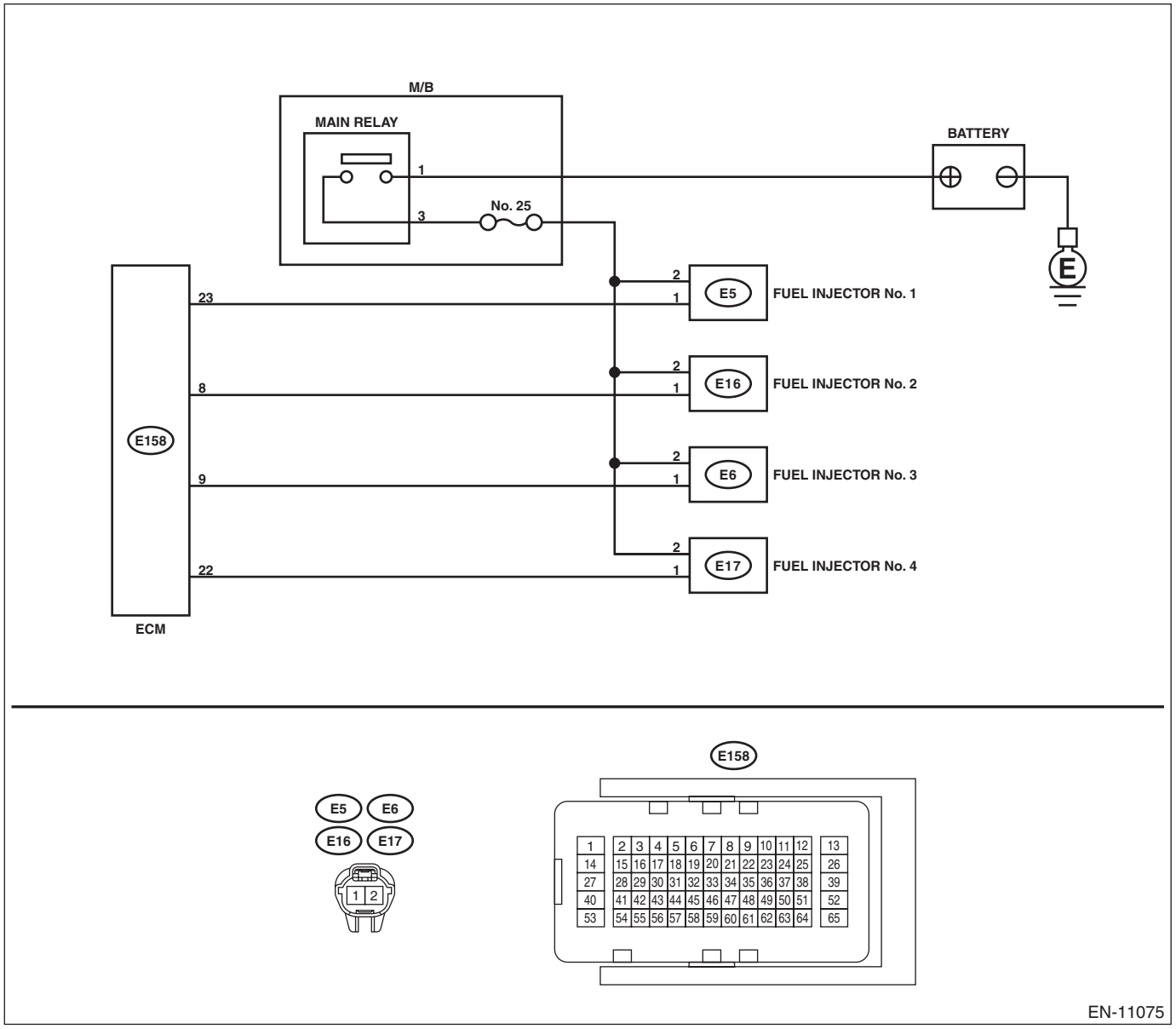

	Step	Check	Yes	No
1	**CHECK POWER SUPPLY TO FUEL INJECTOR.** 1) Turn the ignition switch to OFF. 2) Disconnect the connector from fuel injector. 3) Turn the ignition switch to ON. 4) Measure the voltage between fuel injector connector and the engine ground. ***Connector & terminal*** ***DTC P0201; (E5) No. 2 (+) — Engine ground (–):*** ***DTC P0202; (E16) No. 2 (+) — Engine ground (–):*** ***DTC P0203; (E6) No. 2 (+) — Engine ground (–):*** ***DTC P0204; (E17) No. 2 (+) — Engine ground (–):***	Is the voltage 10 V or more?	Go to step **2**.	Repair the harness and connector. NOTE: In this case, repair the following item: • Open circuit in harness between main relay and fuel injector connector • Poor contact of main relay connector • Poor contact of coupling connector
2	**CHECK HARNESS BETWEEN ECM AND FUEL INJECTOR CONNECTOR.** 1) Turn the ignition switch to OFF. 2) Disconnect the connector from ECM. 3) Measure the resistance between fuel injector connector and engine ground. ***Connector & terminal*** ***DTC P0201; (E5) No. 1 — Engine ground:*** ***DTC P0202; (E16) No. 1 — Engine ground:*** ***DTC P0203; (E6) No. 1 — Engine ground:*** ***DTC P0204; (E17) No. 1 — Engine ground:***	Is the resistance 1 MΩ or more?	Go to step **3**.	Repair the short circuit to ground in harness between ECM connector and fuel injector connector.
3	**CHECK HARNESS BETWEEN ECM AND FUEL INJECTOR CONNECTOR.** Measure the resistance of harness between ECM connector and fuel injector connector. ***Connector & terminal*** ***DTC P0201; (E158) No. 23 — (E5) No. 1:*** ***DTC P0202; (E158) No. 8 — (E16) No. 1:*** ***DTC P0203; (E158) No. 9 — (E6) No. 1:*** ***DTC P0204; (E158) No. 22 — (E17) No. 1:***	Is the resistance less than 1 Ω?	Go to step **4**.	Repair the open circuit of the harness between the ECM connector and fuel injector connector.
4	**CHECK FUEL INJECTOR.** Measure the resistance between fuel injector terminals on the corresponding cylinder. ***Terminals*** ***No. 1 — No. 2:***	Is the resistance 5 — 20 Ω?	Go to step **5**.	Replace the fuel injector. <Ref. to FU(H4DO)-66, Fuel Injector.>
5	**CHECK FOR POOR CONTACT.** Check for poor contact of ECM connector.	Is there poor contact of ECM connector?	Repair the poor contact of ECM connector.	Go to step **6**.

Step		Check	Yes	No
6	**CHECK FUEL INJECTOR OPERATION.** 1) Connect all connectors. 2) Start the engine. 3) Check if the corresponding fuel injector emits operating sound. NOTE: Use a sound scope to check the operating sound.	Does the fuel injector emit operating sound?	Even if DTC is detected, the circuit has returned to a normal condition at this time. Reproduce the failure, and then perform the diagnosis again. NOTE: In this case, temporary poor contact of connector, temporary open or short circuit of harness may be the cause.	Repair the poor contact of fuel injector connector.

1. OUTLINE OF DIAGNOSIS

Based on the self-diagnostic result of the injector driving IC, judge the injector driving circuit as normal or abnormal.
Injector driving IC detects the status of “fuel remains injected” or “fuel is not injected” as a malfunction.

2. EXECUTION CONDITION

Secondary Parameters	Execution condition
Battery voltage	≥ 10.9 V
Elapsed time after starting the engine	> 1 s
Engine speed	> 500 rpm
Injection status	Not during fuel cut

3. GENERAL DRIVING CYCLE

Perform the diagnosis continuously after the enable conditions have been established.

4. DIAGNOSTIC METHOD

Judge as NG when the following conditions are established.

Judgment Value

Malfunction Criteria	Threshold Value
Injector driving IC information	Trouble

Time Needed for Diagnosis: 256/1000 seconds × 10 time(s)
Malfunction Indicator Light Illumination: Illuminates as soon as a malfunction occurs.

BA:DTC P0202 CYLINDER 2 INJECTOR "A" CIRCUIT

NOTE:
For the diagnostic procedure, refer to DTC P0201. <Ref. to EN(H4DO)(diag)-238, DTC P0201 CYLINDER 1 INJECTOR "A" CIRCUIT, Diagnostic Procedure with Diagnostic Trouble Code (DTC).>

1. OUTLINE OF DIAGNOSIS

NOTE:
For the detection standard, refer to DTC P0201. <Ref. to EN(H4DO)(diag)-238, DTC P0201 CYLINDER 1 INJECTOR "A" CIRCUIT, Diagnostic Procedure with Diagnostic Trouble Code (DTC).>

BB:DTC P0203 CYLINDER 3 INJECTOR "A" CIRCUIT

NOTE:
For the diagnostic procedure, refer to DTC P0201. <Ref. to EN(H4DO)(diag)-238, DTC P0201 CYLINDER 1 INJECTOR "A" CIRCUIT, Diagnostic Procedure with Diagnostic Trouble Code (DTC).>

1. OUTLINE OF DIAGNOSIS

NOTE:
For the detection standard, refer to DTC P0201. <Ref. to EN(H4DO)(diag)-238, DTC P0201 CYLINDER 1 INJECTOR "A" CIRCUIT, Diagnostic Procedure with Diagnostic Trouble Code (DTC).>

BC:DTC P0204 CYLINDER 4 INJECTOR "A" CIRCUIT

NOTE:
For the diagnostic procedure, refer to DTC P0201. <Ref. to EN(H4DO)(diag)-238, DTC P0201 CYLINDER 1 INJECTOR "A" CIRCUIT, Diagnostic Procedure with Diagnostic Trouble Code (DTC).>

1. OUTLINE OF DIAGNOSIS

NOTE:
For the detection standard, refer to DTC P0201. <Ref. to EN(H4DO)(diag)-238, DTC P0201 CYLINDER 1 INJECTOR "A" CIRCUIT, Diagnostic Procedure with Diagnostic Trouble Code (DTC).>

BD:DTC P0222 THROTTLE/PEDAL POSITION SENSOR/SWITCH "B" CIRCUIT LOW

DTC DETECTING CONDITION:
Immediately at fault recognition
TROUBLE SYMPTOM:
- Improper idling
- Poor driving performance
- Engine stalls.

CAUTION:
After servicing or replacing faulty parts, perform Clear Memory Mode <Ref. to EN(H4DO)(diag)-78, OPERATION, Clear Memory Mode.>, and Inspection Mode <Ref. to EN(H4DO)(diag)-64, PROCEDURE, Inspection Mode.>.
WIRING DIAGRAM:
- Engine Electrical System ENGINE TYPE FB (WITHOUT PUSH BUTTON START) <Ref. to WI-170, ENGINE TYPE FB (WITHOUT PUSH BUTTON START), WIRING DIAGRAM, Engine Electrical System.>
- Engine Electrical System ENGINE TYPE FB (WITH PUSH BUTTON START) <Ref. to WI-184, ENGINE TYPE FB (WITH PUSH BUTTON START), WIRING DIAGRAM, Engine Electrical System.>

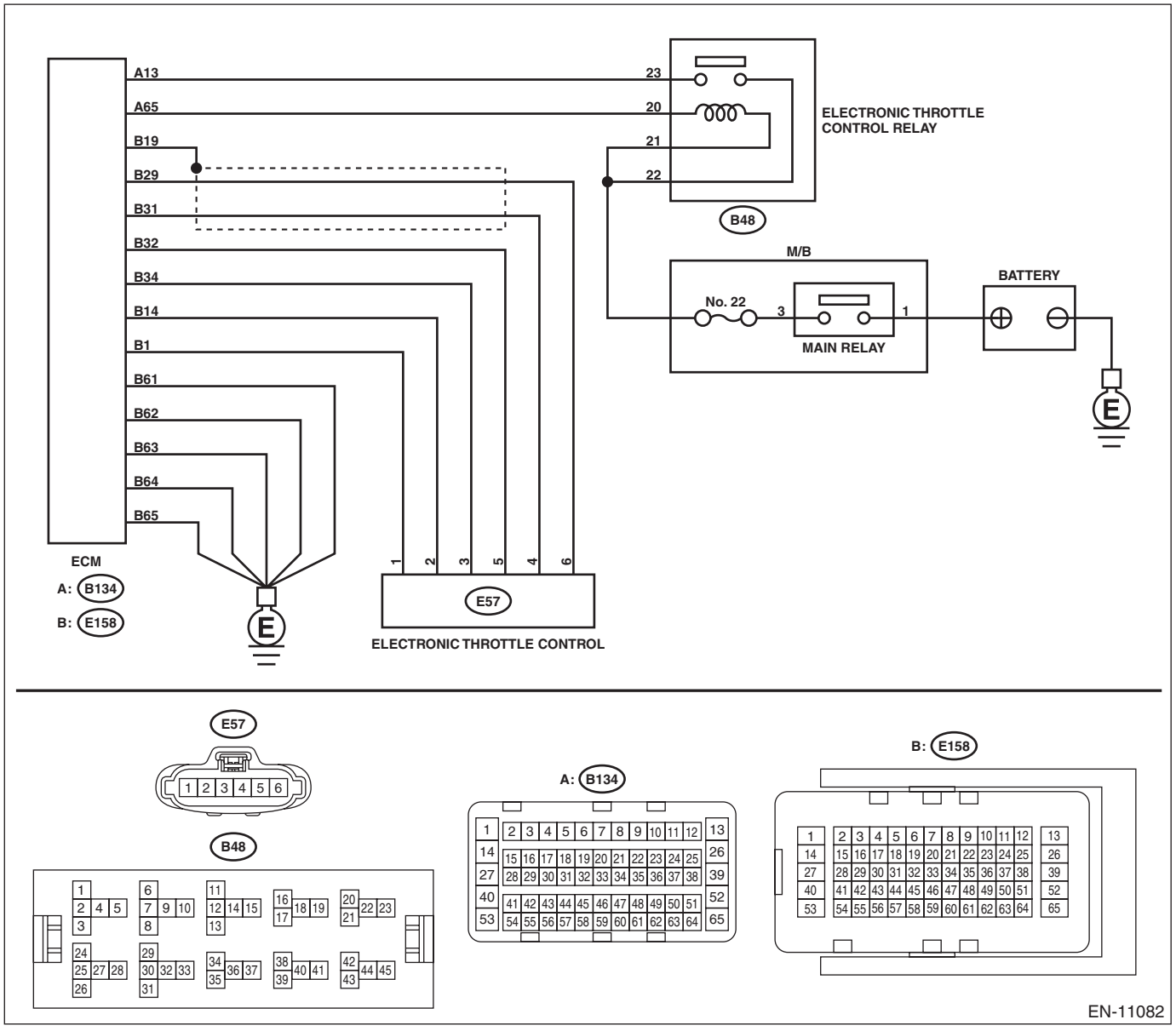

	Step	Check	Yes	No
1	**CHECK HARNESS BETWEEN ECM AND ELECTRONIC THROTTLE CONTROL CONNECTOR.** 1) Turn the ignition switch to OFF. 2) Disconnect the connectors from ECM and electronic throttle control. 3) Measure the resistance between ECM connector and chassis ground. ***Connector & terminal*** ***(E158) No. 29 — Chassis ground:*** ***(E158) No. 31 — Chassis ground:*** ***(E158) No. 31 — (E158) No. 19:***	Is the resistance 1 MΩ or more?	Go to step **2**.	Repair the ground short circuit of harness between ECM connector and electronic throttle control connector.
2	**CHECK SHORT CIRCUIT INSIDE THE ECM.** 1) Connect the connector to ECM. 2) Measure the resistance between electronic throttle control connector and engine ground. ***Connector & terminal*** ***(E57) No. 4 — Engine ground:***	Is the resistance 1 MΩ or more?	Replace the electronic throttle control. <Ref. to FU(H4DO)-14, Throttle Body.>	Repair the ground short circuit of harness between ECM connector and electronic throttle control connector. Replace the ECM if defective. <Ref. to FU(H4DO)-82, Engine Control Module (ECM).>

1. OUTLINE OF DIAGNOSIS

Detect the open or short circuit of throttle position sensor 2.
Judge as NG if out of specification.

2. COMPONENT DESCRIPTION

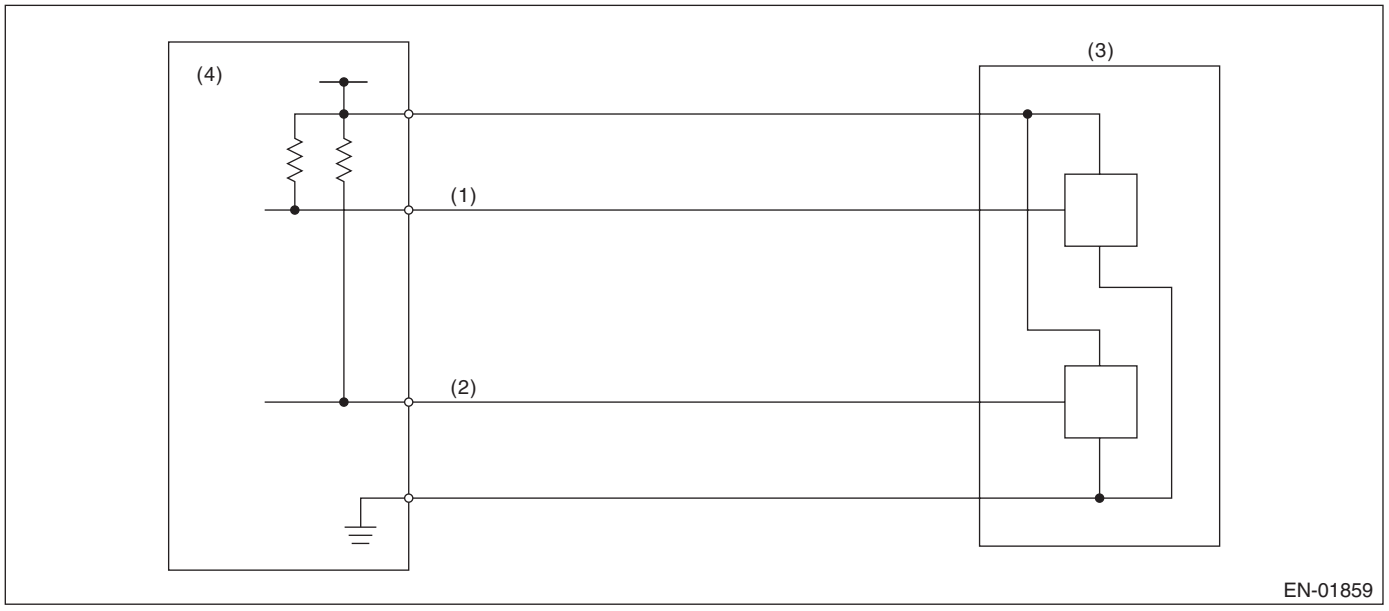

(1) Throttle position sensor 1 signal
(2) Throttle position sensor 2 signal
(3) Throttle position sensor
(4) Engine control module (ECM)

3. EXECUTION CONDITION

Secondary Parameters	Execution condition
Battery voltage	≥ 6 V

4. GENERAL DRIVING CYCLE

Always perform the diagnosis continuously.

5. DIAGNOSTIC METHOD

If the duration of time while the following conditions are met is longer than the time indicated, judge as NG.

Judgment Value

Malfunction Criteria	Threshold Value
Sensor 2 input voltage	≤ 1.134 V

Time Needed for Diagnosis: 24 ms
Malfunction Indicator Light Illumination: Illuminates as soon as a malfunction occurs.

BE:DTC P0223 THROTTLE/PEDAL POSITION SENSOR/SWITCH "B" CIRCUIT HIGH

DTC DETECTING CONDITION:
Immediately at fault recognition
TROUBLE SYMPTOM:
- Improper idling
- Poor driving performance
- Engine stalls.

CAUTION:
After servicing or replacing faulty parts, perform Clear Memory Mode <Ref. to EN(H4DO)(diag)-78, OPERATION, Clear Memory Mode.>, and Inspection Mode <Ref. to EN(H4DO)(diag)-64, PROCEDURE, Inspection Mode.>.
WIRING DIAGRAM:
- Engine Electrical System ENGINE TYPE FB (WITHOUT PUSH BUTTON START) <Ref. to WI-170, ENGINE TYPE FB (WITHOUT PUSH BUTTON START), WIRING DIAGRAM, Engine Electrical System.>
- Engine Electrical System ENGINE TYPE FB (WITH PUSH BUTTON START) <Ref. to WI-184, ENGINE TYPE FB (WITH PUSH BUTTON START), WIRING DIAGRAM, Engine Electrical System.>

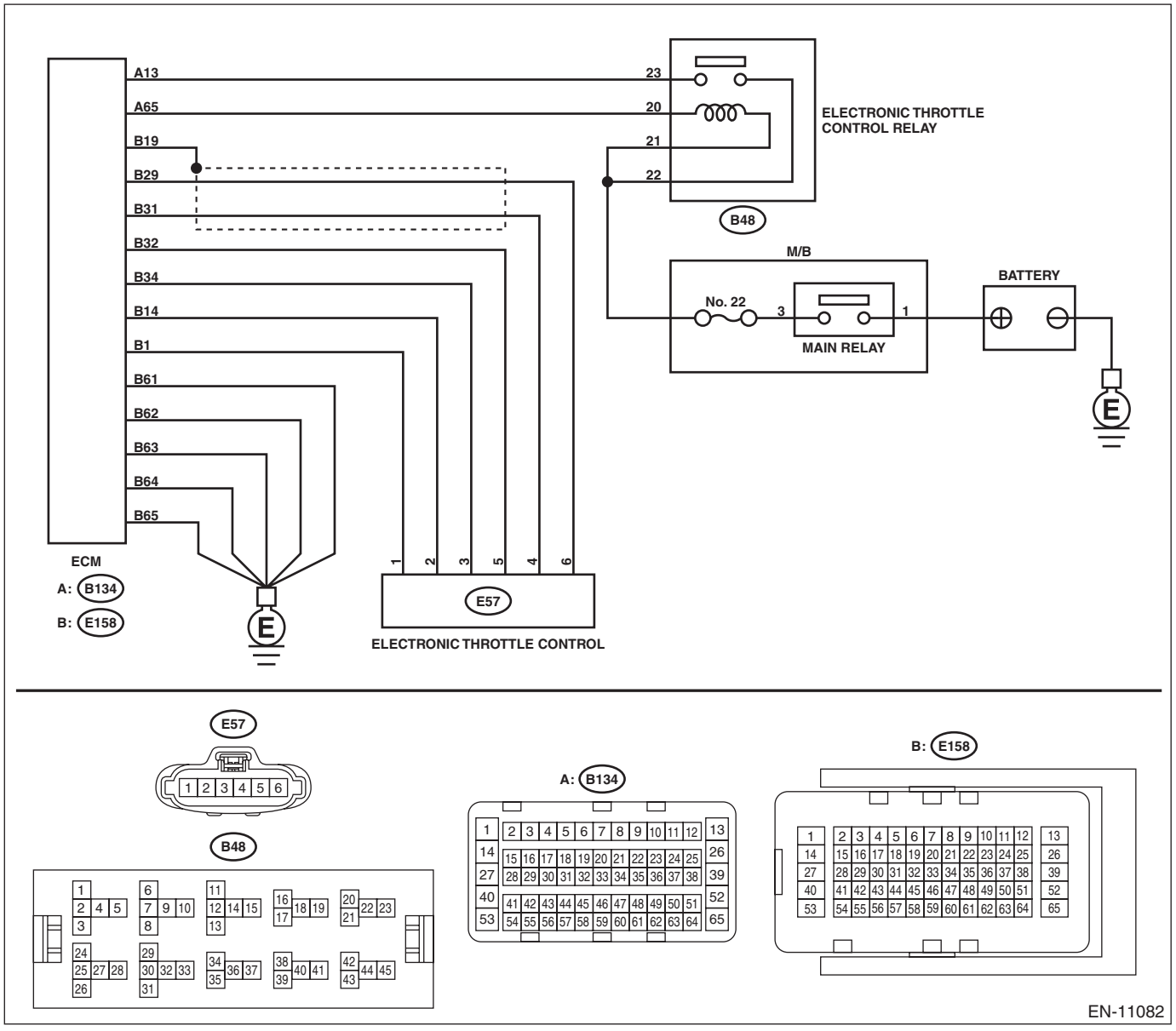

	Step	Check	Yes	No
1	**CHECK HARNESS BETWEEN ECM AND ELECTRONIC THROTTLE CONTROL CONNECTOR.** 1) Turn the ignition switch to OFF. 2) Disconnect the connectors from ECM and electronic throttle control. 3) Measure the resistance of harness between ECM connector and electronic throttle control connector. ***Connector & terminal*** ***(E158) No. 31 — (E57) No. 4:*** ***(E158) No. 34 — (E57) No. 3:***	Is the resistance less than 1 Ω?	Go to step **2**.	Repair the open circuit of harness between ECM connector and electronic throttle control connector.
2	**CHECK HARNESS BETWEEN ECM AND ELECTRONIC THROTTLE CONTROL CONNECTOR.** 1) Connect the connector to ECM. 2) Measure the resistance between electronic throttle control connector and engine ground. ***Connector & terminal*** ***(E57) No. 3 — Engine ground:***	Is the resistance less than 5 Ω?	Go to step **3**.	Repair the harness and connector. NOTE: In this case, repair the following item: • Open circuit of harness between ECM connector and engine ground • Poor contact of ECM connector • Poor contact of coupling connector
3	**CHECK HARNESS BETWEEN ECM AND ELECTRONIC THROTTLE CONTROL CONNECTOR.** 1) Turn the ignition switch to ON. 2) Measure the voltage between electronic throttle control connector and engine ground. ***Connector & terminal*** ***(E57) No. 4 (+) — Engine ground (–):***	Is the voltage 5 V or more?	Repair the short circuit to power in the harness between ECM connector and electronic throttle control connector.	Go to step **4**.
4	**CHECK HARNESS BETWEEN ECM AND ELECTRONIC THROTTLE CONTROL CONNECTOR.** 1) Turn the ignition switch to OFF. 2) Disconnect the connector from ECM. 3) Measure the resistance between ECM connectors. ***Connector & terminal*** ***(E158) No. 32 — (E158) No. 31:***	Is the resistance 1 MΩ or more?	Repair the poor contact of electronic throttle control connector. Replace the electronic throttle control if defective. <Ref. to FU(H4DO)-14, Throttle Body.>	Repair the short circuit to power in the harness between ECM connector and electronic throttle control connector.

1. OUTLINE OF DIAGNOSIS

Detect the open or short circuit of throttle position sensor 2.
Judge as NG if out of specification.

2. COMPONENT DESCRIPTION

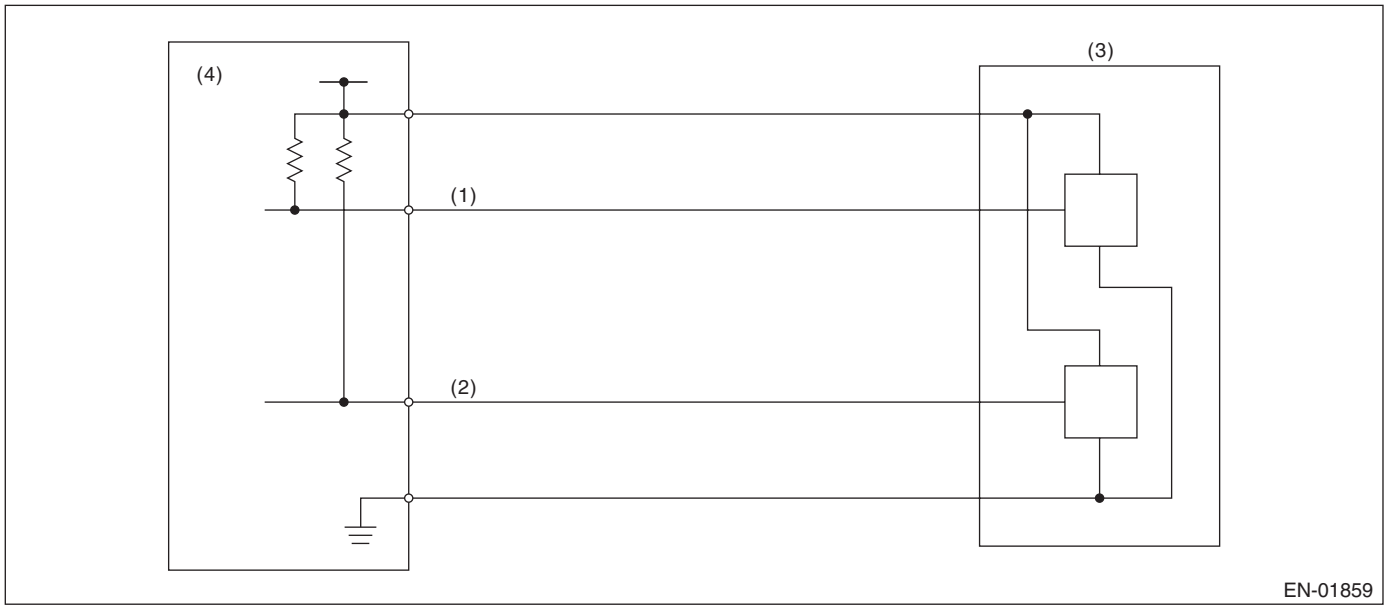

(1) Throttle position sensor 1 signal
(2) Throttle position sensor 2 signal
(3) Throttle position sensor
(4) Engine control module (ECM)

3. EXECUTION CONDITION

Secondary Parameters	Execution condition
Battery voltage	≥ 6 V

4. GENERAL DRIVING CYCLE

Always perform the diagnosis continuously.

5. DIAGNOSTIC METHOD

If the duration of time while the following conditions are met is longer than the time indicated, judge as NG.

Judgment Value

Malfunction Criteria	Threshold Value
Sensor 2 input voltage	≥ 4.782 V

Time Needed for Diagnosis: 24 ms
Malfunction Indicator Light Illumination: Illuminates as soon as a malfunction occurs.

BF:DTC P0300 RANDOM/MULTIPLE CYLINDER MISFIRE DETECTED

DTC DETECTING CONDITION:

- Detected when two consecutive driving cycles with fault occur.
- Immediately at fault recognition (A misfire which could damage catalyst occurs.)

TROUBLE SYMPTOM:

- Engine stalls.
- Improper idling
- Rough driving

CAUTION:

After servicing or replacing faulty parts, perform Clear Memory Mode <Ref. to EN(H4DO)(diag)-78, OPERATION, Clear Memory Mode.>, and Inspection Mode <Ref. to EN(H4DO)(diag)-64, PROCEDURE, Inspection Mode.>.

WIRING DIAGRAM:

- Engine Electrical System ENGINE TYPE FB (WITHOUT PUSH BUTTON START) <Ref. to WI-170, ENGINE TYPE FB (WITHOUT PUSH BUTTON START), WIRING DIAGRAM, Engine Electrical System.>
- Engine Electrical System ENGINE TYPE FB (WITH PUSH BUTTON START) <Ref. to WI-184, ENGINE TYPE FB (WITH PUSH BUTTON START), WIRING DIAGRAM, Engine Electrical System.>

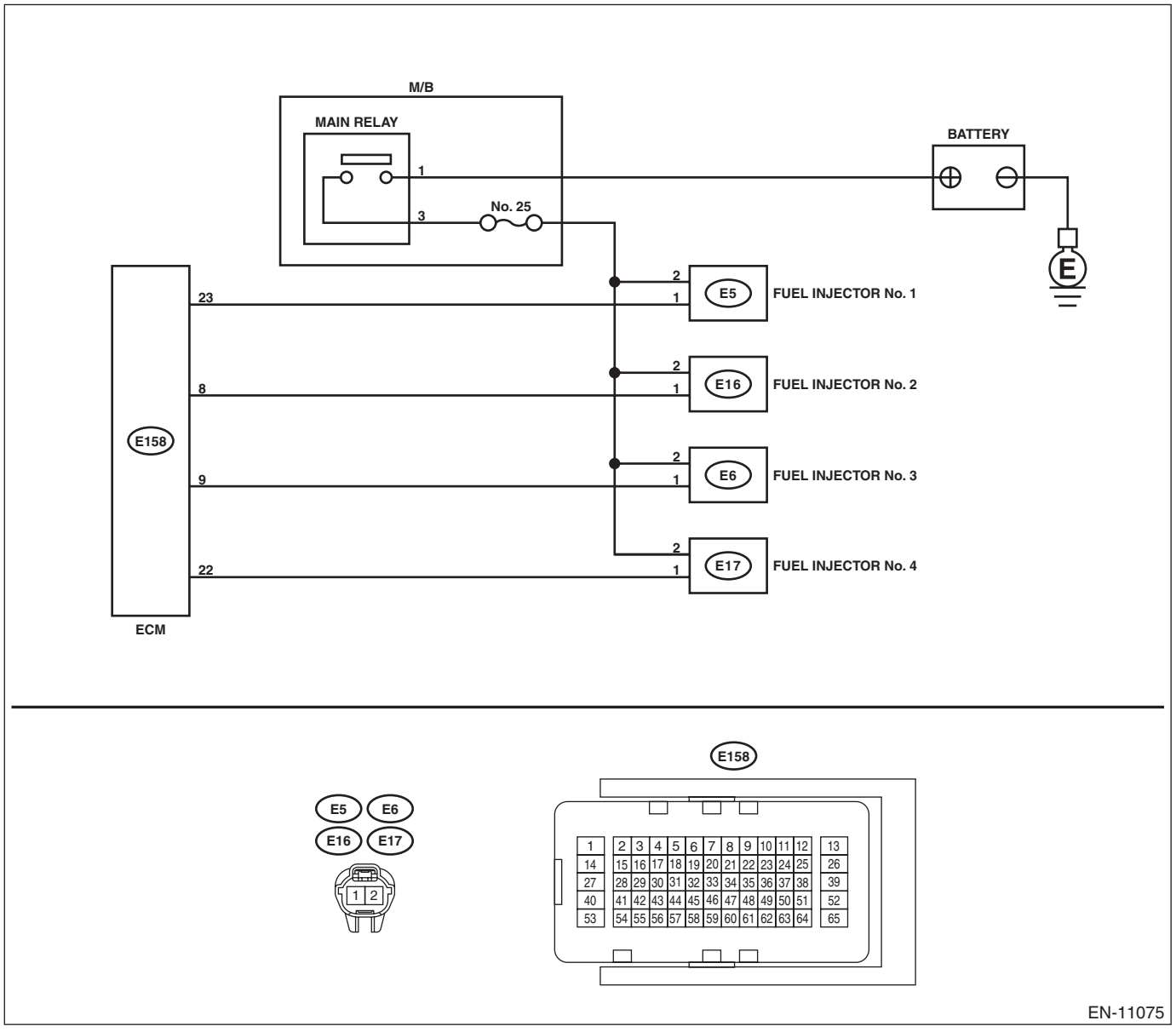

	Step	Check	Yes	No
1	**CHECK OUTPUT SIGNAL OF ECM.** 1) Turn the ignition switch to ON. 2) Measure the voltage between ECM and chassis ground on all cylinders. ***Connector & terminal*** ***#1 (E158) No. 23 (+) — Chassis ground (–):*** ***#2 (E158) No. 8 (+) — Chassis ground (–):*** ***#3 (E158) No. 9 (+) — Chassis ground (–):*** ***#4 (E158) No. 22 (+) — Chassis ground (–):***	Is the voltage 10 V or more?	Go to step **6**.	Go to step **2**.
2	**CHECK HARNESS BETWEEN ECM AND FUEL INJECTOR CONNECTOR.** 1) Turn the ignition switch to OFF. 2) Disconnect the connector from all fuel injectors. 3) Measure the resistance between all fuel injector connectors and engine ground. ***Connector & terminal*** ***#1 (E5) No. 1 — Engine ground:*** ***#2 (E16) No. 1 — Engine ground:*** ***#3 (E6) No. 1 — Engine ground:*** ***#4 (E17) No. 1 — Engine ground:***	Is the resistance 1 MΩ or more?	Go to step **3**.	Repair the short circuit to ground in harness between ECM connector and fuel injector connector.
3	**CHECK HARNESS BETWEEN ECM AND FUEL INJECTOR CONNECTOR.** Measure the resistance of harness between ECM and fuel injector connector on all cylinders. ***Connector & terminal*** ***#1 (E158) No. 32 — (E5) No. 1:*** ***#2 (E158) No. 8 — (E16) No. 1:*** ***#3 (E158) No. 9 — (E6) No. 1:*** ***#4 (E158) No. 22 — (E17) No. 1:***	Is the resistance less than 1 Ω?	Go to step **4**.	Repair the open circuit of the harness between the ECM connector and fuel injector connector.
4	**CHECK FUEL INJECTOR.** Measure the resistance between all fuel injector terminals. ***Terminals*** ***No. 1 — No. 2:***	Is the resistance 5 — 20 Ω?	Go to step **5**.	Replace the faulty fuel injector. <Ref. to FU(H4DO)-66, Fuel Injector.>
5	**CHECK POWER SUPPLY LINE.** 1) Turn the ignition switch to ON. 2) Measure the voltage between all fuel injector connectors and the engine ground. ***Connector & terminal*** ***#1 (E5) No. 2 (+) — Engine ground (–):*** ***#2 (E16) No. 2 (+) — Engine ground (–):*** ***#3 (E6) No. 2 (+) — Engine ground (–):*** ***#4 (E17) No. 2 (+) — Engine ground (–):***	Is the voltage 10 V or more?	Repair the poor contact of all connectors in fuel injector circuit.	Repair the harness and connector. NOTE: In this case, repair the following item: • Open circuit in harness between main relay connector and fuel injector connector • Poor contact of coupling connector • Poor contact of main relay connector

	Step	Check	Yes	No
6	**CHECK HARNESS BETWEEN ECM AND FUEL INJECTOR CONNECTOR.** 1) Turn the ignition switch to OFF. 2) Disconnect the connector from all fuel injectors. 3) Turn the ignition switch to ON. 4) Measure the voltage between ECM and chassis ground on all cylinders. ***Connector & terminal*** ***#1 (E158) No. 23 (+) — Chassis ground (–):*** ***#2 (E158) No. 8 (+) — Chassis ground (–):*** ***#3 (E158) No. 9 (+) — Chassis ground (–):*** ***#4 (E158) No. 22 (+) — Chassis ground (–):***	Is the voltage 10 V or more?	Repair the short circuit to power in harness between ECM connector and fuel injector connectors.	Go to step **7**.
7	**CHECK FUEL INJECTOR.** 1) Turn the ignition switch to OFF. 2) Measure the resistance between all fuel injector terminals. ***Terminals*** ***No. 1 — No. 2:***	Is the resistance 5 — 20 Ω?	Go to step **8**.	Replace the faulty fuel injector. <Ref. to FU(H4DO)-66, Fuel Injector.>
8	**CHECK INSTALLATION CONDITION OF CAMSHAFT POSITION SENSOR/CRANKSHAFT POSITION SENSOR.**	Is the camshaft position sensor or crankshaft position sensor loosely installed?	Tighten the camshaft position sensor or crankshaft position sensor. <Ref. to FU(H4DO)-52, INSTALLATION, Camshaft Position Sensor.> <Ref. to FU(H4DO)-48, INSTALLATION, Crankshaft Position Sensor.>	Go to step **9**.
9	**CHECK CRANKSHAFT POSITION SENSOR PLATE.**	Is the crankshaft position sensor plate rusted or does it have broken teeth?	Replace the crankshaft position sensor plate. <Ref. to ME(H4DO)-211, Cylinder Block.>	Go to step **10**.
10	**CHECK INSTALLATION CONDITION OF TIMING CHAIN.** Turn the crankshaft using ST, and align the alignment mark on crank sprocket with alignment mark on cylinder block. ST 18252AA000 CRANKSHAFT SOCKET	Is the timing chain dislocated from its proper position?	Correct the installation condition of timing chain. <Ref. to ME(H4DO)-97, Timing Chain Assembly.>	Go to step **11**.
11	**CHECK FUEL LEVEL.**	Is the fuel meter indication higher than the “Lower” level?	Go to step **12**.	Refill the fuel so that the fuel meter indication is higher than the “Lower” level, and proceed to the next step. Go to step **12**.
12	**CHECK STATUS OF MALFUNCTION INDICATOR LIGHT.** 1) Clear the memory using the Subaru Select Monitor. <Ref. to EN(H4DO)(diag)-78, Clear Memory Mode.> 2) Start the engine, and drive the vehicle 10 minutes or more.	Does the malfunction indicator light illuminate or blink?	Go to step **14**.	Go to step **13**.

Step		Check	Yes	No
13	**CHECK CAUSE OF MISFIRE.**	Was the cause of misfire identified when the engine is running?	Finish diagnostics operation, if the engine has no abnormality.	Repair the poor contact of connector. NOTE: In this case, repair the following item: • Poor contact of ignition coil connector • Poor contact of fuel injector connector on faulty cylinders • Poor contact of ECM connector • Poor contact of coupling connector
14	**CHECK AIR INTAKE SYSTEM.**	Is there any fault in air intake system?	Repair the air intake system. NOTE: Check the following items. • Are there air leaks or air suction caused by loose or dislocated nuts and bolts? • Are there cracks or any disconnection of hoses?	Go to step **15**.
15	**CHECK ALL CYLINDERS.**	Is there a fault in any cylinder?	Repair or replace the faulty part of the faulty cylinder. NOTE: Check the following items. • Spark plug • Ignition coil • Fuel injector • Compression • Skipping timing chain teeth	Go to DTC P0171. <Ref. to EN(H4DO)(diag)-225, DTC P0171 SYSTEM TOO LEAN BANK 1, Diagnostic Procedure with Diagnostic Trouble Code (DTC).>

1. OUTLINE OF DIAGNOSIS

NOTE:
For the detection standard, refer to DTC P0301. <Ref. to EN(H4DO)(diag)-252, DTC P0301 CYLINDER 1 MISFIRE DETECTED, Diagnostic Procedure with Diagnostic Trouble Code (DTC).>

BG:DTC P0301 CYLINDER 1 MISFIRE DETECTED

NOTE:
For the diagnostic procedure, refer to DTC P0304. <Ref. to EN(H4DO)(diag)-263, DTC P0304 CYLINDER 4 MISFIRE DETECTED, Diagnostic Procedure with Diagnostic Trouble Code (DTC).>

1. OUTLINE OF DIAGNOSIS

Detect the presence of misfire occurrence. (Revolution fluctuation method)
Monitoring Misfire which influences exhaust deterioration (1.5 times of FTP) and catalyst damage is made obligatory by the law. Misfire affecting these two has two patterns below:
• Intermittent misfire (The same cylinder misfires in random, or different cylinders misfire in random.): FTP 1.5 times misfire
• Every time misfire (The same cylinder misfires every time.): FTP 1.5 times misfire, Catalyst damage misfire
The following detecting methods are adopted for these detection.
1) Intermittent misfire: FTP 1.5 times misfire
• 180° Interval Difference Method (MT: 1,800 rpm or less; AT: None)
• 360° Interval Difference Method (whole range)
• 720° Interval Difference Method (3,000 rpm or more)
2) Misfire every time: FTP 1.5 times misfire, Catalyst damage misfire
• 360° Interval Difference Method

2. EXECUTION CONDITION

Secondary Parameters	Execution condition
Throttle position change during 16 milliseconds	< 21 °
Fuel shut-off function	Not in operation
Fuel level	≥ 10.5 ℓ (2.77 US gal, 2.31 Imp gal)
Engine speed	475 rpm — 6100 rpm (CVT model) 500 rpm — 6500 rpm (MT model)
Intake manifold pressure	≥ Value of Map 1
Battery voltage	≥ 8 V
Elapsed time after starting the engine	≥ 2 crankshaft revolutions
Engine coolant temperature at engine start or	> –7°C (19°F)
Engine coolant temperature at engine start and Engine coolant temperature at engine start	≤ –7°C (19°F) ≥ 21°C (70°F)

Map 1 (CVT model)

- Normal ignition

		Barometric pressure (kPa (mmHg, inHg))						
		66 (495 , 19.5)	72.8 (546 , 21.5)	76.4 (573 , 22.6)	80 (600 , 23.6)	86.9 (652 , 25.7)	92 (690 , 27.2)	102.4 (768, 30.2)
Engine speed (rpm)	700	20.8 (155.710837, 6.1)	22.8 (171.343599, 6.7)	22.8 (171.343599, 6.7)	23.4 (175.888138, 6.9)	24.4 (182.864616, 7.2)	25.1 (187.991732, 7.4)	28.8 (215.88139, 8.5)
	1000	20.1 (150.637311, 5.9)	20.8 (156.381664, 6.2)	20.8 (156.381664, 6.2)	20.8 (156.381664, 6.2)	20.8 (156.381664, 6.2)	21.5 (160.893638, 6.3)	24.3 (182.008509, 7.2)
	1200	18.9 (141.874479, 5.6)	18.9 (141.874479, 5.6)	18.9 (141.874479, 5.6)	19.3 (144.428711, 5.7)	20.3 (152.439383, 6)	20.8 (155.915124, 6.1)	24 (179.755531, 7.1)
	1600	16.8 (125.71167, 4.9)	18.6 (139.226293, 5.5)	18.6 (139.226293, 5.5)	19.1 (143.063254, 5.6)	19.8 (148.483477, 5.8)	20.3 (152.342857, 6)	23.3 (175.072957, 6.9)
	2000	18.5 (139, 5.5)	19.9 (149.509884, 5.9)	20.3 (152.045143, 6)	20.8 (155.965925, 6.1)	21.3 (159.694183, 6.3)	21.7 (163.097923, 6.4)	23.6 (176.851058, 7)
	2400	18.4 (138.270107, 5.4)	19.8 (148.802091, 5.9)	20.4 (152.64908, 6)	20.7 (155.242567, 6.1)	21.4 (160.740235, 6.3)	21.9 (164.042269, 6.5)	23.5 (176.583291, 7)
	2800	18.5 (138.416516, 5.4)	20.1 (150.570576, 5.9)	20.8 (155.638616, 6.1)	21.2 (159.21119, 6.3)	21.9 (164.013865, 6.5)	22.5 (168.647069, 6.6)	23.9 (179.405589, 7.1)
	3000	18.8 (140.837697, 5.5)	20.3 (151.935544, 6)	21 (157.495841, 6.2)	21.4 (160.730636, 6.3)	22.2 (166.184359, 6.5)	23 (172.453994, 6.8)	24.6 (184.561996, 7.3)
	3200	22 (165.1972759, 6.5)	22.9 (171.5856879, 6.8)	23.6 (176.8665847, 7)	24.1 (180.4937957, 7.1)	25 (187.6637917, 7.4)	25.6 (192.2186217, 7.6)	27.2 (204.3515927, 8)
	3600	22.5 (169.0932948, 6.7)	23.9 (179.3149038, 7.1)	24.5 (183.6435211, 7.2)	25.4 (190.4392291, 7.5)	25.5 (191.4659571, 7.5)	25.5 (191.4659571, 7.5)	26.9 (201.7364671, 7.9)
	4000	23.1 (173.4046137, 6.8)	24.5 (183.8710907, 7.2)	25 (187.3691646, 7.4)	25.9 (194.1580636, 7.6)	26.1 (195.5277776, 7.7)	26.4 (197.6449146, 7.8)	27.9 (209.4422576, 8.2)
	4400	24.7 (185.1693196, 7.3)	26.1 (195.6357966, 7.7)	26.5 (198.797736, 7.8)	27.4 (205.586635, 8.1)	27.6 (206.956349, 8.1)	27.9 (209.073486, 8.2)	29.4 (220.870829, 8.7)
	4800	26.3 (196.9340255, 7.8)	27.7 (207.4005025, 8.2)	28 (210.2263074, 8.3)	28.9 (217.0152064, 8.5)	29.1 (218.3849204, 8.6)	29.4 (220.5020574, 8.7)	31 (232.2994004, 9.1)
	5200	27.8 (208.6987314, 8.2)	29.2 (219.1652084, 8.6)	29.6 (221.6548789, 8.7)	30.5 (228.4437779, 9)	30.6 (229.8134919, 9)	30.9 (231.9306289, 9.1)	32.5 (243.7279719, 9.6)
	5600	29.4 (220.4634372, 8.7)	30.8 (230.9299142, 9.1)	31.1 (233.0834503, 9.2)	32 (239.8723493, 9.4)	32.2 (241.2420633, 9.5)	32.4 (243.3592003, 9.6)	34 (255.1565433, 10)
	6000	31 (232.2281431, 9.1)	32.4 (242.6946201, 9.6)	32.6 (244.5120217, 9.6)	33.5 (251.3009207, 9.9)	33.7 (252.6706347, 9.9)	34 (254.7877717, 10)	35.5 (266.5851147, 10.5)
	6400	32.5 (243.992849, 9.6)	33.9 (254.459326, 10)	34.5 (258.797736, 10.2)	35.4 (265.586635, 10.5)	35.6 (266.956349, 10.5)	35.9 (269.073486, 10.6)	37.4 (280.870829, 11.1)

kPa (mmHg, inHg)

- Idling ignition

		Barometric pressure (kPa (mmHg, inHg))						
		66 (495, 19.5)	72.8 (546, 21.5)	76.4 (573, 22.6)	80 (600, 23.6)	86.9 (652, 25.7)	92 (690, 27.2)	102.4 (768, 30.2)
Engine speed (rpm)	700	21.7 (163, 6.4)	23.2 (174.270165, 6.9)	23.6 (177.005766, 7)	23.9 (179.07393, 7.1)	24.6 (184.68583, 7.3)	25.7 (192.818791, 7.6)	28.8 (215.88139, 8.5)
	1000	21.2 (159, 6.3)	22.5 (168.635292, 6.6)	22.8 (170.731427, 6.7)	23.1 (173.564013, 6.8)	23.7 (177.515181, 7)	24.8 (186.032822, 7.3)	27.7 (208.017174, 8.2)
	1200	20.1 (151, 5.9)	21.9 (164.301535, 6.5)	22.5 (168.58649, 6.6)	22.6 (169.288059, 6.7)	23.3 (174.534168, 6.9)	24.2 (181.416324, 7.1)	27.3 (204.598019, 8.1)
	1600	19.3 (145, 5.7)	20.8 (156.224694, 6.2)	21.5 (161.419926, 6.4)	21.6 (162.219494, 6.4)	22.2 (166.157347, 6.5)	23.1 (173.540521, 6.8)	25.9 (194.544754, 7.7)
	2000	18.5 (139, 5.5)	20.2 (151.671526, 6)	21.7 (162.446626, 6.4)	21.7 (162.599773, 6.4)	22.1 (165.404576, 6.5)	23 (172.145487, 6.8)	24.7 (185.417643, 7.3)
	2400	19.3 (145, 5.7)	19.8 (148.802091, 5.9)	21.3 (159.885746, 6.3)	21.3 (159.885746, 6.3)	21.6 (161.865877, 6.4)	22.5 (168.409561, 6.6)	24.1 (180.432366, 7.1)
	2800	19.6 (147, 5.8)	20.1 (150.570576, 5.9)	21.3 (159.922105, 6.3)	21.4 (160.673162, 6.3)	21.9 (164.013865, 6.5)	22.7 (170.252396, 6.7)	24.2 (181.662089, 7.2)
	3000	19.7 (148, 5.8)	20.3 (151.935544, 6)	21.4 (160.714101, 6.3)	21.4 (160.730636, 6.3)	22.2 (166.184359, 6.5)	23 (172.715584, 6.8)	24.6 (184.561996, 7.3)
	3200	23.8 (178.8823529, 7)	25.2 (188.8119557, 7.4)	25.2 (188.8119557, 7.4)	25.2 (188.8119557, 7.4)	25.2 (188.8119557, 7.4)	25.6 (192.3631357, 7.6)	27.2 (204.3515927, 8)
	3600	24.1 (180.6470588, 7.1)	26.1 (195.3980078, 7.7)	26.4 (197.9150171, 7.8)	26.4 (197.9150171, 7.8)	26.4 (197.9150171, 7.8)	27.2 (203.8620481, 8)	27.9 (209.3827721, 8.2)
	4000	24.3 (182.4117647, 7.2)	25.4 (190.5265057, 7.5)	26.1 (195.9262666, 7.7)	26.4 (197.7900646, 7.8)	26.5 (198.4259696, 7.8)	27.2 (203.7847746, 8)	28.5 (213.4175236, 8.4)
	4400	25.9 (194.1764706, 7.6)	27 (202.2912116, 8)	27.6 (207.354838, 8.2)	27.9 (209.218636, 8.2)	28 (209.854541, 8.3)	28.7 (215.213346, 8.5)	30 (224.846095, 8.9)
	4800	27.5 (205.9411765, 8.1)	28.5 (214.0559175, 8.4)	29.2 (218.7834094, 8.6)	29.4 (220.6472074, 8.7)	29.5 (221.2831124, 8.7)	30.2 (226.6419174, 8.9)	31.5 (236.2746664, 9.3)
	5200	29 (217.7058824, 8.6)	30.1 (225.8206234, 8.9)	30.7 (230.2119809, 9.1)	30.9 (232.0757789, 9.1)	31 (232.7116839, 9.2)	31.7 (238.0704889, 9.4)	33 (247.7032379, 9.8)
	5600	30.6 (229.4705882, 9)	31.7 (237.5853292, 9.4)	32.2 (241.6405523, 9.5)	32.5 (243.5043503, 9.6)	32.5 (244.1402553, 9.6)	33.3 (249.4990603, 9.8)	34.5 (259.1318093, 10.2)
	6000	32.2 (241.2352941, 9.5)	33.2 (249.3500351, 9.8)	33.7 (253.0691237, 10)	34 (254.9329217, 10)	34.1 (255.5688267, 10.1)	34.8 (260.9276317, 10.3)	36.1 (270.5603807, 10.7)
	6400	33.7 (253, 10)	34.8 (261.114741, 10.3)	35.6 (267.354838, 10.5)	35.9 (269.218636, 10.6)	36 (269.854541, 10.6)	36.7 (275.213346, 10.8)	38 (284.846095, 11.2)

kPa (mmHg, inHg)

Map 1 (MT model)

- Normal ignition

		Barometric pressure (kPa (mmHg, inHg))						
		66 (495 , 19.5)	72.8 (546 , 21.5)	76.4 (573 , 22.6)	80 (600 , 23.6)	86.9 (652 , 25.7)	92 (690 , 27.2)	102.4 (768, 30.2)
Engine speed (rpm)	700	20.8 (155.710837, 6.1)	22.8 (171.343599, 6.7)	22.8 (171.343599, 6.7)	23.4 (175.888138, 6.9)	24.4 (182.864616, 7.2)	25.1 (187.991732, 7.4)	28.8 (215.88139, 8.5)
	1000	20.1 (150.637311, 5.9)	20.8 (156.381664, 6.2)	20.8 (156.381664, 6.2)	20.8 (156.381664, 6.2)	20.8 (156.381664, 6.2)	21.5 (160.893638, 6.3)	24.3 (182.008509, 7.2)
	1200	18.9 (141.874479, 5.6)	18.9 (141.874479, 5.6)	18.9 (141.874479, 5.6)	19.3 (144.428711, 5.7)	20.3 (152.439383, 6)	20.8 (155.915124, 6.1)	24 (179.755531, 7.1)
	1600	16.8 (125.71167, 4.9)	18.6 (139.226293, 5.5)	18.6 (139.226293, 5.5)	19.1 (143.063254, 5.6)	19.8 (148.483477, 5.8)	20.3 (152.342857, 6)	23.3 (175.072957, 6.9)
	2000	18.5 (139, 5.5)	19.9 (149.509884, 5.9)	20.3 (152.045143, 6)	20.8 (155.965925, 6.1)	21.3 (159.694183, 6.3)	21.7 (163.097923, 6.4)	23.6 (176.851058, 7)
	2400	18.4 (138.270107, 5.4)	19.8 (148.802091, 5.9)	20.4 (152.64908, 6)	20.7 (155.242567, 6.1)	21.4 (160.740235, 6.3)	21.9 (164.042269, 6.5)	23.5 (176.583291, 7)
	2800	18.5 (138.416516, 5.4)	20.1 (150.570576, 5.9)	20.8 (155.638616, 6.1)	21.2 (159.21119, 6.3)	21.9 (164.013865, 6.5)	22.5 (168.647069, 6.6)	23.9 (179.405589, 7.1)
	3000	18.8 (140.837697, 5.5)	20.3 (151.935544, 6)	21 (157.495841, 6.2)	21.4 (160.730636, 6.3)	22.2 (166.184359, 6.5)	23 (172.453994, 6.8)	24.6 (184.561996, 7.3)
	3200	22 (165.1972759, 6.5)	22.9 (171.5856879, 6.8)	23.6 (176.8665847, 7)	24.1 (180.4937957, 7.1)	25 (187.6637917, 7.4)	25.6 (192.2186217, 7.6)	27.2 (204.3515927, 8)
	3600	22.5 (169.0932948, 6.7)	23.9 (179.3149038, 7.1)	24.5 (183.6435211, 7.2)	25.4 (190.4392291, 7.5)	25.5 (191.4659571, 7.5)	25.5 (191.4659571, 7.5)	26.9 (201.7364671, 7.9)
	4000	23.1 (173.4046137, 6.8)	24.5 (183.8710907, 7.2)	25 (187.3691646, 7.4)	25.9 (194.1580636, 7.6)	26.1 (195.5277776, 7.7)	26.4 (197.6449146, 7.8)	27.9 (209.4422576, 8.2)
	4400	24.7 (185.1693196, 7.3)	26.1 (195.6357966, 7.7)	26.5 (198.797736, 7.8)	27.4 (205.586635, 8.1)	27.6 (206.956349, 8.1)	27.9 (209.073486, 8.2)	29.4 (220.870829, 8.7)
	4800	26.3 (196.9340255, 7.8)	27.7 (207.4005025, 8.2)	28 (210.2263074, 8.3)	28.9 (217.0152064, 8.5)	29.1 (218.3849204, 8.6)	29.4 (220.5020574, 8.7)	31 (232.2994004, 9.1)
	5200	27.8 (208.6987314, 8.2)	29.2 (219.1652084, 8.6)	29.6 (221.6548789, 8.7)	30.5 (228.4437779, 9)	30.6 (229.8134919, 9)	30.9 (231.9306289, 9.1)	32.5 (243.7279719, 9.6)
	5600	29.4 (220.4634372, 8.7)	30.8 (230.9299142, 9.1)	31.1 (233.0834503, 9.2)	32 (239.8723493, 9.4)	32.2 (241.2420633, 9.5)	32.4 (243.3592003, 9.6)	34 (255.1565433, 10)
	6000	31 (232.2281431, 9.1)	32.4 (242.6946201, 9.6)	32.6 (244.5120217, 9.6)	33.5 (251.3009207, 9.9)	33.7 (252.6706347, 9.9)	34 (254.7877717, 10)	35.5 (266.5851147, 10.5)
	6400	32.5 (243.992849, 9.6)	33.9 (254.459326, 10)	34.5 (258.797736, 10.2)	35.4 (265.586635, 10.5)	35.6 (266.956349, 10.5)	35.9 (269.073486, 10.6)	37.4 (280.870829, 11.1)

kPa (mmHg, inHg)

- Idling ignition

		Barometric pressure (kPa (mmHg, inHg))						
		66 (495, 19.5)	72.8 (546, 21.5)	76.4 (573, 22.6)	80 (600, 23.6)	86.9 (652, 25.7)	92 (690, 27.2)	102.4 (768, 30.2)
Engine speed (rpm)	700	21.7 (163, 6.4)	23.2 (174.270165, 6.9)	23.6 (177.005766, 7)	23.9 (179.07393, 7.1)	24.6 (184.68583, 7.3)	25.7 (192.818791, 7.6)	28.8 (215.88139, 8.5)
	1000	21.2 (159, 6.3)	22.5 (168.635292, 6.6)	22.8 (170.731427, 6.7)	23.1 (173.564013, 6.8)	23.7 (177.515181, 7)	24.8 (186.032822, 7.3)	27.7 (208.017174, 8.2)
	1200	20.1 (151, 5.9)	21.9 (164.301535, 6.5)	22.5 (168.58649, 6.6)	22.6 (169.288059, 6.7)	23.3 (174.534168, 6.9)	24.2 (181.416324, 7.1)	27.3 (204.598019, 8.1)
	1600	19.3 (145, 5.7)	20.8 (156.224694, 6.2)	21.5 (161.419926, 6.4)	21.6 (162.219494, 6.4)	22.2 (166.157347, 6.5)	23.1 (173.540521, 6.8)	25.9 (194.544754, 7.7)
	2000	18.5 (139, 5.5)	20.2 (151.671526, 6)	21.7 (162.446626, 6.4)	21.7 (162.599773, 6.4)	22.1 (165.404576, 6.5)	23 (172.145487, 6.8)	24.7 (185.417643, 7.3)
	2400	19.3 (145, 5.7)	19.8 (148.802091, 5.9)	21.3 (159.885746, 6.3)	21.3 (159.885746, 6.3)	21.6 (161.865877, 6.4)	22.5 (168.409561, 6.6)	24.1 (180.432366, 7.1)
	2800	19.6 (147, 5.8)	20.1 (150.570576, 5.9)	21.3 (159.922105, 6.3)	21.4 (160.673162, 6.3)	21.9 (164.013865, 6.5)	22.7 (170.252396, 6.7)	24.2 (181.662089, 7.2)
	3000	19.7 (148, 5.8)	20.3 (151.935544, 6)	21.4 (160.714101, 6.3)	21.4 (160.730636, 6.3)	22.2 (166.184359, 6.5)	23 (172.715584, 6.8)	24.6 (184.561996, 7.3)
	3200	23.8 (178.8823529, 7)	25.2 (188.8119557, 7.4)	25.2 (188.8119557, 7.4)	25.2 (188.8119557, 7.4)	25.2 (188.8119557, 7.4)	25.6 (192.3631357, 7.6)	27.2 (204.3515927, 8)
	3600	24.1 (180.6470588, 7.1)	26.1 (195.3980078, 7.7)	26.4 (197.9150171, 7.8)	26.4 (197.9150171, 7.8)	26.4 (197.9150171, 7.8)	27.2 (203.8620481, 8)	27.9 (209.3827721, 8.2)
	4000	24.3 (182.4117647, 7.2)	25.4 (190.5265057, 7.5)	26.1 (195.9262666, 7.7)	26.4 (197.7900646, 7.8)	26.5 (198.4259696, 7.8)	27.2 (203.7847746, 8)	28.5 (213.4175236, 8.4)
	4400	25.9 (194.1764706, 7.6)	27 (202.2912116, 8)	27.6 (207.354838, 8.2)	27.9 (209.218636, 8.2)	28 (209.854541, 8.3)	28.7 (215.213346, 8.5)	30 (224.846095, 8.9)
	4800	27.5 (205.9411765, 8.1)	28.5 (214.0559175, 8.4)	29.2 (218.7834094, 8.6)	29.4 (220.6472074, 8.7)	29.5 (221.2831124, 8.7)	30.2 (226.6419174, 8.9)	31.5 (236.2746664, 9.3)
	5200	29 (217.7058824, 8.6)	30.1 (225.8206234, 8.9)	30.7 (230.2119809, 9.1)	30.9 (232.0757789, 9.1)	31 (232.7116839, 9.2)	31.7 (238.0704889, 9.4)	33 (247.7032379, 9.8)
	5600	30.6 (229.4705882, 9)	31.7 (237.5853292, 9.4)	32.2 (241.6405523, 9.5)	32.5 (243.5043503, 9.6)	32.5 (244.1402553, 9.6)	33.3 (249.4990603, 9.8)	34.5 (259.1318093, 10.2)
	6000	32.2 (241.2352941, 9.5)	33.2 (249.3500351, 9.8)	33.7 (253.0691237, 10)	34 (254.9329217, 10)	34.1 (255.5688267, 10.1)	34.8 (260.9276317, 10.3)	36.1 (270.5603807, 10.7)
	6400	33.7 (253, 10)	34.8 (261.114741, 10.3)	35.6 (267.354838, 10.5)	35.9 (269.218636, 10.6)	36 (269.854541, 10.6)	36.7 (275.213346, 10.8)	38 (284.846095, 11.2)

kPa (mmHg, inHg)

3. GENERAL DRIVING CYCLE

- If conditions are met, it is possible to detect the misfires from idling to high engine speed. However, in case any engine load or breakage occurs, perform with the engine at idle.
- Perform the diagnosis continuously.

4. DIAGNOSTIC METHOD

When a misfire occurs, the engine speed will decrease and the crankshaft position speed will change. Calculate the interval difference value (diagnostic value) from crankshaft position speed by the following formula, and judge whether a misfire is occurring or not comparing the calculated result with judgment value. Count the number of misfires, if the misfire ratio is higher during 1000 revs. or 200 revs., judge corresponding cylinders as NG.

Diagnostic value calculation (Calculate from angle speed) →	Misfire detection every single ignition (Compare diagnostic value with judgment value) →	NG judgment (Misfire occurrence judgment required by the law) (Compare number of misfire with judgment value)
	• 180° Interval Difference Method • 360° Interval Difference Method • 720° Interval Difference Method	• FTP 1.5 times misfire NG judgment • NG judgment for catalyst-damaging misfire

As shown in the following figure, pick a cylinder as the standard and name it omg 0. And the former crankshaft position speed is named omg 1, the second former crankshaft position speed is named omg 2, the third is named omg 3, etc.

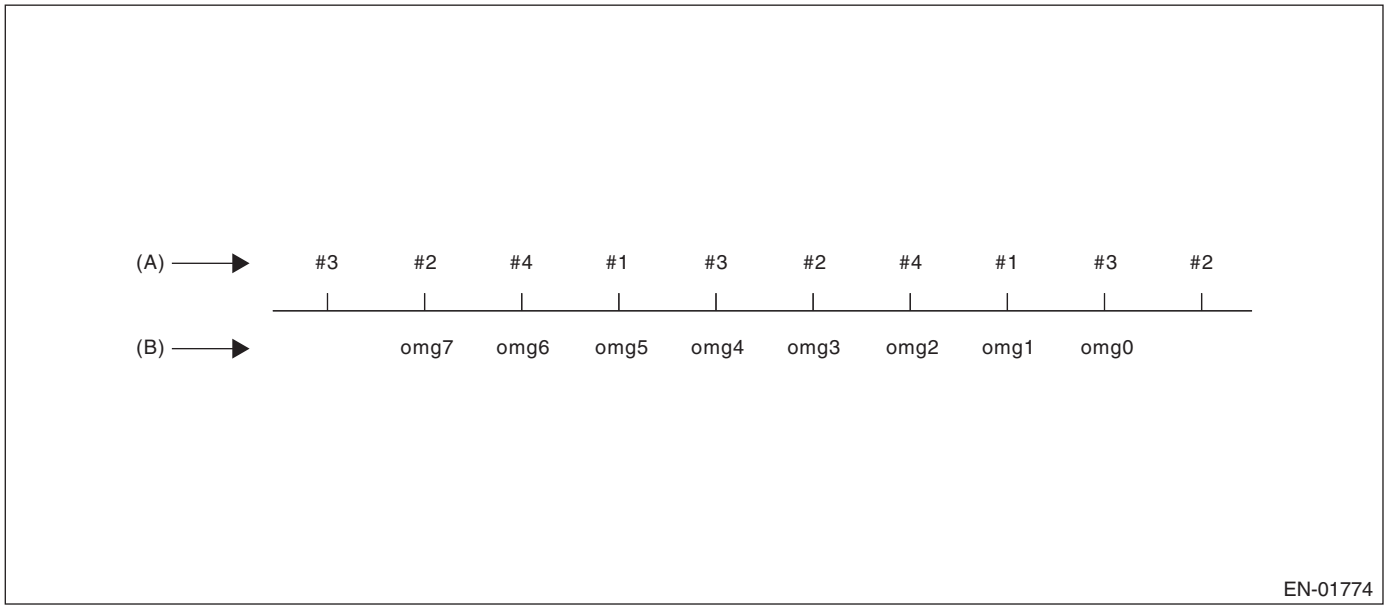

(A) Ignition order (B) Crankshaft position speed

180° Interval Difference Method

Diagnostic value	domg 180 = (omg 1 – omg 0) – (omg 5 – omg 1)/4
Judge as a misfire in the following cases. • domg 180 > judgment value of positive side • domg 180 ≤ judgment value of negative side (Diagnostic value before 180° CA)	

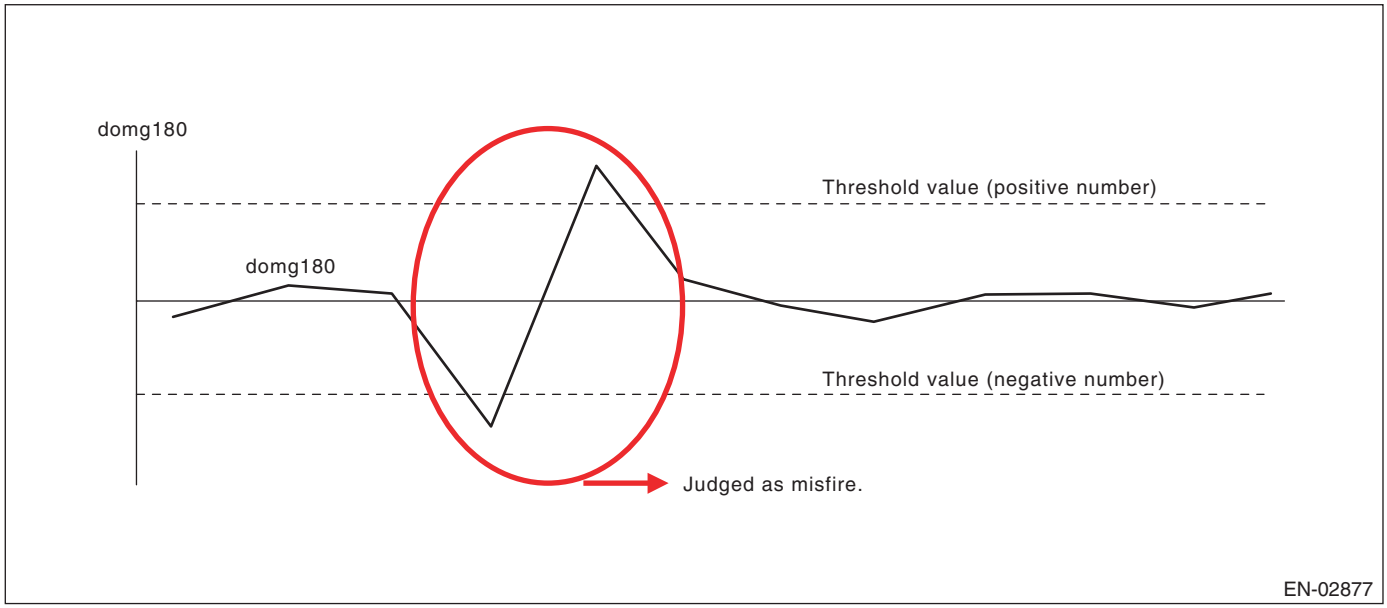

360° Interval Difference Method

Diagnostic value	domg 360 = (omg 1 – omg 0) – (omg 3 – omg 2)
Misfire judgment	domg 360 > Judgment value → Judge as misfire

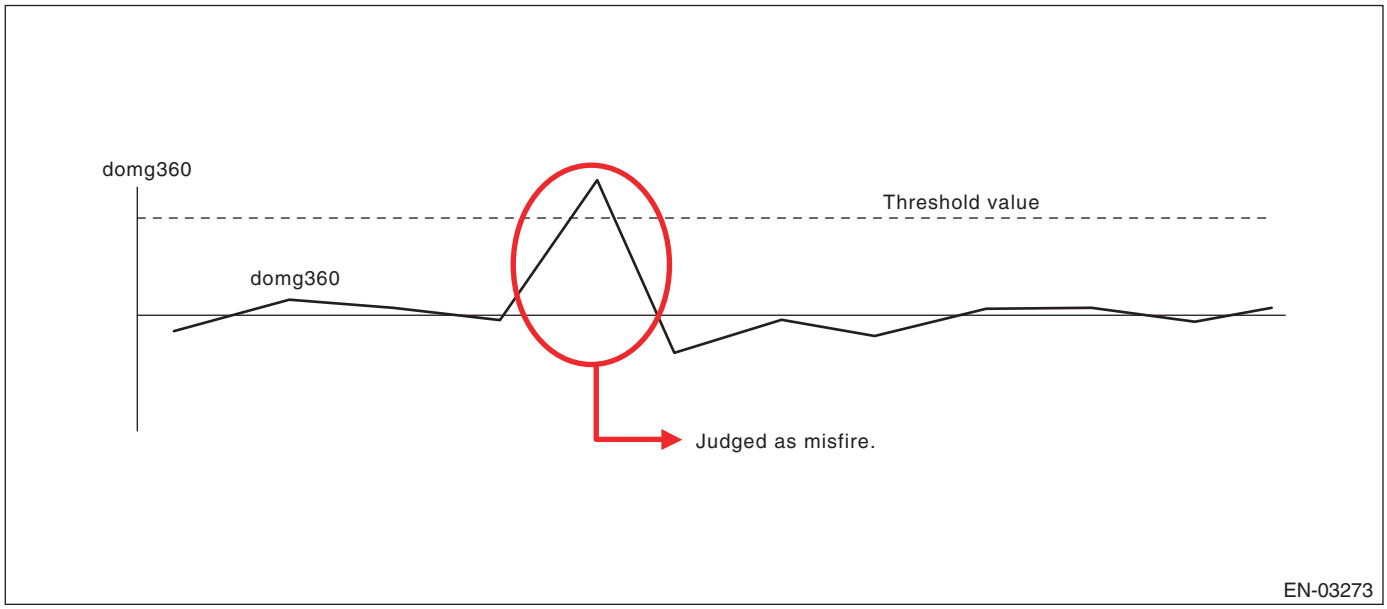

720° Interval Difference Method

Diagnostic value	domg 720 = (omg 1 – omg 0) – (omg 5 – omg 4)
Misfire judgment	domg 720 > Judgment value → Judge as misfire

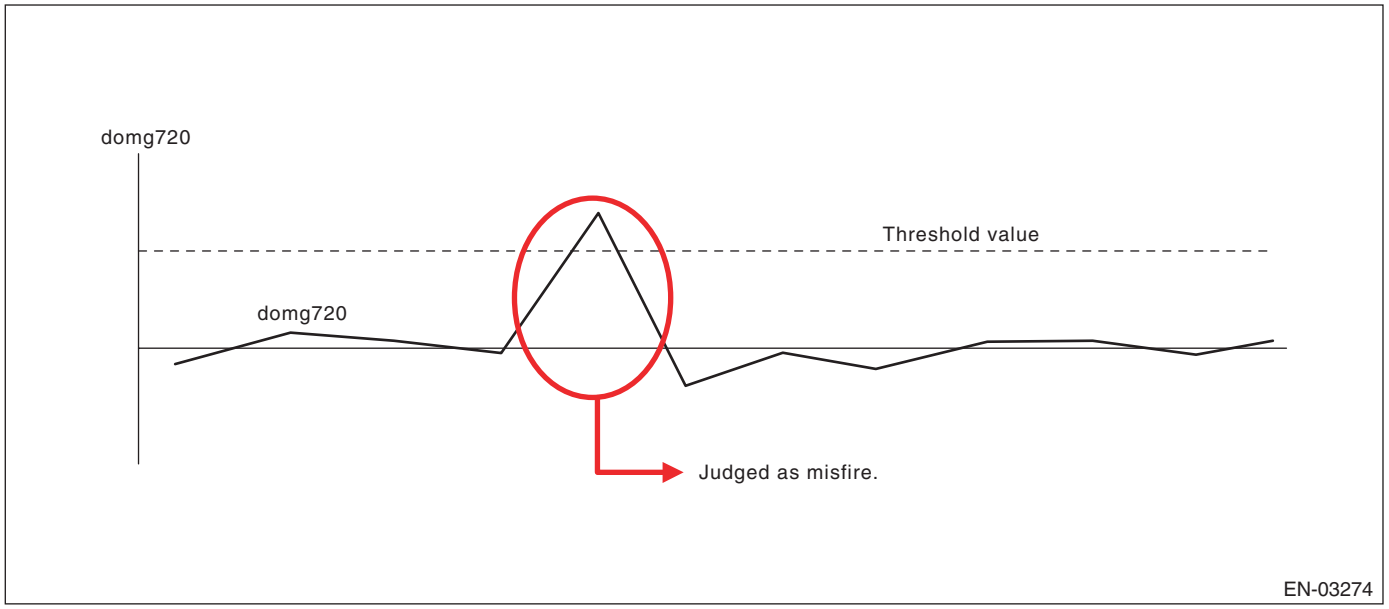

- **FTP 1.5 times misfire (Misfire occurrence level which influences exhaust gas)**

Judgment Value (Judge that malfunction occurs when the misfire ratio is high in 1000 engine revs.)

Malfunction Criteria	Threshold Value
FTP emission diagnostic value	≥ 45 × 100/2000% in 1000 revs. (except for PZEV model) ≥ 48 × 100/2000% in 1000 revs. (PZEV model)

Time Needed for Diagnosis: 1000 engine revs.
Malfunction Indicator Light Illumination: Illuminates when malfunction occurs in 2 continuous driving cycles.

- **Catalyst-damaging misfire (misfire occurrence level that will damage catalyst)**

Judgment Value

Malfunction Criteria	Threshold Value
Catalyst-damaging misfire diagnostic value	≥ Value from Map 2

Map 2

- Normal ignition

		Intake air amount (g/rev (oz/rev))							
		0.2, (0.01)	0.3, (0.01)	0.4, (0.01)	0.5, (0.02)	0.6, (0.02)	0.8, (0.03)	0.9, (0.03)	1.1, (0.04)
Engine speed (rpm)	650	100	100	100	100	100	80	64	48
	1000	100	100	100	80	80	80	52	24
	1500	100	100	80	80	80	57	36	26
	2000	80	80	80	80	80	44	26	26
	2500	68	68	68	58	58	35	26	26
	3000	57	57	57	36	36	26	26	26
	3500	55	46	42	30	28	20	20	20
	4000	55	36	26	20	20	20	20	20
	4500	50	28	20	20	20	20	20	20
	5000	50	20	20	20	20	20	20	20
	5500	40	20	20	20	20	20	20	20
	6000	40	20	20	20	20	20	20	20
	6400	40	20	20	20	20	20	20	20
g/rev									

- Idling ignition

		Barometric pressure (kPa (mmHg, inHg))						
		66 (495, 19.5)	72.8 (546, 21.5)	76.4 (573, 22.6)	80 (600, 23.6)	86.9 (652, 25.7)	92 (690, 27.2)	102.4 (768, 30.2)
Engine speed (rpm)	700	21.7 (163, 6.4)	23.2 (174.270165, 6.9)	23.6 (177.005766, 7)	23.9 (179.07393, 7.1)	24.6 (184.68583, 7.3)	25.7 (192.818791, 7.6)	28.8 (215.88139, 8.5)
	1000	21.2 (159, 6.3)	22.5 (168.635292, 6.6)	22.8 (170.731427, 6.7)	23.1 (173.564013, 6.8)	23.7 (177.515181, 7)	24.8 (186.032822, 7.3)	27.7 (208.017174, 8.2)
	1200	20.1 (151, 5.9)	21.9 (164.301535, 6.5)	22.5 (168.58649, 6.6)	22.6 (169.288059, 6.7)	23.3 (174.534168, 6.9)	24.2 (181.416324, 7.1)	27.3 (204.598019, 8.1)
	1600	19.3 (145, 5.7)	20.8 (156.224694, 6.2)	21.5 (161.419926, 6.4)	21.6 (162.219494, 6.4)	22.2 (166.157347, 6.5)	23.1 (173.540521, 6.8)	25.9 (194.544754, 7.7)
	2000	18.5 (139, 5.5)	20.2 (151.671526, 6)	21.7 (162.446626, 6.4)	21.7 (162.599773, 6.4)	22.1 (165.404576, 6.5)	23 (172.145487, 6.8)	24.7 (185.417643, 7.3)
	2400	19.3 (145, 5.7)	19.8 (148.802091, 5.9)	21.3 (159.885746, 6.3)	21.3 (159.885746, 6.3)	21.6 (161.865877, 6.4)	22.5 (168.409561, 6.6)	24.1 (180.432366, 7.1)
	2800	19.6 (147, 5.8)	20.1 (150.570576, 5.9)	21.3 (159.922105, 6.3)	21.4 (160.673162, 6.3)	21.9 (164.013865, 6.5)	22.7 (170.252396, 6.7)	24.2 (181.662089, 7.2)
	3000	19.7 (148, 5.8)	20.3 (151.935544, 6)	21.4 (160.714101, 6.3)	21.4 (160.730636, 6.3)	22.2 (166.184359, 6.5)	23 (172.715584, 6.8)	24.6 (184.561996, 7.3)
	3200	23.8 (178.8823529, 7)	25.2 (188.8119557, 7.4)	25.2 (188.8119557, 7.4)	25.2 (188.8119557, 7.4)	25.2 (188.8119557, 7.4)	25.6 (192.3631357, 7.6)	27.2 (204.3515927, 8)
	3600	24.1 (180.6470588, 7.1)	26.1 (195.3980078, 7.7)	26.4 (197.9150171, 7.8)	26.4 (197.9150171, 7.8)	26.4 (197.9150171, 7.8)	27.2 (203.8620481, 8)	27.9 (209.3827721, 8.2)
	4000	24.3 (182.4117647, 7.2)	25.4 (190.5265057, 7.5)	26.1 (195.9262666, 7.7)	26.4 (197.7900646, 7.8)	26.5 (198.4259696, 7.8)	27.2 (203.7847746, 8)	28.5 (213.4175236, 8.4)
	4400	25.9 (194.1764706, 7.6)	27 (202.2912116, 8)	27.6 (207.354838, 8.2)	27.9 (209.218636, 8.2)	28 (209.854541, 8.3)	28.7 (215.213346, 8.5)	30 (224.846095, 8.9)
	4800	27.5 (205.9411765, 8.1)	28.5 (214.0559175, 8.4)	29.2 (218.7834094, 8.6)	29.4 (220.6472074, 8.7)	29.5 (221.2831124, 8.7)	30.2 (226.6419174, 8.9)	31.5 (236.2746664, 9.3)
	5200	29 (217.7058824, 8.6)	30.1 (225.8206234, 8.9)	30.7 (230.2119809, 9.1)	30.9 (232.0757789, 9.1)	31 (232.7116839, 9.2)	31.7 (238.0704889, 9.4)	33 (247.7032379, 9.8)
	5600	30.6 (229.4705882, 9)	31.7 (237.5853292, 9.4)	32.2 (241.6405523, 9.5)	32.5 (243.5043503, 9.6)	32.5 (244.1402553, 9.6)	33.3 (249.4990603, 9.8)	34.5 (259.1318093, 10.2)
	6000	32.2 (241.2352941, 9.5)	33.2 (249.3500351, 9.8)	33.7 (253.0691237, 10)	34 (254.9329217, 10)	34.1 (255.5688267, 10.1)	34.8 (260.9276317, 10.3)	36.1 (270.5603807, 10.7)
kPa (mmHg, inHg)								

Time Needed for Diagnosis: 200 engine revs.
Malfunction Indicator Light Illumination: Illuminates as soon as a malfunction occurs.

BH:DTC P0302 CYLINDER 2 MISFIRE DETECTED

NOTE:
For the diagnostic procedure, refer to DTC P0304. <Ref. to EN(H4DO)(diag)-263, DTC P0304 CYLINDER 4 MISFIRE DETECTED, Diagnostic Procedure with Diagnostic Trouble Code (DTC).>

1. OUTLINE OF DIAGNOSIS

NOTE:
For the detection standard, refer to DTC P0301. <Ref. to EN(H4DO)(diag)-252, DTC P0301 CYLINDER 1 MISFIRE DETECTED, Diagnostic Procedure with Diagnostic Trouble Code (DTC).>

BI: DTC P0303 CYLINDER 3 MISFIRE DETECTED

NOTE:
For the diagnostic procedure, refer to DTC P0304. <Ref. to EN(H4DO)(diag)-263, DTC P0304 CYLINDER 4 MISFIRE DETECTED, Diagnostic Procedure with Diagnostic Trouble Code (DTC).>

1. OUTLINE OF DIAGNOSIS

NOTE:
For the detection standard, refer to DTC P0301. <Ref. to EN(H4DO)(diag)-252, DTC P0301 CYLINDER 1 MISFIRE DETECTED, Diagnostic Procedure with Diagnostic Trouble Code (DTC).>

BJ:DTC P0304 CYLINDER 4 MISFIRE DETECTED

DTC DETECTING CONDITION:

- Detected when two consecutive driving cycles with fault occur.
- Immediately at fault recognition (A misfire which could damage catalyst occurs.)

TROUBLE SYMPTOM:

- Engine stalls.
- Improper idling
- Rough driving

CAUTION:

After servicing or replacing faulty parts, perform Clear Memory Mode <Ref. to EN(H4DO)(diag)-78, OPERATION, Clear Memory Mode.>, and Inspection Mode <Ref. to EN(H4DO)(diag)-64, PROCEDURE, Inspection Mode.>.

WIRING DIAGRAM:

- Engine Electrical System ENGINE TYPE FB (WITHOUT PUSH BUTTON START) <Ref. to WI-170, ENGINE TYPE FB (WITHOUT PUSH BUTTON START), WIRING DIAGRAM, Engine Electrical System.>
- Engine Electrical System ENGINE TYPE FB (WITH PUSH BUTTON START) <Ref. to WI-184, ENGINE TYPE FB (WITH PUSH BUTTON START), WIRING DIAGRAM, Engine Electrical System.>

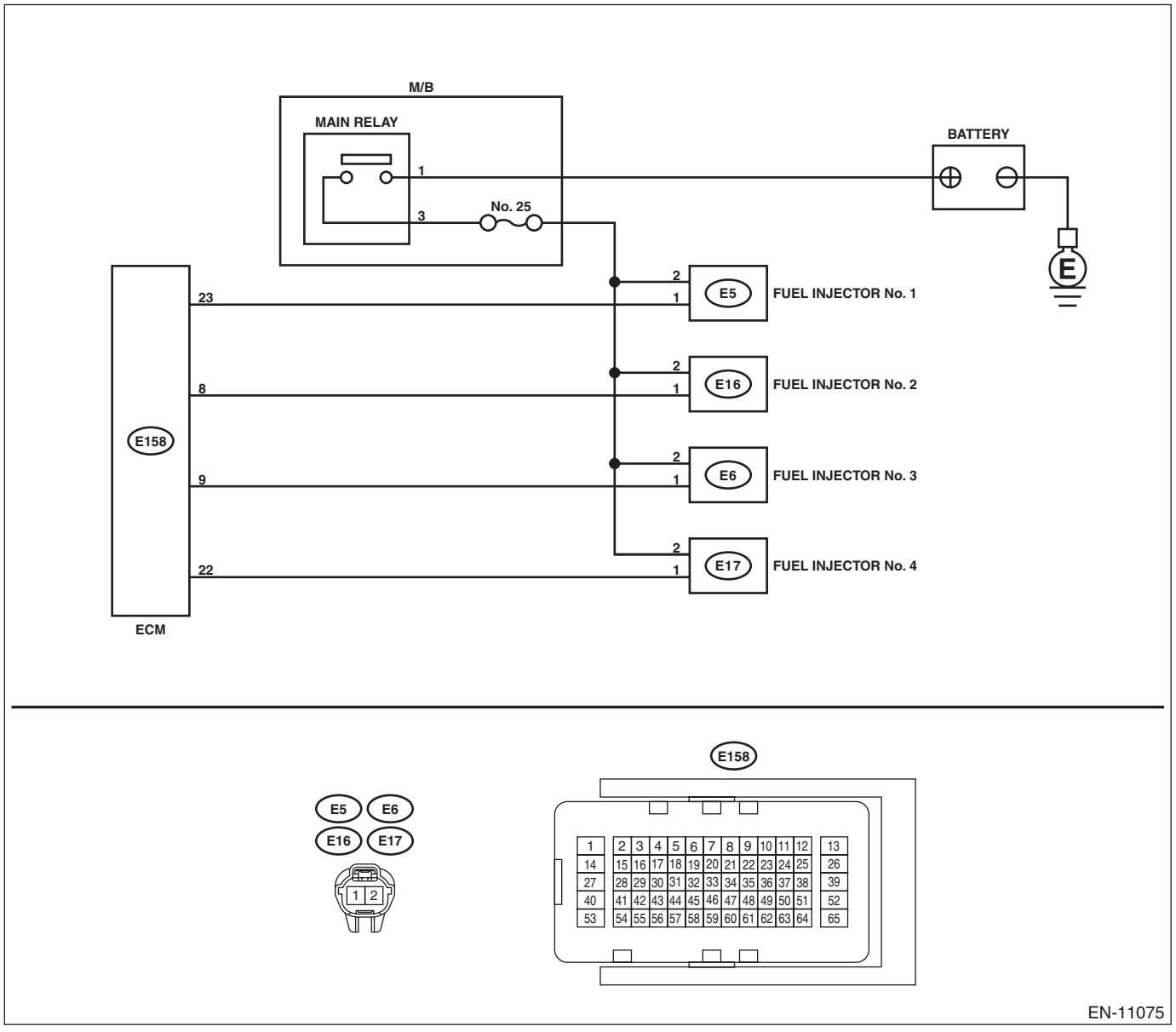

	Step	Check	Yes	No
1	**CHECK OUTPUT SIGNAL OF ECM.** 1) Turn the ignition switch to ON. 2) Measure the voltage between ECM and chassis ground on faulty cylinders. ***Connector & terminal*** ***#1 (E158) No. 23 (+) — Chassis ground (–):*** ***#2 (E158) No. 8 (+) — Chassis ground (–):*** ***#3 (E158) No. 9 (+) — Chassis ground (–):*** ***#4 (E158) No. 22 (+) — Chassis ground (–):***	Is the voltage 10 V or more?	Go to step **6**.	Go to step **2**.
2	**CHECK HARNESS BETWEEN ECM AND FUEL INJECTOR CONNECTOR.** 1) Turn the ignition switch to OFF. 2) Disconnect the connector from fuel injector on faulty cylinders. 3) Measure the resistance between fuel injector connector and engine ground on faulty cylinders. ***Connector & terminal*** ***#1 (E5) No. 1 — Engine ground:*** ***#2 (E16) No. 1 — Engine ground:*** ***#3 (E6) No. 1 — Engine ground:*** ***#4 (E17) No. 1 — Engine ground:***	Is the resistance 1 MΩ or more?	Go to step **3**.	Repair the short circuit to ground in harness between ECM connector and fuel injector connector.
3	**CHECK HARNESS BETWEEN ECM AND FUEL INJECTOR CONNECTOR.** Measure the resistance of harness between ECM and fuel injector connector on faulty cylinders. ***Connector & terminal*** ***#1 (E158) No. 23 — (E5) No. 1:*** ***#2 (E158) No. 8 — (E16) No. 1:*** ***#3 (E158) No. 9 — (E6) No. 1:*** ***#4 (E158) No. 22 — (E17) No. 1:***	Is the resistance less than 1 Ω?	Go to step **4**.	Repair the open circuit of the harness between the ECM connector and fuel injector connector.
4	**CHECK FUEL INJECTOR.** Measure the resistance between fuel injector terminals on faulty cylinder. ***Terminals*** ***No. 1 — No. 2:***	Is the resistance 5 — 20 Ω?	Go to step **5**.	Replace the faulty fuel injector. <Ref. to FU(H4DO)-66, Fuel Injector.>
5	**CHECK POWER SUPPLY LINE.** 1) Turn the ignition switch to ON. 2) Measure the voltage between fuel injector and engine ground on faulty cylinders. ***Connector & terminal*** ***#1 (E5) No. 2 (+) — Engine ground (–):*** ***#2 (E16) No. 2 (+) — Engine ground (–):*** ***#3 (E6) No. 2 (+) — Engine ground (–):*** ***#4 (E17) No. 2 (+) — Engine ground (–):***	Is the voltage 10 V or more?	Repair the poor contact of all connectors in fuel injector circuit.	Repair the harness and connector. NOTE: In this case, repair the following item: • Open circuit in harness between the main relay connector and fuel injector connector on faulty cylinders • Poor contact of coupling connector • Poor contact of main relay connector

	Step	Check	Yes	No
6	**CHECK HARNESS BETWEEN ECM AND FUEL INJECTOR CONNECTOR.** 1) Turn the ignition switch to OFF. 2) Disconnect the connector from fuel injector on faulty cylinders. 3) Turn the ignition switch to ON. 4) Measure the voltage between ECM and chassis ground on faulty cylinders. ***Connector & terminal*** ***#1 (E158) No. 23 (+) — Chassis ground (–):*** ***#2 (E158) No. 8 (+) — Chassis ground (–):*** ***#3 (E158) No. 9 (+) — Chassis ground (–):*** ***#4 (E158) No. 22 (+) — Chassis ground (–):***	Is the voltage 10 V or more?	Repair the short circuit to power in harness between ECM connector and fuel injector connectors.	Go to step **7**.
7	**CHECK FUEL INJECTOR.** 1) Turn the ignition switch to OFF. 2) Measure the resistance between fuel injector terminals on faulty cylinder. ***Terminals*** ***No. 1 — No. 2:***	Is the resistance 5 — 20 Ω?	Go to step **8**.	Replace the faulty fuel injector. <Ref. to FU(H4DO)-66, Fuel Injector.>
8	**CHECK INSTALLATION CONDITION OF CAMSHAFT POSITION SENSOR/CRANKSHAFT POSITION SENSOR.**	Is the camshaft position sensor or crankshaft position sensor loosely installed?	Tighten the camshaft position sensor or crankshaft position sensor. <Ref. to FU(H4DO)-52, INSTALLATION, Camshaft Position Sensor.> <Ref. to FU(H4DO)-48, INSTALLATION, Crankshaft Position Sensor.>	Go to step **9**.
9	**CHECK CRANKSHAFT POSITION SENSOR PLATE.**	Is the crankshaft position sensor plate rusted or does it have broken teeth?	Replace the crankshaft position sensor plate. <Ref. to ME(H4DO)-211, Cylinder Block.>	Go to step **10**.
10	**CHECK INSTALLATION CONDITION OF TIMING CHAIN.** Turn the crankshaft using ST, and align the alignment mark on crank sprocket with alignment mark on cylinder block. ST 18252AA000 CRANKSHAFT SOCKET	Is the timing chain dislocated from its proper position?	Correct the installation condition of timing chain. <Ref. to ME(H4DO)-97, Timing Chain Assembly.>	Go to step **11**.
11	**CHECK FUEL LEVEL.**	Is the fuel meter indication higher than the “Lower” level?	Go to step **12**.	Refill the fuel so that the fuel meter indication is higher than the “Lower” level, and proceed to the next step. Go to step **12**.
12	**CHECK STATUS OF MALFUNCTION INDICATOR LIGHT.** 1) Clear the memory using the Subaru Select Monitor. <Ref. to EN(H4DO)(diag)-78, Clear Memory Mode.> 2) Start the engine, and drive the vehicle 10 minutes or more.	Does the malfunction indicator light illuminate or blink?	Go to step **14**.	Go to step **13**.

Step		Check	Yes	No
13	**CHECK CAUSE OF MISFIRE.**	Was the cause of misfire identified when the engine is running?	Finish diagnostics operation, if the engine has no abnormality.	Repair the poor contact of connector. NOTE: In this case, repair the following item: • Poor contact of ignition coil connector • Poor contact of fuel injector connector on faulty cylinders • Poor contact of ECM connector • Poor contact of coupling connector
14	**CHECK AIR INTAKE SYSTEM.**	Is there any fault in air intake system?	Repair the air intake system. NOTE: Check the following items. • Are there air leaks or air suction caused by loose or dislocated nuts and bolts? • Are there cracks or any disconnection of hoses?	Go to step **15**.
15	**CHECK CYLINDER.**	Is there any fault in the cylinder?	Repair or replace faulty parts. NOTE: Check the following items. • Spark plug • Ignition coil • Fuel injector • Compression • Skipping timing chain teeth	Go to DTC P0171. <Ref. to EN(H4DO)(diag)-225, DTC P0171 SYSTEM TOO LEAN BANK 1, Diagnostic Procedure with Diagnostic Trouble Code (DTC).>

1. OUTLINE OF DIAGNOSIS

NOTE:
For the detection standard, refer to DTC P0301. <Ref. to EN(H4DO)(diag)-252, DTC P0301 CYLINDER 1 MISFIRE DETECTED, Diagnostic Procedure with Diagnostic Trouble Code (DTC).>

BK:DTC P0327 KNOCK/COMBUSTION VIBRATION SENSOR 1 CIRCUIT LOW BANK 1 OR SINGLE SENSOR

DTC DETECTING CONDITION:
Immediately at fault recognition
TROUBLE SYMPTOM:
- Poor driving performance
- Knocking occurs

CAUTION:
After servicing or replacing faulty parts, perform Clear Memory Mode <Ref. to EN(H4DO)(diag)-78, OPERATION, Clear Memory Mode.>, and Inspection Mode <Ref. to EN(H4DO)(diag)-64, PROCEDURE, Inspection Mode.>.
WIRING DIAGRAM:
- Engine Electrical System ENGINE TYPE FB (WITHOUT PUSH BUTTON START) <Ref. to WI-170, ENGINE TYPE FB (WITHOUT PUSH BUTTON START), WIRING DIAGRAM, Engine Electrical System.>
- Engine Electrical System ENGINE TYPE FB (WITH PUSH BUTTON START) <Ref. to WI-184, ENGINE TYPE FB (WITH PUSH BUTTON START), WIRING DIAGRAM, Engine Electrical System.>

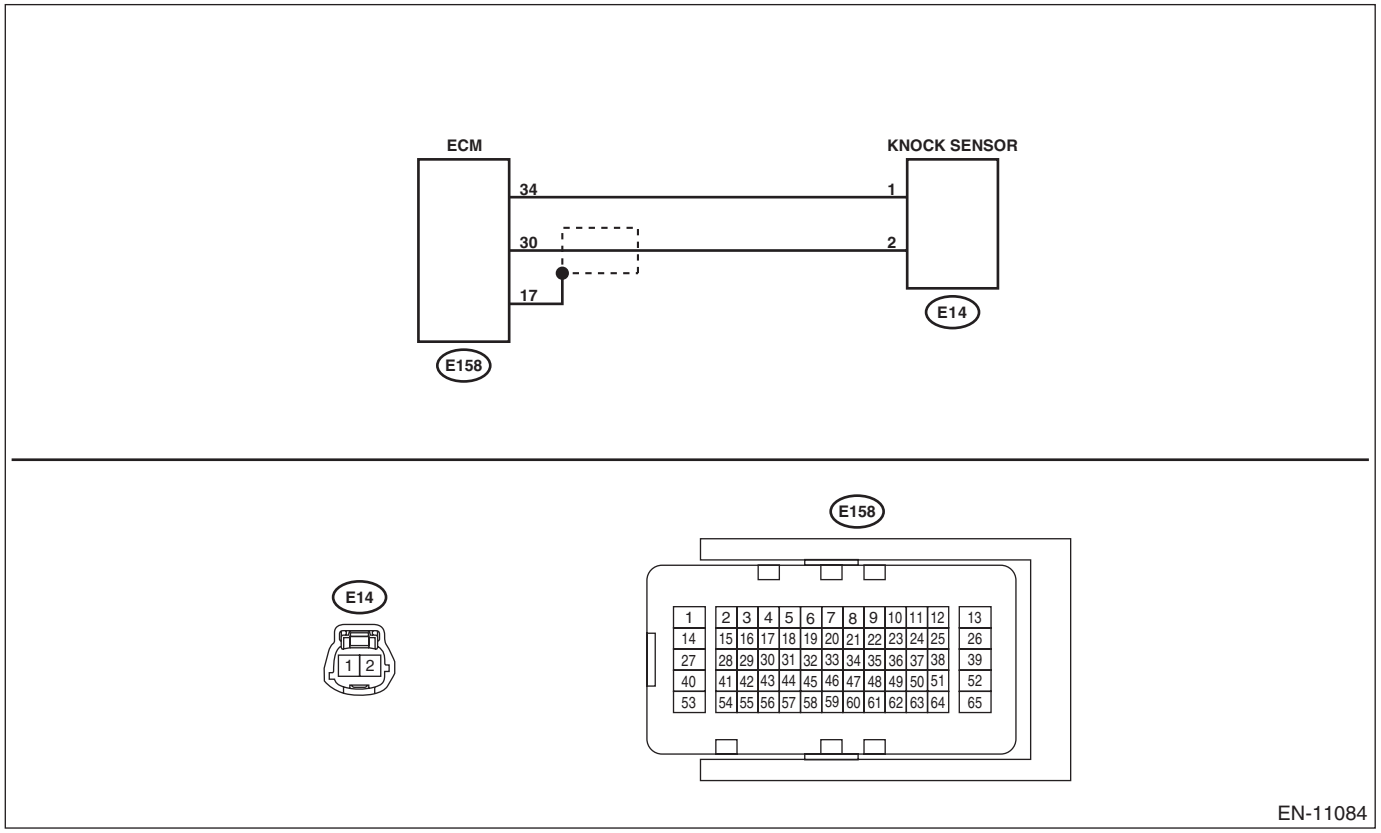

Step		Check	Yes	No
1	**CHECK HARNESS BETWEEN ECM AND KNOCK SENSOR CONNECTOR.** 1) Turn the ignition switch to OFF. 2) Disconnect the connector from ECM. 3) Measure the resistance between ECM connectors. ***Connector & terminal*** ***(E158) No. 30 — (E158) No. 34:***	Is the resistance less than 500 kΩ?	Go to step **2**.	Go to step **3**.

	Step	Check	Yes	No
2	**CHECK KNOCK SENSOR.** 1) Disconnect the connector from the knock sensor. 2) Measure the resistance between knock sensor terminals. ***Terminals*** ***No. 1 — No. 2:***	Is the resistance less than 500 kΩ?	Replace the knock sensor. <Ref. to FU(H4DO)-56, Knock Sensor.>	Repair the short circuit to ground in harness between ECM connector and knock sensor connector. NOTE: The harness between both connectors are shielded. Remove the shield and repair the short circuit of harness.
3	**CHECK INPUT SIGNAL OF ECM.** 1) Connect the connector to ECM. 2) Turn the ignition switch to ON. 3) Measure the voltage between ECM connector and chassis ground. ***Connector & terminal*** ***(E158) No. 30 (+) — Chassis ground (–):***	Is the voltage 2 V or more?	Even if DTC is detected, the circuit has returned to a normal condition at this time. Reproduce the failure, and then perform the diagnosis again. NOTE: In this case, temporary poor contact of connector, temporary open or short circuit of harness may be the cause.	Repair the short circuit to ground in harness between ECM connector and knock sensor connector. NOTE: The harness between both connectors are shielded. Remove the shield and repair the short circuit of harness.

1. OUTLINE OF DIAGNOSIS

Detect the open or short circuit of knock sensor.
Judge as NG if out of specification.

2. COMPONENT DESCRIPTION

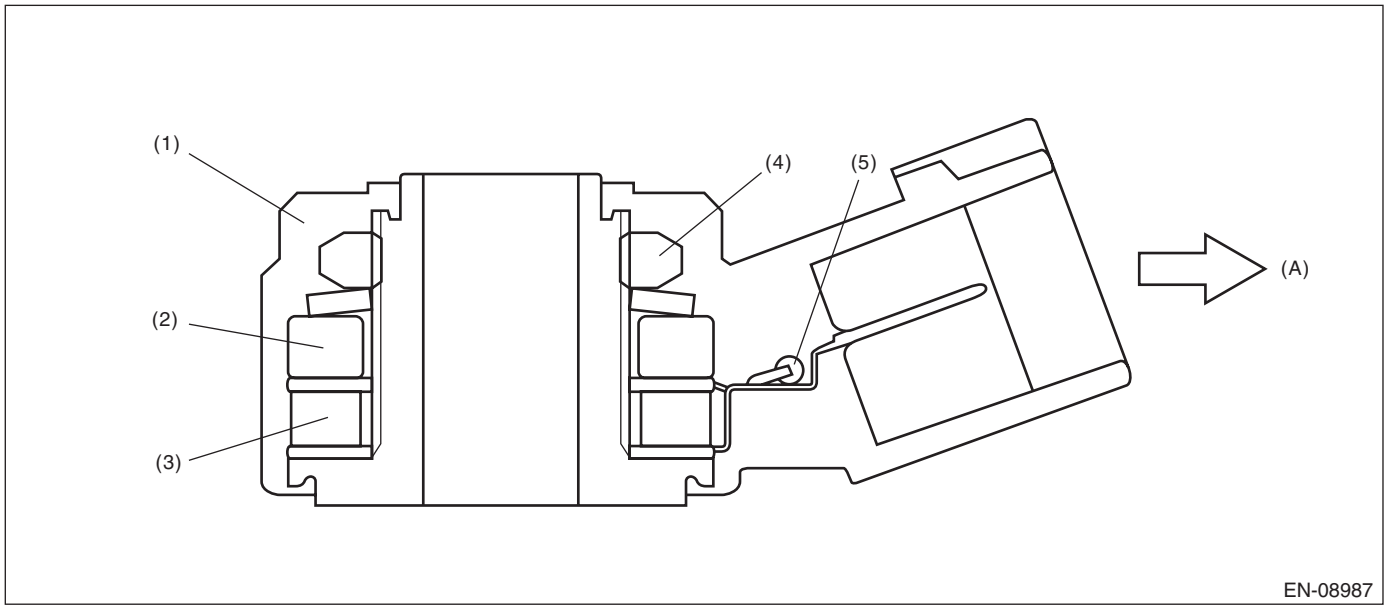

(A) To knock sensor harness

(1) Case
(2) Weight
(3) Piezoelectric element
(4) Nut
(5) Resistance

3. EXECUTION CONDITION

Secondary Parameters	Execution condition
None	

4. GENERAL DRIVING CYCLE

Always perform the diagnosis continuously.

5. DIAGNOSTIC METHOD

If the duration of time while the following conditions are met is longer than the time indicated, judge as NG.

Judgment Value

Malfunction Criteria	Threshold Value
Output voltage	< 0.278 V

Time Needed for Diagnosis: 1000 ms
Malfunction Indicator Light Illumination: Illuminates as soon as a malfunction occurs.

BL:DTC P0328 KNOCK/COMBUSTION VIBRATION SENSOR 1 CIRCUIT HIGH BANK 1 OR SINGLE SENSOR

DTC DETECTING CONDITION:
Immediately at fault recognition
TROUBLE SYMPTOM:
- Poor driving performance
- Knocking occurs

CAUTION:
After servicing or replacing faulty parts, perform Clear Memory Mode <Ref. to EN(H4DO)(diag)-78, OPERATION, Clear Memory Mode.>, and Inspection Mode <Ref. to EN(H4DO)(diag)-64, PROCEDURE, Inspection Mode.>.
WIRING DIAGRAM:
- Engine Electrical System ENGINE TYPE FB (WITHOUT PUSH BUTTON START) <Ref. to WI-170, ENGINE TYPE FB (WITHOUT PUSH BUTTON START), WIRING DIAGRAM, Engine Electrical System.>
- Engine Electrical System ENGINE TYPE FB (WITH PUSH BUTTON START) <Ref. to WI-184, ENGINE TYPE FB (WITH PUSH BUTTON START), WIRING DIAGRAM, Engine Electrical System.>

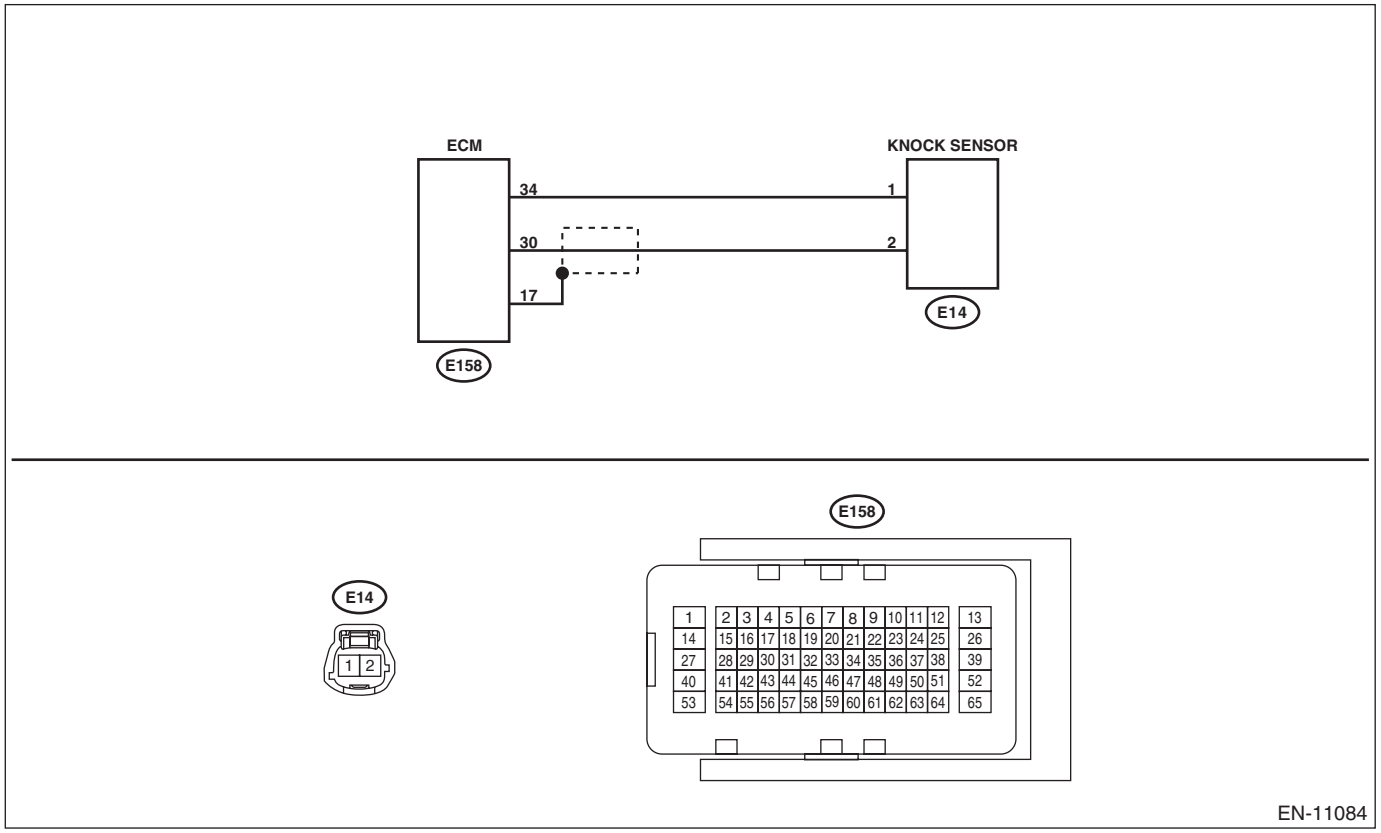

Step		Check	Yes	No
1	**CHECK HARNESS BETWEEN ECM AND KNOCK SENSOR CONNECTOR.** 1) Turn the ignition switch to OFF. 2) Disconnect the connector from ECM. 3) Measure the resistance between ECM connectors. ***Connector & terminal*** ***(E158) No. 30 — (E158) No. 34:***	Is the resistance 600 kΩ or more?	Go to step **2**.	Repair the poor contact of ECM connector.

	Step	Check	Yes	No
2	**CHECK KNOCK SENSOR.** 1) Disconnect the connector from the knock sensor. 2) Measure the resistance between knock sensor terminals. ***Terminals*** ***No. 1 — No. 2:***	Is the resistance 600 kΩ or more?	Replace the knock sensor. <Ref. to FU(H4DO)-56, Knock Sensor.>	Repair the harness and connector. NOTE: In this case, repair the following item: • Open circuit in harness between ECM connector and knock sensor connector • Poor contact of knock sensor connector • Poor contact of coupling connector

1. OUTLINE OF DIAGNOSIS

Detect the open or short circuit of knock sensor.
Judge as NG if out of specification.

2. COMPONENT DESCRIPTION

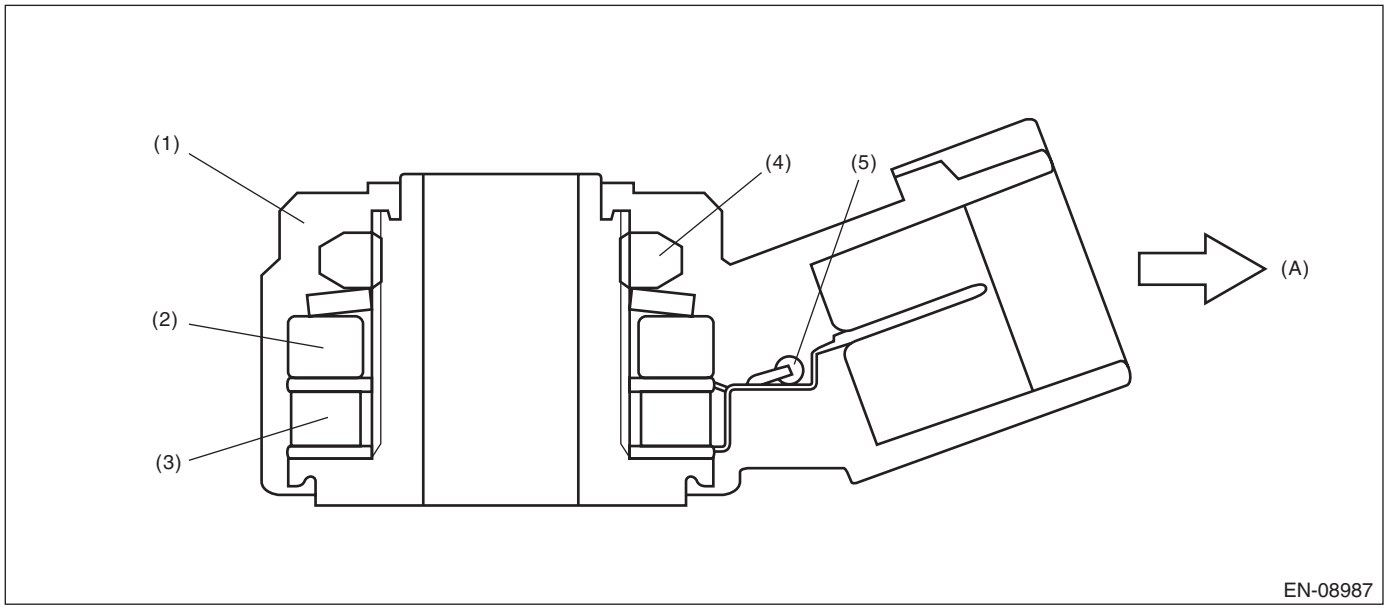

(A) To knock sensor harness

(1) Case
(2) Weight
(3) Piezoelectric element
(4) Nut
(5) Resistance

3. EXECUTION CONDITION

Secondary Parameters	Execution condition
None	

4. GENERAL DRIVING CYCLE

Always perform the diagnosis continuously.

5. DIAGNOSTIC METHOD

If the duration of time while the following conditions are met is longer than the time indicated, judge as NG.

Judgment Value

Malfunction Criteria	Threshold Value
Output voltage	≥ 4.591 V

Time Needed for Diagnosis: 1000 ms
Malfunction Indicator Light Illumination: Illuminates as soon as a malfunction occurs.

BM:DTC P0335 CRANKSHAFT POSITION SENSOR "A" CIRCUIT

DTC DETECTING CONDITION:
Immediately at fault recognition
TROUBLE SYMPTOM:
- Engine stalls.
- Failure of engine to start

CAUTION:
After servicing or replacing faulty parts, perform Clear Memory Mode <Ref. to EN(H4DO)(diag)-78, OPERATION, Clear Memory Mode.>, and Inspection Mode <Ref. to EN(H4DO)(diag)-64, PROCEDURE, Inspection Mode.>.
WIRING DIAGRAM:
- Engine Electrical System ENGINE TYPE FB (WITHOUT PUSH BUTTON START) <Ref. to WI-170, ENGINE TYPE FB (WITHOUT PUSH BUTTON START), WIRING DIAGRAM, Engine Electrical System.>
- Engine Electrical System ENGINE TYPE FB (WITH PUSH BUTTON START) <Ref. to WI-184, ENGINE TYPE FB (WITH PUSH BUTTON START), WIRING DIAGRAM, Engine Electrical System.>

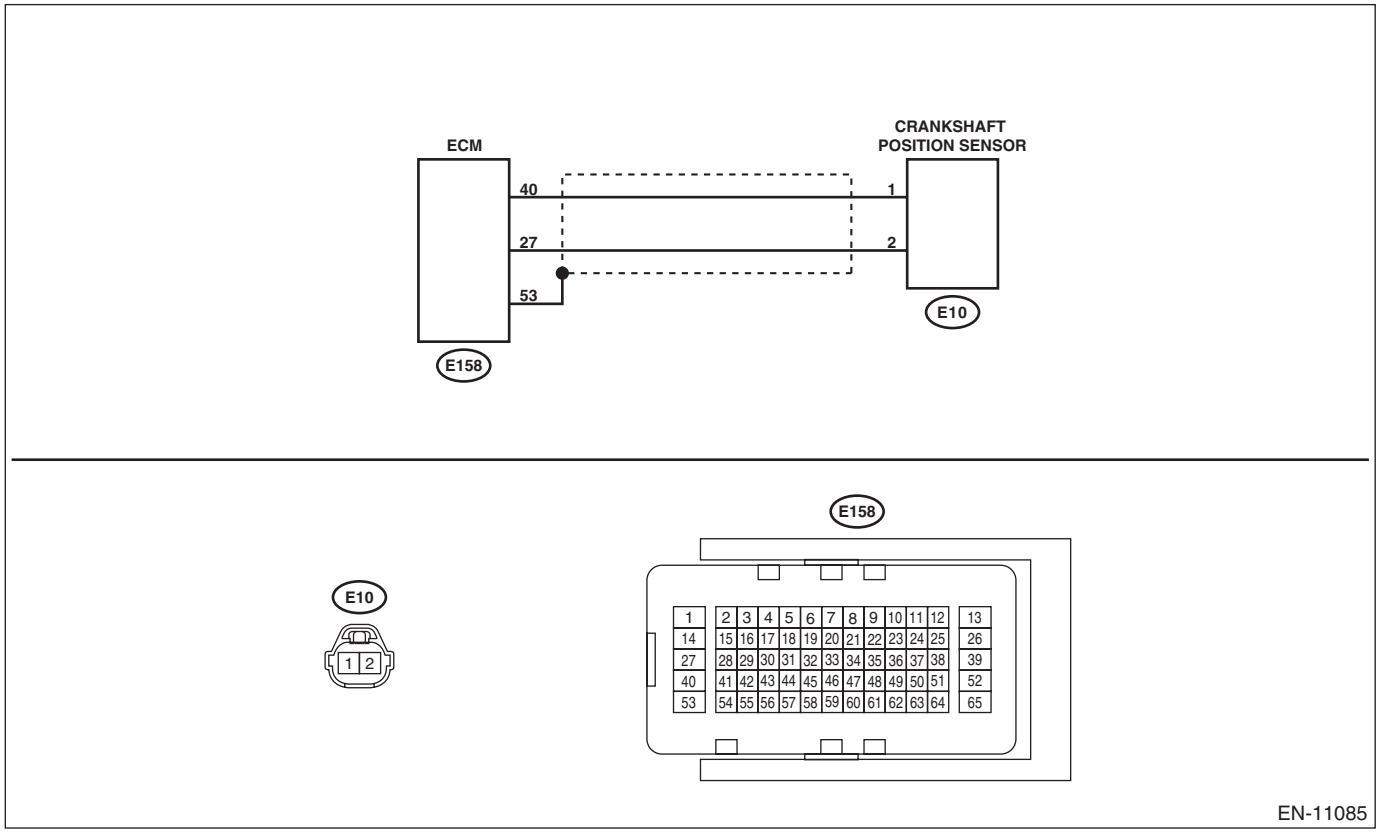

Step		Check	Yes	No
1	**CHECK INSTALLATION CONDITION OF CRANKSHAFT POSITION SENSOR.**	Is the crankshaft position sensor installation bolt tightened securely?	Go to step **2**.	Tighten the crankshaft position sensor installation bolt securely. <Ref. to FU(H4DO)-48, INSTALLATION, Crankshaft Position Sensor.>

	Step	Check	Yes	No
2	**CHECK CRANKSHAFT POSITION SENSOR.** 1) Turn the ignition switch to OFF. 2) Remove the crankshaft position sensor. 3) Measure the resistance between terminals of crankshaft position sensor. ***Terminals*** ***No. 1 — No. 2:***	Is the resistance between 1 and 4 kΩ?	Go to step **3**.	Replace the crankshaft position sensor. <Ref. to FU(H4DO)-47, Crankshaft Position Sensor.>
3	**CHECK HARNESS BETWEEN ECM AND CRANKSHAFT POSITION SENSOR CONNECTOR.** 1) Disconnect the connector from ECM. 2) Measure the resistance of harness between ECM connector and crankshaft position sensor connector. ***Connector & terminal*** ***(E158) No. 40 — (E10) No. 1:*** ***(E158) No. 27 — (E10) No. 2:***	Is the resistance less than 1 Ω?	Repair the poor contact of ECM and crankshaft position sensor connector.	Repair the harness and connector. NOTE: In this case, repair the following item: • Open circuit in harness between ECM connector and crankshaft position sensor connector • Poor contact of coupling connector

1. OUTLINE OF DIAGNOSIS

Detect the open or short circuit of the crankshaft position sensor.
Judge as NG when the crank signal is not input even though the starter was rotated.

2. COMPONENT DESCRIPTION

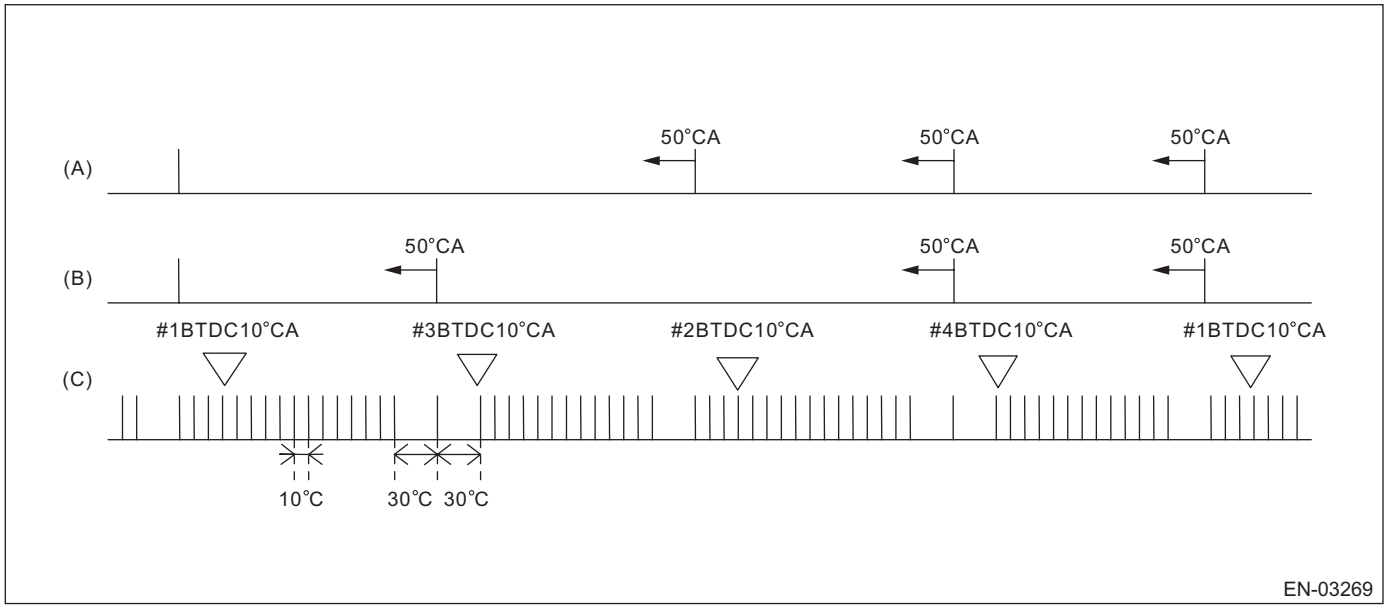

(A) Camshaft signal (RH) (B) Camshaft signal (LH) (C) Crankshaft signal

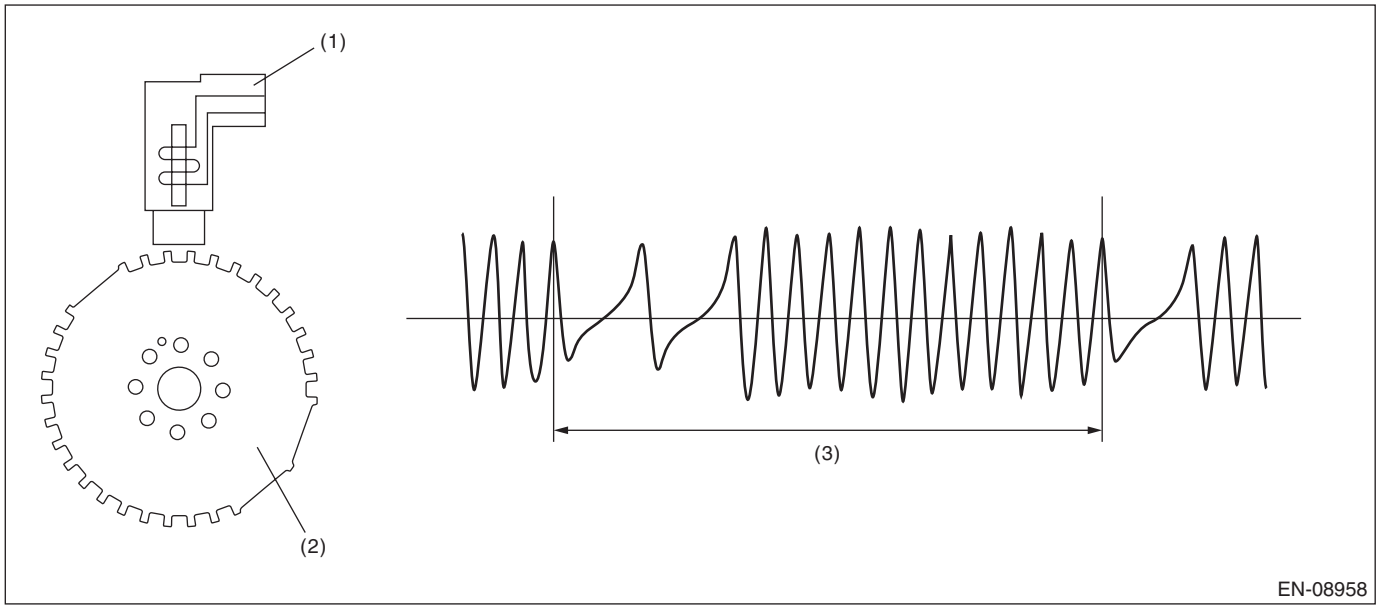

(1) Crankshaft position sensor (2) Crankshaft position sensor plate (3) One crankshaft rotation

3. EXECUTION CONDITION

Secondary Parameters	Execution condition
Battery voltage	≥ 8 V

4. GENERAL DRIVING CYCLE

Always perform the diagnosis continuously.

5. DIAGNOSTIC METHOD

If the duration of time while the following conditions are met is longer than the time indicated, judge as NG.

Judgment Value

Malfunction Criteria	Threshold Value
Number of crankshaft position sensor signals during cranking	= 0

Time Needed for Diagnosis: 3000 ms
Malfunction Indicator Light Illumination: Illuminates as soon as a malfunction occurs.

BN:DTC P0336 CRANKSHAFT POSITION SENSOR "A" CIRCUIT RANGE/PERFORMANCE

DTC DETECTING CONDITION:
Detected when two consecutive driving cycles with fault occur.
TROUBLE SYMPTOM:
- Engine stalls.
- Failure of engine to start

CAUTION:
After servicing or replacing faulty parts, perform Clear Memory Mode <Ref. to EN(H4DO)(diag)-78, OPERATION, Clear Memory Mode.>, and Inspection Mode <Ref. to EN(H4DO)(diag)-64, PROCEDURE, Inspection Mode.>.

	Step	Check	Yes	No
1	**CHECK CONDITION OF CRANKSHAFT POSITION SENSOR.** Turn the ignition switch to OFF.	Is the crankshaft position sensor installation bolt tightened securely?	Go to step **2**.	Tighten the crankshaft position sensor installation bolt securely. <Ref. to FU(H4DO)-48, INSTALLATION, Crankshaft Position Sensor.>
2	**CHECK CRANKSHAFT POSITION SENSOR PLATE.**	Is there crack or damage in the crankshaft position sensor plate teeth?	Replace the crankshaft position sensor plate. <Ref. to ME(H4DO)-211, Cylinder Block.>	Go to step **3**.
3	**CHECK INSTALLATION CONDITION OF TIMING CHAIN.** Turn the crankshaft, and align alignment mark on crank sprocket with alignment mark on cylinder block. ST 18252AA000 CRANKSHAFT SOCKET	Is the timing chain dislocated from its proper position?	Correct the installation condition of timing chain. <Ref. to ME(H4DO)-97, Timing Chain Assembly.>	Replace the crankshaft position sensor. <Ref. to FU(H4DO)-47, Crankshaft Position Sensor.>

1. OUTLINE OF DIAGNOSIS

Detect for faults in crankshaft position sensor output properties.
Judge as NG when there is a problem in the number of crankshaft signals for every revolution of crankshaft.

2. COMPONENT DESCRIPTION

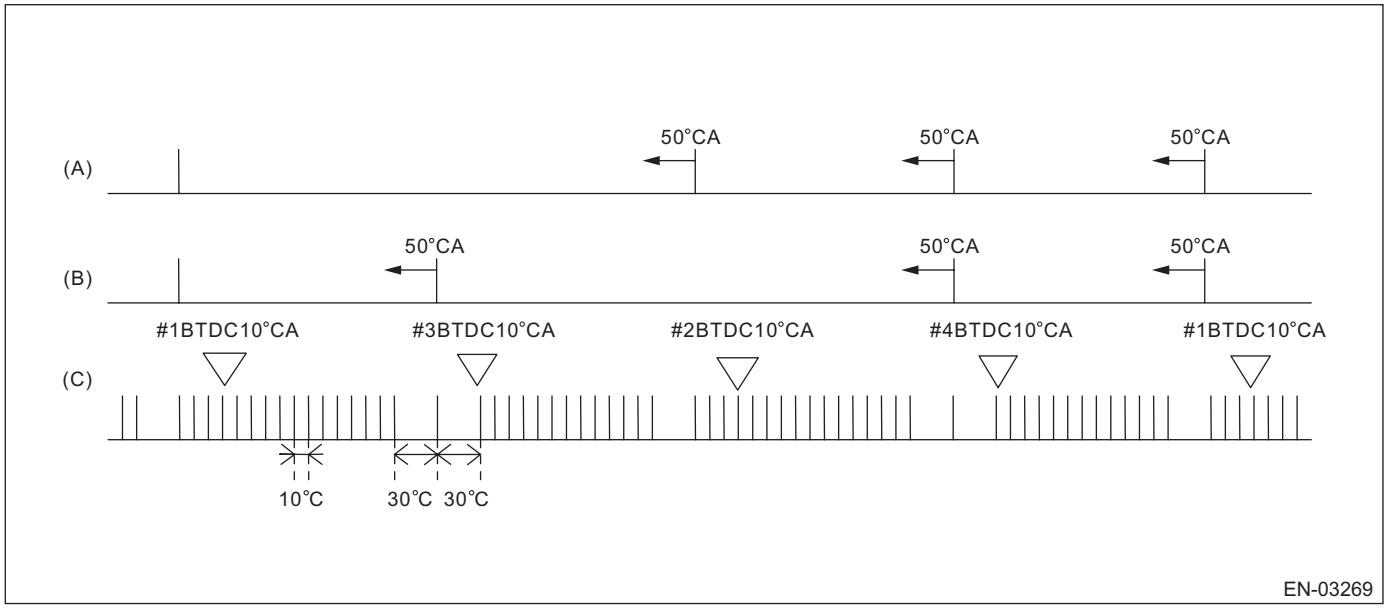

(A) Camshaft signal (RH) (B) Camshaft signal (LH) (C) Crankshaft signal

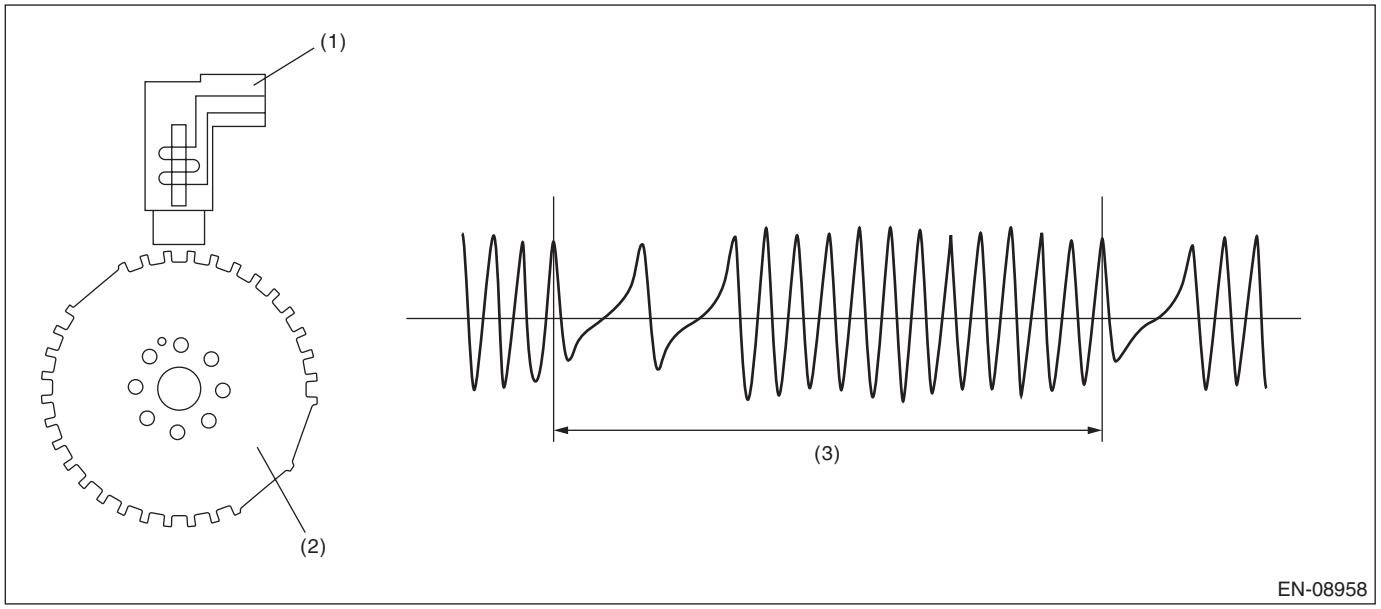

(1) Crankshaft position sensor (2) Crankshaft position sensor plate (3) One crankshaft rotation

3. EXECUTION CONDITION

Secondary Parameters	Execution condition
Battery voltage	≥ 8 V

4. GENERAL DRIVING CYCLE

Always perform the diagnosis continuously.

5. DIAGNOSTIC METHOD

Judge as NG when the following conditions are established.

Judgment Value

Malfunction Criteria	Threshold Value
The number of crankshaft position sensor signals in one crankshaft revolution during driving	≠ 30

Time Needed for Diagnosis: 10 engine revs engine revs.
Malfunction Indicator Light Illumination: Illuminates when malfunction occurs in 2 continuous driving cycles.

BO:DTC P0340 CAMSHAFT POSITION SENSOR "A" CIRCUIT BANK 1 OR SINGLE SENSOR

DTC DETECTING CONDITION:
Immediately at fault recognition
TROUBLE SYMPTOM:
- Engine stalls.
- Failure of engine to start

CAUTION:
After servicing or replacing faulty parts, perform Clear Memory Mode <Ref. to EN(H4DO)(diag)-78, OPERATION, Clear Memory Mode.>, and Inspection Mode <Ref. to EN(H4DO)(diag)-64, PROCEDURE, Inspection Mode.>.
WIRING DIAGRAM:
- Engine Electrical System ENGINE TYPE FB (WITHOUT PUSH BUTTON START) <Ref. to WI-170, ENGINE TYPE FB (WITHOUT PUSH BUTTON START), WIRING DIAGRAM, Engine Electrical System.>
- Engine Electrical System ENGINE TYPE FB (WITH PUSH BUTTON START) <Ref. to WI-184, ENGINE TYPE FB (WITH PUSH BUTTON START), WIRING DIAGRAM, Engine Electrical System.>

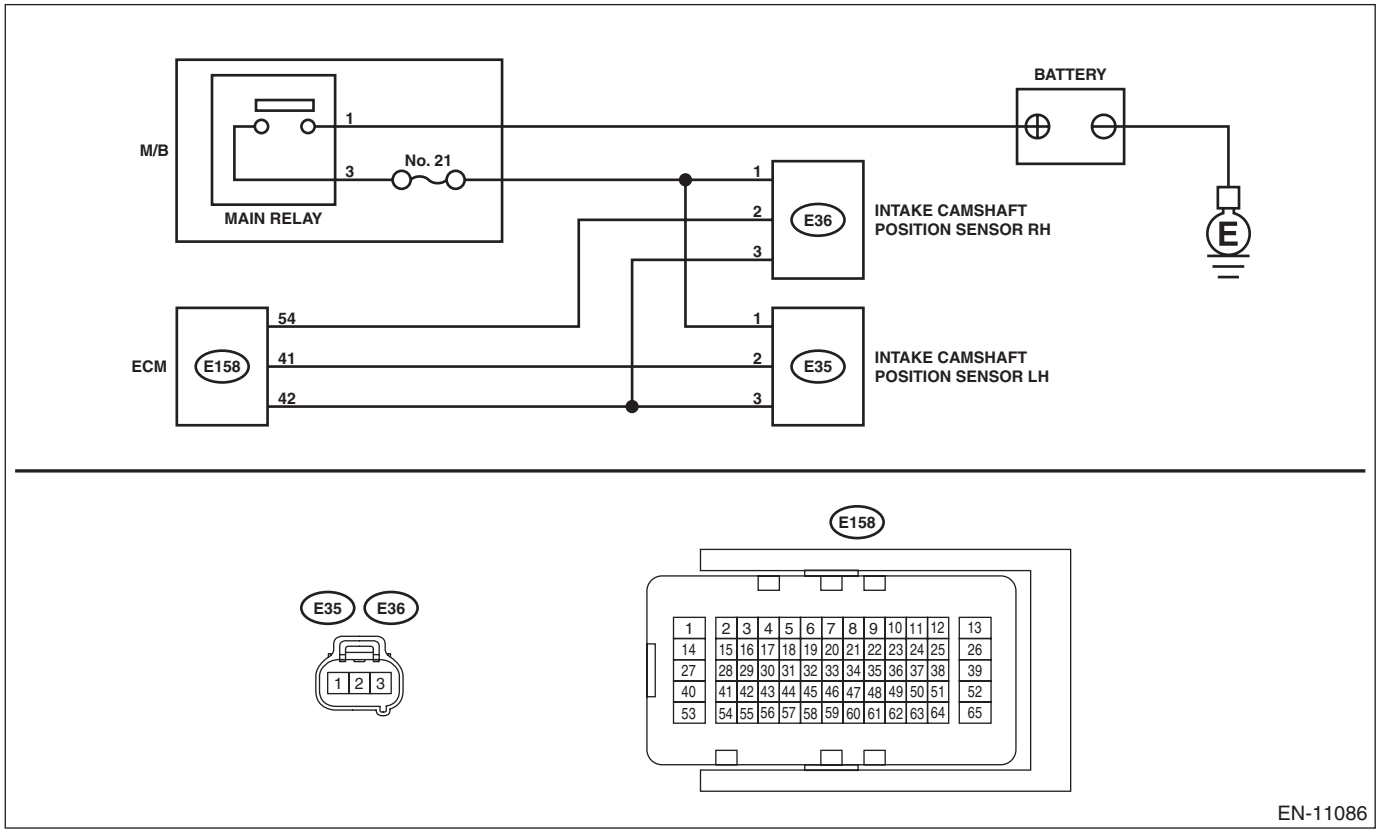

	Step	Check	Yes	No
1	**CHECK POWER SUPPLY OF CAMSHAFT POSITION SENSOR.** 1) Turn the ignition switch to OFF. 2) Disconnect the connector from camshaft position sensor. 3) Turn the ignition switch to ON. 4) Measure the voltage between camshaft position sensor connector and engine ground. ***Connector & terminal*** ***(E36) No. 1 (+) — Engine ground (–):***	Is the voltage 10 V or more?	Go to step **2**.	Repair the harness and connector. NOTE: In this case, repair the following item: • Open circuit or short circuit to ground in harness between main relay connector and camshaft position sensor connector • Poor contact of coupling connector
2	**CHECK HARNESS BETWEEN ECM AND CAMSHAFT POSITION SENSOR CONNECTOR.** 1) Turn the ignition switch to OFF. 2) Disconnect the connector from ECM. 3) Measure the resistance between ECM connector and camshaft position sensor connector. ***Connector & terminal*** ***(E158) No. 54 — (E36) No. 2:*** ***(E158) No. 42 — (E36) No. 3:***	Is the resistance less than 1 Ω?	Go to step **3**.	Repair the open circuit in the harness between the ECM connector and camshaft position sensor connector.
3	**CHECK HARNESS BETWEEN ECM AND CAMSHAFT POSITION SENSOR CONNECTOR.** Measure the resistance between camshaft position sensor connector and engine ground. ***Connector & terminal*** ***(E36) No. 2 — Engine ground:***	Is the resistance 1 MΩ or more?	Go to step **4**.	Repair short circuit to ground in harness between ECM connector and camshaft position sensor connector.
4	**CHECK HARNESS BETWEEN ECM AND CAMSHAFT POSITION SENSOR CONNECTOR.** Measure the voltage between camshaft position sensor connector and engine ground. ***Connector & terminal*** ***(E36) No. 2 (+) — Engine ground (–):***	Is the voltage 5 V or more?	Repair the short circuit to power in the harness between ECM connector and camshaft position sensor connector.	Go to step **5**.
5	**CHECK CONDITION OF CAMSHAFT POSITION SENSOR.**	Is the camshaft position sensor installation bolt tightened securely?	Go to step **6**.	Tighten the camshaft position sensor installation bolt securely. <Ref. to FU(H4DO)-52, INSTALLATION, Camshaft Position Sensor.>
6	**CHECK CAMSHAFT POSITION SENSOR.** Check the waveform of the camshaft position sensor. <Ref. to EN(H4DO)(diag)-20, Engine Control Module (ECM) I/O Signal.>	Is there any abnormality in waveform?	Replace the camshaft position sensor. <Ref. to FU(H4DO)-51, Camshaft Position Sensor.>	Repair the following item. • Poor contact of ECM connector • Poor contact of camshaft position sensor connector • Poor contact of coupling connector

1. OUTLINE OF DIAGNOSIS

Detect the open or short circuit of the camshaft position sensor.
When there is no camshaft position signal input continuously, judge as NG.

2. COMPONENT DESCRIPTION

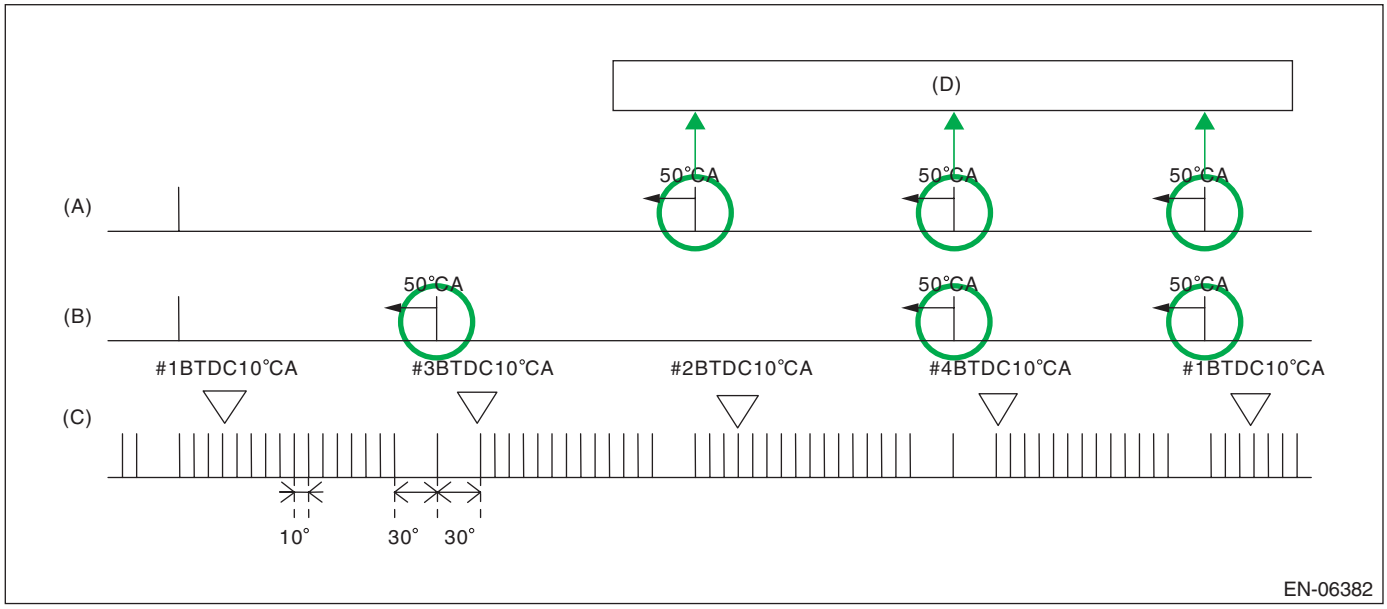

(A) Camshaft signal (RH)
(B) Camshaft signal (LH)
(C) Crankshaft signal
(D) Camshaft position signal: When normal, there will be 3 camshaft position signals for every 2 crankshaft revolutions.

3. EXECUTION CONDITION

Diagnosis 1

Secondary Parameters	Execution condition
Battery voltage	≥ 8 V

Diagnosis 2

Secondary Parameters	Execution condition
Battery voltage	≥ 8 V
Elapsed time after starting the engine	≥ 200 ms

4. GENERAL DRIVING CYCLE

Diagnosis 1: Perform the diagnosis only once.
Diagnosis 2: Always perform the diagnosis continuously.

5. DIAGNOSTIC METHOD

Diagnosis 1

If the duration of time while the following conditions are met is longer than the time indicated, judge as NG.

Judgment Value

Malfunction Criteria	Threshold Value
Number of camshaft position sensor signals during cranking	= 0

Time Needed for Diagnosis: 3000 ms

Diagnosis 2

Judge as NG if there is no input signal from the camshaft position sensor for 4 engine revs ((10 time(s) +2)/3) revs.

Judgment Value

Malfunction Criteria	Threshold Value
Amount of camshaft sensor signal during 0.33 revs of crankshaft	= 0

Time Needed for Diagnosis:

Diagnosis 1

3000 ms

Diagnosis 2

Judge as NG if there are consecutive engine revolutions of (10 time(s) +2)/2 revs.

Malfunction Indicator Light Illumination: Illuminates as soon as a malfunction occurs.

BP:DTC P0341 CAMSHAFT POSITION SENSOR "A" CIRCUIT RANGE/PERFORMANCE BANK 1 OR SINGLE SENSOR

NOTE:
For the diagnostic procedure, refer to DTC P0340. <Ref. to EN(H4DO)(diag)-280, DTC P0340 CAMSHAFT POSITION SENSOR "A" CIRCUIT BANK 1 OR SINGLE SENSOR, Diagnostic Procedure with Diagnostic Trouble Code (DTC).>

1. OUTLINE OF DIAGNOSIS

Detect the malfunction of camshaft position sensor property.
Judge as NG when the number of camshaft signals remains abnormal.

2. COMPONENT DESCRIPTION

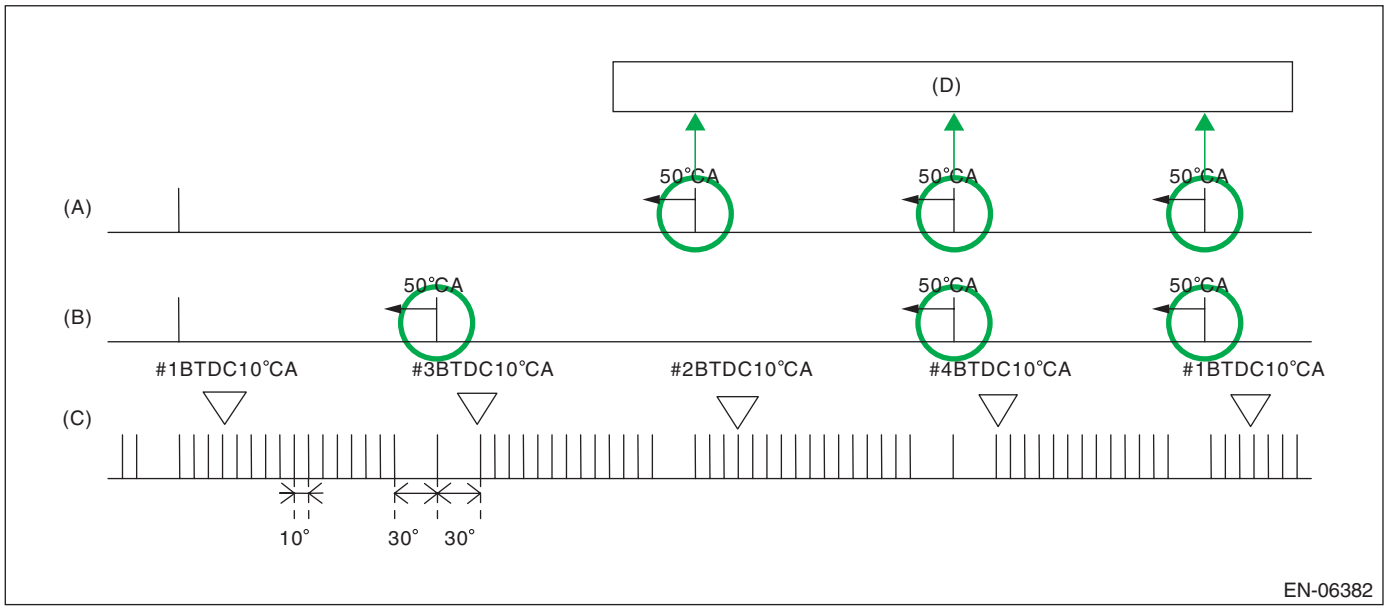

(A) Camshaft signal (RH)
(B) Camshaft signal (LH)
(C) Crankshaft signal
(D) Camshaft position signal: When normal, there will be 3 camshaft position signals for every 2 crankshaft revolutions.

3. EXECUTION CONDITION

Secondary Parameters	Execution condition
Battery voltage	≥ 8 V
Elapsed time after starting the engine	≥ 200 ms

4. GENERAL DRIVING CYCLE

Always perform the diagnosis continuously.

5. DIAGNOSTIC METHOD

Judge as NG when the status where the number of camshaft position sensor signal in two crankshaft revolutions is other than 3 time(s).

Judgment Value

Malfunction Criteria	Threshold Value
Amount of camshaft sensor signal during 2 revs of crankshaft	≠ 3 time(s)

Time Needed for Diagnosis: Two engine revs. × 4 time(s)
Malfunction Indicator Light Illumination: Illuminates as soon as a malfunction occurs.

BQ:DTC P0345 CAMSHAFT POSITION SENSOR "A" CIRCUIT BANK 2

DTC DETECTING CONDITION:
Immediately at fault recognition
TROUBLE SYMPTOM:
- Engine stalls.
- Failure of engine to start

CAUTION:
After servicing or replacing faulty parts, perform Clear Memory Mode <Ref. to EN(H4DO)(diag)-78, OPERATION, Clear Memory Mode.>, and Inspection Mode <Ref. to EN(H4DO)(diag)-64, PROCEDURE, Inspection Mode.>.
WIRING DIAGRAM:
- Engine Electrical System ENGINE TYPE FB (WITHOUT PUSH BUTTON START) <Ref. to WI-170, ENGINE TYPE FB (WITHOUT PUSH BUTTON START), WIRING DIAGRAM, Engine Electrical System.>
- Engine Electrical System ENGINE TYPE FB (WITH PUSH BUTTON START) <Ref. to WI-184, ENGINE TYPE FB (WITH PUSH BUTTON START), WIRING DIAGRAM, Engine Electrical System.>

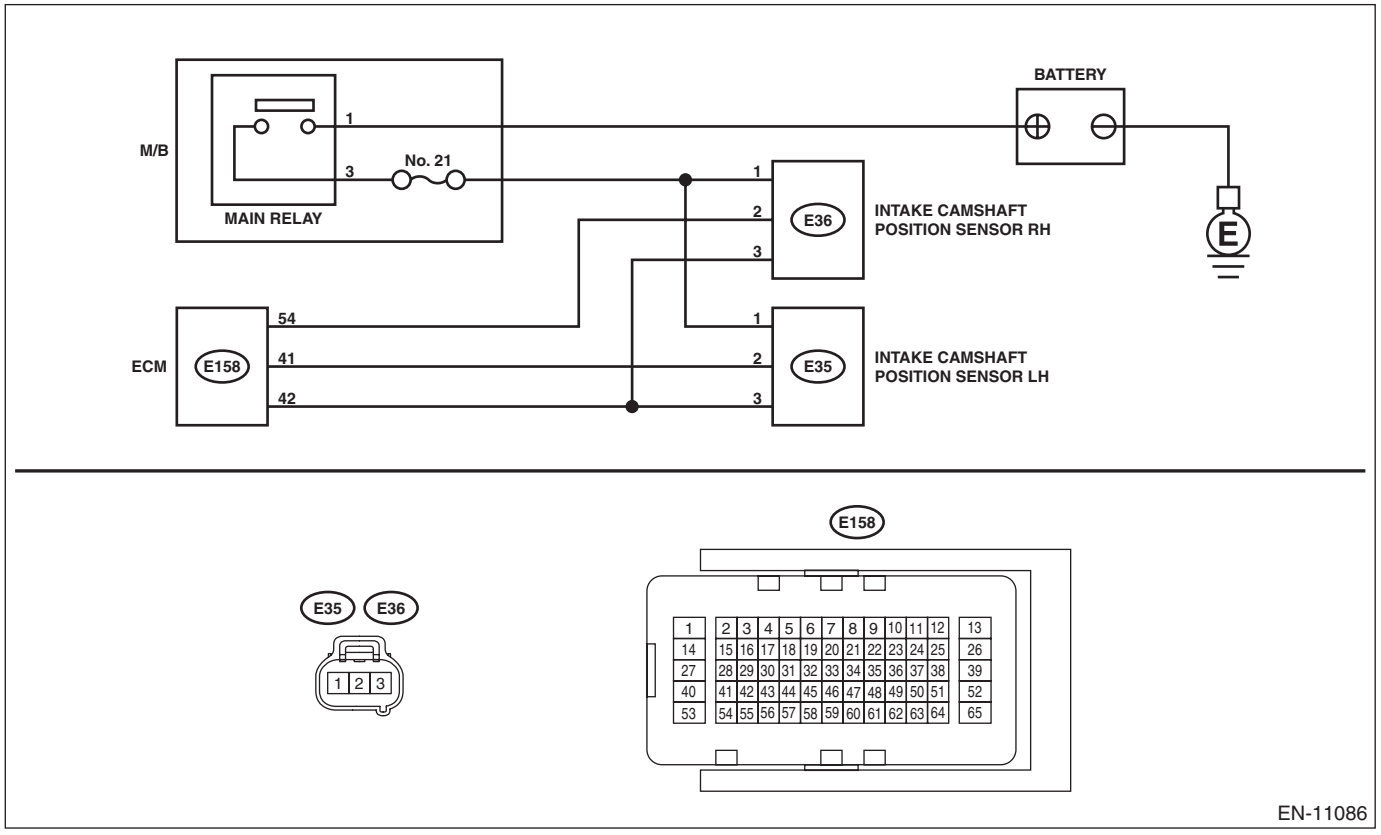

Step		Check	Yes	No
1	**CHECK POWER SUPPLY OF CAMSHAFT POSITION SENSOR.** 1) Turn the ignition switch to OFF. 2) Disconnect the connector from camshaft position sensor. 3) Turn the ignition switch to ON. 4) Measure the voltage between camshaft position sensor connector and engine ground. ***Connector & terminal*** ***(E35) No. 1 (+) — Engine ground (–):***	Is the voltage 10 V or more?	Go to step **2**.	Repair the harness and connector. NOTE: In this case, repair the following item: • Open circuit or short circuit to ground in harness between main relay connector and camshaft position sensor connector • Poor contact of coupling connector

	Step	Check	Yes	No
2	**CHECK HARNESS BETWEEN ECM AND CAMSHAFT POSITION SENSOR CONNECTOR.** 1) Turn the ignition switch to OFF. 2) Disconnect the connector from ECM. 3) Measure the resistance between ECM connector and camshaft position sensor connector. ***Connector & terminal*** ***(E158) No. 41 — (E35) No. 2:*** ***(E158) No. 42 — (E35) No. 3:***	Is the resistance less than 1 Ω?	Go to step **3**.	Repair the open circuit in the harness between the ECM connector and camshaft position sensor connector.
3	**CHECK HARNESS BETWEEN ECM AND CAMSHAFT POSITION SENSOR CONNECTOR.** Measure the resistance between camshaft position sensor connector and engine ground. ***Connector & terminal*** ***(E35) No. 2 — Engine ground:***	Is the resistance 1 MΩ or more?	Go to step **4**.	Repair short circuit to ground in harness between ECM connector and camshaft position sensor connector.
4	**CHECK HARNESS BETWEEN ECM AND CAMSHAFT POSITION SENSOR CONNECTOR.** Measure the voltage between camshaft position sensor connector and engine ground. ***Connector & terminal*** ***(E35) No. 2 (+) — Engine ground (–):***	Is the voltage 5 V or more?	Repair the short circuit to power in the harness between ECM connector and camshaft position sensor connector.	Go to step **5**.
5	**CHECK CONDITION OF CAMSHAFT POSITION SENSOR.**	Is the camshaft position sensor installation bolt tightened securely?	Go to step **6**.	Tighten the camshaft position sensor installation bolt securely. <Ref. to FU(H4DO)-52, INSTALLATION, Camshaft Position Sensor.>
6	**CHECK CAMSHAFT POSITION SENSOR.** Check the waveform of the camshaft position sensor. <Ref. to EN(H4DO)(diag)-20, Engine Control Module (ECM) I/O Signal.>	Is there any abnormality in waveform?	Replace the camshaft position sensor. <Ref. to FU(H4DO)-51, Camshaft Position Sensor.>	Repair the following item. • Poor contact of ECM connector • Poor contact of camshaft position sensor connector • Poor contact of coupling connector

1. OUTLINE OF DIAGNOSIS

NOTE:
For the detection standard, refer to DTC P0340. <Ref. to EN(H4DO)(diag)-280, DTC P0340 CAMSHAFT POSITION SENSOR "A" CIRCUIT BANK 1 OR SINGLE SENSOR, Diagnostic Procedure with Diagnostic Trouble Code (DTC).>

BR:DTC P0346 CAMSHAFT POSITION SENSOR "A" CIRCUIT RANGE/PERFORMANCE BANK 2

NOTE:
For the diagnostic procedure, refer to DTC P0345. <Ref. to EN(H4DO)(diag)-285, DTC P0345 CAMSHAFT POSITION SENSOR "A" CIRCUIT BANK 2 , Diagnostic Procedure with Diagnostic Trouble Code (DTC).>

1. OUTLINE OF DIAGNOSIS

NOTE:
For the detection standard, refer to DTC P0341. <Ref. to EN(H4DO)(diag)-284, DTC P0341 CAMSHAFT POSITION SENSOR "A" CIRCUIT RANGE/PERFORMANCE BANK 1 OR SINGLE SENSOR, Diagnostic Procedure with Diagnostic Trouble Code (DTC).>

BS:DTC P0351 IGNITION COIL "A" PRIMARY CONTROL CIRCUIT/OPEN

DTC DETECTING CONDITION:
Immediately at fault recognition
TROUBLE SYMPTOM:
- Improper idling
- Poor driving performance

CAUTION:
After servicing or replacing faulty parts, perform Clear Memory Mode <Ref. to EN(H4DO)(diag)-78, OPERATION, Clear Memory Mode.>, and Inspection Mode <Ref. to EN(H4DO)(diag)-64, PROCEDURE, Inspection Mode.>.
WIRING DIAGRAM:
- Engine Electrical System ENGINE TYPE FB (WITHOUT PUSH BUTTON START) <Ref. to WI-170, ENGINE TYPE FB (WITHOUT PUSH BUTTON START), WIRING DIAGRAM, Engine Electrical System.>
- Engine Electrical System ENGINE TYPE FB (WITH PUSH BUTTON START) <Ref. to WI-184, ENGINE TYPE FB (WITH PUSH BUTTON START), WIRING DIAGRAM, Engine Electrical System.>

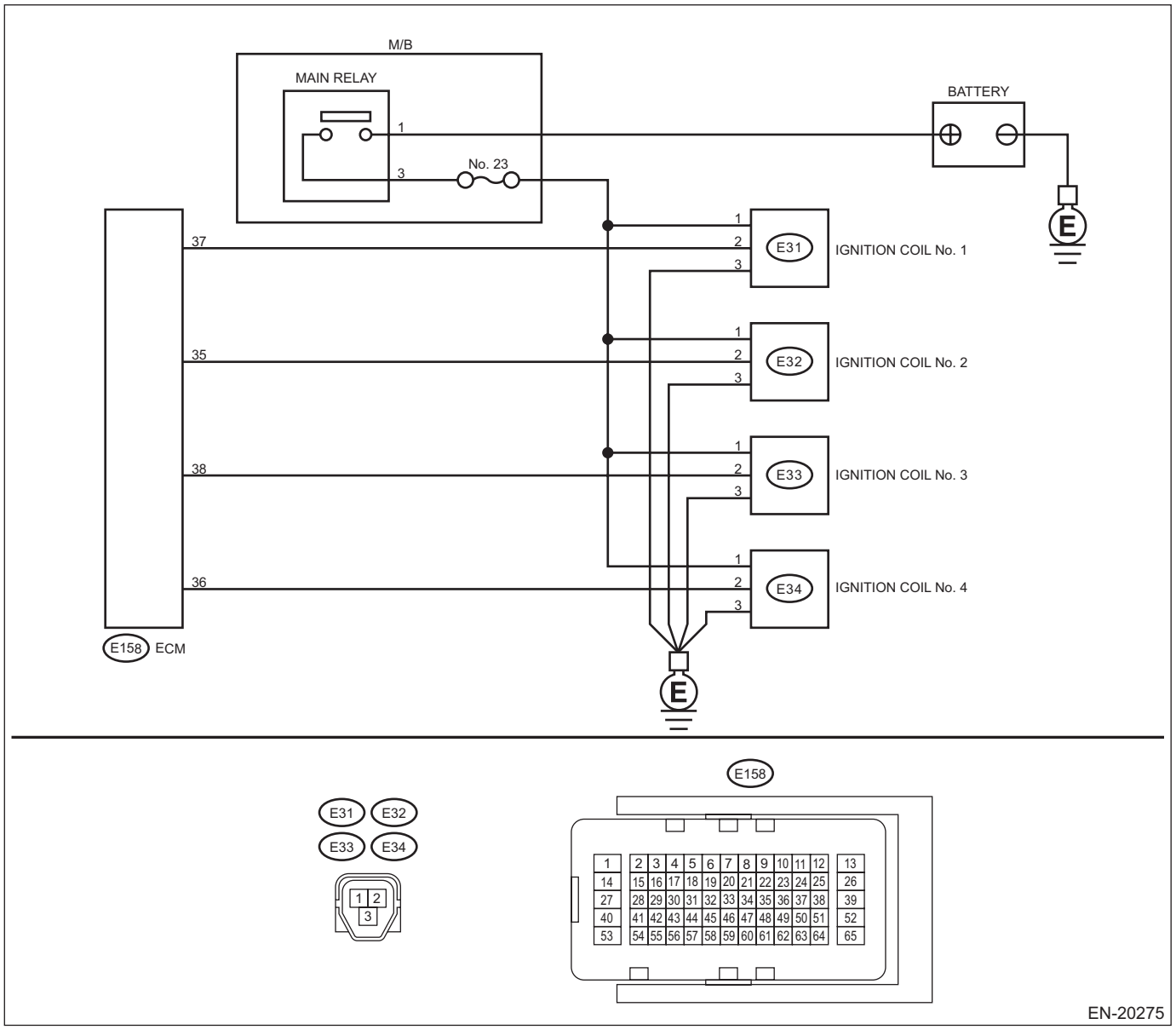

	Step	Check	Yes	No
1	**CHECK IGNITION COIL POWER SUPPLY CIRCUIT.** 1) Turn the ignition switch to OFF. 2) Disconnect the connector from ignition coil. 3) Turn the ignition switch to ON. 4) Measure the voltage between ignition coil connector and engine ground. ***Connector & terminal*** ***DTC P0351; (E31) No. 1 (+) — Engine ground (–):*** ***DTC P0352; (E32) No. 1 (+) — Engine ground (–):*** ***DTC P0353; (E33) No. 1 (+) — Engine ground (–):*** ***DTC P0354; (E34) No. 1 (+) — Engine ground (–):***	Is the voltage 10 V or more?	Go to step **2**.	Repair the harness and connector. NOTE: In this case, repair the following item: • Open or short to ground in harness of power supply circuit • Blown out of fuse • Poor contact of IG relay connector • Poor contact of coupling connector • Faulty IG relay
2	**CHECK HARNESS OF IGNITION COIL GROUND CIRCUIT.** 1) Turn the ignition switch to OFF. 2) Measure the resistance of harness between ignition coil connector and engine ground. ***Connector & terminal*** ***DTC P0351; (E31) No. 3 — Engine ground:*** ***DTC P0352; (E32) No. 3 — Engine ground:*** ***DTC P0353; (E33) No. 3 — Engine ground:*** ***DTC P0354; (E34) No. 3 — Engine ground:***	Is the resistance less than 5 Ω?	Go to step **3**.	Repair the open circuit in harness between ignition coil connector and engine grounding terminal.
3	**CHECK HARNESS BETWEEN ECM AND IGNITION COIL CONNECTOR.** 1) Disconnect the connector from ECM. 2) Measure the resistance between ignition coil connector and engine ground. ***Connector & terminal*** ***DTC P0351; (E31) No. 2 — Engine ground:*** ***DTC P0352; (E32) No. 2 — Engine ground:*** ***DTC P0353; (E33) No. 2 — Engine ground:*** ***DTC P0354; (E34) No. 2 — Engine ground:***	Is the resistance 1 MΩ or more?	Go to step **4**.	Repair the ground short circuit of harness between ECM connector and ignition coil connector.
4	**CHECK HARNESS BETWEEN ECM AND IGNITION COIL CONNECTOR.** Measure the resistance of harness between ECM connector and ignition coil connector. ***Connector & terminal*** ***DTC P0351; (E158) No. 37 — (E31) No. 2:*** ***DTC P0352; (E158) No. 35 — (E32) No. 2:*** ***DTC P0353; (E158) No. 38 — (E33) No. 2:*** ***DTC P0354; (E158) No. 36 — (E34) No. 2:***	Is the resistance less than 1 Ω?	Go to step **5**.	Repair the open circuit in harness between ECM connector and ignition coil connector.
5	**CHECK FOR POOR CONTACT.** Check for poor contact of ECM connector.	Is there poor contact of ECM connector?	Repair the poor contact of ECM connector.	Go to step **6**.
6	**CHECK SPARK PLUG CONDITION.** 1) Remove the spark plug of the corresponding cylinder. <Ref. to IG(H4DO)-4, REMOVAL, Spark Plug.> 2) Check the spark plug condition. <Ref. to IG(H4DO)-6, INSPECTION, Spark Plug.>	Is the spark plug condition normal?	Replace the ignition coil. <Ref. to IG(H4DO)-10, Ignition Coil.>	Replace the spark plug. <Ref. to IG(H4DO)-4, Spark Plug.>

1. OUTLINE OF DIAGNOSIS

Based on the self-diagnostic result of the ignition coil driving IC, judge the ignition coil driving circuit as normal or abnormal.
The ignition coil driving IC detects “no ignition” status as a malfunction.

2. EXECUTION CONDITION

Secondary Parameters	Execution condition
Battery voltage	≥ 10.9 V
Elapsed time after starting the engine	> 1 s
Engine speed	> 500 rpm

3. GENERAL DRIVING CYCLE

Always perform the diagnosis continuously.

4. DIAGNOSTIC METHOD

Judge as NG when the following conditions are established.

Judgment Value

Malfunction Criteria	Threshold Value
Ignition driving IC information	Trouble

Time Needed for Diagnosis: 256/1000 seconds × 10 time(s)
Malfunction Indicator Light Illumination: Illuminates as soon as a malfunction occurs.

BT:DTC P0352 IGNITION COIL "B" PRIMARY CONTROL CIRCUIT/OPEN

NOTE:
For the diagnostic procedure, refer to DTC P0351. <Ref. to EN(H4DO)(diag)-288, DTC P0351 IGNITION COIL "A" PRIMARY CONTROL CIRCUIT/OPEN, Diagnostic Procedure with Diagnostic Trouble Code (DTC).>

1. OUTLINE OF DIAGNOSIS

NOTE:
For the detection standard, refer to DTC P0351. <Ref. to EN(H4DO)(diag)-288, DTC P0351 IGNITION COIL "A" PRIMARY CONTROL CIRCUIT/OPEN, Diagnostic Procedure with Diagnostic Trouble Code (DTC).>

BU:DTC P0353 IGNITION COIL "C" PRIMARY CONTROL CIRCUIT/OPEN

NOTE:
For the diagnostic procedure, refer to DTC P0351. <Ref. to EN(H4DO)(diag)-288, DTC P0351 IGNITION COIL "A" PRIMARY CONTROL CIRCUIT/OPEN, Diagnostic Procedure with Diagnostic Trouble Code (DTC).>

1. OUTLINE OF DIAGNOSIS

NOTE:
For the detection standard, refer to DTC P0351. <Ref. to EN(H4DO)(diag)-288, DTC P0351 IGNITION COIL "A" PRIMARY CONTROL CIRCUIT/OPEN, Diagnostic Procedure with Diagnostic Trouble Code (DTC).>

BV:DTC P0354 IGNITION COIL "D" PRIMARY CONTROL CIRCUIT/OPEN

NOTE:
For the diagnostic procedure, refer to DTC P0351. <Ref. to EN(H4DO)(diag)-288, DTC P0351 IGNITION COIL "A" PRIMARY CONTROL CIRCUIT/OPEN, Diagnostic Procedure with Diagnostic Trouble Code (DTC).>

1. OUTLINE OF DIAGNOSIS

NOTE:
For the detection standard, refer to DTC P0351. <Ref. to EN(H4DO)(diag)-288, DTC P0351 IGNITION COIL "A" PRIMARY CONTROL CIRCUIT/OPEN, Diagnostic Procedure with Diagnostic Trouble Code (DTC).>

BW:DTC P0400 EGR "A" FLOW

DTC DETECTING CONDITION:
Detected when two consecutive driving cycles with fault occur.
TROUBLE SYMPTOM:
- Movement performance problem when engine is low speed
- Improper idling
- Movement performance problem

CAUTION:
After servicing or replacing faulty parts, perform Clear Memory Mode <Ref. to EN(H4DO)(diag)-78, OPERATION, Clear Memory Mode.>, and Inspection Mode <Ref. to EN(H4DO)(diag)-64, PROCEDURE, Inspection Mode.>.

	Step	Check	Yes	No
1	**CHECK CURRENT DATA.** 1) Start the engine. 2) Read the value of «Mani. Absolute Pressure» using the Subaru Select Monitor or a general scan tool. NOTE: • Subaru Select Monitor For detailed operation procedures, refer to “Read Current Data For Engine”. <Ref. to EN(H4DO)(diag)-45, Subaru Select Monitor.> • General scan tool For detailed operation procedures, refer to the general scan tool operation manual.	Is the value of «Mani. Absolute Pressure» 53.3 kPa (400 mmHg, 15.75 inHg) or more?	Make sure that the EGR control valve, manifold absolute pressure sensor and throttle body are installed securely.	Go to step **2**.
2	**CHECK EGR CONTROL VALVE.** Remove the EGR control valve.	Are there any holes, clogged lines or foreign matters in the EGR system?	Repair the EGR system.	Replace EGR control valve. <Ref. to EC(H4DO)-26, EGR Control Valve.>

1. OUTLINE OF DIAGNOSIS

Detect EGR system malfunction.
Intake manifold pressure (negative pressure) is constant because the throttle valve is fully closed during deceleration fuel cut. At this time, when the EGR valve is opened/closed, the intake manifold pressure will change. EGR System OK/NG is judged by the range of this change.

2. COMPONENT DESCRIPTION

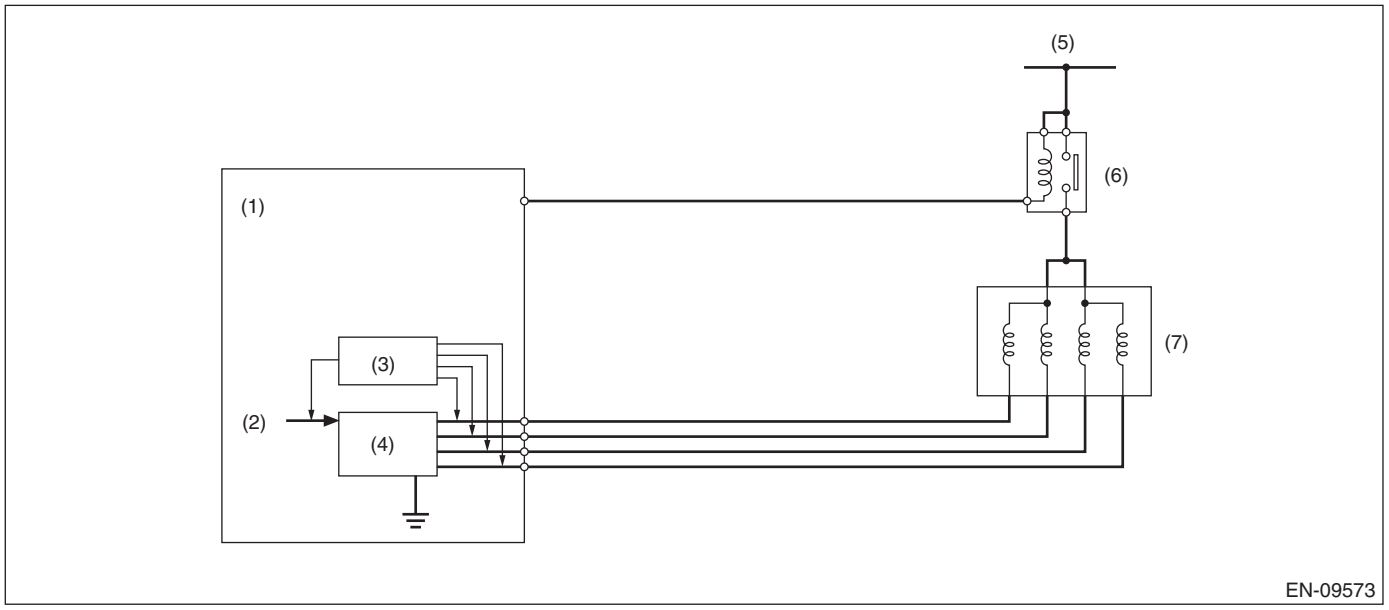

(1) Engine control module (ECM)
(2) Computer unit (CPU)
(3) Detecting circuit
(4) Switch circuit
(5) Battery voltage
(6) Main relay
(7) EGR control valve

3. EXECUTION CONDITION

Secondary Parameters	Execution condition
Engine speed	1300 rpm — 5000 rpm (CVT model) 1400 rpm — 5000 rpm (MT model)
Intake air temperature	≥ 0 °C(32 °F)
Battery voltage	≥ 10.9 V
Barometric pressure	≥ 75.1 kPa (563 mmHg, 22.2 inHg)
Vehicle speed	≥40 km/h (24.9 MPH)
Fuel shut-off function of 3000 ms or more	In operation
Neutral switch	OFF

4. GENERAL DRIVING CYCLE

Perform the diagnosis only once during deceleration fuel cut from a vehicle speed of 40 km/h (24.9 MPH) or more.
Be careful of vehicle speed and engine speed. (Diagnosis will not be completed if the vehicle speed and engine speed conditions become out of specification due to deceleration.)

5. DIAGNOSTIC METHOD

Measure the pressure values when the enable conditions are established, and perform diagnosis by calculating those results.

1. Label the intake manifold pressure value as PMOF1, which is observed when enable conditions are established, and set the EGR target step to 45 step(s) (nearly full open).
2. Label the intake manifold pressure value as PMON, which is observed after 1000 ms has passed since EGR target step was set to 45 step(s) (when the enable conditions were established), and set the EGR target step to 0.
3. Label the intake manifold pressure as PMOF2, which is observed after 1000 ms has passed since EGR target step was set to 0 (after (1000 ms + 1000 ms) have passed since the enable conditions were established).

Judge as NG when the following conditions are established.

Judgment Value

Malfunction Criteria	Threshold Value
PMON – (PMOF1 + PMOF2)/2	< 2.5 kPa (18.63 mmHg, 0.7 inHg)

Time Needed for Diagnosis: 1000 ms × 2
Malfunction Indicator Light Illumination: Illuminates when malfunction occurs in 2 continuous driving cycles.

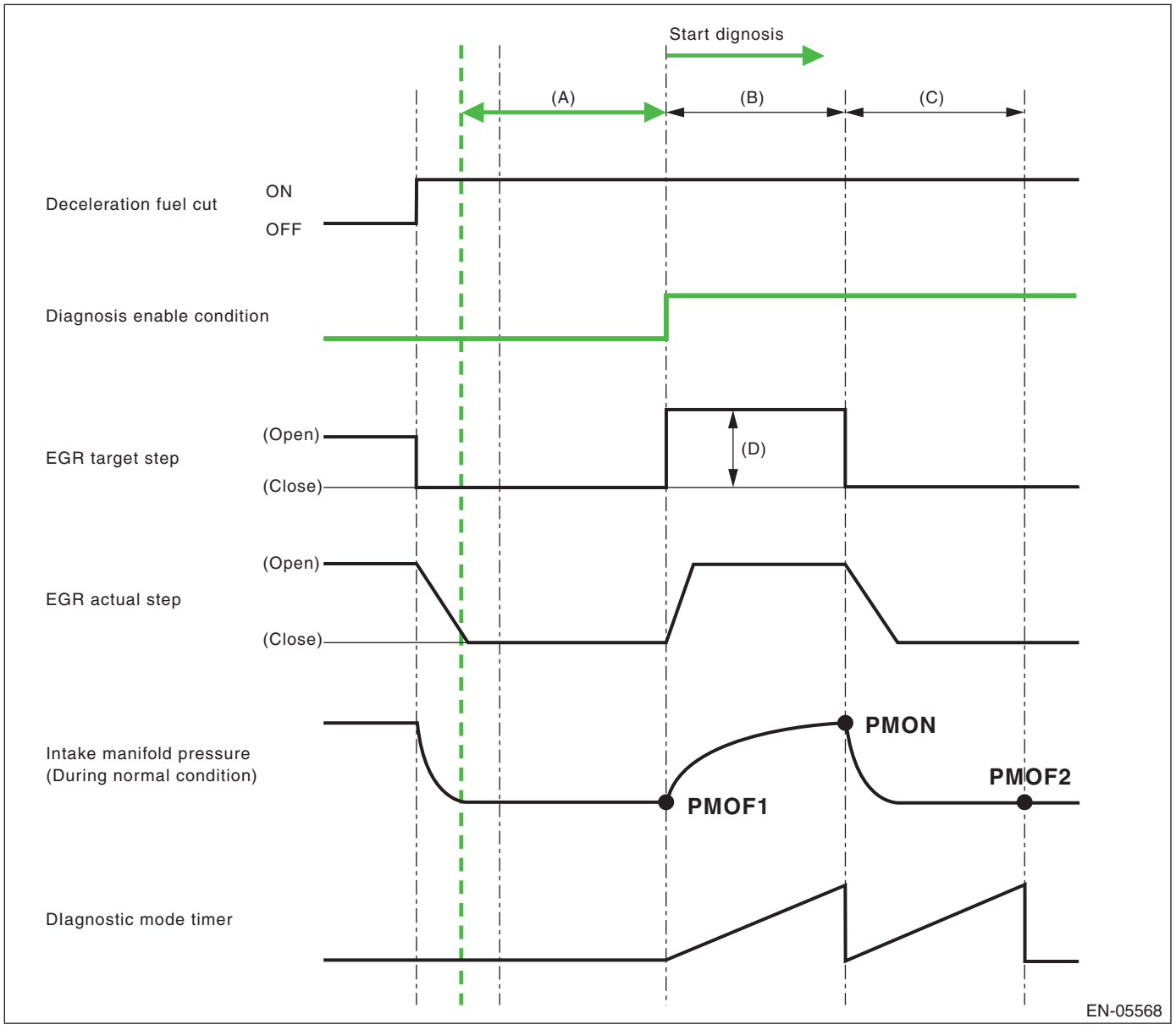

(A) 3000 ms (B) 1000 ms (C) 1000 ms
(D) 45 step(s)

BX:DTC P0420 CATALYST SYSTEM EFFICIENCY BELOW THRESHOLD BANK 1

DTC DETECTING CONDITION:

Detected when two consecutive driving cycles with fault occur.

TROUBLE SYMPTOM:

- Engine stalls.
- Idle mixture is out of specifications.

CAUTION:

After servicing or replacing faulty parts, perform Clear Memory Mode <Ref. to EN(H4DO)(diag)-78, OPERATION, Clear Memory Mode.>, and Inspection Mode <Ref. to EN(H4DO)(diag)-64, PROCEDURE, Inspection Mode.>.

WIRING DIAGRAM:

- Engine Electrical System ENGINE TYPE FB (WITHOUT PUSH BUTTON START) <Ref. to WI-170, ENGINE TYPE FB (WITHOUT PUSH BUTTON START), WIRING DIAGRAM, Engine Electrical System.>
- Engine Electrical System ENGINE TYPE FB (WITH PUSH BUTTON START) <Ref. to WI-184, ENGINE TYPE FB (WITH PUSH BUTTON START), WIRING DIAGRAM, Engine Electrical System.>

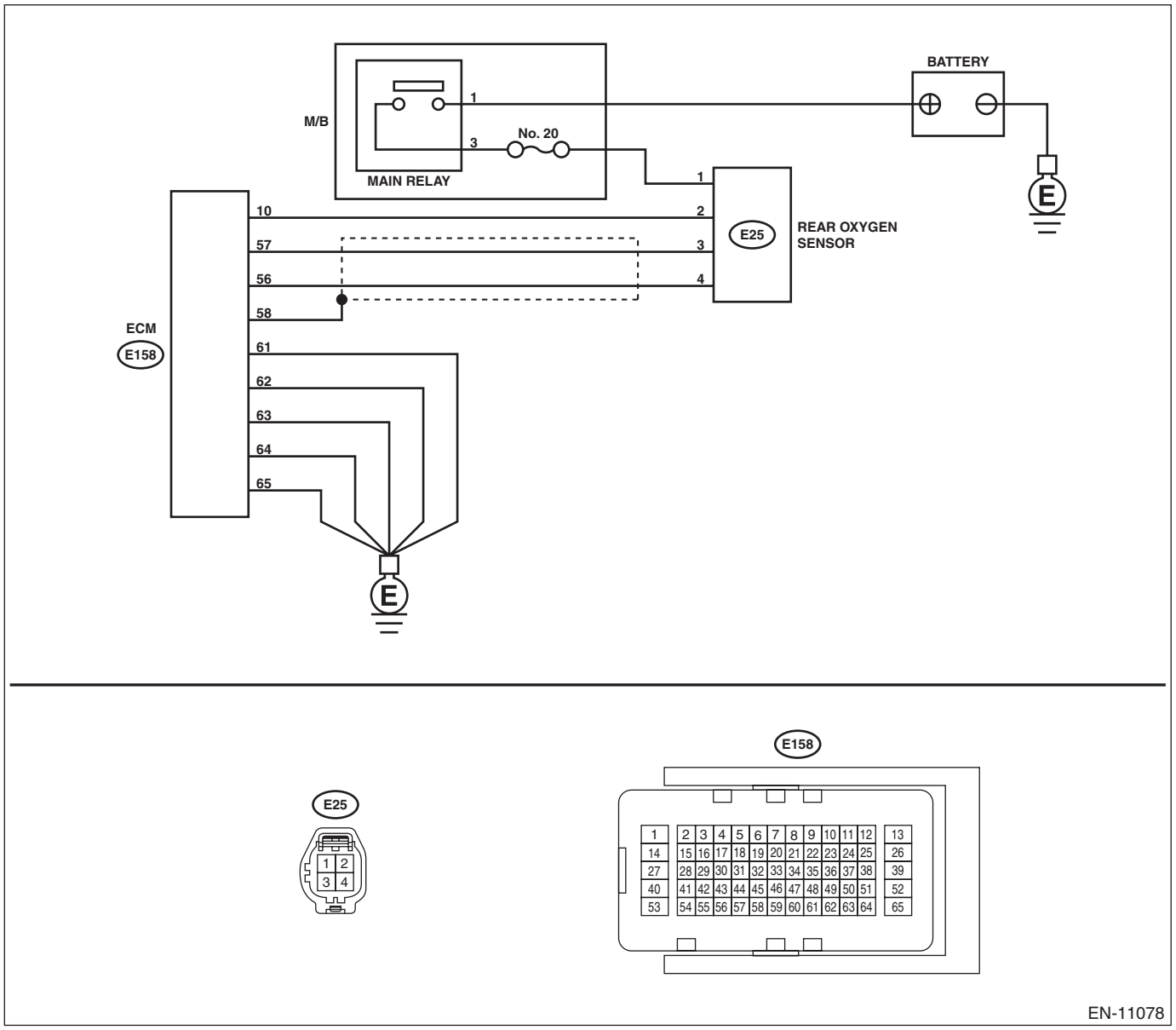

	Step	Check	Yes	No
1	**CHECK EXHAUST SYSTEM.** Check for gas leaks or air suction caused by loose or dislocated nuts and bolts, and open hole at exhaust pipes. NOTE: Check the following positions. • Between cylinder head and front exhaust pipe • Between front exhaust pipe and front catalytic converter • Between front catalytic converter and rear catalytic converter • Loose or improperly attached front oxygen (A/F) sensor or rear oxygen sensor	Is there any fault in exhaust system?	Repair or replace the exhaust system. <Ref. to EX(H4DO)-2, General Description.>	Go to step **2**.
2	**CHECK WAVEFORM DATA ON THE SUBARU SELECT MONITOR (WHILE DRIVING).** 1) Drive at a constant speed between 80 — 112 km/h (50 — 70 MPH). 2) After 5 minutes have elapsed in the condition of step 1), use the Subaru Select Monitor while still driving to read the waveform data. • At normal condition 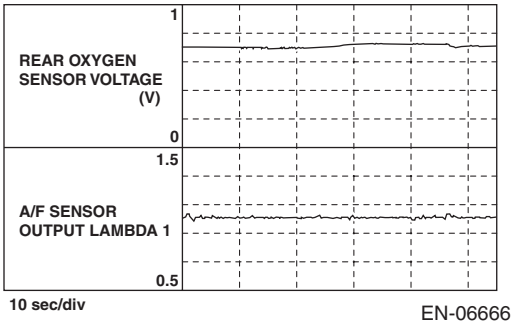 EN-06666 • At abnormal condition (numerous inversion) 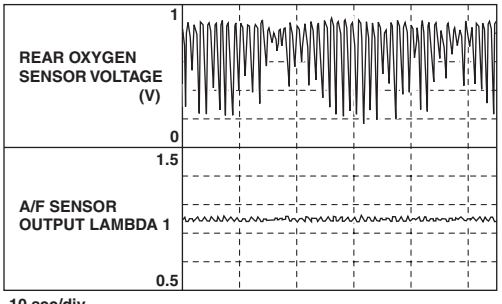 EN-06667	Is a normal waveform displayed?	Even if DTC is detected, the circuit has returned to a normal condition at this time. Reproduce the failure, and then perform the diagnosis again. NOTE: In this case, temporary poor contact of connector, temporary open or short circuit of harness may be the cause.	Go to step **3**.

	Step	Check	Yes	No
3	**CHECK WAVEFORM DATA ON THE SUBARU SELECT MONITOR (WHILE IDLING).** 1) Run the engine at idle. 2) In the condition of step 1), use the Subaru Select Monitor to read the waveform data. • At normal condition 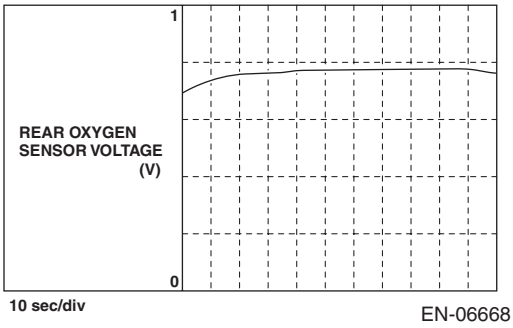 EN-06668 • At abnormal condition 1 (numerous inversion) 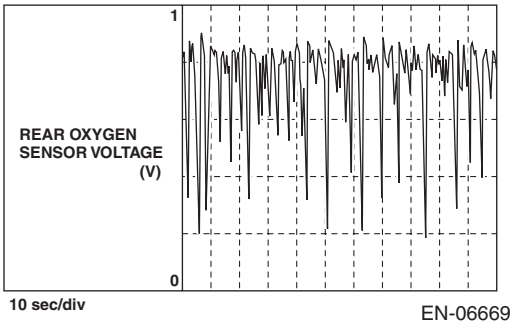 EN-06669 • At abnormal condition 2 (noise input) 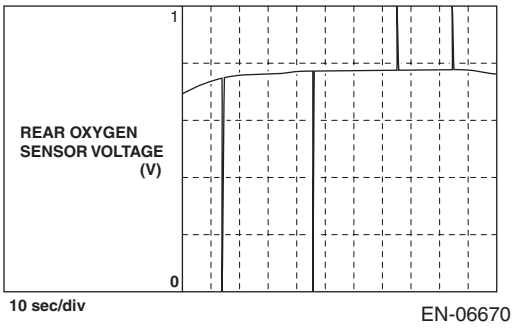 EN-06670	Is a normal waveform displayed?	Go to step **4**.	• The waveform is displayed at abnormal condition 1: Go to step **4**. • The waveform is displayed at abnormal condition 2: Go to step **5**.
4	**CHECK CATALYTIC CONVERTER.**	Is the catalytic converter damaged?	Replace the catalytic converter. <Ref. to EC(H4DO)-7, Front Catalytic Converter.> <Ref. to EC(H4DO)-8, Rear Catalytic Converter.>	Go to step **5**.
5	**CHECK REAR OXYGEN SENSOR CONNECTOR AND COUPLING CONNECTOR.**	Has water entered the connector?	Completely remove any water inside.	Go to step **6**.

	Step	Check	Yes	No
6	**CHECK HARNESS BETWEEN ECM AND REAR OXYGEN SENSOR CONNECTOR.** 1) Turn the ignition switch to OFF. 2) Disconnect the connector from ECM and rear oxygen sensor. 3) Measure the resistance of harness between ECM connector and rear oxygen sensor connector. ***Connector & terminal*** ***(E158) No. 57 — (E25) No. 3:*** ***(E158) No. 56 — (E25) No. 4:***	Is the resistance less than 1 Ω?	Go to step **7**.	Repair the harness and connector. NOTE: Repair the following locations. • Open circuit in harness between ECM connector and rear oxygen sensor connector • Poor contact of coupling connector
7	**CHECK REAR OXYGEN SENSOR SHIELD.** 1) Turn the ignition switch to OFF. 2) Expose the rear oxygen sensor connector body side harness sensor shield. 3) Measure the resistance between sensor shield and chassis ground.	Is the resistance less than 1 Ω?	Go to step **8**.	Repair the open circuit of rear oxygen sensor harness.
8	**CHECK ENGINE OIL AMOUNT AND EXHAUST GAS.** 1) Check the engine oil amount. <Ref. to LU(H4DO)-9, INSPECTION, Engine Oil.> 2) Check exhaust gas during idling.	Does the engine oil amount drop or white smoke emit from the muffler?	Check the engine, and repair the defective part. <Ref. to ME(H4DO)-321, INSPECTION, Engine Trouble in General.> After repairing the engine, replace the catalytic converter. <Ref. to EC(H4DO)-7, Front Catalytic Converter.> <Ref. to EC(H4DO)-8, Rear Catalytic Converter.> After the catalytic converter is replaced, perform step 2 to check the normal waveform is displayed, and then exit the procedure.	Go to step **9**.

Step		Check	Yes	No
9	**CHECK IGNITION SYSTEM.** 1) Check the spark plug. <Ref. to IG(H4DO)-6, INSPECTION, Spark Plug.> 2) Check the status of the ignition coil connector and the spark plug terminal.	Is there any fault in the ignition system?	After repairing the ignition system, replace the catalytic converter. <Ref. to EC(H4DO)-7, Front Catalytic Converter.> <Ref. to EC(H4DO)-8, Rear Catalytic Converter.> After the catalytic converter is replaced, perform step 2 to check the normal waveform is displayed, and then exit the procedure.	Go to step **10**.
10	**CHECK FUEL SYSTEM.** 1) Refer to and check the items in “Insufficient fuel supply to fuel injector” (except for “a. Fuel pump does not operate.”) and “Leakage or blow out of fuel”. <Ref. to FU(H4DO)-155, INSPECTION, Fuel System Trouble in General.> 2) Check throttle body. <Ref. to FU(H4DO)-16, INSPECTION, Throttle Body.> 3) Check intake manifold. <Ref. to FU(H4DO)-35, INSPECTION, Intake Manifold Assembly.>	Is there any fault in the fuel system?	After repairing the fuel system, replace the catalytic converter. <Ref. to EC(H4DO)-7, Front Catalytic Converter.> <Ref. to EC(H4DO)-8, Rear Catalytic Converter.> After the catalytic converter is replaced, perform step 2 to check the normal waveform is displayed, and then exit the procedure.	Go to step **11**.

Step		Check	Yes	No
11	CHECK DTC.	Is any other DTC displayed?	Check the appropriate DTC using the “List of Diagnostic Trouble Code (DTC)”. <Ref. to EN(H4DO)(diag)-102, List of Diagnostic Trouble Code (DTC).> After checking the DTC, replace the catalytic converter. <Ref. to EC(H4DO)-7, Front Catalytic Converter.> <Ref. to EC(H4DO)-8, Rear Catalytic Converter.> After the catalytic converter is replaced, perform step 2 to check the normal waveform is displayed, and then exit the procedure.	Replace the rear oxygen sensor. <Ref. to FU(H4DO)-79, Rear Oxygen Sensor.>

1. OUTLINE OF DIAGNOSIS

Detect the deterioration of the catalyst function.
Though the rear oxygen sensor output changes slowly with a new catalyst, the sensor output with a deteriorated catalyst becomes high and the inversion time is shortened.
For this reason, the catalyst diagnosis is carried out by monitoring the rear oxygen sensor output and comparing it with the front oxygen (A/F) sensor output.

2. COMPONENT DESCRIPTION

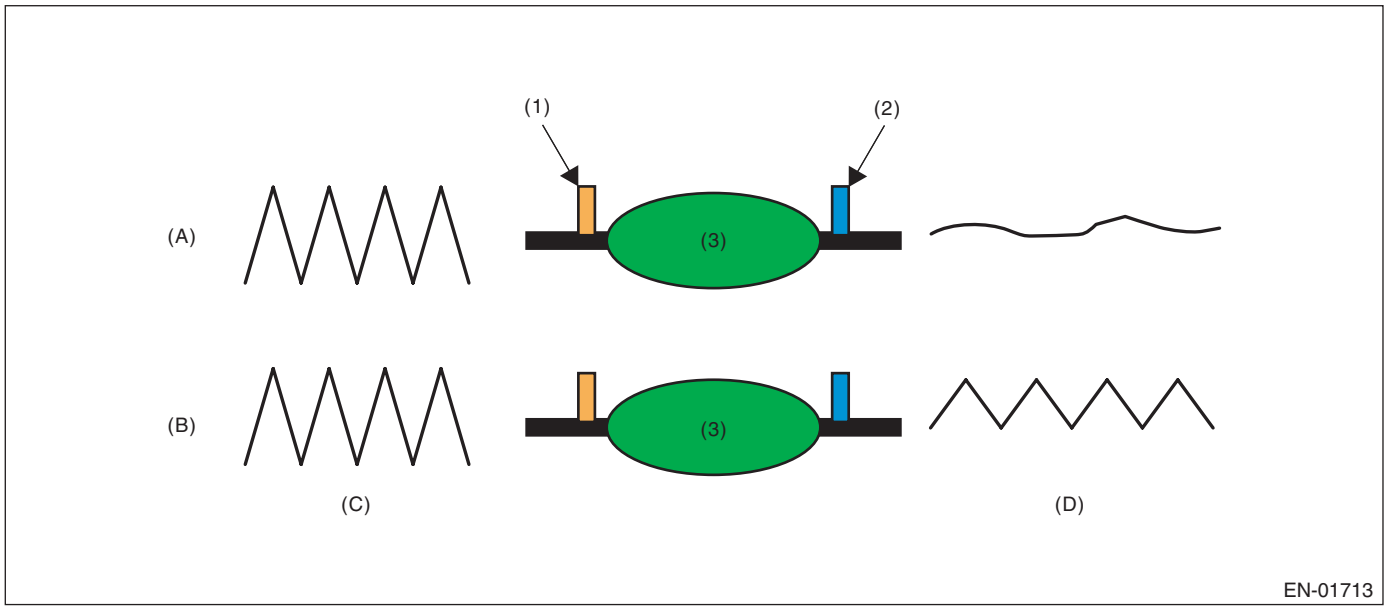

(A) Normal
(B) Deterioration
(C) Output waveform from the front oxygen (A/F) sensor
(D) Output waveform from the rear oxygen sensor
(1) Front oxygen (A/F) sensor
(2) Rear oxygen sensor
(3) Catalytic converter

3. EXECUTION CONDITION

Secondary Parameters	Execution condition
Battery voltage	≥ 10.9 V
Barometric pressure	≥ 75.1 kPa (563 mmHg, 22.2 inHg)
Sub feedback	In operation
Intake air amount	≥ 8 g/s (0.28 oz/s) and < 45 g/s (1.59 oz/s)
Estimated catalyst temperature	≥ 570 °C (1058 °F) (CVT model) ≥ 575 °C (1067 °F) (MT model)
Vehicle speed	≥ 40 km/h (24.9 MPH)
Rear oxygen output change from 0.55 V or less to 0.55 V or more	Experienced after fuel cut
ELCM switching valve	Open
Estimated temperature of the rear oxygen sensor element	≥ 500 °C (932 °F)

4. GENERAL DRIVING CYCLE

Perform the diagnosis only once at a constant vehicle speed of 40 km/h (24.9 MPH) or more.

5. DIAGNOSTIC METHOD

After the enable conditions have been established, calculate the front oxygen (A/F) sensor lambda value deviation sum value (Σ |(sglmd$_n$ – sglmd$_{n-1}$)|), and rear oxygen sensor output voltage deviation sum value (Σ |(ro2sad$_n$ – ro2sad$_{n-1}$)|) in every 32 ms × 4 times. If the front oxygen (A/F) sensor lambda value deviation sum value (Σ |(sglmd$_n$ – sglmd$_{n-1}$)|) is the predetermined value or more, calculate the diagnostic value.
If the duration of time while the following conditions are met is within the time indicated, judge as NG.

Judgment Value

Malfunction Criteria	Threshold Value
Σ |(ro2sad$_n$ – ro2sad$_{n-1}$)| / Σ |(sglmd$_n$ – sglmd$_{n-1}$)|	> 8

Time Needed for Diagnosis: 30 — 55 seconds
Malfunction Indicator Light Illumination: Illuminates when malfunction occurs in 2 continuous driving cycles.

BY:DTC P0441 EVAP SYSTEM (CPC) INCORRECT PURGE FLOW

DTC DETECTING CONDITION:
Detected when two consecutive driving cycles with fault occur.
TROUBLE SYMPTOM:
Improper idling

CAUTION:
After servicing or replacing faulty parts, perform Clear Memory Mode <Ref. to EN(H4DO)(diag)-78, OPERATION, Clear Memory Mode.>, and Inspection Mode <Ref. to EN(H4DO)(diag)-64, PROCEDURE, Inspection Mode.>.

	Step	Check	Yes	No
1	**CHECK FOR ANY OTHER DTC ON DISPLAY.**	Is any other DTC displayed?	Check the appropriate DTC using the “List of Diagnostic Trouble Code (DTC)”. <Ref. to EN(H4DO)(diag)-102, List of Diagnostic Trouble Code (DTC).>	Go to step **2**.
2	**CHECK PURGE CONTROL SOLENOID VALVE.** Operate the purge control solenoid valve using the Subaru Select Monitor. NOTE: For detailed operation procedures, refer to the “Active Test”. <Ref. to EN(H4DO)(diag)-79, Active Test.>	Does the purge control solenoid valve operate?	Go to step **3**.	Replace the purge control solenoid valve. <Ref. to EC(H4DO)-21, Purge Control Solenoid Valve.>
3	**CHECK EVAPORATIVE EMISSION CONTROL SYSTEM LINE.** Turn the ignition switch to OFF.	Are there holes, cracks, clogging, or disconnection, misconnection of hoses or pipes in evaporative emission control system?	Repair or replace the hoses or pipes.	Repair the poor contact of ECM connector.

1. OUTLINE OF DIAGNOSIS

This monitor intrusively performs a functional check to detect incorrect purge flow. The monitor seals the EVAP system (i.e. isolate from atmosphere) by closing the ELCM switching valve intrusively after recovering from a fuel cut event. In the case of normal condition, and the commanded purge control duty ratio is more than 0%, ELCM pressure (gauge) will decrease due to engine vacuum and reach to the threshold value. However, in the case of malfunction condition (e.g. fuel cap open, purge valve stuck closed, purge line disconnected or blocked), if the ELCM pressure (gauge) does not reach the threshold within a predetermined time, the monitor determines a malfunction and stores a fault code.

Malfunction Criteria

ELCM pressure (gauge) > Threshold

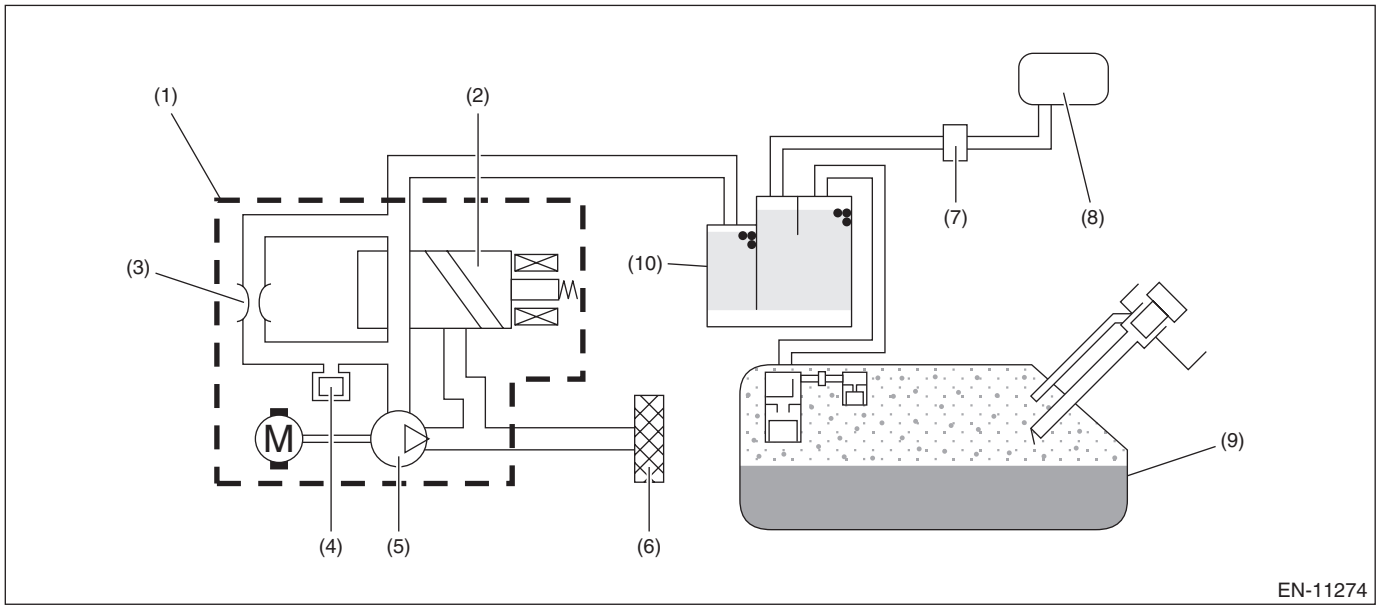

(1)	ELCM	(5)	Vacuum pump	(9)	Fuel tank
(2)	Switching valve (closed)	(6)	Drain filter	(10)	Canister
(3)	Reference orifice (0.02 inch orifice)	(7)	Purge control solenoid valve		
(4)	Pressure sensor	(8)	Intake manifold		

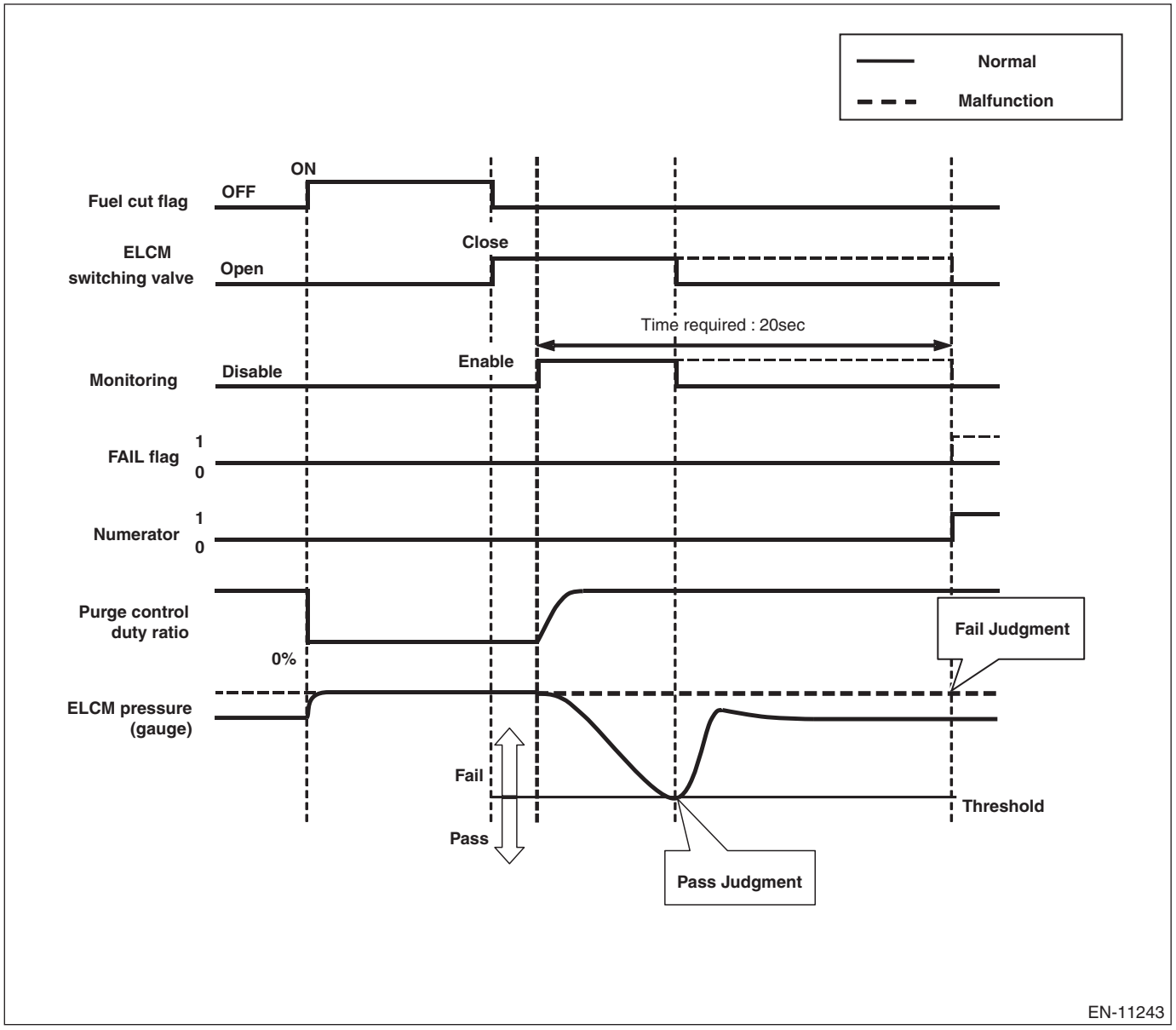
Normal
Malfunction
Fuel cut flag
ON
OFF
ELCM switching valve
Close
Open
Time required : 20sec
Monitoring
Disable
Enable
FAIL flag
1
0
Numerator
1
0
Purge control duty ratio
0%
Fail Judgment
ELCM pressure (gauge)
Fail
Pass
Threshold
Pass Judgment
EN-11243

2. EXECUTION CONDITION

Secondary Parameters	Execution condition
Time when ELCM switching valve is closed	< 120000 ms
Purge control solenoid valve control duty	> 0%
Precondition Conditions to close the switching valve of ELCM intrusively.	
Battery voltage	≥ 10.9 V
Barometric pressure	≥ 75.1 kPa (563 mmHg, 22.2 inHg)
Integrated value of calculated purge airflow since engine start	≥ Value from Map*
Atmospheric pressure – Intake manifold absolute pressure	≥ 6.7 kPa (50 mmHg, 2 inHg)
((Fuel system status for time) followed by Fuel system status)	= Fuel cut ≥ Is ≠ Fuel cut
Ambient temperature	≥ –25 °C (–13 °F)

*It takes approximately 2 min at 40 MPH

Map

Ambient temperature °C (°F)	0 (32)	10 (50)	20 (68)	30 (86)	40 (104)	50 (122)
Integrated value of calculated purge airflow since engine start g (oz)	72 (2.54)	72 (2.54)	72 (2.54)	72 (2.54)	72 (2.54)	72 (2.54)

3. GENERAL DRIVING CYCLE

Perform the diagnosis only once during ordinary driving.

4. DIAGNOSTIC METHOD

Judge as NG when the following conditions are established.

Judgment Value

Malfunction Criteria	Threshold Value
ELCM pressure	> 666.6 Pa × –1 (5 mmHg × –1, 0.2 inHg × –1)

Time Needed for Diagnosis: 30000 ms – 10000 ms
Malfunction Indicator Light Illumination: Illuminates when malfunction occurs in 2 continuous driving cycles.

BZ:DTC P0451 EVAP SYSTEM (CPC) PRESSURE SENSOR/SWITCH CIRCUIT RANGE/PERFORMANCE

DTC DETECTING CONDITION:

Detected when two consecutive driving cycles with fault occur.

CAUTION:

After servicing or replacing faulty parts, perform Clear Memory Mode <Ref. to EN(H4DO)(diag)-78, OPERATION, Clear Memory Mode.>, and Inspection Mode <Ref. to EN(H4DO)(diag)-64, PROCEDURE, Inspection Mode.>.

	Step	Check	Yes	No
1	**CHECK FOR ANY OTHER DTC ON DISPLAY.**	Is any other DTC displayed?	Check the appropriate DTC using the “List of Diagnostic Trouble Code (DTC)”. <Ref. to EN(H4DO)(diag)-102, List of Diagnostic Trouble Code (DTC).>	Go to step **2**.
2	**CHECK CURRENT DATA.** 1) Turn the ignition switch to ON (engine OFF). 2) Using the Subaru Select Monitor or general scan tool, read the value in «Absolute Evap Sys. Pressure» and «Mani. Absolute Pressure», and compare them with the actual atmospheric pressure. NOTE: • Subaru Select Monitor For detailed operation procedures, refer to “Read Current Data For Engine”. <Ref. to EN(H4DO)(diag)-45, Subaru Select Monitor.> • General scan tool For detailed operation procedures, refer to the general scan tool operation manual. • To read the actual atmospheric pressure, connect the Subaru Select Monitor or general scan tool to the other known good vehicle.	Is the difference with the actual atmospheric pressure 2.4 kPa (17.8 mmHg, 0.7 inHg) or more?	Replace the part that showed larger deviation from the actual atmospheric pressure than the other. • If deviations in value for «Absolute Evap Sys. Pressure» is larger: Replace the leak check valve assembly. <Ref. to EC(H4DO)-59, Leak Check Valve Assembly.> • If deviations in value for «Mani. Absolute Pressure» is larger: Replace the manifold absolute pressure sensor. <Ref. to FU(H4DO)-63, Manifold Absolute Pressure Sensor.>	Even if DTC is detected, the circuit has returned to a normal condition at this time. Reproduce the failure, and then perform the diagnosis again. NOTE: In this case, temporary poor contact of connector, temporary open or short circuit of harness may be the cause.

1. OUTLINE OF DIAGNOSIS

Detect the malfunction of ELCM pressure sensor output properties.
Judge as NG when the ELCM pressure sensor output value is largely different from the intake manifold pressure when the ignition switch is ON.

2. COMPONENT DESCRIPTION

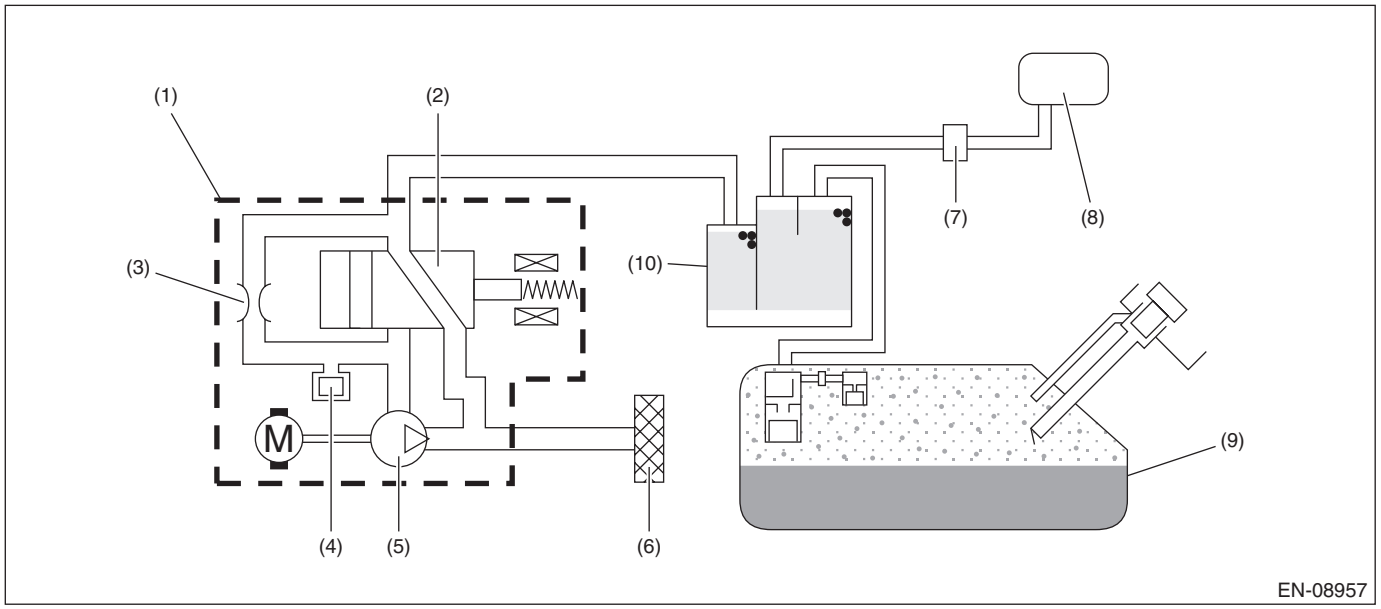

(1) ELCM
(2) Switching valve
(3) Reference orifice (0.02 inch orifice)
(4) Pressure sensor
(5) Vacuum pump
(6) Drain filter
(7) Purge control solenoid valve
(8) Intake manifold
(9) Fuel tank
(10) Canister

3. EXECUTION CONDITION

Secondary Parameters	Execution condition
Elapsed time after ignition switch is turned to ON	≥ 500 ms and < 60000 ms
Soaking time	≥ 60 s
ELCM vacuum pump	Not in operation
ELCM switching valve	Open
Purge control	Not in operation

4. GENERAL DRIVING CYCLE

Perform the diagnosis once at ignition ON.

5. DIAGNOSTIC METHOD

If the duration of time while the following conditions are met is longer than the time indicated, judge as NG.

Judgment Value

Malfunction Criteria	Threshold Value
|ELCM pressure sensor output value – intake manifold pressure (absolute pressure) when ignition switch is ON|	> 4732.9 Pa (35.5 mmHg, 1.4 inHg)

Time Needed for Diagnosis: 320 ms
Malfunction Indicator Light Illumination: Illuminates when malfunction occurs in 2 continuous driving cycles.

CA:DTC P0452 EVAP SYSTEM (CPC) PRESSURE SENSOR/SWITCH CIRCUIT LOW

DTC DETECTING CONDITION:
Immediately at fault recognition

CAUTION:
After servicing or replacing faulty parts, perform Clear Memory Mode <Ref. to EN(H4DO)(diag)-78, OPERATION, Clear Memory Mode.>, and Inspection Mode <Ref. to EN(H4DO)(diag)-64, PROCEDURE, Inspection Mode.>.

WIRING DIAGRAM:

- Engine Electrical System ENGINE TYPE FB (WITHOUT PUSH BUTTON START) <Ref. to WI-170, ENGINE TYPE FB (WITHOUT PUSH BUTTON START), WIRING DIAGRAM, Engine Electrical System.>
- Engine Electrical System ENGINE TYPE FB (WITH PUSH BUTTON START) <Ref. to WI-184, ENGINE TYPE FB (WITH PUSH BUTTON START), WIRING DIAGRAM, Engine Electrical System.>

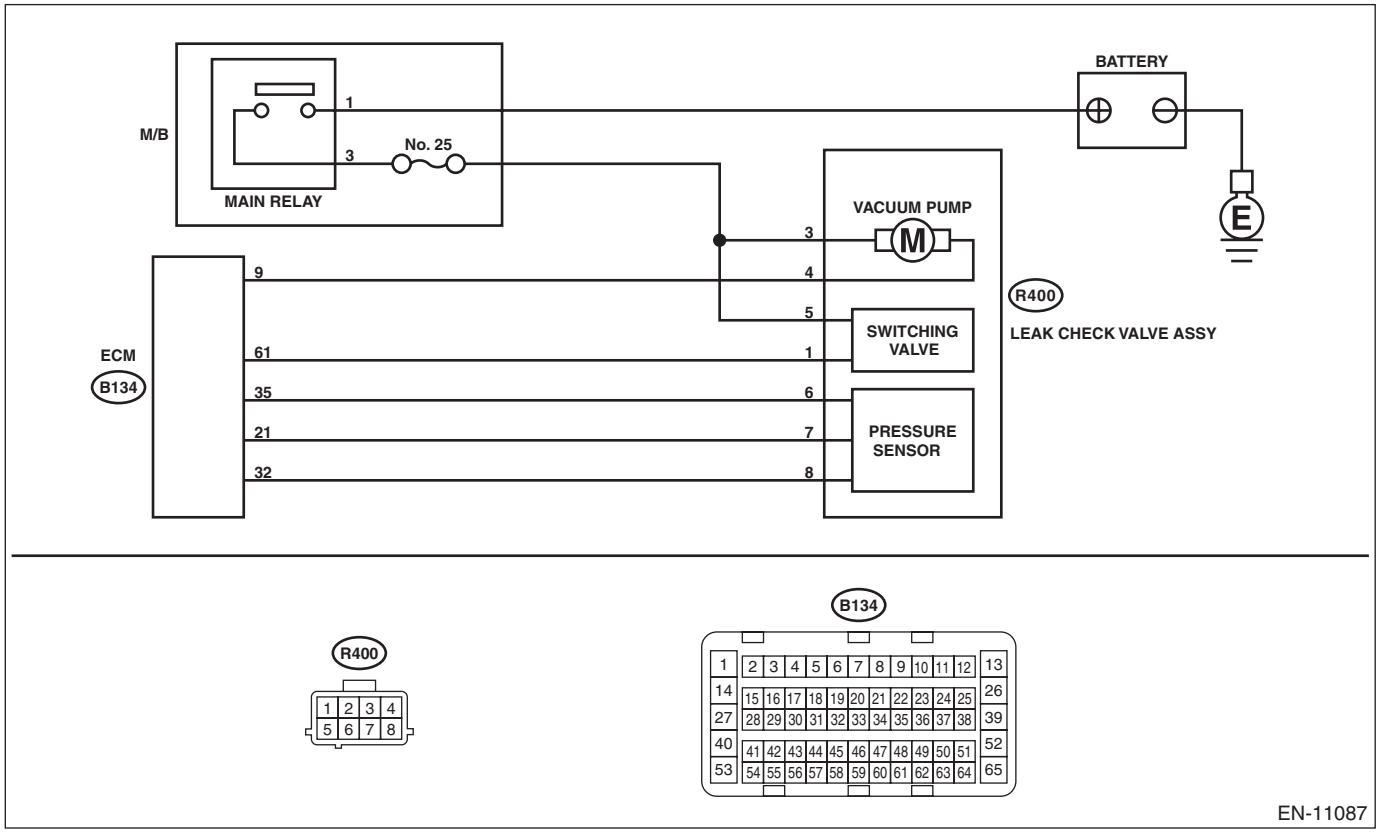

	Step	Check	Yes	No
1	**CHECK CURRENT DATA.** 1) Turn the ignition switch to ON. 2) Read the value of «Atmosphere Pressure» using the Subaru Select Monitor or a general scan tool. NOTE: • Subaru Select Monitor For detailed operation procedures, refer to "Read Current Data For Engine". <Ref. to EN(H4DO)(diag)-45, Subaru Select Monitor.> • General scan tool For detailed operation procedures, refer to the general scan tool operation manual.	Is the value in «Atmosphere Pressure» 34 kPa (255 mmHg, 10 inHg) or less?	Go to step **2**.	Even if DTC is detected, the circuit has returned to a normal condition at this time. Reproduce the failure, and then perform the diagnosis again. NOTE: In this case, temporary poor contact of connector, temporary open or short circuit of harness may be the cause.
2	**CHECK POWER SUPPLY OF LEAK CHECK VALVE ASSEMBLY.** 1) Turn the ignition switch to OFF. 2) Disconnect the connector from the leak check valve assembly. 3) Turn the ignition switch to ON. 4) Measure the voltage between the leak check valve assembly connector and chassis ground. ***Connector & terminal*** ***(R400) No. 6 (+) — Chassis ground (–):***	Is the voltage 4.5 V or more?	Go to step **3**.	Repair the harness and connector. NOTE: In this case, repair the following item: • Open circuit in harness between ECM connector and the leak check valve assembly connector • Poor contact of ECM connector • Poor contact of coupling connector
3	**CHECK HARNESS BETWEEN ECM AND LEAK CHECK VALVE ASSEMBLY CONNECTOR.** 1) Turn the ignition switch to OFF. 2) Disconnect the connector from ECM. 3) Measure the resistance between ECM connector and chassis ground. ***Connector & terminal*** ***(B134) No. 21 — Chassis ground:***	Is the resistance 1 MΩ or more?	Go to step **4**.	Repair the short circuit to ground in harness between ECM connector and leak check valve assembly connector.
4	**CHECK FOR POOR CONTACT.** Check for poor contact of leak check valve assembly connector.	Is there poor contact in the leak check valve assembly connector?	Repair the poor contact in the leak check valve assembly connector.	Replace the leak check valve assembly. <Ref. to EC(H4DO)-59, Leak Check Valve Assembly.>

1. OUTLINE OF DIAGNOSIS

Detect the open or short circuit of the ELCM pressure sensor.
Judge as NG if out of specification.

2. COMPONENT DESCRIPTION

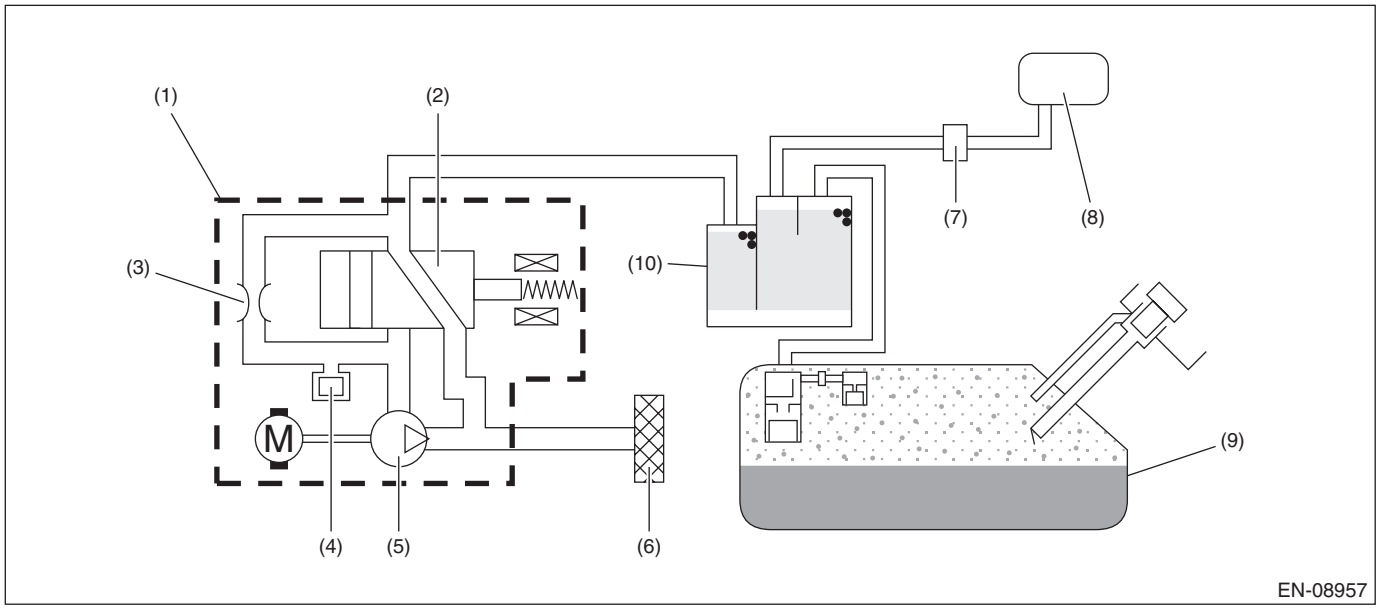

(1) ELCM
(2) Switching valve
(3) Reference orifice (0.02 inch orifice)
(4) Pressure sensor
(5) Vacuum pump
(6) Drain filter
(7) Purge control solenoid valve
(8) Intake manifold
(9) Fuel tank
(10) Canister

3. EXECUTION CONDITION

Secondary Parameters	Execution condition
Battery voltage	≥ 10.9 V

4. GENERAL DRIVING CYCLE

Always perform the diagnosis continuously.

5. DIAGNOSTIC METHOD

If the duration of time while the following conditions are met is longer than the time indicated, judge as NG.

Judgment Value

Malfunction Criteria	Threshold Value
Output voltage	< 0.973 V

Time Needed for Diagnosis: 1000 ms
Malfunction Indicator Light Illumination: Illuminates as soon as a malfunction occurs.

CB:DTC P0453 EVAP SYSTEM (CPC) PRESSURE SENSOR/SWITCH CIRCUIT HIGH

DTC DETECTING CONDITION:
Immediately at fault recognition

CAUTION:
After servicing or replacing faulty parts, perform Clear Memory Mode <Ref. to EN(H4DO)(diag)-78, OPERATION, Clear Memory Mode.>, and Inspection Mode <Ref. to EN(H4DO)(diag)-64, PROCEDURE, Inspection Mode.>.

WIRING DIAGRAM:

- Engine Electrical System ENGINE TYPE FB (WITHOUT PUSH BUTTON START) <Ref. to WI-170, ENGINE TYPE FB (WITHOUT PUSH BUTTON START), WIRING DIAGRAM, Engine Electrical System.>
- Engine Electrical System ENGINE TYPE FB (WITH PUSH BUTTON START) <Ref. to WI-184, ENGINE TYPE FB (WITH PUSH BUTTON START), WIRING DIAGRAM, Engine Electrical System.>

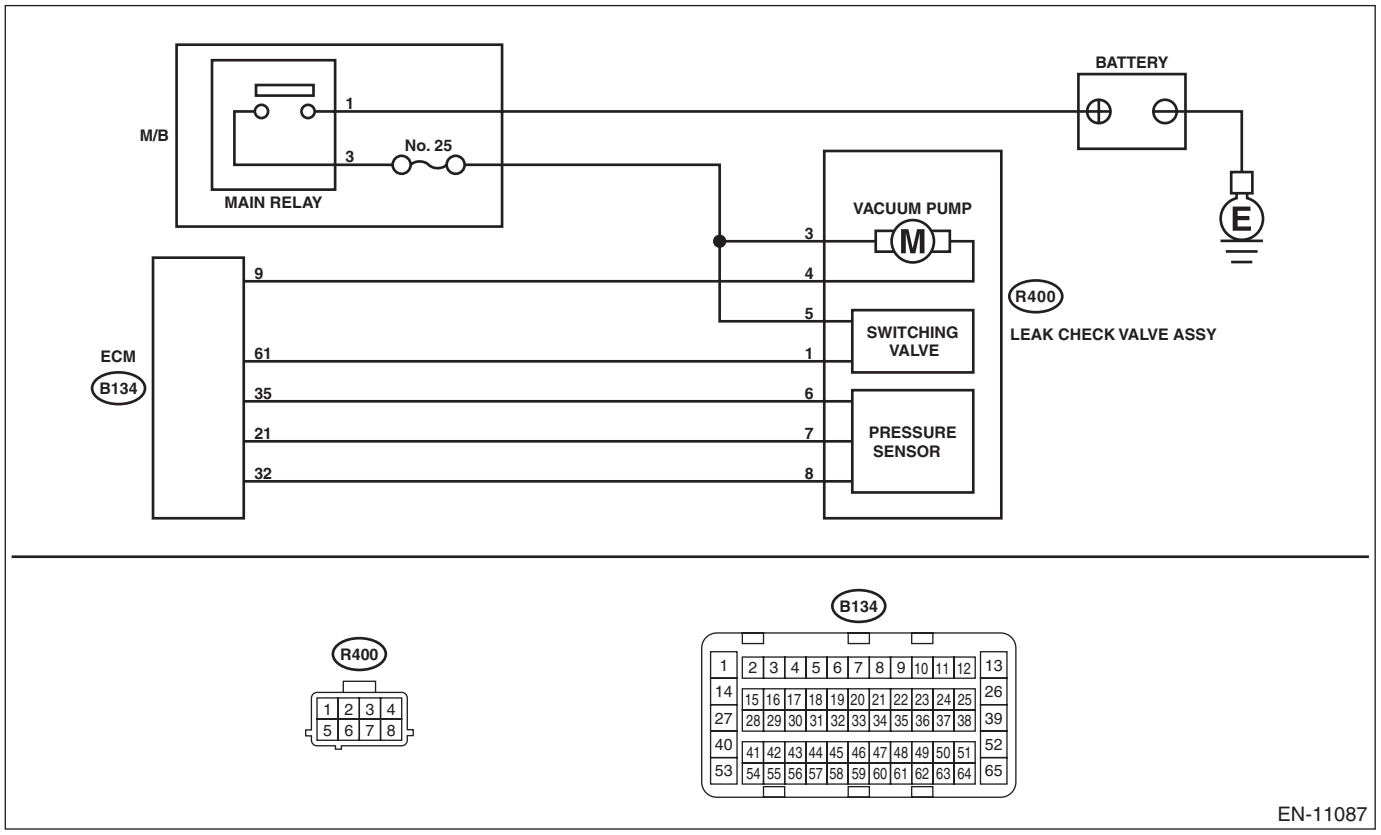

	Step	Check	Yes	No
1	**CHECK CURRENT DATA.** 1) Turn the ignition switch to ON. 2) Read the value of «Atmosphere Pressure» using the Subaru Select Monitor or a general scan tool. NOTE: • Subaru Select Monitor For detailed operation procedures, refer to "Read Current Data For Engine". <Ref. to EN(H4DO)(diag)-45, Subaru Select Monitor.> • General scan tool For detailed operation procedures, refer to the general scan tool operation manual.	Is the value in «Atmosphere Pressure» 125 kPa (938 mmHg, 36.9 inHg) or more?	Go to step **2**.	Even if DTC is detected, the circuit has returned to a normal condition at this time. Reproduce the failure, and then perform the diagnosis again. NOTE: In this case, temporary poor contact of connector, temporary open or short circuit of harness may be the cause.
2	**CHECK HARNESS BETWEEN ECM AND LEAK CHECK VALVE ASSEMBLY CONNECTOR.** 1) Turn the ignition switch to OFF. 2) Disconnect the connector from ECM and the leak check valve assembly. 3) Measure the resistance of harness between ECM connector and the leak check valve assembly connector. ***Connector & terminal*** ***(B134) No. 21 — (R400) No. 7:*** ***(B134) No. 32 — (R400) No. 8:***	Is the resistance less than 1 Ω?	Go to step **3**.	Repair the harness and connector. NOTE: In this case, repair the following item: • Open circuit in harness between ECM connector and the leak check valve assembly connector • Poor contact of coupling connector • Poor contact of joint connector
3	**CHECK FOR POOR CONTACT.** Check for poor contact of ECM and the leak check valve assembly connector.	Is there poor contact in ECM and the leak check valve assembly connector?	Repair the poor contact of ECM and the leak check valve assembly connector.	Go to step **4**.
4	**CHECK LEAK CHECK VALVE ASSEMBLY.** Check the pressure sensor of the leak check valve assembly. <Ref. to EC(H4DO)-60, CHECK PRESSURE SENSOR, INSPECTION, Leak Check Valve Assembly.>	Is the pressure sensor of the leak check valve assembly OK?	Repair the short circuit to power in harness between ECM connector and leak check valve assembly connector.	Replace the leak check valve assembly. <Ref. to EC(H4DO)-59, Leak Check Valve Assembly.>

1. OUTLINE OF DIAGNOSIS

Detect the open or short circuit of the ELCM pressure sensor.
Judge as NG if out of specification.

2. COMPONENT DESCRIPTION

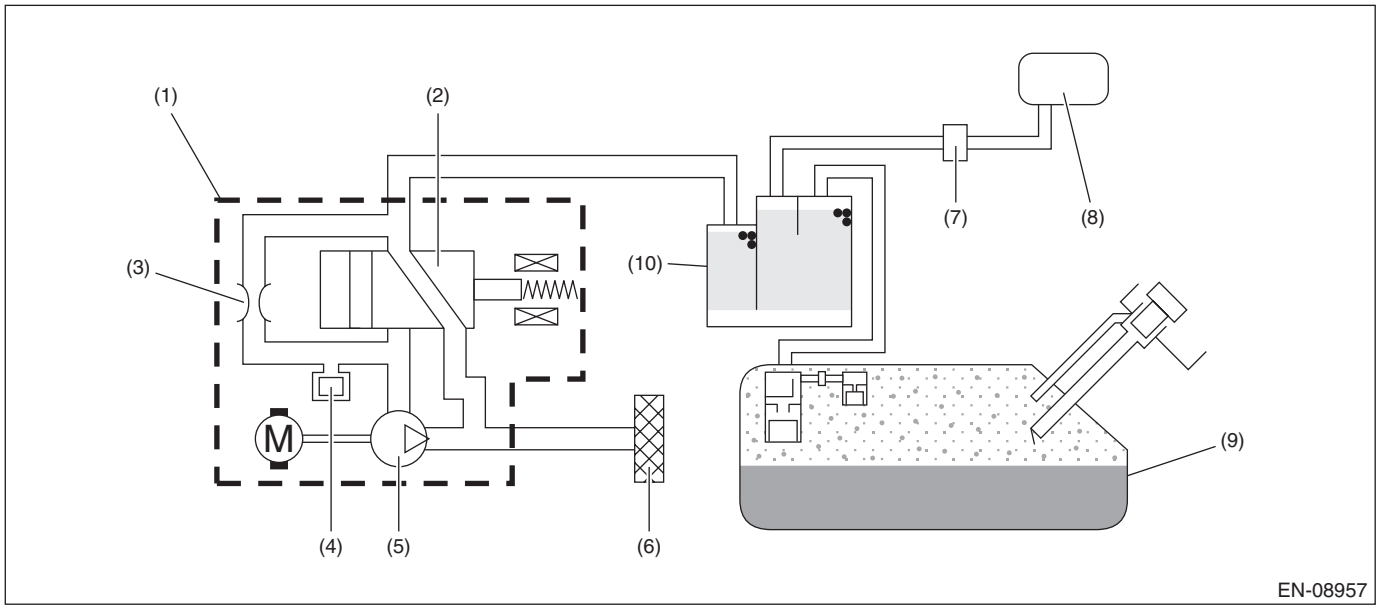

(1) ELCM
(2) Switching valve
(3) Reference orifice (0.02 inch orifice)
(4) Pressure sensor
(5) Vacuum pump
(6) Drain filter
(7) Purge control solenoid valve
(8) Intake manifold
(9) Fuel tank
(10) Canister

3. EXECUTION CONDITION

Secondary Parameters	Execution condition
Battery voltage	≥ 10.9 V

4. GENERAL DRIVING CYCLE

Always perform the diagnosis continuously.

5. DIAGNOSTIC METHOD

If the duration of time while the following conditions are met is longer than the time indicated, judge as NG.

Judgment Value

Malfunction Criteria	Threshold Value
Output voltage	≥ 4.095 V

Time Needed for Diagnosis: 1000 ms
Malfunction Indicator Light Illumination: Illuminates as soon as a malfunction occurs.

CC:DTC P0455 EVAP SYSTEM (CPC) LEAK DETECTED (LARGE LEAK)

DTC DETECTING CONDITION:
Detected when two consecutive driving cycles with fault occur.
TROUBLE SYMPTOM:
- Fuel odor
- There is a hole of more than 1.0 mm (0.04 in) dia. in evaporation system or fuel tank.
- Fuel filler cap loose or lost

CAUTION:
After servicing or replacing faulty parts, perform Clear Memory Mode <Ref. to EN(H4DO)(diag)-78, OPERATION, Clear Memory Mode.>, and Inspection Mode <Ref. to EN(H4DO)(diag)-64, PROCEDURE, Inspection Mode.>.

	Step	Check	Yes	No
1	**CHECK FUEL FILLER CAP.** 1) Turn the ignition switch to OFF. 2) Check the fuel filler cap. NOTE: The DTC is stored in memory if fuel filler cap is or was loose or if the cap chain has caught while tightening.	Is the fuel filler cap tightened securely?	Go to step **2**.	Tighten fuel filler cap securely.
2	**CHECK FUEL FILLER CAP.**	Is the fuel filler cap genuine?	Go to step **3**.	Replace with a genuine fuel filler cap.
3	**CHECK FUEL FILLER PIPE GASKET.**	Is there any damage to the seal between fuel filler cap and fuel filler pipe?	Repair or replace the fuel filler cap and fuel filler pipe. <Ref. to FU(H4DO)-110, Fuel Filler Pipe.>	Go to step **4**.
4	**CHECK PURGE CONTROL SOLENOID VALVE.** Check air-tightness of the purge control solenoid valve. <Ref. to EC(H4DO)-24, INSPECTION, Purge Control Solenoid Valve.>	Is the purge control solenoid valve OK?	Go to step **5**.	Replace the purge control solenoid valve. <Ref. to EC(H4DO)-21, Purge Control Solenoid Valve.>
5	**CHECK EVAPORATIVE EMISSION CONTROL SYSTEM LINE.**	Are there holes on the evaporation line?	Repair or replace the evaporation line. <Ref. to FU(H4DO)-143, Fuel Delivery and Evaporation Lines.>	Go to step **6**.
6	**CHECK CANISTER.**	Are there holes on the canister?	Replace the canister. <Ref. to EC(H4DO)-9, Canister.>	Go to step **7**.
7	**CHECK LEAK CHECK VALVE ASSEMBLY.**	Are there damage or holes on the leak check valve assembly?	Replace the leak check valve assembly. <Ref. to EC(H4DO)-59, Leak Check Valve Assembly.>	Go to step **8**.
8	**CHECK FUEL TANK.** Remove the fuel tank. <Ref. to FU(H4DO)-97, Fuel Tank.>	Are there damage or holes on the fuel tank?	Repair or replace the fuel tank. <Ref. to FU(H4DO)-97, Fuel Tank.>	Go to step **9**.

Step		Check	Yes	No
9	**CHECK ANY OTHER MECHANICAL TROUBLE IN EVAPORATIVE EMISSION CONTROL SYSTEM.**	Are there holes, cracks, clogging, or disconnection, misconnection of hoses or pipes in evaporative emission control system?	Repair or replace the hoses or pipes.	Repair the poor contact of ECM connector.

1. OUTLINE OF DIAGNOSIS

This diagnosis judges whether the ELCM operation is normal or not, and whether the evaporative emission system has leak and clogging or not.
To purge the canister, after driving, perform the five hours soaking after ignition switch OFF in order to stabilize the evaporative gas status. * After 5 or 7 or 9.5 hours passed, ECM is activated by soaking timer, and the leak check is started.
Judges whether the ELCM operation is normal or not, by measuring the reference pressure status via reference orifice (0.02 inch orifice). Judge as malfunction if the reference pressure is out of specified range. Then, judge whether there is a leak or not, by comparing the pressure (leak pressure) when the reference pressure and the evaporative emission system are in negative pressure condition. Judge as system leak in the evaporative emission system if the leak pressure is higher than reference pressure. Judge as clogging of pipe if the leak pressure becomes lower than the reference pressure within the specified amount of time.
0.02 inch leak and 0.04 inch leak can be distinguished by measuring the leak pressure.
The diagnosis results are stored inside ECM until the engine is started again.
*: When the test conditions are not met in 5 hours, perform diagnosis at elapsed time of 7 hours. When the test conditions are not met in 7 hours, perform diagnosis at elapsed time of 9.5 hours.

Diagnostic item	
ELCM system (ELCM body)	Vacuum pump stuck Switching valve stuck to open Switching valve stuck to close Reference orifice flow large Reference orifice flow small
Leak check	Large leak • 0.04 inch leak • Fuel cap loose • Fuel cap off • System malfunction
	Very small leak • 0.02 inch leak
Clogging of pipe	—

OUTLINE OF DIAGNOSIS

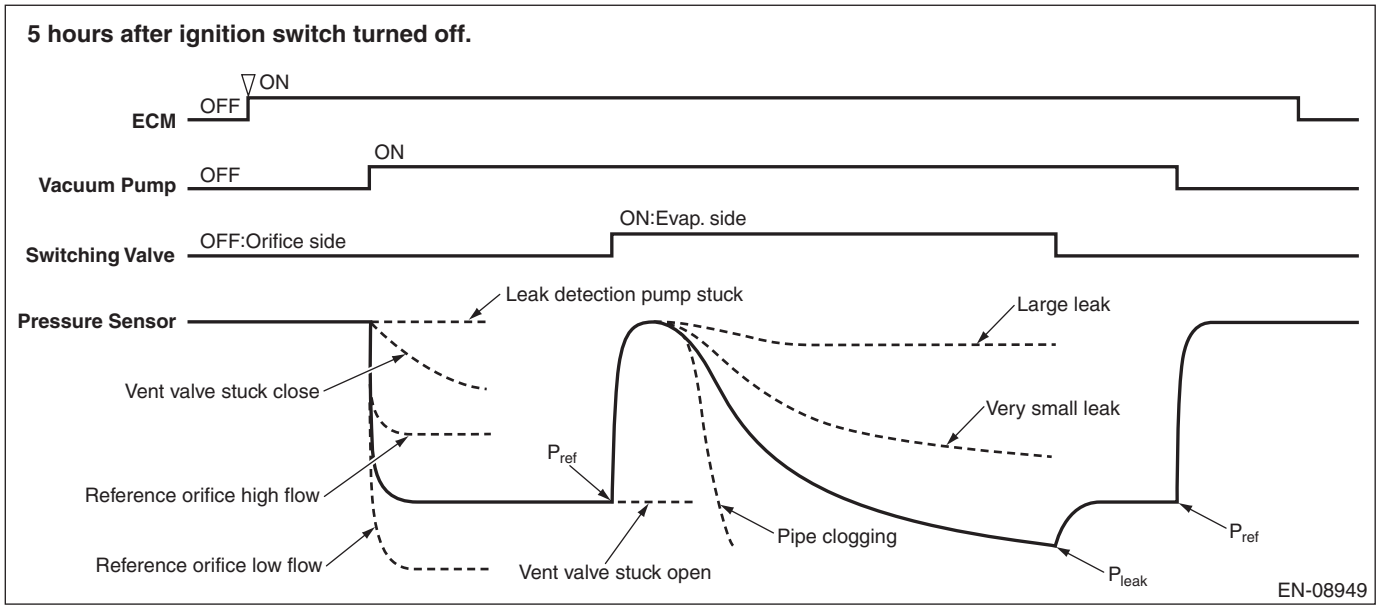

2. COMPONENT DESCRIPTION

ELCM consists of the pressure sensor, the reference orifice (diameter of 0.02 inch), the vacuum pump which introduces the negative pressure into evaporative emission system, and the switching valve which switches the passage to introduce the negative pressure.

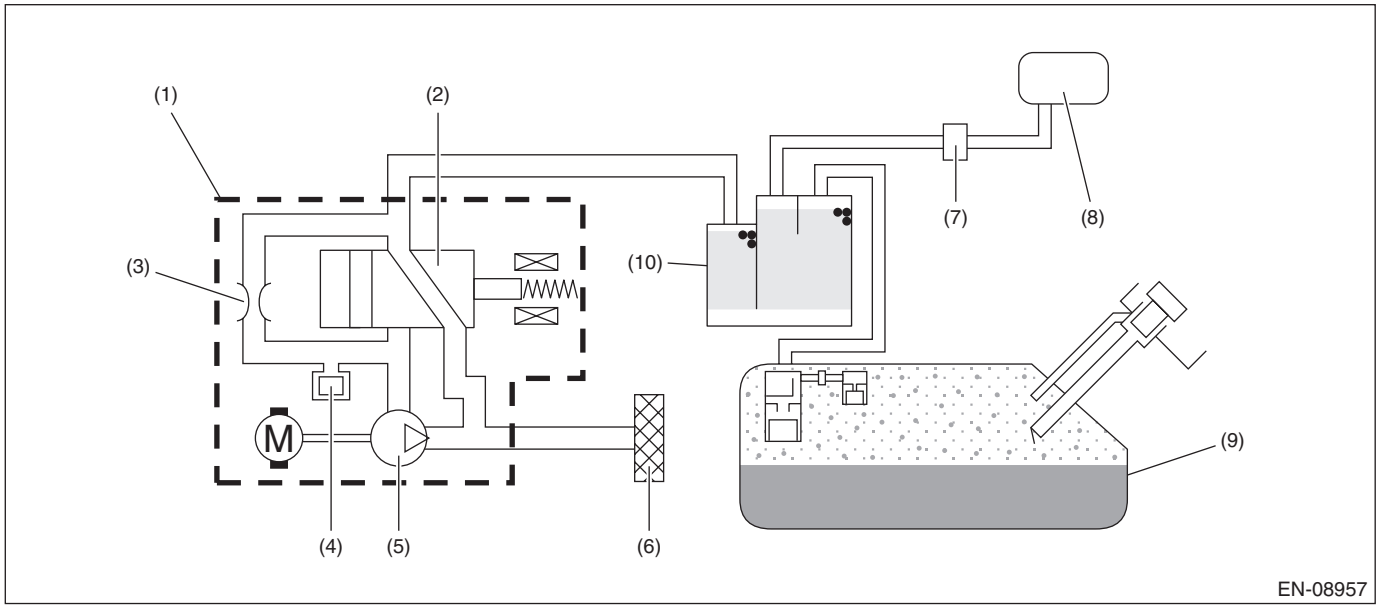

(1) ELCM
(2) Switching valve
(3) Reference orifice (0.02 inch orifice)
(4) Pressure sensor
(5) Vacuum pump
(6) Drain filter
(7) Purge control solenoid valve
(8) Intake manifold
(9) Fuel tank
(10) Canister

3. EXECUTION CONDITION

Secondary Parameters	Execution condition
Battery voltage	≥ 10.9 V
Barometric pressure	≥ 75.1 kPa (563 mmHg, 22.2 inHg)
Activation of soaking timer	Completed
Engine coolant temperature	≥ 4.4 °C (39.9 °F) and < 45 °C (113 °F)
Accumulated purge amount during previous driving cycle	≥ Value of Map 1

Map 1

Engine coolant temperature °C (°F)	0 (32)	30 (86)	35 (95)	40 (104)	45 (113)
Accumulated purge amount during previous driving cycle g (oz)	128 (4.51)	128 (4.51)	480 (16.93)	832 (29.34)	1184 (41.76)

4. GENERAL DRIVING CYCLE

Perform the diagnosis only once when 5 or 7 or 9.5 hours has passed after ignition switch is OFF. For more detail, refer to “OUTLINE OF DIAGNOSIS”. <Ref. to EN(H4DO)(diag)-316, OUTLINE OF DIAGNOSIS, DTC P0455 EVAP SYSTEM (CPC) LEAK DETECTED (LARGE LEAK), Diagnostic Procedure with Diagnostic Trouble Code (DTC).>

5. DIAGNOSTIC METHOD

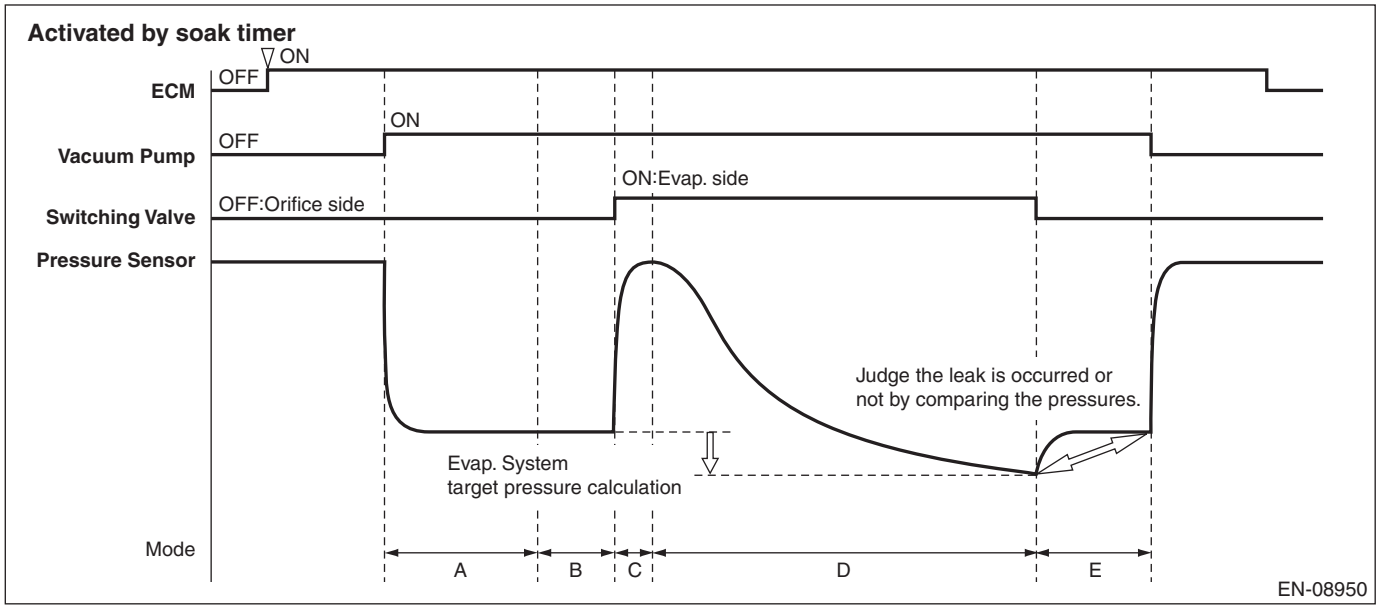

Mode	Explanation of Mode	Diagnosis Period
A	Vacuum pump operation confirmation and characteristics stability	7 s or less & 300 s
B	Measurement of reference pressure for setting the target negative pressure	40 s or less
C	Switching valve operation confirmation	12 s or less
D	Clogging of pipe diagnosis and leak pressure measurement	900 s or less
E	Reference pressure measurement for judgment	40 s or less

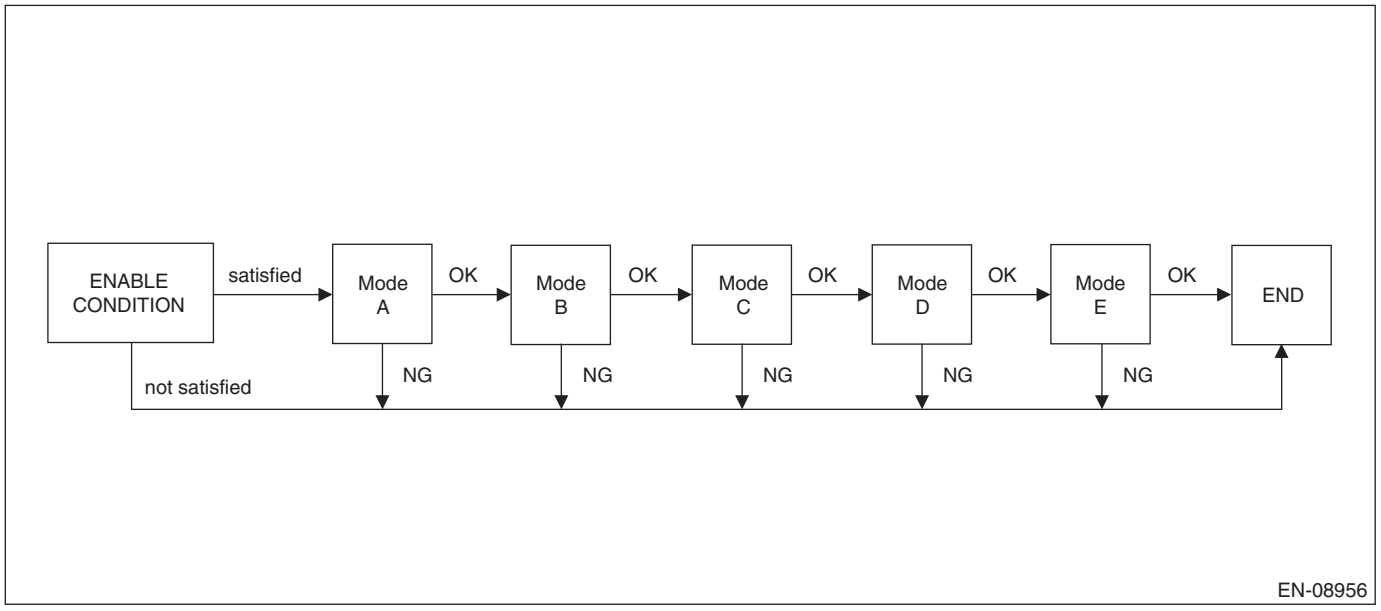

Mode A (Vacuum pump operation confirmation and characteristics stability)

Purpose: Detect the vacuum pump operation trouble.
Judge as NG when the following conditions are established.
Judge as OK if the following conditions are not established, and warm up for five minutes to stabilize the vacuum pump characteristics.

Judgment Value

Malfunction Criteria	Threshold Value	DTC
Pressure sensor output value	> –224 Pa (–1.68 mmHg, –0.1 inHg)	P2404

Mode B (Measurement of reference pressure for setting the target negative pressure)

1. Purpose: Judge the reference pressure stability.
Judge as NG when the following conditions are established.

Judgment Value

Malfunction Criteria	Threshold Value	DTC
|Pressure sensor maximum output value – Pressure sensor minimum output value|	> 314 Pa (2.355 mmHg, 0.1 inHg)	P2404

2. Purpose: Judge whether the reference pressure is within the normal range, and detect the vacuum pump and orifice malfunctions.
Judge as NG when the following conditions are established.

Judgment Value

Malfunction Criteria	Threshold Value	DTC
Reference pressure for setting the target negative pressure Reference pressure for judgment	< Value of Map 2 or > Value of Map 3	P2404

Map 2

Barometric pressure kPa (mmHg, inHg)	70 (525, 20.7)	80 (600, 23.6)	90 (675, 26.6)	100 (750, 29.5)
Reference pressure for setting the target negative pressure kPa (mmHg, inHg)	–4 (–29.79, –1.2)	–4.1 (–30.593, –1.2)	–4.2 (–31.395, –1.2)	–4.3 (–32.19, –1.3)

Map 3

Barometric pressure kPa (mmHg, inHg)	70 (525, 20.7)	80 (600, 23.6)	90 (675, 26.6)	100 (750, 29.5)
Reference pressure for judgment kPa (mmHg, inHg)	–0.9 (–7.065, –0.3)	–1 (–7.86, –0.3)	–1.2 (–8.663, –0.3)	–1.3 (–9.465, –0.4)

Mode C (Switching valve operation confirmation)

Purpose: Measure the pressure increase when switching valve is changed from open to close, and detect the stuck to open/close malfunctions of the switching valve.
Judge as NG when the following conditions are established.

Judgment Value

Malfunction Criteria	Threshold Value	DTC
Pressure sensor output value – Reference pressure for setting the target negative pressure	< 224 Pa (1.68 mmHg, 0.1 inHg)	P2404

Mode D (Clogging of pipe diagnosis and leak pressure measurement)

1. **Clogging of pipe**
   Purpose: Measure the time required for the evaporative emission system to reach the target negative pressure by the vacuum pump, and detect the clogging of pipe trouble.
   Judge as clogging of pipe malfunction if the evaporative emission system reaches to the target negative pressure within the specified time.

Judgment Value

Malfunction Criteria	Threshold Value	DTC
Time required to reach to the target negative pressure For target vacuum, use one of the followings. •Reference pressure for target vacuum setting – value of Map 4 •–5 kPa (–37.298 mmHg, –1.5 inHg)	≤ 27500 ms	P1451

Map 4

Time of negative pressure introduction ms	0	100000	200000	300000	400000	500000	600000	700000	800000	900000	1000000	1100000	1200000
Reference pressure for setting the target negative pressure – Pressure sensor output value kPa (mmHg, inHg)	0.9 (7.058, 0.3)	0.9 (7.058, 0.3)	0.9 (7.058, 0.3)	0.9 (7.058, 0.3)	0.9 (7.058, 0.3)	0.9 (7.058, 0.3)	0.9 (7.058, 0.3)	0.9 (7.058, 0.3)	0.9 (7.058, 0.3)	0.9 (7.058, 0.3)	0.9 (7.058, 0.3)	0.9 (7.058, 0.3)	0.9 (7.058, 0.3)

2. **Leak pressure measurement**
   Purpose: Measure the pressure (leak pressure) when the evaporative emission system becomes the negative pressure by the vacuum pump.
   Store the pressure as a leak pressure while the following conditions are met.

Judgment Value

Conditions for storing the leak pressure	Threshold Value
When any one of the followings is established:	
• Reference pressure for setting the target negative pressure – Pressure sensor output value	≥ Value of Map 4
• Pressure sensor output value	< –5 kPa (–37.298 mmHg, –1.5 inHg)
• Time of negative pressure introduction	≥ 900000 ms

Mode E (Measurement of reference pressure for judgment)

1. Purpose: Judge the reference pressure stability.

Judge as NG when the following conditions are established.

Judgment Value

Malfunction Criteria	Threshold Value	DTC
|Pressure sensor maximum output value – Pressure sensor minimum output value|	> 314 Pa (2.355 mmHg, 0.1 inHg)	P2404

2. Purpose: Judge whether the reference pressure is within the normal range, and detect the vacuum pump and orifice malfunctions. Judge the vacuum pump performance stability.
Judge as NG when the following conditions are established.

Judgment Value

Malfunction Criteria	Threshold Value	DTC
Reference pressure for judgment	< Value of Map 5 or > Value of Map 6	P2404

Map 5

Barometric pressure kPa (mmHg, inHg)	70 (525, 20.7)	80 (600, 23.6)	90 (675, 26.6)	100 (750, 29.5)
Reference pressure for judgment kPa (mmHg, inHg)	–4.5 (–34.02, –1.3)	–4.6 (–34.815, –1.4)	–4.7 (–35.618, –1.4)	–4.9 (–36.42, –1.4)

Map 6

Barometric pressure kPa (mmHg, inHg)	70 (525, 20.7)	80 (600, 23.6)	90 (675, 26.6)	100 (750, 29.5)
Reference pressure for judgment kPa (mmHg, inHg)	–0.8 (–6.18, –0.2)	–0.9 (–6.983, –0.3)	–1 (–7.785, –0.3)	–1.1 (–8.58, –0.3)

3. Purpose: Judge the presence of evaporative emission system leak.
Judge as NG when the following conditions are established.

Judgment Value

Malfunction Criteria	Threshold Value	DTC
<Large leak (0.04 inch)> Leak pressure lleakjdg = (Reference pressure for judgment) × 0.377 – (–45.5 Pa)	≥ lleakjdg (Pa)	P0455
<Very small leak (0.02 inch)> Leak pressure	> Reference pressure of 0.018 inch and < lleakjdg (Pa)	P0456

Time Needed for Diagnosis: Approx. 23 min
At next engine start, confirm whether the enable conditions are satisfied even though refueling has been done during soaking, and determine the malfunction.
Malfunction Indicator Light Illumination: Illuminates when malfunction occurs in 2 continuous driving cycles.

CD:DTC P0456 EVAP SYSTEM (CPC) LEAK DETECTED (VERY SMALL LEAK)

NOTE:
For the diagnostic procedure, refer to DTC P0455. <Ref. to EN(H4DO)(diag)-314, DTC P0455 EVAP SYSTEM (CPC) LEAK DETECTED (LARGE LEAK), Diagnostic Procedure with Diagnostic Trouble Code (DTC).>

1. OUTLINE OF DIAGNOSIS

NOTE:
For the detection standard, refer to DTC P0455. <Ref. to EN(H4DO)(diag)-314, DTC P0455 EVAP SYSTEM (CPC) LEAK DETECTED (LARGE LEAK), Diagnostic Procedure with Diagnostic Trouble Code (DTC).>

CE:DTC P0458 EVAP SYSTEM (CPC) PURGE CONTROL VALVE "A" CIRCUIT LOW

DTC DETECTING CONDITION:
Detected when two consecutive driving cycles with fault occur.
TROUBLE SYMPTOM:
Improper idling

CAUTION:
After servicing or replacing faulty parts, perform Clear Memory Mode <Ref. to EN(H4DO)(diag)-78, OPERATION, Clear Memory Mode.>, and Inspection Mode <Ref. to EN(H4DO)(diag)-64, PROCEDURE, Inspection Mode.>.
WIRING DIAGRAM:
• Engine Electrical System ENGINE TYPE FB (WITHOUT PUSH BUTTON START) <Ref. to WI-170, ENGINE TYPE FB (WITHOUT PUSH BUTTON START), WIRING DIAGRAM, Engine Electrical System.>
• Engine Electrical System ENGINE TYPE FB (WITH PUSH BUTTON START) <Ref. to WI-184, ENGINE TYPE FB (WITH PUSH BUTTON START), WIRING DIAGRAM, Engine Electrical System.>

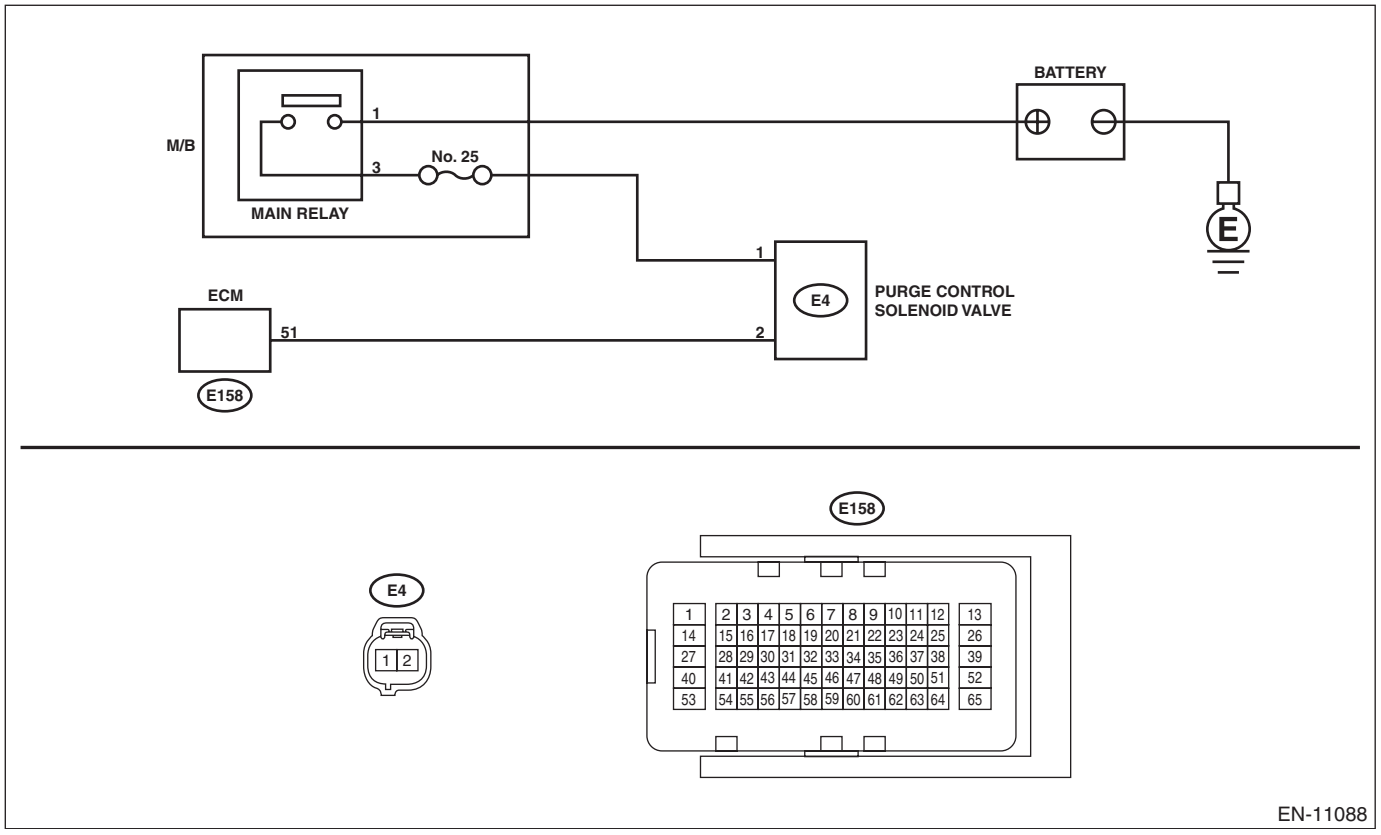

Step		Check	Yes	No
1	**CHECK OUTPUT SIGNAL OF ECM.** 1) Turn the ignition switch to ON. 2) Measure the voltage between ECM connector and chassis ground. ***Connector & terminal*** ***(E158) No. 51 (+) — Chassis ground (–):***	Is the voltage 10 V or more?	Go to step **2**.	Go to step **3**.

	Step	Check	Yes	No
2	**CHECK FOR POOR CONTACT.** Check for poor contact of ECM connector.	Is there poor contact of ECM connector?	Repair the poor contact of ECM connector.	Even if DTC is detected, the circuit has returned to a normal condition at this time. Reproduce the failure, and then perform the diagnosis again. NOTE: In this case, temporary open or short circuit of harness or temporary poor contact of connector may be the cause.
3	**CHECK POWER SUPPLY TO PURGE CONTROL SOLENOID VALVE.** Measure the voltage between purge control solenoid valve connector and engine ground. ***Connector & terminal*** ***(E4) No. 1 (+) — Engine ground (–):***	Is the voltage 10 V or more?	Go to step **4**.	Repair the power supply circuit.
4	**CHECK HARNESS BETWEEN ECM AND PURGE CONTROL SOLENOID VALVE CONNECTOR.** 1) Turn the ignition switch to OFF. 2) Disconnect the connectors from ECM and purge control solenoid valve. 3) Measure the resistance between the purge control solenoid valve connector and engine ground. ***Connector & terminal*** ***(E4) No. 2 — Engine ground:***	Is the resistance 1 MΩ or more?	Go to step **5**.	Repair the short circuit to ground in harness between ECM connector and purge control solenoid valve connector.
5	**CHECK HARNESS BETWEEN ECM AND PURGE CONTROL SOLENOID VALVE CONNECTOR.** Measure the resistance of harness between ECM connector and purge control solenoid valve. ***Connector & terminal*** ***(E158) No. 51 — (E4) No. 2:***	Is the resistance less than 1 Ω?	Go to step **6**.	Repair the open circuit in harness between ECM connector and purge control solenoid valve connector.
6	**CHECK PURGE CONTROL SOLENOID VALVE.** 1) Remove the purge control solenoid valve. 2) Measure the resistance between purge control solenoid valve terminals. ***Terminals*** ***No. 1 — No. 2:***	Is the resistance 10 — 100 Ω?	Repair the poor contact of purge control solenoid valve connector.	Replace the purge control solenoid valve. <Ref. to EC(H4DO)-21, Purge Control Solenoid Valve.>

1. OUTLINE OF DIAGNOSIS

Detect open or short circuit of the purge control solenoid valve.
Judge as NG when the ECM output level differs from the actual terminal level.

2. COMPONENT DESCRIPTION

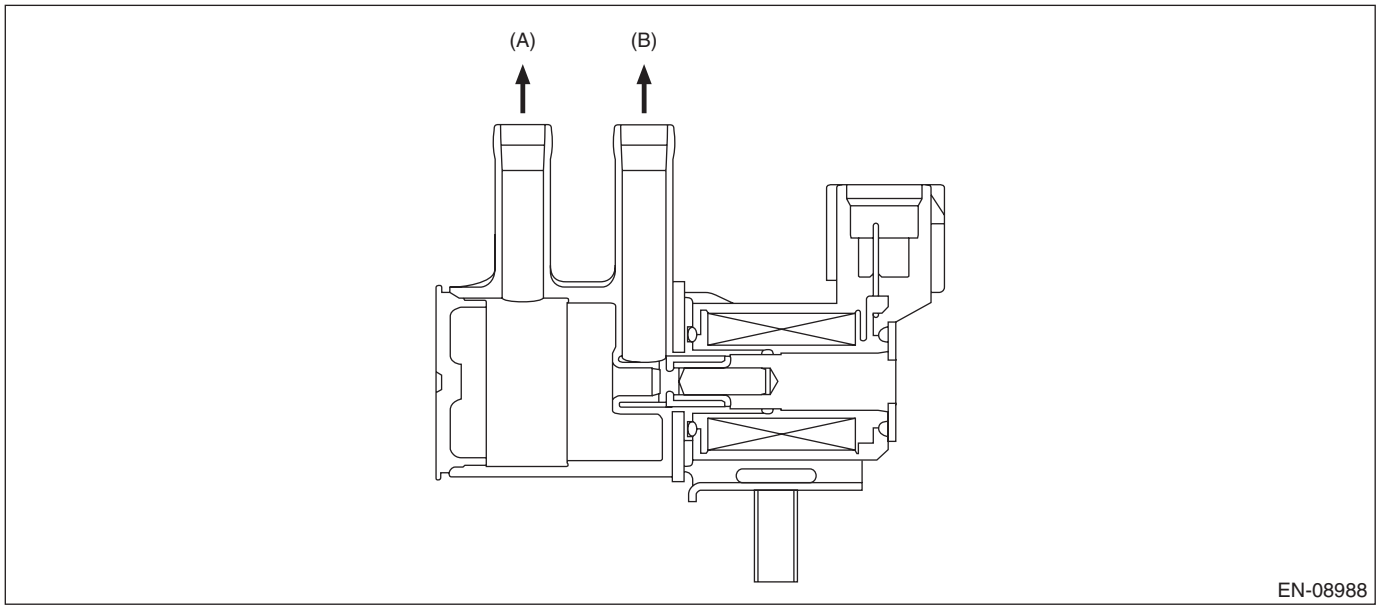

(A) To canister (B) To intake manifold

3. EXECUTION CONDITION

Secondary Parameters	Execution condition
Battery voltage	≥ 10.9 V
Purge control solenoid valve control duty	< 0.75 × 100%

4. GENERAL DRIVING CYCLE

Perform the diagnosis continuously after the enable conditions have been established.

5. DIAGNOSTIC METHOD

If the duration of time while the following conditions are met is longer than the time indicated, judge as NG.

Judgment Value

Malfunction Criteria	Threshold Value
Terminal output voltage	≤ Battery voltage × 0.34

Time Needed for Diagnosis: 2500 ms
Malfunction Indicator Light Illumination: Illuminates when malfunction occurs in 2 continuous driving cycles.

CF:DTC P0459 EVAP SYSTEM (CPC) PURGE CONTROL VALVE "A" CIRCUIT HIGH

DTC DETECTING CONDITION:
Detected when two consecutive driving cycles with fault occur.
TROUBLE SYMPTOM:
Improper idling

CAUTION:
After servicing or replacing faulty parts, perform Clear Memory Mode <Ref. to EN(H4DO)(diag)-78, OPERATION, Clear Memory Mode.>, and Inspection Mode <Ref. to EN(H4DO)(diag)-64, PROCEDURE, Inspection Mode.>.
WIRING DIAGRAM:
• Engine Electrical System ENGINE TYPE FB (WITHOUT PUSH BUTTON START) <Ref. to WI-170, ENGINE TYPE FB (WITHOUT PUSH BUTTON START), WIRING DIAGRAM, Engine Electrical System.>
• Engine Electrical System ENGINE TYPE FB (WITH PUSH BUTTON START) <Ref. to WI-184, ENGINE TYPE FB (WITH PUSH BUTTON START), WIRING DIAGRAM, Engine Electrical System.>

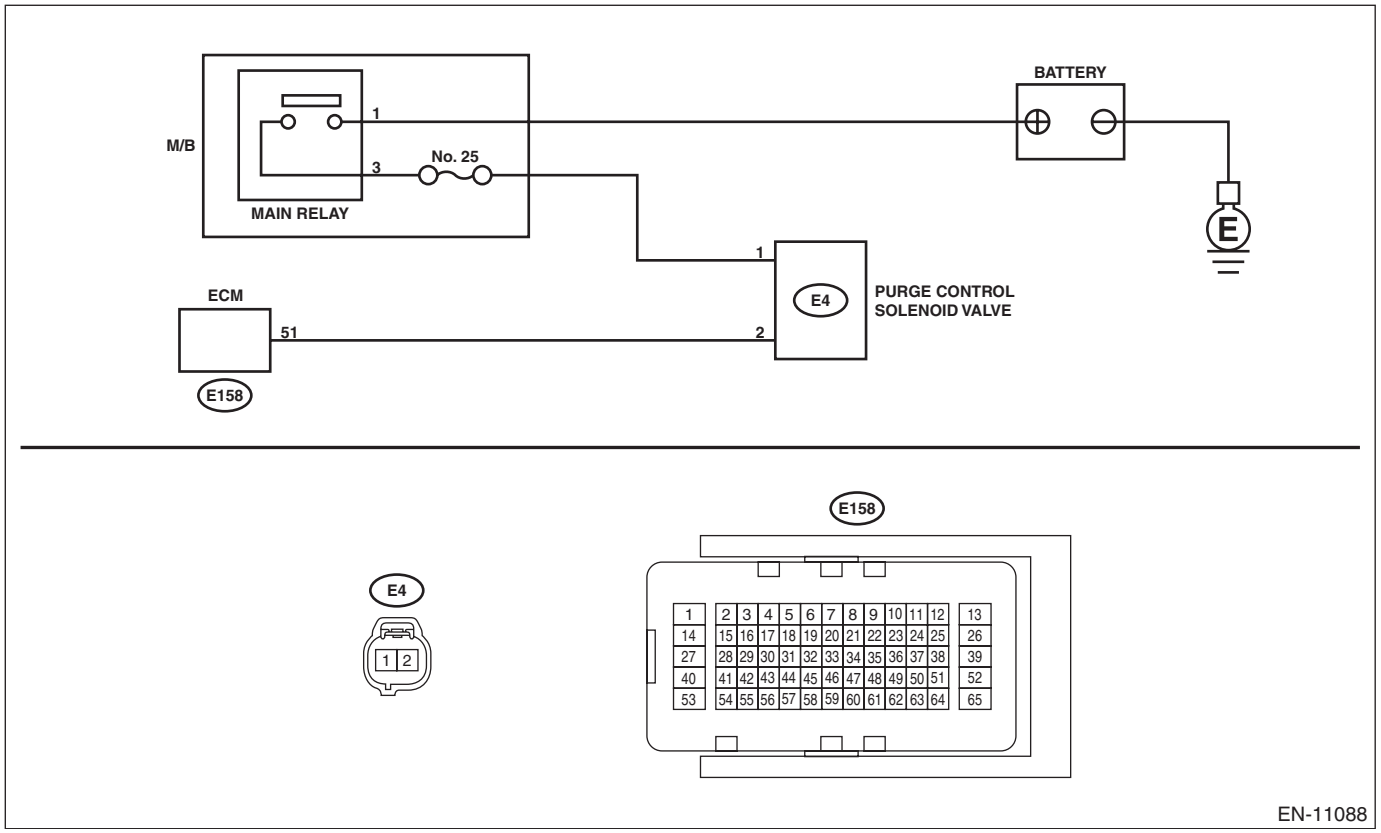

Step		Check	Yes	No
1	**CHECK HARNESS BETWEEN ECM AND PURGE CONTROL SOLENOID VALVE CONNECTOR.** 1) Turn the ignition switch to OFF. 2) Disconnect the connectors from ECM and purge control solenoid valve. 3) Turn the ignition switch to ON. 4) Measure the voltage between ECM connector and chassis ground. ***Connector & terminal*** ***(E158) No. 51 (+) — Chassis ground (–):***	Is the voltage 10 V or more?	Repair the short circuit to power in the harness between ECM connector and purge control solenoid valve connector.	Go to step **2**.

Step		Check	Yes	No
2	**CHECK PURGE CONTROL SOLENOID VALVE.** 1) Turn the ignition switch to OFF. 2) Measure the resistance between purge control solenoid valve terminals. ***Terminals*** ***No. 1 — No. 2:***	Is the resistance less than 1 Ω?	Replace the purge control solenoid valve. <Ref. to EC(H4DO)-21, Purge Control Solenoid Valve.>	Repair the poor contact of ECM connector.

1. OUTLINE OF DIAGNOSIS

Detect open or short circuit of the purge control solenoid valve.
Judge as NG when the ECM output level differs from the actual terminal level.

2. COMPONENT DESCRIPTION

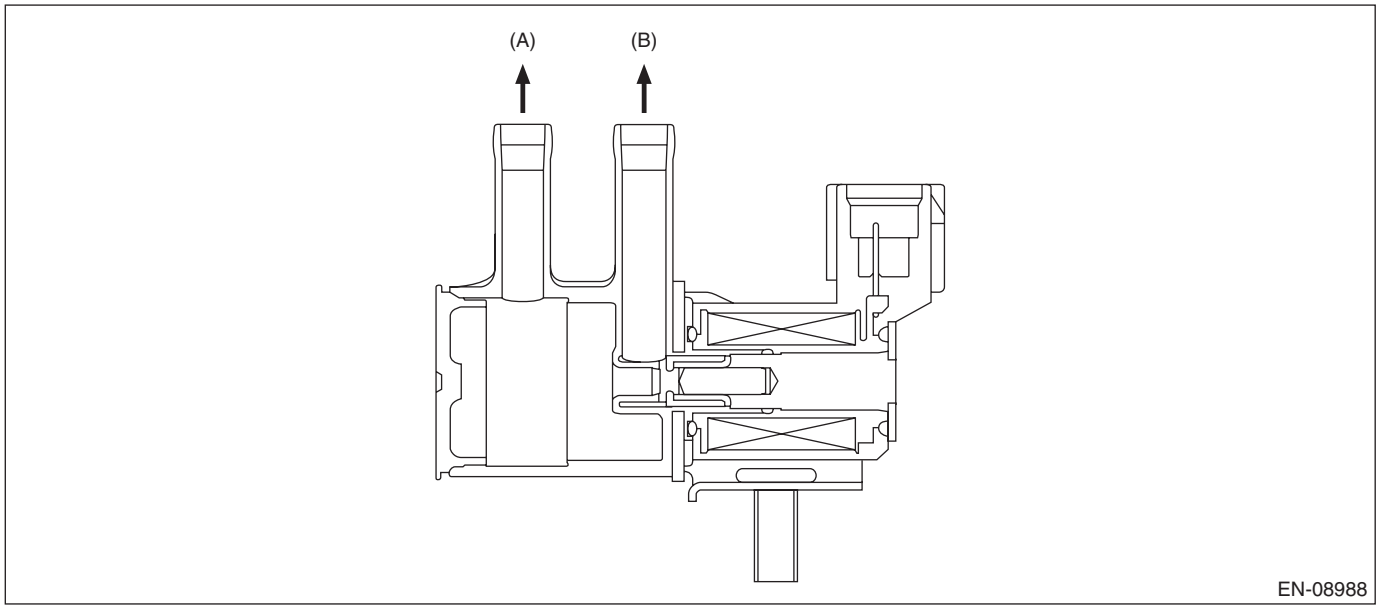

(A) To canister (B) To intake manifold

3. EXECUTION CONDITION

Secondary Parameters	Execution condition
Battery voltage	≥ 10.9 V
Purge control solenoid valve control duty	≥ 0.25 × 100%

4. GENERAL DRIVING CYCLE

Perform the diagnosis continuously after the enable conditions have been established.

5. DIAGNOSTIC METHOD

If the duration of time while the following conditions are met is longer than the time indicated, judge as NG.

Judgment Value

Malfunction Criteria	Threshold Value
Terminal output current	≥ 12 A

Time Needed for Diagnosis: 2500 ms
Malfunction Indicator Light Illumination: Illuminates when malfunction occurs in 2 continuous driving cycles.

CG:DTC P0461 FUEL LEVEL SENSOR "A" CIRCUIT RANGE/PERFORMANCE

DTC DETECTING CONDITION:

Detected when two consecutive driving cycles with fault occur.

CAUTION:

After servicing or replacing faulty parts, perform Clear Memory Mode <Ref. to EN(H4DO)(diag)-78, OPERATION, Clear Memory Mode.>, and Inspection Mode <Ref. to EN(H4DO)(diag)-64, PROCEDURE, Inspection Mode.>.

Step		Check	Yes	No
1	CHECK FOR ANY OTHER DTC ON DISPLAY.	Is any other DTC displayed?	Check the appropriate DTC using the “List of Diagnostic Trouble Code (DTC)”. <Ref. to EN(H4DO)(diag)-102, List of Diagnostic Trouble Code (DTC).>	Replace the fuel level sensor and fuel sub level sensor. <Ref. to FU(H4DO)-122, Fuel Level Sensor.> <Ref. to FU(H4DO)-125, Fuel Sub Level Sensor.>

1. OUTLINE OF DIAGNOSIS

Detect malfunctions of the fuel level sensor output property.
If the fuel level does not vary in a particular driving condition / engine condition where it should, judge as NG.

2. COMPONENT DESCRIPTION

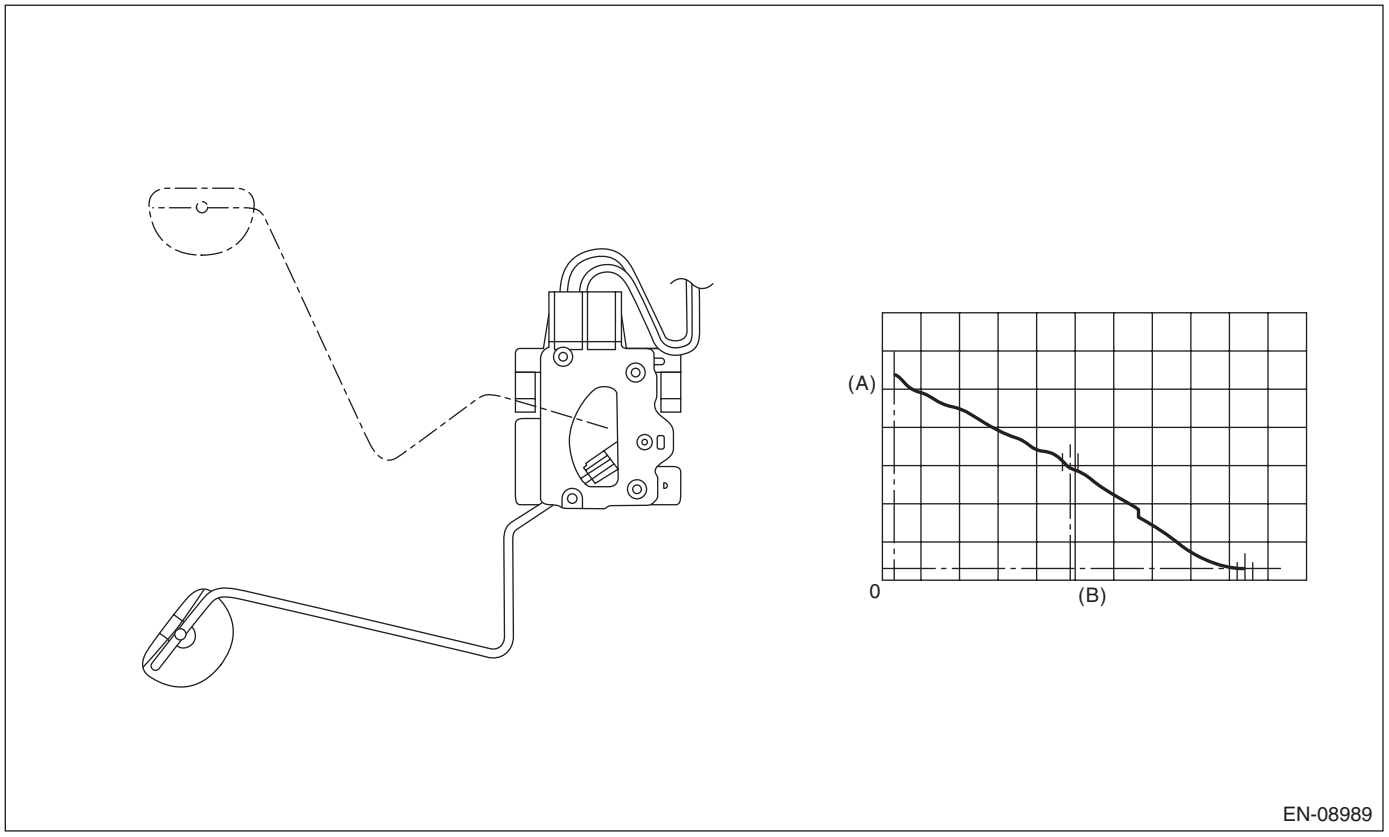

(A) Fuel level (B) Resistance

3. EXECUTION CONDITION

Secondary Parameters	Execution condition
Accumulated amount of intake air	≥ 165375 g (5832.78 oz)
Battery voltage	≥ 10.9 V
Elapsed time after starting the engine	≥ 5000 ms

4. GENERAL DRIVING CYCLE

Always perform the diagnosis continuously.

5. DIAGNOSTIC METHOD

Judge as NG when the following conditions are established.

Judgment Value

Malfunction Criteria	Threshold Value
Max. – min. values of fuel level output	< 2.6 ℓ (0.69 US gal, 0.57 Imp gal)

Time Needed for Diagnosis: Less than 1 second
Malfunction Indicator Light Illumination: Illuminates when malfunction occurs in 2 continuous driving cycles.

CH:DTC P0462 FUEL LEVEL SENSOR "A" CIRCUIT LOW

NOTE:
For the diagnostic procedure, refer to DTC P0463. <Ref. to EN(H4DO)(diag)-330, DTC P0463 FUEL LEVEL SENSOR "A" CIRCUIT HIGH, Diagnostic Procedure with Diagnostic Trouble Code (DTC).>

1. OUTLINE OF DIAGNOSIS

Detect the open or short circuit of fuel level sensor. Judge as NG if out of specification.

2. COMPONENT DESCRIPTION

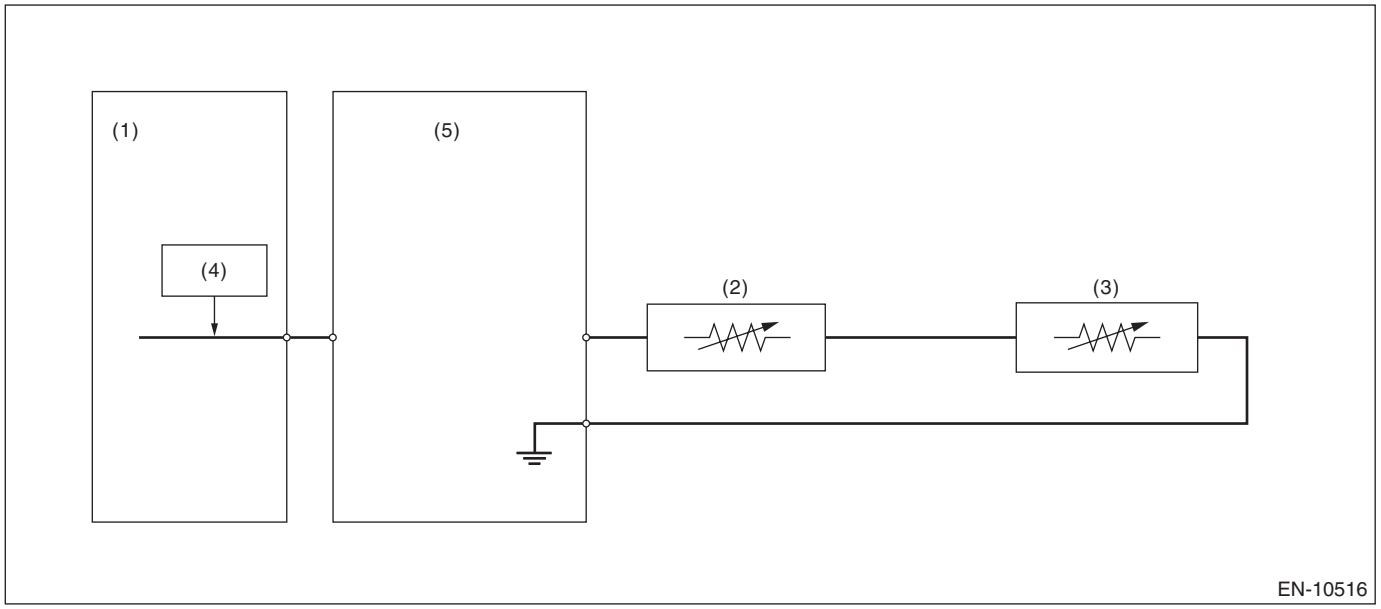

(1) Engine control module (ECM)
(2) Fuel sub level sensor
(3) Fuel level sensor
(4) Detecting circuit
(5) Body integrated unit

3. EXECUTION CONDITION

Secondary Parameters	Execution condition
Battery voltage	≥ 10.9 V
Elapsed time after ignition switch is turned to ON	≥ 3000 ms

4. GENERAL DRIVING CYCLE

Always perform the diagnosis continuously.

5. DIAGNOSTIC METHOD

If the duration of time while the following conditions are met is longer than the time indicated, judge as NG.

Judgment Value

Malfunction Criteria	Threshold Value
Output voltage	< 2.211 V

Time Needed for Diagnosis: 2500 ms
Malfunction Indicator Light Illumination: Illuminates when malfunction occurs in 2 continuous driving cycles.

CI: DTC P0463 FUEL LEVEL SENSOR "A" CIRCUIT HIGH

DTC DETECTING CONDITION:
Detected when two consecutive driving cycles with fault occur.

CAUTION:
After servicing or replacing faulty parts, perform Clear Memory Mode <Ref. to EN(H4DO)(diag)-78, OPERATION, Clear Memory Mode.>, and Inspection Mode <Ref. to EN(H4DO)(diag)-64, PROCEDURE, Inspection Mode.>.

Step		Check	Yes	No
1	**CHECK FOR ANY OTHER DTC ON DISPLAY.**	Is DTC P0462 or P0463 displayed on the Subaru Select Monitor?	Check the combination meter. <Ref. to MET(diag)-2, Basic Diagnostic Procedure.>	Even if DTC is detected, the circuit has returned to a normal condition at this time. Reproduce the failure, and then perform the diagnosis again. NOTE: In this case, temporary poor contact of connector, temporary open or short circuit of harness may be the cause.

1. OUTLINE OF DIAGNOSIS

Detect the open or short circuit of fuel level sensor. Judge as NG if out of specification.

2. COMPONENT DESCRIPTION

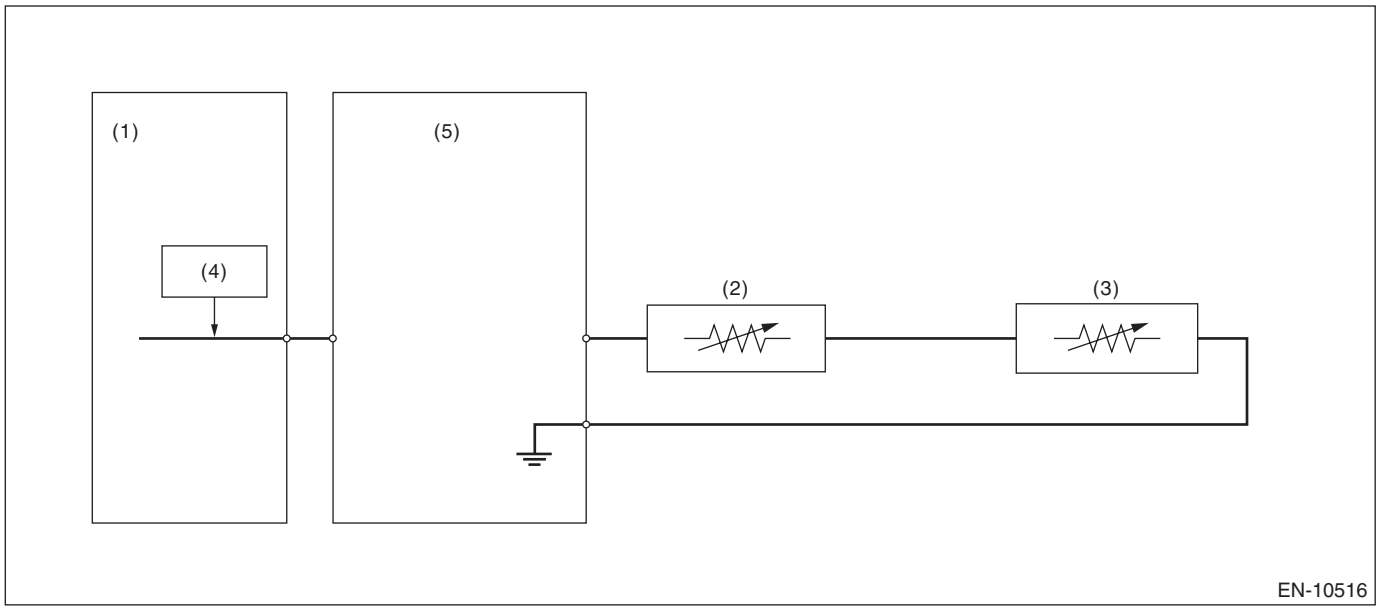

(1) Engine control module (ECM)
(2) Fuel sub level sensor
(3) Fuel level sensor
(4) Detecting circuit
(5) Body integrated unit

3. EXECUTION CONDITION

Secondary Parameters	Execution condition
Battery voltage	≥ 10.9 V

4. GENERAL DRIVING CYCLE

Always perform the diagnosis continuously.

5. DIAGNOSTIC METHOD

If the duration of time while the following conditions are met is longer than the time indicated, judge as NG.

Judgment Value

Malfunction Criteria	Threshold Value
Output voltage	≥ 12 V

Time Needed for Diagnosis: 1000 ms
Malfunction Indicator Light Illumination: Illuminates when malfunction occurs in 2 continuous driving cycles.

CJ:DTC P0500 VEHICLE SPEED SENSOR "A" CIRCUIT

DTC DETECTING CONDITION:
Immediately at fault recognition

CAUTION:
After servicing or replacing faulty parts, perform Clear Memory Mode <Ref. to EN(H4DO)(diag)-78, OPERATION, Clear Memory Mode.>, and Inspection Mode <Ref. to EN(H4DO)(diag)-64, PROCEDURE, Inspection Mode.>.

Step		Check	Yes	No
1	**CHECK DTC OF VDC.** Check DTC of VDC.	Is DTC of VDC displayed?	Perform the diagnosis according to DTC. <Ref. to VDC(diag)-40, List of Diagnostic Trouble Code (DTC).>	Repair the poor contact of ECM connector.

1. OUTLINE OF DIAGNOSIS

Judge as NG when outside of the judgment value.
Judge NG when the received data from VDCCM&H/U is abnormal vehicle speed, and the vehicle speed data is impossible.

2. COMPONENT DESCRIPTION

Vehicle speed signals are taken in to the VDC control module and hydraulic control unit, and normal/erroneous data of the ABS wheel speed sensor is received by CAN communication from the VDC control module and hydraulic control unit.

3. EXECUTION CONDITION

Secondary Parameters	Execution condition
Battery voltage	≥ 10.9 V

4. GENERAL DRIVING CYCLE

Always perform the diagnosis continuously.

5. DIAGNOSTIC METHOD

If the duration of time while the following conditions are met is longer than the time indicated, judge as NG.

Judgment Value

Malfunction Criteria	Threshold Value
Speed of the front wheels received from VDC control module & hydraulic control unit	≥ 300 km/h (186.4 MPH)

Time Needed for Diagnosis: 2500 ms
Malfunction Indicator Light Illumination: Illuminates as soon as a malfunction occurs.

CK:DTC P0506 IDLE CONTROL SYSTEM RPM - LOWER THAN EXPECTED

DTC DETECTING CONDITION:

Detected when two consecutive driving cycles with fault occur.

TROUBLE SYMPTOM:

- Hard to start the engine.
- Engine does not start.
- Improper idling
- Engine stalls.

CAUTION:

After servicing or replacing faulty parts, perform Clear Memory Mode <Ref. to EN(H4DO)(diag)-78, OPERATION, Clear Memory Mode.>, and Inspection Mode <Ref. to EN(H4DO)(diag)-64, PROCEDURE, Inspection Mode.>.

	Step	Check	Yes	No
1	**CHECK FOR ANY OTHER DTC ON DISPLAY.**	Is any other DTC displayed?	Check the appropriate DTC using the "List of Diagnostic Trouble Code (DTC)". <Ref. to EN(H4DO)(diag)-102, List of Diagnostic Trouble Code (DTC).>	Go to step **2**.
2	**CHECK AIR CLEANER ELEMENT.** 1) Turn the ignition switch to OFF. 2) Check the air cleaner element.	Is there excessive clogging on air cleaner element?	Replace the air cleaner element. <Ref. to IN(H4DO)-4, Air Cleaner Element.>	Go to step **3**.
3	**CHECK ELECTRONIC THROTTLE CONTROL.** 1) Remove the electronic throttle control. <Ref. to FU(H4DO)-14, REMOVAL, Throttle Body.> 2) Check the electronic throttle control.	Are foreign matter found inside electronic throttle control?	Remove foreign matter from electronic throttle control.	Perform the diagnosis of DTC P2101. <Ref. to EN(H4DO)(diag)-507, DTC P2101 THROTTLE ACTUATOR "A" CONTROL MOTOR CIRCUIT RANGE/PERFORMANCE, Diagnostic Procedure with Diagnostic Trouble Code (DTC).>

1. OUTLINE OF DIAGNOSIS

Detect the malfunction that actual engine speed is not close to target engine speed during idling. Judge as NG when actual engine speed is not close to target engine speed during idling.

2. EXECUTION CONDITION

Secondary Parameters	Execution condition
Battery voltage	≥ 10.9 V
Barometric pressure	≥ 75.1 kPa (563 mmHg, 22.2 inHg)
Lambda value (left and right)	≥ 0.85 and < 1.151
Vehicle speed	= 0 km/h (0 MPH)
Engine coolant temperature	≥ 60 °C (140 °F)
Elapsed time after starting the engine	≥ 10 s
Accelerator pedal position	= 0%
Elapsed time after switching neutral position switch to ON/OFF	> 5 s
Cold start diagnosis	Not in operation

3. GENERAL DRIVING CYCLE

Perform the diagnosis continuously at idling after warming up engine.

4. DIAGNOSTIC METHOD

If the duration of time while the following conditions are met is longer than the time indicated, judge as NG.

Judgment Value

Malfunction Criteria	Threshold Value
Actual engine speed – Targeted engine speed	< –100 rpm

Time Needed for Diagnosis: 15 s × 1 time(s)
Malfunction Indicator Light Illumination: Illuminates when malfunction occurs in 2 continuous driving cycles.

CL:DTC P0507 IDLE CONTROL SYSTEM RPM - HIGHER THAN EXPECTED

DTC DETECTING CONDITION:
Detected when two consecutive driving cycles with fault occur.
TROUBLE SYMPTOM:
Engine keeps running at higher speed than specified idle speed.

CAUTION:
After servicing or replacing faulty parts, perform Clear Memory Mode <Ref. to EN(H4DO)(diag)-78, OPERATION, Clear Memory Mode.>, and Inspection Mode <Ref. to EN(H4DO)(diag)-64, PROCEDURE, Inspection Mode.>.

	Step	Check	Yes	No
1	**CHECK FOR ANY OTHER DTC ON DISPLAY.**	Is any other DTC displayed?	Check the appropriate DTC using the “List of Diagnostic Trouble Code (DTC)”. <Ref. to EN(H4DO)(diag)-102, List of Diagnostic Trouble Code (DTC).>	Go to step **2**.
2	**CHECK AIR INTAKE SYSTEM.** 1) Start and idle the engine. 2) Check the following items. • Loose installation of intake manifold and throttle body • Cracks of intake manifold gasket and throttle body gasket • Disconnection of vacuum hoses	Is there any fault in air intake system?	Repair air suction and leaks.	Go to step **3**.
3	**CHECK ELECTRONIC THROTTLE CONTROL.** 1) Turn the ignition switch to OFF. 2) Remove the electronic throttle control. <Ref. to FU(H4DO)-14, REMOVAL, Throttle Body.> 3) Check the electronic throttle control.	Are foreign matter found inside electronic throttle control?	Remove foreign matter from electronic throttle control.	Perform the diagnosis of DTC P2101. <Ref. to EN(H4DO)(diag)-507, DTC P2101 THROTTLE ACTUATOR "A" CONTROL MOTOR CIRCUIT RANGE/PERFORMANCE, Diagnostic Procedure with Diagnostic Trouble Code (DTC).>

1. OUTLINE OF DIAGNOSIS

Detect the malfunction that actual engine speed is not close to target engine speed during idling. Judge as NG when actual engine speed is not close to target engine speed during idling.

2. EXECUTION CONDITION

Secondary Parameters	Execution condition
Battery voltage	≥ 10.9 V
Barometric pressure	≥ 75.1 kPa (563 mmHg, 22.2 inHg)
Lambda value (left and right)	≥ 0.85 and < 1.151
Vehicle speed	= 0 km/h (0 MPH)
Engine coolant temperature	≥ 60 °C (140 °F)
Elapsed time after starting the engine	≥ 10 s
Accelerator pedal position	= 0%
Elapsed time after switching neutral position switch to ON/OFF	> 5 s
Cold start diagnosis	Not in operation

3. GENERAL DRIVING CYCLE

Perform the diagnosis continuously at idling after warming up engine.

4. DIAGNOSTIC METHOD

If the duration of time while the following conditions are met is longer than the time indicated, judge as NG.

Judgment Value

Malfunction Criteria	Threshold Value
Actual engine speed – Targeted engine speed	> 200 rpm

Time Needed for Diagnosis: 15 s × 1 time(s)
Malfunction Indicator Light Illumination: Illuminates when malfunction occurs in 2 continuous driving cycles.

CM:DTC P050A COLD START IDLE CONTROL SYSTEM PERFORMANCE

DTC DETECTING CONDITION:

Detected when two consecutive driving cycles with fault occur.

TROUBLE SYMPTOM:

- Engine keeps running at higher speed than specified idle speed.
- Engine keeps running at a lower speed than the specified idle speed.
- Engine stalls.

CAUTION:

After servicing or replacing faulty parts, perform Clear Memory Mode <Ref. to EN(H4DO)(diag)-78, OPERATION, Clear Memory Mode.>, and Inspection Mode <Ref. to EN(H4DO)(diag)-64, PROCEDURE, Inspection Mode.>.

WIRING DIAGRAM:

- Engine Electrical System ENGINE TYPE FB (WITHOUT PUSH BUTTON START) <Ref. to WI-170, ENGINE TYPE FB (WITHOUT PUSH BUTTON START), WIRING DIAGRAM, Engine Electrical System.>
- Engine Electrical System ENGINE TYPE FB (WITH PUSH BUTTON START) <Ref. to WI-184, ENGINE TYPE FB (WITH PUSH BUTTON START), WIRING DIAGRAM, Engine Electrical System.>

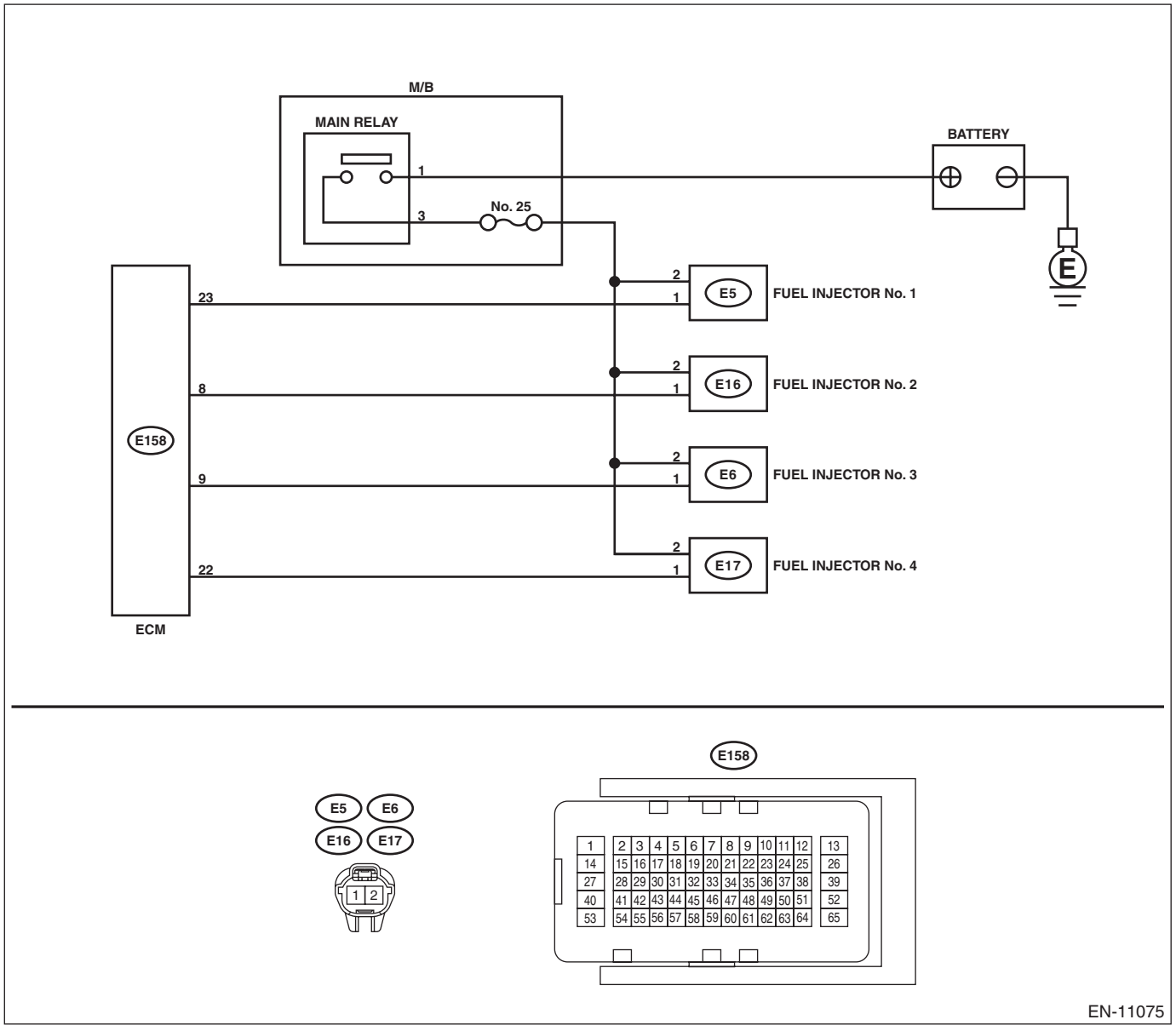

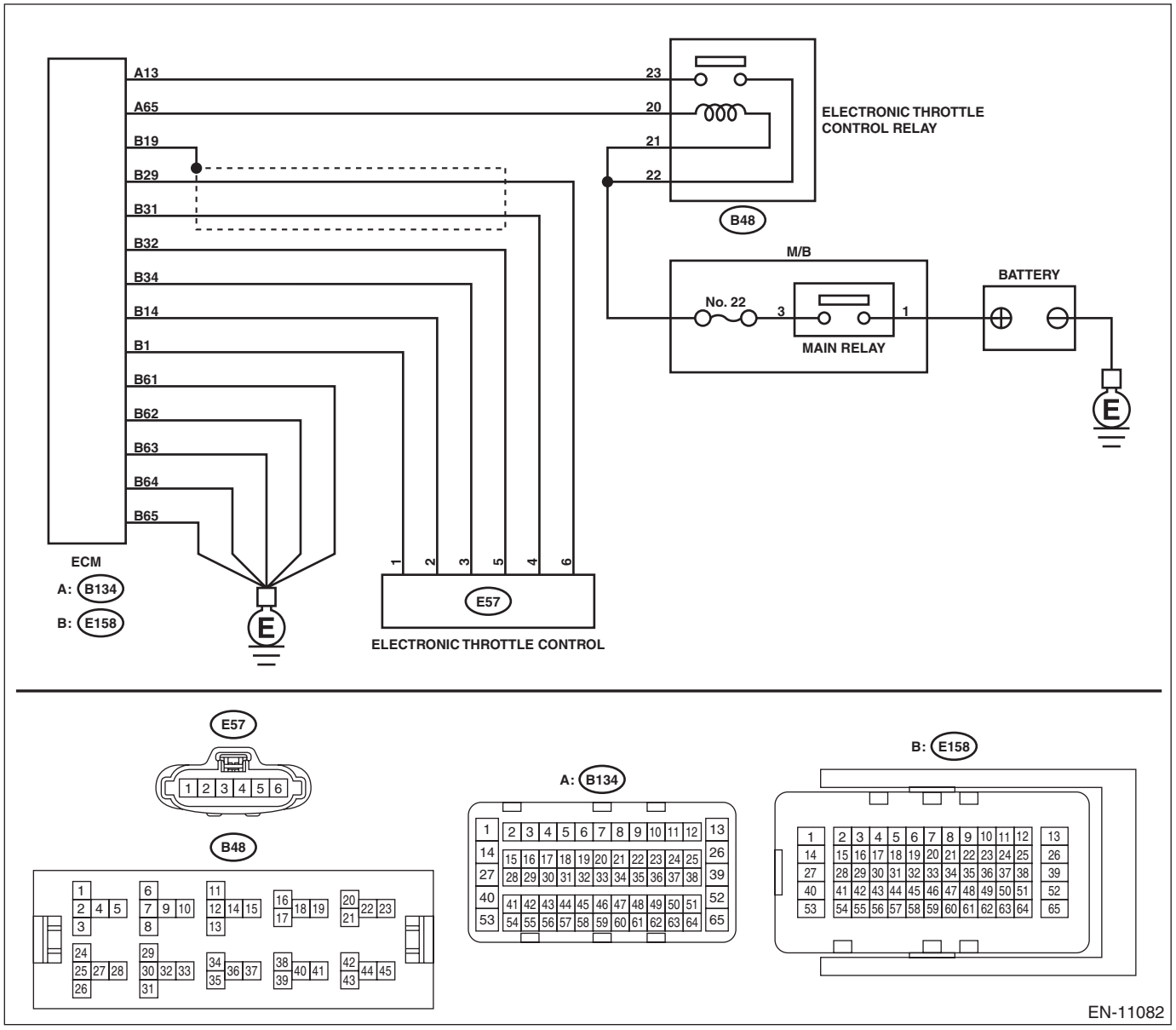

Step		Check	Yes	No
1	**CHECK FOR ANY OTHER DTC ON DISPLAY.**	Is any other DTC displayed?	Check the appropriate DTC using the "List of Diagnostic Trouble Code (DTC)". <Ref. to EN(H4DO)(diag)-102, List of Diagnostic Trouble Code (DTC).>	Go to step **2**.
2	**CHECK ENGINE OIL.**	Is there a proper amount of engine oil?	Go to step **3**.	Replace engine oil. <Ref. to LU(H4DO)-10, REPLACEMENT, Engine Oil.>
3	**CHECK EXHAUST SYSTEM.**	Are there holes or loose bolts on exhaust system?	Repair the exhaust system.	Go to step **4**.

	Step	Check	Yes	No
4	**CHECK AIR INTAKE SYSTEM.**	Are there holes, loose bolts or disconnection of hose on air intake system?	Repair the air intake system.	Go to step **5**.
5	**CHECK FUEL PRESSURE.** **WARNING:** **Place "NO OPEN FLAMES" signs near the working area.** **CAUTION:** **Be careful not to spill fuel.** Measure the fuel pressure. <Ref. to ME(H4DO)-31, INSPECTION, Fuel Pressure.> **CAUTION:** **Before attaching/detaching a fuel pressure gauge, release the fuel pressure.**	Is the measured value 340 — 400 kPa (3.5 — 4.1 kg/cm^2, 49 — 58 psi)?	Go to step **6**.	Check the fuel pump and fuel delivery line. <Ref. to FU(H4DO)-121, INSPECTION, Fuel Pump.> <Ref. to FU(H4DO)-154, INSPECTION, Fuel Delivery and Evaporation Lines.>
6	**CHECK ENGINE COOLANT TEMPERATURE SENSOR.** 1) Start the engine and warm up completely. 2) Read the value of «Coolant Temp.» using the Subaru Select Monitor or a general scan tool. NOTE: • Subaru Select Monitor For detailed operation procedures, refer to "Read Current Data For Engine". <Ref. to EN(H4DO)(diag)-45, Subaru Select Monitor.> • General scan tool For detailed operation procedures, refer to the general scan tool operation manual.	Is the value of «Coolant Temp.» 75°C (167°F) or more?	Go to step **7**.	Replace the engine coolant temperature sensor. <Ref. to FU(H4DO)-43, Engine Coolant Temperature Sensor.>
7	**CHECK MASS AIR FLOW AND INTAKE AIR TEMPERATURE SENSOR.** 1) Start the engine and warm up engine until coolant temperature is higher than 75°C (167°F). 2) For CVT models, set the select lever to "P" range or "N" range, and for MT models, place the shift lever in the neutral position. 3) Turn the A/C switch to OFF. 4) Turn all the accessory switches to OFF. 5) Read the value of «Mass Air Flow» using the Subaru Select Monitor or a general scan tool. NOTE: • Subaru Select Monitor For detailed operation procedures, refer to "Read Current Data For Engine". <Ref. to EN(H4DO)(diag)-45, Subaru Select Monitor.> • General scan tool For detailed operation procedures, refer to the general scan tool operation manual.	Is the value of «Mass Air Flow» 2.0 — 5.0 g/s (0.26 — 0.66 lb/m)?	Go to step **8**.	Replace the mass air flow and intake air temperature sensor. <Ref. to FU(H4DO)-60, Mass Air Flow and Intake Air Temperature Sensor.>

	Step	Check	Yes	No
8	**CHECK MASS AIR FLOW AND INTAKE AIR TEMPERATURE SENSOR.** 1) Start the engine and warm up engine until coolant temperature is higher than 75°C (167°F). 2) For CVT models, set the select lever to "P" range or "N" range, and for MT models, place the shift lever in the neutral position. 3) Turn the A/C switch to OFF. 4) Turn all the accessory switches to OFF. 5) Open the front hood. 6) Measure the ambient temperature. 7) Read the value of «Intake Air Temp.» using the Subaru Select Monitor or a general scan tool. NOTE: • Subaru Select Monitor For detailed operation procedures, refer to "Read Current Data For Engine". <Ref. to EN(H4DO)(diag)-45, Subaru Select Monitor.> • General scan tool For detailed operation procedures, refer to the general scan tool operation manual.	Subtract ambient temperature from «Intake Air Temp.». Is the obtained value –10 — 50°C (–18 — 90°F)?	Go to step **9**.	Check the mass air flow and intake air temperature sensor. <Ref. to FU(H4DO)-60, Mass Air Flow and Intake Air Temperature Sensor.>
9	**CHECK OUTPUT SIGNAL OF ECM.** 1) Turn the ignition switch to ON. 2) Measure the voltage between ECM and chassis ground on faulty cylinders. ***Connector & terminal*** ***#1 (E158) No. 23 (+) — Chassis ground (–):*** ***#2 (E158) No. 8 (+) — Chassis ground (–):*** ***#3 (E158) No. 9 (+) — Chassis ground (–):*** ***#4 (E158) No. 22 (+) — Chassis ground (–):***	Is the voltage 10 V or more?	Go to step **14**.	Go to step **10**.
10	**CHECK HARNESS BETWEEN ECM AND FUEL INJECTOR CONNECTOR.** 1) Turn the ignition switch to OFF. 2) Disconnect the connector from fuel injector on faulty cylinders. 3) Measure the resistance between fuel injector connector and engine ground on faulty cylinders. ***Connector & terminal*** ***#1 (E5) No. 1 — Engine ground:*** ***#2 (E16) No. 1 — Engine ground:*** ***#3 (E6) No. 1 — Engine ground:*** ***#4 (E17) No. 1 — Engine ground:***	Is the resistance 1 MΩ or more?	Go to step **11**.	Repair the short circuit to ground in harness between ECM connector and fuel injector connector.
11	**CHECK HARNESS BETWEEN ECM AND FUEL INJECTOR CONNECTOR.** Measure the resistance of harness between ECM and fuel injector connector on faulty cylinders. ***Connector & terminal*** ***#1 (E158) No. 23 — (E5) No. 1:*** ***#2 (E158) No. 8 — (E16) No. 1:*** ***#3 (E158) No. 9 — (E6) No. 1:*** ***#4 (E158) No. 22 — (E17) No. 1:***	Is the resistance less than 1 Ω?	Go to step **12**.	Repair the open circuit of the harness between the ECM connector and fuel injector connector.
12	**CHECK FUEL INJECTOR.** Measure the resistance between fuel injector terminals on faulty cylinder. ***Terminals*** ***No. 1 — No. 2:***	Is the resistance 5 — 20 Ω?	Go to step **13**.	Replace the faulty fuel injector. <Ref. to FU(H4DO)-66, Fuel Injector.>

	Step	Check	Yes	No
13	**CHECK POWER SUPPLY LINE.** 1) Turn the ignition switch to ON. 2) Measure the voltage between fuel injector and engine ground on faulty cylinders. ***Connector & terminal*** ***#1 (E5) No. 2 (+) — Engine ground (–):*** ***#2 (E16) No. 2 (+) — Engine ground (–):*** ***#3 (E6) No. 2 (+) — Engine ground (–):*** ***#4 (E17) No. 2 (+) — Engine ground (–):***	Is the voltage 10 V or more?	Repair the poor contact of all connectors in fuel injector circuit.	Repair the harness and connector. NOTE: In this case, repair the following item: • Open circuit in harness between the main relay connector and fuel injector connector on faulty cylinders • Poor contact of coupling connector • Poor contact of main relay connector
14	**CHECK HARNESS BETWEEN ECM AND FUEL INJECTOR CONNECTOR.** 1) Turn the ignition switch to OFF. 2) Disconnect the connector from fuel injector on faulty cylinders. 3) Turn the ignition switch to ON. 4) Measure the voltage between ECM and chassis ground on faulty cylinders. ***Connector & terminal*** ***#1 (E158) No. 23 (+) — Chassis ground (–):*** ***#2 (E158) No. 8 (+) — Chassis ground (–):*** ***#3 (E158) No. 9 (+) — Chassis ground (–):*** ***#4 (E158) No. 22 (+) — Chassis ground (–):***	Is the voltage 10 V or more?	Repair the short circuit to power in harness between ECM connector and fuel injector.	Go to step **15**.
15	**CHECK FUEL INJECTOR.** 1) Turn the ignition switch to OFF. 2) Measure the resistance between fuel injector terminals on faulty cylinder. ***Terminals*** ***No. 1 — No. 2:***	Is the resistance 5 — 20 Ω?	Go to step **16**.	Replace the faulty fuel injector. <Ref. to FU(H4DO)-66, Fuel Injector.>
16	**CHECK INSTALLATION CONDITION OF CAMSHAFT POSITION SENSOR/CRANKSHAFT POSITION SENSOR.**	Is the camshaft position sensor or crankshaft position sensor loosely installed?	Tighten the camshaft position sensor or crankshaft position sensor. <Ref. to FU(H4DO)-52, INSTALLATION, Camshaft Position Sensor.> <Ref. to FU(H4DO)-48, INSTALLATION, Crankshaft Position Sensor.>	Go to step **17**.
17	**CHECK CRANKSHAFT POSITION SENSOR PLATE.**	Is the crankshaft position sensor plate rusted or does it have broken teeth?	Replace the crankshaft position sensor plate. <Ref. to ME(H4DO)-211, Cylinder Block.>	Go to step **18**.
18	**CHECK INSTALLATION CONDITION OF TIMING CHAIN.** Turn the crankshaft using ST, and align the alignment mark on crank sprocket with alignment mark on cylinder block. ST 18252AA000 CRANKSHAFT SOCKET	Is the timing chain dislocated from its proper position?	Correct the installation condition of timing chain. <Ref. to ME(H4DO)-97, Timing Chain Assembly.>	Go to step **19**.

	Step	Check	Yes	No
19	**CHECK ELECTRONIC THROTTLE CONTROL RELAY.** 1) Turn the ignition switch to OFF. 2) Remove the electronic throttle control relay. 3) Connect the battery to terminals No. 13 and No. 14 of electronic throttle control relay. 4) Measure the resistance between electronic throttle control relay terminals. ***Terminals*** ***No. 15 — No. 16:***	Is the resistance less than 1 Ω?	Go to step **20**.	Replace the electronic throttle control relay. <Ref. to FU(H4DO)-86, Electronic Throttle Control Relay.>
20	**CHECK POWER SUPPLY OF ELECTRONIC THROTTLE CONTROL RELAY.** Measure the voltage between electronic throttle control relay connector and chassis ground. ***Connector & terminal*** ***(B48) No. 22 (+) — Chassis ground (–):***	Is the voltage 10 V or more?	Go to step **21**.	Repair the open or short to ground in the power supply circuit.
21	**CHECK HARNESS BETWEEN ECM AND ELECTRONIC THROTTLE CONTROL RELAY CONNECTOR.** 1) Disconnect the connector from ECM. 2) Turn the ignition switch to ON. 3) Measure the voltage between electronic throttle control relay connector and chassis ground. ***Connector & terminal*** ***(B48) No. 20 (+) — Chassis ground (–):***	Is the voltage 10 V or more?	Repair the short circuit to power in the harness between ECM connector and electronic throttle control relay connector.	Go to step **22**.
22	**CHECK HARNESS BETWEEN ECM AND ELECTRONIC THROTTLE CONTROL RELAY CONNECTOR.** 1) Turn the ignition switch to OFF. 2) Measure the resistance between electronic throttle control relay connector and chassis ground. ***Connector & terminal*** ***(B48) No. 20 — Chassis ground:*** ***(B48) No. 23 — Chassis ground:***	Is the resistance 1 MΩ or more?	Go to step **23**.	Repair the short circuit to ground in harness between ECM connector and electronic throttle control relay connector.
23	**CHECK HARNESS BETWEEN ECM AND ELECTRONIC THROTTLE CONTROL RELAY CONNECTOR.** Measure the resistance of harness between ECM connector and electronic throttle control relay connector. ***Connector & terminal*** ***(B134) No. 65 — (B48) No. 20:*** ***(B134) No. 13 — (B48) No. 23:***	Is the resistance less than 1 Ω?	Go to step **24**.	Repair the open circuit in harness between ECM connector and electronic throttle control relay connector.
24	**CHECK HARNESS BETWEEN ECM AND ELECTRONIC THROTTLE CONTROL CONNECTOR.** 1) Turn the ignition switch to OFF. 2) Disconnect the connectors from ECM and electronic throttle control. 3) Measure the resistance between ECM connector and chassis ground. ***Connector & terminal*** ***(E158) No. 32 — Chassis ground:*** ***(E158) No. 29 — Chassis ground:*** ***(E158) No. 29 — (E158) No. 19:*** ***(E158) No. 31 — Chassis ground:*** ***(E158) No. 31 — (E158) No. 19:***	Is the resistance 1 MΩ or more?	Go to step **25**.	Repair the ground short circuit of harness between ECM connector and electronic throttle control connector.

	Step	Check	Yes	No
25	**CHECK SHORT CIRCUIT INSIDE THE ECM.** 1) Connect the connector to ECM. 2) Measure the resistance between electronic throttle control connector and engine ground. ***Connector & terminal*** ***(E57) No. 6 — Engine ground:*** ***(E57) No. 4 — Engine ground:***	Is the resistance 1 MΩ or more?	Go to step **26**.	Repair the ground short circuit of harness between ECM connector and electronic throttle control connector. Replace the ECM if defective. <Ref. to FU(H4DO)-82, Engine Control Module (ECM).>
26	**CHECK HARNESS BETWEEN ECM AND ELECTRONIC THROTTLE CONTROL CONNECTOR.** 1) Disconnect the connector from ECM. 2) Measure the resistance of harness between ECM connector and electronic throttle control connector. ***Connector & terminal*** ***(E158) No. 29 — (E57) No. 6:*** ***(E158) No. 31 — (E57) No. 4:*** ***(E158) No. 34 — (E57) No. 3:***	Is the resistance less than 1 Ω?	Go to step **27**.	Repair the harness and connector. NOTE: In this case, repair the following item: • Open circuit in harness between ECM connector and electronic throttle control connector • Poor contact of coupling connector
27	**CHECK HARNESS BETWEEN ECM AND ELECTRONIC THROTTLE CONTROL CONNECTOR.** 1) Connect the connector to ECM. 2) Measure the resistance between electronic throttle control connector and engine ground. ***Connector & terminal*** ***(E57) No. 3 — Engine ground:***	Is the resistance less than 5 Ω?	Go to step **28**.	Repair the harness and connector. NOTE: In this case, repair the following item: • Open circuit of harness between ECM connector and engine ground • Poor contact of ECM connector
28	**CHECK HARNESS BETWEEN ECM AND ELECTRONIC THROTTLE CONTROL CONNECTOR.** 1) Turn the ignition switch to ON. 2) Measure the voltage between electronic throttle control connector and engine ground. ***Connector & terminal*** ***(E57) No. 6 (+) — Engine ground (–):*** ***(E57) No. 4 (+) — Engine ground (–):***	Is the voltage 5 V or more?	Repair the short circuit to power in the harness between ECM connector and electronic throttle control connector.	Go to step **29**.
29	**CHECK HARNESS BETWEEN ECM AND ELECTRONIC THROTTLE CONTROL CONNECTOR.** 1) Turn the ignition switch to OFF. 2) Disconnect the connector from ECM. 3) Measure the resistance between ECM connectors. ***Connector & terminal*** ***(E158) No. 32 — (E158) No. 29:*** ***(E158) No. 32 — (E158) No. 31:***	Is the resistance 1 MΩ or more?	Go to step **30**.	Repair the short circuit to power in the harness between ECM connector and electronic throttle control connector.

	Step	Check	Yes	No
30	**CHECK SENSOR OUTPUT.** 1) Connect all connectors. 2) Turn the ignition switch to ON. 3) Read the value of «Main-Throttle Sensor» using Subaru Select Monitor. NOTE: For detailed operation procedures, refer to "Read Current Data For Engine". <Ref. to EN(H4DO)(diag)-45, Subaru Select Monitor.>	Is the value of «Main-Throttle Sensor» 0.81 — 0.87 V?	Go to step **31**.	Repair the poor contact of electronic throttle control connector. Replace the electronic throttle control if defective. <Ref. to FU(H4DO)-14, Throttle Body.>
31	**CHECK SENSOR OUTPUT.** Read the value of «Sub-Throttle Sensor» using Subaru Select Monitor. NOTE: For detailed operation procedures, refer to "Read Current Data For Engine". <Ref. to EN(H4DO)(diag)-45, Subaru Select Monitor.>	Is the value of «Sub-Throttle Sensor» 1.64 — 1.70 V?	Go to step **32**.	Repair the poor contact of electronic throttle control connector. Replace the electronic throttle control if defective. <Ref. to FU(H4DO)-14, Throttle Body.>
32	**CHECK HARNESS BETWEEN ECM AND ELECTRONIC THROTTLE CONTROL CONNECTOR.** 1) Turn the ignition switch to OFF. 2) Disconnect the connectors from ECM and electronic throttle control. 3) Measure the resistance between ECM connector and electronic throttle control connector. ***Connector & terminal*** ***(E158) No. 14 — (E57) No. 2:*** ***(E158) No. 1 — (E57) No. 1:***	Is the resistance less than 1 Ω?	Go to step **33**.	Repair the open circuit of harness between ECM connector and electronic throttle control connector.
33	**CHECK HARNESS BETWEEN ECM AND ELECTRONIC THROTTLE CONTROL CONNECTOR.** 1) Connect the connector to ECM. 2) Turn the ignition switch to ON. 3) Measure the voltage between electronic throttle control connector and engine ground. ***Connector & terminal*** ***(E57) No. 2 (+) — Engine ground (–):*** ***(E57) No. 1 (+) — Engine ground (–):***	Is the voltage 5 V or more?	Repair the short circuit to power in the harness between ECM connector and electronic throttle control connector.	Go to step **34**.
34	**CHECK HARNESS BETWEEN ECM AND ELECTRONIC THROTTLE CONTROL CONNECTOR.** 1) Turn the ignition switch to OFF. 2) Disconnect the connector from ECM. 3) Measure the resistance between electronic throttle control connector and engine ground. ***Connector & terminal*** ***(E57) No. 2 — Engine ground:*** ***(E57) No. 1 — Engine ground:***	Is the resistance 1 MΩ or more?	Go to step **35**.	Repair the ground short circuit of harness between ECM connector and electronic throttle control connector.
35	**CHECK HARNESS BETWEEN ELECTRONIC THROTTLE CONTROL CONNECTOR.** Measure the resistance between electronic throttle control connectors. ***Connector & terminal*** ***(E57) No. 2 — (E57) No. 1:***	Is the resistance 1 MΩ or more?	Go to step **36**.	Repair the short circuit in harness between ECM connector and electronic throttle control connector.

	Step	Check	Yes	No
36	**CHECK ELECTRONIC THROTTLE CONTROL GROUND CIRCUIT.** Measure the resistance between ECM connector and chassis ground. ***Connector & terminal*** ***(E158) No. 61 — Chassis ground:*** ***(E158) No. 62 — Chassis ground:*** ***(E158) No. 63 — Chassis ground:*** ***(E158) No. 64 — Chassis ground:*** ***(E158) No. 65 — Chassis ground:***	Is the resistance less than 5 Ω?	Go to step **37**.	Repair the open circuit in harness between ECM connector and engine ground.
37	**CHECK ELECTRONIC THROTTLE CONTROL.** Measure the resistance between electronic throttle control terminals. ***Terminals*** ***No. 2 — No. 1:***	Is the resistance 50 Ω or less?	Go to step **38**.	Replace the electronic throttle control. <Ref. to FU(H4DO)-14, Throttle Body.>
38	**CHECK ELECTRONIC THROTTLE CONTROL.** Move the throttle valve to the fully opened and fully closed positions with fingers. Check that the valve returns to the specified position when releasing fingers.	Does the valve return to the specified position? Standard value: 3 mm (0.12 in) from fully closed position	Repair the poor contact of ECM connector.	Replace the electronic throttle control. <Ref. to FU(H4DO)-14, Throttle Body.>

1. OUTLINE OF DIAGNOSIS

• When cold, the abnormality in the control of target engine speed increase is detected. (P050A)

• Idle speed diagnosis

Judge as NG when actual engine speed is not close to target engine speed at cold start.

• Detect malfunctions of the catalyst advanced idling retard angle control. (P050B)

Judge as NG when ECM is not controlling the angle properly during catalyst advanced idling retard angle control.

• Final ignition timing diagnosis

Judge as NG when actual retard amount is under the specified value at cold start.

2. EXECUTION CONDITION

Secondary Parameters	Execution condition
<Idle speed diagnosis>	
Barometric pressure	≥ 75.1 kPa (563 mmHg, 22.2 inHg)
Battery voltage	> 10.9 V
Vehicle speed	≤ 2 km/h (1.2 MPH)
Engine coolant temperature	≤ 60 °C (140 °F)
Intake air amount sum value	≤ Value of Map 1
Elapsed time after gear position change (P ←→ D or N ←→ D)	≥ 3000 ms
Throttle valve opening angle	< 0.37 °
Fuel property	Not extremely low volatility
Elapsed time after starting the engine	≥ 2000 ms
<Final ignition timing diagnosis>	
Barometric pressure	≥ 75.1 kPa (563 mmHg, 22.2 inHg)
Battery voltage	> 10.9 V
Vehicle speed	≤ 2 km/h (1.2 MPH)
Engine coolant temperature	≤ 60 °C (140 °F)
Intake air amount sum value	≤ Value of Map 2
Elapsed time after gear position change (P ←→ D or N ←→ D)	≥ 3000 ms
Throttle valve opening angle	< 0.37 °
Fuel property	Not extremely low volatility
Commanded ignition timing retard	≥ Value from Map 3

Map 1

Engine coolant temperature at engine starting °C (°F)	–40 (–40)	–30 (–22)	–20 (–4)	–10 (14)	0 (32)	10 (50)	20 (68)	30 (86)
Intake air amount sum value g (oz)	2000 (70.54)	1800 (63.49)	1500 (52.91)	675 (23.81)	550 (19.4)	450 (15.87)	390 (13.76)	320 (11.29)

Engine coolant temperature at engine starting °C (°F)	40 (104)	50 (122)	60 (140)	70 (158)	80 (176)	90 (194)	100 (212)	110 (230)
Intake air amount sum value g (oz)	260 (9.17)	210 (7.41)	180 (6.35)	180 (6.35)	180 (6.35)	180 (6.35)	180 (6.35)	180 (6.35)

Map 2

Engine coolant temperature at engine starting °C (°F)	–40 (–40)	–30 (–22)	–20 (–4)	–10 (14)	0 (32)	10 (50)	20 (68)	30 (86)
Intake air amount sum value g (oz)	2000 (70.54)	1800 (63.49)	1500 (52.91)	675 (23.81)	550 (19.4)	450 (15.87)	390 (13.76)	320 (11.29)

Engine coolant temperature at engine starting °C (°F)	40 (104)	50 (122)	60 (140)	70 (158)	80 (176)	90 (194)	100 (212)	110 (230)
Intake air amount sum value g (oz)	260 (9.17)	210 (7.41)	180 (6.35)	180 (6.35)	180 (6.35)	180 (6.35)	180 (6.35)	180 (6.35)

Map 3

Engine coolant temperature	–40 °C (–40 °F)	–30 °C (–22 °F)	–20 °C (–4 °F)	–10 °C (14 °F)	0 °C (32 °F)	10 °C (50 °F)	20 °C (68 °F)	30 °C (86 °F)	40 °C (104 °F)	50 °C (122 °F)	60 °C (140 °F)
Commanded ignition timing retard (CVT model)	21 °CA	21 °CA	21 °CA	21 °CA	21 °CA	21 °CA	21 °CA	21 °CA	21 °CA	21 °CA	21 °CA
Commanded ignition timing retard (MT model)	11 °CA	11 °CA	11 °CA	11 °CA	11 °CA	11 °CA	11 °CA	11 °CA	11 °CA	11 °CA	11 °CA

3. GENERAL DRIVING CYCLE

Perform the diagnosis at cold start.

4. DIAGNOSTIC METHOD

• Idle speed diagnosis

Judge as NG when the following conditions are established.

Judgment Value

Malfunction Criteria	Threshold Value
Actual engine speed – Target engine speed	< Value of Map 4

Map 4 (CVT model)

Engine coolant temperature	–40 °C (–40 °F)	–30 °C (–22 °F)	–20 °C (–4 °F)	–10 °C (14 °F)	0.00 °C (32 °F)	10.00 °C (50 °F)	20.00 °C (68 °F)	30.00 °C (86 °F)	40.00 °C (104 °F)	50.00 °C (122 °F)	60.00 °C (140 °F)
Threshold Value	–300 rpm	–300 rpm	–300 rpm	–300 rpm	–300 rpm	–300 rpm	–300 rpm	–300 rpm	–300 rpm	–300 rpm	–300 rpm

Map 4 (MT model)

Engine coolant temperature	–40 °C (–40 °F)	–30 °C (–22 °F)	–20 °C (–4 °F)	–10 °C (14 °F)	0.00 °C (32 °F)	10.00 °C (50 °F)	20.00 °C (68 °F)	30.00 °C (86 °F)	40.00 °C (104 °F)	50.00 °C (122 °F)	60.00 °C (140 °F)
Threshold Value	–300 rpm	–300 rpm	–300 rpm	–300 rpm	–300 rpm	–300 rpm	–300 rpm	–300 rpm	–300 rpm	–300 rpm	–300 rpm

Time Needed for Diagnosis: 7000 ms
Malfunction Indicator Light Illumination: Illuminates when malfunction occurs in 2 continuous driving cycles.

• Final ignition timing diagnosis

Judge as NG when the following conditions are established.

Judgment Value

Malfunction Criteria	Threshold Value
Final CIT – CSERS CIT* *: • CIT = Commanded Ignition Timing • CSERS = Cold Start Emission Reduction Strategy	> Value of Map 5

Map 5

Engine coolant temperature at engine starting	–40 °C (–40 °F)	–30 °C (–22 °F)	–20 °C (–4 °F)	–10 °C (14 °F)	0 °C (32 °F)	10 °C (50 °F)	20 °C (68 °F)	30 °C (86 °F)	40 °C (104 °F)	50 °C (122 °F)	60 °C (140 °F)
Threshold value (CVT model)	6.5 °CA	6.5 °CA	6.5 °CA	6.5 °CA	6.5 °CA	6.5 °CA	6.5 °CA	6.5 °CA	6.5 °CA	6.5 °CA	6.5 °CA
Threshold value (MT model)	7 °CA	7 °CA	7 °CA	7 °CA	7 °CA	7 °CA	7 °CA	7 °CA	7 °CA	7 °CA	7 °CA

Time Needed for Diagnosis: 7000 ms
Malfunction Indicator Light Illumination: Illuminates when malfunction occurs in 2 continuous driving cycles.

CN:DTC P050B COLD START IGNITION TIMING PERFORMANCE

NOTE:
For the diagnostic procedure, refer to DTC P050A. <Ref. to EN(H4DO)(diag)-337, DTC P050A COLD START IDLE CONTROL SYSTEM PERFORMANCE, Diagnostic Procedure with Diagnostic Trouble Code (DTC).>

1. OUTLINE OF DIAGNOSIS

NOTE:
For the detection standard, refer to DTC P050A. <Ref. to EN(H4DO)(diag)-337, DTC P050A COLD START IDLE CONTROL SYSTEM PERFORMANCE, Diagnostic Procedure with Diagnostic Trouble Code (DTC).>

CO:DTC P0512 STARTER (SWITCH) REQUEST CIRCUIT

DTC DETECTING CONDITION:
Immediately at fault recognition
TROUBLE SYMPTOM:
Failure of engine to start

CAUTION:
After servicing or replacing faulty parts, perform Clear Memory Mode <Ref. to EN(H4DO)(diag)-78, OPERATION, Clear Memory Mode.>, and Inspection Mode <Ref. to EN(H4DO)(diag)-64, PROCEDURE, Inspection Mode.>.

WIRING DIAGRAM:

Engine Electrical System ENGINE TYPE FB (WITH PUSH BUTTON START) <Ref. to WI-184, ENGINE TYPE FB (WITH PUSH BUTTON START), WIRING DIAGRAM, Engine Electrical System.>

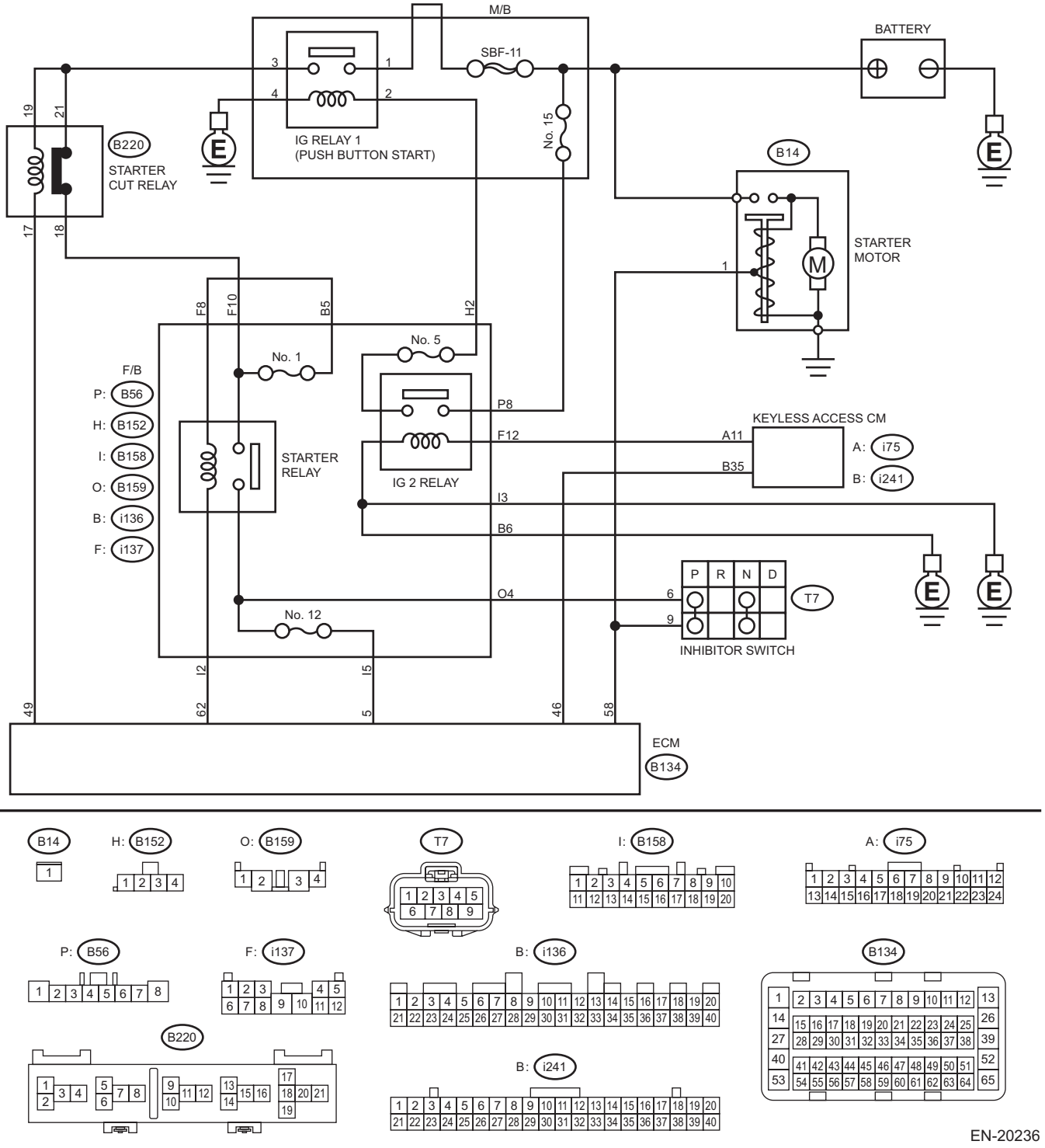

EN-20236

	Step	Check	Yes	No
1	**CHECK PUSH BUTTON IGNITION SWITCH.** Operate the push button ignition switch.	Does it operate smoothly without catch?	Go to step **2**.	Replace the push button ignition switch. <Ref. to SL-106, Push Button Ignition Switch.>
2	**CHECK DTC.** 1) Clear the memory using the Subaru Select Monitor. <Ref. to EN(H4DO)(diag)-78, Clear Memory Mode.> 2) Start and idle the engine for three minutes or more.	Is the same DTC as current diagnosis output?	Go to step **3**.	Even if DTC is detected, the circuit has returned to a normal condition at this time. Reproduce the failure, and then perform the diagnosis again. NOTE: In this case, temporary poor contact of connector, temporary open or short circuit of harness may be the cause.
3	**CHECK HARNESS BETWEEN ECM AND KEYLESS ACCESS CM.** 1) Turn the ignition to OFF. 2) Disconnect the connector from ECM. 3) Turn the ignition to ON. 4) Measure the voltage between ECM connector and chassis ground. ***Connector & terminal*** ***(B134) No. 46 (+) — Chassis ground (–):***	Is the voltage 10 V or more?	Repair the short circuit to power supply in harness between ECM connector and keyless access CM connector.	Repair the poor contact of ECM connector.

1. OUTLINE OF DIAGNOSIS

Detect abnormal continuity in the starter SW1.
Judge as ON NG when the starter SW 1 signal remains ON.

2. EXECUTION CONDITION

Secondary Parameters	Execution condition
Battery voltage	≥ 8 V
Engine speed	> 500 rpm

3. GENERAL DRIVING CYCLE

Perform the diagnosis continuously after starting the engine.

4. DIAGNOSTIC METHOD

If the duration of time while the following conditions are met is longer than the time indicated, judge as NG.

Judgment Value

Malfunction Criteria	Threshold Value
Starter SW1 voltage	≥ Battery voltage × 0.6

Time Needed for Diagnosis: 30000 ms
Malfunction Indicator Light Illumination: Illuminates as soon as a malfunction occurs.

CP:DTC P0560 SYSTEM VOLTAGE

DTC DETECTING CONDITION:
Immediately at fault recognition

CAUTION:
After servicing or replacing faulty parts, perform Clear Memory Mode <Ref. to EN(H4DO)(diag)-78, OPERATION, Clear Memory Mode.>, and Inspection Mode <Ref. to EN(H4DO)(diag)-64, PROCEDURE, Inspection Mode.>.

WIRING DIAGRAM:

- Engine Electrical System ENGINE TYPE FB (WITHOUT PUSH BUTTON START) <Ref. to WI-170, ENGINE TYPE FB (WITHOUT PUSH BUTTON START), WIRING DIAGRAM, Engine Electrical System.>
- Engine Electrical System ENGINE TYPE FB (WITH PUSH BUTTON START) <Ref. to WI-184, ENGINE TYPE FB (WITH PUSH BUTTON START), WIRING DIAGRAM, Engine Electrical System.>

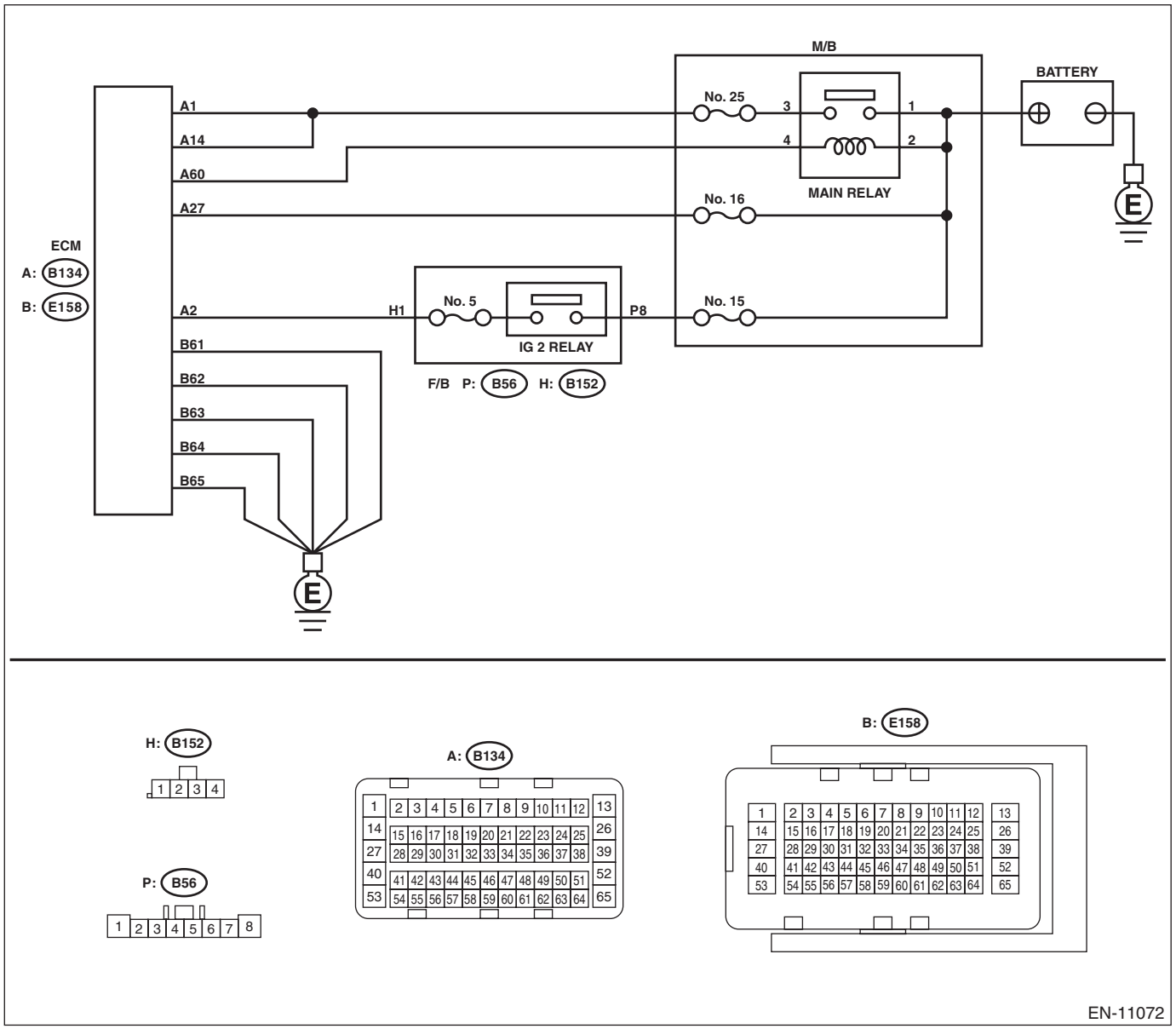

	Step	Check	Yes	No
1	**CHECK INPUT SIGNAL OF ECM.** 1) Turn the ignition switch to OFF. 2) Measure the voltage between ECM connector and chassis ground. ***Connector & terminal*** ***(B134) No. 27 (+) — Chassis ground (–):***	Is the voltage 10 V or more?	Repair the poor contact of ECM connector.	Go to step **2**.
2	**CHECK HARNESS BETWEEN ECM AND MAIN FUSE BOX CONNECTOR.** 1) Disconnect the connector from ECM. 2) Measure the resistance between ECM connector and chassis ground. ***Connector & terminal*** ***(B134) No. 27 — Chassis ground:***	Is the resistance 1 MΩ or more?	Go to step **3**.	Repair the short circuit to ground in harness between ECM connector and battery terminal.
3	**CHECK FUSE NO. 12 (MAIN FUSE BOX).**	Is the fuse blown out?	Replace the fuse.	Repair the harness and connector. NOTE: In this case, repair the following item: • Open circuit in harness between ECM connector and battery • Poor contact of ECM connector • Poor contact of battery terminal

1. OUTLINE OF DIAGNOSIS

Detect the open/short circuit of back-up power supply circuit.
Judge as NG when the backup power voltage is low.

2. EXECUTION CONDITION

Secondary Parameters	Execution condition
Battery voltage	≥ 10.9 V

3. GENERAL DRIVING CYCLE

Always perform the diagnosis continuously.

4. DIAGNOSTIC METHOD

If the duration of time while the following conditions are met is longer than the time indicated, judge as NG.

Judgment Value

Malfunction Criteria	Threshold Value
Voltage of back-up power supply	≤ 3.5 V

Time Needed for Diagnosis: 2500 ms
Malfunction Indicator Light Illumination: Illuminates as soon as a malfunction occurs.

CQ:DTC P059A ACTIVE GRILLE AIR SHUTTER "A" POSITION SENSOR CIRCUIT

DTC DETECTING CONDITION:
Immediately at fault recognition

CAUTION:
After servicing or replacing faulty parts, perform Clear Memory Mode <Ref. to EN(H4DO)(diag)-78, OPERATION, Clear Memory Mode.>, and Inspection Mode <Ref. to EN(H4DO)(diag)-64, PROCEDURE, Inspection Mode.>.

	Step	Check	Yes	No
1	**CHECK ACTIVE GRILLE SHUTTER.** Check the area around the active grille shutter louver, louver link and actuator.	Is there any abnormality such as a foreign matter adhered or pinched and a frost?	Remove the foreign matter from the active grille shutter and go to the next step. Go to step **2**.	Go to step **2**.
2	**CHECK ACTIVE GRILLE SHUTTER.** 1) Turn the ignition switch to OFF, and wait for approx. 30 seconds. 2) Turn the ignition switch to ON. NOTE: Make sure that the ambient temperature is equal to or higher than 3°C (37.4°F). 3) Start the engine. 4) Three minutes after starting the engine, perform the operation check for the active grille shutter using the Subaru Select Monitor. NOTE: For detailed operation procedures, refer to the “Active Test”. <Ref. to EN(H4DO)(diag)-79, Active Test.>	Does the open/close operation finish correctly?	Even if DTC is detected, it has returned to a normal condition at this time. NOTE: In this case, it is assumed that the active grille shutter may have temporarily had a foreign matter adhered/pinched or a frost.	Replace the active grille shutter. <Ref. to CO(H4DO)-63, Active Grille Shutter.>

1. OUTLINE OF DIAGNOSIS

Detect the malfunction of active grille shutter position sensor.
Judge as NG if out of specification.

2. COMPONENT DESCRIPTION

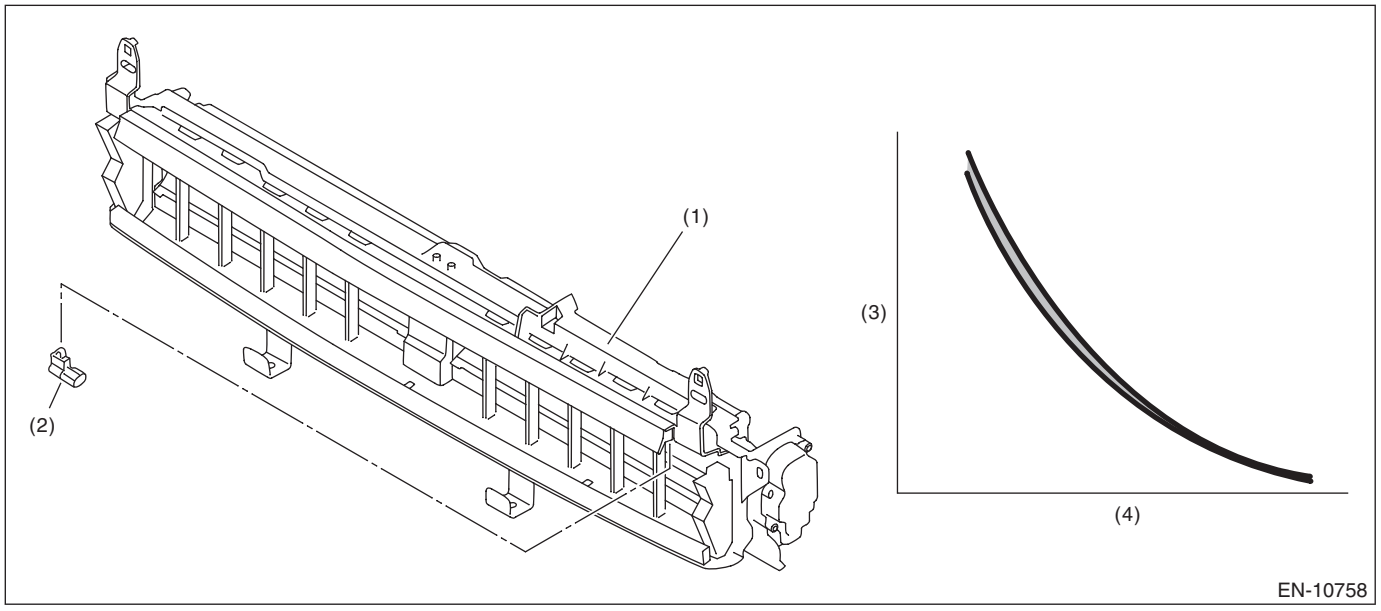

(1) Active grille shutter
(2) Ambient sensor
(3) Resistance value (kΩ)
(4) Ambient air temperature (°C (°F))

3. EXECUTION CONDITION

Secondary Parameters	Execution condition
Battery voltage	≥ 10.9 V
Command to active grille shutter	Open or Closed

4. GENERAL DRIVING CYCLE

Always perform the diagnosis continuously.

5. DIAGNOSTIC METHOD

Judge as NG when the following conditions are established.

Judgment Value

Malfunction Criteria	Threshold Value
Input pulse of the active grille shutter position sensor	= 0

Time Needed for Diagnosis: 2500 ms
Malfunction Indicator Light Illumination: Illuminates as soon as a malfunction occurs.

CR:DTC P059F ACTIVE GRILLE AIR SHUTTER "A" PERFORMANCE/STUCK OFF

DTC DETECTING CONDITION:
Detected when two consecutive driving cycles with fault occur.

CAUTION:
After servicing or replacing faulty parts, perform Clear Memory Mode <Ref. to EN(H4DO)(diag)-78, OPERATION, Clear Memory Mode.>, and Inspection Mode <Ref. to EN(H4DO)(diag)-64, PROCEDURE, Inspection Mode.>.

	Step	Check	Yes	No
1	**CHECK DTC.** Check for DTC. <Ref. to EN(H4DO)(diag)-63, Read Diagnostic Trouble Code (DTC).>	Is P059F displayed in «Present fault»?	Go to step **2**.	Even if DTC is detected, it has returned to a normal condition at this time. Reproduce the failure, and then perform the diagnosis again. NOTE: In this case, it is assumed that the active grille shutter may have temporarily had a foreign matter adhered/pinched or a frost.
2	**CHECK ACTIVE GRILLE SHUTTER.** Check the area around the active grille shutter louver, louver link and actuator.	Is there any abnormality such as a foreign matter adhered or pinched and a frost?	Remove the foreign matter from the active grille shutter and go to the next step. Go to step **3**.	Go to step **3**.
3	**CHECK ACTIVE GRILLE SHUTTER.** 1) Turn the ignition switch to ON (engine OFF). 2) Using the Subaru Select Monitor, perform the operation check of the active grille shutter to measure time needed for open or close operation. NOTE: For detailed operation procedures, refer to the “Active Test”. <Ref. to EN(H4DO)(diag)-79, Active Test.>	Is the time less than 15 seconds?	Even if DTC is detected, it has returned to a normal condition at this time. Reproduce the failure, and then perform the diagnosis again.	Go to step **4**.
4	**CHECK CURRENT DATA.** Read the value of «Active Grille Shutter Voltage Error Status» using Subaru Select Monitor. NOTE: For detailed operation procedures, refer to “Current Data Display For Engine”. <Ref. to EN(H4DO)(diag)-45, Subaru Select Monitor.>	Is «Normal» displayed?	Go to step **5**.	Check the power supply circuit. If the power supply circuit is normal. replace the active grille shutter. <Ref. to CO(H4DO)-63, Active Grille Shutter.>

	Step	Check	Yes	No
5	**CHECK CURRENT DATA.** 1) Turn the ignition switch to OFF, and cool down the engine enough. NOTE: Cool down the engine unit until it can be easily touched by hand. 2) Turn the ignition switch to ON. 3) Read the value of «Active Grille Shutter Temperature Error Status» using Subaru Select Monitor. NOTE: For detailed operation procedures, refer to “Current Data Display For Engine”. <Ref. to EN(H4DO)(diag)-45, Subaru Select Monitor.>	Is «Normal» displayed?	Even if DTC is detected, it has returned to a normal condition at this time. Reproduce the failure, and then perform the diagnosis again.	Replace the active grille shutter. <Ref. to CO(H4DO)-63, Active Grille Shutter.>

1. OUTLINE OF DIAGNOSIS

Detect the malfunction of the response to open/close request for the active grille shutter.
Judge as NG if out of specification.

2. COMPONENT DESCRIPTION

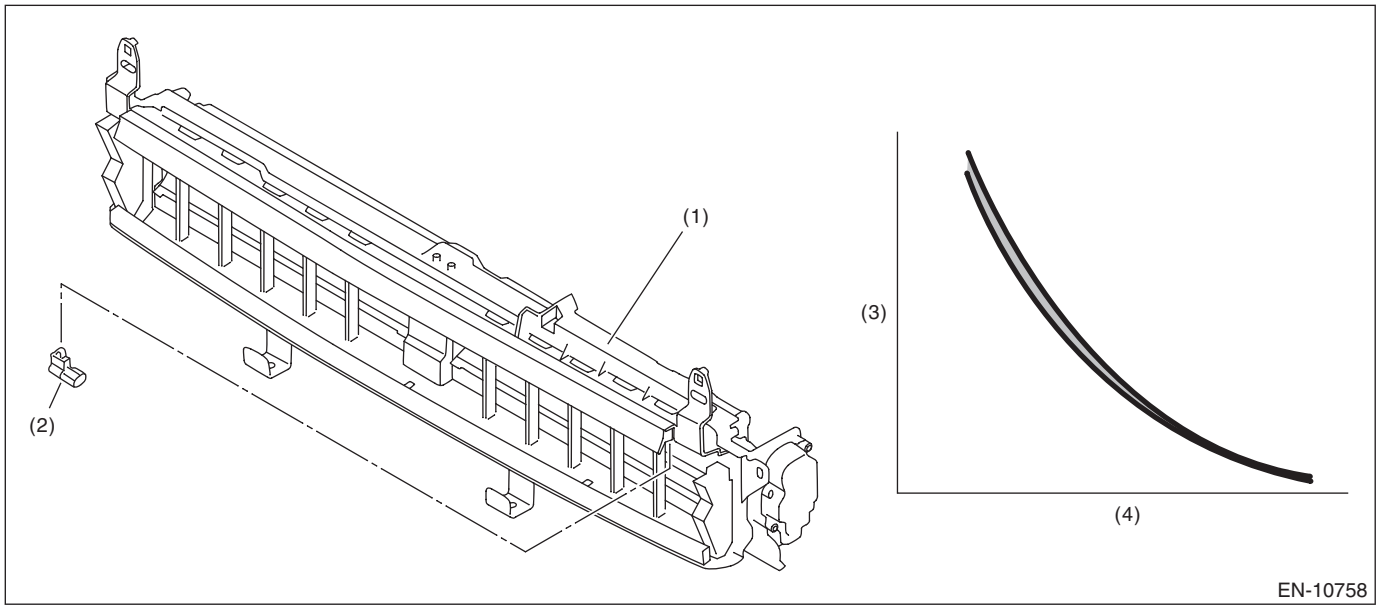

(1) Active grille shutter
(2) Ambient sensor
(3) Resistance value (kΩ)
(4) Ambient air temperature (°C (°F))

3. EXECUTION CONDITION

Secondary Parameters	Execution condition
Battery voltage	≥ 10.9 V
Active grille shutter drive	Yes

4. GENERAL DRIVING CYCLE

Always perform the diagnosis continuously.

5. DIAGNOSTIC METHOD

Judge as NG when the following conditions are established.

Judgment Value

Malfunction Criteria	Threshold Value
Changing rate of the active grille shutter in 15000 ms	< 94%

Time Needed for Diagnosis: 15000 ms
Malfunction Indicator Light Illumination: Illuminates when malfunction occurs in 2 continuous driving cycles.

CS:DTC P05A0 ACTIVE GRILLE AIR SHUTTER "A" STUCK ON

DTC DETECTING CONDITION:

Detected when two consecutive driving cycles with fault occur.

CAUTION:

After servicing or replacing faulty parts, perform Clear Memory Mode <Ref. to EN(H4DO)(diag)-78, OPERATION, Clear Memory Mode.>, and Inspection Mode <Ref. to EN(H4DO)(diag)-64, PROCEDURE, Inspection Mode.>.

	Step	Check	Yes	No
1	**CHECK ACTIVE GRILLE SHUTTER.** Check the area around the active grille shutter louver, louver link and actuator.	Is there any abnormality such as a foreign matter adhered or pinched and a frost?	Remove the foreign matter from the active grille shutter.	Go to step **2**.
2	**CHECK ACTIVE GRILLE SHUTTER.** Check the area around the active grille shutter louver, louver link and actuator.	Is there any damage in each part of the active grille shutter?	Replace the active grille shutter. <Ref. to CO(H4DO)-63, Active Grille Shutter.>	Go to step **3**.
3	**CHECK ACTIVE GRILLE SHUTTER.** 1) Turn the ignition switch to OFF, and wait for approx. 30 seconds. 2) Turn the ignition switch to ON. 3) Perform operation check for the active grille shutter using the Subaru Select Monitor. NOTE: For detailed operation procedures, refer to the “Active Test”. <Ref. to EN(H4DO)(diag)-79, Active Test.>	Does the open/close operation finish correctly?	Even if DTC is detected, it has returned to a normal condition at this time. NOTE: In this case, it is assumed that the active grille shutter may have temporarily had a foreign matter adhered/pinched or a frost.	Replace the active grille shutter. <Ref. to CO(H4DO)-63, Active Grille Shutter.>

1. OUTLINE OF DIAGNOSIS

Detect that open/close operation of the active grille shutter is disabled due to a foreign matter pinched in or other defects.
Judge as NG if out of specification.

2. COMPONENT DESCRIPTION

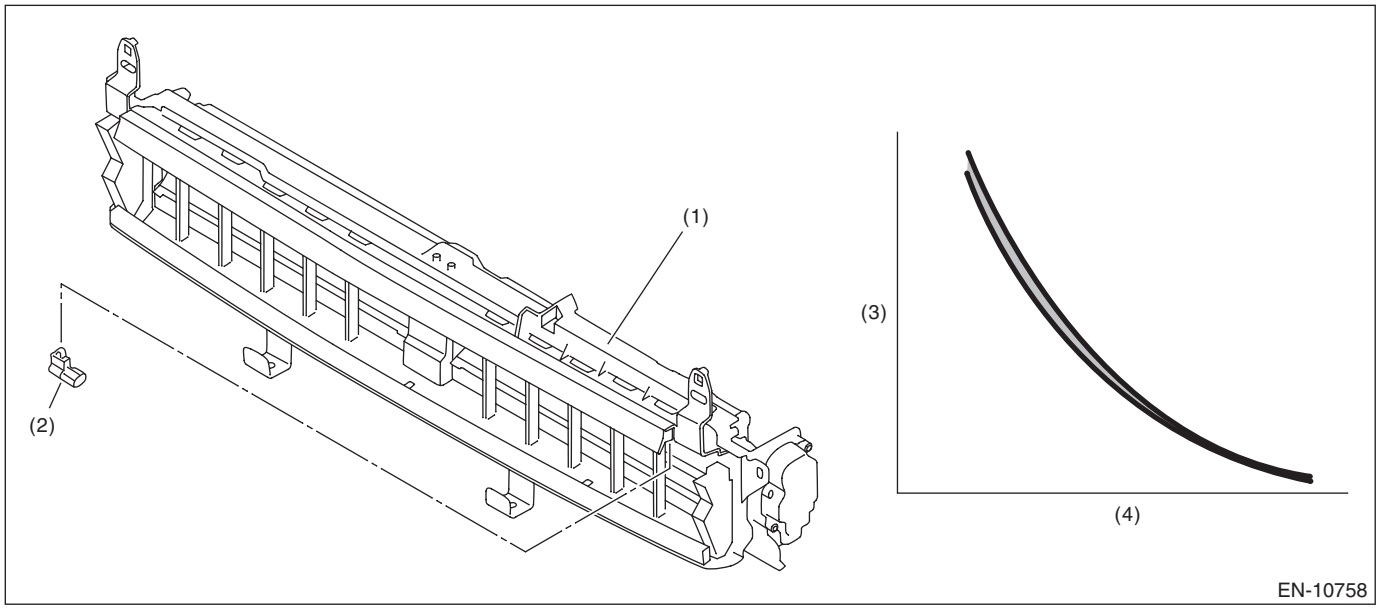

(1) Active grille shutter
(2) Ambient sensor
(3) Resistance value (kΩ)
(4) Ambient air temperature (°C (°F))

3. EXECUTION CONDITION

Secondary Parameters	Execution condition
Battery voltage	≥ 10.9 V
Command to active grille shutter	Open or Closed

4. GENERAL DRIVING CYCLE

Always perform the diagnosis continuously.

5. DIAGNOSTIC METHOD

Judge as NG when the following conditions are established.

Judgment Value

Malfunction Criteria	Threshold Value
Max value of the active grille shutter position sensor (when controlled at power supply ON)	< 70 deg

Time Needed for Diagnosis: 2500 ms
Malfunction Indicator Light Illumination: Illuminates when malfunction occurs in 2 continuous driving cycles.

CT:DTC P05A1 ACTIVE GRILLE AIR SHUTTER "A" POSITION SENSOR MINIMUM/MAXIMUM STOP PERFORMANCE

DTC DETECTING CONDITION:

Detected when two consecutive driving cycles with fault occur.

CAUTION:

After servicing or replacing faulty parts, perform Clear Memory Mode <Ref. to EN(H4DO)(diag)-78, OPERATION, Clear Memory Mode.>, and Inspection Mode <Ref. to EN(H4DO)(diag)-64, PROCEDURE, Inspection Mode.>.

	Step	Check	Yes	No
1	**CHECK ACTIVE GRILLE SHUTTER.** Check the area around the active grille shutter louver, louver link and actuator.	Is there any abnormality such as a foreign matter adhered or pinched and a frost?	Remove the foreign matter from the active grille shutter.	Go to step **2**.
2	**CHECK ACTIVE GRILLE SHUTTER.** Check the area around the active grille shutter louver, louver link and actuator.	Is there any damage in each part of the active grille shutter?	Replace the active grille shutter. <Ref. to CO(H4DO)-63, Active Grille Shutter.>	Go to step **3**.
3	**CHECK ACTIVE GRILLE SHUTTER.** 1) Turn the ignition switch to OFF, and wait for approx. 30 seconds. 2) Turn the ignition switch to ON. 3) Perform operation check for the active grille shutter using the Subaru Select Monitor. NOTE: For detailed operation procedures, refer to the “Active Test”. <Ref. to EN(H4DO)(diag)-79, Active Test.>	Does the open/close operation finish correctly?	Even if DTC is detected, it has returned to a normal condition at this time. NOTE: In this case, it is assumed that the active grille shutter may have temporarily had a foreign matter adhered/pinched or a frost.	Replace the active grille shutter. <Ref. to CO(H4DO)-63, Active Grille Shutter.>

1. OUTLINE OF DIAGNOSIS

Detect that the revolution angle goes beyond the defined angle due to the malfunction of the active grille shutter.
Judge as NG if out of specification.

2. COMPONENT DESCRIPTION

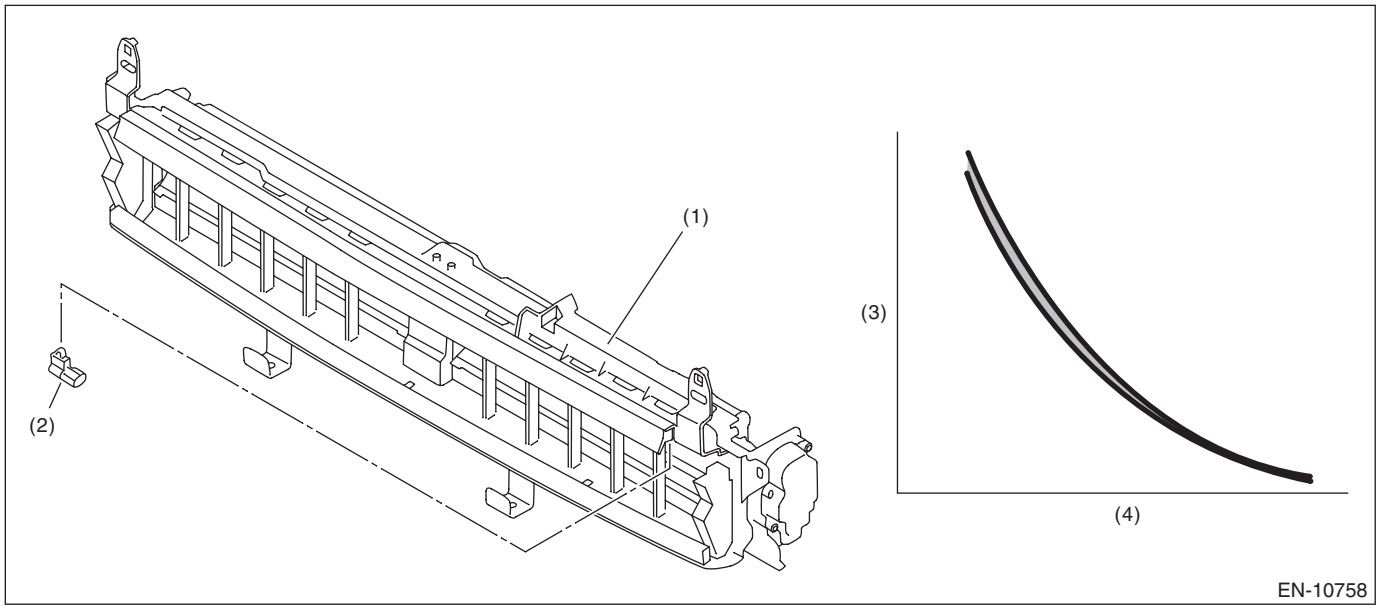

(1) Active grille shutter
(2) Ambient sensor
(3) Resistance value (kΩ)
(4) Ambient air temperature (°C (°F))

3. EXECUTION CONDITION

Secondary Parameters	Execution condition
Battery voltage	≥ 10.9 V
Command to active grille shutter	Open or Closed

4. GENERAL DRIVING CYCLE

Always perform the diagnosis continuously.

5. DIAGNOSTIC METHOD

Judge as NG when the following conditions are established.

Judgment Value

Malfunction Criteria	Threshold Value
Max value of the active grille shutter position sensor (when controlled at power supply ON)	> 155 deg

Time Needed for Diagnosis: 2500 ms
Malfunction Indicator Light Illumination: Illuminates when malfunction occurs in 2 continuous driving cycles.

CU:DTC P05A2 ACTIVE GRILLE AIR SHUTTER "A" CONTROL CIRCUIT/OPEN

DTC DETECTING CONDITION:
Immediately at fault recognition

CAUTION:
After servicing or replacing faulty parts, perform Clear Memory Mode <Ref. to EN(H4DO)(diag)-78, OPERATION, Clear Memory Mode.>, and Inspection Mode <Ref. to EN(H4DO)(diag)-64, PROCEDURE, Inspection Mode.>.

Step		Check	Yes	No
1	**CHECK DTC.** 1) Perform the Clear Memory Mode using the Subaru Select Monitor. <Ref. to EN(H4DO)(diag)-78, OPERATION, Clear Memory Mode.> 2) Turn the ignition switch to OFF, and wait for approx. 30 seconds. 3) Turn the ignition switch to ON. 4) Check for DTC. <Ref. to EN(H4DO)(diag)-63, Read Diagnostic Trouble Code (DTC).>	Is P05A2 displayed in «Present fault»?	Replace the active grille shutter. <Ref. to CO(H4DO)-63, Active Grille Shutter.>	Using the Subaru Select Monitor, perform the operation check for the active grille shutter to make sure that its open and close operation can be completed properly. NOTE: For detailed operation procedures, refer to the “Active Test”. <Ref. to EN(H4DO)(diag)-79, Active Test.>

1. OUTLINE OF DIAGNOSIS

Detect for the malfunction of active grille shutter motor circuit.
Judge as NG if out of specification.

2. COMPONENT DESCRIPTION

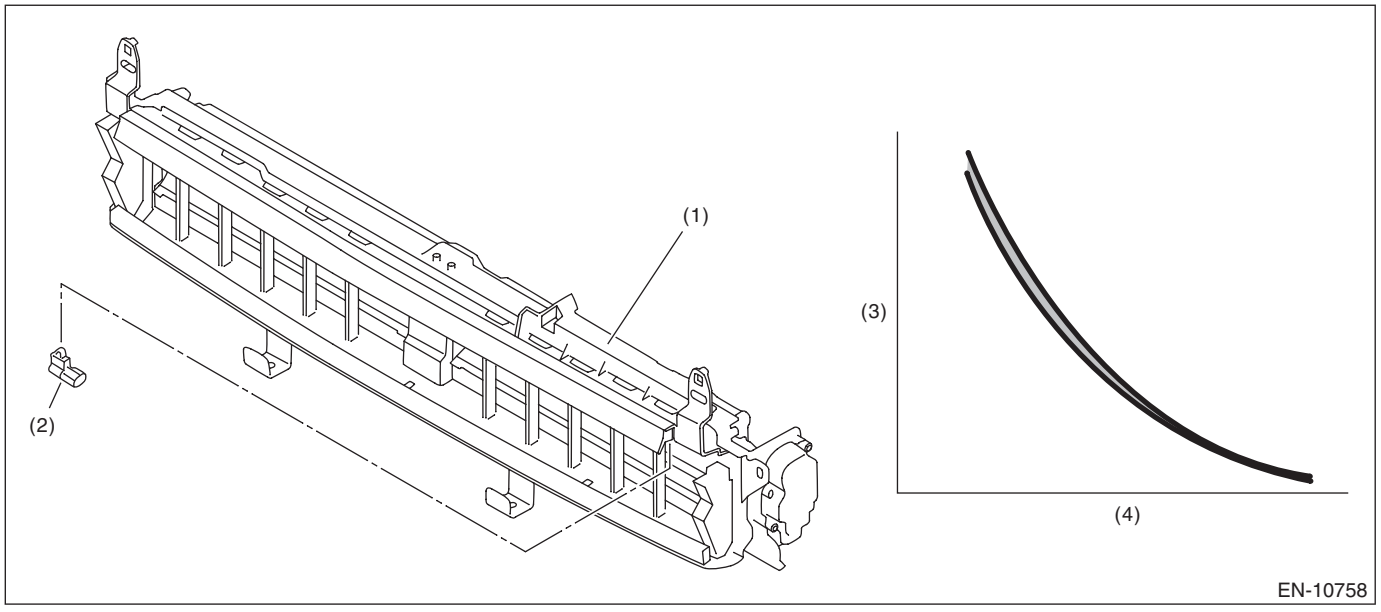

(1) Active grille shutter
(2) Ambient sensor
(3) Resistance value (kΩ)
(4) Ambient air temperature (°C (°F))

3. EXECUTION CONDITION

Diagnosis 1

Secondary Parameters	Execution condition
Battery voltage	≥ 10.9 V

Diagnosis 2

Secondary Parameters	Execution condition
Battery voltage	≥ 10.9 V
Command to active grille shutter	Open or Closed

4. GENERAL DRIVING CYCLE

Always perform the diagnosis continuously.

5. DIAGNOSTIC METHOD

Diagnosis 1

Judge as NG when the following conditions are established.

Judgment Value

Malfunction Criteria	Threshold Value
Current in the motor circuit during open/close command to the active grille shutter	> 650 mA

Time Needed for Diagnosis: 2500 ms

Diagnosis 2

Judge as NG when the following conditions are established.

Judgment Value

Malfunction Criteria	Threshold Value
Current in the motor circuit during open/close command to the active grille shutter	< 10 mA

Time Needed for Diagnosis: 2500 ms

Malfunction Indicator Light Illumination: Illuminates as soon as a malfunction occurs.

CV:DTC P05A6 ACTIVE GRILLE AIR SHUTTER "A" SUPPLY VOLTAGE CIRCUIT/OPEN

DTC DETECTING CONDITION:
Immediately at fault recognition

CAUTION:
After servicing or replacing faulty parts, perform Clear Memory Mode <Ref. to EN(H4DO)(diag)-78, OPERATION, Clear Memory Mode.>, and Inspection Mode <Ref. to EN(H4DO)(diag)-64, PROCEDURE, Inspection Mode.>.

WIRING DIAGRAM:
Active grille shutter <Ref. to WI-88, Active Grille Shutter.>

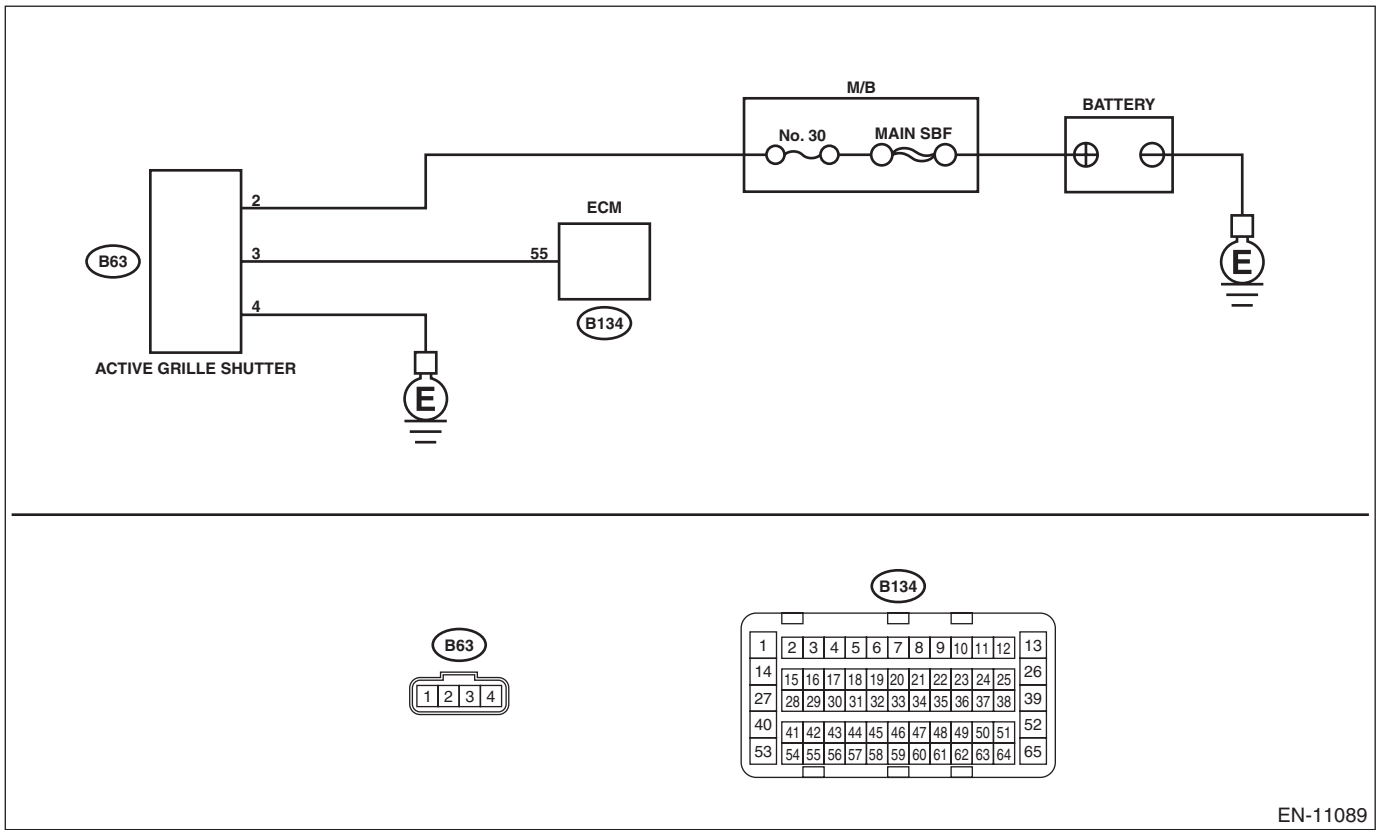

Step		Check	Yes	No
1	**CHECK DTC.** 1) Turn the ignition switch to OFF, and wait for approx. 30 seconds. 2) Turn the ignition switch to ON. 3) Check for DTC. <Ref. to EN(H4DO)(diag)-63, Read Diagnostic Trouble Code (DTC).>	Is P05A6 displayed in «Present fault»?	Go to step **2**.	Even if DTC is detected, the circuit has returned to a normal condition at this time. Reproduce the failure, and then perform the diagnosis again. NOTE: In this case, a temporary drop of battery voltage, temporary poor contact of connector, temporary open or short circuit of harness may be the cause.

	Step	Check	Yes	No
2	**CHECK BATTERY.** Check the battery. <Ref. to SC(H4DO)-63, Battery.>	Is the battery OK?	Go to step **3**.	Charge or replace the battery. <Ref. to SC(H4DO)-63, Battery.>
3	**CHECK ACTIVE GRILLE SHUTTER POWER SUPPLY.** 1) Turn the ignition switch to OFF. 2) Disconnect the battery. <Ref. to RC-4, BATTERY, NOTE, Repair Contents.> 3) Disconnect the connector from the active grille shutter. 4) Measure the voltage between active grille shutter connector and chassis ground. ***Connector & terminal*** ***(B63) No. 2 (+) — Chassis ground (–):***	Is the voltage 9 V or more?	Replace the active grille shutter. <Ref. to CO(H4DO)-63, Active Grille Shutter.>	Repair the power supply circuit.

1. OUTLINE OF DIAGNOSIS

Detect the abnormal voltage of active grille shutter power supply.
Judge as NG if out of specification.

2. COMPONENT DESCRIPTION

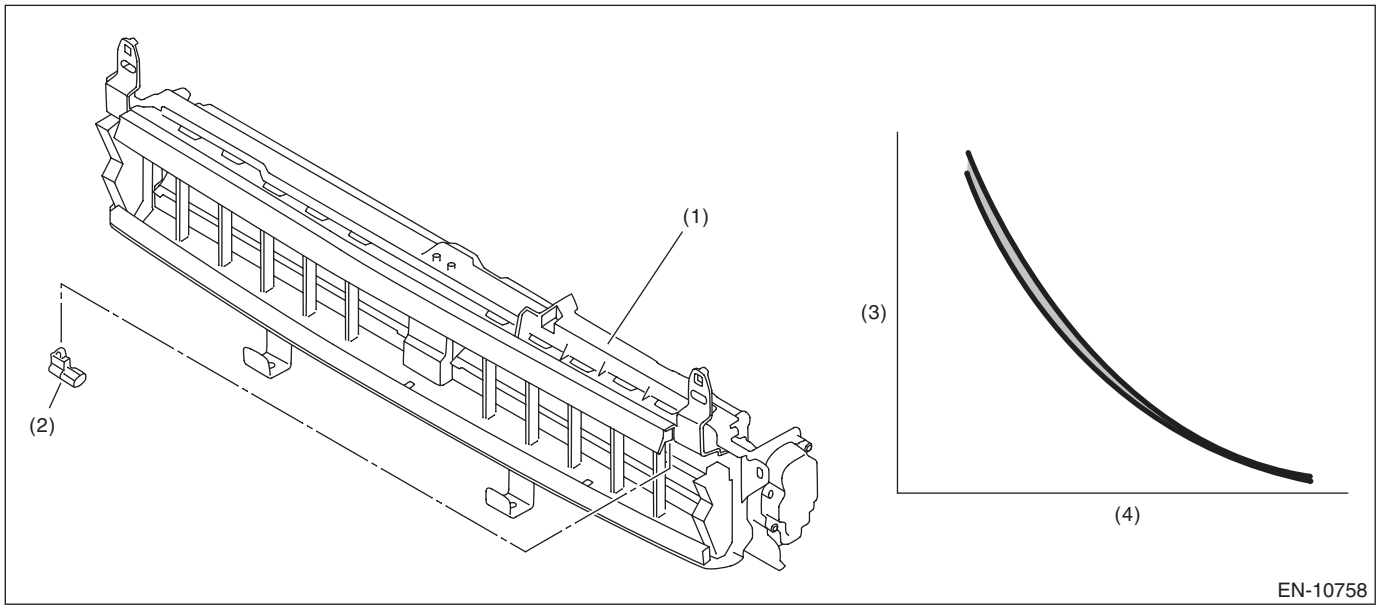

(1) Active grille shutter
(2) Ambient sensor
(3) Resistance value (kΩ)
(4) Ambient air temperature (°C (°F))

3. EXECUTION CONDITION

Secondary Parameters	Execution condition
Battery voltage	≥ 10.9 V

4. GENERAL DRIVING CYCLE

Always perform the diagnosis continuously.

5. DIAGNOSTIC METHOD

Judge as NG when the following conditions are established.

Judgment Value

Malfunction Criteria	Threshold Value
Malfunction judgment flag	1

Time Needed for Diagnosis: 2500 ms
Malfunction Indicator Light Illumination: Does not illuminate.

CW:DTC P05C0 ACTIVE GRILLE AIR SHUTTER MODULE "A" OVER TEMPERATURE

DTC DETECTING CONDITION:
Immediately at fault recognition

CAUTION:
After servicing or replacing faulty parts, perform Clear Memory Mode <Ref. to EN(H4DO)(diag)-78, OPERATION, Clear Memory Mode.>, and Inspection Mode <Ref. to EN(H4DO)(diag)-64, PROCEDURE, Inspection Mode.>.

	Step	Check	Yes	No
1	**CHECK DTC.** 1) Turn the ignition switch to OFF, and cool down the engine enough. NOTE: Cool down the engine unit until it can be easily touched by hand. 2) Turn the ignition switch to ON. 3) Check for DTC. <Ref. to EN(H4DO)(diag)-63, Read Diagnostic Trouble Code (DTC).>	Is P05C0 displayed in «Present fault»?	Replace the active grille shutter. <Ref. to CO(H4DO)-63, Active Grille Shutter.>	Even if DTC is detected, it has returned to a normal condition at this time. NOTE: In this case, there may have been a temporary rise of the temperature in the engine compartment.

1. OUTLINE OF DIAGNOSIS

Detect the abnormal temperature inside the active grille shutter.
Judge as NG if out of specification.

2. COMPONENT DESCRIPTION

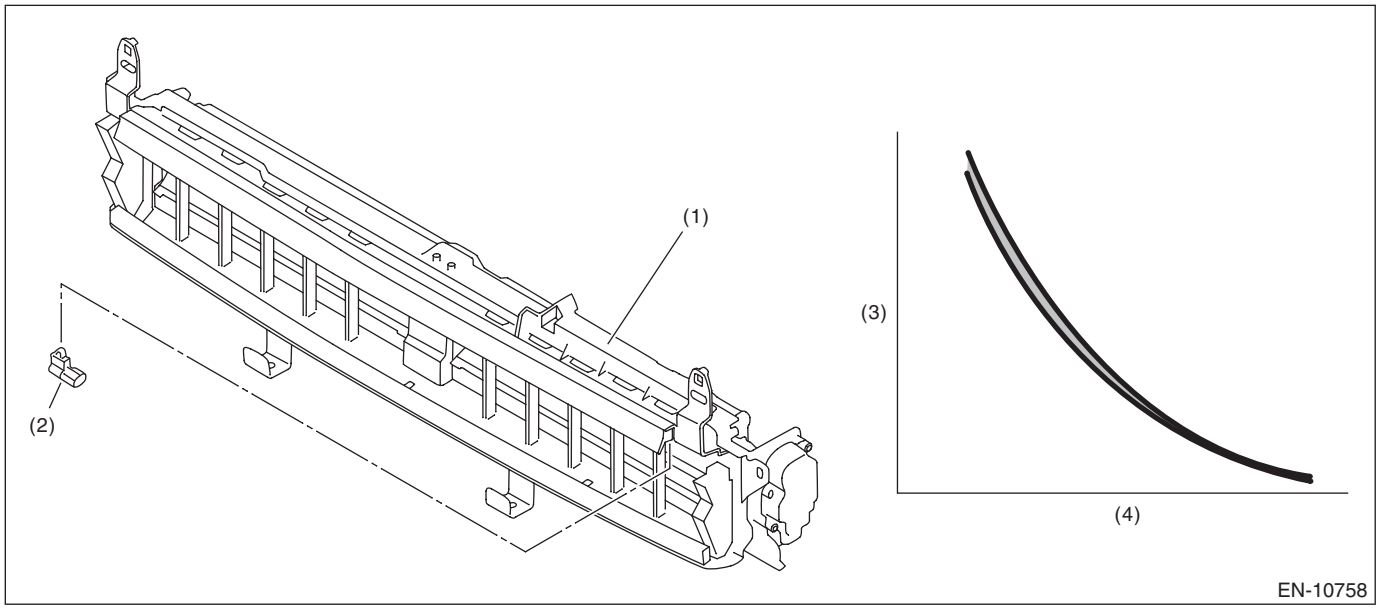

(1) Active grille shutter
(2) Ambient sensor
(3) Resistance value (kΩ)
(4) Ambient air temperature (°C (°F))

3. EXECUTION CONDITION

Secondary Parameters	Execution condition
Battery voltage	≥ 10.9 V

4. GENERAL DRIVING CYCLE

Always perform the diagnosis continuously.

5. DIAGNOSTIC METHOD

Judge as NG when the following conditions are established.

Judgment Value

Malfunction Criteria	Threshold Value
Malfunction judgment flag	1

Time Needed for Diagnosis: 2500 ms
Malfunction Indicator Light Illumination: Does not illuminate.

CX:DTC P0604 INTERNAL CONTROL MODULE RANDOM ACCESS MEMORY (RAM) ERROR

DTC DETECTING CONDITION:
Immediately at fault recognition
TROUBLE SYMPTOM:
- Engine does not start.
- Engine stalls.

CAUTION:
After servicing or replacing faulty parts, perform Clear Memory Mode <Ref. to EN(H4DO)(diag)-78, OPERATION, Clear Memory Mode.>, and Inspection Mode <Ref. to EN(H4DO)(diag)-64, PROCEDURE, Inspection Mode.>.

Step	Check	Yes	No
1 **CHECK FOR ANY OTHER DTC ON DISPLAY.**	Is any other DTC displayed?	Check the appropriate DTC using the "List of Diagnostic Trouble Code (DTC)". <Ref. to EN(H4DO)(diag)-102, List of Diagnostic Trouble Code (DTC).>	Even if DTC is detected, the circuit has returned to a normal condition at this time. Reproduce the failure, and then perform the diagnosis again. NOTE: In this case, temporary poor contact of connector, temporary open or short circuit of harness may be the cause.

1. OUTLINE OF DIAGNOSIS

Detect the malfunction of microcomputer (RAM).
When there is a problem in the CPU normal RAM, judge as NG.
If it is possible to write data to the whole area of RAM in the initial routine, and is possible to read the same data, it is judged as OK, and if not, NG.

2. EXECUTION CONDITION

Secondary Parameters	Execution condition
None	

Diagnosis with the initial routine.

3. GENERAL DRIVING CYCLE

Perform the diagnosis as soon as the ignition switch is turned to ON.

4. DIAGNOSTIC METHOD

Judge as NG when the following conditions are established.

Judgment Value

Malfunction Criteria	Threshold Value
Written value to RAM	≠ Read out value

Time Needed for Diagnosis: 32 ms × 16 time(s)
Malfunction Indicator Light Illumination: Illuminates as soon as a malfunction occurs.

CY:DTC P0605 INTERNAL CONTROL MODULE READ ONLY MEMORY (ROM) ERROR

NOTE:
For the diagnostic procedure, refer to DTC P0606. <Ref. to EN(H4DO)(diag)-372, DTC P0606 CONTROL MODULE PROCESSOR, Diagnostic Procedure with Diagnostic Trouble Code (DTC).>

1. OUTLINE OF DIAGNOSIS

Judge as NG when SUM value of ROM is outside the standard value.

2. EXECUTION CONDITION

Secondary Parameters	Execution condition
None	

Diagnosis with the initial routine.

3. GENERAL DRIVING CYCLE

Perform the diagnosis as soon as the ignition switch is turned to ON.

4. DIAGNOSTIC METHOD

Judge as NG if the criteria below are met.

Judgment Value

Malfunction Criteria	Threshold Value
SUM value of ROM	Malfunction

Time Needed for Diagnosis: 32 ms × 32 time(s)
Malfunction Indicator Light Illumination: Illuminates as soon as a malfunction occurs.

CZ:DTC P0606 CONTROL MODULE PROCESSOR

DTC DETECTING CONDITION:
Immediately at fault recognition
TROUBLE SYMPTOM:
- Improper idling
- Poor driving performance

CAUTION:
After servicing or replacing faulty parts, perform Clear Memory Mode <Ref. to EN(H4DO)(diag)-78, OPERATION, Clear Memory Mode.>, and Inspection Mode <Ref. to EN(H4DO)(diag)-64, PROCEDURE, Inspection Mode.>.
WIRING DIAGRAM:
- Engine Electrical System ENGINE TYPE FB (WITHOUT PUSH BUTTON START) <Ref. to WI-170, ENGINE TYPE FB (WITHOUT PUSH BUTTON START), WIRING DIAGRAM, Engine Electrical System.>
- Engine Electrical System ENGINE TYPE FB (WITH PUSH BUTTON START) <Ref. to WI-184, ENGINE TYPE FB (WITH PUSH BUTTON START), WIRING DIAGRAM, Engine Electrical System.>

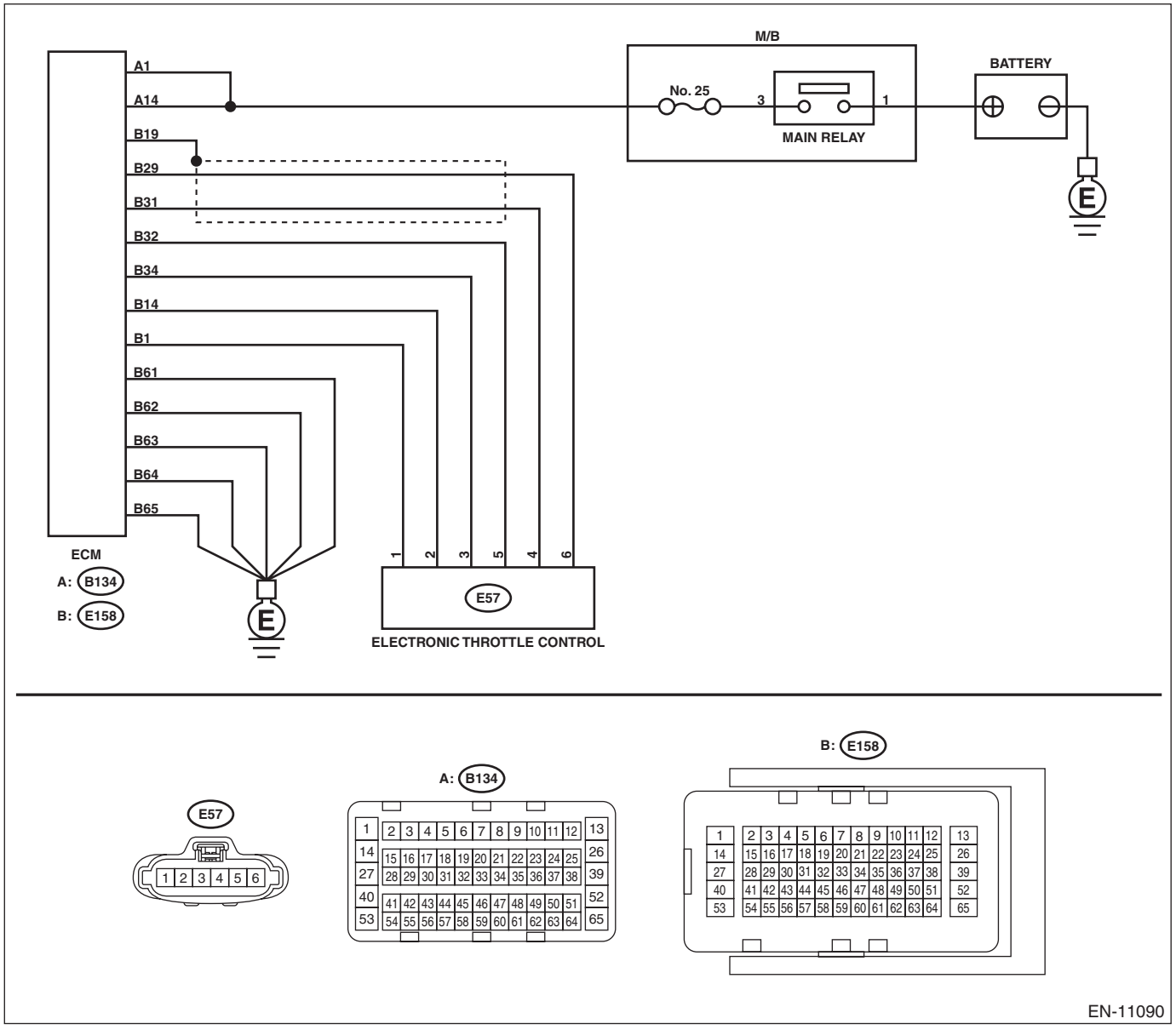

	Step	Check	Yes	No
1	**CHECK INPUT VOLTAGE OF ECM.** 1) Turn the ignition switch to ON. 2) Measure the voltage between ECM connector and chassis ground. ***Connector & terminal*** ***(B134) No. 14 (+) — Chassis ground (–):*** ***(B134) No. 1 (+) — Chassis ground (–):***	Is the voltage 10 — 13 V?	Go to step **2**.	Repair the open or short to ground in the power supply circuit.
2	**CHECK INPUT VOLTAGE OF ECM.** 1) Start the engine. 2) Measure the voltage between ECM connector and chassis ground. ***Connector & terminal*** ***(B134) No. 14 (+) — Chassis ground (–):*** ***(B134) No. 1 (+) — Chassis ground (–):***	Is the voltage 13 — 15 V?	Go to step **3**.	Repair the open or short to ground in the power supply circuit.
3	**CHECK HARNESS BETWEEN ECM AND ELECTRONIC THROTTLE CONTROL CONNECTOR.** 1) Turn the ignition switch to OFF. 2) Disconnect the connectors from ECM and electronic throttle control. 3) Measure the resistance of harness between ECM connector and electronic throttle control connector. ***Connector & terminal*** ***(E158) No. 32 — (E57) No. 5:*** ***(E158) No. 34 — (E57) No. 3:***	Is the resistance less than 1 Ω?	Go to step **4**.	Repair the open circuit of harness between ECM connector and electronic throttle control connector.
4	**CHECK ECM GROUND HARNESS.** 1) Connect all connectors. 2) Turn the ignition to ON. 3) Measure the voltage between ECM connector and chassis ground. ***Connector & terminal*** ***(E158) No. 61 (+) — Chassis ground (–):*** ***(E158) No. 62 (+) — Chassis ground (–):*** ***(E158) No. 63 (+) — Chassis ground (–):*** ***(E158) No. 64 (+) — Chassis ground (–):*** ***(E158) No. 65 (+) — Chassis ground (–):***	Is the voltage less than 1 V?	Check the connector for poor contact and check the harness. Replace the ECM if no fault is found. <Ref. to FU(H4DO)-82, Engine Control Module (ECM).>	Repair the harness and connector. NOTE: In this case, repair the following item: • Open circuit in ground circuit • Loose engine ground terminal

1. OUTLINE OF DIAGNOSIS

Judge as NG when the CPU operation is abnormal.
(1) Instruction check
(2) Software flow check
(3) Software monitor check
(4) If the output IC operation is abnormal
(5) CAN register check

2. COMPONENT DESCRIPTION

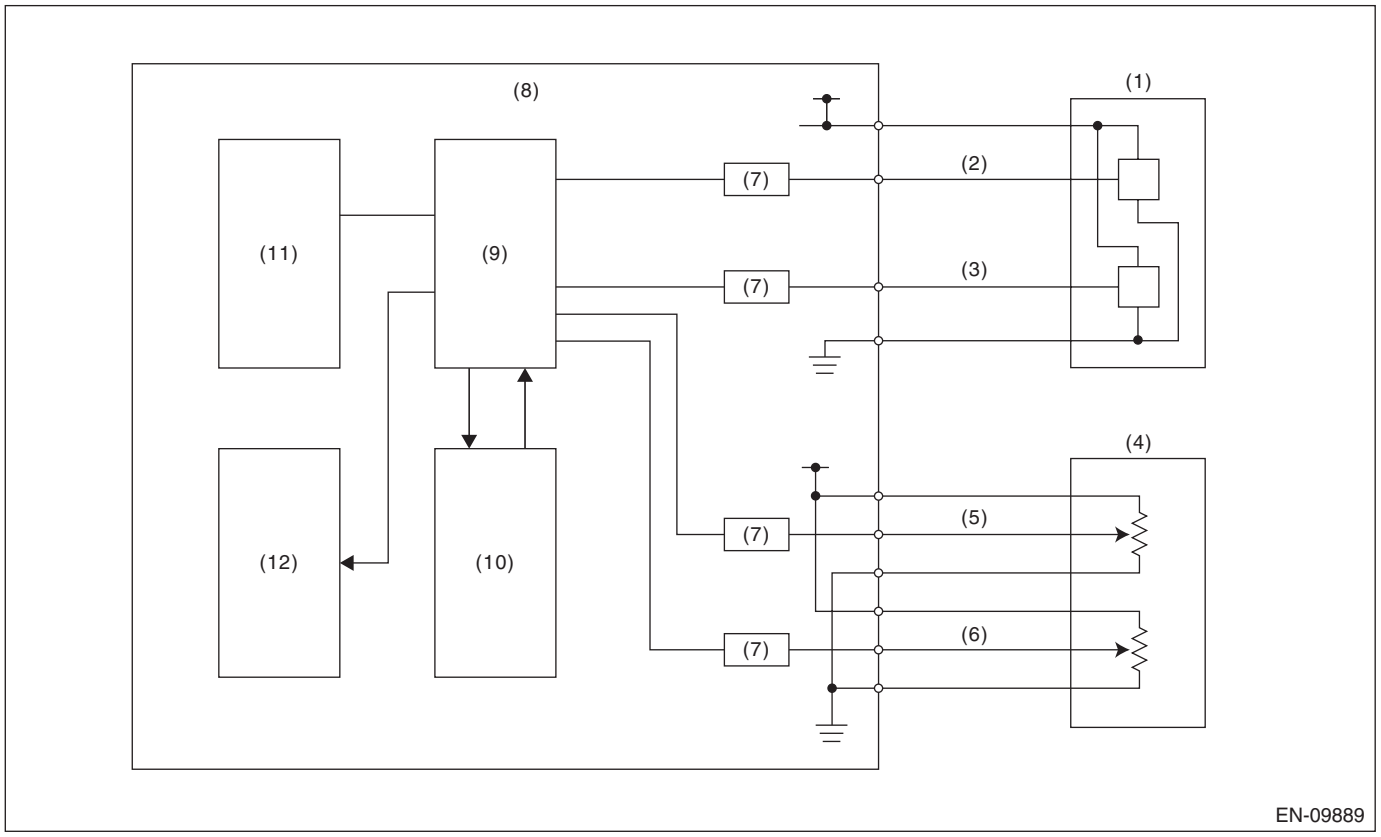

(1)	Throttle position sensor	(5)	Accelerator pedal position sensor 1	(9)	CPU
(2)	Throttle position sensor 1	(6)	Accelerator pedal position sensor 2	(10)	Monitoring IC
(3)	Throttle position sensor 2	(7)	I/F circuit	(11)	EEPROM
(4)	Accelerator pedal position sensor	(8)	Engine control module (ECM)	(12)	Output IC

3. EXECUTION CONDITION

Secondary Parameters	Execution condition
(1) — 1 Initial routine	
(1) — 2 Ignition switch	ON
(1) — 2 Battery voltage	≥ 6.2 V
(1) — 2 Electronic throttle control relay	ON
(2) Ignition switch	ON
(3) Ignition switch	ON
(3) Battery voltage	≥ 6.2 V
(3) Electronic throttle control relay	ON
(4) Ignition switch	ON
(5) Initial routine	

4. GENERAL DRIVING CYCLE

Always perform the diagnosis continuously.

5. DIAGNOSTIC METHOD

Judge as NG when the following conditions are established.

Judgment Value

Malfunction Criteria	Threshold Value
(1) — 1 Instruction value	Different from expected value
(1) — 2 Calculated result from CPU and FPU	Different from expected value
(2) Process flow result	The result and expected value do not match.
(3) High integrated IC motor continuity cut demand	Exist
(4) Communication between output driver ICs	Communication failure
(5) Writing value to CAN register	≠ Read out value

Time Needed for Diagnosis:
(1) — 1:2 time(s)
(1) — 2:512 ms
(2): 504 ms
(3): 48 ms
(4): 2500 ms
(5): Less than 1 second
Malfunction Indicator Light Illumination: Illuminates as soon as a malfunction occurs.

DA:DTC P060A INTERNAL CONTROL MODULE MONITORING PROCESSOR PERFORMANCE

NOTE:
For the diagnostic procedure, refer to DTC P0606. <Ref. to EN(H4DO)(diag)-372, DTC P0606 CONTROL MODULE PROCESSOR, Diagnostic Procedure with Diagnostic Trouble Code (DTC).>

1. OUTLINE OF DIAGNOSIS

Judge as NG when the monitoring IC operation is abnormal.
(1) Monitoring IC Disable (motor continuity cut demand) diagnosis
(2) Monitoring IC function diagnosis
(3) Monitoring IC register diagnosis

2. COMPONENT DESCRIPTION

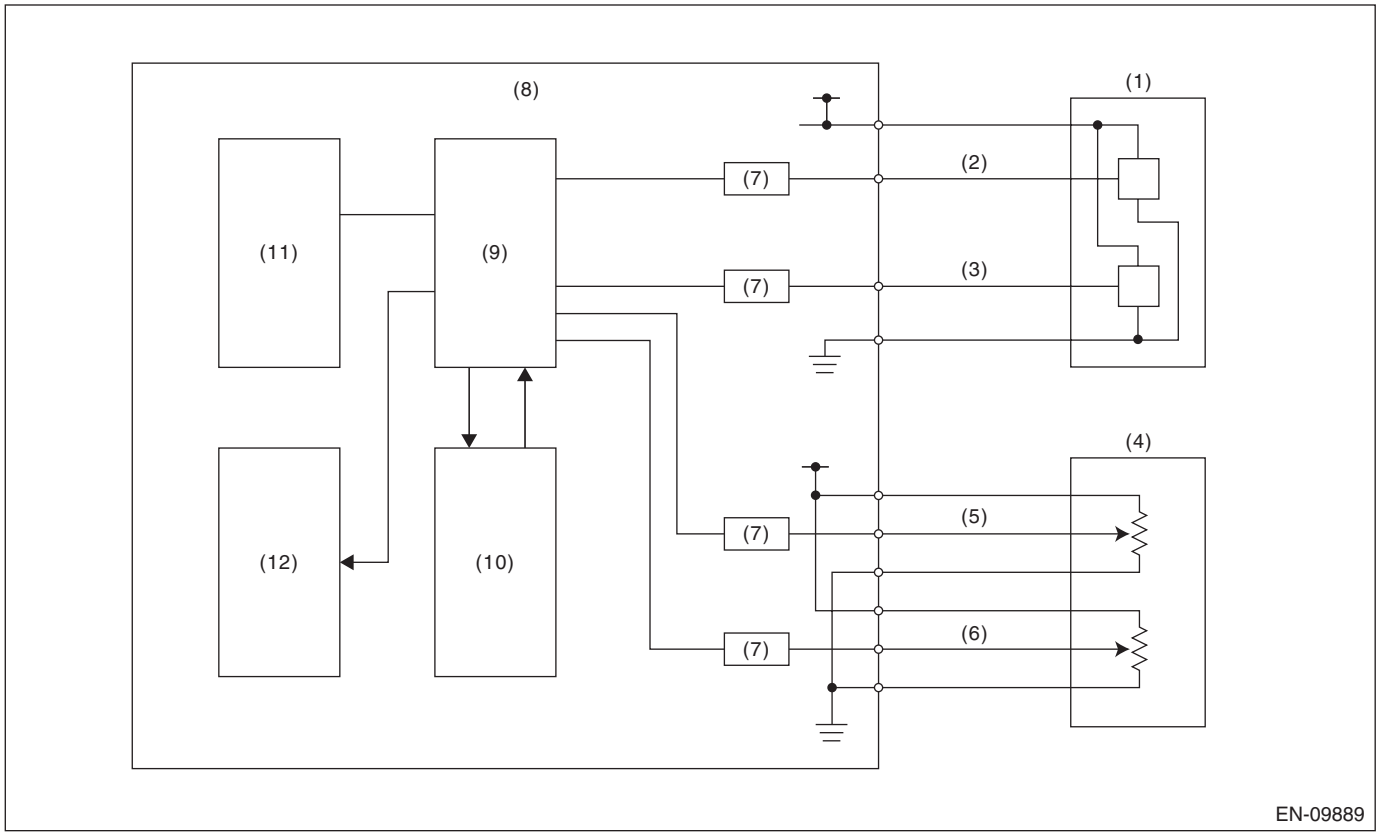

(1)	Throttle position sensor	(5)	Accelerator pedal position sensor 1	(9)	CPU
(2)	Throttle position sensor 1	(6)	Accelerator pedal position sensor 2	(10)	Monitoring IC
(3)	Throttle position sensor 2	(7)	I/F circuit	(11)	EEPROM
(4)	Accelerator pedal position sensor	(8)	Engine control module (ECM)	(12)	Output IC

3. EXECUTION CONDITION

Secondary Parameters	Execution condition
(1) Battery voltage	≥ 6 V
(1) When CPU intentionally sends motor continuity cut demand	
(2) Battery voltage	≥ 6 V
(2) CPU intentionally sends incorrect data	
(3) Battery voltage	≥ 6 V

4. GENERAL DRIVING CYCLE

Always perform the diagnosis continuously.

5. DIAGNOSTIC METHOD

Judge as NG when one of the following conditions is established.

Judgment Value

Malfunction Criteria	Threshold Value
(1) Main throttle opening angle – Main throttle opening angle at monitoring start	≥ 2 °
(2) Monitoring IC motor continuity cut demand	None
(3) Monitoring IC register writing value	≠ Reading value

Time Needed for Diagnosis:
(1): 24 ms
(2): 2984 ms = (25 + 6) × 0.008 + (4 × 25 + 4) × 0.008 + (5 × 25 + 9) × 0.008 + (2 × 25) × 0.008 + (25 + 2) × 0.008 × 2
(3): 200 ms
Malfunction Indicator Light Illumination: Illuminates as soon as a malfunction occurs.

DB:DTC P060B INTERNAL CONTROL MODULE A/D PROCESSING PERFORMANCE

NOTE:
For the diagnostic procedure, refer to DTC P0606. <Ref. to EN(H4DO)(diag)-372, DTC P0606 CONTROL MODULE PROCESSOR, Diagnostic Procedure with Diagnostic Trouble Code (DTC).>

1. OUTLINE OF DIAGNOSIS

Judge as NG when the AD converter operation is abnormal.

2. COMPONENT DESCRIPTION

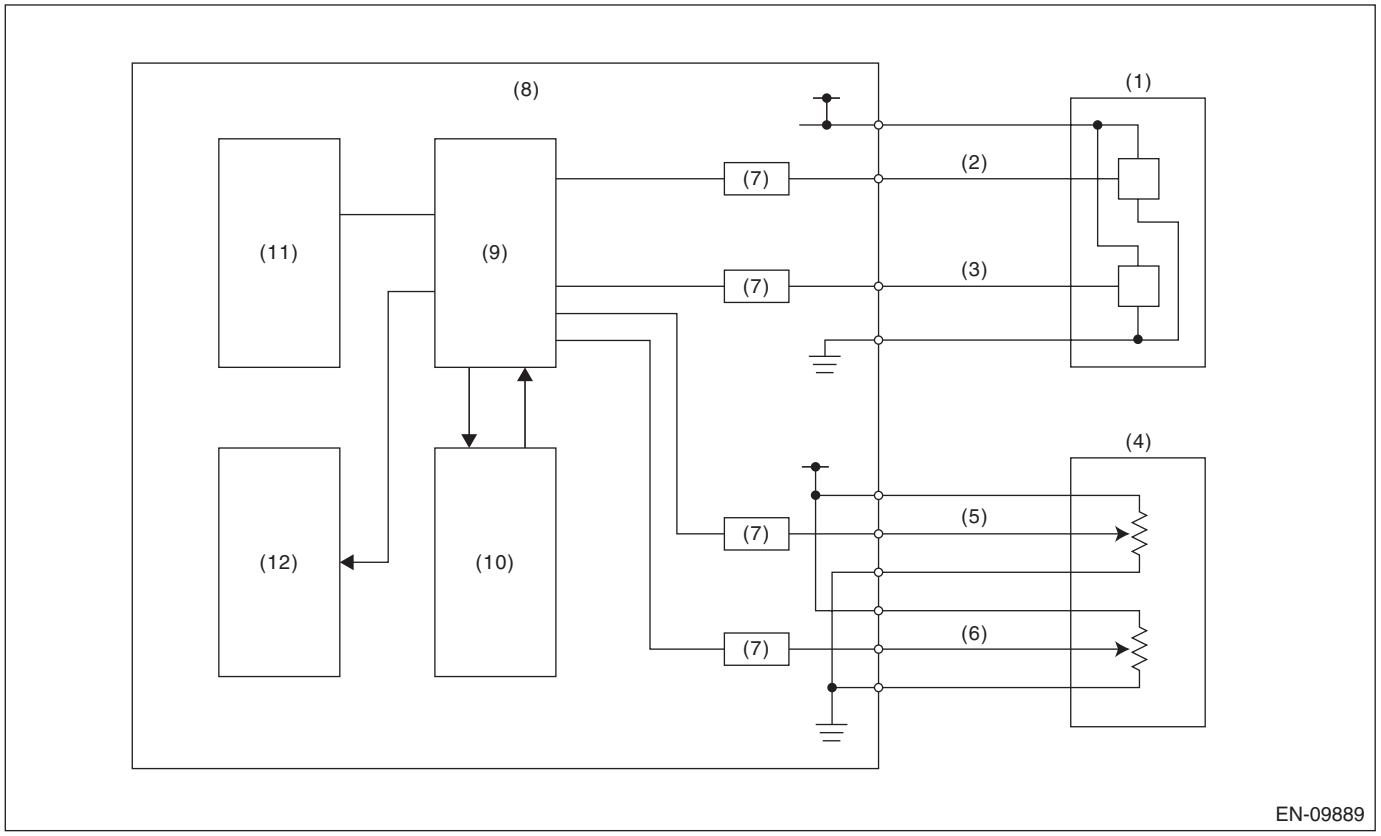

(1)	Throttle position sensor	(5)	Accelerator pedal position sensor 1	(9)	CPU
(2)	Throttle position sensor 1	(6)	Accelerator pedal position sensor 2	(10)	Monitoring IC
(3)	Throttle position sensor 2	(7)	I/F circuit	(11)	EEPROM
(4)	Accelerator pedal position sensor	(8)	Engine control module (ECM)	(12)	Output IC

3. EXECUTION CONDITION

Diagnosis 1

Secondary Parameters	Execution condition
Battery voltage	≥ 6 V
Target voltage	= 0 V

Diagnosis 2

Secondary Parameters	Execution condition
Battery voltage	≥ 6 V
Target voltage	= 5 V

4. GENERAL DRIVING CYCLE

Always perform the diagnosis continuously.

5. DIAGNOSTIC METHOD

Diagnosis 1

Judge as NG when the following conditions are established.

Judgment Value

Malfunction Criteria	Threshold Value
Actual voltage	> 0.01953125 V

Time Needed for Diagnosis: 200 ms

Diagnosis 2

Judge as NG when the following conditions are established.

Judgment Value

Malfunction Criteria	Threshold Value
Actual voltage	> 4.979248047 V

Time Needed for Diagnosis: 200 ms

Malfunction Indicator Light Illumination: Illuminates as soon as a malfunction occurs.

DC:DTC P0616 STARTER RELAY "A" CIRCUIT LOW

1. MODEL WITHOUT PUSH BUTTON START

DTC DETECTING CONDITION:
Immediately at fault recognition

CAUTION:
After servicing or replacing faulty parts, perform Clear Memory Mode <Ref. to EN(H4DO)(diag)-78, OPERATION, Clear Memory Mode.>, and Inspection Mode <Ref. to EN(H4DO)(diag)-64, PROCEDURE, Inspection Mode.>.

WIRING DIAGRAM:
Engine Electrical System ENGINE TYPE FB (WITHOUT PUSH BUTTON START) <Ref. to WI-170, ENGINE TYPE FB (WITHOUT PUSH BUTTON START), WIRING DIAGRAM, Engine Electrical System.>

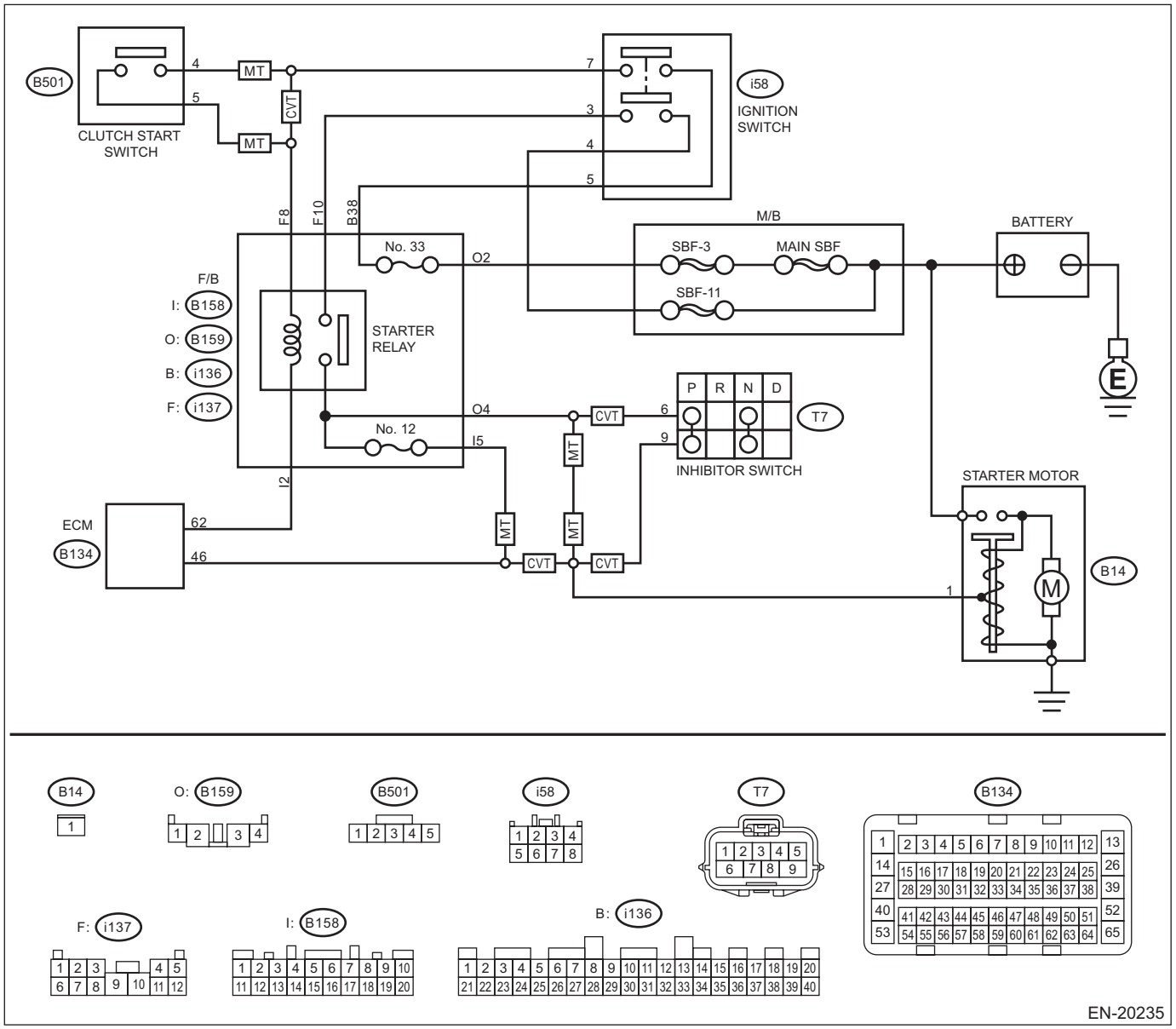

	Step	Check	Yes	No
1	**CHECK FOR ANY OTHER DTC ON DISPLAY.**	Is any other DTC displayed?	Check DTC using "List of Diagnostic Trouble Code (DTC)". <Ref. to EN(H4DO)(diag)-102, List of Diagnostic Trouble Code (DTC).>	Go to step **2**.
2	**CHECK HARNESS BETWEEN ECM AND STARTER RELAY CONNECTOR.** 1) Turn the ignition switch to OFF. 2) Remove the starter relay. 3) Disconnect the connectors from ECM and starter motor. 4) Measure the resistance of harness between ECM connector and starter relay connector. ***Connector & terminal*** ***CVT model*** ***(B134) No. 46 — (B159) No. 4:*** ***MT model*** ***(B134) No. 46 — (B158) No. 5:*** NOTE: For CVT model, place the select lever in "P" range or "N" range.	Is the resistance less than 1 Ω?	Go to step **3**.	NOTE: Check the following item and repair or replace if necessary. • Open circuit of harness between ECM connector and starter relay connector • Poor contact of coupling connector
3	**CHECK HARNESS BETWEEN ECM AND STARTER RELAY CONNECTOR.** Measure the resistance between ECM connector and chassis ground. ***Connector & terminal*** ***(B134) No. 46 — Chassis ground:***	Is the resistance 1 MΩ or more?	Repair the poor contact of ECM connector.	Repair the short circuit to ground in harness between ECM connector and starter relay connector.

2. MODEL WITH PUSH BUTTON START

DTC DETECTING CONDITION:

Immediately at fault recognition

TROUBLE SYMPTOM:

Failure of engine to start

CAUTION:

After servicing or replacing faulty parts, perform Clear Memory Mode <Ref. to EN(H4DO)(diag)-78, OPERATION, Clear Memory Mode.>, and Inspection Mode <Ref. to EN(H4DO)(diag)-64, PROCEDURE, Inspection Mode.>.

WIRING DIAGRAM:

Engine Electrical System ENGINE TYPE FB (WITH PUSH BUTTON START) <Ref. to WI-184, ENGINE TYPE FB (WITH PUSH BUTTON START), WIRING DIAGRAM, Engine Electrical System.>

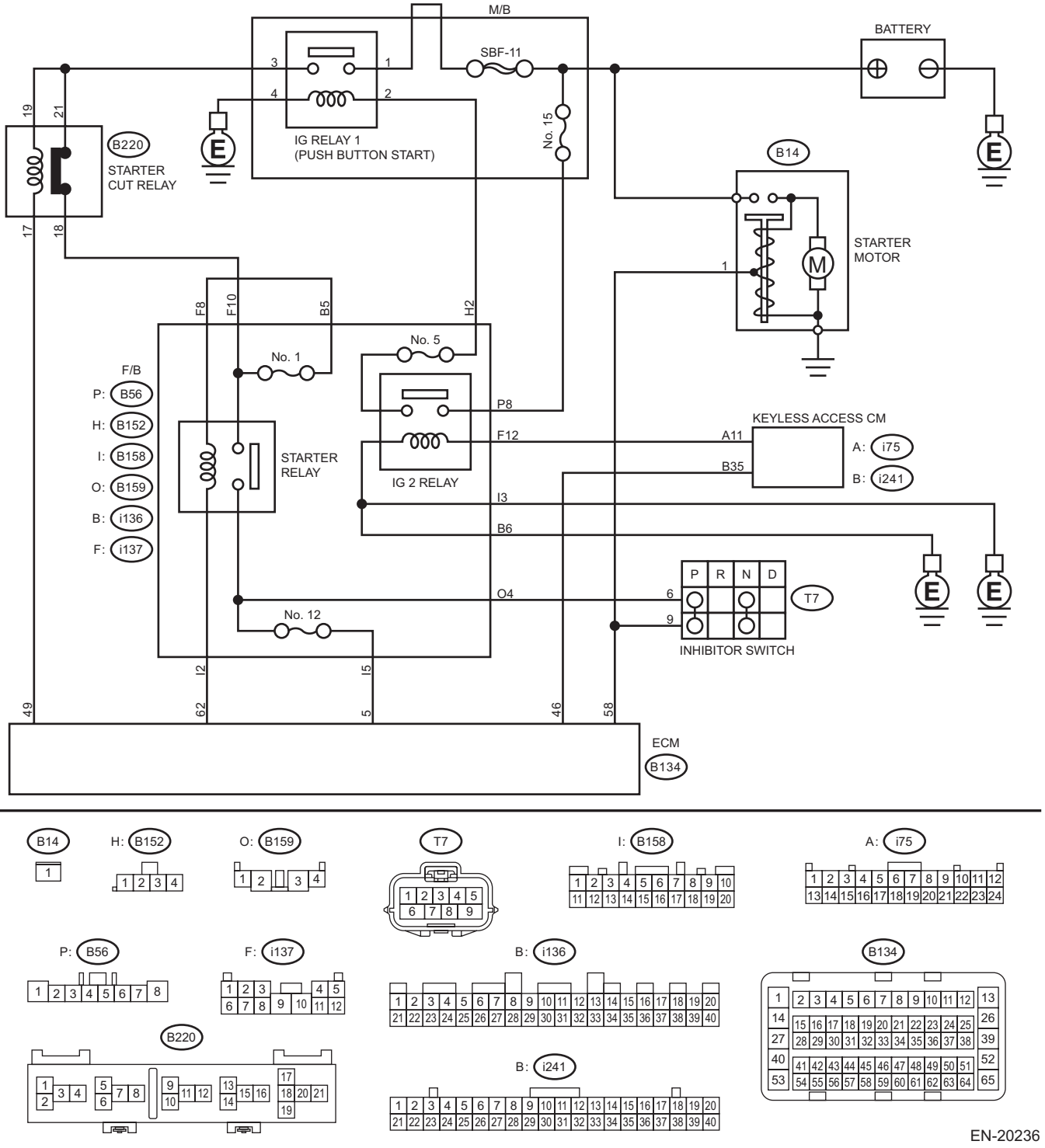

EN-20236

	Step	Check	Yes	No
1	**CHECK HARNESS BETWEEN ECM AND STARTER RELAY CONNECTOR.** 1) Turn the ignition to OFF. 2) Disconnect the connector from ECM. 3) Remove the starter relay. 4) Measure the resistance of harness between ECM connector and starter relay connector. NOTE: Place the select lever in "P" range or "N" range. ***Connector & terminal*** ***(B134) No. 58 — (B159) No. 4:***	Is the resistance less than 1 Ω?	Go to step **2**.	Repair the harness and connector. NOTE: In this case, repair the following item: • Open circuit of harness between ECM connector and starter relay connector • Poor contact of coupling connector
2	**CHECK HARNESS BETWEEN ECM AND STARTER RELAY CONNECTOR.** 1) Disconnect the connector from starter motor. 2) Measure the resistance between ECM connector and chassis ground. ***Connector & terminal*** ***(B134) No. 58 — Chassis ground:***	Is the resistance 1 MΩ or more?	Repair the poor contact of ECM connector.	Repair the short circuit to ground in harness between ECM connector and starter relay connector.

3. OUTLINE OF DIAGNOSIS

• Model without push button start
Detect abnormal continuity in the starter SW1.
Judge as OFF NG when the starter SW 1 signal remains OFF.
• Model with push button start
Detect abnormal continuity in the starter SW 2.
Judge as OFF NG when the starter SW 2 signal remains OFF.

4. EXECUTION CONDITION

Secondary Parameters	Execution condition
Battery voltage	≥ 8 V
Engine speed	Increase from 0 rpm to 500 rpm or more
Vehicle speed	< 1 km/h (0.6 MPH)
Starter relay command	ON

5. GENERAL DRIVING CYCLE

Perform the diagnosis only once after the enable conditions have been established.

6. DIAGNOSTIC METHOD

Judge as OFF NG when the following conditions are established.

Judgment Value

Malfunction Criteria	Threshold Value
Starter SW1 signal with battery voltage × 0.6 or more (models without push button start) Starter SW2 signal with battery voltage × 0.6 or more (models with push button start)	Not detected

Time Needed for Diagnosis: Less than 1 second
Malfunction Indicator Light Illumination: Illuminates as soon as a malfunction occurs.

DD:DTC P0617 STARTER RELAY "A" CIRCUIT HIGH

1. MODEL WITHOUT PUSH BUTTON START

DTC DETECTING CONDITION:
Immediately at fault recognition
TROUBLE SYMPTOM:
Failure of engine to start

CAUTION:
After servicing or replacing faulty parts, perform Clear Memory Mode <Ref. to EN(H4DO)(diag)-78, OPERATION, Clear Memory Mode.>, and Inspection Mode <Ref. to EN(H4DO)(diag)-64, PROCEDURE, Inspection Mode.>.
WIRING DIAGRAM:
Engine Electrical System ENGINE TYPE FB (WITHOUT PUSH BUTTON START) <Ref. to WI-170, ENGINE TYPE FB (WITHOUT PUSH BUTTON START), WIRING DIAGRAM, Engine Electrical System.>

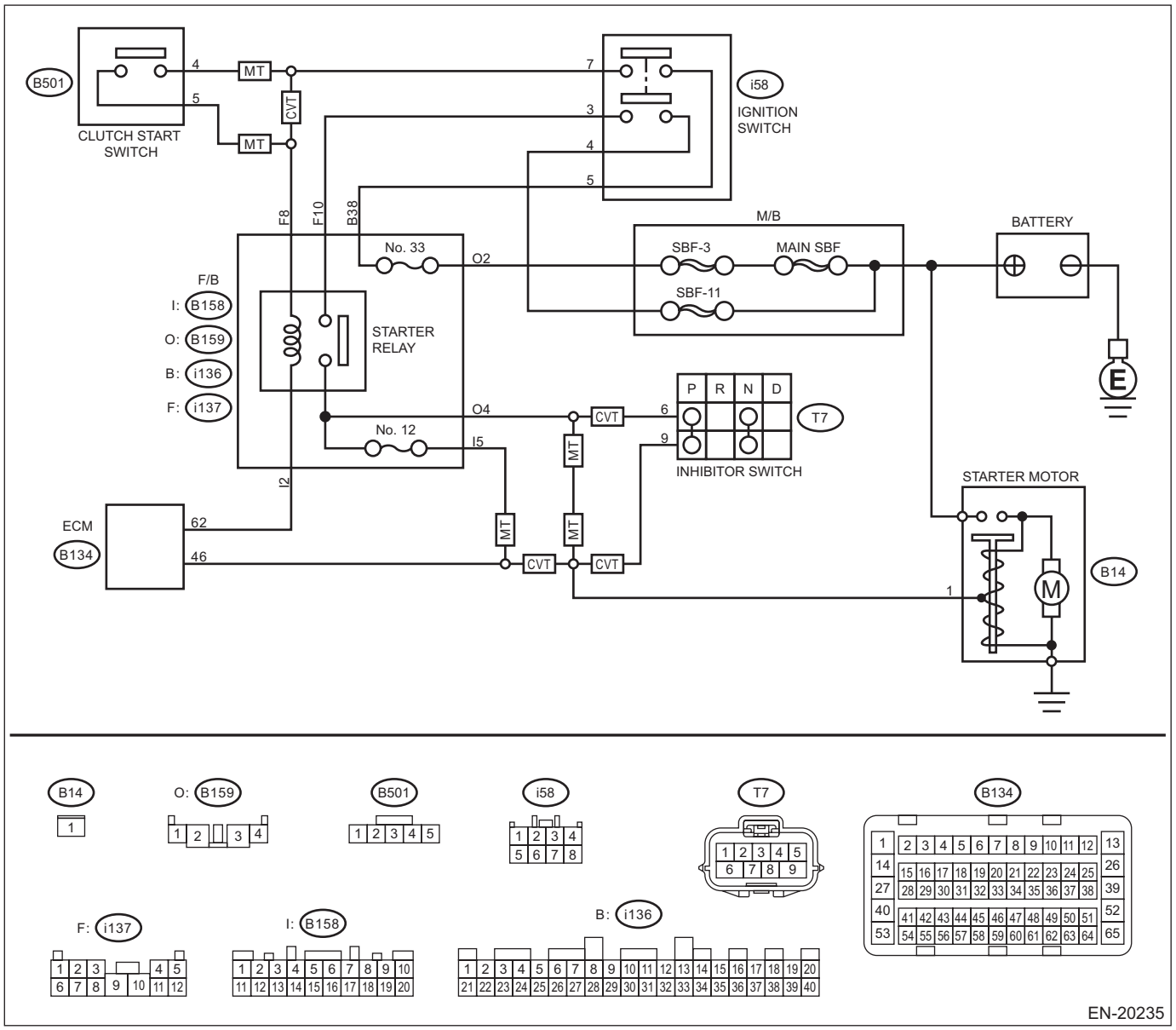

	Step	Check	Yes	No
1	**CHECK FOR ANY OTHER DTC ON DISPLAY.**	Is any other DTC displayed?	Check the appropriate DTC using the "List of Diagnostic Trouble Code (DTC)". <Ref. to EN(H4DO)(diag)-102, List of Diagnostic Trouble Code (DTC).>	Go to step **2**.
2	**CHECK HARNESS BETWEEN ECM AND STARTER RELAY CONNECTOR.** 1) Turn the ignition switch to OFF. 2) Disconnect the connector from ECM. 3) Turn the ignition switch to ON. 4) Measure the voltage between ECM connector and chassis ground. ***Connector & terminal*** ***(B134) No. 46 (+) — Chassis ground (–):*** NOTE: For CVT model, place the select lever in "P" range or "N" range.	Is the voltage 10 V or more?	Repair the short circuit to power in harness between ECM connector and starter relay connector.	Repair the poor contact of ECM connector.

2. MODEL WITH PUSH BUTTON START

DTC DETECTING CONDITION:
Immediately at fault recognition
TROUBLE SYMPTOM:
Failure of engine to start

CAUTION:
After servicing or replacing faulty parts, perform Clear Memory Mode <Ref. to EN(H4DO)(diag)-78, OPERATION, Clear Memory Mode.>, and Inspection Mode <Ref. to EN(H4DO)(diag)-64, PROCEDURE, Inspection Mode.>.

WIRING DIAGRAM:

Engine Electrical System ENGINE TYPE FB (WITH PUSH BUTTON START) <Ref. to WI-184, ENGINE TYPE FB (WITH PUSH BUTTON START), WIRING DIAGRAM, Engine Electrical System.>

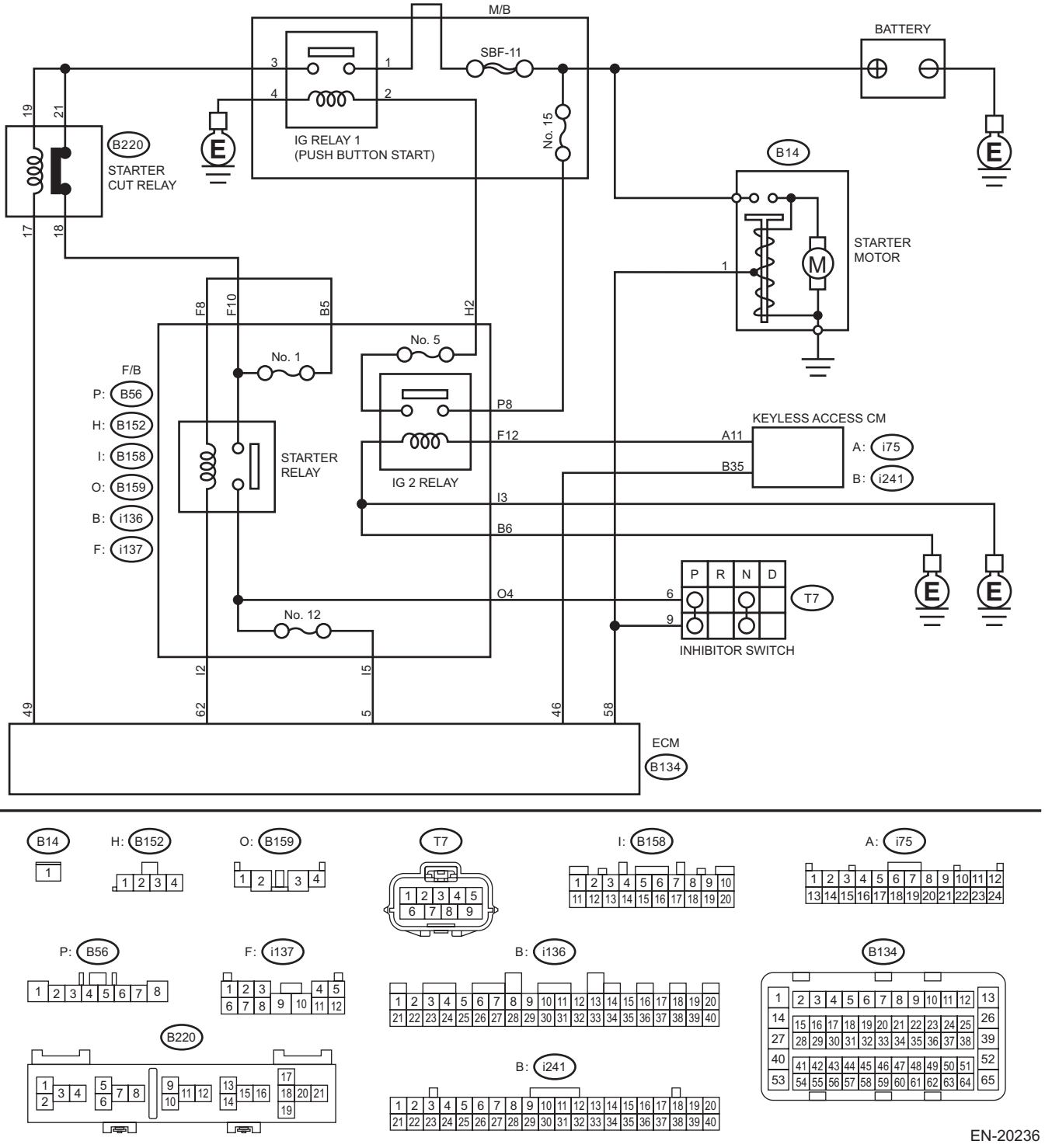

EN-20236

	Step	Check	Yes	No
1	**CHECK STARTER MOTOR.** 1) Turn the ignition to ON. 2) Check the starter motor condition.	Is the starter motor rotating?	Go to step **2**.	Repair the short circuit to power supply. NOTE: In this case, repair the following harnesses: • Short circuit to power supply in harness between ECM connector and starter relay connector • Short circuit to power supply in harness between ECM connector and starter motor • Short circuit to power supply in harness between starter relay connector and starter motor
2	**CHECK HARNESS BETWEEN STARTER CUT RELAY CONNECTOR AND STARTER RELAY CONNECTOR.** 1) Turn the ignition to OFF. 2) Disconnect the connector from starter motor. 3) Remove the starter cut relay, starter relay and inhibitor relay. 4) Turn the ignition to ON. 5) Measure the voltage between starter relay connector and chassis ground. ***Connector & terminal*** ***(i137) No. 8 (+) — Chassis ground (–):***	Is the voltage 10 V or more?	Repair the short circuit to power supply in harness between starter cut relay connector and starter relay connector.	Go to step **3**.
3	**CHECK STARTER CUT RELAY.** 1) Connect the battery to starter cut relay terminals No. 17 and No. 19. 2) Measure the resistance between starter cut relay terminals. ***Terminals*** ***No. 18 — No. 21:***	Is the resistance 1 MΩ or more?	Go to step **6**.	Replace the starter cut relay. <Ref. to SL-9, Relay and Fuse.> Go to step **4**.
4	**CHECK HARNESS BETWEEN ECM AND F/B STARTER RELAY CONNECTOR.** 1) Disconnect the connector from ECM. 2) Measure the resistance between ECM connector and chassis ground. ***Connector & terminal*** ***(B134) No. 62 — Chassis ground:***	Is the resistance 1 MΩ or more?	Go to step **5**.	Repair the short circuit to ground in harness between ECM connector and starter relay connector.
5	**CHECK F/B STARTER RELAY.** Measure the resistance between F/B starter relay terminals. <Ref. to SL-9, Relay and Fuse.>	Is the resistance 1 MΩ or more?	Go to step **6**.	Replace the starter relay. <Ref. to EN(H4DO)(diag)-11, LOCATION, Electrical Component Location.>

Step		Check	Yes	No
6	**CHECK HARNESS BETWEEN ECM, F/B STARTER RELAY CONNECTOR AND STARTER MOTOR.** 1) Disconnect the connector from ECM. 2) Turn the ignition to ON. 3) Measure the voltage between ECM connector and chassis ground. ***Connector & terminal*** ***(B134) No. 58 (+) — Chassis ground (–):***	Is the voltage 10 V or more?	Repair the short circuit to power supply. NOTE: In this case, repair the following harnesses: • Short circuit to power supply in harness between ECM connector and starter relay connector • Short circuit to power supply in harness between ECM connector and starter motor • Short circuit to power supply in harness between starter relay connector and starter motor	Repair the poor contact of ECM connector.

3. OUTLINE OF DIAGNOSIS

• Model without push button start
Detect abnormal continuity in the starter SW1.
Judge as ON NG when the starter SW 1 signal remains ON.
• Model with push button start
Detect abnormal continuity in the starter SW 2.
Judge as ON NG when the starter SW 2 signal remains ON.

4. EXECUTION CONDITION

Secondary Parameters	Execution condition
Battery voltage	≥ 8 V
Engine speed	> 500 rpm
Starter relay command	OFF

5. GENERAL DRIVING CYCLE

Perform the diagnosis continuously after the enable conditions have been established.

6. DIAGNOSTIC METHOD

If the duration of time while the following conditions are met is longer than the time indicated, judge as NG.

Judgment Value

Malfunction Criteria	Threshold Value
Starter SW 1 signal (model without push button start) Starter SW 2 signal (model with push button start)	≥ Battery voltage × 0.6

Time Needed for Diagnosis: 30000 ms
Malfunction Indicator Light Illumination: Illuminates as soon as a malfunction occurs.

DE:DTC P062F INTERNAL CONTROL MODULE EEPROM ERROR

NOTE:
For the diagnostic procedure, refer to DTC P0606. <Ref. to EN(H4DO)(diag)-372, DTC P0606 CONTROL MODULE PROCESSOR, Diagnostic Procedure with Diagnostic Trouble Code (DTC).>

1. OUTLINE OF DIAGNOSIS

Judge as NG when the EEPROM operation is abnormal.

2. COMPONENT DESCRIPTION

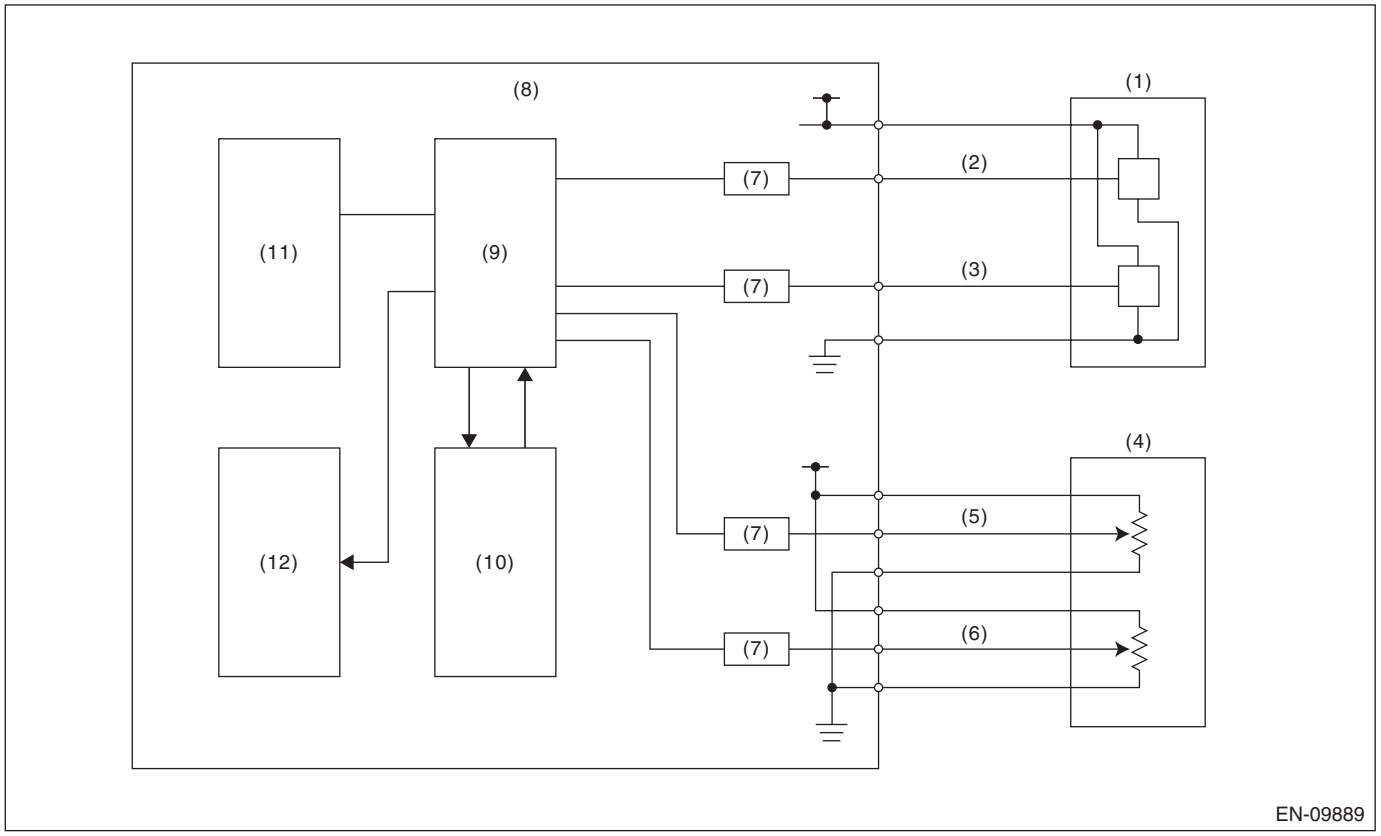

(1)	Throttle position sensor	(5)	Accelerator pedal position sensor 1	(9)	CPU
(2)	Throttle position sensor 1	(6)	Accelerator pedal position sensor 2	(10)	Monitoring IC
(3)	Throttle position sensor 2	(7)	I/F circuit	(11)	EEPROM
(4)	Accelerator pedal position sensor	(8)	Engine control module (ECM)	(12)	Output IC

3. EXECUTION CONDITION

Secondary Parameters	Execution condition
None	

4. GENERAL DRIVING CYCLE

Perform the diagnosis during self shut.

5. DIAGNOSTIC METHOD

Judge as NG when the following conditions are established.

Judgment Value

Malfunction Criteria	Threshold Value
Writing result to EEPROM	Malfunction

Time Needed for Diagnosis: 2 times
Malfunction Indicator Light Illumination: Illuminates as soon as a malfunction occurs.

DF:DTC P0685 ECM/PCM POWER RELAY CONTROL CIRCUIT/OPEN

DTC DETECTING CONDITION:

Detected when two consecutive driving cycles with fault occur.

CAUTION:

After servicing or replacing faulty parts, perform Clear Memory Mode <Ref. to EN(H4DO)(diag)-78, OPERATION, Clear Memory Mode.>, and Inspection Mode <Ref. to EN(H4DO)(diag)-64, PROCEDURE, Inspection Mode.>.

WIRING DIAGRAM:

- Engine Electrical System ENGINE TYPE FB (WITHOUT PUSH BUTTON START) <Ref. to WI-170, ENGINE TYPE FB (WITHOUT PUSH BUTTON START), WIRING DIAGRAM, Engine Electrical System.>
- Engine Electrical System ENGINE TYPE FB (WITH PUSH BUTTON START) <Ref. to WI-184, ENGINE TYPE FB (WITH PUSH BUTTON START), WIRING DIAGRAM, Engine Electrical System.>

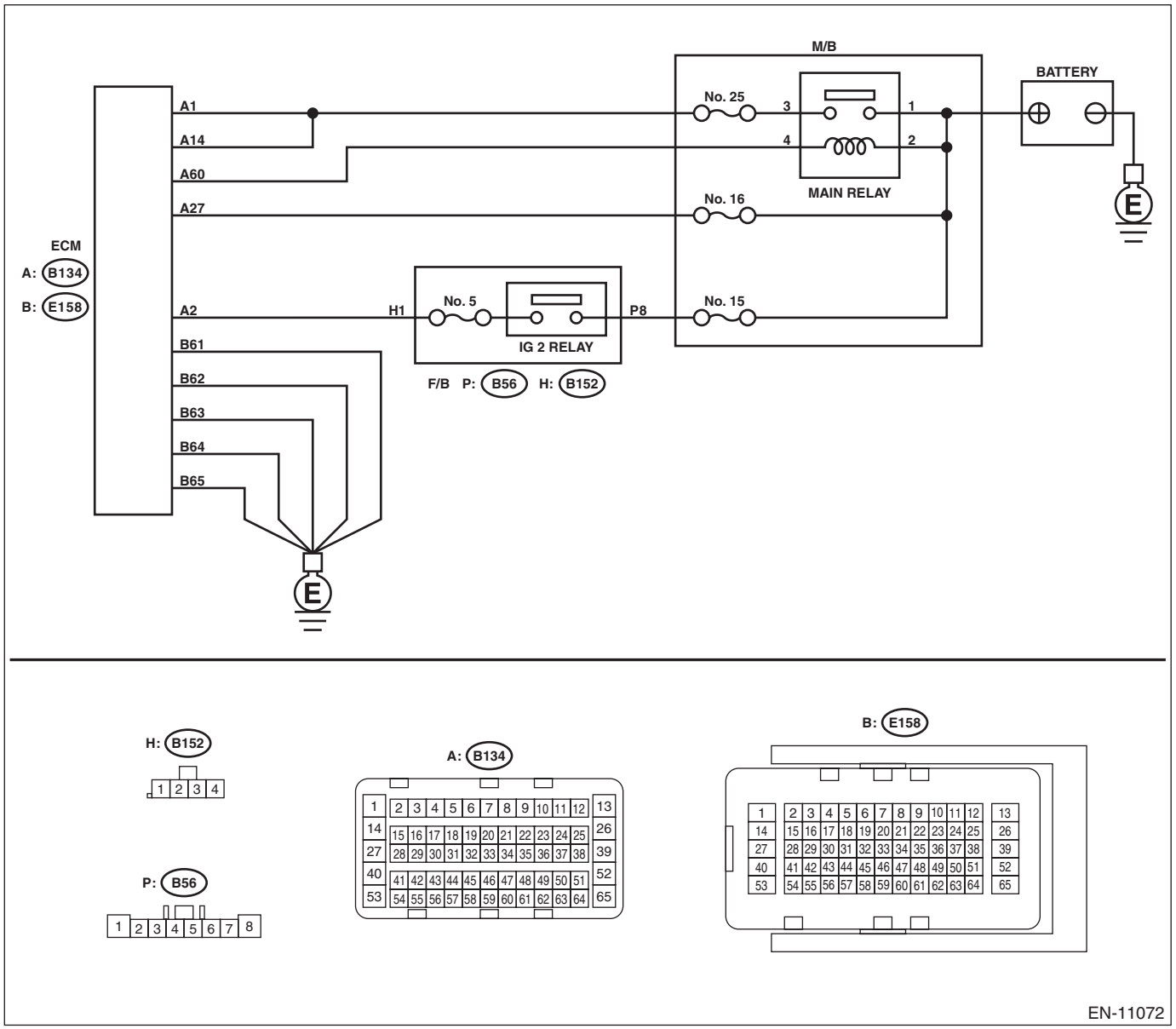

Step		Check	Yes	No
1	**CHECK ECM CONNECTOR.** Check the connecting condition of ECM connector.	Is the ECM connector correctly connected?	Go to step **2**.	Connect the ECM connector correctly.

	Step	Check	Yes	No
2	**CHECK HARNESS BETWEEN ECM AND MAIN RELAY CONNECTOR.** 1) Turn the ignition switch to OFF. 2) Measure the voltage between ECM connector and engine ground. ***Connector & terminal*** ***(B134) No. 1 (+) — Engine ground (–):*** ***(B134) No. 14 (+) — Engine ground (–):***	Is the voltage 10 V or more?	Repair the harness and connector. NOTE: In this case, repair the following item: • Short circuit to power supply in harness between ECM connector and main relay connector • Defective main relay	Go to step **3**.
3	**CHECK HARNESS BETWEEN ECM AND MAIN RELAY CONNECTOR.** 1) Turn the ignition switch to OFF. 2) Remove the main relay. 3) Disconnect the connector from ECM. 4) Measure the resistance between the ECM connector and engine ground. ***Connector & terminal*** ***(B134) No. 60 — Engine ground:***	Is the resistance 1 MΩ or more?	Repair the poor contact of ECM connector.	Repair the short circuit to ground in harness between ECM connector and main relay connector.

1. OUTLINE OF DIAGNOSIS

Detect the main relay stuck to ON.
Judge as NG when ECM keeps operating for more than predetermined time although the main relay does not turn to OFF after ignition switch is turned to OFF.

2. COMPONENT DESCRIPTION

The main relay controls current of coils by receiving instructions from the ignition switch and ELCM to switch ECM to ON/OFF.

3. EXECUTION CONDITION

Secondary Parameters	Execution condition
Main relay	OFF instruction

4. GENERAL DRIVING CYCLE

Perform the diagnosis only once when the enable conditions are established with the ignition switch OFF → ON.

5. DIAGNOSTIC METHOD

If the duration of time while the following conditions are met is longer than the time indicated, judge as NG.

Judgment Value

Malfunction Criteria	Threshold Value
ECM status	In operation

Time Needed for Diagnosis: 2500 ms
Malfunction Indicator Light Illumination: Illuminates when malfunction occurs in 2 continuous driving cycles.

DG:DTC P0700 TRANSMISSION CONTROL SYSTEM (MIL REQUEST)

NOTE:
For the diagnostic procedure, refer to AT section. <Ref. to CVT(diag)-2, Basic Diagnostic Procedure.>

1. OUTLINE OF DIAGNOSIS

Judge as NG when there is CAN communication with the TCM and there is a MIL lighting request.

2. EXECUTION CONDITION

Secondary Parameters	Execution condition
Battery voltage	≥ 10.9 V

3. GENERAL DRIVING CYCLE

Always perform the diagnosis continuously.

4. DIAGNOSTIC METHOD

If the duration of time while the following conditions are met is longer than the time indicated, judge as NG.

Judgment Value

Malfunction Criteria	Threshold Value
MIL lighting request from TCM	Yes

Time Needed for Diagnosis: 128 ms
Malfunction Indicator Light Illumination: Illuminates as soon as a malfunction occurs.

DH:DTC P081A STARTER DISABLE CIRCUIT LOW

DTC DETECTING CONDITION:
Immediately at fault recognition
TROUBLE SYMPTOM:
Failure of engine to start

CAUTION:
After servicing or replacing faulty parts, perform Clear Memory Mode <Ref. to EN(H4DO)(diag)-78, OPERATION, Clear Memory Mode.>, and Inspection Mode <Ref. to EN(H4DO)(diag)-64, PROCEDURE, Inspection Mode.>.

WIRING DIAGRAM:

Engine Electrical System ENGINE TYPE FB (WITH PUSH BUTTON START) <Ref. to WI-184, ENGINE TYPE FB (WITH PUSH BUTTON START), WIRING DIAGRAM, Engine Electrical System.>

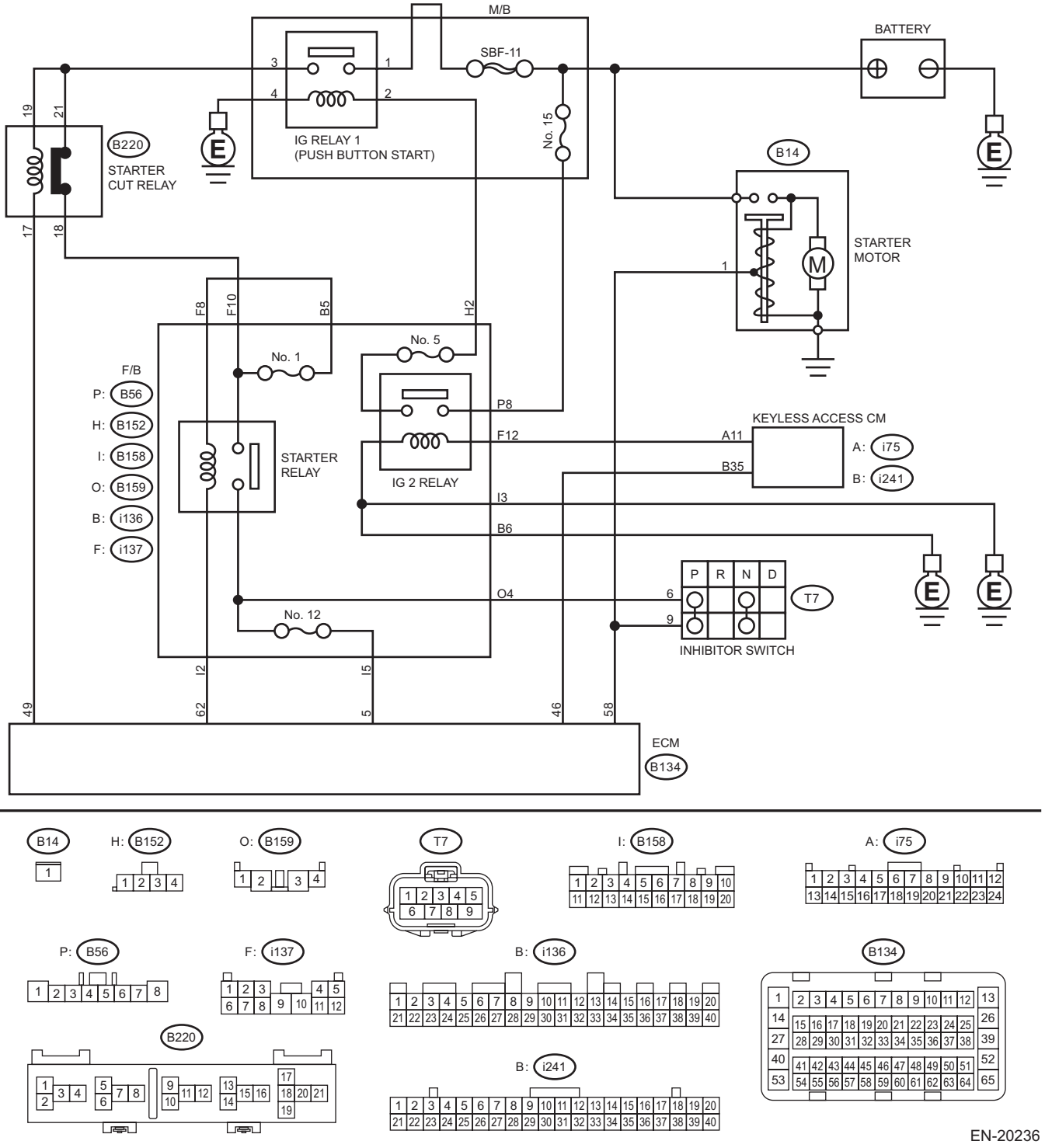

EN-20236

	Step	Check	Yes	No
1	**CHECK HARNESS BETWEEN F/B STARTER RELAY (PUSH BUTTON START) CONNECTOR AND STARTER CUT RELAY CONNECTOR.** 1) Turn the ignition to OFF. 2) Remove the F/B starter relay and starter cut relay. 3) Measure the resistance of harness between F/B starter relay connector and starter cut relay connector. ***Connector & terminal*** ***(B220) No. 18 — (i137) No. 8:***	Is the resistance less than 1 Ω?	Go to step **2**.	Repair the open circuit of harness. • Open circuit of harness between F/B starter relay connector and starter cut relay connector • Blown out of fuse (F/B No. 1)
2	**CHECK HARNESS BETWEEN ECM AND STARTER CUT RELAY CONNECTOR.** 1) Disconnect the connector from ECM. 2) Measure the resistance of harness between ECM connector and starter cut relay connector. ***Connector & terminal*** ***(B134) No. 62 — (B158) No. 2:***	Is the resistance less than 1 Ω?	Go to step **3**.	Repair the open circuit of harness between ECM connector and starter cut relay connector.
3	**CHECK STARTER CUT RELAY.** 1) Connect the battery to starter cut relay terminals No. 17 and No. 19. 2) Measure the resistance between starter cut relay terminals. ***Terminals*** ***No. 18 — No. 21:***	Is the resistance 1 MΩ or more?	Repair the poor contact of ECM connector.	Replace the starter cut relay. <Ref. to SL-9, Relay and Fuse.>

1. OUTLINE OF DIAGNOSIS

Detect abnormal continuity in the starter cut relay.
Judge as NG when the starter cut relay output line is open.

2. EXECUTION CONDITION

Secondary Parameters	Execution condition
Battery voltage	≥ 8 V
Engine speed	Increase from 0 rpm to 500 rpm or more
Vehicle speed	< 1 km/h (0.6 MPH)
Starter cut relay command	OFF

3. GENERAL DRIVING CYCLE

Perform the diagnosis only once after the enable conditions have been established.

4. DIAGNOSTIC METHOD

Judge as NG when the following conditions are established.

Judgment Value

Malfunction Criteria	Threshold Value
Starter cut relay control voltage that exceeds battery voltage × 0.34	Not detected

Time Needed for Diagnosis: Less than 1 second
Malfunction Indicator Light Illumination: Illuminates as soon as a malfunction occurs.

DI: DTC P0851 PARK/NEUTRAL SWITCH INPUT CIRCUIT LOW

DTC DETECTING CONDITION:
Detected when two consecutive driving cycles with fault occur.
TROUBLE SYMPTOM:
Improper idling

CAUTION:
After servicing or replacing faulty parts, perform Clear Memory Mode <Ref. to EN(H4DO)(diag)-78, OPERATION, Clear Memory Mode.>, and Inspection Mode <Ref. to EN(H4DO)(diag)-64, PROCEDURE, Inspection Mode.>.

1. CVT MODEL

WIRING DIAGRAM:
Engine Electrical System <Ref. to WI-170, WIRING DIAGRAM, Engine Electrical System.>
- Engine Electrical System ENGINE TYPE FB (WITHOUT PUSH BUTTON START) <Ref. to WI-170, ENGINE TYPE FB (WITHOUT PUSH BUTTON START), WIRING DIAGRAM, Engine Electrical System.>
- Engine Electrical System ENGINE TYPE FB (WITH PUSH BUTTON START) <Ref. to WI-184, ENGINE TYPE FB (WITH PUSH BUTTON START), WIRING DIAGRAM, Engine Electrical System.>

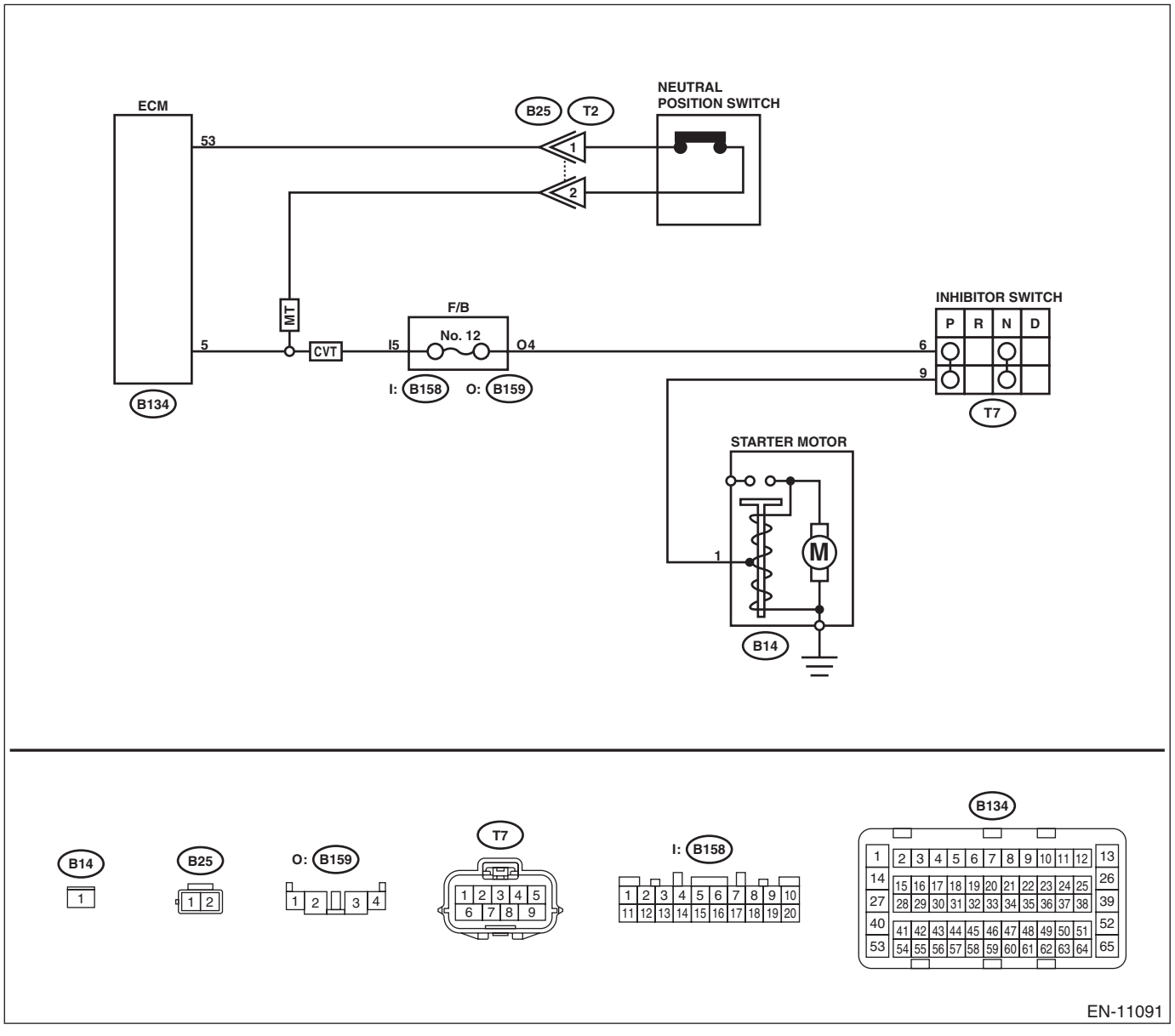

EN-11091

	Step	Check	Yes	No
1	**CHECK SELECT CABLE.**	Is there any fault in select cable?	Repair or adjust the select cable. <Ref. to CS-41, Select Cable.>	Go to step **2**.
2	**CHECK INPUT SIGNAL OF ECM.** 1) Turn the ignition switch to ON. 2) Place the select lever in other than "P" range and "N" range. 3) Measure the voltage between ECM connector and chassis ground. ***Connector & terminal*** ***(B134) No. 5 (+) — Chassis ground (–):***	Is the voltage 10 V or more?	Repair the poor contact of ECM connector.	Go to step **3**.
3	**CHECK HARNESS BETWEEN ECM AND TRANSMISSION HARNESS CONNECTOR.** 1) Turn the ignition switch to OFF. 2) Disconnect the connectors from ECM and inhibitor switch. 3) Measure the resistance between ECM connector and chassis ground. ***Connector & terminal*** ***(B134) No. 5 — Chassis ground:***	Is the resistance 1 MΩ or more?	Replace the inhibitor switch. <Ref. to CVT(TR690)-102, Inhibitor Switch.>	Repair the harness and connector. NOTE: In this case, repair the following item: • Short circuit to ground in harness between ECM connector and inhibitor switch connector • Poor contact of coupling connector

2. OUTLINE OF DIAGNOSIS

Detect the open or short circuit of neutral SW.
Judge as NG when the ECM neutral terminal input differs from the reception data from TCM.

3. EXECUTION CONDITION

Secondary Parameters	Execution condition
Battery voltage	≥ 10.9 V
Starter relay feedback voltage	< Battery voltage × 0.35
Data received from TCM	≠ "P" range/"N" range

4. GENERAL DRIVING CYCLE

Perform the diagnosis only once after the enable conditions have been established.

5. DIAGNOSTIC METHOD

If the duration of time while the following conditions are met is longer than the time indicated, judge as NG.

Judgment Value

Malfunction Criteria	Threshold Value
Voltage of the neutral position switch signal	≤ Battery voltage × 0.19

Time Needed for Diagnosis: 64 ms × 100 time(s)
Malfunction Indicator Light Illumination: Illuminates when malfunction occurs in 2 continuous driving cycles.

6. MT MODEL

WIRING DIAGRAM:

• Engine Electrical System ENGINE TYPE FB (WITHOUT PUSH BUTTON START) <Ref. to WI-170, ENGINE TYPE FB (WITHOUT PUSH BUTTON START), WIRING DIAGRAM, Engine Electrical System.>
• Engine Electrical System ENGINE TYPE FB (WITH PUSH BUTTON START) <Ref. to WI-184, ENGINE TYPE FB (WITH PUSH BUTTON START), WIRING DIAGRAM, Engine Electrical System.>

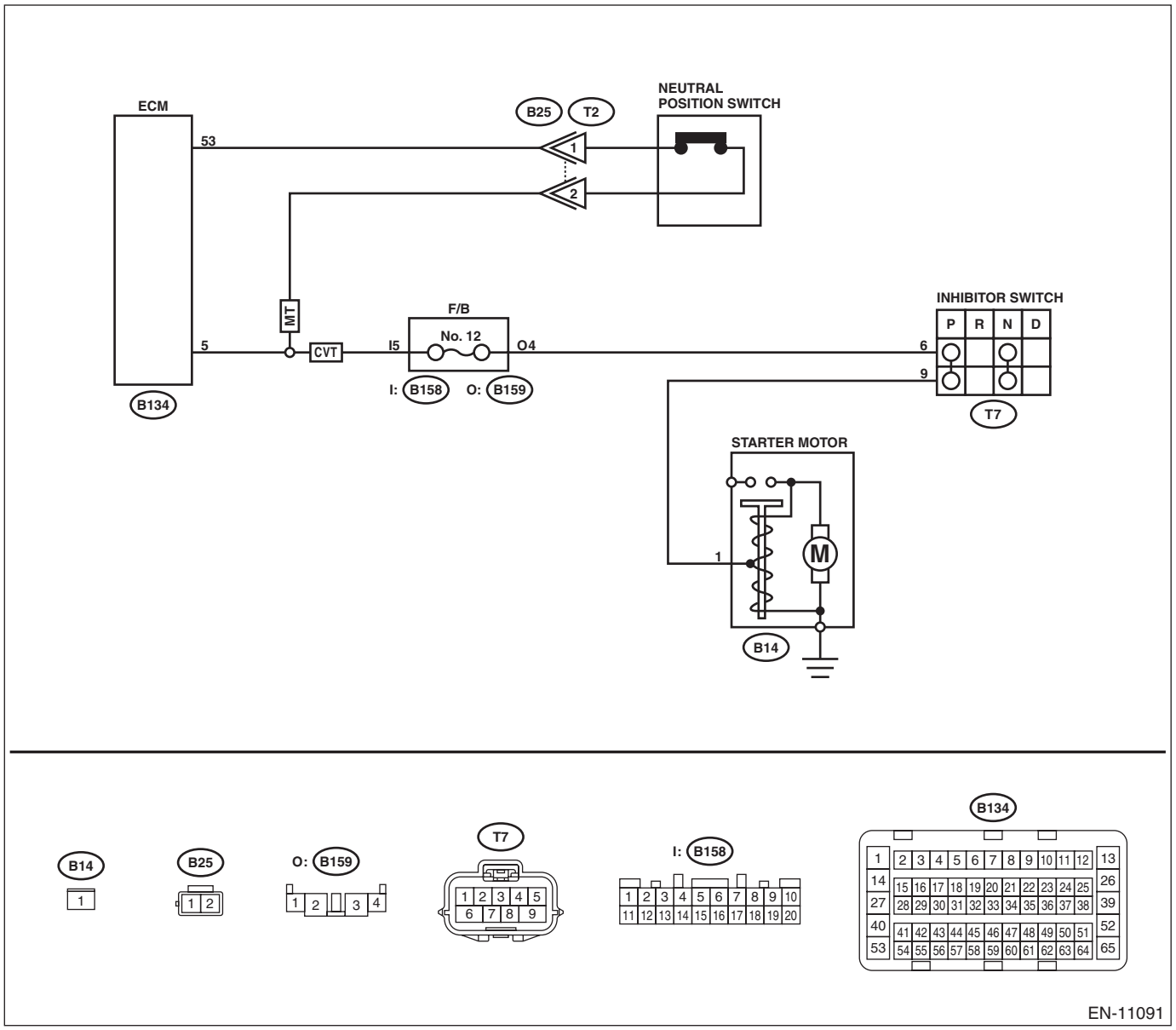

EN-11091

	Step	Check	Yes	No
1	**CHECK INPUT SIGNAL OF ECM.** 1) Turn the ignition switch to ON. 2) Place the shift lever in a position other than neutral. 3) Measure the voltage between ECM connector and chassis ground. ***Connector & terminal*** ***(B134) No. 5 (+) — Chassis ground (–):***	Is the voltage 10 V or more?	Repair the poor contact of ECM connector.	Go to step **2**.

	Step	Check	Yes	No
2	**CHECK HARNESS BETWEEN ECM AND NEUTRAL POSITION SWITCH CONNECTOR.** 1) Turn the ignition switch to OFF. 2) Disconnect the connectors from ECM and neutral position switch. 3) Measure the resistance between ECM connector and chassis ground. ***Connector & terminal*** ***(B134) No. 5 — Chassis ground:***	Is the resistance 1 MΩ or more?	Replace the neutral position switch. <Ref. to 6MT-55, Switches and Harness.>	Repair the short circuit to ground harness between ECM connector and neutral position switch connector.

7. OUTLINE OF DIAGNOSIS

Detect the open or short circuit of neutral SW.
Judge as NG when there is no change in the neutral SW even if the driving shift was applied. (There is neutral SW ON/OFF inversion from the vehicle speed and engine speed.)

8. EXECUTION CONDITION

Secondary Parameters	Execution condition
Battery voltage	≥ 10.9 V
The number of driving condition change from a) to b)	= 3 time(s)
a) Vehicle speed & Engine speed	≤ 0 km/h (0 MPH) ≥ 550 rpm and ≤ 900 rpm
b) Vehicle speed & Engine speed	≥ 64 km/h ≥ 1500 rpm and ≤ 2150 rpm

9. GENERAL DRIVING CYCLE

Perform the diagnosis continuously after the enable conditions have been established.

10.DIAGNOSTIC METHOD

Judge NG when the malfunction criteria below are completed determined times or more after the neutral SW change.

Judgment Value

Malfunction Criteria	Threshold Value
Neutral switch output voltage	≤ Battery voltage × 0.19 V

Time Needed for Diagnosis: 3 time(s)
Malfunction Indicator Light Illumination: Illuminates when malfunction occurs in 2 continuous driving cycles.

DJ:DTC P0852 PARK/NEUTRAL SWITCH INPUT CIRCUIT HIGH

DTC DETECTING CONDITION:
Detected when two consecutive driving cycles with fault occur.
TROUBLE SYMPTOM:
Improper idling

CAUTION:
After servicing or replacing faulty parts, perform Clear Memory Mode <Ref. to EN(H4DO)(diag)-78, OPERATION, Clear Memory Mode.>, and Inspection Mode <Ref. to EN(H4DO)(diag)-64, PROCEDURE, Inspection Mode.>.

1. CVT MODEL

WIRING DIAGRAM:

- Engine Electrical System ENGINE TYPE FB (WITHOUT PUSH BUTTON START) <Ref. to WI-170, ENGINE TYPE FB (WITHOUT PUSH BUTTON START), WIRING DIAGRAM, Engine Electrical System.>
- Engine Electrical System ENGINE TYPE FB (WITH PUSH BUTTON START) <Ref. to WI-184, ENGINE TYPE FB (WITH PUSH BUTTON START), WIRING DIAGRAM, Engine Electrical System.>

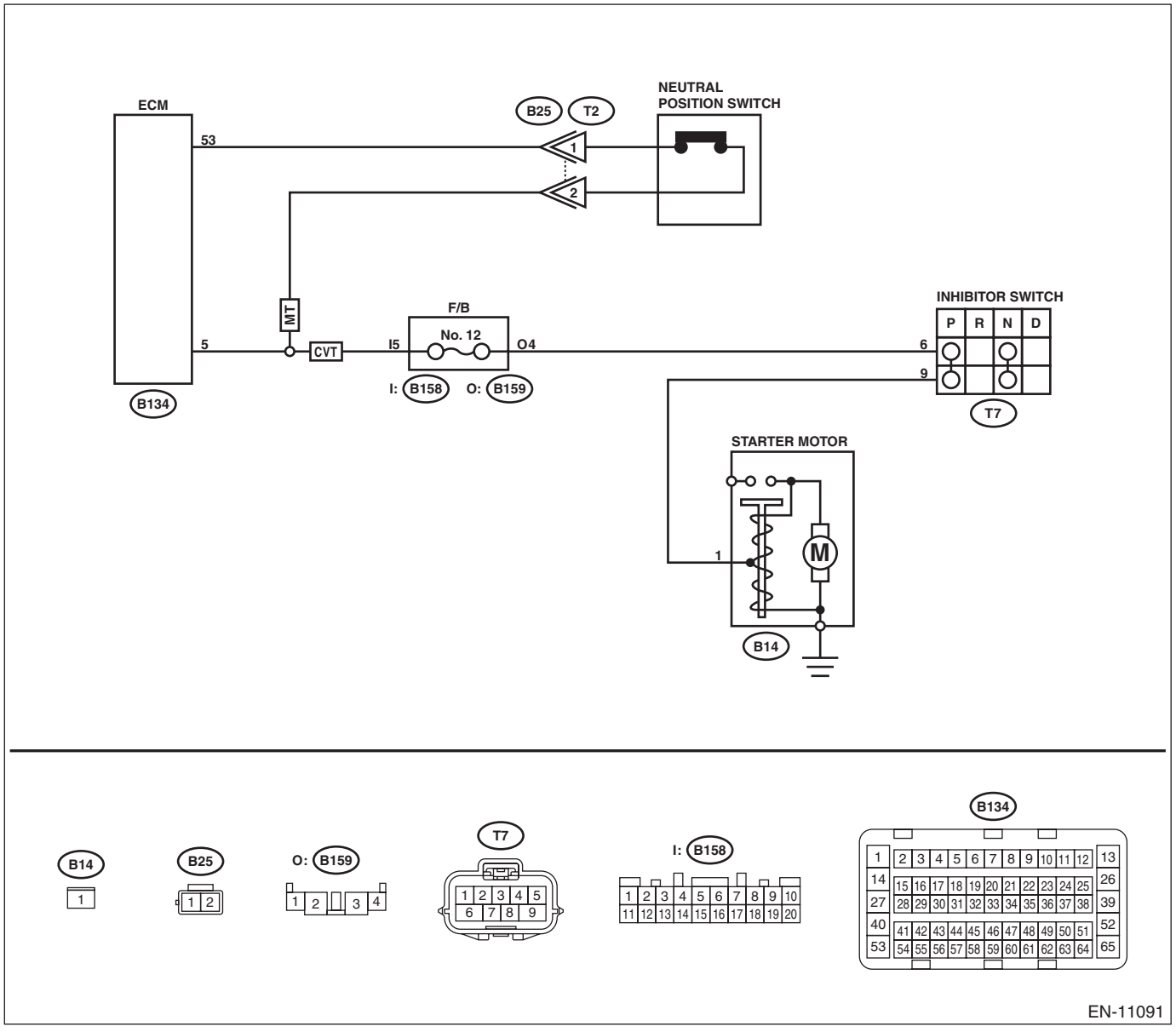

EN-11091

	Step	Check	Yes	No
1	**CHECK SELECT CABLE.**	Is there any fault in select cable?	Repair or adjust the select cable. <Ref. to CS-41, Select Cable.>	Go to step **2**.
2	**CHECK INPUT SIGNAL OF ECM.** 1) Turn the ignition switch to ON. 2) Measure the voltage between ECM and chassis ground with select lever at "P" range and "N" range. ***Connector & terminal*** ***(B134) No. 5 (+) — Chassis ground (–):***	Is the voltage less than 1 V?	Repair the poor contact of ECM connector.	Go to step **3**.
3	**CHECK HARNESS BETWEEN ECM AND INHIBITOR SWITCH CONNECTOR.** 1) Turn the ignition switch to OFF. 2) Disconnect the connectors from ECM and inhibitor switch. 3) Measure the resistance of harness between ECM connector and inhibitor switch connector. ***Connector & terminal*** ***(B134) No. 5 — (T7) No. 6:***	Is the resistance less than 1 Ω?	Go to step **4**.	Repair the harness and connector. NOTE: In this case, repair the following item: • Open circuit in harness between ECM connector and inhibitor switch connector • Poor contact of coupling connector
4	**CHECK INHIBITOR SWITCH GROUND LINE.** Measure the resistance of harness between inhibitor switch connector and engine ground. ***Connector & terminal*** ***(T7) No. 9 — Engine ground:***	Is the resistance less than 5 Ω?	Replace the inhibitor switch. <Ref. to CVT(TR690)-102, Inhibitor Switch.>	Repair the harness and connector. NOTE: In this case, repair the following item: • Open circuit of harness between inhibitor switch connector and starter motor ground line • Poor contact of coupling connector • Poor contact of starter motor connector • Poor contact of starter motor ground • Starter motor

2. OUTLINE OF DIAGNOSIS

Detect the open or short circuit of neutral SW.
Judge as NG when the ECM neutral terminal input differs from the reception data from TCM.

3. EXECUTION CONDITION

Secondary Parameters	Execution condition
Battery voltage	≥ 10.9 V
Starter relay feedback voltage	< Battery voltage × 0.35
Data received from TCM	= "P" range/"N" range

4. GENERAL DRIVING CYCLE

Perform the diagnosis only once after the enable conditions have been established.

5. DIAGNOSTIC METHOD

If the duration of time while the following conditions are met is longer than the time indicated, judge as NG.

Judgment Value

Malfunction Criteria	Threshold Value
Voltage of the neutral position switch signal	≥ Battery voltage × 0.6

Time Needed for Diagnosis: 64 ms × 100 time(s)
Malfunction Indicator Light Illumination: Illuminates when malfunction occurs in 2 continuous driving cycles.

6. MT MODEL

WIRING DIAGRAM:

- Engine Electrical System ENGINE TYPE FB (WITHOUT PUSH BUTTON START) <Ref. to WI-170, ENGINE TYPE FB (WITHOUT PUSH BUTTON START), WIRING DIAGRAM, Engine Electrical System.>
- Engine Electrical System ENGINE TYPE FB (WITH PUSH BUTTON START) <Ref. to WI-184, ENGINE TYPE FB (WITH PUSH BUTTON START), WIRING DIAGRAM, Engine Electrical System.>

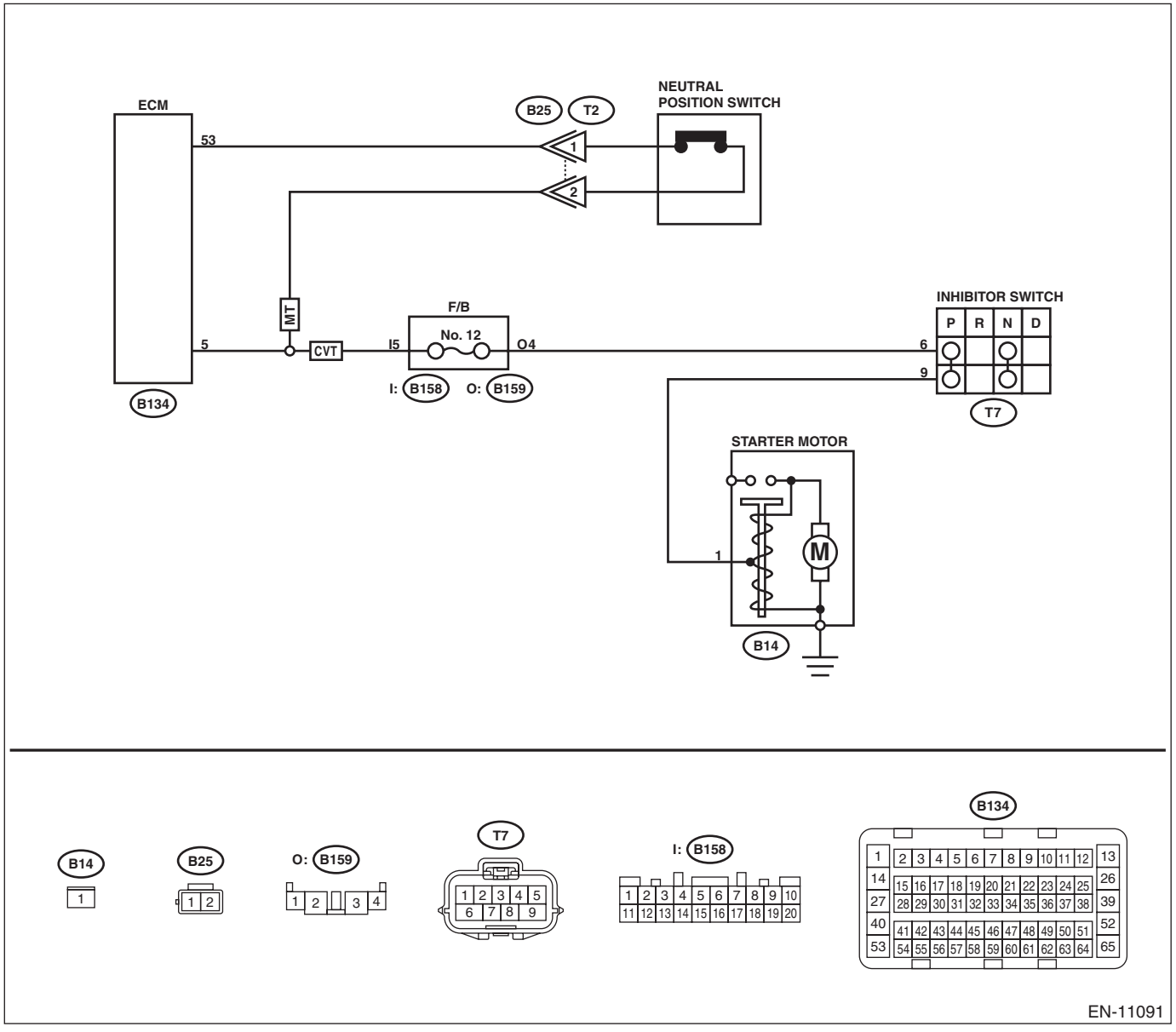

	Step	Check	Yes	No
1	**CHECK INPUT SIGNAL OF ECM.** 1) Turn the ignition switch to ON. 2) Place the shift lever in neutral. 3) Measure the voltage between ECM connector and chassis ground. ***Connector & terminal*** ***(B134) No. 5 (+) — Chassis ground (–):***	Is the voltage less than 1 V?	Repair the poor contact of ECM connector.	Go to step **2**.
2	**CHECK HARNESS BETWEEN ECM AND NEUTRAL POSITION SWITCH CONNECTOR.** 1) Turn the ignition switch to OFF. 2) Disconnect the connectors from ECM and neutral position switch. 3) Measure the resistance of harness between ECM connector and neutral position switch connector. ***Connector & terminal*** ***(B134) No. 5 — (B25) No. 2:*** ***(B134) No. 53 — (B25) No. 1:***	Is the resistance less than 1 Ω?	Go to step **3**.	Repair the harness and connector. NOTE: In this case, repair the following item: • Open circuit in harness between ECM connector and neutral position switch connector • Poor contact of coupling connector
3	**CHECK NEUTRAL POSITION SWITCH.** 1) Place the shift lever in neutral. 2) Measure the resistance between neutral position switch terminals. ***Terminals*** ***No. 1 — No. 2:***	Is the resistance less than 1 Ω?	Repair the poor contact of neutral position switch connector.	Replace the neutral position switch. <Ref. to 6MT-55, Switches and Harness.>

7. OUTLINE OF DIAGNOSIS

Detect the open or short circuit of neutral SW.
Judge as NG when there is no change in the neutral SW even if the driving shift was applied. (There is neutral SW ON/OFF inversion from the vehicle speed and engine speed.)

8. EXECUTION CONDITION

Secondary Parameters	Execution condition
Battery voltage	≥ 10.9 V
The number of driving condition change from a) to b)	= 3 time(s)
a) Vehicle speed & Engine speed	≤ 0 km/h (0 MPH) ≥ 550 rpm and ≤ 900 rpm
b) Vehicle speed & Engine speed	≥ 64 km/h (39.8 MPH) ≥ 1500 rpm and ≤ 2150 rpm

9. GENERAL DRIVING CYCLE

Perform the diagnosis continuously after the enable conditions have been established.

10.DIAGNOSTIC METHOD

Judge NG when the malfunction criteria below are completed determined times or more after the neutral SW change.

Judgment Value

Malfunction Criteria	Threshold Value
Neutral switch output voltage	≥ Battery voltage × 0.6 V

Time Needed for Diagnosis: 3 time(s)
Malfunction Indicator Light Illumination: Illuminates when malfunction occurs in 2 continuous driving cycles.

DK:DTC P1160 THROTTLE RETURN SPRING

NOTE:
For the diagnostic procedure, refer to DTC P2101. <Ref. to EN(H4DO)(diag)-507, DTC P2101 THROTTLE ACTUATOR "A" CONTROL MOTOR CIRCUIT RANGE/PERFORMANCE, Diagnostic Procedure with Diagnostic Trouble Code (DTC).>

1. OUTLINE OF DIAGNOSIS

Judge as NG when the valve is opened more than the default opening angle, but does not move to the close direction with the motor power stopped.

2. COMPONENT DESCRIPTION

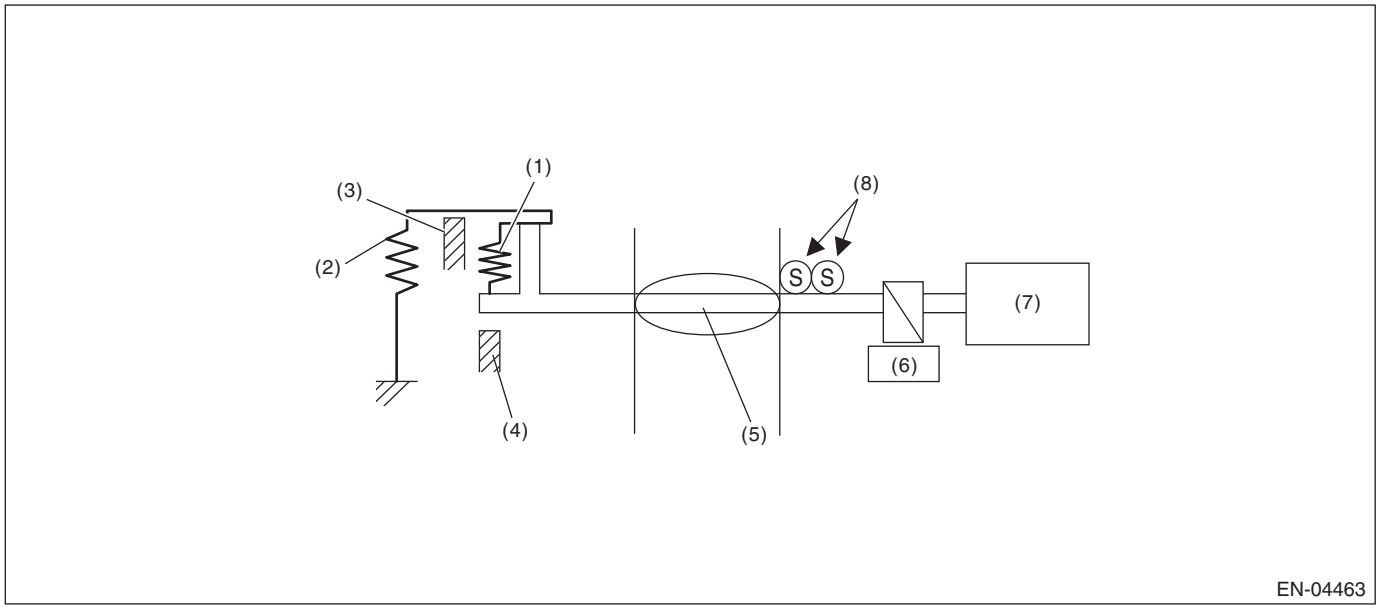

(1) Opener spring
(2) Return spring
(3) Intermediate stopper
(4) Full closed stopper
(5) Throttle valve
(6) Gear
(7) DC motor
(8) Main and sub throttle position sensor

3. EXECUTION CONDITION

Secondary Parameters	Execution condition
Ignition switch	OFF
Battery voltage	≥ 6 V
Elapsed time after motor continuity OFF	= 1.6 s

4. GENERAL DRIVING CYCLE

- Ignition switch ON → OFF
- Ignition switch OFF → ON (Only after clearing memory)

5. DIAGNOSTIC METHOD

Judge as NG when the following conditions are established.

Judgment Value

Malfunction Criteria	Threshold Value
Change of the opening angle after the motor current is cut OFF	< 2 °

Time Needed for Diagnosis: Less than 1 second
Malfunction Indicator Light Illumination: Illuminates as soon as a malfunction occurs.

DL:DTC P1449 EVAP SYSTEM CLOG DETECTED (AIR FILTER)

DTC DETECTING CONDITION:
Detected when two consecutive driving cycles with fault occur.

CAUTION:
After servicing or replacing faulty parts, perform Clear Memory Mode <Ref. to EN(H4DO)(diag)-78, OPERATION, Clear Memory Mode.>, and Inspection Mode <Ref. to EN(H4DO)(diag)-64, PROCEDURE, Inspection Mode.>.

	Step	Check	Yes	No
1	**CHECK FOR ANY OTHER DTC ON DISPLAY.**	Is any other DTC displayed?	Check the appropriate DTC using the "List of Diagnostic Trouble Code (DTC)". <Ref. to EN(H4DO)(diag)-102, List of Diagnostic Trouble Code (DTC).>	Go to step **2**.
2	**CHECK CANISTER TUBE ASSEMBLY AND DRAIN TUBE ASSEMBLY BETWEEN CANISTER AND DRAIN FILTER.**	Is the canister tube assembly and/or the drain tube assembly clogged between canister and drain filter?	Replace the canister tube assembly and/or the drain tube assembly between canister and drain filter. <Ref. to EC(H4DO)-9, Canister.> <Ref. to EC(H4DO)-54, Drain Filter.>	Go to step **3**.
3	**CHECK DRAIN FILTER.**	Is the drain filter clogged?	Replace the drain filter. <Ref. to EC(H4DO)-54, Drain Filter.>	Replace the canister. <Ref. to EC(H4DO)-9, Canister.>

1. OUTLINE OF DIAGNOSIS

Detect the drain filter clogging by the pressure change during purge introduction.
Judge as drain filter clogging malfunction if the pressure in the evaporative emission system piping suddenly decreases by the purging.

2. COMPONENT DESCRIPTION

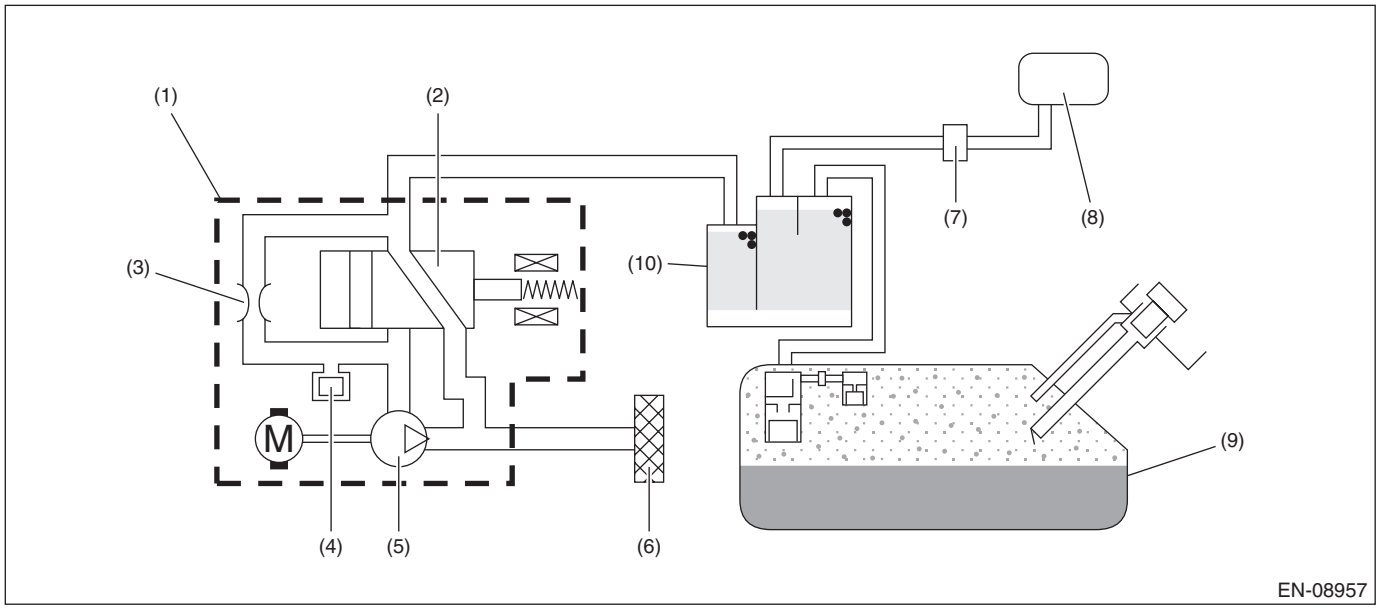

(1) ELCM
(2) Switching valve
(3) Reference orifice (0.02 inch orifice)
(4) Pressure sensor
(5) Vacuum pump
(6) Drain filter
(7) Purge control solenoid valve
(8) Intake manifold
(9) Fuel tank
(10) Canister

3. EXECUTION CONDITION

Secondary Parameters	Execution condition
Battery voltage	≥ 10.9 V
Elapsed time after starting the engine	≥ 20000 ms
• ELCM vacuum pump	Not in operation
• ELCM switching valve	Open

4. GENERAL DRIVING CYCLE

Perform the diagnosis continuously when purging is performed after 20000 ms have passed since the engine started.

5. DIAGNOSTIC METHOD

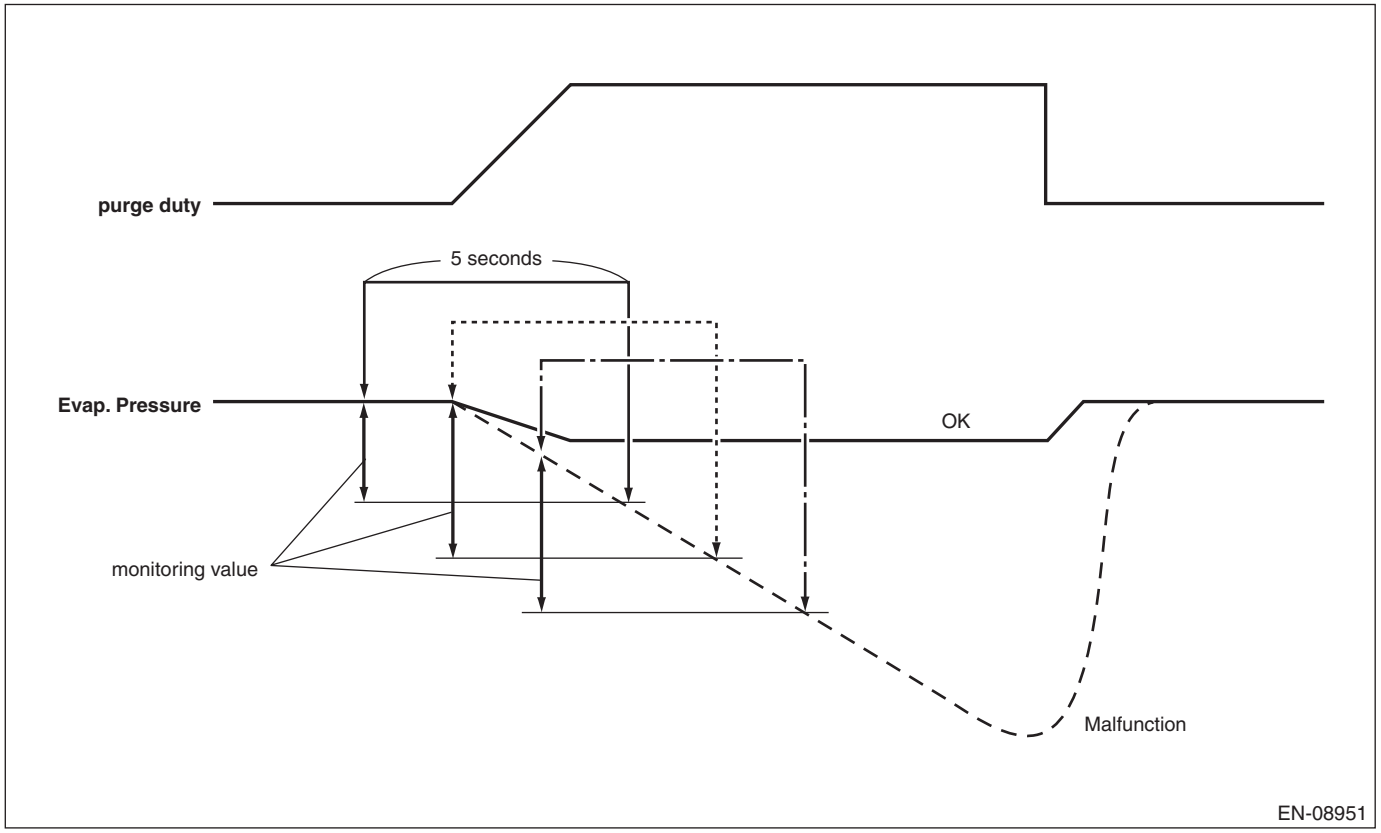

Calculate the difference between the ELCM pressure sensor output value as of 5 seconds ago and the current one, and if the value is greater than judgment value, detect and judge as filter clogging trouble.
Judge as NG when the following conditions are established.

Judgment Value

Malfunction Criteria	Threshold Value
|Pressure sensor output value as of 5 seconds ago – Current pressure sensor output value|	> Value from Map
Number of above conditions established	> 2 time(s)

Map

Vehicle speed km/h (MPH)	0 (0)	20 (12.4)	40 (24.9)	60 (37.3)	80 (49.7)	100 (62.1)	120 (74.6)	300 (186.4)
|Pressure sensor output value as of 5 seconds ago – Current pressure sensor output value| kPa (mmHg, inHg)	1151.4 (8.636, 0.3)	1151.4 (8.636, 0.3)	1151.4 (8.636, 0.3)	1151.4 (8.636, 0.3)	1151.4 (8.636, 0.3)	1151.4 (8.636, 0.3)	1151.4 (8.636, 0.3)	2209.1 (16.57, 0.7)

Time Needed for Diagnosis: Approx. 5.5 seconds
Malfunction Indicator Light Illumination: Illuminates when malfunction occurs in 2 continuous driving cycles.

DM:DTC P1451 EVAP SYSTEM CLOG DETECTED (PIPE)

DTC DETECTING CONDITION:
Detected when two consecutive driving cycles with fault occur.

CAUTION:
After servicing or replacing faulty parts, perform Clear Memory Mode <Ref. to EN(H4DO)(diag)-78, OPERATION, Clear Memory Mode.>, and Inspection Mode <Ref. to EN(H4DO)(diag)-64, PROCEDURE, Inspection Mode.>.

	Step	Check	Yes	No
1	**CHECK DRAIN TUBE BETWEEN CANISTER AND LEAK CHECK VALVE ASSEMBLY.**	Is the drain tube between canister and leak check valve assembly clogged?	Replace the drain tube between the canister and leak check valve assembly. <Ref. to EC(H4DO)-9, Canister.>	Go to step **2**.
2	**CHECK HOSE AND TUBE BETWEEN CANISTER AND FUEL TANK.**	Are the hose and tube between the canister and fuel tank clogged?	Replace the hose or tube between the canister and fuel tank. <Ref. to EC(H4DO)-9, Canister.> <Ref. to FU(H4DO)-97, Fuel Tank.>	Replace the canister. <Ref. to EC(H4DO)-9, Canister.> After the operation is complete, go to the next step. Go to step **3**.
3	**CHECK EVAPORATIVE EMISSION CONTROL SYSTEM.** Perform drive cycle I. <Ref. to EN(H4DO)(diag)-73, DRIVE CYCLE I, PROCEDURE, Drive Cycle.>	Is DTC P1451 displayed on the display?	Replace the leak check valve assembly. <Ref. to EC(H4DO)-59, Leak Check Valve Assembly.>	End.

1. OUTLINE OF DIAGNOSIS

NOTE:
For the detection standard, refer to DTC P0455. <Ref. to EN(H4DO)(diag)-314, DTC P0455 EVAP SYSTEM (CPC) LEAK DETECTED (LARGE LEAK), Diagnostic Procedure with Diagnostic Trouble Code (DTC).>

DN:DTC P1492 COIL 1 EGR "A" CONTROL CIRCUIT LOW

NOTE:
For the diagnostic procedure, refer to DTC P1498. <Ref. to EN(H4DO)(diag)-414, DTC P1498 COIL 4 EGR "A" CONTROL CIRCUIT LOW, Diagnostic Procedure with Diagnostic Trouble Code (DTC).>

1. OUTLINE OF DIAGNOSIS

Detects open or short circuit of EGR.
Judge as NG when the ECM output level differs from the actual terminal level.

2. COMPONENT DESCRIPTION

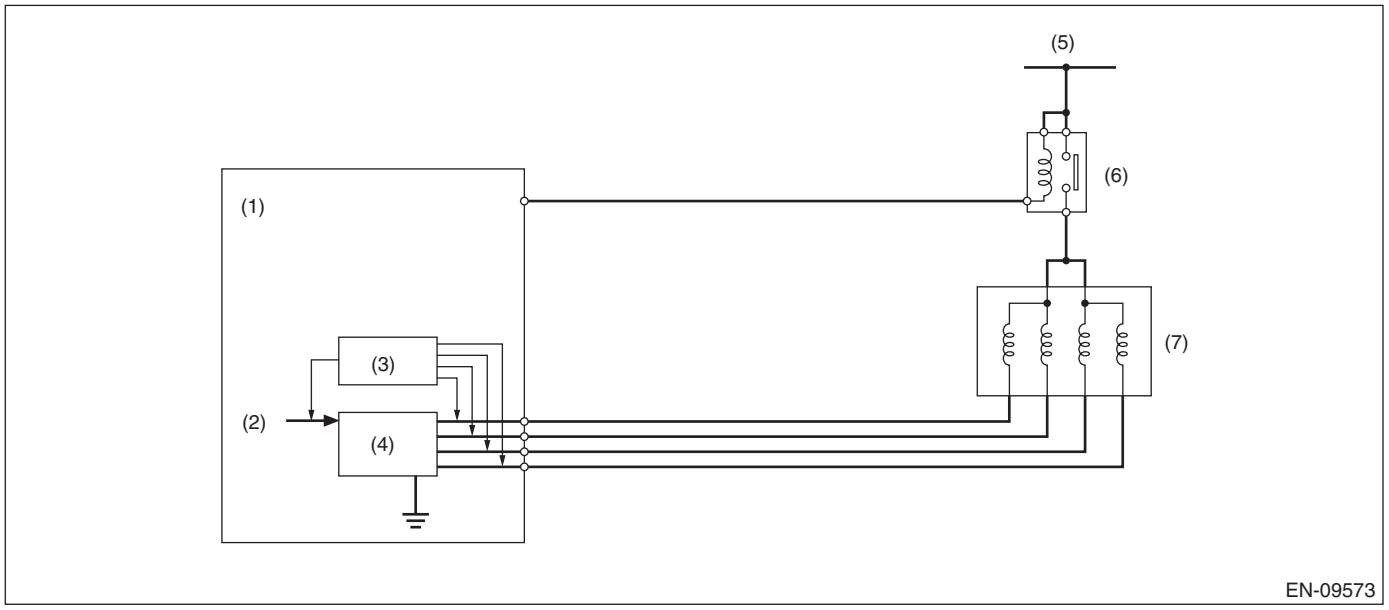

(1) Engine control module (ECM)
(2) Computer unit (CPU)
(3) Detecting circuit
(4) Switch circuit
(5) Battery voltage
(6) Main relay
(7) EGR control valve

3. EXECUTION CONDITION

Secondary Parameters	Execution condition
Battery voltage	≥ 10.9 V
EGR drive signal	OFF

4. GENERAL DRIVING CYCLE

Perform the diagnosis continuously after the enable conditions have been established.

5. DIAGNOSTIC METHOD

If the duration of time while the following conditions are met is longer than the time indicated, judge as NG.

Judgment Value

Malfunction Criteria	Threshold Value
EGR terminal voltage	≤ Battery voltage × 0.34

Time Needed for Diagnosis: 2500 ms
Malfunction Indicator Light Illumination: Illuminates as soon as a malfunction occurs.

DO:DTC P1493 COIL 1 EGR "A" CONTROL CIRCUIT HIGH

NOTE:
For the diagnostic procedure, refer to DTC P1499. <Ref. to EN(H4DO)(diag)-397, DTC P0851 PARK/NEUTRAL SWITCH INPUT CIRCUIT LOW, Diagnostic Procedure with Diagnostic Trouble Code (DTC).>

1. OUTLINE OF DIAGNOSIS

Detects open or short circuit of EGR.
Judge as NG when the ECM output level differs from the actual terminal level.

2. COMPONENT DESCRIPTION

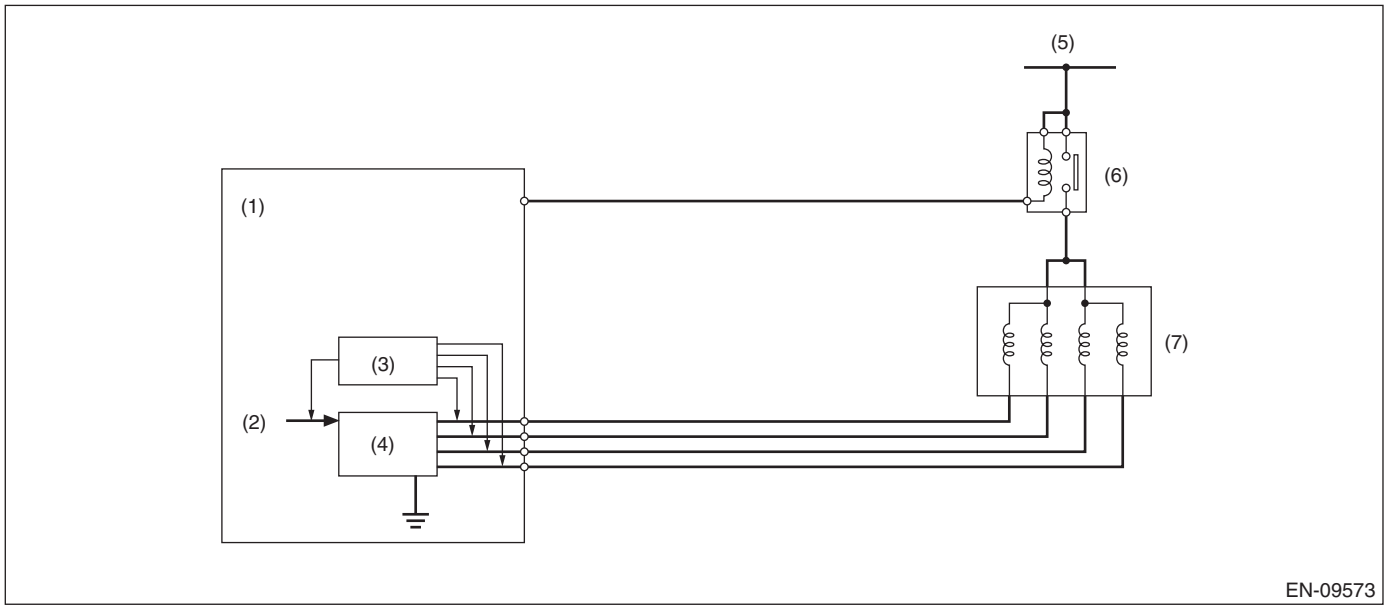

(1) Engine control module (ECM)
(2) Computer unit (CPU)
(3) Detecting circuit
(4) Switch circuit
(5) Battery voltage
(6) Main relay
(7) EGR control valve

3. EXECUTION CONDITION

Secondary Parameters	Execution condition
Battery voltage	≥ 10.9 V
EGR drive signal	ON

4. GENERAL DRIVING CYCLE

Perform the diagnosis continuously after the enable conditions have been established.

5. DIAGNOSTIC METHOD

If the duration of time while the following conditions are met is longer than the time indicated, judge as NG.

Judgment Value

Malfunction Criteria	Threshold Value
EGR terminal current	≥ 6 A

Time Needed for Diagnosis: 2500 ms
Malfunction Indicator Light Illumination: Illuminates as soon as a malfunction occurs.

DP:DTC P1494 COIL 2 EGR "A" CONTROL CIRCUIT LOW

NOTE:
For the diagnostic procedure, refer to DTC P1498. <Ref. to EN(H4DO)(diag)-414, DTC P1498 COIL 4 EGR "A" CONTROL CIRCUIT LOW, Diagnostic Procedure with Diagnostic Trouble Code (DTC).>

1. OUTLINE OF DIAGNOSIS

NOTE:
For the detection standard, refer to DTC P1492. <Ref. to EN(H4DO)(diag)-411, DTC P1492 COIL 1 EGR "A" CONTROL CIRCUIT LOW, Diagnostic Procedure with Diagnostic Trouble Code (DTC).>

DQ:DTC P1495 COIL 2 EGR "A" CONTROL CIRCUIT HIGH

NOTE:
For the diagnostic procedure, refer to DTC P1499. <Ref. to EN(H4DO)(diag)-397, DTC P0851 PARK/NEUTRAL SWITCH INPUT CIRCUIT LOW, Diagnostic Procedure with Diagnostic Trouble Code (DTC).>

1. OUTLINE OF DIAGNOSIS

NOTE:
For the detection standard, refer to DTC P1493. <Ref. to EN(H4DO)(diag)-412, DTC P1493 COIL 1 EGR "A" CONTROL CIRCUIT HIGH, Diagnostic Procedure with Diagnostic Trouble Code (DTC).>

DR:DTC P1496 COIL 3 EGR "A" CONTROL CIRCUIT LOW

NOTE:
For the diagnostic procedure, refer to DTC P1498. <Ref. to EN(H4DO)(diag)-414, DTC P1498 COIL 4 EGR "A" CONTROL CIRCUIT LOW, Diagnostic Procedure with Diagnostic Trouble Code (DTC).>

1. OUTLINE OF DIAGNOSIS

NOTE:
For the detection standard, refer to DTC P1492. <Ref. to EN(H4DO)(diag)-411, DTC P1492 COIL 1 EGR "A" CONTROL CIRCUIT LOW, Diagnostic Procedure with Diagnostic Trouble Code (DTC).>

DS:DTC P1497 COIL 3 EGR "A" CONTROL CIRCUIT HIGH

NOTE:
For the diagnostic procedure, refer to DTC P1499. <Ref. to EN(H4DO)(diag)-397, DTC P0851 PARK/NEUTRAL SWITCH INPUT CIRCUIT LOW, Diagnostic Procedure with Diagnostic Trouble Code (DTC).>

1. OUTLINE OF DIAGNOSIS

NOTE:
For the detection standard, refer to DTC P1493. <Ref. to EN(H4DO)(diag)-412, DTC P1493 COIL 1 EGR "A" CONTROL CIRCUIT HIGH, Diagnostic Procedure with Diagnostic Trouble Code (DTC).>

DT:DTC P1498 COIL 4 EGR "A" CONTROL CIRCUIT LOW

DTC DETECTING CONDITION:
Immediately at fault recognition
TROUBLE SYMPTOM:
- Improper idling
- Poor driving performance
- Engine breathing

CAUTION:
After servicing or replacing faulty parts, perform Clear Memory Mode <Ref. to EN(H4DO)(diag)-78, OPERATION, Clear Memory Mode.>, and Inspection Mode <Ref. to EN(H4DO)(diag)-64, PROCEDURE, Inspection Mode.>.
WIRING DIAGRAM:
- Engine Electrical System ENGINE TYPE FB (WITHOUT PUSH BUTTON START) <Ref. to WI-170, ENGINE TYPE FB (WITHOUT PUSH BUTTON START), WIRING DIAGRAM, Engine Electrical System.>
- Engine Electrical System ENGINE TYPE FB (WITH PUSH BUTTON START) <Ref. to WI-184, ENGINE TYPE FB (WITH PUSH BUTTON START), WIRING DIAGRAM, Engine Electrical System.>

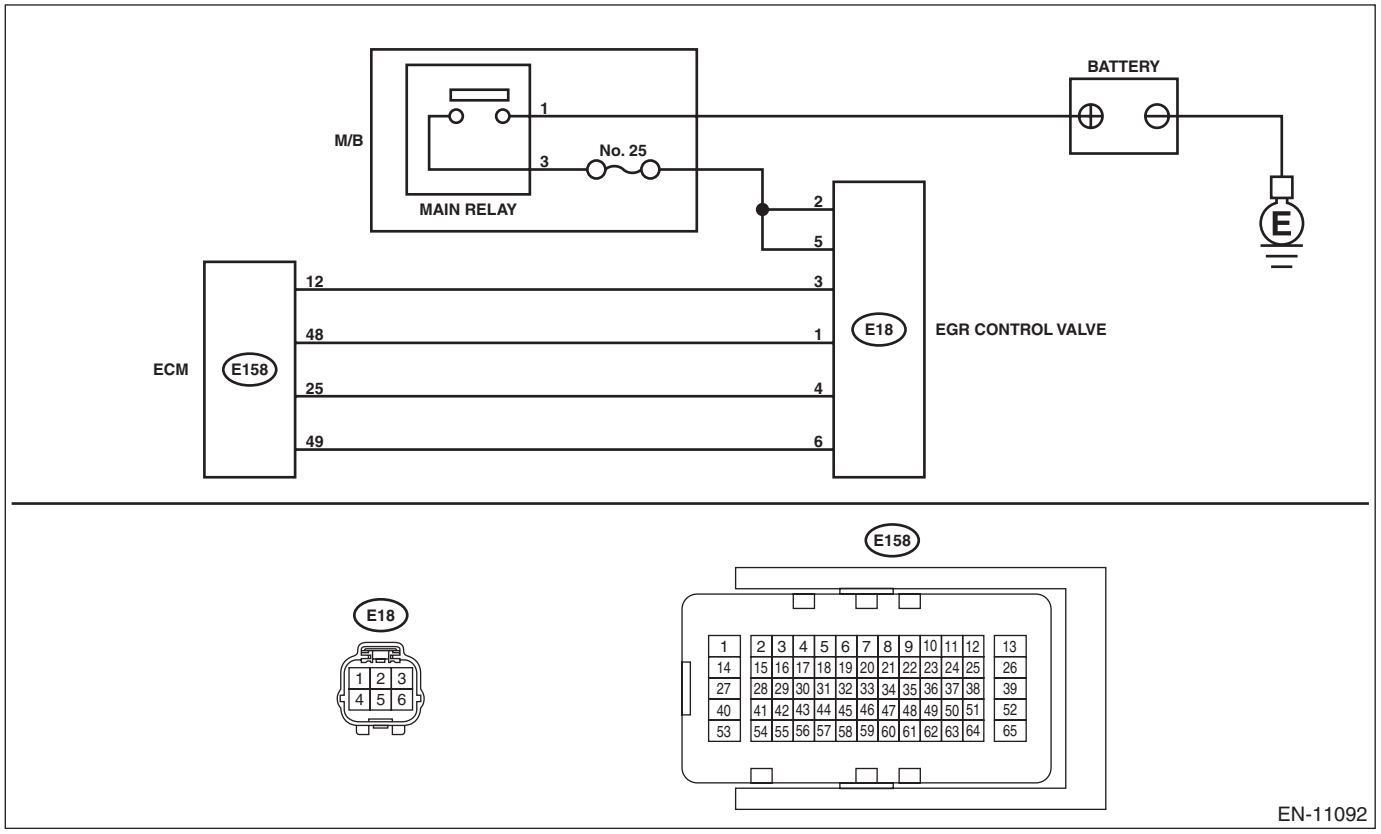

Step		Check	Yes	No
1	**CHECK POWER SUPPLY TO EGR CONTROL VALVE.** 1) Turn the ignition switch to OFF. 2) Disconnect the connector from the EGR control valve. 3) Turn the ignition switch to ON. 4) Measure the voltage between EGR control valve connector and engine ground. ***Connector & terminal*** ***(E18) No. 2 (+) — Engine ground (–):*** ***(E18) No. 5 (+) — Engine ground (–):***	Is the voltage 10 V or more?	Go to step **2**.	Repair the harness and connector. NOTE: In this case, repair the following item: • Open circuit in harness between EGR control valve and main relay connector • Poor contact of coupling connector

	Step	Check	Yes	No
2	**CHECK HARNESS BETWEEN ECM AND EGR CONTROL VALVE CONNECTOR.** 1) Turn the ignition switch to OFF. 2) Disconnect the connector from ECM. 3) Measure the resistance between ECM connector and EGR control valve connector. ***Connector & terminal*** ***DTC P1492; (E158) No. 12 — (E18) No. 3:*** ***DTC P1494; (E158) No. 48 — (E18) No. 1:*** ***DTC P1496; (E158) No. 25 — (E18) No. 4:*** ***DTC P1498; (E158) No. 49 — (E18) No. 6:***	Is the resistance less than 1 Ω?	Go to step **3**.	Repair the open circuit of the harness between the ECM connector and EGR control valve connector.
3	**CHECK HARNESS BETWEEN ECM AND EGR CONTROL VALVE CONNECTOR.** 1) Disconnect the connector from ECM. 2) Measure the resistance between ECM connector and chassis ground. ***Connector & terminal*** ***DTC P1492; (E158) No. 12 — Chassis ground:*** ***DTC P1494; (E158) No. 48 — Chassis ground:*** ***DTC P1496; (E158) No. 25 — Chassis ground:*** ***DTC P1498; (E158) No. 49 — Chassis ground:***	Is the resistance 1 MΩ or more?	Go to step **4**.	Repair ground short circuit of harness between ECM connector and EGR control valve connector.
4	**CHECK FOR POOR CONTACT.** Check for poor contact between ECM connector and EGR control valve connector.	Is there poor contact in ECM or EGR control valve connector?	Repair the poor contact of ECM or EGR control valve connector.	Replace EGR control valve. <Ref. to EC(H4DO)-26, EGR Control Valve.>

1. OUTLINE OF DIAGNOSIS

NOTE:
For the detection standard, refer to DTC P1492. <Ref. to EN(H4DO)(diag)-411, DTC P1492 COIL 1 EGR "A" CONTROL CIRCUIT LOW, Diagnostic Procedure with Diagnostic Trouble Code (DTC).>

DU:DTC P1499 COIL 4 EGR "A" CONTROL CIRCUIT HIGH

DTC DETECTING CONDITION:
Immediately at fault recognition
TROUBLE SYMPTOM:

- Improper idling
- Poor driving performance
- Engine breathing

CAUTION:
After servicing or replacing faulty parts, perform Clear Memory Mode <Ref. to EN(H4DO)(diag)-78, OPERATION, Clear Memory Mode.>, and Inspection Mode <Ref. to EN(H4DO)(diag)-64, PROCEDURE, Inspection Mode.>.
WIRING DIAGRAM:

- Engine Electrical System ENGINE TYPE FB (WITHOUT PUSH BUTTON START) <Ref. to WI-170, ENGINE TYPE FB (WITHOUT PUSH BUTTON START), WIRING DIAGRAM, Engine Electrical System.>
- Engine Electrical System ENGINE TYPE FB (WITH PUSH BUTTON START) <Ref. to WI-184, ENGINE TYPE FB (WITH PUSH BUTTON START), WIRING DIAGRAM, Engine Electrical System.>

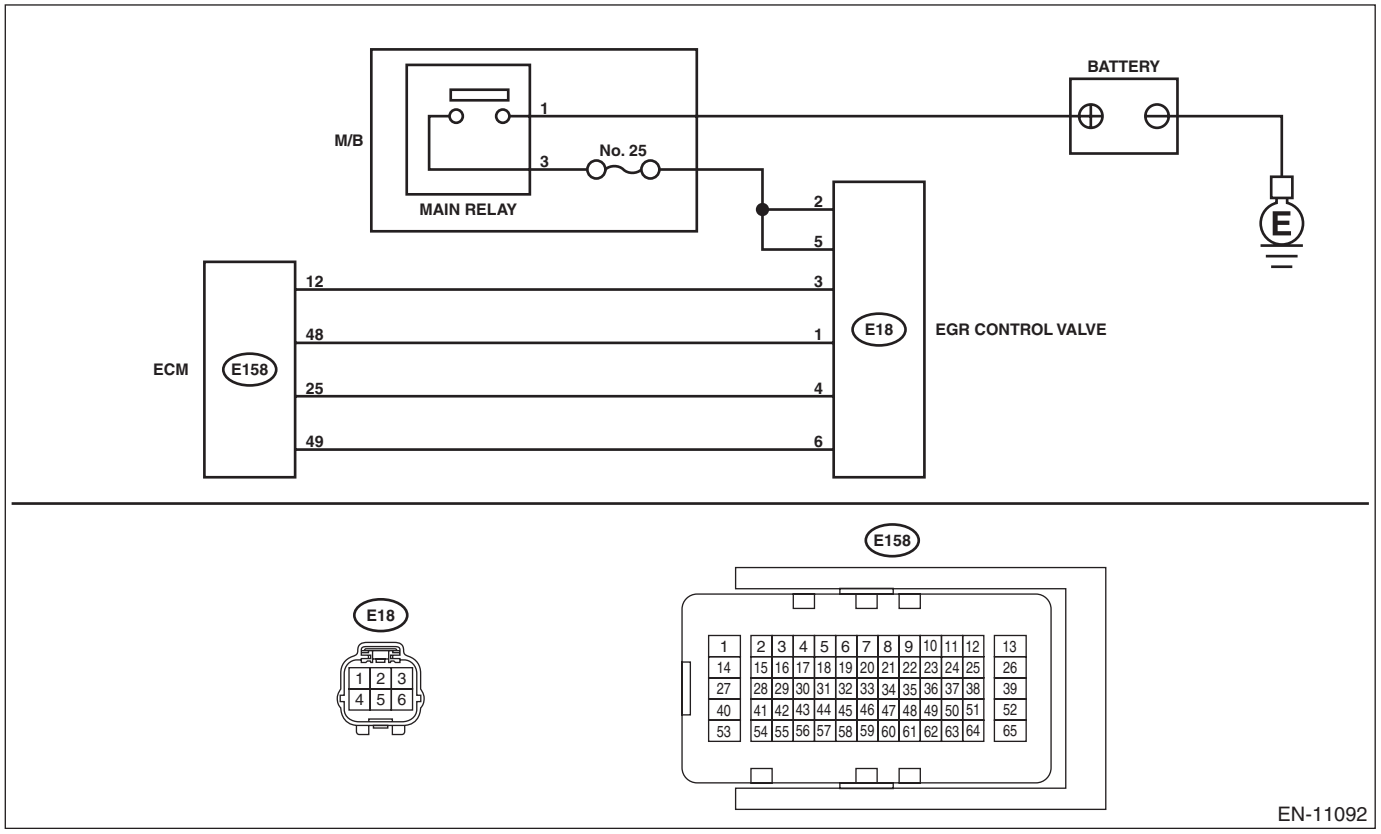

	Step	Check	Yes	No
1	**CHECK HARNESS BETWEEN ECM AND EGR CONTROL VALVE CONNECTOR.** 1) Turn the ignition switch to OFF. 2) Disconnect the connector from ECM and EGR control valve. 3) Turn the ignition switch to ON. 4) Measure the voltage between ECM connector and chassis ground. ***Connector & terminal*** ***DTC P1493; (E158) No. 12 (+) — Chassis ground (–):*** ***DTC P1495; (E158) No. 48 (+) — Chassis ground (–):*** ***DTC P1497; (E158) No. 25 (+) — Chassis ground (–):*** ***DTC P1499; (E158) No. 49 (+) — Chassis ground (–):***	Is the voltage 10 V or more?	Repair the short circuit to power supply in the harness between the ECM connector and EGR control valve connector.	Go to step **2**.
2	**CHECK EGR CONTROL VALVE.** Measure the resistance between EGR control valve terminals. ***Terminals*** ***DTC P1493; No. 2 — No. 3:*** ***DTC P1495; No. 2 — No. 1:*** ***DTC P1497; No. 5 — No. 4:*** ***DTC P1499; No. 5 — No. 6:***	Is the resistance 20 Ω or more?	Repair the poor contact of ECM connector.	Replace EGR control valve. <Ref. to EC(H4DO)-26, EGR Control Valve.>

1. OUTLINE OF DIAGNOSIS

NOTE:
For the detection standard, refer to DTC P1493. <Ref. to EN(H4DO)(diag)-412, DTC P1493 COIL 1 EGR "A" CONTROL CIRCUIT HIGH, Diagnostic Procedure with Diagnostic Trouble Code (DTC).>

DV:DTC P1603 ENGINE STALL HISTORY

DTC DETECTING CONDITION:
Immediately at fault recognition

CAUTION:
After servicing or replacing faulty parts, perform Clear Memory Mode. <Ref. to EN(H4DO)(diag)-78, OPERATION, Clear Memory Mode.>

NOTE:
This DTC may be detected even if fault does not occur in the vehicle. If the customer does not ask for inspection, perform the clear memory mode without inspection and return the vehicle to the user.

WIRING DIAGRAM:

- Engine Electrical System ENGINE TYPE FB (WITHOUT PUSH BUTTON START) <Ref. to WI-170, ENGINE TYPE FB (WITHOUT PUSH BUTTON START), WIRING DIAGRAM, Engine Electrical System.>
- Engine Electrical System ENGINE TYPE FB (WITH PUSH BUTTON START) <Ref. to WI-184, ENGINE TYPE FB (WITH PUSH BUTTON START), WIRING DIAGRAM, Engine Electrical System.>

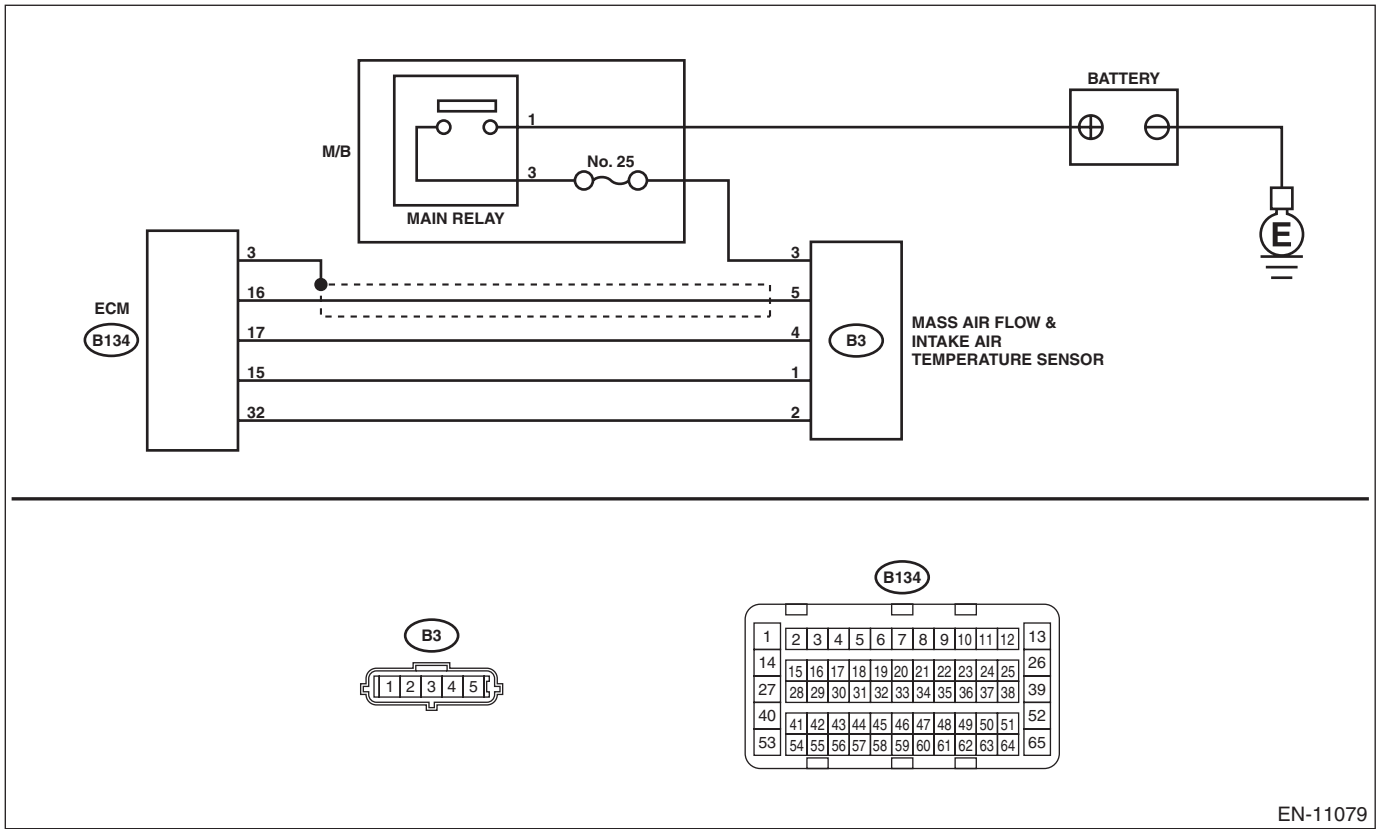

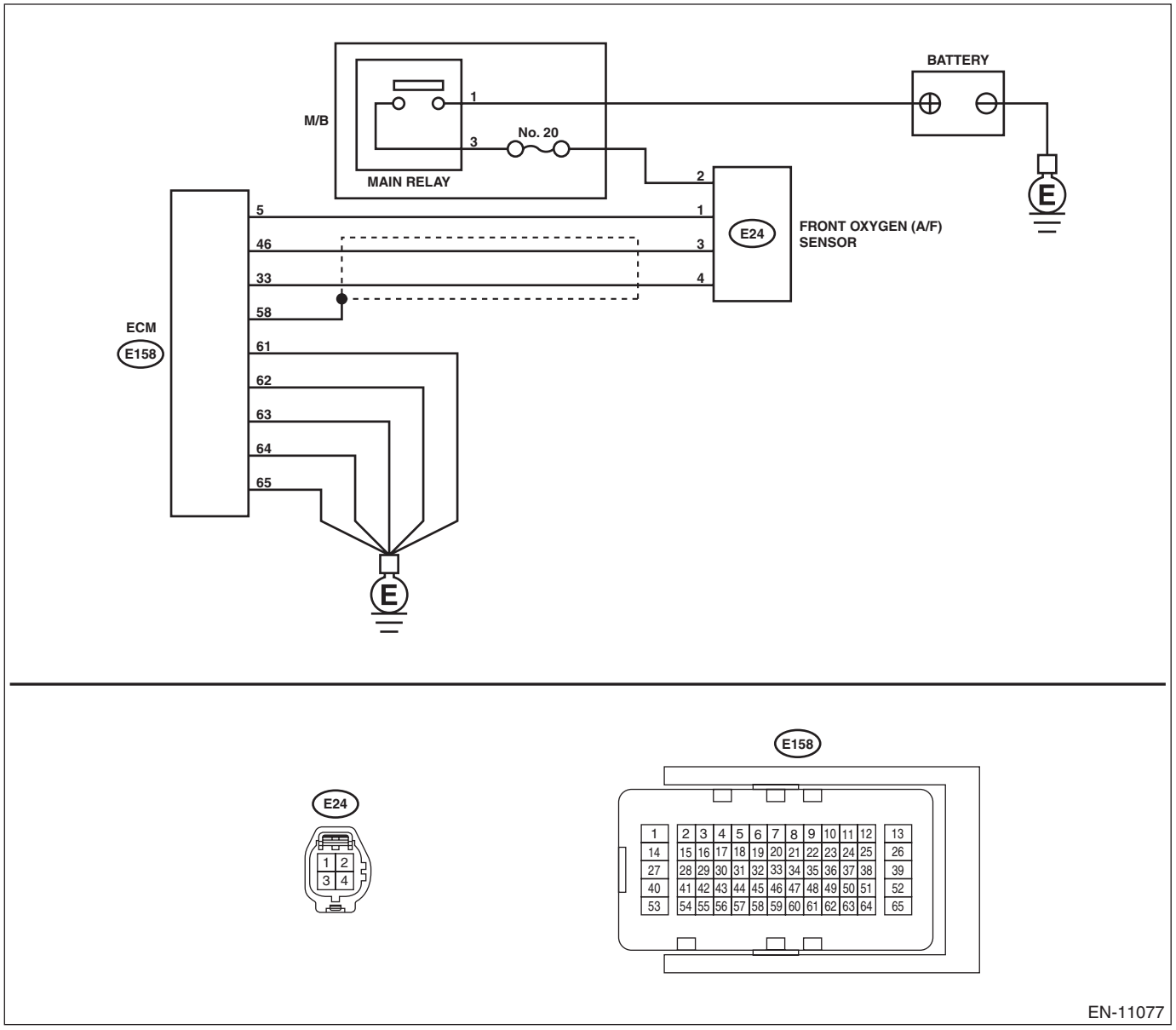
BATTERY
M/B
1
3
No. 20
MAIN RELAY
2
E
5
46
33
58
61
62
63
64
65
ECM
E158
1
3
4
E24
FRONT OXYGEN (A/F)
SENSOR
E24
1 2
3 4
E158
1 2 3 4 5 6 7 8 9 10 11 12 13
14 15 16 17 18 19 20 21 22 23 24 25 26
27 28 29 30 31 32 33 34 35 36 37 38 39
40 41 42 43 44 45 46 47 48 49 50 51 52
53 54 55 56 57 58 59 60 61 62 63 64 65
EN-11077

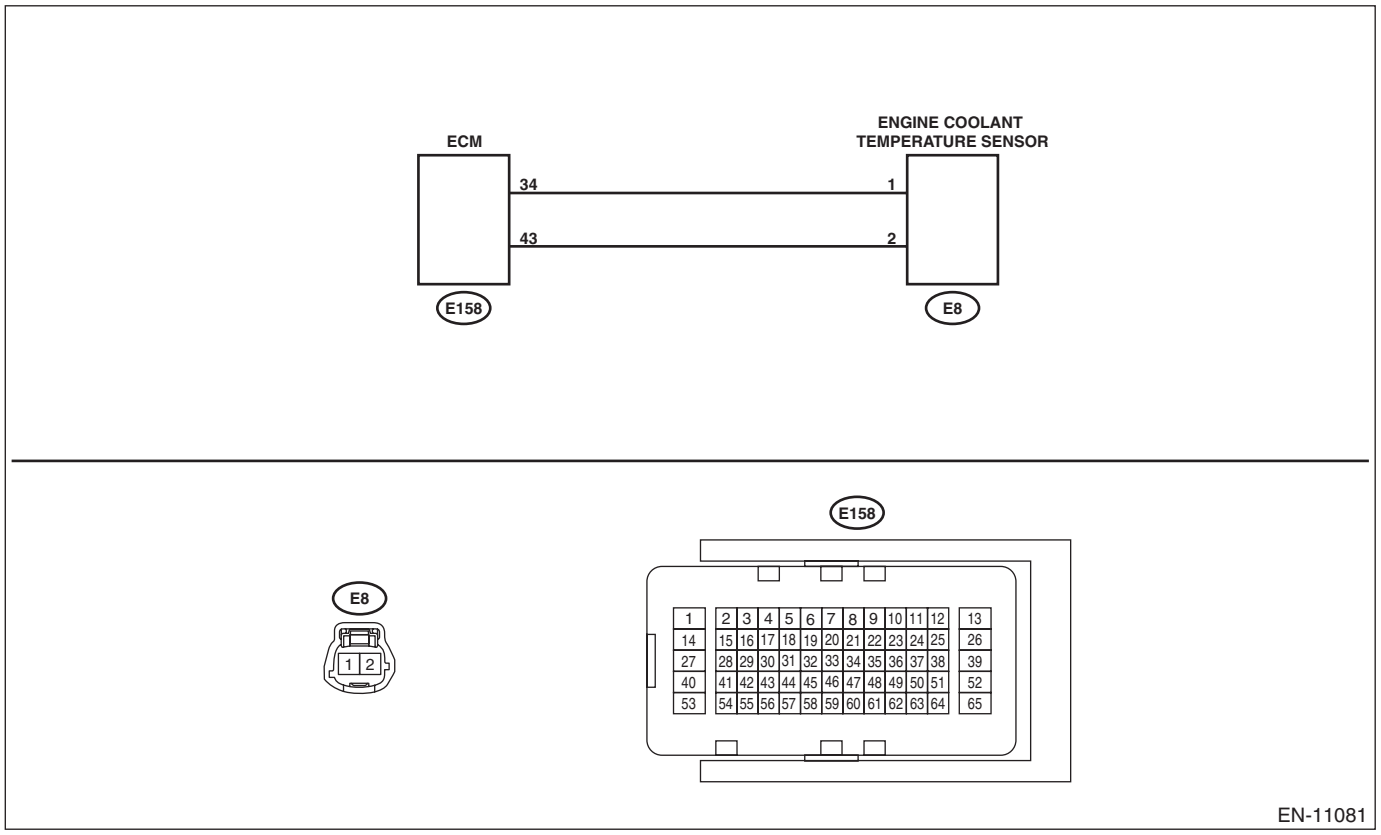
ECM
ENGINE COOLANT TEMPERATURE SENSOR
34
43
1
2
E158
E8
E158
E8
1 2
1 2 3 4 5 6 7 8 9 10 11 12 13
14 15 16 17 18 19 20 21 22 23 24 25 26
27 28 29 30 31 32 33 34 35 36 37 38 39
40 41 42 43 44 45 46 47 48 49 50 51 52
53 54 55 56 57 58 59 60 61 62 63 64 65
EN-11081

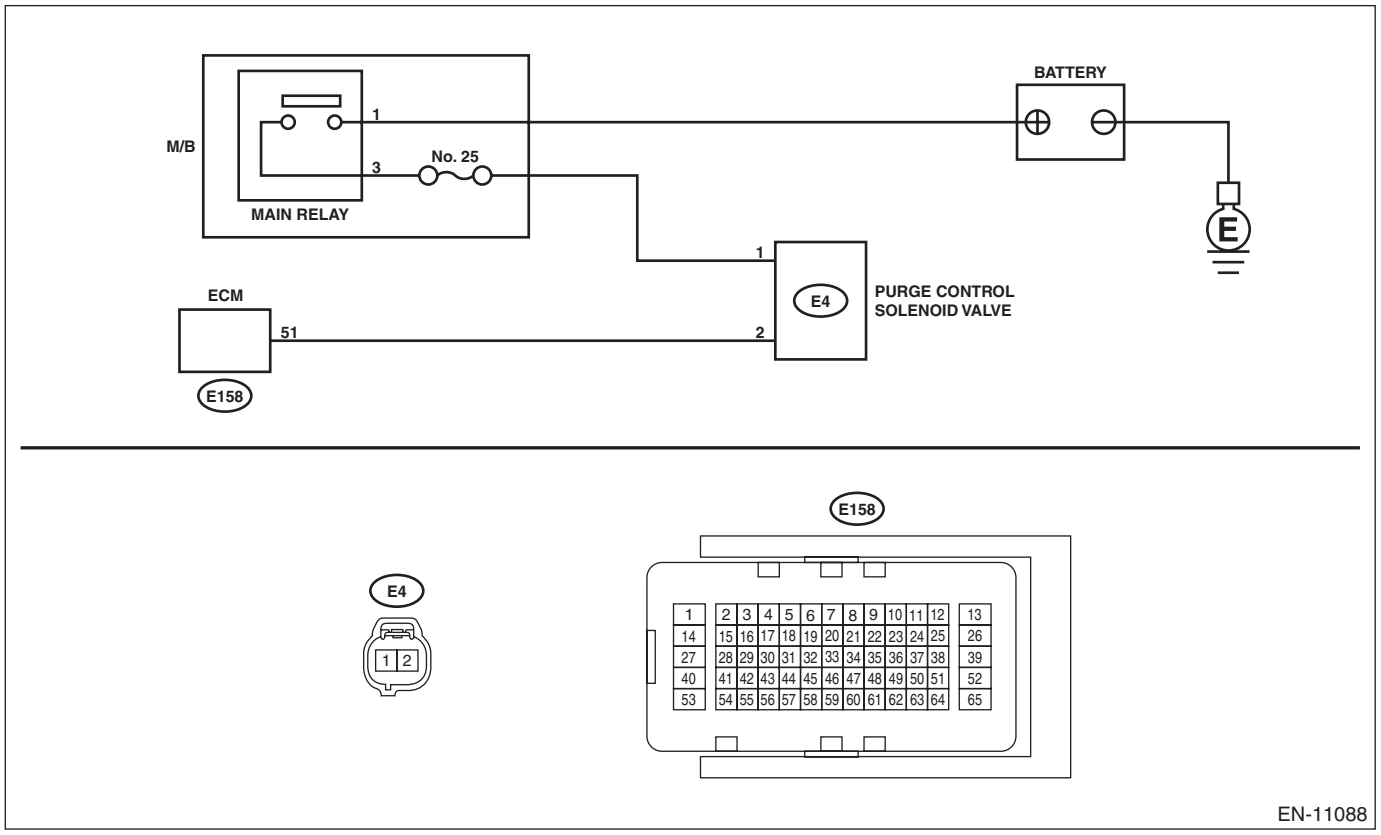
M/B
MAIN RELAY
1
3
No. 25
BATTERY
E
1
E4
PURGE CONTROL SOLENOID VALVE
ECM
51
2
E158
E158
E4
1 2
1 2 3 4 5 6 7 8 9 10 11 12 13
14 15 16 17 18 19 20 21 22 23 24 25 26
27 28 29 30 31 32 33 34 35 36 37 38 39
40 41 42 43 44 45 46 47 48 49 50 51 52
53 54 55 56 57 58 59 60 61 62 63 64 65
EN-11088

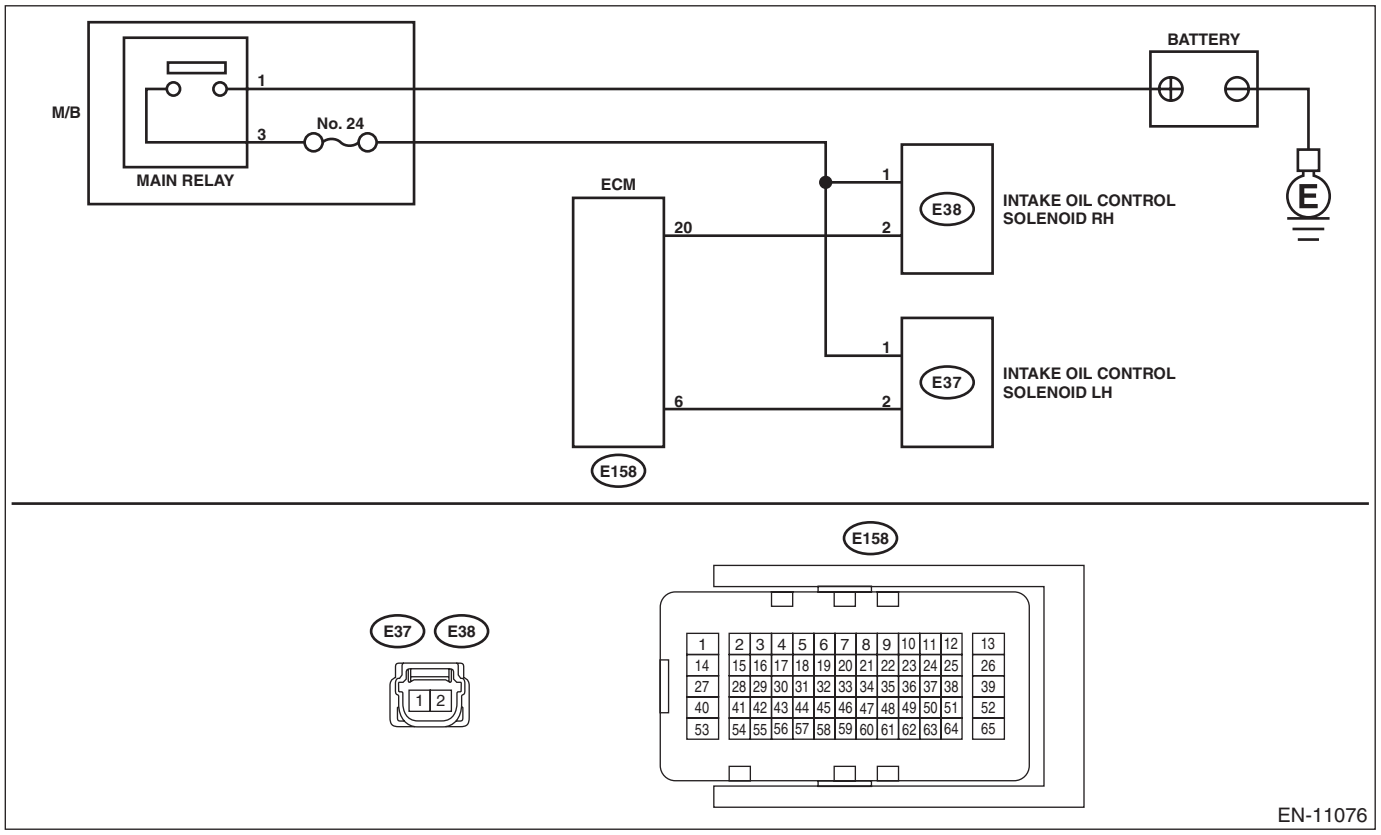
BATTERY
M/B
1
3
No. 24
MAIN RELAY
ECM
20
6
E158
1
2
E38
INTAKE OIL CONTROL SOLENOID RH
1
2
E37
INTAKE OIL CONTROL SOLENOID LH
E
E37
E38
1
2
E158
1 2 3 4 5 6 7 8 9 10 11 12 13
14 15 16 17 18 19 20 21 22 23 24 25 26
27 28 29 30 31 32 33 34 35 36 37 38 39
40 41 42 43 44 45 46 47 48 49 50 51 52
53 54 55 56 57 58 59 60 61 62 63 64 65
EN-11076

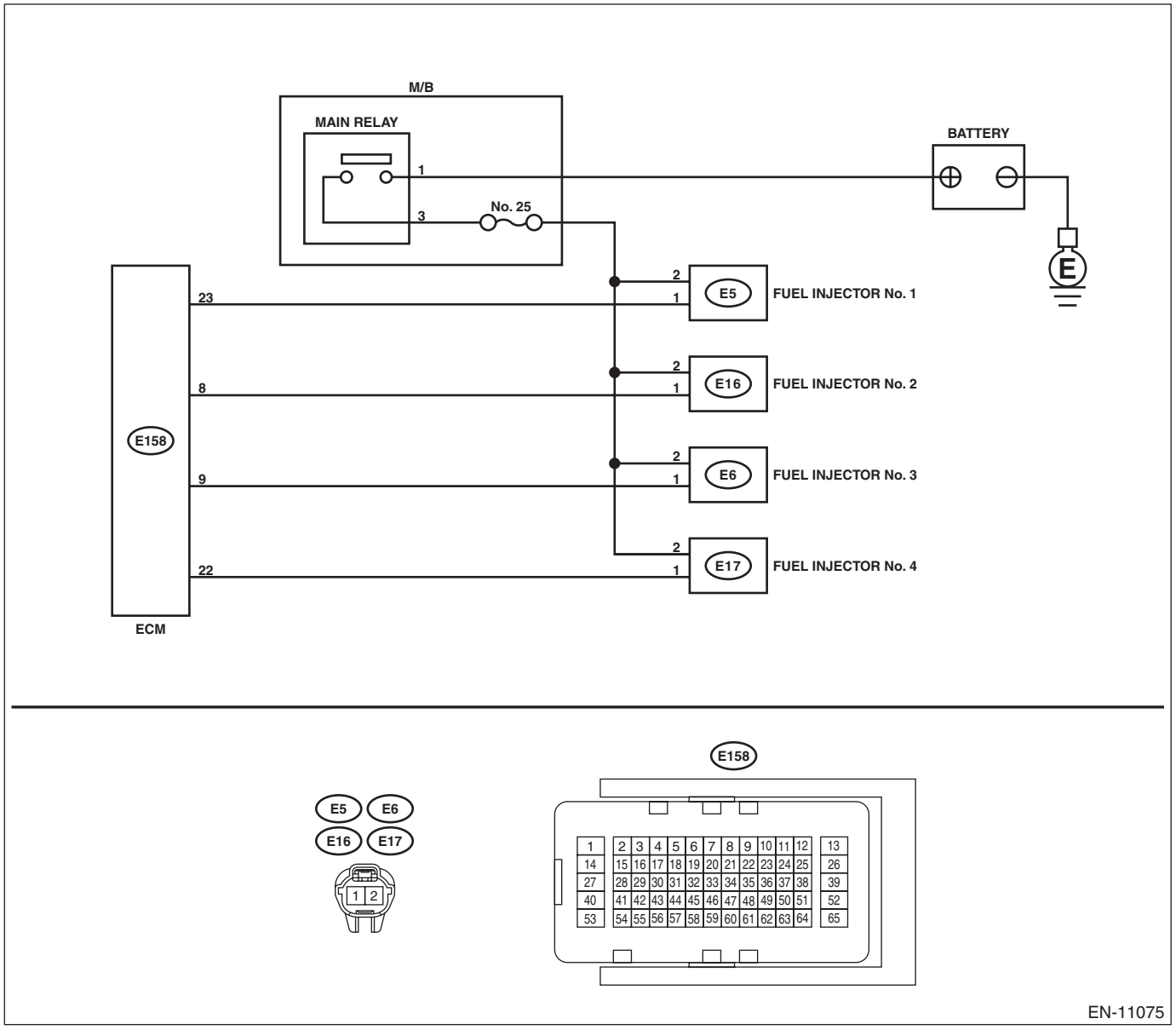

Step		Check	Yes	No
1	**CHECK DTC.**	Is any other DTC displayed?	Check DTC using “List of Diagnostic Trouble Code (DTC)”. <Ref. to EN(H4DO)(diag)-102, List of Diagnostic Trouble Code (DTC).>	Go to step **2**.
2	**CHECK FREEZE FRAME DATA.** Using the Subaru Select Monitor, read the value in «Fuel Level». NOTE: For detailed operation procedures, refer to “Freeze Frame Data Display For Engine”. <Ref. to EN(H4DO)(diag)-57, DISPLAY OF ENGINE FREEZE FRAME DATA, OPERATION, Subaru Select Monitor.>	Is the value of «Fuel Level» 16.4% or more?	Go to step **3**.	Fuel may be run out. If the fault occurs after refueling, continue the diagnosis. Go to step **3**.

	Step	Check	Yes	No
3	**CHECK FREEZE FRAME DATA.** Read the value of «Control module voltage» using Subaru Select Monitor. NOTE: For detailed operation procedures, refer to "Freeze Frame Data Display For Engine". <Ref. to EN(H4DO)(diag)-57, DISPLAY OF ENGINE FREEZE FRAME DATA, OPERATION, Subaru Select Monitor.>	Is the value of «Control module voltage» 11 V or more?	Go to step **4**.	Check the battery and generator. <Ref. to SC(H4DO)-65, INSPECTION, Battery.> <Ref. to SC(H4DO)-58, INSPECTION, Generator.>
4	**CHECK FOR MALFUNCTION OCCURRENCE.**	Did you ask the customer about the driving condition and engine speed status when the fault occurred?	• The engine speed dropped slowly and then the engine stalled during idling or deceleration: Go to step **5**. • The engine speed dropped rapidly and then the engine stalled during idling or deceleration: Go to step **68**. • The engine stalled during standing start, acceleration, or constant speed driving: Go to step **76**.	Ask the customer about the driving condition and engine speed status when fault occurred.
5	**CHECK FREEZE FRAME DATA.** 1) Read the values of «Short term fuel trim B1» and «Long term fuel trim B1», using the Subaru Select Monitor. NOTE: For detailed operation procedures, refer to "Freeze Frame Data Display For Engine". <Ref. to EN(H4DO)(diag)-57, DISPLAY OF ENGINE FREEZE FRAME DATA, OPERATION, Subaru Select Monitor.> 2) Obtain the sum values of «Short term fuel trim B1» and «Long term fuel trim B1» in each freeze frame data.	Is the sum value of «Short term fuel trim B1» and «Long term fuel trim B1» within ±15% in each freeze frame data?	Go to step **49**.	• More than 15% in each freeze frame data: Go to step **6**. • Less than –15% in any one of freeze frame data: Go to step **34**.
6	**CHECK AIR INTAKE SYSTEM.** Check the installing condition of the air intake system.	Are there holes, loose bolts or disconnection of hose on air intake system?	Repair the air intake system. <Ref. to IN(H4DO)-2, General Description.>	Go to step **7**.
7	**CHECK PURGE CONTROL SOLENOID VALVE.** Check the purge control solenoid valve. <Ref. to EC(H4DO)-24, INSPECTION, Purge Control Solenoid Valve.>	Is the purge control solenoid valve OK?	Go to step **8**.	Replace the faulty purge control solenoid valve. <Ref. to EC(H4DO)-21, Purge Control Solenoid Valve.>

	Step	Check	Yes	No
8	**CHECK FREEZE FRAME DATA.** Read the value of «Stop Light Switch» using Subaru Select Monitor. NOTE: For detailed operation procedures, refer to "Freeze Frame Data Display For Engine". <Ref. to EN(H4DO)(diag)-57, DISPLAY OF ENGINE FREEZE FRAME DATA, OPERATION, Subaru Select Monitor.>	Does the value of «Stop Light Switch» indicate OFF in all freeze frame data?	Go to step **11**.	Go to step **9**.
9	**CHECK CURRENT DATA.** 1) Start the engine and warm up completely. 2) Read the value of «Short term fuel trim B1» both when the brake pedal is released and depressed using Subaru Select Monitor. NOTE: For detailed operation procedures, refer to "Current Data Display For Engine". <Ref. to EN(H4DO)(diag)-45, DISPLAY CURRENT ENGINE DATA, OPERATION, Subaru Select Monitor.>	Does the value of «Short term fuel trim B1» with the brake pedal depressed increase by 10% or more compared to when the pedal is released?	Replace the brake booster. <Ref. to BR-55, Brake Booster.>	Go to step **10**.
10	**CHECK CURRENT DATA.** 1) Start the engine and warm up completely. 2) While reproducing the faulty condition of the vehicle, read the values of «Short term fuel trim B1» and «Long term fuel trim B1» using the Subaru Select Monitor. NOTE: For detailed operation procedures, refer to "Current Data Display For Engine". <Ref. to EN(H4DO)(diag)-45, DISPLAY CURRENT ENGINE DATA, OPERATION, Subaru Select Monitor.> 3) Obtain the sum values of «Short term fuel trim B1» and «Long term fuel trim B1».	Is the sum value of «Short term fuel trim B1» and «Long term fuel trim B1» within ±15%?	Go to step **11**.	Replace the brake booster. <Ref. to BR-55, Brake Booster.>
11	**CHECK IGNITION SYSTEM.** Check the ignition system. <Ref. to EN(H4DO)(diag)-96, IGNITION CONTROL SYSTEM, Diagnostics for Engine Starting Failure.>	Is the ignition system normal?	Go to step **12**.	Repair the ignition system. <Ref. to IG(H4DO)-2, General Description.>
12	**CHECK MASS AIR FLOW AND INTAKE AIR TEMPERATURE SENSOR.** Check the mass air flow and intake air temperature sensor. <Ref. to FU(H4DO)-61, INSPECTION, Mass Air Flow and Intake Air Temperature Sensor.>	Is the mass air flow and intake air temperature sensor normal?	Go to step **13**.	Replace the mass air flow and intake air temperature sensor. <Ref. to FU(H4DO)-60, Mass Air Flow and Intake Air Temperature Sensor.>
13	**CHECK HARNESS BETWEEN ECM AND MASS AIR FLOW AND INTAKE AIR TEMPERATURE SENSOR CONNECTOR.** 1) Turn the ignition switch to OFF. 2) Disconnect the connector from ECM and the mass air flow and intake air temperature sensor. 3) Measure the resistance of harness between ECM connector and the mass air flow and intake air temperature sensor connector. ***Connector & terminal*** ***(B134) No. 16 — (B3) No. 5:*** ***(B134) No. 17 — (B3) No. 4:***	Is the resistance less than 1 Ω?	Go to step **14**.	Repair the open circuit of harness between ECM connector and the mass air flow and intake air temperature sensor connector.

	Step	Check	Yes	No
14	**CHECK HARNESS BETWEEN ECM AND MASS AIR FLOW AND INTAKE AIR TEMPERATURE SENSOR CONNECTOR.** Measure the resistance between the ECM connector and engine ground. ***Connector & terminal*** ***(B134) No. 16 — Engine ground:*** ***(B134) No. 17 — Engine ground:***	Is the resistance 1 MΩ or more?	Go to step **15**.	Repair the ground short circuit of harness between ECM connector and the mass air flow and intake air temperature sensor connector.
15	**CHECK CURRENT DATA.** 1) Start the engine and warm up completely. 2) Using the Subaru Select Monitor, read the value of «Calculated load value», then compare it with that of «Calculated load value» listed in "Engine Current Data Display". <Ref. to EN(H4DO)(diag)-45, DISPLAY CURRENT ENGINE DATA, OPERATION, Subaru Select Monitor.> NOTE: • The value of «Calculated load value» change depending on how the engine internal parts settle in. If the value is out of standard, judge it again by comparing the vehicle with another one with the same specifications and similar conditions such as travel distance. • For detailed operation procedures, refer to "Current Data Display For Engine". <Ref. to EN(H4DO)(diag)-45, DISPLAY CURRENT ENGINE DATA, OPERATION, Subaru Select Monitor.>	Does the value of «Calculated load value» falls between 90 — 110% of the value described in the list?	Go to step **16**.	Replace the mass air flow and intake air temperature sensor. <Ref. to FU(H4DO)-60, Mass Air Flow and Intake Air Temperature Sensor.>
16	**CHECK FRONT OXYGEN (A/F) SENSOR DATA.** 1) Start the engine and warm up completely. 2) Raise the engine speed up to 2,500 rpm and maintain it for approx. three minutes. 3) Release the accelerator pedal and idle the engine. 4) Using «Injection Quantity Control» in «Active Test», read the value of «A/F Sensor #1» at the increase rate of both 12% and –12%. NOTE: • Perform the operation immediately after the engine comes into idling condition, otherwise the front oxygen (A/F) sensor will be cooled. • For detailed operation procedures, refer to the "Active Test". <Ref. to EN(H4DO)(diag)-79, Active Test.>	Does the value of «A/F Sensor #1» change to less than 0.88 at the increase rate of 12%, and to 1.12 or more at the rate of –12%?	Go to step **20**.	Go to step **17**.

	Step	Check	Yes	No
17	**CHECK POWER SUPPLY TO FRONT OXYGEN (A/F) SENSOR.** 1) Turn the ignition switch to OFF. 2) Disconnect the connectors from front oxygen (A/F) sensor. 3) Turn the ignition switch to ON. 4) Measure the voltage between front oxygen (A/F) sensor connector and engine ground. ***Connector & terminal*** ***(E24) No. 2 (+) — Engine ground (–):***	Is the voltage 10 V or more?	Go to step **18**.	Repair the power supply line. NOTE: In this case, repair the following item: • Open circuit in harness between A/F, oxygen sensor relay and front oxygen (A/F) sensor connector • Poor contact of A/F, oxygen sensor relay connector • Poor contact of coupling connector • Malfunction of A/F, oxygen sensor relay
18	**CHECK HARNESS BETWEEN ECM AND FRONT OXYGEN (A/F) SENSOR CONNECTOR.** 1) Turn the ignition switch to OFF. 2) Disconnect the connector from ECM. 3) Measure the resistance of harness between ECM connector and front oxygen (A/F) sensor connector. ***Connector & terminal*** ***(E158) No. 5 — (E24) No. 1:*** ***(E158) No. 33 — (E24) No. 4:*** ***(E158) No. 46 — (E24) No. 3:***	Is the resistance less than 1 Ω?	Go to step **19**.	Repair the open circuit of harness between ECM connector and front oxygen (A/F) sensor connector.
19	**CHECK HARNESS BETWEEN ECM AND FRONT OXYGEN (A/F) SENSOR CONNECTOR.** Measure the resistance between the ECM connector and engine ground. ***Connector & terminal*** ***(E158) No. 5 — Engine ground:*** ***(E158) No. 33 — Engine ground:*** ***(E158) No. 46 — Engine ground:***	Is the resistance 1 MΩ or more?	Go to step **20**.	Repair the short circuit to ground in harness between ECM connector and front oxygen (A/F) sensor connector.
20	**CHECK FREEZE FRAME DATA.** Using the Subaru Select Monitor, read the values in «Coolant Temp.» and «Ambient Temperature». NOTE: For detailed operation procedures, refer to “Freeze Frame Data Display For Engine”. <Ref. to EN(H4DO)(diag)-57, DISPLAY OF ENGINE FREEZE FRAME DATA, OPERATION, Subaru Select Monitor.>	Is the value of «Coolant Temp.» 120°C (248°F) or more? Or, is the value of «Coolant Temp.» lower than «Ambient Temperature» by 15°C (27°F) or more?	Go to step **21**.	Go to step **24**.
21	**CHECK ENGINE COOLANT TEMPERATURE SENSOR.** Check the engine coolant temperature sensor. <Ref. to FU(H4DO)-44, INSPECTION, Engine Coolant Temperature Sensor.>	Is the engine coolant temperature sensor normal?	Go to step **22**.	Replace the engine coolant temperature sensor. <Ref. to FU(H4DO)-43, Engine Coolant Temperature Sensor.>

	Step	Check	Yes	No
22	**CHECK HARNESS BETWEEN ECM AND ENGINE COOLANT TEMPERATURE SENSOR CONNECTOR.** 1) Turn the ignition switch to OFF. 2) Disconnect the connectors from ECM and engine coolant temperature sensor. 3) Measure the resistance of harness between ECM connector and engine coolant temperature sensor connector. ***Connector & terminal*** ***(E158) No. 34 — (E8) No. 1:*** ***(E158) No. 43 — (E8) No. 2:***	Is the resistance less than 1 Ω?	Go to step **23**.	Repair the open circuit of the harness between the ECM connector and engine coolant temperature sensor connector.
23	**CHECK HARNESS BETWEEN ECM AND ENGINE COOLANT TEMPERATURE SENSOR CONNECTOR.** Measure the resistance between the ECM connector and engine ground. ***Connector & terminal*** ***(E158) No. 43 — Engine ground:*** ***(E158) No. 34 — Engine ground:***	Is the resistance 1 MΩ or more?	Go to step **24**.	Repair the short circuit to ground in harness between ECM connector and engine coolant temperature sensor connector.
24	**CHECK FREEZE FRAME DATA.** Using the Subaru Select Monitor, read the value in «Evap Purge Flow». NOTE: For detailed operation procedures, refer to "Freeze Frame Data Display For Engine". <Ref. to EN(H4DO)(diag)-57, DISPLAY OF ENGINE FREEZE FRAME DATA, OPERATION, Subaru Select Monitor.>	Is the value of «Evap Purge Flow» 0% in all freeze frame data?	Go to step **30**.	Go to step **25**.
25	**CHECK PURGE CONTROL SOLENOID VALVE.** 1) Select «CPC Solenoid Valve» from "Actuator ON/OFF Operation" in "Active Test". NOTE: For detailed operation procedures, refer to the "Active Test". <Ref. to EN(H4DO)(diag)-79, Active Test.> 2) Check if the ventilation changes according to ON/OFF switching operation.	Does the ventilation of purge control solenoid valve change correctly?	Go to step **29**.	Go to step **26**.
26	**CHECK POWER SUPPLY TO PURGE CONTROL SOLENOID VALVE CONNECTOR.** 1) Turn the ignition switch to OFF. 2) Disconnect the connector from the purge control solenoid valve. 3) Turn the ignition switch to ON. 4) Measure the voltage between purge control solenoid valve connector and engine ground. ***Connector & terminal*** ***(E4) No. 1 (+) — Engine ground (–):***	Is the voltage 10 V or more?	Go to step **27**.	Repair the power supply circuit.
27	**CHECK HARNESS BETWEEN ECM AND PURGE CONTROL SOLENOID VALVE CONNECTOR.** 1) Turn the ignition switch to OFF. 2) Disconnect the connector from ECM. 3) Measure the resistance of harness between ECM connector and purge control solenoid valve connector. ***Connector & terminal*** ***(E158) No. 51 — (E4) No. 2:***	Is the resistance less than 1 Ω?	Go to step **28**.	Repair the open circuit in harness between ECM connector and purge control solenoid valve connector.

	Step	Check	Yes	No
28	**CHECK HARNESS BETWEEN ECM AND PURGE CONTROL SOLENOID VALVE CONNECTOR.** Measure the resistance between the purge control solenoid valve connector and engine ground. ***Connector & terminal*** ***(E4) No. 2 — Engine ground:***	Is the resistance 1 MΩ or more?	Go to step **29**.	Repair the ground short circuit of harness between ECM connector and purge control solenoid valve 1 connector.
29	**CHECK FOR POOR CONTACT.** Check for poor contact of ECM connector.	Is there poor contact of ECM connector?	Repair the poor contact of ECM connector.	Replace the ECM. <Ref. to FU(H4DO)-82, Engine Control Module (ECM).>
30	**CHECK OF FUEL PUMP.** 1) Select «Fuel Pump» from "Actuator ON/OFF Operation" in "Active Test". NOTE: For detailed operation procedures, refer to the "Active Test". <Ref. to EN(H4DO)(diag)-79, Active Test.> 2) Check if operating sound occurs in the fuel pump according to ON/OFF switching operation.	Does the fuel pump emit operating sound?	Go to step **32**.	Go to step **31**.
31	**CHECK OF FUEL PUMP.** Check fuel pump. <Ref. to FU(H4DO)-121, INSPECTION, Fuel Pump.>	Is the fuel pump normal?	Check fuel pump system. <Ref. to FU(H4DO)-116, Fuel Pump.>	Replace the fuel pump. <Ref. to FU(H4DO)-116, Fuel Pump.>
32	**CHECK FUEL TANK.** Check if any foreign matters such as iron powder exist in the fuel tank.	Is there any foreign matter in the fuel tank?	Remove foreign matter from the fuel tank.	Go to step **33**.
33	**CHECK FUEL PRESSURE.** **WARNING:** **Place "NO OPEN FLAMES" signs near the working area.** **CAUTION:** **Be careful not to spill fuel.** Measure the fuel pressure. <Ref. to ME(H4DO)-31, INSPECTION, Fuel Pressure.> **CAUTION:** **Before attaching/detaching a fuel pressure gauge, release the fuel pressure.**	Is the measured value 340 — 400 kPa (3.5 — 4.1 kgf/cm^2, 49 — 58 psi)?	Go to step **34**.	Check the fuel pump and fuel delivery line. <Ref. to FU(H4DO)-121, INSPECTION, Fuel Pump.> <Ref. to FU(H4DO)-154, INSPECTION, Fuel Delivery and Evaporation Lines.>
34	**CHECK IGNITION SYSTEM.** Check the ignition system. <Ref. to EN(H4DO)(diag)-96, IGNITION CONTROL SYSTEM, Diagnostics for Engine Starting Failure.>	Is the ignition system normal?	Go to step **35**.	Repair the ignition system. <Ref. to IG(H4DO)-2, General Description.>

	Step	Check	Yes	No
35	**CHECK FREEZE FRAME DATA.** Using the Subaru Select Monitor, read the value of «Calculated load value», then compare it with that of «Calculated load value» listed in "Engine Current Data Display". <Ref. to EN(H4DO)(diag)-45, DISPLAY CURRENT ENGINE DATA, OPERATION, Subaru Select Monitor.> NOTE: • The value of «Calculated load value» change depending on how the engine internal parts settle in. If the value is out of standard, judge it again by comparing the vehicle with another one with the same specifications and similar conditions such as travel distance. • For detailed operation procedures, refer to "Freeze Frame Data Display For Engine". <Ref. to EN(H4DO)(diag)-57, DISPLAY OF ENGINE FREEZE FRAME DATA, OPERATION, Subaru Select Monitor.>	Is the value of «Calculated load value» 110% or more of the value described in the list?	Go to step **36**.	Go to step **40**.
36	**CHECK MASS AIR FLOW AND INTAKE AIR TEMPERATURE SENSOR.** Check the mass air flow and intake air temperature sensor. <Ref. to FU(H4DO)-61, INSPECTION, Mass Air Flow and Intake Air Temperature Sensor.>	Is the mass air flow and intake air temperature sensor normal?	Go to step **37**.	Replace the mass air flow and intake air temperature sensor. <Ref. to FU(H4DO)-60, Mass Air Flow and Intake Air Temperature Sensor.>
37	**CHECK HARNESS BETWEEN ECM AND MASS AIR FLOW AND INTAKE AIR TEMPERATURE SENSOR CONNECTOR.** 1) Turn the ignition switch to OFF. 2) Disconnect the connector from ECM and the mass air flow and intake air temperature sensor. 3) Measure the resistance of harness between ECM connector and the mass air flow and intake air temperature sensor connector. ***Connector & terminal*** ***(B134) No. 16 — (B3) No. 3:*** ***(B134) No. 17 — (B3) No. 4:***	Is the resistance less than 1 Ω?	Go to step **38**.	Repair the open circuit of harness between ECM connector and the mass air flow and intake air temperature sensor connector.
38	**CHECK HARNESS BETWEEN ECM AND MASS AIR FLOW AND INTAKE AIR TEMPERATURE SENSOR CONNECTOR.** Measure the resistance between the ECM connector and engine ground. ***Connector & terminal*** ***(B134) No. 16 — Engine ground:*** ***(B134) No. 17 — Engine ground:***	Is the resistance 1 MΩ or more?	Go to step **39**.	Repair the ground short circuit of harness between ECM connector and the mass air flow and intake air temperature sensor connector.

	Step	Check	Yes	No
39	**CHECK CURRENT DATA.** 1) Start the engine and warm up completely. 2) Using the Subaru Select Monitor, read the value of «Calculated load value», then compare it with that of «Calculated load value» listed in "Engine Current Data Display". <Ref. to EN(H4DO)(diag)-45, DISPLAY CURRENT ENGINE DATA, OPERATION, Subaru Select Monitor.> NOTE: • The value of «Calculated load value» change depending on how the engine internal parts settle in. If the value is out of standard, judge it again by comparing the vehicle with another one with the same specifications and similar conditions such as travel distance. • For detailed operation procedures, refer to "Current Data Display For Engine". <Ref. to EN(H4DO)(diag)-45, DISPLAY CURRENT ENGINE DATA, OPERATION, Subaru Select Monitor.>	Does the value of «Calculated load value» falls between 90 — 110% of the value described in the list?	Go to step **40**.	Replace the mass air flow and intake air temperature sensor. <Ref. to FU(H4DO)-60, Mass Air Flow and Intake Air Temperature Sensor.>
40	**CHECK CURRENT DATA.** 1) Start the engine and warm up completely. 2) Raise the engine speed up to 2,500 rpm and maintain it for approx. three minutes. 3) Release the accelerator pedal and idle the engine. 4) Using «Injection Quantity Control» in «Active Test», read the value of «A/F Sensor #1» at the increase rate of both 12% and –12%. NOTE: • Perform the operation immediately after the engine comes into idling condition, otherwise the front oxygen (A/F) sensor will be cooled. • For detailed operation procedures, refer to the "Active Test". <Ref. to EN(H4DO)(diag)-79, Active Test.>	Does the value of «A/F Sensor #1» change to less than 0.88 at the increase rate of 12%, and to 1.12 or more at the rate of –12%?	Go to step **45**.	Go to step **41**.
41	**CHECK FREEZE FRAME DATA.** Read the value of «A/F Sensor #1 Resistance» using the Subaru Select Monitor. NOTE: For detailed operation procedures, refer to "Freeze Frame Data Display For Engine". <Ref. to EN(H4DO)(diag)-57, DISPLAY OF ENGINE FREEZE FRAME DATA, OPERATION, Subaru Select Monitor.>	Is the value of «A/F Sensor #1 Resistance» 500 Ω or more?	Replace the front oxygen (A/F) sensor. <Ref. to FU(H4DO)-76, Front Oxygen (A/F) Sensor.>	Go to step **42**.

	Step	Check	Yes	No
42	**CHECK POWER SUPPLY TO FRONT OXYGEN (A/F) SENSOR.** 1) Turn the ignition switch to OFF. 2) Disconnect the connectors from front oxygen (A/F) sensor. 3) Turn the ignition switch to ON. 4) Measure the voltage between front oxygen (A/F) sensor connector and engine ground. ***Connector & terminal*** ***(E24) No. 2 (+) — Engine ground (–):***	Is the voltage 10 V or more?	Go to step **43**.	Repair the power supply line. NOTE: In this case, repair the following item: • Open circuit in harness between A/F, oxygen sensor relay and front oxygen (A/F) sensor connector • Poor contact of A/F, oxygen sensor relay connector • Poor contact of coupling connector • Malfunction of A/F, oxygen sensor relay
43	**CHECK HARNESS BETWEEN ECM AND FRONT OXYGEN (A/F) SENSOR CONNECTOR.** 1) Turn the ignition switch to OFF. 2) Disconnect the connector from ECM. 3) Measure the resistance of harness between ECM connector and front oxygen (A/F) sensor connector. ***Connector & terminal*** ***(E158) No. 5 — (E24) No. 1:*** ***(E158) No. 33 — (E24) No. 4:*** ***(E158) No. 46 — (E24) No. 3:***	Is the resistance less than 1 Ω?	Go to step **44**.	Repair the open circuit of harness between ECM connector and front oxygen (A/F) sensor connector.
44	**CHECK HARNESS BETWEEN ECM AND FRONT OXYGEN (A/F) SENSOR CONNECTOR.** Measure the resistance between the ECM connector and engine ground. ***Connector & terminal*** ***(E158) No. 5 — Engine ground:*** ***(E158) No. 33 — Engine ground:*** ***(E158) No. 46 — Engine ground:***	Is the resistance 1 MΩ or more?	Go to step **45**.	Repair the short circuit to ground in harness between ECM connector and front oxygen (A/F) sensor connector.
45	**CHECK FREEZE FRAME DATA.** Using the Subaru Select Monitor, read the values in «Coolant Temp.» and «Ambient Temperature». NOTE: For detailed operation procedures, refer to “Freeze Frame Data Display For Engine”. <Ref. to EN(H4DO)(diag)-57, DISPLAY OF ENGINE FREEZE FRAME DATA, OPERATION, Subaru Select Monitor.>	Is the value of «Coolant Temp.» 120°C (248°F) or more? Or, is the value of «Coolant Temp.» lower than «Ambient Temperature» by 15°C (27°F) or more?	Go to step **46**.	Perform the Clear Memory Mode to complete. <Ref. to EN(H4DO)(diag)-78, Clear Memory Mode.>
46	**CHECK ENGINE COOLANT TEMPERATURE SENSOR.** Check the engine coolant temperature sensor. <Ref. to FU(H4DO)-44, INSPECTION, Engine Coolant Temperature Sensor.>	Is the engine coolant temperature sensor normal?	Go to step **47**.	Replace the engine coolant temperature sensor. <Ref. to FU(H4DO)-43, Engine Coolant Temperature Sensor.>

	Step	Check	Yes	No
47	**CHECK HARNESS BETWEEN ECM AND ENGINE COOLANT TEMPERATURE SENSOR CONNECTOR.** 1) Turn the ignition switch to OFF. 2) Disconnect the connectors from ECM and engine coolant temperature sensor. 3) Measure the resistance of harness between ECM connector and engine coolant temperature sensor connector. ***Connector & terminal*** ***(E158) No. 34 — (E8) No. 1:*** ***(E158) No. 43 — (E8) No. 2:***	Is the resistance less than 1 Ω?	Go to step **48**.	Repair the open circuit of the harness between the ECM connector and engine coolant temperature sensor connector.
48	**CHECK HARNESS BETWEEN ECM AND ENGINE COOLANT TEMPERATURE SENSOR CONNECTOR.** Measure the resistance between the ECM connector and engine ground. ***Connector & terminal*** ***(E158) No. 43 — Engine ground:*** ***(E158) No. 34 — Engine ground:***	Is the resistance 1 MΩ or more?	Even if DTC is detected, it has returned to a normal condition at this time. Reproduce the failure, and then perform the diagnosis again. NOTE: In this case, temporary poor contact of connector, temporary open or short circuit of harness may be the cause.	Repair the short circuit to ground in harness between ECM connector and engine coolant temperature sensor connector.
49	**CHECK IGNITION SYSTEM.** Check the ignition system. <Ref. to EN(H4DO)(diag)-96, IGNITION CONTROL SYSTEM, Diagnostics for Engine Starting Failure.>	Is the ignition system normal?	Go to step **50**.	Repair the ignition system. <Ref. to IG(H4DO)-2, General Description.>

	Step	Check	Yes	No
50	**CHECK FREEZE FRAME DATA.** 1) Using Subaru Select Monitor, read the values of «Idle Mass Air Flow Feedback correct», «ISC Learning Value» and «Idle dirty throttle correct» in freeze frame data. NOTE: For detailed operation procedures, refer to "Freeze Frame Data Display For Engine". <Ref. to EN(H4DO)(diag)-57, DISPLAY OF ENGINE FREEZE FRAME DATA, OPERATION, Subaru Select Monitor.> 2) Obtain the sum value of «Idle Mass Air Flow Feedback correct», «ISC Learning Value» and «Idle dirty throttle correct». 3) Start the engine and warm up completely. 4) Using Subaru Select Monitor, read the values of «Idle Mass Air Flow Feedback correct», «ISC Learning Value» and «Idle dirty throttle correct» in current data at normal idling. NOTE: For detailed operation procedures, refer to "Current Data Display For Engine". <Ref. to EN(H4DO)(diag)-45, DISPLAY CURRENT ENGINE DATA, OPERATION, Subaru Select Monitor.> 5) Obtain the sum value of «Idle Mass Air Flow Feedback correct», «ISC Learning Value» and «Idle dirty throttle correct».	Is the sum value of freeze frame data less than 80% of the sum value of current data?	Go to step **51**.	Go to step **53**.
51	**CHECK AIR INTAKE SYSTEM.** Check the installing condition of the air intake system.	Are there holes, loose bolts or disconnection of hose on air intake system?	Repair the air intake system. <Ref. to IN(H4DO)-2, General Description.>	Go to step **52**.
52	**CHECK AIR INTAKE SYSTEM.** Check the air intake system related parts. • Brake booster: <Ref. to BR-60, INSPECTION, Brake Booster.> • Mass air flow and intake air temperature sensor: <Ref. to FU(H4DO)-61, INSPECTION, Mass Air Flow and Intake Air Temperature Sensor.> • PCV hose: <Ref. to EC(H4DO)-63, INSPECTION, PCV Hose.> • PCV valve: <Ref. to EC(H4DO)-66, INSPECTION, PCV Valve.> • Purge control solenoid valve: <Ref. to EC(H4DO)-24, INSPECTION, Purge Control Solenoid Valve.>	Are all of the air intake system related parts normal?	Go to step **62**.	Replace the parts if defective.

	Step	Check	Yes	No
53	**CHECK FREEZE FRAME DATA.** 1) Using Subaru Select Monitor, read the values of «VVT Adv. Ang. Amount R», «VVT Advance Target Angle Amount R» and «VVT Adv. Ang. Amount L» and «VVT Advance Target Angle Amount L». NOTE: For detailed operation procedures, refer to "Freeze Frame Data Display For Engine". <Ref. to EN(H4DO)(diag)-57, DISPLAY OF ENGINE FREEZE FRAME DATA, OPERATION, Subaru Select Monitor.> 2) Using Subaru Select Monitor, compare the respective values between the followings: «VVT Adv. Ang. Amount R», «VVT Advance Target Angle Amount R», «VVT Adv. Ang. Amount L» and «VVT Advance Target Angle Amount L».	Does all of the advance angle amount and retard angle amount synchronize with their target values?	Go to step **62**.	Diagnose the part that does not synchronize. • Intake RH: Go to step **54**. • Intake LH: Go to step **58**.
54	**CHECK POWER SUPPLY TO THE INTAKE OIL CONTROL SOLENOID RH.** 1) Turn the ignition switch to OFF. 2) Disconnect the connector from the intake oil control solenoid RH. 3) Turn the ignition switch to ON. 4) Measure the voltage between intake oil control solenoid RH connector and engine ground. ***Connector & terminal*** ***(E38) No. 1 (+) — Engine ground (–):***	Is the voltage 10 V or more?	Go to step **55**.	Repair the power supply circuit.
55	**CHECK HARNESS BETWEEN ECM AND INTAKE OIL CONTROL SOLENOID RH CONNECTOR.** 1) Turn the ignition switch to OFF. 2) Disconnect the connector from ECM. 3) Measure the resistance of harness between ECM connector and intake oil control solenoid RH. ***Connector & terminal*** ***(E158) No. 20 — (E38) No. 2:***	Is the resistance less than 1 Ω?	Go to step **56**.	Repair the open circuit in harness between ECM connector and intake oil control solenoid RH connector.
56	**CHECK HARNESS BETWEEN ECM AND INTAKE OIL CONTROL SOLENOID RH CONNECTOR.** Measure the resistance between intake oil control solenoid RH connector and engine ground. ***Connector & terminal*** ***(E38) No. 2 — Engine ground:***	Is the resistance 1 MΩ or more?	Go to step **57**.	Repair the short circuit to ground in harness between ECM connector and intake oil control solenoid RH connector.
57	**CHECK INTAKE OIL CONTROL SOLENOID RH.** Check the intake oil control solenoid RH. <Ref. to FU(H4DO)-55, INSPECTION, Oil Control Solenoid.>	Is the intake oil control solenoid RH normal?	Replace the intake cam sprocket RH. <Ref. to ME(H4DO)-118, Cam Sprocket.>	Replace the intake oil control solenoid RH. <Ref. to FU(H4DO)-54, Oil Control Solenoid.>
58	**CHECK POWER SUPPLY TO THE INTAKE OIL CONTROL SOLENOID LH.** 1) Turn the ignition switch to OFF. 2) Disconnect the connector from the intake oil control solenoid LH. 3) Turn the ignition switch to ON. 4) Measure the voltage between intake oil control solenoid LH connector and engine ground. ***Connector & terminal*** ***(E37) No. 1 (+) — Engine ground (–):***	Is the voltage 10 V or more?	Go to step **59**.	Repair the power supply circuit.

	Step	Check	Yes	No
59	**CHECK HARNESS BETWEEN ECM AND INTAKE OIL CONTROL SOLENOID LH CONNECTOR.** 1) Turn the ignition switch to OFF. 2) Disconnect the connector from ECM. 3) Measure the resistance of harness between ECM connector and intake oil control solenoid LH. ***Connector & terminal*** ***(E158) No. 6 — (E37) No. 2:***	Is the resistance less than 1 Ω?	Go to step **60**.	Repair the open circuit in harness between ECM connector and intake oil control solenoid LH connector.
60	**CHECK HARNESS BETWEEN ECM AND INTAKE OIL CONTROL SOLENOID LH CONNECTOR.** Measure the resistance between intake oil control solenoid LH connector and engine ground. ***Connector & terminal*** ***(E37) No. 2 — Engine ground:***	Is the resistance 1 MΩ or more?	Go to step **61**.	Repair the short circuit to ground in harness between ECM connector and intake oil control solenoid LH connector.
61	**CHECK INTAKE OIL CONTROL SOLENOID LH.** Check the intake oil control solenoid LH. <Ref. to FU(H4DO)-55, INSPECTION, Oil Control Solenoid.>	Is the intake oil control solenoid LH normal?	Replace the intake cam sprocket LH. <Ref. to ME(H4DO)-118, Cam Sprocket.>	Replace the intake oil control solenoid LH. <Ref. to FU(H4DO)-54, Oil Control Solenoid.>
62	**CHECK ENGINE COOLANT TEMPERATURE SENSOR.** Check the engine coolant temperature sensor. <Ref. to FU(H4DO)-44, INSPECTION, Engine Coolant Temperature Sensor.>	Is the engine coolant temperature sensor normal?	Go to step **63**.	Replace the engine coolant temperature sensor. <Ref. to FU(H4DO)-43, Engine Coolant Temperature Sensor.>
63	**CHECK HARNESS BETWEEN ECM AND ENGINE COOLANT TEMPERATURE SENSOR CONNECTOR.** 1) Turn the ignition switch to OFF. 2) Disconnect the connectors from ECM and engine coolant temperature sensor. 3) Measure the resistance of harness between ECM connector and engine coolant temperature sensor connector. ***Connector & terminal*** ***(E158) No. 34 — (E8) No. 1:*** ***(E158) No. 43 — (E8) No. 2:***	Is the resistance less than 1 Ω?	Go to step **64**.	Repair the open circuit of the harness between the ECM connector and engine coolant temperature sensor connector.
64	**CHECK HARNESS BETWEEN ECM AND ENGINE COOLANT TEMPERATURE SENSOR CONNECTOR.** Measure the resistance between the ECM connector and engine ground. ***Connector & terminal*** ***(E158) No. 43 — Engine ground:*** ***(E158) No. 34 — Engine ground:***	Is the resistance 1 MΩ or more?	Go to step **65**.	Repair the short circuit to ground in harness between ECM connector and engine coolant temperature sensor connector.
65	**CHECK MASS AIR FLOW AND INTAKE AIR TEMPERATURE SENSOR.** Check the mass air flow and intake air temperature sensor. <Ref. to FU(H4DO)-61, INSPECTION, Mass Air Flow and Intake Air Temperature Sensor.>	Is the mass air flow and intake air temperature sensor normal?	Go to step **66**.	Replace the mass air flow and intake air temperature sensor. <Ref. to FU(H4DO)-60, Mass Air Flow and Intake Air Temperature Sensor.>

	Step	Check	Yes	No
66	**CHECK MANIFOLD ABSOLUTE PRESSURE SENSOR.** Check the manifold absolute pressure sensor. <Ref. to FU(H4DO)-63, Manifold Absolute Pressure Sensor.>	Is the manifold absolute pressure sensor normal?	Perform the Clear Memory Mode to complete. <Ref. to EN(H4DO)(diag)-78, Clear Memory Mode.>	Check the manifold absolute pressure sensor. <Ref. to FU(H4DO)-63, Manifold Absolute Pressure Sensor.> Go to step **67**.
67	**CHECK POWER SUPPLY CIRCUIT OF FUEL INJECTOR.** 1) Turn the ignition switch to OFF. 2) Disconnect the connector from fuel injector. 3) Turn the ignition switch to ON. 4) Measure the voltage between fuel injector connector and the engine ground. ***Connector & terminal*** ***(E5) No. 2 (+) — Engine ground (–):*** ***(E16) No. 2 (+) — Engine ground (–):*** ***(E6) No. 2 (+) — Engine ground (–):*** ***(E17) No. 2 (+) — Engine ground (–):***	Is the voltage 10 V or more?	Go to step **68**.	Repair the power supply circuit.
68	**CHECK HARNESS BETWEEN ECM AND FUEL INJECTOR CONNECTOR.** 1) Turn the ignition switch to OFF. 2) Disconnect the connectors from ECM and fuel injectors. 3) Measure the resistance of harness between ECM connector and fuel injector connector. ***Connector & terminal*** ***#1 (E158) No. 23 — (E5) No. 1:*** ***#2 (E158) No. 8 — (E16) No. 1:*** ***#3 (E158) No. 9 — (E6) No. 1:*** ***#4 (E158) No. 22 — (E17) No. 1:***	Is the resistance less than 1 Ω?	Go to step **69**.	Repair the open circuit of the harness between the ECM connector and fuel injector connector.
69	**CHECK HARNESS BETWEEN ECM AND FUEL INJECTOR CONNECTOR.** Measure the resistance between the ECM connector and engine ground. ***Connector & terminal*** ***#1 (E158) No. 23 — Engine ground:*** ***#2 (E158) No. 8 — Engine ground:*** ***#3 (E158) No. 9 — Engine ground:*** ***#4 (E158) No. 22 — Engine ground:***	Is the resistance 1 MΩ or more?	Go to step **70**.	Repair the short circuit to ground in harness between ECM connector and fuel injector connector.
70	**CHECK IGNITION SYSTEM.** Check the ignition system. <Ref. to EN(H4DO)(diag)-96, IGNITION CONTROL SYSTEM, Diagnostics for Engine Starting Failure.>	Is the ignition system normal?	Go to step **71**.	Repair the ignition system. <Ref. to IG(H4DO)-2, General Description.>
71	**CHECK FREEZE FRAME DATA.** Using the Subaru Select Monitor, read the value of «A/C Compressor Signal». NOTE: For detailed operation procedures, refer to “Freeze Frame Data Display For Engine”. <Ref. to EN(H4DO)(diag)-57, DISPLAY OF ENGINE FREEZE FRAME DATA, OPERATION, Subaru Select Monitor.>	Is the value of «A/C Compressor Signal» ON output?	Go to step **72**.	Go to step **73**.

	Step	Check	Yes	No
72	**CHECK FREEZE FRAME DATA.** Using the Subaru Select Monitor, read the value of «Idle A/C load correct». NOTE: For detailed operation procedures, refer to “Freeze Frame Data Display For Engine”. <Ref. to EN(H4DO)(diag)-57, DISPLAY OF ENGINE FREEZE FRAME DATA, OPERATION, Subaru Select Monitor.>	Is the value of «Idle A/C load correct» increasing?	Check the air conditioner. <Ref. to AC(diag)-9, Diagnostics with Phenomenon.> <Ref. to BC(diag)-2, PROCEDURE, Basic Diagnostic Procedure.>	Go to step **73**.
73	**CHECK FREEZE FRAME DATA.** 1) Using the Subaru Select Monitor, read the value of «Electric Load Feedback Val». NOTE: For detailed operation procedures, refer to “Freeze Frame Data Display For Engine”. <Ref. to EN(H4DO)(diag)-57, DISPLAY OF ENGINE FREEZE FRAME DATA, OPERATION, Subaru Select Monitor.> 2) Compare the value of «Electric Load Feedback Val» with that of «Idle Mass Air Flow», which is described in “Engine Current Data Display”. <Ref. to EN(H4DO)(diag)-45, DISPLAY CURRENT ENGINE DATA, OPERATION, Subaru Select Monitor.> NOTE: For detailed operation procedures, refer to “Current Data Display For Engine”. <Ref. to EN(H4DO)(diag)-45, DISPLAY CURRENT ENGINE DATA, OPERATION, Subaru Select Monitor.>	Is the value of «Electric Load Feedback Val» 20% or more than «Idle Mass Air Flow»?	Check the generator and power assisted system. <Ref. to SC(H4DO)-58, INSPECTION, Generator.> <Ref. to PS(diag)-2, Basic Diagnostic Procedure.>	Go to step **74**.
74	**CHECK FREEZE FRAME DATA.** 1) Using the Subaru Select Monitor, read the values of «Vehicle Speed», «Engine Speed» and «AT turbine speed». NOTE: For detailed operation procedures, refer to “Freeze Frame Data Display For Engine”. <Ref. to EN(H4DO)(diag)-57, DISPLAY OF ENGINE FREEZE FRAME DATA, OPERATION, Subaru Select Monitor.>	Is there any freeze frame data indicating that the value of «Vehicle Speed» is less than 6 km/h (18.6 MPH), and that the difference in values between «Engine Speed» and «AT turbine speed» is less than 100 rpm?	Repair the CVT. <Ref. to CVT(TR580)-3, General Description.>	Go to step **75**.
75	**CHECK DTC.**	Is DTC of CVT displayed? <Ref. to CVT(diag)-25, OPERATION, Read Diagnostic Trouble Code (DTC).>	Check the appropriate DTC using the “List of Diagnostic Trouble Code (DTC)”. <Ref. to CVT(diag)-44, List of Diagnostic Trouble Code (DTC).>	Even if DTC is detected, it has returned to a normal condition at this time. Reproduce the failure, and then perform the diagnosis again. NOTE: In this case, temporary poor contact of connector, temporary open or short circuit of harness may be the cause.

	Step	Check	Yes	No
76	**CHECK FREEZE FRAME DATA.** Using the Subaru Select Monitor, read the values in «Calculated load value» and «Relative Throttle Pos.». NOTE: For detailed operation procedures, refer to "Freeze Frame Data Display For Engine". <Ref. to EN(H4DO)(diag)-57, DISPLAY OF ENGINE FREEZE FRAME DATA, OPERATION, Subaru Select Monitor.>	Is the value of «Calculated load value» decreasing while that of «Relative Throttle Pos.» is increasing?	Go to step **77**.	Go to step **82**.
77	**CHECK MASS AIR FLOW AND INTAKE AIR TEMPERATURE SENSOR.** Check the mass air flow and intake air temperature sensor. <Ref. to FU(H4DO)-61, INSPECTION, Mass Air Flow and Intake Air Temperature Sensor.>	Is the mass air flow and intake air temperature sensor normal?	Go to step **78**.	Replace the mass air flow and intake air temperature sensor. <Ref. to FU(H4DO)-60, Mass Air Flow and Intake Air Temperature Sensor.>
78	**CHECK HARNESS BETWEEN ECM AND MASS AIR FLOW AND INTAKE AIR TEMPERATURE SENSOR CONNECTOR.** 1) Turn the ignition switch to OFF. 2) Disconnect the connector from ECM and the mass air flow and intake air temperature sensor. 3) Measure the resistance of harness between ECM connector and the mass air flow and intake air temperature sensor connector. ***Connector & terminal*** ***(B134) No. 16 — (B3) No. 5:*** ***(B134) No. 17 — (B3) No. 4:***	Is the resistance less than 1 Ω?	Go to step **79**.	Repair the open circuit of harness between ECM connector and the mass air flow and intake air temperature sensor connector.
79	**CHECK HARNESS BETWEEN ECM AND MASS AIR FLOW AND INTAKE AIR TEMPERATURE SENSOR CONNECTOR.** Measure the resistance between the ECM connector and engine ground. ***Connector & terminal*** ***(B134) No. 16 — Engine ground:*** ***(B134) No. 17 — Engine ground:***	Is the resistance 1 MΩ or more?	Go to step **80**.	Repair the ground short circuit of harness between ECM connector and the mass air flow and intake air temperature sensor connector.
80	**CHECK CURRENT DATA.** 1) Start the engine and warm up completely. 2) Using the Subaru Select Monitor, read the value of «Calculated load value», then compare it with that of «Calculated load value» listed in "Engine Current Data Display". <Ref. to EN(H4DO)(diag)-45, DISPLAY CURRENT ENGINE DATA, OPERATION, Subaru Select Monitor.> NOTE: • The value of «Calculated load value» change depending on how the engine internal parts settle in. If the value is out of standard, judge it again by comparing the vehicle with another one with the same specifications and similar conditions such as travel distance. • For detailed operation procedures, refer to "Current Data Display For Engine". <Ref. to EN(H4DO)(diag)-45, DISPLAY CURRENT ENGINE DATA, OPERATION, Subaru Select Monitor.>	Does the value of «Calculated load value» falls between 90 — 110% of the value described in the list?	Go to step **81**.	Replace the mass air flow and intake air temperature sensor. <Ref. to FU(H4DO)-60, Mass Air Flow and Intake Air Temperature Sensor.>

	Step	Check	Yes	No
81	**CHECK POWER SUPPLY CIRCUIT OF FUEL INJECTOR.** 1) Turn the ignition switch to OFF. 2) Disconnect the connector from fuel injector. 3) Turn the ignition switch to ON. 4) Measure the voltage between fuel injector connector and the engine ground. ***Connector & terminal*** ***(E5) No. 2 (+) — Engine ground (–):*** ***(E16) No. 2 (+) — Engine ground (–):*** ***(E6) No. 2 (+) — Engine ground (–):*** ***(E17) No. 2 (+) — Engine ground (–):***	Is the voltage 10 V or more?	Go to step **82**.	Repair the power supply circuit.
82	**CHECK HARNESS BETWEEN ECM AND FUEL INJECTOR CONNECTOR.** 1) Turn the ignition switch to OFF. 2) Disconnect the connectors from ECM and fuel injectors. 3) Measure the resistance of harness between ECM connector and fuel injector connector. ***Connector & terminal*** ***#1 (E158) No. 23 — (E5) No. 1:*** ***#2 (E158) No. 8 — (E16) No. 1:*** ***#3 (E158) No. 9 — (E6) No. 1:*** ***#4 (E158) No. 22 — (E17) No. 1:***	Is the resistance less than 1 Ω?	Go to step **83**.	Repair the open circuit of the harness between the ECM connector and fuel injector connector.
83	**CHECK HARNESS BETWEEN ECM AND FUEL INJECTOR CONNECTOR.** Measure the resistance between the ECM connector and engine ground. ***Connector & terminal*** ***#1 (E158) No. 23 — Engine ground:*** ***#2 (E158) No. 8 — Engine ground:*** ***#3 (E158) No. 9 — Engine ground:*** ***#4 (E158) No. 22 — Engine ground:***	Is the resistance 1 MΩ or more?	Go to step **84**.	Repair the short circuit to ground in harness between ECM connector and fuel injector connector.
84	**CHECK IGNITION SYSTEM.** Check the ignition system. <Ref. to EN(H4DO)(diag)-96, IGNITION CONTROL SYSTEM, Diagnostics for Engine Starting Failure.>	Is the ignition system normal?	Go to step **85**.	Repair the ignition system. <Ref. to IG(H4DO)-2, General Description.>
85	**CHECK OF FUEL PUMP.** 1) Select «Fuel Pump» from “Actuator ON/OFF Operation” in “Active Test”. NOTE: For detailed operation procedures, refer to the “Active Test”. <Ref. to EN(H4DO)(diag)-79, Active Test.> 2) Check if operating sound occurs in the fuel pump according to ON/OFF switching operation.	Does the fuel pump emit operating sound?	Go to step **87**.	Go to step **86**.
86	**CHECK OF FUEL PUMP.** Check fuel pump. <Ref. to FU(H4DO)-121, INSPECTION, Fuel Pump.>	Is the fuel pump normal?	Check fuel pump system. <Ref. to FU(H4DO)-116, Fuel Pump.>	Replace the fuel pump. <Ref. to FU(H4DO)-116, Fuel Pump.>
87	**CHECK FUEL TANK.** Check if any foreign matters such as iron powder exist in the fuel tank.	Is there any foreign matter in the fuel tank?	Remove foreign matter from the fuel tank.	Go to step **88**.

Step		Check	Yes	No
88	**CHECK FUEL PRESSURE.** **WARNING:** **Place "NO OPEN FLAMES" signs near the working area.** **CAUTION:** **Be careful not to spill fuel.** Measure the fuel pressure. <Ref. to ME(H4DO)-31, INSPECTION, Fuel Pressure.> **CAUTION:** **Before attaching/detaching a fuel pressure gauge, release the fuel pressure.**	Is the measured value 340 — 400 kPa (3.5 — 4.1 kgf/cm^2, 49 — 58 psi)?	Go to step **89**.	Check the fuel pump and fuel delivery line. <Ref. to FU(H4DO)-121, INSPECTION, Fuel Pump.> <Ref. to FU(H4DO)-154, INSPECTION, Fuel Delivery and Evaporation Lines.>
89	**CHECK ENGINE RUNNING CONDITION.** Check the engine running condition using "Roughness monitor" in the Subaru Select Monitor. NOTE: For detailed operation procedures, refer to "Application help".	Is there a large difference in the speed between each cylinder?	It is possible that the compression pressure of the engine is not sufficient. Check the engine. <Ref. to ME(H4DO)-321, INSPECTION, Engine Trouble in General.>	Perform the Clear Memory Mode to complete. <Ref. to EN(H4DO)(diag)-78, Clear Memory Mode.>

1. OUTLINE OF DIAGNOSIS

Judge as NG when the engine stops except by operating the ignition switch after starting the engine.

2. EXECUTION CONDITION

Secondary Parameters	Execution condition
Engine condition	After engine starting

3. GENERAL DRIVING CYCLE

Perform the diagnosis continuously after the enable conditions have been established.

4. DIAGNOSTIC METHOD

If the duration of time while the following conditions are met is longer than the time indicated, judge as NG.

Judgment Value

Malfunction Criteria	Threshold Value
Engine speed	≤ 300 rpm

Time Needed for Diagnosis: 48 ms
Malfunction Indicator Light Illumination: Does not illuminate.

DW:DTC P1604 STARTABILITY MALFUNCTION

DTC DETECTING CONDITION:
Immediately at fault recognition

CAUTION:
After servicing or replacing faulty parts, perform Clear Memory Mode. <Ref. to EN(H4DO)(diag)-78, OPERATION, Clear Memory Mode.>

NOTE:
This DTC may be detected even if fault does not occur in the vehicle. If the customer does not ask for inspection, perform the clear memory mode without inspection and return the vehicle to the user.

WIRING DIAGRAM:

- Engine Electrical System ENGINE TYPE FB (WITHOUT PUSH BUTTON START) <Ref. to WI-170, ENGINE TYPE FB (WITHOUT PUSH BUTTON START), WIRING DIAGRAM, Engine Electrical System.>
- Engine Electrical System ENGINE TYPE FB (WITH PUSH BUTTON START) <Ref. to WI-184, ENGINE TYPE FB (WITH PUSH BUTTON START), WIRING DIAGRAM, Engine Electrical System.>

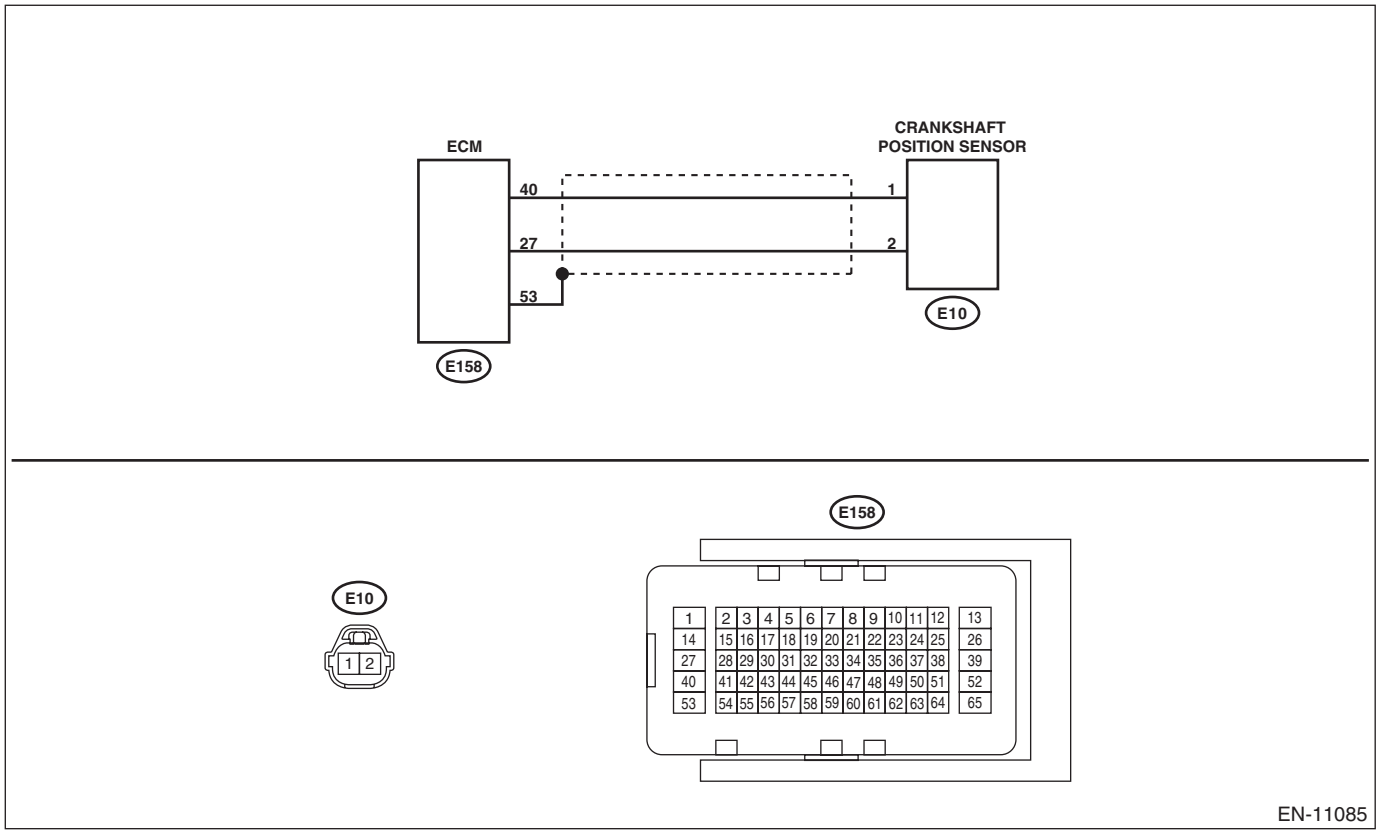

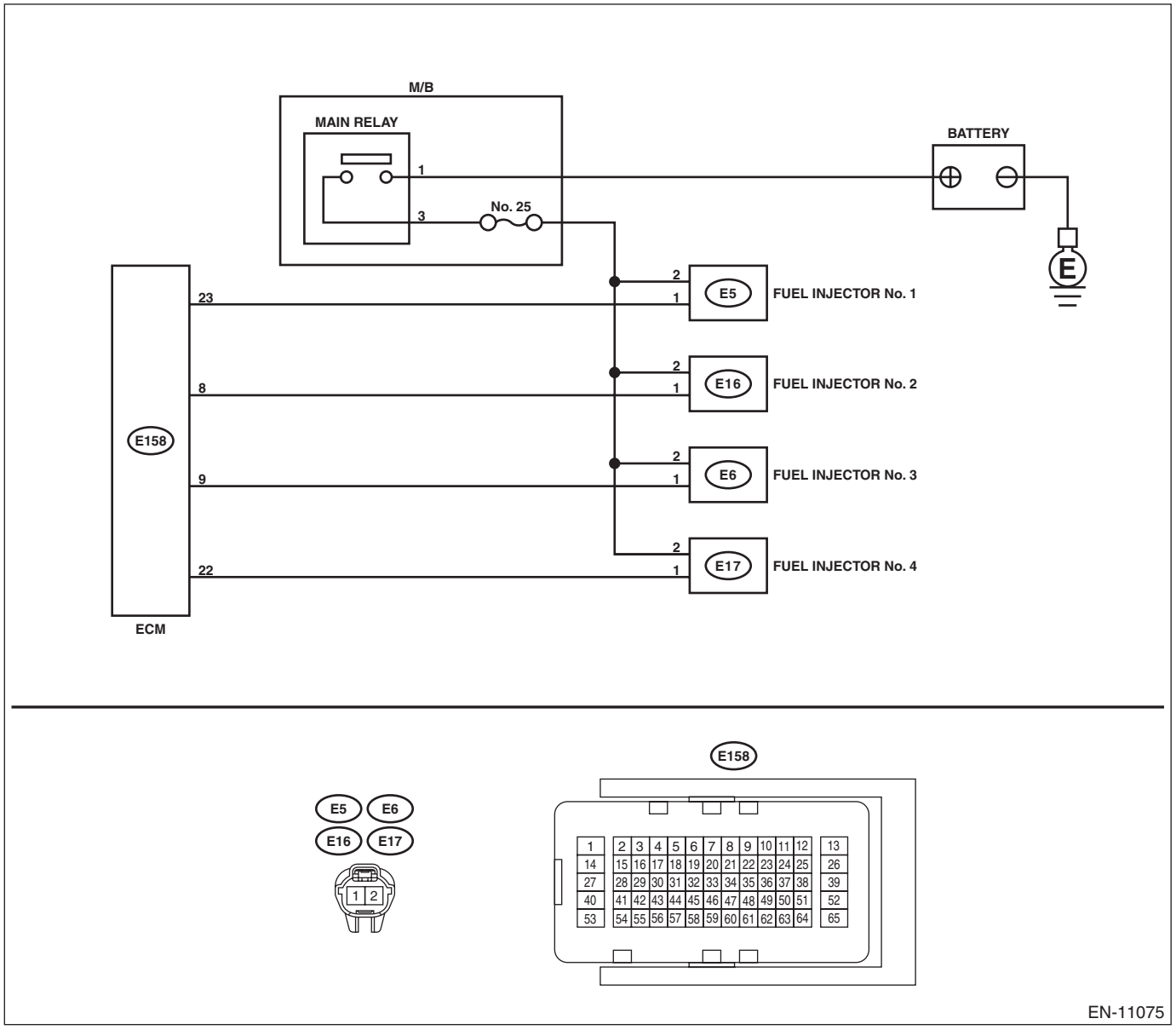
M/B
MAIN RELAY
1
3
No. 25
BATTERY
E
E158
23
8
9
22
ECM
2
1
E5
FUEL INJECTOR No. 1
E16
FUEL INJECTOR No. 2
E6
FUEL INJECTOR No. 3
E17
FUEL INJECTOR No. 4
E5
E6
E16
E17
1 2
E158
1 2 3 4 5 6 7 8 9 10 11 12 13
14 15 16 17 18 19 20 21 22 23 24 25 26
27 28 29 30 31 32 33 34 35 36 37 38 39
40 41 42 43 44 45 46 47 48 49 50 51 52
53 54 55 56 57 58 59 60 61 62 63 64 65
EN-11075

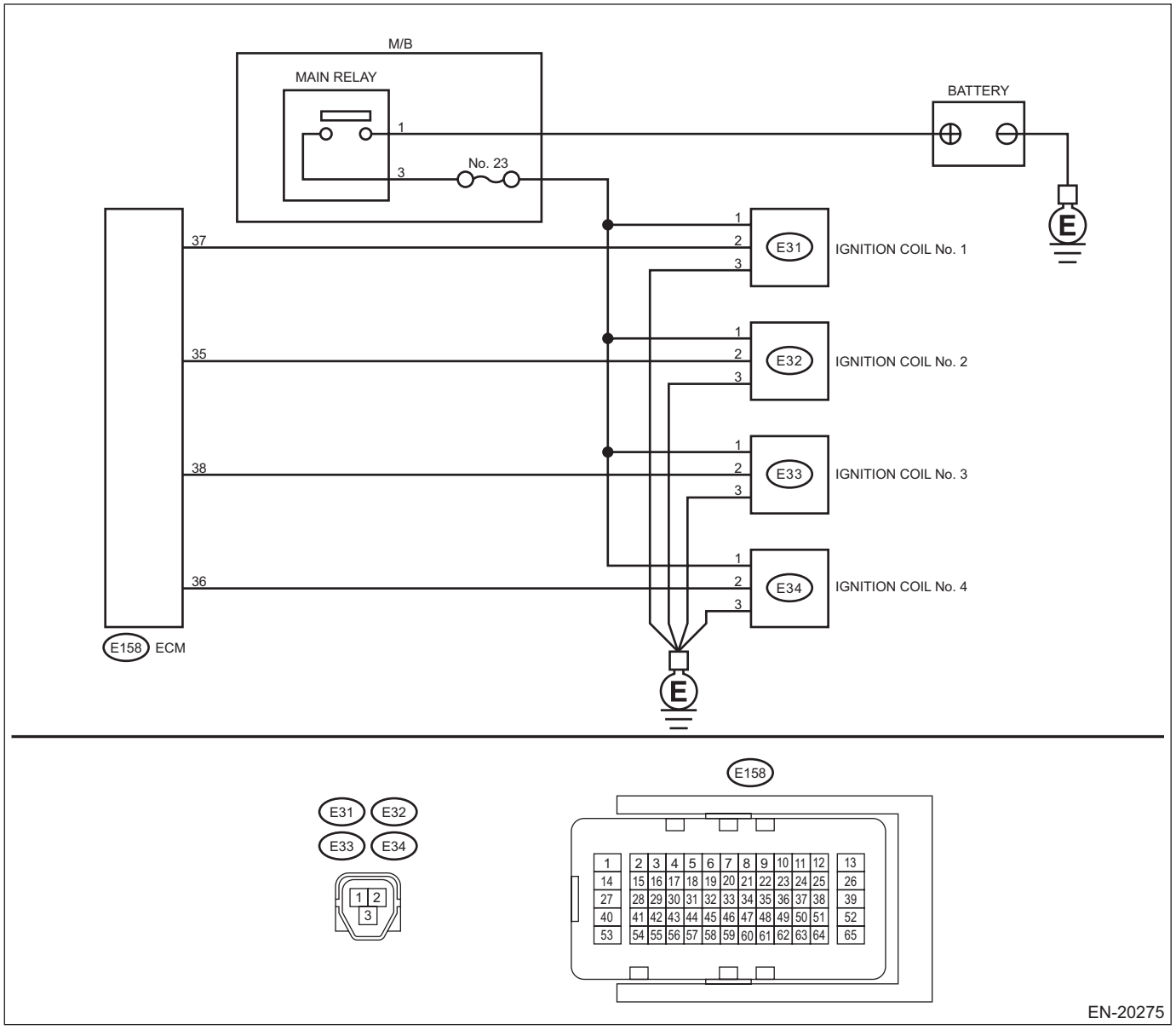
M/B
MAIN RELAY
1
3
No. 23
BATTERY
E
37
35
38
36
E158 ECM
E31
E32
E33
E34
IGNITION COIL No. 1
IGNITION COIL No. 2
IGNITION COIL No. 3
IGNITION COIL No. 4
1
2
3
E158
1 2 3 4 5 6 7 8 9 10 11 12 13
14 15 16 17 18 19 20 21 22 23 24 25 26
27 28 29 30 31 32 33 34 35 36 37 38 39
40 41 42 43 44 45 46 47 48 49 50 51 52
53 54 55 56 57 58 59 60 61 62 63 64 65
EN-20275

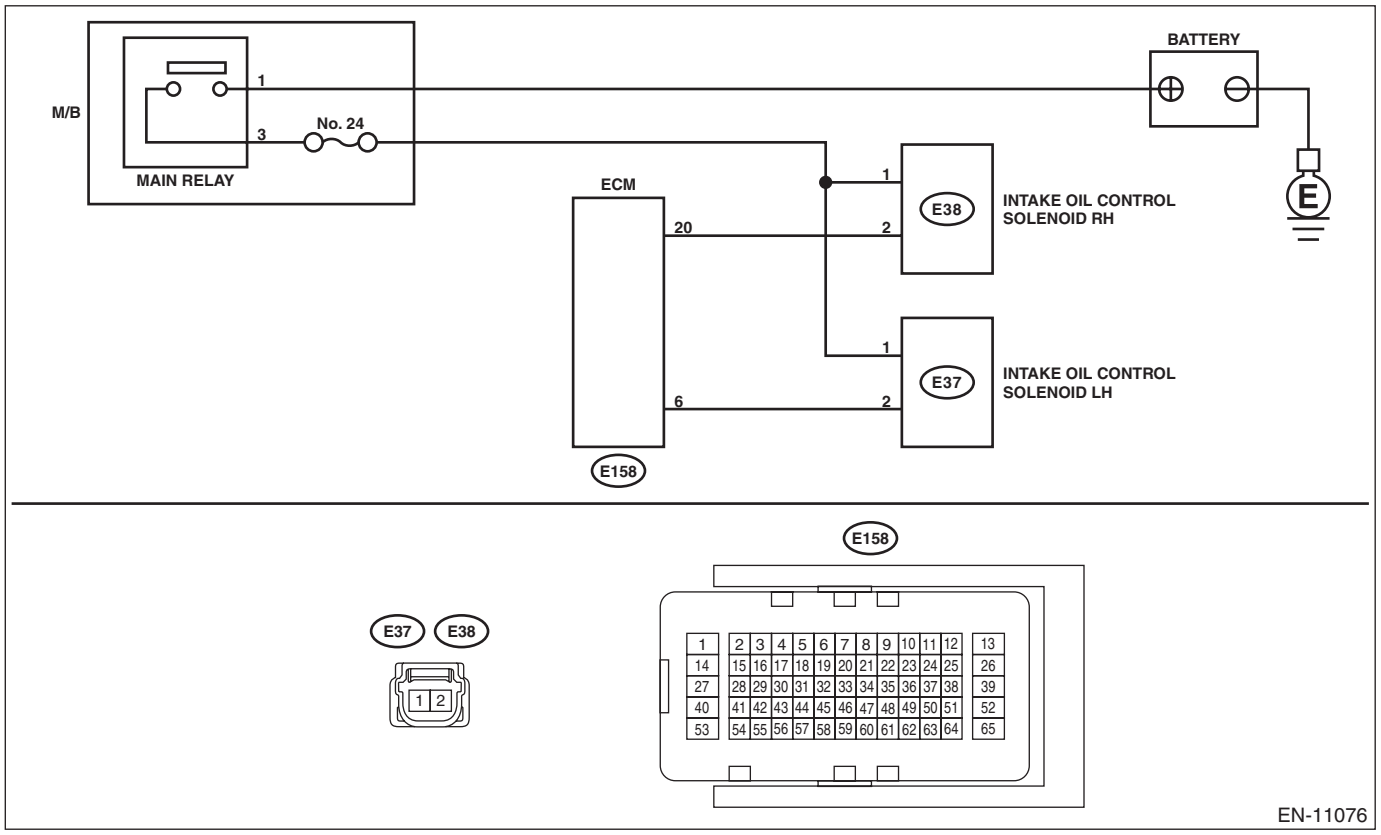
BATTERY
M/B
1
3
No. 24
MAIN RELAY
ECM
20
6
1
2
E38
INTAKE OIL CONTROL SOLENOID RH
E37
INTAKE OIL CONTROL SOLENOID LH
E158
E
E158
E37
E38
1 2
1 2 3 4 5 6 7 8 9 10 11 12 13
14 15 16 17 18 19 20 21 22 23 24 25 26
27 28 29 30 31 32 33 34 35 36 37 38 39
40 41 42 43 44 45 46 47 48 49 50 51 52
53 54 55 56 57 58 59 60 61 62 63 64 65
EN-11076

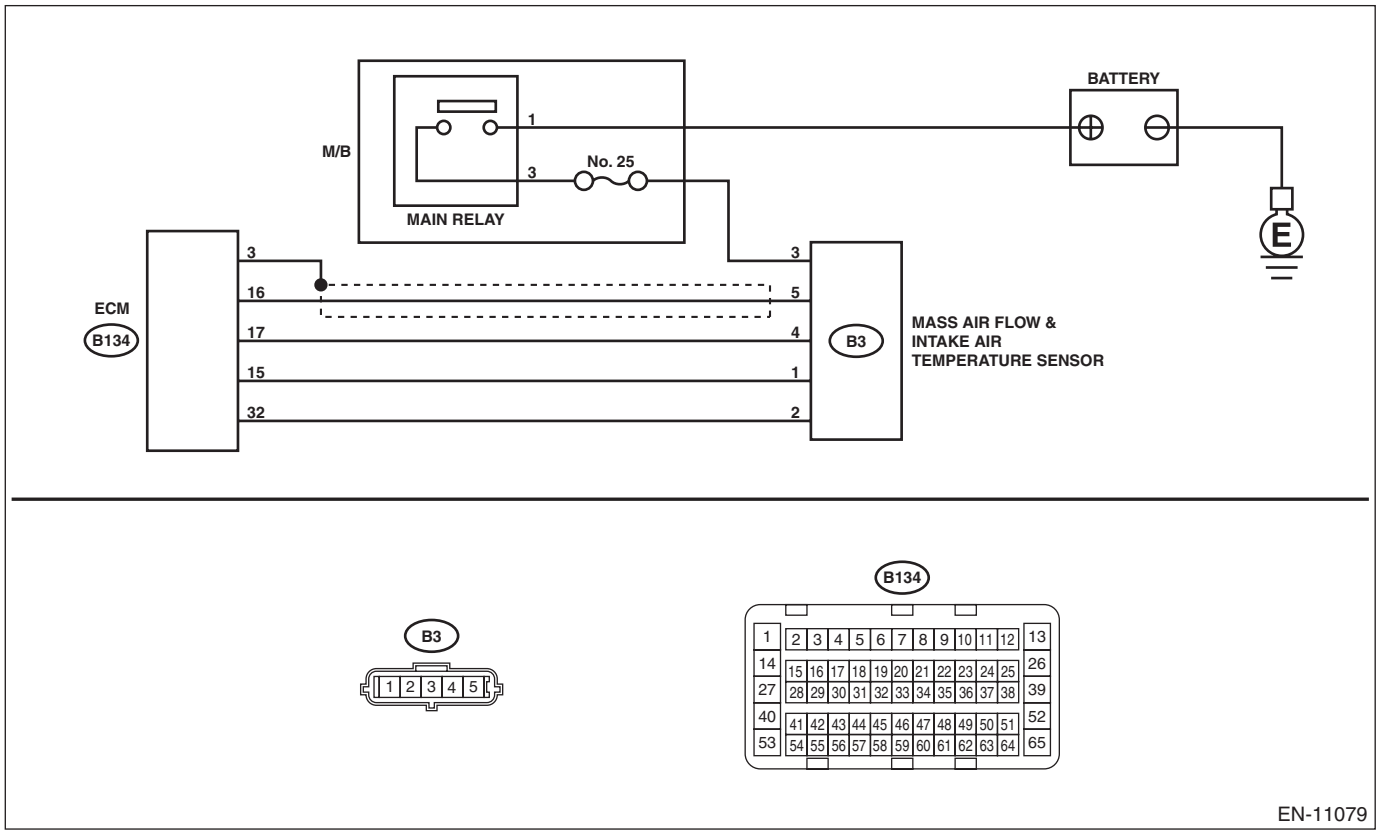
BATTERY
M/B
1
3
No. 25
MAIN RELAY
E
ECM
B134
3
16
17
15
32
3
5
4
1
2
B3
MASS AIR FLOW & INTAKE AIR TEMPERATURE SENSOR
B3
1 2 3 4 5
B134
1 2 3 4 5 6 7 8 9 10 11 12 13
14 15 16 17 18 19 20 21 22 23 24 25 26
27 28 29 30 31 32 33 34 35 36 37 38 39
40 41 42 43 44 45 46 47 48 49 50 51 52
53 54 55 56 57 58 59 60 61 62 63 64 65
EN-11079

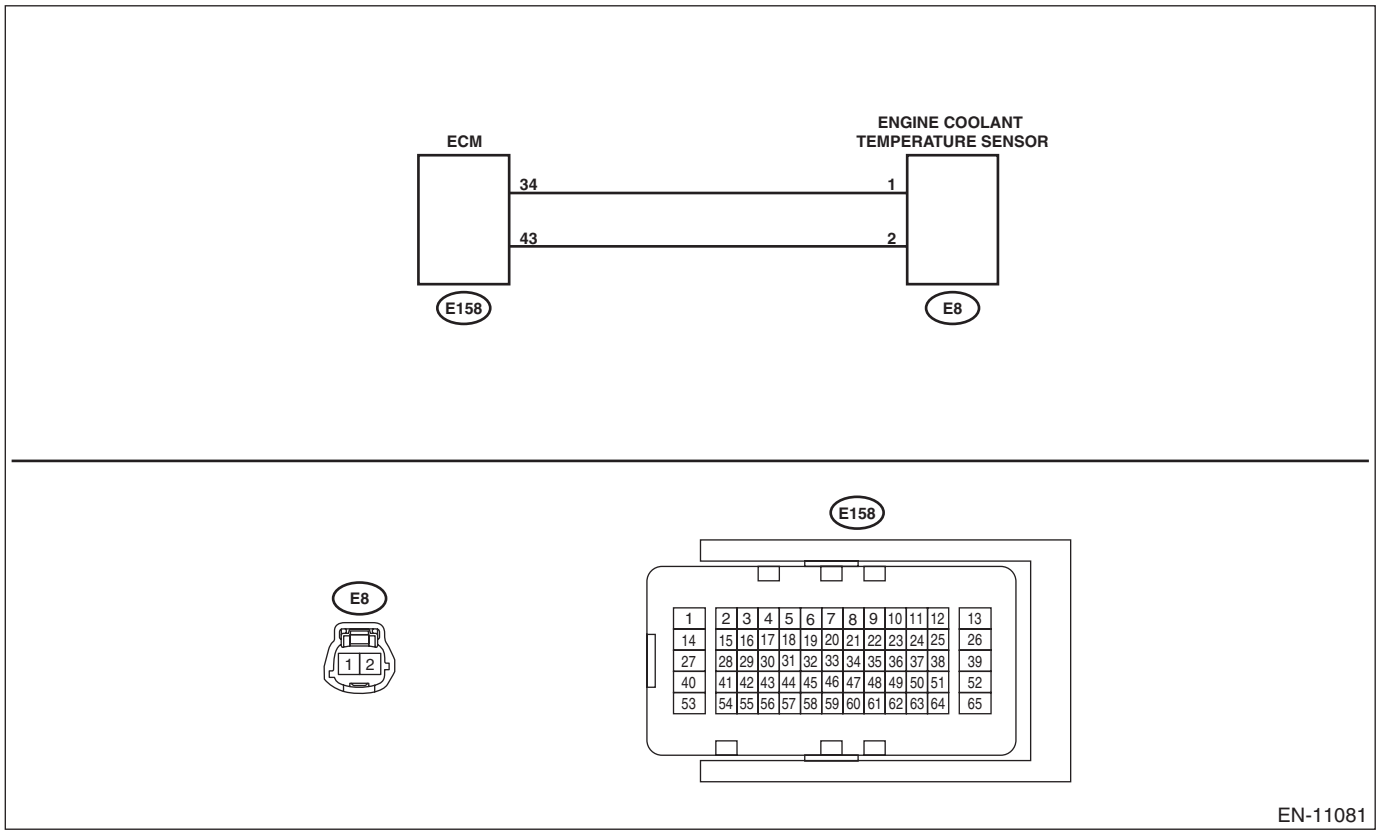
ECM
ENGINE COOLANT TEMPERATURE SENSOR
34
43
1
2
E158
E8
E8
1 2
E158
1 2 3 4 5 6 7 8 9 10 11 12 13
14 15 16 17 18 19 20 21 22 23 24 25 26
27 28 29 30 31 32 33 34 35 36 37 38 39
40 41 42 43 44 45 46 47 48 49 50 51 52
53 54 55 56 57 58 59 60 61 62 63 64 65
EN-11081

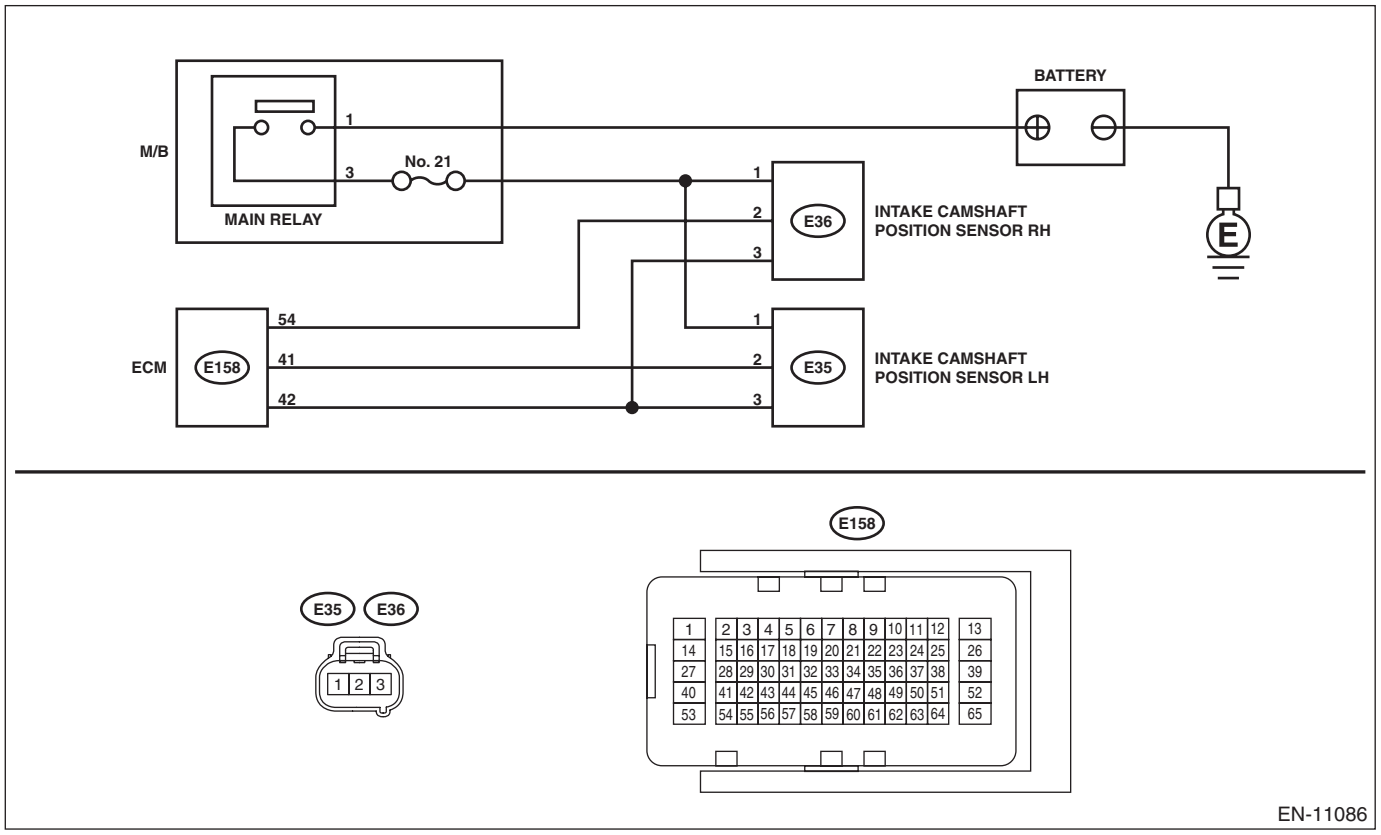
BATTERY
M/B
1
3
No. 21
MAIN RELAY
1
2
3
E36
INTAKE CAMSHAFT POSITION SENSOR RH
E
ECM
E158
54
41
42
1
2
3
E35
INTAKE CAMSHAFT POSITION SENSOR LH
E158
E35
E36
1 2 3
1 2 3 4 5 6 7 8 9 10 11 12 13
14 15 16 17 18 19 20 21 22 23 24 25 26
27 28 29 30 31 32 33 34 35 36 37 38 39
40 41 42 43 44 45 46 47 48 49 50 51 52
53 54 55 56 57 58 59 60 61 62 63 64 65
EN-11086

	Step	Check	Yes	No
1	**CHECK DTC.**	Is any other DTC displayed?	Check DTC using "List of Diagnostic Trouble Code (DTC)". <Ref. to EN(H4DO)(diag)-102, List of Diagnostic Trouble Code (DTC).>	Go to step **2**.
2	**CHECK IMMOBILIZER.** Check the immobilizer. <Ref. to IM(diag)-2, Basic Diagnostic Procedure.>	Is the immobilizer normal?	Go to step **3**.	Repair the immobilizer. <Ref. to IM(diag)-2, Basic Diagnostic Procedure.>
3	**CHECK FOR MALFUNCTION OCCURRENCE.**	Is it possible to reproduce the faulty phenomenon or to identify the faulty condition?	Go to step **28**.	Go to step **4**.
4	**CHECK FREEZE FRAME DATA.** Using the Subaru Select Monitor, read the values in «Engine Speed» and «Control module voltage». NOTE: For detailed operation procedures, refer to "Freeze Frame Data Display For Engine". <Ref. to EN(H4DO)(diag)-57, DISPLAY OF ENGINE FREEZE FRAME DATA, OPERATION, Subaru Select Monitor.>	Is the value of «Engine Speed» 0 rpm?	• When the value of «Control module voltage» is less than 5 V: Check the battery. <Ref. to SC(H4DO)-65, INSPECTION, Battery.> • When the value of «Control module voltage» is 5 V or more: Go to step **5**.	• When the value of «Engine Speed» is less than 250 rpm: Go to step **11**. • When the value of «Engine Speed» is 250 rpm or more: Go to step **18**.
5	**CHECK FREEZE FRAME DATA.** Read the value of «Control module voltage» using Subaru Select Monitor. NOTE: • For detailed operation procedures, refer to "Freeze Frame Data Display For Engine". <Ref. to EN(H4DO)(diag)-57, DISPLAY OF ENGINE FREEZE FRAME DATA, OPERATION, Subaru Select Monitor.> • ECM power voltage drops temporarily at cranking.	Is the value of «Control module voltage» less than 9 V?	It is possible that the engine friction is too large. Check the engine. <Ref. to ME(H4DO)-321, INSPECTION, Engine Trouble in General.>	• When the value of «Control module voltage» changes in any one of freeze frame data: Go to step **6**. • When the value of «Control module voltage» does not change in all freeze frame data: Check the starter motor circuit. <Ref. to EN(H4DO)(diag)-84, STARTER MOTOR CIRCUIT, Diagnostics for Engine Starting Failure.>
6	**CHECK INSTALLATION CONDITION OF CRANKSHAFT POSITION SENSOR.**	Is the crankshaft position sensor installed correctly?	Go to step **7**.	Install the crankshaft position sensor correctly. <Ref. to FU(H4DO)-48, INSTALLATION, Crankshaft Position Sensor.>

	Step	Check	Yes	No
7	**CHECK CRANKSHAFT POSITION SENSOR.** Check the crankshaft position sensor. <Ref. to FU(H4DO)-48, INSPECTION, Crankshaft Position Sensor.>	Is the crankshaft position sensor normal?	Go to step **8**.	Replace the crankshaft position sensor. <Ref. to FU(H4DO)-47, Crankshaft Position Sensor.>
8	**CHECK HARNESS BETWEEN ECM AND CRANKSHAFT POSITION SENSOR CONNECTOR.** 1) Turn the ignition switch to OFF. 2) Disconnect the connector from ECM. 3) Measure the resistance of harness between ECM connector and crankshaft position sensor connector. ***Connector & terminal*** ***(E158) No. 40 — (E10) No. 1:*** ***(E158) No. 27 — (E10) No. 2:***	Is the resistance less than 1 Ω?	Go to step **9**.	Repair the open circuit in the harness between the ECM connector and crankshaft position sensor connector.
9	**CHECK HARNESS BETWEEN ECM AND CRANKSHAFT POSITION SENSOR CONNECTOR.** Measure the resistance between crankshaft position sensor connector and engine ground. ***Connector & terminal*** ***(E10) No. 1 — Engine ground:*** ***(E10) No. 2 — Engine ground:***	Is the resistance 1 MΩ or more?	Go to step **10**.	Repair short circuit to ground in harness between ECM connector and crankshaft position sensor connector.
10	**CHECK FOR MALFUNCTION OCCURRENCE.** 1) Replace the crankshaft position sensor. <Ref. to FU(H4DO)-47, Crankshaft Position Sensor.> 2) Check that the fault is removed.	Is the fault removed?	Perform the Clear Memory Mode to complete. <Ref. to EN(H4DO)(diag)-78, Clear Memory Mode.>	Replace the ECM. <Ref. to FU(H4DO)-82, Engine Control Module (ECM).>
11	**CHECK OF FUEL PUMP.** 1) Select «Fuel Pump» from “Actuator ON/OFF Operation” in “Active Test”. NOTE: For detailed operation procedures, refer to the “Active Test”. <Ref. to EN(H4DO)(diag)-79, Active Test.> 2) Check if operating sound occurs in the fuel pump according to ON/OFF switching operation.	Does the fuel pump emit operating sound?	Go to step **13**.	Go to step **12**.
12	**CHECK OF FUEL PUMP.** Check fuel pump. <Ref. to FU(H4DO)-121, INSPECTION, Fuel Pump.>	Is the fuel pump normal?	Check fuel pump system. <Ref. to FU(H4DO)-116, Fuel Pump.>	Replace the fuel pump. <Ref. to FU(H4DO)-116, Fuel Pump.>
13	**CHECK FUEL TANK.** Check if any foreign matters such as iron powder exist in the fuel tank.	Is there any foreign matter in the fuel tank?	Remove foreign matter from the fuel tank.	Go to step **14**.
14	**CHECK FUEL PRESSURE.** **WARNING:** **Place “NO OPEN FLAMES” signs near the working area.** **CAUTION:** **Be careful not to spill fuel.** Measure the fuel pressure. <Ref. to ME(H4DO)-31, INSPECTION, Fuel Pressure.> **CAUTION:** **Before attaching/detaching a fuel pressure gauge, release the fuel pressure.**	Is the measured value 340 — 400 kPa (3.5 — 4.1 kgf/cm^2, 49 — 58 psi)?	Go to step **15**.	Check the fuel pump and fuel delivery line. <Ref. to FU(H4DO)-121, INSPECTION, Fuel Pump.> <Ref. to FU(H4DO)-154, INSPECTION, Fuel Delivery and Evaporation Lines.>

	Step	Check	Yes	No
15	**CHECK POWER SUPPLY CIRCUIT OF FUEL INJECTOR.** 1) Turn the ignition switch to OFF. 2) Disconnect the connector from fuel injector. 3) Turn the ignition switch to ON. 4) Measure the voltage between fuel injector connector and the engine ground. ***Connector & terminal*** ***(E5) No. 2 (+) — Engine ground (–):*** ***(E16) No. 2 (+) — Engine ground (–):*** ***(E6) No. 2 (+) — Engine ground (–):*** ***(E17) No. 2 (+) — Engine ground (–):***	Is the voltage 10 V or more?	Go to step **16**.	Repair the power supply circuit.
16	**CHECK HARNESS BETWEEN ECM AND FUEL INJECTOR CONNECTOR.** 1) Turn the ignition switch to OFF. 2) Disconnect the connectors from ECM and fuel injectors. 3) Measure the resistance of harness between ECM connector and fuel injector connector. ***Connector & terminal*** ***#1 (E158) No. 23 — (E5) No. 1:*** ***#2 (E158) No. 8 — (E16) No. 1:*** ***#3 (E158) No. 9 — (E6) No. 1:*** ***#4 (E158) No. 22 — (E17) No. 1:***	Is the resistance less than 1 Ω?	Go to step **17**.	Repair the open circuit of the harness between the ECM connector and fuel injector connector.
17	**CHECK HARNESS BETWEEN ECM AND FUEL INJECTOR CONNECTOR.** Measure the resistance between the ECM connector and engine ground. ***Connector & terminal*** ***#1 (E158) No. 23 — Engine ground:*** ***#2 (E158) No. 8 — Engine ground:*** ***#3 (E158) No. 9 — Engine ground:*** ***#4 (E158) No. 22 — Engine ground:***	Is the resistance 1 MΩ or more?	Go to step **27**.	Repair the short circuit to ground in harness between ECM connector and fuel injector connector.
18	**CHECK FREEZE FRAME DATA.** Using the Subaru Select Monitor, read the values in «Coolant Temp.», «Ambient Temperature» and «Engine Speed». NOTE: For detailed operation procedures, refer to “Freeze Frame Data Display For Engine”. <Ref. to EN(H4DO)(diag)-57, DISPLAY OF ENGINE FREEZE FRAME DATA, OPERATION, Subaru Select Monitor.>	Is the value of «Coolant Temp.» 120°C (248°F) or more? Or, is the value of «Coolant Temp.» lower than «Ambient Temperature» by 15°C (27°F) or more?	Replace the engine coolant temperature sensor. <Ref. to FU(H4DO)-43, Engine Coolant Temperature Sensor.>	• When the minimum value of «Engine Speed» is less than 300 rpm: Go to step **19**. • When the minimum value of «Engine Speed» is 300 rpm or more: It is possible that the engine compression pressure is not sufficient. Check the engine. <Ref. to ME(H4DO)-321, INSPECTION, Engine Trouble in General.>
19	**CHECK FUEL INJECTOR.** Check fuel injector. <Ref. to FU(H4DO)-73, INSPECTION, Fuel Injector.>	Is there any deposit in the fuel injectors?	Replace the fuel injector. <Ref. to FU(H4DO)-66, Fuel Injector.>	Go to step **20**.
20	**CHECK FUEL TANK.** Check if any foreign matters such as iron powder exist in the fuel tank.	Is there any foreign matter in the fuel tank?	Remove foreign matter from the fuel tank.	Go to step **21**.

	Step	Check	Yes	No
21	**CHECK FREEZE FRAME DATA.** Using the Subaru Select Monitor, read the value in «Coolant Temp.». NOTE: For detailed operation procedures, refer to "Freeze Frame Data Display For Engine". <Ref. to EN(H4DO)(diag)-57, DISPLAY OF ENGINE FREEZE FRAME DATA, OPERATION, Subaru Select Monitor.> 3	Is the value of «Coolant Temp.» 40 — 90°C (104 — 194°F)?	Go to step **23**.	Go to step **22**.
22	**CHECK FUEL PRESSURE.** **WARNING:** **Place "NO OPEN FLAMES" signs near the working area.** **CAUTION:** **Be careful not to spill fuel.** Measure the fuel pressure five minutes after the engine is stopped. <Ref. to ME(H4DO)-31, INSPECTION, Fuel Pressure.> **CAUTION:** **Before attaching/detaching a fuel pressure gauge, release the fuel pressure.** NOTE: If the engine does not start, measure the fuel pressure five minutes after cranking is completed.	Is the measured value 147 kPa (1.5 kgf/cm^2, 21 psi) or more?	Go to step **27**.	Replace the pressure regulator. <Ref. to FU(H4DO)-132, Fuel Filter.>
23	**CHECK FUEL INJECTOR.** 1) After the engine is stopped, scavenge inside of the intake manifold by applying compressed air. 2) Measure the HC concentration inside the intake manifold 15 minutes after scavenging is completed. • If HC concentration gauge is not available, go to the next step. • For measuring HC concentration, remove the vacuum hose between intake manifold assembly and purge control solenoid valve to measure the HC concentration in the intake manifold assembly.	Is the HC concentration less than 4,000 ppm?	Go to step **25**.	Go to step **24**.
24	**CHECK FUEL INJECTOR.** Check fuel injector. <Ref. to FU(H4DO)-73, INSPECTION, Fuel Injector.>	Are fuel injectors OK?	Go to step **25**.	Replace the fuel injector. <Ref. to FU(H4DO)-66, Fuel Injector.>
25	**CHECK THROTTLE BODY.** Check throttle body. <Ref. to FU(H4DO)-16, INSPECTION, Throttle Body.>	Is there any deposit in the throttle body?	Replace the throttle body. <Ref. to FU(H4DO)-14, Throttle Body.>	Go to step **26**.
26	**CHECK AIR INTAKE SYSTEM.** Check the installing condition of the air intake system.	Are there holes, loose bolts or disconnection of hose on air intake system?	Repair the air intake system. <Ref. to IN(H4DO)-2, General Description.>	Go to step **27**.
27	**CHECK FOR MALFUNCTION OCCURRENCE.**	Is the fault removed?	Perform the Clear Memory Mode to complete. <Ref. to EN(H4DO)(diag)-78, Clear Memory Mode.>	Go to step **28**.

	Step	Check	Yes	No
28	**CHECK FOR MALFUNCTION OCCURRENCE.**	Does cranking occur?	• When the engine speed is abnormal during cranking: Go to step **35**. • When an initial combustion does not occur: Go to step **38**. • When the engine stalls immediately after engine start: Go to step **56**. • When the engine takes time to start: Go to step **70**.	Go to step **29**.
29	**CHECK FOR MALFUNCTION OCCURRENCE.**	Does the sound occur by a protruding starter pinion gear during cranking?	• When the starter motor does not rotate: Go to step **30**. • When the starter motor rotates but does not engage: Go to step **32**.	Go to step **33**.
30	**CHECK BATTERY.** Check the battery. <Ref. to SC(H4DO)-65, INSPECTION, Battery.>	Is the battery OK?	Go to step **31**.	Charge or replace the battery. <Ref. to SC(H4DO)-63, Battery.>
31	**CHECK ENGINE MAIN BODY.** Using the ST, rotate the crankshaft. ST 18252AA000 CRANKSHAFT SOCKET	Does the crankshaft rotate smoothly?	Check the starter motor. <Ref. to SC(H4DO)-24, INSPECTION, Starter.> NOTE: It is possible that the engine friction increased temporarily. Check if any foreign matter is mixed in engine oil. If a foreign matter is found, check the engine. <Ref. to ME(H4DO)-321, INSPECTION, Engine Trouble in General.>	It is possible that the engine friction is too large. Check the engine. <Ref. to ME(H4DO)-321, INSPECTION, Engine Trouble in General.>
32	**CHECK STARTER MOTOR.** Check the starter motor. <Ref. to SC(H4DO)-24, INSPECTION, Starter.>	Is there any wear or damage in the starter pinion gear?	Repair the starter motor. <Ref. to SC(H4DO)-7, Starter.>	• CVT model: Replace the torque converter assembly. <Ref. to CVT(TR580)-196, Torque Converter Assembly.> • MT model: Replace the flywheel. <Ref. to CL-12, Flywheel.>

	Step	Check	Yes	No
33	**CHECK BATTERY.** Check the battery. <Ref. to SC(H4DO)-65, INSPECTION, Battery.>	Is the battery OK?	Go to step **34**.	Charge or replace the battery. <Ref. to SC(H4DO)-63, Battery.>
34	**CHECK STARTER MOTOR.** Check the starter motor. <Ref. to SC(H4DO)-24, INSPECTION, Starter.>	Is the starter motor OK?	Check the starter motor circuit. <Ref. to EN(H4DO)(diag)-84, STARTER MOTOR CIRCUIT, Diagnostics for Engine Starting Failure.>	Repair the starter motor. <Ref. to SC(H4DO)-7, Starter.>
35	**CHECK CURRENT DATA.** Read the value of «Engine Speed» during cranking using Subaru Select Monitor. NOTE: For detailed operation procedures, refer to “Current Data Display For Engine”. <Ref. to EN(H4DO)(diag)-45, DISPLAY CURRENT ENGINE DATA, OPERATION, Subaru Select Monitor.>	Is the value of «Engine Speed» 300 rpm or more?	It is possible that the compression pressure of the engine is not sufficient. Check the engine. <Ref. to ME(H4DO)-321, INSPECTION, Engine Trouble in General.>	Go to step **36**.
36	**CHECK BATTERY.** Check the battery. <Ref. to SC(H4DO)-65, INSPECTION, Battery.>	Is the battery OK?	Go to step **37**.	Charge or replace the battery. <Ref. to SC(H4DO)-63, Battery.>
37	**CHECK ENGINE MAIN BODY.** Using the ST, rotate the crankshaft. ST 18252AA000 CRANKSHAFT SOCKET	Does the crankshaft rotate smoothly?	Check the starter motor. <Ref. to SC(H4DO)-24, INSPECTION, Starter.> NOTE: It is possible that the engine friction increased temporarily. Check if any foreign matter is mixed in engine oil. If a foreign matter is found, check the engine. <Ref. to ME(H4DO)-321, INSPECTION, Engine Trouble in General.>	It is possible that the engine friction is too large. Check the engine. <Ref. to ME(H4DO)-321, INSPECTION, Engine Trouble in General.>
38	**CHECK OPERATION OF EACH FUEL INJECTOR.** Using a sound scope, check each fuel injector for operation sound during cranking.	Does the fuel injector emit operating sound?	Go to step **39**.	Go to step **52**.

	Step	Check	Yes	No
39	**CHECK FUEL PRESSURE.** **WARNING:** **Place "NO OPEN FLAMES" signs near the working area.** **CAUTION:** **Be careful not to spill fuel.** Measure the fuel pressure. <Ref. to ME(H4DO)-31, INSPECTION, Fuel Pressure.> **CAUTION:** **Before attaching/detaching a fuel pressure gauge, release the fuel pressure.**	Is the measured value 340 — 400 kPa (3.5 — 4.1 kgf/cm^2, 49 — 58 psi)?	Go to step **40**.	Go to step **50**.
40	**CHECK IGNITION CONDITION.** Check the ignition condition. <Ref. to EN(H4DO)(diag)-96, IGNITION CONTROL SYSTEM, Diagnostics for Engine Starting Failure.>	Is the ignition condition normal?	Go to step **41**.	Go to step **44**.
41	**CHECK FOR MALFUNCTION OCCURRENCE.** Check for the condition of fault occurrence.	Does the fault occur only within approx. 15 to 120 minutes after the engine is stopped?	Go to step **43**.	• When the fault occurs in two or three minutes or a long time after the engine is stopped: Go to step **42**. • When the fault occurrence pattern is inconsistent: Go to step **83**.
42	**CHECK FUEL PRESSURE.** **WARNING:** **Place "NO OPEN FLAMES" signs near the working area.** **CAUTION:** **Be careful not to spill fuel.** Measure the fuel pressure five minutes after the engine is stopped. <Ref. to ME(H4DO)-31, INSPECTION, Fuel Pressure.> **CAUTION:** **Before attaching/detaching a fuel pressure gauge, release the fuel pressure.** NOTE: If the engine does not start, measure the fuel pressure five minutes after cranking is completed.	Is the measured value 147 kPa (1.5 kgf/cm^2, 21 psi) or more?	Go to step **83**.	Replace the pressure regulator. <Ref. to FU(H4DO)-132, Fuel Filter.>
43	**CHECK FUEL INJECTOR.** 1) After the engine is stopped, scavenge inside of the intake manifold by applying compressed air. 2) Measure the HC concentration inside the intake manifold 15 minutes after scavenging is completed. NOTE: • If HC concentration gauge is not available, go to the next step. • For measuring HC concentration, remove the vacuum hose between intake manifold assembly and purge control solenoid valve to measure the HC concentration in the intake manifold assembly.	Is the HC concentration less than 4,000 ppm?	Go to step **83**.	Replace the fuel injector. <Ref. to FU(H4DO)-66, Fuel Injector.>

	Step	Check	Yes	No
44	**CHECK SPARK PLUG.** Check the spark plug. <Ref. to IG(H4DO)-6, INSPECTION, Spark Plug.>	Are the spark plugs normal?	Go to step **45**.	Replace all spark plugs on all cylinders. <Ref. to IG(H4DO)-4, Spark Plug.>
45	**CHECK CURRENT DATA.** Record the value of «Engine Speed» during cranking using Subaru Select Monitor. NOTE: For detailed operation procedures, refer to "Current Data Display For Engine". <Ref. to EN(H4DO)(diag)-45, DISPLAY CURRENT ENGINE DATA, OPERATION, Subaru Select Monitor.>	Does the recorded value of «Engine Speed» contain data of 0 rpm?	It is possible that temporary fault occurs in the crankshaft position sensor circuit. Check the crankshaft position sensor circuit. <Ref. to EN(H4DO)(diag)-273, DTC P0335 CRANKSHAFT POSITION SENSOR "A" CIRCUIT, Diagnostic Procedure with Diagnostic Trouble Code (DTC).>	Go to step **46**.
46	**CHECK IGNITION COIL POWER SUPPLY CIRCUIT.** 1) Turn the ignition switch to OFF. 2) Disconnect the connector from ignition coil. 3) Turn the ignition switch to ON. 4) Measure the voltage between ignition coil connector and engine ground. ***Connector & terminal*** ***(E31) No. 1 (+) — Engine ground (–):*** ***(E32) No. 1 (+) — Engine ground (–):*** ***(E33) No. 1 (+) — Engine ground (–):*** ***(E34) No. 1 (+) — Engine ground (–):***	Is the voltage 10 V or more?	Go to step **47**.	Repair the harness and connector. NOTE: In this case, repair the following item: • Open or short to ground in power supply circuit • Poor contact of coupling connector • Blown out of fuse
47	**CHECK HARNESS BETWEEN ECM AND IGNITION COIL CONNECTOR.** 1) Disconnect the connector from ECM. 2) Measure the resistance of harness between ECM connector and ignition coil connector. ***Connector & terminal*** ***(E158) No. 37 — (E31) No. 2:*** ***(E158) No. 35 — (E32) No. 2:*** ***(E158) No. 38 — (E33) No. 2:*** ***(E158) No. 36 — (E34) No. 2:***	Is the resistance less than 1 Ω?	Go to step **48**.	Repair the open circuit in harness between ECM connector and ignition coil connector.
48	**CHECK HARNESS BETWEEN ECM AND IGNITION COIL CONNECTOR.** Measure the resistance of harness between ECM connector and engine ground. ***Connector & terminal*** ***(E158) No. 37 — Engine ground:*** ***(E158) No. 35 — Engine ground:*** ***(E158) No. 38 — Engine ground:*** ***(E158) No. 36 — Engine ground:***	Is the resistance 1 MΩ or more?	Go to step **49**.	Repair the ground short circuit of harness between ECM connector and ignition coil connector.

	Step	Check	Yes	No
49	**CHECK HARNESS OF IGNITION COIL GROUND CIRCUIT.** 1) Turn the ignition switch to OFF. 2) Measure the resistance of harness between ignition coil connector and engine ground. ***Connector & terminal*** ***(E31) No. 3 — Engine ground:*** ***(E32) No. 3 — Engine ground:*** ***(E33) No. 3 — Engine ground:*** ***(E34) No. 3 — Engine ground:***	Is the resistance less than 5 Ω?	Replace the ignition coil. <Ref. to IG(H4DO)-10, Ignition Coil.> If the fault occurs after servicing, continue the diagnosis. Go to step **89**.	Repair the open circuit in harness between ignition coil connector and engine grounding terminal.
50	**CHECK OF FUEL PUMP.** 1) Select «Fuel Pump» from "Actuator ON/OFF Operation" in "Active Test". NOTE: For detailed operation procedures, refer to the "Active Test". <Ref. to EN(H4DO)(diag)-79, Active Test.> 2) Check if operating sound occurs in the fuel pump according to ON/OFF switching operation.	Does the fuel pump emit operating sound?	Check the fuel pump and fuel delivery line. <Ref. to FU(H4DO)-121, INSPECTION, Fuel Pump.> <Ref. to FU(H4DO)-154, INSPECTION, Fuel Delivery and Evaporation Lines.>	Go to step **51**.
51	**CHECK OF FUEL PUMP.** Check fuel pump. <Ref. to FU(H4DO)-121, INSPECTION, Fuel Pump.>	Is the fuel pump normal?	Check fuel pump system. <Ref. to FU(H4DO)-116, Fuel Pump.> If the fault occurs after servicing, continue the diagnosis. Go to step **83**.	Replace the fuel pump. <Ref. to FU(H4DO)-116, Fuel Pump.>
52	**CHECK CURRENT DATA.** Record the value of «Engine Speed» during cranking using Subaru Select Monitor. NOTE: For detailed operation procedures, refer to "Current Data Display For Engine". <Ref. to EN(H4DO)(diag)-45, DISPLAY CURRENT ENGINE DATA, OPERATION, Subaru Select Monitor.>	Does the recorded value of «Engine Speed» contain data of 0 rpm?	It is possible that temporary fault occurs in the crankshaft position sensor circuit. Check the crankshaft position sensor circuit. <Ref. to EN(H4DO)(diag)-273, DTC P0335 CRANKSHAFT POSITION SENSOR "A" CIRCUIT, Diagnostic Procedure with Diagnostic Trouble Code (DTC).>	Go to step **53**.
53	**CHECK POWER SUPPLY CIRCUIT OF FUEL INJECTOR.** 1) Turn the ignition switch to OFF. 2) Disconnect the connector from fuel injector. 3) Turn the ignition switch to ON. 4) Measure the voltage between fuel injector connector and the engine ground. ***Connector & terminal*** ***(E5) No. 2 (+) — Engine ground (–):*** ***(E16) No. 2 (+) — Engine ground (–):*** ***(E6) No. 2 (+) — Engine ground (–):*** ***(E17) No. 2 (+) — Engine ground (–):***	Is the voltage 10 V or more?	Go to step **54**.	Repair the power supply circuit.

	Step	Check	Yes	No
54	**CHECK HARNESS BETWEEN ECM AND FUEL INJECTOR CONNECTOR.** 1) Turn the ignition switch to OFF. 2) Disconnect the connectors from ECM and fuel injectors. 3) Measure the resistance of harness between ECM connector and fuel injector connector. ***Connector & terminal*** ***#1 (E158) No. 23 — (E5) No. 1:*** ***#2 (E158) No. 8 — (E16) No. 1:*** ***#3 (E158) No. 9 — (E6) No. 1:*** ***#4 (E158) No. 22 — (E17) No. 1:***	Is the resistance less than 1 Ω?	Go to step **55**.	Repair the open circuit of the harness between the ECM connector and fuel injector connector.
55	**CHECK HARNESS BETWEEN ECM AND FUEL INJECTOR CONNECTOR.** Measure the resistance between the ECM connector and engine ground. ***Connector & terminal*** ***#1 (E158) No. 23 — Engine ground:*** ***#2 (E158) No. 8 — Engine ground:*** ***#3 (E158) No. 9 — Engine ground:*** ***#4 (E158) No. 22 — Engine ground:***	Is the resistance 1 MΩ or more?	Replace the ECM. <Ref. to FU(H4DO)-82, Engine Control Module (ECM).>	Repair the short circuit to ground in harness between ECM connector and fuel injector connector.
56	**CHECK MASS AIR FLOW AND INTAKE AIR TEMPERATURE SENSOR.** Check the mass air flow and intake air temperature sensor. <Ref. to FU(H4DO)-61, INSPECTION, Mass Air Flow and Intake Air Temperature Sensor.>	Is the mass air flow and intake air temperature sensor normal?	Go to step **57**.	Go to step **68**.
57	**CHECK AIR INTAKE SYSTEM.** Check the installing condition of the air intake system.	Are there holes, loose bolts or disconnection of hose on air intake system?	Repair the air intake system. <Ref. to IN(H4DO)-2, General Description.>	Go to step **58**.
58	**CHECK THROTTLE BODY.** Check throttle body. <Ref. to FU(H4DO)-16, INSPECTION, Throttle Body.>	Is there any deposit in the throttle body?	Replace the throttle body. <Ref. to FU(H4DO)-14, Throttle Body.>	Go to step **59**.
59	**CHECK FREEZE FRAME DATA.** 1) Using Subaru Select Monitor, read the values of «VVT Adv. Ang. Amount R», «VVT Advance Target Angle Amount R» and «VVT Adv. Ang. Amount L» and «VVT Advance Target Angle Amount L». NOTE: For detailed operation procedures, refer to “Freeze Frame Data Display For Engine”. <Ref. to EN(H4DO)(diag)-57, DISPLAY OF ENGINE FREEZE FRAME DATA, OPERATION, Subaru Select Monitor.> 2) Using Subaru Select Monitor, compare the respective values between the followings: «VVT Adv. Ang. Amount R», «VVT Advance Target Angle Amount R», «VVT Adv. Ang. Amount L» and «VVT Advance Target Angle Amount L».	Does all of the advance angle amount and retard angle amount synchronize with their target values?	Go to step **98**.	Diagnose the part where there is difference of 10 deg or more. • Intake RH: Go to step **60**. • Intake LH: Go to step **64**.

	Step	Check	Yes	No
60	**CHECK POWER SUPPLY TO THE INTAKE OIL CONTROL SOLENOID RH.** 1) Turn the ignition switch to OFF. 2) Disconnect the connector from the intake oil control solenoid RH. 3) Turn the ignition switch to ON. 4) Measure the voltage between intake oil control solenoid RH connector and engine ground. ***Connector & terminal*** ***(E38) No. 1 (+) — Engine ground (–):***	Is the voltage 10 V or more?	Go to step **61**.	Repair the power supply circuit.
61	**CHECK HARNESS BETWEEN ECM AND INTAKE OIL CONTROL SOLENOID RH CONNECTOR.** 1) Turn the ignition switch to OFF. 2) Disconnect the connector from ECM. 3) Measure the resistance of harness between ECM connector and intake oil control solenoid RH. ***Connector & terminal*** ***(E158) No. 20 — (E38) No. 2:***	Is the resistance less than 1 Ω?	Go to step **62**.	Repair the open circuit in harness between ECM connector and intake oil control solenoid RH connector.
62	**CHECK HARNESS BETWEEN ECM AND INTAKE OIL CONTROL SOLENOID RH CONNECTOR.** Measure the resistance between intake oil control solenoid RH connector and engine ground. ***Connector & terminal*** ***(E38) No. 2 — Engine ground:***	Is the resistance 1 MΩ or more?	Go to step **63**.	Repair the short circuit to ground in harness between ECM connector and intake oil control solenoid RH connector.
63	**CHECK INTAKE OIL CONTROL SOLENOID RH.** Check the intake oil control solenoid RH. <Ref. to FU(H4DO)-55, INSPECTION, Oil Control Solenoid.>	Is the intake oil control solenoid RH normal?	Replace the intake cam sprocket RH. <Ref. to ME(H4DO)-118, Cam Sprocket.>	Replace the intake oil control solenoid RH. <Ref. to FU(H4DO)-54, Oil Control Solenoid.>
64	**CHECK POWER SUPPLY TO THE INTAKE OIL CONTROL SOLENOID LH.** 1) Turn the ignition switch to OFF. 2) Disconnect the connector from the intake oil control solenoid LH. 3) Turn the ignition switch to ON. 4) Measure the voltage between intake oil control solenoid LH connector and engine ground. ***Connector & terminal*** ***(E37) No. 1 (+) — Engine ground (–):***	Is the voltage 10 V or more?	Go to step **65**.	Repair the power supply circuit.
65	**CHECK HARNESS BETWEEN ECM AND INTAKE OIL CONTROL SOLENOID LH CONNECTOR.** 1) Turn the ignition switch to OFF. 2) Disconnect the connector from ECM. 3) Measure the resistance of harness between ECM connector and intake oil control solenoid LH. ***Connector & terminal*** ***(E158) No. 6 — (E37) No. 2:***	Is the resistance less than 1 Ω?	Go to step **66**.	Repair the open circuit in harness between ECM connector and intake oil control solenoid LH connector.
66	**CHECK HARNESS BETWEEN ECM AND INTAKE OIL CONTROL SOLENOID LH CONNECTOR.** Measure the resistance between intake oil control solenoid LH connector and engine ground. ***Connector & terminal*** ***(E37) No. 2 — Engine ground:***	Is the resistance 1 MΩ or more?	Go to step **67**.	Repair the short circuit to ground in harness between ECM connector and intake oil control solenoid LH connector.

	Step	Check	Yes	No
67	**CHECK INTAKE OIL CONTROL SOLENOID LH.** Check the intake oil control solenoid LH. <Ref. to FU(H4DO)-55, INSPECTION, Oil Control Solenoid.>	Is the intake oil control solenoid LH normal?	Replace the intake cam sprocket LH. <Ref. to ME(H4DO)-118, Cam Sprocket.>	Replace the intake oil control solenoid LH. <Ref. to FU(H4DO)-54, Oil Control Solenoid.>
68	**CHECK HARNESS BETWEEN ECM AND MASS AIR FLOW AND INTAKE AIR TEMPERATURE SENSOR CONNECTOR.** 1) Turn the ignition switch to OFF. 2) Disconnect the connector from ECM and the mass air flow and intake air temperature sensor. 3) Measure the resistance of harness between ECM connector and the mass air flow and intake air temperature sensor connector. ***Connector & terminal*** ***(B134) No. 16 — (B3) No. 5:*** ***(B134) No. 17 — (B3) No. 4:***	Is the resistance less than 1 Ω?	Go to step **69**.	Repair the open circuit of harness between ECM connector and the mass air flow and intake air temperature sensor connector.
69	**CHECK HARNESS BETWEEN ECM AND MASS AIR FLOW AND INTAKE AIR TEMPERATURE SENSOR CONNECTOR.** Measure the resistance between the ECM connector and engine ground. ***Connector & terminal*** ***(B134) No. 16 — Engine ground:*** ***(B134) No. 17 — Engine ground:***	Is the resistance 1 MΩ or more?	Replace the mass air flow and intake air temperature sensor. <Ref. to FU(H4DO)-60, Mass Air Flow and Intake Air Temperature Sensor.> If the fault occurs after servicing, continue the diagnosis. Go to step **98**.	Repair the ground short circuit of harness between ECM connector and the mass air flow and intake air temperature sensor connector.
70	**CHECK ENGINE COOLANT TEMPERATURE SENSOR.** Check the engine coolant temperature sensor. <Ref. to FU(H4DO)-44, INSPECTION, Engine Coolant Temperature Sensor.>	Is the engine coolant temperature sensor normal?	Go to step **71**.	Replace the engine coolant temperature sensor. <Ref. to FU(H4DO)-43, Engine Coolant Temperature Sensor.> If the fault occurs after servicing, replace the ECM. <Ref. to FU(H4DO)-82, Engine Control Module (ECM).> If the fault still occurs after replacing the ECM, continue the diagnosis. Go to step **109**.

	Step	Check	Yes	No
71	**CHECK HARNESS BETWEEN ECM AND ENGINE COOLANT TEMPERATURE SENSOR CONNECTOR.** 1) Turn the ignition switch to OFF. 2) Disconnect the connectors from ECM and engine coolant temperature sensor. 3) Measure the resistance of harness between ECM connector and engine coolant temperature sensor connector. ***Connector & terminal*** ***(E158) No. 34 — (E8) No. 1:*** ***(E158) No. 43 — (E8) No. 2:***	Is the resistance less than 1 Ω?	Go to step **72**.	Repair the open circuit of the harness between the ECM connector and engine coolant temperature sensor connector. If the fault occurs after servicing, replace the ECM. <Ref. to FU(H4DO)-82, Engine Control Module (ECM).> If the fault still occurs after replacing the ECM, continue the diagnosis. Go to step **109**.
72	**CHECK HARNESS BETWEEN ECM AND ENGINE COOLANT TEMPERATURE SENSOR CONNECTOR.** Measure the resistance between the ECM connector and engine ground. ***Connector & terminal*** ***(E158) No. 43 — Engine ground:*** ***(E158) No. 34 — Engine ground:***	Is the resistance 1 MΩ or more?	Go to step **73**.	Repair the short circuit to ground in harness between ECM connector and engine coolant temperature sensor connector. If the fault occurs after servicing, replace the ECM. <Ref. to FU(H4DO)-82, Engine Control Module (ECM).> If the fault still occurs after replacing the ECM, continue the diagnosis. Go to step **109**.
73	**CHECK CURRENT DATA.** 1) Turn the ignition switch to ON. (Engine OFF) 2) Read the values of «Long term fuel trim B1» and «Atmosphere Pressure», using the Subaru Select Monitor. NOTE: For detailed operation procedures, refer to “Current Data Display For Engine”. <Ref. to EN(H4DO)(diag)-45, DISPLAY CURRENT ENGINE DATA, OPERATION, Subaru Select Monitor.>	Is the value of «Long term fuel trim B1» –25 — 25%, and «Atmosphere Pressure» 80 kPa (600 mmHg, 23.6 inHg) or more?	Go to step **76**.	Go to step **74**.
74	**CHECK FOR MALFUNCTION OCCURRENCE.** 1) Perform the Clear Memory Mode. <Ref. to EN(H4DO)(diag)-78, Clear Memory Mode.> 2) Start the engine.	Does the engine start?	Go to step **75**.	Go to step **76**.

	Step	Check	Yes	No
75	**CHECK IDLE SPEED.** Check the idle speed.	Is the idle speed stable?	Replace the mass air flow and intake air temperature sensor. <Ref. to FU(H4DO)-60, Mass Air Flow and Intake Air Temperature Sensor.> If the fault occurs after servicing, replace the ECM. <Ref. to FU(H4DO)-82, Engine Control Module (ECM).> If the fault still occurs after replacing the ECM, continue the diagnosis. Go to step **109**.	Replace the fuel injector. <Ref. to FU(H4DO)-66, Fuel Injector.> If the fault occurs after servicing, replace the ECM. <Ref. to FU(H4DO)-82, Engine Control Module (ECM).> If the fault still occurs after replacing the ECM, continue the diagnosis. Go to step **109**.
76	**CHECK FUEL PRESSURE.** **WARNING:** **Place "NO OPEN FLAMES" signs near the working area.** **CAUTION:** **Be careful not to spill fuel.** Measure the fuel pressure. <Ref. to ME(H4DO)-31, INSPECTION, Fuel Pressure.> **CAUTION:** **Before attaching/detaching a fuel pressure gauge, release the fuel pressure.**	Is the measured value 340 — 400 kPa (3.5 — 4.1 kgf/cm^2, 49 — 58 psi)?	Go to step **77**.	Go to step **82**.
77	**CHECK SPARK PLUG.** Check the spark plug. <Ref. to IG(H4DO)-6, INSPECTION, Spark Plug.>	Are all spark plug in all cylinders normal?	Go to step **78**.	• When spark plugs in some cylinders are faulty: Replace the faulty spark plugs of the cylinders, then check the ignition system and fuel system in the faulty cylinders. <Ref. to IG(H4DO)-4, Spark Plug.> If the fault occurs after servicing, continue the diagnosis. Go to step **109**. • When all spark plugs in all cylinders are faulty: Replace faulty spark plugs in all cylinders. <Ref. to IG(H4DO)-4, Spark Plug.> If the fault occurs after servicing, continue the diagnosis. Go to step **109**.

	Step	Check	Yes	No
78	**CHECK FOR MALFUNCTION OCCURRENCE.** Check for the condition of fault occurrence.	Does the fault occur only within approx. 15 to 120 minutes after the engine is stopped?	Go to step **80**.	• When the fault occurs in two or three minutes or a long time after the engine is stopped: Go to step **79**. • When the fault occurrence pattern is inconsistent: Go to step **109**.
79	**CHECK FUEL PRESSURE.** **WARNING:** **Place "NO OPEN FLAMES" signs near the working area.** **CAUTION:** **Be careful not to spill fuel.** Measure the fuel pressure five minutes after the engine is stopped. <Ref. to ME(H4DO)-31, INSPECTION, Fuel Pressure.> **CAUTION:** **Before attaching/detaching a fuel pressure gauge, release the fuel pressure.** NOTE: If the engine does not start, measure the fuel pressure five minutes after cranking is completed.	Is the measured value 147 kPa (1.5 kgf/cm^2, 21 psi) or more?	Go to step **108**.	Replace the pressure regulator. <Ref. to FU(H4DO)-132, Fuel Filter.>
80	**CHECK PURGE CONTROL SOLENOID VALVE.** Check the purge control solenoid valve. <Ref. to EC(H4DO)-24, INSPECTION, Purge Control Solenoid Valve.>	Is the purge control solenoid valve OK?	Go to step **81**.	Replace the faulty purge control solenoid valve. <Ref. to EC(H4DO)-21, Purge Control Solenoid Valve.>
81	**CHECK FUEL INJECTOR.** 1) After the engine is stopped, scavenge inside of the intake manifold by applying compressed air. 2) Measure the HC concentration inside the intake manifold 15 minutes after scavenging is completed. NOTE: • If HC concentration gauge is not available, go to the next step. • For measuring HC concentration, remove the vacuum hose between intake manifold assembly and purge control solenoid valve to measure the HC concentration in the intake manifold assembly.	Is the HC concentration less than 4,000 ppm?	Go to step **109**.	Replace the fuel injector. <Ref. to FU(H4DO)-66, Fuel Injector.>
82	**CHECK OF FUEL PUMP.** Check fuel pump. <Ref. to FU(H4DO)-121, INSPECTION, Fuel Pump.>	Is the fuel pump normal?	Check fuel pump system. <Ref. to FU(H4DO)-116, Fuel Pump.> If the fault occurs after servicing, continue the diagnosis. Go to step **109**.	Replace the fuel pump. <Ref. to FU(H4DO)-116, Fuel Pump.>

	Step	Check	Yes	No
83	**CHECK FUEL INJECTOR.** Check fuel injector. <Ref. to FU(H4DO)-73, INSPECTION, Fuel Injector.>	Are fuel injectors OK?	Go to step **84**.	Replace the fuel injector. <Ref. to FU(H4DO)-66, Fuel Injector.>
84	**CHECK POWER SUPPLY CIRCUIT OF FUEL INJECTOR.** 1) Turn the ignition switch to OFF. 2) Disconnect the connector from fuel injector. 3) Turn the ignition switch to ON. 4) Measure the voltage between fuel injector connector and the engine ground. ***Connector & terminal*** ***(E5) No. 2 (+) — Engine ground (–):*** ***(E16) No. 2 (+) — Engine ground (–):*** ***(E6) No. 2 (+) — Engine ground (–):*** ***(E17) No. 2 (+) — Engine ground (–):***	Is the voltage 10 V or more?	Go to step **85**.	Repair the power supply circuit.
85	**CHECK HARNESS BETWEEN ECM AND FUEL INJECTOR CONNECTOR.** 1) Turn the ignition switch to OFF. 2) Disconnect the connectors from ECM and fuel injectors. 3) Measure the resistance of harness between ECM connector and fuel injector connector. ***Connector & terminal*** ***#1 (E158) No. 23 — (E5) No. 1:*** ***#2 (E158) No. 8 — (E16) No. 1:*** ***#3 (E158) No. 9 — (E6) No. 1:*** ***#4 (E158) No. 22 — (E17) No. 1:***	Is the resistance less than 1 Ω?	Go to step **86**.	Repair the open circuit of the harness between the ECM connector and fuel injector connector.
86	**CHECK HARNESS BETWEEN ECM AND FUEL INJECTOR CONNECTOR.** Measure the resistance between the ECM connector and engine ground. ***Connector & terminal*** ***#1 (E158) No. 23 — Engine ground:*** ***#2 (E158) No. 8 — Engine ground:*** ***#3 (E158) No. 9 — Engine ground:*** ***#4 (E158) No. 22 — Engine ground:***	Is the resistance 1 MΩ or more?	Go to step **87**.	Repair the short circuit to ground in harness between ECM connector and fuel injector connector.
87	**CHECK FOR MALFUNCTION OCCURRENCE.** 1) Replace the crankshaft position sensor. <Ref. to FU(H4DO)-47, Crankshaft Position Sensor.> 2) Check that the fault is removed.	Is the fault removed?	Perform the Clear Memory Mode to complete. <Ref. to EN(H4DO)(diag)-78, Clear Memory Mode.>	Go to step **88**.
88	**CHECK FOR MALFUNCTION OCCURRENCE.** 1) Replace the camshaft position sensor. <Ref. to FU(H4DO)-51, Camshaft Position Sensor.> 2) Check that the fault is removed.	Is the fault removed?	Perform the Clear Memory Mode to complete. <Ref. to EN(H4DO)(diag)-78, Clear Memory Mode.>	Replace the ECM. <Ref. to FU(H4DO)-82, Engine Control Module (ECM).>
89	**CHECK INSTALLATION CONDITION OF CRANKSHAFT POSITION SENSOR.**	Is the crankshaft position sensor installed correctly?	Go to step **90**.	Install the crankshaft position sensor correctly. <Ref. to FU(H4DO)-48, INSTALLATION, Crankshaft Position Sensor.>

	Step	Check	Yes	No
90	**CHECK INSTALLATION CONDITION OF CAMSHAFT POSITION SENSOR.**	Is the camshaft position sensor installed correctly?	Go to step **91**.	Install the camshaft position sensor correctly. <Ref. to FU(H4DO)-52, INSTALLATION, Camshaft Position Sensor.>
91	**CHECK HARNESS BETWEEN ECM AND CRANKSHAFT POSITION SENSOR CONNECTOR.** 1) Turn the ignition switch to OFF. 2) Disconnect the connector from ECM. 3) Measure the resistance of harness between ECM connector and crankshaft position sensor connector. ***Connector & terminal*** ***(E158) No. 40 — (E10) No. 1:*** ***(E158) No. 27 — (E10) No. 2:***	Is the resistance less than 1 Ω?	Go to step **92**.	Repair the open circuit in the harness between the ECM connector and crankshaft position sensor connector.
92	**CHECK HARNESS BETWEEN ECM AND CRANKSHAFT POSITION SENSOR CONNECTOR.** Measure the resistance between crankshaft position sensor connector and engine ground. ***Connector & terminal*** ***(E10) No. 1 — Engine ground:*** ***(E10) No. 2 — Engine ground:***	Is the resistance 1 MΩ or more?	Go to step **93**.	Repair short circuit to ground in harness between ECM connector and crankshaft position sensor connector.
93	**CHECK POWER SUPPLY OF INTAKE CAMSHAFT POSITION SENSOR.** 1) Turn the ignition switch to OFF. 2) Disconnect the connector from the intake camshaft position sensor. 3) Turn the ignition switch to ON. 4) Measure the voltage between intake camshaft position sensor connector and engine ground. ***Connector & terminal*** ***(E35) No. 1 (+) — Engine ground (–):*** ***(E36) No. 1 (+) — Engine ground (–):***	Is the voltage 10 V or more?	Go to step **94**.	Repair the harness and connector. NOTE: In this case, repair the following item: • Open circuit or short circuit to ground in harness between main relay connector and intake camshaft position sensor connector • Poor contact of coupling connector
94	**CHECK HARNESS BETWEEN ECM AND INTAKE CAMSHAFT POSITION SENSOR CONNECTOR.** 1) Turn the ignition switch to OFF. 2) Disconnect the connector from ECM. 3) Measure the resistance between ECM connector and intake camshaft position sensor connector. ***Connector & terminal*** ***(E158) No. 41 — (E35) No. 2:*** ***(E158) No. 42 — (E35) No. 3:*** ***(E158) No. 54 — (E36) No. 2:*** ***(E158) No. 42 — (E36) No. 3:***	Is the resistance less than 1 Ω?	Go to step **95**.	Repair the open circuit in the harness between ECM connector and intake camshaft position sensor connector.

	Step	Check	Yes	No
95	**CHECK HARNESS BETWEEN ECM AND INTAKE CAMSHAFT POSITION SENSOR CONNECTOR.** Measure the resistance between intake camshaft position sensor connector and engine ground. ***Connector & terminal*** ***(E35) No. 2 — Engine ground:*** ***(E36) No. 2 — Engine ground:***	Is the resistance 1 MΩ or more?	Go to step **96**.	Repair short circuit to ground in the harness between ECM connector and intake camshaft position sensor connector.
96	**CHECK FOR MALFUNCTION OCCURRENCE.** 1) Replace the crankshaft position sensor. <Ref. to FU(H4DO)-47, Crankshaft Position Sensor.> 2) Check that the fault is removed.	Is the fault removed?	Perform the Clear Memory Mode to complete. <Ref. to EN(H4DO)(diag)-78, Clear Memory Mode.>	Go to step **97**.
97	**CHECK FOR MALFUNCTION OCCURRENCE.** 1) Replace the camshaft position sensor. <Ref. to FU(H4DO)-51, Camshaft Position Sensor.> 2) Check that the fault is removed.	Is the fault removed?	Perform the Clear Memory Mode to complete. <Ref. to EN(H4DO)(diag)-78, Clear Memory Mode.>	Replace the ECM. <Ref. to FU(H4DO)-82, Engine Control Module (ECM).>
98	**CHECK ENGINE COOLANT TEMPERATURE SENSOR.** Check the engine coolant temperature sensor. <Ref. to FU(H4DO)-44, INSPECTION, Engine Coolant Temperature Sensor.>	Is the engine coolant temperature sensor normal?	Go to step **99**.	Replace the engine coolant temperature sensor. <Ref. to FU(H4DO)-43, Engine Coolant Temperature Sensor.>
99	**CHECK FUEL PRESSURE.** **WARNING:** **Place "NO OPEN FLAMES" signs near the working area.** **CAUTION:** **Be careful not to spill fuel.** Measure the fuel pressure. <Ref. to ME(H4DO)-31, INSPECTION, Fuel Pressure.> **CAUTION:** **Before attaching/detaching a fuel pressure gauge, release the fuel pressure.**	Is the measured value 340 — 400 kPa (3.5 — 4.1 kgf/cm^2, 49 — 58 psi)?	Go to step **100**.	Go to step **117**.
100	**CHECK FUEL PRESSURE.** **WARNING:** **Place "NO OPEN FLAMES" signs near the working area.** **CAUTION:** **Be careful not to spill fuel.** Measure the fuel pressure five minutes after the engine is stopped. <Ref. to ME(H4DO)-31, INSPECTION, Fuel Pressure.> **CAUTION:** **Before attaching/detaching a fuel pressure gauge, release the fuel pressure.** NOTE: If the engine does not start, measure the fuel pressure five minutes after cranking is completed.	Is the measured value 147 kPa (1.5 kgf/cm^2, 21 psi) or more?	Go to step **101**.	Go to step **117**.

	Step	Check	Yes	No
101	**CHECK CURRENT DATA.** 1) Turn the ignition switch to ON. (Engine OFF) 2) Read the value of «Long term fuel trim B1» using the Subaru Select Monitor. NOTE: For detailed operation procedures, refer to "Current Data Display For Engine". <Ref. to EN(H4DO)(diag)-45, DISPLAY CURRENT ENGINE DATA, OPERATION, Subaru Select Monitor.>	Does the value of «Long term fuel trim B1» fall within a range of –15 — 15%?	Go to step **102**.	Replace the fuel injector. <Ref. to FU(H4DO)-66, Fuel Injector.>
102	**CHECK FOR MALFUNCTION OCCURRENCE.** Start the engine and check the idling speed.	Is the idling speed stable all time?	It is possible that the fault comes from fuel. Replace fuel.	Go to step **103**.
103	**CHECK INSTALLATION CONDITION OF CRANKSHAFT POSITION SENSOR.**	Is the crankshaft position sensor installed correctly?	Go to step **104**.	Install the crankshaft position sensor correctly. <Ref. to FU(H4DO)-48, INSTALLATION, Crankshaft Position Sensor.>
104	**CHECK HARNESS BETWEEN ECM AND CRANKSHAFT POSITION SENSOR CONNECTOR.** 1) Turn the ignition switch to OFF. 2) Disconnect the connector from ECM. 3) Measure the resistance of harness between ECM connector and crankshaft position sensor connector. ***Connector & terminal*** ***(E158) No. 40 — (E10) No. 1:*** ***(E158) No. 27 — (E10) No. 2:***	Is the resistance less than 1 Ω?	Go to step **105**.	Repair the open circuit in the harness between the ECM connector and crankshaft position sensor connector.
105	**CHECK HARNESS BETWEEN ECM AND CRANKSHAFT POSITION SENSOR CONNECTOR.** Measure the resistance between crankshaft position sensor connector and engine ground. ***Connector & terminal*** ***(E10) No. 1 — Engine ground:*** ***(E10) No. 2 — Engine ground:***	Is the resistance 1 MΩ or more?	Go to step **106**.	Repair short circuit to ground in harness between ECM connector and crankshaft position sensor connector.
106	**CHECK COMPRESSION PRESSURE.** Check the compression pressure. <Ref. to ME(H4DO)-24, INSPECTION, Compression.>	Is the compression pressure normal?	Go to step **107**.	Check the engine. <Ref. to ME(H4DO)-321, INSPECTION, Engine Trouble in General.>
107	**CHECK FOR MALFUNCTION OCCURRENCE.** 1) Replace the crankshaft position sensor. <Ref. to FU(H4DO)-47, Crankshaft Position Sensor.> 2) Check that the fault is removed.	Is the fault removed?	Perform the Clear Memory Mode to complete. <Ref. to EN(H4DO)(diag)-78, Clear Memory Mode.>	Check the valve timing. <Ref. to ME(H4DO)-97, Timing Chain Assembly.> When the valve timing is normal, replace the ECM. <Ref. to FU(H4DO)-82, Engine Control Module (ECM).>

	Step	Check	Yes	No
108	**CHECK OF FUEL PUMP.** Check fuel pump. <Ref. to FU(H4DO)-121, INSPECTION, Fuel Pump.>	Is the fuel pump normal?	Check fuel pump circuit. <Ref. to EN(H4DO)(diag)-98, FUEL PUMP CIRCUIT, Diagnostics for Engine Starting Failure.>	Replace the fuel pump. <Ref. to FU(H4DO)-116, Fuel Pump.>
109	**CHECK FUEL PRESSURE.** **WARNING:** **Place "NO OPEN FLAMES" signs near the working area.** **CAUTION:** **Be careful not to spill fuel.** Measure the fuel pressure. <Ref. to ME(H4DO)-31, INSPECTION, Fuel Pressure.> **CAUTION:** **Before attaching/detaching a fuel pressure gauge, release the fuel pressure.**	Is the measured value 340 — 400 kPa (3.5 — 4.1 kgf/cm^2, 49 — 58 psi)?	Go to step **110**.	Go to step **117**.
110	**CHECK FUEL PRESSURE.** **WARNING:** **Place "NO OPEN FLAMES" signs near the working area.** **CAUTION:** **Be careful not to spill fuel.** Measure the fuel pressure five minutes after the engine is stopped. <Ref. to ME(H4DO)-31, INSPECTION, Fuel Pressure.> **CAUTION:** **Before attaching/detaching a fuel pressure gauge, release the fuel pressure.** NOTE: If the engine does not start, measure the fuel pressure five minutes after cranking is completed.	Is the measured value 147 kPa (1.5 kgf/cm^2, 21 psi) or more?	Go to step **111**.	Go to step **117**.
111	**CHECK CURRENT DATA.** 1) Turn the ignition switch to ON. (Engine OFF) 2) Read the value of «Long term fuel trim B1» using the Subaru Select Monitor. NOTE: For detailed operation procedures, refer to "Current Data Display For Engine". <Ref. to EN(H4DO)(diag)-45, DISPLAY CURRENT ENGINE DATA, OPERATION, Subaru Select Monitor.>	Does the value of «Long term fuel trim B1» fall within a range of –15 — 15%?	Go to step **112**.	Replace the fuel injector. <Ref. to FU(H4DO)-66, Fuel Injector.>
112	**CHECK FOR MALFUNCTION OCCURRENCE.** Start the engine and check the idling speed.	Is the idling speed stable all time?	It is possible that the fault comes from fuel. Replace fuel.	Go to step **113**.
113	**CHECK INSTALLATION CONDITION OF CRANKSHAFT POSITION SENSOR.**	Is the crankshaft position sensor installed correctly?	Go to step **114**.	Install the crankshaft position sensor correctly. <Ref. to FU(H4DO)-48, INSTALLATION, Crankshaft Position Sensor.>

	Step	Check	Yes	No
114	**CHECK HARNESS BETWEEN ECM AND CRANKSHAFT POSITION SENSOR CONNECTOR.** 1) Turn the ignition switch to OFF. 2) Disconnect the connector from ECM. 3) Measure the resistance of harness between ECM connector and crankshaft position sensor connector. ***Connector & terminal*** ***(E158) No. 40 — (E10) No. 1:*** ***(E158) No. 27 — (E10) No. 2:***	Is the resistance less than 1 Ω?	Go to step **115**.	Repair the open circuit in the harness between the ECM connector and crankshaft position sensor connector.
115	**CHECK HARNESS BETWEEN ECM AND CRANKSHAFT POSITION SENSOR CONNECTOR.** Measure the resistance between crankshaft position sensor connector and engine ground. ***Connector & terminal*** ***(E10) No. 1 — Engine ground:*** ***(E10) No. 2 — Engine ground:***	Is the resistance 1 MΩ or more?	Go to step **116**.	Repair short circuit to ground in harness between ECM connector and crankshaft position sensor connector.
116	**CHECK FOR MALFUNCTION OCCURRENCE.** 1) Replace the crankshaft position sensor. <Ref. to FU(H4DO)-47, Crankshaft Position Sensor.> 2) Check that the fault is removed.	Is the fault removed?	Perform the Clear Memory Mode to complete. <Ref. to EN(H4DO)(diag)-78, Clear Memory Mode.>	Replace the ECM. <Ref. to FU(H4DO)-82, Engine Control Module (ECM).>
117	**CHECK OF FUEL PUMP.** Check fuel pump. <Ref. to FU(H4DO)-121, INSPECTION, Fuel Pump.>	Is the fuel pump normal?	Go to step **118**.	Replace the fuel pump. <Ref. to FU(H4DO)-116, Fuel Pump.>
118	**CHECK FUEL PUMP SYSTEM.** Check fuel pump circuit. <Ref. to EN(H4DO)(diag)-98, FUEL PUMP CIRCUIT, Diagnostics for Engine Starting Failure.>	Is the fuel pump system normal?	Go to step **119**.	Repair the fuel pump circuit. <Ref. to EN(H4DO)(diag)-98, FUEL PUMP CIRCUIT, Diagnostics for Engine Starting Failure.>
119	**CHECK PURGE CONTROL SOLENOID VALVE.** Check the purge control solenoid valve. <Ref. to EC(H4DO)-24, INSPECTION, Purge Control Solenoid Valve.>	Is the purge control solenoid valve OK?	Go to step **120**.	Replace the faulty purge control solenoid valve. <Ref. to EC(H4DO)-21, Purge Control Solenoid Valve.>
120	**CHECK FUEL INJECTOR.** 1) After the engine is stopped, scavenge inside of the intake manifold by applying compressed air. 2) Measure the HC concentration inside the intake manifold 15 minutes after scavenging is completed. NOTE: • If HC concentration gauge is not available, go to the next step. • For measuring HC concentration, remove the vacuum hose between intake manifold assembly and purge control solenoid valve to measure the HC concentration in the intake manifold assembly.	Is the HC concentration less than 4,000 ppm?	Go to step **121**.	Replace the fuel injector. <Ref. to FU(H4DO)-66, Fuel Injector.>

	Step	Check	Yes	No
121	**CHECK INTAKE VALVE.** Check the intake valve. <Ref. to ME(H4DO)-191, INSPECTION, Cylinder Head.>	Is there any deposit in the intake valve?	Clean the intake valve. <Ref. to ME(H4DO)-171, Cylinder Head.>	Go to step **122**.
122	**CHECK ENGINE COOLANT TEMPERATURE SENSOR.** Check the engine coolant temperature sensor. <Ref. to FU(H4DO)-44, INSPECTION, Engine Coolant Temperature Sensor.>	Is the engine coolant temperature sensor normal?	Go to step **123**.	Replace the engine coolant temperature sensor. <Ref. to FU(H4DO)-43, Engine Coolant Temperature Sensor.>
123	**CHECK INSTALLATION CONDITION OF CRANKSHAFT POSITION SENSOR.**	Is the crankshaft position sensor installed correctly?	Go to step **124**.	Install the crankshaft position sensor correctly. <Ref. to FU(H4DO)-48, INSTALLATION, Crankshaft Position Sensor.>
124	**CHECK INSTALLATION CONDITION OF CAMSHAFT POSITION SENSOR.**	Is the camshaft position sensor installed correctly?	Go to step **125**.	Install the camshaft position sensor correctly. <Ref. to FU(H4DO)-52, INSTALLATION, Camshaft Position Sensor.>
125	**CHECK HARNESS BETWEEN ECM AND CRANKSHAFT POSITION SENSOR CONNECTOR.** 1) Turn the ignition switch to OFF. 2) Disconnect the connector from ECM. 3) Measure the resistance of harness between ECM connector and crankshaft position sensor connector. ***Connector & terminal*** ***(E158) No. 40 — (E10) No. 1:*** ***(E158) No. 27 — (E10) No. 2:***	Is the resistance less than 1 Ω?	Go to step **126**.	Repair the open circuit in the harness between the ECM connector and crankshaft position sensor connector.
126	**CHECK HARNESS BETWEEN ECM AND CRANKSHAFT POSITION SENSOR CONNECTOR.** Measure the resistance between crankshaft position sensor connector and engine ground. ***Connector & terminal*** ***(E10) No. 1 — Engine ground:*** ***(E10) No. 2 — Engine ground:***	Is the resistance 1 MΩ or more?	Go to step **127**.	Repair short circuit to ground in harness between ECM connector and crankshaft position sensor connector.
127	**CHECK POWER SUPPLY OF INTAKE CAMSHAFT POSITION SENSOR.** 1) Turn the ignition switch to OFF. 2) Disconnect the connector from the intake camshaft position sensor. 3) Turn the ignition switch to ON. 4) Measure the voltage between intake camshaft position sensor connector and engine ground. ***Connector & terminal*** ***(E35) No. 1 (+) — Engine ground (–):*** ***(E36) No. 1 (+) — Engine ground (–):***	Is the voltage 10 V or more?	Go to step **128**.	Repair the harness and connector. NOTE: In this case, repair the following item: • Open circuit or short circuit to ground in harness between main relay connector and intake camshaft position sensor connector • Poor contact of coupling connector

	Step	Check	Yes	No
128	**CHECK HARNESS BETWEEN ECM AND INTAKE CAMSHAFT POSITION SENSOR CONNECTOR.** 1) Turn the ignition switch to OFF. 2) Disconnect the connector from ECM. 3) Measure the resistance between ECM connector and intake camshaft position sensor connector. ***Connector & terminal*** ***(E158) No. 41 — (E35) No. 2:*** ***(E158) No. 42 — (E35) No. 3:*** ***(E158) No. 54 — (E36) No. 2:*** ***(E158) No. 42 — (E36) No. 3:***	Is the resistance less than 1 Ω?	Go to step **129**.	Repair the open circuit in the harness between ECM connector and intake camshaft position sensor connector.
129	**CHECK HARNESS BETWEEN ECM AND INTAKE CAMSHAFT POSITION SENSOR CONNECTOR.** Measure the resistance between intake camshaft position sensor connector and engine ground. ***Connector & terminal*** ***(E35) No. 2 — Engine ground:*** ***(E36) No. 2 — Engine ground:***	Is the resistance 1 MΩ or more?	Go to step **130**.	Repair short circuit to ground in the harness between ECM connector and intake camshaft position sensor connector.
130	**CHECK COMPRESSION PRESSURE.** Check the compression pressure. <Ref. to ME(H4DO)-24, INSPECTION, Compression.>	Is the compression pressure normal?	Go to step **131**.	Check the engine. <Ref. to ME(H4DO)-321, INSPECTION, Engine Trouble in General.>
131	**CHECK FOR MALFUNCTION OCCURRENCE.** 1) Replace the crankshaft position sensor. <Ref. to FU(H4DO)-47, Crankshaft Position Sensor.> 2) Check that the fault is removed.	Is the fault removed?	Perform the Clear Memory Mode to complete. <Ref. to EN(H4DO)(diag)-78, Clear Memory Mode.>	Go to step **132**.
132	**CHECK FOR MALFUNCTION OCCURRENCE.** 1) Replace the camshaft position sensor. <Ref. to FU(H4DO)-51, Camshaft Position Sensor.> 2) Check that the fault is removed.	Is the fault removed?	Perform the Clear Memory Mode to complete. <Ref. to EN(H4DO)(diag)-78, Clear Memory Mode.>	Check the valve timing. <Ref. to ME(H4DO)-97, Timing Chain Assembly.> When the valve timing is normal, replace the ECM. <Ref. to FU(H4DO)-82, Engine Control Module (ECM).>

1. OUTLINE OF DIAGNOSIS

Judge as NG when the status enters into any one of the followings.
- Although starter signal input is present in ECM, the engine does not start (diagnosis 1)
- Although starter signal input is present in ECM, starting takes more time than it should (diagnosis 1)
- The engine stops immediately after starting except by operating the ignition switch (diagnosis 2)

2. EXECUTION CONDITION

Diagnosis 1

Secondary Parameters	Execution condition
Starter signal	ON

Diagnosis 2

Secondary Parameters	Execution condition
Elapsed time after starting the engine	≤ 2 s

3. GENERAL DRIVING CYCLE

Perform the diagnosis continuously after the enable conditions have been established.

4. DIAGNOSTIC METHOD

Diagnosis 1

If the duration of time while the following conditions are met is longer than the time indicated, judge as NG.

Judgment Value

Malfunction Criteria	Threshold Value
Engine speed	< 500 rpm

Time Needed for Diagnosis: 2 — 26 seconds

Diagnosis 2

Judge as NG when the following conditions are established.

Judgment Value

Malfunction Criteria	Threshold Value
Engine speed	< 300 rpm

Time Needed for Diagnosis: Less than 1 second
Malfunction Indicator Light Illumination: Does not illuminate.

DX:DTC P1C00 BATTERY MONITOR MODULE "A" PERFORMANCE

DTC DETECTING CONDITION:
Immediately at fault recognition

CAUTION:
After servicing or replacing faulty parts, perform Clear Memory Mode <Ref. to EN(H4DO)(diag)-78, OPERATION, Clear Memory Mode.>, and Inspection Mode <Ref. to EN(H4DO)(diag)-64, PROCEDURE, Inspection Mode.>.

	Step	Check	Yes	No
1	**CHECK DTC.** Check for DTC. <Ref. to EN(H4DO)(diag)-63, Read Diagnostic Trouble Code (DTC).>	Is P1C00 displayed in «Present fault»?	Replace the battery sensor. <Ref. to SC(H4DO)-72, Battery Sensor.>	Even if DTC is detected, it has returned to a normal condition at this time. Reproduce the failure, and then perform the diagnosis again.

1. OUTLINE OF DIAGNOSIS

Judge as NG when faulty signal of each part is sent from the battery sensor.

2. COMPONENT DESCRIPTION

The battery sensor monitors the data of battery voltage, current, temperature, etc. ECM receives these data via LIN communication with the battery sensor.

3. EXECUTION CONDITION

Secondary Parameters	Execution condition
Ignition switch	ON

4. GENERAL DRIVING CYCLE

Perform the diagnosis continuously after the enable conditions have been established.

5. DIAGNOSTIC METHOD

Judge as NG when the following conditions are established.

Judgment Value

Malfunction Criteria	Threshold Value
Receives «Internal abnormal»	ON
or	
Receives «Temperature Sensor Error»	ON
or	
Receives «Voltage Sensor Error»	ON
or	
Receives «Current Sensor Error»	ON

Time Needed for Diagnosis: Less than 1 second
Malfunction Indicator Light Illumination: Does not illuminate.

DY:DTC P2004 TGV CONTROL STUCK OPEN BANK 1

DTC DETECTING CONDITION:
Immediately at fault recognition

CAUTION:
After servicing or replacing faulty parts, perform Clear Memory Mode <Ref. to EN(H4DO)(diag)-78, OPERATION, Clear Memory Mode.>, and Inspection Mode <Ref. to EN(H4DO)(diag)-64, PROCEDURE, Inspection Mode.>.

	Step	Check	Yes	No
1	**CHECK FOR ANY OTHER DTC ON DISPLAY.**	Is any other DTC displayed?	Check the appropriate DTC using the "List of Diagnostic Trouble Code (DTC)". <Ref. to EN(H4DO)(diag)-102, List of Diagnostic Trouble Code (DTC).>	Go to step **2**.
2	**CHECK TUMBLE GENERATOR VALVE RH.** 1) Remove the tumble generator valve assembly RH. 2) Check the tumble generator valve.	Is there any dirt or clogging with foreign objects in the tumble generator valve?	Clean the tumble generator valve.	Replace the tumble generator valve RH. <Ref. to FU(H4DO)-74, Tumble Generator Valve.>

1. OUTLINE OF DIAGNOSIS

Detect the malfunction of tumble generator valve motor function.
Judge open fixing malfunction when the opening degree is large even after finishing the tumble generator valve closing driving.

2. EXECUTION CONDITION

Secondary Parameters	Execution condition
Battery voltage	≥ 10.9 V
Tumble generator valve "close" signal output time	≥ 1600 ms

3. GENERAL DRIVING CYCLE

Always perform the diagnosis continuously.

4. DIAGNOSTIC METHOD

If the duration of time while the following conditions are met is longer than the time indicated, judge as NG.

Judgment Value

Malfunction Criteria	Threshold Value
Tumble generator valve opening angle	≥ 71.4 deg

Time Needed for Diagnosis: 3000 ms
Malfunction Indicator Light Illumination: Illuminates as soon as a malfunction occurs.

DZ:DTC P2005 TGV CONTROL STUCK OPEN BANK 2

DTC DETECTING CONDITION:
Immediately at fault recognition

CAUTION:
After servicing or replacing faulty parts, perform Clear Memory Mode <Ref. to EN(H4DO)(diag)-78, OPERATION, Clear Memory Mode.>, and Inspection Mode <Ref. to EN(H4DO)(diag)-64, PROCEDURE, Inspection Mode.>.

	Step	Check	Yes	No
1	**CHECK FOR ANY OTHER DTC ON DISPLAY.**	Is any other DTC displayed?	Check the appropriate DTC using the "List of Diagnostic Trouble Code (DTC)". <Ref. to EN(H4DO)(diag)-102, List of Diagnostic Trouble Code (DTC).>	Go to step **2**.
2	**CHECK TUMBLE GENERATOR VALVE LH.** 1) Remove the tumble generator valve assembly LH. 2) Check the tumble generator valve.	Is there any dirt or clogging with foreign objects in the tumble generator valve?	Clean the tumble generator valve.	Replace the tumble generator valve LH. <Ref. to FU(H4DO)-74, Tumble Generator Valve.>

1. OUTLINE OF DIAGNOSIS

Detect the malfunction of tumble generator valve motor function.
Judge open fixing malfunction when the opening degree is large even after finishing the tumble generator valve closing driving.

2. EXECUTION CONDITION

Secondary Parameters	Execution condition
Battery voltage	≥ 10.9 V
Tumble generator valve "close" signal output time	≥ 1600 ms

3. GENERAL DRIVING CYCLE

Always perform the diagnosis continuously.

4. DIAGNOSTIC METHOD

If the duration of time while the following conditions are met is longer than the time indicated, judge as NG.

Judgment Value

Malfunction Criteria	Threshold Value
Tumble generator valve opening angle	≥ 71.4 deg

Time Needed for Diagnosis: 3000 ms
Malfunction Indicator Light Illumination: Illuminates as soon as a malfunction occurs.

EA:DTC P2006 TGV CONTROL STUCK CLOSED BANK 1

DTC DETECTING CONDITION:
Immediately at fault recognition

CAUTION:
After servicing or replacing faulty parts, perform Clear Memory Mode <Ref. to EN(H4DO)(diag)-78, OPERATION, Clear Memory Mode.>, and Inspection Mode <Ref. to EN(H4DO)(diag)-64, PROCEDURE, Inspection Mode.>.

	Step	Check	Yes	No
1	**CHECK FOR ANY OTHER DTC ON DISPLAY.**	Is any other DTC displayed?	Check the appropriate DTC using the "List of Diagnostic Trouble Code (DTC)". <Ref. to EN(H4DO)(diag)-102, List of Diagnostic Trouble Code (DTC).>	Go to step **2**.
2	**CHECK TUMBLE GENERATOR VALVE RH.** 1) Remove the tumble generator valve assembly RH. 2) Check the tumble generator valve.	Is there any dirt or clogging with foreign objects in the tumble generator valve?	Clean the tumble generator valve.	Replace the tumble generator valve RH. <Ref. to FU(H4DO)-74, Tumble Generator Valve.>

1. OUTLINE OF DIAGNOSIS

Detect the malfunction of tumble generator valve motor function.
Judge close fixing malfunction when the opening degree is small even after finishing the tumble generator valve open driving.

2. EXECUTION CONDITION

Secondary Parameters	Execution condition
Battery voltage	≥ 10.9 V
Tumble generator valve "open" signal output time	≥ 1600 ms

3. GENERAL DRIVING CYCLE

Always perform the diagnosis continuously.

4. DIAGNOSTIC METHOD

If the duration of time while the following conditions are met is longer than the time indicated, judge as NG.

Judgment Value

Malfunction Criteria	Threshold Value
Tumble generator valve opening angle	< 71.4 deg

Time Needed for Diagnosis: 3000 ms
Malfunction Indicator Light Illumination: Illuminates as soon as a malfunction occurs.

EB:DTC P2007 TGV CONTROL STUCK CLOSED BANK 2

DTC DETECTING CONDITION:
Immediately at fault recognition

CAUTION:
After servicing or replacing faulty parts, perform Clear Memory Mode <Ref. to EN(H4DO)(diag)-78, OPERATION, Clear Memory Mode.>, and Inspection Mode <Ref. to EN(H4DO)(diag)-64, PROCEDURE, Inspection Mode.>.

	Step	Check	Yes	No
1	**CHECK FOR ANY OTHER DTC ON DISPLAY.**	Is any other DTC displayed?	Check the appropriate DTC using the "List of Diagnostic Trouble Code (DTC)". <Ref. to EN(H4DO)(diag)-102, List of Diagnostic Trouble Code (DTC).>	Go to step **2**.
2	**CHECK TUMBLE GENERATOR VALVE LH.** 1) Remove the tumble generator valve assembly LH. 2) Check the tumble generator valve.	Is there any dirt or clogging with foreign objects in the tumble generator valve?	Clean the tumble generator valve.	Replace the tumble generator valve LH. <Ref. to FU(H4DO)-74, Tumble Generator Valve.>

1. OUTLINE OF DIAGNOSIS

Detect the malfunction of tumble generator valve motor function.
Judge close fixing malfunction when the opening degree is small even after finishing the tumble generator valve open driving.

2. EXECUTION CONDITION

Secondary Parameters	Execution condition
Battery voltage	≥ 10.9 V
Tumble generator valve "open" signal output time	≥ 1600 ms

3. GENERAL DRIVING CYCLE

Always perform the diagnosis continuously.

4. DIAGNOSTIC METHOD

If the duration of time while the following conditions are met is longer than the time indicated, judge as NG.

Judgment Value

Malfunction Criteria	Threshold Value
Tumble generator valve opening angle	< 71.4 deg

Time Needed for Diagnosis: 3000 ms
Malfunction Indicator Light Illumination: Illuminates as soon as a malfunction occurs.

EC:DTC P2008 TGV CONTROL CIRCUIT/OPEN BANK 1

DTC DETECTING CONDITION:
Immediately at fault recognition

CAUTION:
After servicing or replacing faulty parts, perform Clear Memory Mode <Ref. to EN(H4DO)(diag)-78, OPERATION, Clear Memory Mode.>, and Inspection Mode <Ref. to EN(H4DO)(diag)-64, PROCEDURE, Inspection Mode.>.

WIRING DIAGRAM:

- Engine Electrical System ENGINE TYPE FB (WITHOUT PUSH BUTTON START) <Ref. to WI-170, ENGINE TYPE FB (WITHOUT PUSH BUTTON START), WIRING DIAGRAM, Engine Electrical System.>
- Engine Electrical System ENGINE TYPE FB (WITH PUSH BUTTON START) <Ref. to WI-184, ENGINE TYPE FB (WITH PUSH BUTTON START), WIRING DIAGRAM, Engine Electrical System.>

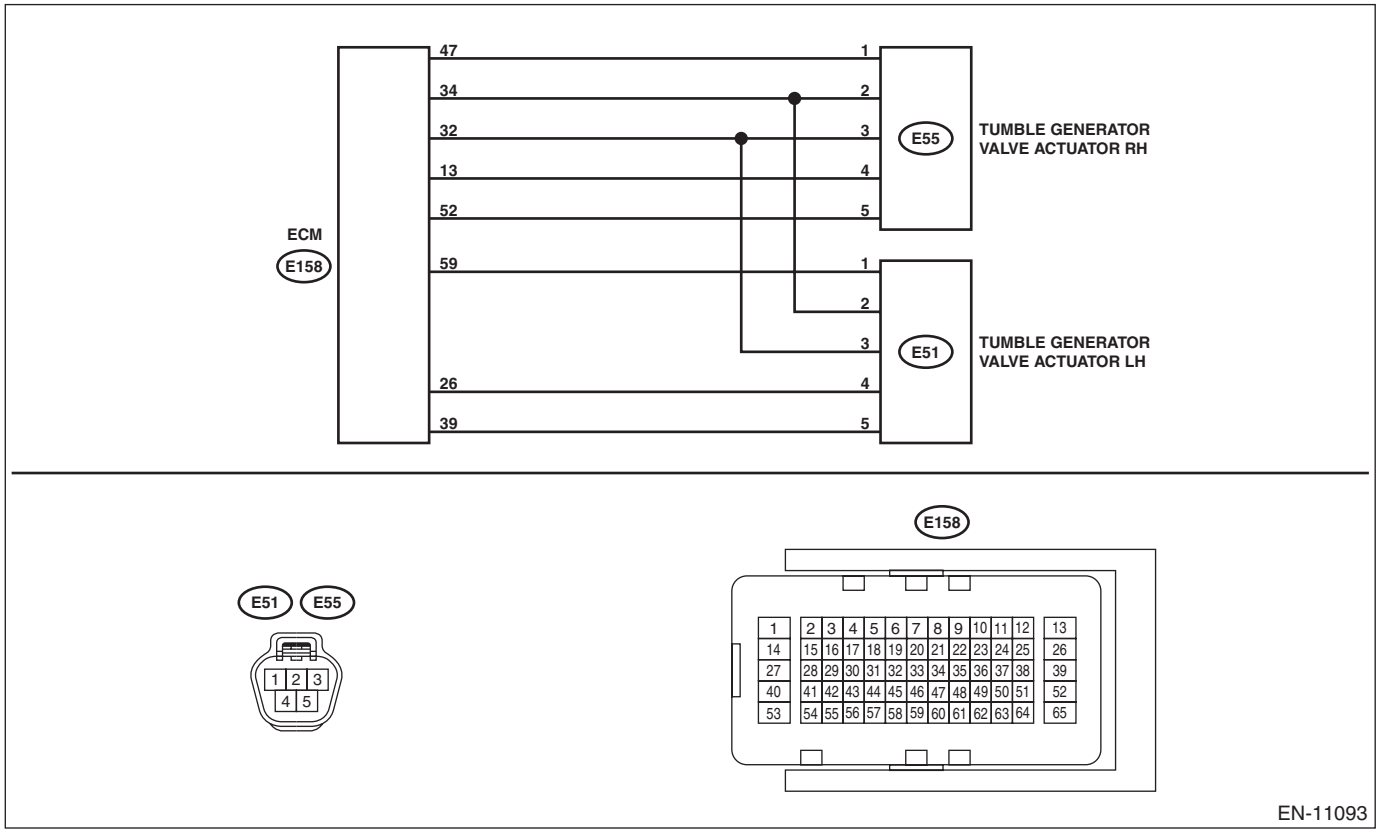

Step		Check	Yes	No
1	**CHECK HARNESS BETWEEN ECM AND TUMBLE GENERATOR VALVE ASSEMBLY RH CONNECTOR.** 1) Turn the ignition switch to OFF. 2) Disconnect the connectors from the ECM and tumble generator valve assembly RH. 3) Measure the resistance of harness between ECM connector and tumble generator valve assembly RH connector. ***Connector & terminal*** ***(E158) No. 52 — (E55) No. 5:*** ***(E158) No. 13 — (E55) No. 4:***	Is the resistance less than 1 Ω?	Go to step **2**.	Repair the harness and connector. NOTE: In this case, repair the following item: • Open circuit in harness between ECM connector and tumble generator valve assembly RH connector • Poor contact of coupling connector

	Step	Check	Yes	No
2	**CHECK HARNESS BETWEEN ECM AND TUMBLE GENERATOR VALVE ASSEMBLY RH CONNECTOR.** Measure the resistance between ECM connector and chassis ground. ***Connector & terminal*** ***(E158) No. 52 — Chassis ground:*** ***(E158) No. 13 — Chassis ground:***	Is the resistance 1 MΩ or more?	Go to step **3**.	Repair the short circuit to ground in harness between ECM connector and tumble generator valve assembly RH connector.
3	**CHECK FOR POOR CONTACT.** Check for poor contact of tumble generator valve assembly RH connector.	Is there poor contact of the tumble generator valve assembly RH connector?	Repair the poor contact of tumble generator valve assembly RH connector.	Replace the tumble generator valve assembly RH. <Ref. to FU(H4DO)-74, Tumble Generator Valve.>

1. OUTLINE OF DIAGNOSIS

Detect the open or short circuit of tumble generator valve motor.
Judge as NG when the open signal is sent from IC after tumble generator valve driving IC diagnosis.

2. COMPONENT DESCRIPTION

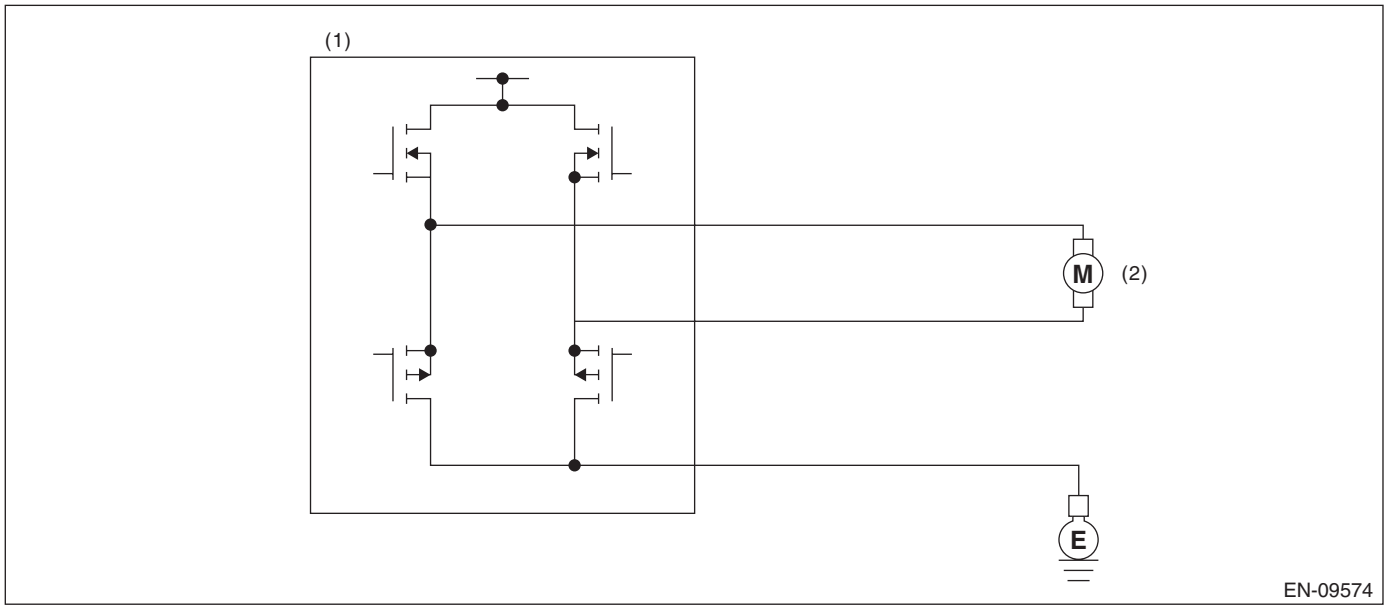

(1) Engine control module (ECM) (2) Tumble generator valve

3. EXECUTION CONDITION

Secondary Parameters	Execution condition
Battery voltage	≥ 10.9 V
Tumble generator valve drive duty	≤ 79.17%

4. GENERAL DRIVING CYCLE

Perform the diagnosis continuously after the enable conditions have been established.

5. DIAGNOSTIC METHOD

If the duration of time while the following conditions are met is longer than the time indicated, judge as NG.

Judgment Value

Malfunction Criteria	Threshold Value
Output voltage	> Battery voltage × 0.55

Time Needed for Diagnosis: 96 ms × 20 time(s)
Malfunction Indicator Light Illumination: Illuminates as soon as a malfunction occurs.

ED:DTC P2009 TGV CONTROL CIRCUIT LOW BANK 1

DTC DETECTING CONDITION:
Immediately at fault recognition

CAUTION:
After servicing or replacing faulty parts, perform Clear Memory Mode <Ref. to EN(H4DO)(diag)-78, OPERATION, Clear Memory Mode.>, and Inspection Mode <Ref. to EN(H4DO)(diag)-64, PROCEDURE, Inspection Mode.>.

WIRING DIAGRAM:

- Engine Electrical System ENGINE TYPE FB (WITHOUT PUSH BUTTON START) <Ref. to WI-170, ENGINE TYPE FB (WITHOUT PUSH BUTTON START), WIRING DIAGRAM, Engine Electrical System.>
- Engine Electrical System ENGINE TYPE FB (WITH PUSH BUTTON START) <Ref. to WI-184, ENGINE TYPE FB (WITH PUSH BUTTON START), WIRING DIAGRAM, Engine Electrical System.>

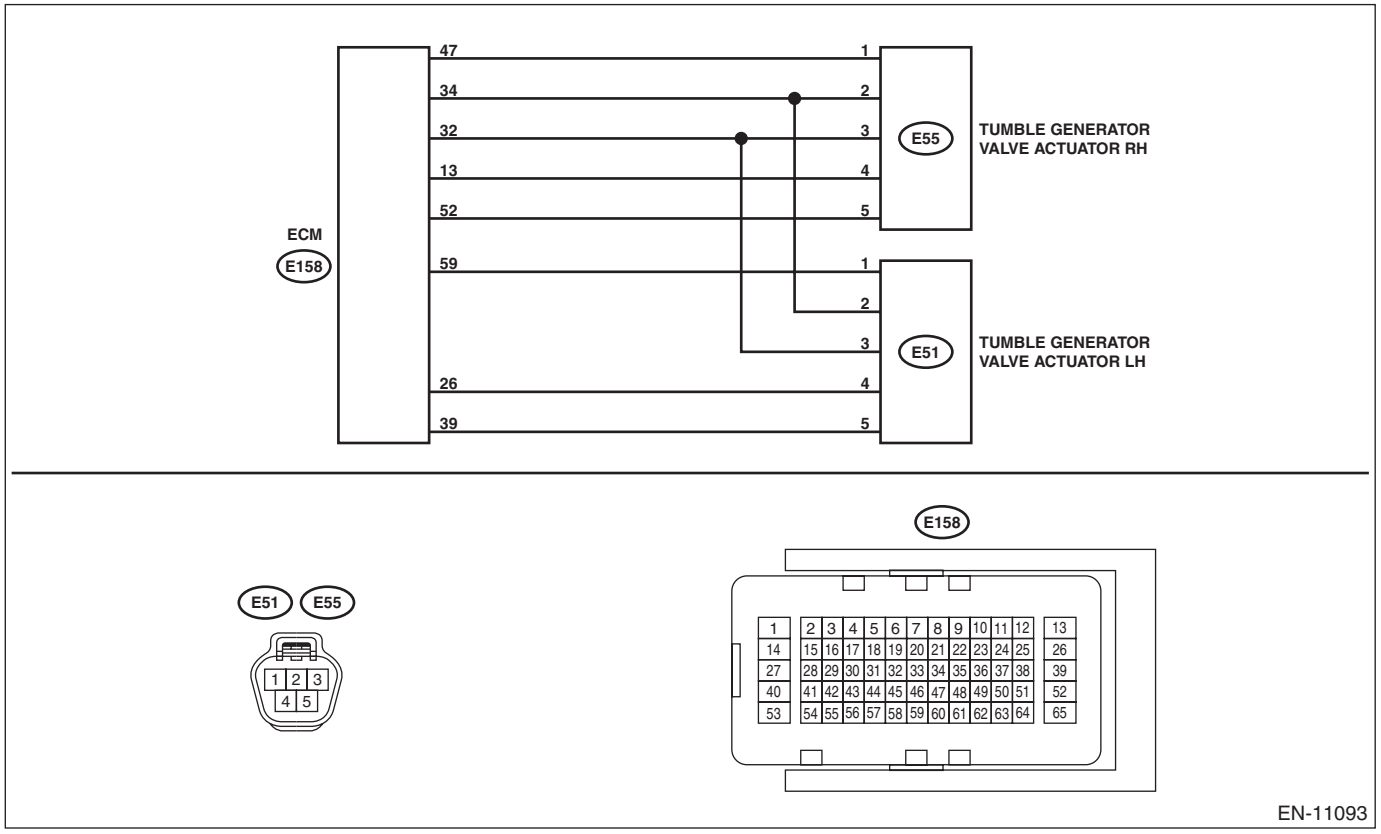

Step		Check	Yes	No
1	**CHECK HARNESS BETWEEN ECM AND TUMBLE GENERATOR VALVE ACTUATOR RH CONNECTOR.** 1) Turn the ignition switch to OFF. 2) Disconnect the connector from ECM. 3) Measure the voltage between ECM connector and chassis ground. ***Connector & terminal*** ***(E158) No. 13 (+) — Chassis ground (–):*** ***(E158) No. 52 (+) — Chassis ground (–):***	Is the voltage 5 V or more?	Repair the short circuit to power in harness between ECM connector and tumble generator valve actuator RH connector.	Replace the tumble generator valve actuator RH. <Ref. to FU(H4DO)-75, Tumble Generator Valve Actuator.>

1. OUTLINE OF DIAGNOSIS

Detect the open or short circuit of tumble generator valve motor.
Judge as NG when the overcurrent signal is sent from IC after tumble generator valve driving IC diagnosis.

2. COMPONENT DESCRIPTION

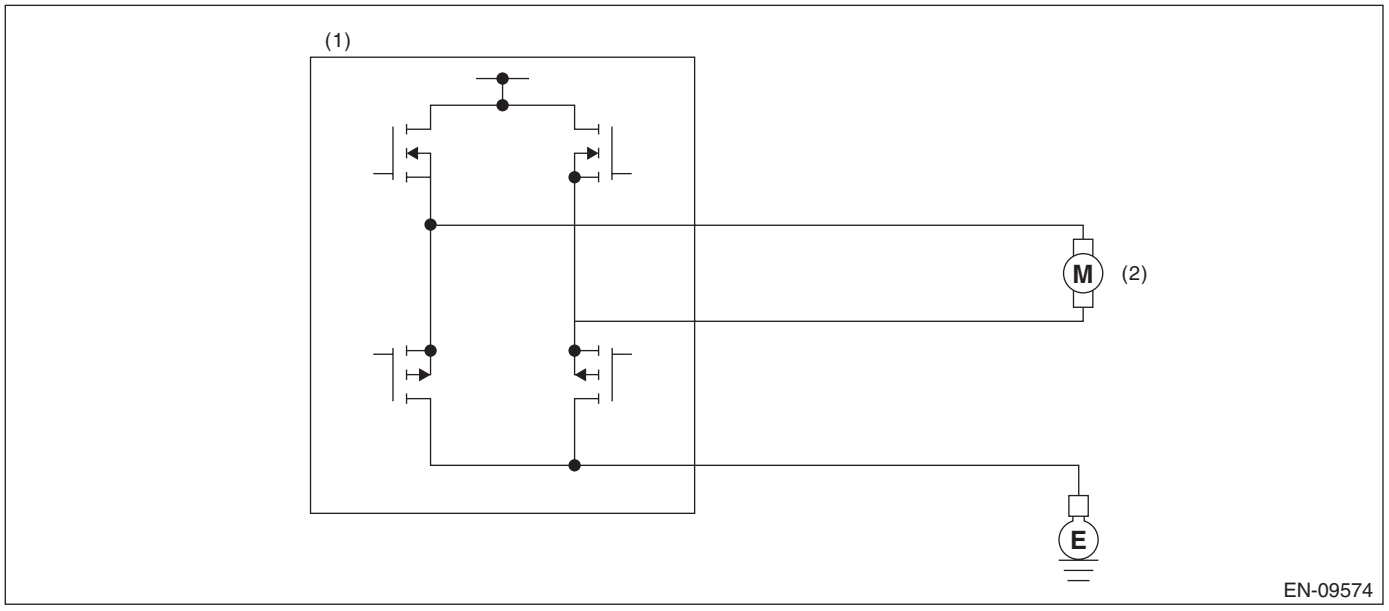

(1) Engine control module (ECM) (2) Tumble generator valve

3. EXECUTION CONDITION

Secondary Parameters	Execution condition
Battery voltage	≥ 10.9 V
Tumble generator valve drive signal	Open or Closed

4. GENERAL DRIVING CYCLE

Perform the diagnosis continuously after the enable conditions have been established.

5. DIAGNOSTIC METHOD

If the duration of time while the following conditions are met is longer than the time indicated, judge as NG.

Judgment Value

Malfunction Criteria	Threshold Value
Overcurrent signal from tumble generator valve drive IC	ON

Time Needed for Diagnosis: 96 ms × 10 time(s)
Malfunction Indicator Light Illumination: Illuminates as soon as a malfunction occurs.

EE:DTC P2011 TGV CONTROL CIRCUIT/OPEN BANK 2

DTC DETECTING CONDITION:
Immediately at fault recognition

CAUTION:
After servicing or replacing faulty parts, perform Clear Memory Mode <Ref. to EN(H4DO)(diag)-78, OPERATION, Clear Memory Mode.>, and Inspection Mode <Ref. to EN(H4DO)(diag)-64, PROCEDURE, Inspection Mode.>.

WIRING DIAGRAM:

- Engine Electrical System ENGINE TYPE FB (WITHOUT PUSH BUTTON START) <Ref. to WI-170, ENGINE TYPE FB (WITHOUT PUSH BUTTON START), WIRING DIAGRAM, Engine Electrical System.>
- Engine Electrical System ENGINE TYPE FB (WITH PUSH BUTTON START) <Ref. to WI-184, ENGINE TYPE FB (WITH PUSH BUTTON START), WIRING DIAGRAM, Engine Electrical System.>

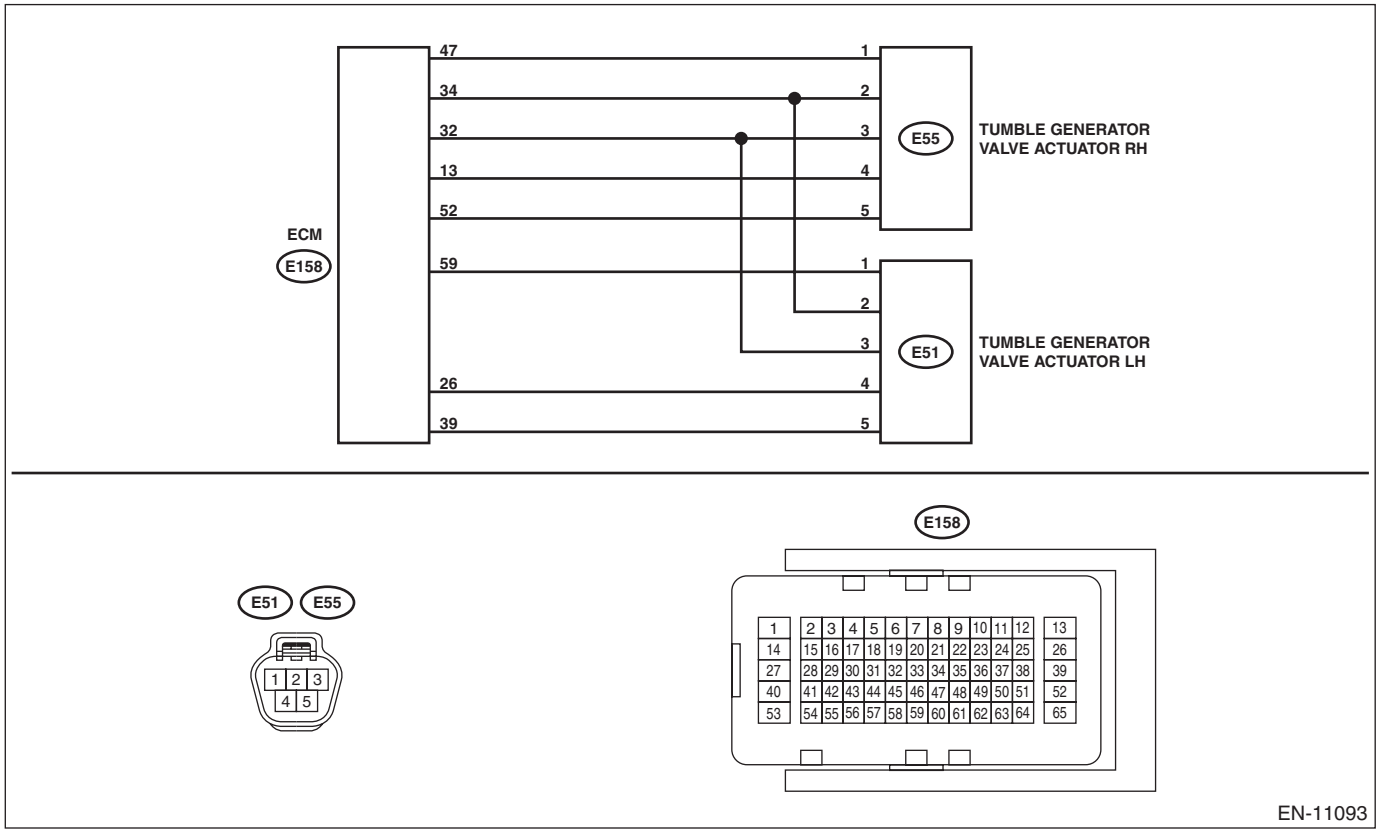

Step		Check	Yes	No
1	**CHECK HARNESS BETWEEN ECM AND TUMBLE GENERATOR VALVE ASSEMBLY LH CONNECTOR.** 1) Turn the ignition switch to OFF. 2) Disconnect the connectors from ECM and tumble generator valve assembly LH. 3) Measure the resistance of harness between ECM connector and tumble generator valve assembly LH connector. ***Connector & terminal*** ***(E158) No. 39 — (E51) No. 5:*** ***(E158) No. 26 — (E51) No. 4:***	Is the resistance less than 1 Ω?	Go to step **2**.	Repair the harness and connector. NOTE: In this case, repair the following item: • Open circuit in harness between ECM connector and tumble generator valve assembly LH connector • Poor contact of coupling connector

	Step	Check	Yes	No
2	**CHECK HARNESS BETWEEN ECM AND TUMBLE GENERATOR VALVE ASSEMBLY LH CONNECTOR.** Measure the resistance between ECM connector and chassis ground. ***Connector & terminal*** ***(E158) No. 39 — Chassis ground:*** ***(E158) No. 26 — Chassis ground:***	Is the resistance 1 MΩ or more?	Go to step **3**.	Repair the short circuit to ground in harness between ECM connector and tumble generator valve assembly LH connector.
3	**CHECK FOR POOR CONTACT.** Check for poor contact of tumble generator valve assembly LH connector.	Is there poor contact of the tumble generator valve assembly LH connector?	Repair the poor contact of tumble generator valve assembly LH connector.	Replace the tumble generator valve assembly LH. <Ref. to FU(H4DO)-74, Tumble Generator Valve.>

1. OUTLINE OF DIAGNOSIS

NOTE:
For the detection standard, refer to DTC P2008. <Ref. to EN(H4DO)(diag)-475, DTC P2008 TGV CONTROL CIRCUIT/OPEN BANK 1, Diagnostic Procedure with Diagnostic Trouble Code (DTC).>

EF:DTC P2012 TGV CONTROL CIRCUIT LOW BANK 2

DTC DETECTING CONDITION:
Immediately at fault recognition

CAUTION:
After servicing or replacing faulty parts, perform Clear Memory Mode <Ref. to EN(H4DO)(diag)-78, OPERATION, Clear Memory Mode.>, and Inspection Mode <Ref. to EN(H4DO)(diag)-64, PROCEDURE, Inspection Mode.>.

WIRING DIAGRAM:

- Engine Electrical System ENGINE TYPE FB (WITHOUT PUSH BUTTON START) <Ref. to WI-170, ENGINE TYPE FB (WITHOUT PUSH BUTTON START), WIRING DIAGRAM, Engine Electrical System.>
- Engine Electrical System ENGINE TYPE FB (WITH PUSH BUTTON START) <Ref. to WI-184, ENGINE TYPE FB (WITH PUSH BUTTON START), WIRING DIAGRAM, Engine Electrical System.>

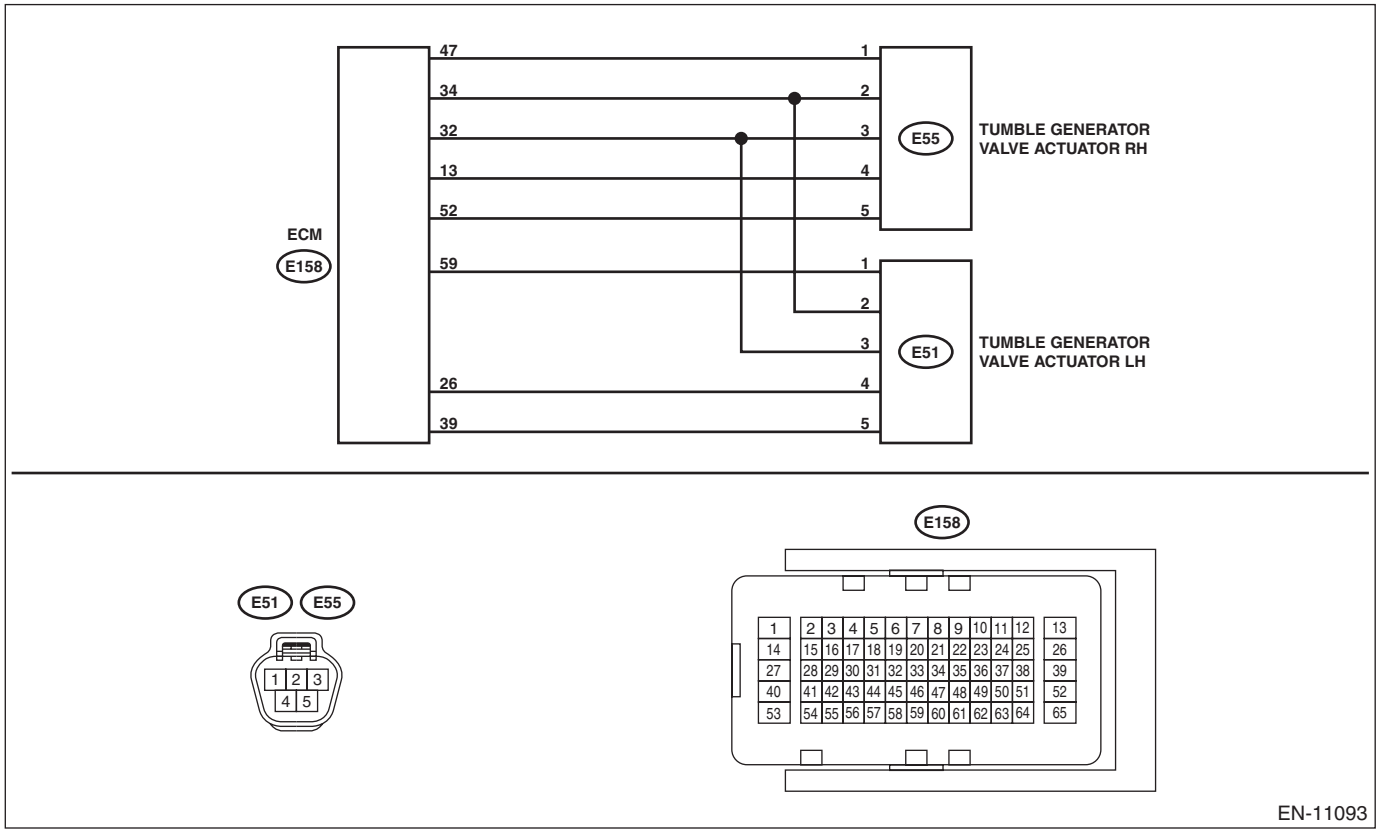

Step		Check	Yes	No
1	**CHECK HARNESS BETWEEN ECM AND TUMBLE GENERATOR VALVE ACTUATOR LH CONNECTOR.** 1) Turn the ignition switch to OFF. 2) Disconnect the connector from ECM. 3) Measure the voltage between ECM connector and chassis ground. ***Connector & terminal*** ***(E158) No. 26 (+) — Chassis ground (–):*** ***(E158) No. 39 (+) — Chassis ground (–):***	Is the voltage 5 V or more?	Repair the short circuit to power in harness between ECM connector and tumble generator valve actuator LH connector.	Replace the tumble generator valve actuator LH. <Ref. to FU(H4DO)-75, Tumble Generator Valve Actuator.>

1. OUTLINE OF DIAGNOSIS

NOTE:
For the detection standard, refer to DTC P2009. <Ref. to EN(H4DO)(diag)-478, DTC P2009 TGV CONTROL CIRCUIT LOW BANK 1, Diagnostic Procedure with Diagnostic Trouble Code (DTC).>

EG:DTC P2016 TGV POSITION SENSOR/SWITCH CIRCUIT LOW BANK 1

DTC DETECTING CONDITION:
Immediately at fault recognition
TROUBLE SYMPTOM:

- Improper idling
- Engine stalls.
- Poor driving performance

CAUTION:
After servicing or replacing faulty parts, perform Clear Memory Mode <Ref. to EN(H4DO)(diag)-78, OPERATION, Clear Memory Mode.>, and Inspection Mode <Ref. to EN(H4DO)(diag)-64, PROCEDURE, Inspection Mode.>.
WIRING DIAGRAM:

- Engine Electrical System ENGINE TYPE FB (WITHOUT PUSH BUTTON START) <Ref. to WI-170, ENGINE TYPE FB (WITHOUT PUSH BUTTON START), WIRING DIAGRAM, Engine Electrical System.>
- Engine Electrical System ENGINE TYPE FB (WITH PUSH BUTTON START) <Ref. to WI-184, ENGINE TYPE FB (WITH PUSH BUTTON START), WIRING DIAGRAM, Engine Electrical System.>

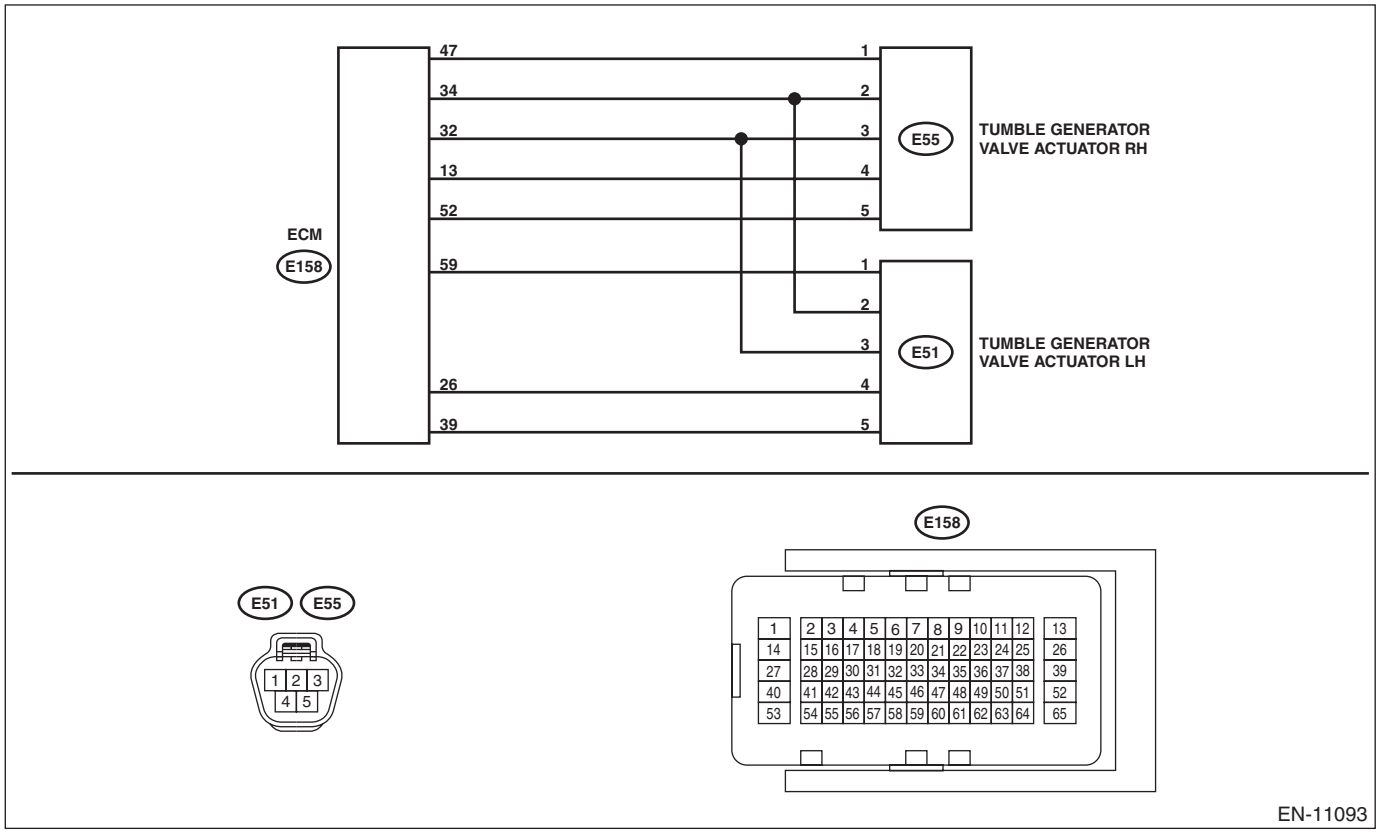

	Step	Check	Yes	No
1	**CHECK CURRENT DATA.** 1) Start the engine. 2) Read the value of «TGV Position Sensor R» using the Subaru Select Monitor. NOTE: For detailed operation procedures, refer to "Current Data Display For Engine". <Ref. to EN(H4DO)(diag)-45, Subaru Select Monitor.>	Is the value of «TGV Position Sensor R» less than 0.2 V?	Go to step **2**.	Even if DTC is detected, the circuit has returned to a normal condition at this time. Reproduce the failure, and then perform the diagnosis again. NOTE: In this case, temporary poor contact of connector, temporary open or short circuit of harness may be the cause.
2	**CHECK POWER SUPPLY OF TUMBLE GENERATOR VALVE ACTUATOR RH.** 1) Turn the ignition switch to OFF. 2) Disconnect the connector from tumble generator valve actuator RH. 3) Turn the ignition switch to ON. 4) Measure the voltage between tumble generator valve actuator RH connector and engine ground. ***Connector & terminal*** ***(E55) No. 3 (+) — Engine ground (–):***	Is the voltage 4.5 V or more?	Go to step **3**.	Repair the harness and connector. NOTE: In this case, repair the following item: • Open circuit in harness between ECM connector and tumble generator valve actuator RH connector • Poor contact of ECM connector
3	**CHECK HARNESS BETWEEN ECM AND TUMBLE GENERATOR VALVE ACTUATOR RH CONNECTOR.** 1) Turn the ignition switch to OFF. 2) Disconnect the connector from ECM. 3) Measure the resistance of harness between ECM connector and tumble generator valve actuator RH connector. ***Connector & terminal*** ***(E158) No. 47 — (E55) No. 1:***	Is the resistance less than 1 Ω?	Go to step **4**.	Repair the open circuit in harness between ECM connector and tumble generator valve actuator RH connector.
4	**CHECK HARNESS BETWEEN ECM AND TUMBLE GENERATOR VALVE ACTUATOR RH CONNECTOR.** Measure the resistance between the ECM connector and engine ground. ***Connector & terminal*** ***(E158) No. 47 — Engine ground:***	Is the resistance 1 MΩ or more?	Go to step **5**.	Repair the short circuit to ground in harness between ECM connector and tumble generator valve actuator RH connector.
5	**CHECK FOR POOR CONTACT.** Check for poor contact of ECM and tumble generator valve actuator RH connector.	Is there poor contact of ECM or the tumble generator valve actuator RH connector?	Repair the poor contact of ECM or tumble generator valve actuator RH connector.	Replace the tumble generator valve actuator RH. <Ref. to FU(H4DO)-74, Tumble Generator Valve.>

1. OUTLINE OF DIAGNOSIS

Detect open or short circuit of tumble generator valve position sensor.
Judge as NG if out of specification.

2. COMPONENT DESCRIPTION

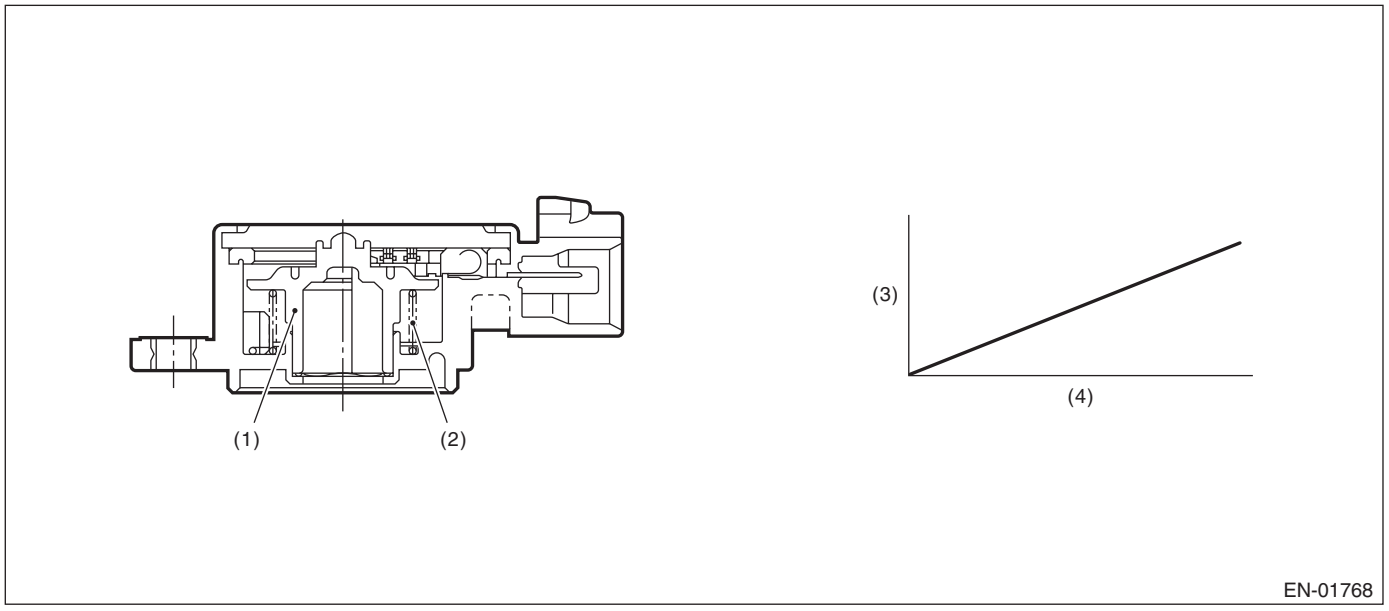

(1) Rotor
(2) Return spring
(3) Voltage (V)
(4) Tumble generator valve opening angle (°)

3. EXECUTION CONDITION

Secondary Parameters	Execution condition
None	

4. GENERAL DRIVING CYCLE

Always perform the diagnosis continuously.

5. DIAGNOSTIC METHOD

If the duration of time while the following conditions are met is longer than the time indicated, judge as NG.

Judgment Value

Malfunction Criteria	Threshold Value
Output voltage	< 0.213 V

Time Needed for Diagnosis: 500 ms
Malfunction Indicator Light Illumination: Illuminates as soon as a malfunction occurs.

EH:DTC P2017 TGV POSITION SENSOR/SWITCH CIRCUIT HIGH BANK 1

DTC DETECTING CONDITION:
Immediately at fault recognition
TROUBLE SYMPTOM:

- Improper idling
- Engine stalls.
- Poor driving performance

CAUTION:
After servicing or replacing faulty parts, perform Clear Memory Mode <Ref. to EN(H4DO)(diag)-78, OPERATION, Clear Memory Mode.>, and Inspection Mode <Ref. to EN(H4DO)(diag)-64, PROCEDURE, Inspection Mode.>.
WIRING DIAGRAM:

- Engine Electrical System ENGINE TYPE FB (WITHOUT PUSH BUTTON START) <Ref. to WI-170, ENGINE TYPE FB (WITHOUT PUSH BUTTON START), WIRING DIAGRAM, Engine Electrical System.>
- Engine Electrical System ENGINE TYPE FB (WITH PUSH BUTTON START) <Ref. to WI-184, ENGINE TYPE FB (WITH PUSH BUTTON START), WIRING DIAGRAM, Engine Electrical System.>

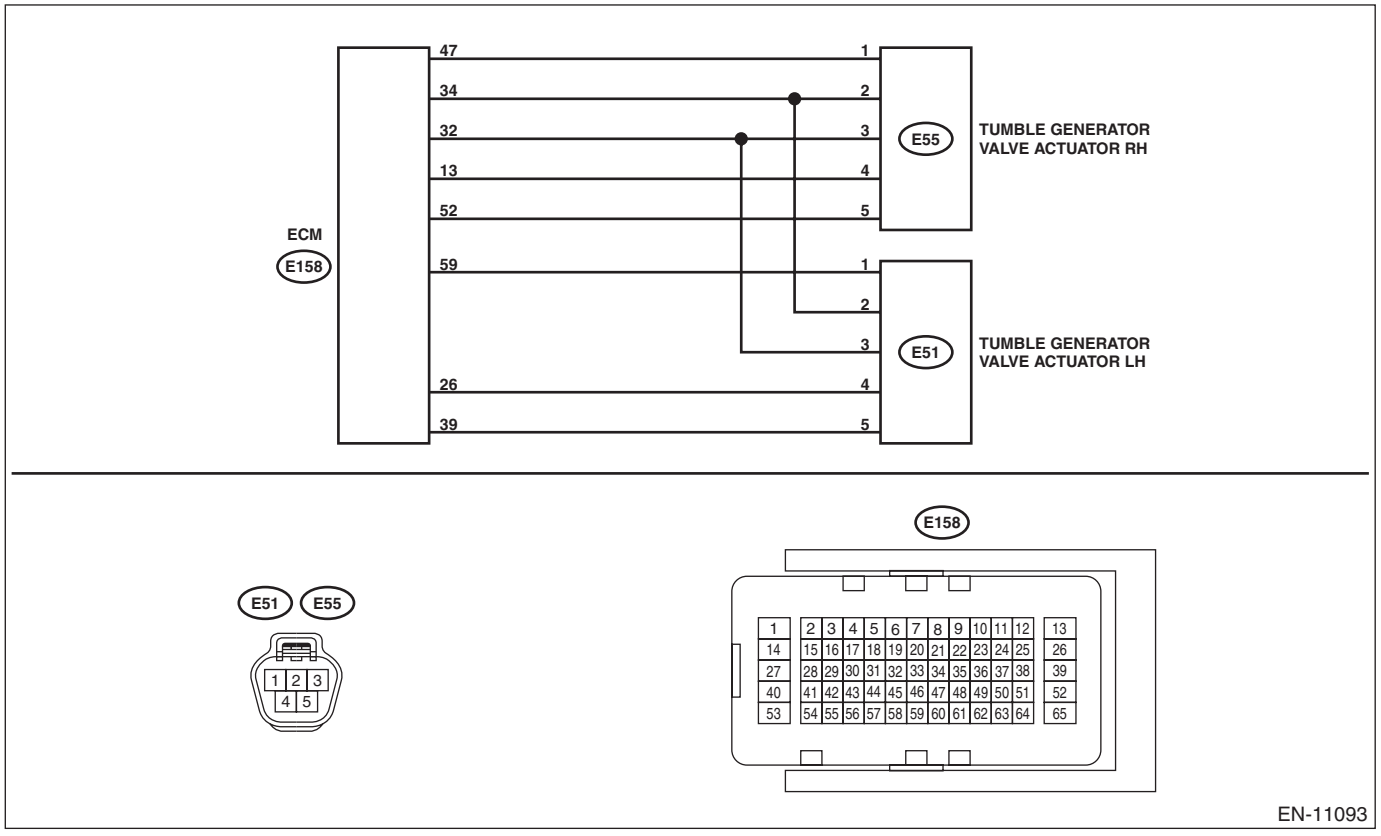

	Step	Check	Yes	No
1	**CHECK CURRENT DATA.** 1) Start the engine. 2) Read the value of «TGV Position Sensor R» using the Subaru Select Monitor. NOTE: For detailed operation procedures, refer to "Current Data Display For Engine". <Ref. to EN(H4DO)(diag)-45, Subaru Select Monitor.>	Is the value of «TGV Position Sensor R» 5 V or more?	Go to step **2**.	Even if DTC is detected, the circuit has returned to a normal condition at this time. Reproduce the failure, and then perform the diagnosis again. NOTE: In this case, temporary poor contact of connector, temporary open or short circuit of harness may be the cause.
2	**CHECK HARNESS BETWEEN ECM AND TUMBLE GENERATOR VALVE ACTUATOR RH CONNECTOR.** 1) Turn the ignition switch to OFF. 2) Disconnect the connector from tumble generator valve actuator RH. 3) Start the engine. 4) Read the value of «TGV Position Sensor R» using the Subaru Select Monitor. NOTE: For detailed operation procedures, refer to "Current Data Display For Engine". <Ref. to EN(H4DO)(diag)-45, Subaru Select Monitor.>	Is the value of «TGV Position Sensor R» 5 V or more?	Repair the short circuit to power in harness between ECM connector and tumble generator valve actuator RH connector.	Go to step **3**.
3	**CHECK HARNESS BETWEEN ECM AND TUMBLE GENERATOR VALVE ACTUATOR RH CONNECTOR.** 1) Turn the ignition switch to OFF. 2) Measure the resistance of harness between tumble generator valve actuator RH connector and engine ground. ***Connector & terminal*** ***(E55) No. 2 — Engine ground:***	Is the resistance less than 5 Ω?	Go to step **4**.	Repair the harness and connector. NOTE: In this case, repair the following item: • Open circuit in harness between ECM connector and tumble generator valve actuator RH connector • Poor contact of ECM connector
4	**CHECK FOR POOR CONTACT.** Check for poor contact of tumble generator valve actuator RH connector.	Is there poor contact of the tumble generator valve actuator RH connector?	Repair the poor contact of tumble generator valve actuator RH connector.	Replace the tumble generator valve actuator RH. <Ref. to FU(H4DO)-74, Tumble Generator Valve.>

1. OUTLINE OF DIAGNOSIS

Detect open or short circuit of tumble generator valve position sensor.
Judge as NG if out of specification.

2. COMPONENT DESCRIPTION

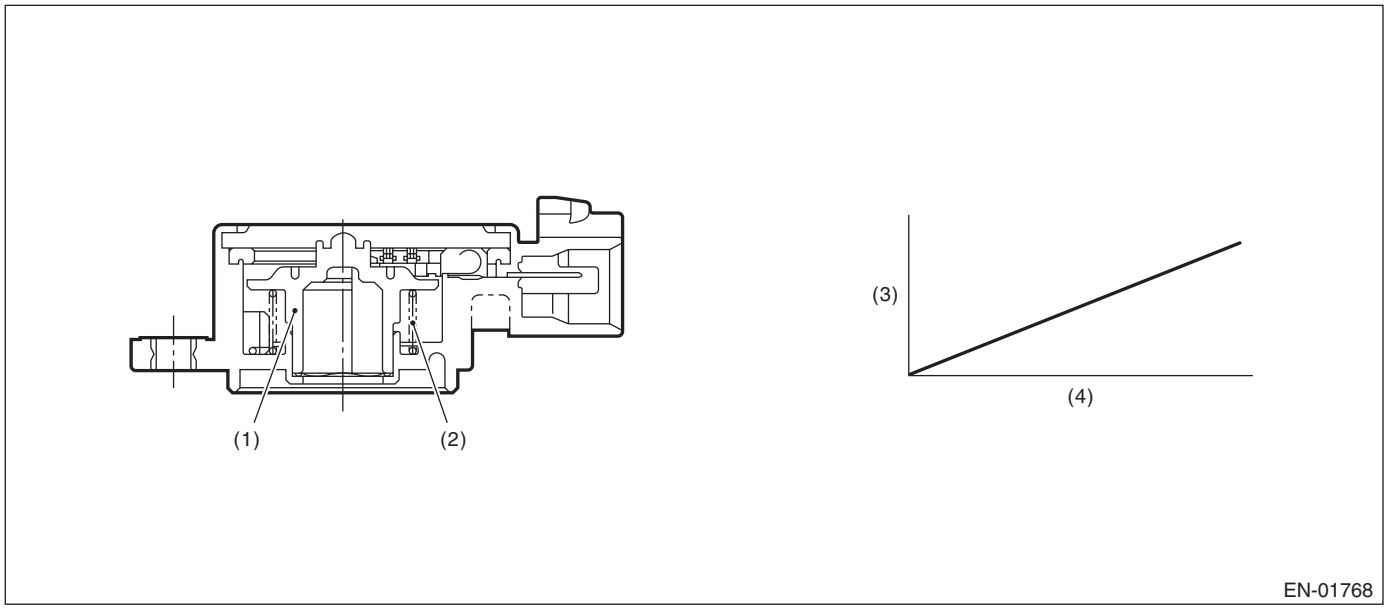

(1) Rotor
(2) Return spring
(3) Voltage (V)
(4) Tumble generator valve opening angle (°)

3. EXECUTION CONDITION

Secondary Parameters	Execution condition
None	

4. GENERAL DRIVING CYCLE

Always perform the diagnosis continuously.

5. DIAGNOSTIC METHOD

If the duration of time while the following conditions are met is longer than the time indicated, judge as NG.

Judgment Value

Malfunction Criteria	Threshold Value
Output voltage	≥ 4.757 V

Time Needed for Diagnosis: 500 ms
Malfunction Indicator Light Illumination: Illuminates as soon as a malfunction occurs.

EI: DTC P2021 TGV POSITION SENSOR/SWITCH CIRCUIT LOW BANK 2

DTC DETECTING CONDITION:
Immediately at fault recognition
TROUBLE SYMPTOM:
- Improper idling
- Engine stalls.
- Poor driving performance

CAUTION:
After servicing or replacing faulty parts, perform Clear Memory Mode <Ref. to EN(H4DO)(diag)-78, OPERATION, Clear Memory Mode.>, and Inspection Mode <Ref. to EN(H4DO)(diag)-64, PROCEDURE, Inspection Mode.>.
WIRING DIAGRAM:
- Engine Electrical System ENGINE TYPE FB (WITHOUT PUSH BUTTON START) <Ref. to WI-170, ENGINE TYPE FB (WITHOUT PUSH BUTTON START), WIRING DIAGRAM, Engine Electrical System.>
- Engine Electrical System ENGINE TYPE FB (WITH PUSH BUTTON START) <Ref. to WI-184, ENGINE TYPE FB (WITH PUSH BUTTON START), WIRING DIAGRAM, Engine Electrical System.>

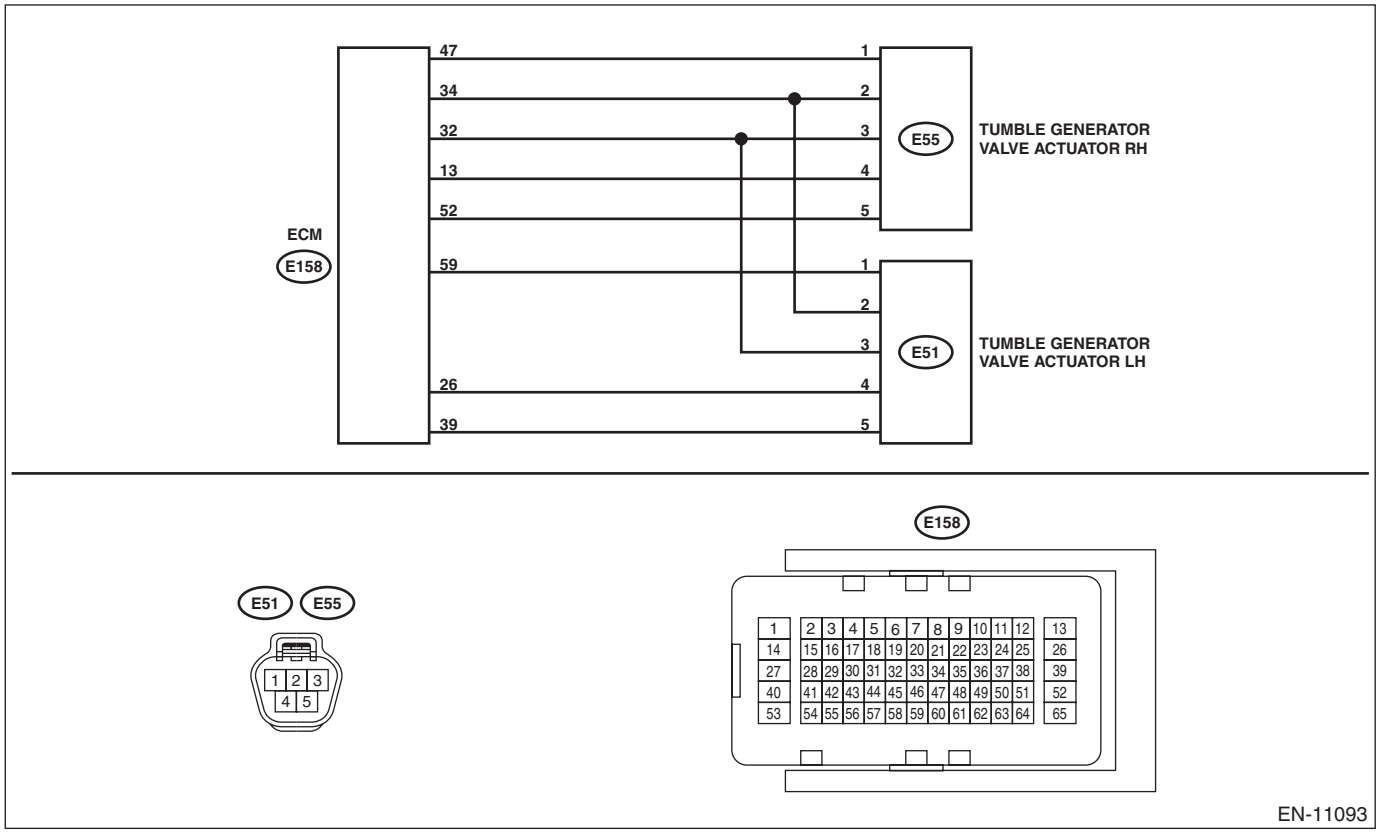

	Step	Check	Yes	No
1	**CHECK CURRENT DATA.** 1) Start the engine. 2) Read the value of «TGV Position Sensor L» using the Subaru Select Monitor. NOTE: For detailed operation procedures, refer to "Current Data Display For Engine". <Ref. to EN(H4DO)(diag)-45, Subaru Select Monitor.>	Is the value of «TGV Position Sensor L» less than 0.2 V?	Go to step **2**.	Even if DTC is detected, the circuit has returned to a normal condition at this time. Reproduce the failure, and then perform the diagnosis again. NOTE: In this case, temporary poor contact of connector, temporary open or short circuit of harness may be the cause.
2	**CHECK POWER SUPPLY OF TUMBLE GENERATOR VALVE ACTUATOR LH.** 1) Turn the ignition switch to OFF. 2) Disconnect the connector from tumble generator valve actuator LH. 3) Turn the ignition switch to ON. 4) Measure the voltage between tumble generator valve actuator LH connector and engine ground. ***Connector & terminal*** ***(E51) No. 3 (+) — Engine ground (–):***	Is the voltage 4.5 V or more?	Go to step **3**.	Repair the harness and connector. NOTE: In this case, repair the following item: • Open circuit in harness between ECM connector and tumble generator valve actuator LH connector • Poor contact of ECM connector
3	**CHECK HARNESS BETWEEN ECM AND TUMBLE GENERATOR VALVE ACTUATOR LH CONNECTOR.** 1) Turn the ignition switch to OFF. 2) Disconnect the connector from ECM. 3) Measure the resistance of harness between ECM connector and tumble generator valve actuator LH connector. ***Connector & terminal*** ***(E158) No. 59 — (E51) No. 1:***	Is the resistance less than 1 Ω?	Go to step **4**.	Repair the open circuit in harness between ECM connector and tumble generator valve actuator LH connector.
4	**CHECK HARNESS BETWEEN ECM AND TUMBLE GENERATOR VALVE ACTUATOR LH CONNECTOR.** Measure the resistance between the ECM connector and engine ground. ***Connector & terminal*** ***(E158) No. 59 — Engine ground:***	Is the resistance 1 MΩ or more?	Go to step **5**.	Repair the short circuit to ground in harness between ECM connector and tumble generator valve actuator LH connector.
5	**CHECK FOR POOR CONTACT.** Check for poor contact of ECM and tumble generator valve actuator LH connector.	Is there poor contact of ECM or the tumble generator valve actuator LH connector?	Repair the poor contact of ECM or tumble generator valve actuator LH connector.	Replace the tumble generator valve actuator LH. <Ref. to FU(H4DO)-74, Tumble Generator Valve.>

1. OUTLINE OF DIAGNOSIS

NOTE:
For the detection standard, refer to DTC P2016. <Ref. to EN(H4DO)(diag)-483, DTC P2016 TGV POSITION SENSOR/SWITCH CIRCUIT LOW BANK 1, Diagnostic Procedure with Diagnostic Trouble Code (DTC).>

EJ: DTC P2022 TGV POSITION SENSOR/SWITCH CIRCUIT HIGH BANK 2

DTC DETECTING CONDITION:
Immediately at fault recognition
TROUBLE SYMPTOM:

- Improper idling
- Engine stalls.
- Poor driving performance

CAUTION:
After servicing or replacing faulty parts, perform Clear Memory Mode <Ref. to EN(H4DO)(diag)-78, OPERATION, Clear Memory Mode.>, and Inspection Mode <Ref. to EN(H4DO)(diag)-64, PROCEDURE, Inspection Mode.>.
WIRING DIAGRAM:

- Engine Electrical System ENGINE TYPE FB (WITHOUT PUSH BUTTON START) <Ref. to WI-170, ENGINE TYPE FB (WITHOUT PUSH BUTTON START), WIRING DIAGRAM, Engine Electrical System.>
- Engine Electrical System ENGINE TYPE FB (WITH PUSH BUTTON START) <Ref. to WI-184, ENGINE TYPE FB (WITH PUSH BUTTON START), WIRING DIAGRAM, Engine Electrical System.>

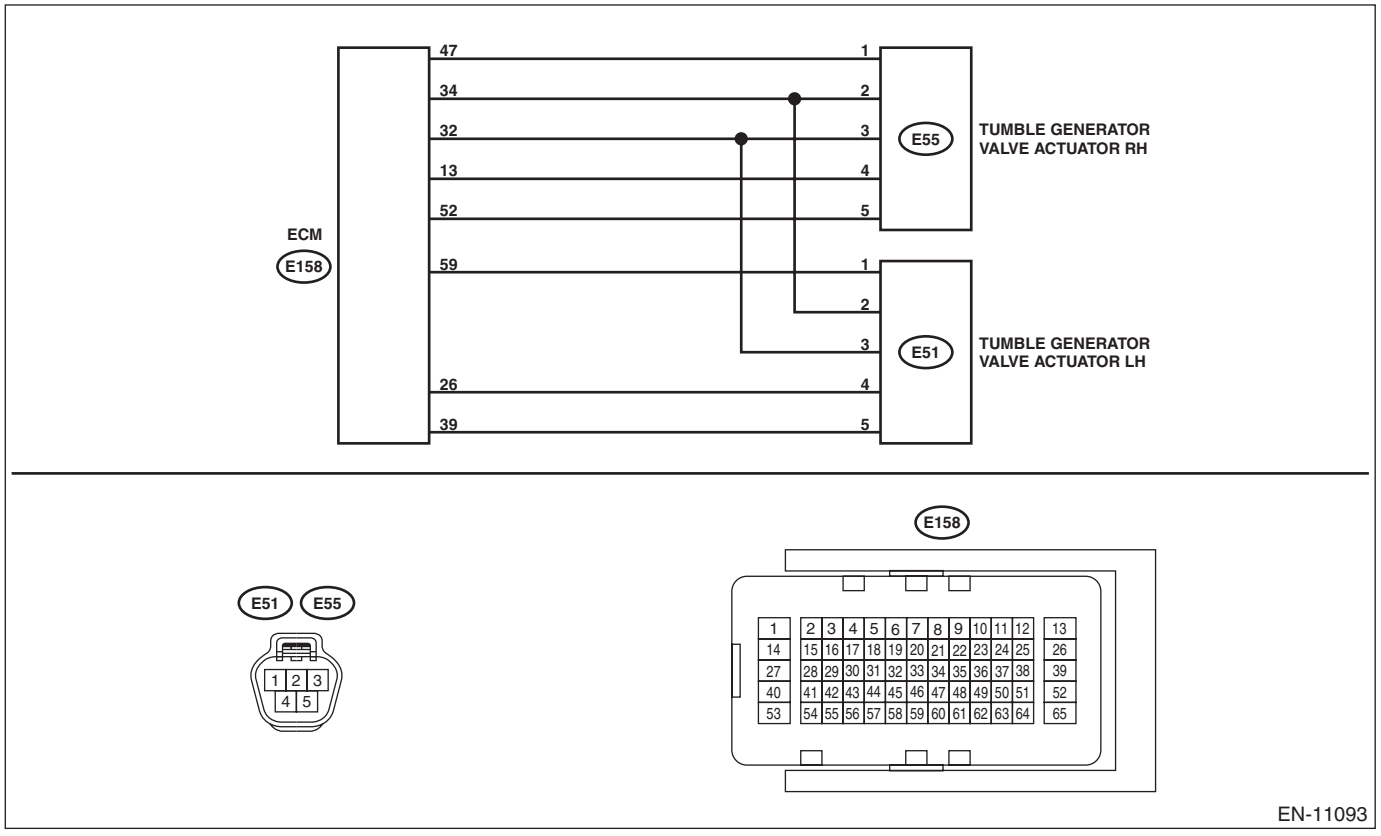

	Step	Check	Yes	No
1	**CHECK CURRENT DATA.** 1) Start the engine. 2) Read the value of «TGV Position Sensor L» using the Subaru Select Monitor. NOTE: For detailed operation procedures, refer to "Current Data Display For Engine". <Ref. to EN(H4DO)(diag)-45, Subaru Select Monitor.>	Is the value of «TGV Position Sensor L» 5 V or more?	Go to step **2**.	Even if DTC is detected, the circuit has returned to a normal condition at this time. Reproduce the failure, and then perform the diagnosis again. NOTE: In this case, temporary poor contact of connector, temporary open or short circuit of harness may be the cause.
2	**CHECK HARNESS BETWEEN ECM AND TUMBLE GENERATOR VALVE ACTUATOR LH CONNECTOR.** 1) Turn the ignition switch to OFF. 2) Disconnect the connector from tumble generator valve actuator LH. 3) Start the engine. 4) Read the value of «TGV Position Sensor L» using the Subaru Select Monitor. NOTE: For detailed operation procedures, refer to "Current Data Display For Engine". <Ref. to EN(H4DO)(diag)-45, Subaru Select Monitor.>	Is the value of «TGV Position Sensor L» 5 V or more?	Repair the short circuit to power in harness between ECM connector and tumble generator valve actuator LH connector.	Go to step **3**.
3	**CHECK HARNESS BETWEEN ECM AND TUMBLE GENERATOR VALVE ACTUATOR LH CONNECTOR.** 1) Turn the ignition switch to OFF. 2) Measure the resistance of harness between tumble generator valve actuator LH connector and engine ground. ***Connector & terminal*** ***(E51) No. 2 — Engine ground:***	Is the resistance less than 5 Ω?	Go to step **4**.	Repair the harness and connector. NOTE: In this case, repair the following item: • Open circuit in harness between ECM connector and tumble generator valve actuator LH connector • Poor contact of ECM connector
4	**CHECK FOR POOR CONTACT.** Check for poor contact of tumble generator valve actuator LH connector.	Is there poor contact of the tumble generator valve actuator LH connector?	Repair the poor contact of tumble generator valve actuator LH connector.	Replace the tumble generator valve actuator LH. <Ref. to FU(H4DO)-74, Tumble Generator Valve.>

1. OUTLINE OF DIAGNOSIS

NOTE:
For the detection standard, refer to DTC P2017. <Ref. to EN(H4DO)(diag)-486, DTC P2017 TGV POSITION SENSOR/SWITCH CIRCUIT HIGH BANK 1, Diagnostic Procedure with Diagnostic Trouble Code (DTC).>

EK:DTC P2096 POST CATALYST FUEL TRIM SYSTEM TOO LEAN BANK 1

DTC DETECTING CONDITION:

Detected when two consecutive driving cycles with fault occur.

CAUTION:

After servicing or replacing faulty parts, perform Clear Memory Mode <Ref. to EN(H4DO)(diag)-78, OPERATION, Clear Memory Mode.>, and Inspection Mode <Ref. to EN(H4DO)(diag)-64, PROCEDURE, Inspection Mode.>.

WIRING DIAGRAM:

- Engine Electrical System ENGINE TYPE FB (WITHOUT PUSH BUTTON START) <Ref. to WI-170, ENGINE TYPE FB (WITHOUT PUSH BUTTON START), WIRING DIAGRAM, Engine Electrical System.>
- Engine Electrical System ENGINE TYPE FB (WITH PUSH BUTTON START) <Ref. to WI-184, ENGINE TYPE FB (WITH PUSH BUTTON START), WIRING DIAGRAM, Engine Electrical System.>

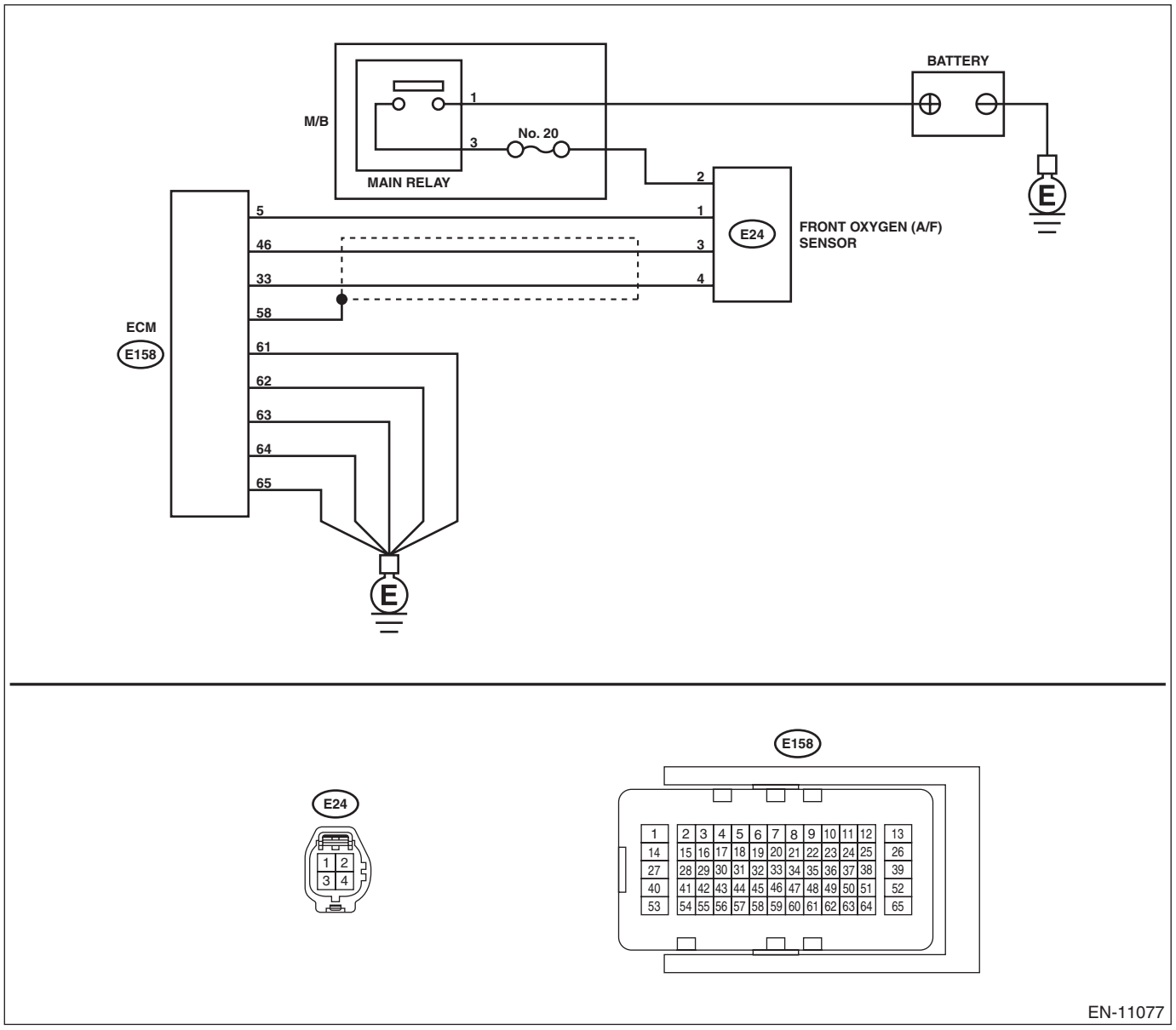

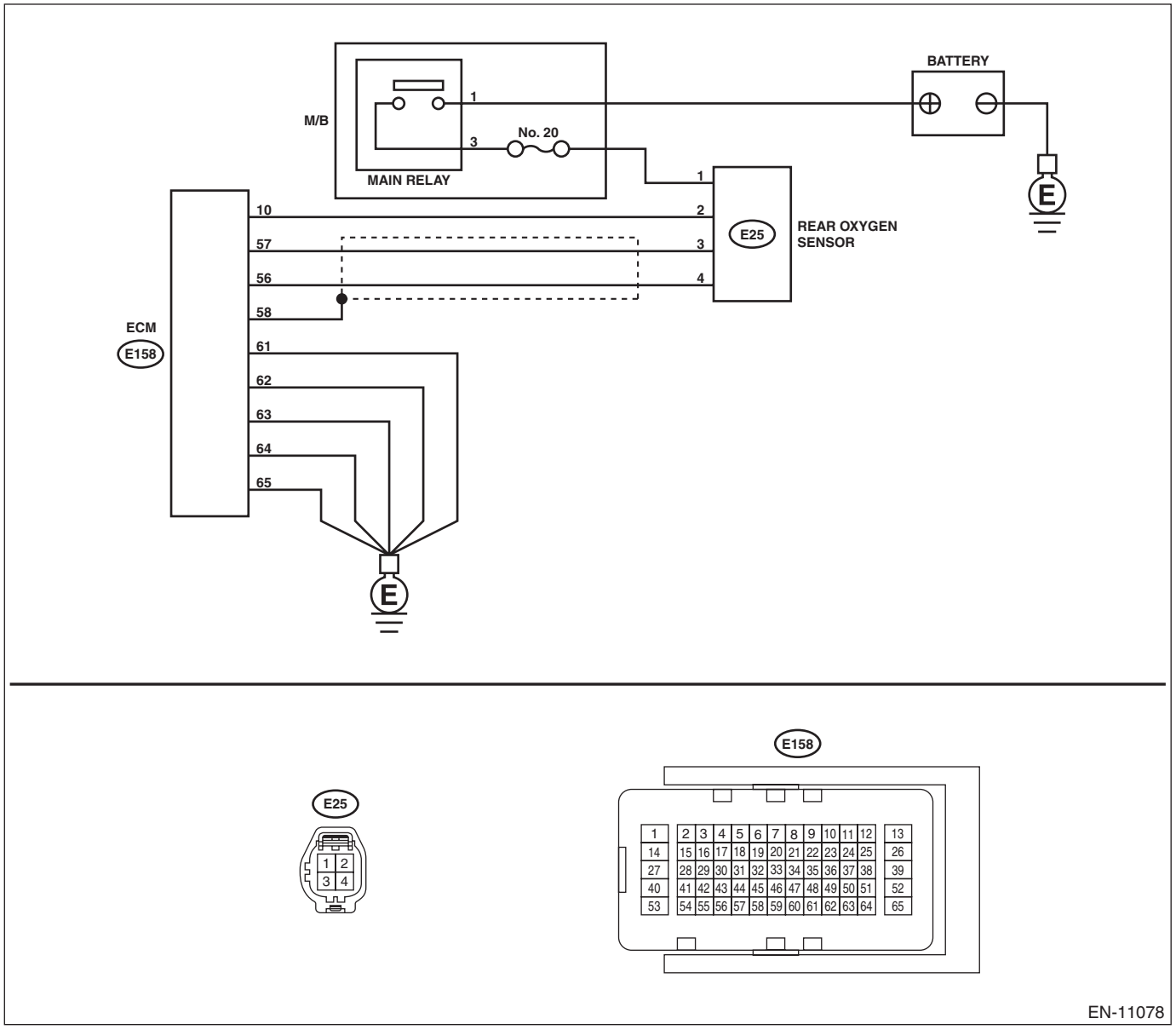

Step		Check	Yes	No
1	**CHECK FOR ANY OTHER DTC ON DISPLAY.**	Is any other DTC displayed?	Check DTC using "List of Diagnostic Trouble Code (DTC)". <Ref. to EN(H4DO)(diag)-102, List of Diagnostic Trouble Code (DTC).>	Go to step **2**.
2	**CHECK FRONT OXYGEN (A/F) SENSOR CONNECTOR AND COUPLING CONNECTOR.**	Has water entered the connector?	Completely remove any water inside.	Go to step **3**.

	Step	Check	Yes	No
3	**CHECK HARNESS BETWEEN ECM AND FRONT OXYGEN (A/F) SENSOR CONNECTOR.** 1) Turn the ignition switch to OFF. 2) Disconnect the connectors from ECM and front oxygen (A/F) sensor. 3) Measure the resistance of harness between ECM connector and front oxygen (A/F) sensor connector. ***Connector & terminal*** ***(E158) No. 46 — (E24) No. 3:*** ***(E158) No. 33 — (E24) No. 4:***	Is the resistance less than 1 Ω?	Go to step **4**.	Repair the open circuit of harness between ECM connector and front oxygen (A/F) sensor connector.
4	**CHECK HARNESS BETWEEN ECM AND FRONT OXYGEN (A/F) SENSOR CONNECTOR.** Measure the resistance between ECM connector and chassis ground. ***Connector & terminal*** ***(E158) No. 46 — Chassis ground:*** ***(E158) No. 33 — Chassis ground:***	Is the resistance 1 MΩ or more?	Go to step **5**.	Repair the short circuit to ground in harness between ECM connector and front oxygen (A/F) sensor connector.
5	**CHECK OUTPUT SIGNAL FOR ECM.** 1) Connect the connector to ECM. 2) Turn the ignition switch to ON. 3) Measure the voltage between front oxygen (A/F) sensor connector and chassis ground. ***Connector & terminal*** ***(E24) No. 3 (+) — Chassis ground (–):***	Is the voltage 4.5 V or more?	Go to step **7**.	Go to step **6**.
6	**CHECK OUTPUT SIGNAL FOR ECM.** Measure the voltage between front oxygen (A/F) sensor connector and chassis ground. ***Connector & terminal*** ***(E24) No. 4 (+) — Chassis ground (–):***	Is the voltage 4.95 V or more?	Go to step **7**.	Go to step **8**.
7	**CHECK OUTPUT SIGNAL FOR ECM.** Measure the voltage between front oxygen (A/F) sensor connector and chassis ground. ***Connector & terminal*** ***(E24) No. 3 (+) — Chassis ground (–):*** ***(E24) No. 4 (+) — Chassis ground (–):***	Is the voltage 8 V or more?	Repair the short circuit to power in the harness between ECM connector and front oxygen (A/F) sensor connector. After repair, replace the ECM. <Ref. to FU(H4DO)-82, Engine Control Module (ECM).>	Repair the poor contact of ECM connector.
8	**CHECK EXHAUST SYSTEM.**	Are there holes or loose bolts on exhaust system?	Repair the exhaust system.	Go to step **9**.
9	**CHECK AIR INTAKE SYSTEM.**	Are there holes, loose bolts or disconnection of hose on air intake system?	Repair the air intake system.	Go to step **10**.

	Step	Check	Yes	No
10	**CHECK FUEL PRESSURE.** **WARNING:** **Place "NO OPEN FLAMES" signs near the working area.** **CAUTION:** **Be careful not to spill fuel.** 1) Connect the front oxygen (A/F) sensor connector. 2) Measure the fuel pressure. <Ref. to ME(H4DO)-31, INSPECTION, Fuel Pressure.> **CAUTION:** **Before attaching/detaching a fuel pressure gauge, release the fuel pressure.**	Is the measured value 340 — 400 kPa (3.5 — 4.1 kg/cm^2, 49 — 58 psi)?	Go to step **11**.	Check the fuel pump and fuel delivery line. <Ref. to FU(H4DO)-121, INSPECTION, Fuel Pump.> <Ref. to FU(H4DO)-154, INSPECTION, Fuel Delivery and Evaporation Lines.>
11	**CHECK ENGINE COOLANT TEMPERATURE SENSOR.** 1) Start the engine and warm up completely. 2) Read the value of «Coolant Temp.» using the Subaru Select Monitor or a general scan tool. NOTE: • Subaru Select Monitor For detailed operation procedures, refer to "Read Current Data For Engine". <Ref. to EN(H4DO)(diag)-45, Subaru Select Monitor.> • General scan tool For detailed operation procedures, refer to the general scan tool operation manual.	Is the value of «Coolant Temp.» 75°C (167°F) or more?	Go to step **12**.	Replace the engine coolant temperature sensor. <Ref. to FU(H4DO)-43, Engine Coolant Temperature Sensor.>
12	**CHECK MASS AIR FLOW AND INTAKE AIR TEMPERATURE SENSOR.** 1) Start the engine and warm up engine until coolant temperature is higher than 75°C (167°F). 2) For CVT models, set the select lever to "P" range or "N" range, and for MT models, place the shift lever in the neutral position. 3) Turn the A/C switch to OFF. 4) Turn all the accessory switches to OFF. 5) Read the value of «Mass Air Flow» using the Subaru Select Monitor or a general scan tool. NOTE: • Subaru Select Monitor For detailed operation procedures, refer to "Read Current Data For Engine". <Ref. to EN(H4DO)(diag)-45, Subaru Select Monitor.> • General scan tool For detailed operation procedures, refer to the general scan tool operation manual.	Is the value of «Mass Air Flow» 2.0 — 5.0 g/s (0.26 — 0.66 lb/m)?	Go to step **13**.	Replace the mass air flow and intake air temperature sensor. <Ref. to FU(H4DO)-60, Mass Air Flow and Intake Air Temperature Sensor.>

	Step	Check	Yes	No
13	**CHECK MASS AIR FLOW AND INTAKE AIR TEMPERATURE SENSOR.** 1) Start the engine and warm up engine until coolant temperature is higher than 75°C (167°F). 2) For CVT models, set the select lever to "P" range or "N" range, and for MT models, place the shift lever in the neutral position. 3) Turn the A/C switch to OFF. 4) Turn all the accessory switches to OFF. 5) Open the front hood. 6) Measure the ambient temperature. 7) Read the value of «Intake Air Temp.» using the Subaru Select Monitor or a general scan tool. NOTE: • Subaru Select Monitor For detailed operation procedures, refer to "Read Current Data For Engine". <Ref. to EN(H4DO)(diag)-45, Subaru Select Monitor.> • General scan tool For detailed operation procedures, refer to the general scan tool operation manual.	Subtract ambient temperature from «Intake Air Temp.». Is the obtained value –10 — 50°C (–18 — 90°F)?	Go to step **14**.	Check the mass air flow and intake air temperature sensor. <Ref. to FU(H4DO)-60, Mass Air Flow and Intake Air Temperature Sensor.>
14	**CHECK REAR OXYGEN SENSOR DATA.** 1) Warm up the engine until engine coolant temperature is higher than 75°C (167°F), and keep the engine speed at 3,000 rpm. (2 minutes maximum) 2) Read the value of «Oxygen sensor #12» using the Subaru Select Monitor or a general scan tool. NOTE: • Depress the clutch pedal. (MT model) • Subaru Select Monitor For detailed operation procedures, refer to "Read Current Data For Engine". <Ref. to EN(H4DO)(diag)-45, Subaru Select Monitor.> • General scan tool For detailed operation procedures, refer to the general scan tool operation manual.	Is the value of «Oxygen sensor #12» 0.490 V or more?	Go to step **15**.	Go to step **16**.
15	**CHECK REAR OXYGEN SENSOR DATA.** 1) Warm up the engine until engine coolant temperature is higher than 75°C (167°F), and rapidly reduce the engine speed from 3,000 rpm. 2) Read the value of «Oxygen sensor #12» using the Subaru Select Monitor or a general scan tool. NOTE: • Depress the clutch pedal. (MT model) • Subaru Select Monitor For detailed operation procedures, refer to "Read Current Data For Engine". <Ref. to EN(H4DO)(diag)-45, Subaru Select Monitor.> • General scan tool For detailed operation procedures, refer to the general scan tool operation manual.	Is the value of «Oxygen sensor #12» 0.250 V or less?	Go to step **17**.	Go to step **16**.
16	**CHECK REAR OXYGEN SENSOR CONNECTOR AND COUPLING CONNECTOR.**	Has water entered the connector?	Completely remove any water inside.	Go to step **18**.

	Step	Check	Yes	No
17	**CHECK FRONT OXYGEN (A/F) SENSOR USING REAR OXYGEN SENSOR SIGNAL.** 1) Warm up the engine until engine coolant temperature is higher than 75°C (167°F), then keep the engine idling for 5 minutes or more. 2) Read the value of «Oxygen sensor #12» using the Subaru Select Monitor or a general scan tool. NOTE: • Subaru Select Monitor For detailed operation procedures, refer to "Read Current Data For Engine". <Ref. to EN(H4DO)(diag)-45, Subaru Select Monitor.> • General scan tool For detailed operation procedures, refer to the general scan tool operation manual.	Is the value of «Oxygen sensor #12» 0.250 V or less for 5 minutes or more?	Replace the front oxygen (A/F) sensor. <Ref. to FU(H4DO)-76, Front Oxygen (A/F) Sensor.>	Go to step **18**.
18	**CHECK HARNESS BETWEEN ECM AND REAR OXYGEN SENSOR CONNECTOR.** 1) Turn the ignition switch to OFF. 2) Disconnect the connector from ECM and rear oxygen sensor. 3) Measure the resistance of harness between ECM connector and rear oxygen sensor connector. ***Connector & terminal*** ***(E158) No. 57 — (E25) No. 3:*** ***(E158) No. 56 — (E25) No. 4:***	Is the resistance less than 1 Ω?	Go to step **19**.	Repair the open circuit of harness between ECM connector and rear oxygen sensor connector.
19	**CHECK HARNESS BETWEEN ECM AND REAR OXYGEN SENSOR CONNECTOR.** 1) Connect the connector to ECM. 2) Turn the ignition switch to ON. 3) Measure the voltage between rear oxygen sensor connector and chassis ground. ***Connector & terminal*** ***(E25) No. 3 (+) — Chassis ground (–):***	Is the voltage 0.2 — 0.5 V?	Replace the rear oxygen sensor. <Ref. to FU(H4DO)-79, Rear Oxygen Sensor.>	Repair the harness and connector. NOTE: In this case, repair the following item: • Open circuit in harness between ECM connector and rear oxygen sensor connector • Poor contact of ECM connector

1. OUTLINE OF DIAGNOSIS

Detect the malfunction of fuel system from the size of the sub feedback learning value.
Control the sub feedback learning and judge as NG when the learning value is in the lean zone.

2. COMPONENT DESCRIPTION

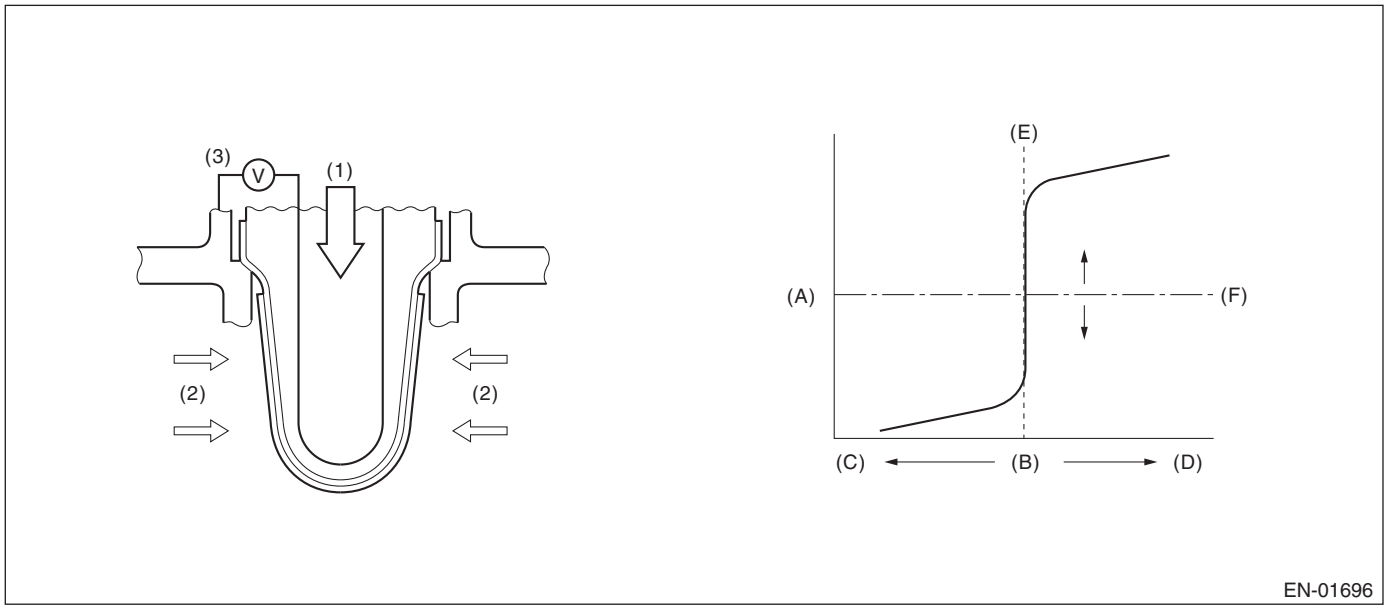

(A)	Electromotive force	(B)	Air fuel ratio	(C)	Lean
(D)	Rich	(E)	Theoretical air fuel ratio	(F)	Comparative voltage
(1)	Atmosphere	(2)	Exhaust gas	(3)	Electromotive force

3. EXECUTION CONDITION

Secondary Parameters	Execution condition
Closed loop control with sub feedback	Operation
Intake air amount	≥ 10 g/s (0.35 oz/s)
Change of the intake air amount during 0.5 crankshaft revs.	< 0.02 g/rev (0 oz/rev)

4. GENERAL DRIVING CYCLE

Perform the diagnosis continuously after the enable conditions have been established.

5. DIAGNOSTIC METHOD

If the duration of time while the following conditions are met is longer than the time indicated, judge as NG.

Judgment Value

Malfunction Criteria	Threshold Value
Sub feedback learning value	< –0.0365 (CVT model except for PZEV) < –0.0365 (MT model except for PZEV) < –0.04 (PZEV model)

Time Needed for Diagnosis: 1 s × 1 time(s)
Malfunction Indicator Light Illumination: Illuminates when malfunction occurs in 2 continuous driving cycles.

EL:DTC P2097 POST CATALYST FUEL TRIM SYSTEM TOO RICH BANK 1

DTC DETECTING CONDITION:

Detected when two consecutive driving cycles with fault occur.

CAUTION:

After servicing or replacing faulty parts, perform Clear Memory Mode <Ref. to EN(H4DO)(diag)-78, OPERATION, Clear Memory Mode.>, and Inspection Mode <Ref. to EN(H4DO)(diag)-64, PROCEDURE, Inspection Mode.>.

WIRING DIAGRAM:

- Engine Electrical System ENGINE TYPE FB (WITHOUT PUSH BUTTON START) <Ref. to WI-170, ENGINE TYPE FB (WITHOUT PUSH BUTTON START), WIRING DIAGRAM, Engine Electrical System.>
- Engine Electrical System ENGINE TYPE FB (WITH PUSH BUTTON START) <Ref. to WI-184, ENGINE TYPE FB (WITH PUSH BUTTON START), WIRING DIAGRAM, Engine Electrical System.>

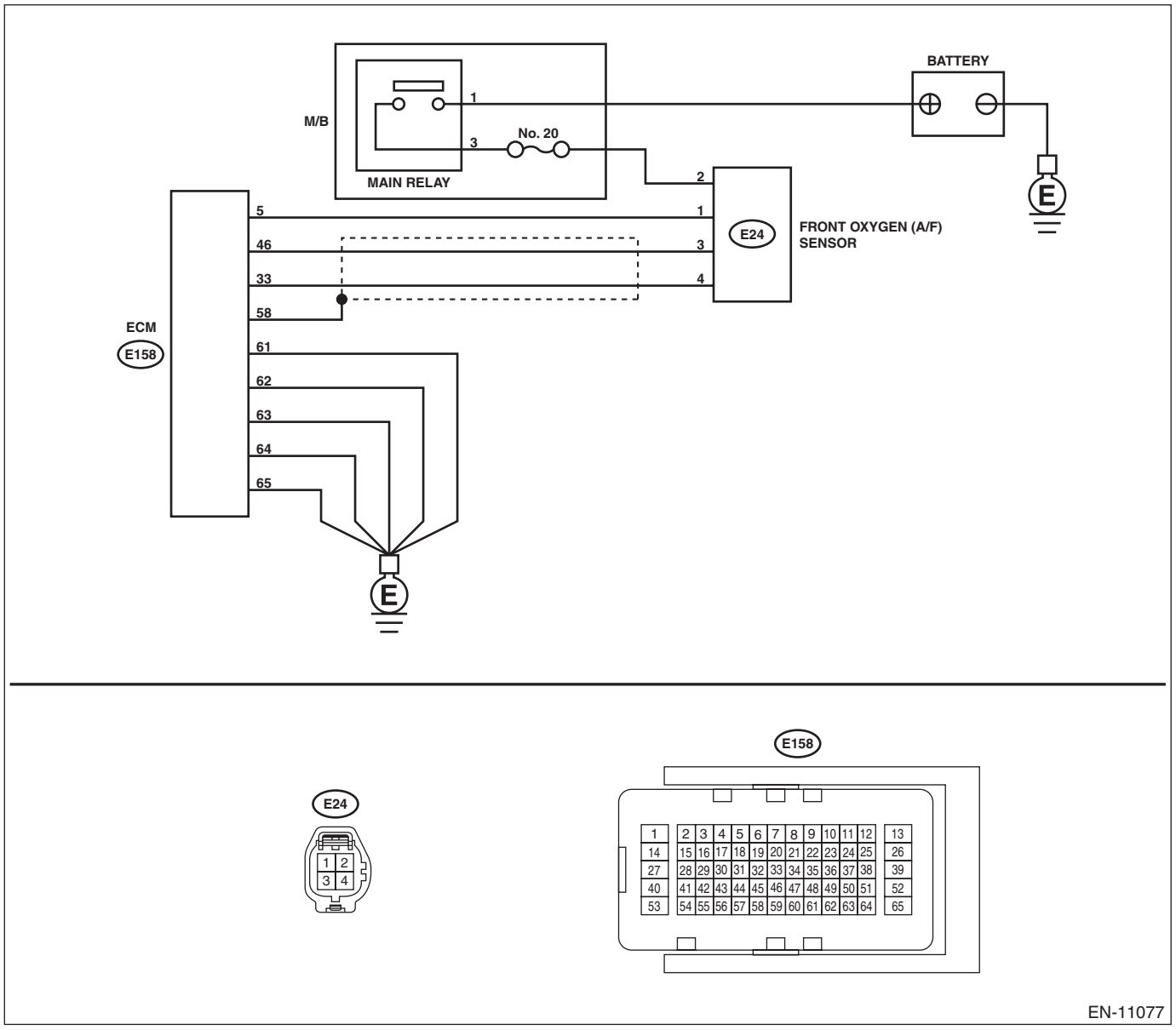

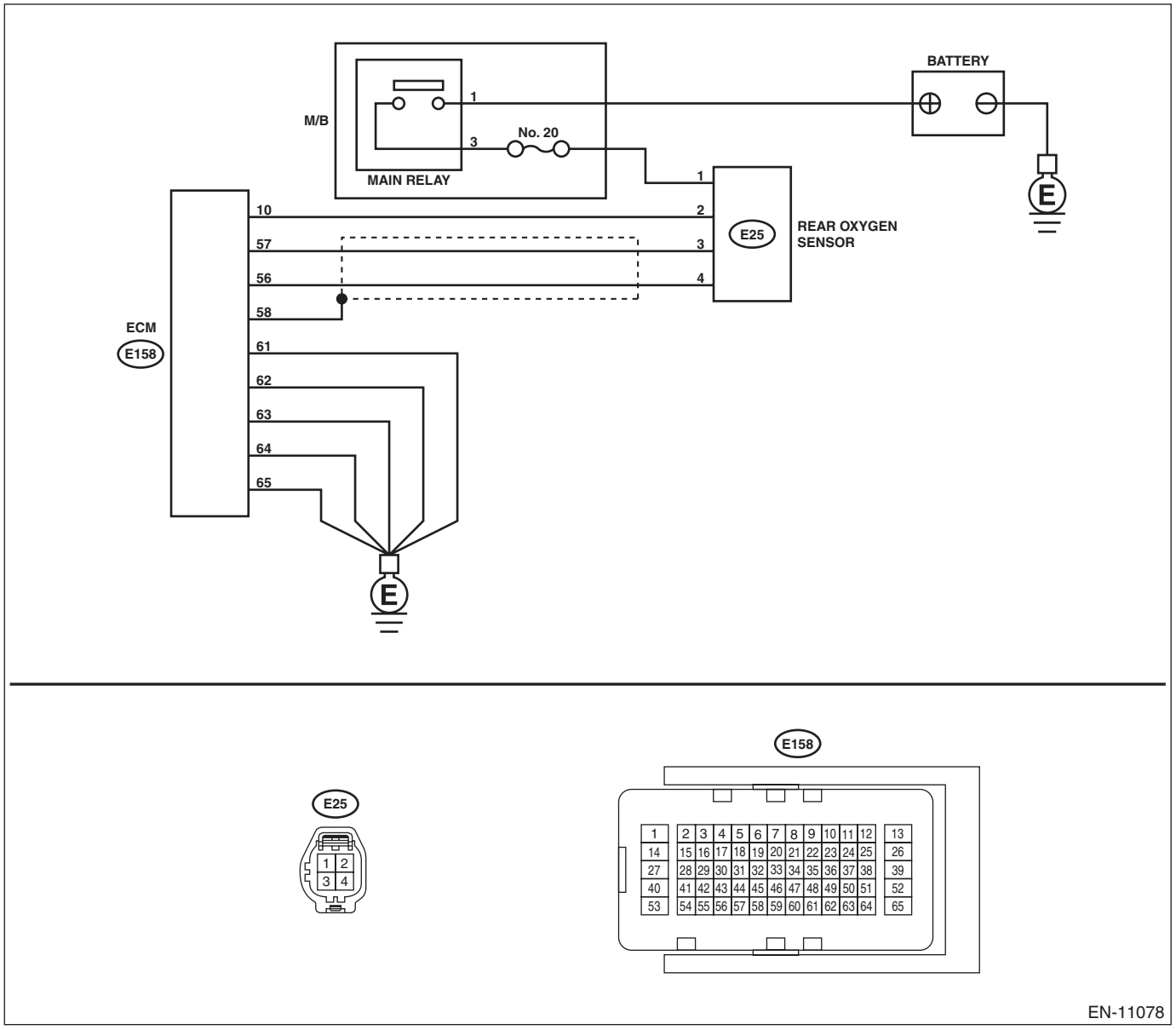

Step		Check	Yes	No
1	**CHECK FOR ANY OTHER DTC ON DISPLAY.**	Is any other DTC displayed?	Check DTC using "List of Diagnostic Trouble Code (DTC)". <Ref. to EN(H4DO)(diag)-102, List of Diagnostic Trouble Code (DTC).>	Go to step **2**.
2	**CHECK FRONT OXYGEN (A/F) SENSOR CONNECTOR AND COUPLING CONNECTOR.**	Has water entered the connector?	Completely remove any water inside.	Go to step **3**.

	Step	Check	Yes	No
3	**CHECK HARNESS BETWEEN ECM AND FRONT OXYGEN (A/F) SENSOR CONNECTOR.** 1) Turn the ignition switch to OFF. 2) Disconnect the connectors from ECM and front oxygen (A/F) sensor. 3) Measure the resistance of harness between ECM connector and front oxygen (A/F) sensor connector. ***Connector & terminal*** ***(E158) No. 46 — (E24) No. 3:*** ***(E158) No. 33 — (E24) No. 4:***	Is the resistance less than 1 Ω?	Go to step **4**.	Repair the open circuit of harness between ECM connector and front oxygen (A/F) sensor connector.
4	**CHECK HARNESS BETWEEN ECM AND FRONT OXYGEN (A/F) SENSOR CONNECTOR.** Measure the resistance between ECM connector and chassis ground. ***Connector & terminal*** ***(E158) No. 46 — Chassis ground:*** ***(E158) No. 33 — Chassis ground:***	Is the resistance 1 MΩ or more?	Go to step **5**.	Repair the short circuit to ground in harness between ECM connector and front oxygen (A/F) sensor connector.
5	**CHECK OUTPUT SIGNAL FOR ECM.** 1) Connect the connector to ECM. 2) Turn the ignition switch to ON. 3) Measure the voltage between front oxygen (A/F) sensor connector and chassis ground. ***Connector & terminal*** ***(E24) No. 3 (+) — Chassis ground (–):***	Is the voltage 4.5 V or more?	Go to step **7**.	Go to step **6**.
6	**CHECK OUTPUT SIGNAL FOR ECM.** Measure the voltage between front oxygen (A/F) sensor connector and chassis ground. ***Connector & terminal*** ***(E24) No. 4 (+) — Chassis ground (–):***	Is the voltage 4.95 V or more?	Go to step **7**.	Go to step **8**.
7	**CHECK OUTPUT SIGNAL FOR ECM.** Measure the voltage between front oxygen (A/F) sensor connector and chassis ground. ***Connector & terminal*** ***(E24) No. 3 (+) — Chassis ground (–):*** ***(E24) No. 4 (+) — Chassis ground (–):***	Is the voltage 8 V or more?	Repair the short circuit to power in the harness between ECM connector and front oxygen (A/F) sensor connector. After repair, replace the ECM. <Ref. to FU(H4DO)-82, Engine Control Module (ECM).>	Repair the poor contact of ECM connector.
8	**CHECK EXHAUST SYSTEM.**	Are there holes or loose bolts on exhaust system?	Repair the exhaust system.	Go to step **9**.
9	**CHECK AIR INTAKE SYSTEM.**	Are there holes, loose bolts or disconnection of hose on air intake system?	Repair the air intake system.	Go to step **10**.

	Step	Check	Yes	No
10	**CHECK FUEL PRESSURE.** **WARNING:** **Place "NO OPEN FLAMES" signs near the working area.** **CAUTION:** **Be careful not to spill fuel.** 1) Connect the front oxygen (A/F) sensor connector. 2) Measure the fuel pressure. <Ref. to ME(H4DO)-31, INSPECTION, Fuel Pressure.> **CAUTION:** **Before attaching/detaching a fuel pressure gauge, release the fuel pressure.**	Is the measured value 340 — 400 kPa (3.5 — 4.1 kg/cm^2, 49 — 58 psi)?	Go to step **11**.	Check the fuel pump and fuel delivery line. <Ref. to FU(H4DO)-121, INSPECTION, Fuel Pump.> <Ref. to FU(H4DO)-154, INSPECTION, Fuel Delivery and Evaporation Lines.>
11	**CHECK ENGINE COOLANT TEMPERATURE SENSOR.** 1) Start the engine and warm up completely. 2) Read the value of «Coolant Temp.» using the Subaru Select Monitor or a general scan tool. NOTE: • Subaru Select Monitor For detailed operation procedures, refer to "Read Current Data For Engine". <Ref. to EN(H4DO)(diag)-45, Subaru Select Monitor.> • General scan tool For detailed operation procedures, refer to the general scan tool operation manual.	Is the value of «Coolant Temp.» 75°C (167°F) or more?	Go to step **12**.	Replace the engine coolant temperature sensor. <Ref. to FU(H4DO)-43, Engine Coolant Temperature Sensor.>
12	**CHECK MASS AIR FLOW AND INTAKE AIR TEMPERATURE SENSOR.** 1) Start the engine and warm up engine until coolant temperature is higher than 75°C (167°F). 2) For CVT models, set the select lever to "P" range or "N" range, and for MT models, place the shift lever in the neutral position. 3) Turn the A/C switch to OFF. 4) Turn all the accessory switches to OFF. 5) Read the value of «Mass Air Flow» using the Subaru Select Monitor or a general scan tool. NOTE: • Subaru Select Monitor For detailed operation procedures, refer to "Read Current Data For Engine". <Ref. to EN(H4DO)(diag)-45, Subaru Select Monitor.> • General scan tool For detailed operation procedures, refer to the general scan tool operation manual.	Is the value of «Mass Air Flow» 2.0 — 5.0 g/s (0.26 — 0.66 lb/m)?	Go to step **13**.	Replace the mass air flow and intake air temperature sensor. <Ref. to FU(H4DO)-60, Mass Air Flow and Intake Air Temperature Sensor.>

	Step	Check	Yes	No
13	**CHECK MASS AIR FLOW AND INTAKE AIR TEMPERATURE SENSOR.** 1) Start the engine and warm up engine until coolant temperature is higher than 75°C (167°F). 2) For CVT models, set the select lever to "P" range or "N" range, and for MT models, place the shift lever in the neutral position. 3) Turn the A/C switch to OFF. 4) Turn all the accessory switches to OFF. 5) Open the front hood. 6) Measure the ambient temperature. 7) Read the value of «Intake Air Temp.» using the Subaru Select Monitor or a general scan tool. NOTE: • Subaru Select Monitor For detailed operation procedures, refer to "Read Current Data For Engine". <Ref. to EN(H4DO)(diag)-45, Subaru Select Monitor.> • General scan tool For detailed operation procedures, refer to the general scan tool operation manual.	Subtract ambient temperature from «Intake Air Temp.». Is the obtained value –10 — 50°C (–18 — 90°F)?	Go to step **14**.	Check the mass air flow and intake air temperature sensor. <Ref. to FU(H4DO)-60, Mass Air Flow and Intake Air Temperature Sensor.>
14	**CHECK REAR OXYGEN SENSOR DATA.** 1) Warm up the engine until engine coolant temperature is higher than 75°C (167°F), and keep the engine speed at 3,000 rpm. (2 minutes maximum) 2) Read the value of «Oxygen sensor #12» using the Subaru Select Monitor or a general scan tool. NOTE: • Depress the clutch pedal. (MT model) • Subaru Select Monitor For detailed operation procedures, refer to "Read Current Data For Engine". <Ref. to EN(H4DO)(diag)-45, Subaru Select Monitor.> • General scan tool For detailed operation procedures, refer to the general scan tool operation manual.	Is the value of «Oxygen sensor #12» 0.490 V or more?	Go to step **15**.	Go to step **16**.
15	**CHECK REAR OXYGEN SENSOR DATA.** 1) Warm up the engine until engine coolant temperature is higher than 75°C (167°F), and rapidly reduce the engine speed from 3,000 rpm. 2) Read the value of «Oxygen sensor #12» using the Subaru Select Monitor or a general scan tool. NOTE: • Depress the clutch pedal. (MT model) • Subaru Select Monitor For detailed operation procedures, refer to "Read Current Data For Engine". <Ref. to EN(H4DO)(diag)-45, Subaru Select Monitor.> • General scan tool For detailed operation procedures, refer to the general scan tool operation manual.	Is the value of «Oxygen sensor #12» 0.250 V or less?	Go to step **17**.	Go to step **16**.
16	**CHECK REAR OXYGEN SENSOR CONNECTOR AND COUPLING CONNECTOR.**	Has water entered the connector?	Completely remove any water inside.	Go to step **18**.

	Step	Check	Yes	No
17	**CHECK FRONT OXYGEN (A/F) SENSOR USING REAR OXYGEN SENSOR SIGNAL.** 1) Warm up the engine until engine coolant temperature is higher than 75°C (167°F), then keep the engine idling for 5 minutes or more. 2) Read the value of «Oxygen sensor #12» using the Subaru Select Monitor or a general scan tool. NOTE: • Subaru Select Monitor For detailed operation procedures, refer to "Read Current Data For Engine". <Ref. to EN(H4DO)(diag)-45, Subaru Select Monitor.> • General scan tool For detailed operation procedures, refer to the general scan tool operation manual.	Is the value of «Oxygen sensor #12» 0.8 V or more for 5 minutes or more?	Replace the front oxygen (A/F) sensor. <Ref. to FU(H4DO)-76, Front Oxygen (A/F) Sensor.>	Go to step **18**.
18	**CHECK HARNESS BETWEEN ECM AND REAR OXYGEN SENSOR CONNECTOR.** 1) Turn the ignition switch to OFF. 2) Disconnect the connector from ECM and rear oxygen sensor. 3) Measure the resistance of harness between ECM connector and rear oxygen sensor connector. ***Connector & terminal*** ***(E158) No. 57 — (E25) No. 3:*** ***(E158) No. 56 — (E25) No. 4:***	Is the resistance less than 1 Ω?	Go to step **19**.	Repair the open circuit of harness between ECM connector and rear oxygen sensor connector.
19	**CHECK HARNESS BETWEEN ECM AND REAR OXYGEN SENSOR CONNECTOR.** 1) Connect the connector to ECM. 2) Turn the ignition switch to ON. 3) Measure the voltage between rear oxygen sensor connector and chassis ground. ***Connector & terminal*** ***(E25) No. 3 (+) — Chassis ground (–):***	Is the voltage 0.2 — 0.5 V?	Replace the rear oxygen sensor. <Ref. to FU(H4DO)-79, Rear Oxygen Sensor.>	Repair the harness and connector. NOTE: In this case, repair the following item: • Open circuit in harness between ECM connector and rear oxygen sensor connector • Poor contact of ECM connector

1. OUTLINE OF DIAGNOSIS

Detect the malfunction of fuel system from the size of the sub feedback learning value.
Sub feedback learning is being performed. When the learning value goes to the rich side, judge as NG.

2. COMPONENT DESCRIPTION

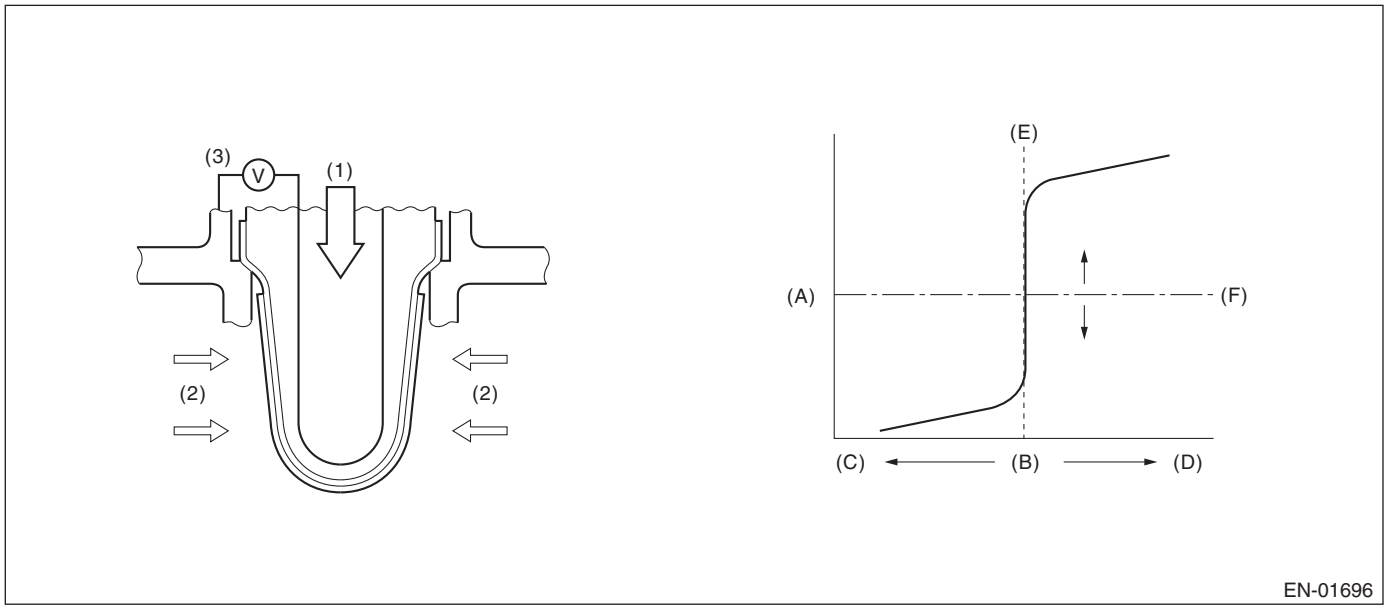

(A)	Electromotive force	(B)	Air fuel ratio	(C)	Lean
(D)	Rich	(E)	Theoretical air fuel ratio	(F)	Comparative voltage
(1)	Atmosphere	(2)	Exhaust gas	(3)	Electromotive force

3. EXECUTION CONDITION

Secondary Parameters	Execution condition
Closed loop control with sub feedback	Operation
Intake air amount	≥ 10 g/s (0.35 oz/s)
Change of the intake air amount during 0.5 crankshaft revs.	< 0.02 g/rev (0 oz/rev)

4. GENERAL DRIVING CYCLE

Perform the diagnosis continuously after the enable conditions have been established.

5. DIAGNOSTIC METHOD

If the duration of time while the following conditions are met is longer than the time indicated, judge as NG.

Judgment Value

Malfunction Criteria	Threshold Value
Sub feedback learning value	≥ 0.033 (CVT model except for PZEV) ≥ 0.033 (MT model except for PZEV) ≥ 0.038 (PZEV model)

Time Needed for Diagnosis: 1 s × 1 time(s)
Malfunction Indicator Light Illumination: Illuminates when malfunction occurs in 2 continuous driving cycles.

EM:DTC P2101 THROTTLE ACTUATOR "A" CONTROL MOTOR CIRCUIT RANGE/PERFORMANCE

DTC DETECTING CONDITION:
Immediately at fault recognition
TROUBLE SYMPTOM:
- Improper idling
- Poor driving performance
- Engine stalls.

CAUTION:
After servicing or replacing faulty parts, perform Clear Memory Mode <Ref. to EN(H4DO)(diag)-78, OPERATION, Clear Memory Mode.>, and Inspection Mode <Ref. to EN(H4DO)(diag)-64, PROCEDURE, Inspection Mode.>.
WIRING DIAGRAM:
- Engine Electrical System ENGINE TYPE FB (WITHOUT PUSH BUTTON START) <Ref. to WI-170, ENGINE TYPE FB (WITHOUT PUSH BUTTON START), WIRING DIAGRAM, Engine Electrical System.>
- Engine Electrical System ENGINE TYPE FB (WITH PUSH BUTTON START) <Ref. to WI-184, ENGINE TYPE FB (WITH PUSH BUTTON START), WIRING DIAGRAM, Engine Electrical System.>

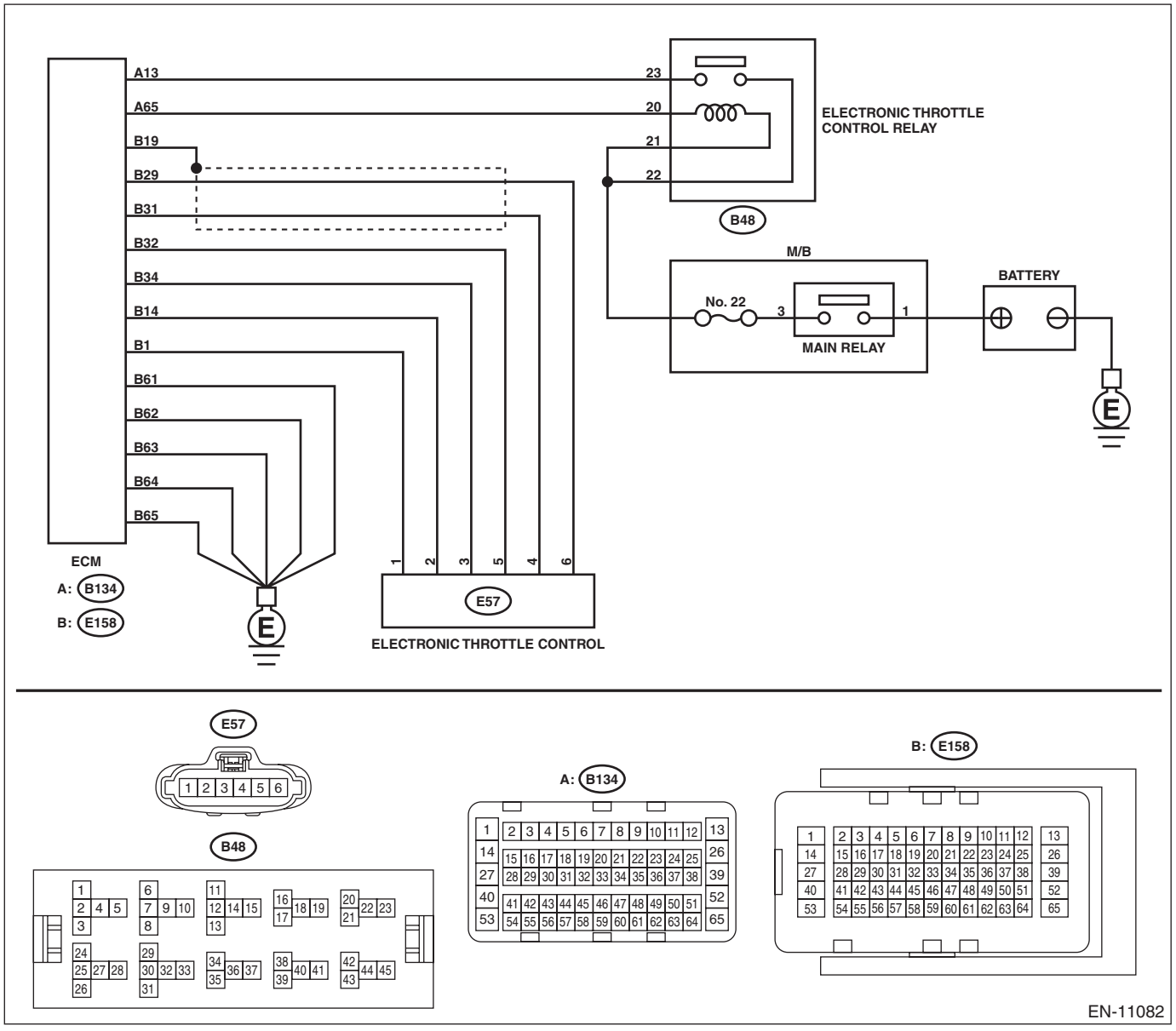

	Step	Check	Yes	No
1	**CHECK ELECTRONIC THROTTLE CONTROL RELAY.** 1) Turn the ignition switch to OFF. 2) Remove the electronic throttle control relay. 3) Connect the battery to terminals No. 13 and No. 14 of electronic throttle control relay. 4) Measure the resistance between electronic throttle control relay terminals. ***Terminals*** ***No. 22 — No. 23:***	Is the resistance less than 1 Ω?	Go to step **2**.	Replace the electronic throttle control relay. <Ref. to FU(H4DO)-86, Electronic Throttle Control Relay.>
2	**CHECK POWER SUPPLY OF ELECTRONIC THROTTLE CONTROL RELAY.** Measure the voltage between electronic throttle control relay connector and chassis ground. ***Connector & terminal*** ***(B48) No. 22 (+) — Chassis ground (–):***	Is the voltage 10 V or more?	Go to step **3**.	Repair the open or short to ground in the power supply circuit.
3	**CHECK HARNESS BETWEEN ECM AND ELECTRONIC THROTTLE CONTROL RELAY CONNECTOR.** 1) Disconnect the connector from ECM. 2) Turn the ignition switch to ON. 3) Measure the voltage between electronic throttle control relay connector and chassis ground. ***Connector & terminal*** ***(B48) No. 20 (+) — Chassis ground (–):***	Is the voltage 10 V or more?	Repair the short circuit to power in the harness between ECM connector and electronic throttle control relay connector.	Go to step **4**.
4	**CHECK HARNESS BETWEEN ECM AND ELECTRONIC THROTTLE CONTROL RELAY CONNECTOR.** 1) Turn the ignition switch to OFF. 2) Measure the resistance between electronic throttle control relay connector and chassis ground. ***Connector & terminal*** ***(B48) No. 20 — Chassis ground:*** ***(B48) No. 23 — Chassis ground:***	Is the resistance 1 MΩ or more?	Go to step **5**.	Repair the short circuit to ground in harness between ECM connector and electronic throttle control relay connector.
5	**CHECK HARNESS BETWEEN ECM AND ELECTRONIC THROTTLE CONTROL RELAY CONNECTOR.** Measure the resistance between ECM connector and electronic throttle control relay connector. ***Connector & terminal*** ***(B134) No. 65 — (B48) No. 20:*** ***(B134) No. 13 — (B48) No. 23:***	Is the resistance less than 1 Ω?	Go to step **6**.	Repair the open circuit in harness between ECM connector and electronic throttle control relay connector.
6	**CHECK HARNESS BETWEEN ECM AND ELECTRONIC THROTTLE CONTROL CONNECTOR.** 1) Turn the ignition switch to OFF. 2) Disconnect the connectors from electronic throttle control. 3) Measure the resistance between ECM connector and chassis ground. ***Connector & terminal*** ***(E158) No. 32 — Chassis ground:*** ***(E158) No. 29 — Chassis ground:*** ***(E158) No. 29 — (E158) No. 19:*** ***(E158) No. 31 — Chassis ground:*** ***(E158) No. 31 — (E158) No. 19:***	Is the resistance 1 MΩ or more?	Go to step **7**.	Repair the ground short circuit of harness between ECM connector and electronic throttle control connector.

	Step	Check	Yes	No
7	**CHECK SHORT CIRCUIT INSIDE THE ECM.** 1) Connect the connector to ECM. 2) Measure the resistance between electronic throttle control connector and engine ground. ***Connector & terminal*** ***(E57) No. 6 — Engine ground:*** ***(E57) No. 4 — Engine ground:***	Is the resistance 1 MΩ or more?	Go to step **8**.	Repair the ground short circuit of harness between ECM connector and electronic throttle control connector. Replace the ECM if defective. <Ref. to FU(H4DO)-82, Engine Control Module (ECM).>
8	**CHECK HARNESS BETWEEN ECM AND ELECTRONIC THROTTLE CONTROL CONNECTOR.** 1) Disconnect the connector from ECM. 2) Measure the resistance of harness between ECM connector and electronic throttle control connector. ***Connector & terminal*** ***(E158) No. 29 — (E57) No. 6:*** ***(E158) No. 31 — (E57) No. 4:*** ***(E158) No. 34 — (E57) No. 3:***	Is the resistance less than 1 Ω?	Go to step **9**.	Repair the open circuit of harness between ECM connector and electronic throttle control connector.
9	**CHECK HARNESS BETWEEN ECM AND ELECTRONIC THROTTLE CONTROL CONNECTOR.** 1) Connect the connector to ECM. 2) Measure the resistance between electronic throttle control connector and engine ground. ***Connector & terminal*** ***(E57) No. 3 — Engine ground:***	Is the resistance less than 5 Ω?	Go to step **10**.	Repair the harness and connector. NOTE: In this case, repair the following item: • Open circuit of harness between ECM connector and engine ground • Poor contact of ECM connector
10	**CHECK HARNESS BETWEEN ECM AND ELECTRONIC THROTTLE CONTROL CONNECTOR.** 1) Turn the ignition switch to ON. 2) Measure the voltage between electronic throttle control connector and engine ground. ***Connector & terminal*** ***(E57) No. 6 (+) — Engine ground (–):*** ***(E57) No. 4 (+) — Engine ground (–):***	Is the voltage 5 V or more?	Repair the short circuit to power in the harness between ECM connector and electronic throttle control connector.	Go to step **11**.
11	**CHECK HARNESS BETWEEN ECM AND ELECTRONIC THROTTLE CONTROL CONNECTOR.** 1) Turn the ignition switch to OFF. 2) Disconnect the connector from ECM. 3) Measure the resistance between ECM connectors. ***Connector & terminal*** ***(E158) No. 32 — (E158) No. 29:*** ***(E158) No. 32 — (E158) No. 31:***	Is the resistance 1 MΩ or more?	Go to step **12**.	Repair the short circuit to power in the harness between ECM connector and electronic throttle control connector.

	Step	Check	Yes	No
12	**CHECK SENSOR OUTPUT.** 1) Connect all connectors. 2) Start the engine and warm up completely. 3) Stop the engine, and then turn the ignition switch to ON (engine OFF). 4) Read the value of «Main-Throttle Sensor» using Subaru Select Monitor. NOTE: For detailed operation procedures, refer to "Read Current Data For Engine". <Ref. to EN(H4DO)(diag)-45, Subaru Select Monitor.>	Is the value of «Main-Throttle Sensor» 0.81 — 0.87 V?	Go to step **13**.	Repair the poor contact of electronic throttle control connector. Replace the electronic throttle control if defective. <Ref. to FU(H4DO)-14, Throttle Body.>
13	**CHECK SENSOR OUTPUT.** Read the value of «Sub-Throttle Sensor» using Subaru Select Monitor. NOTE: For detailed operation procedures, refer to "Read Current Data For Engine". <Ref. to EN(H4DO)(diag)-45, Subaru Select Monitor.>	Is the value of «Sub-Throttle Sensor» 1.64 — 1.70 V?	Go to step **14**.	Repair the poor contact of electronic throttle control connector. Replace the electronic throttle control if defective. <Ref. to FU(H4DO)-14, Throttle Body.>
14	**CHECK HARNESS BETWEEN ECM AND ELECTRONIC THROTTLE CONTROL CONNECTOR.** 1) Turn the ignition switch to OFF. 2) Disconnect the connectors from ECM and electronic throttle control. 3) Measure the resistance between ECM connector and electronic throttle control connector. ***Connector & terminal*** ***(E158) No. 14 — (E57) No. 2:*** ***(E158) No. 1 — (E57) No. 1:***	Is the resistance less than 1 Ω?	Go to step **15**.	Repair the open circuit of harness between ECM connector and electronic throttle control connector.
15	**CHECK HARNESS BETWEEN ECM AND ELECTRONIC THROTTLE CONTROL CONNECTOR.** 1) Connect the connector to ECM. 2) Turn the ignition switch to ON. 3) Measure the voltage between electronic throttle control connector and engine ground. ***Connector & terminal*** ***(E57) No. 2 (+) — Engine ground (–):*** ***(E57) No. 1 (+) — Engine ground (–):***	Is the voltage 5 V or more?	Repair the short circuit to power in the harness between ECM connector and electronic throttle control connector.	Go to step **16**.
16	**CHECK HARNESS BETWEEN ECM AND ELECTRONIC THROTTLE CONTROL CONNECTOR.** 1) Turn the ignition switch to OFF. 2) Disconnect the connector from ECM. 3) Measure the resistance between electronic throttle control connector and engine ground. ***Connector & terminal*** ***(E57) No. 2 — Engine ground:*** ***(E57) No. 1 — Engine ground:***	Is the resistance 1 MΩ or more?	Go to step **17**.	Repair the ground short circuit of harness between ECM connector and electronic throttle control connector.
17	**CHECK ELECTRONIC THROTTLE CONTROL CONNECTOR HARNESS.** Measure the resistance between electronic throttle control connectors. ***Connector & terminal*** ***(E57) No. 2 — (E57) No. 1:***	Is the resistance 1 MΩ or more?	Go to step **18**.	Repair the short circuit in harness between ECM connector and electronic throttle control connector.

	Step	Check	Yes	No
18	**CHECK ELECTRONIC THROTTLE CONTROL GROUND CIRCUIT.** Measure the resistance between ECM connector and chassis ground. ***Connector & terminal*** ***(E158) No. 61 — Chassis ground:*** ***(E158) No. 62 — Chassis ground:*** ***(E158) No. 63 — Chassis ground:*** ***(E158) No. 64 — Chassis ground:*** ***(E158) No. 65 — Chassis ground:***	Is the resistance less than 5 Ω?	Go to step **19**.	Repair the open circuit of harness between ECM connector and electronic throttle control connector.
19	**CHECK ELECTRONIC THROTTLE CONTROL.** Measure the resistance between electronic throttle control terminals. ***Terminals*** ***No. 2 — No. 1:***	Is the resistance 50 Ω or less?	Go to step **20**.	Replace the electronic throttle control. <Ref. to FU(H4DO)-14, Throttle Body.>
20	**CHECK ELECTRONIC THROTTLE CONTROL.** Move the throttle valve to the fully opened and fully closed positions with fingers. Check that the valve returns to the specified position when releasing fingers.	Does the valve return to the specified position? Standard value: 3 mm (0.12 in) from fully closed position	Repair the poor contact of ECM connector.	Replace the electronic throttle control. <Ref. to FU(H4DO)-14, Throttle Body.>

1. OUTLINE OF DIAGNOSIS

Judge as NG when the motor current becomes large or drive circuit is heated.

2. COMPONENT DESCRIPTION

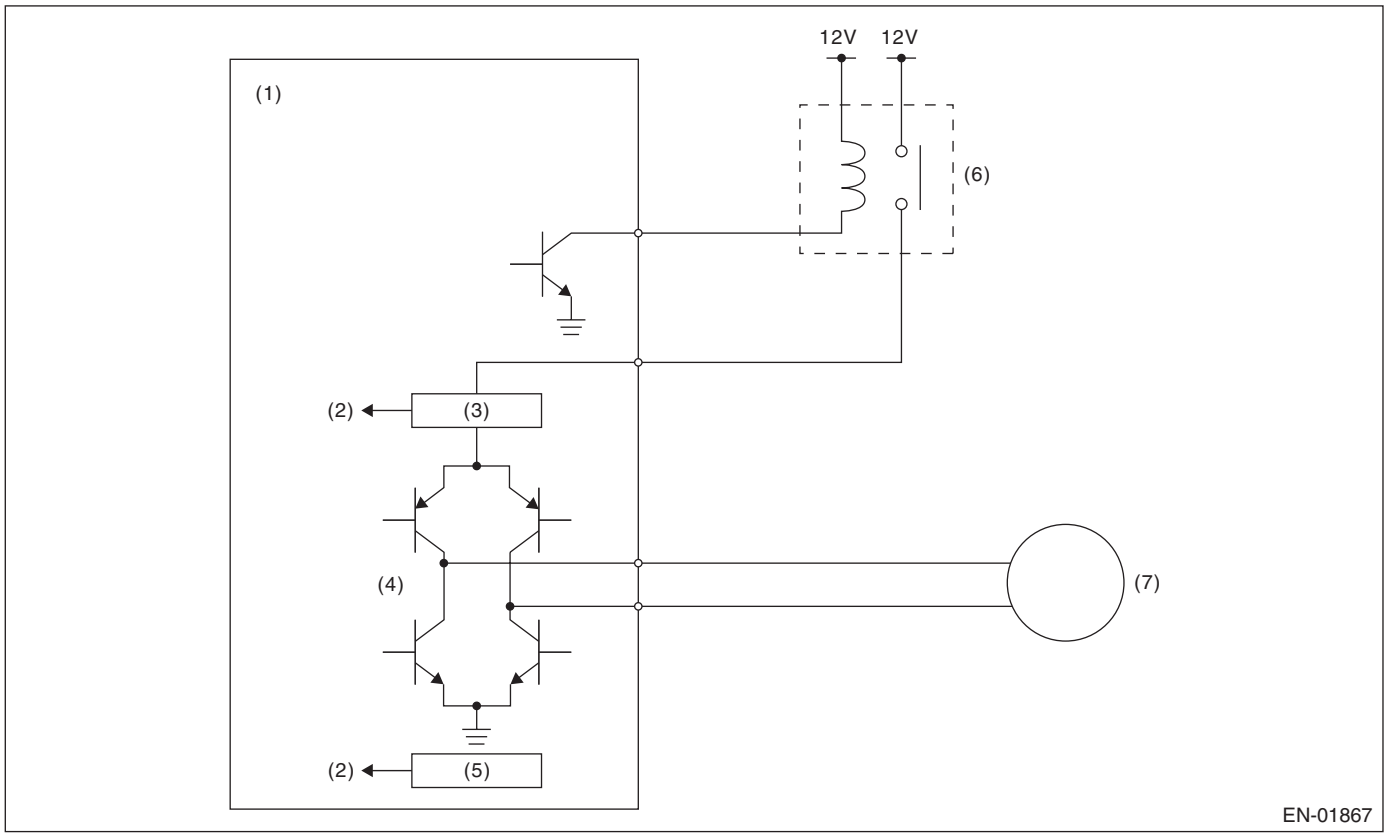

(1) Engine control module (ECM)
(2) Detecting circuit
(3) Overcurrent detection circuit
(4) Drive circuit
(5) Temperature detection circuit
(6) Electronic throttle control relay
(7) Motor

3. EXECUTION CONDITION

Secondary Parameters	Execution condition
Battery voltage	≥ 6.2 V
Electronic throttle control relay output	ON

4. GENERAL DRIVING CYCLE

Always perform the diagnosis continuously.

5. DIAGNOSTIC METHOD

If the duration of time while the following conditions are met is longer than the time indicated, judge as NG.

Judgment Value

Malfunction Criteria	Threshold Value
Overcurrent signal from the electronic throttle control drive IC	ON

Time Needed for Diagnosis: 512 ms
Malfunction Indicator Light Illumination: Illuminates as soon as a malfunction occurs.

EN:DTC P2102 THROTTLE ACTUATOR "A" CONTROL MOTOR CIRCUIT LOW

DTC DETECTING CONDITION:
Immediately at fault recognition
TROUBLE SYMPTOM:

- Improper idling
- Poor driving performance
- Engine stalls.

CAUTION:
After servicing or replacing faulty parts, perform Clear Memory Mode <Ref. to EN(H4DO)(diag)-78, OPERATION, Clear Memory Mode.>, and Inspection Mode <Ref. to EN(H4DO)(diag)-64, PROCEDURE, Inspection Mode.>.
WIRING DIAGRAM:

- Engine Electrical System ENGINE TYPE FB (WITHOUT PUSH BUTTON START) <Ref. to WI-170, ENGINE TYPE FB (WITHOUT PUSH BUTTON START), WIRING DIAGRAM, Engine Electrical System.>
- Engine Electrical System ENGINE TYPE FB (WITH PUSH BUTTON START) <Ref. to WI-184, ENGINE TYPE FB (WITH PUSH BUTTON START), WIRING DIAGRAM, Engine Electrical System.>

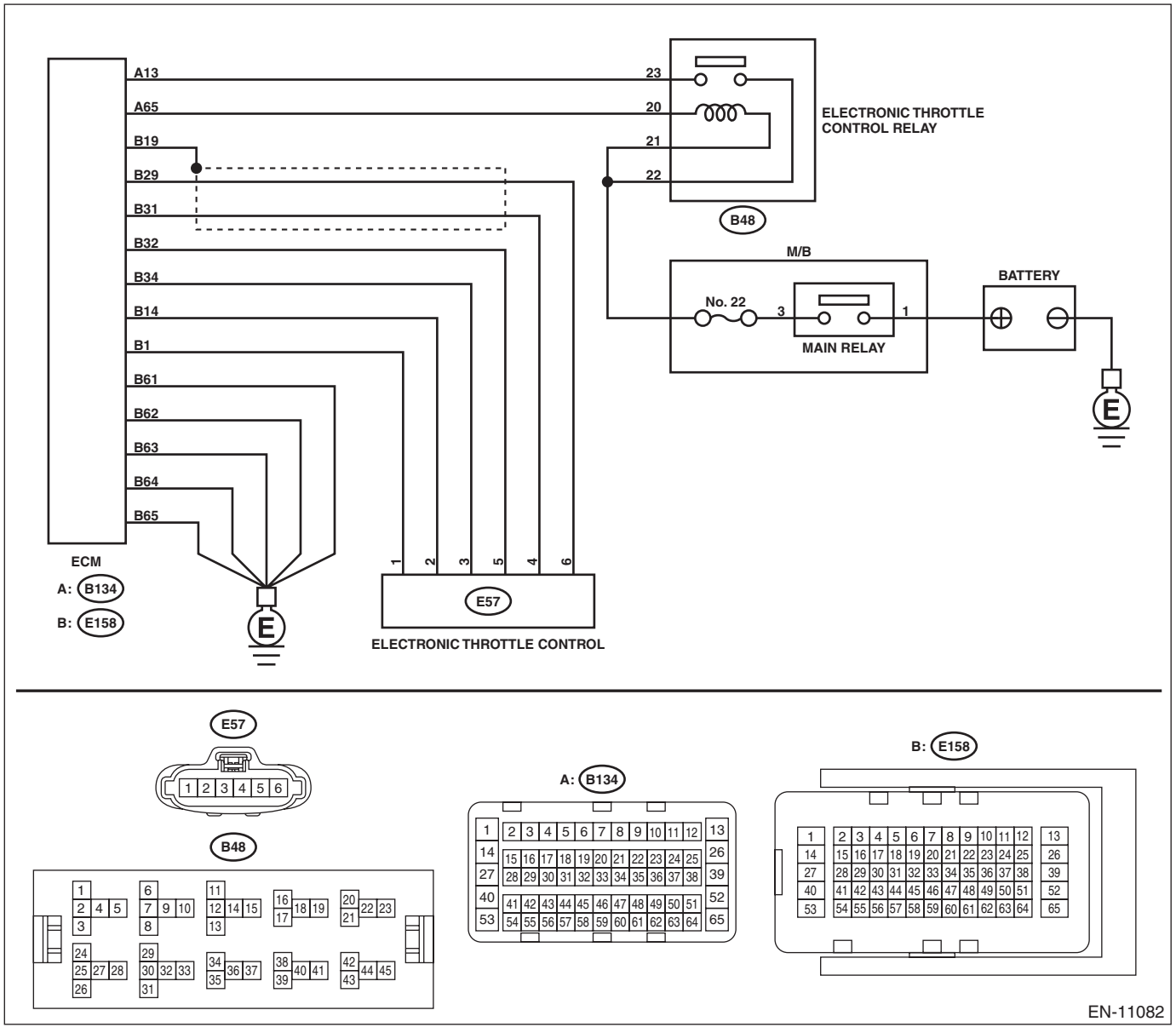

	Step	Check	Yes	No
1	**CHECK ELECTRONIC THROTTLE CONTROL RELAY.** 1) Turn the ignition switch to OFF. 2) Remove the electronic throttle control relay. 3) Connect the battery to terminals No. 13 and No. 14 of electronic throttle control relay. 4) Measure the resistance between electronic throttle control relay terminals. ***Terminals*** ***No. 22 — No. 23:***	Is the resistance less than 1 Ω?	Go to step **2**.	Replace the electronic throttle control relay. <Ref. to FU(H4DO)-86, Electronic Throttle Control Relay.>
2	**CHECK POWER SUPPLY OF ELECTRONIC THROTTLE CONTROL RELAY.** Measure the voltage between electronic throttle control relay connector and chassis ground. ***Connector & terminal*** ***(B48) No. 22 (+) — Chassis ground (–):***	Is the voltage 10 V or more?	Go to step **3**.	Repair the open or short to ground in the power supply circuit.
3	**CHECK HARNESS BETWEEN ECM AND ELECTRONIC THROTTLE CONTROL RELAY CONNECTOR.** 1) Disconnect the connector from ECM. 2) Turn the ignition switch to ON. 3) Measure the voltage between electronic throttle control relay connector and chassis ground. ***Connector & terminal*** ***(B48) No. 20 (+) — Chassis ground (–):***	Is the voltage 10 V or more?	Repair the short circuit to power in the harness between ECM connector and electronic throttle control relay connector.	Go to step **4**.
4	**CHECK HARNESS BETWEEN ECM AND ELECTRONIC THROTTLE CONTROL RELAY CONNECTOR.** 1) Turn the ignition switch to OFF. 2) Measure the resistance between electronic throttle control relay connector and chassis ground. ***Connector & terminal*** ***(B48) No. 20 — Chassis ground:*** ***(B48) No. 23 — Chassis ground:***	Is the resistance 1 MΩ or more?	Go to step **5**.	Repair the short circuit to ground in harness between ECM connector and electronic throttle control relay connector.
5	**CHECK HARNESS BETWEEN ECM AND ELECTRONIC THROTTLE CONTROL RELAY CONNECTOR.** Measure the resistance between ECM connector and electronic throttle control relay connector. ***Connector & terminal*** ***(B134) No. 65 — (B48) No. 20:*** ***(B134) No. 13 — (B48) No. 23:***	Is the resistance less than 1 Ω?	Repair the poor contact of ECM connector.	Repair the open circuit in harness between ECM connector and electronic throttle control relay connector.

1. OUTLINE OF DIAGNOSIS

Judge as NG when the electronic throttle control power is not supplied even when ECM sets the electric control throttle relay to ON.

2. COMPONENT DESCRIPTION

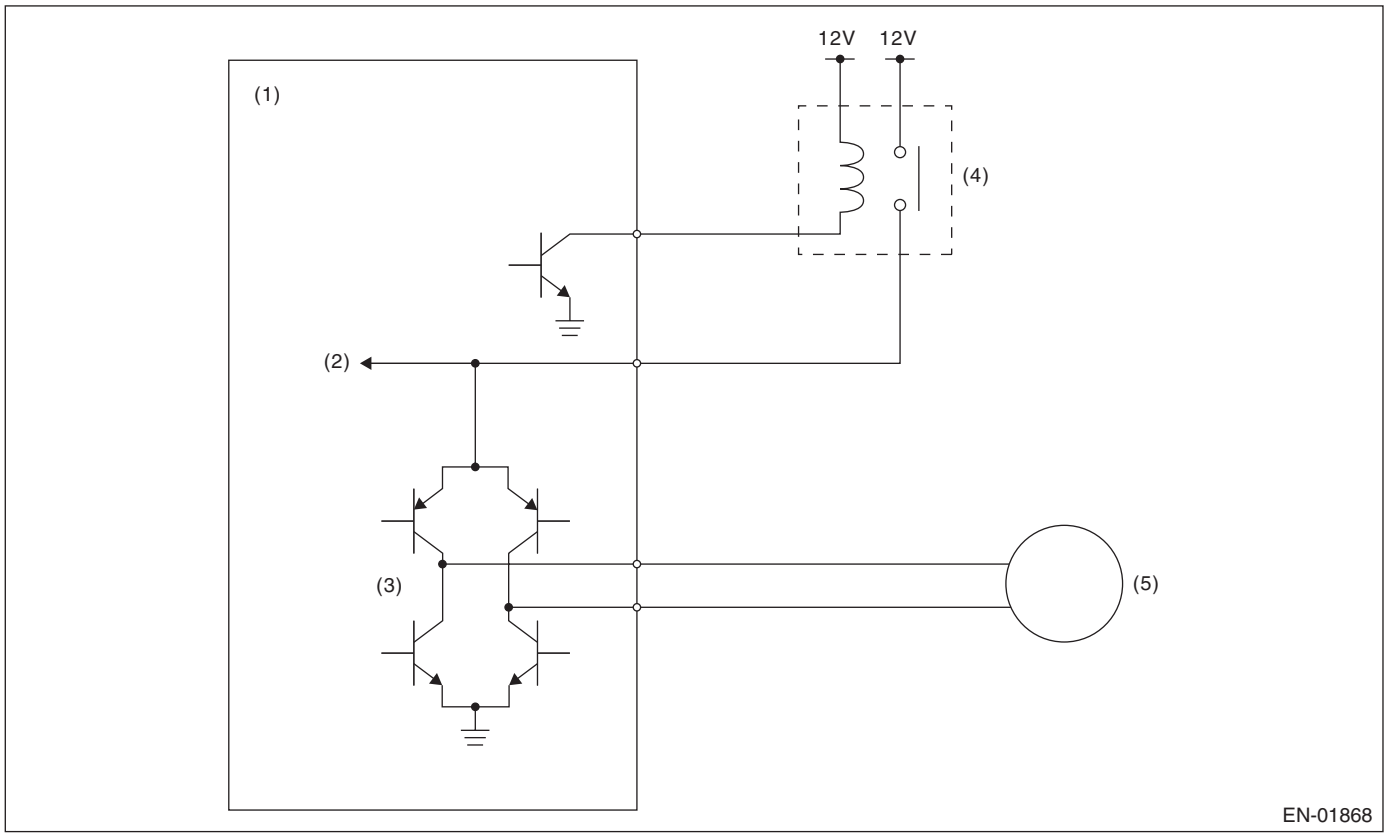

(1) Engine control module (ECM)
(2) Voltage detection circuit
(3) Drive circuit
(4) Electronic throttle control relay
(5) Motor

3. EXECUTION CONDITION

Secondary Parameters	Execution condition
Battery voltage	≥ 11 V
Electronic throttle control relay output	ON

4. GENERAL DRIVING CYCLE

Always perform the diagnosis continuously.

5. DIAGNOSTIC METHOD

If the duration of time while the following conditions are met is longer than the time indicated, judge as NG.

Judgment Value

Malfunction Criteria	Threshold Value
Motor power voltage	≤ 5 V

Time Needed for Diagnosis: 352 ms
Malfunction Indicator Light Illumination: Illuminates as soon as a malfunction occurs.

EO:DTC P2103 THROTTLE ACTUATOR "A" CONTROL MOTOR CIRCUIT HIGH

DTC DETECTING CONDITION:
Immediately at fault recognition

CAUTION:
After servicing or replacing faulty parts, perform Clear Memory Mode <Ref. to EN(H4DO)(diag)-78, OPERATION, Clear Memory Mode.>, and Inspection Mode <Ref. to EN(H4DO)(diag)-64, PROCEDURE, Inspection Mode.>.

WIRING DIAGRAM:

- Engine Electrical System ENGINE TYPE FB (WITHOUT PUSH BUTTON START) <Ref. to WI-170, ENGINE TYPE FB (WITHOUT PUSH BUTTON START), WIRING DIAGRAM, Engine Electrical System.>
- Engine Electrical System ENGINE TYPE FB (WITH PUSH BUTTON START) <Ref. to WI-184, ENGINE TYPE FB (WITH PUSH BUTTON START), WIRING DIAGRAM, Engine Electrical System.>

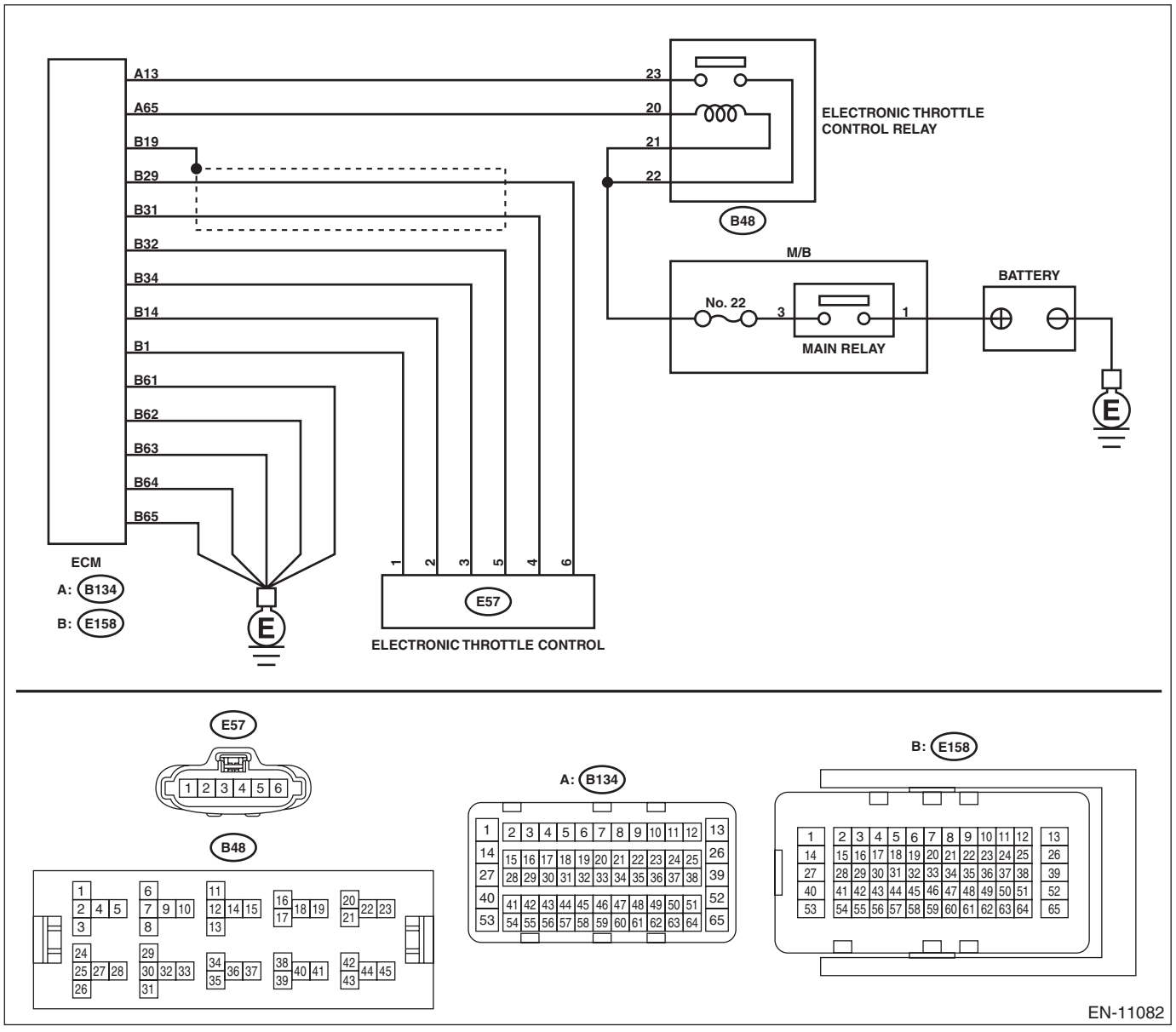

	Step	Check	Yes	No
1	**CHECK ELECTRONIC THROTTLE CONTROL RELAY.** 1) Turn the ignition switch to OFF. 2) Remove the electronic throttle control relay. 3) Measure the resistance between electronic throttle control relay terminals. ***Terminals*** ***No. 23 — No. 22:***	Is the resistance 1 MΩ or more?	Go to step **2**.	Replace the electronic throttle control relay. <Ref. to FU(H4DO)-86, Electronic Throttle Control Relay.>
2	**CHECK SHORT CIRCUIT OF ELECTRONIC THROTTLE CONTROL RELAY POWER SUPPLY.** 1) Turn the ignition switch to ON. 2) Measure the voltage between electronic throttle control relay connector and chassis ground. ***Connector & terminal*** ***(B48) No. 23 (+) — Chassis ground (–):***	Is the voltage 10 V or more?	Repair the short circuit to power in the harness between ECM connector and electronic throttle control relay connector.	Go to step **3**.
3	**CHECK HARNESS BETWEEN ECM AND ELECTRONIC THROTTLE CONTROL RELAY CONNECTOR.** 1) Turn the ignition switch to OFF. 2) Disconnect the connector from ECM. 3) Measure the resistance between ECM connector and chassis ground. ***Connector & terminal*** ***(B134) No. 65 — Chassis ground:***	Is the resistance 1 MΩ or more?	Repair the poor contact of ECM connector.	Repair the short circuit to ground in harness between ECM connector and electronic throttle control relay connector.

1. OUTLINE OF DIAGNOSIS

Judge as NG when the electronic throttle control power is supplied even when ECM sets the electronic throttle control relay to OFF.

2. COMPONENT DESCRIPTION

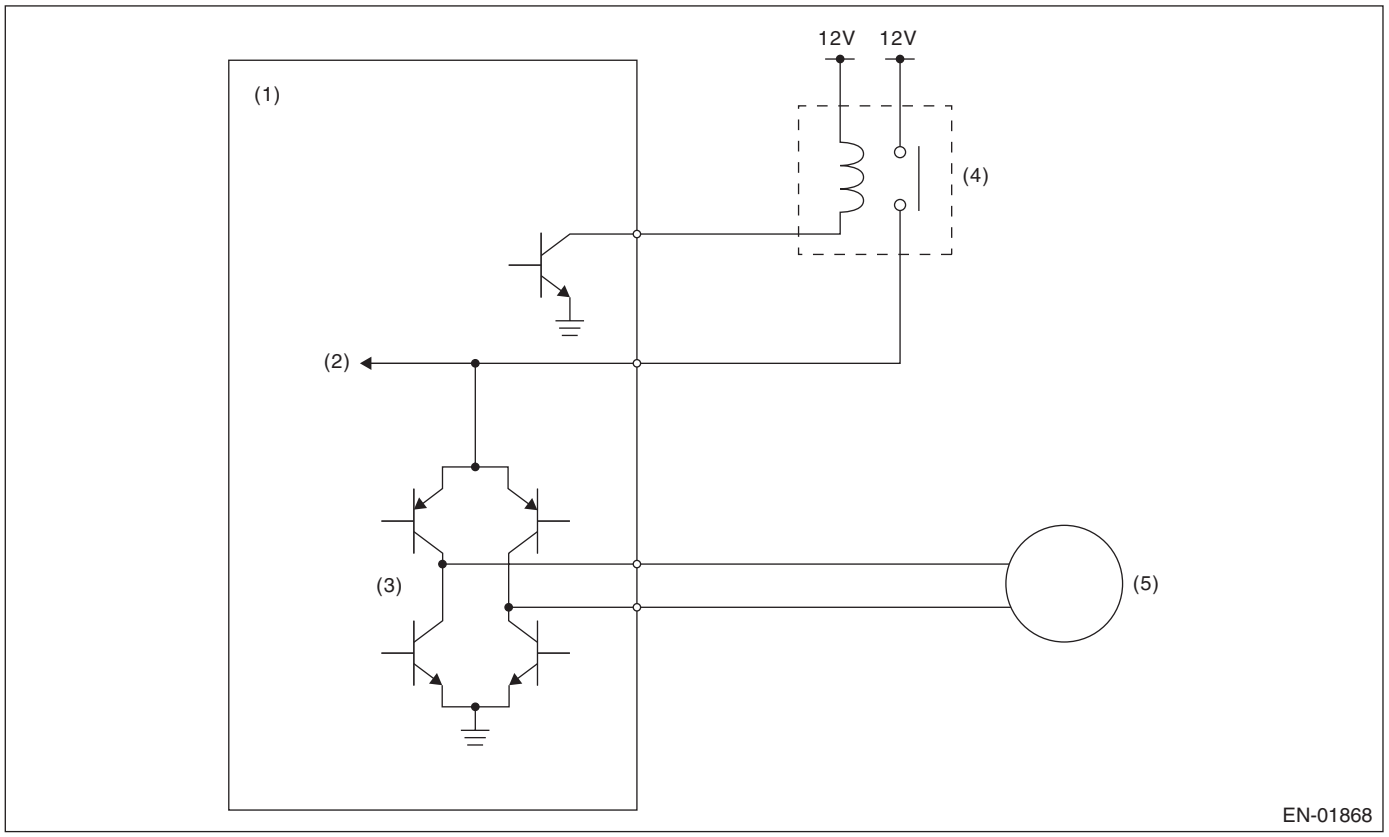

(1) Engine control module (ECM)
(2) Voltage detection circuit
(3) Drive circuit
(4) Electronic throttle control relay
(5) Motor

3. EXECUTION CONDITION

Secondary Parameters	Execution condition
Battery voltage	≥ 6 V
Electronic throttle control relay output	OFF

4. GENERAL DRIVING CYCLE

- When ignition switch ON → OFF
- Ignition switch OFF → ON (Only after clearing memory)

5. DIAGNOSTIC METHOD

If the duration of time while the following conditions are met is longer than the time indicated, judge as NG.

Judgment Value

Malfunction Criteria	Threshold Value
Motor power voltage	≥ 5 V

Time Needed for Diagnosis: 600 ms
Malfunction Indicator Light Illumination: Illuminates as soon as a malfunction occurs.

EP:DTC P2109 THROTTLE/PEDAL POSITION SENSOR "A" MINIMUM STOP PERFORMANCE

NOTE:
For the diagnostic procedure, refer to DTC P2101. <Ref. to EN(H4DO)(diag)-507, DTC P2101 THROTTLE ACTUATOR "A" CONTROL MOTOR CIRCUIT RANGE/PERFORMANCE, Diagnostic Procedure with Diagnostic Trouble Code (DTC).>

1. OUTLINE OF DIAGNOSIS

Judge as NG when full close point learning cannot conducted or abnormal value is detected.

2. COMPONENT DESCRIPTION

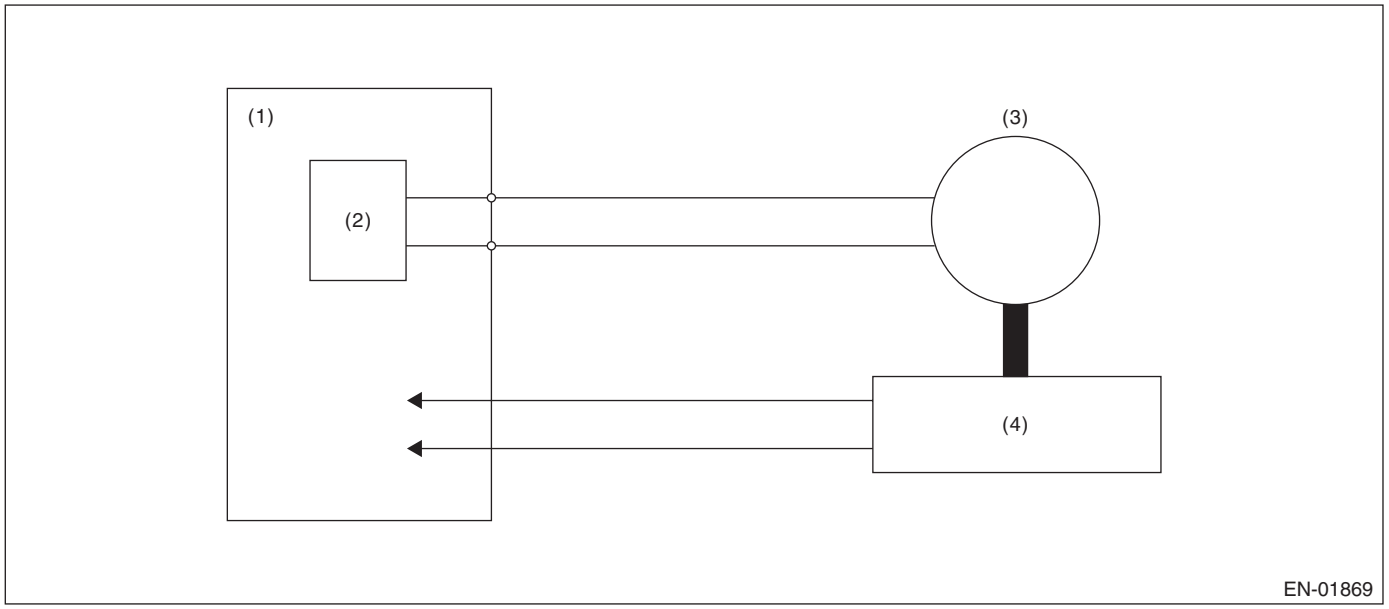

(1) Engine control module (ECM)
(2) Drive circuit
(3) Motor
(4) Throttle position sensor

3. EXECUTION CONDITION

Secondary Parameters	Execution condition
Battery voltage	≥ 6 V

4. GENERAL DRIVING CYCLE

Perform the diagnosis at full closed point learning.

5. DIAGNOSTIC METHOD

If the duration of time while the following conditions are met is longer than the time indicated, judge as NG.

Judgment Value

Malfunction Criteria	Threshold Value
Minimum stop position	< 9.975 ° or > 20.025 °
or	
Throttle opening angle when the ignition switch is ON – Throttle minimum stop position	< 1.162 °

Time Needed for Diagnosis: 8 ms — 80 ms
Malfunction Indicator Light Illumination: Illuminates as soon as a malfunction occurs.

EQ:DTC P2119 THROTTLE ACTUATOR "A" CONTROL THROTTLE BODY RANGE/PERFORMANCE

NOTE:
For the diagnostic procedure, refer to DTC P2101. <Ref. to EN(H4DO)(diag)-507, DTC P2101 THROTTLE ACTUATOR "A" CONTROL MOTOR CIRCUIT RANGE/PERFORMANCE, Diagnostic Procedure with Diagnostic Trouble Code (DTC).>

1. OUTLINE OF DIAGNOSIS

Judge as NG when the target opening angle and actual opening angle is mismatched or the current to motor is the specified duty or more for specified time continuously.

2. COMPONENT DESCRIPTION

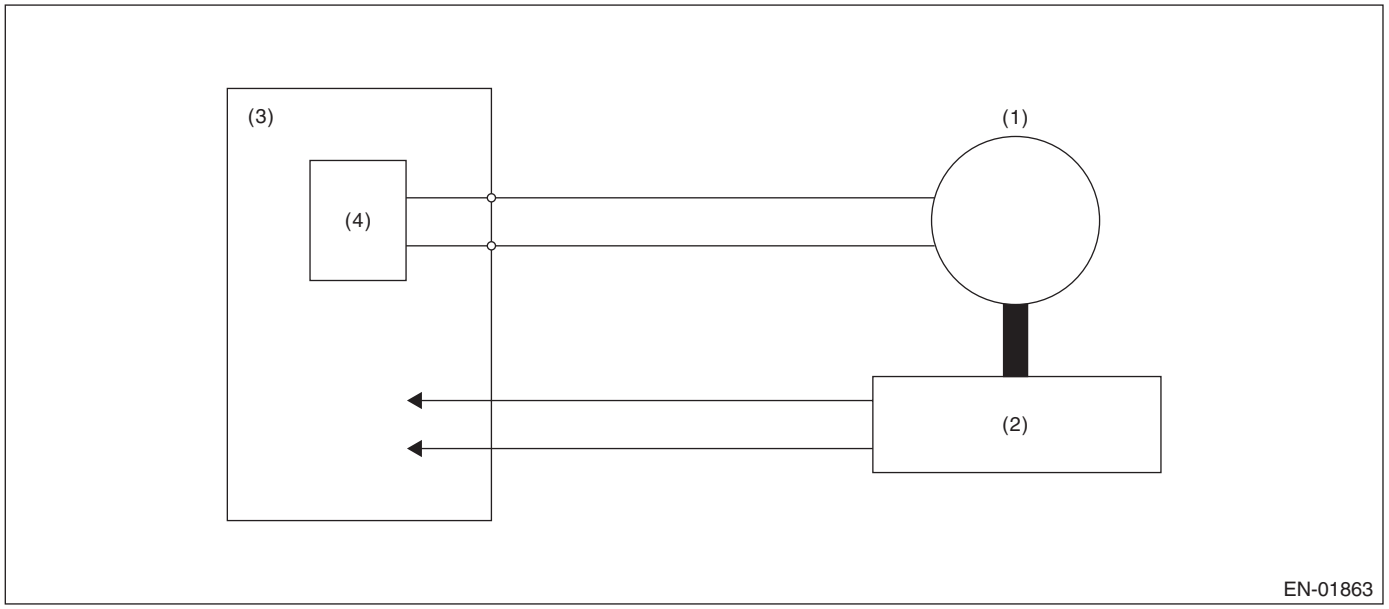

(1) Motor
(2) Throttle position sensor
(3) Engine control module (ECM)
(4) Drive circuit

3. EXECUTION CONDITION

Secondary Parameters	Execution condition
Battery voltage	≥ 6.2 V
Electronic throttle control relay output	ON

4. GENERAL DRIVING CYCLE

Always perform the diagnosis continuously when the electronic throttle control is operating.

5. DIAGNOSTIC METHOD

Judge as NG if the criteria below are met.

Diagnosis 1

Judgment Value

Malfunction Criteria	Threshold Value
Output duty to drive circuit	≥ 95 %

Time Needed for Diagnosis:

- Engine speed ≥ 500 rpm: 2000 ms
- Engine speed < 500 rpm: 5000 ms

Diagnosis 2

Judgment Value

Malfunction Criteria	Threshold Value
Difference between target opening angle and actual opening angle	Within NG range of **Details of Judgment value**

Time Needed for Diagnosis:

- Engine speed ≥ 500 rpm: Refer to **Details of Judgment time**.
- Engine speed < 500 rpm: 5000 ms

Details of Judgment Value

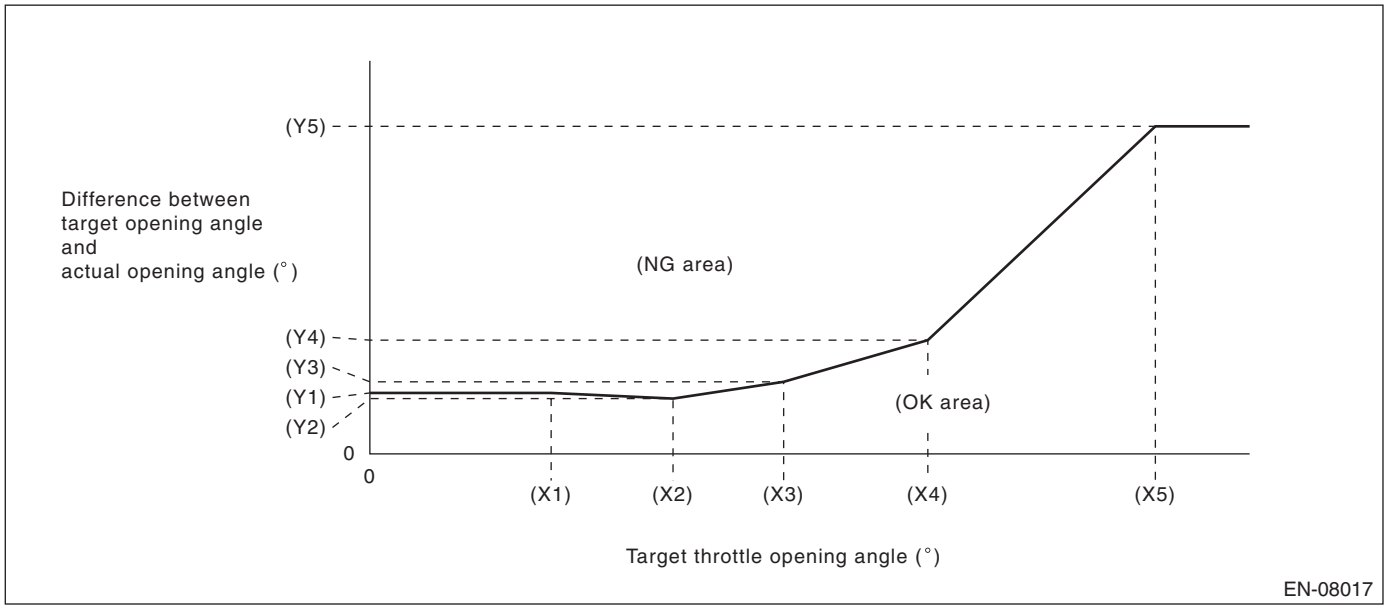

(X1) 6.915 °
(X2) 11.565 °
(X3) 15.785 °
(X4) 21.285 °
(X5) 29.965 °

(Y1) 4.65 °
(Y2) 4.22 °
(Y3) 5.5 °
(Y4) 8.68 °
(Y5) 25 °

Details of Judgment time

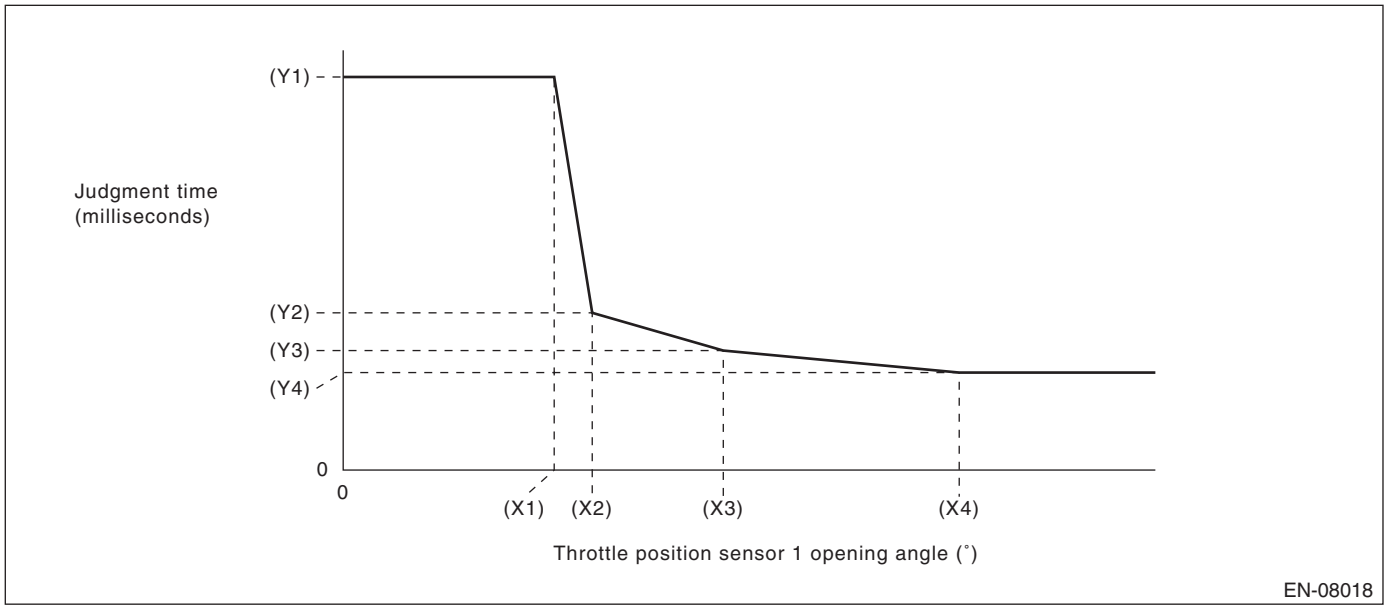

(X1)	8.049999237 °	(X2)	9.5 °	(X3)	14.5 °
(X4)	23.5 °				

(Y1)	1000 ms	(Y2)	400 ms	(Y3)	304 ms
(Y4)	248 ms				

NOTE:
Judgment time is always 1000 milliseconds when actual opening angle < target opening angle.
Malfunction Indicator Light Illumination: Illuminates as soon as a malfunction occurs.

ER:DTC P2122 THROTTLE/PEDAL POSITION SENSOR/SWITCH "D" CIRCUIT LOW

DTC DETECTING CONDITION:
Immediately at fault recognition
TROUBLE SYMPTOM:
- Improper idling
- Poor driving performance

CAUTION:
After servicing or replacing faulty parts, perform Clear Memory Mode <Ref. to EN(H4DO)(diag)-78, OPERATION, Clear Memory Mode.>, and Inspection Mode <Ref. to EN(H4DO)(diag)-64, PROCEDURE, Inspection Mode.>.
WIRING DIAGRAM:
- Engine Electrical System ENGINE TYPE FB (WITHOUT PUSH BUTTON START) <Ref. to WI-170, ENGINE TYPE FB (WITHOUT PUSH BUTTON START), WIRING DIAGRAM, Engine Electrical System.>
- Engine Electrical System ENGINE TYPE FB (WITH PUSH BUTTON START) <Ref. to WI-184, ENGINE TYPE FB (WITH PUSH BUTTON START), WIRING DIAGRAM, Engine Electrical System.>

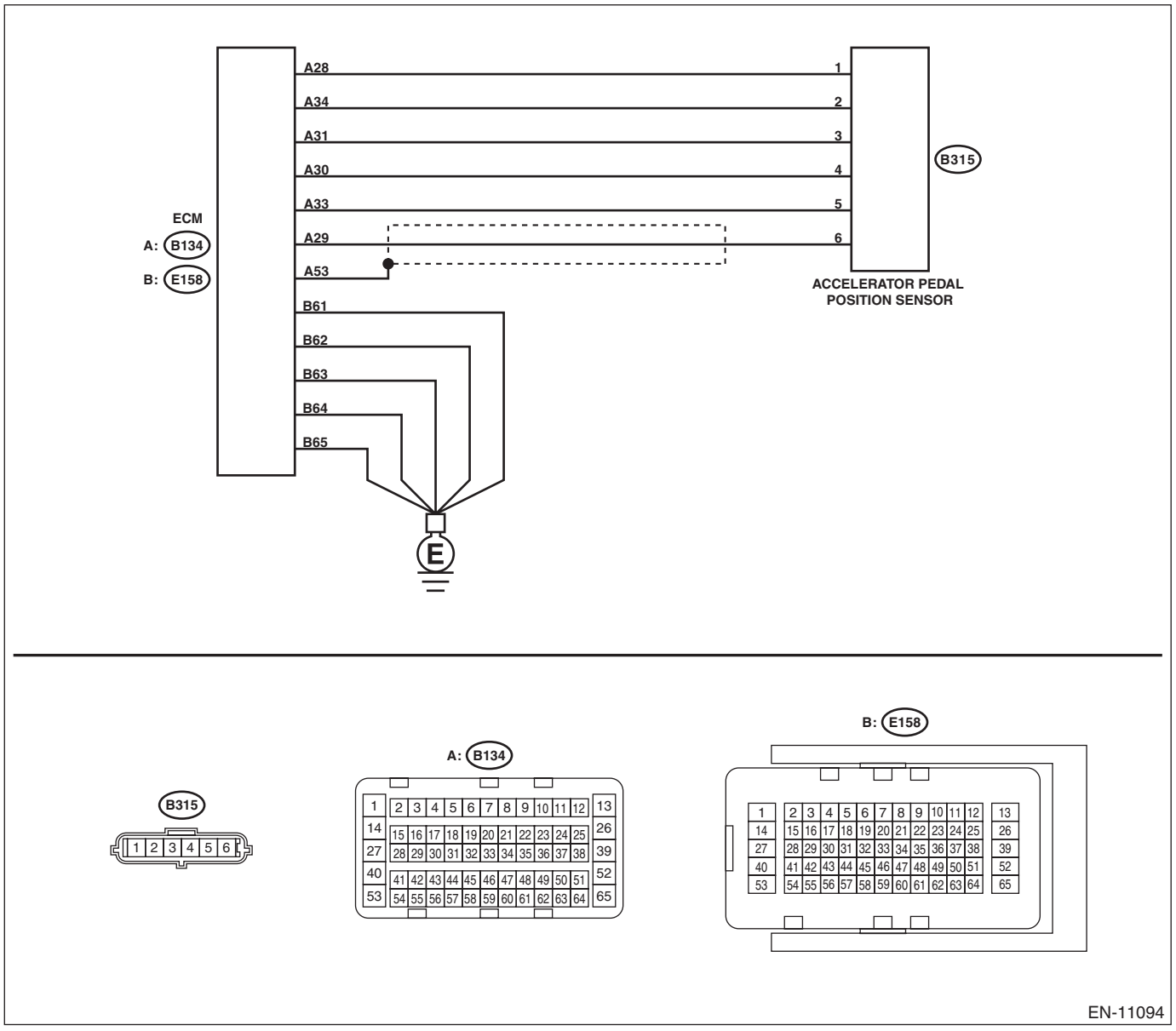

	Step	Check	Yes	No
1	**CHECK HARNESS BETWEEN ECM AND ACCELERATOR PEDAL POSITION SENSOR CONNECTOR.** 1) Turn the ignition switch to OFF. 2) Disconnect the connectors from ECM and accelerator pedal position sensor. 3) Measure the resistance between ECM connector and chassis ground. ***Connector & terminal*** ***(B134) No. 30 — Chassis ground:*** ***(B134) No. 29 — Chassis ground:*** ***(B134) No. 29 — (B134) No. 53:***	Is the resistance 1 MΩ or more?	Go to step **2**.	Repair the short circuit to ground in harness between ECM connector and accelerator pedal position sensor connector. NOTE: In this case, repair the following item: • Short circuit of harness between ECM connector and engine ground • Poor contact of ECM connector • Poor contact of coupling connector
2	**CHECK SHORT CIRCUIT INSIDE THE ECM.** 1) Connect the connector to ECM. 2) Measure the resistance between accelerator pedal position sensor connector and chassis ground. ***Connector & terminal*** ***(B315) No. 6 — Chassis ground:***	Is the resistance 1 MΩ or more?	Replace the accelerator pedal. <Ref. to SP(H4DO)-4, Accelerator Pedal.>	Repair the short circuit to ground in harness between ECM connector and accelerator pedal position sensor connector. Replace the ECM if defective. <Ref. to FU(H4DO)-82, Engine Control Module (ECM).>

1. OUTLINE OF DIAGNOSIS

Detect the open or short circuit of accelerator pedal position sensor 1.
Judge as NG if out of specification.

2. COMPONENT DESCRIPTION

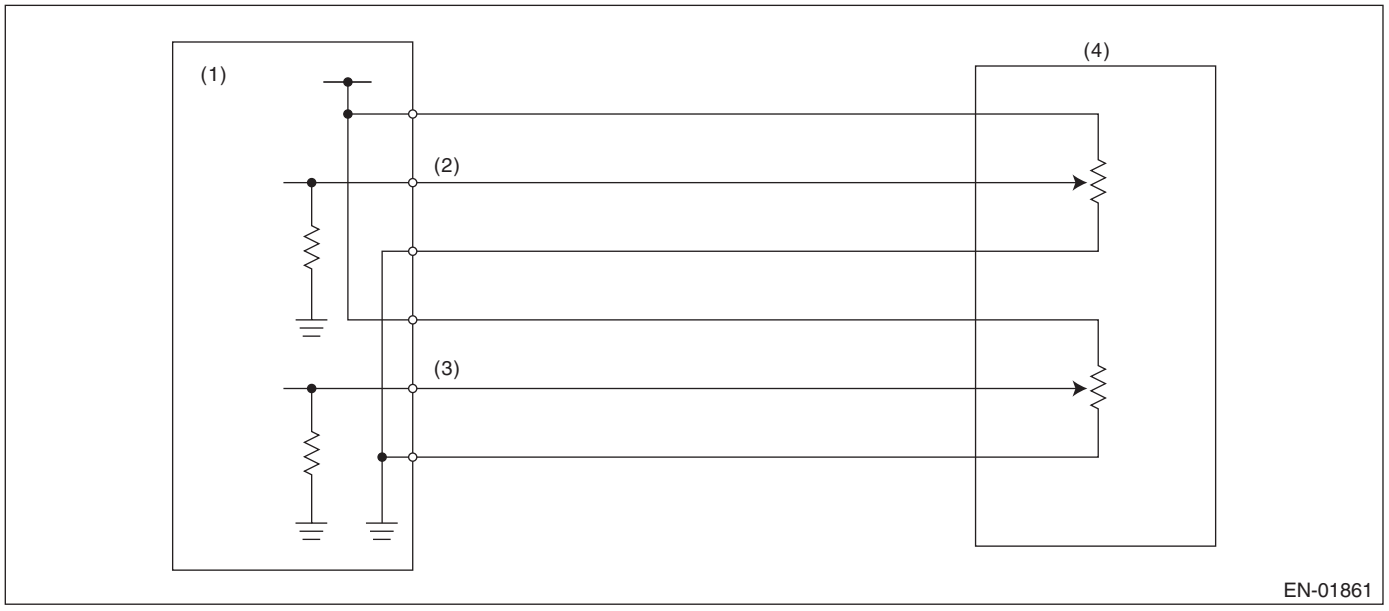

(1) Engine control module (ECM)
(2) Accelerator pedal position sensor 1 signal
(3) Accelerator pedal position sensor 2 signal
(4) Accelerator pedal position sensor

3. EXECUTION CONDITION

Secondary Parameters	Execution condition
Battery voltage	≥ 6 V

4. GENERAL DRIVING CYCLE

Always perform the diagnosis continuously.

5. DIAGNOSTIC METHOD

If the duration of time while the following conditions are met is longer than the time indicated, judge as NG.

Judgment Value

Malfunction Criteria	Threshold Value
Sensor 1 output voltage	< 0.298 V

Time Needed for Diagnosis: 100 ms
Malfunction Indicator Light Illumination: Illuminates as soon as a malfunction occurs.

ES:DTC P2123 THROTTLE/PEDAL POSITION SENSOR/SWITCH "D" CIRCUIT HIGH

DTC DETECTING CONDITION:
Immediately at fault recognition
TROUBLE SYMPTOM:
- Improper idling
- Poor driving performance

CAUTION:
After servicing or replacing faulty parts, perform Clear Memory Mode <Ref. to EN(H4DO)(diag)-78, OPERATION, Clear Memory Mode.>, and Inspection Mode <Ref. to EN(H4DO)(diag)-64, PROCEDURE, Inspection Mode.>.
WIRING DIAGRAM:
- Engine Electrical System ENGINE TYPE FB (WITHOUT PUSH BUTTON START) <Ref. to WI-170, ENGINE TYPE FB (WITHOUT PUSH BUTTON START), WIRING DIAGRAM, Engine Electrical System.>
- Engine Electrical System ENGINE TYPE FB (WITH PUSH BUTTON START) <Ref. to WI-184, ENGINE TYPE FB (WITH PUSH BUTTON START), WIRING DIAGRAM, Engine Electrical System.>

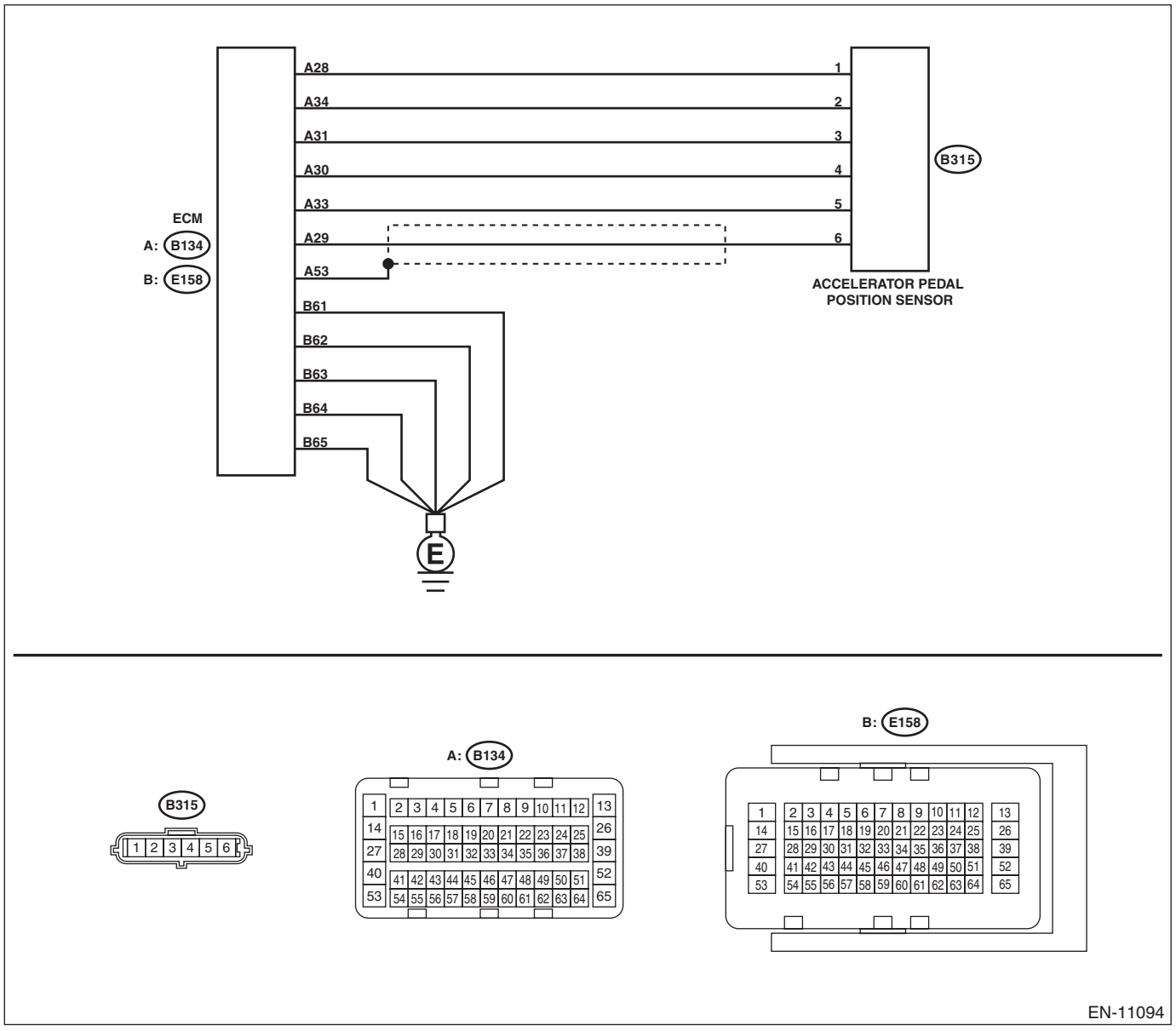

	Step	Check	Yes	No
1	**CHECK HARNESS BETWEEN ECM AND ACCELERATOR PEDAL POSITION SENSOR CONNECTOR.** 1) Turn the ignition switch to OFF. 2) Disconnect the connectors from ECM and accelerator pedal position sensor. 3) Measure the resistance of harness between ECM connector and accelerator pedal position sensor connector. ***Connector & terminal*** ***(E134) No. 29 — (B315) No. 6:*** ***(E134) No. 33 — (B315) No. 5:***	Is the resistance less than 1 Ω?	Go to step **2**.	Repair the open circuit of harness between ECM connector and accelerator pedal position sensor connector.
2	**CHECK HARNESS BETWEEN ECM AND ACCELERATOR PEDAL POSITION SENSOR CONNECTOR.** 1) Connect the connector to ECM. 2) Measure the resistance between accelerator pedal position sensor connector and chassis ground. ***Connector & terminal*** ***(B315) No. 5 — Chassis ground:***	Is the resistance less than 5 Ω?	Go to step **3**.	Repair the harness and connector. NOTE: In this case, repair the following item: • Open circuit of harness between ECM connector and engine ground • Poor contact of ECM connector
3	**CHECK HARNESS BETWEEN ECM AND ACCELERATOR PEDAL POSITION SENSOR CONNECTOR.** 1) Turn the ignition switch to ON. 2) Measure the voltage between accelerator pedal position sensor connector and chassis ground. ***Connector & terminal*** ***(B315) No. 6 (+) — Chassis ground (–):***	Is the voltage 5 V or more?	Repair the short circuit to power supply in harness between ECM connector and accelerator pedal position sensor connector.	Go to step **4**.
4	**CHECK HARNESS BETWEEN ECM AND ACCELERATOR PEDAL POSITION SENSOR CONNECTOR.** 1) Turn the ignition switch to OFF. 2) Disconnect the connector from ECM. 3) Measure the resistance between ECM connectors. ***Connector & terminal*** ***(B134) No. 30 — (B134) No. 29:***	Is the resistance 1 MΩ or more?	Repair the poor contact of accelerator pedal position sensor connector. Replace the accelerator pedal if defective. <Ref. to SP(H4DO)-4, Accelerator Pedal.>	Repair the short circuit to power supply in harness between ECM connector and accelerator pedal position sensor connector.

1. OUTLINE OF DIAGNOSIS

Detect the open or short circuit of accelerator pedal position sensor 1.
Judge as NG if out of specification.

2. COMPONENT DESCRIPTION

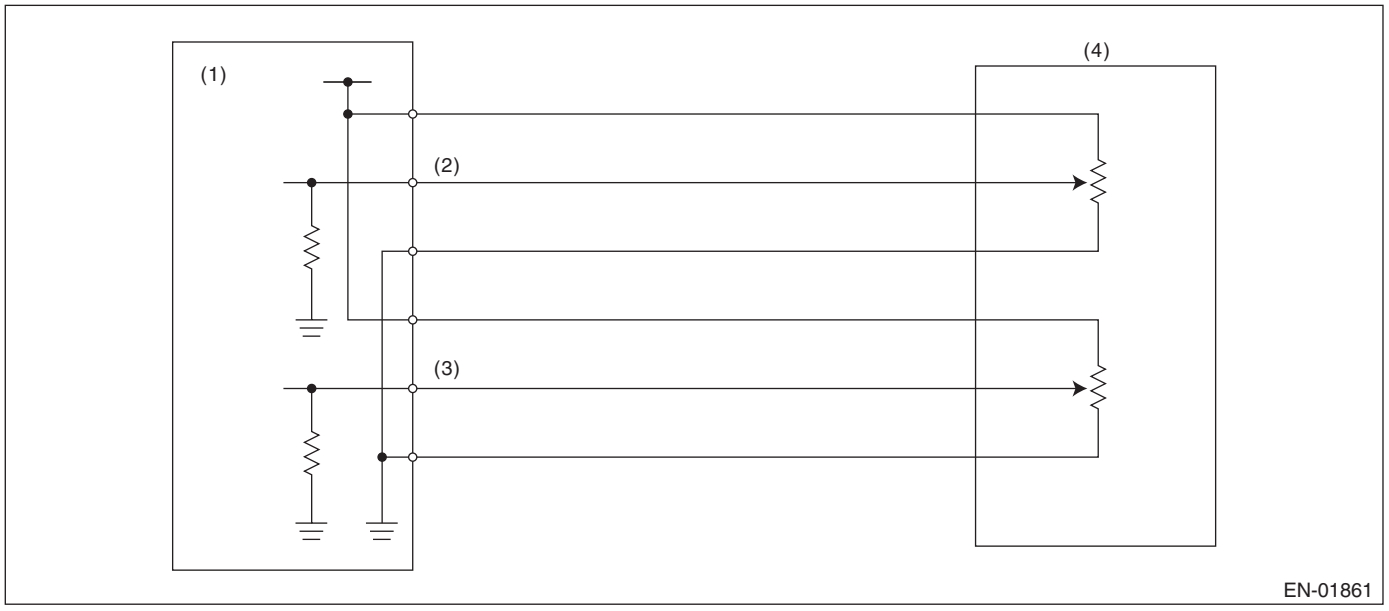

(1) Engine control module (ECM)
(2) Accelerator pedal position sensor 1 signal
(3) Accelerator pedal position sensor 2 signal
(4) Accelerator pedal position sensor

3. EXECUTION CONDITION

Secondary Parameters	Execution condition
Battery voltage	≥ 6 V

4. GENERAL DRIVING CYCLE

Always perform the diagnosis continuously.

5. DIAGNOSTIC METHOD

If the duration of time while the following conditions are met is longer than the time indicated, judge as NG.

Judgment Value

Malfunction Criteria	Threshold Value
Sensor 1 output voltage	≥ 4.757 V

Time Needed for Diagnosis: 32 ms
Malfunction Indicator Light Illumination: Illuminates as soon as a malfunction occurs.

ET:DTC P2127 THROTTLE/PEDAL POSITION SENSOR/SWITCH "E" CIRCUIT LOW

DTC DETECTING CONDITION:
Immediately at fault recognition
TROUBLE SYMPTOM:
- Improper idling
- Poor driving performance

CAUTION:
After servicing or replacing faulty parts, perform Clear Memory Mode <Ref. to EN(H4DO)(diag)-78, OPERATION, Clear Memory Mode.>, and Inspection Mode <Ref. to EN(H4DO)(diag)-64, PROCEDURE, Inspection Mode.>.
WIRING DIAGRAM:
- Engine Electrical System ENGINE TYPE FB (WITHOUT PUSH BUTTON START) <Ref. to WI-170, ENGINE TYPE FB (WITHOUT PUSH BUTTON START), WIRING DIAGRAM, Engine Electrical System.>
- Engine Electrical System ENGINE TYPE FB (WITH PUSH BUTTON START) <Ref. to WI-184, ENGINE TYPE FB (WITH PUSH BUTTON START), WIRING DIAGRAM, Engine Electrical System.>

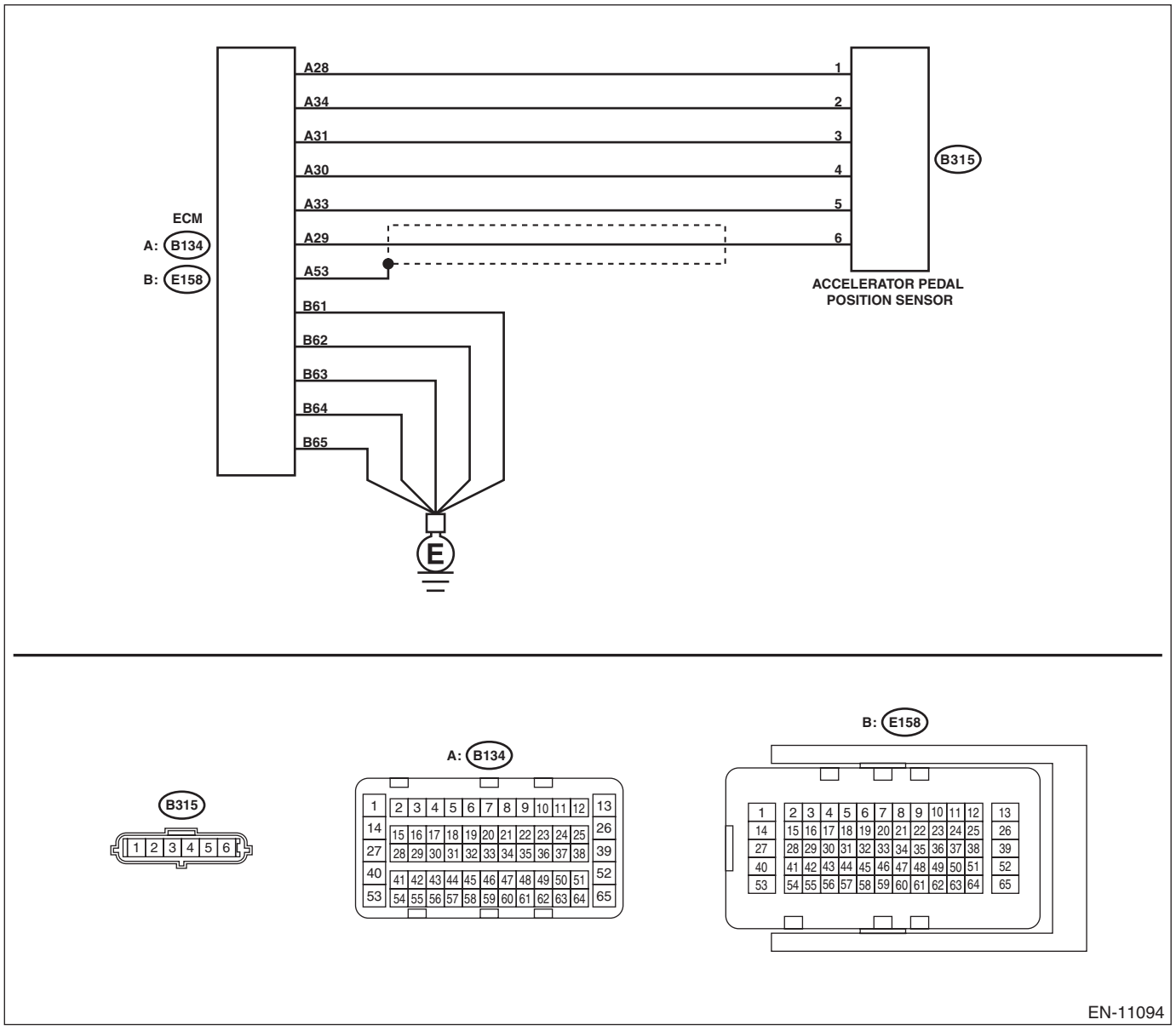

	Step	Check	Yes	No
1	**CHECK HARNESS BETWEEN ECM AND ACCELERATOR PEDAL POSITION SENSOR CONNECTOR.** 1) Turn the ignition switch to OFF. 2) Disconnect the connectors from ECM and accelerator pedal position sensor. 3) Measure the resistance between ECM connector and chassis ground. ***Connector & terminal*** ***(B134) No. 28 — Chassis ground:*** ***(B134) No. 31 — Chassis ground:***	Is the resistance 1 MΩ or more?	Go to step **2**.	Repair the short circuit to ground in harness between ECM connector and accelerator pedal position sensor connector.
2	**CHECK SHORT CIRCUIT INSIDE THE ECM.** 1) Connect the connector to ECM. 2) Measure the resistance between accelerator pedal position sensor connector and chassis ground. ***Connector & terminal*** ***(B315) No. 3 — Chassis ground:***	Is the resistance 1 MΩ or more?	Replace the accelerator pedal. <Ref. to SP(H4DO)-4, Accelerator Pedal.>	Repair the short circuit to ground in harness between ECM connector and accelerator pedal position sensor connector. Replace the ECM if defective. <Ref. to FU(H4DO)-82, Engine Control Module (ECM).>

1. OUTLINE OF DIAGNOSIS

Detect the open or short circuit of accelerator pedal position sensor 2.
Judge as NG if out of specification.

2. COMPONENT DESCRIPTION

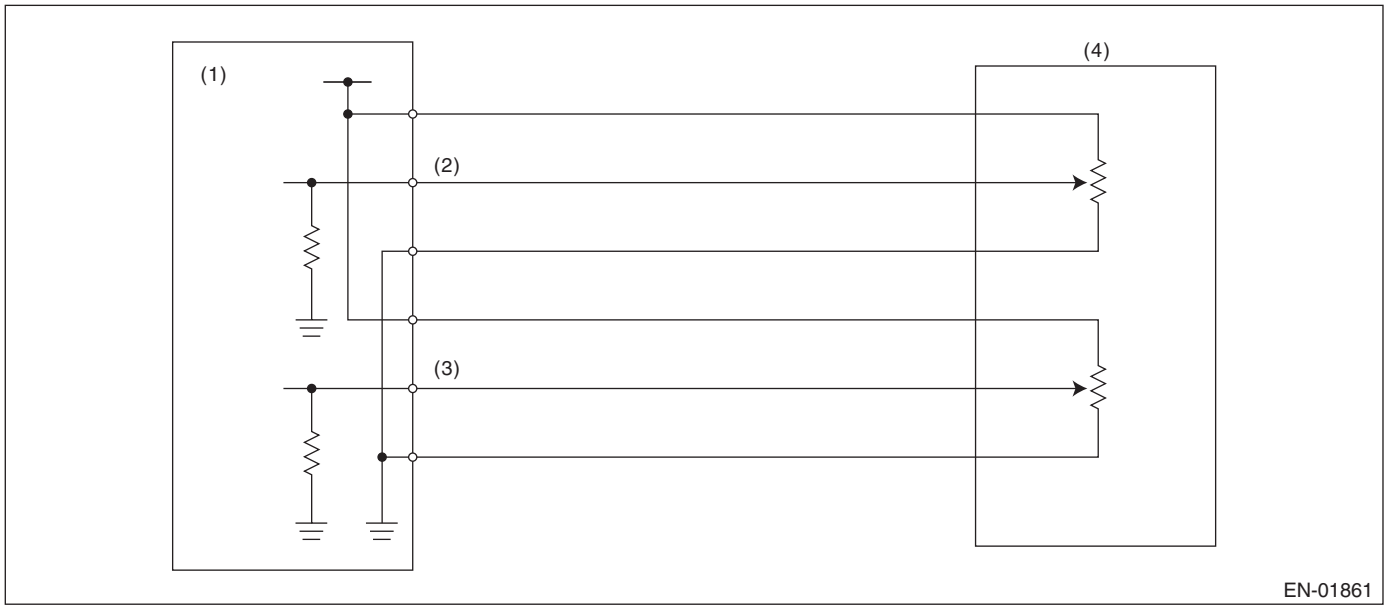

(1) Engine control module (ECM)
(2) Accelerator pedal position sensor 1 signal
(3) Accelerator pedal position sensor 2 signal
(4) Accelerator pedal position sensor

3. EXECUTION CONDITION

Secondary Parameters	Execution condition
Battery voltage	≥ 6 V

4. GENERAL DRIVING CYCLE

Always perform the diagnosis continuously.

5. DIAGNOSTIC METHOD

If the duration of time while the following conditions are met is longer than the time indicated, judge as NG.

Judgment Value

Malfunction Criteria	Threshold Value
Sensor 2 output voltage	< 0.298 V

Time Needed for Diagnosis: 100 ms
Malfunction Indicator Light Illumination: Illuminates as soon as a malfunction occurs.

EU:DTC P2128 THROTTLE/PEDAL POSITION SENSOR/SWITCH "E" CIRCUIT HIGH

DTC DETECTING CONDITION:
Immediately at fault recognition
TROUBLE SYMPTOM:
- Improper idling
- Poor driving performance

CAUTION:
After servicing or replacing faulty parts, perform Clear Memory Mode <Ref. to EN(H4DO)(diag)-78, OPERATION, Clear Memory Mode.>, and Inspection Mode <Ref. to EN(H4DO)(diag)-64, PROCEDURE, Inspection Mode.>.
WIRING DIAGRAM:
- Engine Electrical System ENGINE TYPE FB (WITHOUT PUSH BUTTON START) <Ref. to WI-170, ENGINE TYPE FB (WITHOUT PUSH BUTTON START), WIRING DIAGRAM, Engine Electrical System.>
- Engine Electrical System ENGINE TYPE FB (WITH PUSH BUTTON START) <Ref. to WI-184, ENGINE TYPE FB (WITH PUSH BUTTON START), WIRING DIAGRAM, Engine Electrical System.>

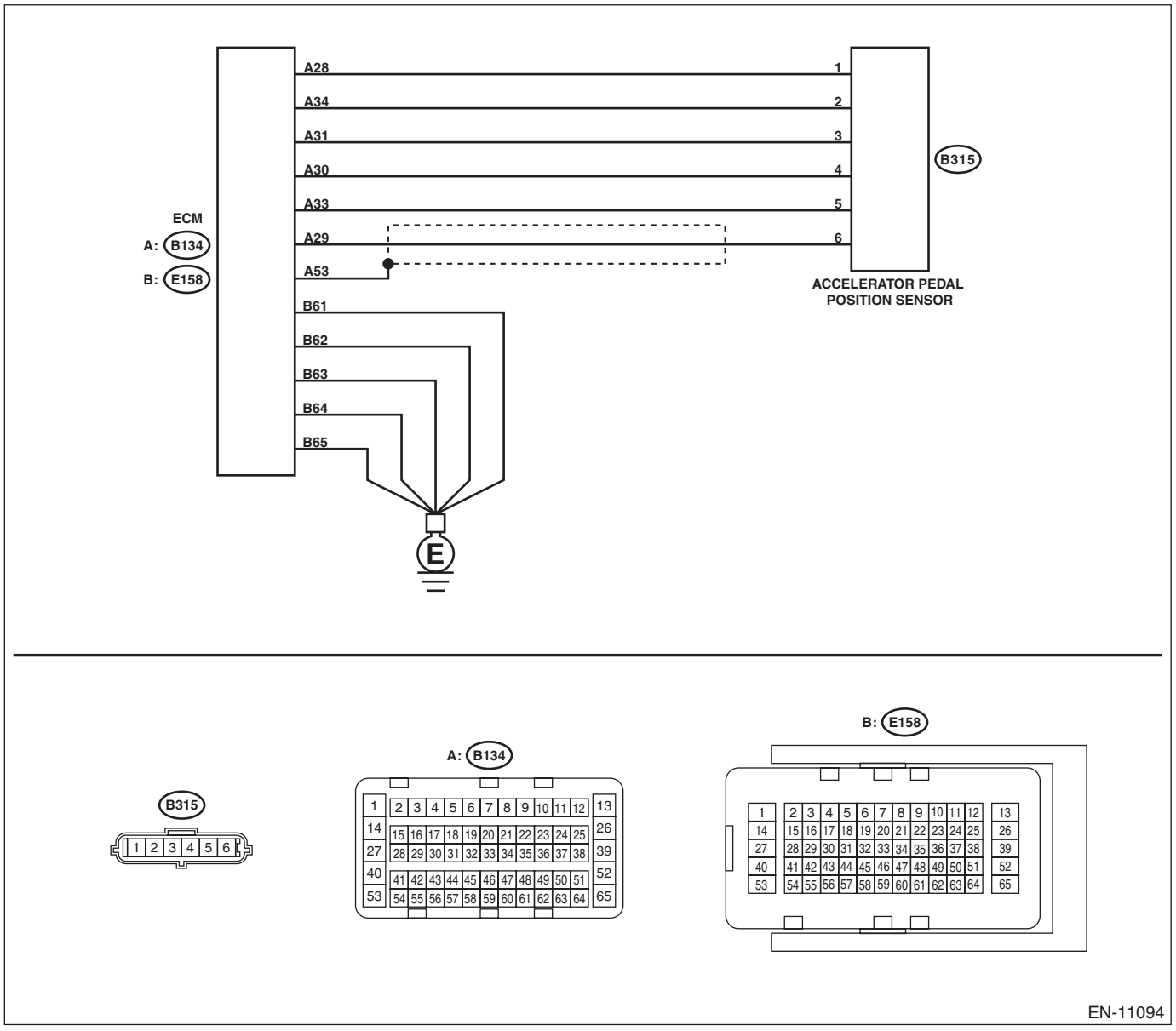

	Step	Check	Yes	No
1	**CHECK HARNESS BETWEEN ECM AND ACCELERATOR PEDAL POSITION SENSOR CONNECTOR.** 1) Turn the ignition switch to OFF. 2) Disconnect the connectors from ECM and accelerator pedal position sensor. 3) Measure the resistance of harness between ECM connector and accelerator pedal position sensor connector. ***Connector & terminal*** ***(B134) No. 31 — (B315) No. 3:*** ***(B134) No. 34 — (B315) No. 2:***	Is the resistance less than 1 Ω?	Go to step **2**.	Repair the harness and connector. NOTE: In this case, repair the following item: • Open circuit of harness between ECM connector and accelerator pedal position sensor connector • Poor contact of joint connector
2	**CHECK HARNESS BETWEEN ECM AND ACCELERATOR PEDAL POSITION SENSOR CONNECTOR.** 1) Connect the connector to ECM. 2) Measure the resistance between accelerator pedal position sensor connector and chassis ground. ***Connector & terminal*** ***(B315) No. 2 — Chassis ground:***	Is the resistance less than 1 Ω?	Go to step **3**.	Repair the harness and connector. NOTE: In this case, repair the following item: • Open circuit of harness between ECM connector and engine ground • Poor contact of ECM connector
3	**CHECK HARNESS BETWEEN ECM AND ACCELERATOR PEDAL POSITION SENSOR CONNECTOR.** 1) Turn the ignition switch to ON. 2) Measure the voltage between accelerator pedal position sensor connector and chassis ground. ***Connector & terminal*** ***(B315) No. 3 (+) — Chassis ground (–):***	Is the voltage 5 V or more?	Repair the short circuit to power supply in harness between ECM connector and accelerator pedal position sensor connector.	Go to step **4**.
4	**CHECK HARNESS BETWEEN ECM AND ACCELERATOR PEDAL POSITION SENSOR CONNECTOR.** 1) Turn the ignition switch to OFF. 2) Disconnect the connector from ECM. 3) Measure the resistance between ECM connectors. ***Connector & terminal*** ***(B134) No. 28 — (B134) No. 31:***	Is the resistance 1 MΩ or more?	Repair the poor contact of accelerator pedal position sensor connector. Replace the accelerator pedal if defective. <Ref. to SP(H4DO)-4, Accelerator Pedal.>	Repair the short circuit to power supply in harness between ECM connector and accelerator pedal position sensor connector.

1. OUTLINE OF DIAGNOSIS

Detect the open or short circuit of accelerator pedal position sensor 2.
Judge as NG if out of specification.

2. COMPONENT DESCRIPTION

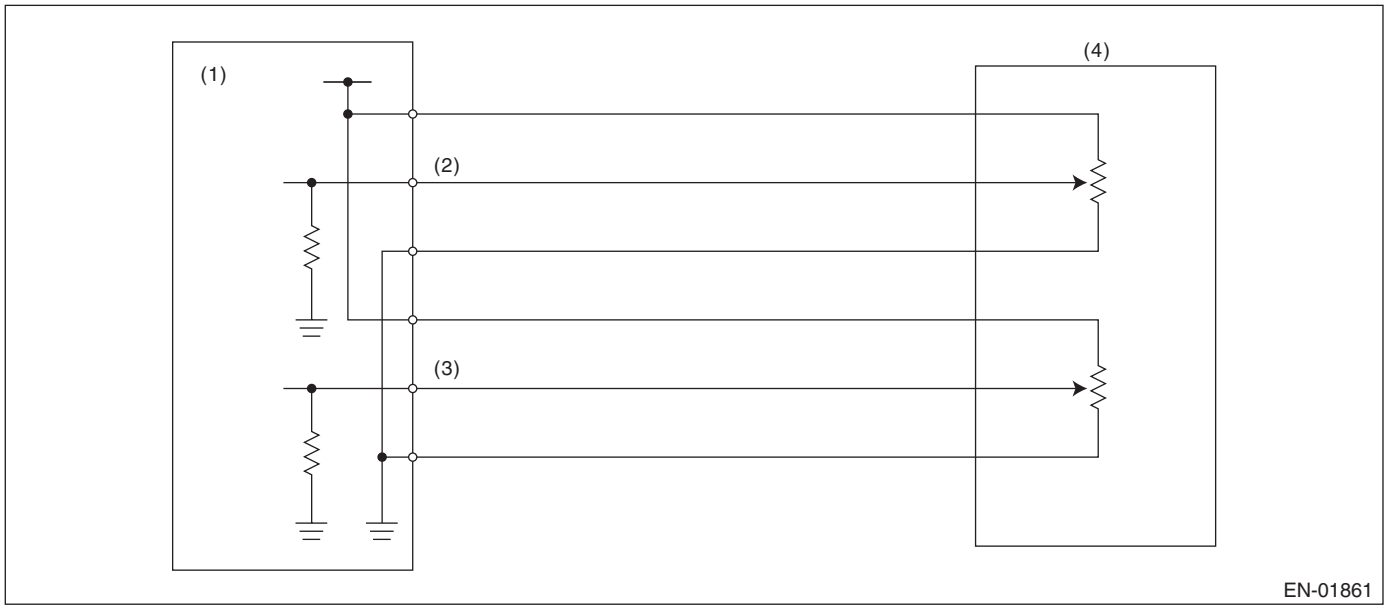

(1) Engine control module (ECM)
(2) Accelerator pedal position sensor 1 signal
(3) Accelerator pedal position sensor 2 signal
(4) Accelerator pedal position sensor

3. EXECUTION CONDITION

Secondary Parameters	Execution condition
Battery voltage	≥ 6 V

4. GENERAL DRIVING CYCLE

Always perform the diagnosis continuously.

5. DIAGNOSTIC METHOD

If the duration of time while the following conditions are met is longer than the time indicated, judge as NG.

Judgment Value

Malfunction Criteria	Threshold Value
Sensor 2 output voltage	≥ 4.757 V

Time Needed for Diagnosis: 100 ms
Malfunction Indicator Light Illumination: Illuminates as soon as a malfunction occurs.

EV:DTC P2135 THROTTLE/PEDAL POSITION SENSOR/SWITCH "A"/"B" VOLTAGE CORRELATION

DTC DETECTING CONDITION:
Immediately at fault recognition
TROUBLE SYMPTOM:
- Improper idling
- Poor driving performance

CAUTION:
After servicing or replacing faulty parts, perform Clear Memory Mode <Ref. to EN(H4DO)(diag)-78, OPERATION, Clear Memory Mode.>, and Inspection Mode <Ref. to EN(H4DO)(diag)-64, PROCEDURE, Inspection Mode.>.
WIRING DIAGRAM:
- Engine Electrical System ENGINE TYPE FB (WITHOUT PUSH BUTTON START) <Ref. to WI-170, ENGINE TYPE FB (WITHOUT PUSH BUTTON START), WIRING DIAGRAM, Engine Electrical System.>
- Engine Electrical System ENGINE TYPE FB (WITH PUSH BUTTON START) <Ref. to WI-184, ENGINE TYPE FB (WITH PUSH BUTTON START), WIRING DIAGRAM, Engine Electrical System.>

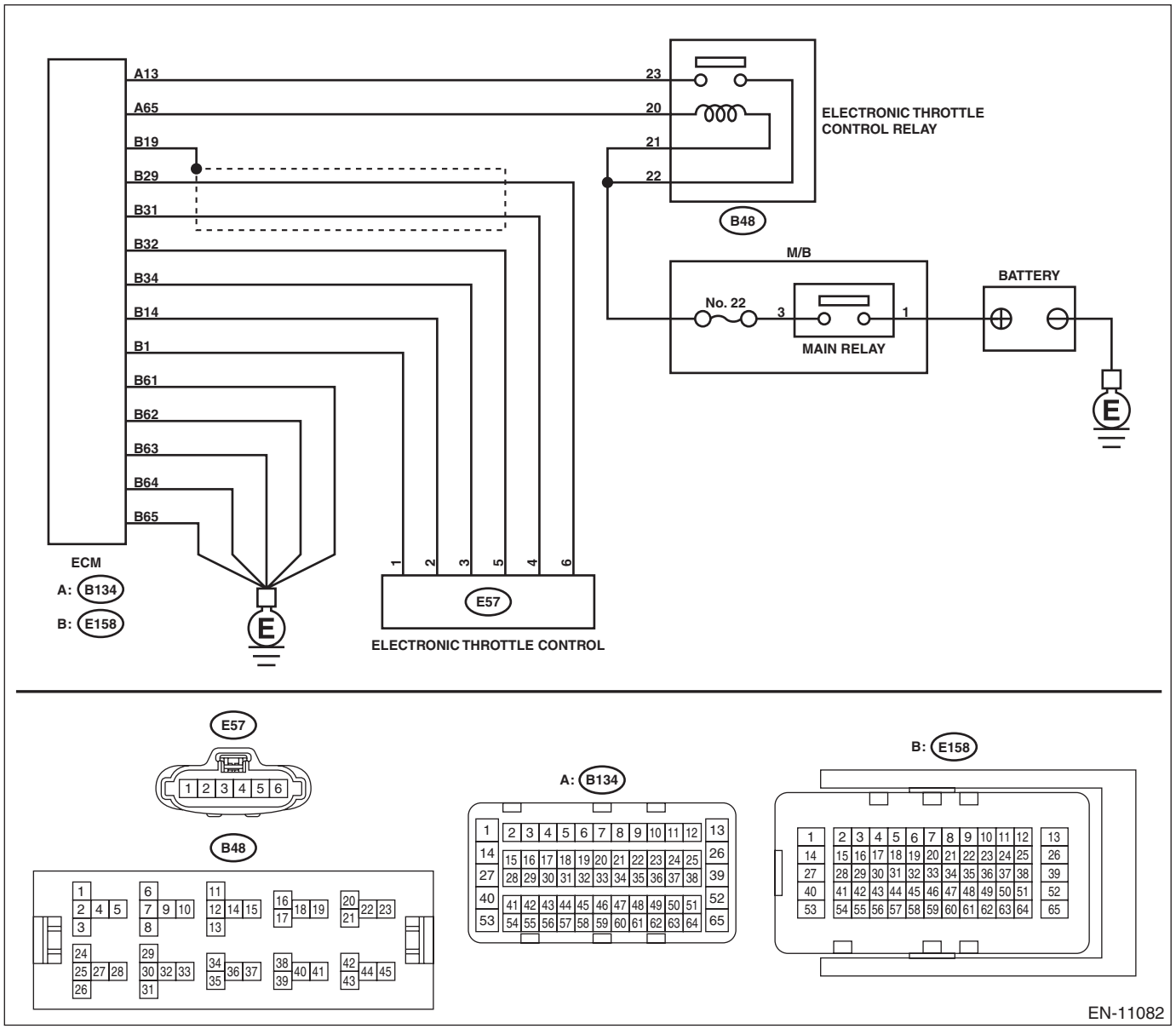

	Step	Check	Yes	No
1	**CHECK HARNESS BETWEEN ECM AND ELECTRONIC THROTTLE CONTROL CONNECTOR.** 1) Turn the ignition switch to OFF. 2) Disconnect the connectors from ECM and electronic throttle control. 3) Measure the resistance between ECM connector and chassis ground. ***Connector & terminal*** ***(E158) No. 32 — Chassis ground:*** ***(E158) No. 29 — Chassis ground:*** ***(E158) No. 29 — (E158) No. 19:*** ***(E158) No. 31 — Chassis ground:*** ***(E158) No. 31 — (E158) No. 19:***	Is the resistance 1 MΩ or more?	Go to step **2**.	Repair the ground short circuit of harness between ECM connector and electronic throttle control connector.
2	**CHECK SHORT CIRCUIT INSIDE THE ECM.** 1) Connect the connector to ECM. 2) Measure the resistance between electronic throttle control connector and engine ground. ***Connector & terminal*** ***(E57) No. 6 — Engine ground:*** ***(E57) No. 4 — Engine ground:***	Is the resistance 1 MΩ or more?	Go to step **3**.	Repair the ground short circuit of harness between ECM connector and electronic throttle control connector. Replace the ECM if defective. <Ref. to FU(H4DO)-82, Engine Control Module (ECM).>
3	**CHECK HARNESS BETWEEN ECM AND ELECTRONIC THROTTLE CONTROL CONNECTOR.** 1) Disconnect the connector from ECM. 2) Measure the resistance of harness between ECM connector and electronic throttle control connector. ***Connector & terminal*** ***(E158) No. 29 — (E57) No. 6:*** ***(E158) No. 31 — (E57) No. 4:*** ***(E158) No. 34 — (E57) No. 3:***	Is the resistance less than 1 Ω?	Go to step **4**.	Repair the open circuit of harness between ECM connector and electronic throttle control connector.
4	**CHECK HARNESS BETWEEN ECM AND ELECTRONIC THROTTLE CONTROL CONNECTOR.** 1) Connect the connector to ECM. 2) Measure the resistance between electronic throttle control connector and engine ground. ***Connector & terminal*** ***(E57) No. 3 — Engine ground:***	Is the resistance less than 5 Ω?	Go to step **5**.	Repair the open circuit in harness between ECM connector and engine ground.
5	**CHECK HARNESS BETWEEN ECM AND ELECTRONIC THROTTLE CONTROL CONNECTOR.** 1) Turn the ignition switch to ON. 2) Measure the voltage between electronic throttle control connector and engine ground. ***Connector & terminal*** ***(E57) No. 6 (+) — Engine ground (–):*** ***(E57) No. 4 (+) — Engine ground (–):***	Is the voltage 5 V or more?	Repair the short circuit to power in the harness between ECM connector and electronic throttle control connector.	Go to step **6**.

Step		Check	Yes	No
6	**CHECK HARNESS BETWEEN ECM AND ELECTRONIC THROTTLE CONTROL CONNECTOR.** 1) Turn the ignition switch to OFF. 2) Disconnect the connector from ECM. 3) Measure the resistance between ECM connectors. ***Connector & terminal*** ***(E158) No. 32 — (E158) No. 29:*** ***(E158) No. 32 — (E158) No. 31:***	Is the resistance 1 MΩ or more?	Repair the poor contact of electronic throttle control connector. Replace the electronic throttle control if defective. <Ref. to FU(H4DO)-14, Throttle Body.>	Repair the short circuit to power in the harness between ECM connector and electronic throttle control connector.

1. OUTLINE OF DIAGNOSIS

Judge as NG when the signal level of throttle position sensor 1 is different from the throttle position sensor 2.

2. COMPONENT DESCRIPTION

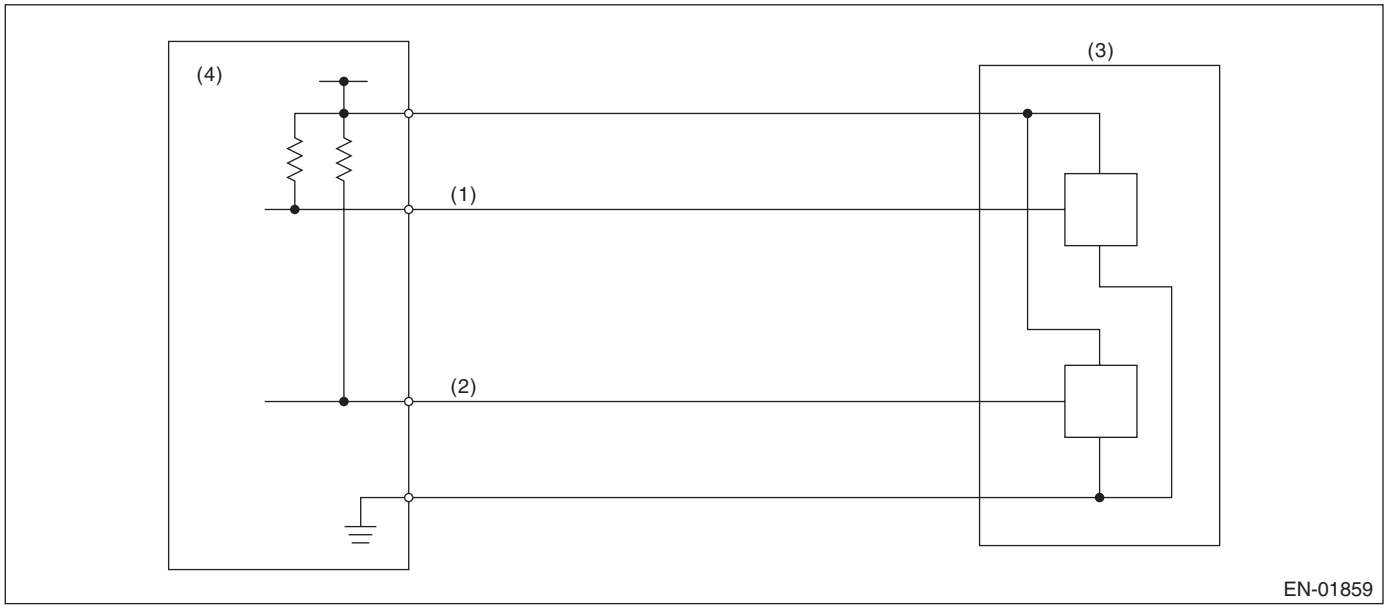

(1) Throttle position sensor 1 signal
(2) Throttle position sensor 2 signal
(3) Throttle position sensor
(4) Engine control module (ECM)

3. EXECUTION CONDITION

Secondary Parameters	Execution condition
Battery voltage	≥ 6 V

4. GENERAL DRIVING CYCLE

Always perform the diagnosis continuously.

5. DIAGNOSTIC METHOD

If the duration of time while the following conditions are met is longer than the time indicated, judge as NG.

Judgment Value

Malfunction Criteria	Threshold Value
Signal difference between two sensors	Within NG range of **Details of Judgment value**

Details of Judgment Value

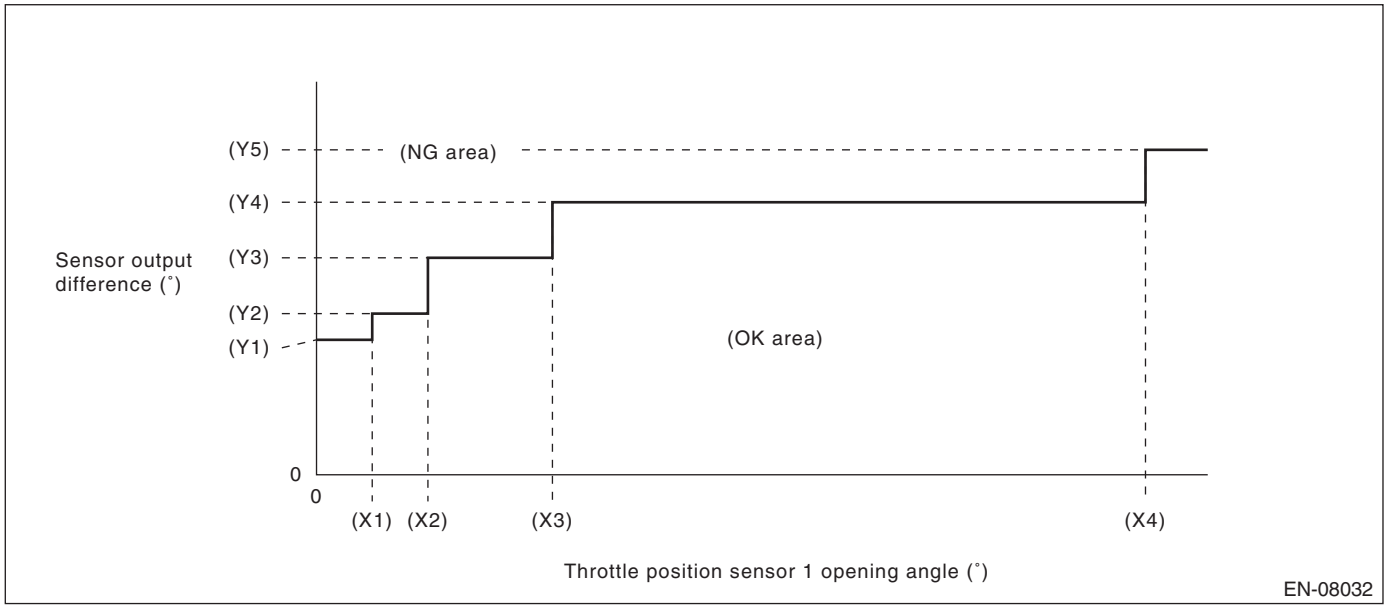

(X1) 2.125 °
(X2) 4.25 °
(X3) 9 °
(X4) 31.625 °

(Y1) 4.736 °
(Y2) 5.736 °
(Y3) 7.861 °
(Y4) 9.986 °
(Y5) 11.986 °

Time Needed for Diagnosis: 212 ms
Malfunction Indicator Light Illumination: Illuminates as soon as a malfunction occurs.

EW:DTC P2138 THROTTLE/PEDAL POSITION SENSOR/SWITCH "D"/"E" VOLTAGE CORRELATION

DTC DETECTING CONDITION:
Immediately at fault recognition
TROUBLE SYMPTOM:
- Improper idling
- Poor driving performance

CAUTION:
After servicing or replacing faulty parts, perform Clear Memory Mode <Ref. to EN(H4DO)(diag)-78, OPERATION, Clear Memory Mode.>, and Inspection Mode <Ref. to EN(H4DO)(diag)-64, PROCEDURE, Inspection Mode.>.
WIRING DIAGRAM:
- Engine Electrical System ENGINE TYPE FB (WITHOUT PUSH BUTTON START) <Ref. to WI-170, ENGINE TYPE FB (WITHOUT PUSH BUTTON START), WIRING DIAGRAM, Engine Electrical System.>
- Engine Electrical System ENGINE TYPE FB (WITH PUSH BUTTON START) <Ref. to WI-184, ENGINE TYPE FB (WITH PUSH BUTTON START), WIRING DIAGRAM, Engine Electrical System.>

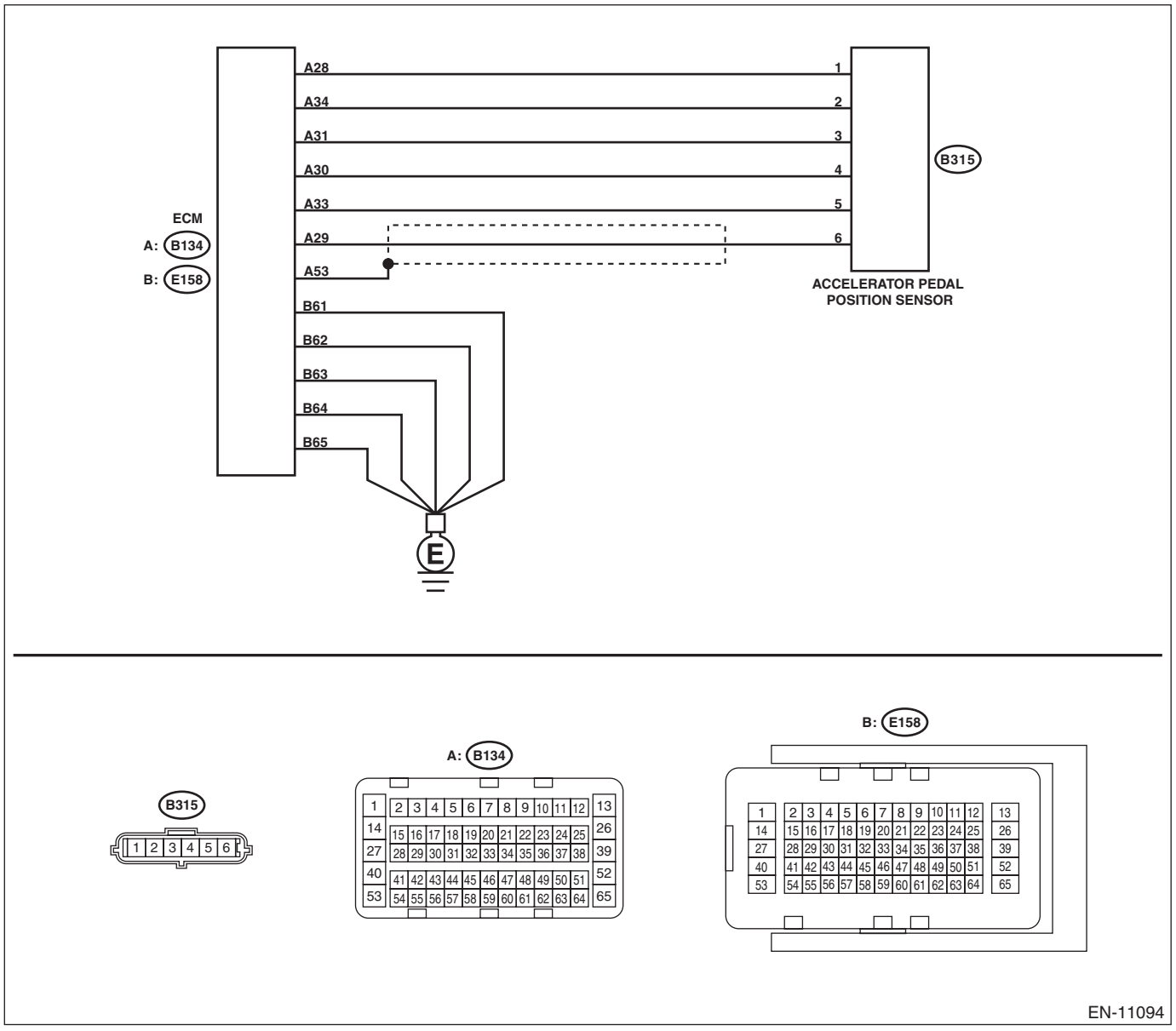

	Step	Check	Yes	No
1	**CHECK ACCELERATOR PEDAL POSITION SENSOR OUTPUT.** 1) Turn the ignition switch to ON. 2) Measure the voltage between ECM connector and chassis ground. ***Connector & terminal*** ***Main accelerator pedal position sensor signal*** ***(E134) No. 29 (+) — Chassis ground (–):*** ***Sub accelerator pedal position sensor signal*** ***(E134) No. 31 (+) — Chassis ground (–):***	Is the difference in measured values for the main accelerator pedal position sensor signal and the sub accelerator pedal position sensor signal 0 V?	Go to step **3**.	Go to step **2**.
2	**CHECK ACCELERATOR PEDAL POSITION SENSOR OUTPUT.** 1) Measure the voltage between accelerator pedal position sensor connector and chassis ground. ***Connector & terminal*** ***(B315) No. 6 (+) — Chassis ground (–):*** ***(B315) No. 3 (+) — Chassis ground (–):***	Is the difference in measured values for the main accelerator pedal position sensor signal and the sub accelerator pedal position sensor signal 0 V?	Replace the accelerator pedal. <Ref. to SP(H4DO)-4, Accelerator Pedal.>	Repair the harness and connector. NOTE: In this case, repair the following item: • Open circuit of harness between ECM connector and accelerator pedal position sensor connector • Short circuit to ground in harness between ECM connector and accelerator pedal position sensor connector
3	**CHECK HARNESS BETWEEN ECM AND ACCELERATOR PEDAL POSITION SENSOR CONNECTOR.** Measure the resistance of harness between accelerator pedal position sensor connector and chassis ground. ***Connector & terminal*** ***(B315) No. 5 — Chassis ground:*** ***(B315) No. 2 — Chassis ground:***	Is the resistance less than 5 Ω?	Repair the poor contact of ECM connector.	Repair the harness and connector. NOTE: In this case, repair the following item: • Open circuit of harness between ECM connector and accelerator pedal position sensor connector • Open circuit of harness between ECM connector and engine ground • Poor contact of ECM connector • Poor contact of joint connector

1. OUTLINE OF DIAGNOSIS

Judge as NG when the signal level of accelerator pedal position sensor 1 is different from the accelerator pedal position sensor 2.

2. COMPONENT DESCRIPTION

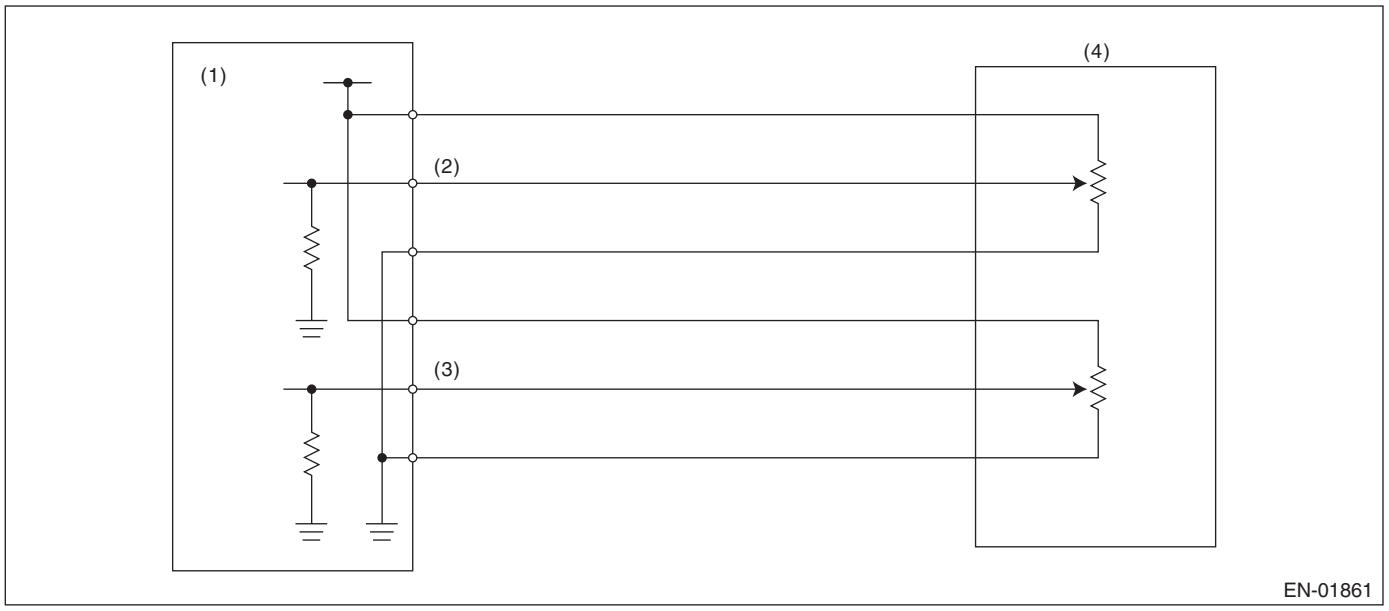

(1) Engine control module (ECM)
(2) Accelerator pedal position sensor 1 signal
(3) Accelerator pedal position sensor 2 signal
(4) Accelerator pedal position sensor

3. EXECUTION CONDITION

Secondary Parameters	Execution condition
Battery voltage	≥ 6 V

4. GENERAL DRIVING CYCLE

Always perform the diagnosis continuously.

5. DIAGNOSTIC METHOD

If the duration of time while the following conditions are met is longer than the time indicated, judge as NG.

Judgment Value

Malfunction Criteria	Threshold Value
Signal difference between two sensors	Within NG range of **Details of Judgment value**

Details of Judgment Value

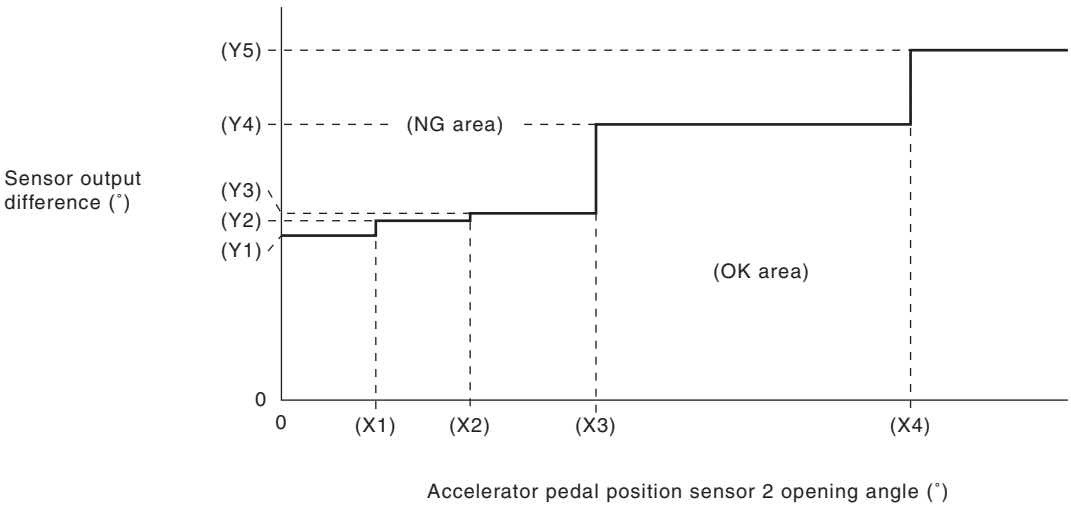

(X1)	0.6 °	(X2)	1.2 °	(X3)	2 °
(X4)	4 °				
(Y1)	1.465 °	(Y2)	1.597 °	(Y3)	1.663 °
(Y4)	2.455 °	(Y5)	3.116 °		

Time Needed for Diagnosis: 116 ms
Malfunction Indicator Light Illumination: Illuminates as soon as a malfunction occurs.

EX:DTC P2195 A/F /O2 SENSOR SIGNAL BIASED/STUCK LEAN BANK 1 SENSOR 1

DTC DETECTING CONDITION:

Detected when two consecutive driving cycles with fault occur.

CAUTION:

After servicing or replacing faulty parts, perform Clear Memory Mode <Ref. to EN(H4DO)(diag)-78, OPERATION, Clear Memory Mode.>, and Inspection Mode <Ref. to EN(H4DO)(diag)-64, PROCEDURE, Inspection Mode.>.

WIRING DIAGRAM:

- Engine Electrical System ENGINE TYPE FB (WITHOUT PUSH BUTTON START) <Ref. to WI-170, ENGINE TYPE FB (WITHOUT PUSH BUTTON START), WIRING DIAGRAM, Engine Electrical System.>
- Engine Electrical System ENGINE TYPE FB (WITH PUSH BUTTON START) <Ref. to WI-184, ENGINE TYPE FB (WITH PUSH BUTTON START), WIRING DIAGRAM, Engine Electrical System.>

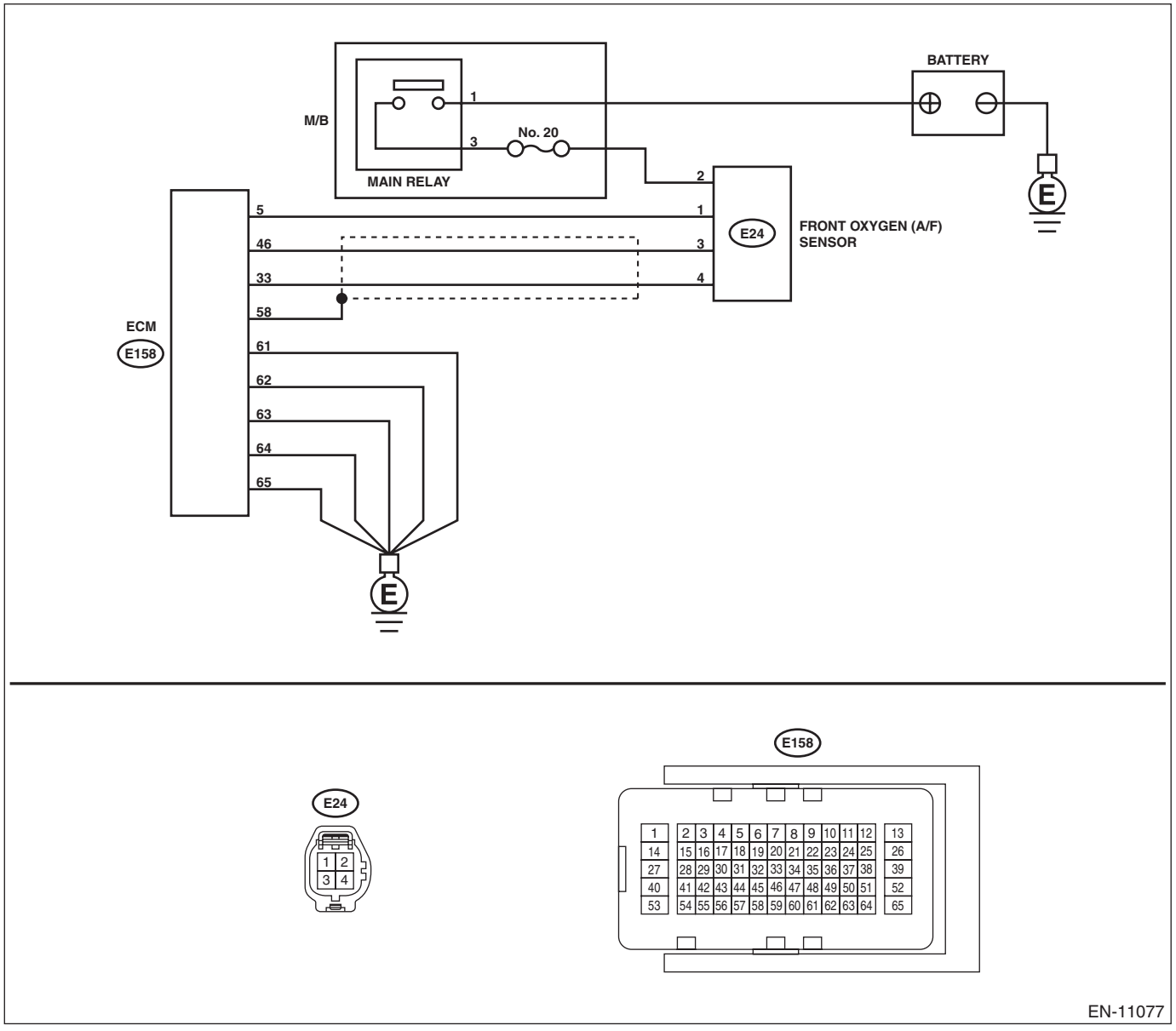

Step		Check	Yes	No
1	**CHECK FRONT OXYGEN (A/F) SENSOR CONNECTOR AND COUPLING CONNECTOR.**	Has water entered the connector?	Completely remove any water inside.	Go to step **2**.

	Step	Check	Yes	No
2	**CHECK HARNESS BETWEEN ECM AND FRONT OXYGEN (A/F) SENSOR CONNECTOR.** 1) Turn the ignition switch to OFF. 2) Disconnect the connectors from ECM and front oxygen (A/F) sensor. 3) Measure the resistance of harness between ECM connector and front oxygen (A/F) sensor connector. ***Connector & terminal*** ***(E158) No. 46 — (E24) No. 3:*** ***(E158) No. 33 — (E24) No. 4:***	Is the resistance less than 1 Ω?	Go to step **3**.	Repair the open circuit of harness between ECM connector and front oxygen (A/F) sensor connector.
3	**CHECK FOR POOR CONTACT.** Check for poor contact of the front oxygen (A/F) sensor connector.	Is there poor contact of front oxygen (A/F) sensor connector?	Repair the poor contact of front oxygen (A/F) sensor connector.	Replace the front oxygen (A/F) sensor. <Ref. to FU(H4DO)-76, Front Oxygen (A/F) Sensor.>

1. OUTLINE OF DIAGNOSIS

Detect that λ value remains low.
Judge as NG if the lambda value can be determined as abnormal in accordance with driving conditions such as vehicle speed, intake air amount, and rear oxygen sensor voltage as well as front oxygen (A/F) sensor λ value.

λ value = Actual air fuel ratio/Theoretical air fuel ratio
λ > 1: Lean
λ < 1: Rich

2. COMPONENT DESCRIPTION

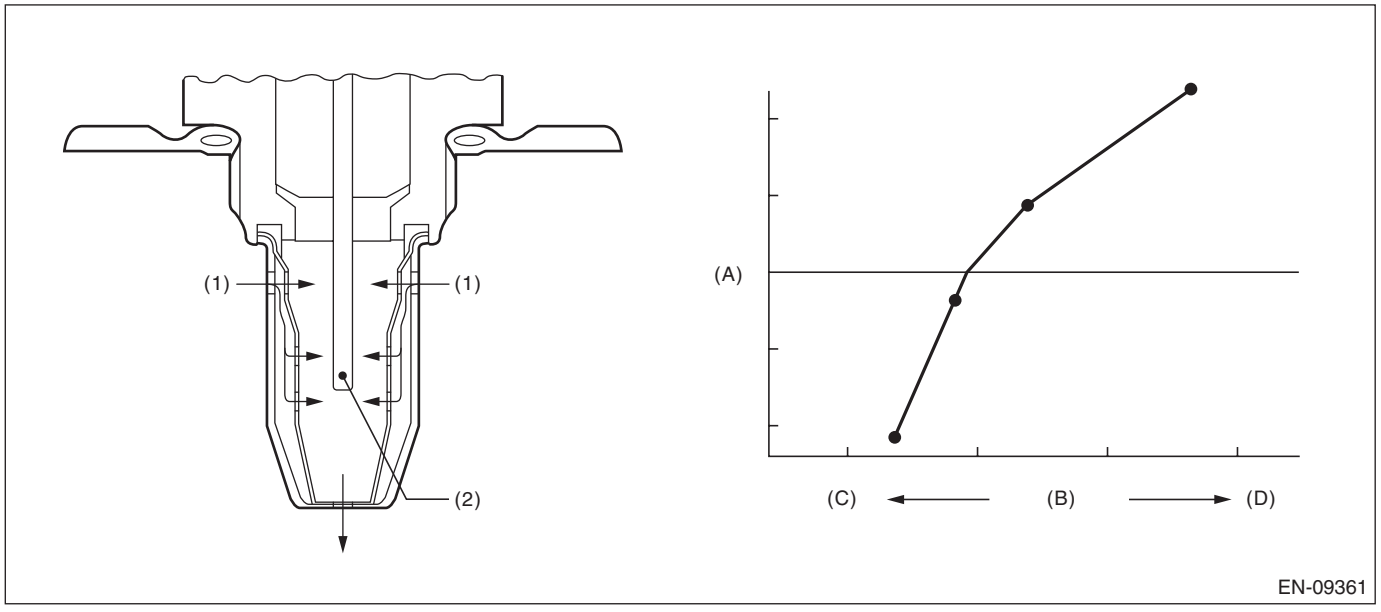

(A) Electromotive force (B) Air fuel ratio (C) Rich
(D) Lean

(1) Exhaust gas (2) ZrO_2

3. EXECUTION CONDITION

Secondary Parameters	Execution condition
Battery voltage	≥ 10.9 V
Barometric pressure	≥ 75.1 kPa (563 mmHg, 22.2 inHg)
Rear oxygen sensor sub feedback	Execution
Rear oxygen sensor output voltage – Feedback target voltage	–0.2 V — 0.1 V
or rear oxygen sensor sub feedback compensation coefficient	On Min.
or rear oxygen sensor sub feedback compensation coefficient	On Max.
Intake air amount	≥ 6 g/s (0.21 oz/s)

4. GENERAL DRIVING CYCLE

Perform the diagnosis continuously after the enable conditions have been established.

5. DIAGNOSTIC METHOD

If the duration of time while the following conditions are met is longer than the time indicated, judge as NG.

Judgment Value

Malfunction Criteria	Threshold Value
λ value	≤ 0.85

Time Needed for Diagnosis: 10000 ms
Malfunction Indicator Light Illumination: Illuminates when malfunction occurs in 2 continuous driving cycles.

EY:DTC P2196 A/F /O2 SENSOR SIGNAL BIASED/STUCK RICH BANK 1 SENSOR 1

DTC DETECTING CONDITION:

Detected when two consecutive driving cycles with fault occur.

CAUTION:

After servicing or replacing faulty parts, perform Clear Memory Mode <Ref. to EN(H4DO)(diag)-78, OPERATION, Clear Memory Mode.>, and Inspection Mode <Ref. to EN(H4DO)(diag)-64, PROCEDURE, Inspection Mode.>.

WIRING DIAGRAM:

- Engine Electrical System ENGINE TYPE FB (WITHOUT PUSH BUTTON START) <Ref. to WI-170, ENGINE TYPE FB (WITHOUT PUSH BUTTON START), WIRING DIAGRAM, Engine Electrical System.>
- Engine Electrical System ENGINE TYPE FB (WITH PUSH BUTTON START) <Ref. to WI-184, ENGINE TYPE FB (WITH PUSH BUTTON START), WIRING DIAGRAM, Engine Electrical System.>

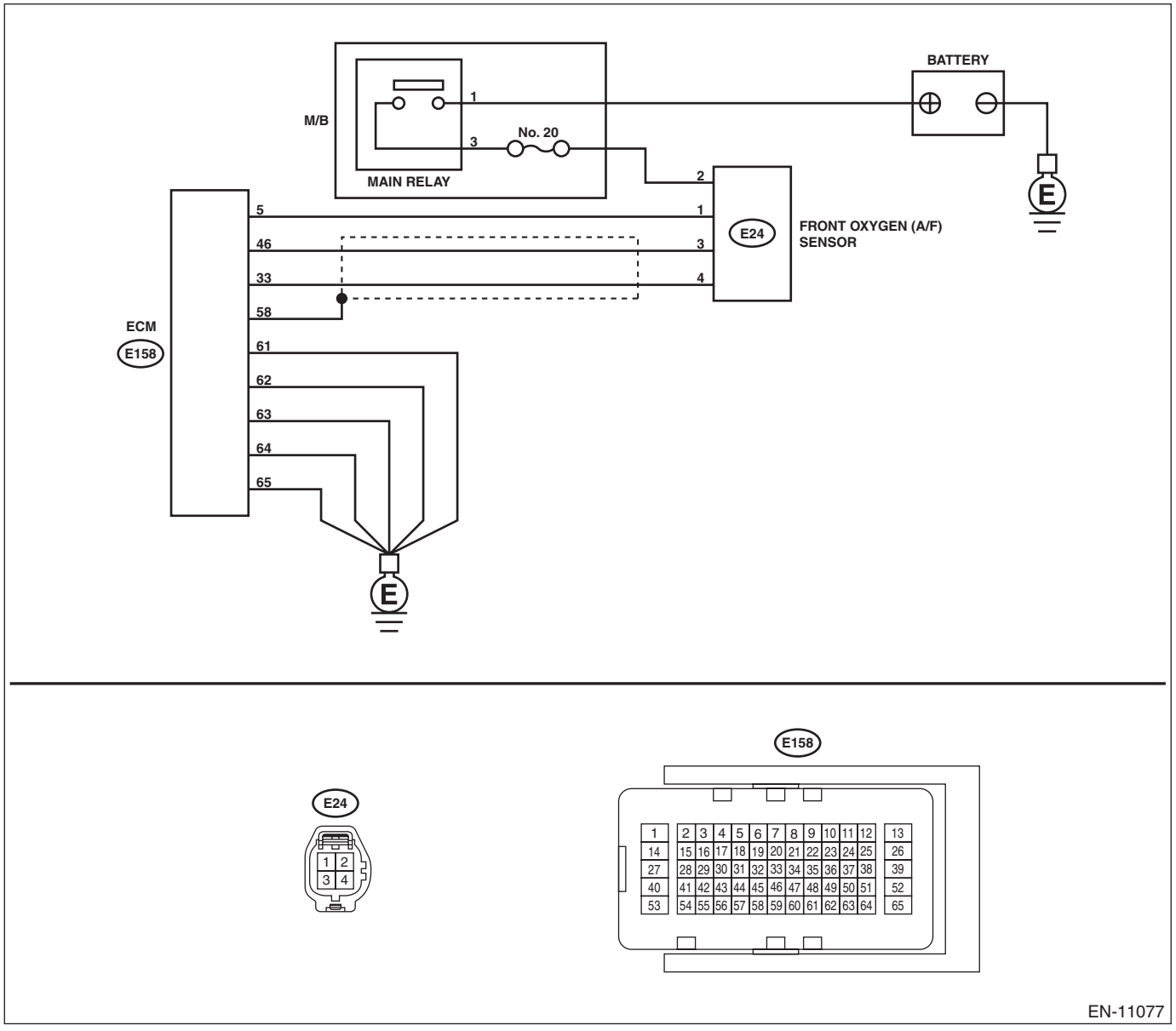

Step		Check	Yes	No
1	**CHECK FRONT OXYGEN (A/F) SENSOR CONNECTOR AND COUPLING CONNECTOR.**	Has water entered the connector?	Completely remove any water inside.	Go to step **2**.

	Step	Check	Yes	No
2	**CHECK HARNESS BETWEEN ECM AND FRONT OXYGEN (A/F) SENSOR CONNECTOR.** 1) Turn the ignition switch to OFF. 2) Disconnect the connector from ECM. 3) Measure the resistance between ECM connector and chassis ground. ***Connector & terminal*** ***(E158) No. 46 — Chassis ground:*** ***(E158) No. 33 — Chassis ground:***	Is the resistance 1 MΩ or more?	Go to step **3**.	Repair the short circuit to ground in harness between ECM connector and front oxygen (A/F) sensor connector.
3	**CHECK OUTPUT SIGNAL FOR ECM.** 1) Connect the connector to ECM. 2) Turn the ignition switch to ON. 3) Measure the voltage between ECM connector and chassis ground. ***Connector & terminal*** ***(E158) No. 46 (+) — Chassis ground (–):***	Is the voltage 4.5 V or more?	Go to step **5**.	Go to step **4**.
4	**CHECK OUTPUT SIGNAL FOR ECM.** Measure the voltage between ECM connector and chassis ground. ***Connector & terminal*** ***(E158) No. 33 (+) — Chassis ground (–):***	Is the voltage 4.95 V or more?	Go to step **5**.	Replace the front oxygen (A/F) sensor. <Ref. to FU(H4DO)-76, Front Oxygen (A/F) Sensor.>
5	**CHECK OUTPUT SIGNAL FOR ECM.** Measure the voltage between ECM connector and chassis ground. ***Connector & terminal*** ***(E158) No. 46 (+) — Chassis ground (–):*** ***(E158) No. 33 (+) — Chassis ground (–):***	Is the voltage 8 V or more?	Repair the short circuit to power in the harness between ECM connector and front oxygen (A/F) sensor connector. After repair, replace the ECM. <Ref. to FU(H4DO)-82, Engine Control Module (ECM).>	Repair the poor contact of ECM connector.

1. OUTLINE OF DIAGNOSIS

Detect that λ value remains high.
Judge as NG if the lambda value can be determined as abnormal in accordance with driving conditions such as vehicle speed, intake air amount, and rear oxygen sensor voltage as well as front oxygen (A/F) sensor λ value.

λ value = Actual air fuel ratio/Theoretical air fuel ratio
λ > 1: Lean
λ < 1: Rich

2. COMPONENT DESCRIPTION

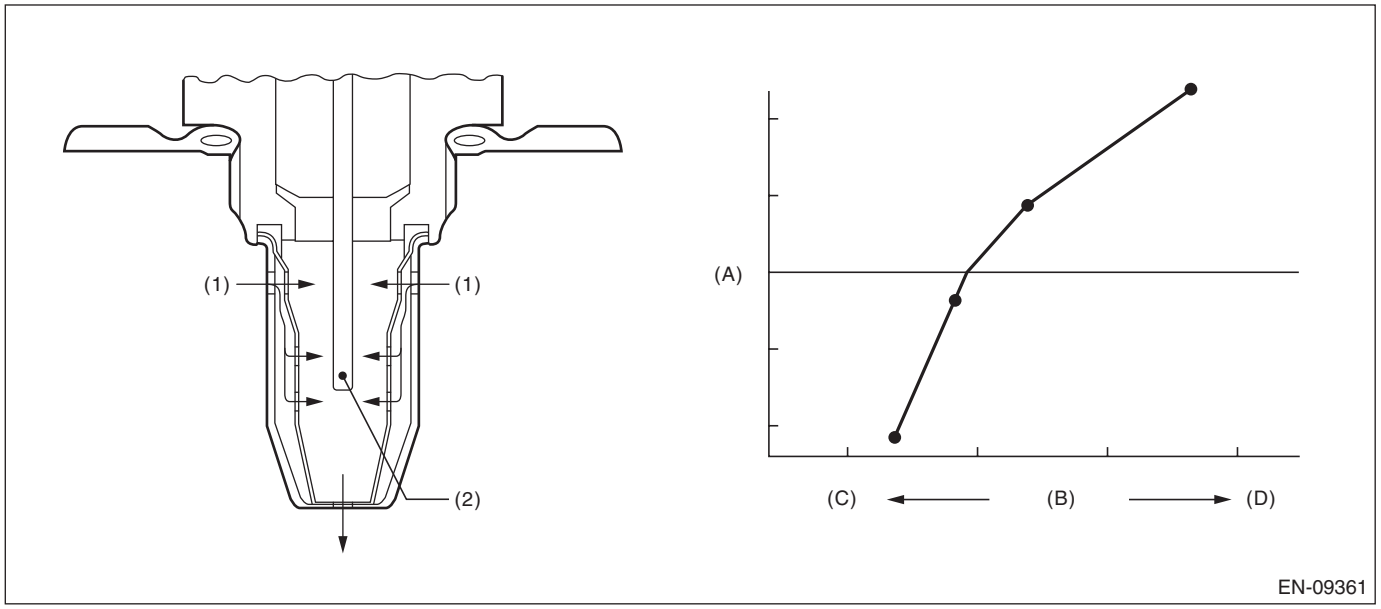

(A) Electromotive force (B) Air fuel ratio (C) Rich
(D) Lean

(1) Exhaust gas (2) ZrO_2

3. EXECUTION CONDITION

Secondary Parameters	Execution condition
Battery voltage	≥ 10.9 V
Barometric pressure	≥ 75.1 kPa (563 mmHg, 22.2 inHg)
Rear oxygen sensor sub feedback	Execution
Rear oxygen sensor output voltage – Feedback target voltage	–0.2 V — 0.1 V
or rear oxygen sensor sub feedback compensation coefficient	On Min.
or rear oxygen sensor sub feedback compensation coefficient	On Max.
Intake air amount	≥ 6 g/s (0.21 oz/s)

4. GENERAL DRIVING CYCLE

Perform the diagnosis continuously after the enable conditions have been established.

5. DIAGNOSTIC METHOD

If the duration of time while the following conditions are met is longer than the time indicated, judge as NG.

Judgment Value

Malfunction Criteria	Threshold Value
λ value	≥ 1.15

Time Needed for Diagnosis: 10000 ms
Malfunction Indicator Light Illumination: Illuminates when malfunction occurs in 2 continuous driving cycles.

EZ:DTC P219C CYLINDER 1 AIR-FUEL RATIO IMBALANCE

DTC DETECTING CONDITION:

Detected when two consecutive driving cycles with fault occur.

TROUBLE SYMPTOM:

- Engine stalls.
- Improper idling

CAUTION:

After servicing or replacing faulty parts, perform Clear Memory Mode <Ref. to EN(H4DO)(diag)-78, OPERATION, Clear Memory Mode.>, and Inspection Mode <Ref. to EN(H4DO)(diag)-64, PROCEDURE, Inspection Mode.>.

WIRING DIAGRAM:

- Engine Electrical System ENGINE TYPE FB (WITHOUT PUSH BUTTON START) <Ref. to WI-170, ENGINE TYPE FB (WITHOUT PUSH BUTTON START), WIRING DIAGRAM, Engine Electrical System.>
- Engine Electrical System ENGINE TYPE FB (WITH PUSH BUTTON START) <Ref. to WI-184, ENGINE TYPE FB (WITH PUSH BUTTON START), WIRING DIAGRAM, Engine Electrical System.>

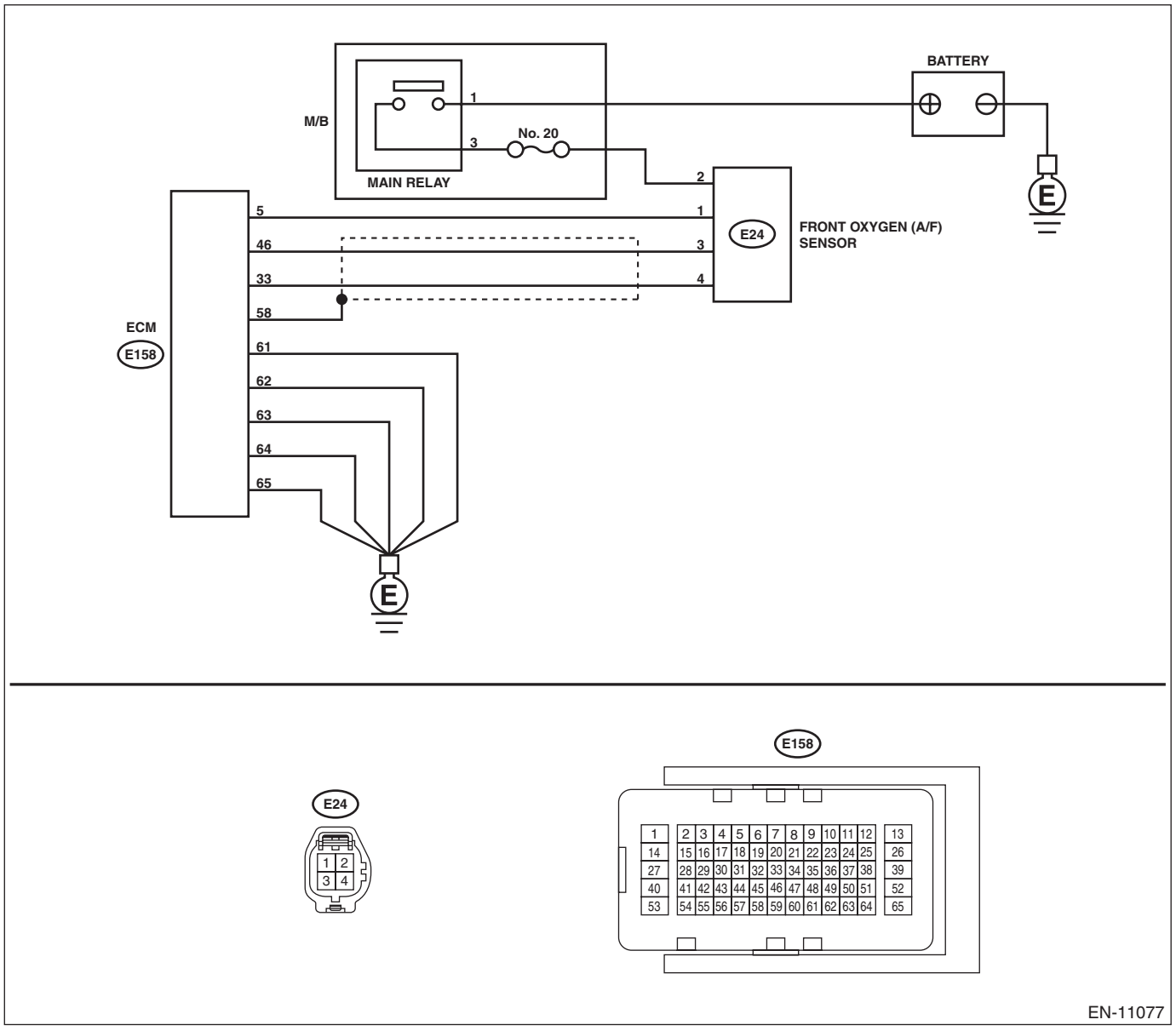

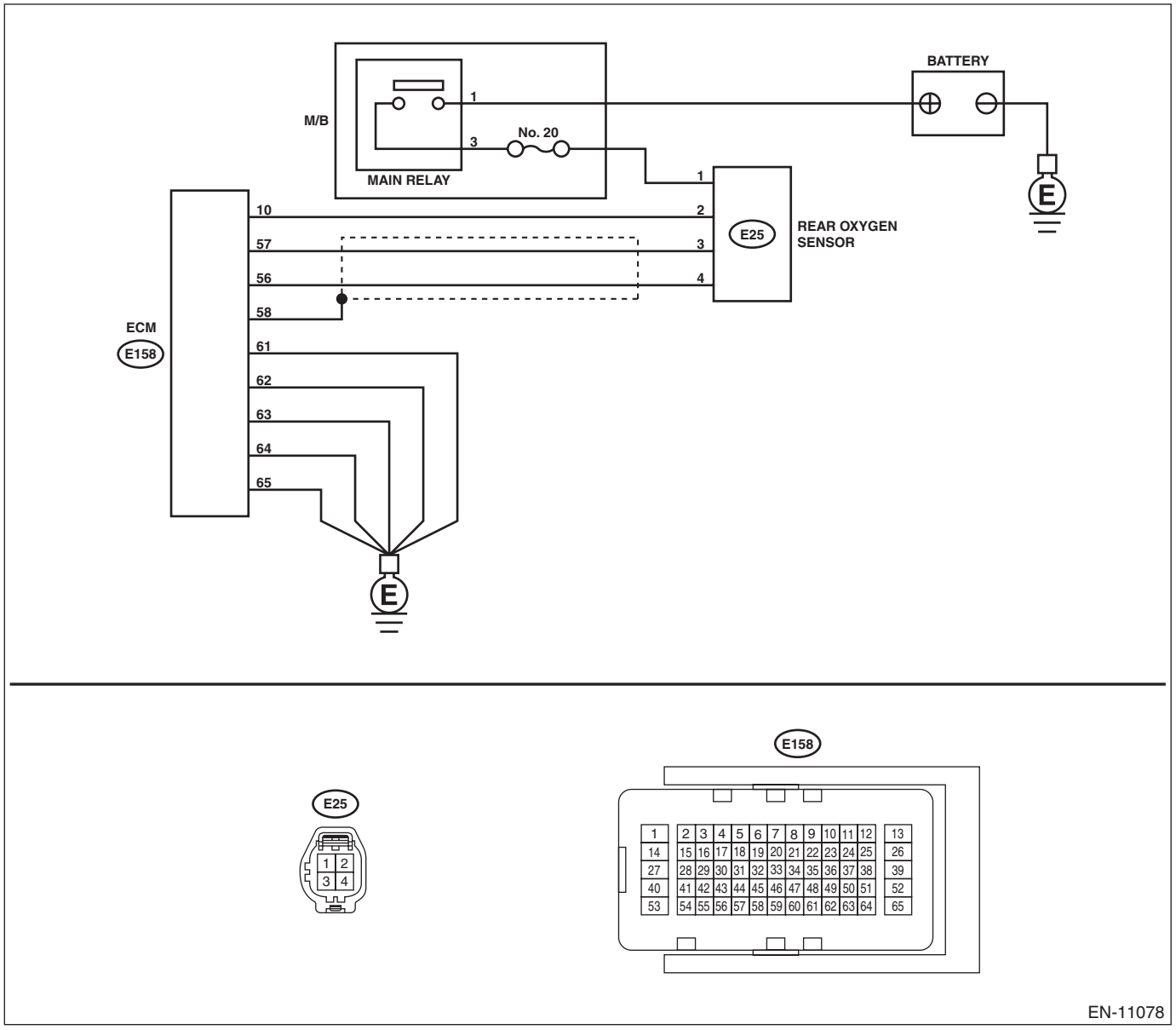
BATTERY
M/B
1
3
No. 20
MAIN RELAY
1
2
3
4
E25
REAR OXYGEN SENSOR
E
ECM
E158
10
57
56
58
61
62
63
64
65
E
E25
1 2
3 4
E158
1 2 3 4 5 6 7 8 9 10 11 12 13
14 15 16 17 18 19 20 21 22 23 24 25 26
27 28 29 30 31 32 33 34 35 36 37 38 39
40 41 42 43 44 45 46 47 48 49 50 51 52
53 54 55 56 57 58 59 60 61 62 63 64 65
EN-11078

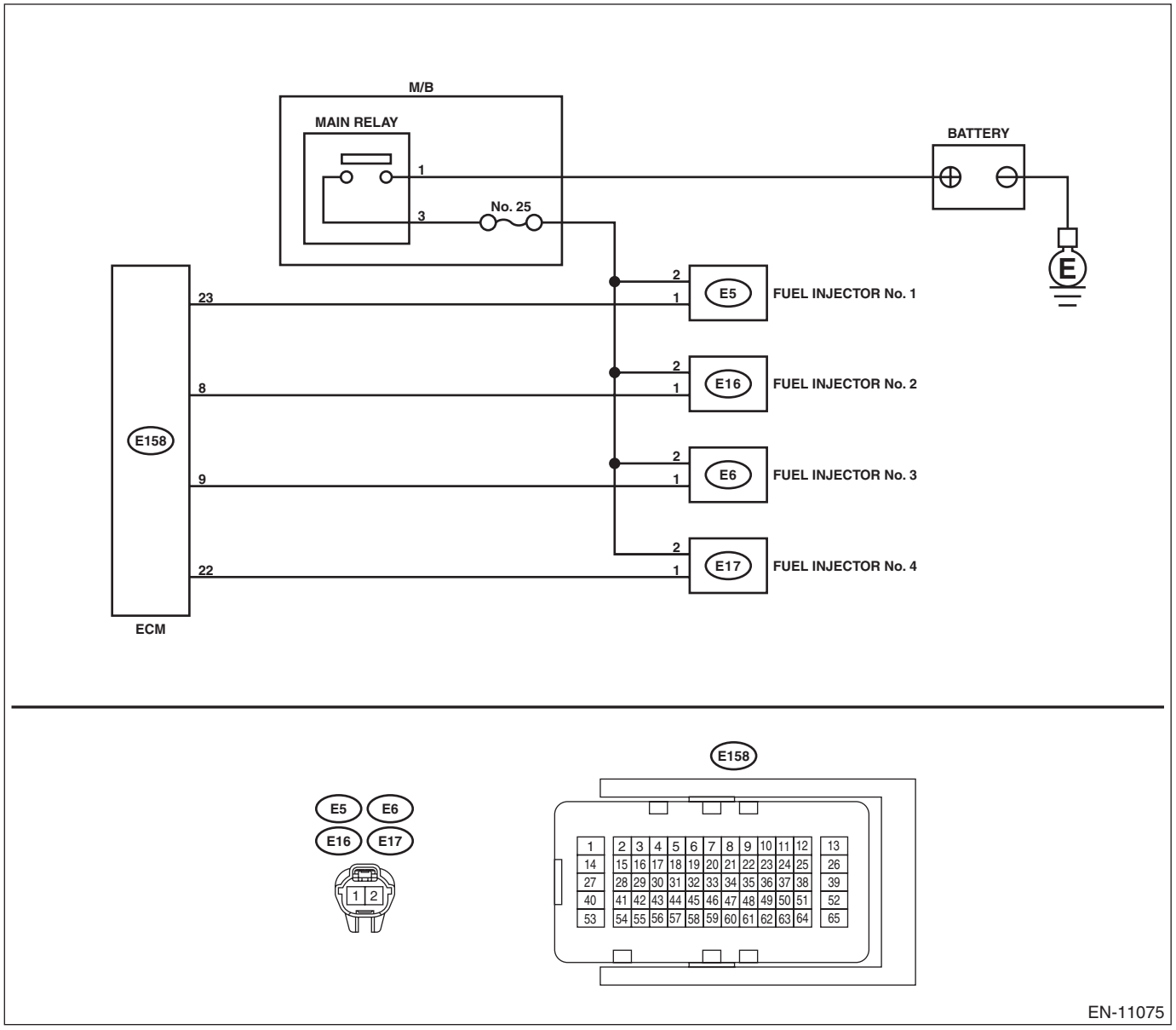

	Step	Check	Yes	No
1	**CHECK FRONT OXYGEN (A/F) SENSOR CONNECTOR AND COUPLING CONNECTOR.**	Has water entered the connector?	Completely remove any water inside.	Go to step **2**.
2	**CHECK HARNESS BETWEEN ECM AND FRONT OXYGEN (A/F) SENSOR CONNECTOR.** 1) Turn the ignition switch to OFF. 2) Disconnect the connectors from ECM and front oxygen (A/F) sensor. 3) Measure the resistance of harness between ECM connector and front oxygen (A/F) sensor connector. ***Connector & terminal*** ***(E158) No. 46 — (E24) No. 3:*** ***(E158) No. 33 — (E24) No. 4:***	Is the resistance less than 1 Ω?	Go to step **3**.	Repair the open circuit of harness between ECM connector and front oxygen (A/F) sensor connector.

	Step	Check	Yes	No
3	**CHECK HARNESS BETWEEN ECM AND FRONT OXYGEN (A/F) SENSOR CONNECTOR.** Measure the resistance between ECM connector and chassis ground. ***Connector & terminal*** ***(E158) No. 46 — Chassis ground:*** ***(E158) No. 33 — Chassis ground:***	Is the resistance 1 MΩ or more?	Go to step **4**.	Repair the short circuit to ground in harness between ECM connector and front oxygen (A/F) sensor connector.
4	**CHECK OUTPUT SIGNAL FOR ECM.** 1) Connect the connector to ECM. 2) Turn the ignition switch to ON. 3) Measure the voltage between front oxygen (A/F) sensor connector and chassis ground. ***Connector & terminal*** ***(E24) No. 3 (+) — Chassis ground (–):***	Is the voltage 4.5 V or more?	Go to step **6**.	Go to step **5**.
5	**CHECK OUTPUT SIGNAL FOR ECM.** Measure the voltage between front oxygen (A/F) sensor connector and chassis ground. ***Connector & terminal*** ***(E24) No. 4 (+) — Chassis ground (–):***	Is the voltage 4.95 V or more?	Go to step **6**.	Go to step **7**.
6	**CHECK OUTPUT SIGNAL FOR ECM.** Measure the voltage between front oxygen (A/F) sensor connector and chassis ground. ***Connector & terminal*** ***(E24) No. 3 (+) — Chassis ground (–):*** ***(E24) No. 4 (+) — Chassis ground (–):***	Is the voltage 8 V or more?	Repair the short circuit to power in the harness between ECM connector and front oxygen (A/F) sensor connector. After repair, replace the ECM. <Ref. to FU(H4DO)-82, Engine Control Module (ECM).>	Repair the poor contact of ECM connector.
7	**CHECK EXHAUST SYSTEM.**	Are there holes or loose bolts on exhaust system?	Repair the exhaust system.	Go to step **8**.
8	**CHECK AIR INTAKE SYSTEM.**	Are there holes, loose bolts or disconnection of hose on air intake system?	Repair the air intake system.	Go to step **9**.
9	**CHECK FUEL PRESSURE.** **WARNING:** **Place "NO OPEN FLAMES" signs near the working area.** **CAUTION:** **Be careful not to spill fuel.** 1) Connect the front oxygen (A/F) sensor connector. 2) Measure the fuel pressure. <Ref. to ME(H4DO)-31, INSPECTION, Fuel Pressure.> **CAUTION:** **Before attaching/detaching a fuel pressure gauge, release the fuel pressure.**	Is the measured value 340 — 400 kPa (3.5 — 4.1 kg/cm^2, 49 — 58 psi)?	Go to step **10**.	Check the fuel pump and fuel delivery line. <Ref. to FU(H4DO)-121, INSPECTION, Fuel Pump.> <Ref. to FU(H4DO)-154, INSPECTION, Fuel Delivery and Evaporation Lines.>

	Step	Check	Yes	No
10	**CHECK ENGINE COOLANT TEMPERATURE SENSOR.** 1) Start the engine and warm up completely. 2) Read the value of «Coolant Temp.» using the Subaru Select Monitor or a general scan tool. NOTE: • Subaru Select Monitor For detailed operation procedures, refer to "Read Current Data For Engine". <Ref. to EN(H4DO)(diag)-45, Subaru Select Monitor.> • General scan tool For detailed operation procedures, refer to the general scan tool operation manual.	Is the value of «Coolant Temp.» 75°C (167°F) or more?	Go to step **11**.	Replace the engine coolant temperature sensor. <Ref. to FU(H4DO)-43, Engine Coolant Temperature Sensor.>
11	**CHECK MASS AIR FLOW AND INTAKE AIR TEMPERATURE SENSOR.** 1) Start the engine and warm up engine until coolant temperature is higher than 75°C (167°F). 2) For CVT models, set the select lever to "P" range or "N" range, and for MT models, place the shift lever in the neutral position. 3) Turn the A/C switch to OFF. 4) Turn all the accessory switches to OFF. 5) Read the value of «Mass Air Flow» using the Subaru Select Monitor or a general scan tool. NOTE: • Subaru Select Monitor For detailed operation procedures, refer to "Read Current Data For Engine". <Ref. to EN(H4DO)(diag)-45, Subaru Select Monitor.> • General scan tool For detailed operation procedures, refer to the general scan tool operation manual.	Is the value of «Mass Air Flow» 2.0 — 5.0 g/s (0.26 — 0.66 lb/m)?	Go to step **12**.	Replace the mass air flow and intake air temperature sensor. <Ref. to FU(H4DO)-60, Mass Air Flow and Intake Air Temperature Sensor.>
12	**CHECK MASS AIR FLOW AND INTAKE AIR TEMPERATURE SENSOR.** 1) Start the engine and warm up engine until coolant temperature is higher than 75°C (167°F). 2) For CVT models, set the select lever to "P" range or "N" range, and for MT models, place the shift lever in the neutral position. 3) Turn the A/C switch to OFF. 4) Turn all the accessory switches to OFF. 5) Open the front hood. 6) Measure the ambient temperature. 7) Read the value of «Intake Air Temp.» using the Subaru Select Monitor or a general scan tool. NOTE: • Subaru Select Monitor For detailed operation procedures, refer to "Read Current Data For Engine". <Ref. to EN(H4DO)(diag)-45, Subaru Select Monitor.> • General scan tool For detailed operation procedures, refer to the general scan tool operation manual.	Subtract ambient temperature from «Intake Air Temp.». Is the obtained value –10 — 50°C (–18 — 90°F)?	Go to step **13**.	Check the mass air flow and intake air temperature sensor. <Ref. to FU(H4DO)-60, Mass Air Flow and Intake Air Temperature Sensor.>

	Step	Check	Yes	No
13	**CHECK REAR OXYGEN SENSOR DATA.** 1) Warm up the engine until engine coolant temperature is higher than 75°C (167°F), and keep the engine speed at 3,000 rpm. (2 minutes maximum) 2) Read the value of «Oxygen sensor #12» using the Subaru Select Monitor or a general scan tool. NOTE: • Depress the clutch pedal (MT model) • Subaru Select Monitor For detailed operation procedures, refer to "Read Current Data For Engine". <Ref. to EN(H4DO)(diag)-45, Subaru Select Monitor.> • General scan tool For detailed operation procedures, refer to the general scan tool operation manual.	Is the value of «Oxygen sensor #12» 0.490 V or more?	Go to step **14**.	Go to step **15**.
14	**CHECK REAR OXYGEN SENSOR DATA.** 1) Warm up the engine until engine coolant temperature is higher than 75°C (167°F), and rapidly reduce the engine speed from 3,000 rpm. 2) Read the value of «Oxygen sensor #12» using the Subaru Select Monitor or a general scan tool. NOTE: • Depress the clutch pedal (MT model) • Subaru Select Monitor For detailed operation procedures, refer to "Read Current Data For Engine". <Ref. to EN(H4DO)(diag)-45, Subaru Select Monitor.> • General scan tool For detailed operation procedures, refer to the general scan tool operation manual.	Is the value of «Oxygen sensor #12» 0.250 V or less?	Go to step **16**.	Go to step **15**.
15	**CHECK REAR OXYGEN SENSOR CONNECTOR AND COUPLING CONNECTOR.**	Has water entered the connector?	Completely remove any water inside.	Go to step **17**.
16	**CHECK FRONT OXYGEN (A/F) SENSOR USING REAR OXYGEN SENSOR SIGNAL.** 1) Warm up the engine until engine coolant temperature is higher than 75°C (167°F), then keep the engine idling for 5 minutes or more. 2) Read the value of «Oxygen sensor #12» using the Subaru Select Monitor or a general scan tool. NOTE: • Subaru Select Monitor For detailed operation procedures, refer to "Read Current Data For Engine". <Ref. to EN(H4DO)(diag)-45, Subaru Select Monitor.> • General scan tool For detailed operation procedures, refer to the general scan tool operation manual.	Is the value of «Oxygen sensor #12» 0.250 V or less for 5 minutes or more?	Replace the front oxygen (A/F) sensor. <Ref. to FU(H4DO)-76, Front Oxygen (A/F) Sensor.>	Go to step **17**.

	Step	Check	Yes	No
17	**CHECK HARNESS BETWEEN ECM AND REAR OXYGEN SENSOR CONNECTOR.** 1) Turn the ignition switch to OFF. 2) Disconnect the connector from ECM and rear oxygen sensor. 3) Measure the resistance of harness between ECM connector and rear oxygen sensor connector. ***Connector & terminal*** ***(E158) No. 57 — (E25) No. 3:*** ***(E158) No. 56 — (E25) No. 4:***	Is the resistance less than 1 Ω?	Go to step **18**.	Repair the open circuit of harness between ECM connector and rear oxygen sensor connector.
18	**CHECK HARNESS BETWEEN ECM AND REAR OXYGEN SENSOR CONNECTOR.** 1) Connect the connector to ECM. 2) Turn the ignition switch to ON. 3) Measure the voltage between rear oxygen sensor connector and chassis ground. ***Connector & terminal*** ***(E25) No. 3 (+) — Chassis ground (–):***	Is the voltage 0.2 — 0.5 V?	Replace the rear oxygen sensor. <Ref. to FU(H4DO)-76, Front Oxygen (A/F) Sensor.>	Go to step **19**.
19	**CHECK OUTPUT SIGNAL OF ECM.** 1) Turn the ignition switch to ON. 2) Measure the voltage between ECM and chassis ground on faulty cylinders. ***Connector & terminal*** ***DTC P219C; #1 (E158) No. 23 (+) — Chassis ground (–):*** ***DTC P219D; #2 (E158) No. 8 (+) — Chassis ground (–):*** ***DTC P219E; #3 (E158) No. 9 (+) — Chassis ground (–):*** ***DTC P219F; #4 (E158) No. 22 (+) — Chassis ground (–):***	Is the voltage 10 V or more?	Go to step **24**.	Go to step **20**.
20	**CHECK HARNESS BETWEEN ECM AND FUEL INJECTOR CONNECTOR.** 1) Turn the ignition switch to OFF. 2) Disconnect the connector from fuel injector on faulty cylinders. 3) Measure the resistance between fuel injector connector and engine ground on faulty cylinders. ***Connector & terminal*** ***DTC P219C; #1 (E5) No. 1 — Engine ground:*** ***DTC P219D; #2 (E16) No. 1 — Engine ground:*** ***DTC P219E; #3 (E6) No. 1 — Engine ground:*** ***DTC P219F; #4 (E17) No. 1 — Engine ground:***	Is the resistance 1 MΩ or more?	Go to step **21**.	Repair the short circuit to ground in harness between ECM connector and fuel injector connector.
21	**CHECK HARNESS BETWEEN ECM AND FUEL INJECTOR CONNECTOR.** Measure the resistance of harness between ECM and fuel injector connector on faulty cylinders. ***Connector & terminal*** ***DTC P219C; #1 (E158) No. 23 — (E5) No. 1:*** ***DTC P219D; #2 (E158) No. 8 — (E16) No. 1:*** ***DTC P219E; #3 (E158) No. 9 — (E6) No. 1:*** ***DTC P219F; #4 (E158) No. 22 — (E17) No. 1:***	Is the resistance less than 1 Ω?	Go to step **22**.	Open circuit in harness between ECM connector and fuel injector connector

Step		Check	Yes	No
22	**CHECK FUEL INJECTOR.** Measure the resistance between fuel injector terminals on faulty cylinder. ***Terminals*** ***No. 1 — No. 2:***	Is the resistance 5 — 20 Ω?	Go to step **23**.	Replace the faulty fuel injector. <Ref. to FU(H4DO)-66, Fuel Injector.>
23	**CHECK POWER SUPPLY LINE.** 1) Turn the ignition switch to ON. 2) Measure the voltage between fuel injector connector of faulty cylinders and engine ground. ***Connector & terminal*** ***DTC P219C; #1 (E5) No. 2 (+) — Engine ground (–):*** ***DTC P219D; #2 (E16) No. 2 (+) — Engine ground (–):*** ***DTC P219E; #3 (E6) No. 2 (+) — Engine ground (–):*** ***DTC P219F; #4 (E17) No. 2 (+) — Engine ground (–):***	Is the voltage 10 V or more?	Repair the poor contact of all connectors in fuel injector circuit.	Repair the harness and connector. NOTE: In this case, repair the following item: • Open circuit in harness between the main relay and fuel injector connector on faulty cylinders • Poor contact of coupling connector • Poor contact of main relay connector
24	**CHECK HARNESS BETWEEN ECM AND FUEL INJECTOR CONNECTOR.** 1) Turn the ignition switch to OFF. 2) Disconnect the connector from fuel injector on faulty cylinders. 3) Turn the ignition switch to ON. 4) Measure the voltage between ECM and chassis ground on faulty cylinders. ***Connector & terminal*** ***DTC P219C; #1 (E158) No. 23 (+) — Chassis ground (–):*** ***DTC P219D; #2 (E158) No. 8 (+) — Chassis ground (–):*** ***DTC P219E; #3 (E158) No. 9 (+) — Chassis ground (–):*** ***DTC P219F; #4 (E158) No. 22 (+) — Chassis ground (–):***	Is the voltage 10 V or more?	Repair the short circuit to power in harness between ECM connector and fuel injector connectors.	Go to step **25**.
25	**CHECK FUEL INJECTOR.** 1) Turn the ignition switch to OFF. 2) Measure the resistance between fuel injector terminals on faulty cylinder. ***Terminals*** ***No. 1 — No. 2:***	Is the resistance 5 — 20 Ω?	Go to step **26**.	Replace the faulty fuel injector. <Ref. to FU(H4DO)-66, Fuel Injector.>
26	**CHECK INSTALLATION CONDITION OF CAMSHAFT POSITION SENSOR/CRANKSHAFT POSITION SENSOR.**	Is the camshaft position sensor or crankshaft position sensor loosely installed?	Tighten the camshaft position sensor or crankshaft position sensor. <Ref. to FU(H4DO)-52, INSTALLATION, Camshaft Position Sensor.> <Ref. to FU(H4DO)-48, INSTALLATION, Crankshaft Position Sensor.>	Go to step **27**.

	Step	Check	Yes	No
27	**CHECK CRANKSHAFT POSITION SENSOR PLATE.**	Is the crankshaft position sensor plate rusted or does it have broken teeth?	Replace the crankshaft position sensor plate. <Ref. to ME(H4DO)-211, Cylinder Block.>	Go to step **28**.
28	**CHECK INSTALLATION CONDITION OF TIMING CHAIN.** Turn the crankshaft using ST, and align the alignment mark on crank sprocket with alignment mark on cylinder block. ST 18252AA000 CRANKSHAFT SOCKET	Is the timing chain dislocated from its proper position?	Correct the installation condition of timing chain. <Ref. to ME(H4DO)-97, Timing Chain Assembly.>	Go to step **29**.
29	**CHECK FUEL LEVEL.**	Is the fuel meter indication higher than the “Lower” level?	Go to step **30**.	Refill the fuel so that the fuel meter indication is higher than the “Lower” level, and proceed to the next step. Go to step **30**.
30	**CHECK STATUS OF MALFUNCTION INDICATOR LIGHT.** 1) Clear the memory using the Subaru Select Monitor or general scan tool. <Ref. to EN(H4DO)(diag)-78, Clear Memory Mode.> 2) Start the engine, and drive the vehicle 10 minutes or more.	Does the malfunction indicator light illuminate or blink?	Go to step **32**.	Go to step **31**.
31	**CHECK CAUSE OF MISFIRE.**	Was the cause of misfire identified when the engine is running?	Finish diagnostics operation, if the engine has no abnormality.	Repair the poor contact of connector. NOTE: In this case, repair the following item: • Poor contact of ignition coil connector • Poor contact of fuel injector connector on faulty cylinders • Poor contact of ECM connector • Poor contact of coupling connector
32	**CHECK AIR INTAKE SYSTEM.**	Is there any fault in air intake system?	Repair the air intake system. NOTE: Check the following items. • Are there air leaks or air suction caused by loose or dislocated nuts and bolts? • Are there cracks or any disconnection of hoses?	Go to step **33**.
33	**CHECK MISFIRE SYMPTOM.** 1) Turn the ignition switch to ON. 2) Check for DTC. <Ref. to EN(H4DO)(diag)-63, Read Diagnostic Trouble Code (DTC).>	Does the Subaru Select Monitor or general scan tool indicate only one DTC?	Go to step **36**.	Go to step **34**.

Step		Check	Yes	No
34	**CHECK DTC.**	Is DTC P0301 and P0303 displayed on the Subaru Select Monitor or general scan tool?	Go to step **37**.	Go to step **35**.
35	**CHECK DTC.**	Is DTC P0302 and P0304 displayed on the Subaru Select Monitor or general scan tool?	Go to step **38**.	Go to step **39**.
36	**ONLY ONE CYLINDER.**	Is there any fault in the cylinder?	Repair or replace faulty parts. NOTE: Check the following items. • Spark plug • Ignition coil • Fuel injector • Compression	Go to DTC P0171. <Ref. to EN(H4DO)(diag)-225, DTC P0171 SYSTEM TOO LEAN BANK 1, Diagnostic Procedure with Diagnostic Trouble Code (DTC).>
37	**GROUP OF #1 AND #3 CYLINDERS.**	Are there any faults in #1 and #3 cylinders?	Repair or replace faulty parts. NOTE: Check the following items. • Spark plug • Ignition coil • Fuel injector • Compression • Skipping timing belt teeth	Go to DTC P0171. <Ref. to EN(H4DO)(diag)-225, DTC P0171 SYSTEM TOO LEAN BANK 1, Diagnostic Procedure with Diagnostic Trouble Code (DTC).>
38	**GROUP OF #2 AND #4 CYLINDERS.**	Are there any faults in #2 and #4 cylinders?	Repair or replace faulty parts. NOTE: Check the following items. • Spark plug • Ignition coil • Fuel injector • Compression • Skipping timing belt teeth	Go to DTC P0171. <Ref. to EN(H4DO)(diag)-225, DTC P0171 SYSTEM TOO LEAN BANK 1, Diagnostic Procedure with Diagnostic Trouble Code (DTC).>
39	**CYLINDER AT RANDOM.**	Is the engine idle rough?	Go to DTC P0171. <Ref. to EN(H4DO)(diag)-225, DTC P0171 SYSTEM TOO LEAN BANK 1, Diagnostic Procedure with Diagnostic Trouble Code (DTC).>	Even if DTC is detected, the circuit has returned to a normal condition at this time. Reproduce the failure, and then perform the diagnosis again. NOTE: In this case, temporary open or short circuit of harness or temporary poor contact of connector may be the cause.

1. OUTLINE OF DIAGNOSIS

To detect malfunctions, the diagnostic uses a predictive model, individual cylinder fuel control, and the primary oxygen sensor measurement. The diagnostic does not directly attempt to separate the primary oxygen sensor measurement into individual cylinder contributions, but uses a predictive model to do so. Individual cylinders STFT are independently adjusted to obtain the moving 720 degree average lambda of all four cylinders using feedback from primary oxygen sensor. If any individual cylinder's STFT is different than the average of the other cylinder's STFT by a calibratable amount, that cylinder will be identified as failing.

Monitor Method

This diagnostic monitor performs a functional check of the fuel system to determine an air-fuel ratio cylinder imbalance, as required by the regulations in Section (e)(6.2.1)(c). This method uses a parameter called "imbalance value" which is calculated for each cylinder. The "imbalance value" is the difference between the individual STFT of the specific cylinder and the average value of the individual STFT of the other three cylinders. These imbalance values are compared to each other in order to determine the "imbalanced cylinder", which is the cylinder with the maximum "imbalance value". A diagnostic value is calculated for the "imbalanced cylinder". When this diagnostic value is more than the predetermined threshold (lean malfunction) or less than the predetermined threshold (rich malfunction), a DTC for the most imbalanced cylinder is determined.
DTC for "Imbalanced cylinder" is following.
P219C: Cylinder 1 Air-Fuel Ratio Imbalance
P219D: Cylinder 2 Air-Fuel Ratio Imbalance
P219E: Cylinder 3 Air-Fuel Ratio Imbalance
P219F: Cylinder 4 Air-Fuel Ratio Imbalance

Malfunction Criteria

Rich malfunction (negative) Diagnostic value < Threshold
or
Lean malfunction (positive) Diagnostic value > Threshold
Diagnostic value = “Imbalance value n” of the “Imbalanced cylinder”
(n: Cylinder number (#1 or #2 or #3 or #4))

- Imbalance value n = iSTFTn – Average (other 3 iSTFTs)

For example: Imbalance value #1 = iSTFT # 1 – (iSTFT # 2+ iSTFT # 3 + iSTFT # 4) /3.

- Imbalanced cylinder: The cylinder with maximum (ABS (Imbalance value #1, #2, #3, #4)) is selected
- iSTFT: Individual cylinder STFT (Refer to the following about the detail)

Individual Cylinder STFT (iSTFT n (k))
Individual cylinder STFT (= iSTFT n (k)) are calculated by integral control and individual cylinder λ deviation u(k) converges to target (no deviation).
iSTFT n (k) = iSTFT n (k-1) + C(tgt – u(k))
iSTFT n (k) = Individual cylinder STFT
u(k): Estimated individual cylinder λ deviation*
tgt: Target (No deviation = zero)
C: Control gain (negative value)

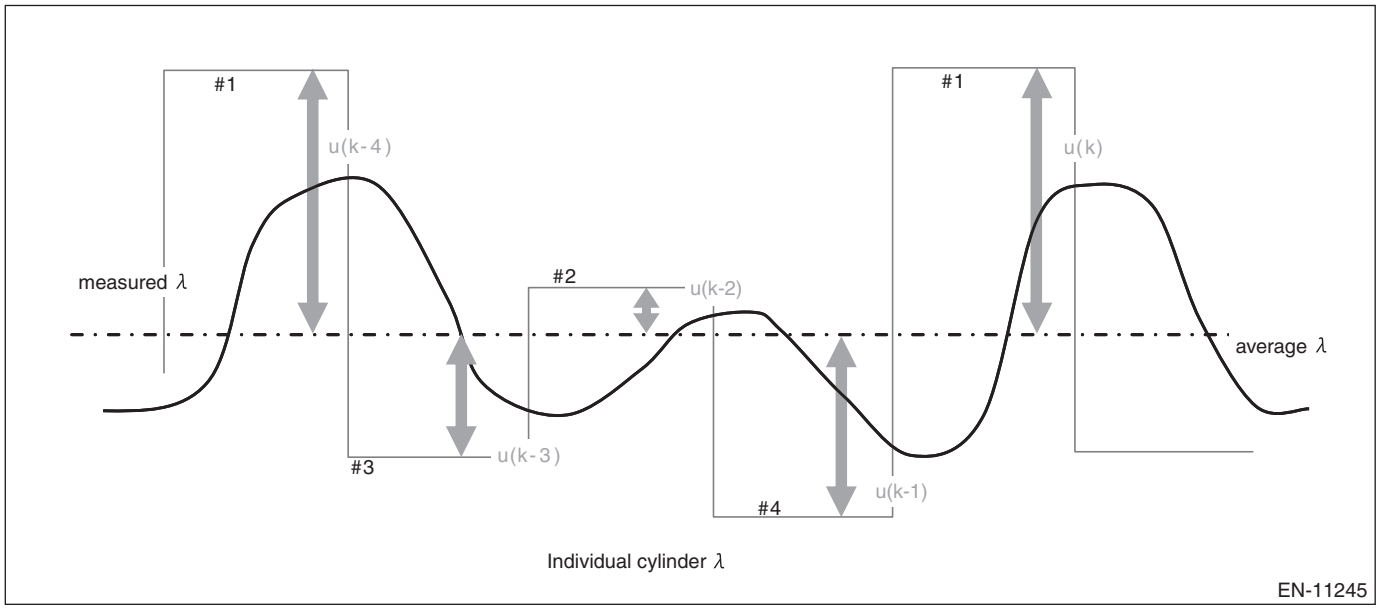

*individual cylinder λ deviation: u(k)
= Individual cylinderλ – averageλ during 720°CA

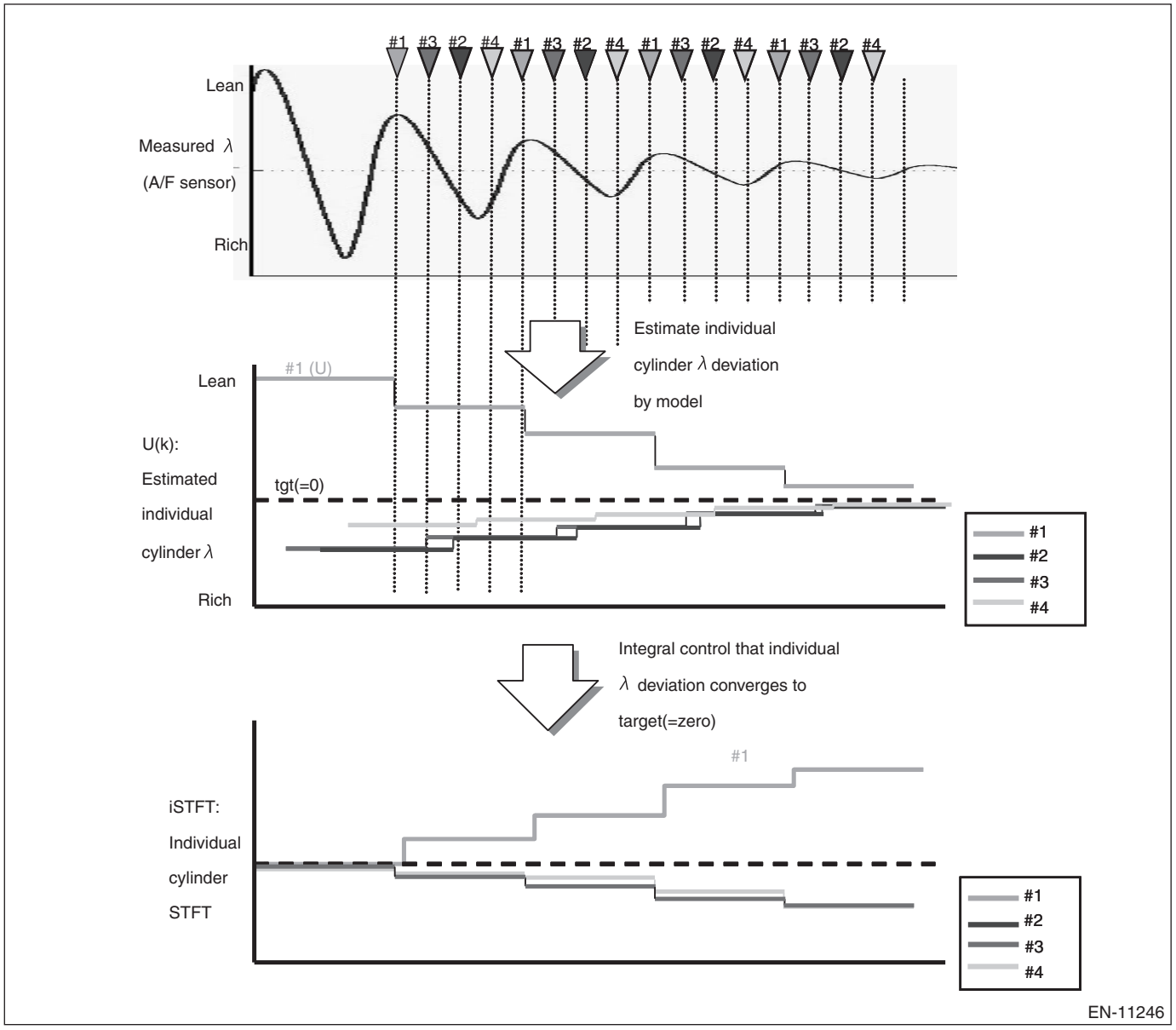
#1 #3 #2 #4 #1 #3 #2 #4 #1 #3 #2 #4 #1 #3 #2 #4
Lean
Measured λ
(A/F sensor)
Rich
Estimate individual
cylinder λ deviation
by model
Lean
#1 (U)
U(k):
Estimated
individual
cylinder λ
tgt(=0)
Rich
#1
#2
#3
#4
Integral control that individual
λ deviation converges to
target(=zero)
#1
iSTFT:
Individual
cylinder
STFT
#1
#2
#3
#4
EN-11246

Estimated individual cylinder λ deviation “u(k)” is calculated by model (as described below).

Estimation Model for individual cylinder λ deviation (u(k))

Subaru developed a model for estimating individual cylinder λ deviation* by the output signal of the primary oxygen sensor (mounted on the collector section of the exhaust manifold). This estimation model makes it possible to control cylinder A/F individually. The estimation model is designed as follows.

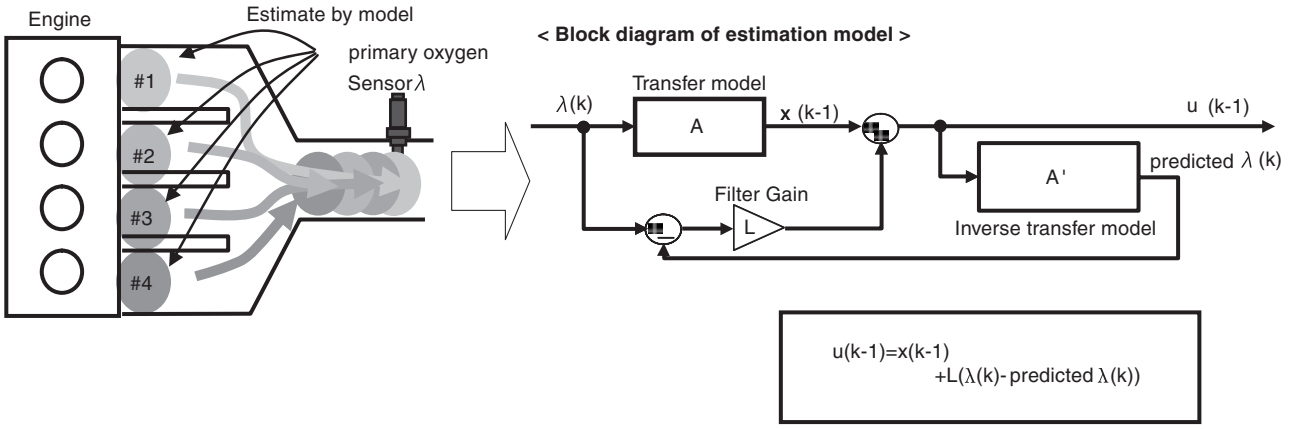

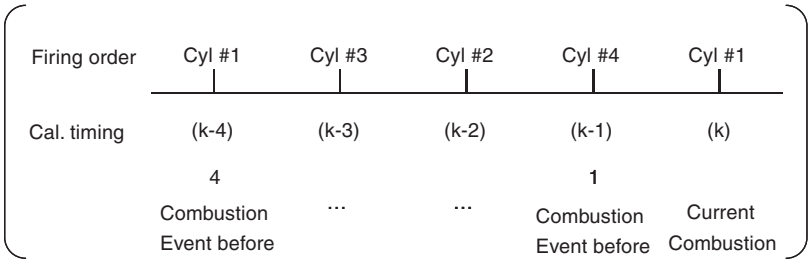

λ(k) : Measured λ

u(k-1) : Estimated individual cylinder λ deviation (after filter)

x(k-1) : Estimated individual cylinder λ deviation (before filter)

predicted λ(k): Estimated λ

EN-11247

Model equations for individual cylinder λ deviation (u(k))

"u(k-1)": Estimated individual cylinder λ deviation is calculated by the following model.

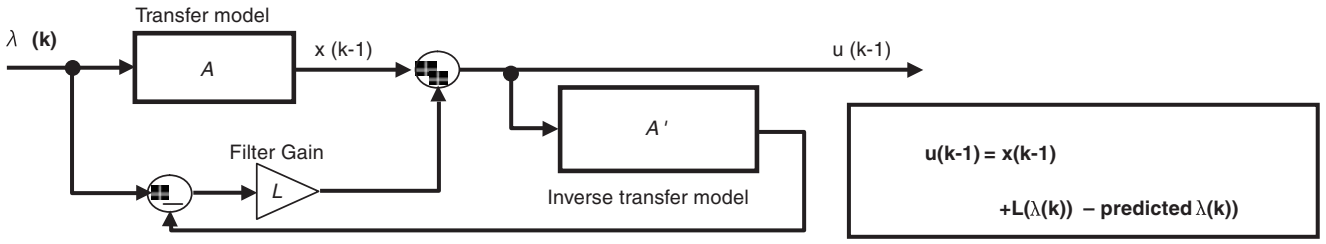

< Model equations >

Transfer model ""A — Measured λ (A/F sensor) → Individual cylinder λ

$$x(k-1) = \frac{(\lambda(k) - a_1\lambda(k-1) - a_2\lambda(k-2) - a_3\lambda(k-3) - a_4\lambda(k-4)}{b_1} - \frac{(b_2x(k-2) + b_3x(k-3) + b_4x(k-4)}{b_1}$$

Inverse transfer model "" A' — **Individual cylinder λ → Measured λ (A/F sensor)**

$$\text{predicted } \lambda(k) = -(a_1\text{predicted }\lambda(k-1) + a_2\text{predicted }\lambda(k-2) + a_3\text{predicted }\lambda(k-3) + a_4\text{predicted }\lambda(k-4)) + (b_1u(k-1)+b_2u(k-2)+b_3u(k-3)+b_4u(k-4))$$

EN-11248

a1 — 4, b1 — 4: Model parameters calibrated by primary oxygen sensor output λ and 'measured' individual cylinder λ. (These parameters are calibrated and fixed prior to production. However these models are calculating the predicted λ of each cylinder during real world driving.)

2. EXECUTION CONDITION

Secondary Parameters	Execution condition
Integrated time of individual cylinder STFT status = ON*2 (Refer to following table: table1) *2: the integrated time is cumulative (i.e. it does not reset if the enable condition is no longer met).	≥ 400 time(s)

table 1

Secondary Parameters	Execution condition
Fuel system status (Primary Oxygen Sensor)	ON
Engine speed	≤ 4000 rpm
Intake air mass per crankshaft revolution	≥ 0.6 g/rev (0.02 oz/rev)
Intake air mass per second	≥ 10 g/s (0.35 oz/s)

3. GENERAL DRIVING CYCLE

Perform the diagnosis continuously after the enable conditions have been established.

4. DIAGNOSTIC METHOD

Judge as NG when the following conditions are established.

Judgment Value

Malfunction Criteria	Threshold Value
Imbalance value$_n$ of the imbalanced cylinder	> 0.2 or < –0.55 (CVT model) > 0.23 or < –0.55 (MT model)
Imbalance value = iSTFT$_n$ – average (other cylinder iSTFT$_n$) iSTFT$_n$: Individual cylinder STFT Imbalanced cylinder: The cylinder with maximum ABS (Imbalance value$_n$)	

Time Needed for Diagnosis: 300 time(s)
Malfunction Indicator Light Illumination: Illuminates when malfunction occurs in 2 continuous driving cycles.

FA:DTC P219D CYLINDER 2 AIR-FUEL RATIO IMBALANCE

NOTE:
For the diagnostic procedure, refer to DTC P219C. <Ref. to EN(H4DO)(diag)-549, DTC P219C CYLINDER 1 AIR-FUEL RATIO IMBALANCE, Diagnostic Procedure with Diagnostic Trouble Code (DTC).>

1. OUTLINE OF DIAGNOSIS

NOTE:
For the detection standard, refer to DTC P219C. <Ref. to EN(H4DO)(diag)-549, DTC P219C CYLINDER 1 AIR-FUEL RATIO IMBALANCE, Diagnostic Procedure with Diagnostic Trouble Code (DTC).>

FB:DTC P219E CYLINDER 3 AIR-FUEL RATIO IMBALANCE

NOTE:
For the diagnostic procedure, refer to DTC P219C. <Ref. to EN(H4DO)(diag)-549, DTC P219C CYLINDER 1 AIR-FUEL RATIO IMBALANCE, Diagnostic Procedure with Diagnostic Trouble Code (DTC).>

1. OUTLINE OF DIAGNOSIS

NOTE:
For the detection standard, refer to DTC P219C. <Ref. to EN(H4DO)(diag)-549, DTC P219C CYLINDER 1 AIR-FUEL RATIO IMBALANCE, Diagnostic Procedure with Diagnostic Trouble Code (DTC).>

FC:DTC P219F CYLINDER 4 AIR-FUEL RATIO IMBALANCE

NOTE:
For the diagnostic procedure, refer to DTC P219C. <Ref. to EN(H4DO)(diag)-549, DTC P219C CYLINDER 1 AIR-FUEL RATIO IMBALANCE, Diagnostic Procedure with Diagnostic Trouble Code (DTC).>

1. OUTLINE OF DIAGNOSIS

NOTE:
For the detection standard, refer to DTC P219C. <Ref. to EN(H4DO)(diag)-549, DTC P219C CYLINDER 1 AIR-FUEL RATIO IMBALANCE, Diagnostic Procedure with Diagnostic Trouble Code (DTC).>

FD:DTC P2270 O2 SENSOR SIGNAL BIASED/STUCK LEAN BANK 1 SENSOR 2

DTC DETECTING CONDITION:

Detected when two consecutive driving cycles with fault occur.

CAUTION:

After servicing or replacing faulty parts, perform Clear Memory Mode <Ref. to EN(H4DO)(diag)-78, OPERATION, Clear Memory Mode.>, and Inspection Mode <Ref. to EN(H4DO)(diag)-64, PROCEDURE, Inspection Mode.>.

WIRING DIAGRAM:

- Engine Electrical System ENGINE TYPE FB (WITHOUT PUSH BUTTON START) <Ref. to WI-170, ENGINE TYPE FB (WITHOUT PUSH BUTTON START), WIRING DIAGRAM, Engine Electrical System.>
- Engine Electrical System ENGINE TYPE FB (WITHOUT PUSH BUTTON START) <Ref. to WI-184, ENGINE TYPE FB (WITH PUSH BUTTON START), WIRING DIAGRAM, Engine Electrical System.>

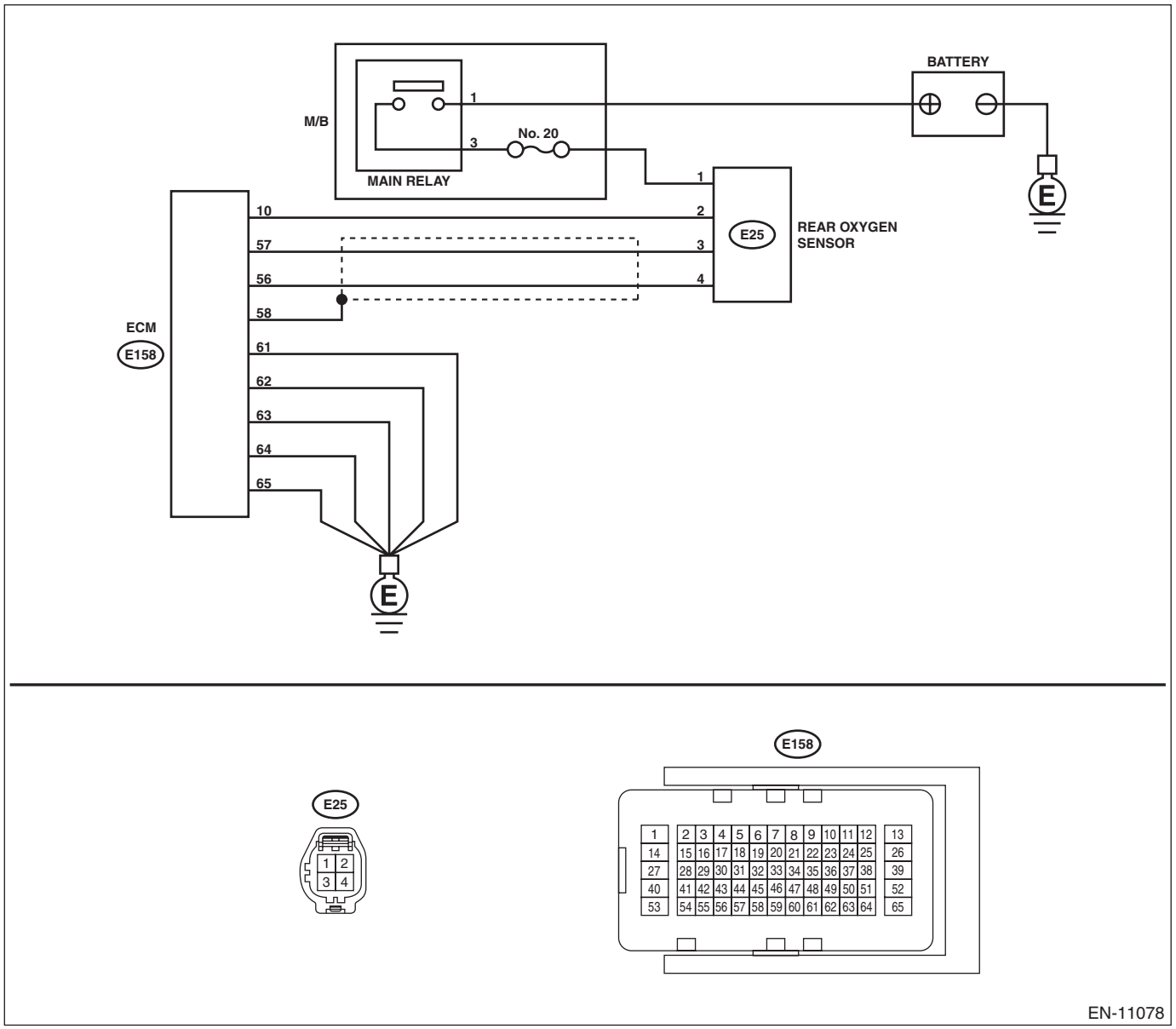

Step		Check	Yes	No
1	**CHECK REAR OXYGEN SENSOR CONNECTOR.**	Has water entered the connector?	Completely remove any water inside.	Go to step **2**.

	Step	Check	Yes	No
2	**CHECK HARNESS BETWEEN ECM AND REAR OXYGEN SENSOR CONNECTOR.** 1) Turn the ignition switch to OFF. 2) Disconnect the connector from ECM and rear oxygen sensor. 3) Measure the resistance of harness between ECM connector and rear oxygen sensor connector. ***Connector & terminal*** ***(E158) No. 56 — (E25) No. 4:*** ***(E158) No. 57 — (E25) No. 3:***	Is the resistance less than 1 Ω?	Go to step **3**.	Repair the open circuit of harness between ECM connector and rear oxygen sensor connector.
3	**CHECK HARNESS BETWEEN ECM AND REAR OXYGEN SENSOR CONNECTOR.** 1) Connect the connector to ECM. 2) Turn the ignition switch to ON. 3) Measure the voltage between rear oxygen sensor connector and engine ground. ***Connector & terminal*** ***(E25) No. 3 (+) — Engine ground (–):***	Is the voltage 0.15 V or more?	Repair the short circuit to power in the harness between ECM connector and rear oxygen sensor connector.	Go to step **4**.
4	**CHECK EXHAUST SYSTEM.** Check exhaust system parts. NOTE: Check the following items. • Looseness and improper fitting of exhaust system parts • Damage (crack, hole etc.) of parts • Damage (crack, hole etc.) between front oxygen (A/F) sensor and rear oxygen sensor	Is there any fault in exhaust system?	Repair or replace faulty parts.	Replace the rear oxygen sensor. <Ref. to FU(H4DO)-79, Rear Oxygen Sensor.>

1. OUTLINE OF DIAGNOSIS

Detect the stuck of rear oxygen sensor voltage in lean state.
When rear oxygen sensor voltage remains below the threshold value for predetermined time, diagnosis interrupts target air fuel ratio for control and raises output voltage.
Judge as NG detecting the stuck in lean state when rear oxygen sensor voltage remains below the threshold value even after the interrupt control.

2. COMPONENT DESCRIPTION

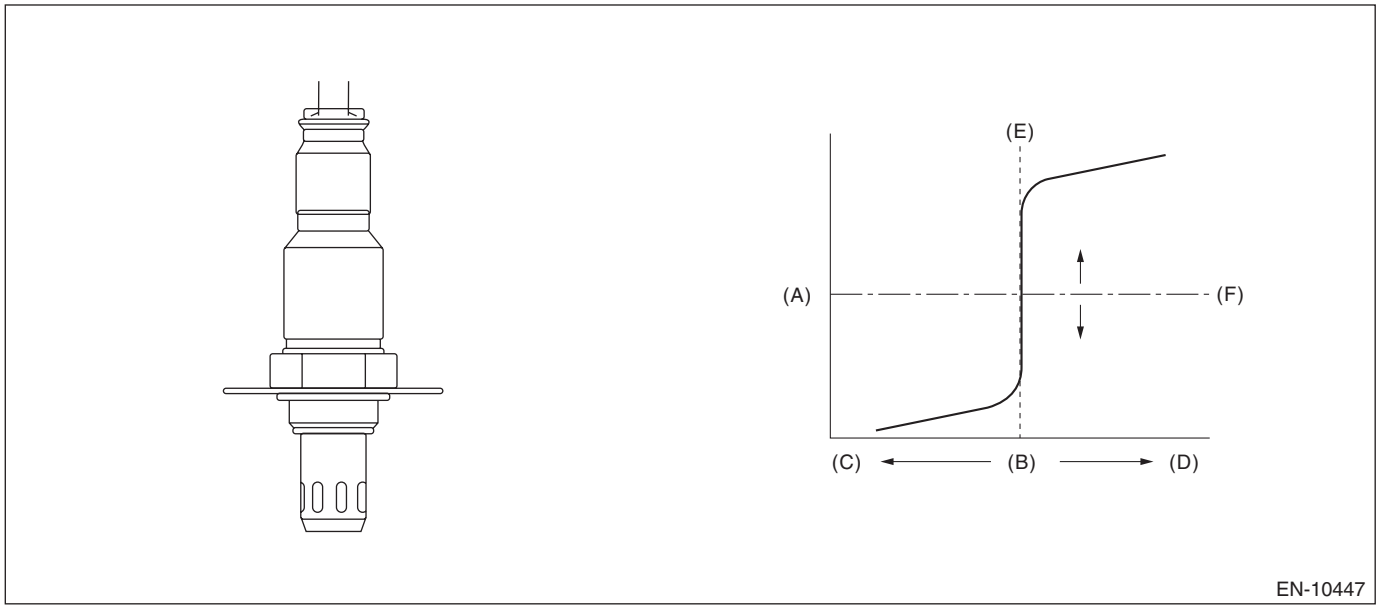

(A) Electromotive force
(B) Air fuel ratio
(C) Lean
(D) Rich
(E) Theoretical air fuel ratio
(F) Comparative voltage

3. EXECUTION CONDITION

Secondary Parameters	Execution condition
Battery voltage	≥ 10.9 V
Sub feedback	In operation
Amount of intake air	≥ 10 g/s (0.35 oz/s)
Estimated temperature of the rear oxygen sensor element	≥ 500 °C (932 °F)
Enable conditions at interrupt control are as follows	
Air fuel ratio reduced from target air fuel ratio	= Value of Map
Continuous time when rear oxygen sensor output voltage is less than 0.55 V	≥ 5000 ms

Map

Output voltage of rear oxygen sensor V	0.0	0.15	0.2	0.4	0.6
Air fuel ratio reduced from target air fuel ratio %	15	15	4	4	4

4. GENERAL DRIVING CYCLE

Perform the diagnosis only once after the enable conditions have been established.

5. DIAGNOSTIC METHOD

If the duration of time while the following conditions are met is longer than the time indicated, judge as NG.

Judgment Value

Malfunction Criteria	Threshold Value
Output voltage of rear oxygen sensor	< 0.55 V

Time Needed for Diagnosis: 15000 ms
Malfunction Indicator Light Illumination: Illuminates when malfunction occurs in 2 continuous driving cycles.

FE:DTC P2271 O2 SENSOR SIGNAL BIASED/STUCK RICH BANK 1 SENSOR 2

DTC DETECTING CONDITION:

Detected when two consecutive driving cycles with fault occur.

CAUTION:

After servicing or replacing faulty parts, perform Clear Memory Mode <Ref. to EN(H4DO)(diag)-78, OPERATION, Clear Memory Mode.>, and Inspection Mode <Ref. to EN(H4DO)(diag)-64, PROCEDURE, Inspection Mode.>.

WIRING DIAGRAM:

- Engine Electrical System ENGINE TYPE FB (WITHOUT PUSH BUTTON START) <Ref. to WI-170, ENGINE TYPE FB (WITHOUT PUSH BUTTON START), WIRING DIAGRAM, Engine Electrical System.>
- Engine Electrical System ENGINE TYPE FB (WITH PUSH BUTTON START) <Ref. to WI-184, ENGINE TYPE FB (WITH PUSH BUTTON START), WIRING DIAGRAM, Engine Electrical System.>

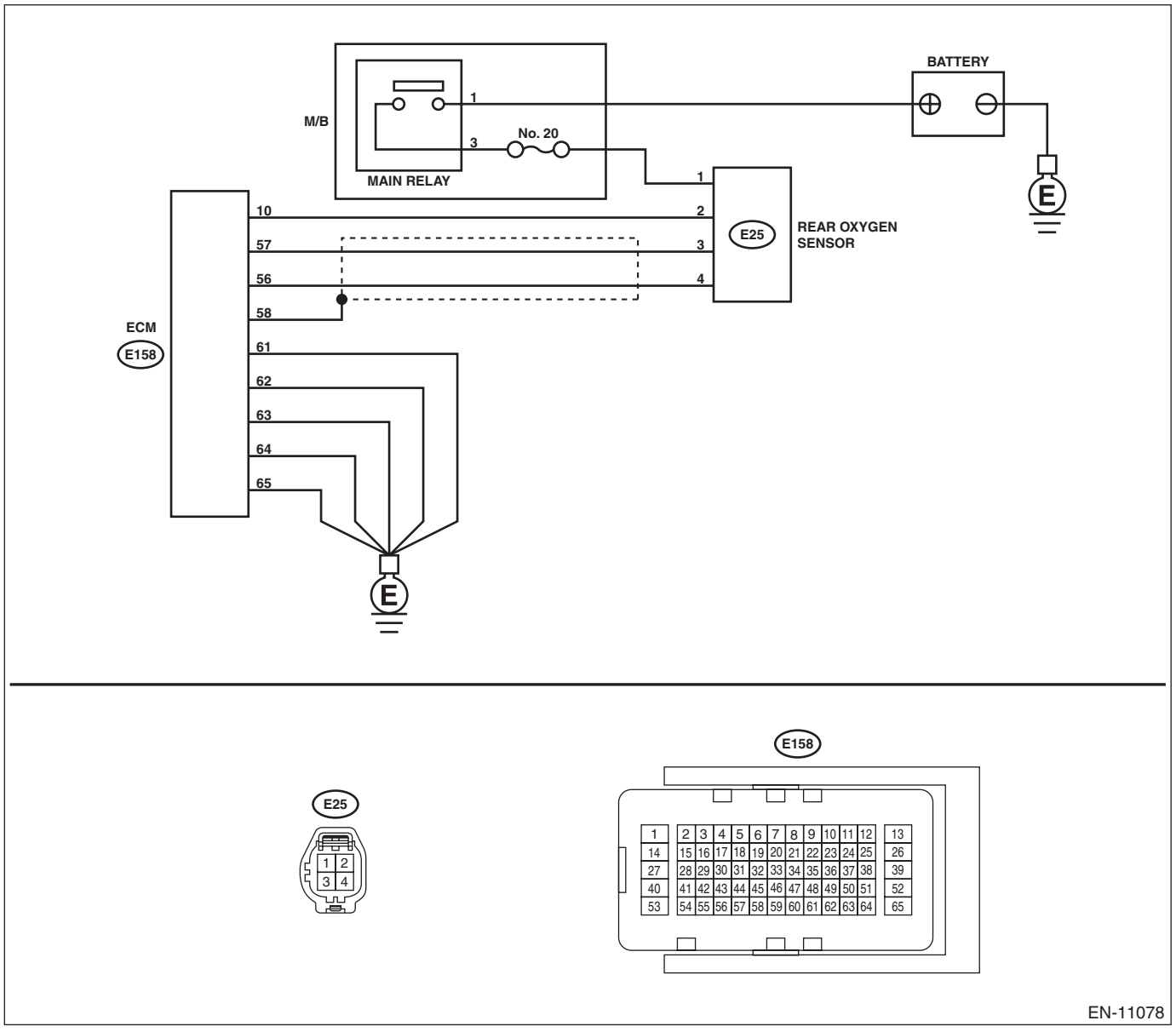

Step		Check	Yes	No
1	**CHECK REAR OXYGEN SENSOR CONNECTOR.**	Has water entered the connector?	Completely remove any water inside.	Go to step **2**.

	Step	Check	Yes	No
2	**CHECK HARNESS BETWEEN ECM AND REAR OXYGEN SENSOR CONNECTOR.** 1) Turn the ignition switch to OFF. 2) Disconnect the connector from ECM and rear oxygen sensor. 3) Measure the resistance of harness between ECM connector and rear oxygen sensor connector. ***Connector & terminal*** ***(E158) No. 56 — (E25) No. 4:*** ***(E158) No. 57 — (E25) No. 3:***	Is the resistance less than 1 Ω?	Go to step **3**.	Repair the open circuit of harness between ECM connector and rear oxygen sensor connector.
3	**CHECK HARNESS BETWEEN ECM AND REAR OXYGEN SENSOR CONNECTOR.** Measure the resistance between the ECM connector and engine ground. ***Connector & terminal*** ***(E158) No. 56 — Engine ground:***	Is the resistance 1 MΩ or more?	Go to step **4**.	Repair the short circuit to ground in harness between ECM connector and rear oxygen sensor connector.
4	**CHECK EXHAUST SYSTEM.** Check exhaust system parts. NOTE: Check the following items. • Looseness and improper fitting of exhaust system parts • Damage (crack, hole etc.) of parts • Damage (crack, hole etc.) between front oxygen (A/F) sensor and rear oxygen sensor	Is there any fault in exhaust system?	Repair or replace faulty parts.	Replace the rear oxygen sensor. <Ref. to FU(H4DO)-79, Rear Oxygen Sensor.>

1. OUTLINE OF DIAGNOSIS

Detect the stuck of rear oxygen sensor voltage in rich state.
Detect the stuck in rich state and judge as NG if rear oxygen sensor voltage remains above the threshold value for predetermined time.

2. COMPONENT DESCRIPTION

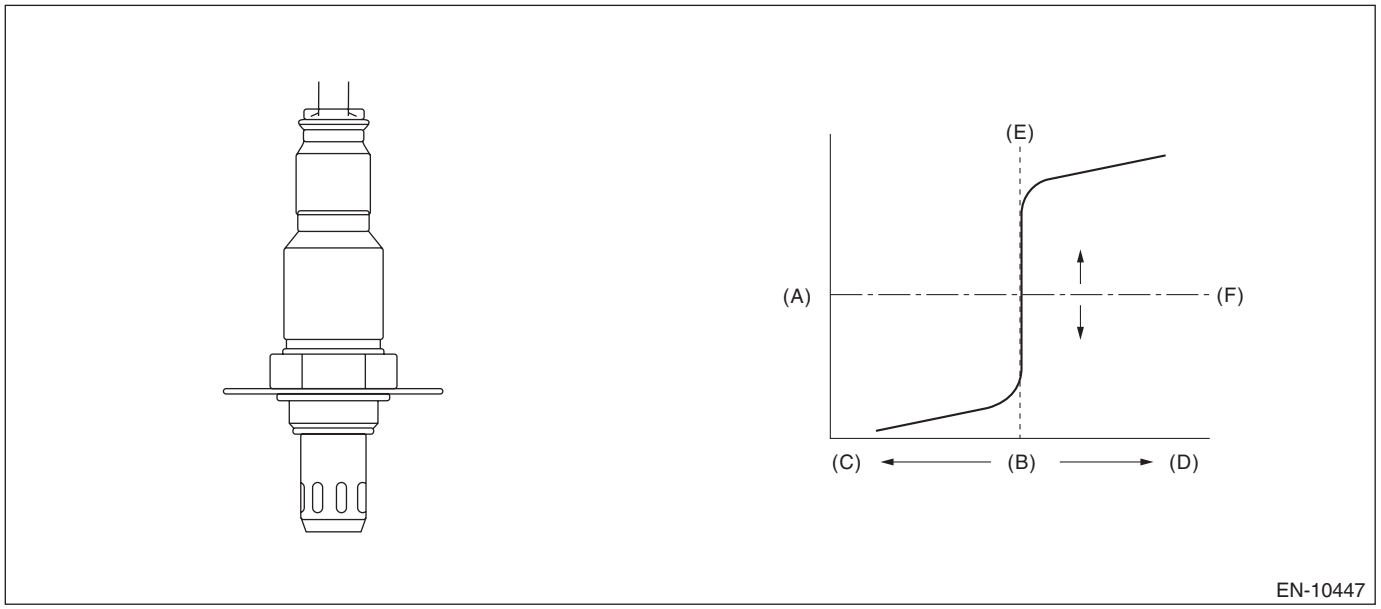

(A) Electromotive force
(B) Air fuel ratio
(C) Lean
(D) Rich
(E) Theoretical air fuel ratio
(F) Comparative voltage

3. EXECUTION CONDITION

Secondary Parameters	Execution condition
Battery voltage	≥ 10.9 V
Fuel cut time	≥ 5000 ms
Estimated temperature of the rear oxygen sensor element	≥ 500 °C (932 °F)

4. GENERAL DRIVING CYCLE

Perform the diagnosis only once after the enable conditions have been established.

5. DIAGNOSTIC METHOD

If the duration of time while the following conditions are met is longer than the time indicated, judge as NG.

Judgment Value

Malfunction Criteria	Threshold Value
Output voltage of rear oxygen sensor	> 0.15 V

Time Needed for Diagnosis: 500 ms
Malfunction Indicator Light Illumination: Illuminates when malfunction occurs in 2 continuous driving cycles.

FF: DTC P2401 EVAP SYSTEM LEAK DETECTION PUMP CONTROL CIRCUIT LOW

DTC DETECTING CONDITION:
Immediately at fault recognition

CAUTION:
After servicing or replacing faulty parts, perform Clear Memory Mode <Ref. to EN(H4DO)(diag)-78, OPERATION, Clear Memory Mode.>, and Inspection Mode <Ref. to EN(H4DO)(diag)-64, PROCEDURE, Inspection Mode.>.

WIRING DIAGRAM:

- Engine Electrical System ENGINE TYPE FB (WITHOUT PUSH BUTTON START) <Ref. to WI-170, ENGINE TYPE FB (WITHOUT PUSH BUTTON START), WIRING DIAGRAM, Engine Electrical System.>
- Engine Electrical System ENGINE TYPE FB (WITH PUSH BUTTON START) <Ref. to WI-184, ENGINE TYPE FB (WITH PUSH BUTTON START), WIRING DIAGRAM, Engine Electrical System.>

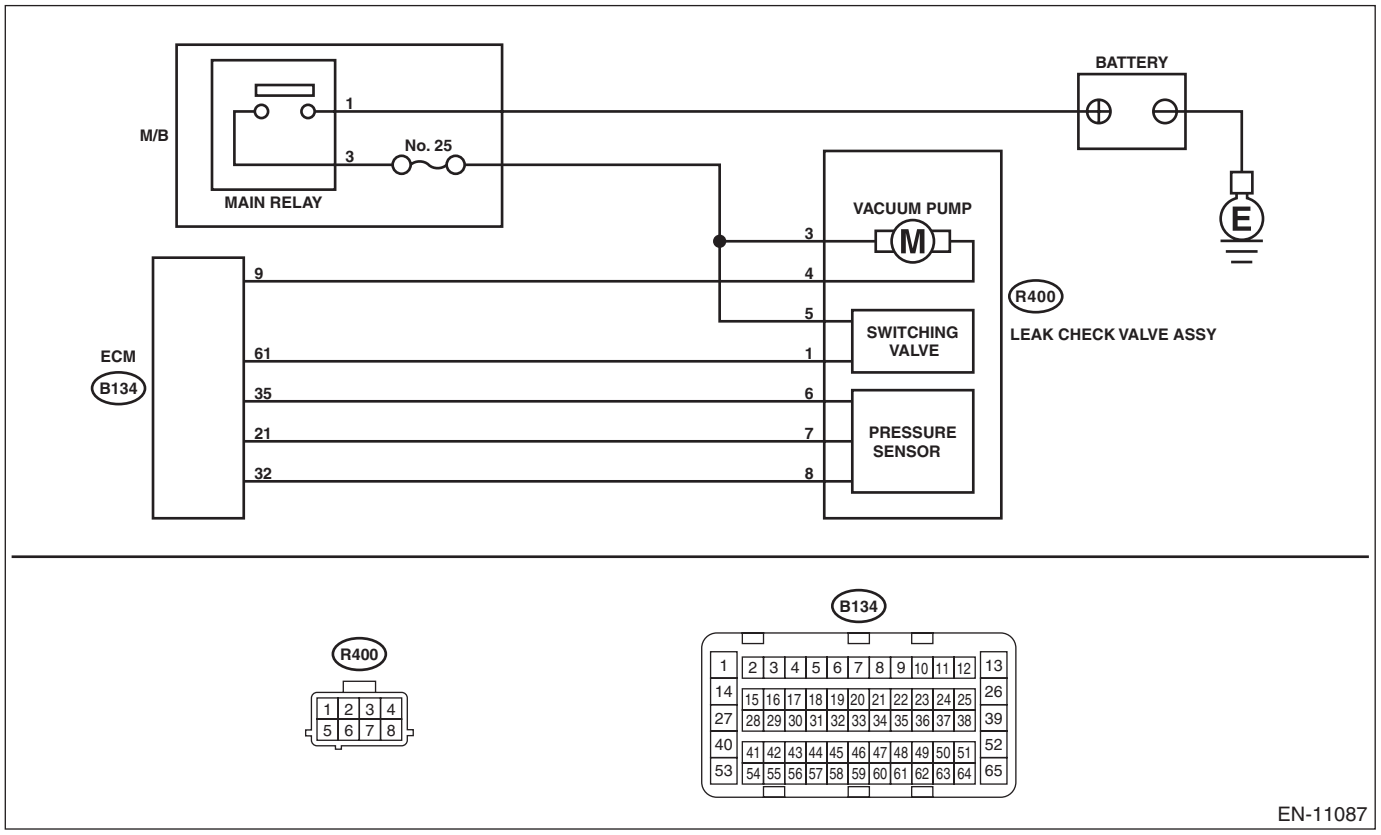

Step		Check	Yes	No
1	**CHECK HARNESS BETWEEN ECM AND LEAK CHECK VALVE ASSEMBLY CONNECTOR.** 1) Turn the ignition switch to ON. 2) Measure the voltage between ECM connector and chassis ground. ***Connector & terminal*** ***(E134) No. 9 (+) — Chassis ground (–):***	Is the voltage 10 V or more?	Go to step **2**.	Go to step **3**.

	Step	Check	Yes	No
2	**CHECK FOR POOR CONTACT.** Check for poor contact of ECM connector.	Is there poor contact of ECM connector?	Repair the poor contact of ECM connector.	Even if DTC is detected, the circuit has returned to a normal condition at this time. Reproduce the failure, and then perform the diagnosis again. NOTE: In this case, temporary open or short circuit of harness or temporary poor contact of connector may be the cause.
3	**CHECK POWER SUPPLY TO LEAK CHECK VALVE ASSEMBLY.** Measure the voltage between the leak check valve assembly connector and engine ground. ***Connector & terminal*** ***(R400) No. 3 (+) — Engine ground (–):***	Is the voltage 10 V or more?	Go to step **4**.	Repair the power supply circuit.
4	**CHECK HARNESS BETWEEN ECM AND LEAK CHECK VALVE ASSEMBLY CONNECTOR.** 1) Turn the ignition switch to OFF. 2) Disconnect the connector from ECM and the leak check valve assembly. 3) Measure the resistance between leak check valve assembly and chassis ground. ***Connector & terminal*** ***(R400) No. 4 — Chassis ground:***	Is the resistance 1 MΩ or more?	Go to step **5**.	Repair the short circuit to ground in harness between ECM connector and leak check valve assembly connector.
5	**CHECK HARNESS BETWEEN ECM AND LEAK CHECK VALVE ASSEMBLY CONNECTOR.** Measure the resistance of harness between ECM connector and the leak check valve assembly connector. ***Connector & terminal*** ***(B134) No. 9 — (R400) No. 4:***	Is the resistance less than 1 Ω?	Go to step **6**.	Repair the harness and connector. NOTE: In this case, repair the following item: • Open circuit in harness between ECM connector and the leak check valve assembly connector • Poor contact of coupling connector
6	**CHECK LEAK CHECK VALVE ASSEMBLY.** Check the vacuum pump of the leak check valve assembly. <Ref. to EC(H4DO)-60, CHECK VACUUM PUMP, INSPECTION, Leak Check Valve Assembly.>	Is the vacuum pump of the leak check valve assembly OK?	Repair the poor contact in the leak check valve assembly connector.	Replace the leak check valve assembly. <Ref. to EC(H4DO)-59, Leak Check Valve Assembly.>

1. OUTLINE OF DIAGNOSIS

Detect the open or short circuit of the ELCM vacuum pump.
Judge as NG if out of specification.

2. COMPONENT DESCRIPTION

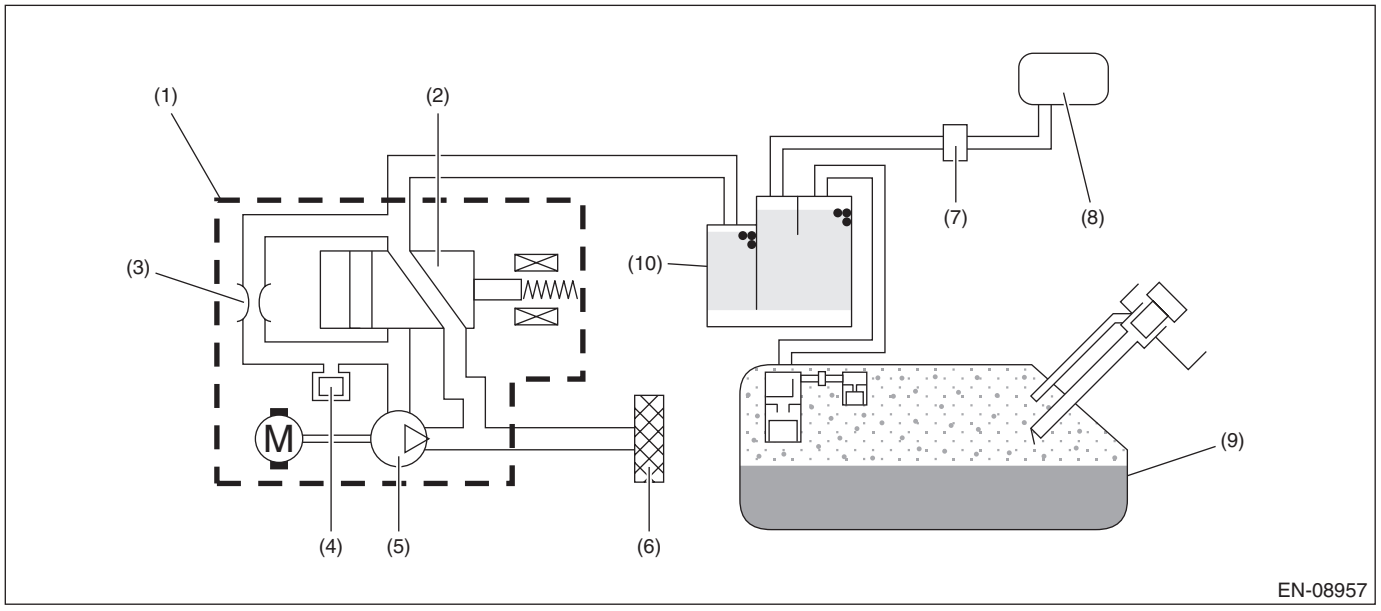

(1) ELCM
(2) Switching valve
(3) Reference orifice (0.02 inch orifice)
(4) Pressure sensor
(5) Vacuum pump
(6) Drain filter
(7) Purge control solenoid valve
(8) Intake manifold
(9) Fuel tank
(10) Canister

3. EXECUTION CONDITION

Secondary Parameters	Execution condition
Battery voltage	≥ 10.9
ELCM vacuum pump drive signal	OFF

4. GENERAL DRIVING CYCLE

Perform the diagnosis only once after the enable conditions have been established.

5. DIAGNOSTIC METHOD

If the duration of time while the following conditions are met is longer than the time indicated, judge as NG.

Judgment Value

Malfunction Criteria	Threshold Value
Output voltage	≤ Battery voltage × 0.34

Time Needed for Diagnosis: 2500 ms
Malfunction Indicator Light Illumination: Illuminates as soon as a malfunction occurs.

FG:DTC P2402 EVAP SYSTEM LEAK DETECTION PUMP CONTROL CIRCUIT HIGH

DTC DETECTING CONDITION:
Immediately at fault recognition

CAUTION:
After servicing or replacing faulty parts, perform Clear Memory Mode <Ref. to EN(H4DO)(diag)-78, OPERATION, Clear Memory Mode.>, and Inspection Mode <Ref. to EN(H4DO)(diag)-64, PROCEDURE, Inspection Mode.>.

WIRING DIAGRAM:

- Engine Electrical System ENGINE TYPE FB (WITHOUT PUSH BUTTON START) <Ref. to WI-170, ENGINE TYPE FB (WITHOUT PUSH BUTTON START), WIRING DIAGRAM, Engine Electrical System.>
- Engine Electrical System ENGINE TYPE FB (WITH PUSH BUTTON START) <Ref. to WI-184, ENGINE TYPE FB (WITH PUSH BUTTON START), WIRING DIAGRAM, Engine Electrical System.>

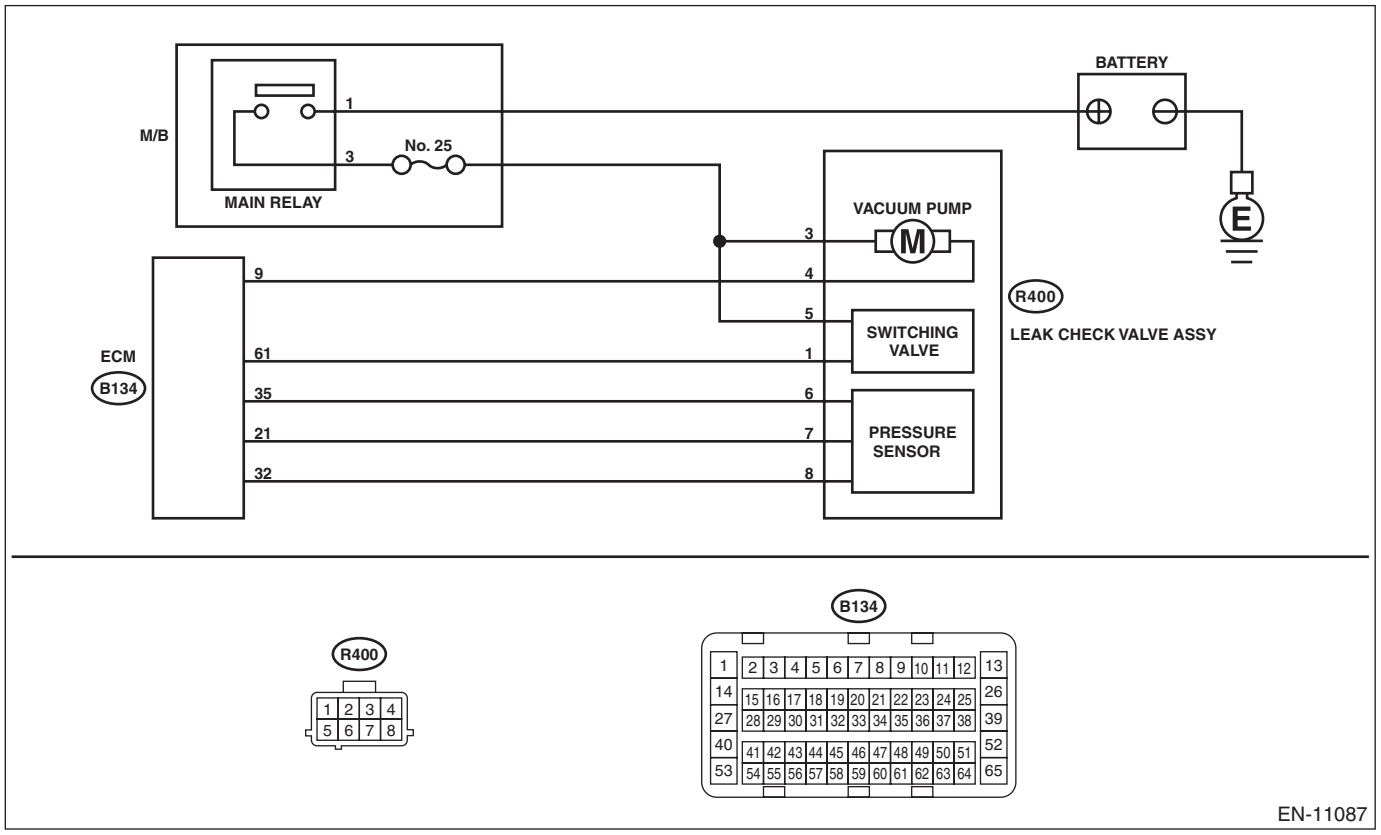

Step		Check	Yes	No
1	**CHECK HARNESS BETWEEN ECM AND LEAK CHECK VALVE ASSEMBLY CONNECTOR.** 1) Turn the ignition switch to OFF. 2) Disconnect the connector from the leak check valve assembly. 3) Turn the ignition switch to ON. 4) Measure the voltage between leak check valve assembly and chassis ground. ***Connector & terminal*** ***(R400) No. 4 (+) — Chassis ground (–):***	Is the voltage 10 V or more?	Repair the short circuit to power in harness between ECM connector and leak check valve assembly connector.	Go to step **2**.

Step		Check	Yes	No
2	**CHECK LEAK CHECK VALVE ASSEMBLY.** 1) Turn the ignition switch to OFF. 2) Check the vacuum pump of the leak check valve assembly. <Ref. to EC(H4DO)-60, CHECK VACUUM PUMP, INSPECTION, Leak Check Valve Assembly.>	Is the vacuum pump of the leak check valve assembly OK?	Repair the poor contact in the leak check valve assembly connector.	Replace the leak check valve assembly. <Ref. to EC(H4DO)-59, Leak Check Valve Assembly.>

1. OUTLINE OF DIAGNOSIS

Detect the open or short circuit of the ELCM vacuum pump.
Judge as NG if out of specification.

2. COMPONENT DESCRIPTION

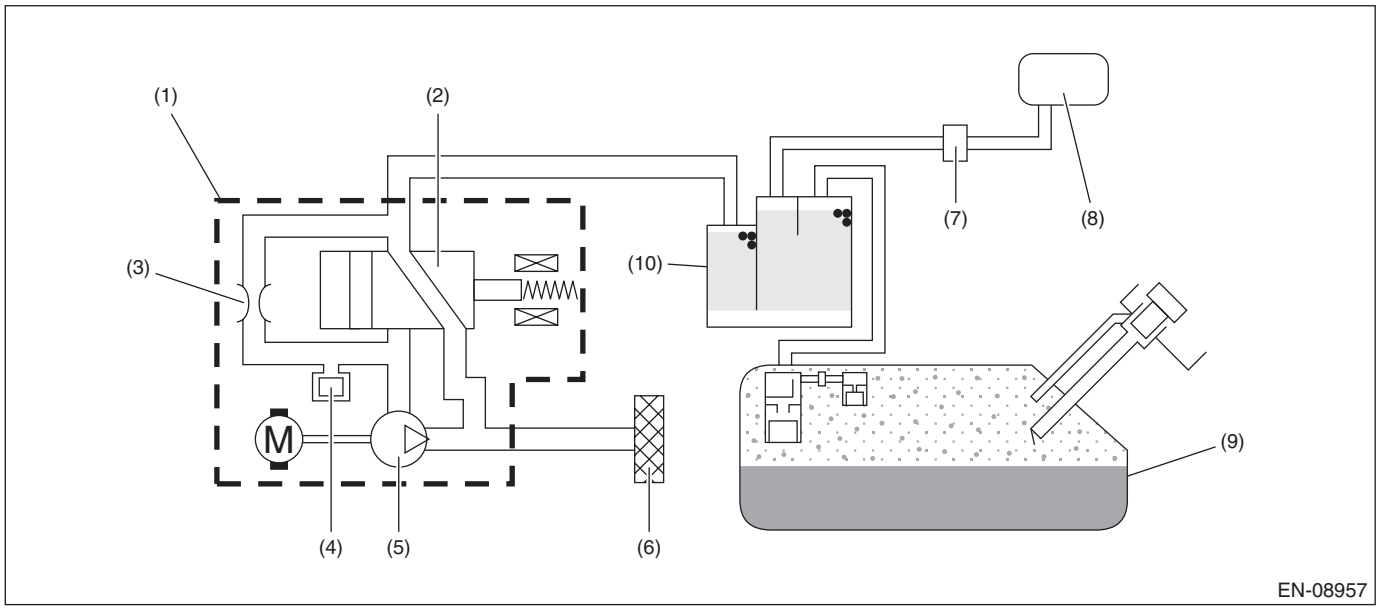

(1) ELCM
(2) Switching valve
(3) Reference orifice (0.02 inch orifice)
(4) Pressure sensor
(5) Vacuum pump
(6) Drain filter
(7) Purge control solenoid valve
(8) Intake manifold
(9) Fuel tank
(10) Canister

3. EXECUTION CONDITION

Secondary Parameters	Execution condition
Battery voltage	≥ 10.9
ELCM vacuum pump drive signal	ON

4. GENERAL DRIVING CYCLE

Perform the diagnosis only once after the enable conditions have been established.

5. DIAGNOSTIC METHOD

If the duration of time while the following conditions are met is longer than the time indicated, judge as NG.

Judgment Value

Malfunction Criteria	Threshold Value
Output current	≥ 6 A

Time Needed for Diagnosis: 2500 ms
Malfunction Indicator Light Illumination: Illuminates as soon as a malfunction occurs.

FH:DTC P2404 EVAP SYSTEM LEAK DETECTION PUMP SENSE CIRCUIT RANGE/PERFORMANCE

DTC DETECTING CONDITION:

Detected when two consecutive driving cycles with fault occur.

CAUTION:

After servicing or replacing faulty parts, perform Clear Memory Mode <Ref. to EN(H4DO)(diag)-78, OPERATION, Clear Memory Mode.>, and Inspection Mode <Ref. to EN(H4DO)(diag)-64, PROCEDURE, Inspection Mode.>.

WIRING DIAGRAM:

- Engine Electrical System ENGINE TYPE FB (WITHOUT PUSH BUTTON START) <Ref. to WI-170, ENGINE TYPE FB (WITHOUT PUSH BUTTON START), WIRING DIAGRAM, Engine Electrical System.>
- Engine Electrical System ENGINE TYPE FB (WITH PUSH BUTTON START) <Ref. to WI-184, ENGINE TYPE FB (WITH PUSH BUTTON START), WIRING DIAGRAM, Engine Electrical System.>

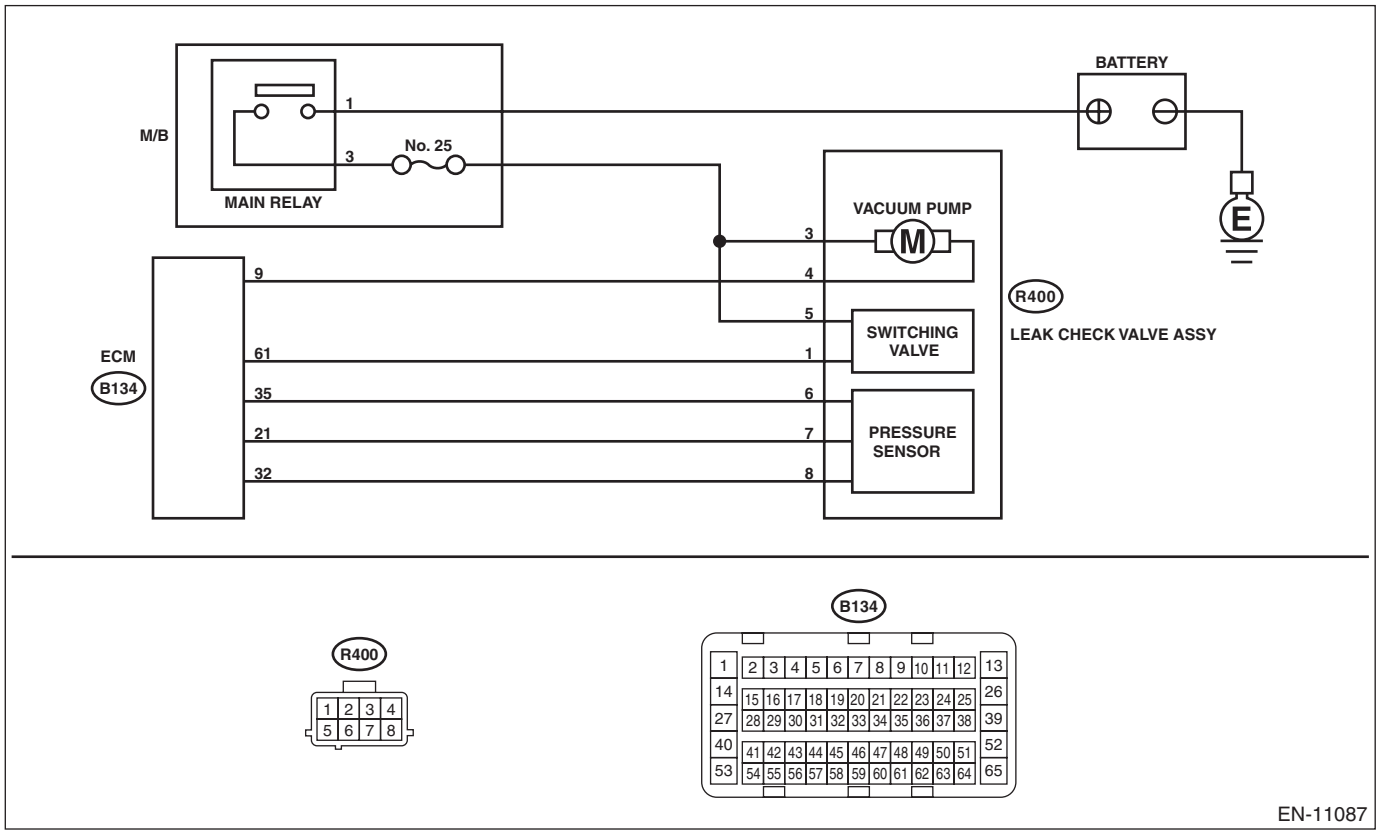

EN-11087

Step	Check	Yes	No
1 **CHECK FOR ANY OTHER DTC ON DISPLAY.**	Is any other DTC displayed?	Check the appropriate DTC using the “List of Diagnostic Trouble Code (DTC)”. <Ref. to EN(H4DO)(diag)-102, List of Diagnostic Trouble Code (DTC).>	Go to step **2**.

	Step	Check	Yes	No
2	**CHECK ELCM PUMP.** Operate the ELCM pump using the Subaru Select Monitor. NOTE: For detailed operation procedures, refer to the "Active Test". <Ref. to EN(H4DO)(diag)-79, Active Test.>	Does the ELCM pump operate?	Go to step **6**.	Go to step **3**.
3	**CHECK POWER SUPPLY OF LEAK CHECK VALVE ASSEMBLY.** 1) Turn the ignition switch to OFF. 2) Disconnect the connector from the leak check valve assembly. 3) Turn the ignition switch to ON. 4) Measure the voltage between the leak check valve assembly connector and chassis ground. ***Connector & terminal*** ***(R400) No. 3 (+) — Chassis ground (–):***	Is the voltage 10 V or more?	Go to step **4**.	Repair the harness and connector. NOTE: In this case, repair the following item: • Open circuit in harness between the main relay and the leak check valve assembly connector • Poor contact of main relay connector • Poor contact of coupling connector
4	**CHECK HARNESS BETWEEN ECM AND LEAK CHECK VALVE ASSEMBLY CONNECTOR.** 1) Turn the ignition switch to OFF. 2) Disconnect the connector from ECM. 3) Measure the resistance of harness between ECM connector and the leak check valve assembly connector. ***Connector & terminal*** ***(B134) No. 9 — (R400) No. 4:***	Is the resistance less than 1 Ω?	Go to step **5**.	Repair the harness and connector. NOTE: In this case, repair the following item: • Open circuit in harness between ECM connector and the leak check valve assembly connector • Poor contact of coupling connector
5	**CHECK HARNESS BETWEEN ECM AND LEAK CHECK VALVE ASSEMBLY CONNECTOR.** 1) Measure the resistance of harness between ECM connector and chassis ground. ***Connector & terminal*** ***(B134) No. 9 — Chassis ground:***	Is the resistance 1 MΩ or more?	Replace the leak check valve assembly. <Ref. to EC(H4DO)-59, Leak Check Valve Assembly.>	Repair the short circuit to ground in harness between ECM connector and leak check valve assembly connector.
6	**CHECK ELCM SWITCHING VALVE.** Operate the ELCM switching valve using the Subaru Select Monitor. NOTE: For detailed operation procedures, refer to the "Active Test". <Ref. to EN(H4DO)(diag)-79, Active Test.>	Does the ELCM switching valve operate?	Go to step **10**.	Go to step **7**.

	Step	Check	Yes	No
7	**CHECK POWER SUPPLY OF LEAK CHECK VALVE ASSEMBLY.** 1) Turn the ignition switch to OFF. 2) Disconnect the connector from the leak check valve assembly. 3) Turn the ignition switch to ON. 4) Measure the voltage between the leak check valve assembly connector and chassis ground. ***Connector & terminal*** ***(R400) No. 5 (+) — Chassis ground (–):***	Is the voltage 10 V or more?	Go to step **8**.	Repair the harness and connector. NOTE: In this case, repair the following item: • Open circuit in harness between the main relay and the leak check valve assembly connector • Poor contact of main relay connector • Poor contact of coupling connector
8	**CHECK HARNESS BETWEEN ECM AND LEAK CHECK VALVE ASSEMBLY CONNECTOR.** 1) Turn the ignition switch to OFF. 2) Disconnect the connector from ECM. 3) Measure the resistance of harness between ECM connector and the leak check valve assembly connector. ***Connector & terminal*** ***(B134) No. 61 — (R400) No. 1:***	Is the resistance less than 1 Ω?	Go to step **9**.	Repair the harness and connector. NOTE: In this case, repair the following item: • Open circuit in harness between ECM connector and the leak check valve assembly connector • Poor contact of coupling connector
9	**CHECK HARNESS BETWEEN ECM AND LEAK CHECK VALVE ASSEMBLY CONNECTOR.** 1) Measure the resistance of harness between ECM connector and chassis ground. ***Connector & terminal*** ***(B134) No. 61 — Chassis ground:***	Is the resistance 1 MΩ or more?	Replace the leak check valve assembly. <Ref. to EC(H4DO)-59, Leak Check Valve Assembly.>	Repair the short circuit to ground in harness between ECM connector and leak check valve assembly connector.
10	**CHECK EVAPORATIVE EMISSION CONTROL SYSTEM.** Perform drive cycle I. <Ref. to EN(H4DO)(diag)-73, DRIVE CYCLE I, PROCEDURE, Drive Cycle.>	Is DTC P2404 displayed on the display?	Replace the leak check valve assembly. <Ref. to EC(H4DO)-59, Leak Check Valve Assembly.>	Even if DTC is detected, the circuit has returned to a normal condition at this time. Reproduce the failure, and then perform the diagnosis again. NOTE: In this case, temporary poor contact of connector, temporary open or short circuit of harness may be the cause.

1. OUTLINE OF DIAGNOSIS

NOTE:
For the detection standard, refer to DTC P0455. <Ref. to EN(H4DO)(diag)-314, DTC P0455 EVAP SYSTEM (CPC) LEAK DETECTED (LARGE LEAK), Diagnostic Procedure with Diagnostic Trouble Code (DTC).>

FI: DTC P2419 EVAP SYSTEM SWITCHING VALVE CONTROL CIRCUIT LOW

DTC DETECTING CONDITION:
Immediately at fault recognition

CAUTION:
After servicing or replacing faulty parts, perform Clear Memory Mode <Ref. to EN(H4DO)(diag)-78, OPERATION, Clear Memory Mode.>, and Inspection Mode <Ref. to EN(H4DO)(diag)-64, PROCEDURE, Inspection Mode.>.

WIRING DIAGRAM:

- Engine Electrical System ENGINE TYPE FB (WITHOUT PUSH BUTTON START) <Ref. to WI-170, ENGINE TYPE FB (WITHOUT PUSH BUTTON START), WIRING DIAGRAM, Engine Electrical System.>
- Engine Electrical System ENGINE TYPE FB (WITH PUSH BUTTON START) <Ref. to WI-184, ENGINE TYPE FB (WITH PUSH BUTTON START), WIRING DIAGRAM, Engine Electrical System.>

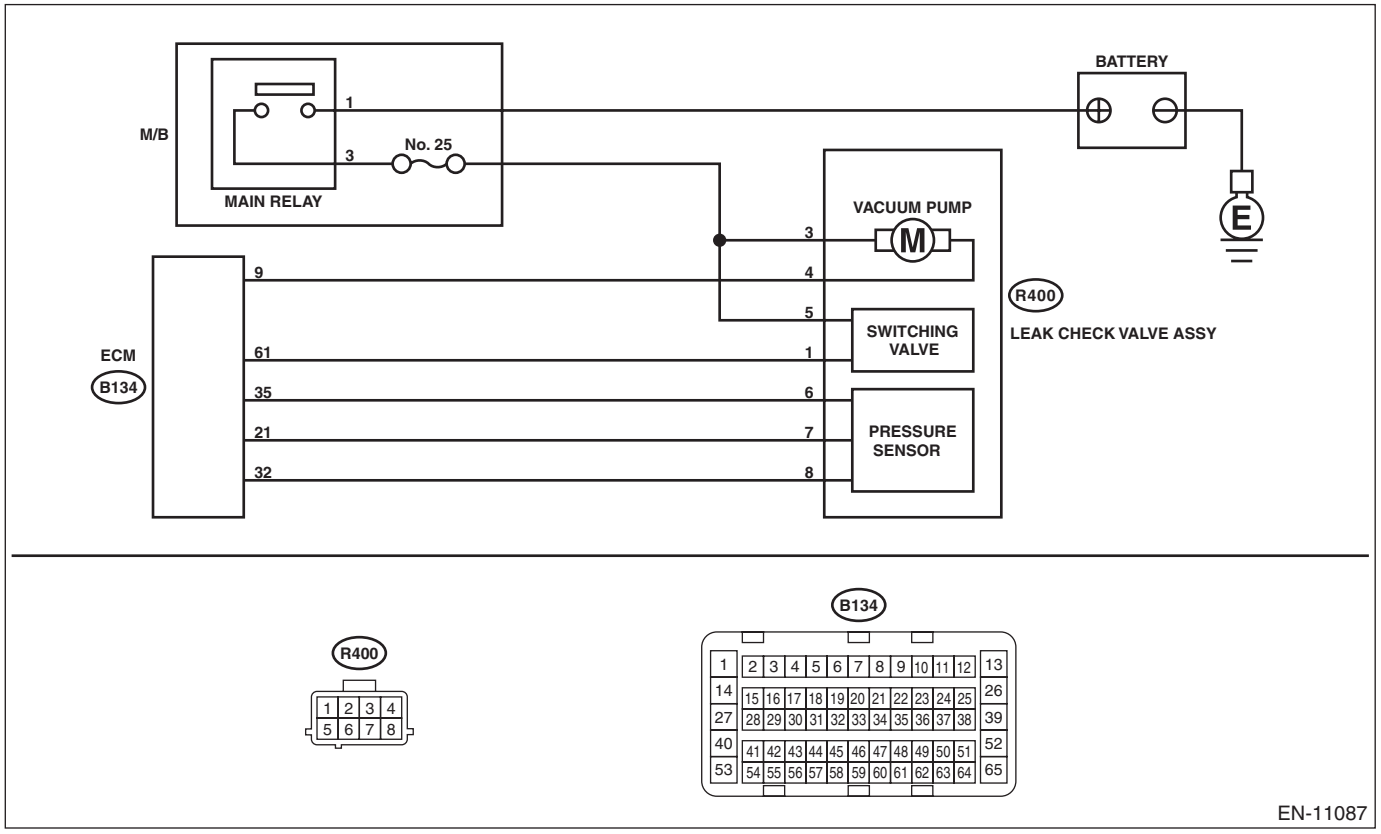

Step		Check	Yes	No
1	**CHECK HARNESS BETWEEN ECM AND LEAK CHECK VALVE ASSEMBLY CONNECTOR.** 1) Turn the ignition switch to ON. 2) Measure the voltage between ECM connector and chassis ground. ***Connector & terminal*** ***(B135) No. 1 (+) — Chassis ground (–):***	Is the voltage 10 V or more?	Go to step **2**.	Go to step **3**.

	Step	Check	Yes	No
2	**CHECK FOR POOR CONTACT.** Check for poor contact of ECM connector.	Is there poor contact of ECM connector?	Repair the poor contact of ECM connector.	Even if DTC is detected, the circuit has returned to a normal condition at this time. Reproduce the failure, and then perform the diagnosis again. NOTE: In this case, temporary open or short circuit of harness or temporary poor contact of connector may be the cause.
3	**CHECK POWER SUPPLY TO LEAK CHECK VALVE ASSEMBLY.** Measure the voltage between the leak check valve assembly connector and engine ground. ***Connector & terminal*** ***(R400) No. 5 (+) — Engine ground (–):***	Is the voltage 10 V or more?	Go to step **4**.	Repair the power supply circuit.
4	**CHECK HARNESS BETWEEN ECM AND LEAK CHECK VALVE ASSEMBLY CONNECTOR.** 1) Turn the ignition switch to OFF. 2) Disconnect the connector from ECM and the leak check valve assembly. 3) Measure the resistance between leak check valve assembly and chassis ground. ***Connector & terminal*** ***(R400) No. 1 — Chassis ground:***	Is the resistance 1 MΩ or more?	Go to step **5**.	Repair the short circuit to ground in harness between ECM connector and leak check valve assembly connector.
5	**CHECK HARNESS BETWEEN ECM AND LEAK CHECK VALVE ASSEMBLY CONNECTOR.** Measure the resistance of harness between ECM connector and the leak check valve assembly connector. ***Connector & terminal*** ***(B134) No. 61 — (R400) No. 1:***	Is the resistance less than 1 Ω?	Go to step **6**.	Repair the harness and connector. NOTE: In this case, repair the following item: • Open circuit in harness between ECM connector and the leak check valve assembly connector • Poor contact of coupling connector
6	**CHECK LEAK CHECK VALVE ASSEMBLY.** Check the switching valve of the leak check valve assembly. <Ref. to EC(H4DO)-59, CHECK SWITCHING VALVE, INSPECTION, Leak Check Valve Assembly.>	Is the switching valve of the leak check valve assembly OK?	Repair the poor contact in the leak check valve assembly connector.	Replace the leak check valve assembly. <Ref. to EC(H4DO)-59, Leak Check Valve Assembly.>

1. OUTLINE OF DIAGNOSIS

Detect the open or short circuit of the ELCM switching valve.
Judge as NG if out of specification.

2. COMPONENT DESCRIPTION

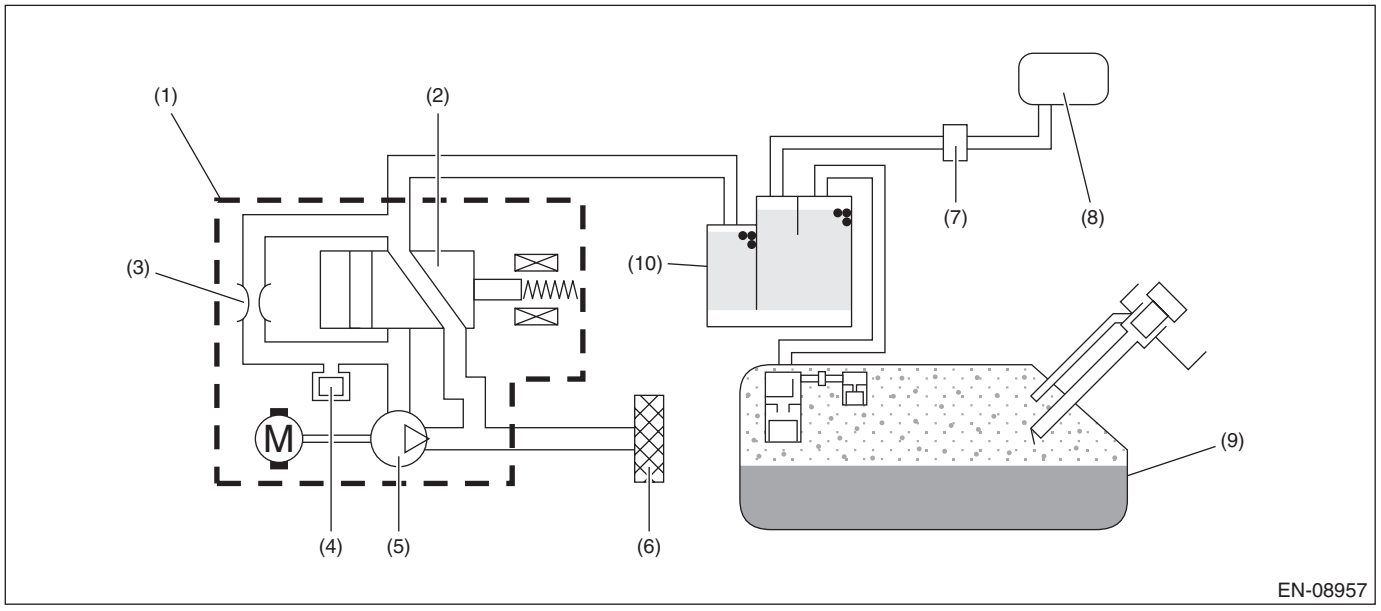

(1) ELCM
(2) Switching valve
(3) Reference orifice (0.02 inch orifice)
(4) Pressure sensor
(5) Vacuum pump
(6) Drain filter
(7) Purge control solenoid valve
(8) Intake manifold
(9) Fuel tank
(10) Canister

3. EXECUTION CONDITION

Secondary Parameters	Execution condition
Battery voltage	≥ 10.9
ELCM switching valve drive signal	OFF

4. GENERAL DRIVING CYCLE

Perform the diagnosis continuously after the enable conditions have been established.

5. DIAGNOSTIC METHOD

If the duration of time while the following conditions are met is longer than the time indicated, judge as NG.

Judgment Value

Malfunction Criteria	Threshold Value
Output voltage	≤ Battery voltage × 0.34

Time Needed for Diagnosis: 2500 ms
Malfunction Indicator Light Illumination: Illuminates as soon as a malfunction occurs.

FJ: DTC P2420 EVAP SYSTEM SWITCHING VALVE CONTROL CIRCUIT HIGH

DTC DETECTING CONDITION:
Immediately at fault recognition

CAUTION:
After servicing or replacing faulty parts, perform Clear Memory Mode <Ref. to EN(H4DO)(diag)-78, OPERATION, Clear Memory Mode.>, and Inspection Mode <Ref. to EN(H4DO)(diag)-64, PROCEDURE, Inspection Mode.>.

WIRING DIAGRAM:

- Engine Electrical System ENGINE TYPE FB (WITHOUT PUSH BUTTON START) <Ref. to WI-170, ENGINE TYPE FB (WITHOUT PUSH BUTTON START), WIRING DIAGRAM, Engine Electrical System.>
- Engine Electrical System ENGINE TYPE FB (WITH PUSH BUTTON START) <Ref. to WI-184, ENGINE TYPE FB (WITH PUSH BUTTON START), WIRING DIAGRAM, Engine Electrical System.>

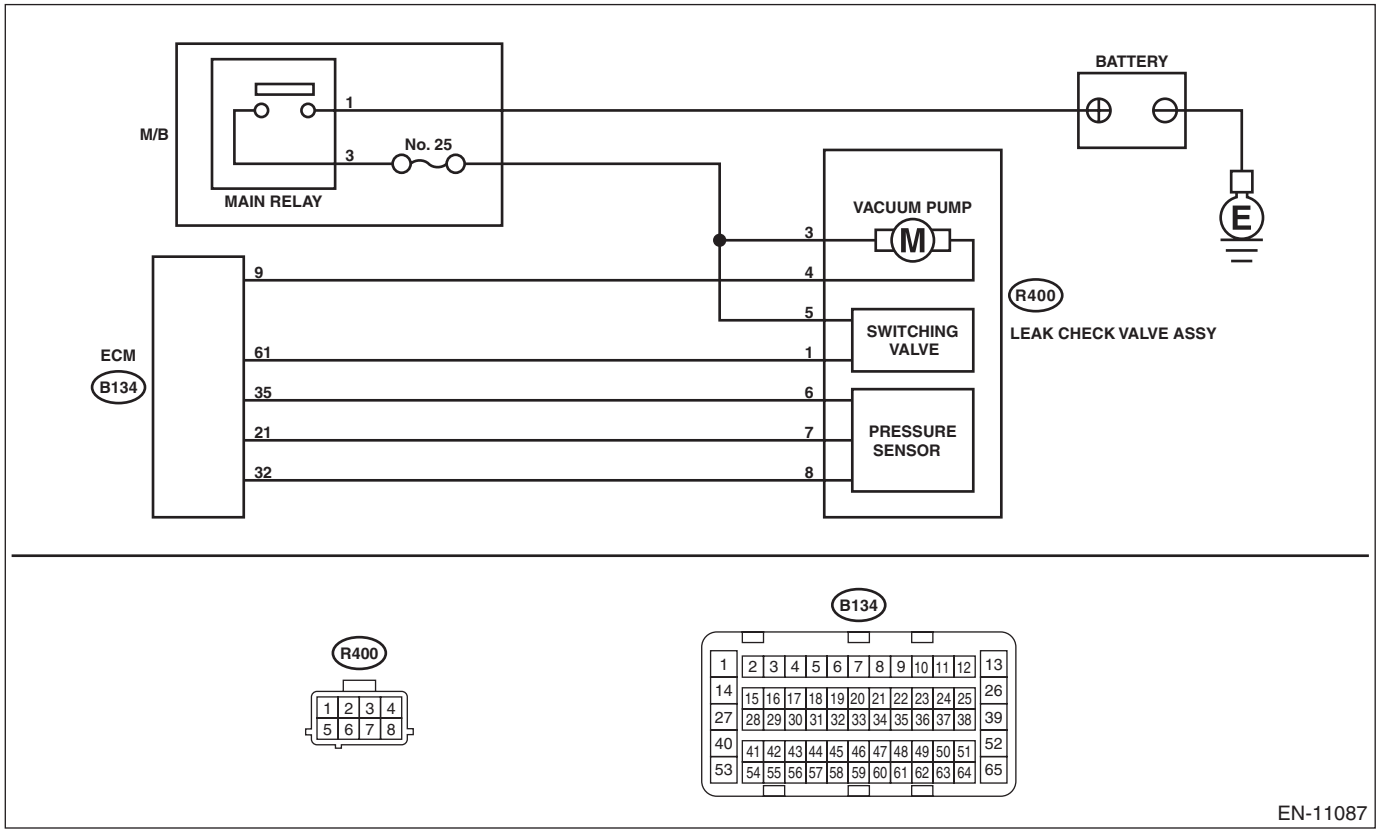

	Step	Check	Yes	No
1	**CHECK HARNESS BETWEEN ECM AND LEAK CHECK VALVE ASSEMBLY CONNECTOR.** 1) Turn the ignition switch to OFF. 2) Disconnect the connector from the leak check valve assembly. 3) Turn the ignition switch to ON. 4) Measure the voltage between leak check valve assembly and chassis ground. ***Connector & terminal*** ***(R400) No. 1 (+) — Chassis ground (–):***	Is the voltage 10 V or more?	Repair the short circuit to power in harness between ECM connector and leak check valve assembly connector.	Go to step **2**.
2	**CHECK LEAK CHECK VALVE ASSEMBLY.** 1) Turn the ignition switch to OFF. 2) Check the switching valve of the leak check valve assembly. <Ref. to EC(H4DO)-59, CHECK SWITCHING VALVE, INSPECTION, Leak Check Valve Assembly.>	Is the switching valve of the leak check valve assembly OK?	Repair the poor contact in the leak check valve assembly connector.	Replace the leak check valve assembly. <Ref. to EC(H4DO)-59, Leak Check Valve Assembly.>

1. OUTLINE OF DIAGNOSIS

Detect the open or short circuit of the ELCM switching valve.
Judge as NG if out of specification.

2. COMPONENT DESCRIPTION

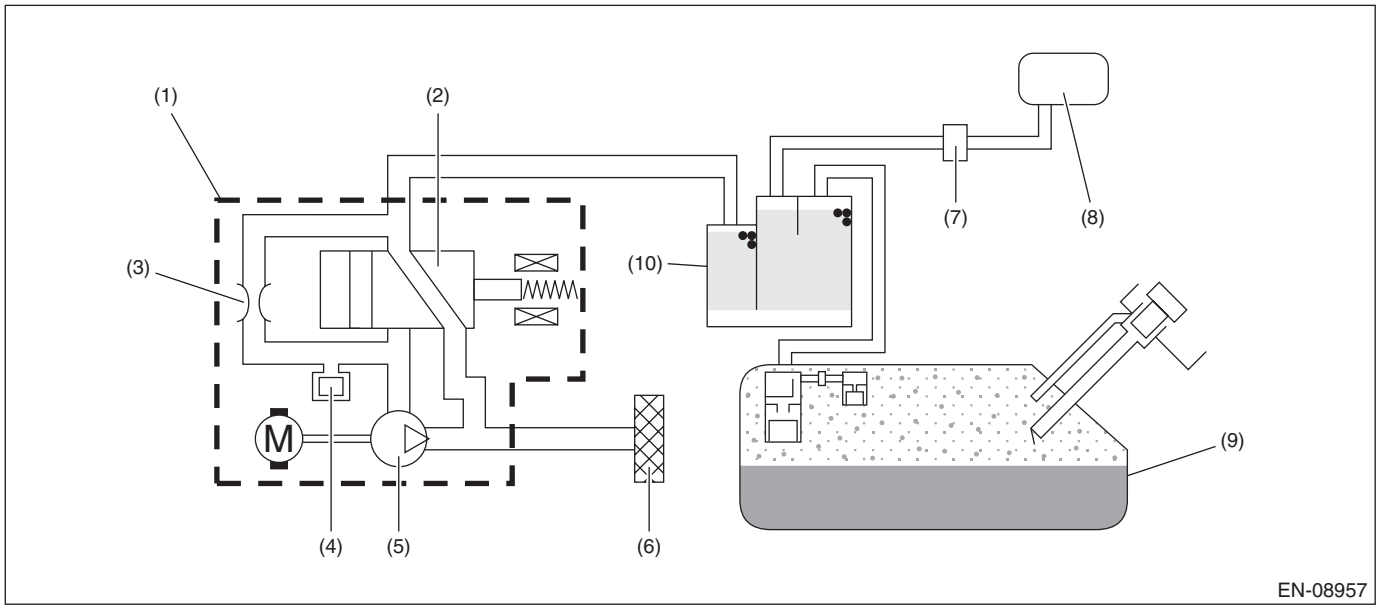

(1) ELCM
(2) Switching valve
(3) Reference orifice (0.02 inch orifice)
(4) Pressure sensor
(5) Vacuum pump
(6) Drain filter
(7) Purge control solenoid valve
(8) Intake manifold
(9) Fuel tank
(10) Canister

3. EXECUTION CONDITION

Secondary Parameters	Execution condition
Battery voltage	≥ 10.9
ELCM switching valve drive signal	ON

4. GENERAL DRIVING CYCLE

Perform the diagnosis continuously after the enable conditions have been established.

5. DIAGNOSTIC METHOD

If the duration of time while the following conditions are met is longer than the time indicated, judge as NG.

Judgment Value

Malfunction Criteria	Threshold Value
Output current	≥ 12 A

Time Needed for Diagnosis: 2500 ms
Malfunction Indicator Light Illumination: Illuminates as soon as a malfunction occurs.

FK:DTC P2530 IGNITION SWITCH RUN POSITION CIRCUIT

DTC DETECTING CONDITION:
Immediately at fault recognition
TROUBLE SYMPTOM:
Improper idling

CAUTION:
After servicing or replacing faulty parts, perform Clear Memory Mode <Ref. to EN(H4DO)(diag)-78, OPERATION, Clear Memory Mode.>, and Inspection Mode <Ref. to EN(H4DO)(diag)-64, PROCEDURE, Inspection Mode.>.
WIRING DIAGRAM:
• Engine Electrical System ENGINE TYPE FB (WITHOUT PUSH BUTTON START) <Ref. to WI-170, ENGINE TYPE FB (WITHOUT PUSH BUTTON START), WIRING DIAGRAM, Engine Electrical System.>
• Engine Electrical System ENGINE TYPE FB (WITH PUSH BUTTON START) <Ref. to WI-184, ENGINE TYPE FB (WITH PUSH BUTTON START), WIRING DIAGRAM, Engine Electrical System.>

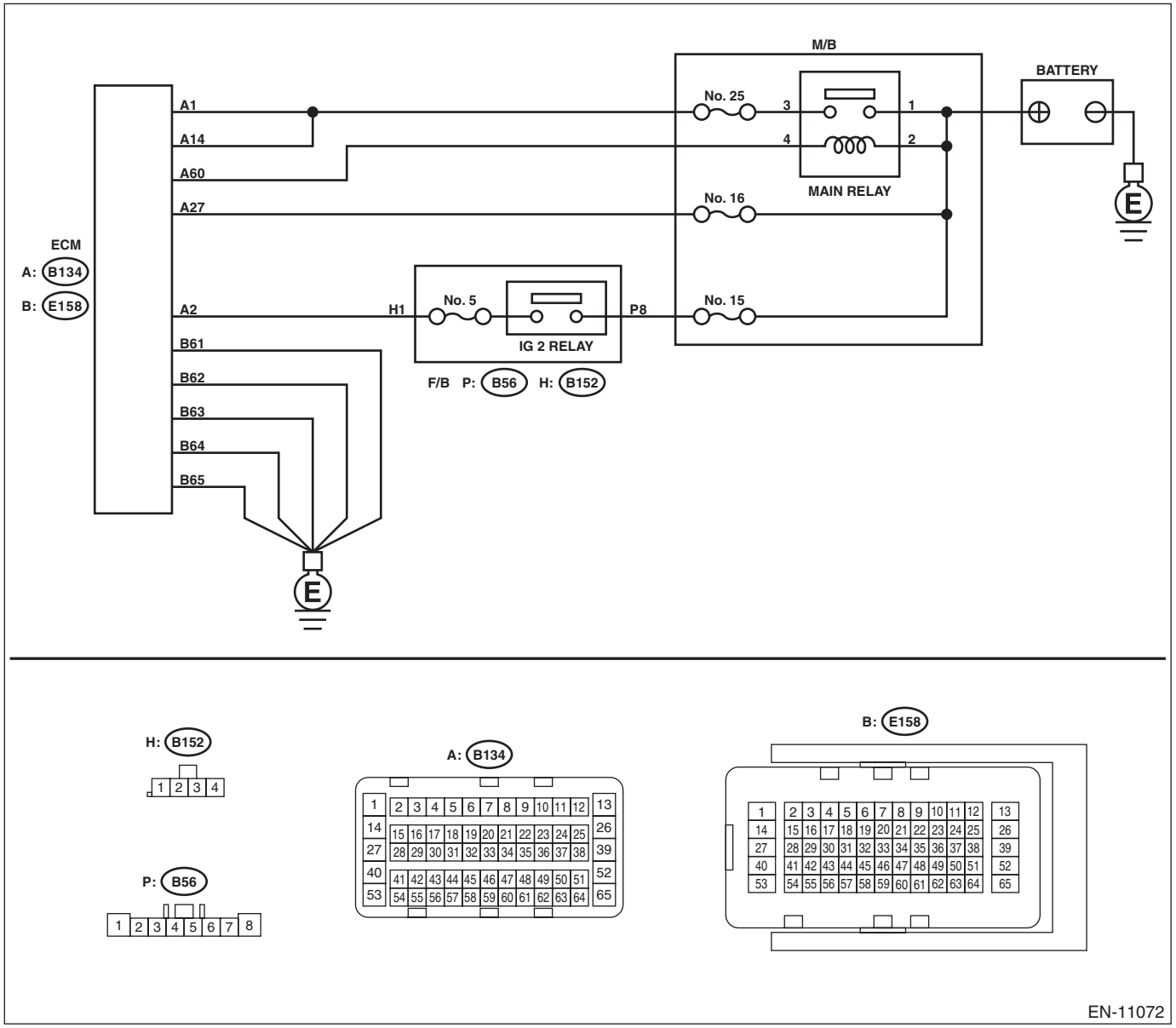

	Step	Check	Yes	No
1	**CHECK ECM CONNECTOR.** Check the connecting condition of ECM connector.	Is the ECM connector correctly connected?	Go to step **2**.	Connect the ECM connector correctly.
2	**CHECK INPUT VOLTAGE OF ECM.** 1) Turn the ignition switch to ON. 2) Connect the check board. ST 18460AA050 CHECK BOARD 3) Measure the voltage between ECM connector and engine ground while wiggling the harness between ECM connector and F/B connector. ***Connector & terminal*** ***(B134) No. 27 (+) — Engine ground (–):***	Is the voltage 8 V or more all the time?	Even if DTC is detected, the circuit has returned to a normal condition at this time. Reproduce the failure, and then perform the diagnosis again. NOTE: In this case, the following items may be the cause of fault. • Open circuit or short circuit to ground in harness between ECM connector and F/B connector • Poor contact of fuse (F/B No. 5) • Poor contact of IG2 relay connector • Poor contact of IG2 relay	Repair the harness and connector. NOTE: In this case, repair the following item: • Open circuit or short circuit to ground in harness between ECM connector and F/B connector • Poor contact of fuse (F/B No. 5) • Poor contact of IG2 relay connector • Poor contact of IG2 relay

1. OUTLINE OF DIAGNOSIS

Detect instantaneous open in ignition switch input circuit to ECM.
Judge as NG if out of specification.

2. COMPONENT DESCRIPTION

ECM monitors the voltage of the ignition switch input circuit. Judge as ignition switch ON when the voltage is the specified value or more.

3. EXECUTION CONDITION

Secondary Parameters	Execution condition
Battery voltage	≥ 10.9 V
Engine speed	≥ 525 rpm

4. GENERAL DRIVING CYCLE

Perform the diagnosis continuously after the enable conditions have been established.

5. DIAGNOSTIC METHOD

Judge as NG when the following conditions are established within the predetermined time.

Judgment Value

Malfunction Criteria	Threshold Value
Number of instantaneous opens in ignition switch input circuit	≥ 5 time(s)

Time Needed for Diagnosis: 5000 ms
Malfunction Indicator Light Illumination: Illuminates as soon as a malfunction occurs.

FL: DTC P2610 ECM/PCM ENGINE OFF TIMER PERFORMANCE

DTC DETECTING CONDITION:
Detected when two consecutive driving cycles with fault occur.

CAUTION:
After servicing or replacing faulty parts, perform Clear Memory Mode <Ref. to EN(H4DO)(diag)-78, OPERATION, Clear Memory Mode.>, and Inspection Mode <Ref. to EN(H4DO)(diag)-64, PROCEDURE, Inspection Mode.>.

Step		Check	Yes	No
1	**CHECK FOR ANY OTHER DTC ON DISPLAY.**	Is any other DTC displayed?	Check DTC using "List of Diagnostic Trouble Code (DTC)". <Ref. to EN(H4DO)(diag)-102, List of Diagnostic Trouble Code (DTC).>	Replace the ECM. <Ref. to FU(H4DO)-82, Engine Control Module (ECM).> NOTE: The soaking timer IC is built into the ECM.

1. OUTLINE OF DIAGNOSIS

Detect malfunction of soaking timer IC by the five diagnoses below.

Monitor Number	Explanation	Time required for diagnosis
Monitor #1 <Timer diagnosis>	Perform diagnosis of the soaking timer IC accuracy	128 ms
Monitor #2 <Full count diagnosis>	Perform diagnosis of the soaking timer IC counter function	128 ms
Monitor #3 <Soaking timer IC setting diagnosis>	Perform diagnosis of communication between ECM and soaking timer IC	128 ms
Monitor #4 <Timer diagnosis (during soaking)>	Perform diagnosis of the soaking timer IC accuracy during soaking	None
Monitor #5 <Wake-up diagnosis>	Perform diagnosis of wake-up function	None

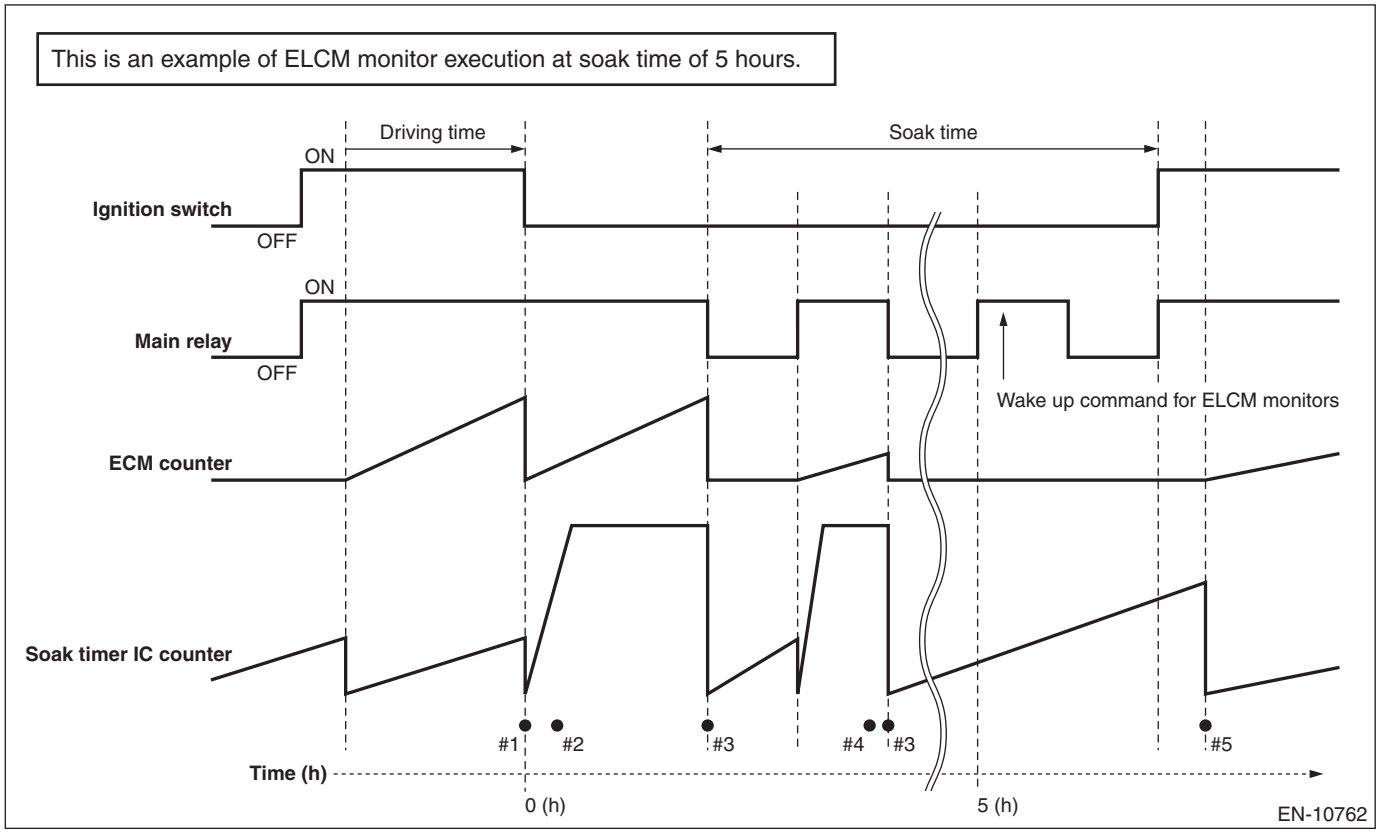

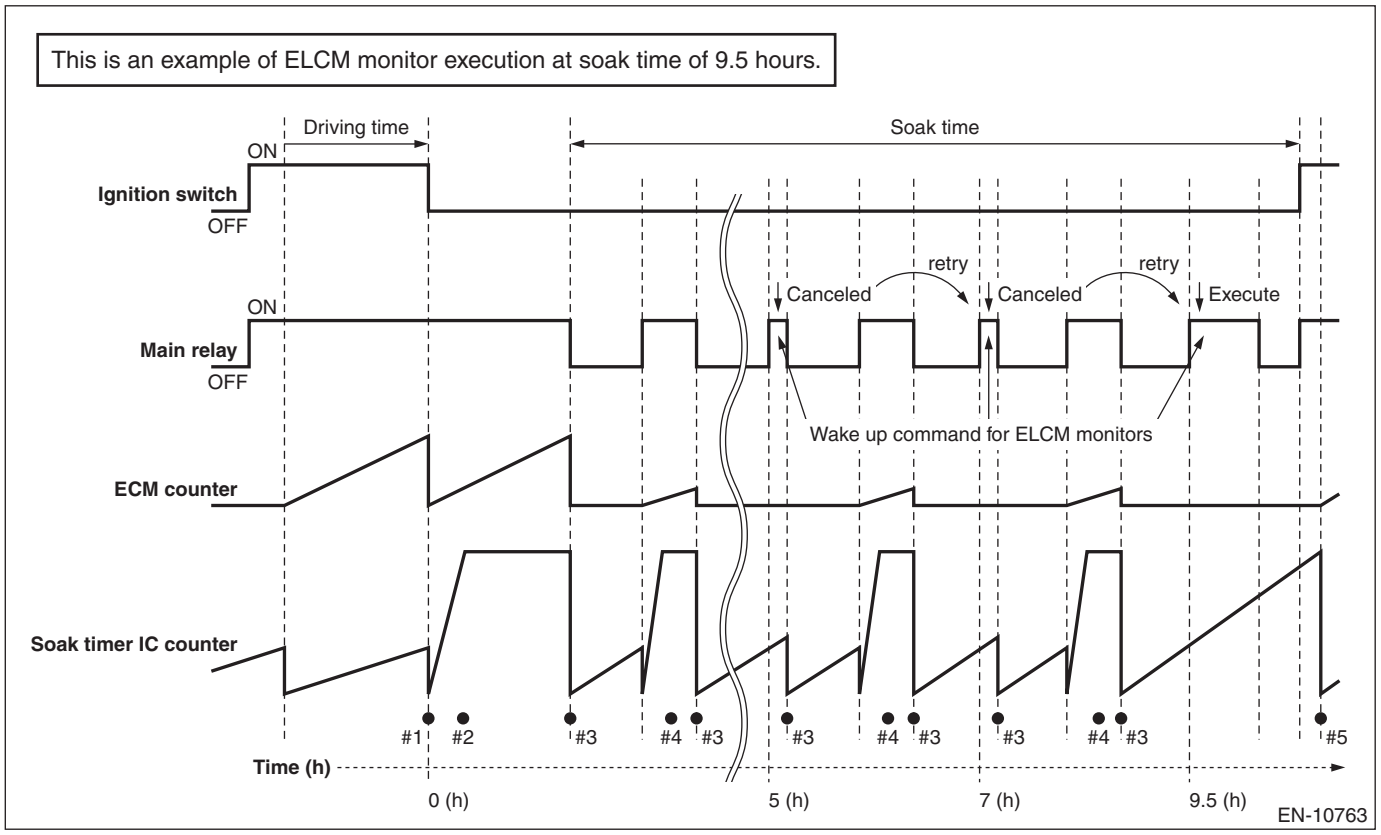

2. COMPONENT DESCRIPTION

The soaking timer IC is built into the ECM.

3. EXECUTION CONDITION

Secondary Parameters	Execution condition
<Timer diagnosis>	
Battery voltage	≥ 10.9 V
Ignition switch	OFF
Elapsed time after starting the engine	> 600 s and < 61380 s
<Full count diagnosis>	
Battery voltage	≥ 10.9 V
Ignition switch	OFF
Counter in ECM	≥ 4 s
<Soaking timer IC setting diagnosis>	
Battery voltage	≥ 10.9 V
Ignition switch	OFF
<Timer diagnosis (during soaking)>	
Battery voltage	≥ 10.9 V
Ignition switch	OFF
<Wake-up diagnosis>	
Ignition switch	ON
Time in the soaking timer IC	> 3600 s

4. GENERAL DRIVING CYCLE

Perform the diagnosis only once when the ignition switch is OFF and when the ignition switch is ON after the soaking of one hour or more.

5. DIAGNOSTIC METHOD

<Timer diagnosis>

Start the count up operation of counters in ECM and in soaking timer IC when the engine is started.
Judge as timer malfunction if the difference between the counter in ECM and counter in soaking timer IC exceeds the allowable limit when the ignition switch is OFF.

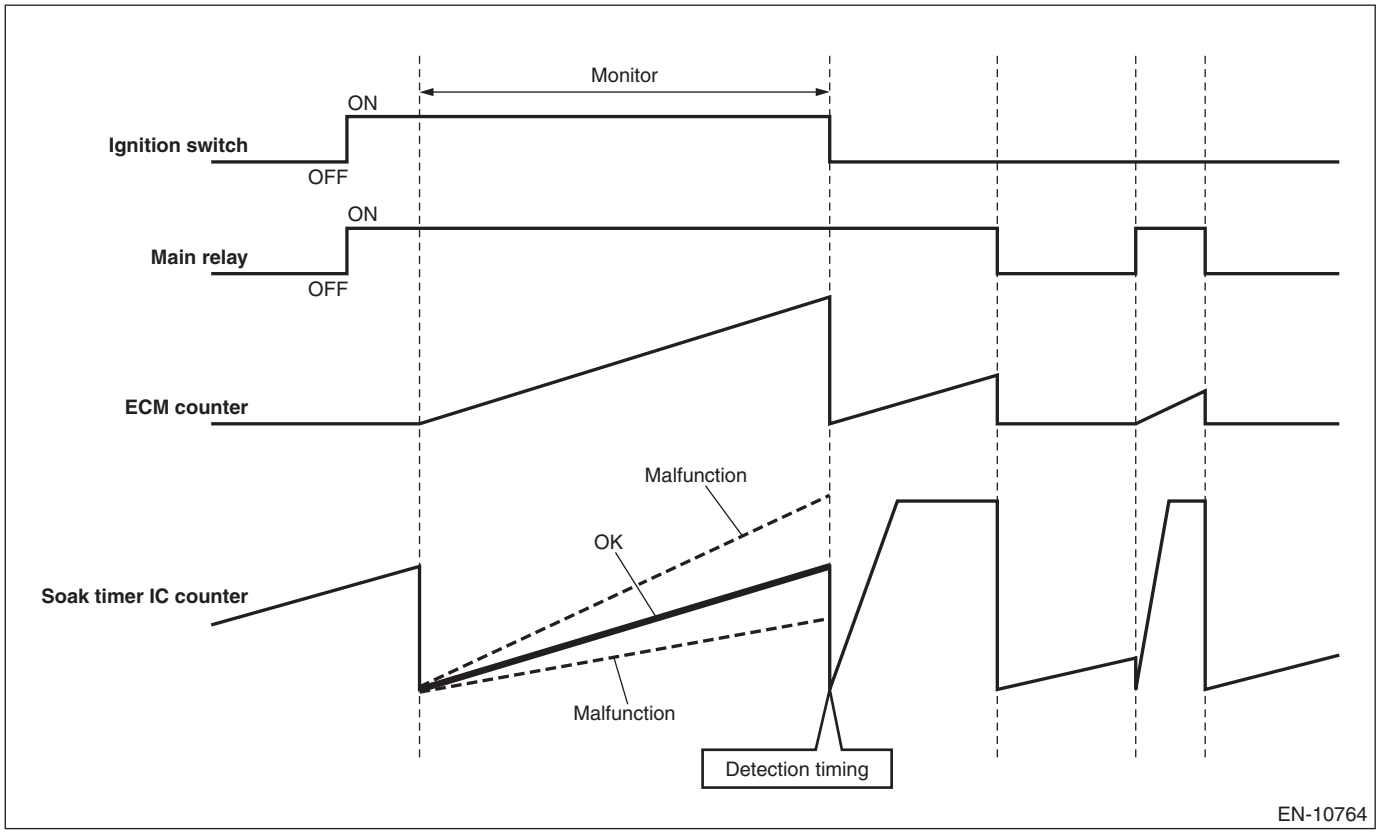

Judge as NG when the following conditions are established.

Judgment Value

Malfunction Criteria	Threshold Value
|osoaktimcpu – osoaktimic| / osoaktimcpu osoaktimcpu = Counter in ECM osoaktimic = Counter in soaking timer IC	> 0.24

<Full count diagnosis>

Reset the counter in soaking timer IC and start the count up operation.
Judge as full count diagnosis malfunction if counter in soaking timer IC is not $3FF (1023 count) after 4 seconds.

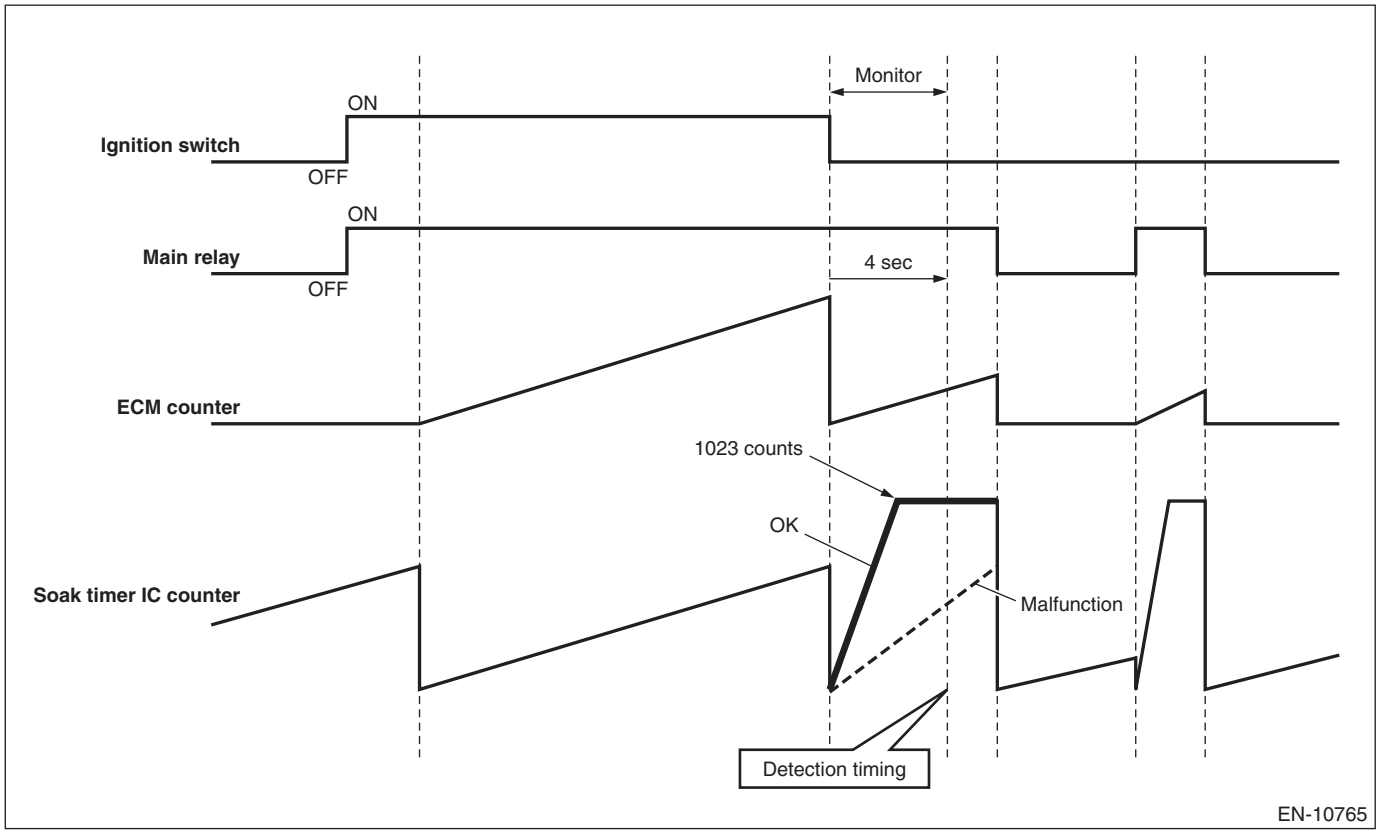

Judge as NG when the following conditions are established.

Judgment Value

Malfunction Criteria	Threshold Value
osoakfcntic osoakfcntic = Counter in soaking timer IC	≠ $3FF (1023 count)

<Soaking timer IC setting diagnosis>

When setting the activation setting time to soaking timer IC, compare the writing value to soaking timer IC with read out value. Judge as malfunction if the values do not match 3 times in a row.

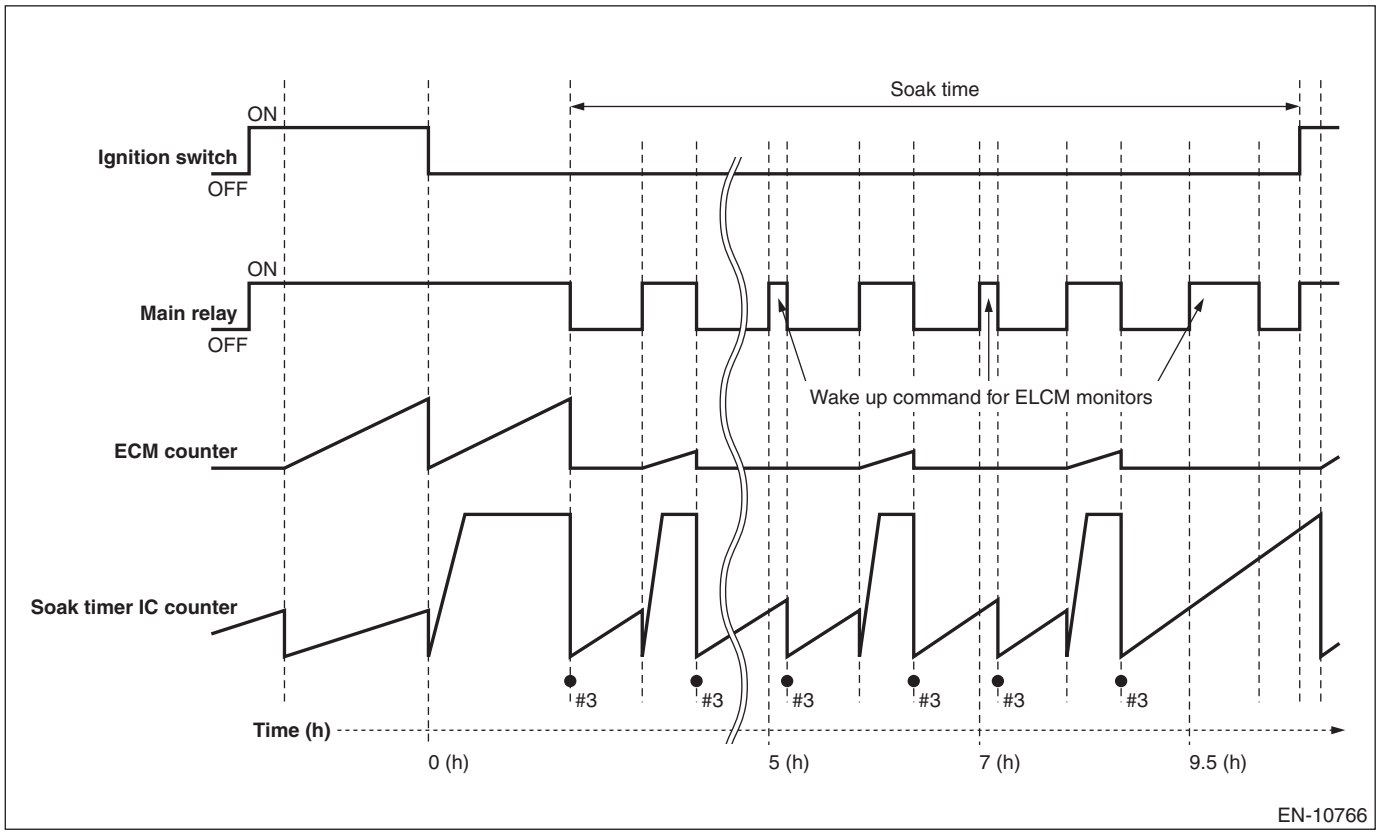

Judge as NG when the following conditions are established.

Judgment Value

Malfunction Criteria	Threshold Value
Writing value and read out value when setting the soaking timer	Unmatch

<Timer diagnosis (during soaking)>

Wake-up at the predetermined interval until 5 or 7 or 9.5 hours have passed after the ignition switch is OFF, and compare the counter in soaking timer IC with the counter in ECM.
Judge as malfunction if the counter in soaking timer IC is counted up to maximum value (1023 count) when the counter in ECM is 1636 ms, or if the counter in soaking timer IC is not counted up to maximum value (1023 count) when the counter in ECM is 2456 ms.

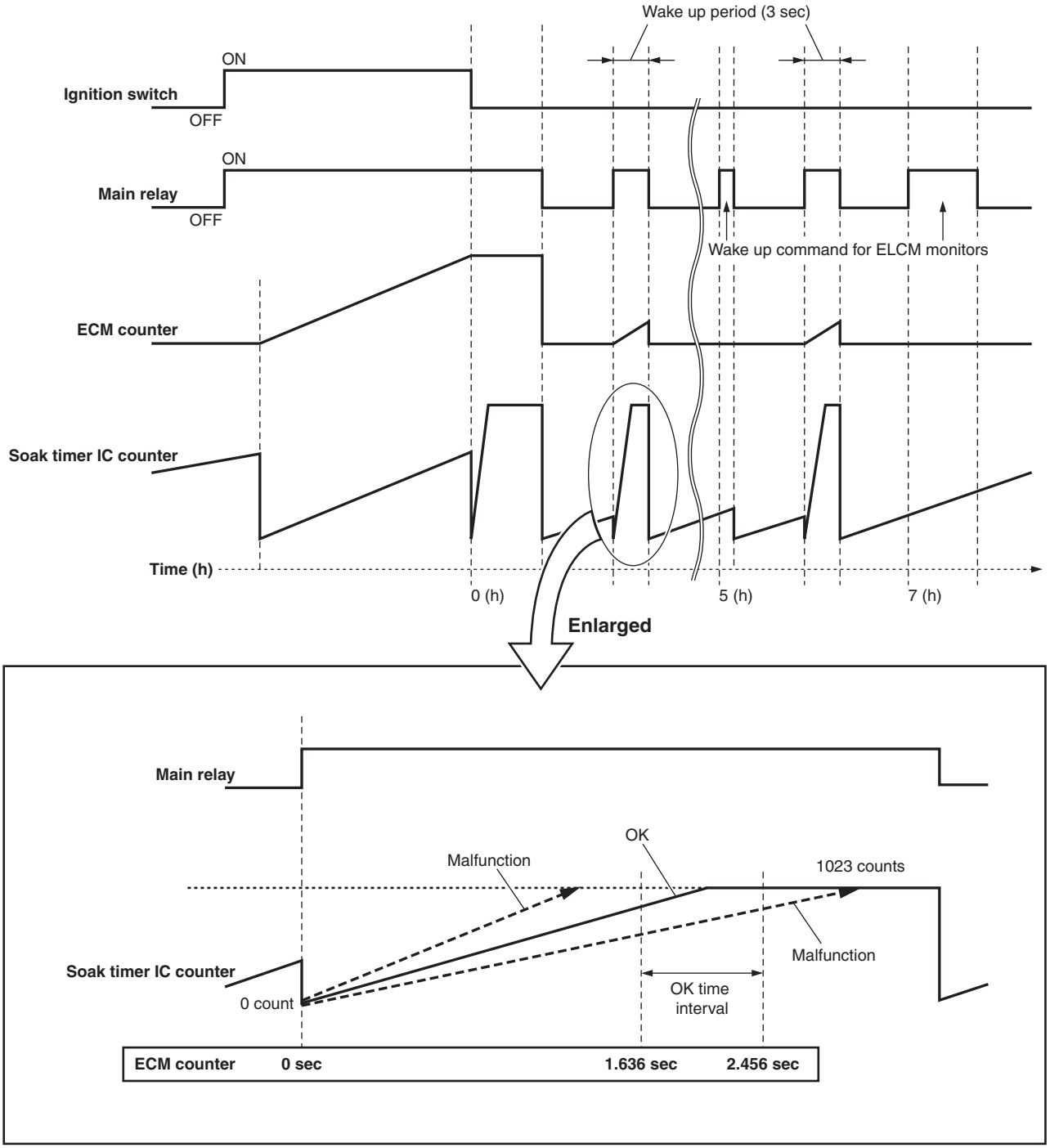

EN-10767

Judge as NG when the following conditions are established.

Judgment Value

Malfunction Criteria	Threshold Value
When any one of the followings is established:	
• All of the following conditions are established.	
Counter in ECM	≤ 1636 ms
Counter in soaking timer IC	= $3FF (1023 count)
• All of the following conditions are established.	
Counter in ECM	≥ 2456 ms
Counter in soaking timer IC	≠ $3FF (1023 count)

<Wake-up diagnosis>

Store the number of wake-up activation when the ECM wakes up by the soaking timer IC.
Next time when the ignition switch is ON, if the number of wake-up activation does not reach the predetermined value even though the counter in soaking timer IC operates 1 hour or more, judge as wake-up malfunction.

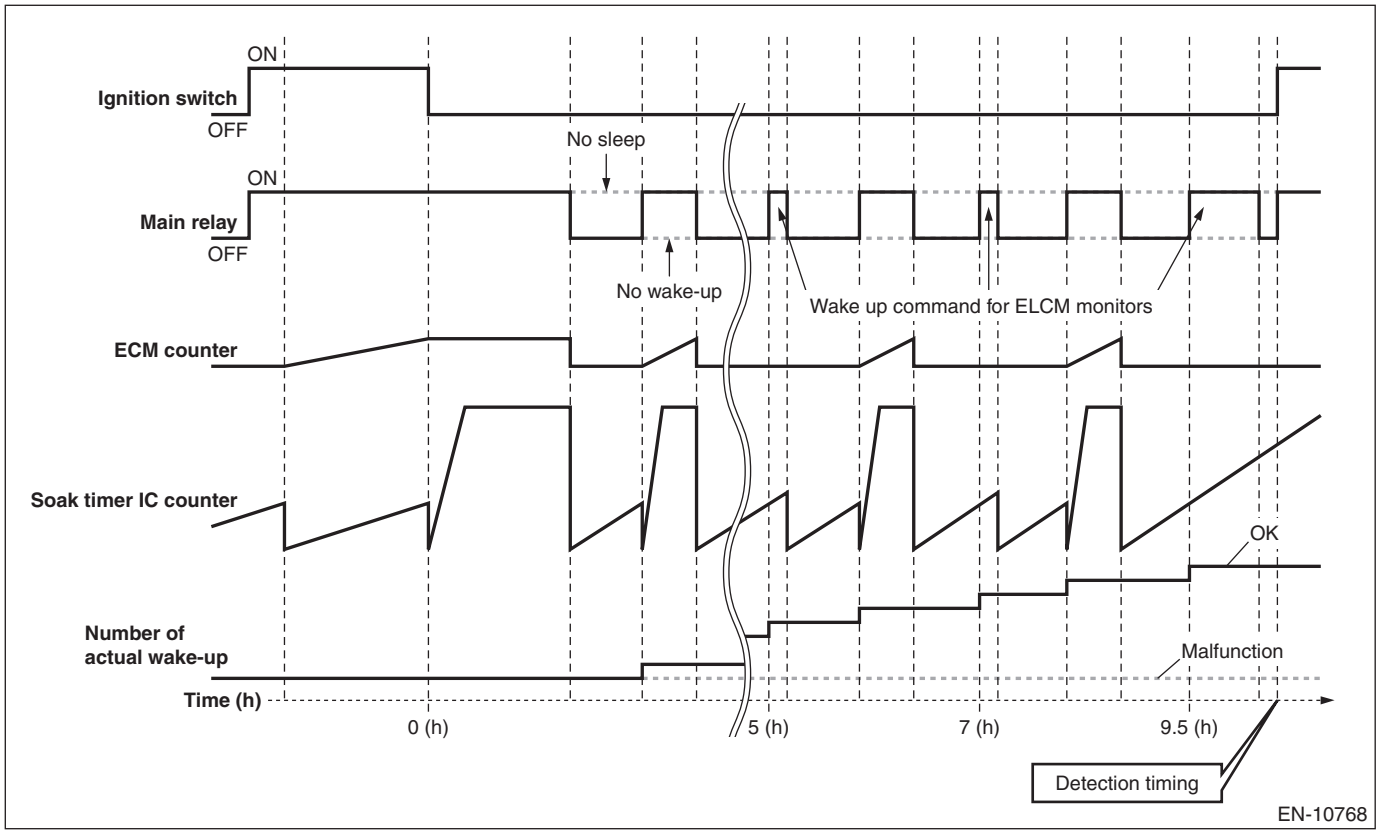

Judge as NG when the following conditions are established.

Judgment Value

Malfunction Criteria	Threshold Value
Number of wake-up	≠ Wake-up indication count

Judge as NG when the following conditions are established.

Judgment Value

Malfunction Criteria	Threshold Value
Ignition switch	ON
Driving cycle	Completed
When any one of the followings is established:	
• Timer diagnosis	NG
• Full count diagnosis	NG
• Soaking timer IC setting diagnosis	NG
• Timer diagnosis (during soaking)	NG
• Wake-up diagnosis	NG

Time Needed for Diagnosis: Approx. 5 — 9.5 hours
Malfunction Indicator Light Illumination: Illuminates when malfunction occurs in 2 continuous driving cycles.

FM:DTC U0073 CONTROL MODULE COMMUNICATION BUS OFF

NOTE:
For the diagnostic procedure, refer to LAN section. <Ref. to LAN(diag)-2, Basic Diagnostic Procedure.>

1. OUTLINE OF DIAGNOSIS

Detect malfunction of CAN communication.
Judge as NG when CAN communication failure has occurred.

2. COMPONENT DESCRIPTION

(Common Specifications)
CAN Protocol 2.0 B (Active)
Frame Format: 11 Bit ID Frame (Standard Frame)
Conforms to ISO11898
Communication Speed: 500 kbps

3. EXECUTION CONDITION

Secondary Parameters	Execution condition
Battery voltage	≥ 10.9 V

4. GENERAL DRIVING CYCLE

Perform the diagnosis continuously after starting the engine.

5. DIAGNOSTIC METHOD

Judge as NG when the following conditions are established.

Judgment Value

Malfunction Criteria	Threshold Value
CAN bus condition	= Bus off

Time Needed for Diagnosis: 1000 ms
Malfunction Indicator Light Illumination: Illuminates as soon as a malfunction occurs.

FN:DTC U0077 LIN COMMUNICATION BUS "ECM/PCM" OFF

DTC DETECTING CONDITION:
Immediately at fault recognition

CAUTION:
After servicing or replacing faulty parts, perform Clear Memory Mode <Ref. to EN(H4DO)(diag)-78, OPERATION, Clear Memory Mode.>, and Inspection Mode <Ref. to EN(H4DO)(diag)-64, PROCEDURE, Inspection Mode.>.

WIRING DIAGRAM:

- Engine Electrical System ENGINE TYPE FB (WITHOUT PUSH BUTTON START) <Ref. to WI-170, ENGINE TYPE FB (WITHOUT PUSH BUTTON START), WIRING DIAGRAM, Engine Electrical System.>
- Engine Electrical System ENGINE TYPE FB (WITH PUSH BUTTON START) <Ref. to WI-184, ENGINE TYPE FB (WITH PUSH BUTTON START), WIRING DIAGRAM, Engine Electrical System.>

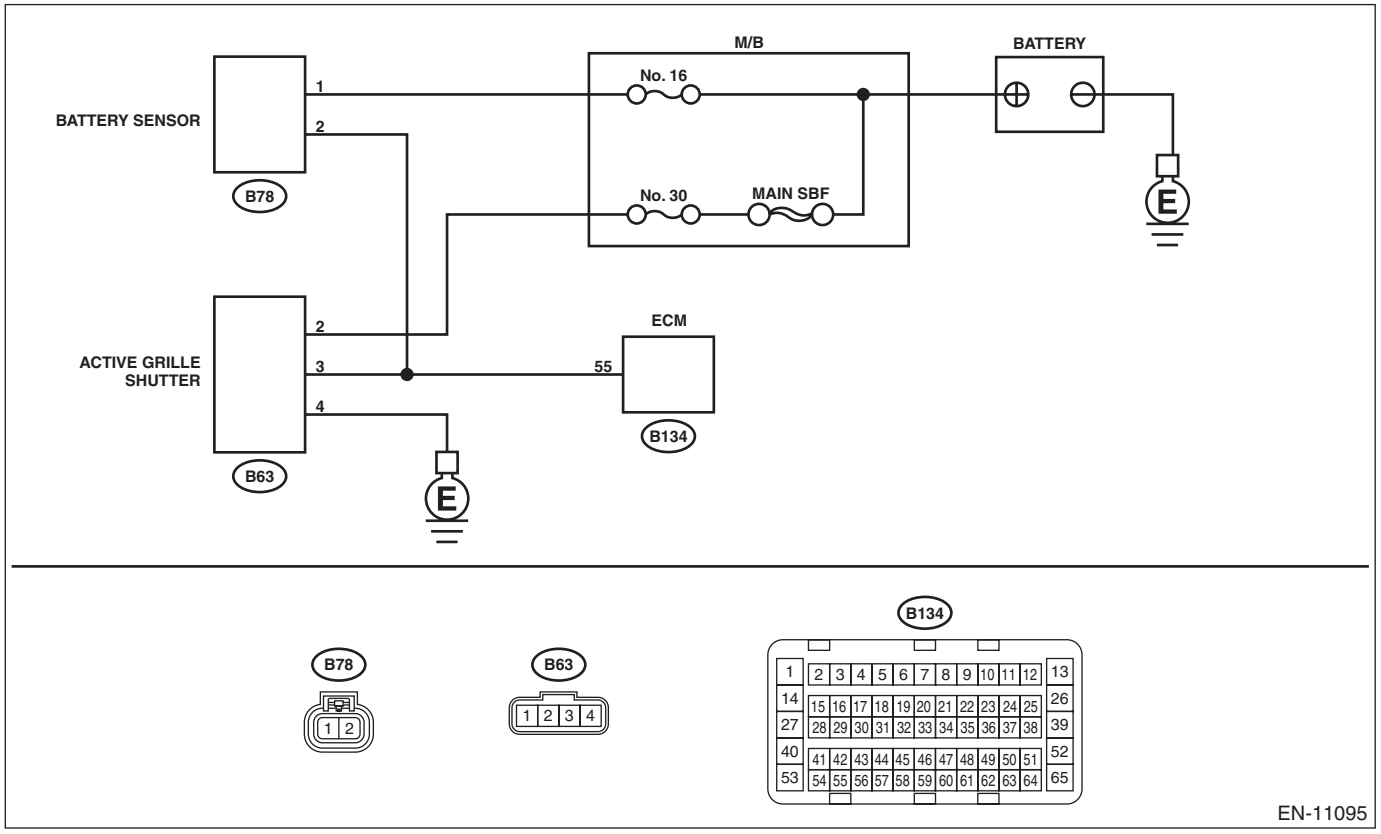

	Step	Check	Yes	No
1	**CHECK DTC.** Check for DTC. NOTE: • Subaru Select Monitor Refer to “Read Diagnostic Trouble Code (DTC)” for detailed operation procedure. <Ref. to EN(H4DO)(diag)-63, Read Diagnostic Trouble Code (DTC).> • General scan tool For detailed operation procedures, refer to the general scan tool operation manual.	Is U0077 displayed in «Present fault»?	Go to step **2**.	Even if DTC is detected, the circuit has returned to a normal condition at this time. Reproduce the failure, and then perform the diagnosis again. Clear the memory using the Subaru Select Monitor or general scan tool. NOTE: • Subaru Select Monitor For detailed procedures, refer to “Clear Memory Mode”. <Ref. to EN(H4DO)(diag)-78, Clear Memory Mode.> • General scan tool For detailed operation procedures, refer to the general scan tool operation manual.
2	**CHECK BETWEEN ECM CONNECTOR AND BATTERY SENSOR CONNECTOR, AND BETWEEN ECM CONNECTOR AND ACTIVE GRILLE SHUTTER CONNECTOR.** 1) Turn the ignition switch to OFF. 2) Disconnect the connectors from ECM, battery sensor and active grille shutter. 3) Measure the resistance of terminals between ECM connector and battery sensor connector, as well as ECM connector and active grille shutter connector. ***Connector & terminal*** ***(B134) No. 55 — (B78) No. 2:*** ***(B134) No. 55 — (B63) No. 3:***	Is the resistance less than 1 Ω?	Go to step **3**.	Repair the harness and connector. NOTE: In this case, repair the following item: • Open circuit of harness between ECM connector and battery sensor connector, and between ECM connector and active grille shutter connector • Poor contact of coupling connector
3	**CHECK WIRING HARNESS BETWEEN ECM CONNECTOR AND BATTERY SENSOR CONNECTOR, AND BETWEEN ECM CONNECTOR AND ACTIVE GRILLE SHUTTER CONNECTOR.** Measure the resistance between ECM connector and chassis ground. ***Connector & terminal*** ***(B134) No. 55 — Chassis ground:***	Is the resistance 1 MΩ or more?	Go to step **4**.	Repair the short circuit to ground in harness between ECM connector and battery sensor connector, as well as ECM connector and active grille shutter connector.

	Step	Check	Yes	No
4	**CHECK WIRING HARNESS BETWEEN ECM CONNECTOR AND BATTERY SENSOR CONNECTOR, AND BETWEEN ECM CONNECTOR AND ACTIVE GRILLE SHUTTER CONNECTOR.** 1) Turn the ignition switch to ON. 2) Measure the voltage between ECM connector and chassis ground. ***Connector & terminal*** ***(B134) No. 55 — Chassis ground:***	Is the voltage less than 1 V?	Go to step **5**.	Repair the short circuit to ground in harness between ECM connector and battery sensor connector, as well as ECM connector and active grille shutter connector.
5	**CHECK DTC.** 1) Turn the ignition switch to OFF. 2) Connect the battery sensor connector and ECM connector. 3) Clear the memory using the Subaru Select Monitor or general scan tool. <Ref. to EN(H4DO)(diag)-78, OPERATION, Clear Memory Mode.> 4) Check for DTC. NOTE: • Subaru Select Monitor Refer to “Read Diagnostic Trouble Code (DTC)” for detailed operation procedure. <Ref. to EN(H4DO)(diag)-63, Read Diagnostic Trouble Code (DTC).> • General scan tool For detailed operation procedures, refer to the general scan tool operation manual.	Is U0077 displayed in «Present fault»?	Replace the ECM. <Ref. to FU(H4DO)-82, Engine Control Module (ECM).>	Even if DTC is detected, the circuit has returned to a normal condition at this time. Reproduce the failure, and then perform the diagnosis again. NOTE: In this case, temporary poor contact of connector, temporary open or short circuit of harness may be the cause. Clear the memory using the Subaru Select Monitor or general scan tool. • Subaru Select Monitor For detailed procedures, refer to “Clear Memory Mode”. <Ref. to EN(H4DO)(diag)-78, Clear Memory Mode.> • General scan tool For detailed operation procedures, refer to the general scan tool operation manual.

1. OUTLINE OF DIAGNOSIS

Detect malfunction of LIN communication.
Judge as NG when the data sent/received via LIN communication is abnormal.

2. COMPONENT DESCRIPTION

LIN communication is used to send/receive data between ECM, battery sensor and active grille shutter.

3. EXECUTION CONDITION

Secondary Parameters	Execution condition
Battery voltage	≥ 10.9 V

4. GENERAL DRIVING CYCLE

Always perform the diagnosis continuously.

5. DIAGNOSTIC METHOD

If the duration of time while the following conditions are met is longer than the time indicated, judge as NG.

Judgment Value

Malfunction Criteria	Threshold Value
Data sent/received with control modules connected to LIN	No change or Checksum error

Time Needed for Diagnosis: 1280 ms
Malfunction Indicator Light Illumination: Illuminates as soon as a malfunction occurs.

FO:DTC U0101 LOST COMMUNICATION WITH TCM

NOTE:
For the diagnostic procedure, refer to LAN section. <Ref. to LAN(diag)-2, Basic Diagnostic Procedure.>

1. OUTLINE OF DIAGNOSIS

Detect malfunction of CAN communication.
Judge as NG when CAN communication failure between TCM, VDC CM and combination meter has occurred.

2. COMPONENT DESCRIPTION

(Common Specifications)
CAN Protocol 2.0 B (Active)
Frame Format: 11 Bit ID Frame (Standard Frame)
Conforms to ISO11898
Communication Speed: 500 kbps

3. EXECUTION CONDITION

Secondary Parameters	Execution condition
Battery voltage	≥ 10.9 V

4. GENERAL DRIVING CYCLE

Always perform the diagnosis continuously.

5. DIAGNOSTIC METHOD

Judge as NG when the following conditions are established.

Judgment Value

Malfunction Criteria	Threshold Value
Data from control modules connected to CAN	None

Time Needed for Diagnosis: 500 ms
Malfunction Indicator Light Illumination: Illuminates as soon as a malfunction occurs.

FP:DTC U0122 LOST COMMUNICATION WITH VEHICLE DYNAMICS CONTROL MODULE

NOTE:
For the diagnostic procedure, refer to LAN section. <Ref. to LAN(diag)-2, Basic Diagnostic Procedure.>

1. OUTLINE OF DIAGNOSIS

NOTE:
For the detection standard, refer to DTC U0101. <Ref. to EN(H4DO)(diag)-601, DTC U0101 LOST COMMUNICATION WITH TCM, Diagnostic Procedure with Diagnostic Trouble Code (DTC).>

FQ:DTC U0155 LOST COMMUNICATION WITH INSTRUMENT PANEL CLUSTER (IPC) CONTROL MODULE

NOTE:
For the diagnostic procedure, refer to LAN section. <Ref. to LAN(diag)-2, Basic Diagnostic Procedure.>

1. OUTLINE OF DIAGNOSIS

NOTE:
For the detection standard, refer to DTC U0101. <Ref. to EN(H4DO)(diag)-601, DTC U0101 LOST COMMUNICATION WITH TCM, Diagnostic Procedure with Diagnostic Trouble Code (DTC).>

FR:DTC U0284 LOST COMMUNICATION WITH ACTIVE GRILLE SHUTTER MODULE "A"

DTC DETECTING CONDITION:
Immediately at fault recognition

CAUTION:
After servicing or replacing faulty parts, perform Clear Memory Mode <Ref. to EN(H4DO)(diag)-78, OPERATION, Clear Memory Mode.>, and Inspection Mode <Ref. to EN(H4DO)(diag)-64, PROCEDURE, Inspection Mode.>.

WIRING DIAGRAM:
Active grille shutter <Ref. to WI-88, Active Grille Shutter.>

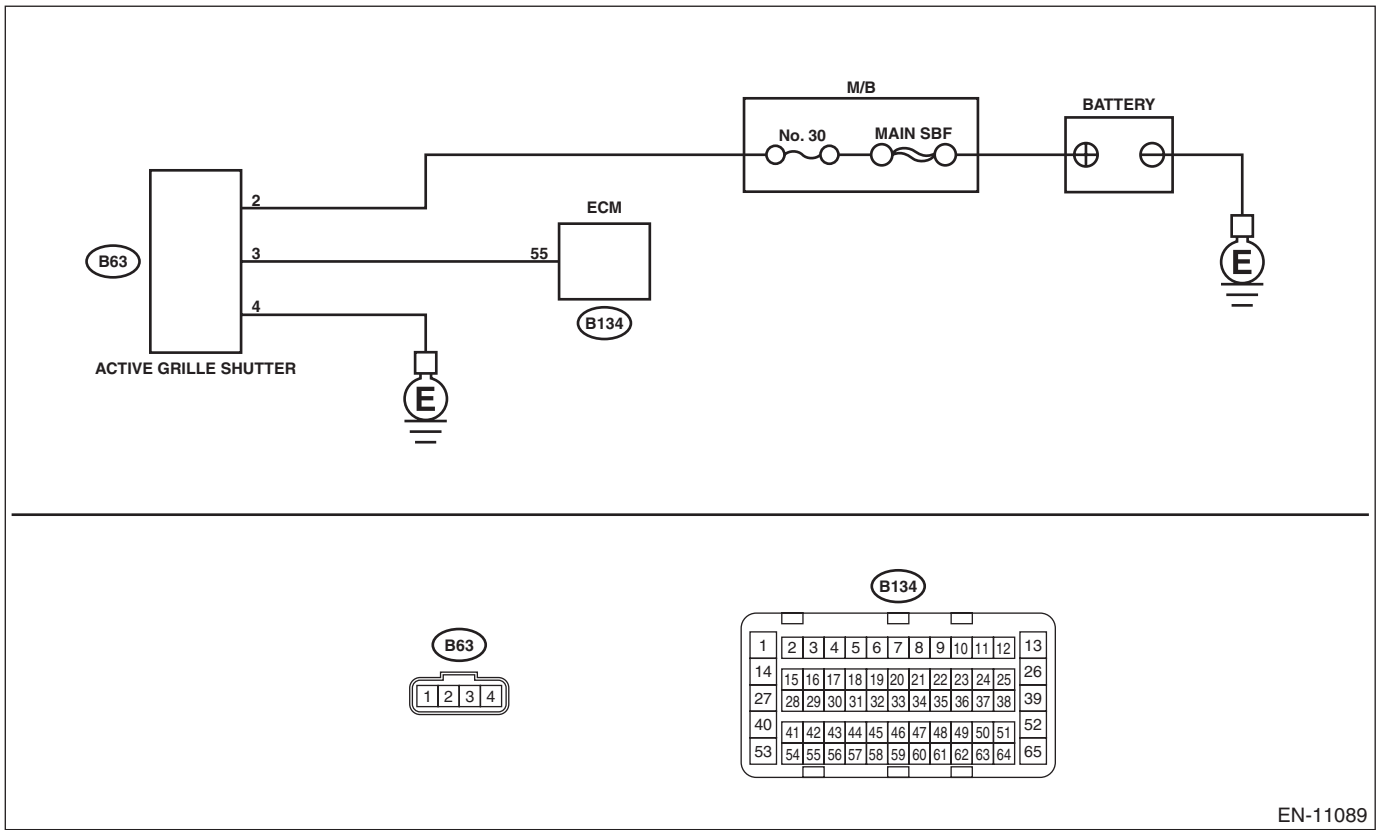

Step		Check	Yes	No
1	**CHECK DTC.** Check for DTC. <Ref. to EN(H4DO)(diag)-63, Read Diagnostic Trouble Code (DTC).>	Is U0284 displayed in «Present fault»?	Go to step **2**.	The circuit has returned to a normal condition at this time. Reproduce the failure, and then perform the diagnosis again. NOTE: In this case, temporary poor contact of connector, temporary open or short circuit of harness may be the cause.

	Step	Check	Yes	No
2	**CHECK FOR ANY OTHER DTC ON DISPLAY.**	Is any other DTC displayed for engine control system?	Check the appropriate DTC using the "List of Diagnostic Trouble Code (DTC)". <Ref. to EN(H4DO)(diag)-102, List of Diagnostic Trouble Code (DTC).>	Go to step **3**.
3	**CHECK HARNESS BETWEEN ECM AND ACTIVE GRILLE SHUTTER CONNECTOR.** 1) Turn the ignition switch to OFF. 2) Disconnect the battery. 3) Disconnect the connectors from ECM and active grille shutter. 4) Measure the resistance between active grille shutter connector and chassis ground. ***Connector & terminal*** ***(B63) No. 3 — Chassis ground:***	Is the resistance 1 MΩ or more?	Go to step **4**.	Repair the short circuit to ground in harness between ECM and active grille shutter connector.
4	**CHECK HARNESS BETWEEN ECM AND ACTIVE GRILLE SHUTTER CONNECTOR.** Measure the resistance of harness between ECM and active grille shutter connector. ***Connector & terminal*** ***(B134) No. 55 — (B63) No. 3:***	Is the resistance less than 10 Ω?	Go to step **5**.	Repair the harness and connector. NOTE: In this case, repair the following item: • Open circuit of harness between ECM and active grille shutter connector • Poor contact of coupling connector
5	**CHECK ACTIVE GRILLE SHUTTER POWER SUPPLY.** 1) Connect the battery. 2) Measure the voltage between active grille shutter connector and chassis ground. ***Connector & terminal*** ***(B63) No. 2 (+) — Chassis ground (–):***	Is the voltage 9 V or more?	Go to step **6**.	Repair the power supply circuit.
6	**CHECK HARNESS BETWEEN ACTIVE GRILLE SHUTTER CONNECTOR AND CHASSIS GROUND.** Measure the resistance of harness between active grille shutter connector and chassis ground. ***Connector & terminal*** ***(B63) No. 4 — Chassis ground:***	Is the resistance less than 10 Ω?	Replace the active grille shutter.	Repair the harness and connector. NOTE: In this case, repair the following item: • Open circuit of harness between active grille shutter connector and chassis ground • Poor contact of coupling connector

1. OUTLINE OF DIAGNOSIS

Detect malfunction of LIN communication.
Judge as NG if LIN communication failure has occurred with the active grille shutter.

2. COMPONENT DESCRIPTION

(Common Specifications)
Communication protocol: LIN 2.0
Communication Speed: 19.20 kbps

3. EXECUTION CONDITION

Secondary Parameters	Execution condition
Battery voltage	≥ 10.9 V

4. GENERAL DRIVING CYCLE

Always perform the diagnosis continuously.

5. DIAGNOSTIC METHOD

Judge as NG when the following conditions are established.

Judgment Value

Malfunction Criteria	Threshold Value
Data from control modules connected to LIN	None

Time Needed for Diagnosis: 3000 ms
Malfunction Indicator Light Illumination: Illuminates as soon as a malfunction occurs.

FS:DTC U0402 INVALID DATA RECEIVED FROM TCM

NOTE:
For the diagnostic procedure, refer to LAN section. <Ref. to LAN(diag)-2, Basic Diagnostic Procedure.>

1. OUTLINE OF DIAGNOSIS

Detect malfunction of CAN communication.
Judge as NG when data received from TCM, VDC CM and combination meter is not normal.

2. COMPONENT DESCRIPTION

(Common Specifications)
CAN Protocol 2.0 B (Active)
Frame Format: 11 Bit ID Frame (Standard Frame)
Conforms to ISO11898
Communication Speed: 500 kbps

3. EXECUTION CONDITION

Secondary Parameters	Execution condition
Battery voltage	≥ 10.9 V

4. GENERAL DRIVING CYCLE

Always perform the diagnosis continuously.

5. DIAGNOSTIC METHOD

Judge as NG when the following conditions are established.

Judgment Value

Malfunction Criteria	Threshold Value
Data from control modules connected to CAN	No change

Time Needed for Diagnosis: 2 seconds
Malfunction Indicator Light Illumination: Illuminates as soon as a malfunction occurs.

FT:DTC U0416 INVALID DATA RECEIVED FROM VEHICLE DYNAMICS CONTROL MODULE

NOTE:
For the diagnostic procedure, refer to LAN section. <Ref. to LAN(diag)-2, Basic Diagnostic Procedure.>

1. OUTLINE OF DIAGNOSIS

NOTE:
For the detection standard, refer to DTC U0402. <Ref. to EN(H4DO)(diag)-605, DTC U0402 INVALID DATA RECEIVED FROM TCM, Diagnostic Procedure with Diagnostic Trouble Code (DTC).>

FU:DTC U0423 INVALID DATA RECEIVED FROM INSTRUMENT PANEL CLUSTER CONTROL MODULE

NOTE:
For the diagnostic procedure, refer to LAN section. <Ref. to LAN(diag)-2, Basic Diagnostic Procedure.>

1. OUTLINE OF DIAGNOSIS

NOTE:
For the detection standard, refer to DTC U0402. <Ref. to EN(H4DO)(diag)-605, DTC U0402 INVALID DATA RECEIVED FROM TCM, Diagnostic Procedure with Diagnostic Trouble Code (DTC).>

FV:DTC U1712 LOST LIN COMMUNICATION WITH BATTERY "1" MONITOR MODULE

DTC DETECTING CONDITION:
Immediately at fault recognition

CAUTION:
After servicing or replacing faulty parts, perform Clear Memory Mode <Ref. to EN(H4DO)(diag)-78, OPERATION, Clear Memory Mode.>, and Inspection Mode <Ref. to EN(H4DO)(diag)-64, PROCEDURE, Inspection Mode.>.

WIRING DIAGRAM:

- Engine Electrical System ENGINE TYPE FB (WITHOUT PUSH BUTTON START) <Ref. to WI-170, ENGINE TYPE FB (WITHOUT PUSH BUTTON START), WIRING DIAGRAM, Engine Electrical System.>
- Engine Electrical System ENGINE TYPE FB (WITH PUSH BUTTON START) <Ref. to WI-184, ENGINE TYPE FB (WITH PUSH BUTTON START), WIRING DIAGRAM, Engine Electrical System.>

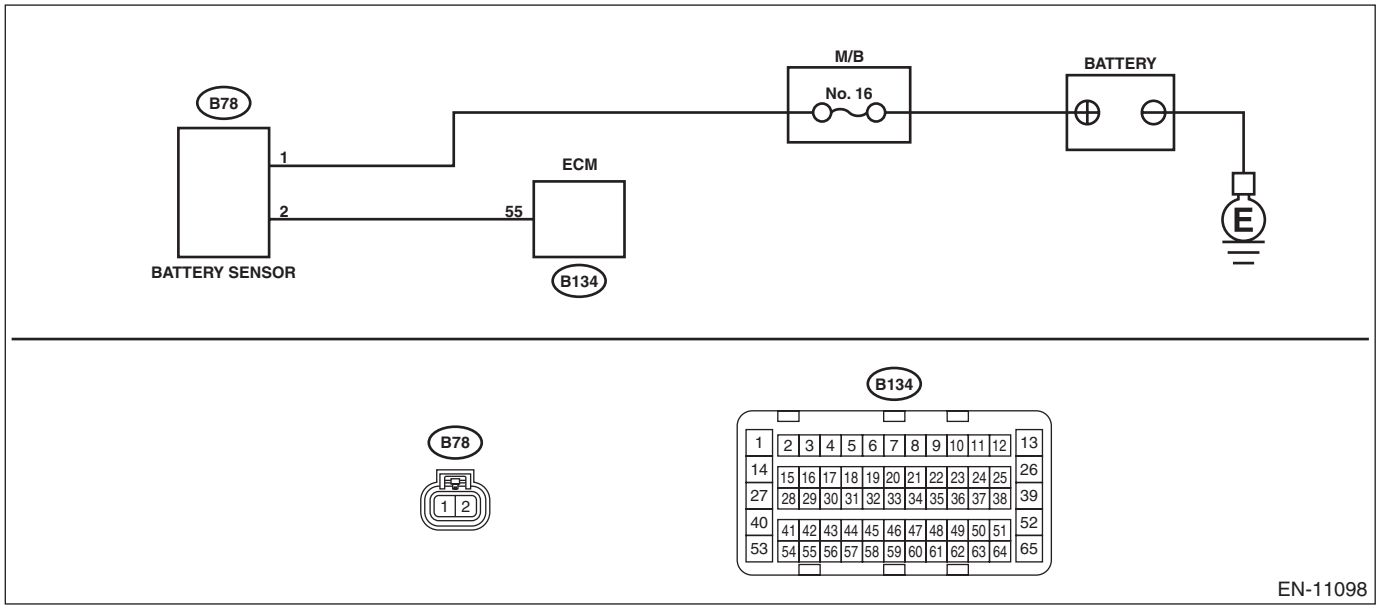

Step		Check	Yes	No
1	**CHECK DTC.** Check for DTC. <Ref. to EN(H4DO)(diag)-63, Read Diagnostic Trouble Code (DTC).>	Is U1712 displayed in «Present fault»?	Go to step **2**.	The circuit has returned to a normal condition at this time. Reproduce the failure, and then perform the diagnosis again.
2	**CHECK ECM CONNECTOR.** Check the connecting condition of ECM connector.	Is the ECM connector correctly connected?	Go to step **3**.	Connect the ECM connector correctly.

	Step	Check	Yes	No
3	**CHECK HARNESS BETWEEN BATTERY AND BATTERY SENSOR CONNECTOR.** 1) Turn the ignition switch to OFF. 2) Disconnect the ground terminal from battery sensor. <Ref. to RC-4, BATTERY, NOTE, Repair Contents.> 3) Disconnect the connector from battery sensor. 4) Disconnect the positive terminal of battery. 5) Measure the resistance of the harness between battery positive cable terminal and battery sensor connector. ***Connector & terminal*** ***Positive cable terminal — (B78) No. 1:***	Is the resistance less than 1 Ω?	Go to step **4**.	Repair the open circuit in harness between battery positive cable terminal and battery sensor connector.
4	**CHECK HARNESS BETWEEN ECM AND BATTERY SENSOR CONNECTOR.** 1) Disconnect the connector from ECM. 2) Measure the resistance of harness between battery positive terminal and battery sensor connector. ***Connector & terminal*** ***(B78) No. 1 — Battery positive terminal:***	Is the resistance less than 1 Ω?	Repair the poor contact of ECM connector or battery sensor connector.	Repair the harness and connector. NOTE: In this case, repair the following item: • Open circuit in harness between ECM connector and battery sensor connector • Poor contact of coupling connector

1. OUTLINE OF DIAGNOSIS

Detect malfunction of LIN communication.
Judge as NG when LIN communication failure has occurred with the battery sensor.

2. COMPONENT DESCRIPTION

(Common Specifications)
Communication protocol: LIN 2.0
Communication Speed: 19.20 kbps

3. EXECUTION CONDITION

Secondary Parameters	Execution condition
Battery voltage	≥ 10.9 V

4. GENERAL DRIVING CYCLE

Always perform the diagnosis continuously.

5. DIAGNOSTIC METHOD

If the duration of time while the following conditions are met is longer than the time indicated, judge as NG.

Judgment Value

Malfunction Criteria	Threshold Value
Data received from control modules connected to LIN	No change or Checksum error

Time Needed for Diagnosis: 2 seconds
Malfunction Indicator Light Illumination: Does not illuminate.

18.General Diagnostic Table

A: INSPECTION

1. ENGINE

NOTE:
Malfunction of parts other than those listed is also possible. <Ref. to ME(H4DO)-321, Engine Trouble in General.>

Symptoms	Faulty parts
1. Engine stalls during idling.	1) Manifold absolute pressure sensor 2) Mass air flow and intake air temperature sensor 3) Ignition parts (*1) 4) Engine coolant temperature sensor (*2) 5) Crankshaft position sensor (*3) 6) Camshaft position sensor (*3) 7) Fuel injection parts (*4) 8) Electronic throttle control
2. Rough idling	1) Manifold absolute pressure sensor 2) Mass air flow and intake air temperature sensor 3) Engine coolant temperature sensor (*2) 4) Ignition parts (*1) 5) Air intake system (*5) 6) Fuel injection parts (*4) 7) Electronic throttle control 8) Crankshaft position sensor (*3) 9) Camshaft position sensor (*3) 10) Oxygen sensor 11) Fuel pump and fuel pump relay 12) EGR control valve
3. Engine does not return to idle.	1) Engine coolant temperature sensor 2) Electronic throttle control 3) Manifold absolute pressure sensor 4) Mass air flow and intake air temperature sensor 5) EGR control valve 6) Accelerator pedal position sensor 7) Engine oil temperature sensor
4. Poor acceleration	1) Manifold absolute pressure sensor 2) Mass air flow and intake air temperature sensor 3) Electronic throttle control 4) Fuel injection parts (*4) 5) Fuel pump and fuel pump relay 6) Engine coolant temperature sensor (*2) 7) Crankshaft position sensor (*3) 8) Camshaft position sensor (*3) 9) Engine torque control signal circuit 10) Ignition parts (*1) 11) EGR control valve 12) Accelerator pedal position sensor 13) Engine oil temperature sensor
5. Engine stalls, hesitates, or sputters at acceleration.	1) Manifold absolute pressure sensor 2) Mass air flow and intake air temperature sensor 3) Engine coolant temperature sensor (*2) 4) Crankshaft position sensor (*3) 5) Camshaft position sensor (*3) 6) Purge control solenoid valve 7) Fuel injection parts (*4) 8) Electronic throttle control 9) Fuel pump and fuel pump relay 10) EGR control valve

Symptoms	Faulty parts
6. Surging	1) Mass air flow and intake air temperature sensor 2) Manifold absolute pressure sensor 3) Engine coolant temperature sensor (*2) 4) Crankshaft position sensor (*3) 5) Camshaft position sensor (*3) 6) Fuel injection parts (*4) 7) Electronic throttle control 8) Fuel pump and fuel pump relay 9) EGR control valve
7. Spark knock	1) Mass air flow and intake air temperature sensor 2) Manifold absolute pressure sensor 3) Engine coolant temperature sensor 4) Knock sensor 5) Fuel injection parts (*4) 6) Fuel pump and fuel pump relay 7) EGR control valve
8. After burning in exhaust system	1) Mass air flow and intake air temperature sensor 2) Manifold absolute pressure sensor 3) Engine coolant temperature sensor (*2) 4) Fuel injection parts (*4) 5) Fuel pump and fuel pump relay

*1: Check ignition coil and spark plug.
*2: Indicate the symptom occurring only in cold temperatures.
*3: Ensure the secure installation.
*4: Check fuel injector and fuel filter.
*5: Inspect air leak in air intake system.

ENGINE 2 SECTION

This service manual has been prepared to provide SUBARU service personnel with the necessary information and data for the correct maintenance and repair of SUBARU vehicles.
This manual includes the procedures for maintenance, disassembling, reassembling, inspection and adjustment of components and diagnostics for guidance of experienced mechanics.
Please peruse and utilize this manual fully to ensure complete repair work for satisfying our customers by keeping their vehicle in optimum condition. When replacement of parts during repair work is needed, be sure to use SUBARU genuine parts.

FUEL INJECTION (FUEL SYSTEMS)	FU(H6DO)
EMISSION CONTROL (AUX. EMISSION CONTROL DEVICES)	EC(H6DO)
INTAKE (INDUCTION)	IN(H6DO)
MECHANICAL	ME(H6DO)
EXHAUST	EX(H6DO)
COOLING	CO(H6DO)
LUBRICATION	LU(H6DO)
SPEED CONTROL SYSTEMS	SP(H6DO)
IGNITION	IG(H6DO)
STARTING/CHARGING SYSTEMS	SC(H6DO)
ENGINE (DIAGNOSTICS)	EN(H6DO) (diag)

All information, illustration and specifications contained in this manual are based on the latest product information available at the time of publication approval.

FUJI HEAVY INDUSTRIES LTD. G2520BE3

FUEL INJECTION (FUEL SYSTEMS)

FU(H6DO)

		Page
1.	General Description	2
2.	Throttle Body	19
3.	Intake Manifold	24
4.	Engine Coolant Temperature Sensor	39
5.	Crankshaft Position Sensor	42
6.	Camshaft Position Sensor	47
7.	Knock Sensor	52
8.	Throttle Position Sensor	54
9.	Manifold Absolute Pressure Sensor	55
10.	Mass Air Flow and Intake Air Temperature Sensor	58
11.	Fuel Injector	61
12.	Oil Flow Control Solenoid Valve	72
13.	Oil Temperature Sensor	76
14.	Front Oxygen (A/F) Sensor	78
15.	Rear Oxygen Sensor	81
16.	Engine Control Module (ECM)	83
17.	Main Relay	85
18.	Electronic Throttle Control Relay	87
19.	Fuel Pump Relay	89
20.	Fuel Pump Control Unit	91
21.	Fuel	93
22.	Fuel Tank Protector	98
23.	Fuel Tank	99
24.	Fuel Filler Pipe	113
25.	Fuel Pump	119
26.	Fuel Level Sensor	125
27.	Fuel Sub Level Sensor	128
28.	Fuel Filter	135
29.	Pulsation Damper	146
30.	Fuel Delivery and Evaporation Lines	154
31.	Fuel System Trouble in General	168

1. General Description

A: SPECIFICATION

Fuel tank	Capacity	70 L (18.5 US gal, 15.4 Imp gal)
	Location	Under rear seat
Fuel pump	Type	Impeller
	Shutoff discharge pressure	940 kPa (9.58 kg/cm^2, 136.3 psi), or less
	Discharge rate	153 L (40.4 US gal, 33.7 Imp gal)/h or more [12.5 V at 343 kPa (3.5 kg/cm^2, 49.7 psi)]
Fuel filter		In-tank type

B: COMPONENT

1. INTAKE MANIFOLD

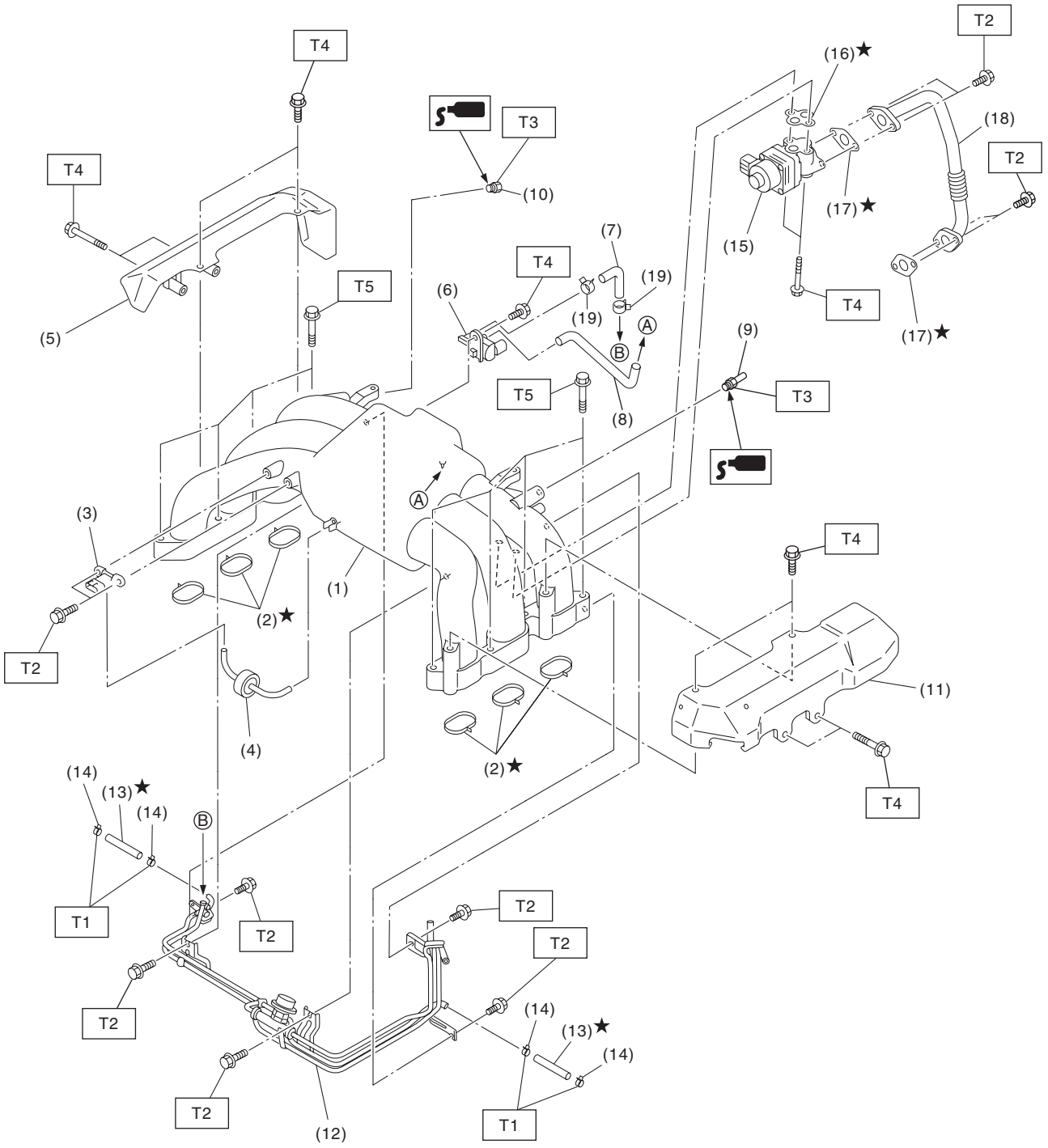

FU-09177

(1) Intake manifold
(2) Gasket
(3) Manifold absolute pressure sensor
(4) Filter
(5) Fuel pipe protector RH
(6) Purge control solenoid valve
(7) Hose
(8) Hose
(9) Nipple
(10) Plug
(11) Fuel pipe protector LH
(12) Fuel pipe ASSY
(13) Fuel hose
(14) Clamp
(15) EGR valve
(16) Gasket
(17) Gasket
(18) EGR pipe
(19) Clip

Tightening torque: N·m (kgf-m, ft-lb)
T1: 1.25 (0.1, 0.9)
T2: 6.4 (0.7, 4.7)
T3: 17 (1.7, 12.5)
T4: 19 (1.9, 14.0)
T5: 25 (2.5, 18.4)

2. FUEL INJECTOR

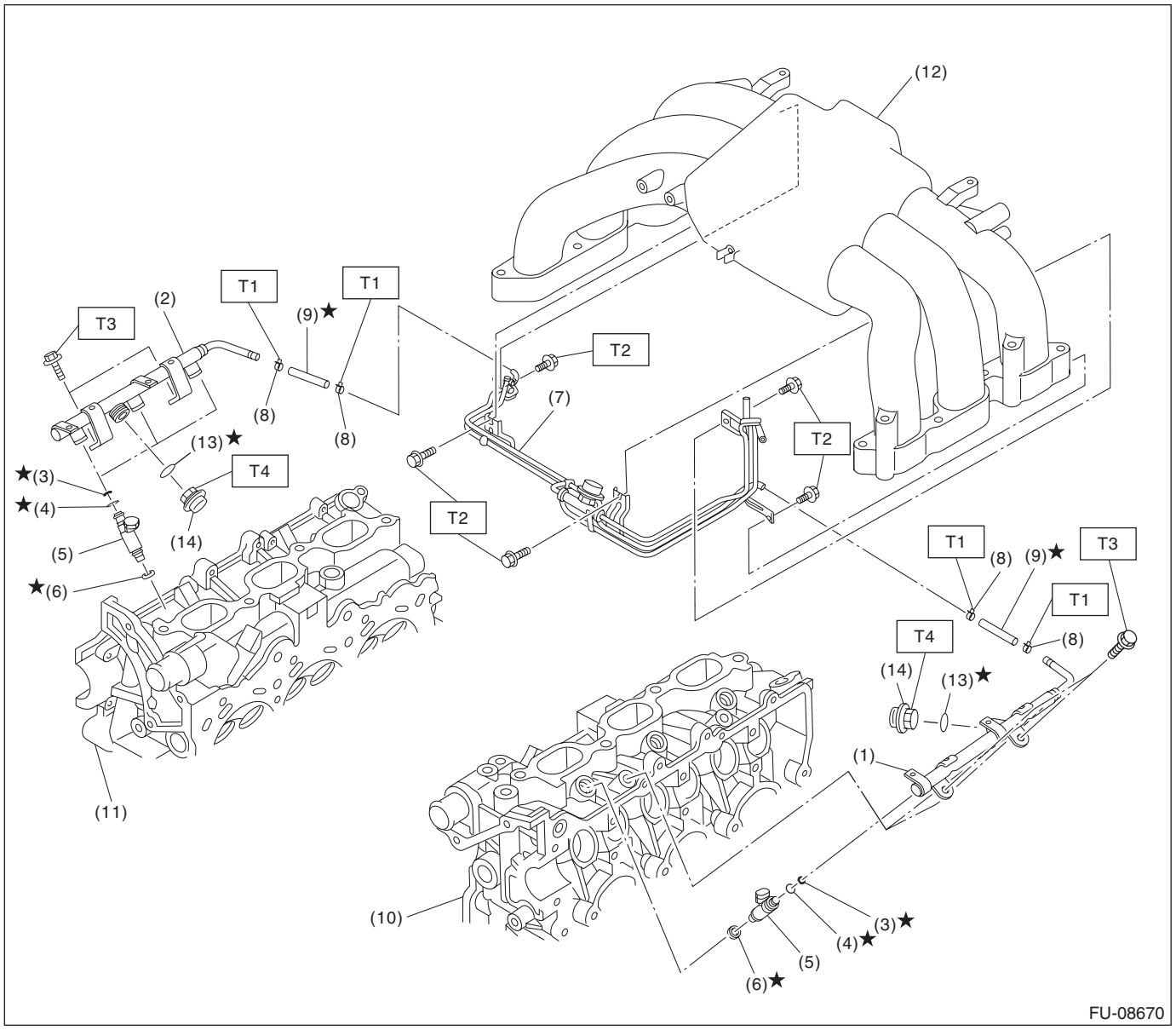

(1)	Fuel injector pipe LH	(8)	Clamp
(2)	Fuel injector pipe RH	(9)	Fuel hose
(3)	O-ring	(10)	Cylinder head LH
(4)	Rubber	(11)	Cylinder head RH
(5)	Fuel injector	(12)	Intake manifold
(6)	Seal ring	(13)	Gasket
(7)	Fuel pipe ASSY	(14)	Pulsation damper

Tightening torque: N·m (kgf-m, ft-lb)
T1: 1.25 (0.1, 0.9)
T2: 6.4 (0.7, 4.7)
T3: 19 (1.9, 14.0)
T4: 21.6 (2.2, 15.9)

3. AIR INTAKE SYSTEM

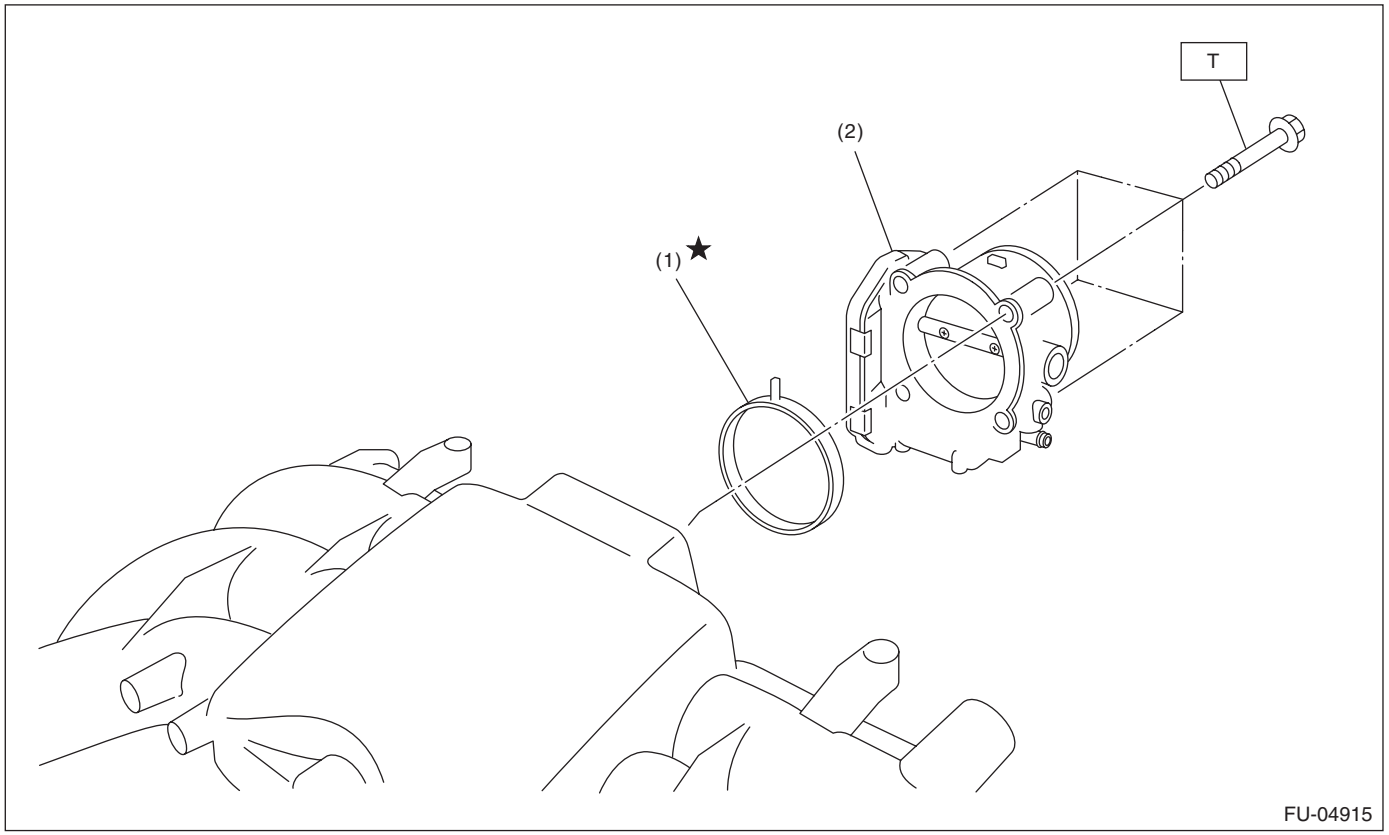

(1) Gasket
(2) Throttle body

Tightening torque: N·m (kgf-m, ft-lb)
T: 8 (0.8, 5.9)

4. SENSOR

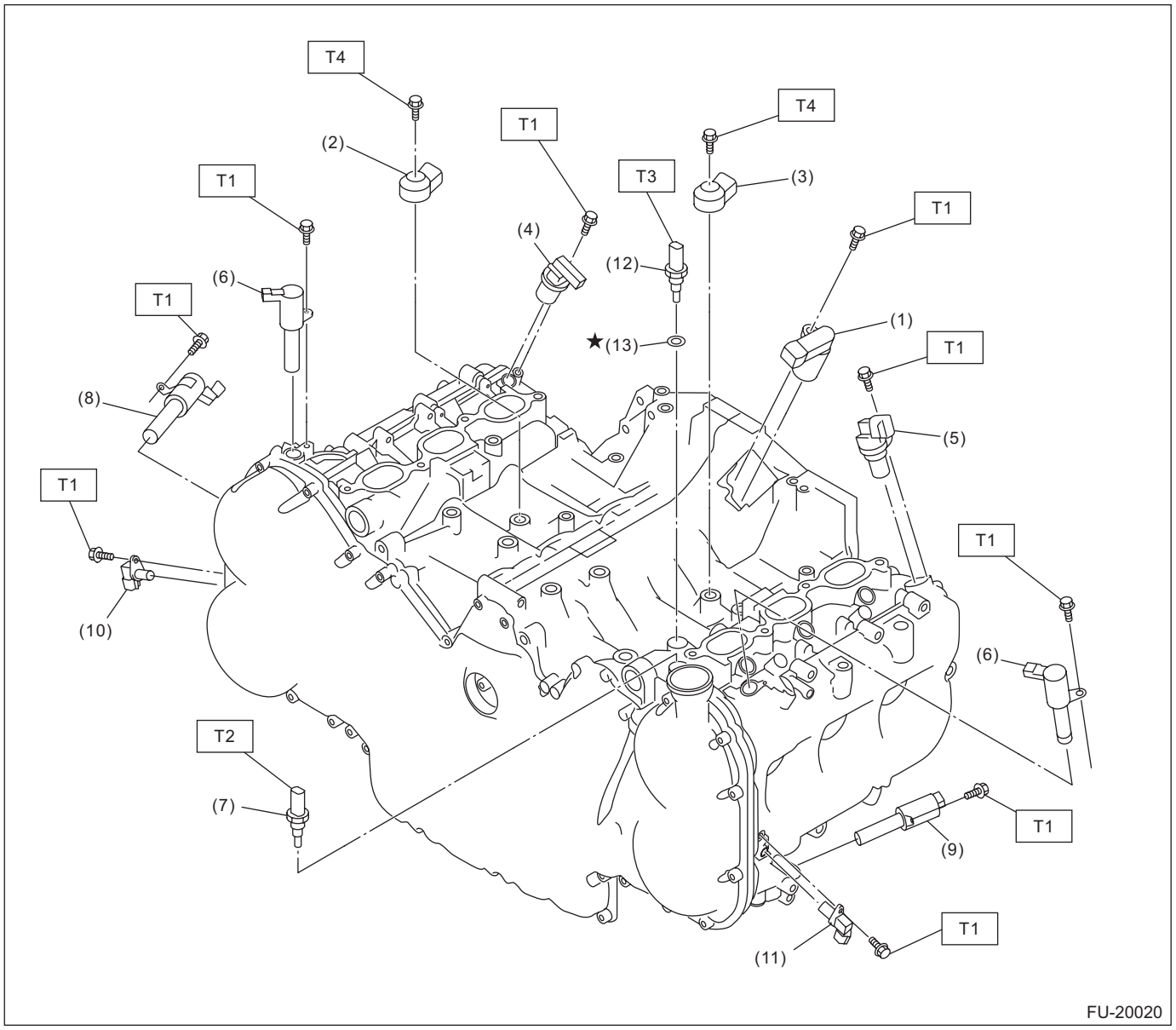

(1)	Crankshaft position sensor	(8)	Exhaust oil flow control solenoid valve RH
(2)	Knock sensor RH	(9)	Exhaust oil flow control solenoid valve LH
(3)	Knock sensor LH	(10)	Exhaust camshaft position sensor RH
(4)	Intake camshaft position sensor RH	(11)	Exhaust camshaft position sensor LH
(5)	Intake camshaft position sensor LH	(12)	Engine coolant temperature sensor
(6)	Intake oil flow control solenoid valve	(13)	Gasket
(7)	Oil temperature sensor		

Tightening torque: N·m (kgf-m, ft-lb)

T1: 6.4 (0.7, 4.7)

T2: 18 (1.8, 13.3)

T3: 22 (2.2, 16.2)

T4: 25 (2.5, 18.4)

5. ENGINE HARNESS

Engine harness assembly diagram 1

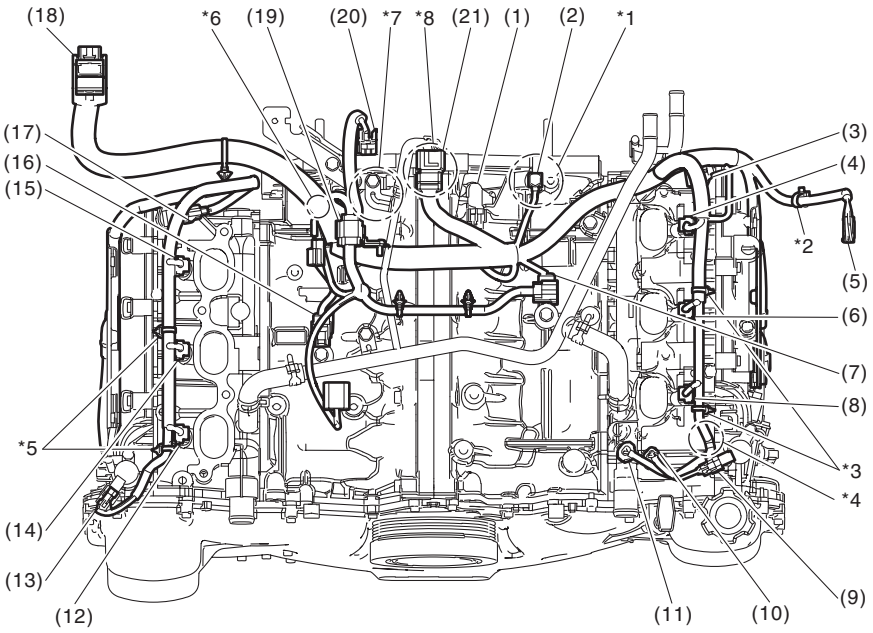

(A)

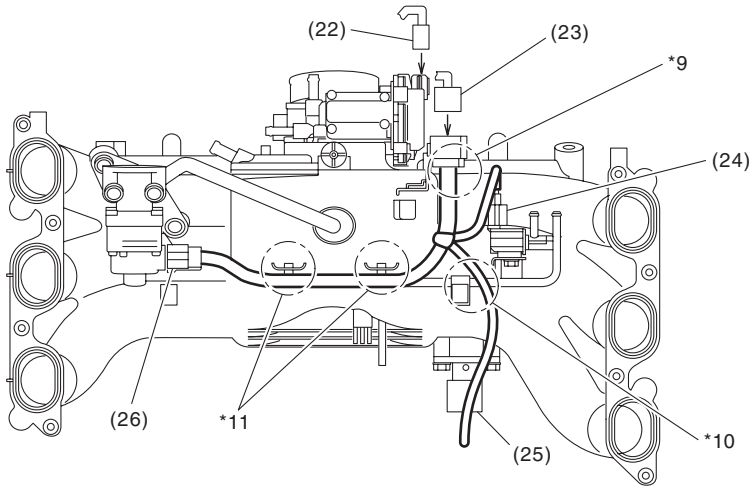

(B)

FU-08671

(A)	Cylinder block upper face	(B)	Intake manifold back surface		
(1)	Crankshaft position sensor connector	(10)	Oil temperature sensor connector	(19)	Engine harness connector (10P)
(2)	Engine ground	(11)	Engine coolant temperature sensor connector	(20)	Throttle position sensor connector
(3)	Intake camshaft position sensor LH connector	(12)	#1 injector connector	(21)	Engine harness connector (16P)
(4)	#6 injector connector	(13)	Intake oil flow control solenoid valve RH connector	(22)	Throttle position sensor connector (to intake manifold)
(5)	Engine harness connector (12P)	(14)	#3 injector connector	(23)	Upper/lower connection connector (to intake manifold)
(6)	#4 injector connector	(15)	#5 injector connector	(24)	Purge control solenoid valve connector
(7)	Knock sensor LH connector	(16)	Knock sensor RH connector	(25)	Manifold absolute pressure sensor connector
(8)	#2 injector connector	(17)	Intake camshaft position sensor RH connector	(26)	EGR valve connector
(9)	Intake oil flow control solenoid valve LH connector	(18)	Engine harness connector (65P)		

*1: Install with the engine ground terminal facing the rear side of vehicle.
*2: Attach the engine harness fixing clip to the main fuse box.
*3: Attach the engine harness fixing clip to the fuel pipe stay.
*4: Route from under the fuel pipe protector LH.
*5: Attach the engine harness fixing clip to the fuel pipe stay.
*6: Attach the engine harness fixing clip to the fixing boss on the cylinder block.
*7: Pass through over the upper side of the heater pipe stay.
*8: Install to the engine hanger stay.
*9: Install the engine harness fixing stay.
*10: Pass along outside of the fuel pipe.
*11: Attach the engine harness fixing clip to the fixing stay on the intake manifold.

Engine harness assembly diagram 2

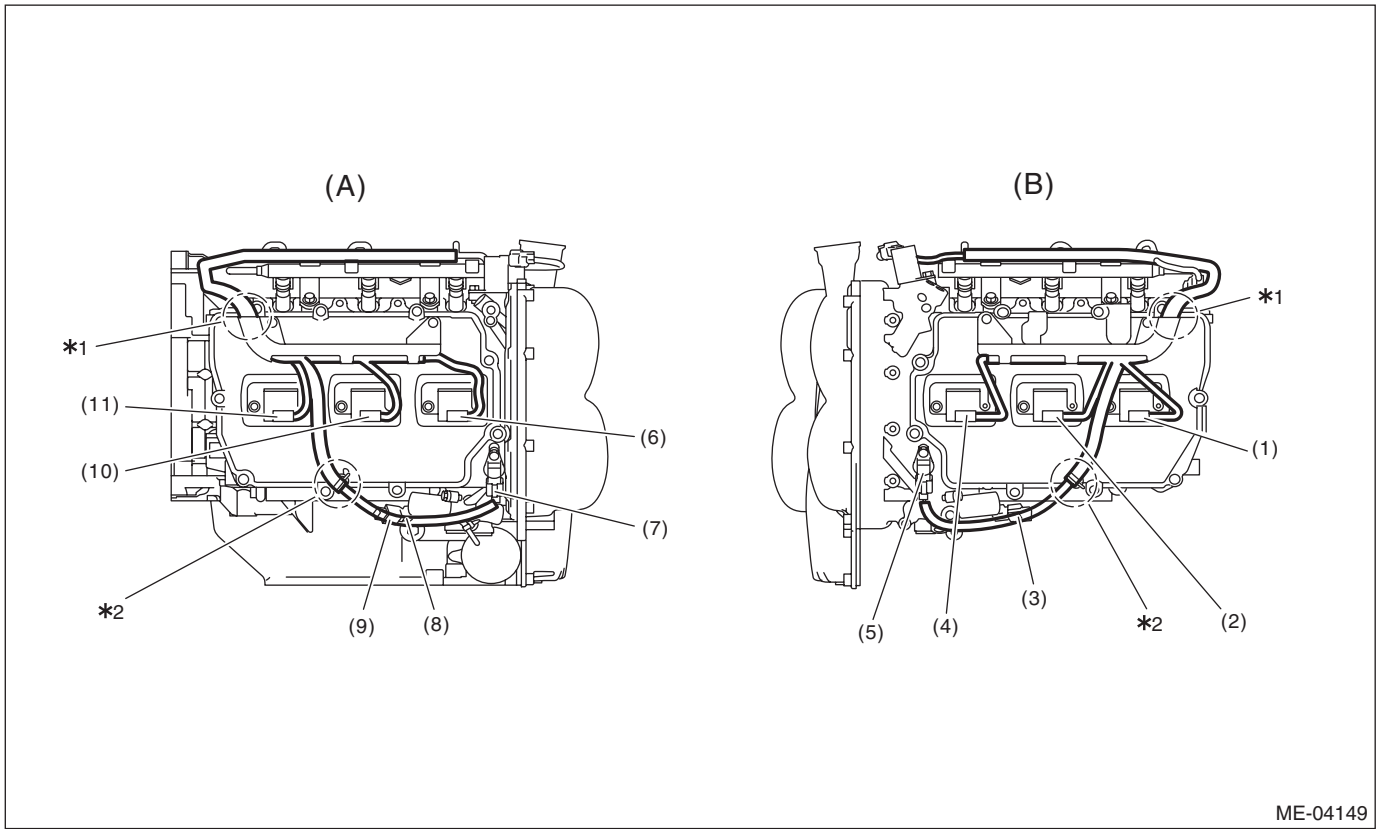

(A)	Right side of the engine	(B)	Left side of the engine		
(1)	#6 ignition coil connector	(5)	Exhaust camshaft position sensor LH connector	(9)	Exhaust oil flow control valve solenoid RH connector
(2)	#4 ignition coil connector	(6)	#1 ignition coil connector	(10)	#3 ignition coil connector
(3)	Exhaust oil flow control valve solenoid LH connector	(7)	Exhaust camshaft position sensor RH connector	(11)	#5 ignition coil connector
(4)	#2 ignition coil connector	(8)	Oil pressure switch connector		

*1: Align the engine harness stay end with the end of engine harness identification tape.
*2: Attach the engine harness fixing clip to the fixing boss on the rocker cover.

6. FUEL TANK

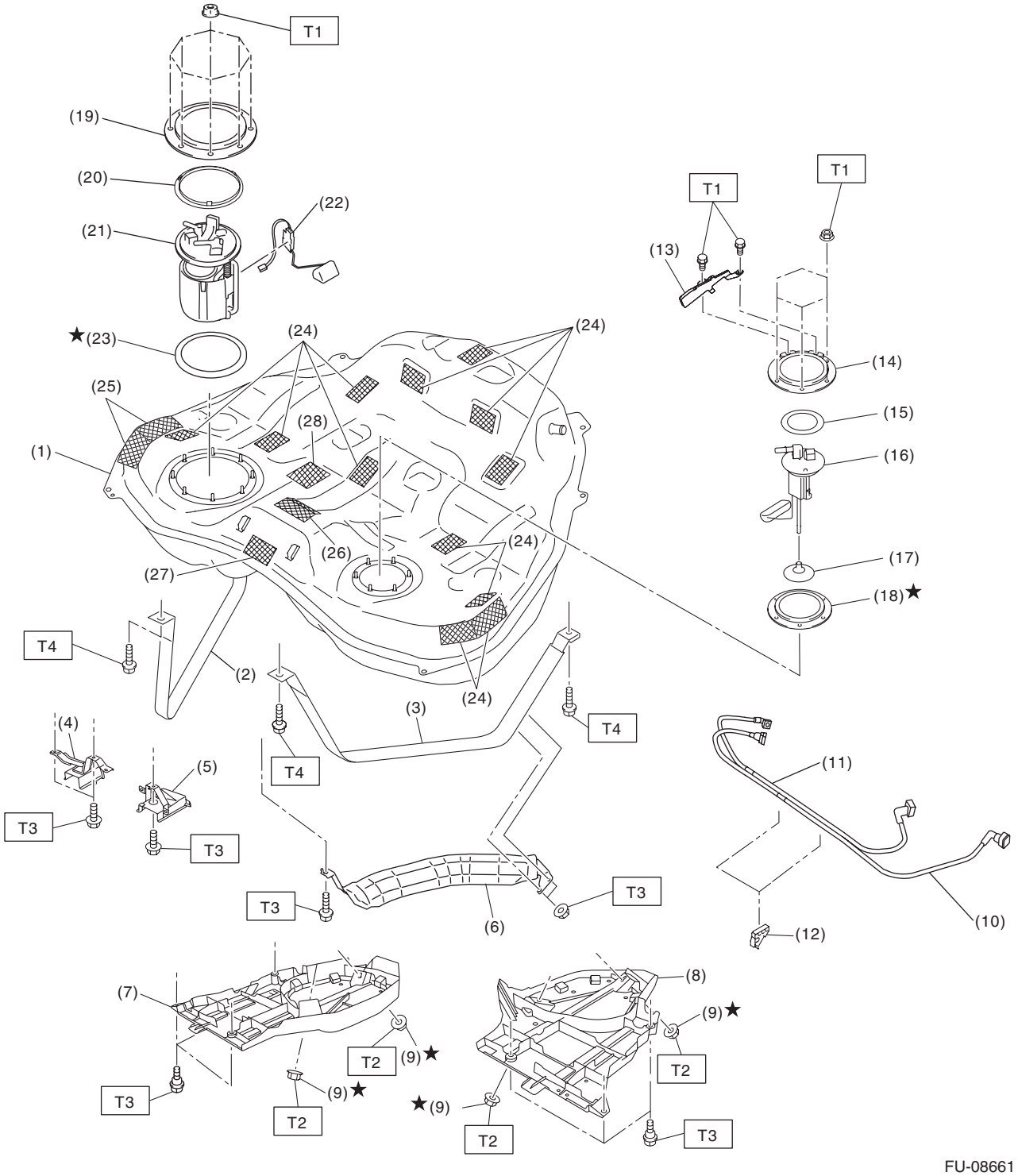
T1
(19)
(20)
(22)
(21)
★(23)
(24)
(24)
(25)
(28)
(1)
(26)
(24)
(27)
(24)
T4
(2)
(3)
T4
T4
(4)
(5)
T3
T3
T3
T3
(6)
(7)
T2
(9)★
T3
(9)★
T2
★(9)
T2
(8)
(9)★
T2
T3
T1
T1
(13)
(14)
(15)
(16)
(17)
(18)★
(11)
(10)
(12)
FU-08661

(1) Fuel tank
(2) Fuel tank band RH
(3) Fuel tank band LH
(4) Stopper RH
(5) Stopper LH
(6) Heat shield cover
(7) Fuel tank protector RH
(8) Fuel tank protector LH
(9) Self-locking nut
(10) Fuel delivery tube
(11) Fuel delivery sub tube
(12) Tube clamp
(13) Fuel sub level sensor protector
(14) Fuel sub level sensor upper plate
(15) Fuel sub level sensor upper plate cushion
(16) Fuel sub level sensor
(17) Fuel sub level sensor filter
(18) Fuel sub level sensor gasket
(19) Fuel pump upper plate
(20) Fuel upper plate cushion
(21) Fuel pump ASSY
(22) Fuel level sensor
(23) Fuel pump gasket
(24) Cushion
(25) Cushion
(26) Cushion
(27) Cushion
(28) Cushion

Tightening torque: N·m (kgf-m, ft-lb)
T1: 4.4 (0.4, 3.2)
T2: 9 (0.9, 6.6)
T3: 18 (1.8, 13.3)
T4: 33 (3.4, 24.3)

7. FUEL LINE

• Fuel line 1

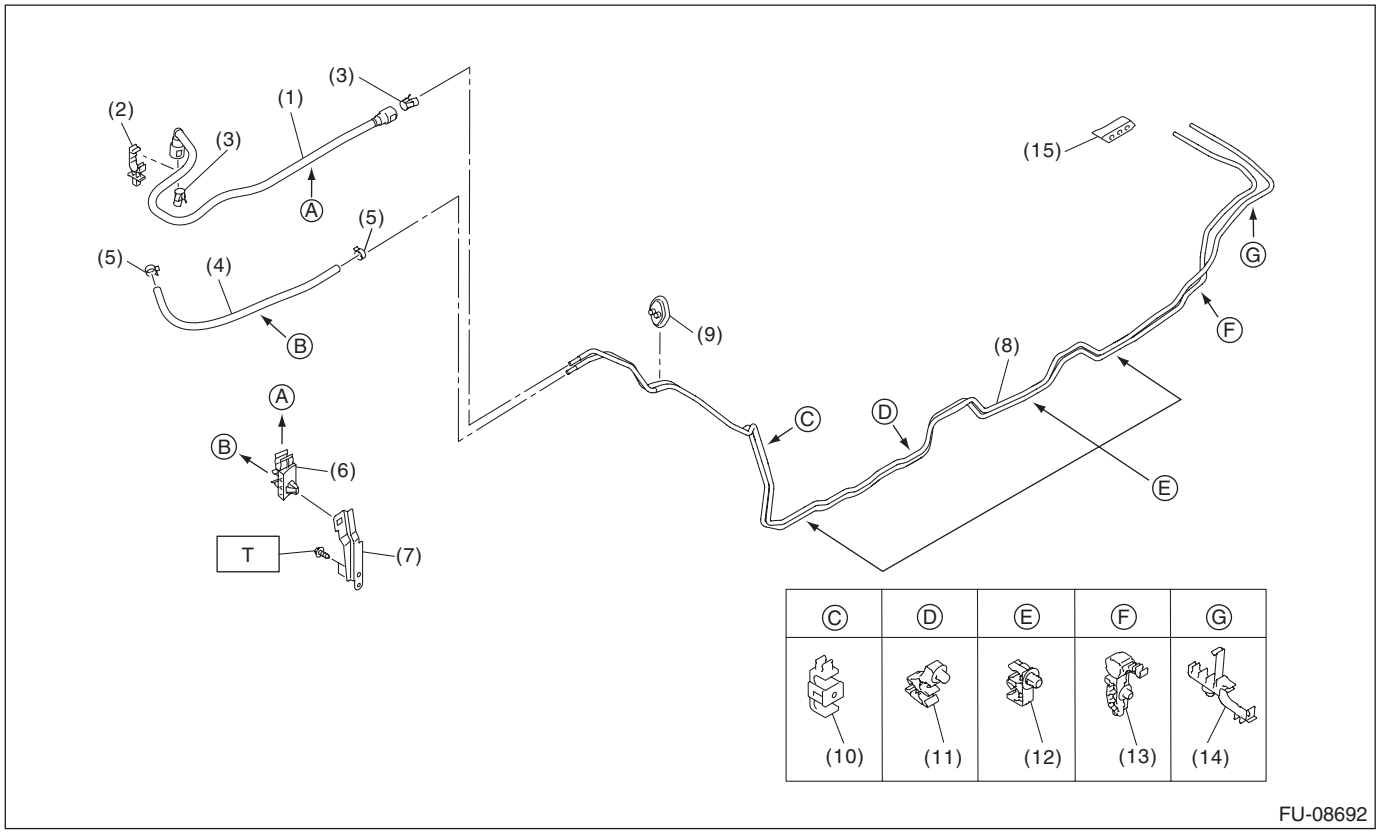

(1) Fuel delivery tube
(2) Tube clamp
(3) Retainer
(4) Evaporation hose
(5) Clip
(6) Tube clamp
(7) Tube clamp bracket
(8) Fuel pipe ASSY
(9) Fuel pipe front grommet
(10) Pipe clamp
(11) Pipe clamp
(12) Pipe clamp
(13) Pipe clamp
(14) Pipe clamp
(15) Fuel pipe rear grommet

Tightening torque: N·m (kgf-m, ft-lb)
T: 7.5 (0.8, 5.5)

- Fuel line 2

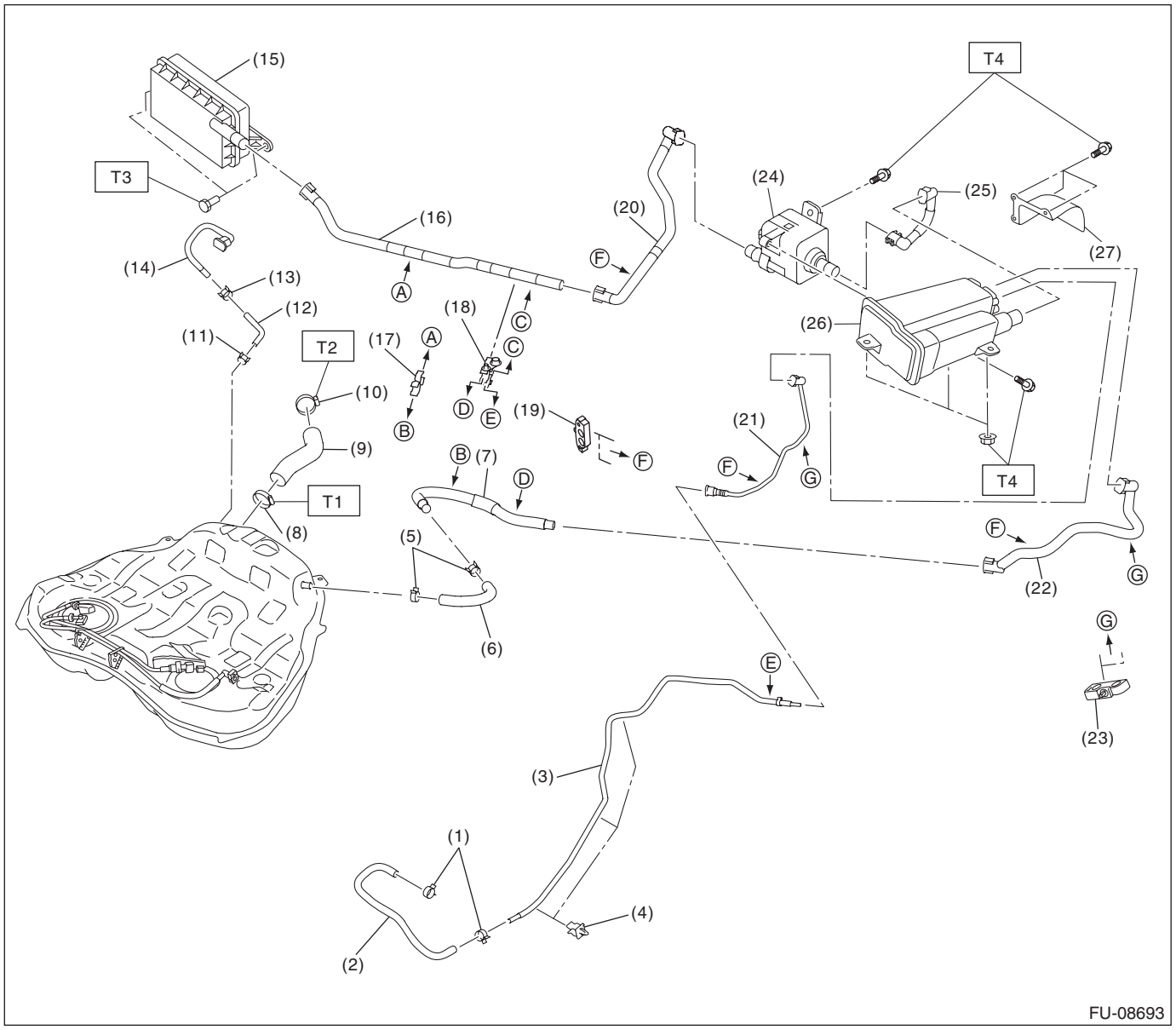

(1) Clip
(2) Purge hose
(3) Purge pipe
(4) Pipe clamp
(5) Clip
(6) Air vent hose
(7) Air vent tube
(8) Clamp
(9) Fuel filler hose
(10) Clamp
(11) Clip
(12) Circulate hose
(13) Clip
(14) Circulate tube
(15) Drain filter
(16) Drain tube
(17) Tube clamp
(18) Tube clamp
(19) Tube clamp
(20) Drain tube
(21) Purge tube
(22) Vent tube
(23) Tube clamp
(24) Leak check valve ASSY
(25) Drain tube
(26) Canister
(27) Canister protector

Tightening torque: N·m (kgf-m, ft-lb)
T1: 2 (0.2, 1.5)
T2: 2.5 (0.3, 1.8)
T3: 7.5 (0.8, 5.5)
T4: 8 (0.8, 5.9)

8. FUEL FILLER PIPE

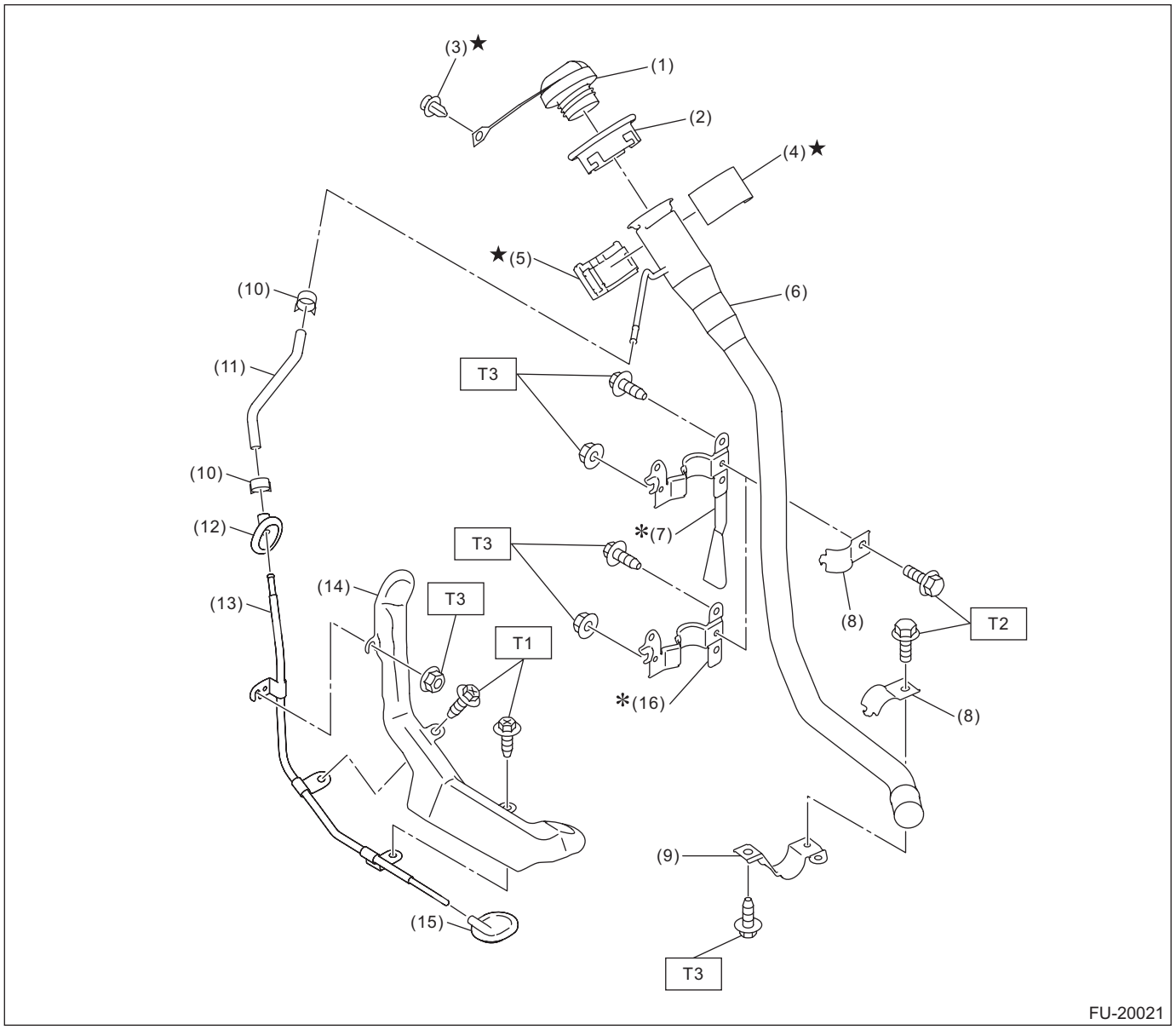

(1) Fuel filler cap
(2) Fuel filler pipe protector
(3) Clip
(4) Neck holder A
(5) Neck holder B
(6) Fuel filler pipe
(7) Fuel filler pipe bracket A (with protector)
(8) Fuel filler pipe bracket B
(9) Fuel filler pipe bracket C
(10) Clip
(11) Evaporation hose
(12) Grommet
(13) Evaporation pipe
(14) Evaporation pipe protector
(15) Grommet
(16) Fuel filler pipe bracket A (without protector)

Tightening torque: N·m (kgf-m, ft-lb)
T1: 1 (0.1, 0.7)
T2: 7.35 (0.7, 5.4)
T3: 7.5 (0.8, 5.5)

*For the fuel filler pipe bracket A, either one with the protector or without the protector is installed depending on the specification.

9. FUEL PUMP

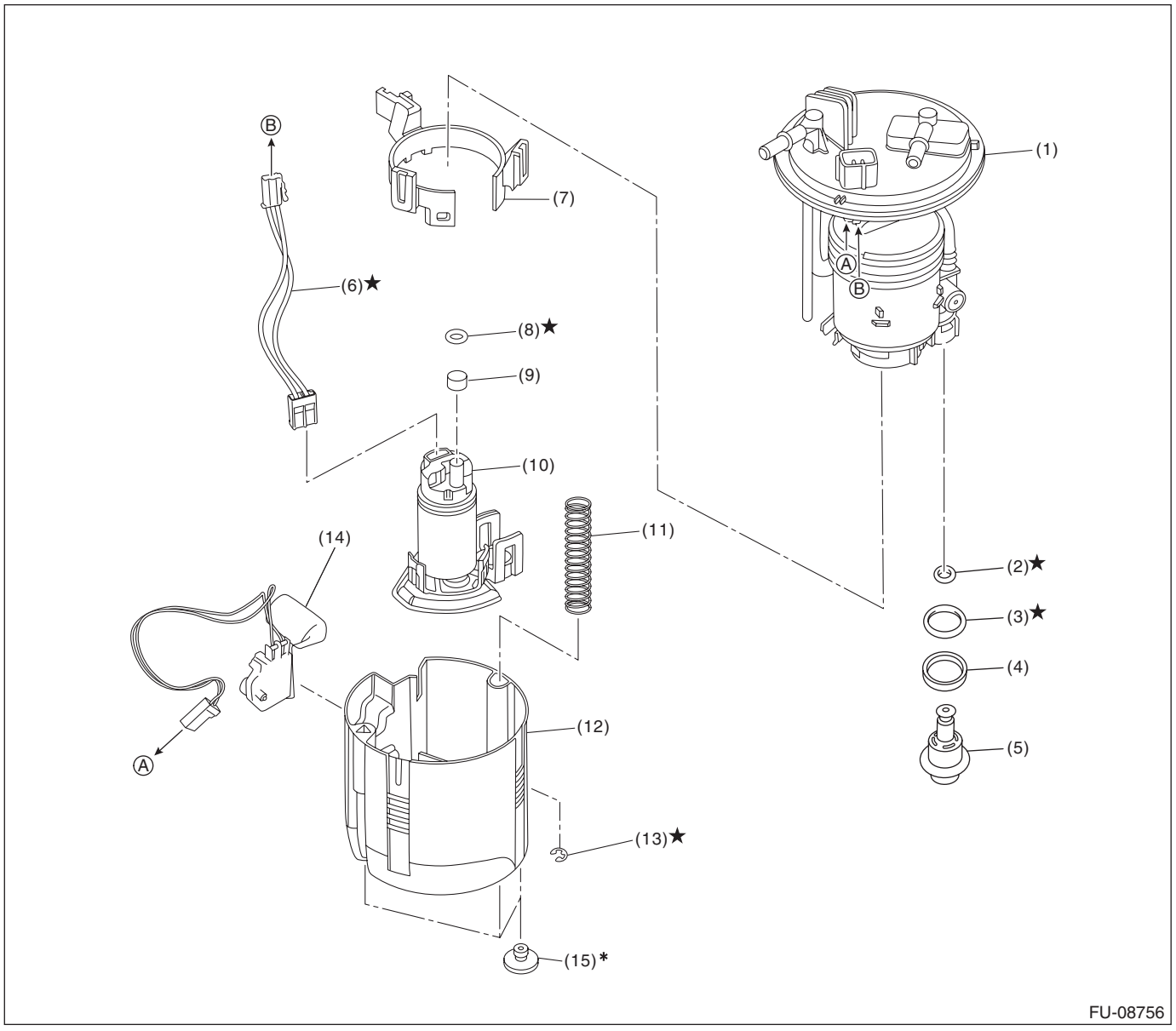

(1)	Fuel filter ASSY	(6)	Connector cable	(11)	Spring
(2)	O-ring	(7)	Fuel pump holder	(12)	Fuel chamber ASSY
(3)	O-ring	(8)	O-ring	(13)	Clip
(4)	Back-up ring	(9)	Spacer	(14)	Fuel level sensor
(5)	Pressure regulator	(10)	Fuel pump	(15)	Cushion

* When removing the cushion from the fuel chamber assembly, replace it with a new part.

C: CAUTION

- Prior to starting work, pay special attention to the following:
  1. Always wear work clothes, a work cap, and protective shoes. Additionally, wear a helmet, protective goggles, etc. if necessary.
  2. Protect the vehicle using a seat cover, fender cover, etc.
  3. Prepare the service tools, clean cloth, containers to catch grease and oil, etc.
- Place “NO OPEN FLAMES” signs near the working area.
- Prepare a container and cloth to prevent scattering of fuels when performing work where fuels can be spilled. If the oil spills, wipe it off immediately to prevent from penetrating into floor or flowing out for environmental protection.
- Vehicle components are extremely hot immediately after driving. Be wary of receiving burns from heated parts.
- When performing a repair, identify the cause of trouble and avoid unnecessary removal, disassembly and replacement.
- Before disconnecting connectors of sensors or units, be sure to disconnect the ground cable from battery.
- Always use the jack-up point when the shop jacks or rigid racks are used to support the vehicle.
- Remove contamination including dirt and corrosion before removal, installation, disassembly or assembly.
- Keep the removed parts in order and protect them from dust and dirt.
- All removed parts, if to be reused, should be reinstalled in the original positions with attention to the correct directions, etc.
- Bolts, nuts and washers should be replaced with new parts as required.
- Follow all government and local regulations concerning disposal of refuse when disposing fuel.

D: PREPARATION TOOL

1. SPECIAL TOOL

ILLUSTRATION	TOOL NUMBER	DESCRIPTION	REMARKS
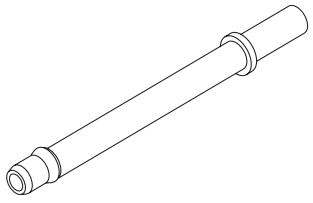 ST18471AA000	18471AA000	FUEL PIPE ADAPTER	Used for draining fuel.
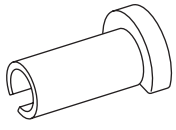 ST42099AE000	42099AE000	QUICK CONNECTOR RELEASE	Used for removing the quick connector of the fuel delivery tube.

ILLUSTRATION	TOOL NUMBER	DESCRIPTION	REMARKS
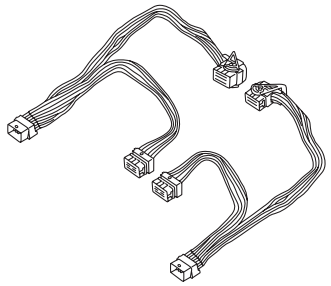 ST18460AA050	18460AA050	CHECK BOARD	Used for inspecting the fuel system.
 STSSM4	— (Newly adopted tool)	SUBARU SELECT MONITOR 4	Used for setting of each function and trouble-shooting for electrical system. NOTE: For detailed operation procedures of Subaru Select Monitor 4, refer to “Application help”.

2. GENERAL TOOL

TOOL NAME	REMARKS
Circuit tester	Used for measuring resistance, voltage and current.
Oscilloscope	Used for inspecting the waveform of each sensor.
Mighty Vac	Used for inspecting the manifold absolute pressure sensor.
DST-i	Used together with Subaru Select Monitor 4.

2. Throttle Body

A: REMOVAL

1) Remove the collector cover.
   (1) Carefully pull up the rear of collector cover at two positions (A).
   (2) Carefully pull up the front of collector cover at two positions (B) while moving it forward.

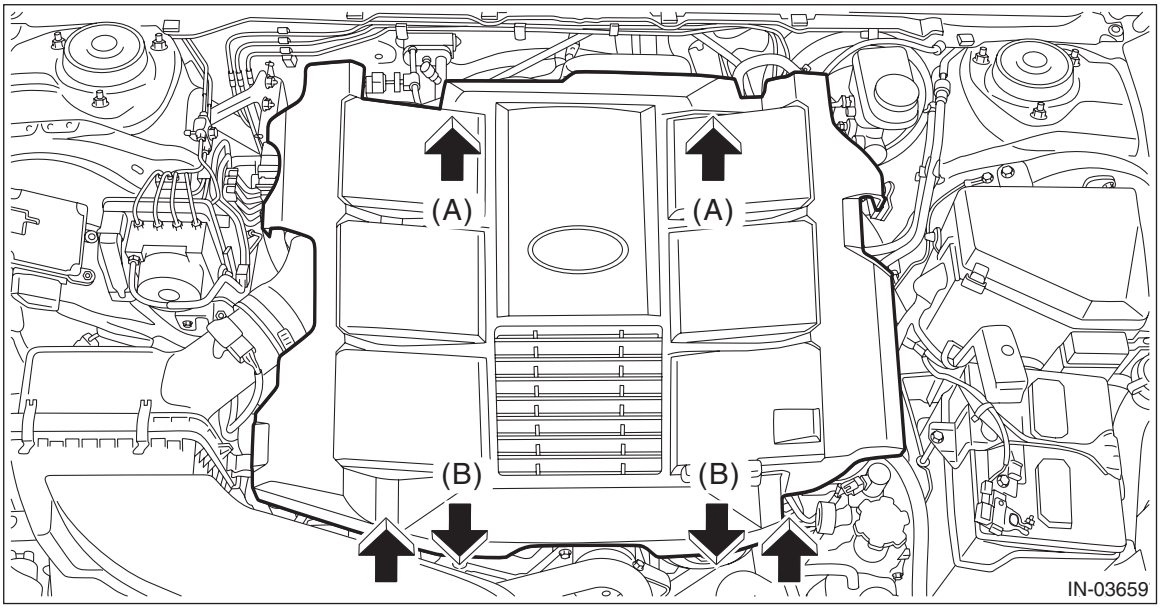

2) Disconnect the ground terminal from battery sensor. <Ref. to RC-4, BATTERY, NOTE, Repair Contents.>
3) Drain approximately 3.0 L (3.2 US qt, 2.6 Imp qt) of coolant. <Ref. to CO(H6DO)-13, DRAINING OF ENGINE COOLANT, REPLACEMENT, Engine Coolant.>
4) Loosen the clamp (A) securing the air intake boot.
5) Remove the bolt (B) securing the air intake boot to the collector cover bracket.

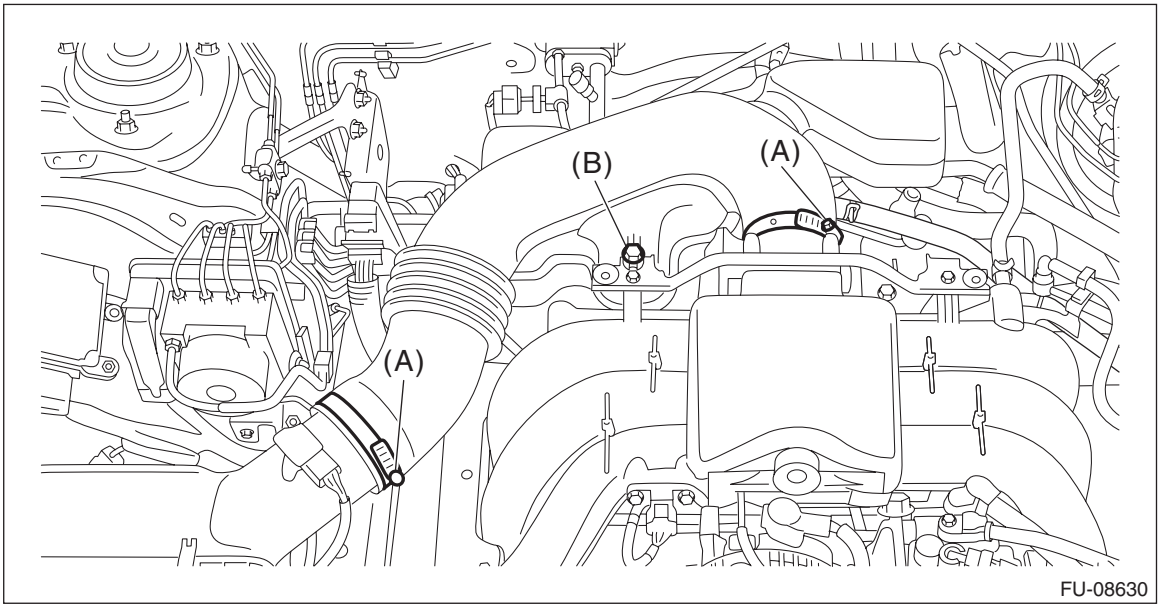

6) Remove the air intake boot from the throttle body and the air cleaner case (rear), and move it to the left side wheel apron.

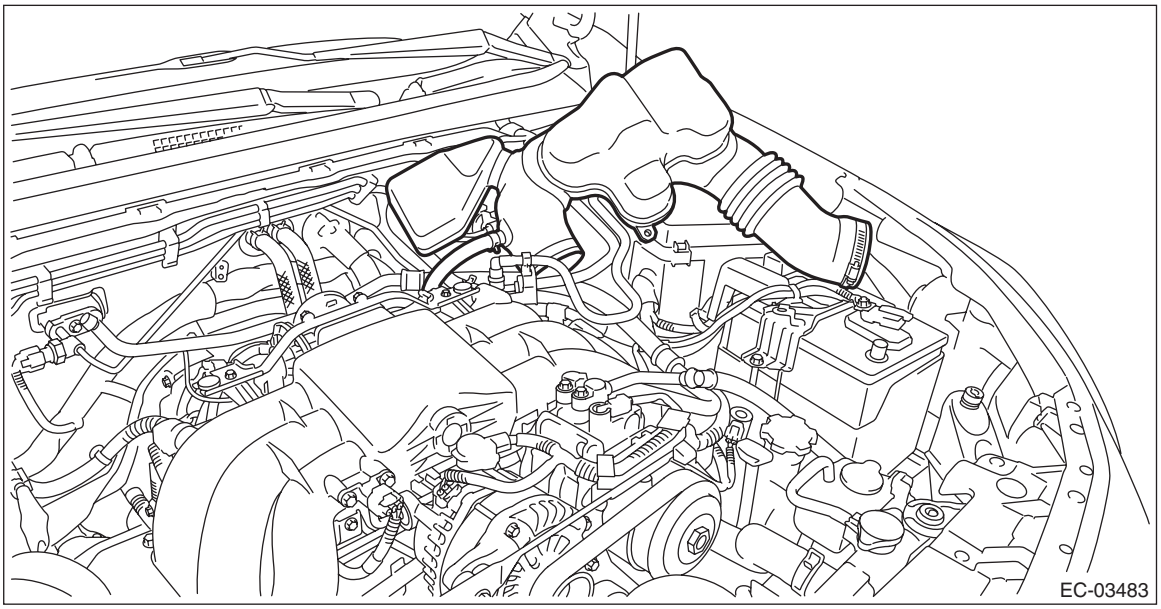

7) Disconnect the connector (A) from the throttle position sensor, and disconnect the preheater hose (B) from the throttle body.
8) Remove the throttle body from the intake manifold.

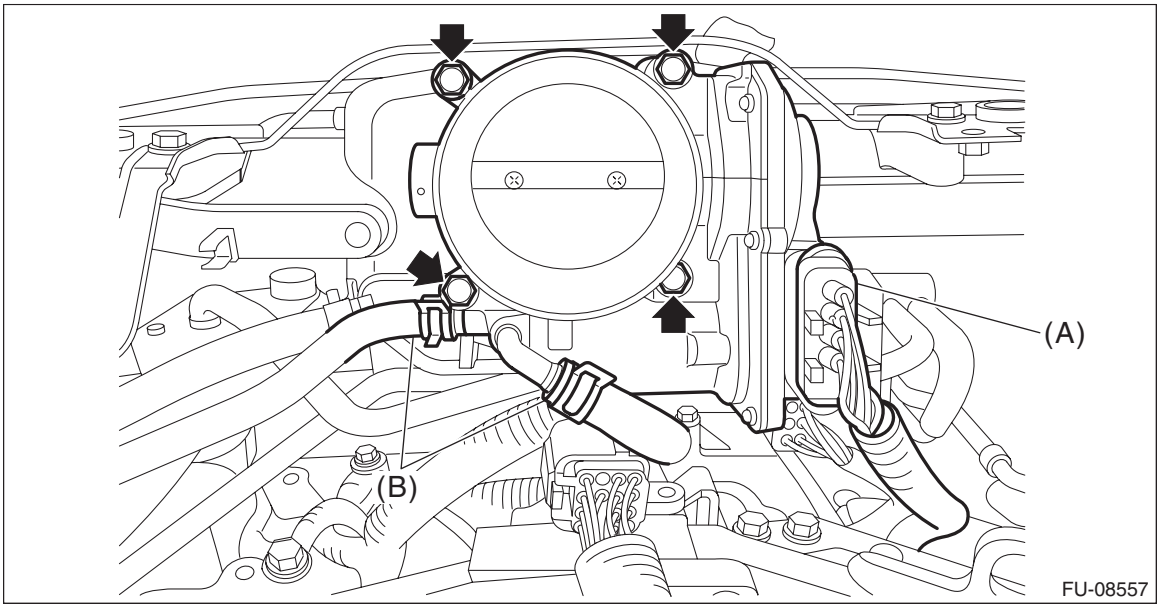

B: INSTALLATION

1) Install the throttle body to the intake manifold.

NOTE:
Use a new gasket.

Tightening torque:
8 N·m (0.8 kgf-m, 5.9 ft-lb)

2) Connect the connector (A) to the throttle position sensor, and connect the preheater hose (B) to the throttle body.

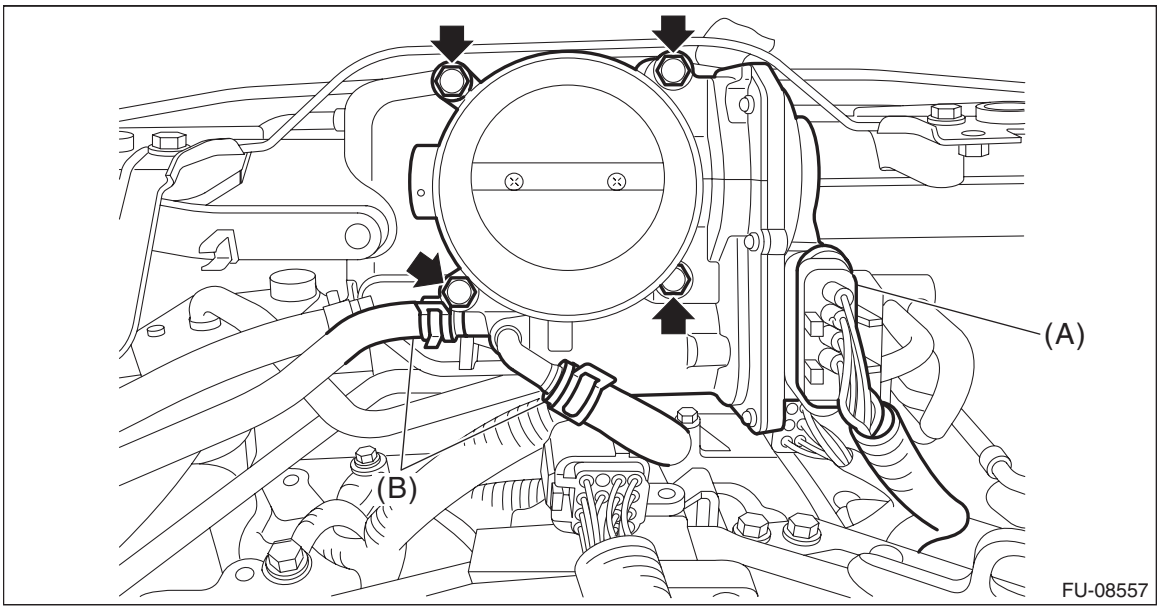

3) Install the air intake boot. <Ref. to IN(H6DO)-11, INSTALLATION, Air Intake Boot.>
4) Connect the ground terminal to battery sensor. <Ref. to RC-4, BATTERY, NOTE, Repair Contents.>
5) Fill engine coolant. <Ref. to CO(H6DO)-14, FILLING OF ENGINE COOLANT, REPLACEMENT, Engine Coolant.>
6) Install the collector cover.

C: INSPECTION

1. THROTTLE SENSOR (METHOD WITH CIRCUIT TESTER)

1) Disconnect the ground terminal from battery sensor. <Ref. to RC-4, BATTERY, NOTE, Repair Contents.>
2) While pressing the section (A) shown in the figure, move the lock lever (B) in the direction of the arrow to disconnect the connectors from the ECM in numerical order as shown in the figure.

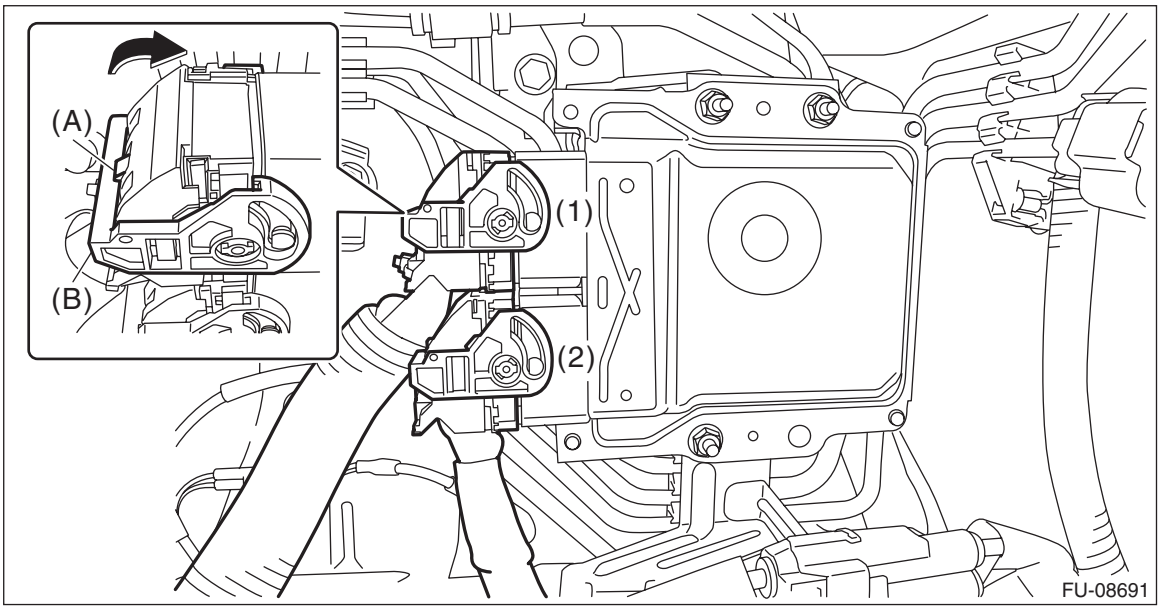

3) Attach the ST between the ECM, engine harness and the bulkhead wiring harness. <Ref. to EN(H6DO)(diag)-6, CAUTION, General Description.>
ST 18460AA050 CHECK BOARD
4) Connect the ground terminal to battery sensor. <Ref. to RC-4, BATTERY, NOTE, Repair Contents.>
5) Turn the ignition switch to ON. (Engine OFF)

6) Measure the voltage between ECM connector terminals using ST.

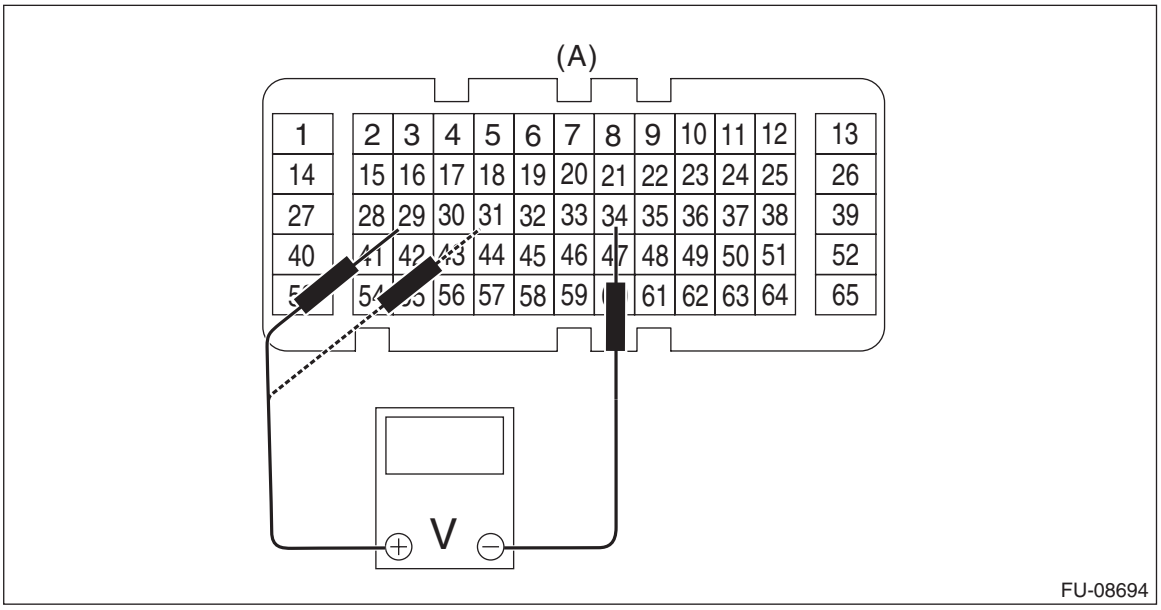

(A) To the check board connector (ECM connector)

Throttle sensor	Accelerator pedal	Terminal No.	Standard
Main	Not depressed (full closed)	29 (+) and 34 (–)	Approx. 0.6 — 1.2 V
	Depressed (full opened)		Approx. 3.8 — 4.4 V
Sub	Not depressed (full closed)	31 (+) and 34 (–)	Approx. 1.4 — 2.0 V
	Depressed (full opened)		Approx. 4.0 — 4.6 V

7) After inspection, install the related parts in the reverse order of removal.

2. THROTTLE SENSOR (METHOD WITH SUBARU SELECT MONITOR)

1) Turn the ignition switch to ON. (Engine OFF)
2) Read the throttle opening angle signal and voltage of throttle sensor using Subaru Select Monitor. <Ref. to EN(H6DO)(diag)-50, DISPLAY CURRENT ENGINE DATA, OPERATION, Subaru Select Monitor.>

Throttle sensor	Throttle opening angle signal	Standard
Main	0.0%	Approx. 0.6 — 1.2 V
	100.0%	Approx. 3.8 — 4.4 V
Sub	0.0%	Approx. 1.4 — 2.0 V
	100.0%	Approx. 4.0 — 4.6 V

3. OTHER INSPECTIONS

1) Check that the throttle body has no deformation, cracks or other damages.
2) Check that the preheater hose has no cracks, damage or loose part.

3. Intake Manifold

A: REMOVAL

1) Remove the collector cover.
   (1) Carefully pull up the rear of collector cover at two positions (A).
   (2) Carefully pull up the front of collector cover at two positions (B) while moving it forward.

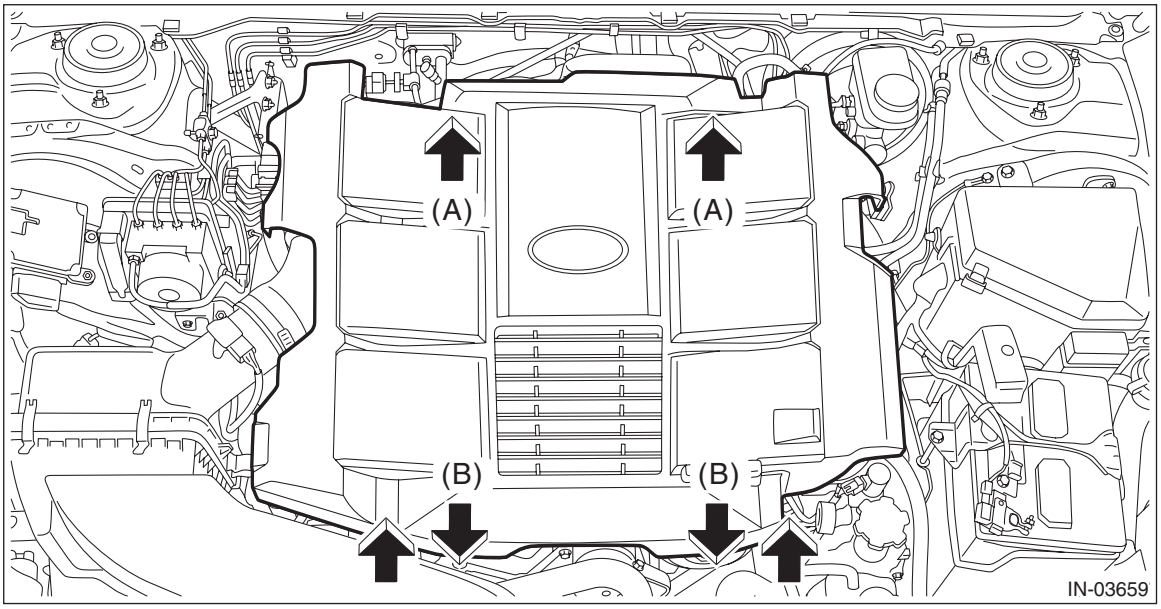

2) Release the fuel pressure. <Ref. to FU(H6DO)-93, RELEASING OF FUEL PRESSURE, PROCEDURE, Fuel.>
3) Disconnect the ground terminal from battery sensor. <Ref. to RC-4, BATTERY, NOTE, Repair Contents.>
4) Open the fuel filler lid and remove the fuel filler cap.

NOTE:
This operation is required to release the inner pressure of the fuel tank.
5) Disconnect the brake booster vacuum hose.

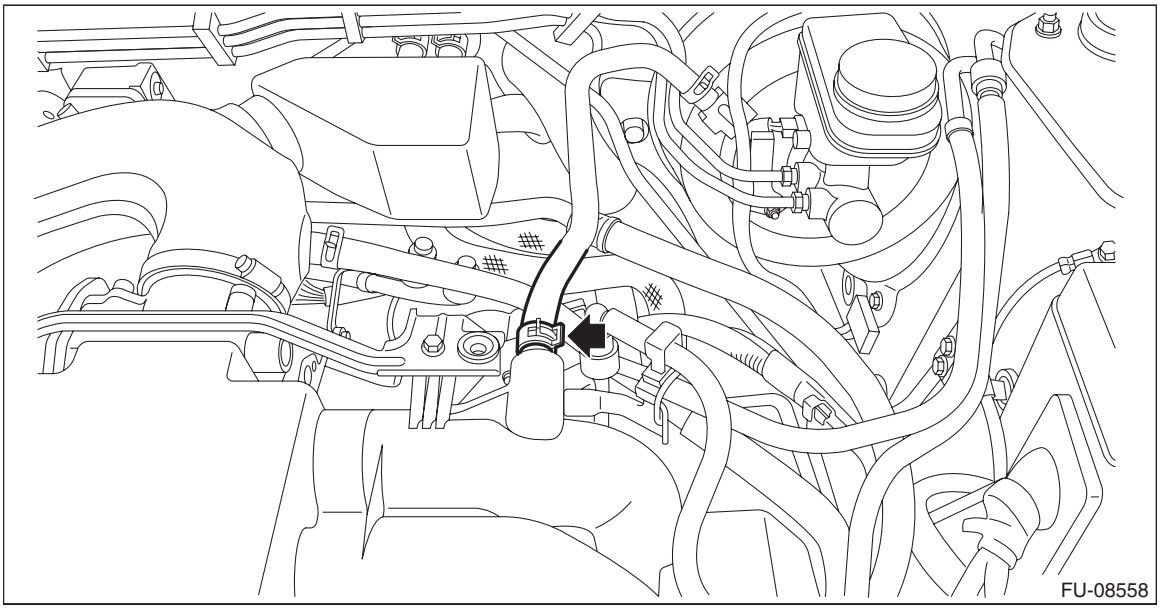

6) Loosen the clamp (A) securing the air intake boot.
7) Remove the bolt (B) securing the air intake boot to the collector cover bracket.

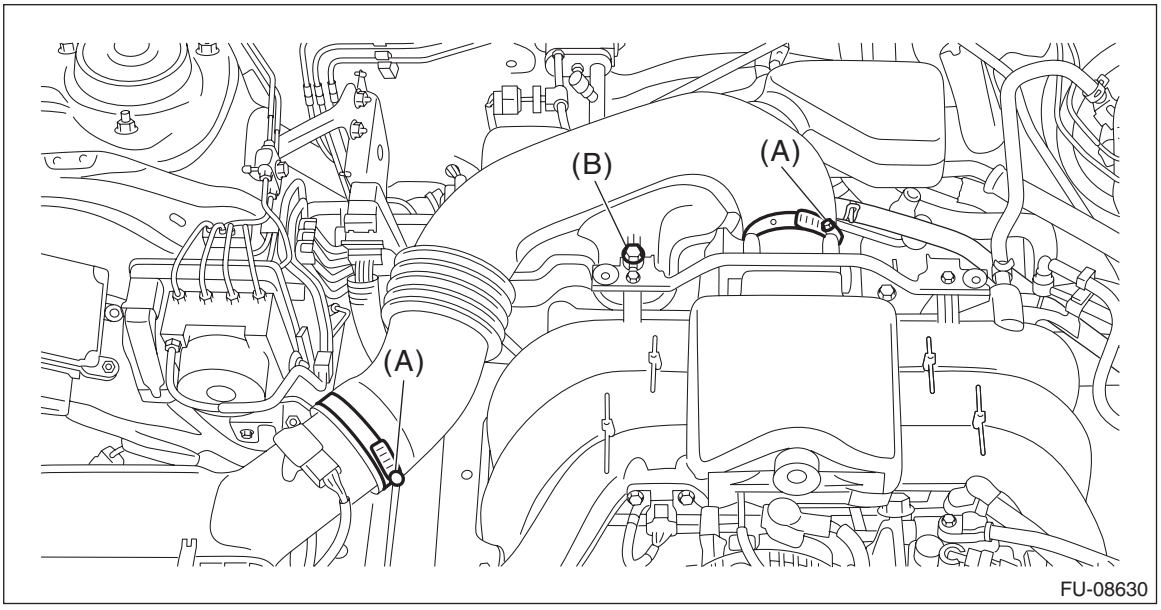

8) Remove the air intake boot from the throttle body and the air cleaner case (rear), and move it to the left side wheel apron.

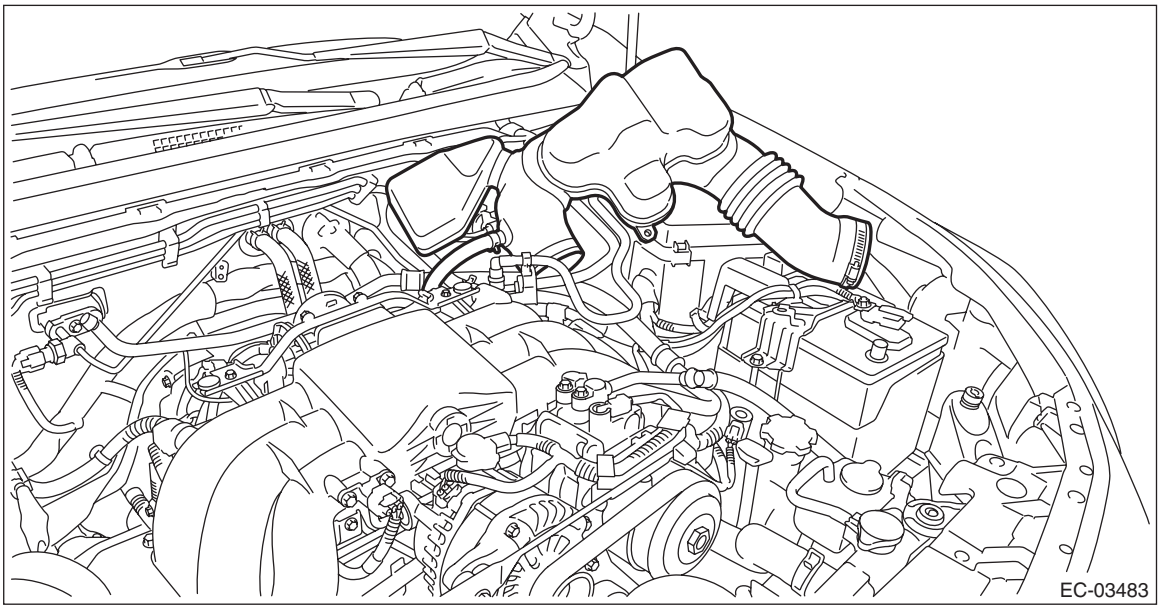

9) Remove the fuel injector. <Ref. to FU(H6DO)-61, REMOVAL, Fuel Injector.>

10) Disconnect the engine harness connector.

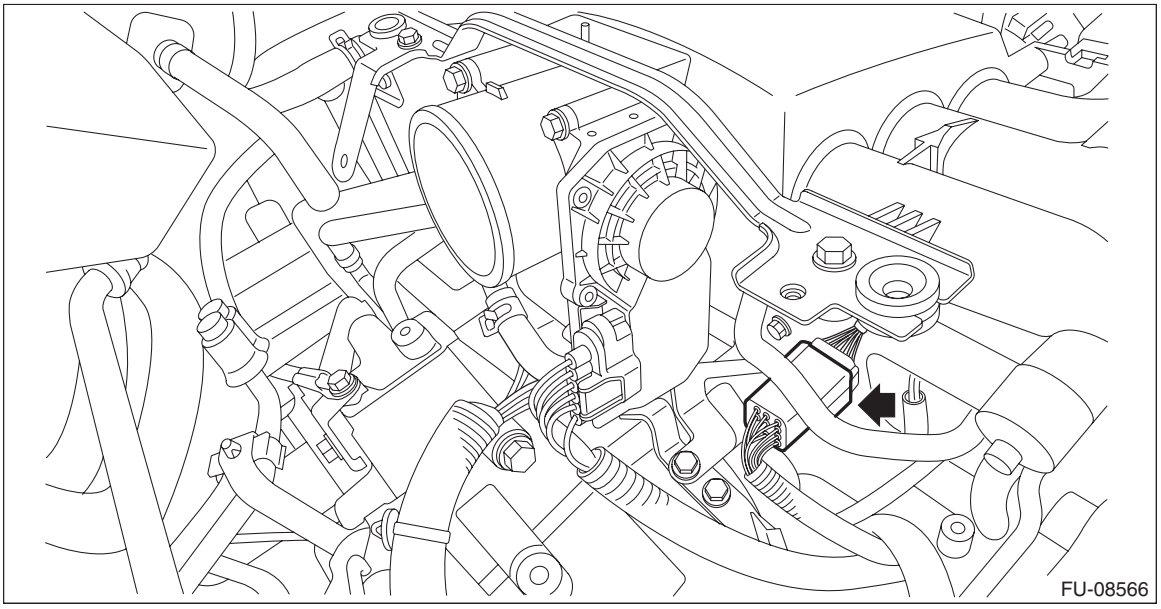

11) Disconnect the connector (A) from the throttle body, and remove the throttle body from the intake manifold.

NOTE:
Do not disconnect the preheater hose.

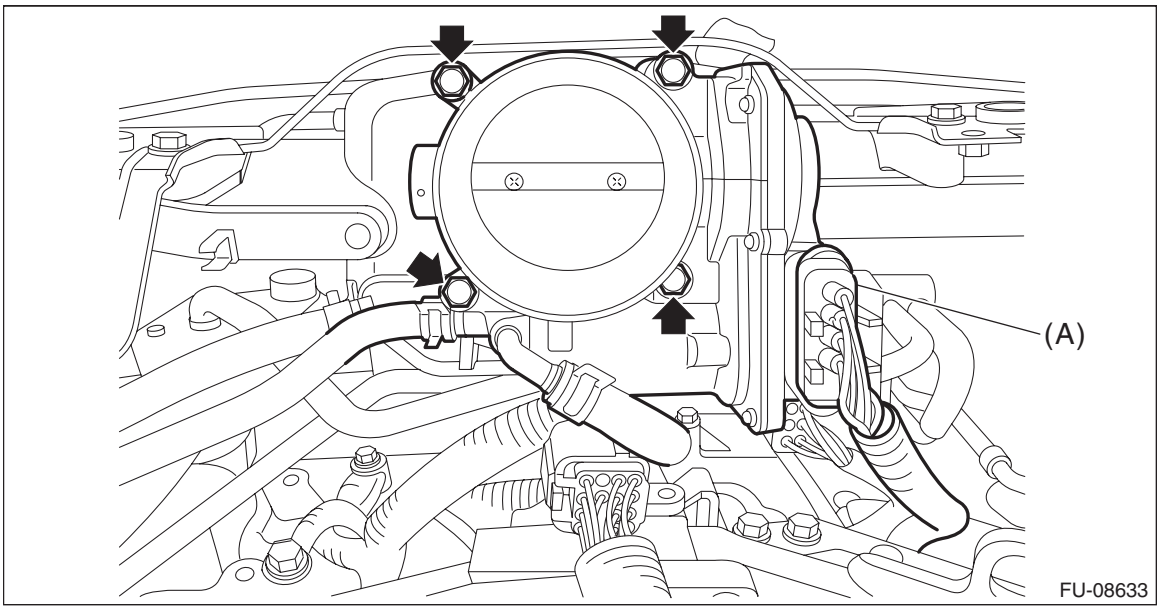

12) Disconnect the fuel delivery tube and evaporation hose.

CAUTION:
- **Be careful not to spill fuel.**
- **Catch the fuel from the tubes using a container or cloth.**

(1) Remove the clip (A) securing the fuel delivery tube.
(2) Attach ST to the fuel pipe assembly and push ST in the direction of arrow mark to disconnect the quick connector of the fuel delivery tube (B).

ST 42099AE000 QUICK CONNECTOR RELEASE

(3) Disconnect the evaporation hose (C) from the fuel pipe assembly.

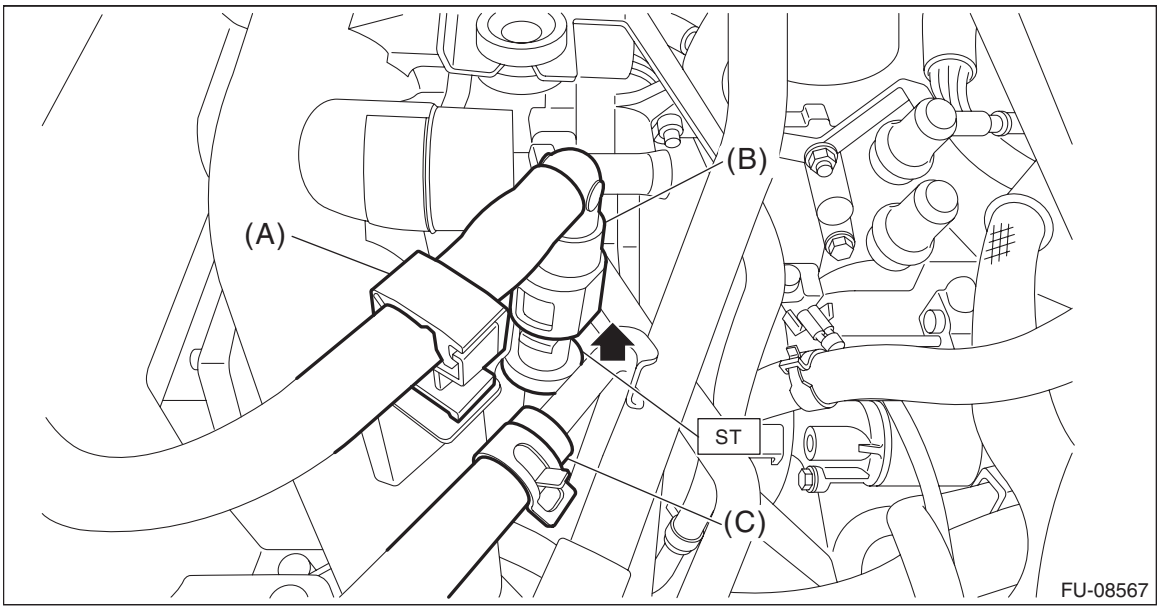

13) Disconnect the connectors from the oil temperature sensor, engine coolant temperature sensor and intake oil flow control solenoid valve LH.

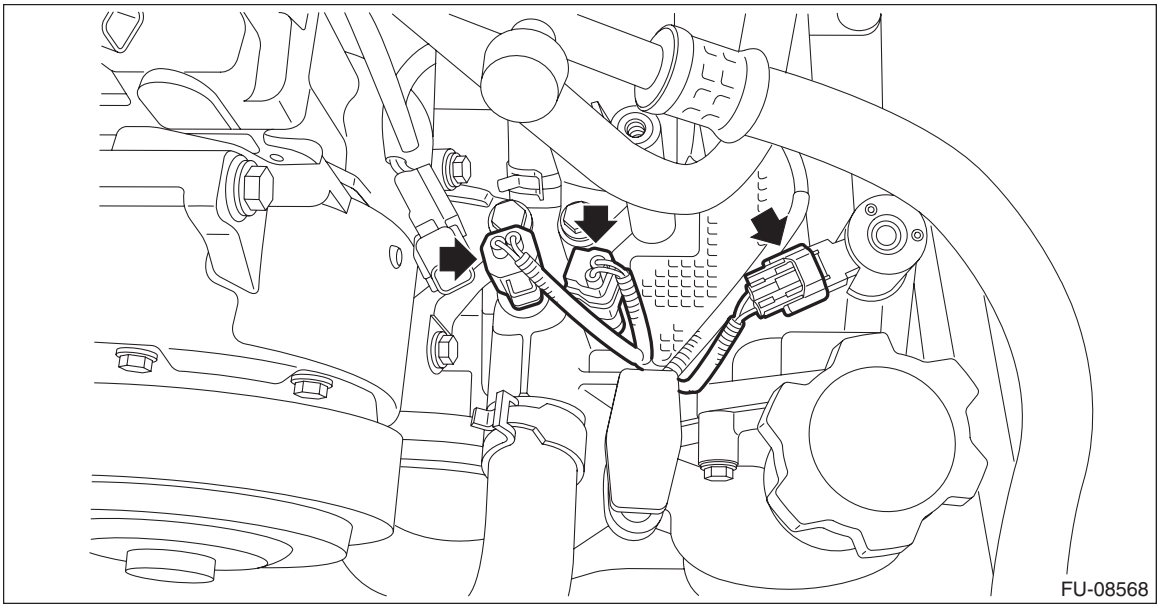

14) Remove the clip securing the engine harness to the fuel injector pipe LH.

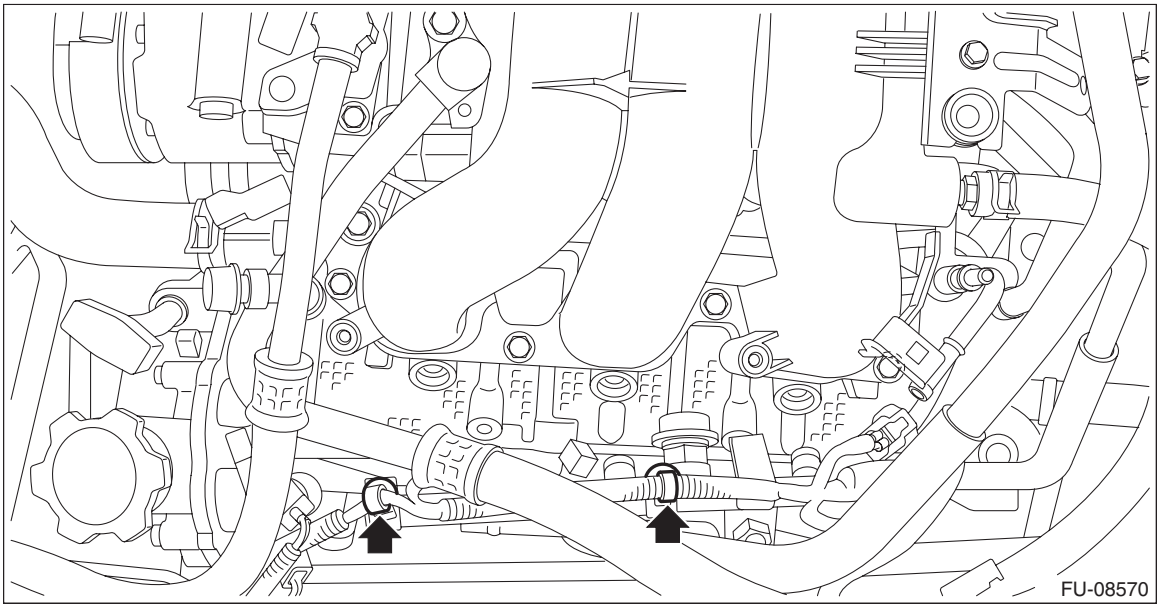

15) Disconnect the connector from the intake oil flow control solenoid valve RH.

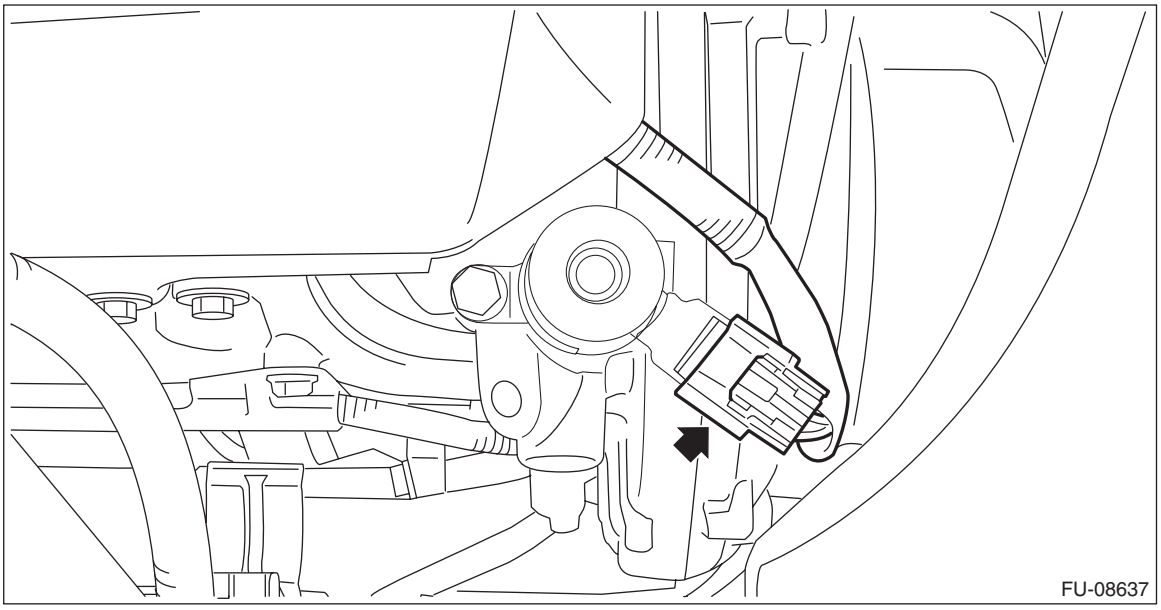

16) Remove the clip securing the engine harness to the fuel injector pipe RH.

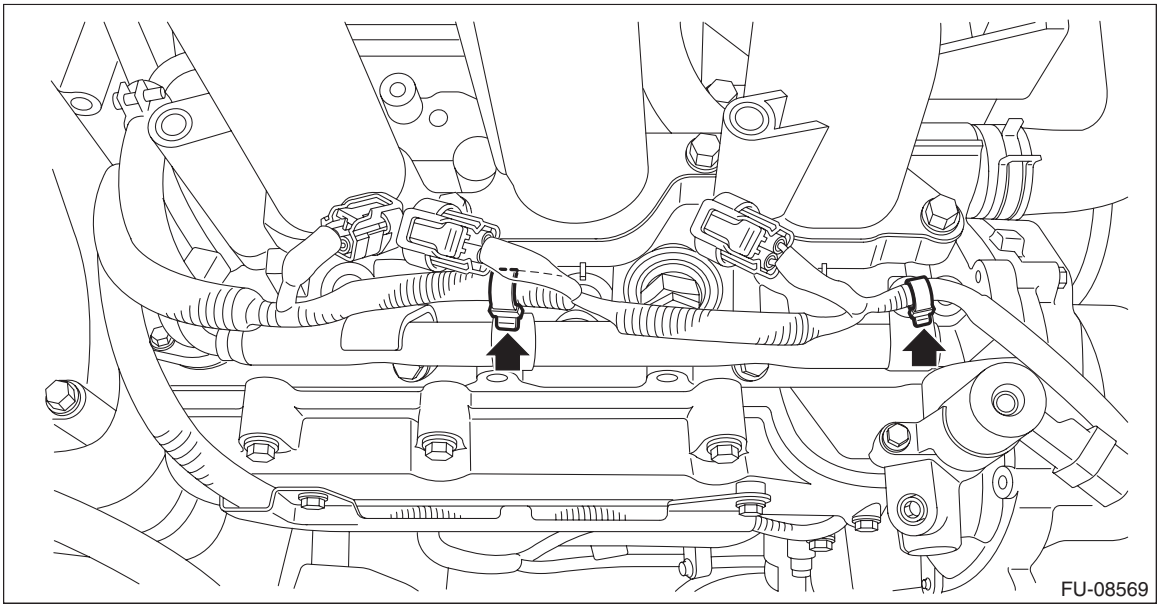

17) Remove the bolts securing the EGR pipe B to the EGR control valve.

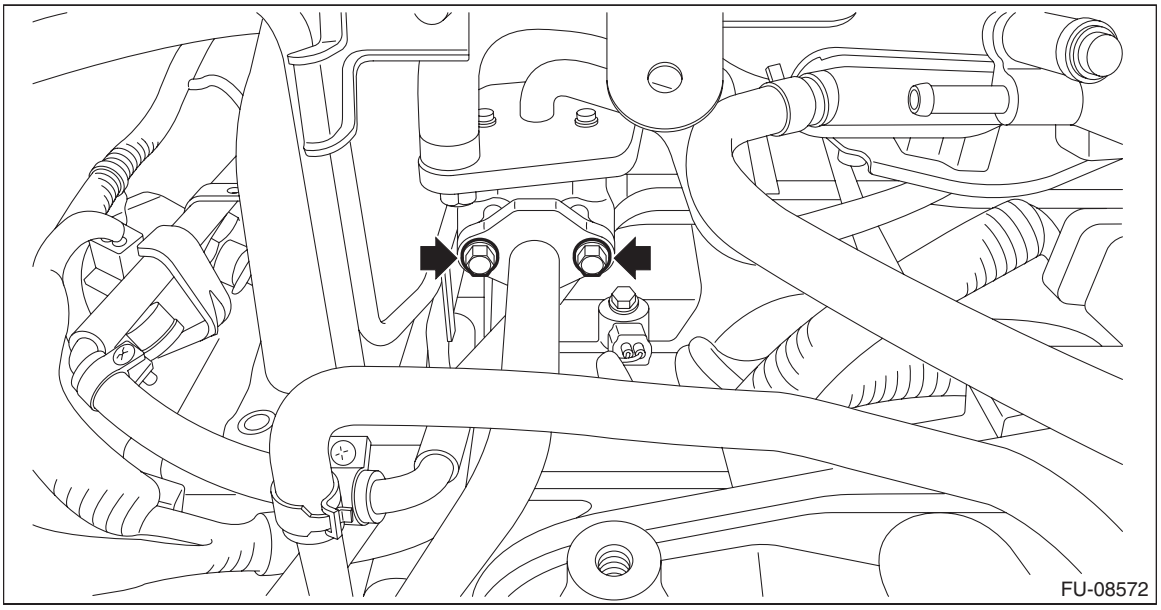

18) Remove the intake manifold from cylinder head.
- RH side

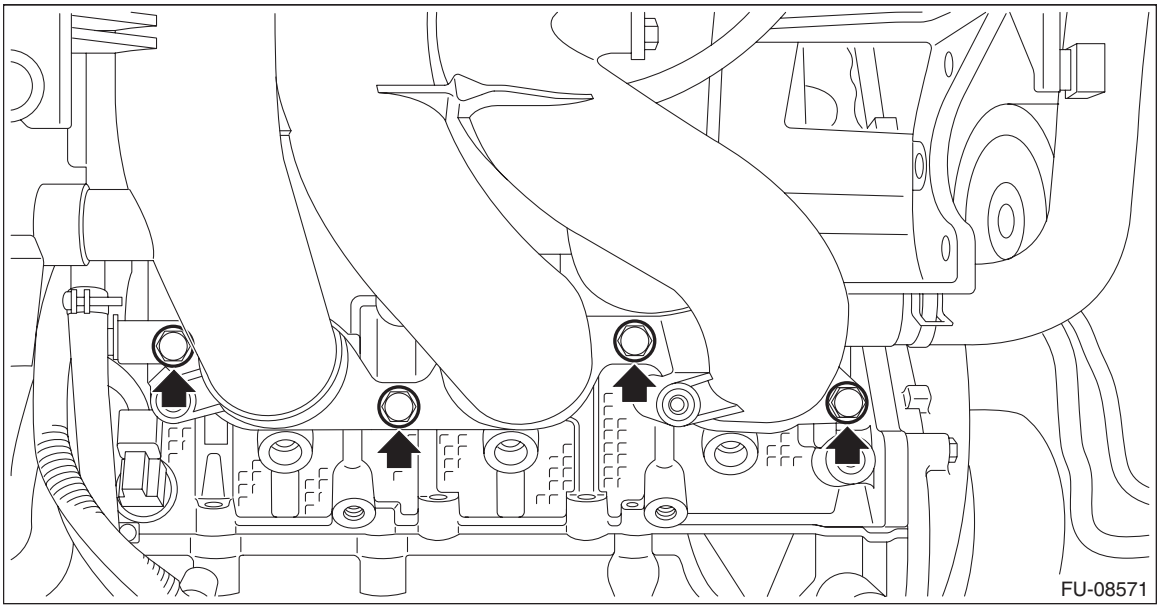

- LH side

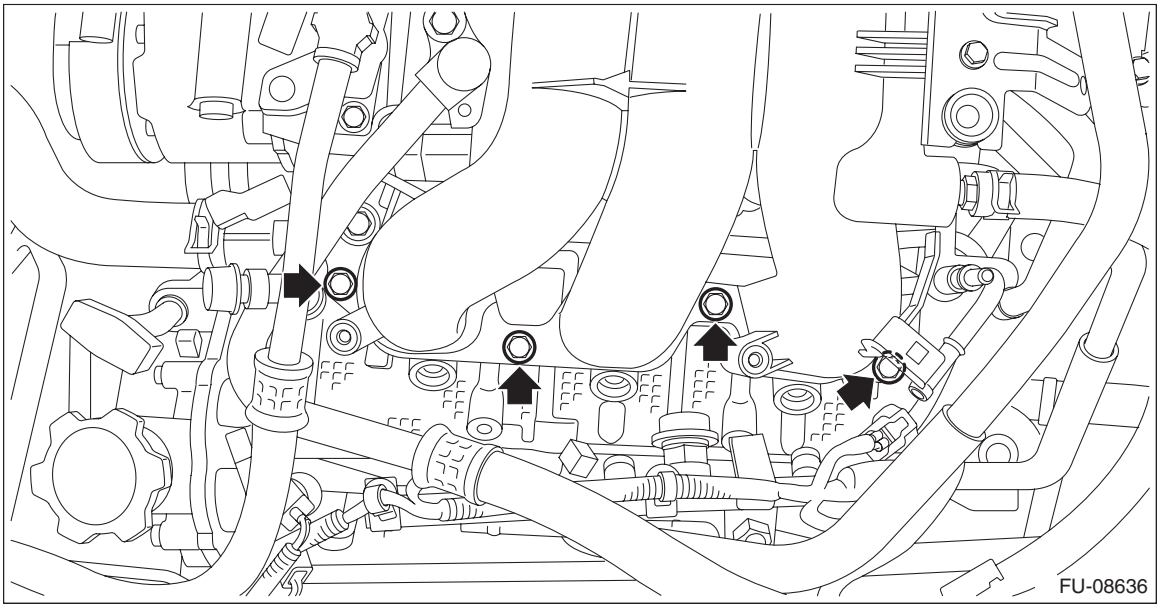

B: INSTALLATION

1) Install the intake manifold onto cylinder heads.

NOTE:
Use a new gasket.

Tightening torque:
25 N·m (2.5 kgf-m, 18.4 ft-lb)

- RH side

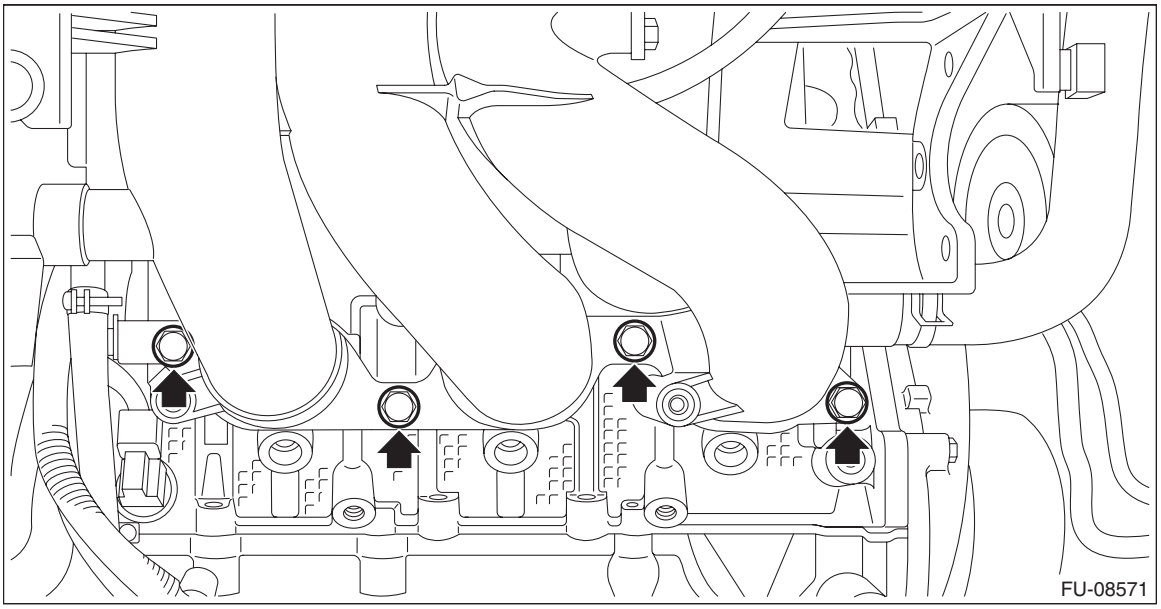

- LH side

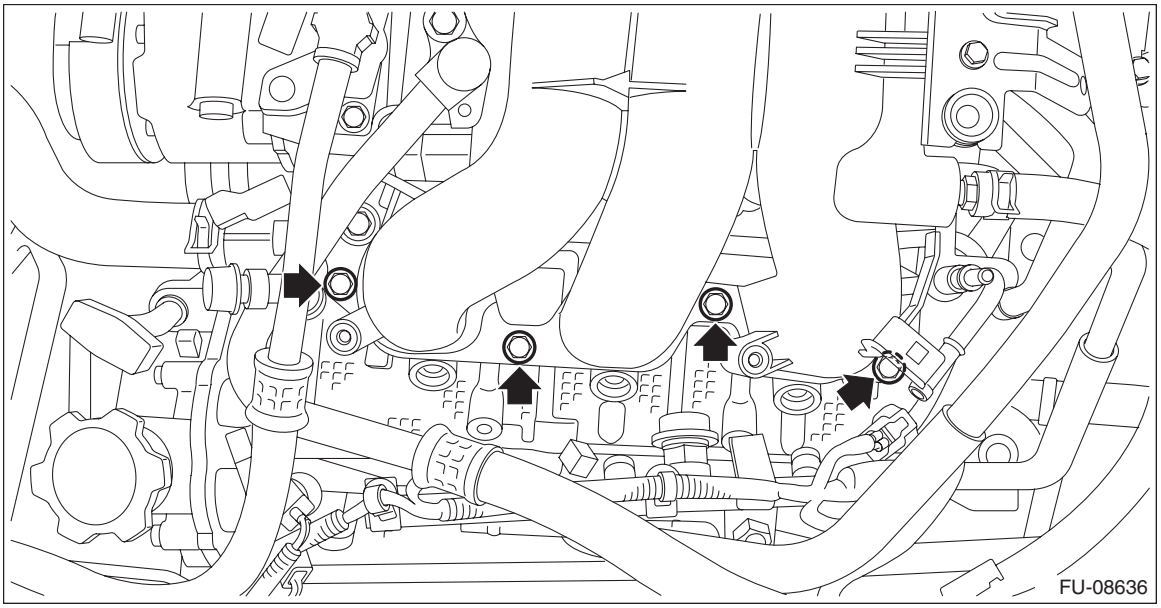

2) Install the bolts securing the EGR pipe B to the EGR control valve.

NOTE:
Use a new gasket.

Tightening torque:
6.4 N·m (0.7 kgf-m, 4.7 ft-lb)

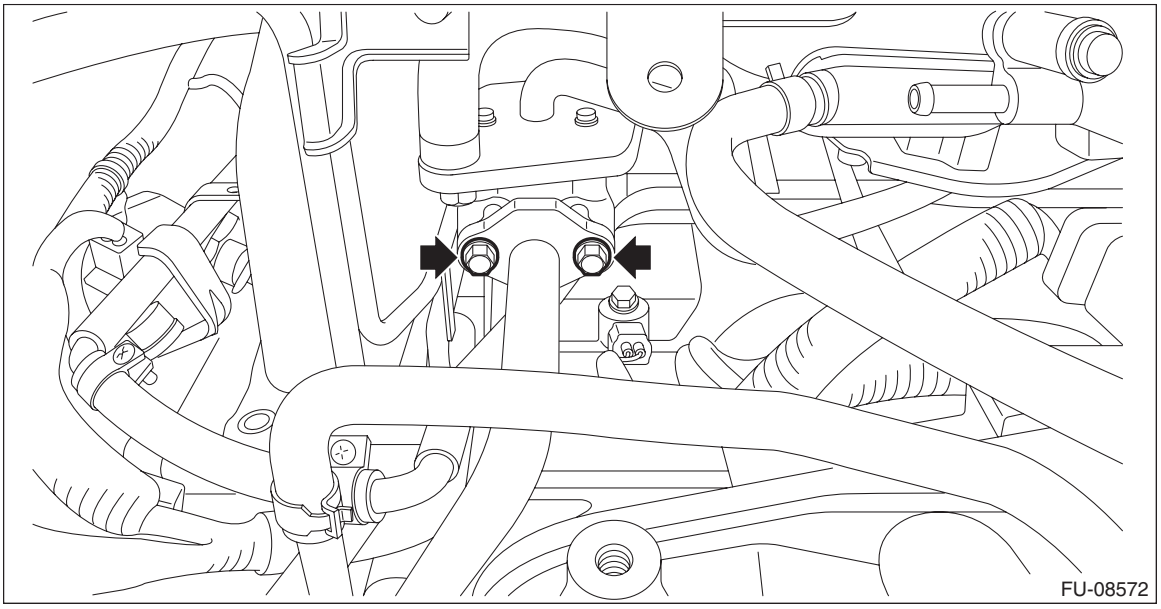

3) Install the clip securing the engine harness to the fuel injector pipe RH.

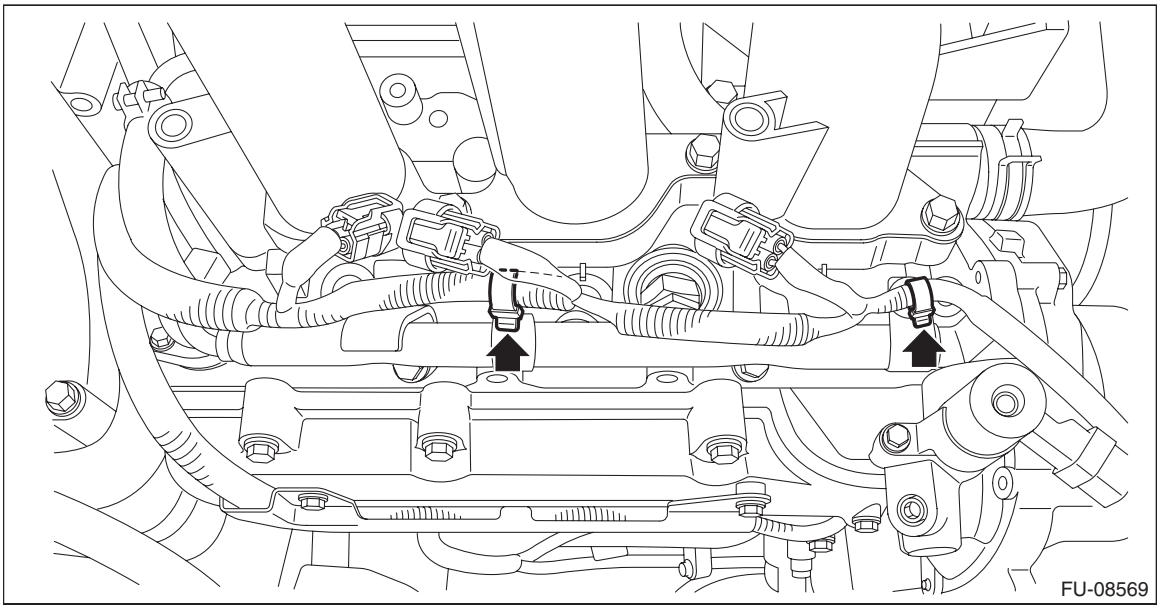

4) Connect the connector to the intake oil flow control solenoid valve RH.

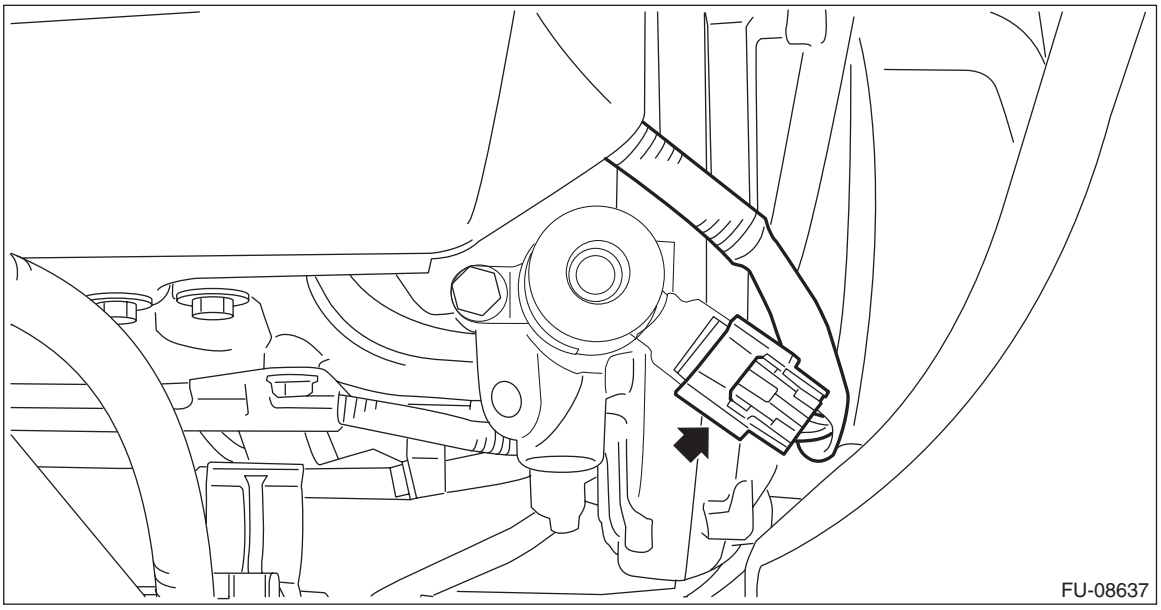

5) Install the clip securing the engine harness to the fuel injector pipe LH.

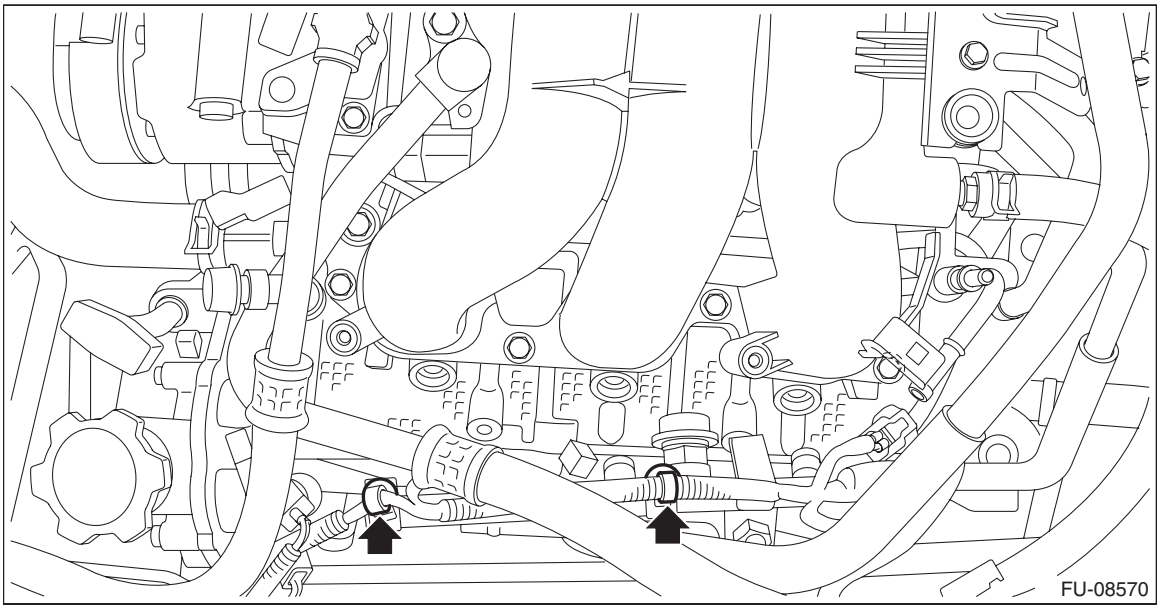

6) Connect the connectors to the oil temperature sensor, engine coolant temperature sensor and intake oil flow control solenoid valve LH.

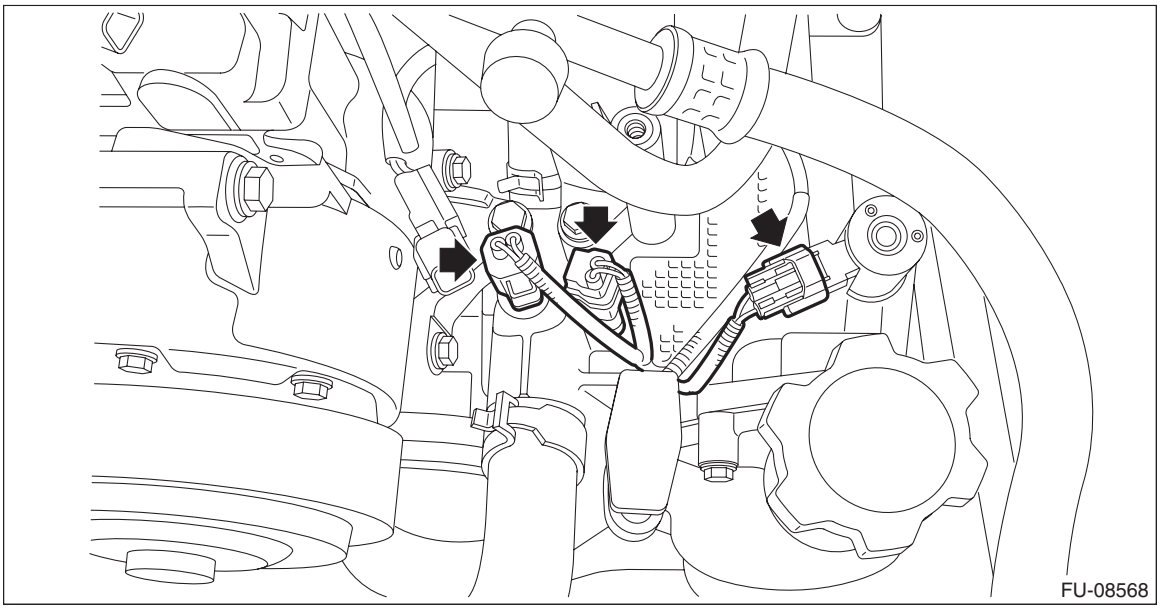

7) Connect the fuel delivery tube and evaporation hose.
   (1) Connect the evaporation hose (C) to the fuel pipe assembly.
   (2) Connect the quick connector of the fuel delivery tube (B) to the fuel pipe assembly, and secure the fuel delivery tube using clip (A).

CAUTION:
• Check that there is no damage or dust on the quick connector. If necessary, clean the seal surface of the pipe.
• Make sure that the quick connector is securely connected.

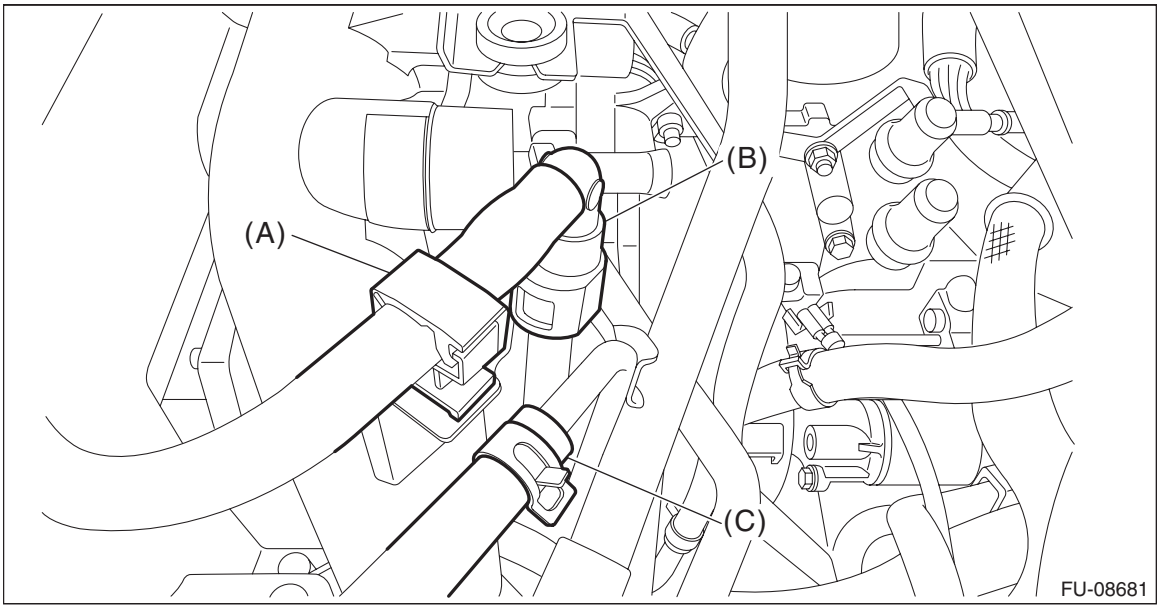

8) Install the throttle body to the intake manifold, and connect the connector (A) to the throttle body.

NOTE:
Use a new gasket.

Tightening torque:
8 N·m (0.8 kgf-m, 5.9 ft-lb)

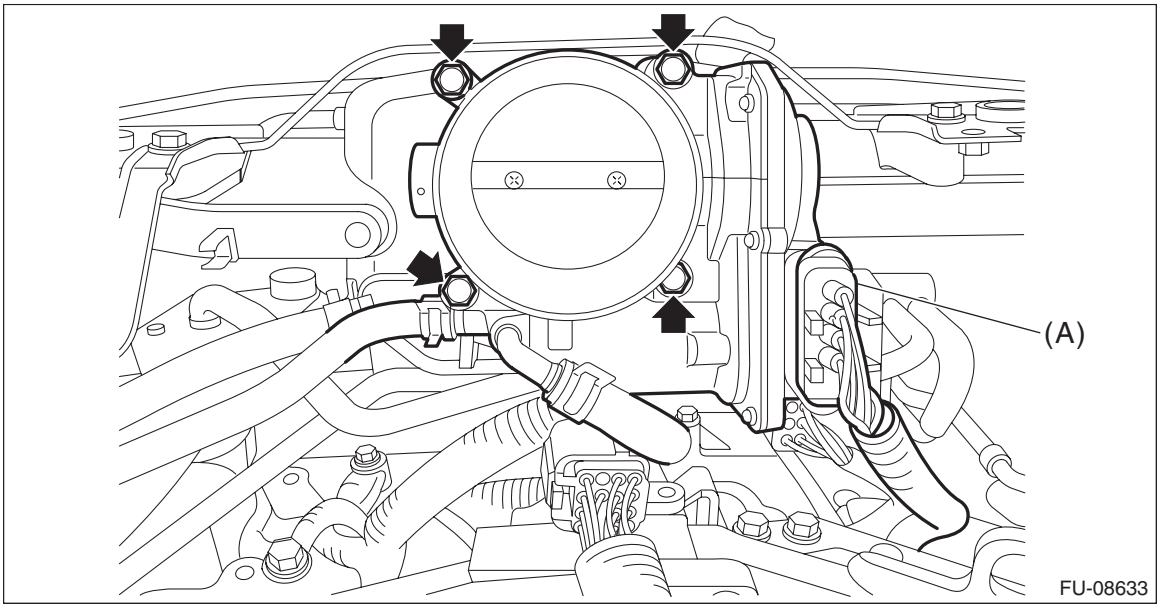

9) Connect the engine harness connector.

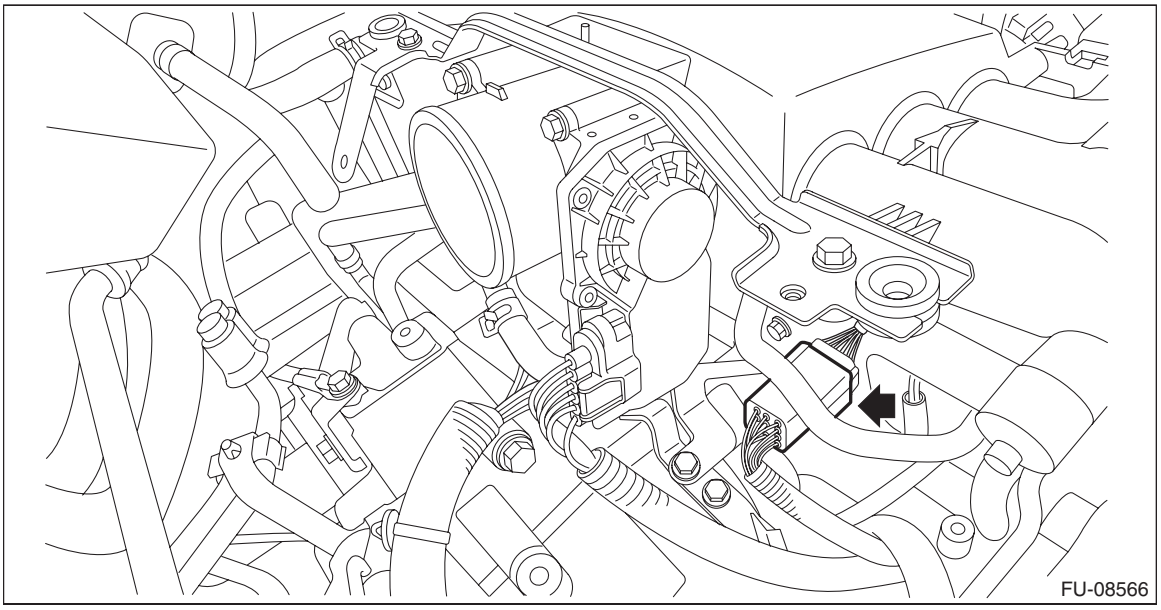

10) Install the fuel injector. <Ref. to FU(H6DO)-67, INSTALLATION, Fuel Injector.>
11) Install the air intake boot. <Ref. to IN(H4DO)-10, INSTALLATION, Air Intake Boot.>
12) Connect the brake booster vacuum hose.

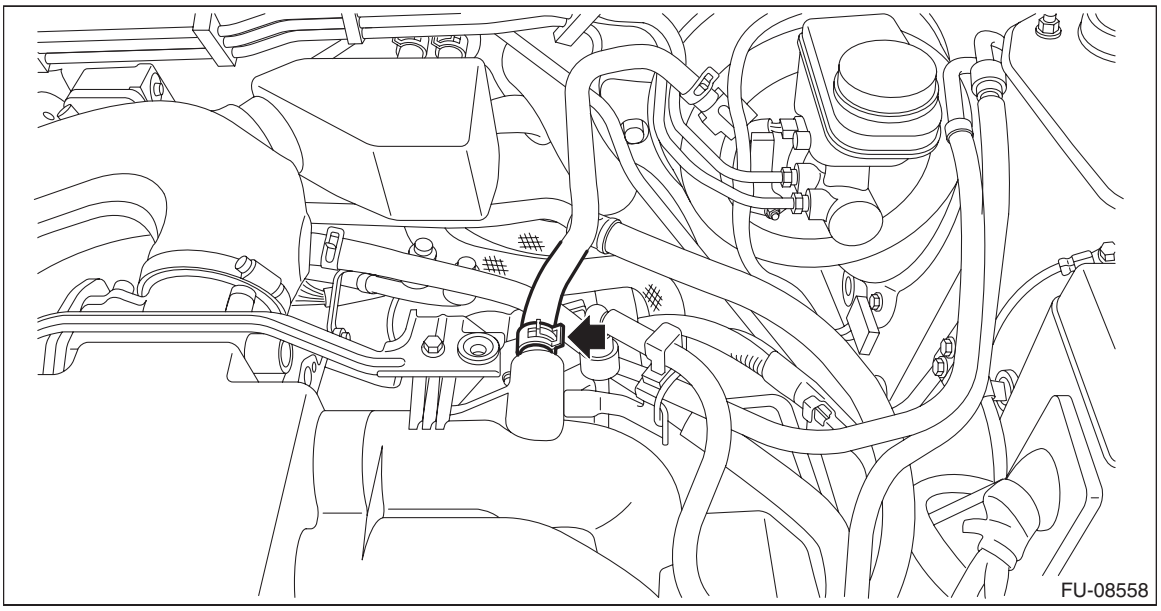

13) Connect the ground terminal to battery sensor. <Ref. to RC-4, BATTERY, NOTE, Repair Contents.>
14) Install the collector cover.

C: DISASSEMBLY

1) Remove the fuel injector pipe and the fuel hose, and remove the fuel pipe assembly.

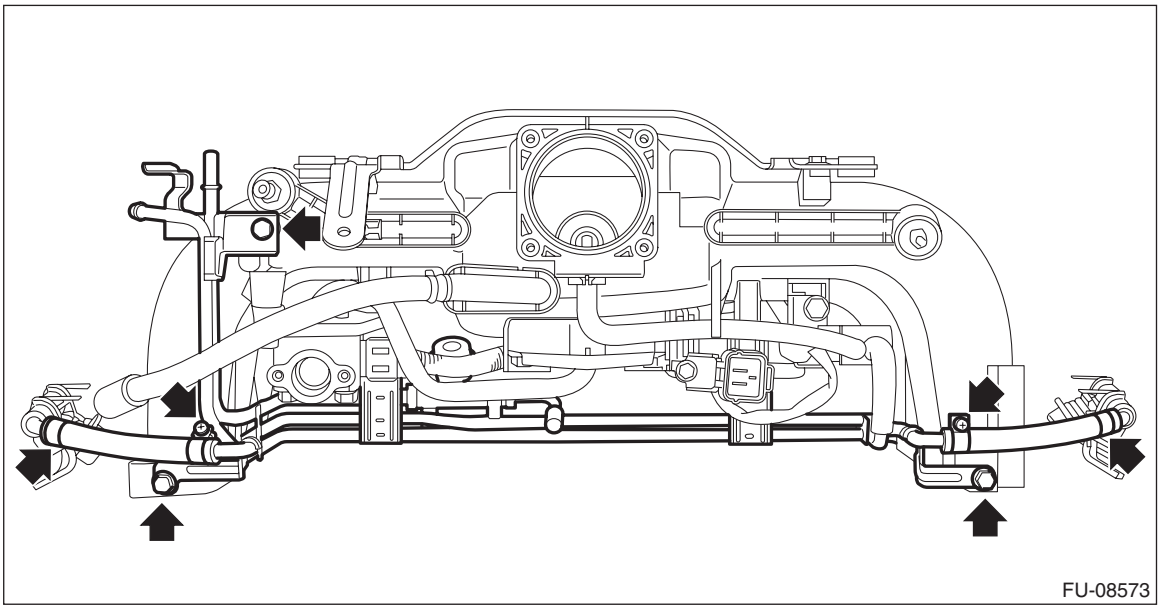

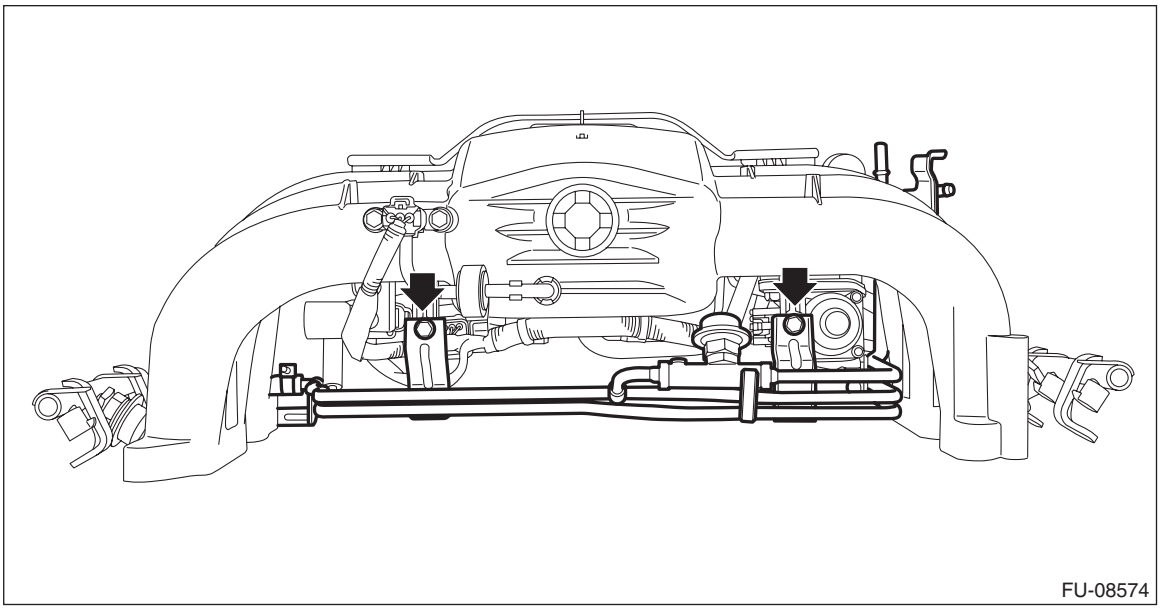

2) Remove the engine harness. <Ref. to FU(H6DO)-8, ENGINE HARNESS, COMPONENT, General Description.>
3) Remove the EGR control valve. <Ref. to EC(H6DO)-22, REMOVAL, EGR Control Valve.>
4) Remove the EGR pipe B. <Ref. to EC(H6DO)-27, EGR PIPE B, REMOVAL, EGR Pipe.>
5) Remove the manifold absolute pressure sensor. <Ref. to FU(H6DO)-55, REMOVAL, Manifold Absolute Pressure Sensor.>
6) Remove the purge control solenoid valve. <Ref. to EC(H6DO)-17, REMOVAL, Purge Control Solenoid Valve.>

D: ASSEMBLY

NOTE:
When assembling the nipple, apply liquid gasket.

Liquid gasket:
THREE BOND 1105 (Part No. 004403010) or equivalent

Tightening torque:
17 N·m (1.7 kgf-m, 12.5 ft-lb)
1) Install the purge control solenoid valve. <Ref. to EC(H6DO)-19, INSTALLATION, Purge Control Solenoid Valve.>
2) Install the manifold absolute pressure sensor. <Ref. to FU(H6DO)-55, INSTALLATION, Manifold Absolute Pressure Sensor.>
3) Install the EGR pipe B. <Ref. to EC(H6DO)-28, EGR PIPE B, INSTALLATION, EGR Pipe.>
4) Install the EGR control valve. <Ref. to EC(H6DO)-24, INSTALLATION, EGR Control Valve.>
5) Install the engine harness to the intake manifold. <Ref. to FU(H6DO)-8, ENGINE HARNESS, COMPONENT, General Description.>

6) Install the fuel pipe assembly, and install the fuel injector pipe and the fuel hose. <Ref. to FU(H6DO)-165, CONNECTING THE FUEL DELIVERY HOSE, INSTALLATION, Fuel Delivery and Evaporation Lines.>

Tightening torque:
T1: 1.25 N·m (0.1 kgf-m, 0.9 ft-lb)
T2: 6.4 N·m (0.7 kgf-m, 4.7 ft-lb)

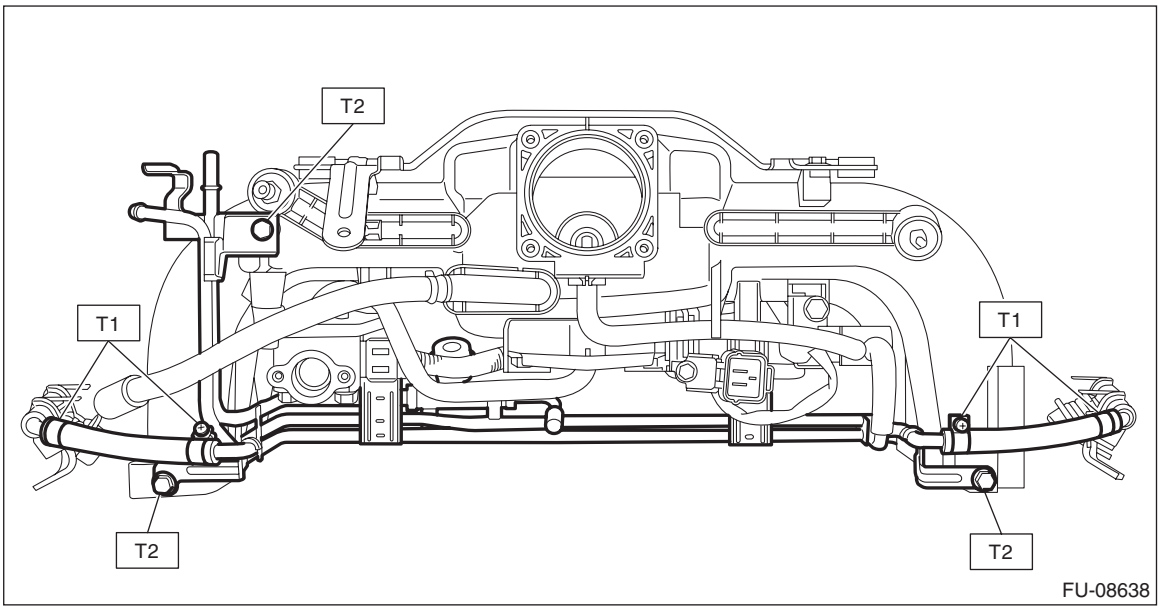

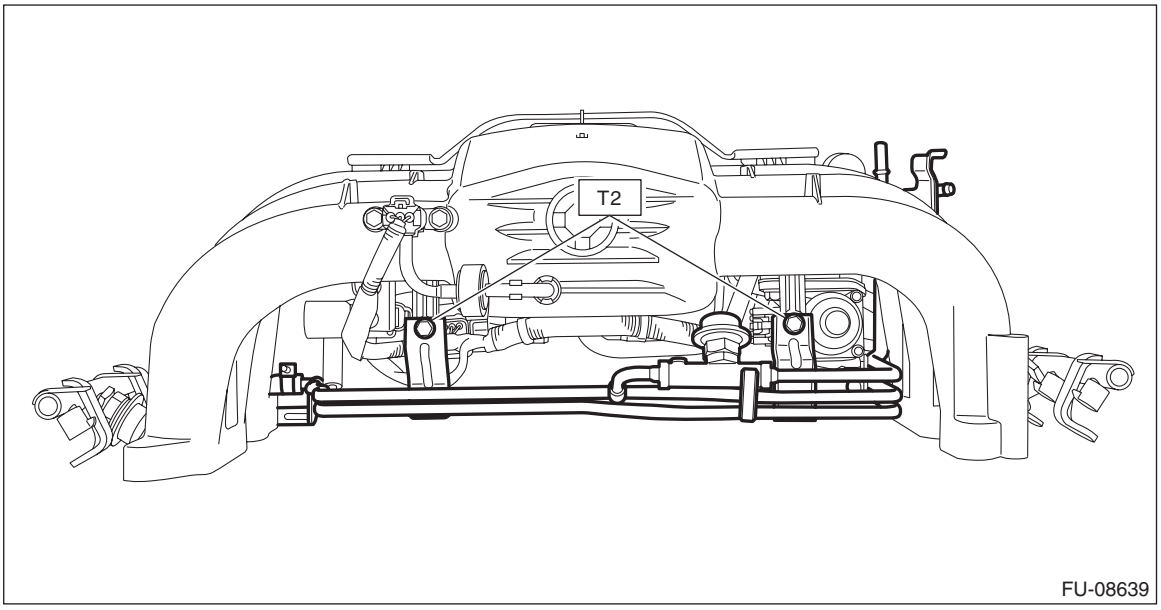

E: INSPECTION

1) Check that the intake manifold and fuel pipe assembly have no deformation, cracks and other damages.
2) Check that the hose has no cracks, damage or loose part.

4. Engine Coolant Temperature Sensor

A: REMOVAL

1) Remove the collector cover.
   (1) Carefully pull up the rear of collector cover at two positions (A).
   (2) Carefully pull up the front of collector cover at two positions (B) while moving it forward.

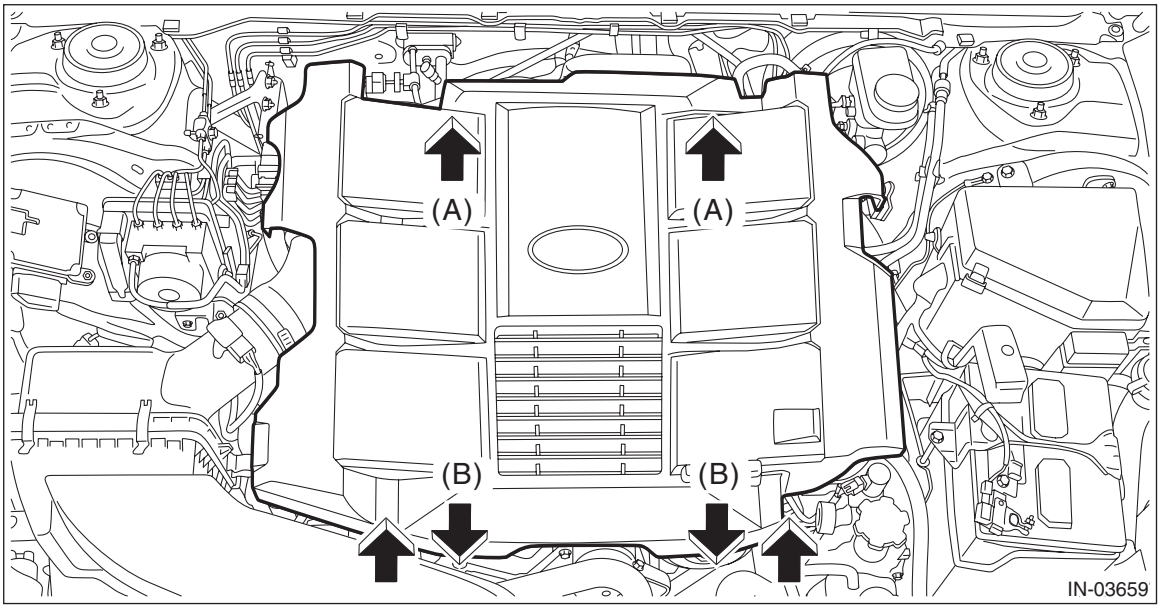

2) Disconnect the ground terminal from battery sensor. <Ref. to RC-4, BATTERY, NOTE, Repair Contents.>
3) Drain engine coolant. <Ref. to CO(H6DO)-13, DRAINING OF ENGINE COOLANT, REPLACEMENT, Engine Coolant.>
4) Disconnect the connector (A) from the engine coolant temperature sensor, and remove the engine coolant temperature sensor.

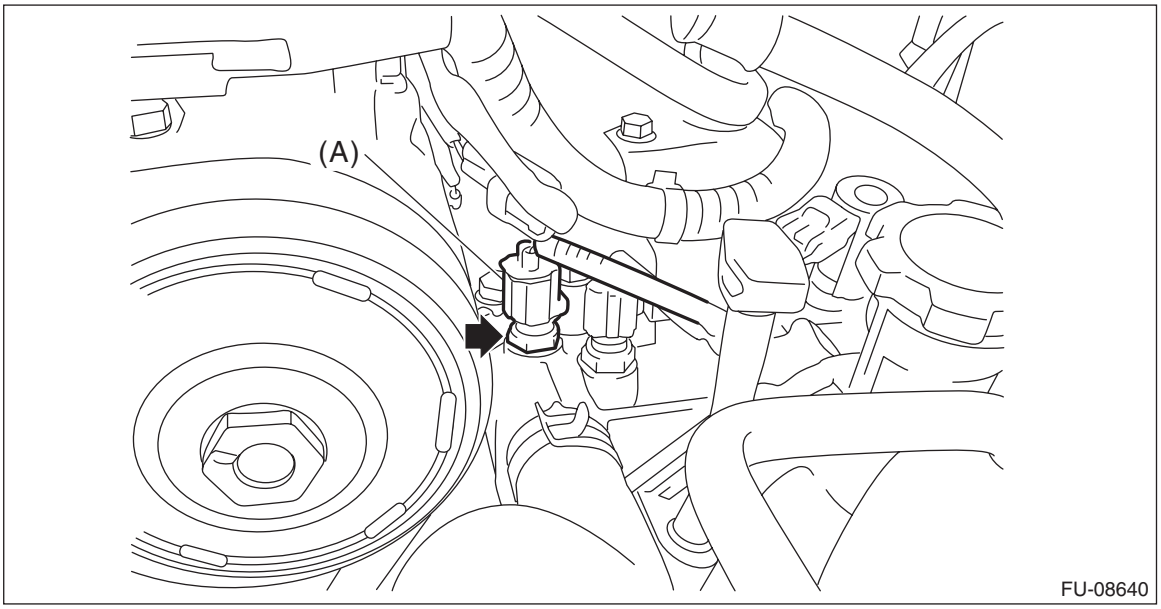

B: INSTALLATION

1) Install the engine coolant temperature sensor, and connect the connector to the engine coolant temperature sensor.

NOTE:
Use a new gasket.

Tightening torque:
22 N·m (2.2 kgf-m, 16.2 ft-lb)

2) Connect the ground terminal to battery sensor. <Ref. to RC-4, BATTERY, NOTE, Repair Contents.>
3) Fill engine coolant. <Ref. to CO(H6DO)-14, FILLING OF ENGINE COOLANT, REPLACEMENT, Engine Coolant.>
4) Install the collector cover.

C: INSPECTION

1) Check that the engine coolant temperature sensor has no deformation, cracks or other damages.
2) Immerse the engine coolant temperature sensor and a thermometer in water.

CAUTION:
Take care not to allow water to get into the engine coolant temperature sensor connector. Completely remove any water inside.

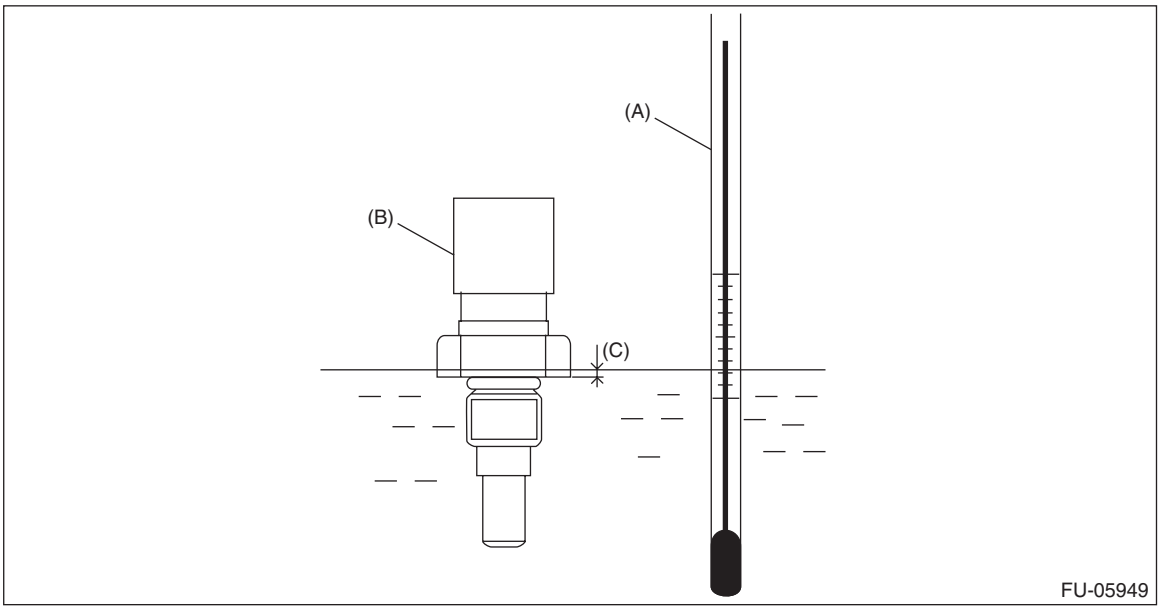

(A) Thermometer
(B) Engine coolant temperature sensor
(C) Hexagonal part height: To approx. $^{1}/_{3}$

3) Raise water temperature gradually, measure the resistance between the engine coolant temperature sensor terminals when the temperature is 20°C (68°F) and 80°C (176°F).

NOTE:
Agitate the water for even temperature distribution.

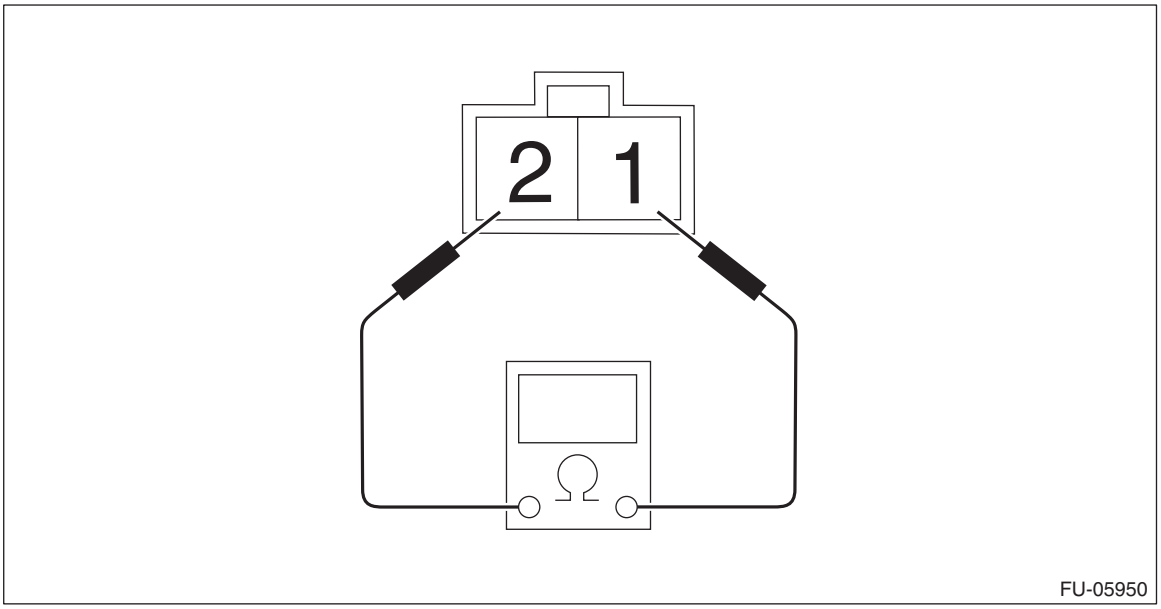

Water temperature	Terminal No.	Standard
20°C (68°F)	1 and 2	Approx. 2.45±0.2 kΩ
80°C (176°F)		Approx. 0.318±0.013 kΩ

5. Crankshaft Position Sensor

A: REMOVAL

1) Remove the collector cover.
   (1) Carefully pull up the rear of collector cover at two positions (A).
   (2) Carefully pull up the front of collector cover at two positions (B) while moving it forward.

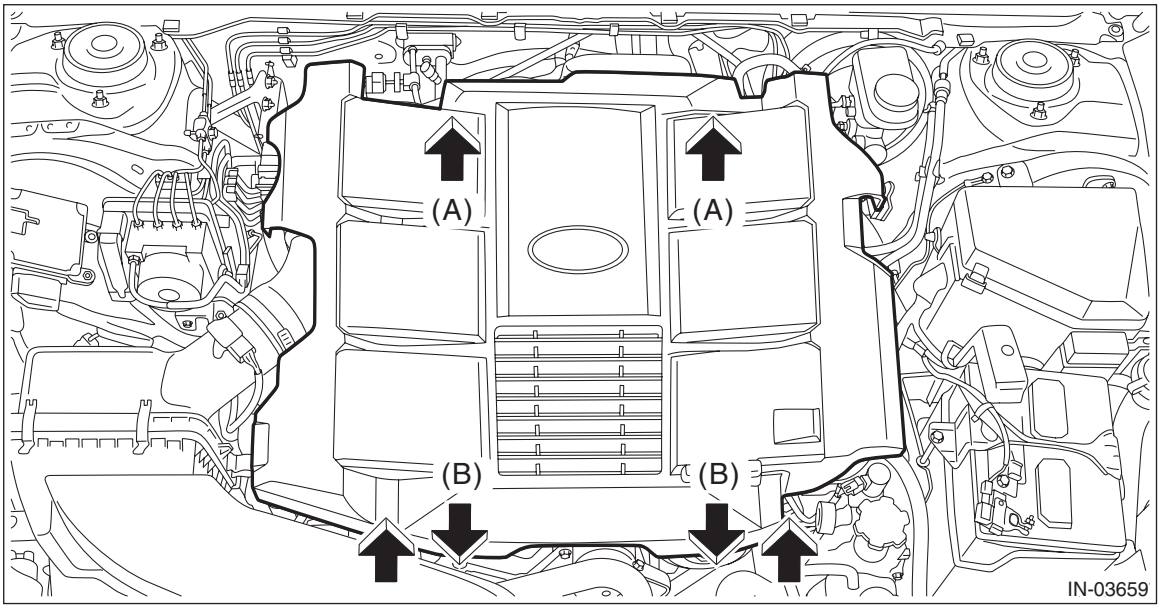

2) Disconnect the ground terminal from battery sensor. <Ref. to RC-4, BATTERY, NOTE, Repair Contents.>
3) Loosen the clamp (A) securing the air intake boot.
4) Remove the bolt (B) securing the air intake boot to the collector cover bracket.

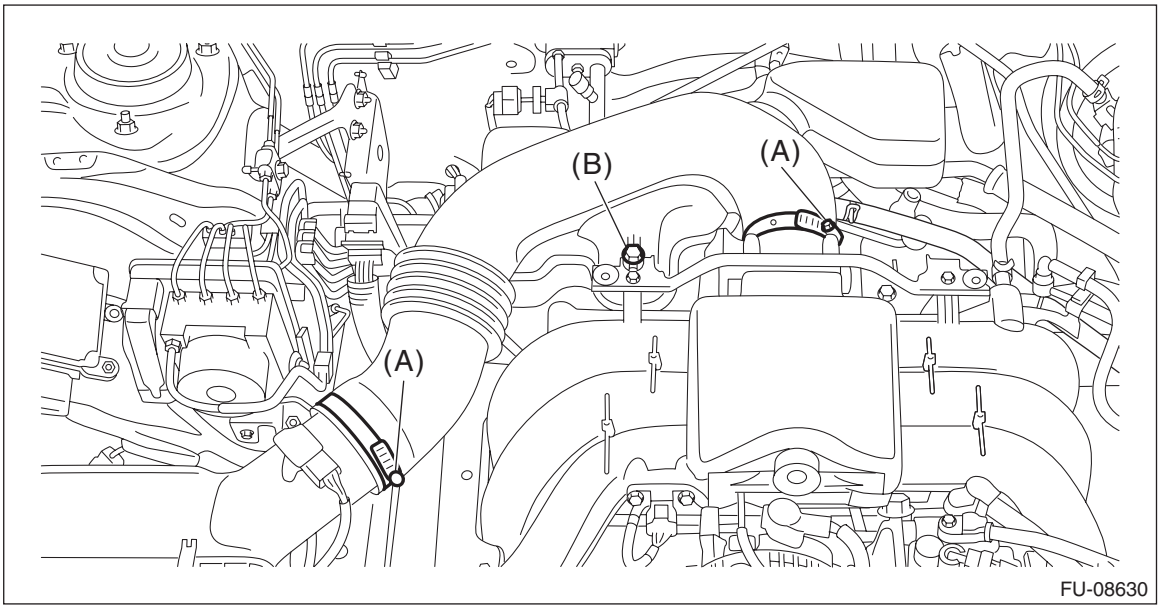

5) Remove the air intake boot from the throttle body and the air cleaner case (rear), and move it to the left side wheel apron.

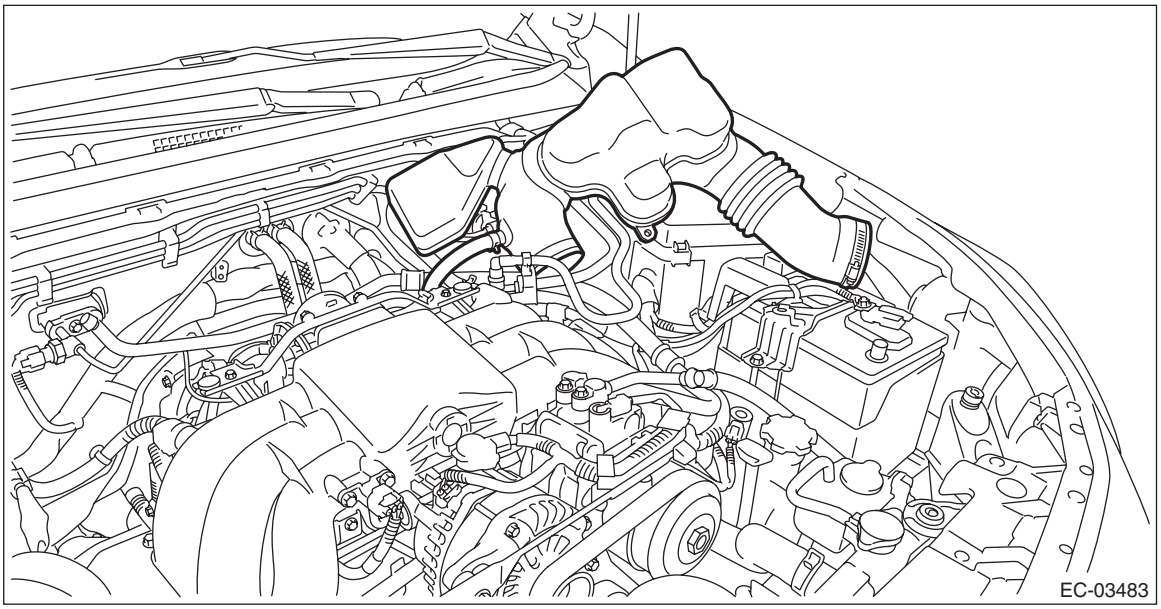

6) Disconnect the connector (A) from the throttle body, and remove the throttle body from the intake manifold.

NOTE:
Do not disconnect the preheater hose.

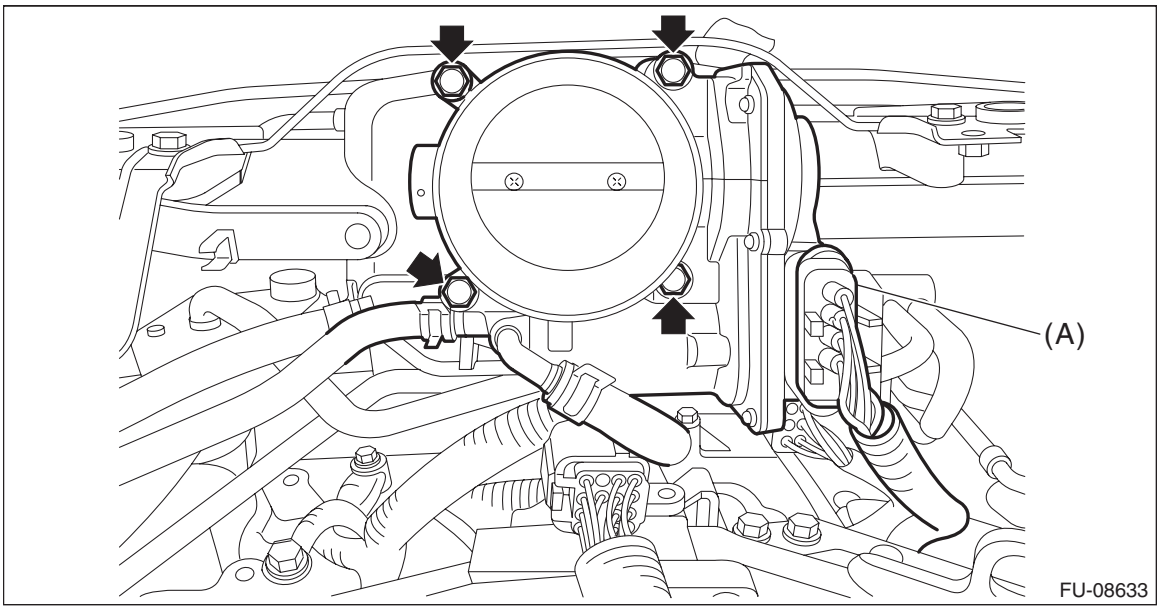

7) Remove the service hole plug.

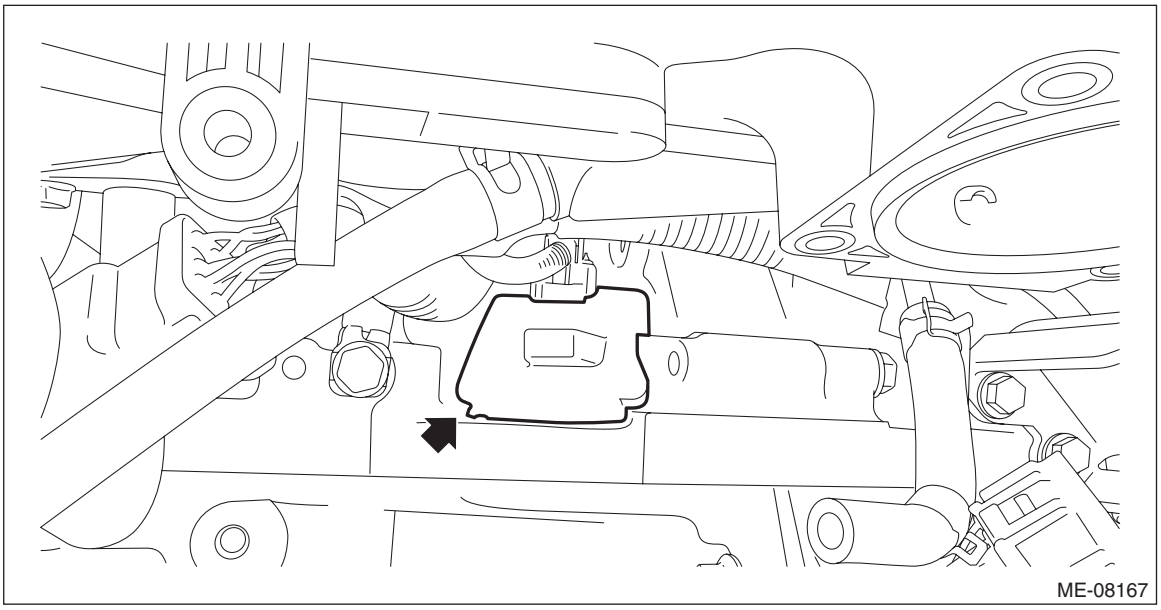

8) Disconnect the connector (A) from the crankshaft position sensor, and remove the crankshaft position sensor from the cylinder block.

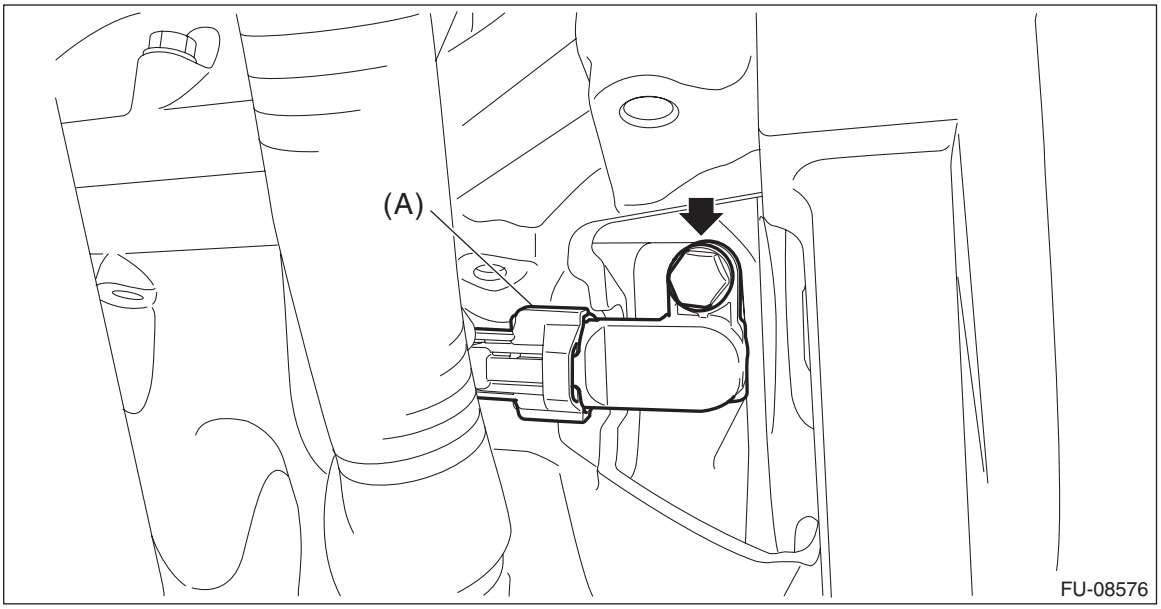

B: INSTALLATION

1) Install the crankshaft position sensor to the cylinder block, and connect the connector to the crankshaft position sensor.

Tightening torque:
6.4 N·m (0.7 kgf-m, 4.7 ft-lb)

2) Install the service hole plug.
3) Install the throttle body. <Ref. to FU(H6DO)-21, INSTALLATION, Throttle Body.>
4) Install the air intake boot. <Ref. to IN(H6DO)-11, INSTALLATION, Air Intake Boot.>
5) Connect the ground terminal to battery sensor. <Ref. to RC-4, BATTERY, NOTE, Repair Contents.>
6) Install the collector cover.

C: INSPECTION

1. CRANKSHAFT POSITION SENSOR

1) Disconnect the ground terminal from battery sensor. <Ref. to RC-4, BATTERY, NOTE, Repair Contents.>
2) Prepare an oscilloscope.
3) While pressing the section (A) shown in the figure, move the lock lever (B) in the direction of the arrow to disconnect the connectors from the ECM in numerical order as shown in the figure.

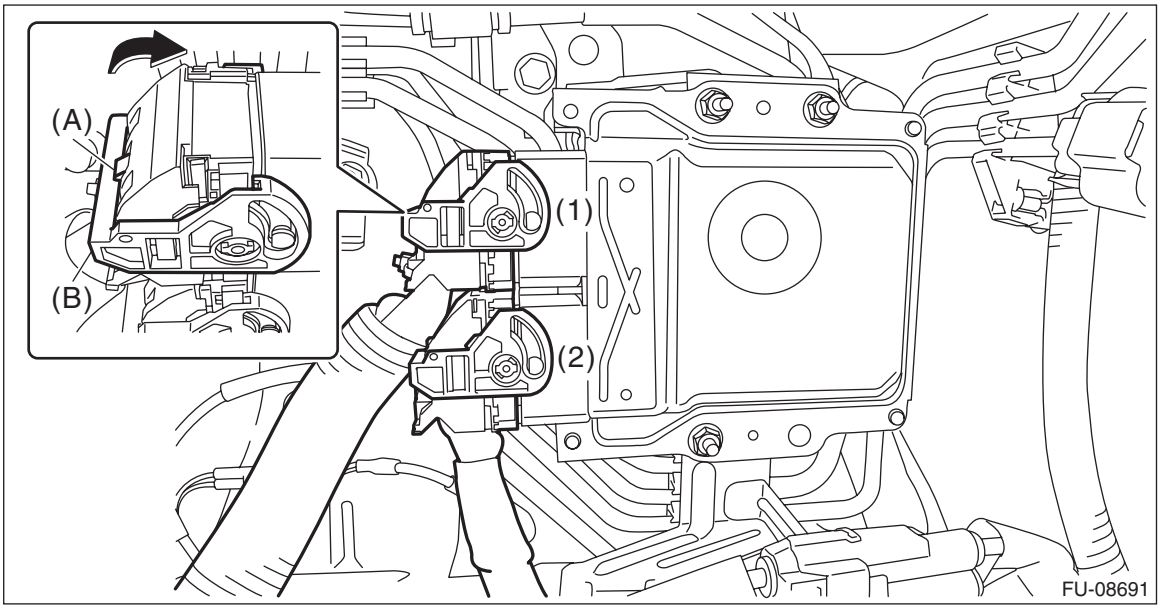

4) Attach the ST between the ECM, engine harness and the bulkhead wiring harness. <Ref. to EN(H6DO)(diag)-6, CAUTION, General Description.>
ST 18460AA050 CHECK BOARD
5) Connect the probe to ST.

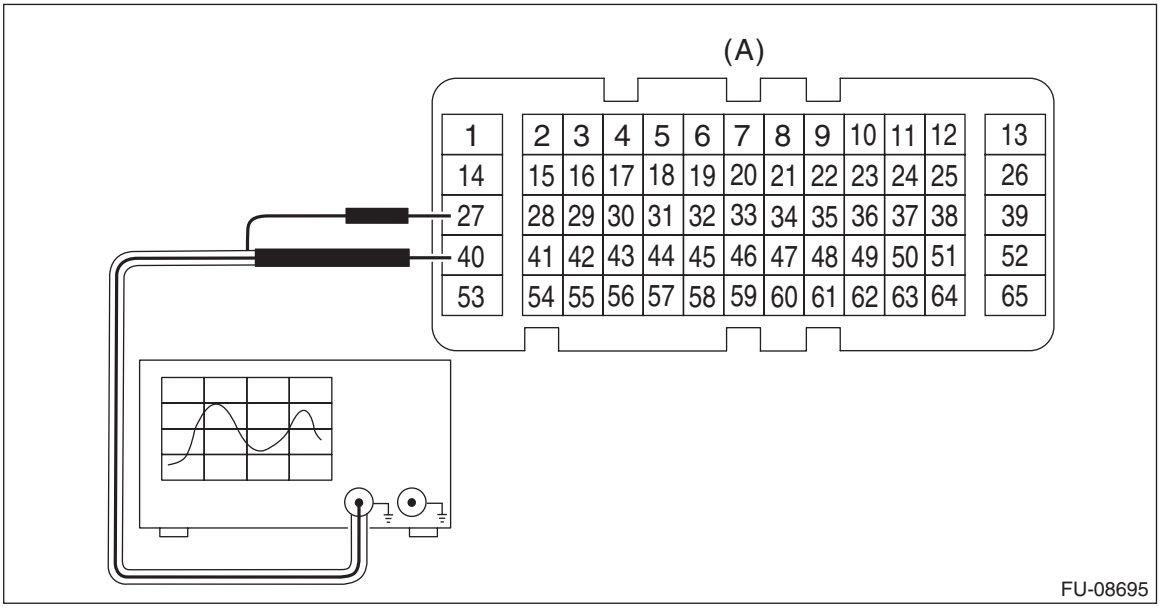

(A) To the check board connector (ECM connector)

Terminal No.	Probe
40	+
27	–

6) Start the engine and let it idle.
7) Check the waveforms and voltage.

NOTE:
For waveform and voltage, refer to “Engine Control Module (ECM) I/O Signal”. <Ref. to EN(H6DO)(diag)-20, ELECTRICAL SPECIFICATION, Engine Control Module (ECM) I/O Signal.>
8) After inspection, install the related parts in the reverse order of removal.

2. OTHER INSPECTIONS

Check that the crankshaft position sensor has no deformation, cracks or other damages.

6. Camshaft Position Sensor

A: REMOVAL

1. INTAKE SIDE

1) Remove the collector cover.
   (1) Carefully pull up the rear of collector cover at two positions (A).
   (2) Carefully pull up the front of collector cover at two positions (B) while moving it forward.

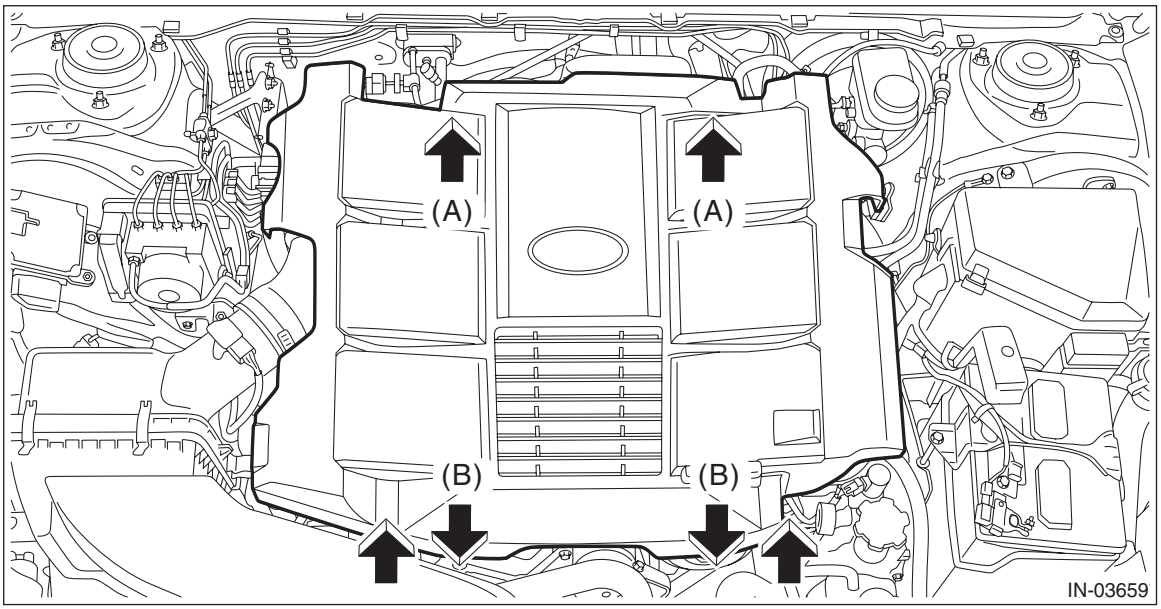

2) Disconnect the ground terminal from battery sensor. <Ref. to RC-4, BATTERY, NOTE, Repair Contents.>
3) Remove the fuel injector. <Ref. to FU(H6DO)-61, REMOVAL, Fuel Injector.>
4) Disconnect the connector (A) from the camshaft position sensor, and remove the camshaft position sensor.

- RH side

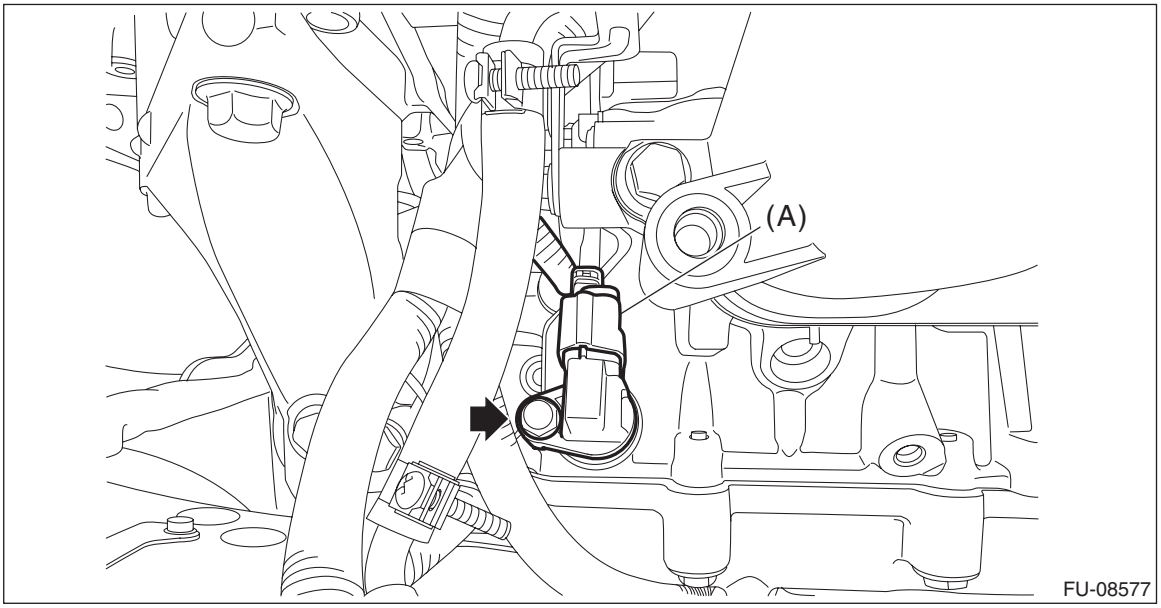

• LH side

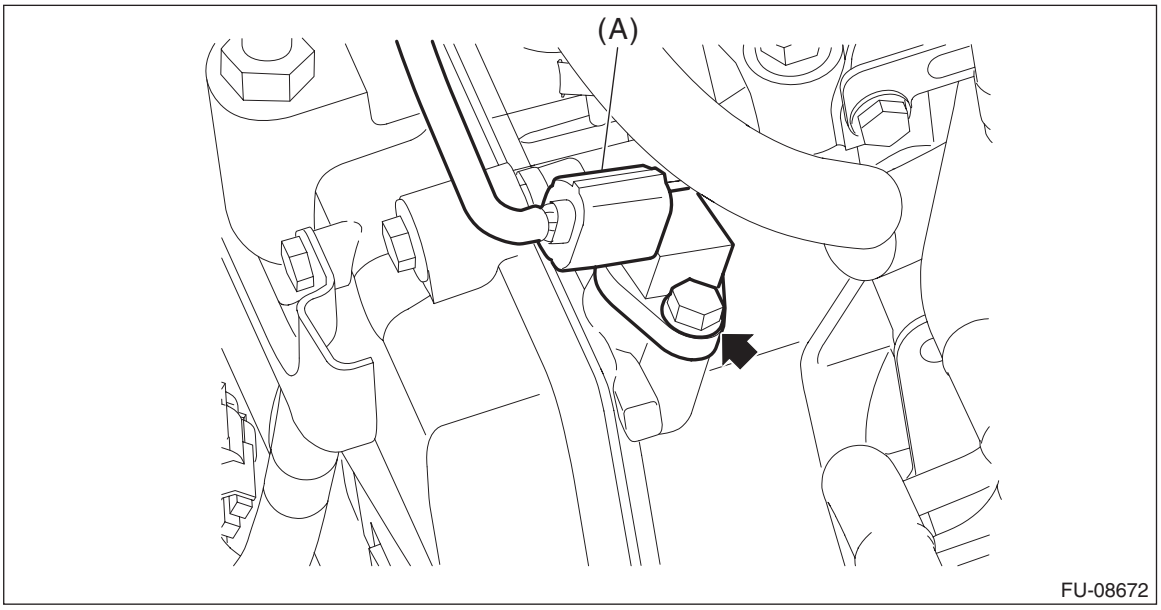

2. EXHAUST SIDE

1) Disconnect the ground terminal from battery sensor. <Ref. to RC-4, BATTERY, NOTE, Repair Contents.>
2) Lift up the vehicle.
3) Remove the under cover. <Ref. to EI-28, REMOVAL, Front Under Cover.>
4) Disconnect the connector (A) from the camshaft position sensor, and remove the camshaft position sensor.

• RH side

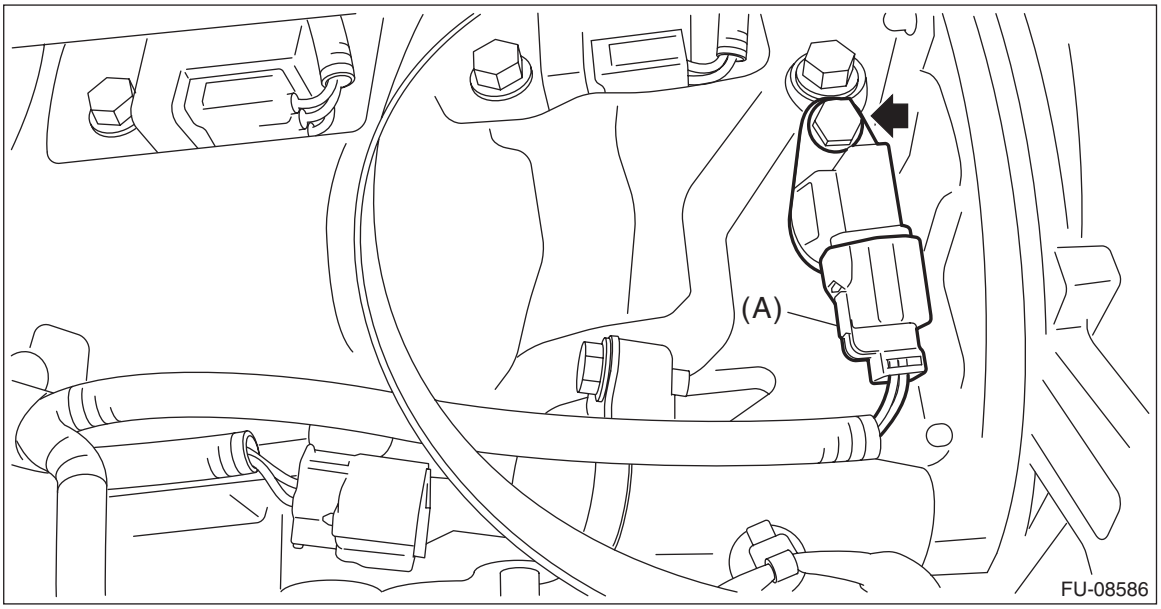

- LH side

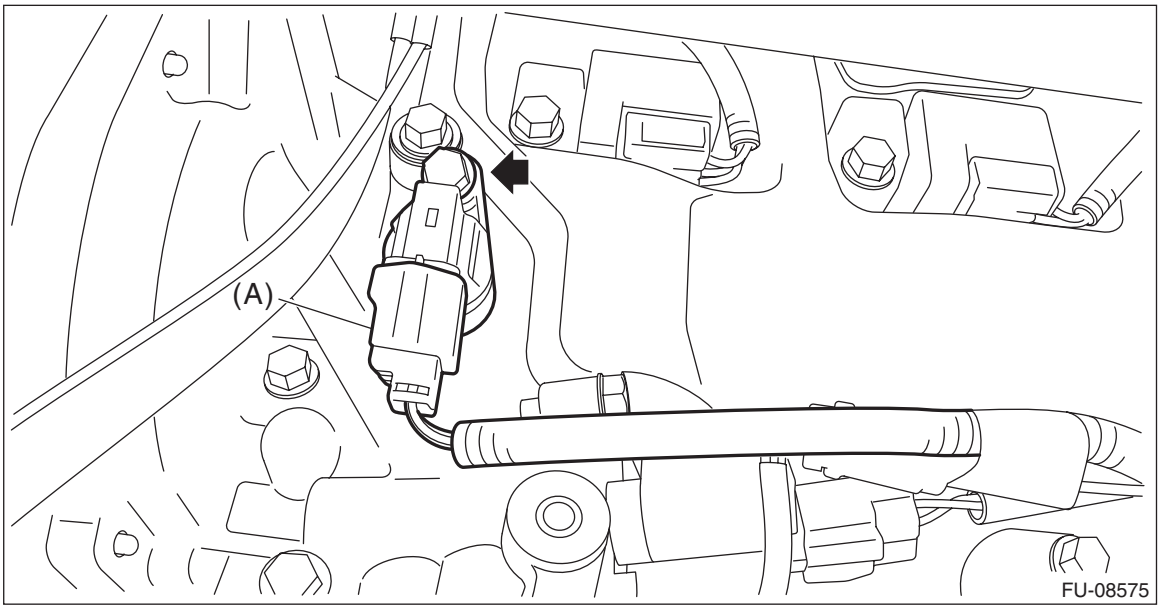

B: INSTALLATION

1. INTAKE SIDE

1) Install the camshaft position sensor, and connect the connector to the camshaft position sensor.

Tightening torque:
6.4 N·m (0.7 kgf-m, 4.7 ft-lb)

2) Install the fuel injector. <Ref. to FU(H6DO)-67, INSTALLATION, Fuel Injector.>
3) Connect the ground terminal to battery sensor. <Ref. to RC-4, BATTERY, NOTE, Repair Contents.>
4) Install the collector cover.

2. EXHAUST SIDE

1) Install the camshaft position sensor, and connect the connector to the camshaft position sensor.

Tightening torque:
6.4 N·m (0.7 kgf-m, 4.7 ft-lb)

2) Install the under cover. <Ref. to EI-28, INSTALLATION, Front Under Cover.>
3) Lower the vehicle.
4) Connect the ground terminal to battery sensor. <Ref. to RC-4, BATTERY, NOTE, Repair Contents.>

C: INSPECTION

1. CAMSHAFT POSITION SENSOR

1) Disconnect the ground terminal from battery sensor. <Ref. to RC-4, BATTERY, NOTE, Repair Contents.>
2) Prepare an oscilloscope.
3) While pressing the section (A) shown in the figure, move the lock lever (B) in the direction of the arrow to disconnect the connectors from the ECM in numerical order as shown in the figure.

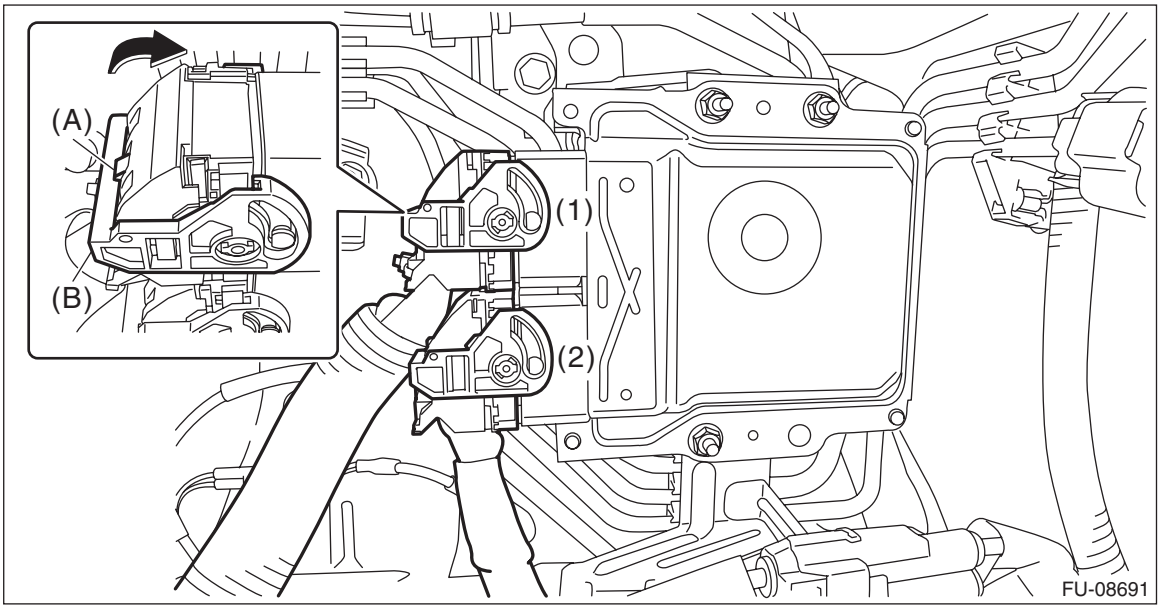

4) Attach the ST between the ECM, engine harness and the bulkhead wiring harness. <Ref. to EN(H6DO)(diag)-6, CAUTION, General Description.>
ST 18460AA050 CHECK BOARD
5) Connect the probe to ST.

- Intake camshaft position sensor

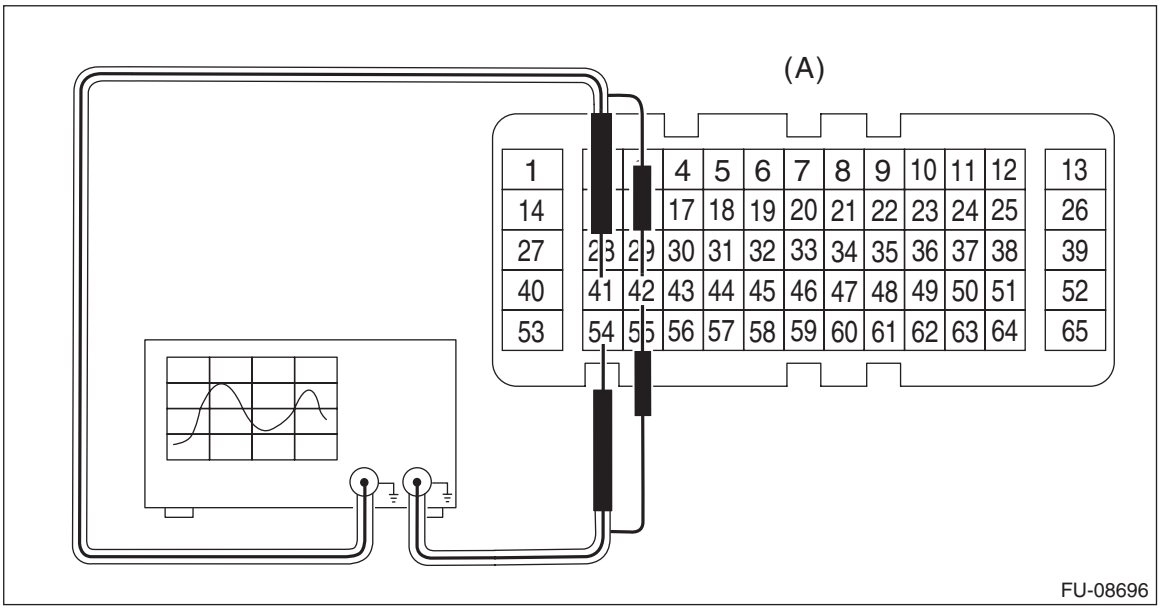

(A) To the check board connector (ECM connector)

- Exhaust camshaft position sensor

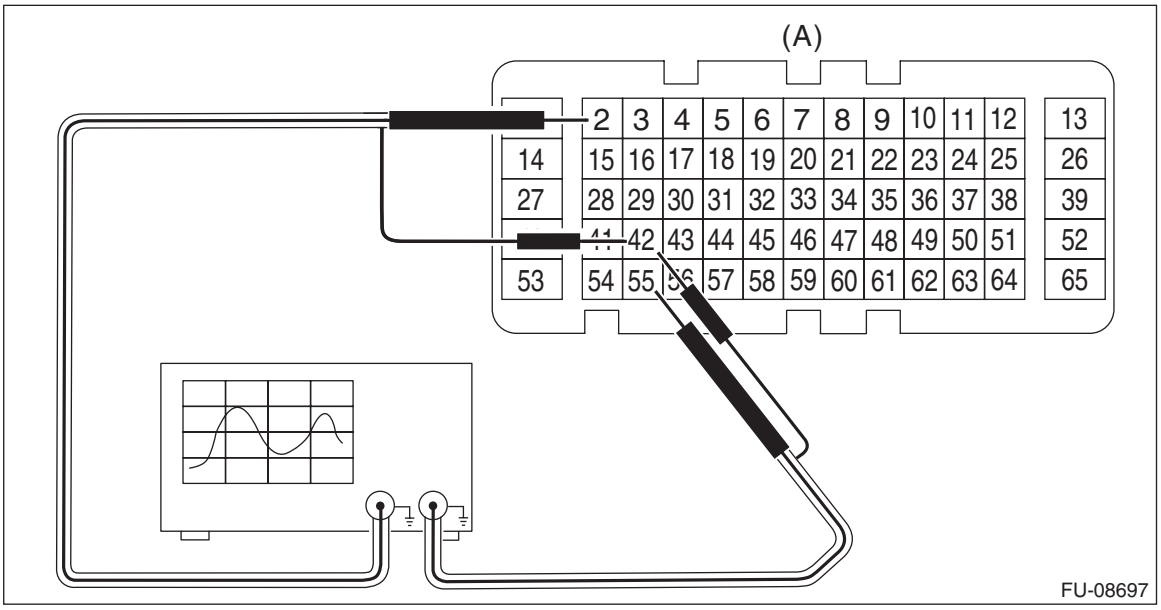

(A) To the check board connector (ECM connector)

Camshaft position sensor		Terminal No.	Probe
Intake	RH	54	+
	LH	41	+
Exhaust	RH	2	+
	LH	55	+
RH and LH		42	–

6) Start the engine and let it idle.
7) Check the waveforms and voltage.

NOTE:
For waveform and voltage, refer to “Engine Control Module (ECM) I/O Signal”. <Ref. to EN(H6DO)(diag)-20, ELECTRICAL SPECIFICATION, Engine Control Module (ECM) I/O Signal.>
8) After inspection, install the related parts in the reverse order of removal.

2. OTHER INSPECTIONS

Check that the camshaft position sensor has no deformation, cracks or other damages.

7. Knock Sensor

A: REMOVAL

1) Remove the collector cover.
   (1) Carefully pull up the rear of collector cover at two positions (A).
   (2) Carefully pull up the front of collector cover at two positions (B) while moving it forward.

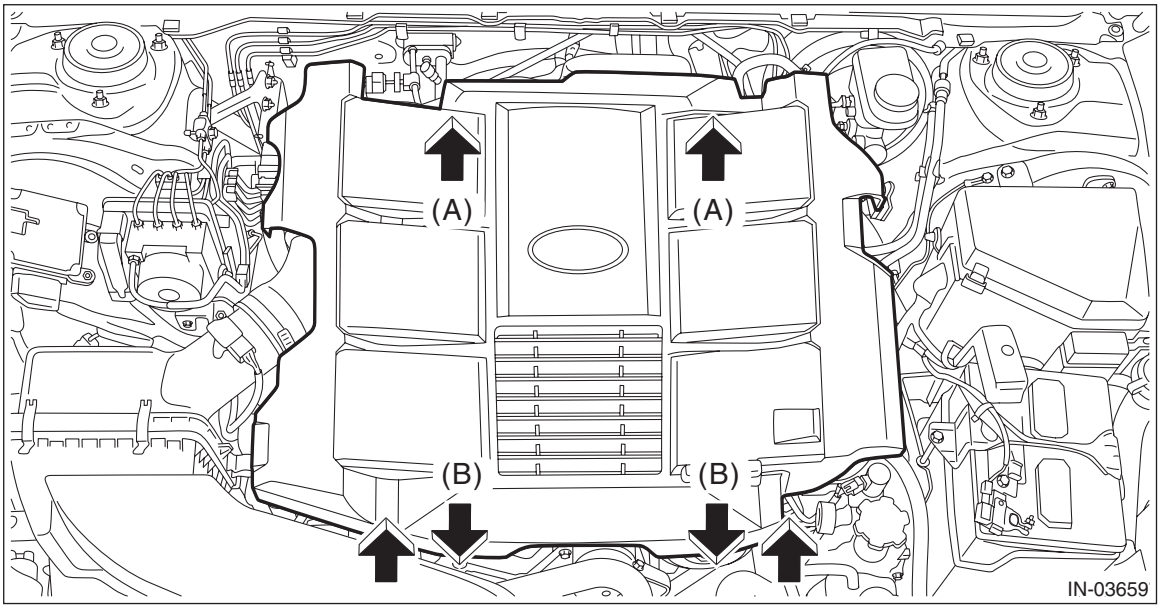

2) Disconnect the ground terminal from battery sensor. <Ref. to RC-4, BATTERY, NOTE, Repair Contents.>
3) Remove the intake manifold. <Ref. to FU(H6DO)-24, REMOVAL, Intake Manifold.>
4) Disconnect the connector (A) from the knock sensor, and remove the knock sensor from the cylinder block.

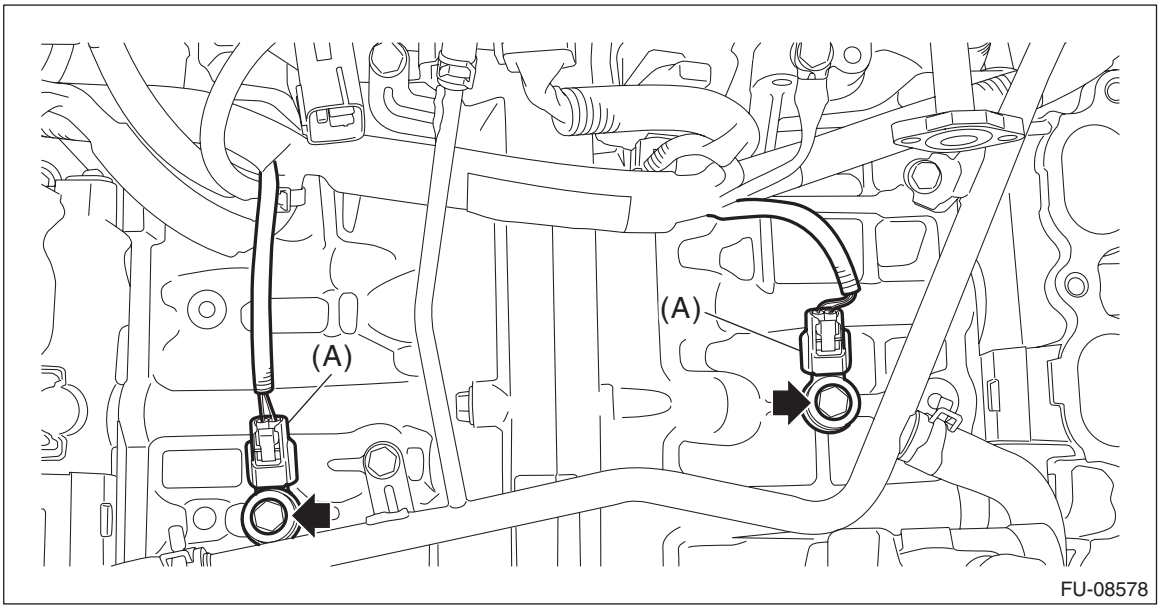

B: INSTALLATION

1) Install the knock sensor to the cylinder block, and connect the connector (A) to the knock sensor.

Tightening torque:
25 N·m (2.5 kgf-m, 18.4 ft-lb)

NOTE:
The knock sensor should be installed so that the center of the connector is positioned as shown in the figure relative to the front of engine.

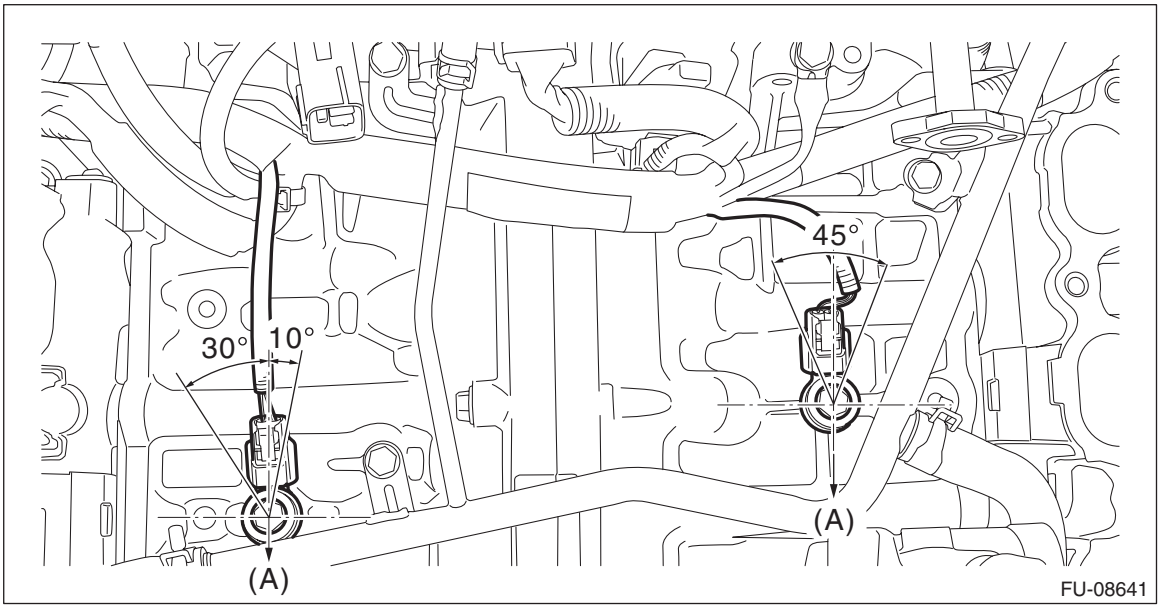

(A) Front of engine

2) Install the intake manifold. <Ref. to FU(H6DO)-31, INSTALLATION, Intake Manifold.>
3) Connect the ground terminal to battery sensor. <Ref. to RC-4, BATTERY, NOTE, Repair Contents.>
4) Install the collector cover.

C: INSPECTION

1) Check that the knock sensor has no deformation, cracks or other damages.
2) Measure the resistance between knock sensor terminals.

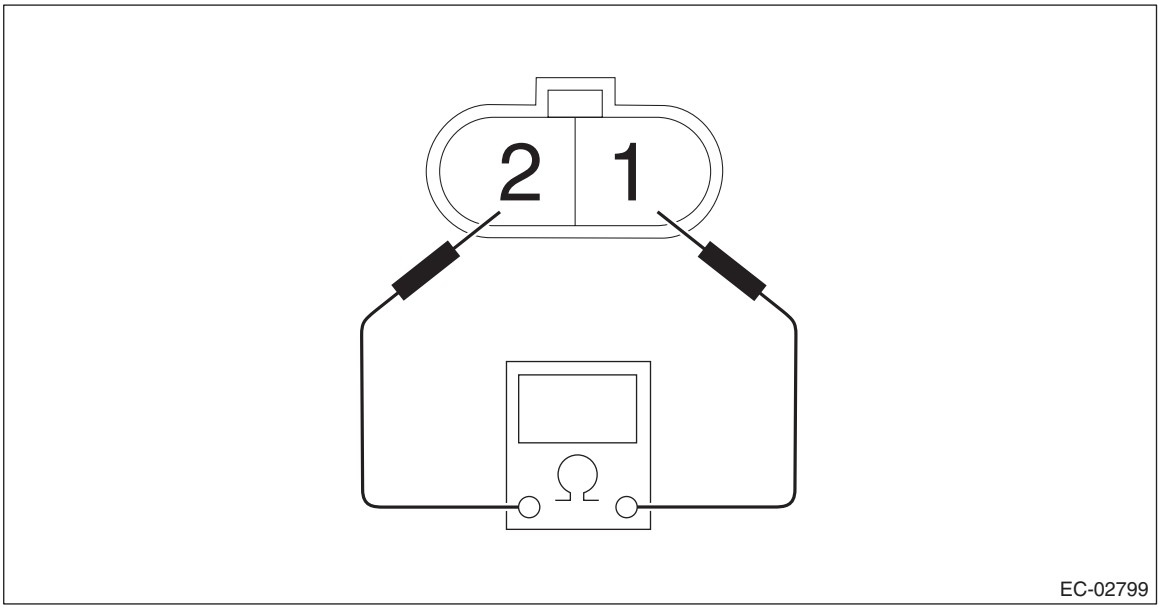

Terminal No.	Standard
1 and 2	560±28 kΩ

8. Throttle Position Sensor

A: SPECIFICATION

Throttle body is a non-disassembled part, so do not remove the throttle position sensor from throttle body. Refer to “Throttle Body” for removal and installation procedure. <Ref. to FU(H6DO)-19, REMOVAL, Throttle Body.> <Ref. to FU(H6DO)-21, INSTALLATION, Throttle Body.>

9. Manifold Absolute Pressure Sensor

A: REMOVAL

1) Remove the collector cover.
   (1) Carefully pull up the rear of collector cover at two positions (A).
   (2) Carefully pull up the front of collector cover at two positions (B) while moving it forward.

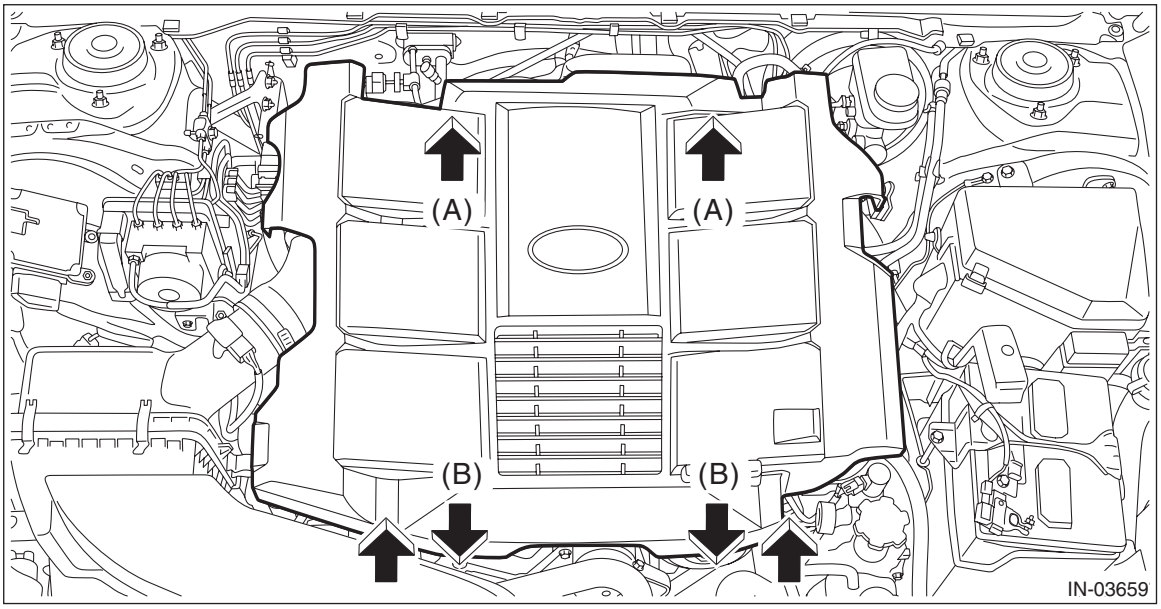

2) Disconnect the ground terminal from battery sensor. <Ref. to RC-4, BATTERY, NOTE, Repair Contents.>
3) Disconnect the connector (A) from the manifold absolute pressure sensor, and remove the manifold absolute pressure sensor from intake manifold.

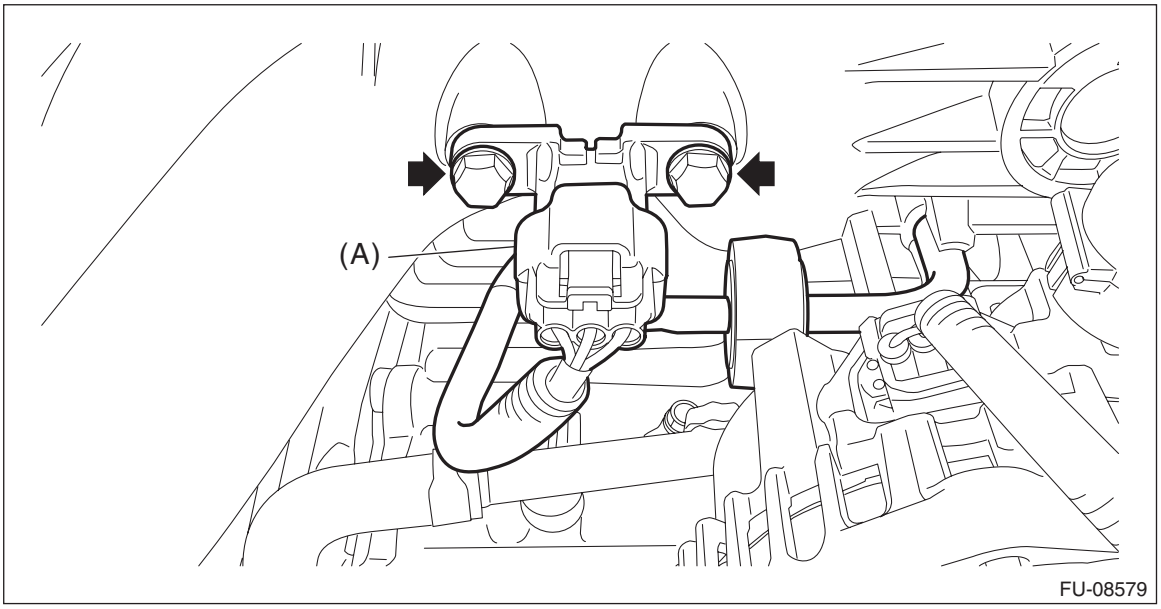

B: INSTALLATION

1) Install the manifold absolute pressure sensor to the intake manifold, and connect the connector to the manifold absolute pressure sensor.

Tightening torque:
6.4 N·m (0.7 kgf-m, 4.7 ft-lb)

2) Connect the ground terminal to battery sensor. <Ref. to RC-4, BATTERY, NOTE, Repair Contents.>
3) Install the collector cover.

C: INSPECTION

1) Check that the manifold absolute pressure sensor has no deformation, cracks or other damages.
2) Connect dry-cell battery positive terminal to terminal No. 3 and dry-cell battery ground terminal to terminal No. 2, circuit tester ground terminal to terminal No. 2 and the circuit tester positive terminal to terminal No. 1.

NOTE:
- Use new dry-cell batteries.
- Using circuit tester, check that the initial voltage of a single dry-cell battery is 1.6 V or more. And also check that the voltage of three batteries in series is between 4.8 V and 5.2 V.
- For power supply, 5 V DC voltage source can also be used.

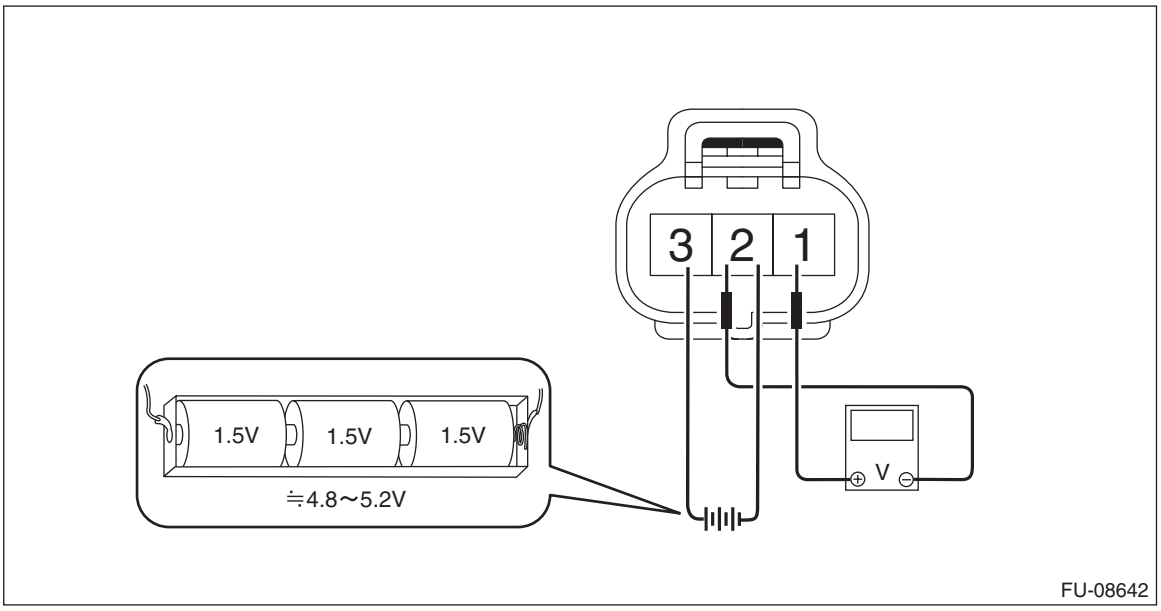

3) Connect the Mighty Vac to the pressure port (A) of manifold absolute pressure sensor.

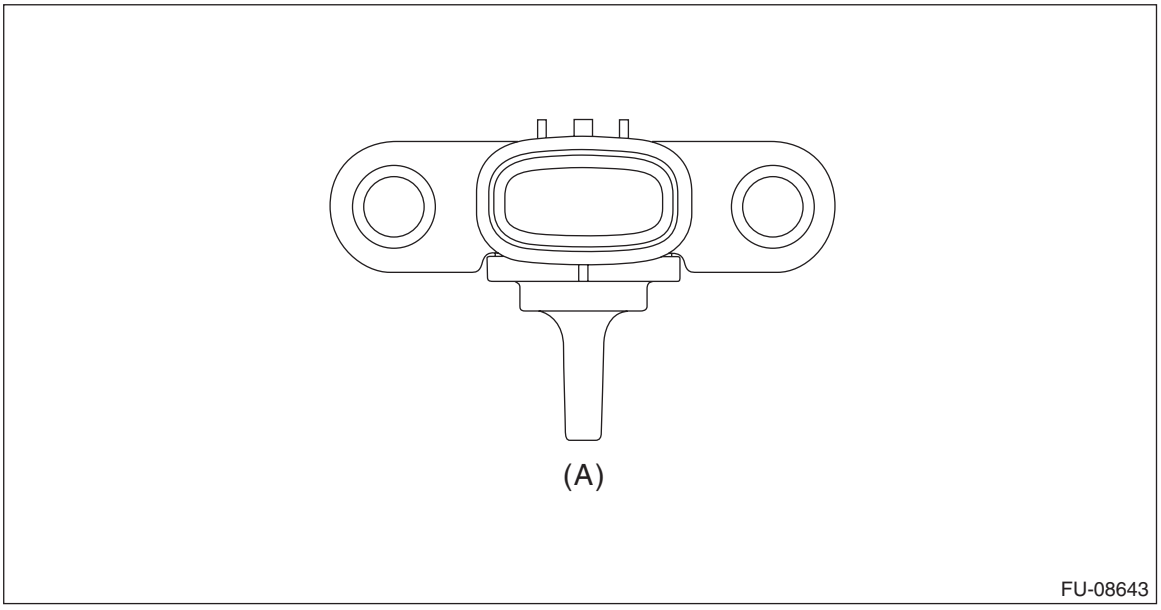

4) Check the voltage when generating vacuum and positive pressure using Mighty Vac.

CAUTION:
Do not apply vacuum of less than –88 kPa (–0.9 kg/cm^2, –12.8 psi). Doing so may damage the manifold absolute pressure sensor.

NOTE:
When vacuum occurs at the pressure port of manifold absolute pressure sensor, the voltage will drop from the value as in step 3). When positive pressure occurs, on the other hand, the voltage will rise.

Pressure	Terminal No.	Standard
–88 kPa (–0.9 kg/cm^2, –12.8 psi)	2 (+) and 1 (–)	Approx. 1 V (when 25°C (77°F))
–35 kPa (–0.4 kg/cm^2, –5.1 psi)		Approx. 2.6 V (when 25°C (77°F))
19 kPa (–0.2 kg/cm^2, 2.8 psi)		Approx. 4.2 V (when 25°C (77°F))

10.Mass Air Flow and Intake Air Temperature Sensor

A: REMOVAL

1) Disconnect the ground terminal from battery sensor. <Ref. to RC-4, BATTERY, NOTE, Repair Contents.>
2) Disconnect the connector (A) from the mass air flow and intake air temperature sensor, and remove the mass air flow and intake air temperature sensor.

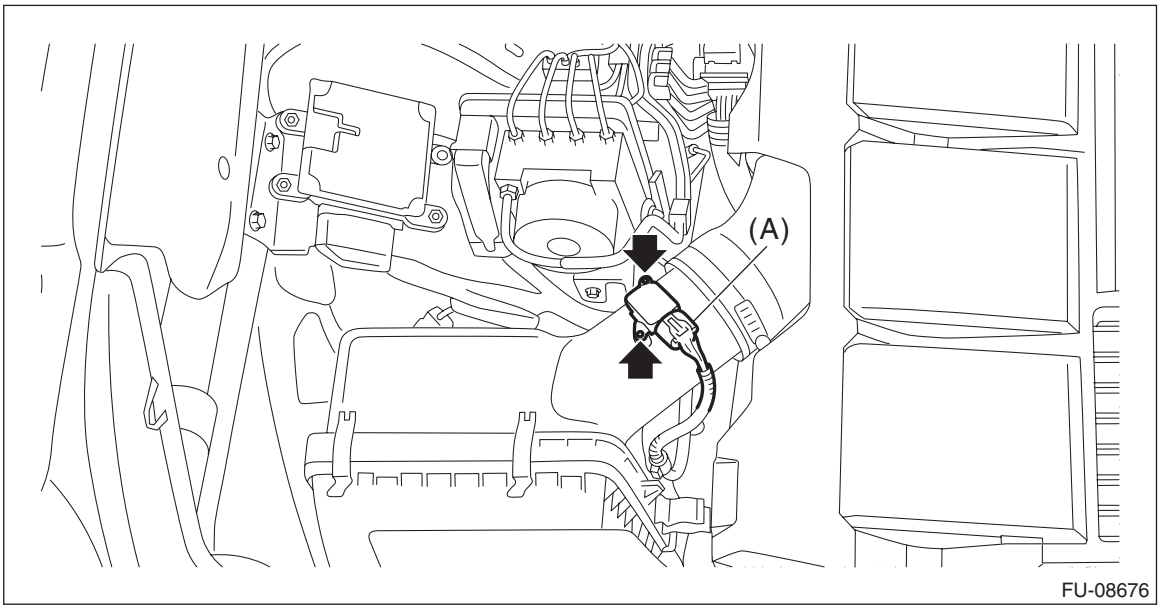

B: INSTALLATION

1) Install the mass air flow and intake air temperature sensor, and connect the connector to the mass air flow and intake air temperature sensor.

Tightening torque:
1 N·m (0.1 kgf-m, 0.7 ft-lb)
2) Connect the ground terminal to battery sensor. <Ref. to RC-4, BATTERY, NOTE, Repair Contents.>

C: INSPECTION

1. CHECK THE MASS AIR FLOW SENSOR UNIT

1) Connect the battery positive terminal to terminal No. 3 and the battery ground terminal to terminal No. 4, and connect the circuit tester positive terminal to terminal No. 5 and the circuit tester ground terminal to terminal No. 4.

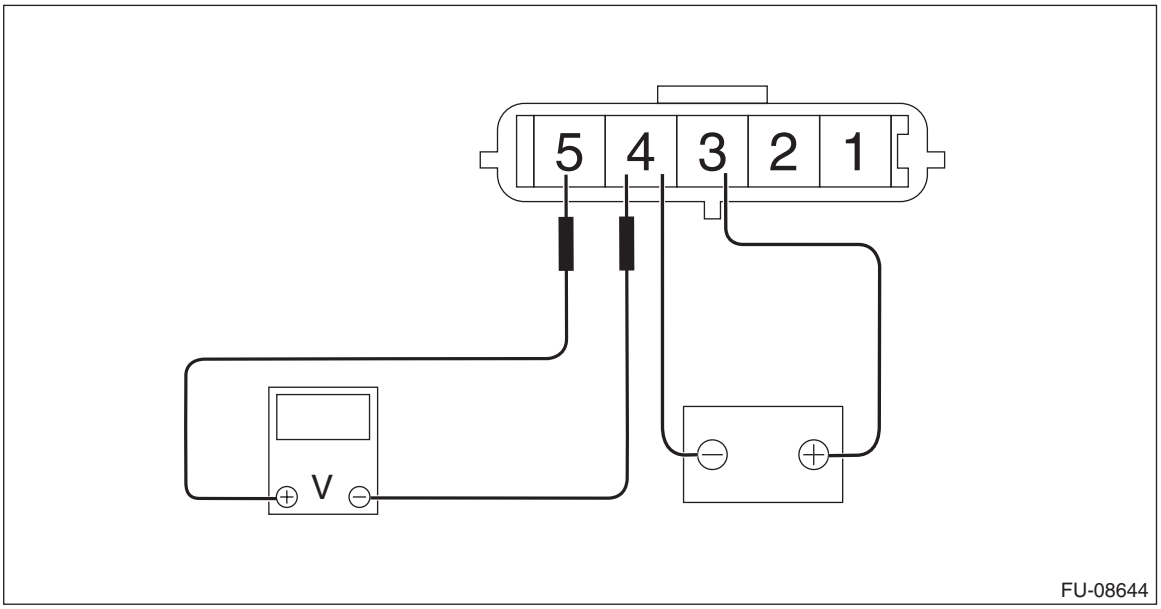

2) Check the voltage changes when air is blown to the mass air flow sensor unit in arrow direction.

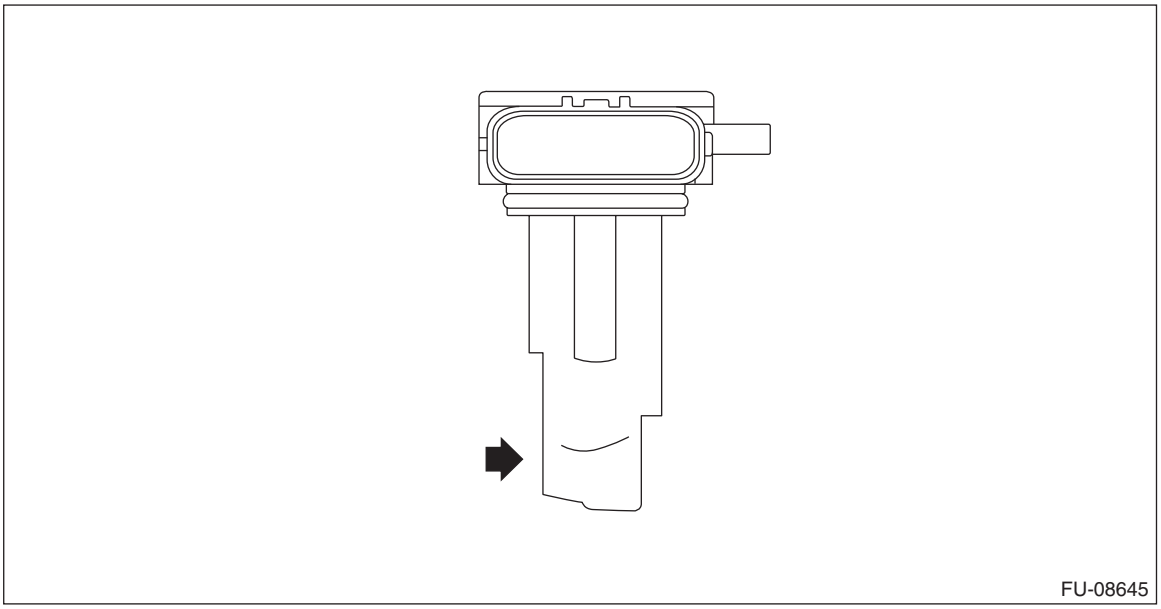

2. CHECK THE INTAKE AIR TEMPERATURE SENSOR UNIT

Measure the resistance between intake air temperature sensor terminals.

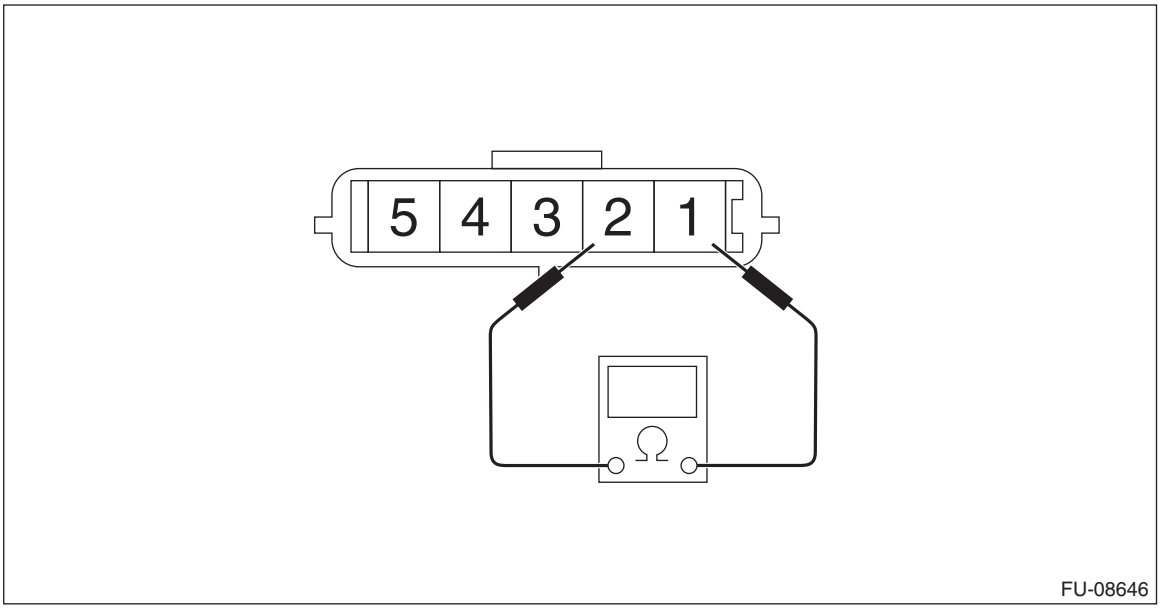

Temperature	Terminal No.	Standard
–20°C (–4°F)	1 and 2	16.0±2.4 kΩ
25°C (77°F)		2.45±0.24 kΩ
60°C (140°F)		0.58±0.087 kΩ

3. OTHER INSPECTIONS

1) Check that the mass air flow and intake air temperature sensor has no deformation, cracks or other damages.
2) Check that the mass air flow and intake air temperature sensor has no dirt.

11.Fuel Injector

A: REMOVAL

1. RH SIDE

1) Remove the collector cover.
   (1) Carefully pull up the rear of collector cover at two positions (A).
   (2) Carefully pull up the front of collector cover at two positions (B) while moving it forward.

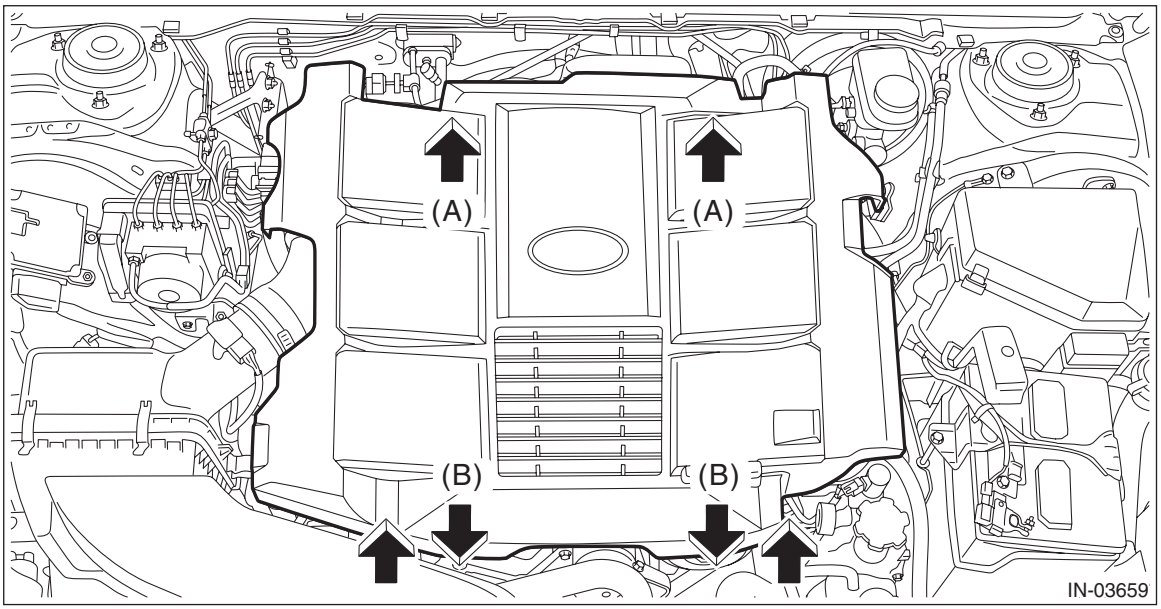

2) Release the fuel pressure. <Ref. to FU(H6DO)-93, RELEASING OF FUEL PRESSURE, PROCEDURE, Fuel.>
3) Disconnect the ground terminal from battery sensor. <Ref. to RC-4, BATTERY, NOTE, Repair Contents.>
4) Open the fuel filler lid and remove the fuel filler cap.

NOTE:
This operation is required to release the inner pressure of the fuel tank.
5) Loosen the clamp (A) securing the air intake boot.
6) Remove the bolt (B) securing the air intake boot to the collector cover bracket.

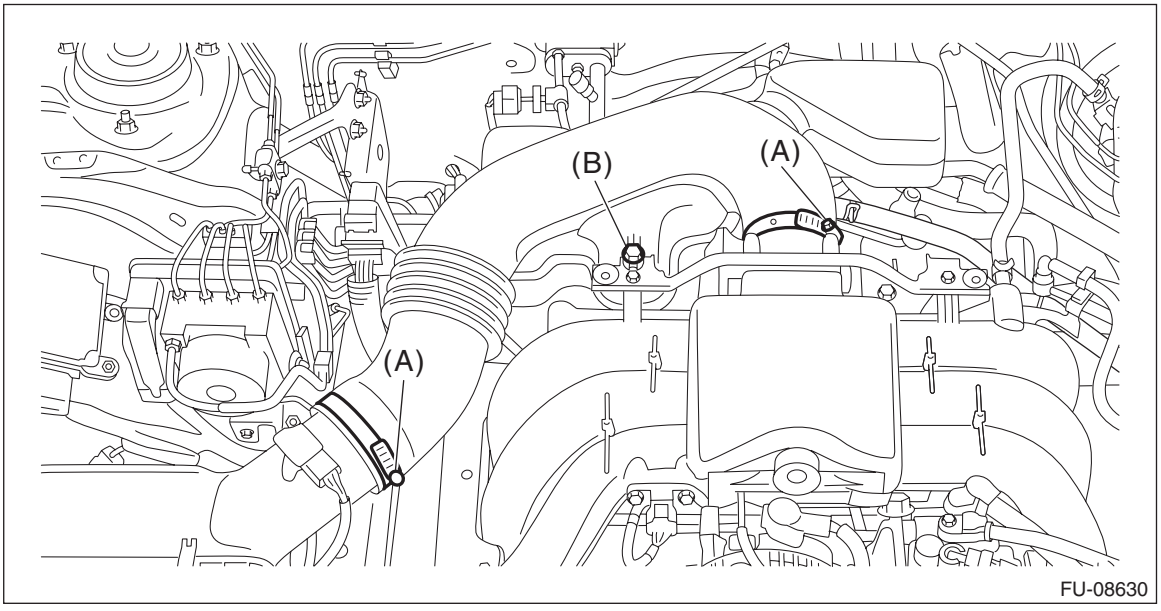

7) Remove the air intake boot from the throttle body and the air cleaner case (rear), and move it to the left side wheel apron.

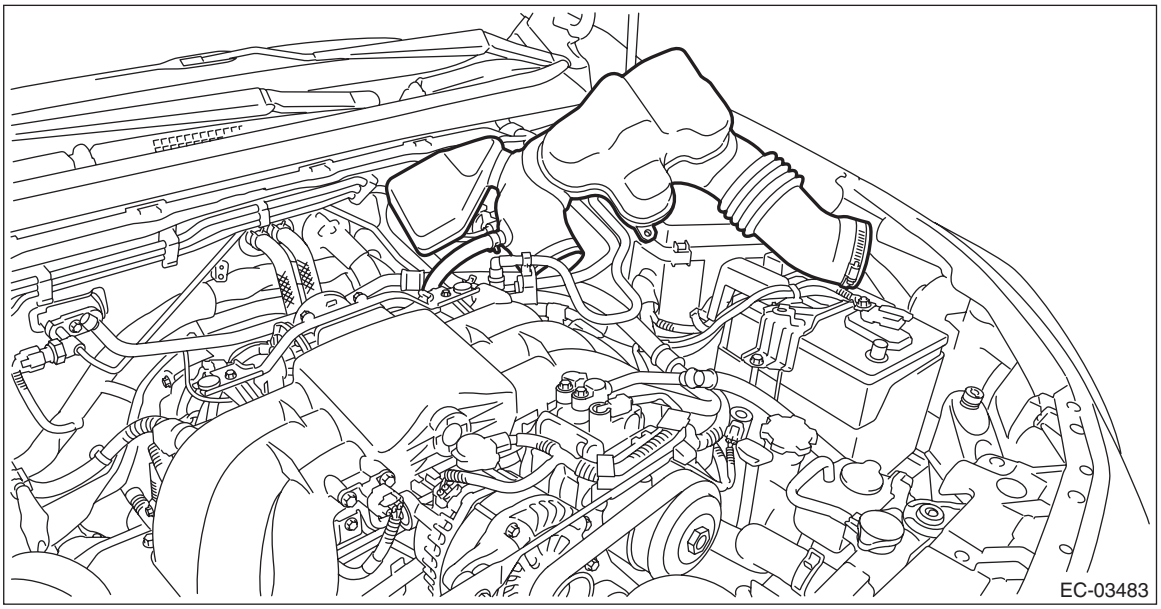

8) Remove the fuel pipe protector RH.

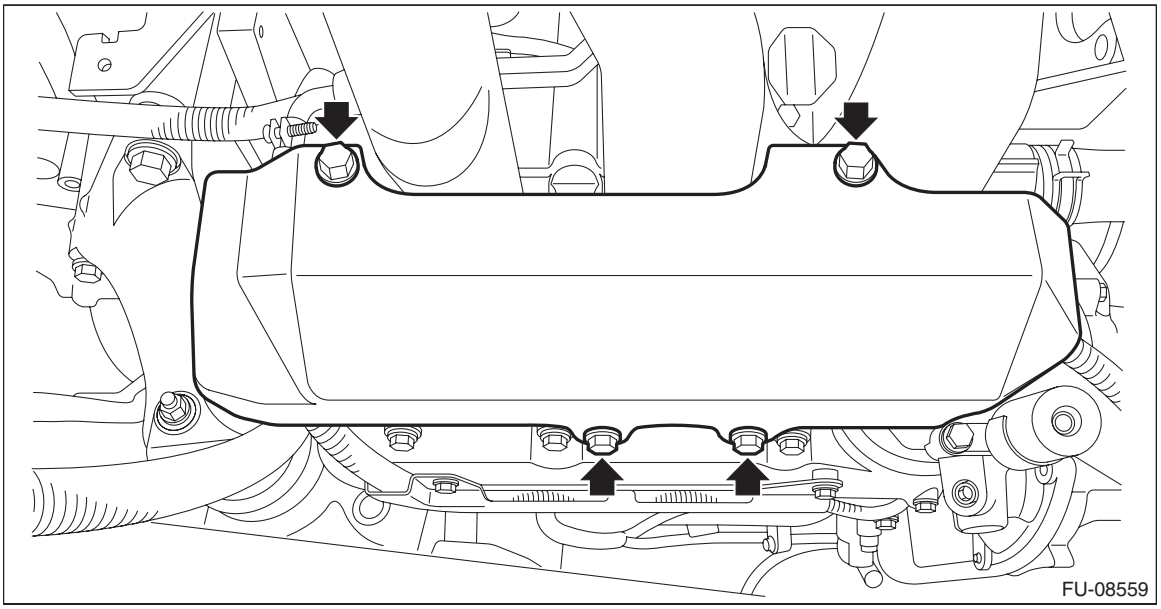

9) Disconnect the connector (A) from the fuel injector, and remove the bolts securing the fuel injector pipe to the cylinder head.

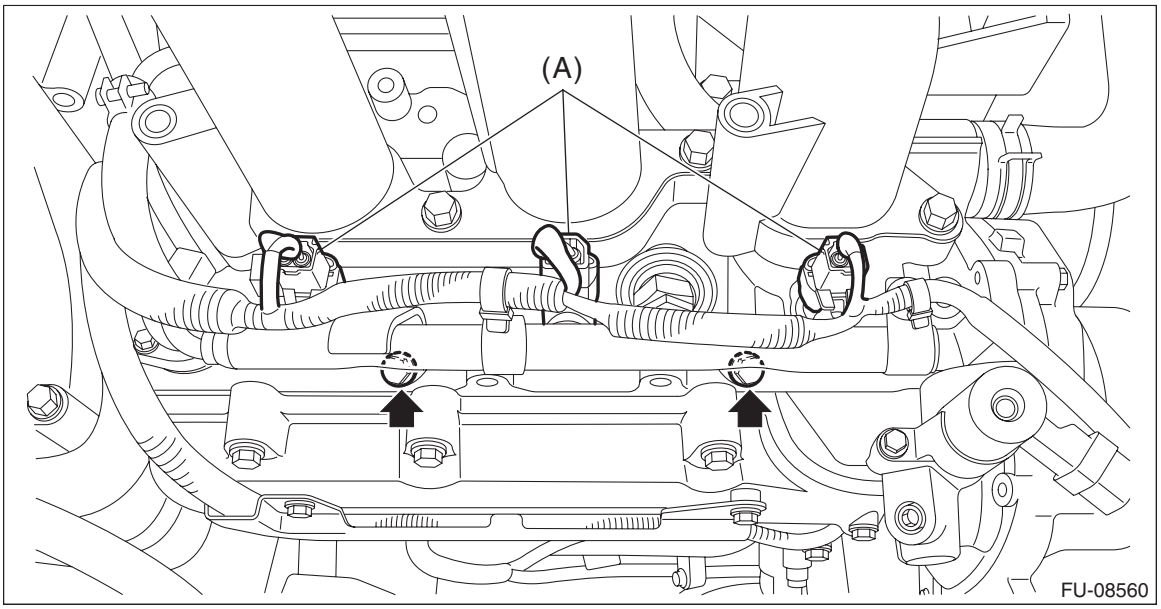

10) Remove the fuel injector while lifting up the fuel injector pipe.

CAUTION:
- **Be careful not to spill fuel.**
- **Catch the fuel from the pipes using a container or cloth.**

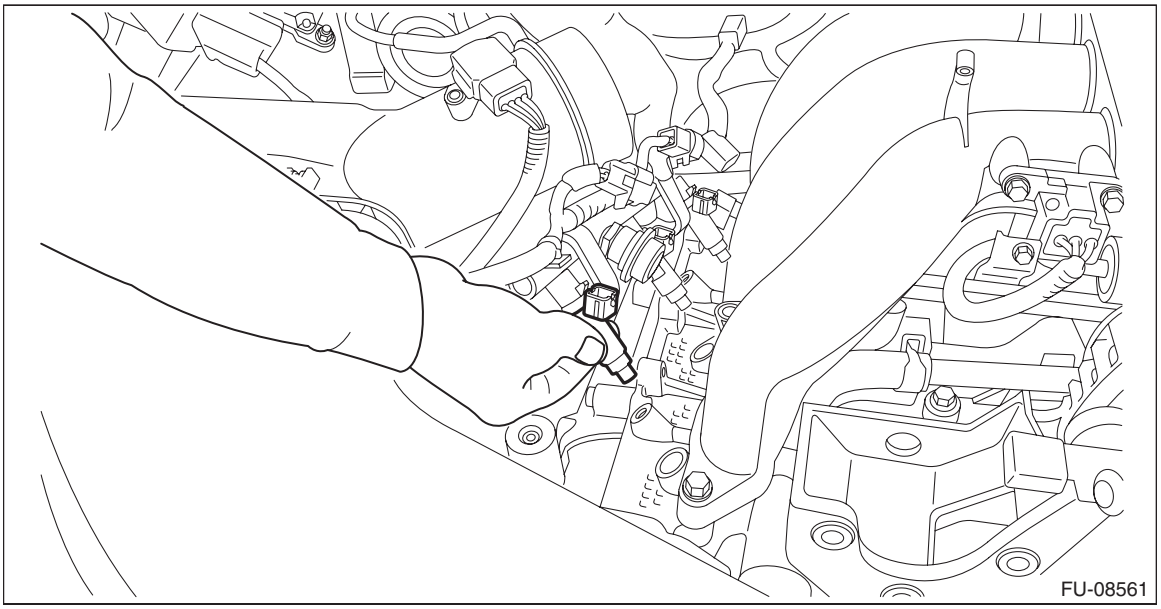

2. LH SIDE

1) Remove the collector cover.
   (1) Carefully pull up the rear of collector cover at two positions (A).
   (2) Carefully pull up the front of collector cover at two positions (B) while moving it forward.

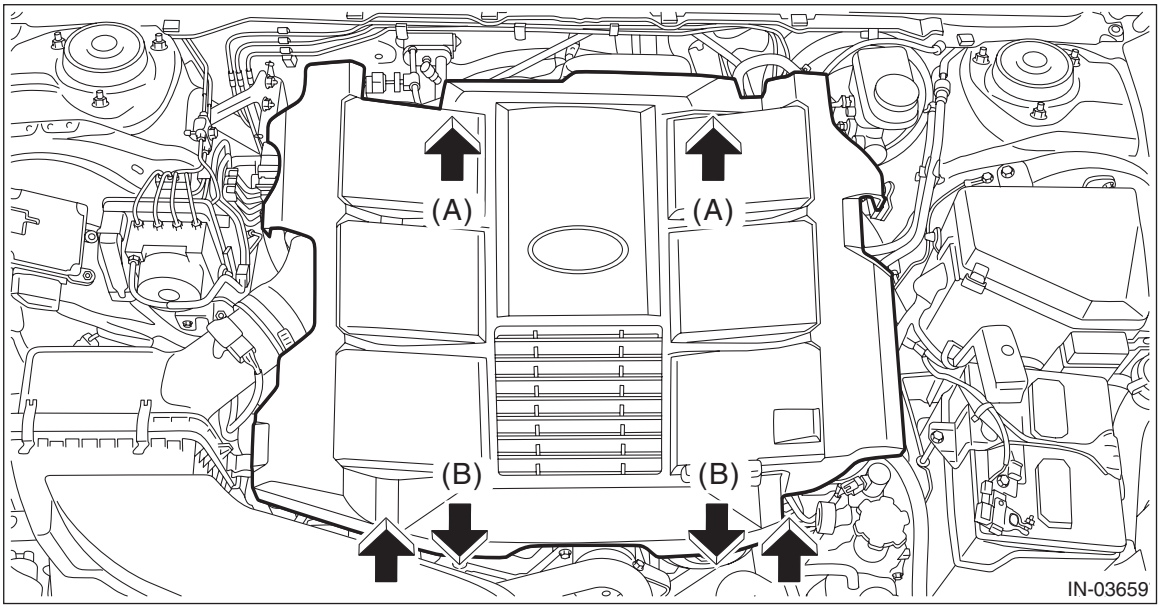

2) Release the fuel pressure. <Ref. to FU(H6DO)-93, RELEASING OF FUEL PRESSURE, PROCEDURE, Fuel.>
3) Disconnect the ground terminal from battery sensor. <Ref. to RC-4, BATTERY, NOTE, Repair Contents.>
4) Open the fuel filler lid and remove the fuel filler cap.

NOTE:
This operation is required to release the inner pressure of the fuel tank.
5) Disconnect the connector (A) and terminal (B) from the generator.
6) Disconnect connectors (C) and (D) from A/C compressor, and remove the generator cord from clip (E).
7) Remove the clip (F) securing the generator cord to the fuel pipe protector LH, and move the generator cord to the left side wheel apron.

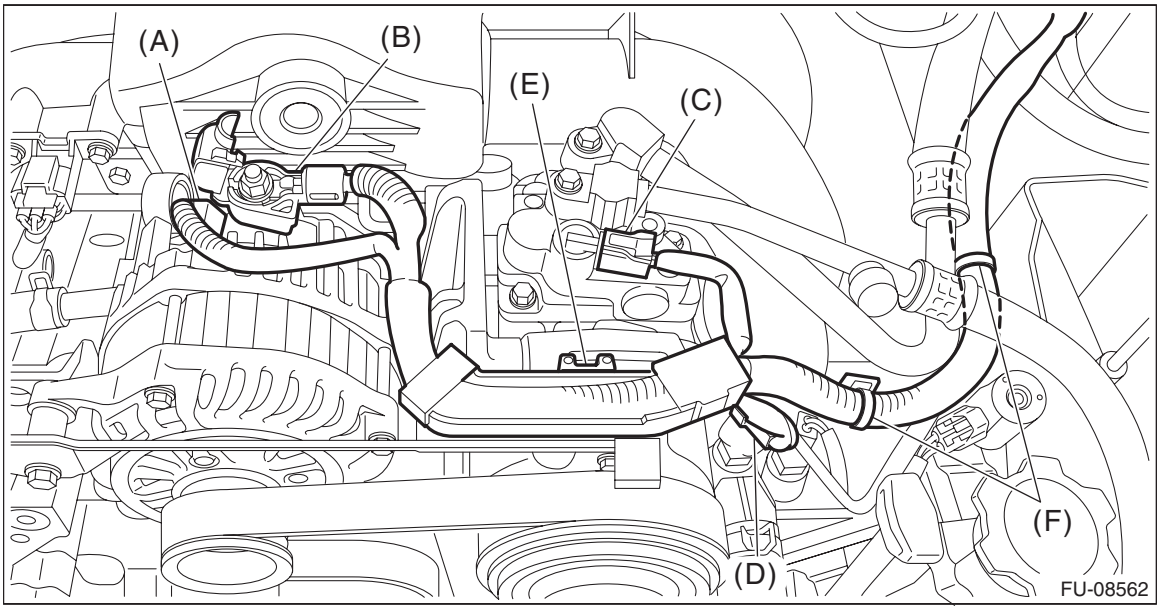

8) Disconnect the PCV hose.

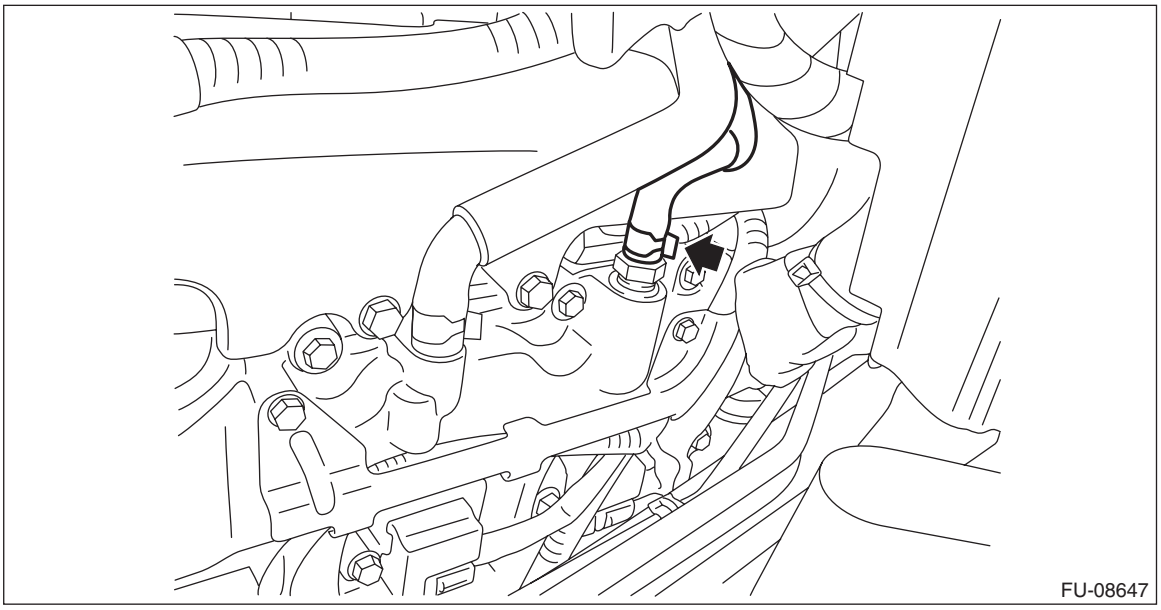

9) Remove the fuel pipe protector LH.

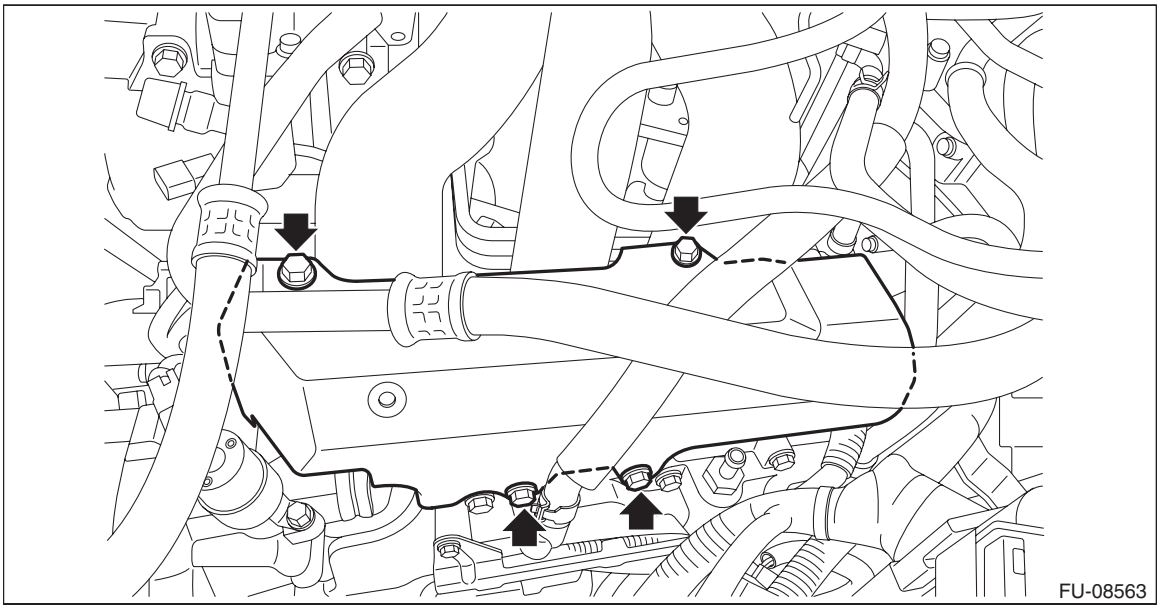

10) Disconnect the connector (A) from the fuel injector, and remove the bolts securing the fuel injector pipe to the cylinder head.

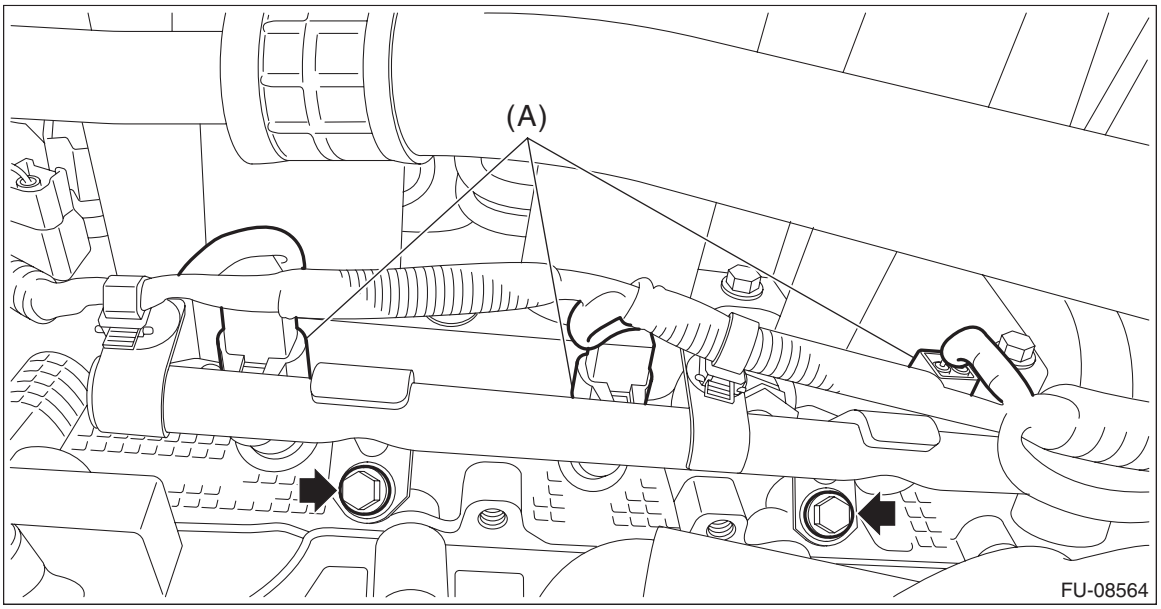

11) Remove the fuel injector while lifting up the fuel injector pipe.

CAUTION:
- **Be careful not to spill fuel.**
- **Catch the fuel from the pipes using a container or cloth.**

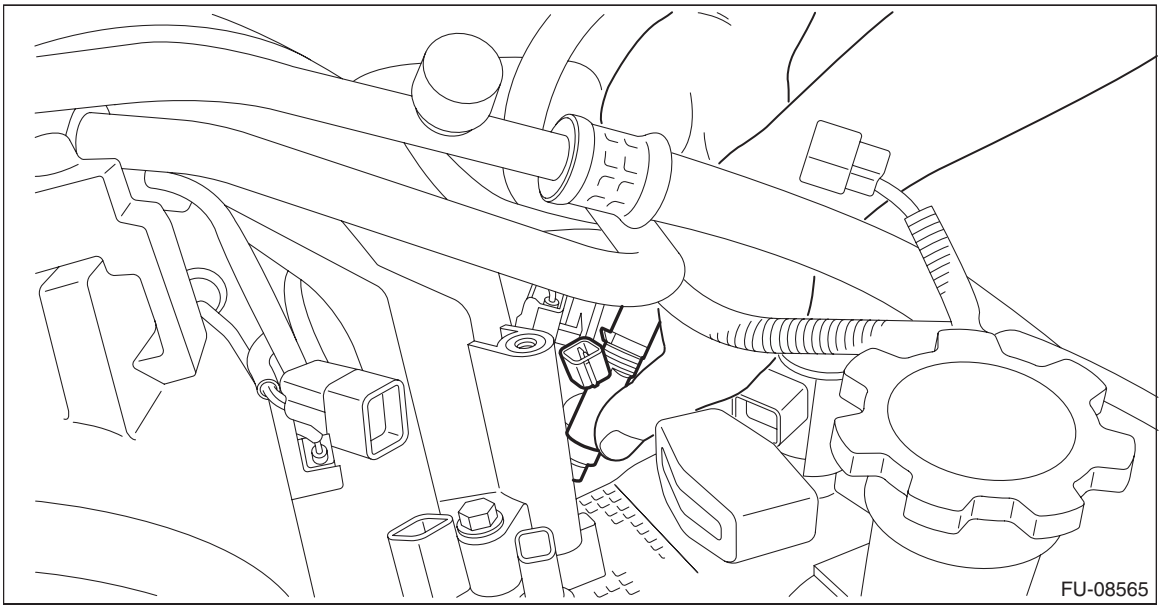

B: INSTALLATION

1. RH SIDE

1) Set the fuel injector to the fuel injector pipe RH, and install the fuel injector pipe RH and fuel injector as a unit to the cylinder head.

NOTE:
Use new O-rings, rubbers and seal rings.

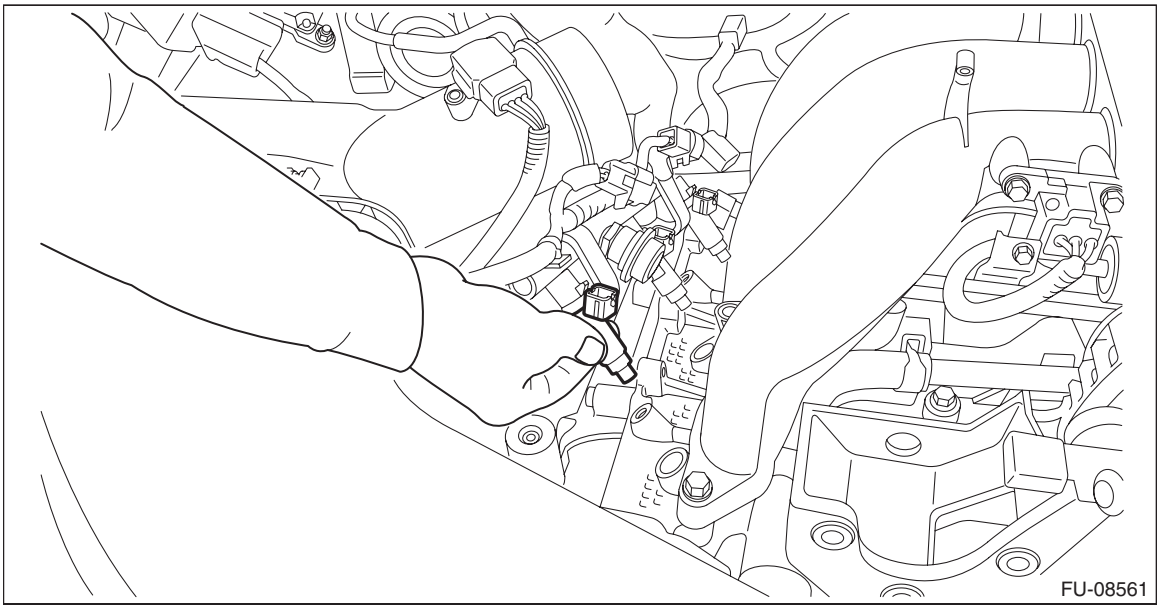

2) Install the bolts securing the fuel injector pipe to the cylinder head, and connect the connector (A) to the fuel injector.

Tightening torque:
19 N·m (1.9 kgf-m, 14.0 ft-lb)

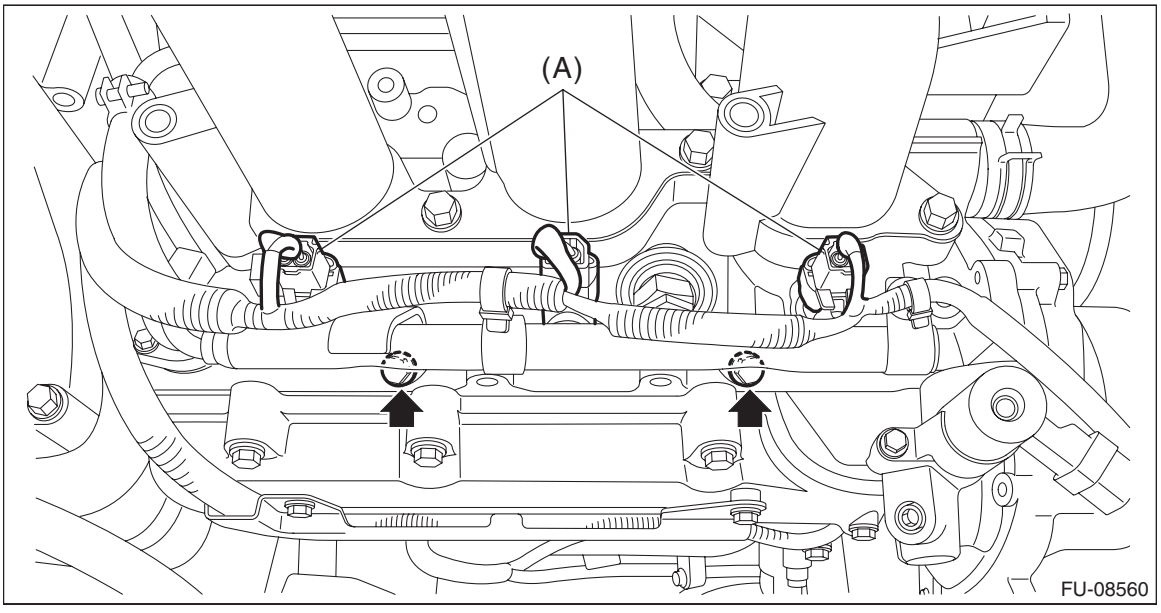

3) Install the fuel pipe protector RH.

Tightening torque:
19 N·m (1.9 kgf-m, 14.0 ft-lb)

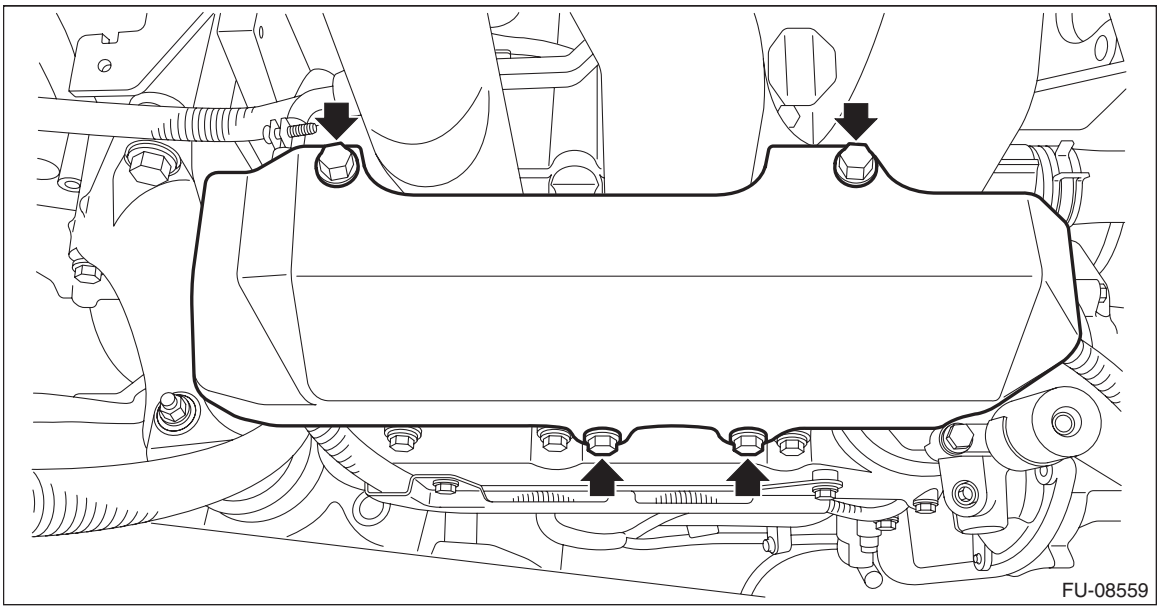

4) Install the air intake boot. <Ref. to IN(H6DO)-11, INSTALLATION, Air Intake Boot.>
5) Connect the ground terminal to battery sensor. <Ref. to RC-4, BATTERY, NOTE, Repair Contents.>
6) Install the collector cover.

2. LH SIDE

1) Set the fuel injector to the fuel injector pipe LH, and install the fuel injector pipe LH and fuel injector as a unit to the cylinder head.

NOTE:
Use new O-rings, rubbers and seal rings.

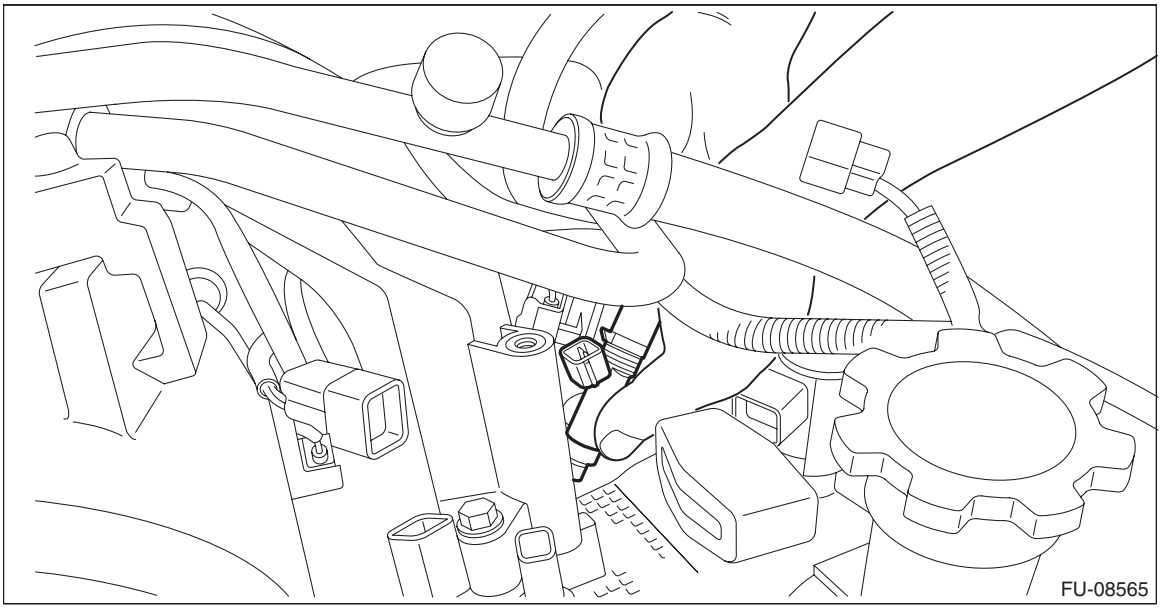

2) Install the bolts securing the fuel injector pipe to the cylinder head, and connect the connector (A) to the fuel injector.

Tightening torque:
19 N·m (1.9 kgf-m, 14.0 ft-lb)

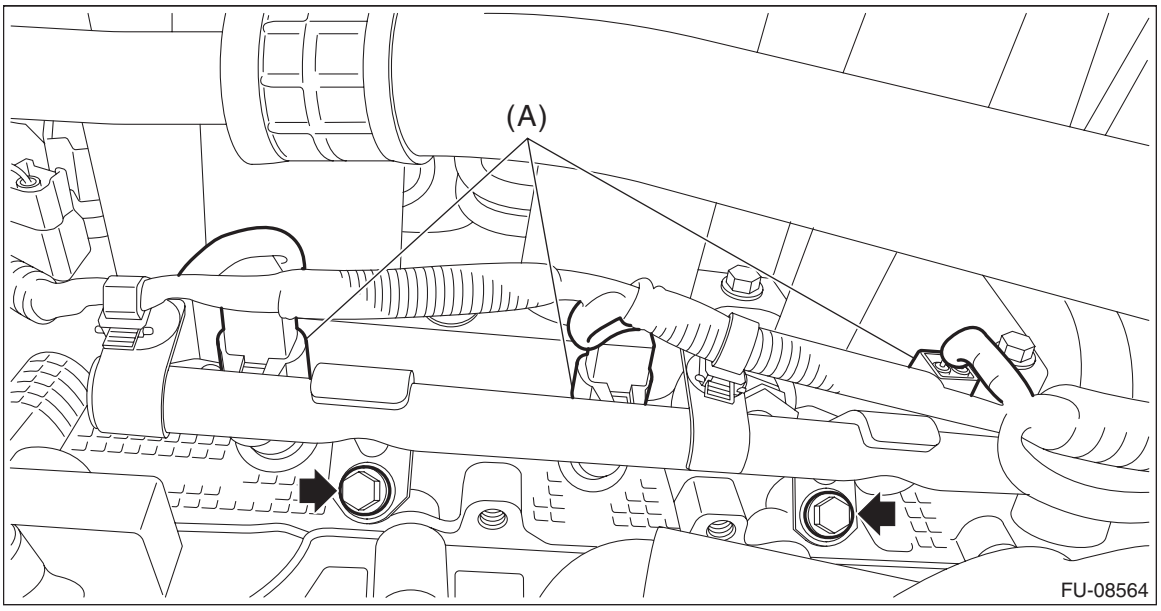

3) Install the fuel pipe protector RH.

Tightening torque:
19 N·m (1.9 kgf-m, 14.0 ft-lb)

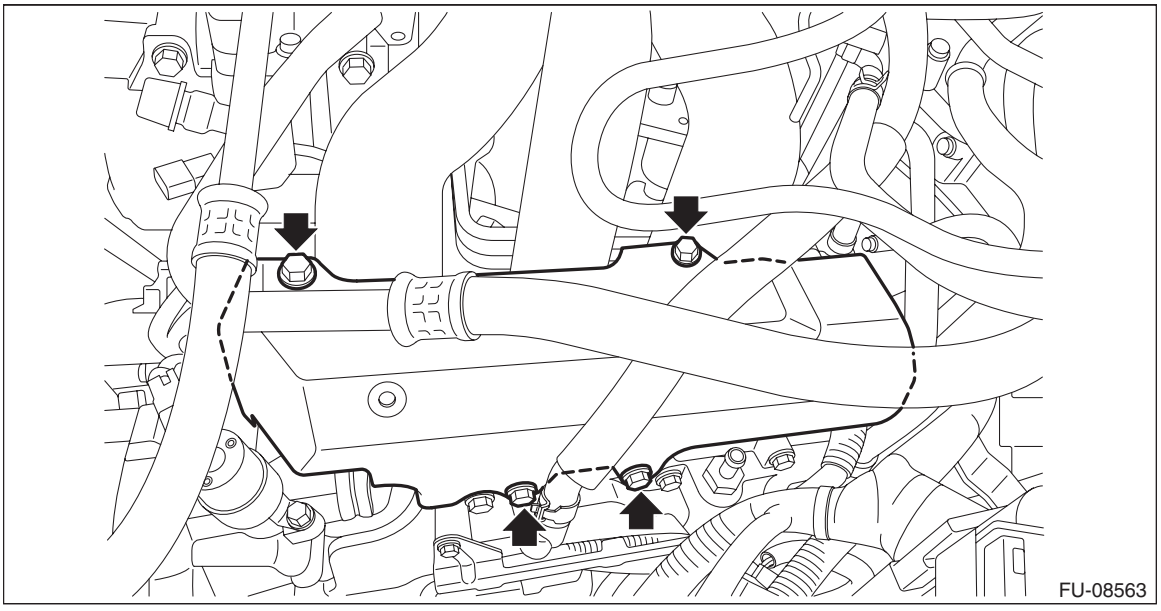

4) Connect the PCV hose.

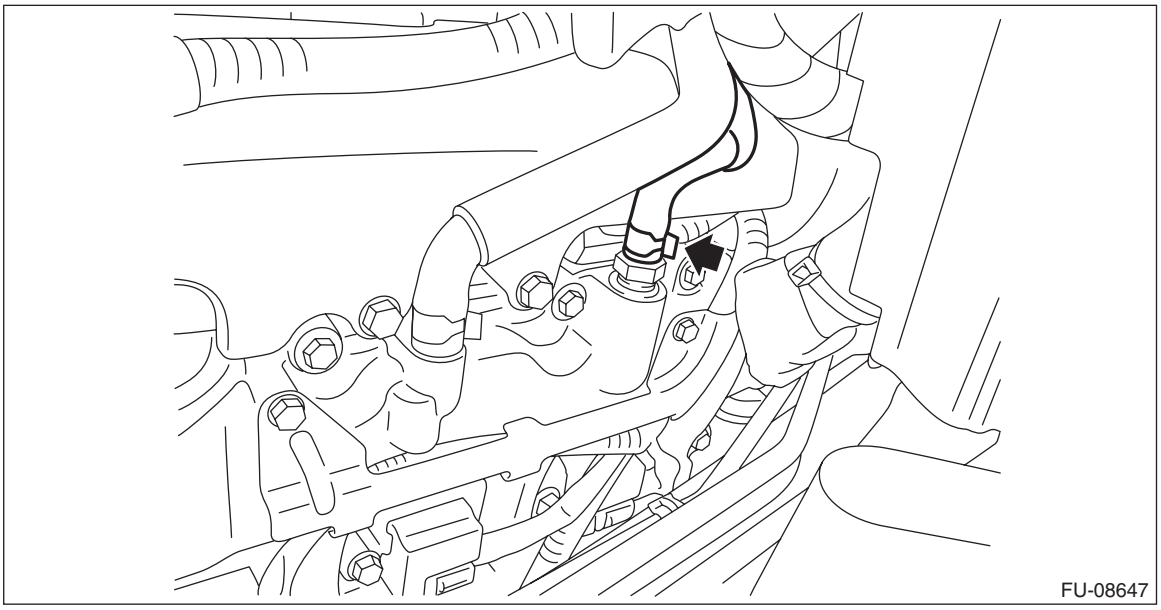

5) Install the clip (F) securing the generator cord to the fuel pipe protector LH.
6) Connect the connectors (C) and (D) to the A/C compressor and attach the generator cord to clip (E).
7) Connect the connector (A) and terminal (B) to the generator.

Tightening torque:
15 N·m (1.5 kgf-m, 11.1 ft-lb)

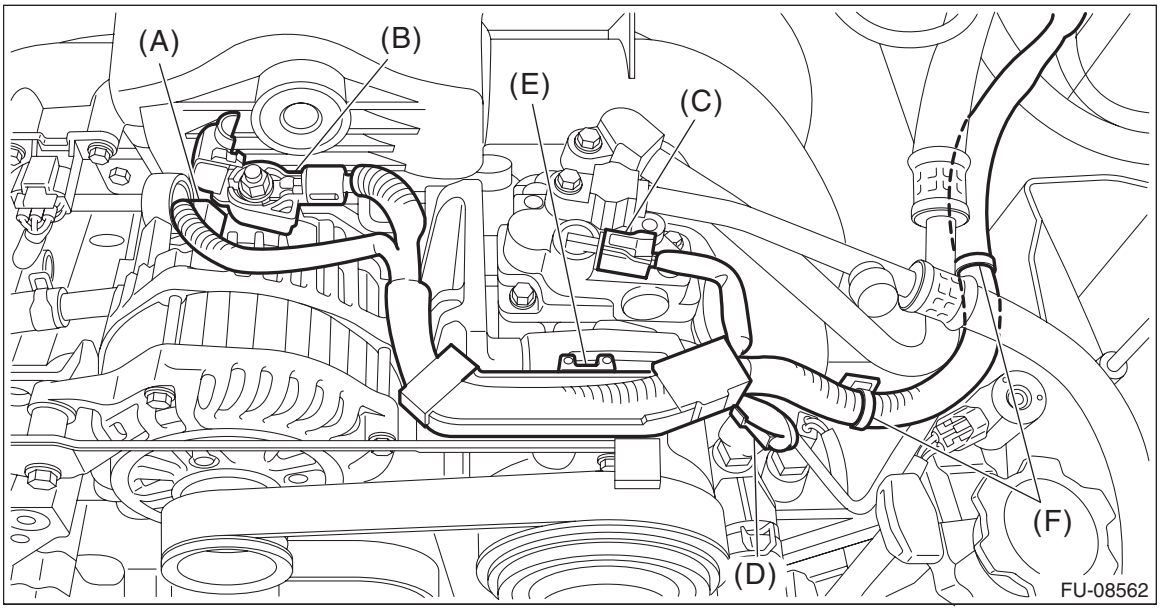

8) Connect the ground terminal to battery sensor. <Ref. to RC-4, BATTERY, NOTE, Repair Contents.>
9) Install the collector cover.

C: INSPECTION

1) Check that the fuel injector has no deformation, cracks or other damages.
2) Measure the resistance between fuel injector terminals.

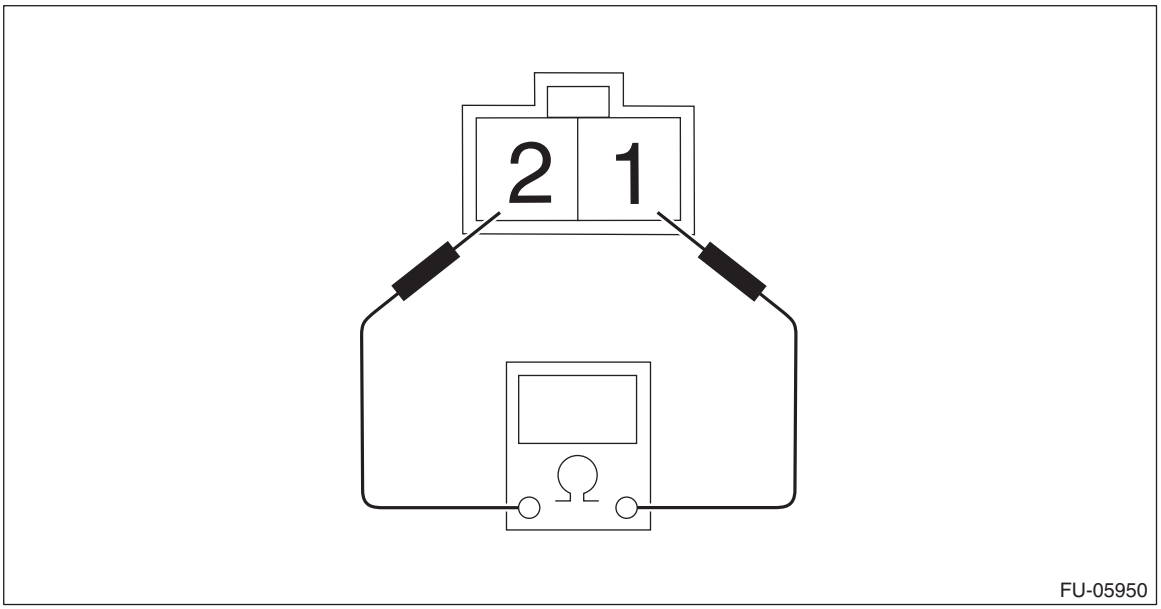

Terminal No.	Standard
1 and 2	Approx. 12.0 Ω (when 20°C (68°F))

12.Oil Flow Control Solenoid Valve

A: REMOVAL

1. INTAKE SIDE

1) Remove the collector cover.
   (1) Carefully pull up the rear of collector cover at two positions (A).
   (2) Carefully pull up the front of collector cover at two positions (B) while moving it forward.

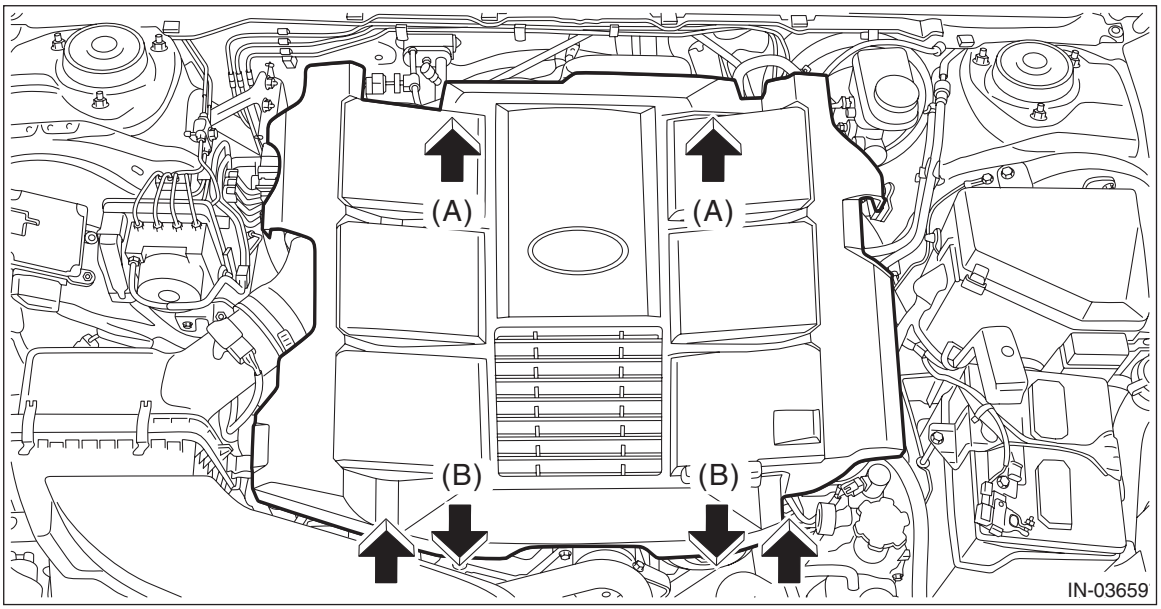

2) Disconnect the ground terminal from battery sensor. <Ref. to RC-4, BATTERY, NOTE, Repair Contents.>
3) Disconnect the connector (A) from the intake oil flow control solenoid valve, and remove the intake oil flow control solenoid valve.

- RH side

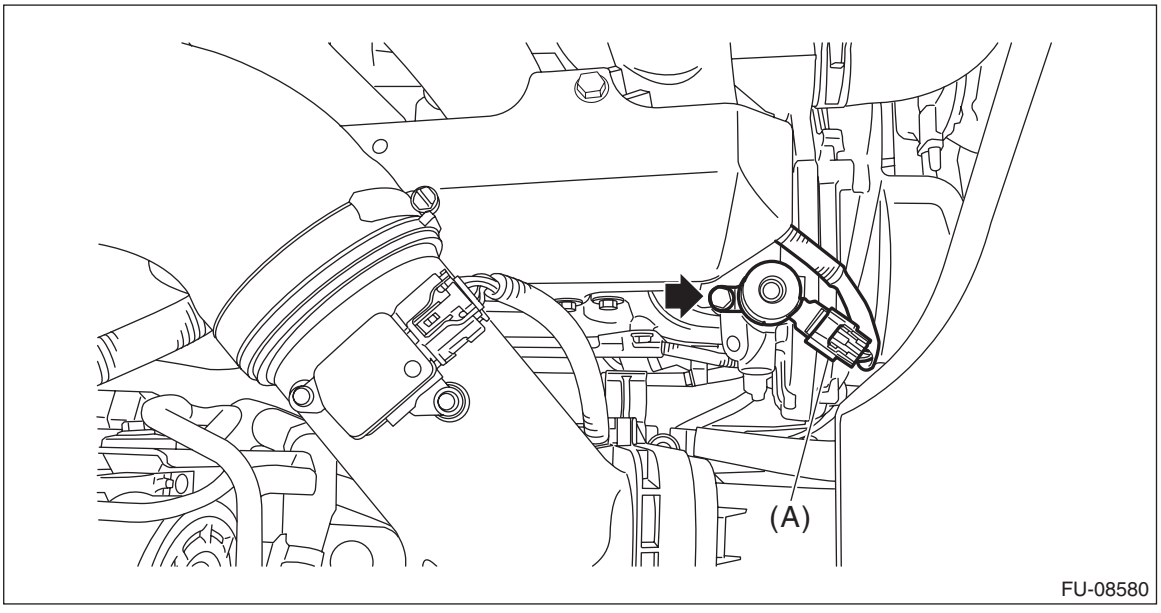

• LH side

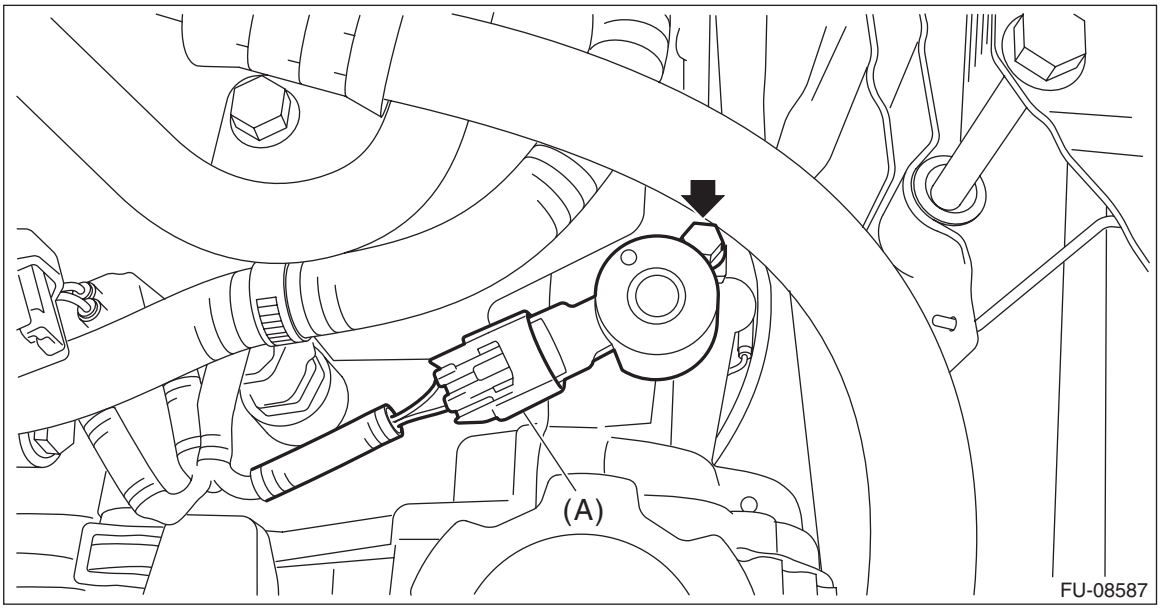

2. EXHAUST SIDE

1) Disconnect the ground terminal from battery sensor. <Ref. to RC-4, BATTERY, NOTE, Repair Contents.>
2) Lift up the vehicle.
3) Remove the under cover. <Ref. to EI-28, REMOVAL, Front Under Cover.>
4) Disconnect the connector (A) from the exhaust oil flow control solenoid valve, and remove the exhaust oil flow control solenoid valve.

• RH side

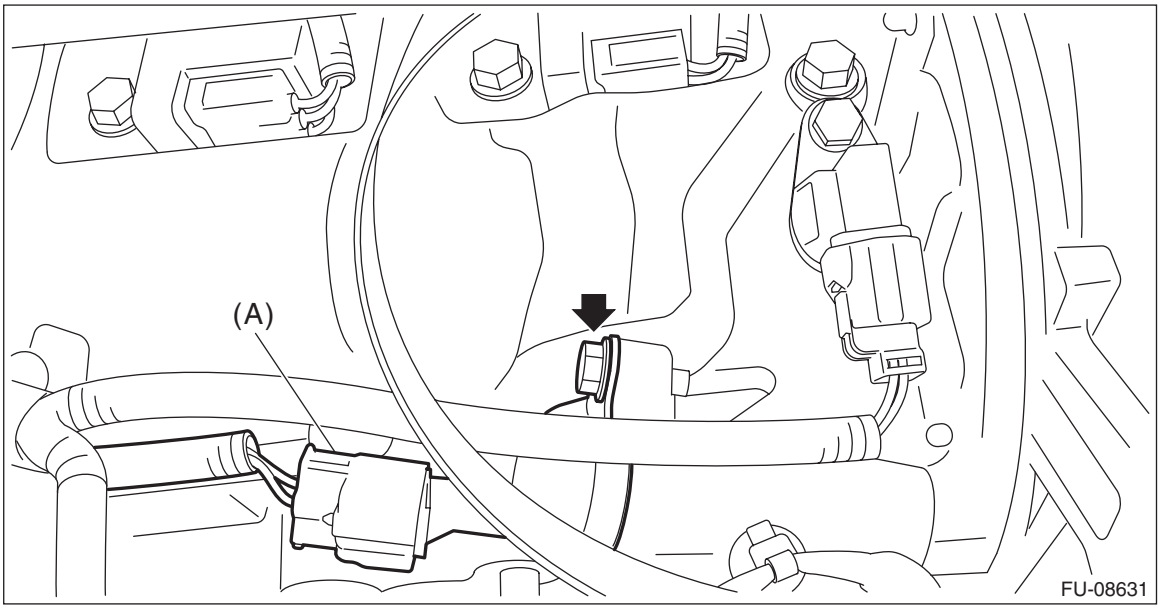

- LH side

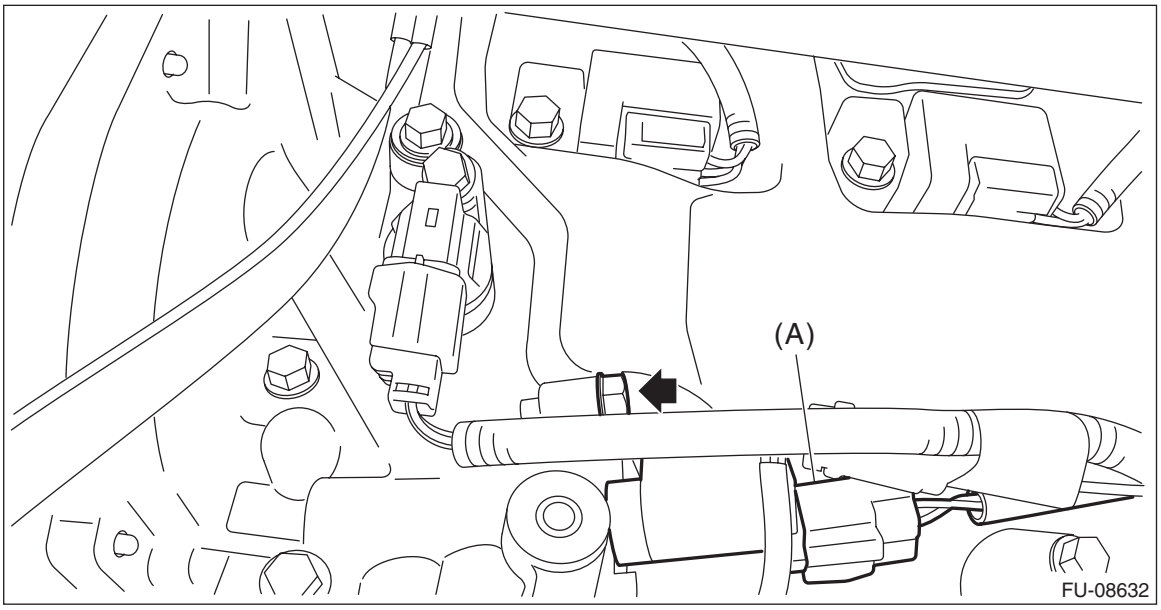

B: INSTALLATION

1. INTAKE SIDE

1) Install the intake oil flow control solenoid valve, and connect the connector to the intake oil flow control solenoid valve.

Tightening torque:
6.4 N·m (0.7 kgf-m, 4.7 ft-lb)

2) Connect the ground terminal to battery sensor. <Ref. to RC-4, BATTERY, NOTE, Repair Contents.>
3) Install the collector cover.

2. EXHAUST SIDE

1) Install the exhaust oil flow control solenoid valve, and connect the connector to the exhaust oil flow control solenoid valve.

Tightening torque:
6.4 N·m (0.7 kgf-m, 4.7 ft-lb)

2) Install the under cover. <Ref. to EI-28, INSTALLATION, Front Under Cover.>
3) Lower the vehicle.
4) Connect the ground terminal to battery sensor. <Ref. to RC-4, BATTERY, NOTE, Repair Contents.>

C: INSPECTION

1) Check that the oil flow control solenoid valve has no deformation, cracks or other damages.
2) Measure the resistance between the oil control solenoid terminals.

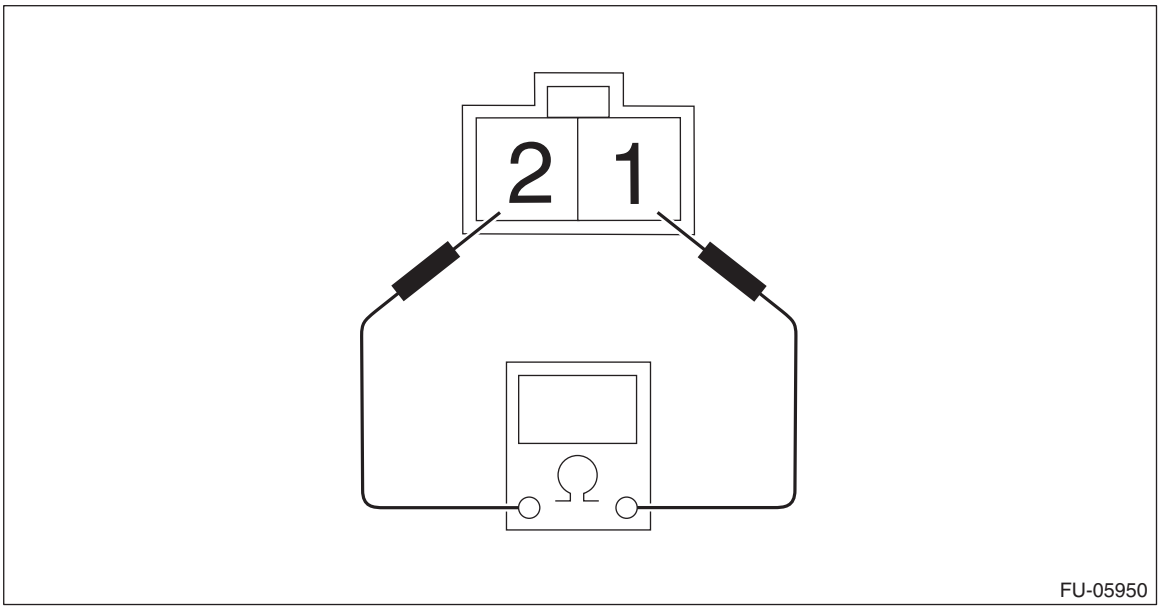

Terminal No.	Standard
1 and 2	7.4±0.5 Ω (when 20°C (68°F))

13.Oil Temperature Sensor

A: REMOVAL

1) Remove the collector cover.
   (1) Carefully pull up the rear of collector cover at two positions (A).
   (2) Carefully pull up the front of collector cover at two positions (B) while moving it forward.

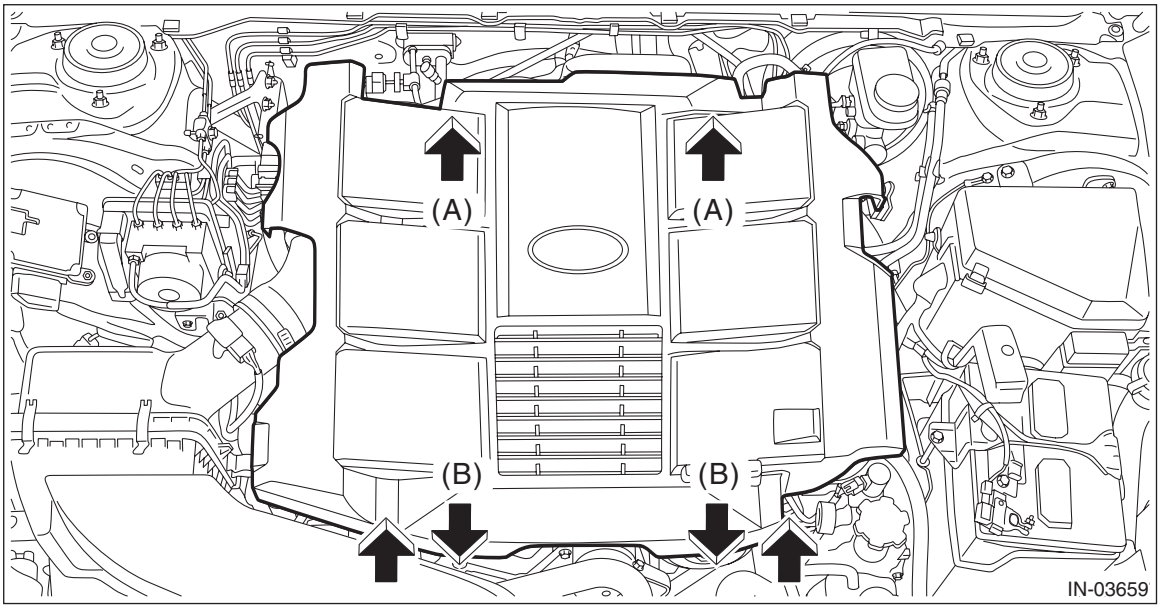

2) Disconnect the ground terminal from battery sensor. <Ref. to RC-4, BATTERY, NOTE, Repair Contents.>
3) Disconnect the connector (A) from the oil temperature sensor, and remove the oil temperature sensor from the cylinder block.

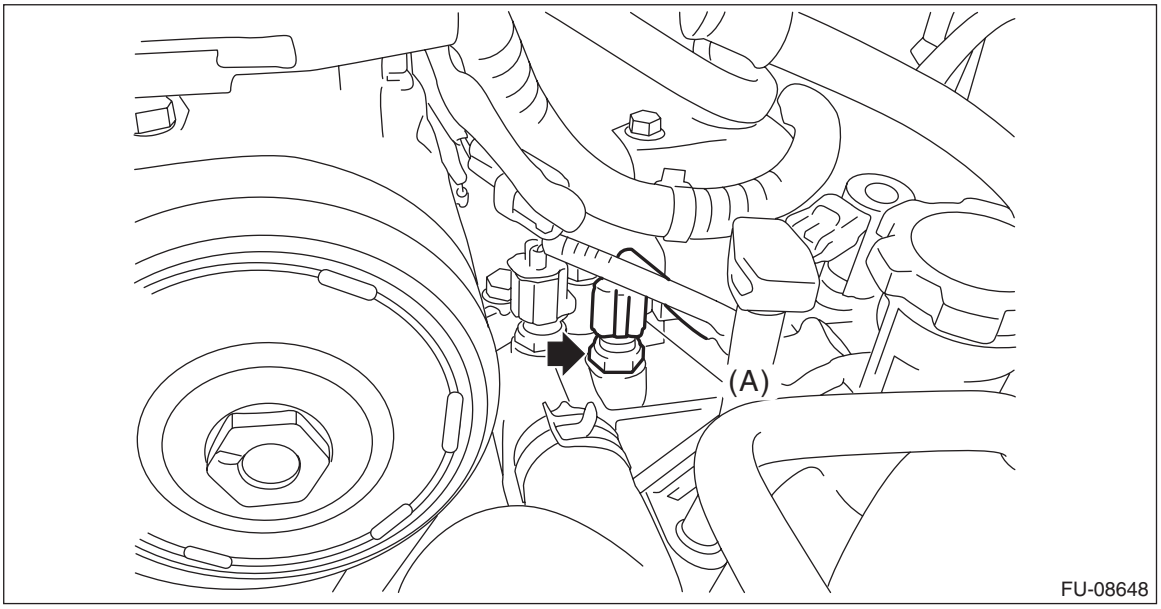

B: INSTALLATION

1) Install the oil temperature sensor to the cylinder block, and connect the connector to the oil temperature sensor.

Tightening torque:
18 N·m (1.8 kgf-m, 13.3 ft-lb)

2) Connect the ground terminal to battery sensor. <Ref. to RC-4, BATTERY, NOTE, Repair Contents.>
3) Install the collector cover.

C: INSPECTION

1) Check that the oil temperature sensor has no deformation, cracks or other damages.
2) Check the resistance between the oil temperature sensor terminals.

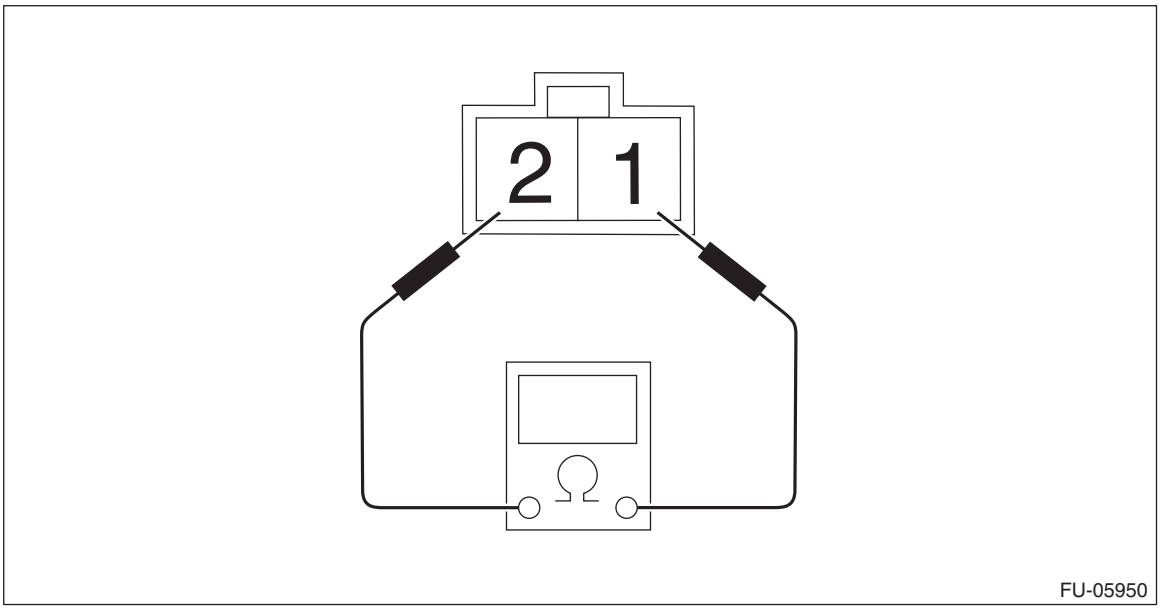

Terminal No.	Standard
1 and 2	Approx. 2.45±0.2 kΩ (when 20°C (68°F))

14.Front Oxygen (A/F) Sensor

A: REMOVAL

1) Disconnect the ground terminal from battery sensor. <Ref. to RC-4, BATTERY, NOTE, Repair Contents.>
2) Lift up the vehicle.
3) Disconnect the connector (A) of the front oxygen (A/F) sensor.
4) Remove the clip (B) securing the front oxygen (A/F) sensor harness. (LH side only)
5) Apply spray-type lubricant (004301003) or equivalent to the threaded portion of front oxygen (A/F) sensor, and leave it for one minute or more.
6) Remove the front oxygen (A/F) sensor.

CAUTION:
When removing the front oxygen (A/F) sensor, wait until exhaust pipe cools, otherwise it will damage the exhaust pipe.

- RH side

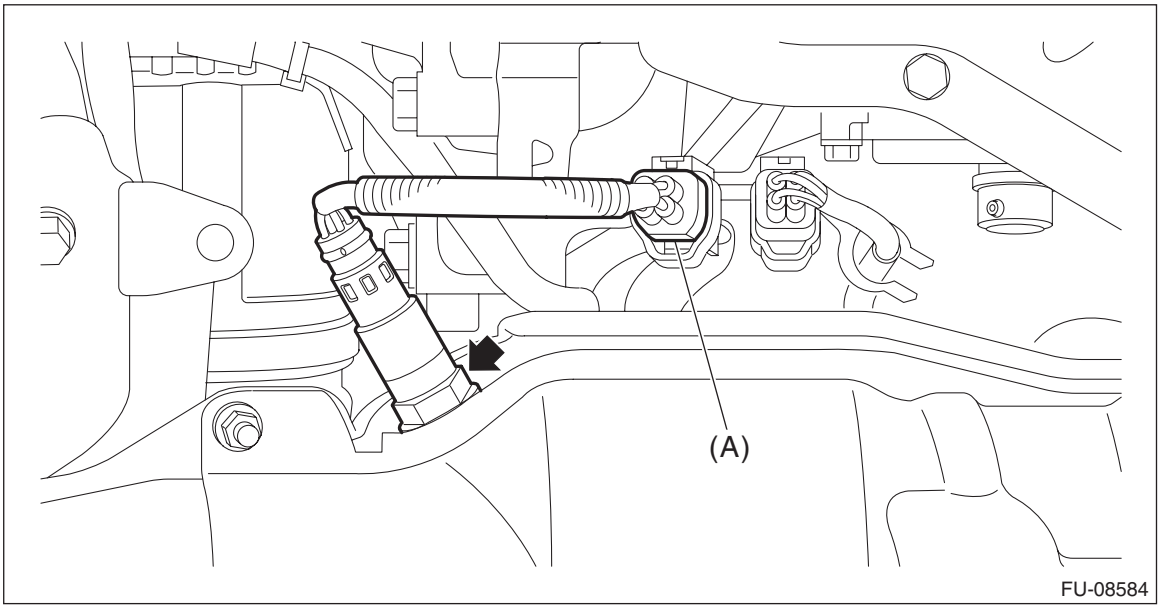

- LH side

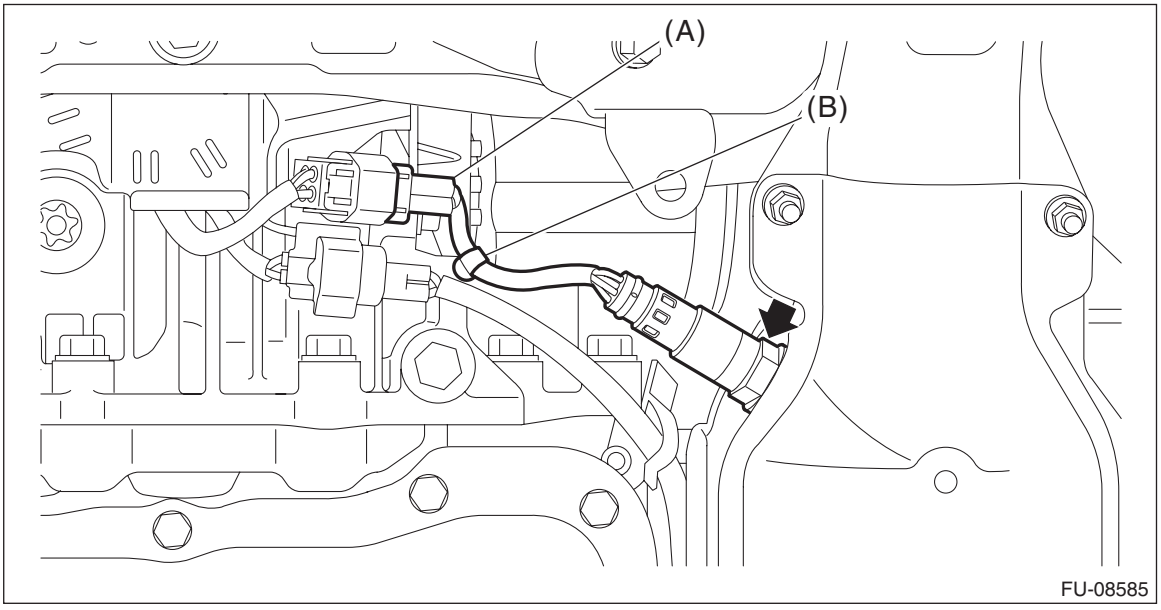

B: INSTALLATION

CAUTION:
If lubricant is spilt over the exhaust pipe, wipe it off with cloth to avoid emission of smoke or causing a fire.

1) Before installing front oxygen (A/F) sensor, apply anti-seize compound only to the threaded portion of front oxygen (A/F) sensor to make the next removal easier.

CAUTION:
Never apply anti-seize compound to the protector of front oxygen (A/F) sensor.

Anti-seize compound:
NEVER-SEEZ NSN, JET LUBE SS-30 or equivalent

2) Install the front oxygen (A/F) sensor.

Tightening torque:
21 N·m (2.1 kgf-m, 15.5 ft-lb)

3) Connect the connector (A) of front oxygen (A/F) sensor.
4) Install the clip (B) securing the front oxygen (A/F) sensor harness. (LH side only)

- RH side

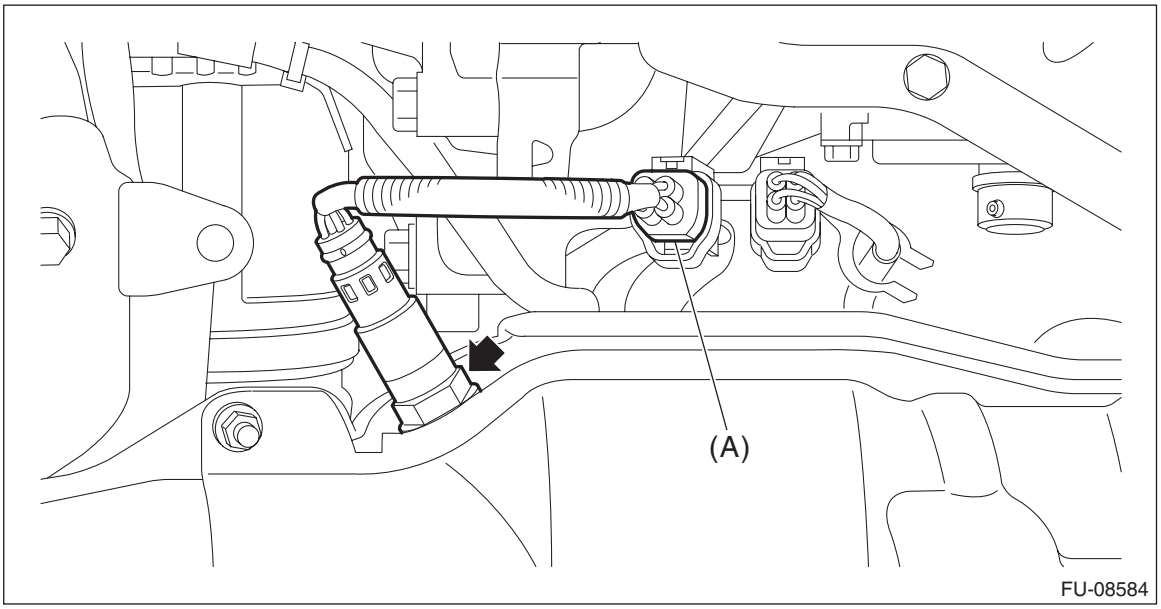

- LH side

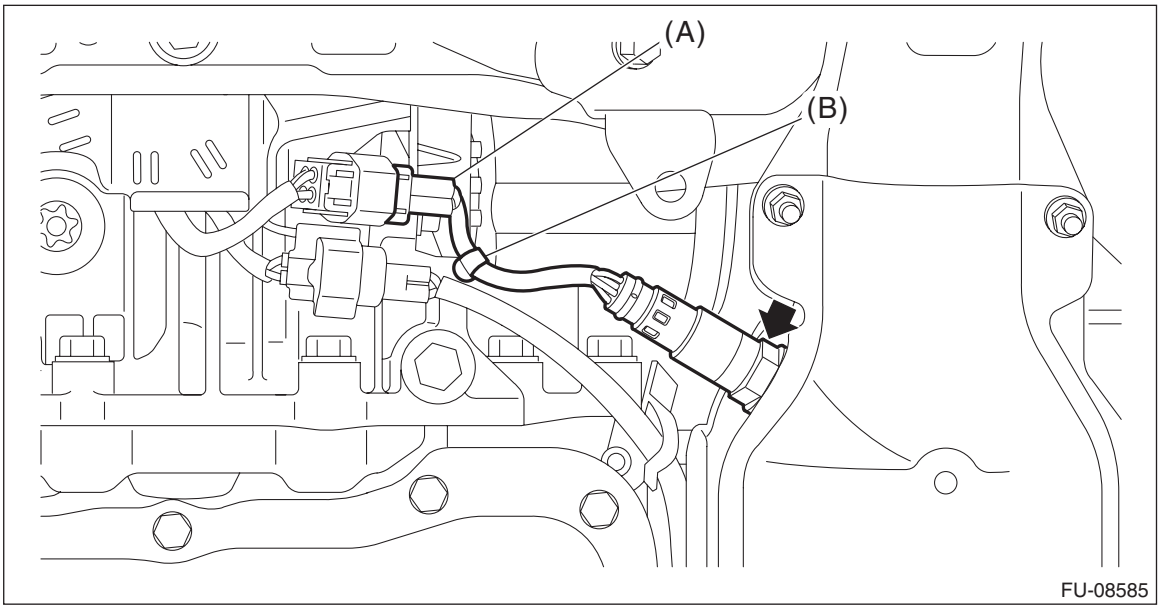

5) Lower the vehicle.
6) Connect the ground terminal to battery sensor. <Ref. to RC-4, BATTERY, NOTE, Repair Contents.>

C: INSPECTION

1) Check that the front oxygen (A/F) sensor has no deformation, cracks or other damages.
2) Measure the resistance between front oxygen (A/F) sensor terminals.

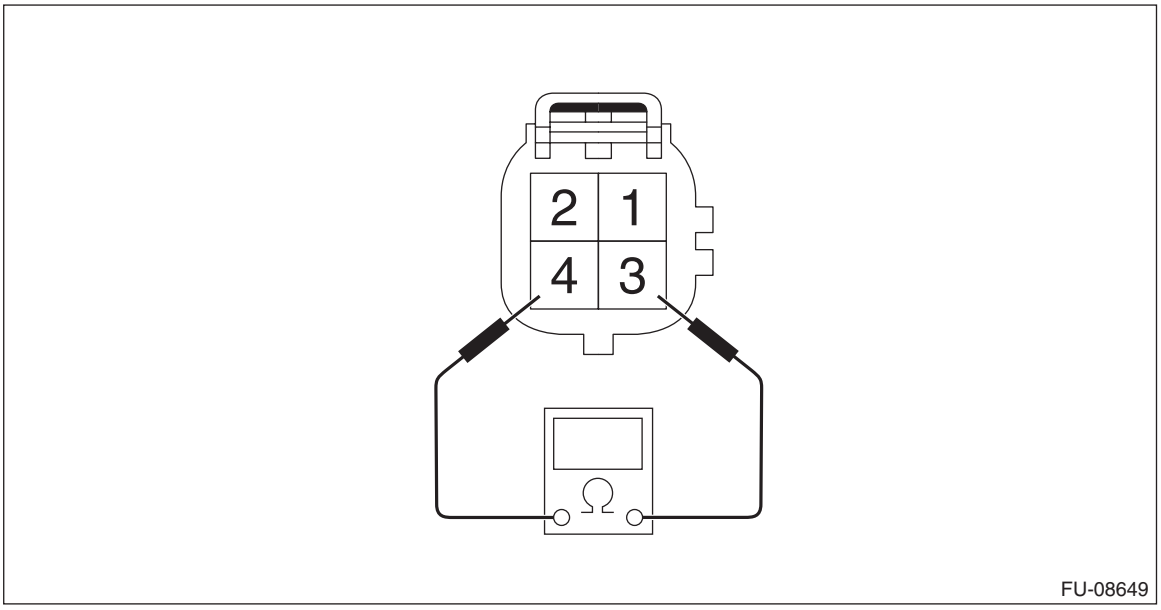

Terminal No.	Standard
3 and 4	$2.0^{+0.42}_{-0.2}$ Ω (when 20°C (68°F))

15.Rear Oxygen Sensor

A: REMOVAL

1) Disconnect the ground terminal from battery sensor. <Ref. to RC-4, BATTERY, NOTE, Repair Contents.>
2) Lift up the vehicle.
3) Remove the front exhaust pipe. <Ref. to EX(H6DO)-6, REMOVAL, Front Exhaust Pipe.>
4) Apply spray-type lubricant (004301003) or equivalent to the threaded portion of rear oxygen sensor, and leave it for one minute or more.
5) Remove the rear oxygen sensor.

CAUTION:
When removing the rear oxygen sensor, wait until exhaust pipe cools, otherwise it will damage the exhaust pipe.

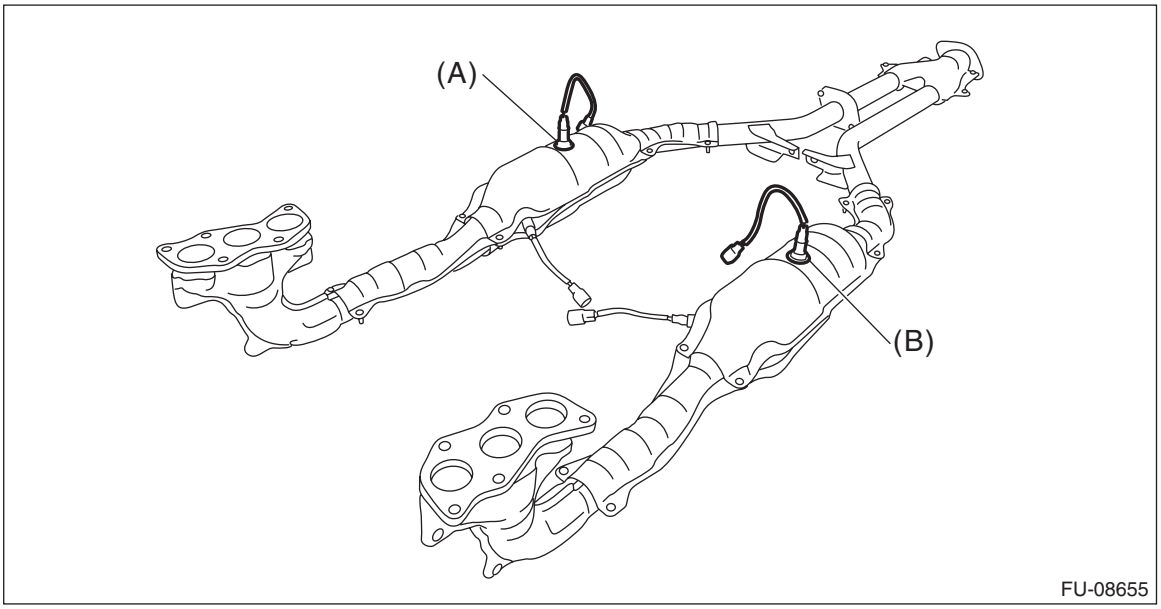

(A) Rear oxygen sensor RH (B) Rear oxygen sensor LH

B: INSTALLATION

CAUTION:
If lubricant is spilt over the exhaust pipe, wipe it off with cloth to avoid emission of smoke or causing a fire.
1) Before installing rear oxygen sensor, apply the anti-seize compound only to the threaded portion of rear oxygen sensor to make the next removal easier.

CAUTION:
Never apply anti-seize compound to the protector of rear oxygen sensor.

Anti-seize compound:
NEVER-SEEZ NSN, JET LUBE SS-30 or equivalent

2) Install the rear oxygen sensor.

Tightening torque:
21 N·m (2.1 kgf-m, 15.5 ft-lb)

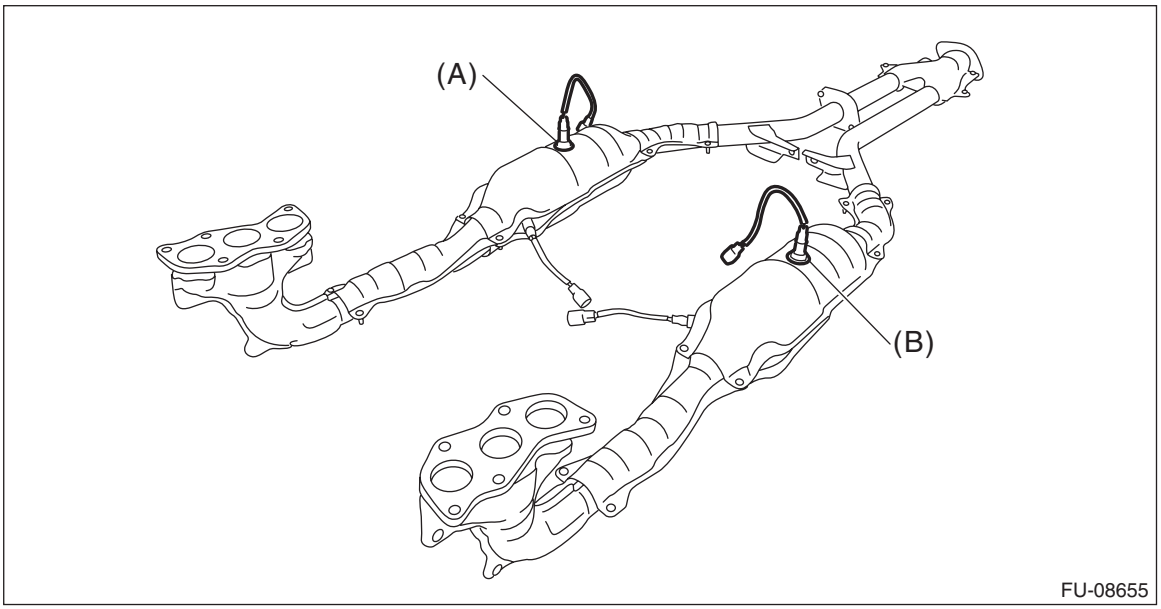

(A) Rear oxygen sensor RH (B) Rear oxygen sensor LH

3) Install the front exhaust pipe. <Ref. to EX(H6DO)-8, INSTALLATION, Front Exhaust Pipe.>
4) Lower the vehicle.
5) Connect the ground terminal to battery sensor. <Ref. to RC-4, BATTERY, NOTE, Repair Contents.>

C: INSPECTION

1) Check that the rear oxygen sensor has no deformation, cracks or other damages.
2) Measure the resistance between rear oxygen sensor terminals.

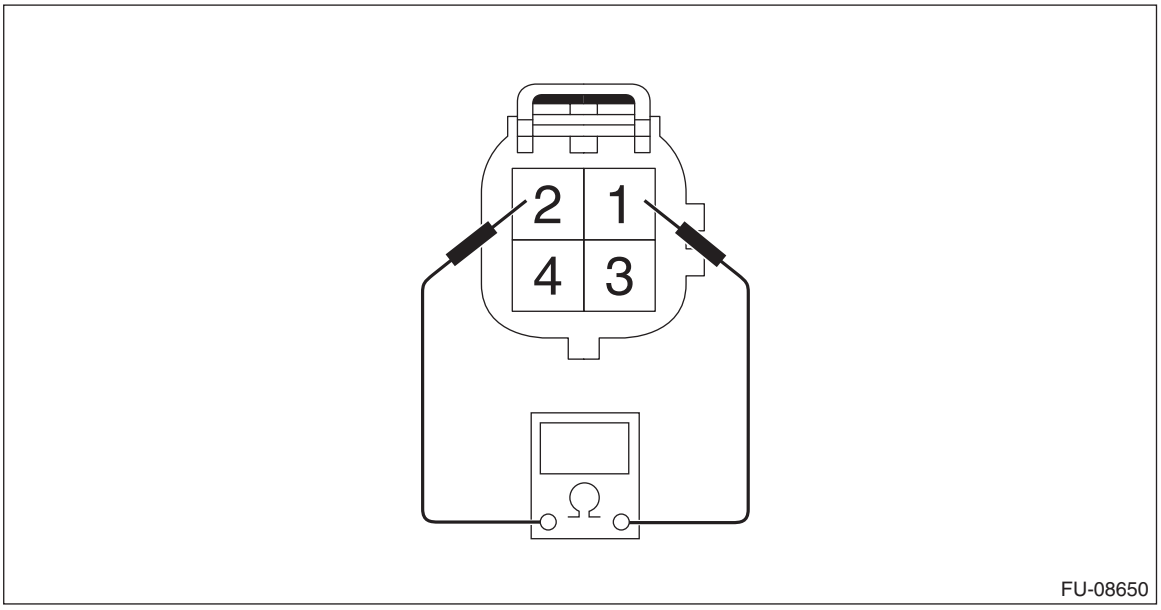

Terminal No.	Standard
1 and 2	$5.6^{+0.8}_{-0.6}$ Ω (when 20°C (68°F))

16.Engine Control Module (ECM)

A: REMOVAL

1) Disconnect the ground terminal from battery sensor. <Ref. to RC-4, BATTERY, NOTE, Repair Contents.>
2) While pressing the section (A) shown in the figure, move the lock lever (B) in the direction of the arrow to disconnect the connectors from the ECM in numerical order as shown in the figure.
3) Remove the ECM from the ECM bracket.

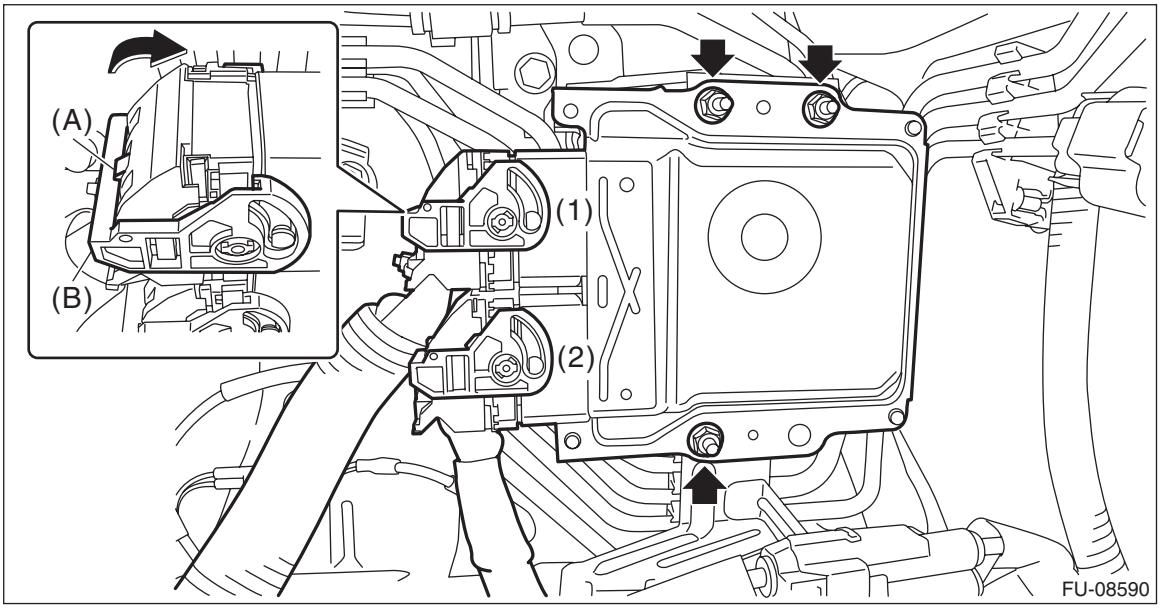

4) Disconnect the connectors (A) and (B) from the ECM bracket, and remove the clip (C) securing the harness.
5) Remove the ECM bracket from the vehicle.

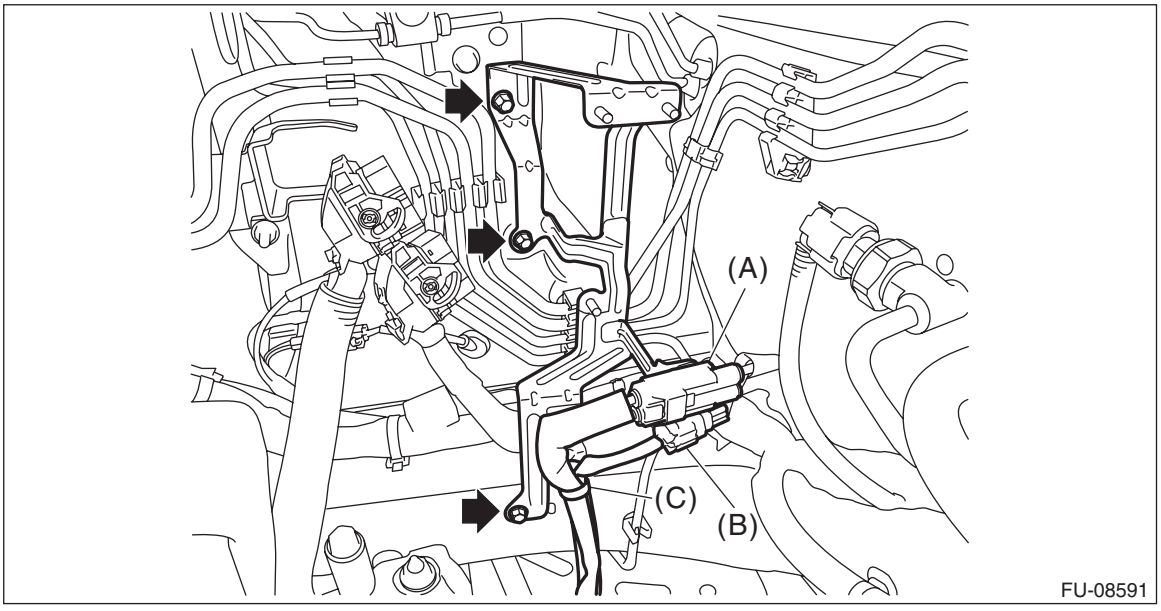

B: INSTALLATION

CAUTION:
When the ECM of model with immobilizer has been replaced, be sure to perform the registration of immobilizer system. (Refer to the "REGISTRATION MANUAL FOR IMMOBILIZER".)

NOTE:
When replacing the ECM, be careful not to use the ECM of wrong specification to avoid any damage on the fuel injection system.

1) Install the ECM bracket to the vehicle.

Tightening torque:
7.5 N·m (0.8 kgf-m, 5.5 ft-lb)

2) Connect the connectors (A) and (B) to the ECM bracket, and install the clip (C) securing the harness.

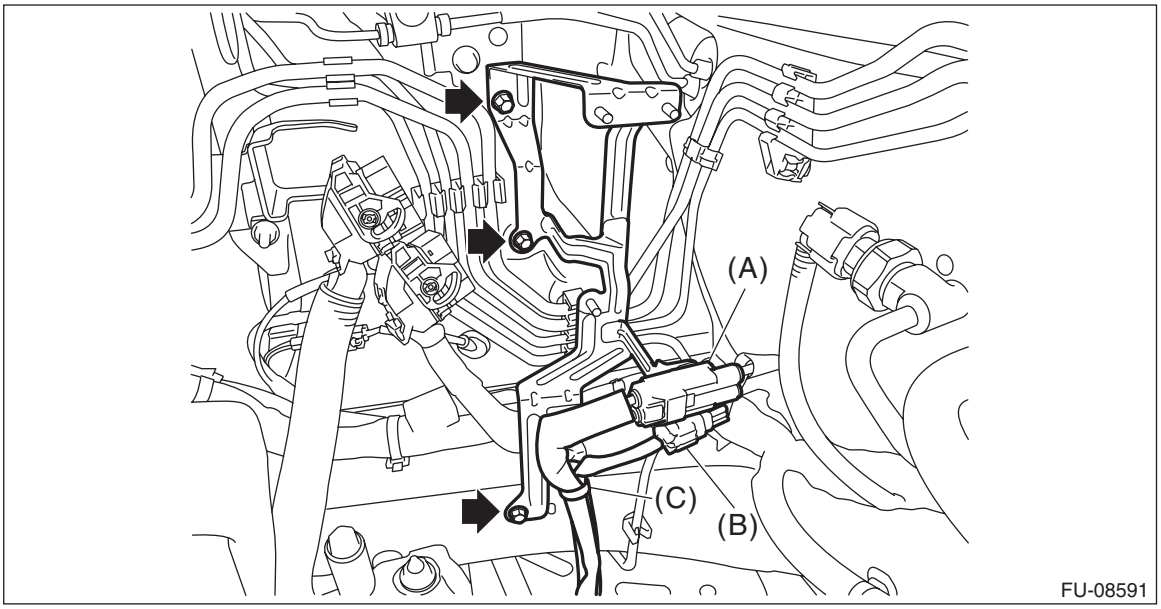

3) Install the ECM to the ECM bracket.

Tightening torque:
7.5 N·m (0.8 kgf-m, 5.5 ft-lb)

4) Move the lock lever in the direction of the arrow, and connect the connector to the ECM in numerical order as shown in the figure.

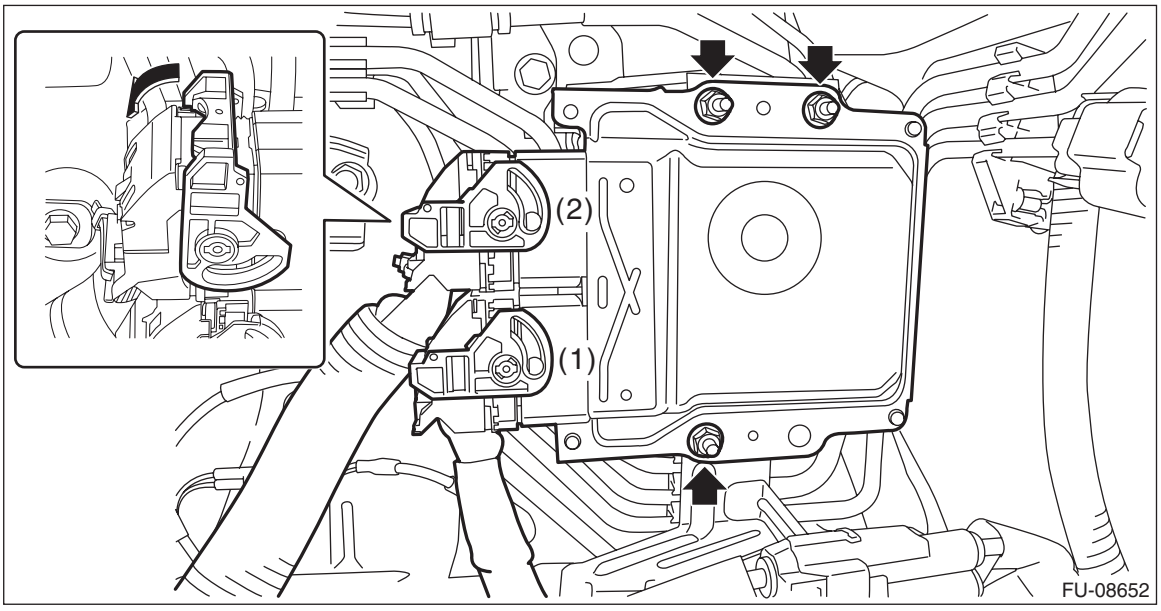

5) Connect the ground terminal to battery sensor. <Ref. to RC-4, BATTERY, NOTE, Repair Contents.>

C: INSPECTION

Check that the ECM has no deformation, cracks or other damages.

17.Main Relay

A: REMOVAL

1) Disconnect the ground terminal from battery sensor. <Ref. to RC-4, BATTERY, NOTE, Repair Contents.>
2) Remove the main relay from main fuse box.

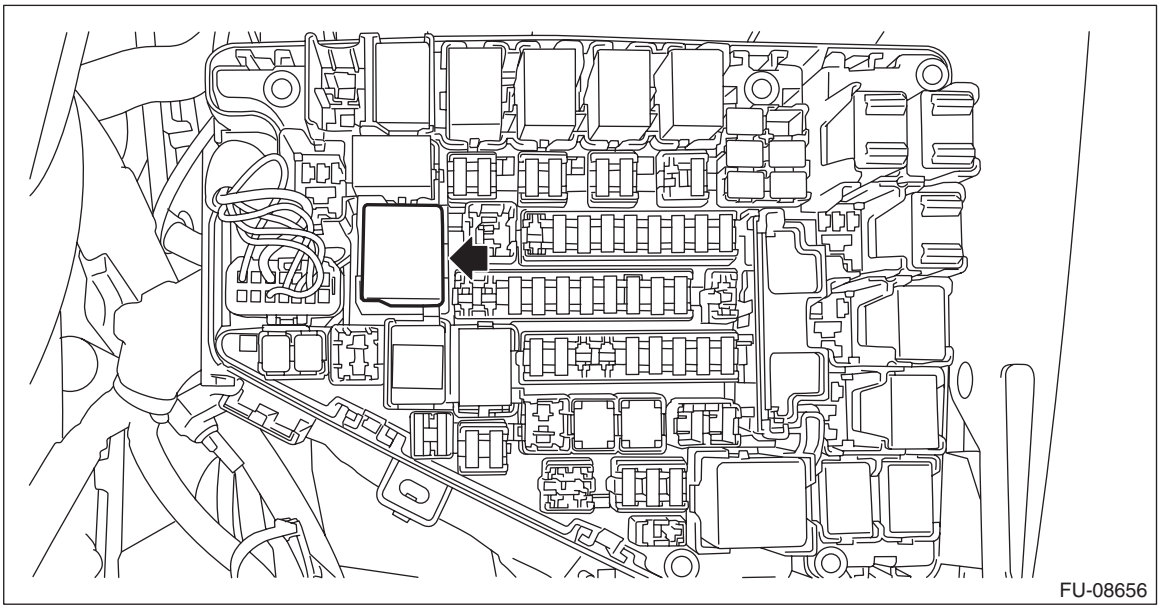

B: INSTALLATION

1) Install the main relay to the main fuse box.
2) Connect the ground terminal to battery sensor. <Ref. to RC-4, BATTERY, NOTE, Repair Contents.>

C: INSPECTION

1) Check that the main relay has no deformation, cracks or other damages.
2) Measure the resistance between main relay terminals.

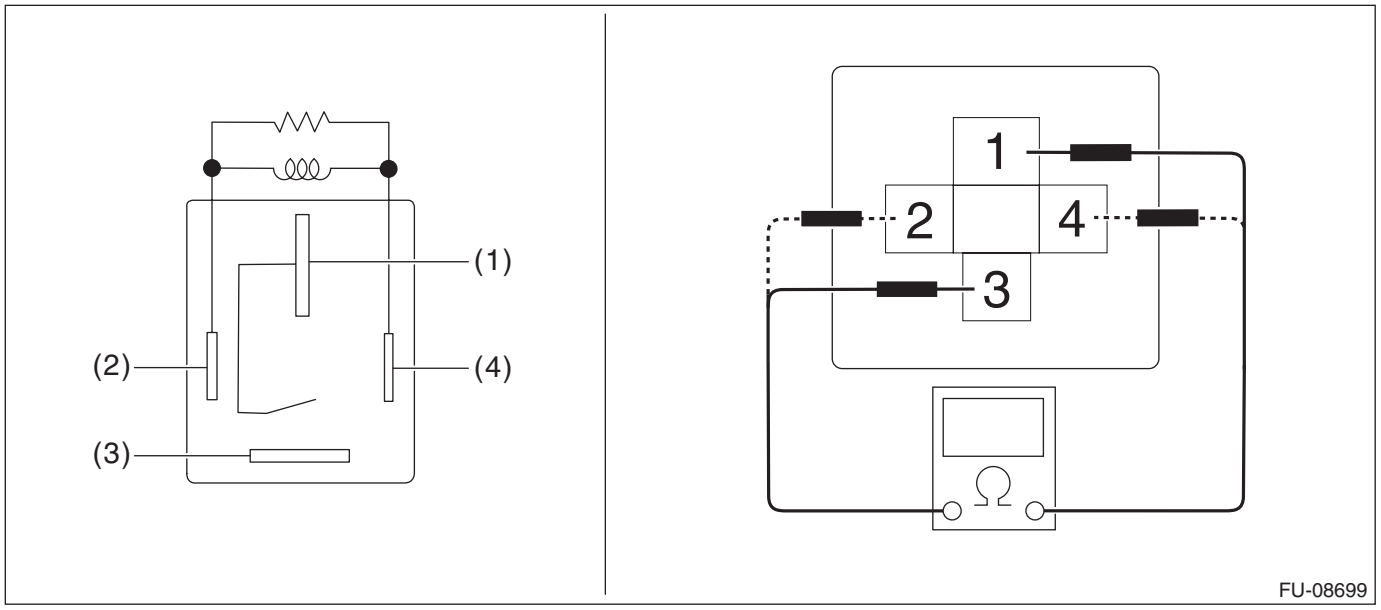

Terminal No.	Standard
1 and 3	1 MΩ or more
2 and 4	80.55 — 98.45 Ω (when 20°C (68°F))

3) Connect battery positive terminal to terminal No. 2 and battery ground terminal to terminal No. 4, and measure the resistance between the main relay terminals.

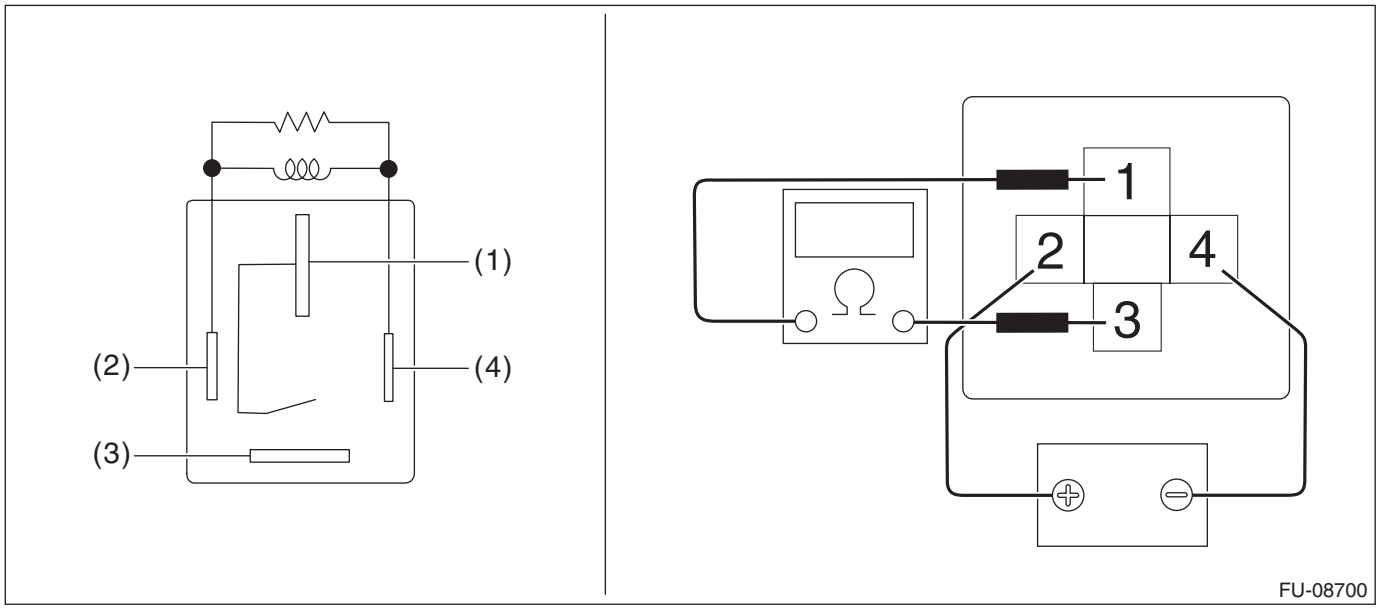

Terminal No.	Standard
1 and 3	Less than 1 Ω

18.Electronic Throttle Control Relay

A: REMOVAL

1) Disconnect the ground terminal from battery sensor. <Ref. to RC-4, BATTERY, NOTE, Repair Contents.>
2) Remove the electronic throttle control relay from the main fuse box.

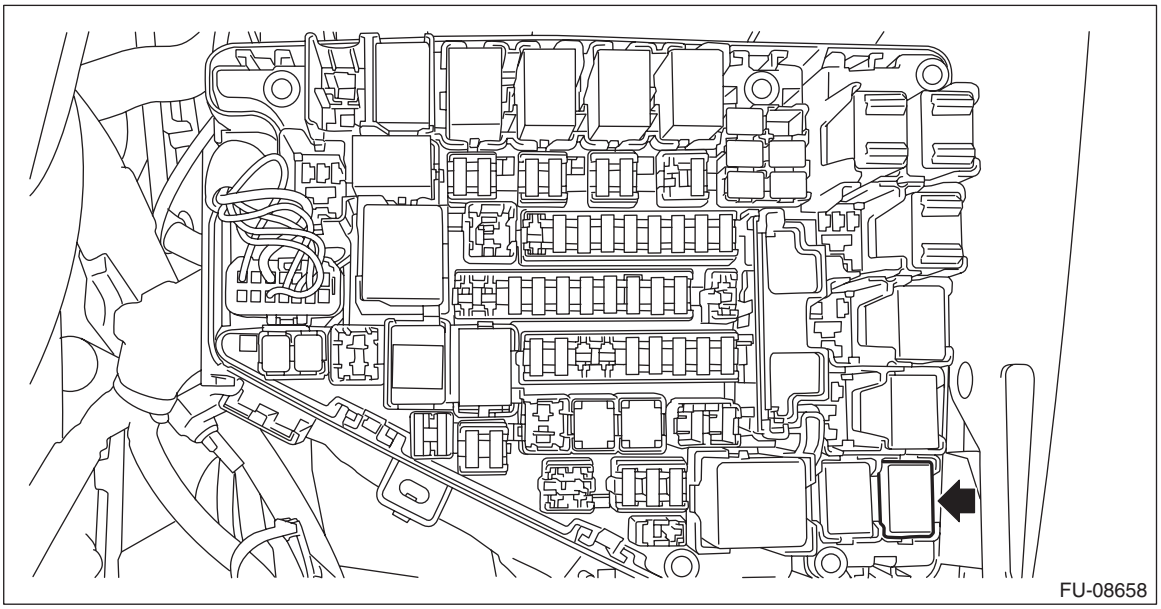

B: INSTALLATION

1) Install the electronic throttle control relay to the main fuse box.
2) Connect the ground terminal to battery sensor. <Ref. to RC-4, BATTERY, NOTE, Repair Contents.>

C: INSPECTION

1) Check that the electronic throttle control relay has no deformation, cracks or other damages.
2) Measure the resistance between electronic throttle control relay terminals.

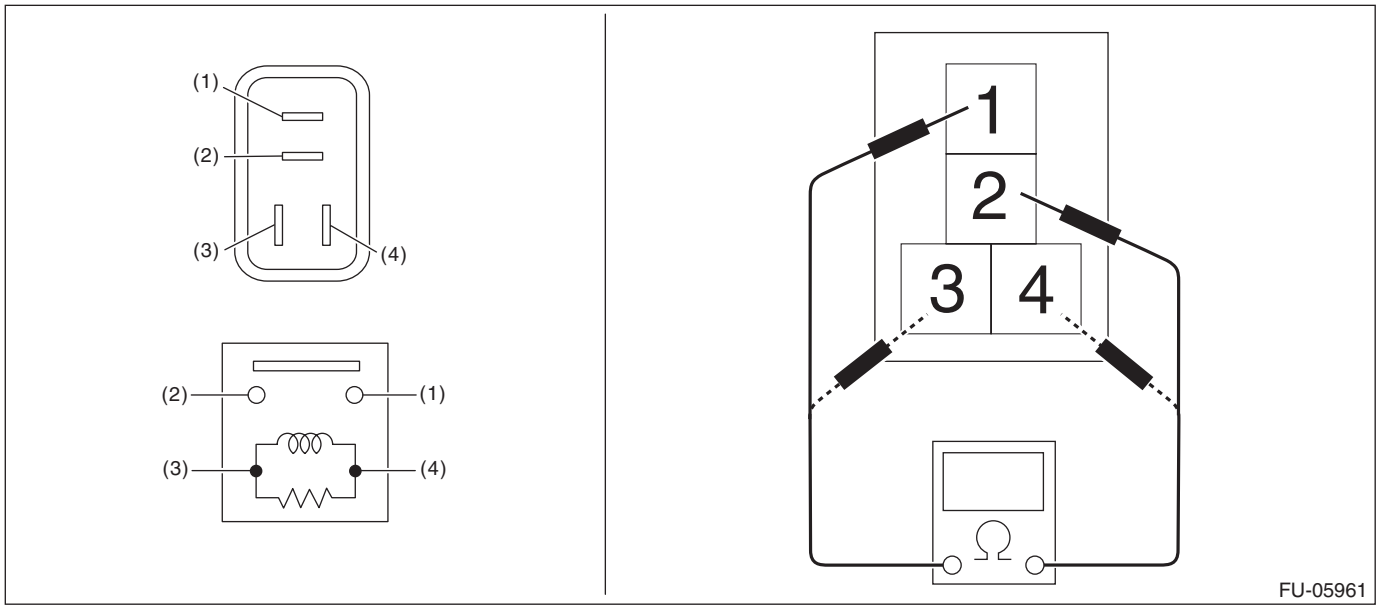

Terminal No.	Standard
1 and 2	1 MΩ or more
3 and 4	130.4 — 230.8 Ω (when 20°C (68°F))

3) Connect battery positive terminal to terminal No. 3 and battery ground terminal to terminal No. 4, and measure the resistance between the electronic throttle control relay terminals.

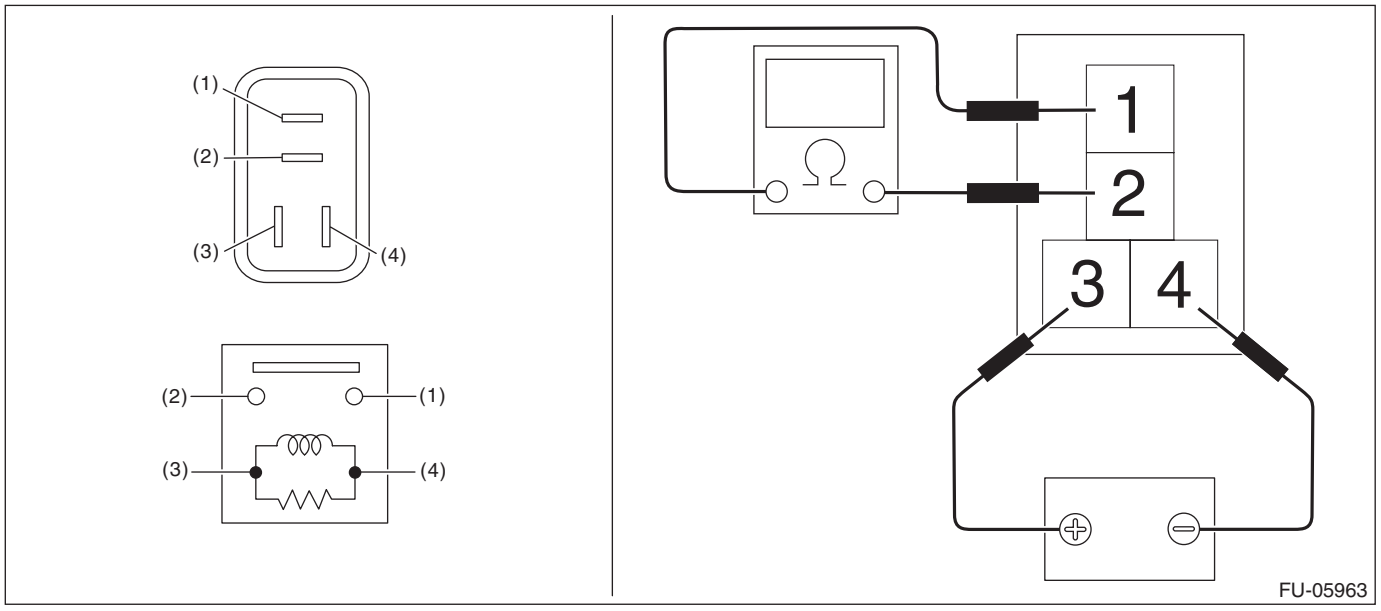

Terminal No.	Standard
1 and 2	Less than 1 Ω

19.Fuel Pump Relay

A: REMOVAL

1) Disconnect the ground terminal from battery sensor. <Ref. to RC-4, BATTERY, NOTE, Repair Contents.>
2) Remove the fuel pump relay from the main fuse box.

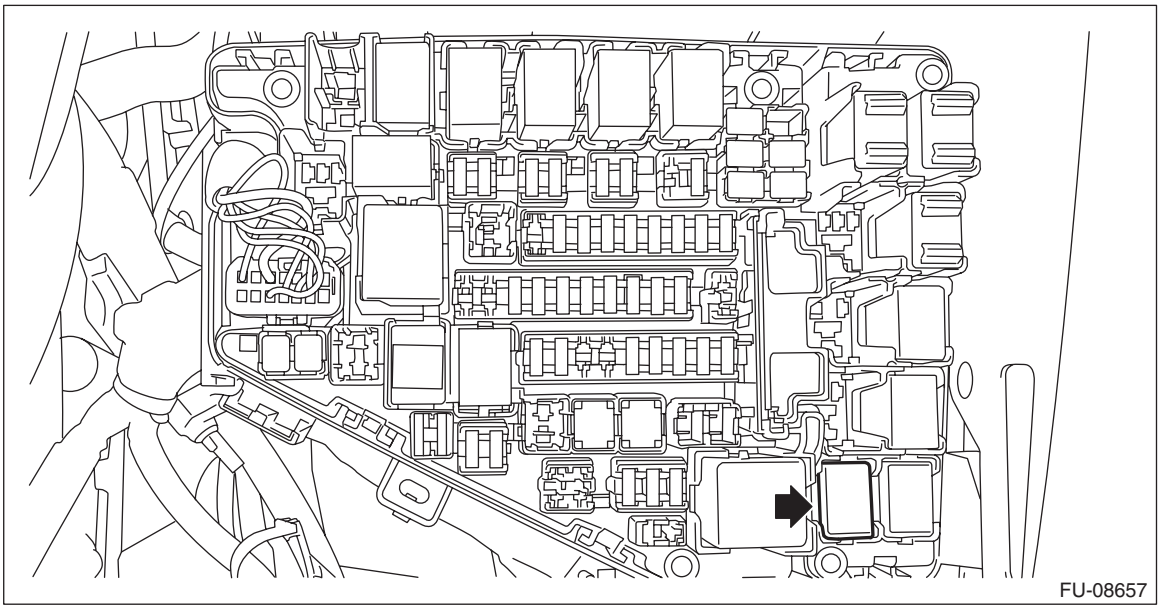

B: INSTALLATION

1) Install the fuel pump relay to the main fuse box.
2) Connect the ground terminal to battery sensor. <Ref. to RC-4, BATTERY, NOTE, Repair Contents.>

C: INSPECTION

1) Check that the fuel pump relay has no deformation, cracks or other damages.
2) Measure the resistance between fuel pump relay terminals.

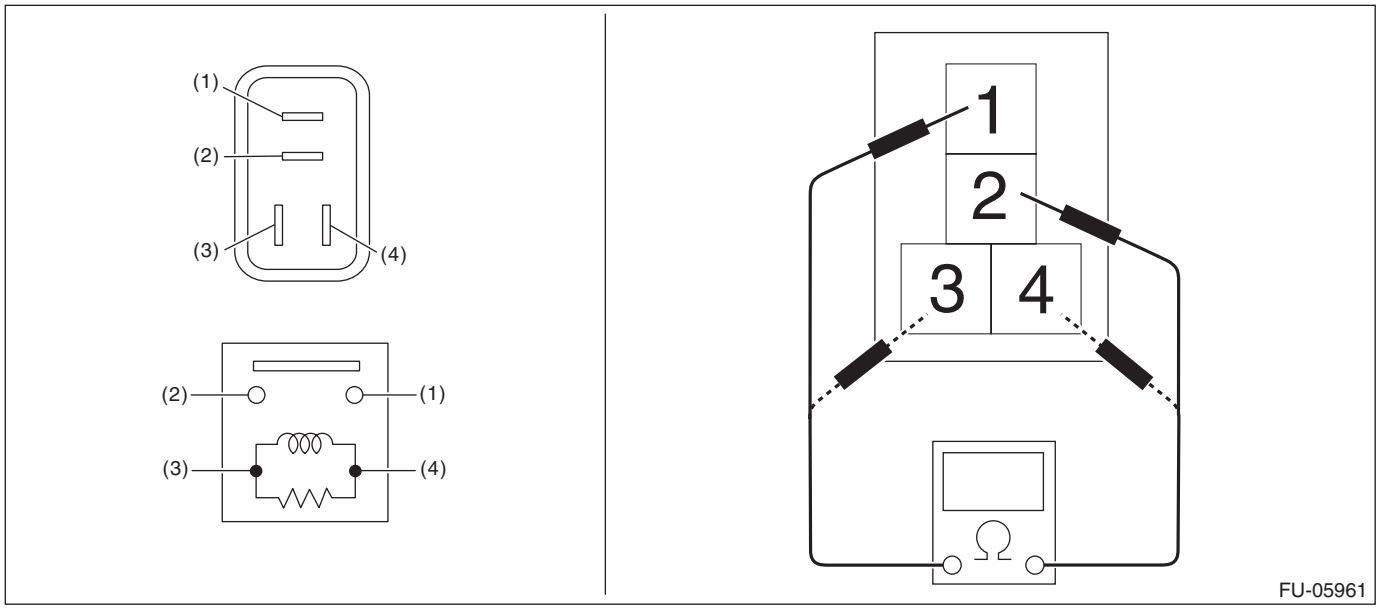

Terminal No.	Standard
1 and 2	1 MΩ or more
3 and 4	130.4 — 230.8 Ω (when 20°C (68°F))

3) Connect battery positive terminal to terminal No. 3 and battery ground terminal to terminal No. 4, and measure the resistance between the fuel pump relay terminals.

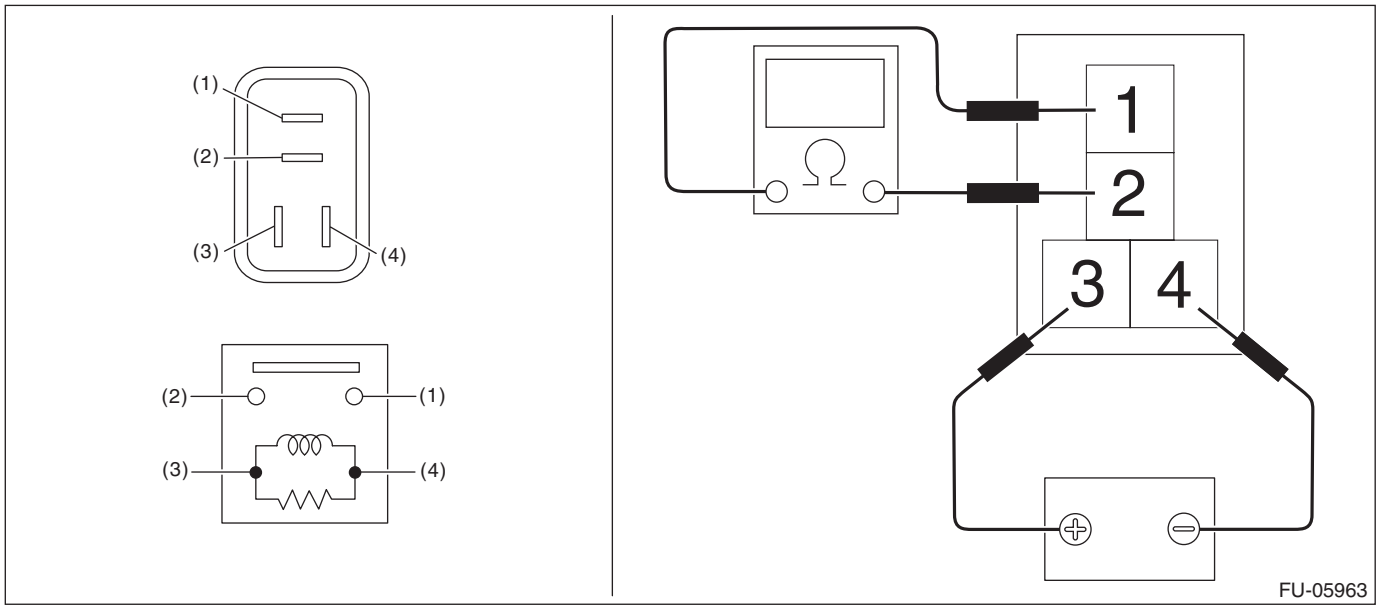

Terminal No.	Standard
1 and 2	Less than 1 Ω

20.Fuel Pump Control Unit

A: REMOVAL

1) Disconnect the ground terminal from battery sensor. <Ref. to RC-4, BATTERY, NOTE, Repair Contents.>
2) Remove the trunk trim panel assembly - side on the RH side. (Sedan model) <Ref. to EI-99, REMOVAL, Rear Quarter Trim.>
3) Remove the right side rear quarter trim. (OUTBACK model) <Ref. to EI-99, REMOVAL, Rear Quarter Trim.>
4) Remove the fuel pump control unit.

- Sedan model

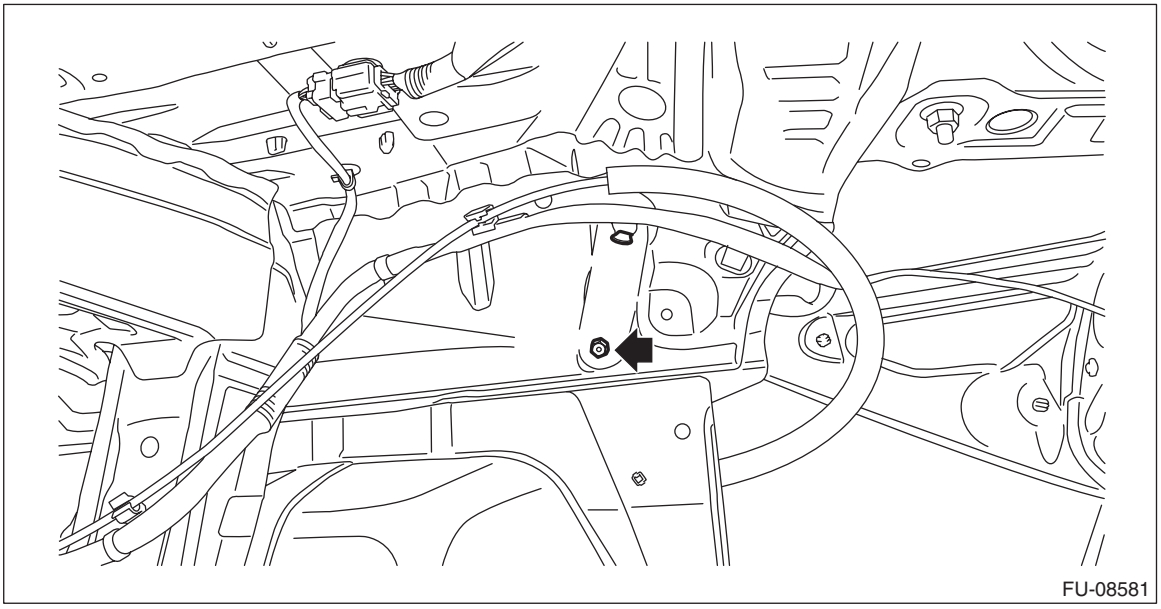

- OUTBACK model

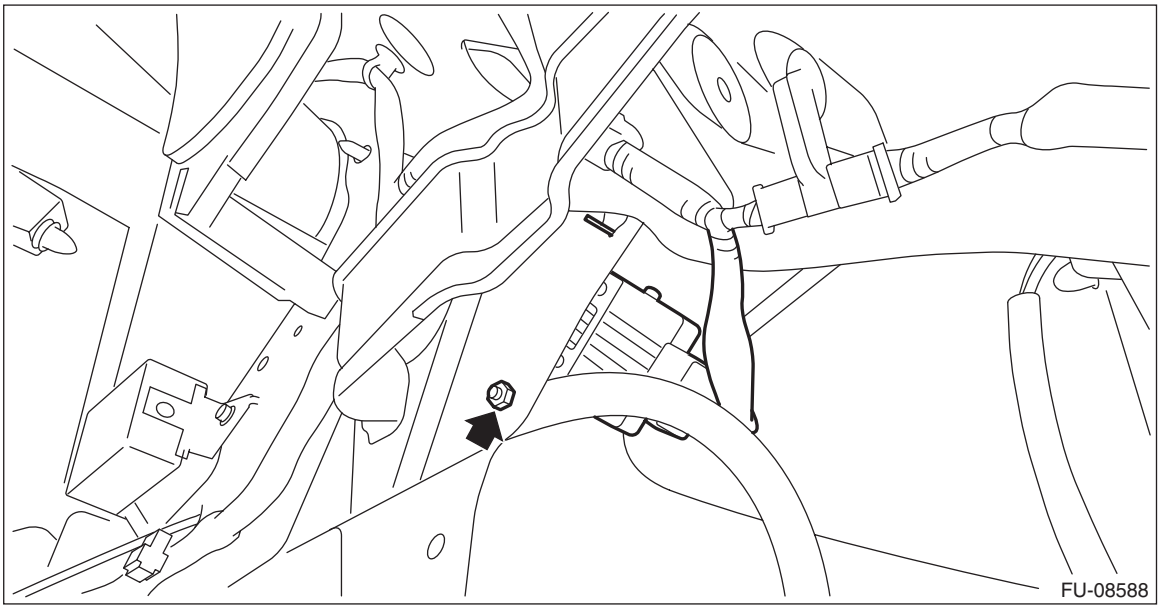

5) Disconnect the connector from fuel pump control unit.

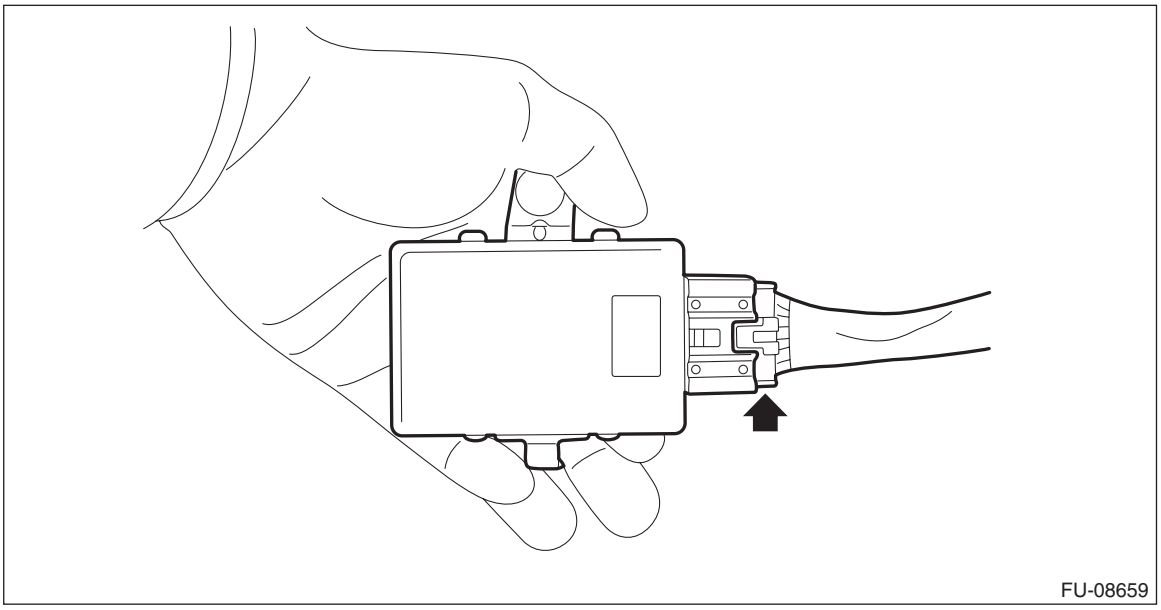

B: INSTALLATION

1) Connect the connector to the fuel pump control module.
2) Install the fuel pump control module.

Tightening torque:
5 N·m (0.5 kgf-m, 3.7 ft-lb)

3) Install the trunk trim panel assembly - side on RH side. (Sedan model) <Ref. to EI-103, INSTALLATION, Rear Quarter Trim.>
4) Install the right side rear quarter trim. (OUTBACK model) <Ref. to EI-103, INSTALLATION, Rear Quarter Trim.>
5) Connect the ground terminal to battery sensor. <Ref. to RC-4, BATTERY, NOTE, Repair Contents.>

C: INSPECTION

Check that the fuel pump control unit has no deformation, cracks or other damages.

21.Fuel

A: PROCEDURE

1. RELEASING OF FUEL PRESSURE

WARNING:
Place “NO OPEN FLAMES” signs near the working area.

CAUTION:
Be careful not to spill fuel.

1) Remove the fuse of fuel pump from main fuse box.

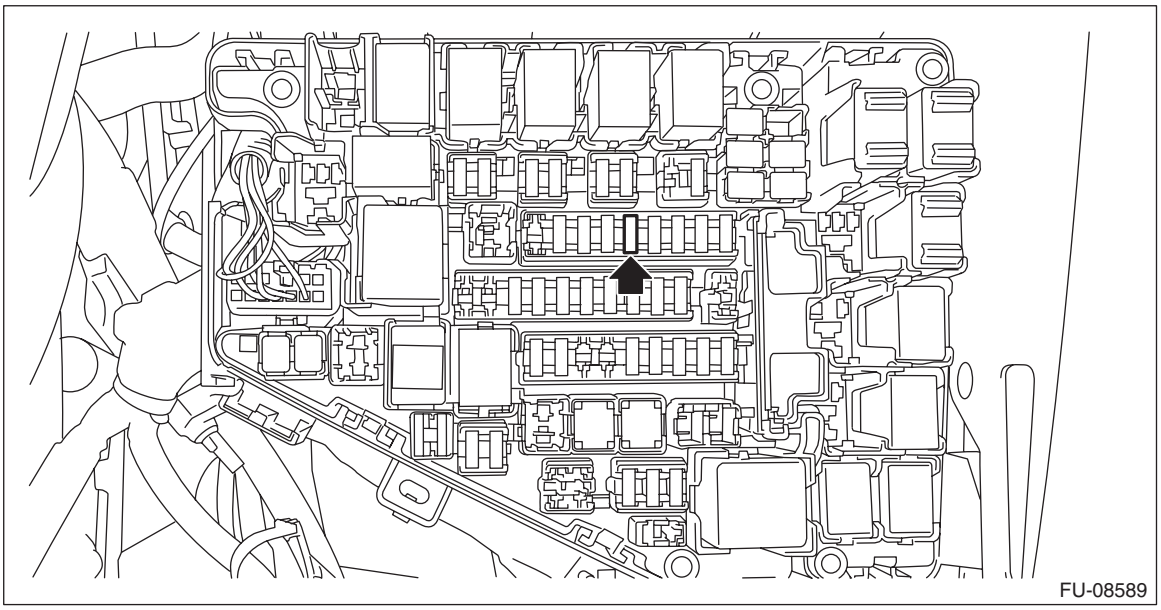

2) Start the engine and run it until it stalls.
3) After the engine stalls, crank it for five more seconds.
4) Turn the ignition switch to OFF.
5) Install the fuse of fuel pump to the main fuse box.

2. DRAINING FUEL (WITH SUBARU SELECT MONITOR)

WARNING:
Place “NO OPEN FLAMES” signs near the working area.

CAUTION:
Be careful not to spill fuel.

NOTE:
• If the fuel pump cannot be driven, refer to the procedures for draining from the fuel filler hose. <Ref. to FU(H6DO)-95, DRAINING FUEL (THROUGH THE FUEL FILLER HOSE), PROCEDURE, Fuel.>
• Be careful not to let the battery run-out.
• Be aware that the fuel may remain in the fuel tank after draining the fuel.

1) Release the fuel pressure. <Ref. to FU(H6DO)-93, RELEASING OF FUEL PRESSURE, PROCEDURE, Fuel.>
2) Remove the clip (A) securing the fuel delivery tube.
3) Attach the ST to the fuel pipe assembly, and push the ST in the direction of arrow mark to disconnect the fuel delivery tube (B).
ST 42099AE000 QUICK CONNECTOR RELEASE

CAUTION:
• Be careful not to spill fuel.
• Catch the fuel from the tubes using a container or cloth.

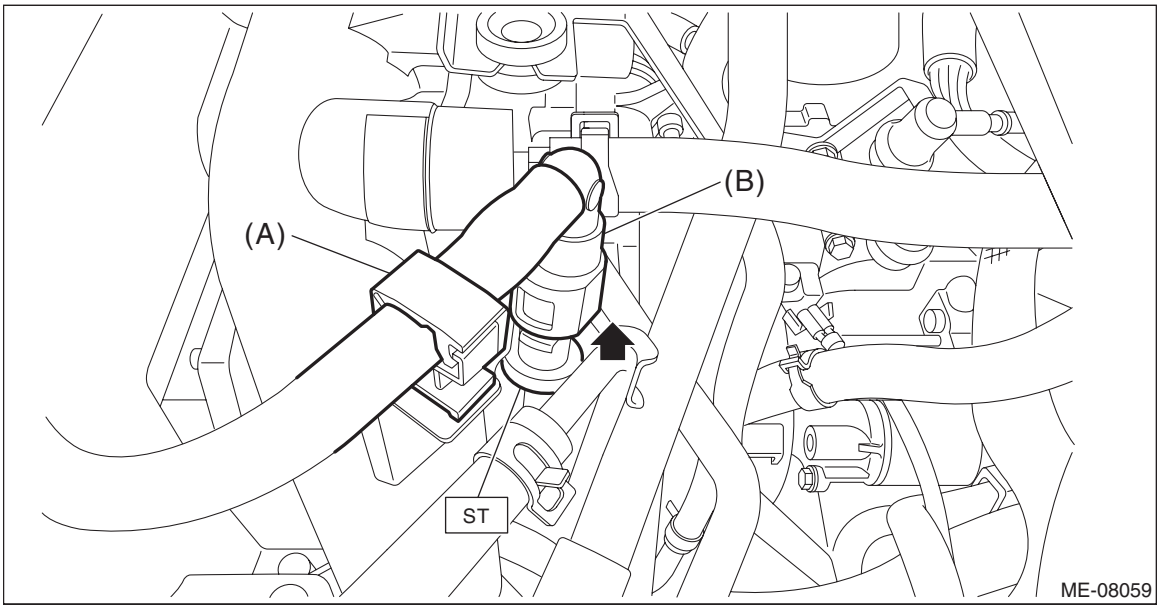

4) Connect ST to the fuel delivery tube.
ST 18471AA000 FUEL PIPE ADAPTER
5) Connect the gasoline proof hose to ST and put the end of the hose in the container.
6) Drive the fuel pump and drain the fuel using Subaru Select Monitor.

CAUTION:
Be careful not to spill fuel.

NOTE:
For detailed operation procedures, refer to “PC application help for Subaru Select Monitor”.
7) Install the related parts in the reverse order after draining the fuel.

CAUTION:
• Be careful not to spill fuel.
• Catch the fuel from the tubes using a container or cloth.
• Check that there is no damage or dust on the quick connector. If necessary, clean the seal surface of the pipe.
• Make sure that the quick connector is securely connected.

3. DRAINING FUEL (THROUGH THE FUEL FILLER HOSE)

• Sedan model

WARNING:
Place “NO OPEN FLAMES” signs near the working area.

CAUTION:
• Be careful not to spill fuel.
• Fuel may remain in the fuel filler pipe. Drain the fuel from the fuel filler pipe through the fill opening using the gasoline proof pump and the gasoline proof hose (ø10 or less) before the operation.

NOTE:
Be aware that the fuel may remain in the fuel tank after draining the fuel.
1) Lift up the vehicle.
2) Remove the rear sub frame. <Ref. to RS-10, REMOVAL, Rear Sub Frame.>
3) Open the fuel filler lid and remove the fuel filler cap.
4) Drain the fuel from the fuel filler pipe through the filler opening using the gasoline proof pump and the gasoline proof hose (ø10 or less).
5) Disconnect the fuel filler hoses from the fuel filler pipe.

CAUTION:
• Be careful not to spill fuel.
• Catch the fuel from hoses using a container or cloth.

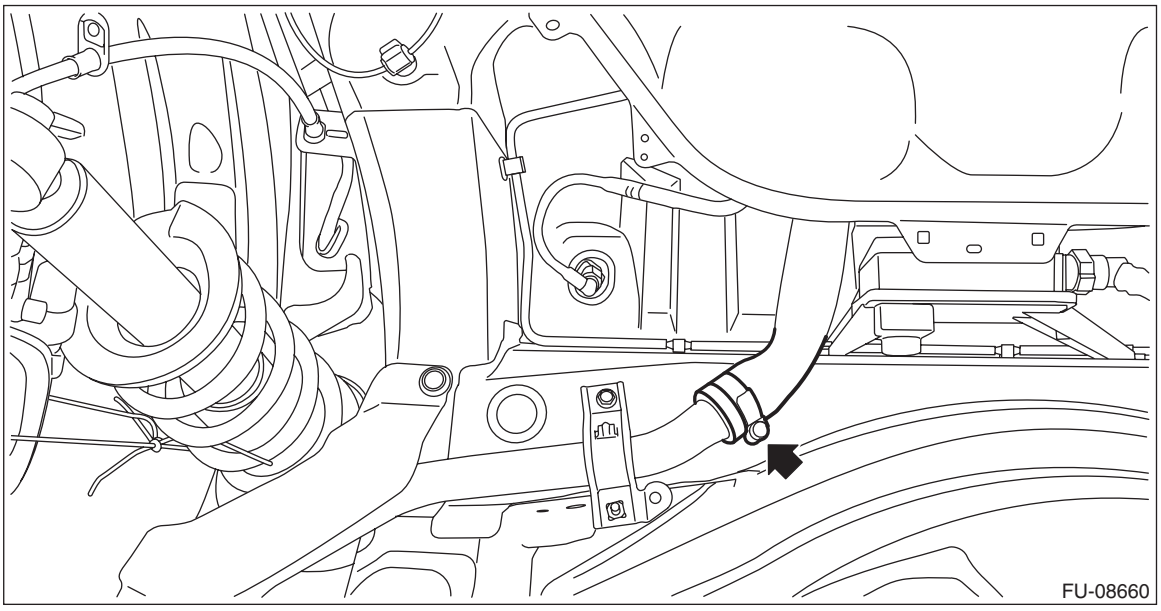

6) Set the container under the vehicle and insert the gasoline proof hose (ø10 or less) into the fuel filler hose to drain the fuel.

CAUTION:
Be careful not to spill fuel.

7) Install the related parts in the reverse order after draining the fuel.

NOTE:
Correctly insert the fuel filler hose to the spool, and then install the clamp as shown.

Tightening torque:
2.5 N·m (0.3 kgf-m, 1.8 ft-lb)

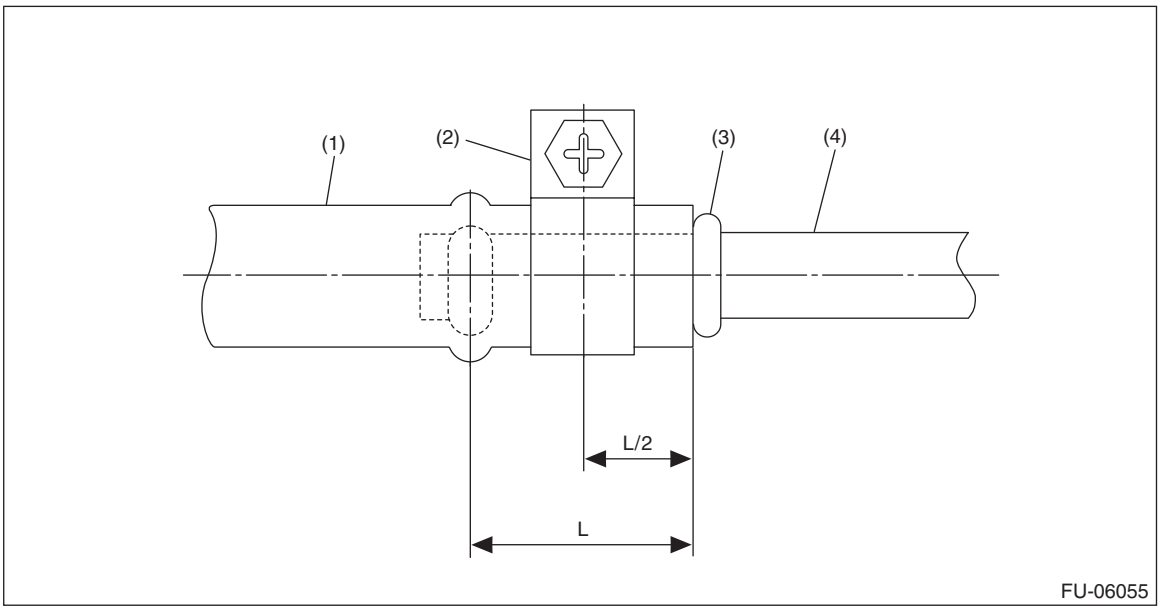

(1) Fuel filler hose
(2) Clamp
(3) Spool
(4) Fuel filler pipe

• OUTBACK model

WARNING:
Place "NO OPEN FLAMES" signs near the working area.

CAUTION:
• Be careful not to spill fuel.
• Fuel may remain in the fuel filler pipe. Drain the fuel from the fuel filler pipe through the fill opening using the gasoline proof pump and the gasoline proof hose (ø10 or less) before the operation.

NOTE:
Be aware that the fuel may remain in the fuel tank after draining the fuel.
1) Open the fuel filler lid and remove the fuel filler cap.
2) Lift up the vehicle.
3) Drain the fuel from the fuel filler pipe through the filler opening using the gasoline proof pump and the gasoline proof hose (ø10 or less).

4) Disconnect the fuel filler hoses from the fuel filler pipe.

CAUTION:
- **Be careful not to spill fuel.**
- **Catch the fuel from hoses using a container or cloth.**

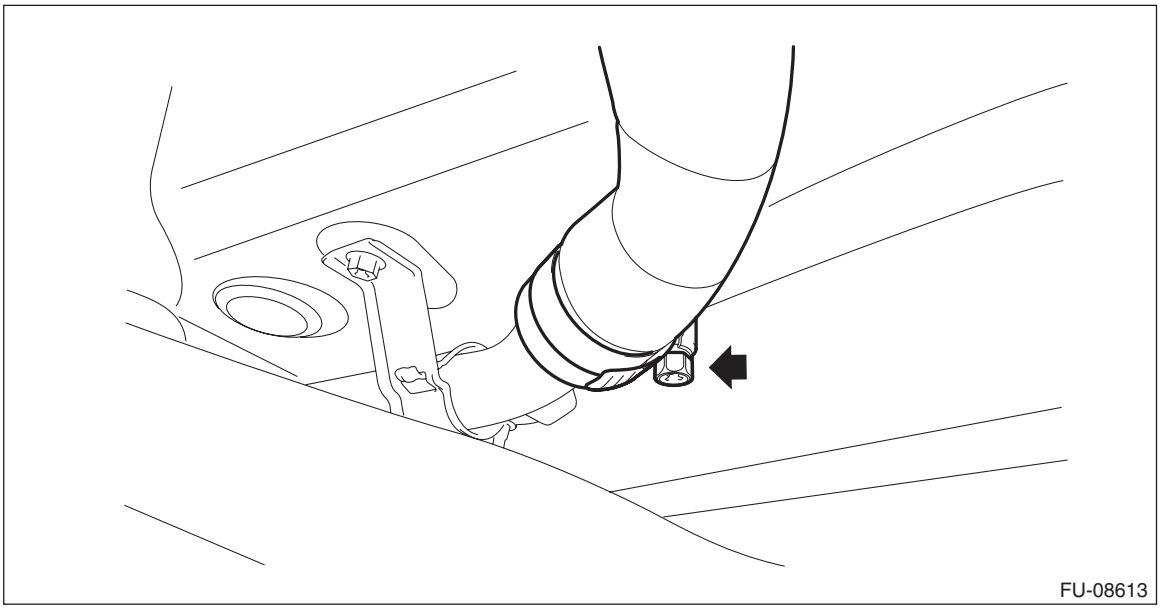

5) Set the container under the vehicle and insert the gasoline proof hose (ø10 or less) into the fuel filler hose to drain the fuel.

CAUTION:
Be careful not to spill fuel.

6) Install the related parts in the reverse order after draining the fuel.

NOTE:
Correctly insert the fuel filler hose to the spool, and then install the clamp as shown.

Tightening torque:
2.5 N·m (0.3 kgf-m, 1.8 ft-lb)

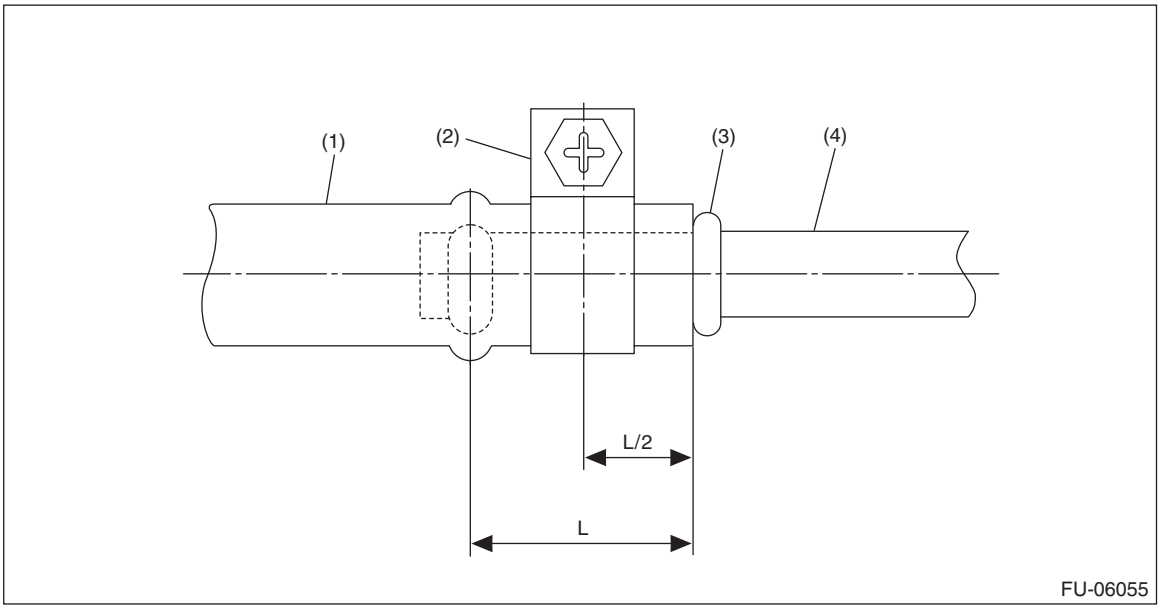

(1) Fuel filler hose
(2) Clamp
(3) Spool
(4) Fuel filler pipe

22.Fuel Tank Protector

A: REMOVAL

1) Lift up the vehicle.
2) Remove the bolt and nuts and remove the fuel tank protector.

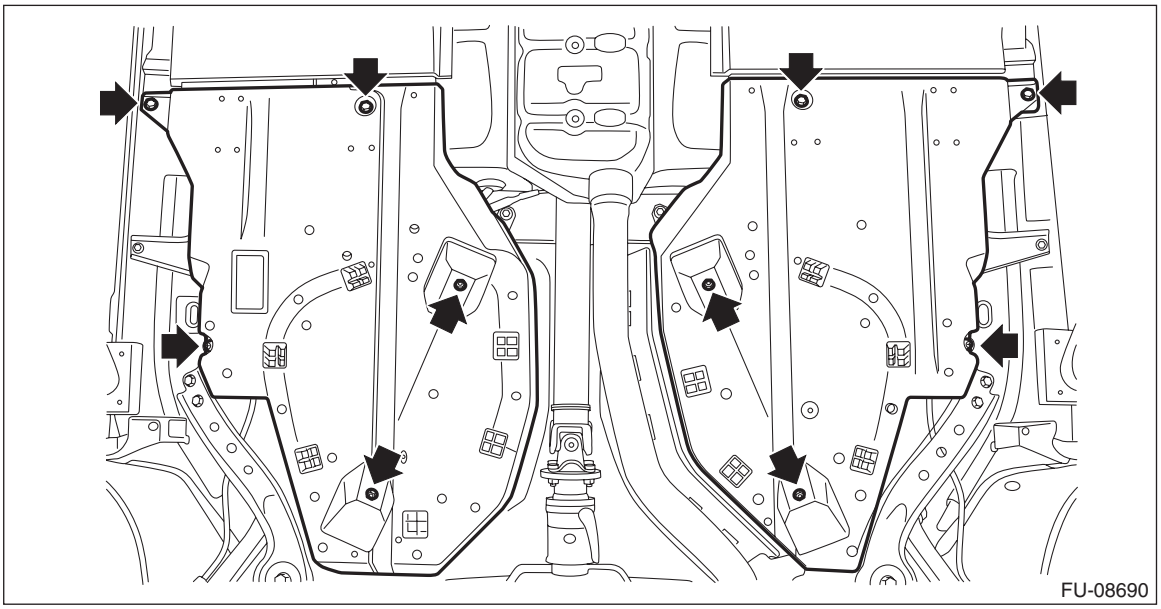

B: INSTALLATION

1) Install the fuel tank protector.

NOTE:
Use a new self-locking nut (a).

Tightening torque:
T1: 9 N·m (0.9 kgf-m, 6.6 ft-lb)
T2: 18 N·m (1.8 kgf-m, 13.3 ft-lb)

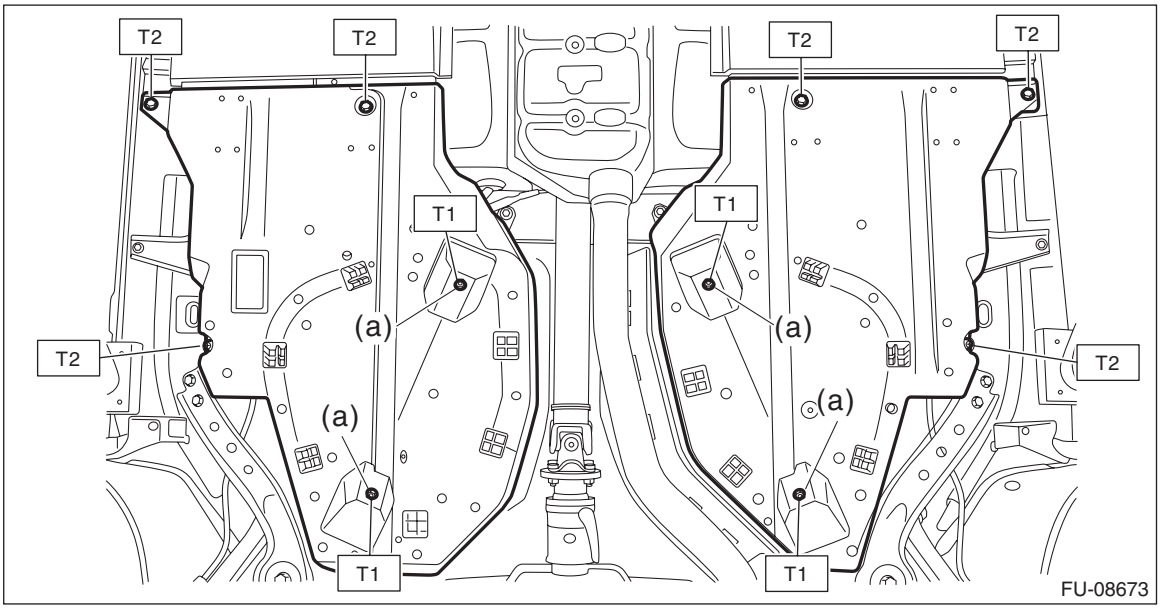

2) Lower the vehicle.

23.Fuel Tank

A: REMOVAL

WARNING:
Place “NO OPEN FLAMES” signs near the working area.

CAUTION:
- **Be careful not to spill fuel.**
- **Catch the fuel from the tubes using a container or cloth.**

1) Release the fuel pressure. <Ref. to FU(H6DO)-93, RELEASING OF FUEL PRESSURE, PROCEDURE, Fuel.>
2) Drain fuel. <Ref. to FU(H6DO)-94, DRAINING FUEL (WITH SUBARU SELECT MONITOR), PROCEDURE, Fuel.>
3) Disconnect the ground terminal from battery sensor. <Ref. to RC-4, BATTERY, NOTE, Repair Contents.>
4) Remove the rear seat cushion. <Ref. to SE-33, REMOVAL, Rear Seat.>
5) Remove the service hole cover of fuel pump.

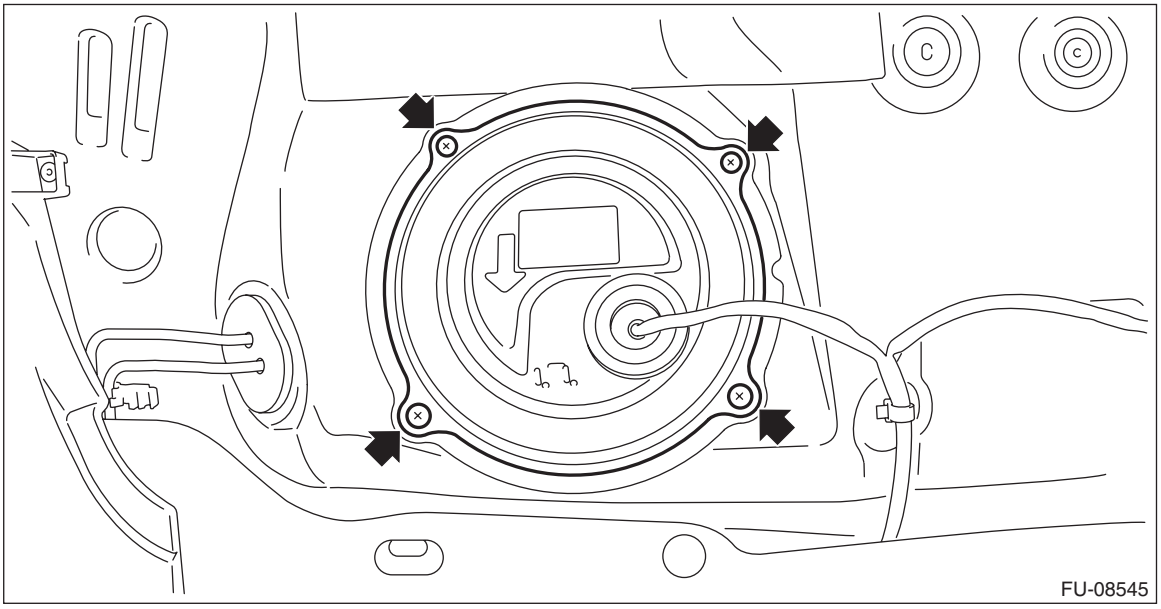
FU-08545

6) Disconnect connectors from the fuel pump, and move aside the service hole cover.

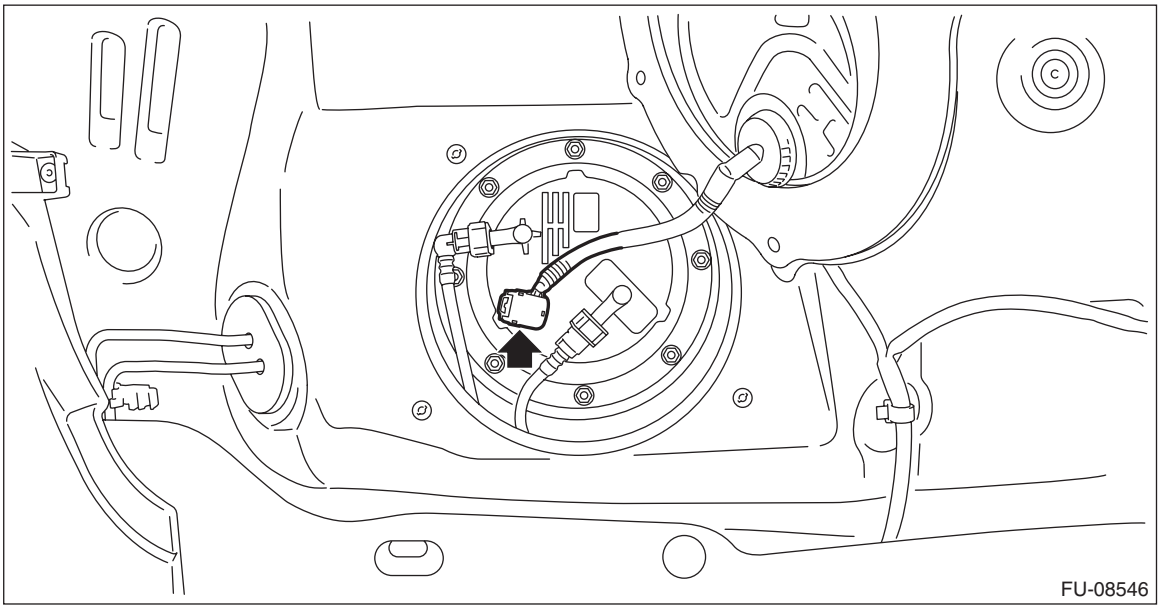
FU-08546

7) Remove the service hole cover of fuel sub level sensor.

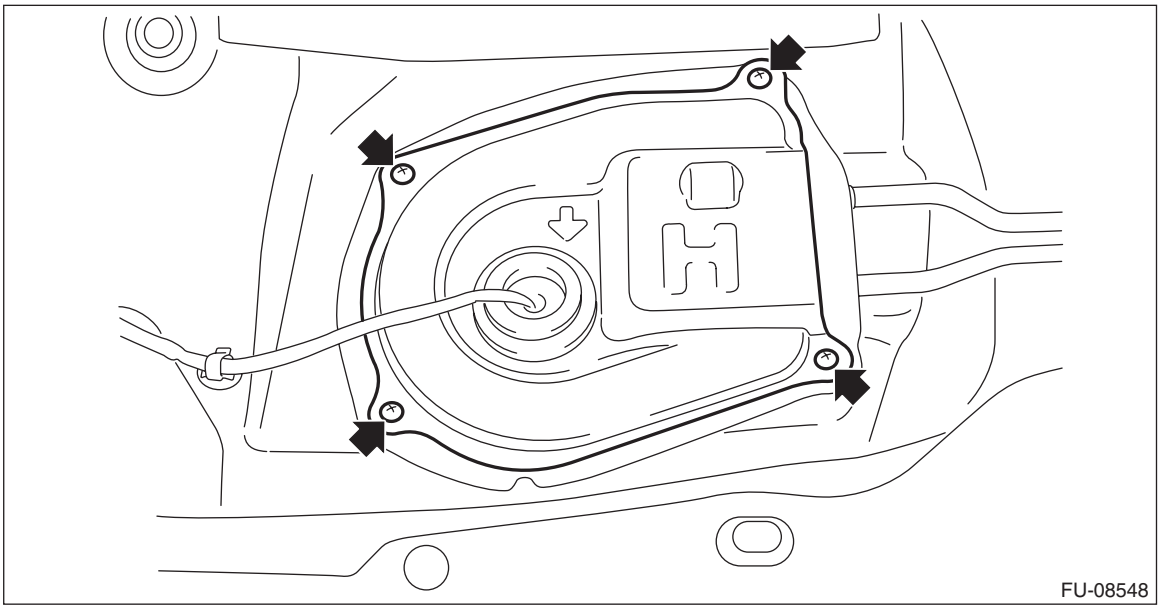

8) Disconnect the connector from the fuel sub level sensor, and move aside the service hole cover.

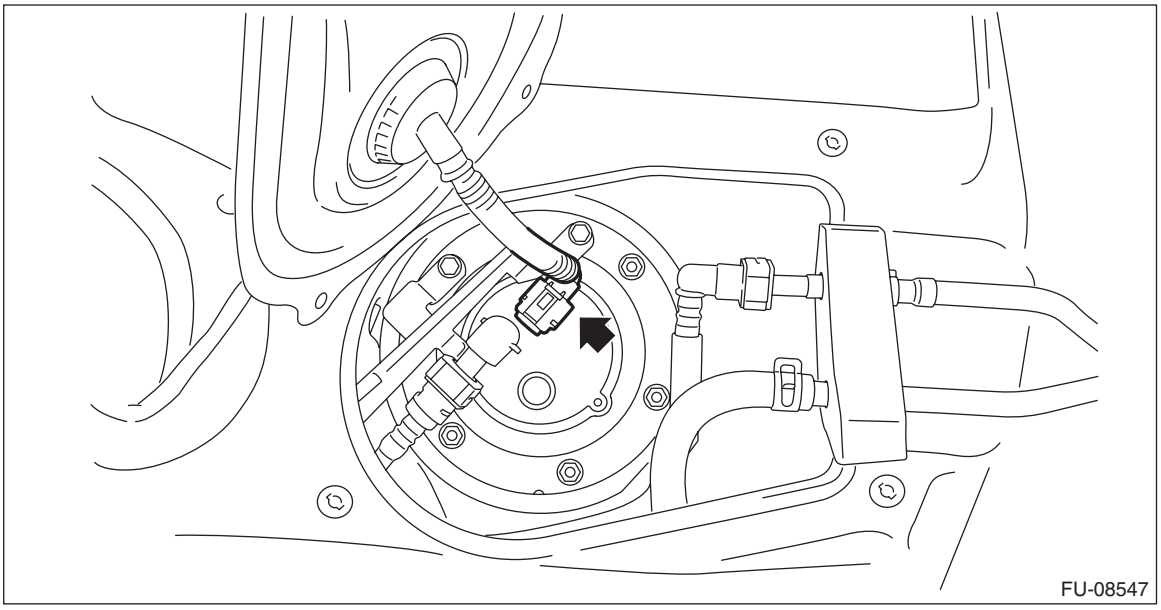

9) Disconnect the quick connector on the fuel delivery tube.

NOTE:
Disconnect the quick connector as shown in the figure.

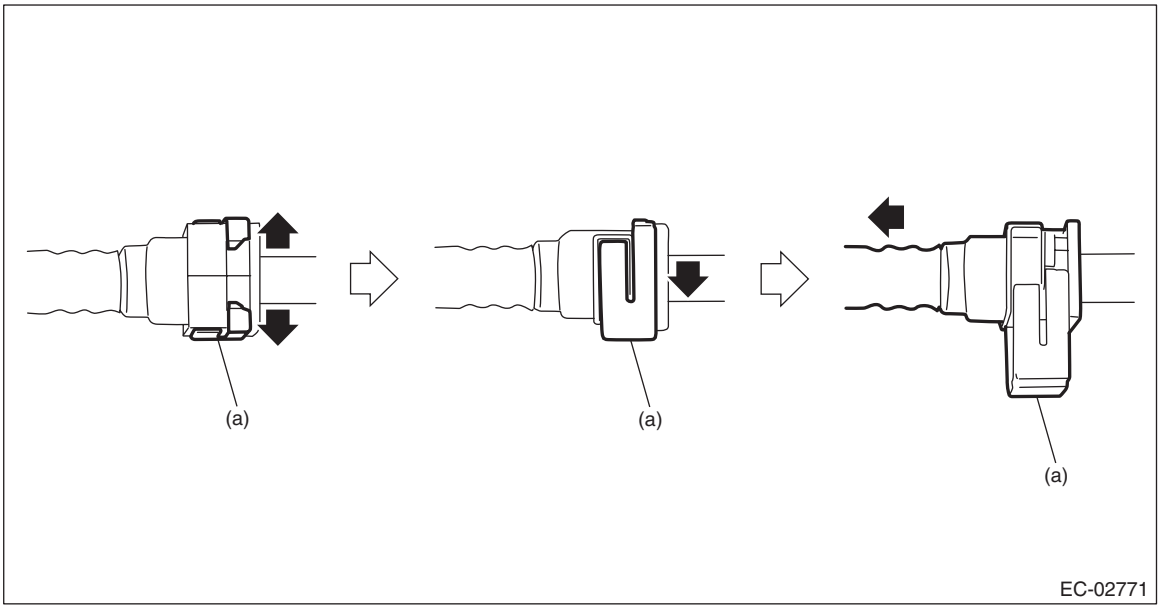

(a) Slider

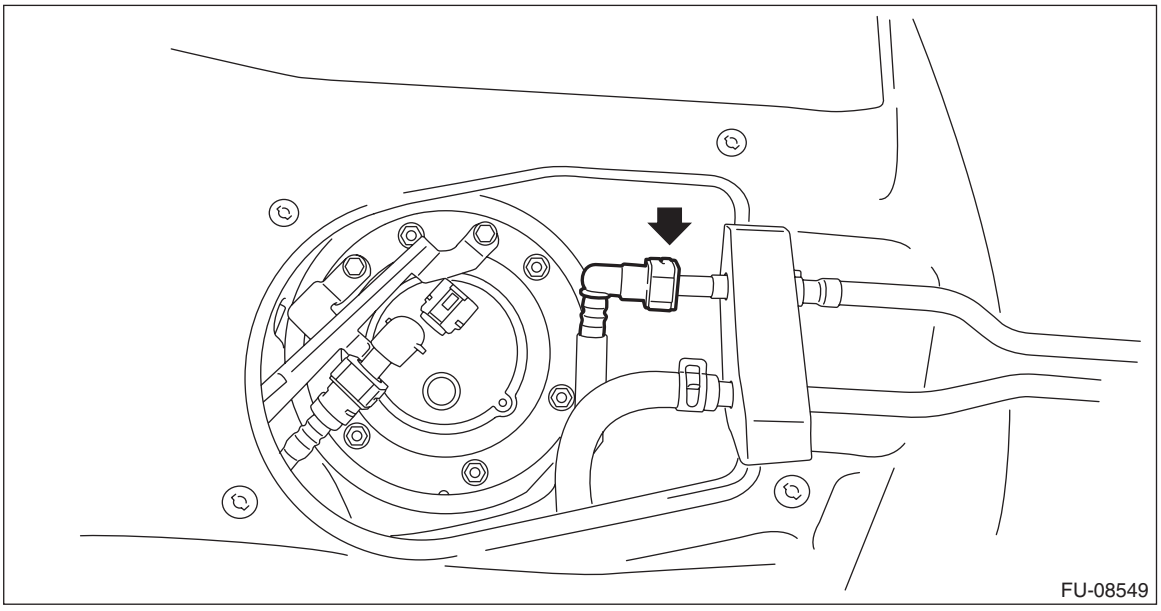

10) Remove the rear sub frame assembly. <Ref. to RS-10, REMOVAL, Rear Sub Frame.>
11) Disconnect the air vent hose from the fuel tank.

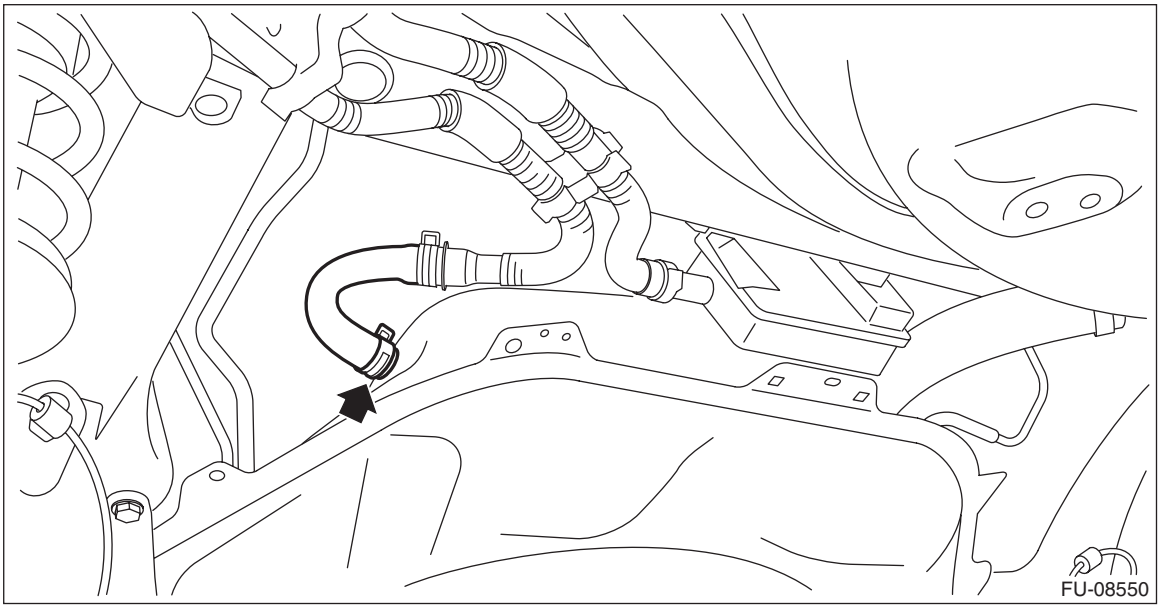

12) Disconnect the quick connector of the circulate tube from evaporation pipe.

NOTE:
Disconnect the quick connector as shown in the figure.

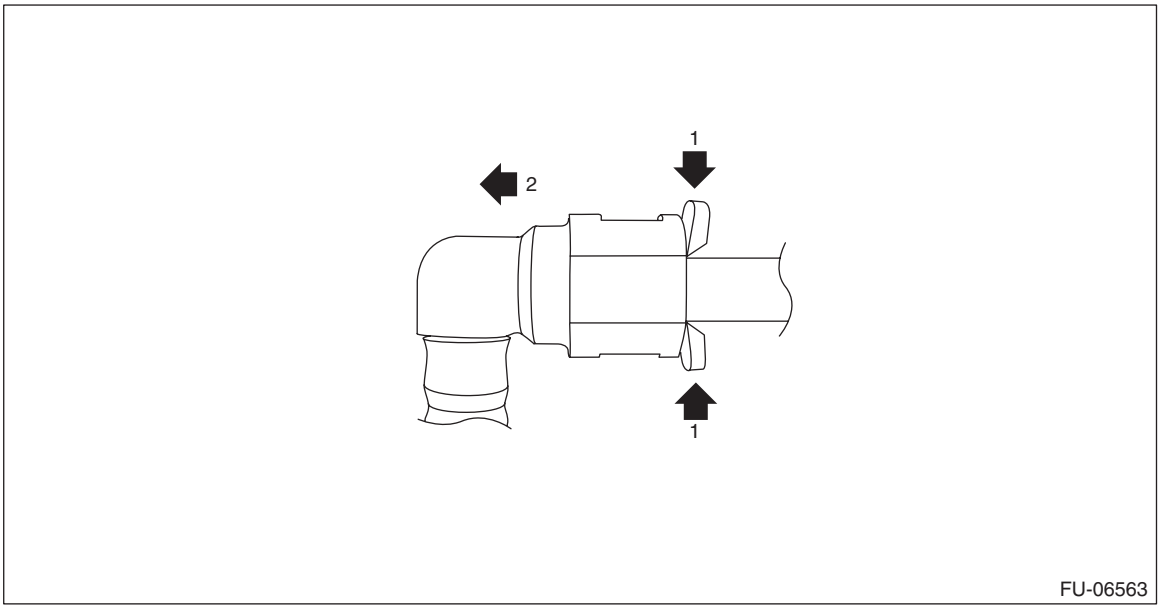

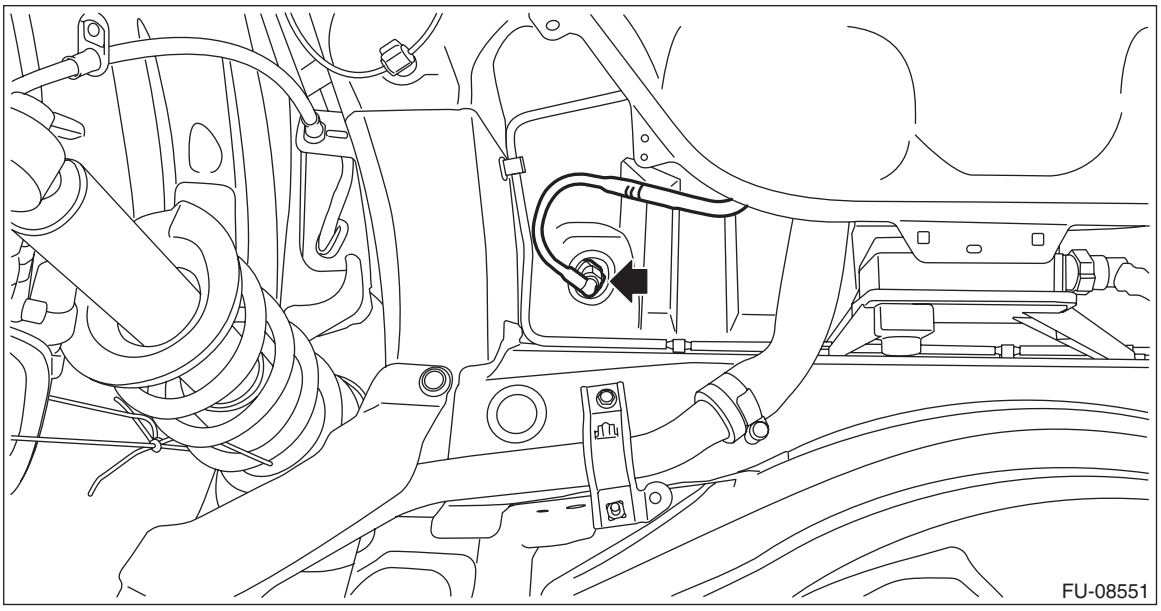

13) Disconnect the fuel filler hoses from the fuel filler pipe.

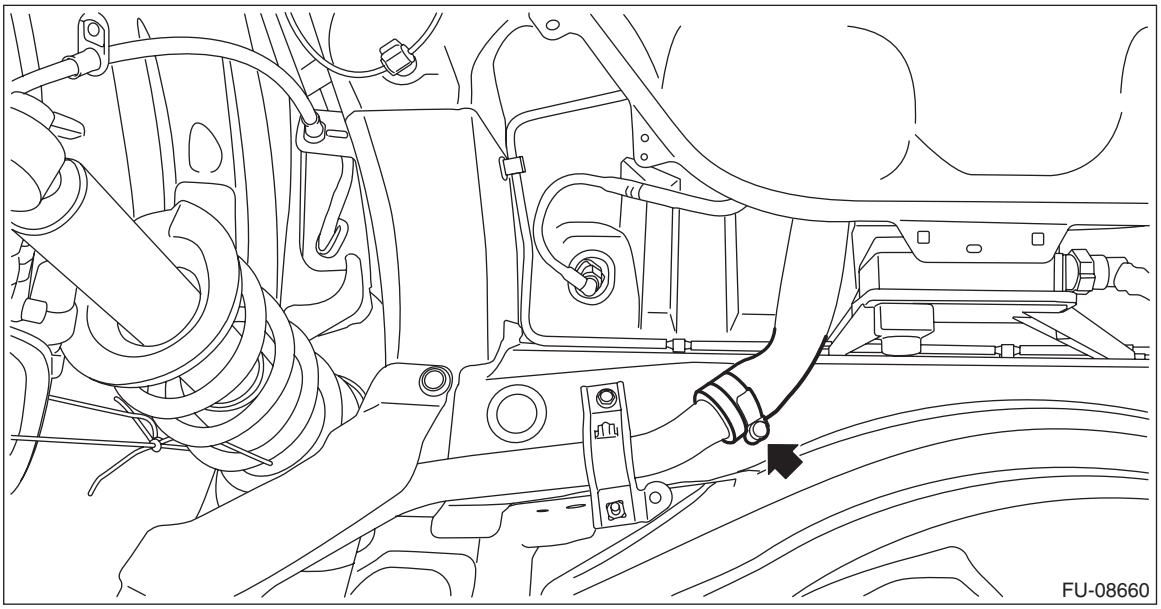

14) Remove the heat shield cover.

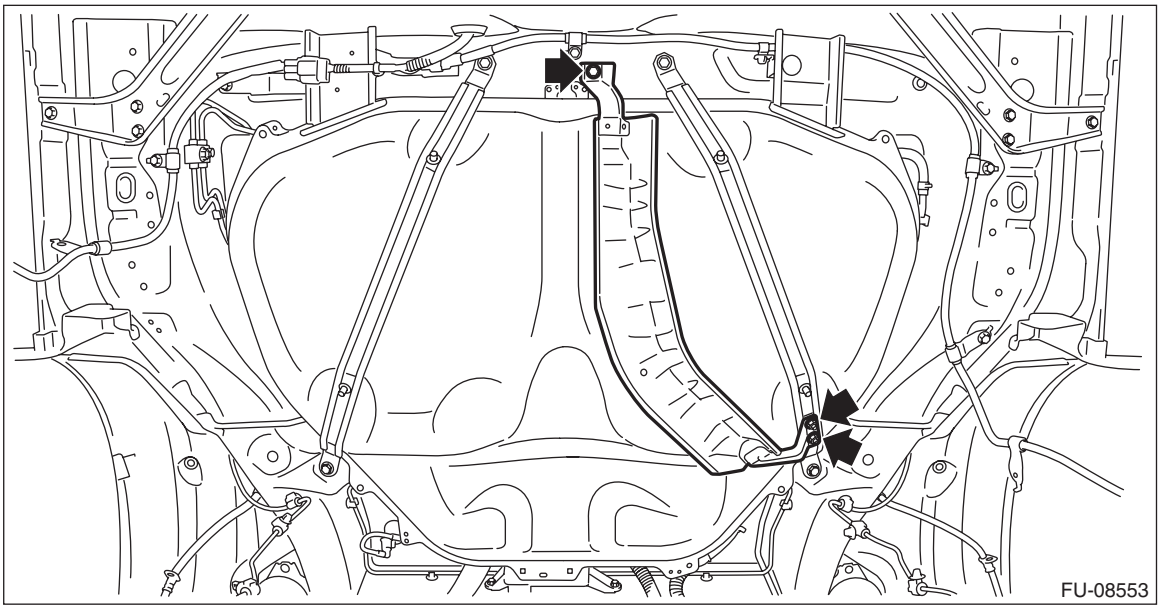

15) Support the fuel tank with a transmission jack, remove the fuel tank band, and remove the fuel tank from the vehicle.

WARNING:
- **A helper is required to perform this work.**
- **Fuel may remain in the fuel tank. This will cause the left and right sides to be unbalanced. Be careful not to drop the fuel tank.**

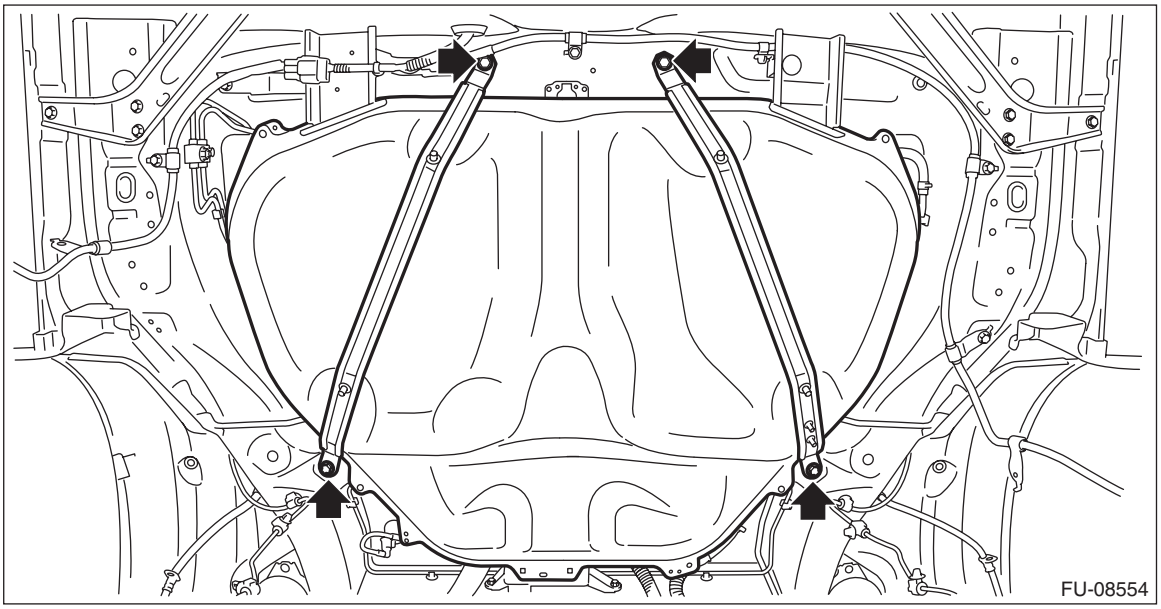

B: INSTALLATION

1) Support the fuel tank with a transmission jack, set the fuel tank and the fuel tank band in place, and temporarily tighten the bolts of the fuel tank band.

WARNING:
A helper is required to perform this work.

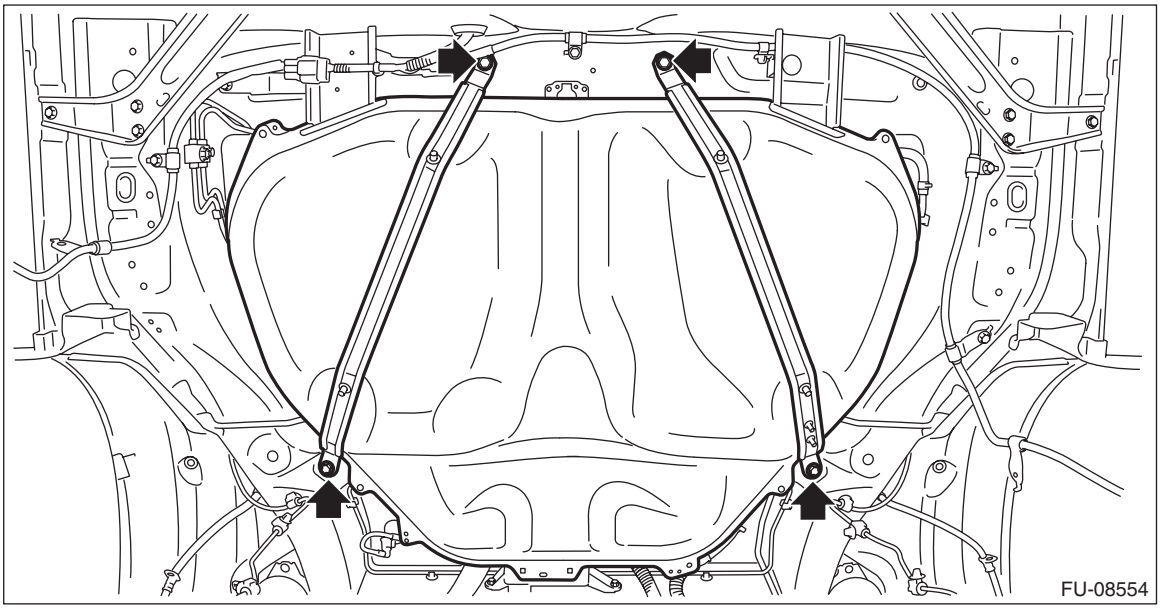

2) Correctly insert the fuel filler hose to the spool, and then install the clamp as shown.

Tightening torque:
2.5 N·m (0.3 kgf-m, 1.8 ft-lb)

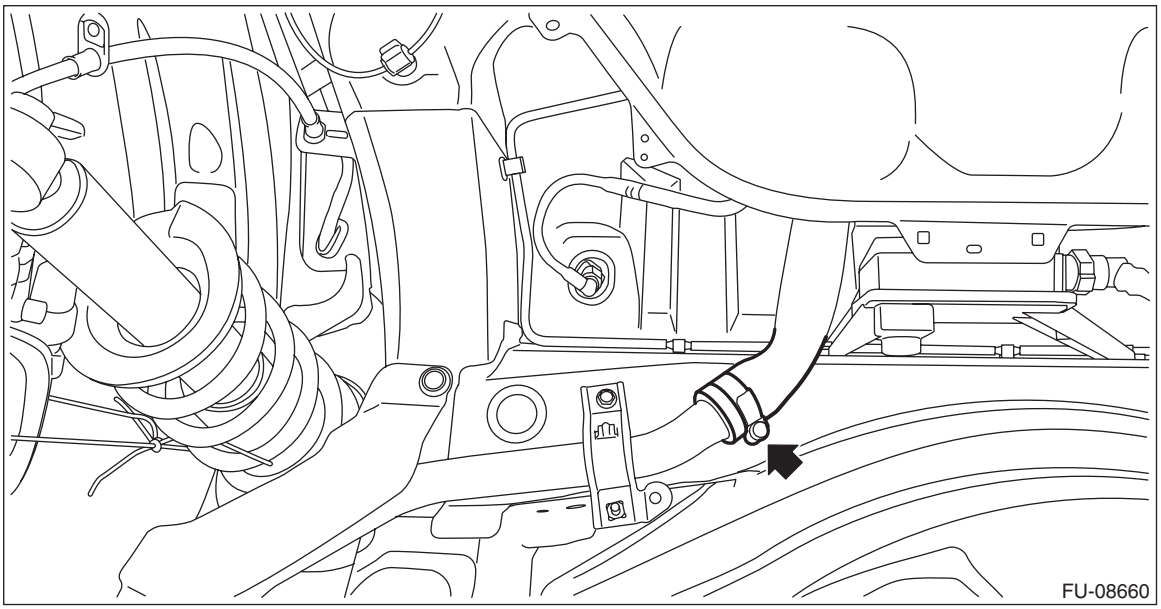

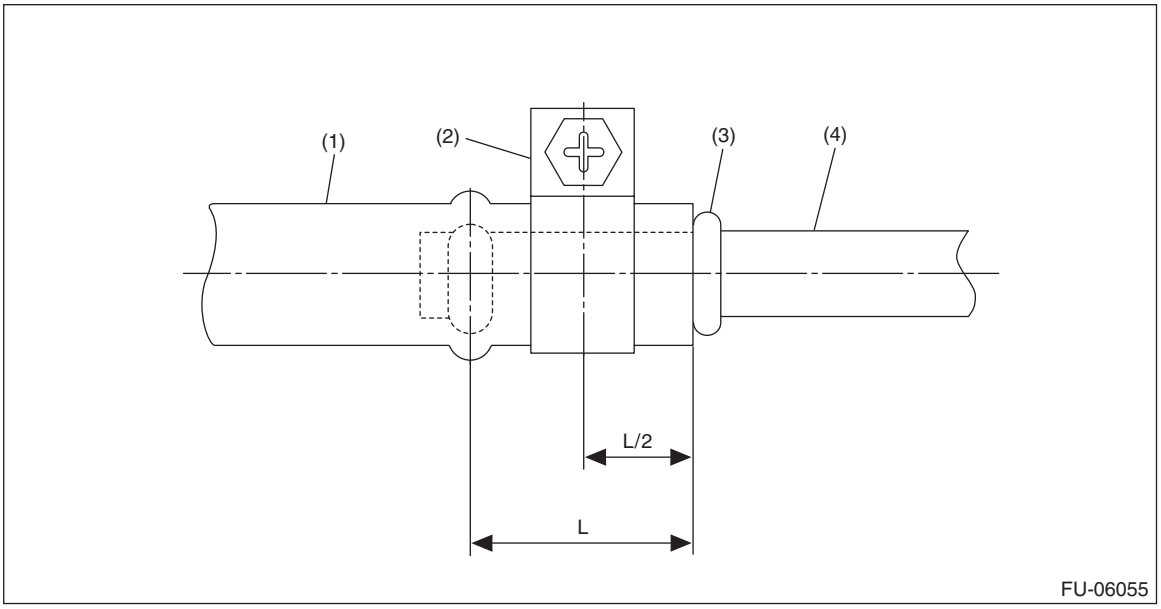

(1) Fuel filler hose
(2) Clamp
(3) Spool
(4) Fuel filler pipe

3) Connect the quick connector of the circulate tube to the evaporation pipe as shown in the figure.

CAUTION:
• Check that there is no damage or dust on the quick connector. If necessary, clean the seal surface of the pipe.
• Make sure that the quick connector is securely connected.

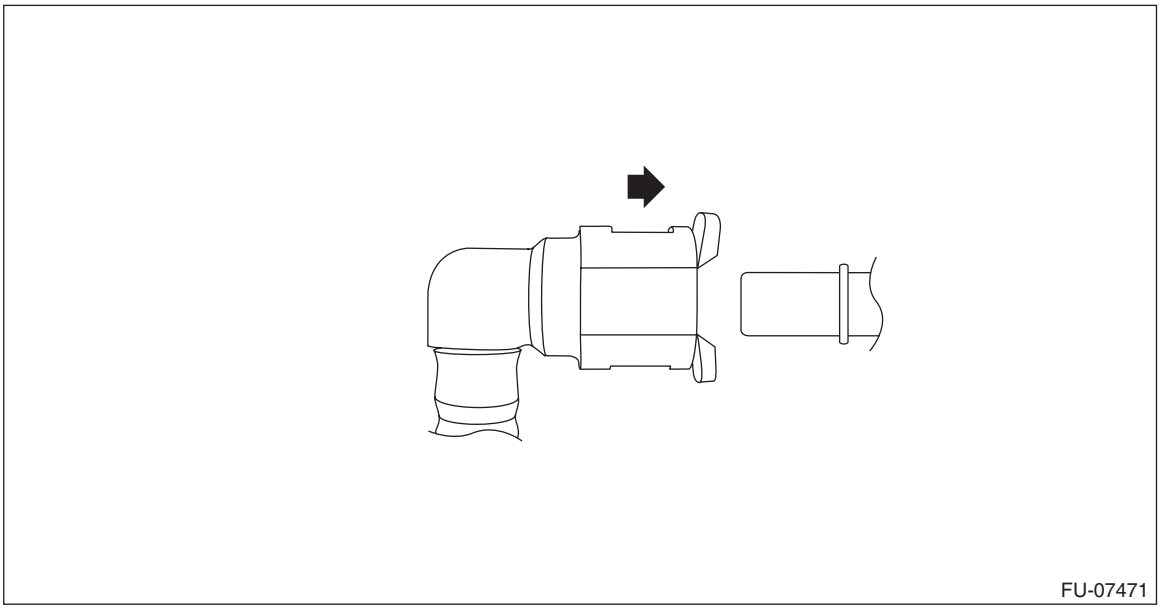
FU-07471

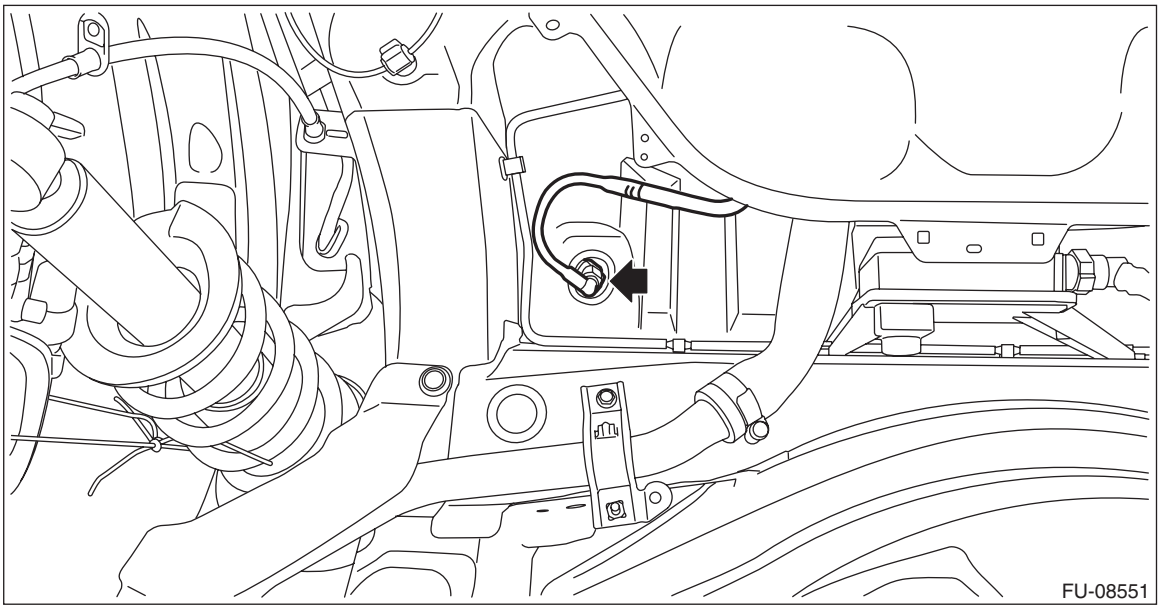
FU-08551

4) Connect the air vent hose to fuel tank.

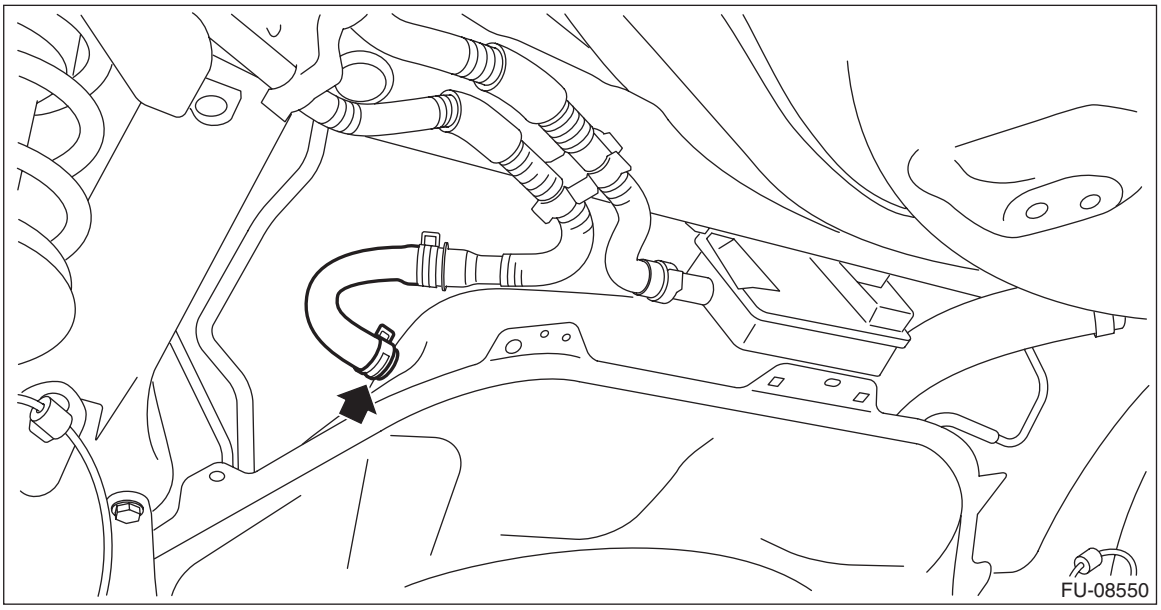

5) Move the fuel tank so that the distance between the center of the positioning hole for the body (A) and the front end of the fuel tank flange (B) becomes L, and tighten the bolts of the fuel tank bands in the sequence shown in the figure.

CAUTION:
To prevent the fuel tank from damage, after tightening the bolts of the fuel tank bands, make sure that the distance between the center of the positioning hole for the body (A) and the front end of the fuel tank flange (B) is L.

Distance L: Center of the positioning hole for the body (A) — Front end of the fuel tank flange (B)
14.5 mm (0.571 in) or less

Tightening torque:
33 N·m (3.4 kgf-m, 24.3 ft-lb)

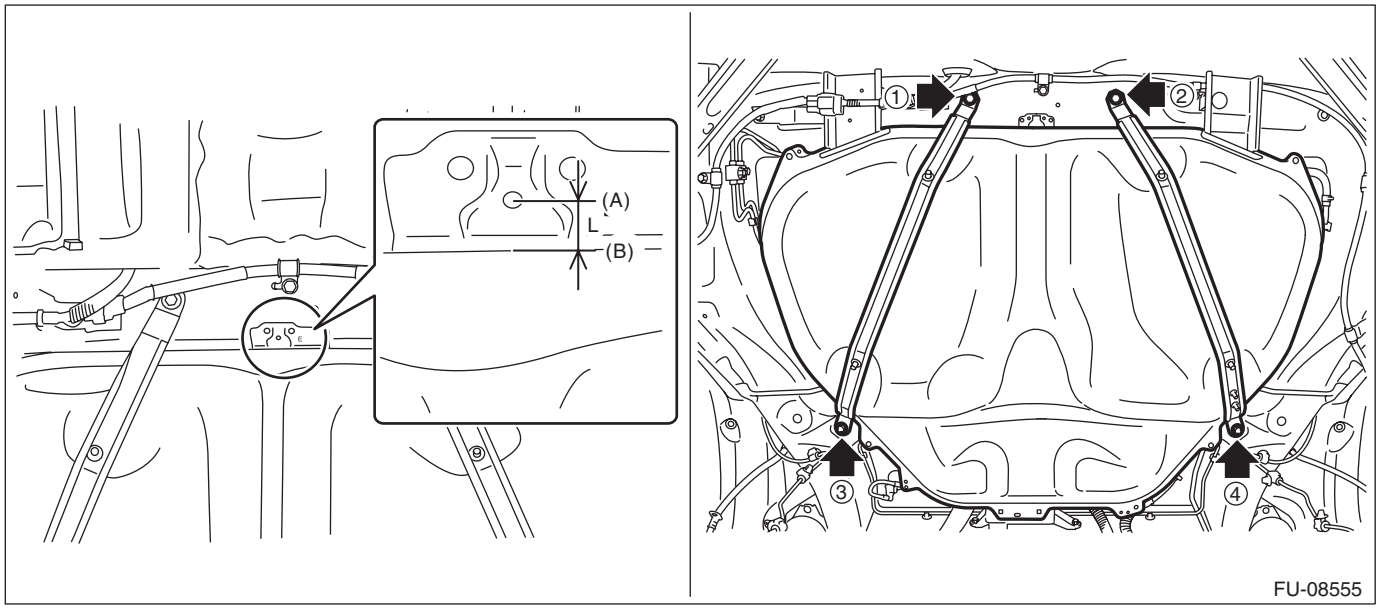

6) Install the heat shield cover.

Tightening torque:
18 N·m (1.8 kgf-m, 13.3 ft-lb)

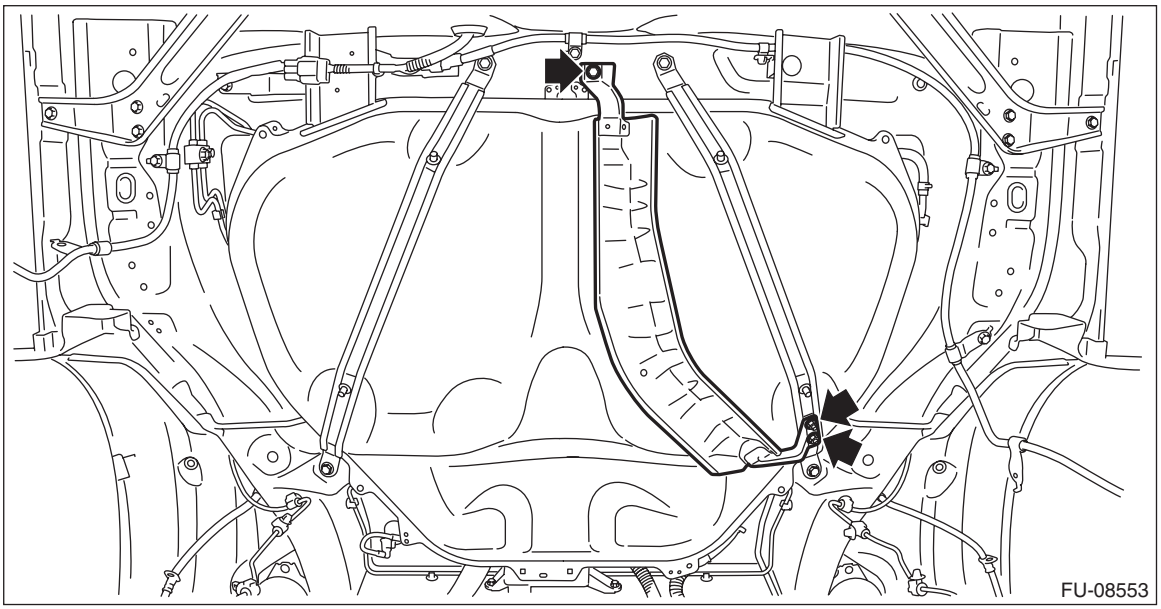

7) Install the rear sub frame assembly. <Ref. to RS-13, INSTALLATION, Rear Sub Frame.>

8) Connect the quick connector of the fuel delivery tube.

CAUTION:
• Check that there is no damage or dust on the quick connector. If necessary, clean the seal surface of the pipe.
• When connecting the quick connector, make sure to insert it all the way in before locking the slider.
• When it is difficult to lock the slider, check that the connector is fully inserted.
• After locking the slider, check again that the quick connector is securely connected.

NOTE:
Connect the quick connector as shown in the figure.

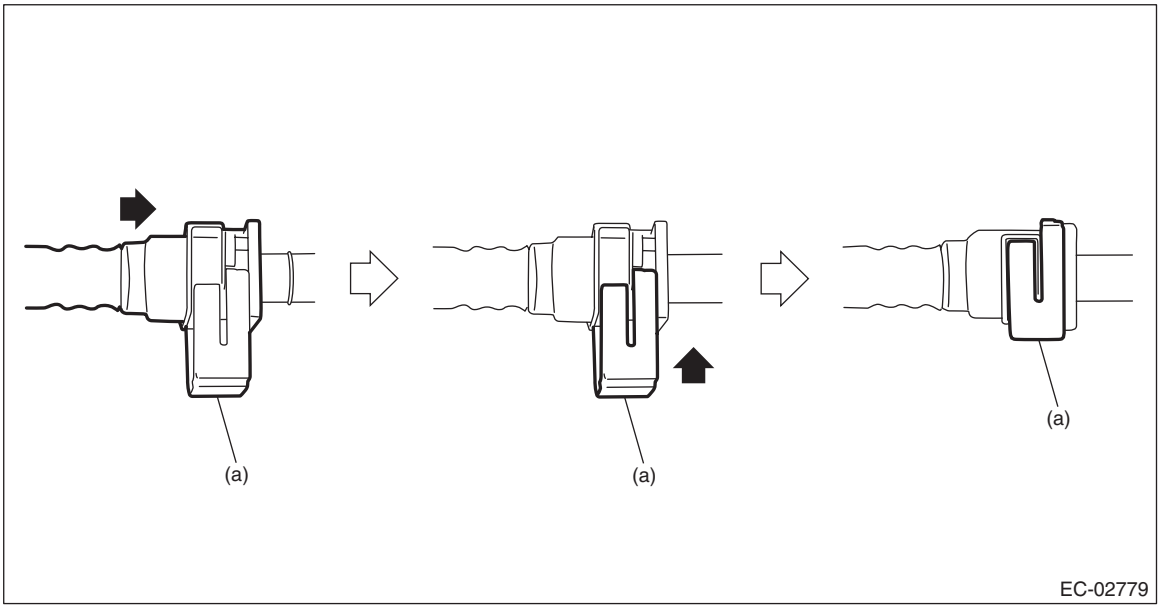

(a) Slider

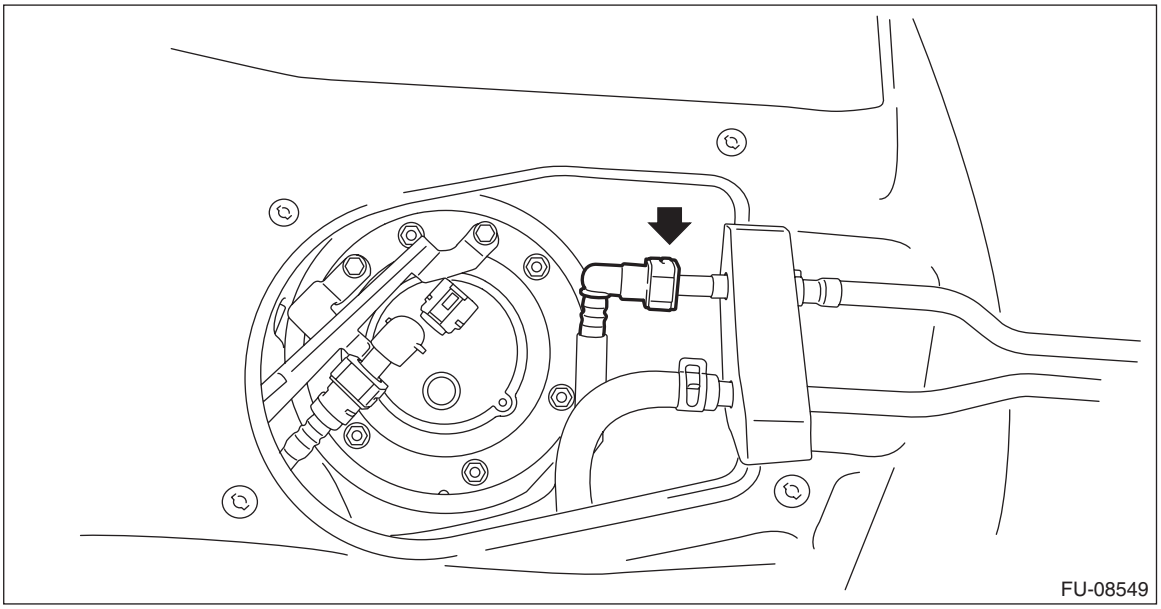

9) Connect the connector to the fuel sub level sensor.

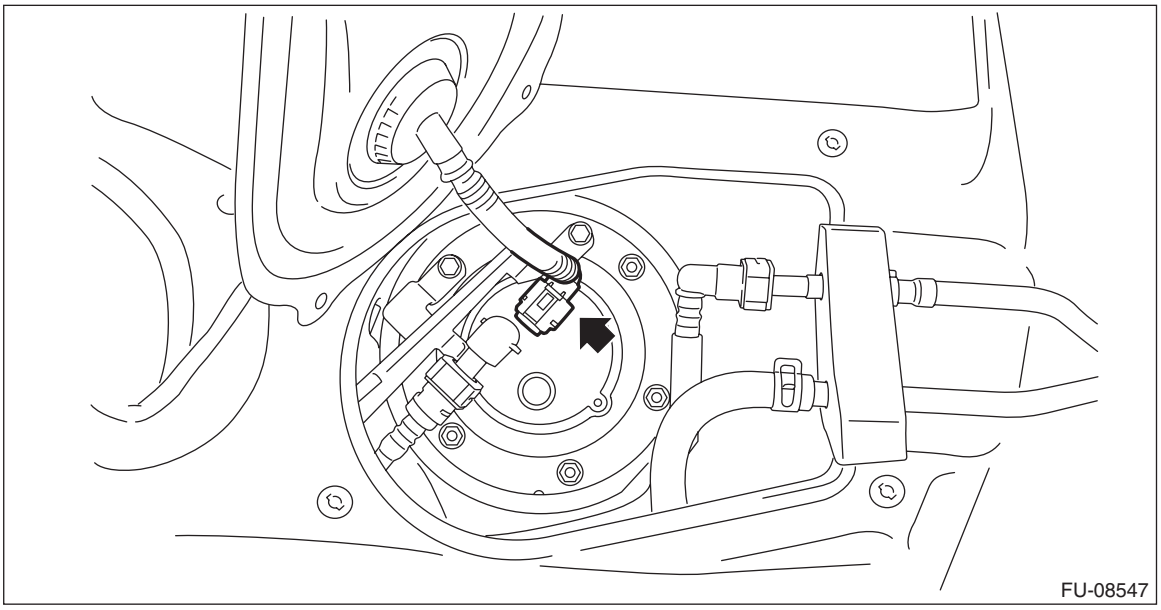

10) Install the service hole cover of fuel sub level sensor.

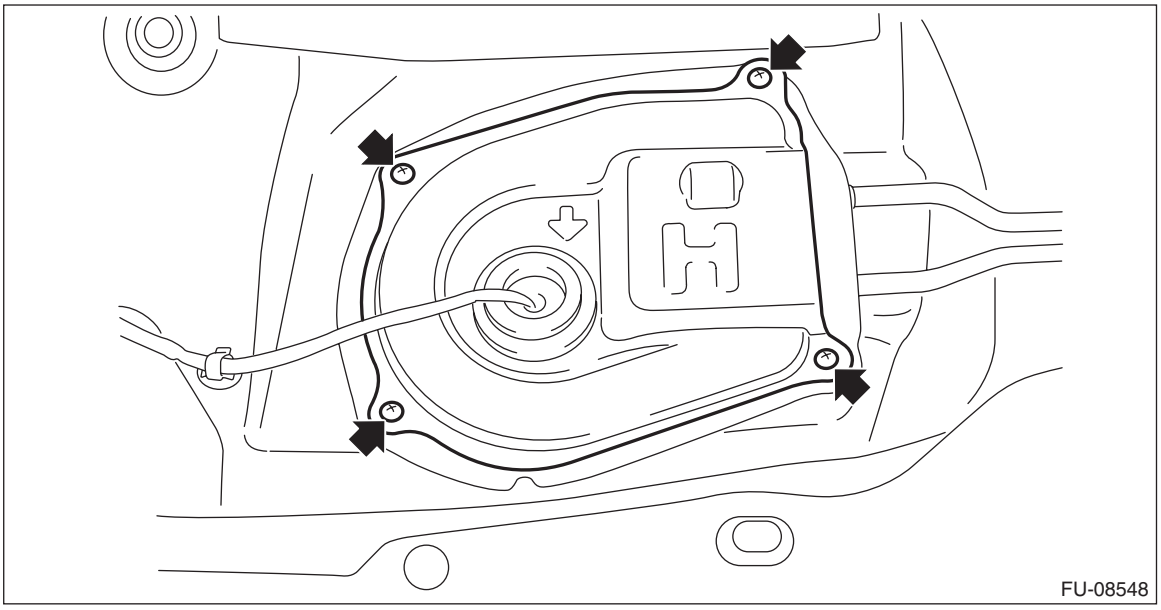

11) Connect the connector to the fuel pump.

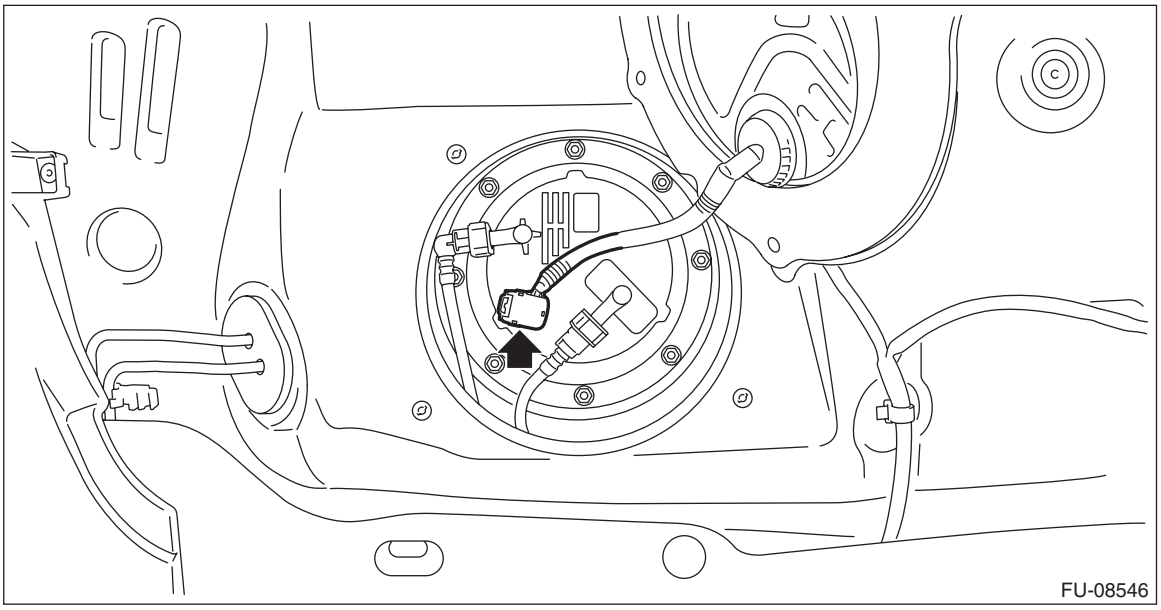

12) Install the service hole cover of fuel pump.

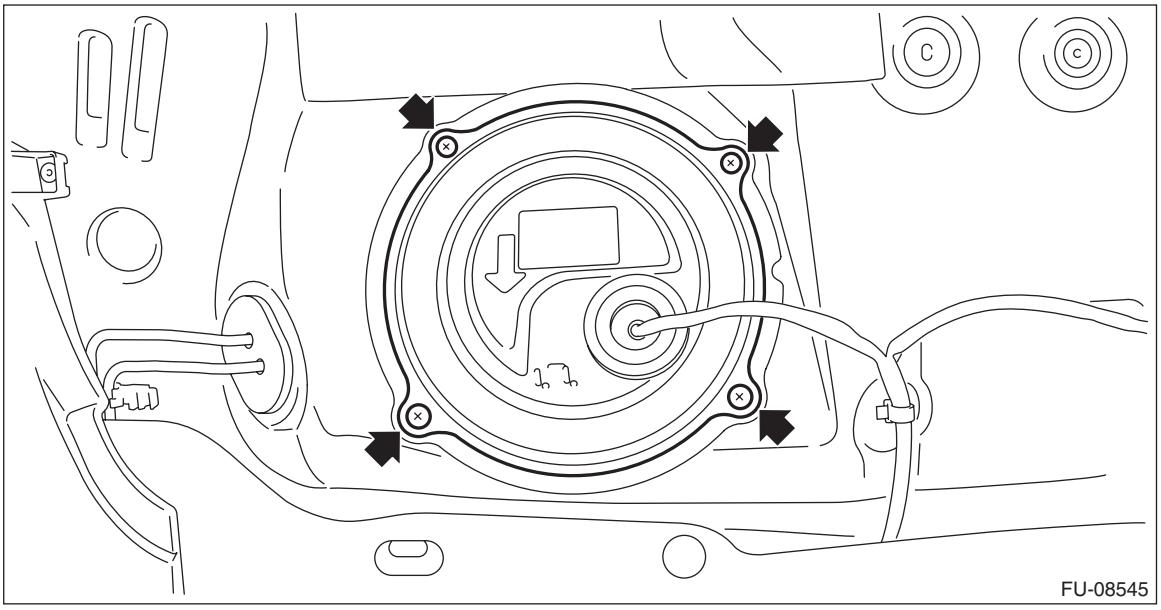

13) Install the rear seat cushion. <Ref. to SE-44, INSTALLATION, Rear Seat.>
14) Connect the ground terminal to battery sensor. <Ref. to RC-4, BATTERY, NOTE, Repair Contents.>

C: INSPECTION

1) Check that the fuel tank and fuel pipe have no deformation, cracks and other damages.
2) Check that the fuel hose and tube have no cracks, damage or loose part.

24.Fuel Filler Pipe

A: REMOVAL

WARNING:
Place “NO OPEN FLAMES” signs near the working area.

CAUTION:
Be careful not to spill fuel.

1) Release the fuel pressure. <Ref. to FU(H6DO)-93, RELEASING OF FUEL PRESSURE, PROCEDURE, Fuel.>
2) Drain fuel. <Ref. to FU(H6DO)-94, DRAINING FUEL (WITH SUBARU SELECT MONITOR), PROCEDURE, Fuel.>
3) Open the fuel filler lid and remove the fuel filler cap.
4) Turn the fuel filler pipe protector in the direction of the arrow to unlock and remove it.

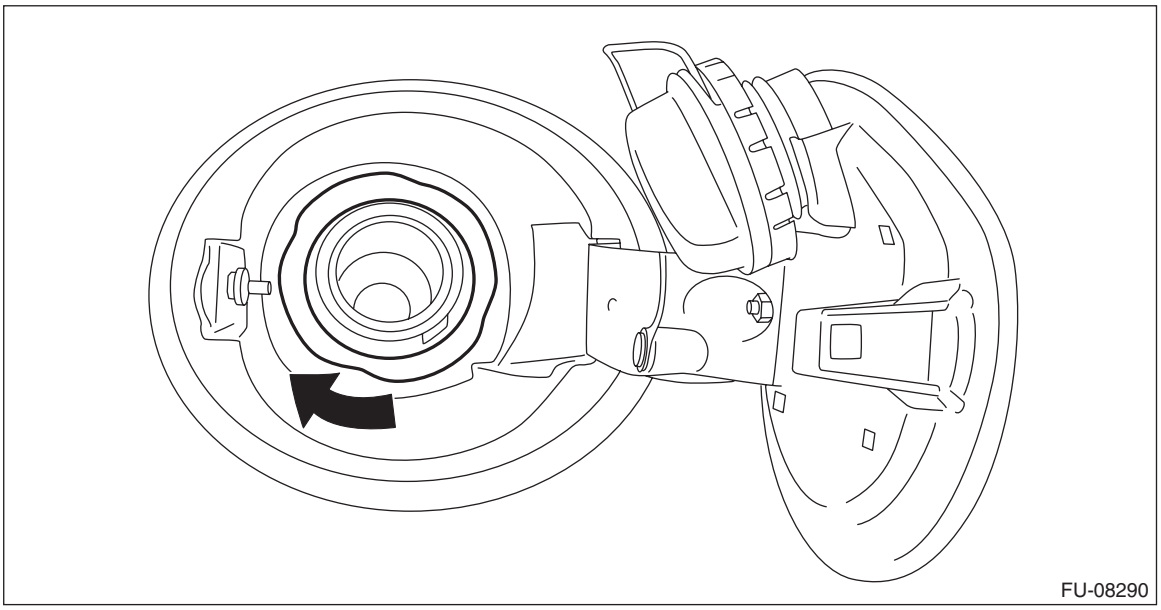

5) Remove the rear sub frame assembly. <Ref. to RS-10, REMOVAL, Rear Sub Frame.>
6) Remove the rear mud guard RH. <Ref. to EI-29, REMOVAL, Mud Guard.>

7) Disconnect the fuel filler hoses from the fuel filler pipe.

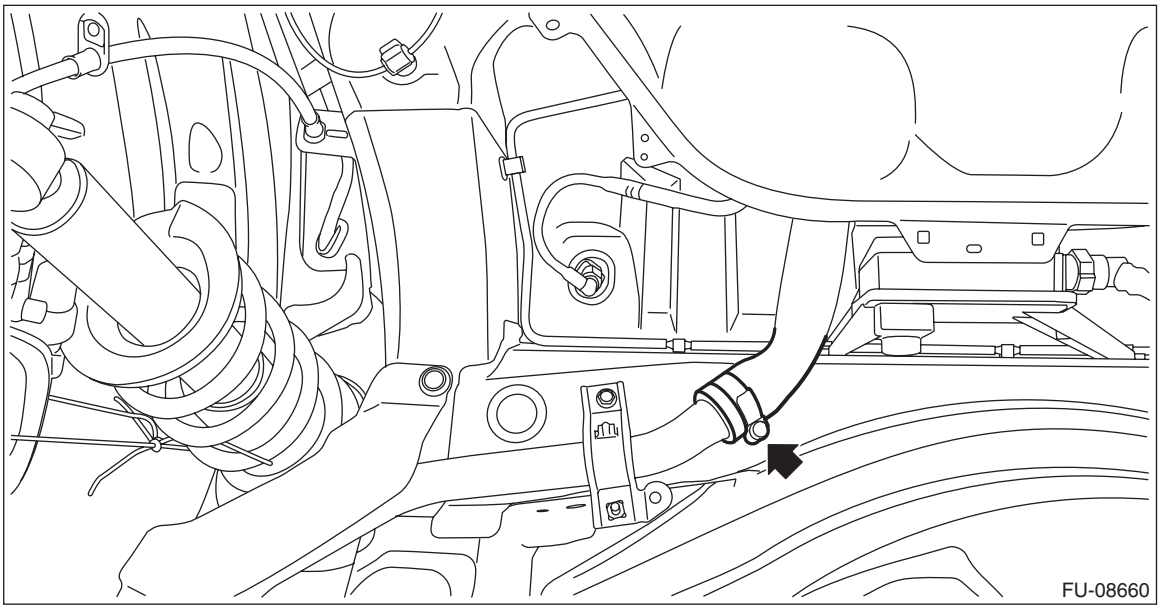

8) Disconnect the evaporation hose (A) from fuel filler pipe and remove the bolts and nuts securing the fuel filler pipe to the vehicle body.

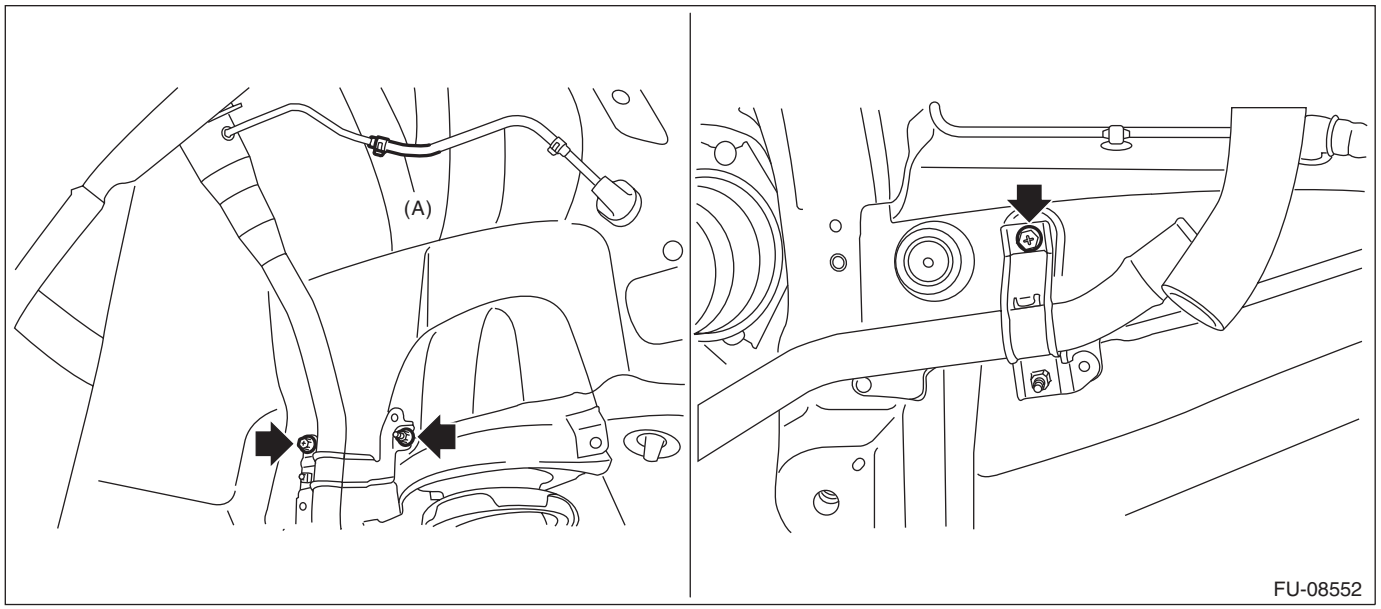

9) Remove the fuel filler pipe from the underside of the vehicle.

B: INSTALLATION

1) Open the fuel filler lid.
2) Insert the fuel filler pipe from inside of the rear fender.
3) Install the fuel filler pipe to the vehicle body and connect the evaporation hose (A) to the fuel filler pipe.

Tightening torque:
7.5 N·m (0.8 kgf-m, 5.5 ft-lb)

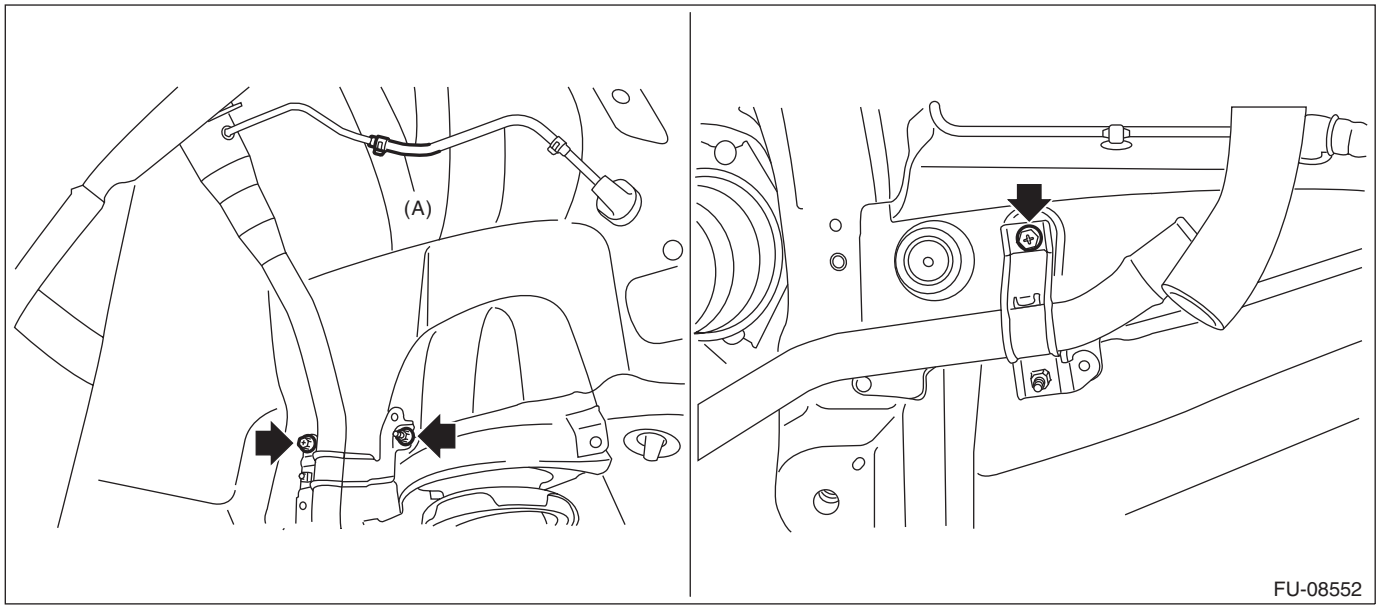

4) Align the cutout on the fuel filler pipe protector and the protrusion of the neck holder and insert them all the way, and then turn the fuel filler pipe protector in the direction of the arrow until it is locked.

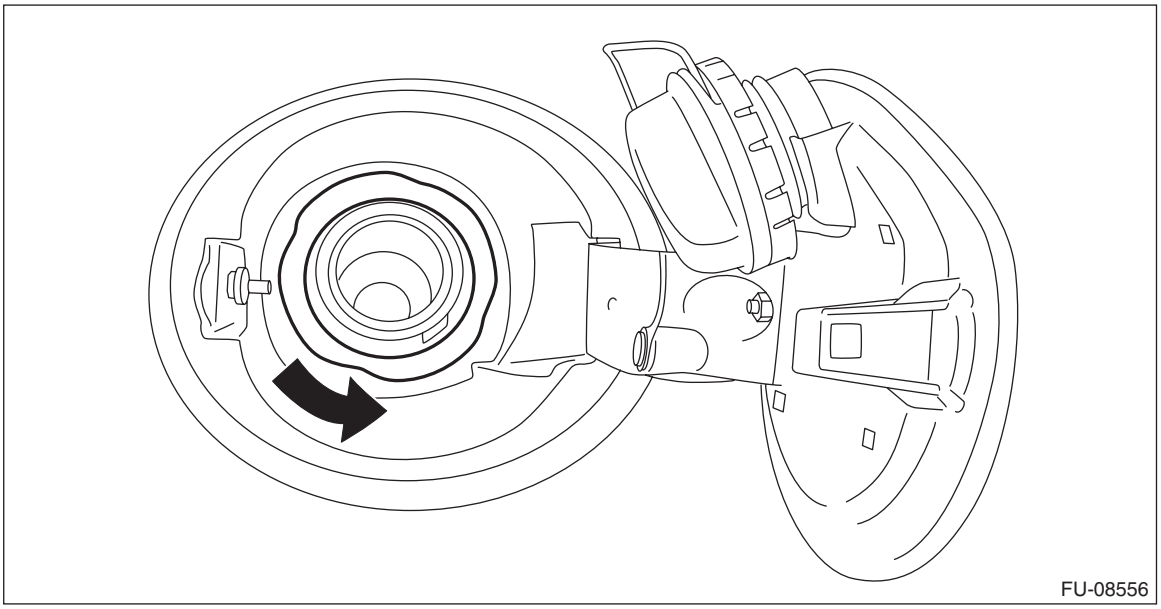

5) Correctly insert the fuel filler hose to the spool, and then install the clamp as shown.

Tightening torque:
2.5 N·m (0.3 kgf-m, 1.8 ft-lb)

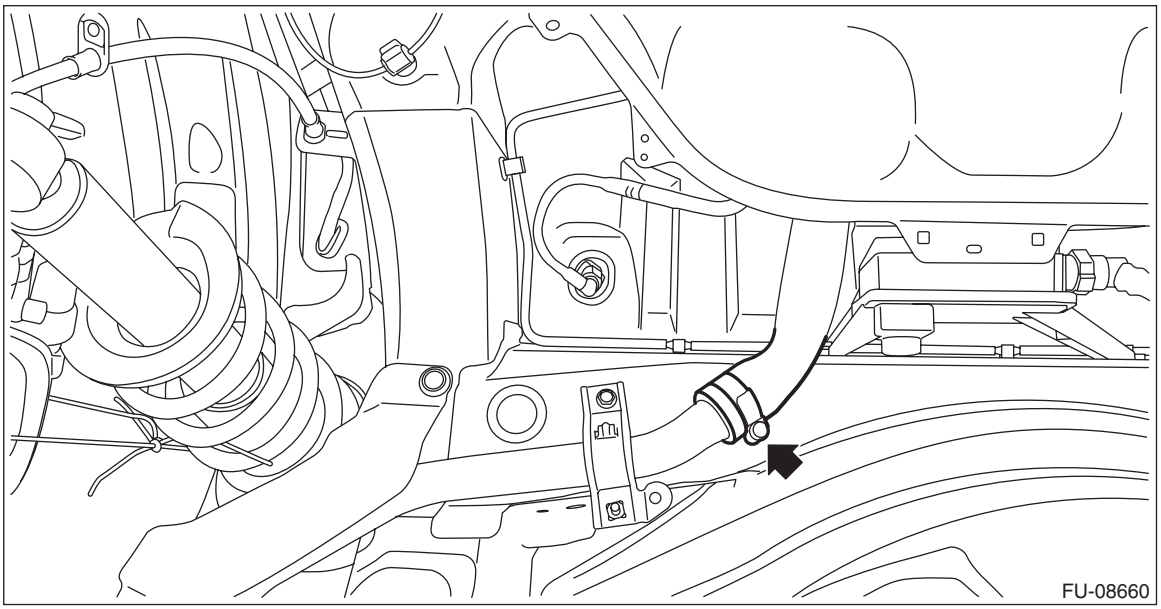

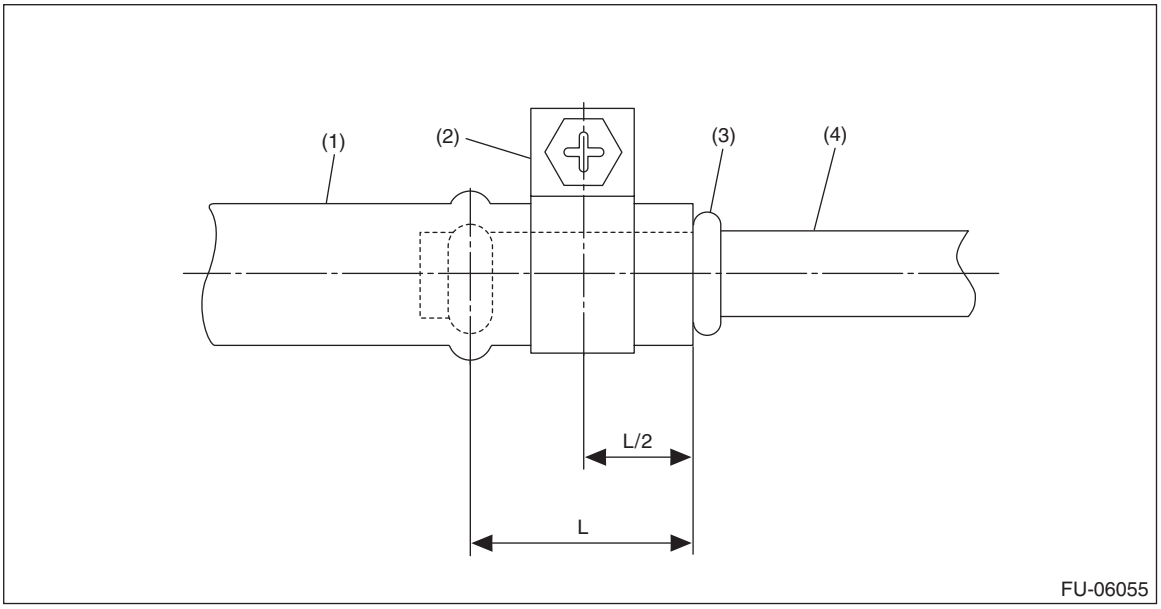

(1) Fuel filler hose
(2) Clamp
(3) Spool
(4) Fuel filler pipe

6) Install the rear mud guard RH. <Ref. to EI-29, INSTALLATION, Mud Guard.>
7) Install the rear sub frame assembly. <Ref. to RS-13, INSTALLATION, Rear Sub Frame.>

C: DISASSEMBLY

1) Using a marker pen, make alignment marks (A) on the fuel filler pipe and the fuel filler pipe bracket.
2) Remove the fuel filler pipe bracket from the fuel filler pipe.

- With protector

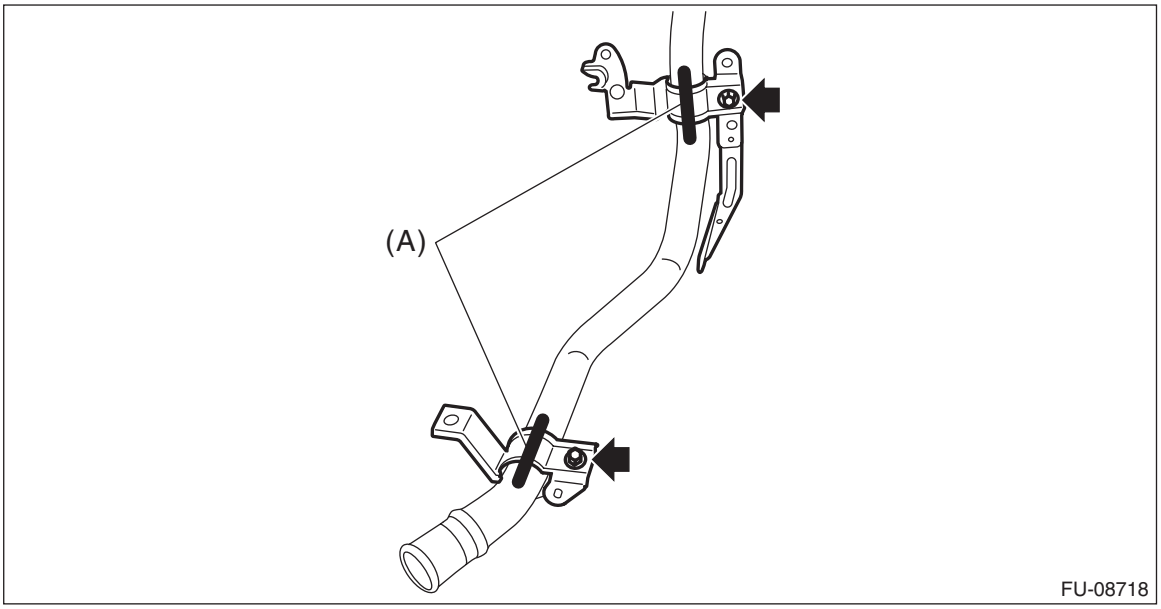

- Without protector

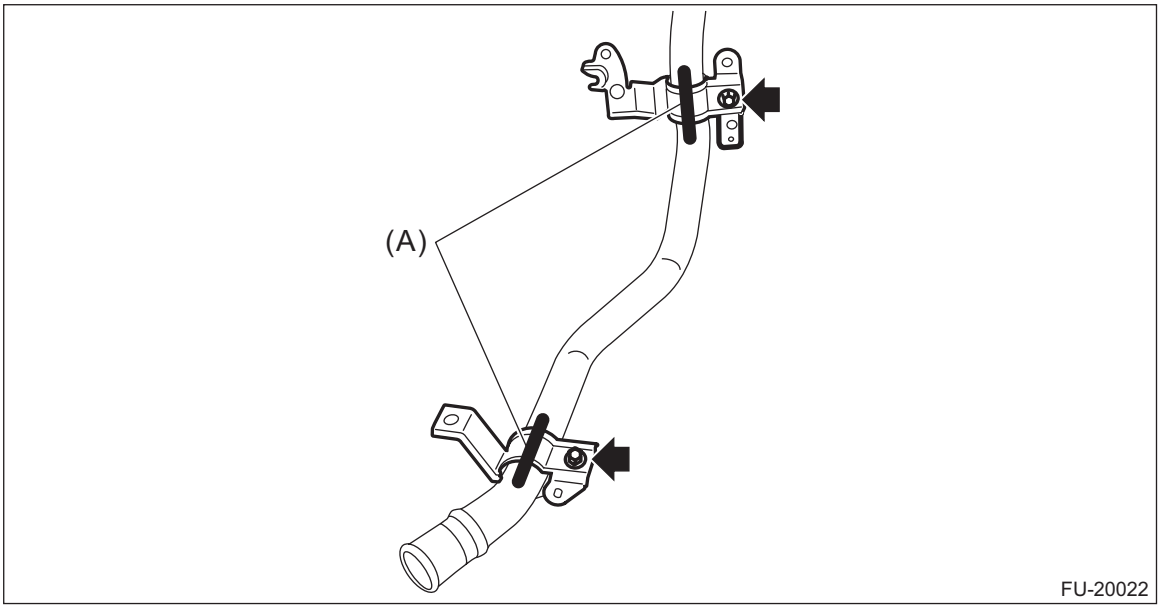

D: ASSEMBLY

Install the fuel filler pipe bracket to the fuel filler pipe by aligning the alignment marks (A).

Tightening torque:
7.35 N·m (0.7 kgf-m, 5.4 ft-lb)

- With protector

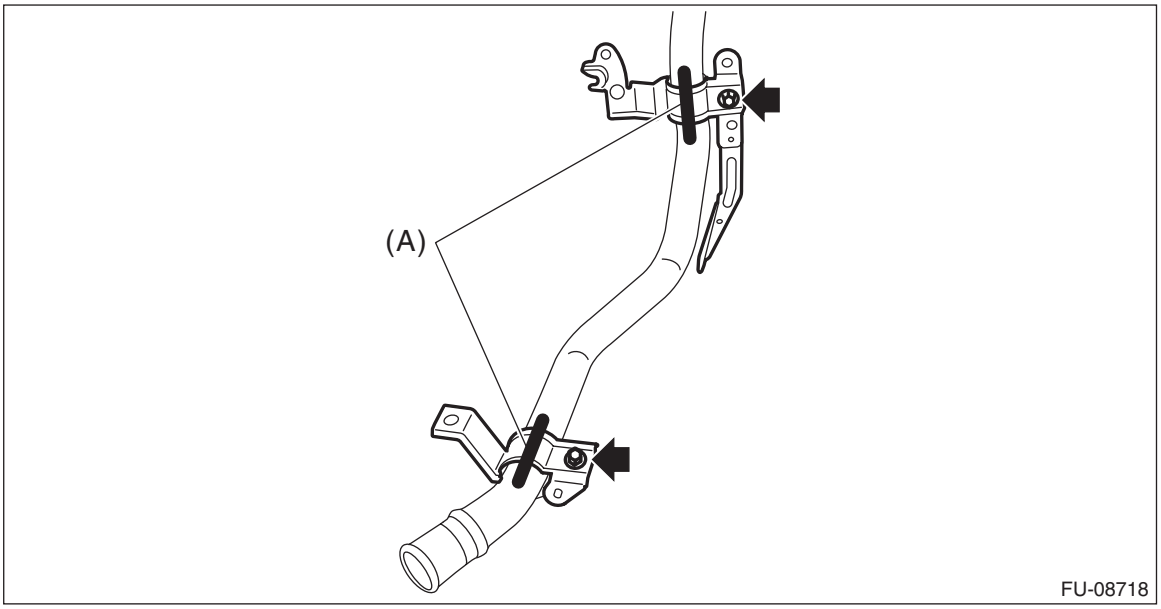

- Without protector

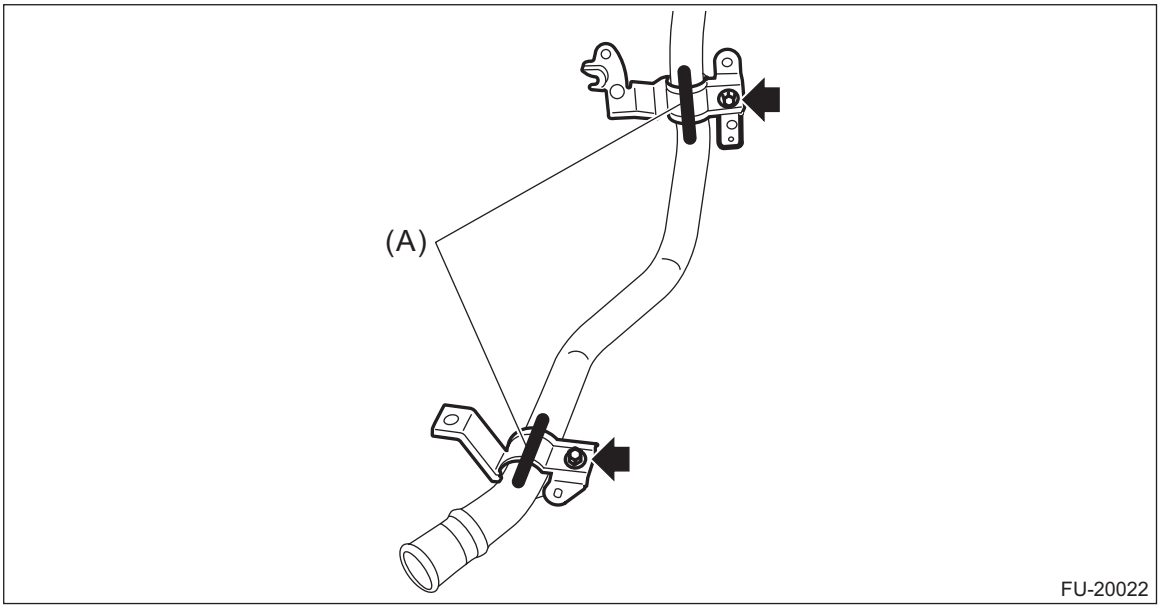

E: INSPECTION

1) Check that the fuel filler pipe does not have deformation, cracks or other damages.
2) Check that the fuel hose has no cracks, damage or loose part.

25.Fuel Pump

A: REMOVAL

WARNING:
Place “NO OPEN FLAMES” signs near the working area.

CAUTION:
- **Be careful not to spill fuel.**
- **Catch the fuel from the tubes using a container or cloth.**
- **If the fuel gauge indicates that two thirds or more of the fuel is remaining, be sure to drain fuel before starting work to avoid the fuel to spill.**

NOTE:
Fuel pump assembly consists of fuel pump, fuel filter and fuel level sensor.
1) Release the fuel pressure. <Ref. to FU(H6DO)-93, RELEASING OF FUEL PRESSURE, PROCEDURE, Fuel.>
2) Drain fuel. <Ref. to FU(H6DO)-94, DRAINING FUEL (WITH SUBARU SELECT MONITOR), PROCEDURE, Fuel.>
3) Disconnect the ground terminal from battery sensor. <Ref. to RC-4, BATTERY, NOTE, Repair Contents.>
4) Remove the rear seat cushion. <Ref. to SE-33, REMOVAL, Rear Seat.>
5) Remove the service hole cover of fuel pump.

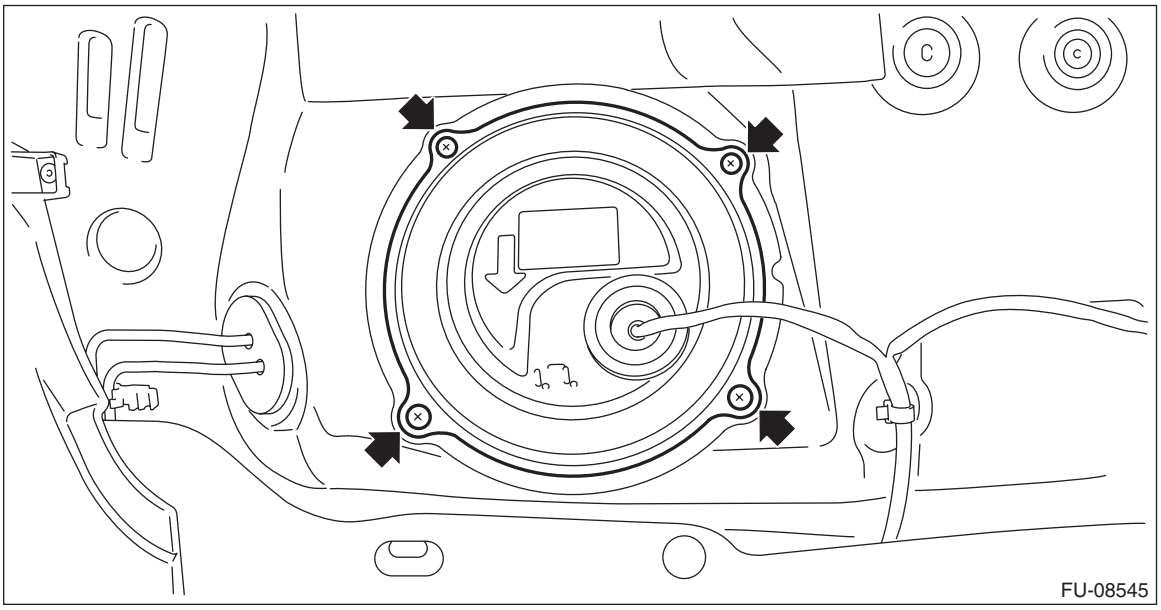

6) Disconnect connector (A) from the fuel pump, and move aside the service hole cover.
7) Disconnect the quick connectors of fuel delivery tube and fuel sub delivery tube.

NOTE:
Disconnect the quick connector as shown in the figure.

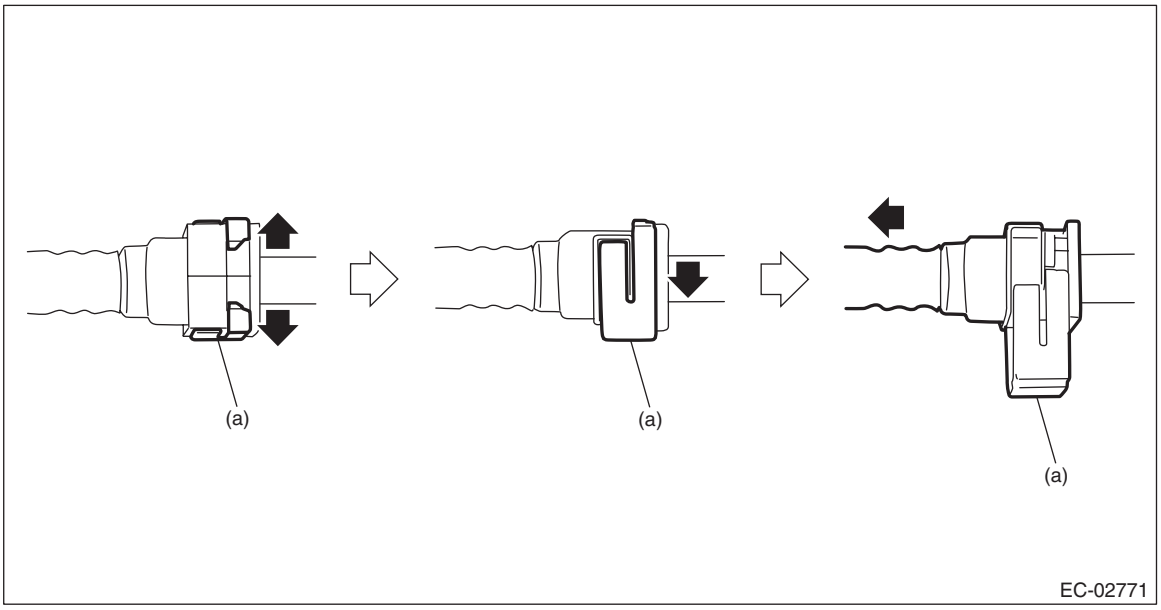

(a) Slider

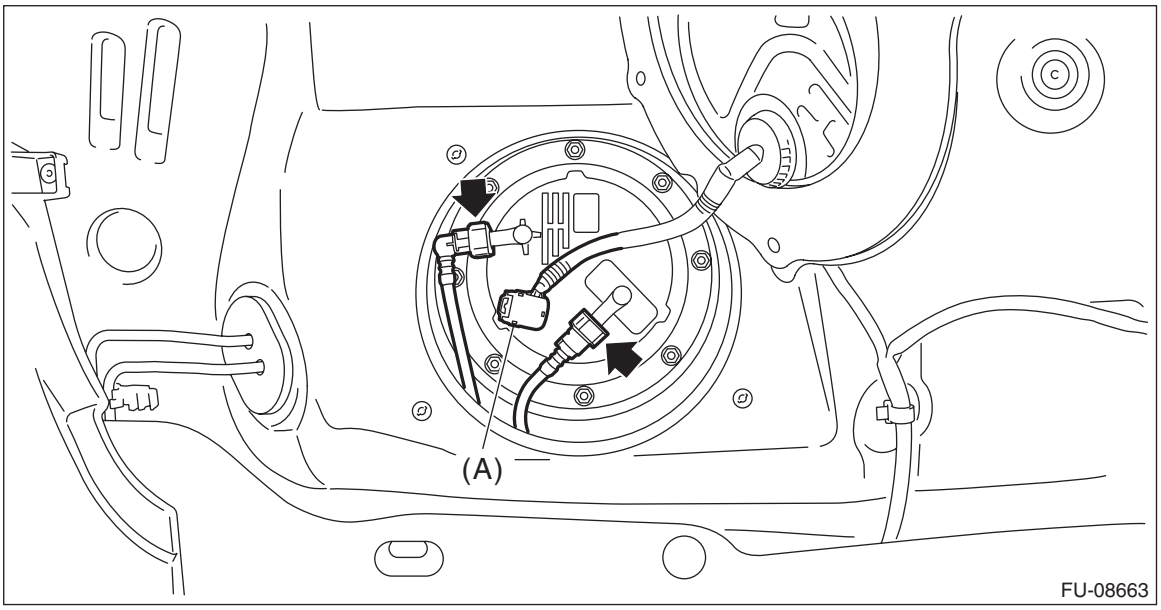

8) Remove the nuts which hold the fuel pump upper plate to the fuel tank.

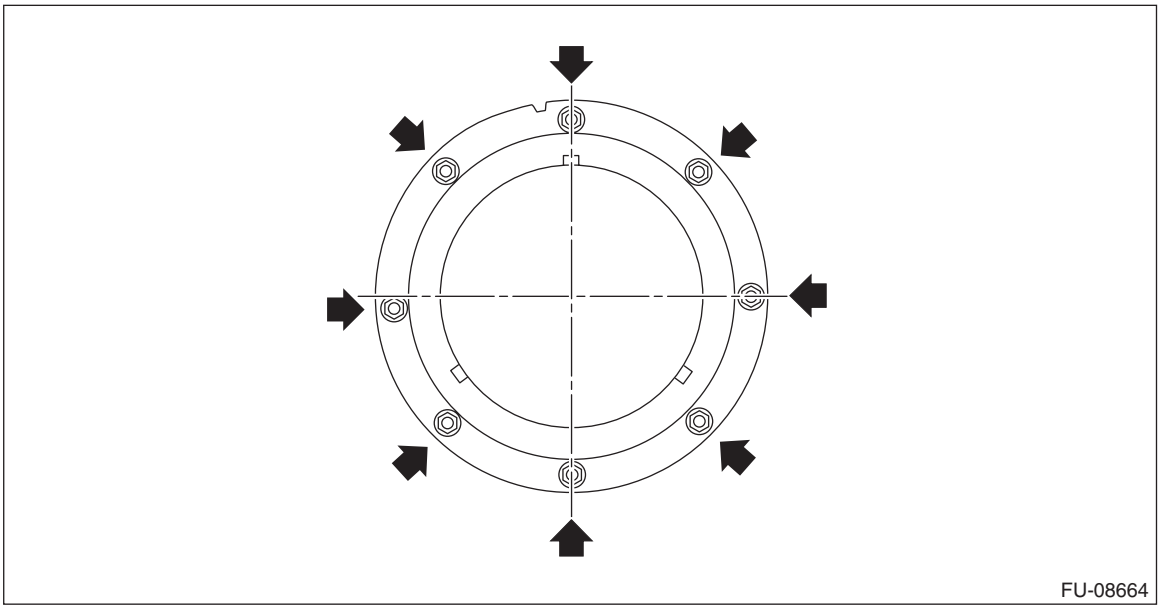

9) Remove the fuel pump assembly from the fuel tank.

CAUTION:
Be careful not to let the arm and float of fuel level sensor contact the fuel tank.

B: INSTALLATION

1) Install the fuel pump assembly to the fuel tank.

CAUTION:
Set the arm and float of the fuel level sensor while paying attention to prevent them from contacting the fuel tank. If the arm of the fuel level sensor is bent, the fuel gauge may not read correctly.

NOTE:
Use a new gasket.

(1) Make sure the sealing portion is free from fuel or foreign matter before installation.
(2) Align the recess of the fuel pump upper plate cushion to the protrusion (A) of the fuel pump assembly.
(3) Keeping the cutout (B) of the fuel pump upper plate facing toward the rear of the vehicle, align the protrusion (C) of the fuel pump upper plate cushion to the cutout.

(4) Tighten the nuts to the specified torque in the order as shown in the figure.

Tightening torque:
4.4 N·m (0.4 kgf-m, 3.2 ft-lb)

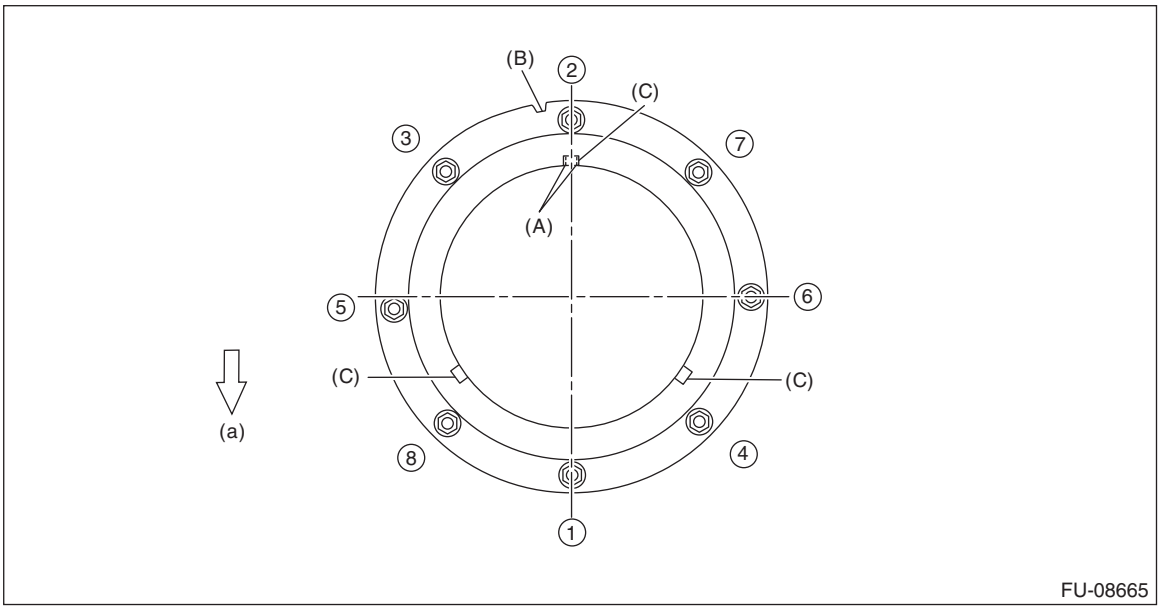

(a) Front side of vehicle

2) Connect the quick connector of the fuel delivery tube and fuel sub delivery tube.

CAUTION:
• Check that there is no damage or dust on the quick connector. If necessary, clean the seal surface of the pipe.
• When connecting the quick connector, make sure to insert it all the way in before locking the slider.
• When it is difficult to lock the slider, check that the connector is fully inserted.
• After locking the slider, check again that the quick connector is securely connected.

NOTE:
Connect the quick connector as shown in the figure.

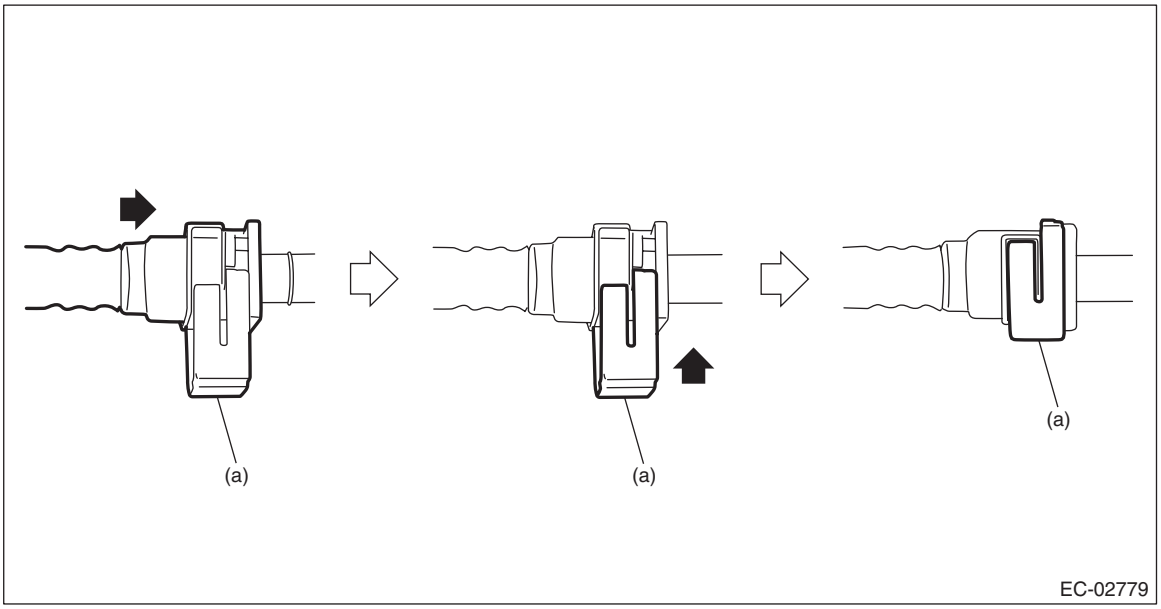

(a) Slider

3) Connect the connector (A) to the fuel pump.

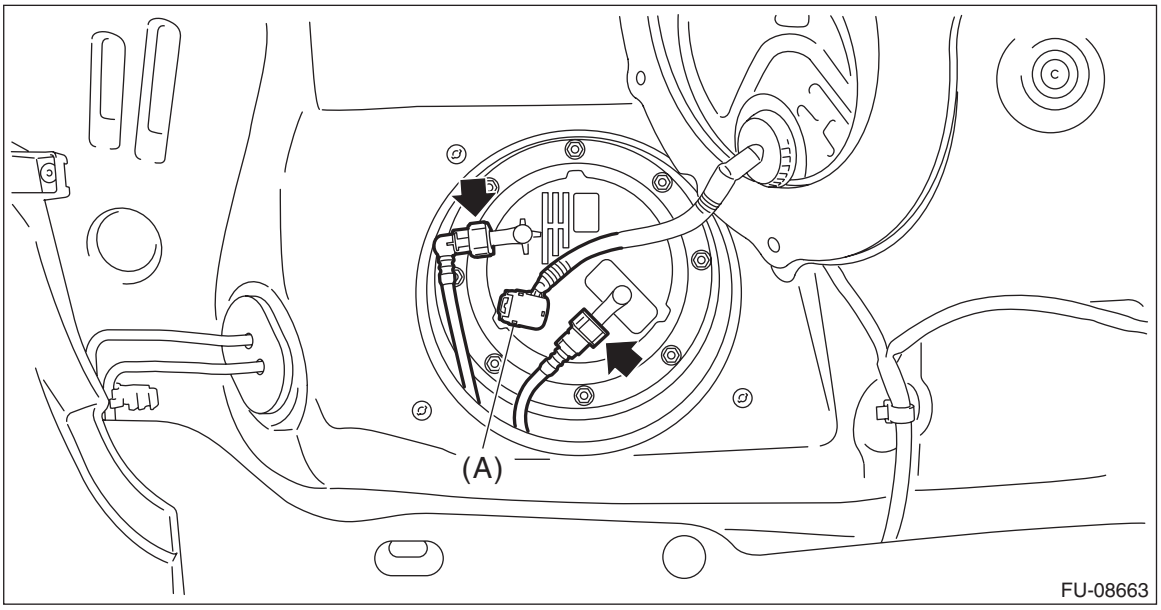

4) Install the service hole cover of fuel pump.

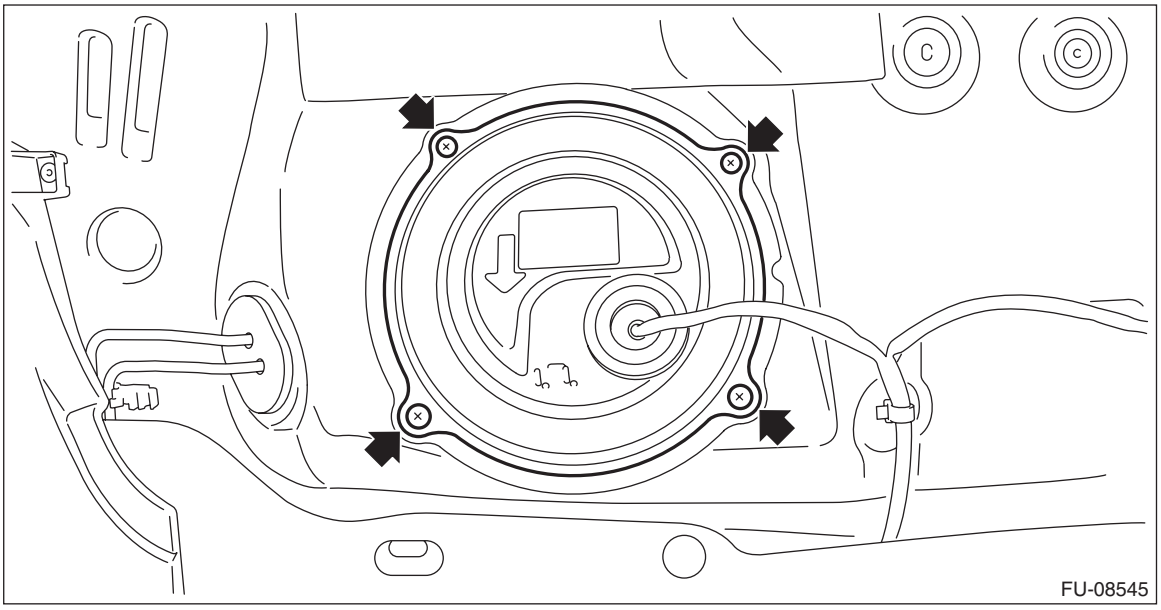

5) Install the rear seat cushion. <Ref. to SE-44, INSTALLATION, Rear Seat.>
6) Connect the ground terminal to battery sensor. <Ref. to RC-4, BATTERY, NOTE, Repair Contents.>

C: INSPECTION

1) Check that the fuel pump has no deformation, cracks or other damages.
2) Connect the battery positive terminal to terminal No. 5 and the battery ground terminal to terminal No. 6, and inspect the fuel pump operation.

WARNING:
- **Wipe off fuel completely.**
- **Keep the battery as far apart from fuel pump as possible.**
- **Do not run the fuel pump for a long time under non-load condition.**

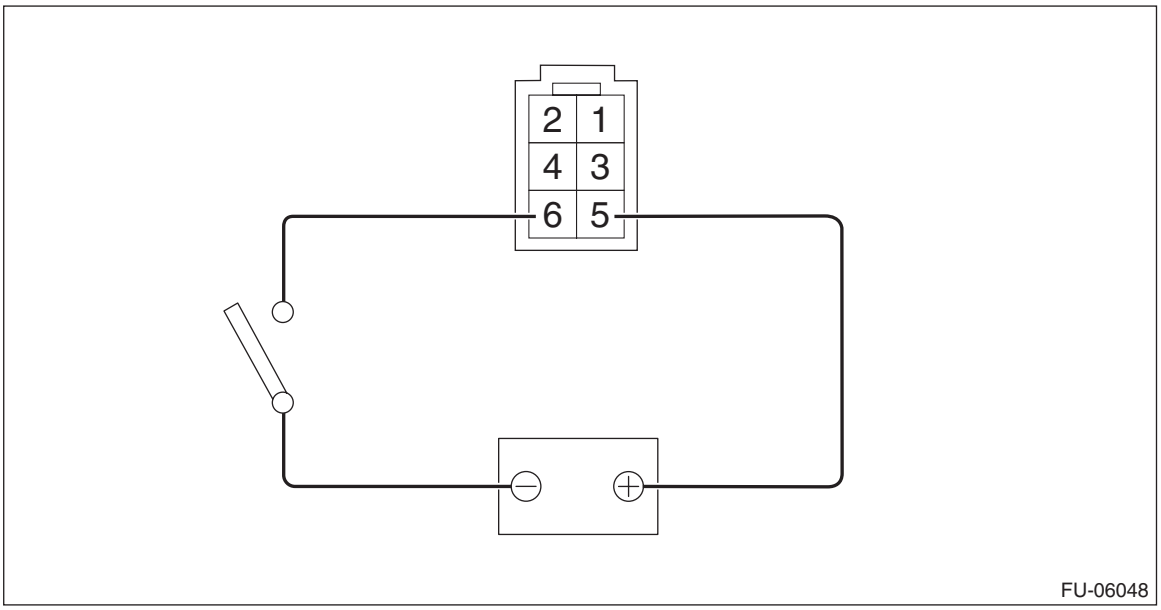

26.Fuel Level Sensor

A: REMOVAL

WARNING:
Place “NO OPEN FLAMES” signs near the working area.

CAUTION:
- **Be careful not to spill fuel.**
- **If the fuel gauge indicates that two thirds or more of the fuel is remaining, be sure to drain fuel before starting work to avoid the fuel to spill.**

NOTE:
The fuel level sensor is built in fuel pump assembly.
1) Remove the fuel pump assembly. <Ref. to FU(H6DO)-119, REMOVAL, Fuel Pump.>
2) Disconnect the connector (A) of the fuel level sensor and pull out the fuel pump harness and fuel level sensor harness from the clip.

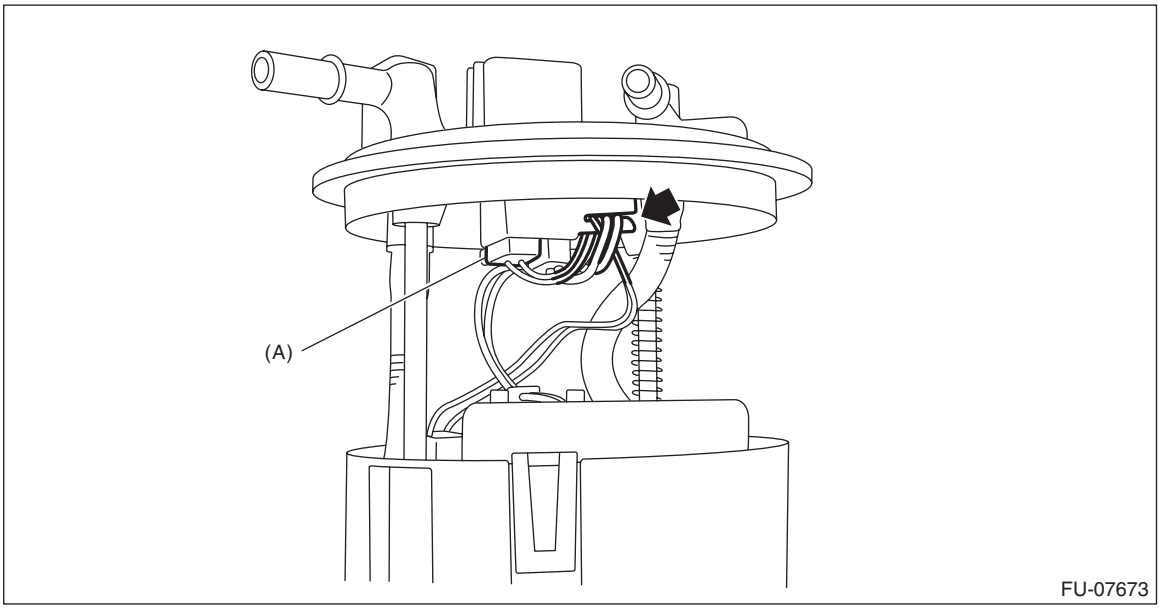

3) While pressing the claw (A) of the fuel level sensor, slide the fuel level sensor in the direction of the arrow, and remove the fuel level sensor.

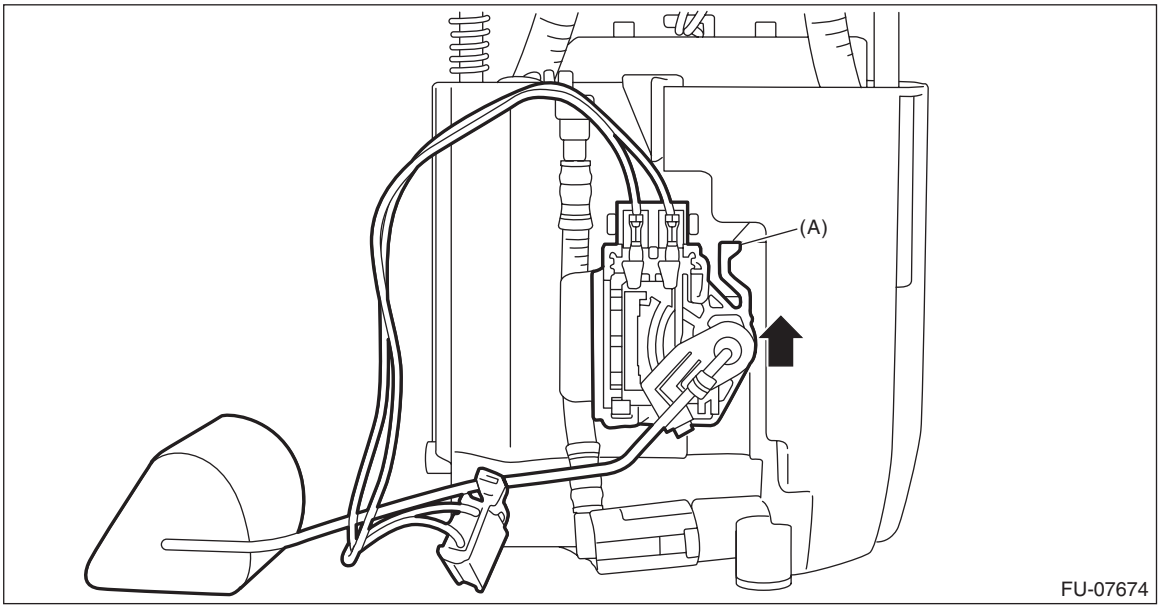

B: INSTALLATION

Install in the reverse order of removal.

CAUTION:
Be sure to install the fuel level sensor harness to the clip first, then install the fuel pump harness. Otherwise, malfunction may occur.

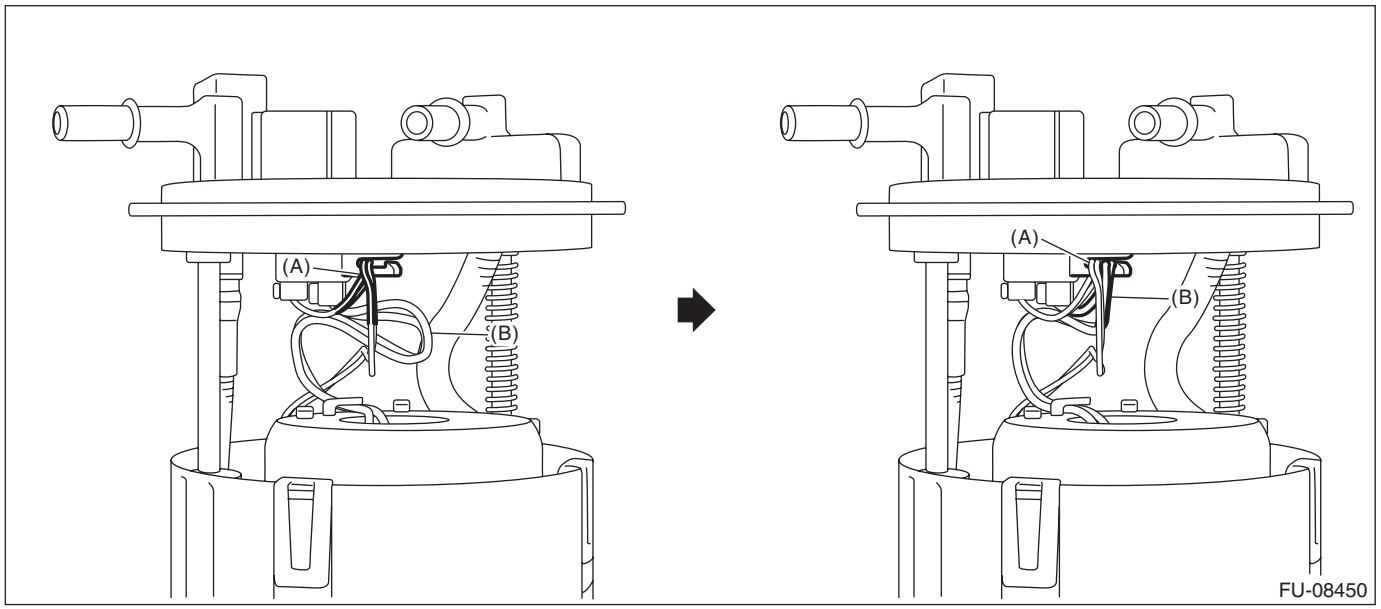

(A) Fuel level sensor harness (B) Fuel pump harness

C: INSPECTION

1) Check that the fuel level sensor has no damage.
2) Measure the fuel level sensor float position.

NOTE:
When inspecting the fuel level sensor, perform the work with the sensor installed to the fuel pump.

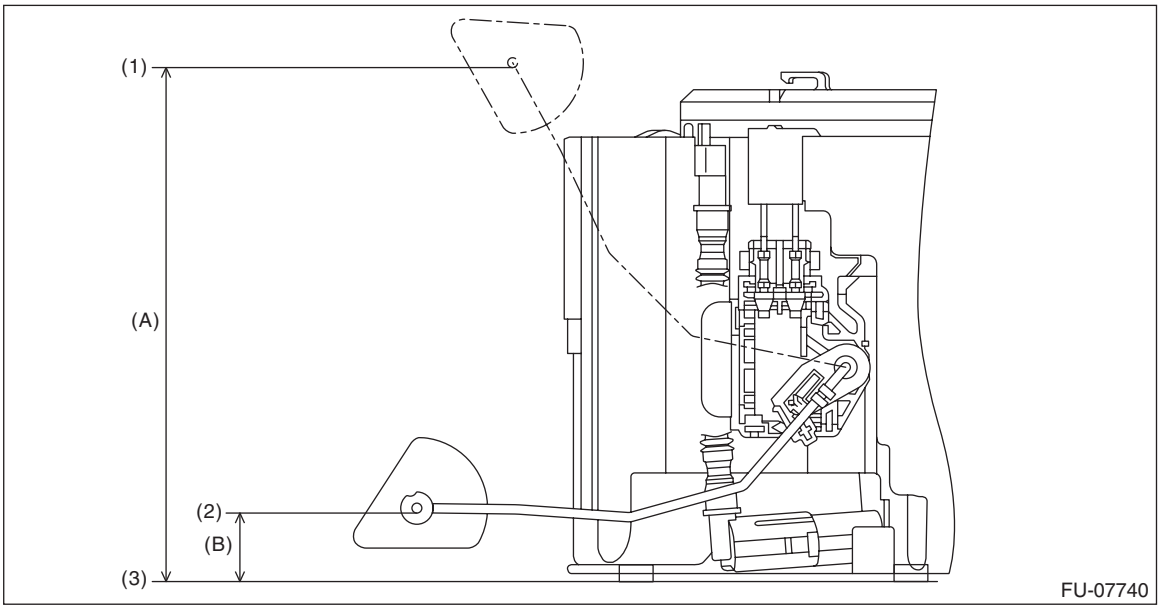

(1) FULL (2) EMPTY (3) Fuel tank seating surface

Float position	Standard
FULL to Fuel tank seating surface (A)	133.0±4 mm (5.236±0.157 in)
EMPTY to Fuel tank seating surface (B)	21.6±4 mm (0.850±0.157 in)

3) Check the resistance between fuel level sensor terminals by the connector on top of the fuel pump.

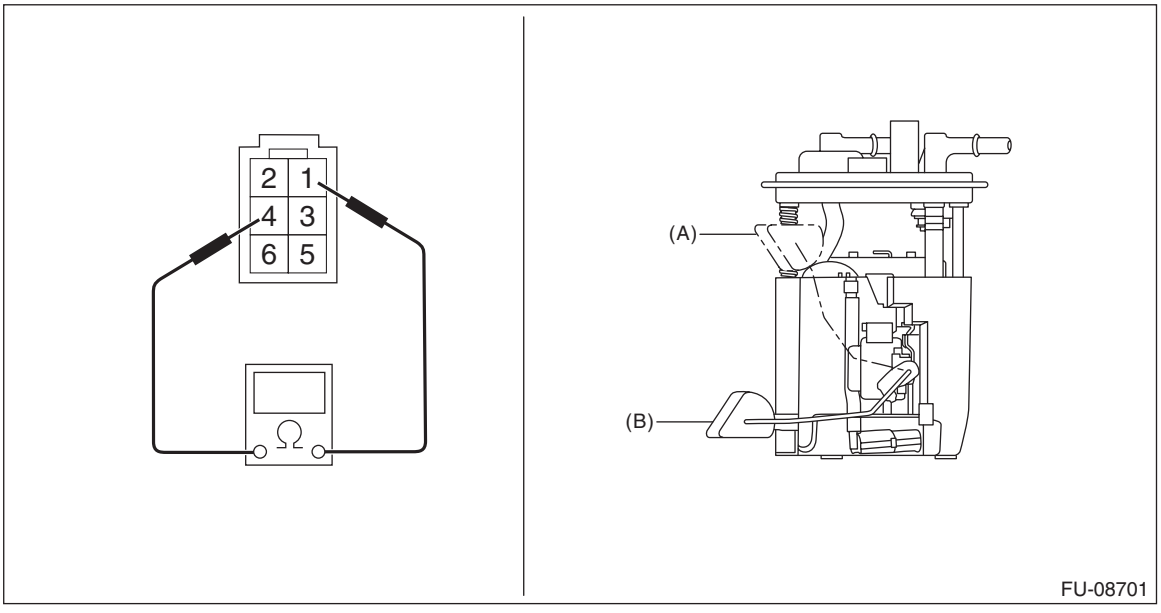

Float position	Terminal No.	Standard
FULL (A)	1 and 4	8.7±1.0 Ω
EMPTY (B)		139.1±2.0 Ω

27.Fuel Sub Level Sensor

A: REMOVAL

WARNING:
Place "NO OPEN FLAMES" signs near the working area.

CAUTION:
- **Be careful not to spill fuel.**
- **Catch the fuel from the tubes using a container or cloth.**
- **If the fuel gauge indicates that two thirds or more of the fuel is remaining, be sure to drain fuel before starting work to avoid the fuel to spill.**

1) Release the fuel pressure. <Ref. to FU(H6DO)-93, RELEASING OF FUEL PRESSURE, PROCEDURE, Fuel.>
2) Drain fuel. <Ref. to FU(H6DO)-94, DRAINING FUEL (WITH SUBARU SELECT MONITOR), PROCEDURE, Fuel.>
3) Disconnect the ground terminal from battery sensor. <Ref. to RC-4, BATTERY, NOTE, Repair Contents.>
4) Remove the rear seat cushion. <Ref. to SE-33, REMOVAL, Rear Seat.>
5) Remove the service hole cover of fuel sub level sensor.

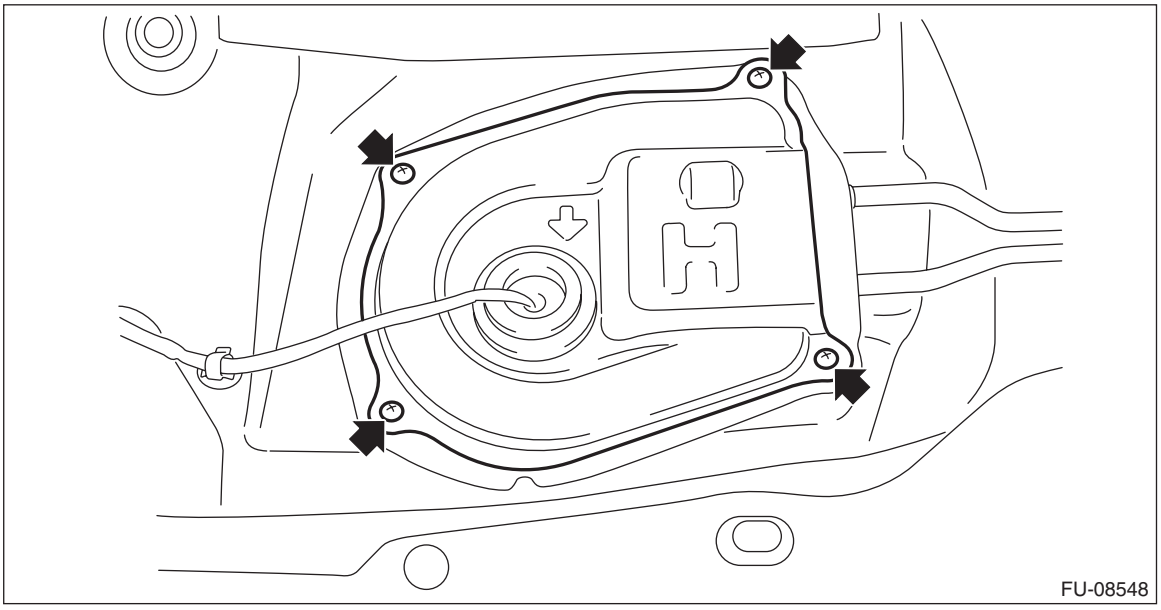
FU-08548

6) Disconnect the connector from the fuel sub level sensor, and move aside the service hole cover.

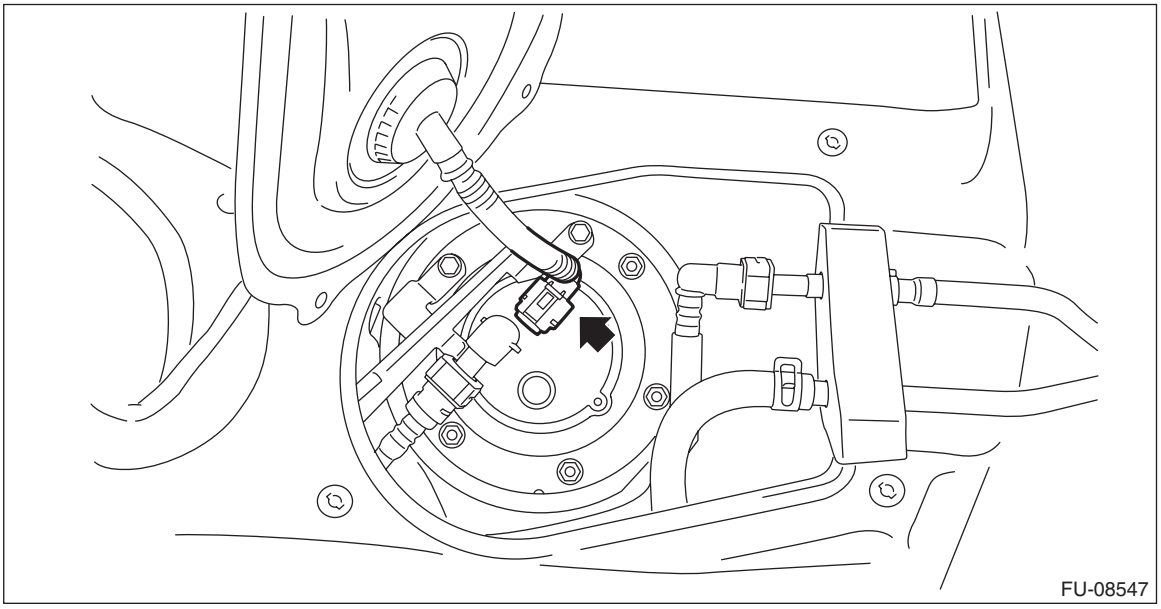
FU-08547

7) Disconnect the quick connector (A) of the fuel sub delivery tube, and remove the fuel sub level sensor protector.

NOTE:
Disconnect the quick connector as shown in the figure.

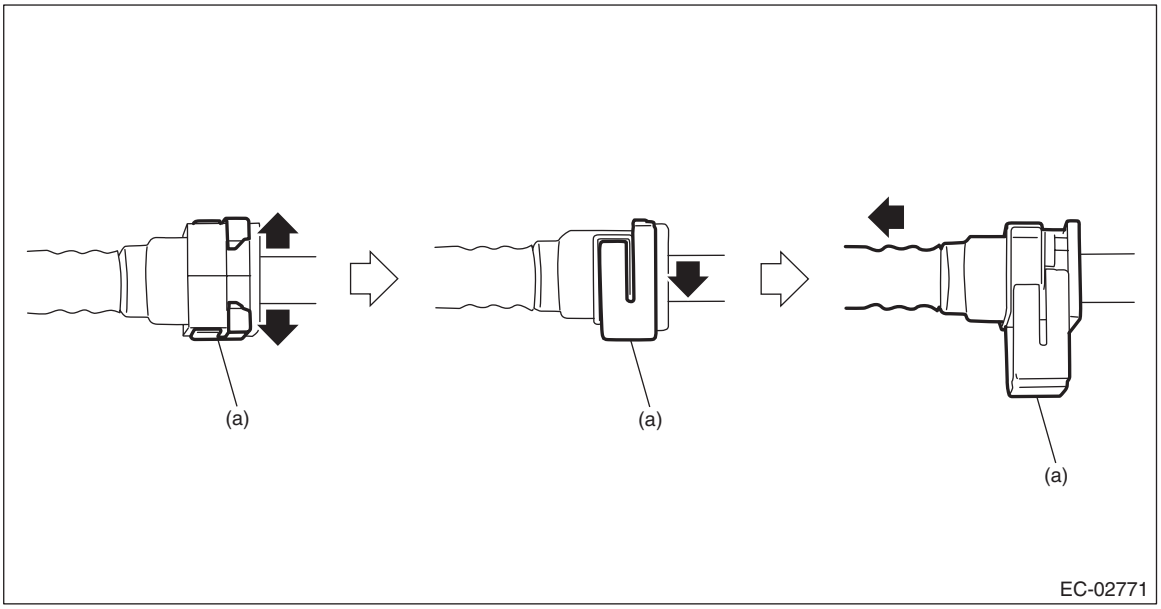

(a) Slider

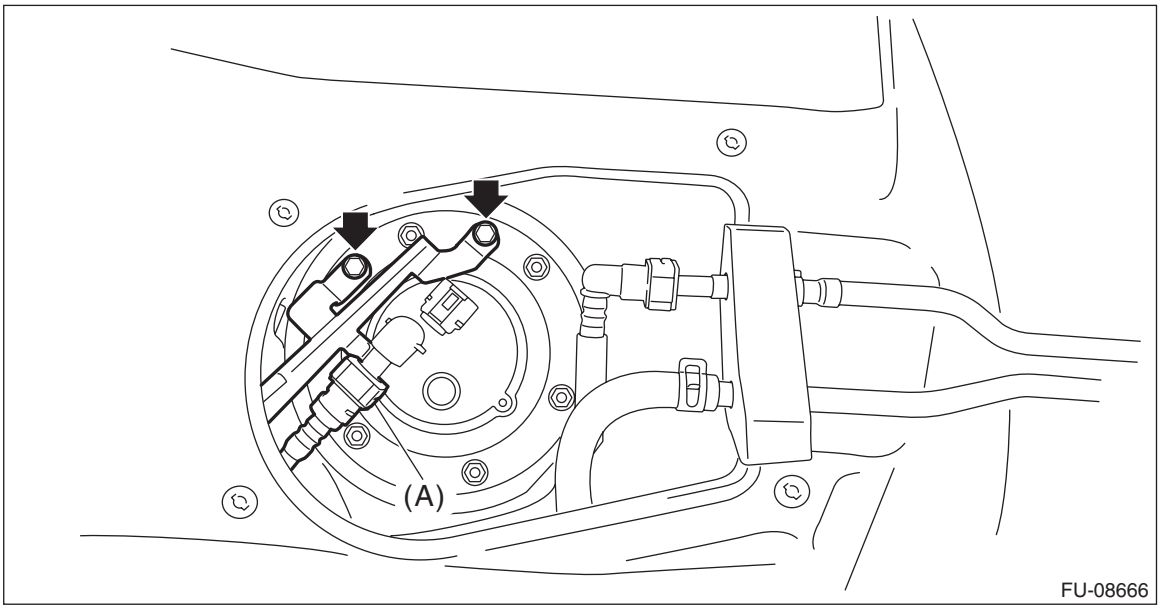

8) Remove the nuts securing the fuel sub level sensor upper plate to the fuel tank and remove the fuel sub level sensor upper plate.

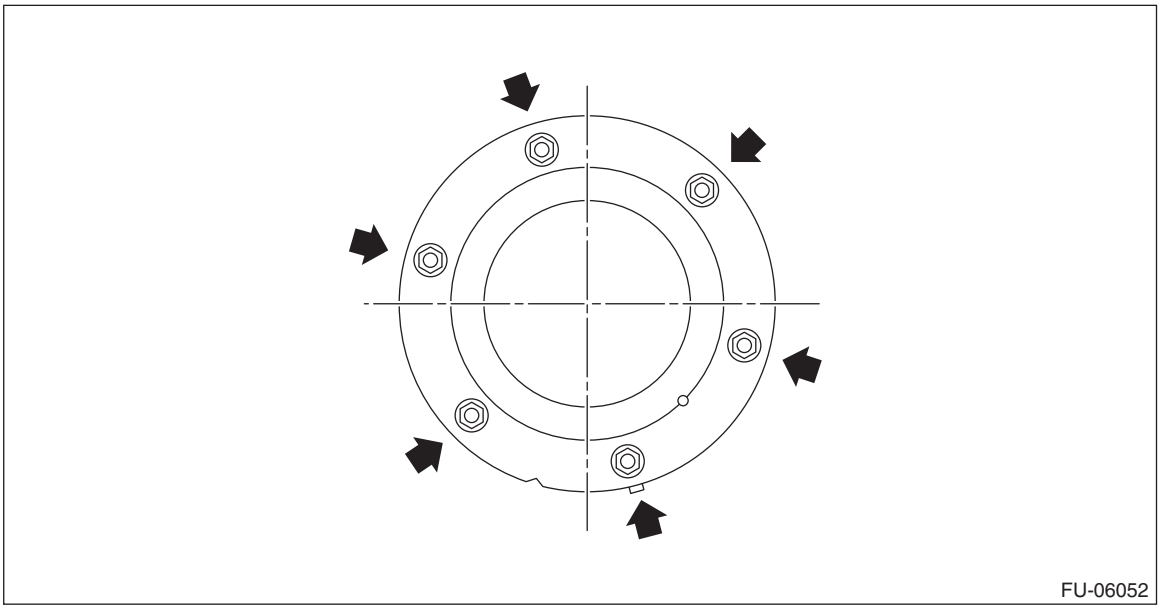

9) Remove the fuel sub level sensor from the fuel tank.

CAUTION:
Be careful not to let the arm and float of the fuel sub level sensor contact the fuel tank.

B: INSTALLATION

1) Install the fuel sub level sensor to the fuel tank.

CAUTION:
Set the arm and float of the fuel sub level sensor while paying attention to prevent them from contacting the fuel tank. If the arm of the fuel sub level sensor is bent, the fuel gauge may not read correctly.

NOTE:
Use a new gasket.

(1) Make sure the sealing portion is free from fuel or foreign matter before installation.
(2) Align protrusion (A) of the gasket to the position shown in the figure.
(3) Align the cutout of fuel sub level sensor upper plate cushion with the protrusion (B) of fuel sub level sensor.
(4) Align the protrusion (B) of fuel sub level sensor upper plate cushion with the cutout of fuel sub level sensor upper plate.
(5) Tighten the nuts to the specified torque in the order as shown in the figure.

Tightening torque:
4.4 N·m (0.4 kgf-m, 3.2 ft-lb)

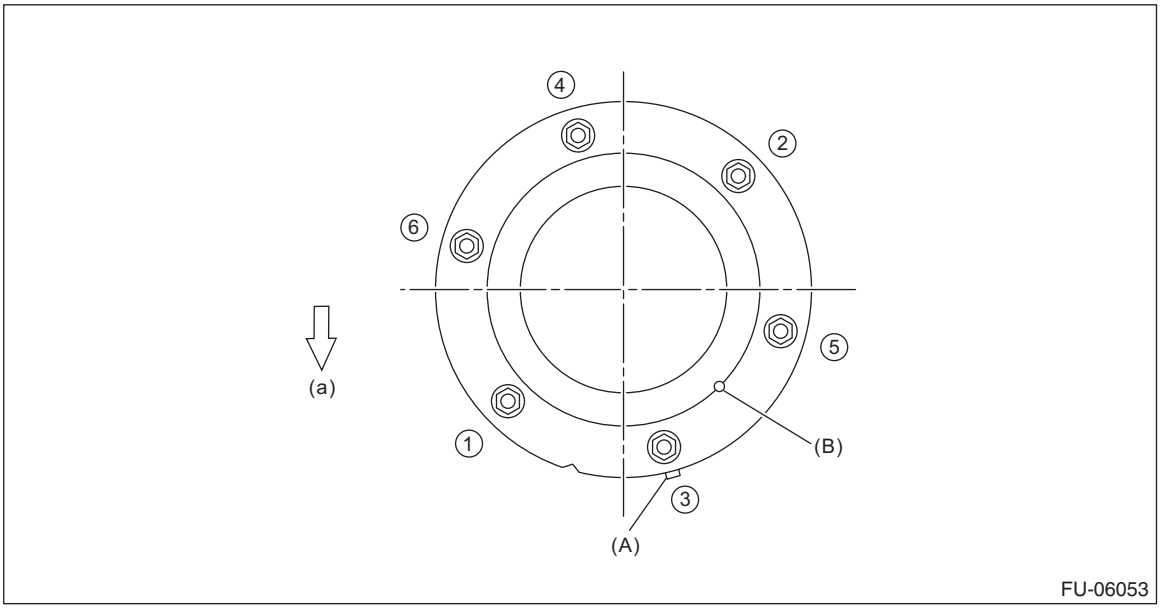

(a) Front side of vehicle

2) Install the fuel sub level sensor protector, and connect the quick connector (A) of the fuel sub delivery tube.

CAUTION:
• Check that there is no damage or dust on the quick connector. If necessary, clean the seal surface of the pipe.
• When connecting the quick connector, make sure to insert it all the way in before locking the slider.
• When it is difficult to lock the slider, check that the connector is fully inserted.
• After locking the slider, check again that the quick connector is securely connected.

NOTE:
Connect the quick connector as shown in the figure.

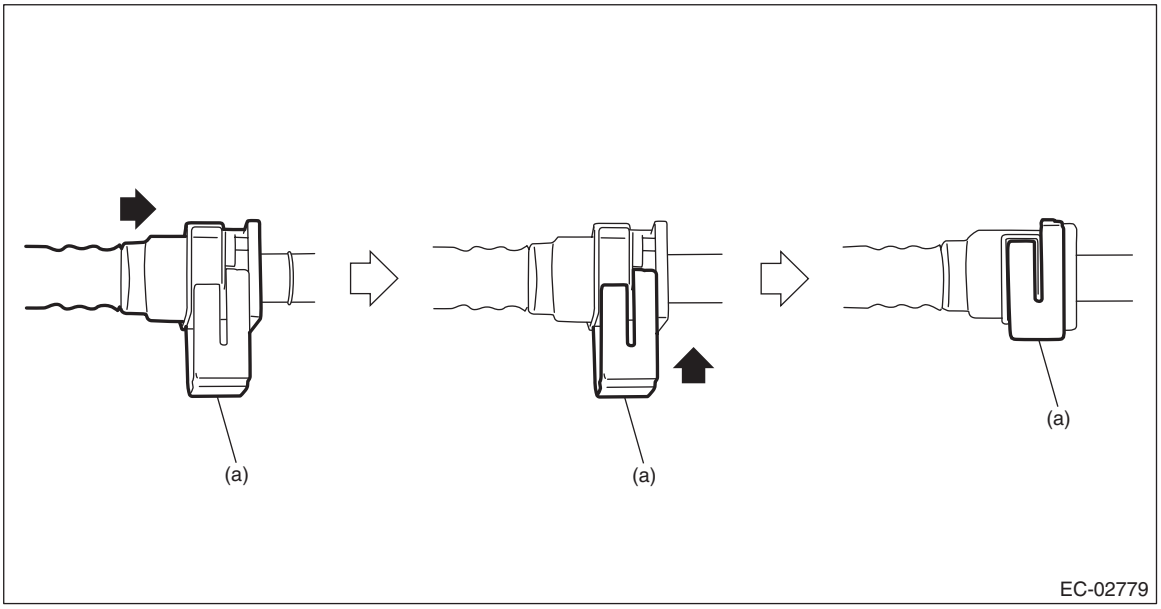

(a) Slider

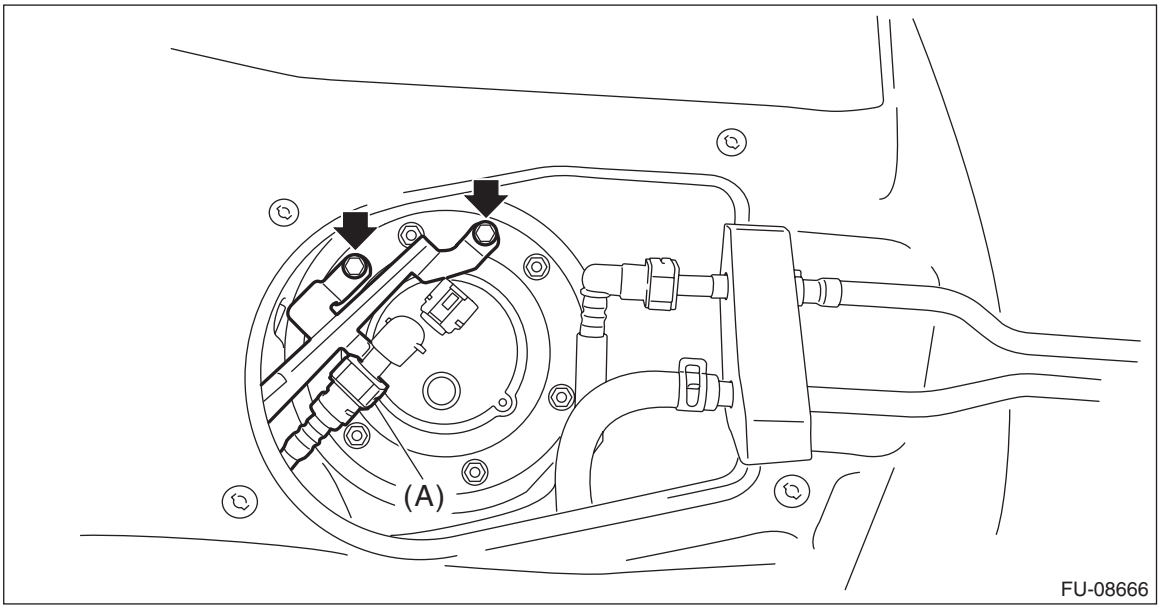

3) Connect the connector to the fuel sub level sensor.

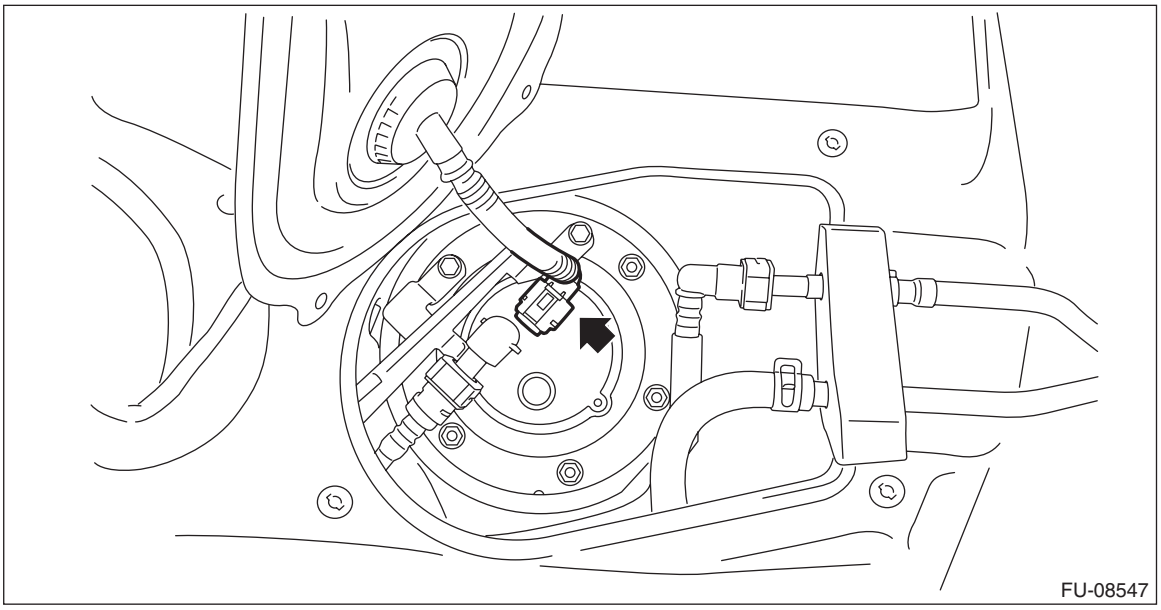

4) Install the service hole cover of fuel sub level sensor.

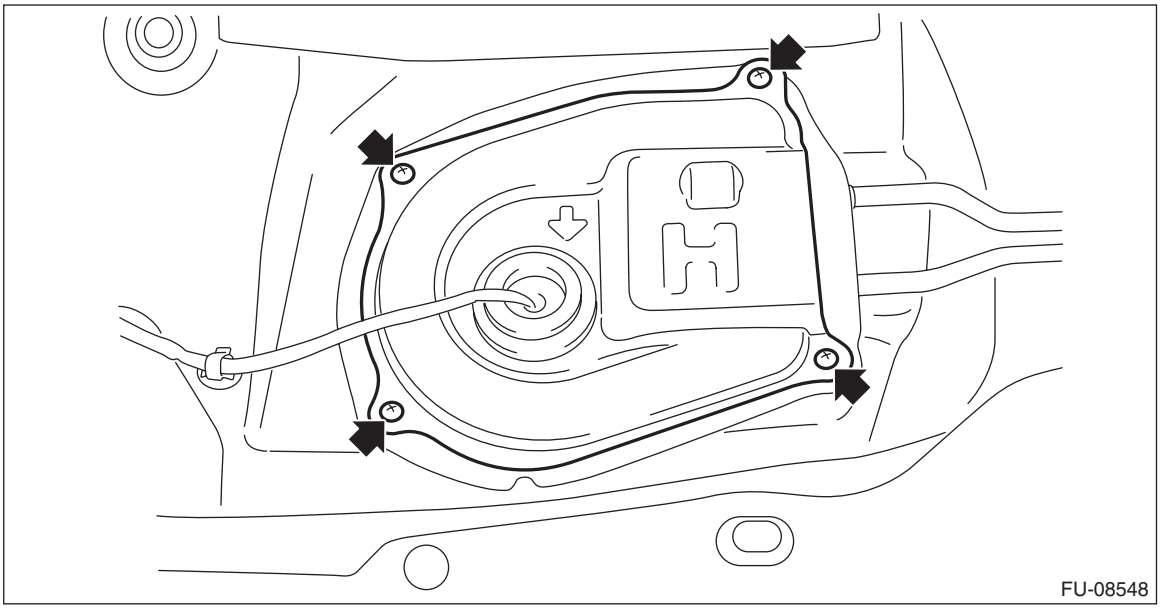

5) Install the rear seat cushion. <Ref. to SE-44, INSTALLATION, Rear Seat.>
6) Connect the ground terminal to battery sensor. <Ref. to RC-4, BATTERY, NOTE, Repair Contents.>

C: INSPECTION

1) Check that the fuel sub level sensor has no damage.
2) Measure the fuel sub level sensor float position.

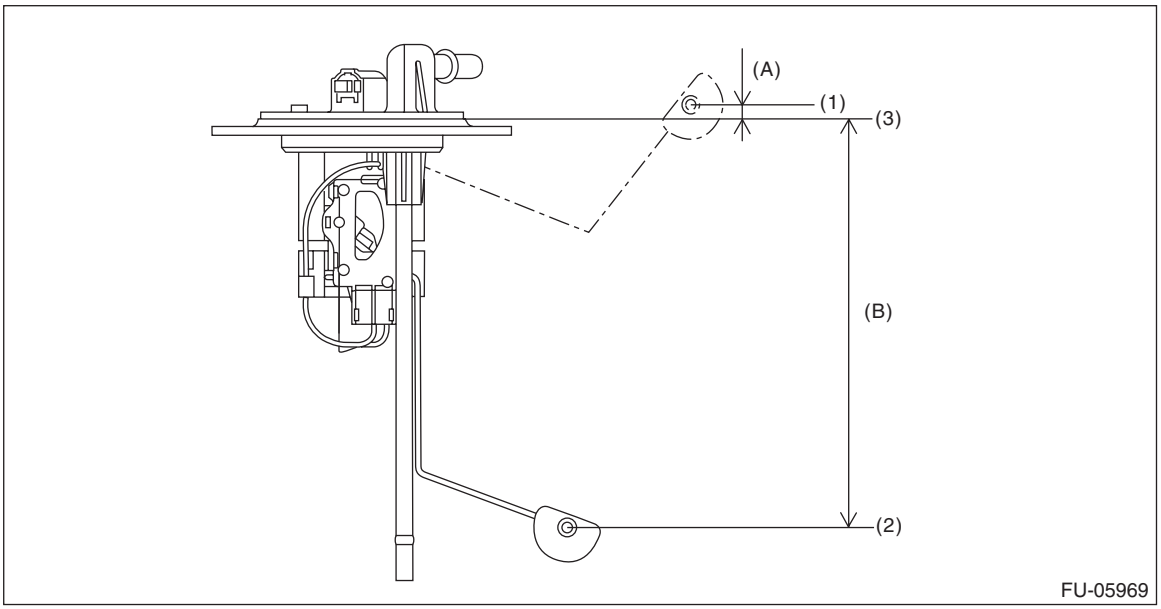

(1) FULL (2) EMPTY (3) Datum points

Float position	Standard
FULL to Datum point (A)	6.4±3.5 mm (0.252±0.138 in)
EMPTY to Datum point (B)	163.3±3.5 mm (6.429±0.138 in)

3) Measure the resistance between fuel sub level sensor terminals.

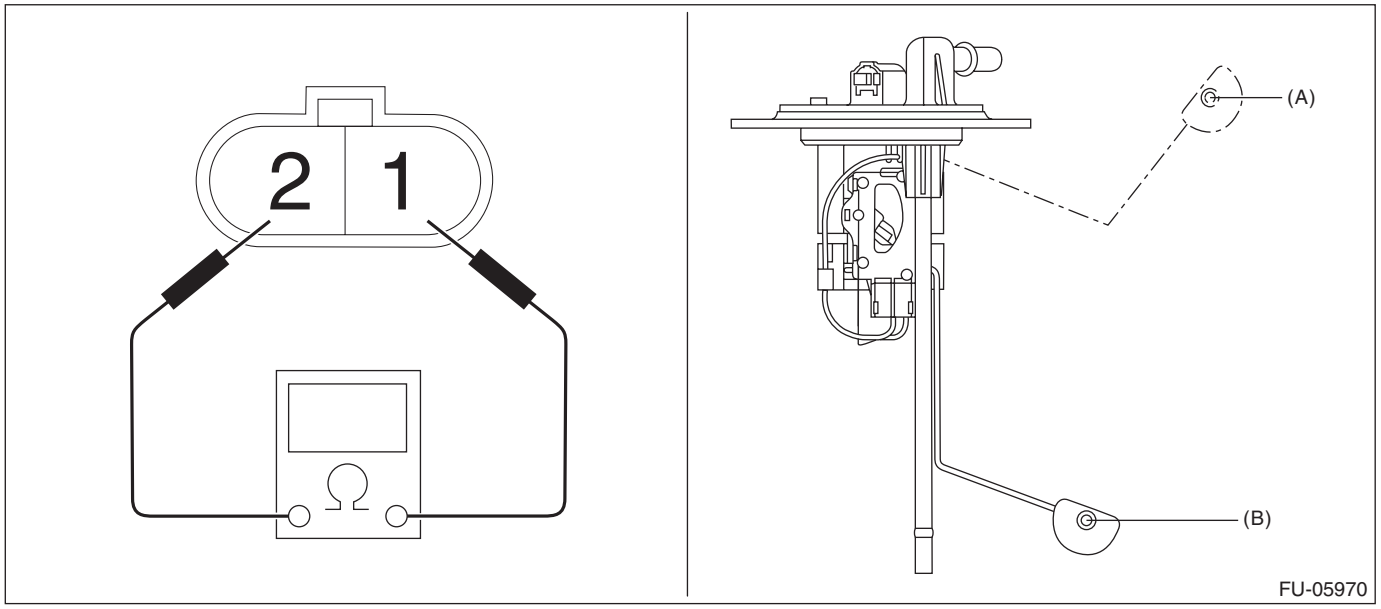

Float position	Terminal No.	Standard
FULL (A)	1 and 2	8.7±1.0 Ω
EMPTY (B)		270.9±4.0 Ω

28.Fuel Filter

A: REMOVAL

WARNING:
Place “NO OPEN FLAMES” signs near the working area.

CAUTION:
- **Be careful not to spill fuel.**
- **If the fuel gauge indicates that two thirds or more of the fuel is remaining, be sure to drain fuel before starting work to avoid the fuel to spill.**
- **Be careful not to drop or apply any impact to the fuel pump during work. This may deteriorate its performance.**

NOTE:
The fuel filter is built in fuel pump assembly.
1) Remove the fuel pump assembly. <Ref. to FU(H6DO)-119, REMOVAL, Fuel Pump.>
2) Remove the fuel level sensor. <Ref. to FU(H6DO)-125, REMOVAL, Fuel Level Sensor.>
3) Remove the fuel pump harness from the clip, and disconnect the connector (A) of the fuel pump harness.

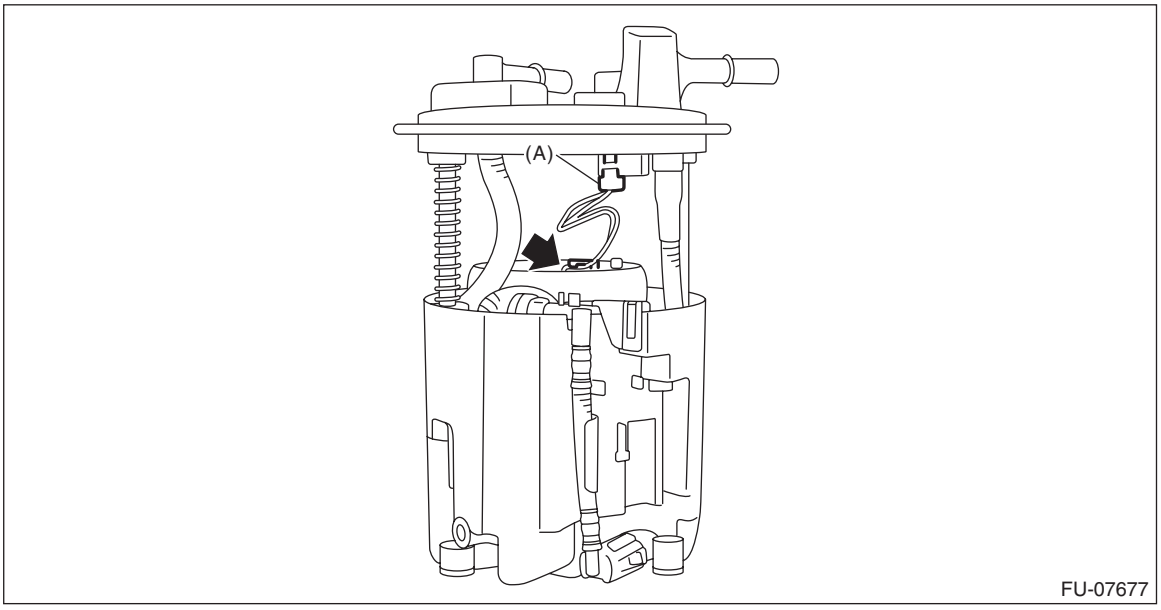

4) Push the fuel filter assembly in the direction of the arrow to compress, and detach the clip.

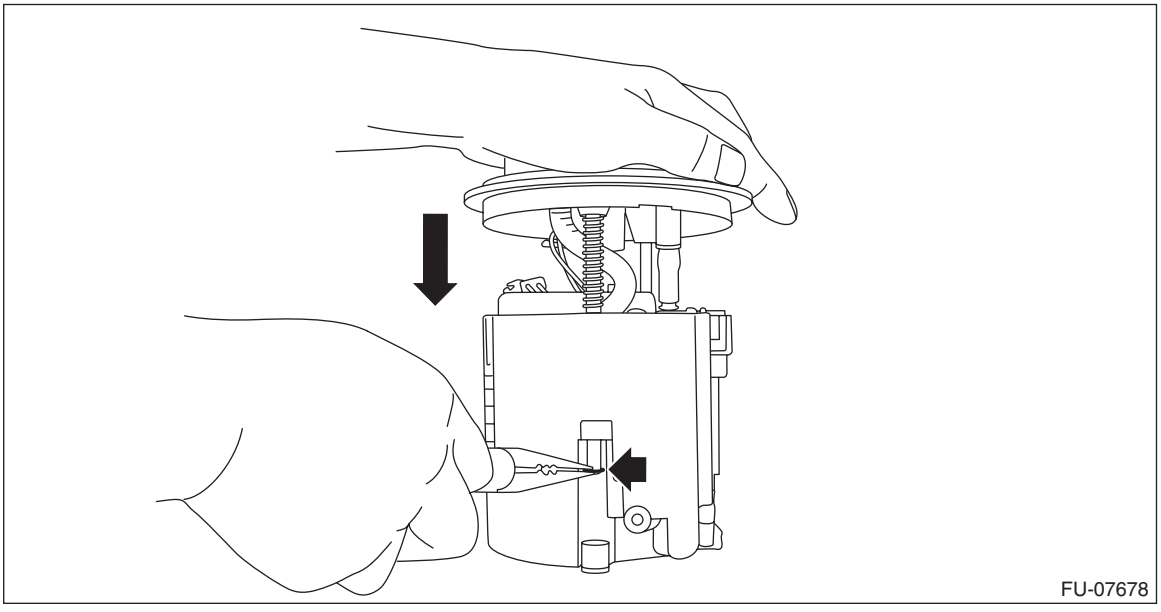

5) Release the claw of the tube assembly using a flat tip screwdriver or similar tool wrapped with a protection tape, and remove the tube assembly from the fuel chamber assembly.

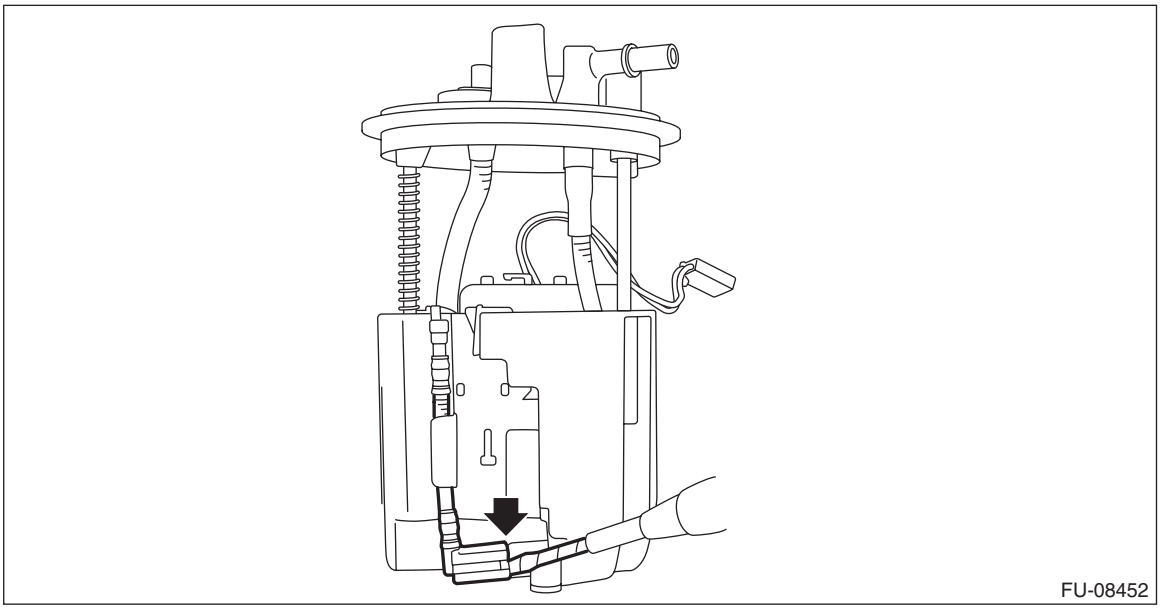

6) Release three claws on the fuel pump holder from the fuel chamber assembly, and raise the fuel filter assembly.

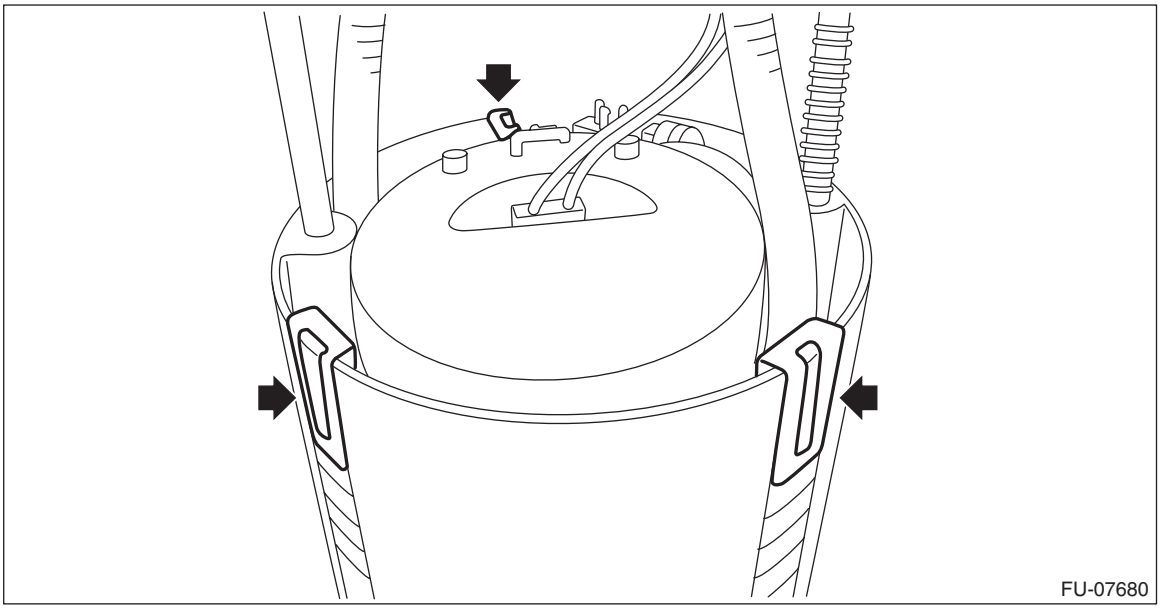

7) Using a flat tip screwdriver or similar tool wrapped with a protection tape, remove the tube assembly from the fuel chamber assembly, and separate the fuel filter assembly and fuel chamber assembly.

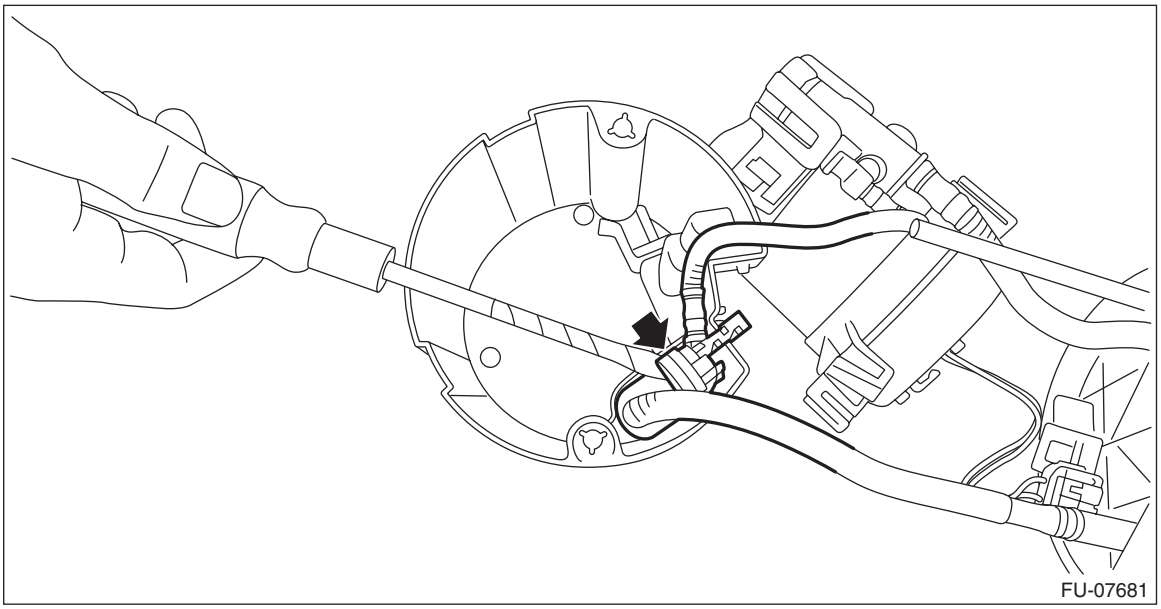

8) Using a precision driver or similar tool wrapped with a protection tape, expand the claws on the fuel pump.

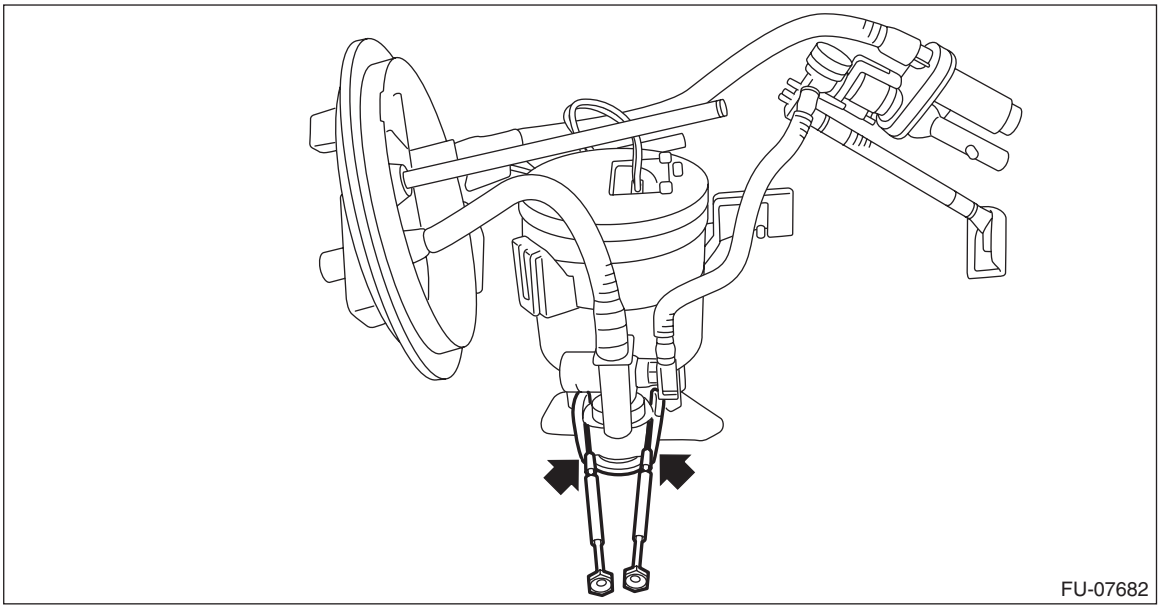

9) Release the claws on the fuel pump.

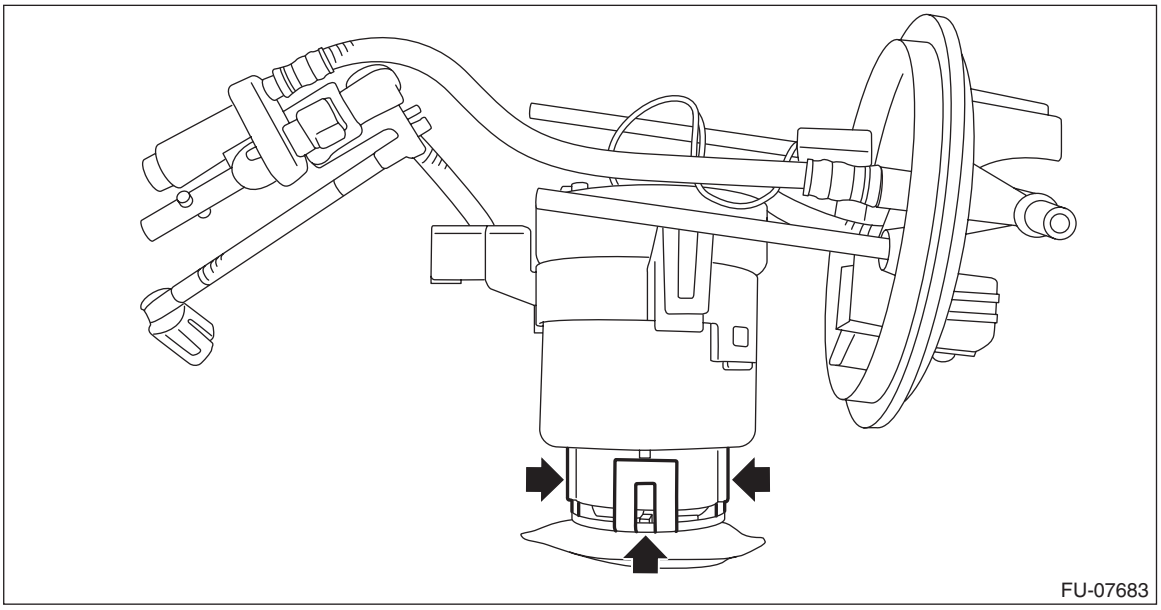

10) Using a flat tip screwdriver or similar tool wrapped with a protection tape, press on the fuel pump and remove the fuel pump together with the fuel pump holder from the fuel filter assembly.

CAUTION:
If O-rings remain on the fuel filter assembly side, carefully remove them with a precision screwdriver or similar tool wrapped with a protection tape.

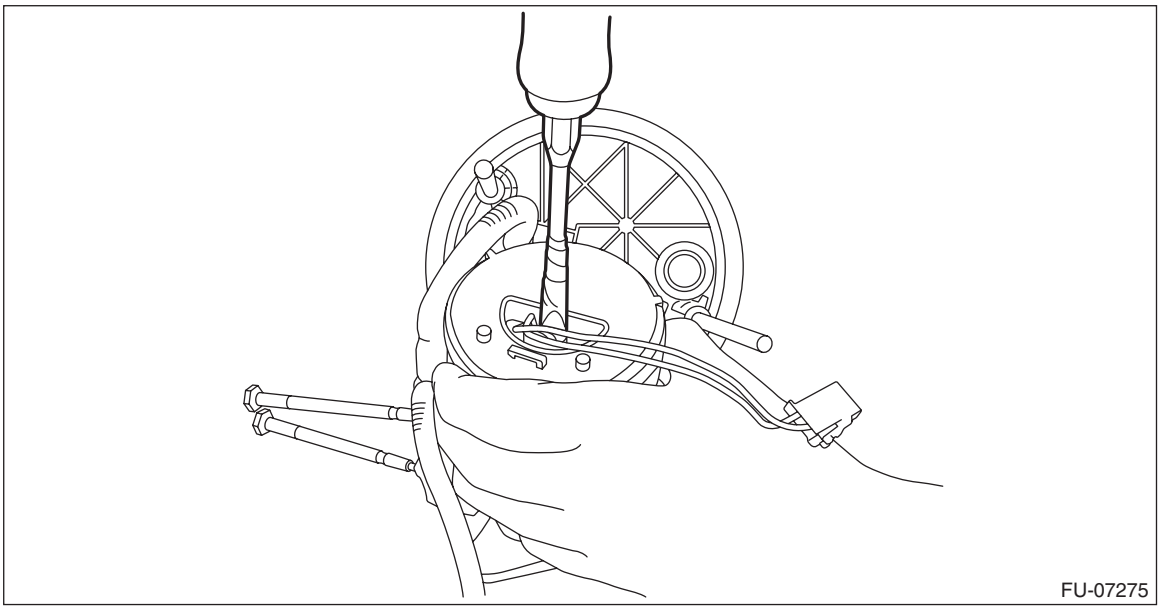

11) Remove the spacer (A) and fuel pump harness (B) from the fuel pump.

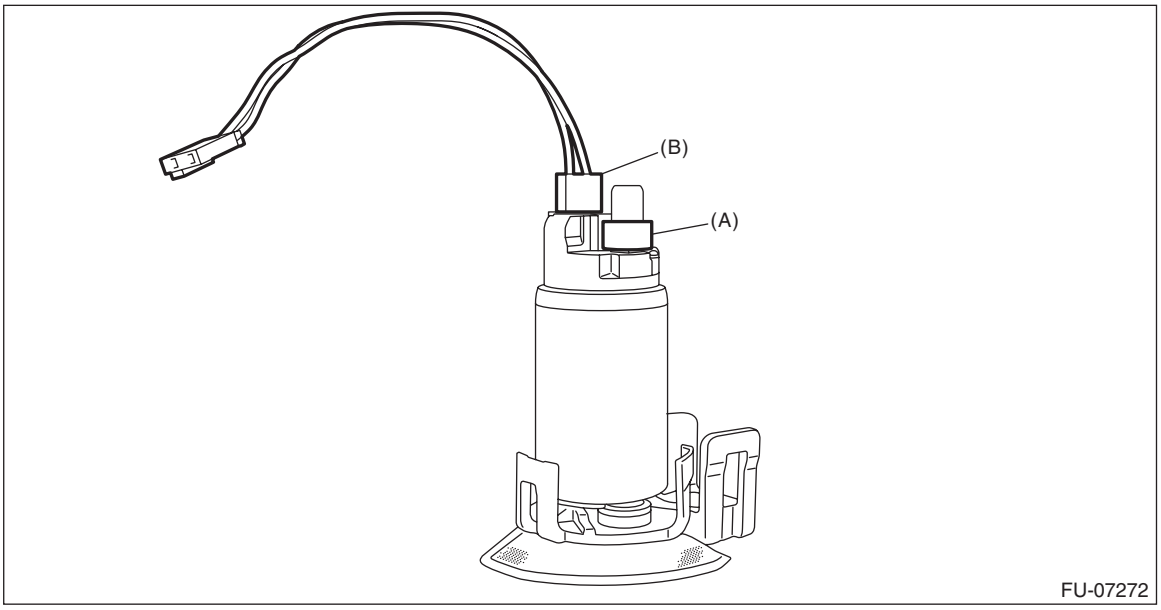

12) Remove the pressure regulator from the fuel filter assembly.

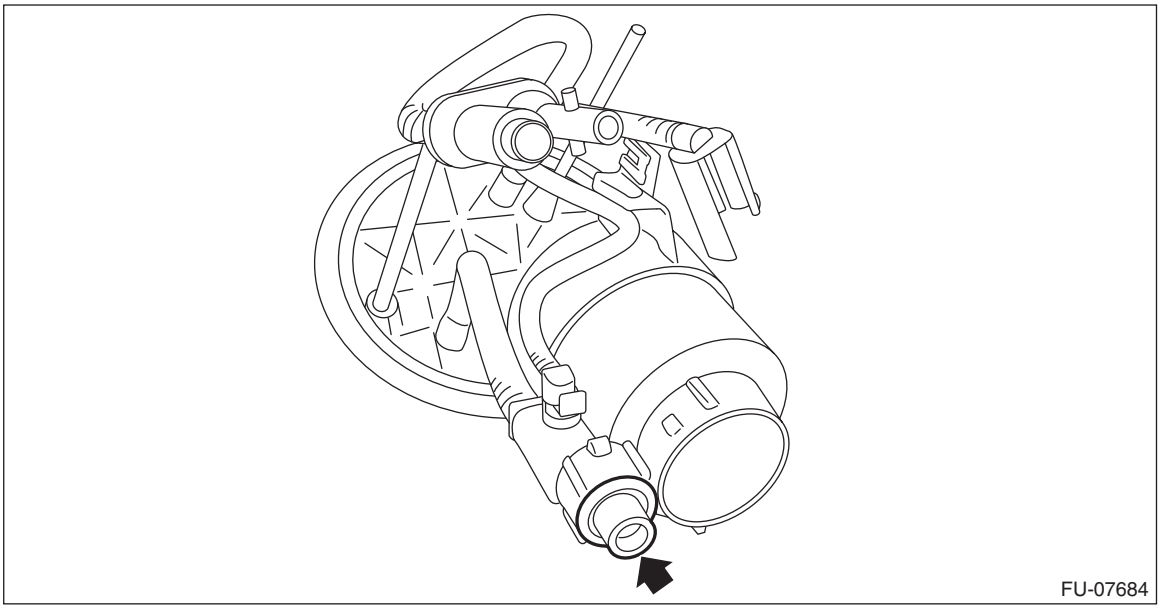

13) Remove O-ring (A), O-ring (B), and backup ring (C) from the pressure regulator.

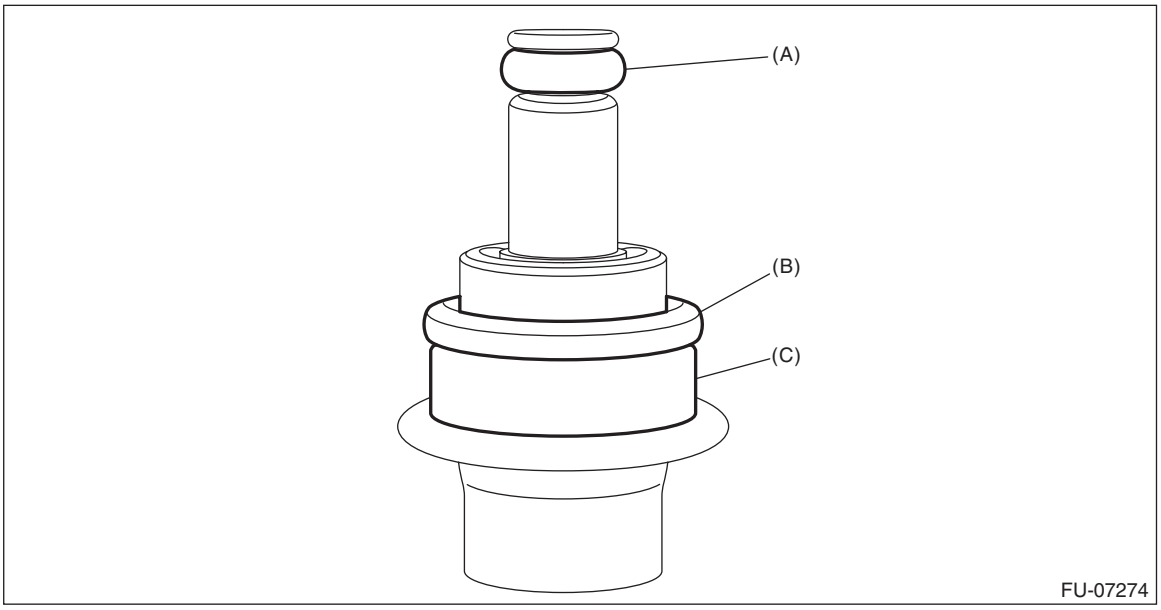

B: INSTALLATION

1) Install O-ring (A), O-ring (B), and backup ring (C) to the pressure regulator.

NOTE:
- Use new O-rings.
- Apply gasoline to the O-ring and backup ring.

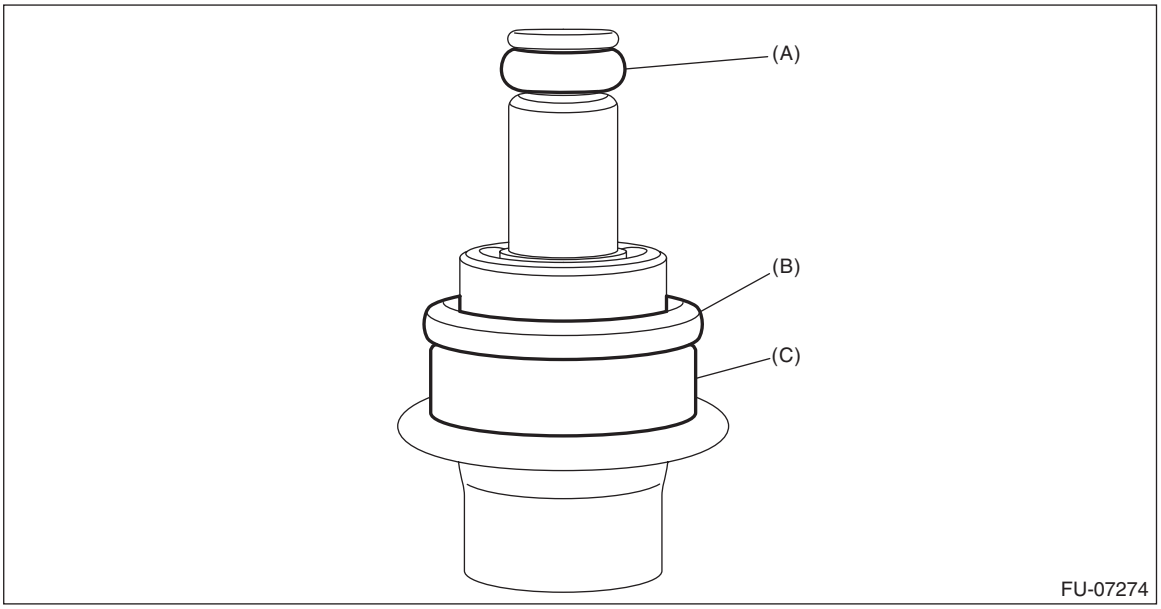

2) Install the pressure regulator to the fuel filter assembly.

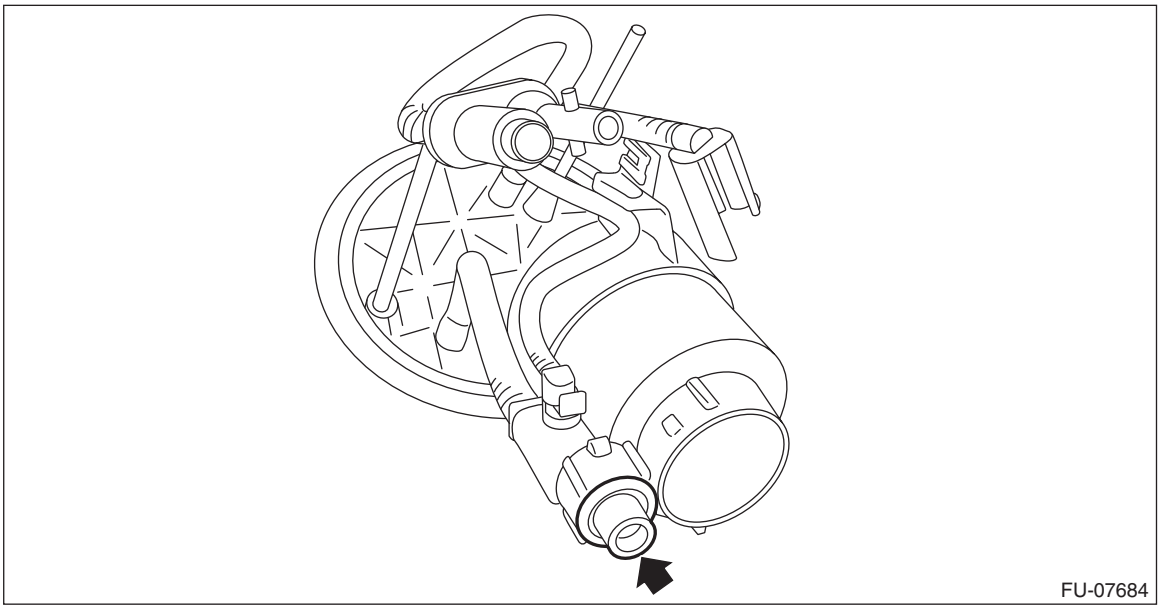

3) Install O-ring (A), spacer (B), and fuel pump harness (C) to the fuel pump.

NOTE:
- Use a new O-ring and fuel pump harness.
- Apply gasoline to the O-rings and the spacer.

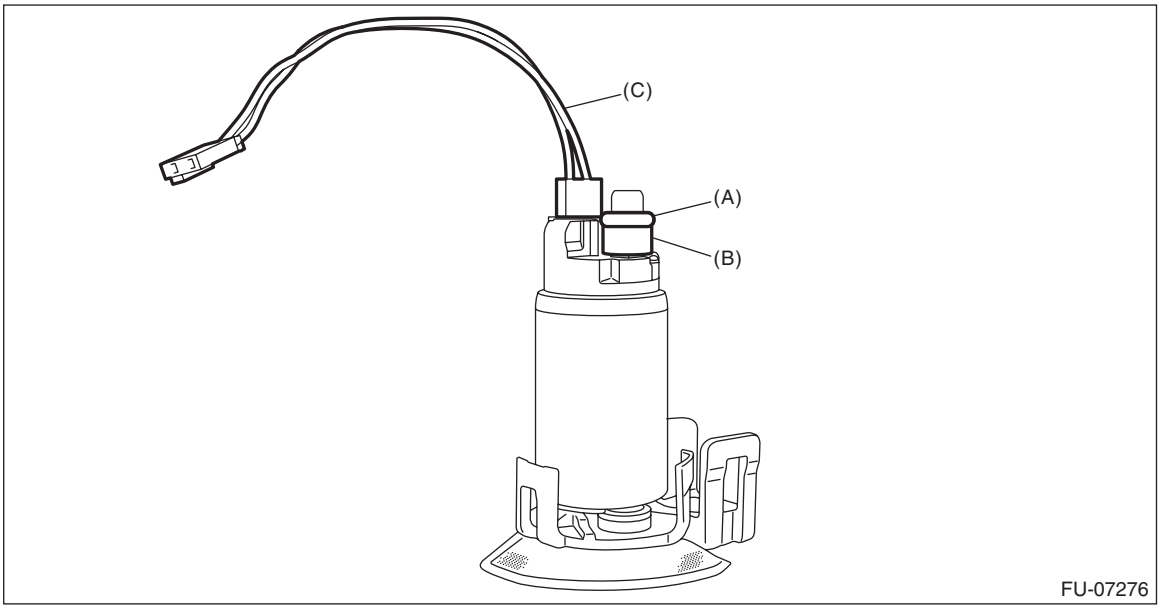

4) Install the fuel pump to the fuel filter assembly.

NOTE:
After installation, make sure five claws are correctly engaged in each position.

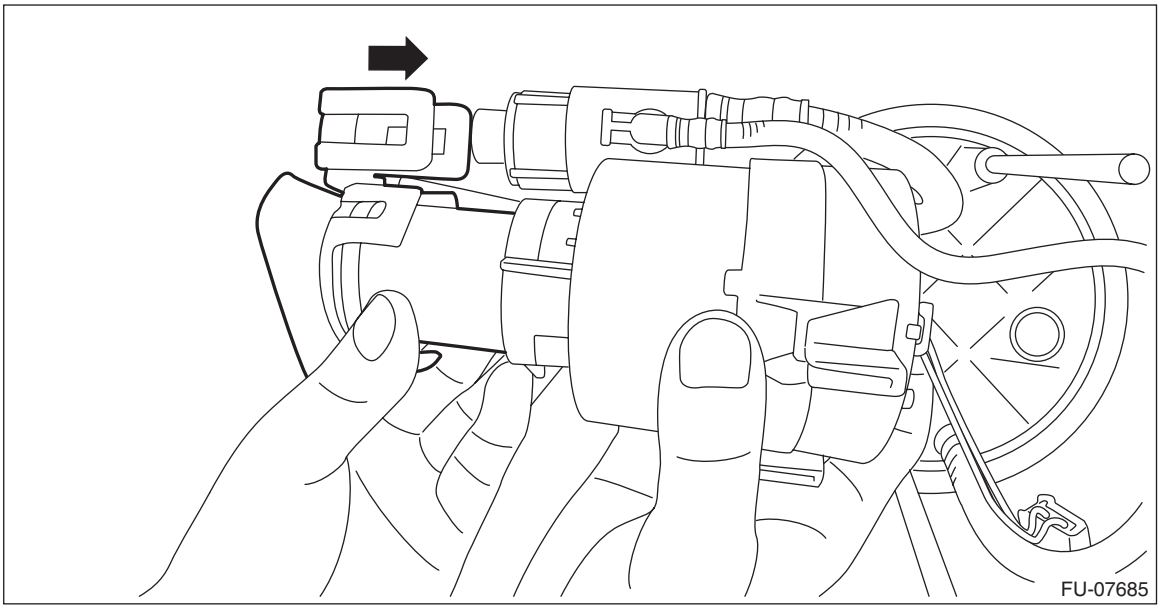

5) Check that the cushions of the fuel chamber assembly for dislocation. If any of them is dislocated, install a new cushion.

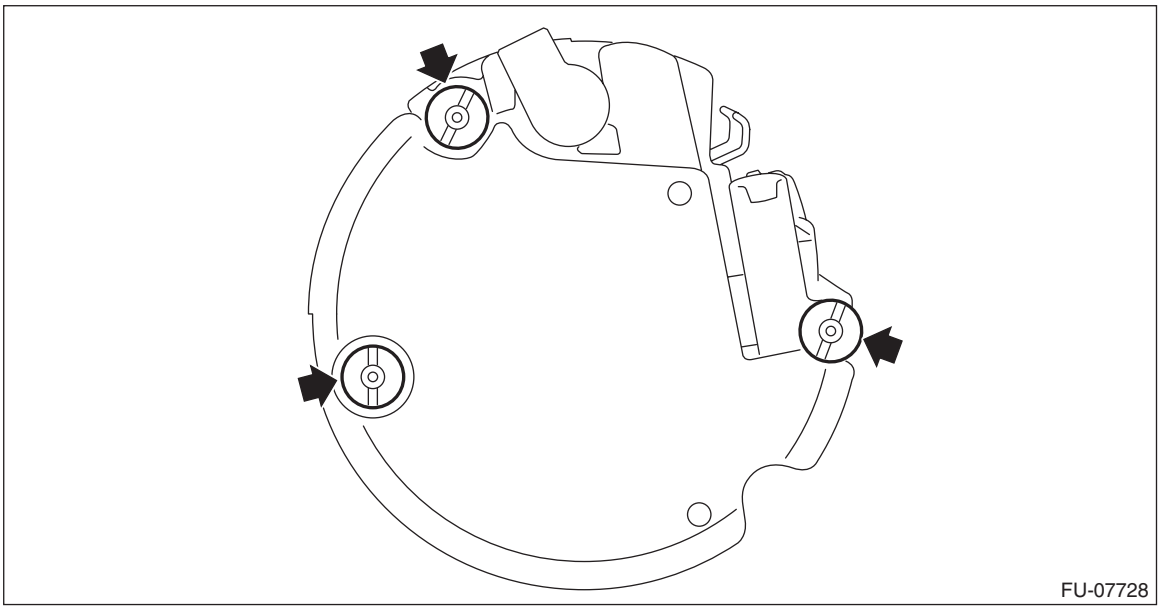

6) Slowly press in and install the tube assembly to the fuel chamber assembly until a clicking sound is heard.

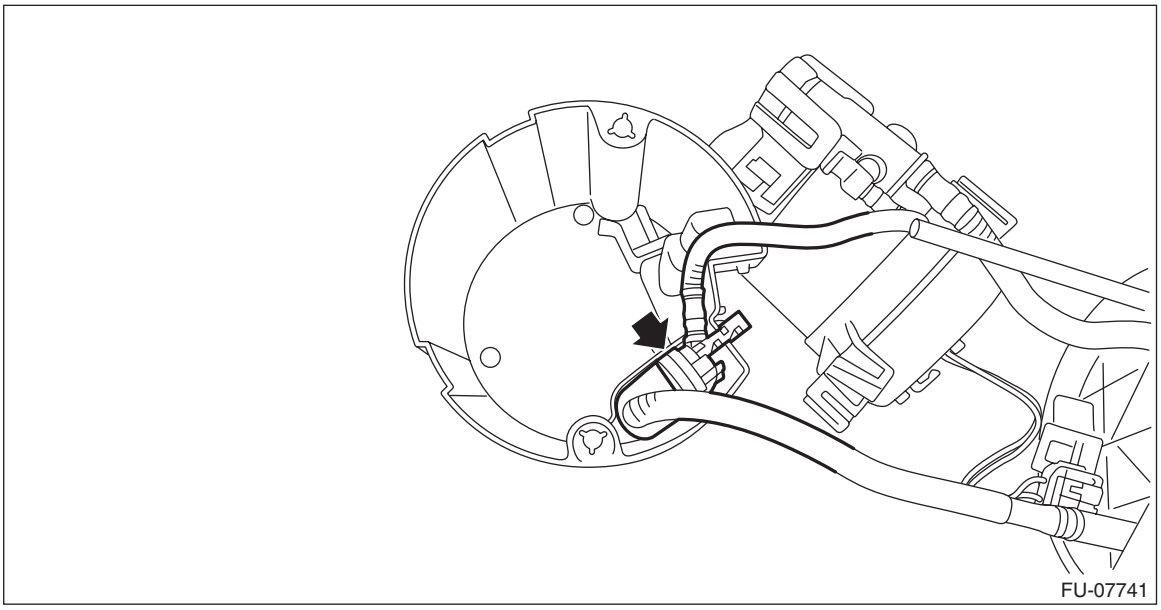

7) Install the tube assembly to the fuel chamber assembly, and connect the tube assembly to the fuel chamber assembly.

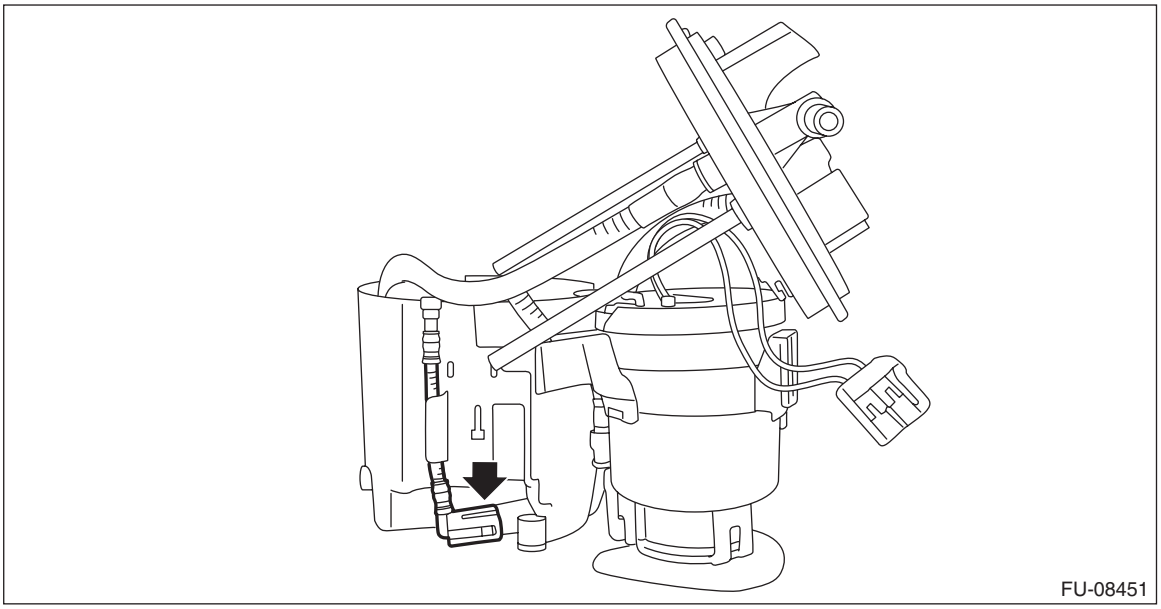

8) Install the fuel filter assembly to the fuel chamber assembly.

NOTE:

- Set the tube (A) and spring (B) for the fuel filter assembly as shown in the figure.

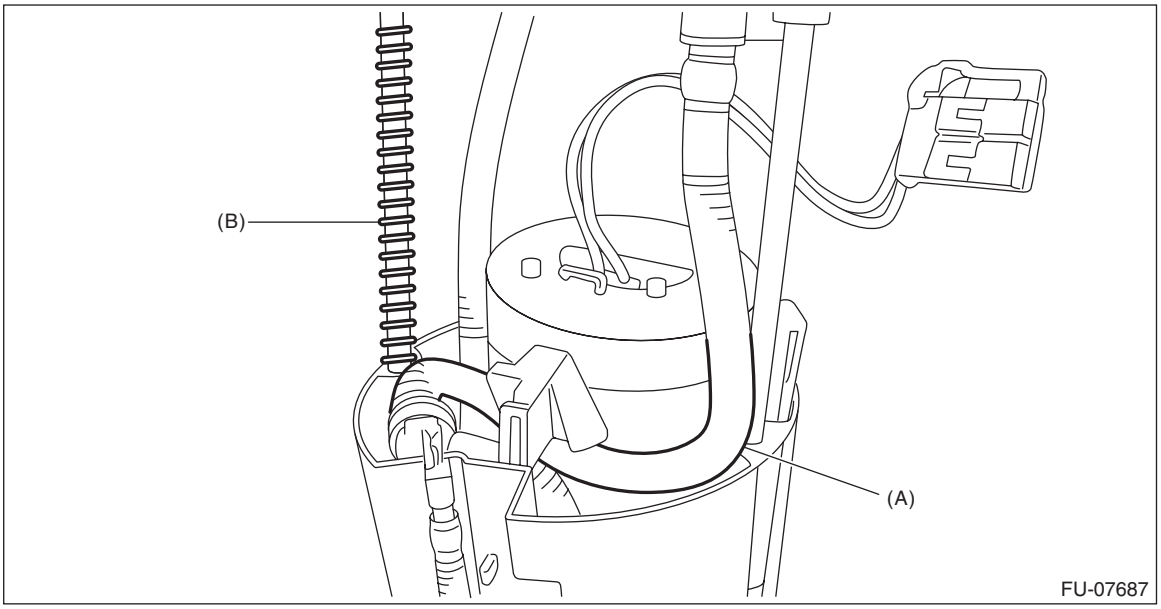

- Check that the claw connecting the fuel camber assembly and the fuel filter assembly is securely fastened.

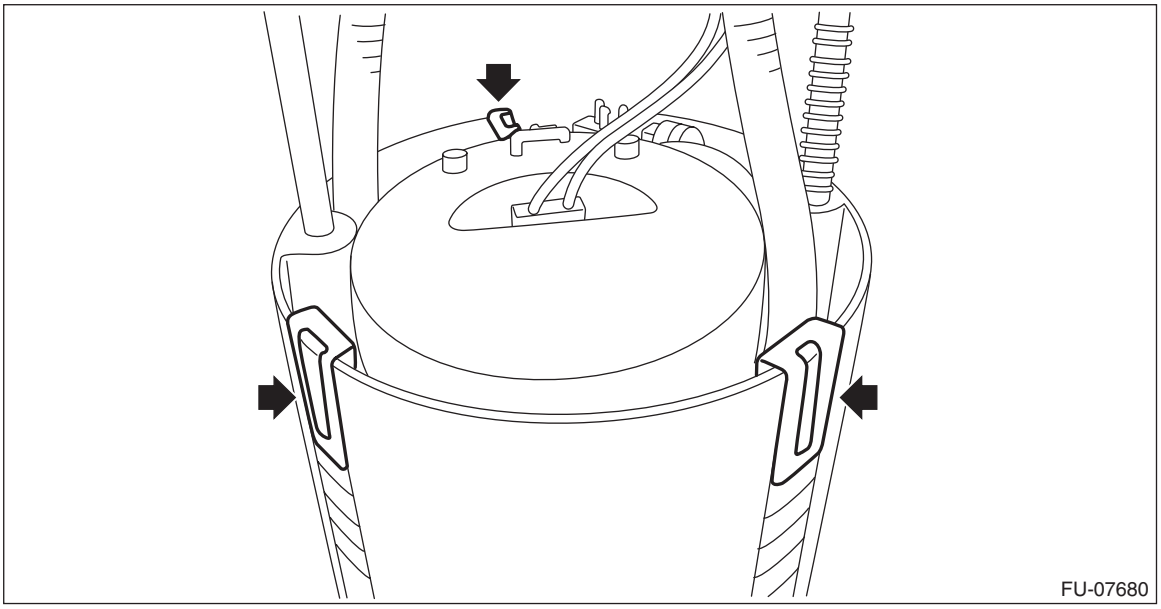

9) Push the fuel filter assembly in the direction of the arrow to compress, and attach the clip.

NOTE:
Use a new clip.

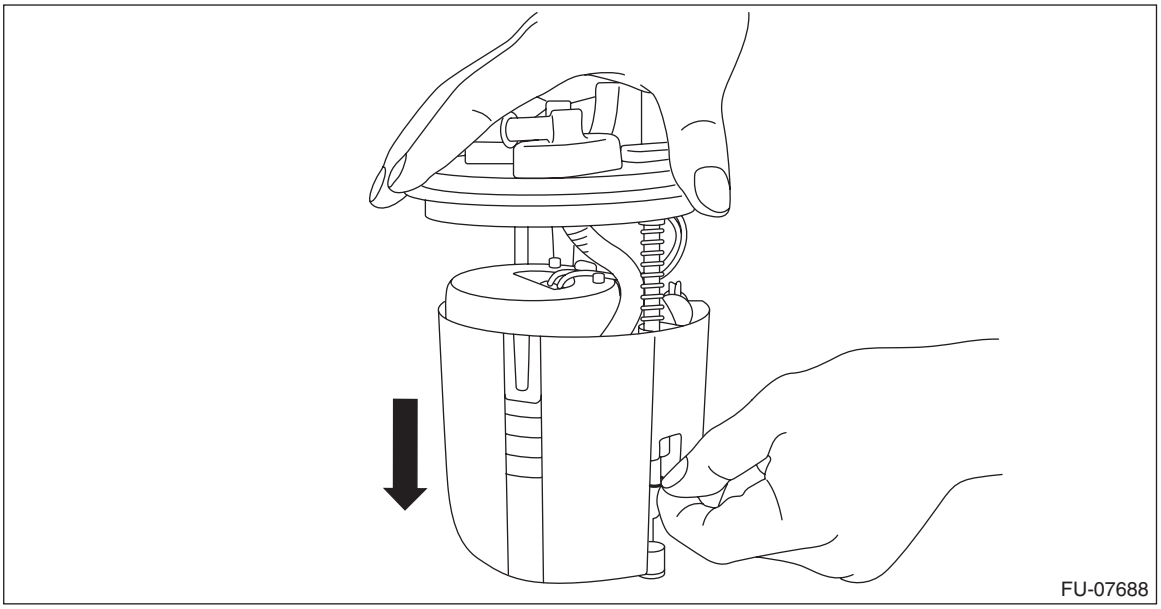

10) Secure the fuel pump harness with the clip, and connect the connector (A) of the fuel pump harness.

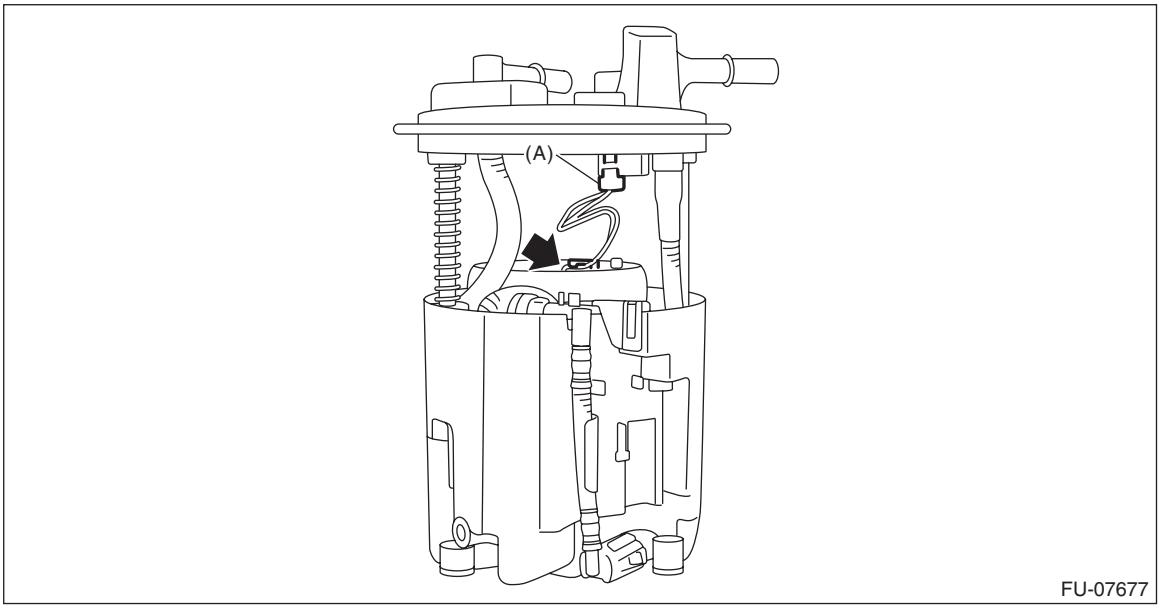

11) Install the fuel level sensor. <Ref. to FU(H6DO)-126, INSTALLATION, Fuel Level Sensor.>
12) Inspect the fuel level sensor. <Ref. to FU(H6DO)-127, INSPECTION, Fuel Level Sensor.>
13) Install the fuel pump assembly. <Ref. to FU(H6DO)-121, INSTALLATION, Fuel Pump.>

29.Pulsation Damper

A: REMOVAL

WARNING:
Place “NO OPEN FLAMES” signs near the working area.

1. PULSATION DAMPER RH

1) Remove the collector cover.
   (1) Carefully pull up the rear of collector cover at two positions (A).
   (2) Carefully pull up the front of collector cover at two positions (B) while moving it forward.

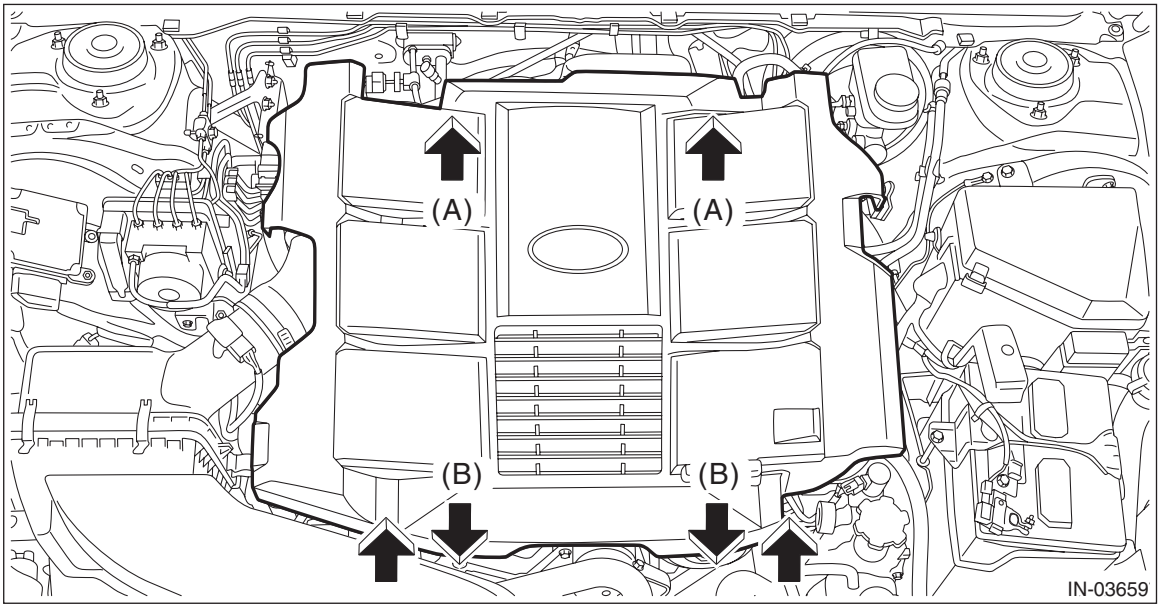

2) Release the fuel pressure. <Ref. to FU(H6DO)-93, RELEASING OF FUEL PRESSURE, PROCEDURE, Fuel.>
3) Disconnect the ground terminal from battery sensor. <Ref. to RC-4, BATTERY, NOTE, Repair Contents.>
4) Open the fuel filler lid and remove the fuel filler cap.

NOTE:
This operation is required to release the inner pressure of the fuel tank.
5) Loosen the clamp (A) securing the air intake boot.
6) Remove the bolt (B) securing the air intake boot to the collector cover bracket.

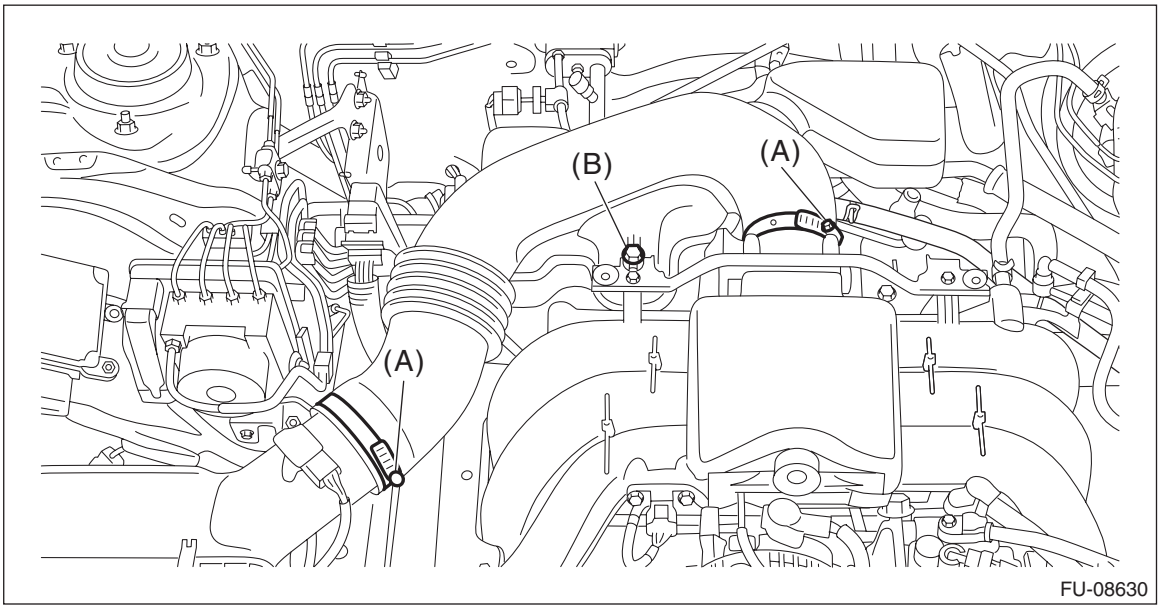

7) Remove the air intake boot from the throttle body and the air cleaner case (rear), and move it to the left side wheel apron.

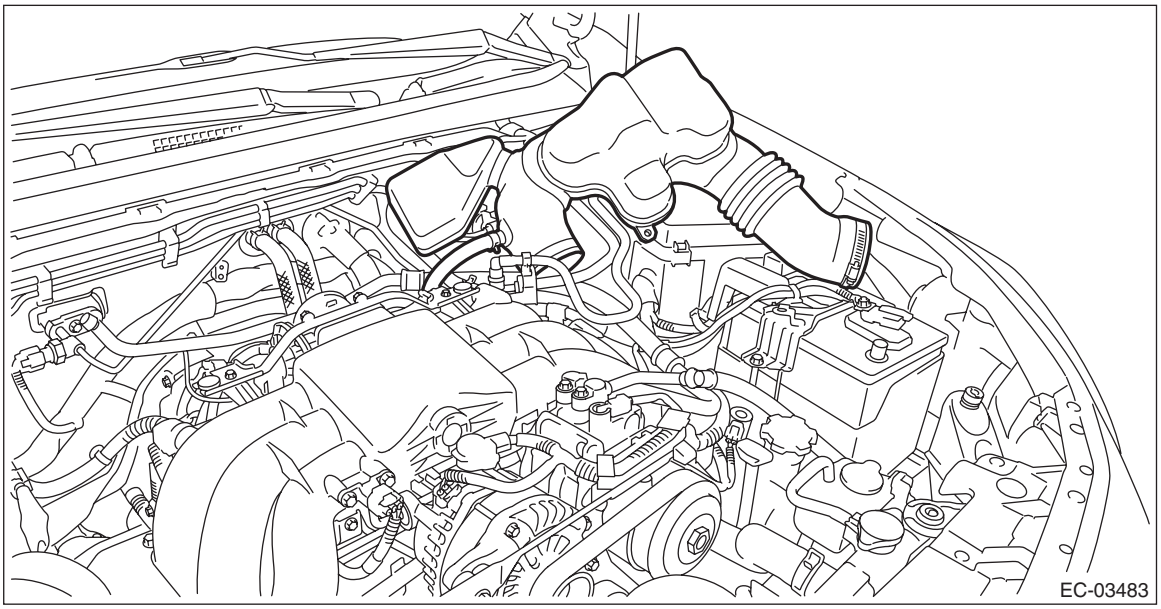

8) Remove the fuel pipe protector RH.

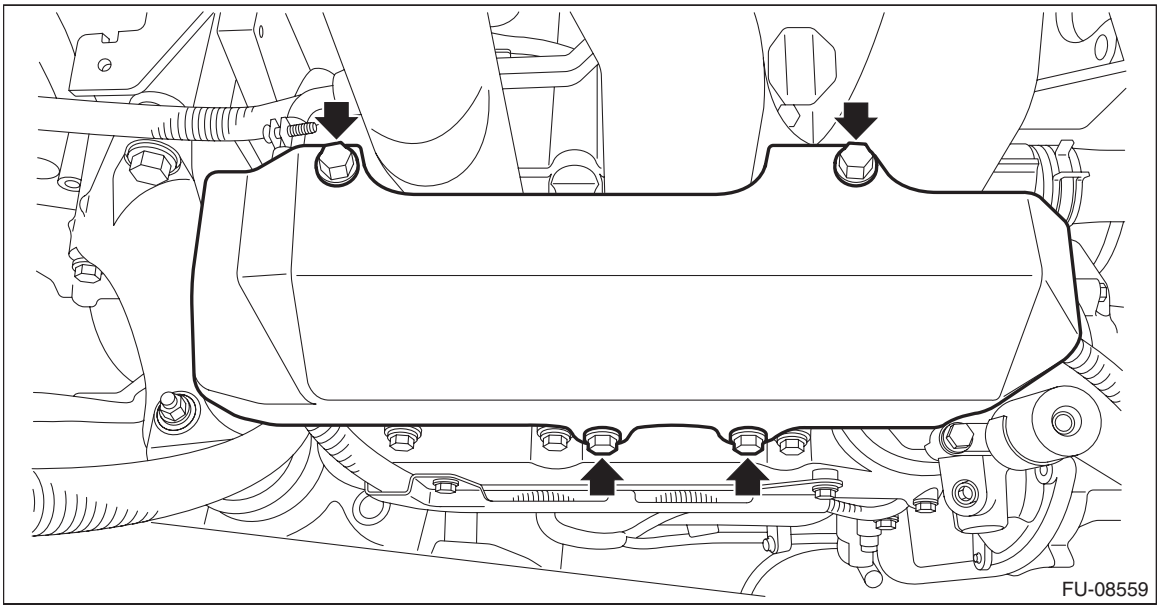

9) Remove the pulsation damper RH from the fuel injector pipe RH.

CAUTION:
- **Be careful not to spill fuel.**
- **Catch the fuel from the pipes using a container or cloth.**

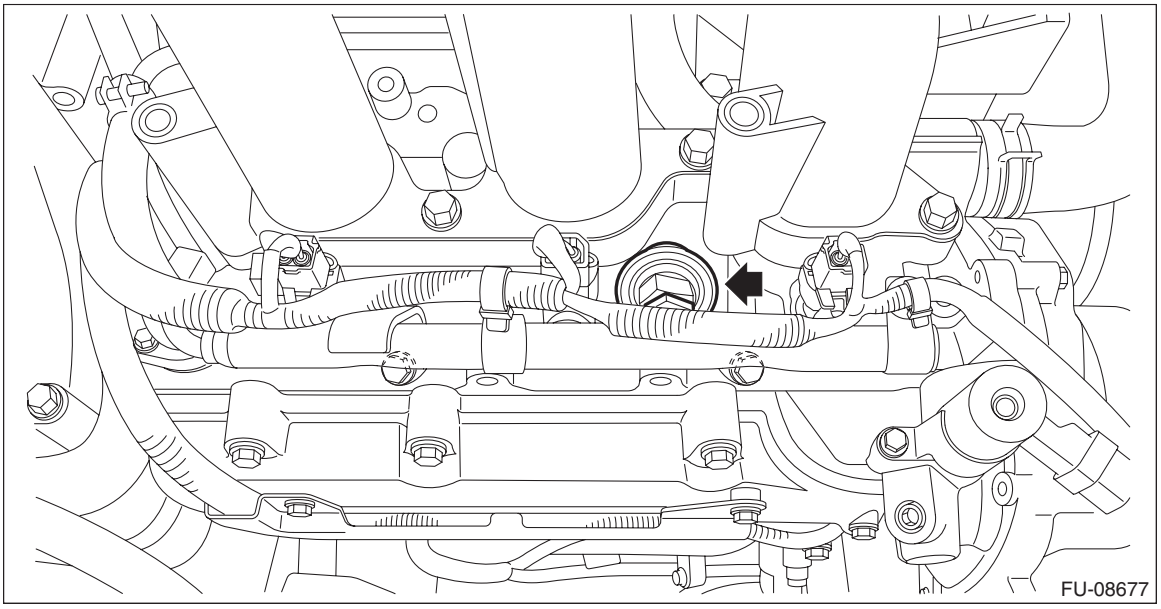

2. PULSATION DAMPER LH

1) Remove the collector cover.
   (1) Carefully pull up the rear of collector cover at two positions (A).
   (2) Carefully pull up the front of collector cover at two positions (B) while moving it forward.

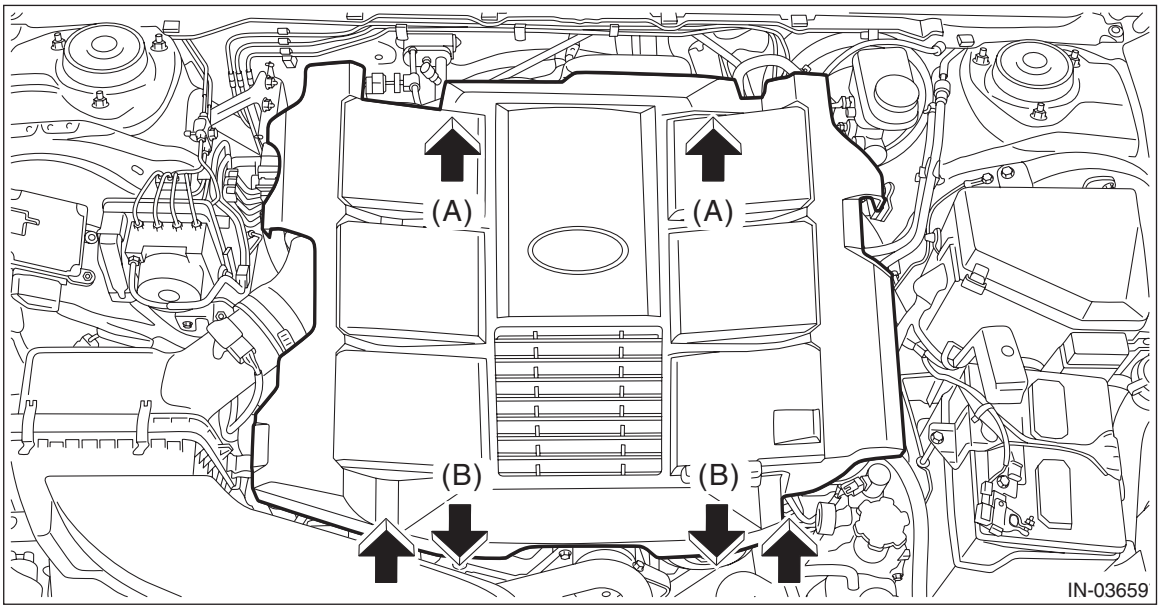

2) Release the fuel pressure. <Ref. to FU(H6DO)-93, RELEASING OF FUEL PRESSURE, PROCEDURE, Fuel.>
3) Disconnect the ground terminal from battery sensor. <Ref. to RC-4, BATTERY, NOTE, Repair Contents.>
4) Open the fuel filler lid and remove the fuel filler cap.

NOTE:
This operation is required to release the inner pressure of the fuel tank.
5) Disconnect the connector (A) and terminal (B) from the generator.
6) Disconnect connectors (C) and (D) from A/C compressor, and remove the generator cord from clip (E).
7) Remove the clip (F) securing the generator cord to the fuel pipe protector LH, and move the generator cord to the left side wheel apron.

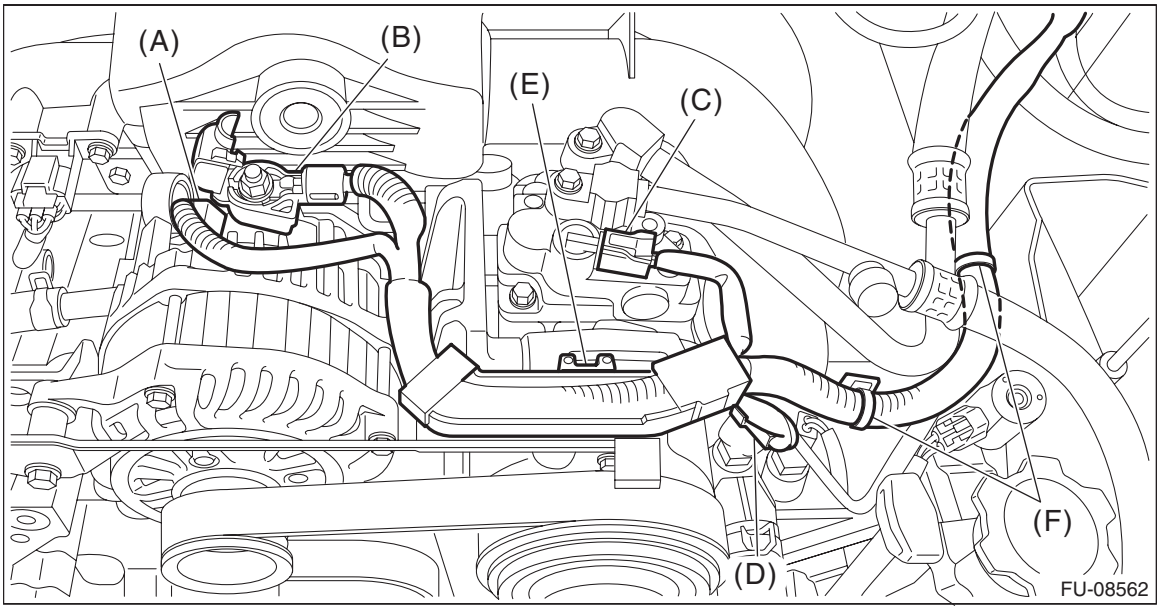

8) Disconnect the PCV hose.

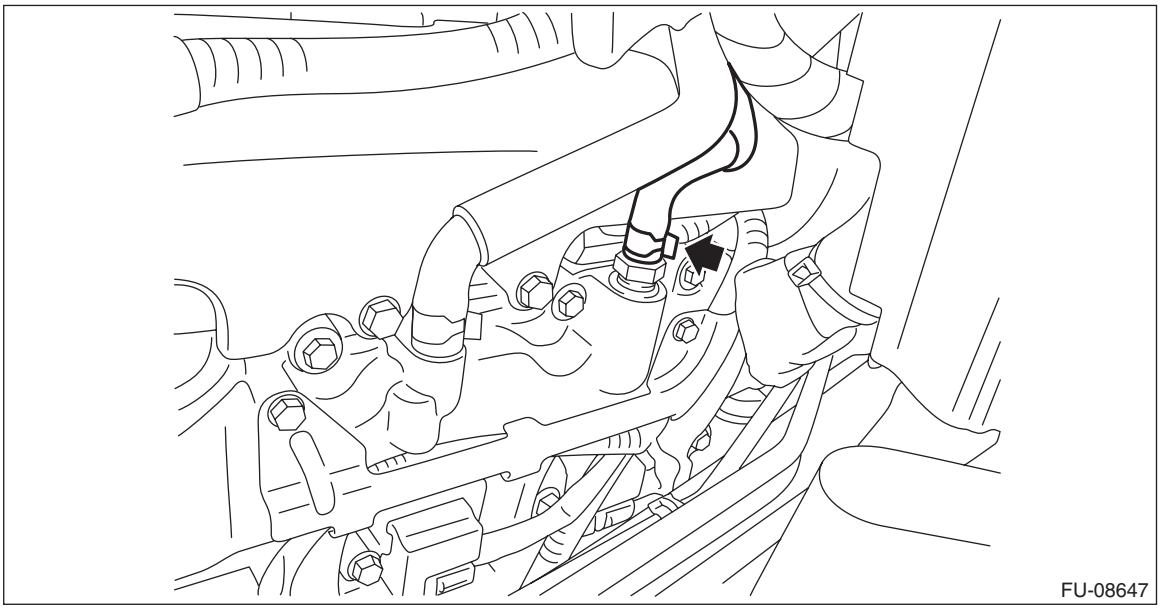

9) Remove the fuel pipe protector LH.

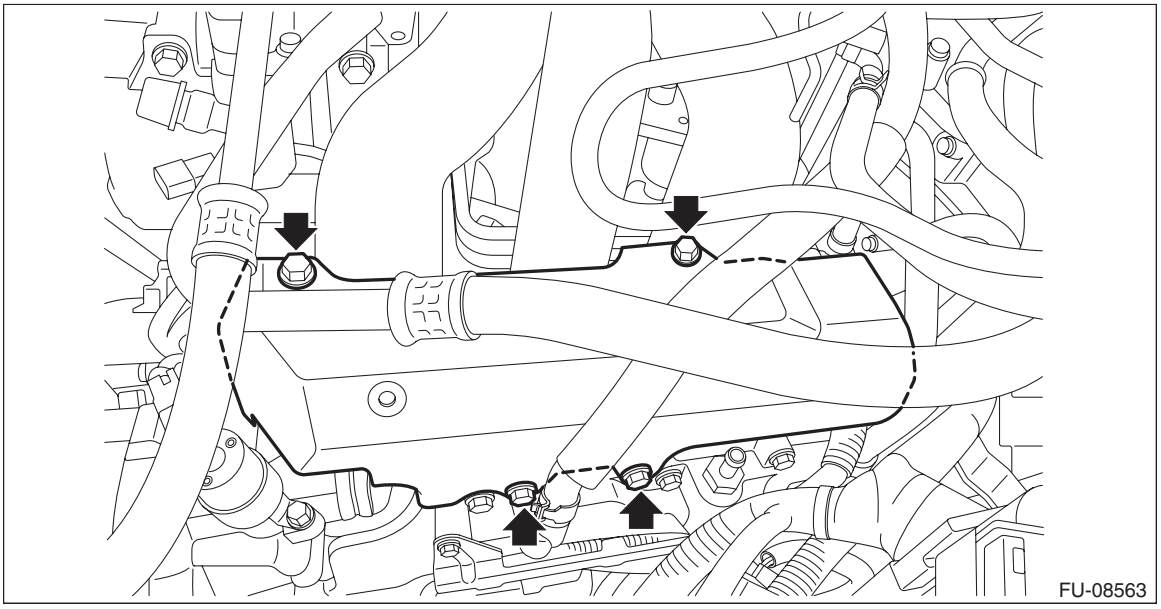

10) Remove the pulsation damper LH from the fuel injector pipe LH.

CAUTION:
- **Be careful not to spill fuel.**
- **Catch the fuel from the pipes using a container or cloth.**

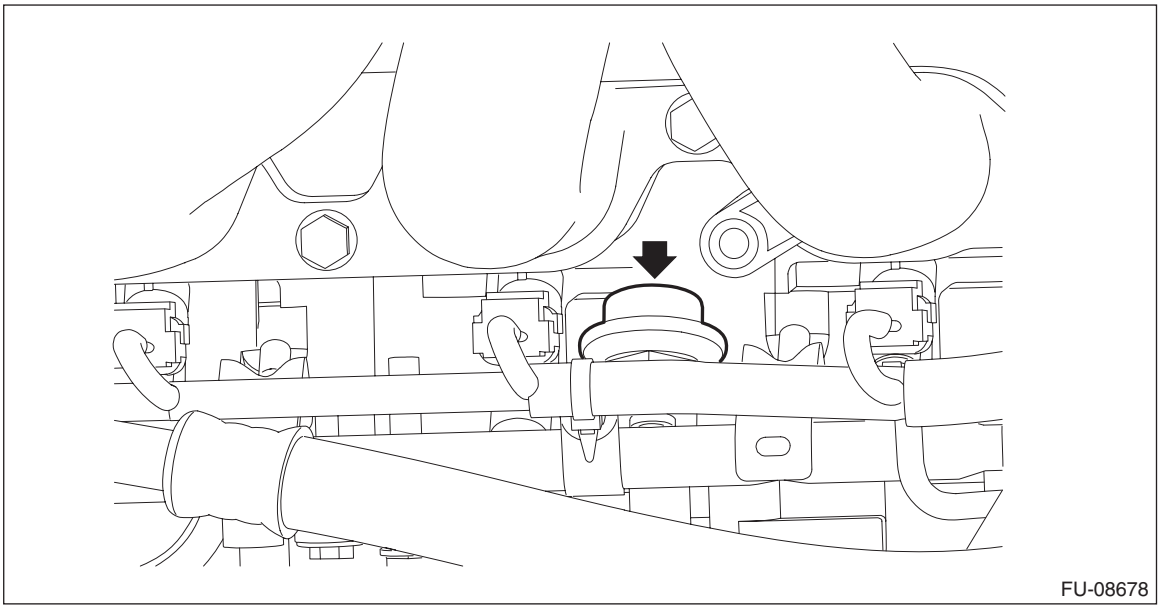

B: INSTALLATION

1. PULSATION DAMPER RH

1) Install the pulsation damper RH to the fuel injector pipe RH.

NOTE:
Use a new gasket.

Tightening torque:
21.6 N·m (2.2 kgf-m, 15.9 ft-lb)

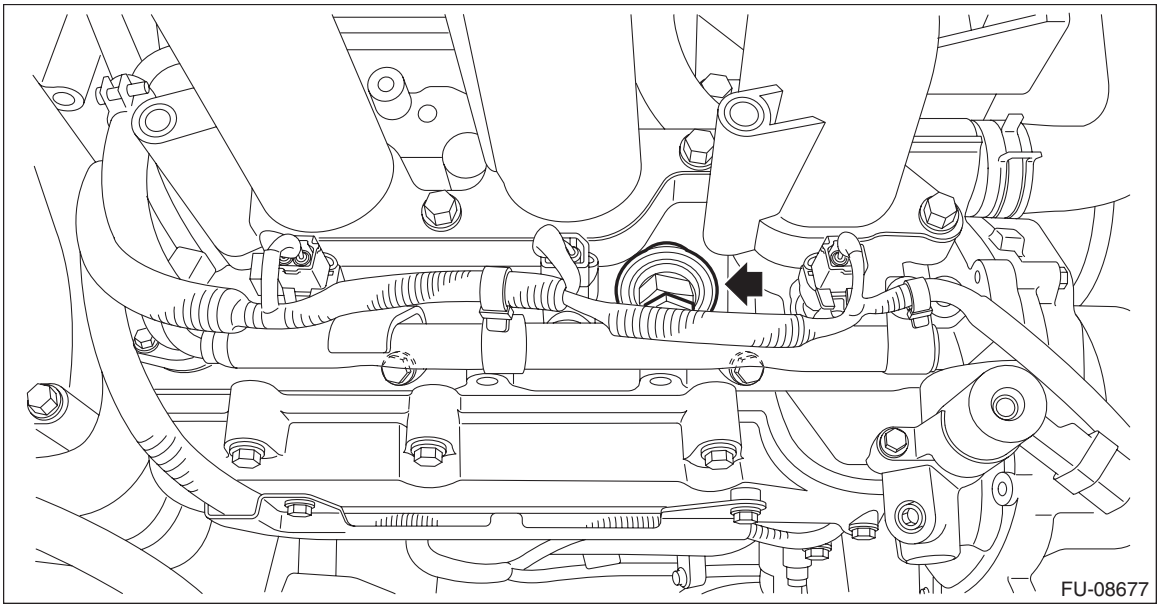

2) Install the fuel pipe protector RH.

Tightening torque:
19 N·m (1.9 kgf-m, 14.0 ft-lb)

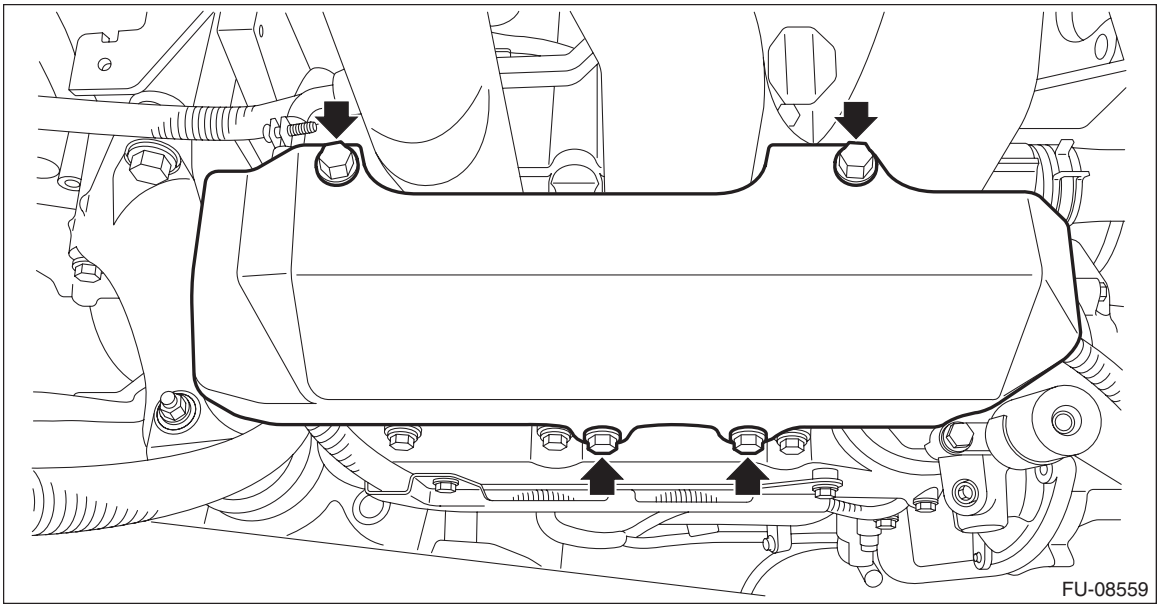

3) Install the air intake boot. <Ref. to IN(H6DO)-11, INSTALLATION, Air Intake Boot.>
4) Connect the ground terminal to battery sensor. <Ref. to RC-4, BATTERY, NOTE, Repair Contents.>
5) Install the collector cover.

2. PULSATION DAMPER LH

1) Install the pulsation damper LH to the fuel injector pipe LH.

NOTE:
Use a new gasket.

Tightening torque:
21.6 N·m (2.2 kgf-m, 15.9 ft-lb)

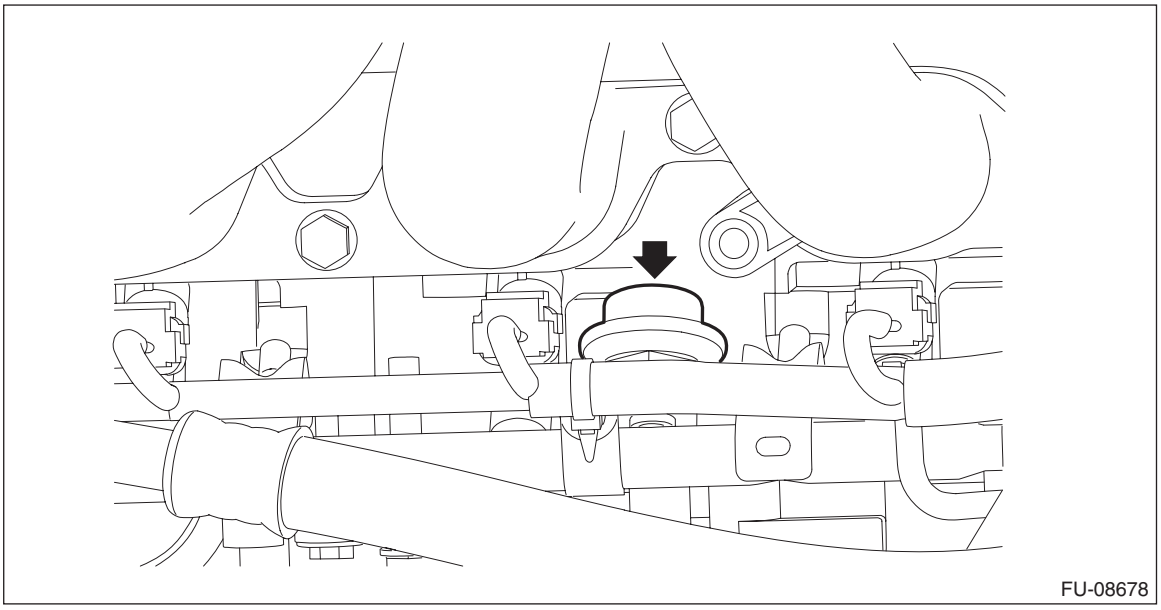

2) Install the fuel pipe protector RH.

Tightening torque:
19 N·m (1.9 kgf-m, 14.0 ft-lb)

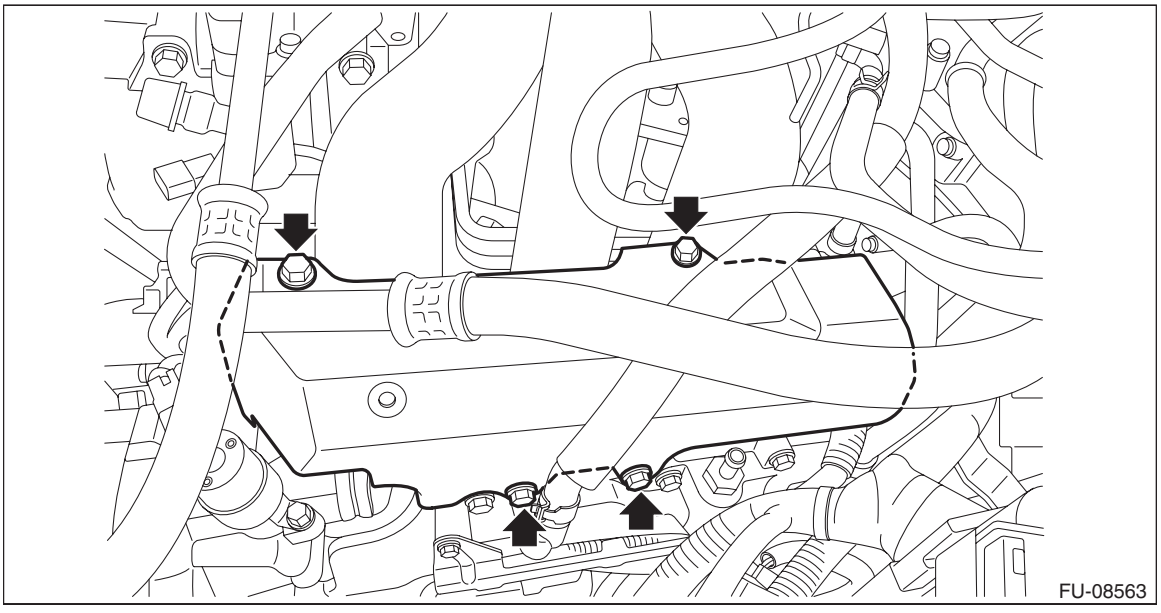

3) Connect the PCV hose.

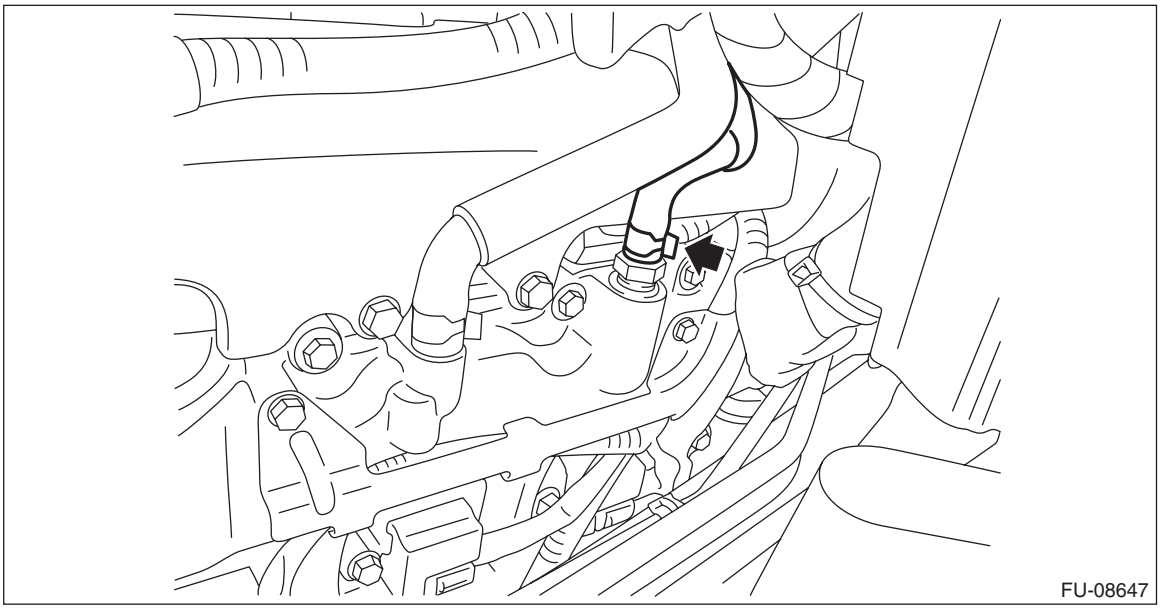

4) Install the clip (F) securing the generator cord to the fuel pipe protector LH.
5) Connect the connectors (C) and (D) to the A/C compressor and attach the generator cord to clip (E).
6) Connect the connector (A) and terminal (B) to the generator.

Tightening torque:
15 N·m (1.5 kgf-m, 11.1 ft-lb)

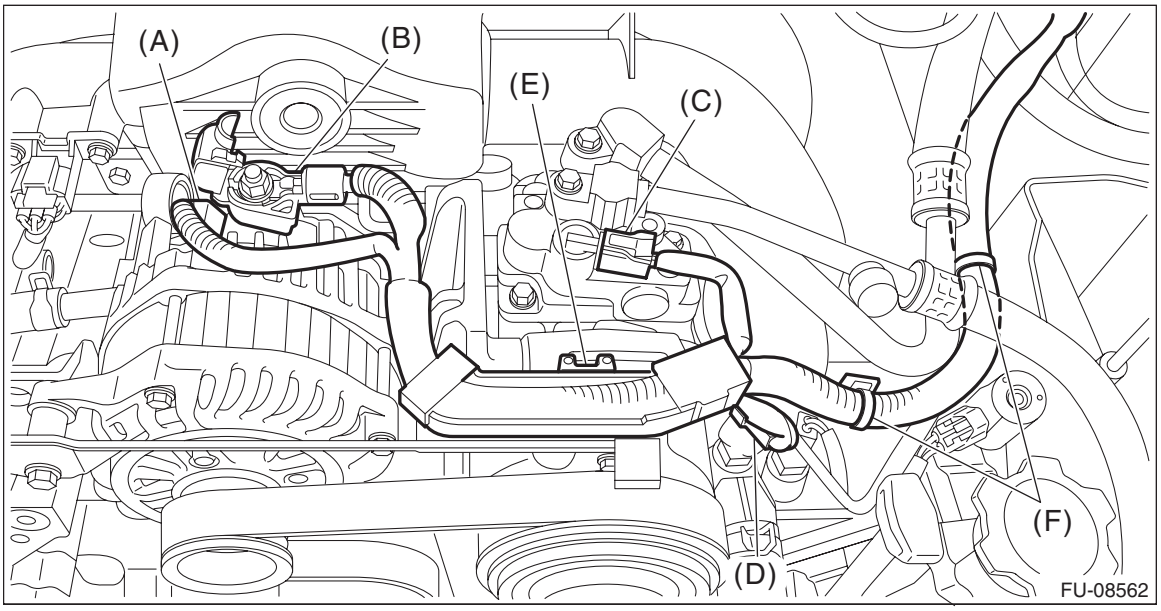

7) Connect the ground terminal to battery sensor. <Ref. to RC-4, BATTERY, NOTE, Repair Contents.>
8) Install the collector cover.

C: INSPECTION

Check that the pulsation damper has no deformation, cracks or other damages.

30.Fuel Delivery and Evaporation Lines

A: REMOVAL

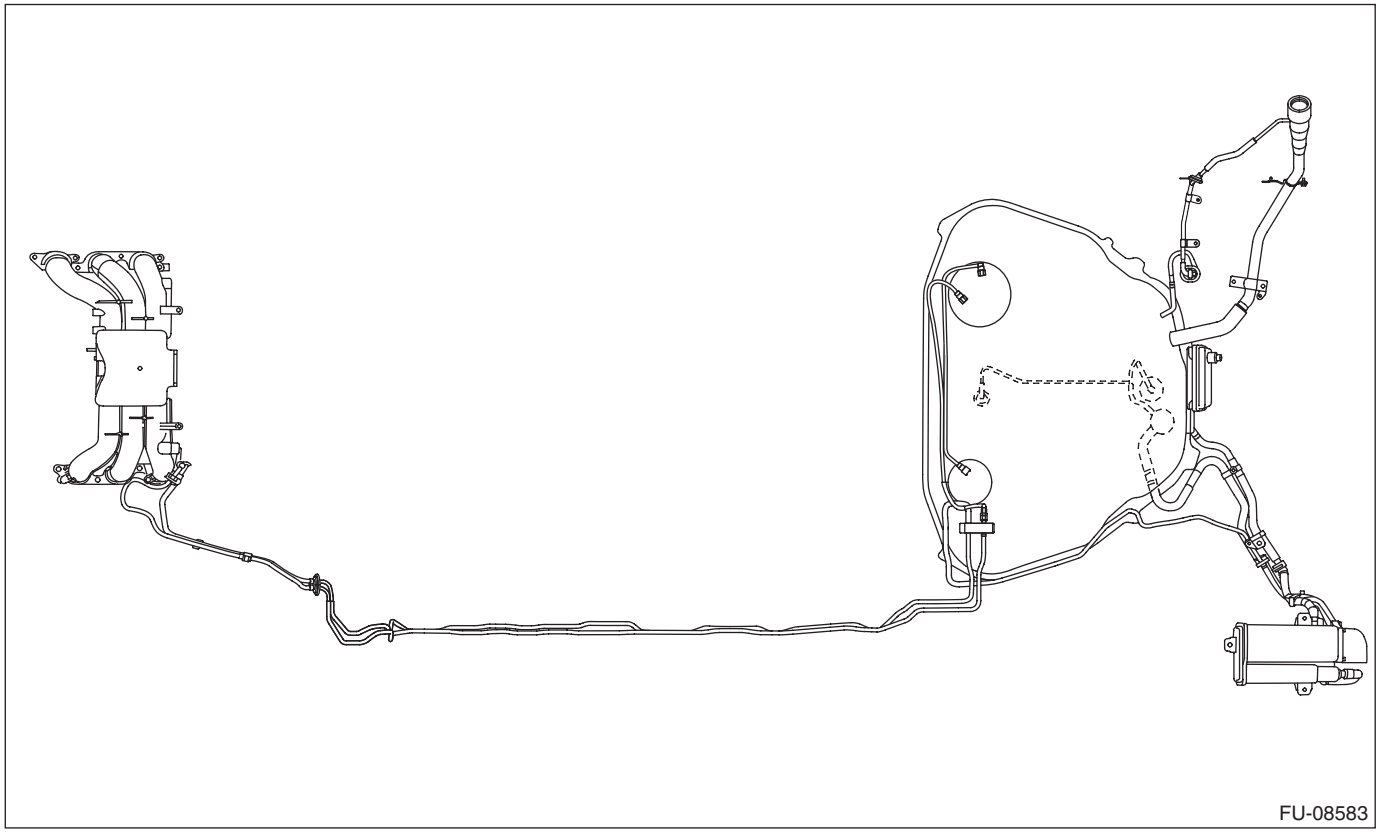

WARNING:
Place “NO OPEN FLAMES” signs near the working area.

CAUTION:
Be careful not to spill fuel.
1) Release the fuel pressure. <Ref. to FU(H6DO)-93, RELEASING OF FUEL PRESSURE, PROCEDURE, Fuel.>
2) Open the fuel filler lid and remove the fuel filler cap.

NOTE:
This operation is required to release the inner pressure of the fuel tank.
3) Remove the floor mat. <Ref. to EI-123, REMOVAL, Floor Mat.>
4) In the engine compartment, disconnect the fuel delivery tube and evaporation hose.

CAUTION:
- **Be careful not to spill fuel.**
- **Catch the fuel from hoses using a container or cloth.**

(1) Disconnect the fuel delivery tube (A).
- When using ST

1. Attach ST to the pipe and push ST in the direction of arrow mark to disconnect the quick connector.

ST 42099AE000 QUICK CONNECTOR RELEASE

CAUTION:
- **Be careful not to spill fuel.**
- **Catch the fuel from hoses using a container or cloth.**
- **Holding the portion (c) shown in the figure, pull the connector in axial direction.**
- **If the connector and pipe are sticking to each other, push and pull the connector with ST pushed, and then pull the connector after it starts moving freely.**
- **When disconnecting the connector, do not bend or twist the tube forcibly. If the tube is bent, replace with a new part.**

NOTE:
Clean the pipe and quick connector, if they are covered with dust.

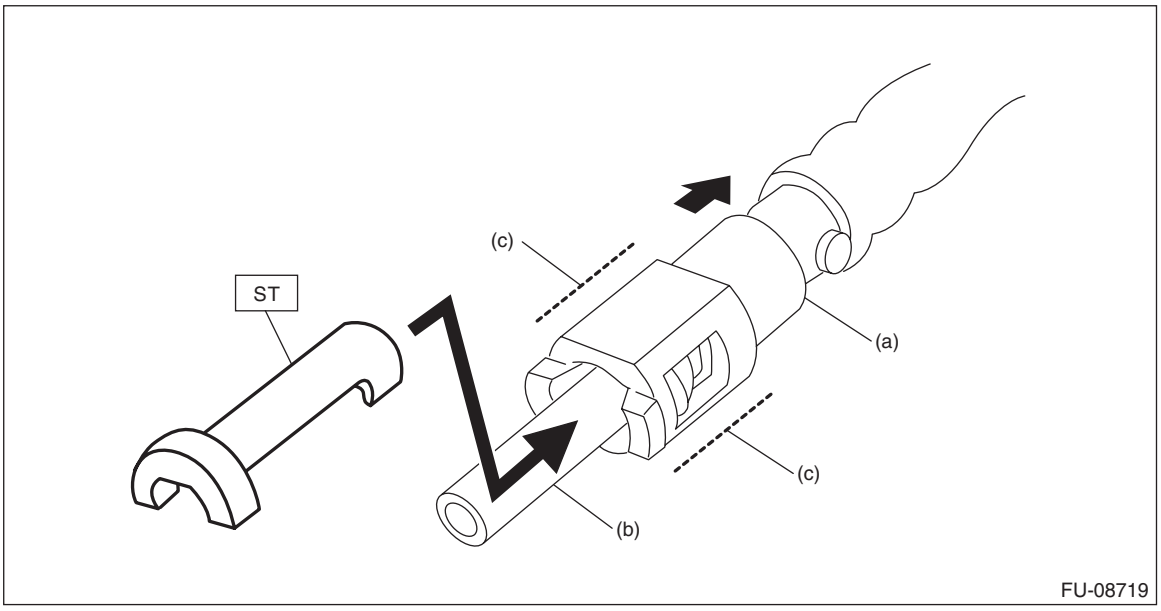

(a) Quick connector (b) Pipe (c) Connector holding position

2. To prevent from damaging or entering foreign matter, wrap the pipes and quick connectors with plastic bag etc.

CAUTION:
When reusing the retainer, do not disconnect the retainer from the connector.

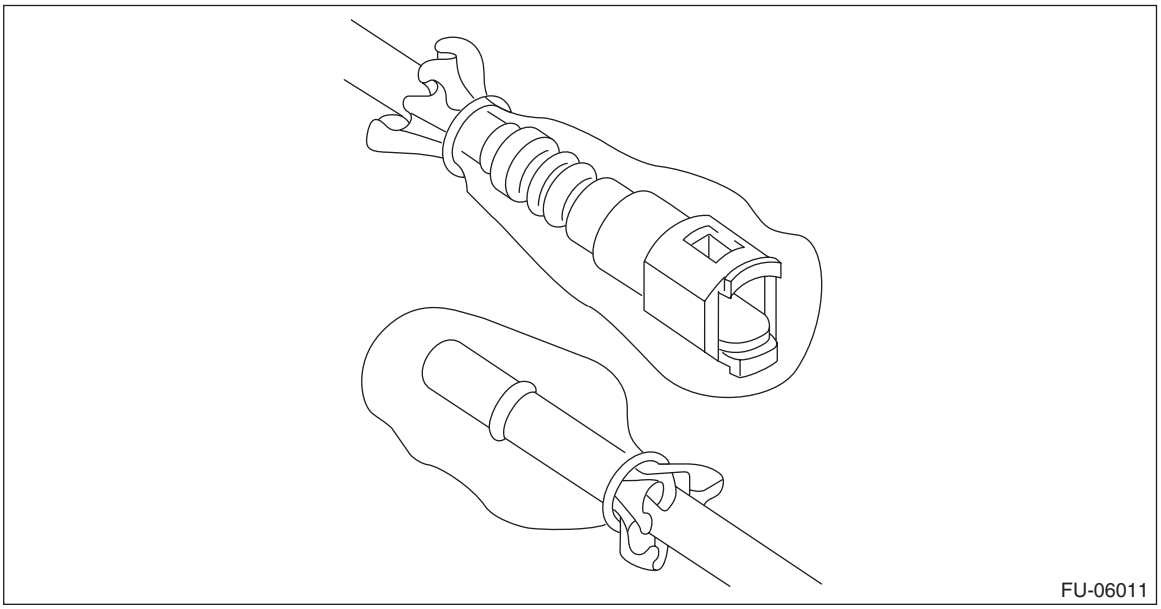

- When not using ST

1. Push the retainer in the direction of the arrow, disconnect the quick connector from pipe.

CAUTION:

- **Be careful not to spill fuel.**
- **Catch the fuel from hoses using a container or cloth.**
- **Holding the portion (d) shown in the figure, pull the connector in axial direction.**
- **If the connector and pipe are sticking to each other, push and pull the connector with the retainer pushed in the direction of the arrow, and then pull the connector after it starts moving freely.**
- **When disconnecting the connector, do not bend or twist the tube forcibly. If the tube is bent, replace with a new part.**

NOTE:
Clean the pipe and quick connector, if they are covered with dust.

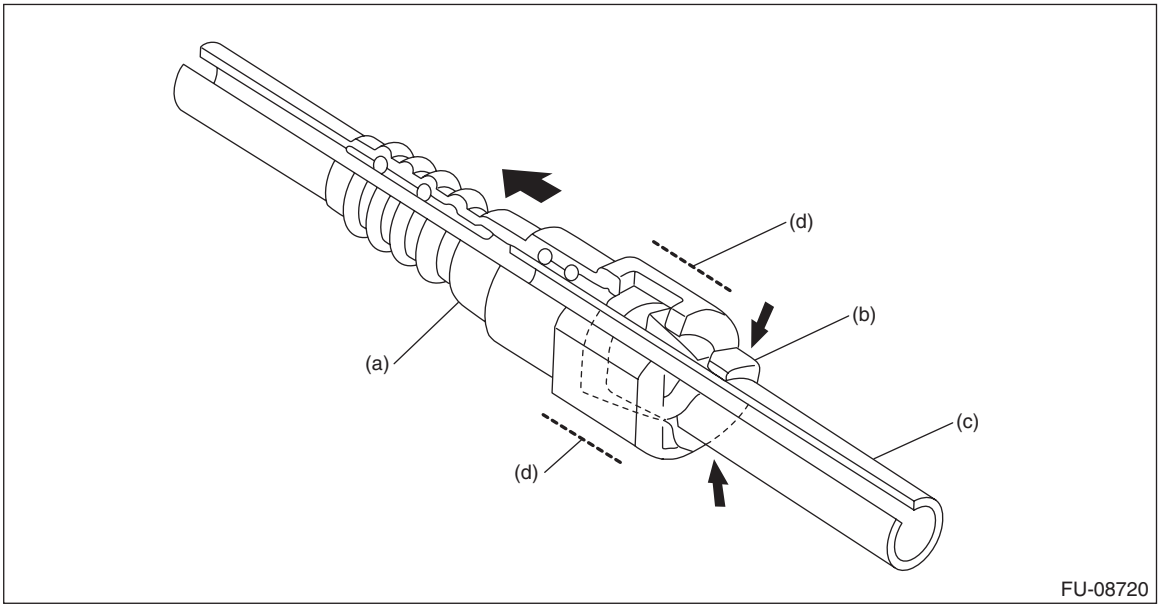

(a) Quick connector
(b) Retainer
(c) Pipe
(d) Connector holding position

2. To prevent from damaging or entering foreign matter, wrap the pipes and quick connectors with plastic bag etc.

CAUTION:
When reusing the retainer, do not disconnect the retainer from the pipe.

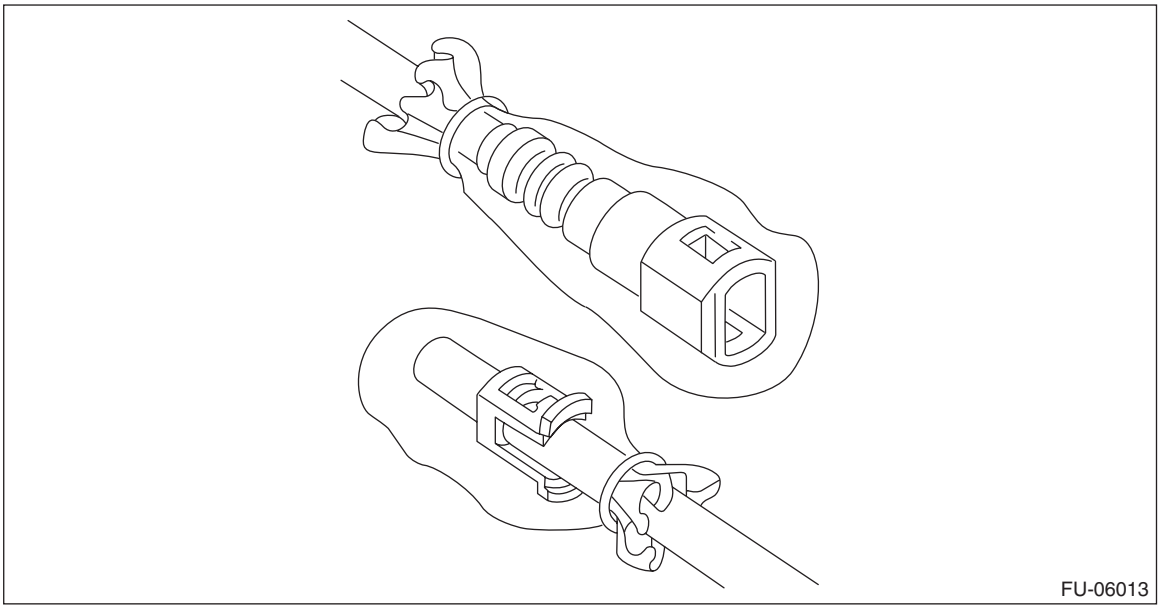

(2) Disconnect the evaporation hose (B) from the fuel pipe.

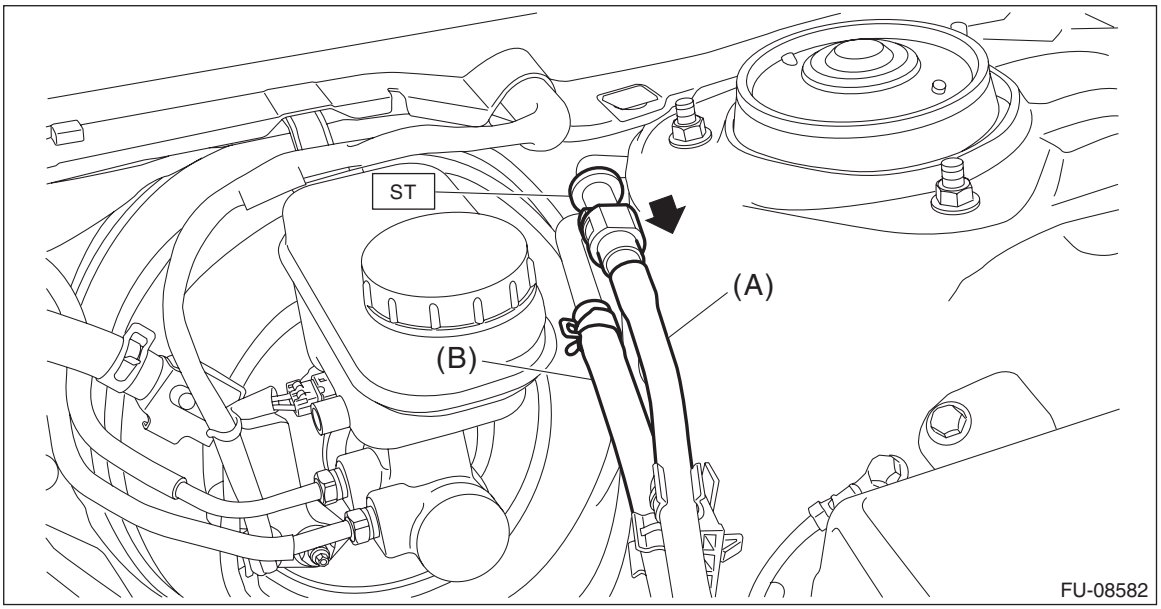

5) Remove the fuel tank. <Ref. to FU(H6DO)-99, REMOVAL, Fuel Tank.>

6) Disconnect the quick connector, and remove the fuel delivery tube and fuel sub delivery tube from the fuel tank.

CAUTION:
- **Be careful not to spill fuel.**
- **Catch the fuel from the tubes using a container or cloth.**

NOTE:
Disconnect the quick connector as shown in the figure.

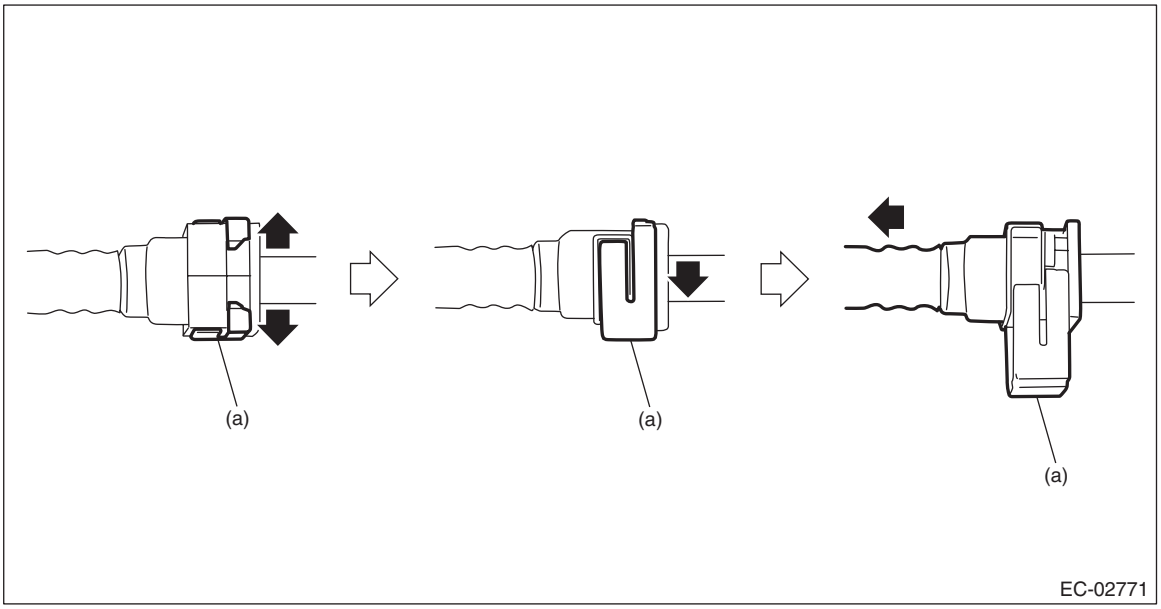

(a) Slider

7) Remove the rear mud guard LH. <Ref. to EI-29, REMOVAL, Mud Guard.>
8) Remove the purge pipe and purge hose.

NOTE:
Disconnect the quick connector as shown in the figure.

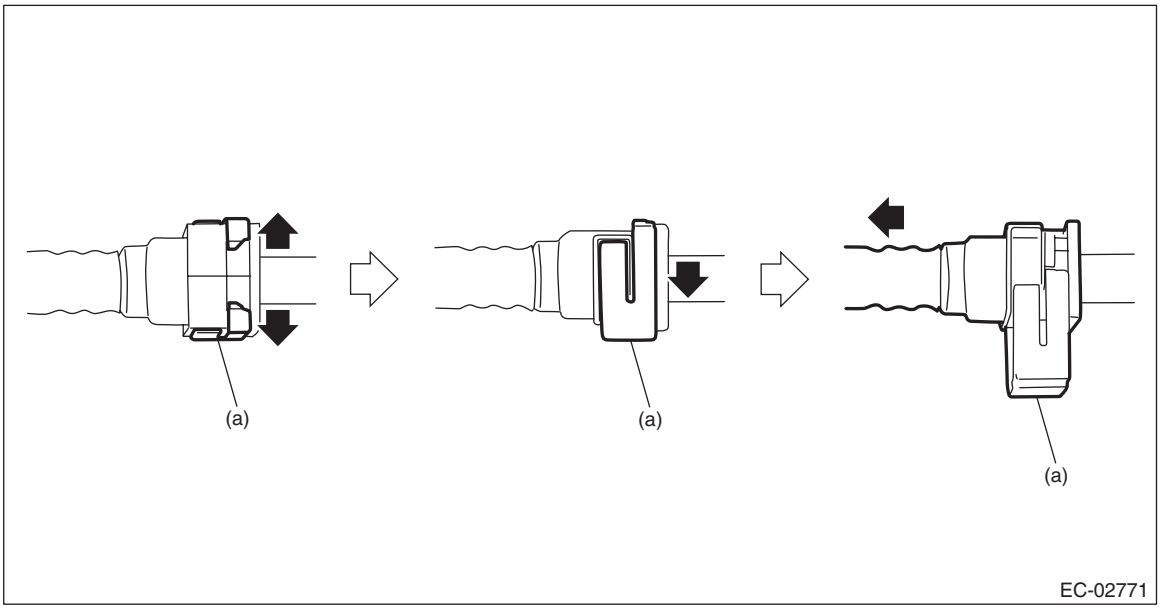

(a) Slider

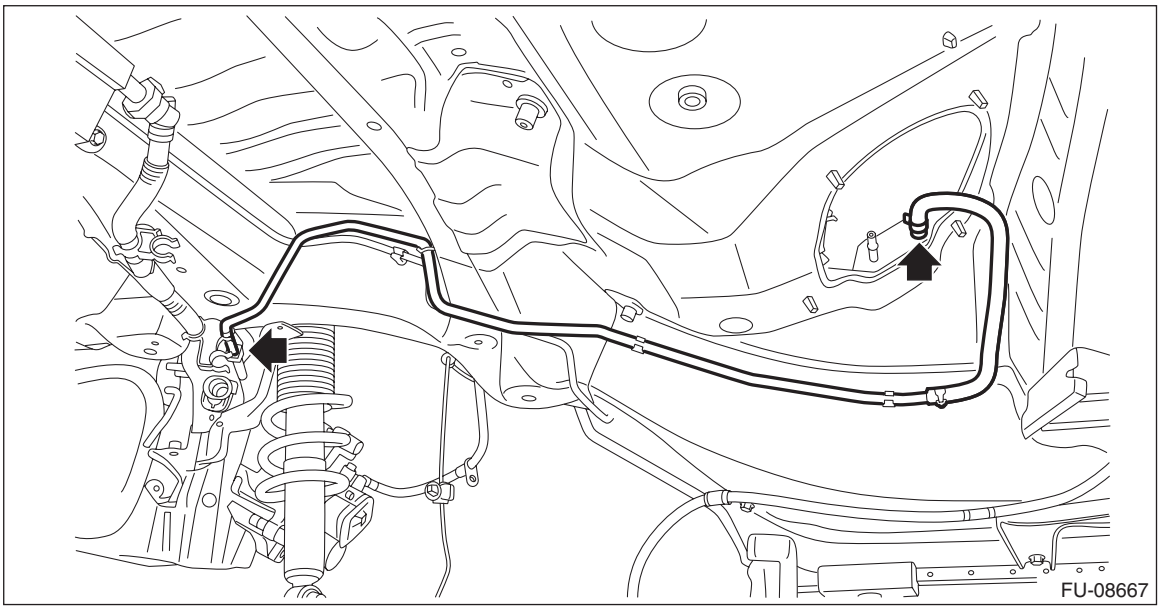

9) Remove the fuel pipe assembly from vehicle.
10) Remove the evaporation pipe.
(1) Remove the rear mud guard RH. <Ref. to EI-29, REMOVAL, Mud Guard.>
(2) Remove the evaporation hose.

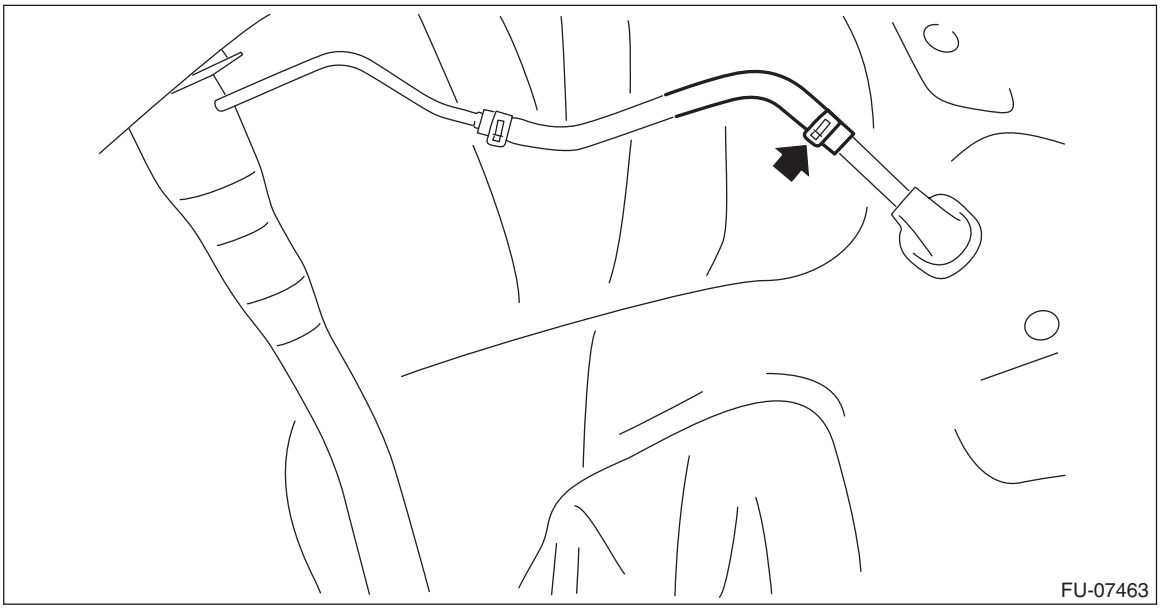

(3) Remove the trunk trim panel assembly - side on the RH side. (Sedan model) <Ref. to EI-99, REMOVAL, Rear Quarter Trim.>
(4) Remove the right side rear quarter trim. (OUTBACK model) <Ref. to EI-99, REMOVAL, Rear Quarter Trim.>
(5) Remove the evaporation pipe protector.

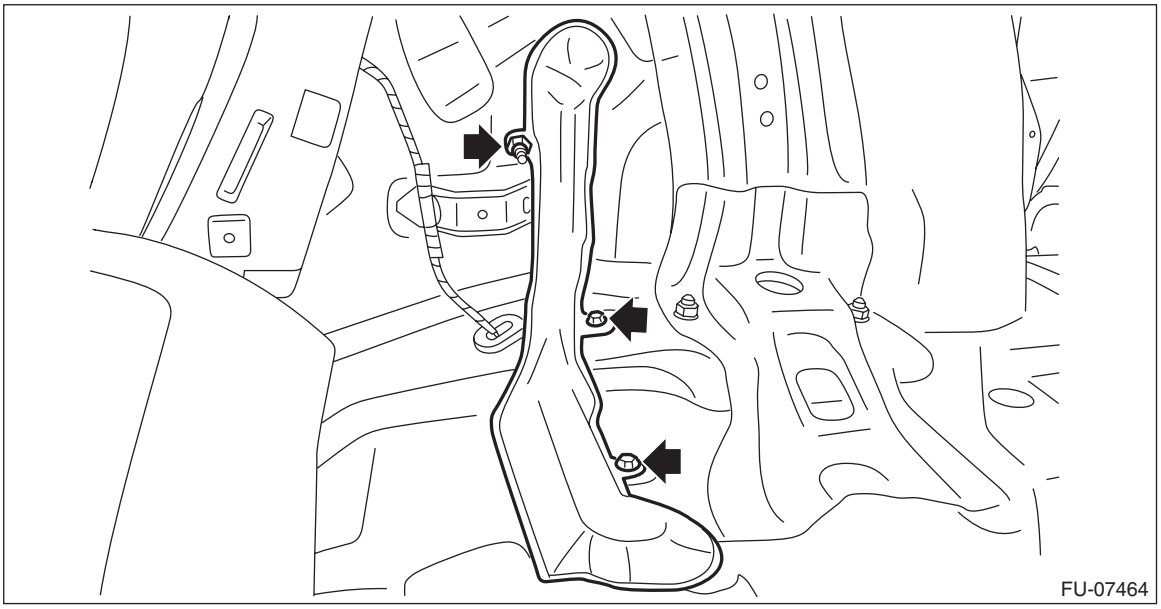

(6) Remove the evaporation pipe from vehicle.

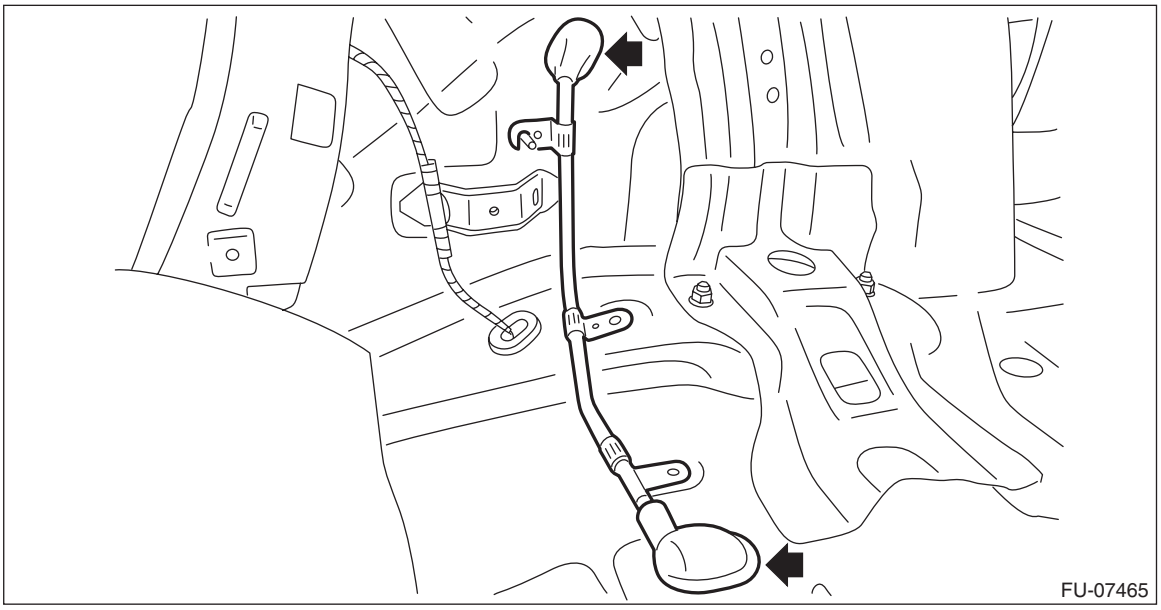

B: INSTALLATION

Install in the reverse order of removal while being careful of the following.

1. EVAPORATION PIPE INSTALLATION

1) Install the evaporation pipe to the vehicle.

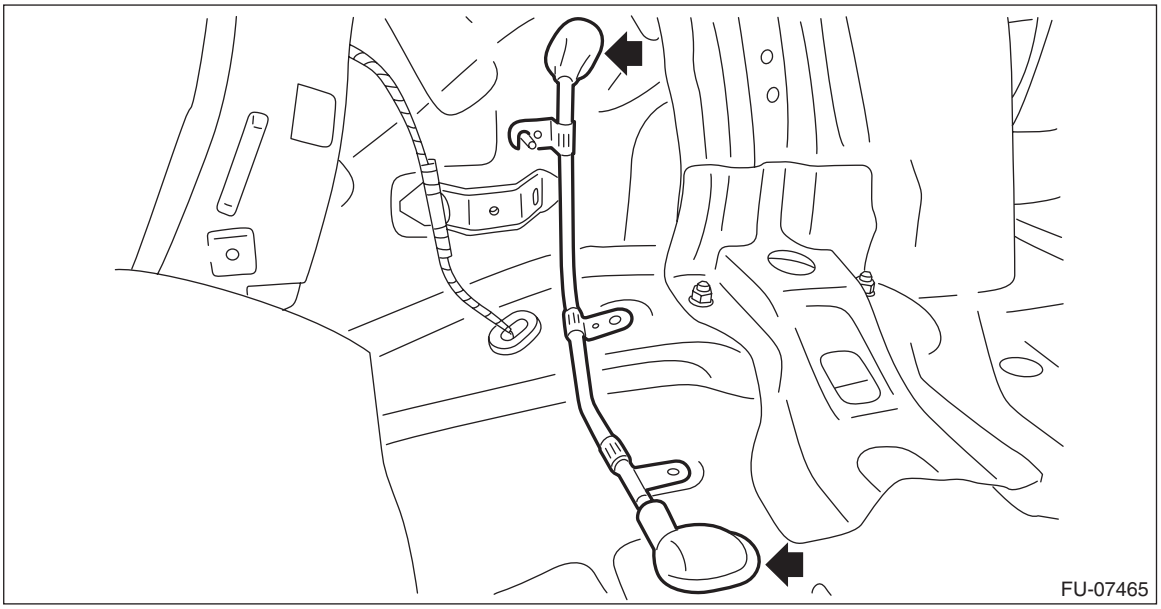

2) Install the evaporation pipe protector.

Tightening torque:
T1: 1 N·m (0.1 kgf-m, 0.7 ft-lb)
T2: 7.5 N·m (0.7 kgf-m, 5.4 ft-lb)

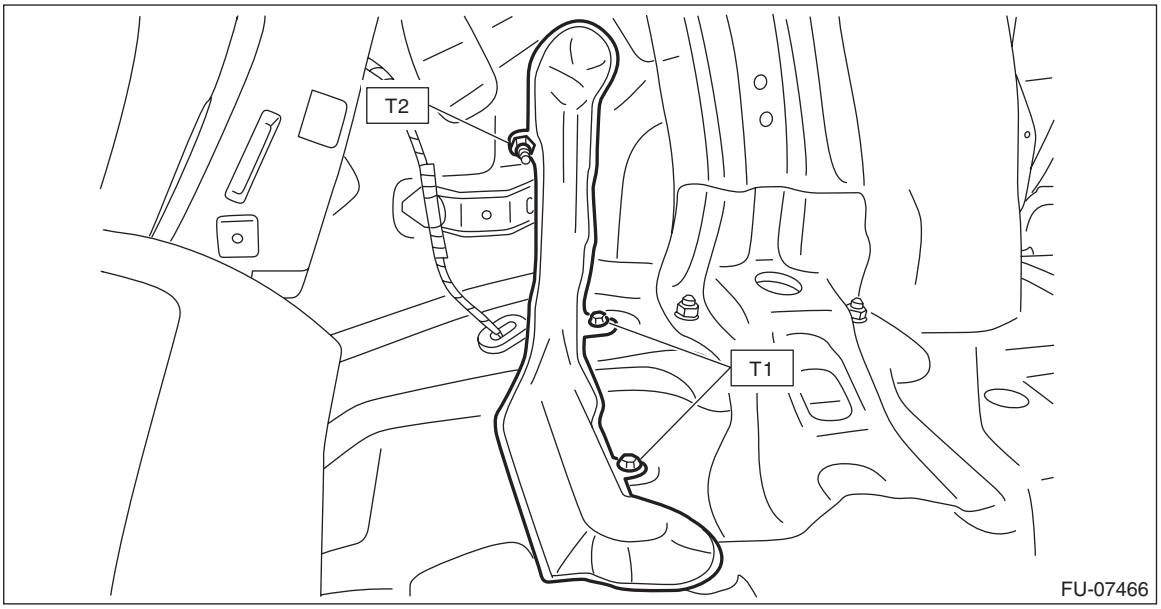

3) Install the trunk trim panel assembly - side on RH side. (Sedan model) <Ref. to EI-103, INSTALLATION, Rear Quarter Trim.>
4) Install the right side rear quarter trim. (OUTBACK model) <Ref. to EI-103, INSTALLATION, Rear Quarter Trim.>
5) Install the evaporation hose.

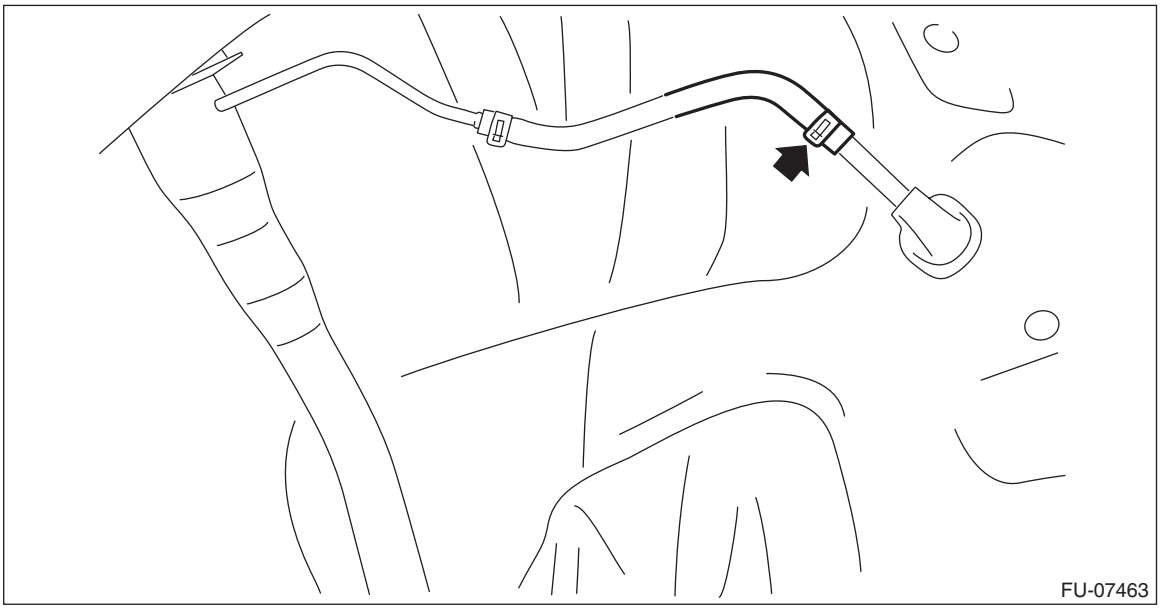

6) Install the rear mud guard RH. <Ref. to EI-29, INSTALLATION, Mud Guard.>

2. CONNECTING THE FUEL LINE QUICK CONNECTOR

CAUTION:
- **Make sure there are no damage or dust on connections. If necessary, clean seal surface of pipe.**

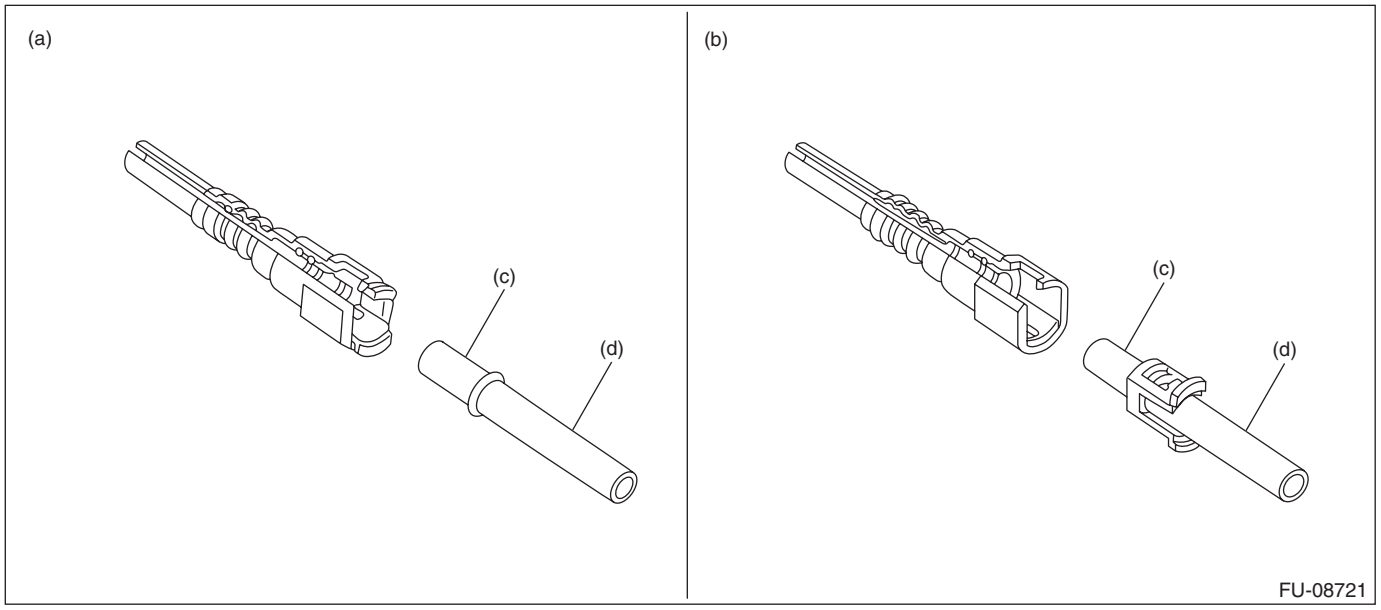

(a) When removed using the ST
(b) When removed without using the ST
(c) Seal surface
(d) Pipe

- **When reusing the retainer, make sure that neither scratches nor deformation exist on the retainer. If it is faulty, use a new part.**

Connect the quick connector.

CAUTION:
- **Make sure that the quick connector is securely connected.**

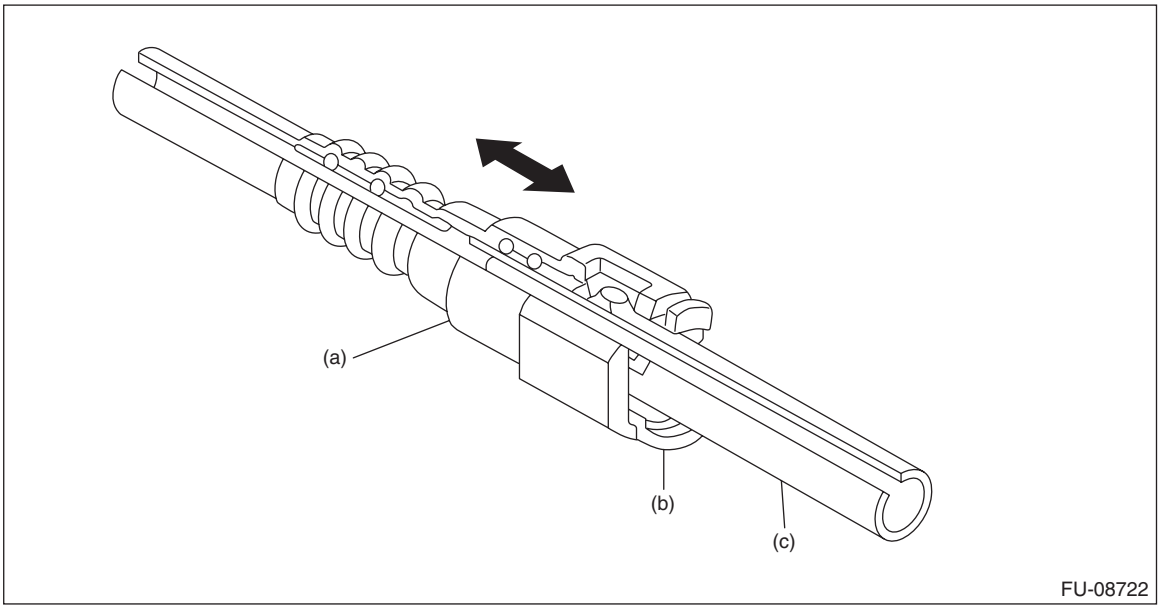

(a) Quick connector
(b) Retainer
(c) Pipe

- **Make sure the two retainer pawls are engaged in their mating positions in the quick connector.**
- **Be sure to inspect tubes and their connections for any leakage of fuel.**
- **Holding the portion (f) shown in the figure, push in the connector in axial direction.**
- **When connecting the connector, do not bend or twist the tube forcibly. If the tube is bent, replace with a new part.**

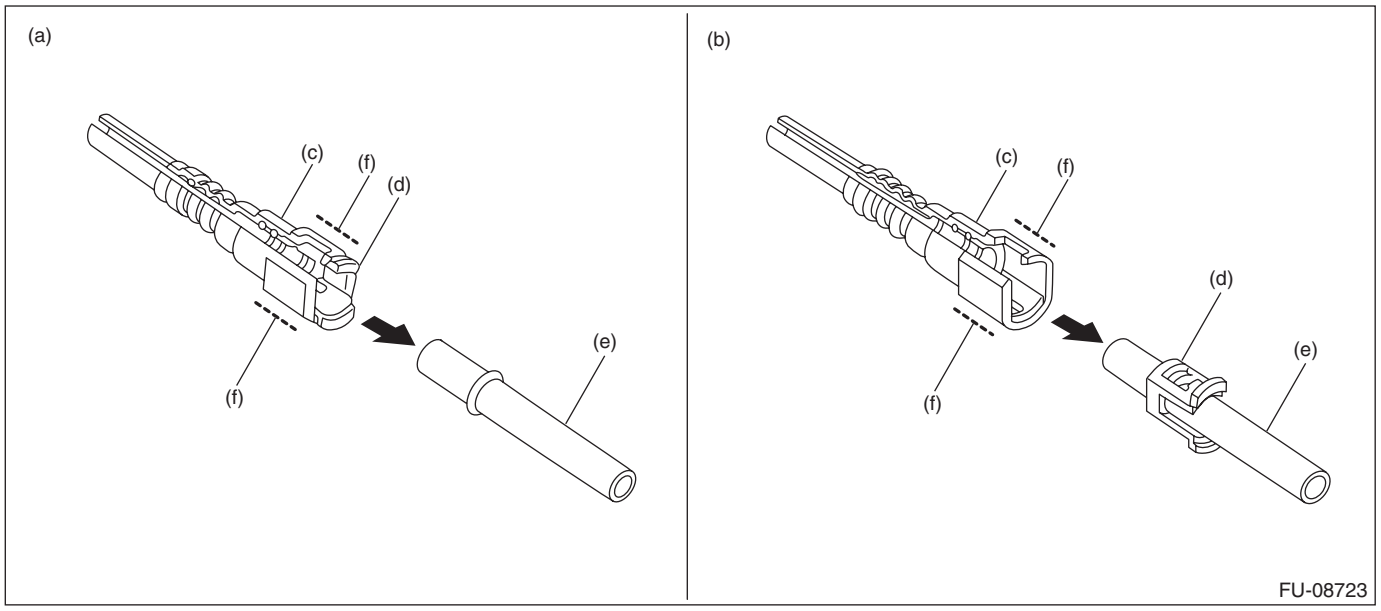

(a) When removed using the ST
(b) When removed without using the ST
(c) Quick connector
(d) Retainer
(e) Pipe
(f) Connector holding position

3. CONNECTING THE FUEL DELIVERY HOSE

Connect the fuel delivery hose as shown in the figure.

CAUTION:
• If the connection portion has a spool or stopper, do not allow the end of the hose to bend or ride over by inserting the hose too deep.
• Be sure to inspect hoses and their connections for any leakage of fuel.

NOTE:
Use a new fuel delivery hose.

Tightening torque:
1.25 N·m (0.1 kgf-m, 0.9 ft-lb)

L1: 2.5±1.5 mm (0.098±0.059 in)

L2: 22.5±2.5 mm (0.886±0.098 in)

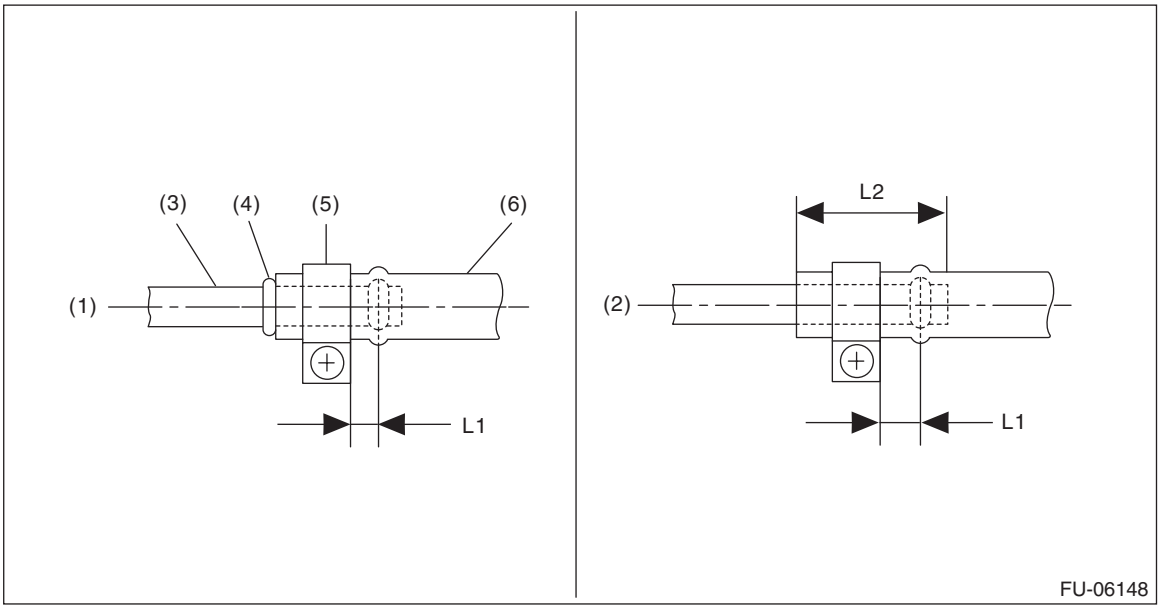

(1) When there is a spool or bump
(2) When there is no spool or bump
(3) Pipe
(4) Spool or bump
(5) Clamp
(6) Hose

4. EVAPORATION HOSE CONNECTION

Connect the evaporation hose by inserting it to the pipe until the hose reaches the spool or bump.

NOTE:
If there is no spool nor bump, connect the evaporation hose by inserting it at 28 mm (1.1 in) to the pipe.

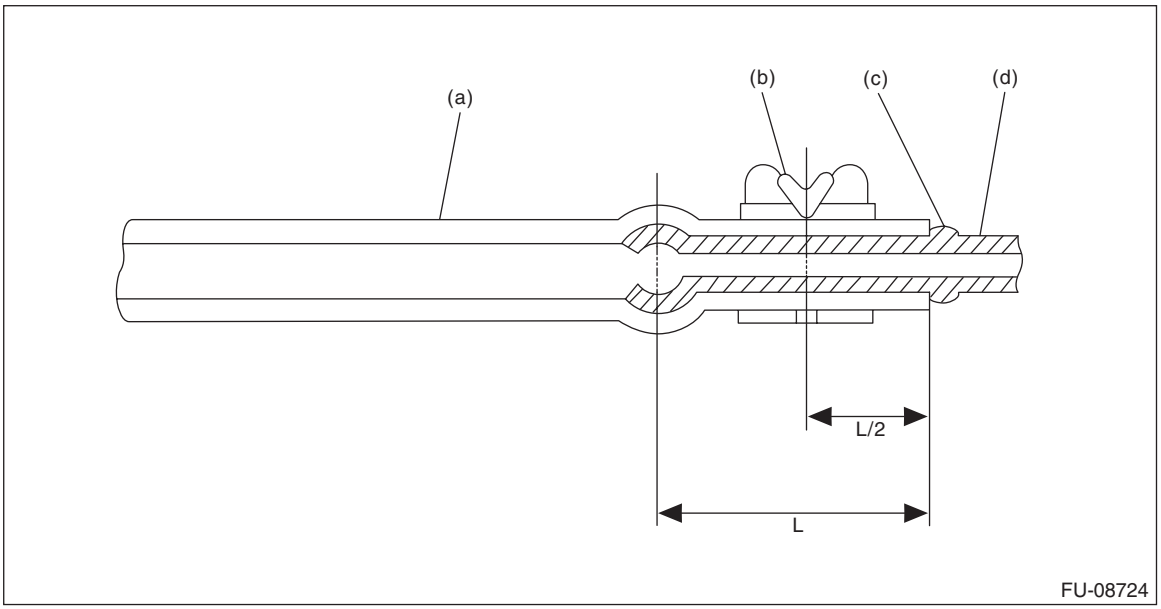

(a) Hose
(b) Clip
(c) Spool or bump
(d) Pipe

5. CONNECTING THE EVAPORATION LINE QUICK CONNECTOR

Connect the quick connector as shown in the figure.

CAUTION:
- **Check that there is no damage or dust on the quick connector. If necessary, clean the seal surface of the pipe.**
- **When connecting the quick connector, make sure to insert it all the way in before locking the slider.**
- **When it is difficult to lock the slider, check that the connector is fully inserted.**
- **After locking the slider, check again that the quick connector is securely connected.**

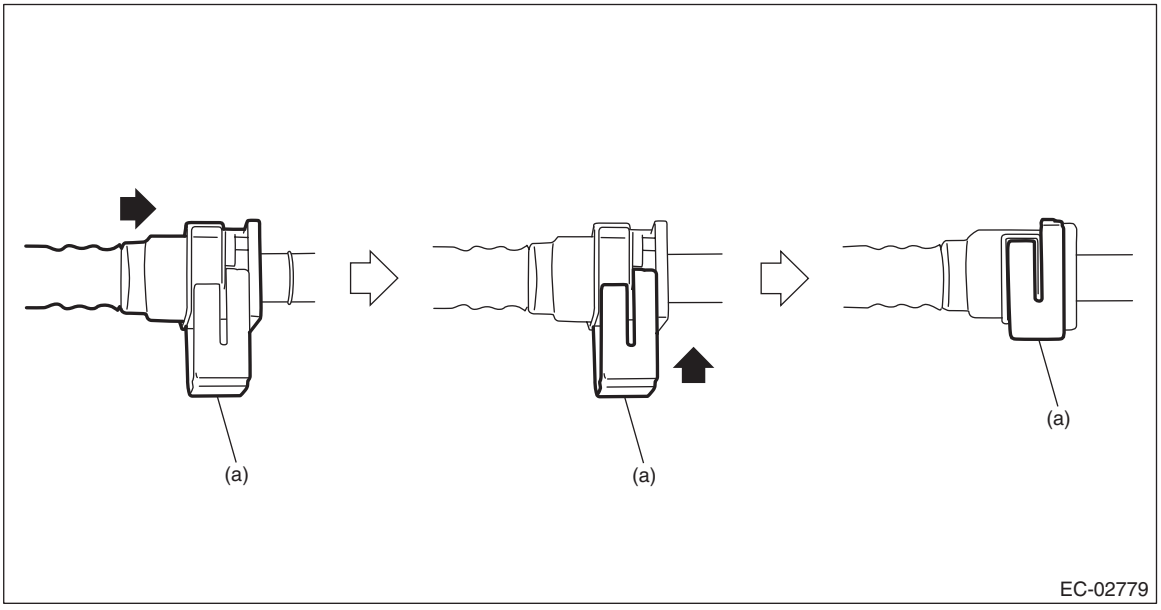

(a) Slider

C: INSPECTION

1) Check that the fuel pipe has no deformation, cracks or other damages.
2) Check that the hose and tube have no cracks, damage or loose part.

31.Fuel System Trouble in General

A: INSPECTION

Trouble	Possible cause	Corrective action
Insufficient fuel supply to fuel injector	a. Fuel pump does not operate.	
	❍ Defective terminal contact	Inspect contact, especially ground, and tighten it securely.
	❍ Trouble in electromagnetic or electronic circuit parts	Replace the faulty parts.
	b. Decline of fuel pump function	Replace the fuel pump.
	c. Clogged fuel filter	Replace the fuel filter. Clean or replace the fuel tank if necessary.
	d. Clogged or bent fuel line pipe, hose or tube	Clean, correct or replace the fuel line pipe, hose or tube.
	e. Air is mixed in fuel system.	Check the fuel line connections, correct or replace the defective part.
	f. Damaged diaphragm of pressure regulator	Replace the fuel filter assembly.
Leakage or blow out of fuel	a. Loose connections of fuel line pipe, hose or tube	Check the fuel line connections, correct or replace the defective part.
	b. Cracked fuel line pipe, hose or tube	Replace the fuel line pipe, hose or tube.
	c. Cracked fuel tank or defective welding part	Replace the fuel tank.
	d. Clogged or bent fuel line pipe, hose or tube	Clean, correct or replace the fuel line pipe, hose or tube.
Gasoline smell inside of compartment	a. Loose connections of fuel line pipe, hose or tube	Check the fuel line connections, correct or replace the defective part.
	b. Defective canister	Replace the canister.
Defective fuel gauge	a. Defective operation of fuel level sensor	Replace the fuel level sensor.
	b. Defective operation of combination meter	Replace the combination meter.
Noise	a. Large operation noise or vibration of fuel pump	Replace the fuel pump.

NOTE:
• When the vehicle is left unattended for an extended period of time, water may accumulate in the fuel tank. Fill fuel fully to prevent the problem.
• In snow-covered areas, mountainous areas, skiing areas, etc. where ambient temperatures drop to 0°C (32°F) or less throughout the winter season, use a water removing agent in the fuel system to prevent freezing fuel system and accumulating water.
• When water is accumulated in fuel filter, fill the water removing agent in the fuel tank.
• Before using water removing agent, follow the cautions noted on the bottle.

EMISSION CONTROL (AUX. EMISSION CONTROL DEVICES)

EC(H6DO)

		Page
1.	General Description	2
2.	Front Catalytic Converter	3
3.	Rear Catalytic Converter	4
4.	Canister	5
5.	Purge Control Solenoid Valve	17
6.	EGR Control Valve	22
7.	EGR Pipe	25
8.	Fuel Level Sensor	29
9.	Fuel Sub Level Sensor	30
10.	Drain Filter	31
11.	Leak Check Valve Assembly	36
12.	PCV Valve	39

1. General Description

A: COMPONENT

1. CANISTER, PURGE CONTROL SOLENOID VALVE, EGR CONTROL VALVE, EGR PIPE AND DRAIN FILTER

For the components of the canister, purge control solenoid valve, EGR control valve, EGR pipe and drain filter, refer to FU (H6DO). <Ref. to FU(H6DO)-3, COMPONENT, General Description.>

B: CAUTION

- Prior to starting work, pay special attention to the following:
  1. Always wear work clothes, a work cap, and protective shoes. Additionally, wear a helmet, protective goggles, etc. if necessary.
  2. Protect the vehicle using a seat cover, fender cover, etc.
  3. Prepare the service tools, clean cloth, containers to catch grease and oil, etc.
- Vehicle components are extremely hot immediately after driving. Be wary of receiving burns from heated parts.
- When performing a repair, identify the cause of trouble and avoid unnecessary removal, disassembly and replacement.
- Before disconnecting connectors of sensors or units, be sure to disconnect the ground cable from battery.
- Always use the jack-up point when the shop jacks or rigid racks are used to support the vehicle.
- Remove contamination including dirt and corrosion before removal, installation, disassembly or assembly.
- Keep the removed parts in order and protect them from dust and dirt.
- All removed parts, if to be reused, should be reinstalled in the original positions with attention to the correct directions, etc.
- Bolts, nuts and washers should be replaced with new parts as required.
- Be sure to tighten the fasteners including bolts and nuts to the specified torque.

C: PREPARATION TOOL

1. GENERAL TOOL

TOOL NAME	REMARKS
Circuit tester	Used for measuring resistance, voltage and current.

2. Front Catalytic Converter

A: REMOVAL

The front and rear catalytic converters are integrated into the front exhaust pipe; therefore, refer to “Front Exhaust Pipe” for the removal procedure. <Ref. to EX(H6DO)-6, REMOVAL, Front Exhaust Pipe.>

B: INSTALLATION

The front and rear catalytic converters are integrated into front exhaust pipe as one unit; therefore, refer to “Front Exhaust Pipe” for installation procedure. <Ref. to EX(H6DO)-8, INSTALLATION, Front Exhaust Pipe.>

C: INSPECTION

1) Check the connections and welded parts for exhaust leaks.
2) Make sure there are no holes or rusting.

3. Rear Catalytic Converter

A: REMOVAL

The front and rear catalytic converters are integrated into the front exhaust pipe; therefore, refer to “Front Exhaust Pipe” for the removal procedure. <Ref. to EX(H6DO)-6, REMOVAL, Front Exhaust Pipe.>

B: INSTALLATION

The front and rear catalytic converters are integrated into front exhaust pipe as one unit; therefore, refer to “Front Exhaust Pipe” for installation procedure. <Ref. to EX(H6DO)-8, INSTALLATION, Front Exhaust Pipe.>

C: INSPECTION

1) Check the connections and welded parts for exhaust leaks.
2) Make sure there are no holes or rusting.

4. Canister

A: REMOVAL

1) Disconnect the ground terminal from battery sensor. <Ref. to RC-4, BATTERY, NOTE, Repair Contents.>
2) Remove the rear wheel LH. <Ref. to WT-5, REMOVAL, Tire and Wheel.>
3) Lift up the vehicle.
4) Remove the rear mud guard LH. <Ref. to EI-29, REMOVAL, Mud Guard.>
5) Disconnect the quick connectors of the vent tube (A), canister drain tube (B) and purge tube (C), and remove the tubes from tube clamp (D).

NOTE:
Disconnect the quick connector as shown in the figure.

- Vent tube (A) and canister drain tube (B) (Slider color is red or green.)

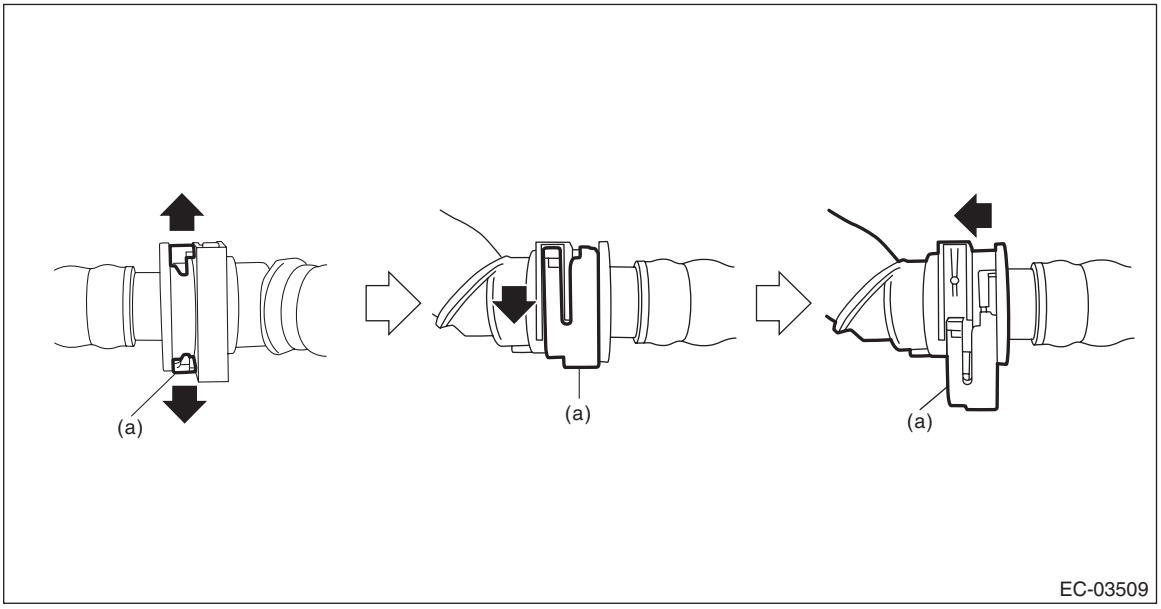

(a) Slider

- Vent tube (A) and canister drain tube (B) (Slider color is white.)

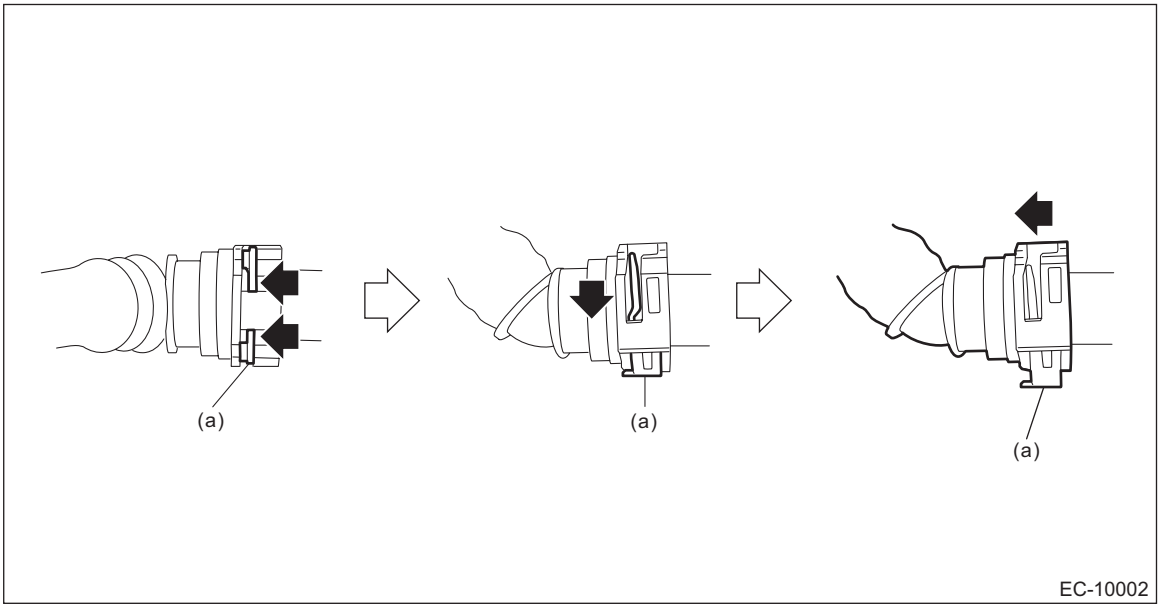

(a) Slider

- Purge tube (C)

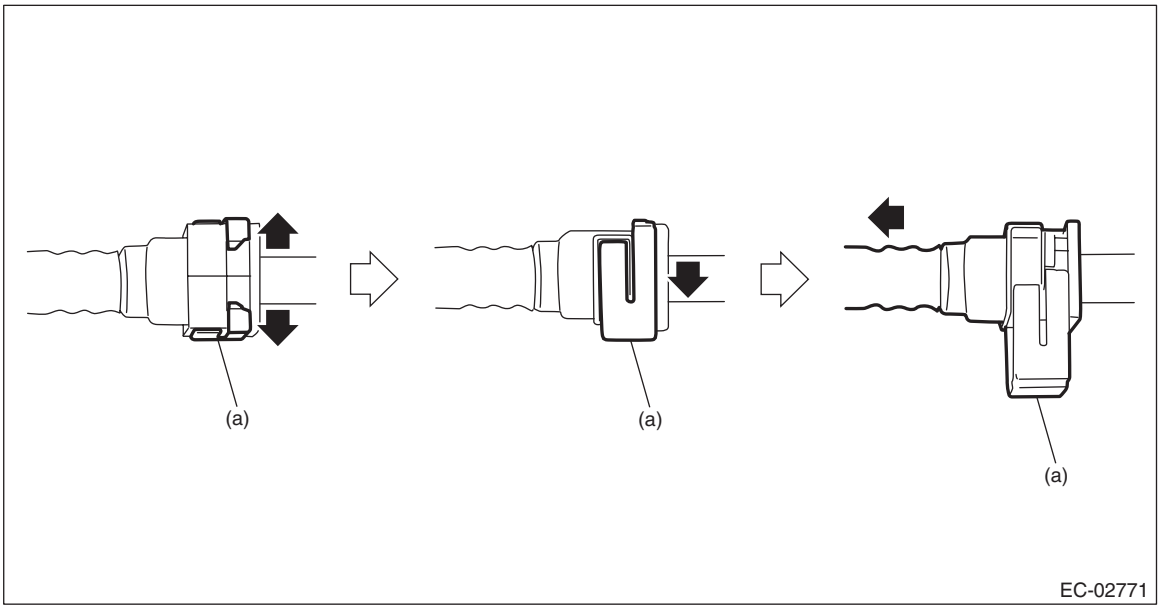

(a) Slider

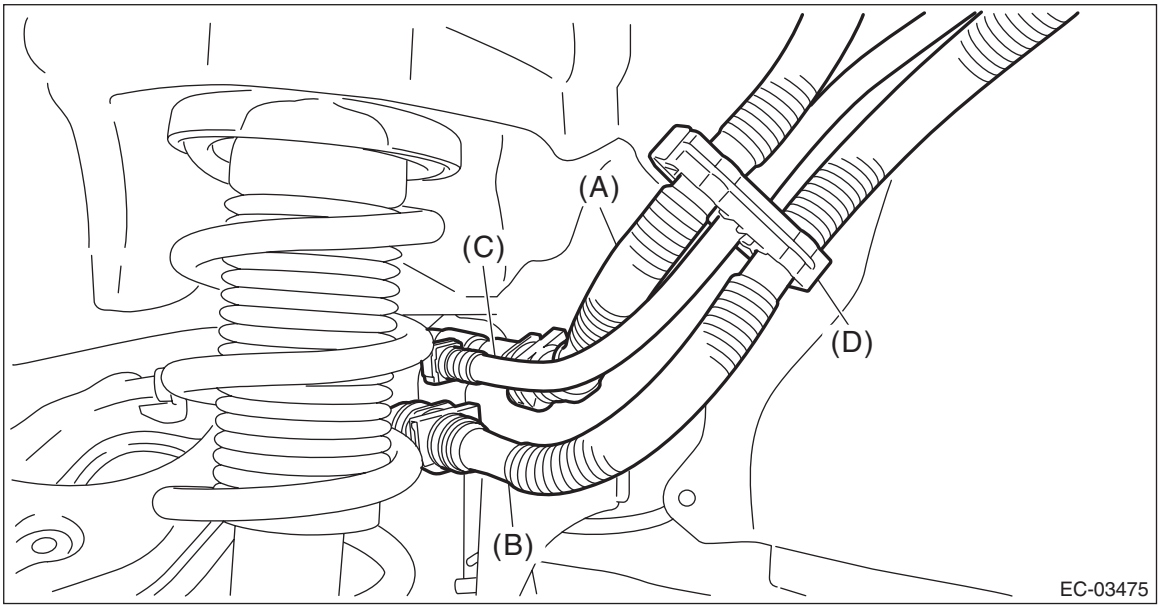

6) Disconnect the connector (A) from the canister and remove the harness clip (B).
7) Remove the canister.

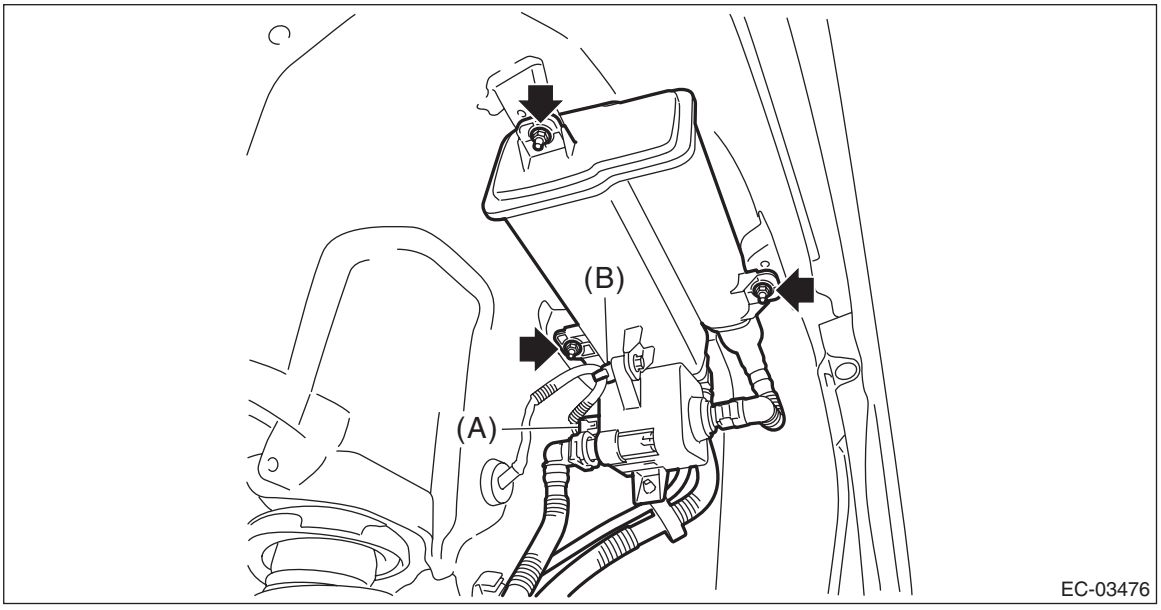

8) Remove the canister protector.

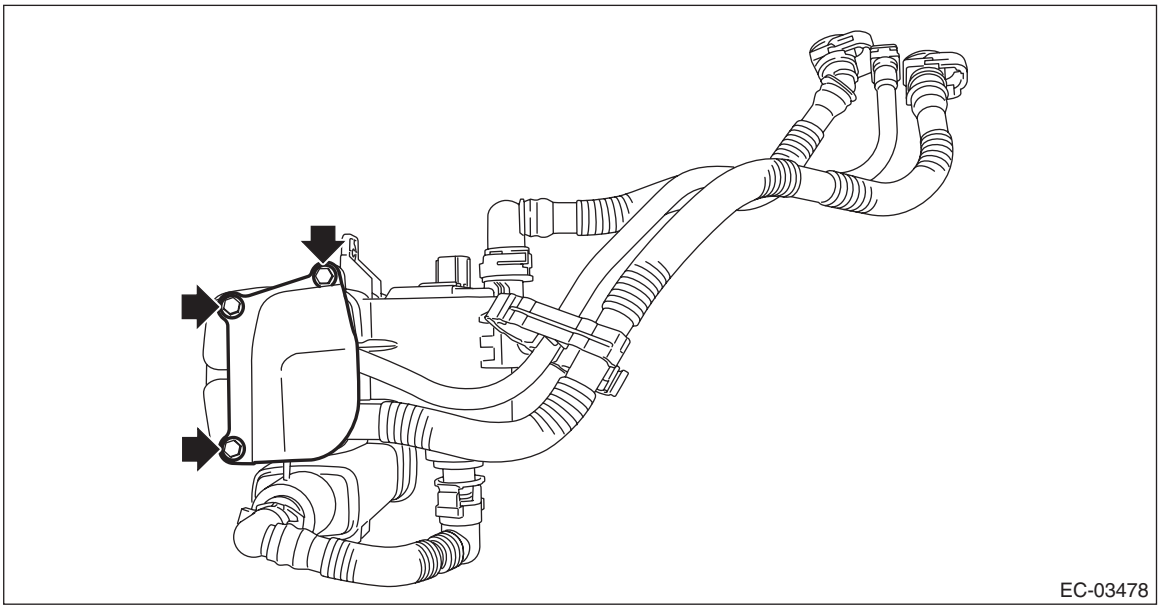

9) Disconnect the vent tube (A), canister drain tube (B) and purge tube (C).

NOTE:
Disconnect the quick connector as shown in the figure.

- Vent tube (A) and canister drain tube (B) (Slider color is red or green.)

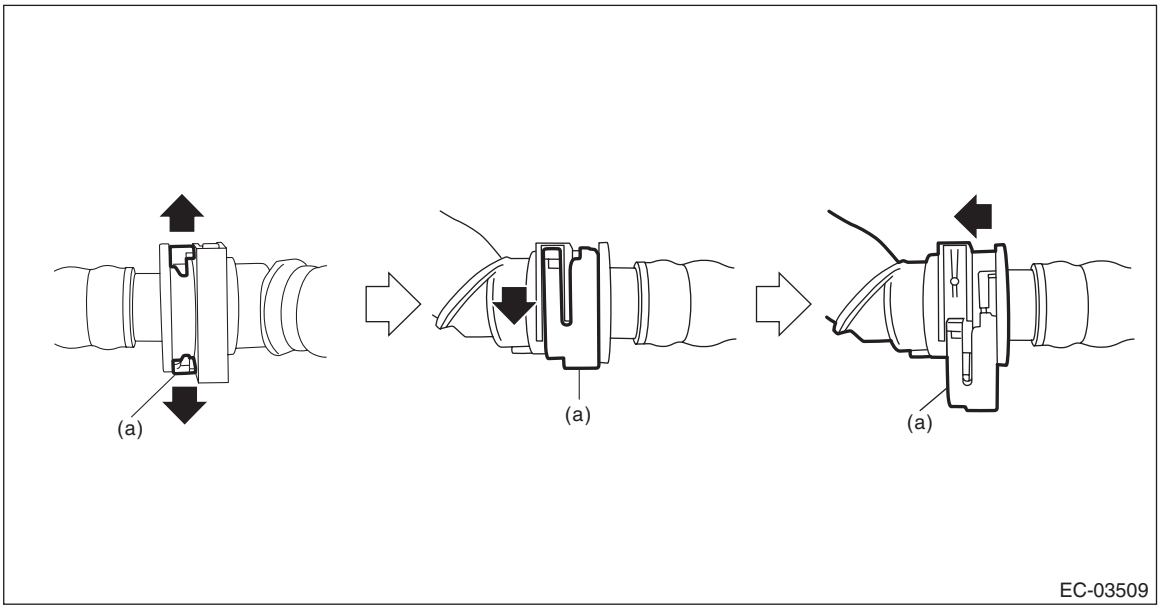

(a) Slider

- Vent tube (A) and canister drain tube (B) (Slider color is white.)

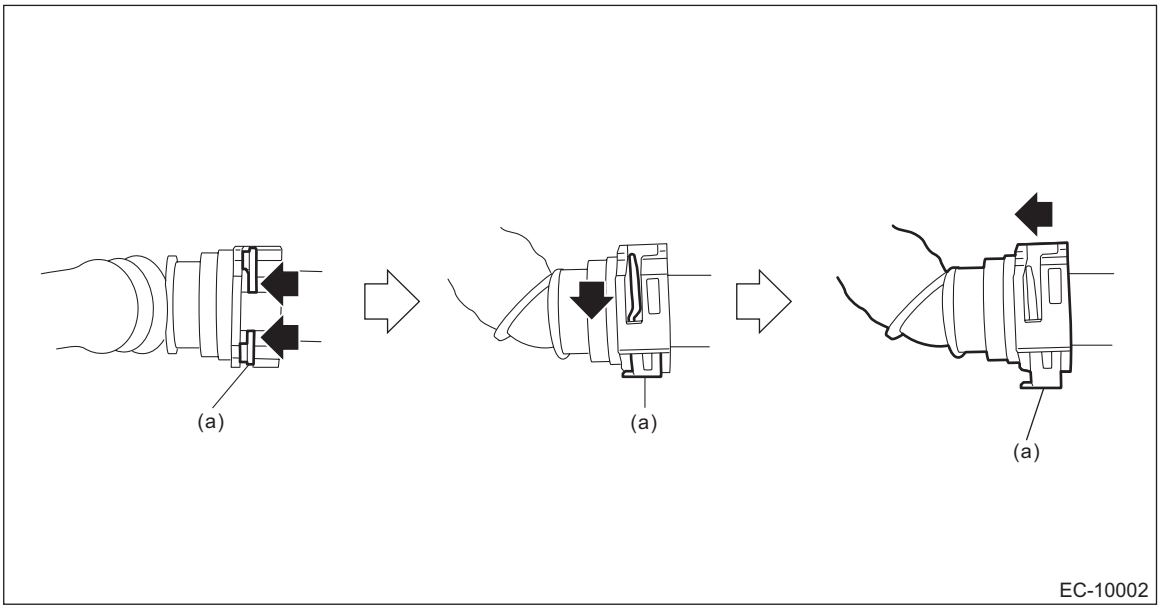

(a) Slider

- Purge tube (C)

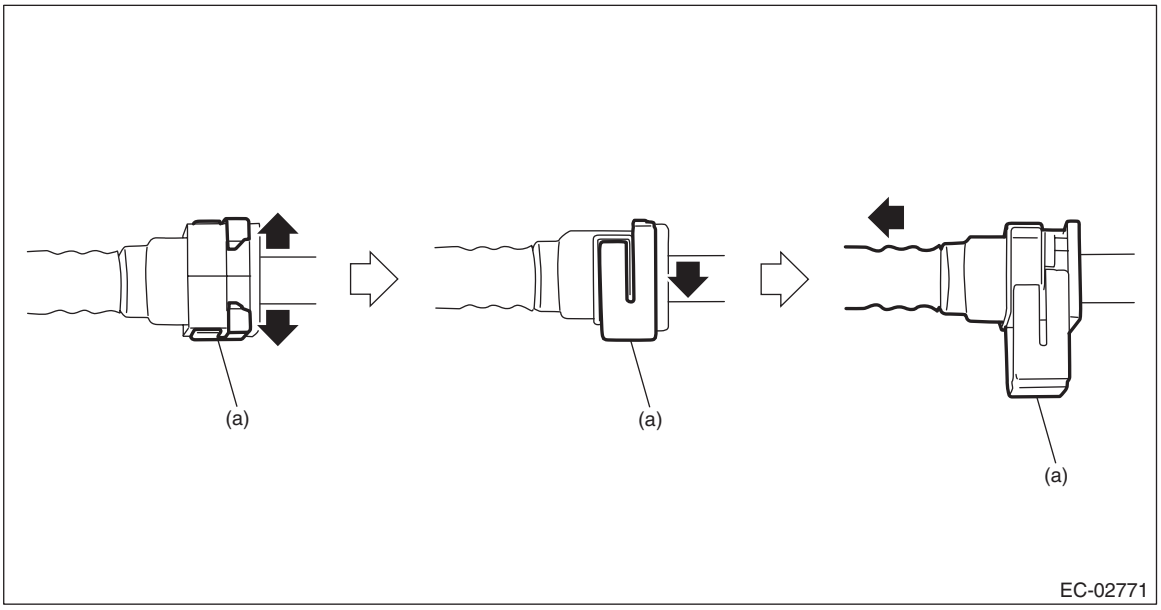

(a) Slider

10) Remove the hose clamp (D).

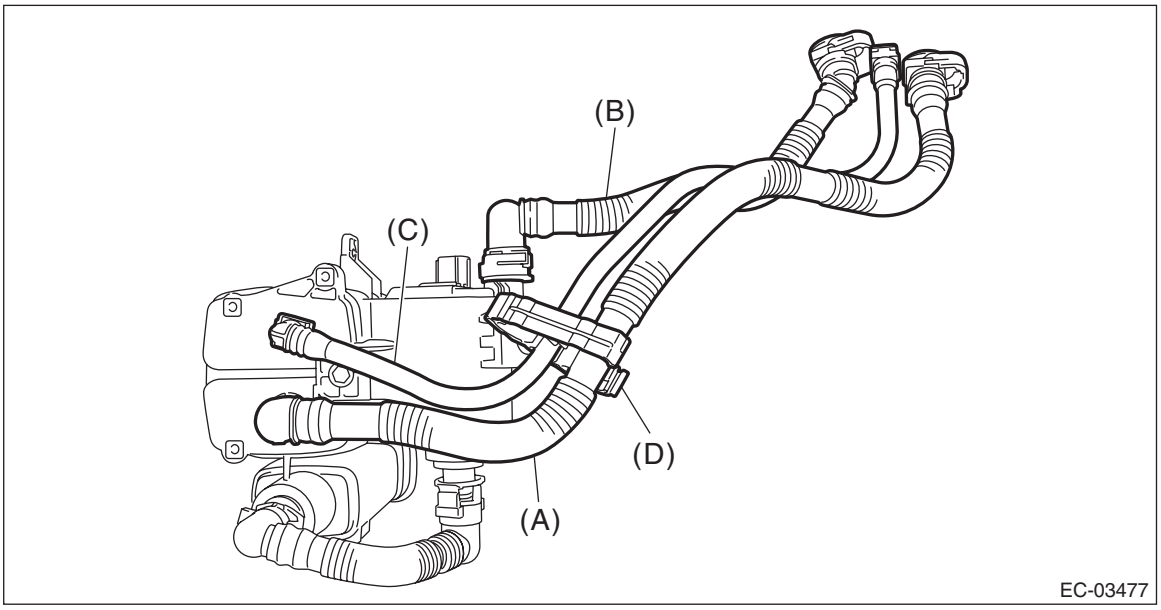

11) Disconnect the drain tube (A).

NOTE:
Disconnect the quick connector as shown in the figure.

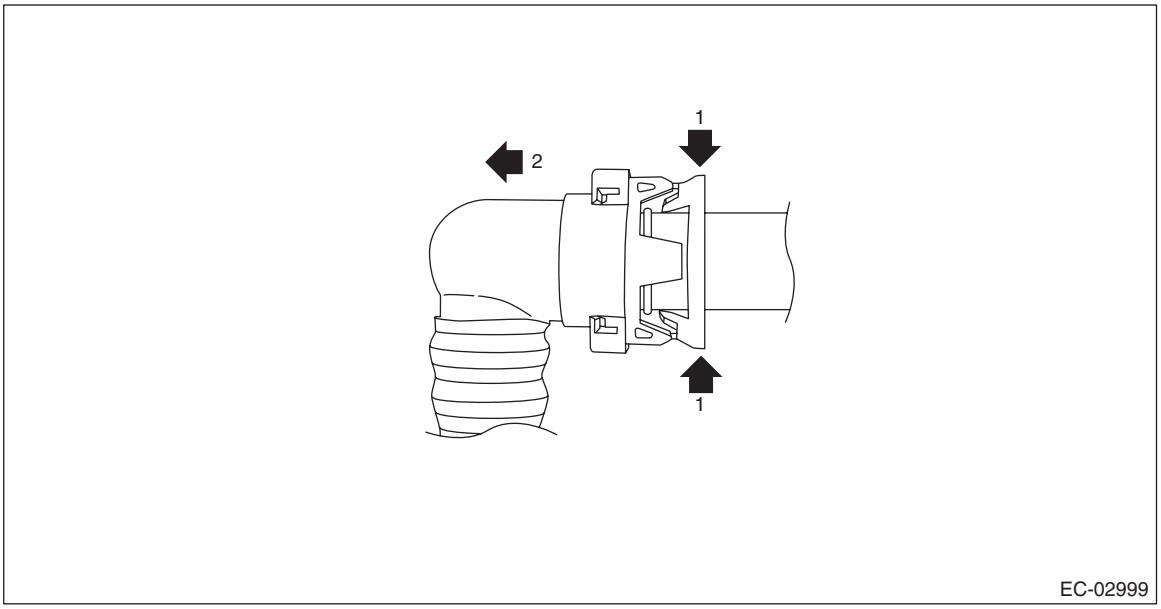

12) Remove the leak check valve assembly from the canister.

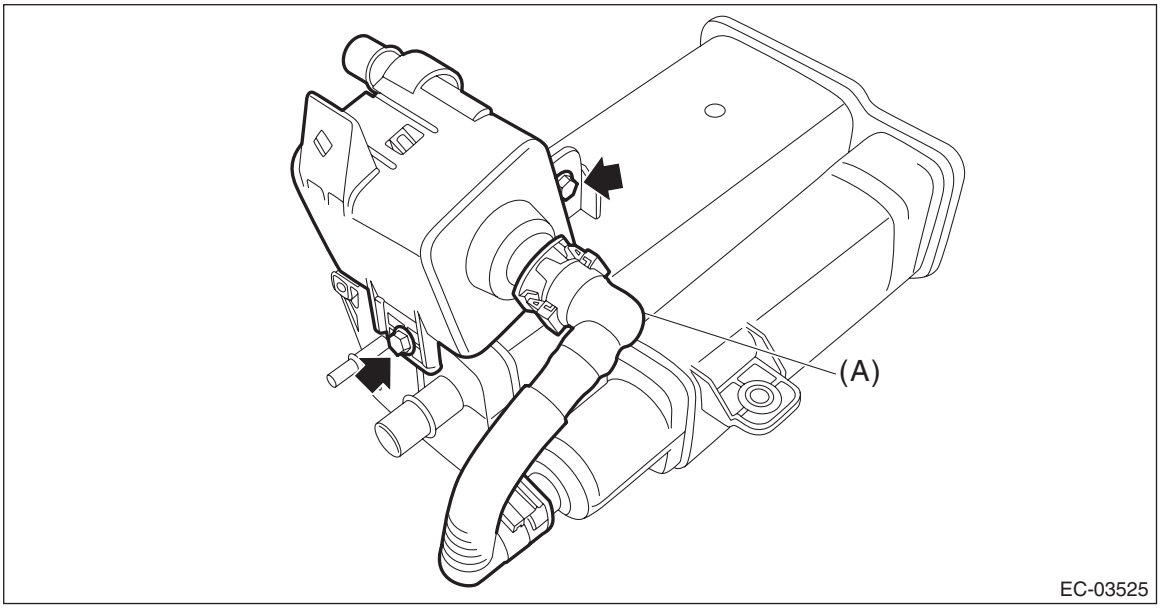

B: INSTALLATION

1) Install the leak check valve assembly to the canister.

Tightening torque:
8 N·m (0.8 kgf-m, 5.9 ft-lb)

2) Connect the drain tube (A).

CAUTION:
• Check that there is no damage or dust on the quick connector. If necessary, clean the seal surface of the pipe.
• Make sure that the quick connector is securely connected.

NOTE:
Connect the quick connector as shown in the figure.

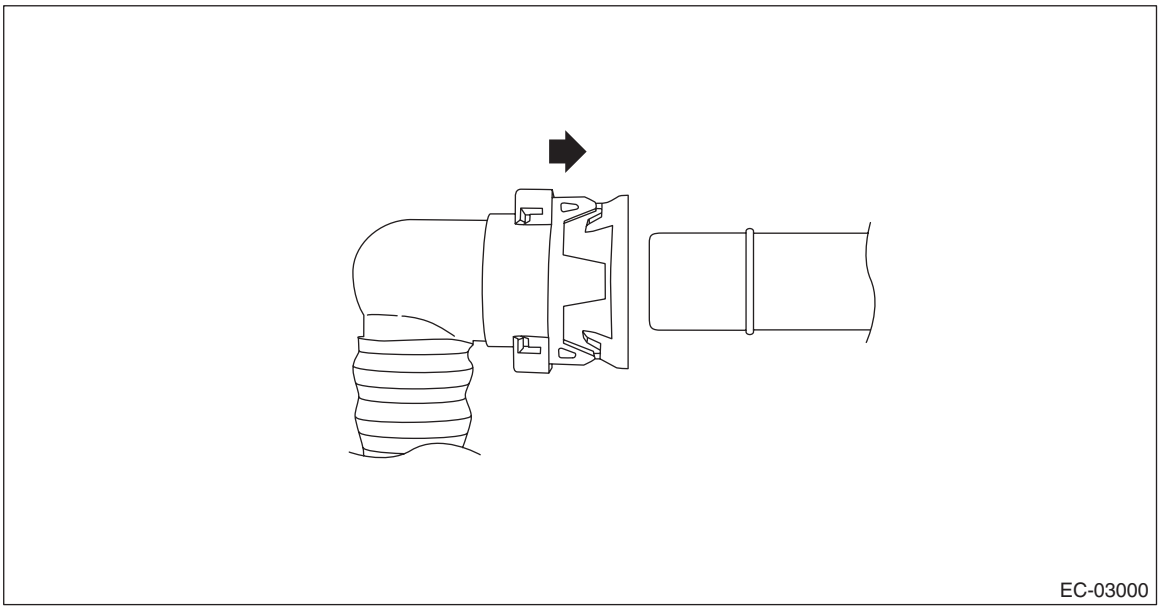
EC-03000

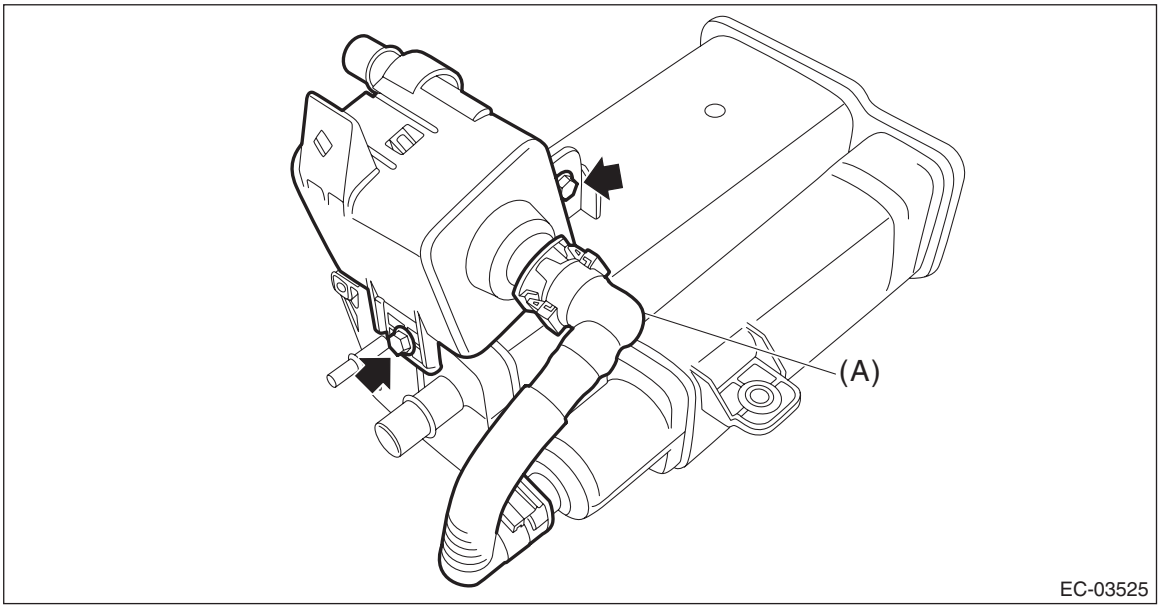

EC-03525

3) Connect the vent tube (A), canister drain tube (B) and purge tube (C), and install the hose clamp (D).

CAUTION:
- **Make sure there are no damage or dust on connections. If necessary, clean the seal surface of the pipe.**
- **Make sure that the quick connector is securely connected.**

NOTE:
Connect the quick connector as shown in the figure.
- Vent tube (A) and canister drain tube (B) (Slider color is red or green.)

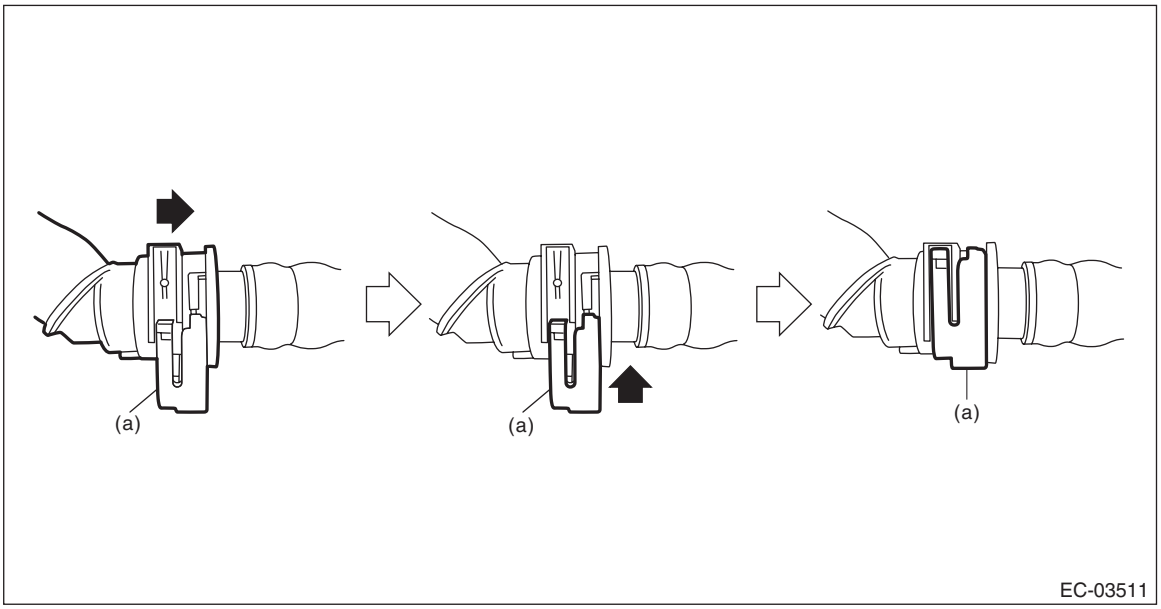

(a) Slider

- Vent tube (A) and canister drain tube (B) (Slider color is white.)

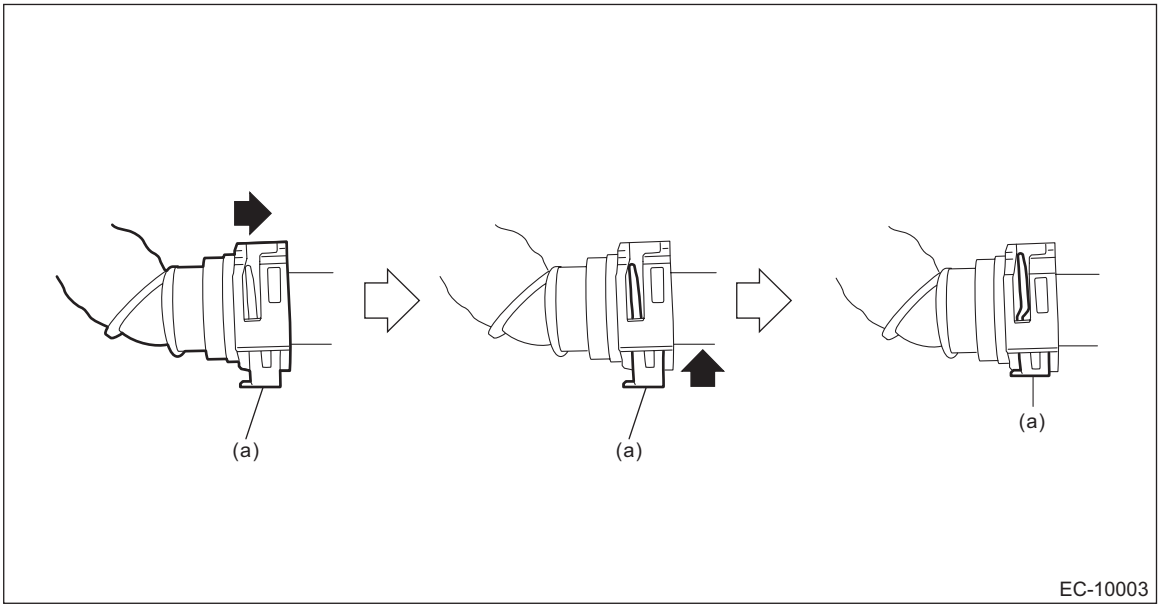

(a) Slider

- Purge tube (C)

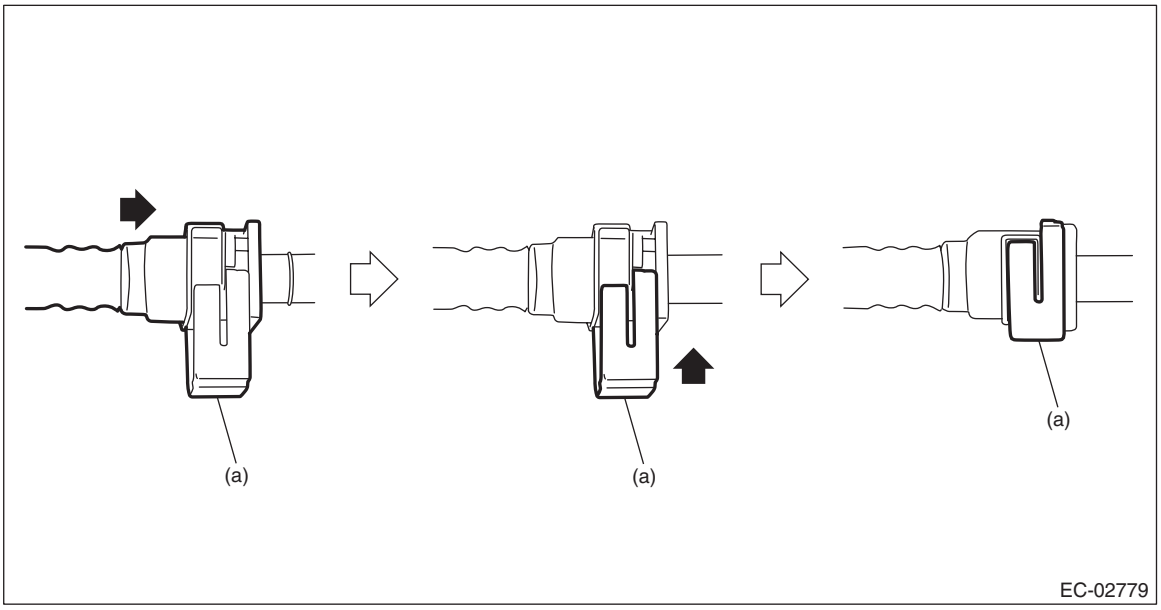

(a) Slider

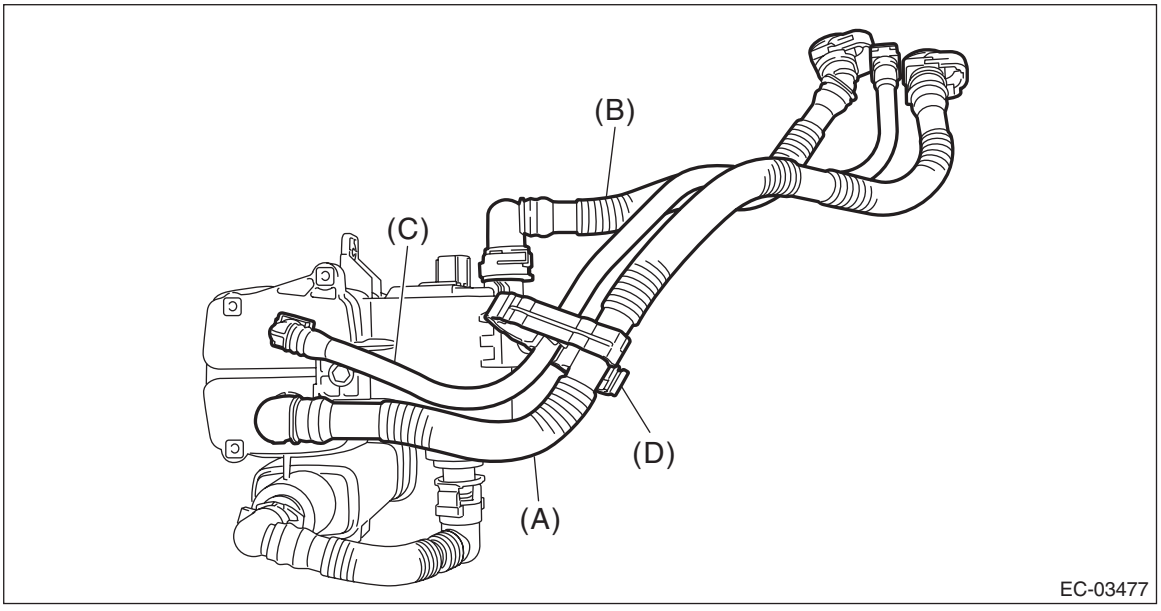

4) Install the canister protector.

Tightening torque:
8 N·m (0.8 kgf-m, 5.9 ft-lb)

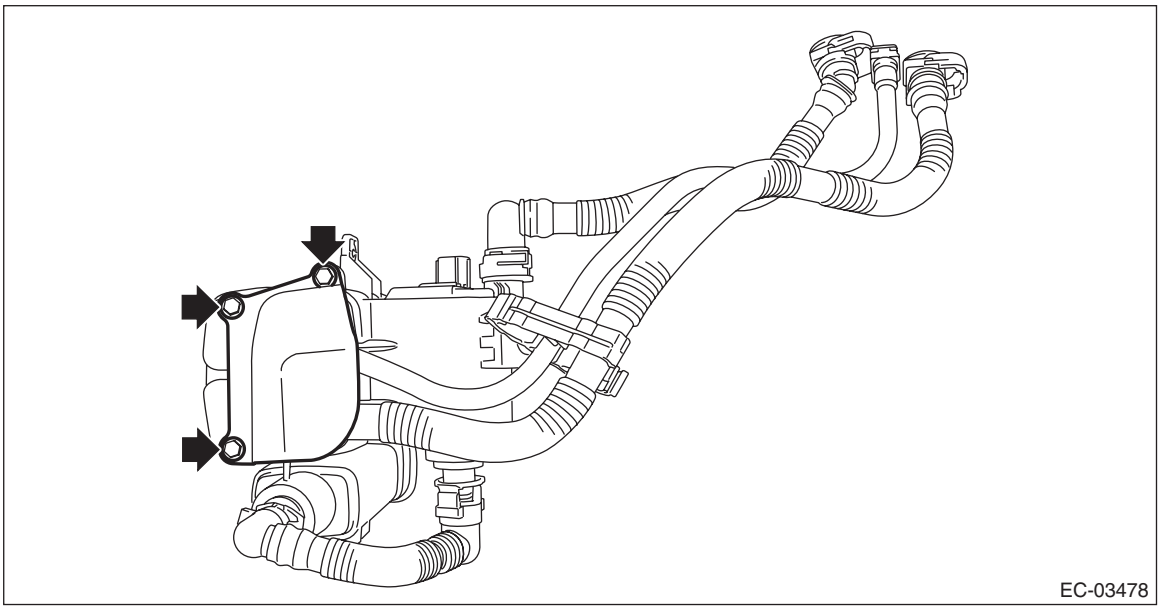

5) Install the canister.

Tightening torque:
8 N·m (0.8 kgf-m, 5.9 ft-lb)

6) Connect the connector (A) to the canister and install the harness clip (B).

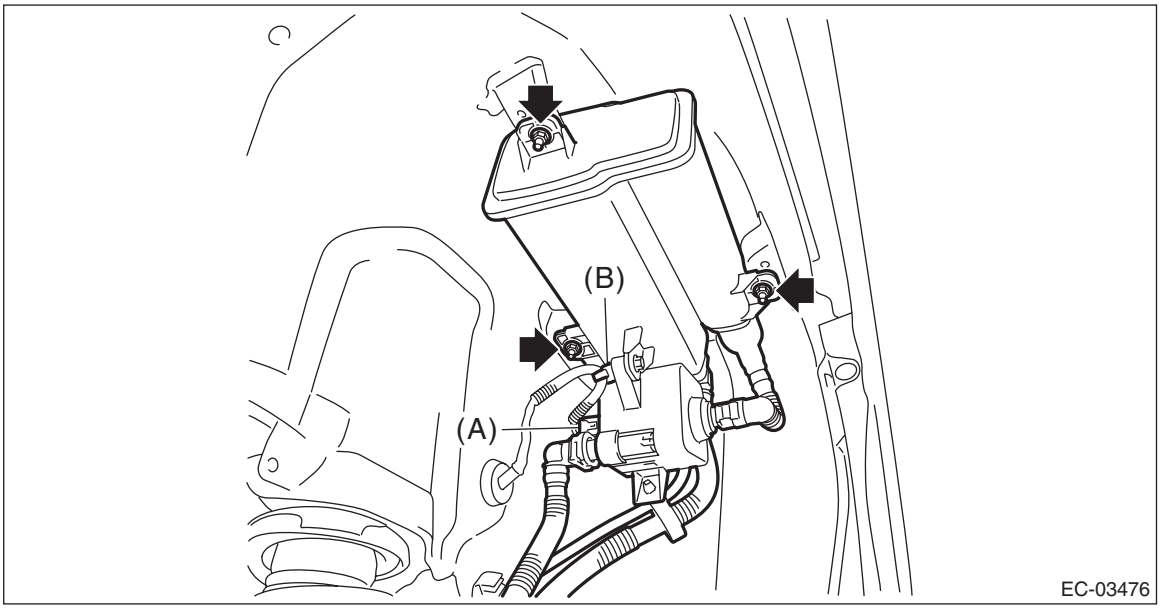

7) Connect the quick connectors of the vent tube (A), canister drain tube (B) and purge tube (C), and install the tube clamp (D).

CAUTION:
- **Make sure there are no damage or dust on connections. If necessary, clean the seal surface of the pipe.**
- **Make sure that the quick connector is securely connected.**

NOTE:
Connect the quick connector as shown in the figure.
- Vent tube (A) and canister drain tube (B) (Slider color is red or green.)

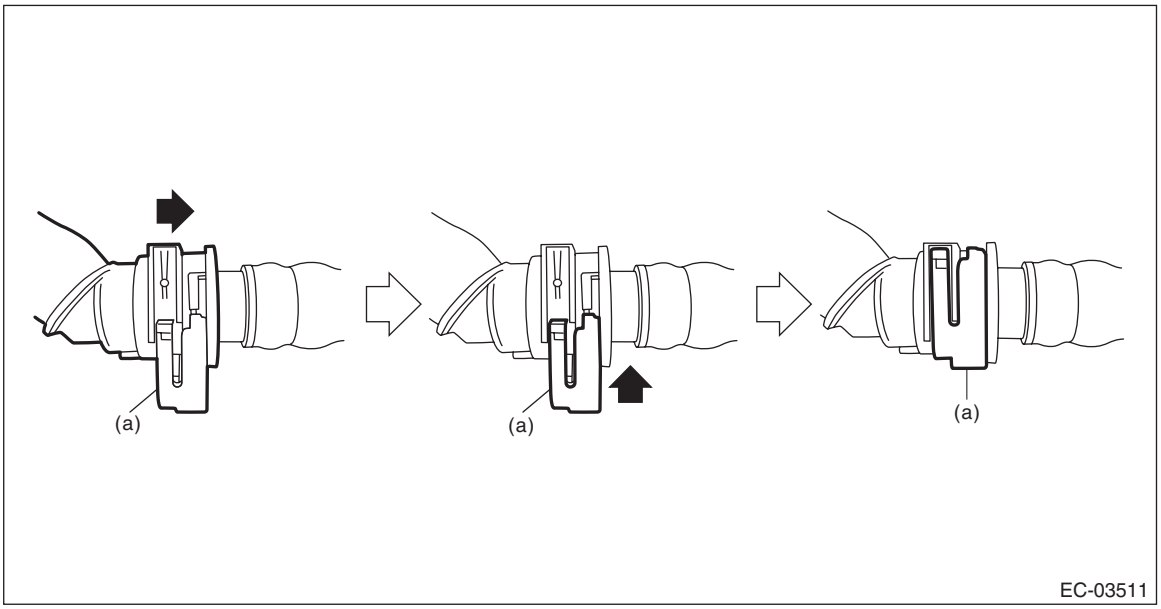

(a) Slider

- Vent tube (A) and canister drain tube (B) (Slider color is white.)

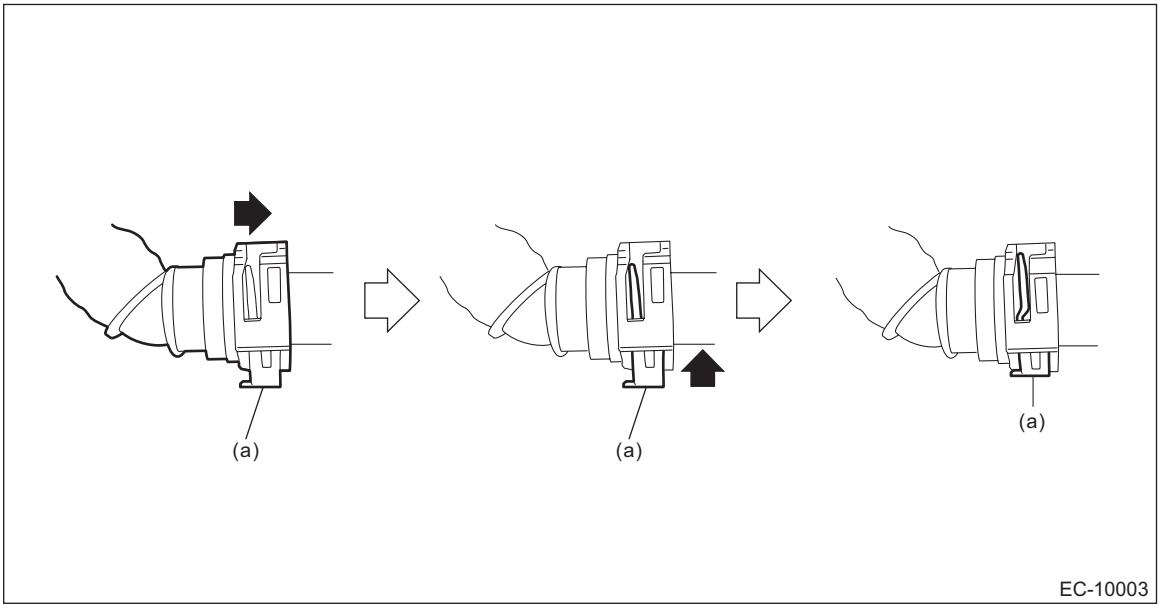

(a) Slider

- Purge tube (C)

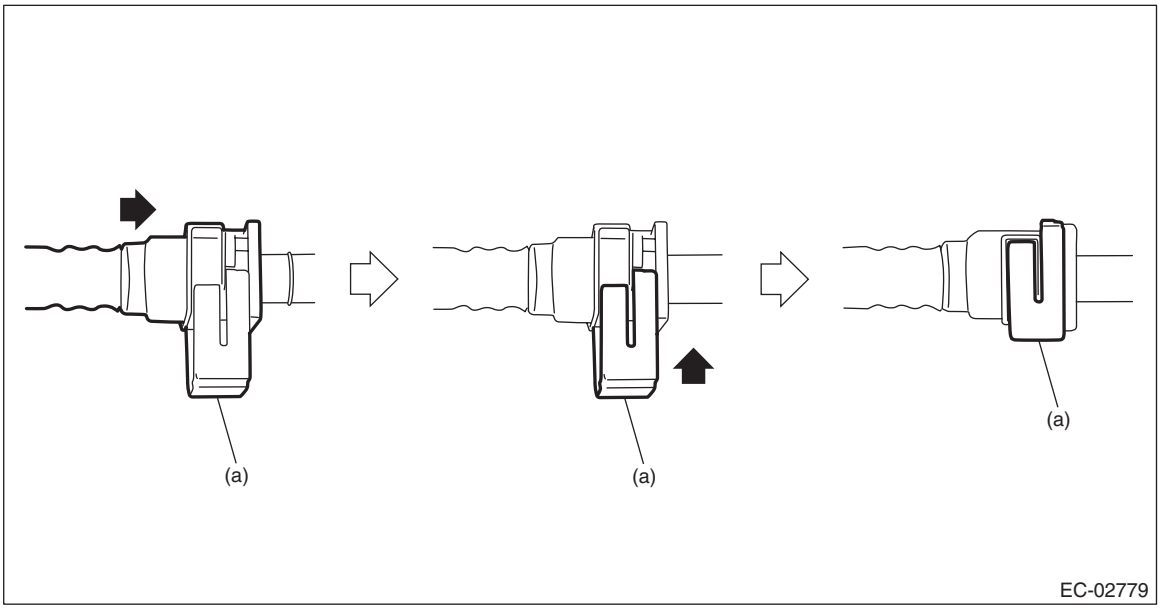

(a) Slider

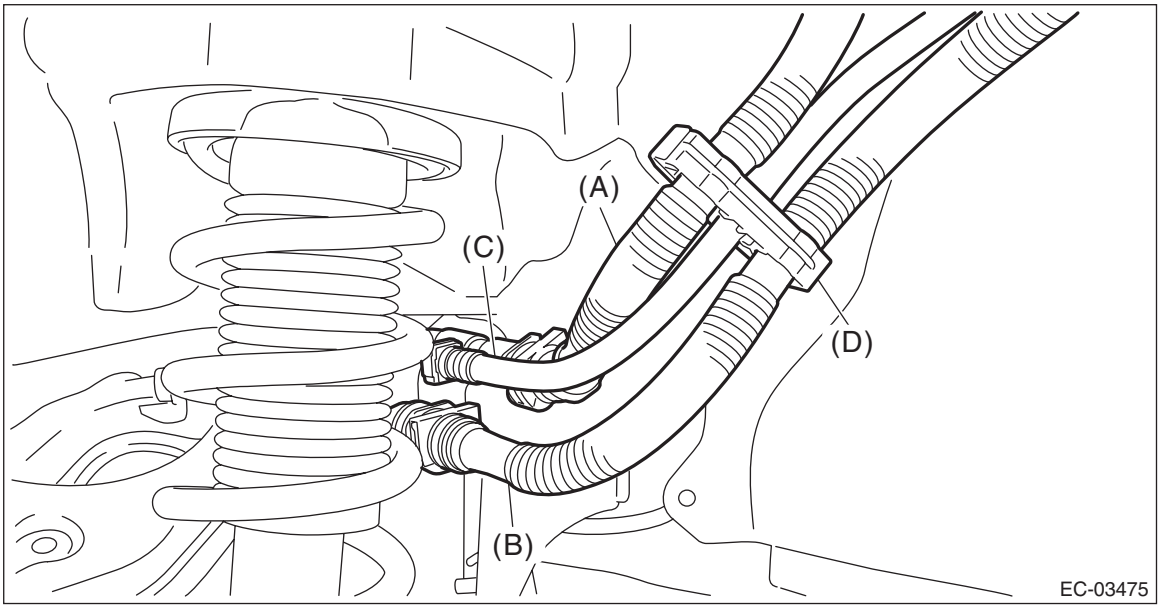

8) Install the rear mud guard LH. <Ref. to EI-29, INSTALLATION, Mud Guard.>
9) Lower the vehicle.
10) Install the rear wheel LH. <Ref. to WT-5, INSTALLATION, Tire and Wheel.>
11) Connect the ground terminal to battery sensor. <Ref. to RC-4, BATTERY, NOTE, Repair Contents.>

C: INSPECTION

1) Check that the canister has no deformation, cracks or other damages.
2) Check that the tube has no cracks, damage or loose part.

5. Purge Control Solenoid Valve

A: REMOVAL

1) Remove the collector cover.
   (1) Carefully pull up the rear of collector cover at two positions (A).
   (2) Carefully pull up the front of collector cover at two positions (B) while moving it forward.

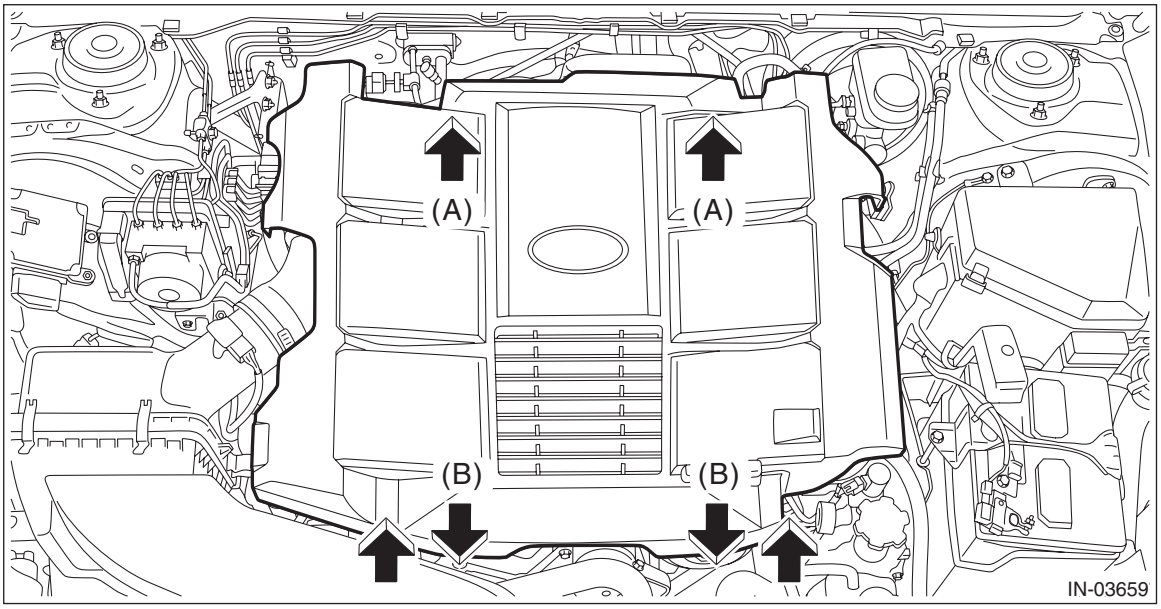

2) Disconnect the ground terminal from battery sensor. <Ref. to RC-4, BATTERY, NOTE, Repair Contents.>
3) Loosen the clamp (A) securing the air intake boot.
4) Remove the bolt (B) securing the air intake boot to the collector cover bracket.

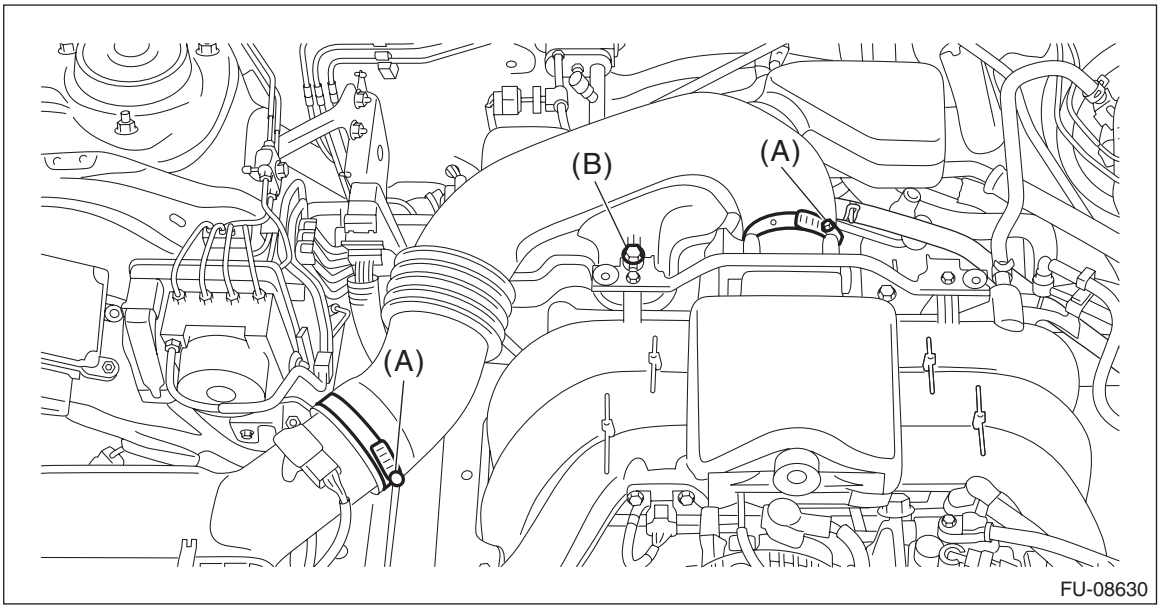

5) Remove the air intake boot from the throttle body and the air cleaner case (rear), and move it to the left side wheel apron.

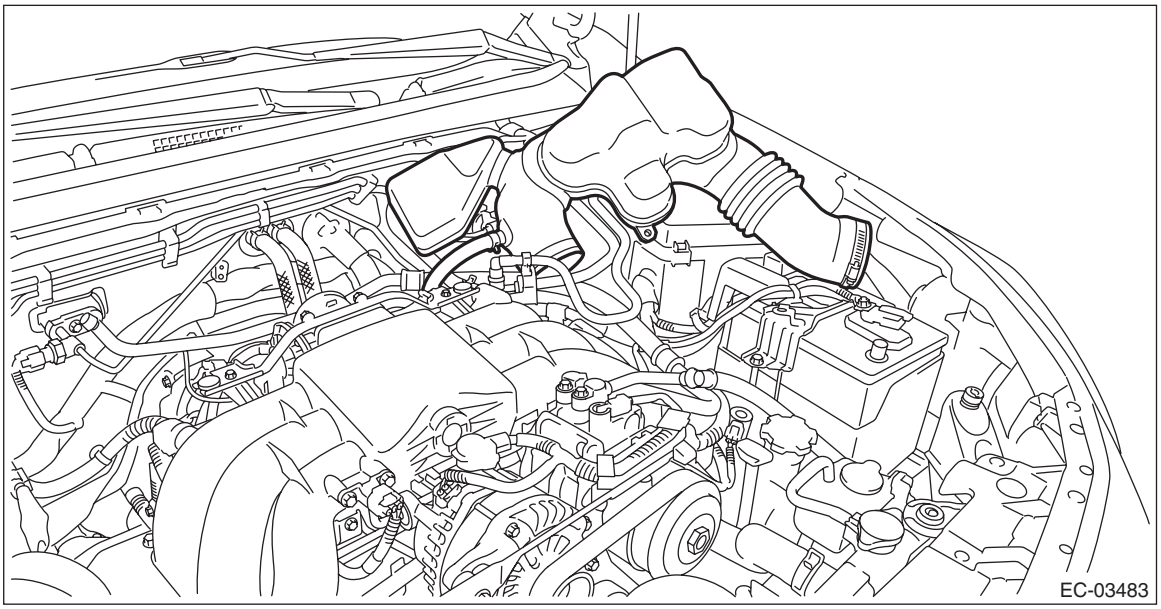

6) Disconnect the connector (A) and vacuum hose (B) from the purge control solenoid valve, and remove the purge control solenoid valve.

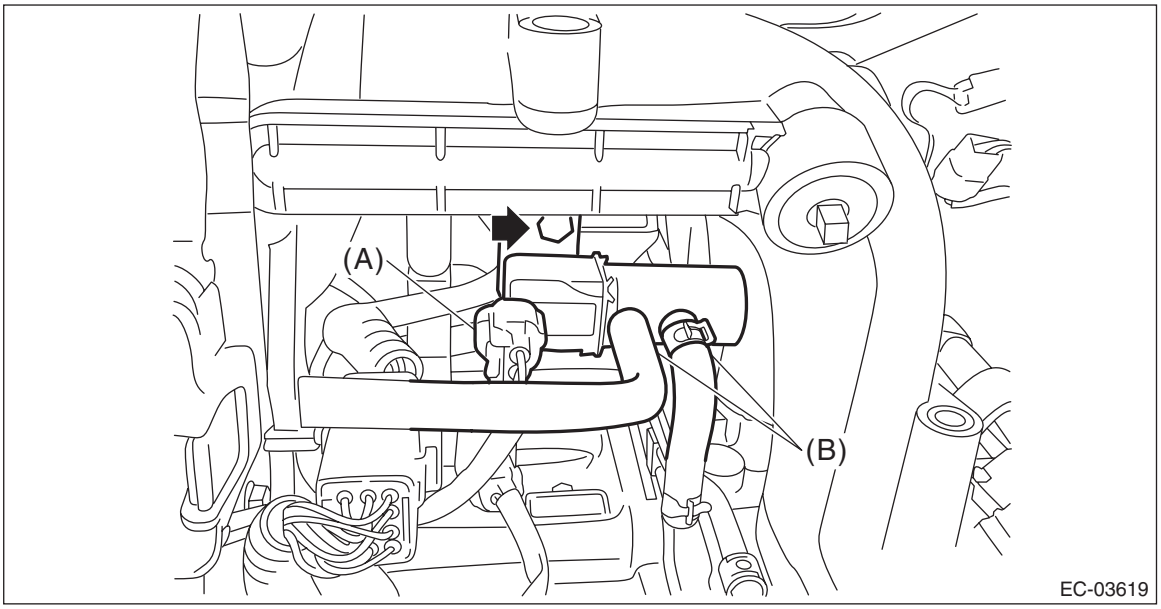

B: INSTALLATION

1) Install the purge control solenoid valve, and connect the connector and vacuum hose to the purge control solenoid valve.

NOTE:
Connect the vacuum hose as shown in the figure.

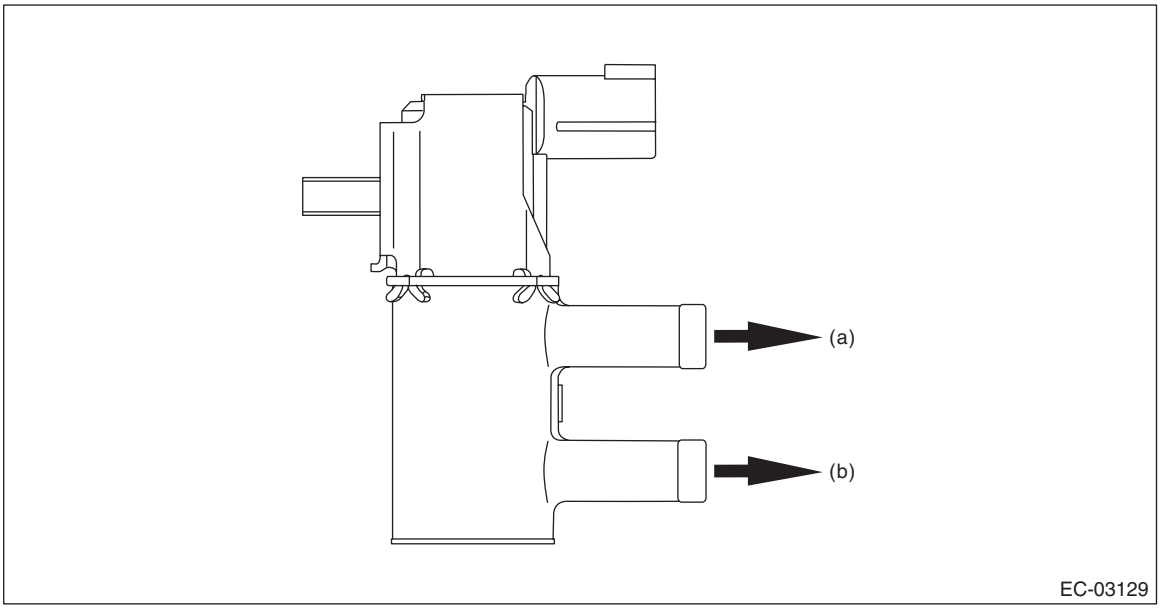

(a) To intake manifold (b) To fuel pipe

Tightening torque:
19 N·m (1.9 kgf-m, 14.0 ft-lb)

2) Install the air intake boot. <Ref. to IN(H4DO)-10, INSTALLATION, Air Intake Boot.>
3) Connect the ground terminal to battery sensor. <Ref. to RC-4, BATTERY, NOTE, Repair Contents.>
4) Install the collector cover.

C: INSPECTION

1. PURGE CONTROL SOLENOID VALVE

1) Check that the purge control solenoid valve has no deformation, cracks or other damages.
2) Measure the resistance between the purge control solenoid valve terminals.

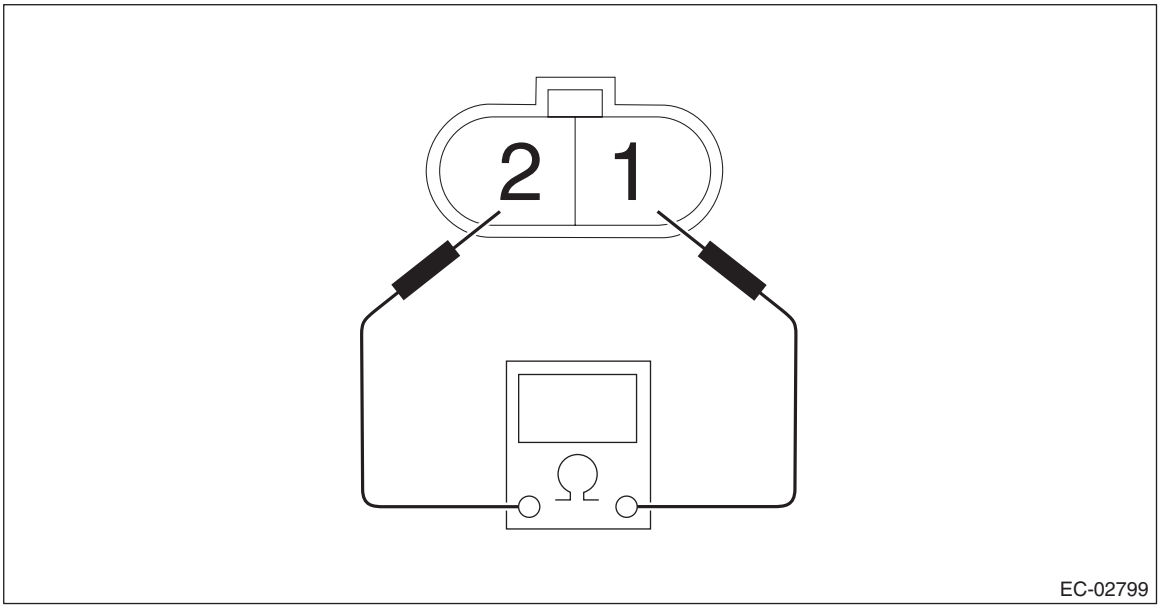

Terminal No.	Standard
1 and 2	24±3 Ω (20°C (68°F))

3) Check that air does not come out from (B) when air is blown into (A).

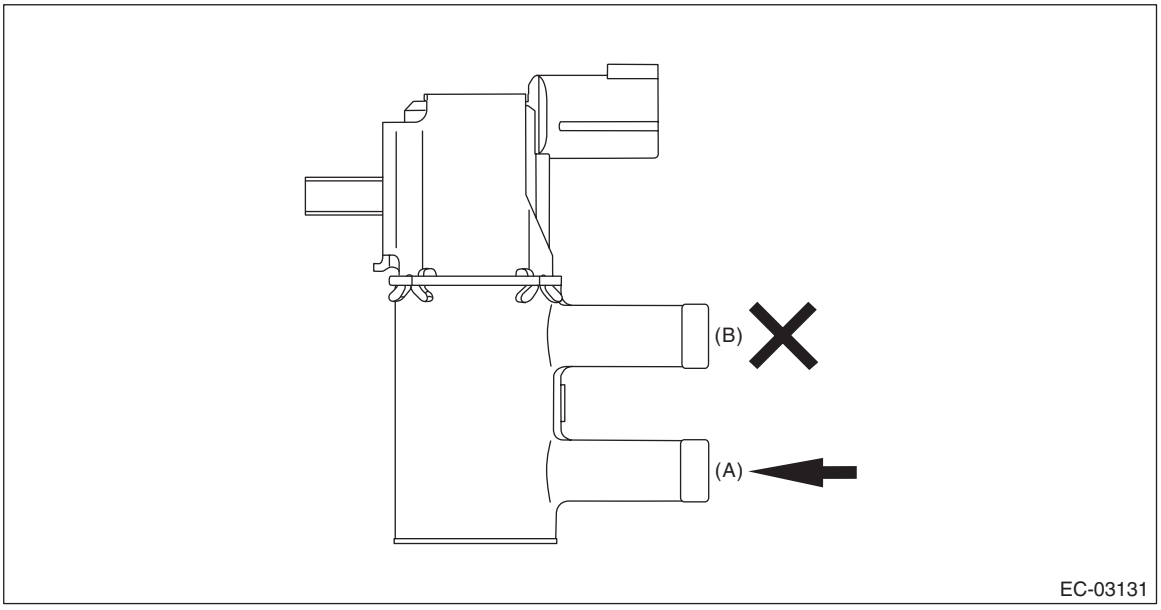

4) Connect the battery positive terminal to the terminal No. 1 and the battery negative terminal to the terminal No. 2. Check that air is discharged from (B), when supplying air to (A).

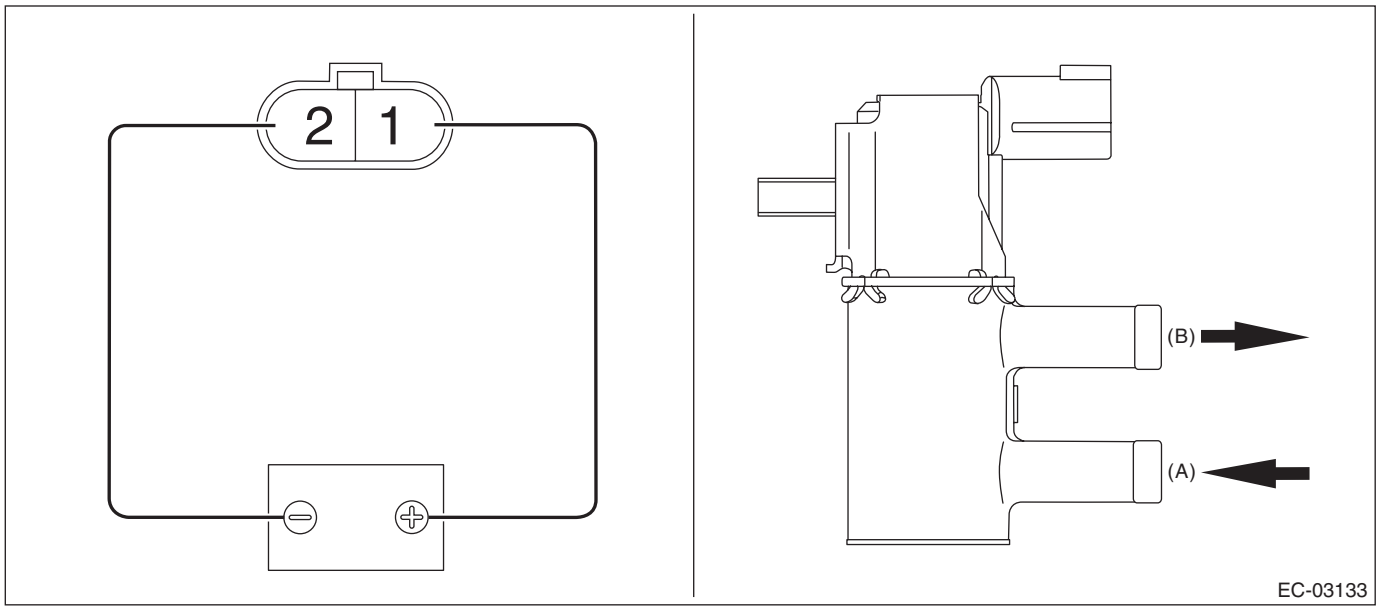

2. OTHER INSPECTIONS

Check the vacuum hose for cracks, damage or looseness.

6. EGR Control Valve

A: REMOVAL

1) Remove the collector cover.
   (1) Carefully pull up the rear of collector cover at two positions (A).
   (2) Carefully pull up the front of collector cover at two positions (B) while moving it forward.

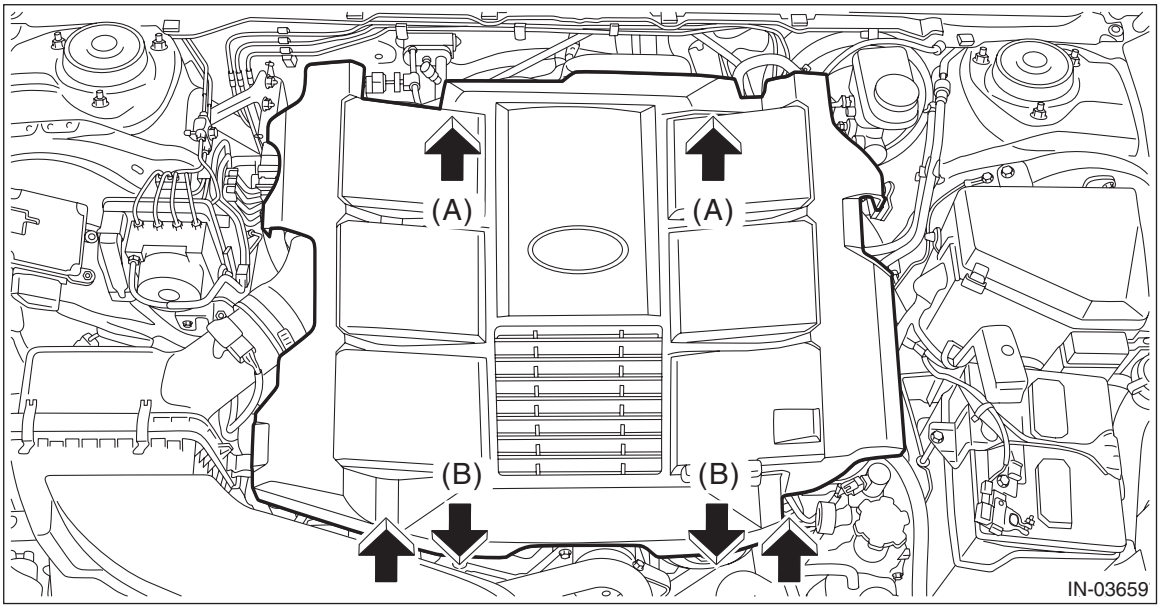

2) Disconnect the ground terminal from battery sensor. <Ref. to RC-4, BATTERY, NOTE, Repair Contents.>
3) Loosen the clamp (A) securing the air intake boot.
4) Remove the bolt (B) securing the air intake boot to the collector cover bracket.

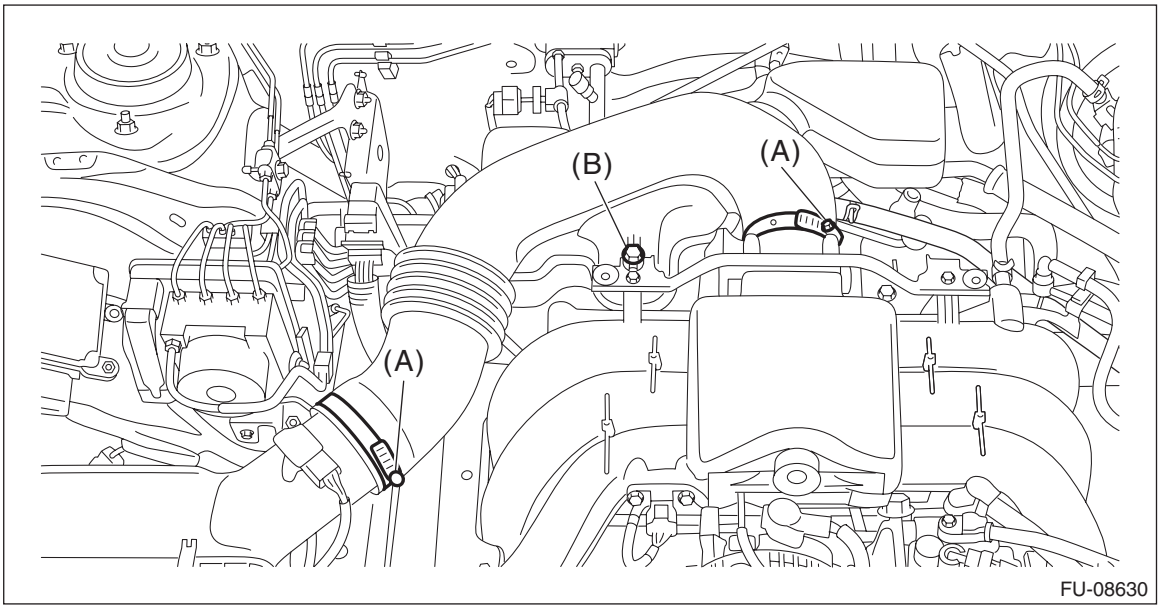

5) Remove the air intake boot from the throttle body and the air cleaner case (rear), and move it to the left side wheel apron.

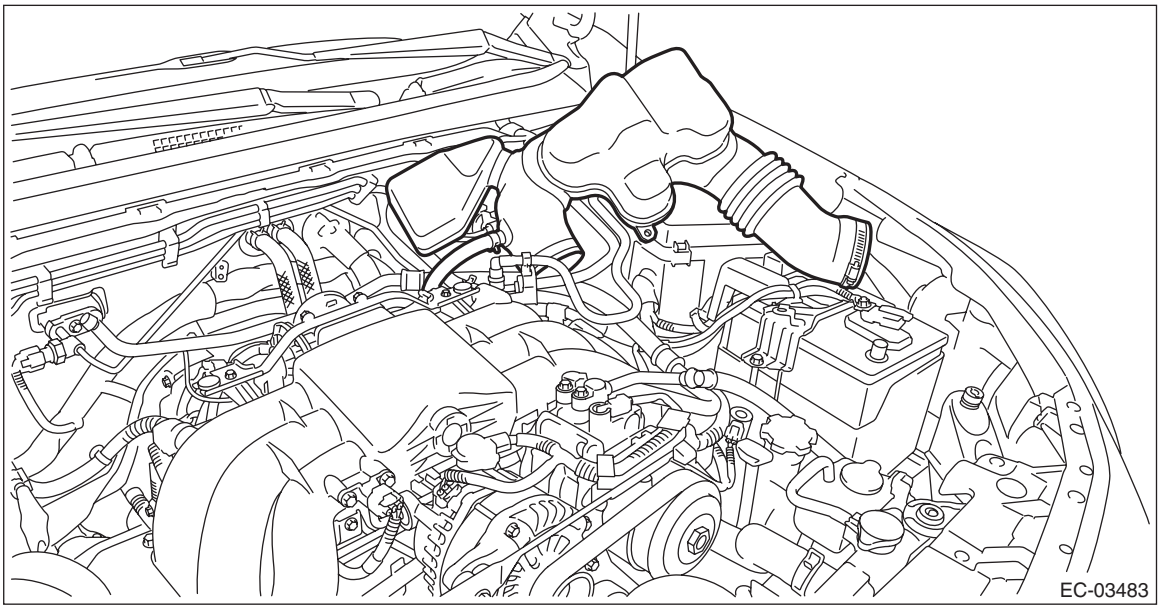

6) Remove the EGR pipe A. <Ref. to EC(H6DO)-25, EGR PIPE A, REMOVAL, EGR Pipe.>
7) Disconnect the connector (A) from EGR control valve, and remove the EGR control valve.

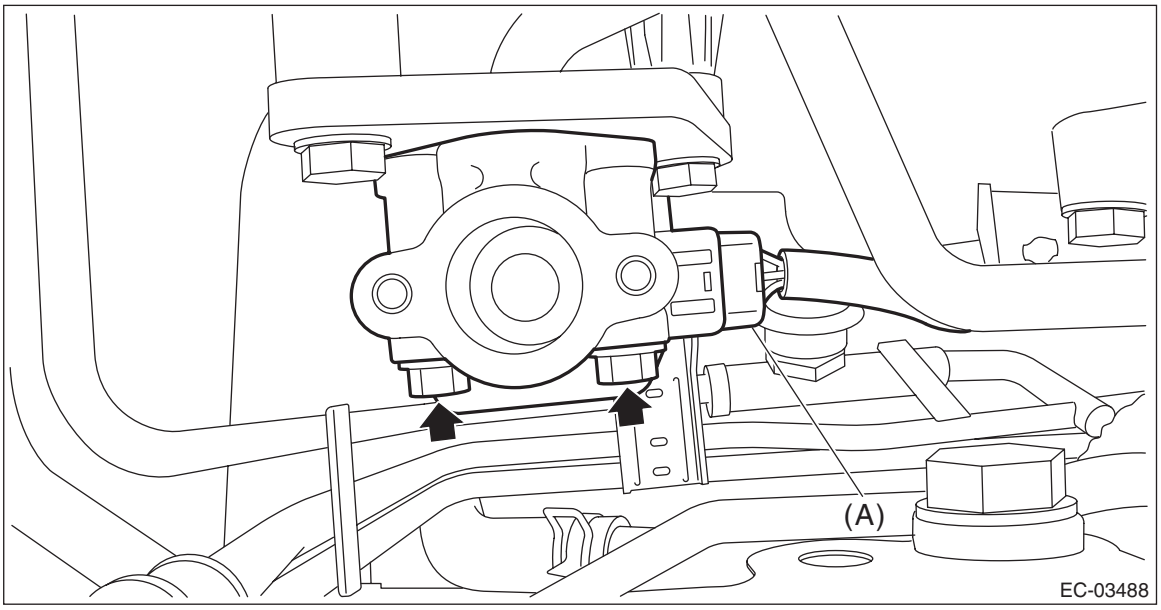

B: INSTALLATION

1) Install the EGR control valve, and connect the connector to the EGR control valve.

NOTE:
Use a new gasket.

Tightening torque:
19 N·m (1.9 kgf-m, 14.0 ft-lb)

2) Install the EGR pipe A. <Ref. to EC(H6DO)-28, EGR PIPE A, INSTALLATION, EGR Pipe.>
3) Install the air intake boot. <Ref. to IN(H6DO)-11, INSTALLATION, Air Intake Boot.>
4) Connect the ground terminal to battery sensor. <Ref. to RC-4, BATTERY, NOTE, Repair Contents.>

C: INSPECTION

1) Check that the EGR control valve has no deformation, cracks or other damages.
2) Measure the resistance between EGR control valve terminals.

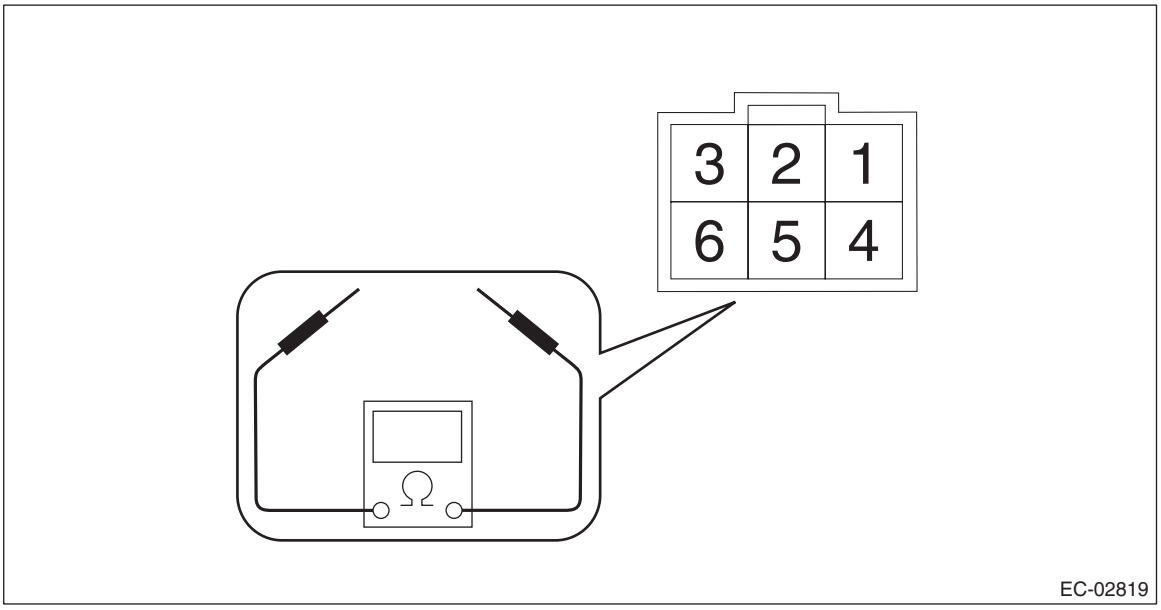

Terminal No.	Standard
2 and 1	22±2 Ω
2 and 3	22±2 Ω
5 and 4	22±2 Ω
5 and 6	22±2 Ω

7. EGR Pipe

A: REMOVAL

1. EGR PIPE A

1) Disconnect the ground terminal from battery sensor. <Ref. to RC-4, BATTERY, NOTE, Repair Contents.>
2) Remove the collector cover.
   (1) Carefully pull up the rear of collector cover at two positions (A).
   (2) Carefully pull up the front of collector cover at two positions (B) while moving it forward.

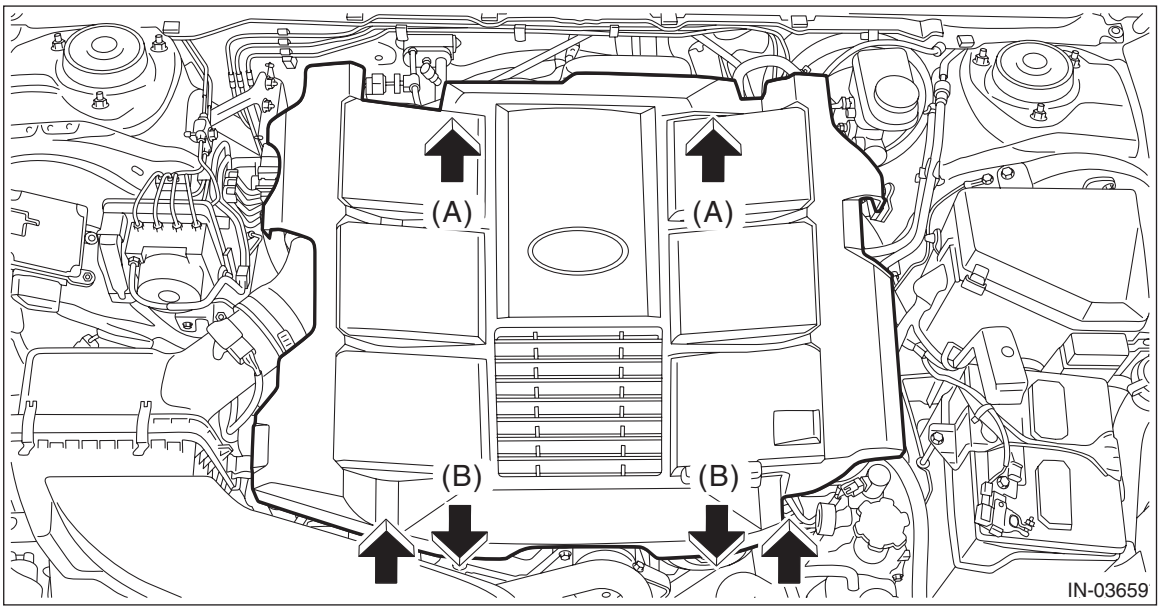

3) Loosen the clamp (A) securing the air intake boot.
4) Remove the bolt (B) securing the air intake boot to the collector cover bracket.

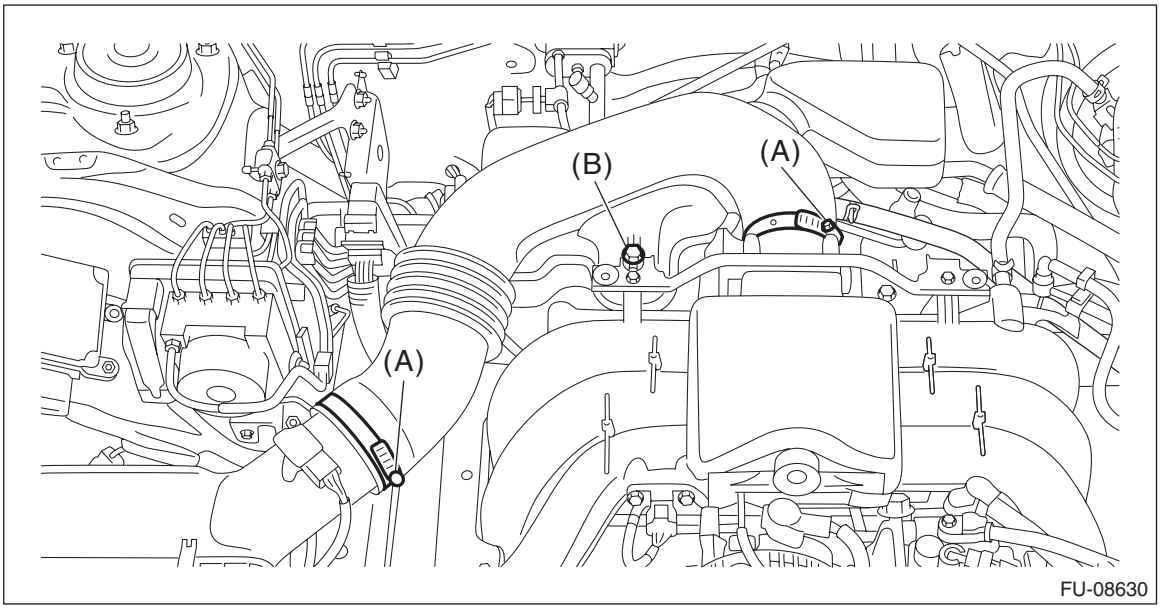

5) Remove the air intake boot from the throttle body and the air cleaner case (rear), and move it to the left side wheel apron.

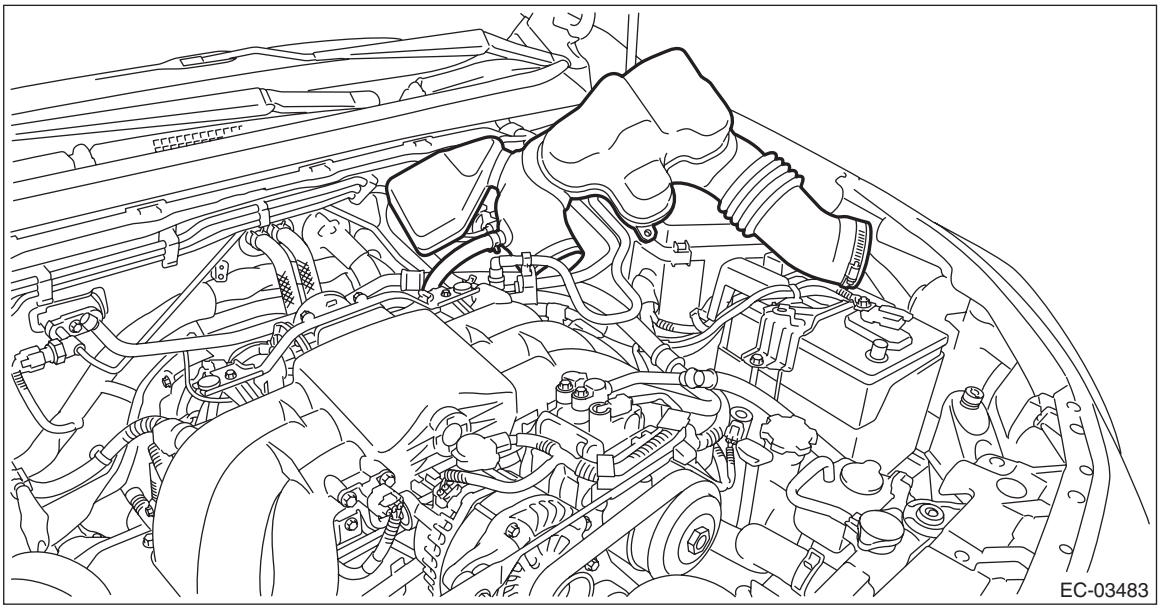

6) Lift up the vehicle.
7) Remove the under cover. <Ref. to EI-28, REMOVAL, Front Under Cover.>
8) Remove the bolts securing the EGR pipe A to the cylinder head.

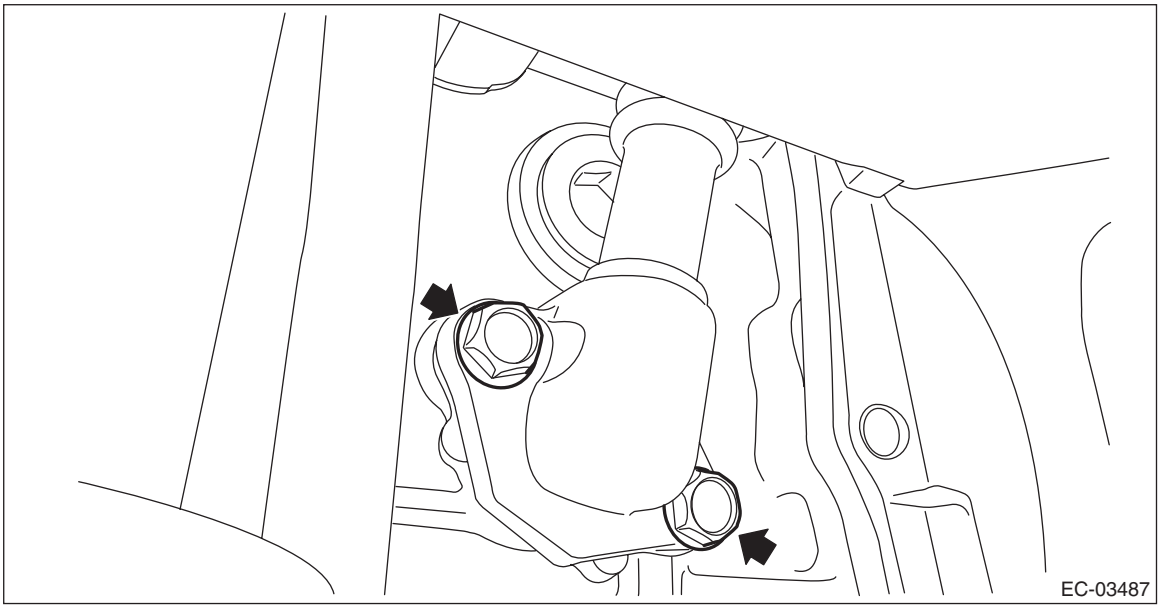

9) Lower the vehicle.
10) Remove the bolts securing the EGR pipe A to the EGR control valve, and pull out the EGR pipe A upward.

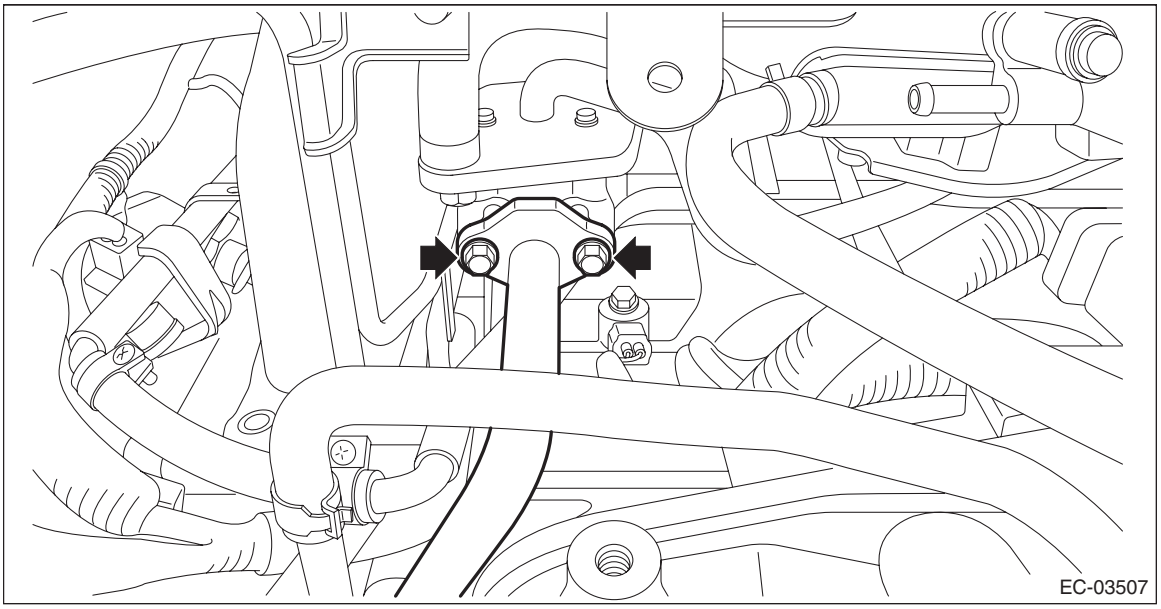

2. EGR PIPE B

1) Remove the intake manifold. <Ref. to FU(H6DO)-24, REMOVAL, Intake Manifold.>
2) Remove the EGR pipe B from the intake manifold.

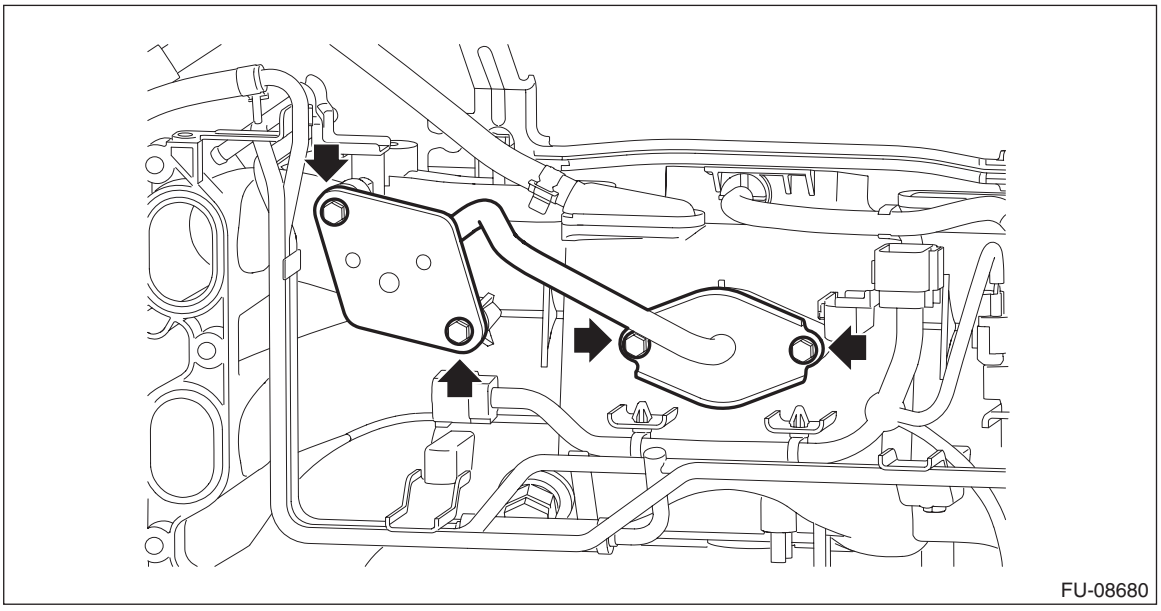

B: INSTALLATION

1. EGR PIPE A

1) Temporarily attach the EGR pipe A to the cylinder head and the EGR control valve.

NOTE:
Use a new gasket.

2) Tighten the bolts securing the EGR pipe A to the EGR control valve.

Tightening torque:
6.4 N·m (0.7 kgf-m, 4.7 ft-lb)

3) Lift up the vehicle.
4) Tighten the bolts securing the EGR pipe A to the cylinder head.

Tightening torque:
6.4 N·m (0.7 kgf-m, 4.7 ft-lb)

5) Install the under cover. <Ref. to EI-28, INSTALLATION, Front Under Cover.>
6) Lower the vehicle.
7) Install the air intake boot. <Ref. to IN(H6DO)-11, INSTALLATION, Air Intake Boot.>
8) Install the collector cover.
9) Connect the ground terminal to battery sensor. <Ref. to RC-4, BATTERY, NOTE, Repair Contents.>

2. EGR PIPE B

1) Install the EGR pipe B to the intake manifold.

NOTE:
Use a new gasket.

Tightening torque:
19 N·m (1.9 kgf-m, 14.0 ft-lb)

2) Install the intake manifold. <Ref. to FU(H6DO)-31, INSTALLATION, Intake Manifold.>

C: INSPECTION

Check that the EGR pipe has no deformation, cracks or other damages.

8. Fuel Level Sensor

A: REMOVAL

Refer to “Fuel Level Sensor” for removal procedure. <Ref. to FU(H6DO)-125, REMOVAL, Fuel Level Sensor.>

B: INSTALLATION

Refer to “Fuel Level Sensor” for the installation procedure. <Ref. to FU(H6DO)-126, INSTALLATION, Fuel Level Sensor.>

C: INSPECTION

Refer to “Fuel Level Sensor” for the inspection procedure. <Ref. to FU(H6DO)-127, INSPECTION, Fuel Level Sensor.>

9. Fuel Sub Level Sensor

A: REMOVAL

Refer to “Fuel Sub Level Sensor” for removal procedure. <Ref. to FU(H6DO)-128, REMOVAL, Fuel Sub Level Sensor.>

B: INSTALLATION

Refer to “Fuel Sub Level Sensor” for the installation procedure. <Ref. to FU(H6DO)-131, INSTALLATION, Fuel Sub Level Sensor.>

C: INSPECTION

Refer to “Fuel Sub Level Sensor” for the inspection procedure. <Ref. to FU(H6DO)-134, INSPECTION, Fuel Sub Level Sensor.>

10.Drain Filter

A: REMOVAL

1) Remove the rear differential. (Sedan model) <Ref. to DI-46, REMOVAL, Rear Differential (VA-type).>
2) Disconnect the drain tube (A) from the drain filter.

NOTE:
Disconnect the quick connector as shown in the figure.

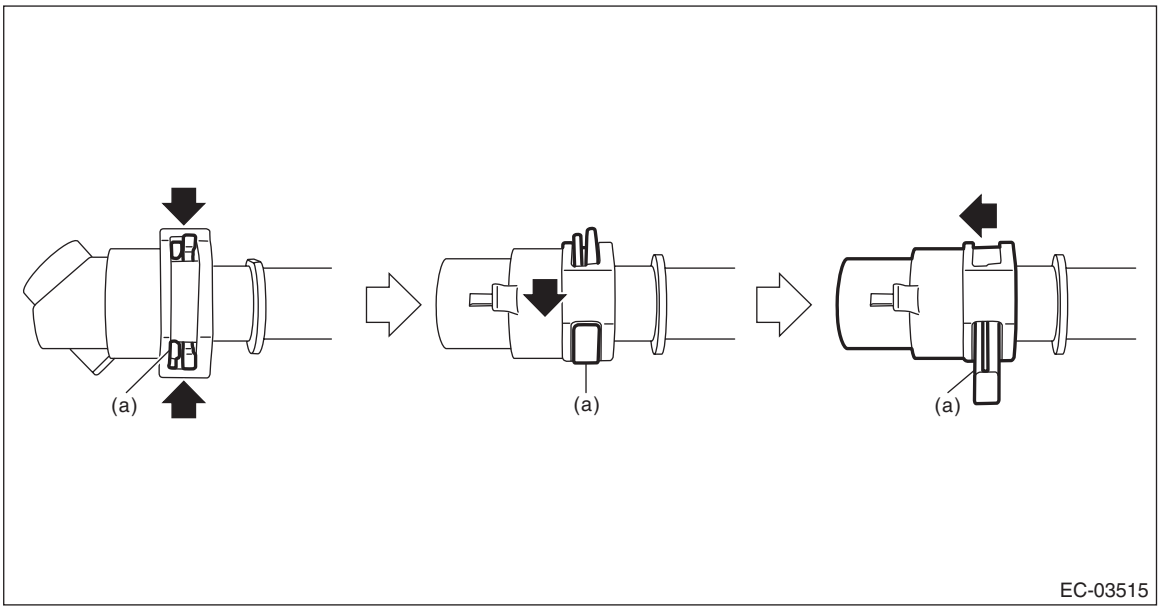

(a) Slider

3) Remove the drain filter.

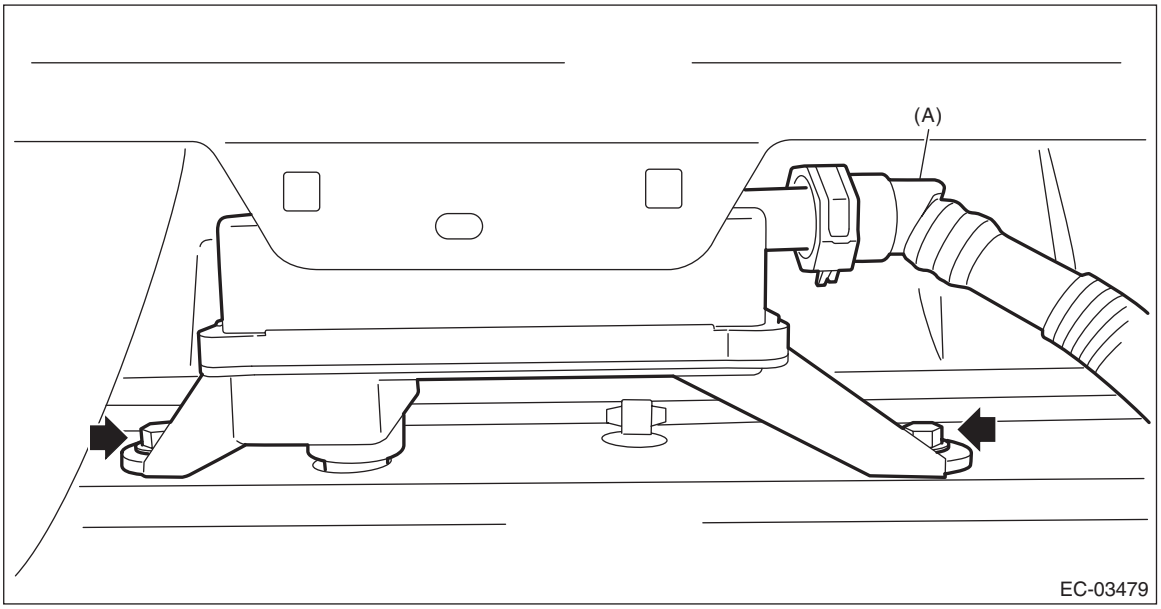

4) Disconnect the drain tube, and remove the drain tube from tube clamp (A) and tube clamp (B).

NOTE:
Disconnect the quick connector as shown in the figure.

- Color of the slider is either red or green

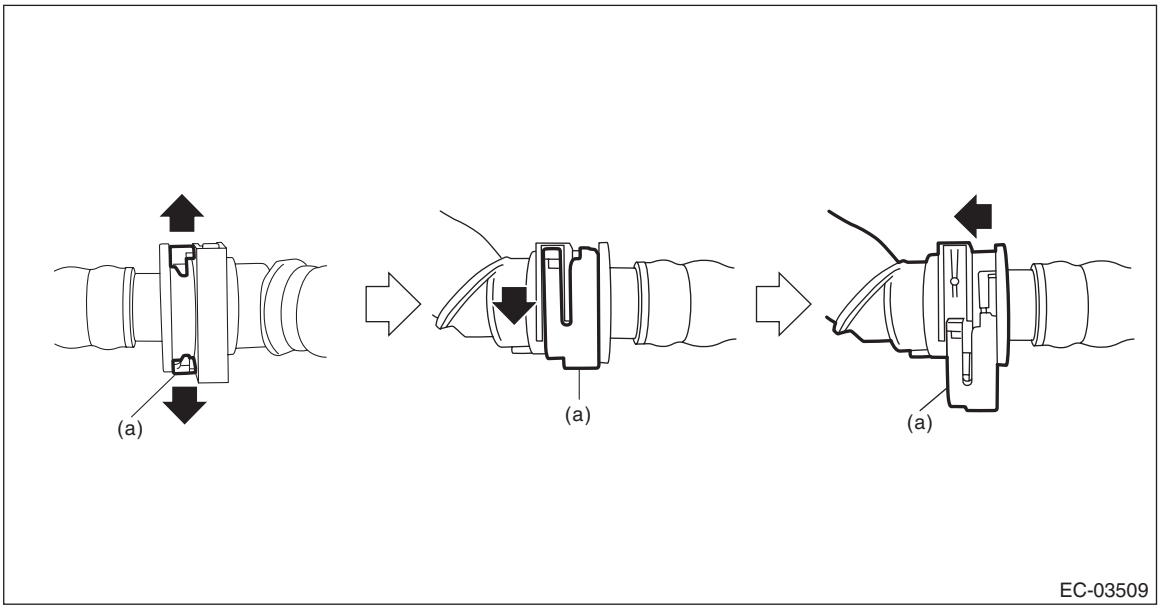

(a) Slider

- Color of the slider is white

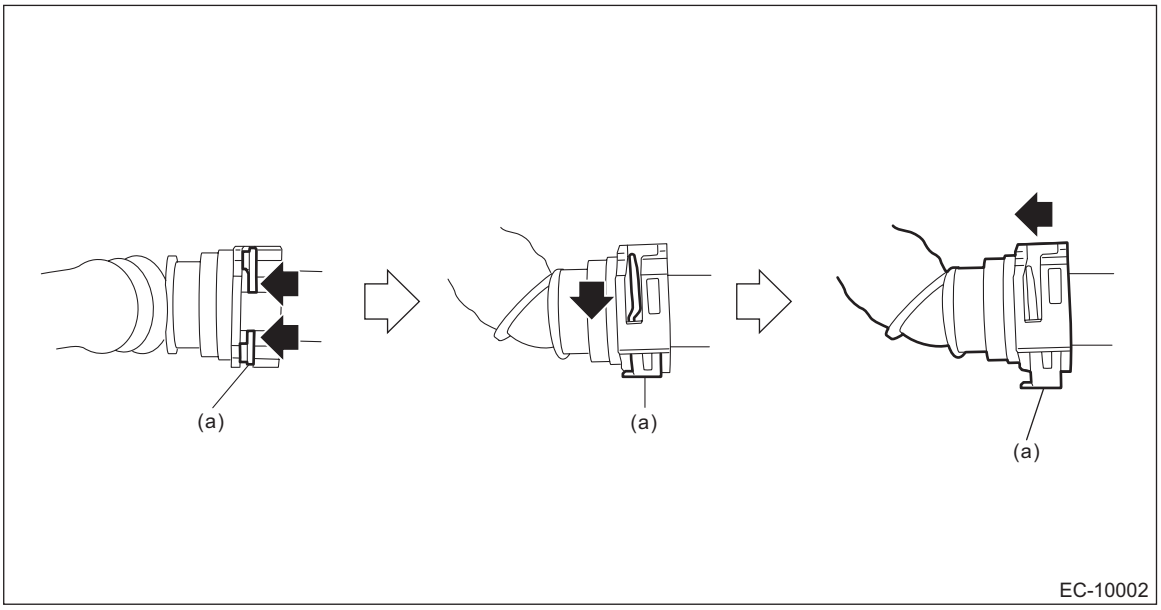

(a) Slider

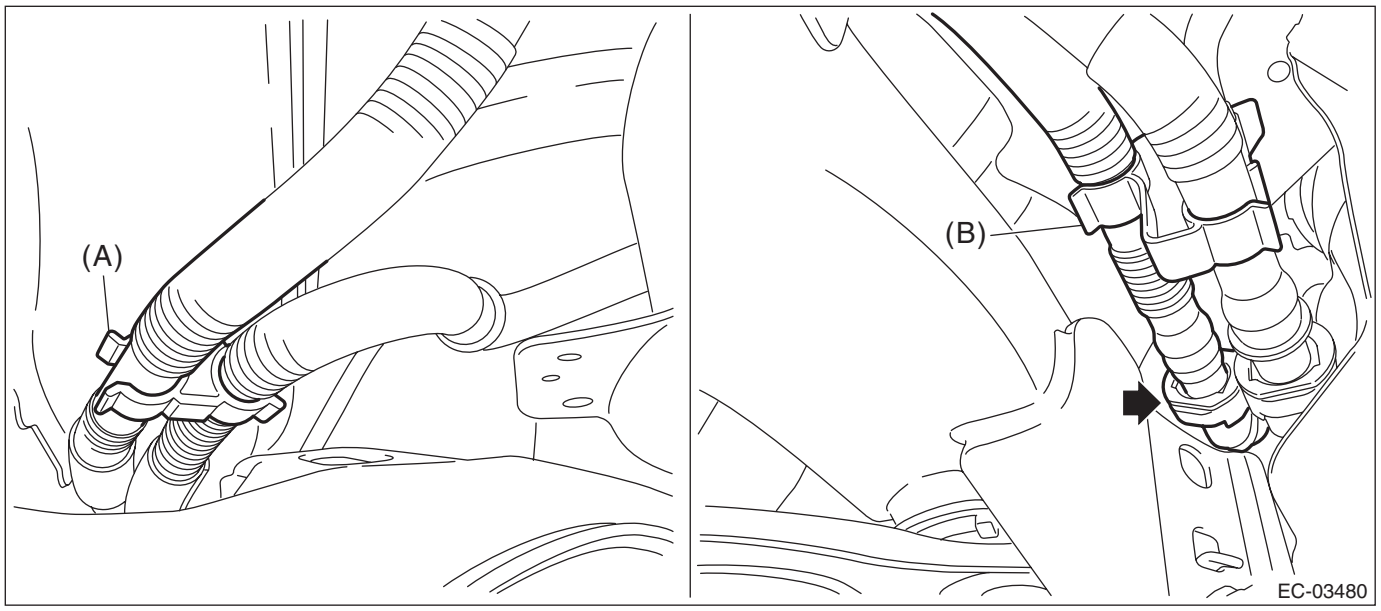

B: INSTALLATION

1) Connect the drain tube, and install the drain tube to the tube clamp (A) and tube clamp (B).

CAUTION:
- **Make sure there are no damage or dust on connections. If necessary, clean the seal surface of the pipe.**
- **Make sure that the quick connector is securely connected.**

NOTE:
Connect the quick connector as shown in the figure.
- Color of the slider is either red or green

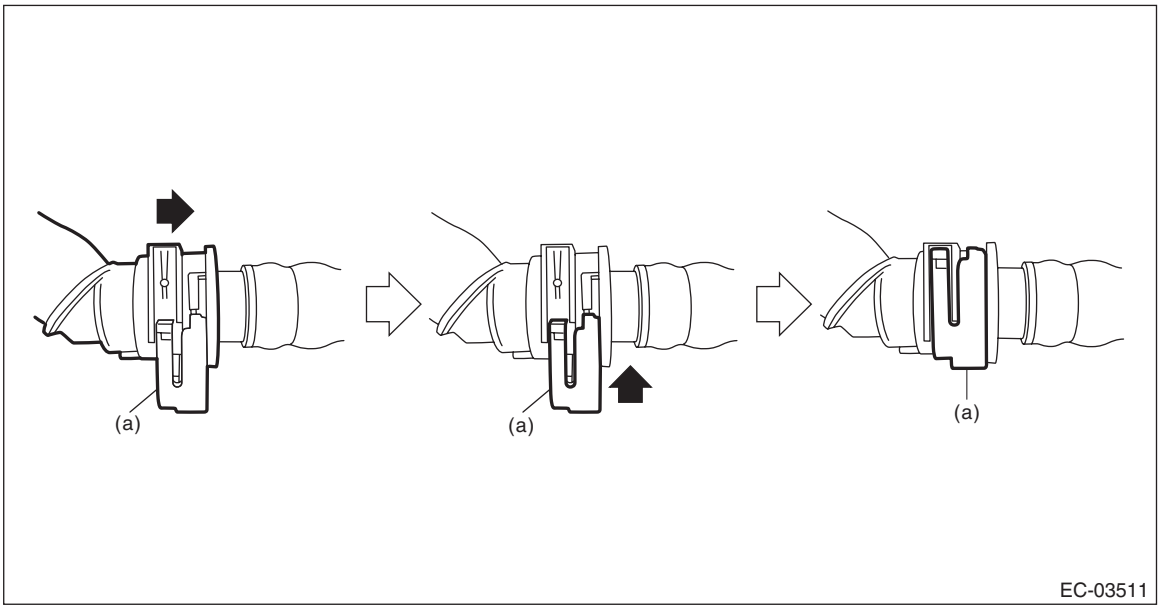

(a) Slider

- Color of the slider is white

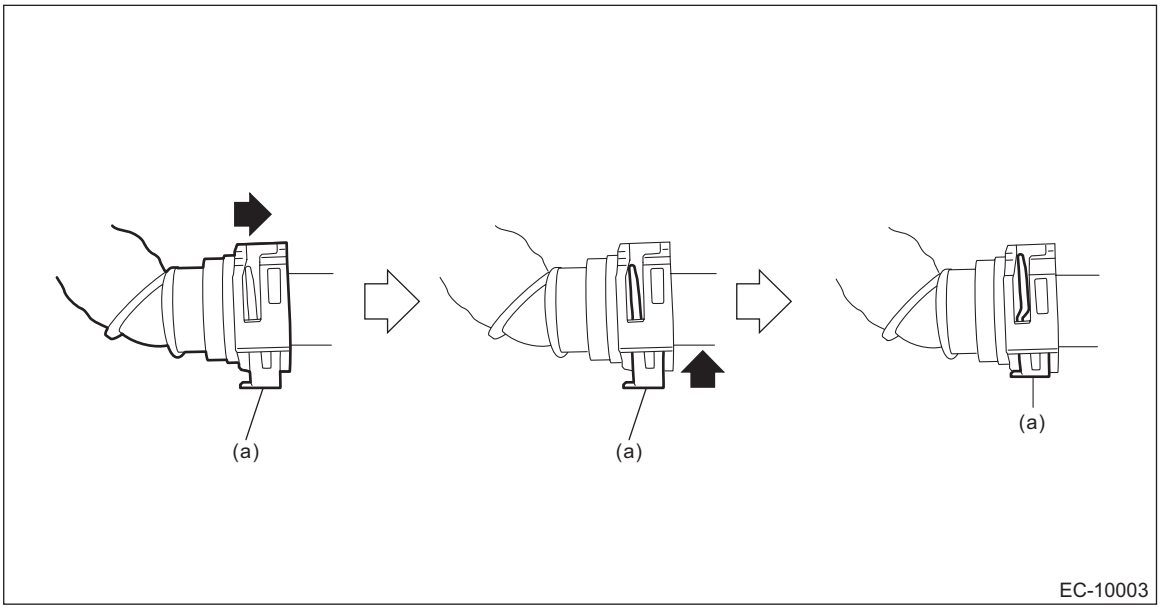

(a) Slider

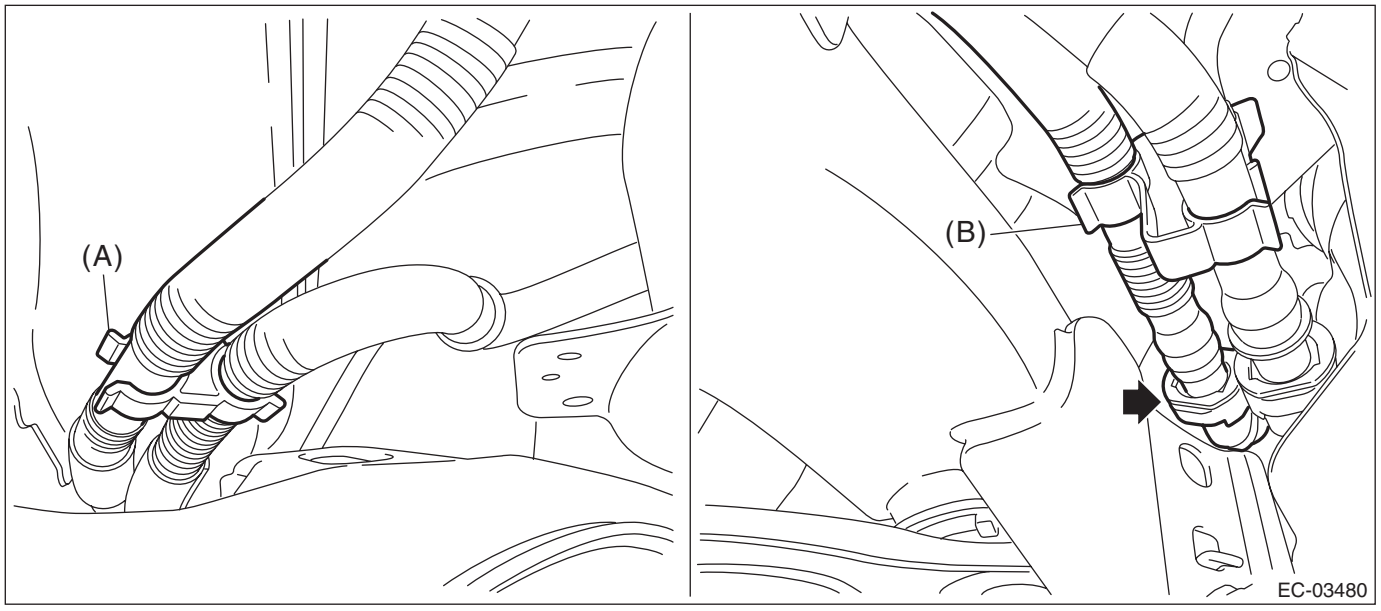

2) Install the drain filter.

Tightening torque:
7.5 N·m (0.8 kgf-m, 5.5 ft-lb)

3) Connect the drain tube (A) to the drain filter.

CAUTION:
• Make sure there are no damage or dust on connections. If necessary, clean the seal surface of the pipe.
• Make sure that the quick connector is securely connected.

NOTE:
Connect the quick connector as shown in the figure.

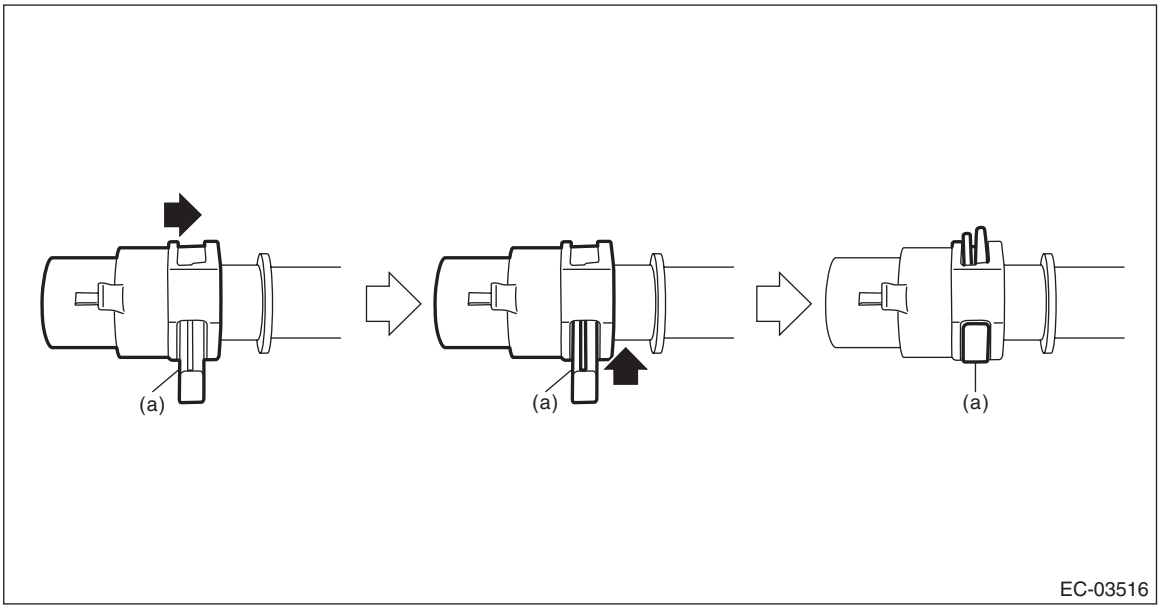

(a) Slider

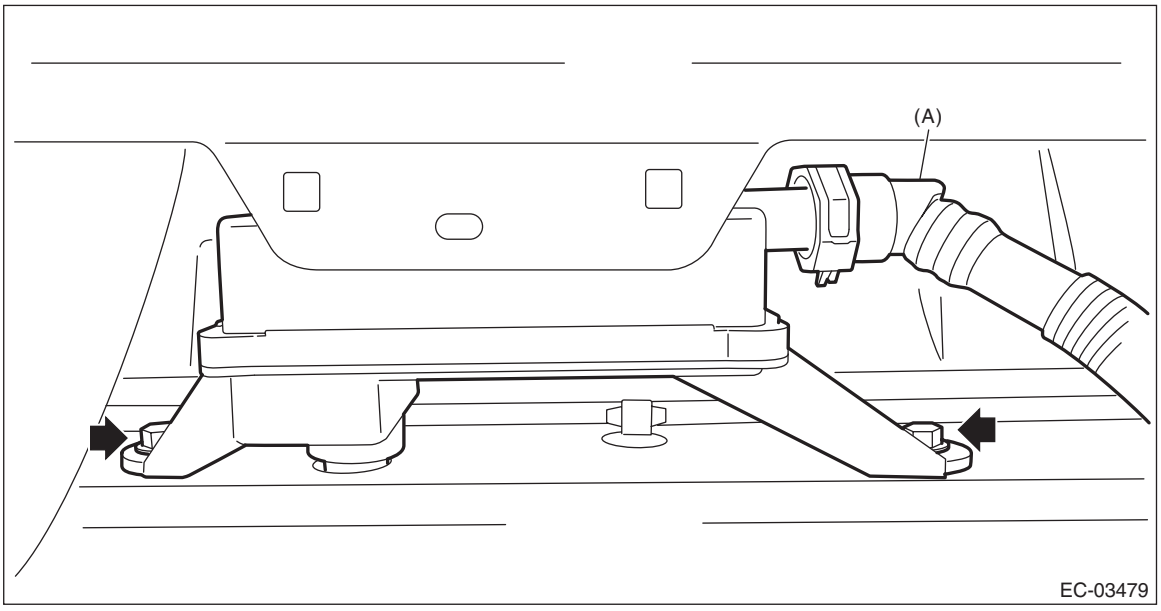

4) Install the rear differential. (Sedan model) <Ref. to DI-46, INSTALLATION, Rear Differential (VA-type).>

C: INSPECTION

1) Check that the drain filter and drain tube have no deformation, cracks or other damages.
2) Check that no foreign substances are clogged in the drain filter.

11.Leak Check Valve Assembly

A: SPECIFICATION

Refer to “Canister” for removal and installation of the leak check valve assembly. <Ref. to EC(H6DO)-5, REMOVAL, Canister.> <Ref. to EC(H6DO)-11, INSTALLATION, Canister.>

B: INSPECTION

1. CHECK SWITCHING VALVE

1) Check the resistance between switching valve terminals.

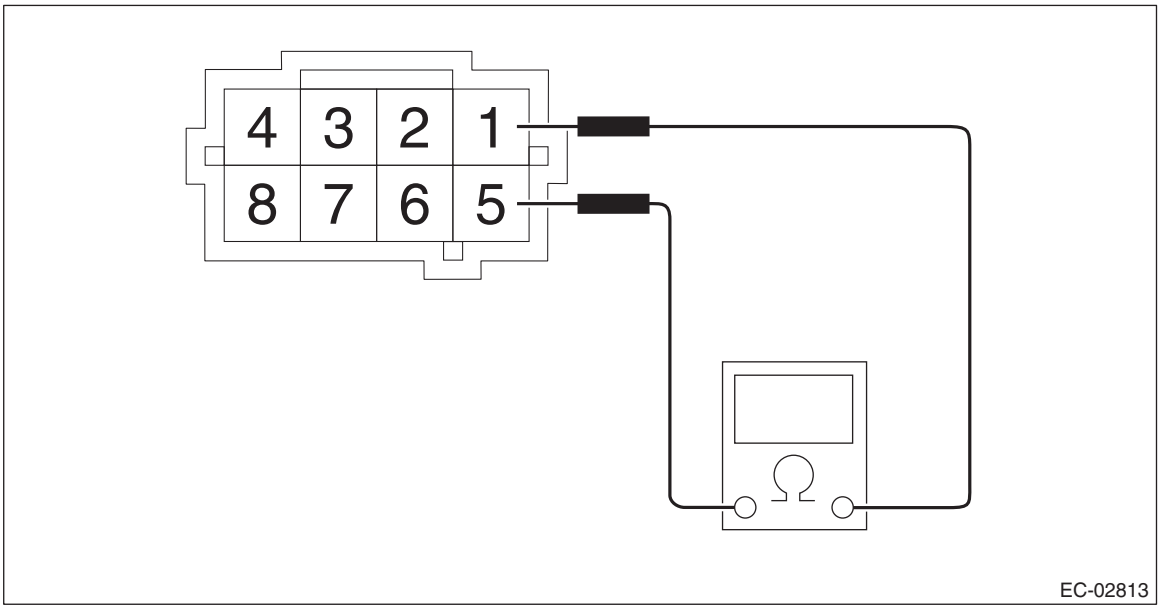

Terminal No.	Standard
1 and 5	27^{+3}_{-2} Ω (when 20°C (68°F))
	31±4 Ω (60°C (140°F))

2) Check that air is discharged from (B) when air is blown into (A).

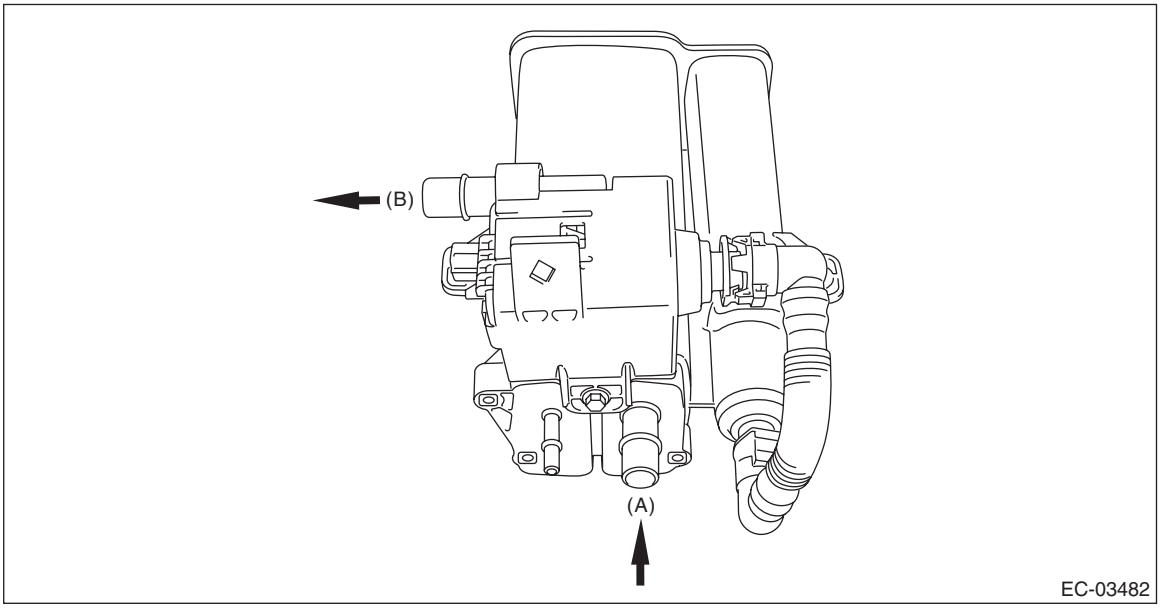

3) Connect the battery positive terminal to the terminal No. 5 and the battery negative terminal to the terminal No. 1. Check that air does not come out from (B) when air is blown into (A).

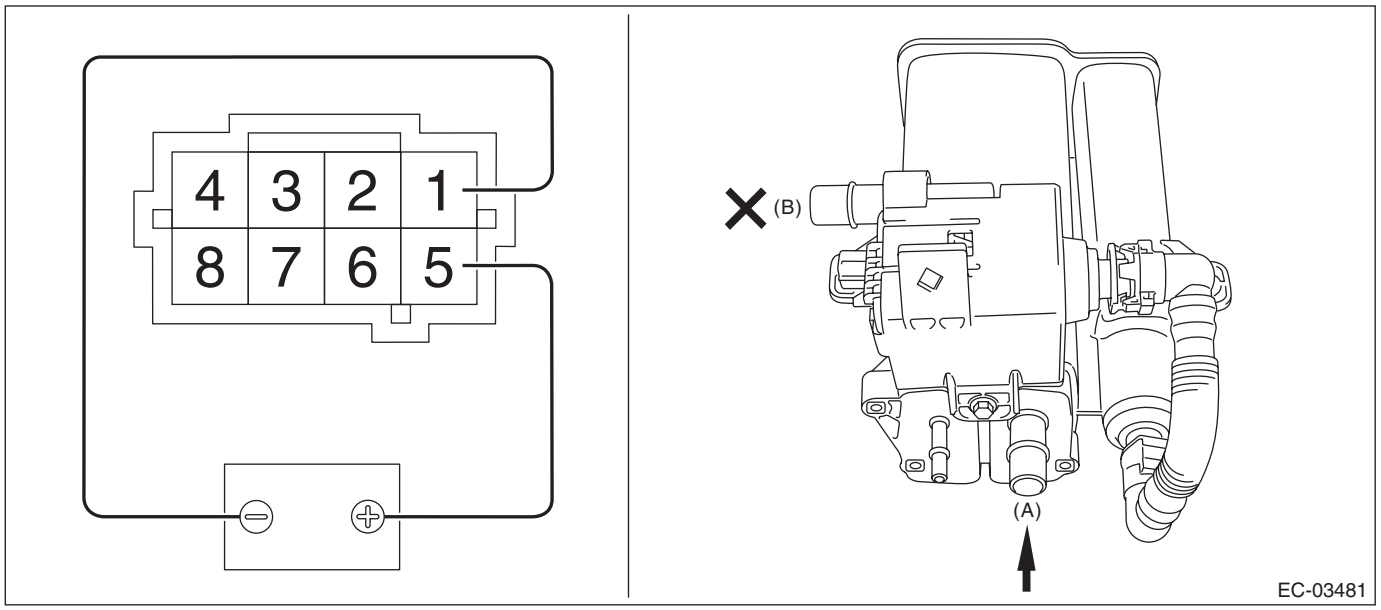

2. CHECK VACUUM PUMP

1) Connect the battery positive terminal to terminal No. 3 and the battery ground terminal to terminal No. 4, and inspect the vacuum pump operation.

CAUTION:
Do not operate the vacuum pump for 5 minutes or more.

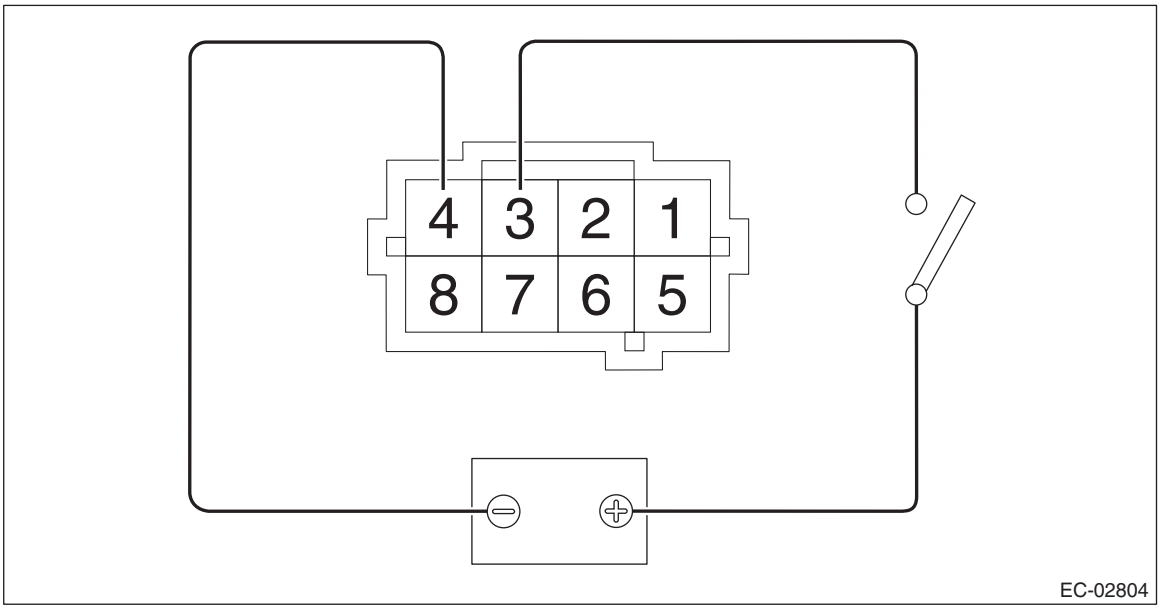

3. CHECK PRESSURE SENSOR

1) Connect dry-cell battery positive terminal to terminal No. 6 and dry-cell battery ground terminal to terminal No. 8, circuit tester positive terminal to terminal No. 7 and the circuit tester ground terminal to terminal No. 8.

NOTE:
- Use new dry-cell batteries.
- Using circuit tester, check that the initial voltage of a single dry-cell battery is 1.6 V or more. And also check that the voltage of three batteries in series is between 4.8 V and 5.2 V.

- For power supply, 5 V DC voltage source can also be used.

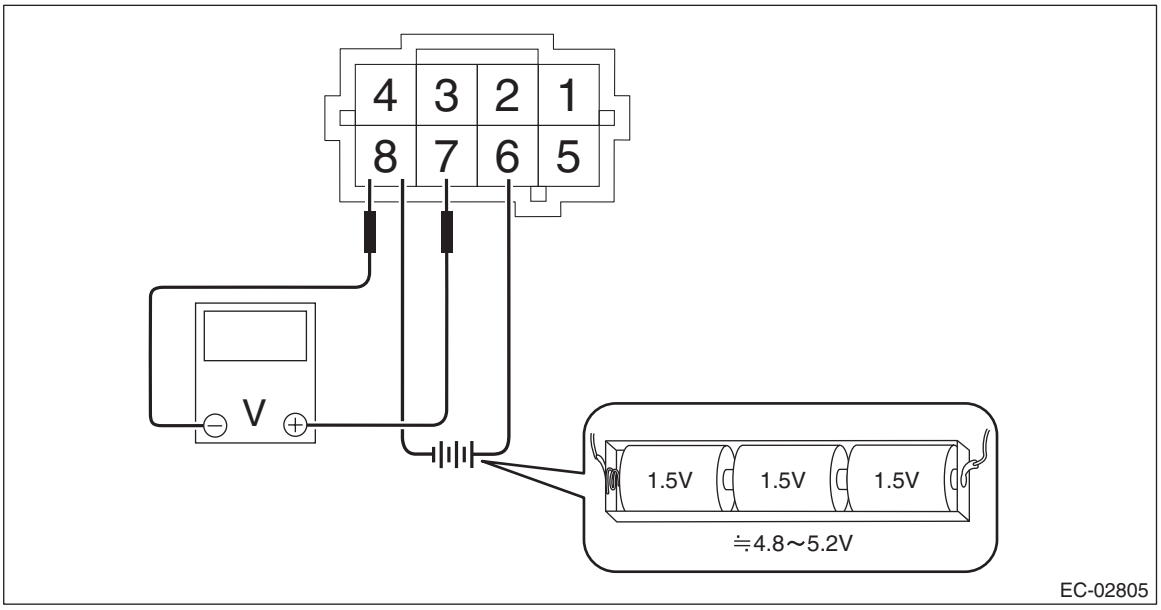

2) Check the voltage at a normal atmospheric pressure.

NOTE:
The atmospheric pressure at higher altitude is lower than normal. Therefore, the voltage is lower than the standard value.

Terminal No.	Standard
7 (+) and 8 (–)	Approx. 3.5 V (when 25°C (77°F))

3) Connect the battery positive terminal to terminal No. 3 and the battery ground terminal to terminal No. 4, and check that there is a voltage drop from the voltage measured in step 2) when the vacuum pump is operated.

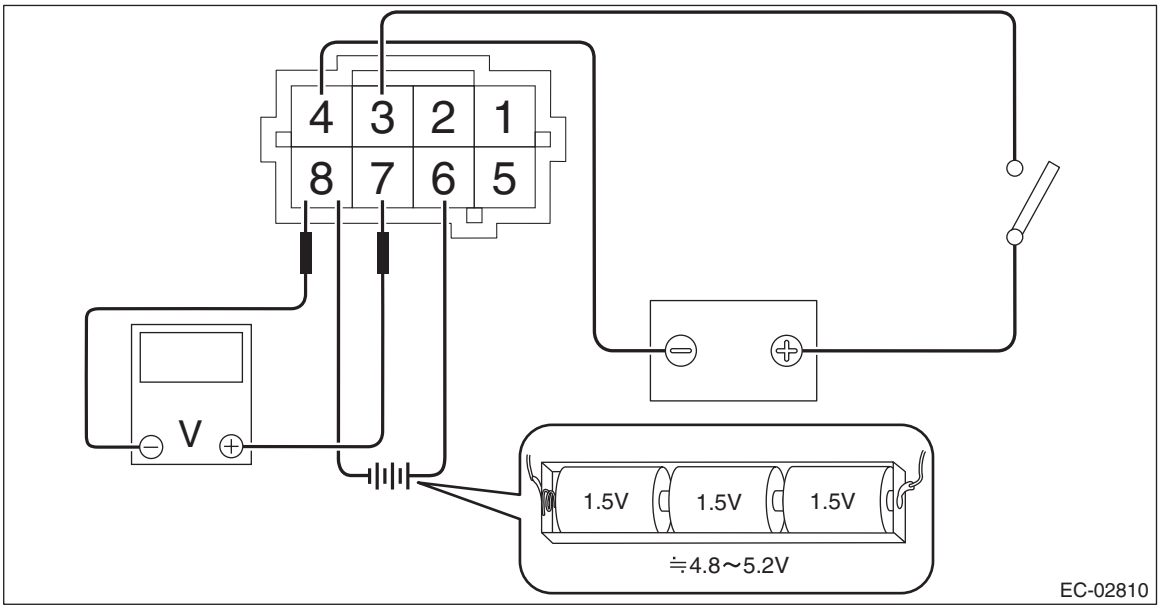

4. OTHER INSPECTIONS

Check that the leak check valve assembly has no deformation, cracks or other damages.

12.PCV Valve

A: REMOVAL

CAUTION:
Do not remove unless the PCV valve is broken.

1) Remove the collector cover.
   (1) Carefully pull up the rear of collector cover at two positions (A).
   (2) Carefully pull up the front of collector cover at two positions (B) while moving it forward.

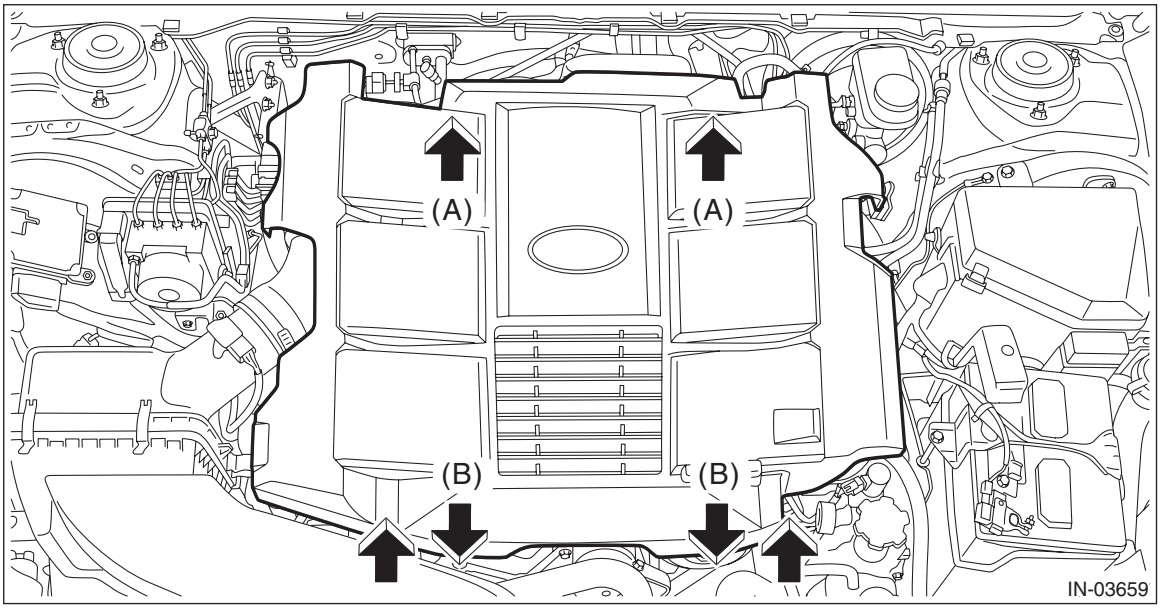

2) Remove the battery. <Ref. to SC(H6DO)-57, BATTERY, REMOVAL, Battery.>
3) Disconnect the PCV hose.

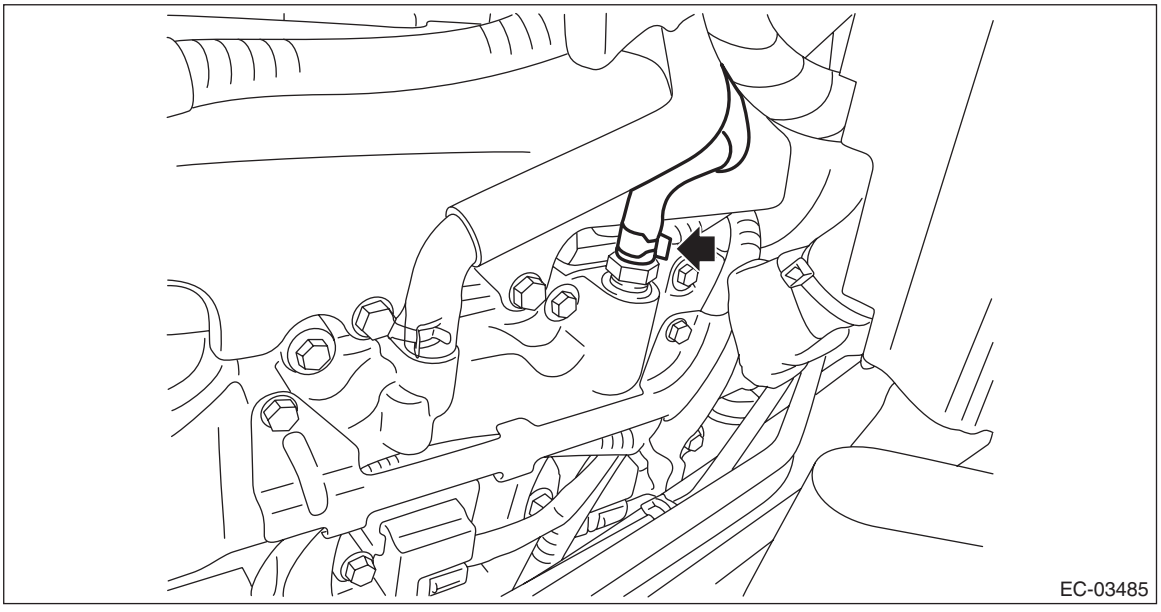

4) Remove the PCV valve from rocker cover.

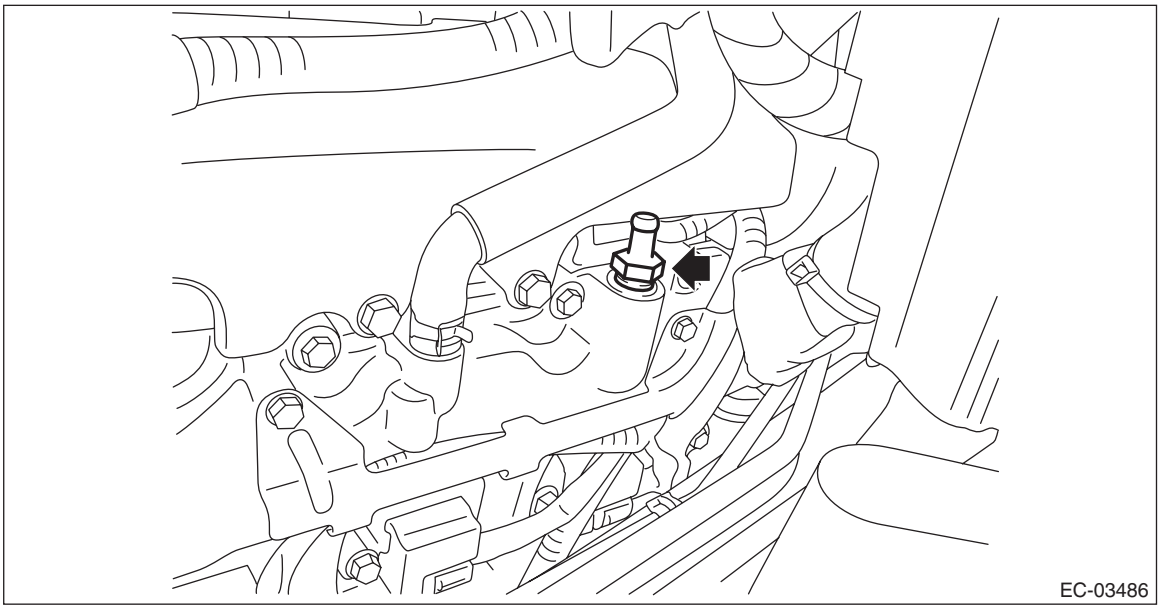

B: INSTALLATION

1) Install the PCV valve to the rocker cover.

NOTE:
Apply liquid gasket to the bolt threads of PCV valve.

Liquid gasket:
THREE BOND 1324 (Part No. 004403042) or equivalent

Tightening torque:
25 N·m (2.5 kgf-m, 18.4 ft-lb)

2) Connect the PCV hose.
3) Install the battery. <Ref. to SC(H6DO)-58, BATTERY, INSTALLATION, Battery.>
4) Install the collector cover.

C: INSPECTION

1. PCV VALVE

1) Check that the PCV valve has no deformation, cracks or other damages.
2) Check that air is discharged from (B) when air is blown into (A).

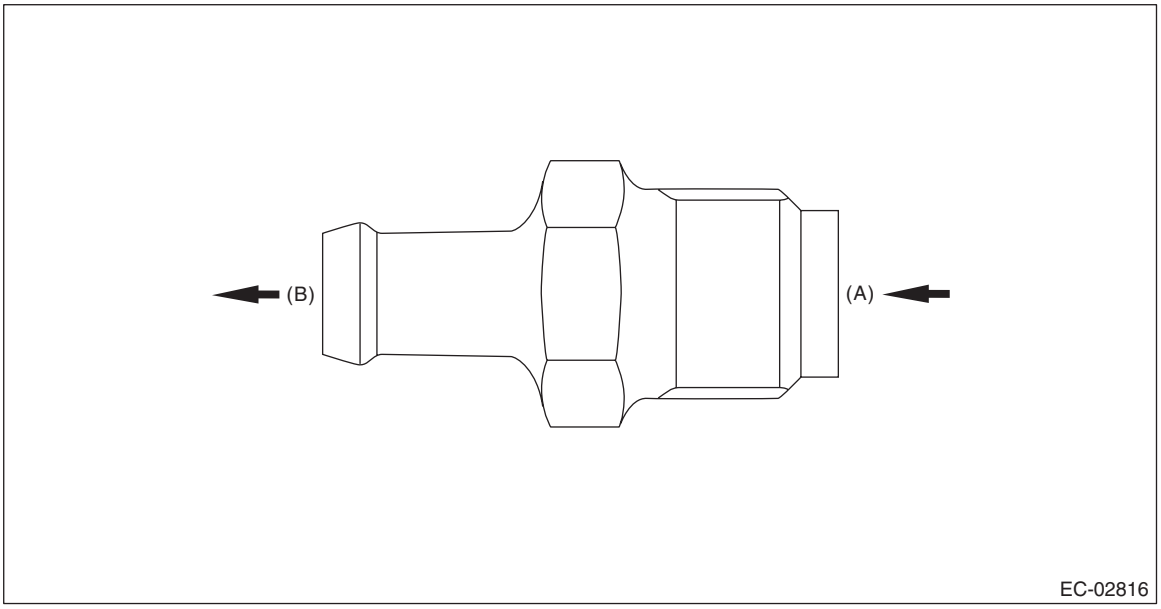

3) Check that air does not come out from (B) when air is blown into (A).

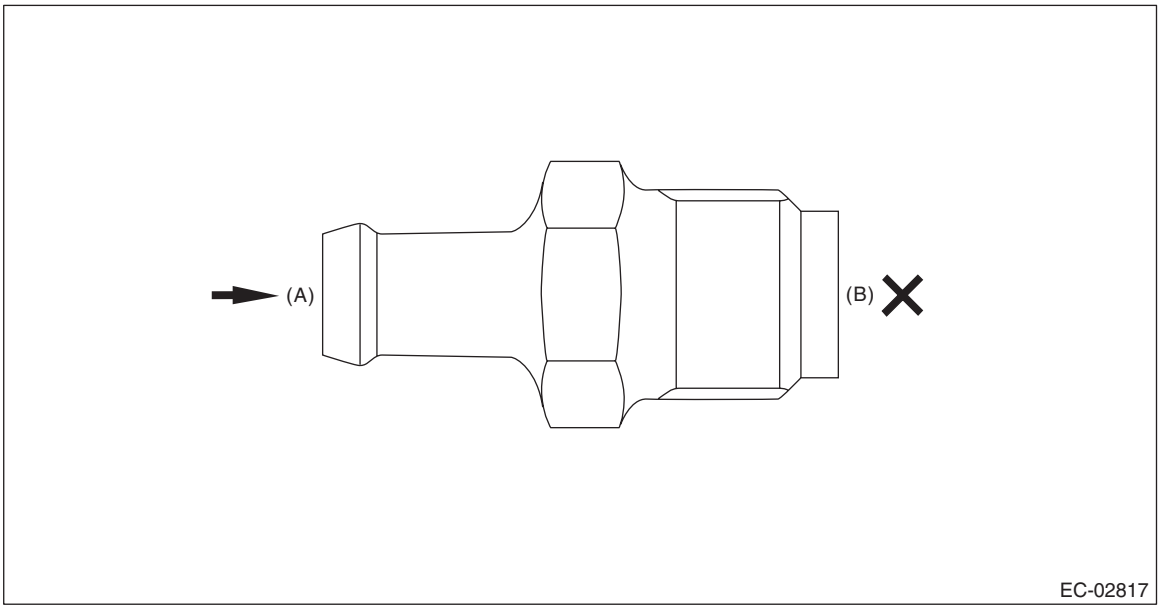

2. OTHER INSPECTIONS

Check that the PCV hose has no cracks, damage or loose part.

INTAKE (INDUCTION)

IN(H6DO)

Page

1. General Description 2
2. Air Cleaner Element 4
3. Air Cleaner Case 8
4. Air Intake Boot 10
5. Air Intake Duct 12
6. Resonator Chamber 13

1. General Description

A: COMPONENT

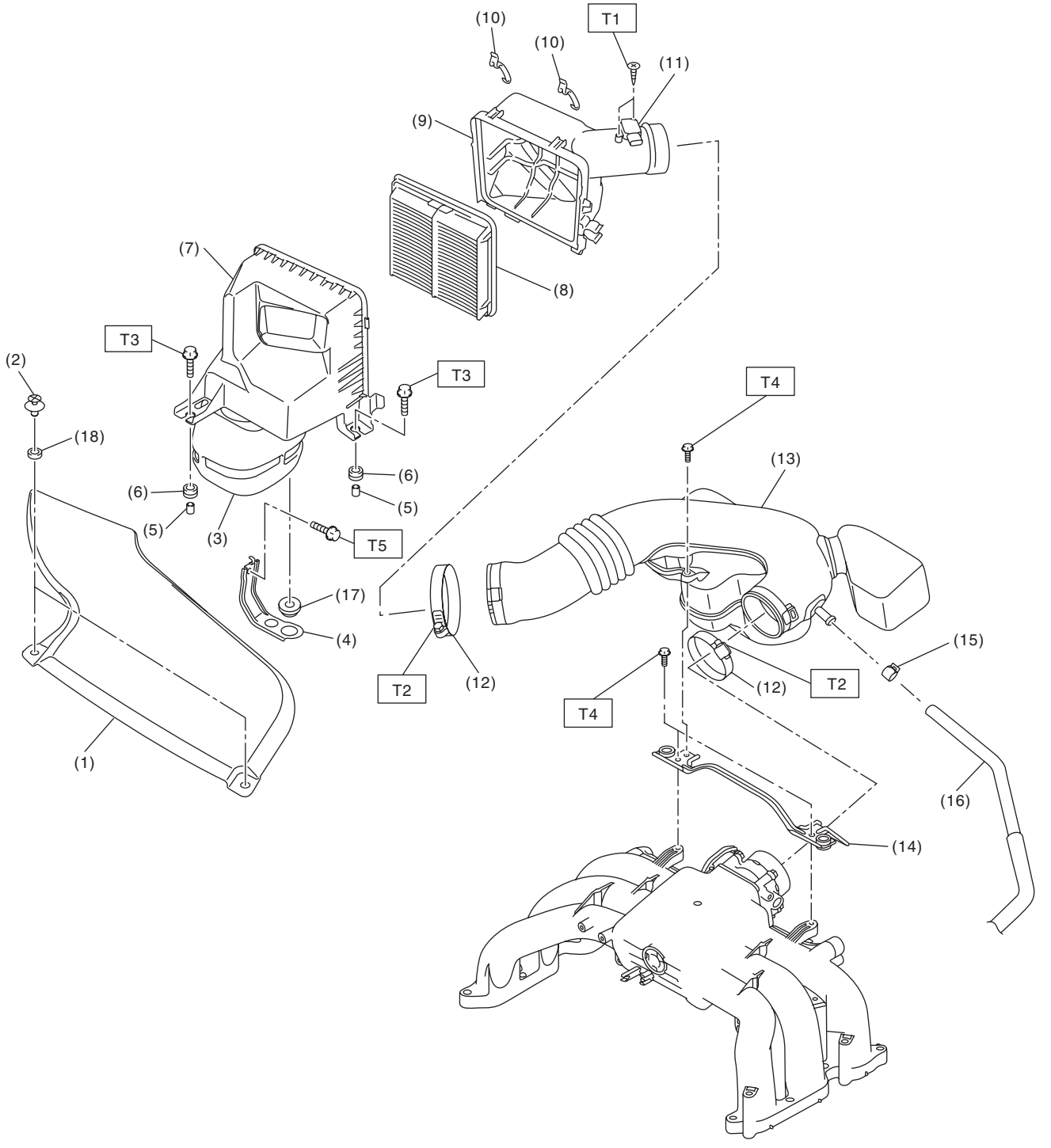

(1)	Air intake duct	(10)	Clip	
(2)	Clip	(11)	Mass air flow and intake air temperature sensor	
(3)	Resonator chamber	(12)	Clamp	
(4)	Air cleaner case bracket	(13)	Air intake boot	
(5)	Spacer	(14)	Collector cover bracket	
(6)	Cushion	(15)	Clip	
(7)	Air cleaner case (front)	(16)	Blow-by hose	
(8)	Air cleaner element	(17)	Cushion	
(9)	Air cleaner case (rear)	(18)	Cushion	

Tightening torque: N·m (kgf-m, ft-lb)
T1: 1 (0.1, 0.7)
T2: 3 (0.3, 2.2)
T3: 6 (0.6, 4.4)
T4: 6.5 (0.7, 4.8)
T5: 7.5 (0.8, 5.5)

B: CAUTION

- Prior to starting work, pay special attention to the following:
  1. Always wear work clothes, a work cap, and protective shoes. Additionally, wear a helmet, protective goggles, etc. if necessary.
  2. Protect the vehicle using a seat cover, fender cover, etc.
  3. Prepare the service tools, clean cloth, containers to catch grease and oil, etc.
- Vehicle components are extremely hot immediately after driving. Be wary of receiving burns from heated parts.
- When performing a repair, identify the cause of trouble and avoid unnecessary removal, disassembly and replacement.
- Before disconnecting connectors of sensors or units, be sure to disconnect the ground cable from battery.
- Always use the jack-up point when the shop jacks or rigid racks are used to support the vehicle.
- Remove contamination including dirt and corrosion before removal, installation, disassembly or assembly.
- Keep the removed parts in order and protect them from dust and dirt.
- All removed parts, if to be reused, should be reinstalled in the original positions with attention to the correct directions, etc.
- Bolts, nuts and washers should be replaced with new parts as required.
- Be sure to tighten the fasteners including bolts and nuts to the specified torque.

2. Air Cleaner Element

A: REMOVAL

1) Disconnect the ground terminal from battery sensor. <Ref. to RC-4, BATTERY, NOTE, Repair Contents.>
2) Remove the air intake duct. <Ref. to IN(H6DO)-12, REMOVAL, Air Intake Duct.>
3) Disconnect the connector (A) from the mass air flow and intake air temperature sensor, and remove the clip (B) from the air cleaner case (rear).

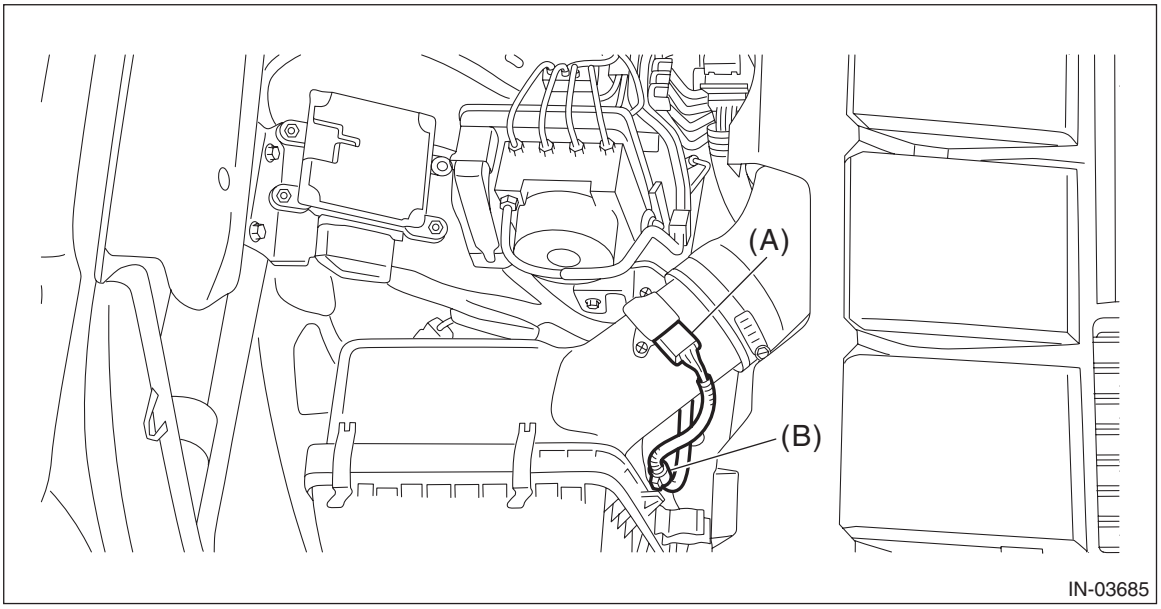

4) Loosen the clamp (A) securing the air intake boot to the air cleaner case (rear), and then remove the clip (B) from the air cleaner case (front).

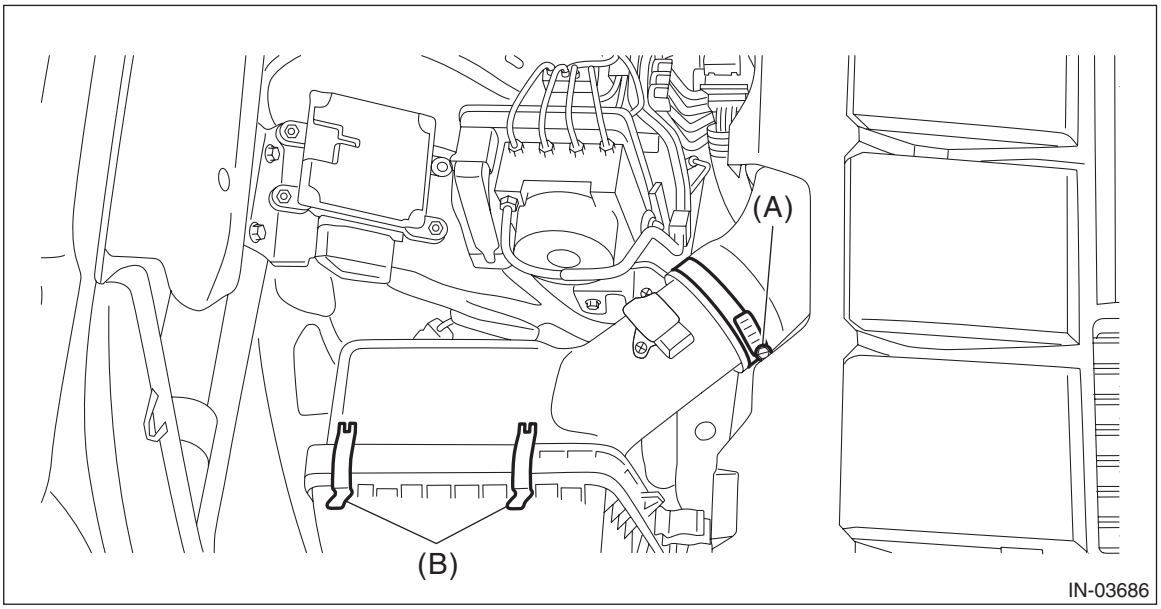

5) Remove the air cleaner case (rear) and air cleaner element.

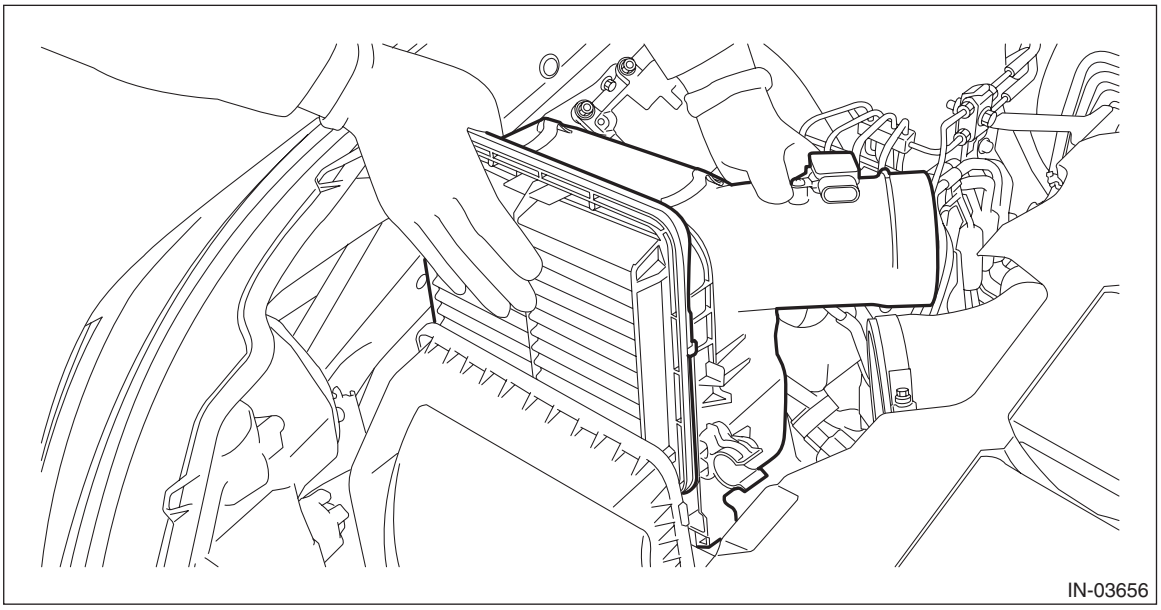

B: INSTALLATION

1) Set the air cleaner case (rear) and air cleaner element to the air cleaner case (front).

CAUTION:
Be sure to use SUBARU genuine air cleaner element depending on the engine type when replacing the air cleaner elements. Using other air cleaner element may affect the engine performance.

NOTE:
- Install the air cleaner element as shown in the figure.

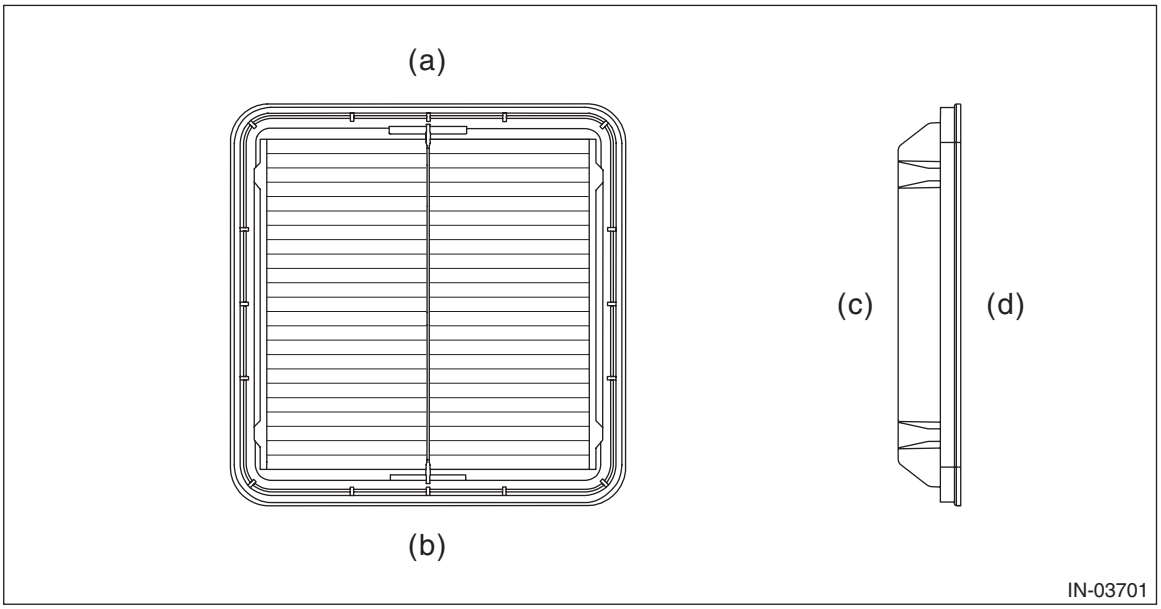

(a) Upside
(b) Downside
(c) Air cleaner case (front) side
(d) Air cleaner case (rear) side

- Check that there is no dirt or dust within the air cleaner case. If any dirt or dust is found, clean it.

• When setting the air cleaner case (rear), align the protrusion of the air cleaner case (rear) to the air cleaner case (front) to insert.

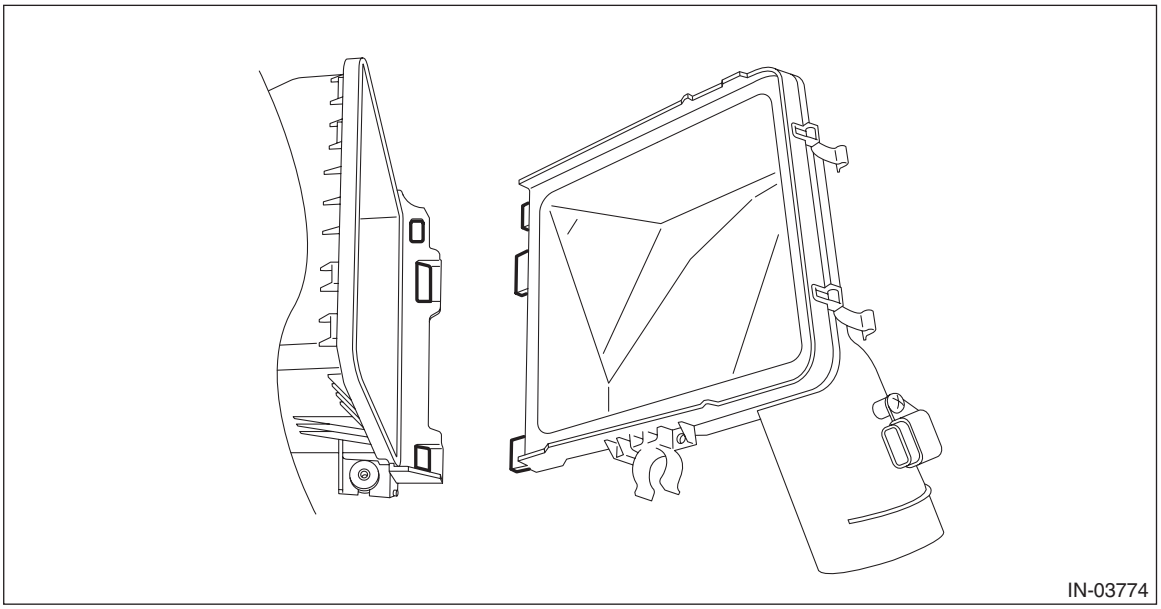

2) Install the clips (B) to the air cleaner case (front), then tighten the clamp (A) securing the air intake boot to the air cleaner case (rear).

Tightening torque:
3 N·m (0.3 kgf-m, 2.2 ft-lb)

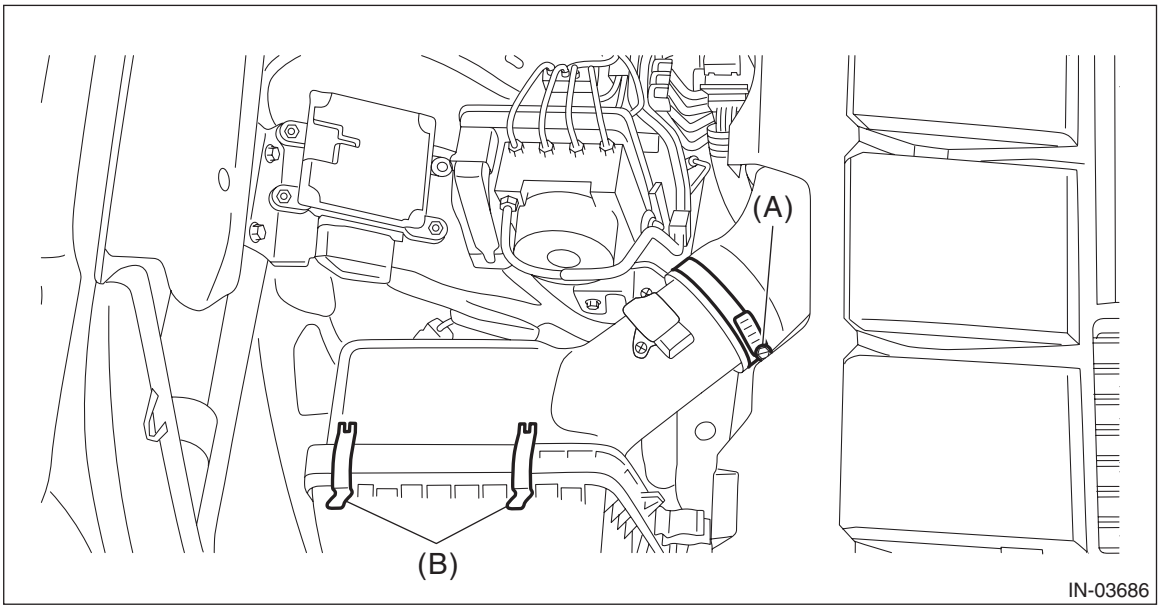

3) Connect the connector (A) to the mass air flow and intake air temperature sensor, and install the clip (B) to the air cleaner case (rear).

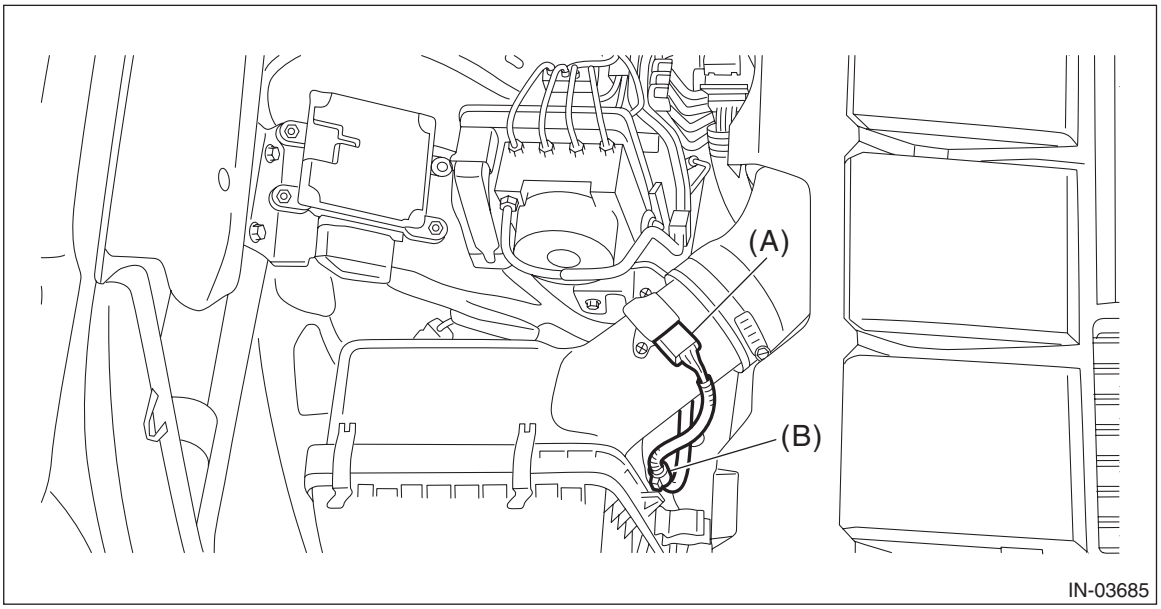

4) Connect the ground terminal to battery sensor. <Ref. to RC-4, BATTERY, NOTE, Repair Contents.>

C: INSPECTION

1) Check that the air cleaner element has no deformation, cracks or other damages.
2) Check the air cleaner element for excessive dirt.

3. Air Cleaner Case

A: REMOVAL

1) Disconnect the ground terminal from battery sensor. <Ref. to RC-4, BATTERY, NOTE, Repair Contents.>
2) Remove the air intake duct. <Ref. to IN(H6DO)-12, REMOVAL, Air Intake Duct.>
3) Remove the air cleaner element. <Ref. to IN(H6DO)-4, REMOVAL, Air Cleaner Element.>
4) Remove the bolts securing the air cleaner case (front) to the vehicle body.
5) Remove the air cleaner case (front).

NOTE:
The protrusion of the air cleaner case (front) is inserted in the cushion of the air cleaner case bracket.

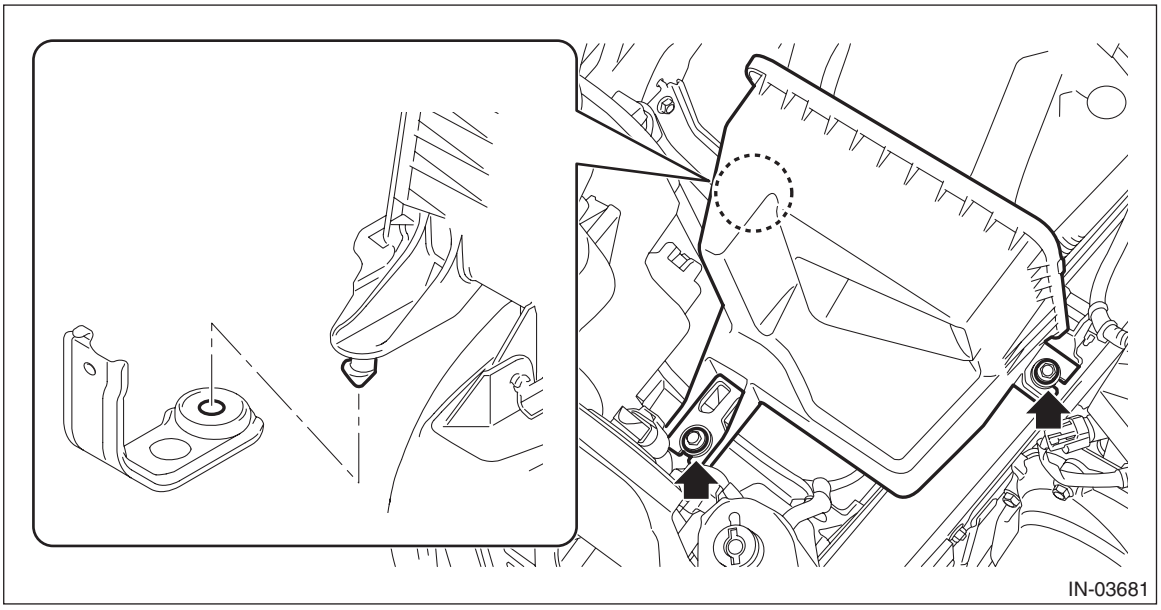
IN-03681

6) Remove the air cleaner case bracket from the vehicle.

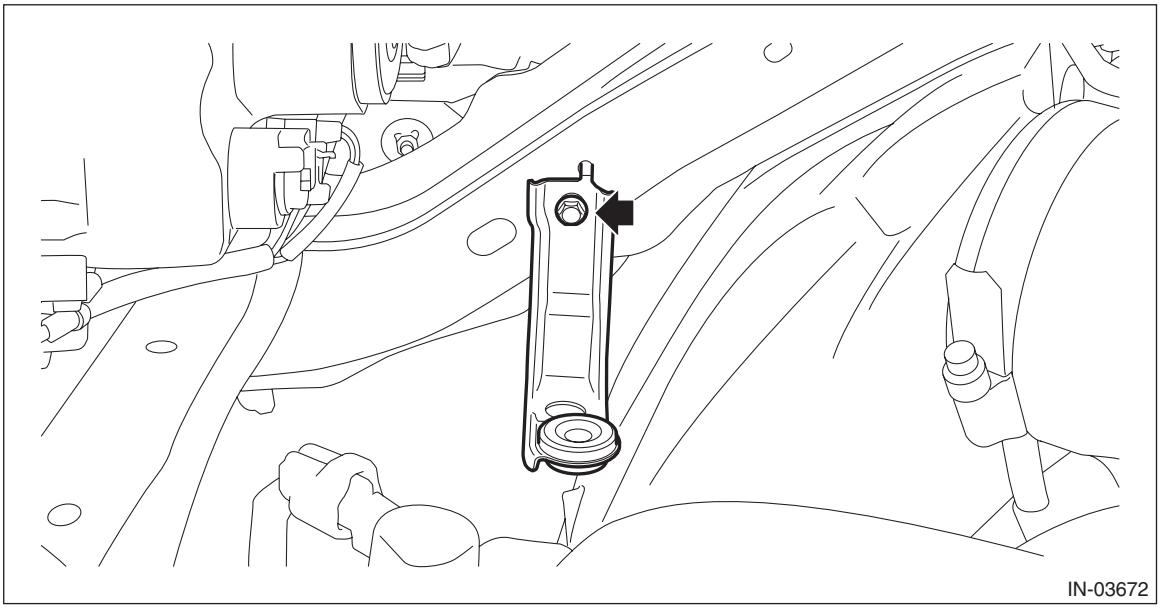
IN-03672

B: INSTALLATION

1) Install the air cleaner case bracket to the vehicle.

Tightening torque:
7.5 N·m (0.8 kgf-m, 5.5 ft-lb)

2) Install the air cleaner case (front) to the vehicle body and air cleaner case bracket.

NOTE:
Make sure that the protrusion of the air cleaner case (front) is inserted in the cushion of the air cleaner case bracket.

Tightening torque:
6 N·m (0.6 kgf-m, 4.4 ft-lb)

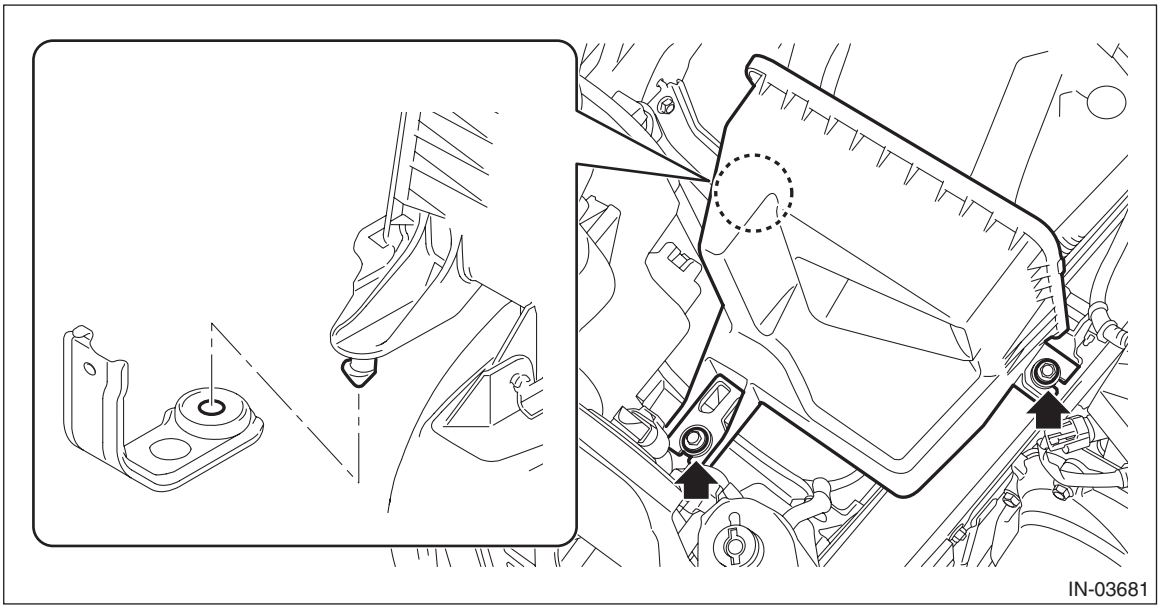

3) Set the air cleaner case (rear) and air cleaner element to the air cleaner case (front). <Ref. to IN(H6DO)-5, INSTALLATION, Air Cleaner Element.>
4) Install the air intake duct. <Ref. to IN(H6DO)-12, INSTALLATION, Air Intake Duct.>
5) Connect the ground terminal to battery sensor. <Ref. to RC-4, BATTERY, NOTE, Repair Contents.>

C: INSPECTION

1) Check that the air cleaner case has no deformation, cracks or other damages.
2) Check that the air intake boot has no cracks, damage or loose part.

4. Air Intake Boot

A: REMOVAL

1) Remove the collector cover.
   (1) Carefully pull up the rear of collector cover at two positions (A).
   (2) Carefully pull up the front of collector cover at two positions (B) while moving it forward.

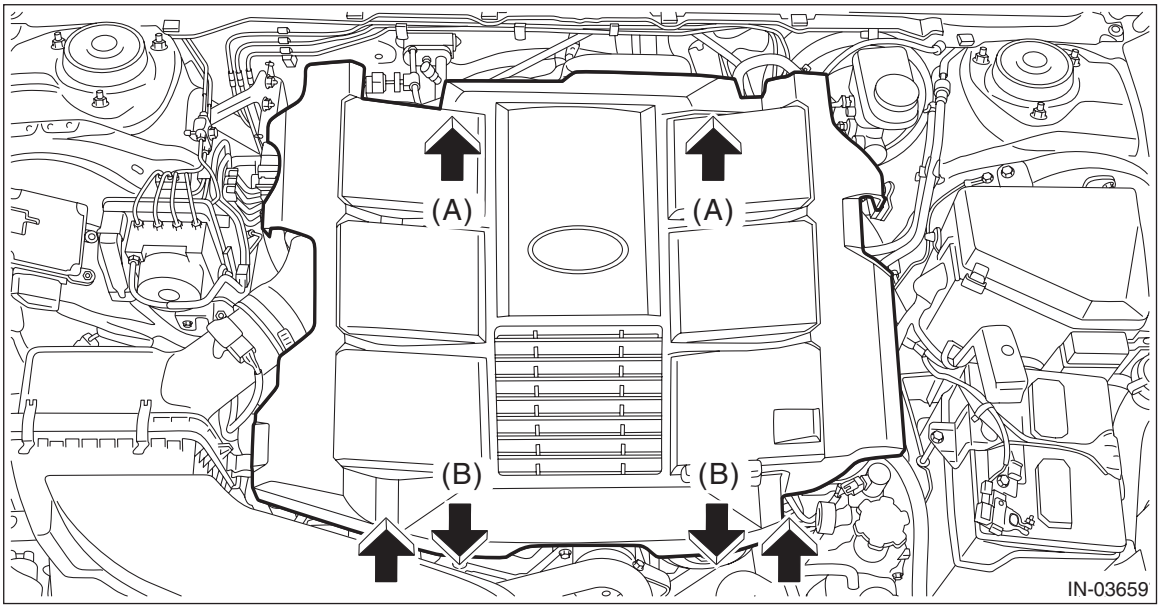

2) Loosen the clamp (A) securing the air cleaner case (rear) to the air intake boot.
3) Loosen the clamp (B) securing the throttle body to the air intake boot.
4) Loosen the bolt (C) securing the air intake boot to the collector cover bracket.
5) Disconnect the blow-by hose (D) from the air intake boot, and remove the air intake boot.

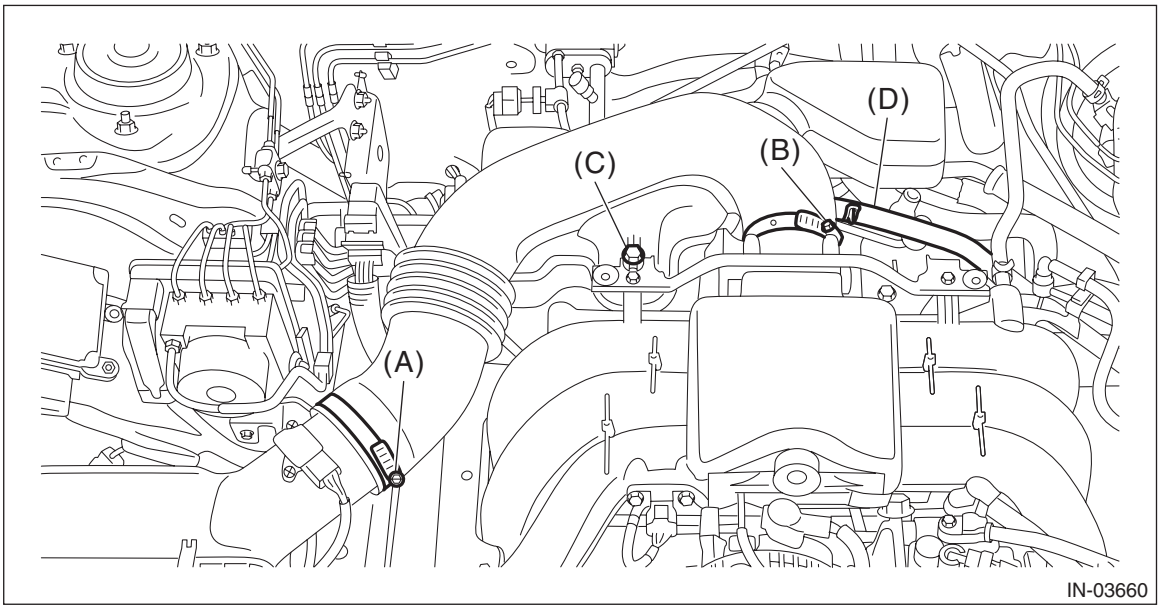

B: INSTALLATION

1) Install the air intake boot and connect the blow-by hose (D) to the air intake boot.
2) Tighten the clamp (B) securing the throttle body to the air intake boot.
3) Tighten the bolt (C) securing the air intake boot to the collector cover bracket.
4) Tighten the clamp (A) securing the air cleaner case (rear) to the air intake boot.

Tightening torque:
T1: 3 N·m (0.3 kgf-m, 2.2 ft-lb)
T2: 6.5 N·m (0.7 kgf-m, 4.8 ft-lb)

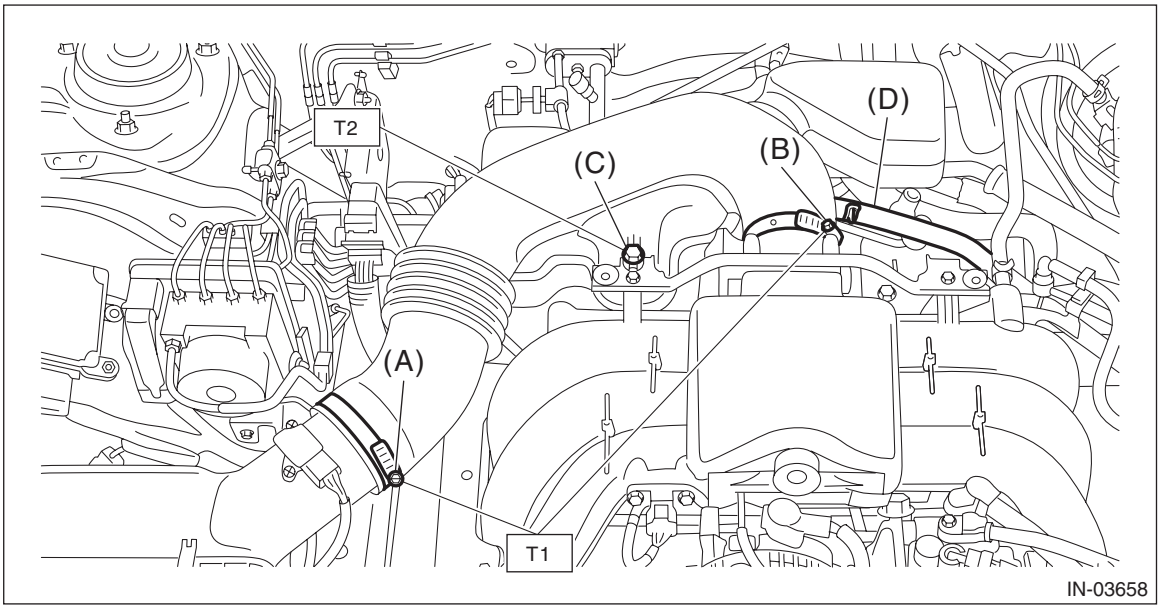

5) Install the collector cover.

C: INSPECTION

1) Check that the air intake boot has no deformation, cracks or other damages.
2) Inspect that no foreign objects are mixed in the air intake boot.

5. Air Intake Duct

A: REMOVAL

Remove the clip which secures the air intake duct, and remove the air intake duct.

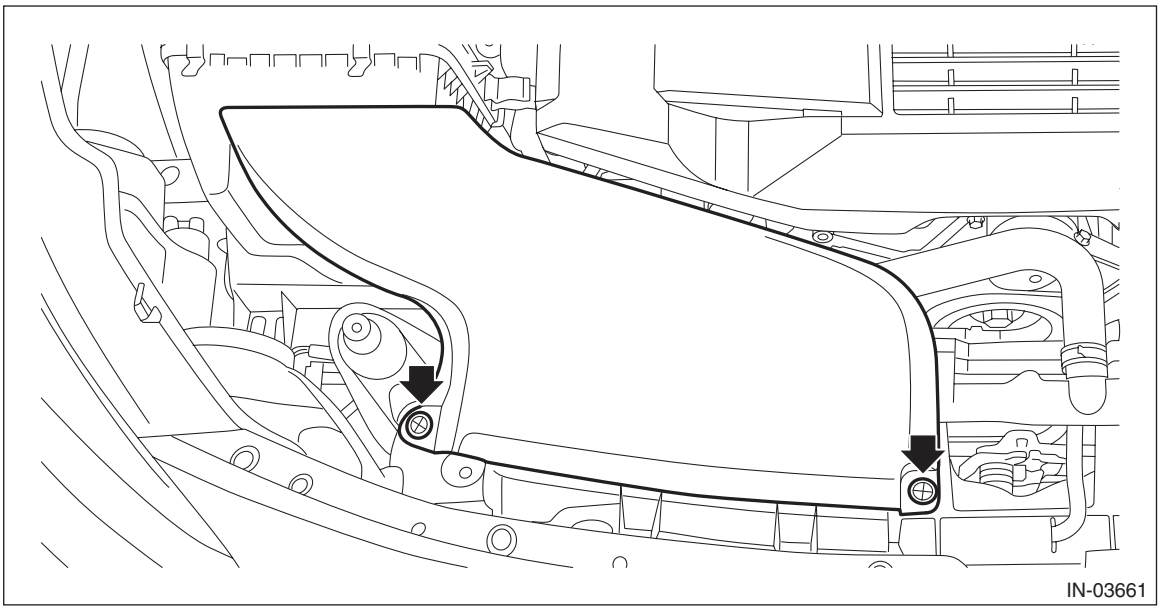

B: INSTALLATION

Install the air intake duct, and install the clips securing the air intake duct.

C: INSPECTION

1) Check that the air intake duct has no deformation, cracks or other damages.
2) Inspect that no foreign objects are mixed in the air intake duct.

6. Resonator Chamber

A: REMOVAL

The resonator chamber and air cleaner case are integrated into one unit; therefore, refer to “Air Cleaner Case” for removal procedure. <Ref. to IN(H6DO)-8, REMOVAL, Air Cleaner Case.>

B: INSTALLATION

The resonator chamber and air cleaner case are integrated into one unit; therefore, refer to “Air Cleaner Case” for installation procedure. <Ref. to IN(H6DO)-9, INSTALLATION, Air Cleaner Case.>

C: INSPECTION

Check that the resonator chamber has no deformation, cracks or other damages.

MECHANICAL

ME(H6DO)

		Page
1.	General Description	2
2.	Compression	22
3.	Idle Speed	25
4.	Ignition Timing	26
5.	Intake Manifold Vacuum	28
6.	Engine Oil Pressure	30
7.	Fuel Pressure	31
8.	Valve Clearance	34
9.	Engine Assembly	41
10.	Engine Mounting	61
11.	Preparation for Overhaul	73
12.	V-belt	74
13.	Crank Pulley	79
14.	Chain Cover	81
15.	Timing Chain Assembly	87
16.	Cam Sprocket	107
17.	Crank Sprocket	109
18.	Camshaft	110
19.	Cylinder Head	119
20.	Cylinder Block	134
21.	Oil Flow Control Solenoid Valve	167
22.	Intake and Exhaust Valve	168
23.	Piston	169
24.	Connecting Rod	170
25.	Crankshaft	171
26.	Engine Trouble in General	172
27.	Engine Noise	178

1. General Description

A: SPECIFICATION

Engine	Model			3.6 L
	Cylinder arrangement			Horizontally opposed, liquid cooled, 6-cylinder, 4-stroke gasoline engine
	Valve system mechanism			Chain driven, double overhead camshaft, 4-valve/cylinder
	Bore × Stroke mm (in)			92.0 × 91.0 (3.62 × 3.58)
	Displacement cm^3 (cu in)			3,630 (221.5)
	Compression ratio			10.5
	Compression (350 r/min and fully open throttle) kPa (kg/cm^2, psi)		Standard	1,128 — 1,471 (11.5 — 15.0, 164 — 213)
	Number of piston rings			Pressure ring: 2, Oil ring: 1
	Intake valve timing	Open	Max. retard	ATDC 10°
			Min. advance	BTDC 40°
		Close	Max. retard	ABDC 74°
			Min. advance	ABDC 24°
	Exhaust valve timing	Open	Max. retard	BBDC 4°
			Min. advance	BBDC 44°
		Close	Max. retard	ATDC 44°
			Min. advance	ATDC 4°
	Valve clearance mm (in)	Intake		$0.20^{+0.04}_{-0.06}$ ($0.0079^{+0.0016}_{-0.0024}$)
		Exhaust		0.35±0.05 (0.0138±0.0020)
	Idle speed [Select lever is in “P” or “N” range] r/min	No load	Standard	700±100
		A/C ON	Standard	700 — 910±100
	Ignition order			1 → 6 → 3 → 2 → 5 → 4
	Ignition timing BTDC/{r/min}		Standard	15°±8°/700

NOTE:
OS: Oversize
US: Undersize

Camshaft	Bending limit mm (in)			0.020 (0.00079)
	Cam lobe height mm (in)	Intake	Standard	45.90 — 46.00 (1.8071 — 1.8110)
		Exhaust	Standard	44.65 — 44.75 (1.7579 — 1.7618)
	Cam base circle diameter mm (in)	Intake	Standard	36.00 (1.4173)
		Exhaust	Standard	36.00 (1.4173)
	Journal O.D. mm (in)	Front	Standard	37.946 — 37.963 (1.4939 — 1.4946)
		Except for front	Standard	25.946 — 25.963 (1.0215 — 1.0222)
	Oil clearance mm (in)		Standard	0.037 — 0.072 (0.0015 — 0.0028)
	Thrust clearance mm (in)	Intake	Standard	0.075 — 0.135 (0.0030 — 0.0053)
		Exhaust	Standard	0.075 — 0.135 (0.0030 — 0.0053)

Cylinder head	Warping limit (Mating surface with cylinder block) mm (in)			0.020 (0.0008)
	Standard height mm (in)			124±0.05 (4.88±0.0020)
Valve seat	Seating angle between valve and valve seat			90°
	Contacting width between valve and valve seat mm (in)	Intake	Standard	1.0 (0.039)
		Exhaust	Standard	1.5 (0.059)
Valve guide	Clearance between the valve guide and valve stem mm (in)	Intake	Standard	0.030 — 0.057 (0.0012 — 0.0022)
		Exhaust	Standard	0.040 — 0.067 (0.0016 — 0.0026)
	Inside diameter mm (in)			5.500 — 5.512 (0.2165 — 0.2170)
	Valve stem outer diameters mm (in)	Intake		5.455 — 5.470 (0.2148 — 0.2154)
		Exhaust		5.445 — 5.460 (0.2144 — 0.2150)
	Valve guide protrusion amount	Intake mm (in)		8.6 — 9.0 (0.3386 — 0.3543)
		Exhaust mm (in)		10.7 — 11.1 (0.4213 — 0.4370)
Valve	Head edge thickness mm (in)	Intake	Standard	1.0 (0.039)
		Exhaust	Standard	1.2 (0.047)
	Overall length mm (in)	Intake		103.5 (4.075)
		Exhaust		103.2 (4.063)
Valve spring	Free length mm (in)	Intake		49.06 (1.9315)
		Exhaust		49.06 (1.9315)
	Tension/spring height N (kgf, lb)/mm (in)		Set	182 — 210 (18.6 — 21.4, 40.9 — 47.2) /31.0 (1.220)
			Lift	316 — 350 (32.2 — 35.7, 71.0 — 78.7) /21.0 (0.827)
	Squareness			2.5°, 2.1 mm (0.083 in)
Valve lifter	Outer diameter mm (in)		Standard	32.959 — 32.975 (1.2976 — 1.2982)
	Valve lifter mating surface inner diameter mm (in)		Standard	32.994 — 33.016 (1.2990 — 1.2998)
	Valve lifter and valve lifter mating surface clearance mm (in)		Standard	0.019 — 0.057 (0.0007 — 0.0022)
Cylinder block	Warping limit (Mating surface with cylinder head) mm (in)			0.020 (0.0008)
	Standard height mm (in)			202 (7.95)
	Cylindricality mm (in)		Limit	0.030 (0.0012)
	Out-of-roundness mm (in)		Limit	0.030 (0.0012)
	Clearance between cylinder and piston at 20°C (68°F) mm (in)		Standard	–0.010 — 0.010 (–0.0004 — 0.0004)
	Cylinder inner diameter boring limit (diameter) mm (in)			92.515 (3.6717)
Piston	Piston grade point mm (in)			37.3 (1.4685)
	Outer diameter mm (in)	Standard	A	92.005 — 92.015 (3.6222 — 3.6226)
			B	91.995 — 92.005 (3.6218 — 3.6222)
		0.25 (0.0098) OS		92.245 — 92.265 (3.6317 — 3.6325)
		0.50 (0.0197) OS		92.495 — 92.515 (3.6415 — 3.6423)
	Inner diameter of piston pin hole mm (in)		Standard	22.000 — 22.006 (0.8661 — 0.8664)
Piston pin	Degree of fit			Piston pin must be fitted into position with thumb at 20°C (68°F).
	Outer diameter mm (in)		Standard	21.994 — 22.000 (0.8659 — 0.8661)
	Clearance between piston and piston pin mm (in)		Standard	0.004 — 0.008 (0.0002 — 0.0003)

Piston ring	Piston ring gap mm (in)	Top ring		Standard	0.20 — 0.35 (0.0079 — 0.0138)
		Second ring		Standard	0.40 — 0.50 (0.0157 — 0.0197)
		Oil ring		Standard	0.20 — 0.50 (0.0079 — 0.0197)
	Clearance between piston ring and piston ring groove mm (in)	Top ring		Standard	0.040 — 0.080 (0.0016 — 0.0031)
		Second ring		Standard	0.030 — 0.070 (0.0012 — 0.0028)
		Oil ring		Standard	0.065 — 0.165 (0.0026 — 0.0065)
Connecting rod and connecting rod bearing	Bend or twist per 100 mm (3.94 in) in length mm (in)			Limit	0.10 (0.0039 in)
	Thrust clearance mm (in)			Standard	0.070 — 0.330 (0.0028 — 0.0130)
	Oil clearance mm (in)			Standard	0.016 — 0.043 (0.0006 — 0.0017)
	Bearing size (thickness at center) mm (in)		Standard		1.495 — 1.511 (0.0589 — 0.0595)
			0.03 (0.0012) US		1.515 — 1.519 (0.0596 — 0.0598)
			0.05 (0.0020) US		1.525 — 1.529 (0.0600 — 0.0602)
			0.25 (0.0098) US		1.625 — 1.629 (0.0640 — 0.0641)
Bushing of small end	Clearance between piston pin and bushing mm (in)			Standard	0 — 0.022 (0 — 0.0009)
Crankshaft and crankshaft bearing	Bending limit mm (in)				0.035 (0.0014)
	Crank pin	Out-of-roundness	mm (in)	Limit	0.005 (0.0002)
		Cylindricality	mm (in)	Limit	0.006 (0.0002)
		Grinding limit		mm (in)	51.734 (2.0368)
	Crank journal	Out-of-roundness	mm (in)	Limit	0.005 (0.0002)
		Cylindricality	mm (in)	Limit	0.006 (0.0002)
		Grinding limit		mm (in)	63.742 (2.5095)
	Crank pin outer diameter mm (in)			Standard	51.976 — 52.000 (2.0463 — 2.0472)
				0.03 (0.0012) US	51.954 — 51.970 (2.0454 — 2.0461)
				0.05 (0.0020) US	51.934 — 51.950 (2.0446 — 2.0453)
				0.25 (0.0098) US	51.734 — 51.750 (2.0368 — 2.0374)
	Crank journal outer diameter mm (in)	#1, #3, #5, #7		Standard	63.992 — 64.016 (2.5194 — 2.5203)
				0.03 (0.0012) US	63.962 — 63.978 (2.5182 — 2.5188)
				0.05 (0.0020) US	63.942 — 63.958 (2.5174 — 2.5180)
				0.25 (0.0098) US	63.742 — 63.758 (2.5095 — 2.5102)
		#2, #4, #6		Standard	63.992 — 64.016 (2.5194 — 2.5203)
				0.03 (0.0012) US	63.962 — 63.978 (2.5182 — 2.5188)
				0.05 (0.0020) US	63.942 — 63.958 (2.5174 — 2.5180)
				0.25 (0.0098) US	63.742 — 63.758 (2.5095 — 2.5102)
	Bearing size (thickness at center) mm (in)	#1, #3, #5		Standard	1.996 — 2.013 (0.0786 — 0.0793)
				0.03 (0.0012) US	2.011 — 2.014 (0.0792 — 0.0793)
				0.05 (0.0020) US	2.021 — 2.024 (0.0796 — 0.0797)
				0.25 (0.0098) US	2.121 — 2.124 (0.0835 — 0.0836)
		#2, #4, #6		Standard	1.996 — 2.013 (0.0786 — 0.0793)
				0.03 (0.0012) US	2.015 — 2.018 (0.0793 — 0.0794)
				0.05 (0.0020) US	2.025 — 2.028 (0.0797 — 0.0798)
				0.25 (0.0098) US	2.125 — 2.128 (0.0837 — 0.0838)
		#7		Standard	1.992 — 2.009 (0.0784 — 0.0791)
				0.03 (0.0012) US	2.011 — 2.014 (0.0792 — 0.0793)
				0.05 (0.0020) US	2.021 — 2.024 (0.0796 — 0.0797)
				0.25 (0.0098) US	2.121 — 2.124 (0.0835 — 0.0836)
	Thrust clearance mm (in)			Standard	0.040 — 0.212 (0.0016 — 0.0083)
	Oil clearance mm (in)			Standard	0.010 — 0.030 (0.0004 — 0.0012)

B: COMPONENT

1. V-BELT

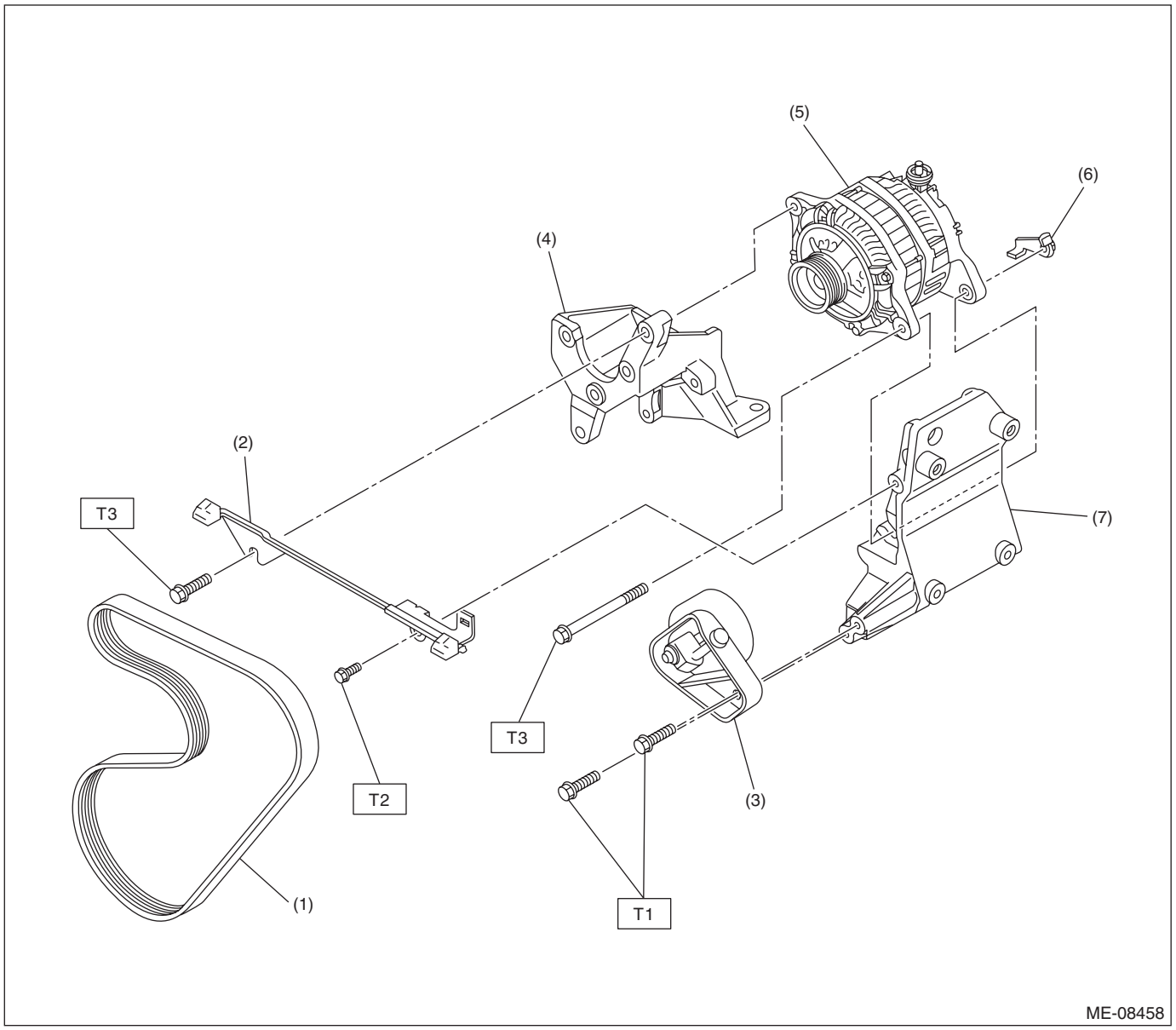

(1) V-belt
(2) Collector cover bracket
(3) Tensioner ASSY
(4) Generator bracket
(5) Generator
(6) Generator plate
(7) A/C compressor bracket

Tightening torque: N·m (kgf-m, ft-lb)
T1: 20 (2.0, 14.8)
T2: <Ref. to SC(H6DO)-35, INSTALLATION, Generator.>
T3: <Ref. to SC(H6DO)-35, INSTALLATION, Generator.>

2. CHAIN COVER

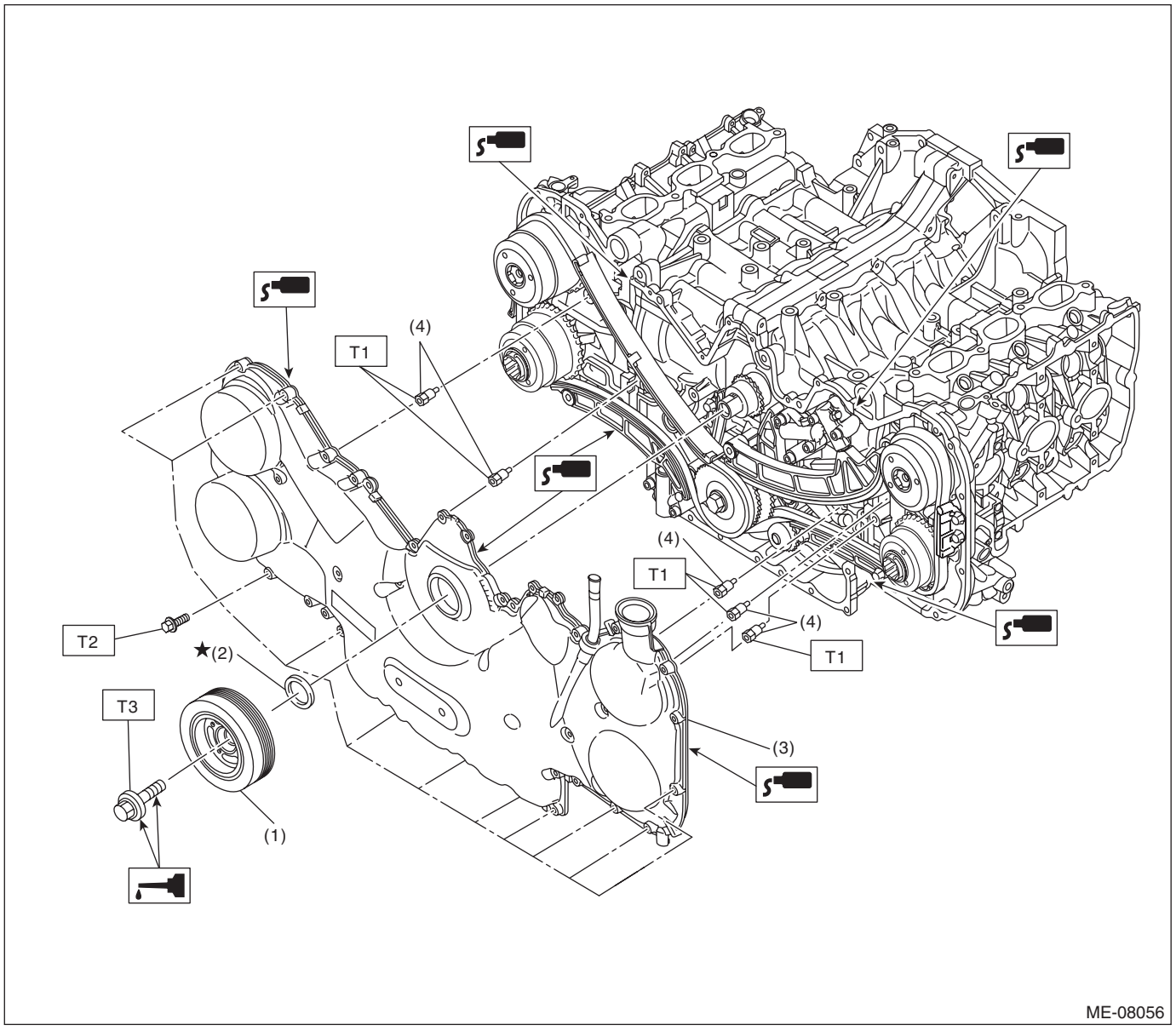

(1) Crank pulley
(2) Oil seal
(3) Chain cover
(4) Bolt

Tightening torque: N·m (kgf-m, ft-lb)
T1: 6.4 (0.7, 4.7)
T2: 10 (1.0, 7.4)
T3: 195 (19.9, 143.8)

3. TIMING CHAIN

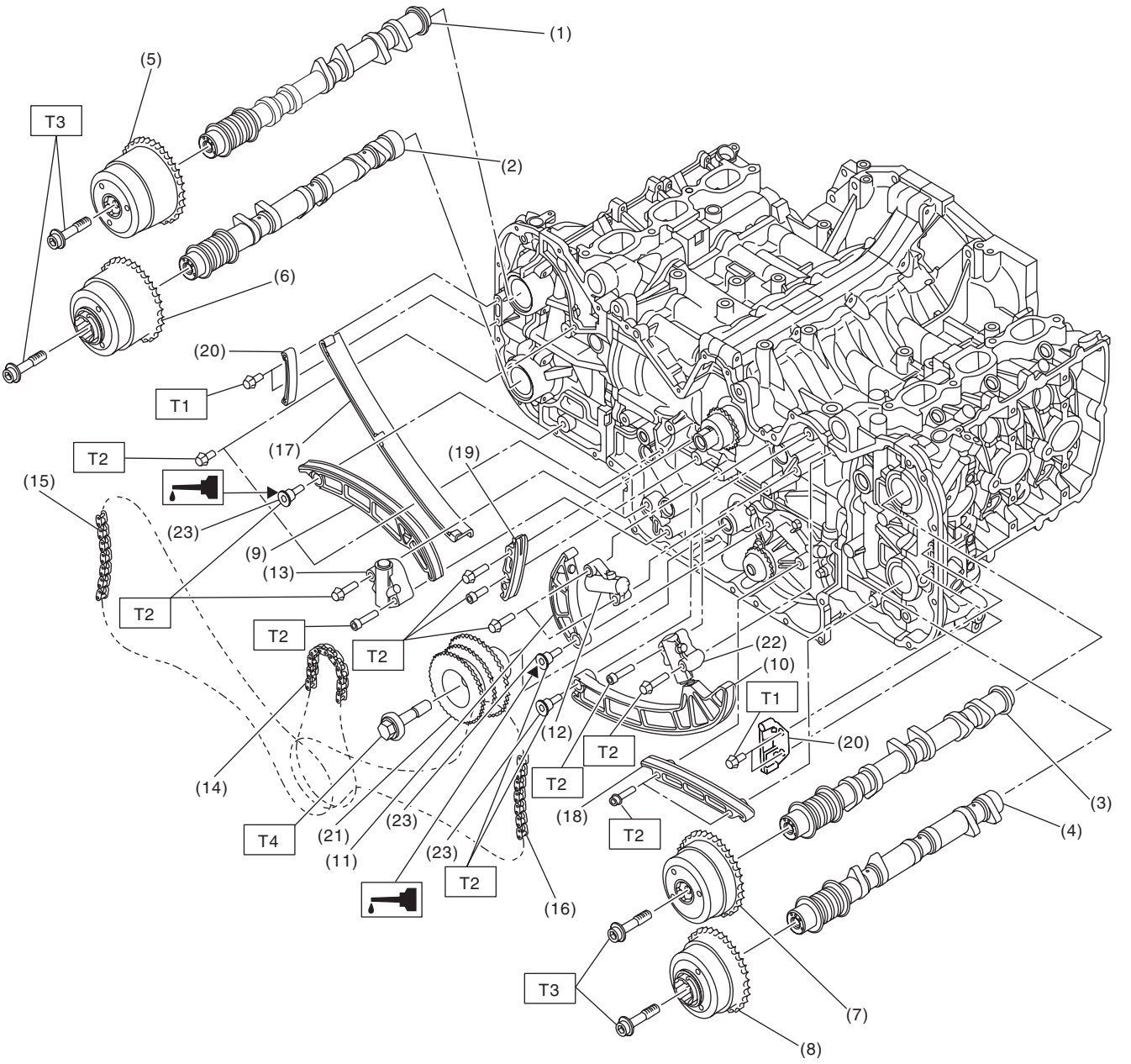

ME-08475

(1) Intake camshaft (RH)
(2) Exhaust camshaft (RH)
(3) Intake camshaft (LH)
(4) Exhaust camshaft (LH)
(5) Intake cam sprocket (RH)
(6) Exhaust cam sprocket (RH)
(7) Intake cam sprocket (LH)
(8) Exhaust cam sprocket (LH)
(9) Chain tensioner lever (RH)
(10) Chain tensioner lever (LH)
(11) Chain tensioner lever (main)
(12) Chain tensioner (main)
(13) Chain tensioner (RH)
(14) Timing chain (main)
(15) Timing chain (RH)
(16) Timing chain (LH)
(17) Chain guide (RH)
(18) Chain guide (LH)
(19) Chain guide (main)
(20) Chain guide (between cams)
(21) Idler sprocket
(22) Chain tensioner (LH)
(23) Chain tensioner lever shaft

Tightening torque: N·m (kgf-m, ft-lb)

T1: 6.4 (0.7, 4.7)
T2: 16 (1.6, 11.8)
T3: <Ref. to ME(H6DO)-107, Cam Sprocket.>
T4: 120 (12.2, 88.5)

4. CYLINDER HEAD AND CAMSHAFT

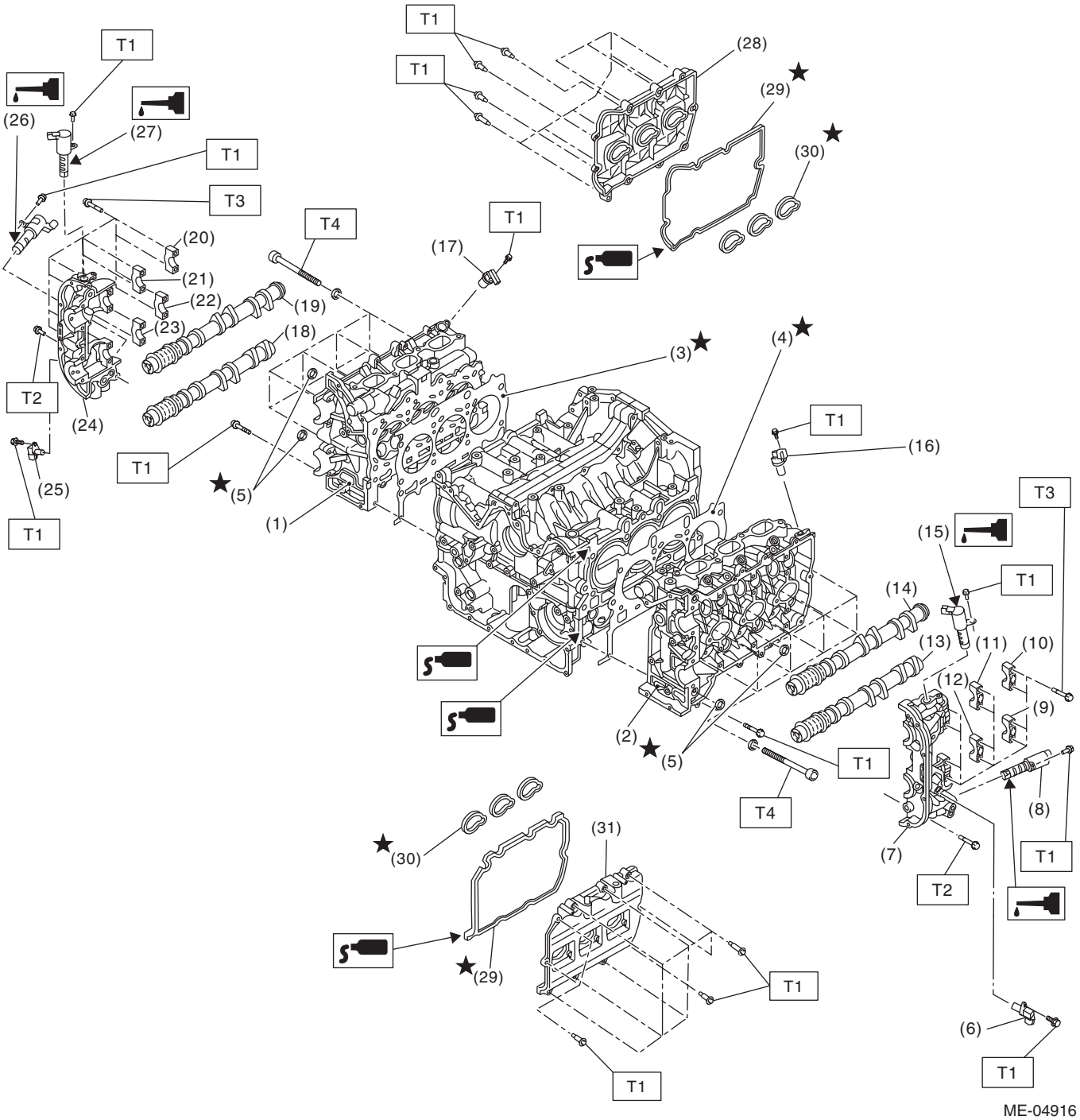

(1) Cylinder head (RH)
(2) Cylinder head (LH)
(3) Cylinder head gasket (RH)
(4) Cylinder head gasket (LH)
(5) O-ring
(6) Exhaust camshaft position sensor (LH)
(7) Front camshaft cap (LH)
(8) Exhaust oil flow control solenoid valve (LH)
(9) Exhaust camshaft cap (rear LH)
(10) Intake camshaft cap (rear LH)
(11) Intake camshaft cap (center LH)
(12) Exhaust camshaft cap (center LH)
(13) Exhaust camshaft (LH)
(14) Intake camshaft (LH)
(15) Intake oil flow control solenoid valve (LH)
(16) Intake camshaft position sensor (LH)
(17) Intake camshaft position sensor (RH)
(18) Exhaust camshaft (RH)
(19) Intake camshaft (RH)
(20) Intake camshaft cap (rear RH)
(21) Intake camshaft cap (center RH)
(22) Exhaust camshaft cap (rear RH)
(23) Exhaust camshaft cap (center RH)
(24) Front camshaft cap (RH)
(25) Exhaust camshaft position sensor (RH)
(26) Exhaust oil flow control solenoid valve (RH)
(27) Intake oil flow control solenoid valve (RH)
(28) Rocker cover (RH)
(29) Gasket
(30) Gasket
(31) Rocker cover (LH)

Tightening torque: N·m (kgf-m, ft-lb)

T1: 6.4 (0.7, 4.7)
T2: 9.75 (1.0, 7.2)
T3: 16 (1.6, 11.8)
T4: <Ref. to ME(H6DO)-119, Cylinder Head.>

5. CYLINDER HEAD AND VALVE ASSEMBLY

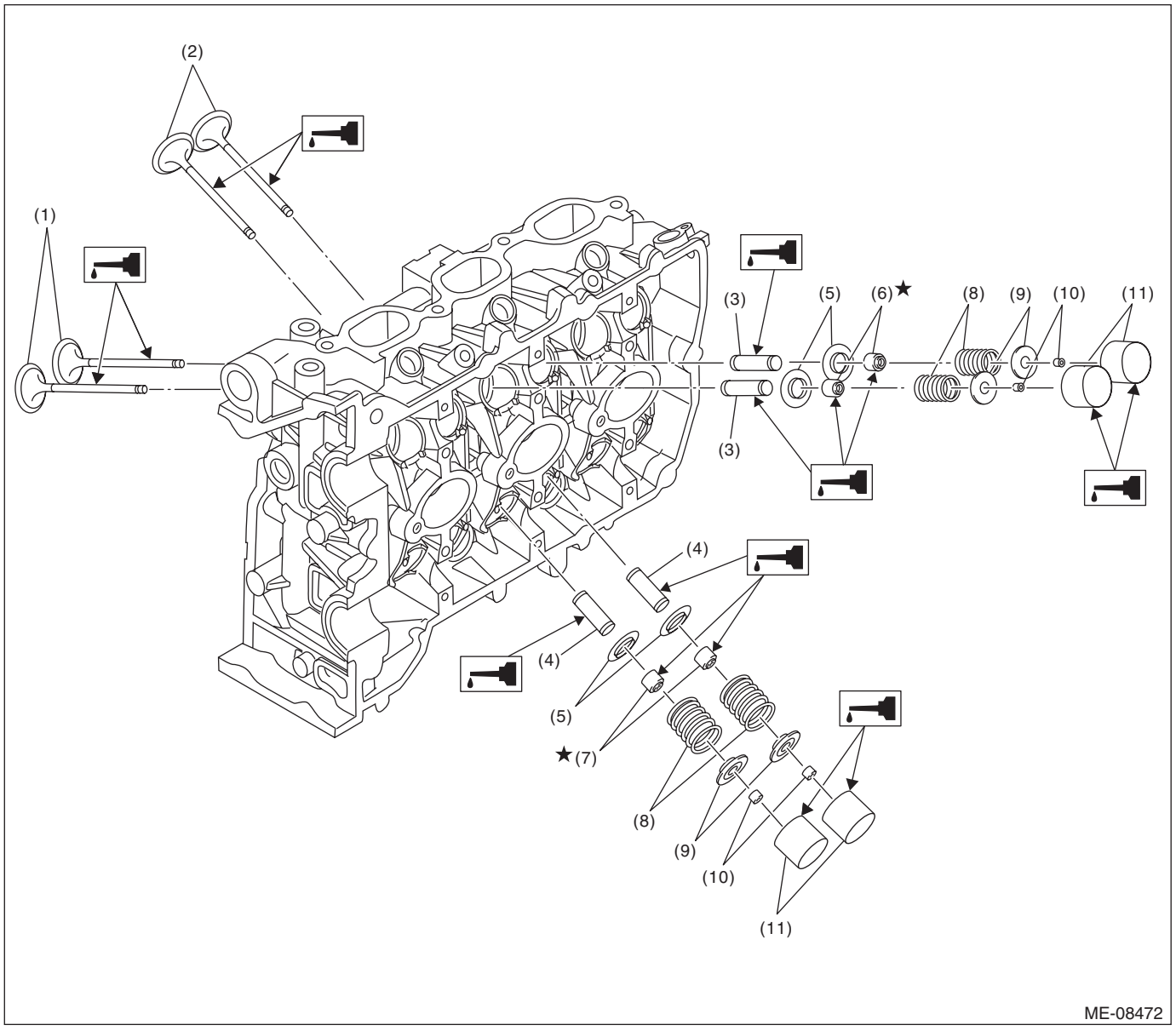

(1) Intake valve
(2) Exhaust valve
(3) Valve guide (intake)
(4) Valve guide (exhaust)
(5) Valve spring seat
(6) Stem seal (intake)
(7) Stem seal (exhaust)
(8) Valve spring
(9) Valve spring retainer
(10) Valve collet
(11) Valve lifter

6. CYLINDER BLOCK

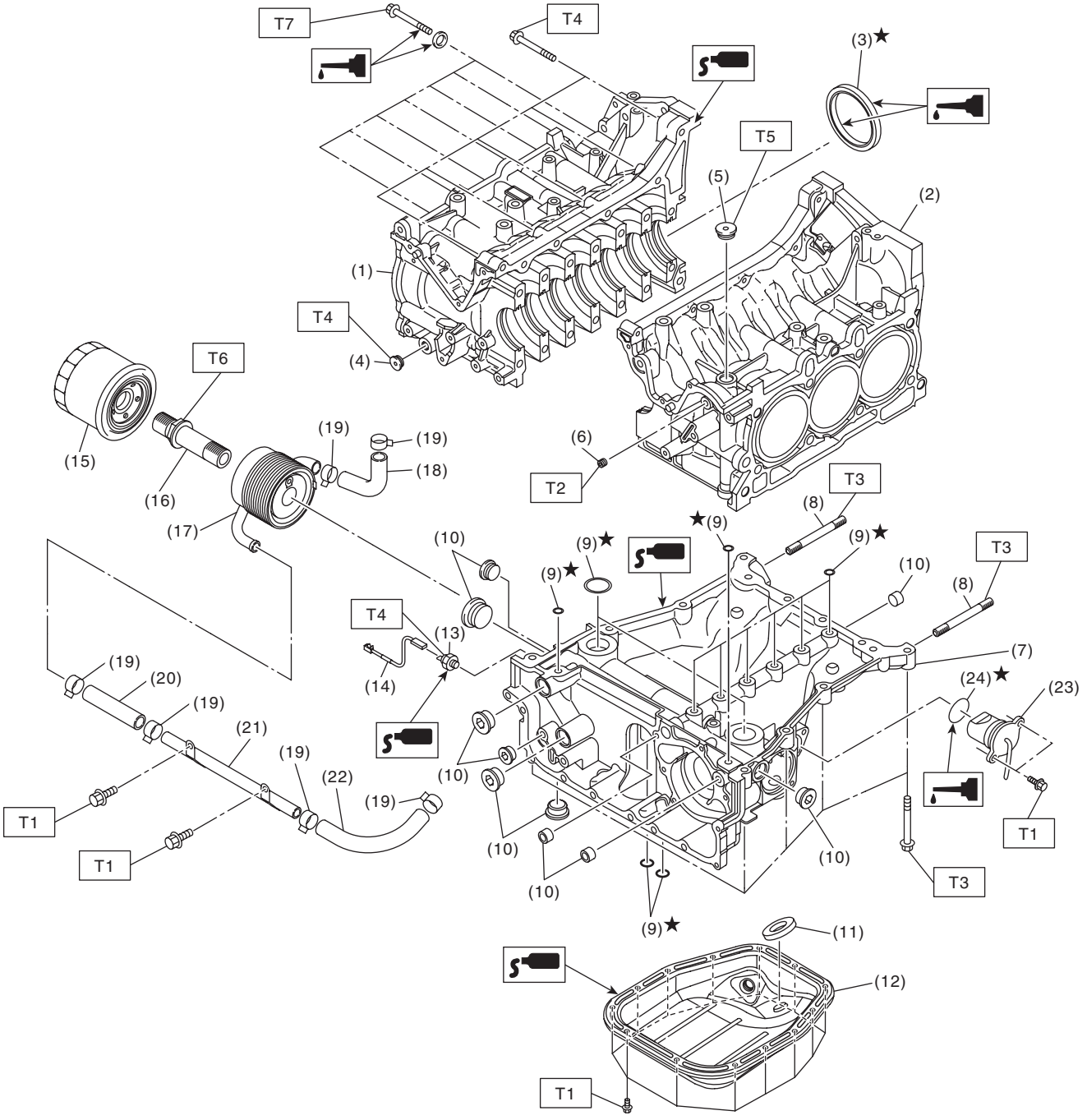

ME-08578

(1) Cylinder block (RH)
(2) Cylinder block (LH)
(3) Oil seal
(4) Plug
(5) Plug
(6) Orifice
(7) Oil pan upper
(8) Stud bolt
(9) O-ring
(10) Plug
(11) Magnet
(12) Oil pan lower
(13) Oil pressure switch
(14) Oil pressure switch harness
(15) Oil filter
(16) Oil cooler connector
(17) Oil cooler
(18) Hose
(19) Clamp
(20) Hose
(21) Oil cooler pipe
(22) Hose
(23) Oil level switch
(24) O-ring

Tightening torque: N·m (kgf-m, ft-lb)
T1: 6.4 (0.7, 4.7)
T2: 17 (1.7, 12.5)
T3: 18 (1.8, 13.3)
T4: 25 (2.5, 18.4)
T5: 37 (3.8, 27.3)
T6: 54 (5.5, 39.8)
T7: <Ref. to ME(H6DO)-134, Cylinder Block.>

7. CRANKSHAFT AND PISTON

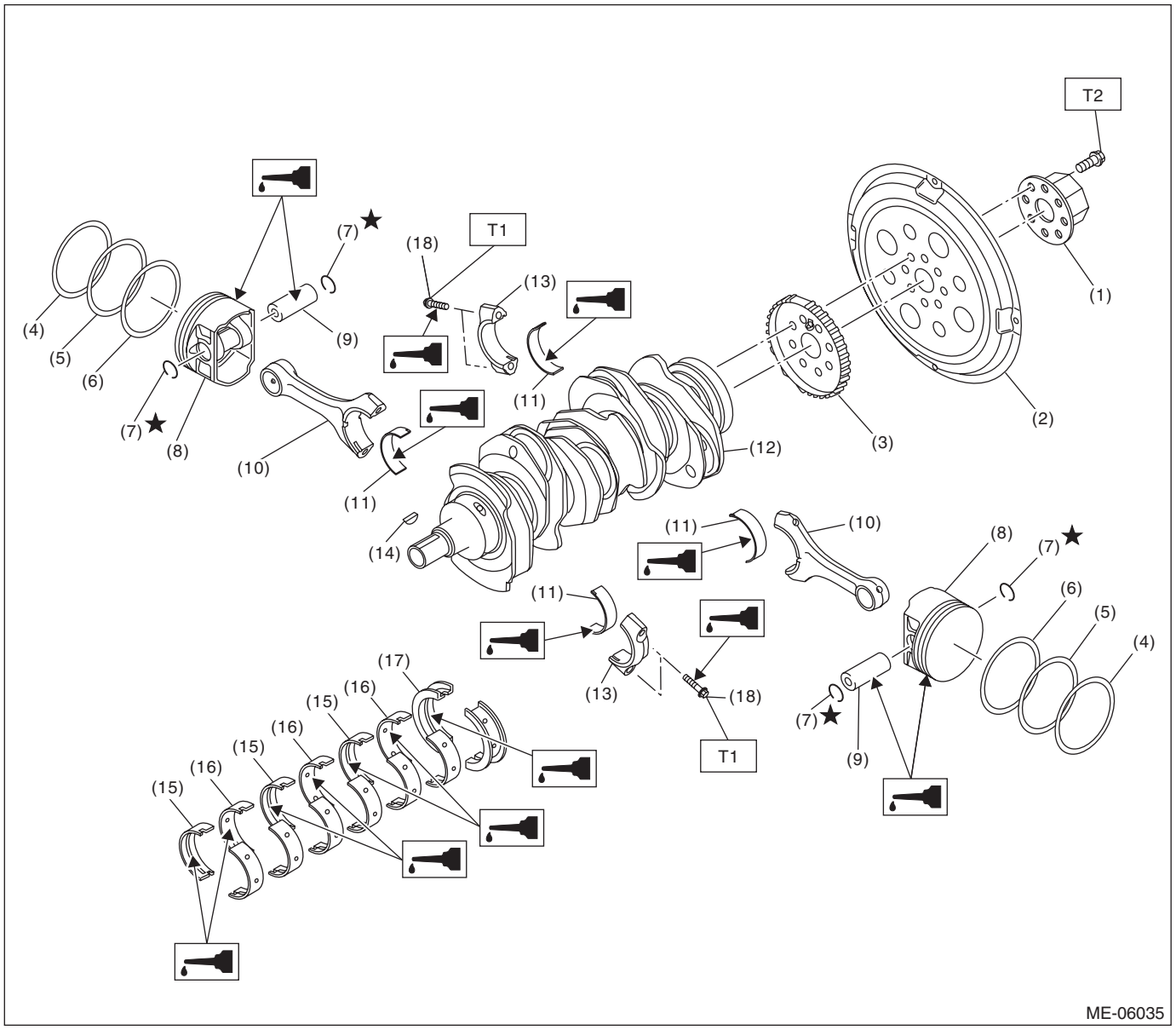

(1) Reinforcement drive plate
(2) Drive plate
(3) Crankshaft sensor plate
(4) Top ring
(5) Second ring
(6) Oil ring
(7) Circlip
(8) Piston
(9) Piston pin
(10) Connecting rod
(11) Connecting rod bearing
(12) Crankshaft
(13) Connecting rod cap
(14) Woodruff key
(15) Crankshaft bearing #1, #3, #5
(16) Crankshaft bearing #2, #4, #6
(17) Crankshaft bearing #7
(18) Connecting rod cap bolt

Tightening torque: N·m (kgf-m, ft-lb)

T1: <Ref. to ME(H6DO)-142, INSTALLATION, Cylinder Block.>

T2: <Ref. to CVT(TR690)-155, INSTALLATION, Drive Plate.>

8. ENGINE MOUNTING

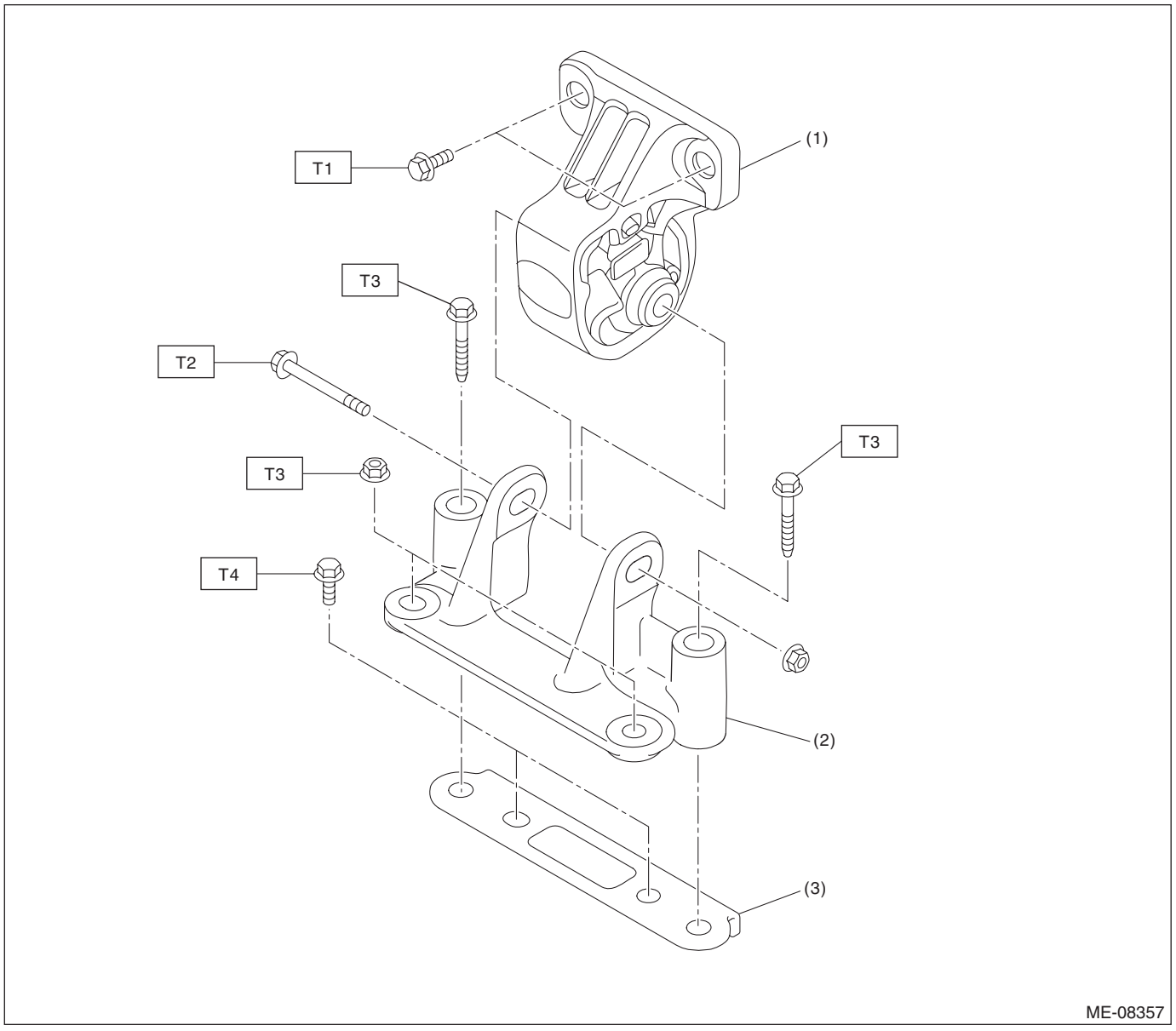

(1) Front cushion rubber
(2) Front mounting bracket
(3) Bracket

Tightening torque: N·m (kgf-m, ft-lb)
T1: 25 (2.5, 18.4)
T2: 45 (4.6, 33.2)
T3: 60 (6.1, 44.3)
T4: 65 (6.6, 47.9)

C: CAUTION

- Prior to starting work, pay special attention to the following:
  1. Always wear work clothes, a work cap, and protective shoes. Additionally, wear a helmet, protective goggles, etc. if necessary.
  2. Protect the vehicle using a seat cover, fender cover, etc.
  3. Prepare the service tools, clean cloth, containers to catch grease and oil, etc.
- Vehicle components are extremely hot immediately after driving. Be wary of receiving burns from heated parts.
- When performing a repair, identify the cause of trouble and avoid unnecessary removal, disassembly and replacement.
- Before disconnecting connectors of sensors or units, be sure to disconnect the ground cable from battery.
- Always use the jack-up point when the shop jacks or rigid racks are used to support the vehicle.
- Remove or install the engine in an area where chain hoists, lifting devices, etc. are available for ready use. When lifting up the vehicle, make sure to support the vehicle at the jack-up points.
- Be careful not to let any oil or grease contact the clutch disc or flywheel.
- Remove contamination including dirt and corrosion before removal, installation, disassembly or assembly.
- Keep the removed parts in order and protect them from dust and dirt.
- All removed parts, if to be reused, should be reinstalled in the original positions with attention to the correct directions, etc.
- Rotating parts and sliding parts such as piston, bearing and gear should be coated with oil when being assembled.
- Bolts, nuts and washers should be replaced with new parts as required.
- Be sure to tighten the fasteners including bolts and nuts to the specified torque.

D: PREPARATION TOOL

1. SPECIAL TOOL

ILLUSTRATION	TOOL NUMBER	DESCRIPTION	REMARKS
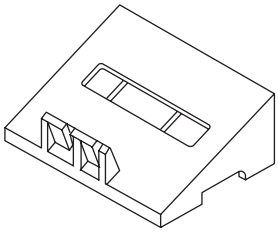 ST18250AA010	18250AA010	CYLINDER HEAD TABLE	• Used for replacing valve guides. • Used for removing and installing valve spring.
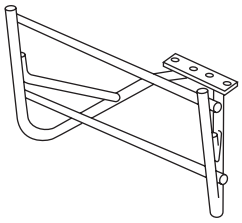 ST18232AA000	18232AA000	ENGINE STAND	Used for disassembling and assembling engine.

ILLUSTRATION	TOOL NUMBER	DESCRIPTION	REMARKS
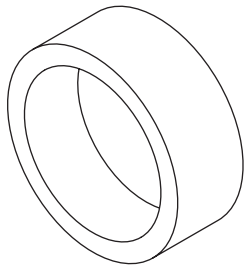 ST-398744300	398744300	PISTON GUIDE	Used for installing piston in cylinder.
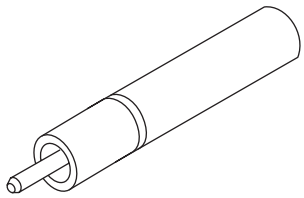 ST18261AA010	18261AA010	VALVE OIL SEAL GUIDE	Used for press-fitting of intake valve guide oil seals and exhaust valve guide oil seals.
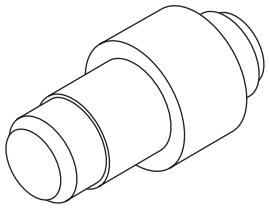 ST18350AA000	18350AA000	CONNECTING ROD BUSHING REMOVER AND INSTALLER	Used for removing and installing connecting rod bushing.
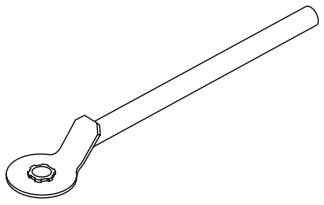 ST-499977500	499977500	CAM SPROCKET WRENCH	Used for removing and installing cam sprocket.
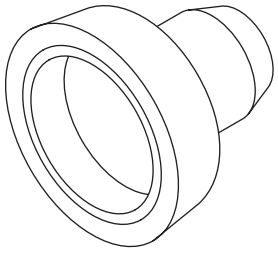 ST-499587200	499587200	CRANKSHAFT OIL SEAL INSTALLER	• Used for installing crankshaft oil seal. • Used together with CRANKSHAFT OIL SEAL GUIDE (499597100).

ILLUSTRATION	TOOL NUMBER	DESCRIPTION	REMARKS
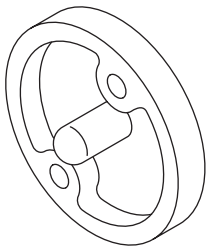 ST-499597100	499597100	CRANKSHAFT OIL SEAL GUIDE	• Used for installing crankshaft oil seal. • Used together with CRANKSHAFT OIL SEAL INSTALLER (499587200).
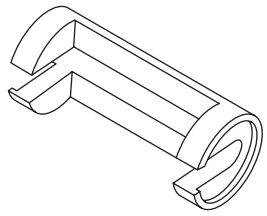 ST-499718000	499718000	VALVE SPRING REMOVER	Used for removing and installing valve spring.
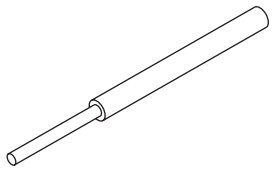 ST-499765700	499765700	VALVE GUIDE REMOVER	Used for removing valve guides.
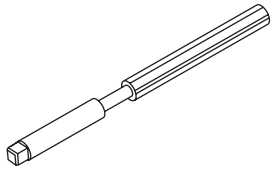 ST-499765900	499765900	VALVE GUIDE REAMER	Used for reaming valve guides.
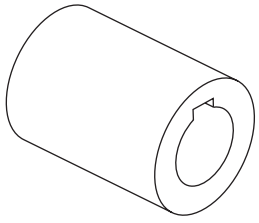 ST18252AA000	18252AA000	CRANKSHAFT SOCKET	Used for rotating crankshaft.

ILLUSTRATION	TOOL NUMBER	DESCRIPTION	REMARKS
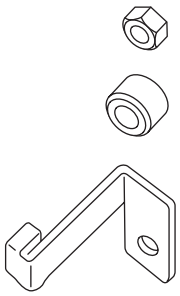 ST-498277200	498277200	STOPPER SET	Used for preventing the torque converter from falling when removing and installing the engine.
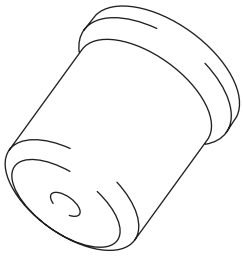 ST-499585700	499585700	OIL SEAL GUIDE	Used for installing the chain cover oil seal.
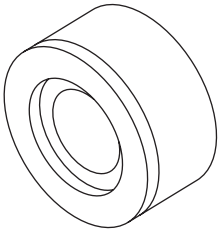 ST18251AA050	18251AA050	VALVE GUIDE ADJUSTER	Used for installing intake valve guides.
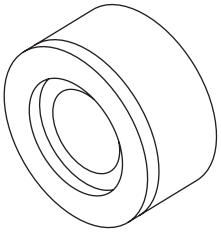 ST18251AA060	18251AA060	VALVE GUIDE ADJUSTER	Used for installing exhaust valve guides.
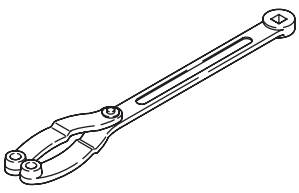 ST18355AA000	18355AA000	PULLEY WRENCH	• Used for removing and installing the crank pulley. • Used for removing and installing the idler sprocket. • Used together with PULLEY WRENCH PIN SET (18334AA000).

ILLUSTRATION	TOOL NUMBER	DESCRIPTION	REMARKS
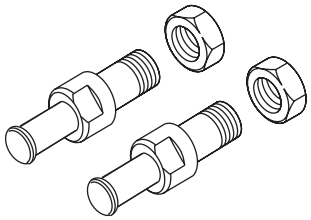 ST18334AA000	18334AA000	PULLEY WRENCH PIN SET	• Used for removing and installing the crank pulley. • Used for removing and installing the idler sprocket. • Used together with PULLEY WRENCH (18355AA000).
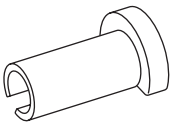 ST42099AE000	42099AE000	QUICK CONNECTOR RELEASE	Used for disconnecting the quick connector of the fuel delivery tube and FUEL HOSE (42075AG690). NOTE: FUEL HOSE (42075AG690) is used for checking the fuel pressure.
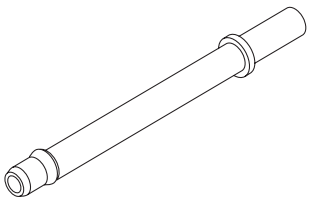 ST18471AA000	18471AA000	FUEL PIPE ADAPTER	Used for inspecting the fuel pressure.
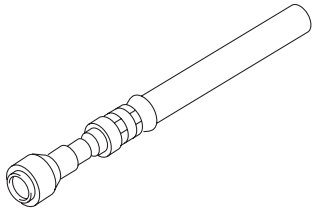 ST42075AG690	42075AG690	FUEL HOSE	Used for inspecting the fuel pressure. NOTE: This is the SUBARU genuine part.
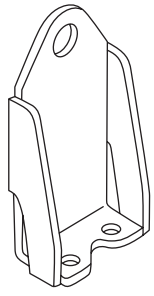 ST18360AA020	18360AA020	HANGER	Used for removing and installing engine.

ILLUSTRATION	TOOL NUMBER	DESCRIPTION	REMARKS
 STSSM4	— (Newly adopted tool)	SUBARU SELECT MONITOR 4	Used for setting of each function and trouble-shooting for electrical system. NOTE: For detailed operation procedures of Subaru Select Monitor 4, refer to “Application help”.

2. GENERAL TOOL

TOOL NAME	REMARKS
Compression gauge	Used for inspecting compression pressure.
Timing light	Used for inspecting the ignition timing.
Vacuum gauge	Used for inspecting intake manifold vacuum.
Oil pressure gauge	Used for inspecting engine oil pressure.
Fuel pressure gauge	Used for inspecting fuel pressure.
TORX® socket (E12)	Used for removing and installing connecting rod cap.
Angle gauge	Used for angle tightening.
DST-i	Used together with Subaru Select Monitor 4.

2. Compression

A: INSPECTION

CAUTION:
After warming-up, engine becomes very hot. Be careful not to burn yourself during measurement.

NOTE:
• Before checking the compression pressure, the compression condition of each cylinder can be confirmed as a guide by using the compression measurement mode in Subaru Select Monitor. <Ref. to EN(H6DO)(diag)-86, OPERATION, Active Test.>
• In the compression measurement mode, the compression condition is judged by each cylinder speed. The high speed cylinder has low compression pressure and low speed cylinder has high compression pressure.
1) Remove the collector cover.
(1) Carefully pull up the rear of collector cover at two positions (A).
(2) Carefully pull up the front of collector cover at two positions (B) while moving it forward.

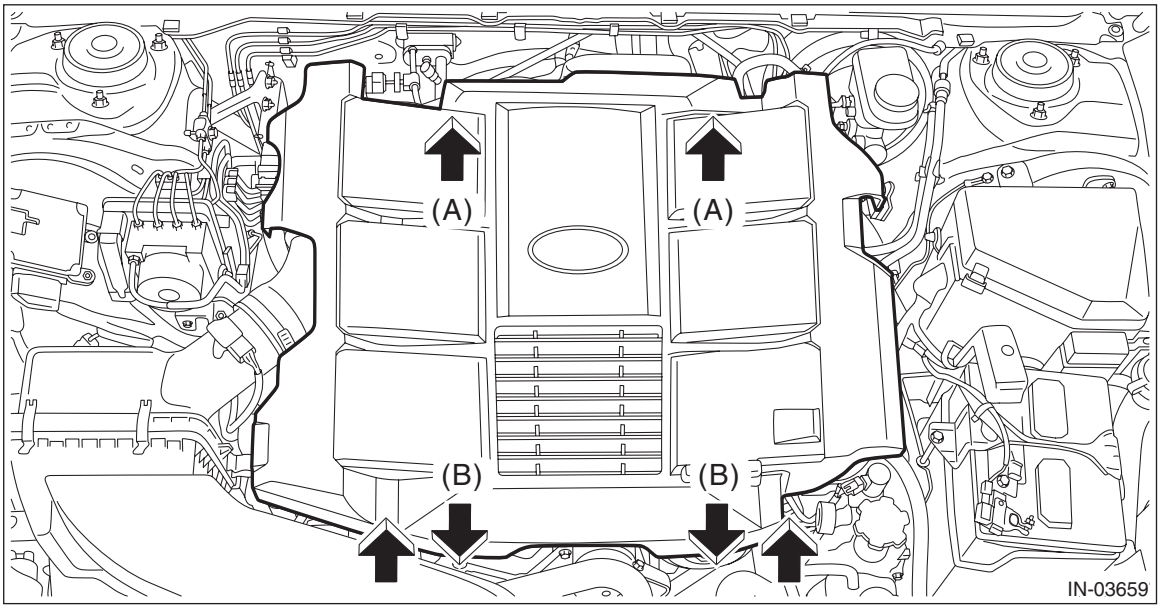

2) After warming-up the engine, turn the ignition switch to OFF.
3) Make sure that the battery is fully charged.
4) Check the starter motor for satisfactory performance and operation.
5) Remove the fuse of fuel pump from main fuse box.

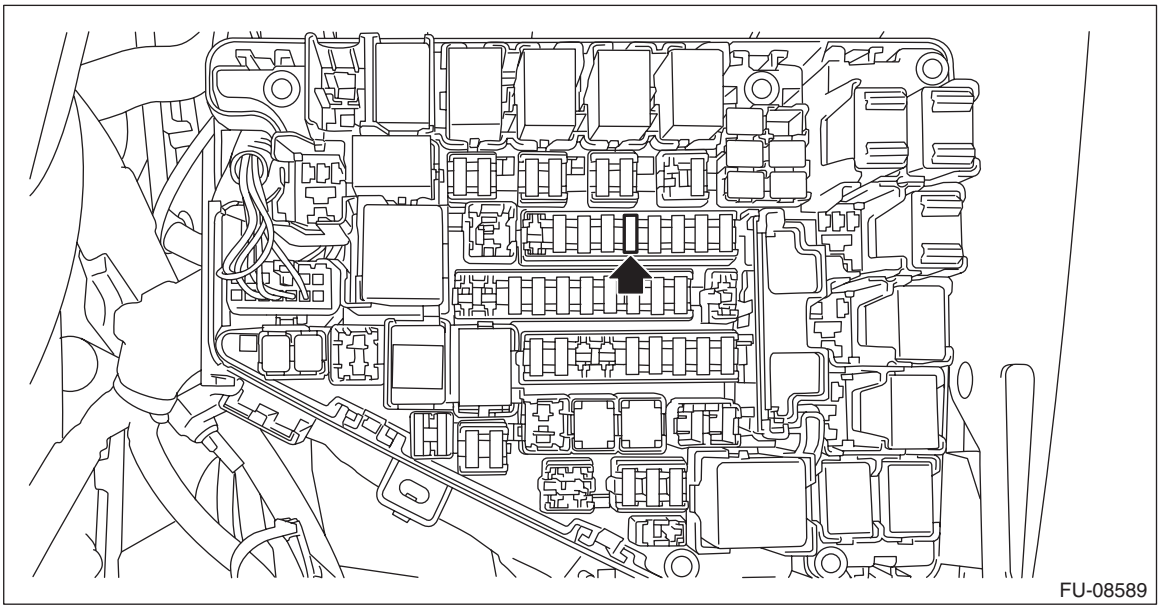

6) Start the engine and run it until it stalls.
7) After the engine stalls, crank it for five more seconds.
8) Turn the ignition switch to OFF.
9) Remove all spark plugs. <Ref. to IG(H6DO)-4, REMOVAL, Spark Plug.>
10) Install the battery. <Ref. to SC(H6DO)-58, BATTERY, INSTALLATION, Battery.>

11) Install the compression gauge to the spark plug hole.

NOTE:
When using a screw-in type compression gauge, the screw should be less than 18 mm (0.71 in) long.

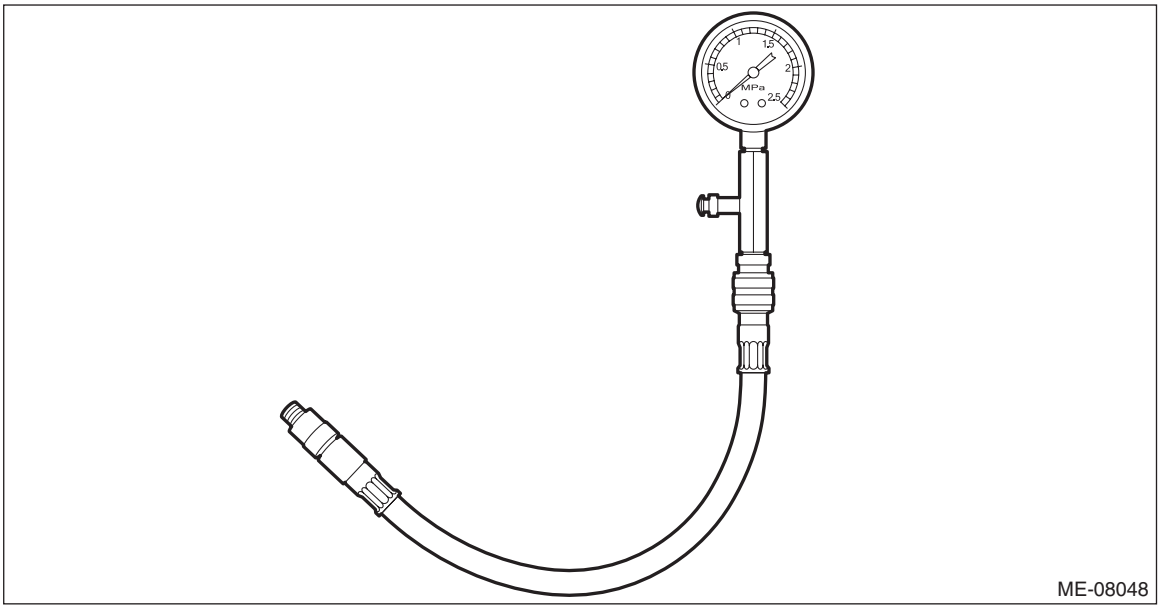

12) Depress the accelerator pedal to full throttle.
13) Crank the engine by the starter motor, and read the maximum value on the gauge when the needle of gauge is steady.

NOTE:
- Perform at least two measurements per cylinder, and make sure that the values are correct.
- If the compression pressure is out of standard, check or adjust the pistons, valves and cylinders.

compression pressure (350 r/min and fully open throttle):
Standard
1,128 — 1,471 kPa (11.5 — 15.0 kg/cm^2, 164 — 213 psi)
Difference between cylinders
49 kPa (0.5 kg/cm^2, 7 psi) or less

14) After inspection, install the related parts in the reverse order of removal.

3. Idle Speed

A: INSPECTION

1) Before checking the idle speed, check the following item:
   (1) Check the air cleaner element is free from clogging, ignition timing is correct, spark plugs are in good condition, and hoses are connected properly.
   (2) Check the malfunction indicator light does not illuminate.
2) Warm up the engine.
3) Read the engine idle speed using Subaru Select Monitor. <Ref. to EN(H6DO)(diag)-50, DISPLAY CURRENT ENGINE DATA, OPERATION, Subaru Select Monitor.>

NOTE:
- Idle speed cannot be adjusted manually, because the idle speed is automatically adjusted.
- If idle speed is out of standard, refer to the General Diagnosis Table under “Engine Control System”. <Ref. to EN(H6DO)(diag)-2, Basic Diagnostic Procedure.>

   (1) Check the idle speed when no-loaded. (Headlight, heater fan, rear defroster, radiator fan, A/C and etc. are OFF)

Idle rpm (no load and select lever in “P” or “N” range):
Standard
700±100 r/min

   (2) Check the idle speed when loaded. (Turn the A/C switch to ON and operate the compressor for at least one minute before measurement.)

Idle speed (A/C ON and select lever in “P” or “N” range):
Standard
700 — 910±100 r/min

4. Ignition Timing

A: INSPECTION

CAUTION:
After warming-up, engine becomes very hot. Be careful not to burn yourself at measurement.

1. METHOD WITH SUBARU SELECT MONITOR

1) Before checking the ignition timing, check the following item:
   (1) Check the air cleaner element is free from clogging, spark plugs are in good condition, and hoses are connected properly.
   (2) Check the malfunction indicator light does not illuminate.
2) Warm up the engine.
3) Read the ignition timing using Subaru Select Monitor. <Ref. to EN(H6DO)(diag)-50, DISPLAY CURRENT ENGINE DATA, OPERATION, Subaru Select Monitor.>

NOTE:
If ignition timing is out of standard, check the ignition control system. Refer to “Engine Control System”. <Ref. to EN(H6DO)(diag)-2, Basic Diagnostic Procedure.>

Ignition timing [BTDC/{r/min}]:
Standard
15°±8°/700

2. METHOD WITH TIMING LIGHT

1) Before checking the ignition timing, check the following item:
   (1) Check the air cleaner element is free from clogging, spark plugs are in good condition, and hoses are connected properly.
   (2) Check the malfunction indicator light does not illuminate.
2) Warm up the engine.
3) Stop the engine, and turn the ignition switch to OFF.
4) Remove the collector cover.
   (1) Carefully pull up the rear of collector cover at two positions (A).
   (2) Carefully pull up the front of collector cover at two positions (B) while moving it forward.

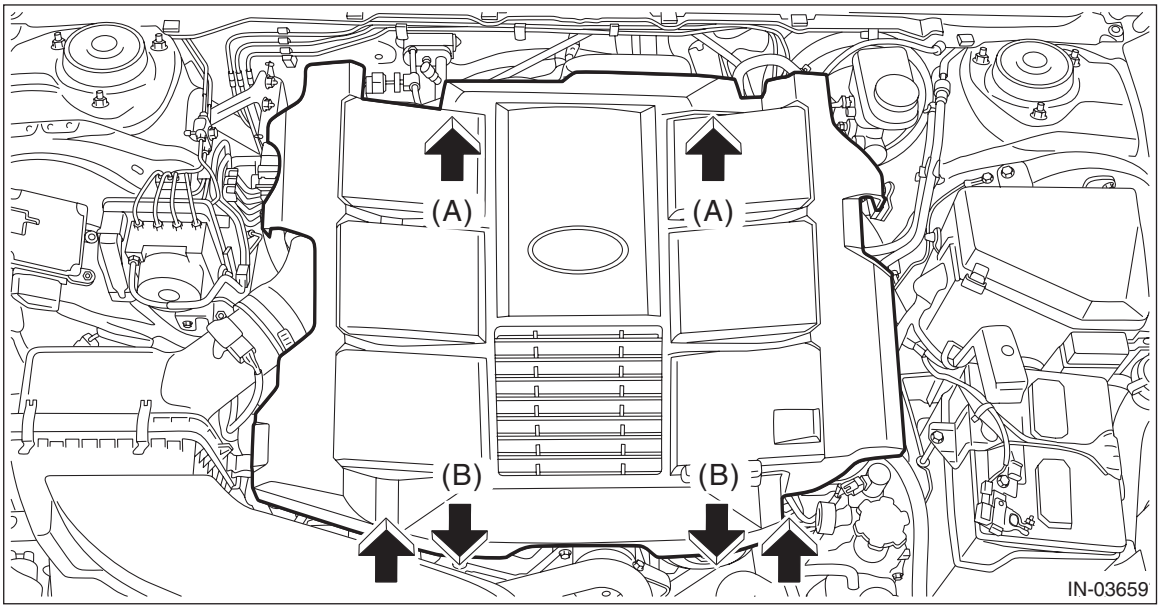

5) Disconnect the ground terminal from battery sensor. <Ref. to RC-4, BATTERY, NOTE, Repair Contents.>
6) Remove the air intake duct. <Ref. to IN(H6DO)-12, REMOVAL, Air Intake Duct.>
7) Remove the air cleaner case and the air cleaner element. <Ref. to IN(H6DO)-8, REMOVAL, Air Cleaner Case.> <Ref. to IN(H6DO)-4, REMOVAL, Air Cleaner Element.>
8) Connect the timing light to the power wire of #1 ignition coil.

9) Install the air cleaner case and the air cleaner element, and connect the connector of the mass air flow and intake air temperature sensor. <Ref. to IN(H6DO)-9, INSTALLATION, Air Cleaner Case.> <Ref. to IN(H6DO)-5, INSTALLATION, Air Cleaner Element.>
10) Connect the ground terminal to battery sensor. <Ref. to RC-4, BATTERY, NOTE, Repair Contents.>
11) Start the engine, turn the timing light to the crank pulley, and check the ignition timing through the chain cover gauge.

NOTE:
If ignition timing is out of standard, check the ignition control system. Refer to “Engine Control System”. <Ref. to EN(H6DO)(diag)-2, Basic Diagnostic Procedure.>

Ignition timing [BTDC/{r/min}]:
Standard
15°±8°/700

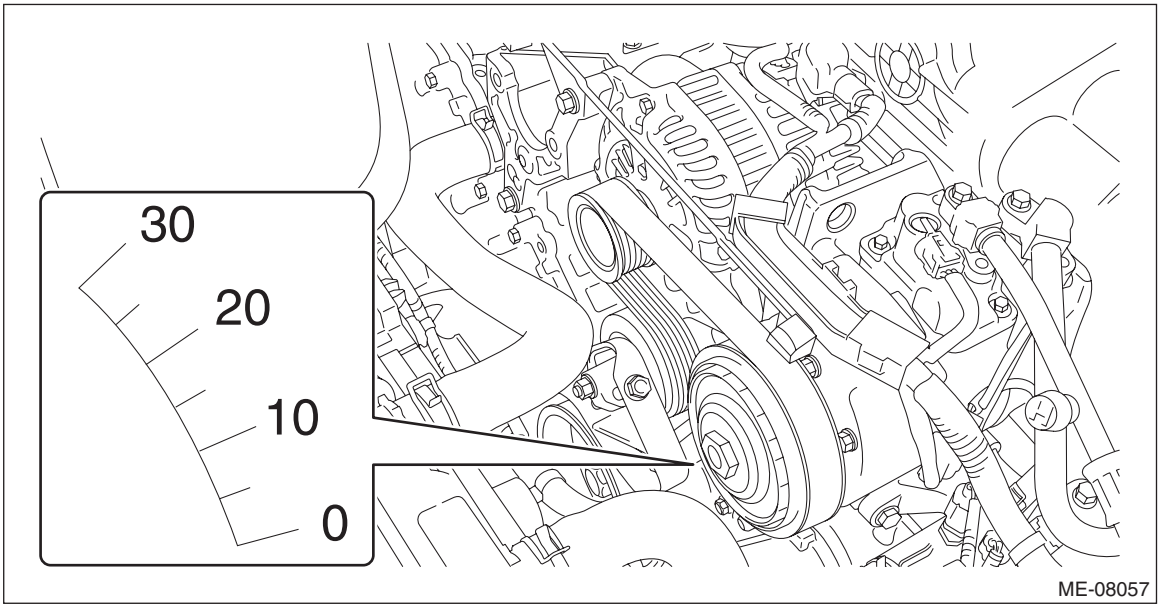

12) After inspection, install the related parts in the reverse order of removal.

5. Intake Manifold Vacuum

A: INSPECTION

1) Warm up the engine.
2) Remove the collector cover.
   (1) Carefully pull up the rear of collector cover at two positions (A).
   (2) Carefully pull up the front of collector cover at two positions (B) while moving it forward.

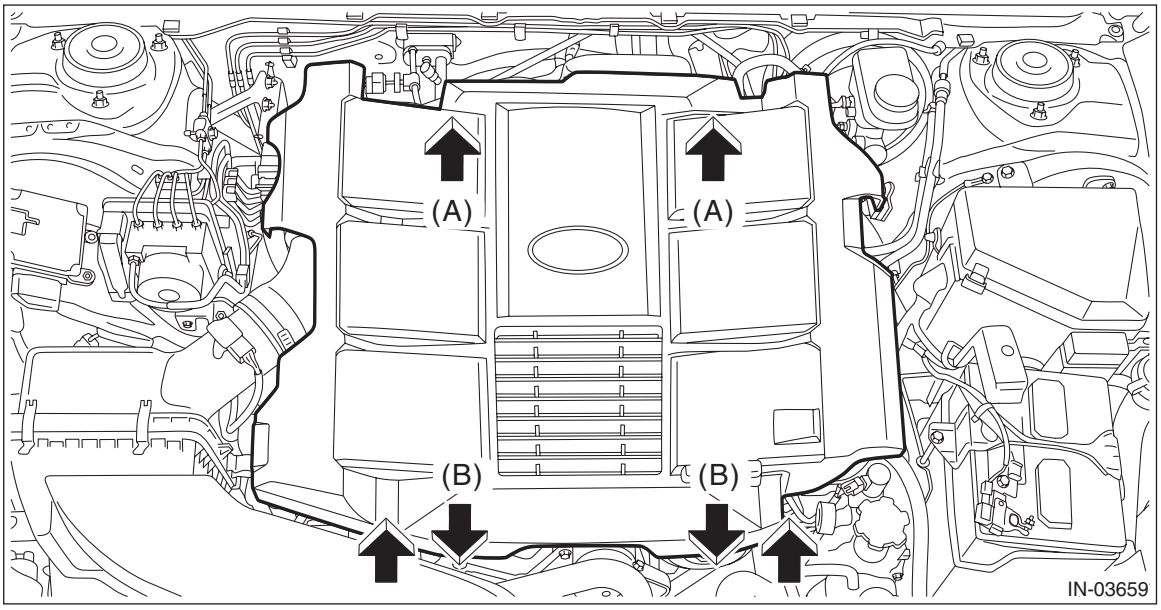

3) Disconnect the brake booster vacuum hose from the intake manifold, and attach the vacuum gauge.

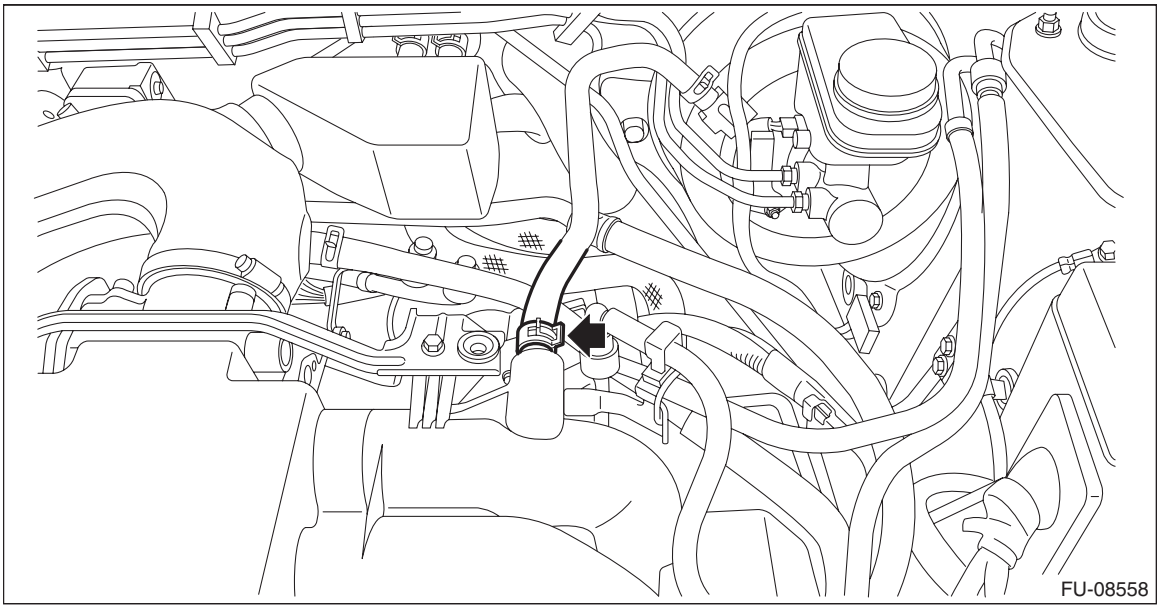

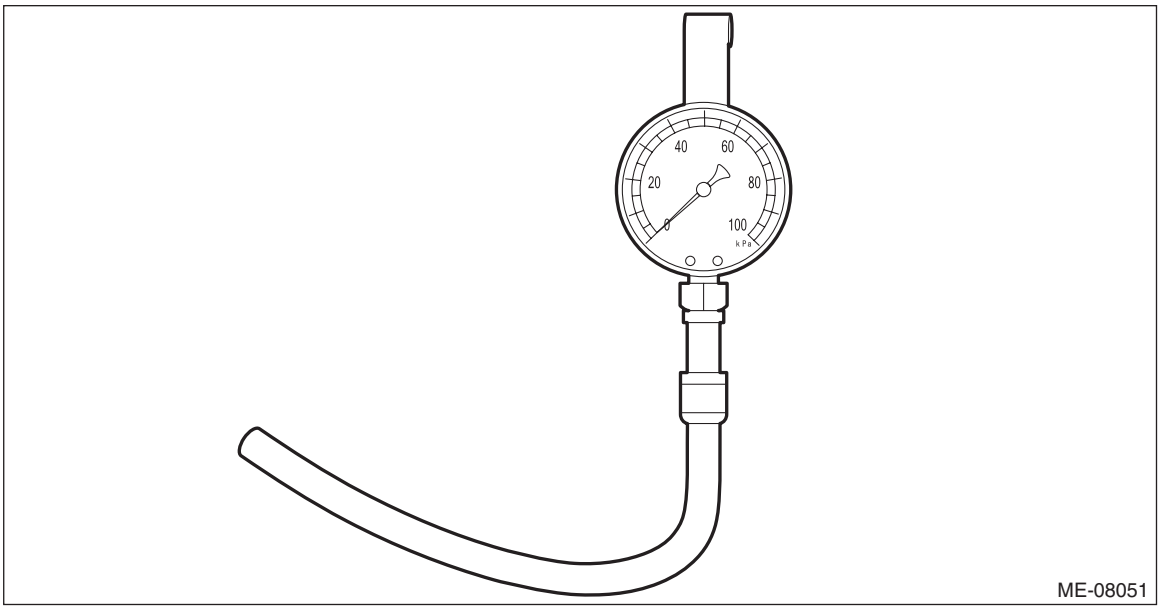

4) Keep the engine at idle speed and read the vacuum gauge indication.

NOTE:
Condition of engine inside can be diagnosed by observing the behavior of the vacuum gauge needle as described in table below.

Intake manifold vacuum (at idling, A/C OFF):
Standard
Less than –60.0 kPa (–450 mmHg, –17.72 inHg)

Diagnosis of engine condition by measurement of intake manifold vacuum	
Vacuum gauge indication	Possible engine condition
1. Needle is steady but lower than standard value. This tendency becomes more evident as engine temperature rises.	Leakage around intake manifold gasket, disconnection or damage of vacuum hose
2. Needle intermittently drops to position lower than standard value.	Leakage around cylinder
3. Needle drops suddenly and intermittently from standard value.	Sticky valve
4. When engine speed is gradually increased, needle begins to vibrate rapidly at certain speed, and then vibration increases as engine speed increases.	Weak or broken valve springs
5. Needle vibrates above and below standard value in narrow range.	Defective ignition system

5) After inspection, install the related parts in the reverse order of removal.

6. Engine Oil Pressure

A: INSPECTION

1) Disconnect the ground terminal from battery sensor. <Ref. to RC-4, BATTERY, NOTE, Repair Contents.>
2) Remove the oil pressure switch from the oil pan upper. <Ref. to LU(H6DO)-19, REMOVAL, Oil Pressure Switch.>
3) Attach the oil pressure gauge to the oil pan upper.

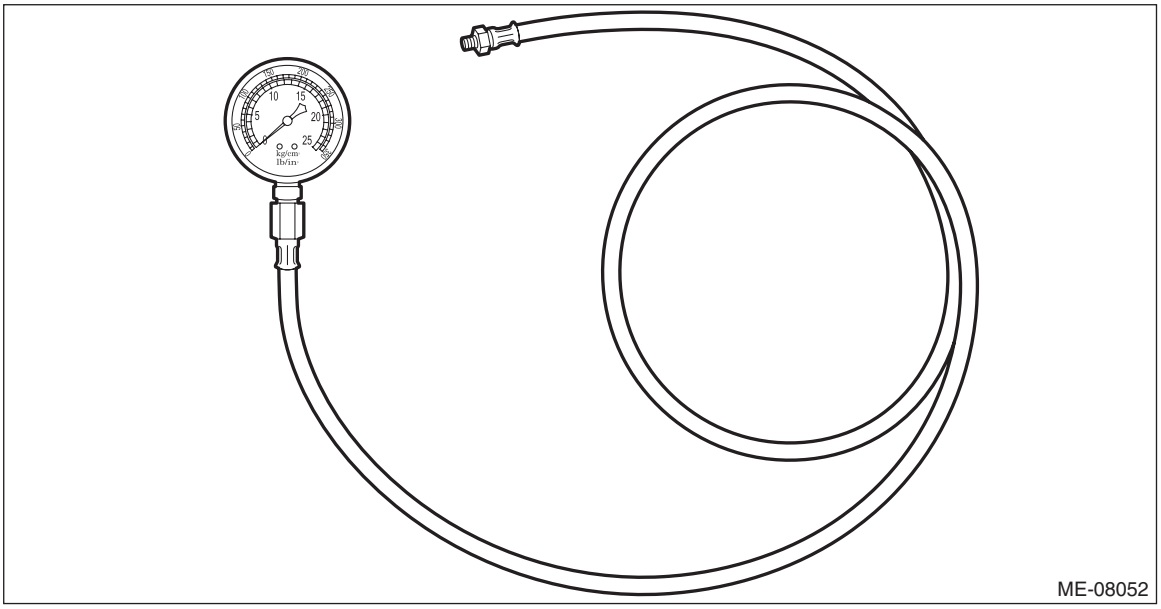

4) Connect the ground terminal to battery sensor. <Ref. to RC-4, BATTERY, NOTE, Repair Contents.>
5) Refill the engine oil. <Ref. to LU(H6DO)-12, REPLACEMENT, Engine Oil.>
6) Start the engine, and check the oil pressure.

NOTE:
• If the oil pressure is out of specification, check oil pump, oil filter and lubrication line. <Ref. to LU(H6DO)-32, Engine Lubrication System Trouble in General.>
• If the oil pressure warning light is ON and oil pressure is within specification, check the oil pressure switch. <Ref. to LU(H6DO)-9, Oil Pressure System.> <Ref. to LU(H6DO)-19, Oil Pressure Switch.>

Engine oil pressure (at oil temperature of 80°C (176°F)):
Standard
100 kPa (1.0 kg/cm^2, 15 psi) or more (at 700 r/min)
500 kPa (5.1 kg/cm^2, 73 psi) or more (at 5,000 r/min)

7) After inspection, install the related parts in the reverse order of removal.

7. Fuel Pressure

A: INSPECTION

1) Remove the collector cover.
   (1) Carefully pull up the rear of collector cover at two positions (A).
   (2) Carefully pull up the front of collector cover at two positions (B) while moving it forward.

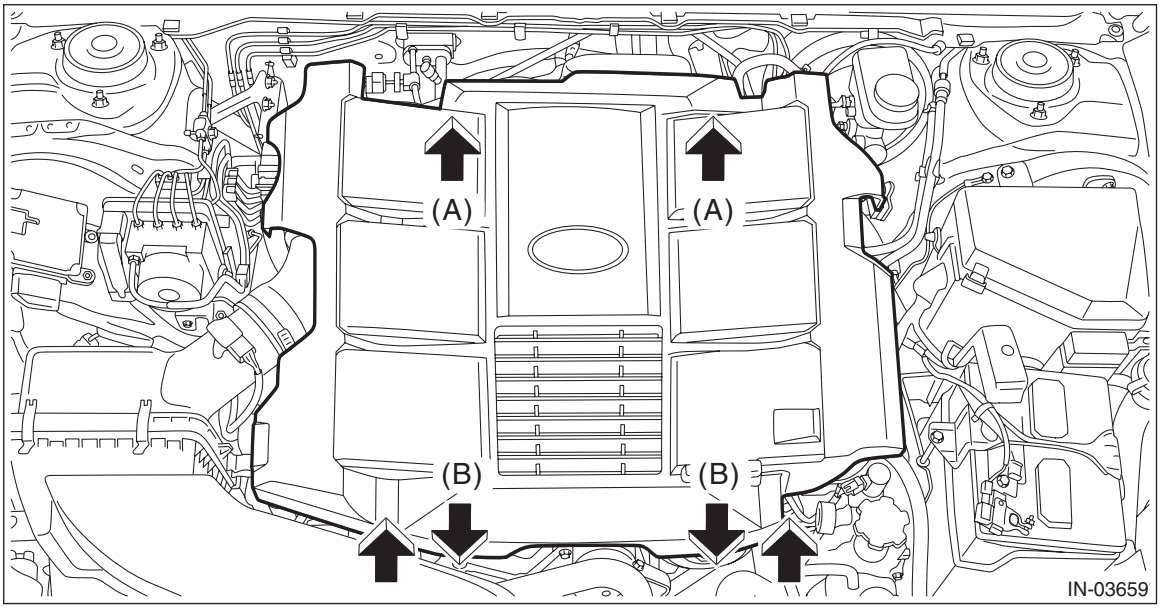

2) Release the fuel pressure. <Ref. to FU(H6DO)-93, RELEASING OF FUEL PRESSURE, PROCEDURE, Fuel.>
3) Open the fuel filler lid and remove the fuel filler cap.

NOTE:
This operation is required to release the inner pressure of the fuel tank.
4) Disconnect the fuel delivery tube from the fuel delivery pipe, and connect the fuel pressure gauge.

CAUTION:
- **Be careful not to spill fuel.**
- **Catch the fuel from the tubes using a container or cloth.**

(1) Remove the clip (A) securing the fuel delivery tube.
(2) Attach ST to the fuel pipe assembly and push ST in the direction of arrow mark to disconnect the quick connector of the fuel delivery tube (B).

ST 42099AE000 QUICK CONNECTOR RELEASE

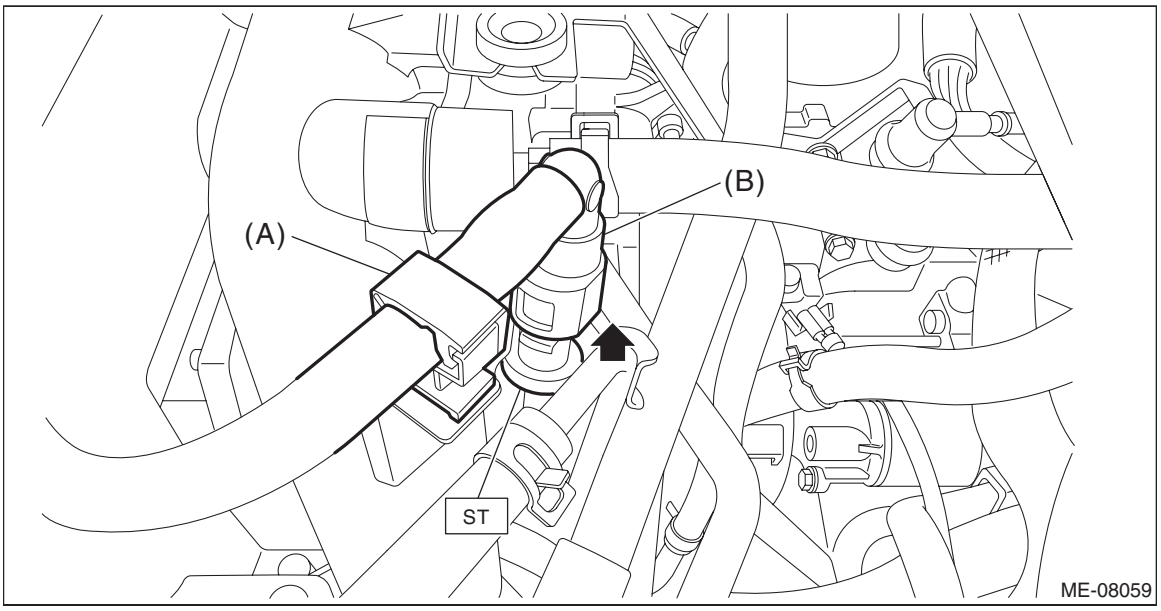

(3) Connect the fuel pressure gauge with ST1 and ST2.

CAUTION:
• Check that there is no damage or dust on the quick connector. If necessary, clean the seal surface of the pipe.
• Make sure that the quick connector is securely connected.

NOTE:
ST1 is a SUBARU genuine part.
ST1 42075AG690 FUEL HOSE
ST2 18471AA000 FUEL PIPE ADAPTER

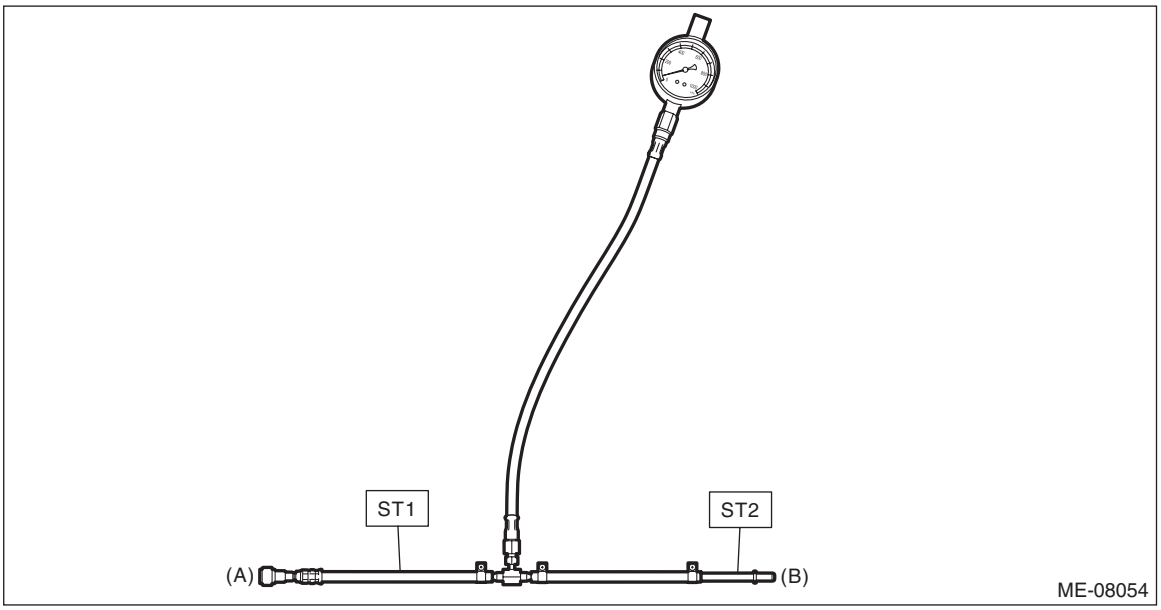

(A) Fuel pipe assembly side (B) Fuel delivery tube side

5) Start the engine.
6) Check the fuel pressure after warming up the engine.

NOTE:
• The fuel pressure gauge registers 10 to 20 kPa (0.1 to 0.2 kg/cm^2, 1 to 3 psi) higher than standard values during high-altitude operations.
• Check or replace the fuel pump and fuel delivery line if the fuel pressure is out of the standard.

Fuel pressure:
Standard
340 — 400 kPa (3.5 — 4.1 kg/cm^2, 49.3 — 58 psi)

7) After inspection, install the related parts in the reverse order of removal.

CAUTION:
- **Before removing the fuel pressure gauge, release the fuel pressure.**
- **Be careful not to spill fuel.**
- **Catch the fuel from hoses and tubes using a container or cloth.**
- **Check that there is no damage or dust on the quick connector. If necessary, clean the seal surface of the pipe.**
- **Make sure that the quick connector is securely connected.**

NOTE:
When disconnecting the ST1 or fuel delivery tube, install the ST3 to the fuel pipe assembly or to ST2, and press the ST3 in the direction of arrow to disconnect the ST1 or the quick connector of the fuel delivery tube.
ST1 42075AG690 FUEL HOSE
ST2 18471AA000 FUEL PIPE ADAPTER
ST3 42099AE000 QUICK CONNECTOR RELEASE

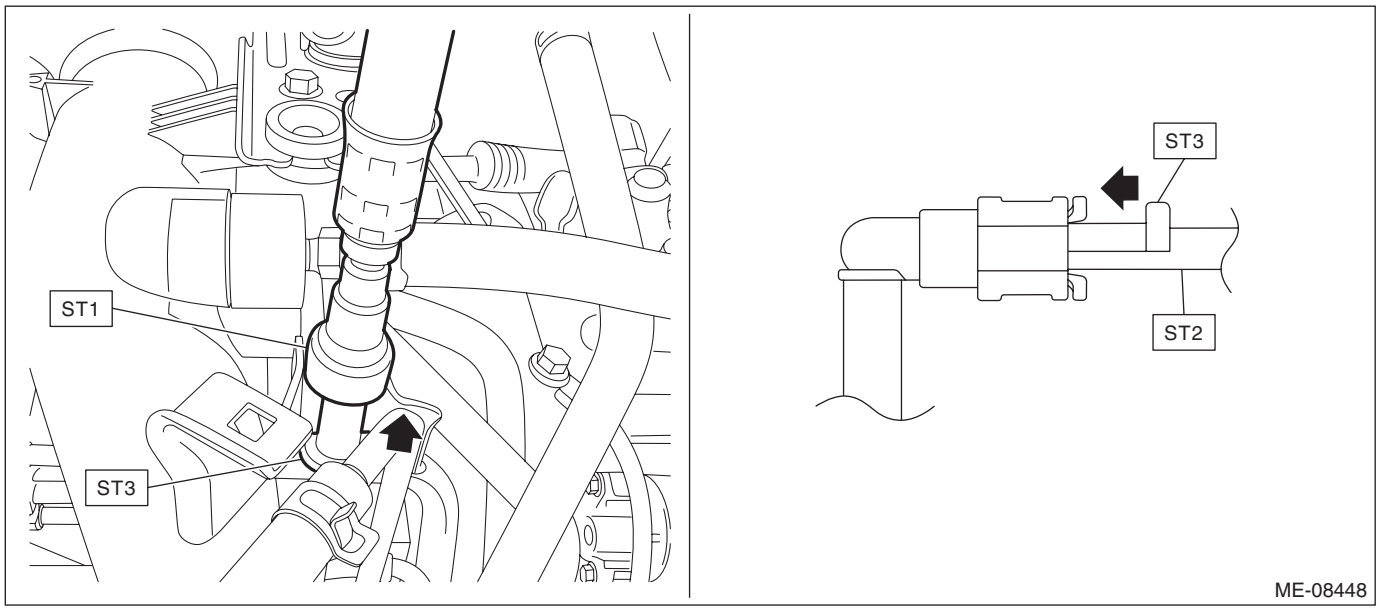

8. Valve Clearance

A: INSPECTION

CAUTION:
If engine oil is spilt onto the exhaust pipe, wipe it off with cloth to avoid emission of smoke or causing a fire.

NOTE:
Inspection of valve clearance should be performed while engine is cold.

1) Remove the collector cover.
   (1) Carefully pull up the rear of collector cover at two positions (A).
   (2) Carefully pull up the front of collector cover at two positions (B) while moving it forward.

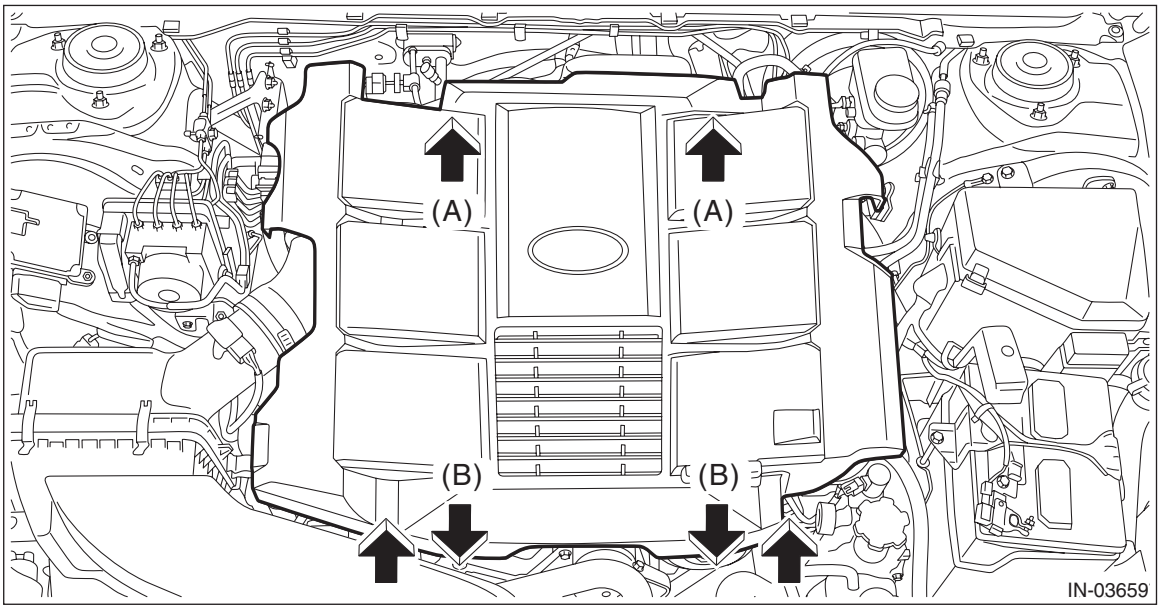

2) Disconnect the ground terminal from battery sensor. <Ref. to RC-4, BATTERY, NOTE, Repair Contents.>
3) Lift up the vehicle.
4) Remove the under cover. <Ref. to EI-28, REMOVAL, Front Under Cover.>
5) Lower the vehicle.

6) When inspecting valve clearances for #1, #3 and #5
(1) Remove the air intake duct. <Ref. to IN(H6DO)-12, REMOVAL, Air Intake Duct.>
(2) Loosen the clamp (A) securing the air intake boot.
(3) Remove the bolt (B) securing the air intake boot to the collector cover bracket.

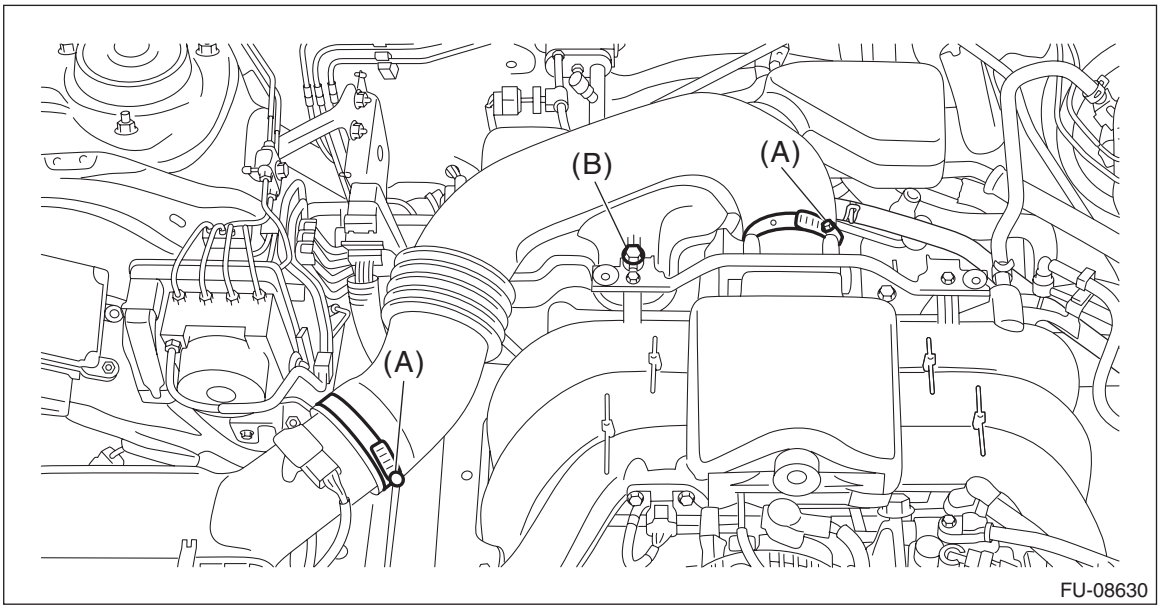

(4) Remove the air intake boot from the throttle body and the air cleaner case (rear), and move it to the left side wheel apron.

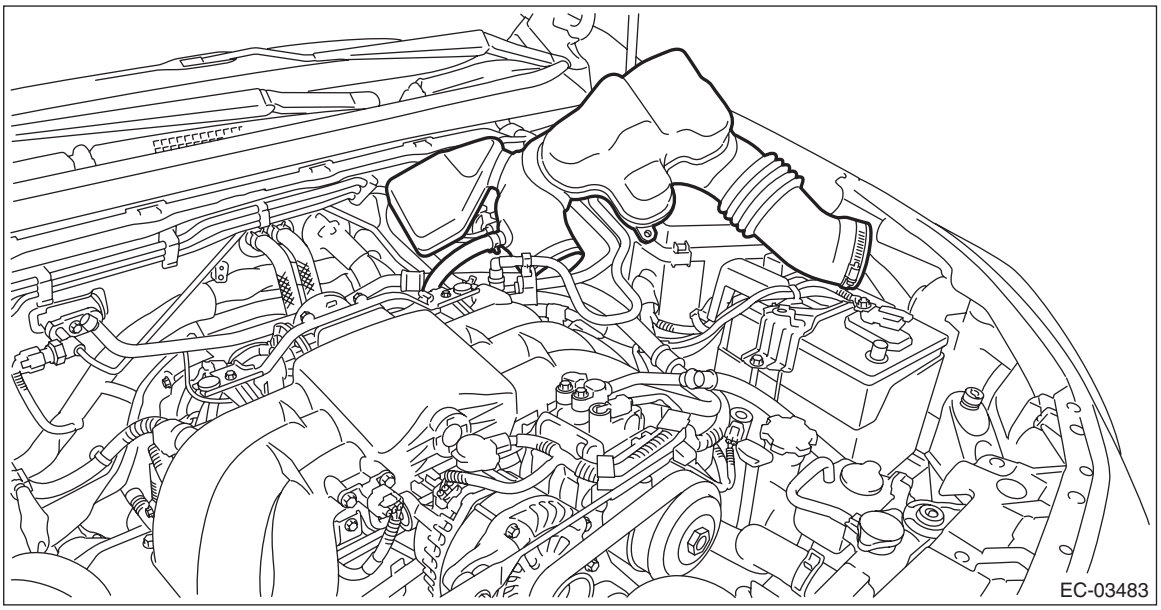

(5) Remove the air cleaner case. <Ref. to IN(H6DO)-8, REMOVAL, Air Cleaner Case.>

(6) Remove the fuel pipe protector (RH).

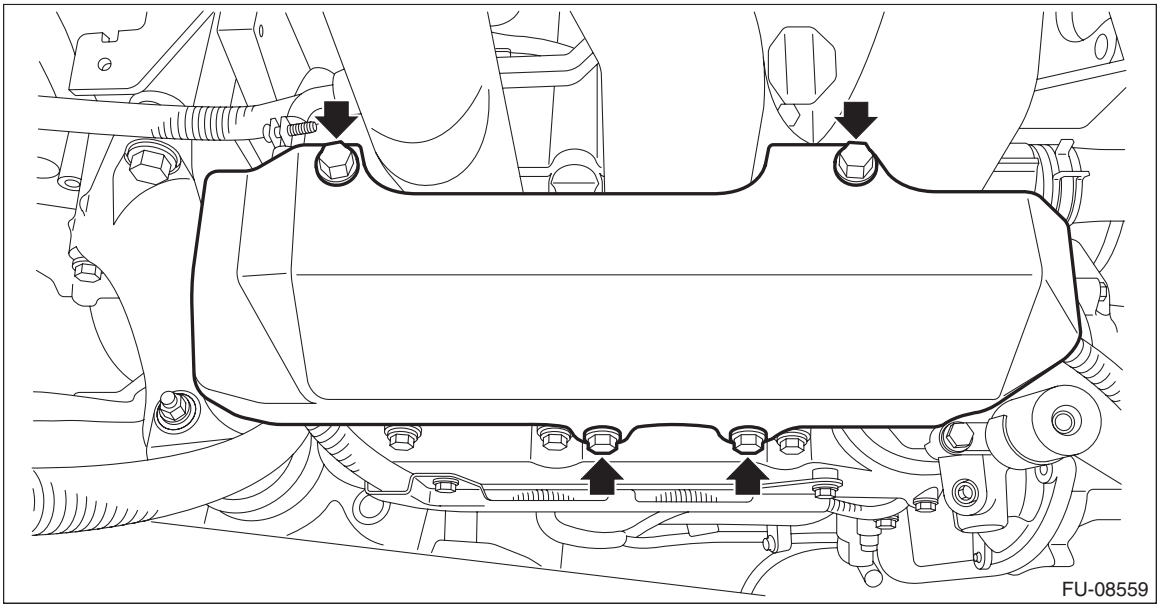

(7) Disconnect the connector of oil pressure switch.
(8) Remove the ignition coil. <Ref. to IG(H6DO)-15, REMOVAL, Ignition Coil.>
(9) Remove the rocker cover (RH). <Ref. to ME(H6DO)-110, REMOVAL, Camshaft.>

7) When inspecting valve clearances for #2, #4 and #6
(1) Remove the battery. <Ref. to SC(H6DO)-57, REMOVAL, Battery.>
(2) Disconnect the connector (A) and terminal (B) from the generator.
(3) Disconnect the connector (C) and connector (D) from the A/C compressor.
(4) Remove the harness cover (E) from the collector cover bracket.
(5) Remove the clip (F) from the fuel pipe protector (LH).

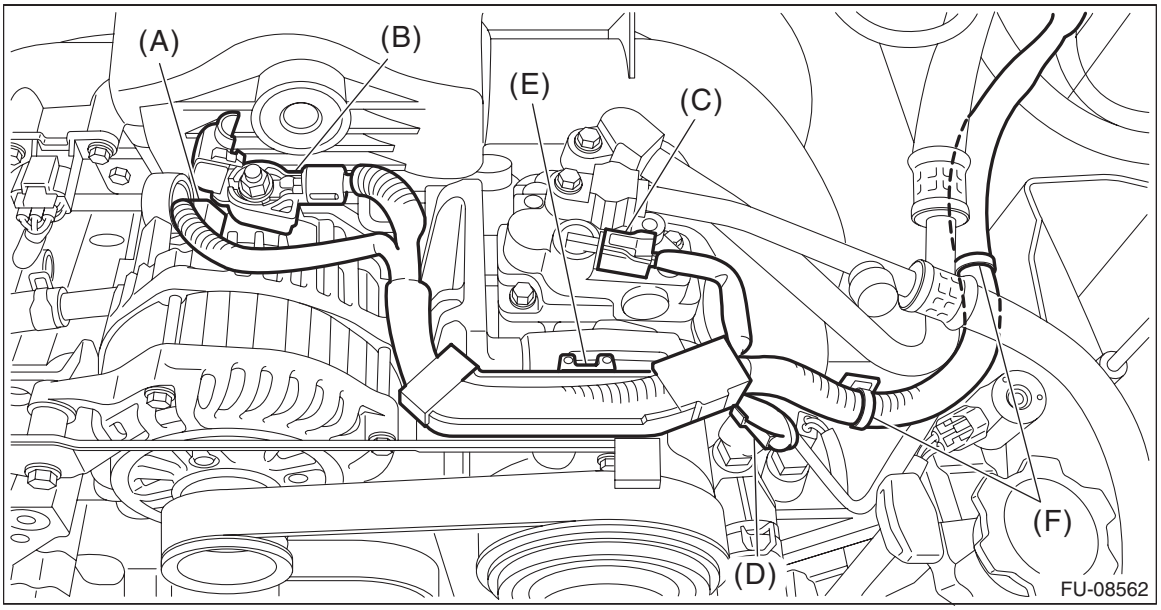

(6) Slide the harness and connector to the battery side.

(7) Disconnect the PCV hose from rocker cover (LH).

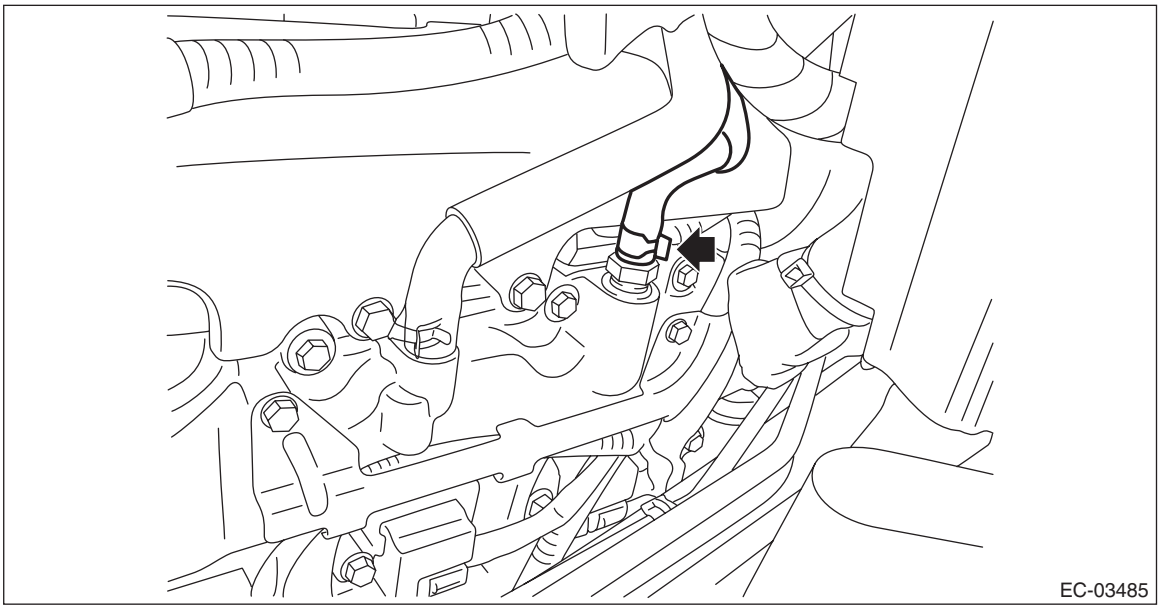

(8) Remove the fuel pipe protector (LH).

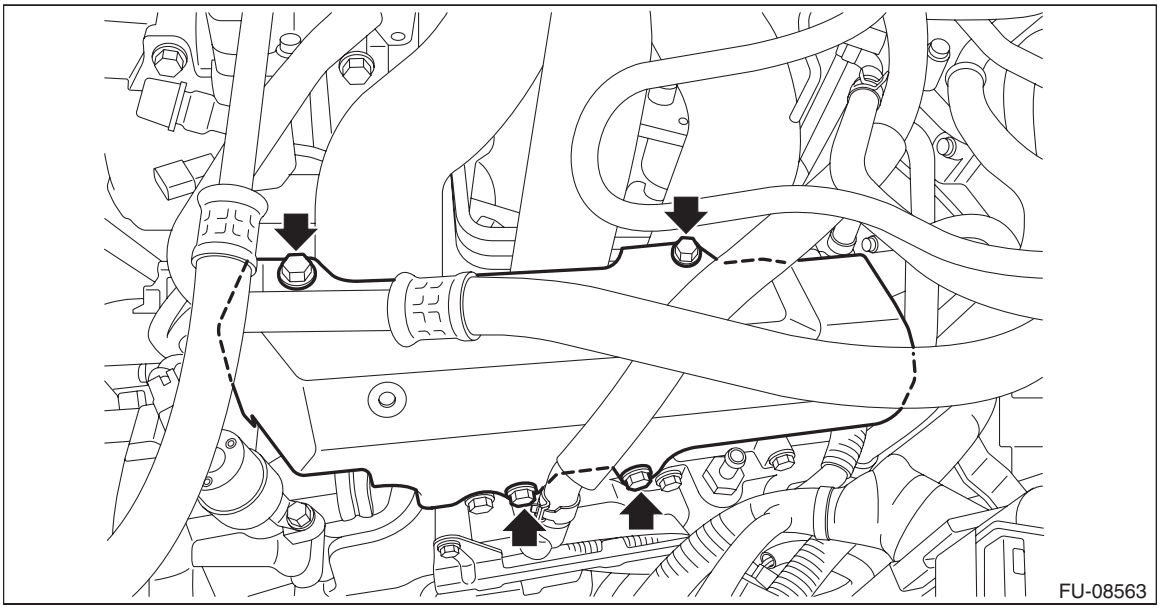

(9) Remove the ignition coil. <Ref. to IG(H6DO)-15, REMOVAL, Ignition Coil.>
(10) Remove the rocker cover (LH). <Ref. to ME(H6DO)-110, REMOVAL, Camshaft.>

8) Turn the crankshaft clockwise until the camshaft is set to position shown in the figure.

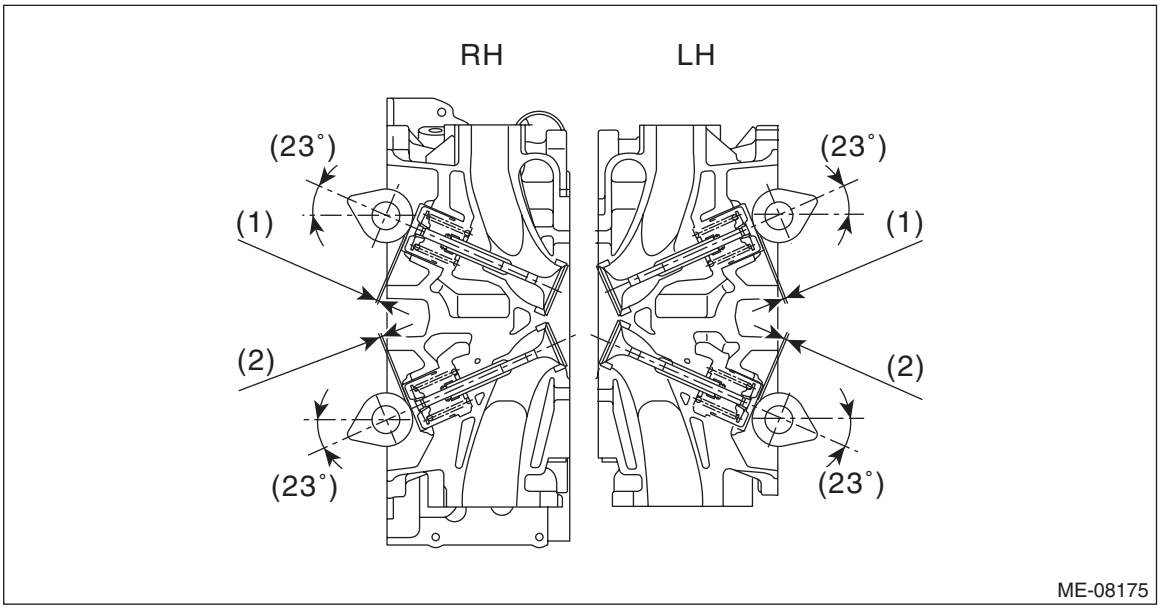

(1) Valve clearance (intake side) (2) Valve clearance (exhaust side)

9) Measure the clearance of intake valve and exhaust valve using thickness gauge (A).

NOTE:
- Measure it within the range of ±30° from specified position shown in the figure.
- Insert a thickness gauge in a direction as horizontal as possible with respect to the valve lifter.

Valve clearance (inspection value):
Intake
$0.20^{+0.04}_{-0.06}$ mm ($0.0079^{+0.0016}_{-0.0024}$ in)
Exhaust
0.35±0.05 mm (0.0138±0.0020 in)

- If the measured value is not within specification, take notes of the value in order to adjust the valve clearance later on.

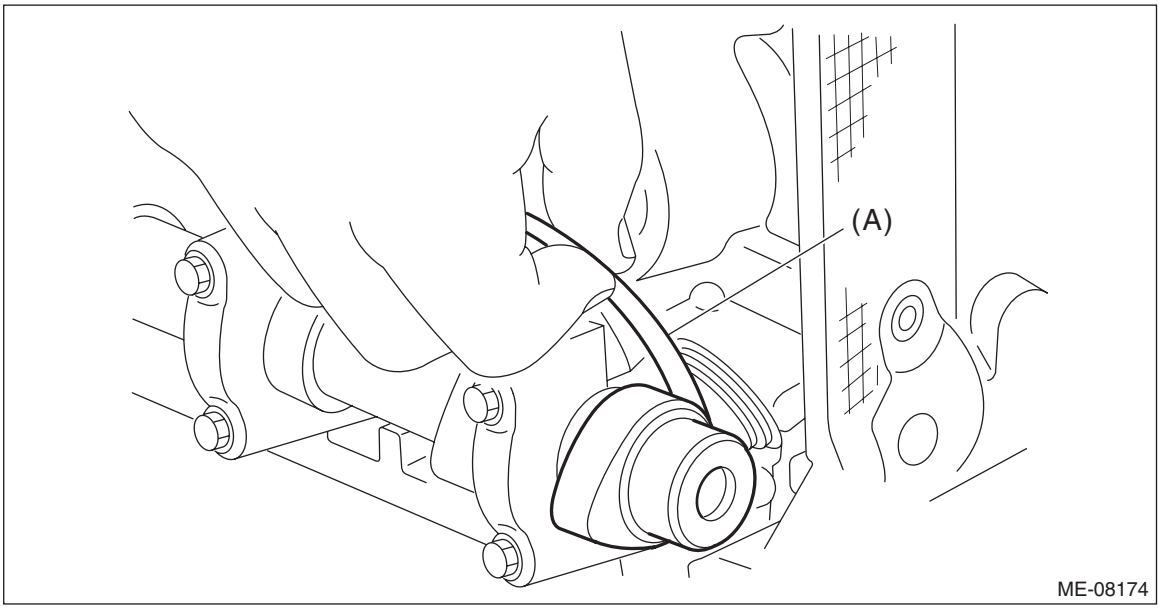

10) If necessary, adjust the valve clearance. <Ref. to ME(H6DO)-39, ADJUSTMENT, Valve Clearance.>
11) Further turn the crank pulley clockwise and then measure the valve clearances again.

12) After inspection, install the related parts in the reverse order of removal. <Ref. to ME(H6DO)-111, INSTALLATION, Camshaft.>

B: ADJUSTMENT

1. INTAKE SIDE

1) Remove the engine from the vehicle. <Ref. to ME(H6DO)-41, REMOVAL, Engine Assembly.>
2) Measure all the valve clearances. <Ref. to ME(H6DO)-34, INSPECTION, Valve Clearance.>

NOTE:
Record each valve clearance after measurement.

3) Remove the timing chain assembly. <Ref. to ME(H6DO)-88, REMOVAL, Timing Chain Assembly.>
4) Remove the cam sprocket. <Ref. to ME(H6DO)-107, REMOVAL, Cam Sprocket.>
5) Remove the camshaft. <Ref. to ME(H6DO)-110, REMOVAL, Camshaft.>
6) Remove the valve lifter.
7) Measure the thickness of valve lifter using micrometer.

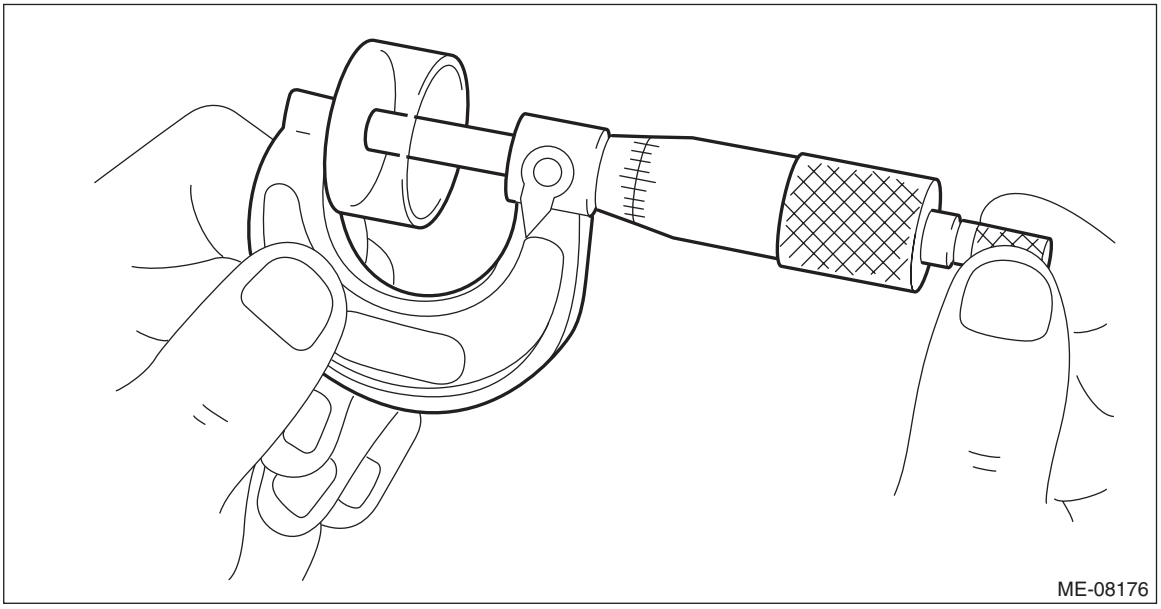

8) Select a valve lifter of suitable thickness using the measured valve clearance and valve lifter thickness, and install it.

NOTE:
Use a new valve lifter.

S = (V + T) – 0.20 mm (0.0079 in)
S: Valve lifter thickness required V: Measured valve clearance T: Current valve lifter thickness

9) Install the camshaft. <Ref. to ME(H6DO)-111, INSTALLATION, Camshaft.>
10) Install the cam sprocket. <Ref. to ME(H6DO)-108, INSTALLATION, Cam Sprocket.>
11) Install the timing chain assembly. <Ref. to ME(H6DO)-94, INSTALLATION, Timing Chain Assembly.>
12) Measure all valve clearance again at this time. If the valve clearance is not within the adjustment value, repeat the procedure from step 3).

Valve clearance (adjustment value):
$0.20^{+0.04}_{-0.06}$ mm ($0.0079^{+0.0016}_{-0.0024}$ in)

13) After adjustment, install the related parts in the reverse order of removal.

NOTE:
Refer to “Camshaft” when installing the rocker cover. <Ref. to ME(H6DO)-111, INSTALLATION, Camshaft.>

2. EXHAUST SIDE

1) Remove the engine from the vehicle. <Ref. to ME(H6DO)-41, REMOVAL, Engine Assembly.>
2) Measure all the valve clearances. <Ref. to ME(H6DO)-34, INSPECTION, Valve Clearance.>

NOTE:
Record each valve clearance after measurement.

3) Remove the camshaft. <Ref. to ME(H6DO)-110, REMOVAL, Camshaft.>
4) Remove the valve lifter.
5) Measure the thickness of valve lifter using micrometer.

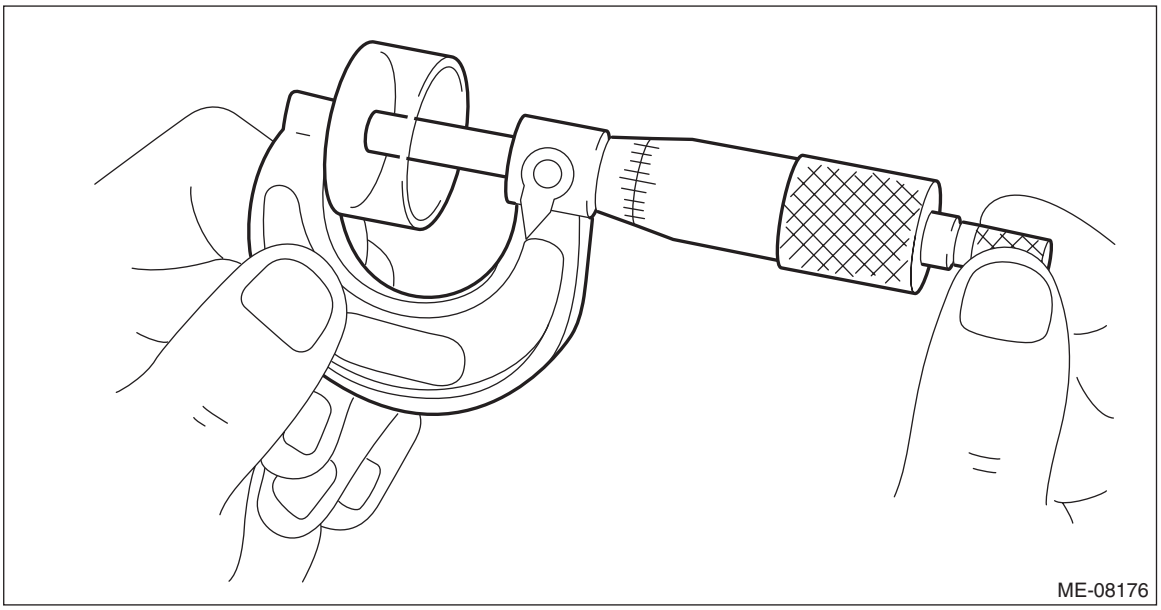

6) Select a valve lifter of suitable thickness using the measured valve clearance and valve lifter thickness, and install it.

NOTE:
Use a new valve lifter.

S = (V + T) – 0.35 mm (0.0138 in)
S: Valve lifter thickness required V: Measured valve clearance T: Current valve lifter thickness

7) Install the camshaft. <Ref. to ME(H6DO)-111, INSTALLATION, Camshaft.>
8) Install the cam sprocket. <Ref. to ME(H6DO)-108, INSTALLATION, Cam Sprocket.>
9) Install the timing chain assembly. <Ref. to ME(H6DO)-94, INSTALLATION, Timing Chain Assembly.>
10) Measure all valve clearance again at this time. If the valve clearance is not within the adjustment value, repeat the procedure from step 3).

Valve clearance (adjustment value):
0.35±0.05 mm (0.0138±0.0020 in)

11) After adjustment, install the related parts in the reverse order of removal.

NOTE:
Refer to “Camshaft” when installing the rocker cover. <Ref. to ME(H6DO)-111, INSTALLATION, Camshaft.>

9. Engine Assembly

A: REMOVAL

1) Fully open the front hood. <Ref. to RC-22, FRONT HOOD DAMPER STAY, NOTE, Repair Contents.>
2) Remove the collector cover.
   (1) Carefully pull up the rear of collector cover at two positions (A).
   (2) Carefully pull up the front of collector cover at two positions (B) while moving it forward.

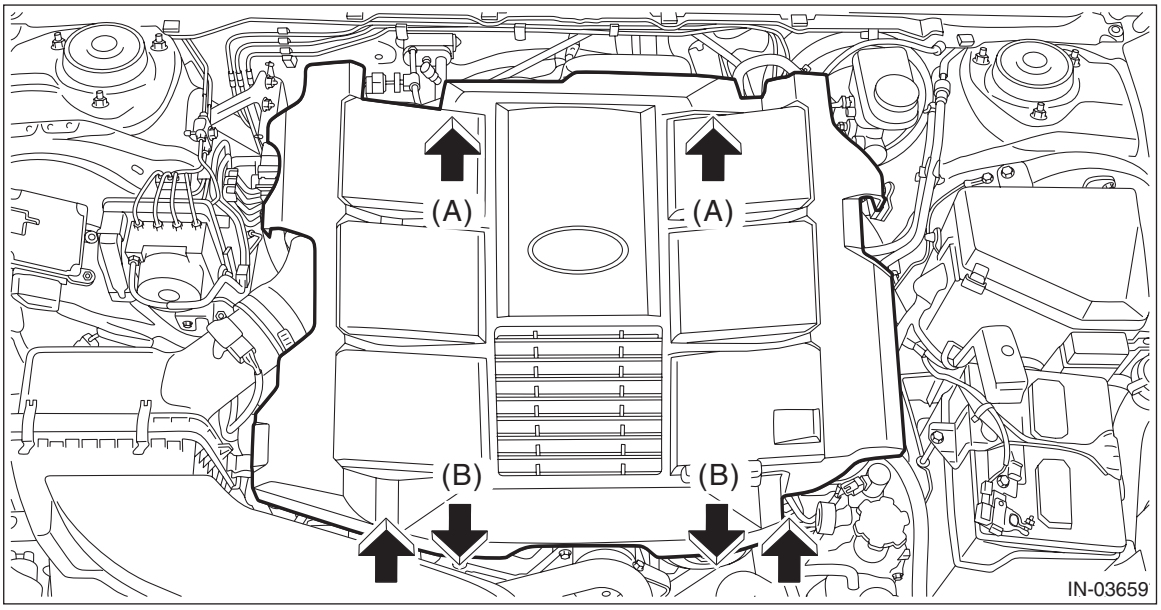

3) Collect the refrigerant. <Ref. to AC-29, PROCEDURE, Refrigerant Recovery Procedure.>
4) Release the fuel pressure. <Ref. to FU(H6DO)-93, RELEASING OF FUEL PRESSURE, PROCEDURE, Fuel.>
5) Open the fuel filler lid and remove the fuel filler cap.

NOTE:
This operation is required to release the inner pressure of the fuel tank.

6) Disconnect the ground terminal from battery sensor. <Ref. to RC-4, BATTERY, NOTE, Repair Contents.>
7) Remove the air intake duct. <Ref. to IN(H6DO)-12, REMOVAL, Air Intake Duct.>
8) Remove the air intake boot. <Ref. to IN(H6DO)-10, REMOVAL, Air Intake Boot.>
9) Remove the air cleaner case (rear) together with the air cleaner element. <Ref. to IN(H6DO)-8, REMOVAL, Air Cleaner Case.>
10) Remove the radiator. <Ref. to CO(H6DO)-20, REMOVAL, Radiator.>

11) Disconnect the connector (A) and terminal (B) from the generator.
12) Disconnect the connector (C) and connector (D) from the A/C compressor.
13) Remove the harness cover (E) from the collector cover bracket.
14) Remove the clip (F) from the fuel pipe protector (LH), and move the generator cord to the left side wheel apron.

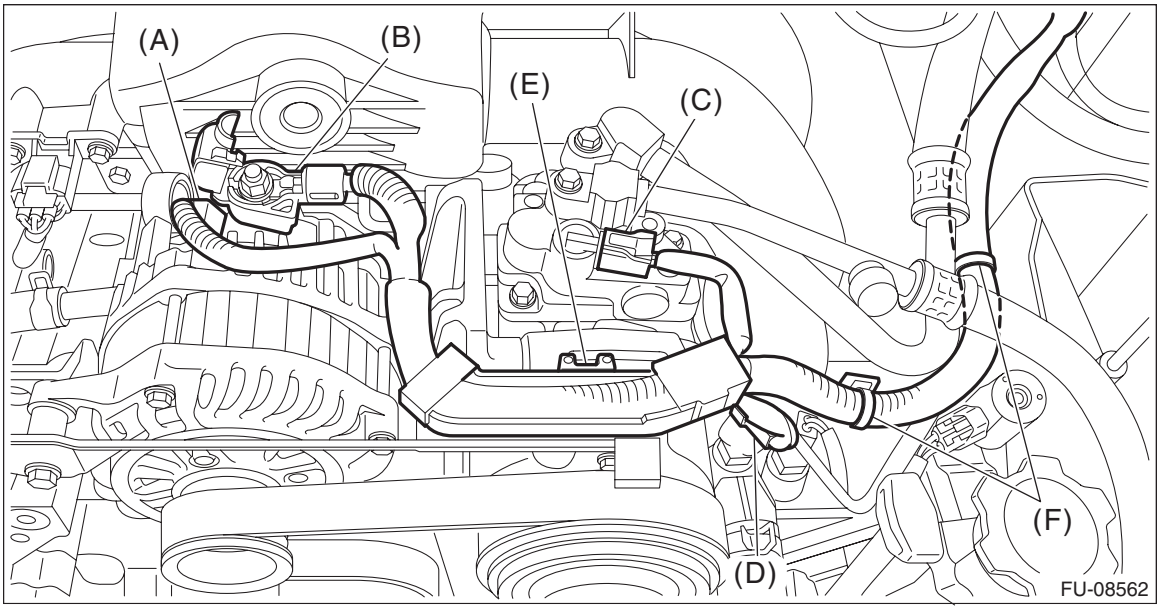

15) Disconnect the A/C pressure hoses from A/C compressor. <Ref. to AC-65, REMOVAL, Hose and Pipe.>
16) Disconnect the brake booster vacuum hose.

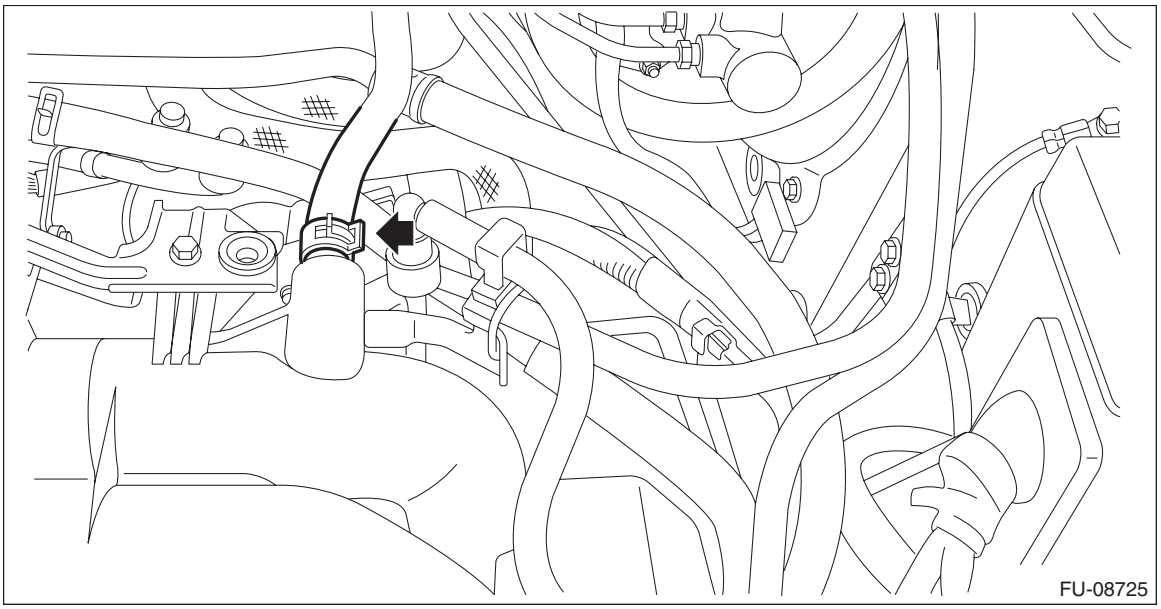

17) Disconnect the heater inlet hose (A) and the heater outlet hose (B).

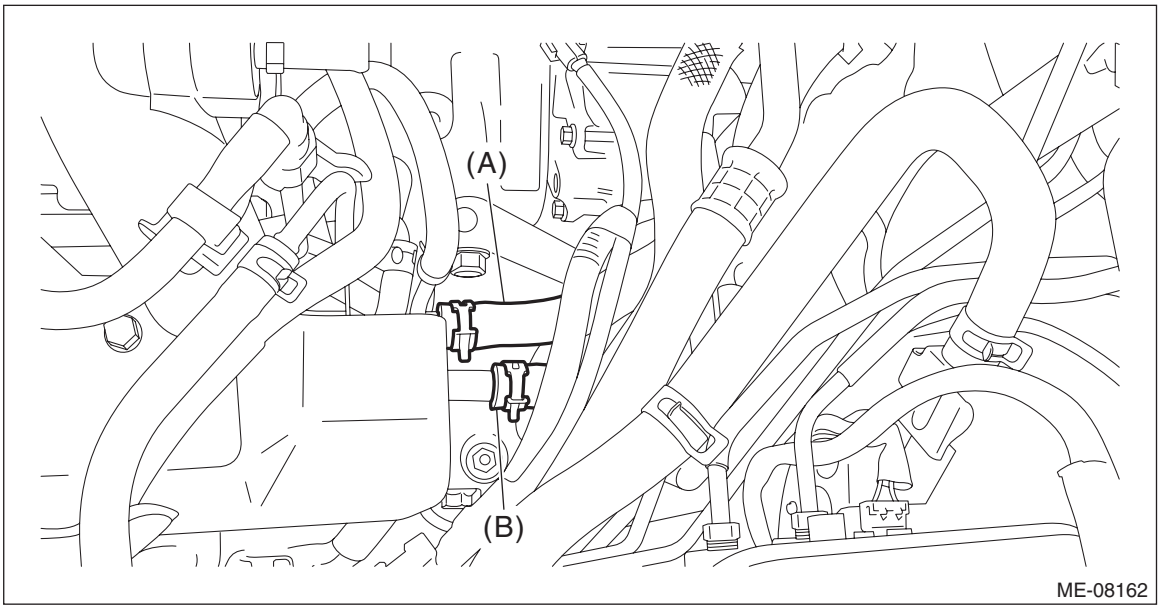

18) Disconnect the engine harness connector (A) from the main fuse box, and remove the engine harness from the claw (B) of the main fuse box.
19) Remove the engine harness from the clip (C) and move the engine harness to the engine side.

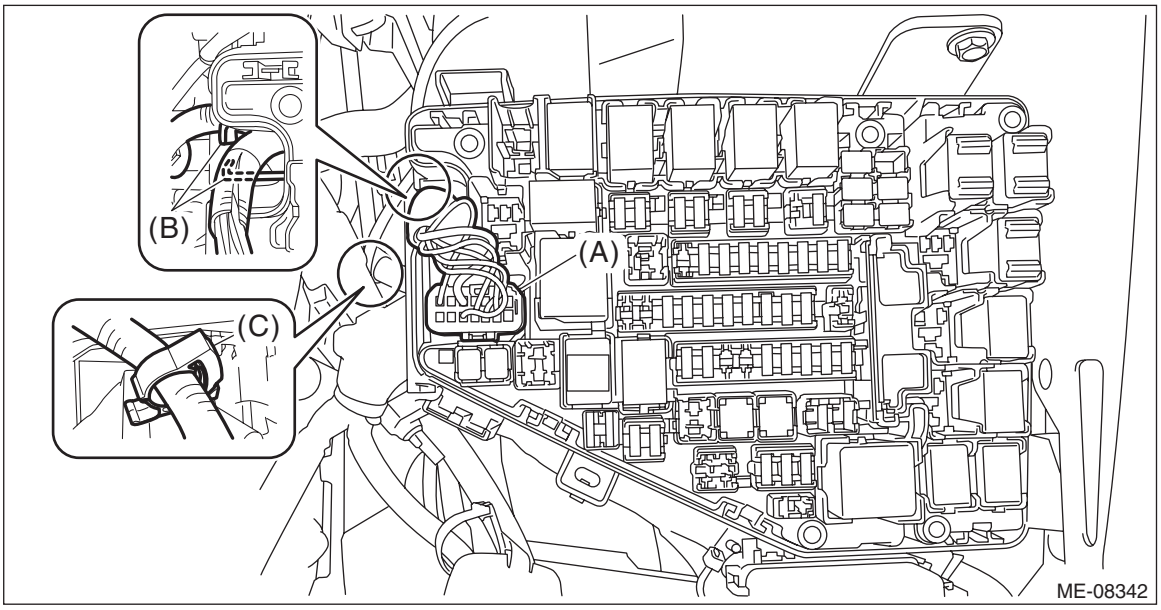

20) While pressing the area (A) shown in the figure, move the lock lever (B) in the direction of the arrow to disconnect the engine harness connector from ECM.

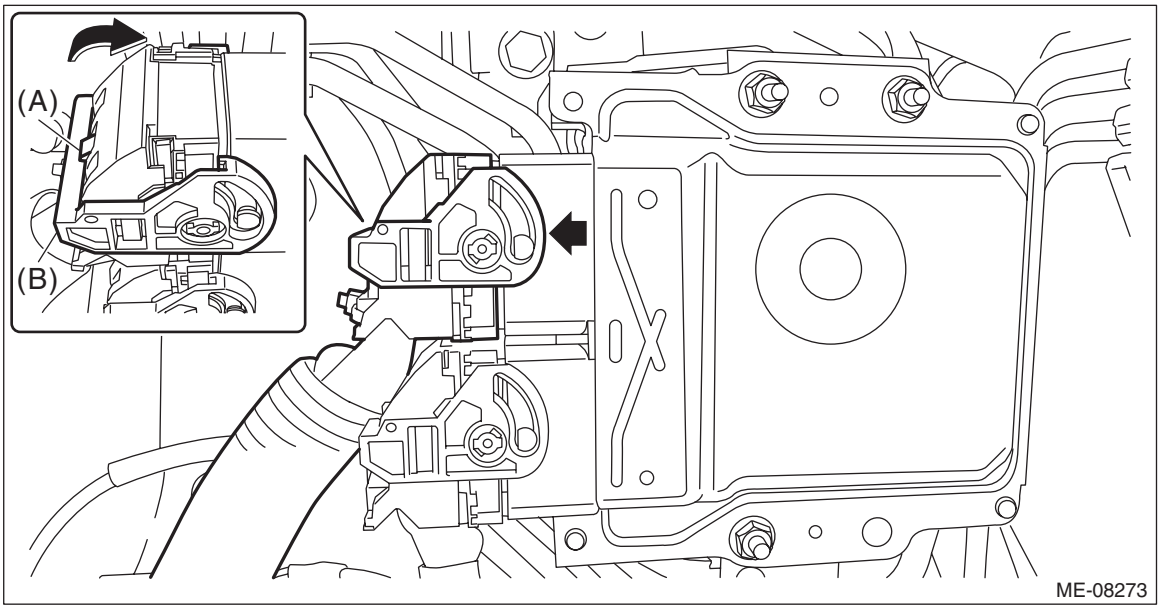

21) Lift up the vehicle.
22) Remove the front exhaust pipe. <Ref. to EX(H6DO)-6, REMOVAL, Front Exhaust Pipe.>
23) Disconnect the ground cable on the engine side.

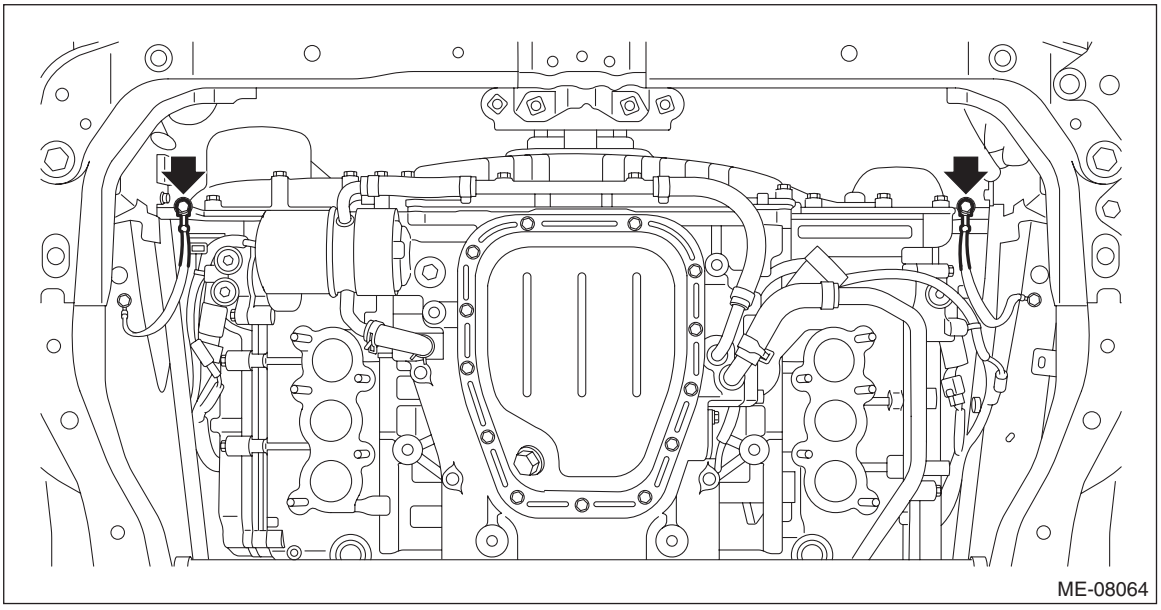

24) Remove the bolts and nuts which hold the lower side of transmission to the engine.

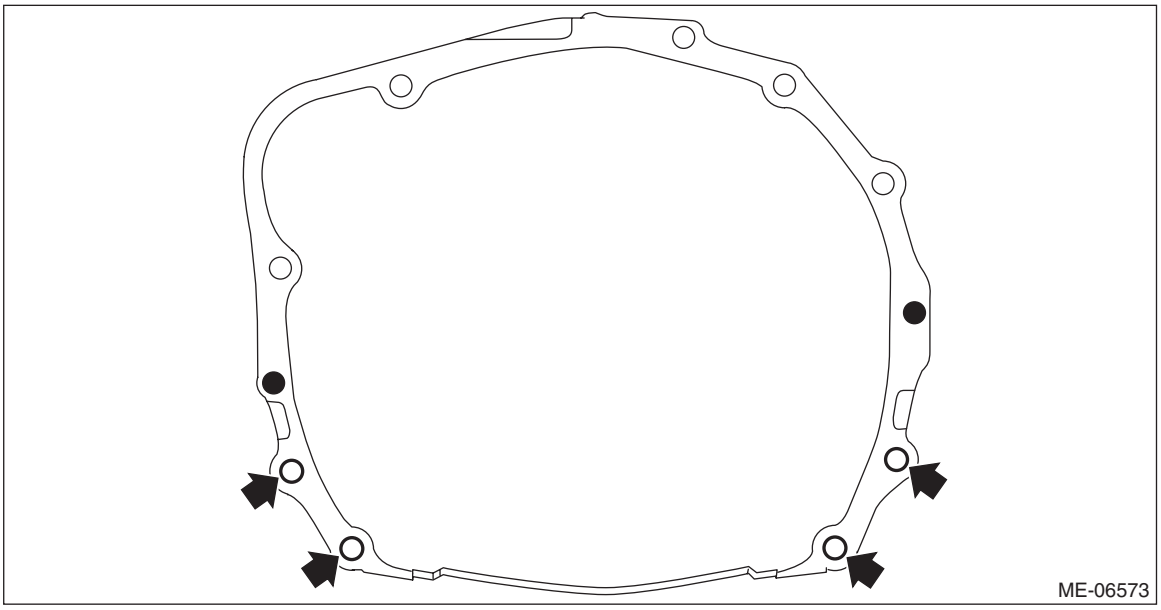

25) Lower the vehicle.
26) Remove the starter. <Ref. to SC(H6DO)-7, REMOVAL, Starter.>
27) Separate the torque converter clutch from the drive plate.
(1) Remove the service hole plug.

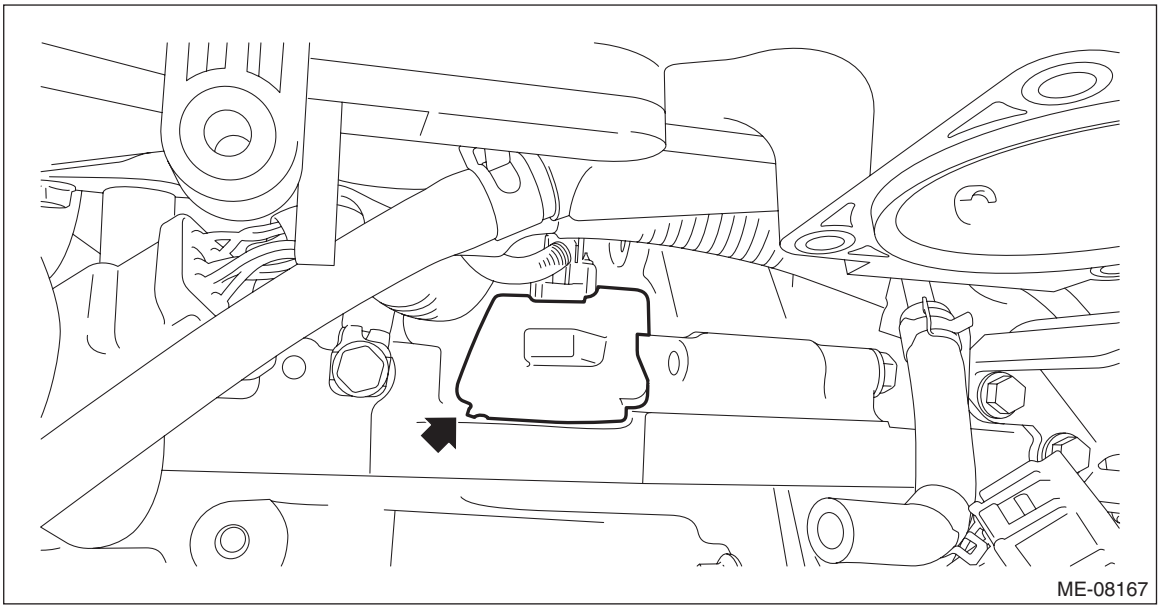

(2) Insert the wrench into the crank pulley bolt, and rotate the crank pulley to remove the four bolts securing the torque converter clutch to the drive plate.

(3) Attach the ST to the torque converter clutch case.
ST 498277200 STOPPER SET

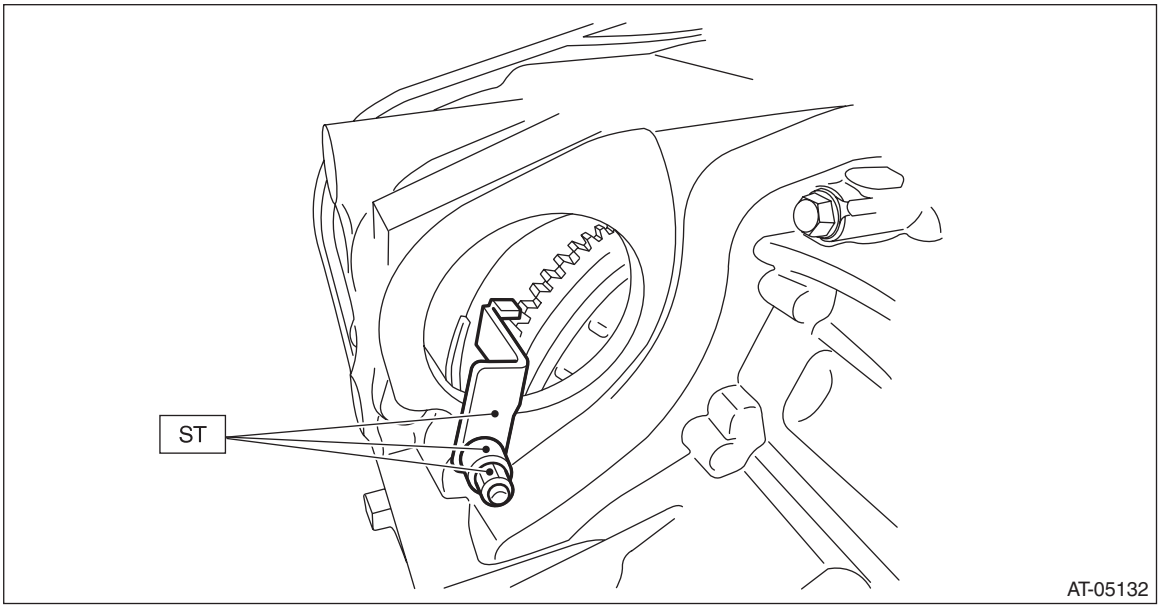

28) Disconnect the fuel delivery tube and evaporation hose.

CAUTION:
- **Be careful not to spill fuel.**
- **Catch the fuel from the tubes using a container or cloth.**

(1) Remove the clip (A) securing the fuel delivery tube.
(2) Attach ST to the fuel pipe assembly and push ST in the direction of arrow mark to disconnect the quick connector of the fuel delivery tube (B).
ST 42099AE000 QUICK CONNECTOR RELEASE
(3) Disconnect the evaporation hose (C) from the fuel pipe assembly.

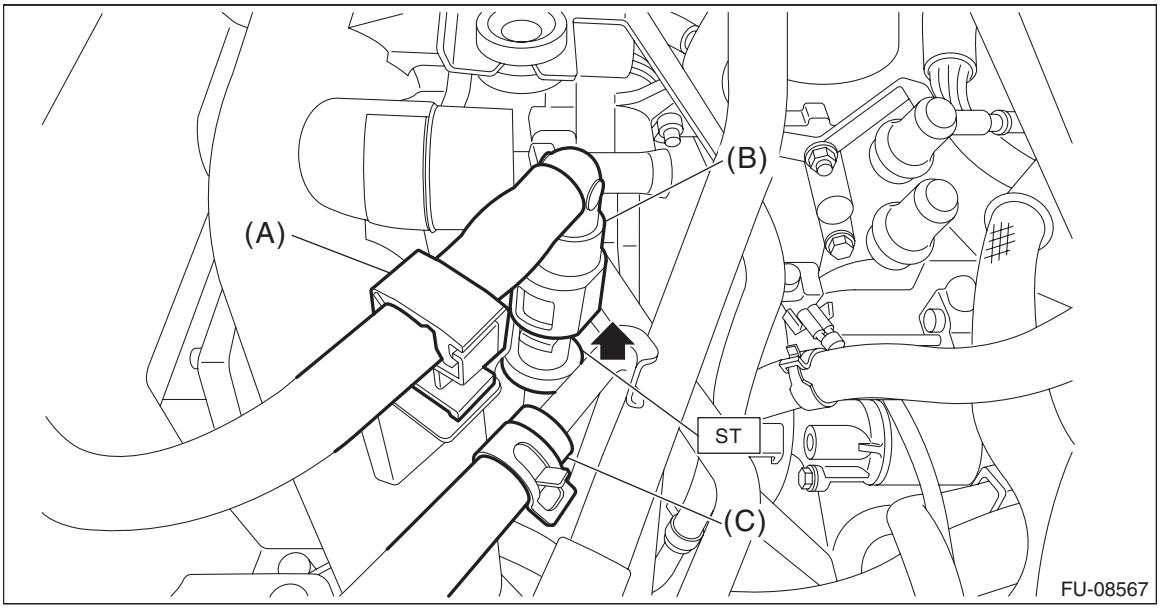

29) Remove the throttle body. <Ref. to FU(H6DO)-19, REMOVAL, Throttle Body.>

30) Disconnect the sensor harness connector.

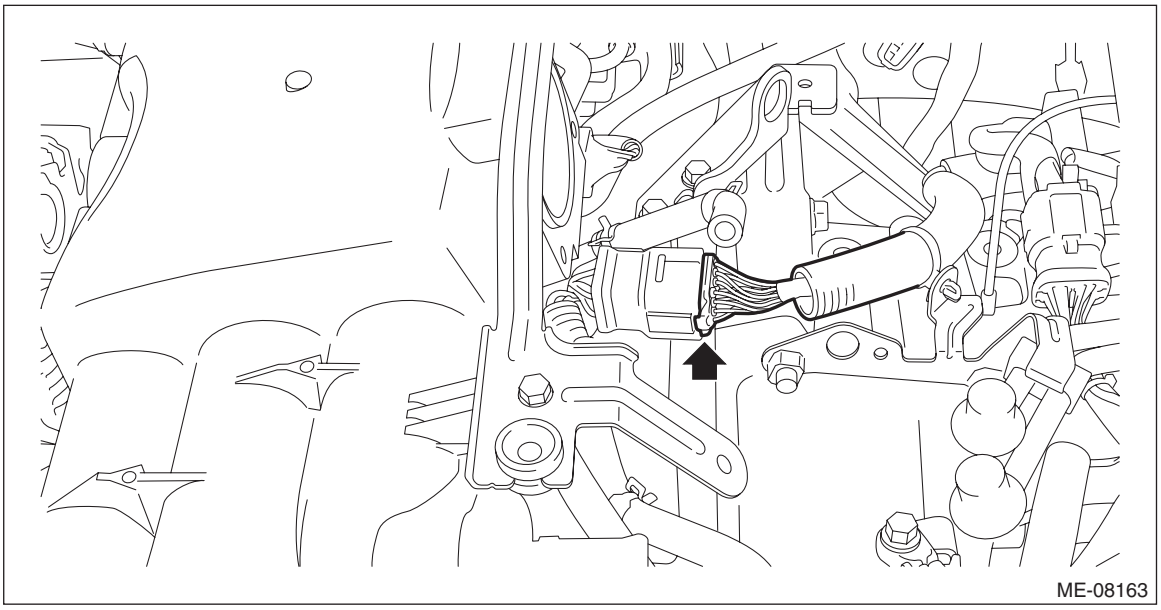

31) Remove the engine harness connector (A) from the engine hanger bracket, and remove the engine hanger bracket.

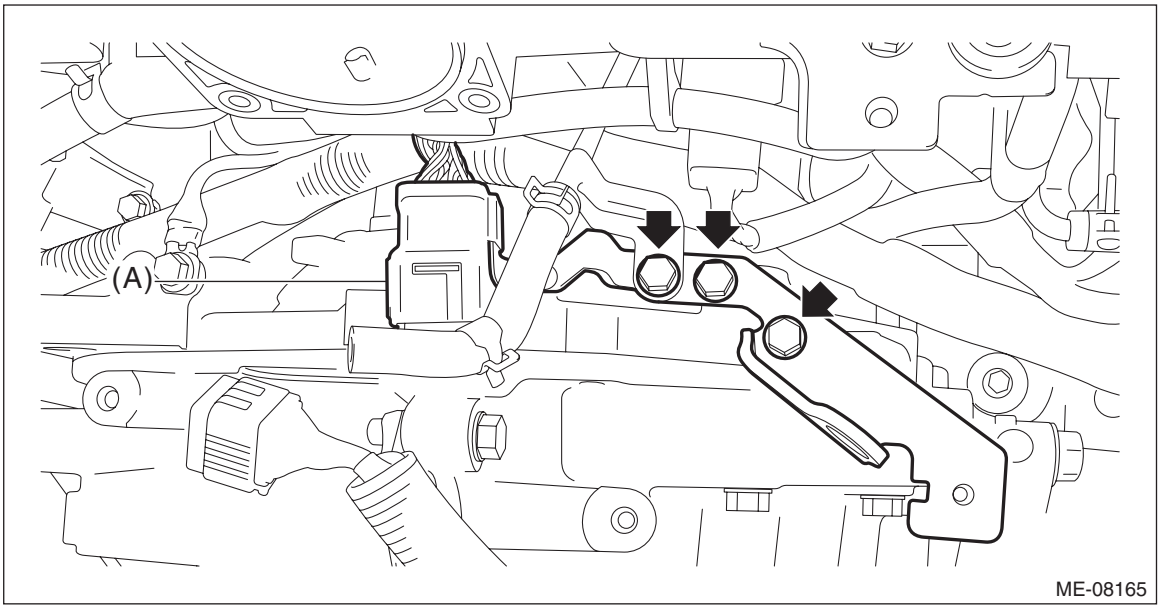

32) Remove the collector cover bracket from the intake manifold.

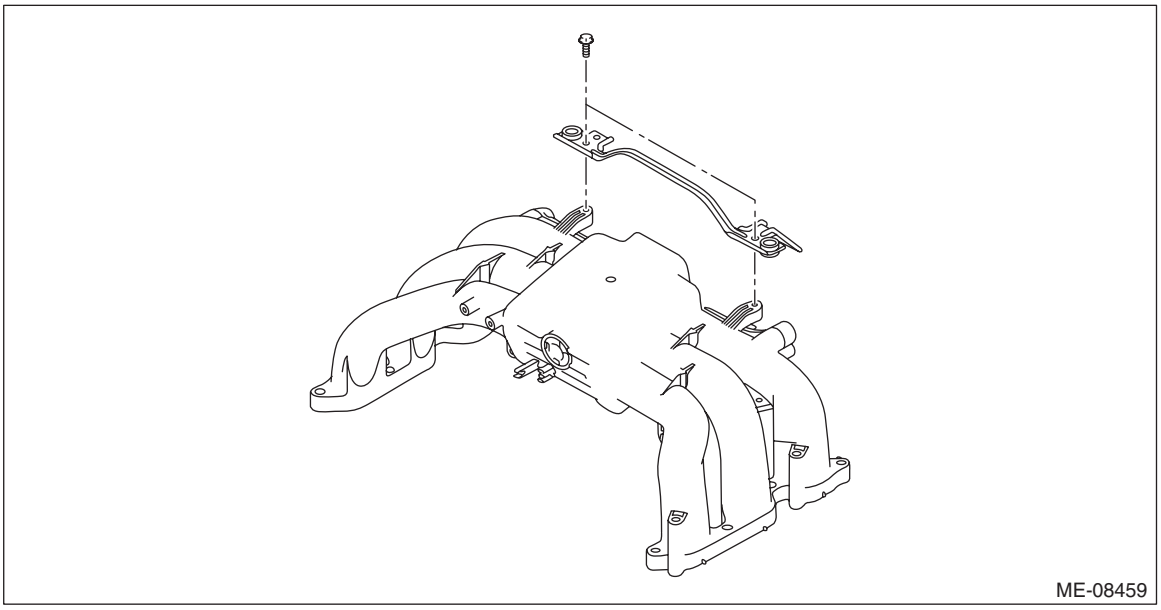

33) Disconnect the engine harness connector.

NOTE:
This procedure is required to prevent the ST from contacting with the connectors in the next step.

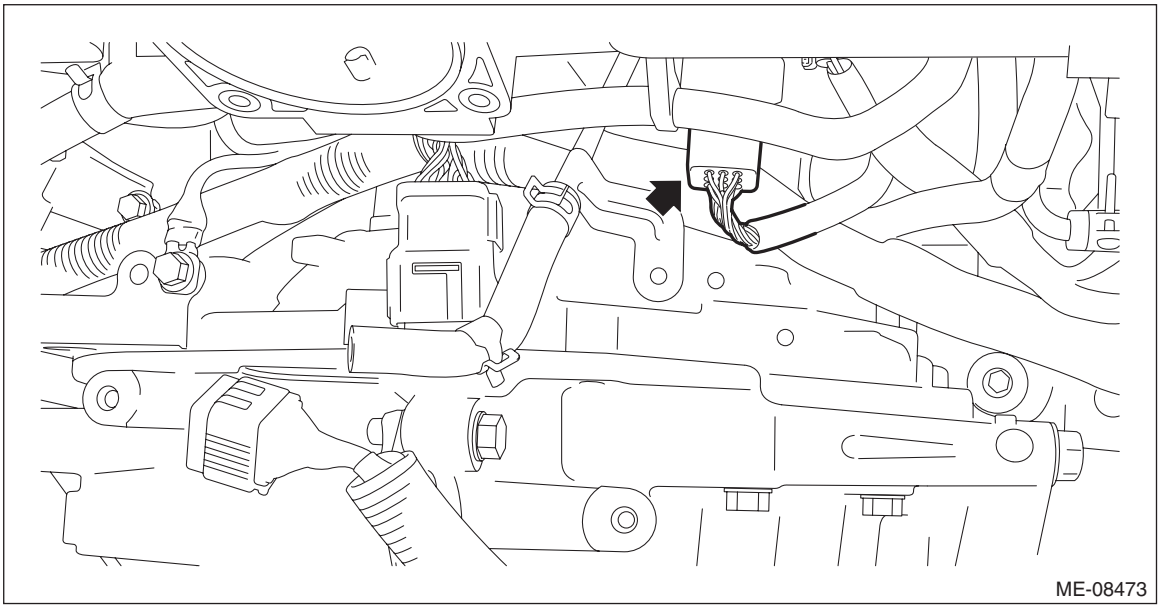

34) Attach the ST.
ST 18360AA020 HANGER

Tightening torque:
19 N·m (1.9 kgf-m, 14.0 ft-lb)

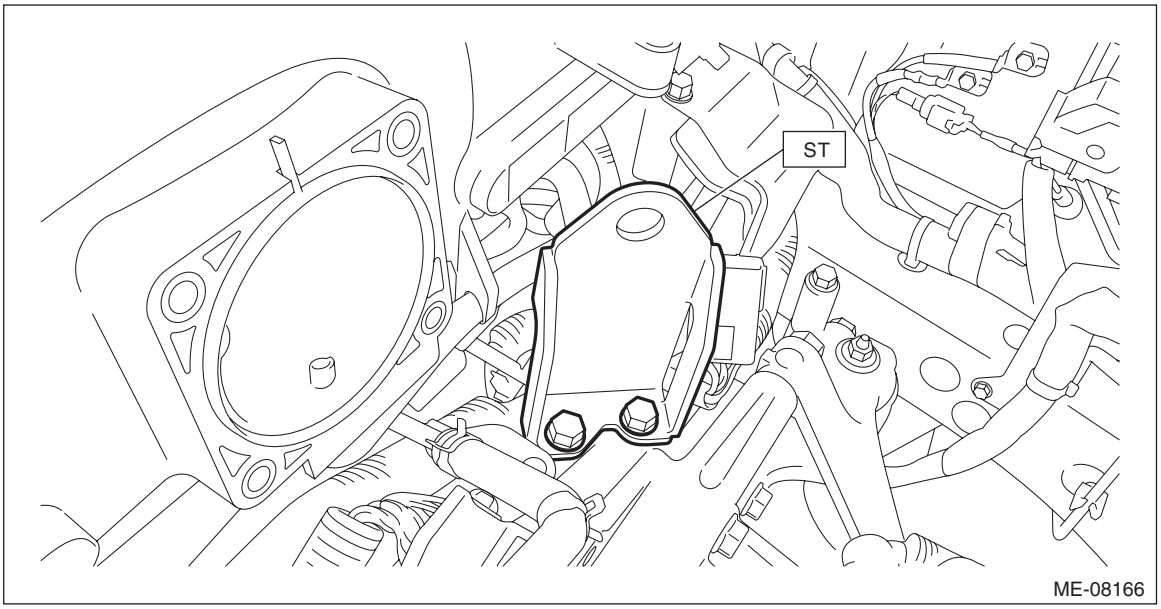

35) Support the engine with a lifting device and wire ropes.

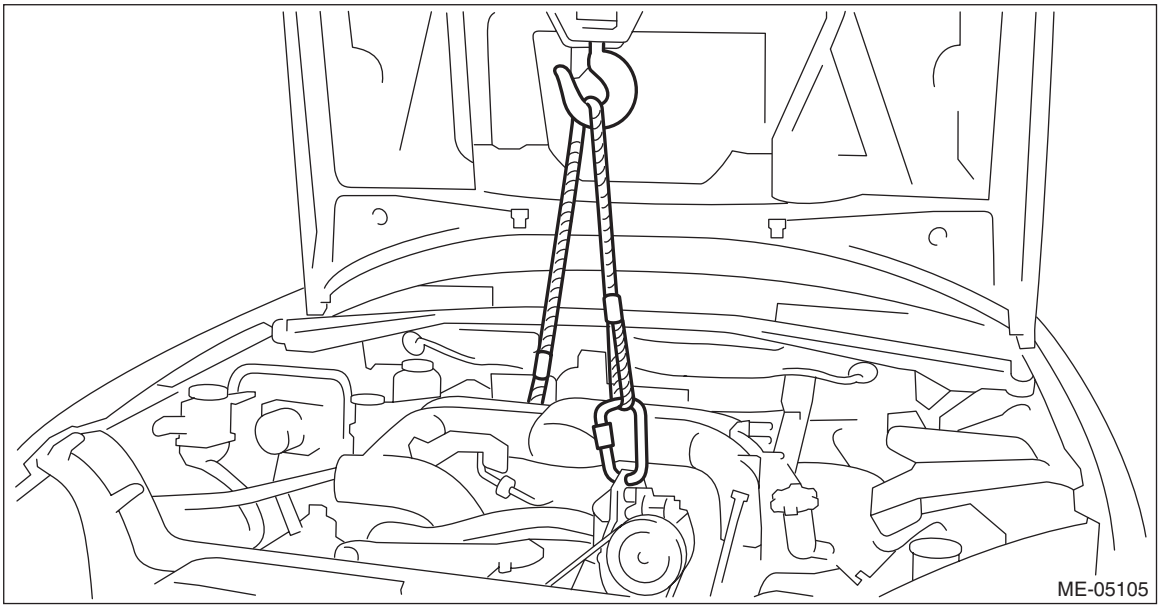

36) Remove the bolts and nuts securing the front mounting bracket to the cradle and the bracket, and remove the front cushion rubber together with the front mounting bracket from the chain cover.

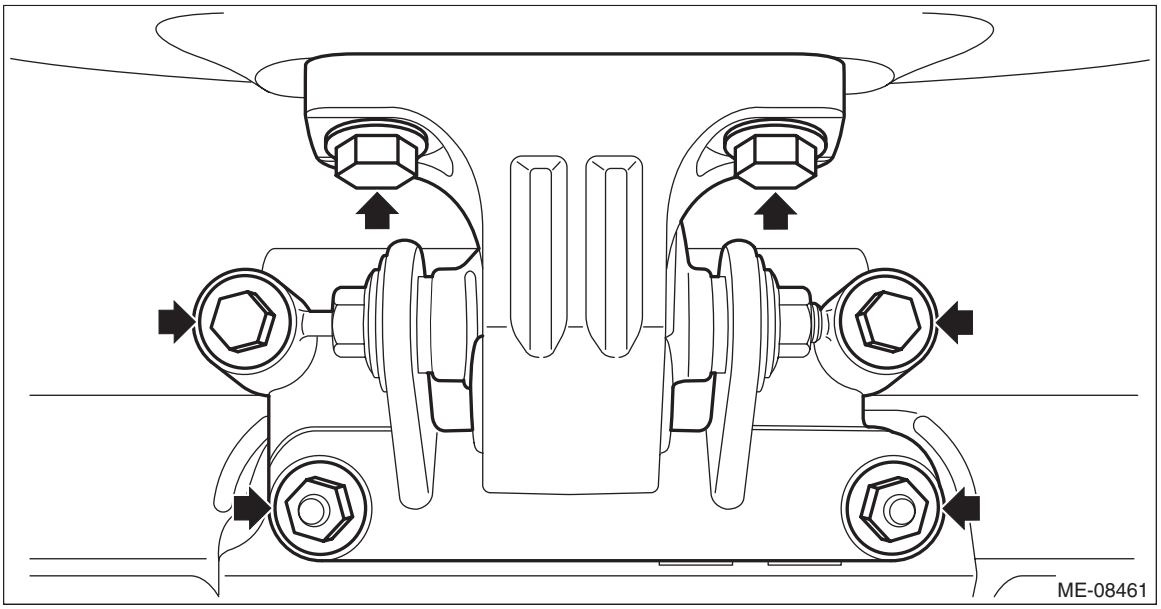

37) Remove the bolt securing the upper side of the transmission to the engine, and separate the transmission and the engine.

CAUTION:
Before removing the engine away from transmission, check to be sure no work has been overlooked.

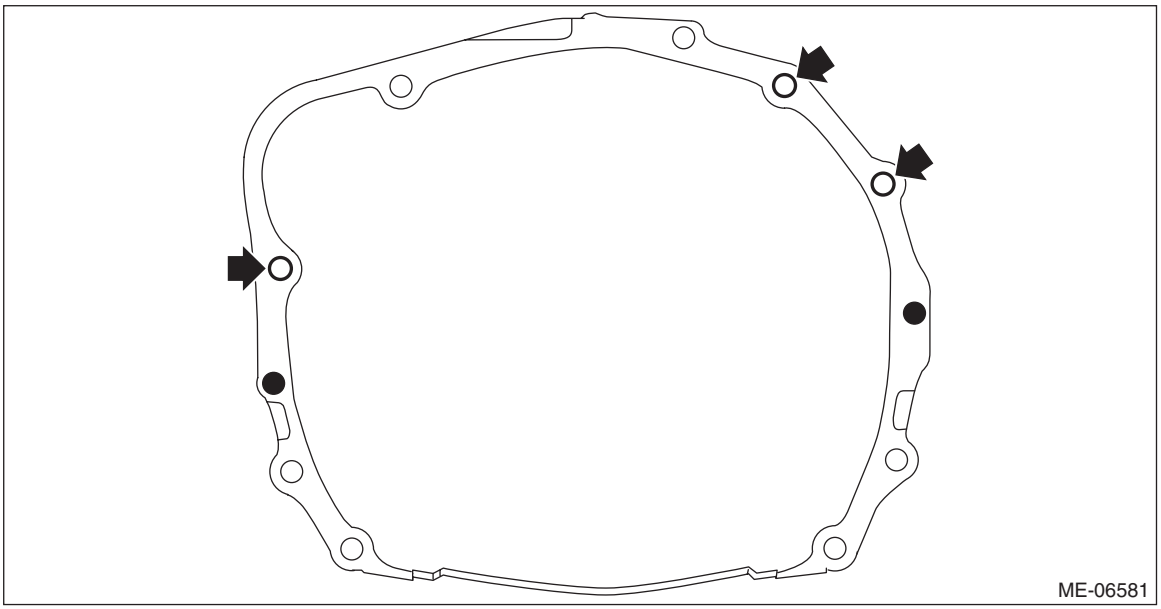

38) Remove the engine from the vehicle.

NOTE:
Be careful not to damage adjacent parts or body panels with crank pulley, oil level gauge, etc.

(1) Move the engine horizontally until engine is withdrawn from transmission.
(2) Slowly move the engine away from engine compartment.

B: INSTALLATION

1) Position the engine in engine compartment and align it with transmission.

NOTE:
Be careful not to damage adjacent parts or body panels with crank pulley, oil level gauge, etc.

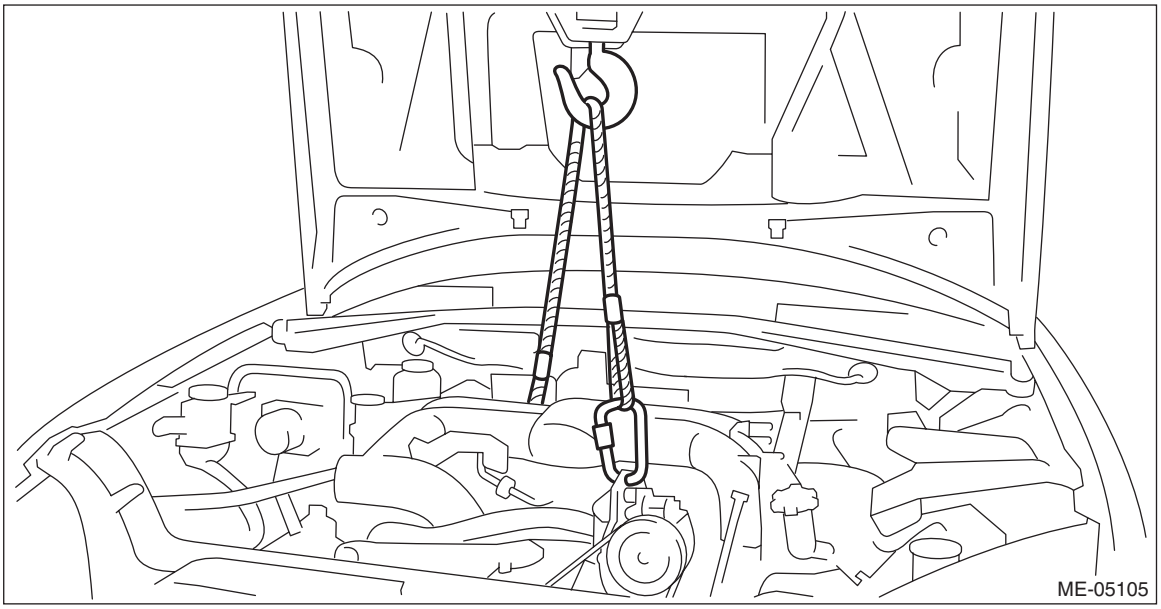

2) Install the bolts which hold upper side of transmission to engine.

Tightening torque:
50 N·m (5.1 kgf-m, 36.9 ft-lb)

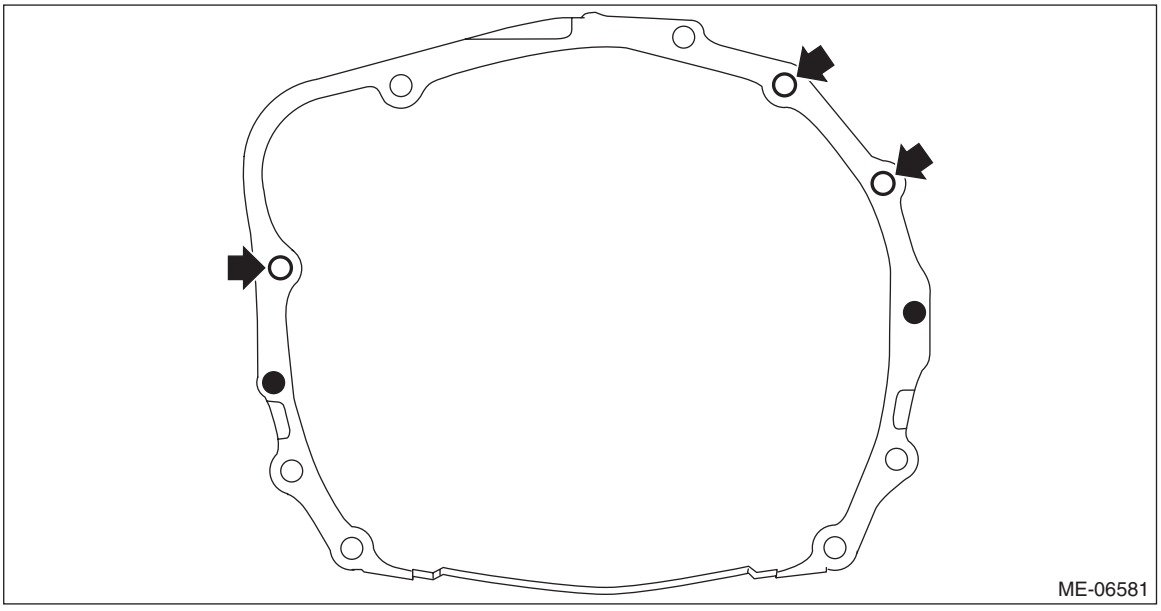

3) Place the front cushion rubber together with the front mounting bracket to the cradle, and install the front cushion rubber to the engine mounting bracket to install the front mounting bracket to the cradle and the bracket.

Tightening torque:
T1: 25 N·m (2.5 kgf-m, 18.4 ft-lb)
T2: 60 N·m (6.1 kgf-m, 44.3 ft-lb)

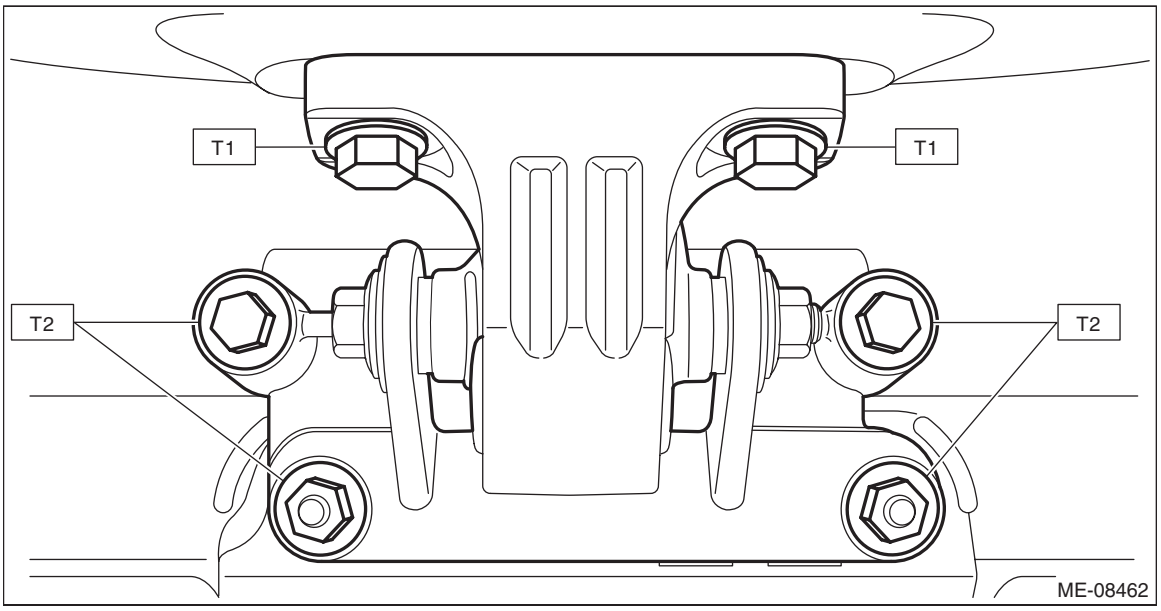

4) Remove the lifting device and wire ropes.
5) Remove the ST.

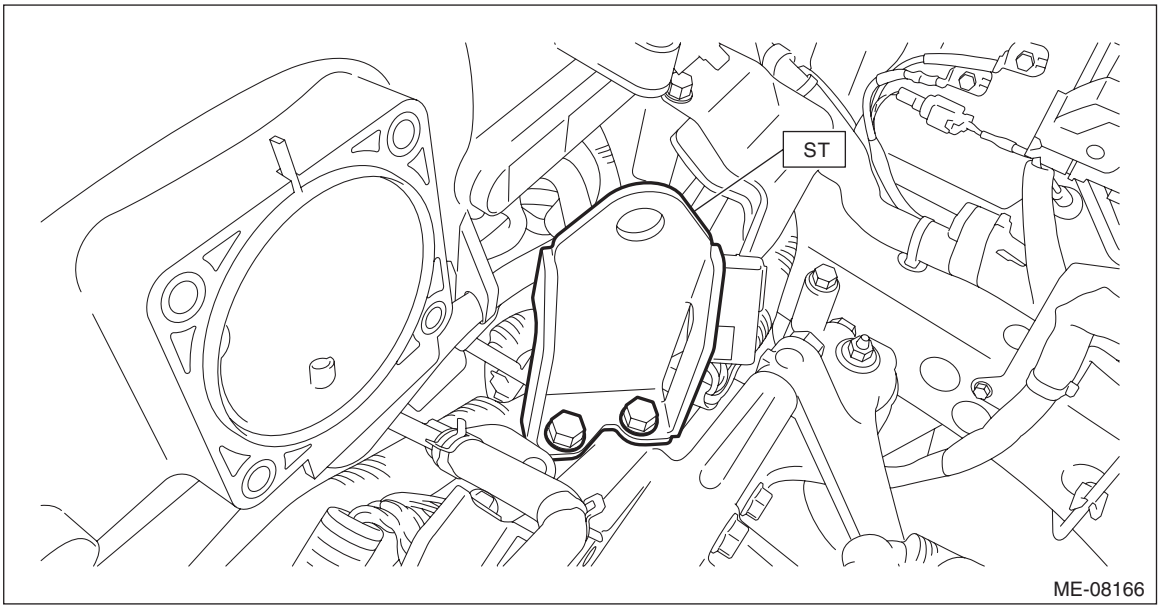

6) Install the torque converter clutch to drive plate.
(1) Remove the ST from torque converter clutch case.

NOTE:
Be careful not to drop the ST into the torque converter clutch case when removing the ST.
ST 498277200 STOPPER SET

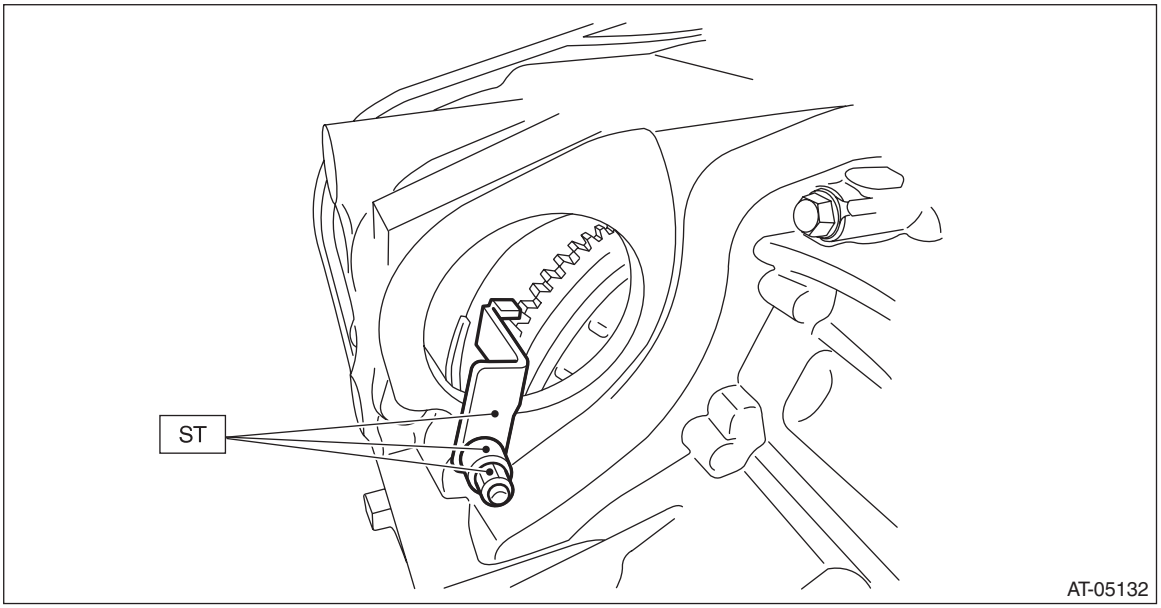

(2) Insert the wrench into the crank pulley bolt, and rotate the crank pulley to attach the four bolts securing the torque converter clutch to the drive plate.

NOTE:
Be careful not to drop bolts into the torque converter clutch case.

Tightening torque:
25 N·m (2.5 kgf-m, 18.4 ft-lb)
(3) Fit the plug to service hole.

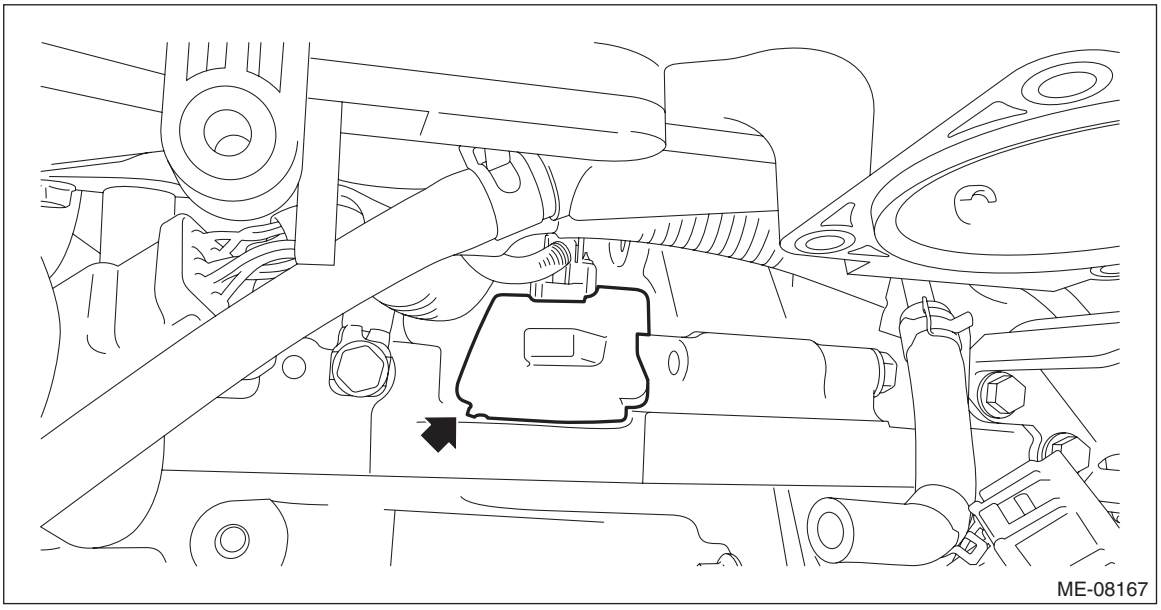

7) Install the starter. <Ref. to SC(H6DO)-9, INSTALLATION, Starter.>
8) Lift up the vehicle.

9) Install the bolts and nuts which hold lower side of the transmission to engine.

Tightening torque:
50 N·m (5.1 kgf-m, 36.9 ft-lb)

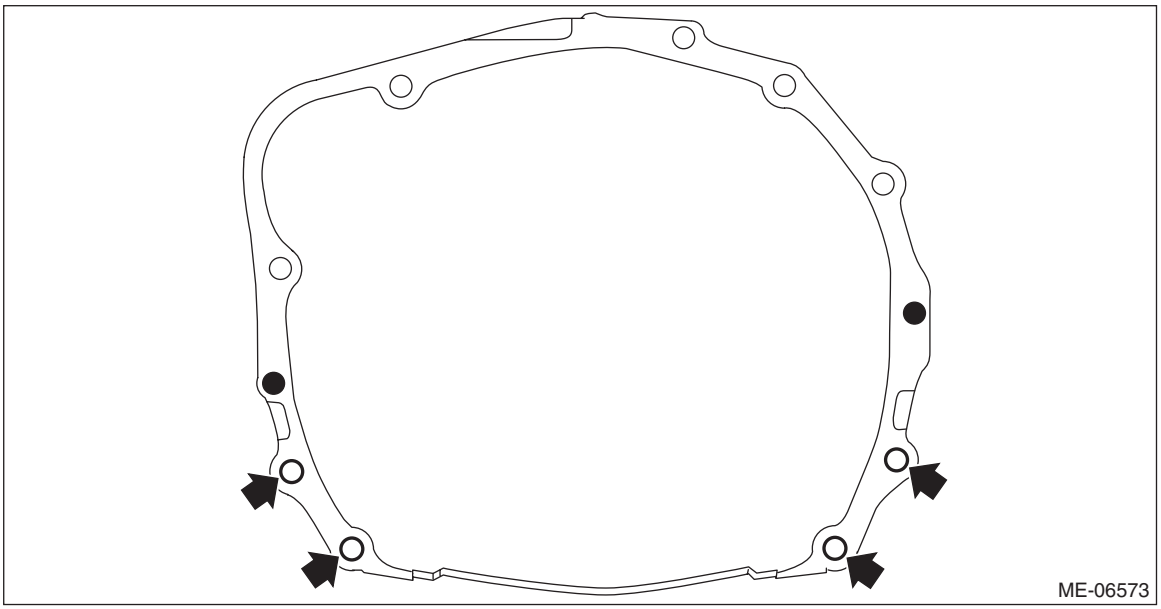

10) Connect the ground cable.

Tightening torque:
7.5 N·m (0.8 kgf-m, 5.5 ft-lb)

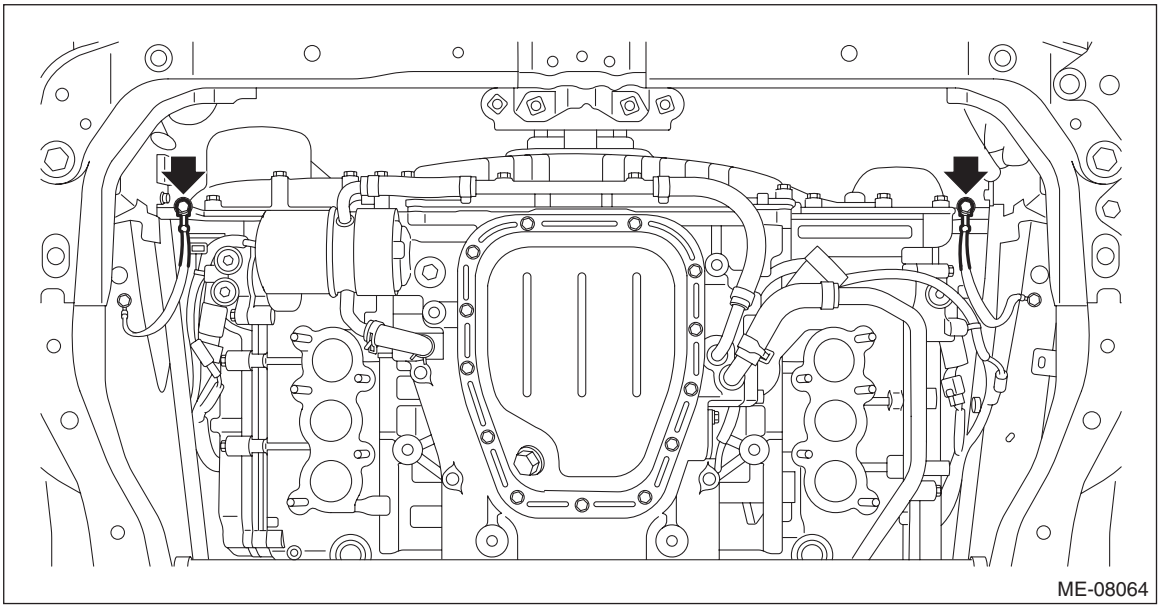

11) Install the front exhaust pipe. <Ref. to EX(H6DO)-8, INSTALLATION, Front Exhaust Pipe.>
12) Lower the vehicle.

13) Connect the fuel delivery tube and evaporation hose.
(1) Connect the evaporation hose (C) to the fuel pipe assembly.
(2) Connect the quick connector of the fuel delivery tube (B) to the fuel pipe assembly, and secure the fuel delivery tube using clip (A).

CAUTION:
• Check that there is no damage or dust on the quick connector. If necessary, clean the seal surface of the pipe.
• Make sure that the quick connector is securely connected.

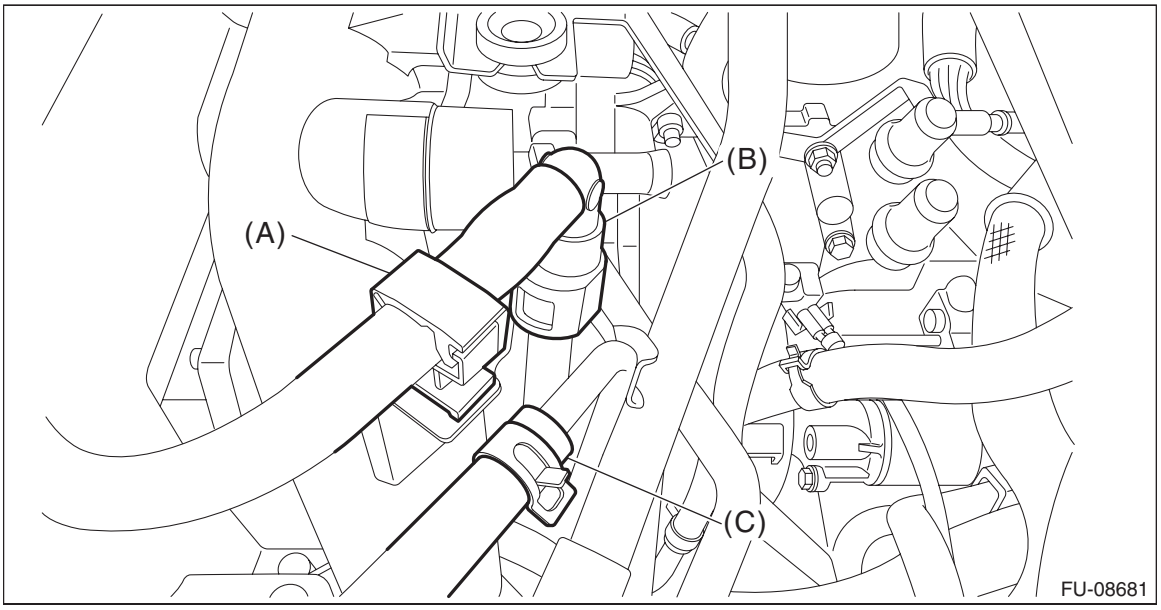

14) Move the lock lever (A) in the direction of arrow, and connect the engine harness connector to ECM.

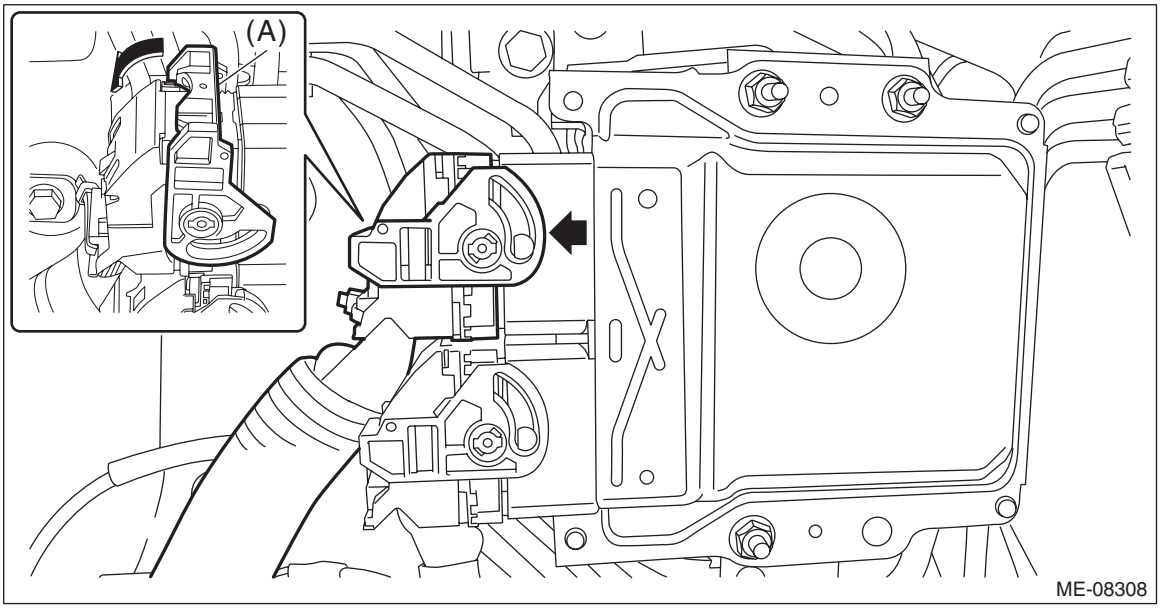

15) Connect the engine harness connector.

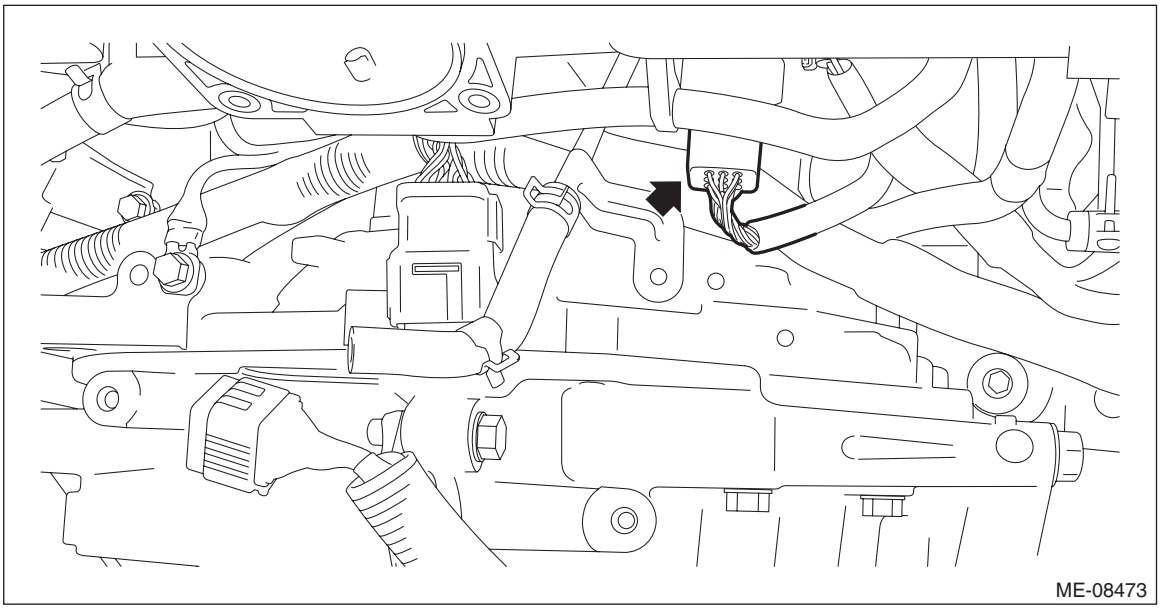

16) Install the collector cover bracket to the intake manifold.

Tightening torque:
6.5 N·m (0.7 kgf-m, 4.8 ft-lb)

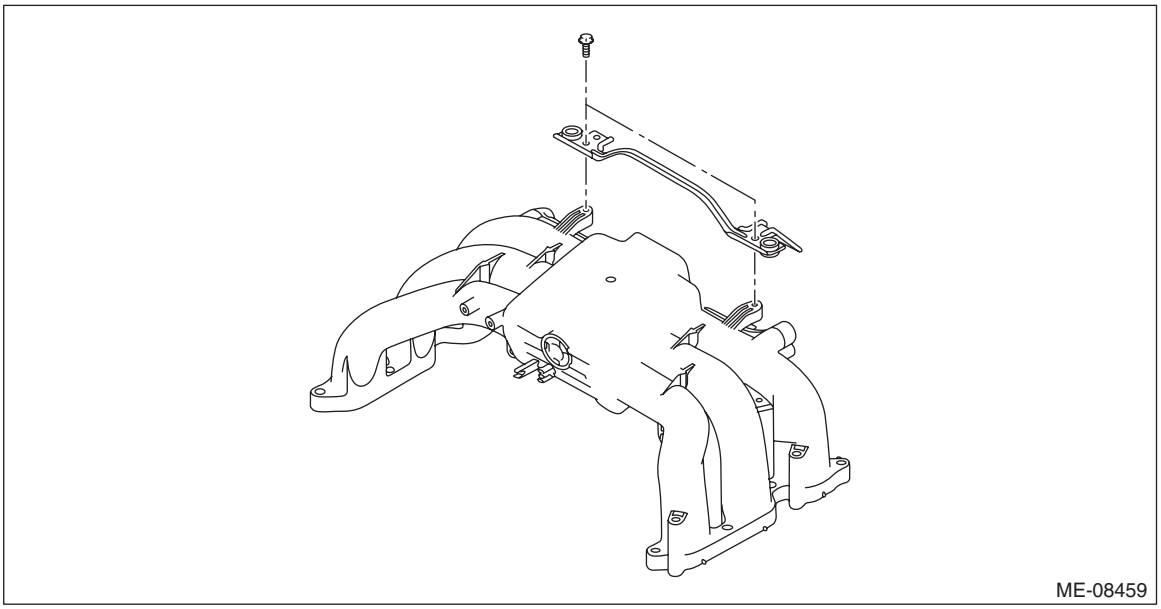

17) Install the engine hanger bracket, and install the engine harness connector (A) to the engine hanger bracket.

Tightening torque:
19 N·m (1.9 kgf-m, 14.0 ft-lb)

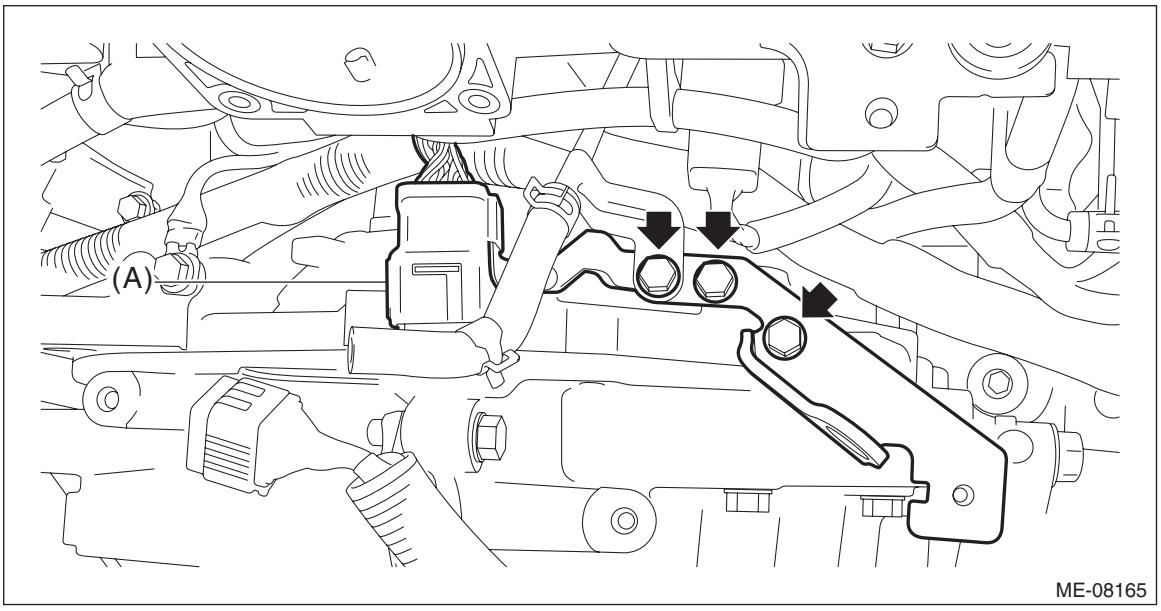

18) Connect the sensor harness connector.

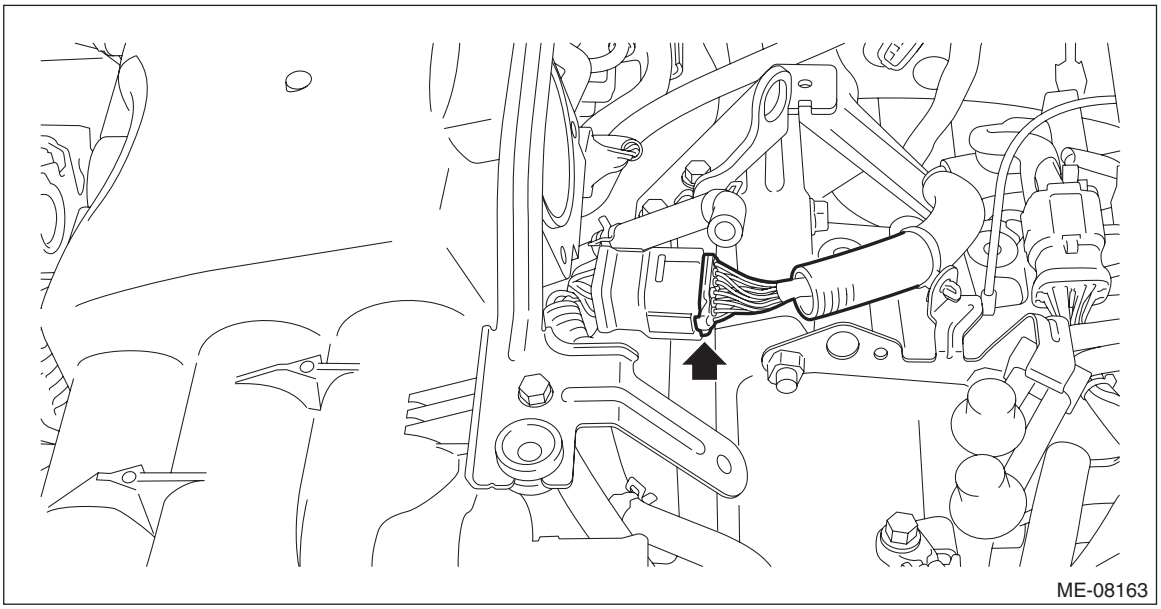

19) Install the throttle body. <Ref. to FU(H6DO)-21, INSTALLATION, Throttle Body.>
20) Place the engine harness and attach the engine harness to the clip (C).
21) Attach the engine harness to the claw (B) of the main fuse box and connect the engine harness connector (A) to the main fuse box.

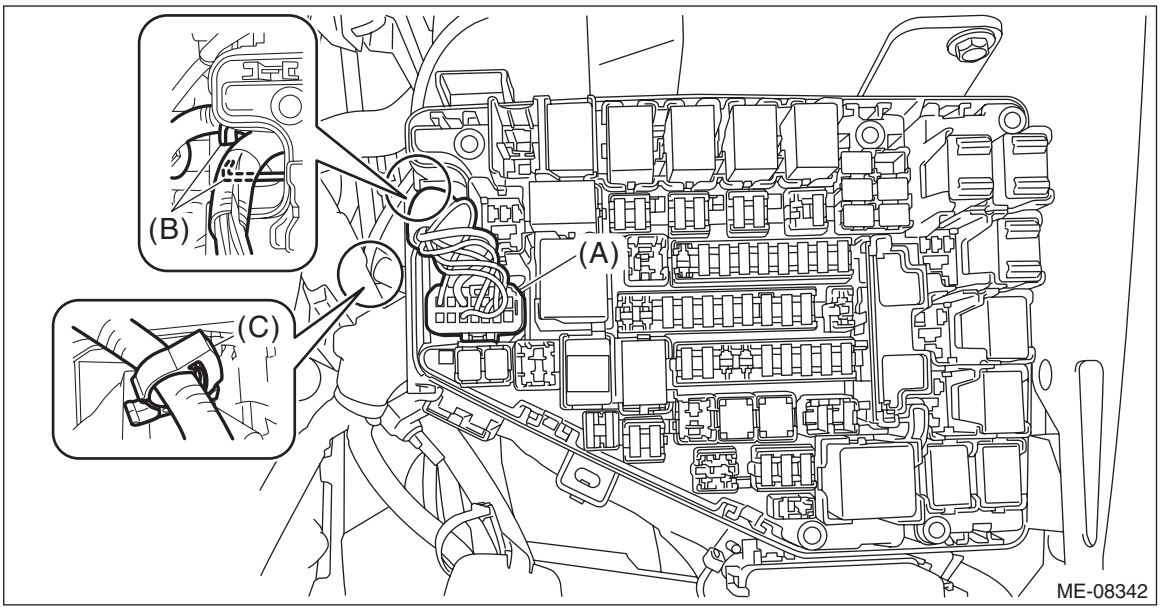

22) Connect the heater inlet hose (A) and the heater outlet hose (B).

NOTE:
Be careful not to mix up the heater inlet hose and the heater outlet hose when connecting them.

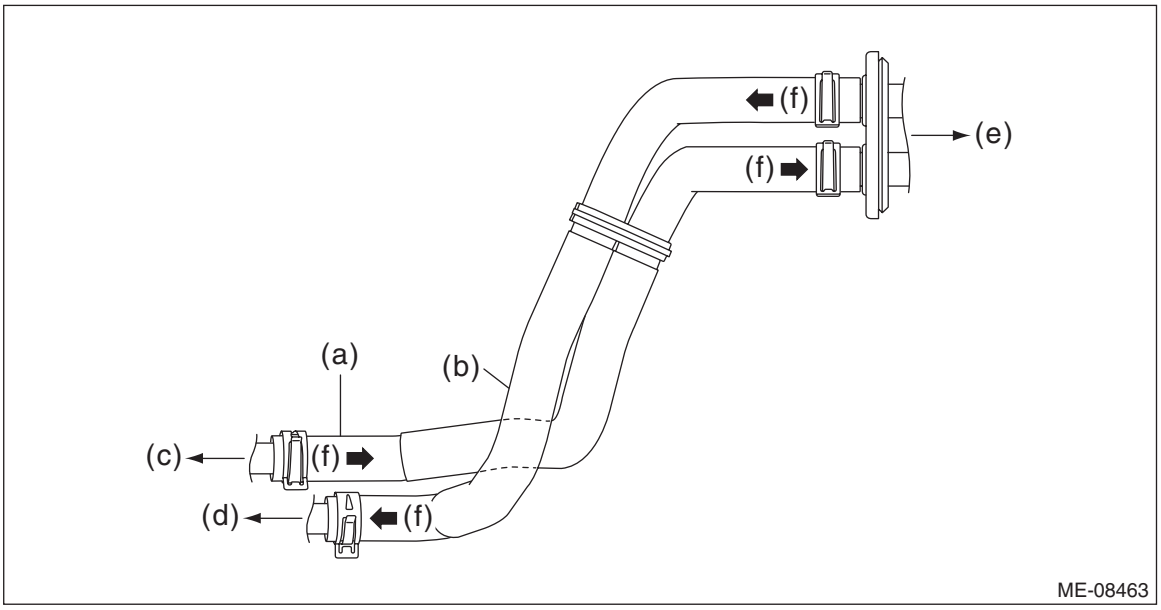

(a) Heater inlet hose
(b) Heater outlet hose
(c) To heater pipe
(d) To water return pipe
(e) To heater core ASSY
(f) Engine coolant flow

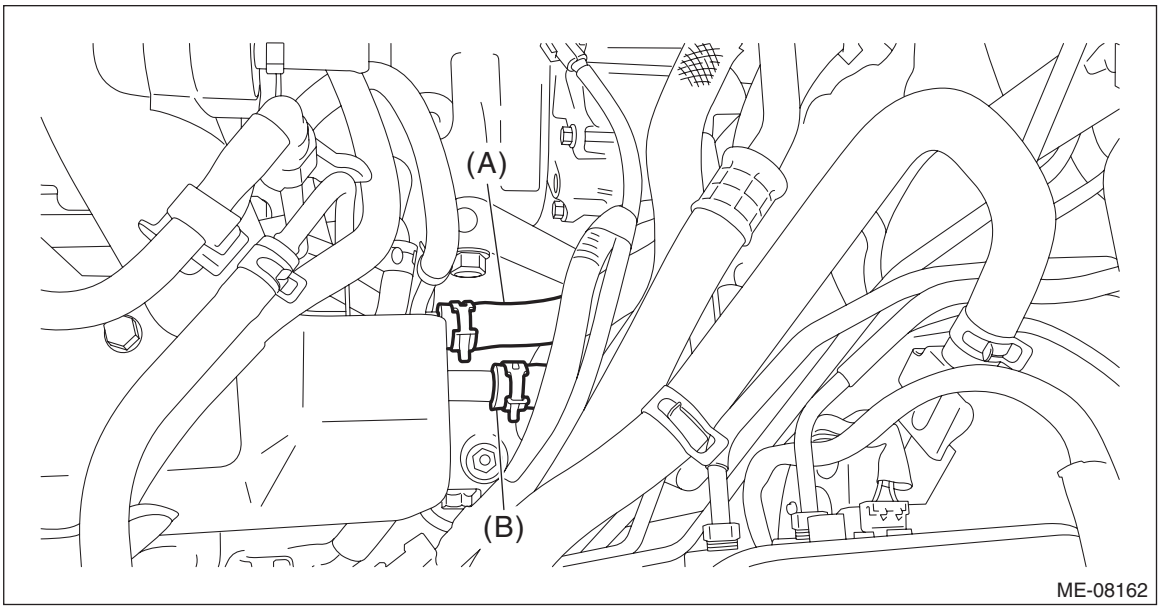

23) Connect the brake booster vacuum hose.

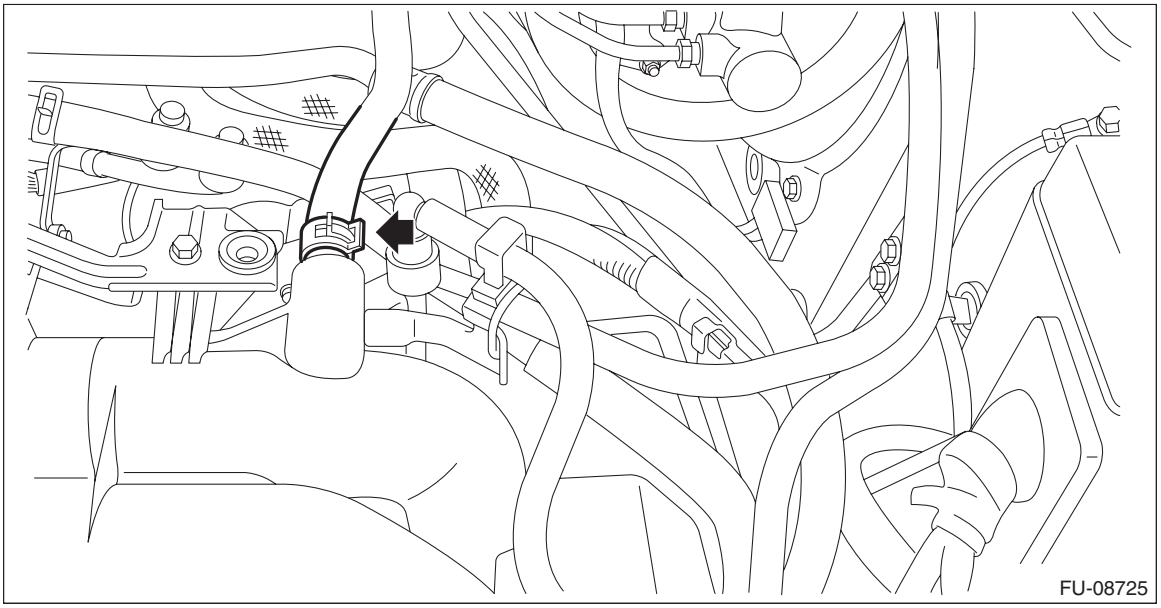

24) Connect the A/C pressure hose to A/C compressor. <Ref. to AC-68, INSTALLATION, Hose and Pipe.>
25) Set the generator cord, and secure the fuel pipe protector (LH) using clip (F).
26) Install the harness cover (E) to the collector cover bracket.
27) Connect the connector (C) and connector (D) to the A/C compressor.
28) Connect the connector (A) and terminal (B) to the generator.

Tightening torque:
15 N·m (1.5 kgf-m, 11.1 ft-lb)

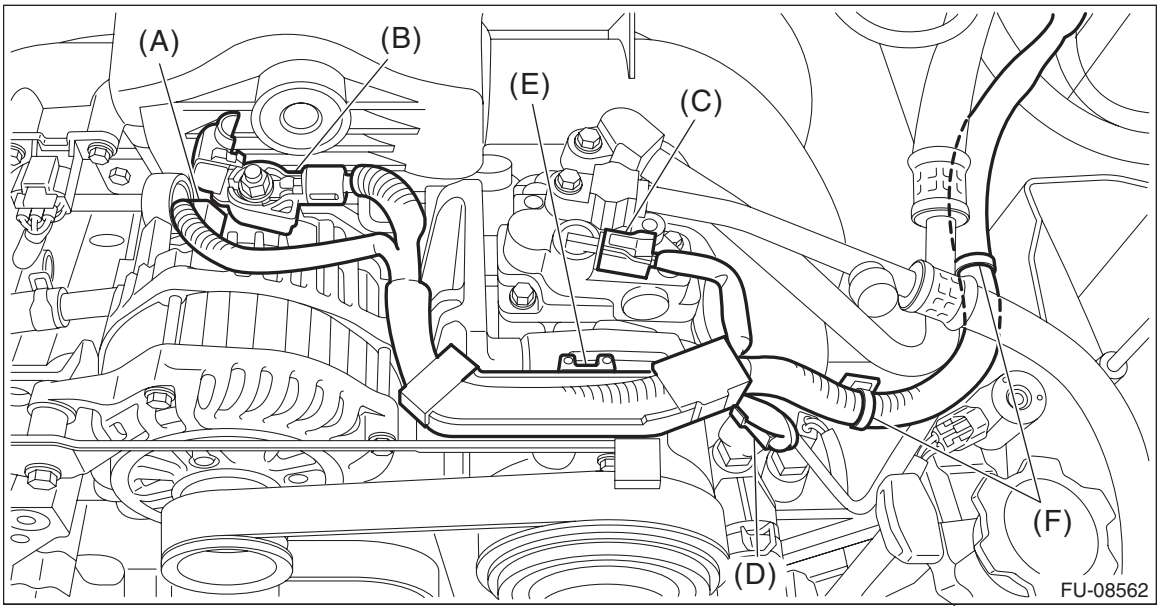

29) Install the radiator. <Ref. to CO(H6DO)-27, INSTALLATION, Radiator.>
30) Install the air cleaner case (rear) together with the air cleaner element. <Ref. to IN(H6DO)-9, INSTALLATION, Air Cleaner Case.>
31) Install the air intake boot. <Ref. to IN(H6DO)-11, INSTALLATION, Air Intake Boot.>
32) Install the air intake duct. <Ref. to IN(H6DO)-12, INSTALLATION, Air Intake Duct.>
33) Connect the ground terminal to battery sensor. <Ref. to RC-4, BATTERY, NOTE, Repair Contents.>
34) Fill engine coolant. <Ref. to CO(H6DO)-14, FILLING OF ENGINE COOLANT, REPLACEMENT, Engine Coolant.>
35) Charge the A/C system with refrigerant. <Ref. to AC-31, PROCEDURE, Refrigerant Charging Procedure.>
36) Check the CVTF level and replenish it if necessary. <Ref. to CVT(TR690)-38, INSPECTION, CVTF.>
37) Install the collector cover.
38) Set the front hood to the normal position. <Ref. to RC-22, FRONT HOOD DAMPER STAY, NOTE, Repair Contents.>
39) Close the front hood.

C: INSPECTION

1) Check that the pipes, hoses, connectors and clips are securely connected.
2) Check the engine coolant is at specified level.
3) Check CVTF is at the specified level.
4) Start the engine and check for exhaust gas, engine coolant, leaks of fuel, etc. Also check for noise and vibrations.

10.Engine Mounting

A: REMOVAL

1. FRONT CUSHION RUBBER

1) Fully open the front hood. <Ref. to RC-22, FRONT HOOD DAMPER STAY, NOTE, Repair Contents.>
2) Remove the collector cover.
   (1) Carefully pull up the rear of collector cover at two positions (A).
   (2) Carefully pull up the front of collector cover at two positions (B) while moving it forward.

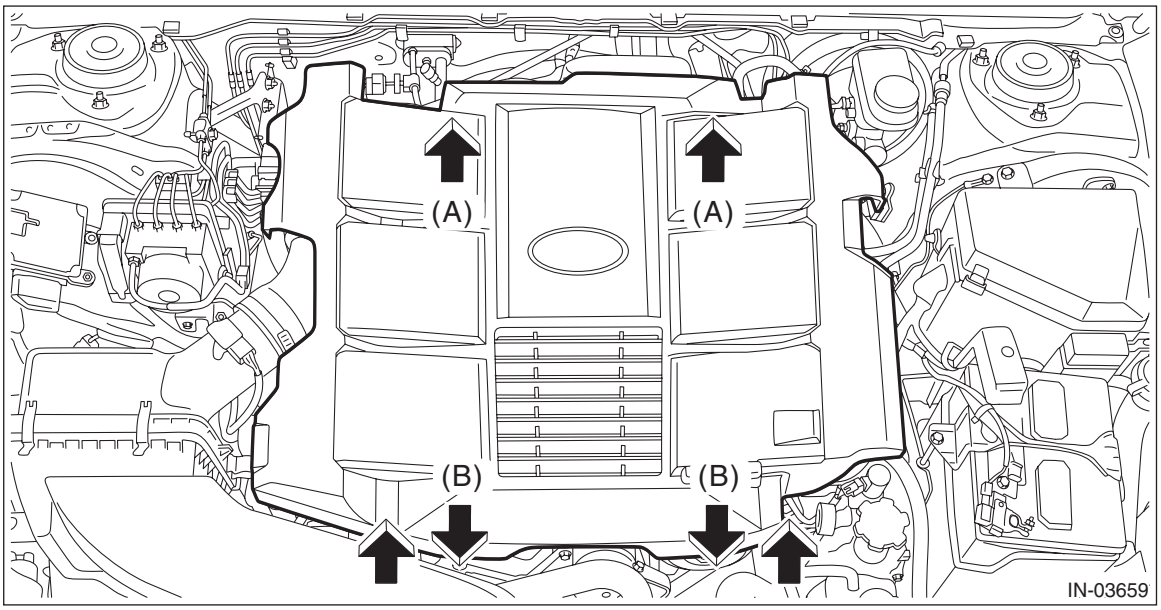

3) Disconnect the ground terminal from battery sensor. <Ref. to RC-4, BATTERY, NOTE, Repair Contents.>
4) Remove the air intake duct. <Ref. to IN(H6DO)-12, REMOVAL, Air Intake Duct.>
5) Loosen the clamp (A) securing the air intake boot.
6) Remove the bolt (B) securing the air intake boot to the collector cover bracket.

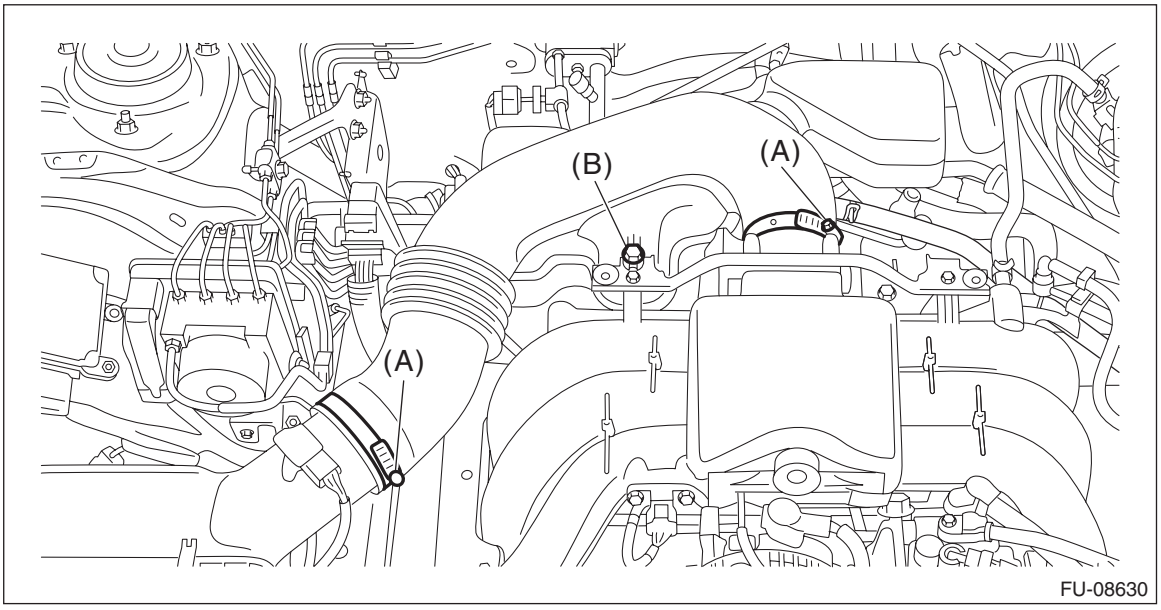

7) Remove the air intake boot from the throttle body and the air cleaner case (rear), and move it to the left side wheel apron.

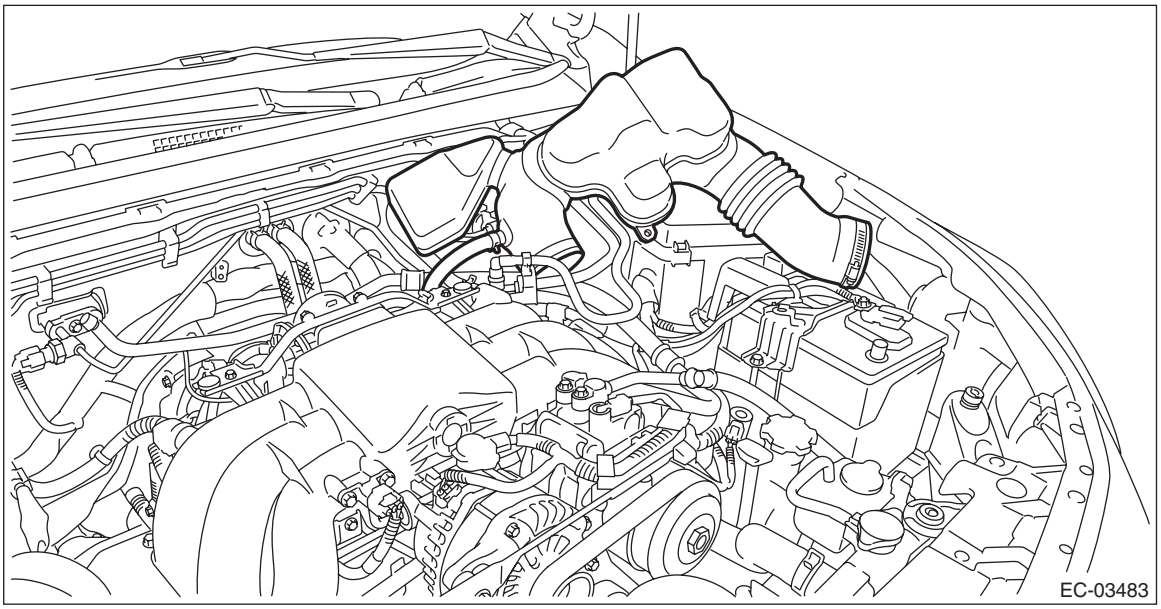

8) Remove the throttle body. <Ref. to FU(H6DO)-19, REMOVAL, Throttle Body.>
9) Disconnect the sensor harness connector.

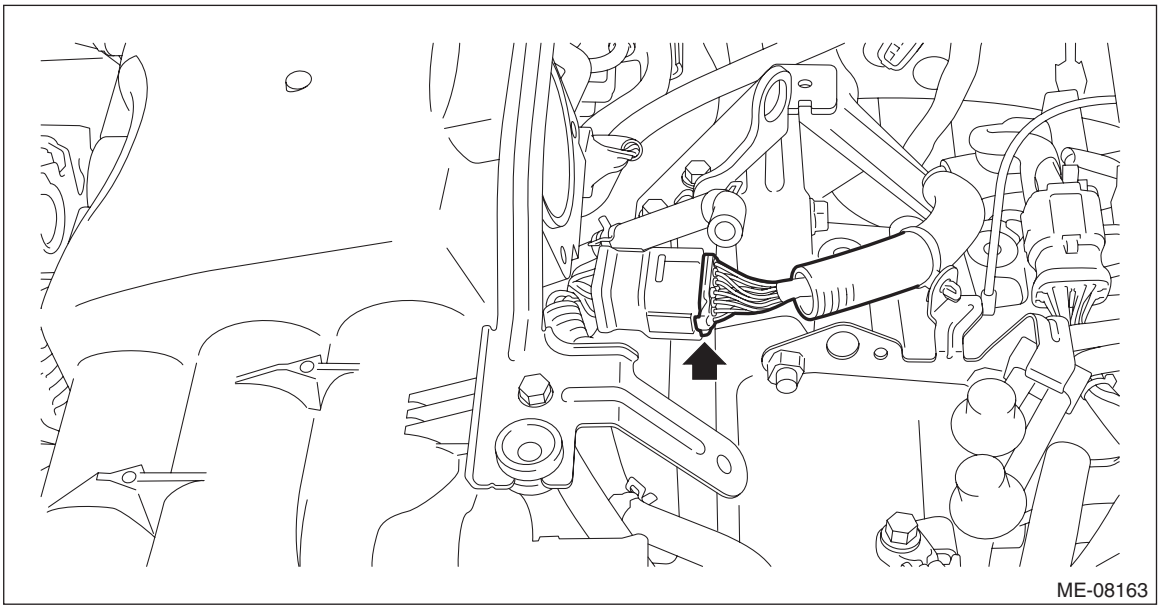

10) Remove the engine harness connector (A) from the engine hanger bracket, and remove the engine hanger bracket.

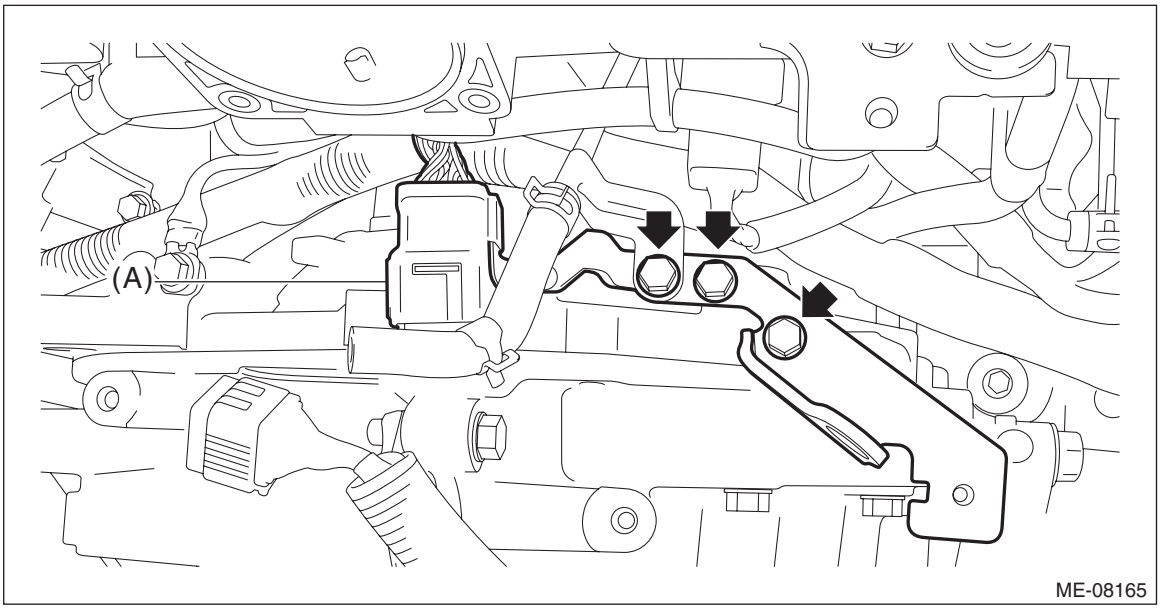

11) Remove the collector cover bracket from the intake manifold.

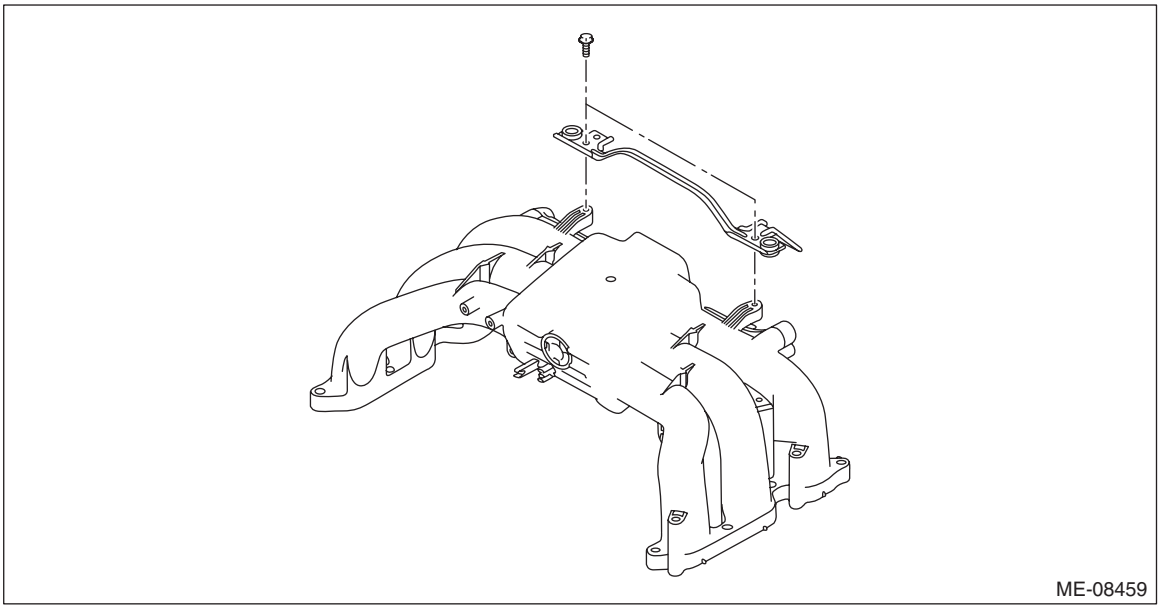

12) Disconnect the engine harness connector.

NOTE:
This procedure is required to prevent the ST from contacting with the connectors in the next step.

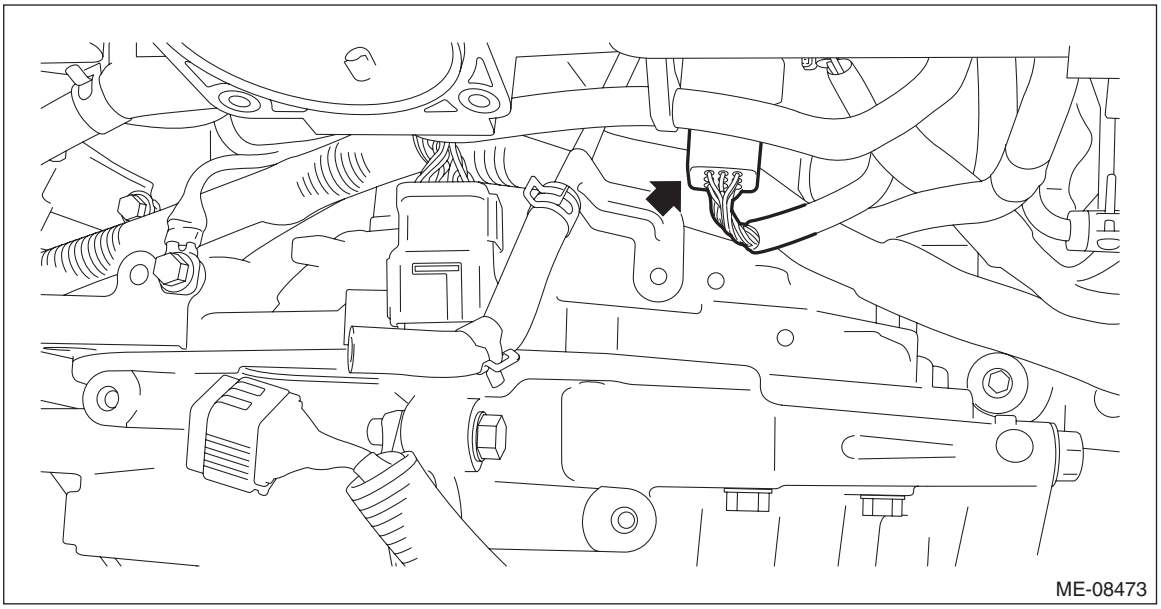
ME-08473

13) Attach the ST.
ST 18360AA020 HANGER

Tightening torque:
19 N·m (1.9 kgf-m, 14.0 ft-lb)

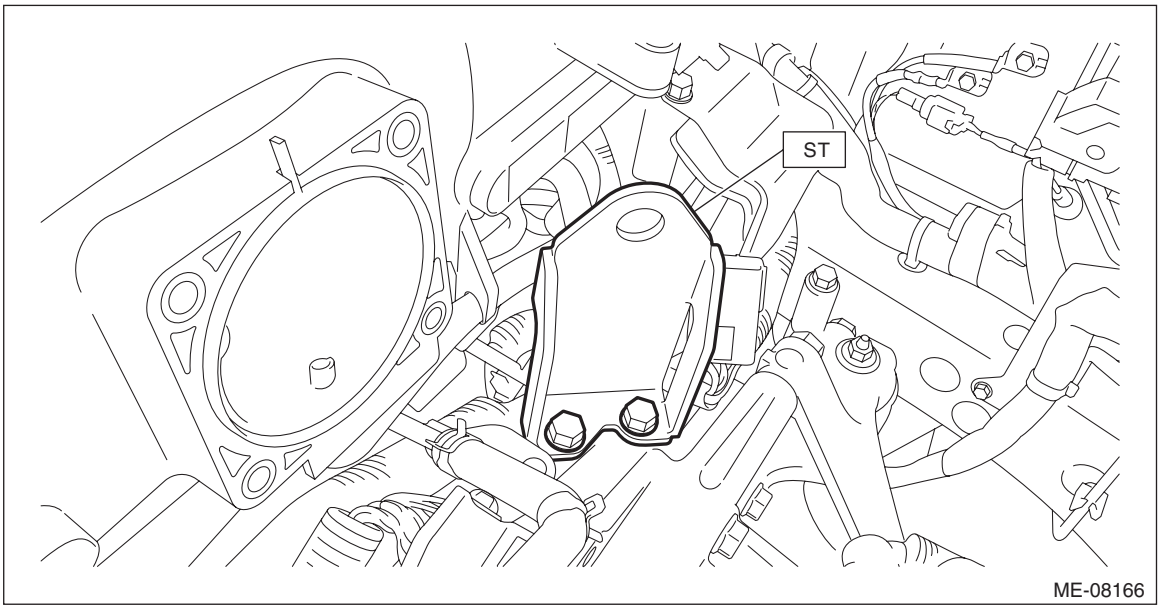

ME-08166

14) Support the engine with a lifting device and wire ropes.

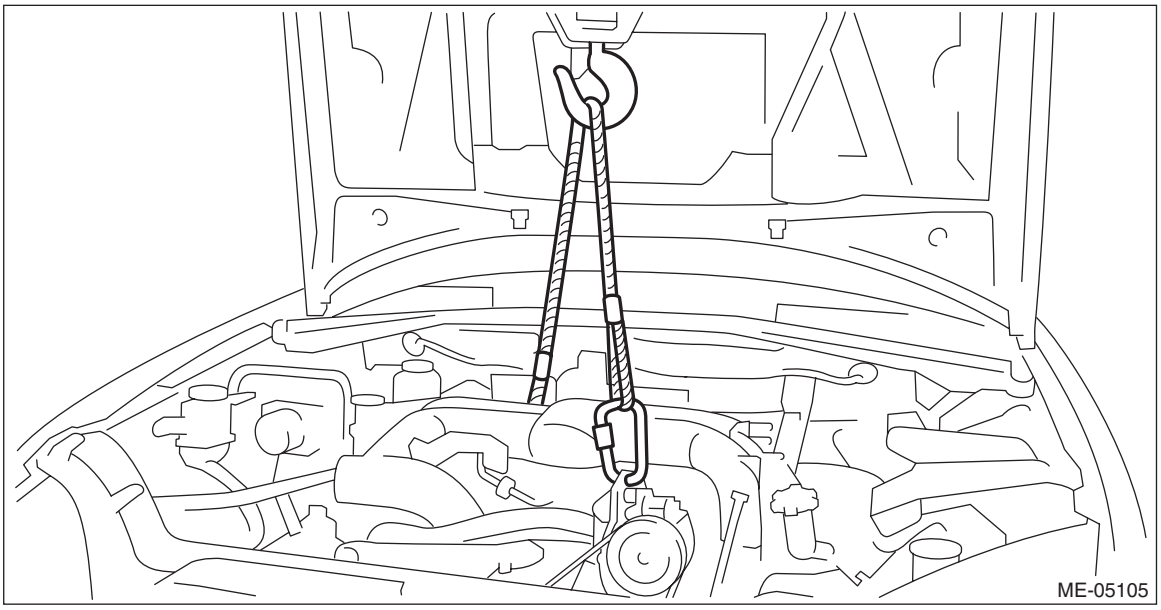

15) Remove the bolts and nuts securing the front cushion rubber to the front mounting bracket.

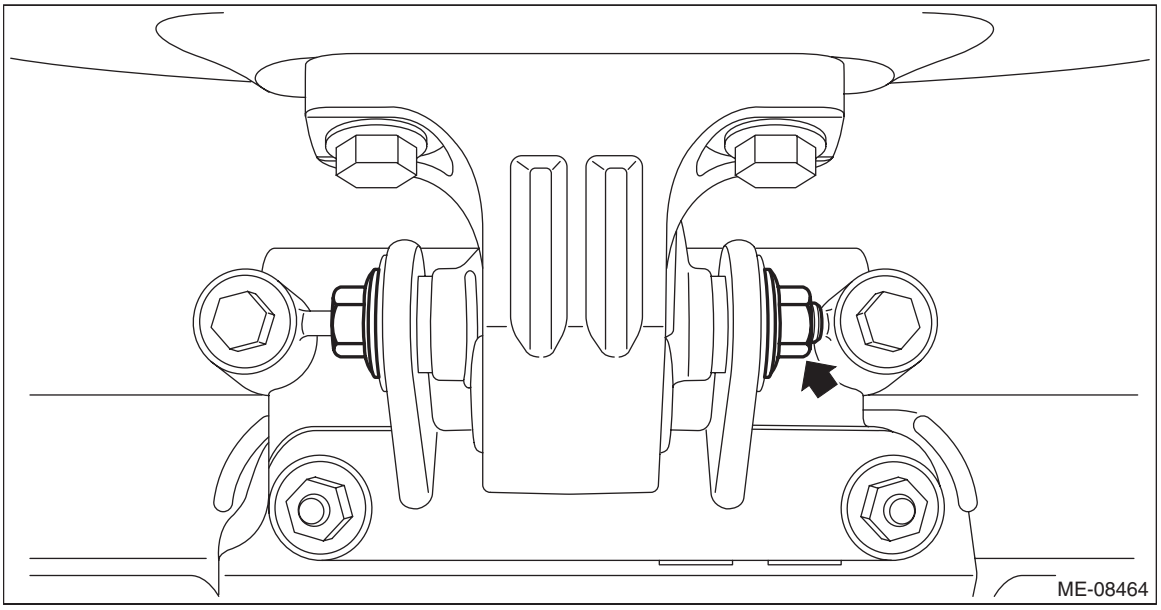

16) Remove the bolts securing the front cushion rubber to the chain cover, and remove the front cushion rubber.

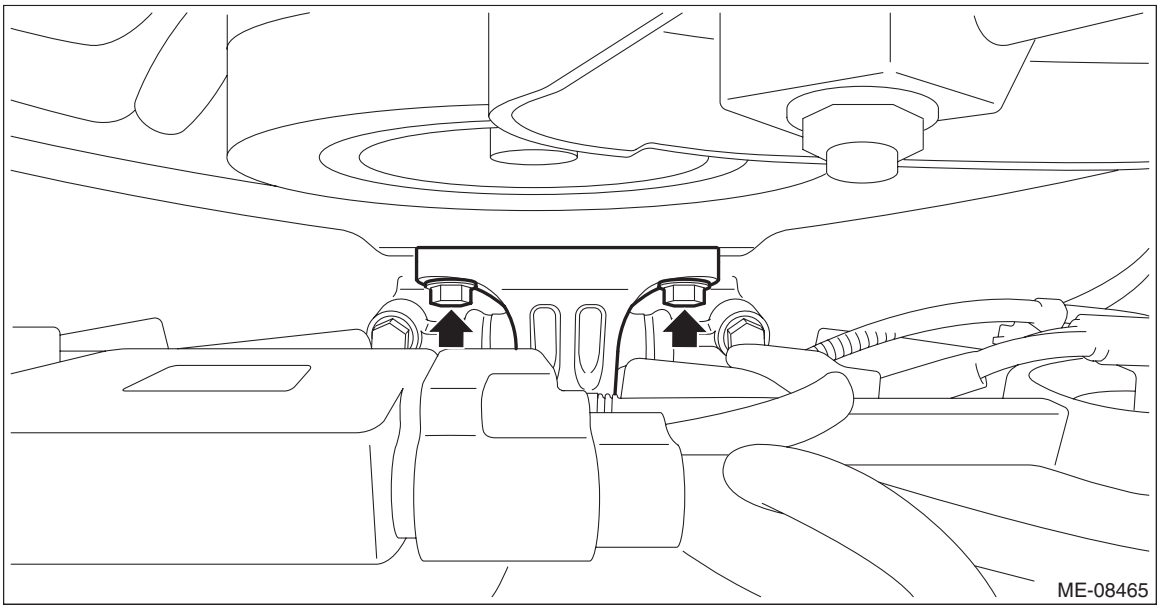

2. FRONT MOUNTING BRACKET

1) Remove the radiator fan and fan motor assembly. <Ref. to CO(H6DO)-37, REMOVAL, Radiator Fan and Fan Motor Assembly.>
2) Remove the front cushion rubbers. <Ref. to ME(H6DO)-61, FRONT CUSHION RUBBER, REMOVAL, Engine Mounting.>
3) Remove the front mounting bracket from the cradle and the bracket.

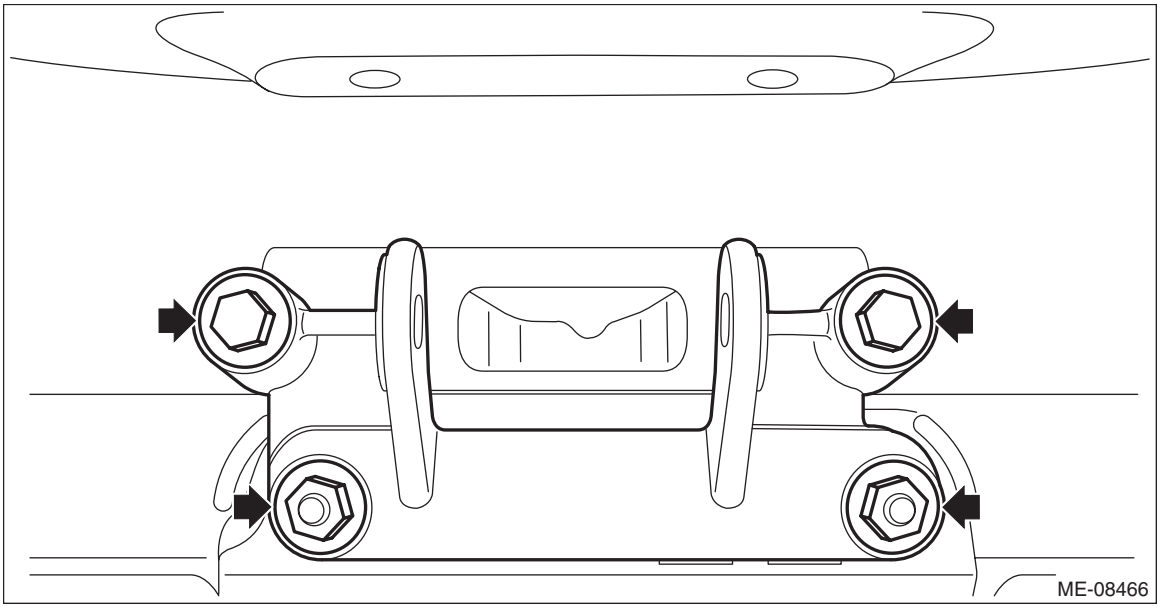

4) Remove the bracket from the cradle.

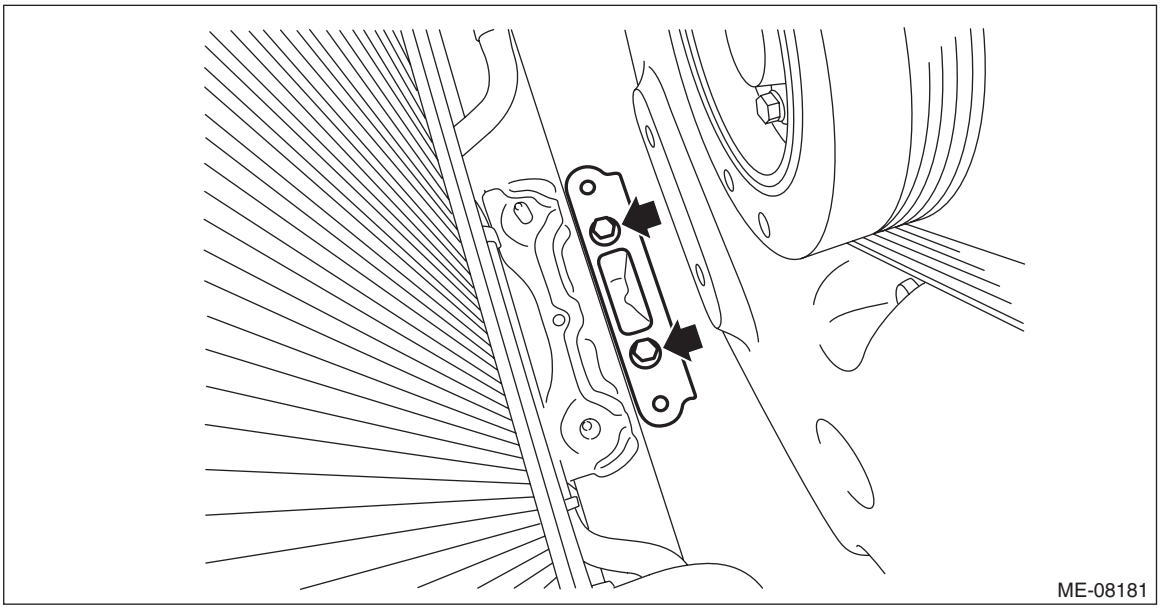

B: INSTALLATION

1. FRONT CUSHION RUBBER

1) Set the front cushion rubber, and install the bolts securing the front cushion rubber to the chain cover.

Tightening torque:
25 N·m (2.5 kgf-m, 18.4 ft-lb)

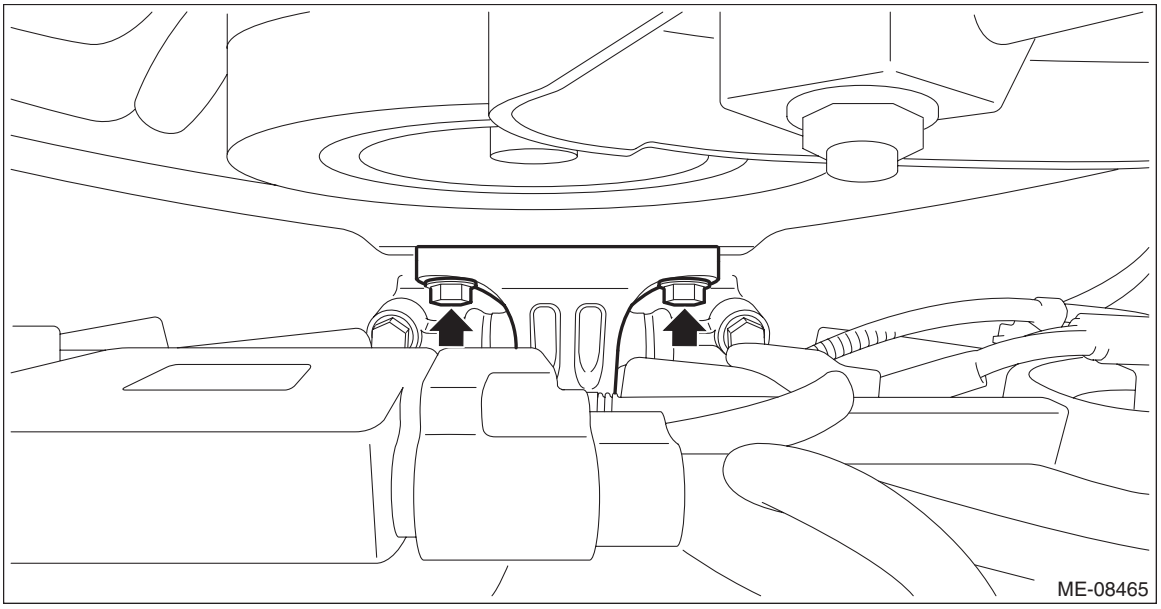

2) Install the bolts and nuts securing the front cushion rubber to the front mounting bracket.

Tightening torque:
45 N·m (4.6 kgf-m, 33.2 ft-lb)

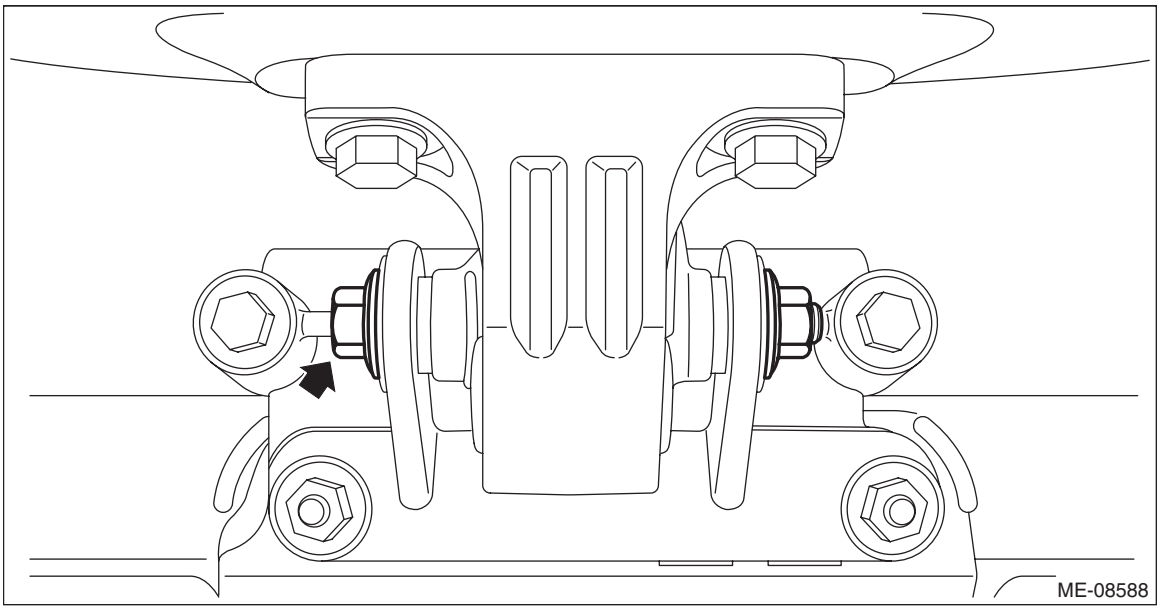

3) Remove the lifting device and wire ropes.

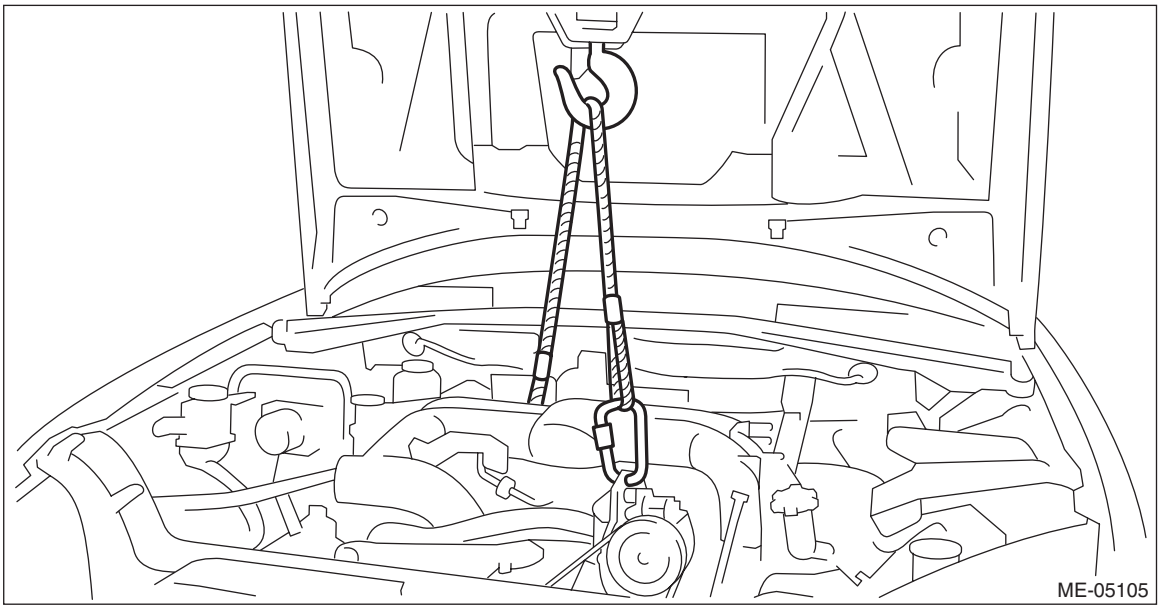

4) Remove the ST.

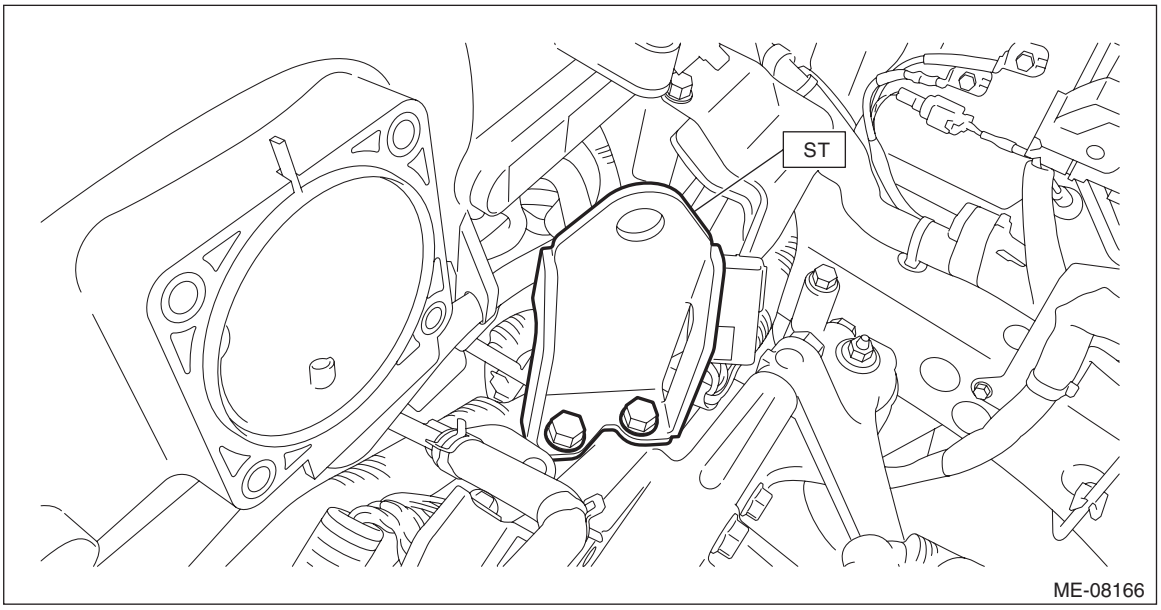

5) Connect the engine harness connector.

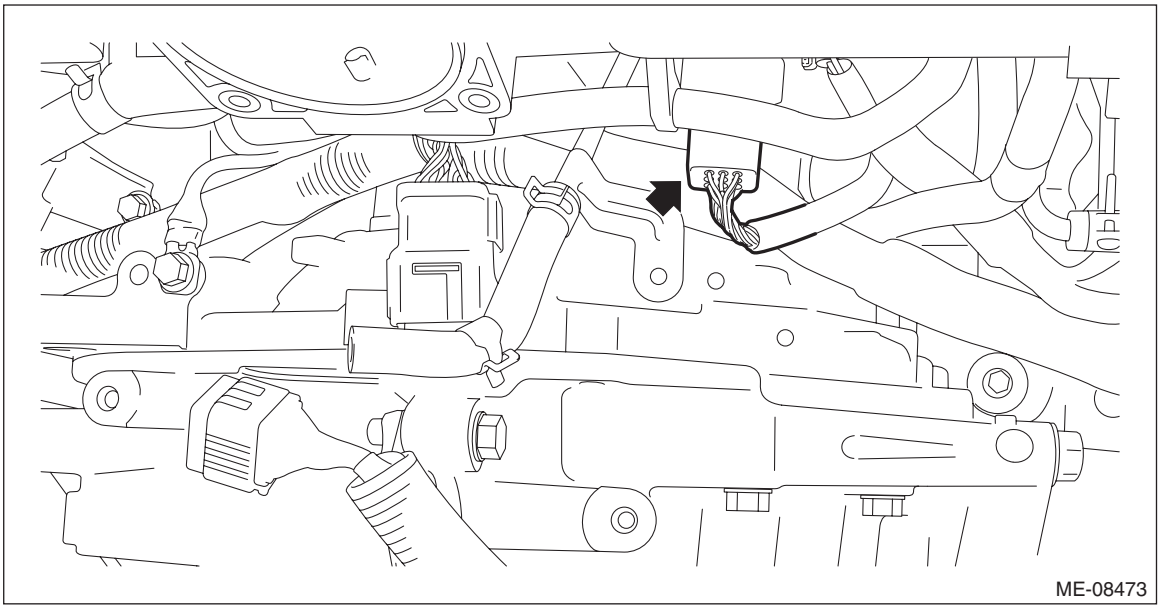

6) Install the collector cover bracket to the intake manifold.

Tightening torque:
6.5 N·m (0.7 kgf-m, 4.8 ft-lb)

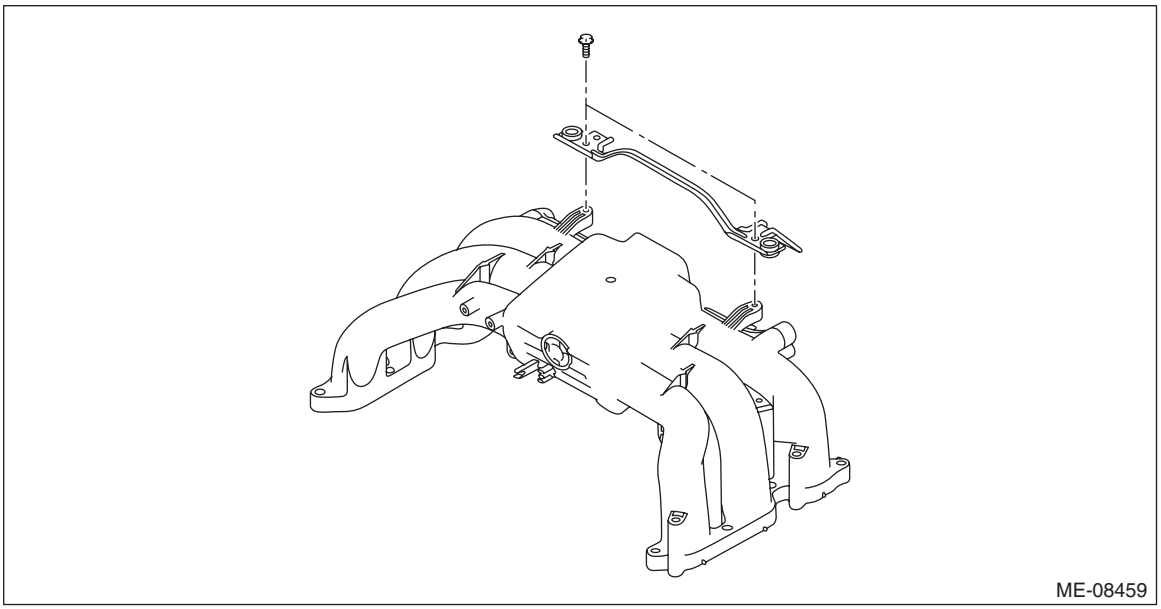

7) Install the engine hanger bracket, and install the engine harness connector (A) to the engine hanger bracket.

Tightening torque:
19 N·m (1.9 kgf-m, 14.0 ft-lb)

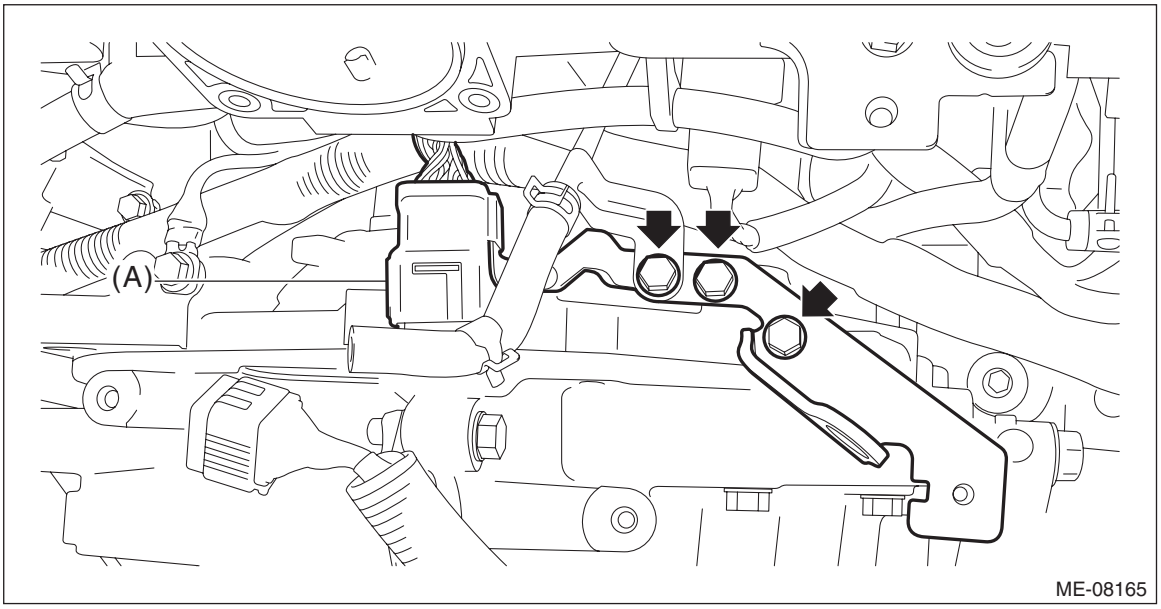

8) Connect the sensor harness connector.

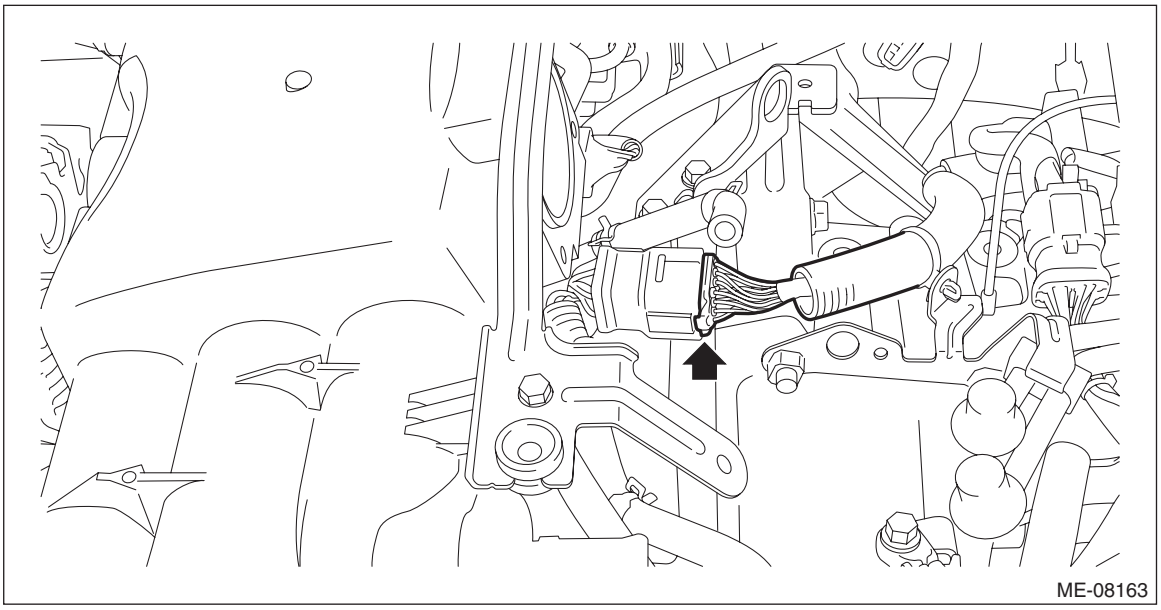

9) Install the throttle body. <Ref. to FU(H6DO)-21, INSTALLATION, Throttle Body.>
10) Install the air intake boot. <Ref. to IN(H6DO)-11, INSTALLATION, Air Intake Boot.>
11) Install the air intake duct. <Ref. to IN(H6DO)-12, INSTALLATION, Air Intake Duct.>
12) Connect the ground terminal to battery sensor. <Ref. to RC-4, BATTERY, NOTE, Repair Contents.>
13) Install the collector cover.
14) Set the front hood to the normal position. <Ref. to RC-22, FRONT HOOD DAMPER STAY, NOTE, Repair Contents.>
15) Close the front hood.

2. FRONT MOUNTING BRACKET

1) Install the bracket to the cradle.

Tightening torque:
65 N·m (6.6 kgf-m, 47.9 ft-lb)

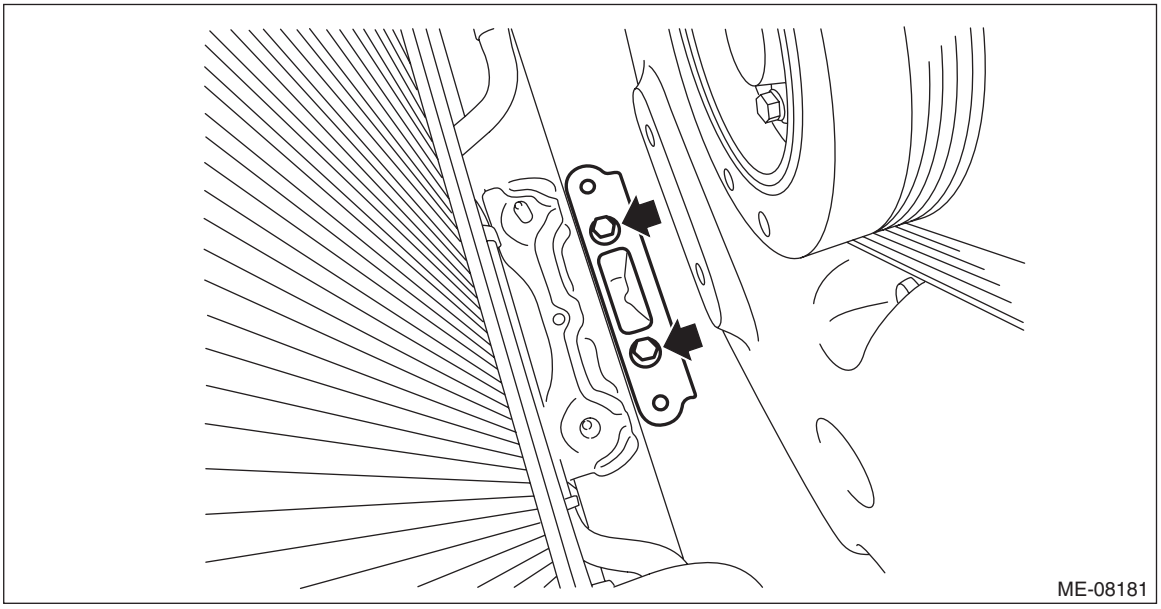

2) Install the front mounting bracket to the cradle and the bracket.

Tightening torque:
60 N·m (6.1 kgf-m, 44.3 ft-lb)

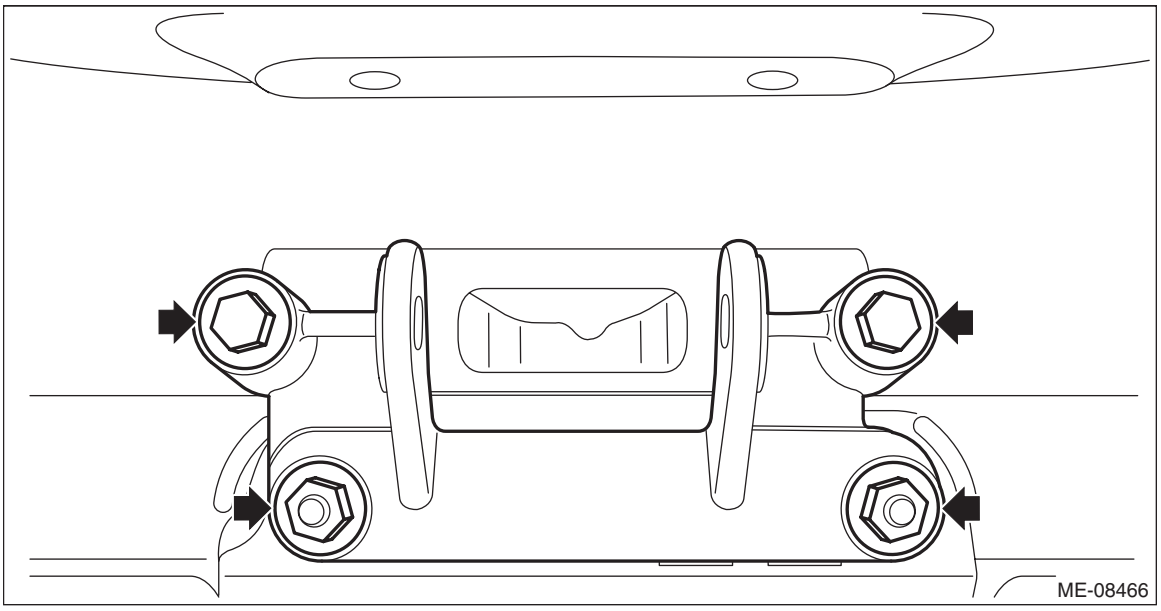

3) Install the front cushion rubber. <Ref. to ME(H6DO)-67, FRONT CUSHION RUBBER, INSTALLATION, Engine Mounting.>
4) Install the radiator fan and fan motor assembly. <Ref. to CO(H6DO)-40, INSTALLATION, Radiator Fan and Fan Motor Assembly.>

C: INSPECTION

Check that the engine mounting does not have deformation, cracks and any other damage.

11.Preparation for Overhaul

A: PROCEDURE

1) After removing the engine from the vehicle body, attach the ST to the engine as shown in the figure.

NOTE:
When using a commercially sold engine stand, follow the instructions of engine stand used.

Tightening torque:
35 N·m (3.6 kgf-m, 25.8 ft-lb)
ST 18232AA000 ENGINE STAND

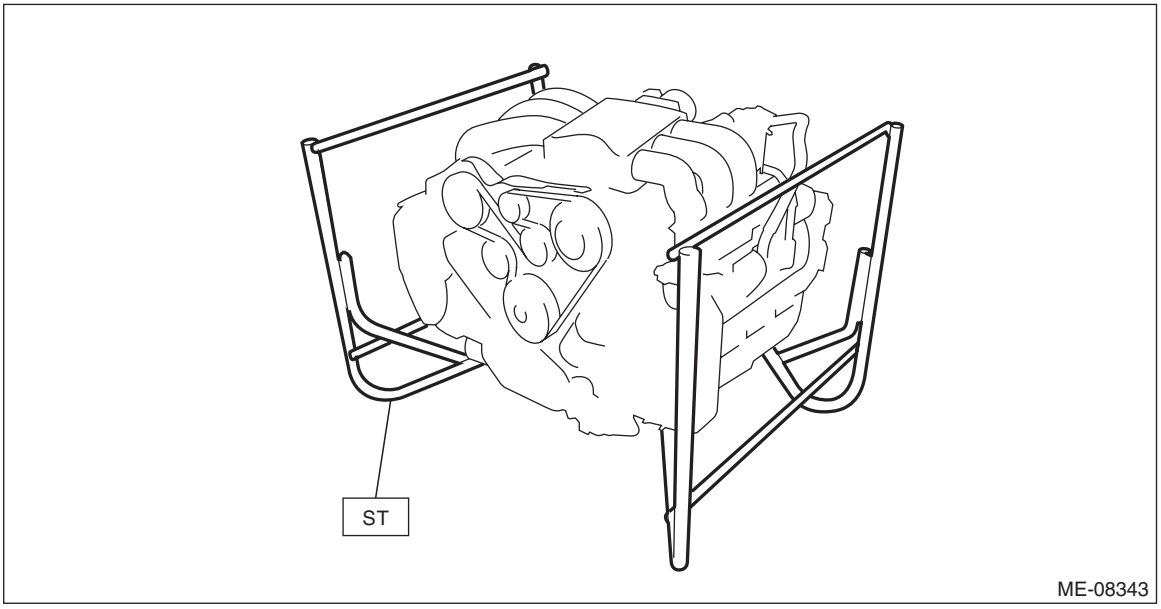

2) In this section the procedures described under each index are all connected and stated in order. The procedure for overhauling of the engine will be completed when you go through all steps in the process. Therefore, in this section, to conduct the particular procedure within the flow of a section, you need to go back and conduct the procedure described previously in order to do that particular procedure.

12.V-belt

A: REMOVAL

1) Remove the collector cover.
   (1) Carefully pull up the rear of collector cover at two positions (A).
   (2) Carefully pull up the front of collector cover at two positions (B) while moving it forward.

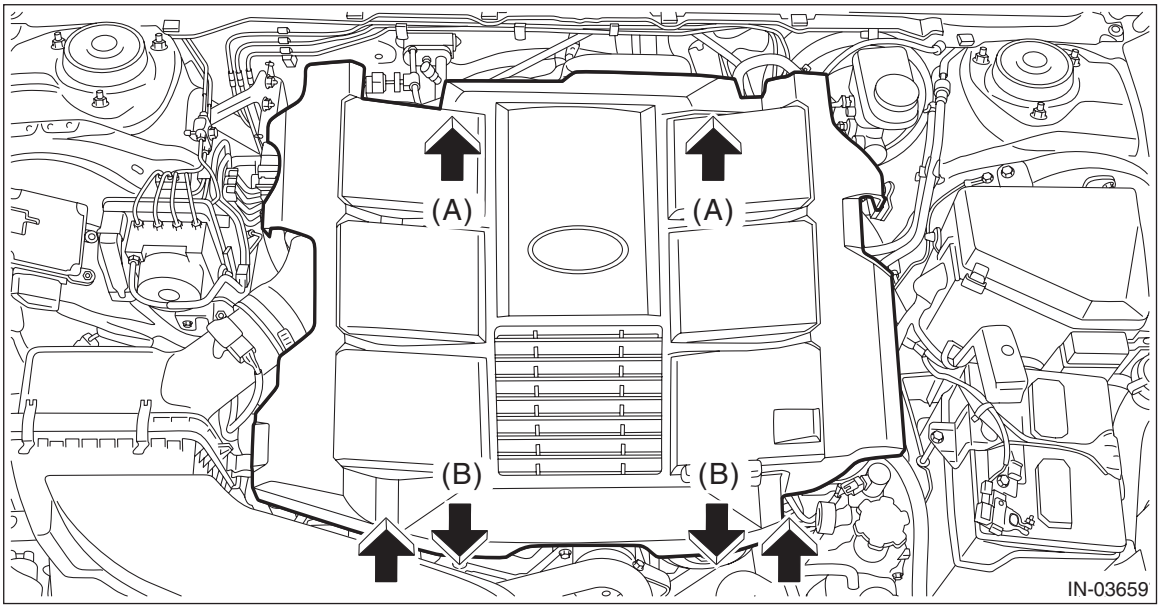

2) Remove the air intake duct. <Ref. to IN(H6DO)-12, REMOVAL, Air Intake Duct.>
3) Loosen the nut (A).
4) Loosen the bolt (B).
5) Remove the V-belt (C).

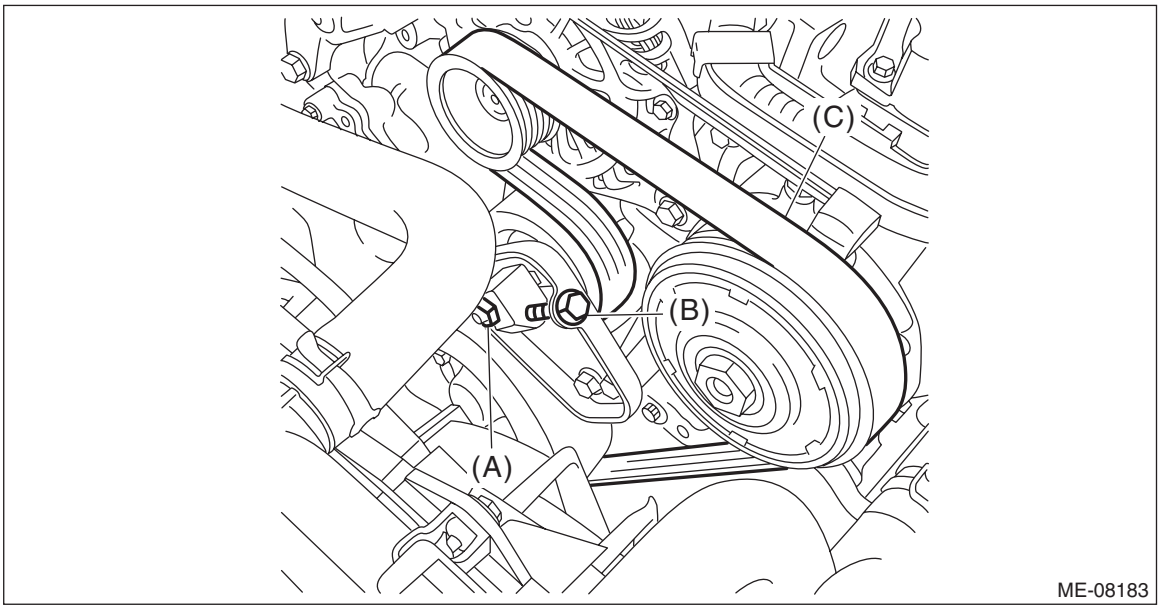

B: INSTALLATION

CAUTION:
- **When reusing the V-belt, wipe off dust and water with cloth.**
- **Do not use the V-belt if there is any oil, grease or coolant on the belt.**
- **Be careful not to rub the belt end surface with bare hands; exposed core may cause injury.**
- **Wipe off any dust, oil and water on the groove of each pulley with cloth.**

1) Make sure that the spline of key (B) on shaft (A) matches with key groove (C), tighten the nut (D) to 1 N·m (0.1 kgf-m, 0.7 ft-lb), and temporarily assemble the tensioner assembly.

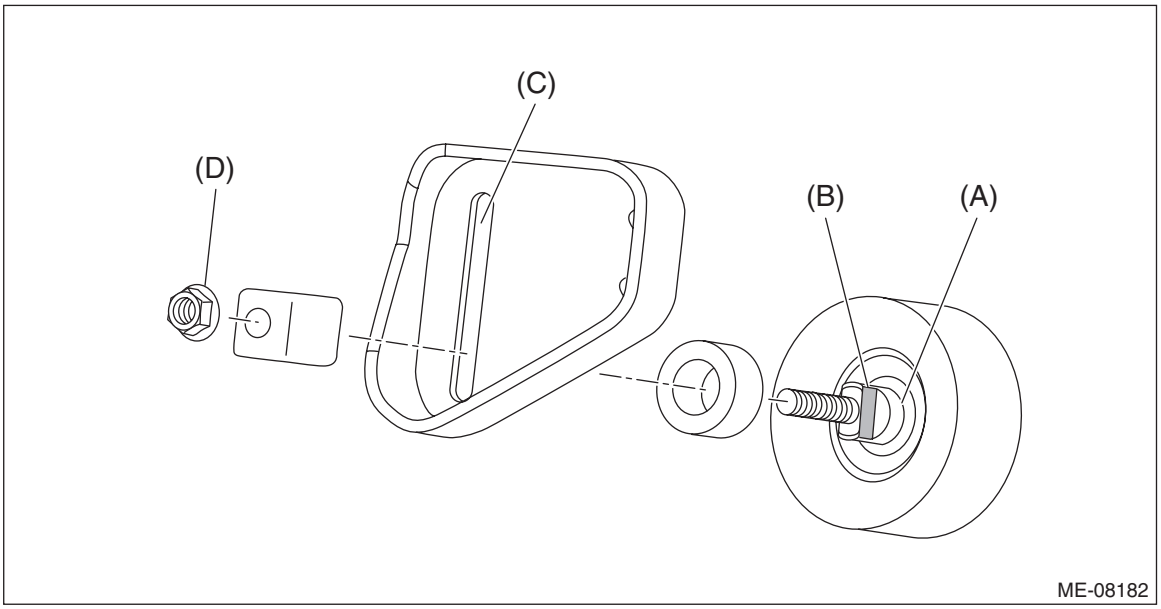

(A) Shaft
(B) Key
(C) Key groove
(D) Nut

2) Install the V-belt (C), and adjust the bolt (B) so as to obtain the specified belt tension. <Ref. to ME(H6DO)-77, INSPECTION, V-belt.>

CAUTION:
After installing the V-belt, check the V-belt tension and adjust it if necessary by loosening the nuts and tensioner pulley, then reinstall the belt.

3) Tighten the nut (A).

Tightening torque:
20 N·m (2.0 kgf-m, 14.8 ft-lb)

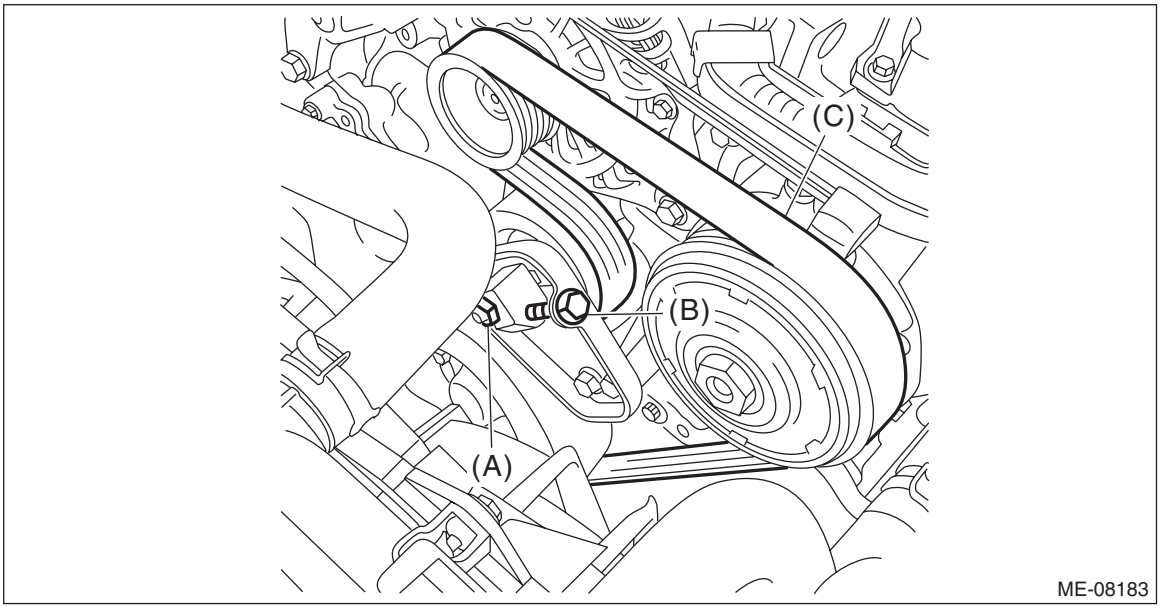

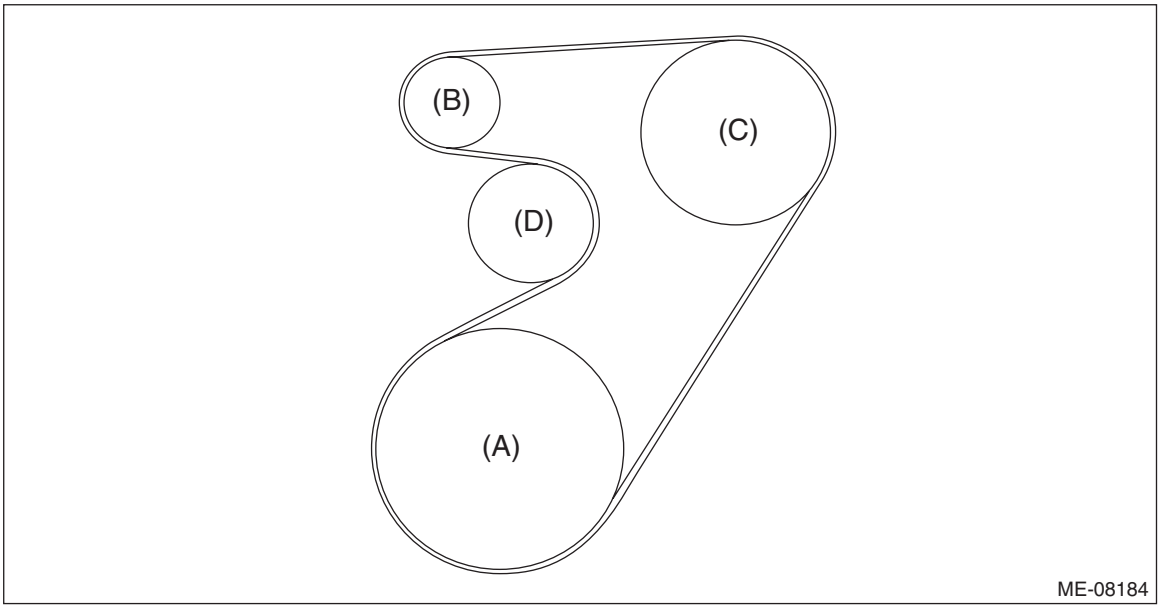

(A) Crank pulley
(B) Generator pulley
(C) A/C compressor pulley
(D) Tensioner pulley

4) Install the air intake duct. <Ref. to IN(H6DO)-12, INSTALLATION, Air Intake Duct.>
5) Install the collector cover.

C: INSPECTION

CAUTION:
Check and adjust the V-belt tension so that it is within the specified range. Using the belt with a tension out of the specified range may result in a fault such as the following:
• If the V-belt tension is higher, unexpected force is generated at the power steering oil pump, generator and crankshaft bearing, causing abnormal noise due to abnormal wear of the bearing.
• If tension of the V-belt is too low, slipping of the V-belt and crank pulley occurs and crank pulley becomes abnormally hot by friction heat. If this condition repeatedly occurs, the V-belt may abnormally wear, causing abnormal noise, V-belt damage or crank pulley damage.
1) Replace the V-belt, if cracks, fraying or wear is found.
2) Inspect the V-belt tension, and adjust if necessary.

V-belt tension (with sonic belt tension gauge):
When installing new parts
1080 — 1230 N (110 — 125 kgf, 243 — 277 lbf)
337 — 360 Hz (frequency)
At inspection
570 — 720 N (58 — 73 kgf, 128 — 162 lbf)
245 — 275 Hz (frequency)

NOTE:
For inspection using sonic belt tension gauge, input of setting value may be needed.
- Belt distance (SPAN) between measuring point to pulley: 163 mm (6.42 in)
- V-belt weight (WEIGHT): 14.9 g (0.033 lb)/m
- V-belt width (WIDTH): 6 mm (0.24 in)/#R

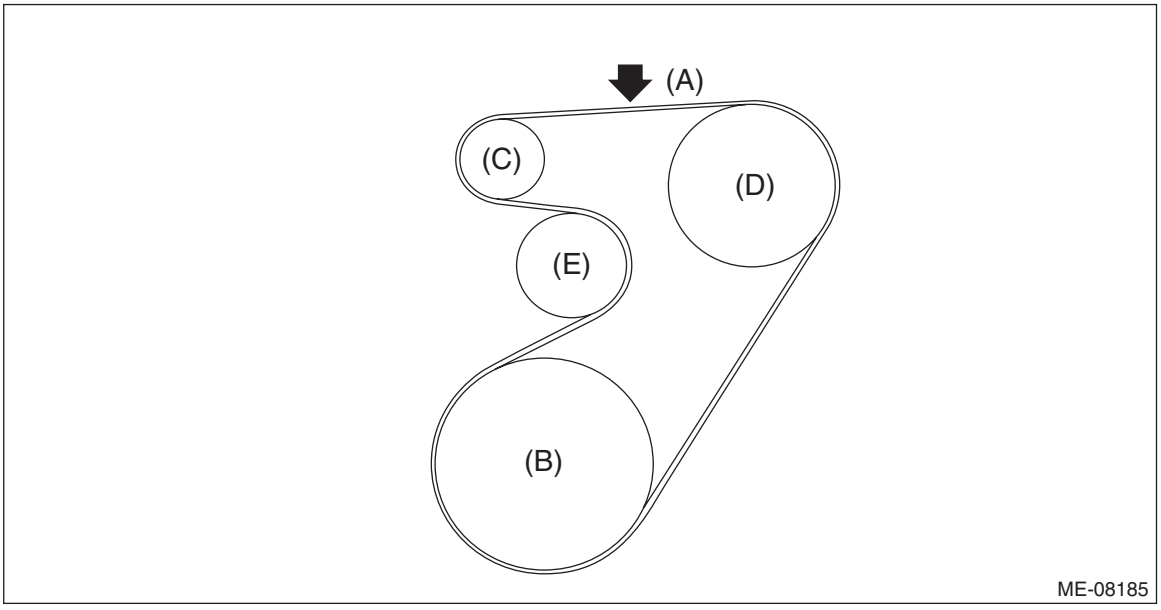

(A) V-belt tension measuring point
(B) Crank pulley
(C) Generator pulley
(D) A/C compressor pulley
(E) Tensioner pulley

V-belt tension (without sonic belt tension gauge):
When installing new parts
3 — 4 mm (0.118 — 0.157 in)
At inspection
6 — 7 mm (0.236 — 0.276 in)

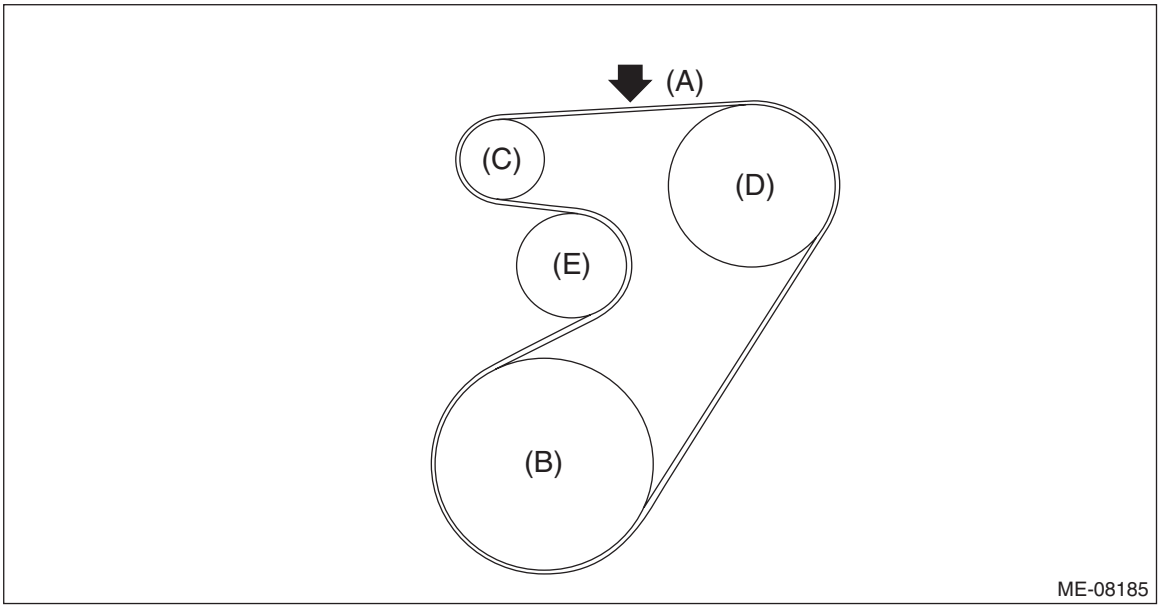

(A) Push the V-belt with a force of 98 N (10 kgf, 22 lbf).
(B) Crank pulley
(C) Generator pulley
(D) A/C compressor pulley
(E) Tensioner pulley

3) Start the engine and confirm that the V-belt rotates smoothly and no abnormal noise is emitted.

13.Crank Pulley

A: REMOVAL

1) Remove the V-belts. <Ref. to ME(H6DO)-74, REMOVAL, V-belt.>
2) Use the ST to lock the crank pulley, and remove the crank pulley bolt.
ST1 18355AA000 PULLEY WRENCH
ST2 18334AA000 PULLEY WRENCH PIN SET
3) Remove the crank pulley.

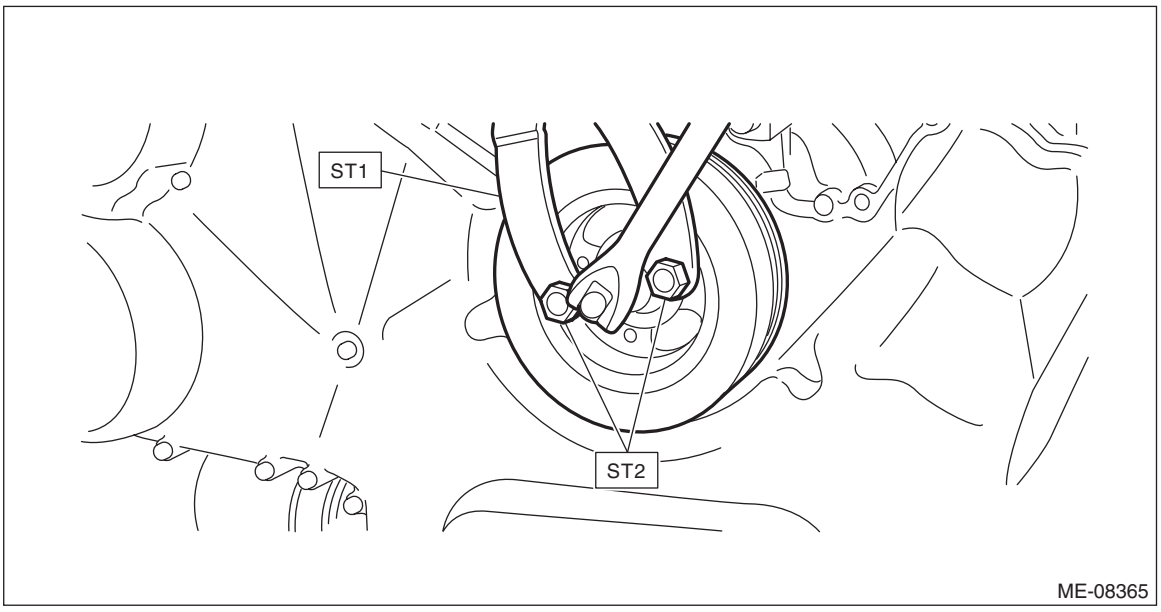

B: INSTALLATION

1) Clean the crankshaft thread using compressed air.
2) Install the crank pulley.
3) Apply engine oil to the crank pulley bolt seat and thread.
4) Use the ST to lock the crank pulley, and tighten the crank pulley bolt.

NOTE:
After tightening, if engine oil is spilt onto the crank pulley bolt or the crank pulley, wipe it off with a cloth.
ST1 18355AA000 PULLEY WRENCH
ST2 18334AA000 PULLEY WRENCH PIN SET

Tightening torque:
195 N·m (19.9 kgf-m, 143.8 ft-lb)

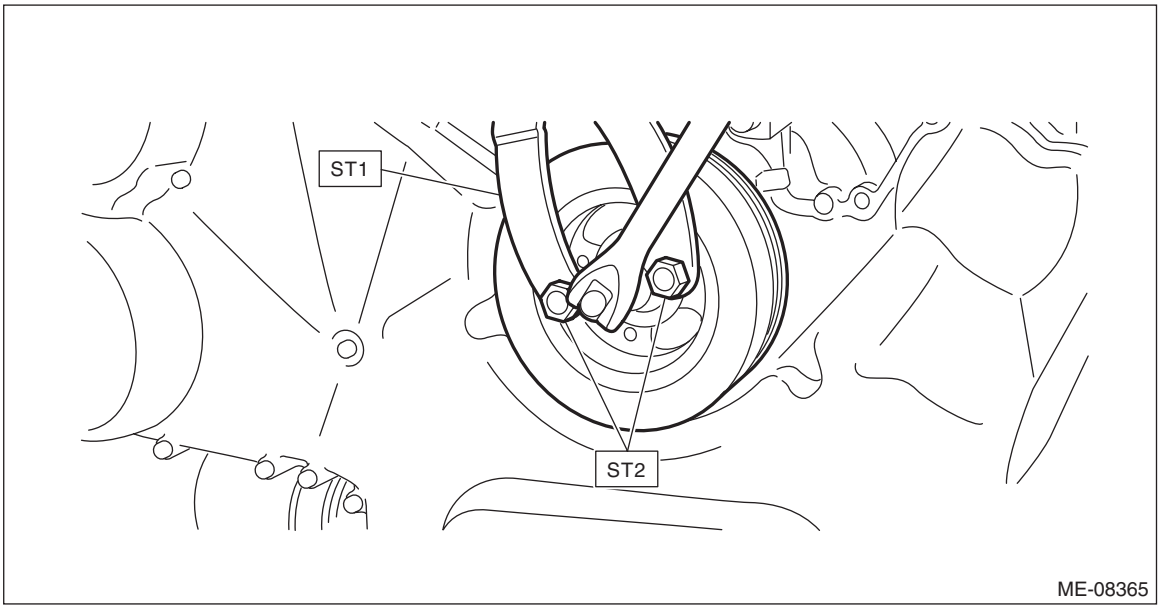

5) Install the V-belts. <Ref. to ME(H6DO)-75, INSTALLATION, V-belt.>

C: INSPECTION

Check that the crank pulley has no deformation, cracks or other damages.

14.Chain Cover

A: REMOVAL

NOTE:
When replacing a single part, perform the work with the engine assembly installed to body.
1) When working on the vehicle

NOTE:
When working on the vehicle, perform the following steps also.
(1) Remove the radiator. <Ref. to CO(H6DO)-20, REMOVAL, Radiator.>
(2) Remove the front exhaust pipe. <Ref. to EX(H6DO)-6, REMOVAL, Front Exhaust Pipe.>
(3) Remove the engine mounting. <Ref. to ME(H6DO)-61, REMOVAL, Engine Mounting.>
2) Drain the engine oil. <Ref. to LU(H6DO)-12, REPLACEMENT, Engine Oil.>
3) Remove the V-belts. <Ref. to ME(H6DO)-74, REMOVAL, V-belt.>
4) Remove the crank pulley. <Ref. to ME(H6DO)-79, REMOVAL, Crank Pulley.>
5) Remove the oil cooler pipe from the chain cover.

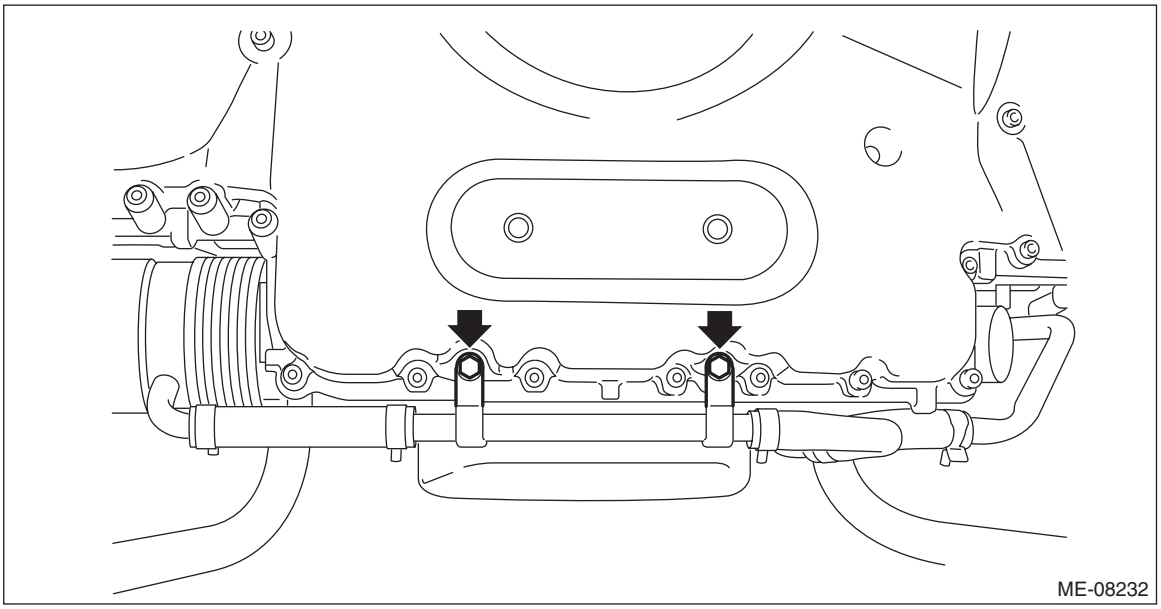

6) Remove the chain cover.

NOTE:
Chain cover installation bolt has three different sizes. To prevent the confusion in installation, keep these bolts on container individually.

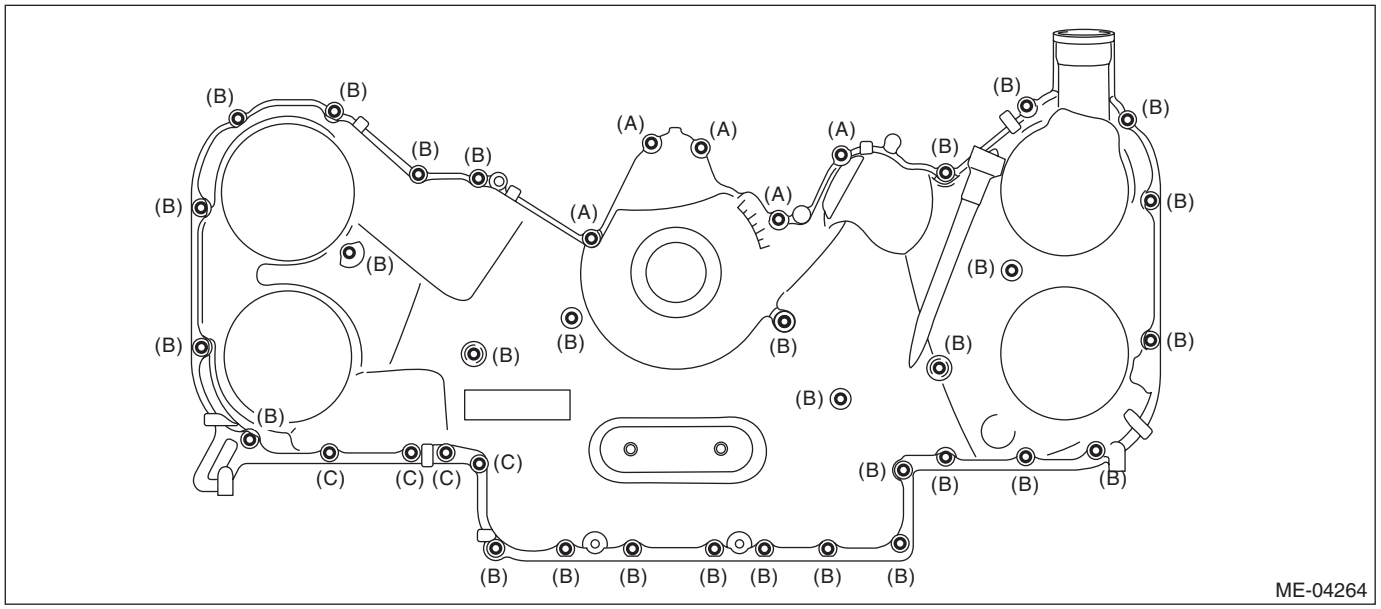

(A) M6 × 21 (B) M6 × 30 (C) M6 × 53

B: INSTALLATION

1) Apply liquid gasket to the mating surfaces of the cylinder block, cylinder head and oil pan upper as shown in the figure.

Liquid gasket:
THREE BOND 1217G (Part No. K0877Y0100), THREE BOND 1217H or equivalent

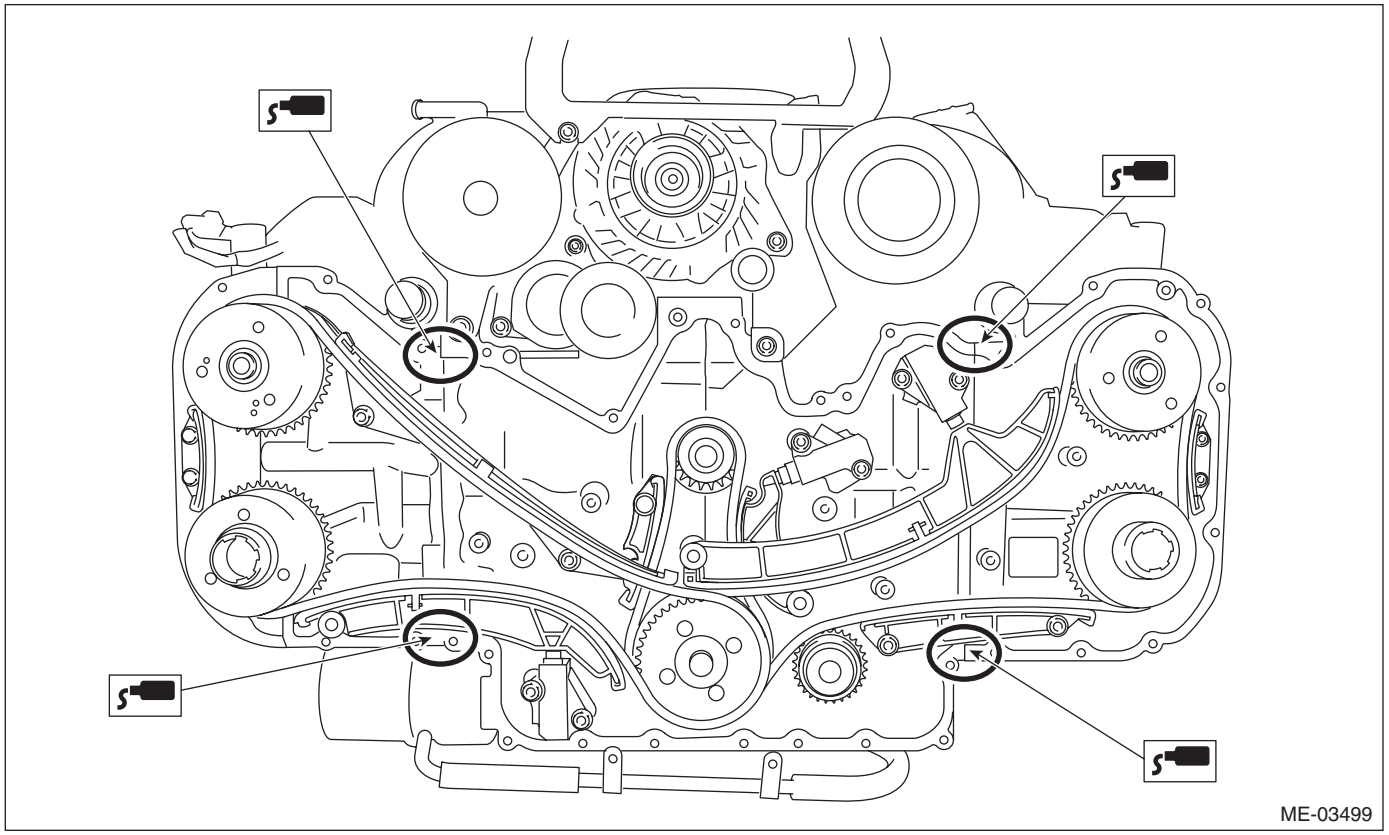

2) Apply liquid gasket to the mating surface of the chain cover.

NOTE:
- Before applying liquid gasket, degrease the old liquid gasket seal surface of the engine and chain cover.
- Install within 5 min. after applying liquid gasket.

Liquid gasket:
THREE BOND 1217G (Part No. K0877Y0100), THREE BOND 1217H or equivalent

Liquid gasket applying diameter:
3.5±0.5 mm (0.138±0.020 in)

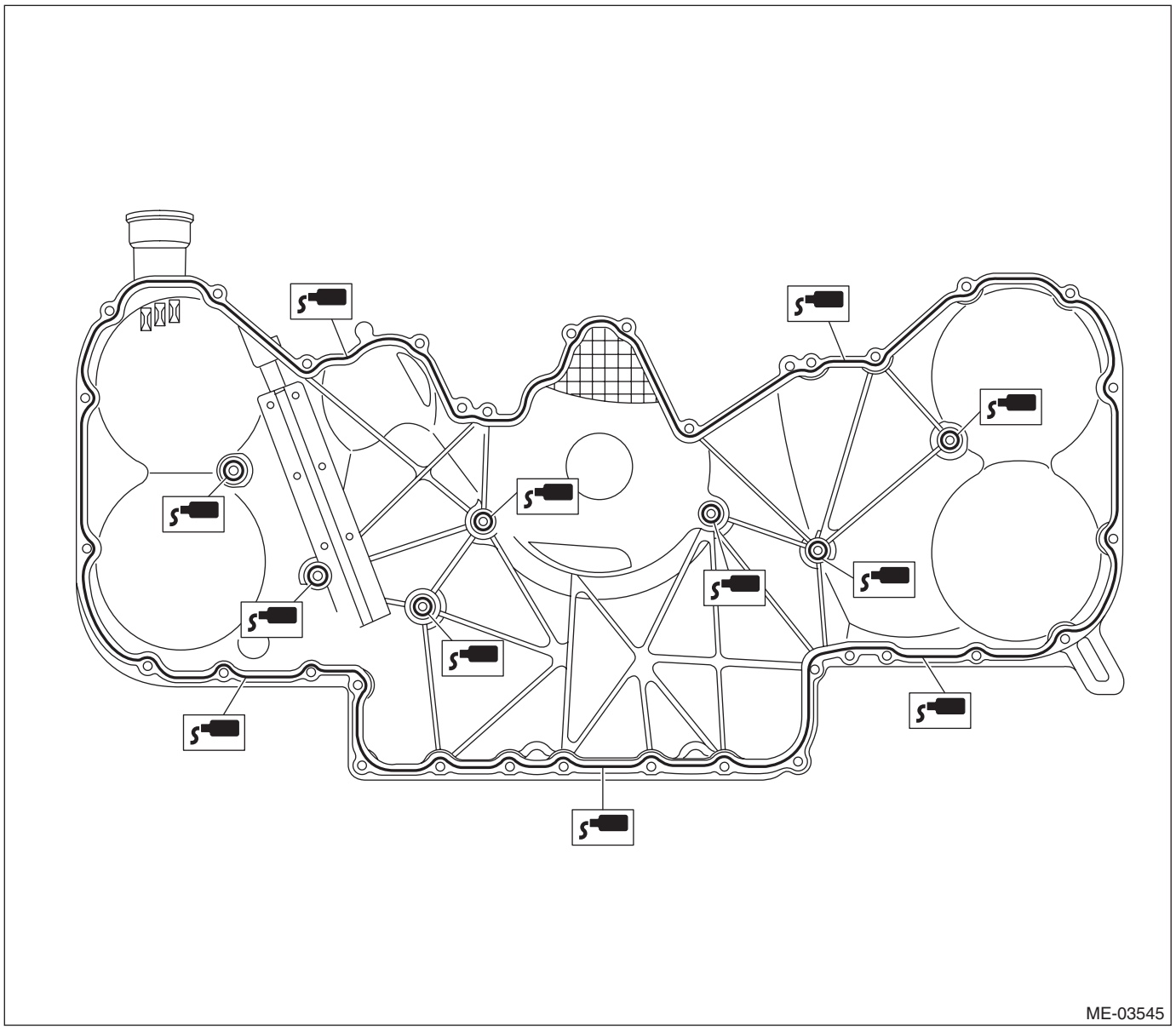

3) Attach the chain cover and temporarily tighten the chain cover installation bolts.

CAUTION:
Do not install the chain cover installation bolts in wrong place.

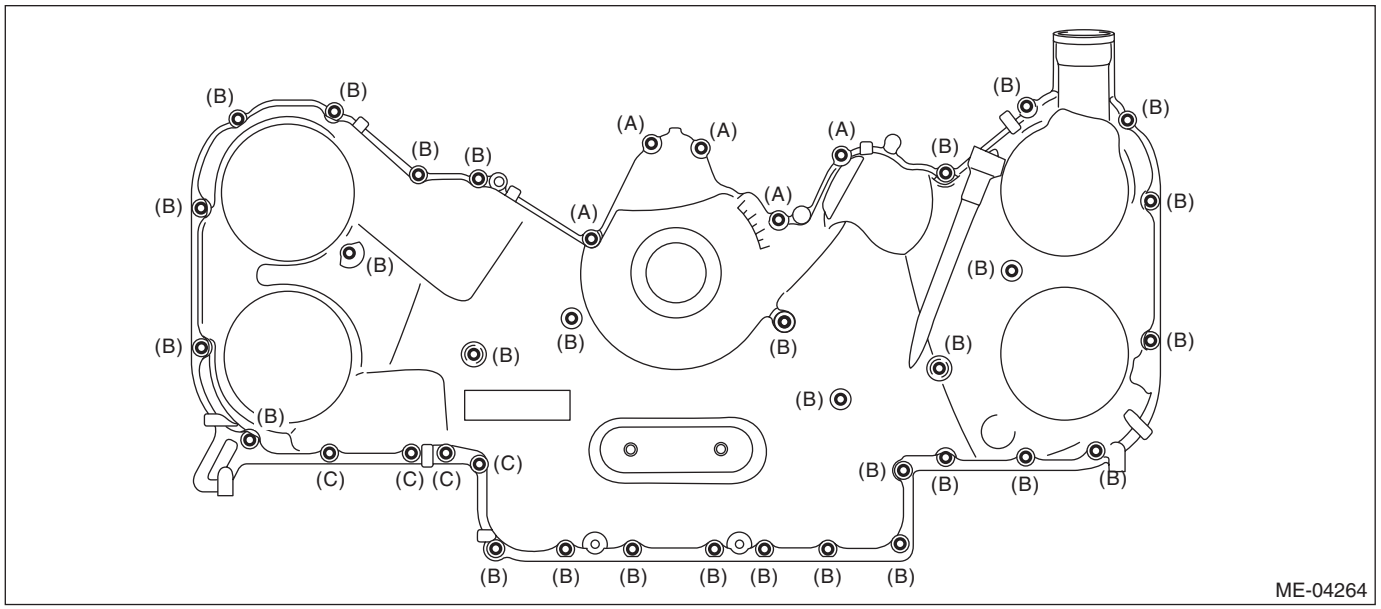

(A) M6 × 21 (B) M6 × 30 (C) M6 × 53

4) Tighten the chain cover installing bolts in the numerical order as shown in the figure.

Tightening torque:
10 N·m (1.0 kgf-m, 7.4 ft-lb)

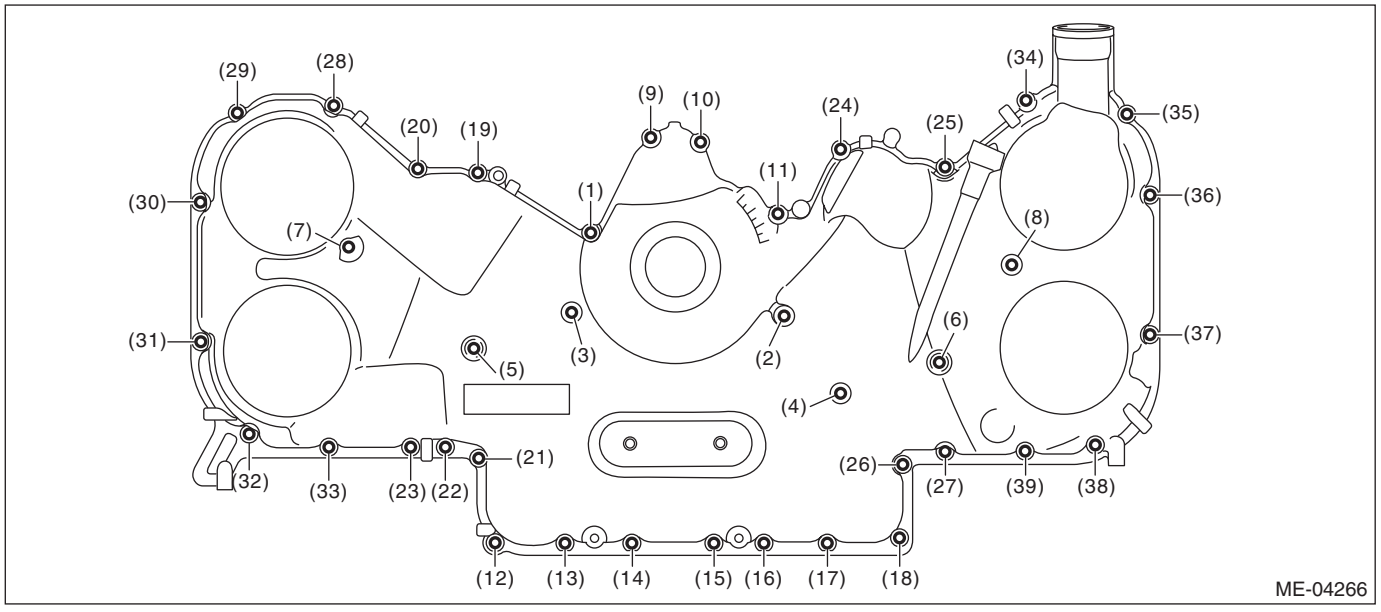

5) Install the oil cooler pipe to the chain cover.

Tightening torque:
6.4 N·m (0.7 kgf-m, 4.7 ft-lb)

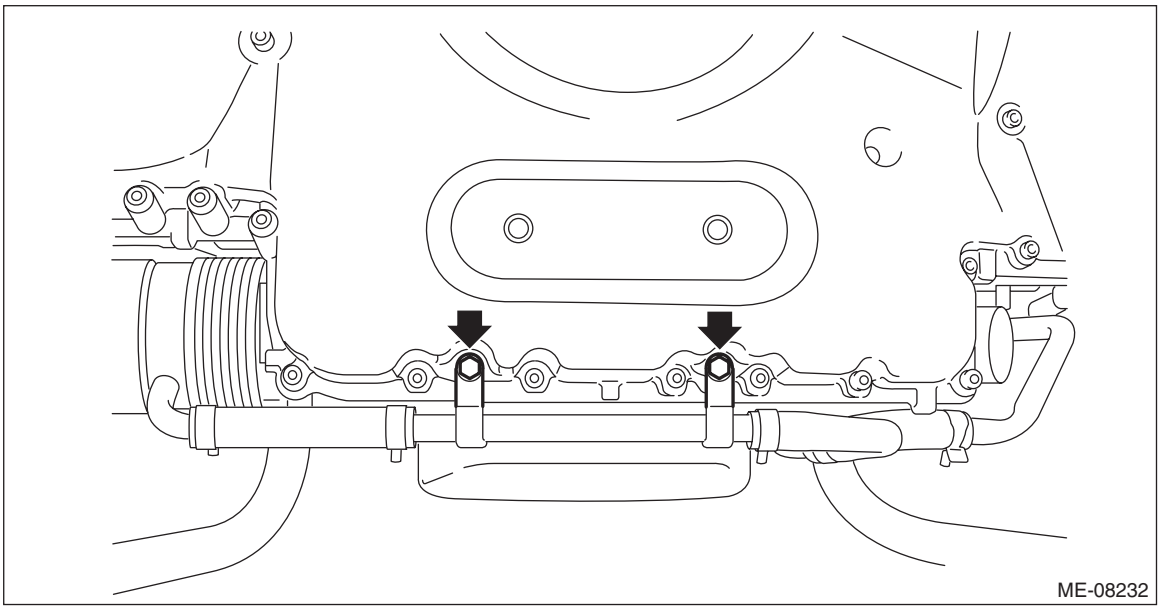

6) Install the crank pulley. <Ref. to ME(H6DO)-80, INSTALLATION, Crank Pulley.>
7) Install the V-belts. <Ref. to ME(H6DO)-75, INSTALLATION, V-belt.>
8) Fill engine oil. <Ref. to LU(H6DO)-12, REPLACEMENT, Engine Oil.>
9) When working on the vehicle

NOTE:
When working on the vehicle, perform the following steps also.
(1) Install the engine mount. <Ref. to ME(H6DO)-67, INSTALLATION, Engine Mounting.>
(2) Install the front exhaust pipe. <Ref. to EX(H4DO)-7, INSTALLATION, Front Exhaust Pipe.>
(3) Install the radiator. <Ref. to CO(H4DO)-45, INSTALLATION, Radiator.>

C: INSPECTION

1) Check the chain cover surface for scratches or dents.
2) Check for oil leakage on the chain cover mating surface and installation part of crank pulley.
If there is an oil leak from the oil seal, perform replacement with a new oil seal.
ST 499585700 OIL SEAL GUIDE

Oil seal press-fit position:
–1 mm (–0.039 in) from the chain cover end face

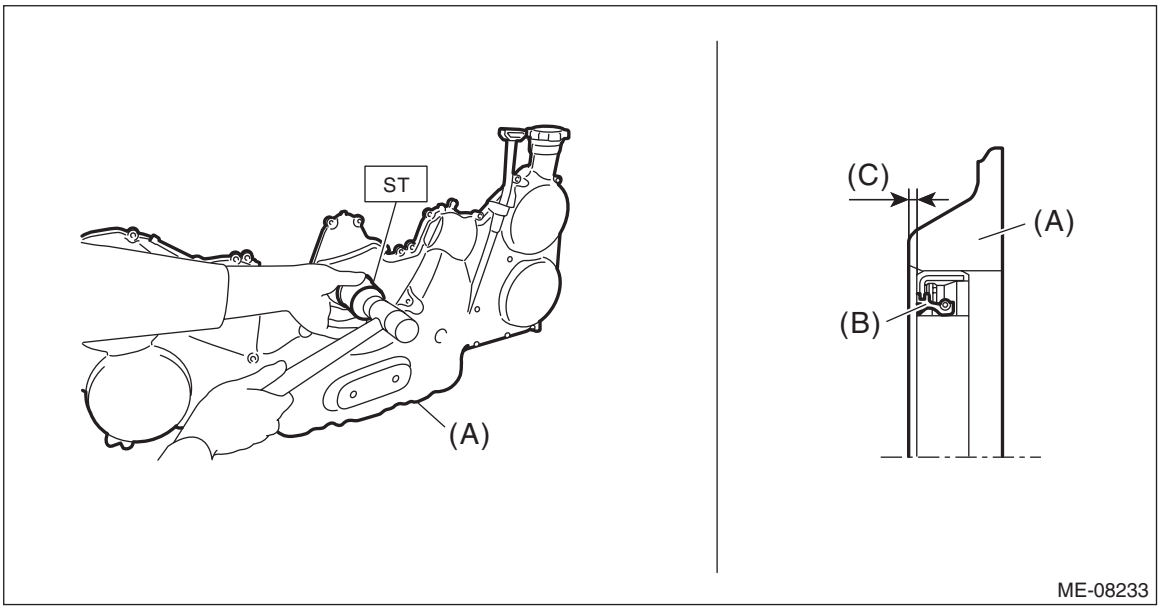

(A) Chain cover
(B) Oil seal
(C) Oil seal press-fit position (chain cover edge –1 mm (–0.039 in) position)

15.Timing Chain Assembly

A: LOCATION

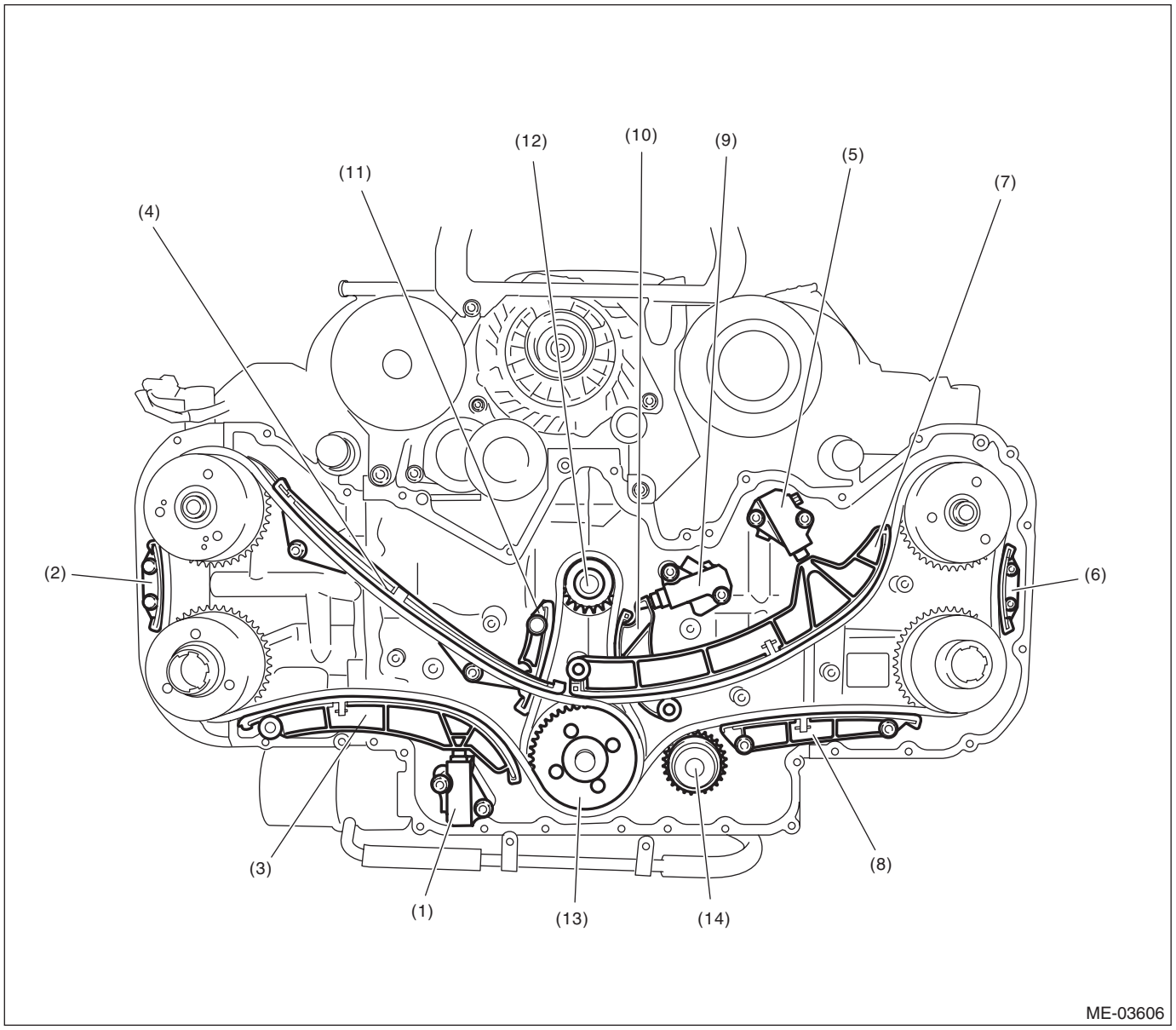

(1) Chain tensioner (RH)
(2) Chain guide (between cams, RH)
(3) Chain tensioner lever (RH)
(4) Chain guide (RH)
(5) Chain tensioner (LH)
(6) Chain guide (between cams, LH)
(7) Chain tensioner lever (LH)
(8) Chain guide (LH)
(9) Chain tensioner (main)
(10) Chain tensioner lever (main)
(11) Chain guide (main)
(12) Crank sprocket
(13) Idler sprocket
(14) Water pump sprocket

B: REMOVAL

NOTE:
To avoid mixing the timing chain component parts, separate each part after their removal.
1) Drain the engine oil. <Ref. to LU(H6DO)-12, REPLACEMENT, Engine Oil.>
2) Remove the radiator. <Ref. to CO(H6DO)-20, REMOVAL, Radiator.>
3) Remove the V-belts. <Ref. to ME(H6DO)-74, REMOVAL, V-belt.>
4) Remove the crank pulley. <Ref. to ME(H6DO)-79, REMOVAL, Crank Pulley.>
5) Remove the chain cover. <Ref. to ME(H6DO)-81, REMOVAL, Chain Cover.>
6) Remove the chain tensioner (RH).

NOTE:
When removing chain tensioner (RH), hold the plunger by hand so that it does not come flying out.

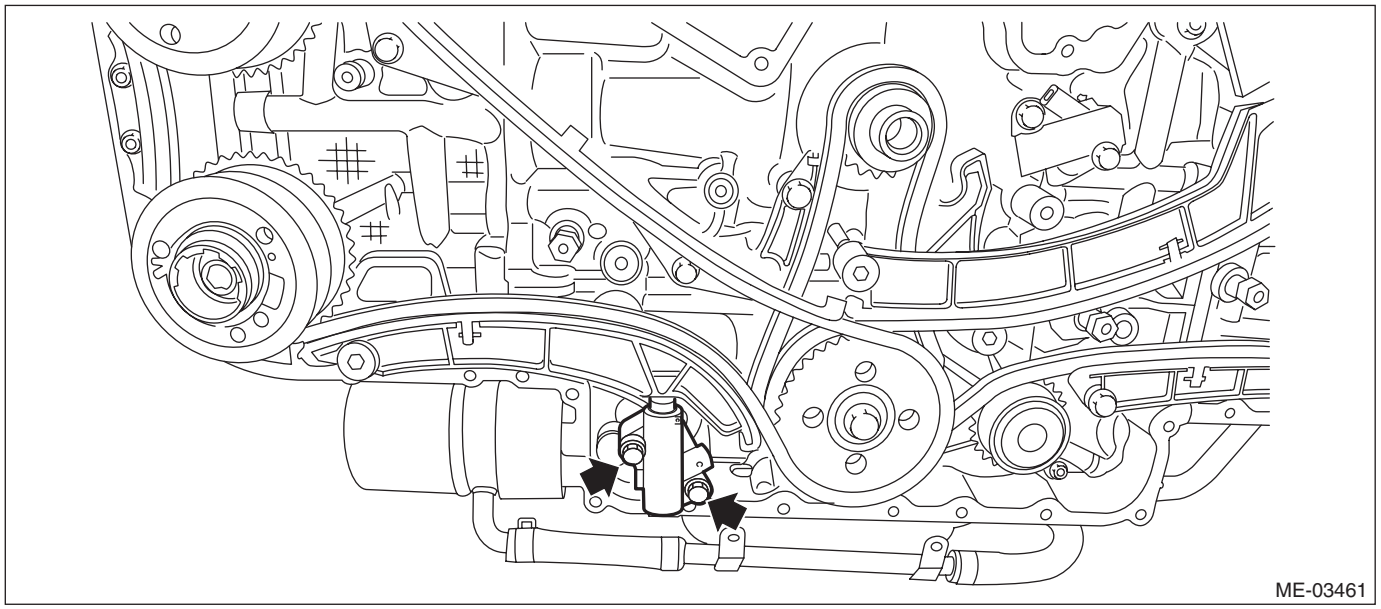
ME-03461

7) Remove the chain guide (RH: between cams).

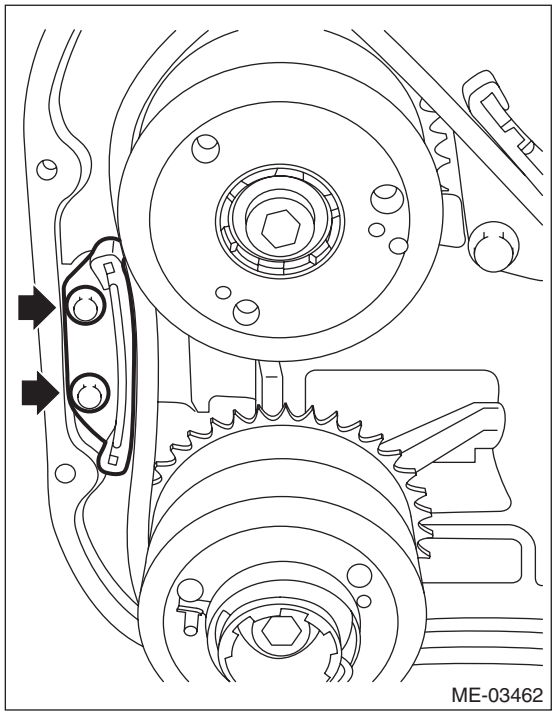
ME-03462

8) Remove the chain tensioner lever (RH).

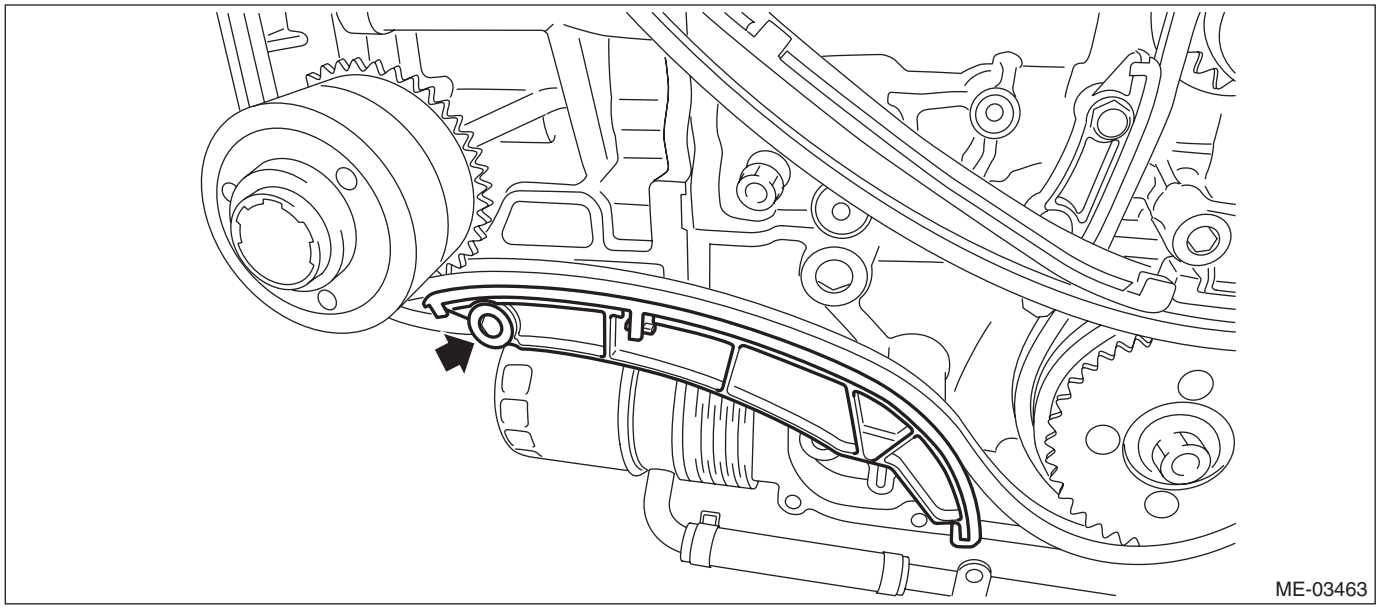

9) Remove the chain guide (RH).

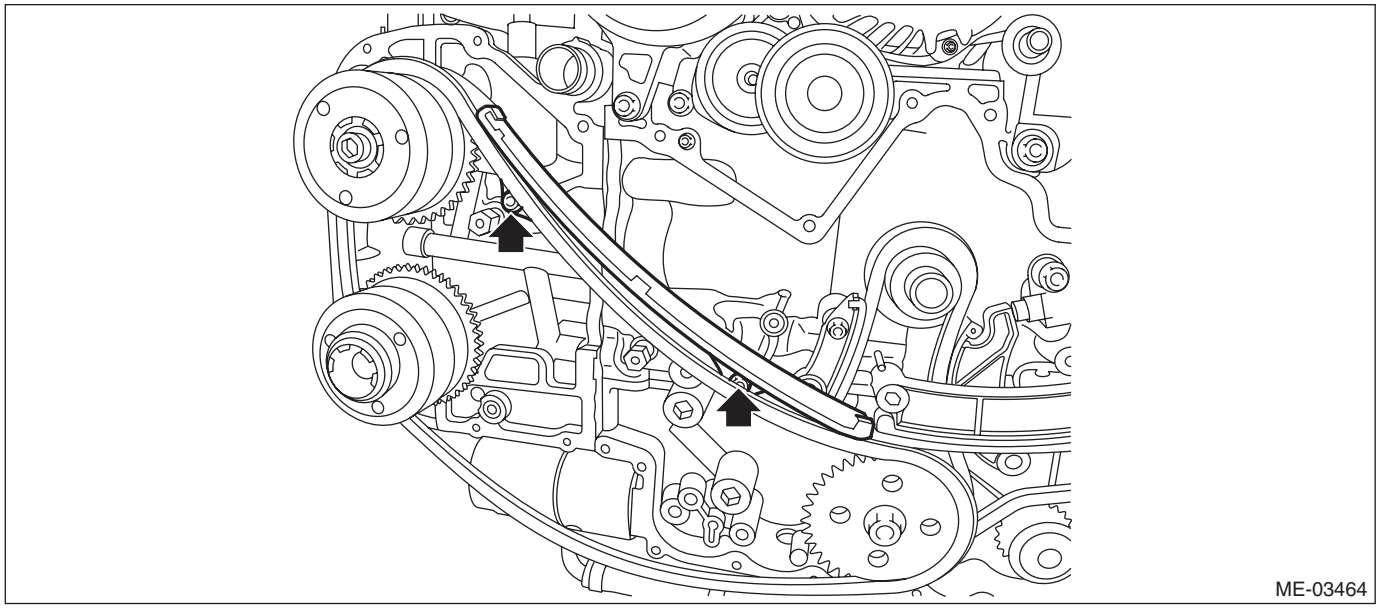

10) Remove the timing chain (RH).
11) Remove the chain tensioner (LH).

NOTE:
When removing chain tensioner (LH), hold the plunger by hand so that it does not come flying out.

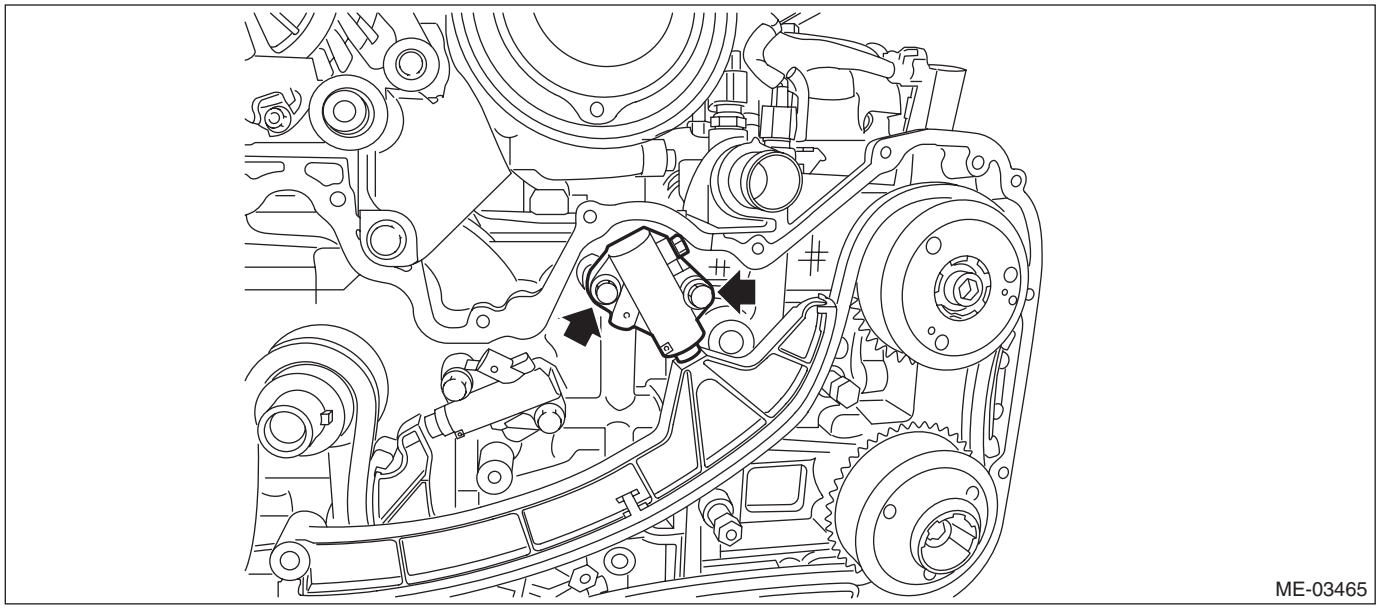

12) Remove the chain guide (LH: between cams).

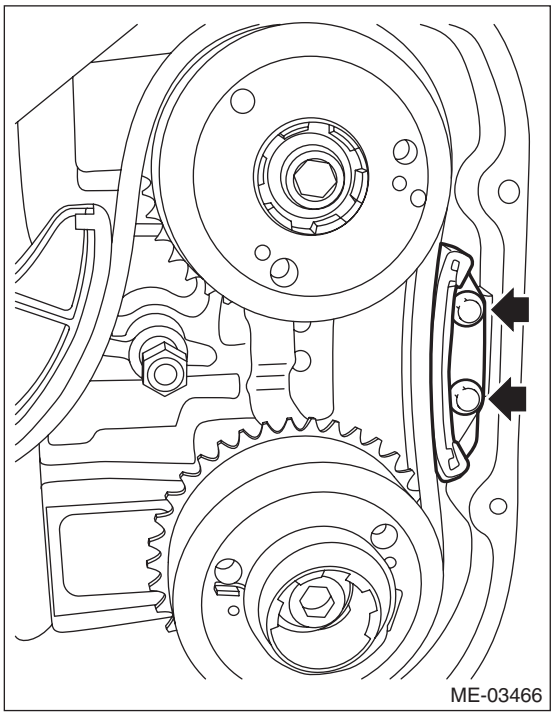

13) Remove the chain tensioner lever (LH).

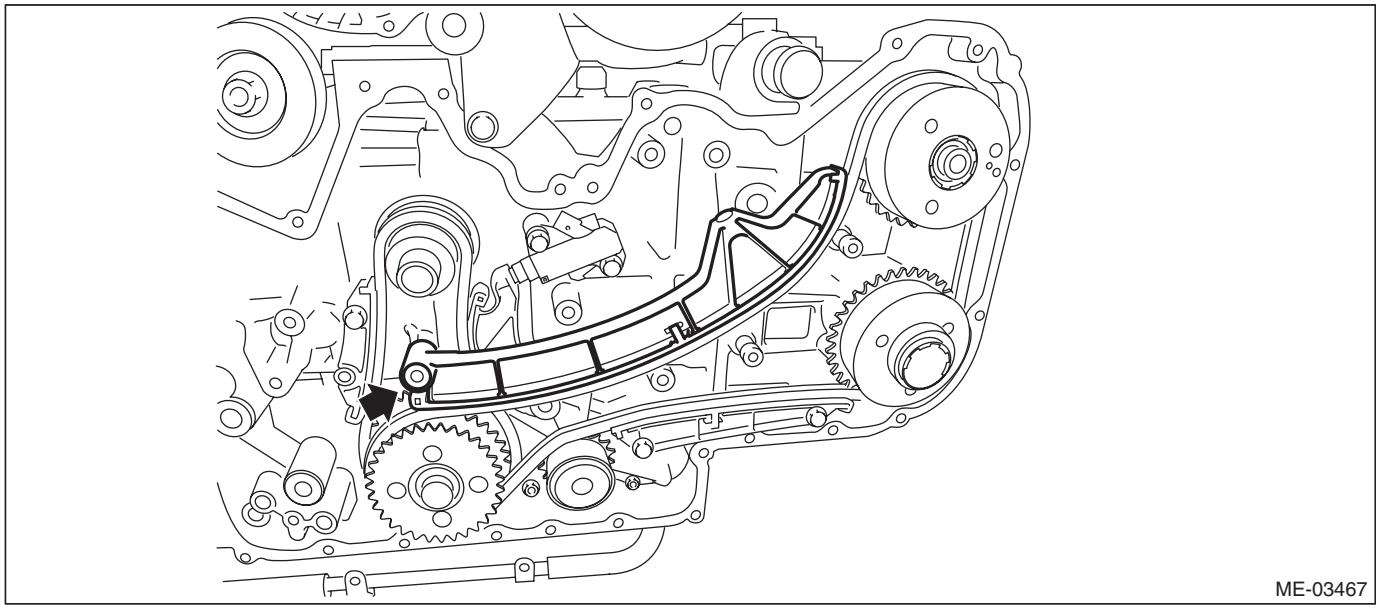

14) Remove the chain guide (LH).

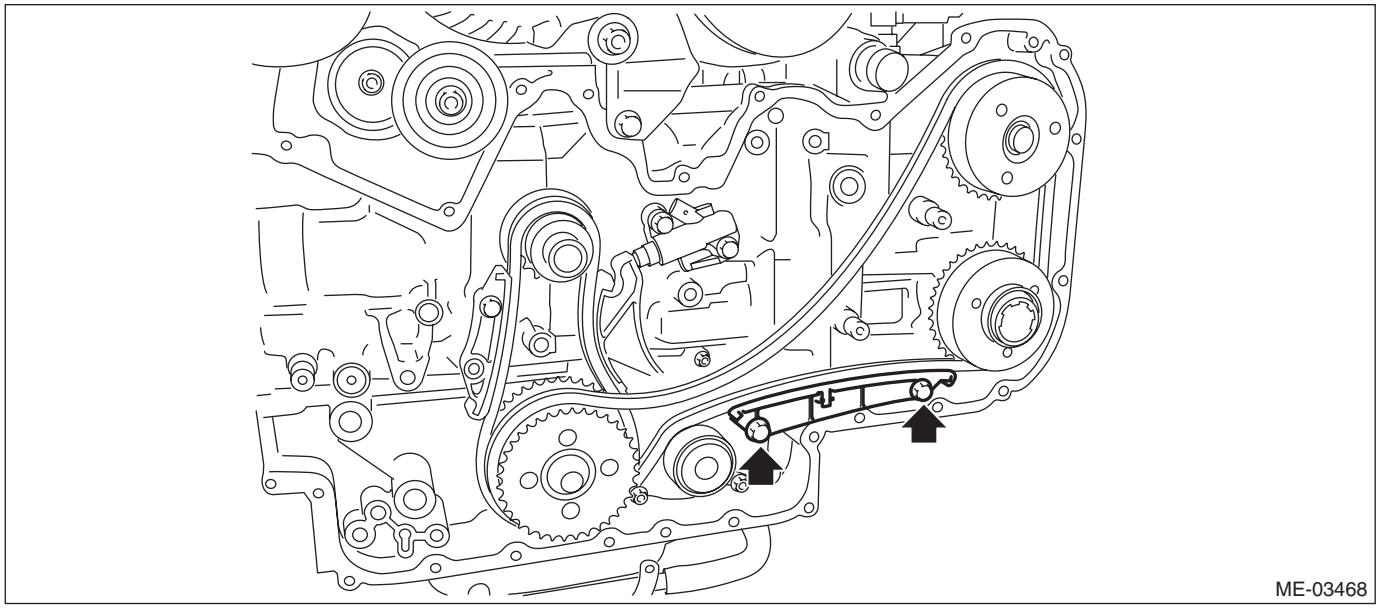

15) Remove the timing chain (LH).
16) Remove the chain tensioner (main).

NOTE:
When removing chain tensioner (main), hold the plunger by hand so that it does not come flying out.

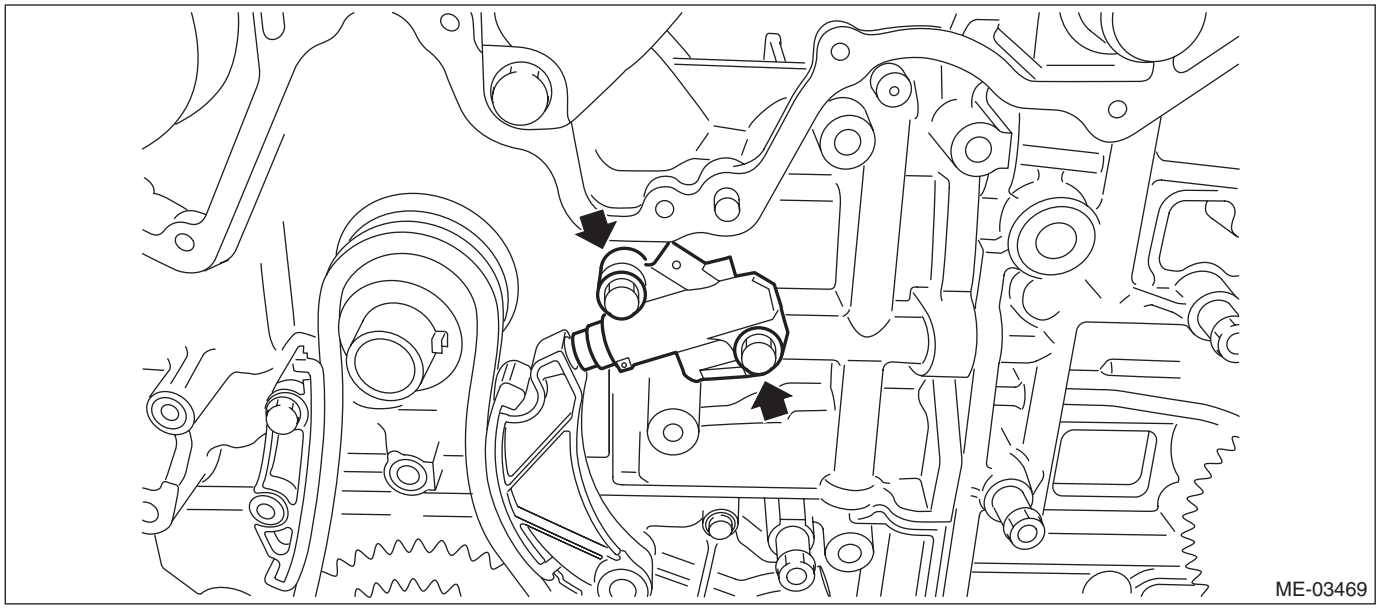

17) Remove the chain guide (main).

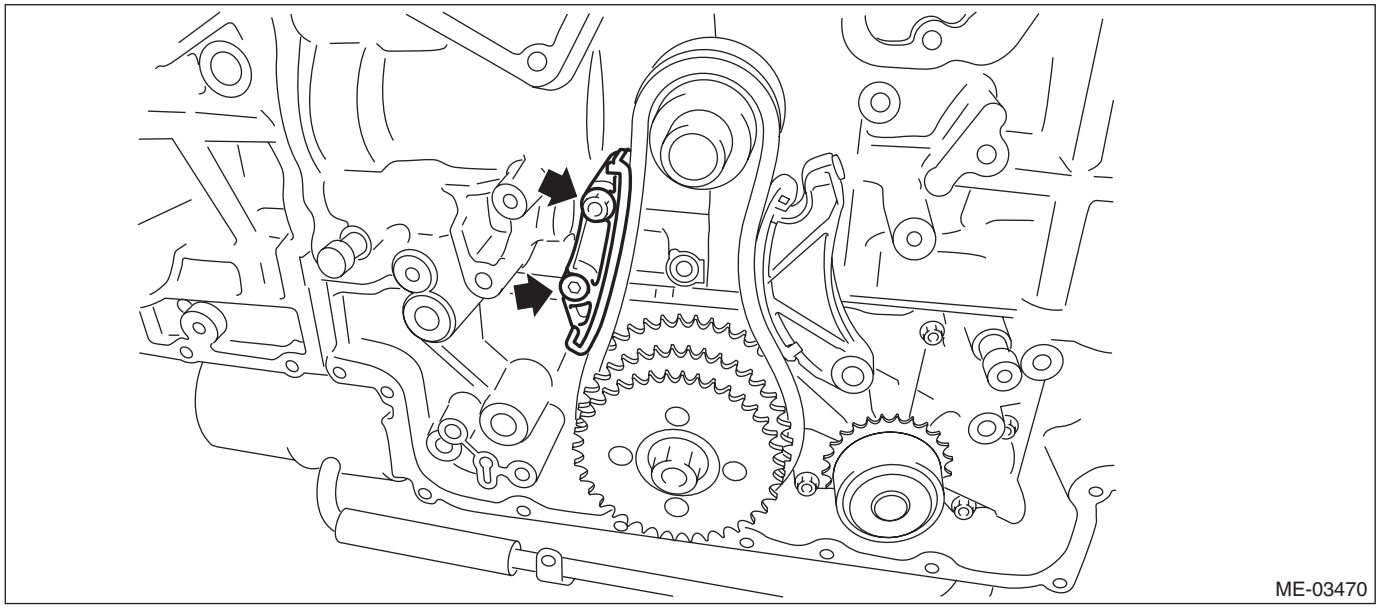

18) Remove the chain tensioner lever (main).

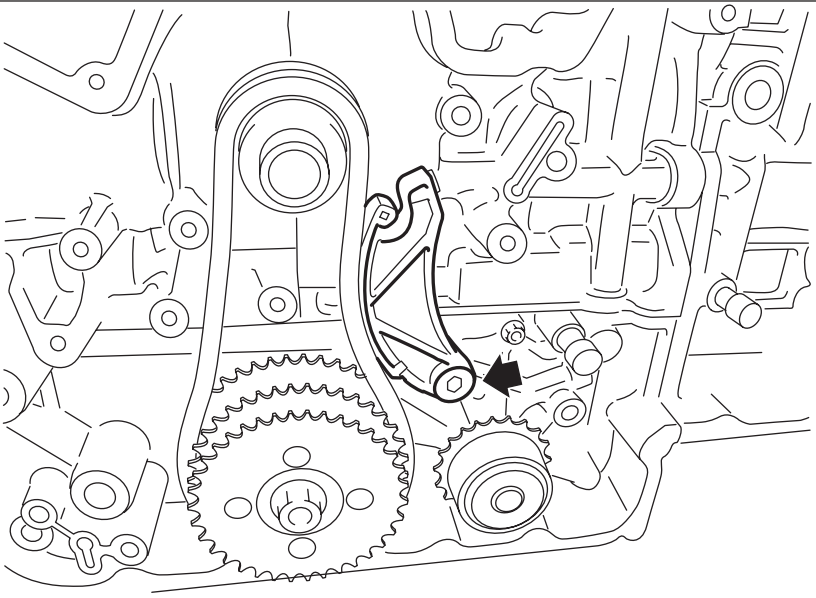

19) Use the ST to lock the idler sprocket, and loosen the idler sprocket bolt.
ST1 18355AA000 PULLEY WRENCH
ST2 18334AA000 PULLEY WRENCH PIN SET
20) Remove the idler sprocket bolts, and remove the idler sprocket and timing chain (main).

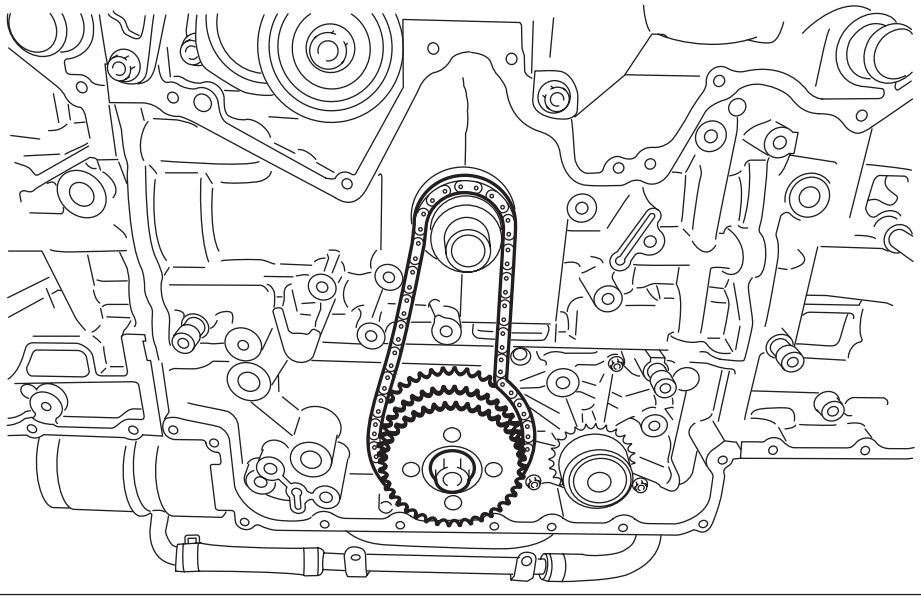

C: INSTALLATION

NOTE:
- Be careful that the foreign matter is not into or onto the assembled component during installation.
- Apply engine oil to all component parts of the timing chain.

1) Prepare to attach the chain tensioner.
   (1) Insert the screw, spring pin and plunger into the tensioner body.
   (2) As shown in the figure, turn the rubber mat counterclockwise while holding the chain tensioner from above by hand.

NOTE:
Degrease the contact surface between the plunger head and rubber mat, so that they do not slip.

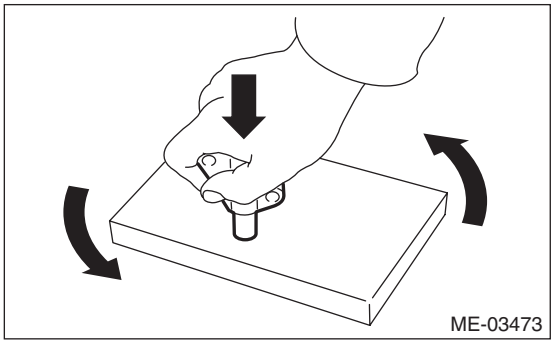
ME-03473

   (3) Insert the stopper pin into the hole on the chain tensioner body.

2) Align the position of oil pump shaft knock pin to six o'clock position as shown in the figure.

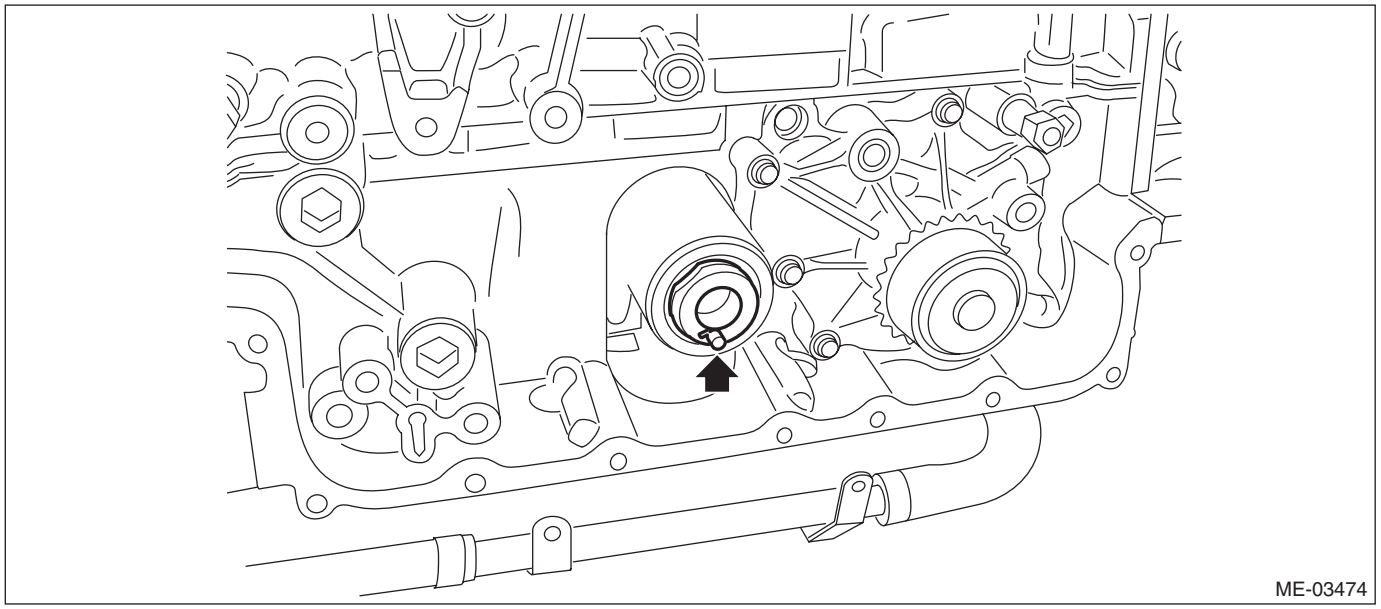
ME-03474

3) Using ST, align the “Top mark” on crank sprocket to nine o’clock position as shown in the figure.
ST 18252AA000 CRANKSHAFT SOCKET

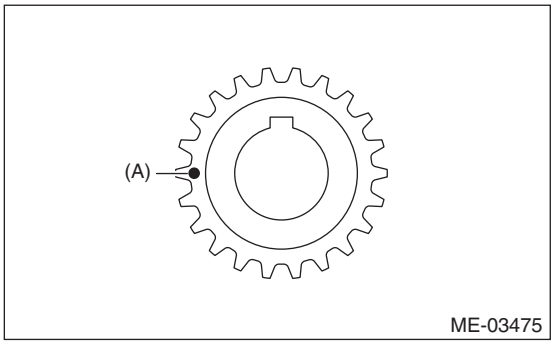

(A) Top mark

4) Align the intake cam sprocket to twelve o’clock position as shown in the figure.
ST 499977500 CAM SPROCKET WRENCH

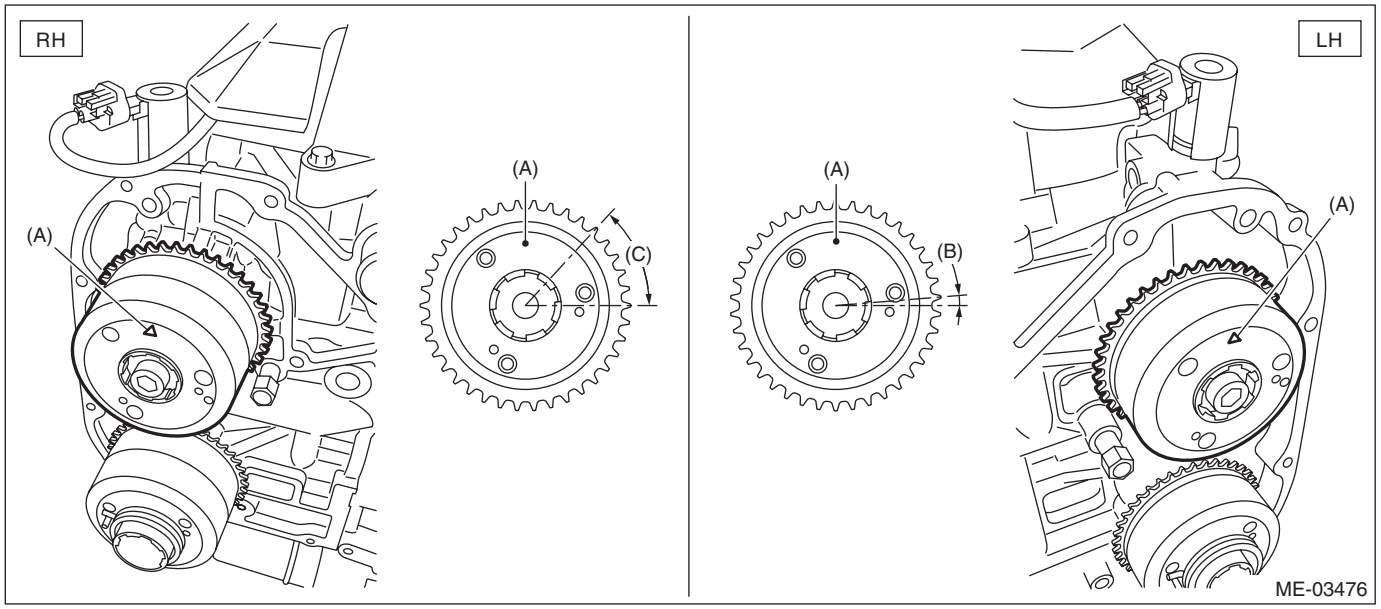

(A) Align the marking (top mark) to twelve o’clock position.
(B) 6°
(C) 47°

5) Align the exhaust cam sprocket to twelve o'clock position as shown in the figure.
ST 499977500 CAM SPROCKET WRENCH

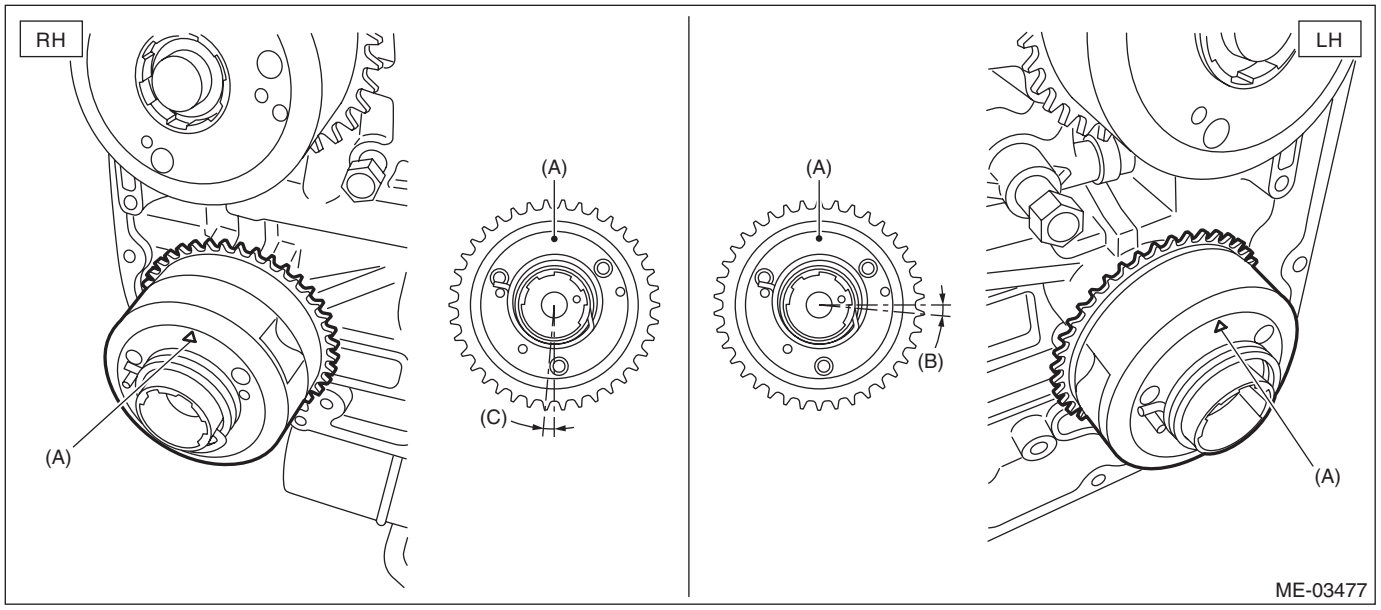

(A) Align the marking (top mark) to twelve o'clock position.
(B) 5.5°
(C) 3.5°

6) Using ST, align the "Top mark" on crank sprocket to twelve o'clock position as shown in the figure.

NOTE:
- The #1 piston is positioned at TDC.
- Do not rotate the crankshaft and cam sprocket before completing timing chain installation.
- At this time, crank sprocket key is at three o'clock position.

ST 18252AA000 CRANKSHAFT SOCKET

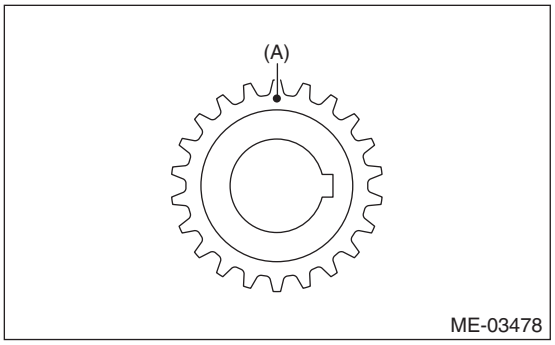

(A) Top mark

7) Install the chain guide (main).

Tightening torque:
16 N·m (1.6 kgf-m, 11.8 ft-lb)

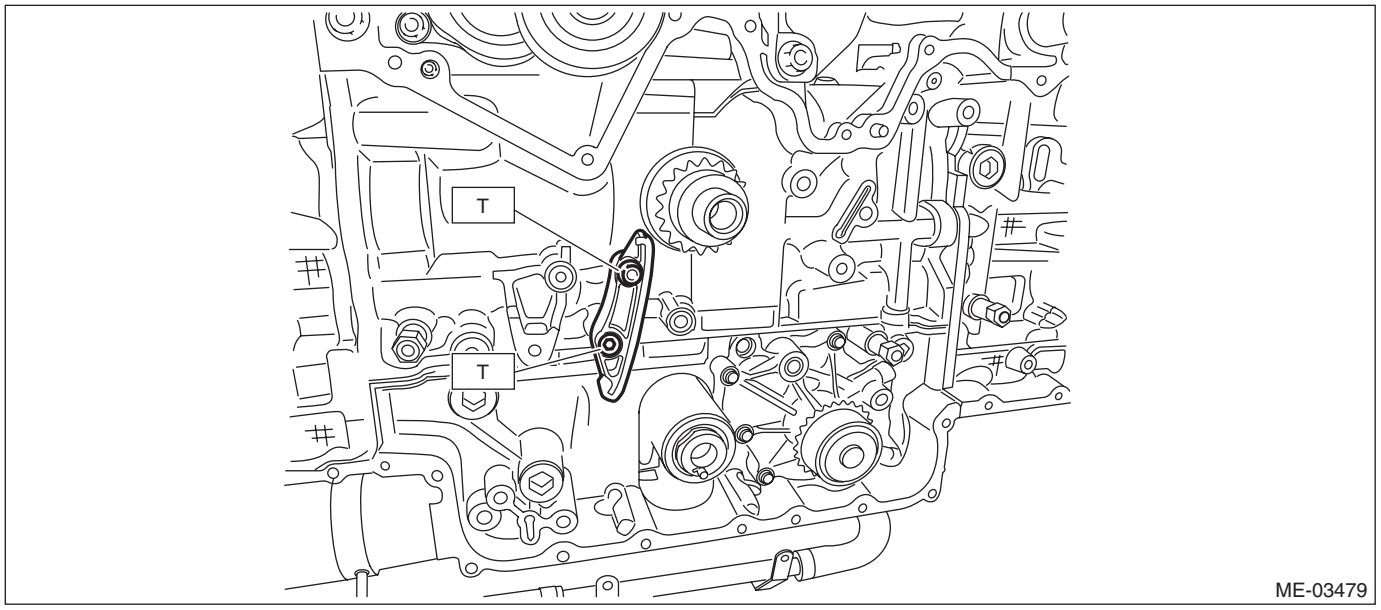

8) Install the idler sprocket and timing chain (main).
(1) Match the timing chain mark (gold) to the timing mark position of the idler sprocket.
(2) Align the idler sprocket timing mark at six o'clock position, and install the idler sprocket and timing chain.
(3) Make sure that the timing chain mark (gold) is located at twelve o'clock position on the crank sprocket.
(4) Use the ST to lock the idler sprocket, and install the idler sprocket bolt.

ST1 18355AA000 PULLEY WRENCH
ST2 18334AA000 PULLEY WRENCH PIN SET

Tightening torque:
120 N·m (12.2 kgf-m, 88.5 ft-lb)

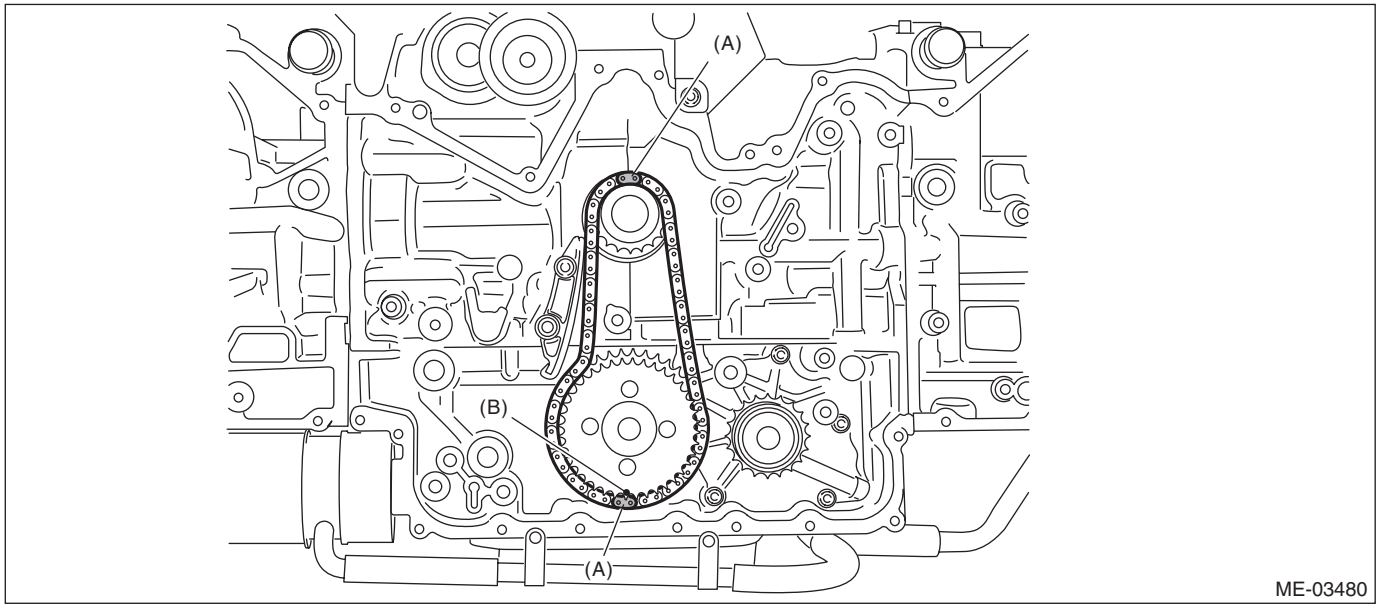

(A) Gold
(B) Timing mark

9) Install the chain tensioner lever (main).

Tightening torque:
16 N·m (1.6 kgf-m, 11.8 ft-lb)

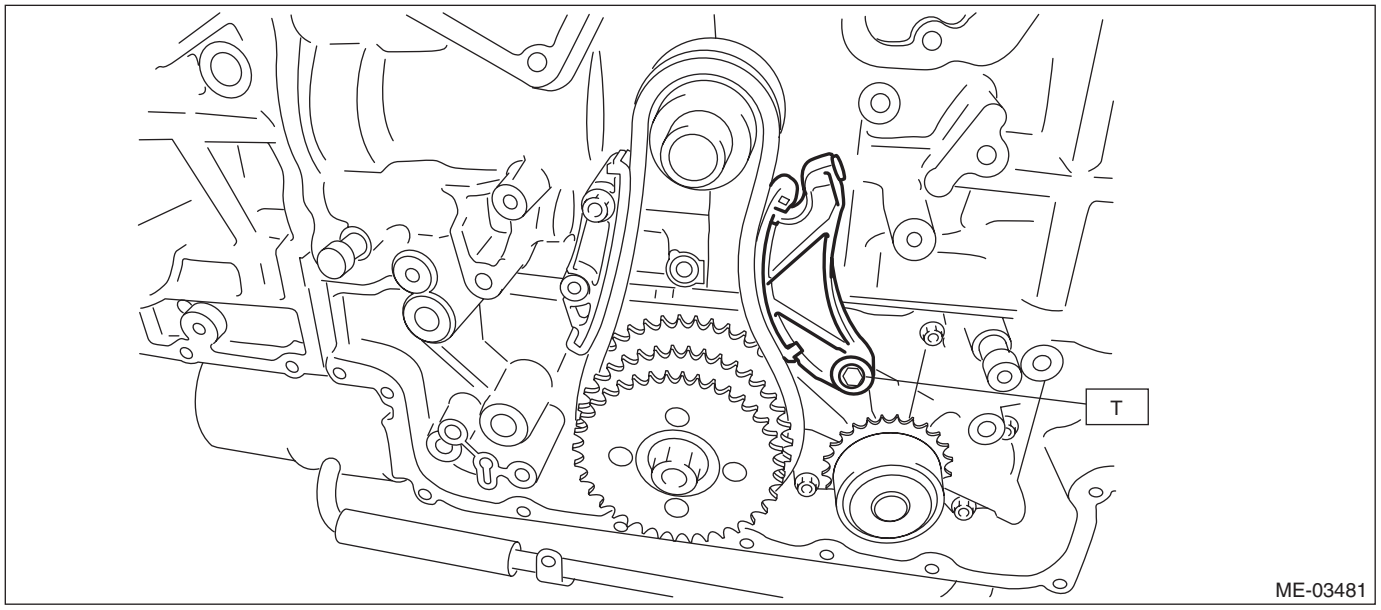

10) Install the chain tensioner (main) and pull out the stopper pin.

NOTE:
The timing chain (main) line will be complete.

Tightening torque:
16 N·m (1.6 kgf-m, 11.8 ft-lb)

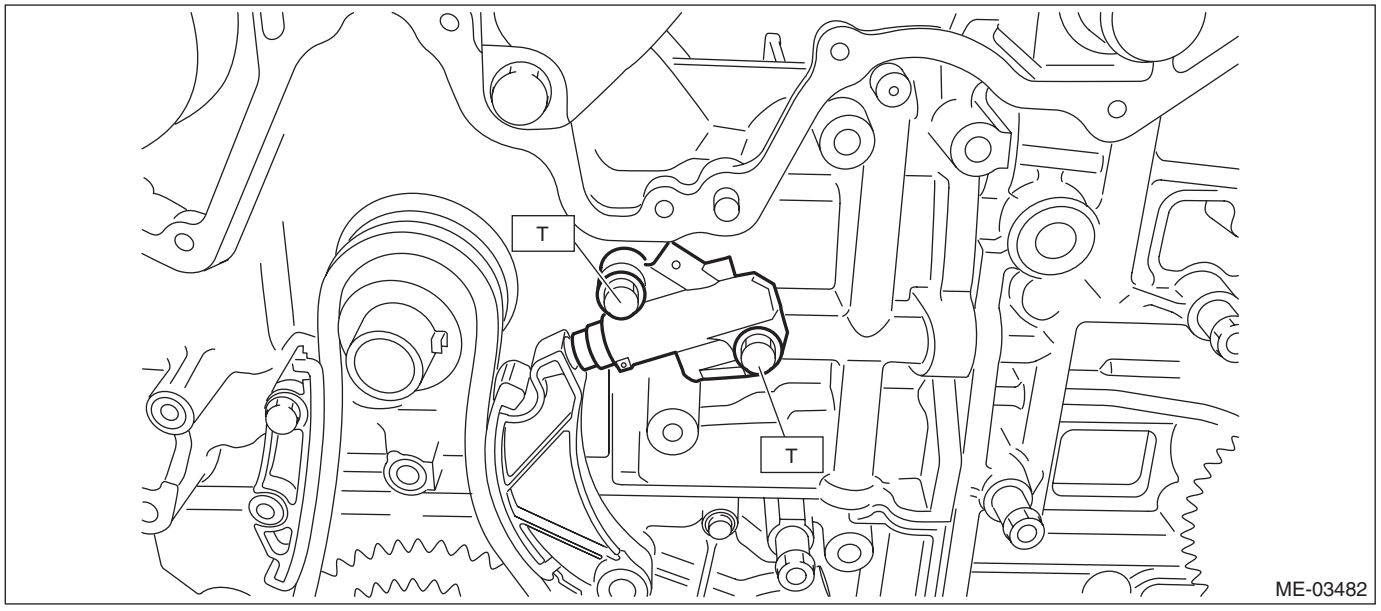

11) Install the chain guide (LH).

Tightening torque:
16 N·m (1.6 kgf-m, 11.8 ft-lb)

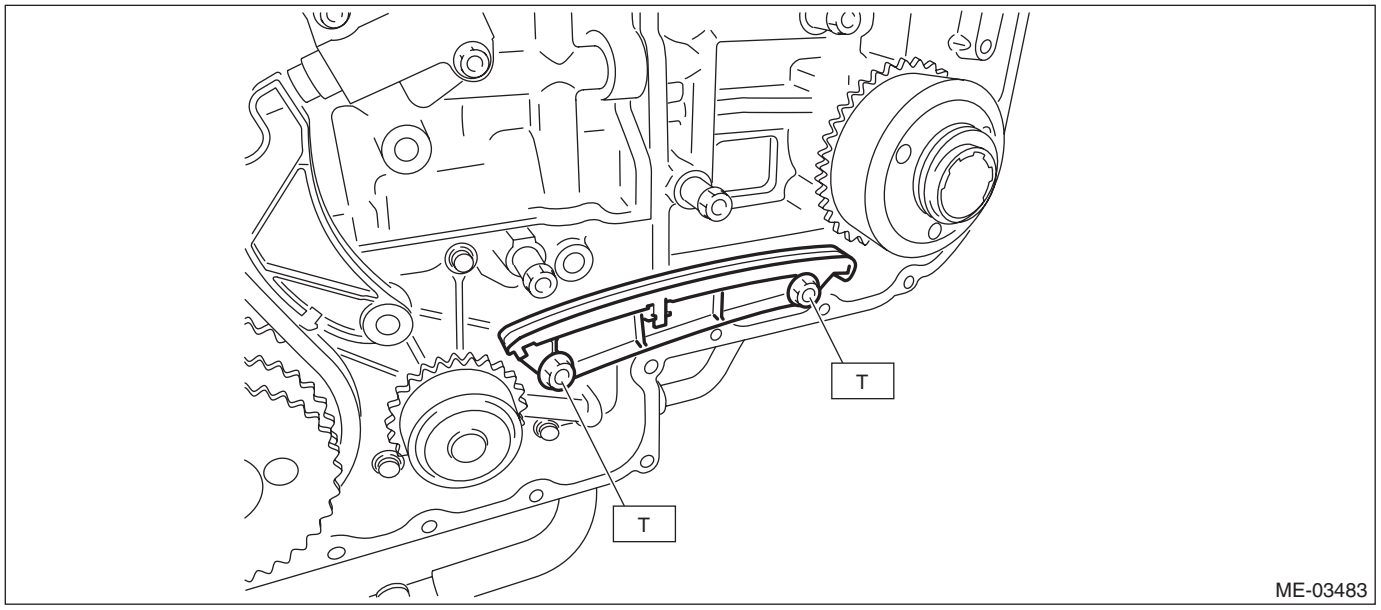

12) Install the chain guide (LH: between cams).

Tightening torque:
6.4 N·m (0.7 kgf-m, 4.7 ft-lb)

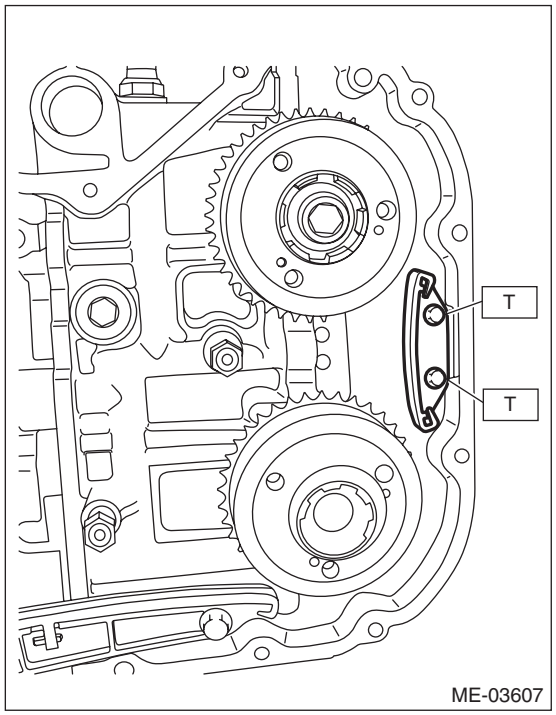

13) Install timing chain (LH).
(1) Match the timing mark of intake cam sprocket (LH) to the timing chain mark (blue).

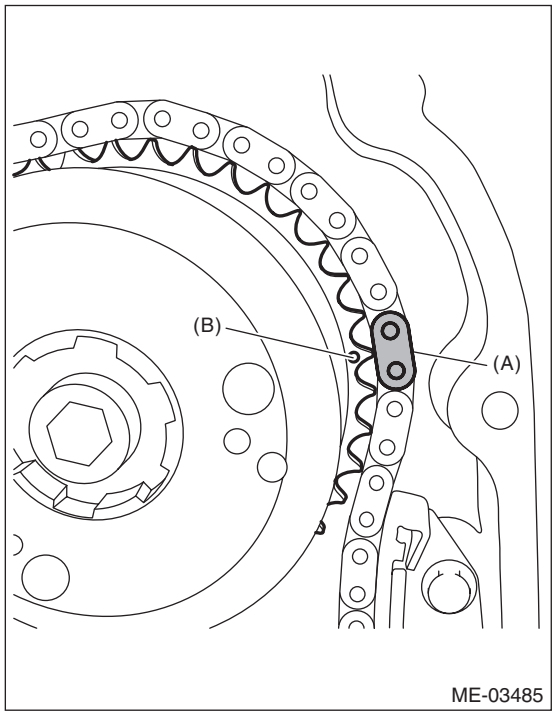

(A) Blue
(B) Timing mark

(2) Match the timing mark of exhaust cam sprocket (LH) to the timing chain mark (blue).

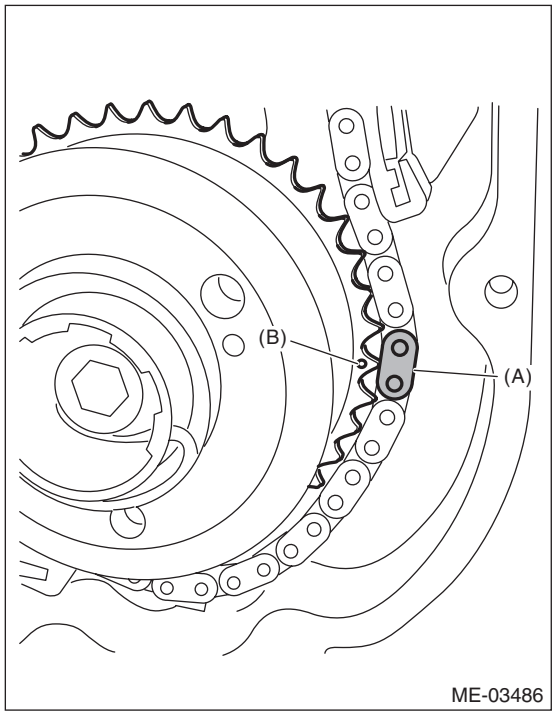

(A) Blue
(B) Timing mark

(3) Install the timing chain to the water pump sprocket.

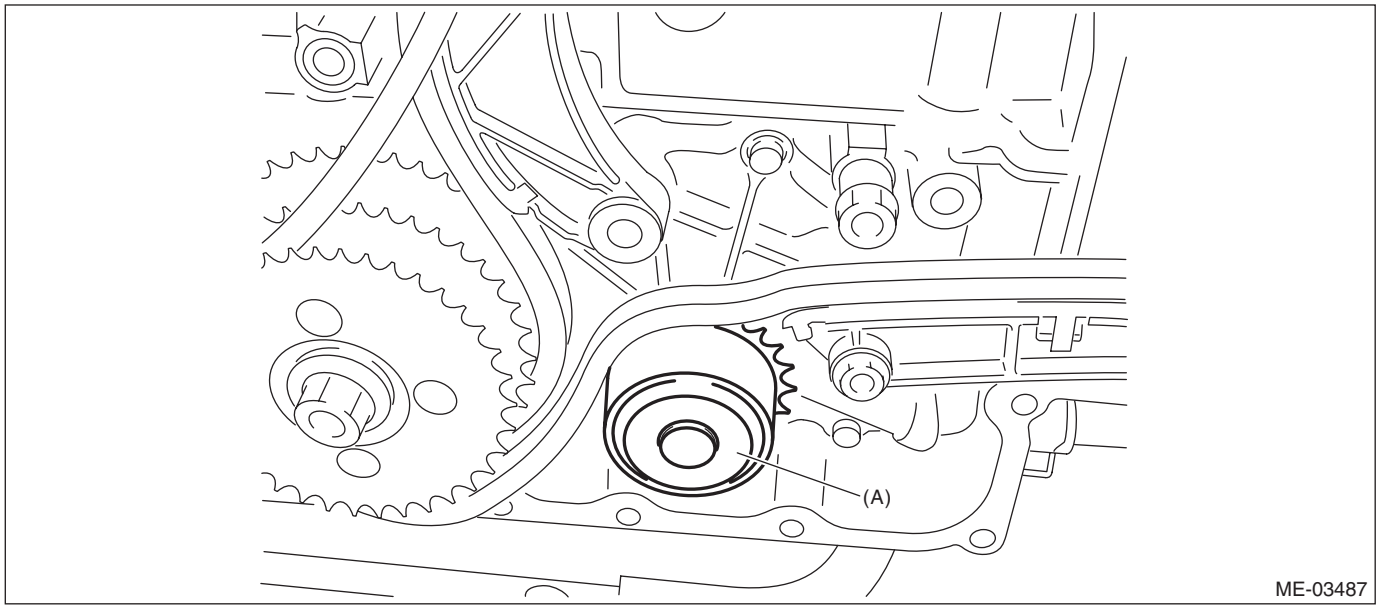

(A) Water pump sprocket

(4) Match the timing mark of idler sprocket to the timing chain mark (gold).

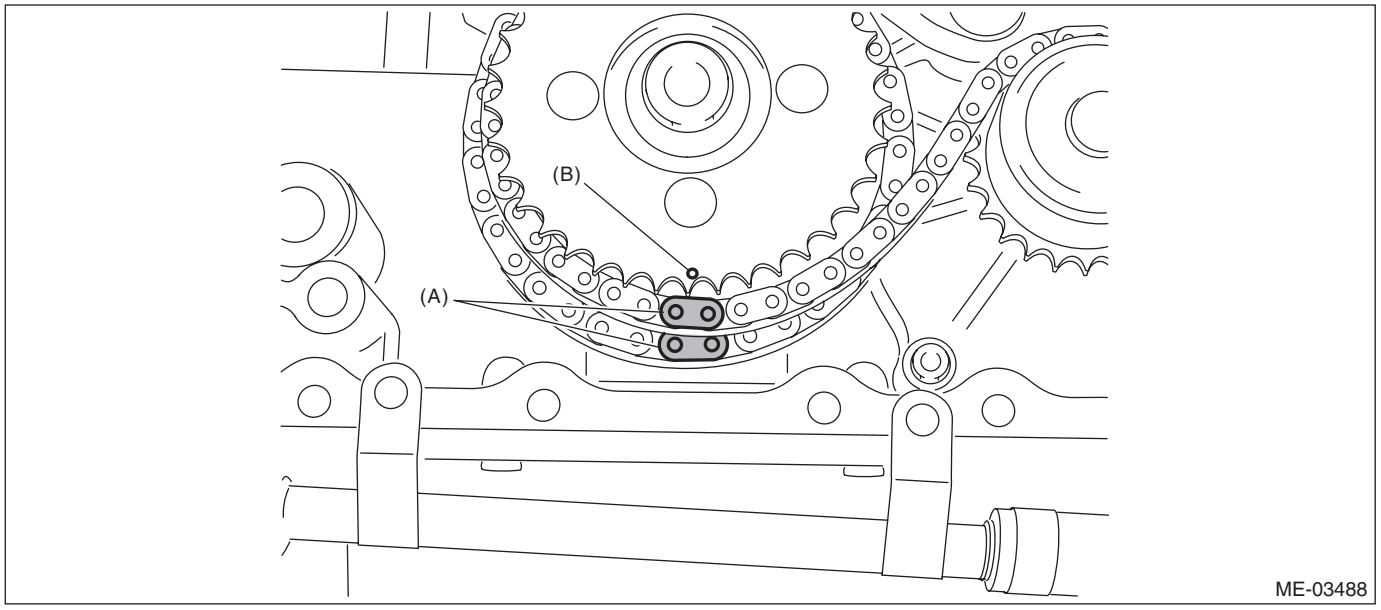

(A) Gold (B) Timing mark

14) Install the chain tensioner lever (LH).

Tightening torque:
16 N·m (1.6 kgf-m, 11.8 ft-lb)

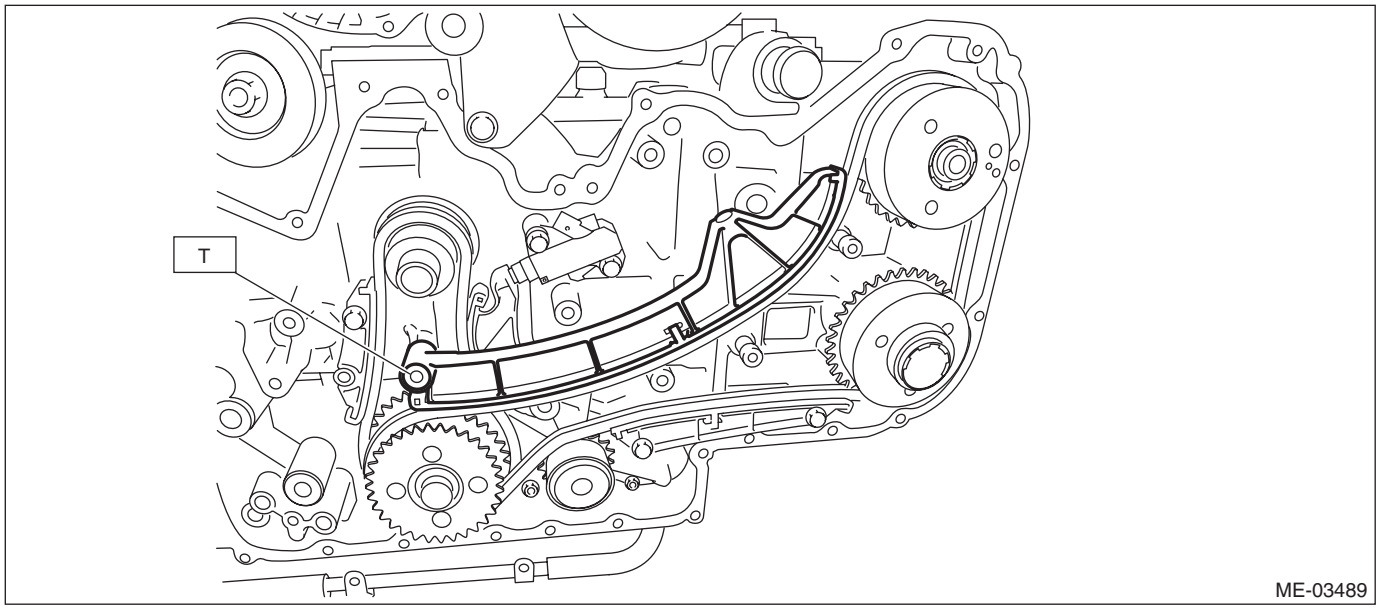

15) Install the chain tensioner (LH) and pull out the stopper pin.

NOTE:
- Make sure that there is a bolt attached on the side face of the chain tensioner housing.
- The timing chain (LH) line will be complete.

Tightening torque:
16 N·m (1.6 kgf-m, 11.8 ft-lb)

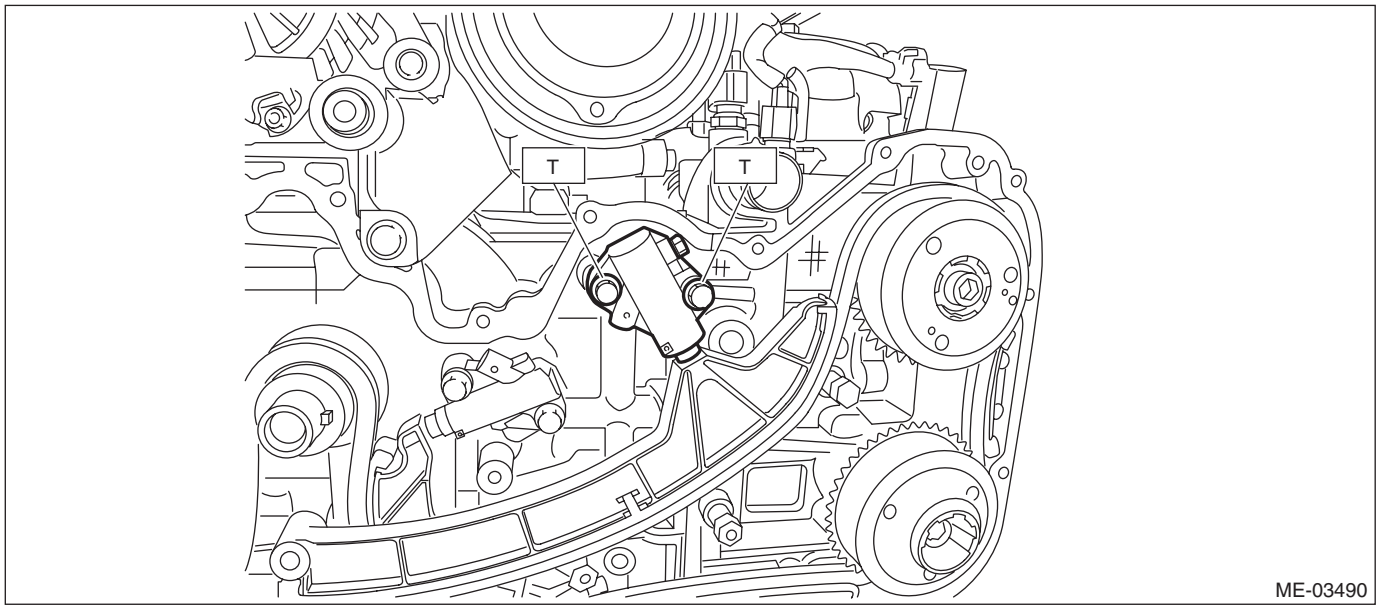

16) Install the chain guide (RH).

Tightening torque:
16 N·m (1.6 kgf-m, 11.8 ft-lb)

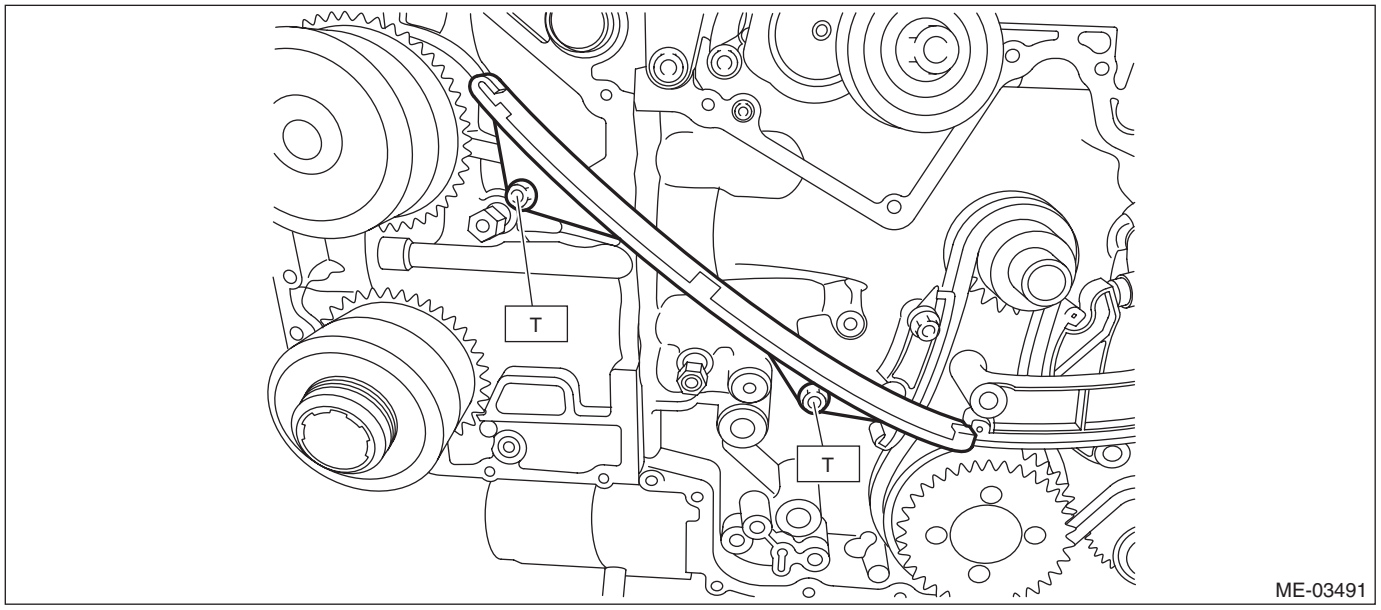

17) Install the chain guide (RH: between cams).

Tightening torque:
6.4 N·m (0.7 kgf-m, 4.7 ft-lb)

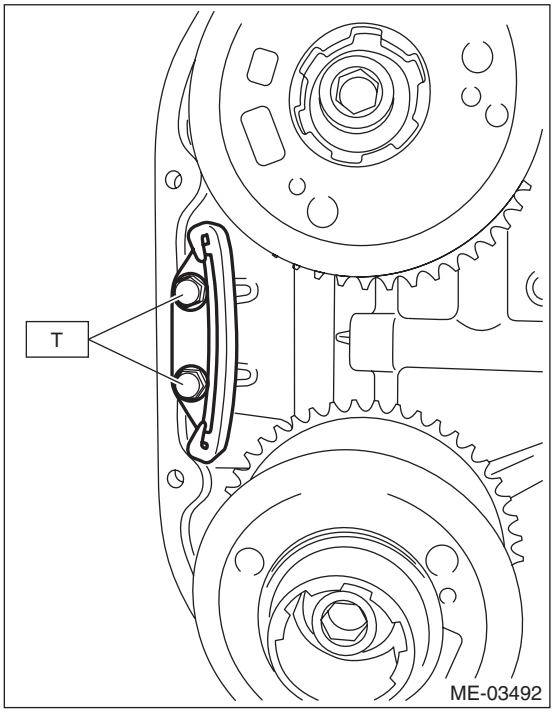

18) Install timing chain (RH).
(1) Match the timing mark of intake cam sprocket (RH) to the timing chain mark (blue).

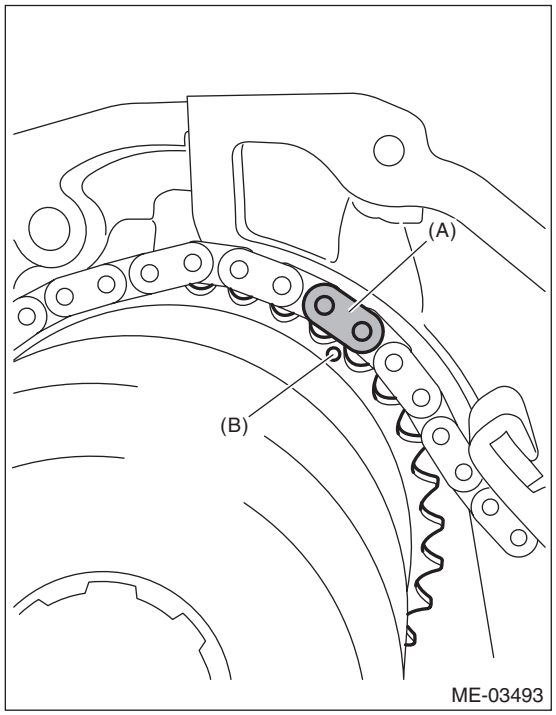

(A) Blue
(B) Timing mark

(2) Match the timing mark of exhaust cam sprocket (RH) to the timing chain mark (blue).

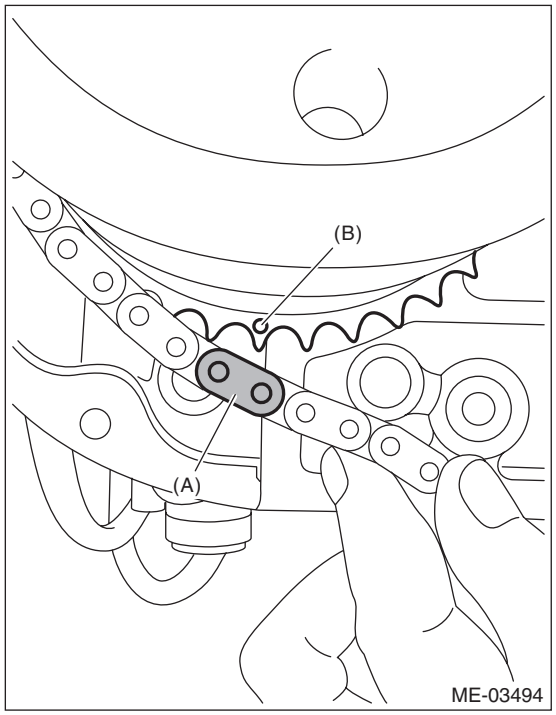

(A) Blue
(B) Timing mark

(3) Match the timing mark of idler sprocket to the timing chain mark (gold).

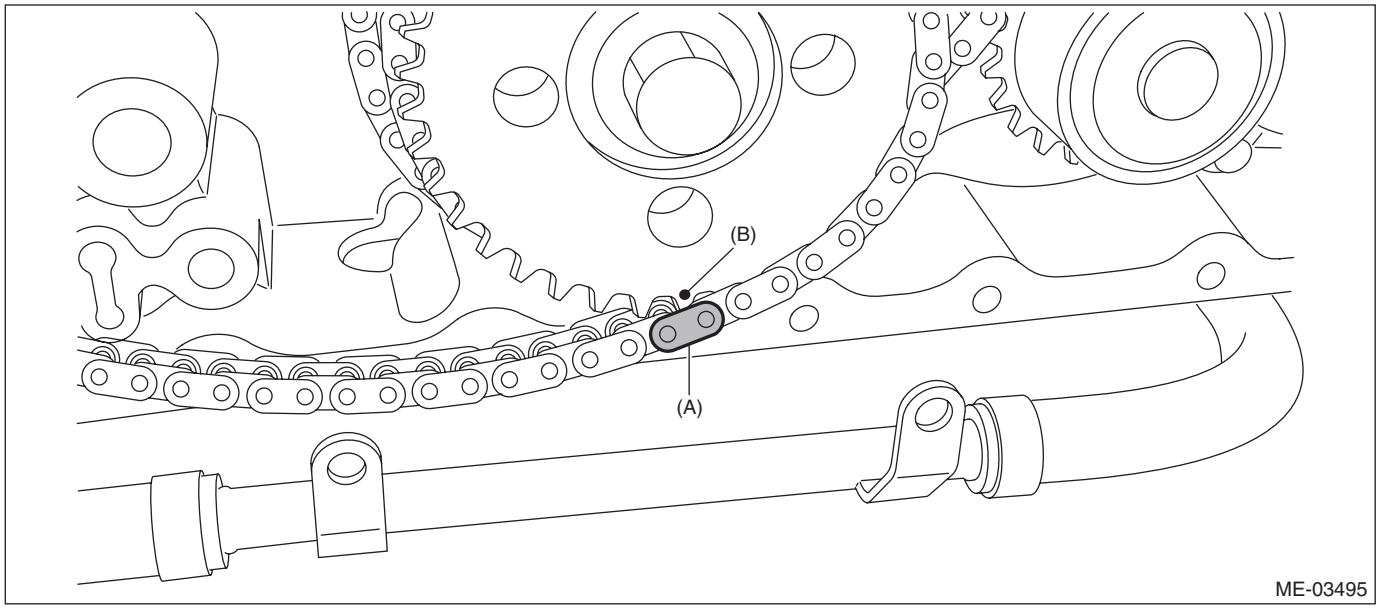

(A) Gold (B) Timing mark

19) Install the chain tensioner lever (RH).

Tightening torque:
16 N·m (1.6 kgf-m, 11.8 ft-lb)

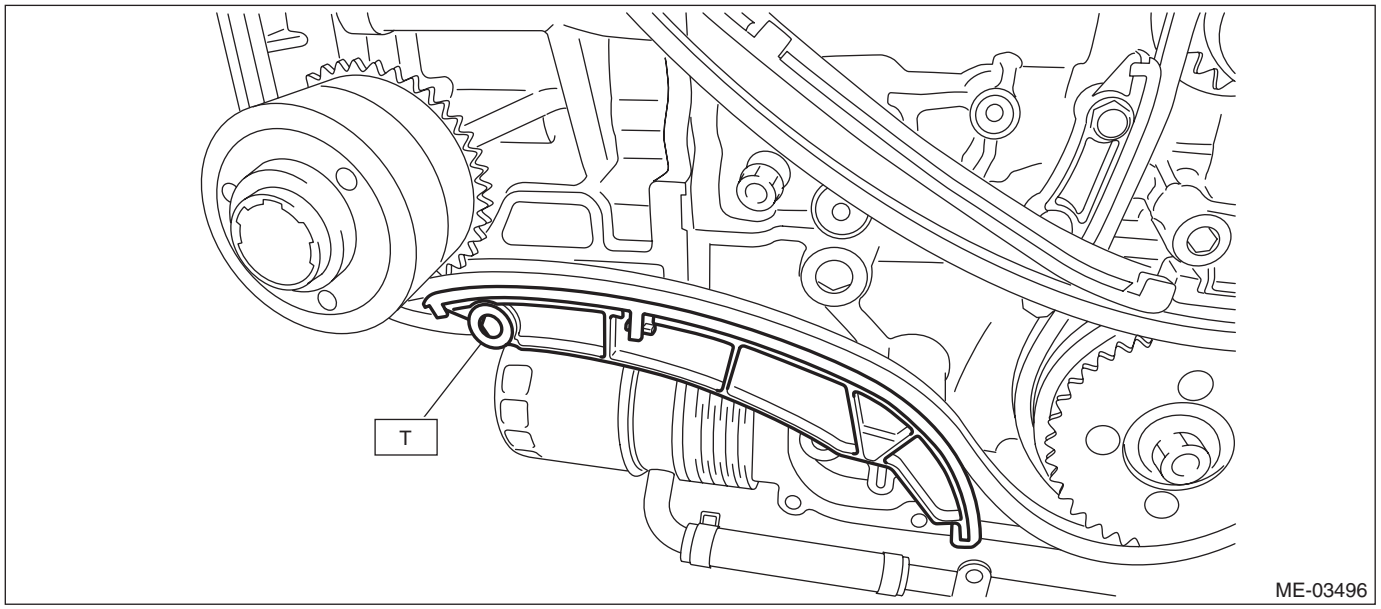

20) Install the chain tensioner (RH) and pull out the stopper pin.

NOTE:
The timing chain (RH) line will be complete.

Tightening torque:
16 N·m (1.6 kgf-m, 11.8 ft-lb)

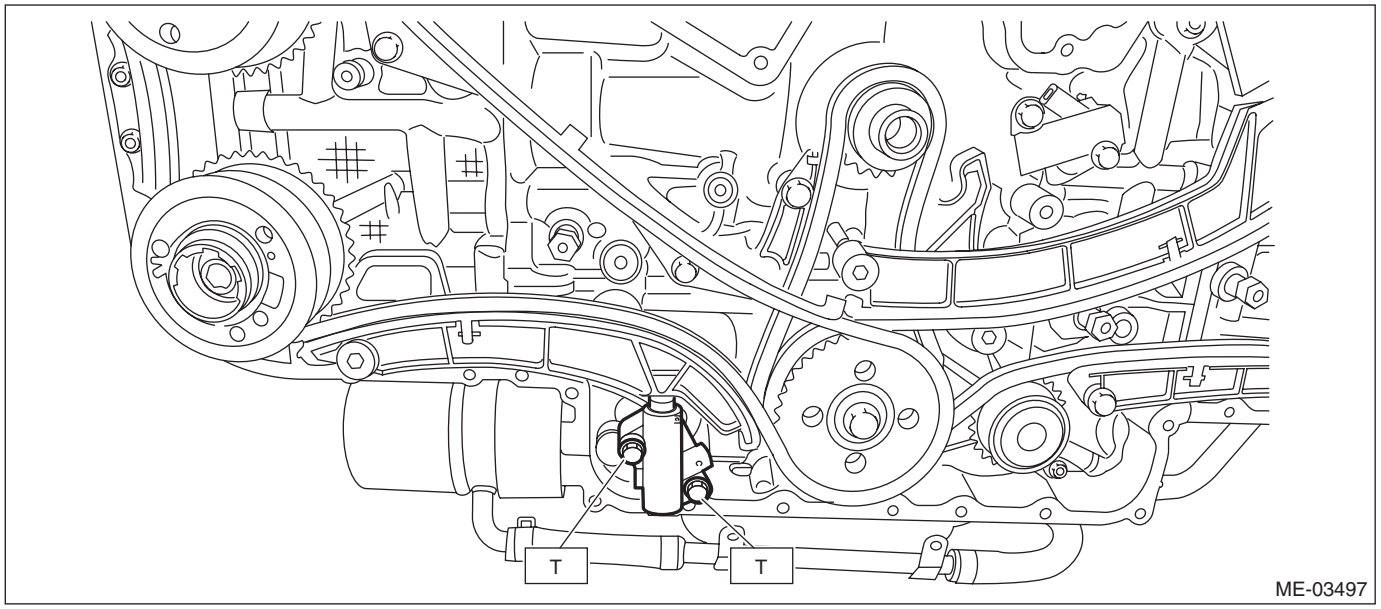

21) After installation, perform the following confirmations.

CAUTION:
Always make sure to perform this confirmation.
(1) Make sure that the timing mark of idler sprocket is aligned to three timing chain marks (gold).
(2) Make sure that the twelve o'clock position on the crank sprocket is aligned to the timing chain (main) mark (gold).
(3) Make sure that the LH side cam sprocket timing mark is aligned to the timing chain mark (blue).
(4) Make sure that the RH side cam sprocket timing mark is aligned to the timing chain mark (blue).
(5) Make sure that all bolts are tightened at the specified torque.

22) Using the ST, turn the crankshaft in the direction of engine rotation, and make sure that there are no abnormal conditions.

CAUTION:
Always make sure to perform this confirmation.

23) Install the chain cover. <Ref. to ME(H6DO)-82, INSTALLATION, Chain Cover.>
24) Install the crank pulley. <Ref. to ME(H6DO)-80, INSTALLATION, Crank Pulley.>
25) Install the V-belts. <Ref. to ME(H6DO)-75, INSTALLATION, V-belt.>
26) Fill engine oil. <Ref. to LU(H6DO)-12, REPLACEMENT, Engine Oil.>
27) Make sure there is no oil leaks in the chain cover mating surface.
28) Install the radiator. <Ref. to CO(H6DO)-27, INSTALLATION, Radiator.>

16.Cam Sprocket

A: REMOVAL

1) Remove the V-belts. <Ref. to ME(H6DO)-74, REMOVAL, V-belt.>
2) Remove the crank pulley. <Ref. to ME(H6DO)-79, REMOVAL, Crank Pulley.>
3) Remove the chain cover. <Ref. to ME(H6DO)-81, REMOVAL, Chain Cover.>
4) Remove the timing chain assembly. <Ref. to ME(H6DO)-88, REMOVAL, Timing Chain Assembly.>
5) Use the ST to lock the cam sprocket, and remove the cam sprocket bolt.
ST 499977500 CAM SPROCKET WRENCH

- IN side

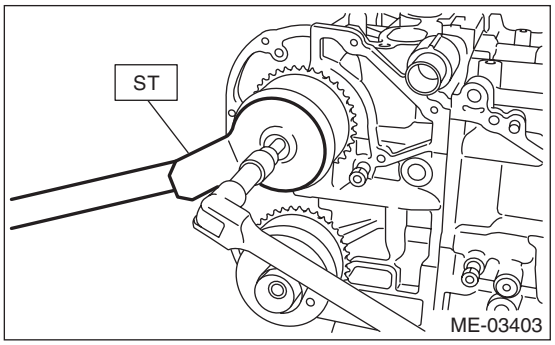

- EX side

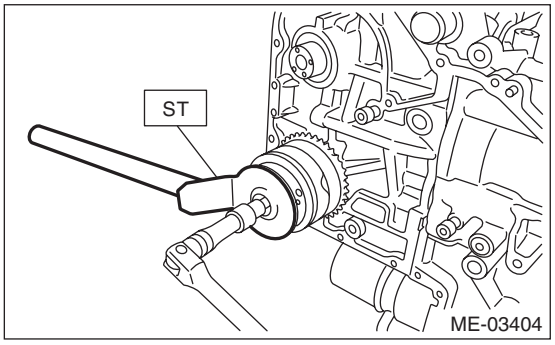

6) Remove the cam sprocket.

B: INSTALLATION

1) Install the cam sprocket.
2) Use the ST to lock the cam sprocket, and install the cam sprocket bolt.

Tightening torque:
Tighten to a torque of 29.5 N·m (3.0 kgf-m, 21.8 ft-lb), and then tighten further by 45°.

ST 499977500 CAM SPROCKET WRENCH

- IN side

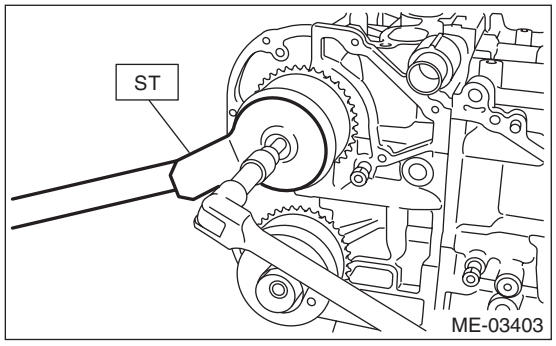

- EX side

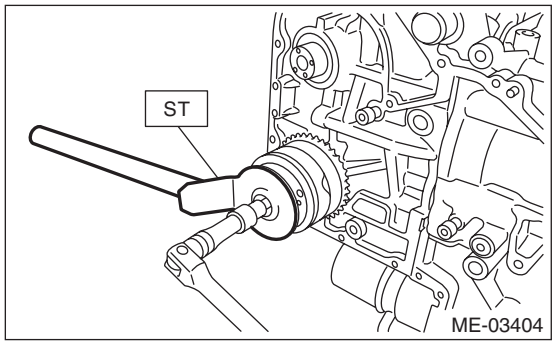

3) Install the timing chain assembly. <Ref. to ME(H6DO)-94, INSTALLATION, Timing Chain Assembly.>
4) Install the chain cover. <Ref. to ME(H6DO)-82, INSTALLATION, Chain Cover.>
5) Install the crank pulley. <Ref. to ME(H6DO)-80, INSTALLATION, Crank Pulley.>
6) Install the V-belts. <Ref. to ME(H6DO)-75, INSTALLATION, V-belt.>

C: INSPECTION

1) Check the cam sprocket teeth for abnormal wear and scratches.
2) Make sure there is no free play between cam sprocket and key.

17.Crank Sprocket

A: REMOVAL

1) Remove the V-belts. <Ref. to ME(H6DO)-74, REMOVAL, V-belt.>
2) Remove the crank pulley. <Ref. to ME(H6DO)-79, REMOVAL, Crank Pulley.>
3) Remove the chain cover. <Ref. to ME(H6DO)-81, REMOVAL, Chain Cover.>
4) Remove the timing chain assembly. <Ref. to ME(H6DO)-88, REMOVAL, Timing Chain Assembly.>
5) Remove the crank sprocket (A).

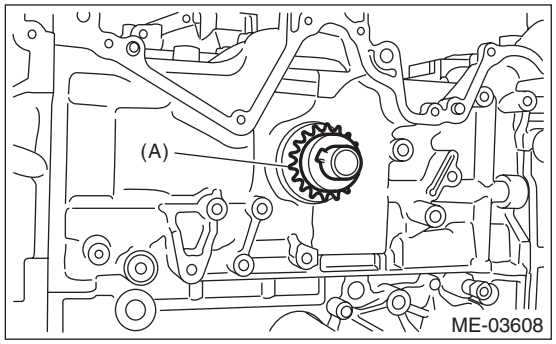

B: INSTALLATION

1) Install the crank sprocket (A).

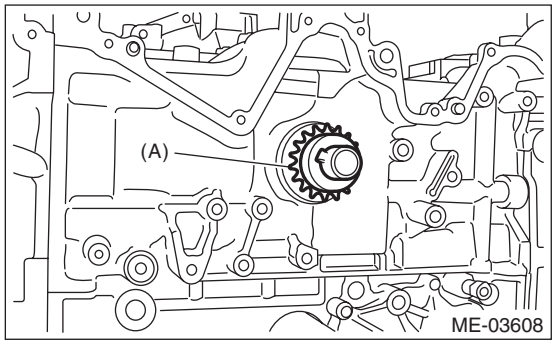

2) Install the timing chain assembly. <Ref. to ME(H6DO)-94, INSTALLATION, Timing Chain Assembly.>
3) Install the chain cover. <Ref. to ME(H6DO)-82, INSTALLATION, Chain Cover.>
4) Install the crank pulley. <Ref. to ME(H6DO)-80, INSTALLATION, Crank Pulley.>
5) Install the V-belts. <Ref. to ME(H6DO)-75, INSTALLATION, V-belt.>

C: INSPECTION

1) Check the crank sprocket teeth for abnormal wear and scratches.
2) Make sure there is no free play between crank sprocket and key.

18.Camshaft

A: REMOVAL

1) Remove the engine from vehicle. <Ref. to ME(H6DO)-41, REMOVAL, Engine Assembly.>
2) Remove the crank pulley. <Ref. to ME(H6DO)-79, REMOVAL, Crank Pulley.>
3) Remove the chain cover. <Ref. to ME(H6DO)-81, REMOVAL, Chain Cover.>
4) Remove the timing chain assembly. <Ref. to ME(H6DO)-88, REMOVAL, Timing Chain Assembly.>
5) Remove the cam sprocket. <Ref. to ME(H6DO)-107, REMOVAL, Cam Sprocket.>
6) Remove the crank sprocket. <Ref. to ME(H6DO)-109, REMOVAL, Crank Sprocket.>
7) Remove the exhaust oil flow control solenoid valve. <Ref. to FU(H6DO)-72, REMOVAL, Oil Flow Control Solenoid Valve.>
8) Remove the camshaft position sensor. <Ref. to FU(H6DO)-47, REMOVAL, Camshaft Position Sensor.>
9) Loosen the rocker cover bolts in the order indicated in the figure, and remove the rocker cover.

- LH side

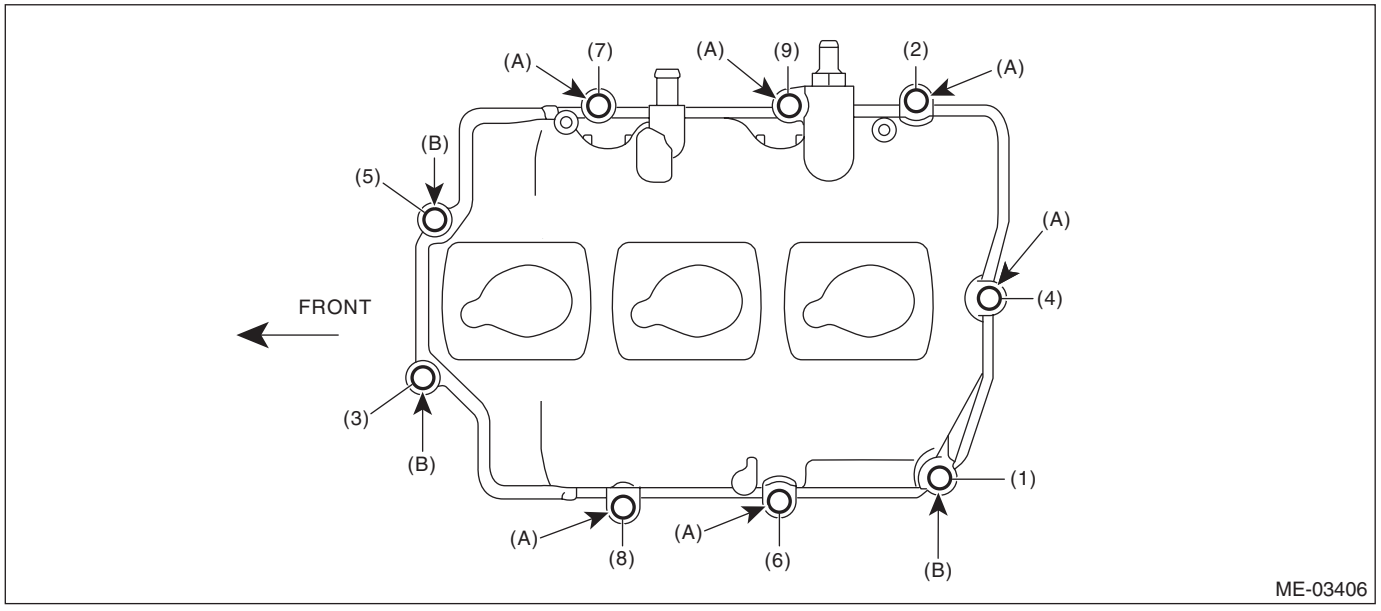

(A) M6 × 39.5 (B) M6 × 26.3

- RH side

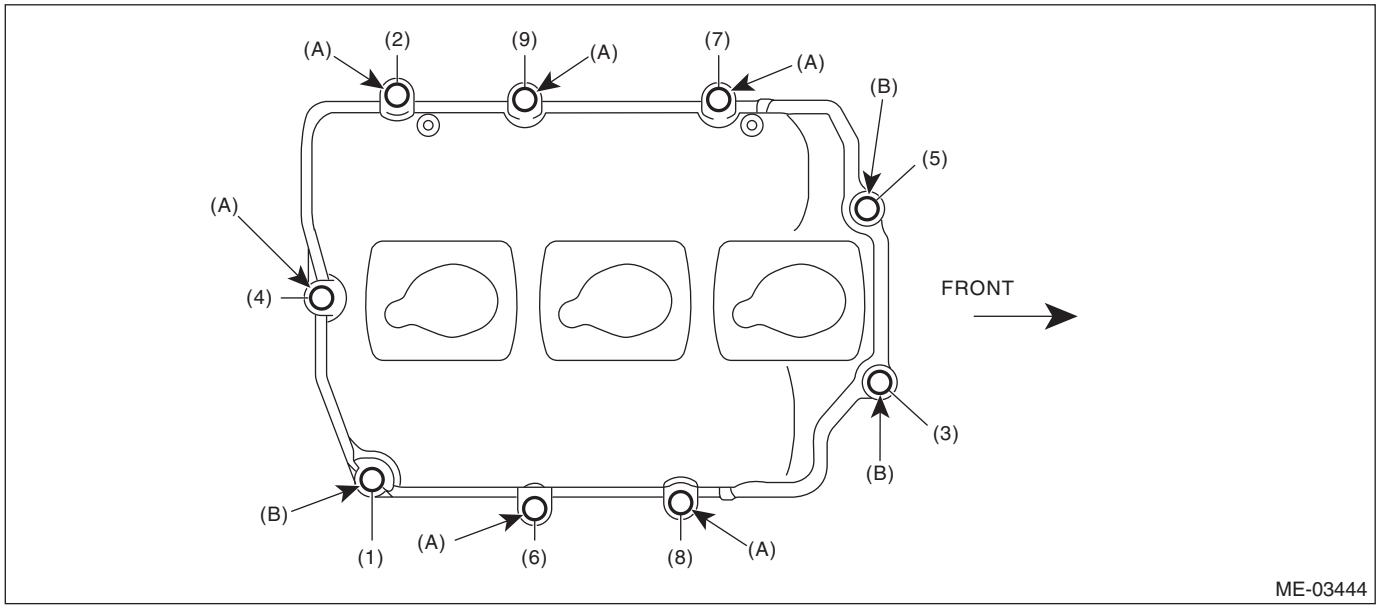

(A) M6 × 39.5 (B) M6 × 26.3

10) Loosen the camshaft cap bolts equally, a little at a time in numerical sequence, as shown in the figure.

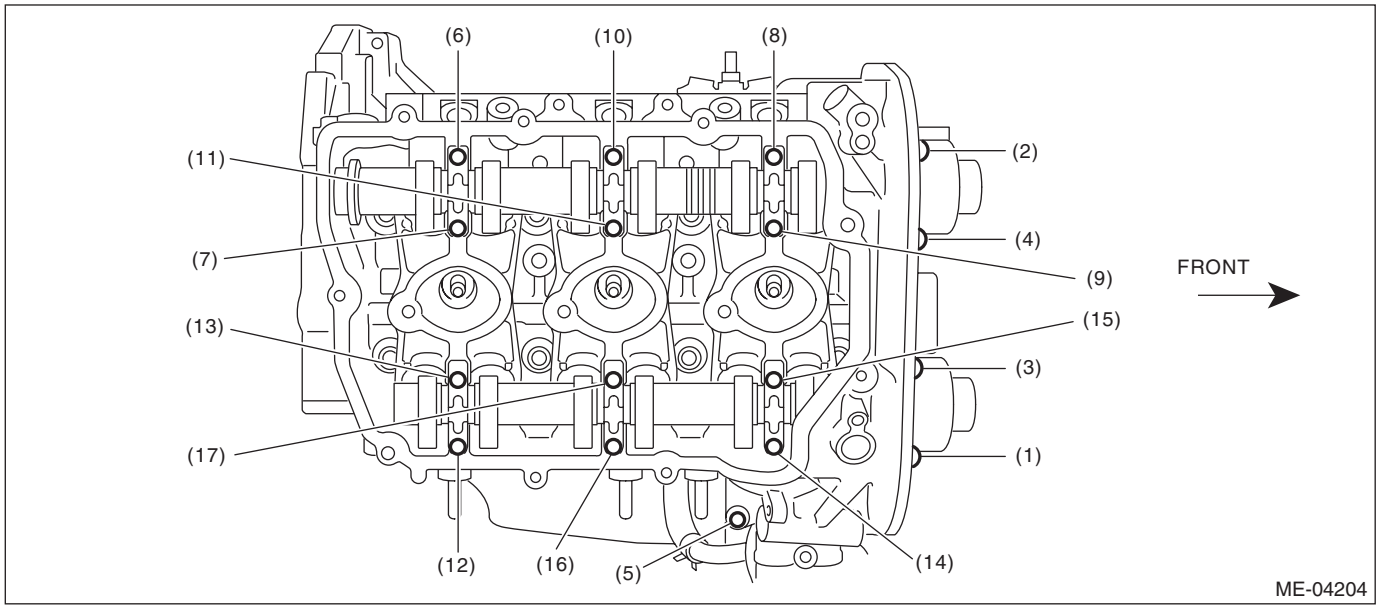

11) Remove the camshaft caps and camshaft (RH).

NOTE:
Arrange camshaft caps in order so that they can be installed in their original positions.
12) Similarly, remove the camshaft (LH) and related parts.

B: INSTALLATION

1) Apply engine oil to camshaft journals, and install the camshaft.
2) Install the camshaft cap.
(1) Apply liquid gasket sparingly to back side of the front camshaft cap as shown in the figure.

NOTE:
- Install within 5 min. after applying liquid gasket.
- Do not apply liquid gasket excessively. Applying excessively may cause excess gasket to come out and flow toward cam journal, resulting in engine seizure.

Liquid gasket:
THREE BOND 1217G (Part No. K0877Y0100), THREE BOND 1217H or equivalent

Liquid gasket applying diameter:
2.0±0.5 mm (0.079±0.020 in)

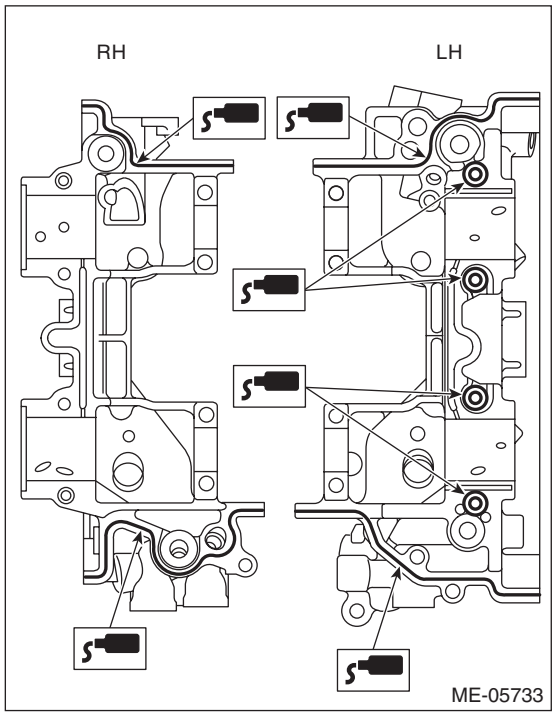

(2) Install the O-ring to the front camshaft cap.

NOTE:
Use new O-rings.

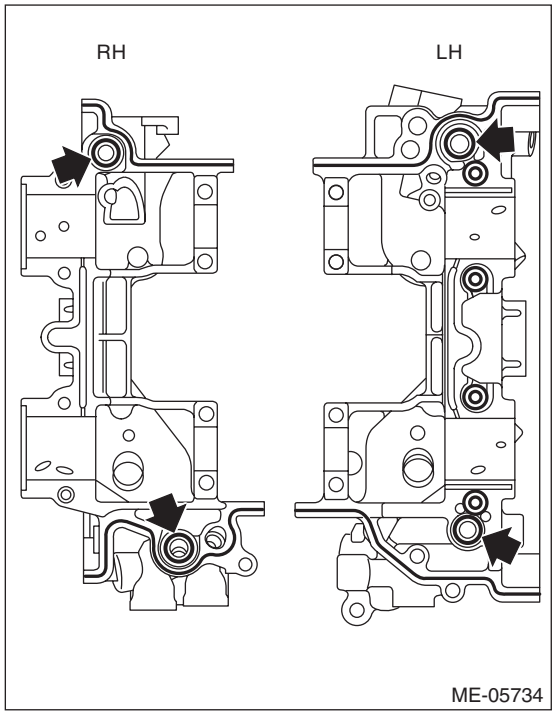

(3) Apply a thin coat of engine oil to the cap journal surface, and install the camshaft cap to the camshaft.

(4) Gradually tighten the camshaft cap in at least two stages in the numerical order shown in the figure, then tighten to specified torque.

Tightening torque:
(1) — (12): 16 N·m (1.6 kgf-m, 11.8 ft-lb)
(13) — (17): 9.75 N·m (1.0 kgf-m, 7.2 ft-lb)

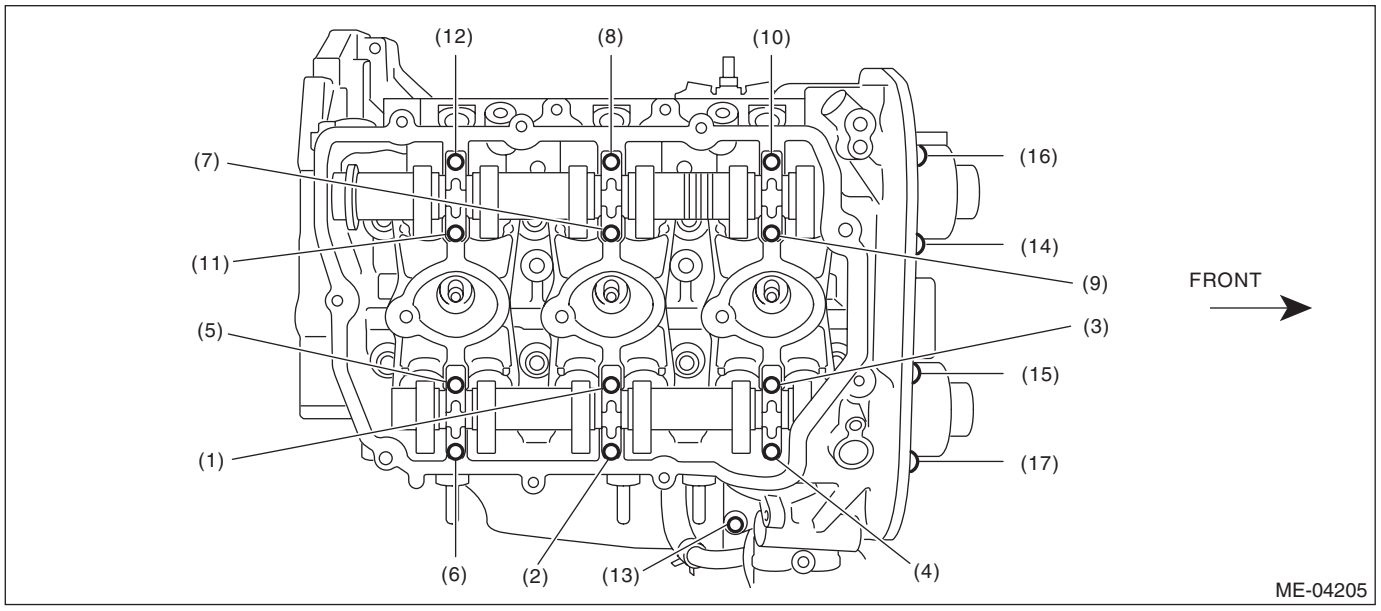

(5) After tightening the camshaft cap, ensure the camshaft rotates only slightly while holding it at base circle.

3) Install the rocker cover.
(1) Install the rocker cover gasket to the rocker cover.

NOTE:
Use a new rocker cover gasket.

(2) Apply liquid gasket sparingly to the mating surface of cylinder head and rocker cover as shown in the figure.

NOTE:
- Install within 5 min. after applying liquid gasket.
- Do not apply liquid gasket excessively. Applying excessively may cause excess gasket to come out and flow toward cam journal, resulting in engine seizure.

Liquid gasket:
THREE BOND 1217G (Part No. K0877Y0100), THREE BOND 1217H or equivalent

Liquid gasket applying diameter:
3.5±0.5 mm (0.138±0.020 in)

- LH side

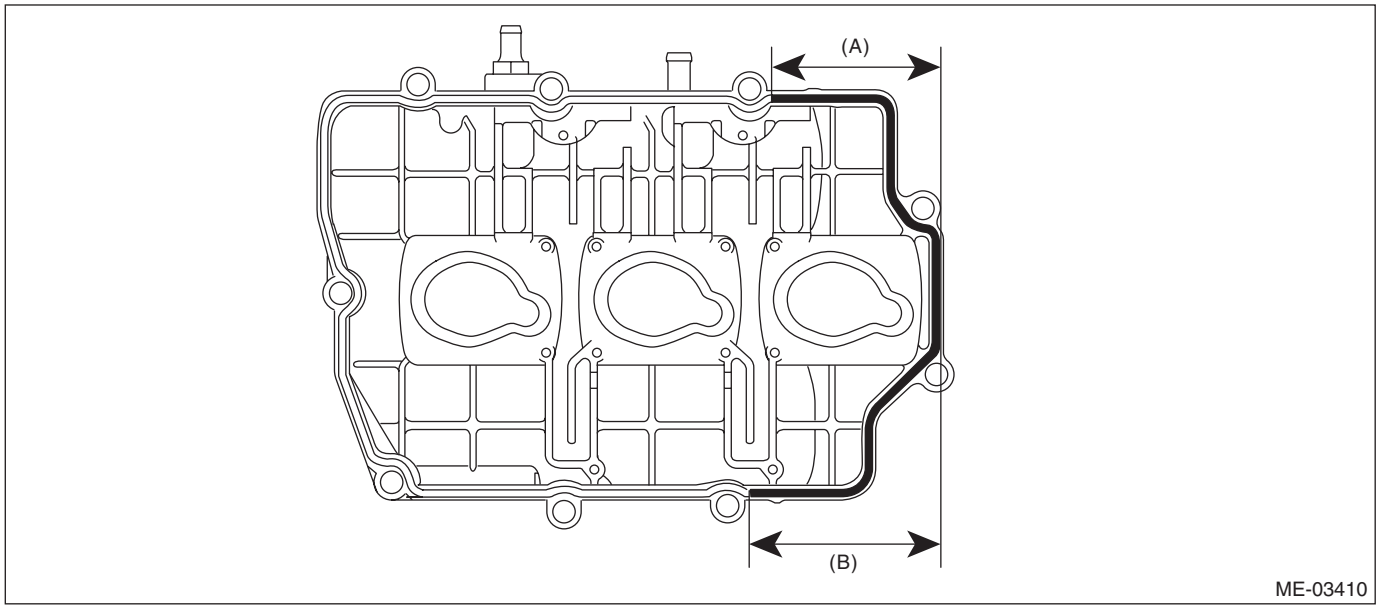

(A) 90 mm (3.543 in) or more (B) 105 mm (4.134 in) or more

- RH side

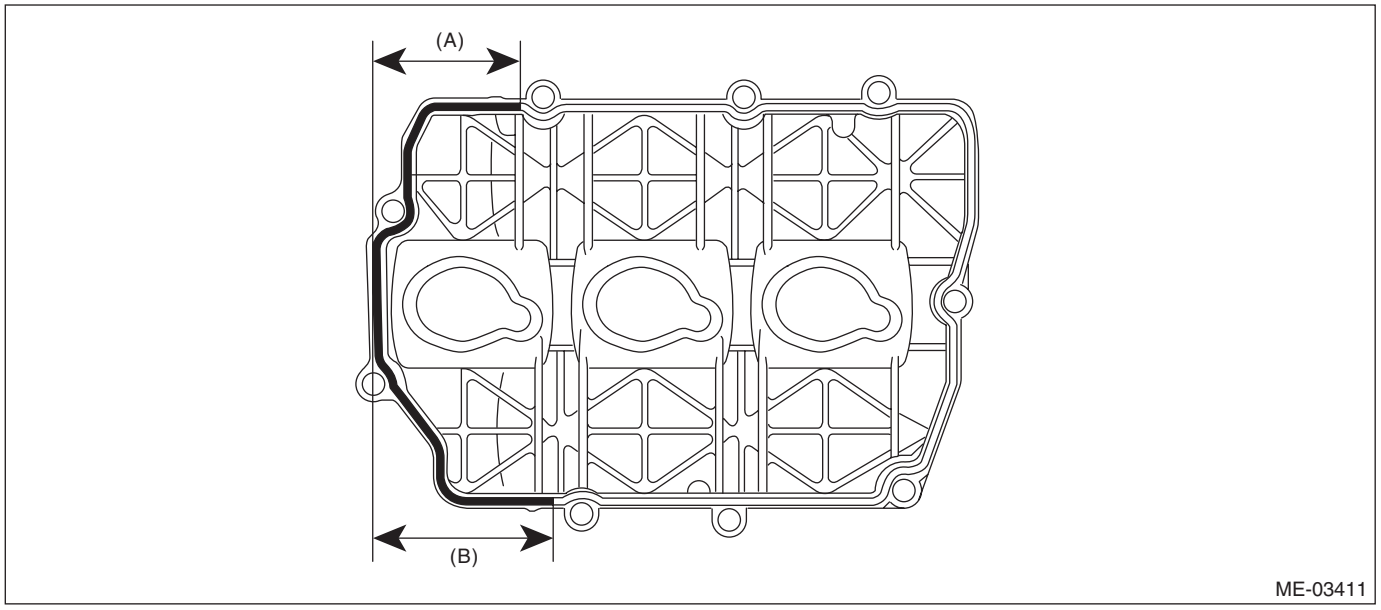

(A) 80 mm (3.150 in) or more (B) 100 mm (3.937 in) or more

(3) Tighten the rocker cover bolts in the numerical order as shown in the figure.

Tightening torque:
6.4 N·m (0.7 kgf-m, 4.7 ft-lb)

- LH side

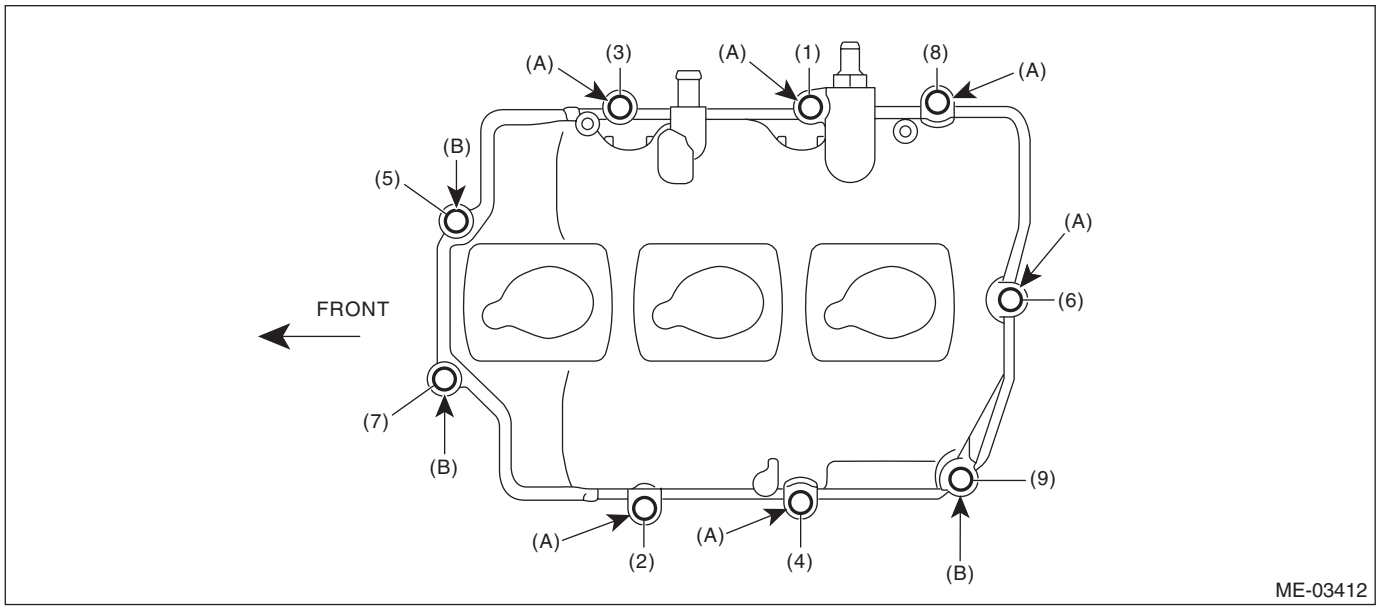

(A) M6 × 39.5 (B) M6 × 26.3

- RH side

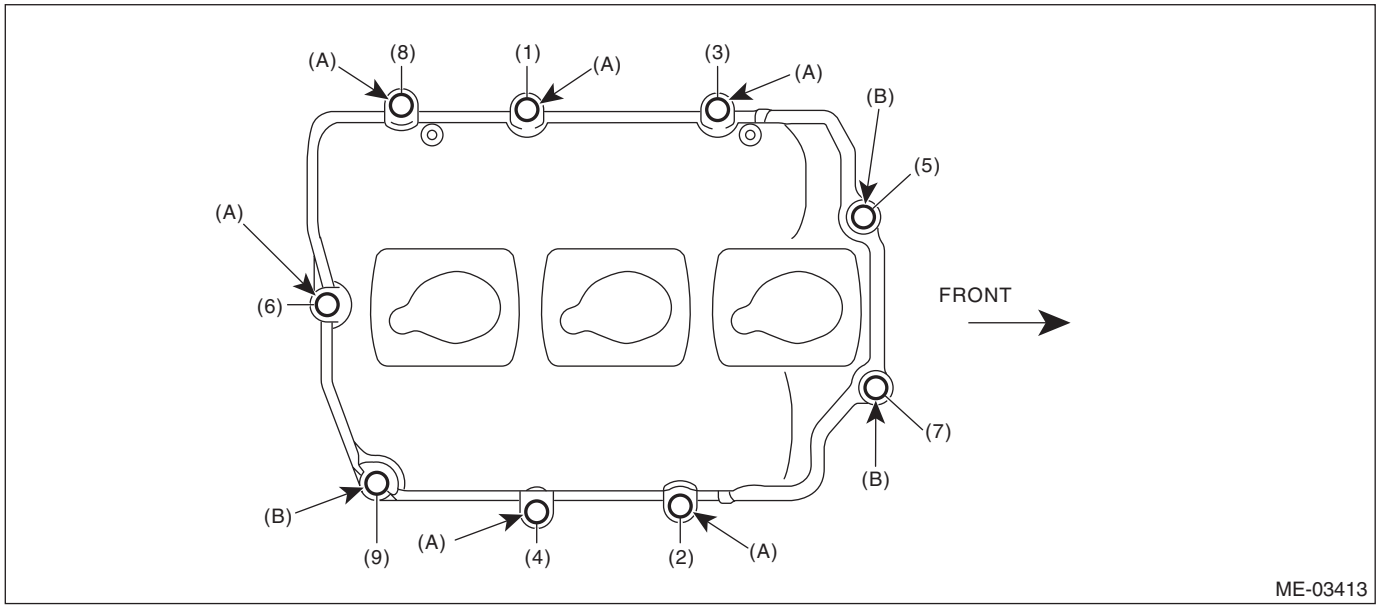

(A) M6 × 39.5 (B) M6 × 26.3

4) Install the crank sprocket. <Ref. to ME(H6DO)-109, INSTALLATION, Crank Sprocket.>
5) Install the cam sprocket. <Ref. to ME(H6DO)-108, INSTALLATION, Cam Sprocket.>
6) Install the timing chain assembly. <Ref. to ME(H6DO)-94, INSTALLATION, Timing Chain Assembly.>
7) Install the chain cover. <Ref. to ME(H6DO)-82, INSTALLATION, Chain Cover.>
8) Install the crank pulley. <Ref. to ME(H6DO)-80, INSTALLATION, Crank Pulley.>
9) Install the engine to the vehicle. <Ref. to ME(H6DO)-51, INSTALLATION, Engine Assembly.>

C: INSPECTION

1) Measure the bend, and repair or replace if necessary.

Camshaft bend limit:
0.020 mm (0.00079 in)

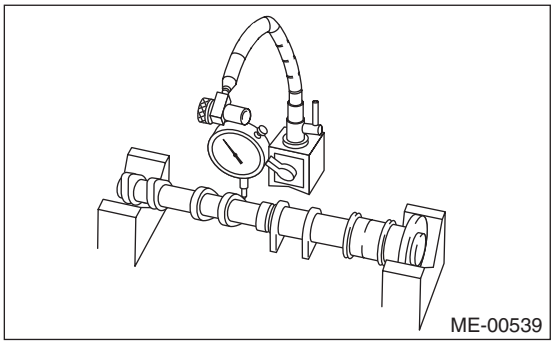

2) Check the journal for damage and wear. Replace if faulty.
3) Check the cutout portion used for camshaft sensor for damage. Replace if faulty.
4) Check the cam face condition; remove the minor faults by grinding with oil stone. Replace if there is uneven wear or others.
5) Measure the cam lobe height “H” and cam base circle diameter “A”. If it exceeds the standard or offset wear occurs, replace it.

Cam lobe height H:

Standard
Intake
45.90 — 46.00 mm (1.8071 — 1.8110 in)
Exhaust
44.65 — 44.75 mm (1.7579 — 1.7618 in)

Cam base circle diameter A:

Standard
Intake
36.00 mm (1.4173 in)
Exhaust
36.00 mm (1.4173 in)

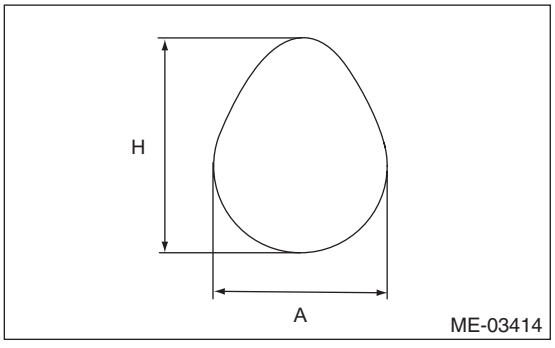

6) Measure the outside diameter of camshaft journal. If the journal diameter is not within specification, check the oil clearance.

	Camshaft journal	
	Front	Except for front
Standard mm (in)	37.946 — 37.963 (1.4939 — 1.4946)	25.946 — 25.963 (1.0215 — 1.0222)

7) Measure the oil clearance of camshaft journal.
(1) Clean the camshaft cap and cylinder head camshaft journal.
(2) Place the camshaft on cylinder head. (Without installing the valve lifter)
(3) Place a plastigauge across each camshaft journals.
(4) Gradually tighten the camshaft cap in at least two stages in the numerical order shown in the figure, then tighten to specified torque. Do not turn the camshaft.

Tightening torque:
(1) — (12): 16 N·m (1.6 kgf-m, 11.8 ft-lb)
(13) — (17): 9.75 N·m (1.0 kgf-m, 7.2 ft-lb)

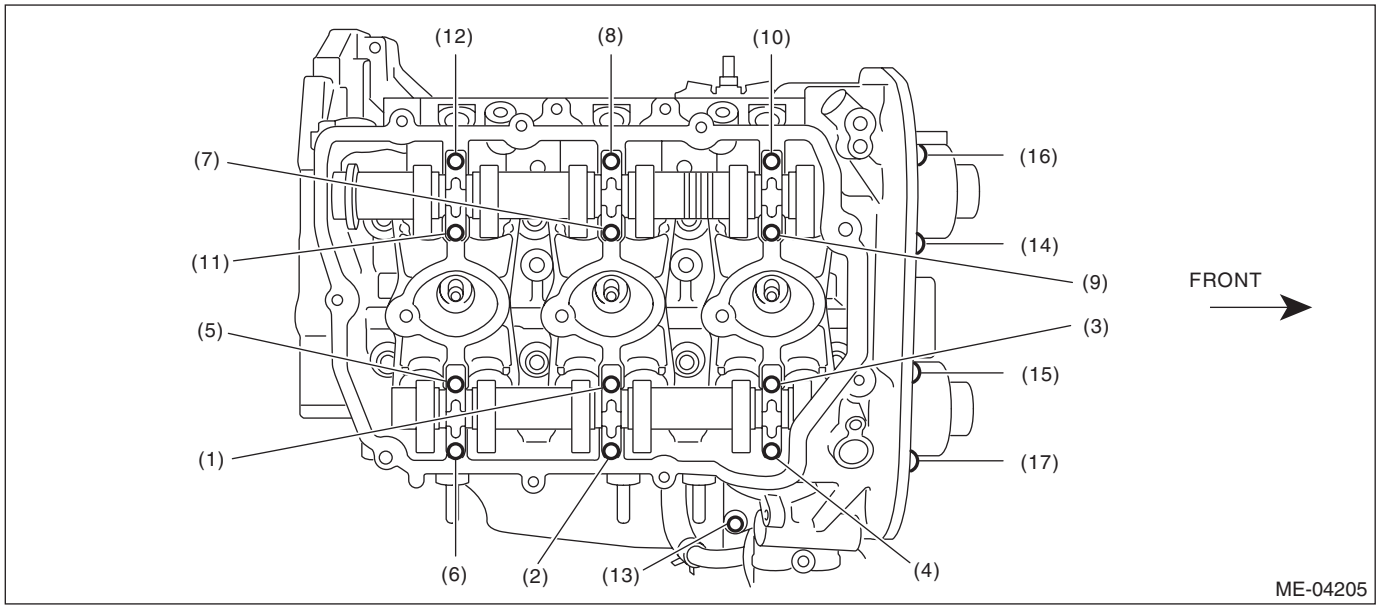

(5) Remove the camshaft cap.
(6) Measure the widest point of the plastigauge on each journal. If oil clearance exceeds the standard, replace the camshaft. If necessary, replace the camshaft caps and cylinder head as a set.

Camshaft oil clearance:
Standard
0.037 — 0.072 mm (0.0015 — 0.0028 in)

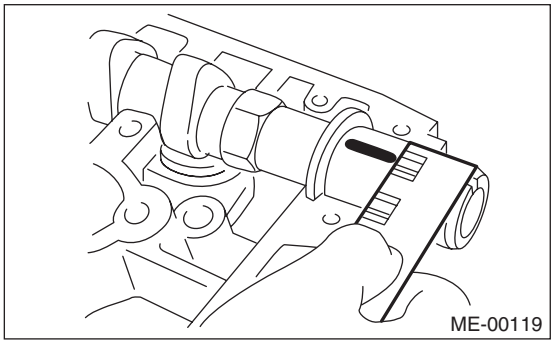

(7) Completely remove the plastigauge.

8) Measure the thrust clearance with setting the dial gauge at end surface of camshaft. If the thrust clearance is not within the standard or there is offset wear, replace the camshaft caps and cylinder head as a set. If necessary replace the camshaft.

Camshaft thrust clearance:

Standard
Intake
0.075 — 0.135 mm (0.0030 — 0.0053 in)
Exhaust
0.075 — 0.135 mm (0.0030 — 0.0053 in)

19.Cylinder Head

A: REMOVAL

1) Remove the engine from vehicle. <Ref. to ME(H6DO)-41, REMOVAL, Engine Assembly.>
2) Remove the crank pulley. <Ref. to ME(H6DO)-79, REMOVAL, Crank Pulley.>
3) Remove the chain cover. <Ref. to ME(H6DO)-81, REMOVAL, Chain Cover.>
4) Remove the timing chain assembly. <Ref. to ME(H6DO)-88, REMOVAL, Timing Chain Assembly.>
5) Remove the cam sprocket. <Ref. to ME(H6DO)-107, REMOVAL, Cam Sprocket.>
6) Remove the crank sprocket. <Ref. to ME(H6DO)-109, REMOVAL, Crank Sprocket.>
7) Remove the camshaft. <Ref. to ME(H6DO)-110, REMOVAL, Camshaft.>
8) Remove the seal bolt shown in the figure.

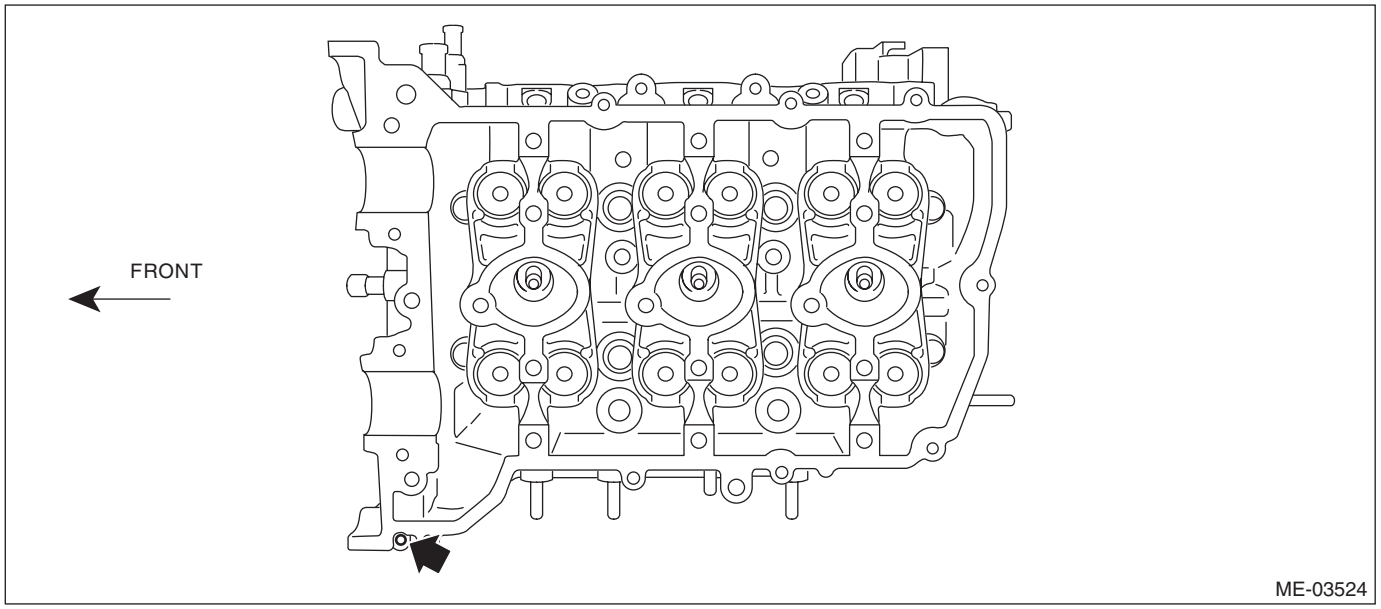

9) Remove the cylinder head bolts in the numerical order as shown in the figure.

NOTE:
Leave bolts (2) and (4) engaged by three or four threads to prevent the cylinder head from falling.

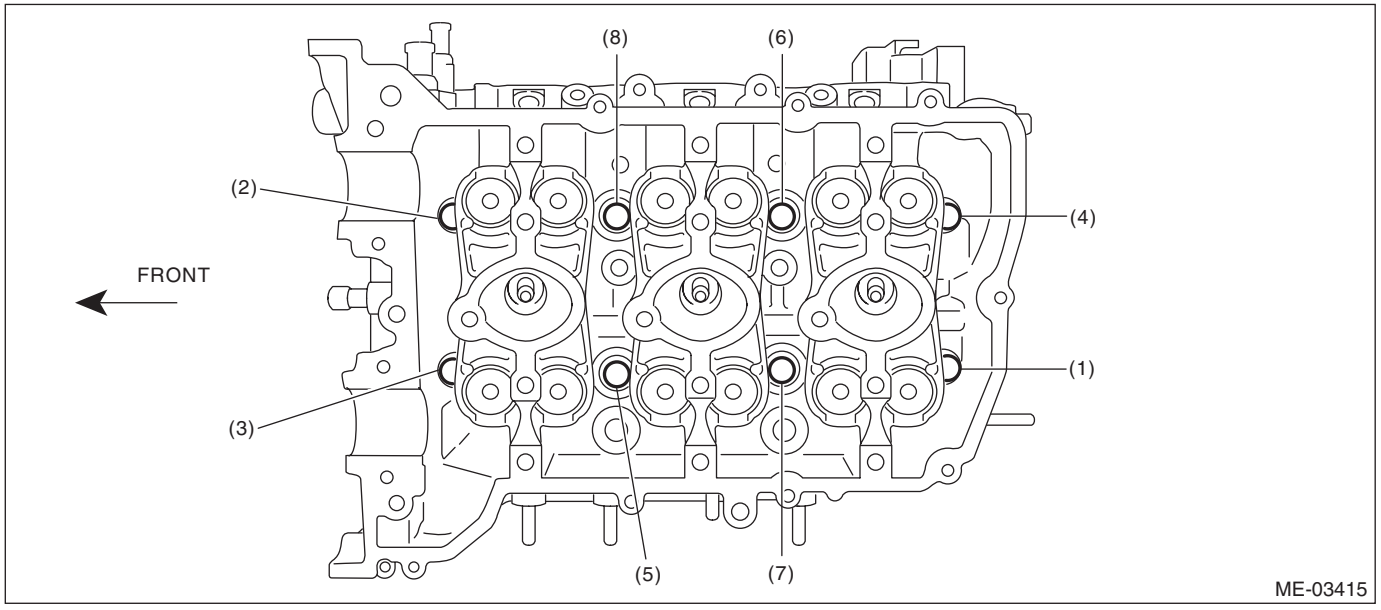

10) While tapping the cylinder head with a plastic hammer, separate it from cylinder block.
11) Remove the bolts (2) and (4) to remove cylinder head.
12) Remove the cylinder head gasket.

CAUTION:
Be careful not to scratch the mating surface of cylinder head and cylinder block.
13) Similarly, remove the cylinder head (RH).

B: INSTALLATION

1) Apply liquid gasket to the mating surface of cylinder block shown in the figure.

NOTE:
- Install within 5 min. after applying liquid gasket.
- Do not apply liquid gasket excessively. If too much is applied, remove any liquid gasket that is squeezed out.

Liquid gasket:
THREE BOND 1217G (K0877Y0100), THREE BOND 1217H or equivalent

Liquid gasket applying diameter:
3.5±1.0 mm (0.138±0.039 in)
- LH side

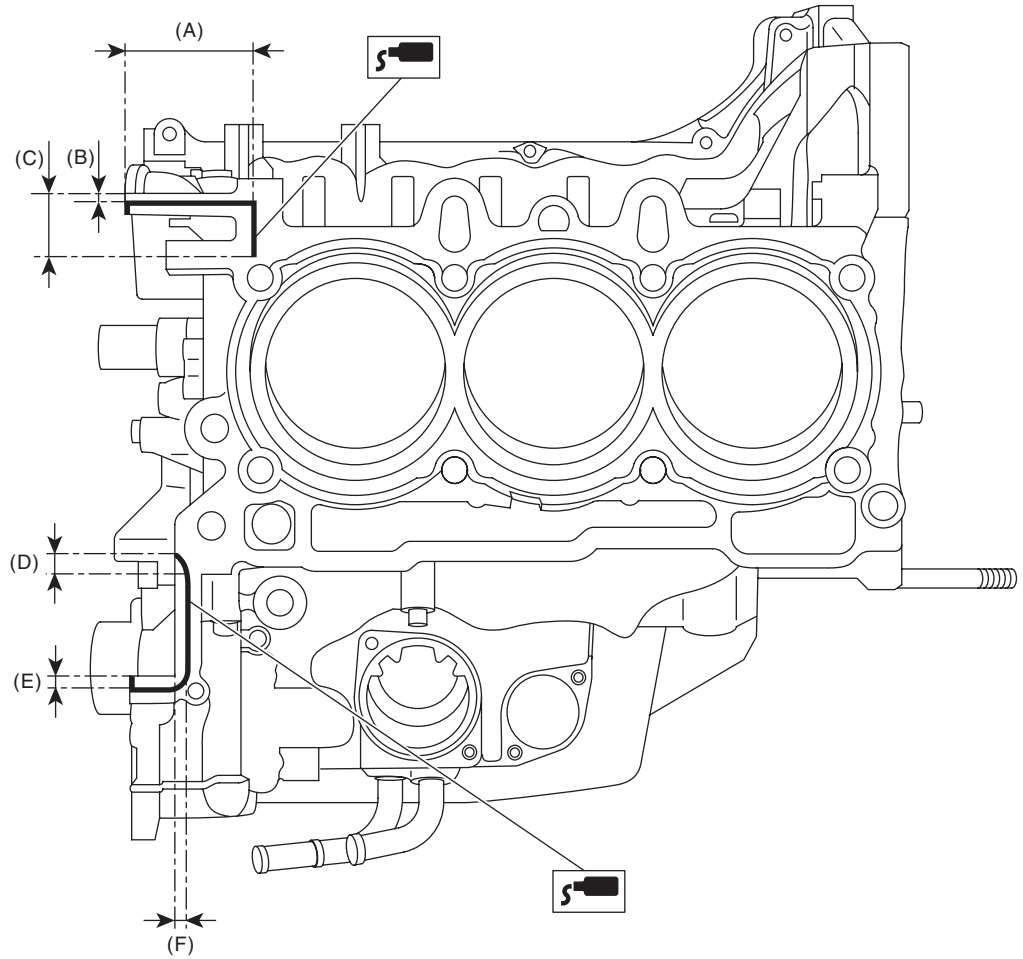

ME-04497

(A) 59 mm (2.323 in)
(B) 2 mm (0.079 in)
(C) 20 mm (0.787 in)
(D) 7 mm (0.276 in)
(E) 4 mm (0.157 in)
(F) 4 mm (0.157 in)

- RH side

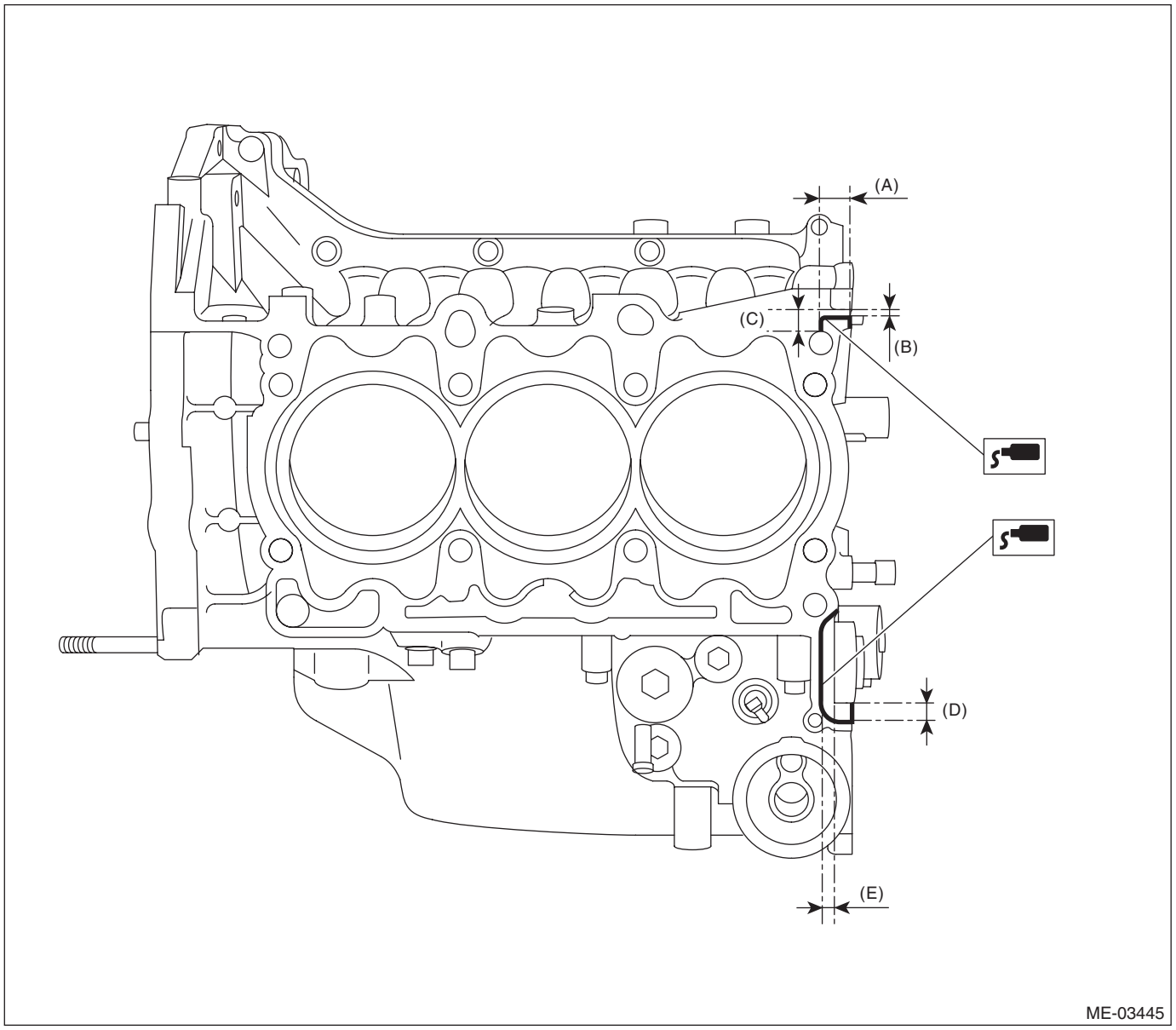

(A) 17 mm (0.669 in)
(B) 2 mm (0.079 in)
(C) 9 mm (0.354 in)
(D) 4 mm (0.157 in)
(E) 4 mm (0.157 in)

2) Install the cylinder head gaskets LH and RH onto the cylinder block.

NOTE:
Use a new cylinder head gasket.

3) Apply liquid gasket to the mating surface of cylinder head gasket shown in the figure.

NOTE:
- Install within 5 min. after applying liquid gasket.
- Do not apply liquid gasket excessively. If too much is applied, remove any liquid gasket that is squeezed out.

Liquid gasket:
THREE BOND 1217G (K0877Y0100), THREE BOND 1217H or equivalent

Liquid gasket applying diameter:
3.5±1.0 mm (0.138±0.039 in)
- LH side

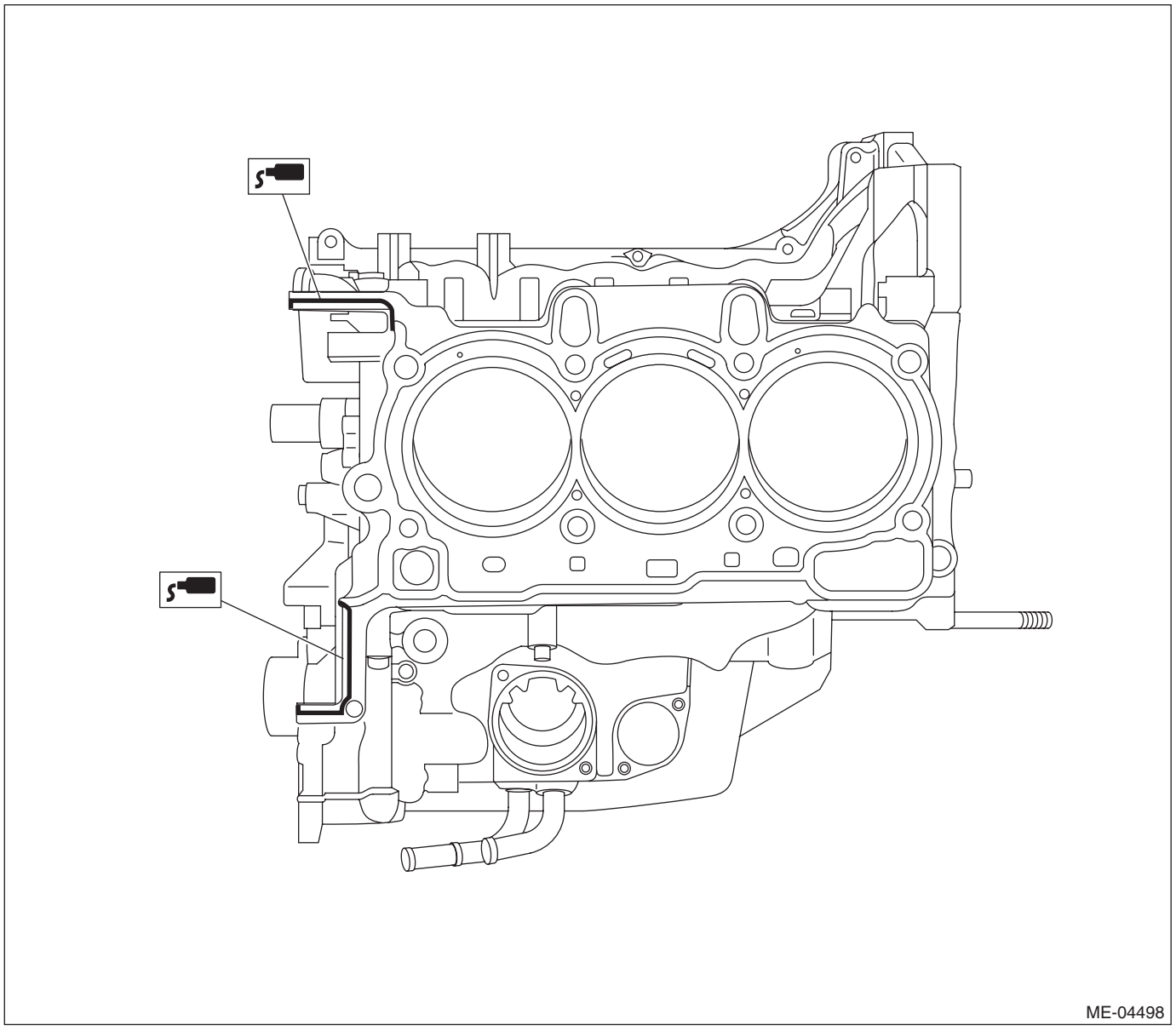

- RH side

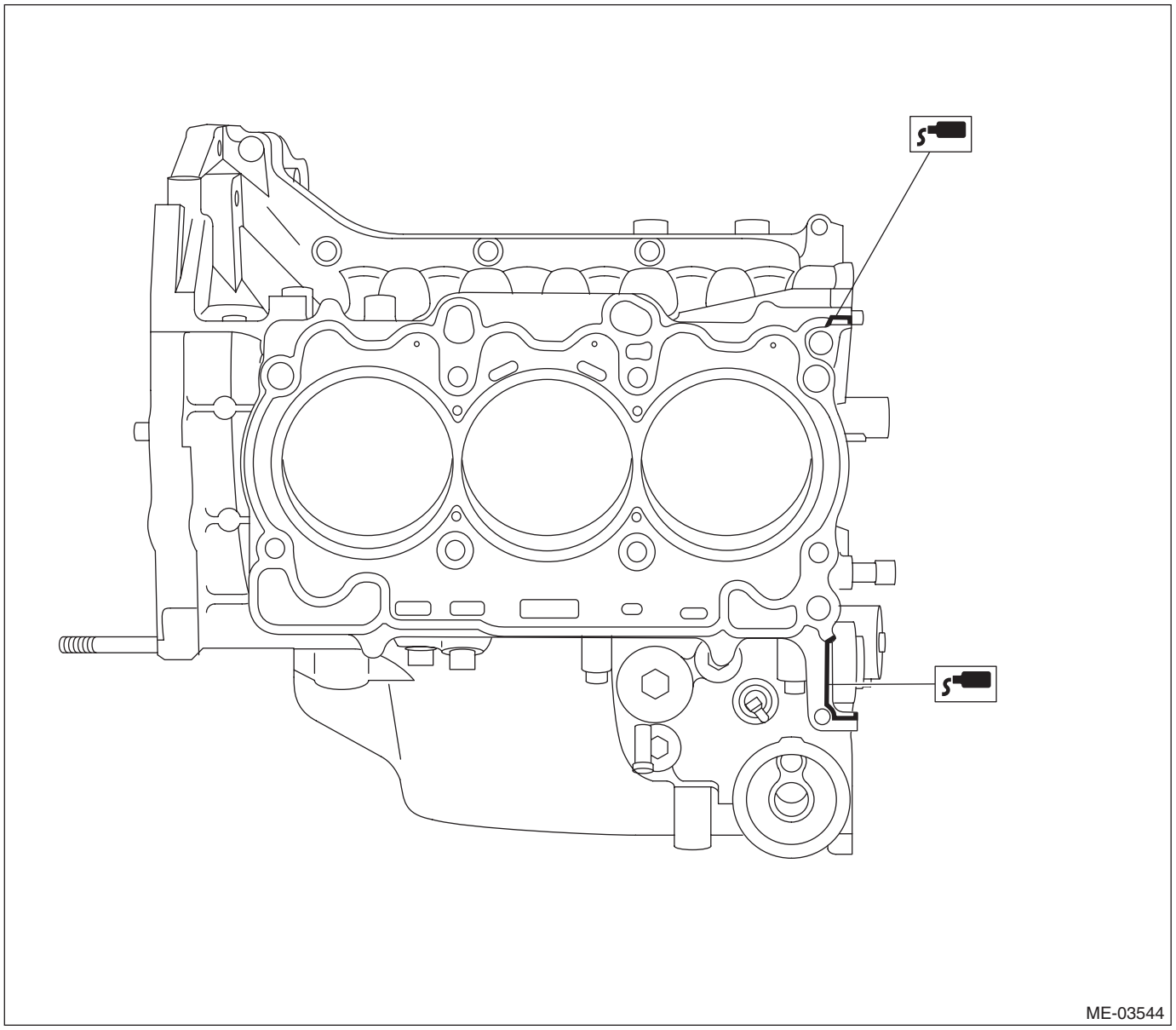

4) Attach the cylinder head to the cylinder block.

CAUTION:
Be careful not to scratch the mating surface of cylinder head and cylinder block.

5) Tighten the cylinder head bolts.
(1) Apply a thin coat of engine oil to washers and cylinder head bolt threads.
(2) Mount the cylinder head onto the cylinder block, then tighten the bolts with a torque of 20 N·m (2.0 kgf-m, 14.8 ft-lb) in the order indicated in the figure.
(3) Tighten the bolts with a torque of 50 N·m (5.1 kgf-m, 36.9 ft-lb) in the order indicated in the figure.
(4) Loosen all the bolts by 180° in the reverse order of installing, and loosen them further by 180°.
(5) Tighten the bolts with torque of 20 N·m (2.0 kgf-m, 14.8 ft-lb) in numerical sequence as shown in the figure.
(6) Tighten the bolts (1) — (4) in the order indicated with a torque of 48 N·m (4.9 kgf-m, 35.4 ft-lb).
(7) Tighten the bolts (5) — (8) in the order indicated with a torque of 44 N·m (4.5 kgf-m, 32.5 ft-lb).
(8) Tighten all bolts 90° in the numerical order as shown in the figure.
(9) Tighten the bolt (1) — (4) by 45° in the numerical order.

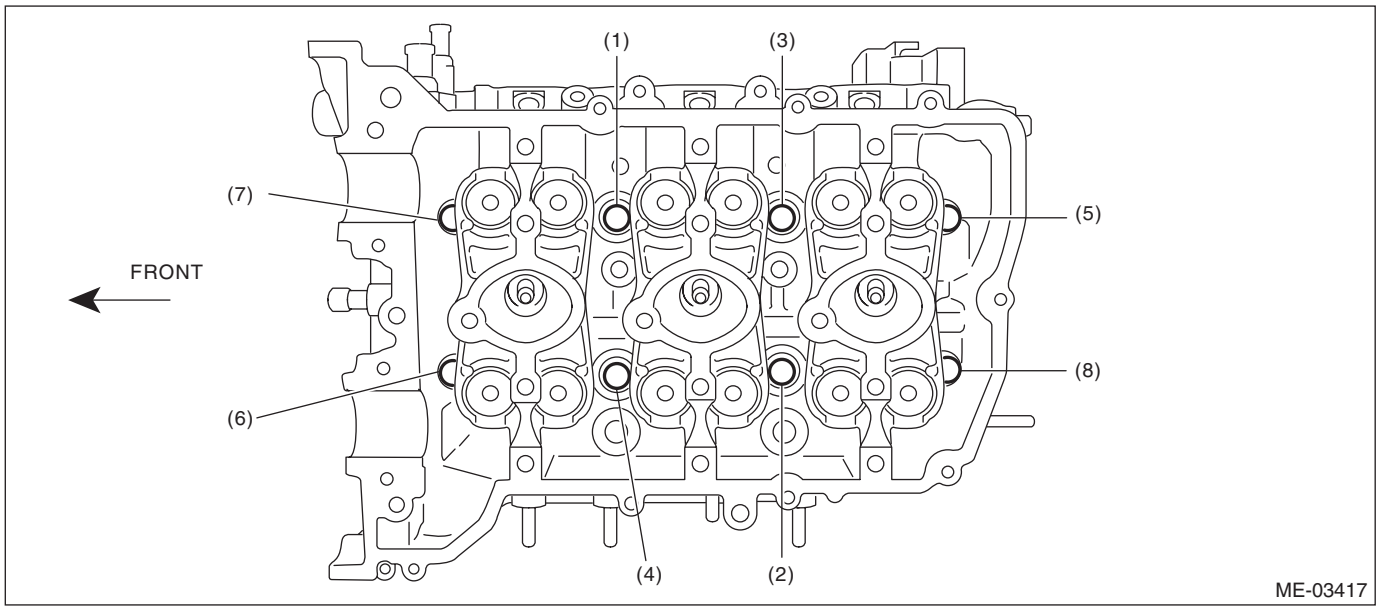

6) Install the seal bolt shown in the figure.

NOTE:
Before installing seal bolts, apply a sealing material to bolt threads.

Seal material:
THREE BOND 1324 (Part No. 004403042) or equivalent

Tightening torque:
6.4 N·m (0.7 kgf-m, 4.7 ft-lb)

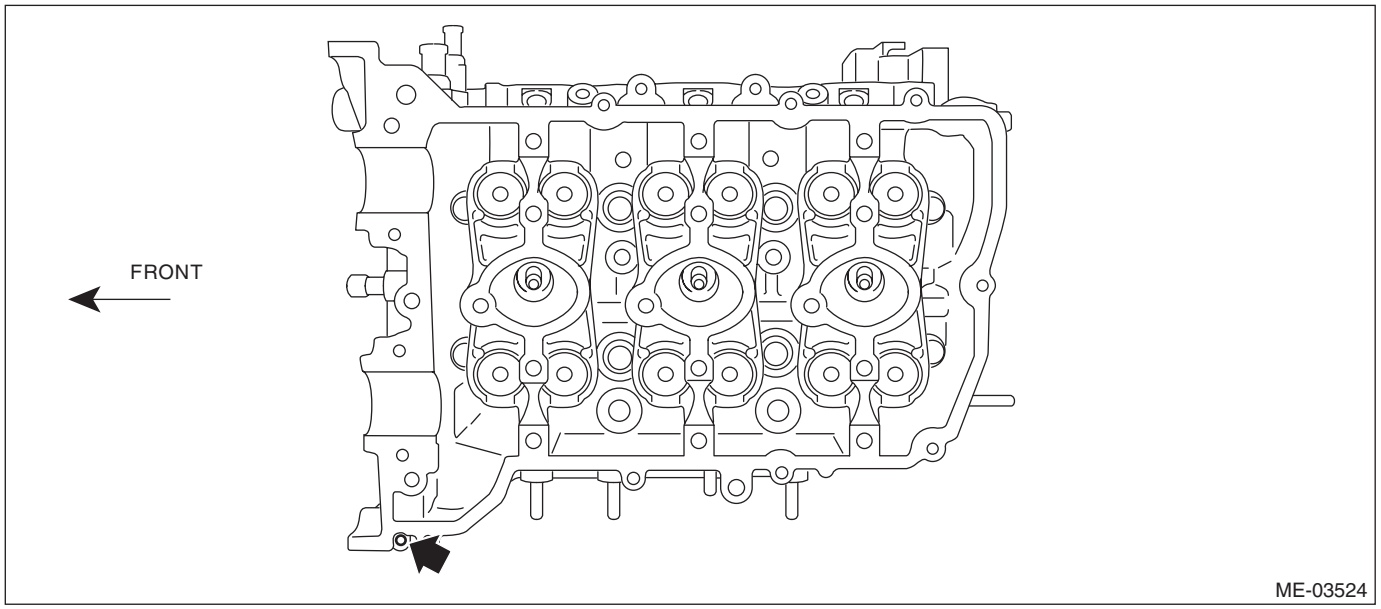

7) Install the camshaft. <Ref. to ME(H6DO)-111, INSTALLATION, Camshaft.>
8) Install the crank sprocket. <Ref. to ME(H6DO)-109, INSTALLATION, Crank Sprocket.>
9) Install the cam sprocket. <Ref. to ME(H6DO)-108, INSTALLATION, Cam Sprocket.>
10) Install the timing chain assembly. <Ref. to ME(H6DO)-94, INSTALLATION, Timing Chain Assembly.>
11) Install the chain cover. <Ref. to ME(H6DO)-82, INSTALLATION, Chain Cover.>
12) Install the crank pulley. <Ref. to ME(H6DO)-80, INSTALLATION, Crank Pulley.>
13) Install the engine to the vehicle. <Ref. to ME(H6DO)-51, INSTALLATION, Engine Assembly.>

C: DISASSEMBLY

1) Set the cylinder head on ST.
ST 18250AA010 CYLINDER HEAD TABLE
2) Remove the valve lifter.
3) Compress the valve spring using ST, and remove the valve spring retainer key, each valve and valve spring.
ST 499718000 VALVE SPRING REMOVER

NOTE:
- Mark each valve to prevent confusion.
- Pay careful attention not to damage the lips of intake valve oil seals and exhaust valve oil seals.
- Keep all the removed parts in order for re-installing in their original positions.
- For removal and installation procedures of the valve guide, intake valve oil seal and exhaust valve oil seal, refer to “INSPECTION”. <Ref. to ME(H6DO)-129, VALVE GUIDE, INSPECTION, Cylinder Head.> <Ref. to ME(H6DO)-132, INTAKE AND EXHAUST VALVE OIL SEAL, INSPECTION, Cylinder Head.>

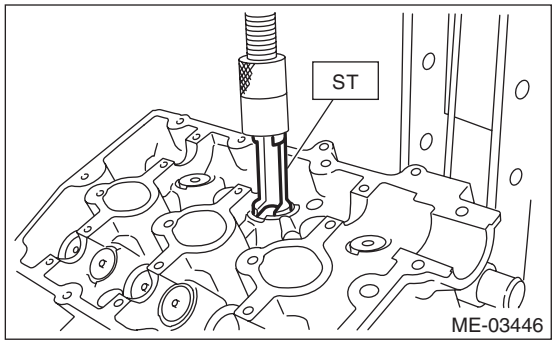

4) Remove the plug and filter from the front camshaft cap as necessary.

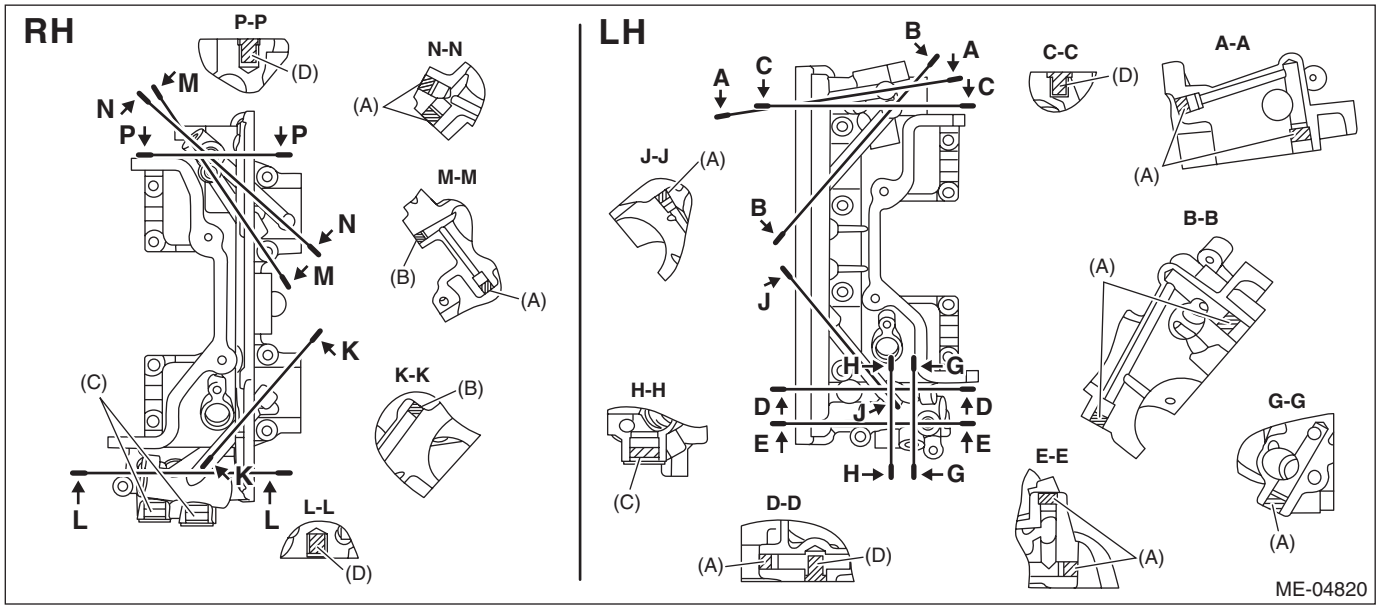

(A) Plug (PT 1/8)
(B) Plug (PT 1/16)
(C) Plug (M16 × 1.5)
(D) Filter

D: ASSEMBLY

1) Install the valve spring and valve.
(1) Set the cylinder head on ST.

ST 18250AA010 CYLINDER HEAD TABLE

(2) Coat the stem of each valve with engine oil and insert the valve into valve guide.

NOTE:
When inserting the valve into valve guide, use special care not to damage the oil seal lip.

(3) Install the valve spring and retainer.

NOTE:
- Be sure to install the valve spring with its close-coiled end facing the seat on cylinder head.
- Install the valve spring with the painted side facing to retainer.

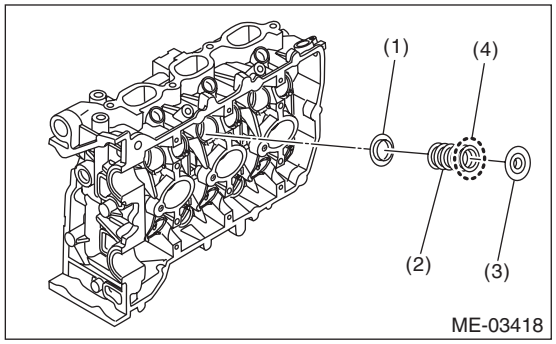

(1) Seat
(2) Valve spring
(3) Retainer
(4) Painted face

(4) Set the ST on valve spring.

ST 499718000 VALVE SPRING REMOVER

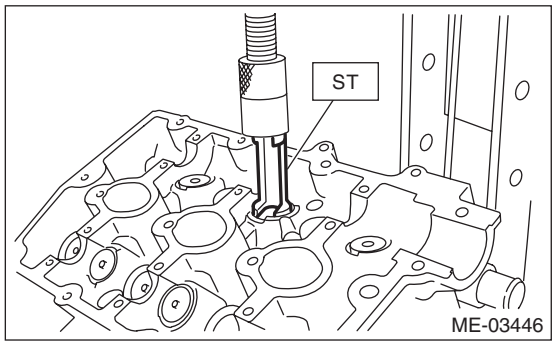

(5) Compress the valve spring and fit the valve spring retainer key.
(6) After installing, tap the valve spring retainers lightly with a wooden hammer for better seating.

2) Apply oil to the surface of valve lifter.
3) Install the valve lifter.

4) Install the plug and filter to the front camshaft cap as necessary.

Tightening torque:
T1: 9 N·m (0.9 kgf-m, 6.6 ft-lb)
T2: 17 N·m (1.7 kgf-m, 12.5 ft-lb)
T3: 23 N·m (2.3 kgf-m, 17.0 ft-lb)

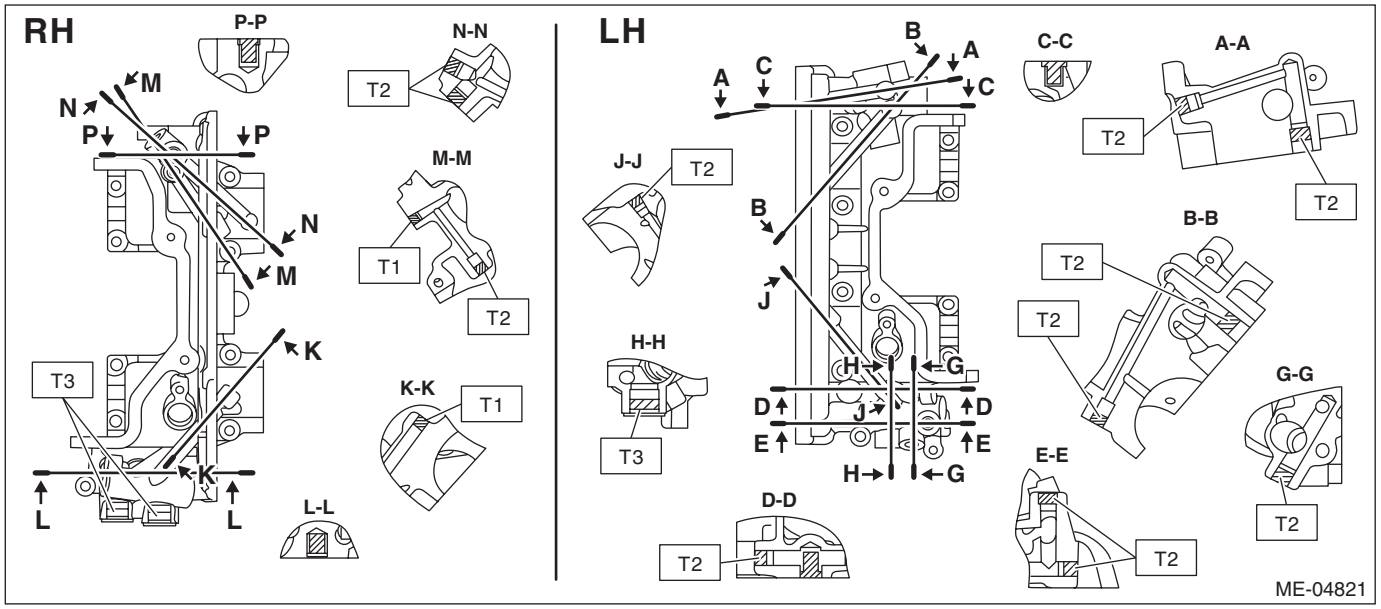

E: INSPECTION

1. CYLINDER HEAD

1) Make sure that there are no cracks or other damages. Perform visual check, and use liquid penetrant tester on the important sections. Check that there are no marks of gas leaking or water leaking on gasket installing surface.
2) Set the cylinder head on ST.
ST 18250AA010 CYLINDER HEAD TABLE
3) Check for warpage at mating surface between the cylinder block and cylinder head using a straight edge (A) and thickness gauge (B). If the warpage exceeds limit, replace the cylinder head.

Warping limit:
0.020 mm (0.0008 in)

Standard height of cylinder head:
124±0.05 mm (4.88±0.0020 in)

NOTE:
Uneven torque for the cylinder head bolts can cause warpage. When reinstalling, pay special attention to the torque so as to tighten evenly.

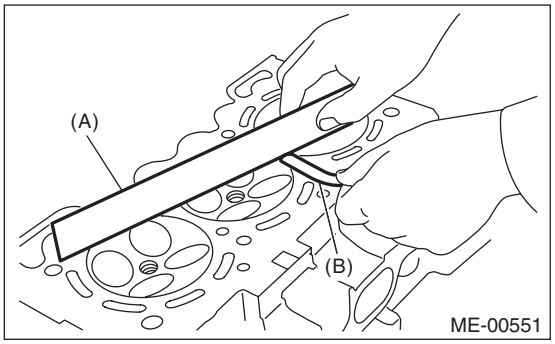

2. VALVE SEAT

Inspect the intake and exhaust valve seats, and correct the contact surfaces with a valve seat cutter if they are defective or when valve guides are replaced.

Contacting width of valve seat W:

Standard
Intake
1.0 mm (0.039 in)
Exhaust
1.5 mm (0.059 in)

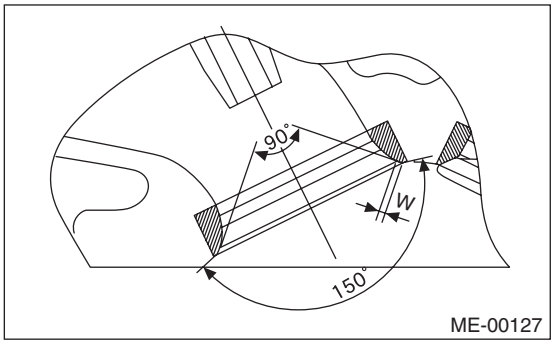

3. VALVE GUIDE

1) Check the clearance between valve guide and valve stem. The clearance can be checked by measuring the outer diameter of valve stem with a micrometer and the inner diameter of valve guide with a caliper gauge respectively.

Clearance between the valve guide and valve stem:

Standard
Intake
0.030 — 0.057 mm (0.0012 — 0.0022 in)
Exhaust
0.040 — 0.067 mm (0.0016 — 0.0026 in)

2) If the clearance between valve guide and valve stem exceeds the standard, replace the valve guide or valve itself, whichever shows the greater amount of wear or damage. See the following procedure for valve guide replacement.

Valve guide inner diameter:
5.500 — 5.512 mm (0.2165 — 0.2170 in)

Valve stem outer diameters:
Intake
5.455 — 5.470 mm (0.2148 — 0.2154 in)
Exhaust
5.445 — 5.460 mm (0.2144 — 0.2150 in)

(1) Place the cylinder head on ST1 with the combustion chamber upward so that valve guides fit the holes in ST1.

(2) Insert the ST2 into valve guide and press it down to remove the valve guide.

ST1 18250AA010 CYLINDER HEAD TABLE
ST2 499765700 VALVE GUIDE REMOVER

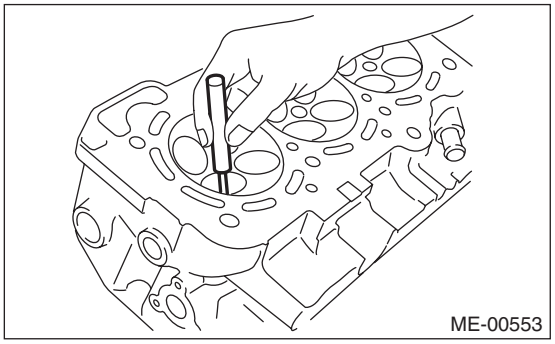

(3) Turn the cylinder head upside down and place the ST as shown in the figure.

ST 18251AA050 VALVE GUIDE ADJUSTER (INTAKE SIDE)
ST 18251AA060 VALVE GUIDE ADJUSTER (EXHAUST SIDE)

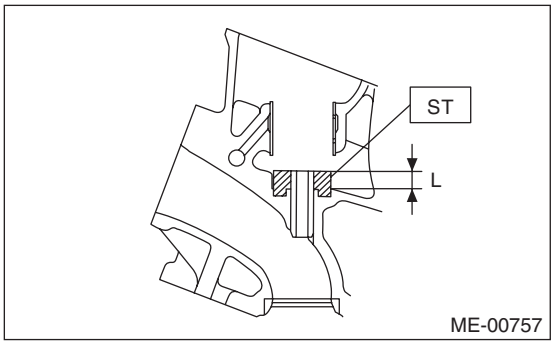

(4) Before installing a new valve guide, make sure that neither scratches nor damages exist on the inner surface of valve guide holes in cylinder head.

(5) Put a new valve guide, coated with sufficient oil, in the cylinder head, and insert the ST1 into valve guide. Press in until the valve guide upper end is flush with the upper surface of ST2.

ST1 499765700 VALVE GUIDE REMOVER
ST2 18251AA050 VALVE GUIDE ADJUSTER (INTAKE SIDE)
ST2 18251AA060 VALVE GUIDE ADJUSTER (EXHAUST SIDE)

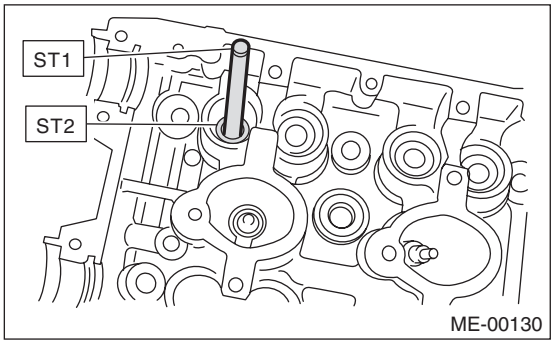

(6) Check the valve guide protrusion amount “L”.

Valve guide protrusion amount L:
Intake
8.6 — 9.0 mm (0.3386 — 0.3543 in)
Exhaust
10.7 — 11.1 mm (0.4213 — 0.4370 in)

(7) Ream the inside of valve guide using ST. Put the ST in valve guide, and rotate the ST slowly clockwise while pushing it lightly. Bring the ST back while rotating it clockwise.

ST 499765900 VALVE GUIDE REAMER

NOTE:
- Apply engine oil to the ST when reaming.
- If the inner surface of valve guide is damaged, the edge of ST should be slightly ground with oil stone.
- If the inner surface of valve guide becomes lustrous and the ST does not chip, use a new ST or remedy the ST.

(8) After reaming, clean the valve guide to remove chips.

(9) Recheck the contact condition between valve and valve seat after replacing the valve guide.

4. INTAKE AND EXHAUST VALVE

1) Check the flange and stem of the valve, and replace the valve with new one if damaged, worn, or deformed, “H” exceeds the standard, or if there is uneven wear.

Head edge thickness H:

Standard
Intake (A)
1.0 mm (0.039 in)
Exhaust (B)
1.2 mm (0.047 in)

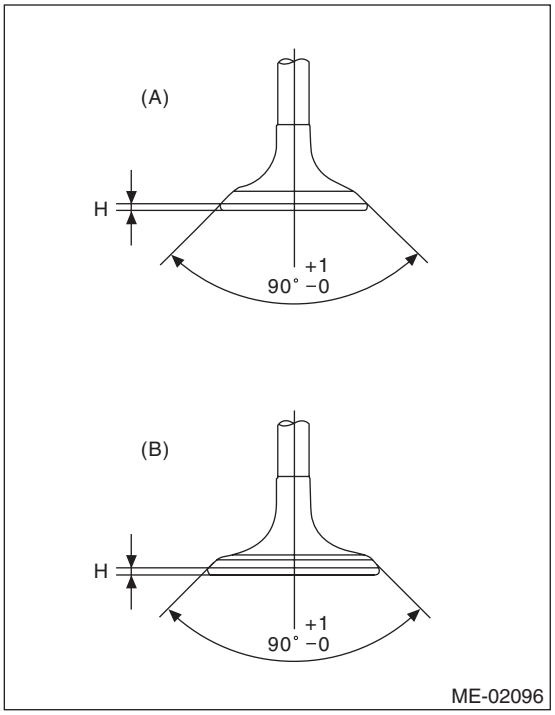

2) Put a small amount of grinding compound on the valve seat surface, and lap the valve and valve seat surface. Install a new valve oil seal after lapping.

NOTE:
It is possible to differentiate between the intake valve and the exhaust valve by their overall length.

Valve overall length:
Intake
103.5 mm (4.075 in)
Exhaust
103.2 mm (4.063 in)

5. VALVE SPRING

1) Check the valve springs for damage, free length, and tension. Replace the valve spring if it is not within the standard value presented in the table.
2) To measure the squareness of the valve spring, stand the valve spring on a surface plate and measure its deflection at the top of the spring using a try square.

Free length mm (in)		49.06 (1.9315)
Tension/spring height N (kgf, lb)/mm (in)	Set	182 — 210 (18.6 — 21.4, 40.9 — 47.2) /31.0 (1.220 in)
	Lift	316 — 350 (32.2 — 35.7, 71.0 — 78.7) /21.0 (0.827 in)
Squareness		2.5°, 2.1 mm (0.083 in) or less

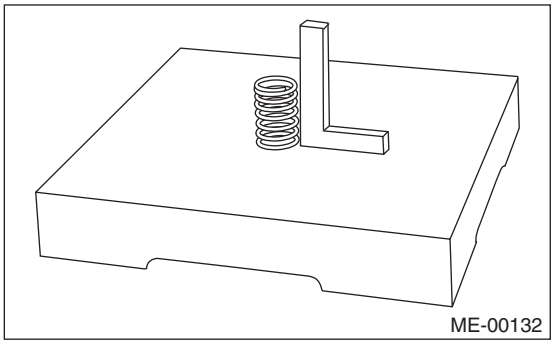
ME-00132

6. INTAKE AND EXHAUST VALVE OIL SEAL

1) For the following, replace the oil seal with a new part.
- When the lip is damaged.
- When the spring is out of the specified position.
- When readjusting the surfaces of valve and valve seat.
- When replacing the valve guide.

2) Set the cylinder head on ST1.
3) Using the ST2, press in the oil seal.
ST1 18250AA010 CYLINDER HEAD TABLE
ST2 18261AA010 VALVE OIL SEAL GUIDE

NOTE:
- Apply engine oil to oil seal before press-fitting.
- When press-fitting the oil seal, do not use a hammer to strike in.

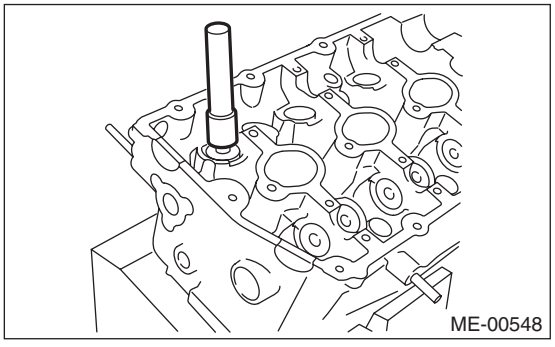
ME-00548

7. VALVE LIFTER

1) Check the valve lifter visually.
2) Measure the outer diameter of valve lifter.

Outer diameter of valve lifter:
32.959 — 32.975 mm (1.2976 — 1.2982 in)

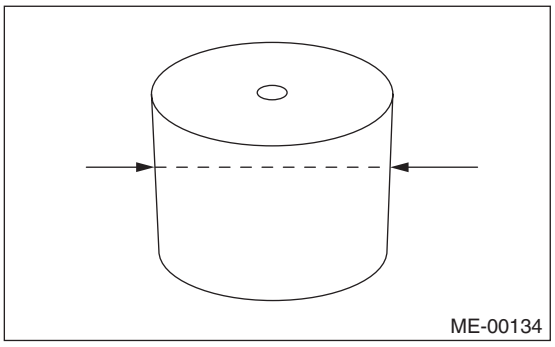

3) Measure the inner diameter of valve lifter mating surface on cylinder head.

Inner diameter of valve lifter mating surface:
32.994 — 33.016 mm (1.2990 — 1.2998 in)

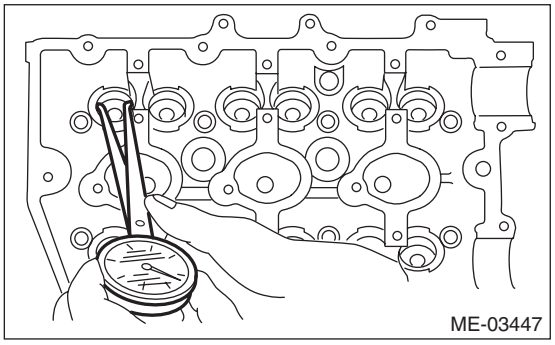

4) Check the clearance between valve lifter and valve lifter mating surface. The clearance can be checked by measuring the outer diameter of valve lifter and the inner diameter of valve lifter. If it exceeds the standard or offset wear occurs, replace the cylinder head.

Valve lifter and valve lifter mating surface clearance:
Standard
0.019 — 0.057 mm (0.0007 — 0.0022 in)

20.Cylinder Block

A: REMOVAL

NOTE:
Before conducting this procedure, drain the engine oil completely.
1) Remove the engine from vehicle. <Ref. to ME(H6DO)-41, REMOVAL, Engine Assembly.>
2) Remove the crank pulley. <Ref. to ME(H6DO)-79, REMOVAL, Crank Pulley.>
3) Remove the chain cover. <Ref. to ME(H6DO)-81, REMOVAL, Chain Cover.>
4) Remove the timing chain assembly. <Ref. to ME(H6DO)-88, REMOVAL, Timing Chain Assembly.>
5) Remove the cam sprocket. <Ref. to ME(H6DO)-107, REMOVAL, Cam Sprocket.>
6) Remove the crank sprocket. <Ref. to ME(H6DO)-109, REMOVAL, Crank Sprocket.>
7) Remove the camshaft. <Ref. to ME(H6DO)-110, REMOVAL, Camshaft.>
8) Remove the cylinder head. <Ref. to ME(H6DO)-119, REMOVAL, Cylinder Head.>
9) Remove the drive plate. <Ref. to CVT(TR690)-155, REMOVAL, Drive Plate.>
10) Remove the crankshaft position sensor.

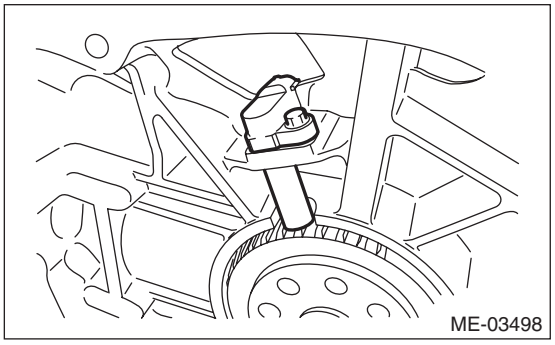
ME-03498

11) Remove the crankshaft position sensor plate.

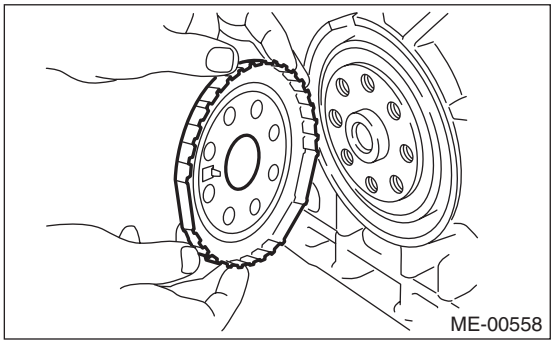
ME-00558

12) Rotate the engine to set oil pan upper.
13) Remove the bolts which secure oil pan lower to oil pan upper.

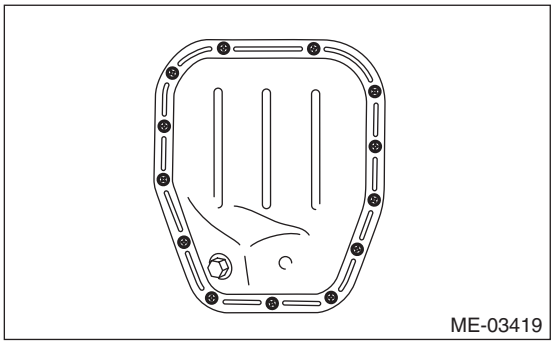
ME-03419

14) Insert an oil pan cutter blade into the gap between oil pan upper and oil pan lower, and remove the oil pan lower.

CAUTION:
Do not use a screwdriver or similar tools in place of oil pan cutter.

15) Remove the oil cooler connector and remove the oil cooler.

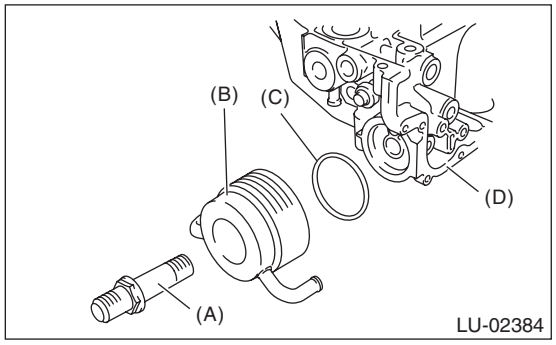

(A) Oil cooler connector
(B) Oil cooler
(C) O-ring
(D) Oil pan upper

16) Remove the oil pump. <Ref. to LU(H6DO)-16, REMOVAL, Oil Pump.>
17) Remove the oil level switch. <Ref. to LU(H6DO)-26, REMOVAL, Oil Level Switch.>
18) Remove the thermostat cover, and then remove the thermostat.

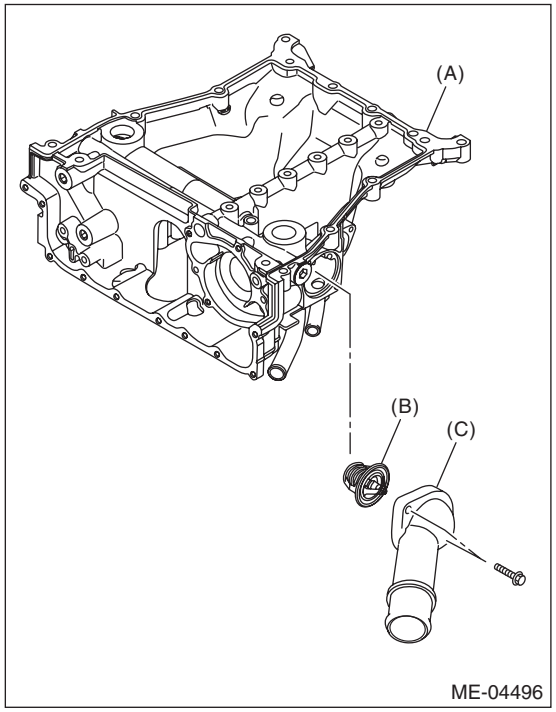

(A) Oil pan upper
(B) Thermostat
(C) Thermostat cover

19) Remove the oil pan upper.

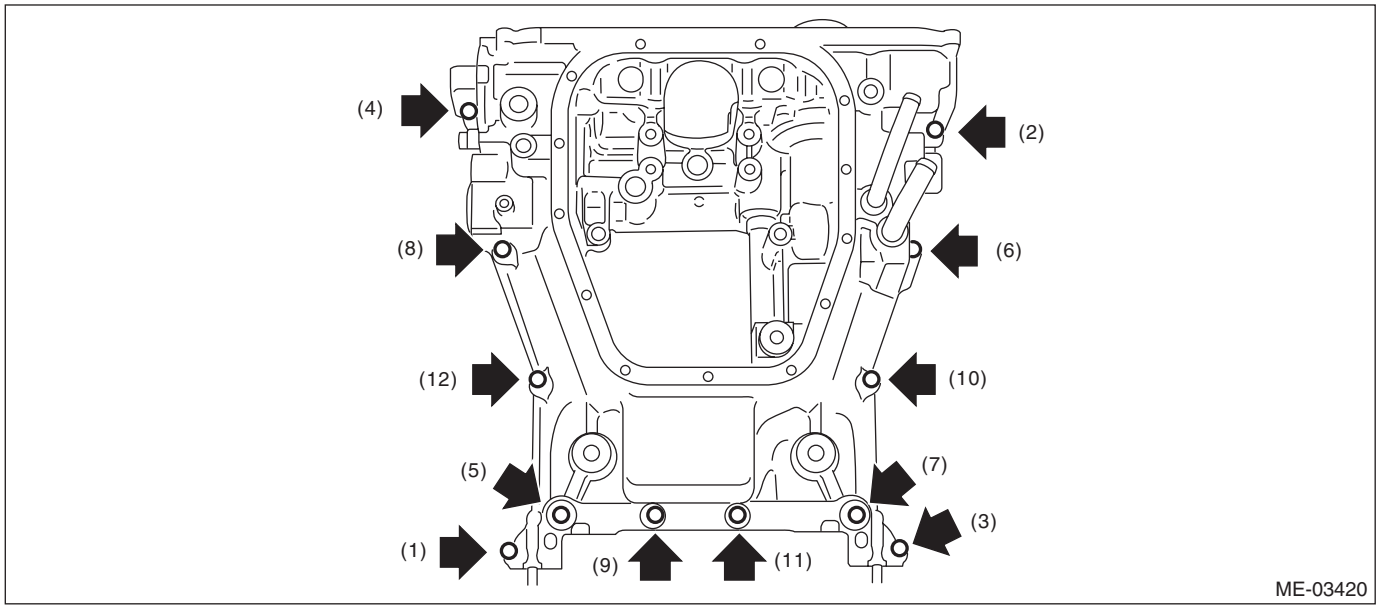

20) Face the front of the engine up, standing the engine on one end.

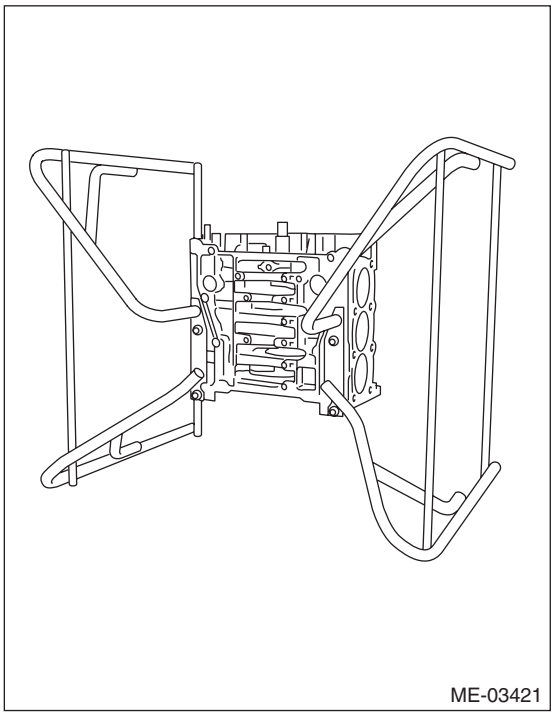

21) Remove ten O-rings from the underside of the cylinder block.

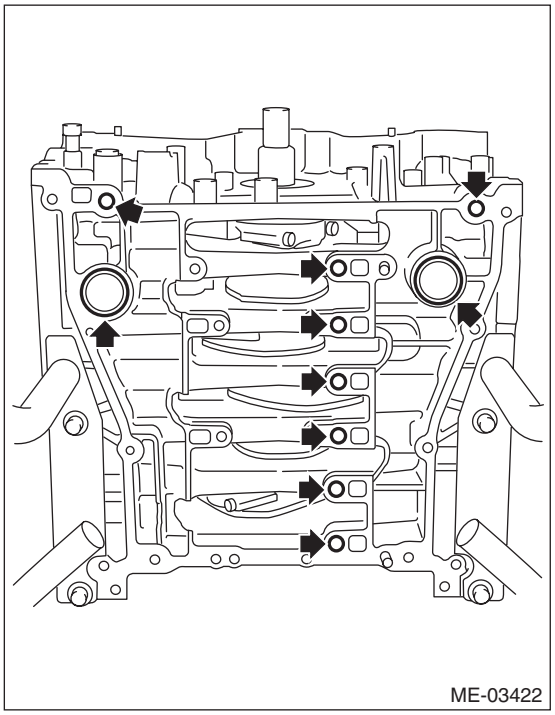

22) Mark the direction of front and the number of connecting rod caps.
23) Remove the #1 and #4 connecting rod caps and pistons from the cylinder block.

NOTE:
- Use 3/8 inch (9.5 sq.) for the extension and TORX® socket (E12).
- After removing the two connecting rod connection bolts, turning the crankshaft (ST) counterclockwise will remove the connecting rod cap.
- Mark each connecting rod cap and piston with connecting rod cap number and piston number.
- The removal of all connecting rod caps and pistons are performed in three separate steps. First, remove the #1 and #4 connecting rod caps and pistons are simultaneously, then the #2 and #5 connecting rod caps and pistons simultaneously, and then the #3 and #6 connecting rod caps and pistons simultaneously.

(1) Using the ST, turn the crankshaft and set the #1 piston at the mid point between TDC and BDC.
ST 18252AA000 CRANKSHAFT SOCKET
(2) Remove the two #1 connecting rod cap connection bolts, and remove the connecting rod cap.

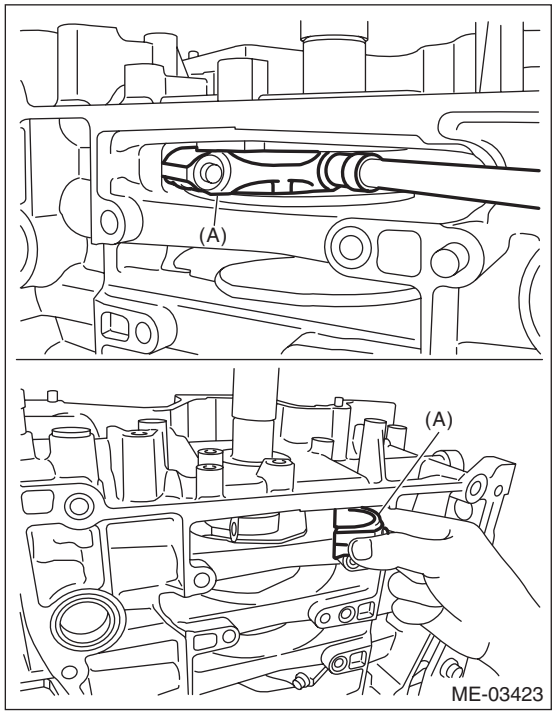

(A) #1 connecting rod cap

(3) Remove the two #4 connecting rod cap connection bolts, and remove the connecting rod cap.

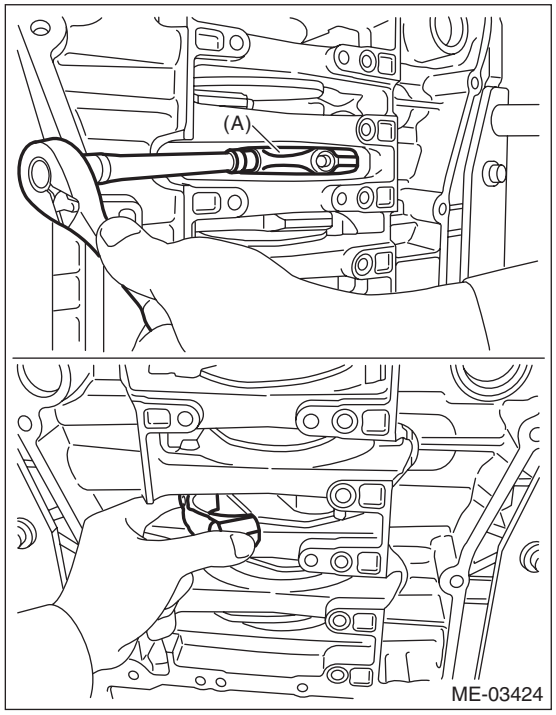

(A) #4 connecting rod cap

(4) Using the ST, turn the crankshaft and separate the positions of the crank pin and the large end of the #1 connecting rod.

ST 18252AA000 CRANKSHAFT SOCKET

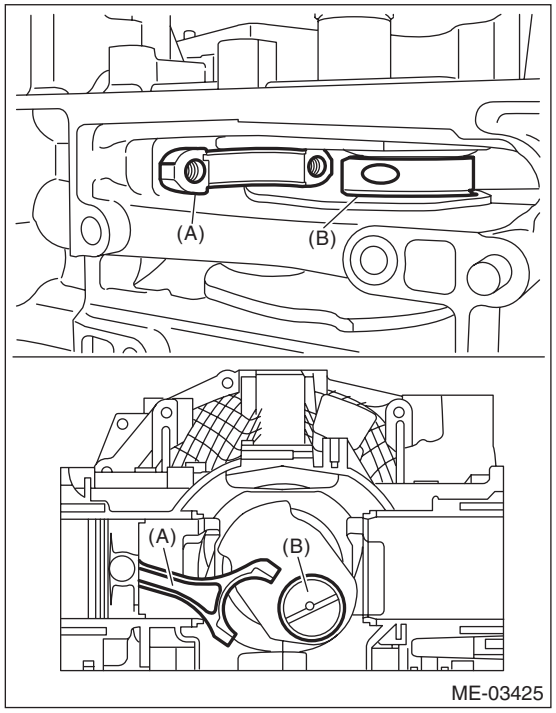

(A) #1 connecting rod
(B) Crank pin

(5) Push the #1 connecting rod in the direction of the arrow, and remove the #1 piston and connecting rod from the cylinder block.

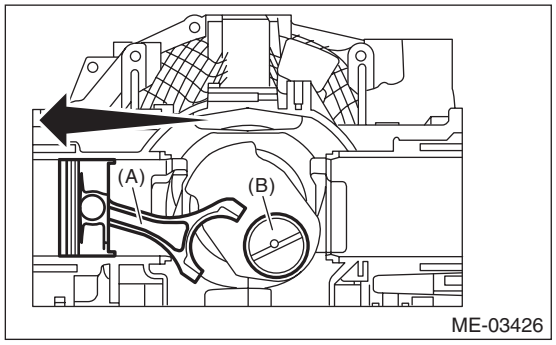

(A) #1 connecting rod
(B) Crank pin

(6) Using the ST, turn the crankshaft and separate the positions of the crank pin and the large end of the #4 connecting rod.

ST 18252AA000 CRANKSHAFT SOCKET

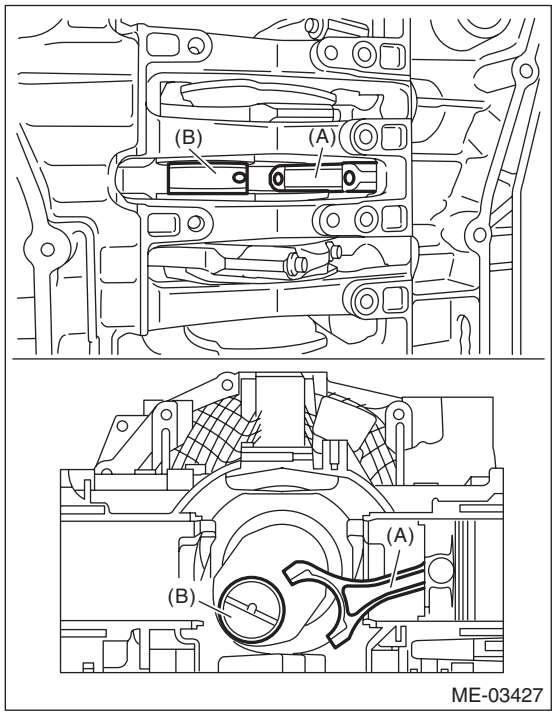

(A) #4 connecting rod
(B) Crank pin

(7) Push the #4 connecting rod in the direction of the arrow, and remove the #4 piston and connecting rod from the cylinder block.

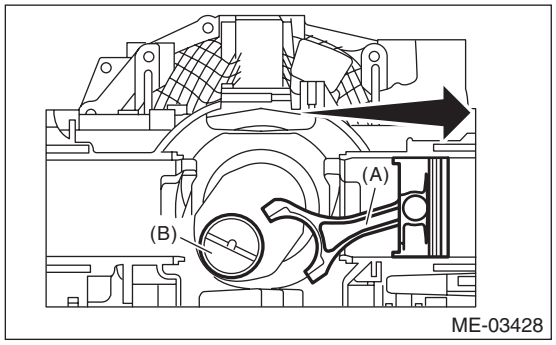

(A) #4 connecting rod
(B) Crank pin

24) Remove the #2 and #5 connecting rods and pistons from the cylinder block in the same manner.

ST 18252AA000 CRANKSHAFT SOCKET

25) Remove the #3 and #6 connecting rods and pistons from the cylinder block in the same manner.

ST 18252AA000 CRANKSHAFT SOCKET

26) Face the cylinder block (RH) up.

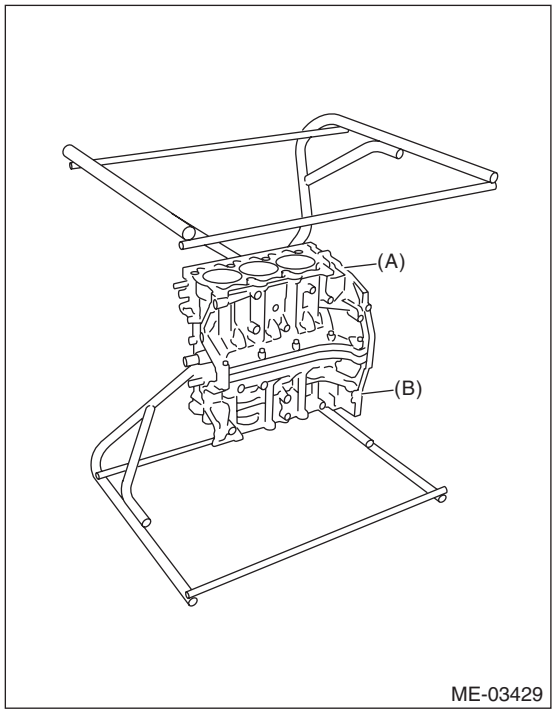

(A) Cylinder block (RH)
(B) Cylinder block (LH)

27) Remove the upper bolt.

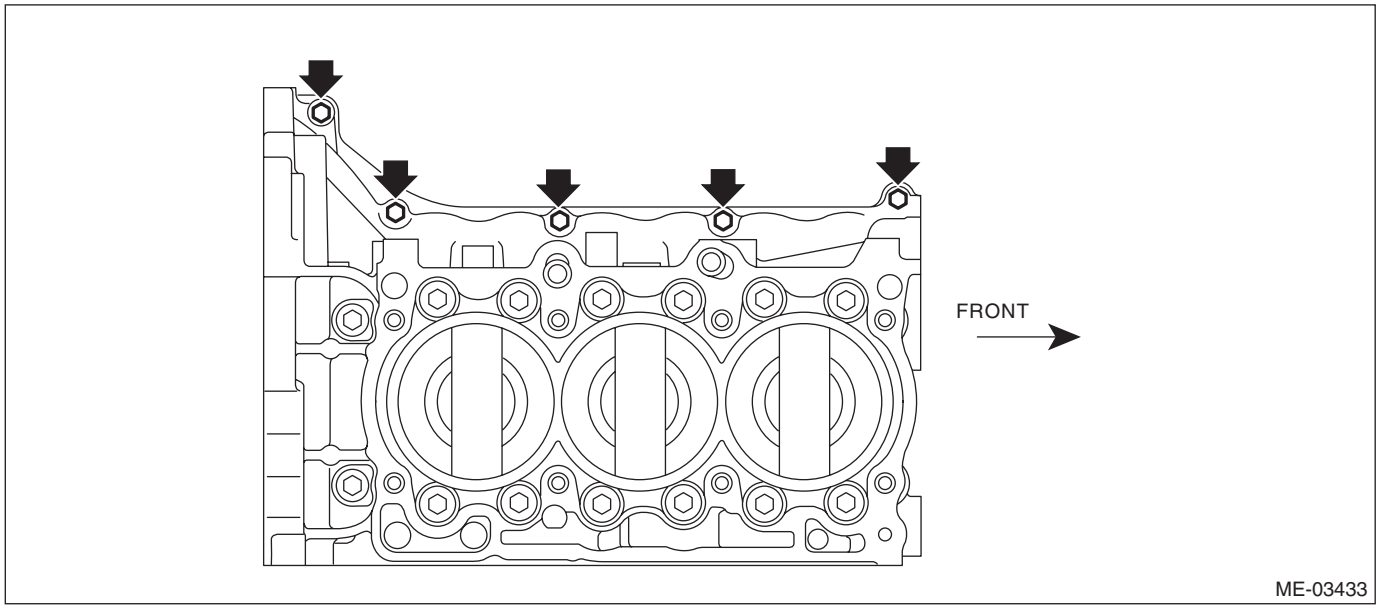

28) Loosen the cylinder block bolts in the order indicated in the figure, and separate cylinder block (RH) and (LH).

NOTE:
Confirm that the crankshaft is remaining in the cylinder block (LH).
If the cylinder block (RH) is lifted carelessly when separating, the crankshaft may stick to cylinder block (RH), then fall off.

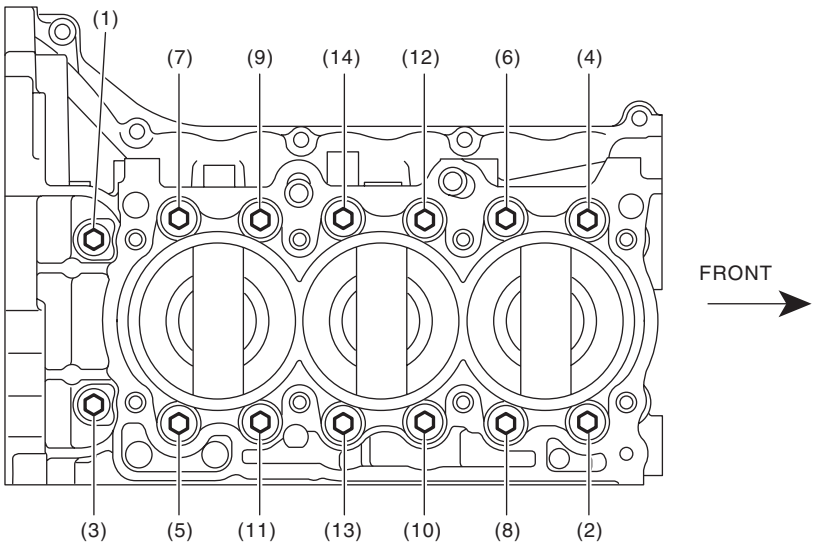

29) Remove the rear oil seal.
30) Remove the crankshaft from cylinder block (LH).
31) Remove the crankshaft bearings from cylinder block using a hammer handle.

NOTE:
- Do not confuse the combination of crankshaft bearings.
- Press the bearing at the end opposite to locking lip.

B: INSTALLATION

1) After setting the cylinder block to ST, install the crankshaft bearing.
ST 18232AA000 ENGINE STAND

NOTE:
Apply a coat of engine oil to the bearing and crankshaft journal.
2) Mount the crankshaft in cylinder block (LH).

3) Apply liquid gasket to the mating surfaces of cylinder block (RH).

CAUTION:
Do not allow liquid gasket to run over into oil passages, bearing grooves, etc.

NOTE:
Install within 5 min. after applying liquid gasket.

Liquid gasket:
THREE BOND 1217G (Part No. K0877Y0100), THREE BOND 1217H or equivalent

Liquid gasket applying diameter:
1.0±0.2 mm (0.039±0.008 in)

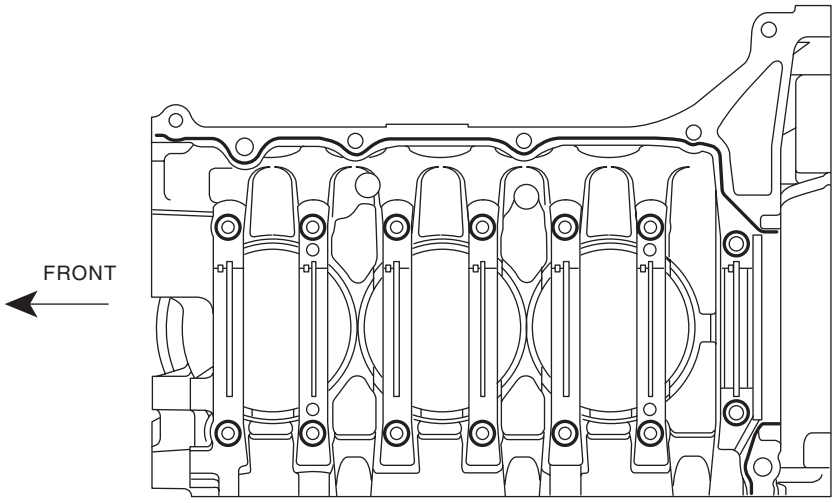

ME-03431

4) Attach cylinder block (RH) to cylinder block (LH).
5) Apply a coat of engine oil to the washer and bolt thread.
6) Tighten all bolts in the numerical order as shown in the figure.

Tightening torque:
12 N·m (1.2 kgf-m, 8.9 ft-lb)

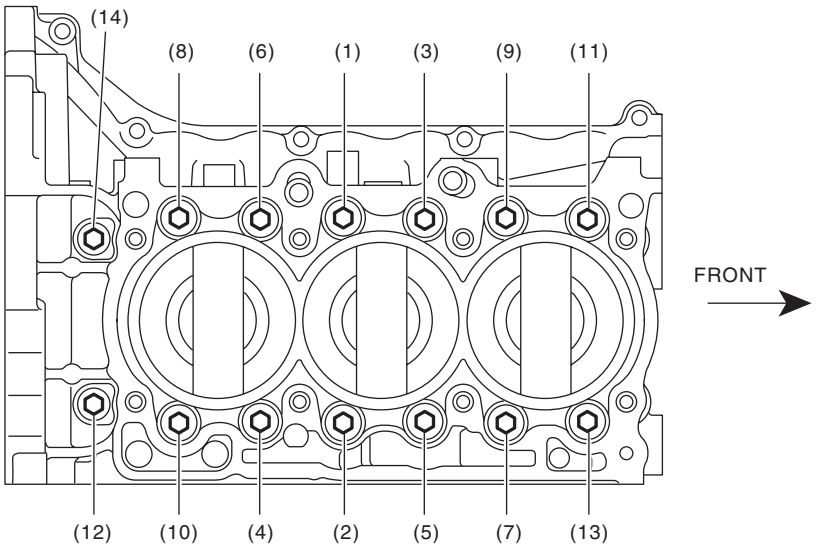

ME-03432

7) Retighten all bolts in the numerical order as shown in the figure.

Tightening torque:
18 N·m (1.8 kgf-m, 13.3 ft-lb)

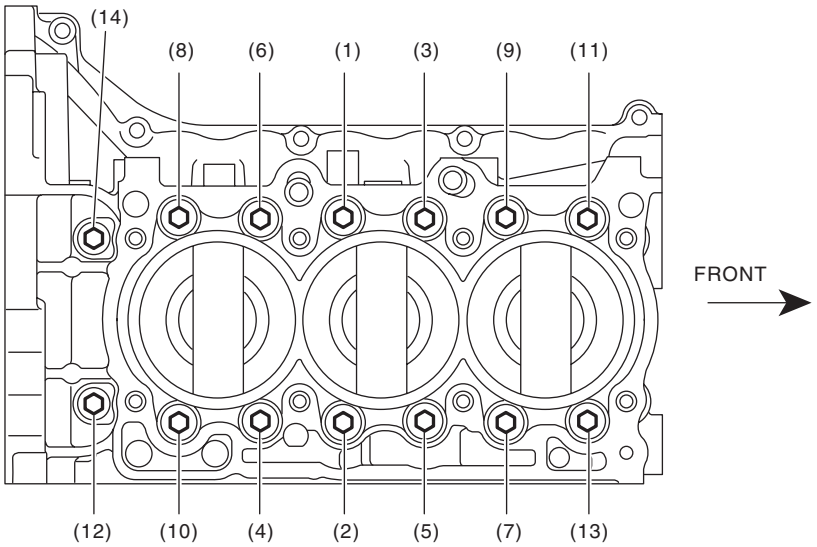

8) Tighten all bolts by 90° in numerical order as shown in the figure.

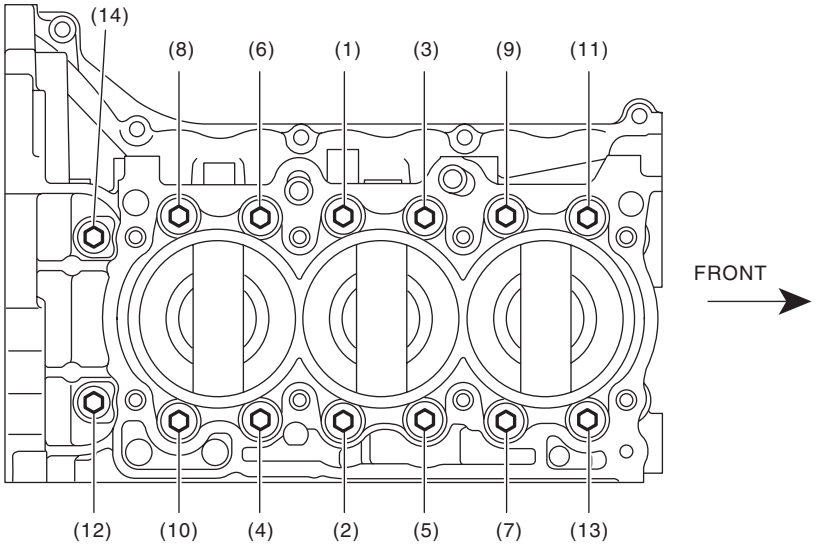

9) Install the upper bolt to cylinder block.

Tightening torque:
25 N·m (2.5 kgf-m, 18.4 ft-lb)

NOTE:
Remove any liquid gasket squeezed out onto the seal surface between the chain cover and oil pan upper, after tightening the cylinder block connecting bolts.

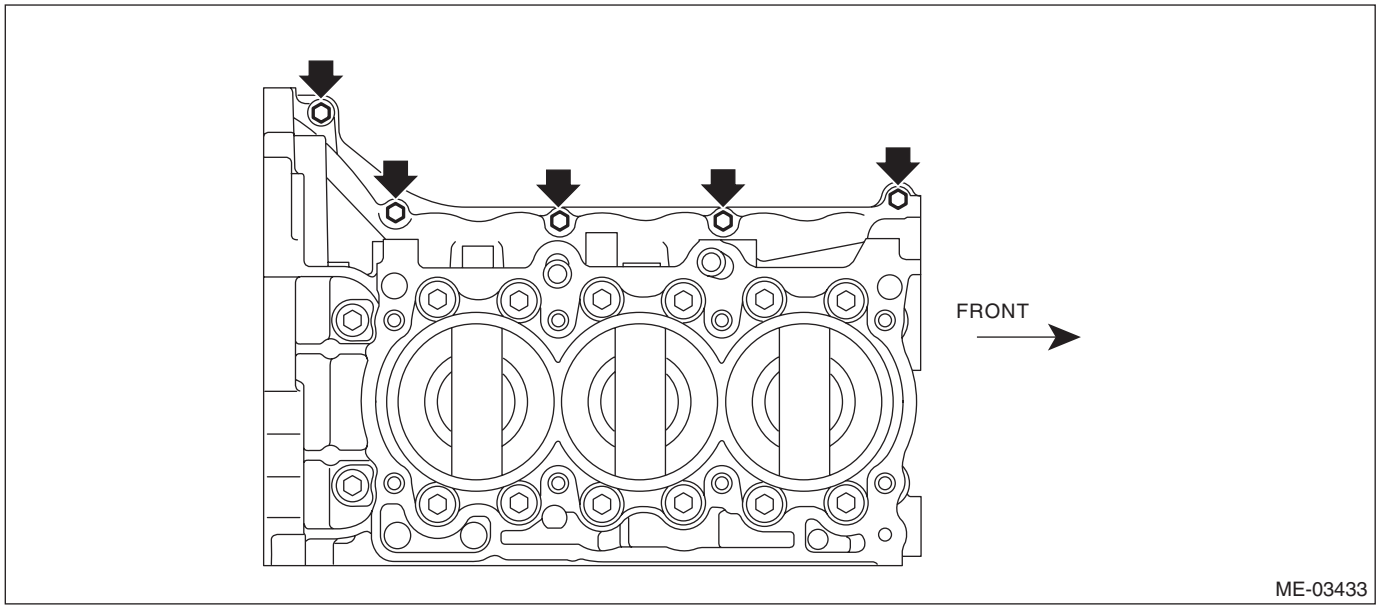

10) Apply a coat of engine oil to the oil seal inner periphery and outer periphery, and install the rear oil seal using ST1 and ST2.

NOTE:
Use a new rear oil seal.
ST1 499597100 CRANKSHAFT OIL SEAL GUIDE
ST2 499587200 CRANKSHAFT OIL SEAL INSTALLER

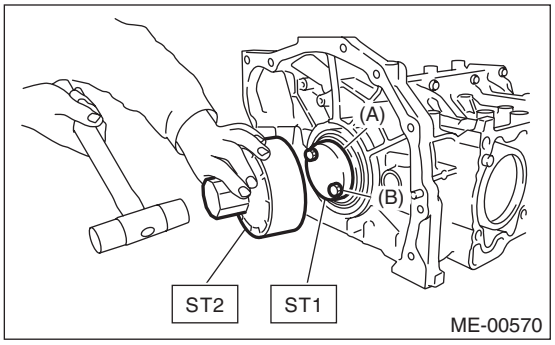

(A) Rear oil seal
(B) Drive plate installation bolt

11) Face the front of the engine up, standing the engine on one end.

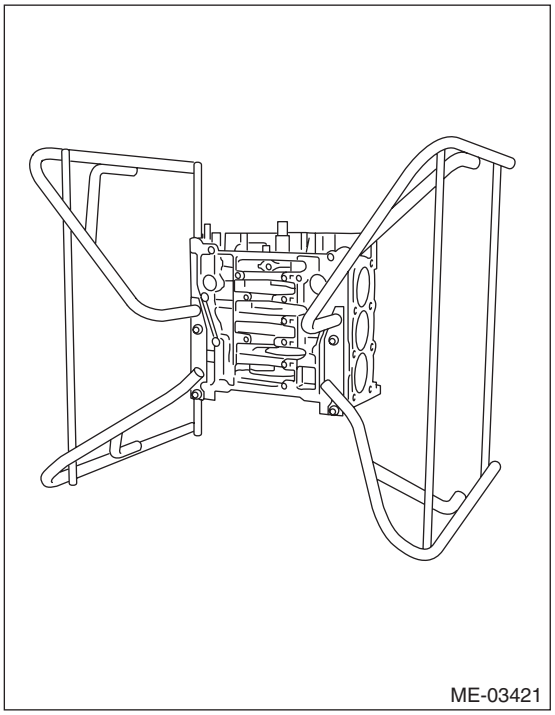

12) Attach the piston ring and oil ring to the piston.
(1) Position the top ring gap at (A) in the figure.
(2) Position the second ring gap at (B).

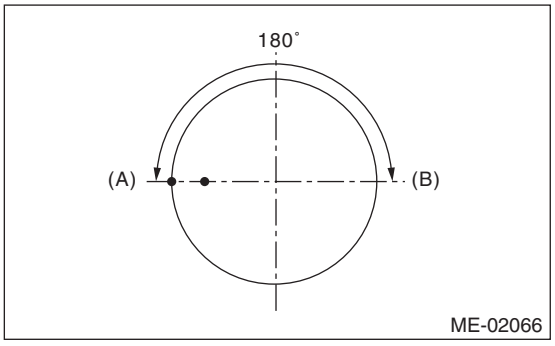

(3) Position the upper rail gap at (C) in the figure.
(4) Position the expander gap at (D) in the figure.
(5) Position the lower rail gap at (E) in the figure.

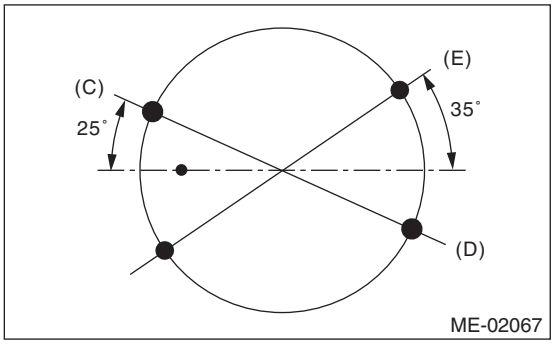

CAUTION:
- **Make sure ring gaps do not face the same direction.**
- **Make sure ring gaps are not within the piston skirt area.**
- **Assemble so that the stamp mark N faces towards the top of the piston.**

13) Install the #1 piston and connecting rod to the cylinder block.
(1) Apply engine oil to the outer circumference of the piston and in the cylinder block.
(2) Face the front mark of piston (A) towards the front of the engine, and set the piston to the ST.

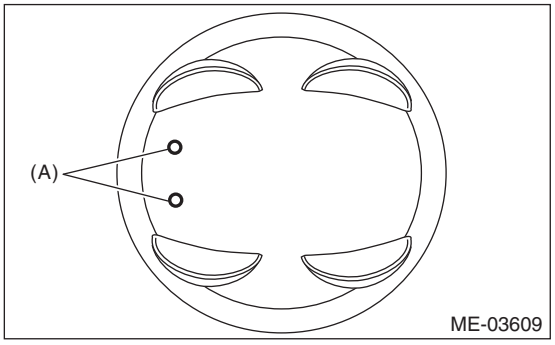

(3) Using ST, press-fit the piston into cylinder block.

NOTE:
When inserting the piston into the cylinder block, perform according to the items listed below.
- Insert while lightly tapping the top of the piston with the handle of a plastic hammer.
- Insert while making sure that the large end of the connecting rod does not scratch the cylinder liner.
- Insert while continually making sure that the large end of the connecting rod does not touch the crankshaft.

ST 398744300 PISTON GUIDE

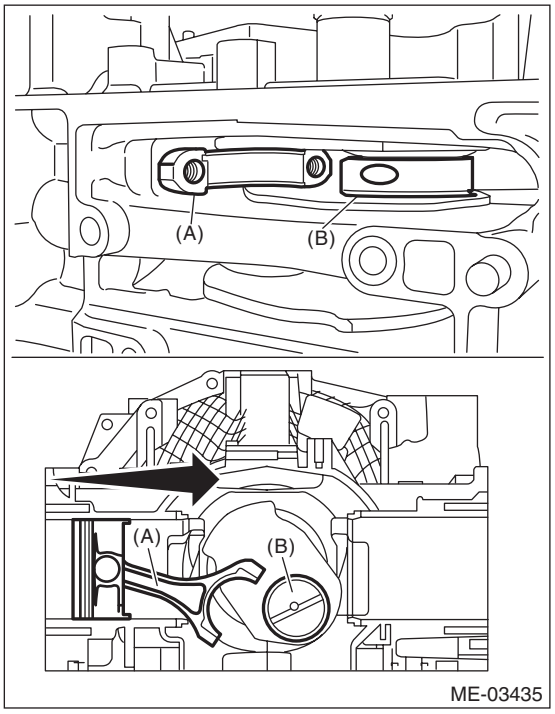

(A) #1 connecting rod
(B) Crank pin

(4) Using the ST, turn the crankshaft and match the positions of the crank pin and the large end of the connecting rod.

ST 18252AA000 CRANKSHAFT SOCKET

(5) Install the connecting rod cap.
1. Tighten the #1 connecting rod cap bolts to 10 N·m (1.0 kgf-m, 7.4 ft-lb) in numerical order as shown in the figure, then retighten the bolts to 29 N·m (3.0 kgf-m, 21.4 ft-lb) in numerical order as shown in the figure.
2. Using an angle gauge, tighten the connecting rod cap bolts to the specified angle in numerical order as shown in the figure.

Tightening angle:
90° — 95°

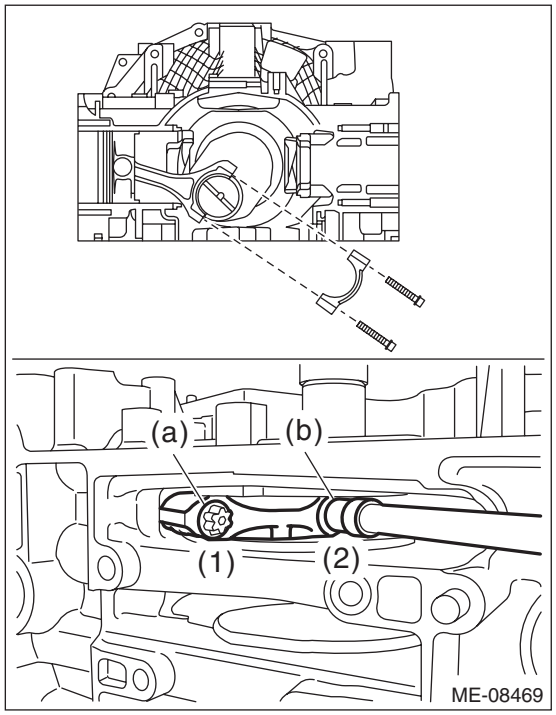

(a) Exhaust side (b) Intake side

14) In the same procedures as for the #1 piston, install the piston and connecting rods to the cylinder block, in the order of #2, #3, #4, #5 and #6.

15) Install the O-ring to the underside of the cylinder block.

NOTE:
Use new O-rings.

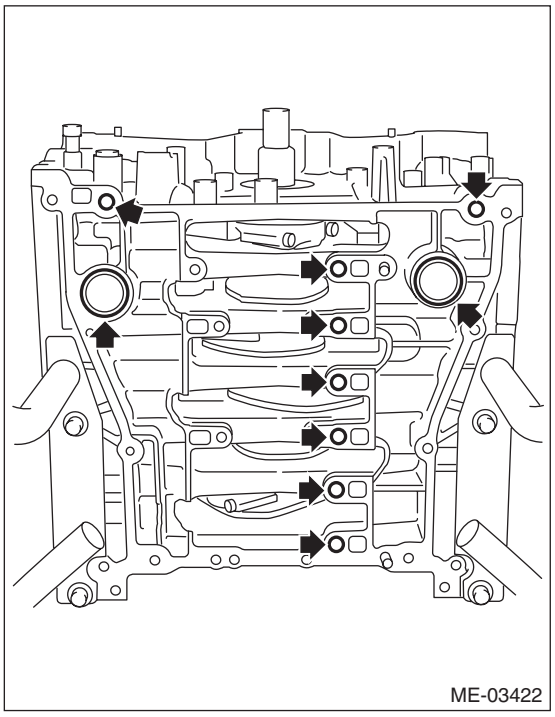

16) Apply liquid gasket to the mating surface of oil pan upper.

NOTE:
Install within 5 min. after applying liquid gasket.

Liquid gasket:
THREE BOND 1217G (Part No. K0877Y0100), THREE BOND 1217H or equivalent

Liquid gasket applying diameter:
5.0±1.0 mm (0.20±0.04 in)

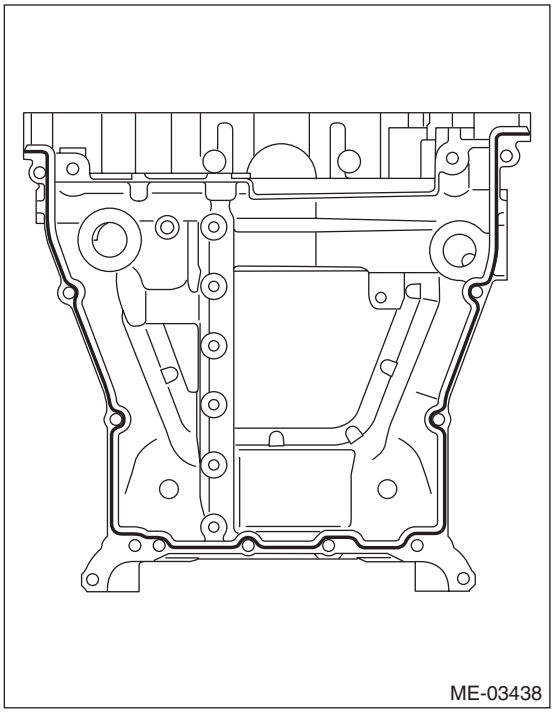

17) Temporarily tighten the oil pan upper.
18) Tighten the oil pan upper installing bolts in the numerical order as shown in the figure.

Tightening torque:
18 N·m (1.8 kgf-m, 13.3 ft-lb)

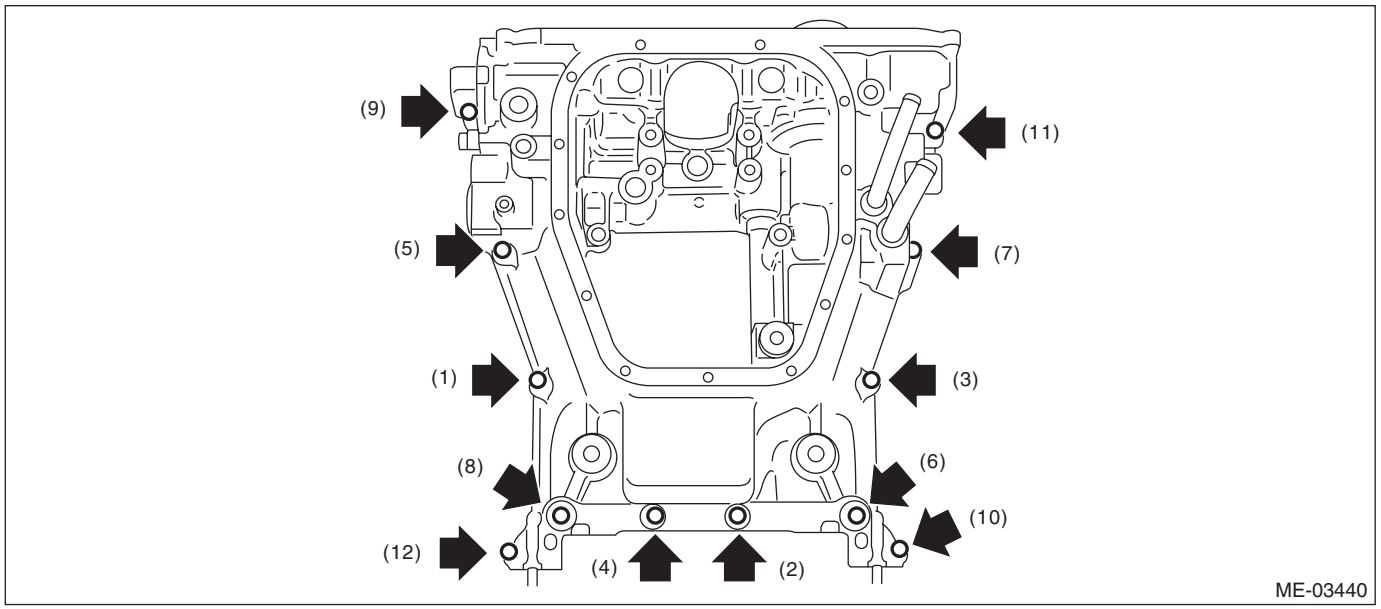

19) Install the thermostat and thermostat cover.

Tightening torque:
6.4 N·m (0.7 kgf-m, 4.7 ft-lb)

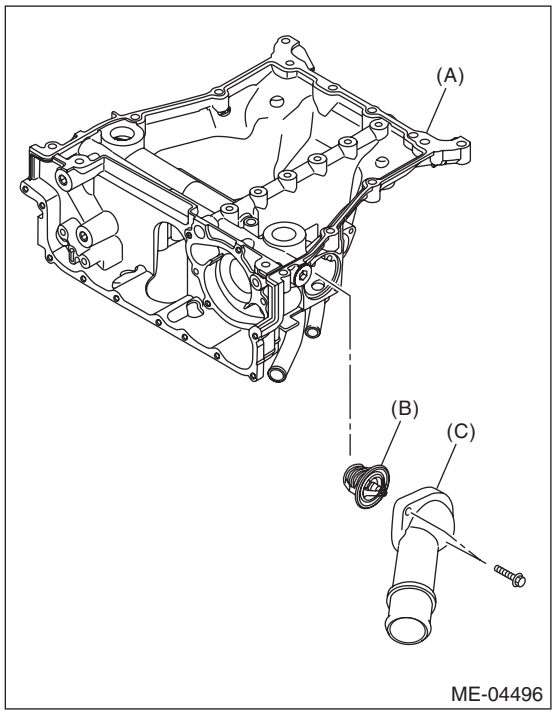

(A) Oil pan upper
(B) Thermostat
(C) Thermostat cover

20) Install the oil level switch. <Ref. to LU(H6DO)-27, INSTALLATION, Oil Level Switch.>
21) Install the oil pump. <Ref. to LU(H6DO)-17, INSTALLATION, Oil Pump.>

22) Tighten the oil cooler connector to install the oil cooler to the oil pan upper.

Tightening torque:
54 N·m (5.5 kgf-m, 39.8 ft-lb)

NOTE:
Use new O-rings.

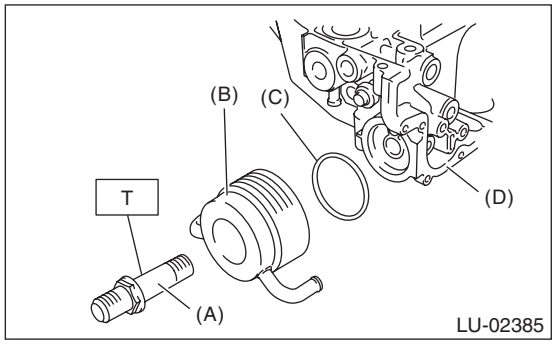

(A) Oil cooler connector
(B) Oil cooler
(C) O-ring
(D) Oil pan upper

23) Apply liquid gasket to the matching surface of oil pan lower.

NOTE:
Install within 5 min. after applying liquid gasket.

Liquid gasket:
THREE BOND 1217G (Part No. K0877Y0100), THREE BOND 1217H or equivalent

Liquid gasket applying diameter:
5.0±1.0 mm (0.20±0.04 in)

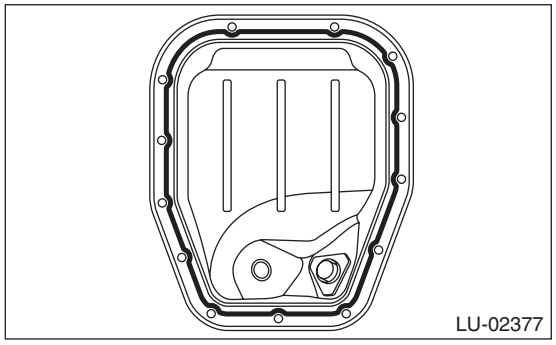

24) Tighten the oil pan lower installing bolts in the numerical order as shown in the figure.

Tightening torque:
6.4 N·m (0.7 kgf-m, 4.7 ft-lb)

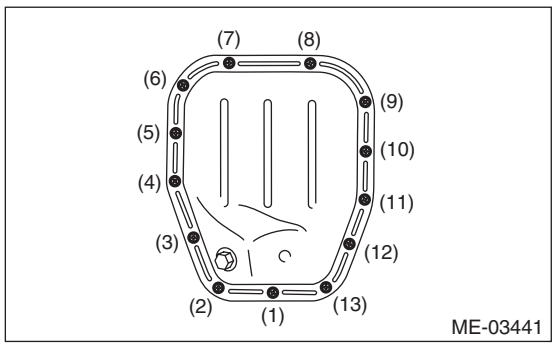

25) Install the crankshaft position sensor plate.

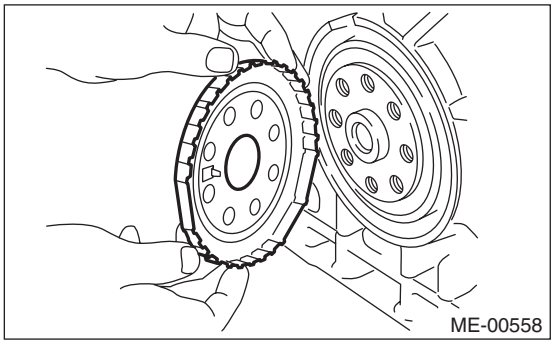

26) Install the crankshaft position sensor.

Tightening torque:
6.4 N·m (0.7 kgf-m, 4.7 ft-lb)

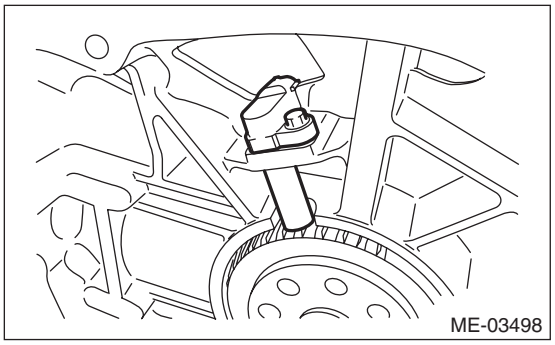

27) Install the drive plate. <Ref. to CVT(TR690)-155, INSTALLATION, Drive Plate.>
28) Install the cylinder head. <Ref. to ME(H6DO)-120, INSTALLATION, Cylinder Head.>
29) Install the camshaft. <Ref. to ME(H6DO)-111, INSTALLATION, Camshaft.>
30) Install the crank sprocket. <Ref. to ME(H6DO)-109, INSTALLATION, Crank Sprocket.>
31) Install the cam sprocket. <Ref. to ME(H6DO)-108, INSTALLATION, Cam Sprocket.>
32) Install the timing chain assembly. <Ref. to ME(H6DO)-94, INSTALLATION, Timing Chain Assembly.>
33) Install the chain cover. <Ref. to ME(H6DO)-82, INSTALLATION, Chain Cover.>
34) Install the crank pulley. <Ref. to ME(H6DO)-80, INSTALLATION, Crank Pulley.>
35) Install the engine to the vehicle. <Ref. to ME(H6DO)-51, INSTALLATION, Engine Assembly.>

C: DISASSEMBLY

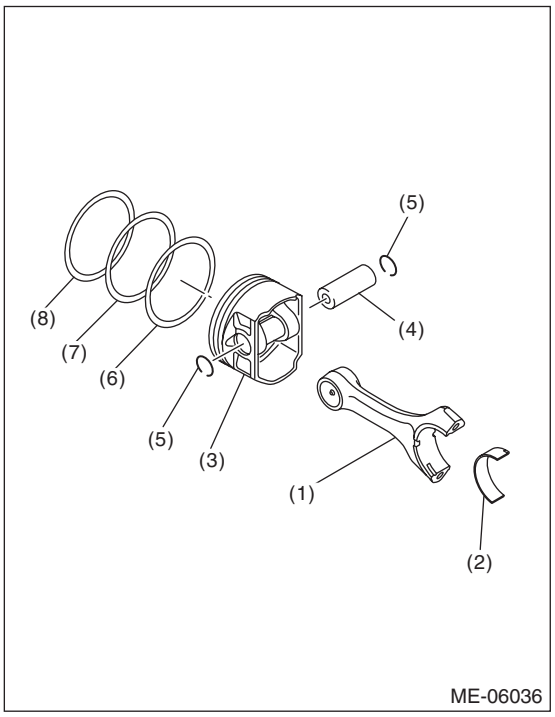

(1) Connecting rod
(2) Connecting rod bearing
(3) Piston
(4) Piston pin
(5) Circlip
(6) Oil ring
(7) Second ring
(8) Top ring

NOTE:
To prevent confusion of various parts, mark each part.
1) Remove the connecting rod bearing.
2) Remove the piston rings using piston ring expander.
3) Remove the oil ring by hand.

NOTE:
Arrange the removed piston rings in proper order, to prevent confusion.
4) Remove the circlip on one end from the piston using a flat tip screwdriver.

NOTE:
Be careful not damage the piston, by wrapping the tip of flat tip screwdriver with tape.
5) Remove the piston pin from the piston.
6) Separate the piston and connecting rod.

NOTE:
Mark the direction of front side to each connecting rod.
7) Remove the circlip on other end from the piston using a flat tip screwdriver.

NOTE:
Be careful not damage the piston, by wrapping the tip of flat tip screwdriver with tape.
8) Remove the plug and orifice from the cylinder block as necessary. <Ref. to ME(H6DO)-12, CYLINDER BLOCK, COMPONENT, General Description.>

D: ASSEMBLY

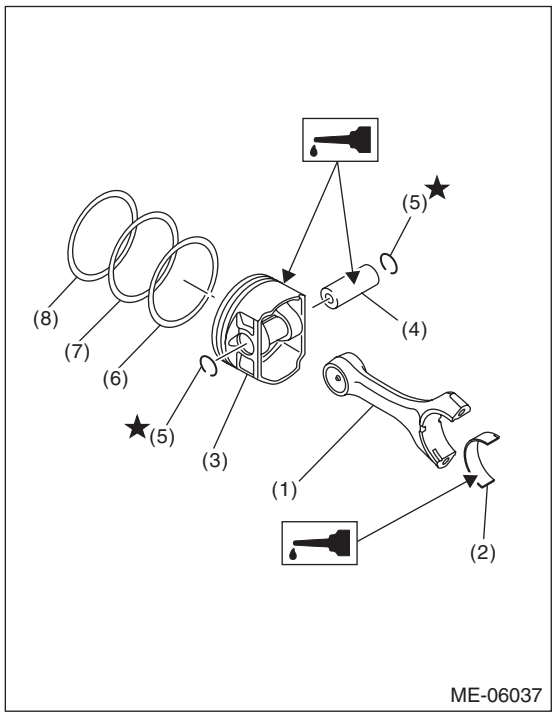

(1) Connecting rod
(2) Connecting rod bearing
(3) Piston
(4) Piston pin
(5) Circlip
(6) Oil ring
(7) Second ring
(8) Top ring

1) Apply engine oil to the surface of the connecting rod bearing. Attach the connecting rod bearing to the connecting rod.

2) Install the circlip on one end of the piston using a flat tip screwdriver.

NOTE:
- Be careful not damage the piston, by wrapping the tip of flat tip screwdriver with tape.
- Make sure the circlip is firmly inserted into the circlip groove.
- After installing the circlip, rotate the circlip so that its end part (a) and the cutout portion of circlip groove (b) do not match.

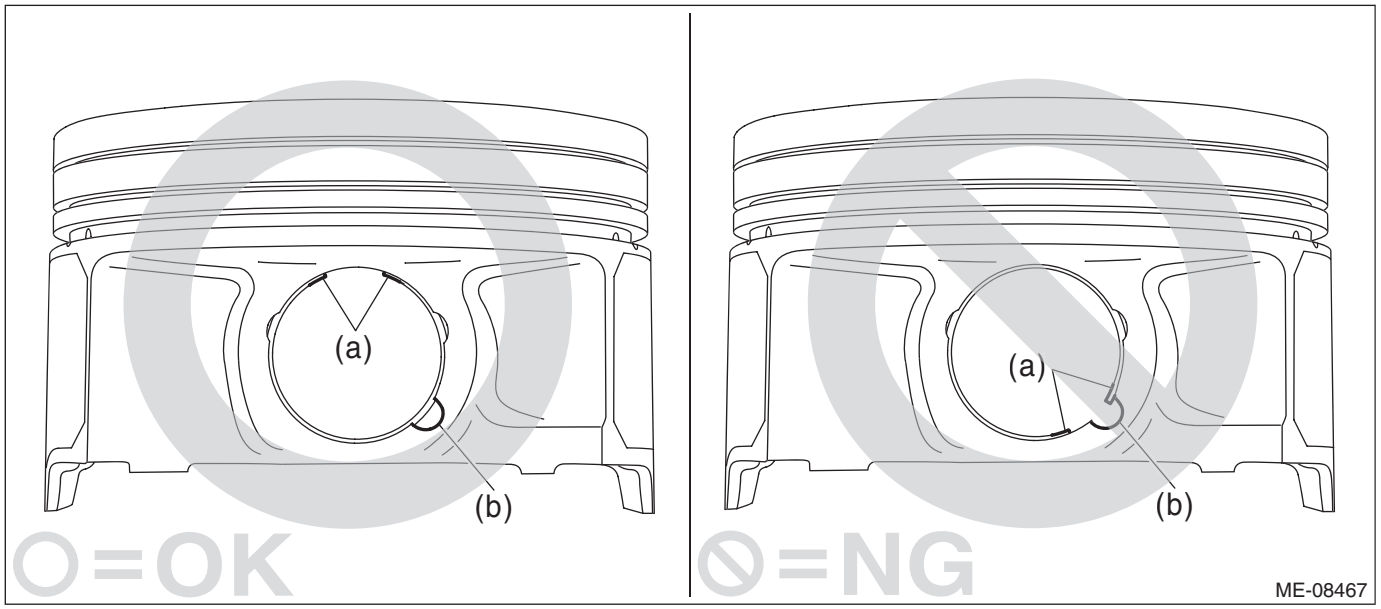

3) Set the piston to the connecting rod.

NOTE:
Align the front mark of piston and the connecting rod direction correctly as shown in the figure.

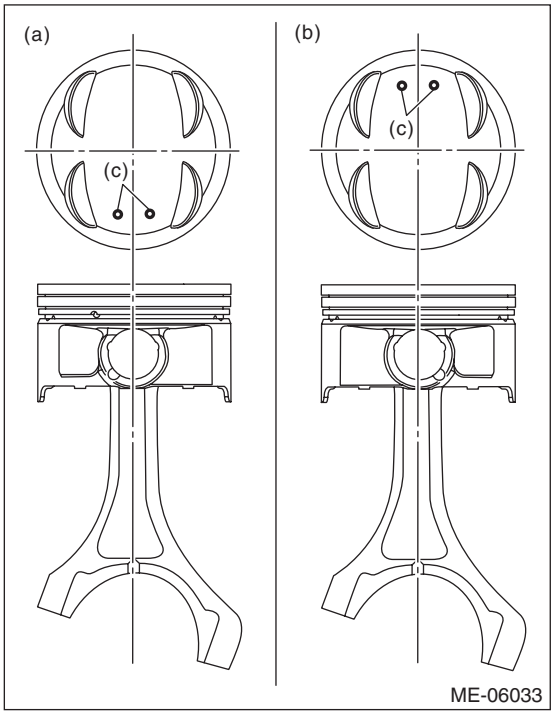

(a) RH side (#1, #3 and #5)
(b) LH side (#2, #4 and #6)
(c) Front mark

4) Apply engine oil to the piston pin, and attach the piston pin.

5) Install the circlip on the piston using a flat tip screwdriver.

NOTE:
- Be careful not damage the piston and piston pin, by wrapping the tip of flat tip screwdriver with tape.
- Make sure the circlip is firmly inserted into the circlip groove.
- After installing the circlip, rotate the circlip so that its end part (a) and the cutout portion of circlip groove (b) do not match.

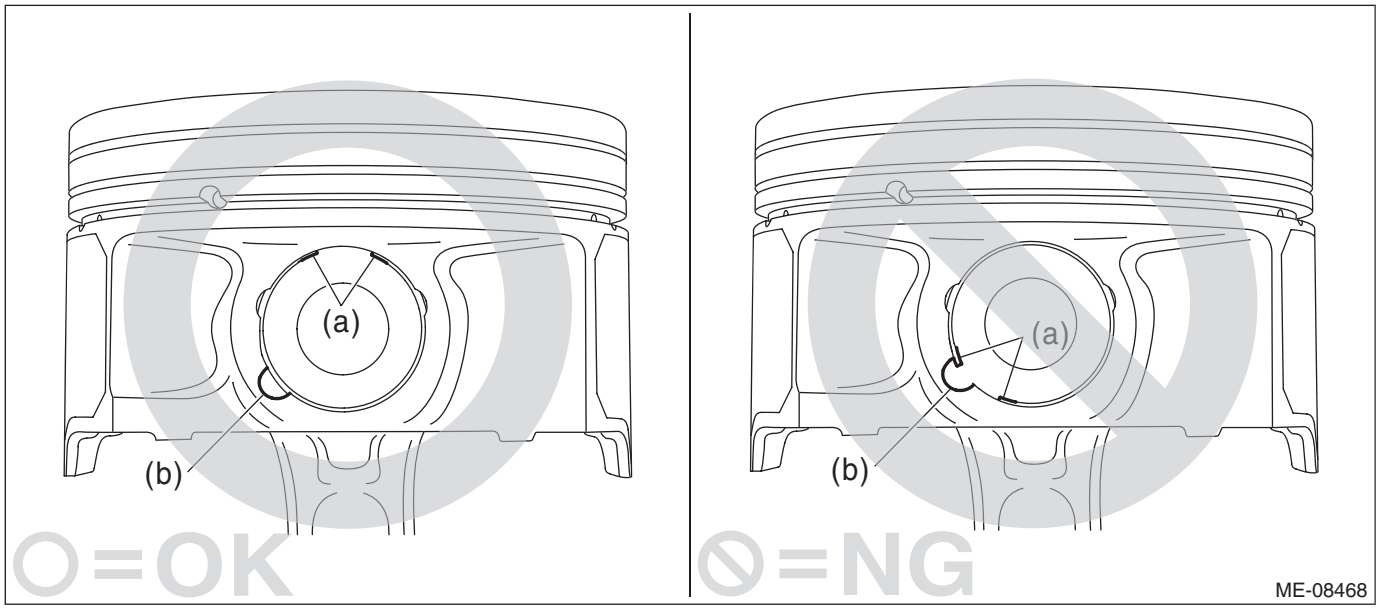

6) Install the oil ring upper rail, expander and lower rail by hand.
7) Install the second ring and top ring using piston ring expander.
8) Install the plug and orifice to the cylinder block as necessary. <Ref. to ME(H6DO)-12, CYLINDER BLOCK, COMPONENT, General Description.>

E: INSPECTION

1. CYLINDER BLOCK

1) Visually check for cracks or damage. Use liquid penetrant tester on the important sections for checking. Check that there are no marks of gas leaking or water leaking on gasket installing surface.
2) Check the oil passages for clogging.
3) Inspect the cylinder block surface that mates with cylinder head for warping by using a straight edge. If the warpage exceeds limit, replace the cylinder block.

Warping limit:
0.020 mm (0.0008 in)

Standard height of cylinder block:
202 mm (7.95 in)

2. CYLINDER AND PISTON

1) The cylinder bore size is stamped on the front upper face of the cylinder block.

NOTE:
- Measurement should be performed at a temperature of 20°C (68°F).
- Standard sized pistons are classified into two grades, “A” and “B”. These grades should be used as guide lines in selecting a standard piston.

Standard diameter:

A: 92.005 — 92.015 mm (3.6222 — 3.6226 in)

B: 91.995 — 92.005 mm (3.6218 — 3.6222 in)

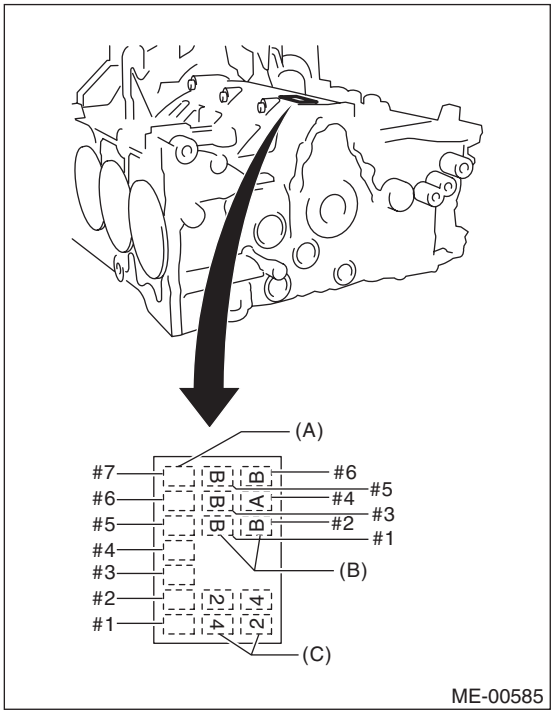

(A) Main journal size mark

(B) Cylinder bore size mark

(C) Cylinder block (RH) – (LH) combination mark

2) Measure inner diameter of each cylinder.

Measure the inner diameter of each cylinder in both the thrust and piston pin directions at the heights as shown in the figure, using a cylinder bore gauge.

NOTE:

Measurement should be performed at a temperature of 20°C (68°F).
- Calculate the cylindricality of cylinder liner by using the following formula.

Calculation formula
C = The larger value between the calculation values C' and C" C' = (D (a)–D (b))/2 C" = (D (c)–D (d))/2
C: Cylindricality of cylinder liner D (a): The largest value of all the values obtained by measuring the cylinder liner inner diameter in the direction of the piston pin D (b): The smallest value of all the values obtained by measuring the cylinder liner inner diameter in the direction of the piston pin D (c): The largest value of all the values obtained by measuring the cylinder liner inner diameter in the thrust direction D (d): The smallest value of all the values obtained by measuring the cylinder liner inner diameter in the thrust direction

• Calculate the out-of-roundness of cylinder liner at each measurement height by using the following formula.

Calculation formula
R = (D(c)–D(d))/2
R: Out-of-roundness of cylinder liner D(c): The larger value between the measurement values in the piston pin direction and in the thrust direction of cylinder liner inner diameter D(d): The smaller value between the measurement values in the piston pin direction and in the thrust direction of cylinder liner inner diameter

Cylindricality:

Limit

0.030 mm (0.0012 in)

Out-of-roundness:

Limit

0.030 mm (0.0012 in)

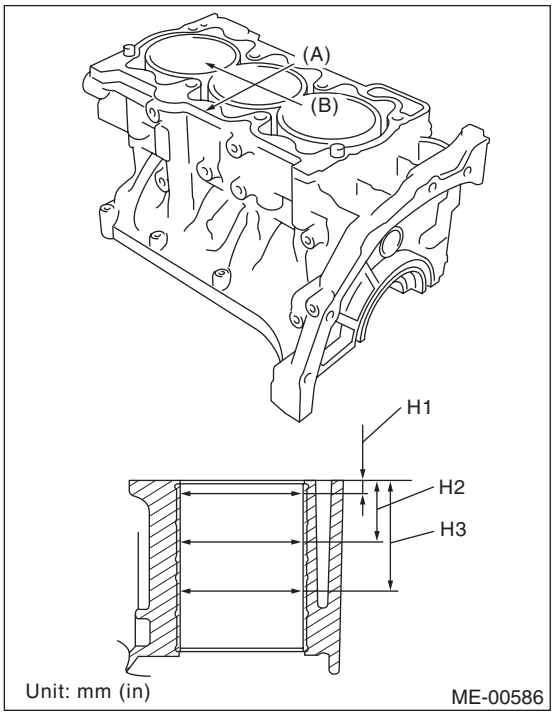

(A) Thrust direction
(B) Piston pin direction
H1: 10 mm (0.39 in)
H2: 45 mm (1.77 in)
H3: 80 mm (3.15 in)

3) When the piston is to be replaced due to general or cylinder wear, select a suitable sized piston by measuring the piston clearance.
4) Measure outer diameter of each piston.
Measure the outer diameter of each piston at the height as shown in the figure. (Thrust direction)

NOTE:
Measurement should be performed at a temperature of 20°C (68°F).

Piston grade point H:
37.3 mm (1.4685 in)

Piston outer diameter:
Standard
A: 92.005 — 92.015 mm (3.6222 — 3.6226 in)
B: 91.995 — 92.005 mm (3.6218 — 3.6222 in)
0.25 mm (0.0098 in) oversize
92.245 — 92.265 mm (3.6317 — 3.6325 in)
0.50 mm (0.0197 in) oversize
92.495 — 92.515 mm (3.6415 — 3.6423 in)

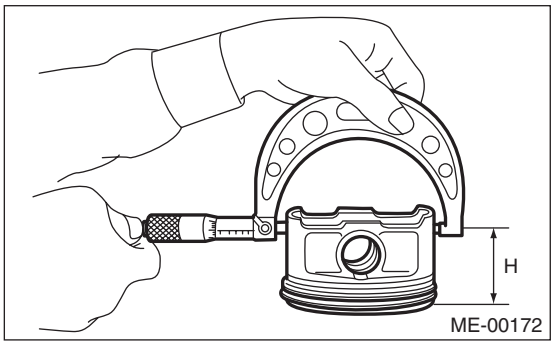

5) Calculate the clearance between cylinder and piston.

NOTE:
Measurement should be performed at a temperature of 20°C (68°F).

Clearance between cylinder and piston at 20°C (68°F):
Standard
–0.010 — 0.010 mm (–0.0004 — 0.0004 in)

6) Boring and honing:
(1) If any of the measured value of cylindricality, out-of-roundness or cylinder-to-piston clearance is out of standard or if there is any damage on the cylinder wall, rebore it to replace with an oversize piston.

CAUTION:
When any of the cylinders needs reboring, all other cylinders must be bored at the same time, and replaced with oversize pistons.

(2) If the cylinder inner diameter exceeds the limit after boring and honing, replace the cylinder block.

NOTE:
Immediately after reboring, the cylinder diameter may differ from its real diameter due to temperature rise. Thus, when measuring the cylinder diameter, wait until it has cooled to room temperature.

Cylinder inner diameter boring limit (diameter):
To 92.515 mm (3.6717 in)

3. PISTON AND PISTON PIN

1) Check the piston and piston pin for damage, cracks or wear. Replace if faulty.
2) Check the piston ring groove for wear or damage. Replace if faulty.
3) Make sure that the piston pin can be inserted into the piston pin hole with a thumb at 20°C (68°F). Replace if faulty.

Clearance between piston pin hole and piston pin:
Standard
0.004 — 0.008 mm (0.0002 — 0.0003 in)

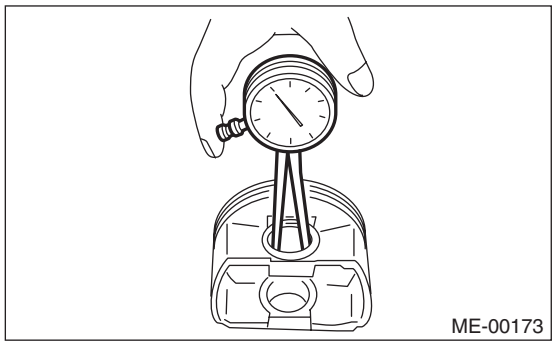
ME-00173

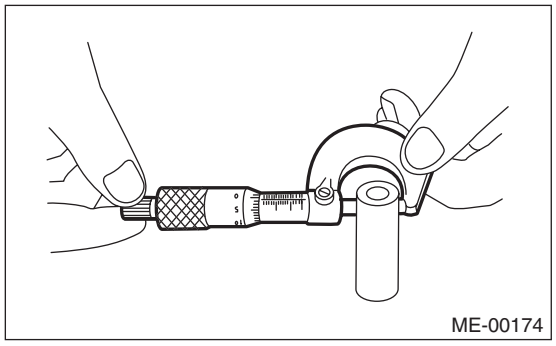
ME-00174

4) Check the snap ring installation groove (A) on the piston for burr. If necessary, remove burr from the groove so that the piston pin can lightly move.

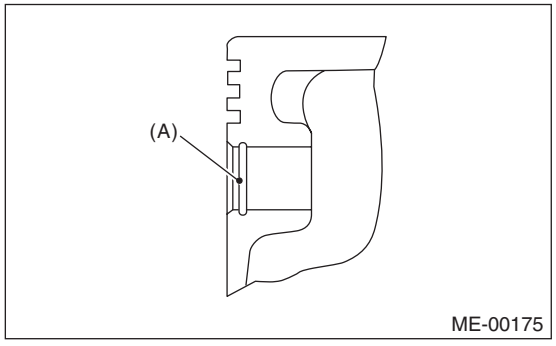

ME-00175

5) Check the piston pin snap ring for distortion, cracks and wear.

4. PISTON RING

1) If the piston ring is broken, damaged or worn, or if its tension is insufficient, or when the piston is replaced, replace the piston ring with a new part of the same size as piston.

NOTE:
• The top ring and second ring have the mark to determine the direction for installing. When installing the ring to piston, face marks to the top side.
• Oil ring consists of the upper rail, expander and lower rail. When installing to the piston, be careful of the direction of each rail.

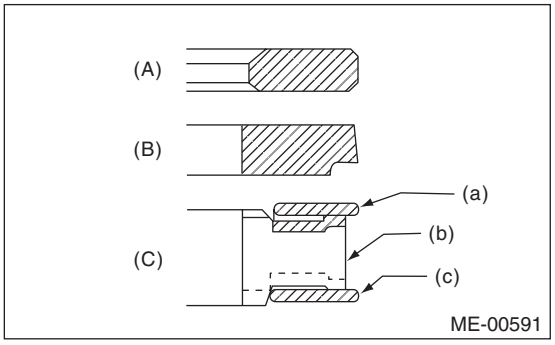

(A) Top ring
(B) Second ring
(C) Oil ring
(a) Upper rail
(b) Expander
(c) Lower rail

2) Squarely place the piston ring and oil ring in cylinder, and measure the piston ring gap with a thickness gauge.

		Standard mm (in)
Piston ring gap	Top ring	0.20 — 0.35 (0.0079 — 0.0138)
	Second ring	0.40 — 0.50 (0.0157 — 0.0197)
	Oil ring	0.20 — 0.50 (0.0079 — 0.0197)

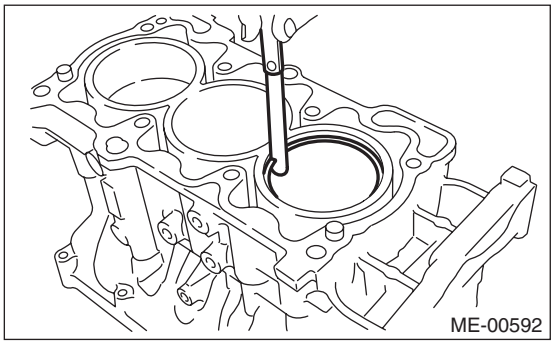

3) Fit the piston ring straight into the piston ring groove, then measure the clearance between piston ring and piston ring groove with a thickness gauge.

NOTE:
Before measuring the clearance, clean the piston ring groove and piston ring.

		Standard mm (in)
Clearance between piston ring and piston ring groove	Top ring	0.040 — 0.080 (0.0016 — 0.0031)
	Second ring	0.030 — 0.070 (0.0012 — 0.0028)
Clearance between oil ring and oil ring groove		0.065 — 0.165 (0.0026 — 0.0065)

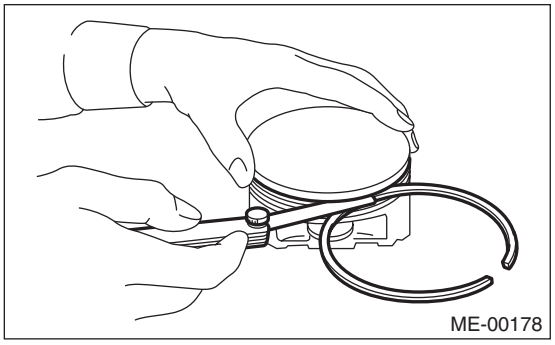
ME-00178

5. CONNECTING ROD

1) Replace the connecting rod, if the large or small end thrust surface is damaged.
2) Check for bend or twist using a connecting rod aligner. Replace the connecting rod if the bend or twist exceeds the limit.

Limit of bend or twist per 100 mm (3.94 in) in length:
0.10 mm (0.0039 in)

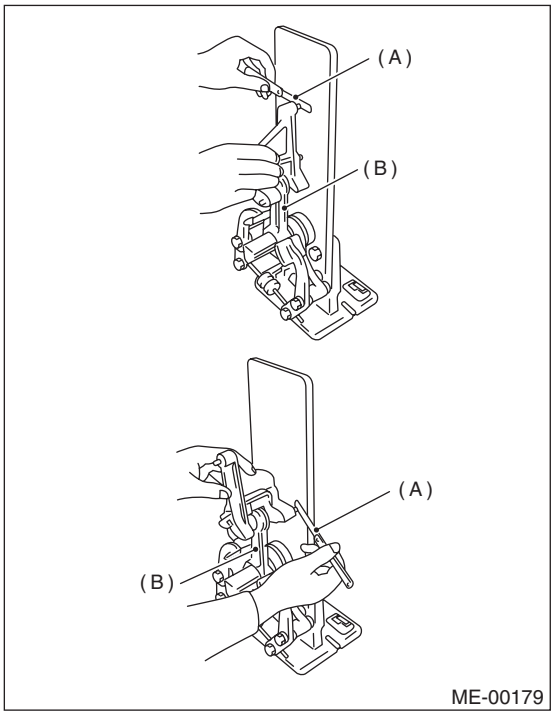

ME-00179

(A) Thickness gauge
(B) Connecting rod

3) Install the connecting rod with bearings attached to the crankshaft, and using a thickness gauge, measure the thrust clearance. If the thrust clearance exceeds the standard or uneven wear is found, replace the connecting rod.

Connecting rod thrust clearance:
Standard
0.070 — 0.330 mm (0.0028 — 0.0130 in)

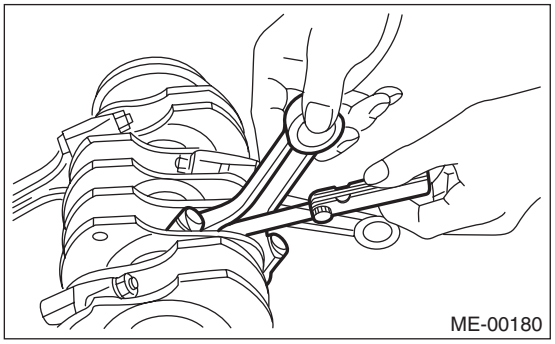

4) Inspect the connecting rod bearing for scar, peeling, seizure, melting, wear, etc.
5) Measure the oil clearance on each connecting rod bearing using plastigauge. If any oil clearance is not within the standard, replace the defective bearing with a new part of standard size or undersize as necessary.

Connecting rod oil clearance:
Standard
0.016 — 0.043 mm (0.0006 — 0.0017 in)

Unit: mm (in)

Bearing	Bearing size (Thickness at center)	Outer diameter of crank pin
Standard	1.495 — 1.511 (0.0589 — 0.0595)	51.976 — 52.000 (2.0463 — 2.0472)
0.03 (0.0012) Undersize	1.515 — 1.519 (0.0596 — 0.0598)	51.954 — 51.970 (2.0454 — 2.0461)
0.05 (0.0020) Undersize	1.525 — 1.529 (0.0600 — 0.0602)	51.934 — 51.950 (2.0446 — 2.0453)
0.25 (0.0098) Undersize	1.625 — 1.629 (0.0640 — 0.0641)	51.734 — 51.750 (2.0368 — 2.0374)

6) Inspect the bushing at connecting rod small end, and replace with a new part if worn or damaged.

7) Measure the piston pin clearance at connecting rod small end. If the measured value is not within the standard, replace it with a new part.

Clearance between piston pin and bushing:
Standard
0 — 0.022 mm (0 — 0.0009 in)

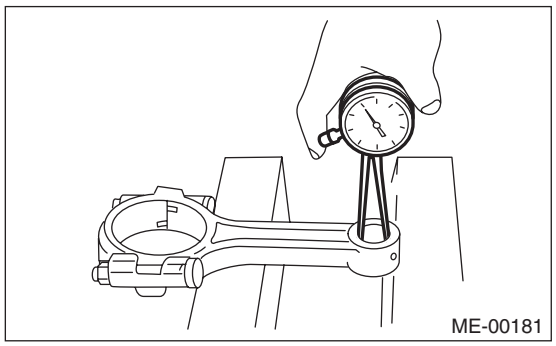

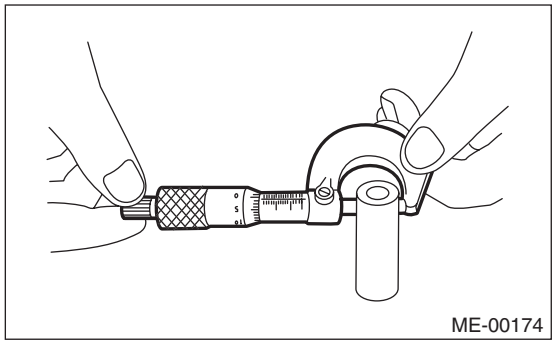

8) The replacement procedure for the connecting rod small end bushing is as follows.
(1) Remove the bushing from connecting rod with ST and press.
(2) Press the bushing with the ST after applying oil on the periphery of new bushing.

ST 18350AA000 CONNECTING ROD BUSHING REMOVER AND INSTALLER

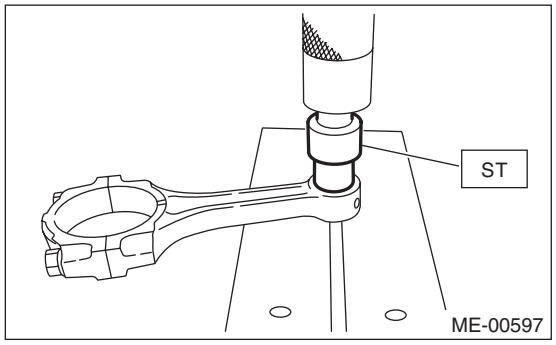

(3) Make two 3 mm (0.12 in) holes in the pressed bushing to match the pre-manufactured holes on the connecting rod, then ream the inside of the bushing.
(4) After completion of reaming, clean the bushing to remove chips.

6. CRANKSHAFT AND CRANKSHAFT BEARING

1) Clean the crankshaft completely, and check it for cracks using liquid penetrant tester. If defective, replace the crankshaft.
2) Check the crankshaft for bend, and repair or replace if needed. If it exceeds the limit, correct or replace it.

NOTE:
If a suitable V-block is not available, using the #1 and #7 crankshaft bearings on cylinder block, position the crankshaft on cylinder block. Then, measure the crankshaft bend using a dial gauge.

Crankshaft bend limit:
0.035 mm (0.0014 in)

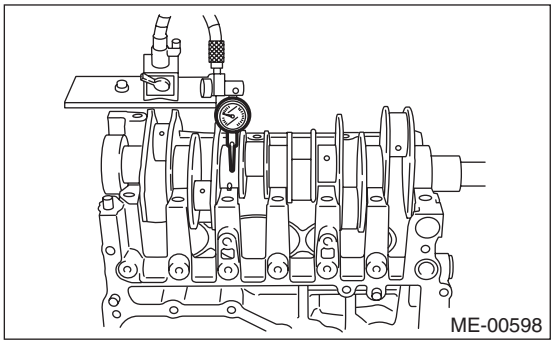

3) Inspect the crank journal and crank pin for wear. If they are not within the standard, replace the bearing with a suitable (undersize) one, and replace or grind to correct the crankshaft as necessary. When grinding the crank journal or crank pin, finish them to the specified dimensions according to the undersize bearing to be used.

Crank pin:
Out-of-roundness
Limit
0.005 mm (0.0002 in)
Cylindricality
Limit
0.006 mm (0.0002 in)
Grinding limit (dia.)
To 51.734 mm (2.0368 in)

Crank journal:
Out-of-roundness
Limit
0.005 mm (0.0002 in)
Cylindricality
Limit
0.006 mm (0.0002 in)
Grinding limit (dia.)
To 63.742 mm (2.5095 in)

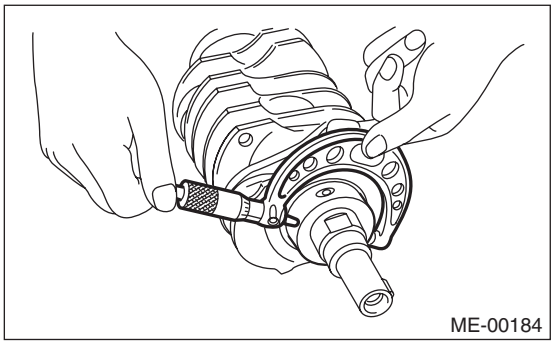

Unit: mm (in)

		Crank journal diameter			Crank pin outer diameter
		#1, #3, #5	#7	#2, #4, #6	
Standard	Journal O.D.	63.992 — 64.016 (2.5194 — 2.5203)			51.976 — 52.000 (2.0463 — 2.0472)
	Bearing size (Thickness at center)	1.996 — 2.013 (0.0786 — 0.0793)	1.992 — 2.009 (0.0784 — 0.0791)	1.996 — 2.013 (0.0786 — 0.0793)	1.495 — 1.511 (0.0589 — 0.0595)
0.03 (0.0012) Undersize	Journal O.D.	63.962 — 63.978 (2.5182 — 2.5188)			51.954 — 51.970 (2.0454 — 2.0461)
	Bearing size (Thickness at center)	2.011 — 2.014 (0.0792 — 0.0793)	2.011 — 2.014 (0.0792 — 0.0793)	2.015 — 2.018 (0.0793 — 0.0794)	1.515 — 1.519 (0.0596 — 0.0598)
0.05 (0.0020) Undersize	Journal O.D.	63.942 — 63.958 (2.5174 — 2.5180)			51.934 — 51.950 (2.0446 — 2.0453)
	Bearing size (Thickness at center)	2.021 — 2.024 (0.0796 — 0.0797)	2.021 — 2.024 (0.0796 — 0.0797)	2.025 — 2.028 (0.0797 — 0.0798)	1.525 — 1.529 (0.0600 — 0.0602)
0.25 (0.0098) Undersize	Journal O.D.	63.742 — 63.758 (2.5095 — 2.5102)			51.734 — 51.750 (2.0368 — 2.0374)
	Bearing size (Thickness at center)	2.121 — 2.124 (0.0835 — 0.0836)	2.121 — 2.124 (0.0835 — 0.0836)	2.125 — 2.128 (0.0837 — 0.0838)	1.625 — 1.629 (0.0640 — 0.0641)

4) Use a thickness gauge to measure the thrust clearance of crankshaft at center bearing. If clearance exceeds the standard, replace the bearing.

Crankshaft thrust clearance:
Standard
0.040 — 0.212 mm (0.0016 — 0.0083 in)

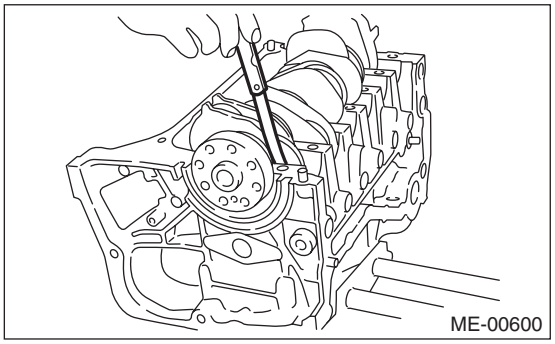

5) Inspect individual crankshaft bearings for signs of flaking, seizure, melting and wear.
6) Measure the oil clearance on each crankshaft bearing using plastigauge. If the measured value is out of standard, replace the defective bearing with an undersize one, and replace or grind to correct the crankshaft as necessary.

Crankshaft oil clearance:
Standard
0.010 — 0.030 mm (0.0004 — 0.0012 in)

21.Oil Flow Control Solenoid Valve

A: REMOVAL

Specifications for the oil flow control solenoid valve are included in the FU section. <Ref. to FU(H6DO)-72, REMOVAL, Oil Flow Control Solenoid Valve.>

B: INSTALLATION

Specifications for the oil flow control solenoid valve are included in the FU section. <Ref. to FU(H6DO)-74, INSTALLATION, Oil Flow Control Solenoid Valve.>

22.Intake and Exhaust Valve

A: SPECIFICATION

Refer to “Cylinder Head” for removal and installation procedures of the intake and exhaust valves. <Ref. to ME(H6DO)-119, REMOVAL, Cylinder Head.> <Ref. to ME(H6DO)-120, INSTALLATION, Cylinder Head.>

23.Piston

A: SPECIFICATION

Refer to “Cylinder Block” for removal and installation procedures of pistons. <Ref. to ME(H6DO)-134, REMOVAL, Cylinder Block.> <Ref. to ME(H6DO)-142, INSTALLATION, Cylinder Block.>

24.Connecting Rod

A: SPECIFICATION

Refer to “Cylinder Block” for removal and installation procedures of connecting rod. <Ref. to ME(H6DO)-134, REMOVAL, Cylinder Block.> <Ref. to ME(H6DO)-142, INSTALLATION, Cylinder Block.>

25.Crankshaft

A: SPECIFICATION

Refer to “Cylinder Block” for removal and installation procedures of the crankshaft. <Ref. to ME(H6DO)-134, REMOVAL, Cylinder Block.> <Ref. to ME(H6DO)-142, INSTALLATION, Cylinder Block.>

26.Engine Trouble in General

A: INSPECTION

NOTE:
The “RANK” shown in the chart shows the possibilities of the cause of trouble in order from “Very often” to “Rarely”.
A — Very often
B — Sometimes
C — Rarely

Symptoms	Problem parts etc.	Possible cause	RANK
1. Engine does not start.			
1) Starter does not turn.	Starter	Defective battery-to-starter harness	B
		Defective starter switch	C
		Defective relay	C
		Defective inhibitor switch	C
		Defective starter	B
	Battery	Improper connection of terminal	A
		Run-down battery	A
		Defective charging system	B
	Friction	Seizure of crankshaft and connecting rod bearing	C
		Seized camshaft	C
		Seized or stuck piston and cylinder	C
2) Initial combustion does not occur.	Starter	Defective starter	C
	Engine control system <Ref. to EN(H6DO)(diag)-2, Basic Diagnostic Procedure.>		A
	Fuel line	Defective fuel pump and relay	A
		Clogged fuel line	C
		Lack of fuel or insufficient fuel	B
	Timing chain	Trouble	B
		Defective timing	B
	Compression	Incorrect valve clearance	C
		Loosened spark plug or defective gasket	C
		Loosened cylinder head bolt or defective gasket	C
		Improper valve sealing	C
		Defective valve stem	C
		Worn or broken valve spring	B
		Worn or stuck piston rings, cylinder and piston	C
		Incorrect valve timing	B
		Improper engine oil (low viscosity)	B

Symptoms	Problem parts etc.	Possible cause	RANK
3) Initial combustion occurs.	Engine control system <Ref. to EN(H6DO)(diag)-2, Basic Diagnostic Procedure.>		A
	Intake system	Defective intake manifold gasket	B
		Defective throttle body gasket	B
	Fuel line	Defective fuel pump and relay	C
		Clogged fuel line	C
		Lack of fuel or insufficient fuel	B
	Timing chain	Trouble	B
		Defective timing	B
	Compression	Incorrect valve clearance	C
		Loosened spark plug or defective gasket	C
		Loosened cylinder head bolt or defective gasket	C
		Improper valve sealing	C
		Defective valve stem	C
		Worn or broken valve spring	B
		Worn or stuck piston rings, cylinder and piston	C
		Incorrect valve timing	B
		Improper engine oil (low viscosity)	B
4) Engine stalls after initial combustion.	Engine control system <Ref. to EN(H6DO)(diag)-2, Basic Diagnostic Procedure.>		A
	Intake system	Loosened or cracked intake duct	B
		Loosened or cracked PCV hose	C
		Loosened or cracked vacuum hose	C
		Defective intake manifold gasket	B
		Defective throttle body gasket	B
		Dirty air cleaner element	C
	Fuel line	Clogged fuel line	C
		Lack of fuel or insufficient fuel	B
	Timing chain	Trouble	B
		Defective timing	B
	Compression	Incorrect valve clearance	C
		Loosened spark plug or defective gasket	C
		Loosened cylinder head bolt or defective gasket	C
		Improper valve sealing	C
		Defective valve stem	C
		Worn or broken valve spring	B
		Worn or stuck piston rings, cylinder and piston	C
		Incorrect valve timing	B
		Improper engine oil (low viscosity)	B

Symptoms	Problem parts etc.	Possible cause	RANK
2. Rough idle and engine stall	Engine control system <Ref. to EN(H6DO)(diag)-2, Basic Diagnostic Procedure.>		A
	Intake system	Loosened or cracked intake duct	A
		Loosened or cracked PCV hose	A
		Loosened or cracked vacuum hose	A
		Defective intake manifold gasket	B
		Defective throttle body gasket	B
		Defective PCV valve	C
		Loosened oil filler cap	B
		Dirty air cleaner element	C
	Fuel line	Defective fuel pump and relay	C
		Clogged fuel line	C
		Lack of fuel or insufficient fuel	B
	Timing chain	Defective timing	C
	Compression	Incorrect valve clearance	B
		Loosened spark plug or defective gasket	B
		Loosened cylinder head bolt or defective gasket	B
		Improper valve sealing	B
		Defective valve stem	C
		Worn or broken valve spring	B
		Worn or stuck piston rings, cylinder and piston	B
		Incorrect valve timing	A
		Improper engine oil (low viscosity)	B
	Lubrication system	Incorrect oil pressure	B
		Defective rocker cover gasket	C
	Cooling system	Over-heating	C
	Other	Evaporative emission control system malfunction	A
		Stuck or damaged throttle valve	B

Symptoms	Problem parts etc.	Possible cause	RANK
3. Low output, hesitation and poor acceleration	Engine control system <Ref. to EN(H6DO)(diag)-2, Basic Diagnostic Procedure.>		A
	Intake system	Loosened or cracked intake duct	A
		Loosened or cracked PCV hose	A
		Loosened or cracked vacuum hose	B
		Defective intake manifold gasket	B
		Defective throttle body gasket	B
		Defective PCV valve	B
		Loosened oil filler cap	B
		Dirty air cleaner element	A
	Fuel line	Defective fuel pump and relay	B
		Clogged fuel line	B
		Lack of fuel or insufficient fuel	C
	Timing chain	Defective timing	B
	Compression	Incorrect valve clearance	B
		Loosened spark plug or defective gasket	B
		Loosened cylinder head bolt or defective gasket	B
		Improper valve sealing	B
		Defective valve stem	C
		Worn or broken valve spring	B
		Worn or stuck piston rings, cylinder and piston	C
		Incorrect valve timing	A
		Improper engine oil (low viscosity)	B
	Lubrication system	Incorrect oil pressure	B
		Defective rocker cover gasket	C
	Cooling system	Over-heating	C
		Over-cooling	C
	Other	Evaporative emission control system malfunction	A

Symptoms	Problem parts etc.	Possible cause	RANK
4. Surging	Engine control system <Ref. to EN(H6DO)(diag)-2, Basic Diagnostic Procedure.>		A
	Intake system	Loosened or cracked intake duct	A
		Loosened or cracked PCV hose	A
		Loosened or cracked vacuum hose	A
		Defective intake manifold gasket	B
		Defective throttle body gasket	B
		Defective PCV valve	B
		Loosened oil filler cap	B
		Dirty air cleaner element	B
	Fuel line	Defective fuel pump and relay	B
		Clogged fuel line	B
		Lack of fuel or insufficient fuel	C
	Timing chain	Defective timing	B
	Compression	Incorrect valve clearance	B
		Loosened spark plug or defective gasket	C
		Loosened cylinder head bolt or defective gasket	C
		Improper valve sealing	C
		Defective valve stem	C
		Worn or broken valve spring	C
		Worn or stuck piston rings, cylinder and piston	C
		Incorrect valve timing	A
		Improper engine oil (low viscosity)	B
	Cooling system	Over-heating	B
	Other	Evaporative emission control system malfunction	C
5. Engine does not return to idle.	Engine control system <Ref. to EN(H6DO)(diag)-2, Basic Diagnostic Procedure.>		A
	Intake system	Loosened or cracked vacuum hose	A
	Other	Stuck or damaged throttle valve	A
6. Dieseling (run-on)	Engine control system <Ref. to EN(H6DO)(diag)-2, Basic Diagnostic Procedure.>		A
	Cooling system	Over-heating	B
	Other	Evaporative emission control system malfunction	B
7. After burning in exhaust system	Engine control system <Ref. to EN(H6DO)(diag)-2, Basic Diagnostic Procedure.>		A
	Intake system	Loosened or cracked intake duct	C
		Loosened or cracked PCV hose	C
		Loosened or cracked vacuum hose	B
		Defective PCV valve	B
		Loosened oil filler cap	C
	Timing chain	Defective timing	B
	Compression	Incorrect valve clearance	B
		Loosened spark plug or defective gasket	C
		Loosened cylinder head bolt or defective gasket	C
		Improper valve sealing	B
		Defective valve stem	C
		Worn or broken valve spring	C
		Worn or stuck piston rings, cylinder and piston	C
		Incorrect valve timing	A
	Lubrication system	Incorrect oil pressure	C
	Cooling system	Over-cooling	C
	Other	Evaporative emission control system malfunction	C

Symptoms	Problem parts etc.	Possible cause	RANK
8. Knocking	Engine control system <Ref. to EN(H6DO)(diag)-2, Basic Diagnostic Procedure.>		A
	Intake system	Loosened oil filler cap	B
	Timing chain	Defective timing	B
	Compression	Incorrect valve clearance	C
		Incorrect valve timing	B
	Cooling system	Over-heating	A
9. Excessive engine oil consumption	Intake system	Loosened or cracked PCV hose	A
		Defective PCV valve	B
		Loosened oil filler cap	C
	Compression	Defective valve stem	A
		Worn or stuck piston rings, cylinder and piston	A
	Lubrication system	Loosened oil pump attaching bolts and defective gasket	B
		Defective oil filter O-ring	B
		Defective crankshaft oil seal	B
		Defective rocker cover gasket	B
		Loosened oil drain plug or defective gasket	B
		Loosened oil pan fitting bolts or defective oil pan	B
10. Excessive fuel consumption	Engine control system <Ref. to EN(H6DO)(diag)-2, Basic Diagnostic Procedure.>		A
	Intake system	Dirty air cleaner element	A
	Timing chain	Defective timing	B
	Compression	Incorrect valve clearance	B
		Loosened spark plug or defective gasket	C
		Loosened cylinder head bolt or defective gasket	C
		Improper valve sealing	B
		Defective valve stem	C
		Worn or broken valve spring	C
		Worn or stuck piston rings, cylinder and piston	B
		Incorrect valve timing	B
	Lubrication system	Incorrect oil pressure	C
	Cooling system	Over-cooling	C

27.Engine Noise

A: INSPECTION

Type of sound	Condition	Possible cause
Regular clicking sound	Sound increases as engine speed increases.	• Valve mechanism is defective • Incorrect valve clearance • Worn camshaft • Broken valve spring • Trouble of valve lifter
Heavy and dull clank	Oil pressure is low.	• Worn camshaft main bearing • Worn connecting rod bearing (large end)
	Oil pressure is normal.	Damaged front mount
High-pitched clank	Sound is noticeable when accelerating with an overload condition.	• Ignition timing advanced • Accumulation of carbon inside combustion chamber • Wrong heat range of spark plug • Improper octane value gasoline
Clank noise when engine speed is between 1,000 and 2,000 r/min	Noise is reduced when fuel injector connector of noisy cylinder is disconnected. *	• Worn crankshaft main bearing • Worn connecting rod bearing (large end)
Knocking sound when engine is operating under idling speed and engine is warm	Noise is reduced when fuel injector connector of noisy cylinder is disconnected. *	• Worn cylinder liner and piston ring • Broken or stuck piston ring • Worn piston pin and hole at piston end of connecting rod
	Sound is not reduced if each fuel injector connector is disconnected in turn.*	• Unusually worn valve lifter • Worn cam gear • Worn camshaft journal bore in cylinder head
Squeaky sound	—	Insufficient generator lubrication
Rubbing sound	—	Poor contact of generator brush and rotor
Gear scream when starting engine	—	• Defective ignition starter switch • Worn gear and starter pinion
Sound like polishing glass with a dry cloth	—	• V-belt • Defective water pump shaft
Hissing sound	—	• Insufficient compression • Air leakage in air intake system, hose, connection or manifold
Timing chain noise	—	• Loose timing chain • Timing chain contacting with adjacent part
Valve lifter noise	—	Incorrect valve clearance

* When disconnecting the fuel injector connector, the malfunction indicator light illuminates and DTC is stored in ECM memory. Therefore, perform the Clear Memory Mode <Ref. to EN(H6DO)(diag)-85, OPERATION, Clear Memory Mode.> and Inspection Mode <Ref. to EN(H6DO)(diag)-69, PROCEDURE, Inspection Mode.> after connecting the fuel injector connector.

EXHAUST

EX(H6DO)

Page

1. General Description 2
2. Front Exhaust Pipe 6
3. Rear Exhaust Pipe 12
4. Muffler 14

1. General Description

A: COMPONENT

1. FRONT EXHAUST PIPE

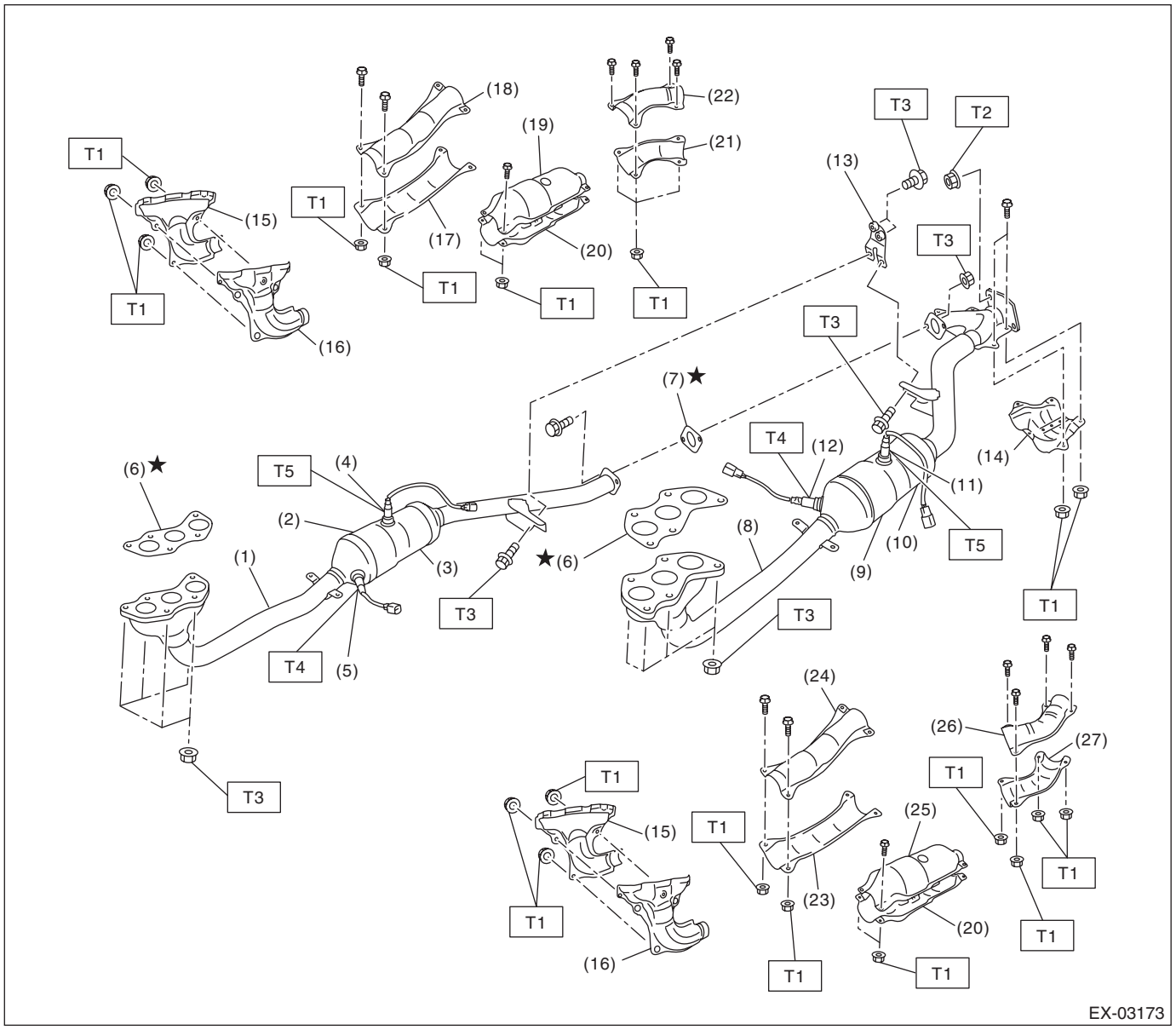

EX-03173

(1) Front exhaust pipe (RH)
(2) Front catalytic converter (RH)
(3) Rear catalytic converter (RH)
(4) Rear oxygen sensor (RH)
(5) Front oxygen (A/F) sensor (RH)
(6) Gasket
(7) Gasket
(8) Front exhaust pipe (LH)
(9) Front catalytic converter (LH)
(10) Rear catalytic converter (LH)
(11) Rear oxygen sensor (LH)
(12) Front oxygen (A/F) sensor (LH)
(13) Bracket
(14) Protector
(15) Front exhaust pipe cover (RH)
(16) Front exhaust pipe cover (LH)
(17) Front exhaust pipe lower cover (RH) (front)
(18) Front exhaust pipe upper cover (RH) (front)
(19) Catalytic converter upper cover (RH)
(20) Catalytic converter lower cover
(21) Front exhaust pipe lower cover (RH) (rear)
(22) Front exhaust pipe upper cover (RH) (rear)
(23) Front exhaust pipe lower cover (LH) (front)
(24) Front exhaust pipe upper cover (LH) (front)
(25) Catalytic converter upper cover (LH)
(26) Front exhaust pipe upper cover (LH) (rear)
(27) Front exhaust pipe lower cover (LH) (rear)

Tightening torque: N·m (kgf-m, ft-lb)

T1: 13 (1.3, 9.6)
T2: 18 (1.8, 13.3)
T3: 30 (3.1, 22.1)
T4: <Ref. to FU(H6DO)-79, INSTALLATION, Front Oxygen (A/F) Sensor.>
T5: <Ref. to FU(H6DO)-81, INSTALLATION, Rear Oxygen Sensor.>

2. REAR EXHAUST PIPE AND MUFFLER

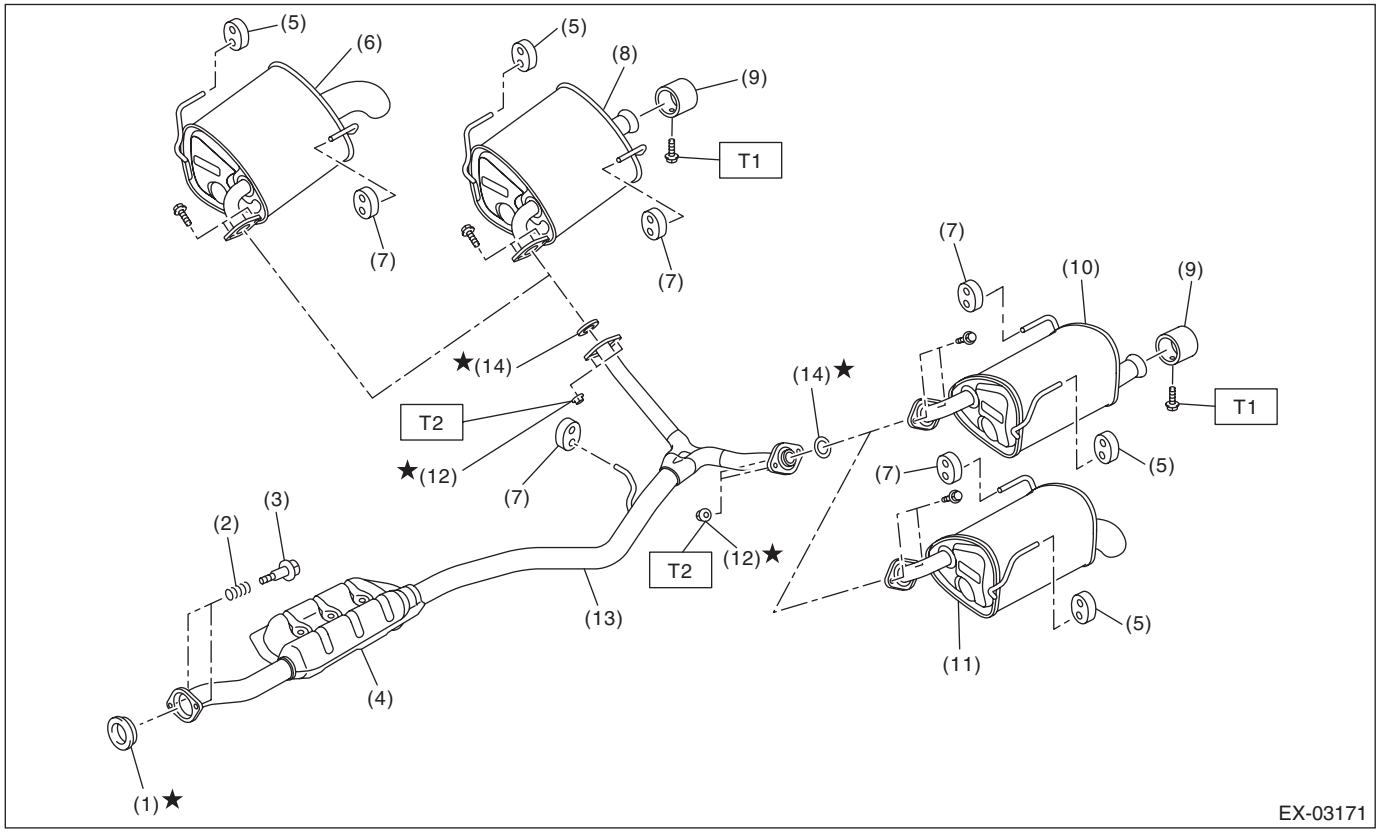

(1)	Gasket	(7)	Cushion rubber (without protrusion)	(13)	Rear exhaust pipe
(2)	Spring	(8)	Muffler RH (sedan model)	(14)	Gasket
(3)	Bolt	(9)	Muffler cutter		
(4)	Chamber	(10)	Muffler LH (sedan model)	***Tightening torque: N·m (kgf-m, ft-lb)***	
(5)	Cushion rubber (with protrusion)	(11)	Muffler LH (OUTBACK model)	***T1:***	***7.5 (0.8, 5.5)***
(6)	Muffler RH (OUTBACK model)	(12)	Self-locking nut	***T2:***	***48 (4.9, 35.4)***

3. HEAT SHIELD COVER

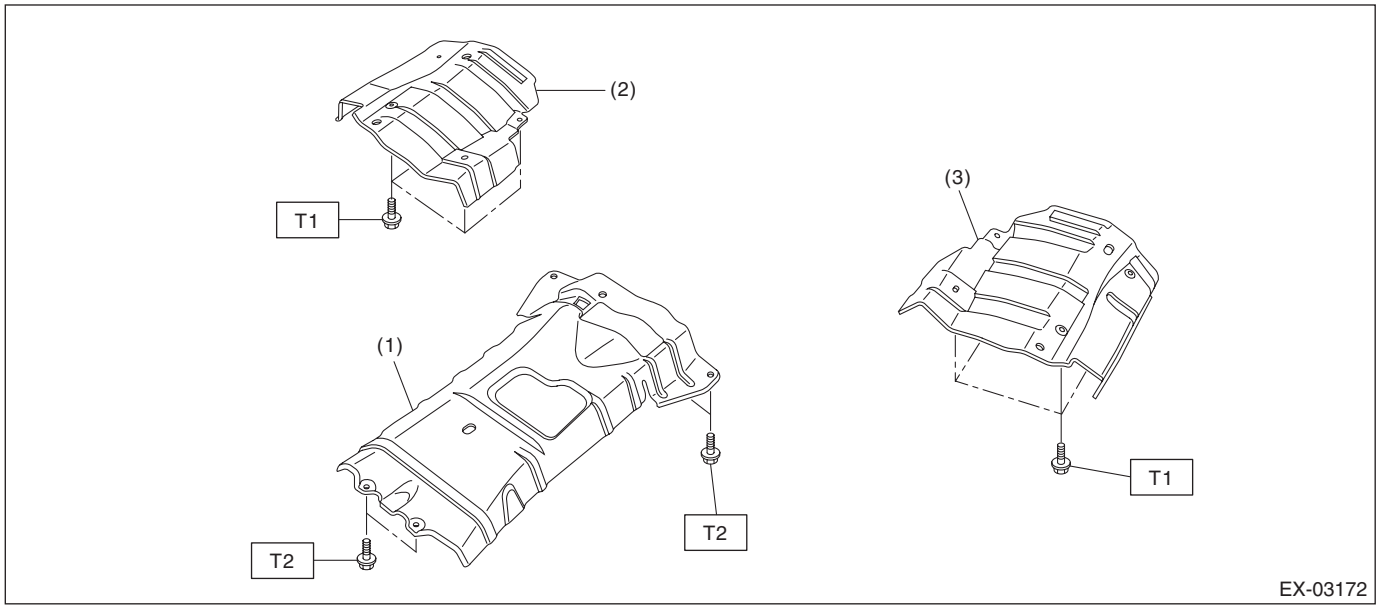

(1) Center exhaust cover
(2) Rear exhaust cover RH
(3) Rear exhaust cover LH

Tightening torque: N·m (kgf-m, ft-lb)
T1: 10 (1.0, 7.4)
T2: 18 (1.8, 13.3)

B: CAUTION

- Prior to starting work, pay special attention to the following:
  1. Always wear work clothes, a work cap, and protective shoes. Additionally, wear a helmet, protective goggles, etc. if necessary.
  2. Protect the vehicle using a seat cover, fender cover, etc.
  3. Prepare the service tools, clean cloth, containers to catch grease and oil, etc.
- Vehicle components are extremely hot immediately after driving. Be wary of receiving burns from heated parts.
- When performing a repair, identify the cause of trouble and avoid unnecessary removal, disassembly and replacement.
- Before disconnecting connectors of sensors or units, be sure to disconnect the ground cable from battery.
- Always use the jack-up point when the shop jacks or rigid racks are used to support the vehicle.
- Remove contamination including dirt and corrosion before removal, installation, disassembly or assembly.
- Keep the removed parts in order and protect them from dust and dirt.
- All removed parts, if to be reused, should be reinstalled in the original positions with attention to the correct directions, etc.
- Bolts, nuts and washers should be replaced with new parts as required.
- Be sure to tighten the fasteners including bolts and nuts to the specified torque.
- If any grease adheres to the exhaust pipe, wipe it off. Otherwise a fire may happen.

2. Front Exhaust Pipe

A: REMOVAL

CAUTION:
Vehicle components are extremely hot after driving. Be wary of receiving burns from heated parts.
1) Disconnect the ground terminal from battery sensor. <Ref. to RC-4, BATTERY, NOTE, Repair Contents.>
2) Lift up the vehicle.
3) Remove the under cover. <Ref. to EI-28, REMOVAL, Front Under Cover.>
4) Disconnect the front oxygen (A/F) sensor connector (A) and remove the clip (B) fastening the harness.
5) Disconnect the rear oxygen sensor connector (C) and remove the bracket (D) and (E) fastening the harness.

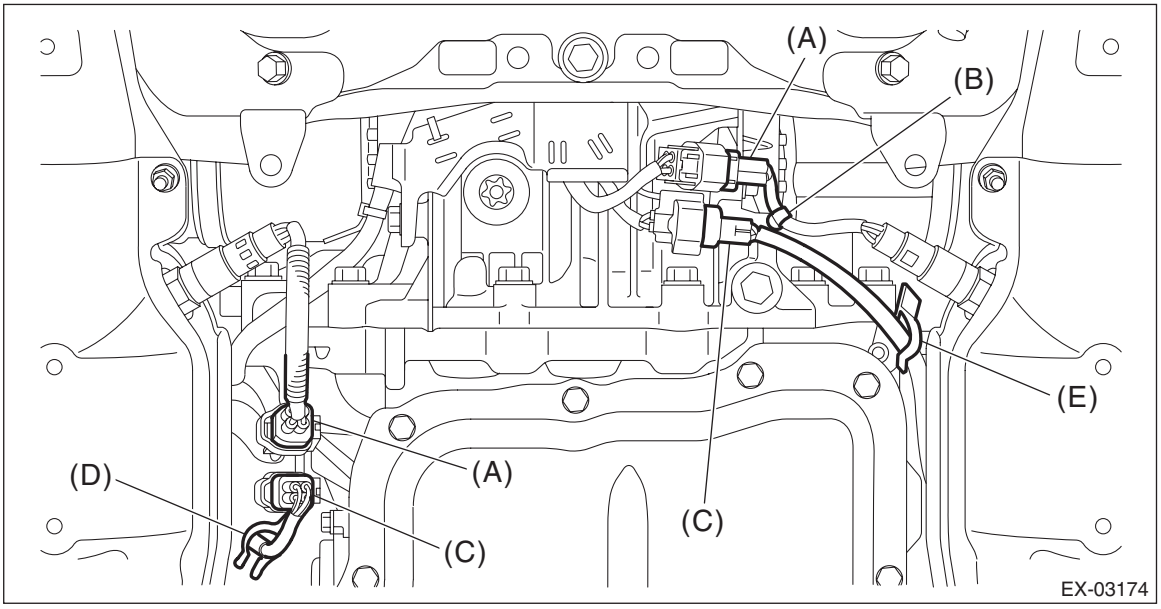

6) Remove the bolts, springs and nuts securing the rear exhaust pipe to the front exhaust pipe assembly.

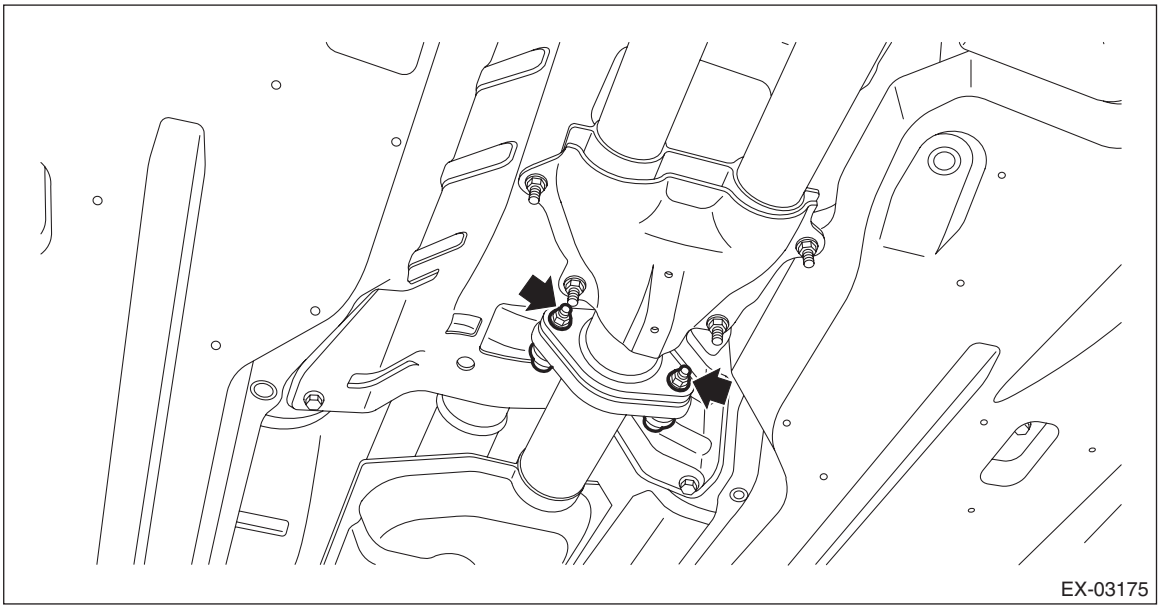

7) Remove the bolt which holds front exhaust pipe assembly to hanger bracket.

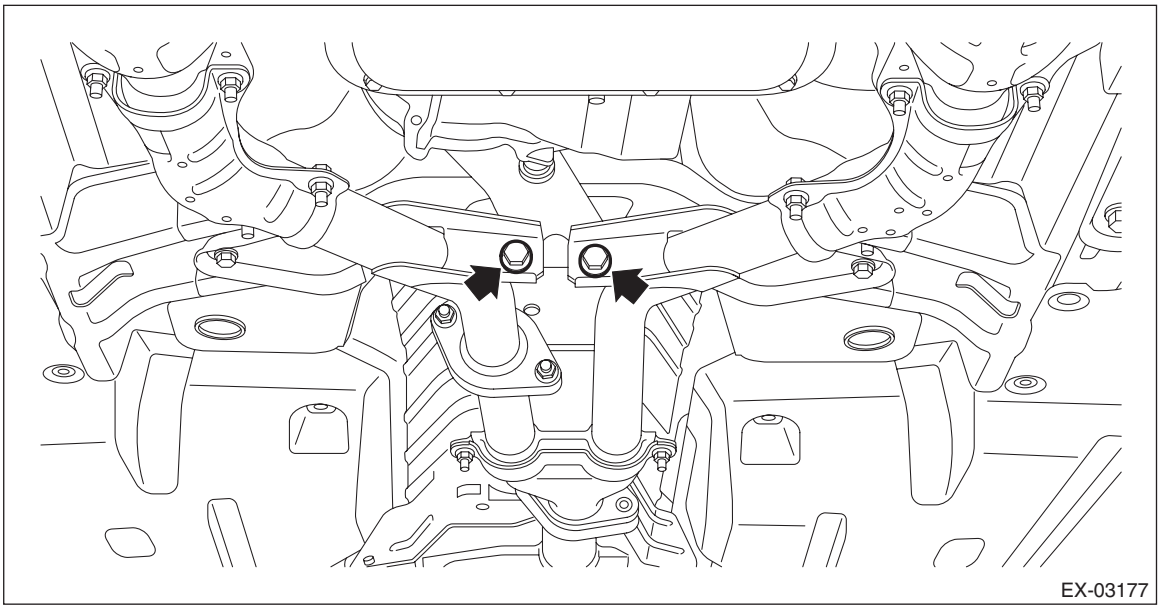

8) Remove the nuts which hold front exhaust pipe assembly onto cylinder heads.

CAUTION:
Be careful not to drop the front exhaust pipe assembly.

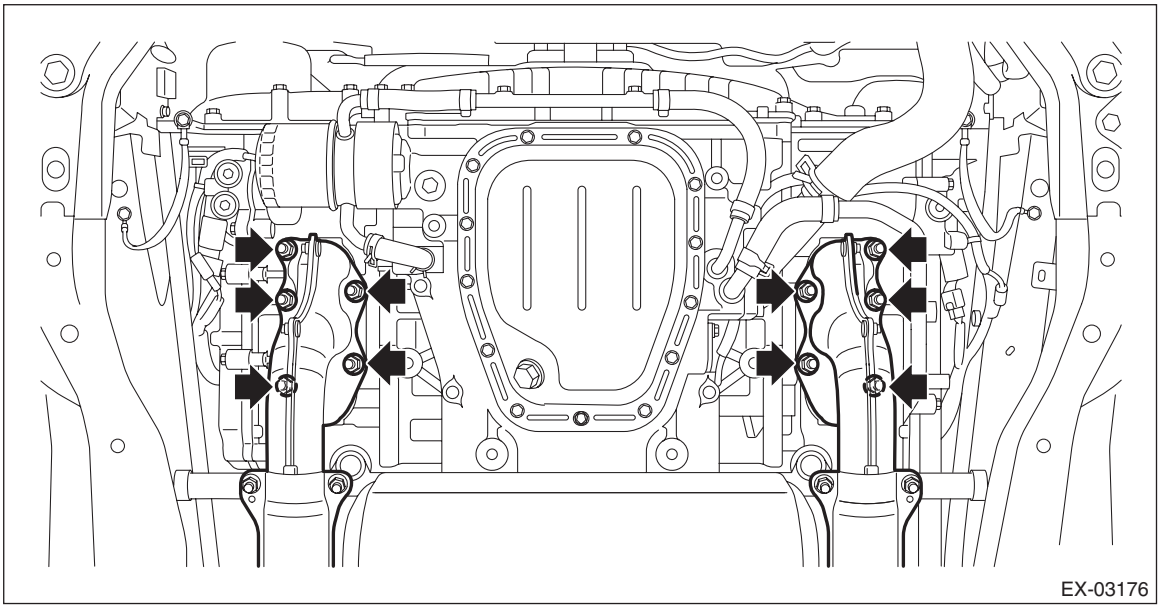

9) Remove the front exhaust pipe assembly from the vehicle body.

CAUTION:
- **Be careful not to let the front exhaust pipe assembly fall off when removing, since it is very heavy.**
- **After removing the front exhaust pipe assembly, do not apply excessive pulling force on the rear exhaust pipe.**

B: INSTALLATION

1) Install the front exhaust pipe assembly.

NOTE:
Use a new gasket.

2) Temporarily tighten the nuts which hold front exhaust pipe assembly to cylinder heads.

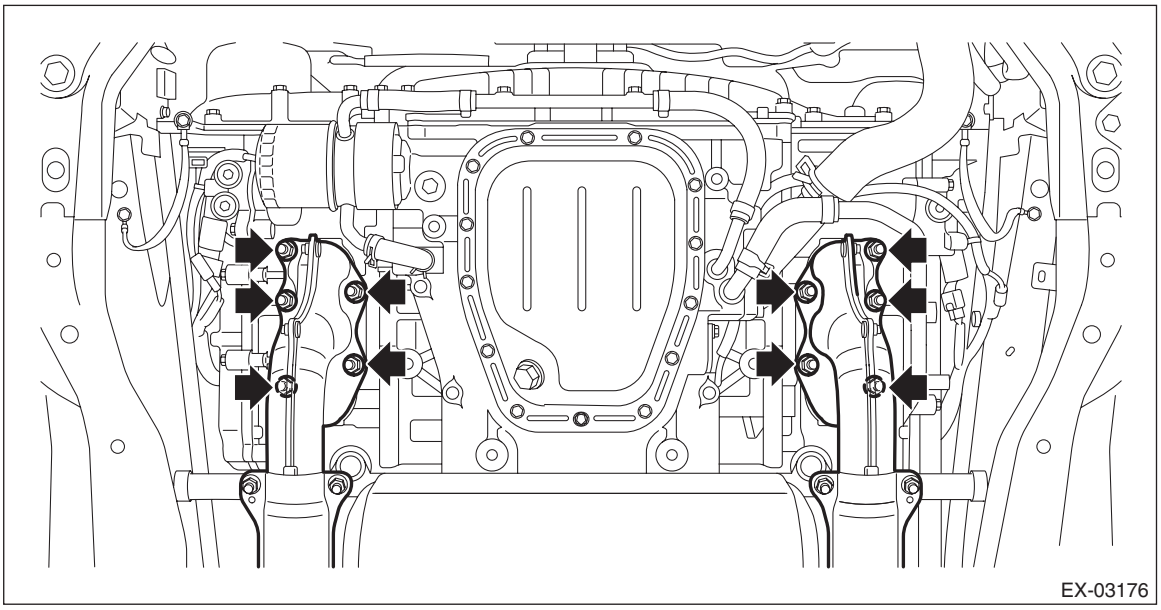

3) Install the bolts, springs and nuts securing the rear exhaust pipe to the front exhaust pipe assembly.

NOTE:
Use a new gasket.

Tightening torque:
18 N·m (1.8 kgf-m, 13.3 ft-lb)

4) Tighten the bolts which hold front exhaust pipe assembly to hanger bracket.

Tightening torque:
30 N·m (3.1 kgf-m, 22.1 ft-lb)

5) Tighten the nuts which hold the front exhaust pipe assembly to the cylinder heads in the numerical sequence as shown in the figure.

Tightening torque:
30 N·m (3.1 kgf-m, 22.1 ft-lb)

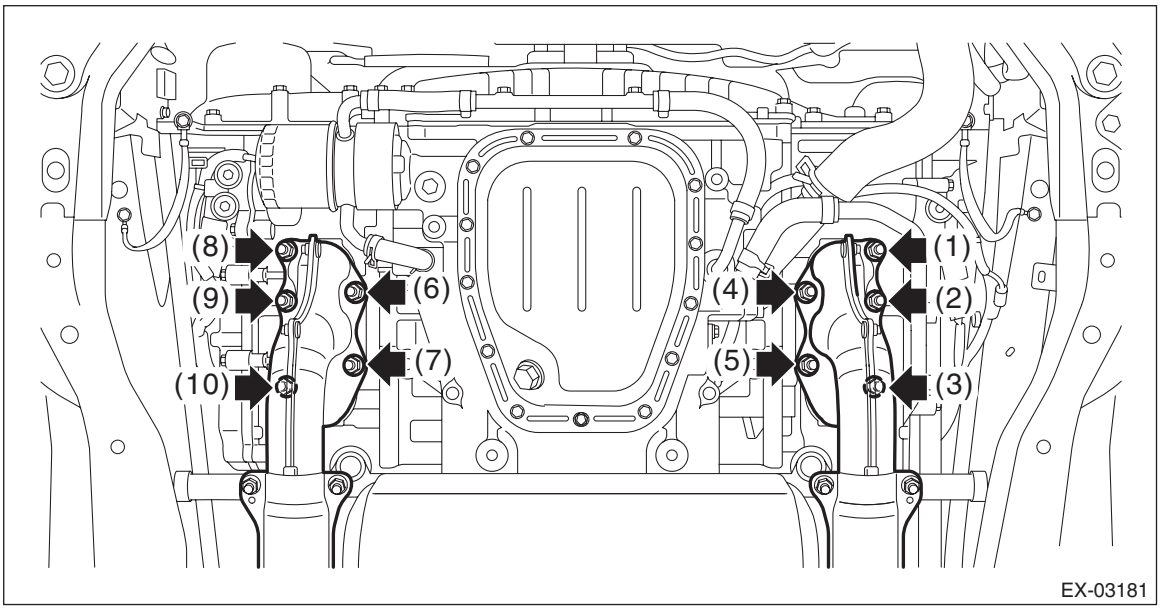

6) Connect the front oxygen (A/F) sensor connector (A) and fasten the harness using clips (B).
7) Connect the rear oxygen sensor connector (C), and fasten the harness using the bracket (D) and (E).

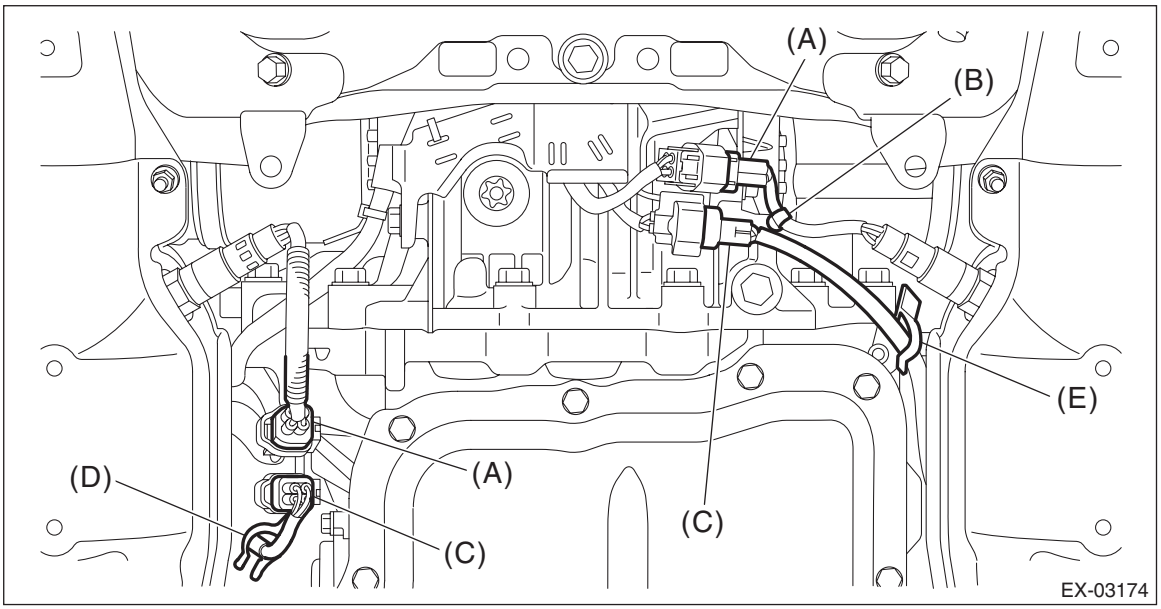

8) Install the under cover. <Ref. to EI-28, INSTALLATION, Front Under Cover.>
9) Lower the vehicle.
10) Connect the ground terminal to battery sensor. <Ref. to RC-4, BATTERY, NOTE, Repair Contents.>

C: DISASSEMBLY

1) Separate the front exhaust pipe (RH) from the front exhaust pipe (LH).

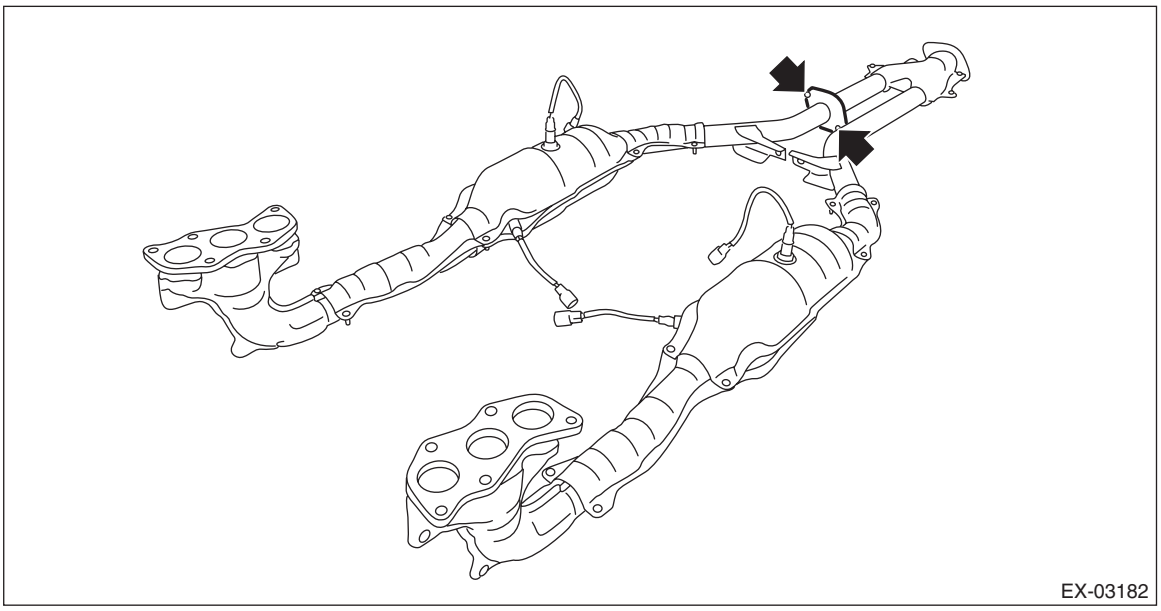

2) Remove the front oxygen (A/F) sensor and rear oxygen sensor from front exhaust pipe assembly. <Ref. to FU(H6DO)-78, REMOVAL, Front Oxygen (A/F) Sensor.> <Ref. to FU(H6DO)-81, REMOVAL, Rear Oxygen Sensor.>

3) Remove each cover from the front exhaust pipe.

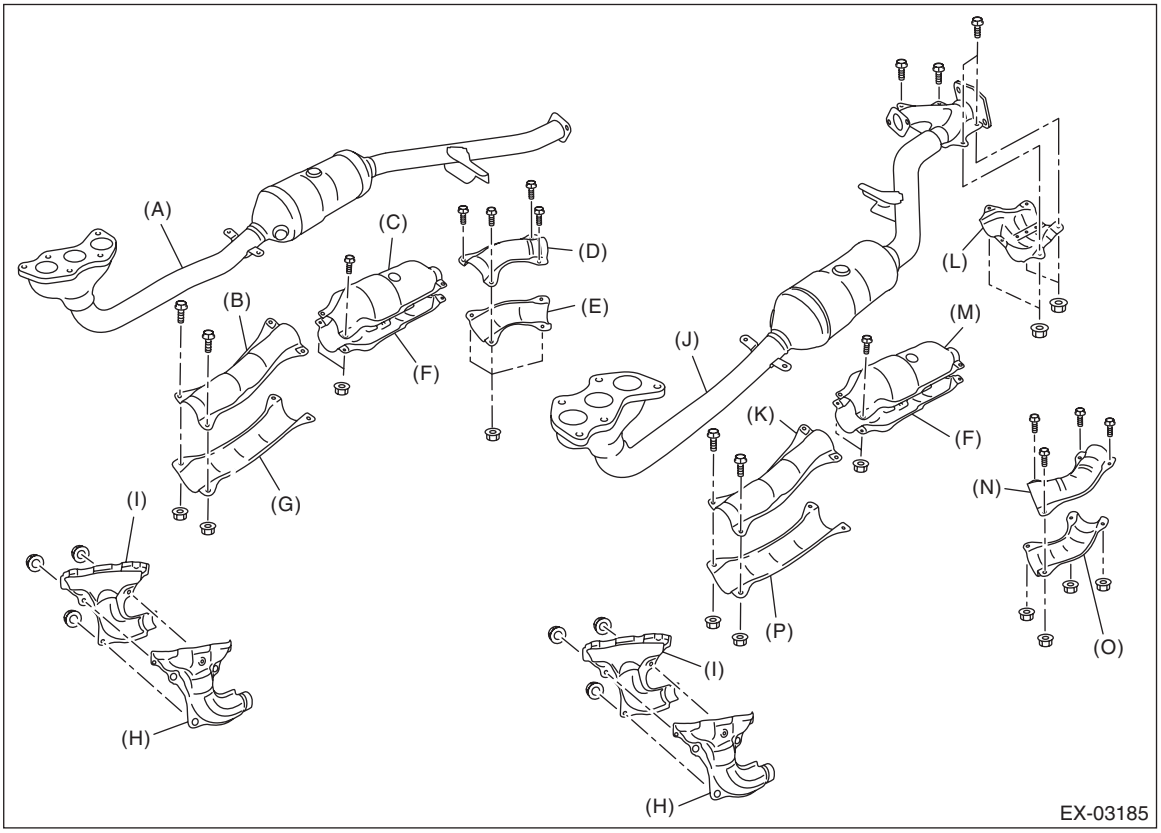

(A)	Front exhaust pipe (RH)	(G)	Front exhaust pipe lower cover (RH) (front)	(M)	Catalytic converter upper cover (LH)
(B)	Front exhaust pipe upper cover (RH) (front)	(H)	Front exhaust pipe cover (LH)	(N)	Front exhaust pipe upper cover (LH) (rear)
(C)	Catalytic converter upper cover (RH)	(I)	Front exhaust pipe cover (RH)	(O)	Front exhaust pipe lower cover (LH) (rear)
(D)	Front exhaust pipe upper cover (RH) (rear)	(J)	Front exhaust pipe (LH)	(P)	Front exhaust pipe lower cover (LH) (front)
(E)	Front exhaust pipe lower cover (RH) (rear)	(K)	Front exhaust pipe upper cover (LH) (front)		
(F)	Catalytic converter lower cover	(L)	Protector		

D: ASSEMBLY

1) Install each cover to the front exhaust pipe.

Tightening torque:
13 N·m (1.3 kgf-m, 9.6 ft-lb)

2) Install the front oxygen (A/F) sensor and rear oxygen sensor. <Ref. to FU(H6DO)-79, INSTALLATION, Front Oxygen (A/F) Sensor.> <Ref. to FU(H6DO)-81, INSTALLATION, Rear Oxygen Sensor.>
3) Install the front exhaust pipe (RH) to the front exhaust pipe (LH).

NOTE:
Use a new gasket.

Tightening torque:
30 N·m (3.1 kgf-m, 22.1 ft-lb)

E: INSPECTION

1) Check the connections and welded parts for exhaust leaks.
2) Make sure there are no holes or rusting.

3. Rear Exhaust Pipe

A: REMOVAL

CAUTION:
Vehicle components are extremely hot after driving. Be wary of receiving burns from heated parts.
1) Lift up the vehicle.
2) Remove the bolts, springs and nuts securing the front exhaust pipe assembly to the rear exhaust pipe.

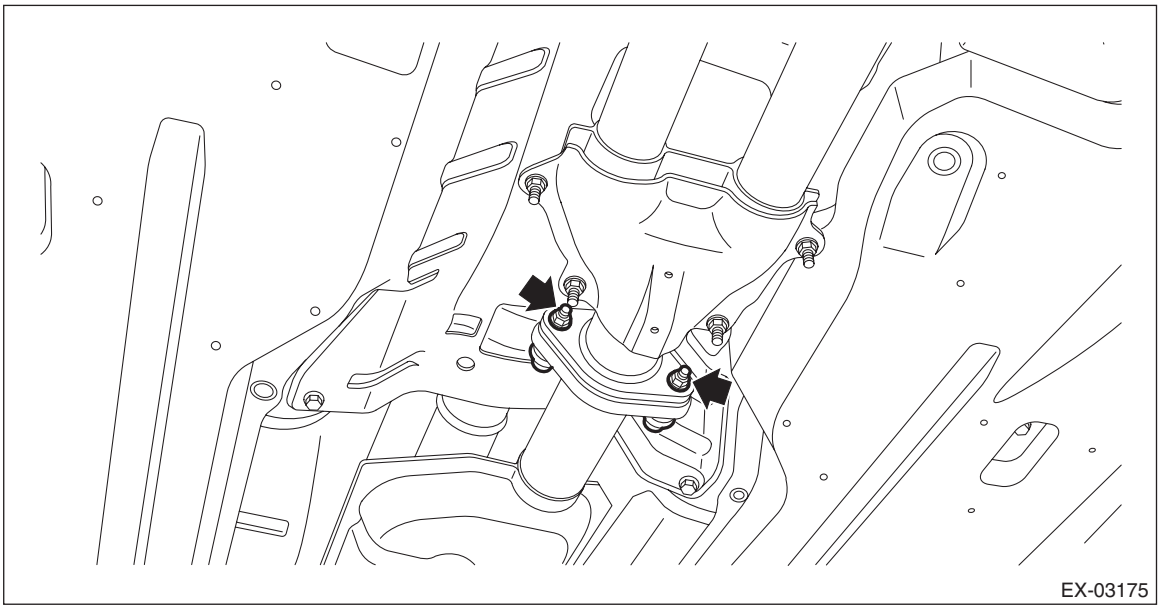
EX-03175

3) Remove the bolts and self-locking nuts securing the mufflers to the rear exhaust pipes.

CAUTION:
Be careful not to drop the rear exhaust pipe.

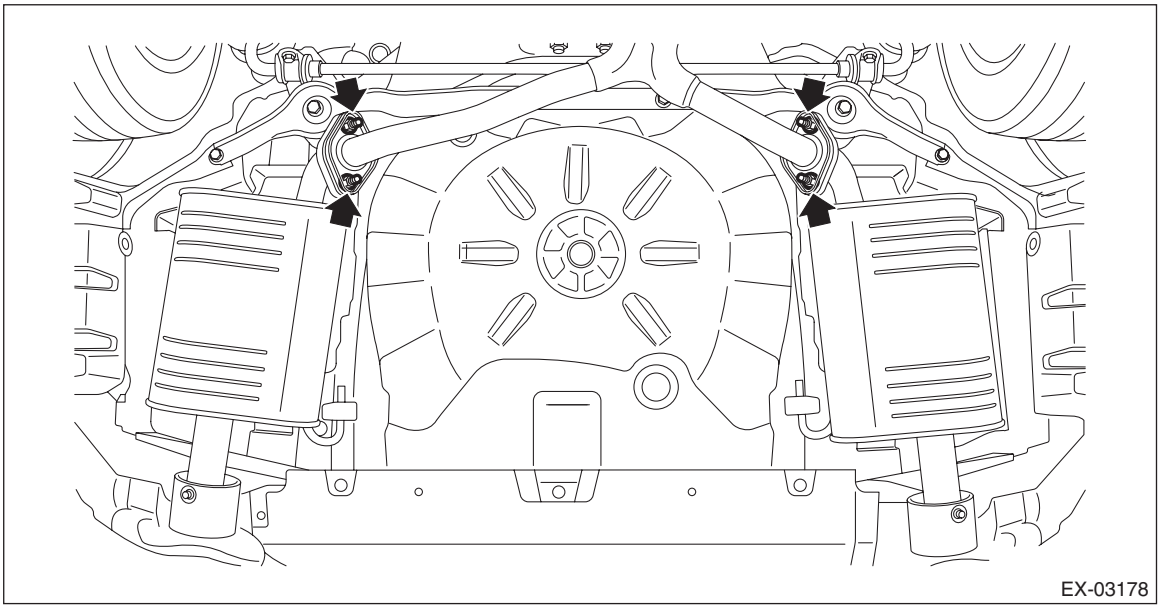
EX-03178

4) Apply a coat of spray type lubricant to the mating area of cushion rubber.
5) Remove the rear exhaust pipe from the cushion rubber.

CAUTION:
Be careful not to let the muffler contact the rear bumper.

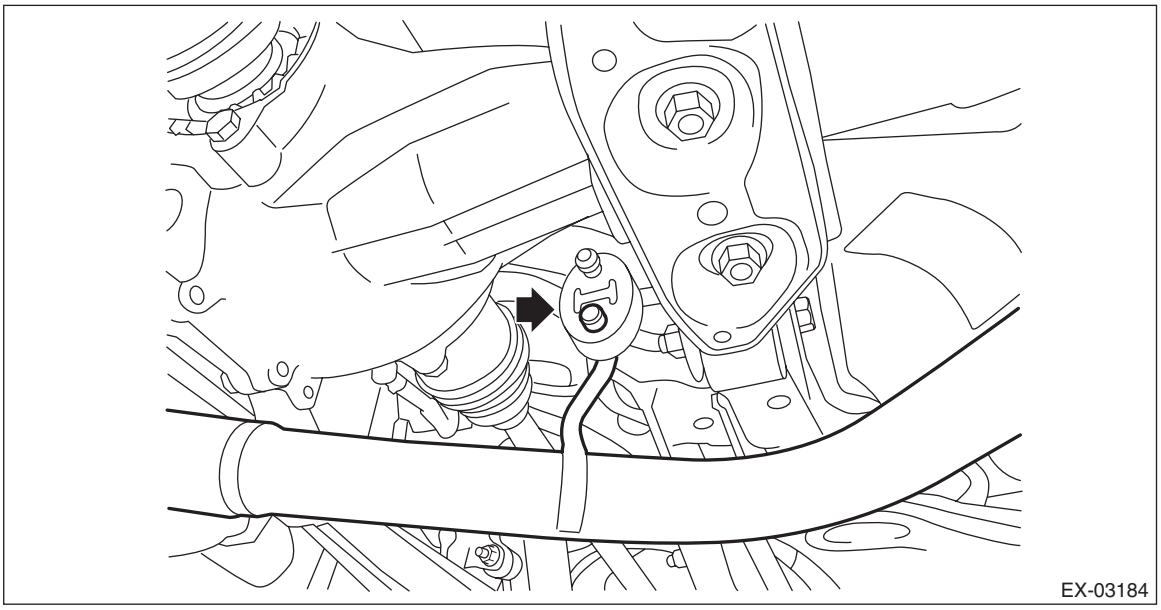

B: INSTALLATION

1) Apply a coat of spray type lubricant to the mating area of cushion rubber.
2) Install the rear exhaust pipe to cushion rubber.

NOTE:
After assembling, degrease the lubricant which was applied to the cushion rubber while removing/installing.
3) Install the bolts and self-locking nuts which secure the muffler to the rear exhaust pipe.

NOTE:
Use a new gasket and self-locking nut.

Tightening torque:
48 N·m (4.9 kgf-m, 35.4 ft-lb)
4) Install the bolts, springs and nuts securing the front exhaust pipe assembly to the rear exhaust pipe.

NOTE:
Use a new gasket.

Tightening torque:
18 N·m (1.8 kgf-m, 13.3 ft-lb)
5) Lower the vehicle.

C: INSPECTION

1) Check the connections and welded parts for exhaust leaks.
2) Make sure there are no holes or rusting.
3) Check the cushion rubber for wear or crack.

4. Muffler

A: REMOVAL

CAUTION:
Vehicle components are extremely hot after driving. Be wary of receiving burns from heated parts.
1) Lift up the vehicle.
2) Remove the bolts and self-locking nuts which secure the rear exhaust pipe to the muffler.

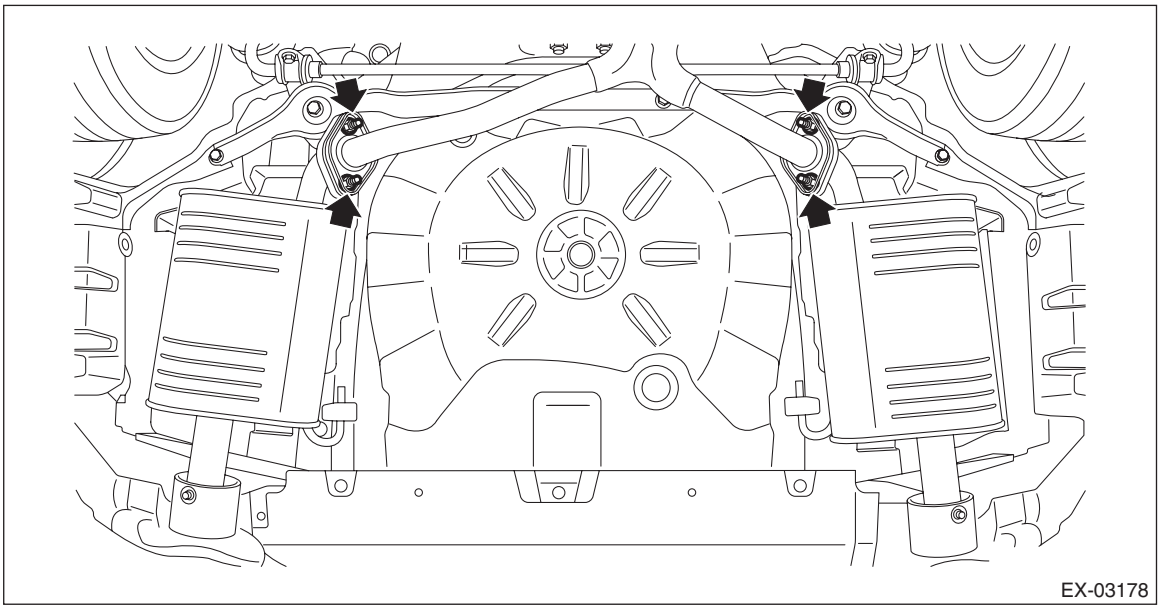

3) Apply a coat of spray type lubricant to the mating area of cushion rubber.
4) Remove the muffler from the cushion rubber.

CAUTION:
Be careful not to drop the muffler during removal.

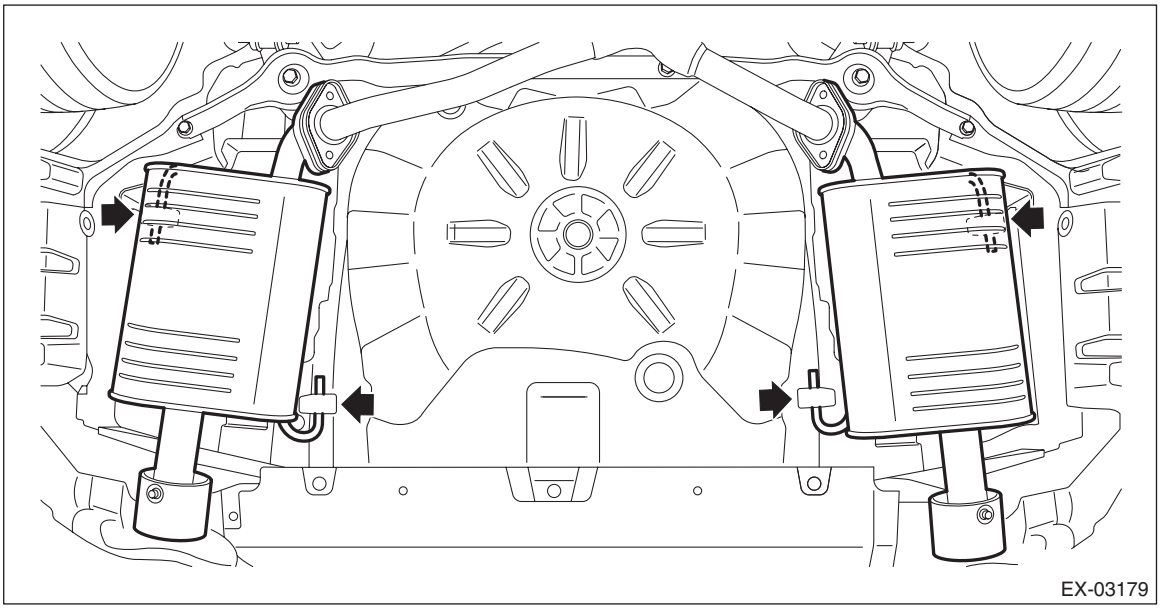

5) Remove the cushion rubber and rear exhaust cover from the vehicle.

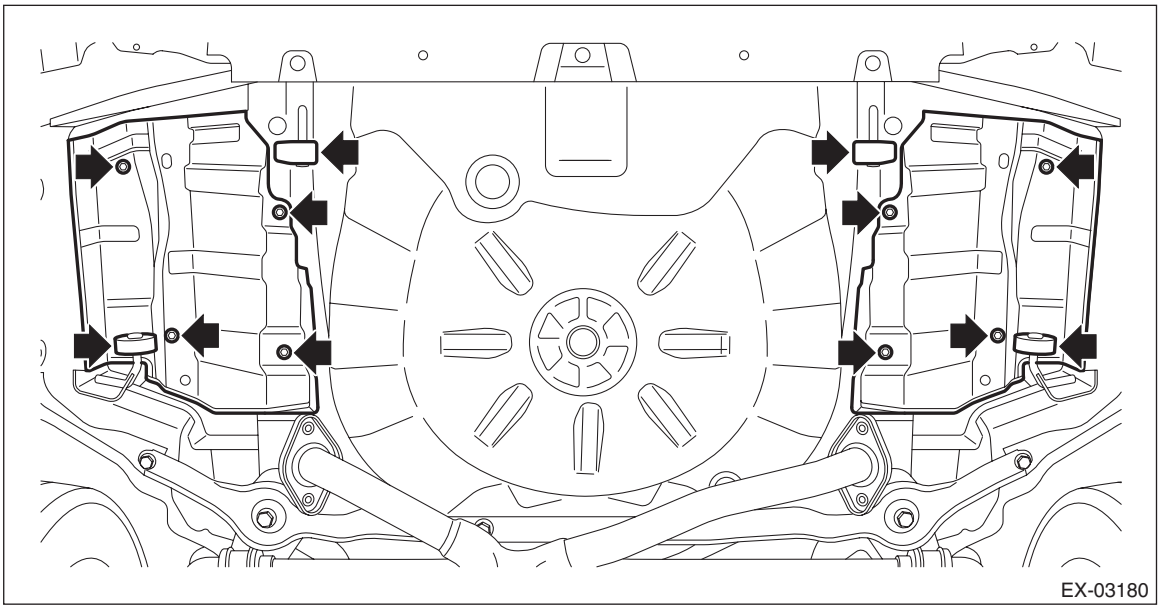

B: INSTALLATION

1) Install the cushion rubber and the rear exhaust cover to the vehicle body.

Tightening torque:
10 N·m (1.0 kgf-m, 7.4 ft-lb)

2) Install the muffler to the cushion rubber.
3) Install the bolts and self-locking nuts securing the rear exhaust pipe to the muffler.

NOTE:
- Use a new gasket and self-locking nut.
- After assembling, degrease the lubricant which was applied to the cushion rubber while removing/installing.

Tightening torque:
48 N·m (4.9 kgf-m, 35.4 ft-lb)

4) Lower the vehicle.

C: INSPECTION

1) Check the connections and welded parts for exhaust leaks.
2) Make sure there are no holes or rusting.
3) Check the cushion rubber for wear or crack.

COOLING

CO(H6DO)

		Page
1.	General Description	2
2.	Radiator Fan System	8
3.	Engine Coolant	13
4.	Water Pump	16
5.	Thermostat	18
6.	Radiator	20
7.	Radiator Cap	36
8.	Radiator Fan and Fan Motor Assembly	37
9.	Reservoir Tank	46
10.	Radiator Fan Control Unit	48
11.	Engine Cooling System Trouble in General	51

1. General Description

A: SPECIFICATION

Cooling system					Electric fan + Forced engine coolant circulation system
Total engine coolant capacity			L (US qt, Imp qt)		7.0 (7.4, 6.2)
Water pump	Type				Centrifugal impeller type
	Discharge performance	Discharge rate	L (US gal, Imp gal)/min		240 (63.4, 52.8)
		Pump speed — Discharge pressure			4,956 r/min — 140 kPa (14.0 mAq)
		Engine coolant temperature			80°C (176°F)
	Impeller diameter		mm (in)		66 (2.60)
	Number of impeller blades				8
	Pump sprocket outer diameter		mm (in)		60.60 (2.39)
Thermostat	Type				Wax pellet type
	Starting temperature to open				76 — 80°C (169 — 176°F)
	Fully opens				91°C (196°F)
	Valve lift		mm (in)		9.0 (0.354) or more
	Valve opening size		mm (in)		35 (1.38)
Radiator fan	Motor input	Main fan	W		240
		Sub fan	W		240
	Fan diameter / Blade	Main fan			320 mm (12.6 in)/7
		Sub fan			320 mm (12.6 in)/9
Radiator	Type				Down flow, pressure type
	Core dimensions	Width × Height × Thickness	mm (in)		702.6 × 349.2 × 27 (27.66 × 13.75 × 1.06)
	Pressure range in which cap valve is open	kPa (kg/cm^2, psi)		Positive pressure side — Standard	93 — 123 (0.95 — 1.25, 14 — 18)
				Positive pressure side — Limit	83 (0.85, 12)
				Negative pressure side — Standard	–1.0 — –4.9 (–0.01 — –0.05, –0.1 — –0.7)
	Fins				Corrugated fin type
Reservoir tank	Capacity		L (US qt, Imp qt)		0.45 (0.48, 0.40)

	Recommended materials	Item number	Alternative
Coolant	SUBARU SUPER COOLANT (concentrated type)	—	—
	SUBARU SUPER COOLANT (diluted type)	K0670Y0001	
Water for dilution	Distilled water	—	Soft water or tap water
Cooling system protective agent	Cooling system conditioner	SOA345001	—

B: COMPONENT

1. WATER PUMP AND WATER PIPE

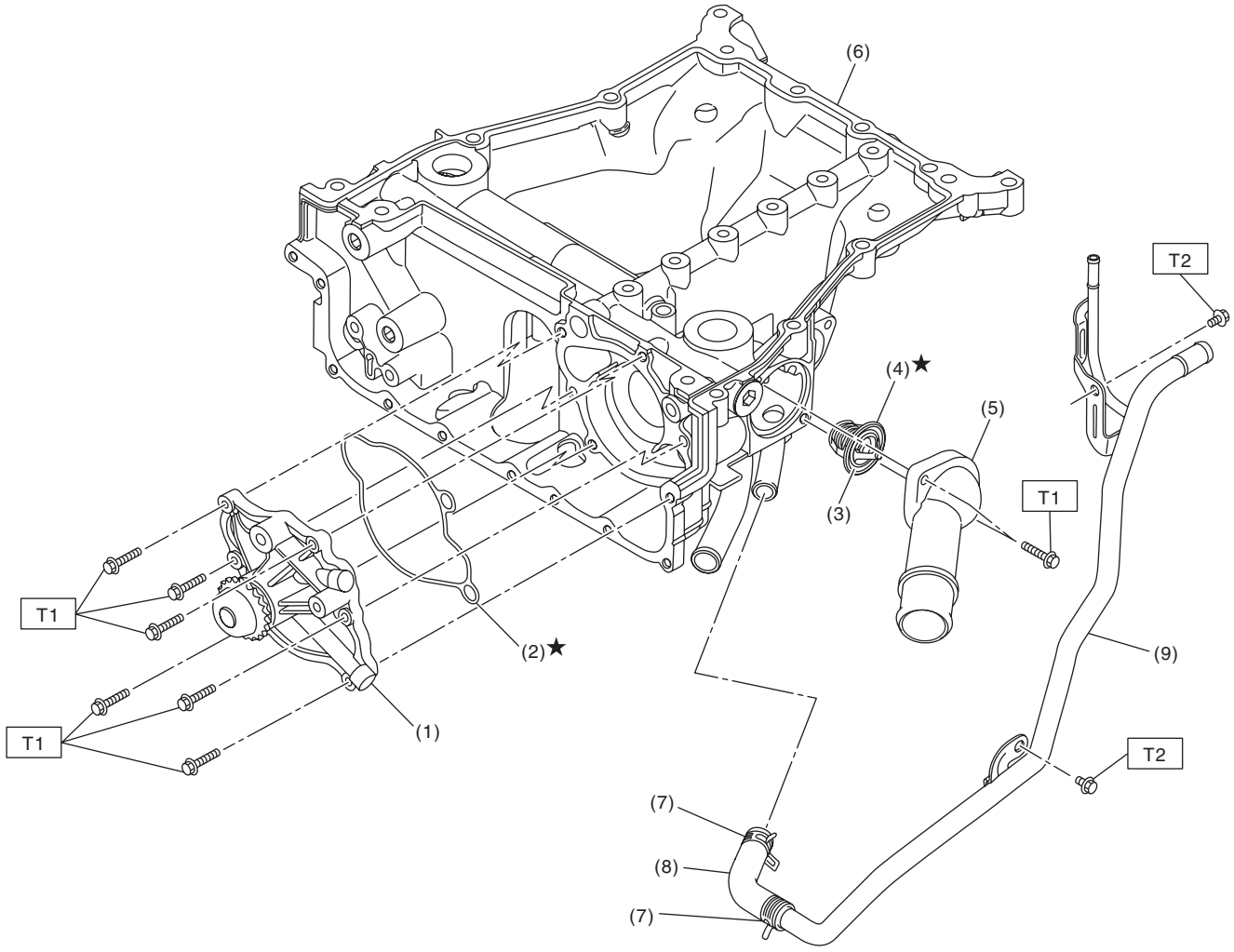

CO-03486

(1) Water pump ASSY
(2) Gasket
(3) Thermostat
(4) Gasket
(5) Thermostat cover
(6) Oil pan upper
(7) Clip
(8) Hose
(9) Water return pipe

Tightening torque: N·m (kgf-m, ft-lb)
T1: 6.4 (0.7, 4.7)
T2: 16 (1.6, 11.8)

2. ENGINE COOLANT TEMPERATURE SENSOR AND HEATER HOSE

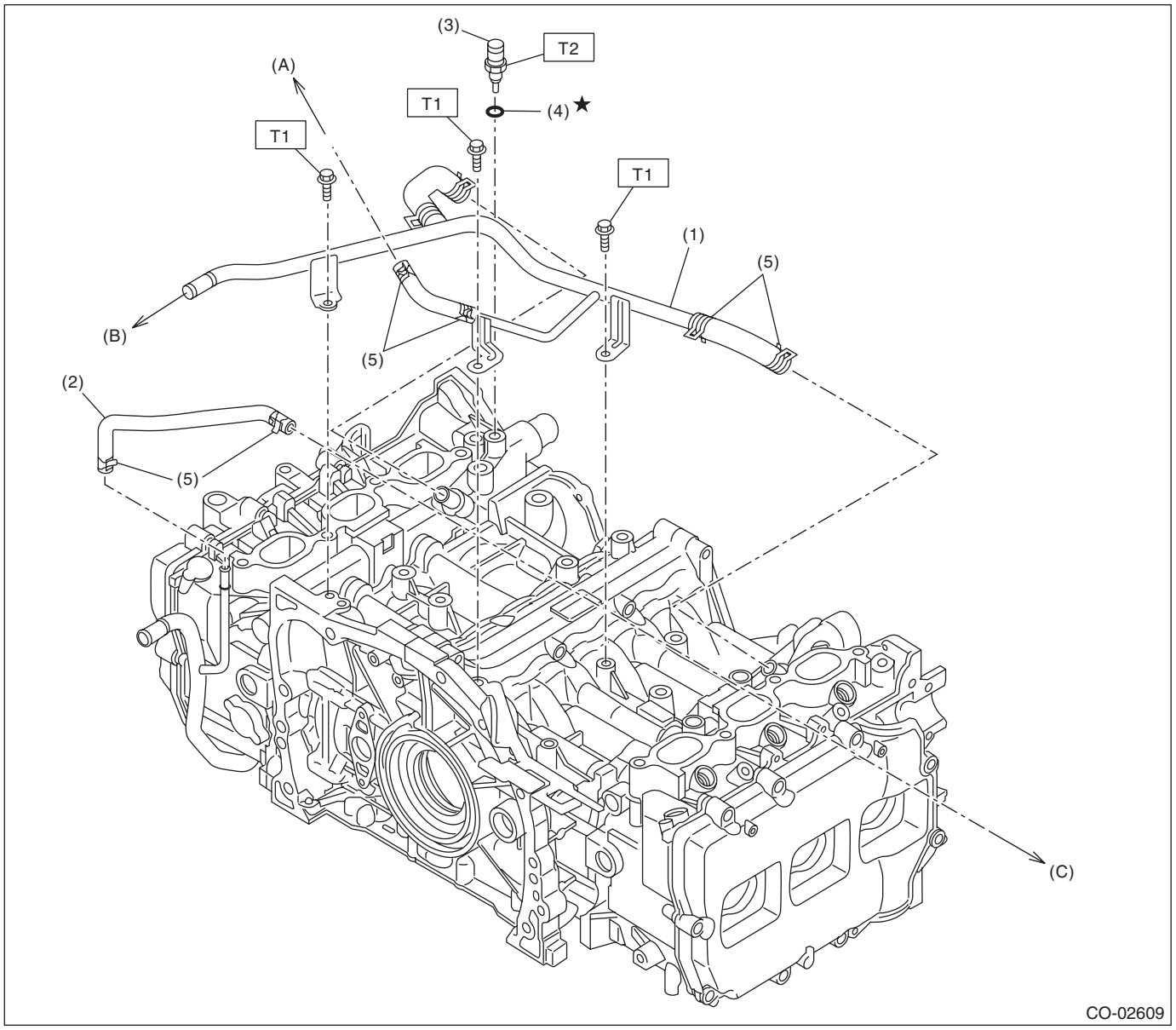

(A) To the throttle body
(B) To heater hose
(C) To the throttle body
(1) Heater pipe
(2) Preheater hose
(3) Engine coolant temperature sensor
(4) Gasket
(5) Clip

Tightening torque: N·m (kgf-m, ft-lb)
T1: 19 (1.9, 14.0)
T2: 22 (2.2, 16.2)

3. RADIATOR AND RADIATOR FAN

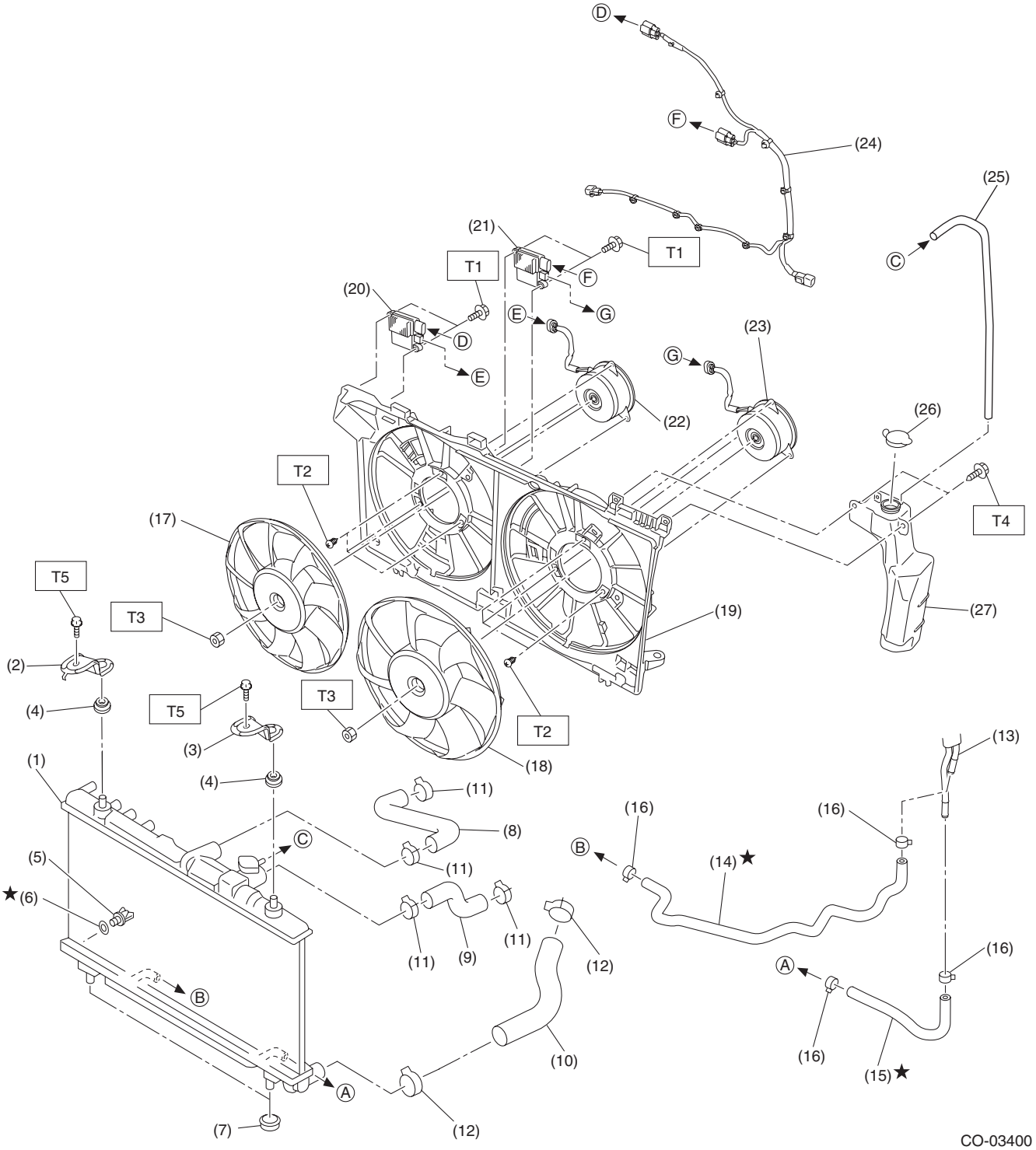

(1) Radiator
(2) Radiator upper bracket RH
(3) Radiator upper bracket LH
(4) Radiator upper cushion
(5) Drain plug
(6) O-ring
(7) Radiator lower cushion
(8) Radiator inlet hose RH
(9) Radiator inlet hose LH
(10) Radiator outlet hose
(11) Clip
(12) Clip
(13) CVTF pipe
(14) CVTF radiator inlet hose
(15) CVTF radiator outlet hose
(16) Clip
(17) Radiator sub fan
(18) Radiator main fan
(19) Radiator fan shroud
(20) Radiator fan control module (sub)
(21) Radiator fan control module (main)
(22) Radiator sub fan motor
(23) Radiator main fan motor
(24) Radiator fan harness
(25) Over flow hose
(26) Reservoir tank cap
(27) Reservoir tank

Tightening torque: N·m (kgf-m, ft-lb)
T1: 2.6 (0.3, 1.9)
T2: 3.9 (0.4, 2.9)
T3: 6.4 (0.7, 4.7)
T4: 7.5 (0.8, 5.5)
T5: 12 (1.2, 8.9)

C: CAUTION

- Prior to starting work, pay special attention to the following:
  1. Always wear work clothes, a work cap, and protective shoes. Additionally, wear a helmet, protective goggles, etc. if necessary.
  2. Protect the vehicle using a seat cover, fender cover, etc.
  3. Prepare the service tools, clean cloth, containers to catch grease and oil, etc.
- Prepare a container and cloth to prevent scattering of engine coolant when performing work where engine coolant can be spilled. If the oil spills, wipe it off immediately to prevent from penetrating into floor or flowing out for environmental protection.
- Vehicle components are extremely hot immediately after driving. Be wary of receiving burns from heated parts.
- When performing a repair, identify the cause of trouble and avoid unnecessary removal, disassembly and replacement.
- Before disconnecting connectors of sensors or units, be sure to disconnect the ground cable from battery.
- Always use the jack-up point when the shop jacks or rigid racks are used to support the vehicle.
- Remove contamination including dirt and corrosion before removal, installation, disassembly or assembly.
- Keep the removed parts in order and protect them from dust and dirt.
- All removed parts, if to be reused, should be reinstalled in the original positions with attention to the correct directions, etc.
- Bolts, nuts and washers should be replaced with new parts as required.
- Be sure to tighten the fasteners including bolts and nuts to the specified torque.
- Follow all government and local regulations concerning disposal of refuse when disposing engine coolant.

D: PREPARATION TOOL

1. SPECIAL TOOL

ILLUSTRATION	TOOL NUMBER	DESCRIPTION	REMARKS
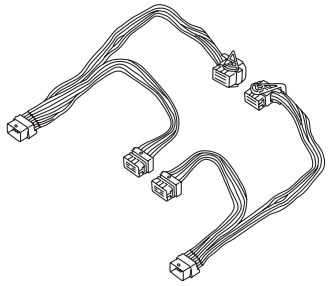 ST18460AA050	18460AA050	CHECK BOARD	Used for inspecting the radiator fan system.
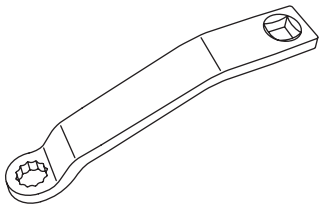 ST73099SG000	73099SG000	SPECIAL TOOL CONDENSER	Used for removing and installing the radiator.
 STSSM4	— (Newly adopted tool)	SUBARU SELECT MONITOR 4	Used for setting of each function and trouble-shooting for electrical system. NOTE: For detailed operation procedures of Subaru Select Monitor 4, refer to “Application help”.

2. GENERAL TOOL

TOOL NAME	REMARKS
Circuit tester	Used for measuring resistance, voltage and current.
Radiator cap tester	Used for checking radiator and radiator cap.
DST-i	Used together with Subaru Select Monitor 4.

2. Radiator Fan System

A: WIRING DIAGRAM

Radiator fan system <Ref. to WI-313, ENGINE TYPE EZ, WIRING DIAGRAM, Radiator Fan System.>

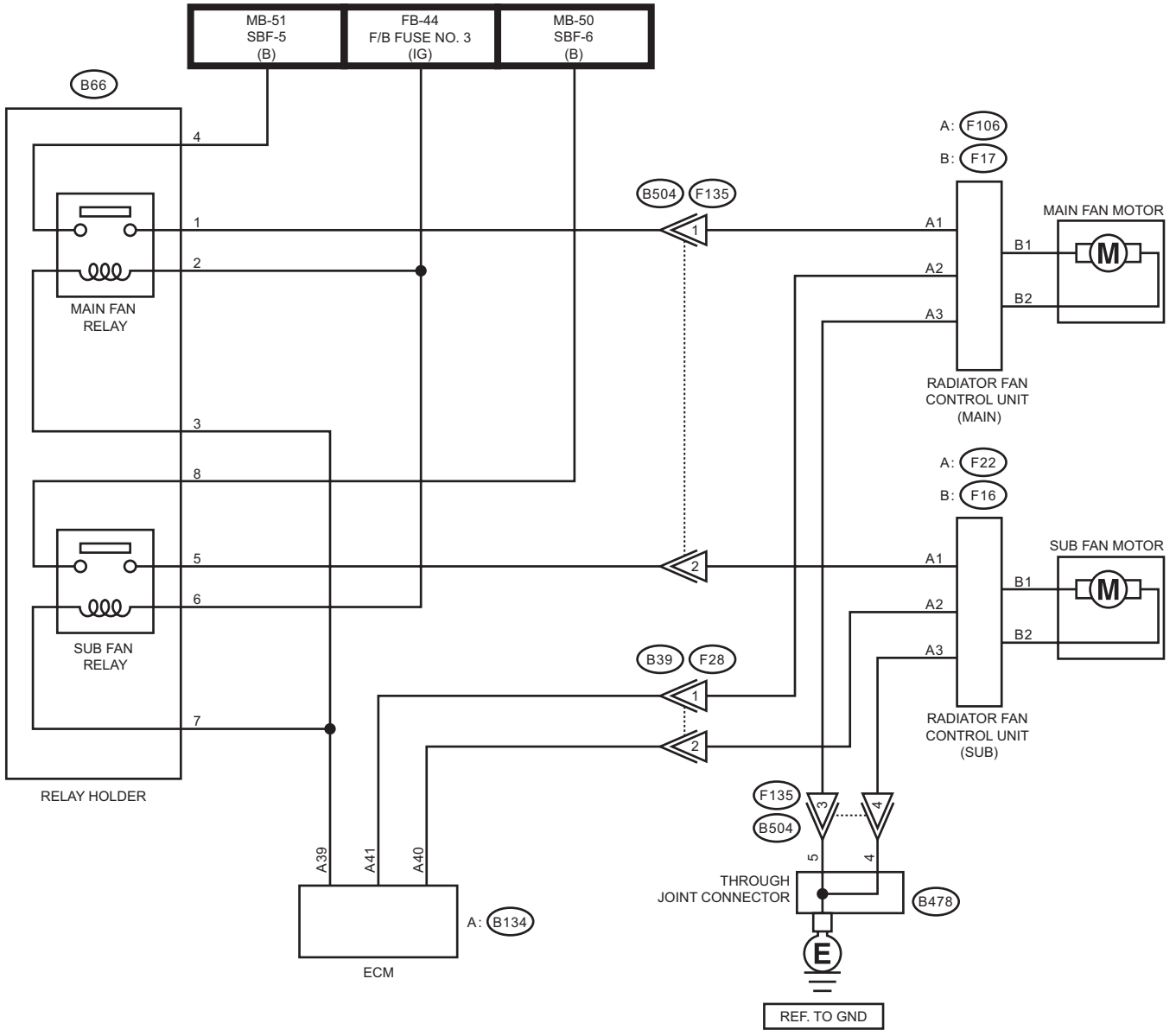

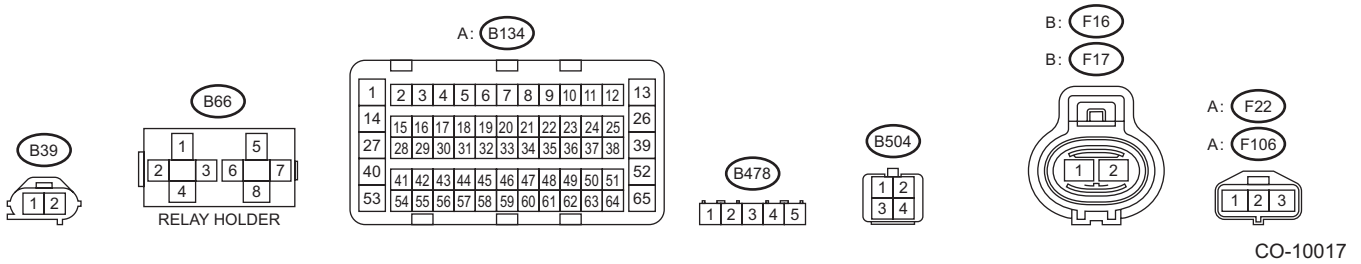

CO-10017

B: RADIATOR FAN CONTROL OUTPUT WAVEFORM

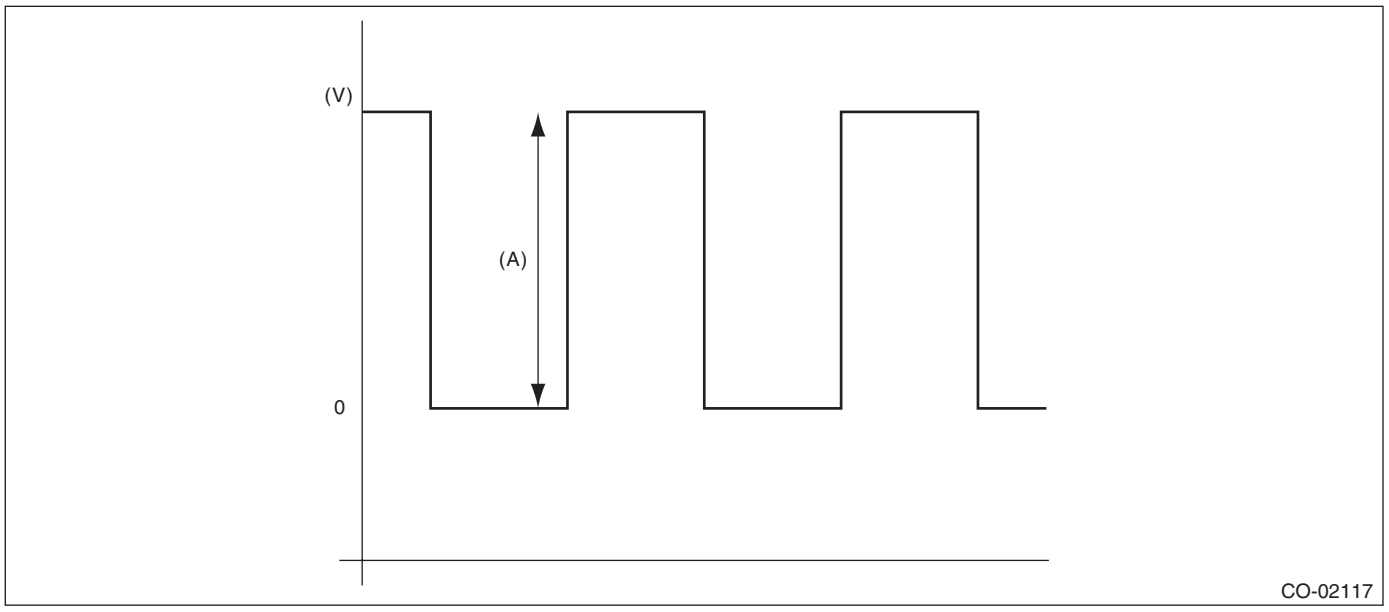

(A) 5 V

C: INSPECTION

Operating condition:

Radiator fan operates depending on the radiator fan speed related to engine coolant temperature or the radiator fan speed related to A/C compressor load, whichever is higher as a load condition.

- Radiator fan speed related to engine coolant temperature

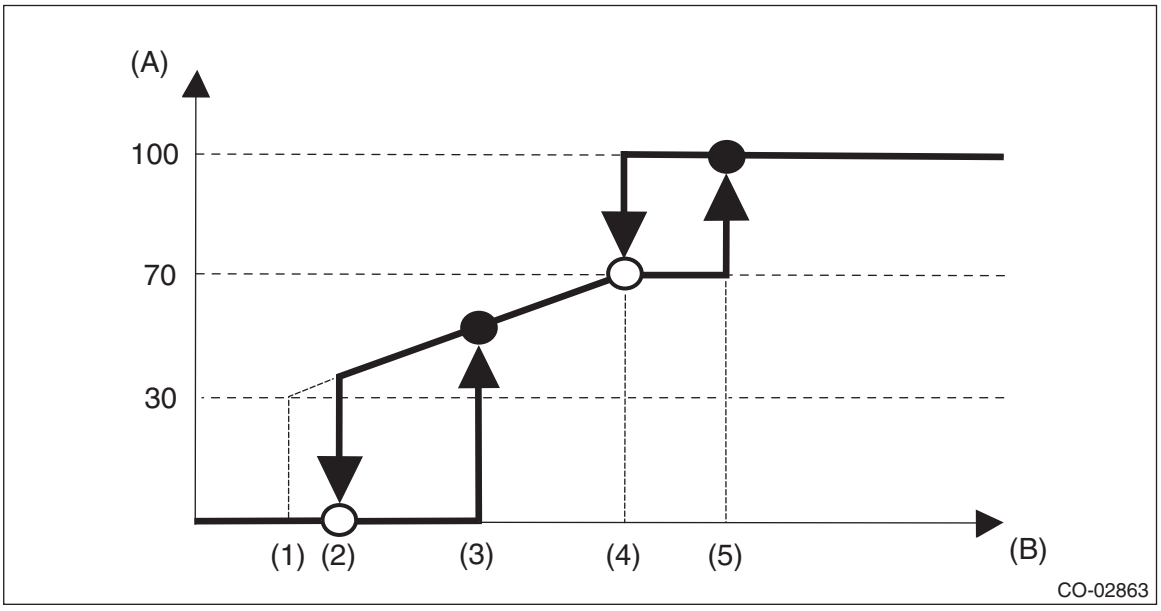

(A) Radiator fan speed (%)
(B) Engine coolant temperature

(1) 95°C (203°F)
(2) 96°C (205°F)
(3) 98°C (208°F)
(4) 100°C (212°F)
(5) 101°C (214°F)

- Radiator fan speed related to A/C compressor load

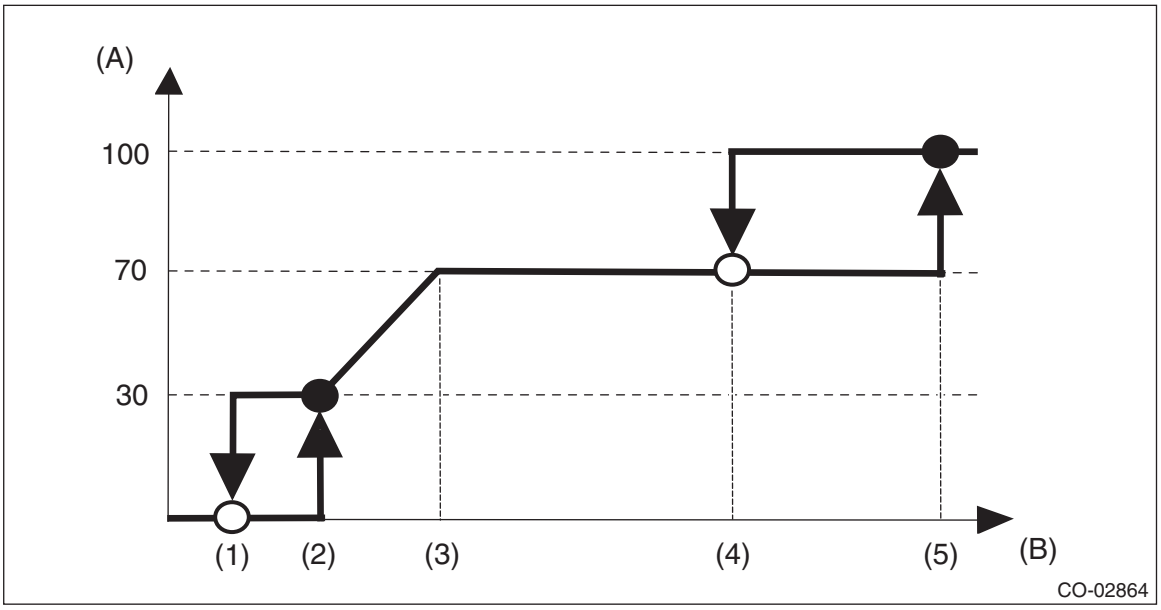

(A) Radiator fan speed (%)
(B) A/C compressor refrigerant pressure
(1) 0.8 MPa (8.16 kg/cm^2, 116 psi)
(2) 1.0 MPa (10.20 kg/cm^2, 145 psi)
(3) 1.4 MPa (14.30 kg/cm^2, 203 psi)
(4) 2.2 MPa (22.43 kg/cm^2, 319 psi)
(5) 2.5 MPa (25.49 kg/cm^2, 362 psi)

DIAGNOSIS:
Radiator main fan and radiator sub fan do not rotate under the above operating conditions.

	Step	Check	Yes	No
1	**CHECK OPERATION OF RADIATOR FAN.** 1) Turn the ignition switch to OFF. 2) Connect the delivery mode fuse.	Does the radiator main fan rotate?	Go to step **2**.	Go to step **3**.
2	**CHECK OPERATION OF RADIATOR FAN.** 1) Turn the ignition switch to OFF. 2) Connect the delivery mode fuse.	Does the radiator sub fan rotate?	Radiator main fan system is normal.	Go to step **11**.
3	**CHECK MAIN FAN RELAY.** 1) Turn the ignition switch to OFF. 2) Remove the main fan relay from the relay holder. 3) Measure the resistance between terminals on the main fan relay switch side.	Is the resistance 1 MΩ or more?	Go to step **4**.	Replace the main fan relay. <Ref. to AC-36, Relay and Fuse.>
4	**CHECK MAIN FAN RELAY.** 1) Connect the main fan relay coil side terminal to the battery. 2) Measure the resistance between terminals on the main fan relay switch side.	Is the resistance less than 1 Ω?	Go to step **5**.	Replace the main fan relay. <Ref. to AC-36, Relay and Fuse.>

	Step	Check	Yes	No
5	**CHECK POWER SUPPLY FOR ECM.** 1) Turn the ignition switch to OFF. 2) Disconnect the connector from ECM. 3) Set the ST between the engine control module (ECM) and engine harness. <Ref. to EN(H6DO)(diag)-6, CAUTION, General Description.> 4) Turn the ignition switch to ON. 5) Measure the voltage between ECM terminal and chassis ground. ***Connector & terminal*** ***(B134) No. 39 (+) — Chassis ground (–):***	Is the voltage 10 V or more?	Go to step **6**.	Repair the power supply line.
6	**CHECK POWER SUPPLY FOR RADIATOR FAN CONTROL MODULE (MAIN).** 1) Turn the ignition switch to OFF. 2) Remove the ST, and connect the connector to ECM. 3) Disconnect the connector from radiator fan control module (main). 4) Turn the ignition switch to ON. 5) Measure the voltage between radiator fan control module (main) terminal and chassis ground. ***Connector & terminal*** ***(F106) No. 1 (+) — Chassis ground (–):***	Is the voltage 10 V or more?	Go to step **7**.	Repair the power supply line.
7	**CHECK HARNESS BETWEEN ECM AND RADIATOR FAN CONTROL MODULE (MAIN).** 1) Turn the ignition switch to OFF. 2) Disconnect the connector from ECM. 3) Measure the resistance between radiator fan control module (main) and ECM connector. ***Connector & terminal*** ***(B134) No. 41 — (F106) No. 2:***	Is the resistance less than 1 Ω?	Go to step **8**.	Repair the open circuit of harness between ECM and radiator fan control module (main).
8	**CHECK GROUND CIRCUIT FOR RADIATOR FAN CONTROL MODULE (MAIN).** 1) Connect the connector to ECM and radiator fan control module (main). 2) Measure the resistance between radiator fan control module (main) connector and chassis ground. ***Connector & terminal*** ***(F106) No. 3 — Chassis ground:***	Is the resistance less than 5 Ω?	Go to step **9**.	Repair the open circuit of harness between radiator fan control module (main) connector and chassis ground.
9	**CHECK MAIN FAN MOTOR.** 1) Disconnect the connector from radiator fan control module (main). 2) Connect the battery positive (+) terminal to terminal No. 1 of the main fan motor, and the ground (–) terminal to terminal No. 2.	Does the main fan motor rotate?	Go to step **10**.	Replace the main fan motor. <Ref. to CO(H6DO)-37, Radiator Fan and Fan Motor Assembly.>
10	**CHECK OUTPUT SIGNAL FROM ECM.** 1) Turn the ignition switch to OFF. 2) Connect the delivery mode fuse. 3) Turn the ignition switch to ON. 4) Check the output waveform using oscilloscope. <Ref. to CO(H6DO)-9, RADIATOR FAN CONTROL OUTPUT WAVEFORM, Radiator Fan System.> ***Connector & terminal*** ***(B134) No. 41 (+) — Chassis ground (–):***	Is waveform being output?	Replace the radiator fan control module (main). <Ref. to CO(H6DO)-48, RADIATOR FAN CONTROL MODULE (MAIN), REMOVAL, Radiator Fan Control Unit.>	Replace the ECM. <Ref. to FU(H6DO)-83, Engine Control Module (ECM).> NOTE: After replacing the ECM, check again from step 1).

	Step	Check	Yes	No
11	**CHECK SUB FAN RELAY.** 1) Turn the ignition switch to OFF. 2) Remove the sub fan relay from the relay holder. 3) Measure the resistance between terminals on the sub fan relay switch side.	Is the resistance 1 MΩ or more?	Go to step **12**.	Replace the sub fan relay. <Ref. to AC-36, Relay and Fuse.>
12	**CHECK SUB FAN RELAY.** 1) Connect the battery to the terminal on the sub fan relay coil side. 2) Measure the resistance between terminals on the sub fan relay switch side.	Is the resistance less than 1 Ω?	Go to step **13**.	Replace the sub fan relay. <Ref. to AC-36, Relay and Fuse.>
13	**CHECK POWER SUPPLY FOR RADIATOR FAN CONTROL MODULE (SUB).** 1) Turn the ignition switch to OFF. 2) Disconnect the connector from radiator fan control module (sub). 3) Turn the ignition switch to ON. 4) Measure the voltage between radiator fan control module (sub) terminal and chassis ground. ***Connector & terminal*** ***(F22) No. 1 (+) — Chassis ground (–):***	Is the voltage 10 V or more?	Go to step **14**.	Repair the power supply line.
14	**CHECK HARNESS BETWEEN ECM AND RADIATOR FAN CONTROL MODULE (SUB).** 1) Turn the ignition switch to OFF. 2) Disconnect the connector from ECM. 3) Measure the resistance between radiator fan control module (sub) and ECM connector. ***Connector & terminal*** ***(B134) No. 40 — (F22) No. 2:***	Is the resistance less than 1 Ω?	Go to step **15**.	Repair the open circuit of harness between ECM and radiator fan control module (sub).
15	**CHECK GROUND CIRCUIT FOR RADIATOR FAN CONTROL MODULE (SUB).** 1) Connect the connector to ECM and radiator fan control module (sub). 2) Measure the resistance between radiator fan control module (sub) connector and chassis ground. ***Connector & terminal*** ***(F22) No. 3 — Chassis ground:***	Is the resistance less than 5 Ω?	Go to step **16**.	Repair the open circuit of harness between radiator fan control module (sub) connector and chassis ground.
16	**CHECK SUB FAN MOTOR.** 1) Disconnect the connector from radiator fan control module (sub). 2) Connect the battery positive (+) terminal to terminal No. 1 of the sub fan motor, and the ground (–) terminal to terminal No. 2.	Does the sub fan motor rotate?	Go to step **17**.	Replace the sub fan motor. <Ref. to CO(H6DO)-37, Radiator Fan and Fan Motor Assembly.>
17	**CHECK OUTPUT SIGNAL FROM ECM.** 1) Turn the ignition switch to OFF. 2) Connect the delivery mode fuse. 3) Turn the ignition switch to ON. 4) Check the output waveform using oscilloscope. <Ref. to CO(H6DO)-9, RADIATOR FAN CONTROL OUTPUT WAVEFORM, Radiator Fan System.> ***Connector & terminal*** ***(B134) No. 40 (+) — Chassis ground (–):***	Is waveform being output?	Replace the radiator fan control module (sub). <Ref. to CO(H6DO)-48, RADIATOR FAN CONTROL MODULE (SUB), REMOVAL, Radiator Fan Control Unit.>	Replace the ECM. <Ref. to FU(H6DO)-83, Engine Control Module (ECM).>

3. Engine Coolant

A: INSPECTION

NOTE:
When adding the engine coolant, always use SUBARU Super Coolant.
1) Park the vehicle on a level surface.
2) Check the engine coolant amount, and if the coolant level is low, check for the coolant leakage, and then add the engine coolant.
   (1) Make sure the engine coolant level in the reservoir tank is between “FULL” and “LOW” with the engine in a cold condition.
   (2) Open the radiator cap and make sure that the radiator is filled with the engine coolant up to its filler neck position.

B: REPLACEMENT

1. DRAINING OF ENGINE COOLANT

1) Lift up the vehicle.
2) Remove the under cover. <Ref. to EI-28, REMOVAL, Front Under Cover.>
3) Connect a hose with inner diameter of ϕ8 mm (0.315 in) to the drain outlet of the radiator.
4) Loosen the drain plug to drain engine coolant into a container.

NOTE:
Remove the radiator cap so that engine coolant will drain faster.

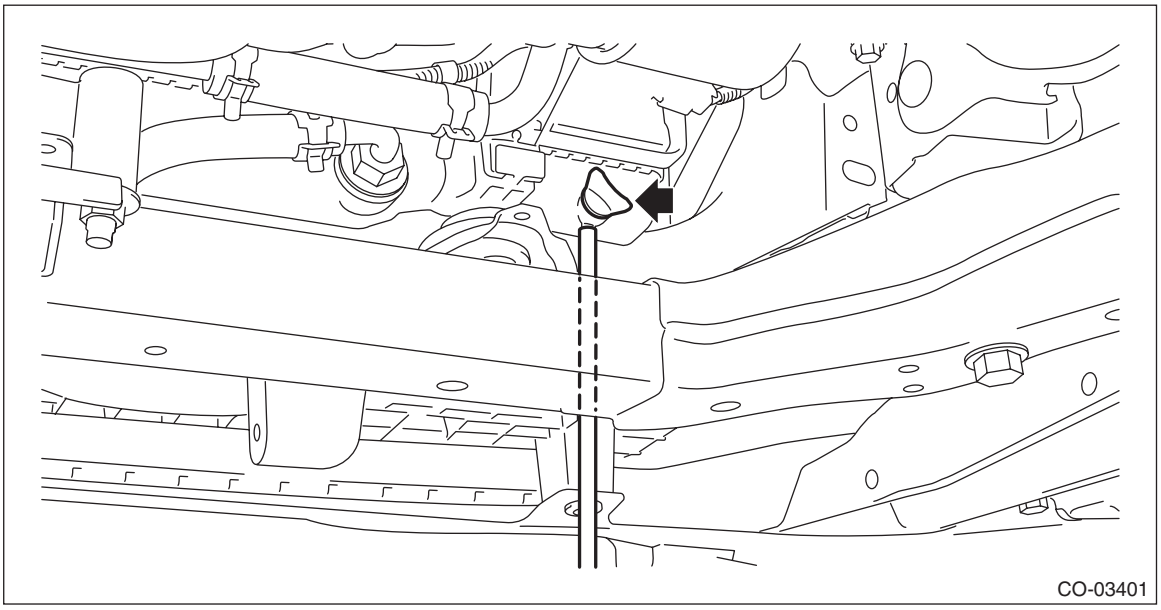

5) Tighten the drain plug.

NOTE:
Use new O-rings.
6) Remove the hose from the drain outlet of the radiator.
7) Install the under cover. <Ref. to EI-28, INSTALLATION, Front Under Cover.>

2. FILLING OF ENGINE COOLANT

CAUTION:
During work, set the select lever to "P" or "N" range and do not shift the lever.
1) Pour cooling system conditioner through the filler neck.

Cooling system protective agent:
Refer to "SPECIFICATION" for cooling system protective agent. <Ref. to CO(H6DO)-2, SPECIFICATION, General Description.>
2) Pour engine coolant into the radiator up to the filler neck position.

Recommended engine coolant:
Refer to "SPECIFICATION" for recommended engine coolant. <Ref. to CO(H6DO)-2, SPECIFICATION, General Description.>

Engine coolant level:
Refer to "SPECIFICATION" for engine coolant level. <Ref. to CO(H6DO)-2, SPECIFICATION, General Description.>

Engine coolant concentration:
Refer to "ADJUSTMENT" for the recommended engine coolant concentration. <Ref. to CO(H6DO)-15, ADJUSTMENT, Engine Coolant.>

NOTE:
The SUBARU Super Coolant contains anti-freeze and anti-rust agents, and is especially made for Subaru engines with an aluminum cylinder block. Be sure to use SUBARU Super Coolant, since other coolant may cause corrosion.
3) Fill engine coolant into the reservoir tank up to "FULL" level.

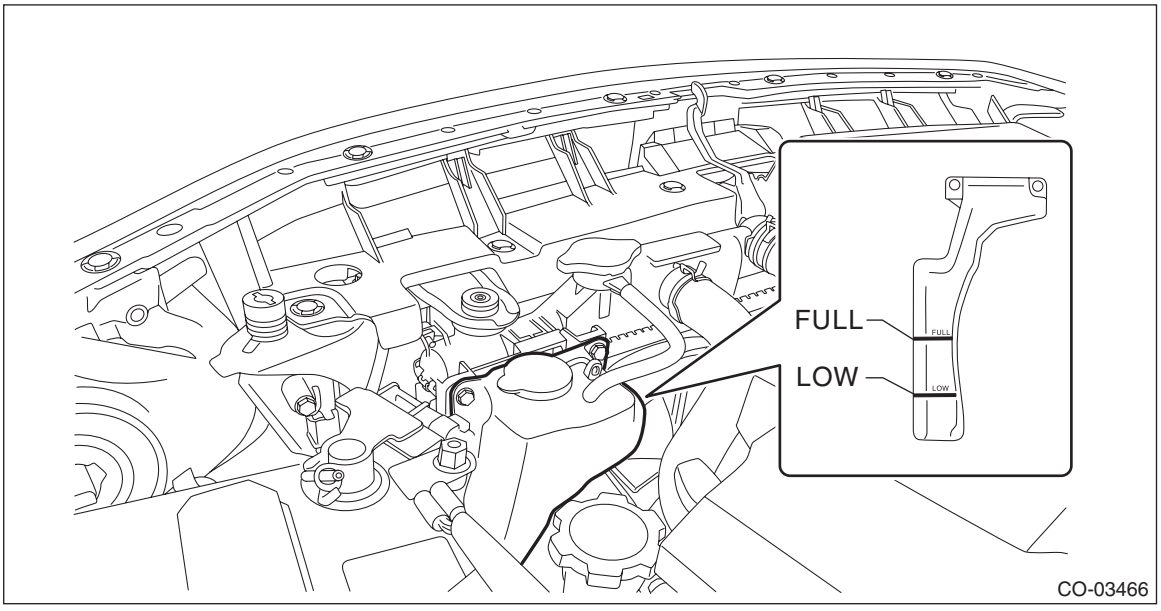

4) Close the radiator cap and start the engine. Race 5 to 6 times at 3,000 r/min or less, then stop the engine. (Complete this operation within 40 seconds.)
5) Wait for one minute after the engine stops, and open the radiator cap. If the engine coolant level drops, add engine coolant into radiator up to the filler neck position.
6) Perform the procedures 4) and 5) again.
7) Attach the radiator cap and reservoir tank cap properly.
8) Start the engine and operate the heater at maximum hot position and the blower speed setting to “LO”.
9) Run the engine at 3,000 r/min or less until radiator fan starts and stops.

NOTE:
Be careful with the engine coolant temperature to prevent overheating.
10) Stop the engine and wait until the engine coolant temperature lowers to 30°C (86°F) or less.
11) Open the radiator cap. If the engine coolant level drops, add engine coolant into the radiator up to the filler neck position and the reservoir tank to “FULL” level.
12) Attach the radiator cap and reservoir tank cap properly.
13) Set the heater setting to maximum hot position and the blower speed setting to “LO” and start the engine. Perform racing at 3,000 r/min or less. If the flowing sound is heard from the heater core, repeat the procedures from step 9).

C: ADJUSTMENT

1. PROCEDURE TO ADJUST THE SUBARU SUPER COOLANT CONCENTRATION

CAUTION:
Use the SUBARU Super Coolant with a 50 — 60% concentration in order to obtain maximum anti-freeze and anti-rust performance.
To adjust the concentration of SUBARU Super Coolant according to temperature, find the proper SUBARU Super Coolant concentration in the table, and add dilution water to the SUBARU Super Coolant (concentrated type) until it reaches the proper dilution.

Relationship of SUBARU Super Coolant concentration and freezing temperature			
SUBARU Super Coolant concentration	50%	55%	60%
Freezing temperature	–36°C (–33°F)	–41°C (–42°F)	–50°C (–58°F)

Engine coolant and diluting water:
Refer to “SPECIFICATION” for recommended engine coolant and diluting water. <Ref. to CO(H6DO)-2, SPECIFICATION, General Description.>

4. Water Pump

A: REMOVAL

1) Remove the collector cover.
   (1) Carefully pull up the rear of collector cover at two positions (A).
   (2) Carefully pull up the front of collector cover at two positions (B) while moving it forward.

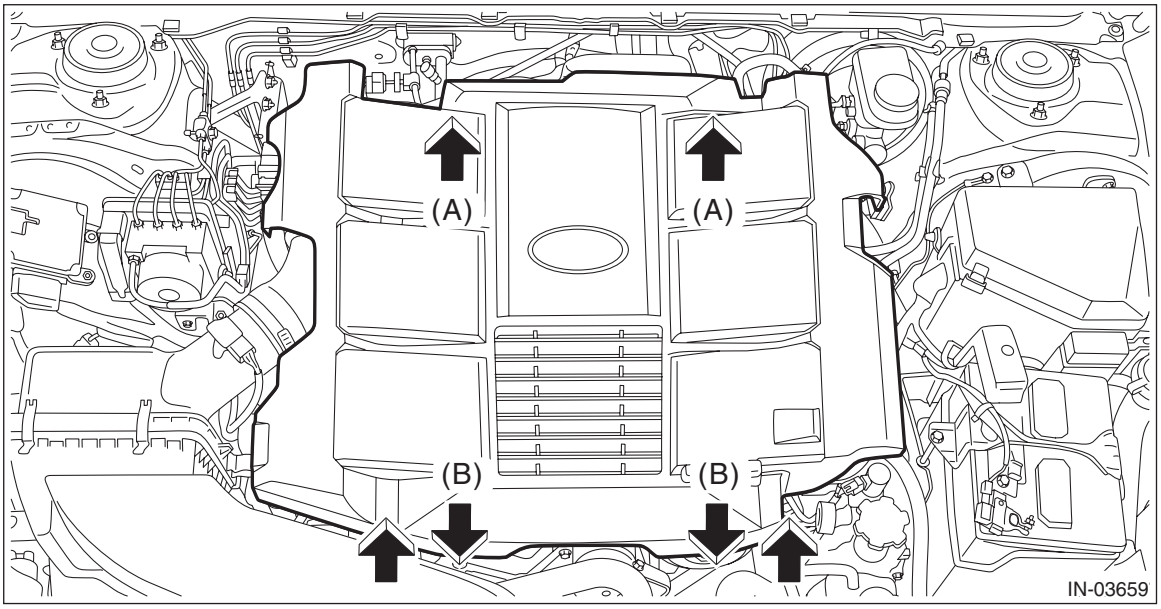

2) Disconnect the ground terminal from battery sensor. <Ref. to RC-4, BATTERY, NOTE, Repair Contents.>
3) Remove the chain cover. <Ref. to ME(H6DO)-81, REMOVAL, Chain Cover.>
4) Remove the timing chain assembly. <Ref. to ME(H6DO)-88, REMOVAL, Timing Chain Assembly.>
5) Remove the water pump from the oil pan upper.

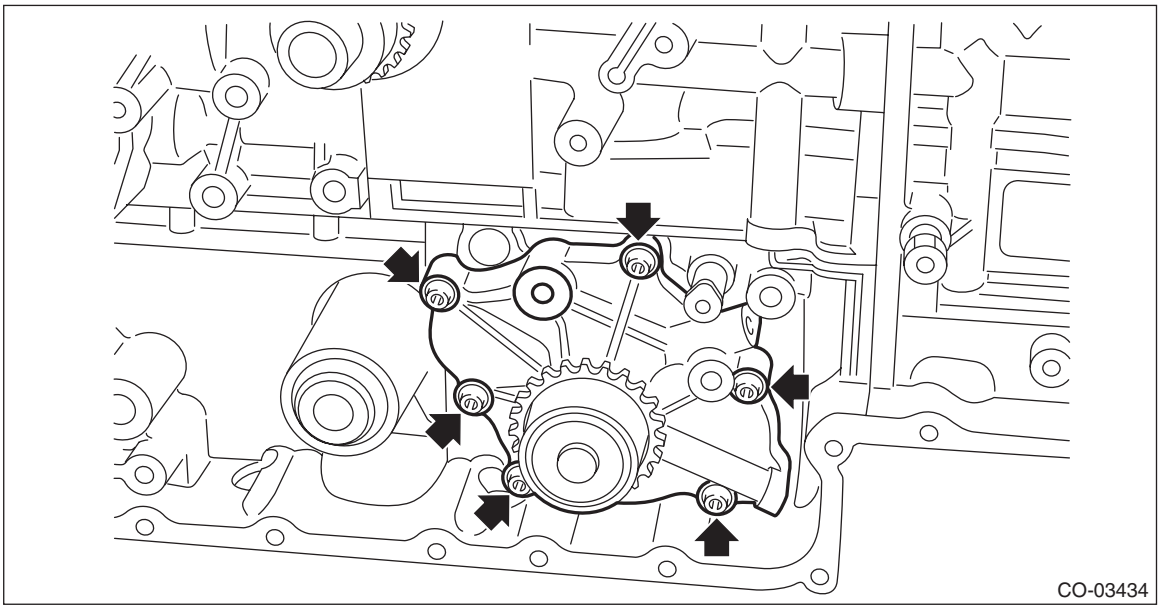

B: INSTALLATION

1) Install the water pump to the oil pan upper, and tighten the bolts in the numerical order as shown in the figure.

NOTE:
Use a new gasket.

Tightening torque:
6.4 N·m (0.7 kgf-m, 4.7 ft-lb)

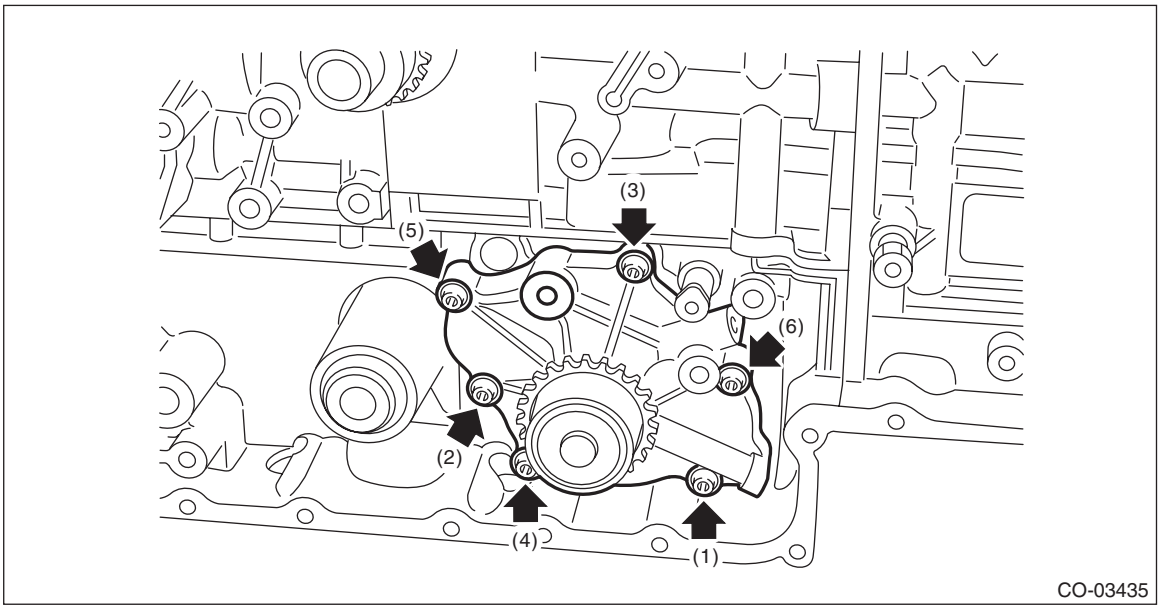

2) Install the timing chain assembly. <Ref. to ME(H6DO)-94, INSTALLATION, Timing Chain Assembly.>
3) Install the chain cover. <Ref. to ME(H6DO)-82, INSTALLATION, Chain Cover.>
4) Connect the ground terminal to battery sensor. <Ref. to RC-4, BATTERY, NOTE, Repair Contents.>
5) Fill engine coolant. <Ref. to CO(H6DO)-14, FILLING OF ENGINE COOLANT, REPLACEMENT, Engine Coolant.>
6) Install the collector cover.

C: INSPECTION

1) Check the water pump bearing for smooth rotation.
2) Check the water pump sprocket for abnormalities.
3) Make sure the impeller is not abnormally deformed or damaged.

5. Thermostat

A: REMOVAL

1) Drain engine coolant. <Ref. to CO(H6DO)-13, DRAINING OF ENGINE COOLANT, REPLACEMENT, Engine Coolant.>
2) Disconnect the radiator outlet hose from thermostat cover.

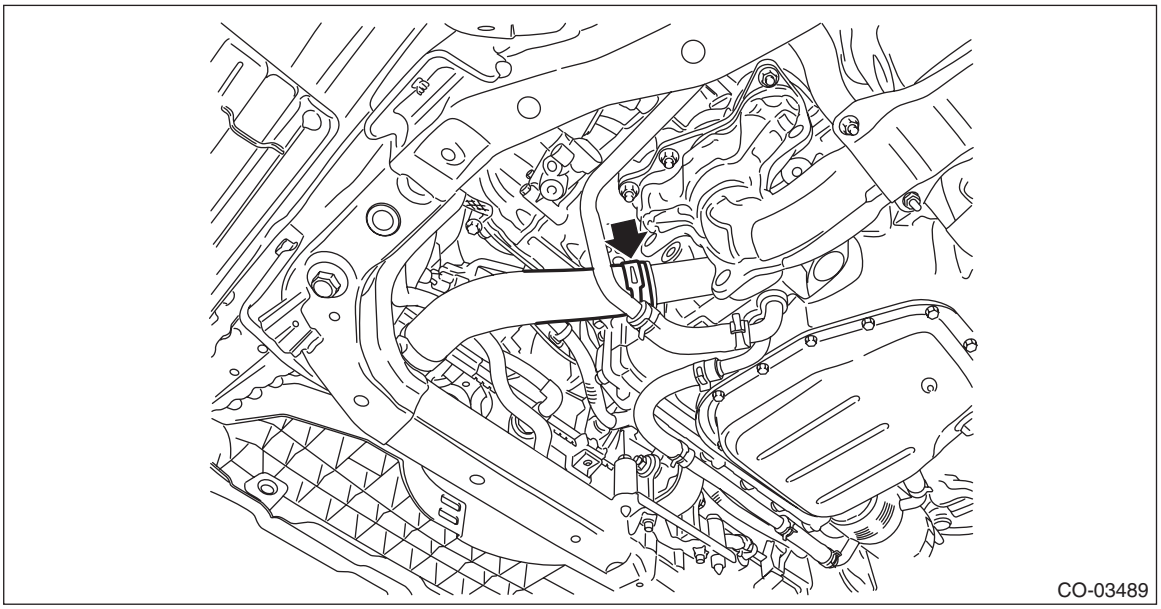

3) Remove the thermostat cover, and then remove the thermostat and gasket.

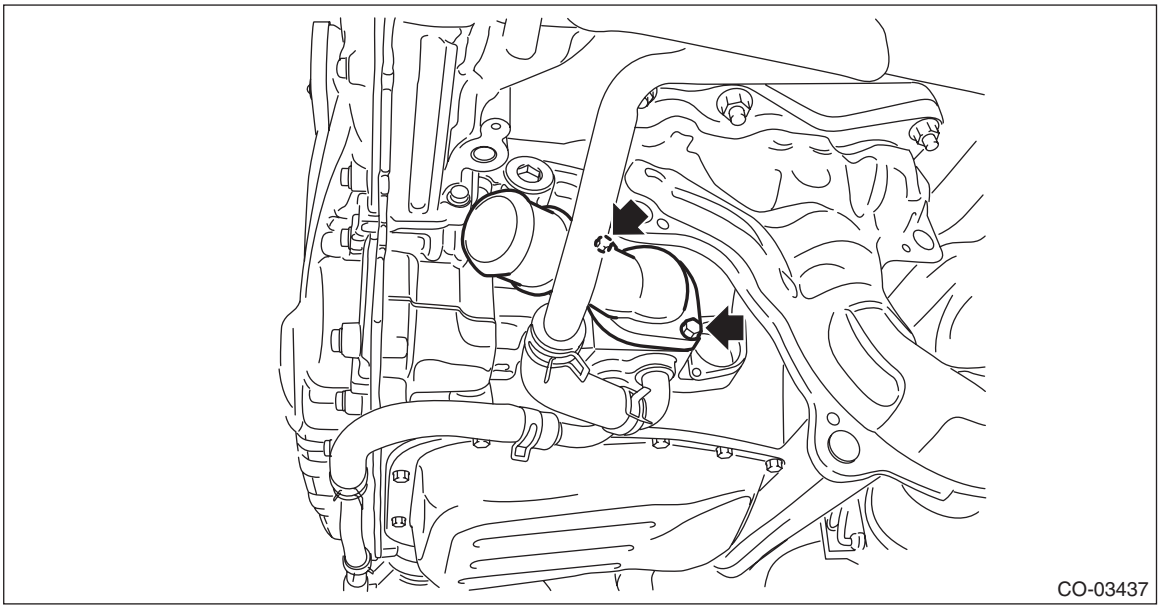

B: INSTALLATION

1) Install a gasket to thermostat.

NOTE:
Use a new gasket.
2) Install the thermostat and thermostat cover.

NOTE:
Install the parts with the jiggle pin facing the upside.

Tightening torque:
6.4 N·m (0.7 kgf-m, 4.7 ft-lb)
3) Attach the radiator outlet hose to the thermostat cover.
4) Install the under cover. <Ref. to EI-28, INSTALLATION, Front Under Cover.>
5) Lower the vehicle.
6) Fill engine coolant. <Ref. to CO(H6DO)-14, FILLING OF ENGINE COOLANT, REPLACEMENT, Engine Coolant.>

C: INSPECTION

1) Check that the thermostat does not have deformation, cracks or damage.
2) Check that the thermostat valve closes completely at an ambient temperature.
3) Immerse the thermostat and a thermometer in water. Raise water temperature gradually, and check the temperature and valve lift when the valve begins to open and when the valve is fully opened. Replace the thermostat if faulty.

NOTE:
- During the test, agitate the water for even temperature distribution.
- Leave the thermostat in the boiling water for five minutes or more before measuring the valve lift.
- Hold the thermostat with a wire or the like to avoid contacting with container bottom.

Starting temperature to open:
76 — 80°C (169 — 176°F)

Full open temperature:
91°C (196°F)

Total valve lift:
9.0 mm (0.354 in) or more

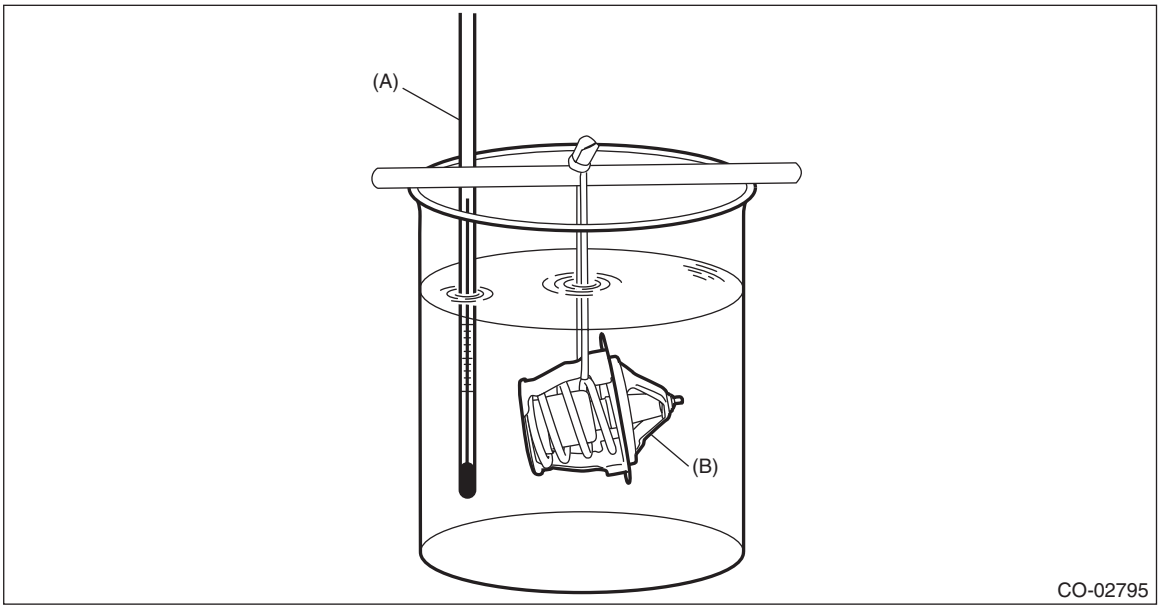

(A) Thermometer (B) Thermostat

6. Radiator

A: REMOVAL

CAUTION:
The radiator is pressurized when the engine and radiator are hot. Wait until engine and radiator cool down before working on the radiator.

1) Remove the collector cover.
   (1) Carefully pull up the rear of collector cover at two positions (A).
   (2) Carefully pull up the front of collector cover at two positions (B) while moving it forward.

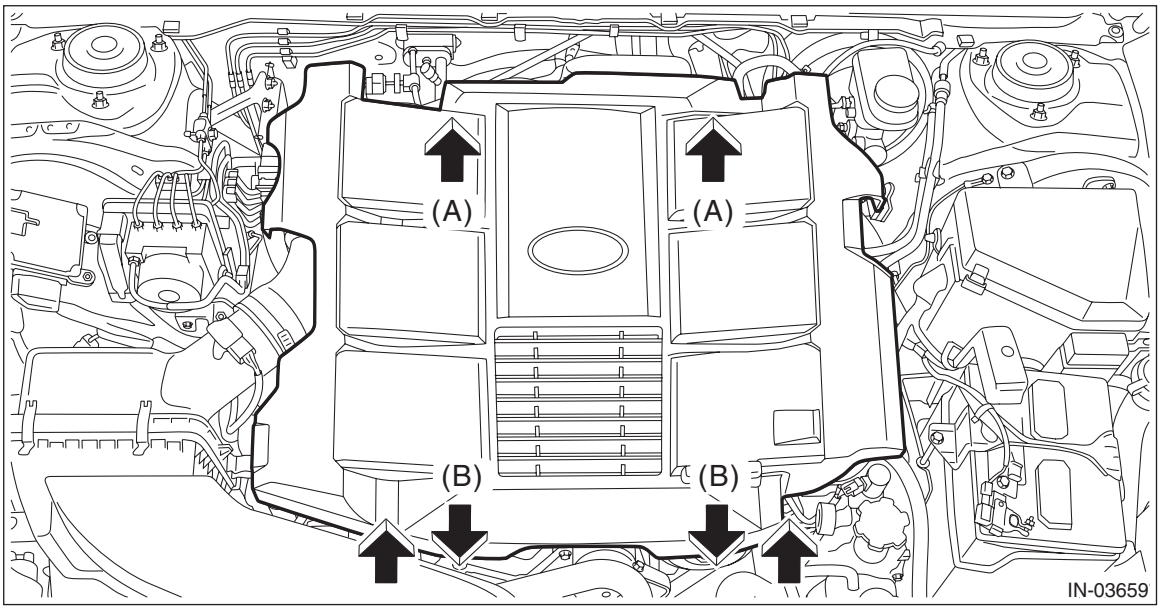

2) Disconnect the ground terminal from battery sensor. <Ref. to RC-4, BATTERY, NOTE, Repair Contents.>
3) Remove the air intake duct. <Ref. to IN(H6DO)-12, REMOVAL, Air Intake Duct.>
4) Remove the front bumper. <Ref. to EI-34, REMOVAL, Front Bumper.>
5) Remove the grille bracket.

NOTE:
Remove six clips when removing the grille bracket.

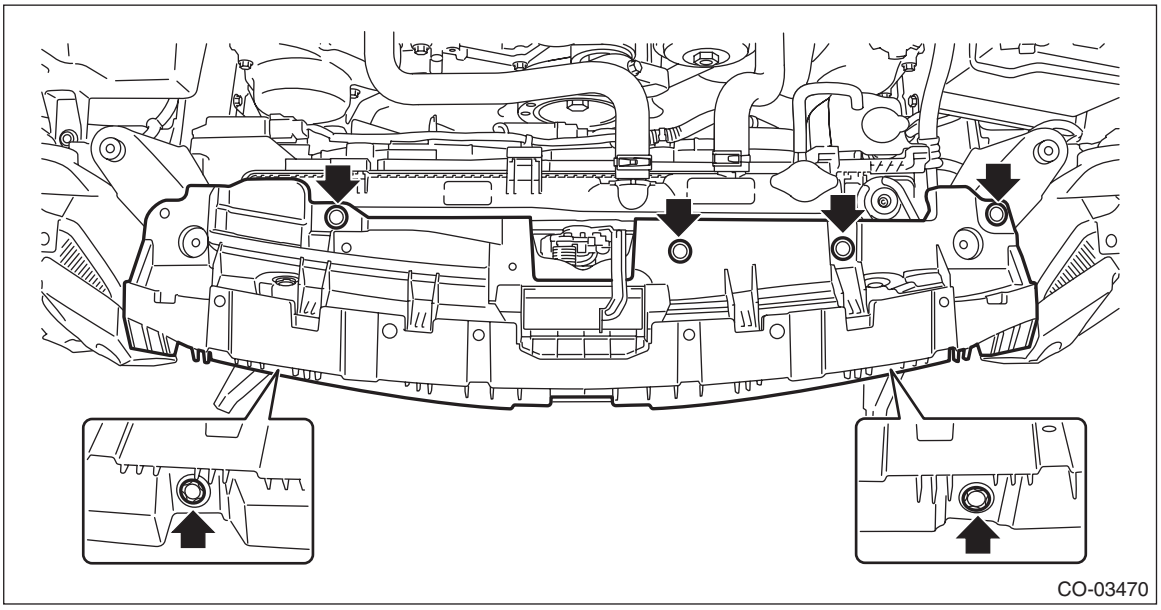

6) Drain engine coolant. <Ref. to CO(H6DO)-13, DRAINING OF ENGINE COOLANT, REPLACEMENT, Engine Coolant.>
7) Disconnect the radiator outlet hose from thermostat cover.

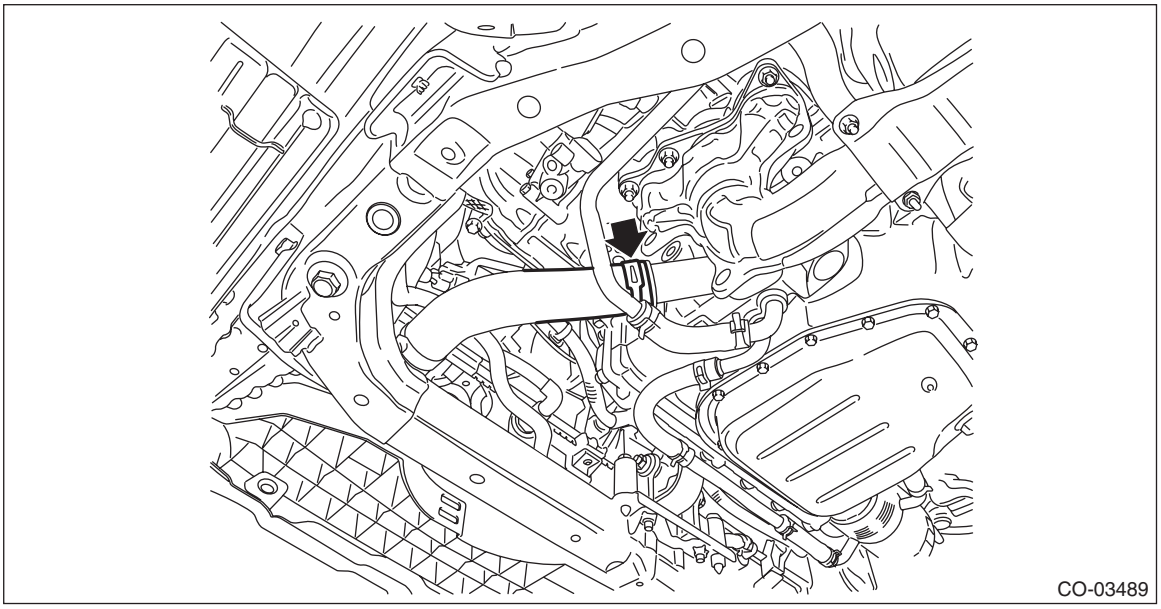

8) Disconnect the CVTF radiator inlet hose and CVTF radiator outlet hose from the CVTF pipe.

NOTE:
Plug the CVTF pipe to prevent CVTF from leaking.

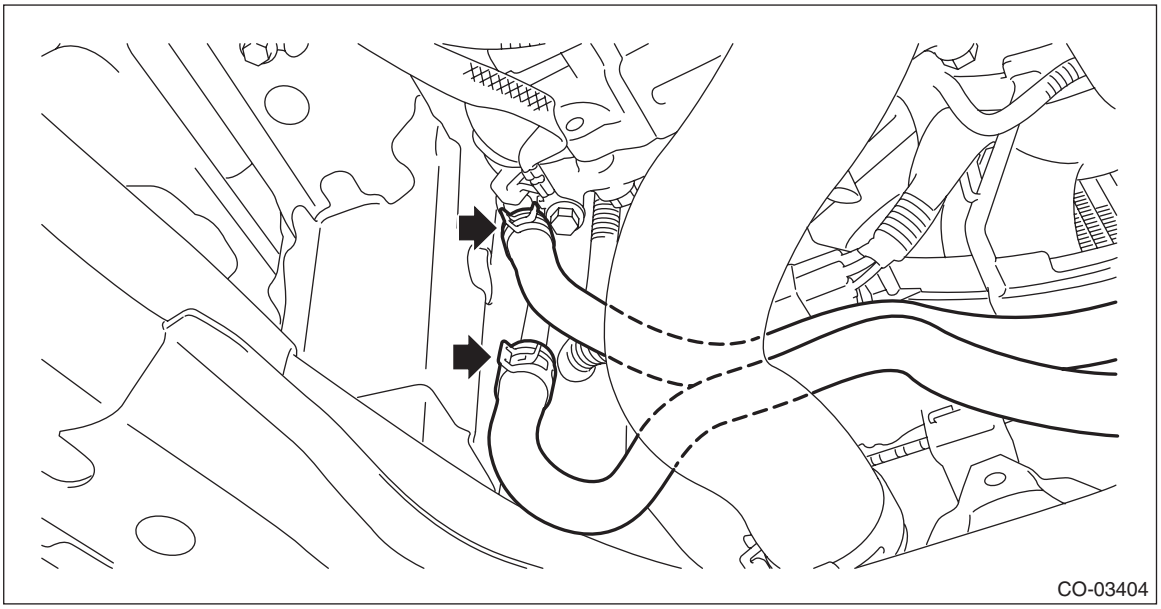

9) Remove the CVTF radiator inlet hose and CVTF radiator outlet hose from the clips of the radiator fan shroud.

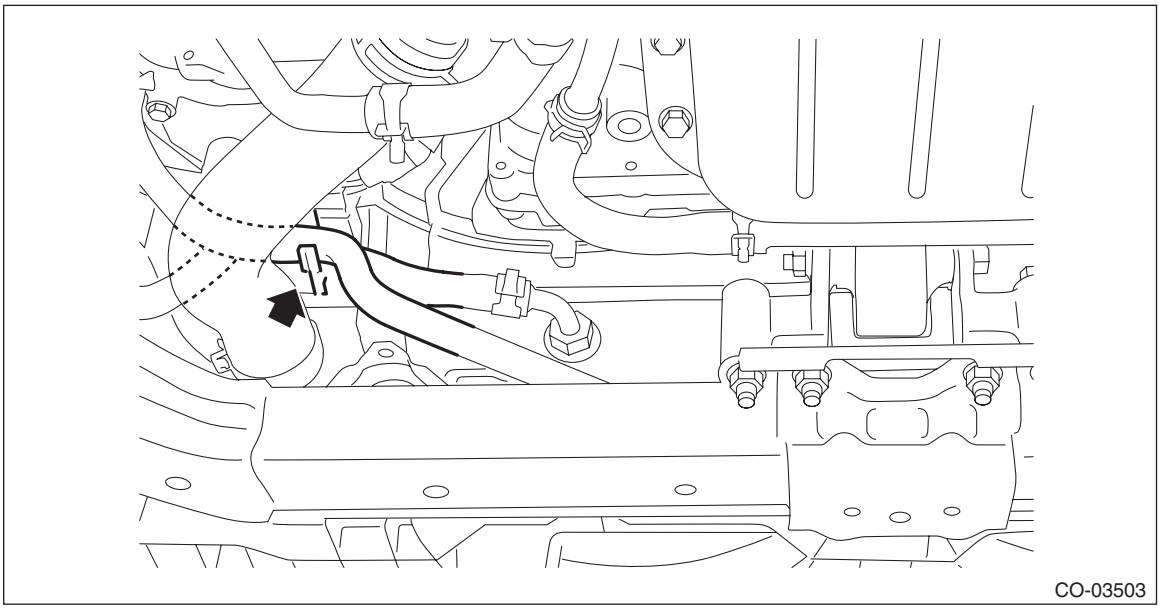

10) Disconnect the connector (A) and connector (B) from the radiator fan harness.

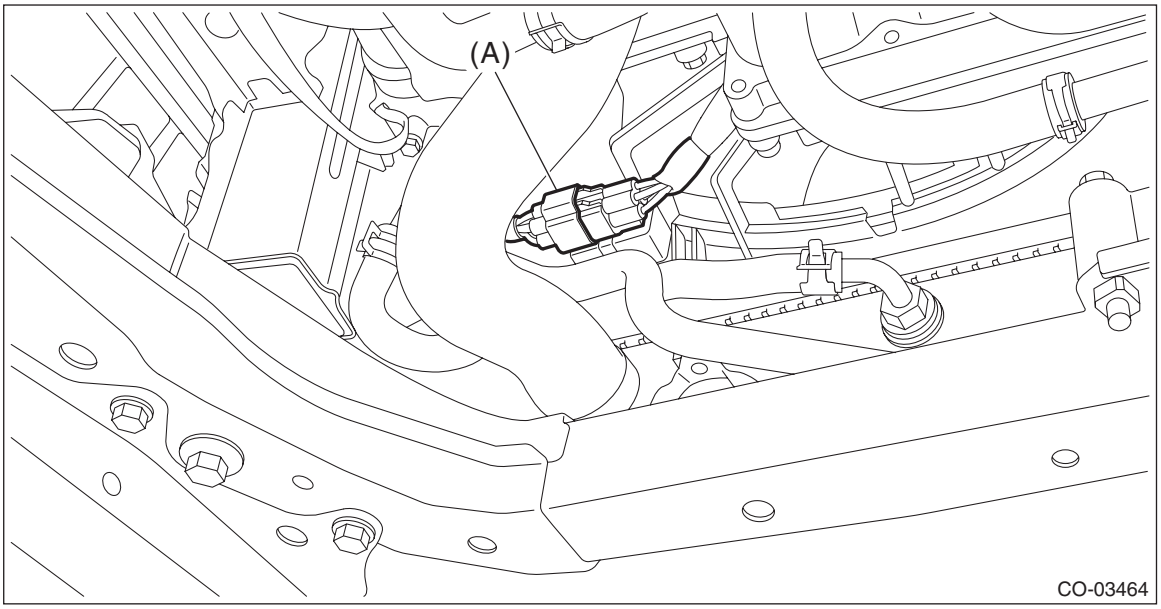

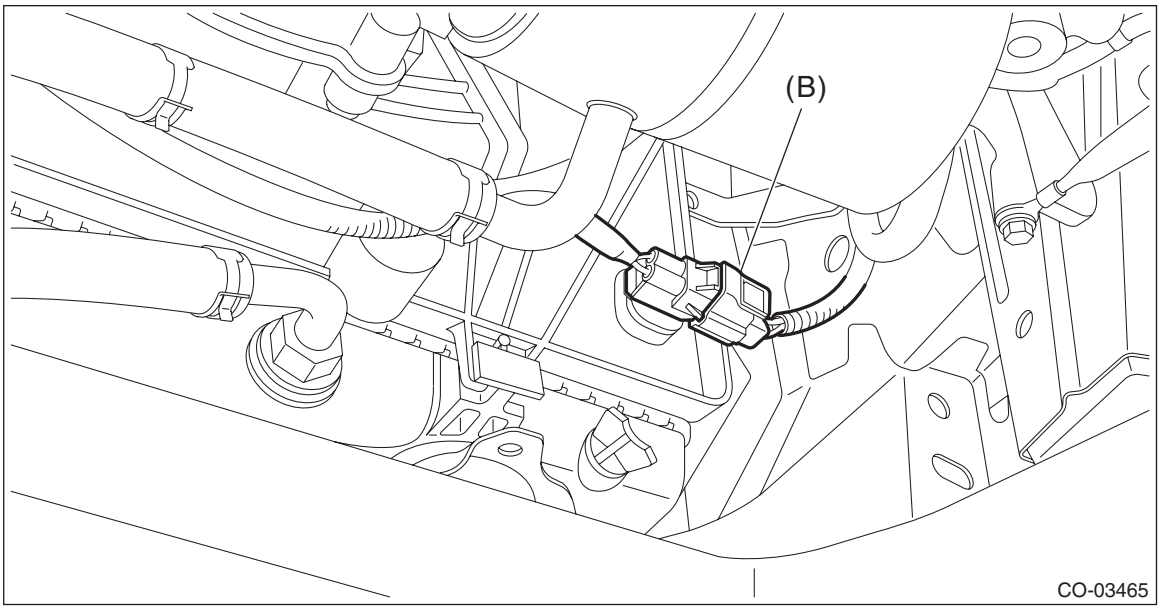

11) Lower the vehicle.
12) Remove the reservoir tank. <Ref. to CO(H6DO)-46, REMOVAL, Reservoir Tank.>
13) Disconnect the radiator inlet hose LH and RH.

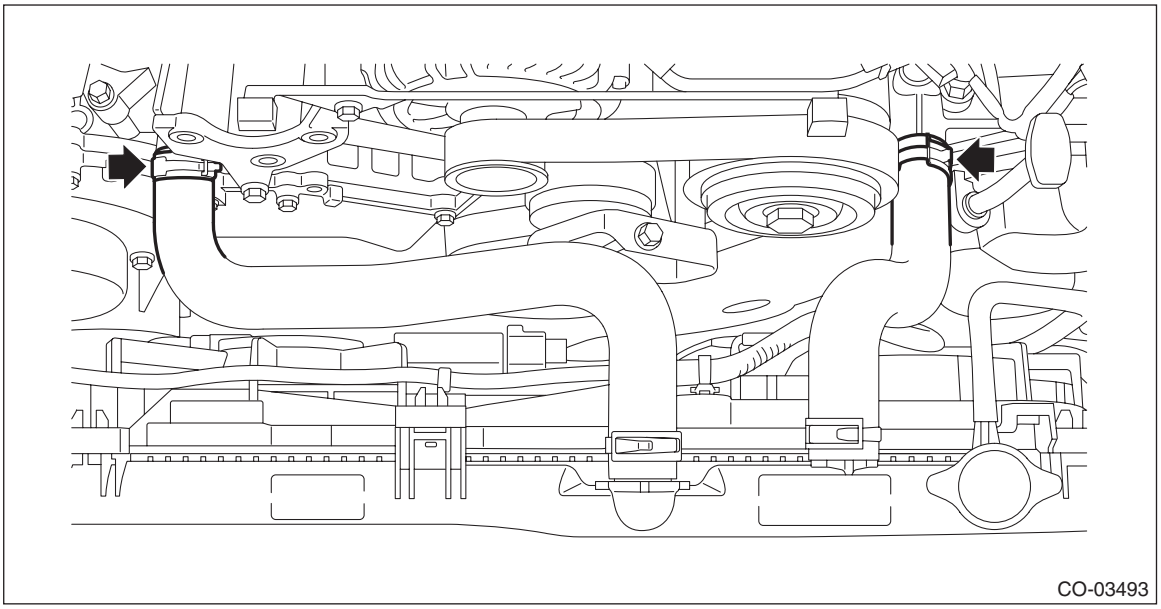

14) Remove the radiator upper bracket LH and RH.

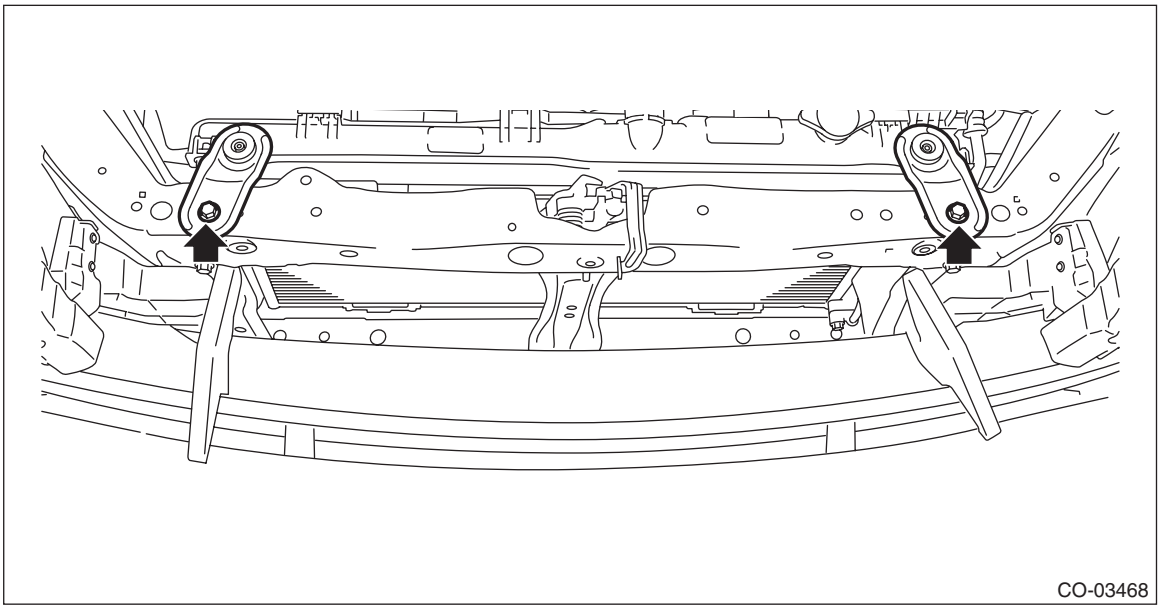

15) Using the ST, remove the bolts securing the condenser lower bracket to the radiator.
ST 73099SG000 SPECIAL TOOL CONDENSER

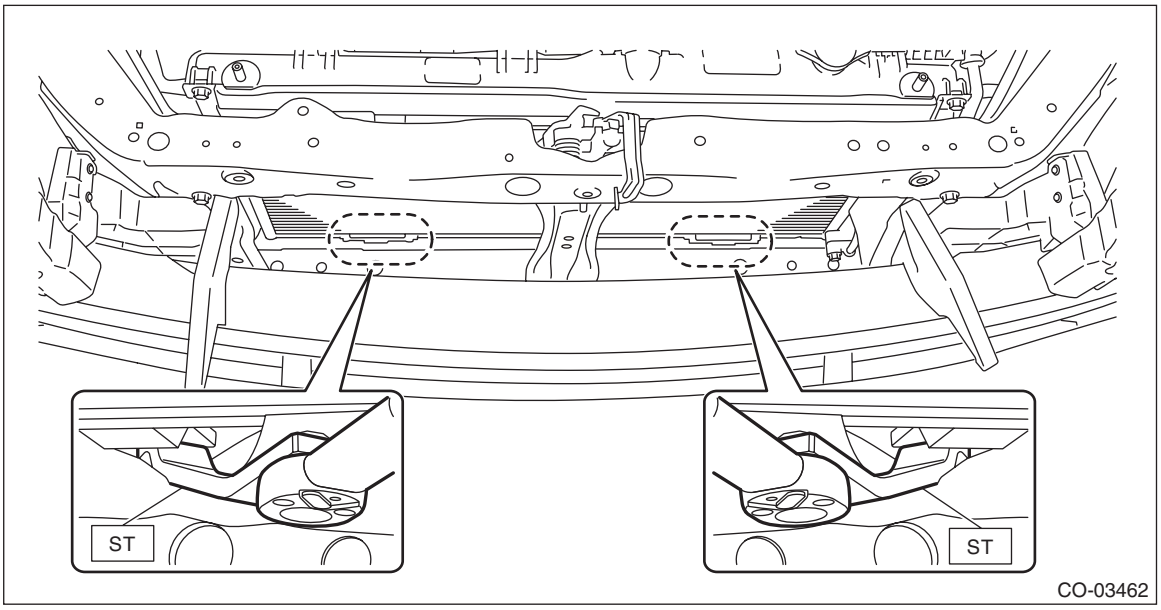

16) Remove the bolts securing the condenser bracket, and remove the condenser lower bracket.

NOTE:
This procedure is required to prevent the lower gasket from being damaged when removing the radiator.

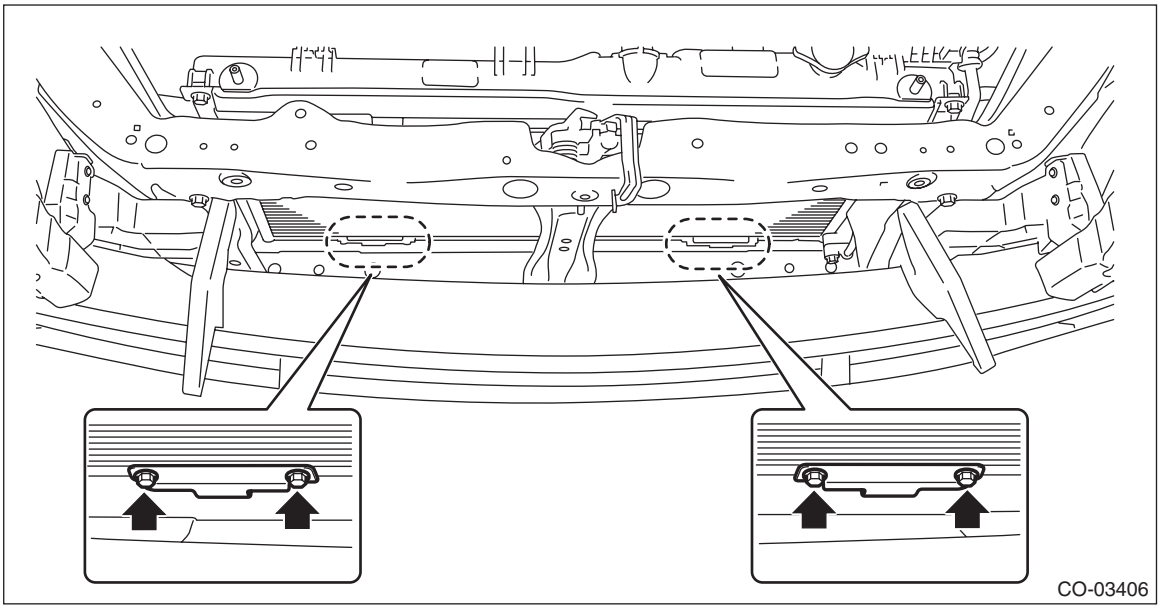

17) Remove the bolts securing the condenser upper bracket to the radiator.

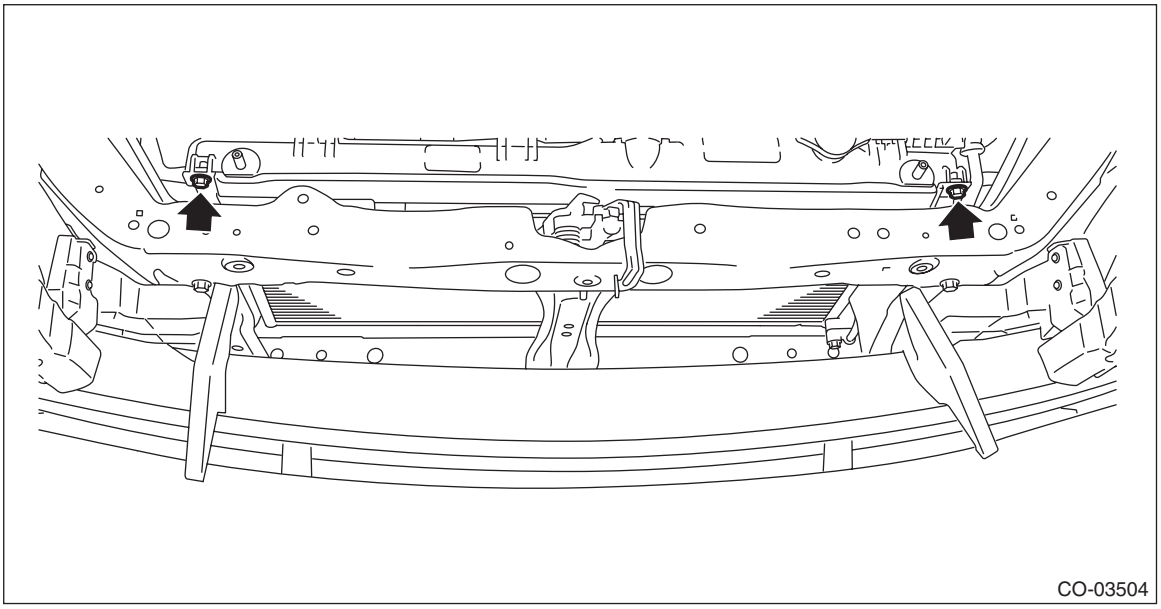

18) Secure the condenser to the vehicle using ropes or other means.

NOTE:
This procedure is required to prevent the condenser from dropping off and also the air conditioner pipes from being damaged.

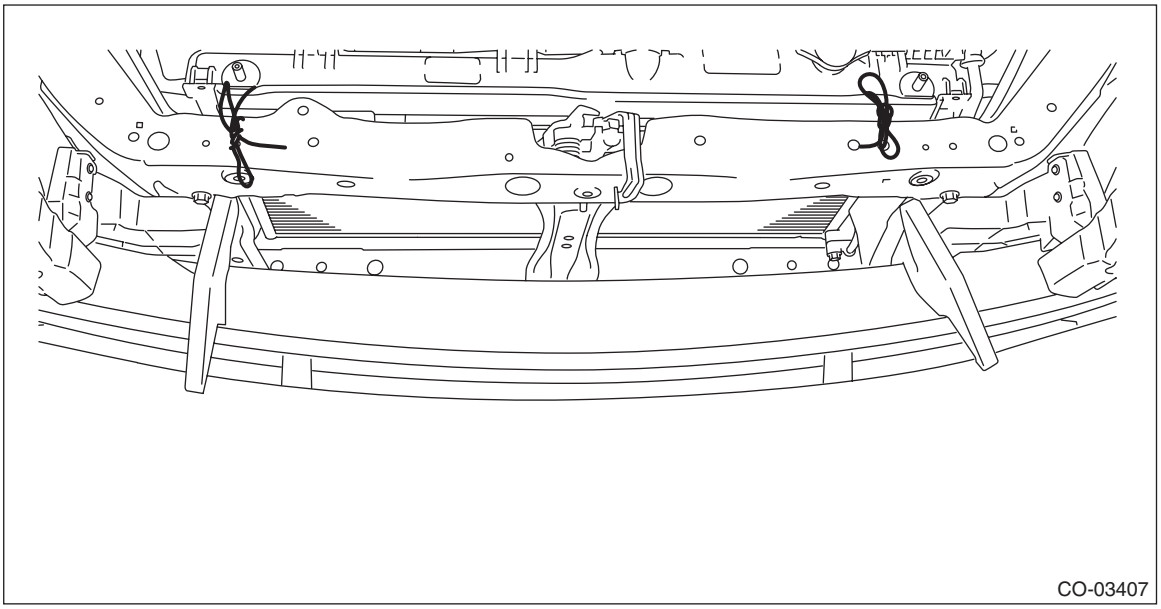
CO-03407

19) Remove the radiator from vehicle.
20) Remove the radiator lower cushion from the vehicle body.

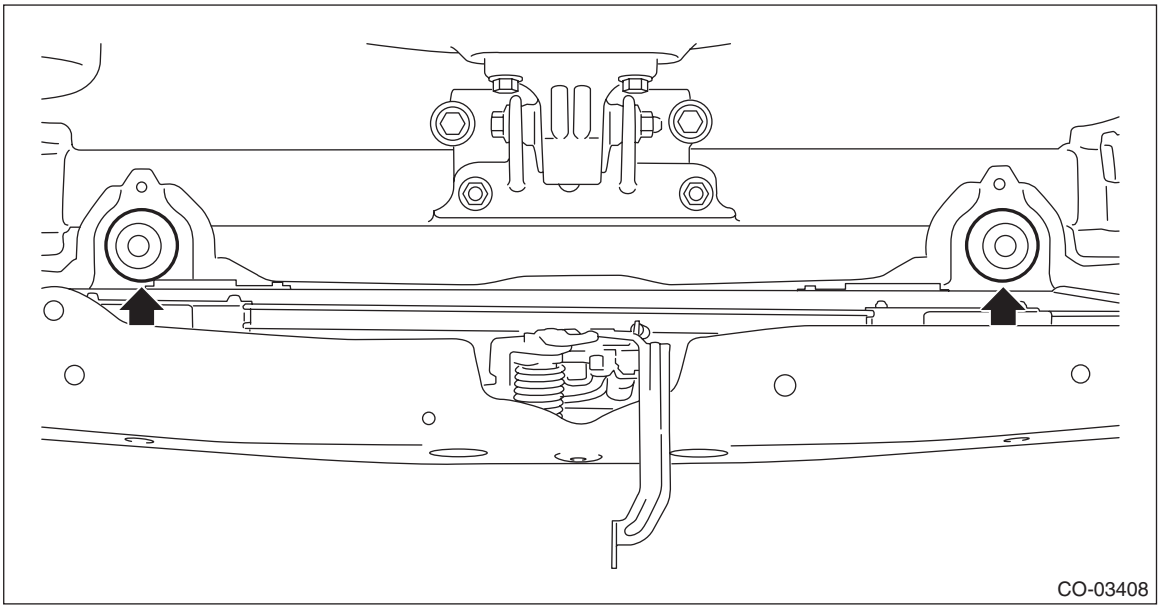
CO-03408

B: INSTALLATION

1) Install the radiator lower cushion to the vehicle body.
2) Install the radiator to vehicle.

NOTE:
Make pins on the lower side of radiator be fitted into the radiator lower cushions.
3) Remove the ropes or other means used to secure the condenser to the vehicle.

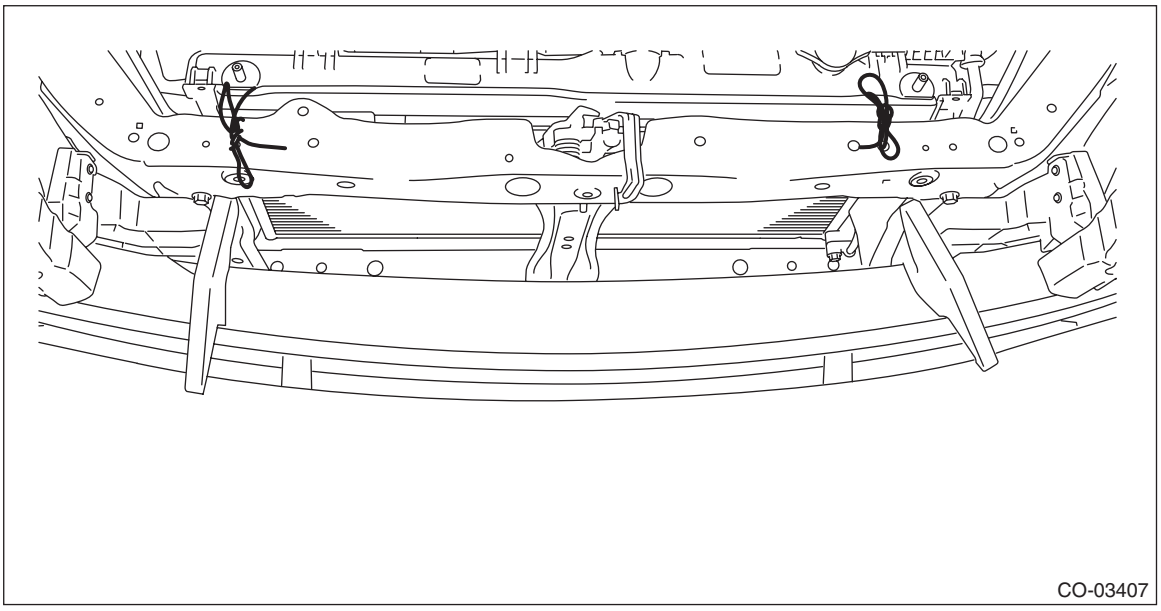

4) Temporarily tighten the bolts securing the condenser upper bracket to the radiator.

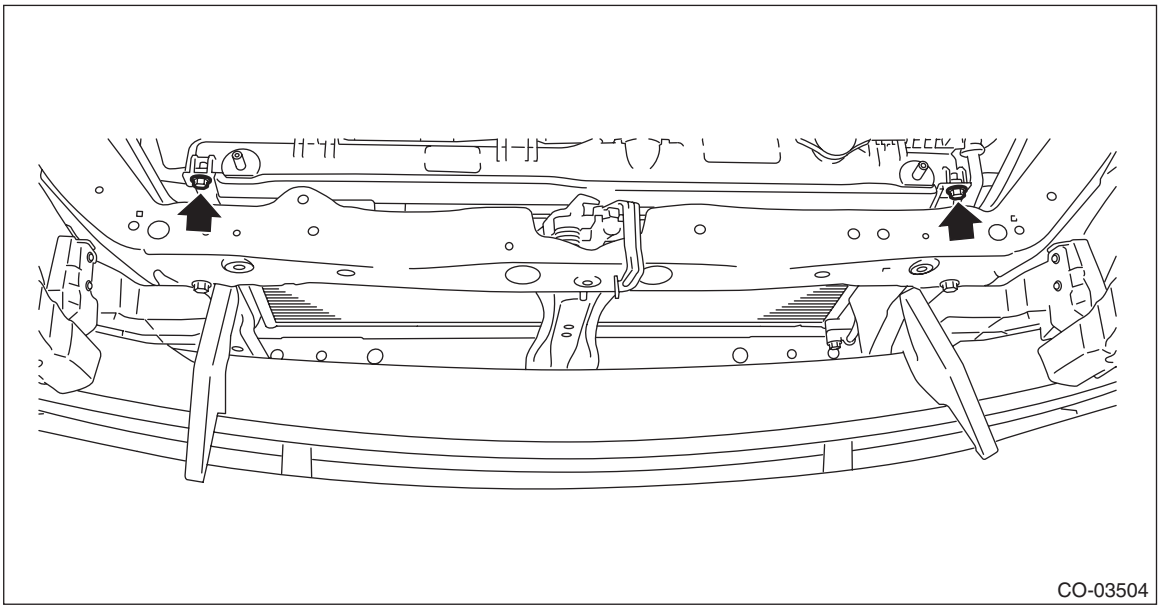

5) Position the condenser lower bracket, and install the bolts securing the condenser lower bracket to the condenser.

Tightening torque:
3.9 N·m (0.4 kgf-m, 2.9 ft-lb)

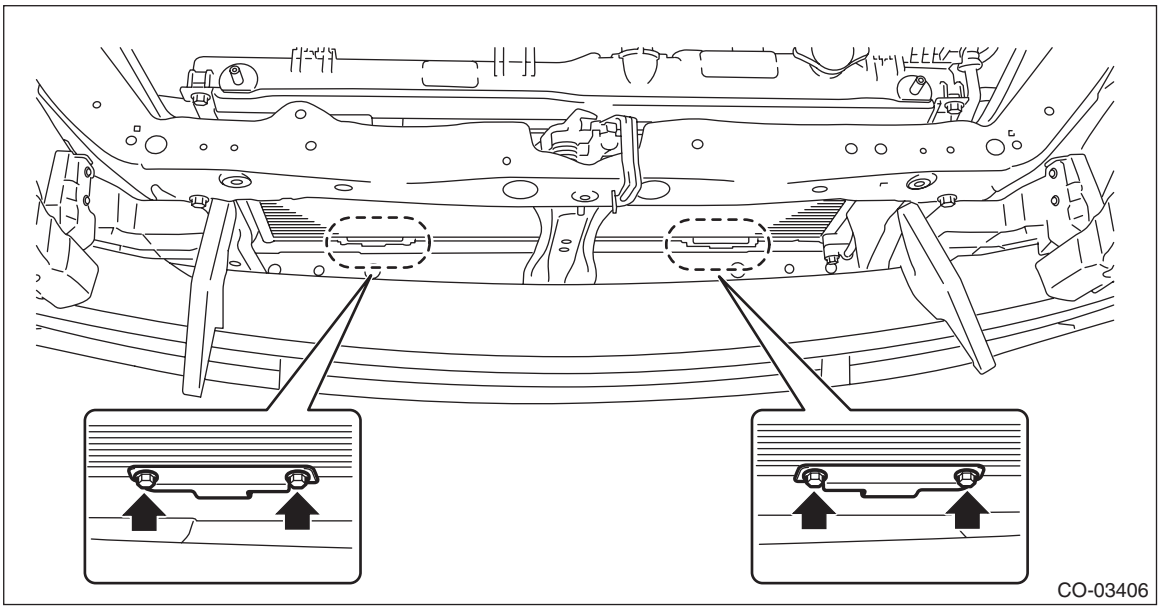

6) Using the ST, tighten the bolts securing the condenser lower bracket to the radiator.
ST 73099SG000 SPECIAL TOOL CONDENSER

Tightening torque:

Calculation formula
T = L/(100 mm (3.94 in) + L) × 7.5 N·m (0.8 kgf-m, 5.5 ft-lb)

T: Tightening torque
L: Effective length of torque wrench

NOTE:
If the effective length of the torque wrench used is unknown, consult the manufacturer of the torque wrench.

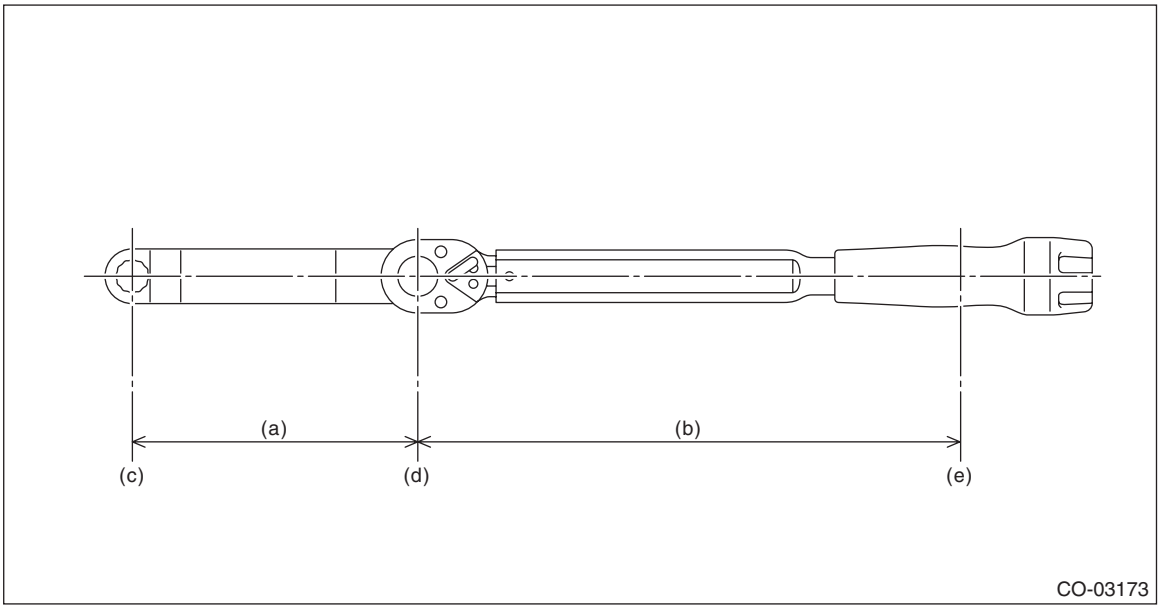

(a) Effective length of the ST
(b) Effective length of the torque wrench
(c) Center of drive angle of the ST
(d) Center of drive angle of the torque wrench
(e) Center of the position where a force is applied by hand

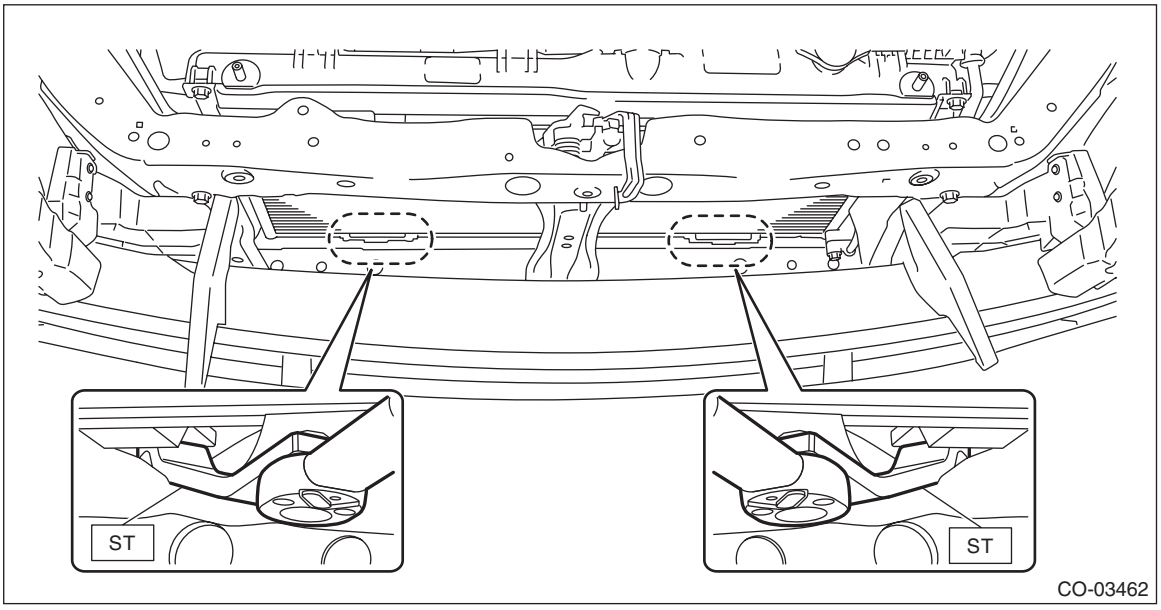

7) Tighten the bolts securing the condenser upper bracket to the radiator.

Tightening torque:
7.5 N·m (0.8 kgf-m, 5.5 ft-lb)

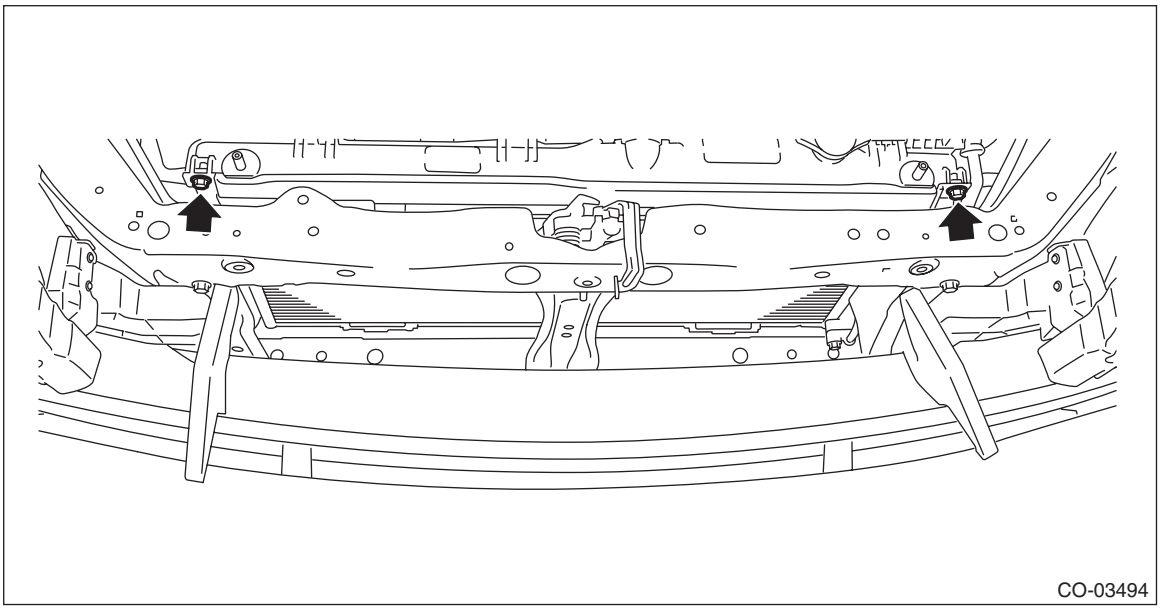

8) Install the radiator upper bracket LH and the radiator upper bracket RH.

Tightening torque:
12 N·m (1.2 kgf-m, 8.9 ft-lb)

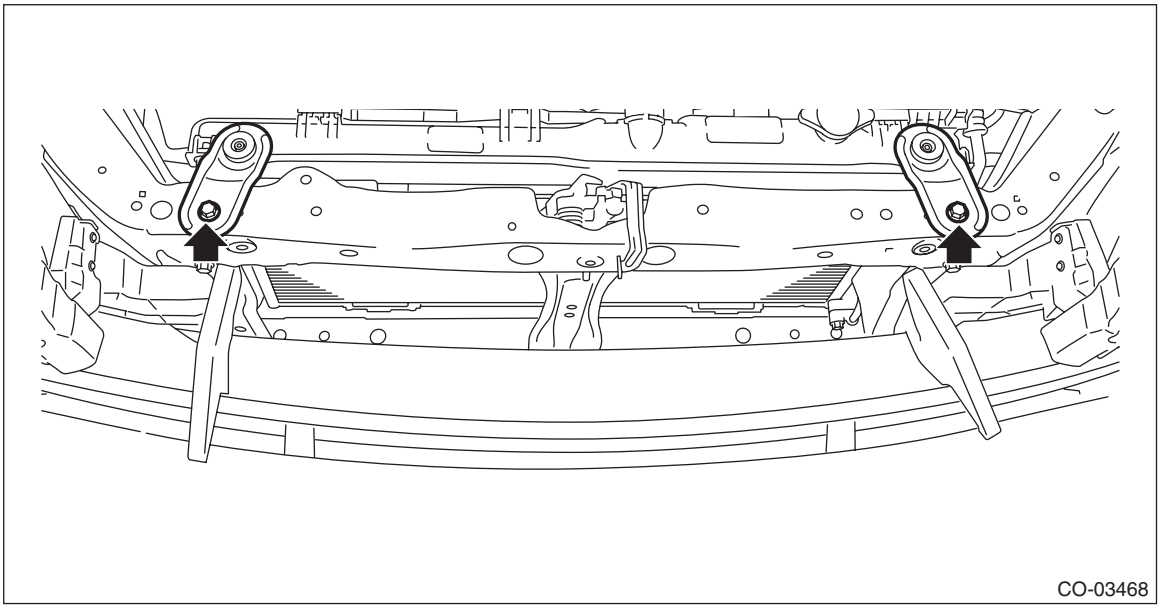

9) Connect the radiator inlet hose LH and radiator inlet hose RH.

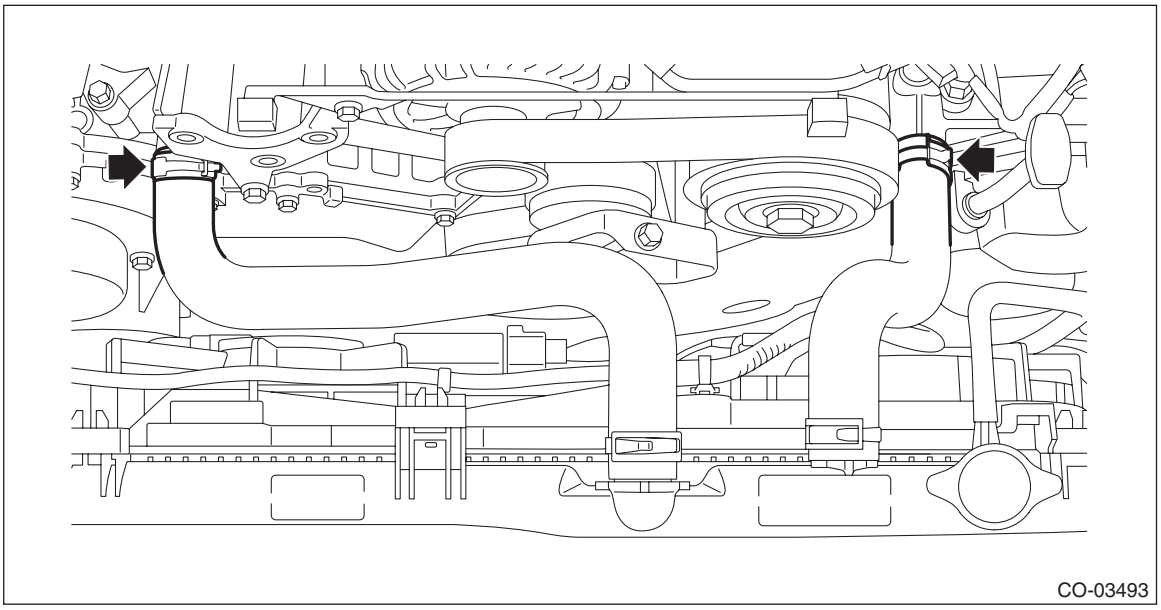

10) Install the reservoir tank. <Ref. to CO(H6DO)-46, INSTALLATION, Reservoir Tank.>
11) Lift up the vehicle.

12) Connect the connector (A) and connector (B) to the radiator fan harness.

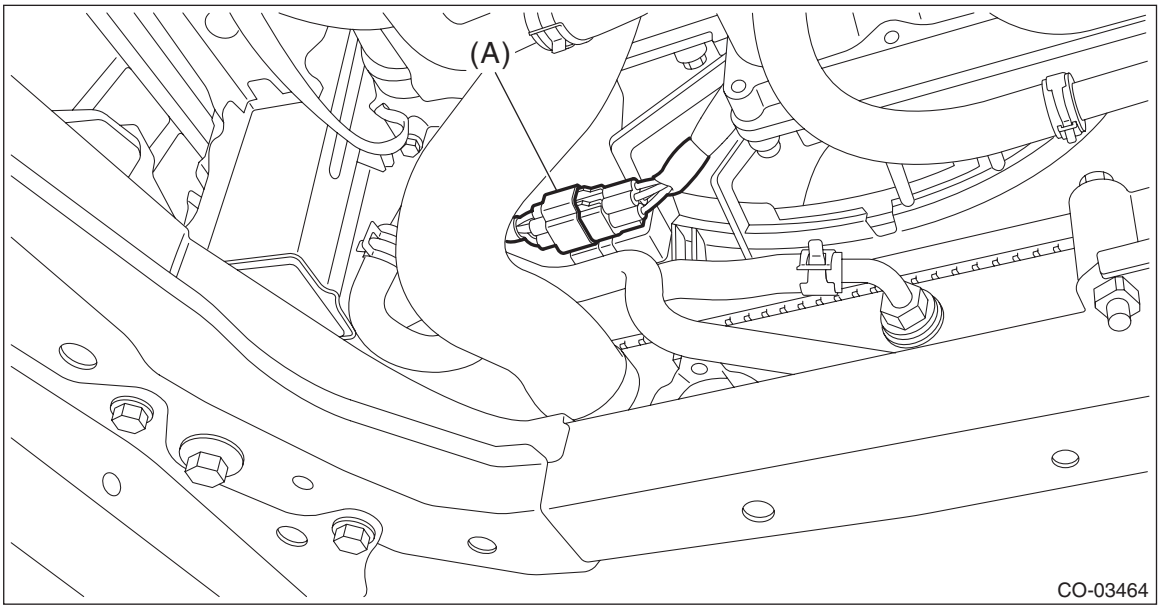

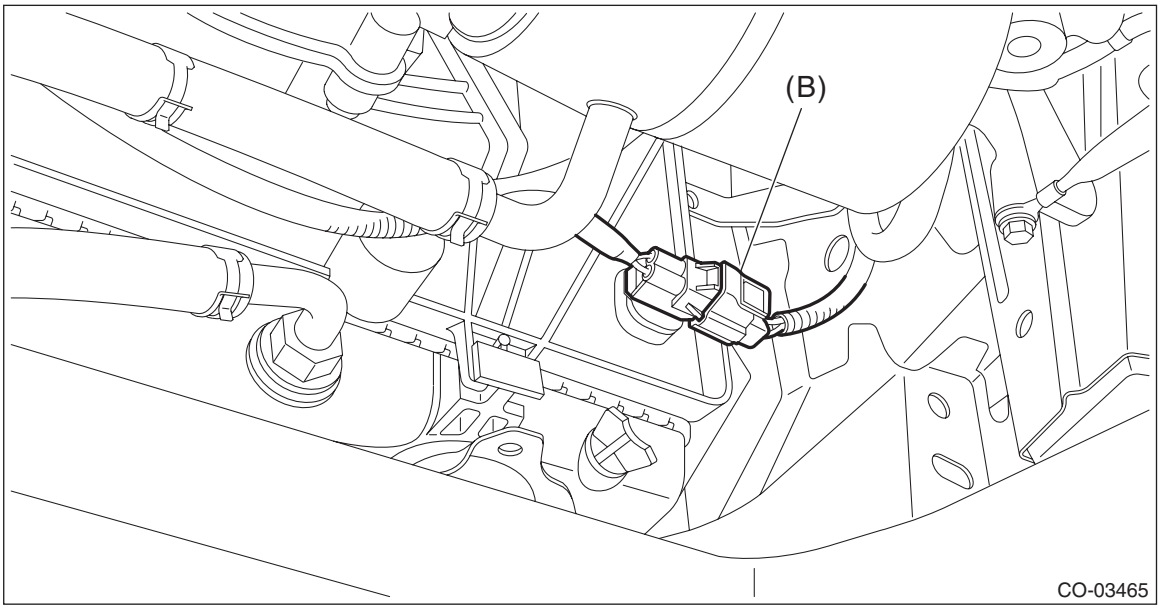

13) Connect the CVTF radiator inlet hose and CVTF radiator outlet hose to the CVTF pipe.

NOTE:
Use a new CVTF radiator hose.

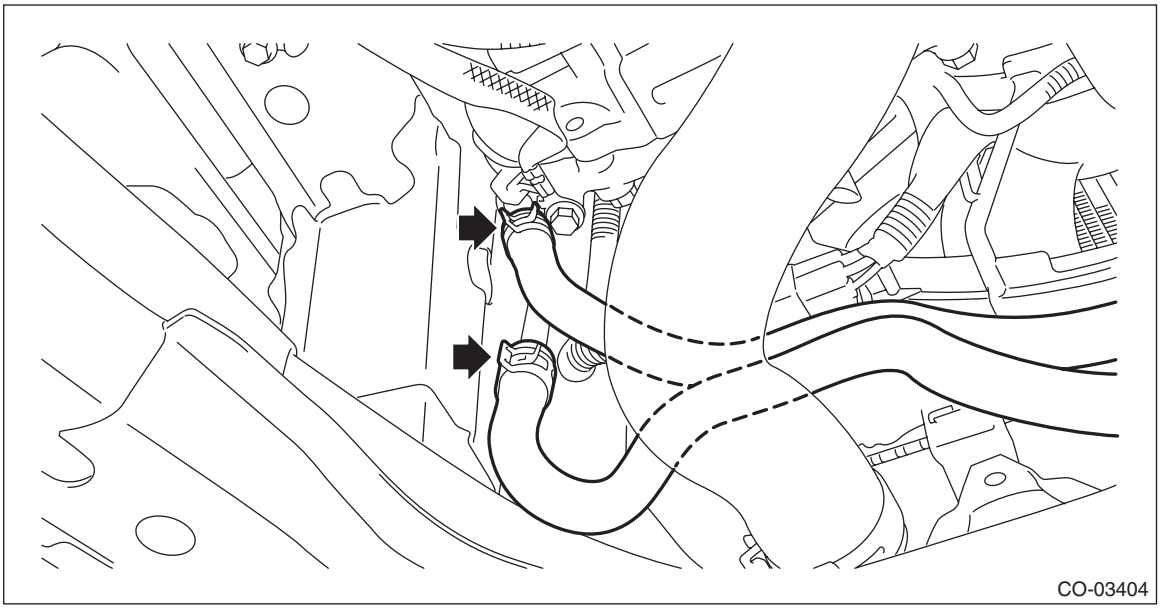

14) Install the CVTF radiator inlet hose and CVTF radiator outlet hose to the clips of the radiator fan shroud.
15) Connect the radiator outlet hose to thermostat cover.

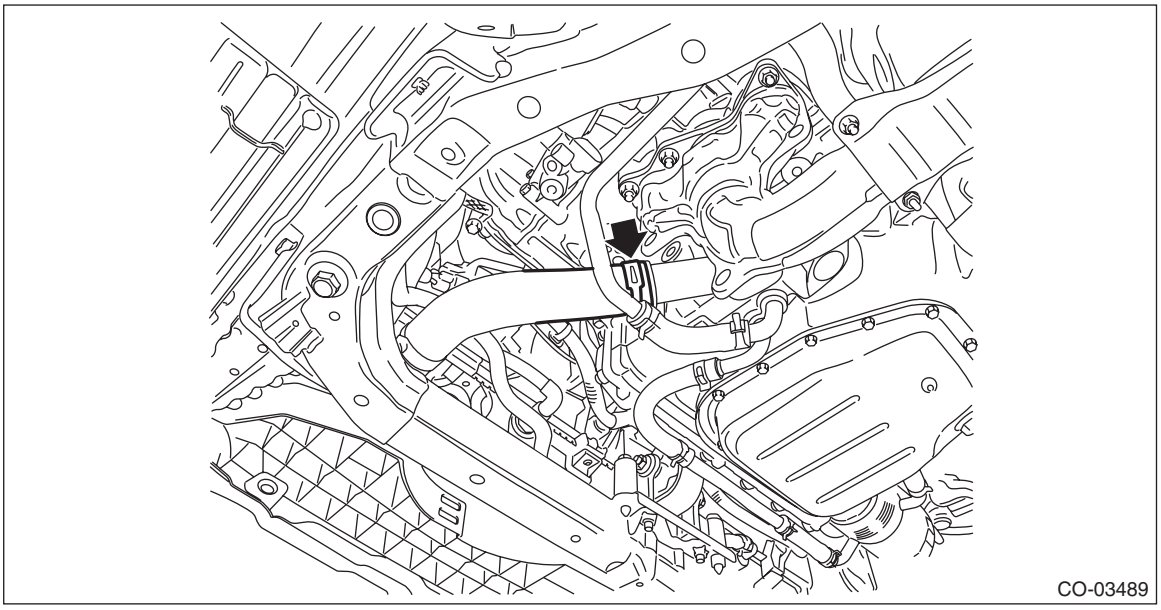

16) Install the under cover. <Ref. to EI-28, INSTALLATION, Front Under Cover.>
17) Lower the vehicle.
18) Attach the grille bracket.

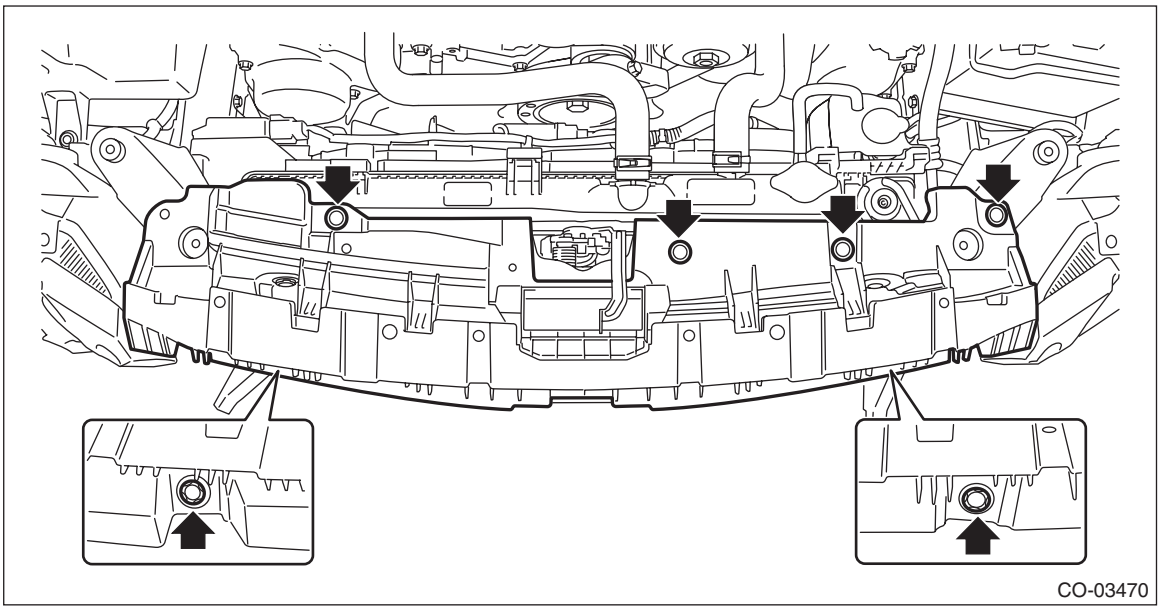

19) Install the front bumper. <Ref. to EI-38, INSTALLATION, Front Bumper.>
20) Install the air intake duct. <Ref. to IN(H6DO)-12, INSTALLATION, Air Intake Duct.>
21) Connect the ground terminal to battery sensor. <Ref. to RC-4, BATTERY, NOTE, Repair Contents.>
22) Fill engine coolant. <Ref. to CO(H6DO)-14, FILLING OF ENGINE COOLANT, REPLACEMENT, Engine Coolant.>
23) Check the CVTF level and replenish it if necessary. <Ref. to CVT(TR690)-38, INSPECTION, CVTF.>
24) Install the collector cover.

C: INSPECTION

1) Check that the radiator does not have deformation, cracks or damage.
2) Check that the hose has no cracks, damage or loose part.
3) Remove the radiator cap, fill the radiator with engine coolant, and then install the radiator cap tester to the filler neck of radiator.

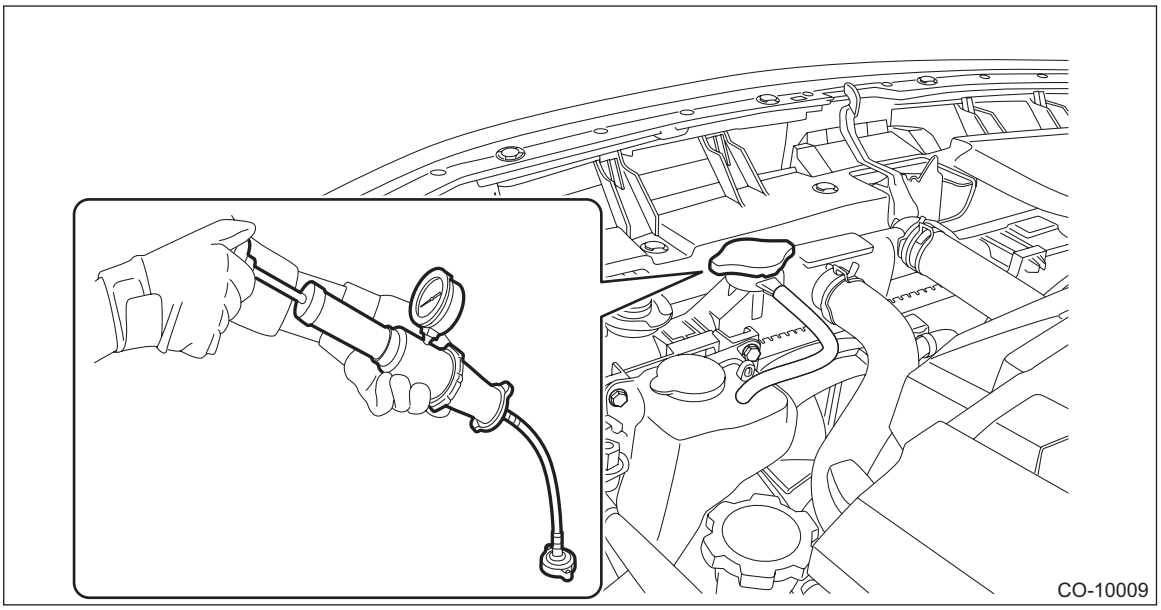

4) Apply a pressure of 157 kPa (1.6 kg/cm^2, 23 psi) to the radiator and check the following points:
- Leakage from the radiator or its vicinity
- Leakage from the hose or its connections

CAUTION:
- **Engine should be turned off.**
- **Clean the check points.**
- **Be careful not to deform the filler neck of radiator when installing and removing the radiator cap tester.**
- **Be careful of engine coolant from spurting out when removing the radiator cap tester.**

7. Radiator Cap

A: INSPECTION

1) Check that the radiator cap does not have deformation, cracks or damage.
2) Attach the radiator cap tester to radiator cap.
3) Check the maximum pressure while pumping the radiator cap tester several times. Replace the radiator cap if its valve opens at less than the service limit.

CAUTION:
• Be sure to remove foreign matter and rust from the cap in advance. Otherwise, results of pressure test will be incorrect.
• For this inspection, tilt the radiator cap tester by at least 30°.

NOTE:
• Pumping interval is one second at a time.
• If the radiator cap cannot retain the maximum pressure at times, this is not malfunction.

Standard:
93 — 123 kPa (0.95 — 1.25 kg/cm^2, 14 — 18 psi)

Service limit:
83 kPa (0.85 kg/cm^2, 12 psi)

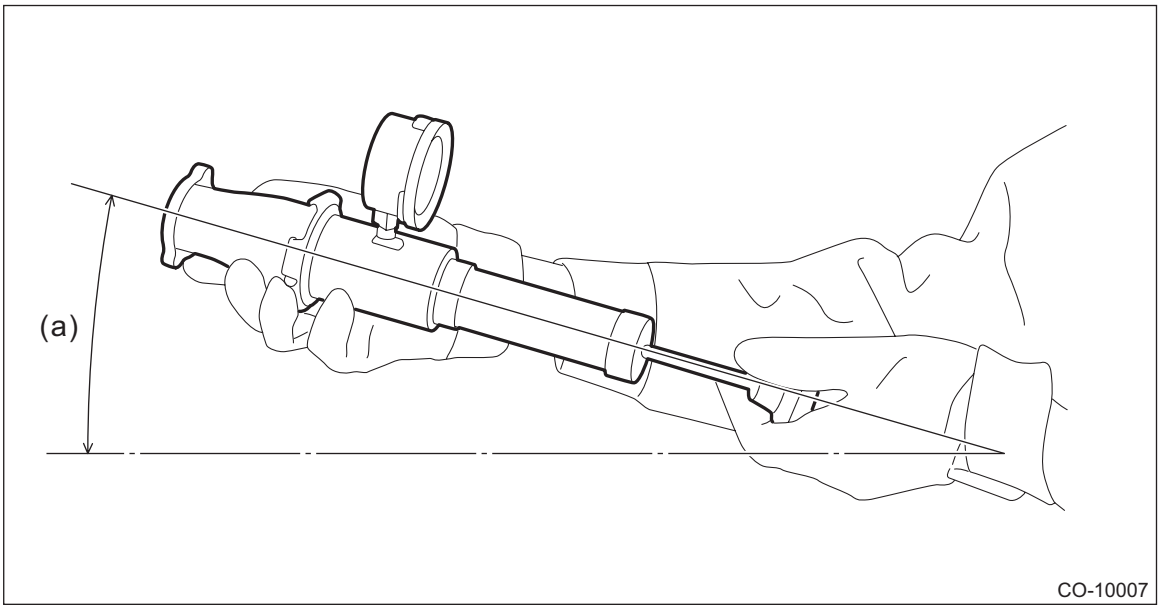

(a) 30° or more

8. Radiator Fan and Fan Motor Assembly

A: REMOVAL

1) Remove the collector cover.
   (1) Carefully pull up the rear of collector cover at two positions (A).
   (2) Carefully pull up the front of collector cover at two positions (B) while moving it forward.

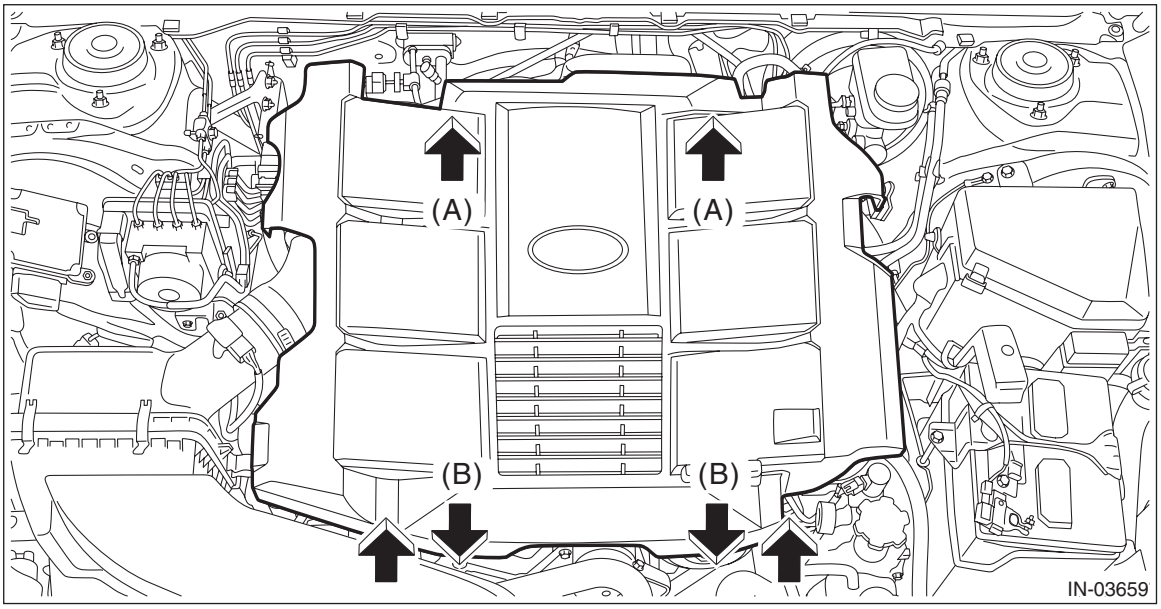

2) Disconnect the ground terminal from battery sensor. <Ref. to RC-4, BATTERY, NOTE, Repair Contents.>
3) Remove the air intake duct. <Ref. to IN(H6DO)-12, REMOVAL, Air Intake Duct.>
4) Drain approximately 3.0 L (3.2 US qt, 2.6 Imp qt) of coolant. <Ref. to CO(H6DO)-13, DRAINING OF ENGINE COOLANT, REPLACEMENT, Engine Coolant.>

5) Disconnect the connector (A) and connector (B) from the radiator fan harness.

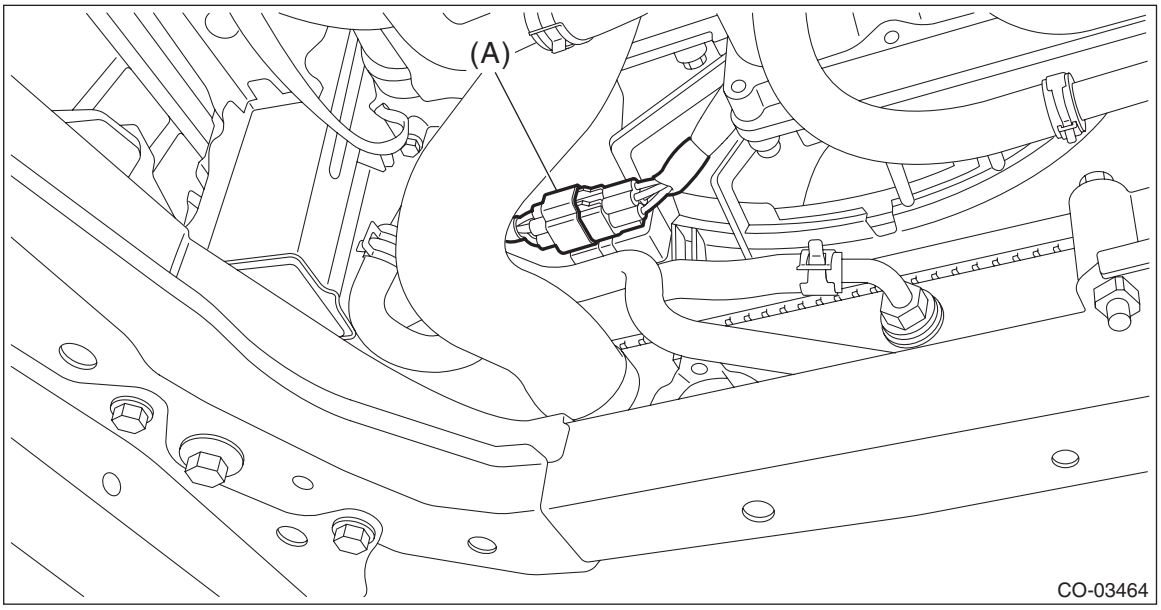

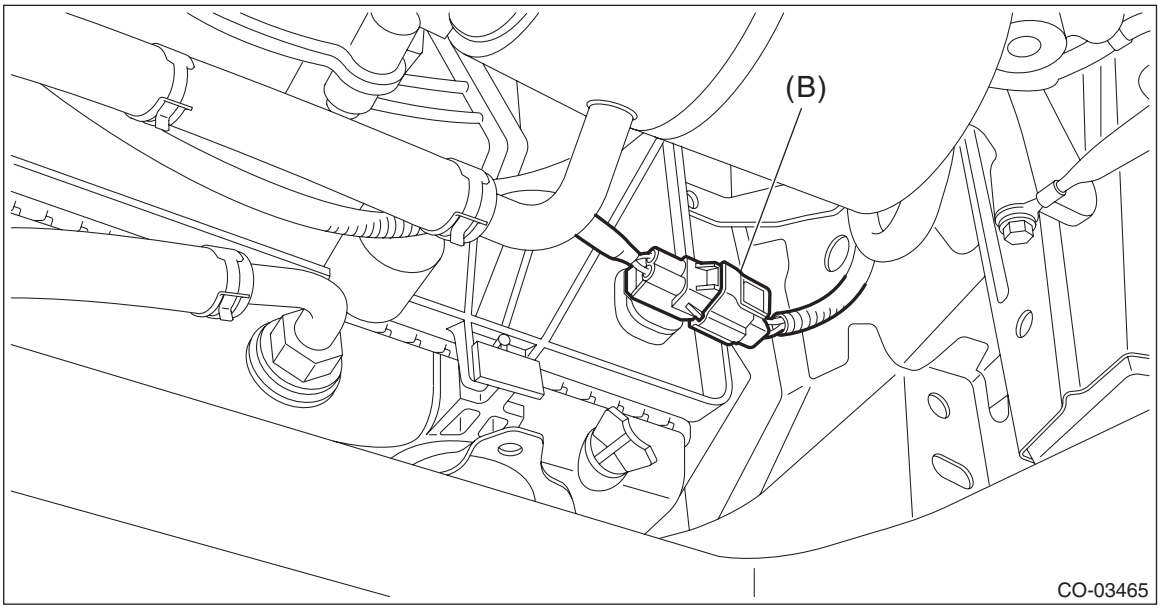

6) Remove the CVTF radiator inlet hose and CVTF radiator outlet hose from the clips of the radiator fan shroud.

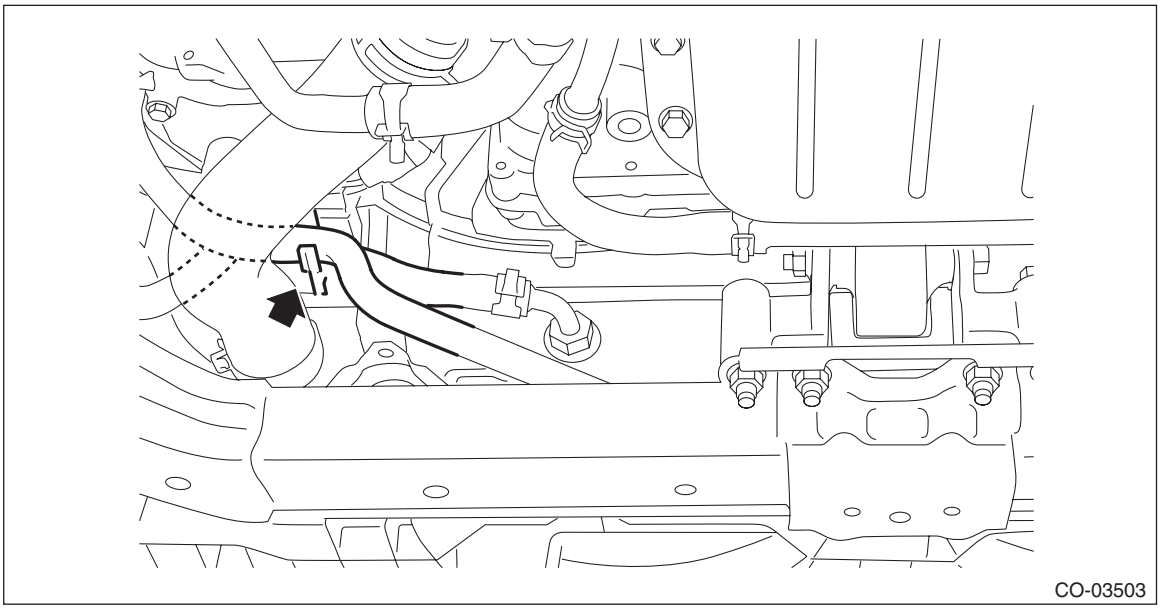

7) Lower the vehicle.
8) Remove the reservoir tank. <Ref. to CO(H6DO)-46, REMOVAL, Reservoir Tank.>
9) Disconnect the radiator inlet hose LH and radiator inlet hose RH.

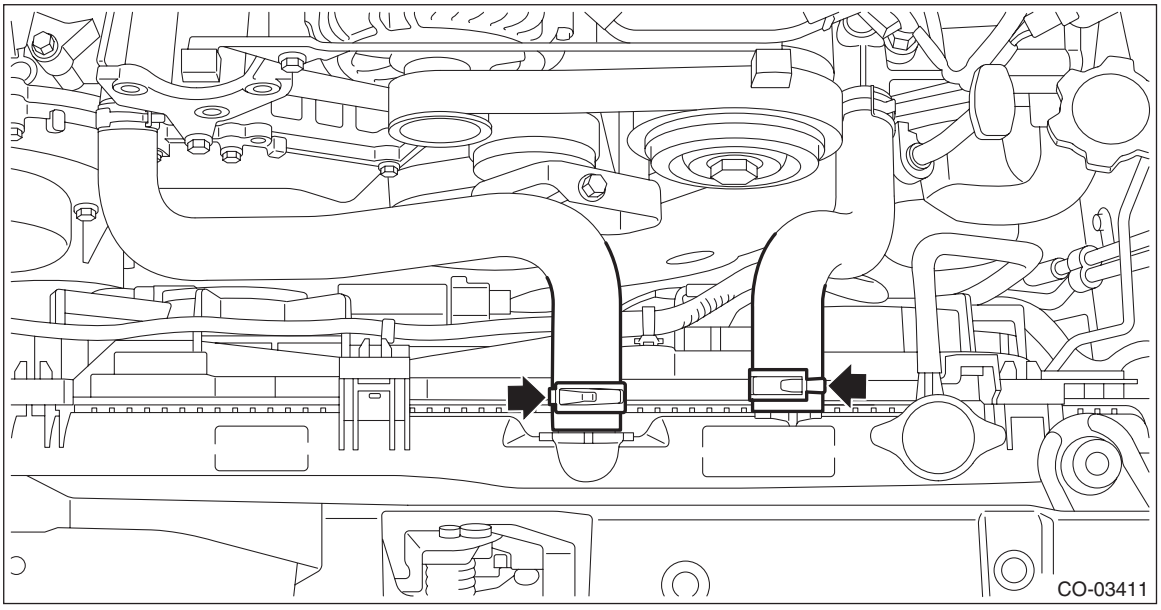

10) Release the claw (A) on the radiator upper side, and incline the top of the radiator fan & fan motor assembly to the engine side.

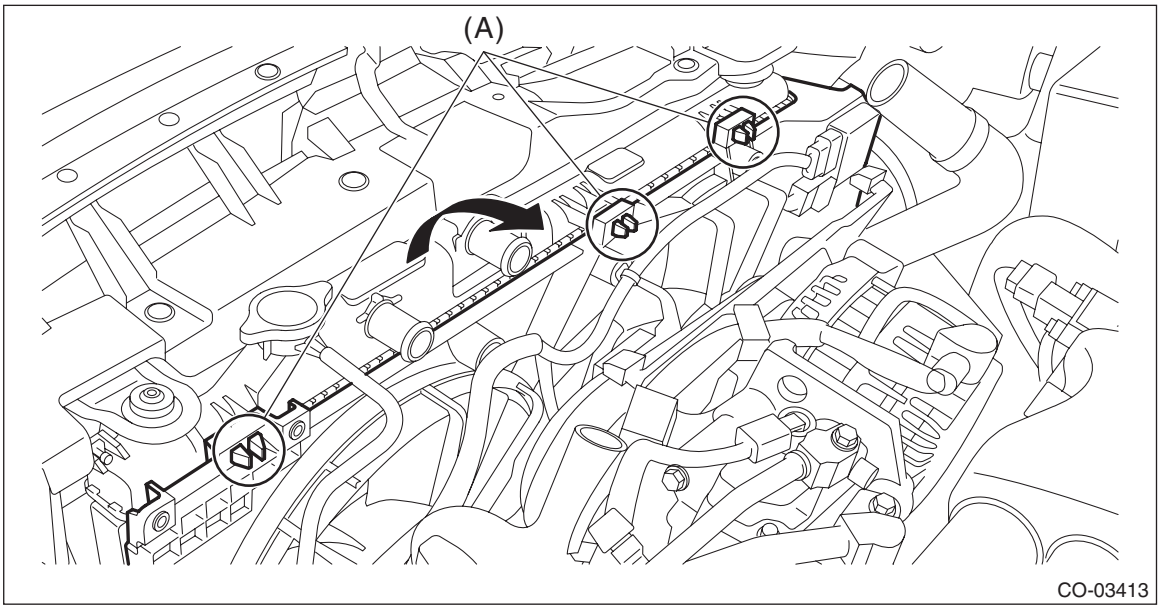

11) Remove the radiator fan & fan motor assembly from vehicle body.

B: INSTALLATION

1) Position the radiator fan & fan motor assembly, and install the radiator fan & fan motor assembly to the claw on the radiator upper side.
2) Connect radiator inlet hoses LH and RH to the radiator.
3) Install the reservoir tank. <Ref. to CO(H6DO)-46, INSTALLATION, Reservoir Tank.>
4) Lift up the vehicle.
5) Connect the connector (A) and connector (B) to the radiator fan harness.

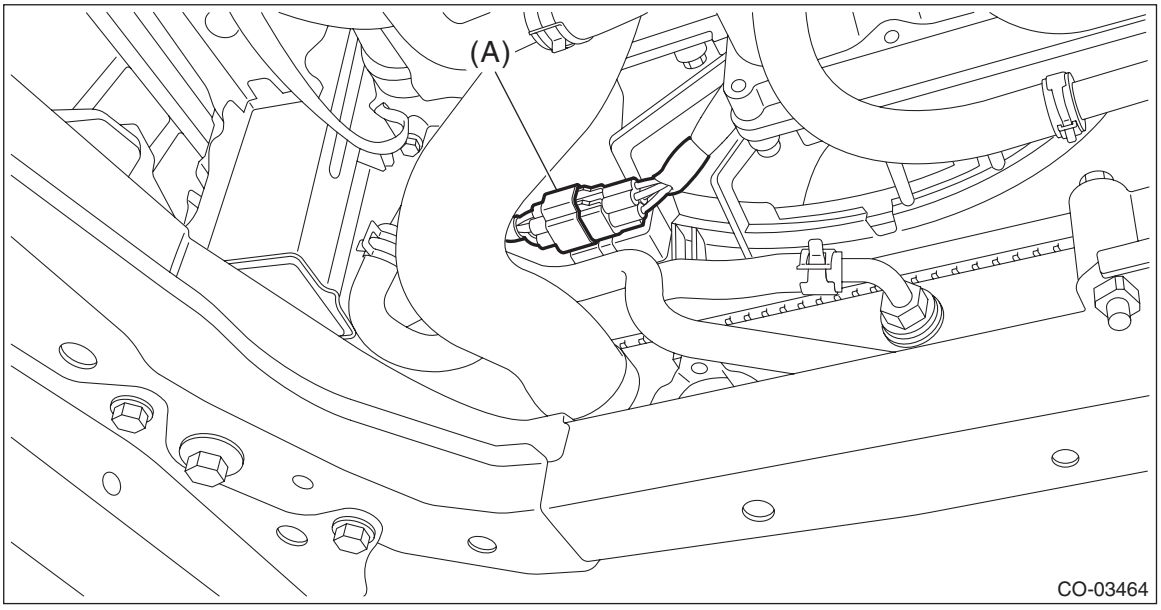

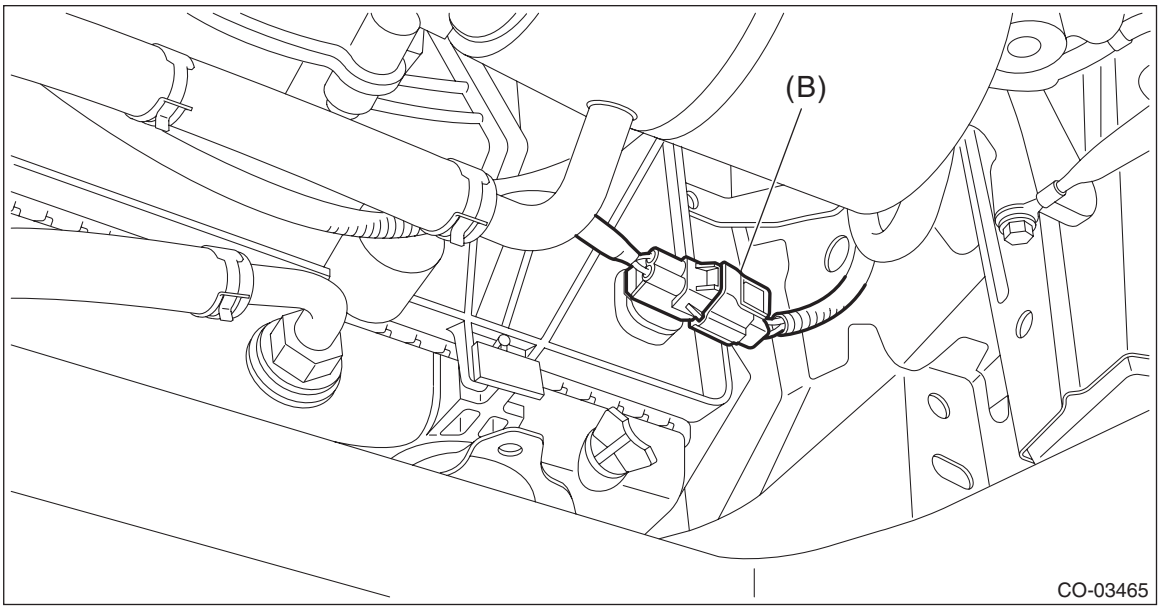

6) Install the CVTF radiator inlet hose and CVTF radiator outlet hose to the clips of the radiator fan shroud.
7) Install the under cover. <Ref. to EI-28, INSTALLATION, Front Under Cover.>
8) Lower the vehicle.
9) Install the air intake duct. <Ref. to IN(H6DO)-12, INSTALLATION, Air Intake Duct.>
10) Connect the ground terminal to battery sensor. <Ref. to RC-4, BATTERY, NOTE, Repair Contents.>
11) Fill engine coolant. <Ref. to CO(H6DO)-14, FILLING OF ENGINE COOLANT, REPLACEMENT, Engine Coolant.>
12) Install the collector cover.

C: DISASSEMBLY

1. RADIATOR MAIN FAN AND RADIATOR MAIN FAN MOTOR

1) Disconnect the connector from the radiator fan control module (main), and remove the radiator main fan motor harness from the clip (A).

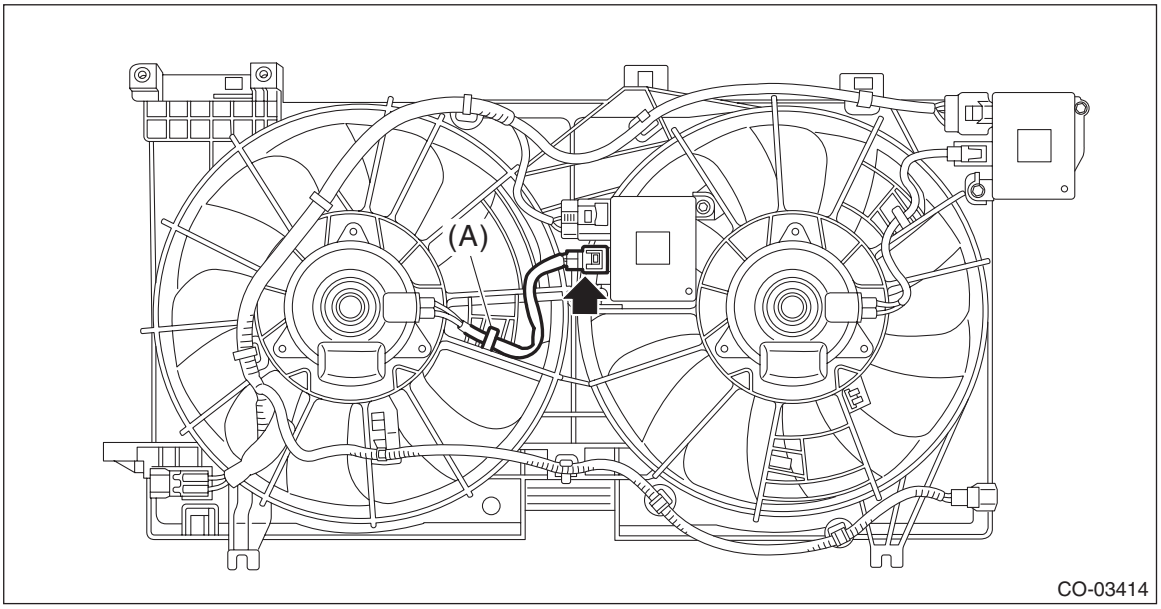

2) Remove the radiator main fan from the radiator main fan motor.

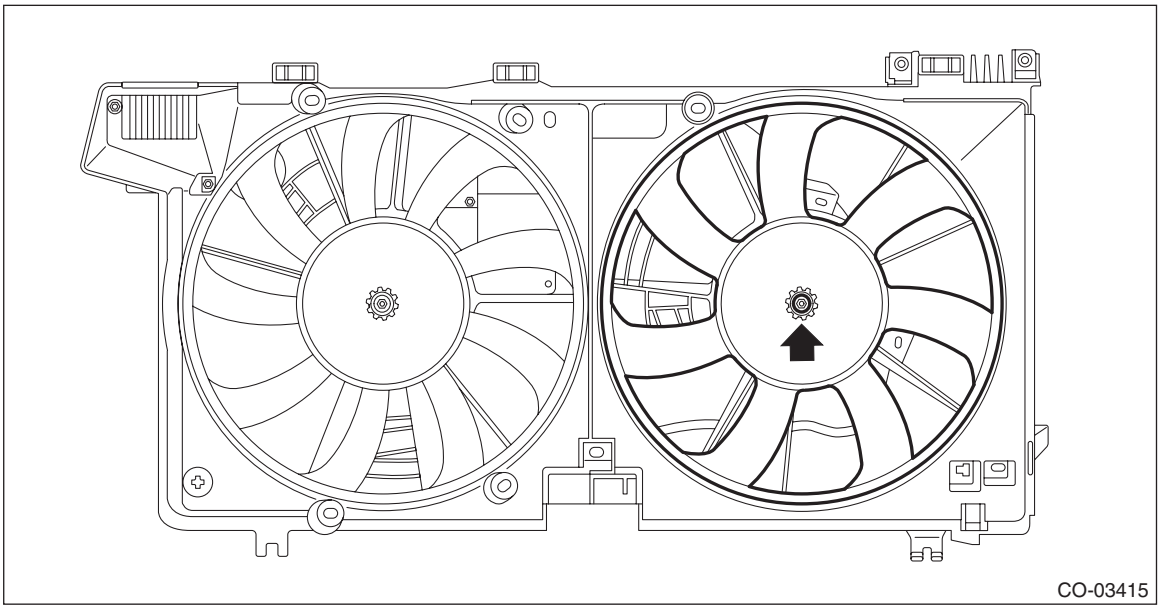

3) Remove the radiator main fan motor from the radiator fan shroud.

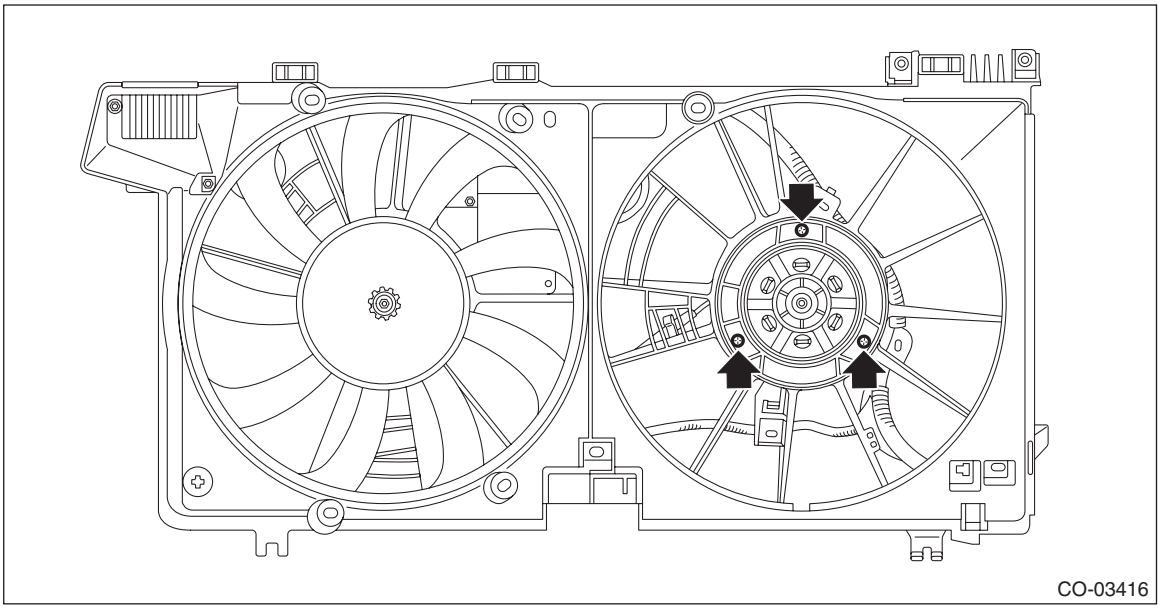

2. RADIATOR SUB FAN AND RADIATOR SUB FAN MOTOR

1) Disconnect the connector from the radiator fan control module (sub), and remove the radiator sub fan motor harness from the clip (A).

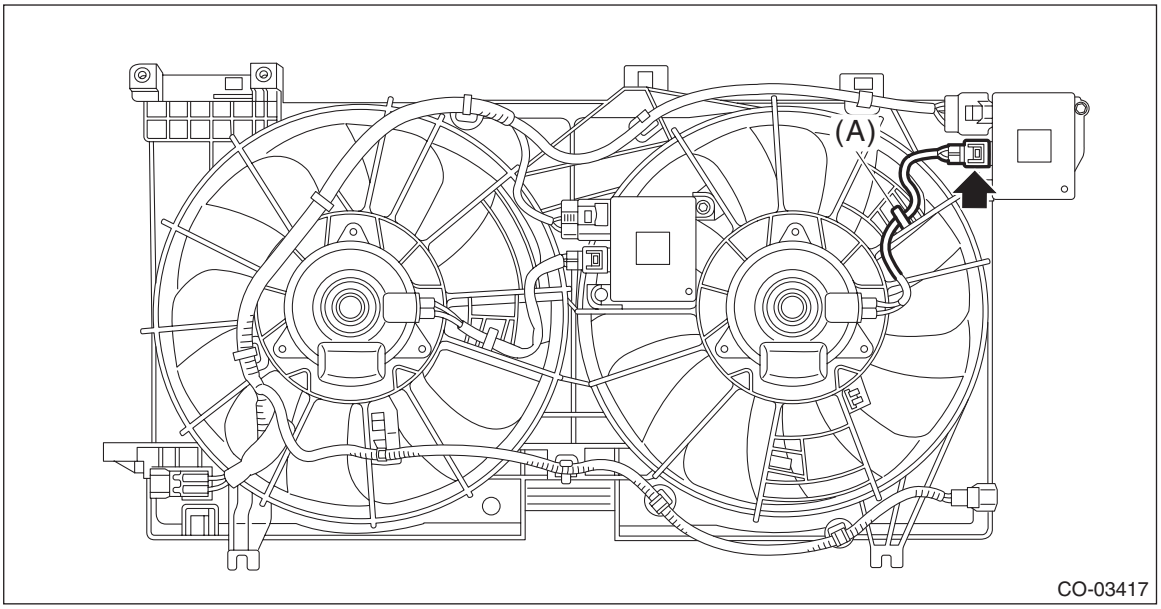

2) Remove the radiator sub fan from the radiator sub fan motor.

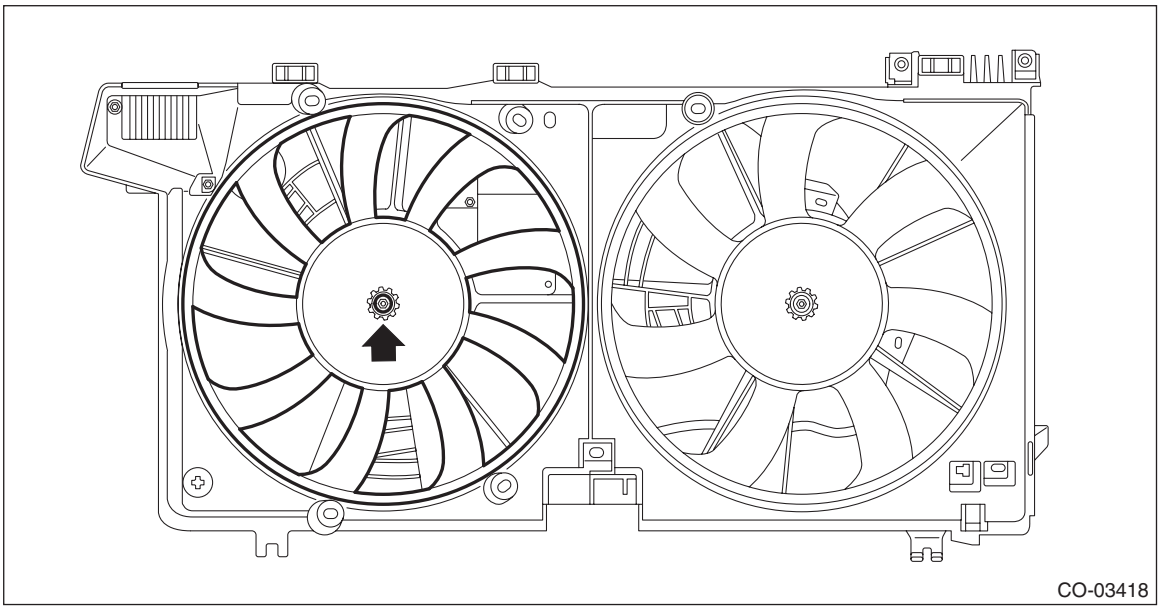

3) Remove the radiator sub fan motor from the radiator fan shroud.

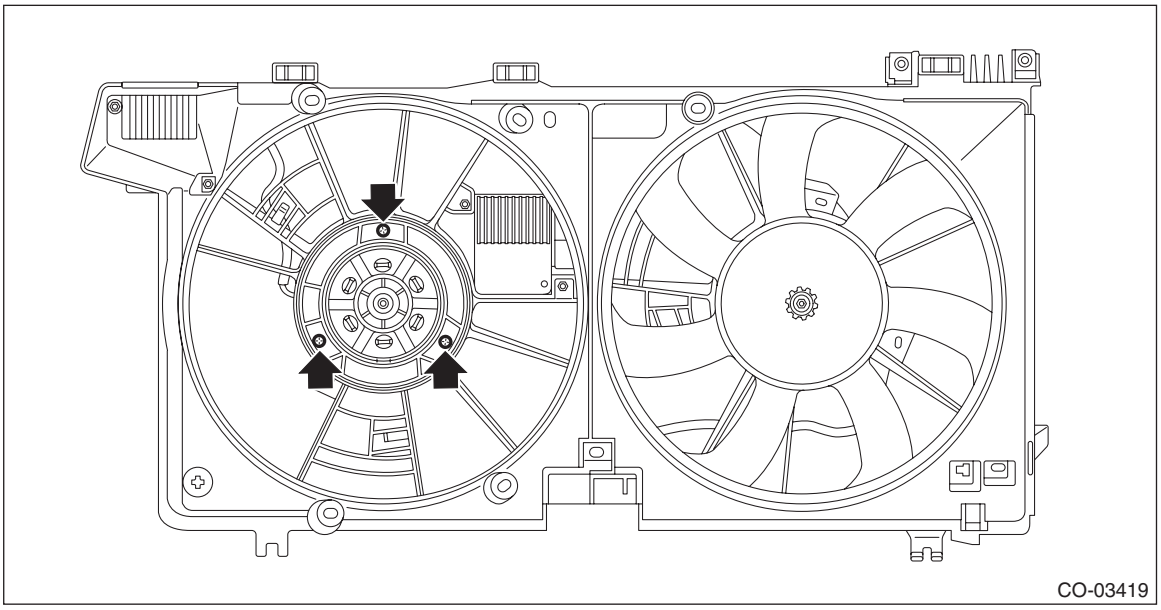

3. RADIATOR FAN HARNESS

Remove the clip securing the radiator fan harness to the radiator fan shroud, and remove the radiator fan harness.

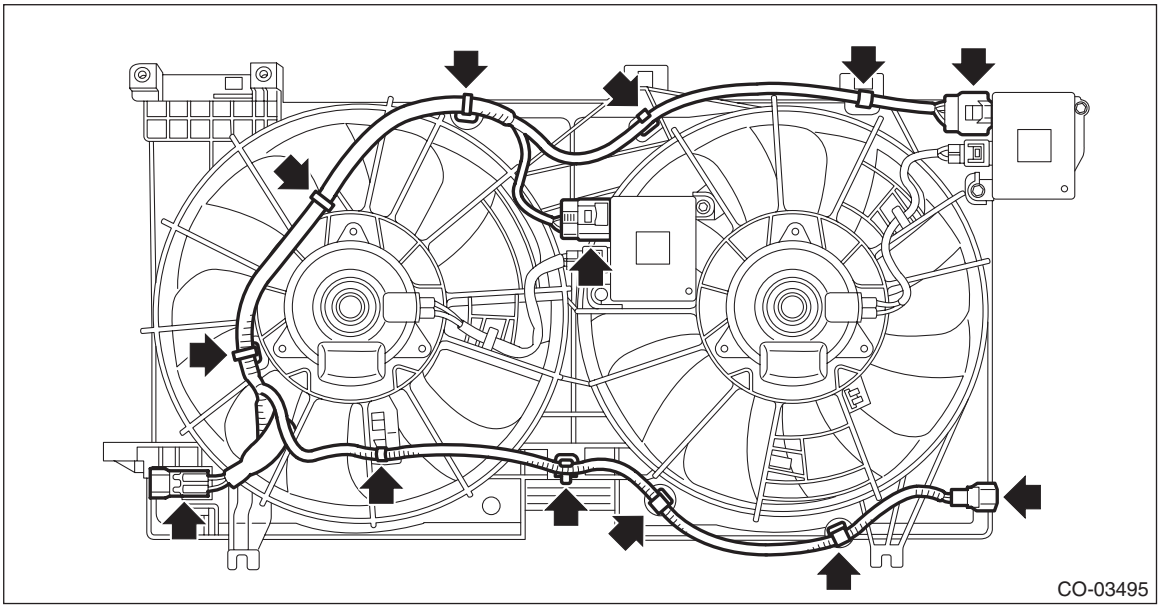

4. RADIATOR FAN SHROUD

1) Remove the radiator main fan and radiator main fan motor. <Ref. to CO(H6DO)-41, RADIATOR MAIN FAN AND RADIATOR MAIN FAN MOTOR, DISASSEMBLY, Radiator Fan and Fan Motor Assembly.>
2) Remove the radiator sub fan and radiator sub fan motor. <Ref. to CO(H6DO)-43, RADIATOR SUB FAN AND RADIATOR SUB FAN MOTOR, DISASSEMBLY, Radiator Fan and Fan Motor Assembly.>
3) Remove the radiator fan harness. <Ref. to CO(H6DO)-44, RADIATOR FAN HARNESS, DISASSEMBLY, Radiator Fan and Fan Motor Assembly.>
4) Remove the radiator fan control unit. <Ref. to CO(H6DO)-48, REMOVAL, Radiator Fan Control Unit.>

D: ASSEMBLY

1. RADIATOR MAIN FAN AND RADIATOR MAIN FAN MOTOR

1) Install the radiator main fan motor to the radiator fan shroud.

Tightening torque:
3.9 N·m (0.4 kgf-m, 2.9 ft-lb)

2) Install the radiator main fan to the radiator main fan motor.

Tightening torque:
6.4 N·m (0.7 kgf-m, 4.7 ft-lb)

3) Connect the connector to the radiator fan control module (main), and install the radiator main fan motor harness.

2. RADIATOR SUB FAN AND SUB FAN MOTOR

1) Install the radiator sub fan motor to the radiator fan shroud.

Tightening torque:
3.9 N·m (0.4 kgf-m, 2.9 ft-lb)

2) Install the radiator sub fan to the radiator sub fan motor.

Tightening torque:
6.4 N·m (0.7 kgf-m, 4.7 ft-lb)

3) Connect the connector to the radiator fan control module (sub), and install the radiator sub fan motor harness.

3. RADIATOR FAN HARNESS

Set the radiator fan harness to the radiator fan shroud, and install the clip securing radiator fan harness.

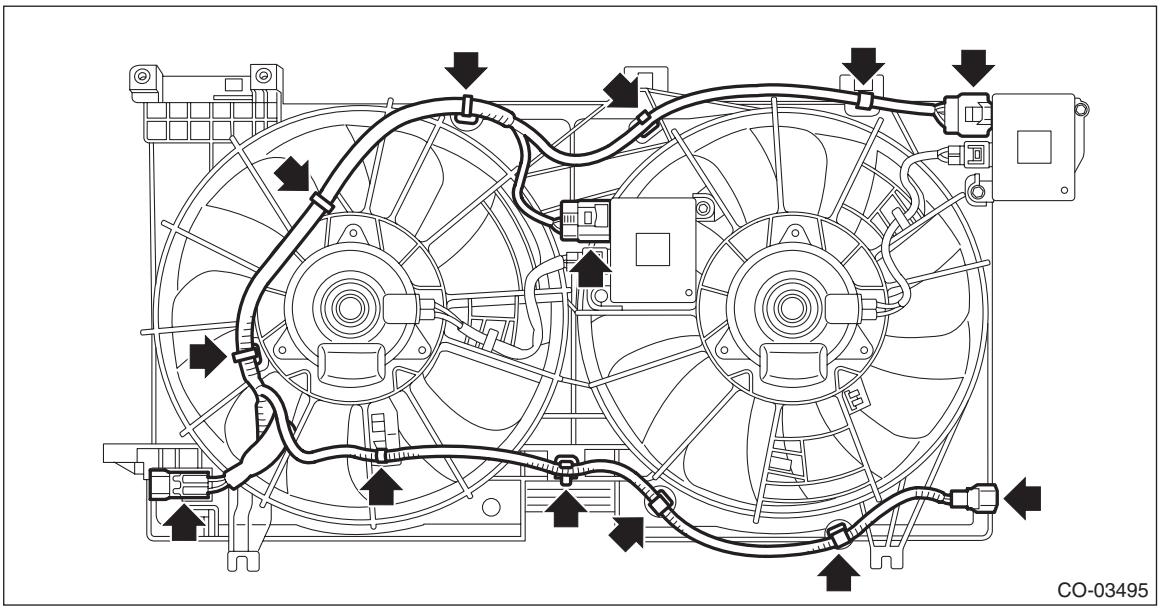

4. RADIATOR FAN SHROUD

1) Install the radiator main fan and the radiator main fan motor. <Ref. to CO(H6DO)-45, RADIATOR MAIN FAN AND RADIATOR MAIN FAN MOTOR, ASSEMBLY, Radiator Fan and Fan Motor Assembly.>
2) Install the radiator sub fan and the radiator sub fan motor. <Ref. to CO(H6DO)-45, RADIATOR SUB FAN AND SUB FAN MOTOR, ASSEMBLY, Radiator Fan and Fan Motor Assembly.>
3) Install the radiator fan harness. <Ref. to CO(H6DO)-45, RADIATOR FAN HARNESS, ASSEMBLY, Radiator Fan and Fan Motor Assembly.>
4) Install the radiator fan control module. <Ref. to CO(H6DO)-49, INSTALLATION, Radiator Fan Control Unit.>

E: INSPECTION

Check that the radiator fan, radiator fan harness, radiator fan shroud and radiator fan motor do not have deformation, cracks or damage.

9. Reservoir Tank

A: REMOVAL

1) Disconnect the over flow hose (A) connected to the radiator filler neck from the reservoir tank.
2) Remove bolts which secure the reservoir tank, and remove the reservoir tank.

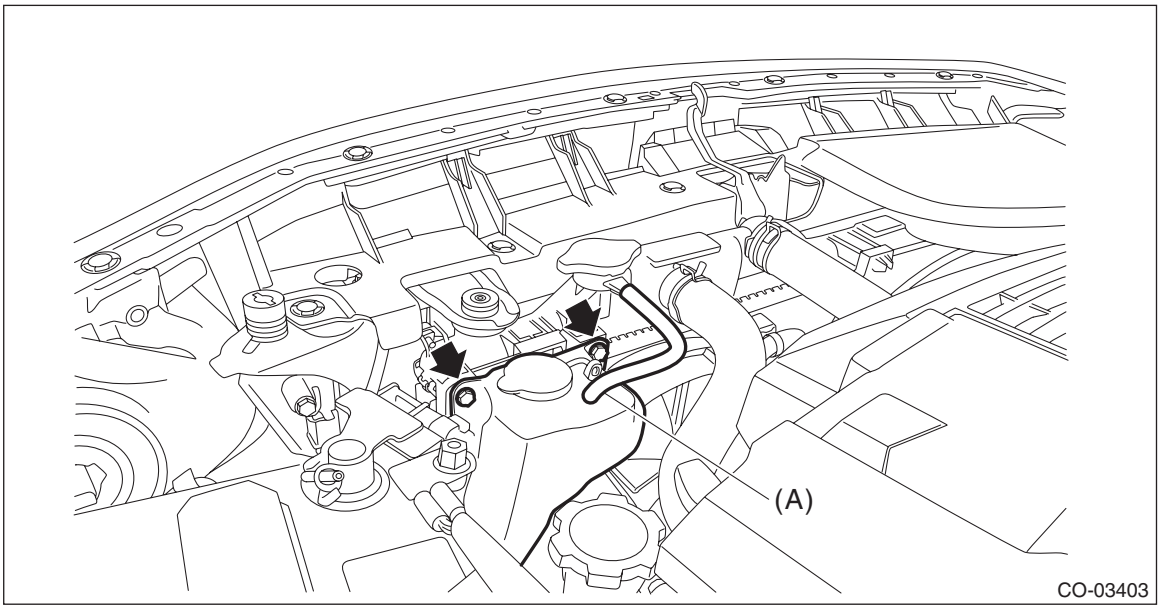

B: INSTALLATION

1) Install the bolts securing the reservoir tank to the radiator fan shroud.

Tightening torque:
7.5 N·m (0.8 kgf-m, 5.5 ft-lb)

2) Insert the over flow hose (A) connected to the radiator filler neck into the reservoir tank.

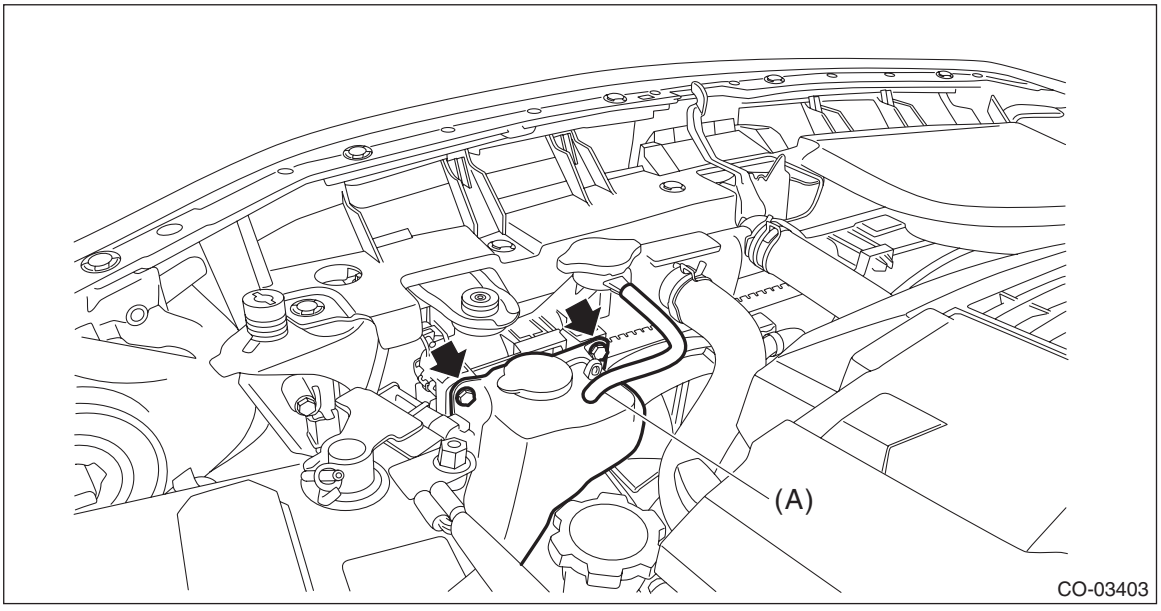

C: INSPECTION

1) Check that the reservoir tank does not have deformation, cracks or damage.
2) Make sure the over flow hoses are not cracked, damaged or loose.
3) Make sure the engine coolant level is between “FULL” and “LOW”.

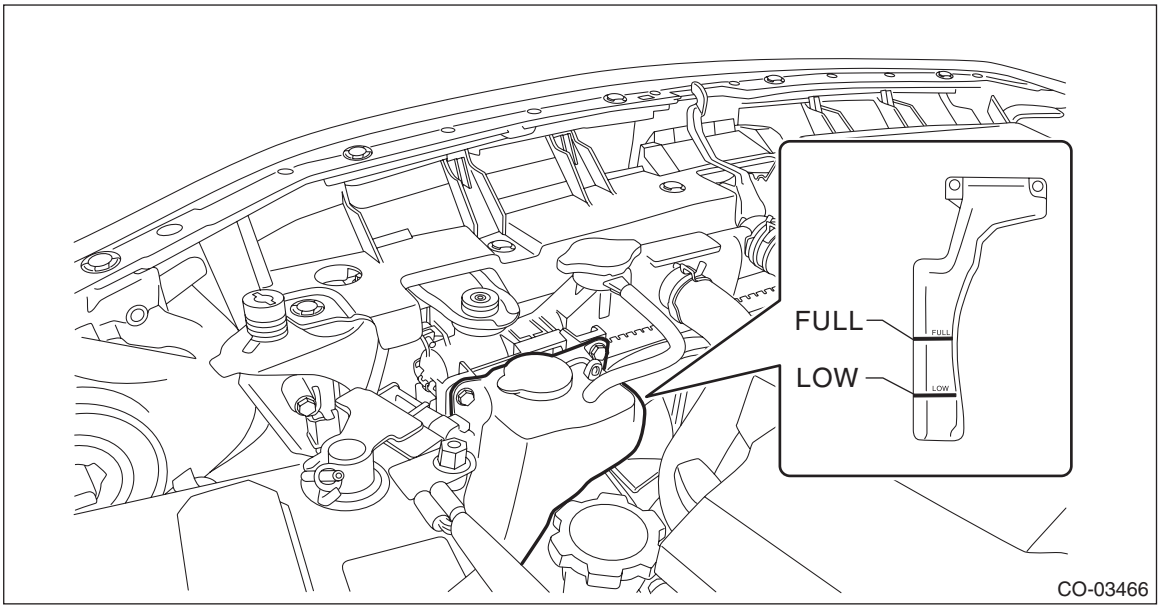

10.Radiator Fan Control Unit

A: REMOVAL

1. RADIATOR FAN CONTROL MODULE (MAIN)

1) Remove the collector cover.
   (1) Carefully pull up the rear of collector cover at two positions (A).
   (2) Carefully pull up the front of collector cover at two positions (B) while moving it forward.

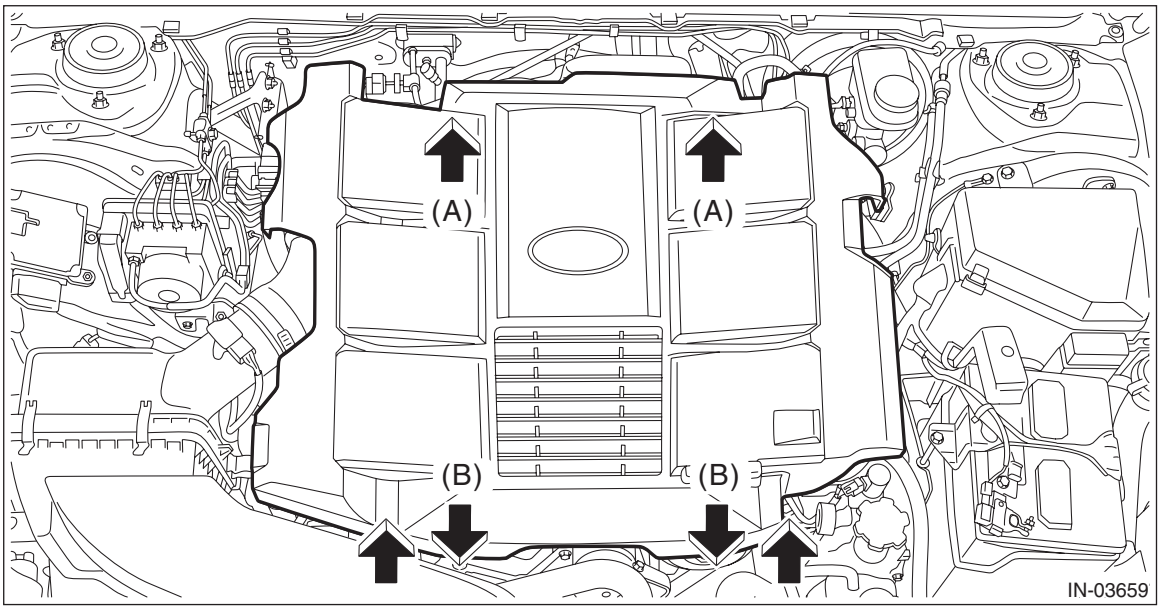

2) Disconnect the ground terminal from battery sensor. <Ref. to RC-4, BATTERY, NOTE, Repair Contents.>
3) Remove the air intake duct. <Ref. to IN(H6DO)-12, REMOVAL, Air Intake Duct.>
4) Disconnect the radiator fan harness connector (A) and radiator main fan motor connector (B) from the radiator fan control module (main).
5) Remove the bolts securing the radiator fan control module (main), and remove the radiator fan control module (main).

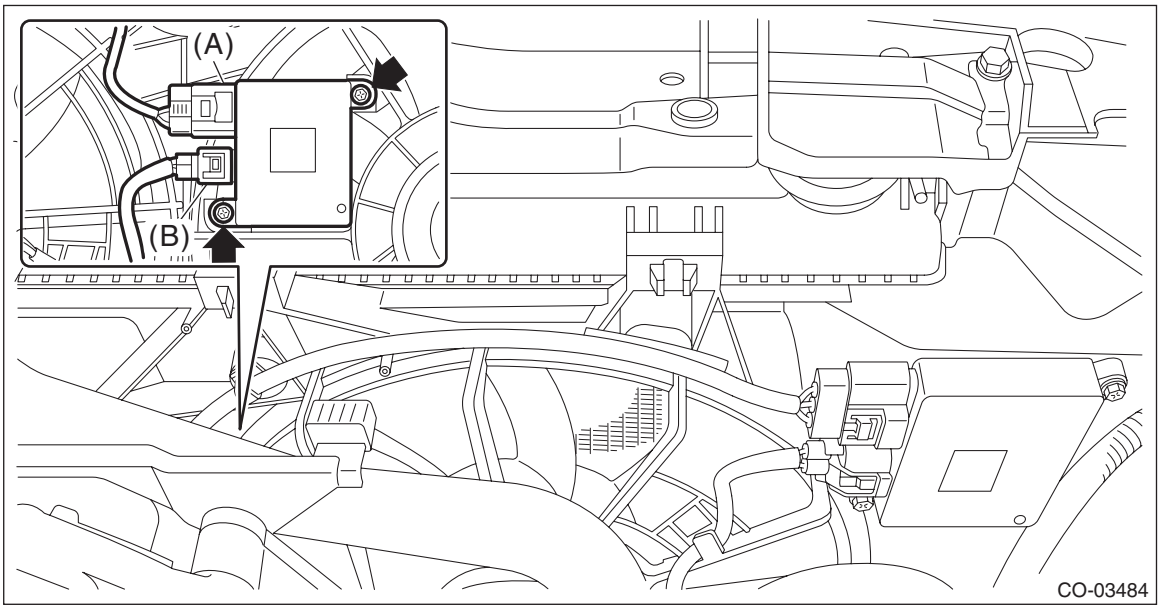

2. RADIATOR FAN CONTROL MODULE (SUB)

1) Disconnect the ground terminal from battery sensor. <Ref. to RC-4, BATTERY, NOTE, Repair Contents.>
2) Remove the air intake duct. <Ref. to IN(H6DO)-12, REMOVAL, Air Intake Duct.>

3) Disconnect the radiator fan harness connector (A) and radiator sub fan motor connector (B) from the radiator fan control module (sub).
4) Remove the bolts securing the radiator fan control module (sub), and remove the radiator fan control module (sub).

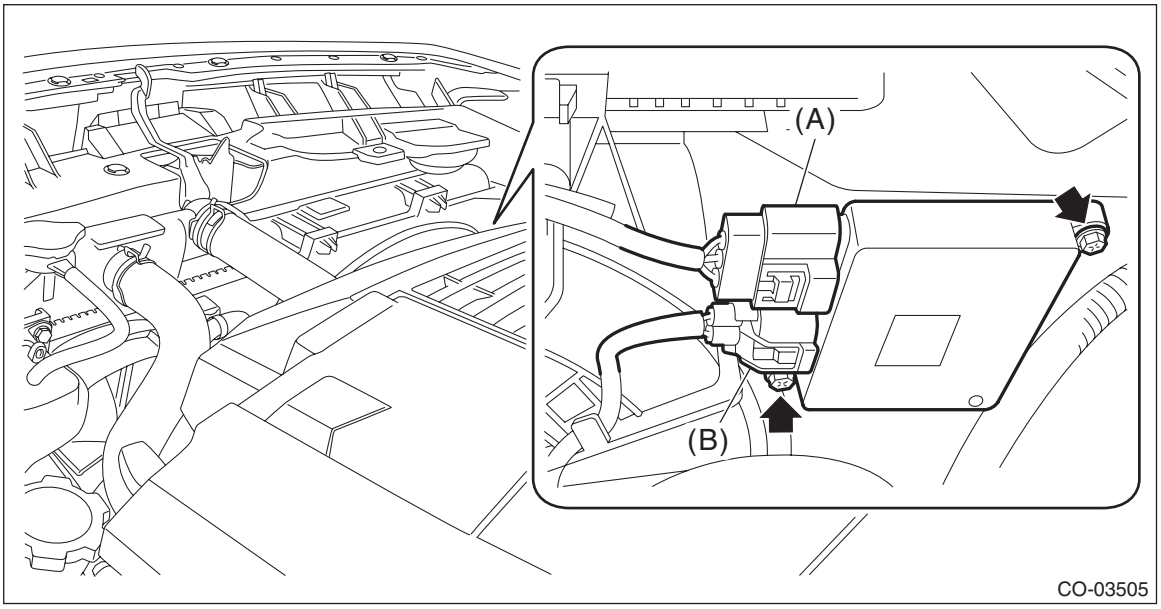

B: INSTALLATION

1. RADIATOR FAN CONTROL MODULE (MAIN)

1) Install the radiator fan control module (main), and install the bolts securing the radiator fan control module (main).

Tightening torque:
2.6 N·m (0.3 kgf-m, 1.9 ft-lb)

2) Connect the radiator fan harness connector (A) and radiator main fan motor connector (B) to the radiator fan control module (main).

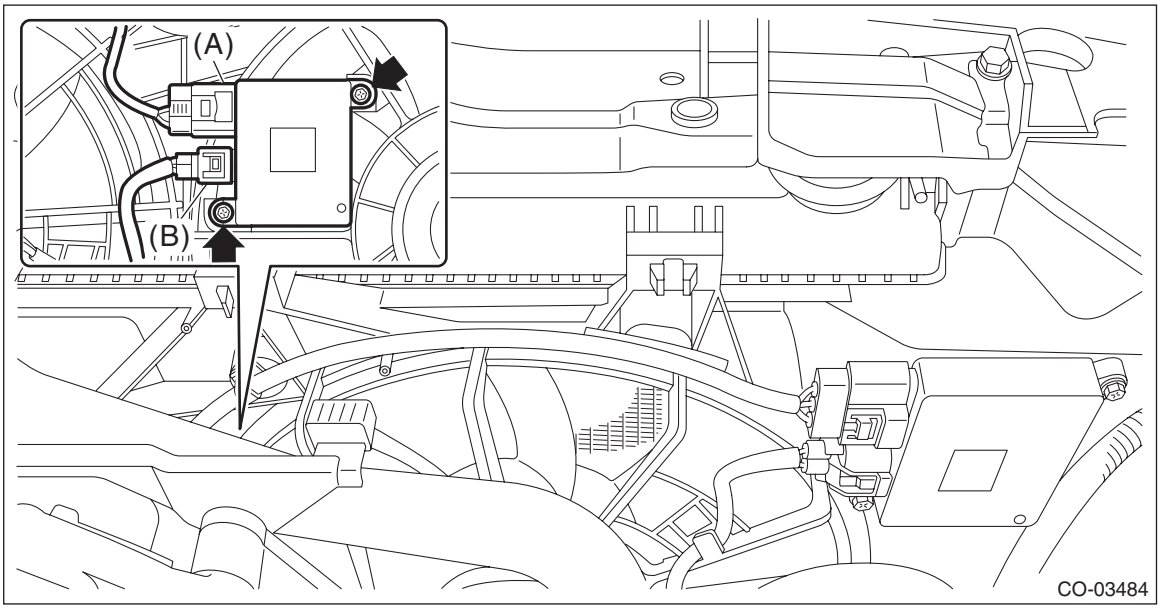

3) Install the air intake duct. <Ref. to IN(H6DO)-12, INSTALLATION, Air Intake Duct.>
4) Connect the ground terminal to battery sensor. <Ref. to RC-4, BATTERY, NOTE, Repair Contents.>
5) Install the collector cover.

2. RADIATOR FAN CONTROL MODULE (SUB)

1) Install the radiator fan control module (sub), and install the bolts securing the radiator fan control module (sub).

Tightening torque:
2.6 N·m (0.3 kgf-m, 1.9 ft-lb)

2) Connect the radiator fan harness connector (A) and radiator sub fan motor connector (B) to the radiator fan control module (sub).

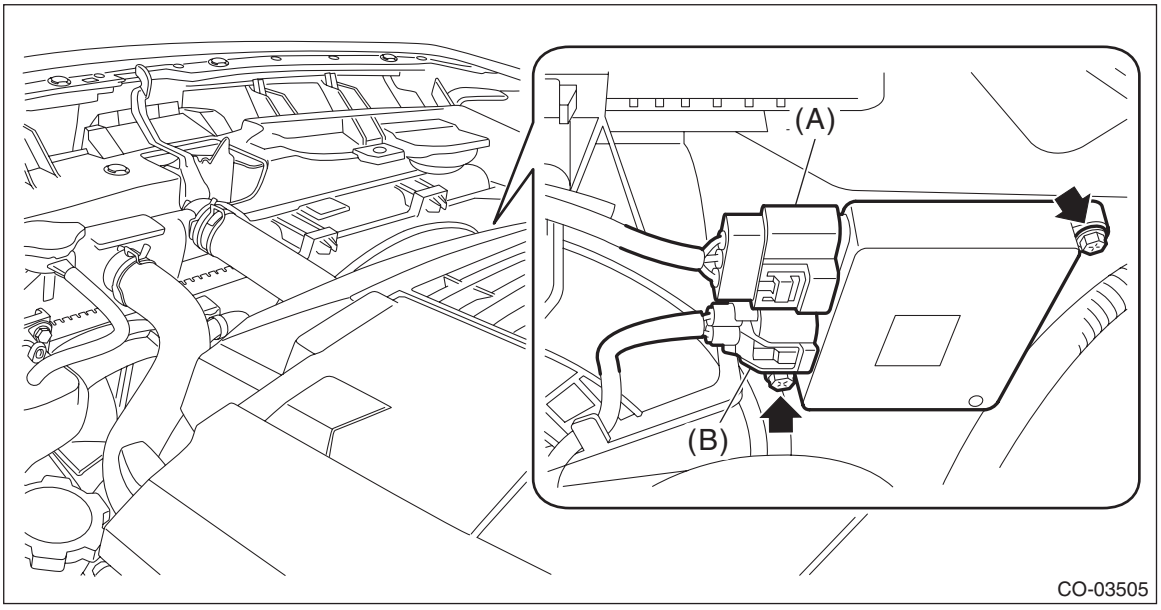

3) Install the air intake duct. <Ref. to IN(H6DO)-12, INSTALLATION, Air Intake Duct.>
4) Connect the ground terminal to battery sensor. <Ref. to RC-4, BATTERY, NOTE, Repair Contents.>

11.Engine Cooling System Trouble in General

A: INSPECTION

Trouble	Possible cause	Corrective action
Over-heating	a. Insufficient engine coolant	Replenish engine coolant, inspect for leakage, and repair it if necessary.
	b. Defective thermostat	Replace.
	c. Malfunction of water pump	Replace.
	d. Clogged engine coolant passage	Clean.
	e. Improper ignition timing	Inspect and repair ignition control system. <Ref. to EN(H6DO)(diag)-2, PROCEDURE, Basic Diagnostic Procedure.>
	f. Clogged or leaking radiator	Clean, repair or replace.
	g. Defective radiator cap	Replace.
	h. Improper engine oil in engine coolant	Replace the engine coolant. If ineffective, check, repair or replace engine components.
	i. Air/fuel mixture ratio too lean	Inspect and repair the fuel injection system. <Ref. to EN(H6DO)(diag)-2, PROCEDURE, Basic Diagnostic Procedure.>
	j. Excessive back pressure in exhaust system	Clean or replace.
	k. Insufficient clearance between piston and cylinder	Adjust or replace.
	l. Dragging brake	Adjust.
	m. Defective radiator fan	Check the radiator fan relay, control module, engine coolant temperature sensor or fan motor, and replace if necessary.
Over-cooling	a. Ambient temperature extremely low	Partly cover radiator front area.
	b. Defective thermostat	Replace.
Engine coolant leaks	a. Loosened or damaged connecting units on hoses	Repair or replace.
	b. Leakage from water pump	Replace.
	c. Leakage from water pipe	Repair or replace.
	d. Leakage around cylinder head gasket	Retighten cylinder head bolts or replace cylinder head gasket.
	e. Damaged or cracked cylinder head and cylinder block	Repair or replace.
	f. Damaged or cracked thermostat cover	Repair or replace.
	g. Leakage from radiator	Repair or replace.
Noise	a. Defective radiator fan	Replace.
	b. Defective water pump bearing	Replace water pump.
	c. Defective water pump mechanical seal	Replace water pump.

LUBRICATION

LU(H6DO)

Page

1. General Description 2
2. Oil Pressure System 9
3. Engine Oil 11
4. Oil Pan 14
5. Oil Pump 16
6. Oil Pressure Switch 19
7. Engine Oil Filter 21
8. Oil Cooler 23
9. Oil Level Switch 26
10. Engine Lubrication System Trouble in General 32

1. General Description

A: SPECIFICATION

Lubrication method					Forced lubrication
Oil pump	Pump type				Trochoid type
	Number of teeth	Inner rotor			7
		Outer rotor			8
	Outer rotor diameter × Thickness			mm (in)	76 × 30.2 (2.99 × 1.19)
	Performance (Oil temperature 80°C (176°F))	600 r/min	Discharge pressure	kPa (kg/cm^2, psi)	98 (1.0, 14)
			Discharge rate	L (US qt, Imp qt)/min	5.0 (5.3, 4.4) or more
		6,000 r/min	Discharge pressure	kPa (kg/cm^2, psi)	392 (4.0, 57)
			Discharge rate	L (US qt, Imp qt)/min	82.8 (87.5, 72.9) or more
Oil filter	Filter type				Full-flow filter type
	Filtration area			cm^2 (sq in)	1,300 (201.5)
	By-pass valve opening pressure			kPa (kg/cm^2, psi)	160 (1.63, 23.2)
	Outer diameter × Width			mm (in)	80 × 75 (3.15 × 2.95)
	Installation screw specifications				M 20 × 1.5
Oil pressure switch	Type				Immersed contact point type
	Operating voltage — power consumption				12 V — 3.4 W or less
	Warning light operating pressure			kPa (kg/cm^2, psi)	14.7 (0.15, 2.1)
	Proof pressure			kPa (kg/cm^2, psi)	980 (10.0, 142)
Engine oil	Total capacity (at overhaul)			L (US qt, Imp qt)	7.8 (8.2, 6.9)
	When replacing engine oil and oil filter			L (US qt, Imp qt)	6.5 (6.9, 5.7)
	When replacing engine oil only			L (US qt, Imp qt)	6.3 (6.7, 5.5)

Recommended oil:

CAUTION:
It is acceptable to fill an engine with oil of another brand when replacing the oil, but make sure to use the following engine oil specified by Subaru.

<table>
<tr>
<td>Engine oil standard</td>
<td>
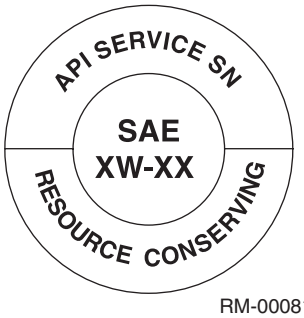

RM-00081
Those with SN “Resource Conserving” logo in case of API standard.
or


RM-00002
Those with GF-5 “starburst mark” displayed on top of the container in case of ILSAC standard.
</td>
</tr>
<tr>
<td>SAE viscosity No.</td>
<td>
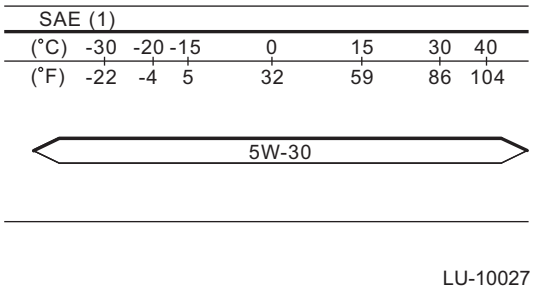

LU-10027
</td>
</tr>
</table>

NOTE:
The proper viscosity oil helps the engine maintain its ideal temperature, and cranking speed increased by reducing viscosity friction in hot condition.

B: COMPONENT

1. OIL PAN, OIL COOLER AND ENGINE OIL FILTER

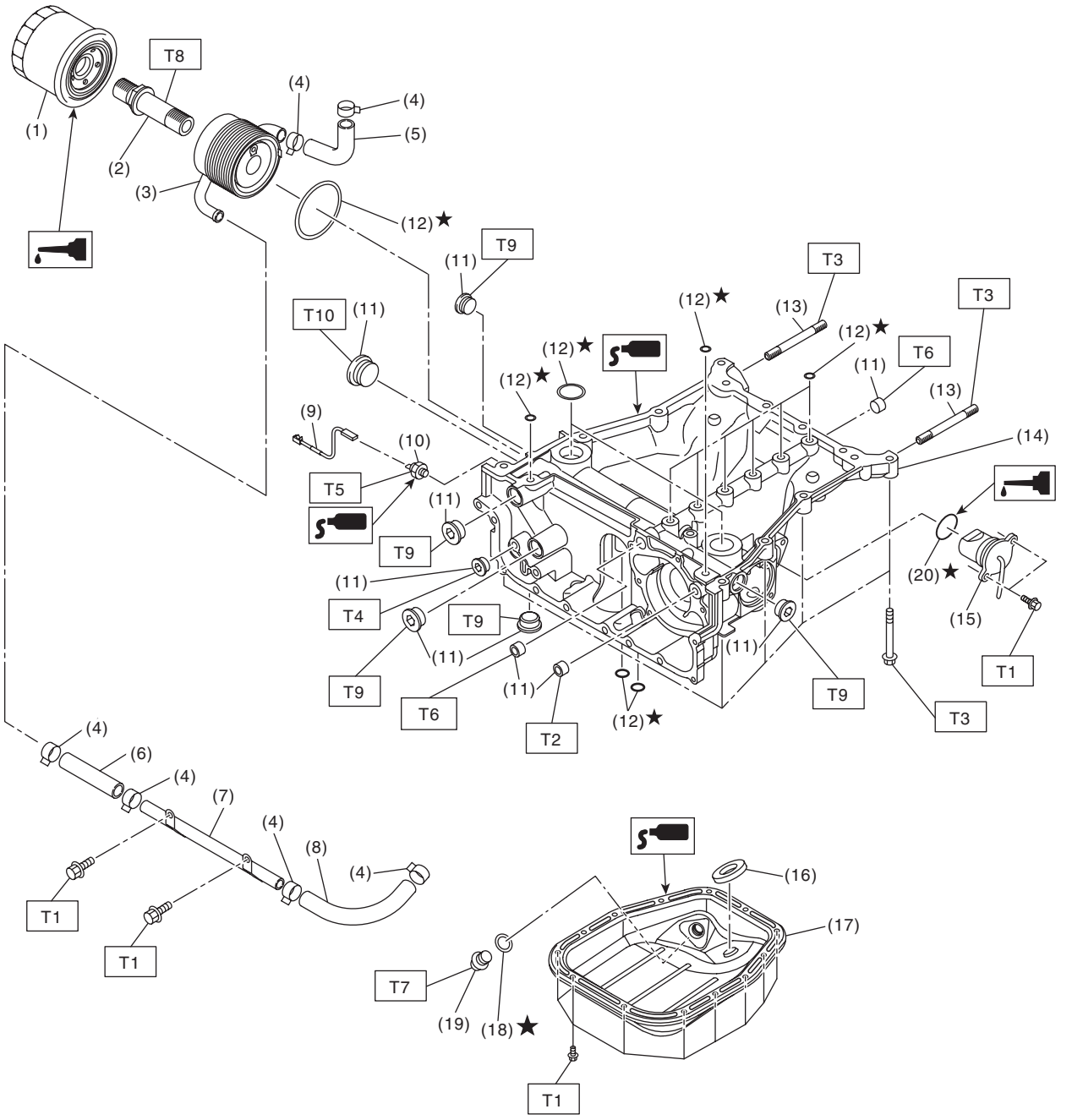

LU-03277

(1)	Oil filter	(12)	O-ring
(2)	Oil cooler connector	(13)	Stud bolt
(3)	Oil cooler	(14)	Oil pan upper
(4)	Clamp	(15)	Oil level switch
(5)	Water hose	(16)	Oil pan magnet
(6)	Water hose	(17)	Oil pan lower
(7)	Engine oil cooler water pipe	(18)	Gasket
(8)	Water hose	(19)	Drain plug
(9)	Oil pressure switch harness	(20)	O-ring
(10)	Oil pressure switch		
(11)	Plug		

Tightening torque: N·m (kgf-m, ft-lb)	
T1:	*6.4 (0.7, 4.7)*
T2:	*17 (1.7, 12.5)*
T3:	*18 (1.8, 13.3)*
T4:	*23 (2.3, 17.0)*
T5:	*25 (2.5, 18.4)*
T6:	*34 (3.5, 25.1)*
T7:	*44 (4.5, 32.5)*
T8:	*54 (5.5, 39.8)*
T9:	*60 (6.1, 44.3)*
T10:	*90 (9.2, 66.4)*

2. OIL PUMP

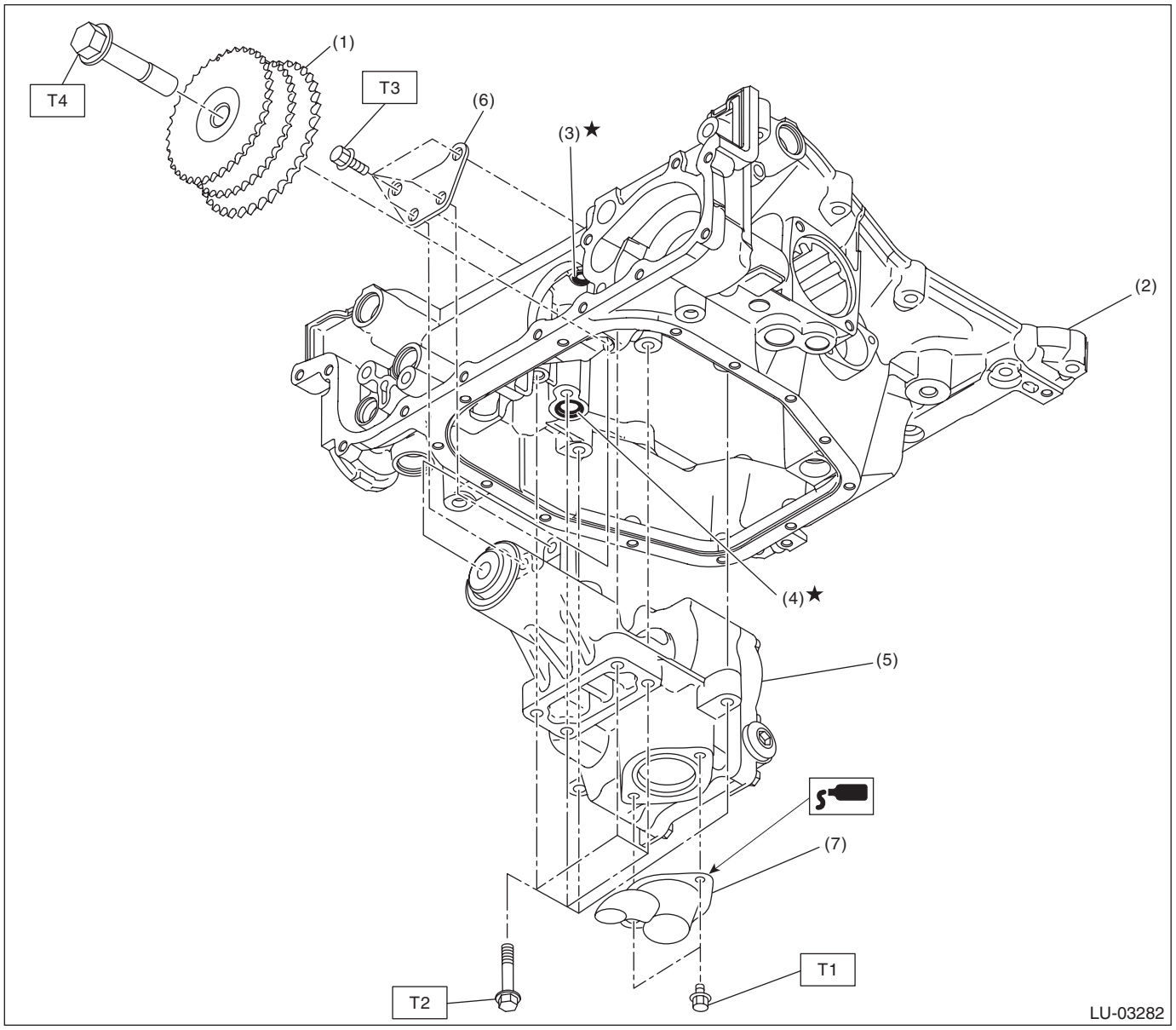

(1) Idler sprocket
(2) Oil pan upper
(3) O-ring
(4) O-ring
(5) Oil pump
(6) Stiffener
(7) Strainer

Tightening torque: N·m (kgf-m, ft-lb)
T1: 6.4 (0.7, 4.7)
T2: 13 (1.3, 9.6)
T3: 24 (2.4, 17.7)
T4: 120 (12.2, 88.5)

C: CAUTION

- Prior to starting work, pay special attention to the following:
  1. Always wear work clothes, a work cap, and protective shoes. Additionally, wear a helmet, protective goggles, etc. if necessary.
  2. Protect the vehicle using a seat cover, fender cover, etc.
  3. Prepare the service tools, clean cloth, containers to catch grease and oil, etc.
- Prepare a container and cloth when performing work which oil possibly spills. If oil spills, wipe it off immediately to prevent from penetrating into floor or flowing out for environmental protection.
- Vehicle components are extremely hot immediately after driving. Be wary of receiving burns from heated parts.
- When performing a repair, identify the cause of trouble and avoid unnecessary removal, disassembly and replacement.
- Before disconnecting connectors of sensors or units, be sure to disconnect the ground cable from battery.
- Always use the jack-up point when the shop jacks or rigid racks are used to support the vehicle.
- Remove contamination including dirt and corrosion before removal, installation, disassembly or assembly.
- Keep the removed parts in order and protect them from dust and dirt.
- All removed parts, if to be reused, should be reinstalled in the original positions with attention to the correct directions, etc.
- Bolts, nuts and washers should be replaced with new parts as required.
- Be sure to tighten the fasteners including bolts and nuts to the specified torque.
- If the engine oil is spilt over exhaust pipe or the under cover, wipe it off with cloth to avoid emitting smoke or causing a fire.
- Follow all government and local regulations concerning disposal of refuse when disposing of oil.

D: PREPARATION TOOL

1. SPECIAL TOOL

ILLUSTRATION	TOOL NUMBER	DESCRIPTION	REMARKS
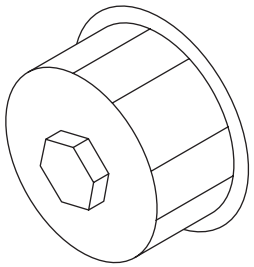 ST-498547000	498547000	OIL FILTER WRENCH	Used for removing and installing oil filter.
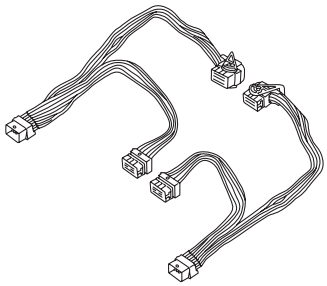 ST18460AA050	18460AA050	CHECK BOARD	Used for inspecting the oil level switch.
 STSSM4	— (Newly adopted tool)	SUBARU SELECT MONITOR 4	Used for setting of each function and trouble-shooting for electrical system. NOTE: For detailed operation procedures of Subaru Select Monitor 4, refer to “Application help”.

2. GENERAL TOOL

TOOL NAME	REMARKS
Circuit tester	Used for measuring resistance, voltage and current.
DST-i	Used together with Subaru Select Monitor 4.

2. Oil Pressure System

A: WIRING DIAGRAM

Oil pressure warning system <Ref. to WI-293, WIRING DIAGRAM, Oil Pressure Warning Light System.>

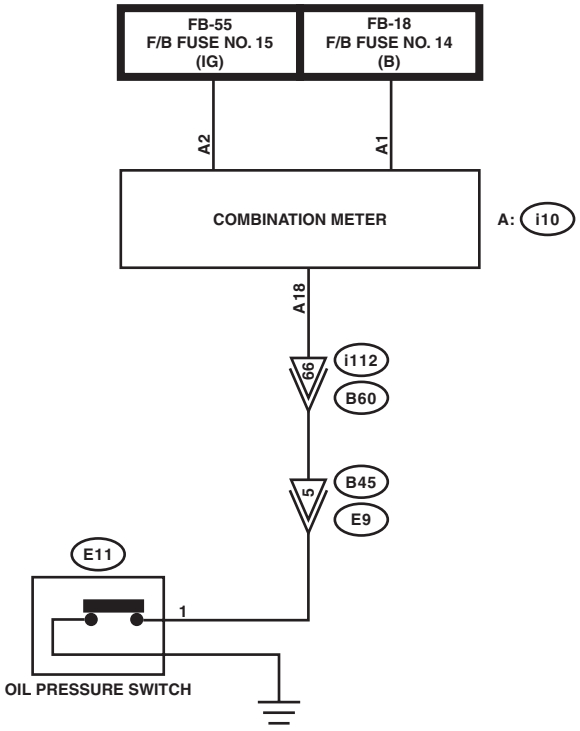

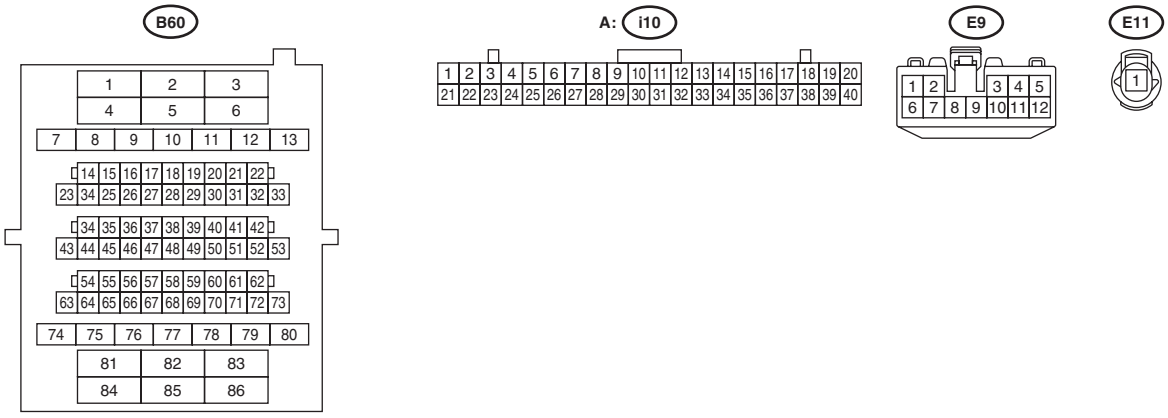

LU-03266

B: INSPECTION

Step		Check	Yes	No
1	**CHECK DTC.**	Is engine DTC displayed? <Ref. to EN(H6DO)(diag)-68, Read Diagnostic Trouble Code (DTC).>	Check the appropriate DTC using the "List of Diagnostic Trouble Code (DTC)". <Ref. to EN(H6DO)(diag)-109, List of Diagnostic Trouble Code (DTC).>	Go to step **2**.
2	**CHECK COMBINATION METER.** 1) Turn the ignition switch to ON. (Engine OFF) 2) Check the warning light in the combination meter.	Does the warning light illuminate?	Go to step **3**.	Repair or replace the combination meter. <Ref. to IDI-10, INSPECTION, Combination Meter System.>
3	**CHECK POWER SUPPLY TO OIL PRESSURE SWITCH.** 1) Turn the ignition switch to OFF. 2) Disconnect the terminal from oil pressure switch. 3) Turn the ignition switch to ON. 4) Measure the voltage of harness between oil pressure switch harness terminal and chassis ground. ***Terminals*** ***(E11) No. 1 (+) — Chassis ground (–):***	Is the voltage 10 V or more?	Replace the oil pressure switch. <Ref. to LU(H6DO)-19, Oil Pressure Switch.>	Go to step **4**.
4	**CHECK COMBINATION METER.** Perform the self-diagnosis of combination meter to check if there are any faults in the combination meter. <Ref. to IDI-6, OPERATION, Combination Meter System.>	Is combination meter OK?	Repair the harness and connector. NOTE: In this case, repair the following item: • Open circuit of harness between combination meter and oil pressure switch • Poor contact of combination meter connector • Poor contact of oil pressure switch terminal • Poor contact of coupling connector	Repair or replace the combination meter. <Ref. to IDI-10, INSPECTION, Combination Meter System.>

3. Engine Oil

A: INSPECTION

CAUTION:
If the engine oil is spilt over exhaust pipe or the under cover, wipe it off with cloth to avoid emission of smoke or causing a fire.

1) Park the vehicle on a level surface.
2) Remove the oil level gauge and wipe away the oil.
3) Reinsert the oil level gauge all the way. Be sure that the oil level gauge is correctly inserted and properly orientated.
4) Pull out the oil level gauge again, and check both sides of the oil level gauge. Use a lower side to determine the engine oil level. If the engine oil level is below “L” line, check for oil leakage from engine and add oil to bring the level up to “F” line.
5) Start the engine to circulate the oil in engine.
6) After turning off the engine, wait a few minutes for the oil to return to the oil pan before checking the level.

NOTE:
- To prevent overfilling of engine oil, do not add oil above “F” line when the engine is cold.
- As the oil level gauge is used for daily maintenance, “F” line and “L” line is set assuming that the engine is cold.

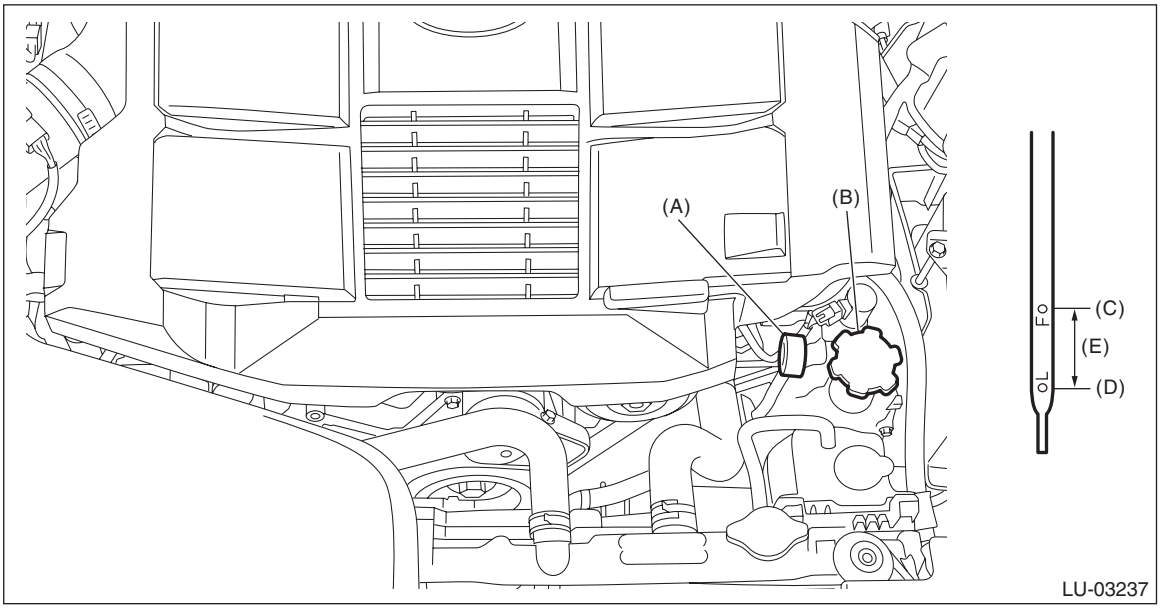

(A) Oil level gauge
(B) Oil filler cap
(C) “F” line
(D) “L” line
(E) Approx. 1.0 L (1.1 US qt, 0.9 Imp qt)

B: REPLACEMENT

CAUTION:
If the engine oil is spilt over exhaust pipe or the under cover, wipe it off with cloth to avoid emission of smoke or causing a fire.

1) Open the oil filler cap for quick draining of engine oil.
2) Lift up the vehicle.
3) Drain engine oil by loosening the drain plug.

NOTE:
Prepare the container for draining of engine oil.

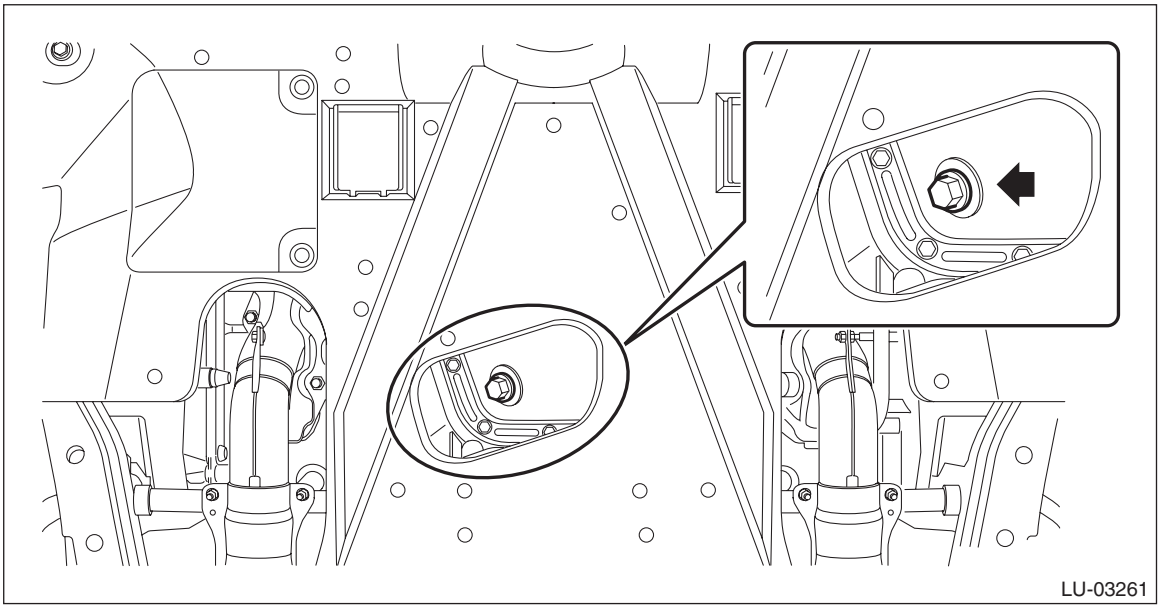

4) After draining the engine oil, tighten the engine oil drain plug.

NOTE:
Use a new drain plug gasket.

Tightening torque:
44 N·m (4.5 kgf-m, 32.5 ft-lb)

5) Lower the vehicle.
6) Select engine oil of adequate quality and viscosity and fill it through the chain cover to the “F” line on the oil level gauge. Make sure that the vehicle is parked on a level surface when checking oil level.

Recommended oil:
Refer to “SPECIFICATION” for recommended oil. <Ref. to LU(H6DO)-2, SPECIFICATION, General Description.>

Engine oil capacity:
Refer to “SPECIFICATION” for engine oil capacity. <Ref. to LU(H6DO)-2, SPECIFICATION, General Description.>

7) Close the oil filler cap.
8) Start the engine to circulate the oil in engine.

9) Stop the engine and pull out the oil level gauge again, and check both sides of the oil level gauge. Use a lower side to check the engine oil level. If necessary, add engine oil up to the “F” line on oil level gauge.

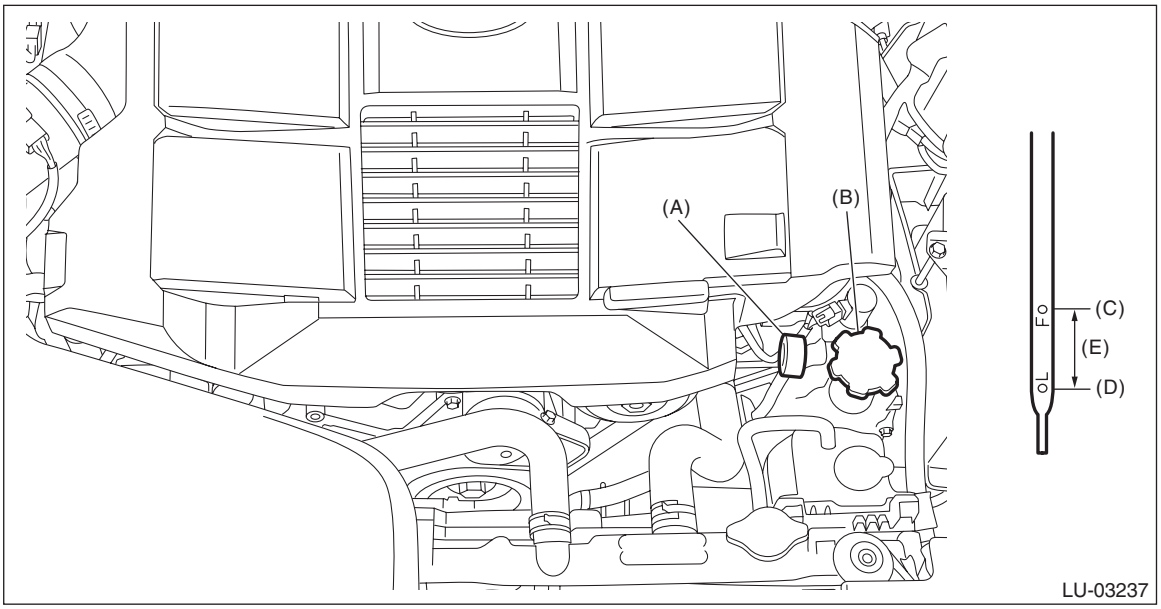

(A) Oil level gauge
(B) Oil filler cap
(C) “F” line
(D) “L” line
(E) Approx. 1.0 L (1.1 US qt, 0.9 Imp qt)

4. Oil Pan

A: REMOVAL

1. OIL PAN LOWER

1) Lift up the vehicle.
2) Remove the under cover. <Ref. to EI-28, REMOVAL, Front Under Cover.>
3) Drain the engine oil. <Ref. to LU(H6DO)-12, REPLACEMENT, Engine Oil.>
4) Remove the bolts securing the oil pan lower to the oil pan upper.

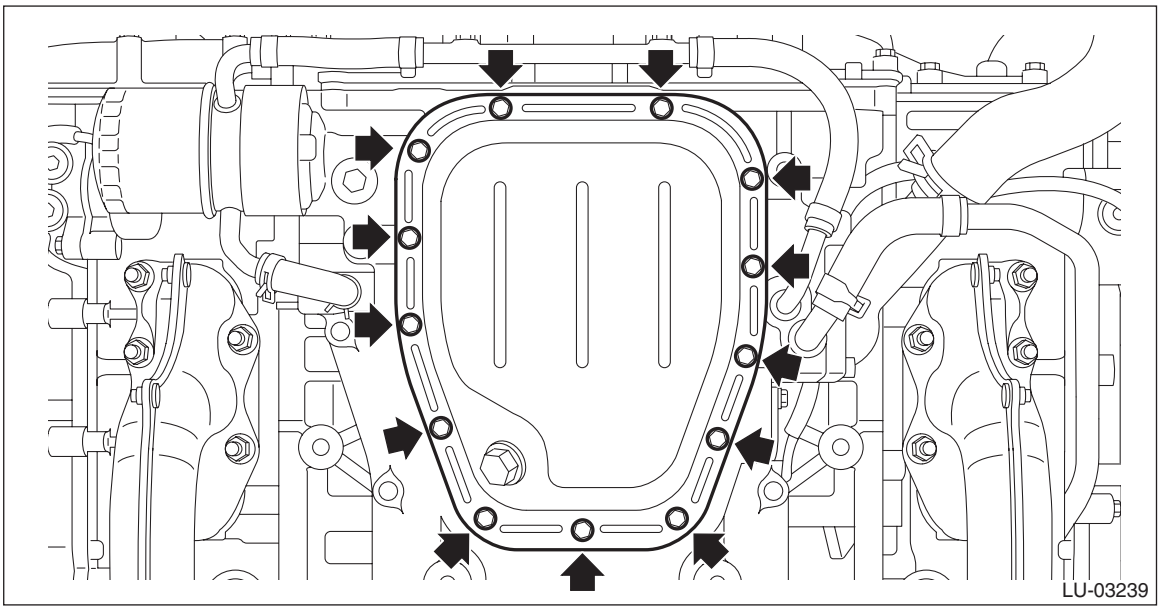

5) Insert an oil pan cutter blade into the gap between oil pan upper and oil pan lower, and remove the oil pan lower.

CAUTION:
Do not use a screwdriver or similar tool in place of oil pan cutter.

2. OIL PAN UPPER

For removing the oil pan upper, refer to “Cylinder Block”. <Ref. to ME(H6DO)-134, REMOVAL, Cylinder Block.>

B: INSTALLATION

1. OIL PAN LOWER

1) Apply liquid gasket to the mating surface of oil pan lower, and install the oil pan lower.

NOTE:
- Before installing the oil pan lower, wipe and clean the mating surface of the oil pan lower and oil pan upper.
- Use a new oil pan seal ring.
- Install within 5 min. after applying liquid gasket.

Liquid gasket:
THREE BOND 1217G (Part No. K0877Y0100), THREE BOND 1217H or equivalent

Liquid gasket applying diameter:
5±1 mm (0.197±0.039 in)

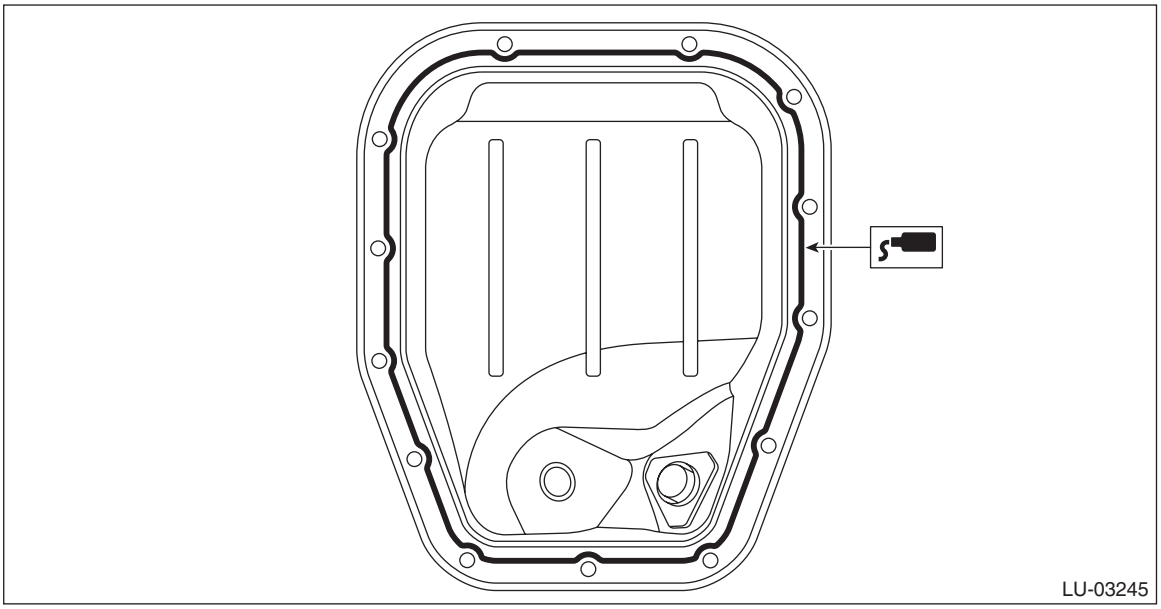

2) Tighten the bolts securing the oil pan lower to the oil pan upper in the numerical order.

Tightening torque:
6.4 N·m (0.7 kgf-m, 4.7 ft-lb)

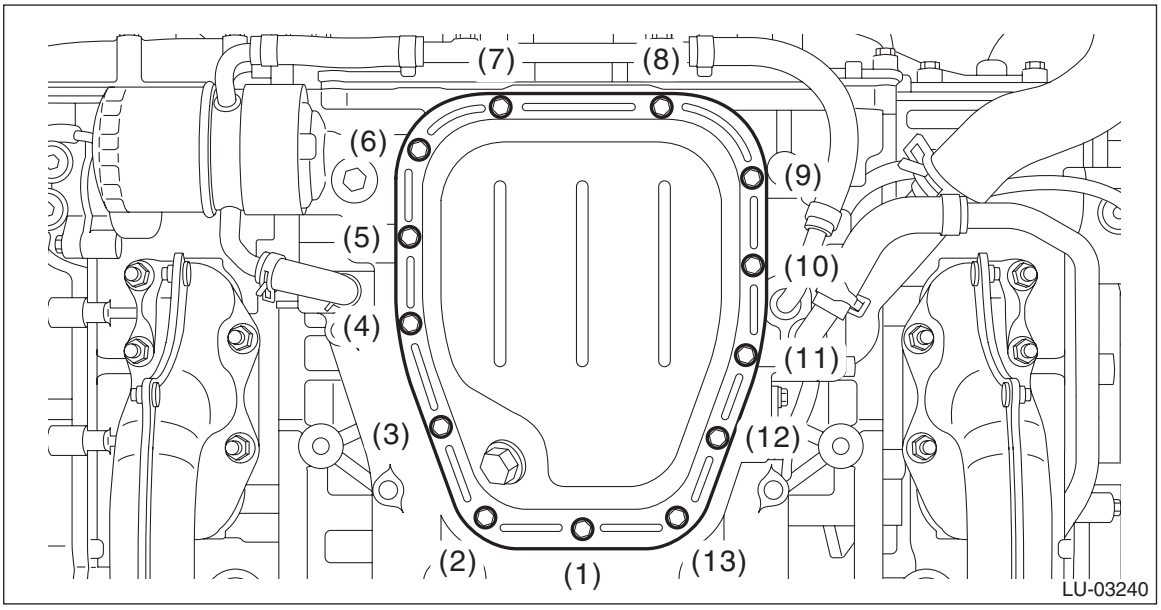

3) Install the under cover. <Ref. to EI-28, INSTALLATION, Front Under Cover.>
4) Lower the vehicle.
5) Refill the engine oil. <Ref. to LU(H6DO)-12, REPLACEMENT, Engine Oil.>

2. OIL PAN UPPER

For installing the oil pan upper, refer to “Cylinder Block”. <Ref. to ME(H6DO)-142, INSTALLATION, Cylinder Block.>

C: INSPECTION

Check that the oil pan upper and oil pan lower have no deformation, cracks or other damages.

5. Oil Pump

A: REMOVAL

1) Remove the chain cover. <Ref. to ME(H6DO)-81, REMOVAL, Chain Cover.>
2) Remove the timing chain assembly. <Ref. to ME(H6DO)-88, REMOVAL, Timing Chain Assembly.>
3) Remove the oil pan lower. <Ref. to LU(H6DO)-14, REMOVAL, Oil Pan.>
4) Remove the stiffener and the oil pump.

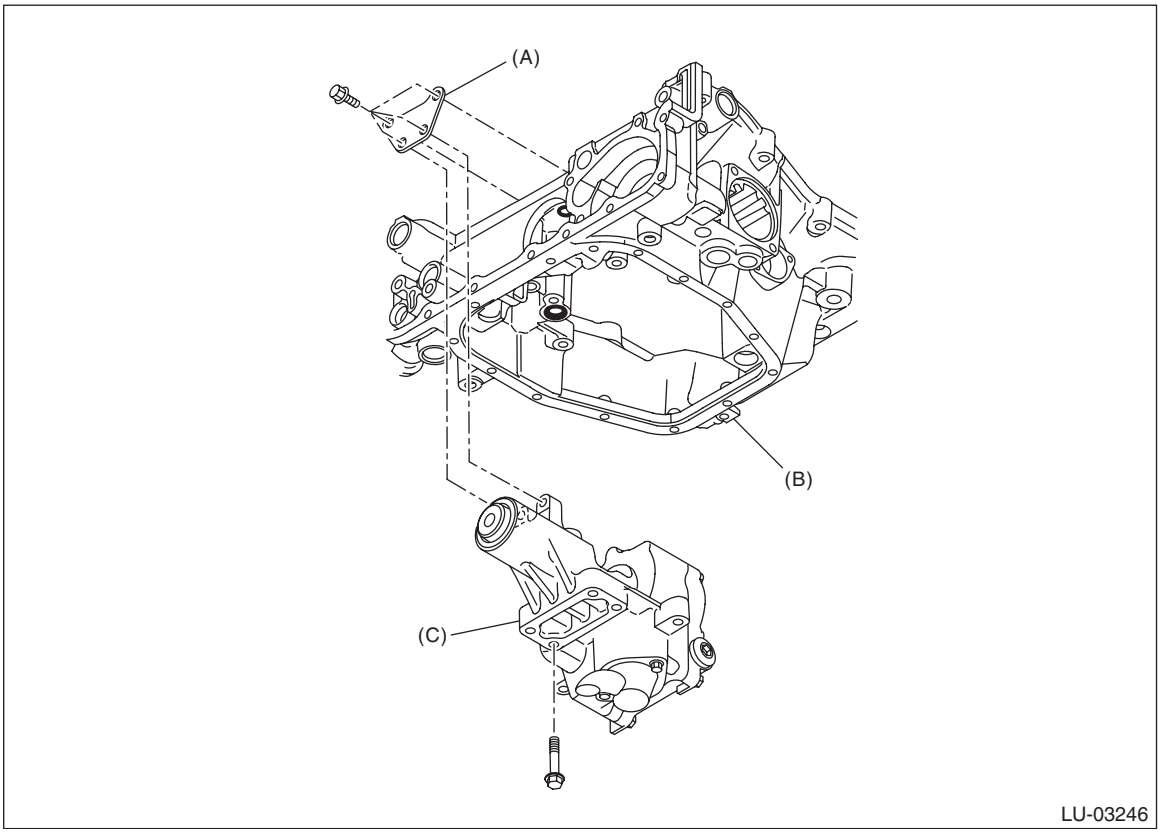

(A) Stiffener (B) Oil pan upper (C) Oil pump

5) Remove the strainer from the oil pump.
6) Remove the O-ring from oil pan upper.

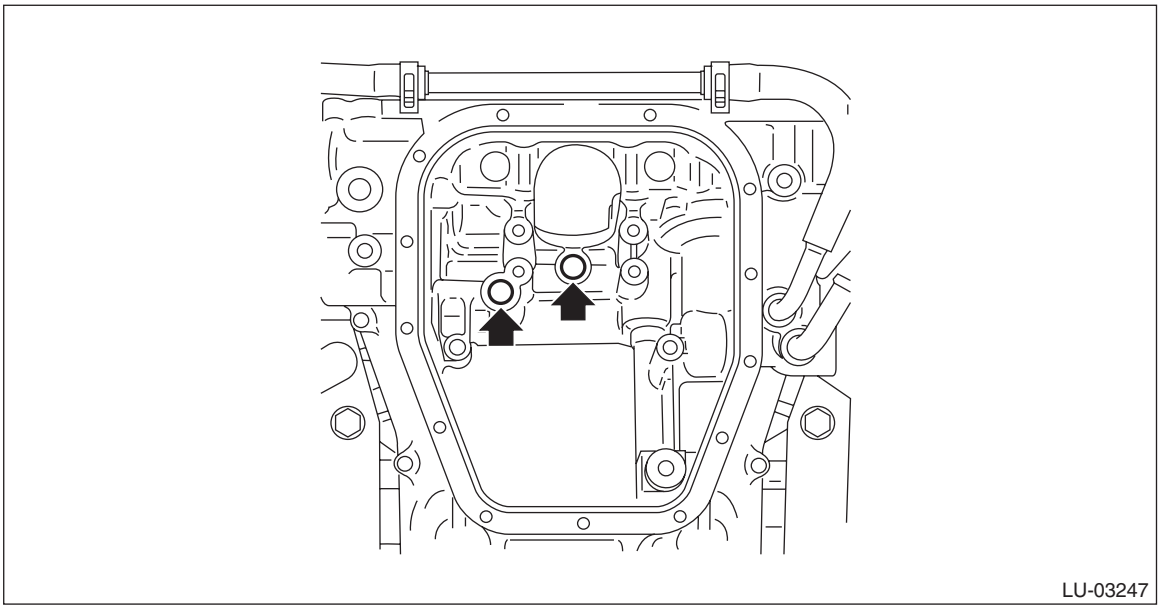

B: INSTALLATION

1) Apply engine oil to the O-ring and attach it to the oil pan upper.

NOTE:
Use new O-rings.

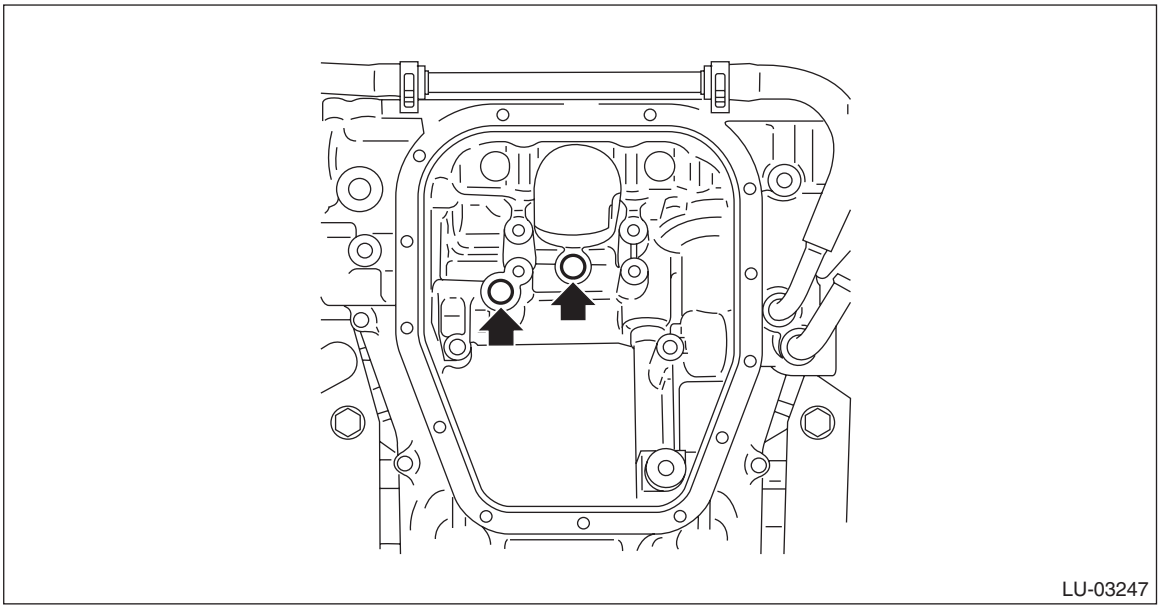

2) Apply liquid gasket to the mating surfaces of strainer.

Liquid gasket:
THREE BOND 1217G (Part No. K0877Y0100), THREE BOND 1217H or equivalent

Liquid gasket applying diameter:
2±1 mm (0.079±0.039 in)

NOTE:
- Install within 5 min. after applying liquid gasket.
- After installing the strainer, remove any liquid gasket that is squeezed out.

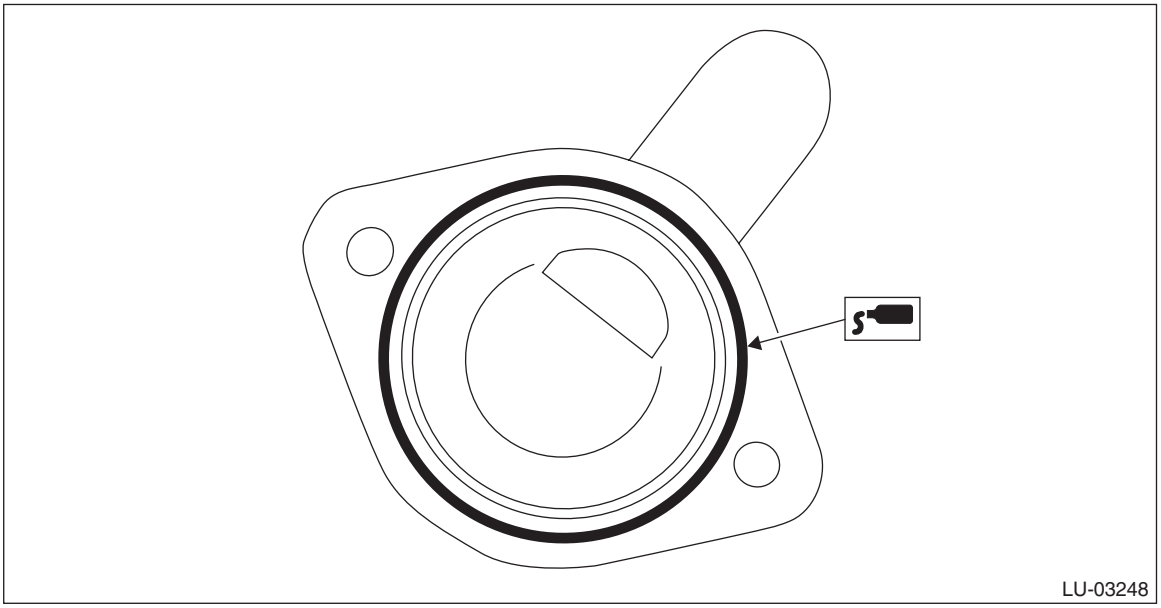

3) Install the strainer to the oil pump.

Tightening torque:
6.4 N·m (0.7 kgf-m, 4.7 ft-lb)

4) Install the stiffener and the oil pump.

Tightening torque:
T1: 13 N·m (1.3 kgf-m, 9.6 ft-lb)
T2: 24 N·m (2.4 kgf-m, 17.7 ft-lb)

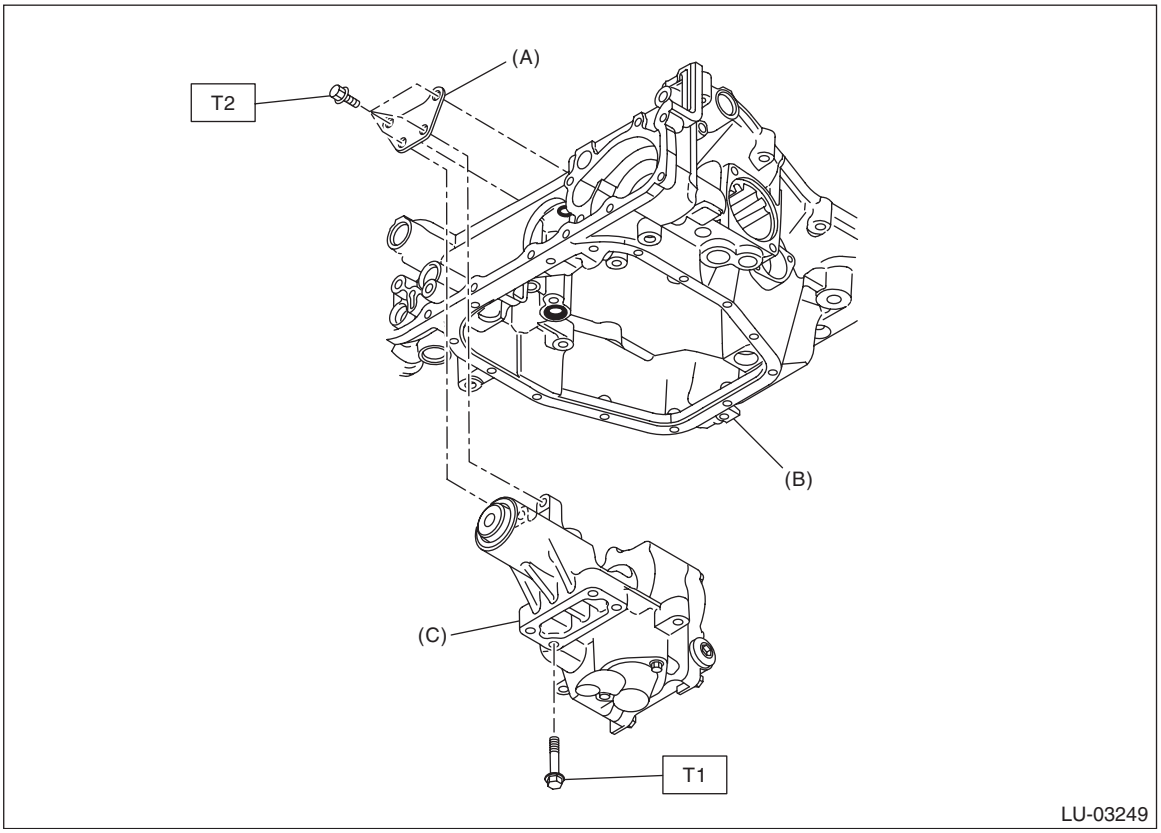

(A) Stiffener (B) Oil pan upper (C) Oil pump

5) Install the oil pan lower. <Ref. to LU(H6DO)-14, INSTALLATION, Oil Pan.>
6) Install the timing chain assembly. <Ref. to ME(H6DO)-94, INSTALLATION, Timing Chain Assembly.>
7) Install the chain cover. <Ref. to ME(H6DO)-82, INSTALLATION, Chain Cover.>
8) Connect the ground terminal to battery sensor. <Ref. to RC-4, BATTERY, NOTE, Repair Contents.>
9) Refill the engine oil. <Ref. to LU(H6DO)-12, REPLACEMENT, Engine Oil.>
10) Fill the ATF. <Ref. to CO(H6DO)-14, FILLING OF ENGINE COOLANT, REPLACEMENT, Engine Coolant.>
11) Install the collector cover.

C: INSPECTION

- Visually check the oil pump for breakage.
- Visually check the strainer portion for clogging.

6. Oil Pressure Switch

A: REMOVAL

CAUTION:
If the engine oil is spilt over exhaust pipe or the under cover, wipe it off with cloth to avoid emission of smoke or causing a fire.

1) Disconnect the ground terminal from battery sensor. <Ref. to RC-4, BATTERY, NOTE, Repair Contents.>
2) Remove the under cover. <Ref. to EI-28, REMOVAL, Front Under Cover.>
3) Drain the engine oil. <Ref. to LU(H6DO)-12, REPLACEMENT, Engine Oil.>
4) Disconnect the terminal from oil pressure switch.

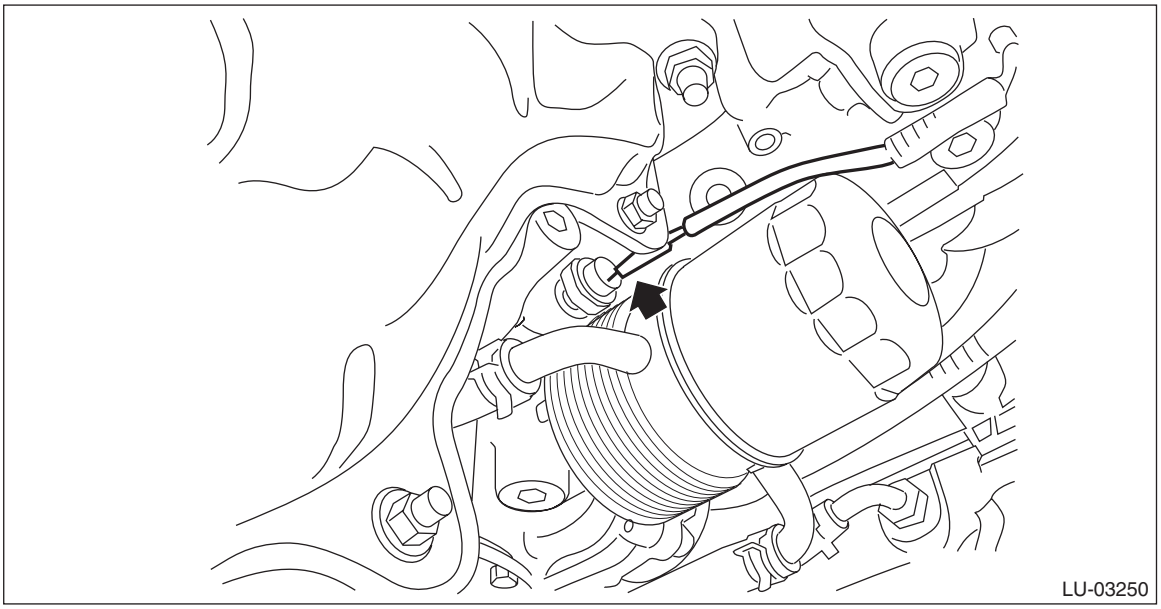

5) Remove the oil pressure switch.

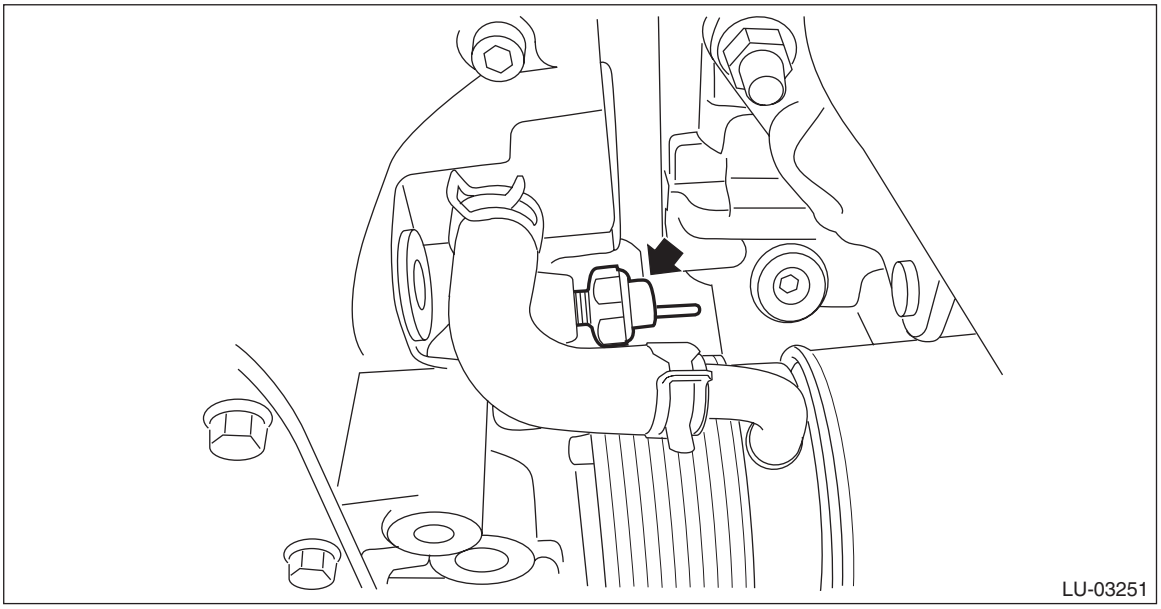

B: INSTALLATION

1) Apply liquid gasket to the oil pressure switch threads.

Liquid gasket:
THREE BOND 1324 (Part No. 004403042) or equivalent

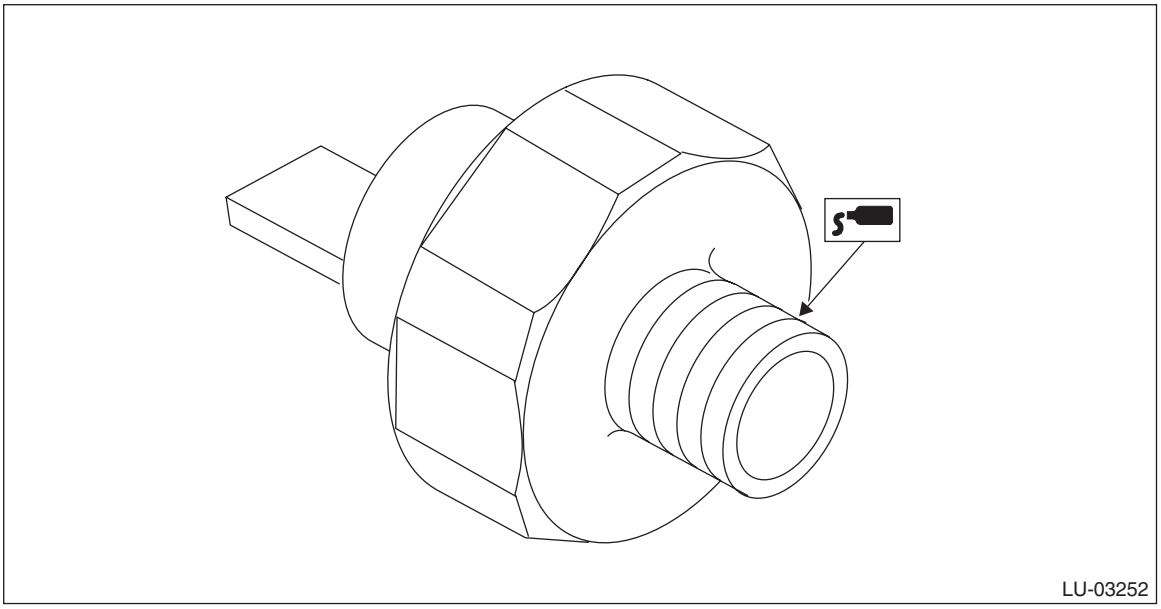

2) Install the oil pressure switch to the oil pan upper.

Tightening torque:
25 N·m (2.5 kgf-m, 18.4 ft-lb)
3) Connect the terminal to the oil pressure switch.
4) Install the under cover. <Ref. to EI-28, INSTALLATION, Front Under Cover.>
5) Lower the vehicle.
6) Connect the ground terminal to battery sensor. <Ref. to RC-4, BATTERY, NOTE, Repair Contents.>
7) Refill the engine oil. <Ref. to LU(H6DO)-12, REPLACEMENT, Engine Oil.>

C: INSPECTION

1) Check that the oil pressure switch does not have deformation, cracks or damage.
2) Check the oil pressure switch installation portion for oil leakage and oil seepage.

7. Engine Oil Filter

A: REMOVAL

CAUTION:
If the engine oil is spilt over exhaust pipe or the under cover, wipe it off with cloth to avoid emission of smoke or causing a fire.

1) Drain the engine oil. <Ref. to LU(H6DO)-12, REPLACEMENT, Engine Oil.>
2) Remove the service hole cover (A) of the under cover.

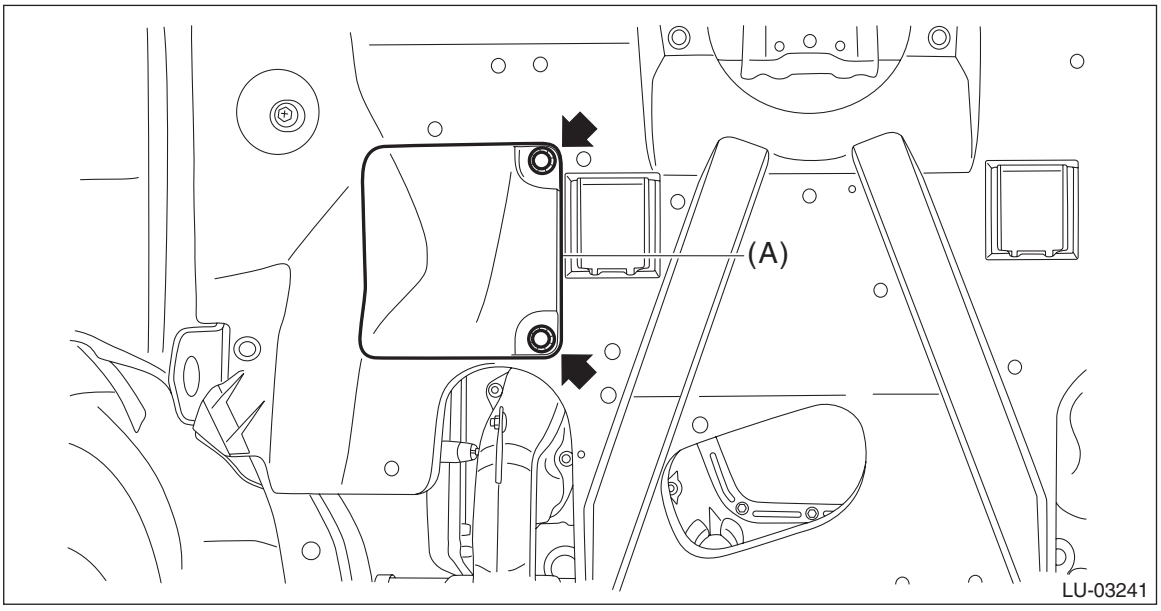

3) Remove the oil filter using ST.
ST 498547000 OIL FILTER WRENCH

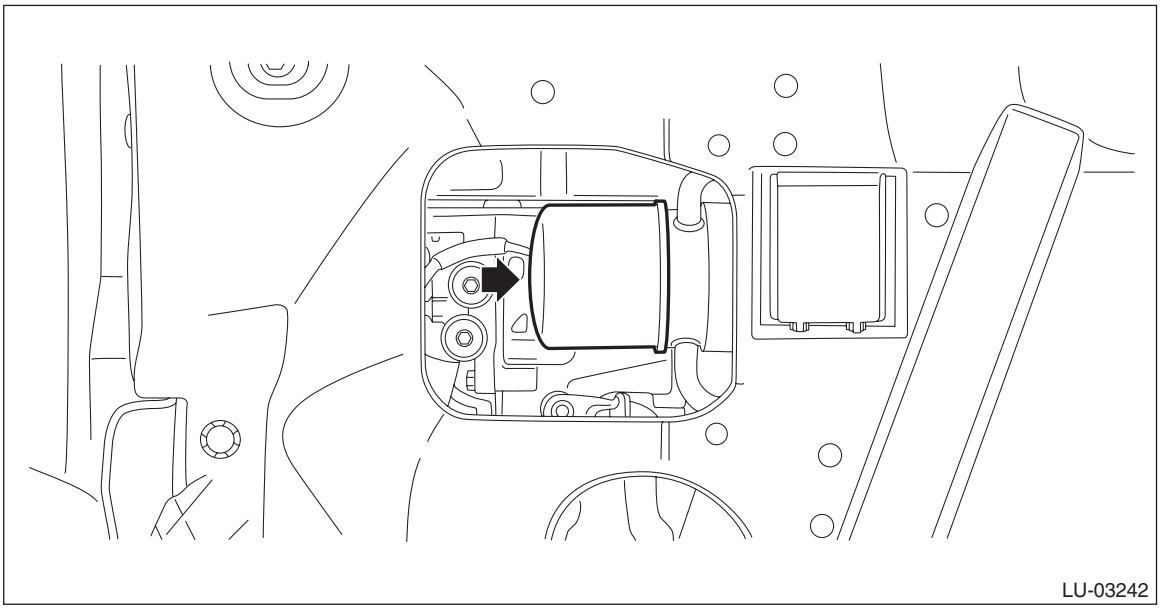

B: INSTALLATION

CAUTION:
Do not tighten excessively, or oil may leak.
1) Clean the oil filter installation surface of the oil cooler.
2) Obtain a new oil filter and apply a thin coat of engine oil to the seal rubber.
3) Install the oil filter by turning it by hand, being careful not to damage the seal rubber of the oil filter.
• Further tighten the oil filter (approx. 3/4 rotation) after the seal rubber of the oil filter comes in contact with the oil cooler. When using a torque wrench, tighten to 14 N·m (1.4 kgf-m, 10.3 ft-lb).
4) Install the service hole cover of the under cover.
5) Lower the vehicle.
6) Refill the engine oil. <Ref. to LU(H6DO)-12, REPLACEMENT, Engine Oil.>

C: INSPECTION

1) After installing the oil filter, run the engine and check for oil leakage.

NOTE:
The filter element and filter case are permanently jointed; therefore, interior cleaning is not necessary.
2) Check the engine oil level. <Ref. to LU(H6DO)-11, INSPECTION, Engine Oil.>

8. Oil Cooler

A: REMOVAL

CAUTION:
If the engine oil is spilt over exhaust pipe or the under cover, wipe it off with cloth to avoid emission of smoke or causing a fire.

1) Drain engine coolant. <Ref. to CO(H6DO)-13, DRAINING OF ENGINE COOLANT, REPLACEMENT, Engine Coolant.>
2) Drain the engine oil. <Ref. to LU(H6DO)-12, REPLACEMENT, Engine Oil.>
3) Remove the engine oil cooler water pipe (A), water hose (B) and water hose (C) as a unit, and disconnect the water hose (D) from the oil cooler.

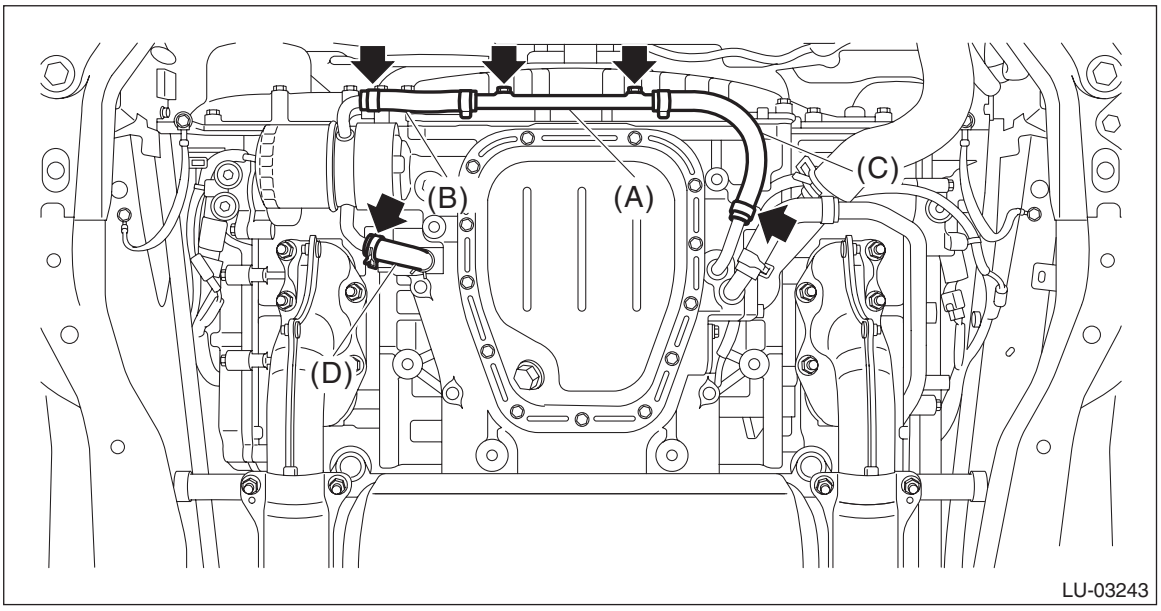

4) Remove the oil filter. <Ref. to LU(H6DO)-21, REMOVAL, Engine Oil Filter.>
5) Remove the oil cooler connector and remove the engine oil cooler.

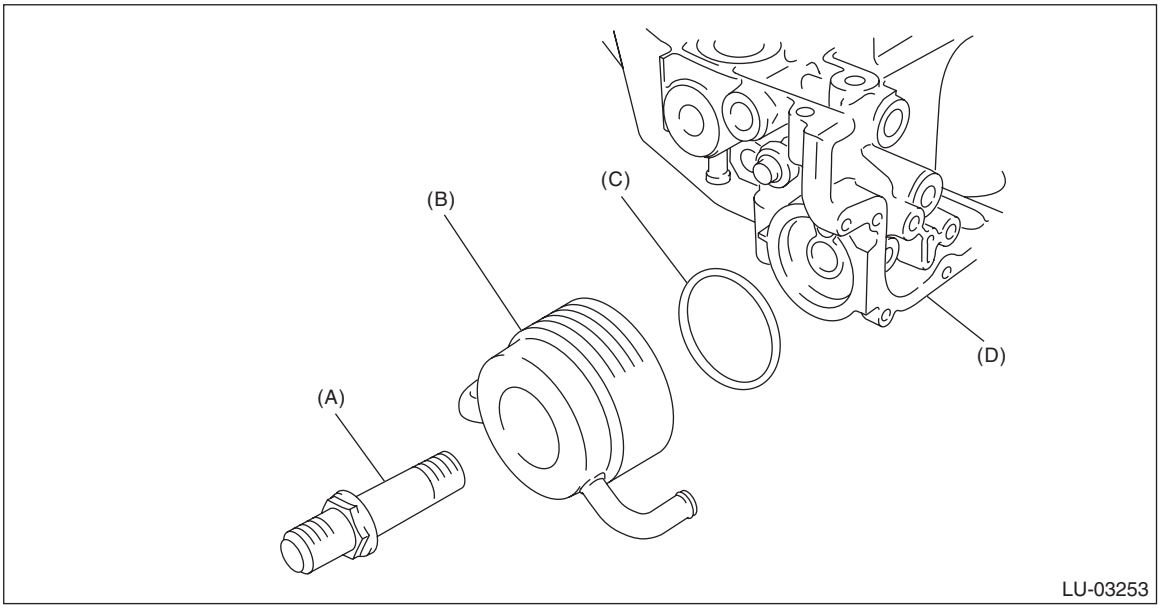

(A) Oil cooler connector
(B) Oil cooler
(C) O-ring
(D) Oil pan upper

B: INSTALLATION

1) Install the oil cooler to the oil pan upper, and fasten the oil cooler connector.

Tightening torque:
54 N·m (5.5 kgf-m, 39.8 ft-lb)

NOTE:
Use new O-rings.

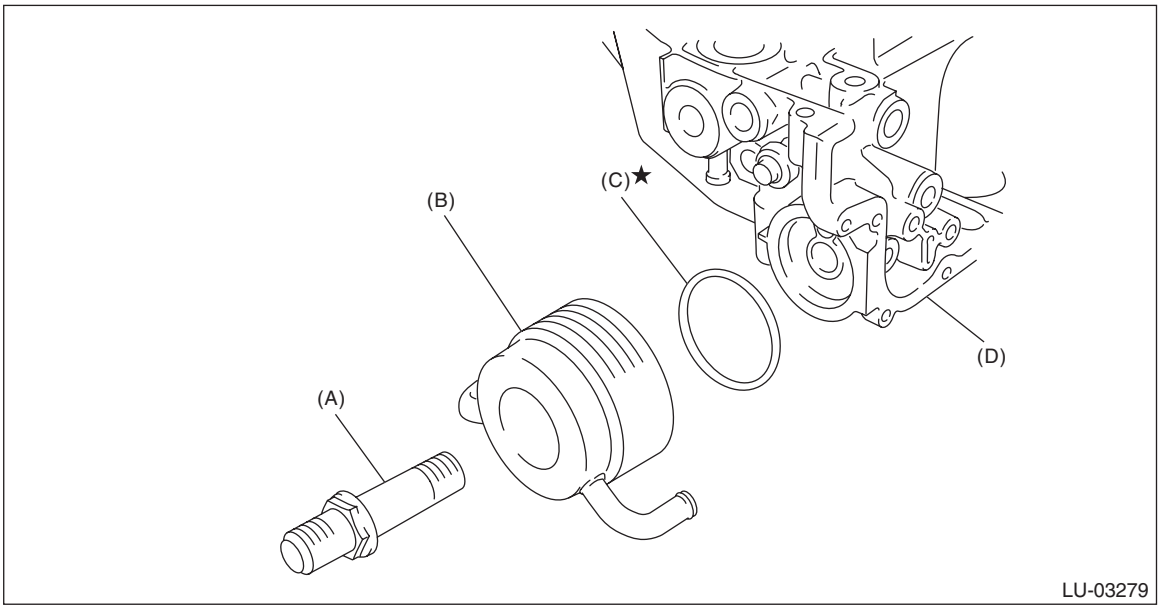

(A) Oil cooler connector (B) Oil cooler (C) O-ring
(D) Oil pan upper

2) Install the oil filter. <Ref. to LU(H6DO)-22, INSTALLATION, Engine Oil Filter.>
3) Install the engine oil cooler water pipe (A), water hose (B) and water hose (C), and connect the water hose (D) to the oil cooler.

Tightening torque:
6.4 N·m (0.7 kgf-m, 4.7 ft-lb)

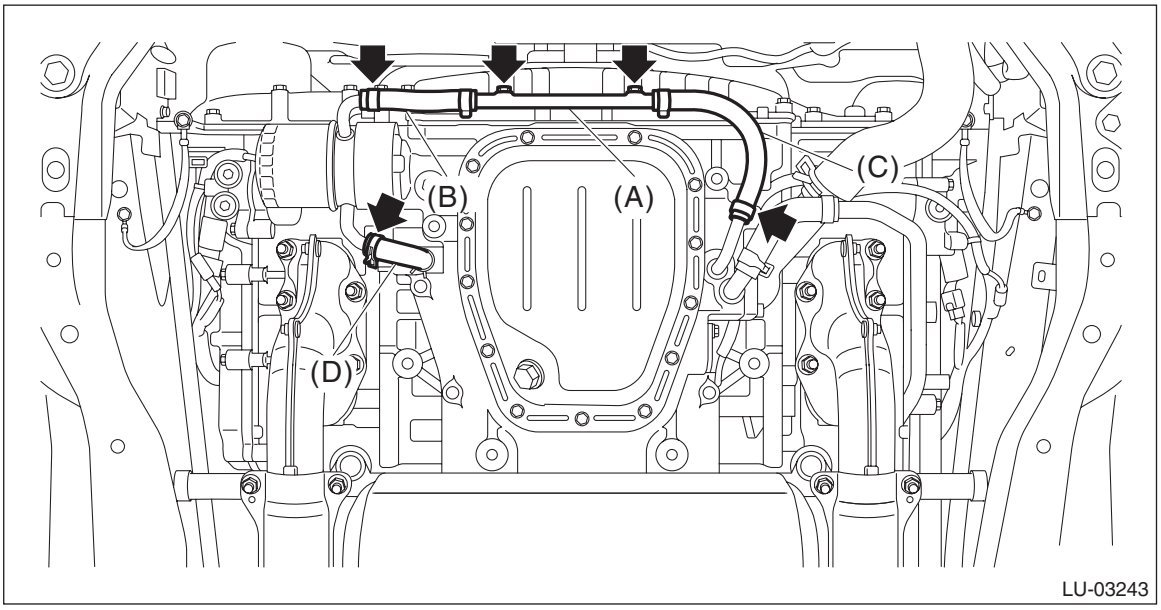

4) Install the under cover. <Ref. to EI-28, INSTALLATION, Front Under Cover.>
5) Lower the vehicle.

6) Refill the engine oil. <Ref. to LU(H6DO)-12, REPLACEMENT, Engine Oil.>
7) Fill the ATF. <Ref. to CO(H6DO)-14, FILLING OF ENGINE COOLANT, REPLACEMENT, Engine Coolant.>

C: INSPECTION

1) Check that the engine oil cooler, engine oil cooler pipe, and oil cooler connector do not have deformation, cracks or damage.
2) Make sure the engine oil cooler hoses are not cracked, damaged or loose.
3) Blow with compressed air to make sure the coolant passages are not clogged.
4) Check that the oil pan upper and O-ring installing surface of oil filter are not damaged.

9. Oil Level Switch

A: REMOVAL

1) Disconnect the ground terminal from battery sensor. <Ref. to RC-4, BATTERY, NOTE, Repair Contents.>
2) Remove the under cover. <Ref. to EI-28, REMOVAL, Front Under Cover.>
3) Drain the engine oil. <Ref. to LU(H6DO)-12, REPLACEMENT, Engine Oil.>
4) Disconnect the connector of the oil level switch from the engine harness, and remove the clip securing the harness to the front camshaft cap (LH) and the cylinder head (LH).

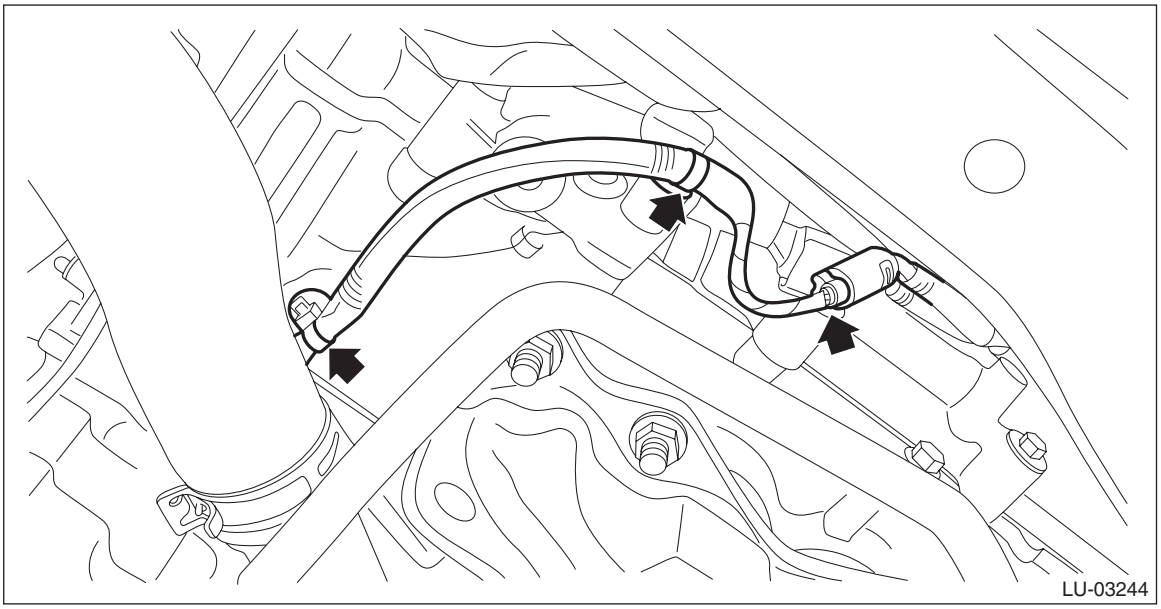

5) Remove the oil level switch from the oil pan upper.

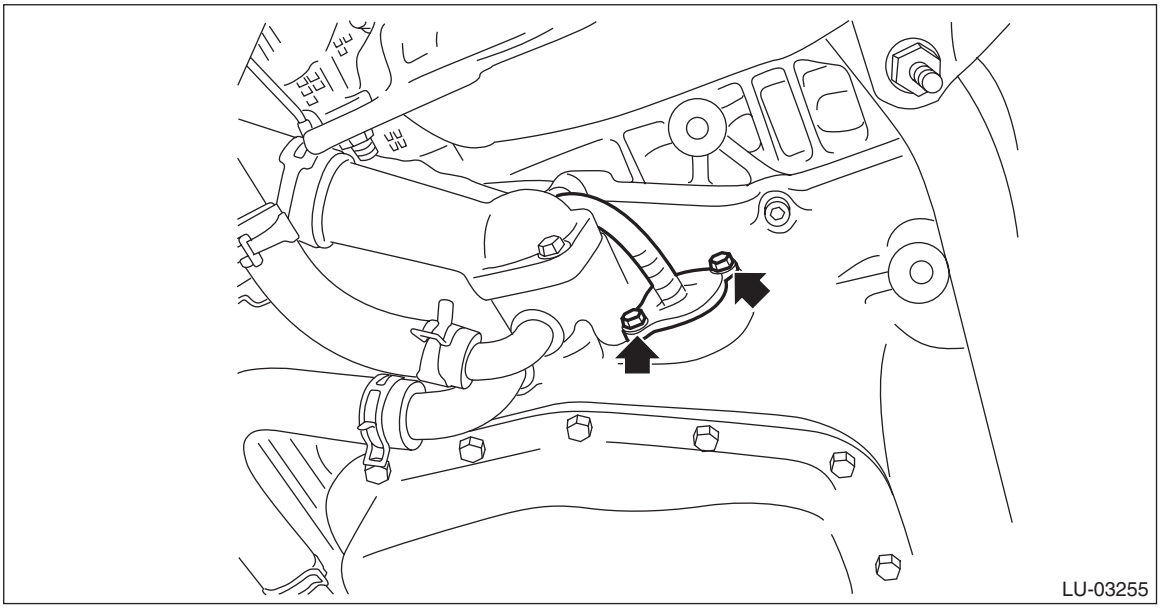

B: INSTALLATION

1) Route the oil level switch harness as shown in the figure.

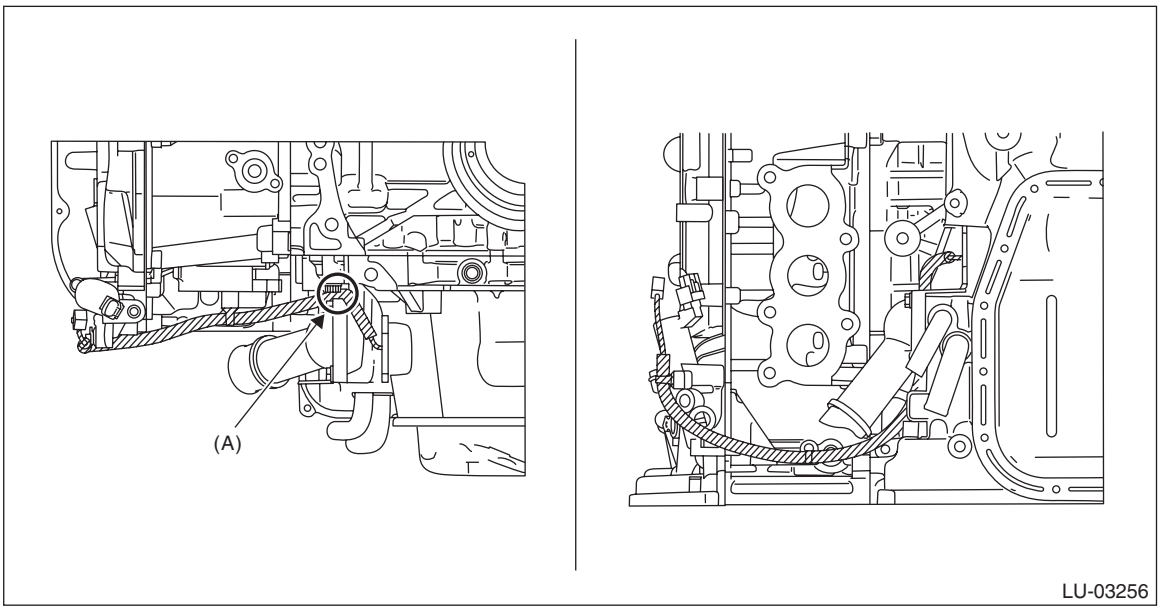

(A) Route the oil level switch harness through inside of the oil pan upper bolt.

2) Attach the oil level switch to the oil pan upper.

NOTE:
- Use new O-rings.
- Apply a coat of engine oil to the O-rings.

Tightening torque:
6.4 N·m (0.7 kgf-m, 4.7 ft-lb)

3) Connect the connector of the oil level switch to the engine harness, and install the clips securing the harness to the front camshaft cap (LH) and the cylinder head (LH).
4) Install the under cover. <Ref. to EI-28, INSTALLATION, Front Under Cover.>
5) Lower the vehicle.
6) Connect the ground terminal to battery sensor. <Ref. to RC-4, BATTERY, NOTE, Repair Contents.>
7) Refill the engine oil. <Ref. to LU(H6DO)-12, REPLACEMENT, Engine Oil.>

C: WIRING DIAGRAM

- Engine electrical system <Ref. to WI-170, WIRING DIAGRAM, Engine Electrical System.>
- CAN communication system <Ref. to WI-132, WIRING DIAGRAM, CAN Communication System.>

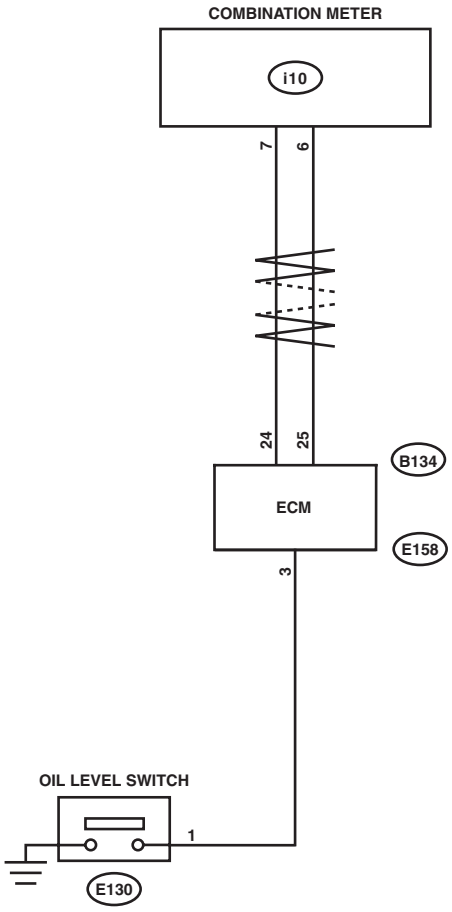

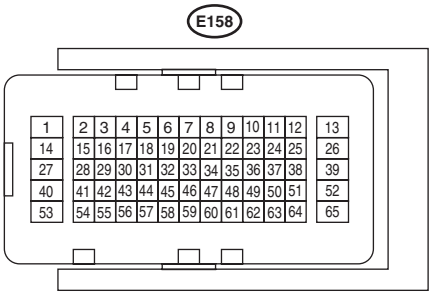

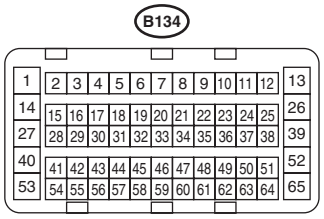

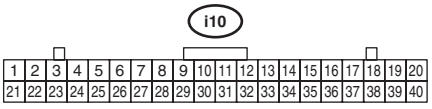

LU-03264

D: INSPECTION

1. INSPECTION WHEN LOW ENGINE OIL WARNING LIGHT ILLUMINATES ON LCD

Step		Check	Yes	No
1	**CHECK ENGINE OIL LEVEL.**	Is engine oil level normal?	Go to step **2**.	Replace engine oil or refill, and check again while the oil level is normal condition. <Ref. to LU(H6DO)-12, REPLACEMENT, Engine Oil.> To disable the low engine oil warning, install the spare fuse at the delivery mode fuse in the main fuse box. Then turn the ignition switch to ON (engine off) again, to confirm the low engine oil warning is not displayed. Remove the spare fuse installed to finish. NOTE: The engine oil level switch is normal if the low engine oil level warning is not displayed with the delivery mode fuse inserted.
2	**CHECK LAN SYSTEM.**	Has a DTC of the LAN system been input?	Perform the diagnosis according to DTC.	Go to step **3**.
3	**CHECK OIL LEVEL SWITCH CIRCUIT.** 1) Turn the ignition switch to ON (engine OFF). 2) Read the current data for engine in the Subaru Select Monitor to confirm the item for “Oil level switch”. <Ref. to EN(H6DO)(diag)-50, DISPLAY CURRENT ENGINE DATA, OPERATION, Subaru Select Monitor.>	Is the “Oil level switch” signal displayed in Subaru Select Monitor HIGH?	To disable the low engine oil warning, install the spare fuse at the delivery mode fuse in the main fuse box. Then turn the ignition switch to ON (engine off) again, to confirm the low engine oil warning is not displayed. Remove the spare fuse installed to finish. NOTE: The engine oil level switch is normal if the low engine oil level warning is not displayed with the delivery mode fuse inserted.	Go to step **4**.

	Step	Check	Yes	No
4	**CHECK COMBINATION METER.** Perform the self-diagnosis of combination meter to check if there are any faults in the combination meter. <Ref. to IDI-6, OPERATION, Combination Meter System.>	Is combination meter OK?	Go to step **5**.	Replace the combination meter. <Ref. to IDI-11, REMOVAL, Combination Meter.>
5	**CHECK SECURE CONNECTION OF CONNECTOR BETWEEN ENGINE HARNESS AND OIL LEVEL SWITCH.**	Is there any insecure connection?	Repair the connection condition. Then, to disable the low engine oil warning display, install the spare fuse at the delivery mode fuse in the main fuse box. Then turn the ignition switch to ON (engine OFF) again to confirm the low engine oil warning is not displayed. Remove the spare fuse installed to finish. NOTE: The engine oil level switch is normal if the low engine oil level warning is not displayed with the delivery mode fuse inserted.	Go to step **6**.
6	**CHECK OIL LEVEL SWITCH.** 1) Deliberately short circuits by connecting the engine harness connector terminal and chassis ground. 2) Turn the ignition switch to ON (engine OFF). 3) Read the current data for engine in the Subaru Select Monitor to confirm the item for “Oil level switch”. <Ref. to EN(H6DO)(diag)-50, DISPLAY CURRENT ENGINE DATA, OPERATION, Subaru Select Monitor.> ***Connector & terminal*** ***(E130) No. 1 — Chassis ground:***	Is the “Oil level switch” signal displayed in Subaru Select Monitor HIGH?	Replace the oil level switch. <Ref. to LU(H6DO)-26, REMOVAL, Oil Level Switch.>	Go to step **7**.

	Step	Check	Yes	No
7	**CHECK SECURE CONNECTION OF CONNECTOR BETWEEN ENGINE CONTROL MODULE (ECM) AND ENGINE HARNESS.**	Is there any insecure connection?	Repair the connection condition. Then, to disable the low engine oil warning display, install the spare fuse at the delivery mode fuse in the main fuse box. Then turn the ignition switch to ON (engine OFF) again to confirm the low engine oil warning is not displayed. Remove the spare fuse installed to finish. NOTE: The engine oil level switch is normal if the low engine oil level warning is not displayed with the delivery mode fuse inserted.	Go to step **8**.
8	**CHECK ENGINE HARNESS.** 1) Disconnect the engine control module (ECM) side connector. 2) Set the ST between the engine control module (ECM) and engine harness. <Ref. to EN(H6DO)(diag)-6, CAUTION, General Description.> 3) Disconnect the connector between the engine harness and the oil level switch. 4) Measure the resistance between connector terminals. ***Connector & terminal*** ***(B158) No. 3 — (B130) No. 1:***	Is the resistance less than 1 Ω?	Replace the engine control module (ECM). <Ref. to FU(H6DO)-83, REMOVAL, Engine Control Module (ECM).>	Repair or replace the open circuit of engine harness.

2. OTHER INSPECTIONS

1) Check that the oil level switch does not have deformation, cracks, or damage.
2) Check the oil level switch installation part for oil leakage and oil seepage.

10.Engine Lubrication System Trouble in General

A: INSPECTION

Before performing diagnostics, make sure that the engine oil level is correct and no oil leakage exists.

Trouble	Possible cause	Corrective action
Warning light remains ON.	a. Oil pressure switch failure	
	❍ Cracked diaphragm or oil leakage within switch	Replace.
	❍ Broken spring or seized contacts	Replace.
	b. Low oil pressure	
	❍ Clogging of oil filter	Replace.
	❍ Malfunction of oil by-pass valve in oil filter	Replace.
	❍ Malfunction of oil relief valve in oil pump	Replace.
	❍ Clogged oil passage	Clean.
	❍ Excessive tip clearance and side clearance of oil pump rotor	Replace.
	❍ Clogged oil strainer or broken pipe	Clean or replace.
	c. No oil pressure	
	❍ Insufficient engine oil (degradation, etc.)	Replace.
	❍ Broken pipe of oil strainer	Replace.
	❍ Stuck oil pump rotor	Replace.
Warning light does not illuminate.	a. Malfunction of combination meter	Replace.
	b. Poor contact of switch contact points	Replace.
	c. Disconnection of wiring	Repair.
Warning light flickers momentarily.	a. Defective terminal contact	Repair.
	b. Defective wiring harness	Repair.
	c. Oil pressure switch failure	
	❍ Cracked diaphragm or oil leakage within switch	Replace.
	❍ Broken spring or seized contacts	Replace.
	d. Low oil pressure	
	❍ Clogging of oil filter	Replace.
	❍ Malfunction of oil by-pass valve in oil filter	Replace.
	❍ Malfunction of oil relief valve in oil pump	Replace.
	❍ Clogged oil passage	Clean.
	❍ Excessive tip clearance and side clearance of oil pump rotor	Replace.
	❍ Clogged oil strainer or broken pipe	Clean or replace.

SPEED CONTROL SYSTEMS

SP(H6DO)

Page

1. General Description 2

1. General Description

A: SPECIFICATION

Specifications for the 3.6 L model are the same as the 2.5 L model. <Ref. to SP(H4DO)-2, General Description.>

IGNITION

IG(H6DO)

Page

1. General Description 2
2. Spark Plug 4
3. Ignition Coil 15

1. General Description

A: SPECIFICATION

Item			Specifications
Ignition coil	Type		FK0368
	Ignition system		Independent ignition coil
	Manufacturer		Diamond Electric
Spark plug	Manufacturer and type		NGK: SILFR6C11
	Thread size (diameter, pitch, length) mm		14, 1.25, 26.5
	Spark plug gap mm (in)	Standard	1.0 — 1.1 (0.039 — 0.043)
	Electrode		Iridium

B: COMPONENT

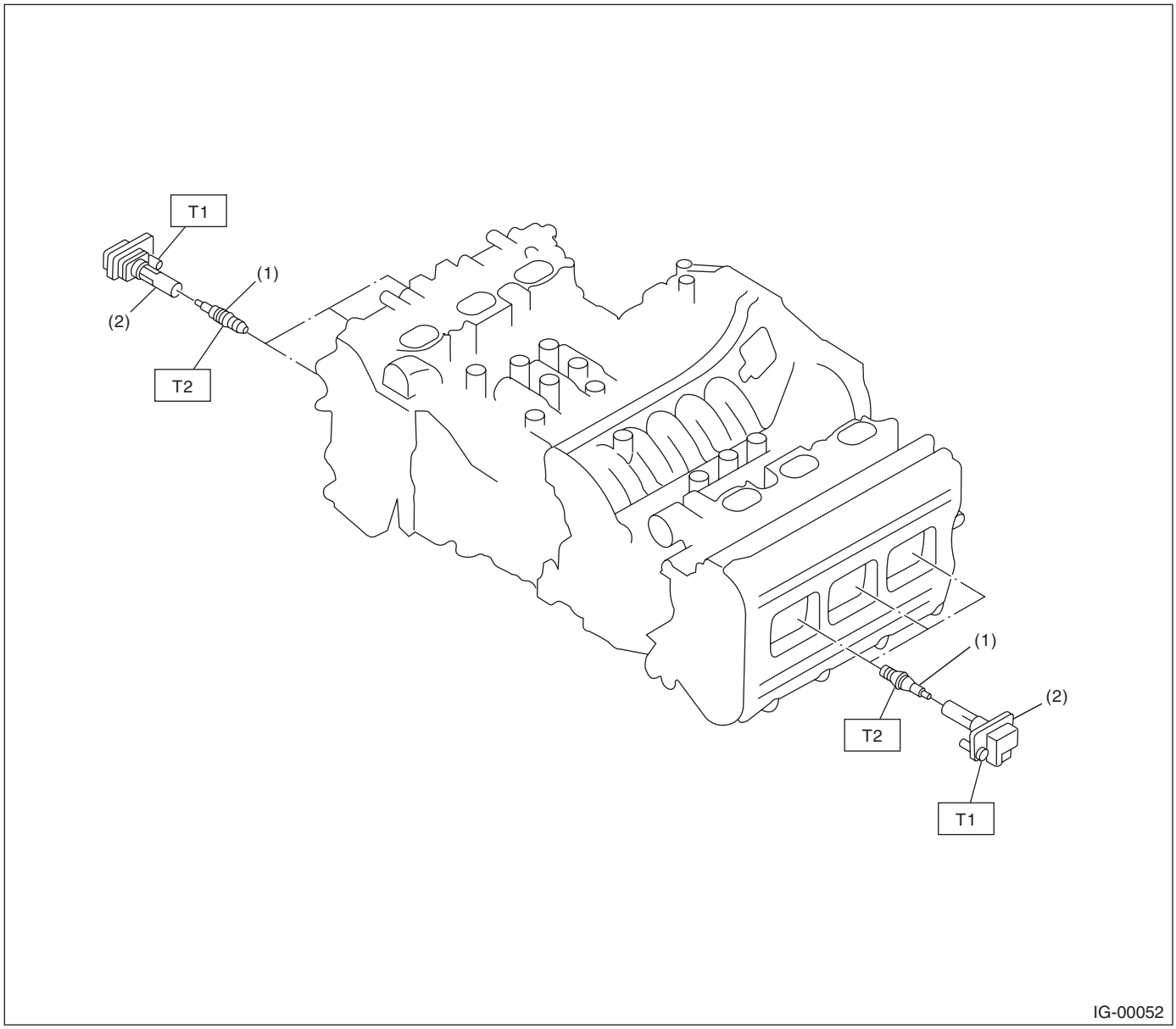

(1) Spark plug
(2) Ignition coil

Tightening torque: N·m (kgf-m, ft-lb)
T1: 16 (1.6, 11.8)
T2: 21 (2.1, 15.5)

C: CAUTION

- Prior to starting work, pay special attention to the following:
  1. Always wear work clothes, a work cap, and protective shoes. Additionally, wear a helmet, protective goggles, etc. if necessary.
  2. Protect the vehicle using a seat cover, fender cover, etc.
  3. Prepare the service tools, clean cloth, containers to catch grease and oil, etc.
- Vehicle components are extremely hot immediately after driving. Be wary of receiving burns from heated parts.
- When performing a repair, identify the cause of trouble and avoid unnecessary removal, disassembly and replacement.
- Before disconnecting connectors of sensors or units, be sure to disconnect the ground cable from battery.
- Always use the jack-up point when the shop jacks or rigid racks are used to support the vehicle.
- Remove contamination including dirt and corrosion before removal, installation, disassembly or assembly.
- Keep the removed parts in order and protect them from dust and dirt.
- All removed parts, if to be reused, should be reinstalled in the original positions with attention to the correct directions, etc.
- Bolts, nuts and washers should be replaced with new parts as required.
- Be sure to tighten the fasteners including bolts and nuts to the specified torque.

2. Spark Plug

A: REMOVAL

Spark plug:

Refer to "SPECIFICATION" for spark plug. <Ref. to IG(H6DO)-2, SPECIFICATION, General Description.>

1. RH SIDE

1) Remove the collector cover.
   (1) Carefully pull up the rear of collector cover at two positions (A).
   (2) Carefully pull up the front of collector cover at two positions (B) while moving it forward.

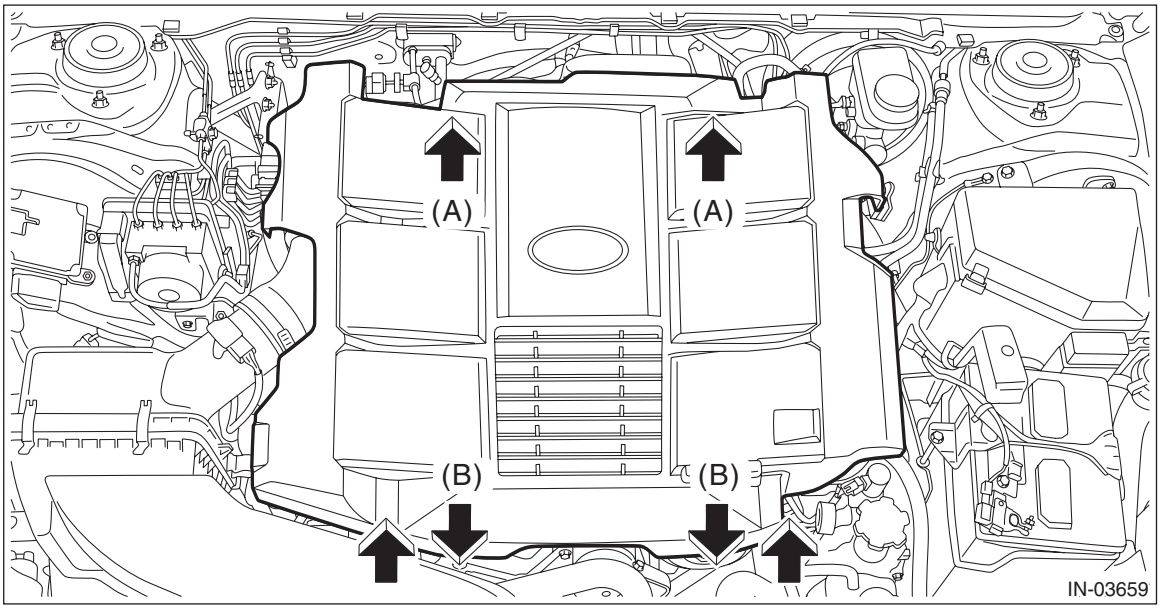

2) Disconnect the ground terminal from battery sensor. <Ref. to RC-4, BATTERY, NOTE, Repair Contents.>
3) Remove the air cleaner case. <Ref. to IN(H6DO)-8, REMOVAL, Air Cleaner Case.>
4) Remove the engine harness stay (A).
5) Disconnect the connector (B) from ignition coil.
6) Remove the ignition coil.

NOTE:
Turn the #5 ignition coil to remove it.

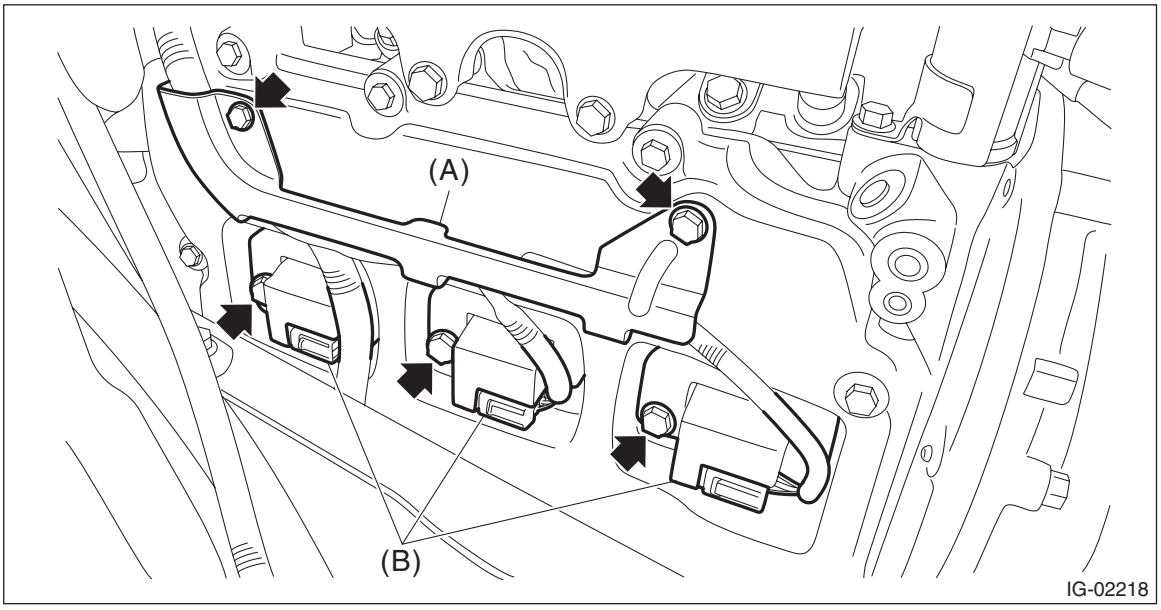

7) Remove the spark plug with a spark plug socket.

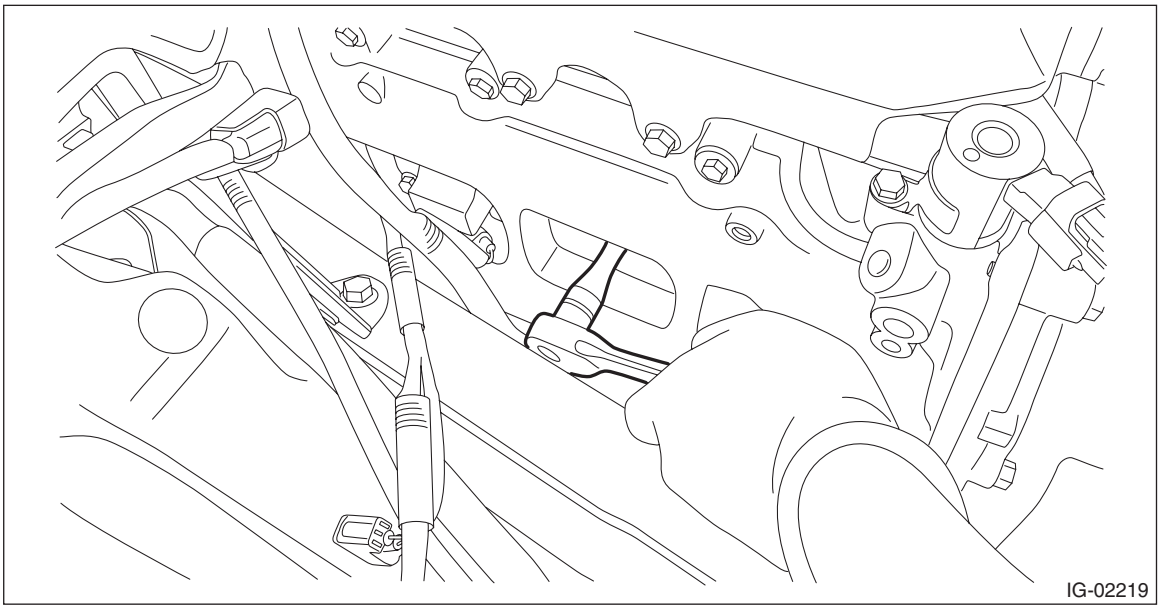

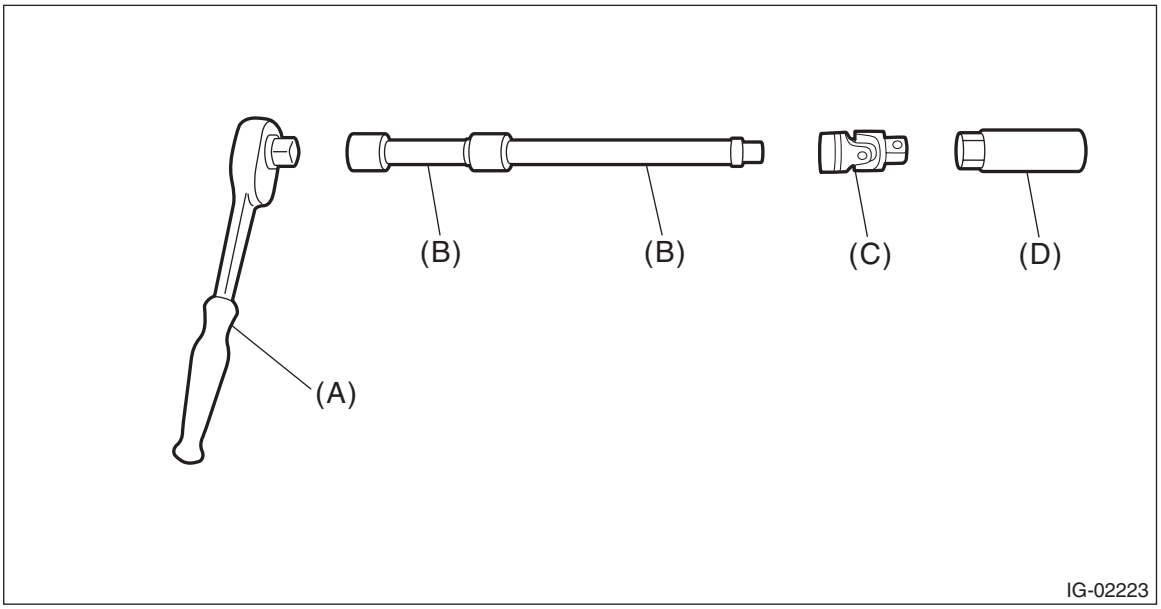

(A) Ratchet handle
(B) Extension bar
(C) Universal joint
(D) Spark plug socket

2. LH SIDE

1) Remove the collector cover.
   (1) Carefully pull up the rear of collector cover at two positions (A).
   (2) Carefully pull up the front of collector cover at two positions (B) while moving it forward.

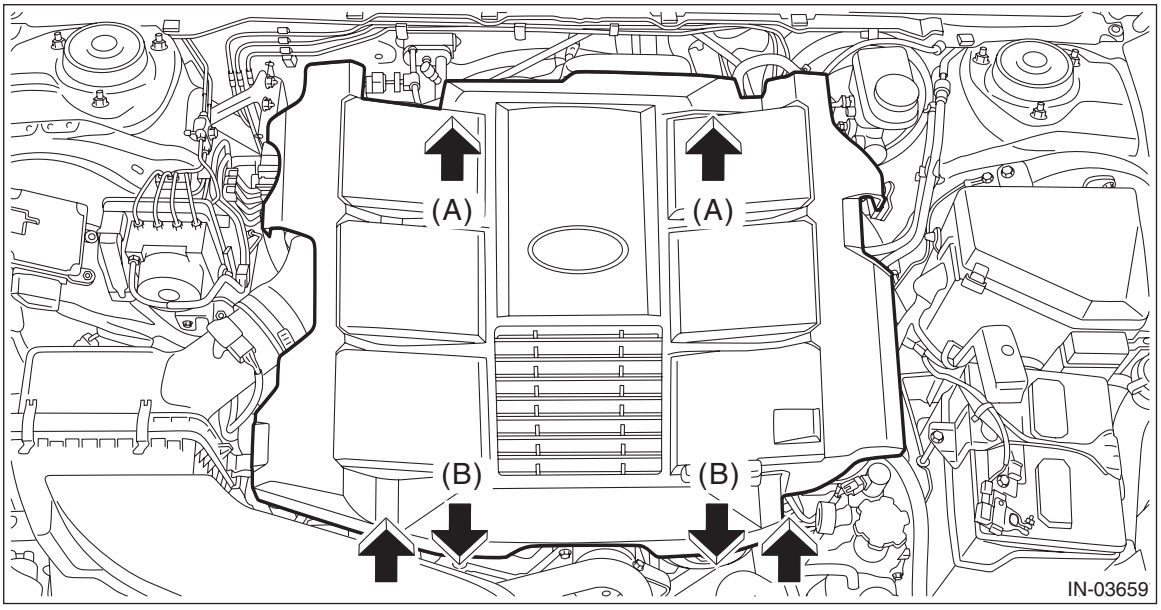

2) Remove the battery. <Ref. to SC(H6DO)-57, REMOVAL, Battery.>
3) Remove the engine harness stay (A).
4) Disconnect the connector (B) from ignition coil.
5) Remove the ignition coil.

NOTE:
Turn the #6 ignition coil to remove it.

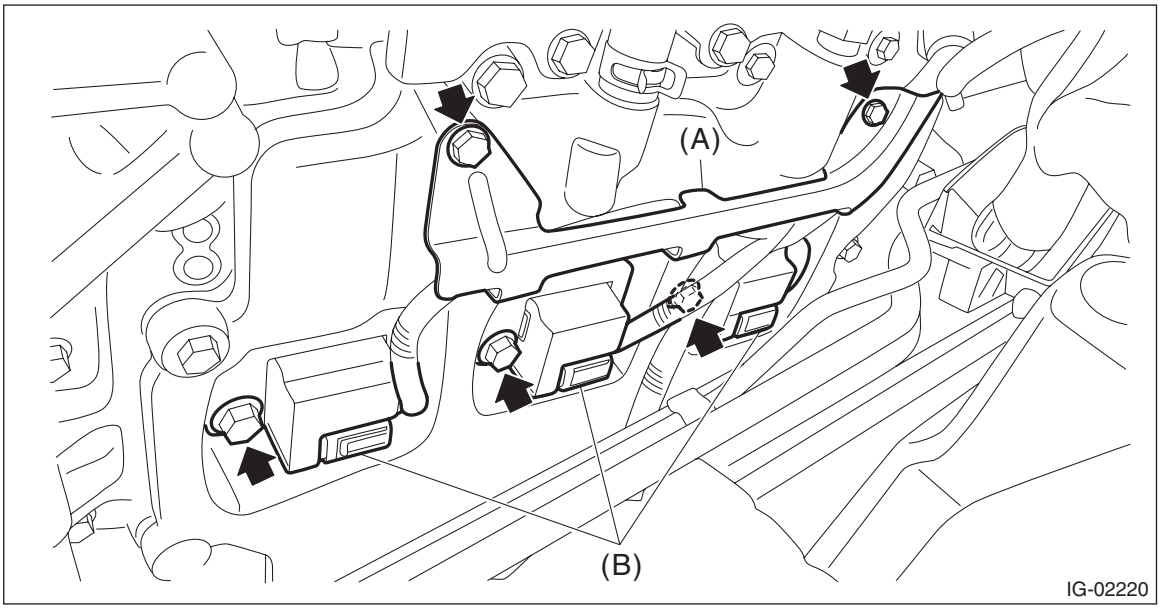

6) Remove the spark plug with a spark plug socket.

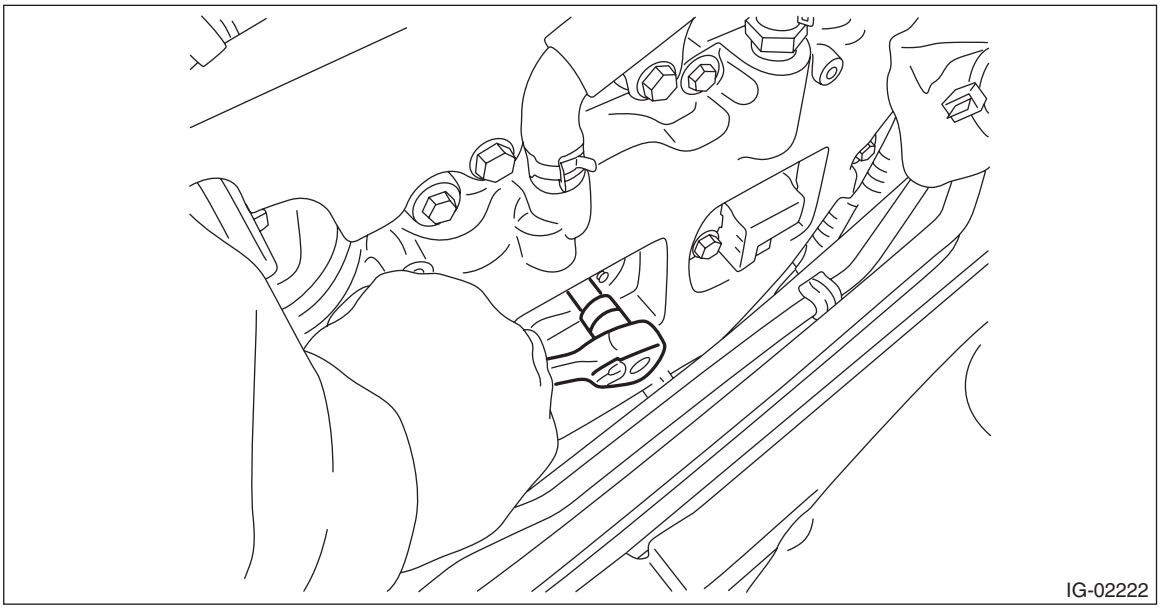

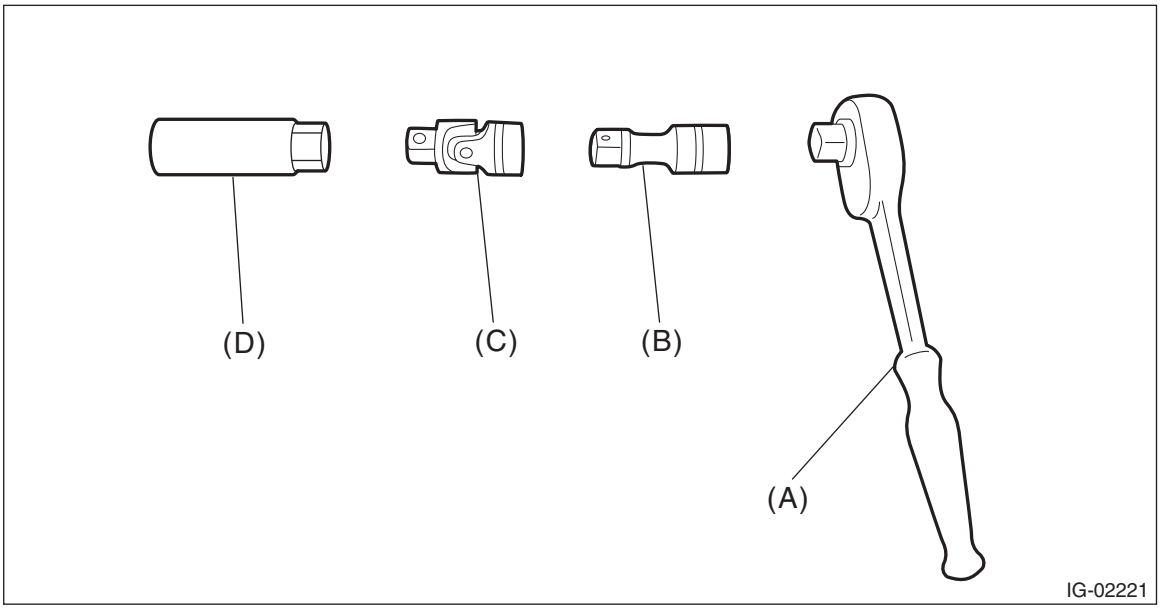

(A) Ratchet handle
(B) Extension bar
(C) Universal joint
(D) Spark plug socket

B: INSTALLATION

1. RH SIDE

1) Install the spark plugs using a spark plug socket.

Tightening torque:
21 N·m (2.1 kgf-m, 15.5 ft-lb)

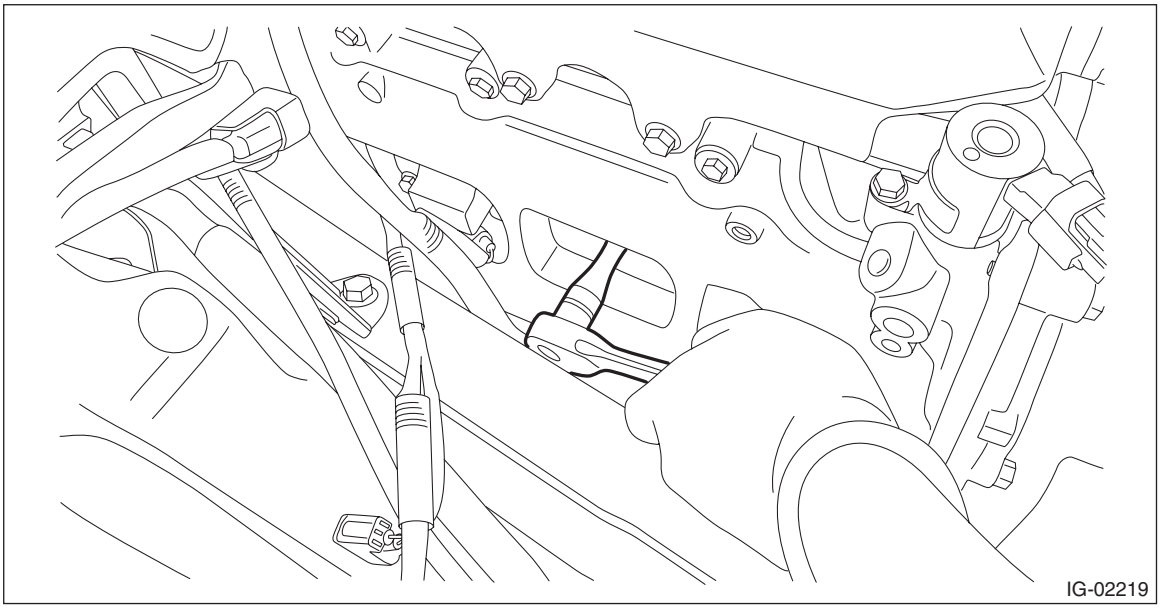

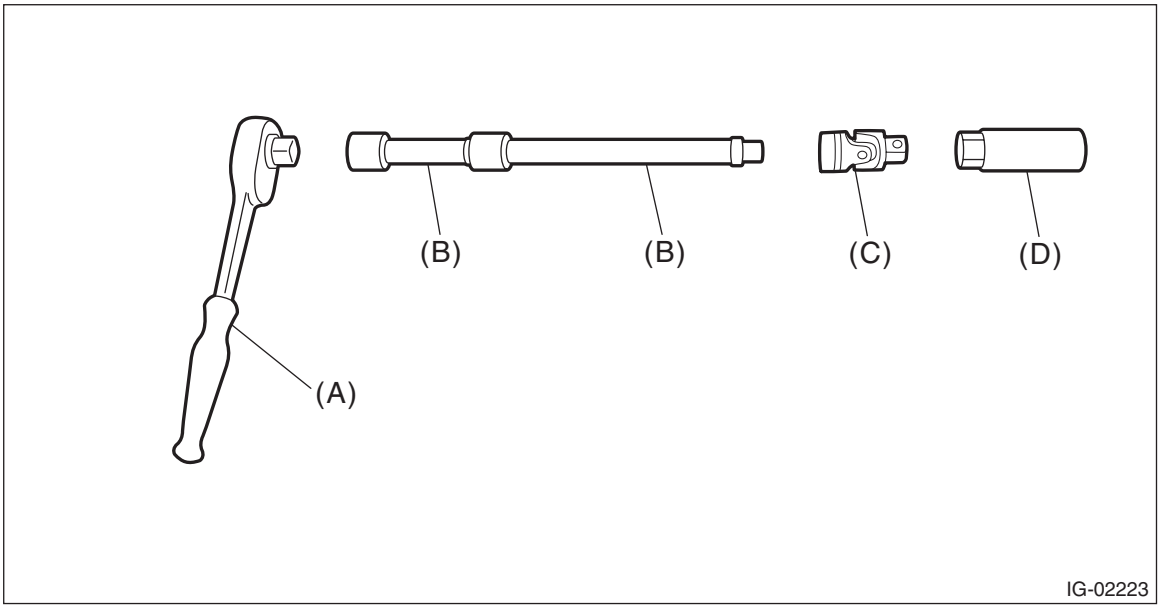

(A) Ratchet handle
(B) Extension bar
(C) Universal joint
(D) Spark plug socket

2) Install the ignition coil.

NOTE:
Turn the #5 ignition coil to install it.

3) Connect the connector (B) to the ignition coil.
4) Install the engine harness stay (A).

Tightening torque:
T1: 6.4 N·m (0.7 kgf-m, 4.7 ft-lb)
T2: 16 N·m (1.6 kgf-m, 11.8 ft-lb)

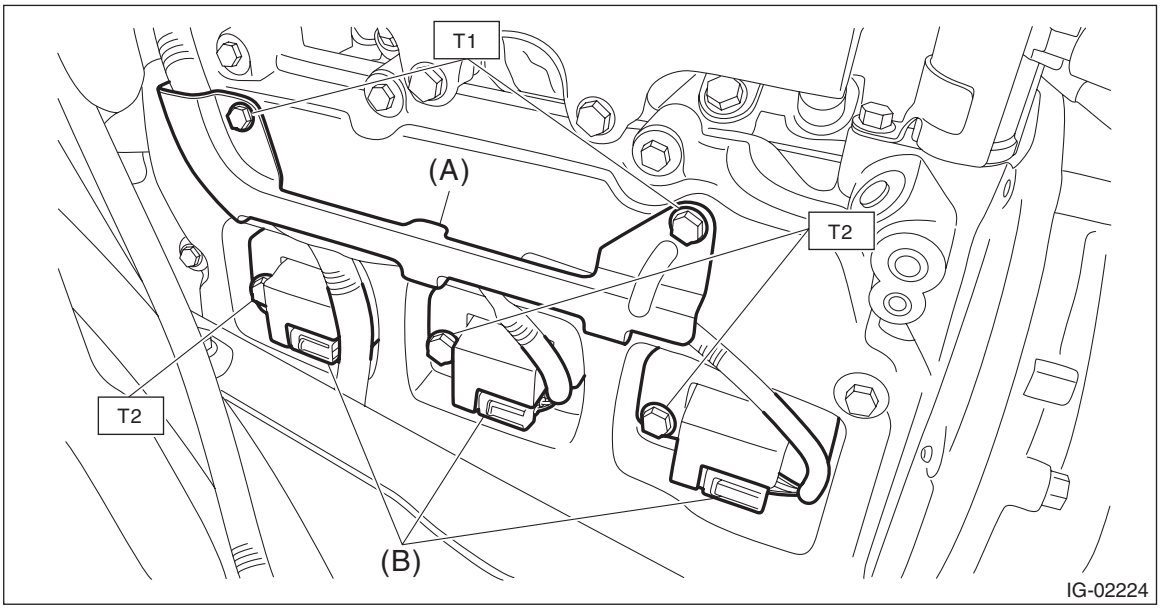

5) Install the air cleaner case. <Ref. to IN(H6DO)-9, INSTALLATION, Air Cleaner Case.>
6) Connect the ground terminal to battery sensor. <Ref. to RC-4, BATTERY, NOTE, Repair Contents.>
7) Install the collector cover.

2. LH SIDE

1) Install the spark plugs using a spark plug socket.

Tightening torque:
21 N·m (2.1 kgf-m, 15.5 ft-lb)



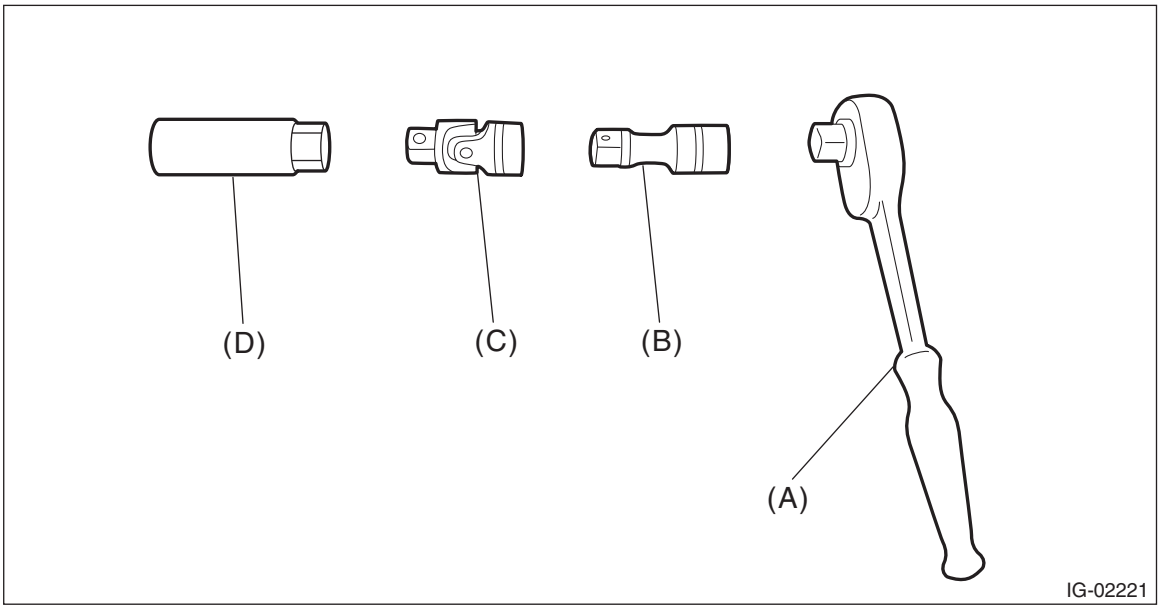

(A) Ratchet handle
(B) Extension bar
(C) Universal joint
(D) Spark plug socket

2) Install the ignition coil.

NOTE:
Turn the #6 ignition coil to install it.

3) Connect the connector (B) to the ignition coil.
4) Install the engine harness stay (A).

Tightening torque:
T1: 6.4 N·m (0.7 kgf-m, 4.7 ft-lb)
T2: 16 N·m (1.6 kgf-m, 11.8 ft-lb)

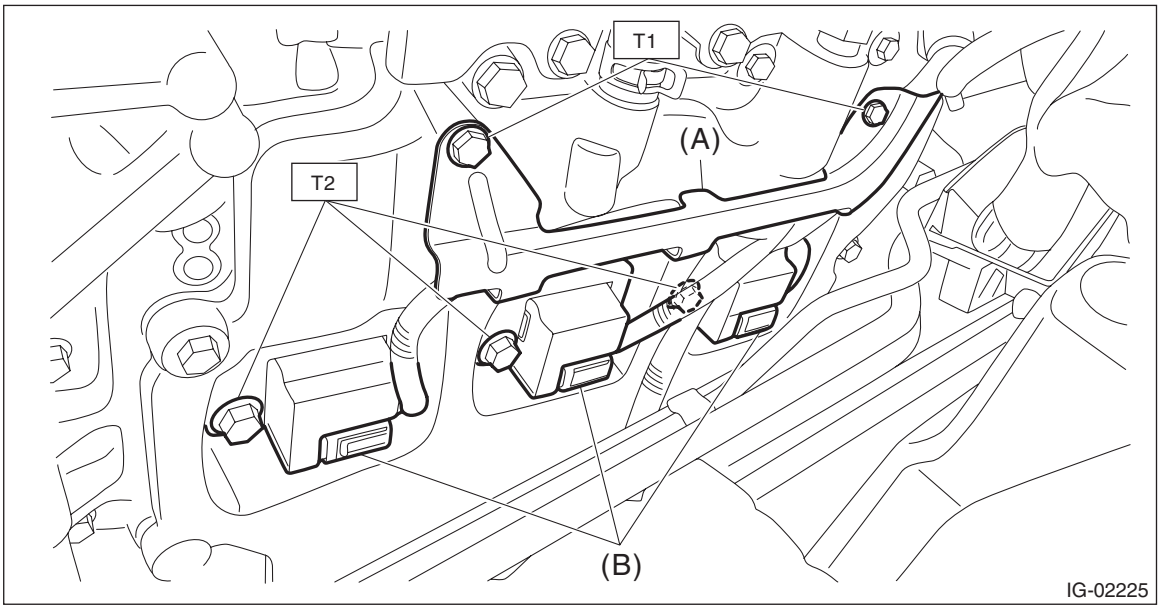

5) Install the battery. <Ref. to SC(H6DO)-58, INSTALLATION, Battery.>
6) Install the collector cover.

C: INSPECTION

1) Check the spark plug for abnormalities. If defective, replace the spark plug.

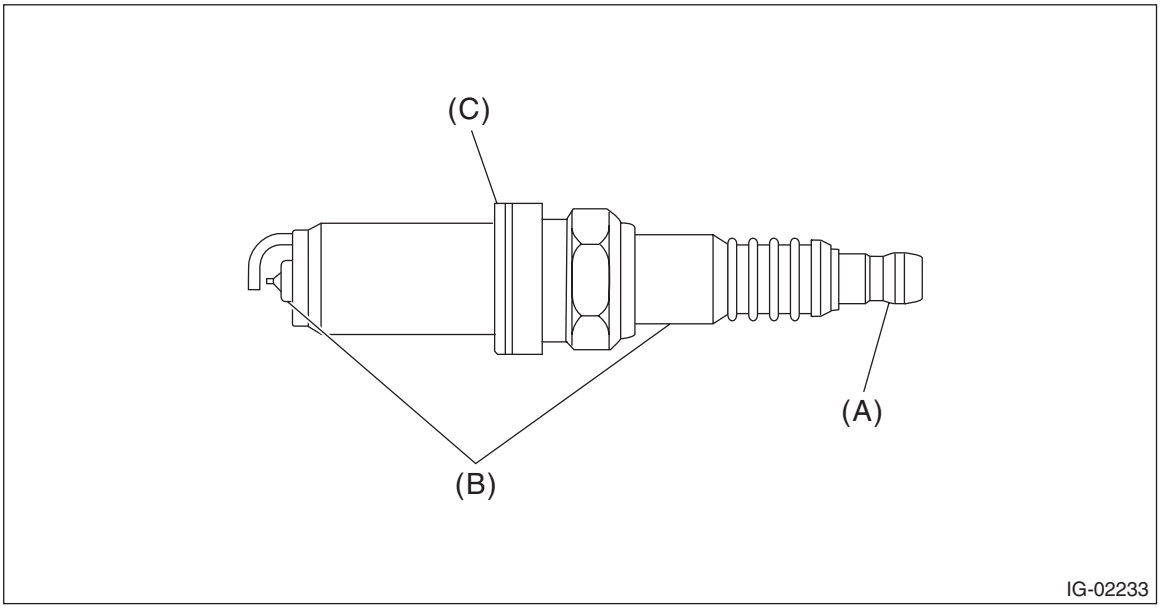

(A) Terminal damage (B) Crack or damage in insulator (C) Damaged gasket

2) Check the spark plug electrode and condition of the insulator. If abnormal, check and repair the cause and replace the spark plug.

(1) Normal:

Brown to grayish-tan deposits and slight electrode wear indicate correct spark plug heat range.

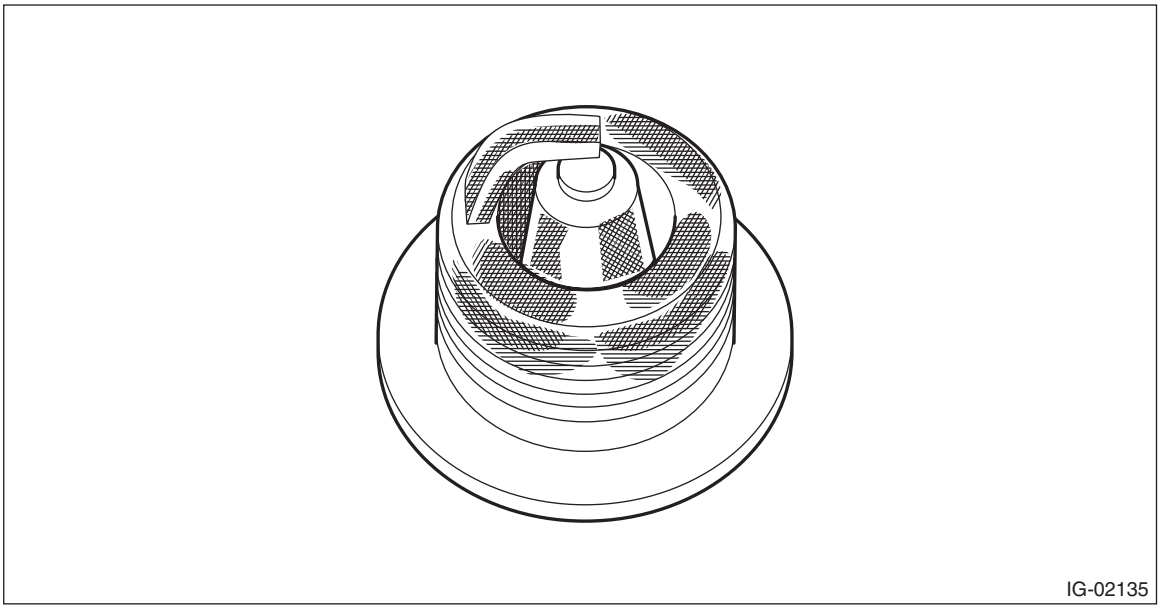

(2) Carbon fouled:

Dry fluffy carbon deposits on the insulator and electrode are mostly caused by slow-speed driving in town, weak ignition, too rich fuel mixture, etc.

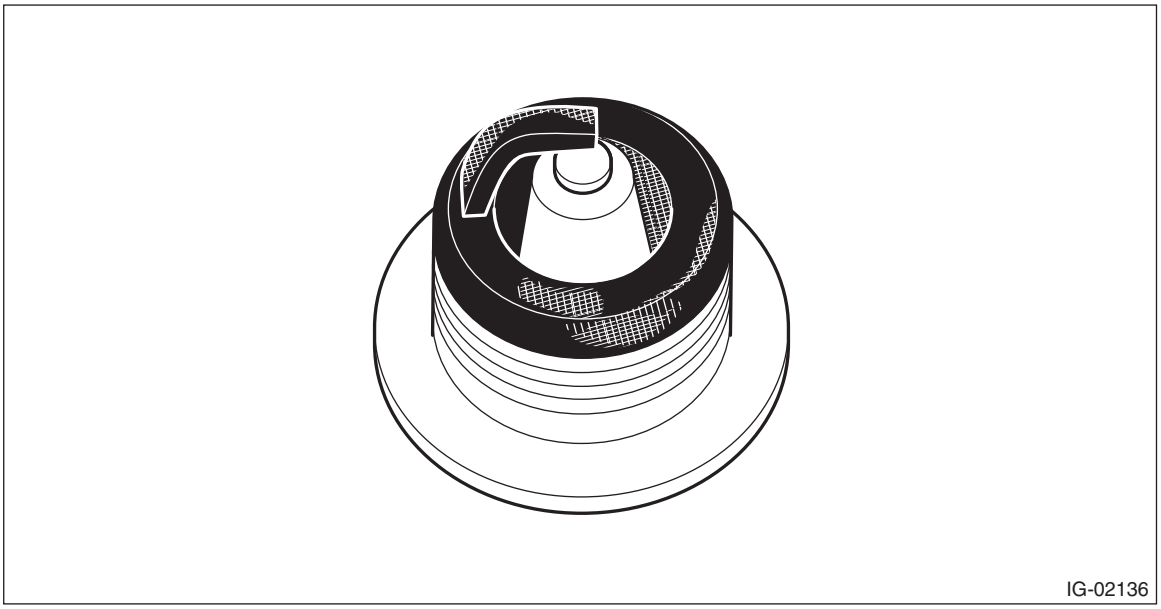

(3) Oil fouled:
Wet black deposits show oil entrance into combustion chamber through worn piston rings or increased clearance between valve guides and valve stems.

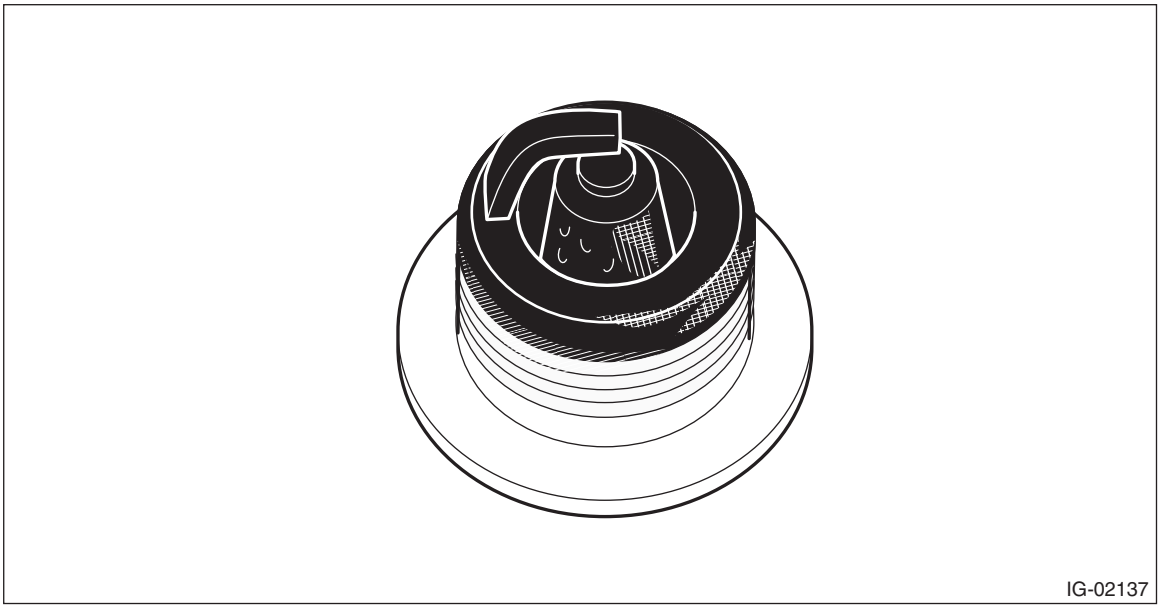
IG-02137

(4) Overheating:
A white or light gray insulator with black or brown spots and bluish burnt electrodes indicate engine overheating, wrong selection of fuel, or loose spark plugs.

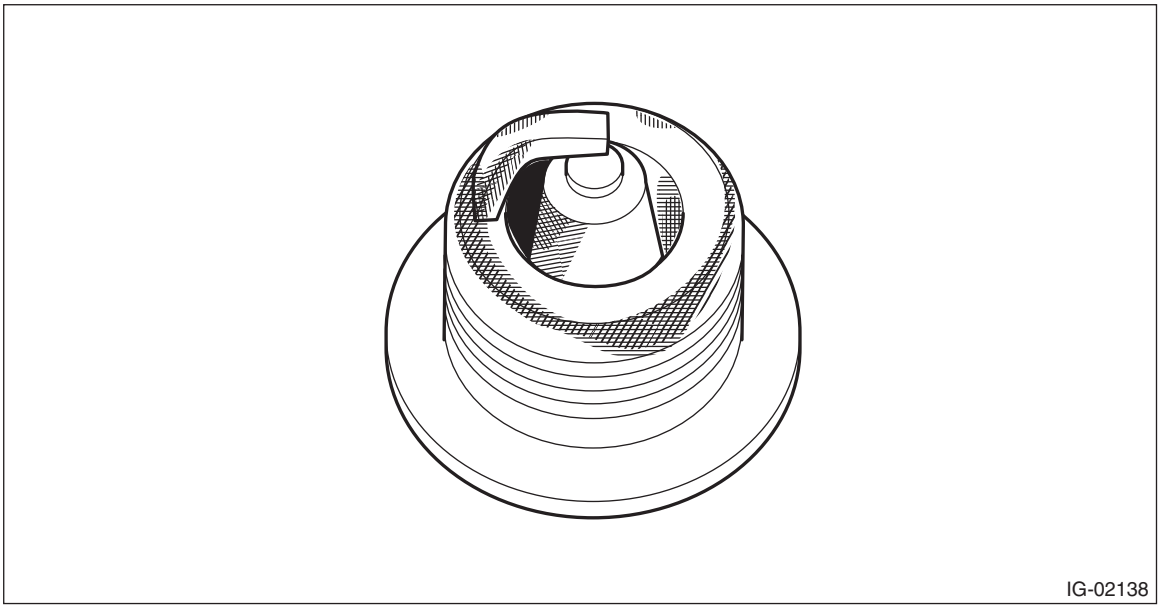
IG-02138

3) Using a nylon brush, etc., clean and remove the carbon or oxide deposits from the spark plug. If deposits are too stubborn, replace the spark plugs. After cleaning the spark plugs, check the spark plug gap “L” using a gap gauge. If it is not within the standard, replace the spark plug.

NOTE:
- Never use a plug cleaner.
- Do not use a metal brush as it may damage the electrode area.

Spark plug gap L:
Standard
1.0 — 1.1 mm (0.039 — 0.043 in)

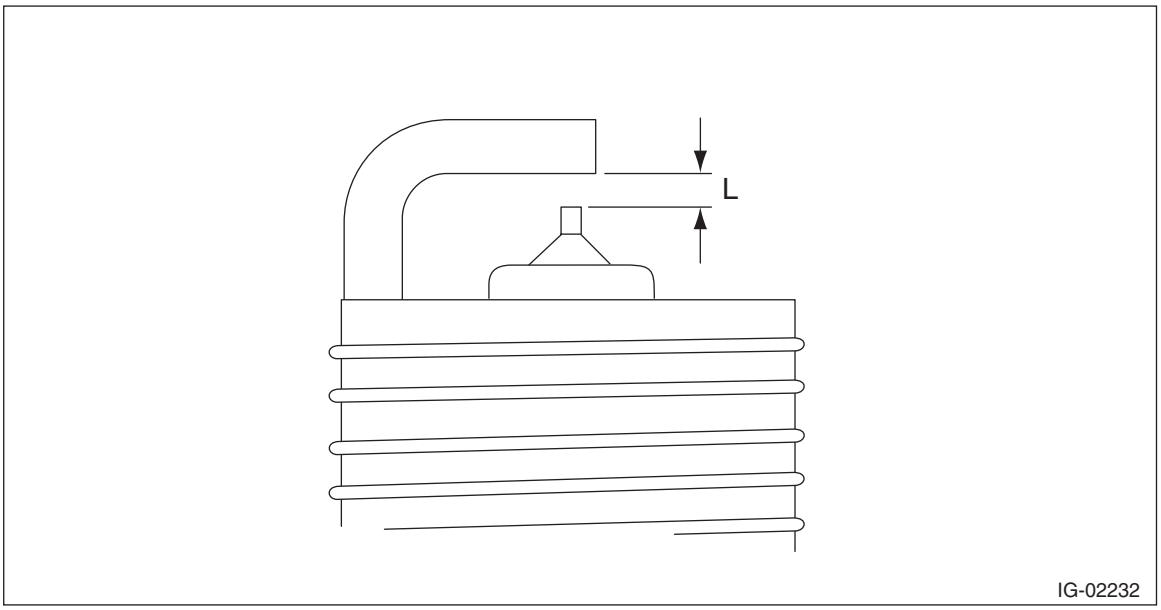

3. Ignition Coil

A: REMOVAL

Direct ignition type is adopted. Refer to “Spark Plug” for removal procedure. <Ref. to IG(H6DO)-4, REMOVAL, Spark Plug.>

B: INSTALLATION

Direct ignition type is adopted. Refer to “Spark Plug” for the installation procedure. <Ref. to IG(H6DO)-8, INSTALLATION, Spark Plug.>

C: INSPECTION

For inspection procedure, refer to “Diagnostics for Engine Starting Failure”. <Ref. to EN(H6DO)(diag)-104, IGNITION CONTROL SYSTEM, Diagnostics for Engine Starting Failure.>

STARTING/CHARGING SYSTEMS

SC(H6DO)

Page

1. General Description 2
2. Starter 7
3. Starter Relay 31
4. Generator 33
5. Battery 57
6. Battery Sensor 66

1. General Description

A: SPECIFICATION

Item			Specifications
Starter	Type		Reduction type
	Model		M000T20176ZC
	Manufacturer		Mitsubishi Electric
	Voltage and output		12 V — 1.4 kW
	Direction of rotation		Counterclockwise (when observed from pinion)
	Number of pinion teeth		9
	No-load characteristics	Voltage	11 V
		Current	90 A or less
Generator	Type		Rotating-field three-phase type, voltage regulator built-in type, with load response control system
	Model		A3TJ3492
	Manufacturer		Mitsubishi Electric
	Voltage and output		12 V — 130 A
	Polarity on ground side		Negative
	Direction of rotation		Clockwise (when observed from pulley side)
	Stator connection		3-phase △ type
	Output current		1,500 r/min — 55 A or more 2,500 r/min — 108 A or more 5,000 r/min — 127 A or more
	Regulated voltage		14.1 — 14.8 V [20°C (68°F)]
	Rotor slip ring outer diameter	Standard	22.7 mm (0.894 in)
		Limit	22.1 mm (0.870 in)
	Brush length	Standard	22.5 mm (0.886 in)
		Limit	5.0 mm (0.197 in)
Battery	Type and capacity		12 V — 52 AH (75D23R)
	CCA		490 A

B: COMPONENT

1. STARTER

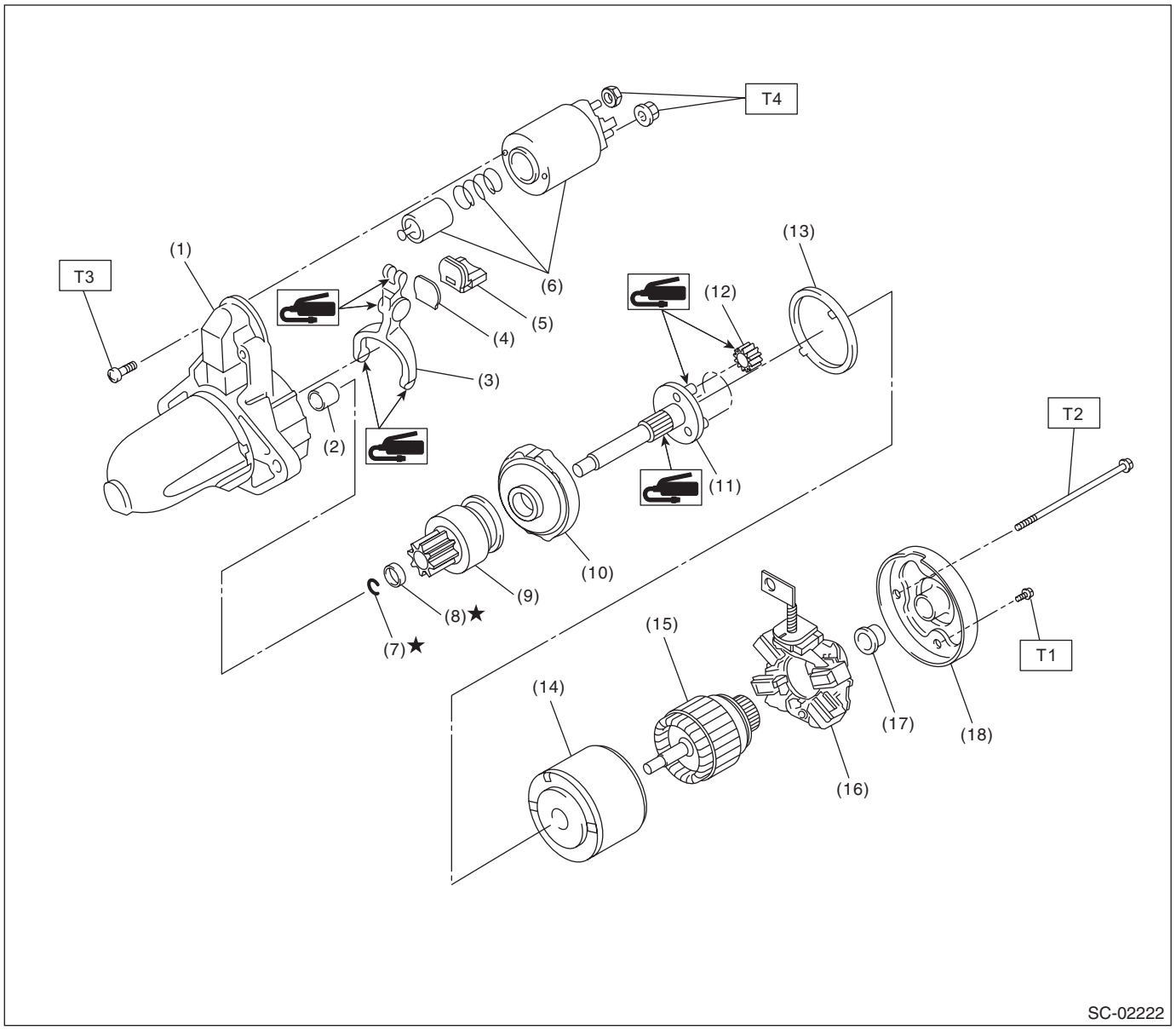

(1)	Starter housing ASSY	(9)	Overrunning clutch	(17)	Sleeve bearing
(2)	Sleeve bearing	(10)	Internal gear ASSY	(18)	Starter cover ASSY
(3)	Shift lever	(11)	Shaft		
(4)	Plate	(12)	Pinion gear	***Tightening torque: N·m (kgf-m, ft-lb)***	
(5)	Seal rubber	(13)	Seal rubber	***T1:***	***1.4 (0.1, 1.0)***
(6)	Magnet switch ASSY	(14)	Yoke ASSY	***T2:***	***6 (0.6, 4.4)***
(7)	Snap ring	(15)	Armature ASSY	***T3:***	***7.5 (0.8, 5.5)***
(8)	Stopper	(16)	Brush holder ASSY	***T4:***	***10 (1.0, 7.4)***

2. GENERATOR

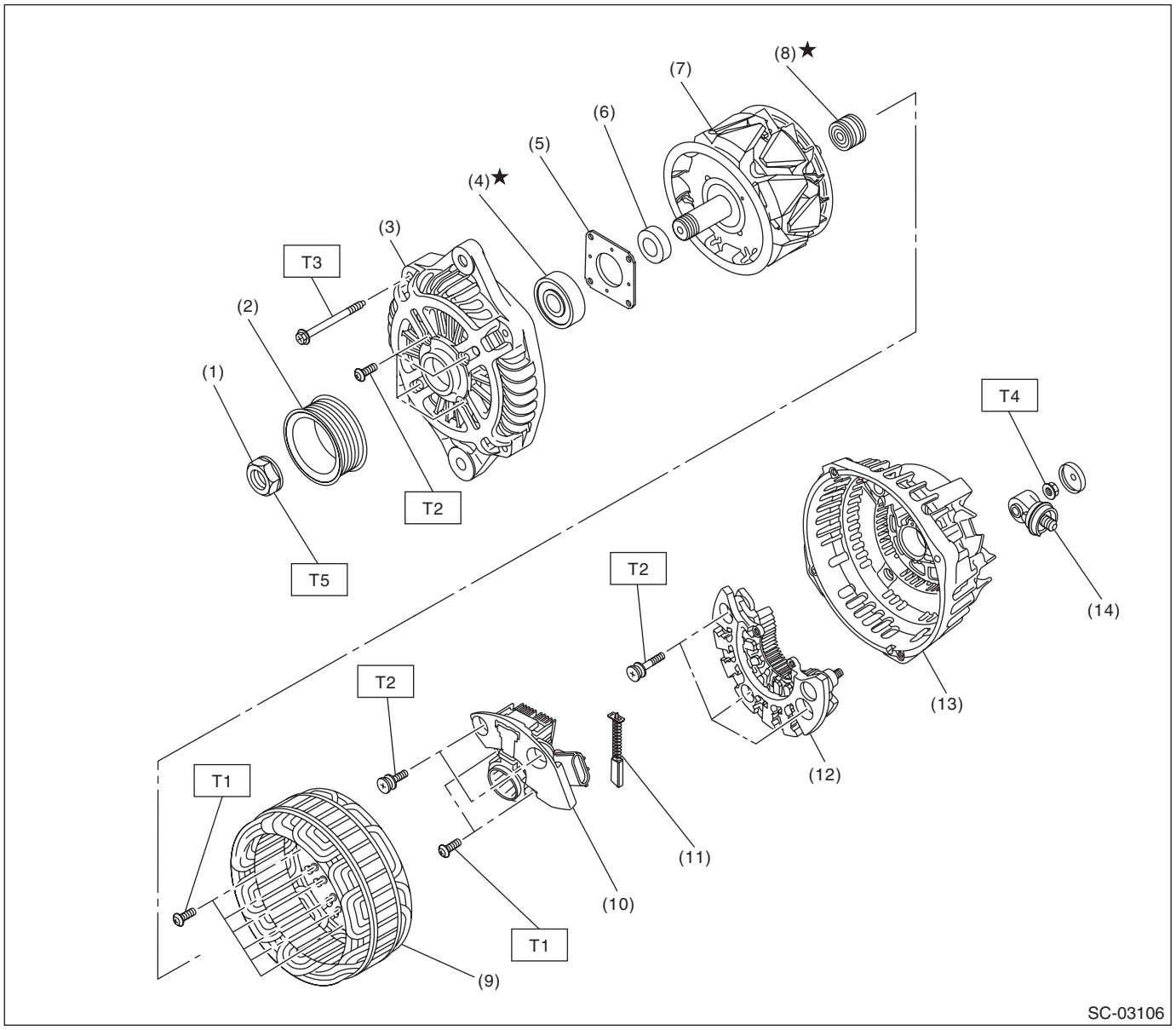

(1) Pulley nut
(2) Pulley
(3) Front cover
(4) Ball bearing
(5) Bearing retainer
(6) Spacer
(7) Rotor
(8) Bearing
(9) Stator coil
(10) IC regulator
(11) Brush
(12) Rectifier
(13) Rear cover
(14) Terminal B

Tightening torque: N·m (kgf-m, ft-lb)
T1: 2 (0.2, 1.5)
T2: 3.9 (0.4, 2.9)
T3: 4.4 (0.4, 3.2)
T4: 8.9 (0.9, 6.6)
T5: 117.5 (12.0, 86.7)

3. GENERATOR BRACKET

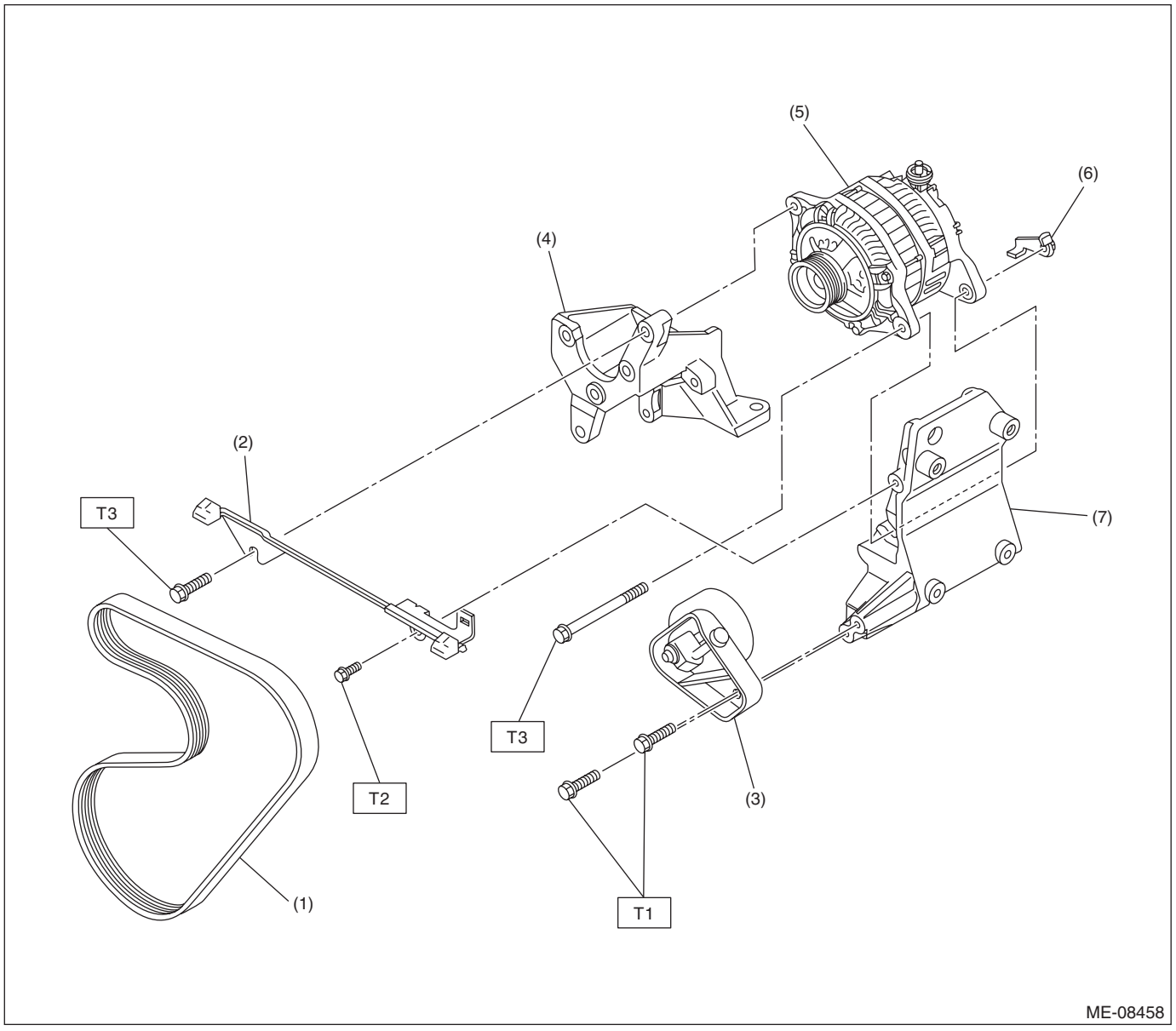

(1) V-belt
(2) Collector cover bracket
(3) Tensioner ASSY
(4) Generator bracket
(5) Generator
(6) Generator plate
(7) A/C compressor bracket

Tightening torque: N·m (kgf-m, ft-lb)
T1: 20 (2.0, 14.8)
T2: <Ref. to SC(H6DO)-35, INSTALLATION, Generator.>
T3: <Ref. to SC(H6DO)-35, INSTALLATION, Generator.>

4. BATTERY SENSOR

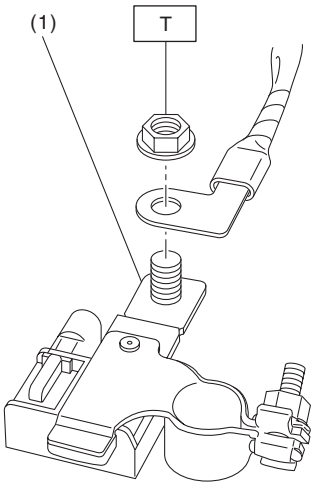

SC-03067

(1) Battery sensor

Tightening torque: N·m (kgf-m, ft-lb)
T: 7.5 (0.8, 5.5)

C: CAUTION

- Prior to starting work, pay special attention to the following:
  1. Always wear work clothes, a work cap, and protective shoes. Additionally, wear a helmet, protective goggles, etc. if necessary.
  2. Protect the vehicle using a seat cover, fender cover, etc.
  3. Prepare the service tools, clean cloth, containers to catch grease and oil, etc.
- Vehicle components are extremely hot immediately after driving. Be wary of receiving burns from heated parts.
- When performing a repair, identify the cause of trouble and avoid unnecessary removal, disassembly and replacement.
- Before disconnecting connectors of sensors or units, be sure to disconnect the ground cable from battery.
- Always use the jack-up point when the shop jacks or rigid racks are used to support the vehicle.
- Remove contamination including dirt and corrosion before removal, installation, disassembly or assembly.
- Keep the removed parts in order and protect them from dust and dirt.
- All removed parts, if to be reused, should be reinstalled in the original positions with attention to the correct directions, etc.
- Bolts, nuts and washers should be replaced with new parts as required.
- Be sure to tighten the fasteners including bolts and nuts to the specified torque.

D: PREPARATION TOOL

1. GENERAL TOOL

TOOL NAME	REMARKS
Circuit tester	Used for measuring resistance, voltage and current. NOTE: • When measuring the standby current, prepare a circuit tester which can measure down to 1 mA. • When measuring the standby current for models with keyless access function, prepare an analog type.

2. Starter

A: REMOVAL

1) Remove the collector cover.
   (1) Carefully pull up the rear of collector cover at two positions (A).
   (2) Carefully pull up the front of collector cover at two positions (B) while moving it forward.

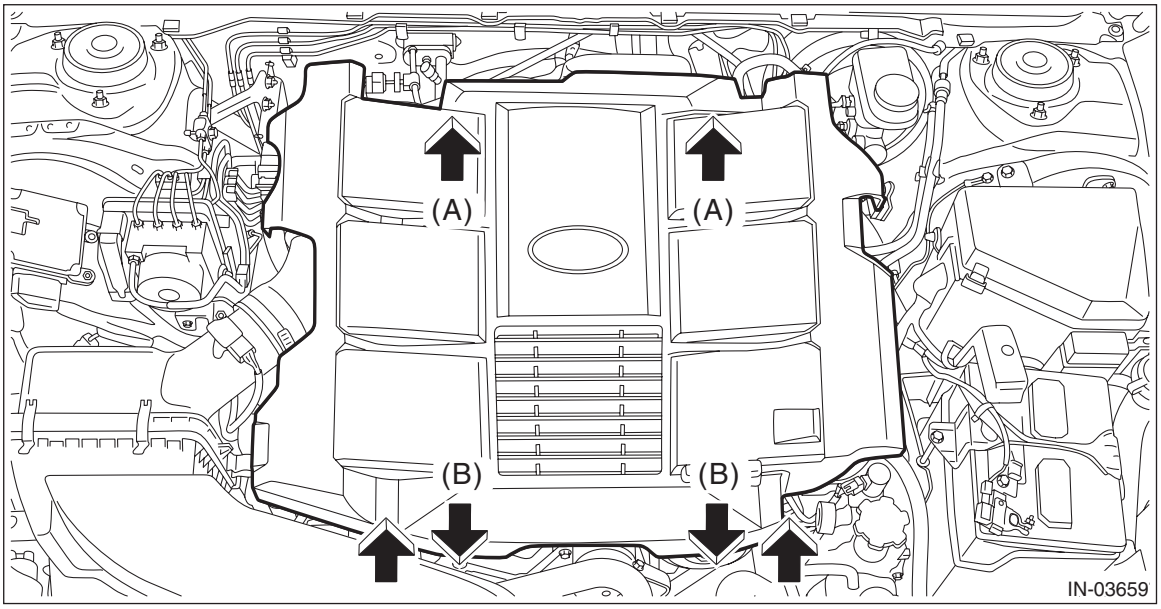

2) Disconnect the ground terminal from battery sensor. <Ref. to RC-4, BATTERY, NOTE, Repair Contents.>
3) Loosen the clamp (A) securing the air intake boot.
4) Loosen the bolt (B) securing the air intake boot to the collector cover bracket.

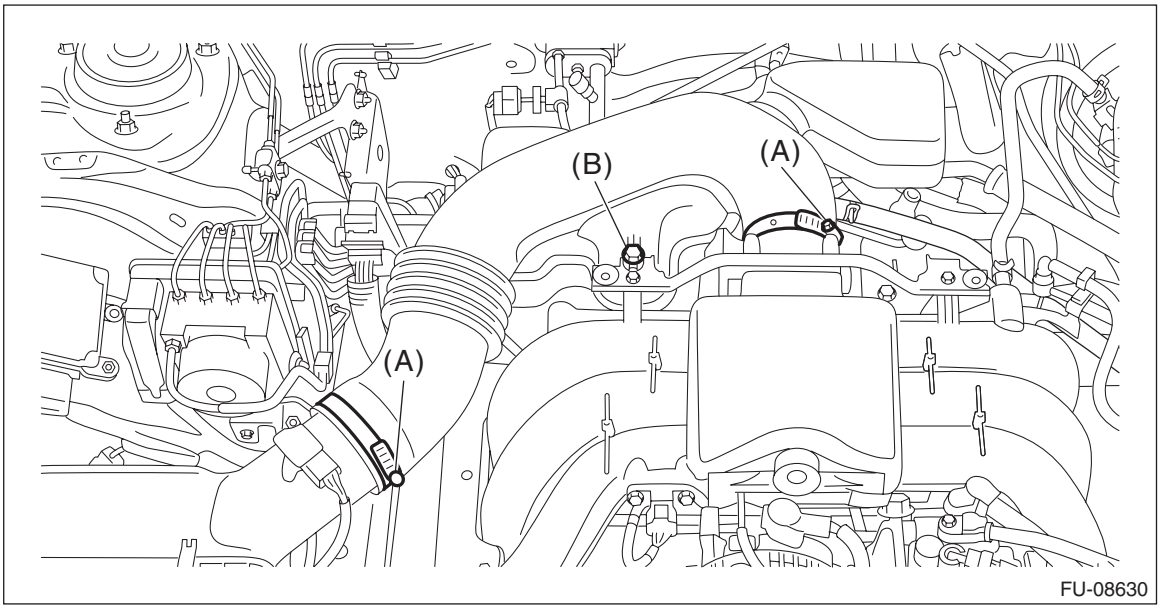

5) Remove the air intake boot from the throttle body and the air cleaner case (rear), and move it to the left side wheel apron.

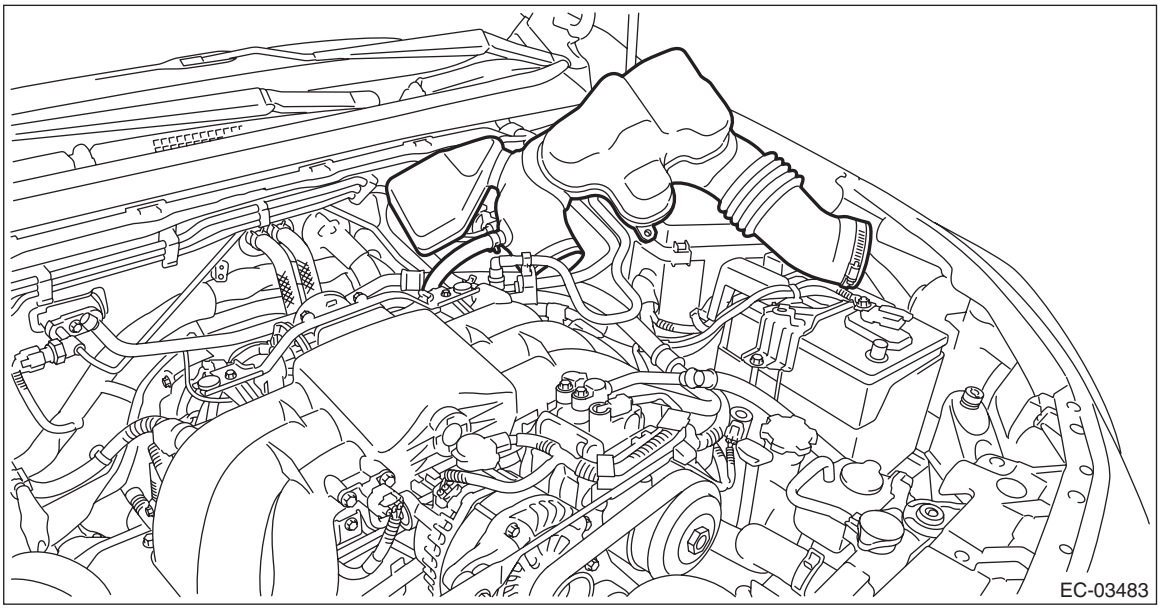

6) Disconnect the connector (A) from the starter, and remove the terminal (B).

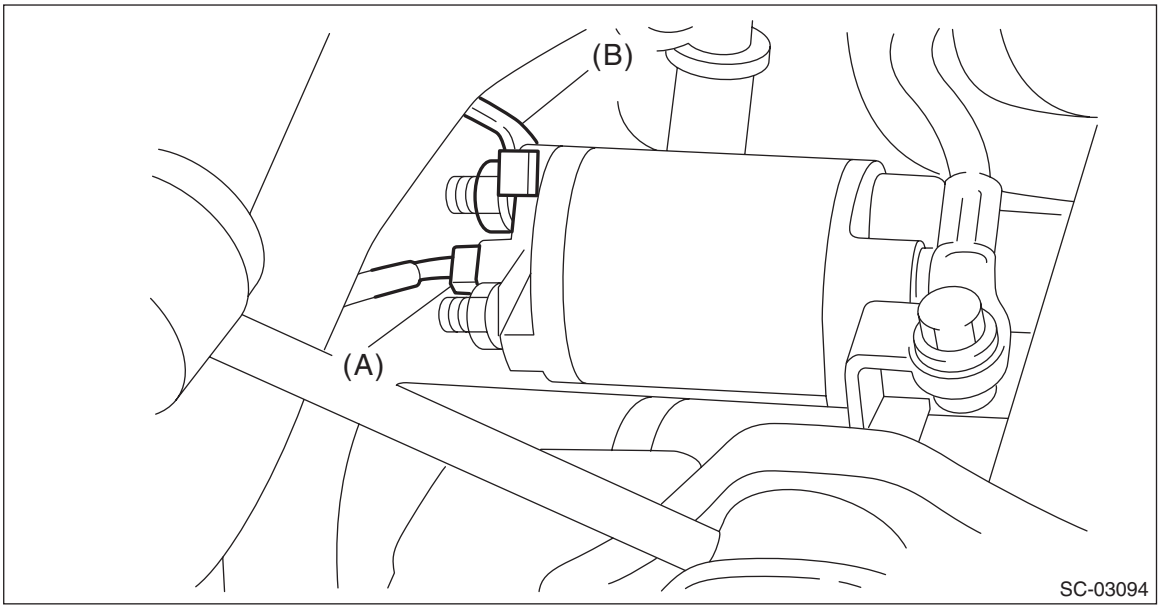

7) Remove the starter from transmission.

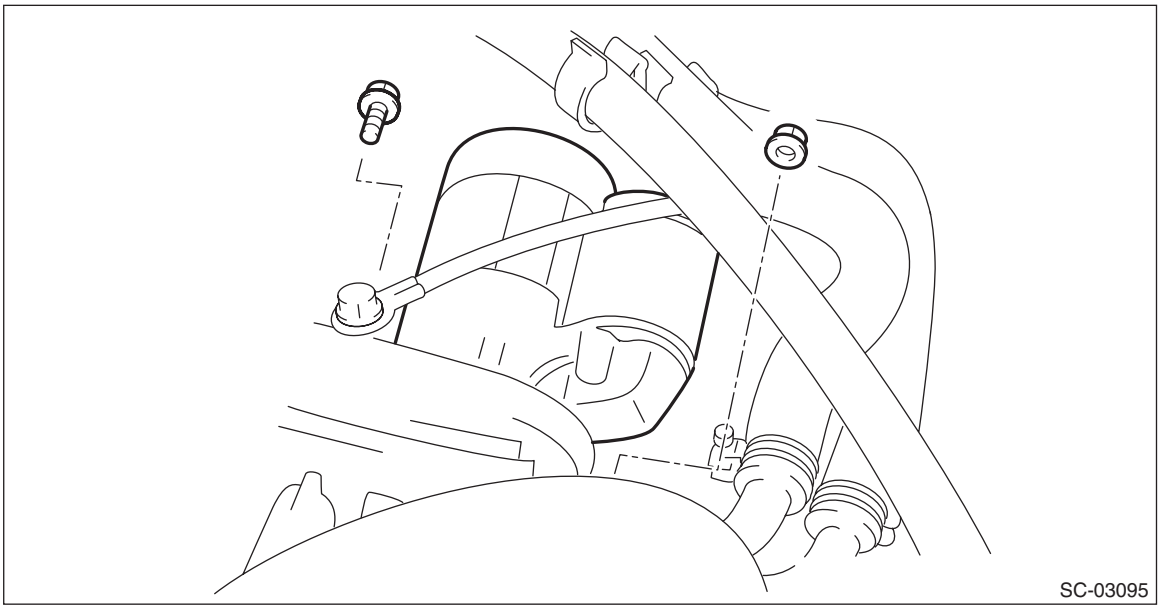

B: INSTALLATION

1) Install the starter to the transmission.

NOTE:
Tighten the starter and bracket (a) together using the upper bolt securing the starter.

Tightening torque:
50 N·m (5.1 kgf-m, 36.9 ft-lb)

2) Connect the connector (A) to the starter, and install the terminal (B).

Tightening torque:
10 N·m (1.0 kgf-m, 7.4 ft-lb)

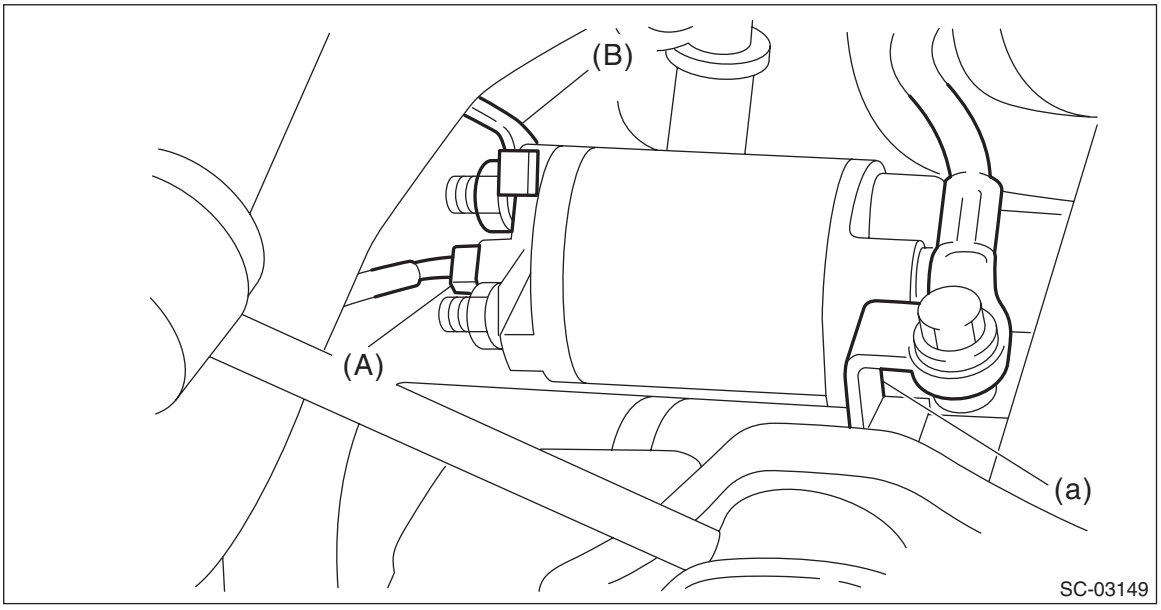

3) Install the air intake boot. <Ref. to IN(H6DO)-11, INSTALLATION, Air Intake Boot.>
4) Connect the ground terminal to battery sensor. <Ref. to RC-4, BATTERY, NOTE, Repair Contents.>
5) Install the collector cover.

C: DISASSEMBLY

1) Disconnect the terminal M from the magnet switch assembly.

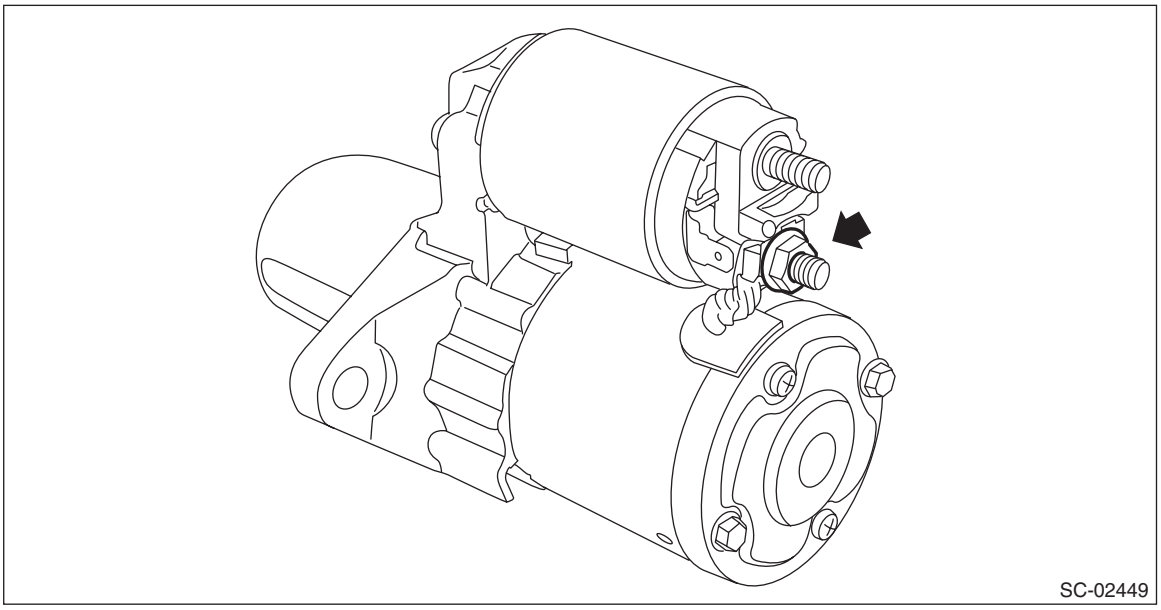

2) Remove the magnet switch assembly from the starter housing assembly.

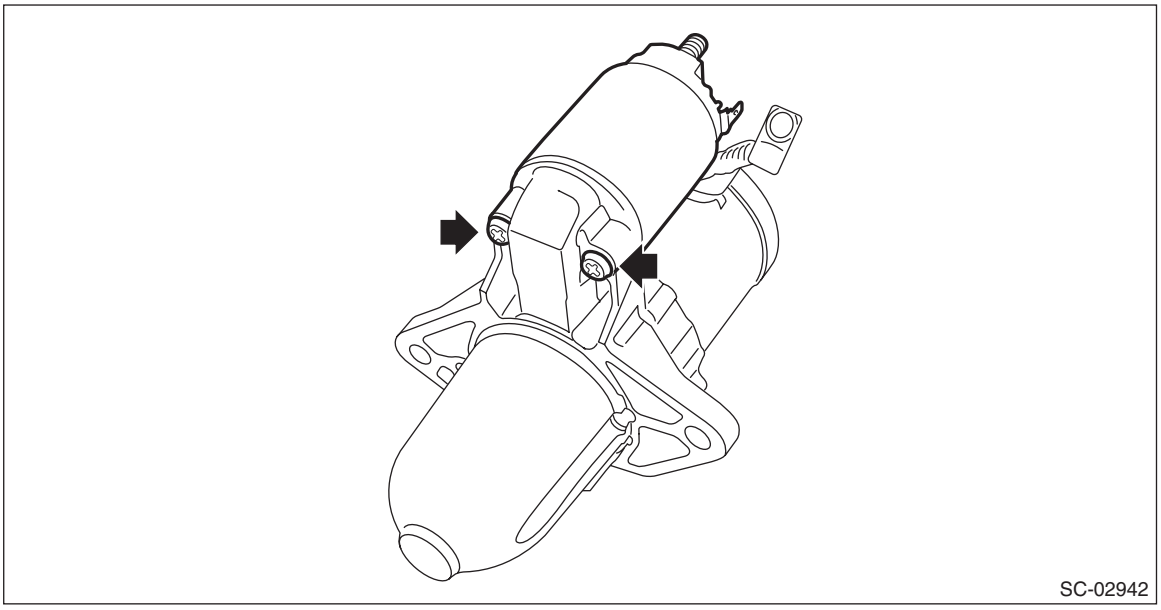

3) Remove screws (A) of the brush holder assembly, and through bolts (B) on both sides, and remove the starter cover assembly.

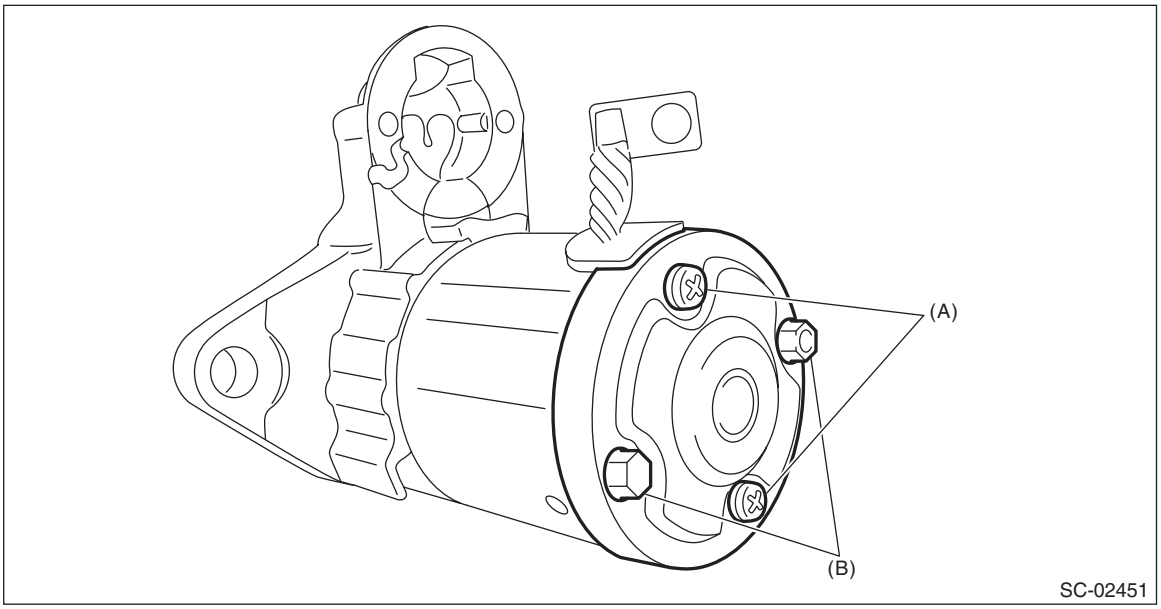

4) Remove the brush holder assembly from the armature assembly.

NOTE:
Hold the brush with your fingers so that the brush spring does not come flying out.

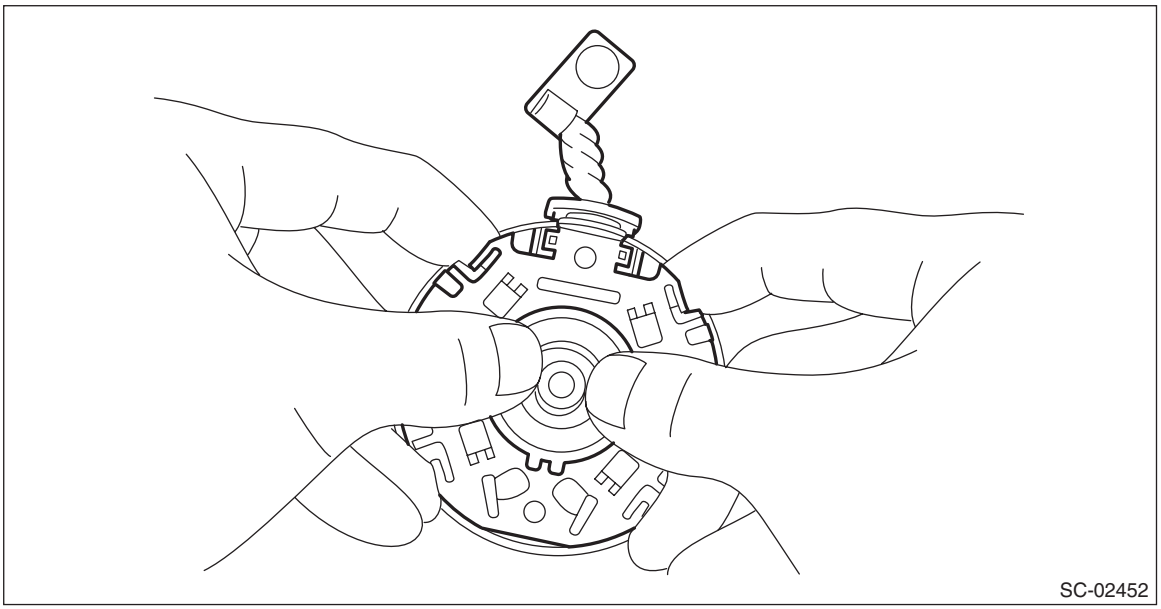

5) Remove the armature assembly and yoke assembly from the starter housing assembly together as a single unit.

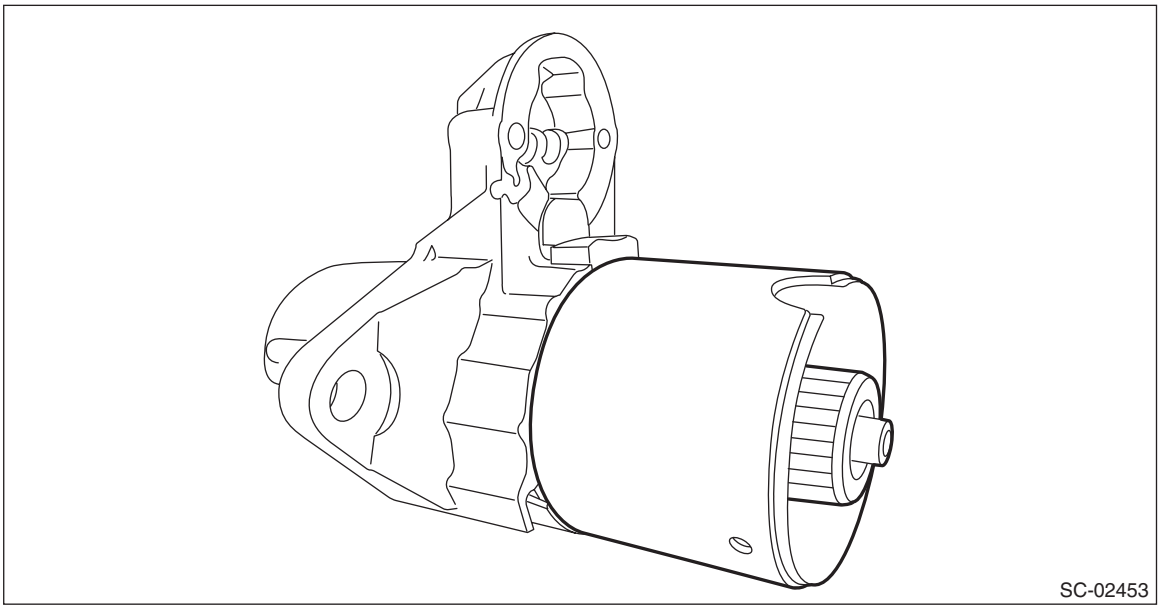
SC-02453

6) Separate the armature assembly and yoke assembly.

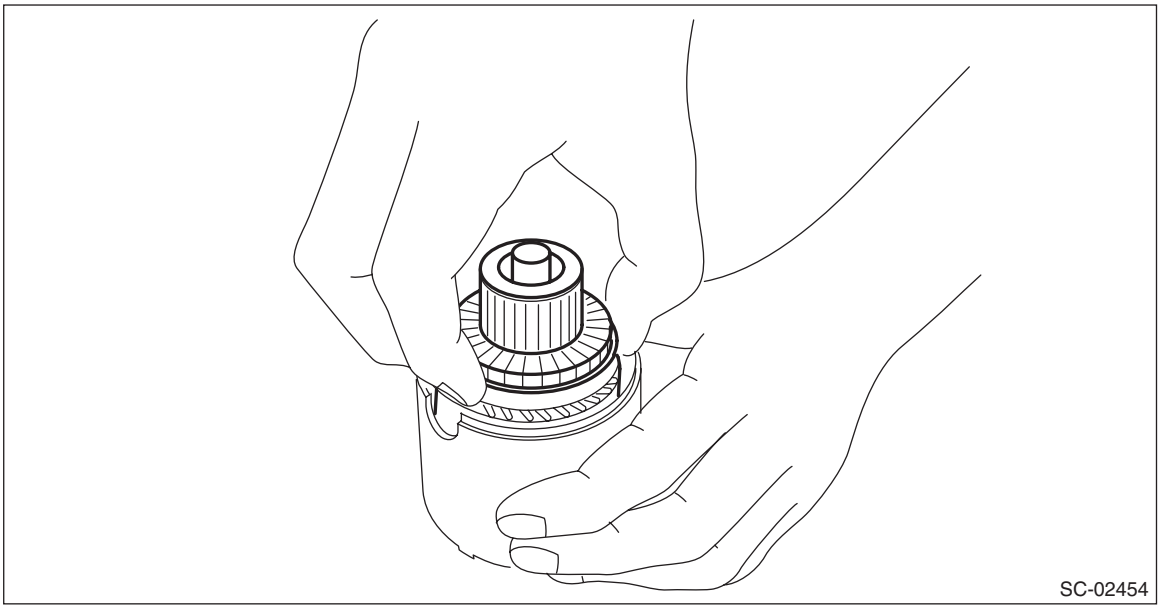
SC-02454

7) Remove the pinion gear from the internal gear assembly.

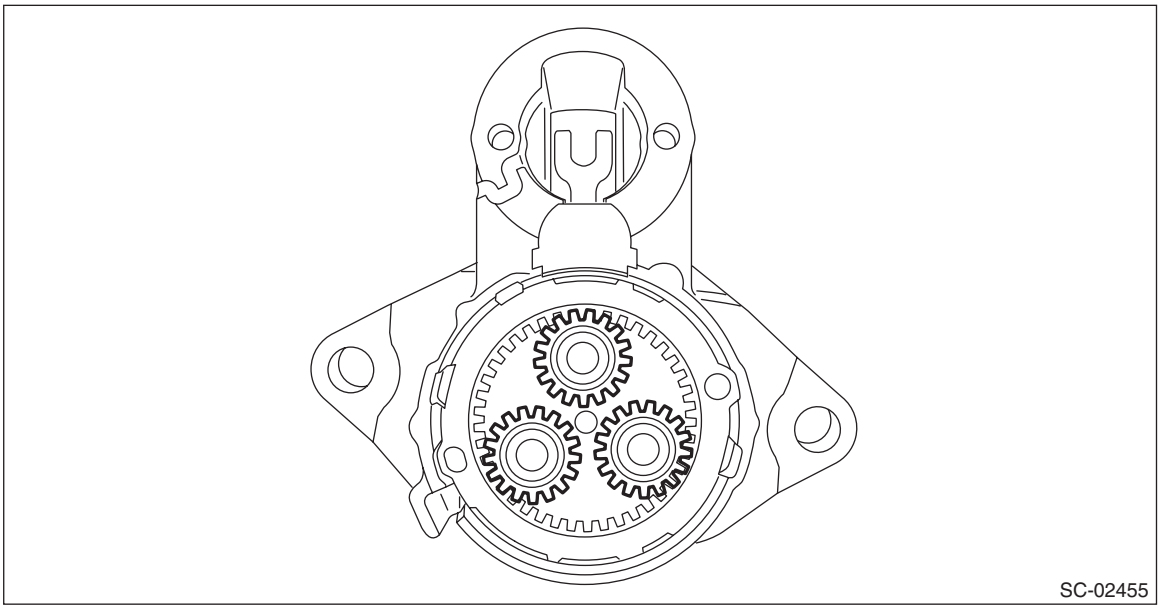

8) Remove seal rubber (A), plate (B), and seal rubber (C).

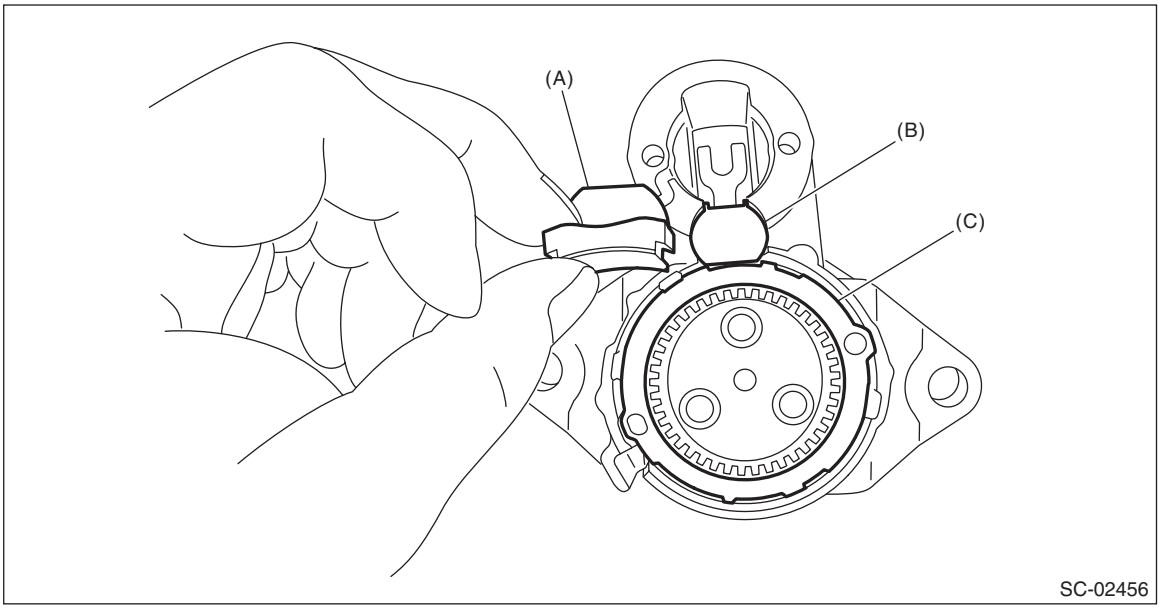

9) Lightly tap the starter housing assembly with a plastic hammer as shown in the figure, and remove the overrunning clutch, internal gear assembly, shaft and shift lever together as one unit.

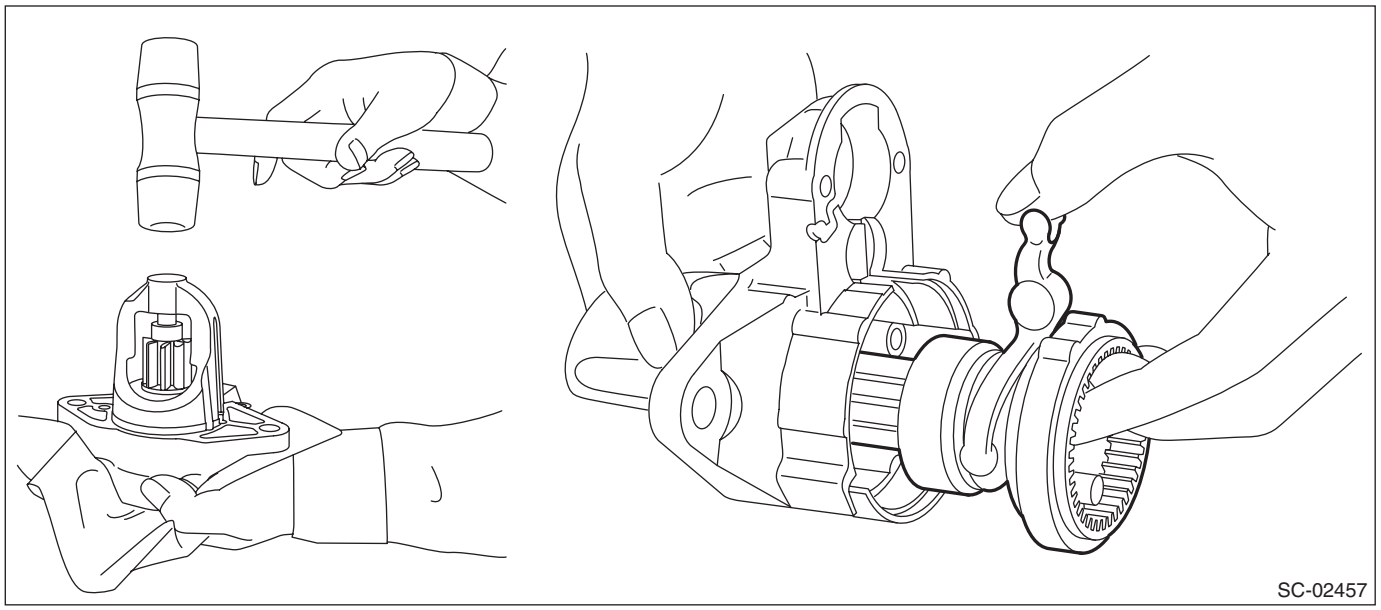
SC-02457

10) Use the following procedures to remove the overrunning clutch from the shaft.
(1) Use an appropriate tool (such as a fit socket wrench), and remove the stopper from snap ring by lightly tapping the stopper with a plastic hammer.

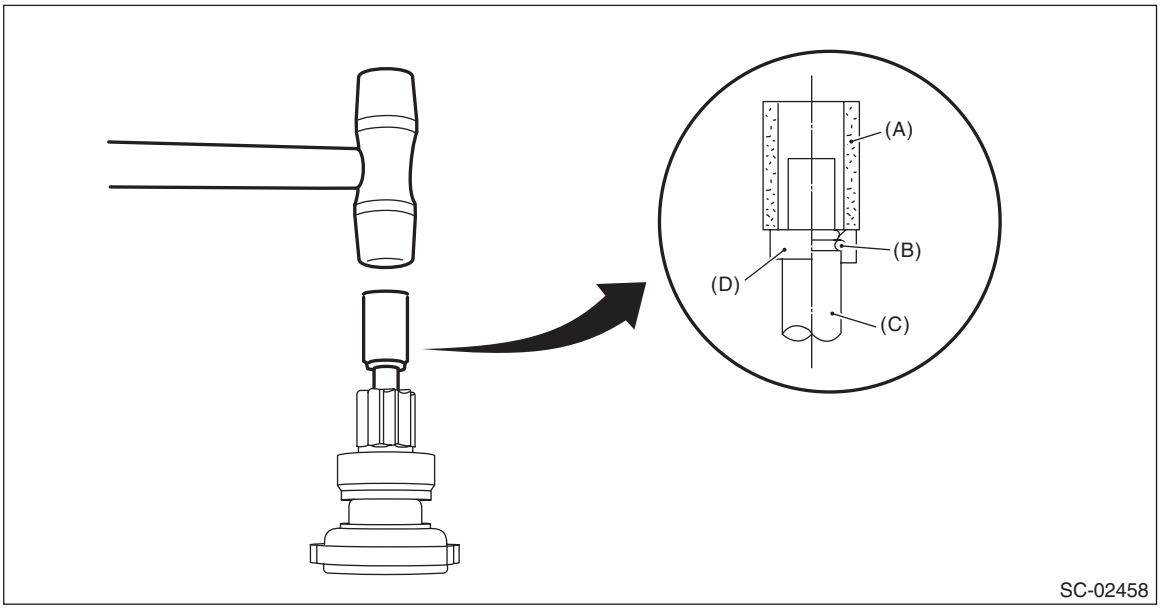

SC-02458

(A) Appropriate tool (B) Snap ring (C) Shaft
(D) Stopper

(2) Remove snap ring (A) from the shaft, and remove stopper (B).

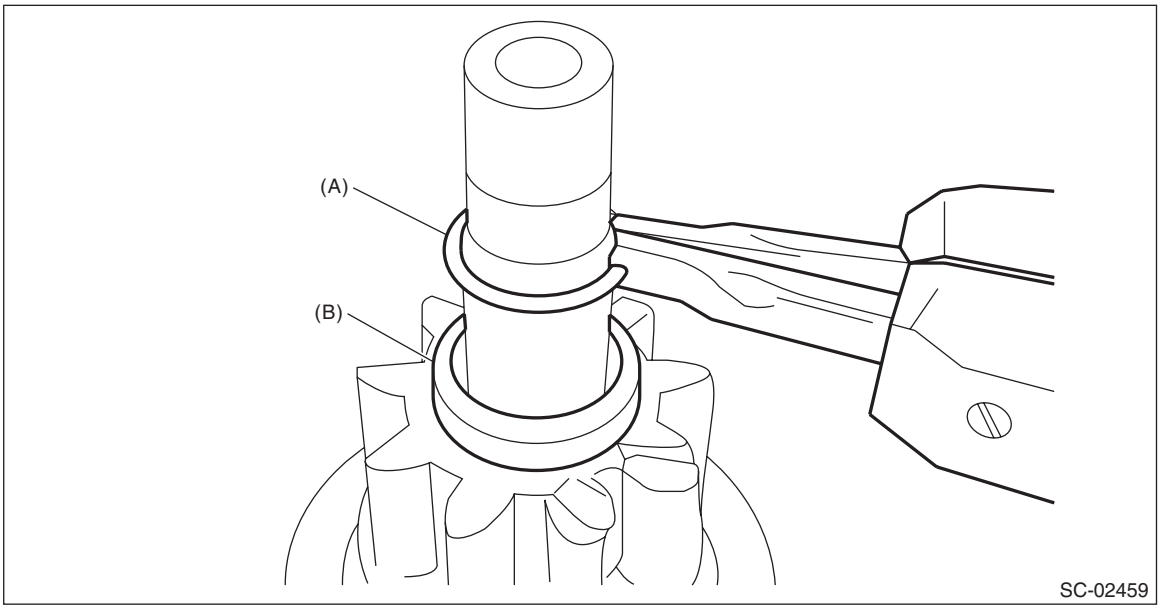

(3) Remove the overrunning clutch from the shaft.

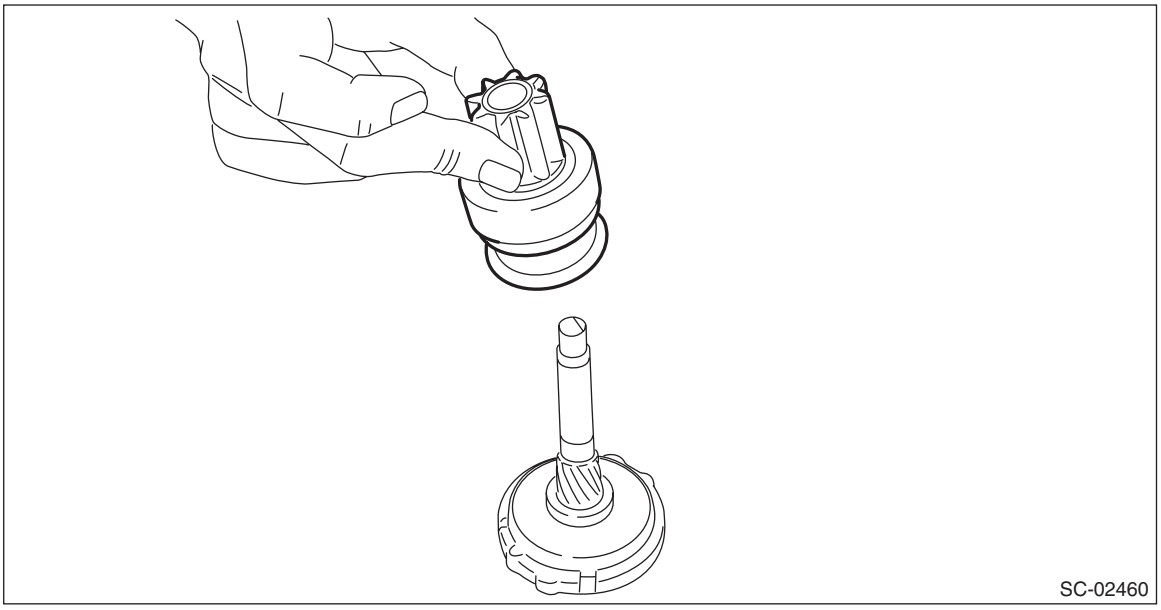

11) Separate the internal gear assembly and shaft.

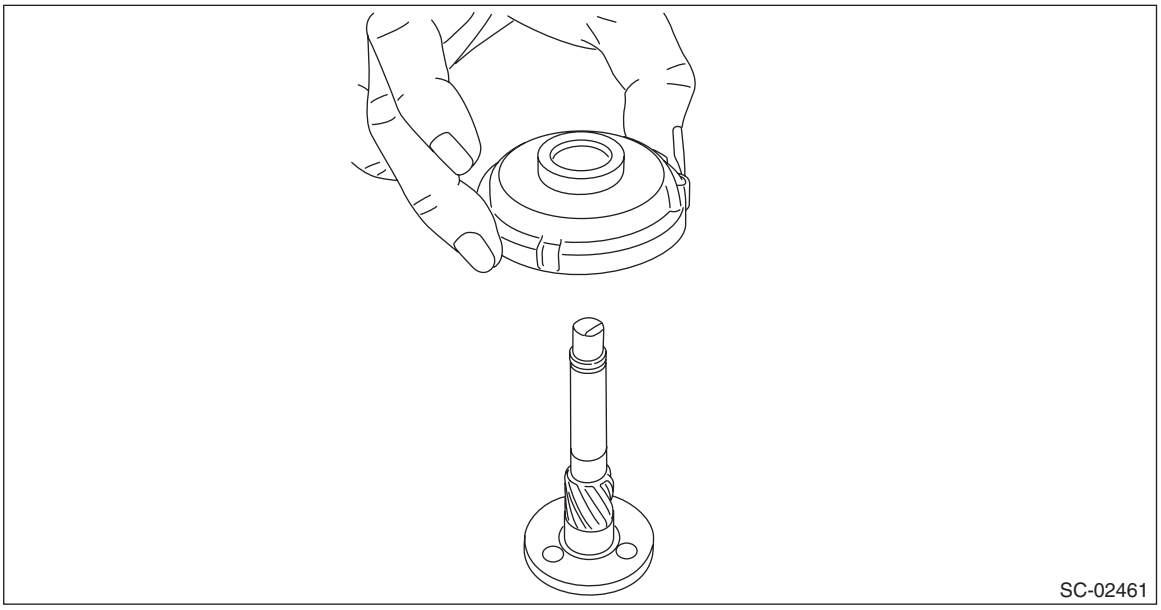

D: ASSEMBLY

1) Apply grease to the shaft sliding surfaces of the internal gear assembly.

Grease:
Multemp #6129 or equivalent

2) Assemble the shaft to the internal gear assembly.

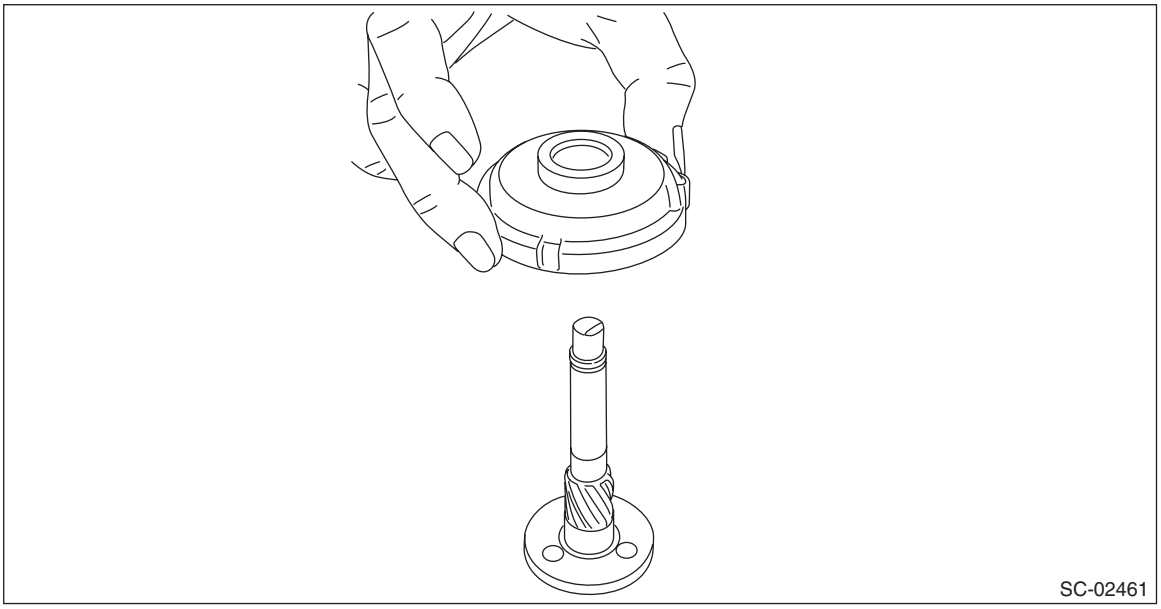

3) Assemble the overrunning clutch as follows:
(1) Apply grease to the spline portion of the shaft.

Grease:
Multemp #6129 or equivalent

(2) Install the overrunning clutch to shaft.

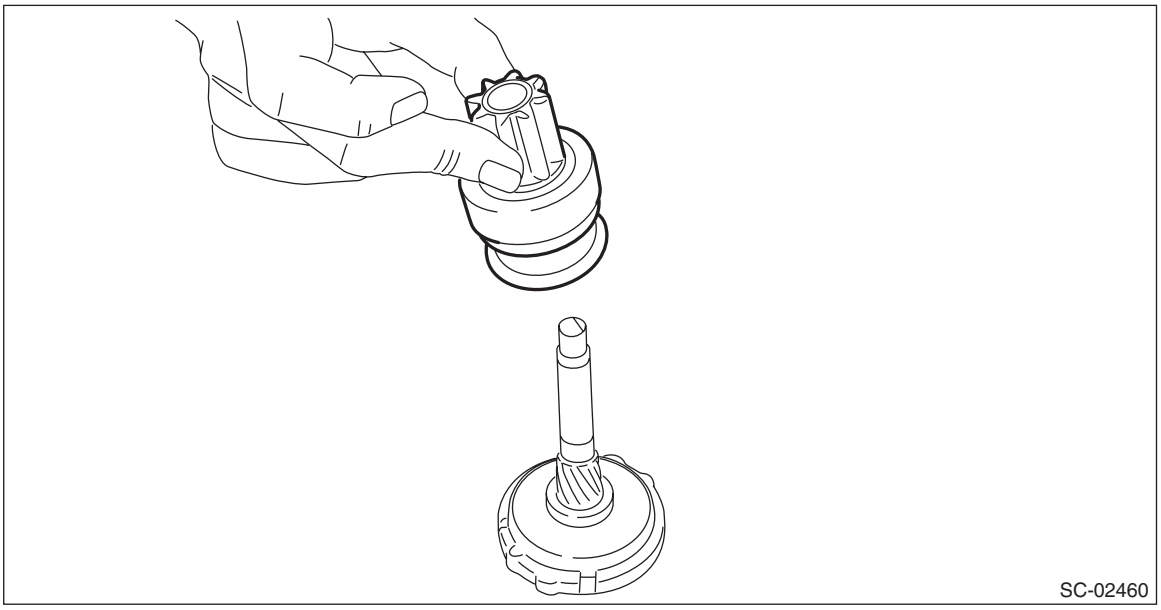

(3) Pass stopper (B) through the shaft assembly, and attach snap ring (A).

NOTE:
Use new stoppers and snap rings.

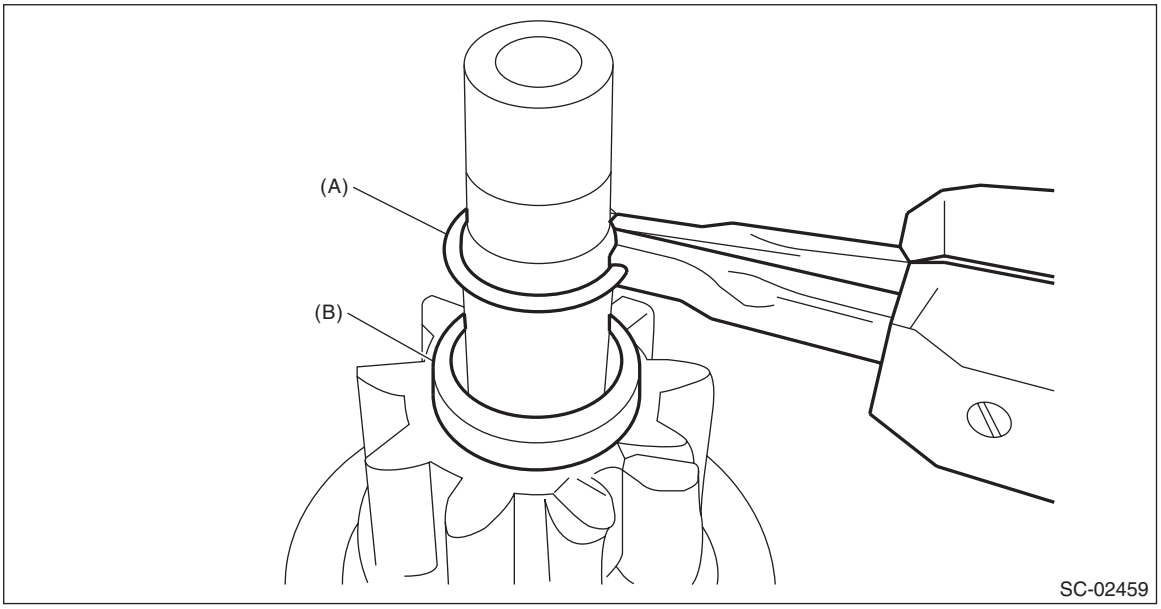

(4) Using a press, pressure fit stopper (B) into snap ring (A).

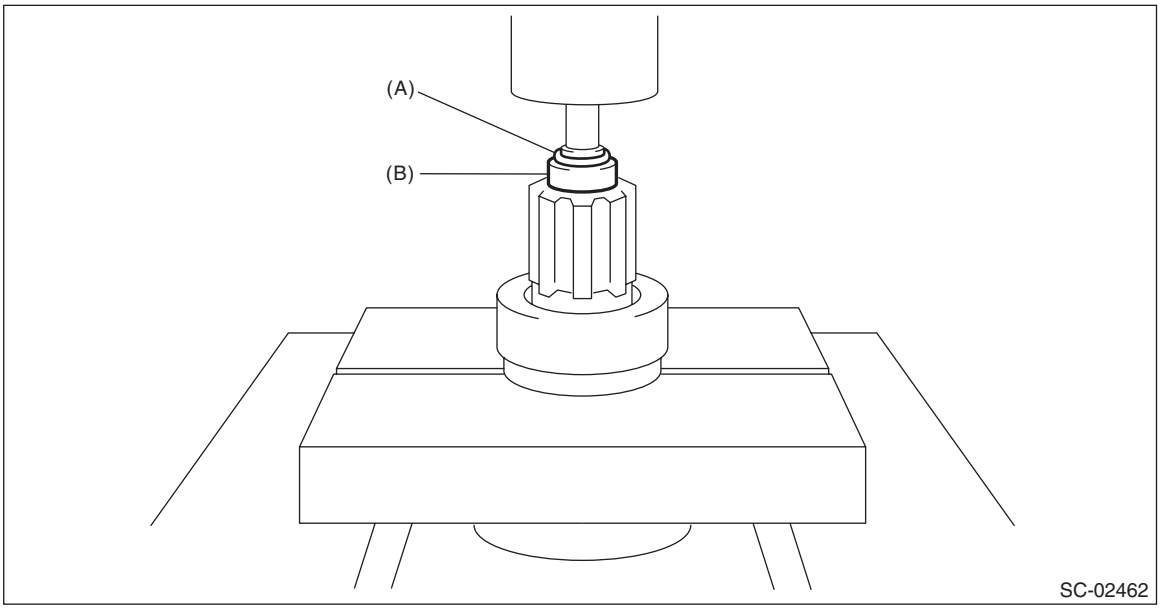

4) Assemble the overrunning clutch, internal gear assembly, shaft and shift lever as a single unit into the starter housing assembly.

NOTE:
Apply grease to the moving parts of the shift lever.

Grease:
Multemp #6129 or equivalent

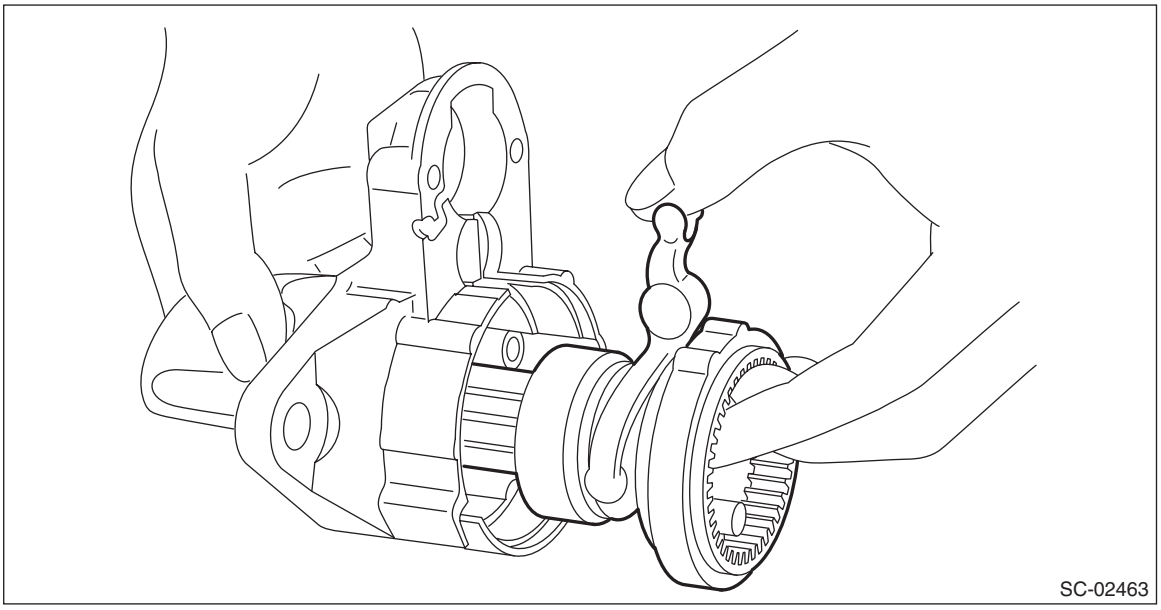

5) Apply grease to the inside of the internal gear assembly and pinion gear, and attach the pinion gear to the internal gear assembly.

NOTE:
- Apply grease evenly to the contact surfaces of each gear.
- Be careful that no debris becomes attached.

Grease:
Molykote® AG650 or equivalent

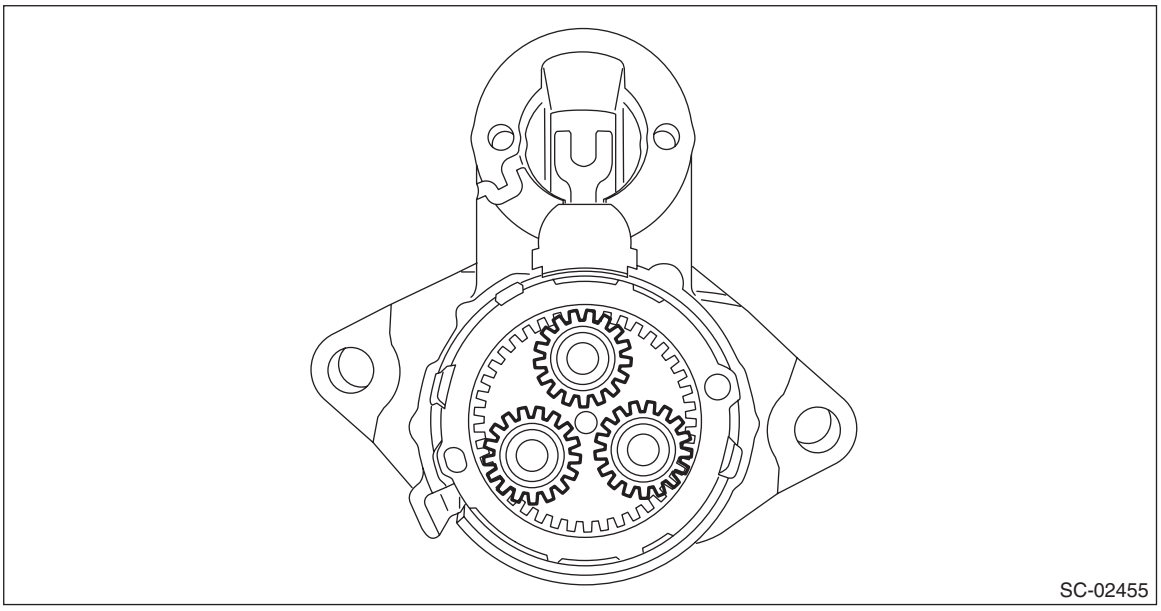

6) Install seal rubber (A), plate (B), and seal rubber (C).

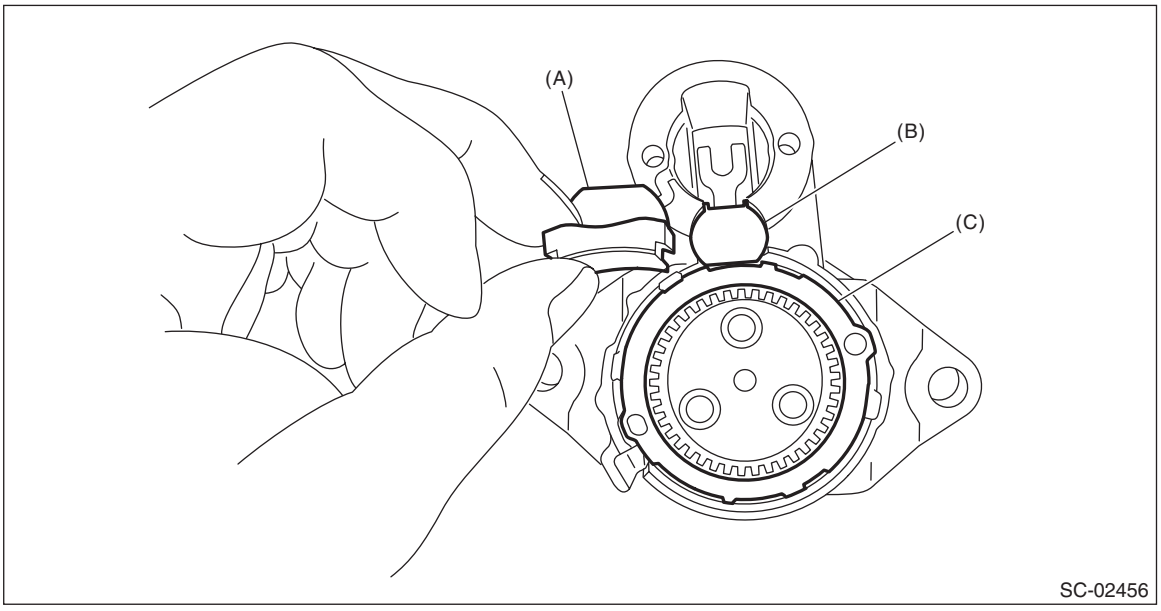

7) Assemble the armature assembly to the yoke assembly.

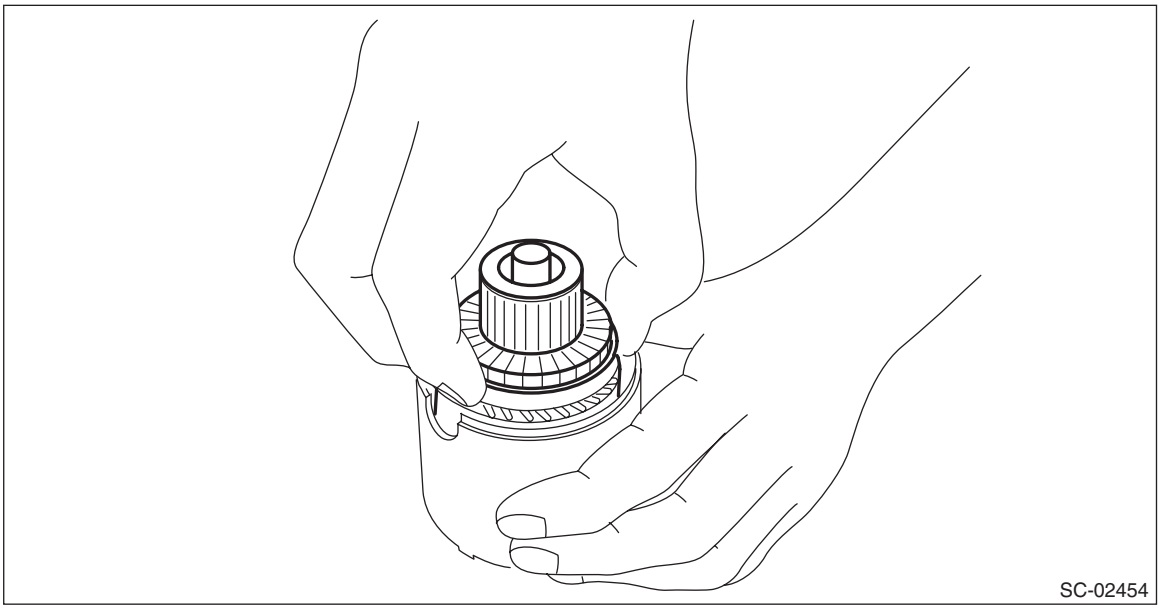

8) Attach the armature assembly and yoke assembly to the starter housing assembly together as a single unit.

NOTE:
As shown in the figure, match the protrusion of the yoke assembly to the cut out of the starter housing assembly.

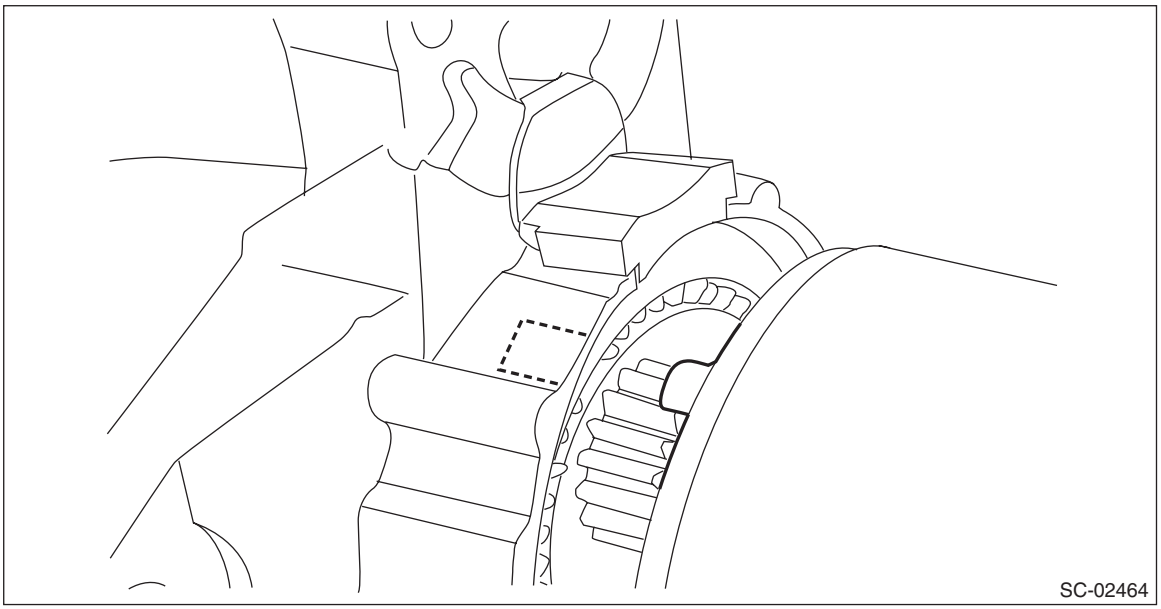

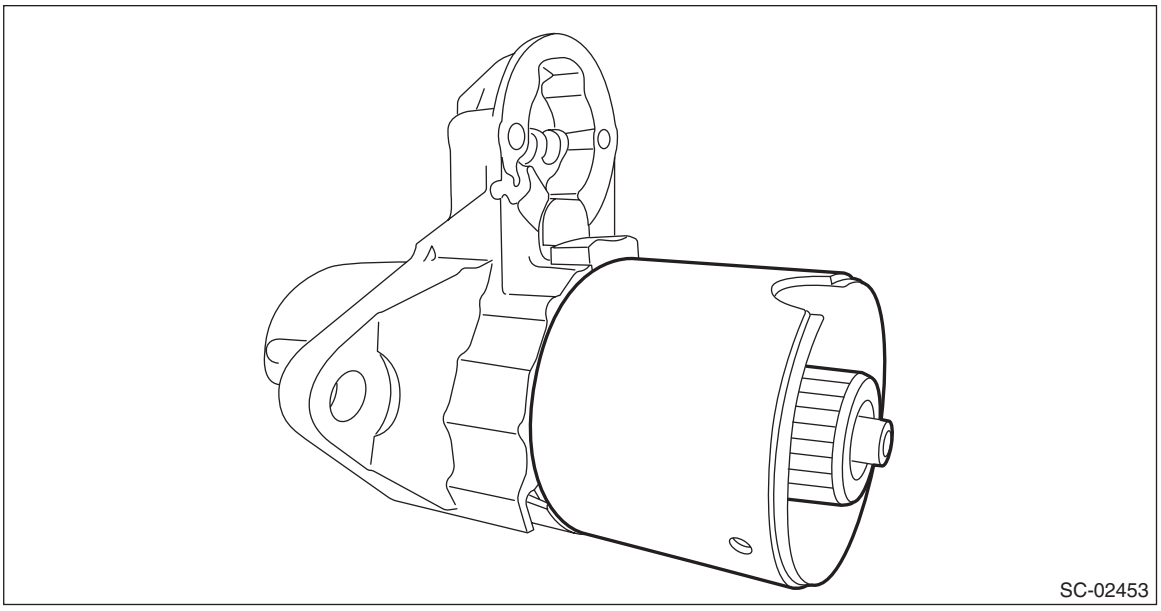
SC-02453

9) Use an appropriate tool (such as correctly sized socket wrenches) and attach the brush holder assembly to the armature assembly.

NOTE:
Be careful not to damage the brushes.

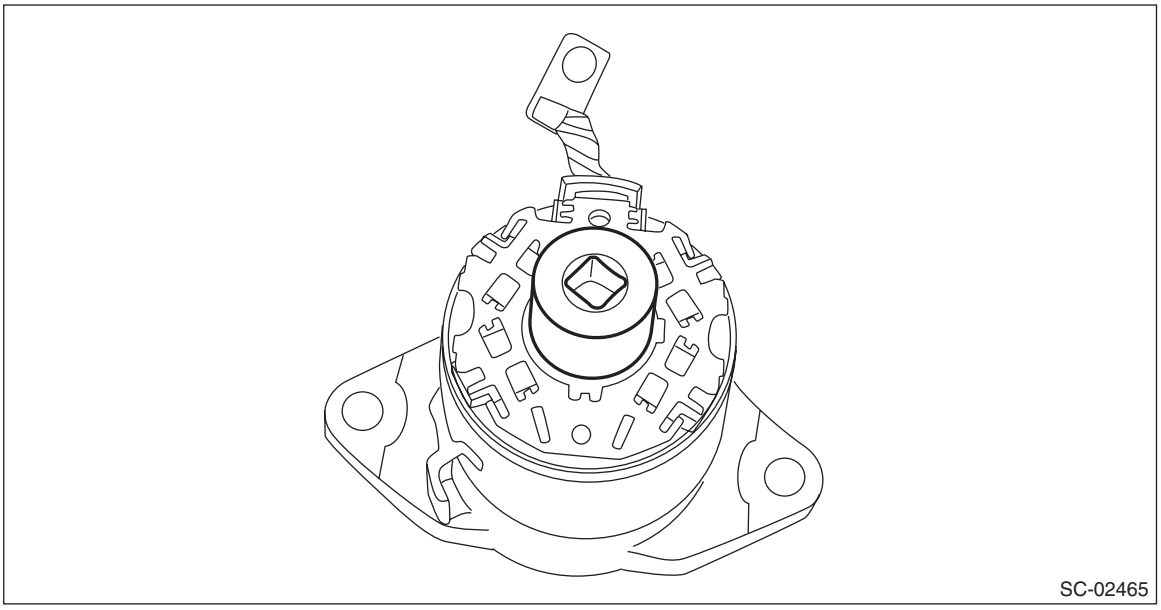
SC-02465

10) Secure starter cover assembly to the brush holder assembly with screws (A).

Tightening torque:
1.4 N·m (0.1 kgf-m, 1.0 ft-lb)

11) Tighten through bolts (B) on both sides.

Tightening torque:
6 N·m (0.6 kgf-m, 4.4 ft-lb)

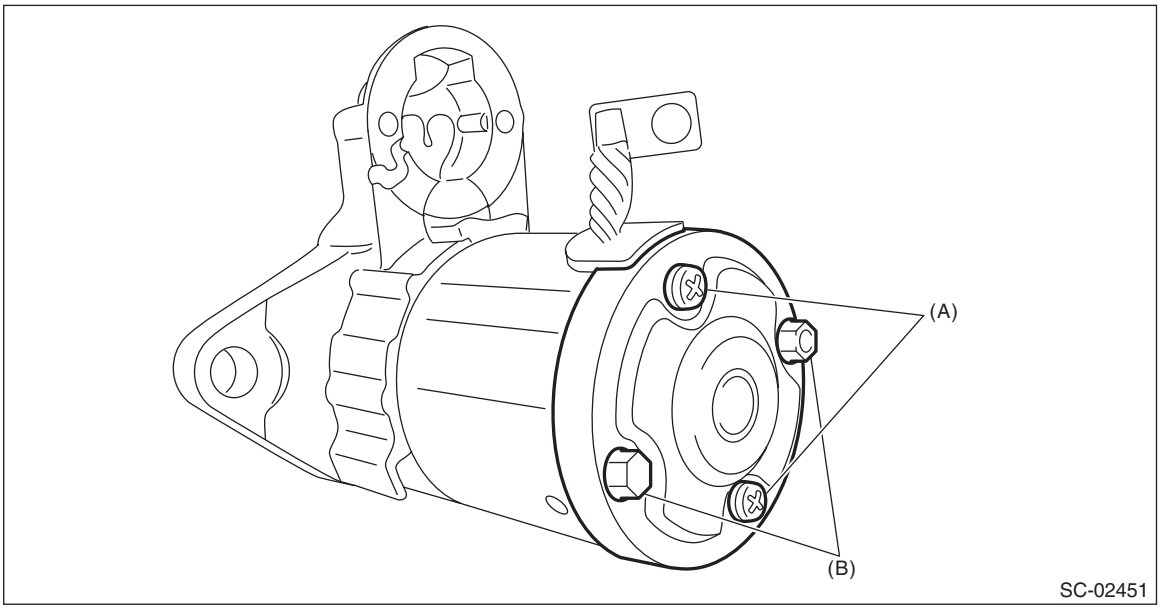

12) Attach the magnet switch assembly to the starter housing assembly.

Tightening torque:
7.5 N·m (0.8 kgf-m, 5.5 ft-lb)

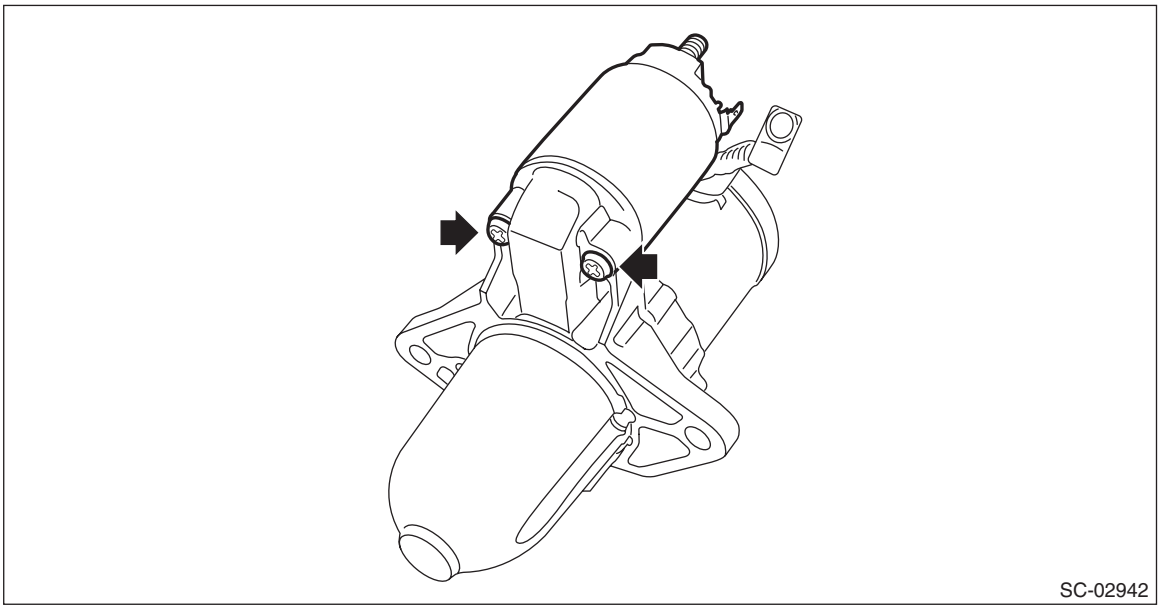

13) Attach the cable to the terminal M of the magnet switch assembly, and secure with nuts.

Tightening torque:
10 N·m (1.0 kgf-m, 7.4 ft-lb)

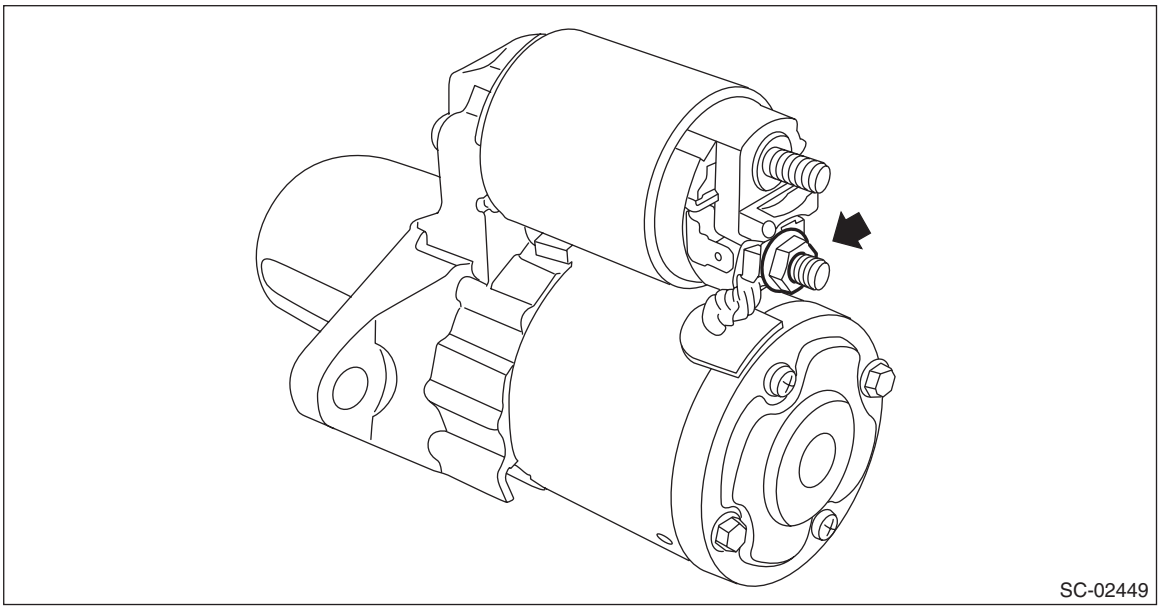

E: INSPECTION

1. ARMATURE

1) Check the commutator for signs of seizure or stepped wear caused by roughness of the surface. If there is light wear, use sandpaper to repair.
2) Check for runout on the commutator. If excessive, replace the armature.

Commutator runout:
Standard
0.05 mm (0.0020 in)
Limit
0.10 mm (0.0039 in)

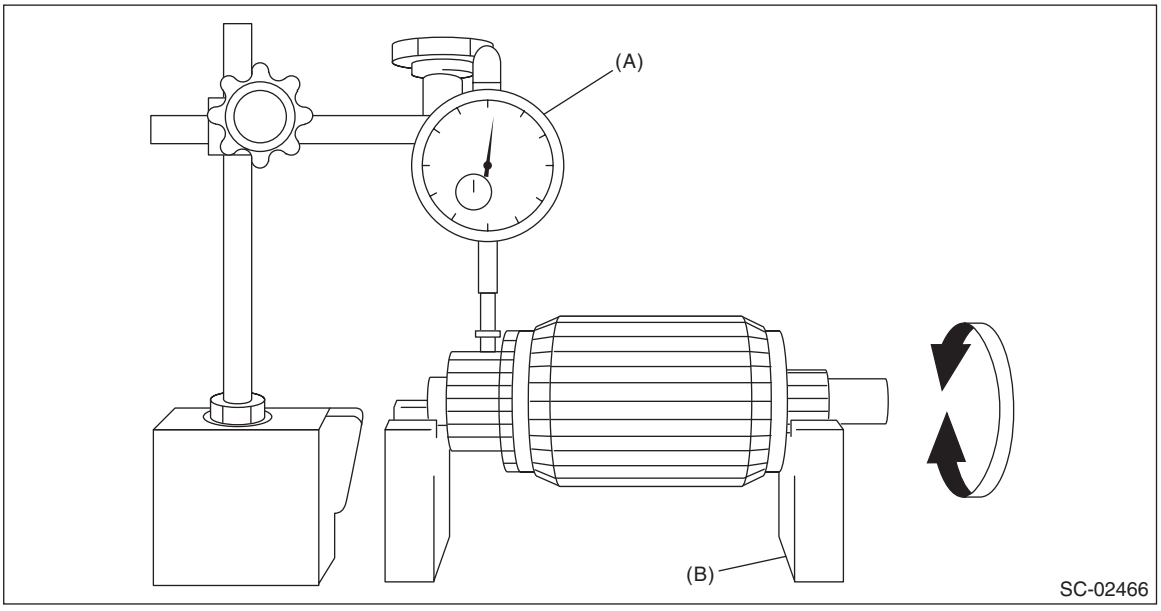

(A) Dial gauge (B) V-block

3) Check the depth of the segment mold. If it is not within the standard, replace the armature.

Depth of segment mold:
Standard
0.50 mm (0.020 in)

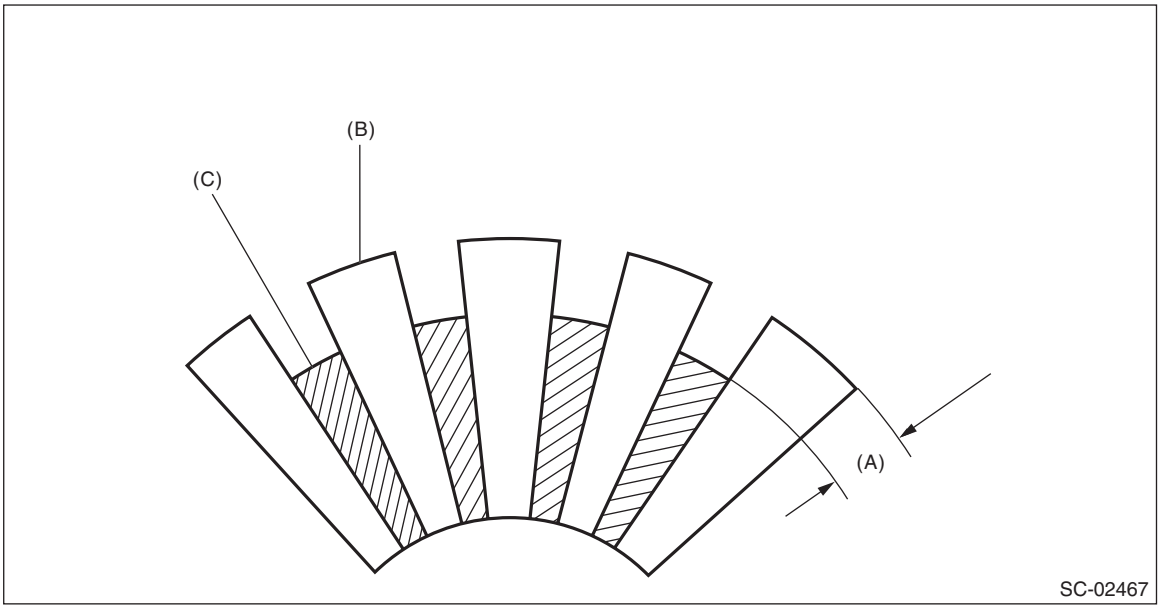

(A) Depth of mold (B) Segment (C) Mold

4) Place the armature on the growler tester to check for short circuits. While slowly turning the armature, support the steel sheet for the armature core. If the circuit of the armature is shorted, the steel sheet will vibrate, causing it to move towards the core. When the steel sheet has moved or vibrated, replace the armature.

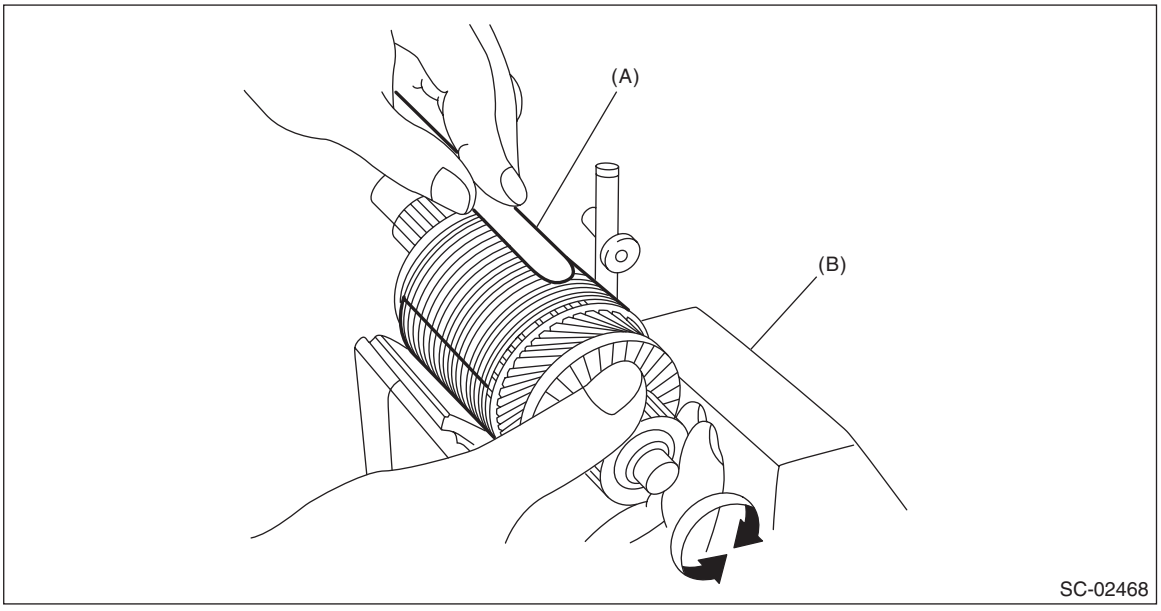

(A) Steel sheet (B) Growler tester

5) Use a circuit tester to touch the probe of one side to the commutator segment, and the other probe to the shaft. If there is continuity, replace the armature.

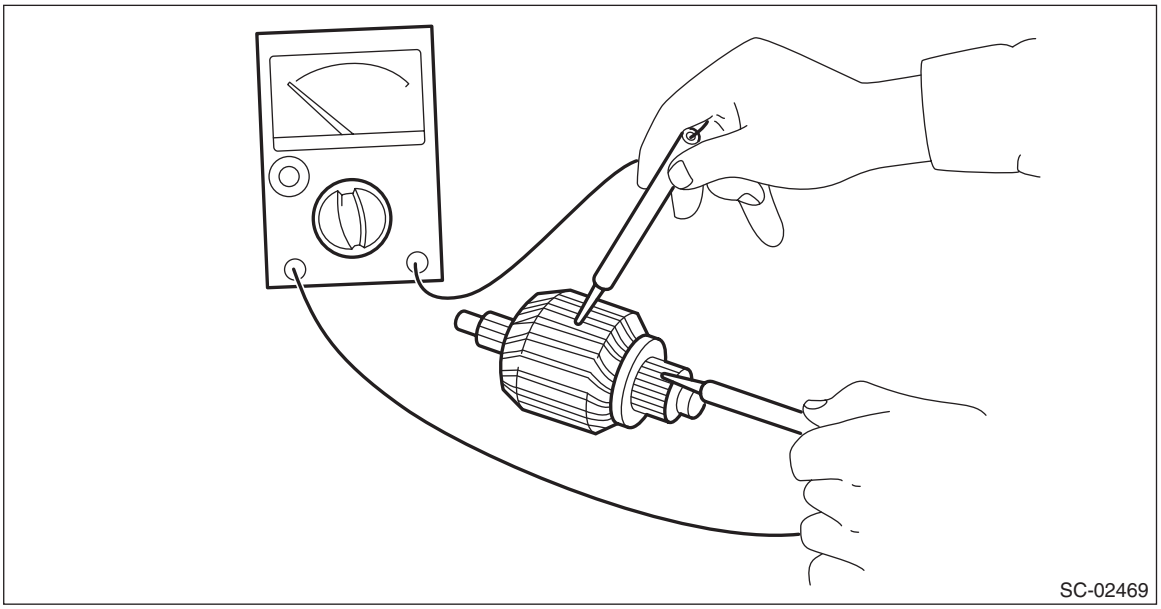

2. YOKE

Make sure that the pole is set at the predetermined position.

3. OVERRUNNING CLUTCH

Inspect the pinion, and if there is any wear or damage, replace the overrunning clutch. Also, check that the pinion rotates counterclockwise smoothly and does not rotate clockwise. If there is any fault, replace the overrunning clutch.

CAUTION:
To prevent spilling of grease, do not clean the overrunning clutch with oil.

4. BRUSH AND BRUSH HOLDER

1) Visually check the brush. If there is any abnormal wear or cracks, replace the brush.
2) Measure the length of the brush. If it exceeds service limits, replace the brush.

Brush length:
Standard
12.3 mm (0.484 in)
Limit
7.0 mm (0.276 in)

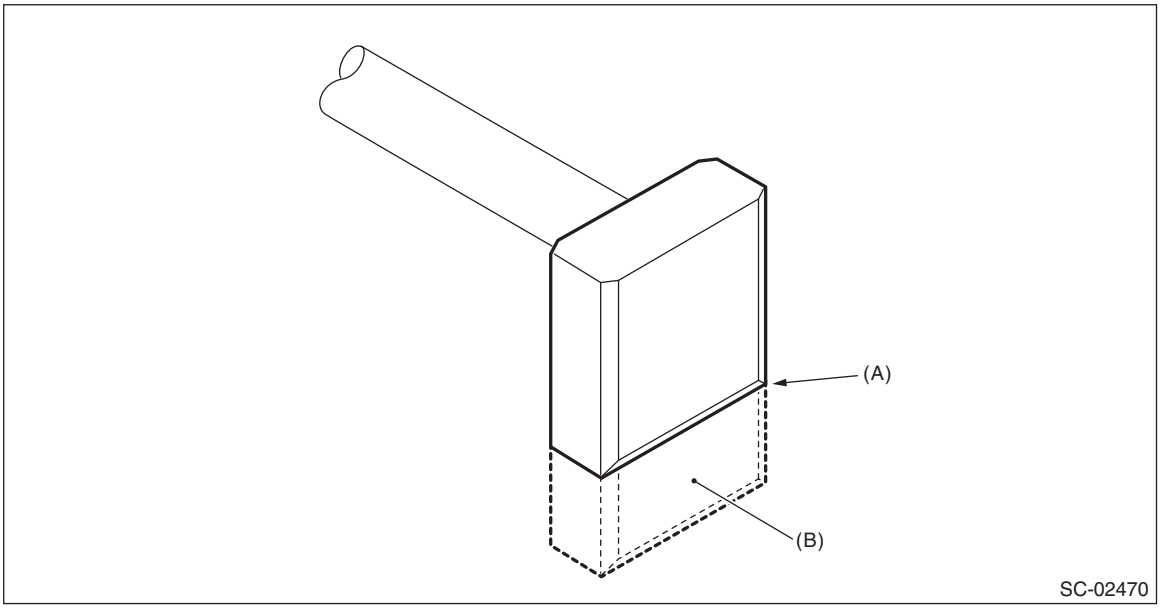

(A) Service limit line (B) Brush

3) Check that the brush moves smoothly in the brush holder.
4) Measure the brush spring force with a spring scale. Replace the brush holder if below the service limit.

Brush spring force:

Standard
15.9 — 19.5 N (1.62 — 1.99 kgf, 3.57 — 4.38 lbf) (when new)

Limit
2.5 N (0.25 kgf, 0.56 lbf)

5. SWITCH ASSEMBLY

Using a circuit tester, check there is continuity between S terminal and M terminal, and between S terminal and ground. Also, check that there is no continuity between M terminal and B terminal.

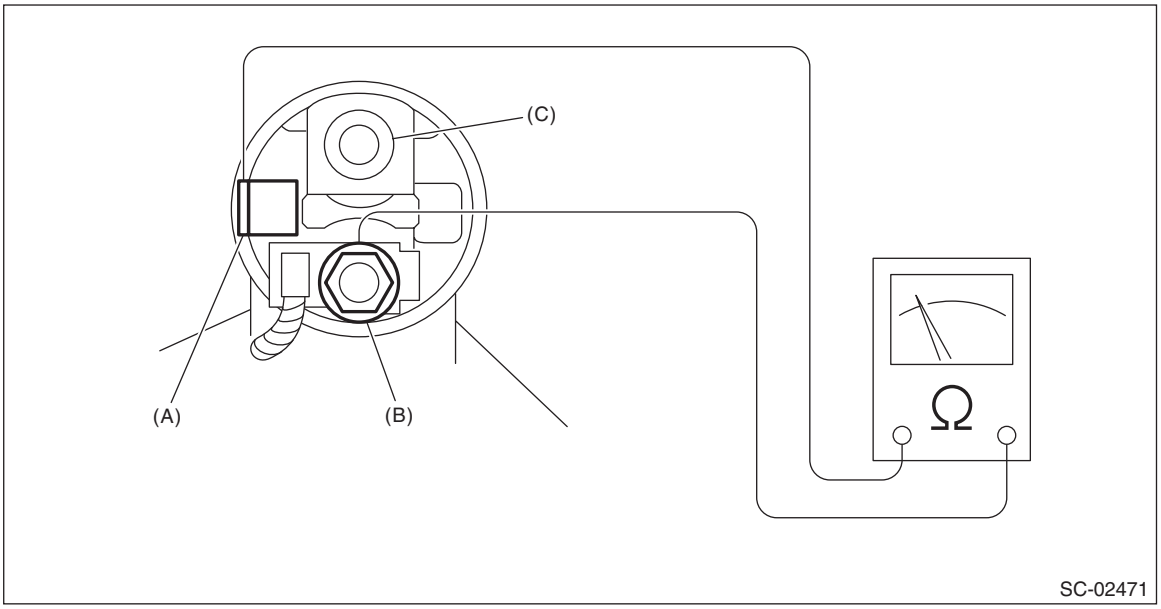

(A) Terminal S (B) Terminal M (C) Terminal B

Terminals	Standard
Terminal S — terminal M	1 Ω or less
Terminal S — Ground	1 Ω or less
Terminal M — terminal B	1 MΩ or more

6. SWITCH ASSEMBLY OPERATION

CAUTION:
Perform the inspection in a short period of time. (Within 3 to 5 seconds)

1) Loosen the nut which holds the M terminal to the starter body.

NOTE:
This procedure is required to facilitate the harness removal from the M terminal.

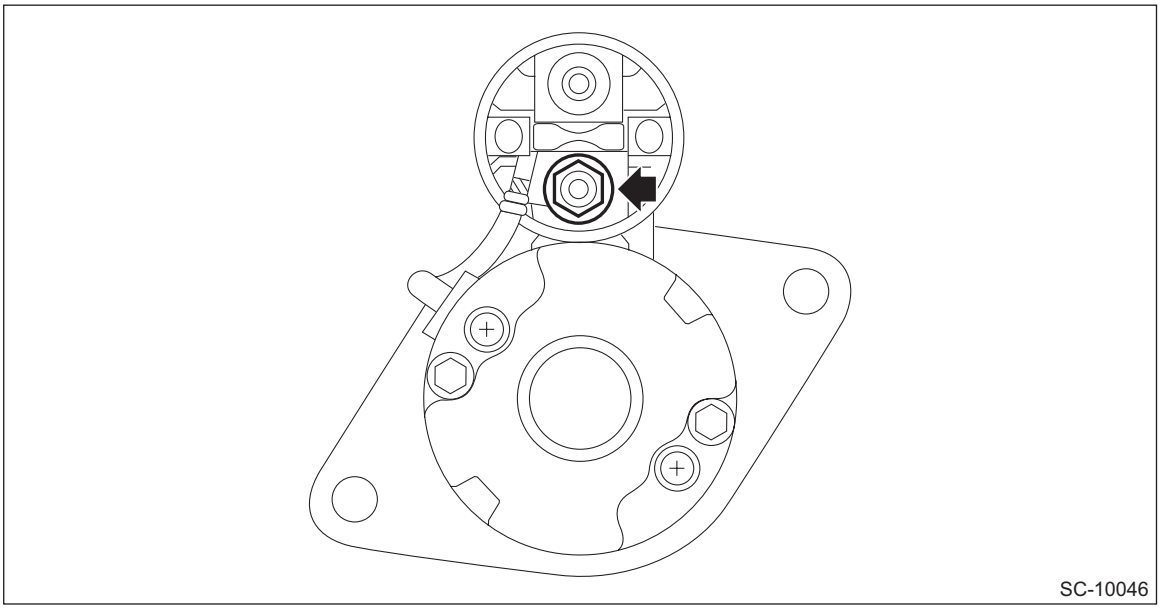

2) Connect the battery positive terminal to the switch assembly S terminal, and connect the battery negative terminal to the starter body. Then, if the pinion protrudes, it is normal.

NOTE:
The starter motor may rotate while the pinion protrudes. This occurs due to current that flows to the motor via pull-in coil. This is not a problem.

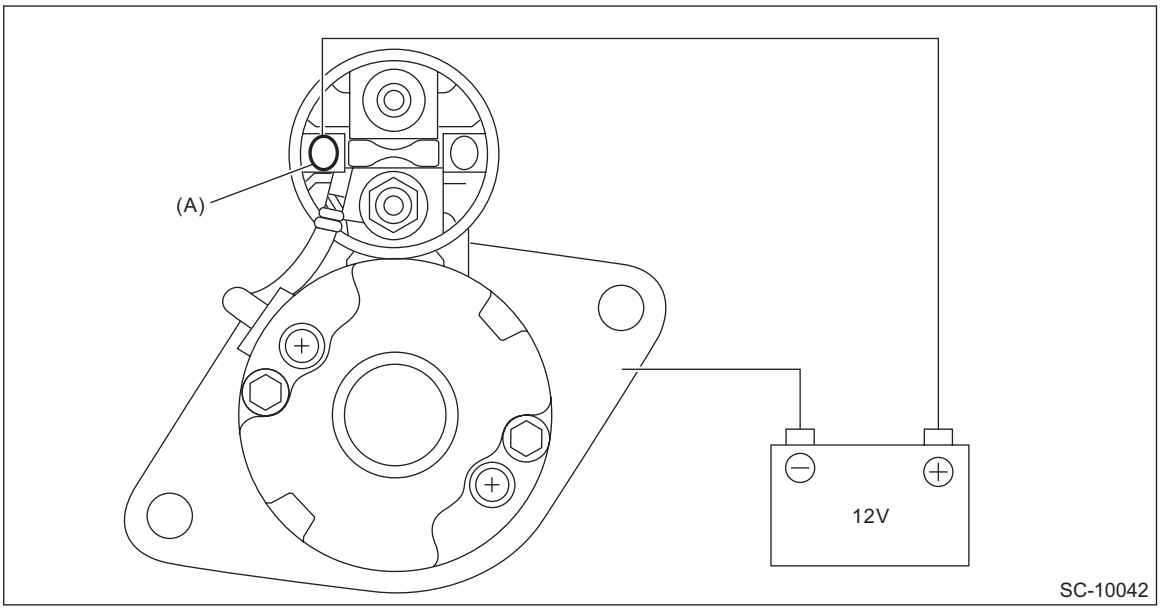

(A) Terminal S

3) Disconnect the harness from the M terminal. Check that the pinion is being protruded at this time.

CAUTION:
Hold the disconnected harness so that it does not contact the terminal or wiring.
4) Disconnect the battery negative terminal from the starter body. Then, if the pinion returns to its original position, it is normal.

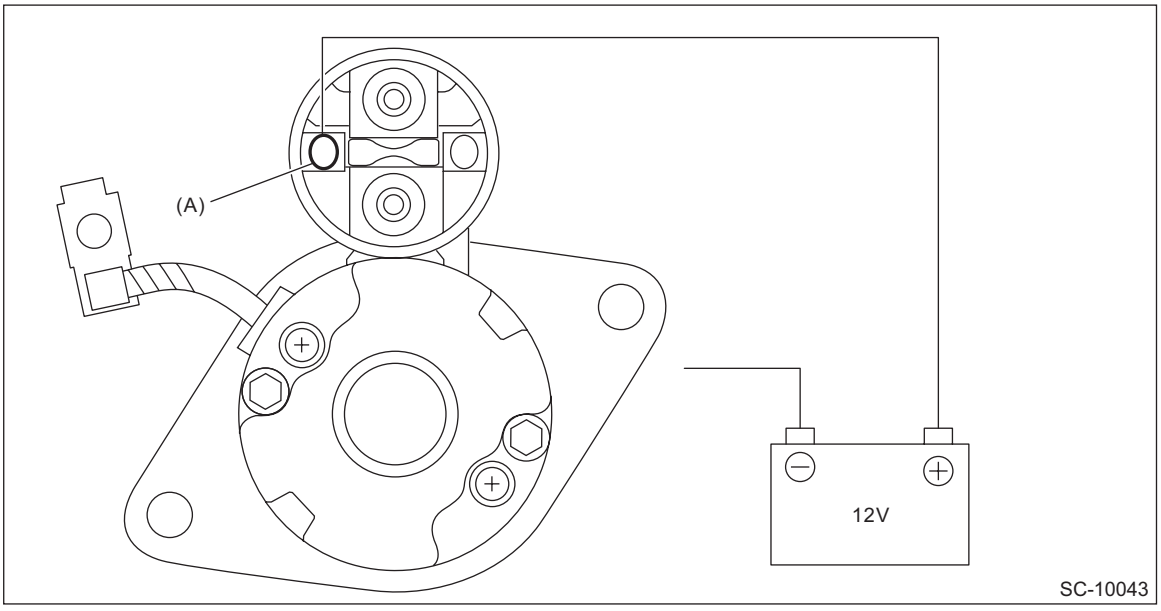

(A) Terminal S

7. NO-LOAD TEST

The starter should be placed through a no-load test whenever it has been overhauled.
For no-load test, use the circuit shown in figure.

CAUTION:

- **Use a thick cable due to large current flowing through the cable.**
  - **For B terminal and ground, it is recommended that the cross-section area of continuity part (shaded part) should be 20 mm ^{2} (0.00310 sq in) or more. For S terminal, 1.25 mm ^{2} (0.00194 sq in) or more.**

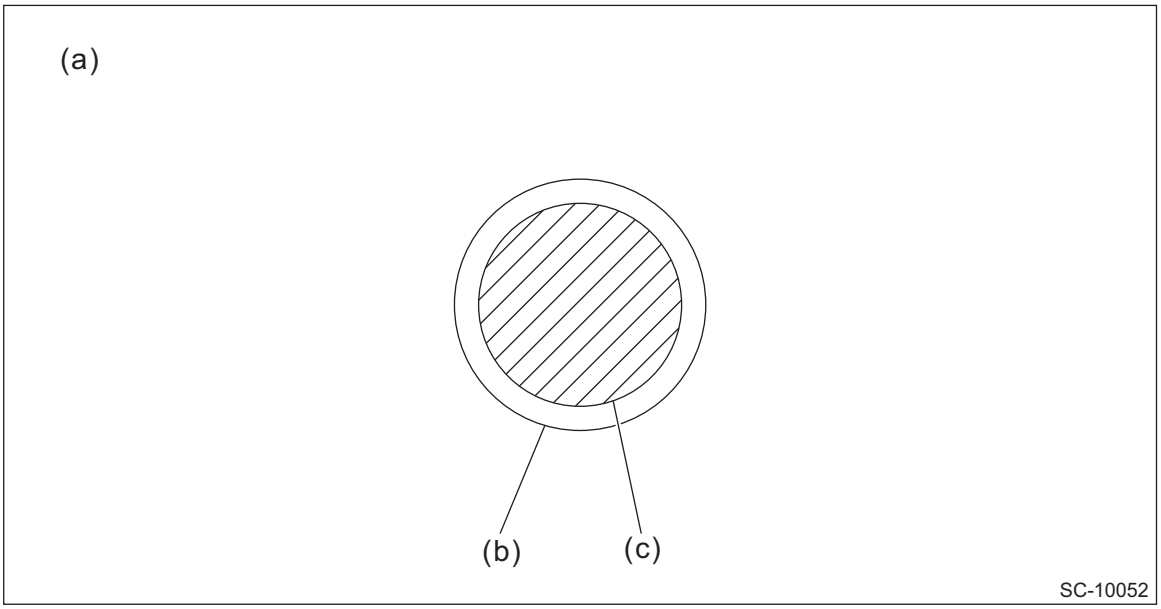

(a) Cable cross-section (b) Cable shield part (c) Cable continuity part

  - **It is possible to use a booster cable instead of wiring.**
- **Be careful not to burn yourself and cause a fire due to heat.**
- **Perform the no-load test in a short period of time. (Within 3 to 5 seconds)**

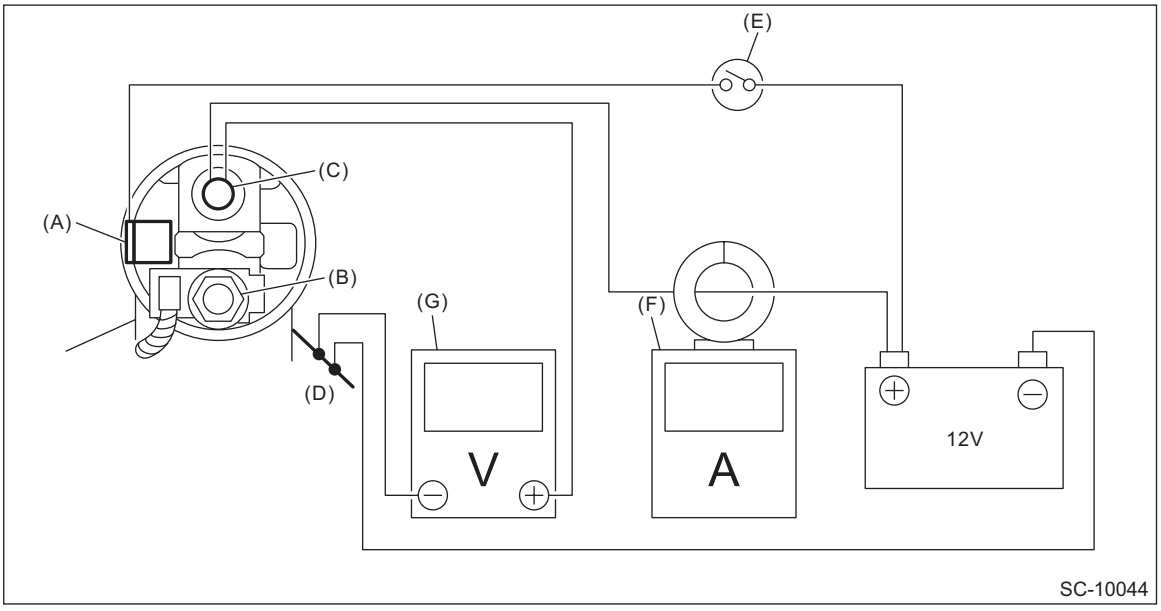

(A) Terminal S (B) Terminal M (C) Terminal B
(D) Magnet switch (E) Switch (F) Circuit tester with clamp-type ammeter
(G) Circuit tester

1) Using a vise, secure the starter.

CAUTION:
Be careful not to deform or damage the starter.
2) Turn the switch ON, and check that the pinion protrudes rapidly into the specified position and rotates powerfully without noise.
3) Check the current and voltage after its rotation speed stabilizes.

Current/Voltage
90 A or less (approx. 11 V)

8. OTHER INSPECTIONS

Check that the starter does not have deformation, cracks and any other damage.

3. Starter Relay

A: REMOVAL

1) Disconnect the ground terminal from battery sensor. <Ref. to RC-4, BATTERY, NOTE, Repair Contents.>
2) Remove the instrument panel lower cover. <Ref. to EI-75, REMOVAL, Instrument Panel Lower Cover.>
3) Remove the starter relay from relay block.

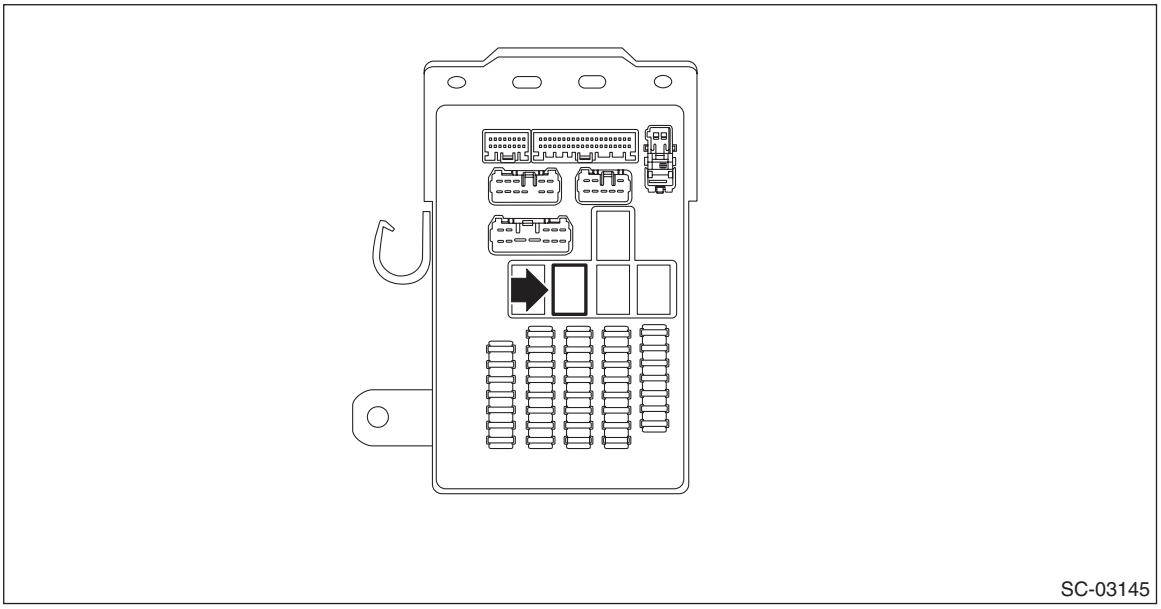

B: INSTALLATION

1) Install the starter relay to the relay block.
2) Install the instrument panel lower cover. <Ref. to EI-76, INSTALLATION, Instrument Panel Lower Cover.>
3) Connect the ground terminal to battery sensor. <Ref. to RC-4, BATTERY, NOTE, Repair Contents.>

C: INSPECTION

1) Check that the starter relay does not have deformation, cracks and any other damage.
2) Measure the resistance between starter relay terminals.

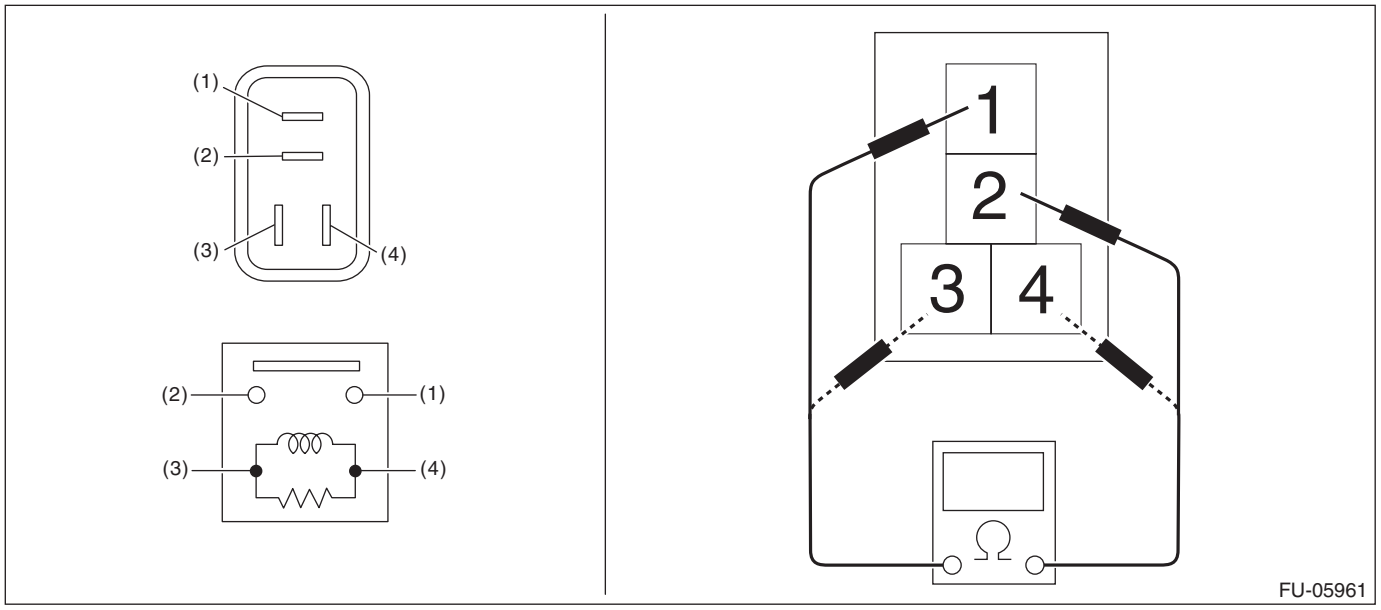

Terminal No.	Standard
1 and 2	1 MΩ or more
3 and 4	128.07 — 156.53 Ω (when 20°C (68°F))

3) Connect battery positive terminal to terminal No. 3 and battery ground terminal to terminal No. 4, and measure the resistance between the starter relay terminals.

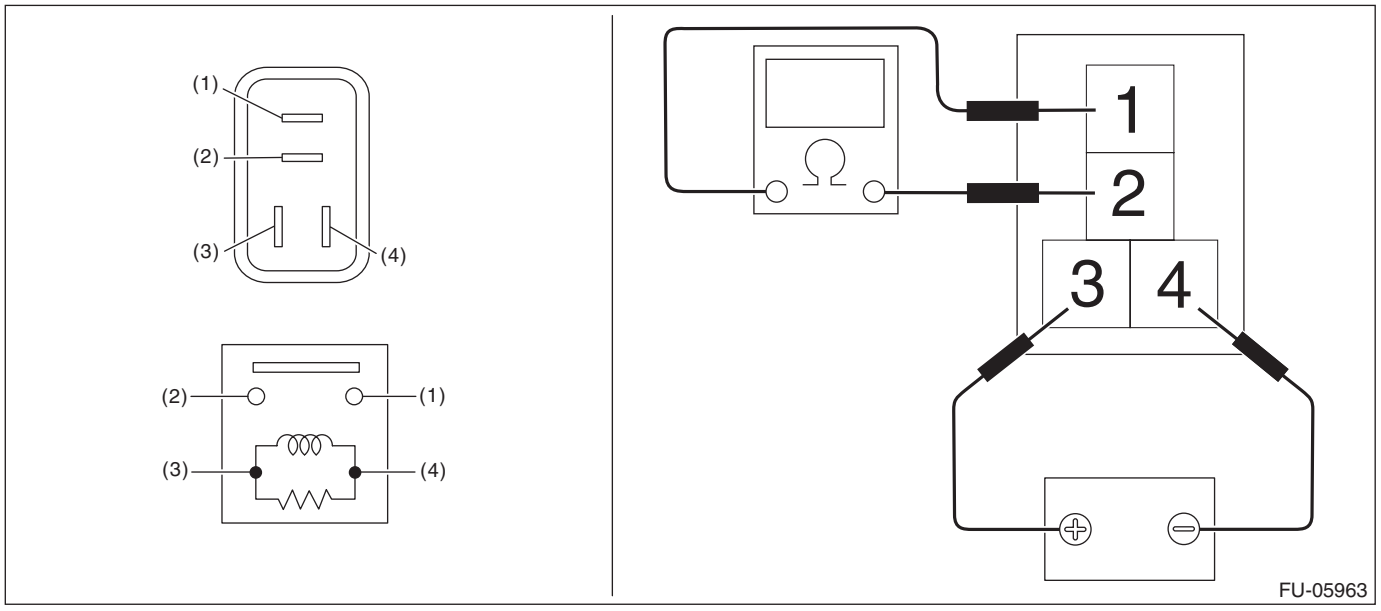

Terminal No.	Standard
1 and 2	Less than 1 Ω

4. Generator

A: REMOVAL

1) Remove the collector cover.
   (1) Carefully pull up the rear of collector cover at two positions (A).
   (2) Carefully pull up the front of collector cover at two positions (B) while moving it forward.

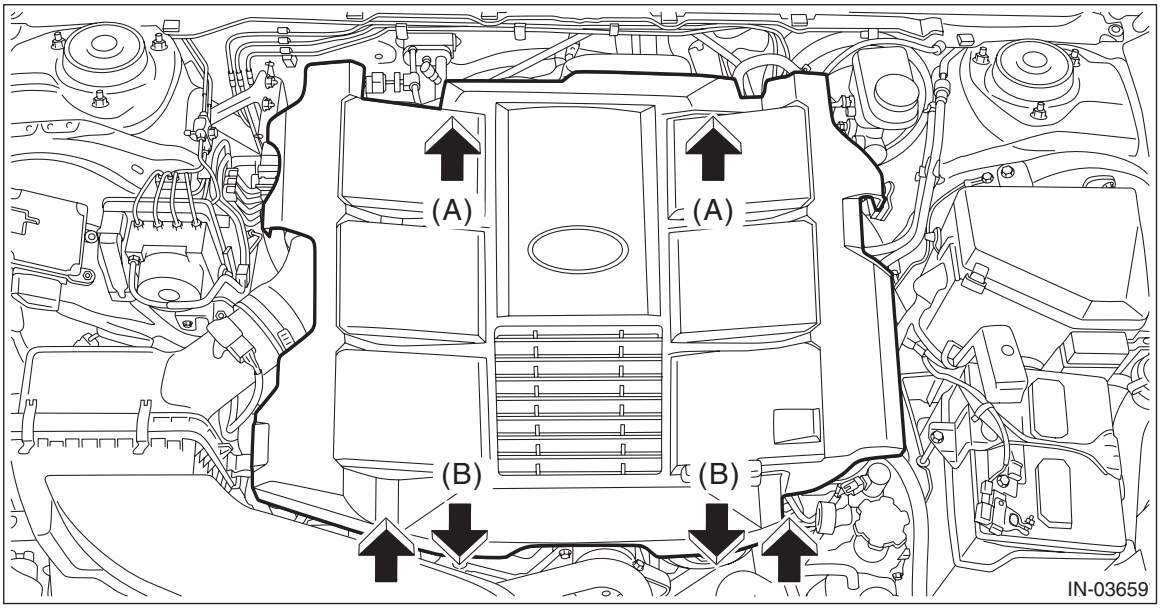

2) Disconnect the ground terminal from battery sensor. <Ref. to RC-4, BATTERY, NOTE, Repair Contents.>
3) Remove the V-belts. <Ref. to ME(H6DO)-74, REMOVAL, V-belt.>
4) Disconnect the connector (A) from the generator, and remove the terminal (B).
5) Remove the harness cover (C) from the collector cover bracket.
6) Remove the collector cover bracket.

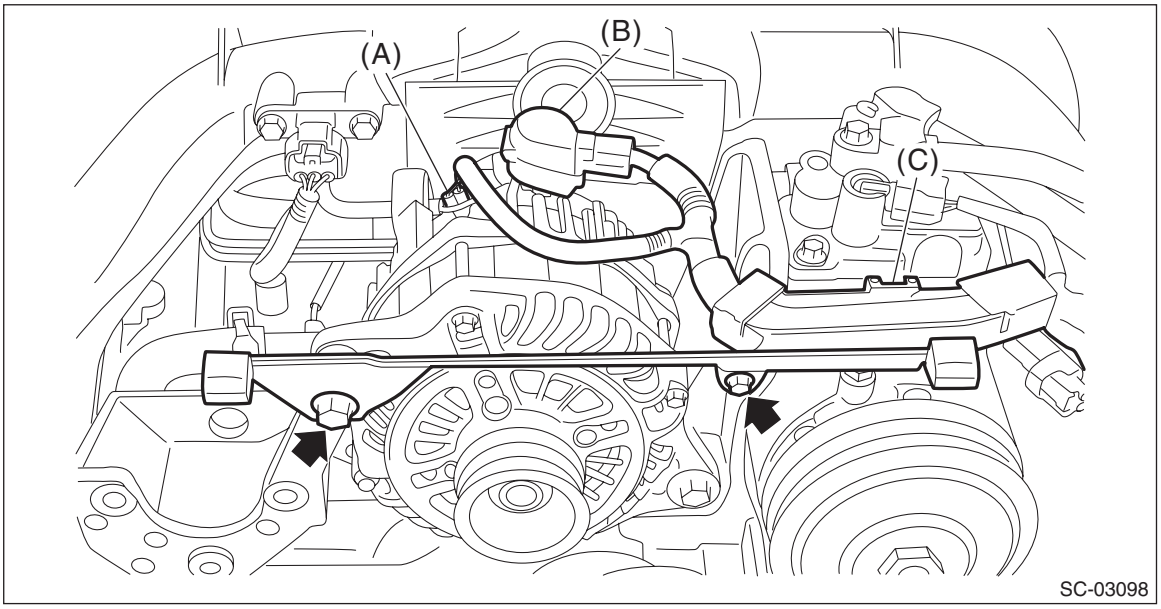

7) Remove the tensioner assembly.

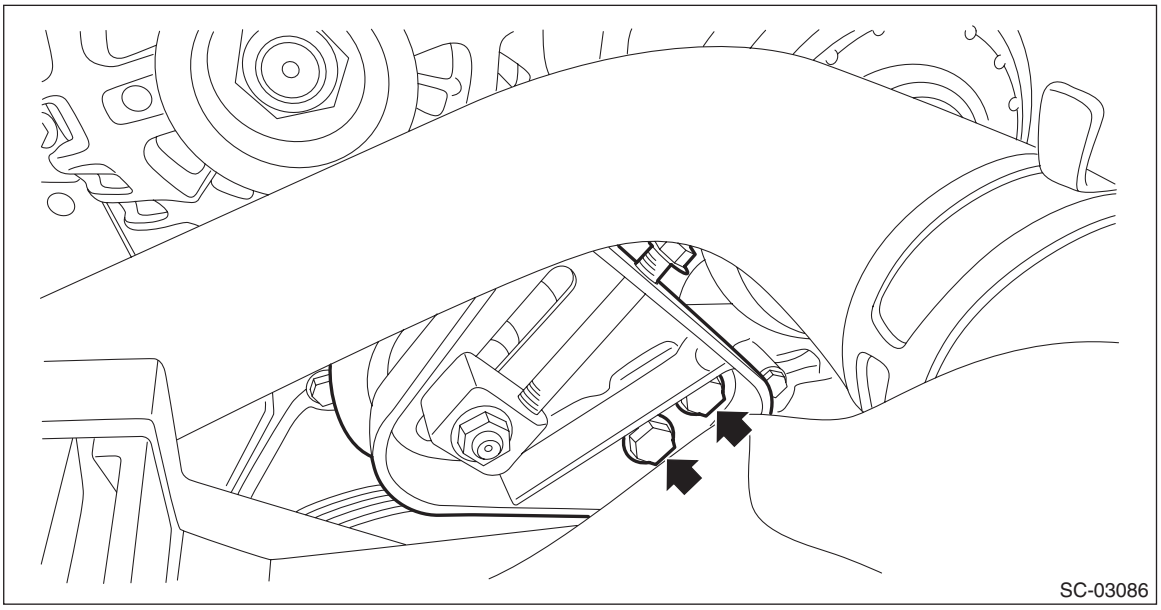

8) Remove the generator from the A/C compressor bracket.

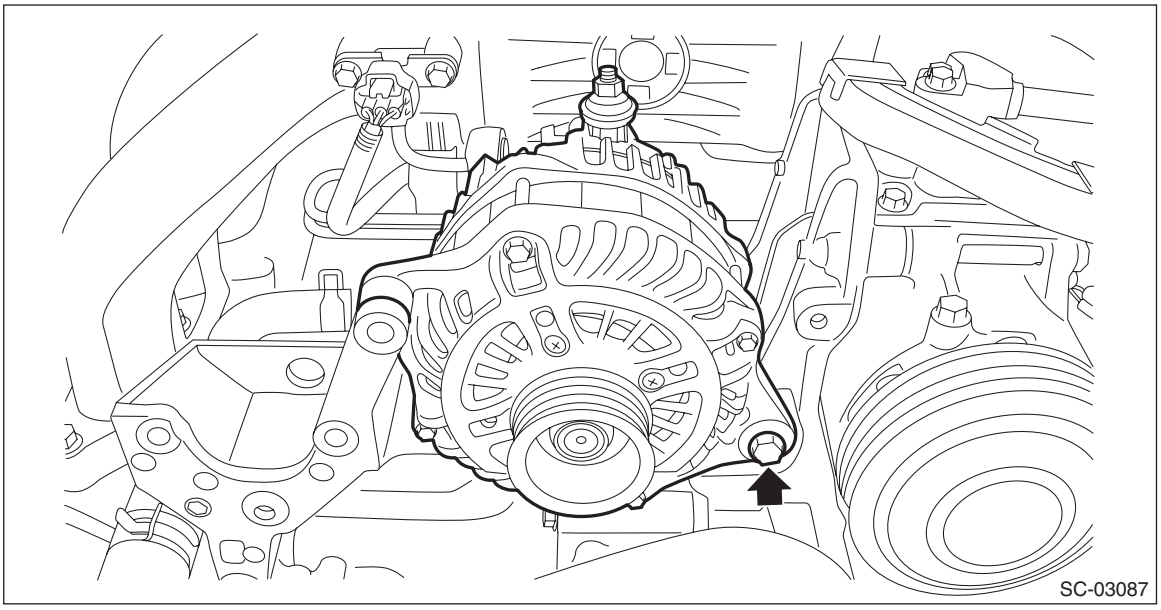

9) Remove the generator bracket from the engine.

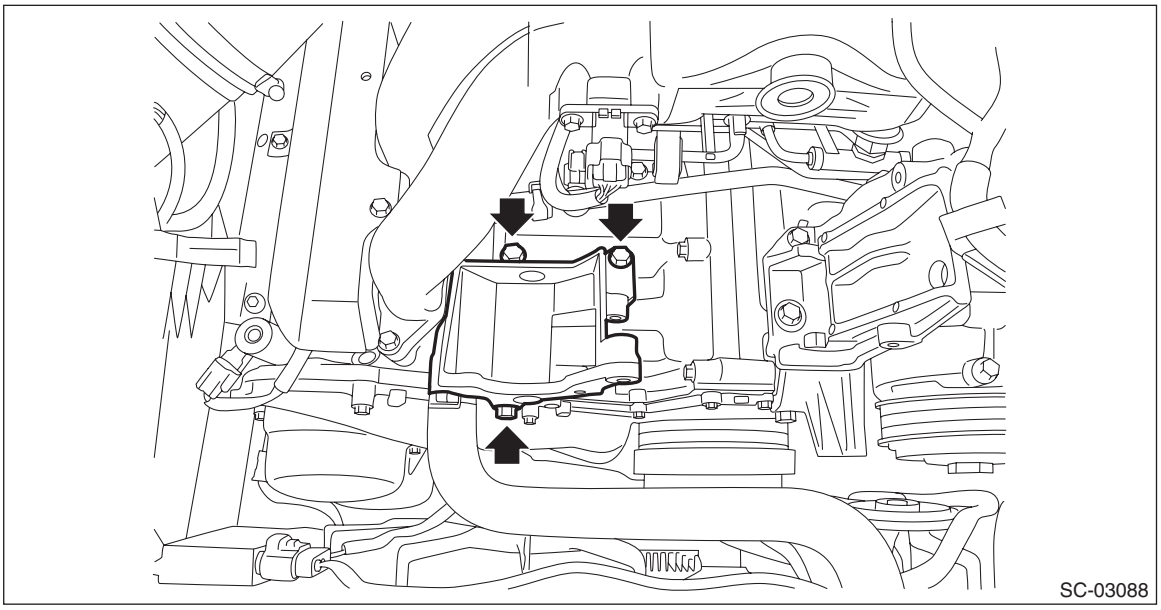

B: INSTALLATION

1) Install the generator bracket to the engine.

Tightening torque:
36 N·m (3.7 kgf-m, 26.6 ft-lb)

2) Temporarily attach the bolts (A) and generator plate (B) to the generator.
3) Temporarily fit the generator in the groove (C) of the A/C compressor bracket.

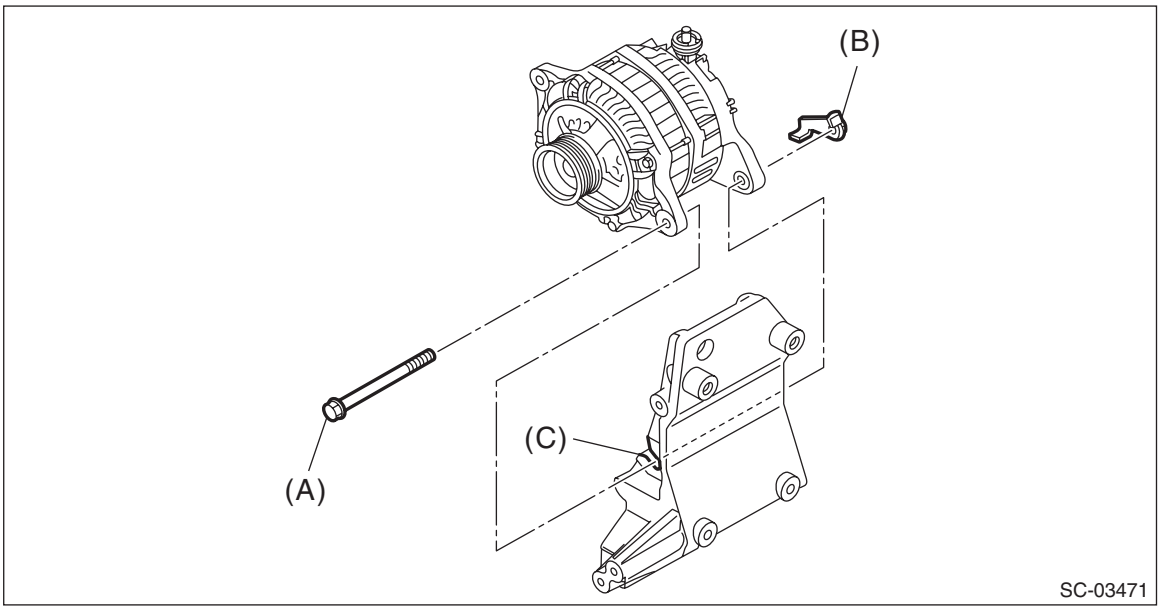

4) Temporarily fit the collector cover bracket.
5) Tighten the generator and collector cover bracket in the numerical order.

Tightening torque:
T1: 6.4 N·m (0.7 kgf-m, 4.7 ft-lb)
T3: 25 N·m (2.5 kgf-m, 18.4 ft-lb)

6) Install the harness cover (C) to the collector cover bracket.
7) Connect the connector (A) to the generator, and install the terminal (B).

Tightening torque:
T2: 15 N·m (1.5 kgf-m, 11.1 ft-lb)

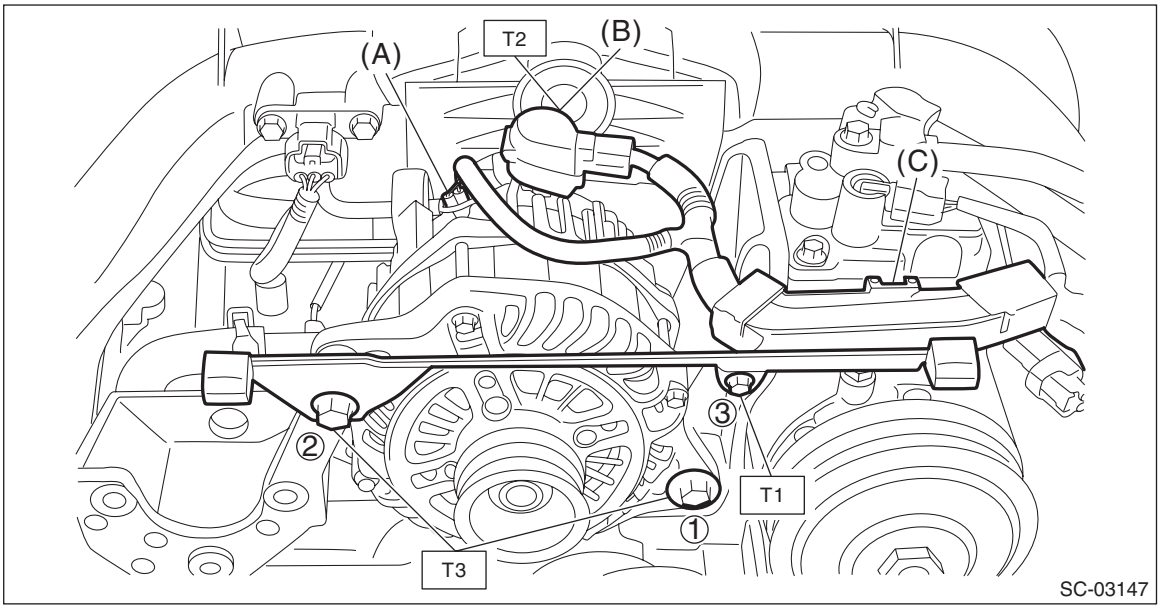

8) Install the tensioner assembly.

Tightening torque:
20 N·m (2.0 kgf-m, 14.8 ft-lb)
9) Install the V-belts. <Ref. to ME(H6DO)-75, INSTALLATION, V-belt.>
10) Connect the ground terminal to battery sensor. <Ref. to RC-4, BATTERY, NOTE, Repair Contents.>
11) Install the collector cover.

C: DISASSEMBLY

1) Remove four bolts.

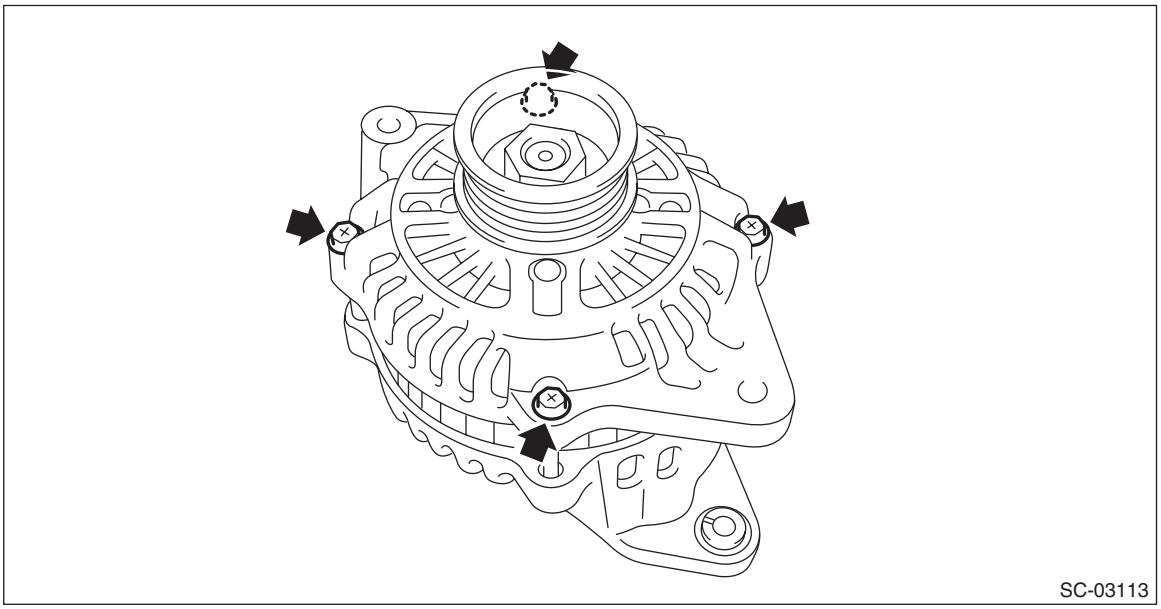

2) Use a drier to heat the rear cover (A) portion to 50 — 60°C (122 — 140°F).

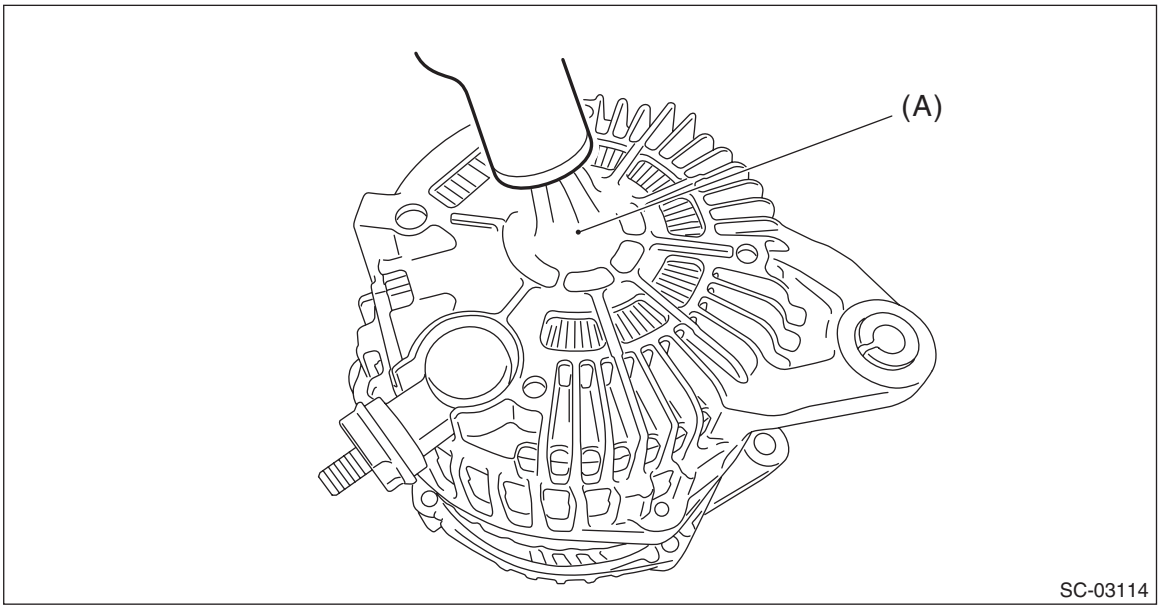

3) Insert the end of a flat tip screwdriver into the gap between stator core and front cover. Pry them apart to disassemble.

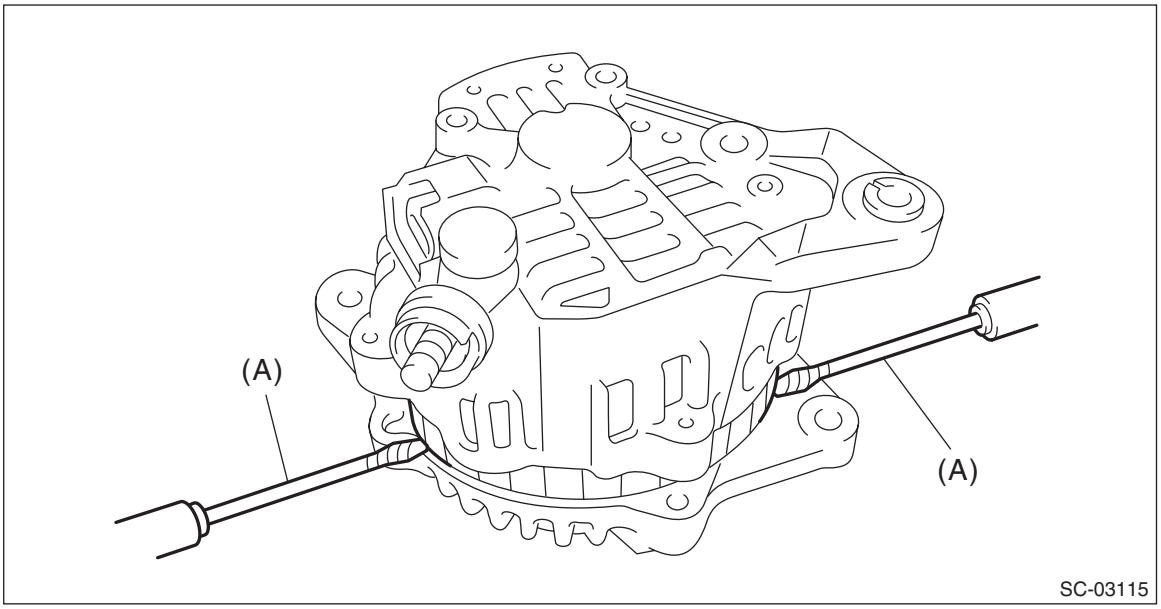

(A) Screwdriver

4) Using a vise, support the rotor and remove the pulley nut, then remove the rotor from the front cover.

CAUTION:
When holding the rotor with a vise, place aluminum plates or wooden pieces on the vise jaws to prevent rotor from damage.

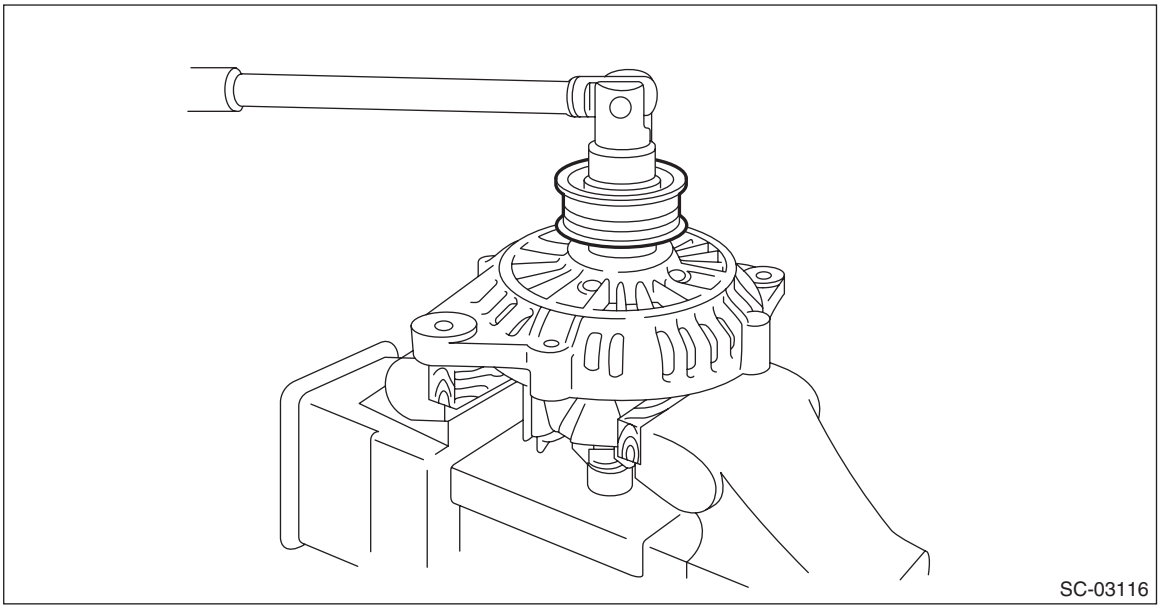

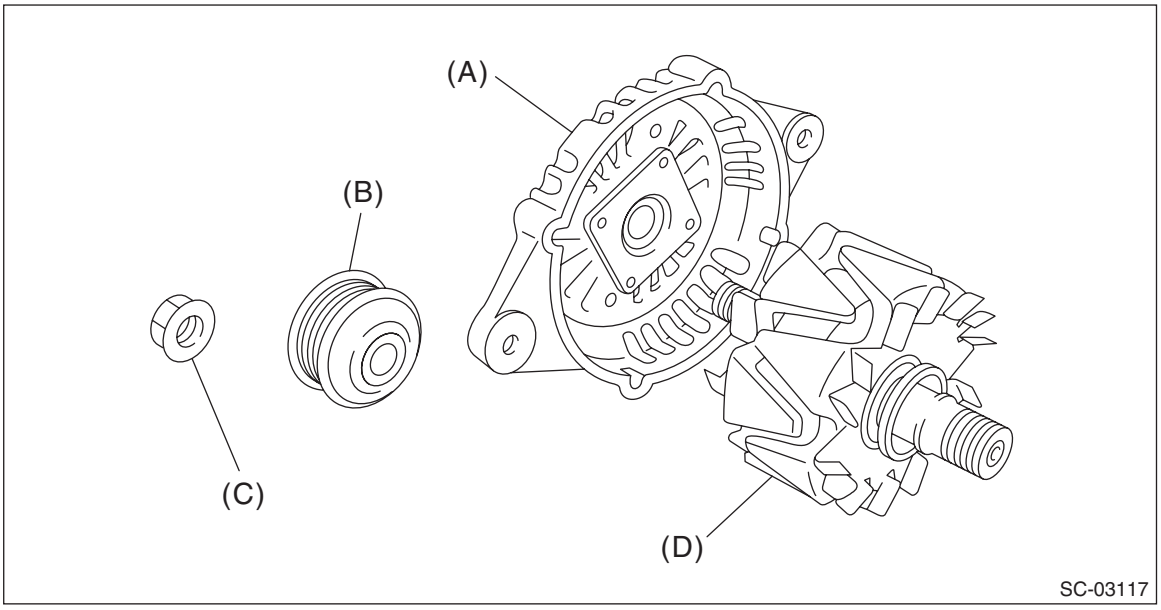

(A) Front cover
(B) Pulley
(C) Pulley nut
(D) Rotor

5) Use the following procedures to remove the ball bearings.
(1) Remove the bolt, and then detach the bearing retainer.

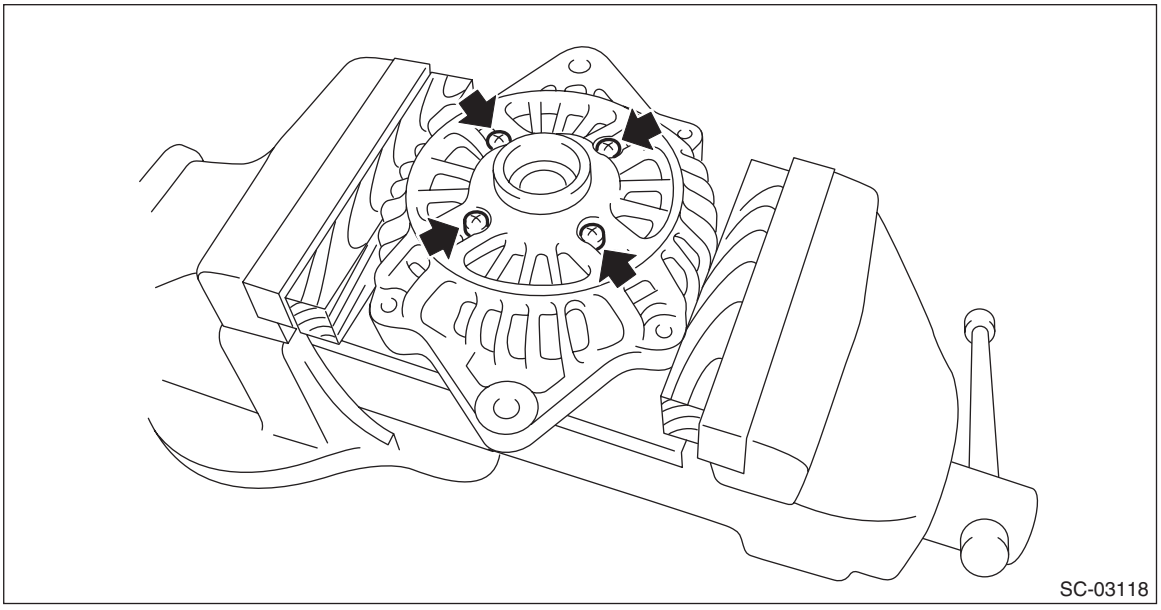
SC-03118

(2) Set an appropriate tool (such as a socket wrench of proper size) properly to the bearing inner race.

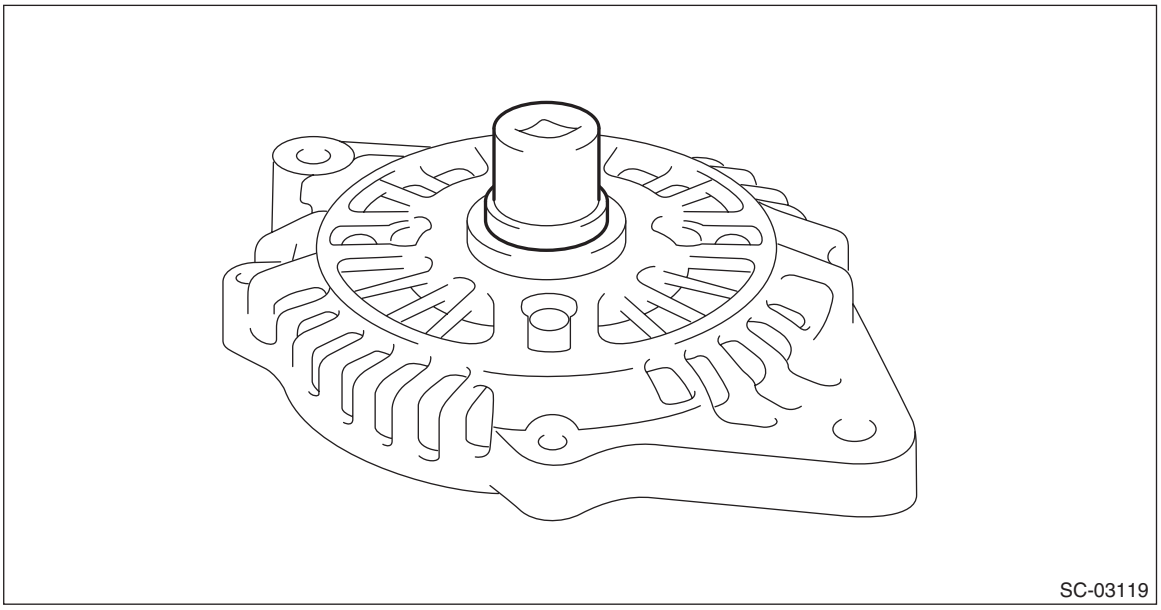
SC-03119

(3) Use the press to push the ball bearings out from the front cover.

6) Using the bearing puller, remove the bearings from the rotor.

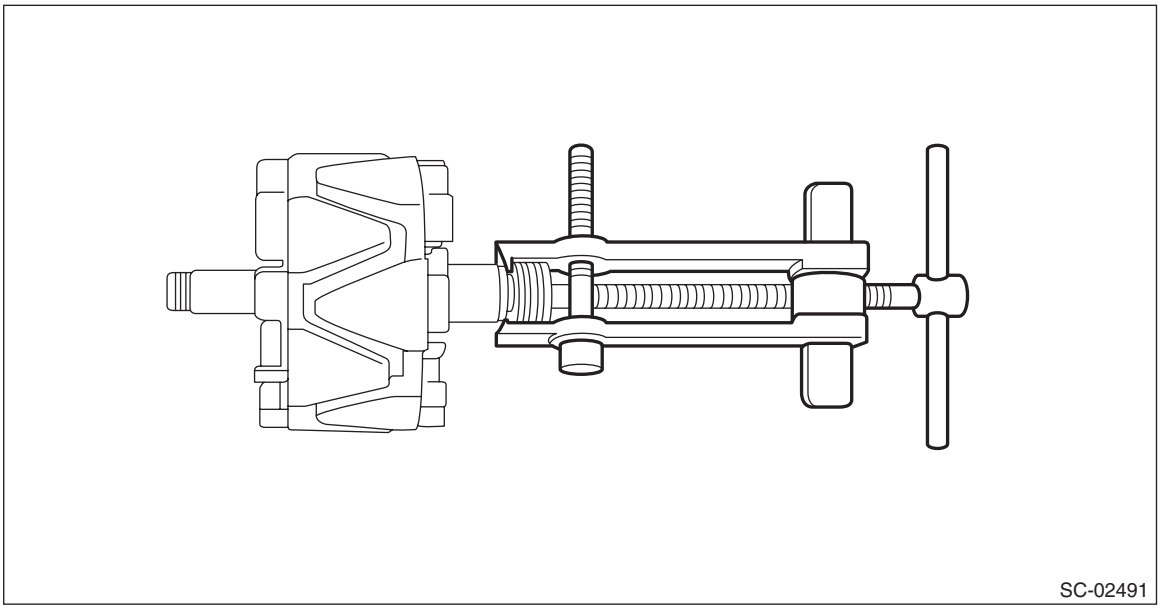
SC-02491

7) Remove six bolts between the rectifier and stator coil, then remove the stator coil.

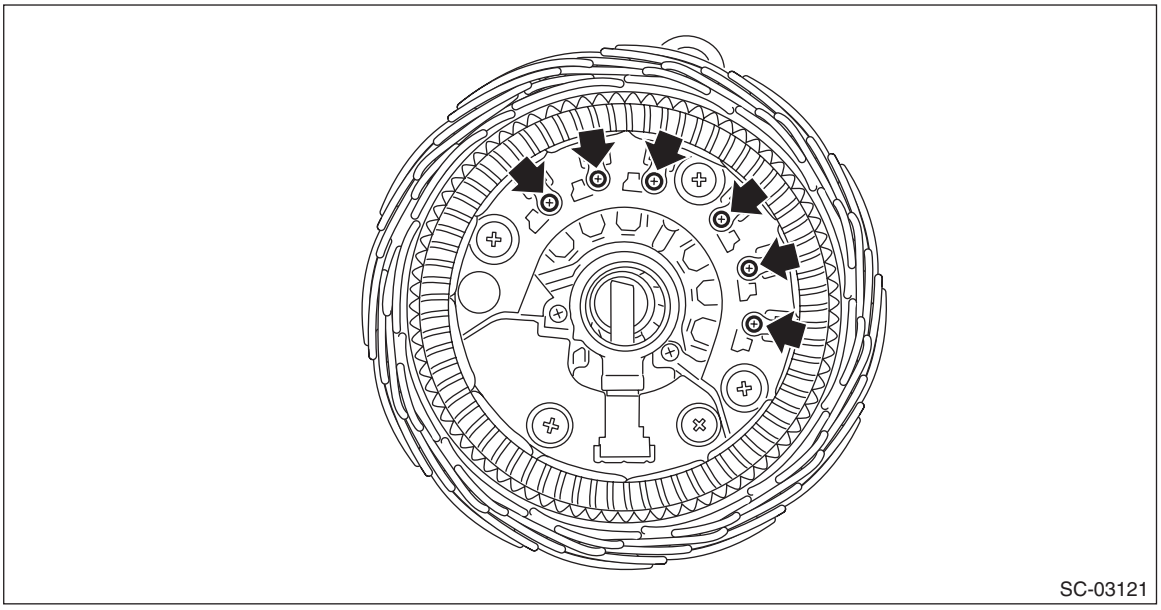
SC-03121

8) Remove four screws which secure the IC regulator to the rear cover, then remove the IC regulator.

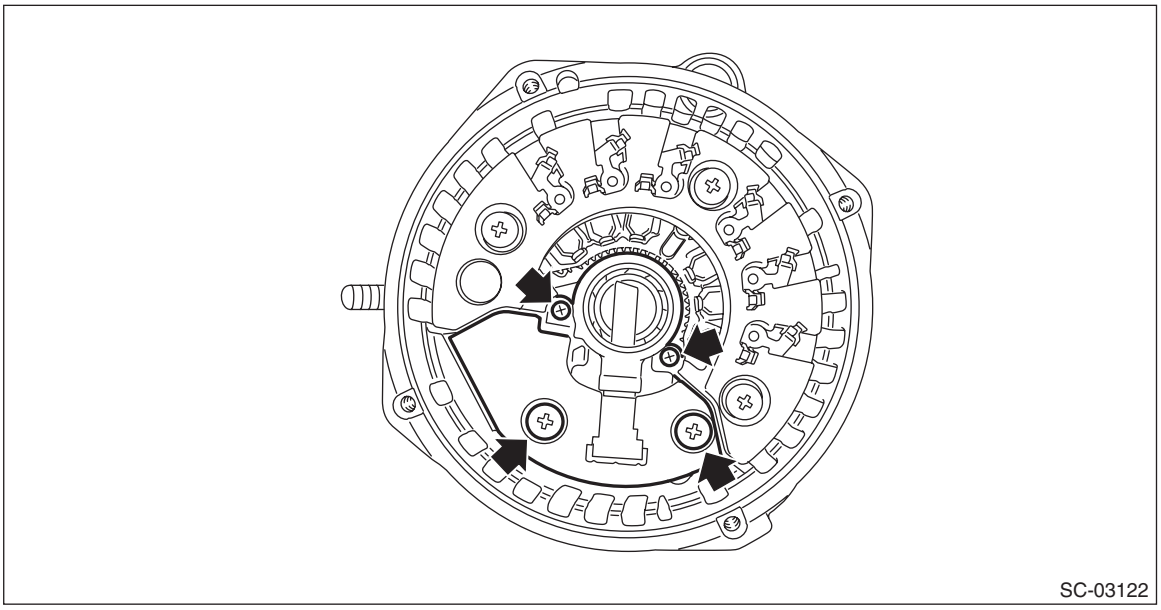
SC-03122

9) Use the following procedures to remove the brush.
(1) Remove the cover A.

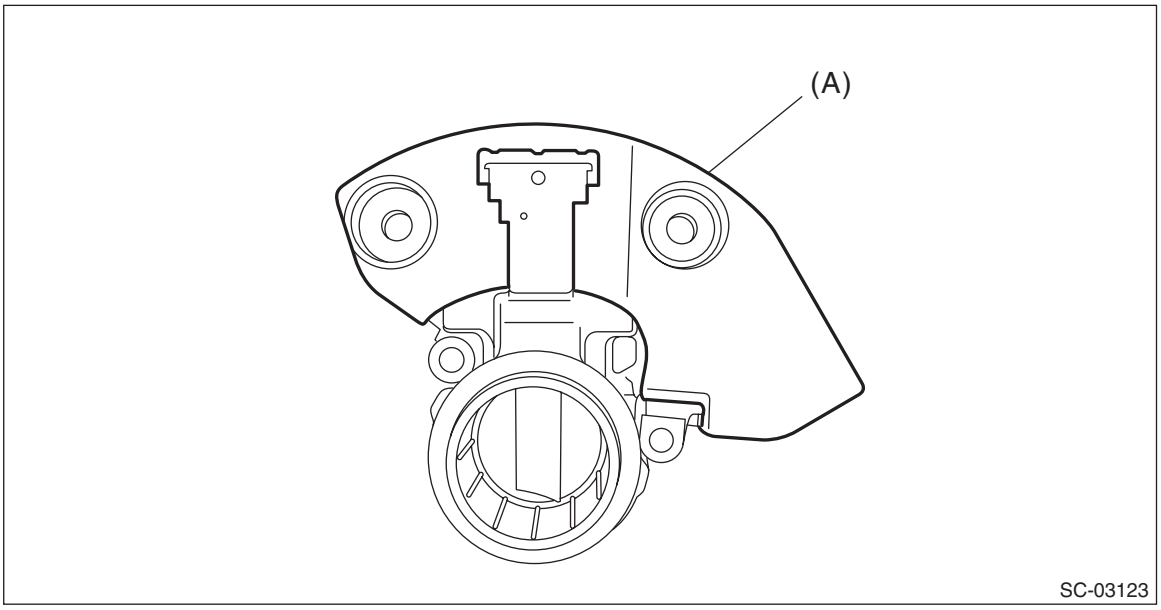

SC-03123

(A) Cover A

(2) Remove the cover B.

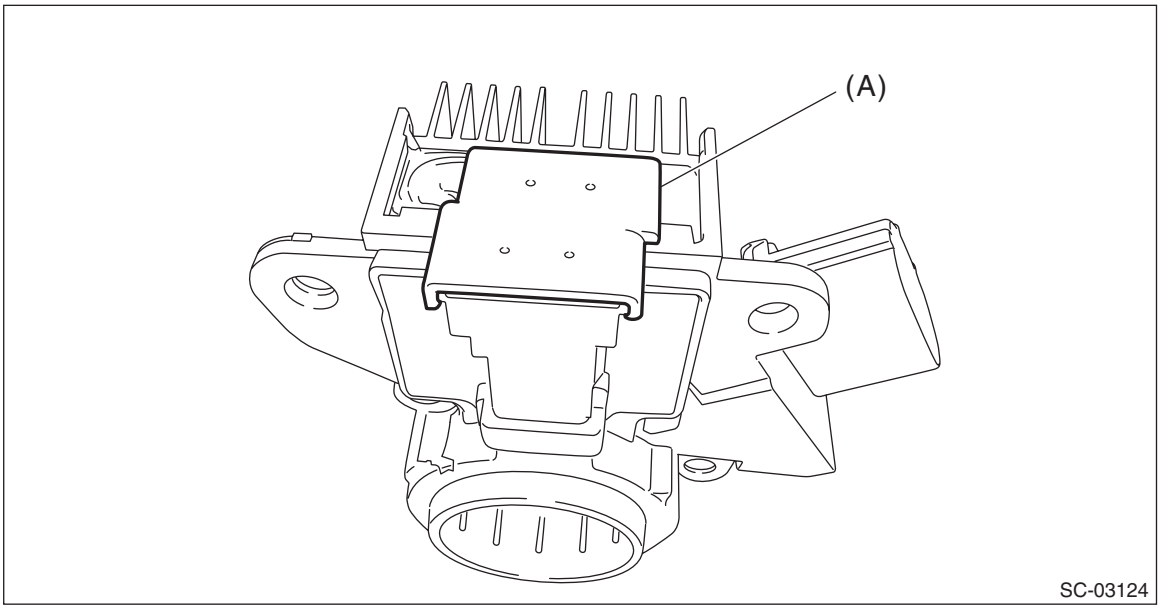

(A) Cover B

(3) Disconnect the connection and remove the brush.

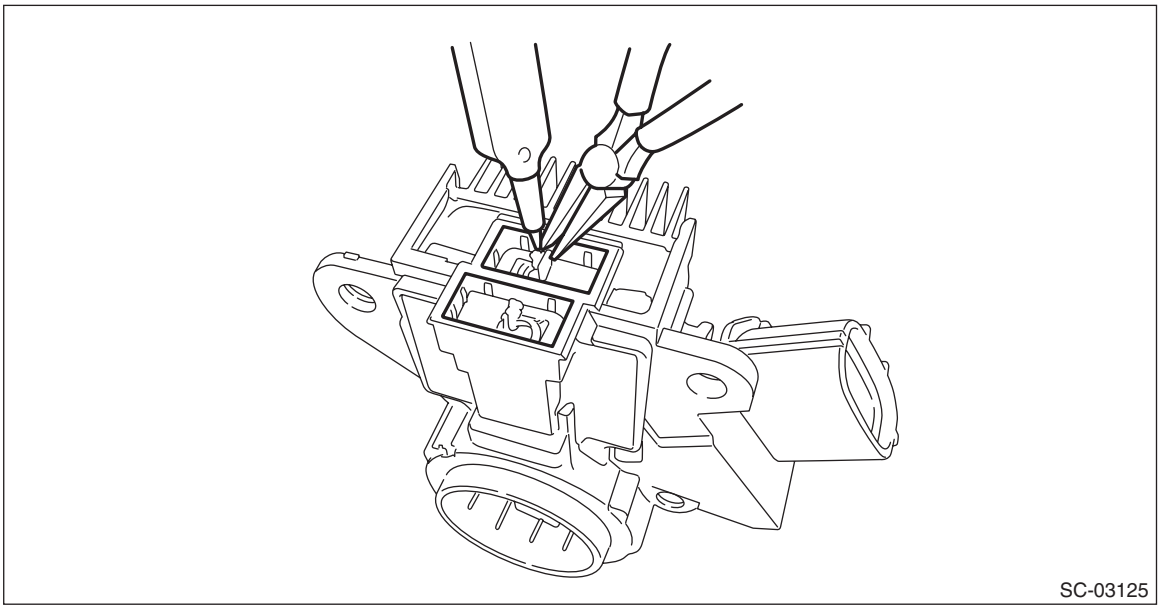

10) Remove the rectifier as follows.
(1) Remove the cover on terminal B.

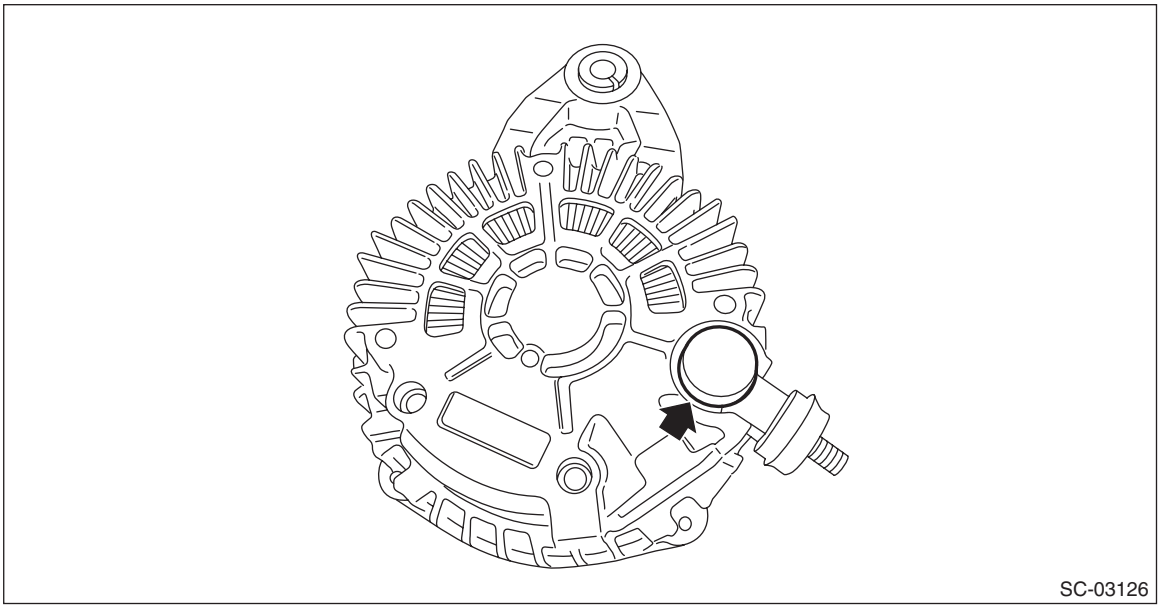
SC-03126

(2) Remove the nut on terminal B.

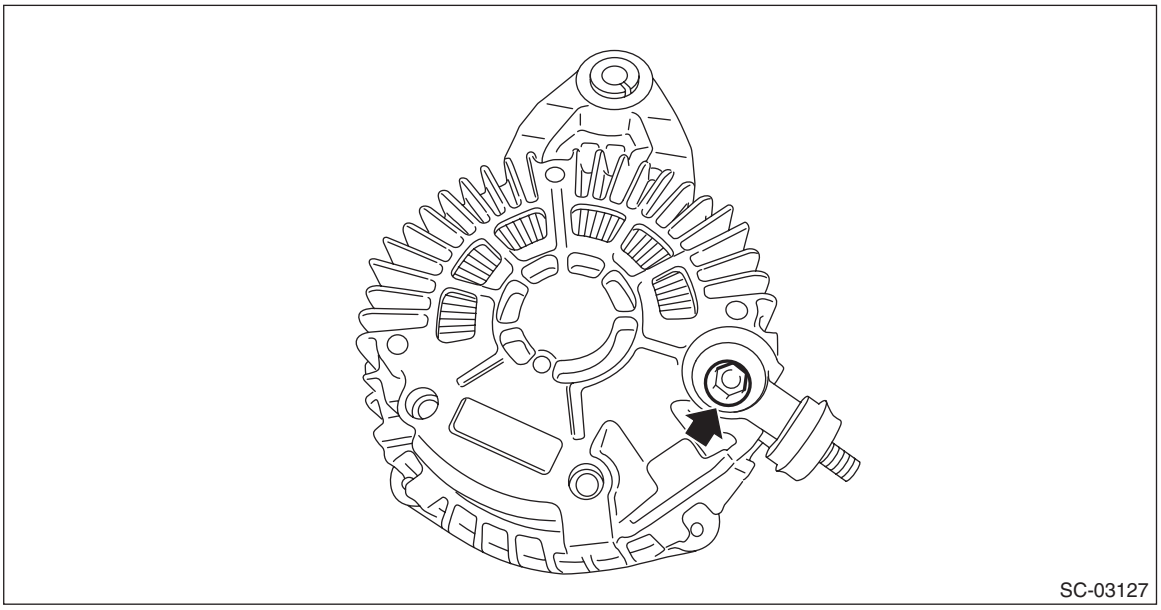
SC-03127

(3) Remove the bolts which secure the rectifier, and remove the rectifier.

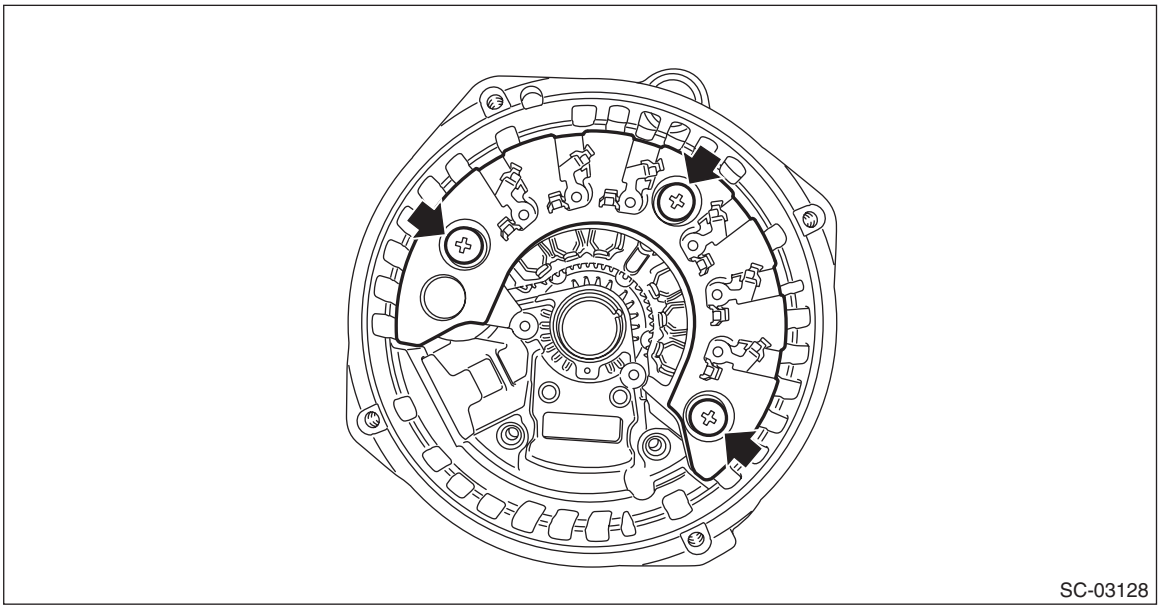

D: ASSEMBLY

NOTE:
After assembling, manually turn the pulley to check that the rotor rotates smoothly.
1) Use the following procedures to install the rectifier.
(1) Remove old silicone grease on the mating surface of rear cover and rectifier and apply new silicone grease.

CAUTION:
Do not apply silicone grease to the attachment threads of rectifier.
(2) Install the rectifier and secure it using bolts.

Tightening torque:
3.9 N·m (0.4 kgf-m, 2.9 ft-lb)

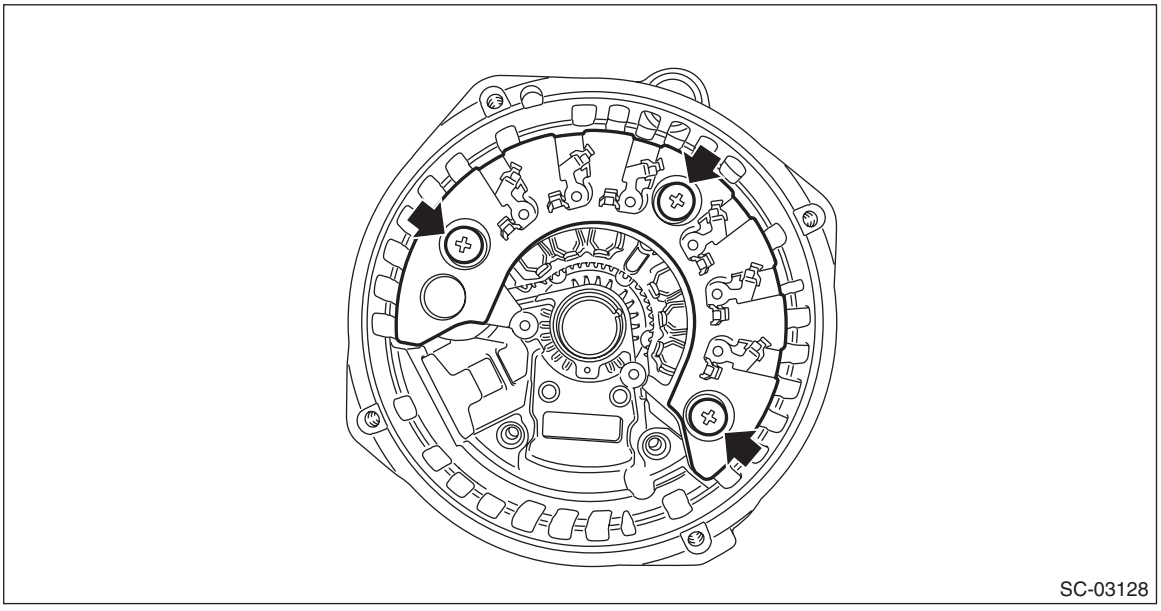

(3) Install the nut on terminal B.

Tightening torque:
8.9 N·m (0.9 kgf-m, 6.6 ft-lb)

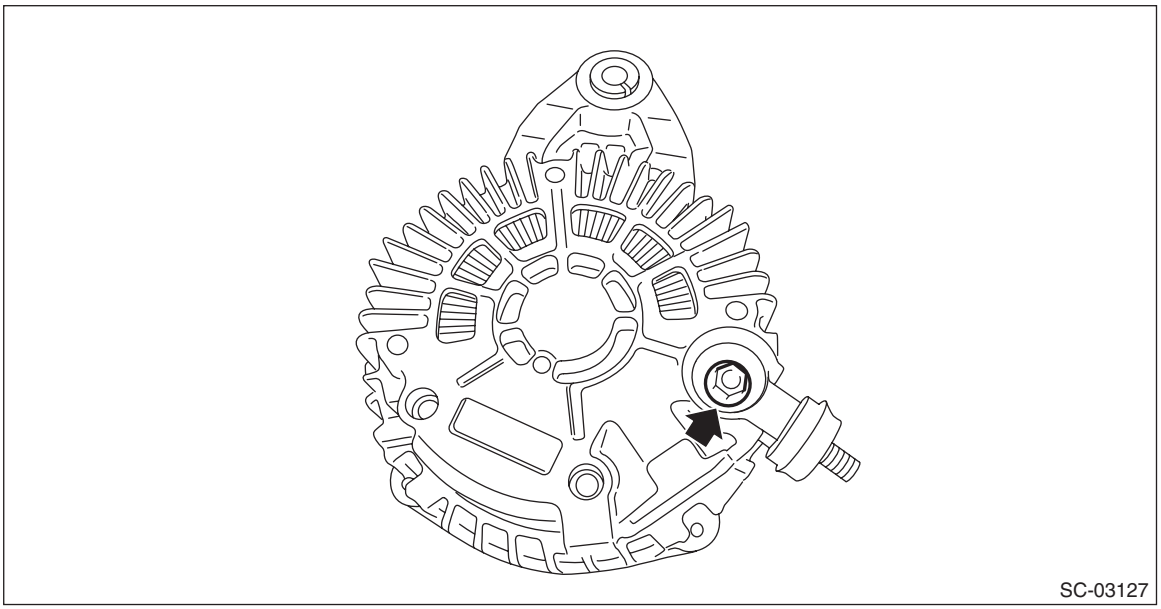
SC-03127

(4) Install the cover on terminal B.

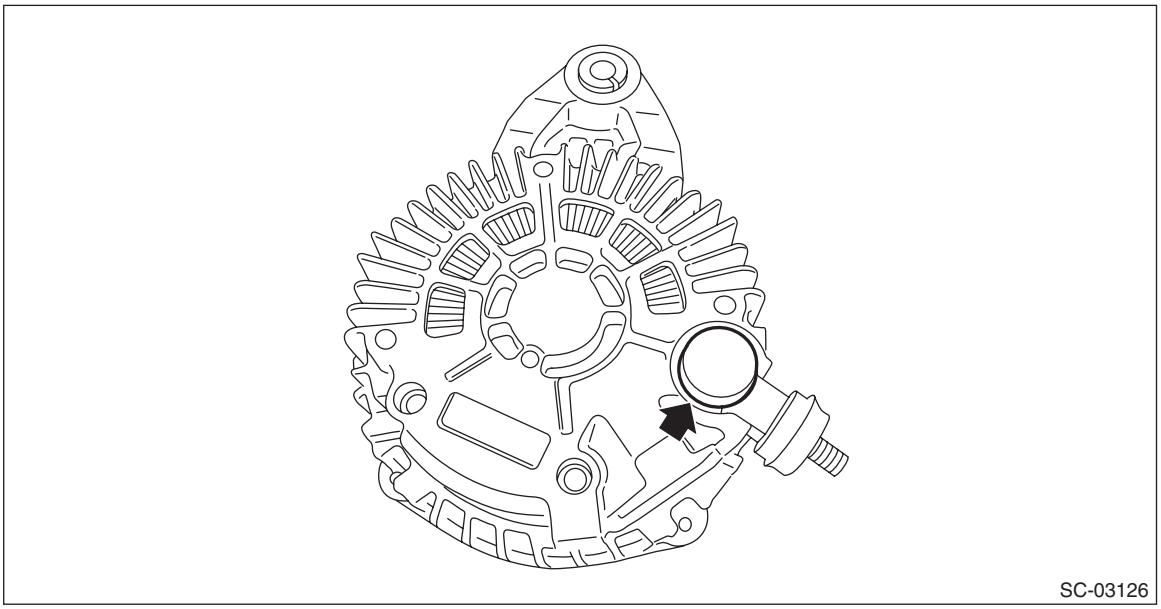
SC-03126

2) Use the following procedures to install the brush.
(1) Install the brush and connect the connection.

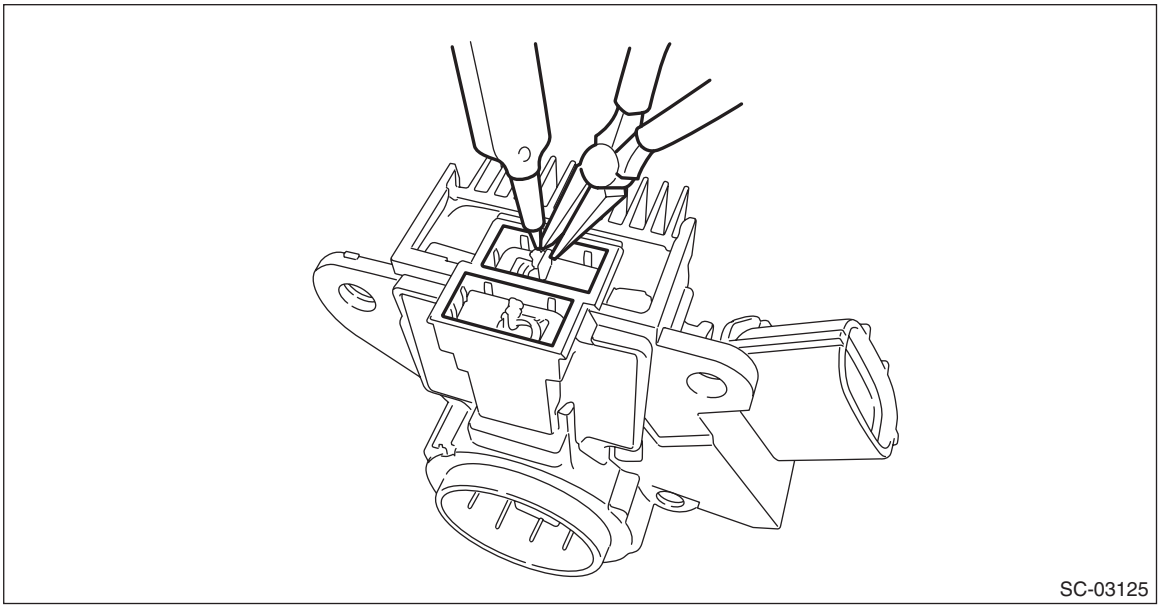
SC-03125

(2) Install the cover B.

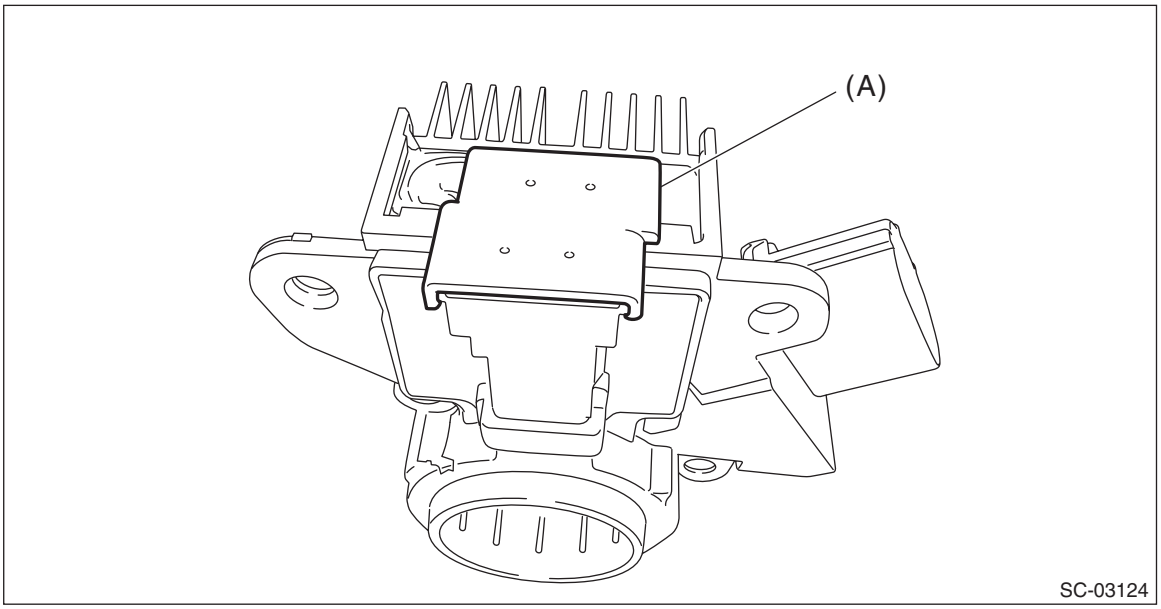

SC-03124

(A) Cover B

(3) Install the cover A.

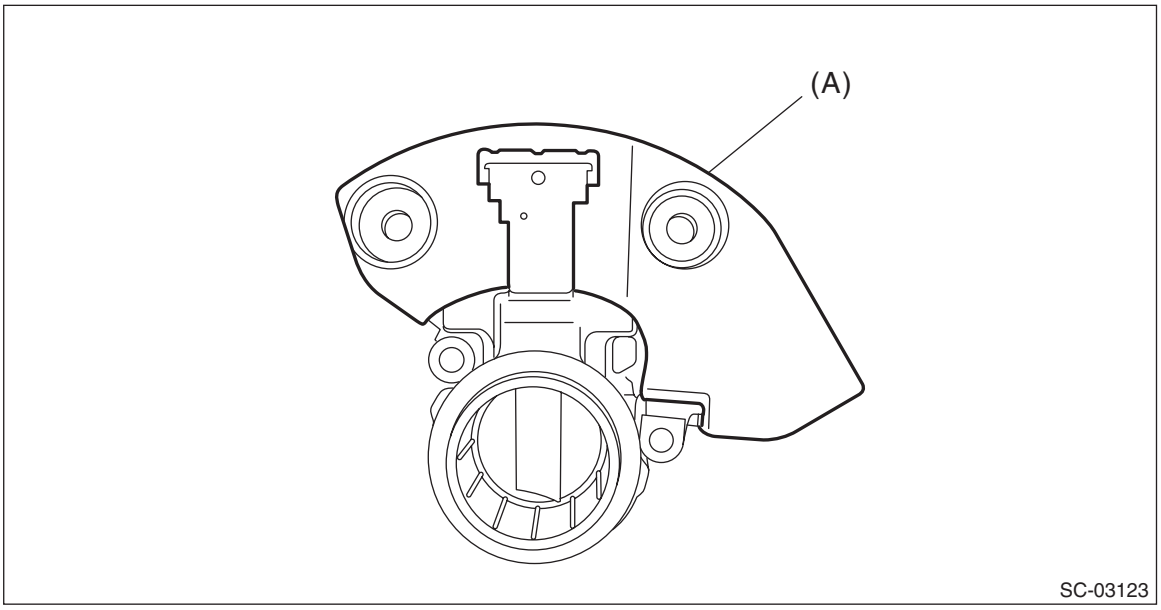

(A) Cover A

3) Install the IC regulator, and secure it to the rear cover using the four screws.

Tightening torque:
T1: 2 N·m (0.2 kgf-m, 1.5 ft-lb)
T2: 3.9 N·m (0.4 kgf-m, 2.9 ft-lb)

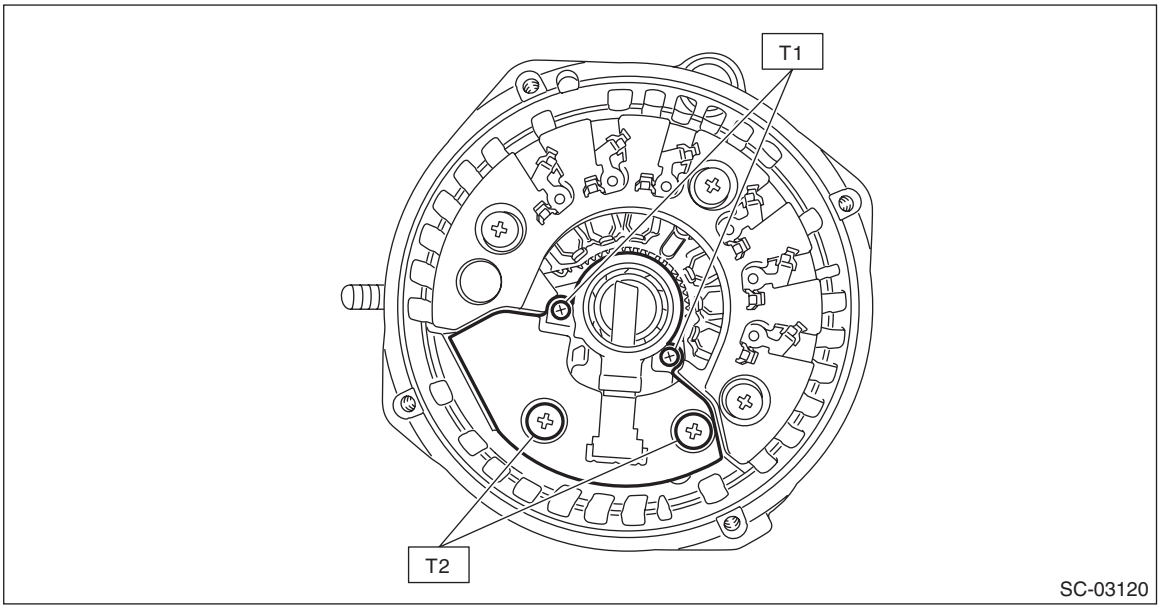

4) Install the stator coil, and secure it together with the rectifier using six bolts.

Tightening torque:
2 N·m (0.2 kgf-m, 1.5 ft-lb)

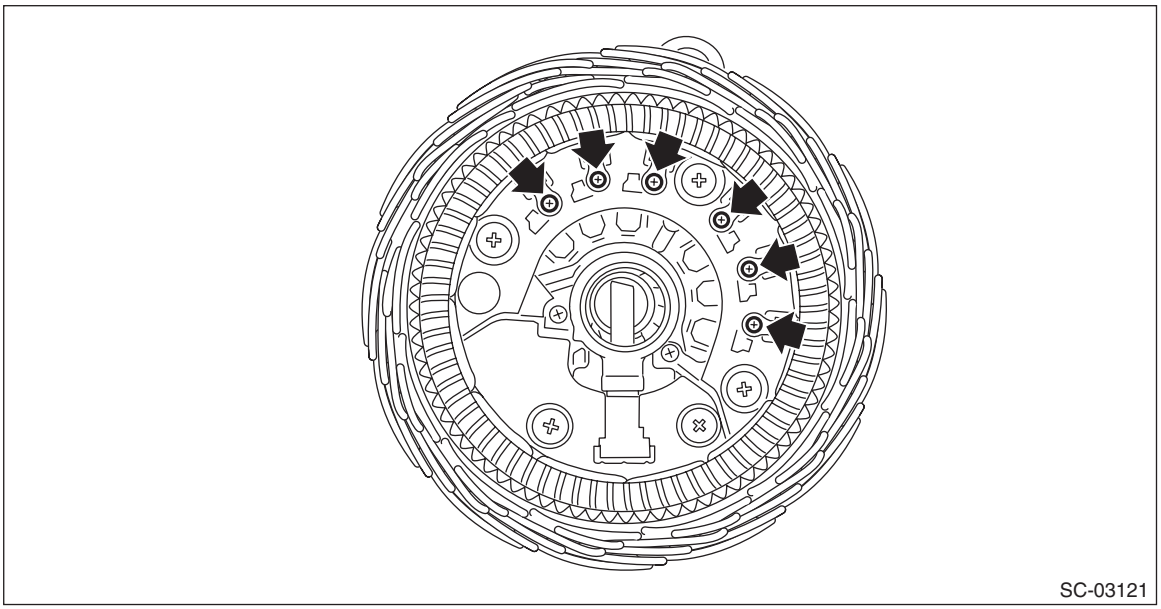

5) Install the ball bearings.
(1) Set the ball bearings in the front cover, then securely install an appropriate tool (such as a socket wrench of proper size) to the bearing outer race.
(2) Using a press to press the ball bearings into the specified location.
(3) Install the bearing retainer.

Tightening torque:
3.9 N·m (0.4 kgf-m, 2.9 ft-lb)

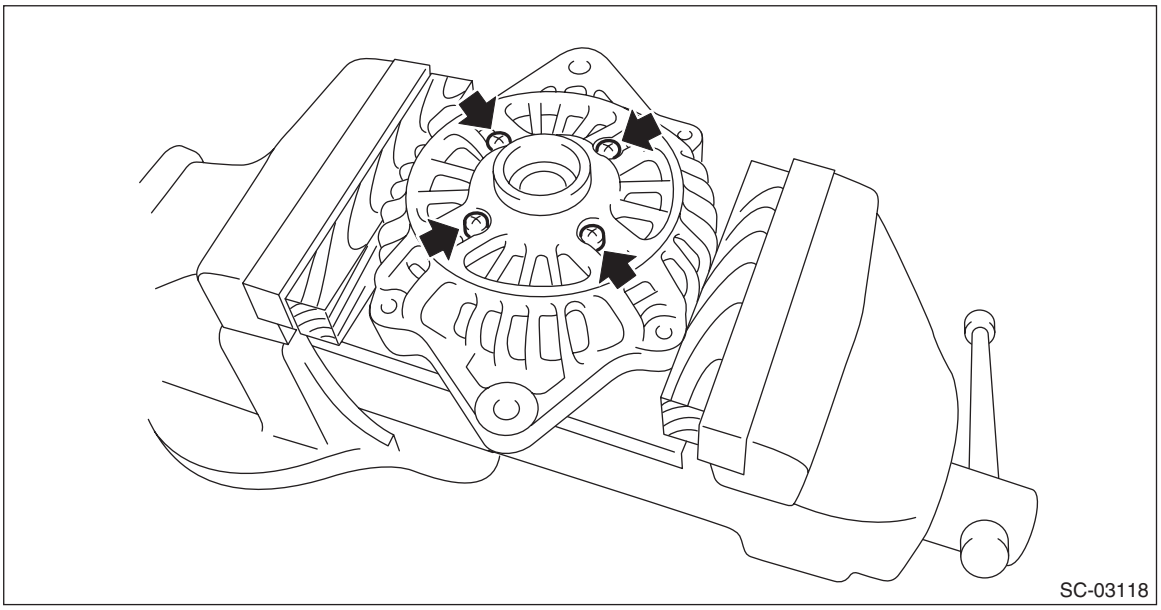

6) Use a press to install the bearings (rear side) to the rotor shaft.
7) Install the rotor to the front cover, and install the pulley holding the rotor using a vise.

CAUTION:
When holding the rotor with a vise, place aluminum plates or wooden pieces on the vise jaws to prevent rotor from damage.

Tightening torque:
117.5 N·m (12.0 kgf-m, 86.7 ft-lb)

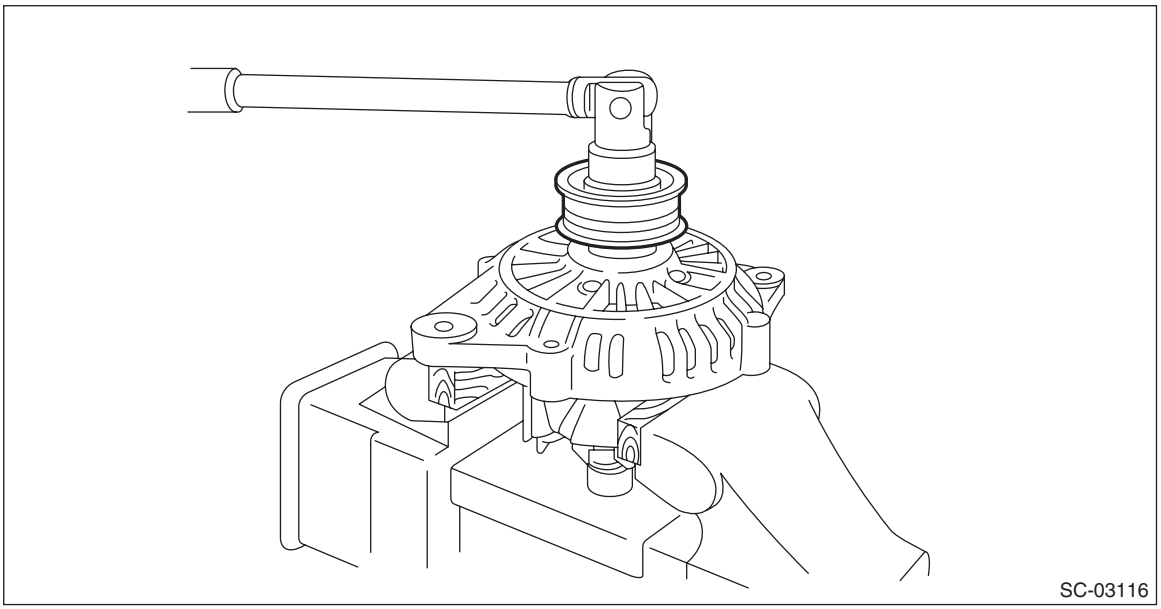
SC-03116

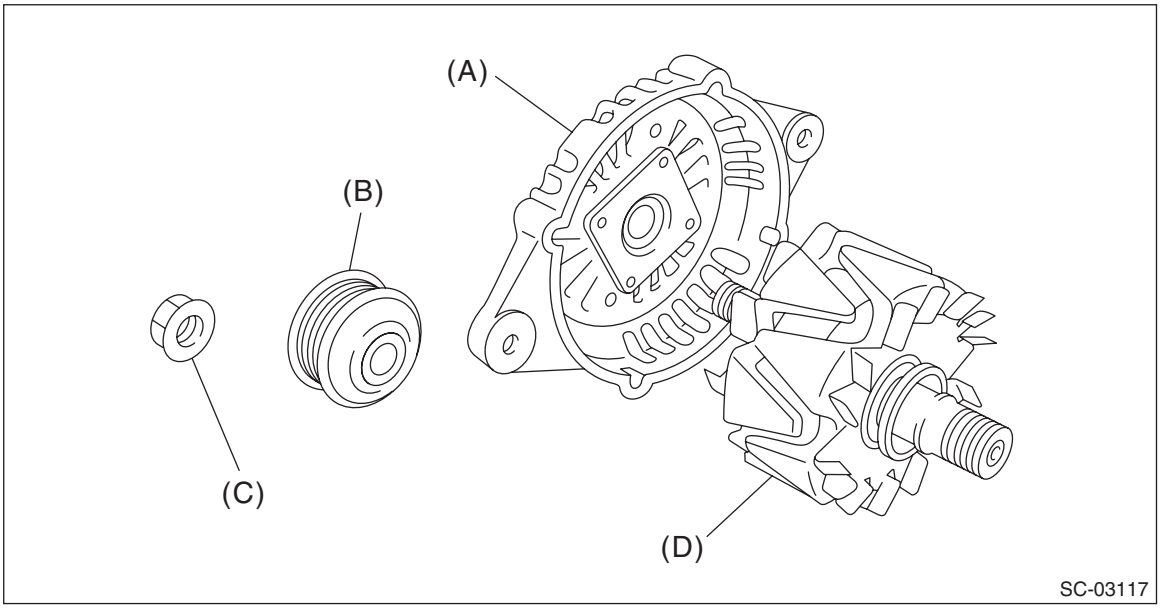

SC-03117

(A) Front cover
(B) Pulley
(C) Pulley nut
(D) Rotor

8) Press the brush into the brush holder, then fix the brush in that position by inserting a [1 mm (0.08 in) dia., 40 — 50 mm (1.6 — 2.0 in) long] wire through the hole as shown in the figure.

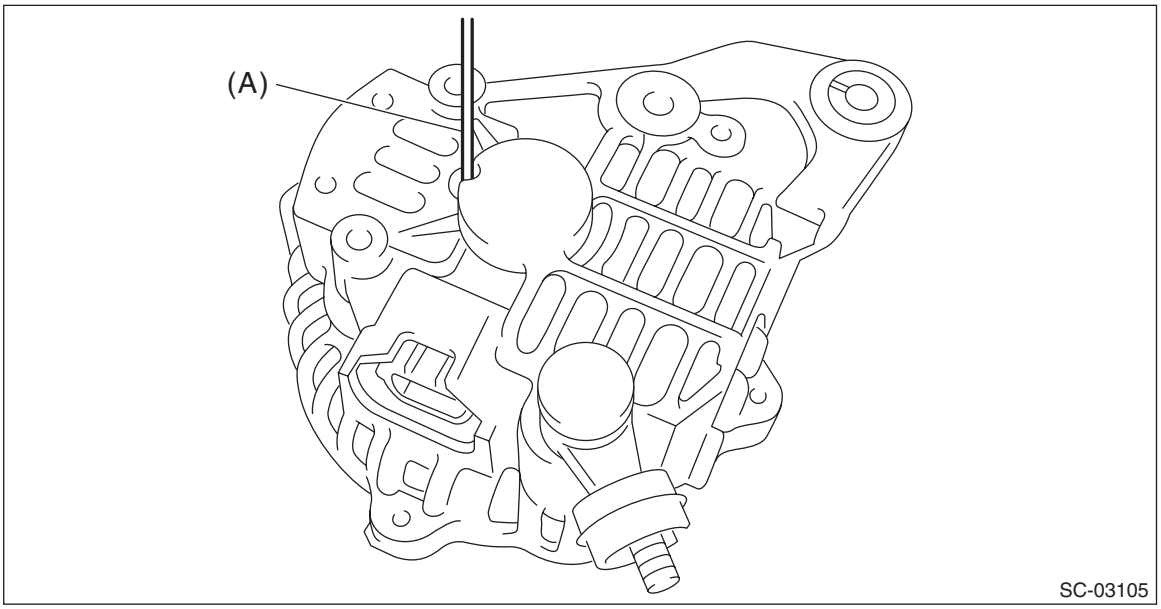

(A) Wire

9) Heat the bearing box in rear cover to 50 — 60°C (122 — 140°F), and then press the rear bearing into rear cover.

CAUTION:
Do not apply grease to the bearings. If there is any oil on the bearing box, remove it completely.
10) Remove the wire.

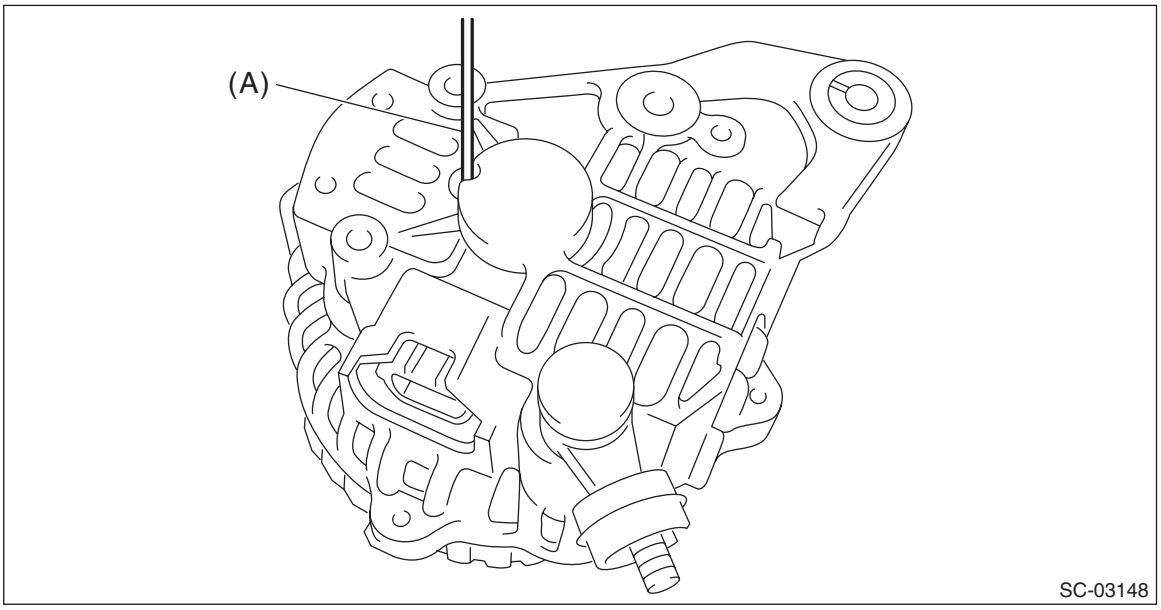

(A) Wire

11) Install the four bolts.

Tightening torque:
4.4 N·m (0.4 kgf-m, 3.2 ft-lb)

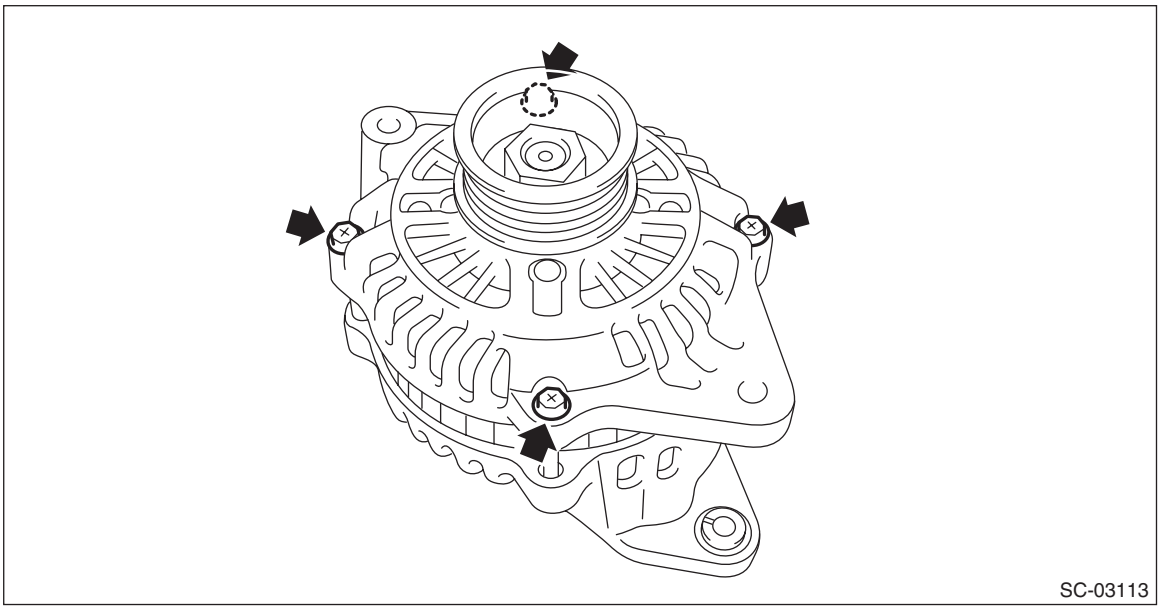

E: INSPECTION

1. DIODE

CAUTION:
There is the possibility of damaging the diodes if a mega-tester (used to measure high voltages) or a similar measuring instrument is used. Never use a mega tester or equivalent for this test.

1) Check for continuity between the diode lead and terminal E or B. If continuity is not as shown in the table, replace the rectifier.

- At analog type tester

Tester lead		Continuity
–lead	+lead	
E	P1, P2, P3, P4, P5, P6	Yes
B		None
P1, P2, P3, P4, P5, P6	E	None
	B	Yes

- At digital type tester

Tester lead		Continuity
–lead	+lead	
E	P1, P2, P3, P4, P5, P6	None
B		Yes
P1, P2, P3, P4, P5, P6	E	Yes
	B	None

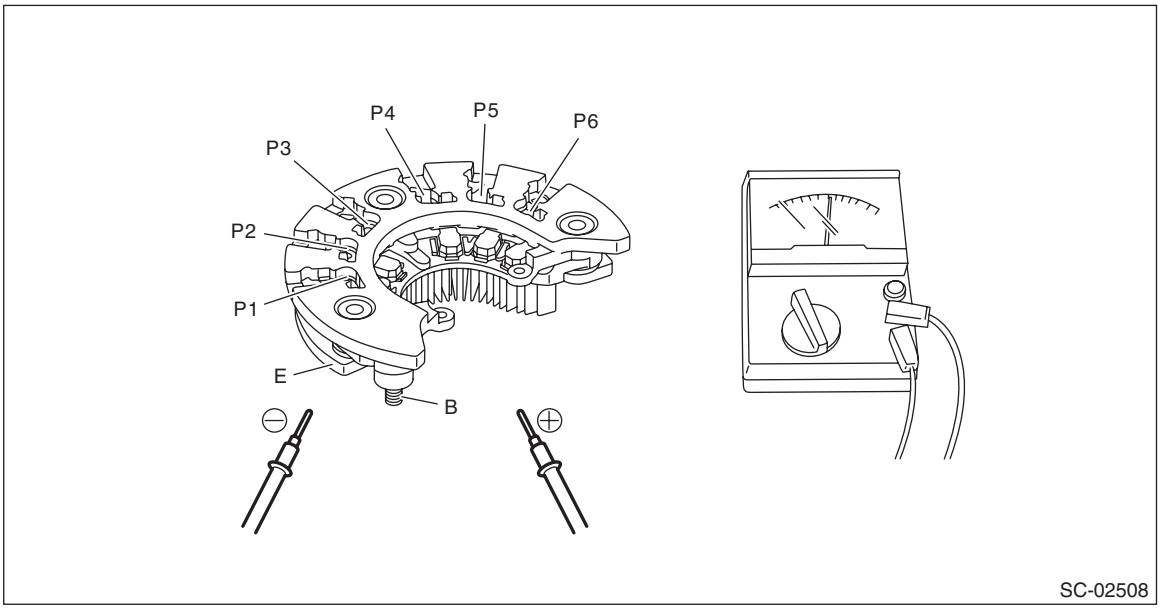

2. ROTOR

1) Slip ring surface

Inspect the slip rings for contamination or any roughness on the sliding surface. Repair the slip ring surface using a lathe or sand paper.

2) Slip ring outer diameter
Measure the slip ring outer diameter. Replace the rotor if the slip ring is worn.

Slip ring outer diameter:
Standard
22.7 mm (0.894 in)
Limit
22.1 mm (0.870 in)

3) Continuity test
Using a circuit tester, check the resistance between slip rings. If the resistance is not within the standard, replace the rotor.

Standard:
Approx. 1.8 — 2.2 Ω

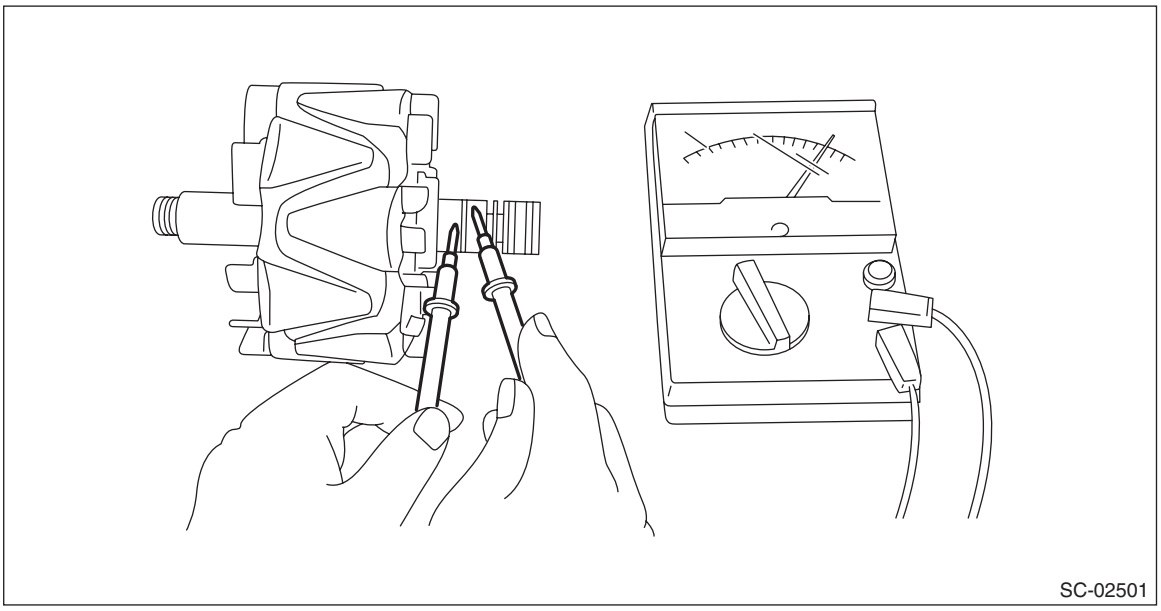
SC-02501

4) Insulation test
Check the continuity between slip ring and rotor core or shaft. If there is continuity, replace the rotor because the rotor coil is grounded.

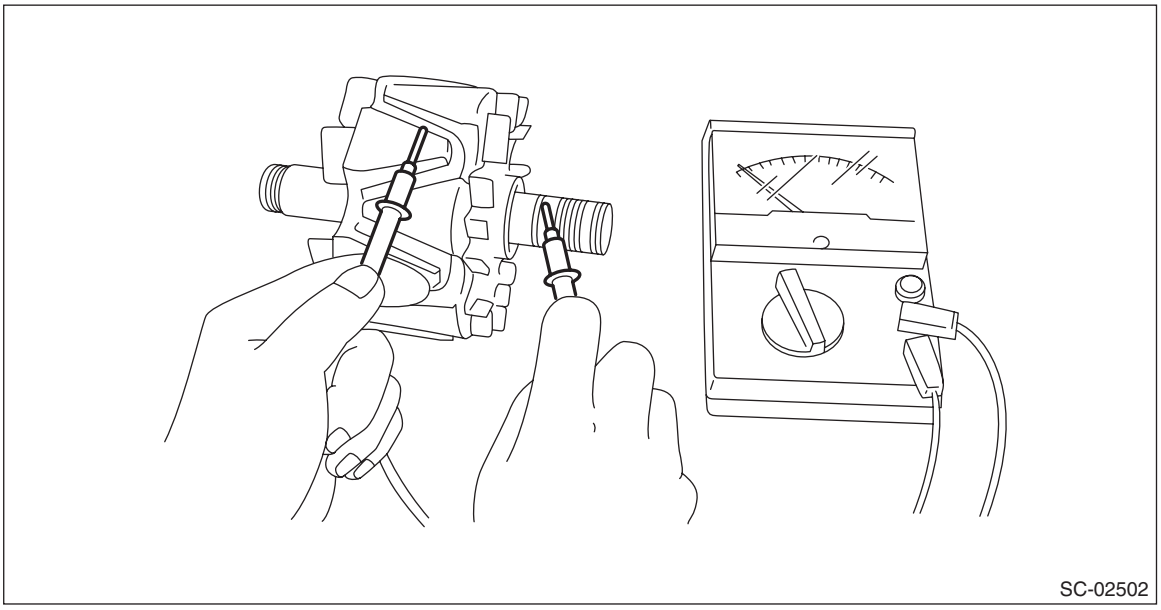
SC-02502

5) Bearing
Check the bearings. If there is any noise, or the rotor does not rotate smoothly, replace the bearings.

3. STATOR COIL

1) Continuity test

Inspect the continuity between the stator coil terminals. If continuity is not as shown in the table, replace the stator coil.

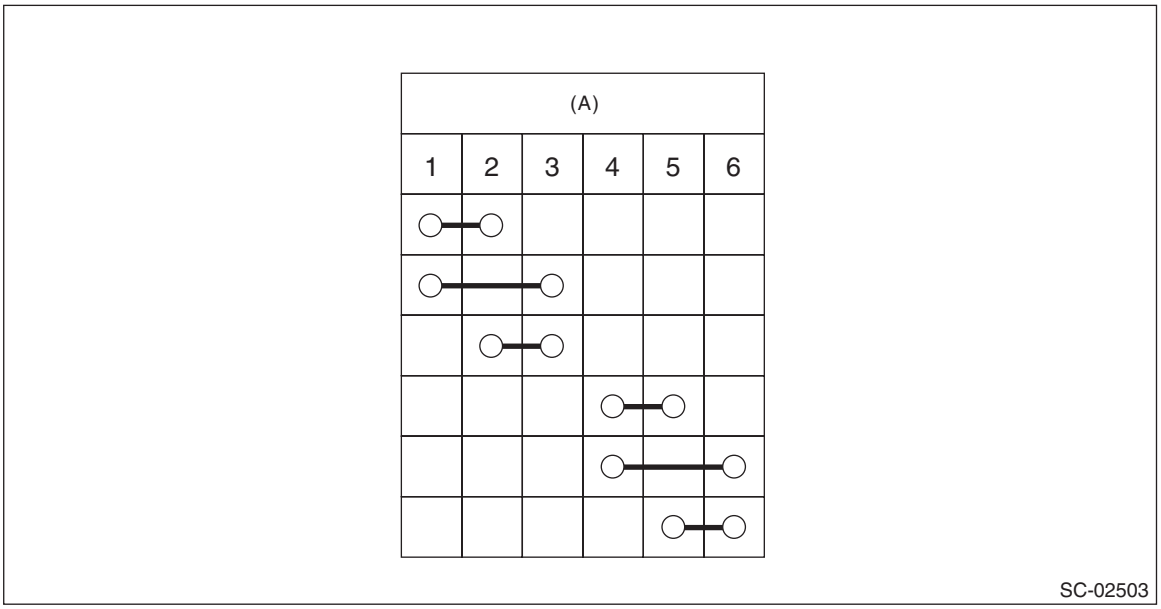

(A) Terminals

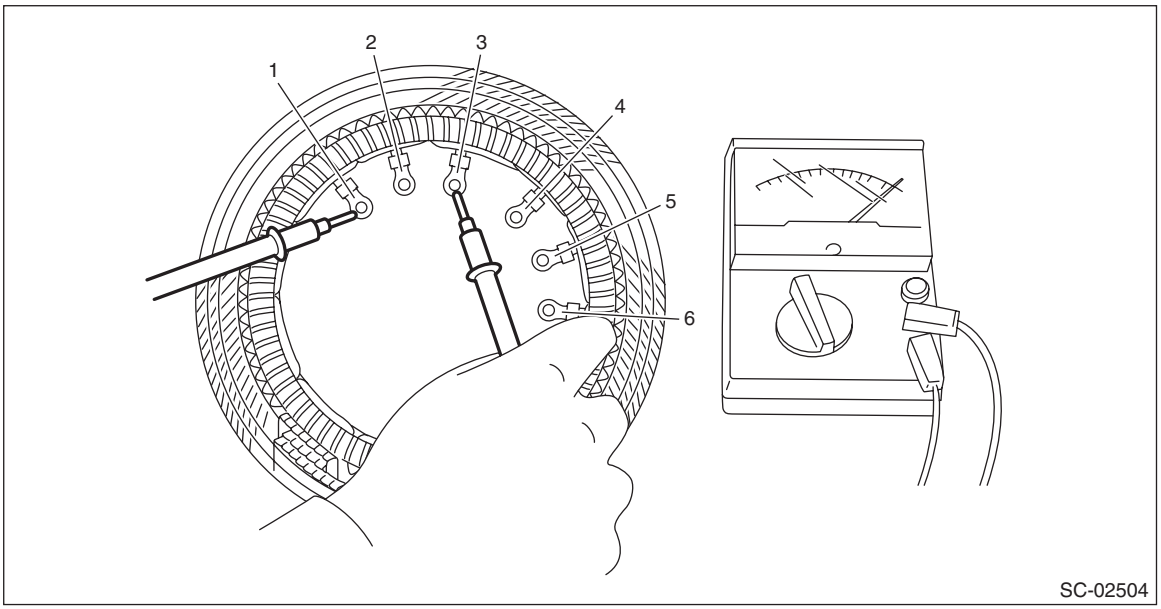

2) Insulation test
Inspect the continuity between the stator coil stator core and lead wire terminals. If there is continuity, replace the stator coil because the stator coil is grounded.

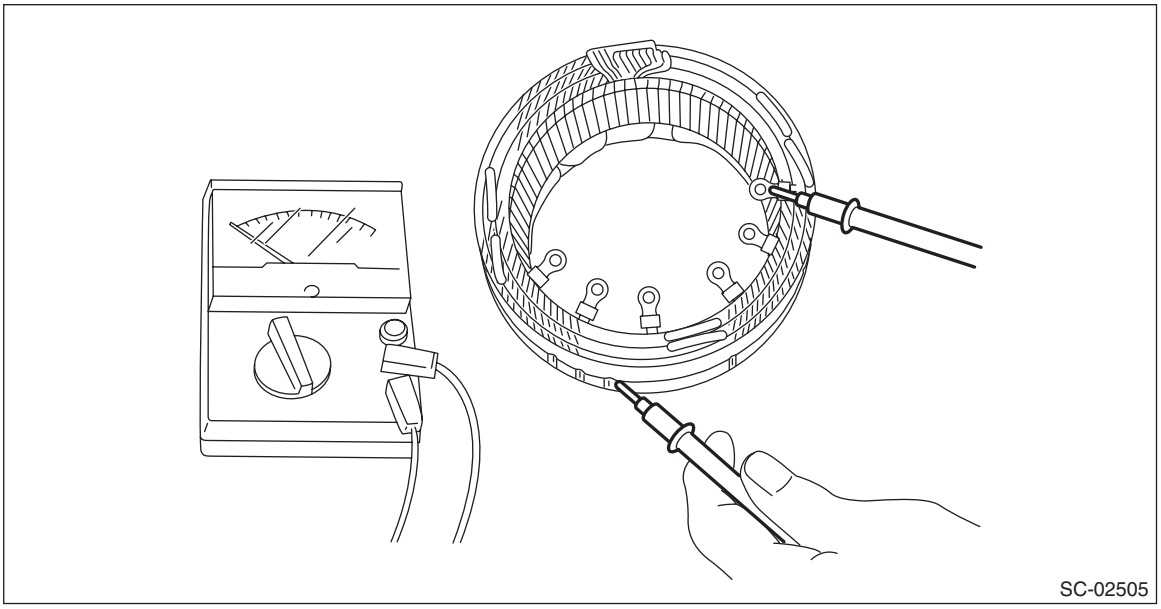
SC-02505

4. BRUSH

1) Measure the length of each brush. Replace the brush if wear exceeds service limits. There is a service limit mark (A) on each brush.

Brush length:
Standard (1)
22.5 mm (0.886 in)
Limit (2)
5.0 mm (0.197 in)

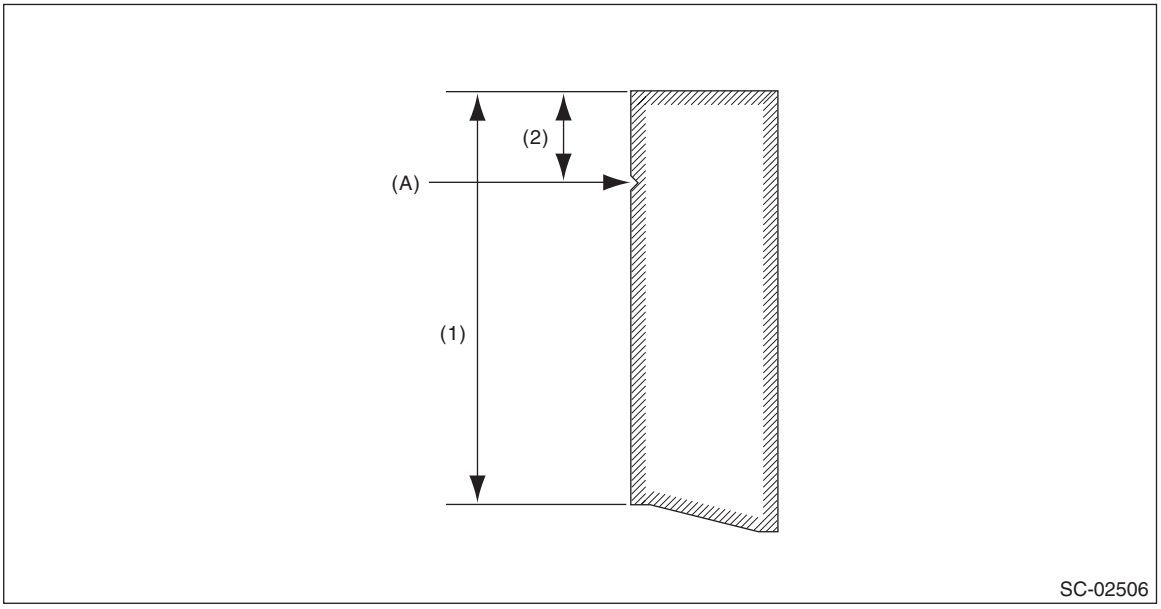

SC-02506

2) Using a spring pressure indicator, push the brush into the brush holder until its tip protrudes 2 mm (0.08 in). Then measure the pressure of brush spring. If the pressure is 2.648 N (270 g, 9.52 oz) or less, replace the brush spring with a new part. 4.609 — 5.786 N (470 — 590 g, 16.58 — 20.810 oz) pressure is required on the new spring.

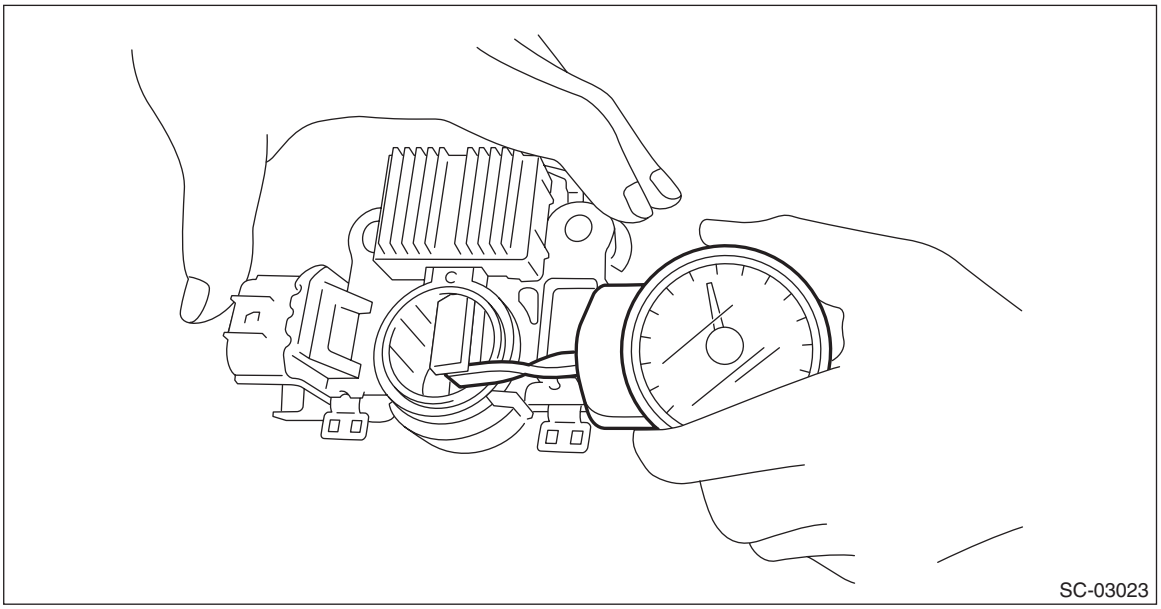

5. BALL BEARING

Check the ball bearings. Replace the ball bearings if there is resistance in the rotation, or if there is any abnormal noise.

5. Battery

A: REMOVAL

1. BATTERY

1) Disconnect the ground terminal from battery sensor. <Ref. to RC-4, BATTERY, NOTE, Repair Contents.>
2) Remove the battery sensor. <Ref. to SC(H6DO)-66, REMOVAL, Battery Sensor.>
3) Disconnect the positive terminal of battery.
4) Remove the battery holder from the battery box.

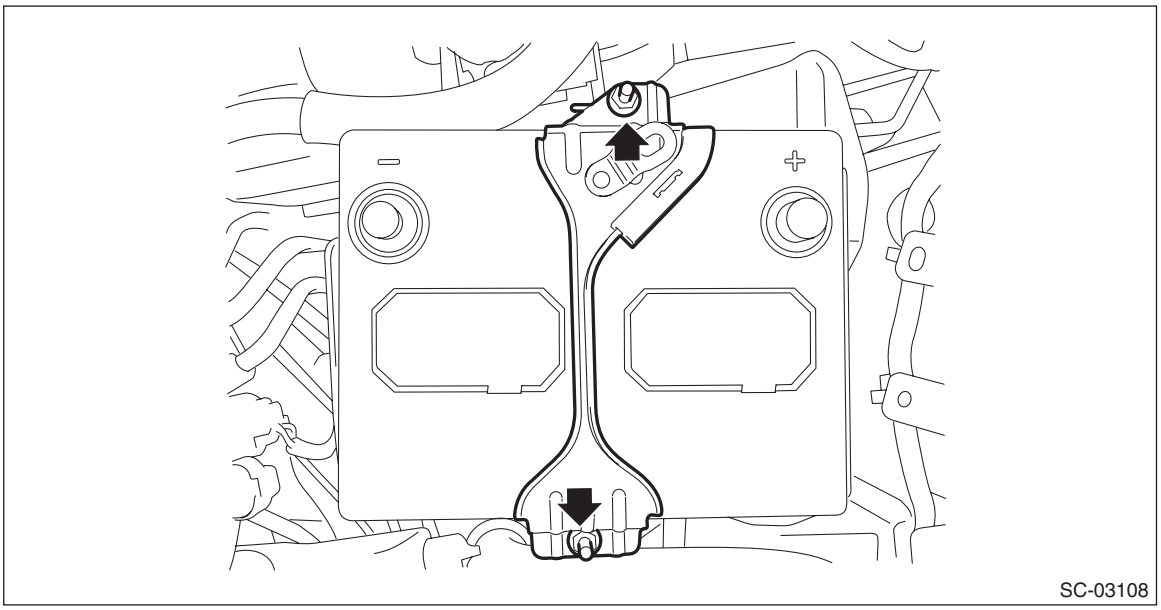

5) Remove the battery and battery pan.

2. BATTERY BOX

1) Remove the battery. <Ref. to SC(H6DO)-57, BATTERY, REMOVAL, Battery.>
2) Remove the battery box.

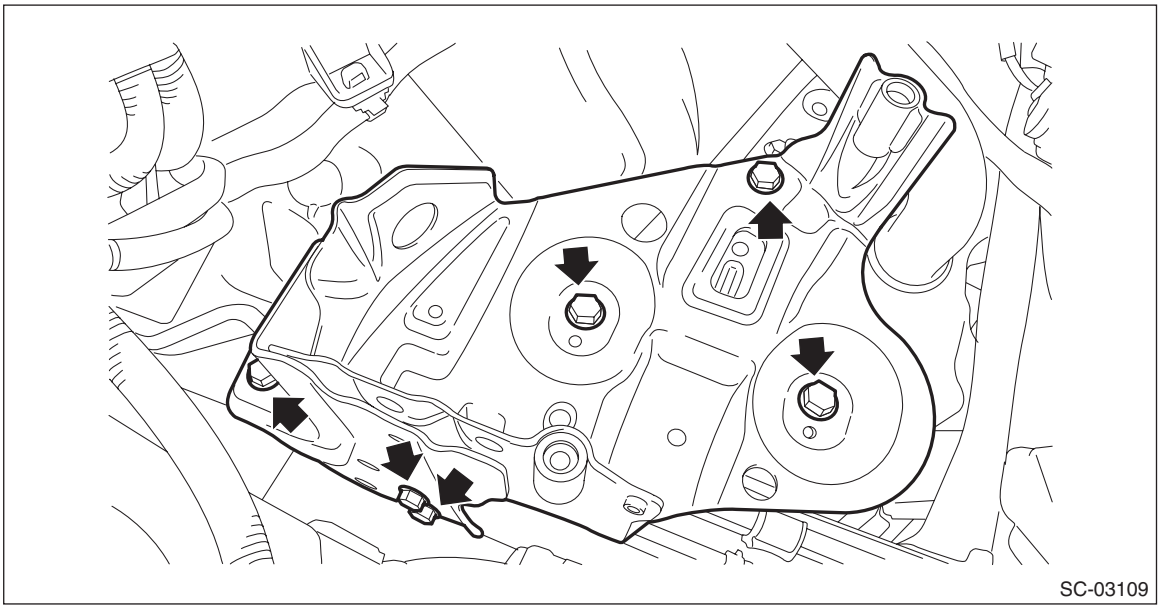

B: INSTALLATION

1. BATTERY

1) Install the battery and battery pan.
2) Install the battery holder, and install the bolts to the battery box.

NOTE:
Check that the rod (b) of the battery holder is inserted into the hole (a) on the battery box and battery pan.

Tightening torque:
7.5 N·m (0.8 kgf-m, 5.5 ft-lb)

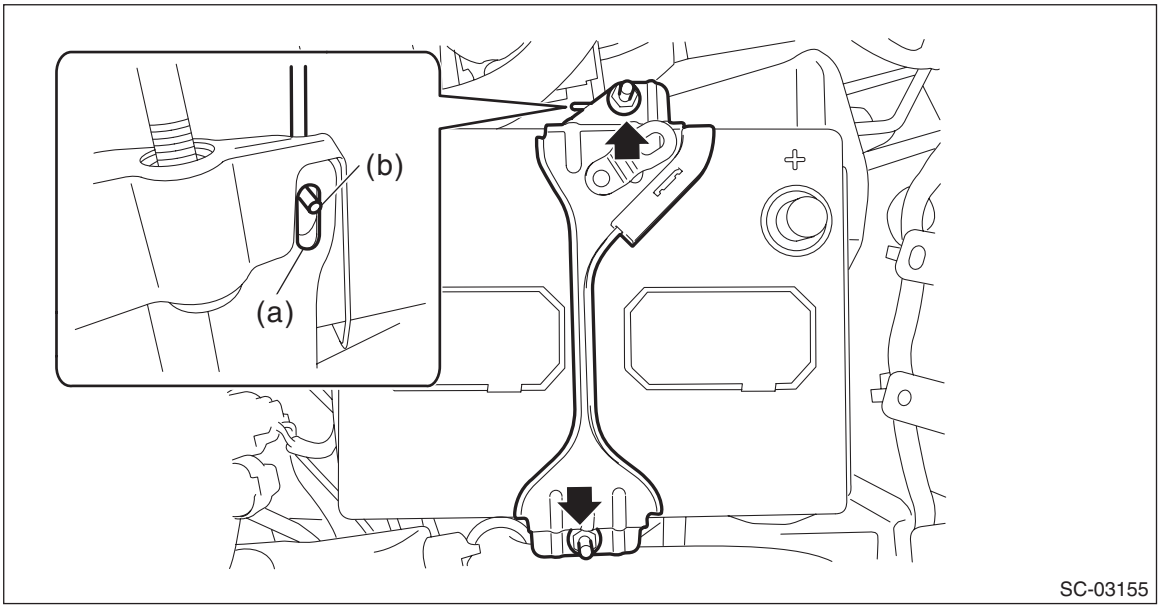

3) Connect the battery positive terminal.
4) Install the battery sensor. <Ref. to SC(H6DO)-66, INSTALLATION, Battery Sensor.>
5) Connect the ground terminal to battery sensor. <Ref. to RC-4, BATTERY, NOTE, Repair Contents.>

2. BATTERY BOX

1) Install the battery box.

Tightening torque:
37 N·m (3.8 kgf-m, 27.3 ft-lb)
2) Install the battery. <Ref. to SC(H6DO)-58, BATTERY, INSTALLATION, Battery.>

C: INSPECTION

WARNING:
- **As batteries produce flammable gases, be careful not to bring an open flame close to the batteries.**
- **Ventilate sufficiently when using or charging battery in enclosed space.**
- **Electrolyte is corrosive acid, and has toxicity; be careful of handling the fluid.**
- **For safety, in case an explosion does occur, wear eye protection or shield your eyes when working near any battery. In addition, never lean over the battery.**
- **Be careful that the electrode does not come into contact with skin, eyes or clothing. Especially at contact with eyes, flush with water for 15 minutes and get prompt medical attention.**
- **Be careful not to let the electrode contact with the coated parts.**
- **Before starting work, remove rings, metal watch-bands, and other metal jewelry.**
- **Be careful not to let the metal tools contact the positive battery terminal and anything connected to it. When the operation using a metal tool to the positive terminal or anything connected to it is required, disconnect the battery ground terminal before starting the operation.**

1. APPEARANCE

Check the battery case, top cover and terminal posts for dirt or cracks, and perform the following work as necessary.
- Clean the battery with water and wipe with a dry cloth.
- Apply a thin coat of grease on the terminal posts to prevent corrosion.

Check

- ***Normal → Go to the check item 2.***
- ***Abnormal → Replace the battery.***

2. ELECTROLYTE LEVEL

Check the electrolyte level in each cell.

CAUTION:
Do not fill beyond MAX level.

NOTE:
If the level is below the middle point between MIN level and MAX level, pour distilled water into the battery cell to bring the level to MAX.

Check

- ***MAX level → Go to the check item 3.***
- ***Below the middle point between MIN level and MAX level → Fill → Go to the check item 3.***

3. SPECIFIC GRAVITY OF ELECTROLYTE

Check the specific gravity of the electrolyte using a hydrometer and a thermometer.

NOTE:
- Specific gravity varies with temperature of electrolyte so that it must be corrected at 20°C (68°F) using the following calculation:

$$S_{20} = St + 0.0007 \times (t - 20)$$

S_{20}: Specific gravity corrected at electrolyte temperature of 20°C
St: Measured specific gravity
t: Measured temperature (°C)

- When measuring in a simplified manner using the battery terminal voltage, calculate the specific gravity by the following formula.

Specific gravity = [0.187 × battery terminal voltage (V)] – 1.1
Perform the steps 1) and 2) before measuring the voltage in order to stabilize the voltage.

1) Turn the ignition switch to OFF and illuminate the headlight for 30 seconds.
2) After turning off the headlight, leave the vehicle for one minute.
• Measuring the specific gravity of the electrolyte in the battery will disclose the state of charge of the battery. The relation between specific gravity and state of charge is as shown in the figure.

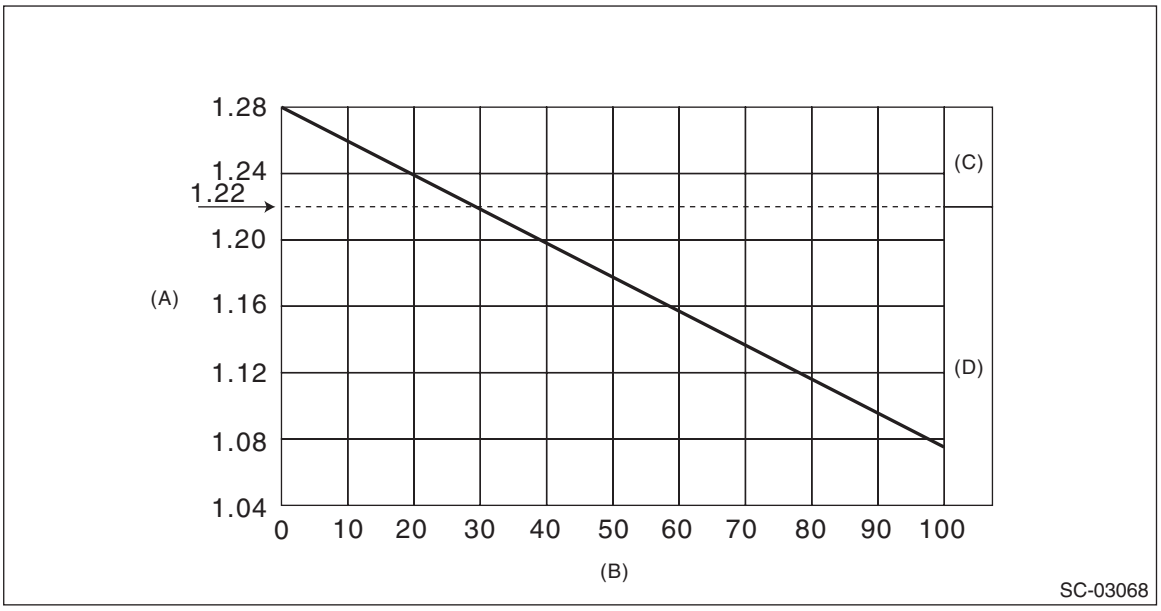

(A) Specific gravity [20°C (68°F)] (B) Amount of discharge (%) (C) Good
(D) Need to charge or replace

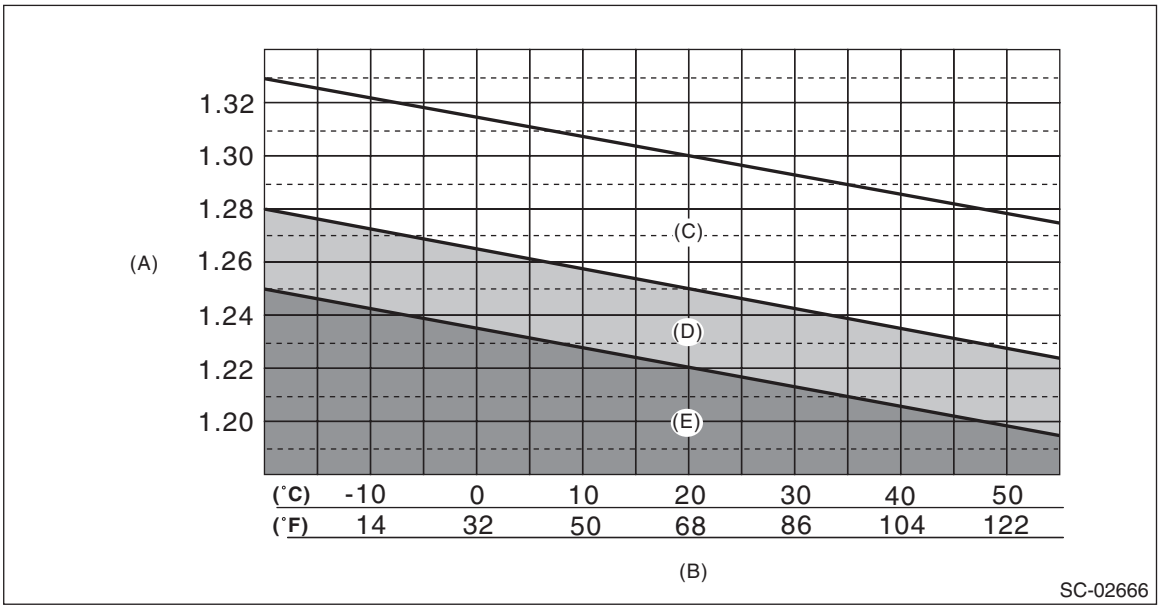

(A) Specific gravity [20°C (68°F)] (B) Electrolyte temperature (C) Good
(D) Caution (E) Need charging

Check

- ***Specific gravity: 1.250 — 1.290, and difference between cells is 0.04 or less → Battery is normal***
- ***Specific gravity: Less than 1.250, or difference between cells is 0.04 or more → Battery needs to be charged or replaced***

4. STANDBY CURRENT

1) Prepare the circuit tester which can measure down to 1 mA.

NOTE:
For model with keyless access function, the standby current changes regularly. Therefore, prepare the analog type circuit tester.

2) Using the circuit tester, check the standby current.

(1) Check the battery. <Ref. to SC(H6DO)-59, APPEARANCE, INSPECTION, Battery.> <Ref. to SC(H6DO)-59, ELECTROLYTE LEVEL, INSPECTION, Battery.> <Ref. to SC(H6DO)-59, SPECIFIC GRAVITY OF ELECTROLYTE, INSPECTION, Battery.>

NOTE:
The standby current may be displayed lower than the actual value if the battery is weak, so be sure to check the battery. Charge or replace if necessary.

(2) Check that the fuse is not blown out and is properly inserted.

(3) When non-genuine electrical parts (including parts sold in authorized workshops) are installed, remove all parts except for genuine electrical parts.

(4) Check that back-up fuse is inserted. <Ref. to PI-5, FUSE, PRE-DELIVERY INSPECTION (PDI) PROCEDURE, Pre-delivery Inspection.>

(5) Start the engine, and set the switch positions for each system as shown in the following table.

NOTE:
Some of the listed systems are not equipped depending on the vehicle. Set only the systems equipped on the vehicle to the positions as shown.

System	Position
Headlight	ON or Auto
Fog light	ON
Wiper (front and rear)	ON or Low speed
Audio and navigation system	ON
Rear defogger	ON
Room light	DOOR
Luggage light	DOOR
Map light	OFF
Auto A/C	ON (AUTO)
Manual A/C	ON (Speed 1)
Electronic parking brake	ON
Electrical parts other than listed above (electrical parts that users can confirm the operation with the key removed)	OFF

(6) Turn the ignition switch to OFF.

(7) Operate the front hood lock release lever to unlock the front hood.

(8) Close all the doors (including rear gate and trunk lid) and then lock the doors. (Security alarm is in set condition)

NOTE:
For model with keyless access function, take the access key 1.5 m or more away from the vehicle after the door lock. And do not put the access key close to the vehicle while measuring the standby current.

(9) Wait for 5 minutes after door lock until the standby current stabilizes.

(10) Loosen the nut which holds the ground terminal to the battery.

NOTE:
Do not remove the ground terminal.

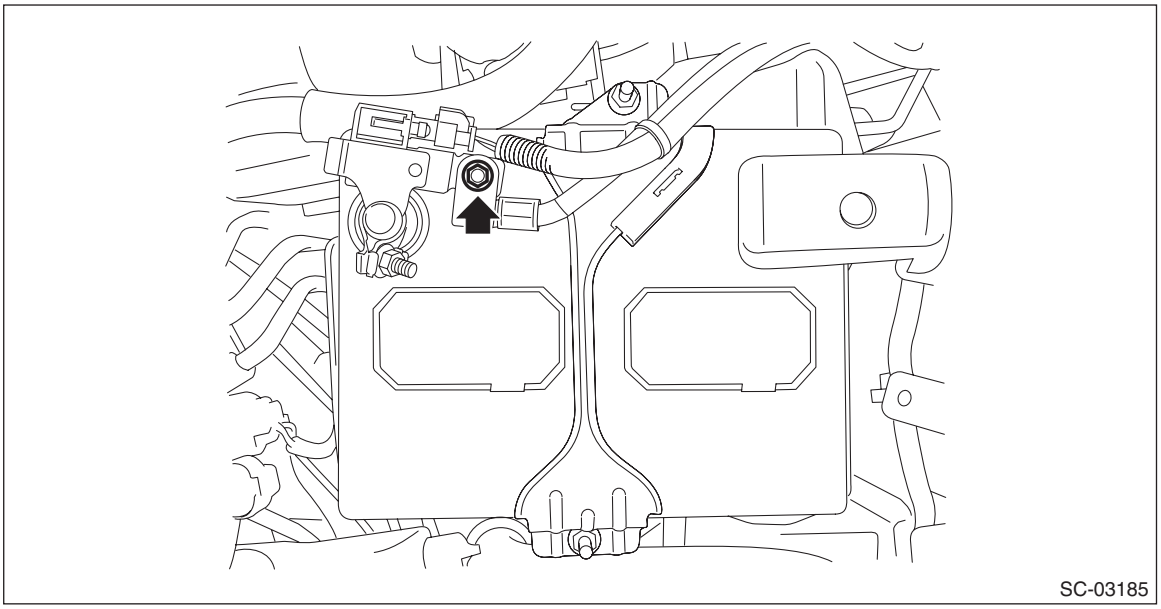

(11) Connect the circuit tester positive terminal to the ground terminal.

NOTE:
To prevent the damage to the circuit tester, set the circuit tester range to a large value first, then gradually change it to smaller values.

(12) Connect the circuit tester negative terminal to the ground terminal installation part of the battery.

(13) While connecting the circuit tester positive terminal with the ground terminal as shown in the figure below, remove the ground terminal from the battery.

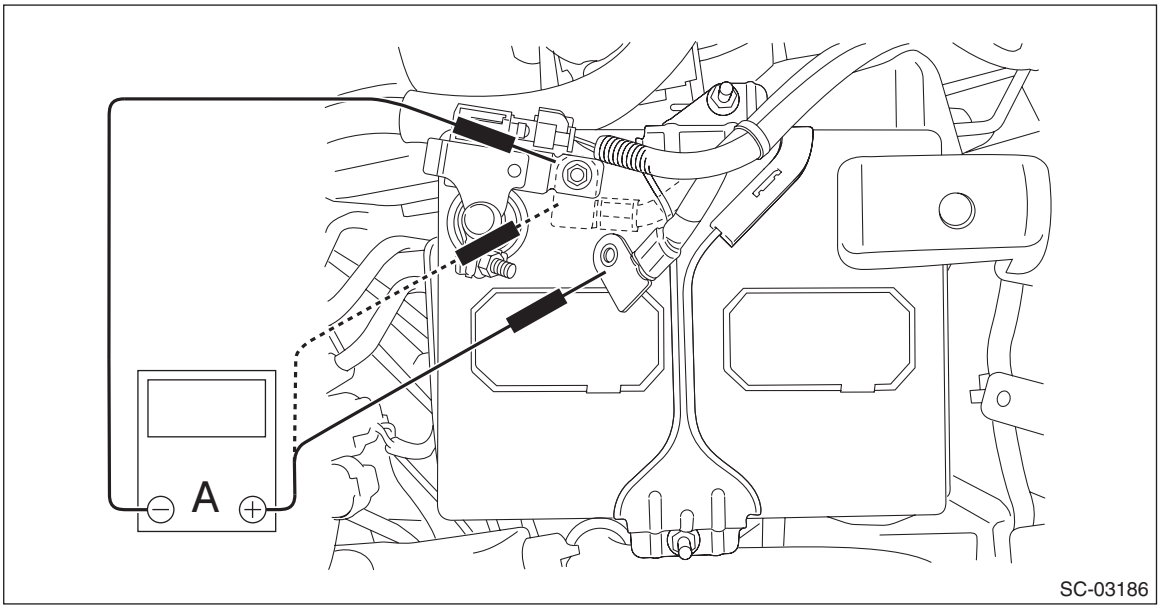

(14) Check the standby current.

NOTE:
• For model with keyless access function, the standby current changes periodically because the keyless access system continuously searches the access key (polling).
• When measuring the standby current, the reading of the circuit tester oscillates. Therefore, read the average value (median value).
• The standby current may become large when the vehicle system is activated 5 times at 30-minute intervals or 5 hours after turning the ignition switch to OFF. Therefore, the measurement should be completed in 20 minutes. If it takes more than 20 minutes, start the engine once, stop the engine, then perform the inspection.

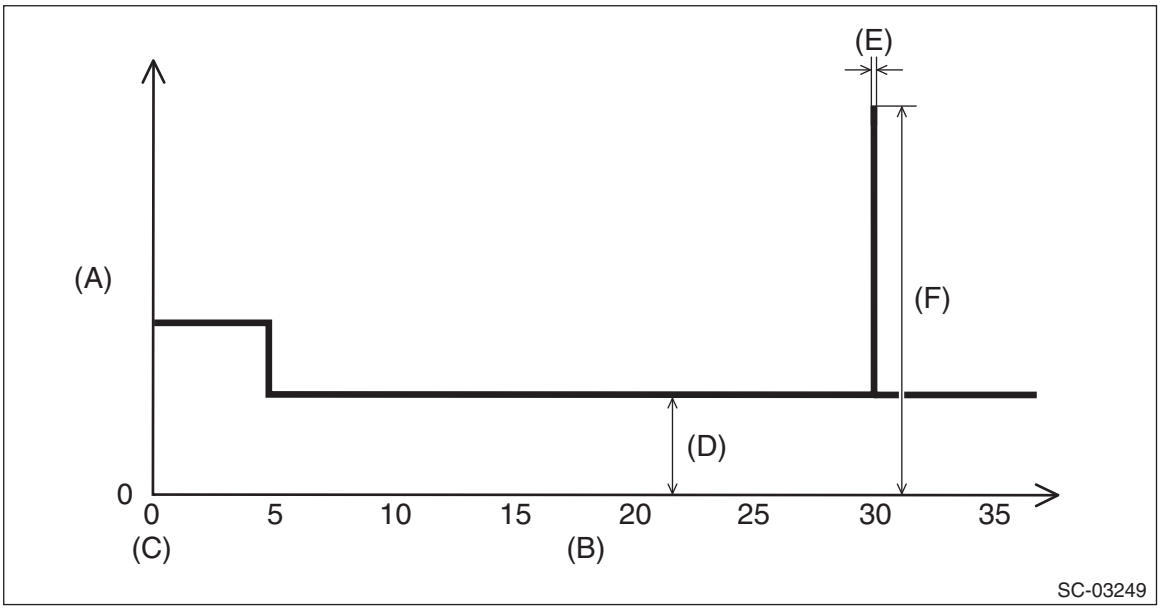

(A)	Current/mA	(B)	Time/min	(C)	Ignition OFF
(D)	Less than 70 mA	(E)	5 seconds (system operation)	(F)	300 mA or more

Check

- ***When the maximum measurement value is less than 70 mA → Standby current is normal.***
- ***When the maximum measurement value is 70 mA or more → Go to step (15).***

(15) Remove all fuses one by one to identify which system changes the standby current value significantly. <Ref. to WI-19, Fuse And Relay.>
(16) Check the harness and connector of the system whose standby current has changed significantly.

D: CHARGE

WARNING:
- **Do not bring an open flame close to the battery when working.**

CAUTION:
- **Prior to charging, corroded terminals should be cleaned with a brush and common caustic soda solution.**
- **Be careful while charging the battery because it produces flammable gasses.**
- **Observe instructions when handling the battery charger.**
- **Before charging the battery on the vehicle, disconnect the battery ground terminal to prevent damage of generator diodes or other electrical units.**

1. NORMAL CHARGE (CONSTANT CURRENT CHARGE)

Charge the battery with the current value specified by manufacturer or with approximately 1/10 of battery's rating capacity. (See the table below.)

Battery size	Charging current (A)	CCA (A)
75D23R	5.0 — 6.5	490

CAUTION:
- **The charge control feature and specifications for judgment of charge completion depend on the device. Follow the instruction manual of the charger used.**
- **Keep the electrolyte temperature at 45°C (113°F) or less while charging. Stop charging when the temperature exceeds this value.**

NOTE:
The characteristics of typical charging methods are as follows.
- Constant current charging

This method makes it easy to charge to 100%, since the electrolyte is agitated by the gassing occurred at the end of charging. However, the time for charging is comparatively long because the current value is kept constant.
- Constant voltage charging

This method completes charging in a short period of time due to the large current. However, it is difficult to charge to 100% because no gassing occurred at the end of charging and the electrolyte is not agitated. Therefore, the combined use with the constant current charging is preferable.
- Quasi-constant voltage charging

This method is widely used for commercially available chargers.
Compared to the constant voltage charging whose charging current at the beginning of charging becomes large, it reduces the charging current by lowering the voltage at the initial stage, resulting in battery load reduction. The time for charging is comparatively long. However, this type of chargers can be manufactured comparatively inexpensive due to the simple control circuit (or manual settings). After the initial stage of charging is completed, it gradually raises the charging voltage so that the charging current is within the specification, until the battery is fully charged.
- Constant voltage/current charging

In addition to the constant voltage charging, this method controls the upper limit of the current.
The constant current charging is applied at the beginning of charging, and the constant voltage charging is applied at the end. This makes battery charge comparatively efficient in a short period of time. Charging by generators is similar to this method.
Judgment of charge completion
1) Specific gravity of electrolyte should be held within the specific range of 1.250 — 1.290 for one hour or more.
2) Voltage while charging should be held within the specified range of 15.0 — 16.8 V for one hour or more.
3) Gas is actively generated in all cells.
4) The amount of charge reaches 1.2 — 1.5 times of the amount of discharge.

NOTE:
The amount of discharge/charge can be calculated by the following formula.
Amount of discharge (Ah) = Remaining capacity (%) calculated by specific gravity × 5 hour rate capacity (Ah)
Amount of charge (Ah) = Charging current value (A) × Time for charging

2. QUICK CHARGING

Charge the battery in a short period of time with a relatively large current by using a quick charger.
Charge the battery with the current value at approximately 1/2 of battery's rating capacity. (See the table below.)

CAUTION:
• Quick charging is accompanied by a large amount of heat generation. Charging should be completed in up to 30 minutes regardless of battery size.
• Quick charging is used to recover the battery until it can start the vehicle. For full charging, use the normal charging method.
• Keep the electrolyte temperature at 55°C (131°F) or less while quick charging. Stop charging when the temperature exceeds this value.

Battery size	Charging current (A)	CCA (A)
75D23R	25.0 — 32.5	490

6. Battery Sensor

A: REMOVAL

1) Disconnect the ground terminal from battery sensor. <Ref. to RC-4, BATTERY, NOTE, Repair Contents.>
2) Remove the clip (A) from the battery holder.
3) Disconnect the connector (B) from the battery sensor, and remove the battery sensor.

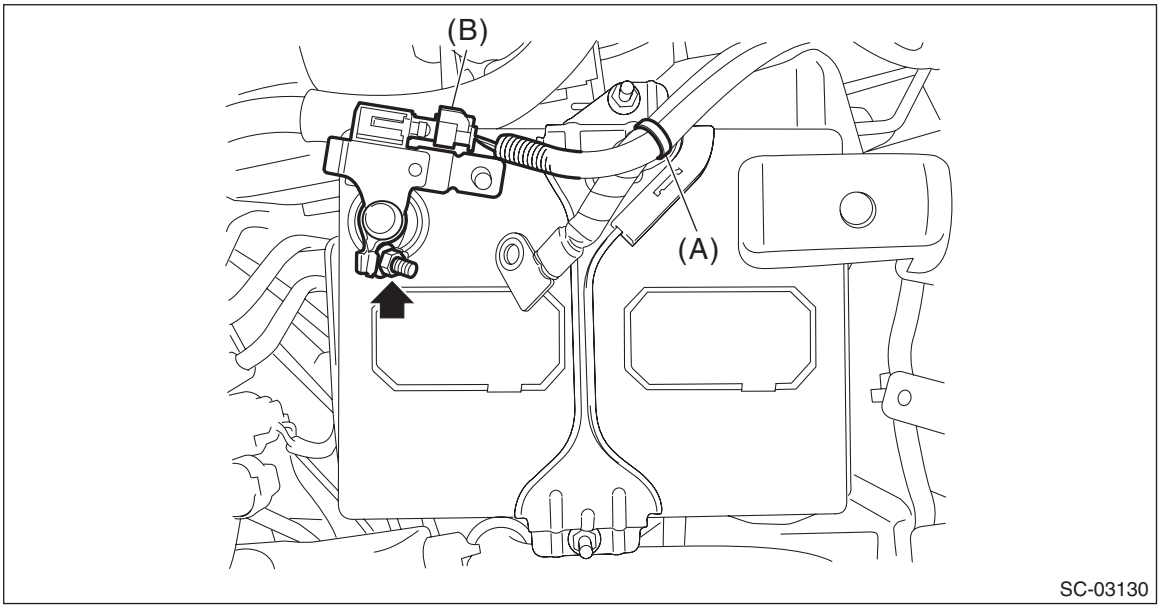

B: INSTALLATION

1) Install the battery sensor, and connect the connector (B) to the battery sensor.

Tightening torque:
6 N·m (0.6 kgf-m, 4.4 ft-lb)

2) Attach the clip (A) to the battery holder.

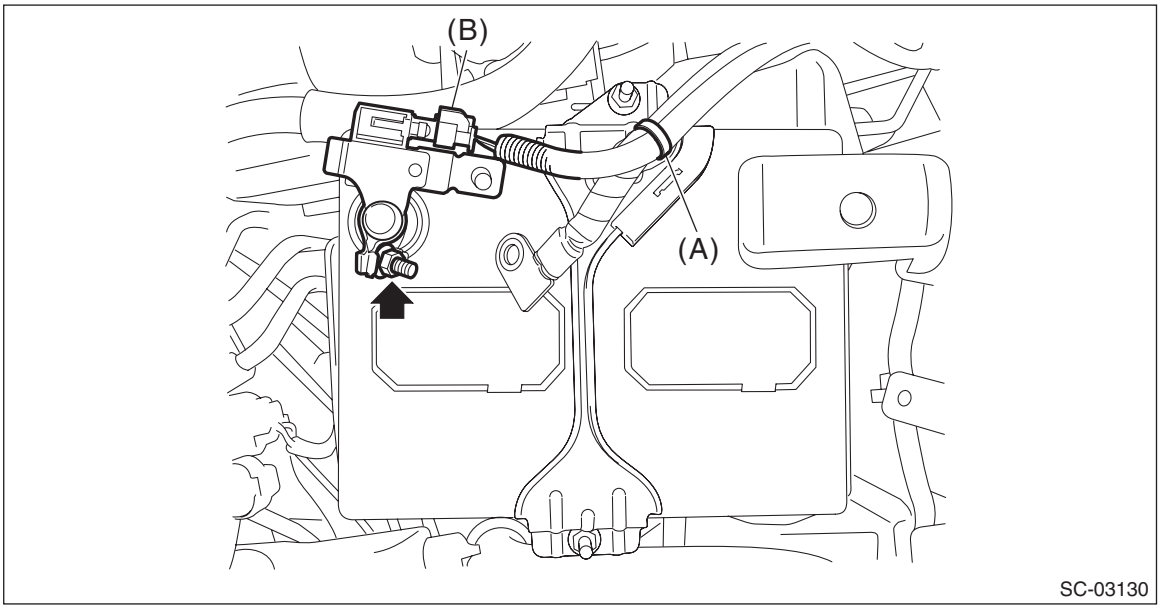

3) Connect the ground terminal to battery sensor. <Ref. to RC-4, BATTERY, NOTE, Repair Contents.>

C: INSPECTION

Check the battery sensor for deformation, cracks and any other damage.

ENGINE (DIAGNOSTICS)

EN(H6DO)(diag)

		Page
1.	Basic Diagnostic Procedure	2
2.	Check List for Interview	4
3.	General Description	6
4.	Electrical Component Location	11
5.	Engine Control Module (ECM) I/O Signal	20
6.	Data Link Connector	43
7.	General Scan Tool	44
8.	Subaru Select Monitor	50
9.	Read Diagnostic Trouble Code (DTC)	68
10.	Inspection Mode	69
11.	Drive Cycle	73
12.	Clear Memory Mode	85
13.	Active Test	86
14.	Malfunction Indicator Light	87
15.	Diagnostics for Engine Starting Failure	92
16.	List of Diagnostic Trouble Code (DTC)	109
17.	Diagnostic Procedure with Diagnostic Trouble Code (DTC)	120
18.	General Diagnostic Table	668

1. Basic Diagnostic Procedure

A: PROCEDURE

1. ENGINE

	Step	Check	Yes	No
1	**CHECK ENGINE START FAILURE.** 1) Ask the customer when and how the trouble occurred using the interview check list. <Ref. to EN(H6DO)(diag)-4, CHECK, Check List for Interview.> 2) Start the engine.	Does the engine start?	Go to step **2**.	Inspection using "Diagnostics for Engine Starting Failure" <Ref. to EN(H6DO)(diag)-92, Diagnostics for Engine Starting Failure.>
2	**CHECK ILLUMINATION OF MALFUNCTION INDICATOR LIGHT.**	Does the malfunction indicator light illuminate?	Go to step **3**.	Inspection using "General Diagnostic Table". <Ref. to EN(H6DO)(diag)-668, INSPECTION, General Diagnostic Table.>
3	**CHECK COMMUNICATION STATUS.** 1) Turn the ignition switch to OFF. 2) Connect the Subaru Select Monitor or general scan tool to the data link connector. 3) Turn the ignition switch to ON, and run the Subaru Select Monitor or general scan tool. NOTE: • Subaru Select Monitor For detailed operation procedures, refer to the "Subaru Select Monitor". <Ref. to EN(H6DO)(diag)-50, Subaru Select Monitor.> • General scan tool For detailed operation procedures, refer to the general scan tool operation manual.	Does Subaru Select Monitor or general scan tool communicate with vehicle normally?	Go to step **4**.	Inspection using LAN system "Diagnostic Procedure with Diagnostic Trouble Code (DTC)". <Ref. to LAN(diag)-2, Basic Diagnostic Procedure.>
4	**CHECK DTC.** Read DTC using Subaru Select Monitor or general scan tool. NOTE: • Subaru Select Monitor For detailed operation procedures, refer to "Read Diagnostic Trouble Code (DTC)". <Ref. to EN(H6DO)(diag)-68, Read Diagnostic Trouble Code (DTC).> • General scan tool For detailed operation procedures, refer to the general scan tool operation manual.	Is DTC displayed on Subaru Select Monitor or general scan tool?	Record the DTC and freeze frame data. Repair the trouble cause. <Ref. to EN(H6DO)(diag)-109, List of Diagnostic Trouble Code (DTC).> After repair, go to the next step. Go to step **5**.	Repair the related parts. NOTE: If DTC is not shown on display although the malfunction indicator light illuminates, perform the diagnosis of malfunction indicator light circuit or combination meter. <Ref. to EN(H6DO)(diag)-87, Malfunction Indicator Light.>

Step		Check	Yes	No
5	**PERFORM DIAGNOSIS.** 1) Perform the Clear Memory Mode. <Ref. to EN(H6DO)(diag)-85, Clear Memory Mode.> 2) Perform the Inspection Mode or Drive Cycle. <Ref. to EN(H6DO)(diag)-69, Inspection Mode.> <Ref. to EN(H6DO)(diag)-73, Drive Cycle.>	Is DTC displayed on Subaru Select Monitor or general scan tool?	Inspect using "Diagnostic Procedure with Diagnostic Trouble Code (DTC)". <Ref. to EN(H6DO)(diag)-120, Diagnostic Procedure with Diagnostic Trouble Code (DTC).>	Finish the diagnosis.

2. Check List for Interview

A: CHECK

1. CHECK LIST NO. 1

Check the following item when problem has occurred.

NOTE:
Use copies of this page for interviewing customers.

<table>
<tr><td>Customer's name</td><td></td><td>Engine No.</td><td></td></tr>
<tr><td>Date of purchase</td><td></td><td>Fuel type</td><td></td></tr>
<tr><td>Date of repair</td><td></td><td rowspan="2">Odometer reading</td><td>km</td></tr>
<tr><td>V.I.N.</td><td></td><td>miles</td></tr>
<tr><td>Weather</td><td colspan="3">❑ Fine
❑ Cloudy
❑ Rainy
❑ Snowy
❑ Various/Others:</td></tr>
<tr><td rowspan="2">Ambient air temperature</td><td>°C (°F)</td><td colspan="2"></td></tr>
<tr><td colspan="3">❑ Hot
❑ Warm
❑ Cool
❑ Cold</td></tr>
<tr><td>Place</td><td colspan="3">❑ Highway
❑ Suburbs
❑ Inner city
❑ Uphill
❑ Downhill
❑ Rough road
❑ Others:</td></tr>
<tr><td>Engine temperature</td><td colspan="3">❑ Cold
❑ Warming-up
❑ After warming-up
❑ Any temperature
❑ Others:</td></tr>
<tr><td>Engine speed</td><td>rpm</td><td colspan="2"></td></tr>
<tr><td>Vehicle speed</td><td>km/h (MPH)</td><td colspan="2"></td></tr>
<tr><td>Driving conditions</td><td colspan="3">❑ Not affected
❑ At starting
❑ While idling
❑ At racing
❑ While accelerating
❑ While cruising
❑ While decelerating
❑ While turning (RH/LH)</td></tr>
<tr><td>Headlight</td><td>❑ ON/❑ OFF</td><td>Rear defogger</td><td>❑ ON/❑ OFF</td></tr>
<tr><td>Blower</td><td>❑ ON/❑ OFF</td><td>Audio</td><td>❑ ON/❑ OFF</td></tr>
<tr><td>A/C compressor</td><td>❑ ON/❑ OFF</td><td>Rear entertainment system</td><td>❑ ON/❑ OFF</td></tr>
<tr><td>Radiator fan</td><td>❑ ON/❑ OFF</td><td>Car phone</td><td>❑ ON/❑ OFF</td></tr>
<tr><td>Front wiper</td><td>❑ ON/❑ OFF</td><td>Wireless device</td><td>❑ ON/❑ OFF</td></tr>
<tr><td>Rear wiper</td><td>❑ ON/❑ OFF</td><td colspan="2"></td></tr>
</table>

2. CHECK LIST NO. 2

Check the following item about the vehicle's state when the malfunction indicator light turns on.

NOTE:
Use copies of this page for interviewing customers.

a) Other warning lights or indicators illuminate: ❑ Yes / ❑ No
❑ Fuel level warning light ❑ Charge warning light ❑ Engine coolant temperature warning light ❑ Oil pressure warning light ❑ ATF temperature warning light or SPORT indicator light ❑ Driver's control center differential indicator light ❑ ABS warning light ❑ VDC warning light ❑ Cruise indicator light ❑ SI-CRUISE warning light ❑ Immobilizer indicator light ❑ STEERING warning light ❑ Glow indicator light ❑ Sedimenter warning light ❑ Electronic parking brake warning light ❑ Others:
b) Fuel level
• Lack of fuel: ❑ Yes / ❑ No • Indicator position of fuel gauge: • Experienced running out of fuel: ❑ Yes / ❑ No
c) Intentional connecting or disconnecting of harness connectors or spark plug cords: ❑ Yes / ❑ No
• What:
d) Intentional connecting or disconnecting of hoses: ❑ Yes / ❑ No
• What:
e) Installing of other parts except genuine parts: ❑ Yes / ❑ No
• What: • Where:
f) Occurrence of noise: ❑ Yes / ❑ No
• From where: • What kind:
g) Occurrence of smell: ❑ Yes / ❑ No
• From where: • What kind:
h) Intrusion of water into engine compartment or passenger compartment: ❑ Yes / ❑ No
i) Troubles occurred
❑ Engine does not start. ❑ Engine stalls during idling. ❑ Engine stalls while driving. ❑ Engine speed decreases. ❑ Engine speed does not decrease. ❑ Rough idling ❑ Poor acceleration ❑ Back fire ❑ After fire ❑ Does not shift. ❑ Excessive shift shock

3. General Description

A: CAUTION

1) Airbag system wiring harness is routed near the ECM, main relay and fuel pump relay.

CAUTION:
- **Do not use electrical test equipment on the airbag system circuits.**
- **Be careful not to damage the airbag system wiring harness when servicing the ECM, TCM, main relay and fuel pump relay.**

2) Never connect the battery in reverse polarity. Doing so will damage the ECM instantly, and other parts will also be damaged.
3) Do not disconnect the battery terminals while the engine is running. A large counter electromotive force will be generated in the generator, and this voltage may damage electronic parts such as ECM etc.
4) After connecting the battery terminals, wait for at least 10 seconds before tuning the ignition switch to ON. <Ref. to RC-4, BATTERY, NOTE, Repair Contents.>
5) When disconnecting the connectors of the electrical components, always be sure to turn the ignition switch to OFF. Perform the Clear Memory Mode after connecting the connectors. <Ref. to EN(H6DO)(diag)-85, Clear Memory Mode.>
6) When measuring the voltage or resistance of individual sensor or all electrical control modules, use a tapered pin with a diameter of less than 0.6 mm (0.024 in) and touch it to the tip of terminal.

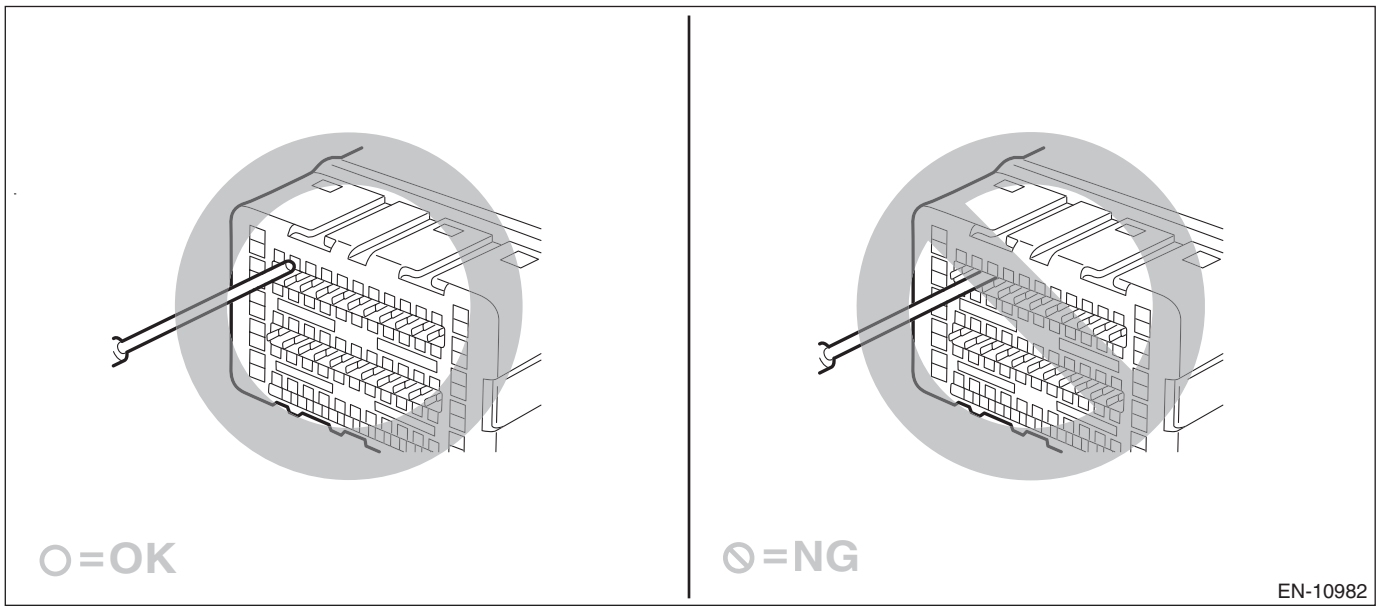

Never insert the tapered pin into the terminal because it deforms inside which may lead to a malfunction.

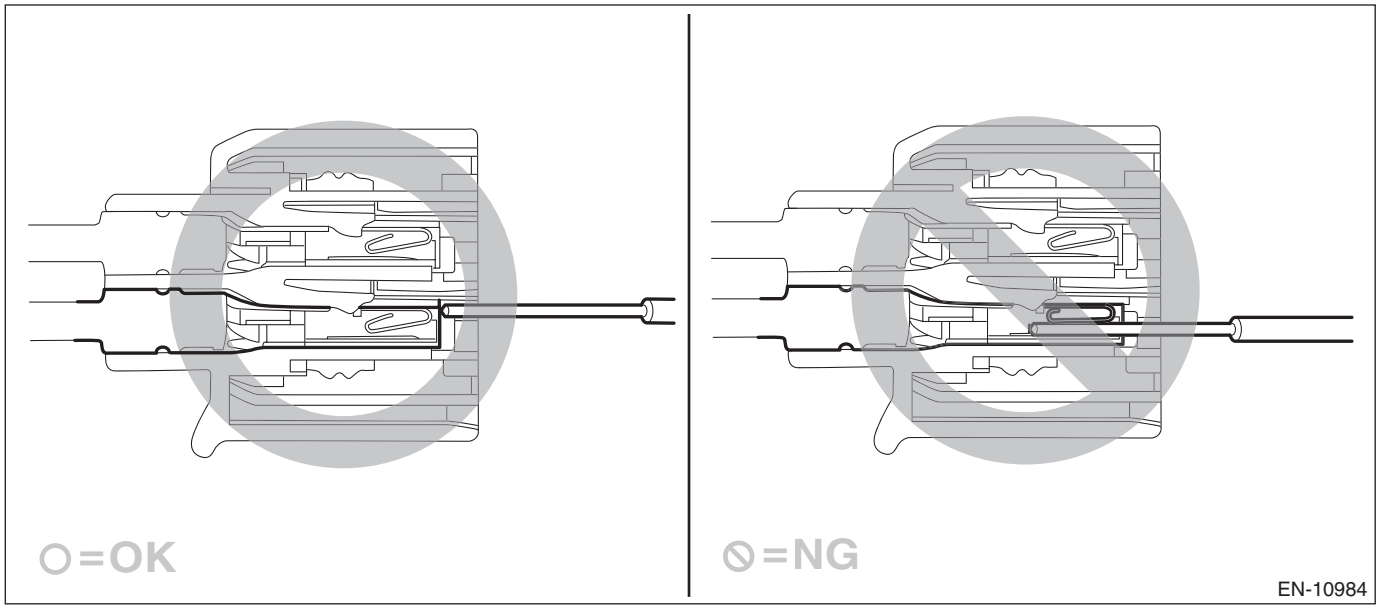

CAUTION:
When replacing the ECM, be careful not to use the ECM of wrong specification to avoid any damage on the fuel injection system.

NOTE:
When replacing the ECM of the models with immobilizer, immobilizer system must be registered. For detailed operation procedure, refer to the “REGISTRATION MANUAL FOR IMMOBILIZER”.
7) Take care not to allow water to get into the connectors when servicing or washing the vehicle in rainy weather. Avoid exposure to water even if the connectors are waterproof.
8) Use ECM mounting stud bolts for the grounding point when measuring voltage and resistance inside the passenger compartment.

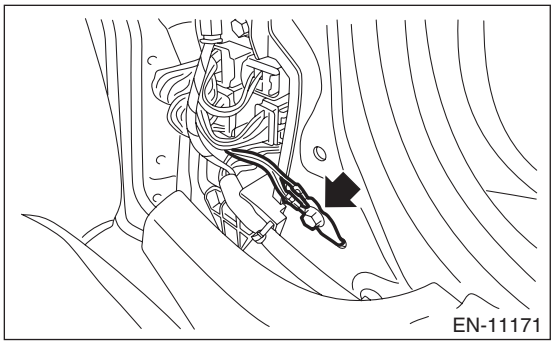

9) Use the engine ground terminal or engine assembly for the grounding point when measuring the voltage and resistance in engine compartment.

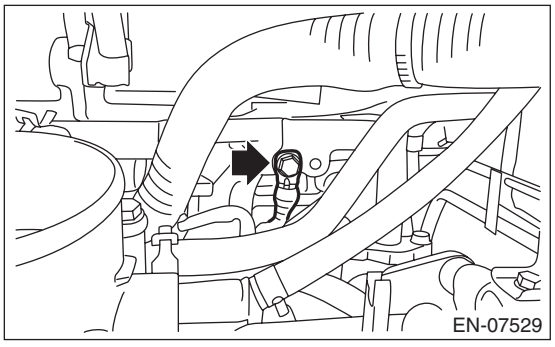

10) All parts related to the engine control system are precision parts. Do not drop or otherwise apply impact. Do not reuse the parts that are dropped accidentally.

11) Observe the following cautions when installing a radio in vehicle.

CAUTION:
• The antenna must be kept as far apart as possible from the ECM. <Ref. to EN(H6DO)(diag)-11, CONTROL MODULE, LOCATION, Electrical Component Location.>
• The antenna feeder must be placed as far apart as possible from the ECM and engine control system harness.
• Carefully adjust the antenna for correct matching.
• When mounting a large power type radio, pay special attention to the three items mentioned above.
• Incorrect installation of the radio may affect the operation of ECM.

12) When disconnecting the fuel tube, release the fuel pressure. <Ref. to FU(H6DO)-93, RELEASING OF FUEL PRESSURE, PROCEDURE, Fuel.>
13) Warning lights may illuminate when performing driving test with jacked-up or lifted-up condition, but this is not a system malfunction. The reason for this is the rotating speed difference between the front and rear wheels. When engine control system diagnosis is finished, perform the VDC memory clearance procedure of self-diagnosis function. <Ref. to VDC(diag)-27, Clear Memory Mode.>

B: INSPECTION

Before performing diagnostics, check the following item which might affect engine problems.

1. BATTERY

1) Check the battery. <Ref. to SC(H6DO)-59, INSPECTION, Battery.>
2) Check the condition of the main and other fuses, and harnesses and connectors. Also check for proper grounding.

2. ENGINE GROUND

Make sure that the engine ground terminal is properly connected to the engine.

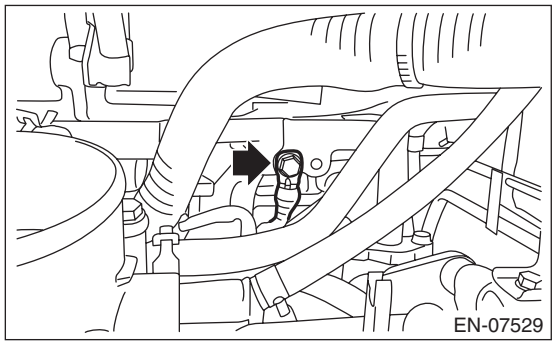

C: NOTE

• The on-board diagnostic (OBD) system detects and indicates a fault in various inputs and outputs of the complex electronic control. Malfunction indicator light in the combination meter indicates occurrence of a fault or trouble.
• Further, against any failure of sensors that would cause the vehicle to stop running, the fail-safe function is provided to ensure the minimal drivability.
• The OBD system incorporated with the vehicles within this type of engine complies with OBD-II regulations. The OBD system monitors the components and the system malfunction listed in “Engine Section” which affects on emissions.
• When the system decides that a malfunction occurs, malfunction indicator light illuminates. At the same time of the malfunction indicator light illumination or blinking, a DTC and a freeze frame engine conditions are stored into on-board computer.
• The OBD system stores freeze frame engine condition data (engine load, engine coolant temperature, fuel trim, engine speed and vehicle speed, etc.) into on-board computer when it detects a malfunction.
• Freeze frame engine condition data are stored until the DTCs are cleared. However when such malfunctions as fuel trim fault and misfire are detected with the freeze frame engine condition data stored, they are rewritten into those related to the fuel trim fault and misfire.
• When the malfunction does not occur again for three consecutive driving cycles*, malfunction indicator light is turned off, but DTC remains at on-board computer.
*: One driving cycle means the period between the ignition switch ON and the ignition switch OFF after driving.
• When performing diagnosis, connect the Subaru Select Monitor or general scan tool to the vehicle.

D: PREPARATION TOOL

1. SPECIAL TOOL

ILLUSTRATION	TOOL NUMBER	Description	REMARKS
 STSSM4	— (Newly adopted tool)	SUBARU SELECT MONITOR 4	Used for setting of each function and trouble-shooting for electrical system. NOTE: For detailed operation procedures of Subaru Select Monitor 4, refer to “Application help”.
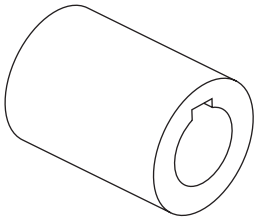 ST18252AA000	18252AA000	CRANKSHAFT SOCKET	Used for rotating crankshaft.
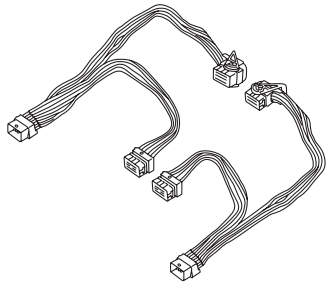 ST18460AA050	18460AA050	CHECK BOARD	Used for measuring ECM terminal voltage.

2. GENERAL TOOL

TOOL NAME	REMARKS
Circuit tester	Used for measuring resistance, voltage and current.
Oscilloscope	Used for measuring the sensor.
DST-i	Used together with Subaru Select Monitor 4.

4. Electrical Component Location

A: LOCATION

1. CONTROL MODULE

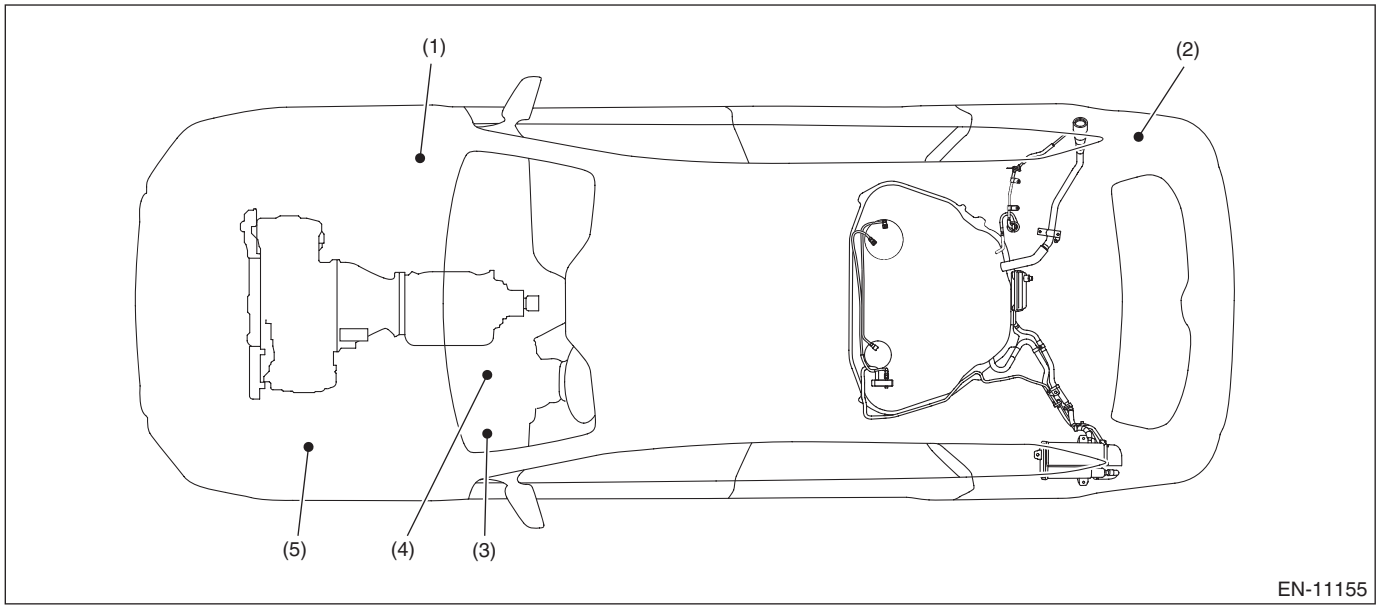

(1) Engine control module (ECM)
(2) Fuel pump control module (ECM)
(3) Data link connector
(4) Malfunction indicator light
(5) Delivery (test) mode fuse

Electrical Component Location

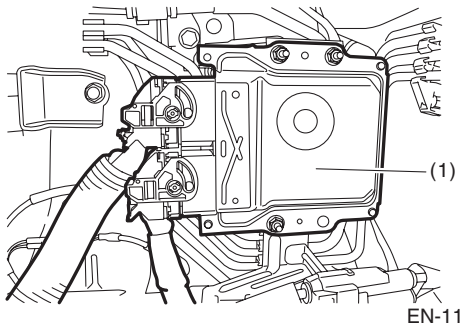

EN-11149

• Sedan model

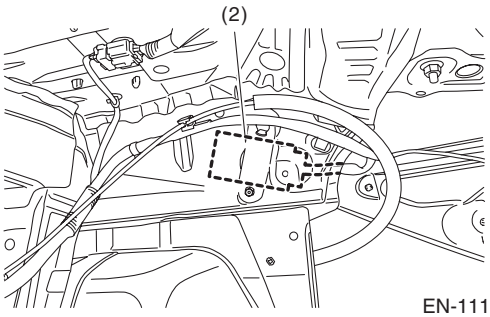

EN-11145

• OUTBACK model

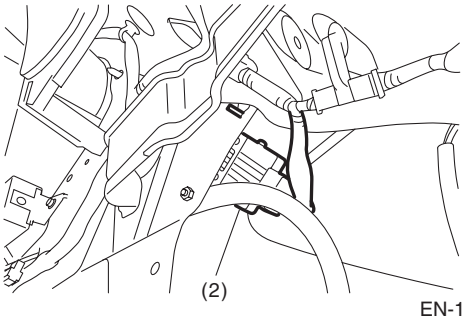

EN-11146

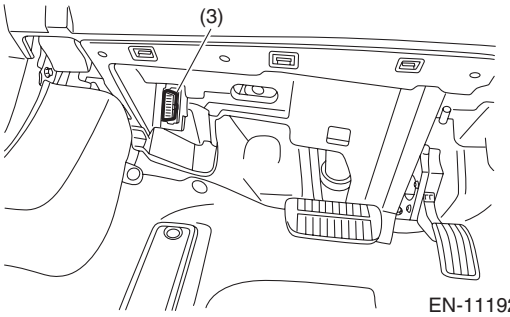

EN-11192

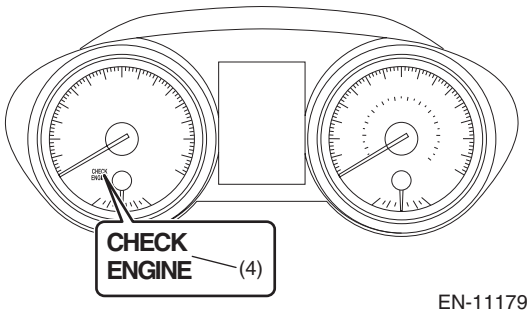

EN-11179

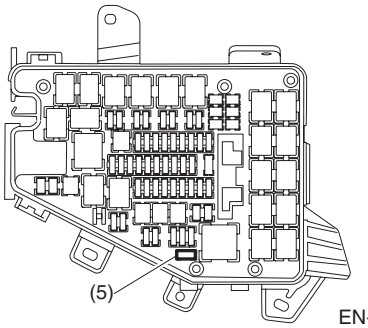

EN-11183

2. SENSOR

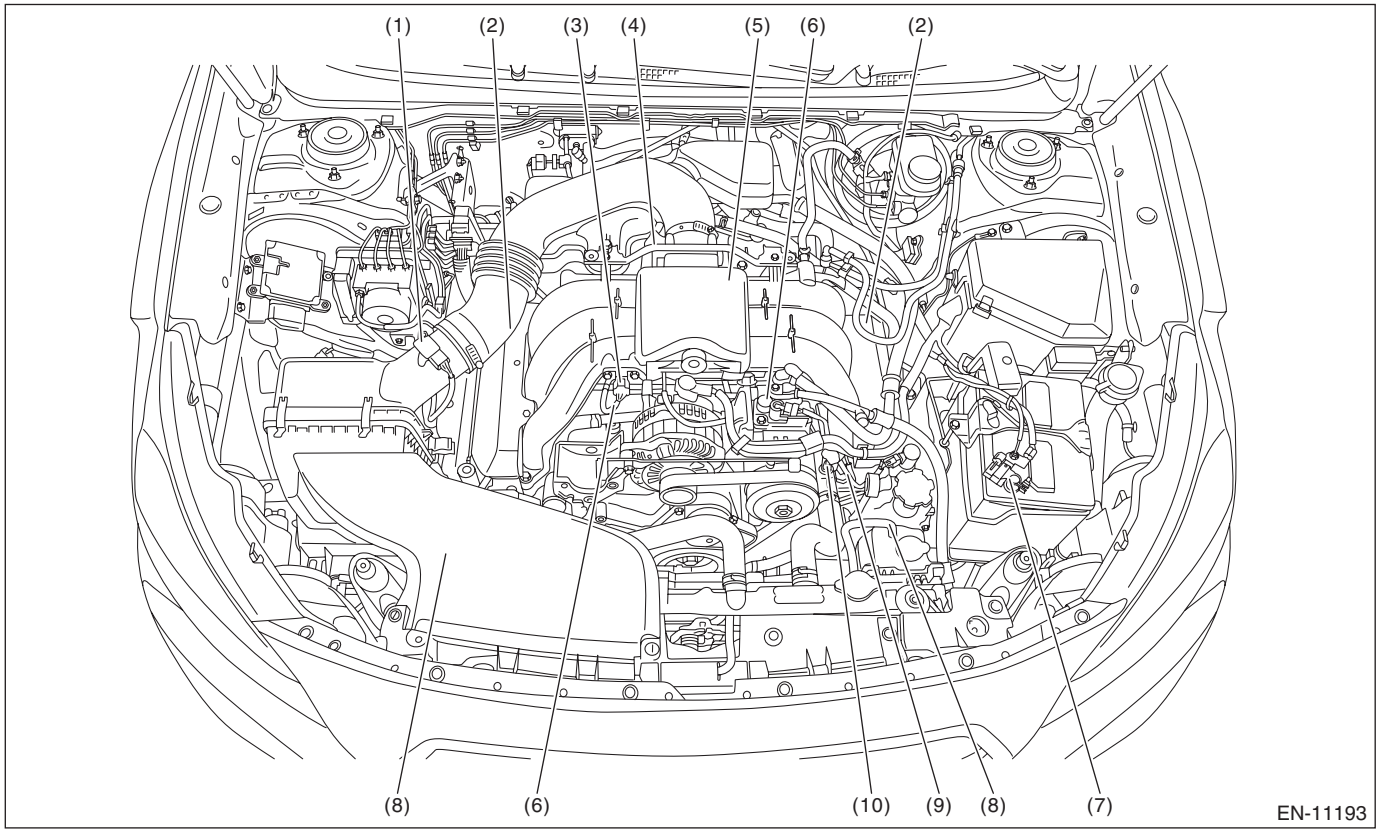

(1) Mass air flow and intake air temperature sensor
(2) Intake camshaft position sensor
(3) Manifold absolute pressure sensor
(4) Electronic throttle control
(5) Crankshaft position sensor
(6) Knock sensor
(7) Battery sensor
(8) Exhaust camshaft position sensor
(9) Engine oil temperature sensor
(10) Engine coolant temperature sensor

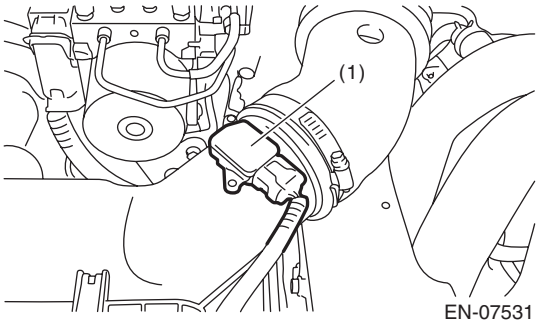
(1)
EN-07531

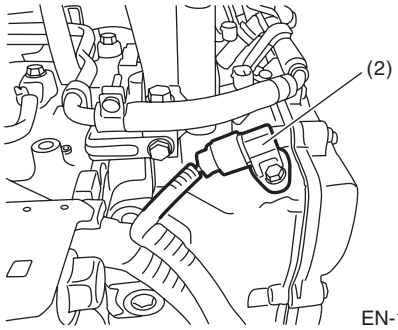
(2)
EN-11198

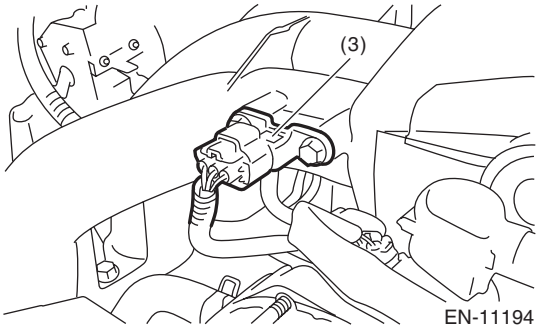
(3)
EN-11194

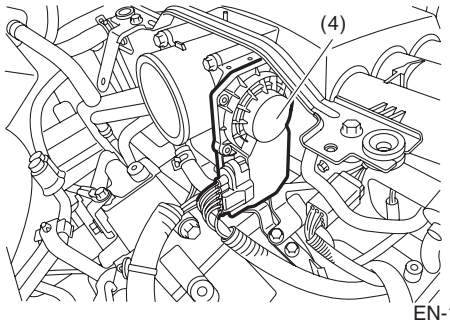
(4)
EN-11150

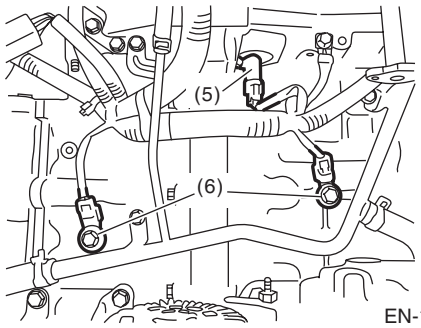
(5)
(6)
EN-11196

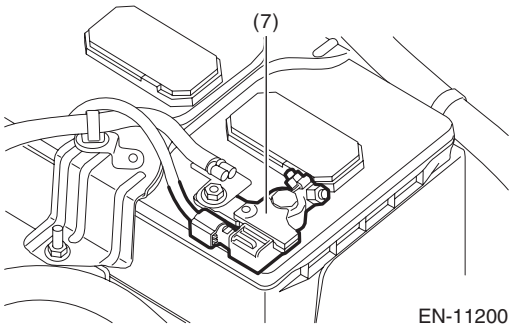
(7)
EN-11200

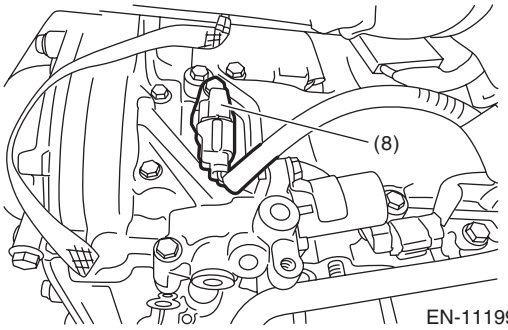
(8)
EN-11199

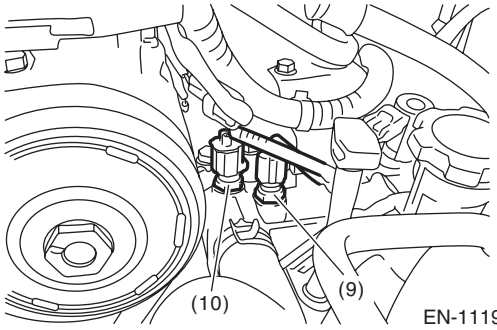
(10)
(9)
EN-11197

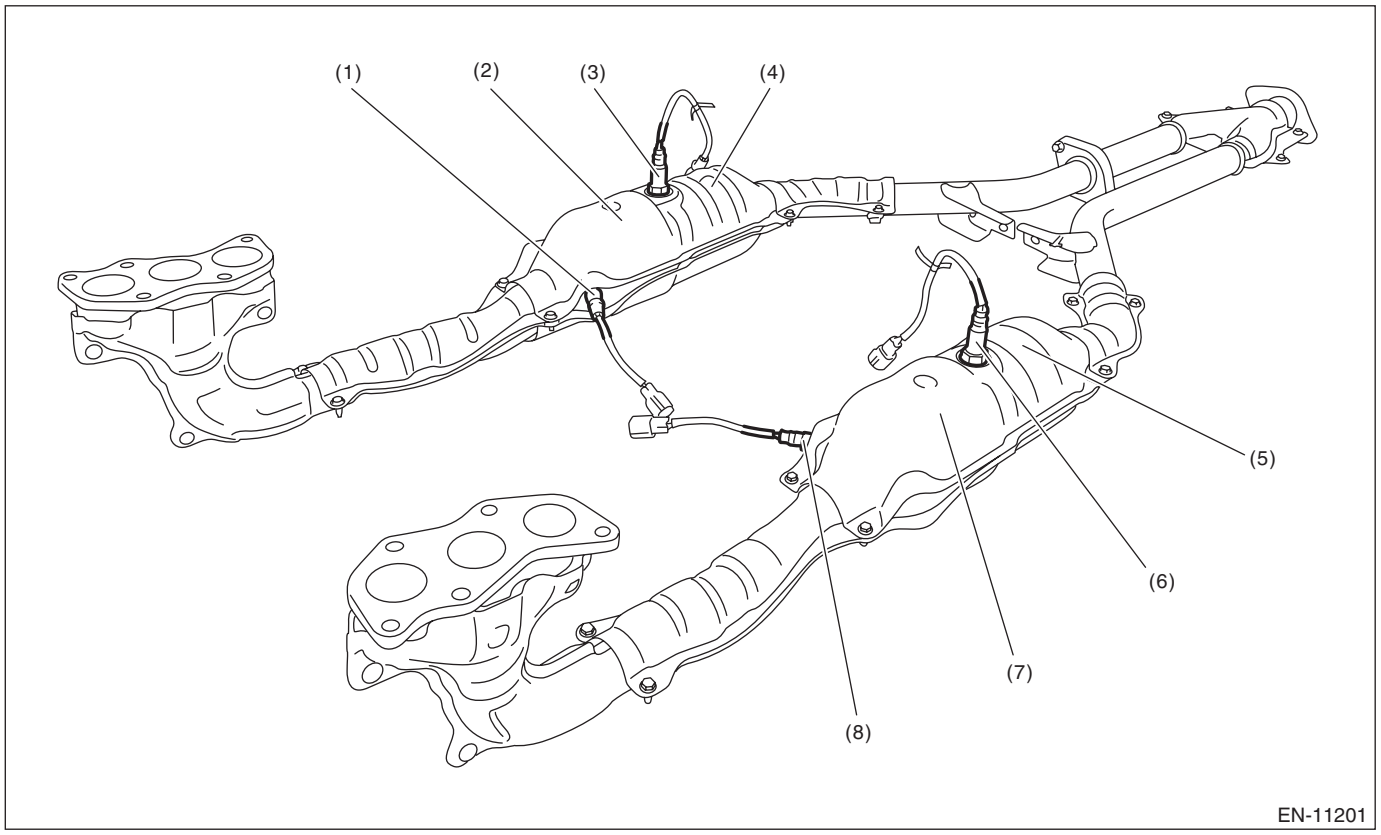

(1) Front oxygen (A/F) sensor RH
(2) Front catalytic converter RH
(3) Rear oxygen sensor RH
(4) Rear catalytic converter RH
(5) Rear catalytic converter LH
(6) Rear oxygen sensor LH
(7) Front catalytic converter LH
(8) Front oxygen (A/F) sensor LH

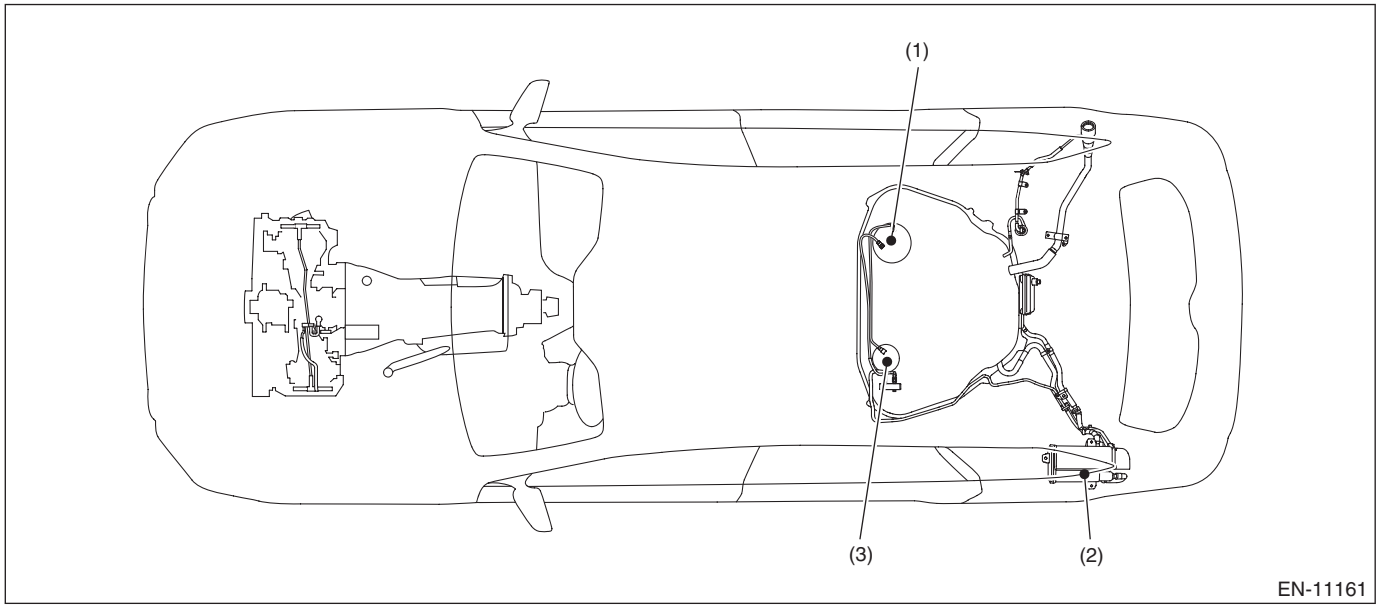

(1) Fuel level sensor
(2) Leak check valve ASSY (with built-in pressure sensor)
(3) Fuel sub level sensor

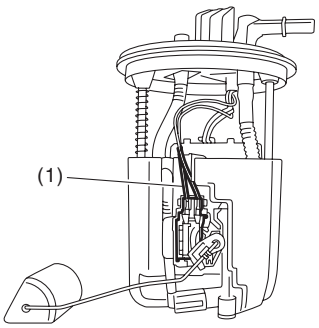

EN-11182

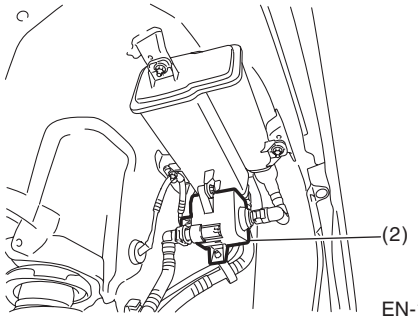

EN-11162

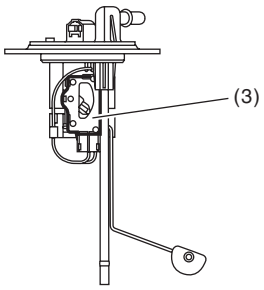

EN-08790

SUBARU.

3. SOLENOID VALVE, ACTUATOR, EMISSION CONTROL SYSTEM PARTS AND IGNITION SYSTEM PARTS

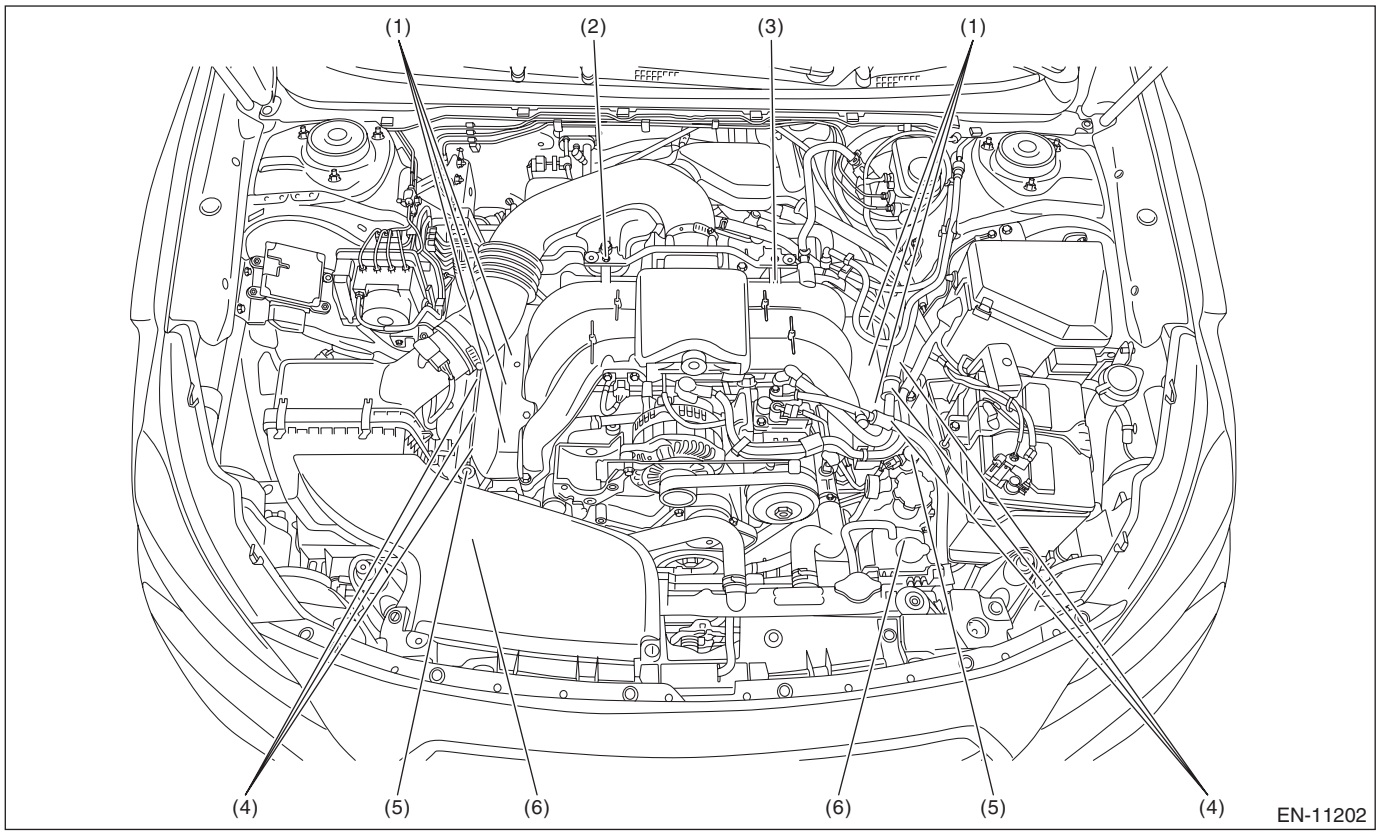

EN-11202

(1) Fuel injector
(2) Purge control solenoid valve
(3) EGR control valve
(4) Ignition coil
(5) Intake oil flow control solenoid valve
(6) Exhaust oil flow control solenoid valve

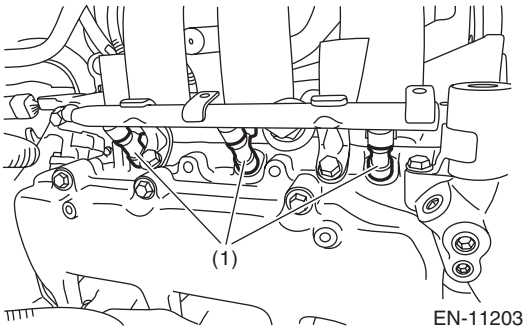

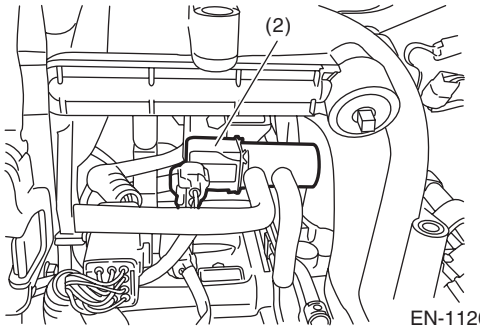

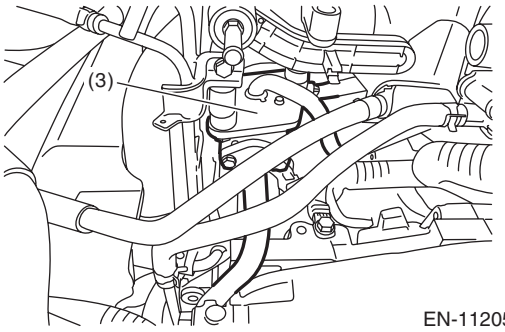

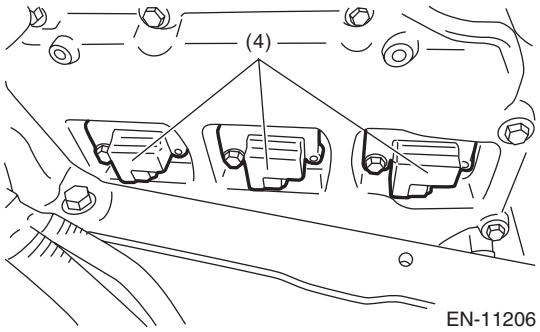

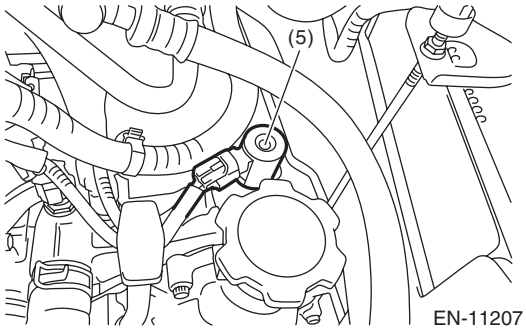

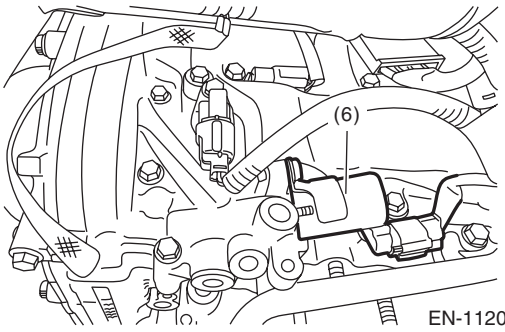

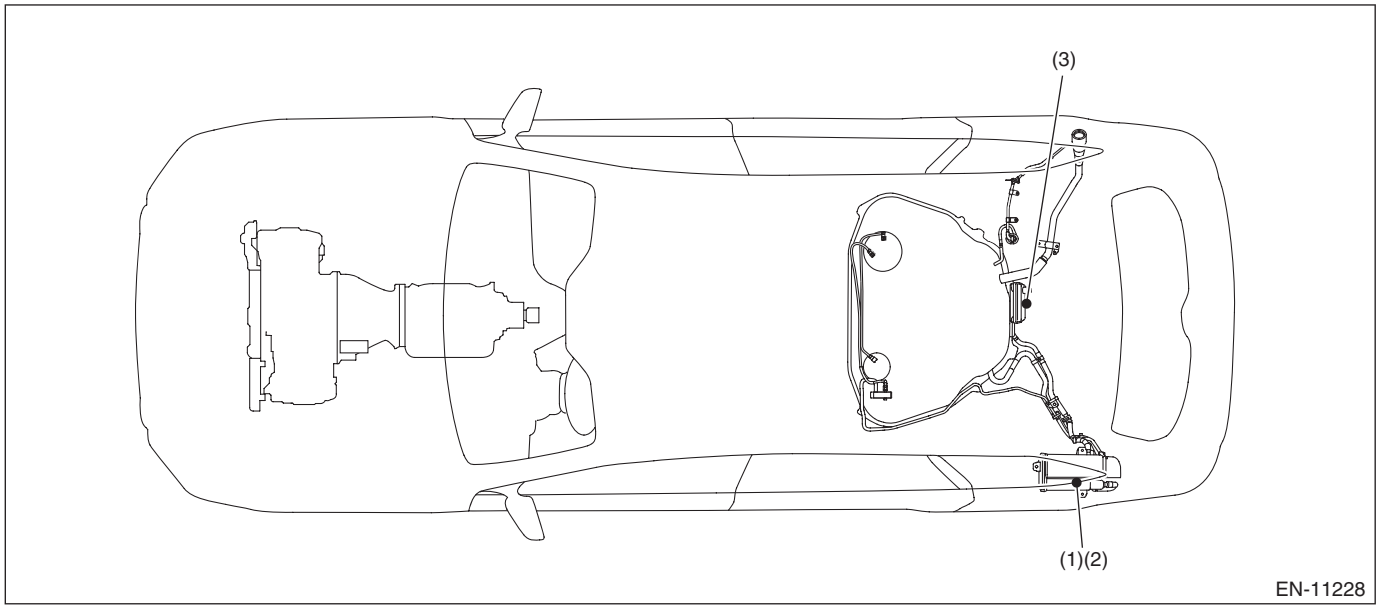

(1) Leak check valve ASSY (2) Canister (3) Drain filter

Electrical Component Location

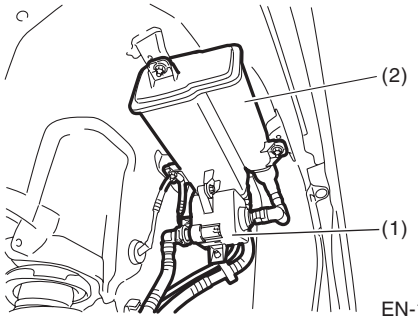

EN-11147

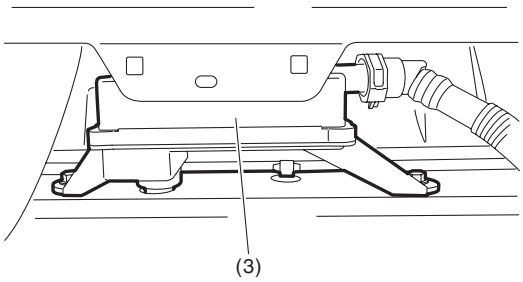

EN-11148

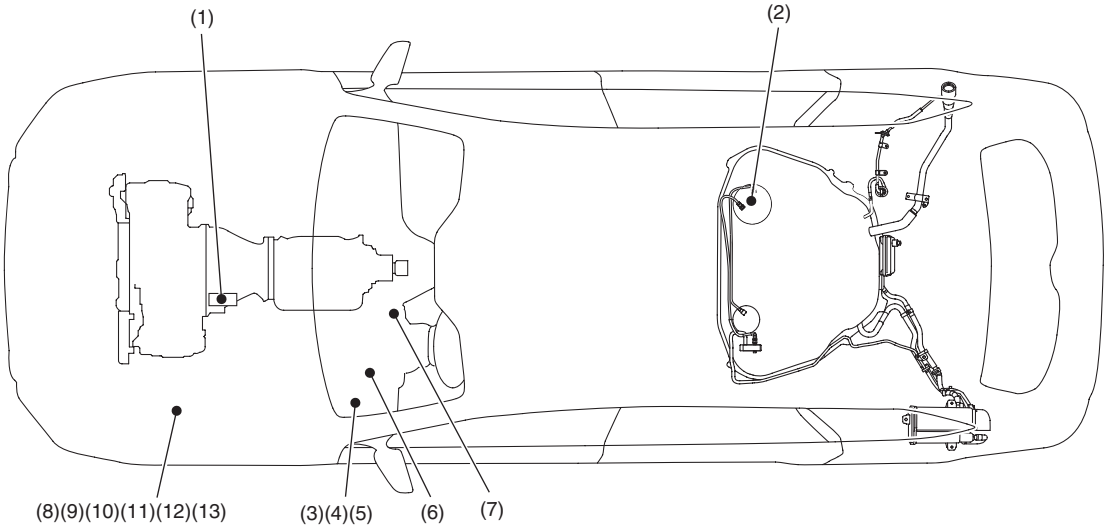

EN-11160

(1) Starter
(2) Fuel pump
(3) IG1 relay
(4) Starter relay
(5) IG2 relay
(6) Starter cut relay
(7) Push button ignition switch
(8) Electronic throttle control relay
(9) Main fan relay
(10) Sub fan relay
(11) Fuel pump relay
(12) Main relay
(13) IG1 relay (push button start)

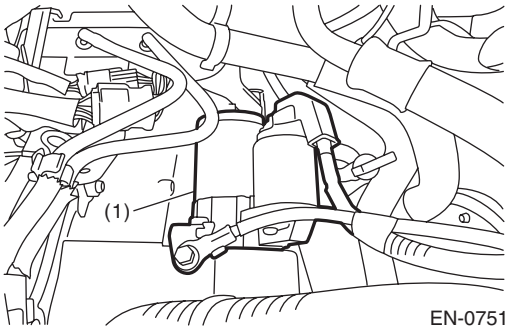

EN-07519

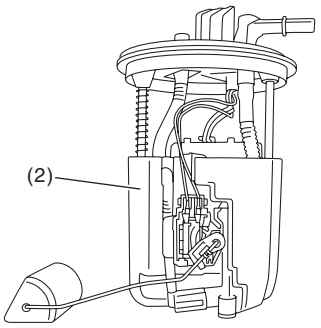

EN-11226

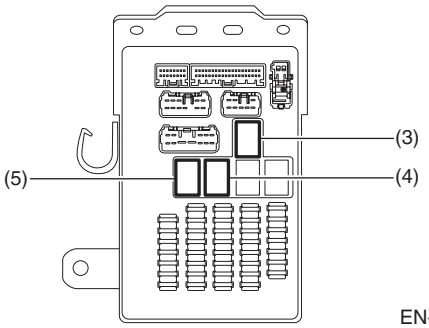

EN-11165

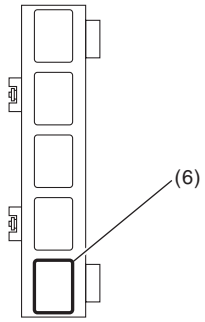

EN-11163

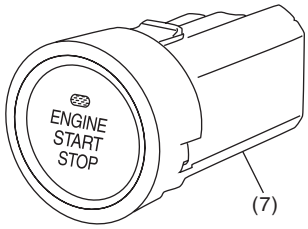

EN-11189

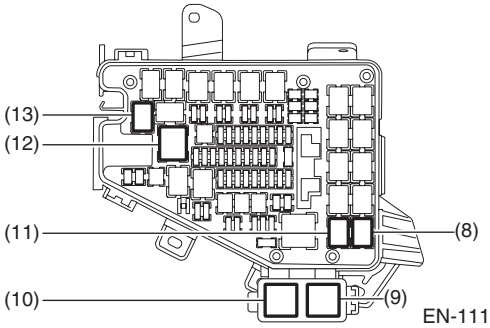

EN-11195

5. Engine Control Module (ECM) I/O Signal

A: ELECTRICAL SPECIFICATION

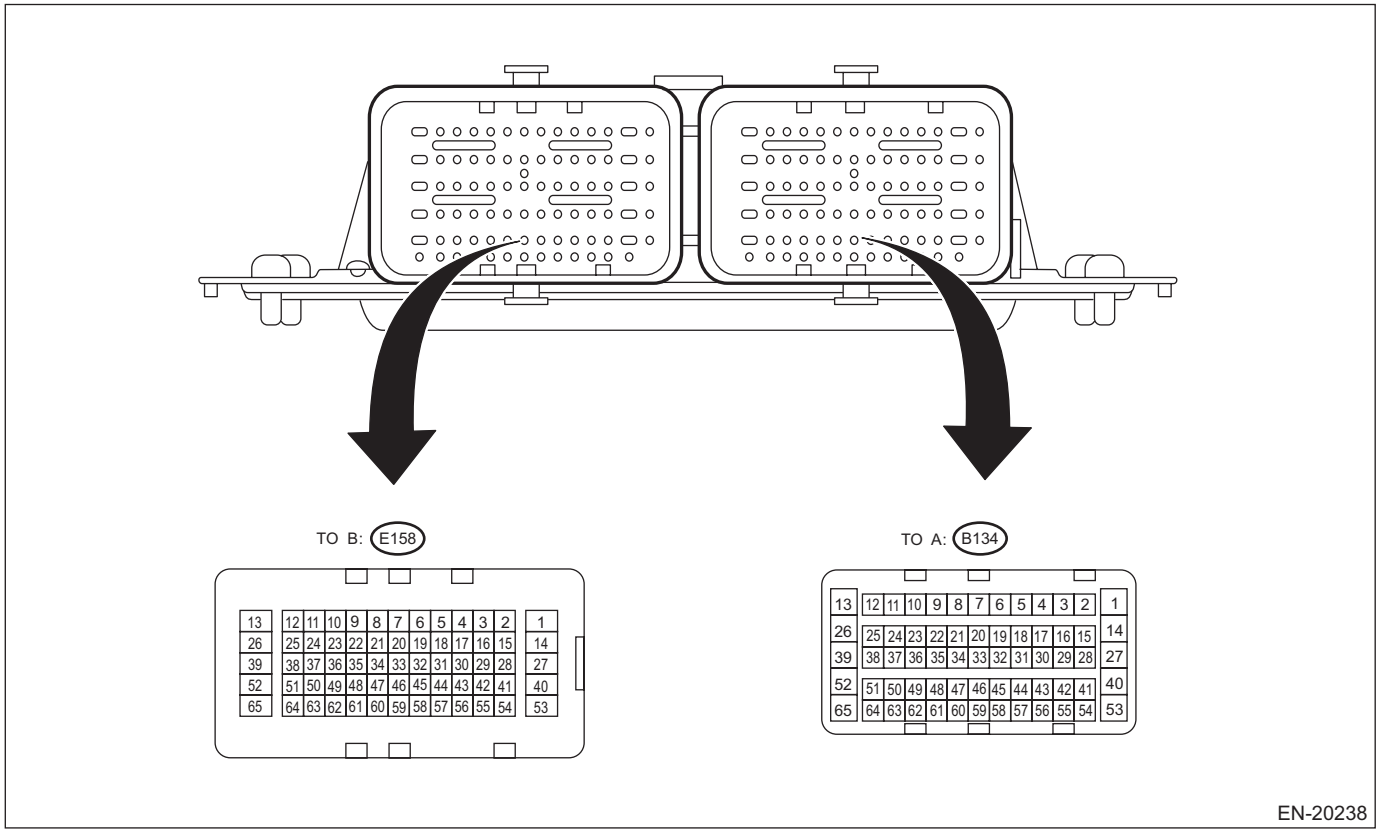

Description		Connector No.	Terminal No.	Signal (V)		Note
				Ignition SW ON After warm-up (at engine OFF)	Engine ON After warm-up (at idle)	
Crankshaft position sensor	+ signal	E158	40	0	–7 — +7	Waveform 1
	– signal	E158	27	0	0	—
	Shield	E158	53	0	0	—
Intake camshaft position sensor RH		E158	54	0 or 5	0 or 5	Waveform 1
Intake camshaft position sensor LH		E158	41	0 or 5	0 or 5	Waveform 1
Exhaust camshaft position sensor RH		E158	2	0 or 5	0 or 5	Waveform 1
Exhaust camshaft position sensor LH		E158	55	0 or 5	0 or 5	Waveform 1
Camshaft position sensor ground		E158	42	0	0	—
Front oxygen (A/F) sensor RH	+ signal	E158	46	2.6 — 3.2	0.9 — 2.9	Waveform 2
	– signal	E158	33	1.3 — 3.1	1.4 — 3.1	—
	Heater signal	E158	5	Battery voltage	0 or battery voltage	Waveform 4
Front oxygen (A/F) sensor LH	+ signal	E158	45	2.6 — 3.2	0.9 — 2.9	Waveform 2
	– signal	E158	44	1.3 — 3.1	1.4 — 3.1	—
	Heater signal	E158	4	Battery voltage	0 or battery voltage	Waveform 4

Description		Connector No.	Terminal No.	Signal (V)		Note
				Ignition SW ON After warm-up (at engine OFF)	Engine ON After warm-up (at idle)	
Rear oxygen sensor RH	+ signal	E158	57	0	0 — 0.9	—
	– signal	E158	56	1.5	1.0 — 1.7	Waveform 3
	Heater signal	E158	10	Battery voltage	0 or battery voltage	Waveform 4
Rear oxygen sensor LH	+ signal	E158	59	0	0 — 0.9	Waveform 3
	– signal	E158	47	1.5	1 — 1.7	—
	Heater signal	E158	11	Battery voltage	0 or battery voltage	Waveform 4
Oxygen sensor shield		E158	58	0	0	—
Air flow sensor	Signal	B134	16	0.5 — 1	0.6 — 2.3	—
	Ground	B134	17	0	0	—
	Shield	B134	3	0	0	—
Intake air temperature sensor signal		B134	15	2.4 — 3.2	2.4 — 3.2	Ambient air temperature
Engine coolant temperature sensor signal		E158	43	0.8 — 1.4	0.5 — 1.4	—
Engine oil temperature sensor signal		E158	18	1 — 1.4	1 — 1.4	—
Manifold absolute pressure sensor signal		E158	15	3.5 — 4.8	1 — 1.9	—
Knock sensor 1 signal		E158	30	2.4 — 2.5	2.2 — 2.7	—
Knock sensor 2 signal		E158	16	2.2 — 2.8	2.1 — 3	—
Knock sensor shield		E158	17	0	0	—
Accelerator pedal position sensor	Main sensor signal	B134	29	Fully closed: 0.3 — 1.1 Fully opened: 2.3 — 3.8	Fully closed: 0.3 — 1.4 Fully opened: 2.3 — 3.8	—
	Main sensor power supply	B134	30	5	5	—
	Main sensor ground	B134	33	0	0	—
	Sub sensor signal	B134	31	Fully closed: 0.3 — 1.1 Fully opened: 2.3 — 3.8	Fully closed: 0.3 — 1.4 Fully opened: 2.3 — 3.8	—
	Sub sensor power supply	B134	28	5	5	—
	Sub sensor ground	B134	34	0	0	—
Intake oil flow control solenoid valve RH		E158	20	Battery voltage	0 or battery voltage	Waveform 5
Intake oil flow control solenoid valve LH		E158	6	Battery voltage	0 or battery voltage	Waveform 5
Exhaust oil flow control solenoid valve RH		E158	21	Battery voltage	0 or battery voltage	Waveform 5
Exhaust oil flow control solenoid valve LH		E158	7	Battery voltage	0 or battery voltage	Waveform 5
Purge control solenoid valve		E158	51	Battery voltage	Battery voltage	In operation: Waveform 6

Engine Control Module (ECM) I/O Signal

Description		Connector No.	Terminal No.	Signal (V)		Note
				Ignition SW ON After warm-up (at engine OFF)	Engine ON After warm-up (at idle)	
ELCM	Switching valve	B134	61	Battery voltage	Battery voltage	Operating: 0
	Pressure sensor	B134	21	1 — 4	1 — 4	When ignition switch is turned to ON: atmospheric pressure
	Vacuum pump	B134	9	Battery voltage	Battery voltage	Operating: 0
Ignition coil	#1	E158	37	0	0 or 5	Waveform 7
	#2	E158	35	0	0 or 5	Waveform 7
	#3	E158	38	0	0 or 5	Waveform 7
	#4	E158	36	0	0 or 5	Waveform 8
	#5	E158	26	0	0 or 5	Waveform 8
	#6	E158	39	0	0 or 5	Waveform 8
Fuel injector	#1	E158	23	Battery voltage	0 or battery voltage	Waveform 9
	#2	E158	8	Battery voltage	0 or battery voltage	Waveform 9
	#3	E158	9	Battery voltage	0 or battery voltage	Waveform 9
	#4	E158	22	Battery voltage	0 or battery voltage	Waveform 10
	#5	E158	52	Battery voltage	0 or battery voltage	Waveform 10
	#6	E158	13	Battery voltage	0 or battery voltage	Waveform 10
EGR control valve	Signal 1	E158	12	0 or battery voltage	0 or battery voltage	—
	Signal 2	E158	48	0 or battery voltage	0 or battery voltage	—
	Signal 3	E158	25	0 or battery voltage	0 or battery voltage	—
	Signal 4	E158	49	0 or battery voltage	0 or battery voltage	—
Electronic throttle control	Main sensor signal	E158	29	Approx. 0.9	Approx. 0.6 — 0.8	Fully closed: Approx. 0.6 — 1.2 Fully opened: Approx. 3.8 — 4.4
	Sub sensor signal	E158	31	Approx. 1.7	Approx. 1.5 — 1.7	Fully closed: Approx. 1.4 — 2 Fully opened: Approx. 4.0 — 4.6
	Shield	E158	19	0	0	—
	Motor (+)	E158	14	Duty waveform	Duty waveform	Drive frequency: 500 Hz Waveform 6
	Motor (–)	E158	1	Duty waveform	Duty waveform	Drive frequency: 500 Hz
Electronic throttle control motor power supply		B134	13	Battery voltage	Battery voltage	—
Electronic throttle relay control		B134	65	0	0	—
Self-shutoff relay control		B134	60	0	0	—
Starter relay control		B134	62	Waveform	Waveform	Model without push button start Waveform 15 Model with push button start Waveform 11

Description	Connector No.	Terminal No.	Signal (V)		Note
			Ignition SW ON After warm-up (at engine OFF)	Engine ON After warm-up (at idle)	
Starter cut relay control	B134	49	Waveform	Waveform	Model without push button start Waveform 15 Model with push button start Waveform 11
Fuel pump relay control	B134	26	0	0	—
Radiator fan relay control	B134	39	0	0	—
Ignition switch	B134	2	Battery voltage	Battery voltage	—
Neutral position switch	B134	5	ON: 0 OFF: Battery voltage	ON: 0 OFF: Battery voltage	—
Delivery mode switch	B134	6	Battery voltage	Battery voltage	When fuse is installed: 0
Oil level switch	E158	3	0	0	Oil level LOW: Battery voltage
Starter switch	B134	46	Waveform	Waveform	Model without push button start Waveform 15 Model with push button start Waveform 11
Starter switch 2	B134	58	Waveform	Waveform	Model without push button start Waveform 15 Model with push button start Waveform 11
Accessory cut request	B134	64	Waveform	Waveform	Model without push button start Waveform 15 Model with push button start Waveform 12
Engine speed output	B134	10	0	0 or battery voltage	Model without push button start Waveform 15 Model with push button start Waveform 12
Brake switch 1 (Brake switch)	B134	59	When brake pedal is depressed: 0 When brake pedal is released: Battery voltage	When brake pedal is depressed: 0 When brake pedal is released: Battery voltage	—
Brake switch 2 (Stop light switch)	B134	48	When brake pedal is depressed: Battery voltage When brake pedal is released: 0	When brake pedal is depressed: Battery voltage When brake pedal is released: 0	—
Cruise control main switch	B134	44	ON: 0 OFF: 5	ON: 0 OFF: 5	Model without EyeSight

Engine Control Module (ECM) I/O Signal

Description		Connector No.	Terminal No.	Signal (V)		Note
				Ignition SW ON After warm-up (at engine OFF)	Engine ON After warm-up (at idle)	
Cruise control command switch		B134	22	When operating nothing: 3.5 — 4.5 When operating RES/ACC: 2.5 — 3.5 When operating SET/COAST: 0.5 — 1.5 When operating CANCEL: 0 — 0.5	When operating nothing: 3.5 — 4.5 When operating RES/ACC: 2.5 — 3.5 When operating SET/COAST: 0.5 — 1.5 When operating CANCEL: 0 — 0.5	Model without EyeSight
Fuel pump control unit	Control signal	B134	63	0	0 or 5	Waveform 13
	Diagnostic signal	B134	8	0	Battery voltage	When malfunction occurs: 0
Radiator main fan control		B134	41	0	0	ON: 5 Waveform 14
Radiator sub fan control		B134	40	0	0	ON: 5 Waveform 14
Generator control		B134	23	0 or 6.5	0 or 6.5	Waveform 14
LIN communication		B134	55	—	—	—
Immobilizer communication		B134	38	—	—	—
CAN communication	HI	B134	25	—	—	—
	LO	B134	24	—	—	—
Control module power supply		B134	1	Battery voltage	Battery voltage	—
		B134	14	Battery voltage	Battery voltage	—
Backup power supply		B134	27	Battery voltage	Battery voltage	Ignition switch OFF: Battery voltage
Sensor power supply		B134	35	5	5	—
		E158	32	5	5	—
Ground	Body	B134	53	0	0	—
	Sensor	B134	32	0	0	—
		E158	34	0	0	—
	Engine 1	E158	65	0	0	—
	Engine 2	E158	64	0	0	—
	Engine 3	E158	63	0	0	—
	Engine 4	E158	62	0	0	—
	Engine 5	E158	61	0	0	—
	Engine 6	E158	60	0	0	—

NOTE:
- After engine is warmed up, attach the check board for measurement.
- Place the select lever in “P” range or “N” range.
- Turn the A/C to OFF.
- Turn all the accessory switches to OFF.
- Waveforms vary depending on a measurement environment and vehicle condition.

1. Waveform 1

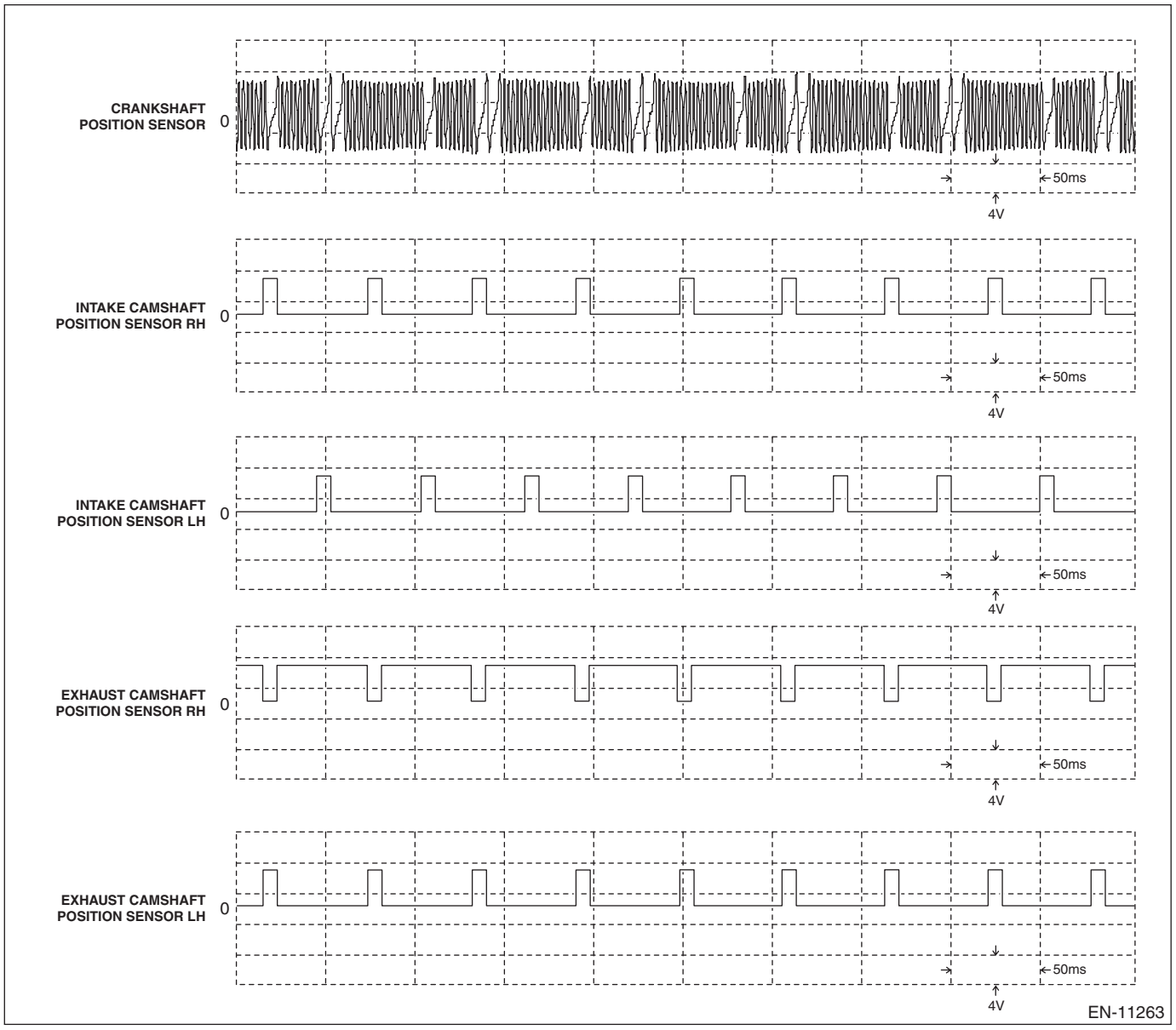

Measured terminal	Crankshaft position sensor (E158) No. 40 — Engine ground 3 (E158) No. 63:
	Intake camshaft position sensor RH (E158) No. 54 — Engine ground 3 (E158) No. 63:
	Intake camshaft position sensor LH (E158) No. 41 — Engine ground 3 (E158) No. 63:
	Exhaust camshaft position sensor RH (E158) No. 2 — Engine ground 3 (E158) No. 63:
	Exhaust camshaft position sensor LH (E158) No. 55 — Engine ground 3 (E158) No. 63:
Measuring condition	While engine idling

2. Waveform 2

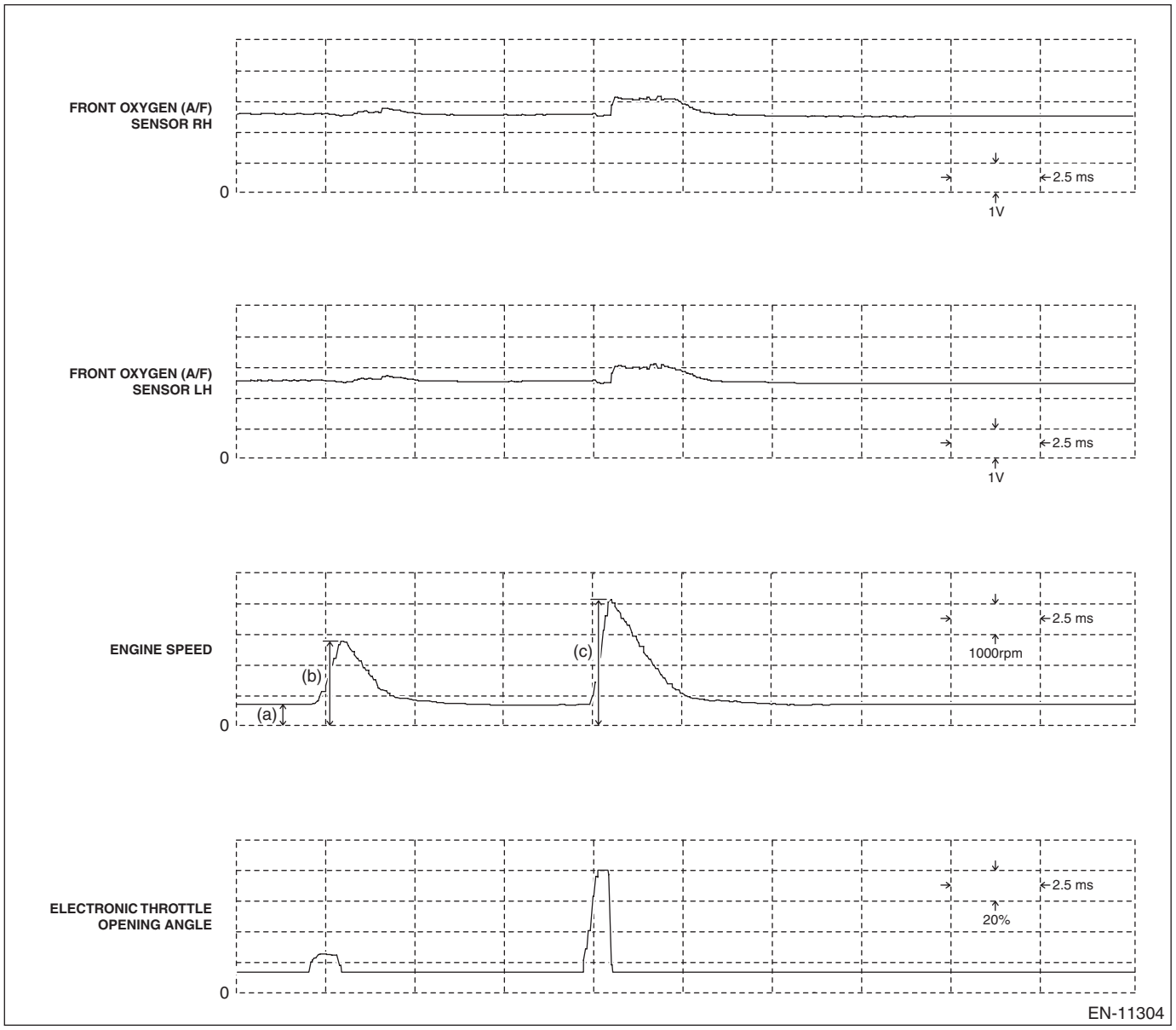

Measured terminal	Front oxygen (A/F) sensor RH (E158) No. 46 (+) — Engine ground 3 (E158) No. 63:
	Front oxygen (A/F) sensor LH (E158) No. 45 (+) — Engine ground 3 (E158) No. 63:
	Engine speed
	Throttle valve opening angle
Measuring condition	(a) accelerator pedal fully closed (b) accelerator pedal half open (c) accelerator pedal fully opened

3. Waveform 3

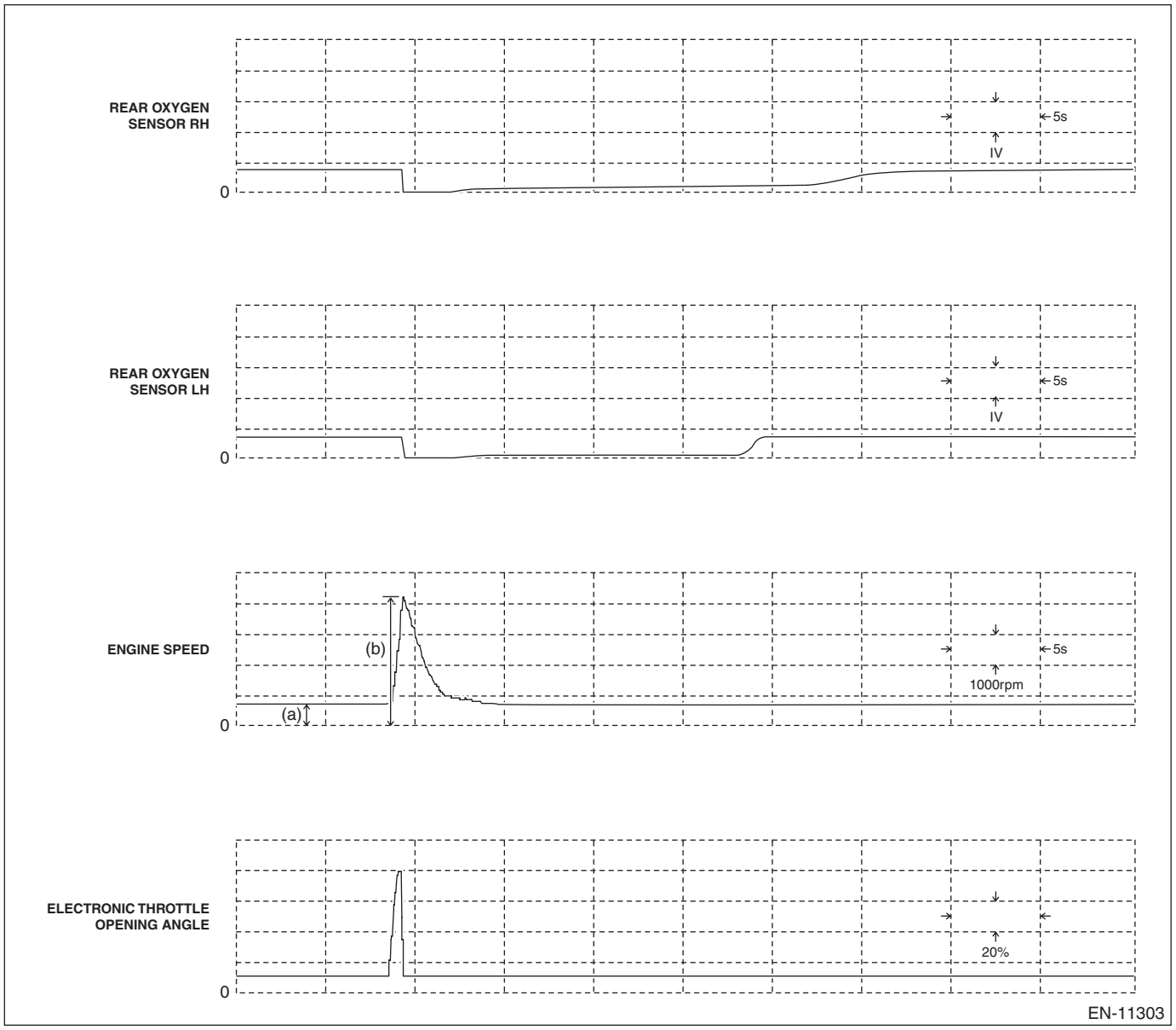

Measured terminal	Rear oxygen sensor RH (E158) No. 57 (+) — Engine ground 3 (E158) No. 63:
	Rear oxygen sensor LH (E158) No. 59 (+) — Engine ground 3 (E158) No. 63:
	Engine speed
	Throttle valve opening angle
Measuring condition	(a) accelerator pedal fully closed (b) accelerator pedal fully opened

4. Waveform 4

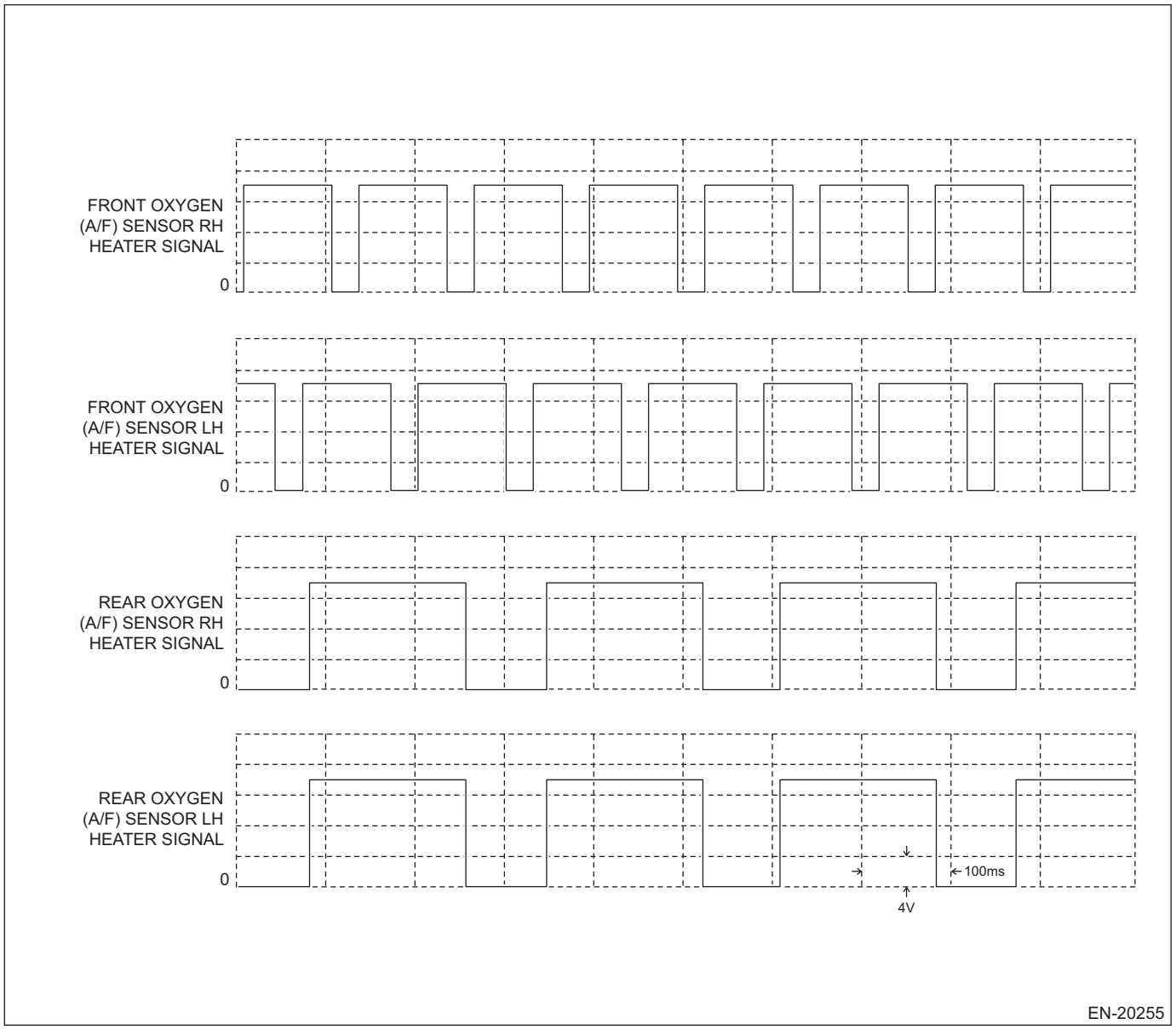

Measured terminal	Front oxygen (A/F) sensor heater RH (E158) No. 5 (+) — Engine ground 3 (E158) No. 63:
	Front oxygen (A/F) sensor heater LH (E158) No. 4 (+) — Engine ground 3 (E158) No. 63:
	Rear oxygen sensor heater RH (E158) No. 10 (+) — Engine ground 3 (E158) No. 63:
	Rear oxygen sensor heater LH (E158) No. 11 (+) — Engine ground 3 (E158) No. 63:
Measuring condition	While engine idling

5. Waveform 5

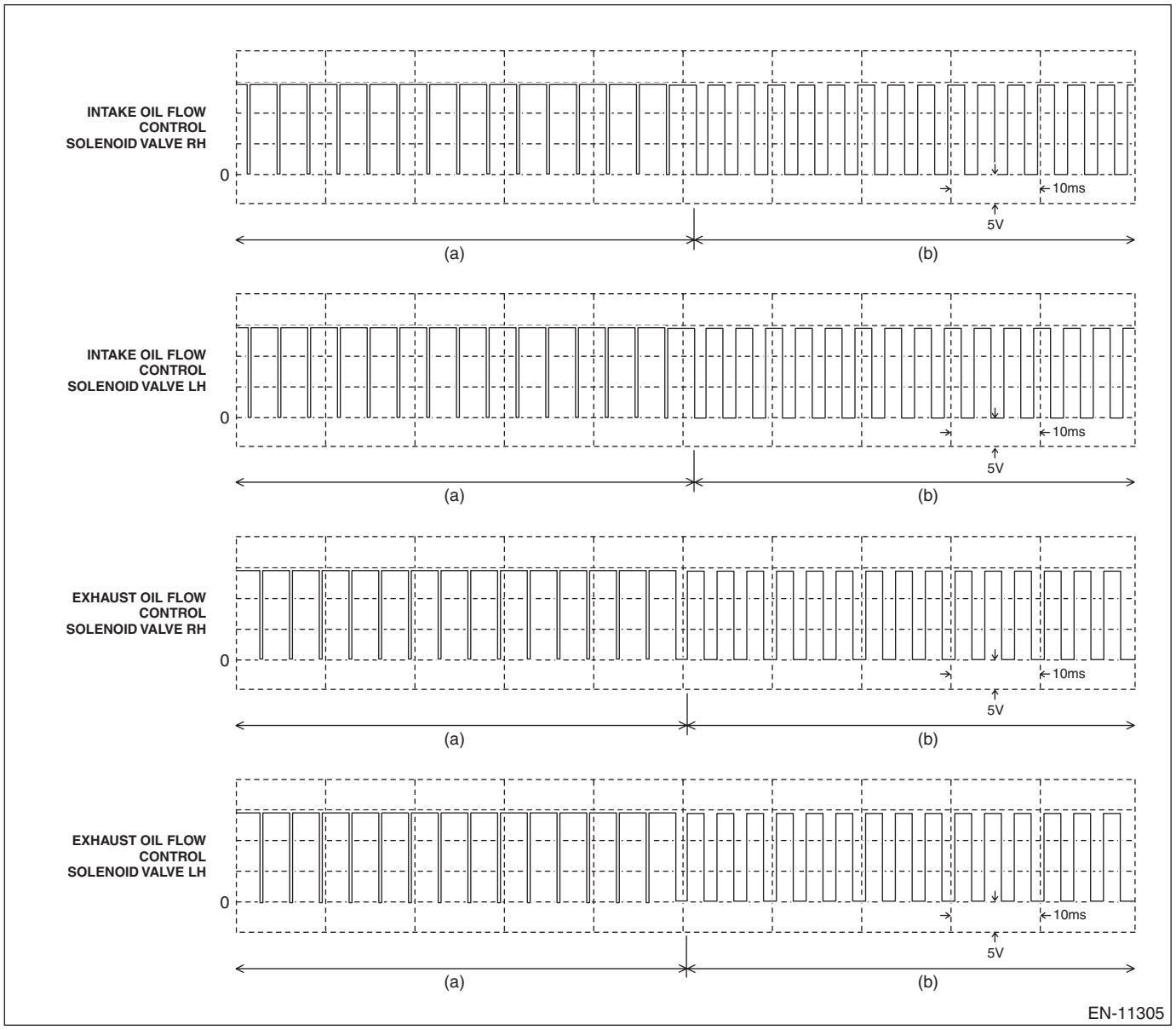

Measured terminal	Intake oil flow control solenoid valve RH (E158) No. 20 (+) — Engine ground 3 (E158) No. 63:
	Intake oil flow control solenoid valve LH (E158) No. 6 (+) — Engine ground 3 (E158) No. 63:
	Exhaust oil flow control solenoid valve RH (E158) No. 21 (+) — Engine ground 3 (E158) No. 63:
	Exhaust oil flow control solenoid valve LH (E158) No. 7 (+) — Engine ground 3 (E158) No. 63:
Measuring condition	(a) accelerator pedal fully closed (b) accelerator pedal fully opened

6. Waveform 6

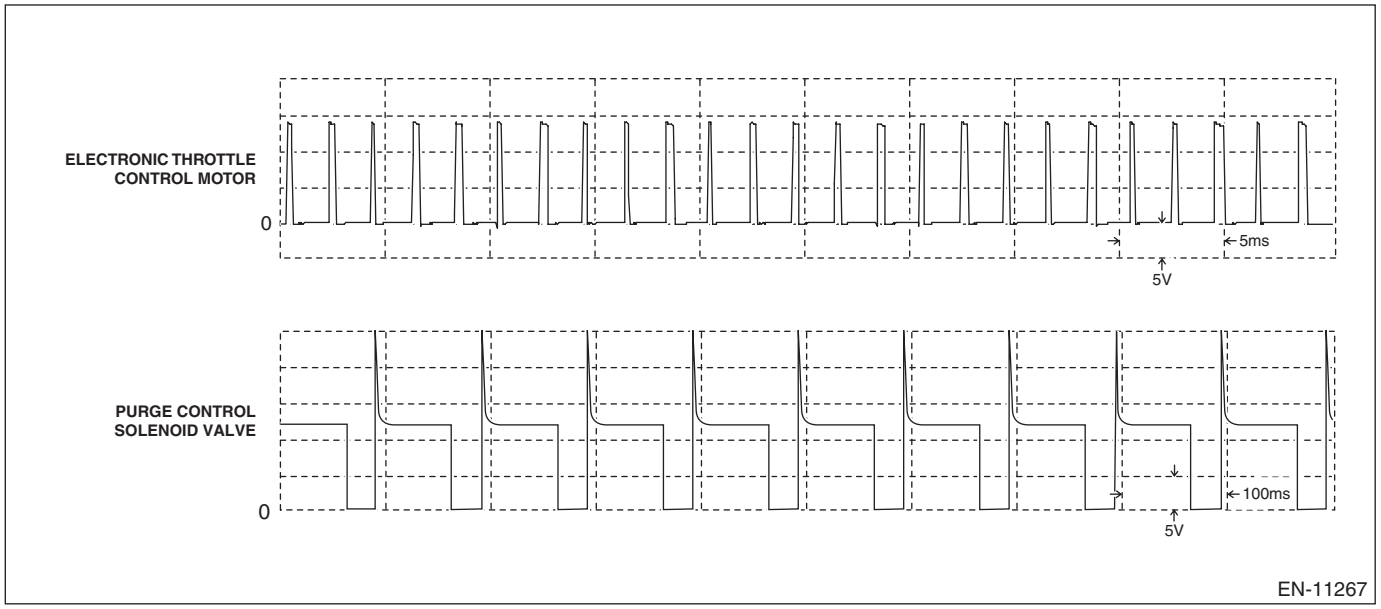

Measured terminal	Electronic throttle control motor (E158) No. 14 (+) — Engine ground 3 (E158) No. 63:
	Purge control solenoid valve (E158) No. 51 (+) — Engine ground 3 (E158) No. 63:
Measuring condition	While engine idling Purge control solenoid valve: At 2000 rpm (during evaporative purge control)

7. Waveform 7

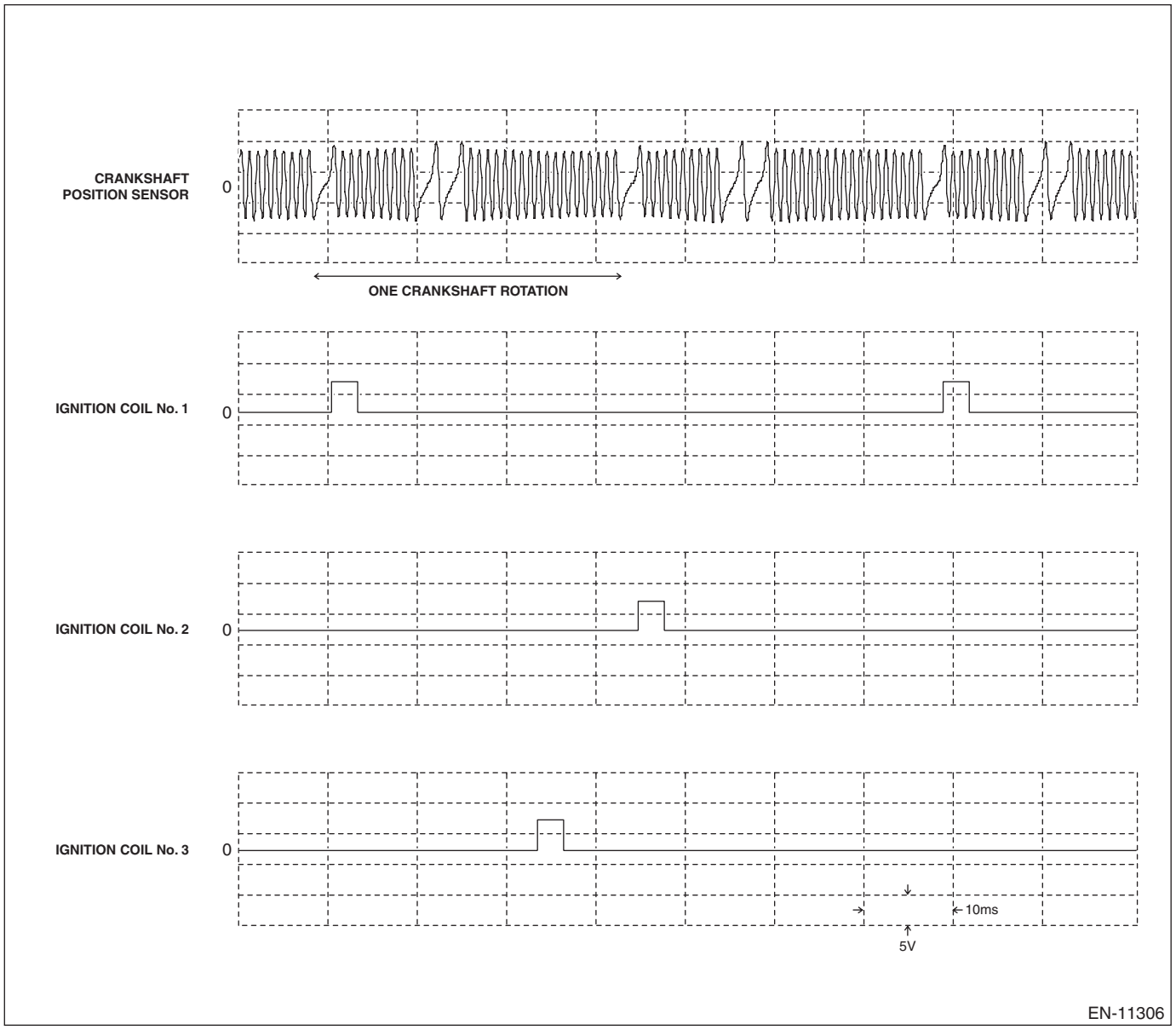

Measured terminal	Crankshaft position sensor (E158) No. 40 (+) — Engine ground 3 (E158) No. 63:
	Ignition coil #1 (E158) No. 37 (+) — Engine ground 3 (E158) No. 63:
	Ignition coil #2 (E158) No. 35 (+) — Engine ground 3 (E158) No. 63:
	Ignition coil #3 (E158) No. 38 (+) — Engine ground 3 (E158) No. 63:
Measuring condition	While engine idling

8. Waveform 8

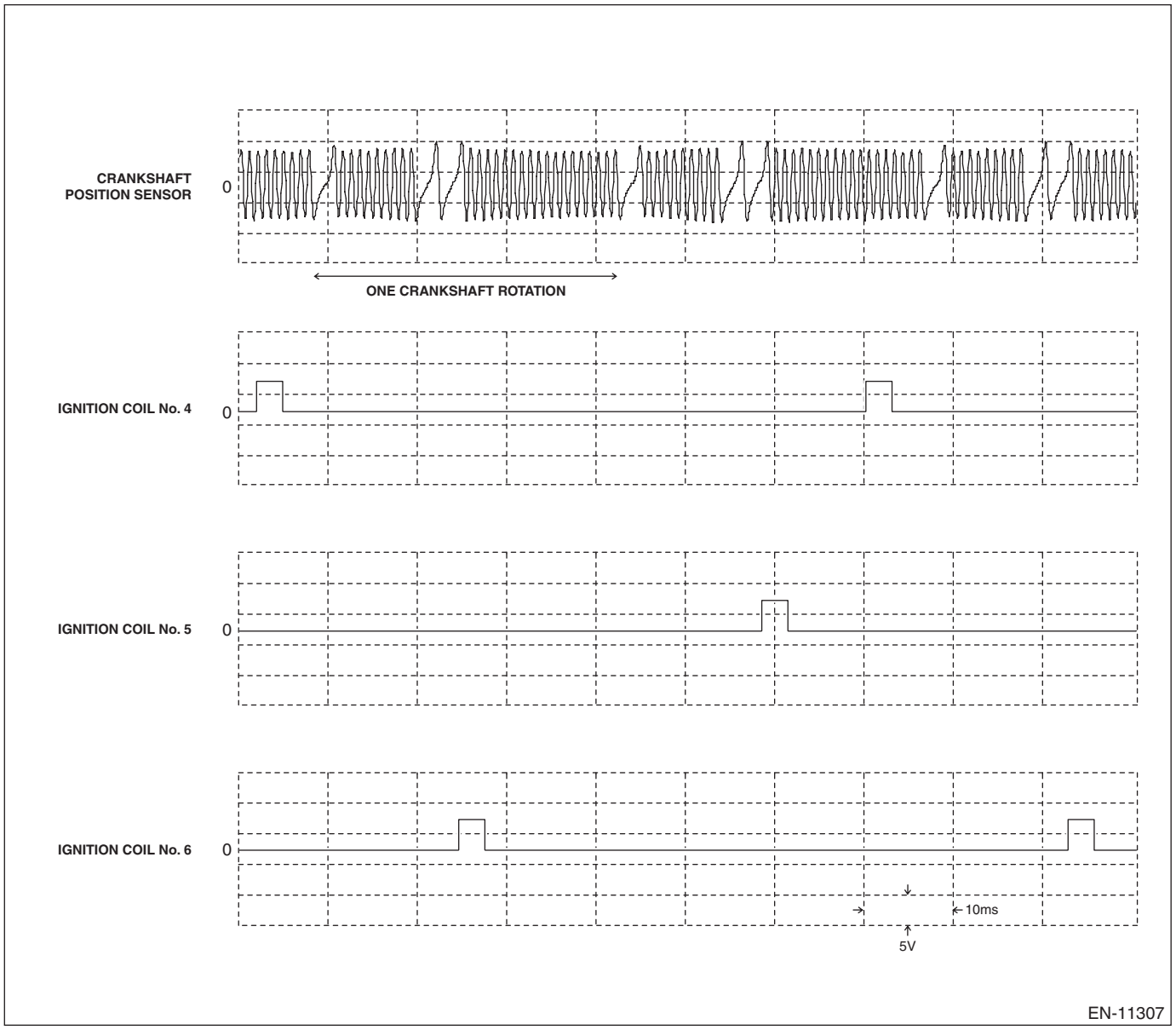

Measured terminal	Crankshaft position sensor (E158) No. 40 (+) — Engine ground 3 (E158) No. 63:
	Ignition coil #4 (E158) No. 36 (+) — Engine ground 3 (E158) No. 63:
	Ignition coil #5 (E158) No. 26 (+) — Engine ground 3 (E158) No. 63:
	Ignition coil #6 (E158) No. 39 (+) — Engine ground 3 (E158) No. 63:
Measuring condition	While engine idling

9. Waveform 9

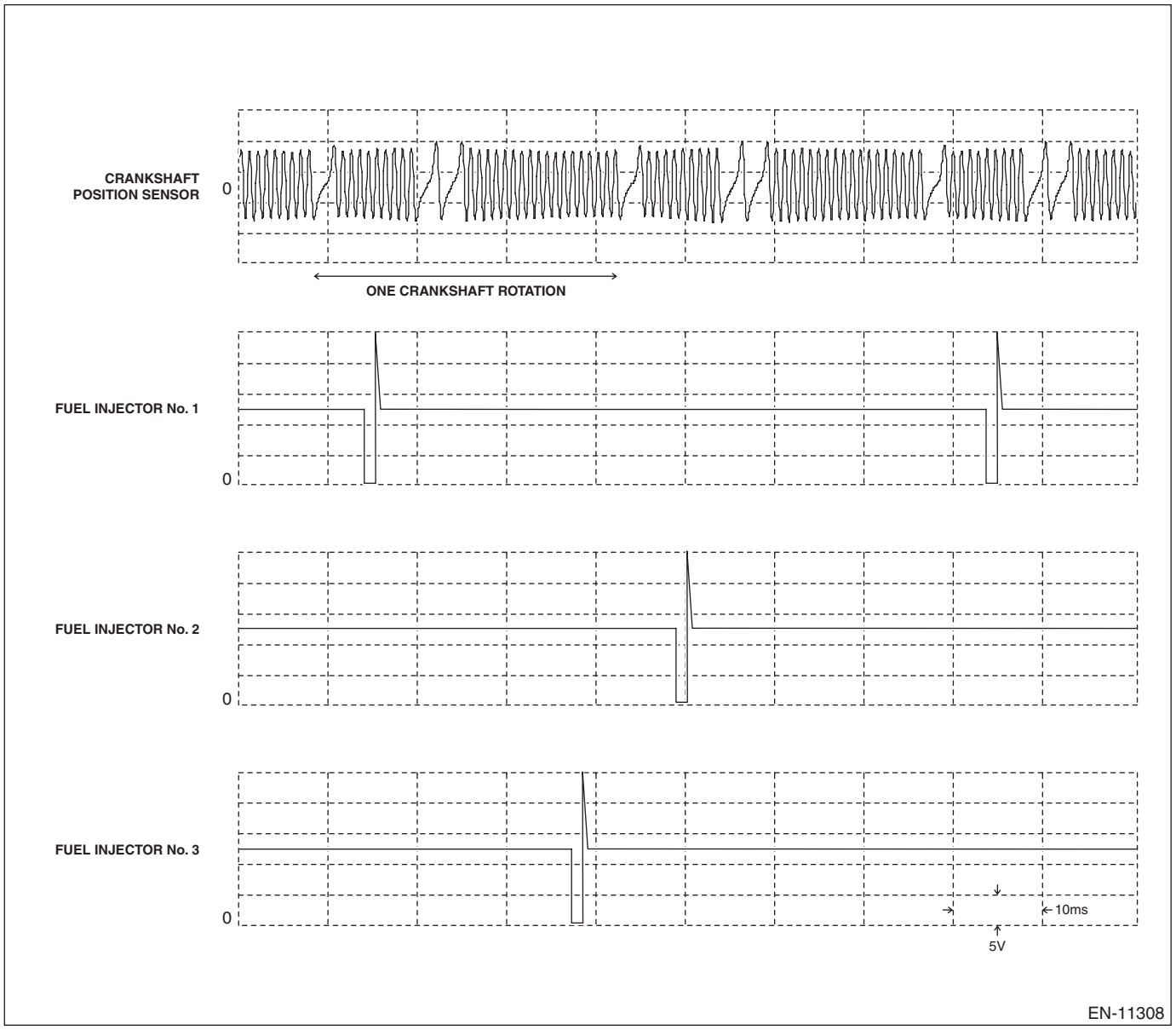

Measured terminal	Crankshaft position sensor (E158) No. 40 (+) — Engine ground 3 (E158) No. 63:
	Fuel injector #1 (E158) No. 23 (+) — Engine ground 3 (E158) No. 63:
	Fuel injector #2 (E158) No. 8 (+) — Engine ground 3 (E158) No. 63:
	Fuel injector #3 (E158) No. 9 (+) — Engine ground 3 (E158) No. 63:
Measuring condition	While engine idling

10.Waveform 10

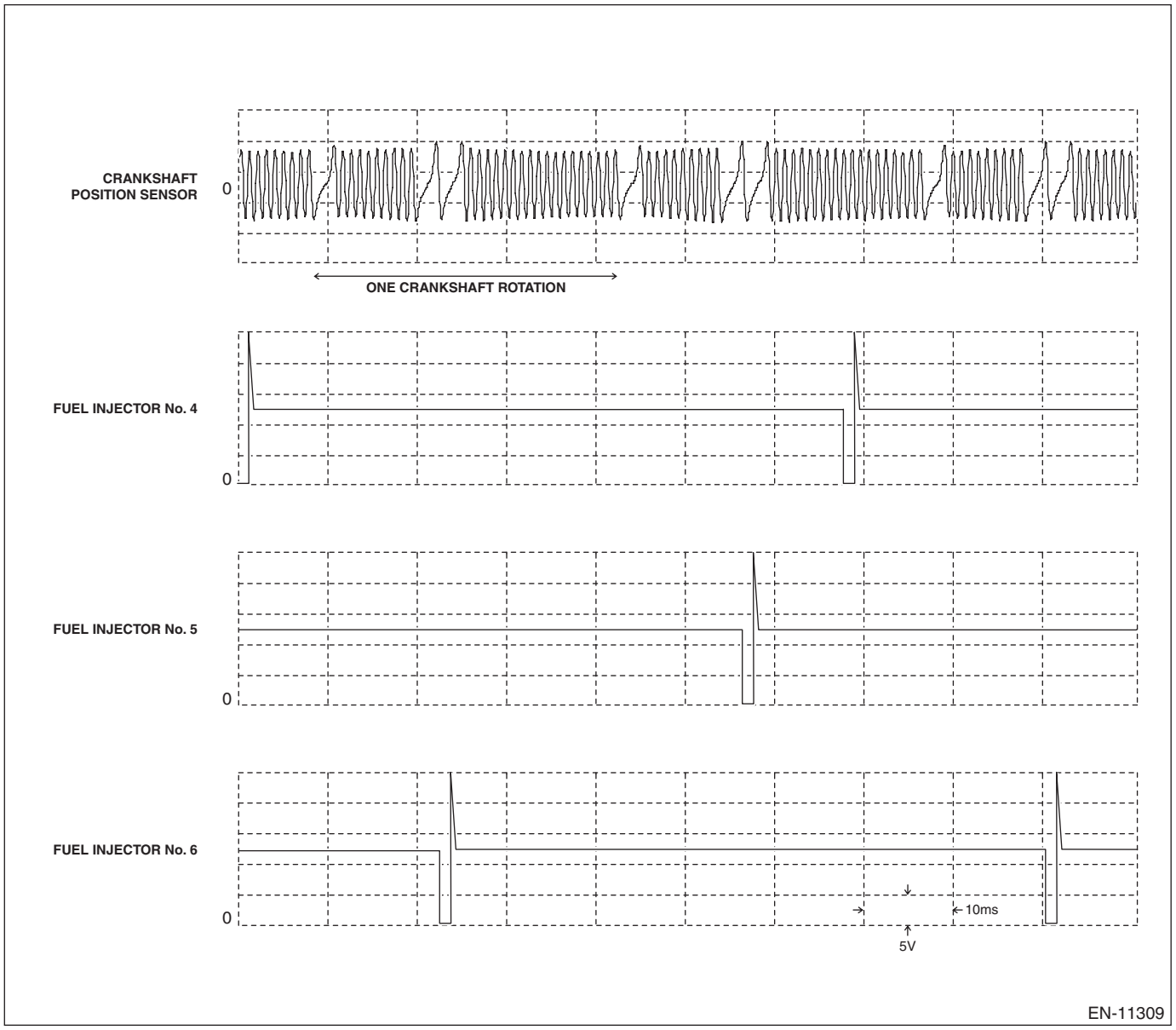

Measured terminal	Crankshaft position sensor (E158) No. 40 (+) — Engine ground 3 (E158) No. 63:
	Fuel injector #4 (E158) No. 22 (+) — Engine ground 3 (E158) No. 63:
	Fuel injector #5 (E158) No. 52 (+) — Engine ground 3 (E158) No. 63:
	Fuel injector #6 (E158) No. 13 (+) — Engine ground 3 (E158) No. 63:
Measuring condition	While engine idling

11.Waveform 11

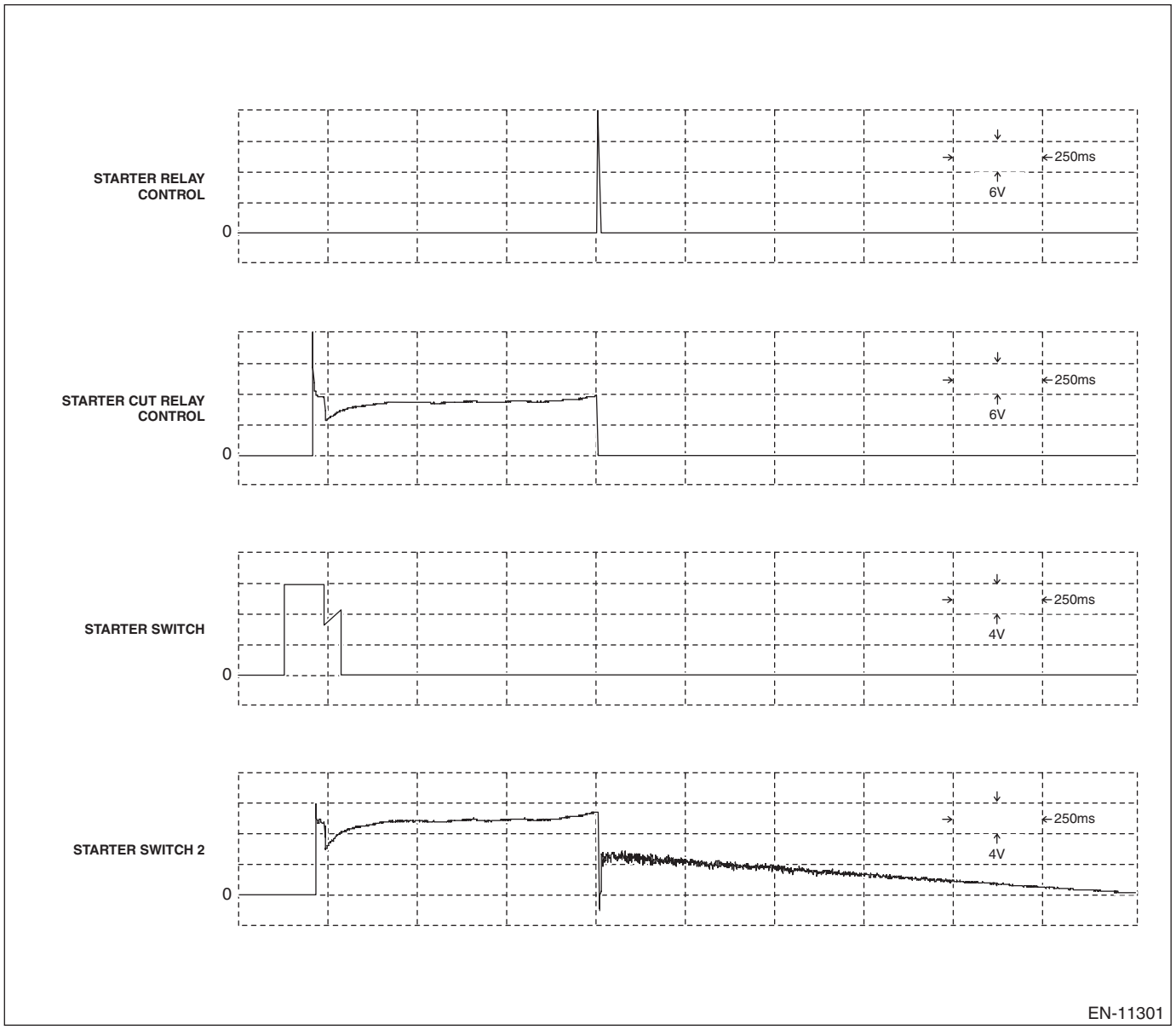

Measured terminal	Starter relay control (B134) No. 62 (+) — Engine ground 3 (E158) No. 63:
	Starter cut relay control (B134) No. 49 (+) — Engine ground 3 (E158) No. 63:
	Starter switch (B134) No. 46 (+) — Engine ground 3 (E158) No. 63:
	Starter switch 2 (B134) No. 58 (+) — Engine ground 3 (E158) No. 63:
Measuring condition	Engine starting status

12.Waveform 12

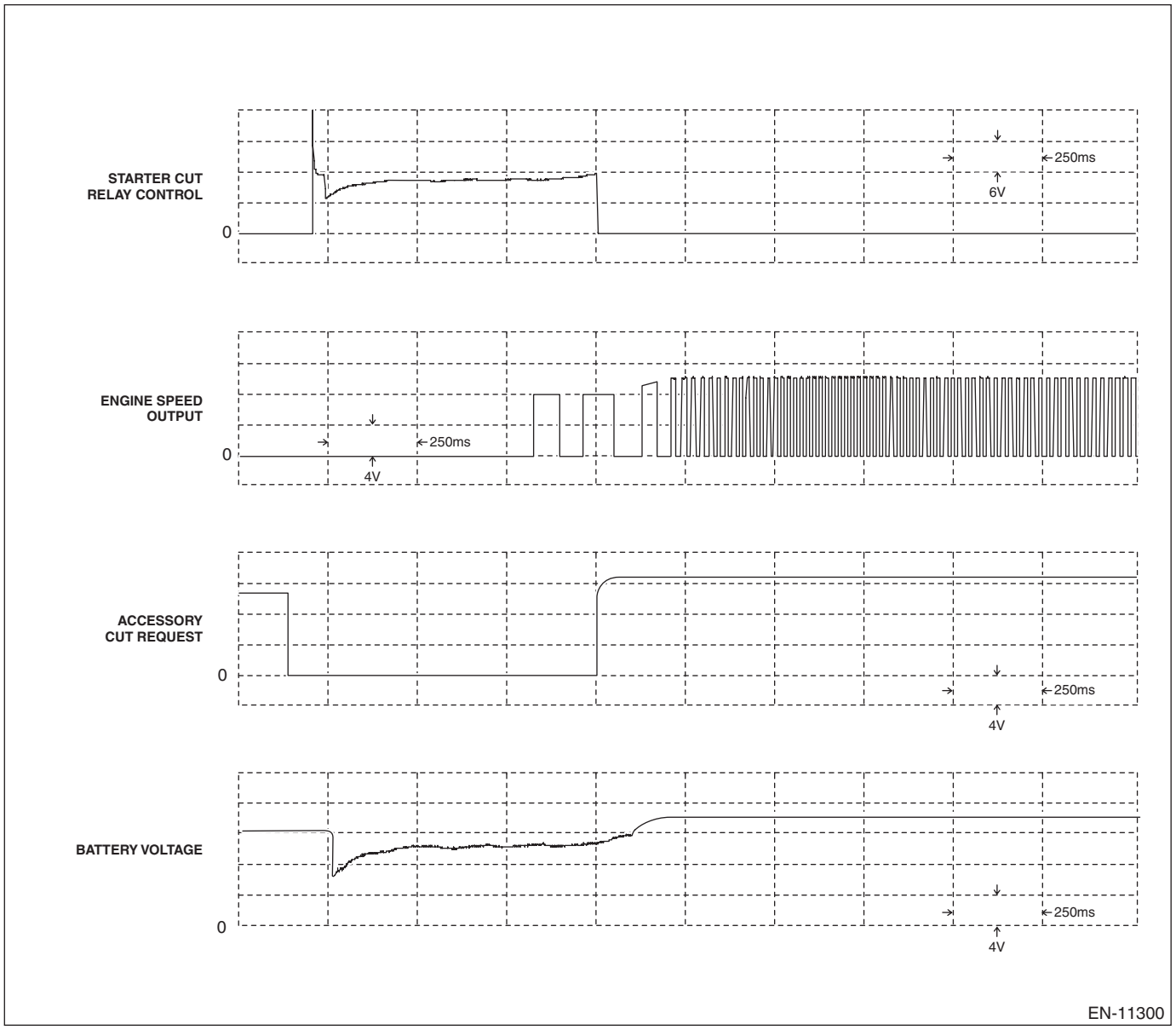

Measured terminal	Starter cut relay control (B134) No. 49 (+) — Engine ground 3 (E158) No. 63:
	Engine speed output (B134) No. 10 (+) — Engine ground 3 (E158) No. 63:
	Accessory cut request (B134) No. 64 (+) — Engine ground 3 (E158) No. 63:
	Battery voltage (battery terminal) (+) — Engine ground 3 (E158) No. 63:
Measuring condition	Engine starting status

13.Waveform 13

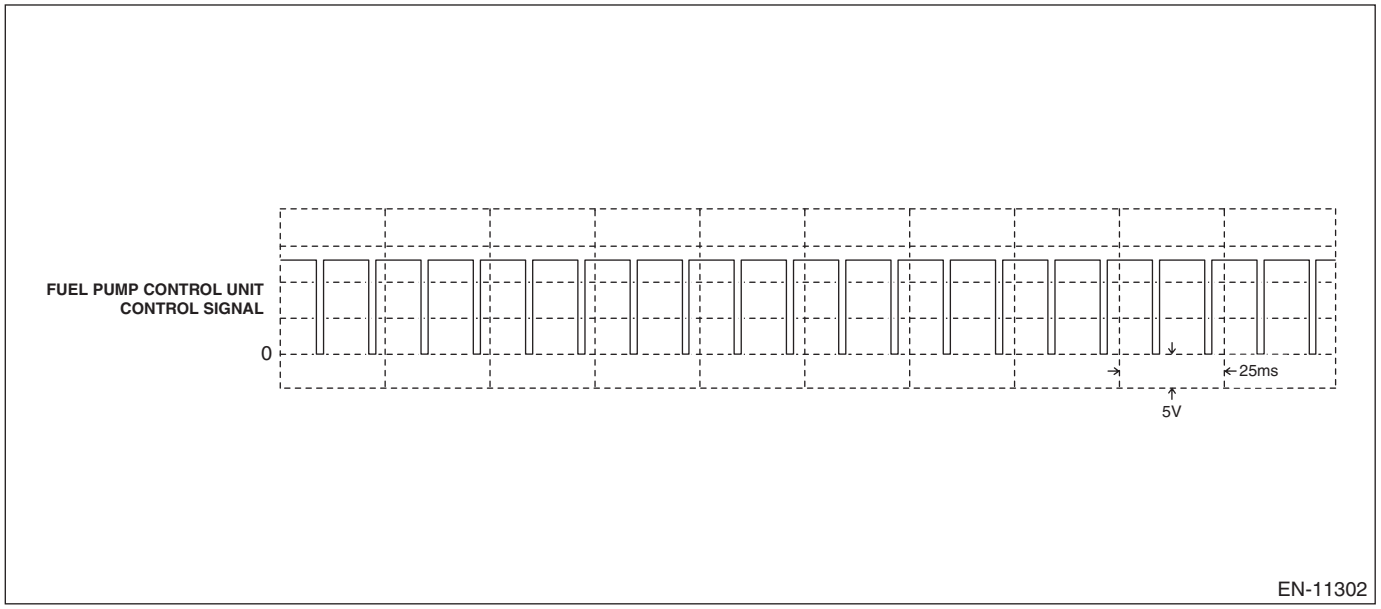

Measured terminal	Fuel pump control module (B134) No. 63 (+) — Engine ground 3 (E158) No. 63:
Measuring condition	Idling status

14.Waveform 14

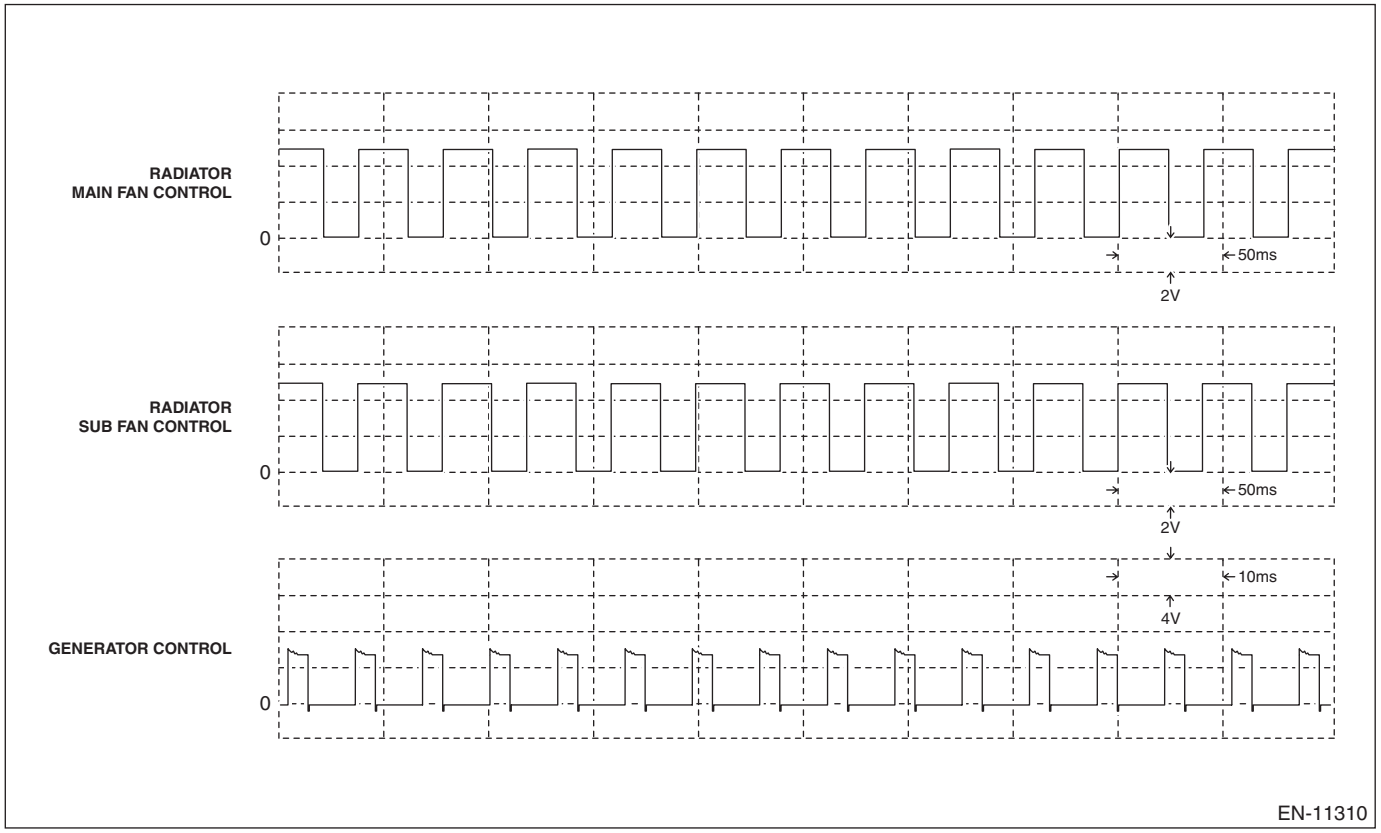

Measured terminal	Radiator main fan control (B134) No. 41 (+) — Engine ground 3 (E158) No. 63:
	Radiator sub fan control (B134) No. 40 (+) — Engine ground 3 (E158) No. 63:
	Generator control (B134) No. 23 (+) — Engine ground 3 (E158) No. 63:
Measuring condition	Idling status At radiator fan operation

15.Waveform 15

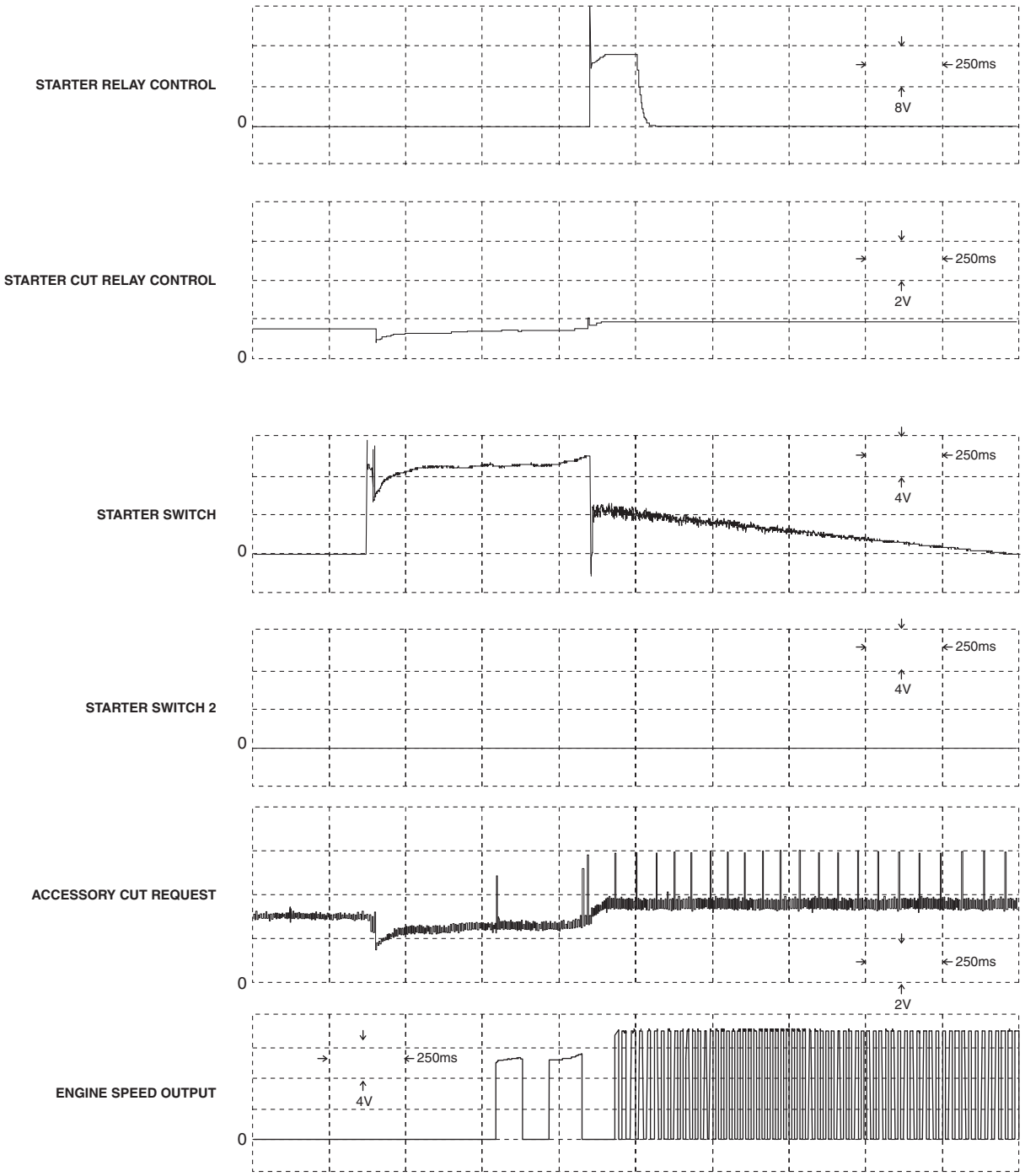

EN-11275

Measured terminal	Starter relay control (B134) No. 62 (+) — Engine ground 3 (E158) No. 63:
	Starter cut relay control (B134) No. 49 (+) — Engine ground 3 (E158) No. 63:
	Starter switch (B134) No. 46 (+) — Engine ground 3 (E158) No. 63:
	Starter switch 2 (B134) No. 58 (+) — Engine ground 3 (E158) No. 63:
	Accessory cut request (B134) No. 64 (+) — Engine ground 3 (E158) No. 63:
	Engine speed output (B134) No. 10 (+) — Engine ground 3 (E158) No. 63:
Measuring condition	When engine is started

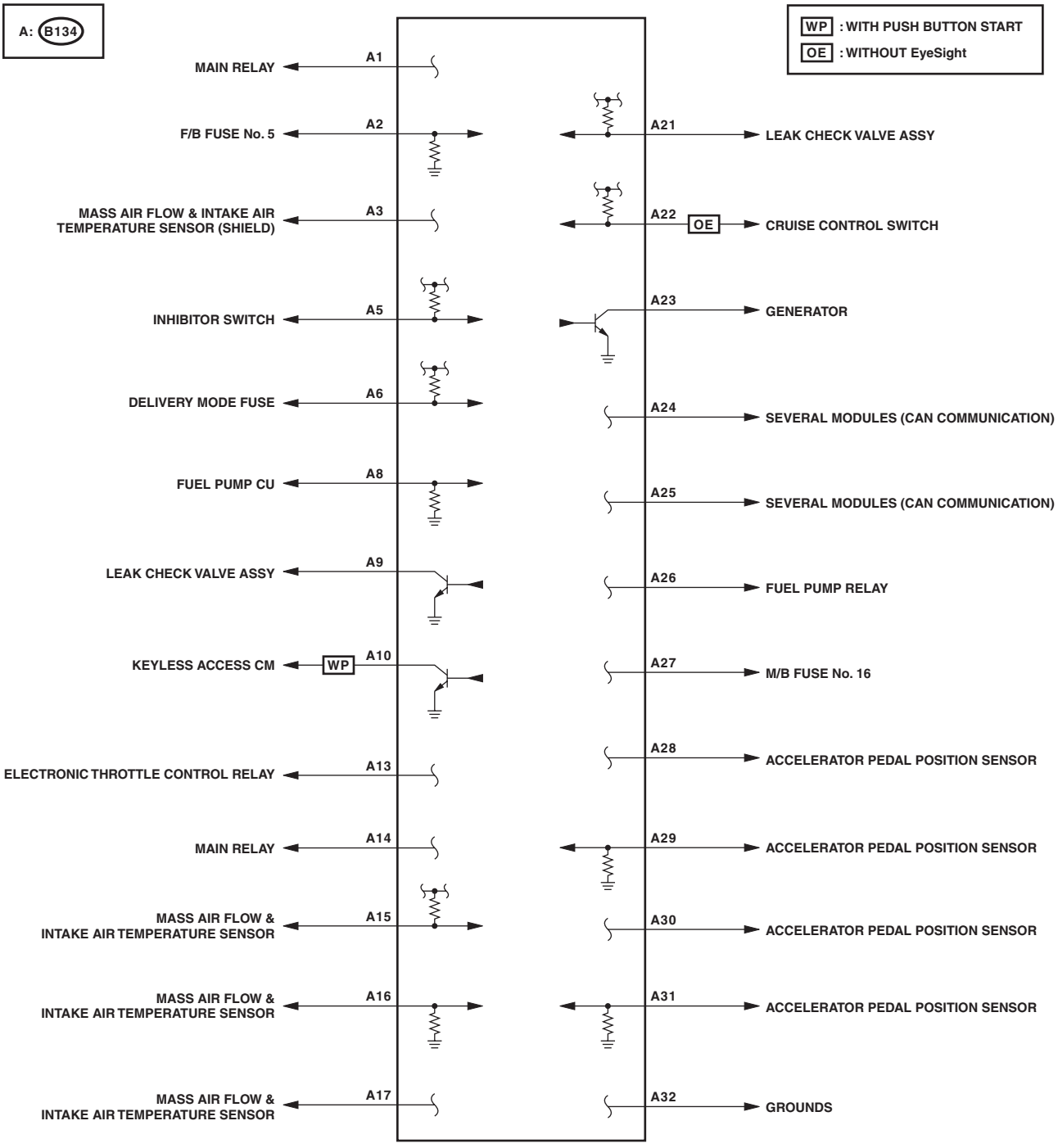
A: B134
WP : WITH PUSH BUTTON START
OE : WITHOUT EyeSight
MAIN RELAY
A1
F/B FUSE No. 5
A2
MASS AIR FLOW & INTAKE AIR TEMPERATURE SENSOR (SHIELD)
A3
INHIBITOR SWITCH
A5
DELIVERY MODE FUSE
A6
FUEL PUMP CU
A8
LEAK CHECK VALVE ASSY
A9
KEYLESS ACCESS CM
WP
A10
ELECTRONIC THROTTLE CONTROL RELAY
A13
MAIN RELAY
A14
MASS AIR FLOW & INTAKE AIR TEMPERATURE SENSOR
A15
MASS AIR FLOW & INTAKE AIR TEMPERATURE SENSOR
A16
MASS AIR FLOW & INTAKE AIR TEMPERATURE SENSOR
A17
A21
LEAK CHECK VALVE ASSY
A22
OE
CRUISE CONTROL SWITCH
A23
GENERATOR
A24
SEVERAL MODULES (CAN COMMUNICATION)
A25
SEVERAL MODULES (CAN COMMUNICATION)
A26
FUEL PUMP RELAY
A27
M/B FUSE No. 16
A28
ACCELERATOR PEDAL POSITION SENSOR
A29
ACCELERATOR PEDAL POSITION SENSOR
A30
ACCELERATOR PEDAL POSITION SENSOR
A31
ACCELERATOR PEDAL POSITION SENSOR
A32
GROUNDS

EN-11056

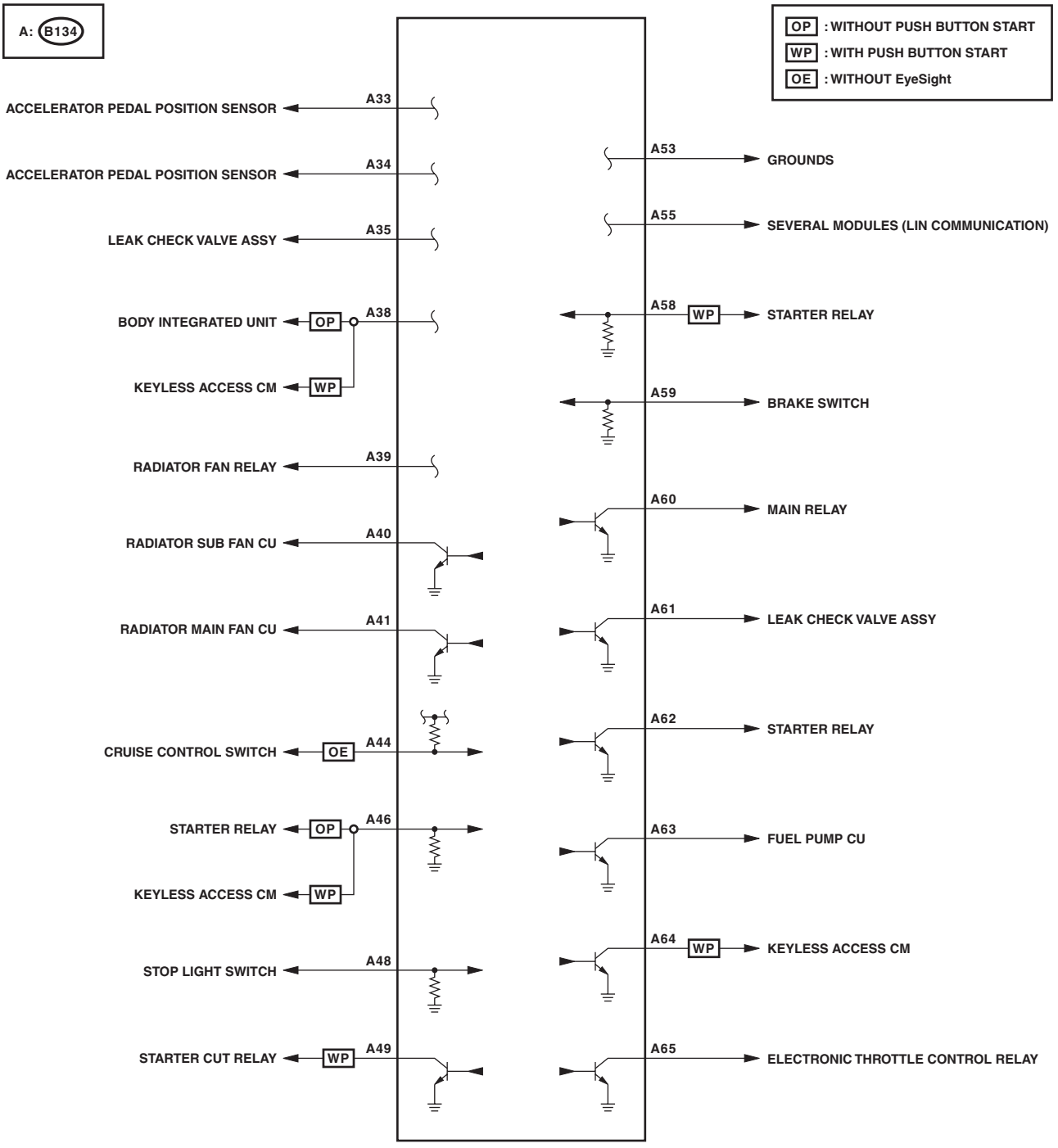
A: B134
OP : WITHOUT PUSH BUTTON START
WP : WITH PUSH BUTTON START
OE : WITHOUT EyeSight
ACCELERATOR PEDAL POSITION SENSOR
A33
ACCELERATOR PEDAL POSITION SENSOR
A34
LEAK CHECK VALVE ASSY
A35
BODY INTEGRATED UNIT
OP
A38
KEYLESS ACCESS CM
WP
RADIATOR FAN RELAY
A39
RADIATOR SUB FAN CU
A40
RADIATOR MAIN FAN CU
A41
CRUISE CONTROL SWITCH
OE
A44
STARTER RELAY
OP
A46
KEYLESS ACCESS CM
WP
STOP LIGHT SWITCH
A48
STARTER CUT RELAY
WP
A49
A53
GROUNDS
A55
SEVERAL MODULES (LIN COMMUNICATION)
A58
WP
STARTER RELAY
A59
BRAKE SWITCH
A60
MAIN RELAY
A61
LEAK CHECK VALVE ASSY
A62
STARTER RELAY
A63
FUEL PUMP CU
A64
WP
KEYLESS ACCESS CM
A65
ELECTRONIC THROTTLE CONTROL RELAY

EN-11057

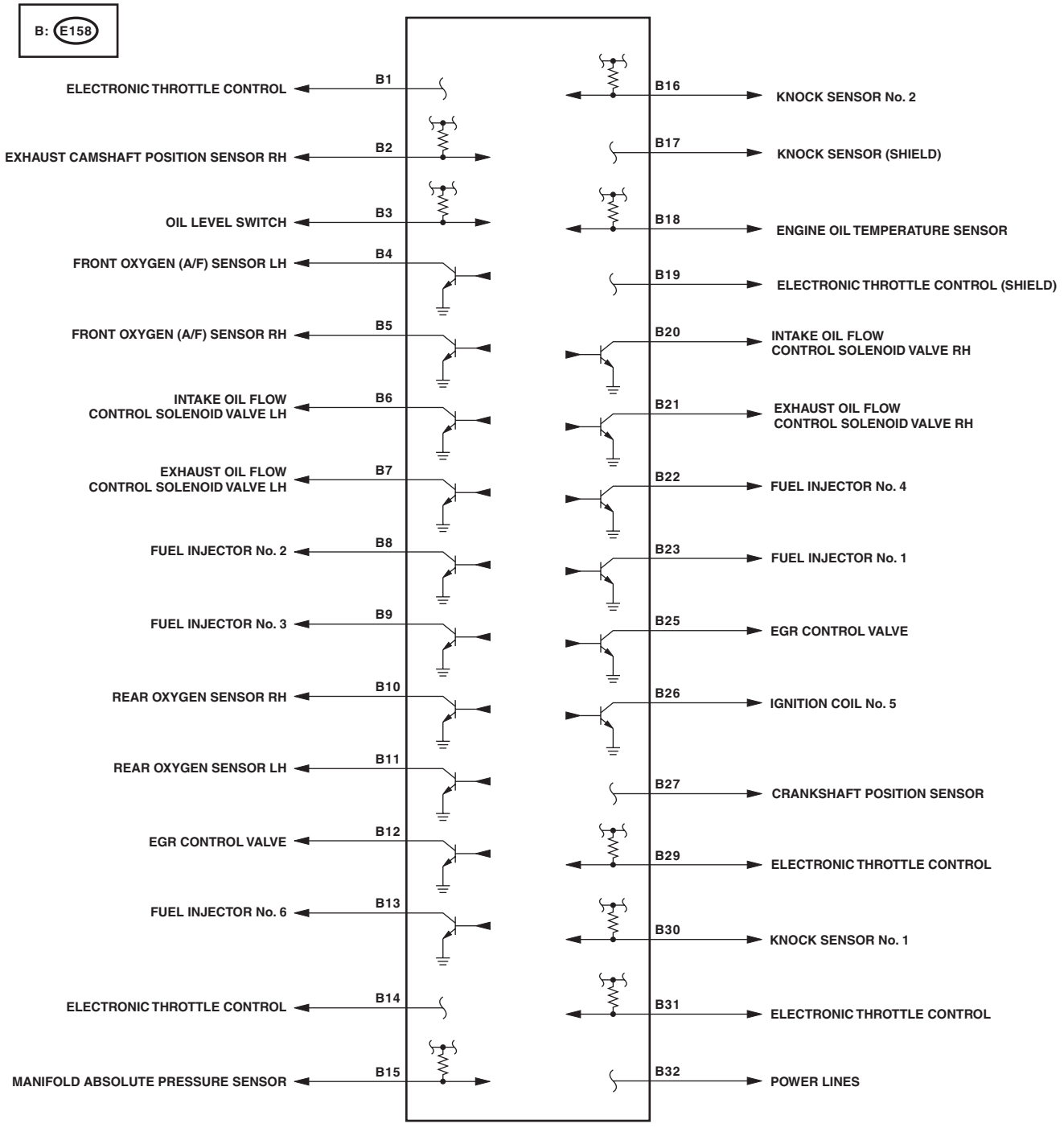
B: E158
ELECTRONIC THROTTLE CONTROL
B1
EXHAUST CAMSHAFT POSITION SENSOR RH
B2
OIL LEVEL SWITCH
B3
FRONT OXYGEN (A/F) SENSOR LH
B4
FRONT OXYGEN (A/F) SENSOR RH
B5
INTAKE OIL FLOW CONTROL SOLENOID VALVE LH
B6
EXHAUST OIL FLOW CONTROL SOLENOID VALVE LH
B7
FUEL INJECTOR No. 2
B8
FUEL INJECTOR No. 3
B9
REAR OXYGEN SENSOR RH
B10
REAR OXYGEN SENSOR LH
B11
EGR CONTROL VALVE
B12
FUEL INJECTOR No. 6
B13
ELECTRONIC THROTTLE CONTROL
B14
MANIFOLD ABSOLUTE PRESSURE SENSOR
B15
B16
KNOCK SENSOR No. 2
B17
KNOCK SENSOR (SHIELD)
B18
ENGINE OIL TEMPERATURE SENSOR
B19
ELECTRONIC THROTTLE CONTROL (SHIELD)
B20
INTAKE OIL FLOW CONTROL SOLENOID VALVE RH
B21
EXHAUST OIL FLOW CONTROL SOLENOID VALVE RH
B22
FUEL INJECTOR No. 4
B23
FUEL INJECTOR No. 1
B25
EGR CONTROL VALVE
B26
IGNITION COIL No. 5
B27
CRANKSHAFT POSITION SENSOR
B29
ELECTRONIC THROTTLE CONTROL
B30
KNOCK SENSOR No. 1
B31
ELECTRONIC THROTTLE CONTROL
B32
POWER LINES

EN-11058

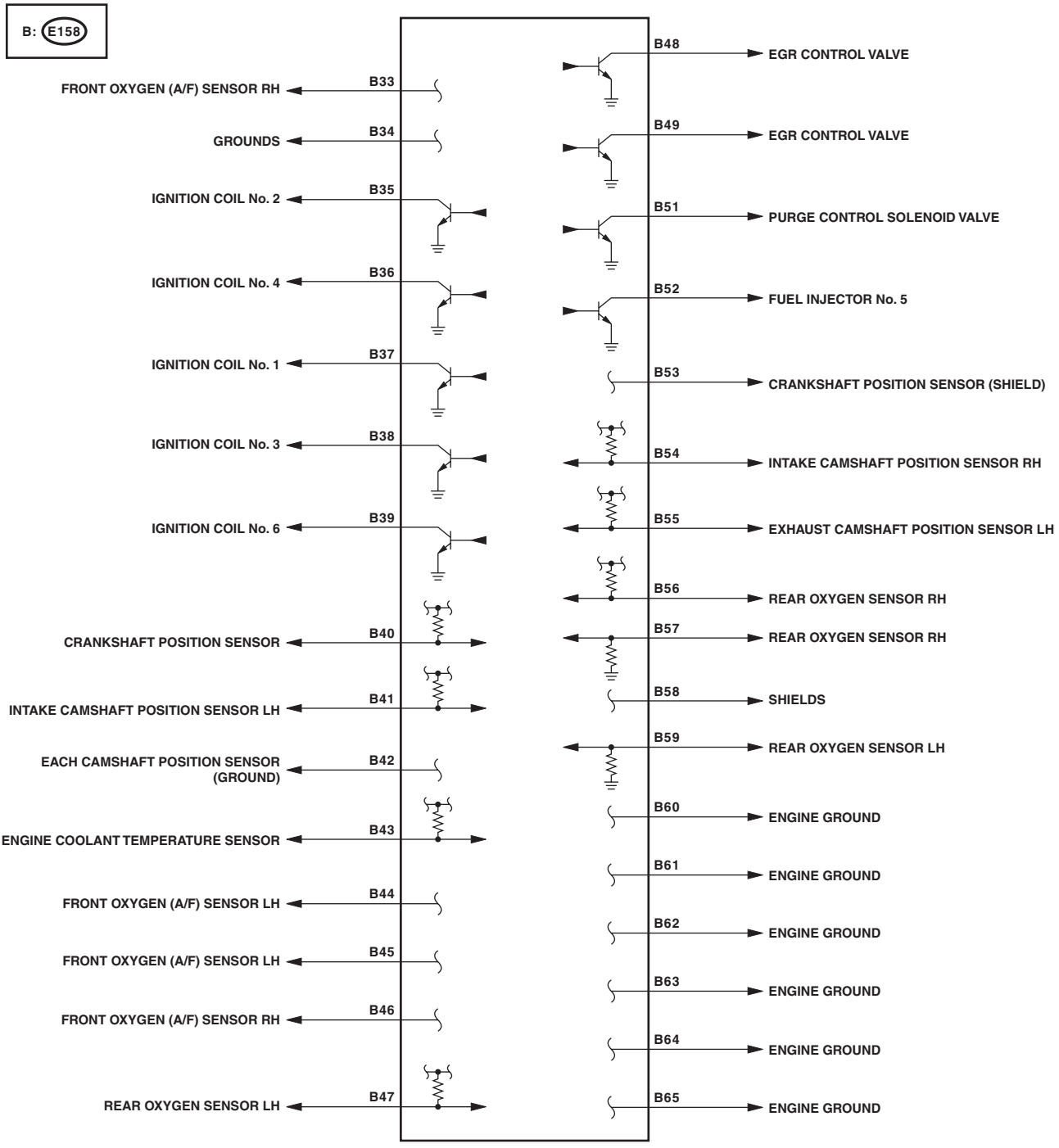
B: E158
FRONT OXYGEN (A/F) SENSOR RH
B33
GROUNDS
B34
IGNITION COIL No. 2
B35
IGNITION COIL No. 4
B36
IGNITION COIL No. 1
B37
IGNITION COIL No. 3
B38
IGNITION COIL No. 6
B39
CRANKSHAFT POSITION SENSOR
B40
INTAKE CAMSHAFT POSITION SENSOR LH
B41
EACH CAMSHAFT POSITION SENSOR (GROUND)
B42
ENGINE COOLANT TEMPERATURE SENSOR
B43
FRONT OXYGEN (A/F) SENSOR LH
B44
FRONT OXYGEN (A/F) SENSOR LH
B45
FRONT OXYGEN (A/F) SENSOR RH
B46
REAR OXYGEN SENSOR LH
B47
B48
EGR CONTROL VALVE
B49
EGR CONTROL VALVE
B51
PURGE CONTROL SOLENOID VALVE
B52
FUEL INJECTOR No. 5
B53
CRANKSHAFT POSITION SENSOR (SHIELD)
B54
INTAKE CAMSHAFT POSITION SENSOR RH
B55
EXHAUST CAMSHAFT POSITION SENSOR LH
B56
REAR OXYGEN SENSOR RH
B57
REAR OXYGEN SENSOR RH
B58
SHIELDS
B59
REAR OXYGEN SENSOR LH
B60
ENGINE GROUND
B61
ENGINE GROUND
B62
ENGINE GROUND
B63
ENGINE GROUND
B64
ENGINE GROUND
B65
ENGINE GROUND

EN-11059

6. Data Link Connector

A: NOTE

This connector is used for Subaru Select Monitor.

CAUTION:
Do not connect any scan tools other than Subaru Select Monitor or general scan tool because the circuit for Subaru Select Monitor may be damaged.

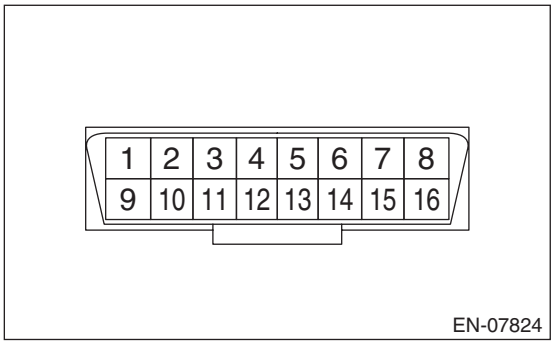

Terminal No.	Contents	Terminal No.	Contents
1	Blank	9	Blank
2	Blank	10	Blank
3	Blank	11	Blank
4	Ground	12	Blank
5	Ground	13	Blank
6	CAN communication (Hi)	14	CAN communication (Lo)
7	Subaru Select Monitor signal	15	Blank
8	Blank	16	Power supply

7. General Scan Tool

A: OPERATION

1. HOW TO USE GENERAL SCAN TOOL

1) Prepare a scan tool (general scan tool) required by SAE J1978.
2) Connect the general scan tool to data link connector located in the lower portion of the instrument panel (on the driver's side).

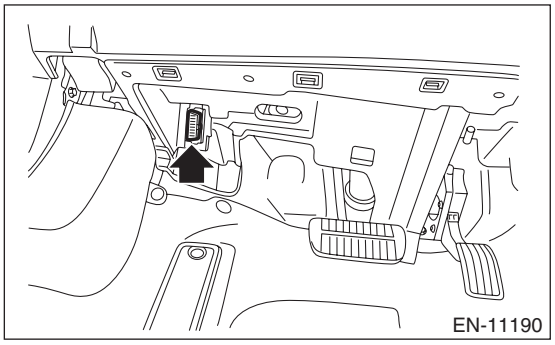

3) Using the general scan tool, call up each data. General scan tool functions consist of:
   (1) MODE $01: Current powertrain diagnostic data
   (2) MODE $02: Powertrain freeze frame data
   (3) MODE $03: Emission-related powertrain DTC
   (4) MODE $04: Clear/Reset emission-related diagnostic information
   (5) MODE $06: Request on-board monitoring test results for intermittently monitored systems
   (6) MODE $07: Initial emission-related powertrain DTC
   (7) MODE $08: Request control for on-board system, test, and component
   (8) MODE $09: Request vehicle information
4) Read out the data according to repair procedures. (For detailed operation procedures, refer to the general scan tool operation manual.)

NOTE:
For details concerning DTC, refer to "List of Diagnostic Trouble Code (DTC)". <Ref. to EN(H6DO)(diag)-109, List of Diagnostic Trouble Code (DTC).>

2. MODE $01 (CURRENT POWERTRAIN DIAGNOSTIC DATA)

Refer to data denoting the current operating condition of analog input/output, digital input/output or the powertrain system.
A list of the support data and PID (Parameter Identification) codes are shown in the following table.

PID	Data	Unit of measure
$01	Number of emission-related powertrain DTC and malfunction indicator light status	—
$03	Fuel system control status	—
$04	Calculated engine load value	%
$05	Engine coolant temperature	°C
$06	Short term fuel trim (Bank 1)	%
$07	Long term fuel trim (Bank 1)	%
$08	Short term fuel trim (Bank 2)	%
$09	Long term fuel trim (Bank 2)	%
$0B	Intake manifold absolute pressure	kPa
$0C	Engine speed	rpm
$0D	Vehicle speed	MPH
$0E	Ignition timing advance	°
$0F	Intake air temperature	°C
$10	Intake air amount	g/s
$11	Throttle valve opening angle	%

PID	Data	Unit of measure
$13	Air fuel ratio sensor	—
$15	Oxygen sensor output voltage (Bank 1 Sensor 2)	V
$15	Oxygen sensor correction (Bank 1 Sensor 2)	%
$19	Oxygen sensor output voltage (Bank 2 Sensor 2)	V
$19	Oxygen sensor correction (Bank 2 Sensor 2)	%
$1C	On-board diagnostic system	—
$1F	Elapsed time after starting the engine	sec
$21	Travel distance after the malfunction indicator light illuminates	miles
$24	Oxygen sensor output voltage and short term fuel trim associated with oxygen sensor (Bank 1)	– and V
$28	Oxygen sensor output voltage and short term fuel trim associated with oxygen sensor (Bank 2)	– and V
$2C	Target EGR	%
$2D	EGR deviation	%
$2E	Evaporative purge	%
$2F	Fuel level	%
$30	Number of warm ups after DTC clear	—
$31	Travel distance after DTC clear	miles
$33	Barometric pressure	kPa
$34	A/F sensor lambda value (Bank 1 Sensor 1)	—
$34	A/F sensor current value (Bank 1 Sensor 1)	mA
$38	A/F sensor lambda value (Bank 2 Sensor 1)	—
$38	A/F sensor current value (Bank 2 Sensor 1)	mA
$3C	Catalyst temperature #1	°C
$3D	Catalyst temperature #2	°C
$41	Diagnostic monitor of each drive cycle	—
$42	ECM power voltage	V
$43	Absolute load	%
$44	A/F target lambda	—
$45	Relative throttle opening angle	%
$46	Ambient temperature	°C
$47	Absolute throttle opening angle 2	%
$49	Absolute accelerator opening angle 1	%
$4A	Absolute accelerator opening angle 2	%
$4C	Target throttle opening angle	%
$4D	Engine operating time while malfunction indicator light lit	min
$4E	Elapsed time after DTC clear	min
$51	Fuel used	—
$53	ELCM pressure	kPa
$5A	Relative accelerator opening angle	%
$5C	Engine oil temperature	°C
$56	Learning value of sub feedback compensation level	—
$65	Neutral status	—

NOTE:
Refer to general scan tool manufacturer's operation manual to access the present powertrain diagnostic data (MODE $01).

3. MODE $02 (POWERTRAIN FREEZE FRAME DATA)

Refer to data denoting the operating condition when trouble is detected by on-board diagnosis system. A list of the support data and PID (Parameter Identification) codes are shown in the following table.

PID	Data	Unit of measure
$02	DTC that caused freeze frame data to be stored	—
$03	Fuel system control status	—
$04	Calculated engine load value	%
$05	Engine coolant temperature	°C
$06	Short term fuel trim (Bank 1)	%
$07	Long term fuel trim (Bank 1)	%
$08	Short term fuel trim (Bank 2)	%
$09	Long term fuel trim (Bank 2)	%
$0B	Intake manifold absolute pressure	kPa
$0C	Engine speed	rpm
$0D	Vehicle speed	MPH
$0E	Ignition timing advance	°
$0F	Intake air temperature	°C
$10	Intake air amount	g/s
$11	Throttle valve opening angle	%
$13	Air fuel ratio sensor	—
$15	Oxygen sensor output voltage (Bank 1 Sensor 2)	V
$15	Oxygen sensor correction (Bank 1 Sensor 2)	%
$19	Oxygen sensor output voltage (Bank 2 Sensor 2)	V
$19	Oxygen sensor correction (Bank 2 Sensor 2)	%
$1C	On-board diagnostic system	—
$1F	Elapsed time after starting the engine	sec
$2C	Target EGR	%
$2D	EGR deviation	%
$2E	Evaporative purge	%
$2F	Fuel level	%
$33	Barometric pressure	kPa
$42	ECM power voltage	V
$43	Absolute load	%
$44	A/F target lambda	—
$45	Relative throttle opening angle	%
$46	Ambient temperature	°C
$47	Absolute throttle opening angle 2	%
$49	Absolute accelerator opening angle 1	%
$4A	Absolute accelerator opening angle 2	%
$4C	Target throttle opening angle	%
$51	Applicable fuel	—
$65	Neutral status	—

NOTE:
Refer to general scan tool manufacturer's instruction manual to access freeze frame data (MODE $02).

4. MODE $03 (EMISSION-RELATED POWERTRAIN DTC)

Refer to "List of Diagnostic Trouble Code (DTC)" for information about data denoting emission-related powertrain DTC. <Ref. to EN(H6DO)(diag)-109, List of Diagnostic Trouble Code (DTC).>

5. MODE $04 (CLEAR/RESET EMISSION-RELATED DIAGNOSTIC INFORMATION)

Refer to the mode used to clear or reset emission-related diagnostic information.

NOTE:
- Refer to general scan tool manufacturer's operation manual to clear emission-related diagnostic information (MODE $04).
- Initial diagnosis of electronic throttle control is performed after memory clearance. Wait for 10 seconds or more after turning the ignition switch to ON, and then start the engine.

6. MODE $06

Refer to diagnostic value of troubleshooting and data of test limit indicated on the support data bit sequence table. A list of the support data is shown in the following table.

NOTE:
Some items are not displayed according to the specifications.

OBDMID	TID	SID	Diagnostic item
$01	$84	$1E	A/F sensor range failure (Bank 1 Sensor 1)
	$85	$1E	
	$86	$20	A/F sensor response failure (Bank 1 Sensor 1)
	$91	$20	
	$92	$10	
	$A3	$20	
	$A4	$10	
	$AC	$10	
	$AD	$10	
	$AE	$10	
	$AF	$10	
	$CD	$20	
	$CF	$20	
	$DF	$10	
$02	$07	$0B	Oxygen sensor drop failure (Bank 1 Sensor 2)
	$08	$0B	
	$A5	$0B	
	$05	$10	Oxygen sensor response failure (Bank 1 Sensor 2)
	$06	$10	
	$BD	$10	
	$D1	$10	Oxygen sensor delay failure (Bank 1 Sensor 2)
	$D2	$01	
$05	$84	$1E	A/F sensor range failure (Bank 2 Sensor 1)
	$85	$1E	
	$86	$20	A/F sensor response failure (Bank 2 Sensor 1)
	$91	$20	
	$92	$10	
	$A3	$20	
	$A4	$10	
	$AC	$10	
	$AD	$10	
	$AE	$10	
	$AF	$10	
	$CE	$20	
	$D0	$20	
	$DF	$10	

OBDMID	TID	SID	Diagnostic item
$06	$07	$0B	Oxygen sensor drop failure (Bank 2 Sensor 2)
	$08	$0B	
	$A5	$0B	
	$05	$10	Oxygen sensor response failure (Bank 2 Sensor 2)
	$06	$10	
	$BD	$10	
	$D1	$10	Oxygen sensor delay failure (Bank 2 Sensor 2)
	$D2	$01	
$21	$89	$20	Catalyst deterioration diagnosis (Bank 1)
$22	$89	$20	Catalyst deterioration diagnosis (Bank 2)
$31	$8A	$FD	EGR system diagnosis
$35	$8B	$9D	VVT monitor (Bank 1)
	$8C	$9D	
	$8D	$9D	
	$8E	$9D	
	$D3	$9D	
	$D5	$9D	
	$D6	$9D	
$36	$8B	$9D	VVT monitor (Bank 2)
	$8C	$9D	
	$8D	$9D	
	$8E	$9D	
	$D3	$9D	
	$D5	$9D	
	$D6	$9D	
$3C	$C1	$FE	Evaporative emission control system (0.02 inch leak)
	$C2	$FE	
	$C3	$FE	
	$C4	$FE	
	$C5	$FE	
	$C6	$35	
	$C7	$FE	
	$C8	$FE	
	$C9	$FE	
	$CA	$FE	
$3D	$E2	$FE	Purge flow
$41	$9B	$14	A/F sensor heater characteristics failure (Bank 1 Sensor 1)
$42	$A2	$24	Oxygen sensor heater characteristics failure (Bank 1 Sensor 2)
$45	$9B	$14	A/F sensor heater characteristics failure (Bank 2 Sensor 1)
$46	$A2	$24	Oxygen sensor heater characteristics failure (Bank 2 Sensor 2)
$A1	$0B	$24	Misfire monitoring (all cylinders)
	$0C	$24	
$A2	$0B	$24	Misfire monitoring (#1 cylinder)
	$0C	$24	
$A3	$0B	$24	Misfire monitoring (#2 cylinder)
	$0C	$24	
$A4	$0B	$24	Misfire monitoring (#3 cylinder)
	$0C	$24	
$A5	$0B	$24	Misfire monitoring (#4 cylinder)
	$0C	$24	

OBDMID	TID	SID	Diagnostic item
$A6	$0B	$24	Misfire monitoring (#5 cylinder)
	$0C	$24	
$A7	$0B	$24	Misfire monitoring (#6 cylinder)
	$0C	$24	

7. MODE $07

Refer to the data of DTC (pending code) for troubleshooting result about emission in the first time.

8. MODE $08 (REQUEST CONTROL FOR ON-BOARD SYSTEM, TEST, AND COMPONENT)

Perform “Active Test” of the on-board system.

9. MODE $09

Refer to the data of the vehicle specification.

8. Subaru Select Monitor

A: OPERATION

1. HOW TO USE SUBARU SELECT MONITOR

NOTE:
For detailed operation procedures, refer to “Application help”.

2. DISPLAY CURRENT ENGINE DATA

NOTE:
- For detailed operation procedures, refer to “Application help”.
- A list of the support data is shown in the following table.

1) On «Start» display, select «Diagnosis».
2) On «Vehicle selection» display, input the vehicle information and select «Confirmed».
3) On «Main Menu» display, select «Each System Check».
4) On «Select System» display, select «Engine Control System».
5) On «Select Function» display, select «Data Monitor».

Display	Contents	Note (at idling)	Remarks
Engine Speed	Calculated from crankshaft position sensor signal.	675 rpm	rpm
Mass Air Flow	Amount of intake air calculated from air flow sensor output value.	2.5 g/s	g/s or lb/m
Vehicle Speed	Value calculated from vehicle speed sensor output value.	0 km/h	km/h or MPH
Throttle Opening Angle	Throttle valve opening angle (in percentage) calculated from throttle position sensor output value.	13%	%
Accel opening angle	Accelerator pedal opening angle (in percentage) calculated from accelerator pedal position sensor output value.	0.0%	%
A/F Sensor #1	Actual lambda value calculated from front A/F sensor output value. (RH bank)	1.0	—
A/F Sensor #2	Actual lambda value calculated from front A/F sensor output value. (LH bank)	1.0	—
Ignition timing adv. #1	Ignition timing control value for No. 1 cylinder. Calculated from rotation speed, intake manifold pressure, intake air temperature, water temperature, and data from knock sensor etc.	14°	°
Engine Coolant Temperature	Value calculated from engine coolant temperature sensor output value.	96°C	°C or °F
Fuel Injection #1 Pulse	Control value of fuel injection time by engine control module. (RH bank)	2.56 ms	ms
Short Term Fuel Trim-Bank1	Air fuel ratio correction control value for the front.	0.8%	%
Short Term Fuel Trim - Bank 2	Air fuel ratio correction control value for the front.	0.0%	%
Long Term Fuel Trim-Bank1	Air fuel ratio learning control value for the front.	1.6%	%
Long Term Fuel Trim - Bank 2	Air fuel ratio learning control value for the front.	0.0%	%
Learned Ignition Timing	Ignition timing learning value. Advance or retard angle amount when knocking occurs.	0.0 deg	deg
Intake Manifold Absolute Pressure	Value calculated from the intake manifold pressure sensor output.	32 kPa	kPa, mmHg, inHg or psig
Oxygen sensor #12	Rear oxygen sensor output voltage value.	0.7 V	V
Oxygen Sensor #22	Rear oxygen sensor output voltage value.	0.795 V	V
VVT Adv. Ang. Amount R	Intake AVCS advance angle amount. (RH bank)	0 deg	deg

Display	Contents	Note (at idling)	Remarks
VVT Advance Target Angle Amount R	AVCS target advance angle amount for the RH bank on the intake side. This value is compared with the AVCS advance angle amount R to judge if the intake AVCS is operating properly. Response delays during the transition time.	0 deg	deg
VVT Adv. Ang. Amount L	Intake AVCS advance angle amount. (LH bank)	0 deg	deg
VVT Advance Target Angle Amount L	AVCS target advance angle amount for the LH bank on the intake side. This value is compared with the AVCS advance angle amount L to judge if the intake AVCS is operating properly. Response delays during the transition time.	0 deg	deg
Exh. VVT Retard Ang. R	AVCS actual retard angle amount for the RH bank on the exhaust side.	0 deg	deg
Ex VVT Retard Target Angle R	AVCS target retard angle amount for the RH bank on the exhaust side. This value is compared with the exhaust AVCS retard angle amount R to judge if the AVCS is operating properly. Response delays during the transition time.	0 deg	deg
Exh. VVT Retard Ang. L	AVCS actual retard angle amount for the RH bank on the exhaust side.	0 deg	deg
Ex VVT Retard Target Angle L	AVCS target retard angle amount for the LH bank on the exhaust side. This value is compared with the exhaust AVCS retard angle amount L to judge if the AVCS is operating properly. Response delays during the transition time.	0 deg	deg
VVT Initial Position Learning Value #1	AVCS initial position learning value for the RH bank on the intake side. Controls the angle against a standard angle. Deviation learning is performed based on this standard value.	29.9°CA	°CA
VVT Initial Position Learning Value #2	AVCS initial position learning value for the LH bank on the intake side. Controls the angle against a standard angle. Deviation learning is performed based on this standard value.	27.7°CA	°CA
VVT Ex Initial Position Learning Value #1	AVCS initial position learning value for the RH bank on the intake side. Controls the angle against a standard angle. Deviation learning is performed based on this standard value.	0	°CA
VVT Ex Initial Position Learning Value #2	AVCS initial position learning value for the RH bank on the intake side. AVCS initial position learning value for the RH bank on the intake side. Controls the angle against a standard angle. Deviation learning is performed based on this standard value.	0	°CA
ECU ACC	ECM input power supply voltage.	14.176 V	V
Target engine speed	ECM target engine speed.	675 rpm	rpm
Target Equivalence Ratio	Target air fuel ratio. (Lambda) It usually becomes 1.0 aiming at a theoretical air fuel ratio.	0.996	—
Engine Oil Temperature	Value calculated from the VVL system engine oil temperature and the oil temperature sensor output.	96°C	°C or °F
Intake Air Temperature	Intake air temperature calculated from the intake air temperature sensor output value.	50°C	°C or °F
Ambient Temperature	Ambient temperature that ECM estimates by input values from the engine coolant temperature sensor or the intake air temperature sensor etc.	Ambient Temp for A/C	°C or °F

Display	Contents	Note (at idling)	Remarks
Calculated load value	Current rate of air amount. Value assuming that the air amount at the current engine speed with the throttle fully open is 100%.	15.3%	%
Absolute Load Value	Percentage of current intake air amount against the maximum air intake amount of the engine. For non-turbo engine, the value can be close to 95%, but will never be 100%. For turbo engine, this value may exceed 100% due to a boost pressure.	14.9%	%
Atmosphere Pressure	Atmospheric pressure calculated from atmospheric pressure sensor output value.	101 kPa	kPa, mmHg, inHg or psig
Mani. Relative Pressure	Pressure value calculated from manifold pressure sensor output value. (Absolute value) (Air intake absolute pressure – Atmospheric pressure)	–69	kPa, mmHg, inHg or psig
Target Throttle Opening Angle	Target throttle opening angle calculated by ECM.	16 deg	deg
Actual Throttle Opening Angle	Actual throttle opening angle. Calculated by ECM based on the throttle sensor input value.	16 deg	deg
Target Throttle Opening Angle	Control value of the target throttle opening angle calculated by ECM. Shows the target value of opening angle in percentage when 0% means fully closed and 100% means fully open.	0.0%	%
Relative Throttle Pos.	Current throttle opening angle in percentage against the throttle voltage (full range) that has reflected the full close point learning value. The value will be approx. 70% at full open.	1.6%	%
Throttle Motor Voltage	Power supply voltage of the throttle motor. ECM input value.	14.2 V	V
Main-Throttle Sensor	Voltage value of the main throttle position sensor. ECM input value.	0.66 V	V
Sub-Throttle Sensor	Voltage value of the sub throttle position sensor. ECM input value.	1.52 V	V
Throttle Motor Duty	Throttle motor control duty ratio. ECM output value.	–14%	%
Main-Accelerator Sensor	Voltage value of the main accelerator pedal position sensor. ECM input value.	0.66 V	V
Sub-Accelerator Sensor	Voltage value of the sub accelerator pedal position sensor. ECM input value.	0.66 V	V
Idle Mass Air Flow	Air volume correction value to maintain the target rotation speed in each water temperature. Corrects air volume when the water temperature changes. It includes values of the feedback correction amount and the learning value.	3.00 g/s	g/s
Idle Mass Air Flow Feedback correct	Air volume compensation value of ISC as a feedback correction to stabilize the idling speed.	0.00 g/s	g/s
ISC Learning Value	Learning control value of ISC. After warming up, learning control is executed to reduce the ISC feedback correction to zero, in order to stabilize the engine speed.	0.55 g/s	g/s
Idle A/C load correct	Air volume correction when the air conditioner is turned on. ECM corrects the air volume against the set target rotation speed when the air conditioner is turned ON.	0.86 g/s	g/s
Electric Load Feedback Val	Air volume correction when an electric load is turned on. ECM corrects the air volume against the set target rotation speed when the electric load is turned ON.	0.10 g/s	g/s

Display	Contents	Note (at idling)	Remarks
Idle dirty throttle correct	Calculates the ISC learning values on a long-term basis, and judges as an ISC dirty throttle correction when the learning value increases gradually. When carbon or other dirt accumulates on the ISC throttle and make the throttle dirty, air volume decreases when the throttle is fully closed. The ECM increases the amount of compensation air to keep the rotation speed.	0 g/s	g/s
Air Flow Sensor Voltage	Air flow sensor output value. Input value to ECM.	1.2 V	V
Fuel Level	Fuel level sensor output value. ECM input value. Total value of main and sub.	—	%
Fuel level resistance	Fuel level sensor resistance value. ECM input value.	—	Ω
Fuel Pump Duty	Display of the fuel pump duty ratio. Supply voltage of the fuel pump is under a DUTY control by the ECM. This value shows the DUTY ratio. While the amount of fuel supply is small, such as during idling, the DUTY value is lowered to decrease the supply voltage.	59	%
Commanded Evap Purge	Evaporative purge rate displayed by the OBD.	0%	%
CPC Valve Duty Ratio	Purge control solenoid valve control duty ratio. ECM output value.	0%	%
Purge Density Learn Value	Leaning value of the evaporation gas density purged from the canister. ECM displays the estimated leaning value.	0.0%	%
Evap Purge Flow	Purge ratio when the evaporation gas is purged from the canister. ECM performs a DUTY drive to the purge solenoid valve. The amount of gas actually purged will vary depending on the vacuum pressure difference before/after the solenoid valve. Purge ratio displayed here shows current purge amount in percentage against the maximum purge amount when the maximum vacuum pressure is applied.	0.0%	%
ALT Duty	Electric power generation voltage is calculated by the ECM. Indicator voltage value from ECM to alternator is under a DUTY control.	69%	%
Alternator control mode	Control mode of the electric power generation voltage by the alternator. Low: Mode that controls the battery charge Mid: Mode where the battery is not charged and discharged High: Mode that fixes the voltage when the battery is charged or when an electric load is turned on ExHigh: Mode where the battery is charged during deceleration	High/Mid/Low	—
Battery Terminal Voltage	Voltage value between battery terminals input from the battery sensor.	14.0 V	V
Battery Charge/Discharge Current	Battery charge/discharge current value input from the battery sensor. When the value is positive: The current flows to a direction that the battery is charged. When the value is negative: The current flows to a direction that the battery is discharged.	3.6 A	A

Display	Contents	Note (at idling)	Remarks
Estimated Battery Temperature	Battery temperature input from the battery sensor.	45°C	°C
Remaining Battery Capacity	Remaining amount of battery estimated by ECM.	89.0%	%
Knocking Correction	Retard angle amount when knocking occurs. Partially learning value of ignition timing learning value.	0.0 deg	deg
Fuel system for Bank 1	Feedback status of air fuel ratio. Open: Feedback is stopped Closed: Feedback control is being performed	Cl_normal	—
Fuel system for Bank 2	Feedback status of air fuel ratio. Open: Feedback is stopped Closed: Feedback control is being performed	Cl_normal	—
A/F Sensor #1 Current	Front A/F sensor output current value. ECM input value.	–0.2 — 0.2 mA	mA
A/F Sensor #2 Current	Front A/F sensor output current value. ECM input value.	0.00 mA	mA
A/F Sensor #1 Resistance	Front A/F sensor resistance value calculated from the front A/F sensor output value.	50 Ω	Ω
A/F Sensor #2 Resistance	Front A/F sensor resistance value calculated from the front A/F sensor output value.	50 Ω	Ω
A/F Correction #3	Sub correction value of A/F feedback control	0.00%	%
No. of EGR steps	Number of EGR valve steps. Number of stepping motor steps. ECM output value.	0 STEP	STEP
Commanded EGR	EGR setting value is calculated by ECM and the target value is displayed.	0%	%
EGR Error	Displays a difference (%) between the target EGR steps and the actual EGR steps. When the value is positive, it opens more than the target value. When the value is negative, it does not reach to the target value.	0%	%
OCV Duty R	Oil control solenoid control duty ratio. (RH bank) ECM output value.	40 — 60%	%
OCV Duty L	Oil control solenoid control duty ratio. (LH bank) ECM output value.	40 — 60%	%
OCV Current R	Actual current value of the oil control solenoid. (RH bank) ECM input value.	550 — 850 mA	mA
OCV Current L	Actual current value of the oil control solenoid. (LH bank) ECM input value.	550 — 850 mA	mA
Exh. OCV Duty R	Exhaust side oil control solenoid control duty ratio on the RH bank. ECM output value.	9.4%	%
Exh. OCV Duty L	Exhaust side oil control solenoid control duty ratio on the LH bank. ECM output value.	9.4%	%
Exh. OCV Current R	Actual current value of the exhaust side oil control solenoid on the RH bank, and engine input value.	64mA	mA
Exh. OCV Current L	Actual current value of the exhaust side oil control solenoid on the LH bank, and engine input value.	64mA	mA
Roughness Monitor #1	#1 cylinder roughness monitor count value.	0	—
Roughness Monitor #2	#2 cylinder roughness monitor count value.	0	—
Roughness Monitor #3	#3 cylinder roughness monitor count value.	0	—
Roughness Monitor #4	#4 cylinder roughness monitor count value.	0	—
Roughness Monitor #5	#5 cylinder roughness monitor count value.	0	—

Display	Contents	Note (at idling)	Remarks
Roughness Monitor #6	#6 cylinder roughness monitor count value.	0	—
Cylinder Monitor #1	Calculates the rotation speed between certain angles on the #1 cylinder. If the rotation speed is low compared to monitor values of other cylinders, it means that the combustion is not ideal in that cylinder.	—	rpm
Cylinder Monitor #2	Calculates the rotation speed between certain angles on the #2 cylinder. If the rotation speed is low compared to monitor values of other cylinders, it means that the combustion is not ideal in that cylinder.	—	rpm
Cylinder Monitor #3	Calculates the rotation speed between certain angles on the #3 cylinder. If the rotation speed is low compared to monitor values of other cylinders, it means that the combustion is not ideal in that cylinder.	—	rpm
Cylinder Monitor #4	Calculates the rotation speed between certain angles on the #4 cylinder. If the rotation speed is low compared to monitor values of other cylinders, it means that the combustion is not ideal in that cylinder.	—	rpm
Cylinder Monitor #5	Calculates the rotation speed between certain angles on the #5 cylinder. If the rotation speed is low compared to monitor values of other cylinders, it means that the combustion is not ideal in that cylinder.	—	rpm
Cylinder Monitor #6	Calculates the rotation speed between certain angles on the #6 cylinder. If the rotation speed is low compared to monitor values of other cylinders, it means that the combustion is not ideal in that cylinder.	—	rpm
Ignition SW ON Count	Time stamp information. Number of times the ignition is ON since the vehicle was manufactured. The number of ignition ON is also recorded when a trouble code is recorded, so the comparison with that number will show you how many times the ignition has turned on since the diagnostic code was recorded.	—	times
Count	Time stamp information. Each unit individually counts the elapsed time since the ignition is turned ON. Master integrated unit and ECM synchronize with the master time. When synchronized: “Common” When not synchronized: “Originally”	Common	—
Time Count	Time stamp information. Elapsed time after ignition ON. When a trouble code is recorded, the elapsed time after ignition ON is also recorded.	—	ms
Time Since Engine Start	Elapsed time after starting the engine.	—	sec
Elapsed Time After Engine Run	Elapsed time after starting the engine. This value is used for control.	—	sec
Accumulation Time After Engine Run	Cumulative time after starting the engine. For models with Auto Start Stop, cumulative time after the first engine start. Time is not accumulated while the engine stops due to the Auto Start Stop system.	—	sec

Display	Contents	Note (at idling)	Remarks
Initial Engine Oil Temp.	Oil temperature when starting the engine, which is input to ECM from the oil temperature sensor.	—	°C
Initial Engine Coolant Temp.	Water temperature when starting the engine, which is input to ECM from the water temperature sensor.	—	°C
Initial Intake Air Temp.	Intake air temperature when starting the engine, which is input to ECM from the intake air temperature sensor.	—	°C
Engine Starting Time	Time needed since the cranking started till the judgment of engine start is complete.	—	ms
Start Mask Control Check 1	Information that shows whether the start prohibition control is executed on the engine side when starting. Values other than zero means that the control is executed to prohibit the engine start.	—	—
Soak Time	The time the vehicle has been left since the engine stopped. This value can be used to check how long the vehicle has left, by turning the ignition switch to ON after the engine stopped.	—	sec
Meter since DTC cleared	Travel distance after DTC clear.	—	km or mile
Time while MIL lighted	Engine operating time from when the malfunction indicator light illuminated till when it went off.	—	min
Time since DTC cleared	Elapsed time after DTC clear.	—	min
Number of warm-ups since DTCs cleared	Number of warm ups after DTC clear. Shows the number of cycle, considering that 1 cycle is the time from when starting and warming the engine till when stopping the engine.	—	times
Lighted MI lamp history	Travel distance after the warning light illuminated.	—	km or mile
Odometer	ECM calculates the total cumulative travel distance from the vehicle speed, separately from the odometer in the combination meter. Small difference from the odometer will be possible, but if there is a big difference, ECM or the combination meter may need to be replaced.	—	km
Fuel Cut Elps Time	Elapsed time after experienced high rotation speed.	0 sec	sec
Memorized Cruise Speed	Cruise control system target vehicle speed. (Set speed)	0 km/h	km/h or MPH
Catalyst Temperature #11	Estimated temperature of the front catalytic converter.	305.1	°C or °F
Catalyst Temperature #21	Estimated temperature of the front catalytic converter.	341.9	°C or °F
Type of fuel	Fuel information recorded in the ECM. Not the fuel information currently used.	GAS	—
AT drive status	Neutral condition. Information input from the inhibitor switch.	NEUT	—
Absolute Evap Sys. Pressure	Measured value of the evaporative emission system pressure. Pressure sensor input value.	101.43	kPa
X Mode	X mode ON or OFF status.	OFF	—
Neutral switch	Neutral switch signal. P or N range signal for AT. Value input to ECM.	Neutral	—
ETC Motor Relay	Drive signal to the electronic throttle motor relay. Set to “ON” when drive signal is output. ECM output value.	ON	—
Stop Light Switch	Stop light switch signal. Set to “ON” when the stop light illuminates. ECM input value.	OFF (when OFF)	—

Display	Contents	Note (at idling)	Remarks
Brake Switch	Brake switch signal. Set to “ON” when the brake pedal is depressed. ECM input value.	OFF (when OFF)	—
Idle Switch Signal	Idle signal. Set to “Idle” while idling.	Idle	—
Ignition switch	Ignition switch signal. Set to “ON” when the ignition switch is ON.	ON	—
A/C Compressor Signal	A/C compressor drive signal. Set to “ON” when the drive signal is output. ECM output value.	OFF (when OFF)	—
Radiator Fan Control	DUTY ratio used for the radiator fan DUTY control. ECM output value.	0	%
A/C Switch	Air conditioner switch signal. Set to “ON” when the air conditioner switch of the heater control is ON. ECM input value.	OFF (when OFF)	—
Variable Load Compressor Torque Value	Load value of the variable capacity air compressor that ECM inputs. The value that the air conditioner CM estimates and outputs.	—	Nm
Starter Switch	Starter switch signal. Set to “ON” when the starter is ON. ECM input value.	OFF	—
Rear Defogger SW	Rear defogger switch input signal. Set to “ON” when the switch is ON. ECM input value.	OFF (when OFF)	—
Blower Fan SW	Blower fan switch input signal. Set to “ON” when the switch is ON. ECM input value.	OFF (when OFF)	—
Light Switch	Light switch input signal. Set to “ON” when the switch is ON. ECM input value.	OFF (when OFF)	—
Wiper Switch	Wiper switch input signal. Set to “ON” when the switch is ON. ECM input value.	OFF (when OFF)	—
Delivery Mode Connector	Delivery mode terminal fuse installation status. ECM displays delivery mode status.	OFF	—
Knocking Signal	Knock sensor output signal. Judges if a knocking occurs or not. ECM input value.	OFF	—
Crankshaft Position Sig.	Crankshaft position sensor output signal. Set to “ON” when the engine is running, ECM input signal. ECM input signal.	ON	—
Camshaft Position Sig.	Camshaft position sensor output signal. Set to “ON” when the engine is running. ECM input signal.	ON	—
Ban of Torque Down VDC	Torque down prohibition notification signal to the vehicle dynamics control (VDC) module. Set to “OFF” when the prohibition signal is output. ECM output value.	ON	—
Request Torque Down VDC	Torque down request signal transmitted from the vehicle dynamics control (VDC) module. Set to “ON” when the request signal is sent. Vehicle dynamics control (VDC) ECM input signal.	OFF	—

Display	Contents	Note (at idling)	Remarks
Torque Permission Signal	Torque down permission notification signal to the transmission control module. Set to “ON” when the permission signal is output. ECM output value.	ON	—
SET/COAST Switch	Cruise control system SET/COAST SW signal. Set to ON when the switch is operated. ECM input signal.	OFF (when OFF)	—
SET/COAST Switch (Deep)	Cruise control system SET/COAST SW signal. Set to ON when the SET/COAST SW is pressed and held. ECM input value.	OFF	—
RESUME/ACCEL Switch	Cruise control system RESUME/ACCEL SW signal. Set to ON when the switch is operated. ECM input signal.	OFF (when OFF)	—
RESUME/ACCEL Switch (Deep)	Cruise control system RESUME/ACCEL SW signal. Set to ON when the RESUME/ACCEL SW is pressed and held. ECM input value.	OFF	—
Main switch	Cruise control system main switch signal. Set to “ON” when the switch is operated. ECM input signal.	OFF (when OFF)	—
Distance Change Switch Signal	ON/OFF status of the following distance setting switch used by ADA cruise control is displayed. (Model with EyeSight)	OFF (when OFF)	—
Cruise Control Cancel Switch Signal	Cruise control cancel switch signal of the cruise control system. Set to “ON” when the switch is operated. ECM input signal.	OFF (when OFF)	—
All Cylinders Fuel cut	Status under the fuel injection amount control where the fuel injection is cut off in all cylinders.	OFF	—
Immobilizer Fuel Cut Status	Status where the fuel injection is cut off by the command from immobilizer.	OFF	—
Shift Pattern Demand for Low Water Temperature	Shift pattern request sent from ECM to the transmission CM. When the water temperature is low, shift pattern change to the low speed side is requested to raise the catalyst temperature faster.	OFF	—
Oil level switch	Oil level switch signal. Set to “LOW level” when the amount of engine oil decreases. ECM input signal.	HIGH level	—
ELCM switching valve	ELCM switching valve drive signal. Set to “Close” when closing the switching valve. ECM output value.	Open	—
ELCM pump	ELCM pump drive signal. Set to “ON” when ELCM decompression pump is activated. ECM output value.	OFF	—
AT turbine speed	Turbine rotation speed of the transmission. Turbine rotation speed is input from the transmission CM via CAN.	900	—
Lock Up Status	Lock-up status of the transmission. Lock up status is input from the transmission CM via CAN.	OPEN	—
P/N Signal	P/N status of the transmission. P/N range status is input from the transmission CM via CAN.	—	—
Front O2 #1 Rich Signal	Monitoring of the front oxygen sensor output. Displays “Rich” when the air fuel ratio is rich.	Rich	—

Display	Contents	Note (at idling)	Remarks
Front O2 #2 Rich Signal	Monitoring of the front oxygen sensor output. Displays “Rich” when the air fuel ratio is rich.	Rich	—
Ignition Control Check 1	Detailed status of the engine ignition control information.	90	—
Ignition Control Check 2	Detailed status of the engine ignition control information.	75	—
Alternator control check 1	Detailed status of charge control.	91	—
Alternator control check 2	Detailed status of charge control.	90.1	—
Alternator control check 3	Detailed status of charge control.	10.350	—
Alternator control check 4	Detailed status of charge control.	8.970	—
Alternator control check 5	Detailed status of charge control.	100	—
Alternator control check 6	Detailed status of charge control.	0	—
Alternator control check 7	Detailed status of charge control.	14.2	—
Alternator control check 8	Detailed status of charge control.	64	—
Alternator control check 9	Detailed status of charge control.	0	—
Alternator control check 10	Detailed status of charge control.	2	—
MIL Status	Malfunction indicator light illumination status. When judged as abnormal, an illumination command signal is sent from ECM to the combination meter.	OFF	—
Number of Diagnostic Code(s):	The number of trouble codes recorded in the ECM.	0	—
(Oxygen sensor #11)	Installation status of the front oxygen sensor.	Support	—
(Oxygen sensor #12)	Installation status of the rear oxygen sensor.	Support	—
(Oxygen sensor #21)	Installation status of the front oxygen sensor.	Support	—
(Oxygen sensor #22)	Installation status of the rear oxygen sensor.	Support	—
Short term fuel trim #12	Air fuel ratio correction control value for the rear.	0.0%	%
Short term fuel trim #22	Air fuel ratio correction control value for the rear.	0.0%	%
A/F Sensor #11	Air fuel ratio calculated from the front A/F sensor output value. (Lambda)	1.001	—
A/F Sensor #11	Output voltage of the front A/F sensor.	2.193 V	V
A/F Sensor #11	Air fuel ratio calculated from the front A/F sensor output value. (Lambda)	1.001	—
A/F Sensor #11	Front A/F sensor current value.	0.00	mA
A/F Sensor #21	Air fuel ratio calculated from the front A/F sensor output value. (Lambda)	0.997	—
A/F Sensor #21	Output voltage of the front A/F sensor.	2.192 V	V
A/F Sensor #21	Air fuel ratio calculated from the front A/F sensor output value. (Lambda)	0.997	—
A/F Sensor #21	Front A/F sensor current value.	-0.01 mA	mA
Absolute Throttle Pos.#2	Shows the sub throttle sensor voltage value in % against the full-range 5 V throttle sensor output voltage.	30.6%	%
Accelerator Pedal Pos.#1	Shows the main accelerator sensor voltage value in % against the full-range 5 V.	13.3%	%
Accelerator Pedal Pos.#2	Shows the sub accelerator sensor voltage value in % against the full-range 5 V.	13.3%	%

Display	Contents	Note (at idling)	Remarks
Relative Accelerator Pos.	Accelerator opening angle with a full close point learning value taken into consideration.	0%	%
Misfire monitoring(Supp)	Shows the support status of whether misfire diagnosis is executed or not.	YES	—
Misfire monitoring(Rdy)	Status of the misfire diagnosis. YES or N/A: Diagnosis is completed or not supported. NO: Diagnosis is not completed.	YES	—
Fuel system monitoring(Supp)	Shows the support status of whether fuel system diagnosis is executed or not.	YES	—
Fuel system monitoring(Rdy)	Status of the fuel system diagnosis. YES or N/A: Diagnosis is completed or not supported. NO: Diagnosis is not completed.	YES	—
Component monitoring(Supp)	Shows the support status of component diagnosis.	YES	—
Component monitoring(Rdy)	Status of the component diagnosis. YES or N/A: Diagnosis is completed or not supported. NO: Diagnosis is not completed.	YES	—
Catalyst Diagnosis(Supp)	Shows the support status of catalyst diagnosis.	YES	—
Catalyst Diagnosis(Rdy)	Status of the catalyst diagnosis. YES or N/A: Diagnosis is completed or not supported. NO: Diagnosis is not completed.	NO	—
Heated catalyst(Supp)	Shows the support status of heated catalyst diagnosis.	NO	—
Heated catalyst(Rdy)	Status of the heated catalyst diagnosis. YES or N/A: Diagnosis is completed or not supported. NO: Diagnosis is not completed.	N/A	—
Evaporative purge system(Supp)	Shows the support status of evaporative purge system diagnosis.	NO	—
Evaporative purge system(Rdy)	Status of the evaporative purge system diagnosis. YES or N/A: Diagnosis is completed or not supported. NO: Diagnosis is not completed.	N/A	—
Secondary air system(Supp)	Shows the support status of the secondary air system diagnosis.	NO	—
Secondary air system(Rdy)	Status of the secondary air system diagnosis. YES or N/A: Diagnosis is completed or not supported. NO: Diagnosis is not completed.	N/A	—
A/C system refrigerant(Supp)	Shows the support status of A/C system refrigerant diagnosis.	NO	—
A/C system refrigerant(Rdy)	Status of the A/C system refrigerant diagnosis. YES or N/A: Diagnosis is completed or not supported. NO: Diagnosis is not completed.	N/A	—
Oxygen sensor(Supp)	Shows the support status of oxygen sensor diagnosis.	YES	—
Oxygen sensor(Rdy)	Status of the oxygen sensor diagnosis. YES or N/A: Diagnosis is completed or not supported. NO: Diagnosis is not completed.	NO	—
O2 Heater Diagnosis(Supp)	Shows the support status of oxygen sensor heater diagnosis.	YES	—
O2 Heater Diagnosis(Rdy)	Status of the oxygen sensor heater diagnosis. YES or N/A: Diagnosis is completed or not supported. NO: Diagnosis is not completed.	YES	—
EGR system(Supp)	Shows the support status of EGR diagnosis.	YES	—
EGR system(Rdy)	Status of the EGR diagnosis. YES or N/A: Diagnosis is completed or not supported. NO: Diagnosis is not completed.	NO	—

Display	Contents	Note (at idling)	Remarks
Misfire monitoring(Enable)	Shows whether or not the execution condition of misfire diagnosis is met. YES: Diagnosis can be executed. NO or N/A: Diagnosis cannot be executed or is not supported.	YES	—
Misfire monitoring(Comp)	Shows whether or not the continuous misfire diagnosis is completed. YES or N/A: Diagnosis is completed or not supported. NO: Diagnosis is not completed.	NO	—
Fuel system monitoring(Enable)	Shows whether or not the execution condition of fuel system diagnosis is met. YES: Diagnosis can be executed. NO or N/A: Diagnosis cannot be executed or is not supported.	YES	—
Fuel system monitoring(Comp)	Shows whether or not the fuel system diagnosis is completed. YES or N/A: Diagnosis is completed or not supported. NO: Diagnosis is not completed.	NO	—
Component monitoring(Enable)	Shows whether or not the execution condition of component diagnosis is met. YES: Diagnosis can be executed. NO or N/A: Diagnosis cannot be executed or is not supported.	YES	—
Component monitoring(Comp)	Shows whether or not the component diagnosis is completed. YES or N/A: Diagnosis is completed or not supported. NO: Diagnosis is not completed.	NO	—
Catalyst Diagnosis(Enable)	Shows whether or not the execution condition of catalyst diagnosis is met. YES: Diagnosis can be executed. NO or N/A: Diagnosis cannot be executed or is not supported.	YES	—
Catalyst Diagnosis(Comp)	Shows whether or not the catalyst diagnosis is completed. YES or N/A: Diagnosis is completed or not supported. NO: Diagnosis is not completed.	NO	—
Heated catalyst(Enable)	Shows whether or not the execution condition of heated catalyst diagnosis is met. YES: Diagnosis can be executed. NO or N/A: Diagnosis cannot be executed or is not supported.	N/A	—
Heated catalyst(Comp)	Shows whether or not the heated catalyst diagnosis is completed. YES or N/A: Diagnosis is completed or not supported. NO: Diagnosis is not completed.	N/A	—
Evaporative purge system(Enable)	Shows whether or not the execution condition of evaporative purge system diagnosis is met. YES: Diagnosis can be executed. NO or N/A: Diagnosis cannot be executed or is not supported.	N/A	—
Evaporative purge system(Comp)	Shows whether or not the evaporative purge system diagnosis is completed. YES or N/A: Diagnosis is completed or not supported. NO: Diagnosis is not completed.	N/A	—
Secondary air system(Enable)	Shows whether or not the execution condition of the secondary air system diagnosis is met. YES: Diagnosis can be executed. NO or N/A: Diagnosis cannot be executed or is not supported.	N/A	—

Display	Contents	Note (at idling)	Remarks
Secondary air system(Comp)	Shows whether or not the secondary air system diagnosis is completed. YES or N/A: Diagnosis is completed or not supported. NO: Diagnosis is not completed.	N/A	—
A/C system refrigerant(Enable)	Shows whether or not the execution condition of A/C system refrigerant diagnosis is met. YES: Diagnosis can be executed. NO or N/A: Diagnosis cannot be executed or is not supported.	N/A	—
A/C system refrigerant(Comp)	Shows whether or not the A/C system refrigerant diagnosis is completed. YES or N/A: Diagnosis is completed or not supported. NO: Diagnosis is not completed.	N/A	—
Oxygen sensor(Enable)	Shows whether or not the execution condition of oxygen sensor diagnosis is met. YES: Diagnosis can be executed. NO or N/A: Diagnosis cannot be executed or is not supported.	YES	—
Oxygen sensor(Comp)	Shows whether or not the oxygen sensor diagnosis is completed. YES or N/A: Diagnosis is completed or not supported. NO: Diagnosis is not completed.	NO	—
O2 Heater Diagnosis(Enable)	Shows whether or not the execution condition of oxygen heater diagnosis is met. YES: Diagnosis can be executed. NO or N/A: Diagnosis cannot be executed or is not supported.	YES	—
O2 Heater Diagnosis(Comp)	Shows whether or not the oxygen heater diagnosis is completed. YES or N/A: Diagnosis is completed or not supported. NO: Diagnosis is not completed.	NO	—
EGR system(Enable)	Shows whether or not the execution condition of EGR diagnosis is met. YES: Diagnosis can be executed. NO or N/A: Diagnosis cannot be executed or is not supported.	YES	—
EGR system(Comp)	Shows whether or not the EGR diagnosis is completed. YES or N/A: Diagnosis is completed or not supported. NO: Diagnosis is not completed.	NO	—
OBD System	Shows the OBD regulation to be followed. This is the information recorded in the ECM, and it does not mean that the unit automatically judges the compliance to the OBD regulations.	OBD/OBD2	—

3. DISPLAY OF ENGINE FREEZE FRAME DATA

NOTE:
• ECM updates the freeze frame data every 0.5 seconds, and always keeps the last three records. Time-series freeze frame data includes the last three freeze frame data and the freeze frame data when the DTC is detected.
• In the time-series freeze frame data, the following freeze frame data are displayed: «Detect», «History1», «History2», and «History3».
• Time lag between the freeze frame data of «Detect» and the freeze frame data of «History1» changes within the range of 0 — 0.5 seconds. This is because the freeze frame data of «Detect» is recorded when the DTC is actually detected, while the freeze frame data of «History1» is updated every 0.5 seconds.

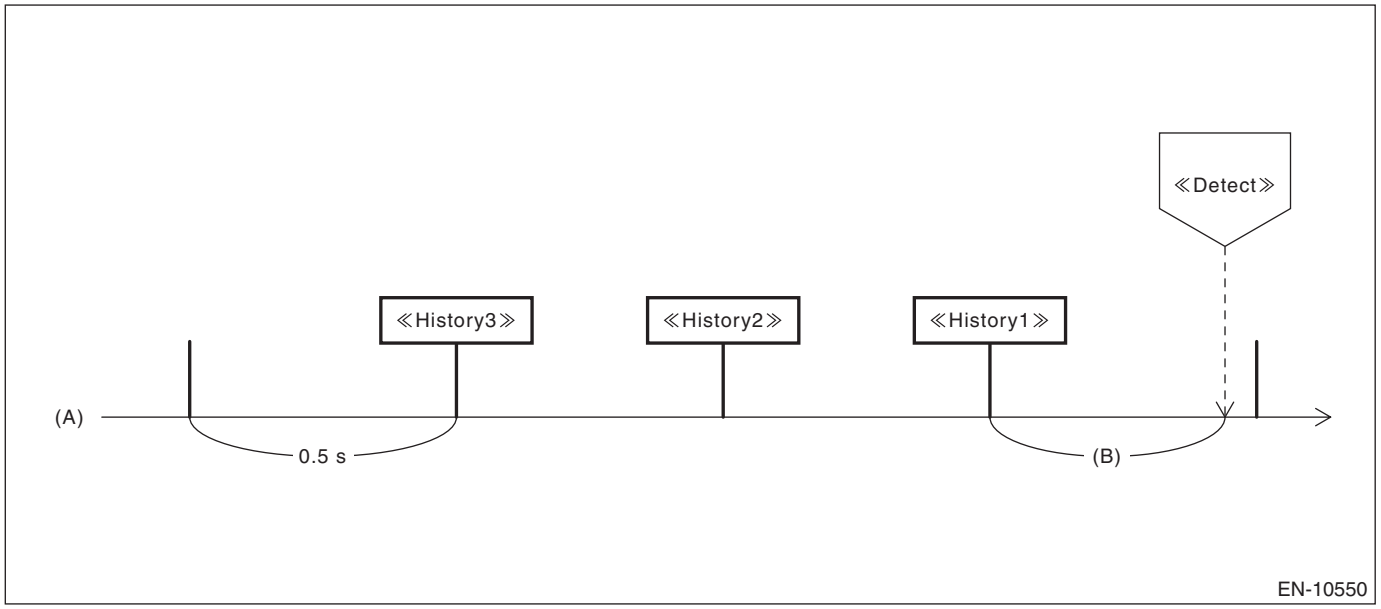

(A) 0.5 seconds timer
(B) Changes within the range of 0 — 0.5 seconds, depending on the timing of DTC detection.

• When more than one DTCs are recorded, the time-series freeze frame data is recorded only for the first-detected DTC, and for the next DTC, just the freeze frame data of «Detect» is recorded. And for the subsequent DTCs, no freeze frame data is recorded.
• When performing diagnosis, you can utilize the time-series freeze frame data to guess the vehicle status when the DTC was detected.
• For detailed operation procedures, refer to “Application help”.
• A list of the support data is shown in the following table.
1) On «Start» display, select «Diagnosis».
2) On «Vehicle selection» display, input the vehicle information and select «Confirmed».
3) On «Main Menu» display, select «Each System Check».
4) On «Select System» display, select «Engine Control System».
5) On «Select Function» display, select «Data Monitor».

Display	Contents	Remarks
Engine Speed	Calculated from crankshaft position sensor signal.	rpm
Mass Air Flow	Amount of intake air calculated from air flow sensor output value.	g/s or lb/m
Vehicle Speed	Value calculated from vehicle speed sensor output value.	km/h or MPH
Throttle Opening Angle	Throttle opening angle in percentage. Calculated from throttle position sensor output value.	%
Ignition timing adv. #1	Ignition timing control value for No. 1 cylinder. Calculated from rotation speed, intake manifold pressure, intake air temperature, water temperature, and data from knock sensor etc.	°
Engine Coolant Temperature	Value calculated from engine coolant temperature sensor output value.	°C or °F

Display	Contents	Remarks
Short Term Fuel Trim-Bank1	Air fuel ratio correction control value for the front.	%
Short Term Fuel Trim - Bank 2	Air fuel ratio correction control value for the front.	%
Long Term Fuel Trim-Bank1	Air fuel ratio learning control value for the front.	%
Long Term Fuel Trim - Bank 2	Air fuel ratio learning control value for the front.	%
Intake Manifold Absolute Pressure	Value calculated from the intake manifold pressure sensor.	kPa, mmHg, inHg or psig
Oxygen sensor #12	Rear oxygen sensor output voltage value.	V
Oxygen Sensor #22	Rear oxygen sensor output voltage value.	V
VVT Adv. Ang. Amount R	Intake AVCS advance angle amount. (RH bank)	deg
VVT Advance Target Angle Amount R	AVCS target advance angle amount for the RH bank on the intake side. This value is compared with the AVCS advance angle amount R to judge if the intake AVCS is operating properly. Response delays during the transition time.	deg
VVT Adv. Ang. Amount L	Intake AVCS advance angle amount. (LH bank)	deg
VVT Advance Target Angle Amount L	AVCS target advance angle amount for the LH bank on the intake side. This value is compared with the AVCS advance angle amount L to judge if the intake AVCS is operating properly. Response delays during the transition time.	deg
Exh. VVT Retard Ang. R	AVCS actual retard angle amount for the RH bank on the exhaust side.	deg
Ex VVT Retard Target Angle R	AVCS target retard angle amount for the RH bank on the exhaust side. This value is compared with the exhaust AVCS retard angle amount R to judge if the AVCS is operating properly. Response delays during the transition time.	deg
Exh. VVT Retard Ang. L	AVCS actual retard angle amount for the RH bank on the exhaust side.	deg
Ex VVT Retard Target Angle L	AVCS target retard angle amount for the LH bank on the exhaust side. This value is compared with the exhaust AVCS retard angle amount L to judge if the AVCS is operating properly. Response delays during the transition time.	deg
ECU ACC	ECM input power supply voltage.	V
Target Equivalence Ratio	Target air fuel ratio. (Lambda) It usually becomes 1.0 aiming at a theoretical air fuel ratio.	—
Intake Air Temperature	Intake air temperature calculated from the intake air temperature sensor output value.	°C or °F
Ambient Temperature	Ambient temperature that ECM estimates by input values from the engine coolant temperature sensor or the intake air temperature sensor etc.	°C or °F
Calculated load value	Current rate of air amount. Value assuming that the air amount at the current engine speed with the throttle fully open is 100%.	%
Absolute Load Value	Percentage of current intake air amount against the maximum air intake amount of the engine. For non-turbo engine, the value can be close to 95%, but will never be 100%. For turbo engine, this value may exceed 100% due to a boost pressure.	%
Atmosphere Pressure	Atmospheric pressure calculated from atmospheric pressure sensor output value.	kPa, mmHg, inHg or psig
Actual Throttle Opening Angle	Actual throttle opening angle. Calculated by ECM based on the throttle sensor input value.	deg
Target Throttle Opening Angle	Control value of the target throttle opening angle calculated by ECM. Shows the target value of opening angle in percentage when 0% means fully closed and 100% means fully open.	%
Relative Throttle Pos.	Current throttle opening angle in percentage against the throttle voltage (full range) that has reflected the full close point learning value. The value will be approx. 70% at full open.	%

Display	Contents	Remarks
Idle Mass Air Flow	Air volume correction value to maintain the target rotation speed in each water temperature. Corrects air volume when the water temperature changes. It includes values of the feedback correction amount and the learning value.	g/s
Idle Mass Air Flow Feedback correct	Air volume compensation value of ISC as a feedback correction to stabilize the idling speed.	g/s
ISC Learning Value	Learning control value of ISC. After warming up, learning control is executed to reduce the ISC feedback correction to zero, in order to stabilize the engine speed.	g/s
Idle A/C load correct	Air volume correction when the air conditioner is turned on. ECM corrects the air volume against the set target rotation speed when the air conditioner is turned ON.	g/s
Electric Load Feedback Val	Air volume correction when an electric load is turned on. ECM corrects the air volume against the set target rotation speed when the electric load is turned ON.	g/s
Idle dirty throttle correct	Calculates the ISC learning values on a long-term basis, and judges as an ISC dirty throttle correction when the learning value increases gradually. When carbon or other dirt accumulates on the ISC throttle and make the throttle dirty, air volume decreases when the throttle is fully closed. The ECM keeps the rotation speed so the amount of compensation air increases.	g/s
Fuel Level	Fuel level sensor output value. ECM input value. Total value of main and sub.	%
Fuel level resistance	Fuel level sensor resistance value. ECM input value.	Ω
Fuel Pump Duty	Display of the fuel pump duty ratio. Supply voltage of the fuel pump is under a DUTY control by the ECM. This value shows the DUTY ratio. While the amount of fuel supply is small, such as during idling, the DUTY value is lowered to decrease the supply voltage.	%
Commanded Evap Purge	Evaporative purge rate displayed by the OBD.	%
Purge Density Learn Value	Leaning value of the evaporation gas density purged from the canister. ECM displays the estimated leaning value.	%
Evap Purge Flow	Purge ratio when the evaporation gas is purged from the canister. ECM performs a DUTY drive to the purge solenoid valve. The amount of gas actually purged will vary depending on the vacuum pressure difference before/after the solenoid valve. Purge ratio displayed here shows current purge amount in percentage against the maximum purge amount when the maximum vacuum pressure is applied.	%
Alternator control mode	Control mode of the electric power generation voltage by the alternator. Low: Mode that controls the battery charge Mid: Mode where the battery is not charged and discharged High: Mode that fixes the voltage when the battery is charged or when an electric load is turned on ExHigh: Mode where the battery is charged during deceleration	—
Battery Terminal Voltage	Voltage value between battery terminals input from the battery sensor.	V
Battery Charge/Discharge Current	Battery charge/discharge current value input from the battery sensor. When the value is positive: The current flows to a direction that the battery is charged. When the value is negative: The current flows to a direction that the battery is discharged.	A
Estimated Battery Temperature	Battery temperature input from the battery sensor.	°C
Remaining Battery Capacity	Remaining amount of battery estimated by ECM.	%
Fuel system for Bank 1	Feedback status of air fuel ratio. Open: Feedback is stopped Closed: Feedback control is being performed	—

Display	Contents	Remarks
Fuel system for Bank 2	Feedback status of air fuel ratio. Open: Feedback is stopped Closed: Feedback control is being performed	—
A/F Sensor #1 Resistance	Front A/F sensor resistance value calculated from the front A/F sensor output value.	Ω
A/F Sensor #2 Resistance	Front A/F sensor resistance value calculated from the front A/F sensor output value.	Ω
Commanded EGR	EGR setting value is calculated by ECM and the target value is displayed.	%
EGR Error	Percentage of the difference in actual EGR steps as compared to the target EGR steps. Both a positive value and a negative value mean that it doesn't fulfill the target. When the value is positive, it opens more than the target value. When the value is negative, it opens smaller than the target value.	%
Cylinder Monitor #1	Calculates the rotation speed between certain angles on the #1 cylinder. If the rotation speed is low compared to monitor values of other cylinders, it means that the combustion is not ideal in that cylinder.	rpm
Cylinder Monitor #2	Calculates the rotation speed between certain angles on the #2 cylinder. If the rotation speed is low compared to monitor values of other cylinders, it means that the combustion is not ideal in that cylinder.	rpm
Cylinder Monitor #3	Calculates the rotation speed between certain angles on the #3 cylinder. If the rotation speed is low compared to monitor values of other cylinders, it means that the combustion is not ideal in that cylinder.	rpm
Cylinder Monitor #4	Calculates the rotation speed between certain angles on the #4 cylinder. If the rotation speed is low compared to monitor values of other cylinders, it means that the combustion is not ideal in that cylinder.	rpm
Cylinder Monitor #5	Calculates the rotation speed between certain angles on the #5 cylinder. If the rotation speed is low compared to monitor values of other cylinders, it means that the combustion is not ideal in that cylinder.	rpm
Cylinder Monitor #6	Calculates the rotation speed between certain angles on the #6 cylinder. If the rotation speed is low compared to monitor values of other cylinders, it means that the combustion is not ideal in that cylinder.	rpm
Ignition SW ON Count	Time stamp information. Number of times the ignition is ON since the vehicle was manufactured. The number of ignition ON is also recorded when a trouble code is recorded, so the comparison with that number will show you how many times the ignition has turned on since the diagnostic code was recorded.	times
Count	Time stamp information. Each unit individually counts the elapsed time since the ignition is turned ON. Master integrated unit and ECM synchronize with the master time. When synchronized: “Common” When not synchronized: “Originally”	—
Time Count	Time stamp information. Elapsed time after ignition ON. When a trouble code is recorded, the elapsed time after ignition ON is also recorded.	ms
Time Since Engine Start	Elapsed time after starting the engine.	sec
Initial Engine Oil Temp.	Oil temperature when starting the engine, which is input to ECM from the oil temperature sensor.	°C
Initial Engine Coolant Temp.	Water temperature when starting the engine, which is input to ECM from the water temperature sensor.	°C
Initial Intake Air Temp.	Intake air temperature when starting the engine, which is input to ECM from the intake air temperature sensor.	°C
Engine Starting Time	Time needed since the cranking started till the judgment of engine start is complete.	ms

Display	Contents	Remarks
Start Mask Control Check 1	Information that shows whether the start prohibition control is executed on the engine side when starting. Values other than zero means that the control is executed to prohibit the engine start.	—
Soak Time	The time the vehicle has been left since the engine stopped. This value can be used to check how long the vehicle has left, by turning the ignition switch to ON after the engine stopped.	sec
Fuel Cut Elps Time	Shows the elapsed time after experienced high rotation speed.	sec
AT drive status	Neutral condition. Information input from the inhibitor switch.	—
MT gear status	Neutral condition. Information input from the neutral switch. (MT model)	—
X Mode	Shows X mode ON or OFF status.	—
Stop Light Switch	Stop light switch signal. Set to “ON” when the stop light illuminates. ECM input value.	—
Ignition switch	Ignition switch signal. Set to ON when the ignition switch is “ON”.	—
A/C Compressor Signal	A/C compressor drive signal. Set to “ON” when the drive signal is output. ECM output value.	—
Variable Load Compressor Torque Value	Load value of the variable capacity air compressor that ECM inputs. The value that the air conditioner CM estimates and outputs.	Nm
Starter Switch	Starter switch signal. Set to “ON” when the starter is ON. ECM input value.	—
AT turbine speed	Turbine rotation speed of the transmission. Turbine rotation speed is input from the transmission CM via CAN.	—
Lock Up Status	Lock-up status of the transmission. Lock up status is input from the transmission CM via CAN.	—
P/N Signal	P/N status of the transmission. P/N range status is input from the transmission CM via CAN.	—
(Oxygen sensor #11)	Installation status of the front oxygen sensor.	—
(Oxygen sensor #12)	Installation status of the rear oxygen sensor.	—
(Oxygen sensor #21)	Installation status of the front oxygen sensor.	—
(Oxygen sensor #22)	Installation status of the rear oxygen sensor.	—
Short term fuel trim #12	Air fuel ratio correction control value for the rear.	%
Short term fuel trim #22	Air fuel ratio correction control value for the rear.	%
Absolute Throttle Pos.#2	Shows the sub throttle sensor voltage value in % against the full-range 5 V throttle sensor output voltage.	%
Accelerator Pedal Pos.#1	Shows the main accelerator sensor voltage value in % against the full-range 5 V.	%
Accelerator Pedal Pos.#2	Shows the sub accelerator sensor voltage value in % against the full-range 5 V.	%
OBD System	Shows the OBD regulation to be followed. This is the information recorded in the ECM, and it does not mean that the unit automatically judges the compliance to the OBD regulations.	—

4. V.I.N REGISTRATION

1) On «Main Menu» display, select {Each System Check}.
2) On «System Selection Menu» display, select {Engine Control System}.
3) Click the [OK] button after the information of engine type has been displayed.
4) On «Engine Diagnosis» display, select {Work Support}.
5) On «Work Support» display, select {Entry VIN}.
6) Perform the procedures shown on the display screen.

9. Read Diagnostic Trouble Code (DTC)

A: OPERATION

1. SUBARU SELECT MONITOR (NORMAL MODE)

NOTE:
• For detailed operation procedures, refer to “Application help”.
• For details concerning DTC, refer to “List of Diagnostic Trouble Code (DTC)”. <Ref. to EN(H6DO)(diag)-109, List of Diagnostic Trouble Code (DTC).>

2. GENERAL SCAN TOOL

Refer to the data denoting emission-related powertrain DTC.
For details concerning DTC, refer to “List of Diagnostic Trouble Code (DTC)”. <Ref. to EN(H6DO)(diag)-109, List of Diagnostic Trouble Code (DTC).>

NOTE:
Refer to the general scan tool manufacturer’s operation manual to access powertrain DTC (MODE $03).

10.Inspection Mode

A: PROCEDURE

Perform the diagnosis shown in the following DTC table.
When performing the diagnosis not listed in “List of Diagnostic Trouble Code (DTC)”, refer to the item on the drive cycle. <Ref. to EN(H6DO)(diag)-73, Drive Cycle.>

DTC	Item	Condition
B1570	ANTENNA	—
B1571	REFERENCE CODE INCOMPATIBILITY (IMMOBILIZER CM TO ECM)	—
B1572	IMM CIRCUIT EXCEPT ANTENNA CIRCUIT	—
B1574	KEY COMMUNICATION	—
B1575	INCORRECT IMMOBILIZER KEY	—
B1576	EGI CONTROL MODULE EEPROM	—
B1577	IMM CONTROL MODULE EEPROM	—
B1578	METER	—
P0010	"A" CAMSHAFT POSITION ACTUATOR CONTROL CIRCUIT/OPEN BANK 1	—
P0013	"B" CAMSHAFT POSITION ACTUATOR CONTROL CIRCUIT/OPEN BANK 1	—
P0020	"A" CAMSHAFT POSITION ACTUATOR CONTROL CIRCUIT/OPEN BANK 2	—
P0023	"B" CAMSHAFT POSITION ACTUATOR CONTROL CIRCUIT/OPEN BANK 2	—
P0031	A/F / O2 HEATER CONTROL CIRCUIT LOW BANK 1 SENSOR 1	—
P0032	A/F / O2 HEATER CONTROL CIRCUIT HIGH BANK 1 SENSOR 1	—
P0037	A/F / O2 HEATER CONTROL CIRCUIT LOW BANK 1 SENSOR 2	—
P0038	A/F / O2 HEATER CONTROL CIRCUIT HIGH BANK 1 SENSOR 2	—
P0051	A/F / O2 HEATER CONTROL CIRCUIT LOW BANK 2 SENSOR 1	—
P0052	A/F / O2 HEATER CONTROL CIRCUIT HIGH BANK 2 SENSOR 1	—
P0057	A/F / O2 HEATER CONTROL CIRCUIT LOW BANK 2 SENSOR 2	—
P0058	A/F / O2 HEATER CONTROL CIRCUIT LOW BANK 2 SENSOR 2	—
P0072	AMBIENT AIR TEMPERATURE SENSOR CIRCUIT "A" LOW	—
P0073	AMBIENT AIR TEMPERATURE SENSOR CIRCUIT "A" HIGH	—
P0102	MASS OR VOLUME AIR FLOW SENSOR "A" CIRCUIT LOW	—
P0103	MASS OR VOLUME AIR FLOW SENSOR "A" CIRCUIT HIGH	—
P0107	MANIFOLD ABSOLUTE PRESSURE/BAROMETRIC PRESSURE SENSOR CIRCUIT LOW	—
P0108	MANIFOLD ABSOLUTE PRESSURE/BAROMETRIC PRESSURE SENSOR CIRCUIT HIGH	—
P0112	INTAKE AIR TEMPERATURE SENSOR 1 CIRCUIT LOW BANK 1	—
P0113	INTAKE AIR TEMPERATURE SENSOR 1 CIRCUIT HIGH BANK 1	—
P0117	ENGINE COOLANT TEMPERATURE SENSOR 1 CIRCUIT LOW	—
P0118	ENGINE COOLANT TEMPERATURE SENSOR 1 CIRCUIT HIGH	—
P0122	THROTTLE/PEDAL POSITION SENSOR/SWITCH "A" CIRCUIT LOW	—
P0123	THROTTLE/PEDAL POSITION SENSOR/SWITCH "A" CIRCUIT HIGH	—
P0131	A/F / O2 SENSOR CIRCUIT LOW VOLTAGE BANK 1 SENSOR 1	—
P0132	A/F / O2 SENSOR CIRCUIT HIGH VOLTAGE BANK 1 SENSOR 1	—
P0151	A/F / O2 SENSOR CIRCUIT LOW VOLTAGE BANK 2 SENSOR 1	—
P0152	A/F / O2 SENSOR CIRCUIT HIGH VOLTAGE BANK 2 SENSOR 1	—
P0197	ENGINE OIL TEMPERATURE SENSOR "A" CIRCUIT LOW	—
P0198	ENGINE OIL TEMPERATURE SENSOR "A" CIRCUIT HIGH	—
P0201	CYLINDER 1 INJECTOR "A" CIRCUIT	—
P0202	CYLINDER 2 INJECTOR "A" CIRCUIT	—
P0203	CYLINDER 3 INJECTOR "A" CIRCUIT	—
P0204	CYLINDER 4 INJECTOR "A" CIRCUIT	—
P0205	CYLINDER 5 INJECTOR "A" CIRCUIT	—
P0206	CYLINDER 6 INJECTOR "A" CIRCUIT	—

DTC	Item	Condition
P0222	THROTTLE/PEDAL POSITION SENSOR/SWITCH "B" CIRCUIT LOW	—
P0223	THROTTLE/PEDAL POSITION SENSOR/SWITCH "B" CIRCUIT HIGH	—
P0230	FUEL PUMP PRIMARY CIRCUIT	—
P0327	KNOCK/COMBUSTION VIBRATION SENSOR 1 CIRCUIT LOW BANK 1 OR SINGLE SENSOR	—
P0328	KNOCK/COMBUSTION VIBRATION SENSOR 1 CIRCUIT HIGH BANK 1 OR SINGLE SENSOR	—
P0332	KNOCK/COMBUSTION VIBRATION SENSOR 2 CIRCUIT LOW BANK 2	—
P0333	KNOCK/COMBUSTION VIBRATION SENSOR 2 CIRCUIT HIGH BANK 2	—
P0335	CRANKSHAFT POSITION SENSOR "A" CIRCUIT	—
P0336	CRANKSHAFT POSITION SENSOR "A" CIRCUIT RANGE/PERFORMANCE	—
P0340	CAMSHAFT POSITION SENSOR "A" CIRCUIT BANK 1 OR SINGLE SENSOR	—
P0341	CAMSHAFT POSITION SENSOR "A" CIRCUIT RANGE/PERFORMANCE BANK 1 OR SINGLE SENSOR	—
P0345	CAMSHAFT POSITION SENSOR "A" CIRCUIT BANK 2	—
P0346	CAMSHAFT POSITION SENSOR "A" CIRCUIT RANGE/PERFORMANCE BANK 2	—
P0351	IGNITION COIL "A" PRIMARY CONTROL CIRCUIT/OPEN	—
P0352	IGNITION COIL "B" PRIMARY CONTROL CIRCUIT/OPEN	—
P0353	IGNITION COIL "C" PRIMARY CONTROL CIRCUIT/OPEN	—
P0354	IGNITION COIL "D" PRIMARY CONTROL CIRCUIT/OPEN	—
P0355	IGNITION COIL "E" PRIMARY CONTROL CIRCUIT/OPEN	—
P0356	IGNITION COIL "F" PRIMARY CONTROL CIRCUIT/OPEN	—
P0365	CAMSHAFT POSITION SENSOR "B" CIRCUIT BANK 1	—
P0366	CAMSHAFT POSITION SENSOR "B" CIRCUIT RANGE/PERFORMANCE BANK 1	—
P0390	CAMSHAFT POSITION SENSOR "B" CIRCUIT BANK 2	—
P0391	CAMSHAFT POSITION SENSOR "B" CIRCUIT RANGE/PERFORMANCE BANK 2	—
P0451	EVAP SYSTEM (CPC) PRESSURE SENSOR/SWITCH CIRCUIT RANGE/PERFORMANCE	—
P0452	EVAP SYSTEM (CPC) PRESSURE SENSOR/SWITCH CIRCUIT LOW	—
P0453	EVAP SYSTEM (CPC) PRESSURE SENSOR/SWITCH CIRCUIT HIGH	—
P0458	EVAP SYSTEM (CPC) PURGE CONTROL VALVE "A" CIRCUIT LOW	—
P0462	FUEL LEVEL SENSOR "A" CIRCUIT LOW	—
P0463	FUEL LEVEL SENSOR "A" CIRCUIT HIGH	—
P0512	STARTER (SWITCH) REQUEST CIRCUIT	—
P0560	SYSTEM VOLTAGE	—
P0604	INTERNAL CONTROL MODULE RANDOM ACCESS MEMORY (RAM) ERROR	—
P0605	INTERNAL CONTROL MODULE READ ONLY MEMORY (ROM) ERROR	—
P0606	CONTROL MODULE PROCESSOR	—
P060A	INTERNAL CONTROL MODULE MONITORING PROCESSOR PERFORMANCE	—
P060B	INTERNAL CONTROL MODULE A/D PROCESSING PERFORMANCE	—
P0616	STARTER RELAY "A" CIRCUIT LOW	—
P0617	STARTER RELAY "A" CIRCUIT HIGH	—
P062F	INTERNAL CONTROL MODULE EEPROM ERROR	—
P0685	ECM/PCM POWER RELAY CONTROL CIRCUIT/OPEN	—
P081A	STARTER DISABLE CIRCUIT LOW	—
P1160	THROTTLE RETURN SPRING	—
P1C00	BATTERY MONITOR MODULE "A" PERFORMANCE	—
P2101	THROTTLE ACTUATOR "A" CONTROL MOTOR CIRCUIT RANGE/PERFORMANCE	—
P2102	THROTTLE ACTUATOR "A" CONTROL MOTOR CIRCUIT LOW	—
P2103	THROTTLE ACTUATOR "A" CONTROL MOTOR CIRCUIT HIGH	—
P2109	THROTTLE/PEDAL POSITION SENSOR "A" MINIMUM STOP PERFORMANCE	—

DTC	Item	Condition
P2119	THROTTLE ACTUATOR "A" CONTROL THROTTLE BODY RANGE/PERFORMANCE	—
P2122	THROTTLE/PEDAL POSITION SENSOR/SWITCH "D" CIRCUIT LOW	—
P2123	THROTTLE/PEDAL POSITION SENSOR/SWITCH "D" CIRCUIT HIGH	—
P2127	THROTTLE/PEDAL POSITION SENSOR/SWITCH "E" CIRCUIT LOW	—
P2128	THROTTLE/PEDAL POSITION SENSOR/SWITCH "E" CIRCUIT HIGH	—
P2135	THROTTLE/PEDAL POSITION SENSOR/SWITCH "A"/"B" VOLTAGE CORRELATION	—
P2138	THROTTLE/PEDAL POSITION SENSOR/SWITCH "D"/"E" VOLTAGE CORRELATION	—
P2401	EVAP SYSTEM LEAK DETECTION PUMP CONTROL CIRCUIT LOW	«Coolant Temp.»: 5 — 45°C (41 — 113°F) «IAT Sensor #11»: 5 — 50°C (41 — 122°F)
P2419	EVAP SYSTEM SWITCHING VALVE CONTROL CIRCUIT LOW	
P2530	IGNITION SWITCH RUN POSITION CIRCUIT	—
U0073	CAN FAILURE, BUS ‘OFF’ DETECTION	—
U0077	LIN COMMUNICATION BUS "ECM/PCM" OFF	—
U0101	LOST COMMUNICATION WITH TCM	—
U0122	LOST COMMUNICATION WITH VEHICLE DYNAMICS CONTROL MODULE	—
U0155	LOST COMMUNICATION WITH INSTRUMENT PANEL CLUSTER (IPC) CONTROL MODULE	—
U0416	INVALID DATA RECEIVED FROM VEHICLE DYNAMICS CONTROL MODULE	—
U0423	INVALID DATA RECEIVED FROM INSTRUMENT PANEL CLUSTER CONTROL MODULE	—
U1712	LOST LIN COMMUNICATION WITH BATTERY "1" MONITOR MODULE	—

1. PREPARATION FOR THE INSPECTION MODE

Check that the battery voltage is 12 V or more and fuel remains approx. half [20 — 40 L (5.3 — 10.6 US gal, 4.4 — 8.8 Imp gal)].

2. SUBARU SELECT MONITOR

1) Perform the Clear Memory Mode. <Ref. to EN(H6DO)(diag)-85, Clear Memory Mode.>
2) Read the diagnostic trouble code (DTC) and check that no DTC is displayed. <Ref. to EN(H6DO)(diag)-68, Read Diagnostic Trouble Code (DTC).>

NOTE:
If the DTC is displayed on the screen, the trouble is still present. Perform the diagnosis using “Diagnostic Procedure with Diagnostic Trouble Code (DTC)”. <Ref. to EN(H6DO)(diag)-120, Diagnostic Procedure with Diagnostic Trouble Code (DTC).> After solving the DTC, repeat from step 1).
3) Start the engine, and run the engine at idle for 10 seconds or more.
4) Read the diagnostic trouble code (DTC) and check the DTC. <Ref. to EN(H6DO)(diag)-68, Read Diagnostic Trouble Code (DTC).>

NOTE:
If the DTC is displayed on the screen, the trouble is still present. Perform the diagnosis using “Diagnostic Procedure with Diagnostic Trouble Code (DTC)”. <Ref. to EN(H6DO)(diag)-120, Diagnostic Procedure with Diagnostic Trouble Code (DTC).> After solving the DTC, repeat from step 1).

3. GENERAL SCAN TOOL

NOTE:
For detailed operation procedures, refer to the general scan tool operation manual.
1) Perform the Clear Memory Mode. <Ref. to EN(H6DO)(diag)-47, MODE $04 (CLEAR/RESET EMISSION-RELATED DIAGNOSTIC INFORMATION), OPERATION, General Scan Tool.>
2) Read the diagnostic trouble code (DTC) and check that no DTC is displayed. <Ref. to EN(H6DO)(diag)-49, MODE $07, OPERATION, General Scan Tool.>

NOTE:
If the DTC is displayed on the screen, the trouble is still present. Perform the diagnosis using “Diagnostic Procedure with Diagnostic Trouble Code (DTC)”. <Ref. to EN(H6DO)(diag)-120, Diagnostic Procedure with Diagnostic Trouble Code (DTC).> After solving the DTC, repeat from step 1).
3) Start the engine, and run the engine at idle for 10 seconds or more.
4) Read the diagnostic trouble code (DTC) and check the DTC. <Ref. to EN(H6DO)(diag)-49, MODE $07, OPERATION, General Scan Tool.>

NOTE:
If the DTC is displayed on the screen, the trouble is still present. Perform the diagnosis using “Diagnostic Procedure with Diagnostic Trouble Code (DTC)”. <Ref. to EN(H6DO)(diag)-120, Diagnostic Procedure with Diagnostic Trouble Code (DTC).> After solving the DTC, repeat from step 1).

11.Drive Cycle

A: PROCEDURE

It is necessary to perform the drive cycle listed below if DTC is not found in the Inspection Mode. It is possible to complete diagnosis of the DTC by performing the indicated drive cycle. After the repair for the DTC, perform a necessary drive cycle and make sure the function recovers and the DTC is recorded.

1. PREPARATION FOR DRIVE CYCLE

1) Check that the battery voltage is 12 V or more and fuel remains approx. half [20 — 40 L (5.3 — 10.6 US gal, 4.4 — 8.8 Imp gal)].
2) After performing the diagnostics and Clear Memory Mode, check that no DTC remains. <Ref. to EN(H6DO)(diag)-85, Clear Memory Mode.>

NOTE:
Perform the drive cycle after warming up the engine except when the engine coolant temperature at engine start is specified.

2. DRIVE CYCLE A

DTC	Item	Condition
P0128	COOLANT THERMOSTAT (ENGINE COOLANT TEMPERATURE BELOW THERMOSTAT REGULATING TEMPERATURE)	—
P0141	O2 SENSOR HEATER CIRCUIT BANK 1 SENSOR 2	—
P014C	A/F / O2 SENSOR SLOW RESPONSE - RICH TO LEAN BANK 1 SENSOR 1	—
P014D	A/F / O2 SENSOR SLOW RESPONSE - LEAN TO RICH BANK 1 SENSOR 1	—
P014E	A/F / O2 SENSOR SLOW RESPONSE - RICH TO LEAN BANK 2 SENSOR 1	—
P014F	A/F / O2 SENSOR SLOW RESPONSE - LEAN TO RICH BANK 2 SENSOR 1	—
P015A	A/F / O2 SENSOR DELAYED RESPONSE - RICH TO LEAN BANK 1 SENSOR 1	—
P015B	A/F / O2 SENSOR DELAYED RESPONSE - LEAN TO RICH BANK 1 SENSOR 1	—
P015C	A/F / O2 SENSOR DELAYED RESPONSE - RICH TO LEAN BANK 2 SENSOR 1	—
P015D	A/F / O2 SENSOR DELAYED RESPONSE - LEAN TO RICH BANK 2 SENSOR 1	—
P0161	O2 SENSOR HEATER CIRCUIT BANK 2 SENSOR 2	—
P0171	SYSTEM TOO LEAN BANK 1	Complete diagnosis with drive cycle B or C as well.
P0172	SYSTEM TOO RICH BANK 1	Complete diagnosis with drive cycle B or C as well.
P0174	SYSTEM TOO LEAN BANK 2	Complete diagnosis with drive cycle B or C as well.
P0175	SYSTEM TOO RICH BANK 2	Complete diagnosis with drive cycle B or C as well.
P0300	RANDOM/MULTIPLE CYLINDER MISFIRE DETECTED	Complete diagnosis with drive cycle B or C as well.
P0301	CYLINDER 1 MISFIRE DETECTED	Complete diagnosis with drive cycle B or C as well.
P0302	CYLINDER 2 MISFIRE DETECTED	Complete diagnosis with drive cycle B or C as well.
P0303	CYLINDER 3 MISFIRE DETECTED	Complete diagnosis with drive cycle B or C as well.
P0304	CYLINDER 4 MISFIRE DETECTED	Complete diagnosis with drive cycle B or C as well.
P0305	CYLINDER 5 MISFIRE DETECTED	Complete diagnosis with drive cycle B or C as well.
P0306	CYLINDER 6 MISFIRE DETECTED	Complete diagnosis with drive cycle B or C as well.
P0420	CATALYST SYSTEM EFFICIENCY BELOW THRESHOLD BANK 1	—
P0430	CATALYST SYSTEM EFFICIENCY BELOW THRESHOLD BANK 2	—

DTC	Item	Condition
P0459	EVAP SYSTEM (CPC) PURGE CONTROL VALVE "A" CIRCUIT HIGH	—
P2096	POST CATALYST FUEL TRIM SYSTEM TOO LEAN BANK 1	Complete diagnosis with drive cycle B or C as well.
P2097	POST CATALYST FUEL TRIM SYSTEM TOO RICH BANK 1	Complete diagnosis with drive cycle B or C as well.
P2098	POST CATALYST FUEL TRIM SYSTEM TOO LEAN BANK 2	Complete diagnosis with drive cycle B or C as well.
P2099	POST CATALYST FUEL TRIM SYSTEM TOO RICH BANK 2	Complete diagnosis with drive cycle B or C as well.
P2195	A/F /O2 SENSOR SIGNAL BIASED/STUCK LEAN BANK 1 SENSOR 1	—
P2196	A/F /O2 SENSOR SIGNAL BIASED/STUCK RICH BANK 1 SENSOR 1	—
P2197	A/F / O2 SENSOR SIGNAL BIASED/STUCK LEAN BANK 2 SENSOR 1	—
P2198	A/F / O2 SENSOR SIGNAL BIASED/STUCK RICH BANK 2 SENSOR 1	—

Diagnostic procedure:
1) Drive for 20 minutes or more at a constant speed of 80 km/h (50 MPH) or more.
2) Stop the vehicle and idle for one minute.
3) Read the temporary code using the Subaru Select Monitor or general scan tool. <Ref. to EN(H6DO)(diag)-68, OPERATION, Read Diagnostic Trouble Code (DTC).>

3. DRIVE CYCLE B

DTC	Item	Condition
P0125	INSUFFICIENT COOLANT TEMPERATURE FOR CLOSED LOOP FUEL CONTROL	«Coolant Temp.» at engine start: Less than –15°C (5°F)
P0137	O2 SENSOR CIRCUIT LOW VOLTAGE BANK 1 SENSOR 2	—
P0138	O2 SENSOR CIRCUIT HIGH VOLTAGE BANK 1 SENSOR 2	—
P0171	SYSTEM TOO LEAN BANK 1	Complete diagnosis with drive cycle A or C as well.
P0172	SYSTEM TOO RICH BANK 1	Complete diagnosis with drive cycle A or C as well.
P0174	SYSTEM TOO LEAN BANK 2	Complete diagnosis with drive cycle A or C as well.
P0175	SYSTEM TOO RICH BANK 2	Complete diagnosis with drive cycle A or C as well.
P0300	RANDOM/MULTIPLE CYLINDER MISFIRE DETECTED	Complete diagnosis with drive cycle A or C as well.
P0301	CYLINDER 1 MISFIRE DETECTED	Complete diagnosis with drive cycle A or C as well.
P0302	CYLINDER 2 MISFIRE DETECTED	Complete diagnosis with drive cycle A or C as well.
P0303	CYLINDER 3 MISFIRE DETECTED	Complete diagnosis with drive cycle A or C as well.
P0304	CYLINDER 4 MISFIRE DETECTED	Complete diagnosis with drive cycle A or C as well.
P0305	CYLINDER 5 MISFIRE DETECTED	Complete diagnosis with drive cycle A or C as well.
P0306	CYLINDER 6 MISFIRE DETECTED	Complete diagnosis with drive cycle A or C as well.
P0500	VEHICLE SPEED SENSOR "A" CIRCUIT	—
P0506	IDLE CONTROL SYSTEM RPM - LOWER THAN EXPECTED	—
P0507	IDLE CONTROL SYSTEM RPM - HIGHER THAN EXPECTED	—
P0700	TRANSMISSION CONTROL SYSTEM (MIL REQUEST)	—
P2096	POST CATALYST FUEL TRIM SYSTEM TOO LEAN BANK 1	Complete diagnosis with drive cycle A or C as well.

DTC	Item	Condition
P2097	POST CATALYST FUEL TRIM SYSTEM TOO RICH BANK 1	Complete diagnosis with drive cycle A or C as well.
P2098	POST CATALYST FUEL TRIM SYSTEM TOO LEAN BANK 2	Complete diagnosis with drive cycle A or C as well.
P2099	POST CATALYST FUEL TRIM SYSTEM TOO RICH BANK 2	Complete diagnosis with drive cycle A or C as well.
P219A	BANK 1 AIR-FUEL RATIO IMBALANCE	Complete diagnosis with drive cycle C as well.
P219B	BANK 2 AIR-FUEL RATIO IMBALANCE	Complete diagnosis with drive cycle C as well.

Diagnostic procedure:
1) Drive at 10 km/h (6 MPH) or more.
2) Stop the vehicle and idle for ten minutes.
3) Read the temporary code using the Subaru Select Monitor or general scan tool. <Ref. to EN(H6DO)(diag)-68, OPERATION, Read Diagnostic Trouble Code (DTC).>

4. DRIVE CYCLE C

DTC	Item	Condition
P000A	"A" CAMSHAFT POSITION SLOW RESPONSE BANK 1	—
P000B	"B" CAMSHAFT POSITION SLOW RESPONSE BANK 1	—
P000C	"A" CAMSHAFT POSITION SLOW RESPONSE BANK 2	—
P000D	"B" CAMSHAFT POSITION SLOW RESPONSE BANK 2	—
P0011	"A" CAMSHAFT POSITION - TIMING OVER-ADVANCED OR SYSTEM PERFORMANCE BANK 1	—
P0014	"B" CAMSHAFT POSITION - TIMING OVER-ADVANCED OR SYSTEM PERFORMANCE BANK 1	—
P0021	"A" CAMSHAFT POSITION - TIMING OVER-ADVANCED OR SYSTEM PERFORMANCE BANK 2	—
P0024	"B" CAMSHAFT POSITION - TIMING OVER-ADVANCED OR SYSTEM PERFORMANCE BANK 2	—
P0030	A/F / O2 HEATER CONTROL CIRCUIT BANK 1 SENSOR 1	—
P0068	MAP/MAF - THROTTLE POSITION CORRELATION	—
P0101	MASS OR VOLUME AIR FLOW SENSOR "A" CIRCUIT RANGE/PERFORMANCE	—
P0134	A/F / O2 SENSOR CIRCUIT NO ACTIVITY DETECTED BANK 1 SENSOR 1	—
P013A	O2 SENSOR SLOW RESPONSE - RICH TO LEAN BANK 1 SENSOR 2	—
P013B	O2 SENSOR SLOW RESPONSE - LEAN TO RICH BANK 1 SENSOR 2	—
P013C	O2 SENSOR SLOW RESPONSE - RICH TO LEAN BANK 2 SENSOR 2	—
P013D	O2 SENSOR SLOW RESPONSE - LEAN TO RICH BANK 2 SENSOR 2	—
P013E	O2 SENSOR DELAYED RESPONSE - RICH TO LEAN BANK 1 SENSOR 2	—
P013F	O2 SENSOR DELAYED RESPONSE - LEAN TO RICH BANK 1 SENSOR 2	—
P014A	O2 SENSOR DELAYED RESPONSE - RICH TO LEAN BANK 2 SENSOR 2	—
P014B	O2 SENSOR DELAYED RESPONSE - LEAN TO RICH BANK 2 SENSOR 2	—
P0171	SYSTEM TOO LEAN BANK 1	Complete diagnosis with drive cycle A or B as well.
P0172	SYSTEM TOO RICH BANK 1	Complete diagnosis with drive cycle A or B as well.
P0174	SYSTEM TOO LEAN BANK 2	Complete diagnosis with drive cycle A or B as well.
P0175	SYSTEM TOO RICH BANK 2	Complete diagnosis with drive cycle A or B as well.
P0300	RANDOM/MULTIPLE CYLINDER MISFIRE DETECTED	Complete diagnosis with drive cycle A or B as well.

Drive Cycle

DTC	Item	Condition
P0301	CYLINDER 1 MISFIRE DETECTED	Complete diagnosis with drive cycle A or B as well.
P0302	CYLINDER 2 MISFIRE DETECTED	Complete diagnosis with drive cycle A or B as well.
P0303	CYLINDER 3 MISFIRE DETECTED	Complete diagnosis with drive cycle A or B as well.
P0304	CYLINDER 4 MISFIRE DETECTED	Complete diagnosis with drive cycle A or B as well.
P0305	CYLINDER 5 MISFIRE DETECTED	Complete diagnosis with drive cycle A or B as well.
P0306	CYLINDER 6 MISFIRE DETECTED	Complete diagnosis with drive cycle A or B as well.
P0400	EGR "A" FLOW	—
P0851	PARK/NEUTRAL SWITCH INPUT CIRCUIT LOW	—
P0852	PARK/NEUTRAL SWITCH INPUT CIRCUIT HIGH	—
P1449	EVAP SYSTEM CLOG DETECTED (AIR FILTER)	—
P1492	COIL 1 EGR "A" CONTROL CIRCUIT LOW	—
P1493	COIL 1 EGR "A" CONTROL CIRCUIT HIGH	—
P1494	COIL 2 EGR "A" CONTROL CIRCUIT LOW	—
P1495	COIL 2 EGR "A" CONTROL CIRCUIT HIGH	—
P1496	COIL 3 EGR "A" CONTROL CIRCUIT LOW	—
P1497	COIL 3 EGR "A" CONTROL CIRCUIT HIGH	—
P1498	COIL 4 EGR "A" CONTROL CIRCUIT LOW	—
P1499	COIL 4 EGR "A" CONTROL CIRCUIT HIGH	—
P2096	POST CATALYST FUEL TRIM SYSTEM TOO LEAN BANK 1	Complete diagnosis with drive cycle A or B as well.
P2097	POST CATALYST FUEL TRIM SYSTEM TOO RICH BANK 1	Complete diagnosis with drive cycle A or B as well.
P2098	POST CATALYST FUEL TRIM SYSTEM TOO LEAN BANK 2	Complete diagnosis with drive cycle A or B as well.
P2099	POST CATALYST FUEL TRIM SYSTEM TOO RICH BANK 2	Complete diagnosis with drive cycle A or B as well.
P219A	BANK 1 AIR-FUEL RATIO IMBALANCE	Complete diagnosis with drive cycle B as well.
P219B	BANK 2 AIR-FUEL RATIO IMBALANCE	Complete diagnosis with drive cycle B as well.
P2270	O2 SENSOR SIGNAL BIASED/STUCK LEAN BANK 1 SENSOR 2	—
P2271	O2 SENSOR SIGNAL BIASED/STUCK RICH BANK 1 SENSOR 2	—
P2272	O2 SENSOR SIGNAL BIASED/STUCK LEAN BANK 2 SENSOR 2	—
P2273	O2 SENSOR SIGNAL BIASED/STUCK RICH BANK 2 SENSOR 2	—

Diagnostic procedure:
1) Drive according to the drive pattern described below.

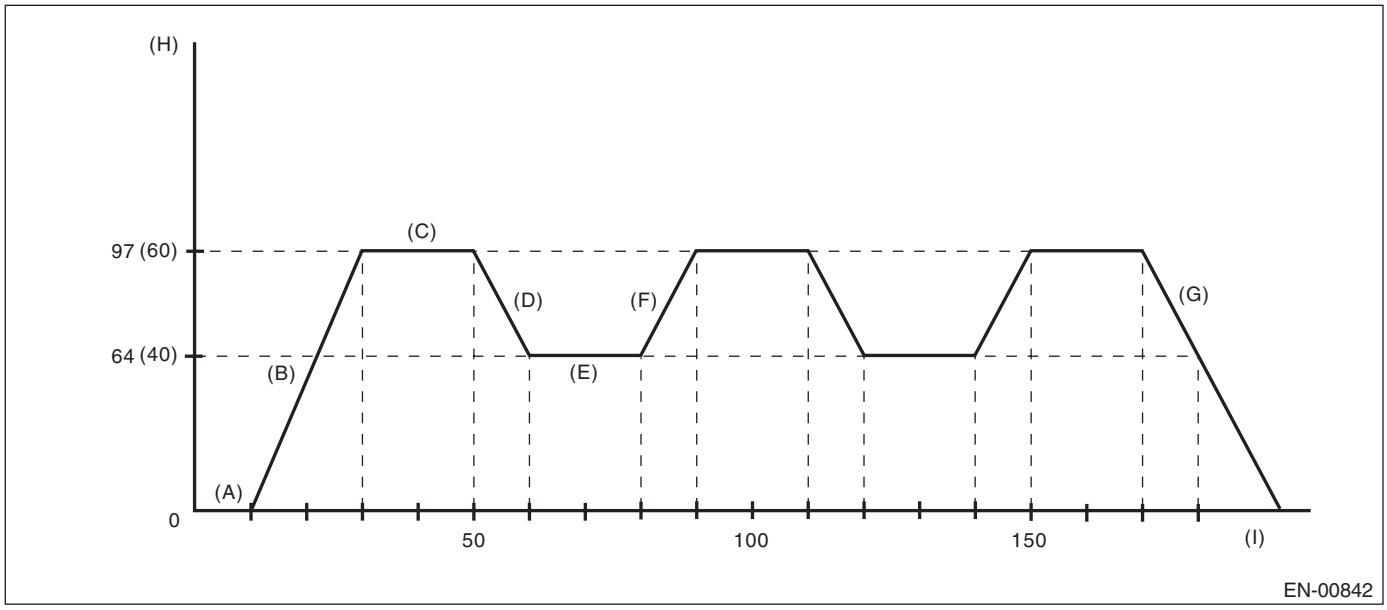

(A)	Shift the select lever to “P” range or the shift lever to the neutral position, and let the engine idle for 10 seconds or more.	(D)	Decelerate with fully closed throttle to 64 km/h (40 MPH) or less.	(G)	Stop vehicle with the throttle fully closed.
(B)	Accelerate to 97 km/h (60 MPH) or more within 20 seconds.	(E)	Drive for 20 seconds or more at 64 km/h (40 MPH) or less.	(H)	Vehicle speed km/h (MPH)
(C)	Drive for 20 seconds or more at 97 km/h (60 MPH) or more.	(F)	Accelerate to 97 km/h (60 MPH) or more within 10 seconds.	(I)	Sec.

2) Read the temporary code using the Subaru Select Monitor or general scan tool. <Ref. to EN(H6DO)(diag)-68, OPERATION, Read Diagnostic Trouble Code (DTC).>

NOTE:
After driving, use the Subaru Select Monitor to check that “Imbalance Check 3 R” indicates “1” and read the temporary code. If “Imbalance Check 3 R” indicates “0”, the diagnosis has not been completed. In this case, repeat driving until the reading is “1”.

5. DRIVE CYCLE E

DTC	Item	Condition
P0461	FUEL LEVEL SENSOR "A" CIRCUIT RANGE/PERFORMANCE	—

Diagnostic procedure:
1) Make sure that the battery voltage is 10.9 V or more.
2) Perform the Clear Memory Mode. <Ref. to EN(H6DO)(diag)-85, Clear Memory Mode.>
3) Drive for approximately 30 L (7.9 US gal, 6.6 Imp gal) of fuel.

NOTE:
- It is acceptable to drive the vehicle intermittently.
- Do not disconnect the battery terminals while diagnosing. (Data will be cleared by disconnecting the battery terminals.)

4) Read the temporary code using the Subaru Select Monitor or general scan tool. <Ref. to EN(H6DO)(diag)-68, OPERATION, Read Diagnostic Trouble Code (DTC).>

6. DRIVE CYCLE F

DTC	Item	Condition
P0111	INTAKE AIR TEMPERATURE SENSOR 1 CIRCUIT RANGE/ PERFORMANCE BANK 1	• 6 hours have elapsed since ignition switch is OFF under a completely warmed up condition. • For models with block heater, at least 6 hours must have elapsed without operating the block heater.

Diagnostic procedure:
1) With the ignition switch ON (engine stopped), read the values in «Coolant Temp.» and «Intake Air Temp.». <Ref. to EN(H6DO)(diag)-50, DISPLAY CURRENT ENGINE DATA, OPERATION, Subaru Select Monitor.>
2) If the values from step 1) satisfy the following conditions, idle the engine for two minutes or more.

Condition:
|Engine coolant temperature — Intake air temperature| ≤ 5°C (9°F)

NOTE:
- If the conditions are not satisfied, turn the ignition switch to OFF and wait until the parameters are satisfied.
- Hold the select lever in “P” range or “N” range at idling.

3) Drive according to the drive pattern described below.

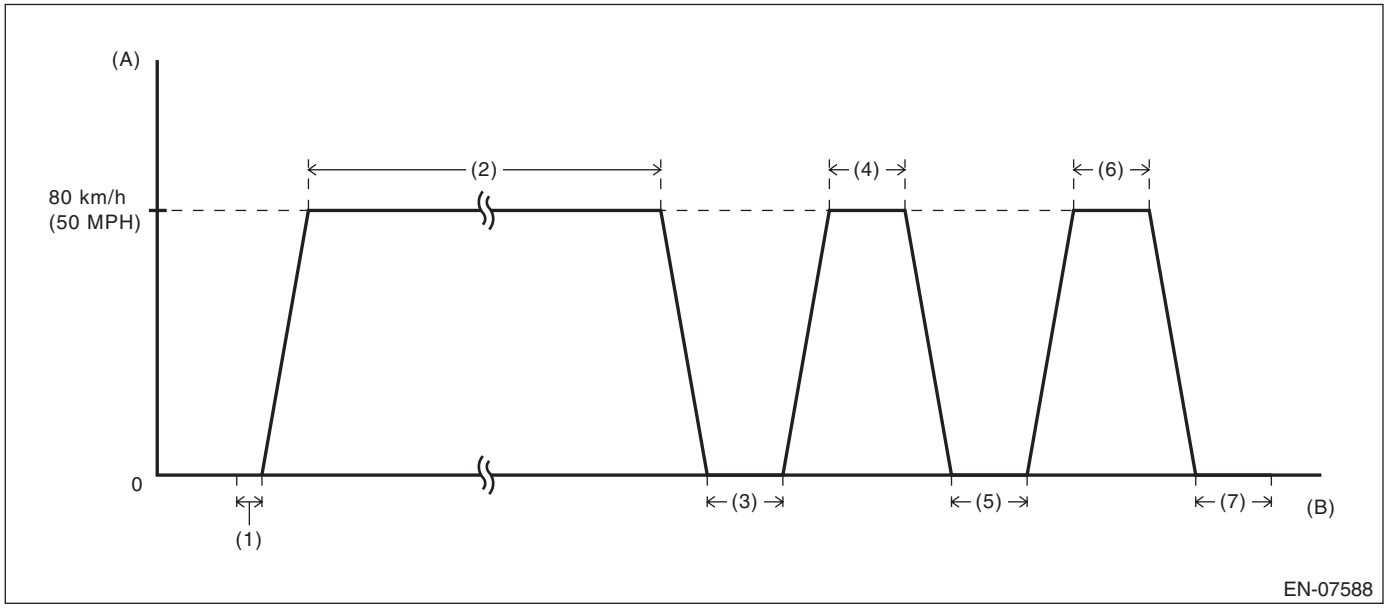

(A)	Vehicle speed	(B)	Elapsed time		
(1)	Idle the engine for 2 minutes or more.	(4)	Drive for 30 seconds or more at a constant speed of 80 km/h (50 MPH) or more.	(6)	Drive for 30 seconds or more at a constant speed of 80 km/h (50 MPH) or more.
(2)	Drive for a total period of 15 minutes or more at a speed of 80 km/h (50 MPH) or more.	(5)	Stop the vehicle and idle for 30 seconds or more.	(7)	Stop the vehicle and idle for 30 seconds.
(3)	Stop the vehicle and idle for 30 seconds or more.				

NOTE:
- In pattern (2), it is acceptable to decelerate to less than 80 km/h (50 MPH) or to stop the vehicle depending on the traffic conditions. Drive the vehicle at 80 km/h (50 MPH) or more until the total driving time reaches or exceeds 15 minutes.
- There is no given transition time between idling and cruising.
- Driving at constant speed only on a downhill causes smaller engine load and may result in failure to obtain a right diagnostic result.

• If the ignition switch is turned to OFF during driving cycle F, perform this driving cycle again after satisfying the conditions listed in the table.
4) Read the temporary code using the Subaru Select Monitor or general scan tool. <Ref. to EN(H6DO)(diag)-68, OPERATION, Read Diagnostic Trouble Code (DTC).>

7. DRIVE CYCLE H

DTC	Item	Condition
P0071	AMBIENT AIR TEMPERATURE SENSOR CIRCUIT "A" RANGE/ PERFORMANCE	• 6 hours have elapsed since ignition switch is OFF under a completely warmed up condition. • For models with block heater, at least 6 hours must have elapsed without operating the block heater.
P0116	ENGINE COOLANT TEMPERATURE SENSOR 1 CIRCUIT RANGE/PERFORMANCE	• 6 hours have elapsed since ignition switch is OFF under a completely warmed up condition. • For models with block heater, at least 6 hours must have elapsed without operating the block heater.
P0196	ENGINE OIL TEMPERATURE SENSOR "A" RANGE/PERFORMANCE	• 6 hours have elapsed since ignition switch is OFF under a completely warmed up condition. • For models with block heater, at least 6 hours must have elapsed without operating the block heater.
P0451	EVAP SYSTEM (CPC) PRESSURE SENSOR/SWITCH CIRCUIT RANGE/PERFORMANCE	60 seconds have elapsed since ignition switch is OFF.
P050A	COLD START IDLE CONTROL SYSTEM PERFORMANCE	—
P050B	COLD START IGNITION TIMING PERFORMANCE	—

Diagnostic procedure:
1) With the ignition switch ON (engine stopped), read the values in «Coolant Temp.» and «Intake Air Temp.». <Ref. to EN(H6DO)(diag)-50, DISPLAY CURRENT ENGINE DATA, OPERATION, Subaru Select Monitor.>
2) If the values from step 1) satisfy the following conditions, idle the engine for two minutes or more.

Condition:
|Engine coolant temperature — Intake air temperature| ≤ 5°C (9°F)

NOTE:
• If the conditions are not satisfied, turn the ignition switch to OFF and wait until the parameters are satisfied.
• Hold the select lever in “P” range or “N” range at idling.
3) Read the temporary code using the Subaru Select Monitor or general scan tool. <Ref. to EN(H6DO)(diag)-68, OPERATION, Read Diagnostic Trouble Code (DTC).>

8. DRIVE CYCLE I

DTC	Item	Condition
P0455	EVAP SYSTEM (CPC) LEAK DETECTED (LARGE LEAK)	«Coolant Temp.»: 5 — 45°C (41 — 113°F) «Intake Air Temp.»: 5 — 50°C (41 — 122°F)
P0456	EVAP SYSTEM (CPC) LEAK DETECTED (VERY SMALL LEAK)	
P1451	EVAP SYSTEM CLOG DETECTED (PIPE)	
P2402	EVAP SYSTEM LEAK DETECTION PUMP CONTROL CIRCUIT HIGH	
P2404	EVAP SYSTEM LEAK DETECTION PUMP SENSE CIRCUIT RANGE/PERFORMANCE	
P2420	EVAP SYSTEM SWITCHING VALVE CONTROL CIRCUIT HIGH	

CAUTION:
Be careful of the state of the battery when performing the drive cycle I consecutively. Performing the drive cycle I consecutively without the engine running may cause a low battery voltage and battery discharge.

NOTE:
• If it is necessary to perform drive cycle I consecutively, drive the vehicle under the following conditions to release accumulated evaporating gas. Performing the drive cycle I consecutively without starting the engine causes a large amount of evaporating gas to accumulate in the canister, which hinders an accurate diagnosis.
  • After engine is warmed up.
  • Drive for 10 minutes or more at a speed of 48 km/h (30 MPH) or more (duration of drive can be an accumulation)
• To obtain an accurate diagnostic result, perform the procedures according to the following points.
  • Do not refuel gas immediately before performing drive cycle I. There will be a large amount of evaporating gas immediately after refuel, which may cause a less accurate diagnostic performance.
  • Do not shake the vehicle while performing drive cycle I. Shaking the vehicle causes evaporating gas to increase inside the fuel tank, which may cause a less accurate diagnostic performance.
  • Do not perform any service operation including installation or removal of parts or connectors while performing drive cycle I. Performing service operation could affect on the functions of related parts, which may cause a less accurate diagnostic performance.
• Perform MODE $08 when using a general scan tool.

Diagnostic procedure:
1) Prepare the Subaru Select Monitor kit. <Ref. to EN(H6DO)(diag)-10, PREPARATION TOOL, General Description.>
2) Prepare PC with Subaru Select Monitor installed.
3) Connect the USB cable to the DST-i and the USB port on the personal computer (dedicated port for the Subaru Select Monitor).

NOTE:
The dedicated port for the Subaru Select Monitor means the USB port which was used to install the Subaru Select Monitor.
4) Connect the diagnosis cable to DST-i.
5) Connect the DST-i to the data link connector located in the lower portion of the instrument panel (on the driver's side).

CAUTION:
Do not connect the scan tools except for Subaru Select Monitor and general scan tool.

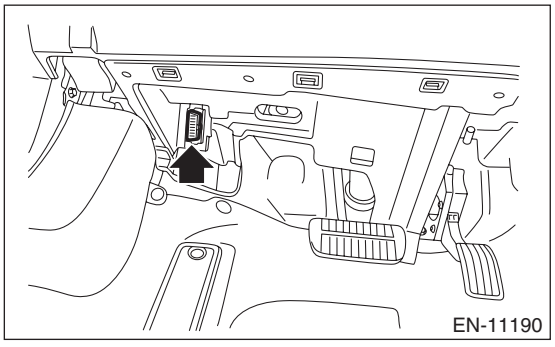

6) Start the PC.
7) Turn the ignition switch to ON (engine OFF) and run the "PC application for Subaru Select Monitor".
8) On «Main Menu» display, select «Each System Check».
9) On «System Selection Menu» display, select «Engine Control System».
10) Click the [OK] button after the information of engine type has been displayed.
11) On «Engine Diagnosis» display, select «OBD System».
12) On «OBD Menu» display, select «Evaporative System Leak Test».
13) On «Evaporative System Leak Test» display, select «Evaporative System Leak Test».
14) On «Evaporative System Leak Test is running. Press Cancel to exit this function.» display, click the [OK] button to perform evaporative system leak test.

15) When «Conditions have been enabled to control this function. Turn the ignition switch off to terminate the test.» display appears, wait for 30 minutes without clicking the [OK] button.

CAUTION:
Do not leave the vehicle for an extended period of time after the test is complete. This may cause early deterioration of the battery or discharged battery.

NOTE:
• Clicking the [OK] button bring the «Evaporative System Leak Test» display back, although the test is continuing.
• The Subaru Select Monitor screen does not change after the evaporative system leak test is complete or when the test is aborted by turning off the ignition switch.
• If «Test conditions are not correct» display appears, use Subaru Select Monitor to check that the values in «Coolant Temp.» and «Intake Air Temp.» are within the specified range. If the conditions are satisfied, make the necessary preparation for the drive cycle again. <Ref. to EN(H6DO)(diag)-73, PREPARATION FOR DRIVE CYCLE, PROCEDURE, Drive Cycle.>
16) After 30 minutes passed from the start of step 14), click the [OK] button to return to the «Evaporative System Leak Test» display.
17) Return to the «OBD Menu» display, then select «Result of on-board monitor test».
18) In the «Result of on-board monitor test», check TID $C1 — $CA of MID $3C.

NOTE:
Perform MODE $06 and check when using a general scan tool.

Result of on-board monitor test

Display	Details	Remarks
$0000 is stored in all Val.	During the evaporative system leak test, the test conditions were not met and the test was canceled.	Once the test conditions are met, perform the test again.
All Val. are stored with values and OK is set to all the results.	Evaporative system leak test is completed correctly.	While the ignition switch is ON, read the pending code using the Subaru Select Monitor.
Some results were no good.	The evaporative system leak test completed successfully but the results were faulty.	While the ignition switch is ON, read the pending code using the Subaru Select Monitor.

19) When the evaporative system leak test is completed correctly, read the pending code with the ignition switch turned to ON position. If the DTC is recorded, check the appropriate DTC. <Ref. to EN(H6DO)(diag)-68, OPERATION, Read Diagnostic Trouble Code (DTC).>

NOTE:
• Perform MODE $07 when using a general scan tool.
• The pending code will be cleared by turning ignition switch to OFF.

9. DRIVE CYCLE J

DTC	Item	Condition
P2610	ECM/PCM ENGINE OFF TIMER PERFORMANCE	—

Diagnostic procedure:
1) Idle the engine for 15 minutes or more.
2) Turn the ignition switch to OFF.
3) After at least 10 hours passed from the start of step 2), read the temporary code using the Subaru Select Monitor or general scan tool. <Ref. to EN(H6DO)(diag)-68, OPERATION, Read Diagnostic Trouble Code (DTC).>

10.DRIVE CYCLE N

DTC	Item	Condition
P0016	CRANKSHAFT POSITION - CAMSHAFT POSITION CORRELATION BANK 1 SENSOR A	«Coolant Temp.»: 80°C (176°F) or more
P0017	CRANKSHAFT POSITION - CAMSHAFT POSITION CORRELATION BANK 1 SENSOR B	
P0018	CRANKSHAFT POSITION - CAMSHAFT POSITION CORRELATION BANK 2 SENSOR A	
P0019	CRANKSHAFT POSITION - CAMSHAFT POSITION CORRELATION BANK 2 SENSOR B	

WARNING:
When performing drive cycle N on a public road, pay sufficient attention to the traffic condition and give the highest priority to safe driving.
1) Check the data in condition column of table by using the Subaru Select Monitor or general scan tool.

NOTE:
• Subaru Select Monitor
For detailed operation procedures, refer to “Read Current Data For Engine”. <Ref. to EN(H6DO)(diag)-50, DISPLAY CURRENT ENGINE DATA, OPERATION, Subaru Select Monitor.>
• General scan tool
For detailed operation procedures, refer to the general scan tool operation manual.
2) While the conditions in the list are satisfied, race the engine at the speed of approx. 2,500 rpm for 40 seconds or more.
3) Start the vehicle, then accelerate the vehicle to 50 km/h (31.1 MPH) or more.
4) When the speed reaches 50 km/h (31.1 MPH) or more, release the accelerator pedal and brake pedal to decelerate the vehicle without shifting the gear. At this time, select an appropriate gear beforehand so that the engine speed can decrease from 2,500 rpm to 1,900 rpm for 5 seconds or more.

NOTE:
• The vehicle speed does not matter so long as the engine speed can maintain from 2,500 rpm to 1,900 rpm for 5 seconds or more.
Example: On a downhill grade, it can be performed with a low speed gear and at a low vehicle speed.
• When it is performed with the electrical load such as the air conditioner, etc. turned OFF or the vehicle driven on a downhill grade, the engine speed decreases slowly. Therefore, the continuous time can be maintained easily.
5) Bring the vehicle to a stop in a safe place, and idle it for 5 minutes or more.

NOTE:
Driving method while vehicle is driven to a stop at safe place is not restricted.

6) With the vehicle idling, read the temporary diagnostic code of DTC using Subaru Select Monitor or general scan tool.

NOTE:
• For detailed operation procedures, refer to “Read Diagnostic Trouble Code (DTC)”. <Ref. to EN(H6DO)(diag)-68, Read Diagnostic Trouble Code (DTC).>
• In the step 6), if the DTC is not displayed on the Subaru Select Monitor or general scan tool display screen, the trouble is resolved.

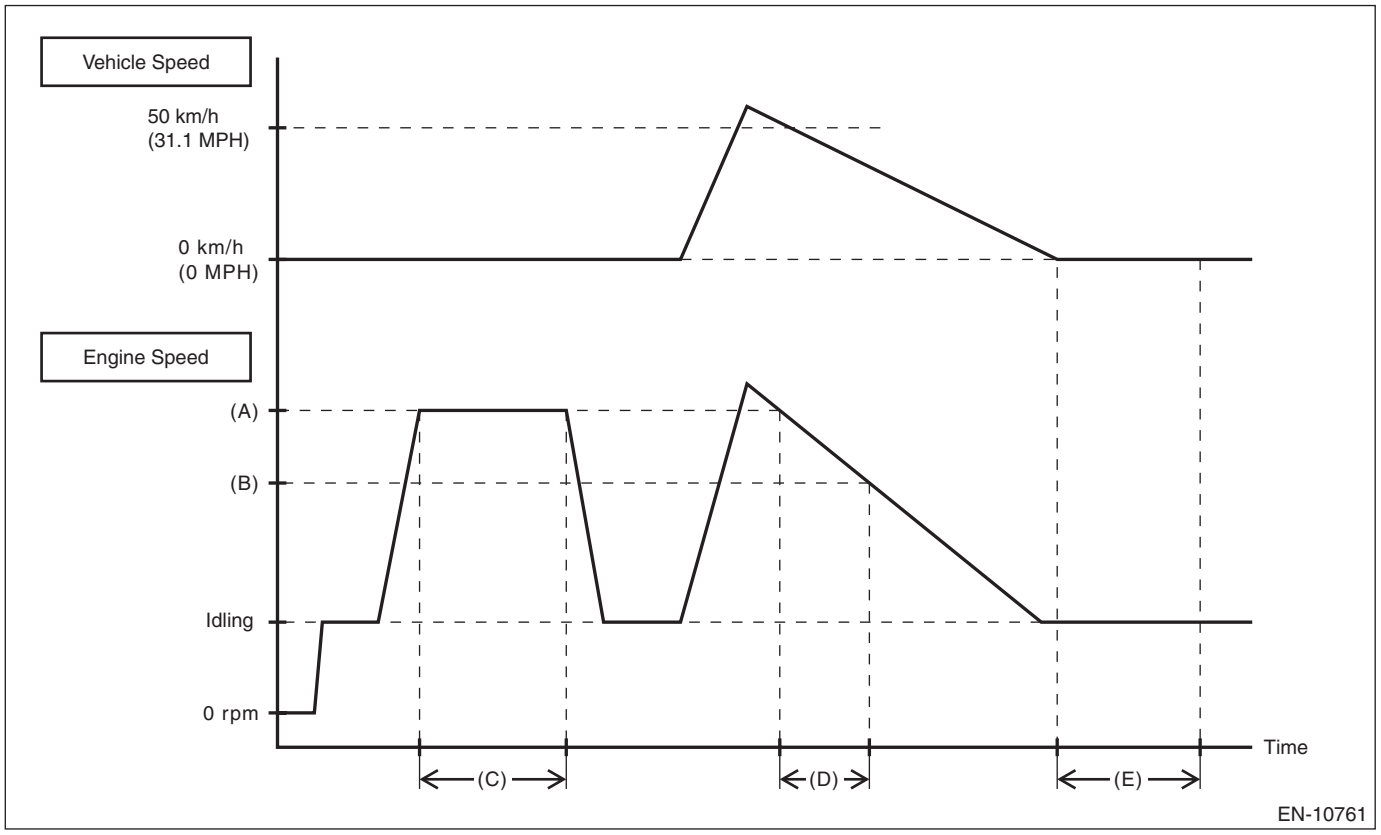

(A) 2500 rpm
(B) 1900 rpm
(C) 40 seconds or more
(D) 5 seconds or more
(E) 5 minutes or more

11.DRIVE CYCLE O

DTC	Item	Condition
P0441	EVAP SYSTEM (CPC) INCORRECT PURGE FLOW	—

Diagnostic procedure:

WARNING:
When performing drive cycle O on a public road, pay sufficient attention to the traffic condition and give the highest priority to safe driving.

1) Drive according to the drive pattern described below.

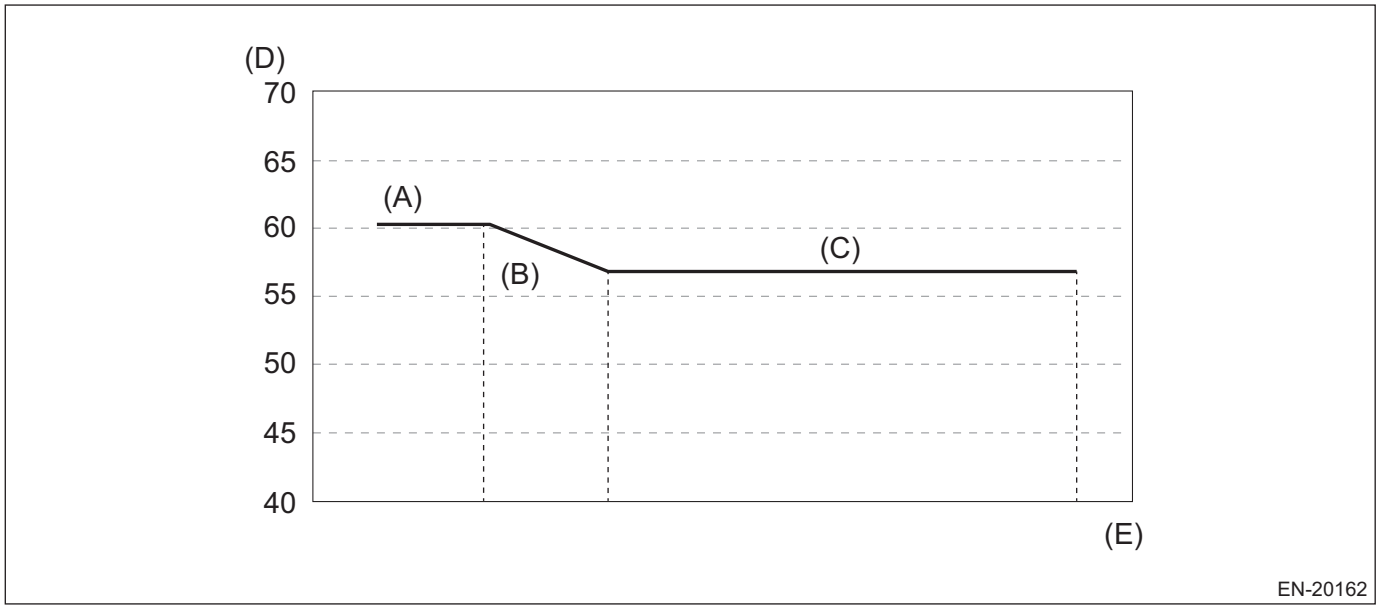

(A) Drive the vehicle at 60 km/h (37 MPH) or faster for at least 5 minutes in fully warm-up condition.
(B) Decelerate with the throttle fully closed for at least 3 seconds.
(C) Drive the vehicle at a constant vehicle speed by depressing the accelerator pedal for at least 30 seconds.
(D) Vehicle speed km/h (MPH)
(E) Sec.

2) Park the vehicle on a safe place.

NOTE:
Driving method while vehicle is driven to a stop at safe place is not restricted.

3) With the vehicle idling, read the temporary diagnostic code of DTC using Subaru Select Monitor or general scan tool.

NOTE:
• For detailed operation procedures, refer to “Read Diagnostic Trouble Code (DTC)”. <Ref. to EN(H6DO)(diag)-68, Read Diagnostic Trouble Code (DTC).>
• In the step 3), if the DTC is not displayed on the Subaru Select Monitor or general scan tool display screen, the trouble is resolved.

12.Clear Memory Mode

A: OPERATION

1. SUBARU SELECT MONITOR

1) On «Start» display, select «Diagnosis».
2) On «Vehicle selection» display, input the target vehicle information and select «Confirmed».
3) On «Main Menu» display, select «Each System».
4) On «Select System» display, select «Engine Control System» and then «Enter».
5) On «Select Function» display, select «DTC».
6) On «DTC» display, select «Clear Memory».

NOTE:
• Initial diagnosis of electronic throttle control is performed after memory clearance. Wait for 10 seconds or more after turning the ignition switch to ON, and then start the engine.
• For detailed operation procedures, refer to “Application help”.

2. GENERAL SCAN TOOL

For procedures clearing memory using the general scan tool, refer to the general scan tool operation manual.

NOTE:
Initial diagnosis of electronic throttle control is performed after memory clearance. Wait for 10 seconds or more after turning the ignition switch to ON, and then start the engine.

13.Active Test

A: OPERATION

CAUTION:
After executing the system operation check mode, execute the Clear Memory Mode. <Ref. to EN(H6DO)(diag)-85, OPERATION, Clear Memory Mode.>

NOTE:
For detailed operation procedures, refer to “Application help”.
*: When the value of “Injection Quantity Control” under “Active Test” is changed from –12% — +12% while «Long term fuel trim B1» is –5%, the value of «A/F Sensor #1» will be changed to 0.92 or 1.17.

Item		SSM display		Execution condition
Activating the actuator ON/OFF	Activating the fuel pump ON/OFF	Fuel Pump Relay	ON ←→ OFF	Ignition switch is ON (engine OFF)
	Activating the purge control solenoid valve ON/OFF	CPC Solenoid Valve	ON ←→ OFF	
	Activating the radiator fan relay ON/OFF	Radiator Fan Relay	ON ←→ OFF	
	Activating the ELCM switching valve ON/OFF	ELCM switching valve	ON ←→ OFF	
	Activating the ELCM vacuum pump ON/OFF	ELCM pump	ON ←→ OFF	
Fuel pump control	Fuel pump OFF operation	OFF Drive	OFF	At idling
Fixing the timing of idle ignition		Fixed Idle Ignition Timing	16.0°	At idling
Idle speed control		Idle Speed Control	500 — 2000 rpm	At idling
Injector control	Stopping fuel injection (Cylinder selection)	Injection Stop Mode	Injector 1 Injector 2 Injector 3 Injector 4 Injector 5 Injector 6	At idling
	Fuel injection amount control (All cylinders)	Injection Quantity Control	–13 — 20%	At idling*
EGR control valve control		EGR Valve Control	0 — 255 STEP	At idling
Alternator control		Alternator control	Low mode Middle mode High mode ExHigh mode	At idling
Compression measurement		Compression monitor	—	• Ignition switch is ON (engine OFF) • Accelerator pedal is fully depressed

14.Malfunction Indicator Light

A: PROCEDURE

1. Activation of malfunction indicator light <Ref. to EN(H6DO)(diag)-87, ACTIVATION OF MALFUNCTION INDICATOR LIGHT, Malfunction Indicator Light.>
↓
2. Malfunction indicator light does not come on <Ref. to EN(H6DO)(diag)-89, MALFUNCTION INDICATOR LIGHT DOES NOT COME ON, Malfunction Indicator Light.>
↓
3. Malfunction indicator light does not go off <Ref. to EN(H6DO)(diag)-89, MALFUNCTION INDICATOR LIGHT DOES NOT GO OFF, Malfunction Indicator Light.>
↓
4. Malfunction indicator light does not blink <Ref. to EN(H6DO)(diag)-90, MALFUNCTION INDICATOR LIGHT DOES NOT BLINK, Malfunction Indicator Light.>
↓
5. Malfunction indicator light remains blinking <Ref. to EN(H6DO)(diag)-91, MALFUNCTION INDICATOR LIGHT REMAINS BLINKING, Malfunction Indicator Light.>

B: ACTIVATION OF MALFUNCTION INDICATOR LIGHT

1) When the ignition switch is turned to ON (engine OFF), the malfunction indicator light (A) in the combination meter illuminates.

NOTE:
If the malfunction indicator light does not illuminate, perform diagnostics of the malfunction indicator light circuit or the combination meter circuit. <Ref. to EN(H6DO)(diag)-89, MALFUNCTION INDICATOR LIGHT DOES NOT COME ON, Malfunction Indicator Light.>

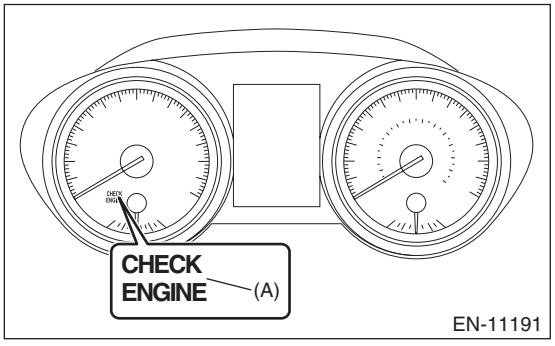

2) After starting the engine, the malfunction indicator light goes out. If it does not go off, any of the engine and emission control system has malfunction.

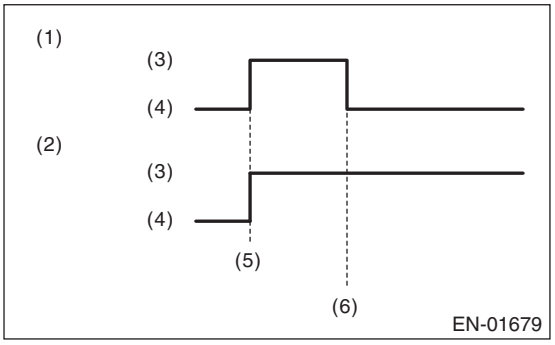

(1) No faulty
(2) Trouble occurs
(3) ON
(4) OFF
(5) Ignition switch ON
(6) Engine start

3) If the diagnostic system detects a misfire which could damage the catalyst, the malfunction indicator light will blink at a cycle of 1 Hz.

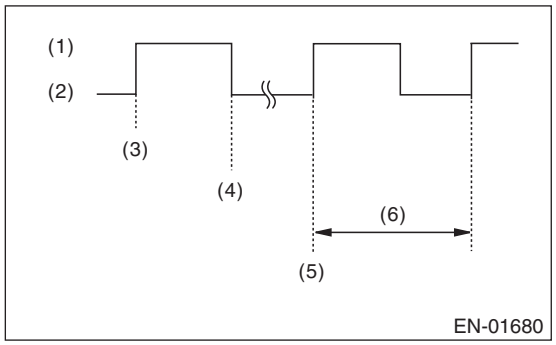

(1) ON
(2) OFF
(3) Ignition switch ON
(4) Engine start
(5) Misfire start
(6) 1 second

4) Install the delivery (test) mode fuse (A) with ignition switch to OFF.

CAUTION:
Do not use any fuses that are installed on the vehicle.

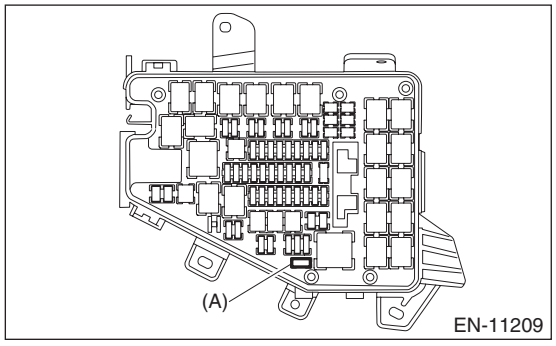

(1) When the ignition switch is turned to ON (engine OFF), the malfunction indicator light illuminates.
(2) After the engine starts, malfunction indicator light blinks in a cycle of 0.5 Hz. (During diagnosis)

(3) Malfunction indicator light blinks at a cycle of 3 Hz after diagnosis if there is no trouble. Malfunction indicator light illuminates if faulty.

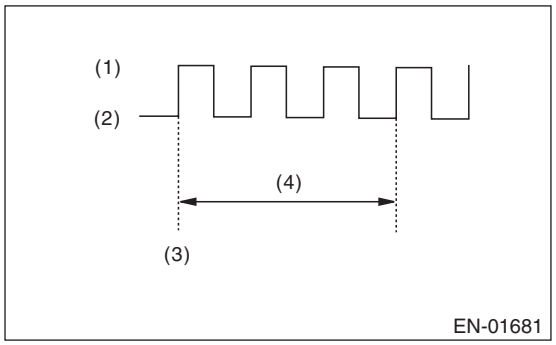

(1) ON
(2) OFF
(3) Ignition switch ON
(4) 1 second

C: MALFUNCTION INDICATOR LIGHT DOES NOT COME ON

TROUBLE SYMPTOM:
When the ignition switch is turned to ON (engine OFF), malfunction indicator light does not illuminate.

	Step	Check	Yes	No
1	**CHECK DTC.**	Is DTC of LAN system displayed? <Ref. to LAN(diag)-33, OPERATION, Read Diagnostic Trouble Code (DTC).>	Check the appropriate DTC using the “List of Diagnostic Trouble Code (DTC)”. <Ref. to LAN(diag)-86, List of Diagnostic Trouble Code (DTC).>	Replace the meter case assembly of combination meter. <Ref. to IDI-11, Combination Meter.>

D: MALFUNCTION INDICATOR LIGHT DOES NOT GO OFF

TROUBLE SYMPTOM:
Although malfunction indicator light comes on when the engine runs, DTC is not shown on the Subaru Select Monitor or general scan tool display.

	Step	Check	Yes	No
1	**CHECK DTC.**	Is DTC of engine or LAN system displayed? <Ref. to EN(H6DO)(diag)-68, OPERATION, Read Diagnostic Trouble Code (DTC).>	Check the appropriate DTC using the “List of Diagnostic Trouble Code (DTC)”. <Ref. to EN(H6DO)(diag)-109, List of Diagnostic Trouble Code (DTC).> <Ref. to LAN(diag)-86, List of Diagnostic Trouble Code (DTC).>	Go to step **2**.
2	**CHECK COMBINATION METER.** Perform the self-diagnosis for combination meter system. <Ref. to IDI-6, SELF-DIAGNOSIS DISPLAY MODE, OPERATION, Combination Meter System.>	Does the malfunction indicator light illuminate and go off normally?	Replace the ECM. <Ref. to FU(H6DO)-83, Engine Control Module (ECM).>	Replace the meter case assembly of combination meter. <Ref. to IDI-11, Combination Meter.>

E: MALFUNCTION INDICATOR LIGHT DOES NOT BLINK

DIAGNOSIS:
- The malfunction indicator light circuit is open or shorted.
- The delivery (test) mode fuse circuit is open.

TROUBLE SYMPTOM:
Malfunction indicator light does not blink during Inspection Mode.

WIRING DIAGRAM:
- Engine Electrical System ENGINE TYPE EZ (WITHOUT PUSH BUTTON START) <Ref. to WI-198, ENGINE TYPE EZ (WITHOUT PUSH BUTTON START), WIRING DIAGRAM, Engine Electrical System.>
- Engine Electrical System ENGINE TYPE EZ (WITH PUSH BUTTON START) <Ref. to WI-214, ENGINE TYPE EZ (WITH PUSH BUTTON START), WIRING DIAGRAM, Engine Electrical System.>

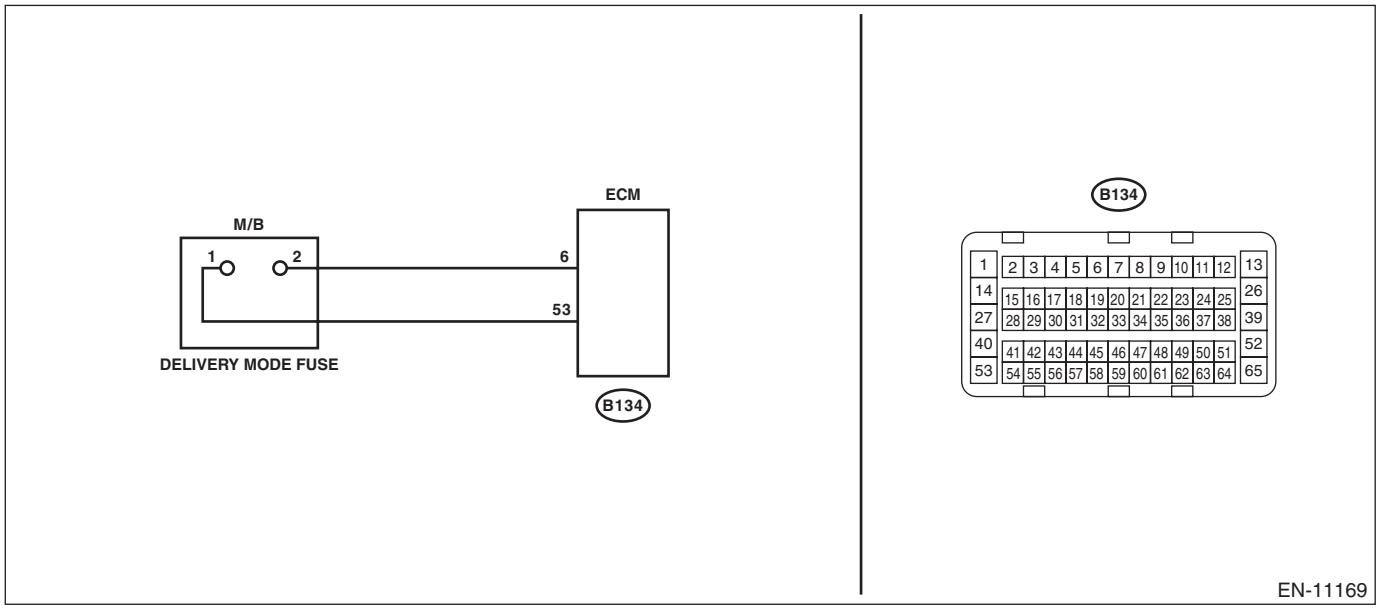

	Step	Check	Yes	No
1	**CHECK STATUS OF MALFUNCTION INDICATOR LIGHT.** 1) Turn the ignition switch to OFF. 2) Check the delivery (test) mode fuse is removed. 3) Turn the ignition switch to ON. (Engine OFF)	Does the malfunction indicator light illuminate?	Go to step **2**.	Repair the malfunction indicator light circuit. <Ref. to EN(H6DO)(diag)-89, MALFUNCTION INDICATOR LIGHT DOES NOT COME ON, Malfunction Indicator Light.>
2	**CHECK HARNESS BETWEEN ECM AND DELIVERY (TEST) MODE FUSE.** 1) Turn the ignition switch to OFF. 2) Disconnect the connector from ECM. 3) Install the delivery (test) mode fuse. **CAUTION:** **Do not use any fuses that are installed on the vehicle.** 4) Measure the resistance of harness between ECM connectors. ***Connector & terminal*** ***(B134) No. 53 — (B134) No. 6:***	Is the resistance less than 1 Ω?	Go to step **3**.	Repair the harness and connector. NOTE: In this case, repair the following item: • Open circuit of harness between ECM connector and delivery (test) mode fuse • Poor contact of joint connector

	Step	Check	Yes	No
3	**CHECK FOR POOR CONTACT.** Check for poor contact of ECM connector.	Is there poor contact of ECM connector?	Repair the poor contact of ECM connector.	Replace the ECM. <Ref. to FU(H6DO)-83, Engine Control Module (ECM).>

F: MALFUNCTION INDICATOR LIGHT REMAINS BLINKING

DIAGNOSIS:
The delivery (test) mode fuse circuit is short-circuited to ground.
TROUBLE SYMPTOM:
Malfunction indicator light blinks when delivery (test) mode fuse is not connected.
WIRING DIAGRAM:
• Engine Electrical System ENGINE TYPE EZ (WITHOUT PUSH BUTTON START) <Ref. to WI-198, ENGINE TYPE EZ (WITHOUT PUSH BUTTON START), WIRING DIAGRAM, Engine Electrical System.>
• Engine Electrical System ENGINE TYPE EZ (WITH PUSH BUTTON START) <Ref. to WI-214, ENGINE TYPE EZ (WITH PUSH BUTTON START), WIRING DIAGRAM, Engine Electrical System.>

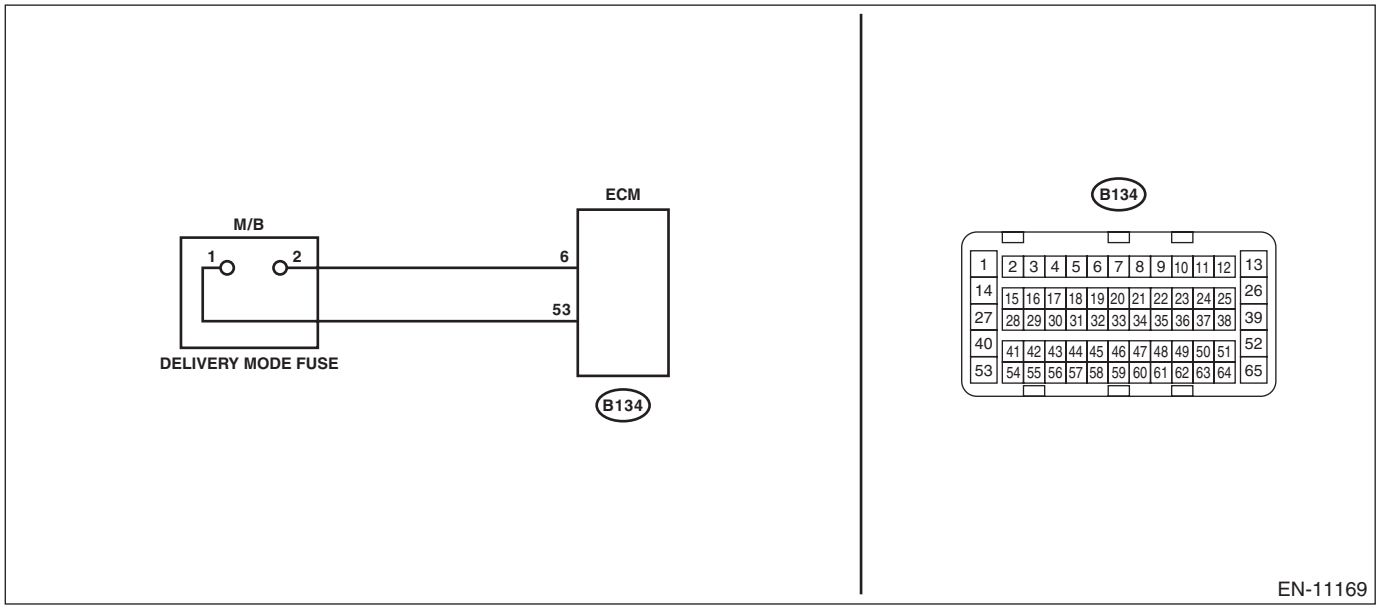

	Step	Check	Yes	No
1	**CHECK DELIVERY (TEST) MODE FUSE.** 1) Check the delivery (test) mode fuse is removed. 2) Turn the ignition switch to ON.	Does the malfunction indicator light blink?	Go to step **2**.	System is normal. NOTE: Malfunction indicator light blinks at a cycle of 3 Hz when delivery (test) mode fuse is attached.
2	**CHECK HARNESS BETWEEN ECM AND DELIVERY (TEST) MODE FUSE.** 1) Turn the ignition switch to OFF. 2) Disconnect the connector from ECM. 3) Measure the resistance between ECM connector and chassis ground. ***Connector & terminal*** ***(B134) No. 53 — Chassis ground:***	Is the resistance 1 MΩ or more?	Replace the ECM. <Ref. to FU(H6DO)-83, Engine Control Module (ECM).>	Repair the short circuit to ground in the harness between the ECM connector and delivery (test) mode fuse.

15.Diagnostics for Engine Starting Failure

A: PROCEDURE

1. Check of the fuel amount
↓
2. Inspection of starter motor circuit <Ref. to EN(H6DO)(diag)-93, STARTER MOTOR CIRCUIT, Diagnostics for Engine Starting Failure.>
↓
3. Inspection of ECM power supply and ground line <Ref. to EN(H6DO)(diag)-102, CHECK POWER SUPPLY AND GROUND LINE OF ENGINE CONTROL MODULE (ECM), Diagnostics for Engine Starting Failure.>
↓
4. Inspection of ignition control system <Ref. to EN(H6DO)(diag)-104, IGNITION CONTROL SYSTEM, Diagnostics for Engine Starting Failure.>
↓
5. Inspection of fuel pump circuit <Ref. to EN(H6DO)(diag)-106, FUEL PUMP CIRCUIT, Diagnostics for Engine Starting Failure.>
↓
6. Inspection of fuel injector circuit <Ref. to EN(H6DO)(diag)-107, FUEL INJECTOR CIRCUIT, Diagnostics for Engine Starting Failure.>

B: STARTER MOTOR CIRCUIT

1. MODEL WITHOUT PUSH BUTTON START

CAUTION:
After servicing or replacing faulty parts, perform Clear Memory Mode <Ref. to EN(H6DO)(diag)-85, OPERATION, Clear Memory Mode.>, and Inspection Mode <Ref. to EN(H6DO)(diag)-69, PROCEDURE, Inspection Mode.>.
WIRING DIAGRAM:
Engine Electrical System ENGINE TYPE EZ (WITHOUT PUSH BUTTON START) <Ref. to WI-198, ENGINE TYPE EZ (WITHOUT PUSH BUTTON START), WIRING DIAGRAM, Engine Electrical System.>

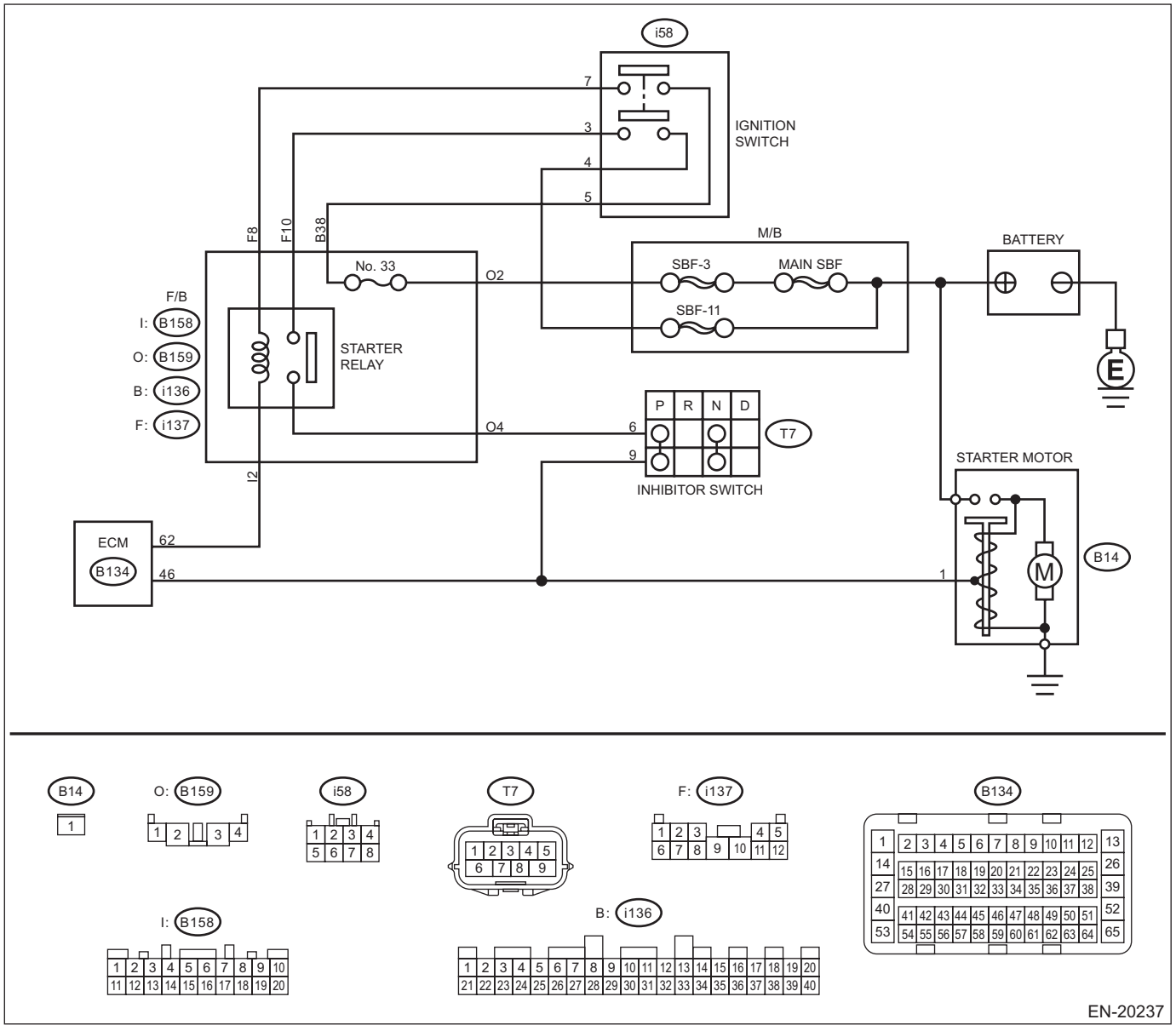

EN-20237

Step		Check	Yes	No
1	**CHECK BATTERY.** Check the battery. <Ref. to SC(H6DO)-2, General Description.>	Is the battery OK?	Go to step **2**.	Charge or replace the battery. <Ref. to SC(H6DO)-57, Battery.>
2	**CHECK OPERATION OF STARTER MOTOR.**	Does the starter motor operate?	Go to step **3**.	Go to step **4**.

	Step	Check	Yes	No
3	**CHECK DTC.**	Is DTC displayed? <Ref. to EN(H6DO)(diag)-68, OPERATION, Read Diagnostic Trouble Code (DTC).>	Check the appropriate DTC using the "List of Diagnostic Trouble Code (DTC)".	Check ignition control system. <Ref. to EN(H6DO)(diag)-104, IGNITION CONTROL SYSTEM, Diagnostics for Engine Starting Failure.>
4	**CHECK INPUT SIGNAL FOR STARTER MOTOR.** 1) Turn the ignition switch to OFF. 2) Disconnect the connector from starter motor. 3) Place the select lever in "P" range or "N" range. 4) Turn the ignition switch to START. 5) Measure the voltage between the starter motor connector and the engine ground. ***Connector & terminal*** ***(B14) No. 1 (+) — Engine ground (–):***	Is the voltage 10 V or more?	Check the starter motor.	Go to step **5**.
5	**CHECK HARNESS BETWEEN BATTERY AND IGNITION SWITCH CONNECTOR.** 1) Turn the ignition switch to OFF. 2) Disconnect the connector from ignition switch. 3) Measure the voltage between battery and ignition switch connector. ***Connector & terminal*** ***(i58) No. 4 (+) — Chassis ground (–):*** ***(B159) No. 2 (+) — Chassis ground (–):*** ***(i136) No. 38 (+) — Chassis ground (–):*** ***(i58) No. 5 (+) — Chassis ground (–):***	Is the voltage 10 V or more?	Go to step **6**.	Repair the harness and connector. NOTE: In this case, repair the following item: • Open circuit in harness between battery and inhibitor switch connector • Blown out of fuse • Replacement of F/B
6	**CHECK IGNITION SWITCH.** Measure the resistance between ignition switch terminals after turning the ignition switch to START position. ***Terminals*** ***No. 3 — No. 4:*** ***No. 5 — No. 7:***	Is the resistance less than 1 Ω?	Go to step **7**.	Replace the ignition switch. <Ref. to SL-68, REPLACEMENT, Ignition Key Lock.>
7	**CHECK F/B INPUT VOLTAGE.** 1) Install the ignition switch. 2) Place the select lever in "P" range or "N" range. 3) Turn the ignition switch to START. 4) Measure the voltage between F/B (starter relay) connector and engine ground. ***Connector & terminal*** ***(i137) No. 8 (+) — Chassis ground (–):*** ***(i137) No. 10 (+) — Chassis ground (–):***	Is the voltage 10 V or more?	Go to step **8**.	Repair the open circuit of harness between F/B (starter relay) connector and ignition switch connector.
8	**CHECK STARTER RELAY.** Check the starter relay. <Ref. to SC(H6DO)-7, Starter.>	Is the relay OK?	Go to step **9**.	Replace the F/B (starter relay).

	Step	Check	Yes	No
9	**CHECK VOLTAGE OF F/B (STARTER RELAY) CONNECTOR.** 1) Place the select lever in "P" range or "N" range. 2) Turn the ignition switch to START. 3) Measure the voltage between F/B (starter relay) connector and engine ground. ***Connector & terminal*** ***(B158) No. 2 (+) — Chassis ground (–):*** ***(B159) No. 4 (+) — Chassis ground (–):***	Is the voltage 10 V or more?	Go to step **10**.	Replace the F/B.
10	**CHECK INPUT SIGNAL FOR STARTER MOTOR.** 1) Place the select lever in "P" range or "N" range. 2) Turn the ignition switch to START. 3) Measure the voltage between starter motor connector and inhibitor switch connector. ***Connector & terminal*** ***(T7) No. 9 (+) — Chassis ground (–):***	Is the voltage 10 V or more?	Go to step **11**.	Repair the harness and connector. NOTE: In this case, repair the following item: • Open circuit in harness between inhibitor switch connector and starter motor • Poor contact of coupling connector
11	**CHECK HARNESS BETWEEN ECM AND INHIBITOR SWITCH CONNECTOR.** 1) Turn the ignition switch to OFF. 2) Disconnect the connector from ECM. 3) Measure the resistance of harness between ECM connector and inhibitor switch. ***Connector & terminal*** ***(B134) No. 46 — (T7) No. 9:***	Is the resistance less than 1 Ω?	Go to step **12**.	Repair the harness and connector. NOTE: In this case, repair the following item: • Open circuit in harness between ECM connector and inhibitor switch connector • Poor contact of coupling connector
12	**CHECK HARNESS BETWEEN ECM AND F/B (STARTER RELAY) CONNECTOR.** 1) Turn the ignition switch to OFF. 2) Disconnect the connector from ECM. 3) Measure the resistance of harness between ECM connector and starter relay connector. ***Connector & terminal*** ***(B134) No. 62 (+) — (B158) No. 1:***	Is the resistance less than 1 Ω?	Replace the ECM.	Repair the open circuit or short circuit to ground in harness between ECM connector and starter relay connector.

2. MODEL WITH PUSH BUTTON START

CAUTION:
After servicing or replacing faulty parts, perform Clear Memory Mode <Ref. to EN(H6DO)(diag)-85, OPERATION, Clear Memory Mode.>, and Inspection Mode <Ref. to EN(H6DO)(diag)-69, PROCEDURE, Inspection Mode.>.
WIRING DIAGRAM:
Engine Electrical System ENGINE TYPE EZ (WITH PUSH BUTTON START) <Ref. to WI-214, ENGINE TYPE EZ (WITH PUSH BUTTON START), WIRING DIAGRAM, Engine Electrical System.>

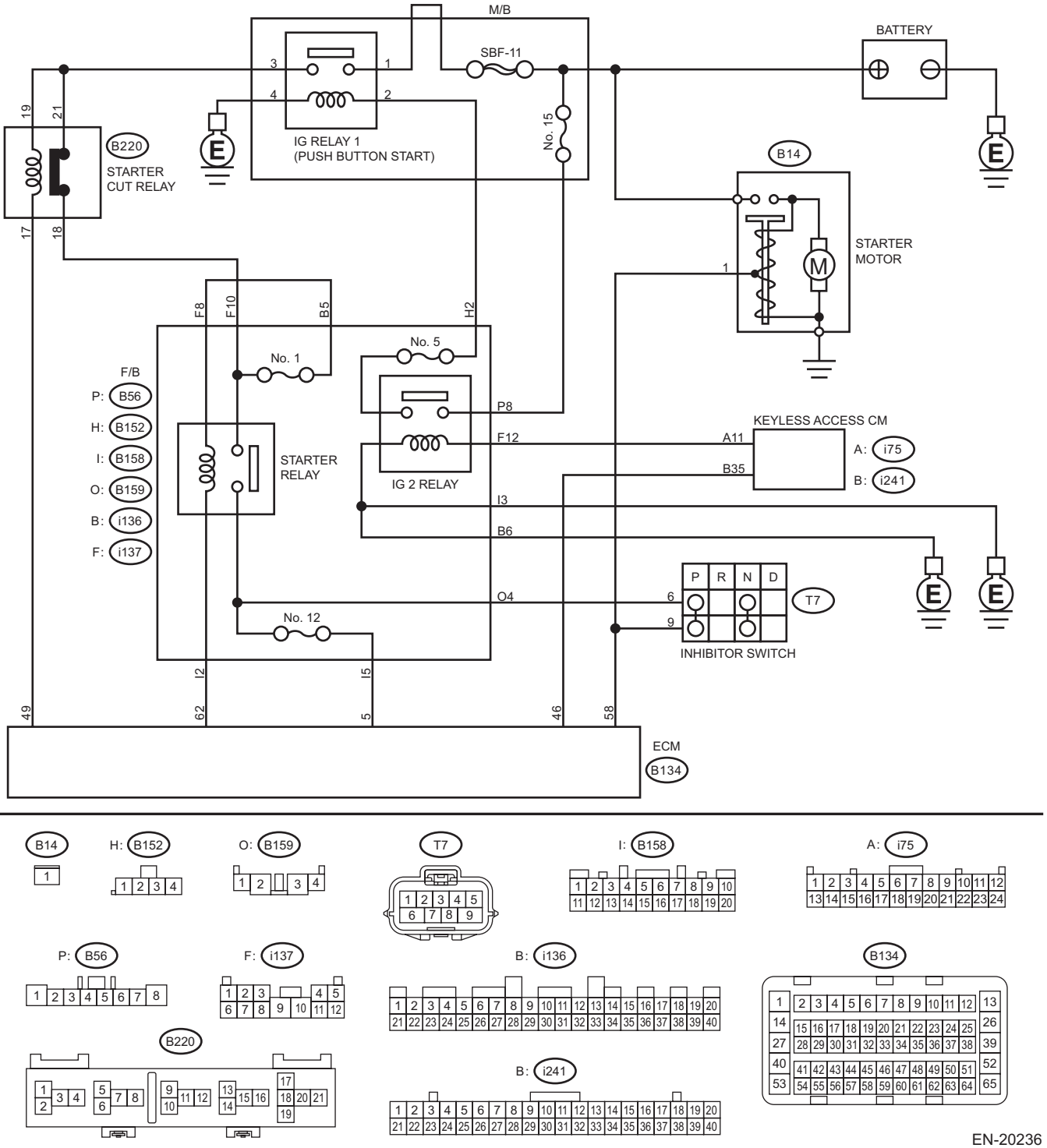

EN-20236

	Step	Check	Yes	No
1	**CHECK BATTERY.** Check the battery. <Ref. to SC(H4DO)-63, Battery.>	Is the battery OK?	Go to step **2**.	Charge or replace the battery. <Ref. to SC(H4DO)-63, Battery.>
2	**CHECK OPERATION OF STARTER MOTOR.**	Does the starter motor operate?	Go to step **3**.	Go to step **4**.
3	**CHECK DTC.**	Is DTC displayed? <Ref. to EN(H6DO)(diag)-68, OPERATION, Read Diagnostic Trouble Code (DTC).>	Check the appropriate DTC using the "List of Diagnostic Trouble Code (DTC)". <Ref. to EN(H6DO)(diag)-109, List of Diagnostic Trouble Code (DTC).>	Check ignition control system. <Ref. to EN(H6DO)(diag)-104, IGNITION CONTROL SYSTEM, Diagnostics for Engine Starting Failure.>
4	**CHECK PUSH BUTTON IGNITION SWITCH.** Press the push button ignition switch twice with the ignition OFF (ACC OFF). NOTE: Release the brake pedal.	Does the ignition turn to ON?	Go to step **5**.	Check the push button start system. <Ref. to KPS(diag)-107, INSPECTION, General Diagnostic Table.>
5	**CHECK PUSH BUTTON IGNITION SWITCH.** 1) Depress the brake pedal. NOTE: Shift the select lever to "P" range. 2) Check the push button ignition switch indicator.	Does the indicator turn to green?	Go to step **6**.	Check the push button start system. <Ref. to KPS(diag)-107, INSPECTION, General Diagnostic Table.>
6	**CHECK START SWITCH SIGNAL.** 1) Read the waveform of «Starter SW» using the Subaru Select Monitor. NOTE: For detailed operation procedures, refer to "Read Current Data For Engine". <Ref. to EN(H6DO)(diag)-50, Subaru Select Monitor.> 2) Press the push button ignition switch once with the brake pedal depressed.	Does waveform of the «Starter SW» occur?	Go to step **10**.	Go to step **7**.
7	**CHECK HARNESS BETWEEN ECM AND KEYLESS ACCESS CM.** 1) Turn the ignition to OFF. 2) Disconnect the connectors from ECM and keyless access CM. 3) Measure the resistance of harness between ECM connector and keyless access CM. ***Connector & terminal*** ***(B134) No. 46 — (i241) No. 35:***	Is the resistance less than 1 Ω?	Go to step **8**.	Repair the harness and connector. NOTE: In this case, repair the following item: • Open circuit of harness between ECM connector and keyless access CM connector • Poor contact of coupling connector
8	**CHECK HARNESS BETWEEN ECM AND KEYLESS ACCESS CM.** Measure the resistance between ECM connector and chassis ground. ***Connector & terminal*** ***(B134) No. 46 — Chassis ground:***	Is the resistance 1 MΩ or more?	Go to step **9**.	Repair the short circuit to ground in harness between ECM connector and keyless access CM connector.

	Step	Check	Yes	No
9	**CHECK START SWITCH SIGNAL.** 1) Connect the connector to ECM and keyless access CM. 2) Read the waveform of start switch signal using an oscilloscope. 3) Press the push button ignition switch once with the brake pedal depressed. ***Connector & terminal*** ***(B134) No. 46 (+) — Chassis ground (–):***	Does waveform of the start switch signal occur?	Check for poor contact of ECM connector. If faulty, repair or replace. Go to step **10**.	Repair the poor contact of keyless access CM connector.
10	**CHECK INPUT SIGNAL FOR STARTER MOTOR.** 1) Turn the ignition to OFF. 2) Disconnect the connector from starter motor. 3) Place the select lever in “P” range or “N” range. 4) Press the push button ignition switch once with the brake pedal depressed. 5) Measure the voltage between the starter motor connector and the engine ground. ***Connector & terminal*** ***(B14) No. 1 (+) — Engine ground (–):***	Is the voltage 10 V or more?	Check the starter motor. <Ref. to SC(H4DO)-7, Starter.>	Go to step **11**.
11	**CHECK POWER SUPPLY OF IG2 RELAY.** 1) Remove the IG2 relay. 2) Turn the ignition to ON. 3) Measure the voltage between F/B (IG2 relay) terminal and chassis ground. ***Connector & terminal*** ***(B56) No. 8 (+) — Chassis ground (–):*** ***(i137) No. 12 (+) — Chassis ground (–):***	Is the voltage 10 V or more?	Go to step **12**.	Check the following item and repair or replace if necessary. • Blown out of fuse (F/B No. 26) • Open circuit or short circuit to ground in harness between F/B (IG2 relay) terminal and power supply circuit • Open circuit or short circuit to ground in harness between F/B (IG2 relay) terminal and keyless access connector • Poor contact of coupling connector • Blown out of fuse
12	**CHECK F/B (IG2 RELAY).** Check the F/B (IG2 relay). <Ref. to SL-9, Relay and Fuse.>	Is the resistance less than 1 Ω?	Go to step **13**.	Replace the IG2 relay. <Ref. to SL-9, Relay and Fuse.>
13	**CHECK POWER SUPPLY OF F/B (IG2 RELAY) CONNECTOR.** 1) Install the F/B (IG2 relay). 2) Remove the F/B (IG2 relay) connectors (B158) and (i136). 3) Measure the voltage between F/B (IG2 relay) connectors (B158) and (i136) and chassis ground. ***Connector & terminal*** ***(B158) No. 3 (+) — Chassis ground (–):*** ***(i136) No. 6 (+) — Chassis ground (–):***	Is the voltage 10 V or more?	Go to step **14**.	Replace the F/B unit. <Ref. to VDC-8, VDC Control Module and Hydraulic Control Unit (VDCCM&H/U).>

	Step	Check	Yes	No
14	**CHECK HARNESS BETWEEN F/B (IG2 RELAY) TERMINAL AND CHASSIS GROUND.** 1) Turn the ignition to OFF. 2) Measure the resistance of the harness between F/B (IG2 relay) terminal and chassis ground. ***Connector & terminal*** ***(B158) No. 3 (+) — Chassis ground (–):*** ***(i136) No. 6 — Chassis ground:***	Is the resistance less than 5 Ω?	Go to step **15**.	Repair the open circuit of the harness between F/B (IG2 relay) connector and chassis ground, or replace the harness.
15	**CHECK IG RELAY 1 (PUSH BUTTON START) POWER SUPPLY.** 1) Remove the M/B IG relay 1 (push button start). 2) Turn the ignition to ON. 3) Measure the voltage between the M/B IG relay 1 (push button start) terminals No. 1 and No. 2 and the chassis ground. ***Terminals*** ***No. 1 (+) — Chassis ground (–):*** ***No. 2 (+) — Chassis ground (–):***	Is the voltage 10 V or more?	Go to step **16**.	Check the following item and repair or replace if necessary. • Blown out of fuse (F/B No. 5) • Open circuit or short circuit to ground in harness between IG relay 1 (push button start) connector and F/B connector • Open circuit or short circuit to ground in harness between IG relay 1 (push button start) connector and battery
16	**CHECK HARNESS BETWEEN M/B IG RELAY 1 (PUSH BUTTON START) TERMINAL AND CHASSIS GROUND.** 1) Turn the ignition to OFF. 2) Measure the resistance of harness between the IG relay 1 (push button start) terminal and chassis ground. ***Terminals*** ***No. 4 — Chassis ground:***	Is the resistance less than 5 Ω?	Go to step **17**.	Repair the open circuit in harness between the IG relay 1 (push button start) connector and chassis ground.
17	**CHECK M/B IG RELAY 1 (PUSH BUTTON START).** 1) Connect the battery to M/B IG relay 1 (push button start) terminals No. 2 and No. 4. 2) Measure the resistance between M/B IG relay 1 (push button start) terminals. ***Terminals*** ***No. 1 — No. 3:***	Is the resistance less than 1 Ω?	Go to step **18**.	Replace the IG relay 1 (push button start). <Ref. to SL-9, Relay and Fuse.>
18	**CHECK HARNESS BETWEEN ECM AND STARTER CUT RELAY CONNECTOR.** 1) Disconnect the connector from ECM. 2) Measure the resistance between starter cut relay connector and chassis ground. ***Connector & terminal*** ***(B220) No. 17 — Chassis ground:***	Is the resistance 1 MΩ or more?	Go to step **19**.	Repair the short circuit to ground in harness between ECM connector and starter cut relay connector.
19	**CHECK STARTER CUT RELAY.** Measure the resistance between starter cut relay terminals. ***Terminals*** ***No. 18 — No. 21:***	Is the resistance less than 1 Ω?	Go to step **20**.	Replace the starter cut relay. <Ref. to SL-9, Relay and Fuse.>

	Step	Check	Yes	No
20	**CHECK HARNESS BETWEEN STARTER CUT RELAY CONNECTOR AND F/B (STARTER RELAY) CONNECTOR.** 1) Remove the starter relay. 2) Measure the resistance of harness between starter cut relay connector and starter relay connector. ***Connector & terminal*** ***(B220) No. 18 — (i137) No. 8:***	Is the resistance less than 1 Ω?	Go to step **21**.	Check the following item and repair or replace if necessary. • Blown out of fuse (F/B No. 26) • Open circuit of harness between starter cut relay connector and F/B (starter relay) connector
21	**CHECK F/B (STARTER RELAY).** Check the F/B (starter relay). <Ref. to SL-9, Relay and Fuse.>	Is the resistance less than 1 Ω?	Go to step **22**.	Replace the starter relay (push button start). <Ref. to SL-9, Relay and Fuse.>
22	**CHECK F/B (STARTER RELAY) POWER SUPPLY.** 1) Install the F/B (starter relay). 2) Disconnect the F/B (starter relay) connector (B158). 3) Measure the voltage between F/B (starter relay) main unit (B158) terminal No. 2 and chassis ground. ***Connector & terminal*** ***(B158) No. 2 (+) — Chassis ground (–):***	Is the voltage 10 V or more?	Go to step **23**.	Replace the F/B unit. <Ref. to VDC-8, VDC Control Module and Hydraulic Control Unit (VDCCM&H/U).>
23	**CHECK HARNESS BETWEEN ECM AND F/B (STARTER RELAY) CONNECTOR.** Measure the resistance of harness between ECM connector and starter relay connector. ***Connector & terminal*** ***(B134) No. 62 — (B158) No. 2:***	Is the resistance less than 1 Ω?	Go to step **24**.	Repair the open circuit of harness between ECM connector and starter relay connector.
24	**CHECK HARNESS BETWEEN F/B (STARTER RELAY) CONNECTORS (B158) AND (B159).** 1) Remove the F/B (starter relay). 2) Measure the resistance between F/B (starter relay) connector (B158) and (B159). ***Terminals*** ***(B158) No. 5 — (B159) No. 4:***	Is the resistance less than 1 Ω?	Go to step **25**.	Check the fuse (F/B No. 12). If a fault is not found, replace the F/B unit. <Ref. to VDC-8, VDC Control Module and Hydraulic Control Unit (VDCCM&H/U).>
25	**CHECK HARNESS BETWEEN STARTER RELAY CONNECTOR AND INHIBITOR SWITCH CONNECTOR.** 1) Disconnect the connector from inhibitor switch. 2) Measure the resistance of harness between starter relay connector and inhibitor switch connector. ***Connector & terminal*** ***(B159) No. 4 — (T7) No. 6:***	Is the resistance less than 1 Ω?	Go to step **26**.	Repair the harness and connector. NOTE: In this case, repair the following item: • Open circuit in harness between starter relay connector and inhibitor switch connector • Poor contact of coupling connector

	Step	Check	Yes	No
26	**CHECK INHIBITOR SWITCH.** 1) Place the select lever in “P” range or “N” range. 2) Measure the resistance between inhibitor switch terminals. ***Terminals*** ***No. 6 — No. 9:***	Is the resistance less than 1 Ω?	Go to step **27**.	Replace the inhibitor switch. <Ref. to CVT(TR690)-102, Inhibitor Switch.>
27	**CHECK HARNESS BETWEEN ECM AND INHIBITOR SWITCH CONNECTOR.** 1) Disconnect the connector from ECM. 2) Measure the resistance of harness between ECM connector and inhibitor switch connector. ***Connector & terminal*** ***(B134) No. 5 — (T7) No. 6:***	Is the resistance less than 1 Ω?	Go to step **28**.	Repair the harness and connector. NOTE: In this case, repair the following item: • Open circuit in harness between ECM connector and inhibitor switch connector • Poor contact of coupling connector
28	**CHECK NEUTRAL POSITION SWITCH SIGNAL.** 1) Connect all relays and connectors to their proper positions. 2) Read the value of «Neutral Position Switch» using the Subaru Select Monitor. NOTE: For detailed operation procedures, refer to “Read Current Data For Engine”. <Ref. to EN(H6DO)(diag)-50, Subaru Select Monitor.> 3) Turn the ignition to ON. 4) Place the select lever in “P” range or “N” range.	Is «Neutral» displayed?	Check the engine control module (ECM) power supply and ground line. <Ref. to EN(H6DO)(diag)-102, CHECK POWER SUPPLY AND GROUND LINE OF ENGINE CONTROL MODULE (ECM), Diagnostics for Engine Starting Failure.>	Repair the harness and connector. NOTE: In this case, repair the following item: • Open circuit in harness between inhibitor switch connector and starter motor connector • Poor contact of coupling connector

C: CHECK POWER SUPPLY AND GROUND LINE OF ENGINE CONTROL MODULE (ECM)

CAUTION:
After servicing or replacing faulty parts, perform Clear Memory Mode <Ref. to EN(H6DO)(diag)-85, OPERATION, Clear Memory Mode.>, and Inspection Mode <Ref. to EN(H6DO)(diag)-69, PROCEDURE, Inspection Mode.>.
WIRING DIAGRAM:

- Engine Electrical System ENGINE TYPE EZ (WITHOUT PUSH BUTTON START) <Ref. to WI-198, ENGINE TYPE EZ (WITHOUT PUSH BUTTON START), WIRING DIAGRAM, Engine Electrical System.>
- Engine Electrical System ENGINE TYPE EZ (WITH PUSH BUTTON START) <Ref. to WI-214, ENGINE TYPE EZ (WITH PUSH BUTTON START), WIRING DIAGRAM, Engine Electrical System.>

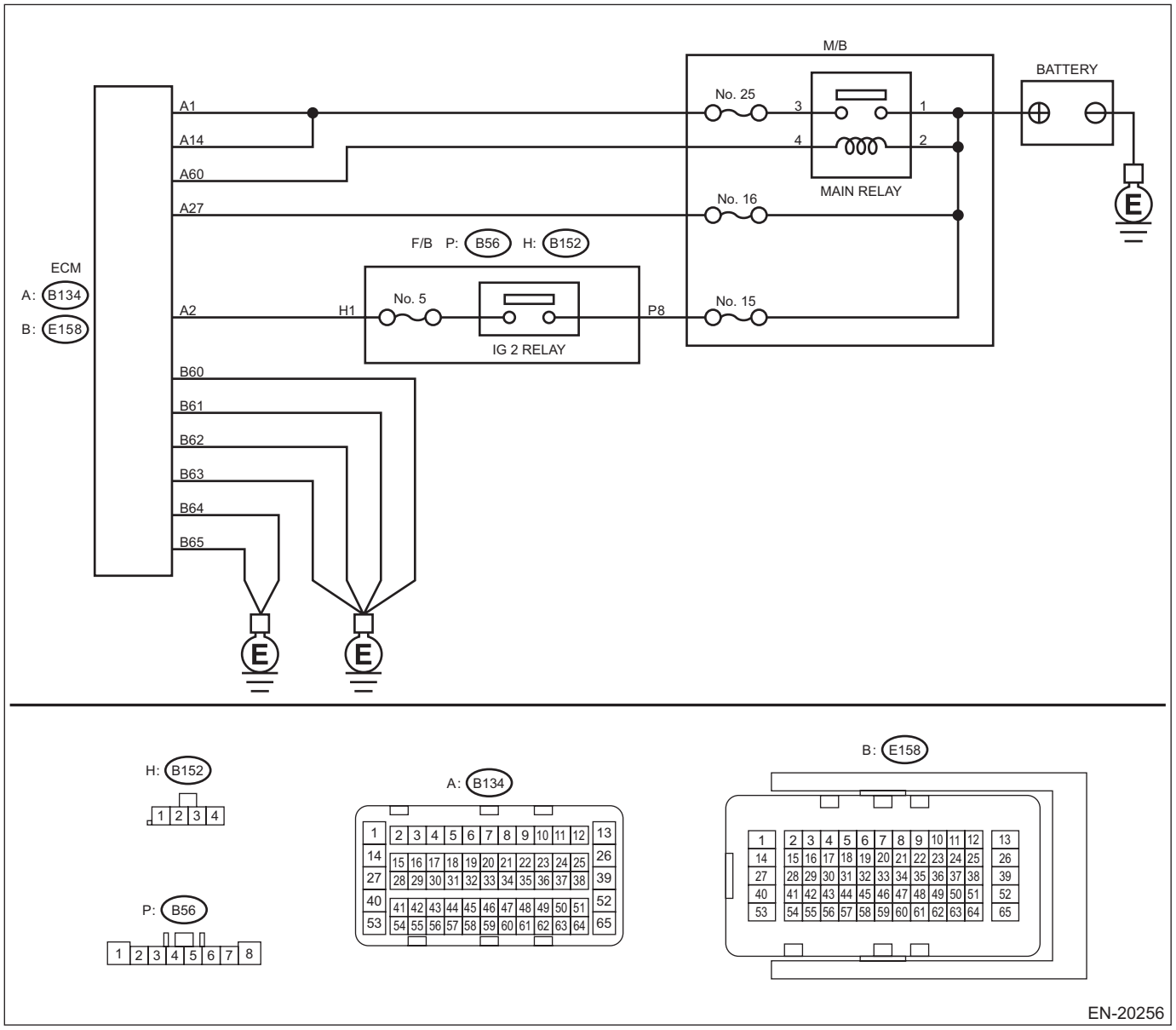

	Step	Check	Yes	No
1	**CHECK MAIN RELAY.** 1) Turn the ignition switch to OFF. 2) Remove the main relay. 3) Connect the battery to main relay terminals No. 1 and No. 2. 4) Measure the resistance between main relay terminals. ***Terminals*** ***No. 3 — No. 4:***	Is the resistance less than 1 Ω?	Go to step **2**.	Replace the main relay. <Ref. to FU(H6DO)-85, Main Relay.>
2	**CHECK GROUND CIRCUIT FOR ECM.** 1) Disconnect the connector from ECM. 2) Measure the resistance of harness between ECM connector and chassis ground. ***Connector & terminal*** ***(B158) No. 60 — Chassis ground:*** ***(B158) No. 61 — Chassis ground:*** ***(B158) No. 62 — Chassis ground:*** ***(B158) No. 63 — Chassis ground:*** ***(B158) No. 64 — Chassis ground:*** ***(B158) No. 65 — Chassis ground:***	Is the resistance less than 5 Ω?	Go to step **3**.	Repair the open circuit of harness between ECM connector and engine ground terminal.
3	**CHECK INPUT VOLTAGE OF ECM.** 1) Turn the ignition switch to ON. 2) Measure the voltage between ECM connector and chassis ground. ***Connector & terminal*** ***(B134) No. 2 (+) — Chassis ground (–):*** ***(B134) No. 27 (+) — Chassis ground (–):***	Is the voltage 10 V or more?	Go to step **4**.	Repair the open or ground short in the harness of power supply circuit.
4	**CHECK INPUT VOLTAGE OF MAIN RELAY.** Measure the voltage between main relay connector and chassis ground. ***Connector & terminal*** ***No. 1 (+) — Chassis ground (–):*** ***No. 2 (+) — Chassis ground (–):***	Is the voltage 10 V or more?	Go to step **5**.	Repair the open or ground short in the harness of power supply circuit.
5	**CHECK INPUT VOLTAGE OF ECM.** 1) Turn the ignition switch to OFF. 2) Install the main relay. 3) Turn the ignition switch to ON. 4) Measure the voltage between ECM connector and chassis ground. ***Connector & terminal*** ***(B134) No. 60 (+) — Chassis ground (–):***	Is the voltage 10 V or more?	Go to step **6**.	Repair the open circuit of harness between ECM connector and main relay connector.
6	**CHECK INPUT VOLTAGE OF ECM.** 1) Turn the ignition switch to OFF. 2) Connect the connector to ECM. 3) Turn the ignition switch to ON. 4) Measure the voltage between ECM connector and chassis ground. ***Connector & terminal*** ***(B134) No. 1 (+) — Chassis ground (–):*** ***(B134) No. 14 (+) — Chassis ground (–):***	Is the voltage 10 V or more?	Check ignition control system. <Ref. to EN(H6DO)(diag)-104, IGNITION CONTROL SYSTEM, Diagnostics for Engine Starting Failure.>	Repair the harness and connector. NOTE: In this case, repair the following item: • Open circuit in harness between ECM connector and main relay connector • Poor contact of main relay connector • Poor contact of ECM connector

D: IGNITION CONTROL SYSTEM

CAUTION:
After servicing or replacing faulty parts, perform Clear Memory Mode <Ref. to EN(H6DO)(diag)-85, OPERATION, Clear Memory Mode.>, and Inspection Mode <Ref. to EN(H6DO)(diag)-69, PROCEDURE, Inspection Mode.>.

WIRING DIAGRAM:

- Engine Electrical System ENGINE TYPE EZ (WITHOUT PUSH BUTTON START) <Ref. to WI-198, ENGINE TYPE EZ (WITHOUT PUSH BUTTON START), WIRING DIAGRAM, Engine Electrical System.>
- Engine Electrical System ENGINE TYPE EZ (WITH PUSH BUTTON START) <Ref. to WI-214, ENGINE TYPE EZ (WITH PUSH BUTTON START), WIRING DIAGRAM, Engine Electrical System.>

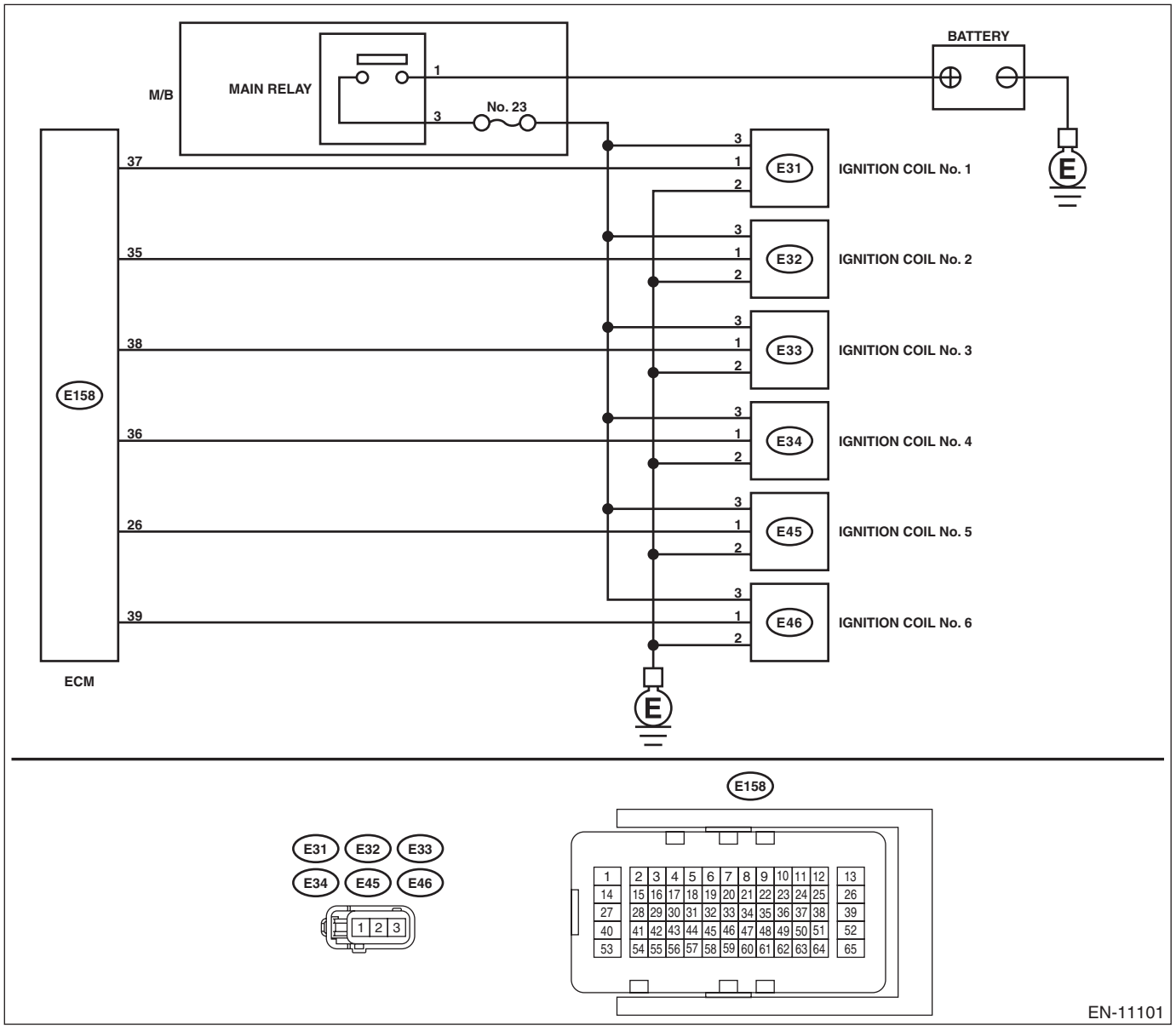

Step		Check	Yes	No
1	**CHECK SPARK PLUG CONDITION.** 1) Remove the spark plug. <Ref. to IG(H6DO)-4, REMOVAL, Spark Plug.> 2) Check the spark plug condition. <Ref. to IG(H6DO)-11, INSPECTION, Spark Plug.>	Is the spark plug condition normal?	Go to step **2**.	Replace the spark plug. <Ref. to IG(H6DO)-4, Spark Plug.>

	Step	Check	Yes	No
2	**CHECK IGNITION SYSTEM FOR SPARKS.** 1) Connect the spark plug to ignition coil. 2) Release the fuel pressure. <Ref. to FU(H6DO)-93, RELEASING OF FUEL PRESSURE, PROCEDURE, Fuel.> 3) Contact the spark plug thread portion to engine. 4) While opening the throttle valve fully, start the engine to check if spark occurs at each cylinder.	Does spark occur at each cylinder?	Check fuel pump system. <Ref. to EN(H6DO)(diag)-106, FUEL PUMP CIRCUIT, Diagnostics for Engine Starting Failure.>	Go to step **3**.
3	**CHECK IGNITION COIL POWER SUPPLY CIRCUIT.** 1) Turn the ignition switch to OFF. 2) Disconnect the connector from ignition coil. 3) Turn the ignition switch to ON. 4) Measure the voltage between ignition coil connector and engine ground. ***Connector & terminal*** ***(E31) No. 3 (+) — Engine ground (–):*** ***(E32) No. 3 (+) — Engine ground (–):*** ***(E33) No. 3 (+) — Engine ground (–):*** ***(E34) No. 3 (+) — Engine ground (–):*** ***(E45) No. 3 (+) — Engine ground (–):*** ***(E46) No. 3 (+) — Engine ground (–):***	Is the voltage 10 V or more?	Go to step **4**.	Repair the harness and connector. NOTE: In this case, repair the following item: • Open or short to ground in harness of power supply circuit • Blown out of fuse (M/B No. 14) • Poor contact of coupling connector
4	**CHECK HARNESS OF IGNITION COIL GROUND CIRCUIT.** 1) Turn the ignition switch to OFF. 2) Measure the resistance of harness between ignition coil connector and engine ground. ***Connector & terminal*** ***(E31) No. 2 — Engine ground:*** ***(E32) No. 2 — Engine ground:*** ***(E33) No. 2 — Engine ground:*** ***(E34) No. 2 — Engine ground:*** ***(E45) No. 2 — Engine ground:*** ***(E46) No. 2 — Engine ground***	Is the resistance less than 5 Ω?	Go to step **5**.	Repair the open circuit in harness between ignition coil connector and engine grounding terminal.
5	**CHECK HARNESS BETWEEN ECM AND IGNITION COIL CONNECTOR.** 1) Disconnect the connector from ECM. 2) Measure the resistance of harness between ECM connector and ignition coil connector. ***Connector & terminal*** ***(B158) No. 37 — (E31) No. 1:*** ***(B158) No. 35 — (E32) No. 1:*** ***(B158) No. 38 — (E33) No. 1:*** ***(B158) No. 36 — (E34) No. 1:*** ***(B158) No. 26 — (E45) No. 1:*** ***(B158) No. 39 — (E46) No. 1:***	Is the resistance less than 1 Ω?	Go to step **6**.	Repair the harness and connector. NOTE: In this case, repair the following item: • Open circuit of harness between ECM connector and the ignition coil connector • Poor contact of coupling connector
6	**CHECK HARNESS BETWEEN ECM AND IGNITION COIL CONNECTOR.** Measure the resistance of harness between ECM connector and chassis ground. ***Connector & terminal:*** ***(B158) No. 37 — Chassis ground:*** ***(B158) No. 35 — Chassis ground:*** ***(B158) No. 38 — Chassis ground:*** ***(B158) No. 36 — Chassis ground:*** ***(B158) No. 26 — Chassis ground:*** ***(B158) No. 39 — Chassis ground:***	Is the resistance 1 MΩ or more?	Go to step **7**.	Repair the ground short circuit of harness between ECM connector and ignition coil connector.

	Step	Check	Yes	No
7	**CHECK FOR POOR CONTACT.** Check for poor contact of ECM connector.	Is there poor contact of ECM connector?	Repair the poor contact of ECM connector.	Replace the ignition coil. <Ref. to IG(H6DO)-15, Ignition Coil.>

E: FUEL PUMP CIRCUIT

CAUTION:
After servicing or replacing faulty parts, perform Clear Memory Mode <Ref. to EN(H6DO)(diag)-85, OPERATION, Clear Memory Mode.>, and Inspection Mode <Ref. to EN(H6DO)(diag)-69, PROCEDURE, Inspection Mode.>.

	Step	Check	Yes	No
1	**CHECK OPERATING SOUND OF FUEL PUMP.** Make sure that the fuel pump operates for two seconds when turning the ignition switch to ON. NOTE: Fuel pump operation can be executed using the Subaru Select Monitor. For detailed operation procedures, refer to the “Active Test”. <Ref. to EN(H6DO)(diag)-86, Active Test.>	Does the fuel pump emit operating sound?	Check the fuel injector circuit. <Ref. to EN(H6DO)(diag)-107, FUEL INJECTOR CIRCUIT, Diagnostics for Engine Starting Failure.>	Display the DTC. <Ref. to EN(H6DO)(diag)-68, OPERATION, Read Diagnostic Trouble Code (DTC).>

F: FUEL INJECTOR CIRCUIT

CAUTION:
- **Check or repair only faulty parts.**
- **After servicing or replacing faulty parts, perform Clear Memory Mode <Ref. to EN(H6DO)(diag)-85, OPERATION, Clear Memory Mode.>, and Inspection Mode <Ref. to EN(H6DO)(diag)-69, PROCEDURE, Inspection Mode.>.**

WIRING DIAGRAM:
- Engine Electrical System ENGINE TYPE EZ (WITHOUT PUSH BUTTON START) <Ref. to WI-198, ENGINE TYPE EZ (WITHOUT PUSH BUTTON START), WIRING DIAGRAM, Engine Electrical System.>
- Engine Electrical System ENGINE TYPE EZ (WITH PUSH BUTTON START) <Ref. to WI-214, ENGINE TYPE EZ (WITH PUSH BUTTON START), WIRING DIAGRAM, Engine Electrical System.>

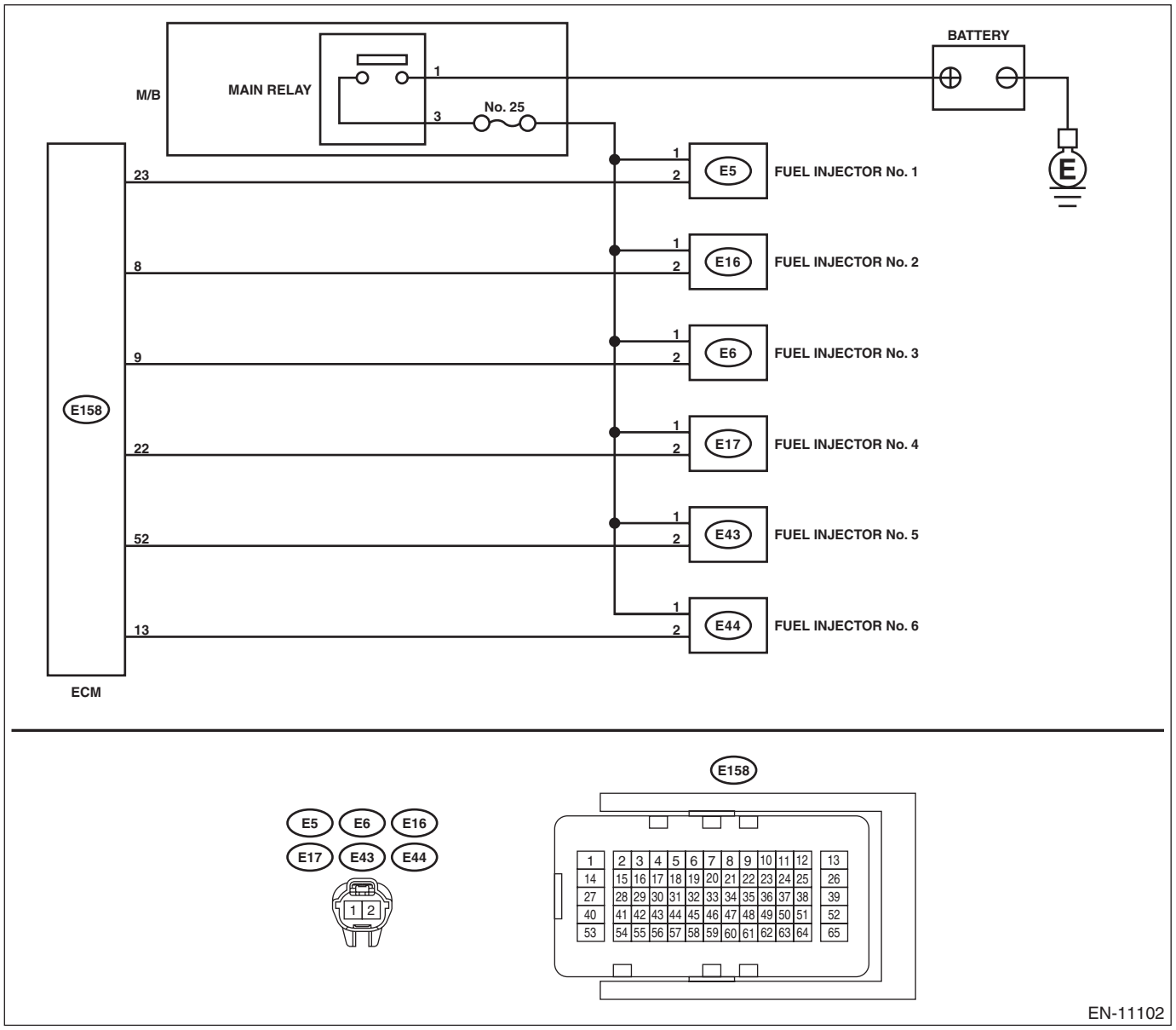

	Step	Check	Yes	No
1	**CHECK OPERATION OF EACH FUEL INJECTOR.** While cranking the engine, check each fuel injector emits operating sound. Use a sound scope or listen by attaching a screwdriver to the injector for this check.	Does the fuel injector emit operating sound?	Check the fuel pressure. <Ref. to ME(H6DO)-31, INSPECTION, Fuel Pressure.>	Go to step **2**.

	Step	Check	Yes	No
2	**CHECK POWER SUPPLY TO EACH FUEL INJECTOR.** 1) Turn the ignition switch to OFF. 2) Disconnect the connector from fuel injector. 3) Turn the ignition switch to ON. 4) Measure the voltage between fuel injector connector and the engine ground. ***Connector & terminal*** ***#1 (E5) No. 1 (+) — Engine ground (–):*** ***#2 (E16) No. 1 (+) — Engine ground (–):*** ***#3 (E6) No. 1 (+) — Engine ground (–):*** ***#4 (E17) No. 1 (+) — Engine ground (–):*** ***#5 (E43) No. 1 (+) — Engine ground (–):*** ***#6 (E44) No. 1 (+) — Engine ground (–):***	Is the voltage 10 V or more?	Go to step **3**.	Repair the harness and connector. NOTE: In this case, repair the following item: • Open circuit in harness between main relay and fuel injector connector • Poor contact of main relay connector • Poor contact of coupling connector
3	**CHECK HARNESS BETWEEN ECM AND FUEL INJECTOR CONNECTOR.** 1) Turn the ignition switch to OFF. 2) Disconnect the connector from ECM. 3) Measure the resistance of harness between ECM connector and fuel injector connector. ***Connector & terminal*** ***#1 (B158) No. 23 — (E5) No. 1:*** ***#2 (B158) No. 8 — (E16) No. 1:*** ***#3 (B158) No. 9 — (E6) No. 1:*** ***#4 (B158) No. 22 — (E17) No. 1:*** ***#5 (B158) No. 52 — (E43) No. 1:*** ***#6 (B158) No. 13 — (E44) No. 1:***	Is the resistance less than 1 Ω?	Go to step **4**.	Repair the open circuit of the harness between the ECM connector and fuel injector connector.
4	**CHECK HARNESS BETWEEN ECM AND FUEL INJECTOR CONNECTOR.** Measure the resistance between ECM connector and chassis ground. ***Connector & terminal*** ***#1 (B158) No. 23 — Chassis ground:*** ***#2 (B158) No. 8 — Chassis ground:*** ***#3 (B158) No. 9 — Chassis ground:*** ***#4 (B158) No. 22 — Chassis ground:*** ***#5 (B158) No. 52 — Chassis ground:*** ***#6 (B158) No. 13 — Chassis ground:***	Is the resistance 1 MΩ or more?	Go to step **5**.	Repair the short circuit to ground in harness between ECM connector and fuel injector connector.
5	**CHECK EACH FUEL INJECTOR.** Measure the resistance between each fuel injector terminals. ***Terminals*** ***No. 1 — No. 2:***	Is the resistance 5 — 20 Ω?	Go to step **6**.	Replace the faulty fuel injector. <Ref. to FU(H6DO)-61, Fuel Injector.>
6	**CHECK FOR POOR CONTACT.** Check for poor contact of ECM connector.	Is there poor contact of ECM connector?	Repair the poor contact of ECM connector.	Inspection using “General Diagnostic Table”. <Ref. to EN(H6DO)(diag)-668, INSPECTION, General Diagnostic Table.>

16.List of Diagnostic Trouble Code (DTC)

A: LIST

DTC	Item	Note
B1570	ANTENNA	<Ref. to IM(diag)-30, DTC B1570 ANTENNA, Diagnostic Procedure with Diagnostic Trouble Code (DTC).>
B1571	REFERENCE CODE INCOMPATIBILITY (IMMOBILIZER CM TO ECM)	<Ref. to IM(diag)-34, DTC B1571 REFERENCE CODE INCOMPATIBILITY (IMMOBILIZER CM TO ECM), Diagnostic Procedure with Diagnostic Trouble Code (DTC).> <Ref. to KPS(diag)-99, DTC B1571 REFERENCE CODE INCOMPATIBILITY (IMMOBILIZER CM TO ECM), Diagnostic Procedure with Diagnostic Trouble Code (DTC).>
B1572	IMM CIRCUIT EXCEPT ANTENNA CIRCUIT	<Ref. to IM(diag)-36, DTC B1572 IMM CIRCUIT EXCEPT ANTENNA CIRCUIT, Diagnostic Procedure with Diagnostic Trouble Code (DTC).> <Ref. to KPS(diag)-100, DTC B1572 IMM CIRCUIT EXCEPT ANTENNA CIRCUIT, Diagnostic Procedure with Diagnostic Trouble Code (DTC).>
B1574	KEY COMMUNICATION	<Ref. to IM(diag)-42, DTC B1574 KEY COMMUNICATION, Diagnostic Procedure with Diagnostic Trouble Code (DTC).>
B1575	INCORRECT IMMOBILIZER KEY	<Ref. to IM(diag)-44, DTC B1575 INCORRECT IMMOBILIZER KEY, Diagnostic Procedure with Diagnostic Trouble Code (DTC).>
B1576	EGI CONTROL MODULE EEPROM	<Ref. to IM(diag)-46, DTC B1576 EGI CONTROL MODULE EEPROM, Diagnostic Procedure with Diagnostic Trouble Code (DTC).> <Ref. to KPS(diag)-104, DTC B1576 EGI CONTROL MODULE EEPROM, Diagnostic Procedure with Diagnostic Trouble Code (DTC).>
B1577	IMM CONTROL MODULE EEPROM	<Ref. to IM(diag)-47, DTC B1577 IMM CONTROL MODULE EEPROM, Diagnostic Procedure with Diagnostic Trouble Code (DTC).> <Ref. to KPS(diag)-105, DTC B1577 IMM CONTROL MODULE EEPROM, Diagnostic Procedure with Diagnostic Trouble Code (DTC).>
B1578	METER	<Ref. to IM(diag)-48, DTC B1578 METER, Diagnostic Procedure with Diagnostic Trouble Code (DTC).>
P000A	"A" CAMSHAFT POSITION SLOW RESPONSE BANK 1	<Ref. to EN(H6DO)(diag)-120, DTC P000A "A" CAMSHAFT POSITION SLOW RESPONSE BANK 1, Diagnostic Procedure with Diagnostic Trouble Code (DTC).>
P000B	"B" CAMSHAFT POSITION SLOW RESPONSE BANK 1	<Ref. to EN(H6DO)(diag)-122, DTC P000B "B" CAMSHAFT POSITION SLOW RESPONSE BANK 1, Diagnostic Procedure with Diagnostic Trouble Code (DTC).>
P000C	"A" CAMSHAFT POSITION SLOW RESPONSE BANK 2	<Ref. to EN(H6DO)(diag)-123, DTC P000C "A" CAMSHAFT POSITION SLOW RESPONSE BANK 2, Diagnostic Procedure with Diagnostic Trouble Code (DTC).>
P000D	"B" CAMSHAFT POSITION SLOW RESPONSE BANK 2	<Ref. to EN(H6DO)(diag)-123, DTC P000D "B" CAMSHAFT POSITION SLOW RESPONSE BANK 2, Diagnostic Procedure with Diagnostic Trouble Code (DTC).>
P0010	"A" CAMSHAFT POSITION ACTUATOR CONTROL CIRCUIT/OPEN BANK 1	<Ref. to EN(H6DO)(diag)-124, DTC P0010 "A" CAMSHAFT POSITION ACTUATOR CONTROL CIRCUIT/OPEN BANK 1, Diagnostic Procedure with Diagnostic Trouble Code (DTC).>
P0011	"A" CAMSHAFT POSITION - TIMING OVER-ADVANCED OR SYSTEM PERFORMANCE BANK 1	<Ref. to EN(H6DO)(diag)-127, DTC P0011 "A" CAMSHAFT POSITION - TIMING OVER-ADVANCED OR SYSTEM PERFORMANCE BANK 1, Diagnostic Procedure with Diagnostic Trouble Code (DTC).>
P0013	"B" CAMSHAFT POSITION ACTUATOR CONTROL CIRCUIT/OPEN BANK 1	<Ref. to EN(H6DO)(diag)-129, DTC P0013 "B" CAMSHAFT POSITION ACTUATOR CONTROL CIRCUIT/OPEN BANK 1, Diagnostic Procedure with Diagnostic Trouble Code (DTC).>
P0014	"B" CAMSHAFT POSITION - TIMING OVER-ADVANCED OR SYSTEM PERFORMANCE BANK 1	<Ref. to EN(H6DO)(diag)-132, DTC P0014 "B" CAMSHAFT POSITION - TIMING OVER-ADVANCED OR SYSTEM PERFORMANCE BANK 1, Diagnostic Procedure with Diagnostic Trouble Code (DTC).>
P0016	CRANKSHAFT POSITION - CAMSHAFT POSITION CORRELATION BANK 1 SENSOR A	<Ref. to EN(H6DO)(diag)-134, DTC P0016 CRANKSHAFT POSITION - CAMSHAFT POSITION CORRELATION BANK 1 SENSOR A, Diagnostic Procedure with Diagnostic Trouble Code (DTC).>

DTC	Item	Note
P0017	CRANKSHAFT POSITION - CAMSHAFT POSITION CORRELATION BANK 1 SENSOR B	<Ref. to EN(H6DO)(diag)-136, DTC P0017 CRANKSHAFT POSITION - CAMSHAFT POSITION CORRELATION BANK 1 SENSOR B, Diagnostic Procedure with Diagnostic Trouble Code (DTC).>
P0018	CRANKSHAFT POSITION - CAMSHAFT POSITION CORRELATION BANK 2 SENSOR A	<Ref. to EN(H6DO)(diag)-138, DTC P0018 CRANKSHAFT POSITION - CAMSHAFT POSITION CORRELATION BANK 2 SENSOR A, Diagnostic Procedure with Diagnostic Trouble Code (DTC).>
P0019	CRANKSHAFT POSITION - CAMSHAFT POSITION CORRELATION BANK 2 SENSOR B	<Ref. to EN(H6DO)(diag)-139, DTC P0019 CRANKSHAFT POSITION - CAMSHAFT POSITION CORRELATION BANK 2 SENSOR B, Diagnostic Procedure with Diagnostic Trouble Code (DTC).>
P0020	"A" CAMSHAFT POSITION ACTUATOR CONTROL CIRCUIT/OPEN BANK 2	<Ref. to EN(H6DO)(diag)-140, DTC P0020 "A" CAMSHAFT POSITION ACTUATOR CONTROL CIRCUIT/OPEN BANK 2, Diagnostic Procedure with Diagnostic Trouble Code (DTC).>
P0021	"A" CAMSHAFT POSITION - TIMING OVER-ADVANCED OR SYSTEM PERFORMANCE BANK 2	<Ref. to EN(H6DO)(diag)-142, DTC P0021 "A" CAMSHAFT POSITION - TIMING OVER-ADVANCED OR SYSTEM PERFORMANCE BANK 2, Diagnostic Procedure with Diagnostic Trouble Code (DTC).>
P0023	"B" CAMSHAFT POSITION ACTUATOR CONTROL CIRCUIT/OPEN BANK 2	<Ref. to EN(H6DO)(diag)-143, DTC P0023 "B" CAMSHAFT POSITION ACTUATOR CONTROL CIRCUIT/OPEN BANK 2, Diagnostic Procedure with Diagnostic Trouble Code (DTC).>
P0024	"B" CAMSHAFT POSITION - TIMING OVER-ADVANCED OR SYSTEM PERFORMANCE BANK 2	<Ref. to EN(H6DO)(diag)-145, DTC P0024 "B" CAMSHAFT POSITION - TIMING OVER-ADVANCED OR SYSTEM PERFORMANCE BANK 2, Diagnostic Procedure with Diagnostic Trouble Code (DTC).>
P0030	A/F / O2 HEATER CONTROL CIRCUIT BANK 1 SENSOR 1	<Ref. to EN(H6DO)(diag)-146, DTC P0030 A/F / O2 HEATER CONTROL CIRCUIT BANK 1 SENSOR 1, Diagnostic Procedure with Diagnostic Trouble Code (DTC).>
P0031	A/F / O2 HEATER CONTROL CIRCUIT LOW BANK 1 SENSOR 1	<Ref. to EN(H6DO)(diag)-149, DTC P0031 A/F / O2 HEATER CONTROL CIRCUIT LOW BANK 1 SENSOR 1, Diagnostic Procedure with Diagnostic Trouble Code (DTC).>
P0032	A/F / O2 HEATER CONTROL CIRCUIT HIGH BANK 1 SENSOR 1	<Ref. to EN(H6DO)(diag)-152, DTC P0032 A/F / O2 HEATER CONTROL CIRCUIT HIGH BANK 1 SENSOR 1, Diagnostic Procedure with Diagnostic Trouble Code (DTC).>
P0037	A/F / O2 HEATER CONTROL CIRCUIT LOW BANK 1 SENSOR 2	<Ref. to EN(H6DO)(diag)-155, DTC P0037 A/F / O2 HEATER CONTROL CIRCUIT LOW BANK 1 SENSOR 2, Diagnostic Procedure with Diagnostic Trouble Code (DTC).>
P0038	A/F / O2 HEATER CONTROL CIRCUIT HIGH BANK 1 SENSOR 2	<Ref. to EN(H6DO)(diag)-158, DTC P0038 A/F / O2 HEATER CONTROL CIRCUIT HIGH BANK 1 SENSOR 2, Diagnostic Procedure with Diagnostic Trouble Code (DTC).>
P0050	A/F / O2 HEATER CONTROL CIRCUIT BANK 2 SENSOR 1	<Ref. to EN(H6DO)(diag)-161, DTC P0050 A/F / O2 HEATER CONTROL CIRCUIT BANK 2 SENSOR 1, Diagnostic Procedure with Diagnostic Trouble Code (DTC).>
P0051	A/F / O2 HEATER CONTROL CIRCUIT LOW BANK 2 SENSOR 1	<Ref. to EN(H6DO)(diag)-163, DTC P0051 A/F / O2 HEATER CONTROL CIRCUIT LOW BANK 2 SENSOR 1, Diagnostic Procedure with Diagnostic Trouble Code (DTC).>
P0052	A/F / O2 HEATER CONTROL CIRCUIT HIGH BANK 2 SENSOR 1	<Ref. to EN(H6DO)(diag)-165, DTC P0052 A/F / O2 HEATER CONTROL CIRCUIT HIGH BANK 2 SENSOR 1, Diagnostic Procedure with Diagnostic Trouble Code (DTC).>
P0057	A/F / O2 HEATER CONTROL CIRCUIT LOW BANK 2 SENSOR 2	<Ref. to EN(H6DO)(diag)-167, DTC P0057 A/F / O2 HEATER CONTROL CIRCUIT LOW BANK 2 SENSOR 2, Diagnostic Procedure with Diagnostic Trouble Code (DTC).>
P0058	A/F / O2 HEATER CONTROL CIRCUIT LOW BANK 2 SENSOR 2	<Ref. to EN(H6DO)(diag)-169, DTC P0058 A/F / O2 HEATER CONTROL CIRCUIT LOW BANK 2 SENSOR 2, Diagnostic Procedure with Diagnostic Trouble Code (DTC).>
P0068	MAP/MAF - THROTTLE POSITION CORRELATION	<Ref. to EN(H6DO)(diag)-171, DTC P0068 MAP/MAF - THROTTLE POSITION CORRELATION, Diagnostic Procedure with Diagnostic Trouble Code (DTC).>
P0071	AMBIENT AIR TEMPERATURE SENSOR CIRCUIT "A" RANGE/PERFORMANCE	<Ref. to EN(H6DO)(diag)-174, DTC P0071 AMBIENT AIR TEMPERATURE SENSOR CIRCUIT "A" RANGE/PERFORMANCE, Diagnostic Procedure with Diagnostic Trouble Code (DTC).>

DTC	Item	Note
P0072	AMBIENT AIR TEMPERATURE SENSOR CIRCUIT "A" LOW	<Ref. to EN(H6DO)(diag)-176, DTC P0072 AMBIENT AIR TEMPERATURE SENSOR CIRCUIT "A" LOW, Diagnostic Procedure with Diagnostic Trouble Code (DTC).>
P0073	AMBIENT AIR TEMPERATURE SENSOR CIRCUIT "A" HIGH	<Ref. to EN(H6DO)(diag)-178, DTC P0073 AMBIENT AIR TEMPERATURE SENSOR CIRCUIT "A" HIGH, Diagnostic Procedure with Diagnostic Trouble Code (DTC).>
P0101	MASS OR VOLUME AIR FLOW SENSOR "A" CIRCUIT RANGE/PERFORMANCE	<Ref. to EN(H6DO)(diag)-179, DTC P0101 MASS OR VOLUME AIR FLOW SENSOR "A" CIRCUIT RANGE/PERFORMANCE, Diagnostic Procedure with Diagnostic Trouble Code (DTC).>
P0102	MASS OR VOLUME AIR FLOW SENSOR "A" CIRCUIT LOW	<Ref. to EN(H6DO)(diag)-182, DTC P0102 MASS OR VOLUME AIR FLOW SENSOR "A" CIRCUIT LOW, Diagnostic Procedure with Diagnostic Trouble Code (DTC).>
P0103	MASS OR VOLUME AIR FLOW SENSOR "A" CIRCUIT HIGH	<Ref. to EN(H6DO)(diag)-185, DTC P0103 MASS OR VOLUME AIR FLOW SENSOR "A" CIRCUIT HIGH, Diagnostic Procedure with Diagnostic Trouble Code (DTC).>
P0107	MANIFOLD ABSOLUTE PRESSURE/ BAROMETRIC PRESSURE SENSOR CIRCUIT LOW	<Ref. to EN(H6DO)(diag)-188, DTC P0107 MANIFOLD ABSOLUTE PRESSURE/BAROMETRIC PRESSURE SENSOR CIRCUIT LOW, Diagnostic Procedure with Diagnostic Trouble Code (DTC).>
P0108	MANIFOLD ABSOLUTE PRESSURE/ BAROMETRIC PRESSURE SENSOR CIRCUIT HIGH	<Ref. to EN(H6DO)(diag)-191, DTC P0108 MANIFOLD ABSOLUTE PRESSURE/BAROMETRIC PRESSURE SENSOR CIRCUIT HIGH, Diagnostic Procedure with Diagnostic Trouble Code (DTC).>
P0111	INTAKE AIR TEMPERATURE SENSOR 1 CIRCUIT RANGE/PERFORMANCE BANK 1	<Ref. to EN(H6DO)(diag)-194, DTC P0111 INTAKE AIR TEMPERATURE SENSOR 1 CIRCUIT RANGE/PERFORMANCE BANK 1, Diagnostic Procedure with Diagnostic Trouble Code (DTC).>
P0112	INTAKE AIR TEMPERATURE SENSOR 1 CIRCUIT LOW BANK 1	<Ref. to EN(H6DO)(diag)-198, DTC P0112 INTAKE AIR TEMPERATURE SENSOR 1 CIRCUIT LOW BANK 1, Diagnostic Procedure with Diagnostic Trouble Code (DTC).>
P0113	INTAKE AIR TEMPERATURE SENSOR 1 CIRCUIT HIGH BANK 1	<Ref. to EN(H6DO)(diag)-201, DTC P0113 INTAKE AIR TEMPERATURE SENSOR 1 CIRCUIT HIGH BANK 1, Diagnostic Procedure with Diagnostic Trouble Code (DTC).>
P0116	ENGINE COOLANT TEMPERATURE SENSOR 1 CIRCUIT RANGE/PERFORMANCE	<Ref. to EN(H6DO)(diag)-204, DTC P0116 ENGINE COOLANT TEMPERATURE SENSOR 1 CIRCUIT RANGE/PERFORMANCE, Diagnostic Procedure with Diagnostic Trouble Code (DTC).>
P0117	ENGINE COOLANT TEMPERATURE SENSOR 1 CIRCUIT LOW	<Ref. to EN(H6DO)(diag)-206, DTC P0117 ENGINE COOLANT TEMPERATURE SENSOR 1 CIRCUIT LOW, Diagnostic Procedure with Diagnostic Trouble Code (DTC).>
P0118	ENGINE COOLANT TEMPERATURE SENSOR 1 CIRCUIT HIGH	<Ref. to EN(H6DO)(diag)-209, DTC P0118 ENGINE COOLANT TEMPERATURE SENSOR 1 CIRCUIT HIGH, Diagnostic Procedure with Diagnostic Trouble Code (DTC).>
P0122	THROTTLE/PEDAL POSITION SENSOR/SWITCH "A" CIRCUIT LOW	<Ref. to EN(H6DO)(diag)-212, DTC P0122 THROTTLE/PEDAL POSITION SENSOR/SWITCH "A" CIRCUIT LOW, Diagnostic Procedure with Diagnostic Trouble Code (DTC).>
P0123	THROTTLE/PEDAL POSITION SENSOR/SWITCH "A" CIRCUIT HIGH	<Ref. to EN(H6DO)(diag)-215, DTC P0123 THROTTLE/PEDAL POSITION SENSOR/SWITCH "A" CIRCUIT HIGH, Diagnostic Procedure with Diagnostic Trouble Code (DTC).>
P0125	INSUFFICIENT COOLANT TEMPERATURE FOR CLOSED LOOP FUEL CONTROL	<Ref. to EN(H6DO)(diag)-218, DTC P0125 INSUFFICIENT COOLANT TEMPERATURE FOR CLOSED LOOP FUEL CONTROL, Diagnostic Procedure with Diagnostic Trouble Code (DTC).>
P0128	COOLANT THERMOSTAT (ENGINE COOLANT TEMPERATURE BELOW THERMOSTAT REGULATING TEMPERATURE)	<Ref. to EN(H6DO)(diag)-220, DTC P0128 COOLANT THERMOSTAT (ENGINE COOLANT TEMPERATURE BELOW THERMOSTAT REGULATING TEMPERATURE), Diagnostic Procedure with Diagnostic Trouble Code (DTC).>
P0131	A/F / O2 SENSOR CIRCUIT LOW VOLTAGE BANK 1 SENSOR 1	<Ref. to EN(H6DO)(diag)-224, DTC P0131 A/F / O2 SENSOR CIRCUIT LOW VOLTAGE BANK 1 SENSOR 1, Diagnostic Procedure with Diagnostic Trouble Code (DTC).>

DTC	Item	Note
P0132	A/F / O2 SENSOR CIRCUIT HIGH VOLTAGE BANK 1 SENSOR 1	<Ref. to EN(H6DO)(diag)-227, DTC P0132 A/F / O2 SENSOR CIRCUIT HIGH VOLTAGE BANK 1 SENSOR 1, Diagnostic Procedure with Diagnostic Trouble Code (DTC).>
P0134	A/F / O2 SENSOR CIRCUIT NO ACTIVITY DETECTED BANK 1 SENSOR 1	<Ref. to EN(H6DO)(diag)-230, DTC P0134 A/F / O2 SENSOR CIRCUIT NO ACTIVITY DETECTED BANK 1 SENSOR 1, Diagnostic Procedure with Diagnostic Trouble Code (DTC).>
P0137	O2 SENSOR CIRCUIT LOW VOLTAGE BANK 1 SENSOR 2	<Ref. to EN(H6DO)(diag)-233, DTC P0137 O2 SENSOR CIRCUIT LOW VOLTAGE BANK 1 SENSOR 2, Diagnostic Procedure with Diagnostic Trouble Code (DTC).>
P0138	O2 SENSOR CIRCUIT HIGH VOLTAGE BANK 1 SENSOR 2	<Ref. to EN(H6DO)(diag)-237, DTC P0138 O2 SENSOR CIRCUIT HIGH VOLTAGE BANK 1 SENSOR 2, Diagnostic Procedure with Diagnostic Trouble Code (DTC).>
P013A	O2 SENSOR SLOW RESPONSE - RICH TO LEAN BANK 1 SENSOR 2	<Ref. to EN(H6DO)(diag)-240, DTC P013A O2 SENSOR SLOW RESPONSE - RICH TO LEAN BANK 1 SENSOR 2, Diagnostic Procedure with Diagnostic Trouble Code (DTC).>
P013B	O2 SENSOR SLOW RESPONSE - LEAN TO RICH BANK 1 SENSOR 2	<Ref. to EN(H6DO)(diag)-244, DTC P013B O2 SENSOR SLOW RESPONSE - LEAN TO RICH BANK 1 SENSOR 2, Diagnostic Procedure with Diagnostic Trouble Code (DTC).>
P013C	O2 SENSOR SLOW RESPONSE - RICH TO LEAN BANK 2 SENSOR 2	<Ref. to EN(H6DO)(diag)-246, DTC P013C O2 SENSOR SLOW RESPONSE - RICH TO LEAN BANK 2 SENSOR 2, Diagnostic Procedure with Diagnostic Trouble Code (DTC).>
P013D	O2 SENSOR SLOW RESPONSE - LEAN TO RICH BANK 2 SENSOR 2	<Ref. to EN(H6DO)(diag)-247, DTC P013D O2 SENSOR SLOW RESPONSE - LEAN TO RICH BANK 2 SENSOR 2, Diagnostic Procedure with Diagnostic Trouble Code (DTC).>
P013E	O2 SENSOR DELAYED RESPONSE - RICH TO LEAN BANK 1 SENSOR 2	<Ref. to EN(H6DO)(diag)-248, DTC P013E O2 SENSOR DELAYED RESPONSE - RICH TO LEAN BANK 1 SENSOR 2, Diagnostic Procedure with Diagnostic Trouble Code (DTC).>
P013F	O2 SENSOR DELAYED RESPONSE - LEAN TO RICH BANK 1 SENSOR 2	<Ref. to EN(H6DO)(diag)-250, DTC P013F O2 SENSOR DELAYED RESPONSE - LEAN TO RICH BANK 1 SENSOR 2, Diagnostic Procedure with Diagnostic Trouble Code (DTC).>
P0141	O2 SENSOR HEATER CIRCUIT BANK 1 SENSOR 2	<Ref. to EN(H6DO)(diag)-252, DTC P0141 O2 SENSOR HEATER CIRCUIT BANK 1 SENSOR 2, Diagnostic Procedure with Diagnostic Trouble Code (DTC).>
P014A	O2 SENSOR DELAYED RESPONSE - RICH TO LEAN BANK 2 SENSOR 2	<Ref. to EN(H6DO)(diag)-253, DTC P014A O2 SENSOR DELAYED RESPONSE - RICH TO LEAN BANK 2 SENSOR 2, Diagnostic Procedure with Diagnostic Trouble Code (DTC).>
P014B	O2 SENSOR DELAYED RESPONSE - LEAN TO RICH BANK 2 SENSOR 2	<Ref. to EN(H6DO)(diag)-253, DTC P014B O2 SENSOR DELAYED RESPONSE - LEAN TO RICH BANK 2 SENSOR 2, Diagnostic Procedure with Diagnostic Trouble Code (DTC).>
P014C	A/F / O2 SENSOR SLOW RESPONSE - RICH TO LEAN BANK 1 SENSOR 1	<Ref. to EN(H6DO)(diag)-254, DTC P014C A/F / O2 SENSOR SLOW RESPONSE - RICH TO LEAN BANK 1 SENSOR 1, Diagnostic Procedure with Diagnostic Trouble Code (DTC).>
P014D	A/F / O2 SENSOR SLOW RESPONSE - LEAN TO RICH BANK 1 SENSOR 1	<Ref. to EN(H6DO)(diag)-256, DTC P014D A/F / O2 SENSOR SLOW RESPONSE - LEAN TO RICH BANK 1 SENSOR 1, Diagnostic Procedure with Diagnostic Trouble Code (DTC).>
P014E	A/F / O2 SENSOR SLOW RESPONSE - RICH TO LEAN BANK 2 SENSOR 1	<Ref. to EN(H6DO)(diag)-257, DTC P014E A/F / O2 SENSOR SLOW RESPONSE - RICH TO LEAN BANK 2 SENSOR 1, Diagnostic Procedure with Diagnostic Trouble Code (DTC).>
P014F	A/F / O2 SENSOR SLOW RESPONSE - LEAN TO RICH BANK 2 SENSOR 1	<Ref. to EN(H6DO)(diag)-257, DTC P014F A/F / O2 SENSOR SLOW RESPONSE - LEAN TO RICH BANK 2 SENSOR 1, Diagnostic Procedure with Diagnostic Trouble Code (DTC).>
P0151	A/F / O2 SENSOR CIRCUIT LOW VOLTAGE BANK 2 SENSOR 1	<Ref. to EN(H6DO)(diag)-258, DTC P0151 A/F / O2 SENSOR CIRCUIT LOW VOLTAGE BANK 2 SENSOR 1, Diagnostic Procedure with Diagnostic Trouble Code (DTC).>
P0152	A/F / O2 SENSOR CIRCUIT HIGH VOLTAGE BANK 2 SENSOR 1	<Ref. to EN(H6DO)(diag)-260, DTC P0152 A/F / O2 SENSOR CIRCUIT HIGH VOLTAGE BANK 2 SENSOR 1, Diagnostic Procedure with Diagnostic Trouble Code (DTC).>

DTC	Item	Note
P0154	A/F / O2 SENSOR CIRCUIT NO ACTIVITY DETECTED BANK 2 SENSOR 1	<Ref. to EN(H6DO)(diag)-262, DTC P0154 A/F / O2 SENSOR CIRCUIT NO ACTIVITY DETECTED BANK 2 SENSOR 1, Diagnostic Procedure with Diagnostic Trouble Code (DTC).>
P0157	O2 SENSOR CIRCUIT LOW VOLTAGE BANK 2 SENSOR 2	<Ref. to EN(H6DO)(diag)-264, DTC P0157 O2 SENSOR CIRCUIT LOW VOLTAGE BANK 2 SENSOR 2, Diagnostic Procedure with Diagnostic Trouble Code (DTC).>
P0158	O2 SENSOR CIRCUIT HIGH VOLTAGE BANK 2 SENSOR 2	<Ref. to EN(H6DO)(diag)-266, DTC P0158 O2 SENSOR CIRCUIT HIGH VOLTAGE BANK 2 SENSOR 2, Diagnostic Procedure with Diagnostic Trouble Code (DTC).>
P015A	A/F / O2 SENSOR DELAYED RESPONSE - RICH TO LEAN BANK 1 SENSOR 1	<Ref. to EN(H6DO)(diag)-268, DTC P015A A/F / O2 SENSOR DELAYED RESPONSE - RICH TO LEAN BANK 1 SENSOR 1, Diagnostic Procedure with Diagnostic Trouble Code (DTC).>
P015B	A/F / O2 SENSOR DELAYED RESPONSE - LEAN TO RICH BANK 1 SENSOR 1	<Ref. to EN(H6DO)(diag)-271, DTC P015B A/F / O2 SENSOR DELAYED RESPONSE - LEAN TO RICH BANK 1 SENSOR 1, Diagnostic Procedure with Diagnostic Trouble Code (DTC).>
P015C	A/F / O2 SENSOR DELAYED RESPONSE - RICH TO LEAN BANK 2 SENSOR 1	<Ref. to EN(H6DO)(diag)-271, DTC P015C A/F / O2 SENSOR DELAYED RESPONSE - RICH TO LEAN BANK 2 SENSOR 1, Diagnostic Procedure with Diagnostic Trouble Code (DTC).>
P015D	A/F / O2 SENSOR DELAYED RESPONSE - LEAN TO RICH BANK 2 SENSOR 1	<Ref. to EN(H6DO)(diag)-271, DTC P015D A/F / O2 SENSOR DELAYED RESPONSE - LEAN TO RICH BANK 2 SENSOR 1, Diagnostic Procedure with Diagnostic Trouble Code (DTC).>
P0161	O2 SENSOR HEATER CIRCUIT BANK 2 SENSOR 2	<Ref. to EN(H6DO)(diag)-271, DTC P0161 O2 SENSOR HEATER CIRCUIT BANK 2 SENSOR 2, Diagnostic Procedure with Diagnostic Trouble Code (DTC).>
P0171	SYSTEM TOO LEAN BANK 1	<Ref. to EN(H6DO)(diag)-272, DTC P0171 SYSTEM TOO LEAN BANK 1, Diagnostic Procedure with Diagnostic Trouble Code (DTC).>
P0172	SYSTEM TOO RICH BANK 1	<Ref. to EN(H6DO)(diag)-273, DTC P0172 SYSTEM TOO RICH BANK 1, Diagnostic Procedure with Diagnostic Trouble Code (DTC).>
P0174	SYSTEM TOO LEAN BANK 2	<Ref. to EN(H6DO)(diag)-273, DTC P0174 SYSTEM TOO LEAN BANK 2, Diagnostic Procedure with Diagnostic Trouble Code (DTC).>
P0175	SYSTEM TOO RICH BANK 2	<Ref. to EN(H6DO)(diag)-274, DTC P0175 SYSTEM TOO RICH BANK 2, Diagnostic Procedure with Diagnostic Trouble Code (DTC).>
P0196	ENGINE OIL TEMPERATURE SENSOR "A" RANGE/PERFORMANCE	<Ref. to EN(H6DO)(diag)-276, DTC P0196 ENGINE OIL TEMPERATURE SENSOR "A" RANGE/PERFORMANCE, Diagnostic Procedure with Diagnostic Trouble Code (DTC).>
P0197	ENGINE OIL TEMPERATURE SENSOR "A" CIRCUIT LOW	<Ref. to EN(H6DO)(diag)-279, DTC P0197 ENGINE OIL TEMPERATURE SENSOR "A" CIRCUIT LOW, Diagnostic Procedure with Diagnostic Trouble Code (DTC).>
P0198	ENGINE OIL TEMPERATURE SENSOR "A" CIRCUIT HIGH	<Ref. to EN(H6DO)(diag)-282, DTC P0198 ENGINE OIL TEMPERATURE SENSOR "A" CIRCUIT HIGH, Diagnostic Procedure with Diagnostic Trouble Code (DTC).>
P0201	CYLINDER 1 INJECTOR "A" CIRCUIT	<Ref. to EN(H6DO)(diag)-285, DTC P0201 CYLINDER 1 INJECTOR "A" CIRCUIT, Diagnostic Procedure with Diagnostic Trouble Code (DTC).>
P0202	CYLINDER 2 INJECTOR "A" CIRCUIT	<Ref. to EN(H6DO)(diag)-288, DTC P0202 CYLINDER 2 INJECTOR "A" CIRCUIT, Diagnostic Procedure with Diagnostic Trouble Code (DTC).>
P0203	CYLINDER 3 INJECTOR "A" CIRCUIT	<Ref. to EN(H6DO)(diag)-288, DTC P0203 CYLINDER 3 INJECTOR "A" CIRCUIT, Diagnostic Procedure with Diagnostic Trouble Code (DTC).>
P0204	CYLINDER 4 INJECTOR "A" CIRCUIT	<Ref. to EN(H6DO)(diag)-288, DTC P0204 CYLINDER 4 INJECTOR "A" CIRCUIT, Diagnostic Procedure with Diagnostic Trouble Code (DTC).>
P0205	CYLINDER 5 INJECTOR "A" CIRCUIT	<Ref. to EN(H6DO)(diag)-288, DTC P0205 CYLINDER 5 INJECTOR "A" CIRCUIT, Diagnostic Procedure with Diagnostic Trouble Code (DTC).>
P0206	CYLINDER 6 INJECTOR "A" CIRCUIT	<Ref. to EN(H6DO)(diag)-288, DTC P0206 CYLINDER 6 INJECTOR "A" CIRCUIT, Diagnostic Procedure with Diagnostic Trouble Code (DTC).>
P0222	THROTTLE/PEDAL POSITION SENSOR/SWITCH "B" CIRCUIT LOW	<Ref. to EN(H6DO)(diag)-289, DTC P0222 THROTTLE/PEDAL POSITION SENSOR/SWITCH "B" CIRCUIT LOW, Diagnostic Procedure with Diagnostic Trouble Code (DTC).>

DTC	Item	Note
P0223	THROTTLE/PEDAL POSITION SENSOR/SWITCH "B" CIRCUIT HIGH	<Ref. to EN(H6DO)(diag)-292, DTC P0223 THROTTLE/PEDAL POSITION SENSOR/SWITCH "B" CIRCUIT HIGH, Diagnostic Procedure with Diagnostic Trouble Code (DTC).>
P0230	FUEL PUMP PRIMARY CIRCUIT	<Ref. to EN(H6DO)(diag)-295, DTC P0230 FUEL PUMP PRIMARY CIRCUIT, Diagnostic Procedure with Diagnostic Trouble Code (DTC).>
P0300	RANDOM/MULTIPLE CYLINDER MISFIRE DETECTED	<Ref. to EN(H6DO)(diag)-299, DTC P0300 RANDOM/MULTIPLE CYLINDER MISFIRE DETECTED, Diagnostic Procedure with Diagnostic Trouble Code (DTC).>
P0301	CYLINDER 1 MISFIRE DETECTED	<Ref. to EN(H6DO)(diag)-303, DTC P0301 CYLINDER 1 MISFIRE DETECTED, Diagnostic Procedure with Diagnostic Trouble Code (DTC).>
P0302	CYLINDER 2 MISFIRE DETECTED	<Ref. to EN(H6DO)(diag)-310, DTC P0302 CYLINDER 2 MISFIRE DETECTED, Diagnostic Procedure with Diagnostic Trouble Code (DTC).>
P0303	CYLINDER 3 MISFIRE DETECTED	<Ref. to EN(H6DO)(diag)-310, DTC P0303 CYLINDER 3 MISFIRE DETECTED, Diagnostic Procedure with Diagnostic Trouble Code (DTC).>
P0304	CYLINDER 4 MISFIRE DETECTED	<Ref. to EN(H6DO)(diag)-310, DTC P0304 CYLINDER 4 MISFIRE DETECTED, Diagnostic Procedure with Diagnostic Trouble Code (DTC).>
P0305	CYLINDER 5 MISFIRE DETECTED	<Ref. to EN(H6DO)(diag)-310, DTC P0305 CYLINDER 5 MISFIRE DETECTED, Diagnostic Procedure with Diagnostic Trouble Code (DTC).>
P0306	CYLINDER 6 MISFIRE DETECTED	<Ref. to EN(H6DO)(diag)-311, DTC P0306 CYLINDER 6 MISFIRE DETECTED, Diagnostic Procedure with Diagnostic Trouble Code (DTC).>
P0327	KNOCK/COMBUSTION VIBRATION SENSOR 1 CIRCUIT LOW BANK 1 OR SINGLE SENSOR	<Ref. to EN(H6DO)(diag)-316, DTC P0327 KNOCK/COMBUSTION VIBRATION SENSOR 1 CIRCUIT LOW BANK 1 OR SINGLE SENSOR, Diagnostic Procedure with Diagnostic Trouble Code (DTC).>
P0328	KNOCK/COMBUSTION VIBRATION SENSOR 1 CIRCUIT HIGH BANK 1 OR SINGLE SENSOR	<Ref. to EN(H6DO)(diag)-319, DTC P0328 KNOCK/COMBUSTION VIBRATION SENSOR 1 CIRCUIT HIGH BANK 1 OR SINGLE SENSOR, Diagnostic Procedure with Diagnostic Trouble Code (DTC).>
P0332	KNOCK/COMBUSTION VIBRATION SENSOR 2 CIRCUIT LOW BANK 2	<Ref. to EN(H6DO)(diag)-322, DTC P0332 KNOCK/COMBUSTION VIBRATION SENSOR 2 CIRCUIT LOW BANK 2, Diagnostic Procedure with Diagnostic Trouble Code (DTC).>
P0333	KNOCK/COMBUSTION VIBRATION SENSOR 2 CIRCUIT HIGH BANK 2	<Ref. to EN(H6DO)(diag)-324, DTC P0333 KNOCK/COMBUSTION VIBRATION SENSOR 2 CIRCUIT HIGH BANK 2, Diagnostic Procedure with Diagnostic Trouble Code (DTC).>
P0335	CRANKSHAFT POSITION SENSOR "A" CIRCUIT	<Ref. to EN(H6DO)(diag)-326, DTC P0335 CRANKSHAFT POSITION SENSOR "A" CIRCUIT, Diagnostic Procedure with Diagnostic Trouble Code (DTC).>
P0336	CRANKSHAFT POSITION SENSOR "A" CIRCUIT RANGE/PERFORMANCE	<Ref. to EN(H6DO)(diag)-329, DTC P0336 CRANKSHAFT POSITION SENSOR "A" CIRCUIT RANGE/PERFORMANCE, Diagnostic Procedure with Diagnostic Trouble Code (DTC).>
P0340	CAMSHAFT POSITION SENSOR "A" CIRCUIT BANK 1 OR SINGLE SENSOR	<Ref. to EN(H6DO)(diag)-331, DTC P0340 CAMSHAFT POSITION SENSOR "A" CIRCUIT BANK 1 OR SINGLE SENSOR, Diagnostic Procedure with Diagnostic Trouble Code (DTC).>
P0341	CAMSHAFT POSITION SENSOR "A" CIRCUIT RANGE/PERFORMANCE BANK 1 OR SINGLE SENSOR	<Ref. to EN(H6DO)(diag)-335, DTC P0341 CAMSHAFT POSITION SENSOR "A" CIRCUIT RANGE/PERFORMANCE BANK 1 OR SINGLE SENSOR, Diagnostic Procedure with Diagnostic Trouble Code (DTC).>
P0345	CAMSHAFT POSITION SENSOR "A" CIRCUIT BANK 2	<Ref. to EN(H6DO)(diag)-337, DTC P0345 CAMSHAFT POSITION SENSOR "A" CIRCUIT BANK 2 , Diagnostic Procedure with Diagnostic Trouble Code (DTC).>
P0346	CAMSHAFT POSITION SENSOR "A" CIRCUIT RANGE/PERFORMANCE BANK 2	<Ref. to EN(H6DO)(diag)-338, DTC P0346 CAMSHAFT POSITION SENSOR "A" CIRCUIT RANGE/PERFORMANCE BANK 2, Diagnostic Procedure with Diagnostic Trouble Code (DTC).>
P0351	IGNITION COIL "A" PRIMARY CONTROL CIRCUIT/OPEN	<Ref. to EN(H6DO)(diag)-339, DTC P0351 IGNITION COIL "A" PRIMARY CONTROL CIRCUIT/OPEN, Diagnostic Procedure with Diagnostic Trouble Code (DTC).>
P0352	IGNITION COIL "B" PRIMARY CONTROL CIRCUIT/OPEN	<Ref. to EN(H6DO)(diag)-342, DTC P0352 IGNITION COIL "B" PRIMARY CONTROL CIRCUIT/OPEN, Diagnostic Procedure with Diagnostic Trouble Code (DTC).>

DTC	Item	Note
P0353	IGNITION COIL "C" PRIMARY CONTROL CIRCUIT/OPEN	<Ref. to EN(H6DO)(diag)-342, DTC P0353 IGNITION COIL "C" PRIMARY CONTROL CIRCUIT/OPEN, Diagnostic Procedure with Diagnostic Trouble Code (DTC).>
P0354	IGNITION COIL "D" PRIMARY CONTROL CIRCUIT/OPEN	<Ref. to EN(H6DO)(diag)-342, DTC P0354 IGNITION COIL "D" PRIMARY CONTROL CIRCUIT/OPEN, Diagnostic Procedure with Diagnostic Trouble Code (DTC).>
P0355	IGNITION COIL "E" PRIMARY CONTROL CIRCUIT/OPEN	<Ref. to EN(H6DO)(diag)-342, DTC P0355 IGNITION COIL "E" PRIMARY CONTROL CIRCUIT/OPEN, Diagnostic Procedure with Diagnostic Trouble Code (DTC).>
P0356	IGNITION COIL "F" PRIMARY CONTROL CIRCUIT/OPEN	<Ref. to EN(H6DO)(diag)-342, DTC P0356 IGNITION COIL "F" PRIMARY CONTROL CIRCUIT/OPEN, Diagnostic Procedure with Diagnostic Trouble Code (DTC).>
P0365	CAMSHAFT POSITION SENSOR "B" CIRCUIT BANK 1	<Ref. to EN(H6DO)(diag)-343, DTC P0365 CAMSHAFT POSITION SENSOR "B" CIRCUIT BANK 1, Diagnostic Procedure with Diagnostic Trouble Code (DTC).>
P0366	CAMSHAFT POSITION SENSOR "B" CIRCUIT RANGE/PERFORMANCE BANK 1	<Ref. to EN(H6DO)(diag)-347, DTC P0366 CAMSHAFT POSITION SENSOR "B" CIRCUIT RANGE/PERFORMANCE BANK 1, Diagnostic Procedure with Diagnostic Trouble Code (DTC).>
P0390	CAMSHAFT POSITION SENSOR "B" CIRCUIT BANK 2	<Ref. to EN(H6DO)(diag)-349, DTC P0390 CAMSHAFT POSITION SENSOR "B" CIRCUIT BANK 2, Diagnostic Procedure with Diagnostic Trouble Code (DTC).>
P0391	CAMSHAFT POSITION SENSOR "B" CIRCUIT RANGE/PERFORMANCE BANK 2	<Ref. to EN(H6DO)(diag)-351, DTC P0391 CAMSHAFT POSITION SENSOR "B" CIRCUIT RANGE/PERFORMANCE BANK 2, Diagnostic Procedure with Diagnostic Trouble Code (DTC).>
P0400	EGR "A" FLOW	<Ref. to EN(H6DO)(diag)-352, DTC P0400 EGR "A" FLOW, Diagnostic Procedure with Diagnostic Trouble Code (DTC).>
P0420	CATALYST SYSTEM EFFICIENCY BELOW THRESHOLD BANK 1	<Ref. to EN(H6DO)(diag)-355, DTC P0420 CATALYST SYSTEM EFFICIENCY BELOW THRESHOLD BANK 1, Diagnostic Procedure with Diagnostic Trouble Code (DTC).>
P0430	CATALYST SYSTEM EFFICIENCY BELOW THRESHOLD BANK 2	<Ref. to EN(H6DO)(diag)-363, DTC P0430 CATALYST SYSTEM EFFICIENCY BELOW THRESHOLD BANK 2, Diagnostic Procedure with Diagnostic Trouble Code (DTC).>
P0441	EVAP SYSTEM (CPC) INCORRECT PURGE FLOW	<Ref. to EN(H6DO)(diag)-371, DTC P0441 EVAP SYSTEM (CPC) INCORRECT PURGE FLOW, Diagnostic Procedure with Diagnostic Trouble Code (DTC).>
P0451	EVAP SYSTEM (CPC) PRESSURE SENSOR/SWITCH CIRCUIT RANGE/PERFORMANCE	<Ref. to EN(H6DO)(diag)-375, DTC P0451 EVAP SYSTEM (CPC) PRESSURE SENSOR/SWITCH CIRCUIT RANGE/PERFORMANCE, Diagnostic Procedure with Diagnostic Trouble Code (DTC).>
P0452	EVAP SYSTEM (CPC) PRESSURE SENSOR/SWITCH CIRCUIT LOW	<Ref. to EN(H6DO)(diag)-377, DTC P0452 EVAP SYSTEM (CPC) PRESSURE SENSOR/SWITCH CIRCUIT LOW, Diagnostic Procedure with Diagnostic Trouble Code (DTC).>
P0453	EVAP SYSTEM (CPC) PRESSURE SENSOR/SWITCH CIRCUIT HIGH	<Ref. to EN(H6DO)(diag)-380, DTC P0453 EVAP SYSTEM (CPC) PRESSURE SENSOR/SWITCH CIRCUIT HIGH, Diagnostic Procedure with Diagnostic Trouble Code (DTC).>
P0455	EVAP SYSTEM (CPC) LEAK DETECTED (LARGE LEAK)	<Ref. to EN(H6DO)(diag)-383, DTC P0455 EVAP SYSTEM (CPC) LEAK DETECTED (LARGE LEAK), Diagnostic Procedure with Diagnostic Trouble Code (DTC).>
P0456	EVAP SYSTEM (CPC) LEAK DETECTED (VERY SMALL LEAK)	<Ref. to EN(H6DO)(diag)-391, DTC P0456 EVAP SYSTEM (CPC) LEAK DETECTED (VERY SMALL LEAK), Diagnostic Procedure with Diagnostic Trouble Code (DTC).>
P0458	EVAP SYSTEM (CPC) PURGE CONTROL VALVE "A" CIRCUIT LOW	<Ref. to EN(H6DO)(diag)-392, DTC P0458 EVAP SYSTEM (CPC) PURGE CONTROL VALVE "A" CIRCUIT LOW, Diagnostic Procedure with Diagnostic Trouble Code (DTC).>
P0459	EVAP SYSTEM (CPC) PURGE CONTROL VALVE "A" CIRCUIT HIGH	<Ref. to EN(H6DO)(diag)-395, DTC P0459 EVAP SYSTEM (CPC) PURGE CONTROL VALVE "A" CIRCUIT HIGH, Diagnostic Procedure with Diagnostic Trouble Code (DTC).>

List of Diagnostic Trouble Code (DTC)

DTC	Item	Note
P0461	FUEL LEVEL SENSOR "A" CIRCUIT RANGE/PERFORMANCE	<Ref. to EN(H6DO)(diag)-397, DTC P0461 FUEL LEVEL SENSOR "A" CIRCUIT RANGE/PERFORMANCE, Diagnostic Procedure with Diagnostic Trouble Code (DTC).>
P0462	FUEL LEVEL SENSOR "A" CIRCUIT LOW	<Ref. to EN(H6DO)(diag)-399, DTC P0462 FUEL LEVEL SENSOR "A" CIRCUIT LOW, Diagnostic Procedure with Diagnostic Trouble Code (DTC).>
P0463	FUEL LEVEL SENSOR "A" CIRCUIT HIGH	<Ref. to EN(H6DO)(diag)-400, DTC P0463 FUEL LEVEL SENSOR "A" CIRCUIT HIGH, Diagnostic Procedure with Diagnostic Trouble Code (DTC).>
P0500	VEHICLE SPEED SENSOR "A" CIRCUIT	<Ref. to EN(H6DO)(diag)-402, DTC P0500 VEHICLE SPEED SENSOR "A" CIRCUIT, Diagnostic Procedure with Diagnostic Trouble Code (DTC).>
P0506	IDLE CONTROL SYSTEM RPM - LOWER THAN EXPECTED	<Ref. to EN(H6DO)(diag)-403, DTC P0506 IDLE CONTROL SYSTEM RPM - LOWER THAN EXPECTED, Diagnostic Procedure with Diagnostic Trouble Code (DTC).>
P0507	IDLE CONTROL SYSTEM RPM - HIGHER THAN EXPECTED	<Ref. to EN(H6DO)(diag)-405, DTC P0507 IDLE CONTROL SYSTEM RPM - HIGHER THAN EXPECTED, Diagnostic Procedure with Diagnostic Trouble Code (DTC).>
P050A	COLD START IDLE CONTROL SYSTEM PERFORMANCE	<Ref. to EN(H6DO)(diag)-407, DTC P050A COLD START IDLE CONTROL SYSTEM PERFORMANCE, Diagnostic Procedure with Diagnostic Trouble Code (DTC).>
P050B	COLD START IGNITION TIMING PERFORMANCE	<Ref. to EN(H6DO)(diag)-419, DTC P050B COLD START IGNITION TIMING PERFORMANCE, Diagnostic Procedure with Diagnostic Trouble Code (DTC).>
P0512	STARTER (SWITCH) REQUEST CIRCUIT	<Ref. to EN(H6DO)(diag)-420, DTC P0512 STARTER (SWITCH) REQUEST CIRCUIT, Diagnostic Procedure with Diagnostic Trouble Code (DTC).>
P0560	SYSTEM VOLTAGE	<Ref. to EN(H6DO)(diag)-423, DTC P0560 SYSTEM VOLTAGE, Diagnostic Procedure with Diagnostic Trouble Code (DTC).>
P0604	INTERNAL CONTROL MODULE RANDOM ACCESS MEMORY (RAM) ERROR	<Ref. to EN(H6DO)(diag)-425, DTC P0604 INTERNAL CONTROL MODULE RANDOM ACCESS MEMORY (RAM) ERROR, Diagnostic Procedure with Diagnostic Trouble Code (DTC).>
P0605	INTERNAL CONTROL MODULE READ ONLY MEMORY (ROM) ERROR	<Ref. to EN(H6DO)(diag)-426, DTC P0605 INTERNAL CONTROL MODULE READ ONLY MEMORY (ROM) ERROR, Diagnostic Procedure with Diagnostic Trouble Code (DTC).>
P0606	CONTROL MODULE PROCESSOR	<Ref. to EN(H6DO)(diag)-427, DTC P0606 CONTROL MODULE PROCESSOR, Diagnostic Procedure with Diagnostic Trouble Code (DTC).>
P060A	INTERNAL CONTROL MODULE MONITORING PROCESSOR PERFORMANCE	<Ref. to EN(H6DO)(diag)-431, DTC P060A INTERNAL CONTROL MODULE MONITORING PROCESSOR PERFORMANCE, Diagnostic Procedure with Diagnostic Trouble Code (DTC).>
P060B	INTERNAL CONTROL MODULE A/D PROCESSING PERFORMANCE	<Ref. to EN(H6DO)(diag)-433, DTC P060B INTERNAL CONTROL MODULE A/D PROCESSING PERFORMANCE, Diagnostic Procedure with Diagnostic Trouble Code (DTC).>
P0616	STARTER RELAY "A" CIRCUIT LOW	<Ref. to EN(H6DO)(diag)-435, DTC P0616 STARTER RELAY "A" CIRCUIT LOW, Diagnostic Procedure with Diagnostic Trouble Code (DTC).>
P0617	STARTER RELAY "A" CIRCUIT HIGH	<Ref. to EN(H6DO)(diag)-439, DTC P0617 STARTER RELAY "A" CIRCUIT HIGH, Diagnostic Procedure with Diagnostic Trouble Code (DTC).>
P062F	INTERNAL CONTROL MODULE EEPROM ERROR	<Ref. to EN(H6DO)(diag)-444, DTC P062F INTERNAL CONTROL MODULE EEPROM ERROR, Diagnostic Procedure with Diagnostic Trouble Code (DTC).>
P0685	ECM/PCM POWER RELAY CONTROL CIRCUIT/OPEN	<Ref. to EN(H6DO)(diag)-446, DTC P0685 ECM/PCM POWER RELAY CONTROL CIRCUIT/OPEN, Diagnostic Procedure with Diagnostic Trouble Code (DTC).>
P0700	TRANSMISSION CONTROL SYSTEM (MIL REQUEST)	<Ref. to EN(H6DO)(diag)-448, DTC P0700 TRANSMISSION CONTROL SYSTEM (MIL REQUEST), Diagnostic Procedure with Diagnostic Trouble Code (DTC).>
P081A	STARTER DISABLE CIRCUIT LOW	<Ref. to EN(H6DO)(diag)-449, DTC P081A STARTER DISABLE CIRCUIT LOW, Diagnostic Procedure with Diagnostic Trouble Code (DTC).>

DTC	Item	Note
P0851	PARK/NEUTRAL SWITCH INPUT CIRCUIT LOW	<Ref. to EN(H6DO)(diag)-452, DTC P0851 PARK/NEUTRAL SWITCH INPUT CIRCUIT LOW, Diagnostic Procedure with Diagnostic Trouble Code (DTC).>
P0852	PARK/NEUTRAL SWITCH INPUT CIRCUIT HIGH	<Ref. to EN(H6DO)(diag)-454, DTC P0852 PARK/NEUTRAL SWITCH INPUT CIRCUIT HIGH, Diagnostic Procedure with Diagnostic Trouble Code (DTC).>
P1160	THROTTLE RETURN SPRING	<Ref. to EN(H6DO)(diag)-456, DTC P1160 THROTTLE RETURN SPRING, Diagnostic Procedure with Diagnostic Trouble Code (DTC).>
P1449	EVAP SYSTEM CLOG DETECTED (AIR FILTER)	<Ref. to EN(H6DO)(diag)-457, DTC P1449 EVAP SYSTEM CLOG DETECTED (AIR FILTER), Diagnostic Procedure with Diagnostic Trouble Code (DTC).>
P1451	EVAP SYSTEM CLOG DETECTED (PIPE)	<Ref. to EN(H6DO)(diag)-460, DTC P1451 EVAP SYSTEM CLOG DETECTED (PIPE), Diagnostic Procedure with Diagnostic Trouble Code (DTC).>
P1492	COIL 1 EGR "A" CONTROL CIRCUIT LOW	<Ref. to EN(H6DO)(diag)-461, DTC P1492 COIL 1 EGR "A" CONTROL CIRCUIT LOW, Diagnostic Procedure with Diagnostic Trouble Code (DTC).>
P1493	COIL 1 EGR "A" CONTROL CIRCUIT HIGH	<Ref. to EN(H6DO)(diag)-462, DTC P1493 COIL 1 EGR "A" CONTROL CIRCUIT HIGH, Diagnostic Procedure with Diagnostic Trouble Code (DTC).>
P1494	COIL 2 EGR "A" CONTROL CIRCUIT LOW	<Ref. to EN(H6DO)(diag)-463, DTC P1494 COIL 2 EGR "A" CONTROL CIRCUIT LOW, Diagnostic Procedure with Diagnostic Trouble Code (DTC).>
P1495	COIL 2 EGR "A" CONTROL CIRCUIT HIGH	<Ref. to EN(H6DO)(diag)-463, DTC P1495 COIL 2 EGR "A" CONTROL CIRCUIT HIGH, Diagnostic Procedure with Diagnostic Trouble Code (DTC).>
P1496	COIL 3 EGR "A" CONTROL CIRCUIT LOW	<Ref. to EN(H6DO)(diag)-463, DTC P1496 COIL 3 EGR "A" CONTROL CIRCUIT LOW, Diagnostic Procedure with Diagnostic Trouble Code (DTC).>
P1497	COIL 3 EGR "A" CONTROL CIRCUIT HIGH	<Ref. to EN(H6DO)(diag)-463, DTC P1497 COIL 3 EGR "A" CONTROL CIRCUIT HIGH, Diagnostic Procedure with Diagnostic Trouble Code (DTC).>
P1498	COIL 4 EGR "A" CONTROL CIRCUIT LOW	<Ref. to EN(H6DO)(diag)-464, DTC P1498 COIL 4 EGR "A" CONTROL CIRCUIT LOW, Diagnostic Procedure with Diagnostic Trouble Code (DTC).>
P1499	COIL 4 EGR "A" CONTROL CIRCUIT HIGH	<Ref. to EN(H6DO)(diag)-466, DTC P1499 COIL 4 EGR "A" CONTROL CIRCUIT HIGH, Diagnostic Procedure with Diagnostic Trouble Code (DTC).>
P1603	ENGINE STALL HISTORY	<Ref. to EN(H6DO)(diag)-468, DTC P1603 ENGINE STALL HISTORY, Diagnostic Procedure with Diagnostic Trouble Code (DTC).>
P1604	STARTABILITY MALFUNCTION	<Ref. to EN(H6DO)(diag)-494, DTC P1604 STARTABILITY MALFUNCTION, Diagnostic Procedure with Diagnostic Trouble Code (DTC).>
P1C00	BATTERY MONITOR MODULE "A" PERFORMANCE	<Ref. to EN(H6DO)(diag)-529, DTC P1C00 BATTERY MONITOR MODULE "A" PERFORMANCE, Diagnostic Procedure with Diagnostic Trouble Code (DTC).>
P2096	POST CATALYST FUEL TRIM SYSTEM TOO LEAN BANK 1	<Ref. to EN(H6DO)(diag)-530, DTC P2096 POST CATALYST FUEL TRIM SYSTEM TOO LEAN BANK 1, Diagnostic Procedure with Diagnostic Trouble Code (DTC).>
P2097	POST CATALYST FUEL TRIM SYSTEM TOO RICH BANK 1	<Ref. to EN(H6DO)(diag)-537, DTC P2097 POST CATALYST FUEL TRIM SYSTEM TOO RICH BANK 1, Diagnostic Procedure with Diagnostic Trouble Code (DTC).>
P2098	POST CATALYST FUEL TRIM SYSTEM TOO LEAN BANK 2	<Ref. to EN(H6DO)(diag)-544, DTC P2098 POST CATALYST FUEL TRIM SYSTEM TOO LEAN BANK 2, Diagnostic Procedure with Diagnostic Trouble Code (DTC).>
P2099	POST CATALYST FUEL TRIM SYSTEM TOO RICH BANK 2	<Ref. to EN(H6DO)(diag)-550, DTC P2099 POST CATALYST FUEL TRIM SYSTEM TOO RICH BANK 2, Diagnostic Procedure with Diagnostic Trouble Code (DTC).>
P2101	THROTTLE ACTUATOR "A" CONTROL MOTOR CIRCUIT RANGE/PERFORMANCE	<Ref. to EN(H6DO)(diag)-556, DTC P2101 THROTTLE ACTUATOR "A" CONTROL MOTOR CIRCUIT RANGE/PERFORMANCE, Diagnostic Procedure with Diagnostic Trouble Code (DTC).>
P2102	THROTTLE ACTUATOR "A" CONTROL MOTOR CIRCUIT LOW	<Ref. to EN(H6DO)(diag)-562, DTC P2102 THROTTLE ACTUATOR "A" CONTROL MOTOR CIRCUIT LOW, Diagnostic Procedure with Diagnostic Trouble Code (DTC).>

List of Diagnostic Trouble Code (DTC)

DTC	Item	Note
P2103	THROTTLE ACTUATOR "A" CONTROL MOTOR CIRCUIT HIGH	<Ref. to EN(H6DO)(diag)-565, DTC P2103 THROTTLE ACTUATOR "A" CONTROL MOTOR CIRCUIT HIGH, Diagnostic Procedure with Diagnostic Trouble Code (DTC).>
P2109	THROTTLE/PEDAL POSITION SENSOR "A" MINIMUM STOP PERFORMANCE	<Ref. to EN(H6DO)(diag)-568, DTC P2109 THROTTLE/PEDAL POSITION SENSOR "A" MINIMUM STOP PERFORMANCE, Diagnostic Procedure with Diagnostic Trouble Code (DTC).>
P2119	THROTTLE ACTUATOR "A" CONTROL THROTTLE BODY RANGE/PERFORMANCE	<Ref. to EN(H6DO)(diag)-569, DTC P2119 THROTTLE ACTUATOR "A" CONTROL THROTTLE BODY RANGE/PERFORMANCE, Diagnostic Procedure with Diagnostic Trouble Code (DTC).>
P2122	THROTTLE/PEDAL POSITION SENSOR/SWITCH "D" CIRCUIT LOW	<Ref. to EN(H6DO)(diag)-572, DTC P2122 THROTTLE/PEDAL POSITION SENSOR/SWITCH "D" CIRCUIT LOW, Diagnostic Procedure with Diagnostic Trouble Code (DTC).>
P2123	THROTTLE/PEDAL POSITION SENSOR/SWITCH "D" CIRCUIT HIGH	<Ref. to EN(H6DO)(diag)-575, DTC P2123 THROTTLE/PEDAL POSITION SENSOR/SWITCH "D" CIRCUIT HIGH, Diagnostic Procedure with Diagnostic Trouble Code (DTC).>
P2127	THROTTLE/PEDAL POSITION SENSOR/SWITCH "E" CIRCUIT LOW	<Ref. to EN(H6DO)(diag)-578, DTC P2127 THROTTLE/PEDAL POSITION SENSOR/SWITCH "E" CIRCUIT LOW, Diagnostic Procedure with Diagnostic Trouble Code (DTC).>
P2128	THROTTLE/PEDAL POSITION SENSOR/SWITCH "E" CIRCUIT HIGH	<Ref. to EN(H6DO)(diag)-581, DTC P2128 THROTTLE/PEDAL POSITION SENSOR/SWITCH "E" CIRCUIT HIGH, Diagnostic Procedure with Diagnostic Trouble Code (DTC).>
P2135	THROTTLE/PEDAL POSITION SENSOR/SWITCH "A"/"B" VOLTAGE CORRELATION	<Ref. to EN(H6DO)(diag)-584, DTC P2135 THROTTLE/PEDAL POSITION SENSOR/SWITCH "A"/"B" VOLTAGE CORRELATION, Diagnostic Procedure with Diagnostic Trouble Code (DTC).>
P2138	THROTTLE/PEDAL POSITION SENSOR/SWITCH "D"/"E" VOLTAGE CORRELATION	<Ref. to EN(H6DO)(diag)-588, DTC P2138 THROTTLE/PEDAL POSITION SENSOR/SWITCH "D"/"E" VOLTAGE CORRELATION, Diagnostic Procedure with Diagnostic Trouble Code (DTC).>
P2195	A/F /O2 SENSOR SIGNAL BIASED/STUCK LEAN BANK 1 SENSOR 1	<Ref. to EN(H6DO)(diag)-592, DTC P2195 A/F /O2 SENSOR SIGNAL BIASED/STUCK LEAN BANK 1 SENSOR 1, Diagnostic Procedure with Diagnostic Trouble Code (DTC).>
P2196	A/F /O2 SENSOR SIGNAL BIASED/STUCK RICH BANK 1 SENSOR 1	<Ref. to EN(H6DO)(diag)-595, DTC P2196 A/F /O2 SENSOR SIGNAL BIASED/STUCK RICH BANK 1 SENSOR 1, Diagnostic Procedure with Diagnostic Trouble Code (DTC).>
P2197	A/F / O2 SENSOR SIGNAL BIASED/STUCK LEAN BANK 2 SENSOR 1	<Ref. to EN(H6DO)(diag)-598, DTC P2197 A/F / O2 SENSOR SIGNAL BIASED/STUCK LEAN BANK 2 SENSOR 1, Diagnostic Procedure with Diagnostic Trouble Code (DTC).>
P2198	A/F / O2 SENSOR SIGNAL BIASED/STUCK LEAN BANK 2 SENSOR 1	<Ref. to EN(H6DO)(diag)-600, DTC P2198 A/F / O2 SENSOR SIGNAL BIASED/STUCK RICH BANK 2 SENSOR 1, Diagnostic Procedure with Diagnostic Trouble Code (DTC).>
P219A	BANK 1 AIR-FUEL RATIO IMBALANCE	<Ref. to EN(H6DO)(diag)-602, DTC P219A BANK 1 AIR-FUEL RATIO IMBALANCE, Diagnostic Procedure with Diagnostic Trouble Code (DTC).>
P219B	BANK 2 AIR-FUEL RATIO IMBALANCE	<Ref. to EN(H6DO)(diag)-617, DTC P219B BANK 2 AIR-FUEL RATIO IMBALANCE, Diagnostic Procedure with Diagnostic Trouble Code (DTC).>
P2270	O2 SENSOR SIGNAL BIASED/STUCK LEAN BANK 1 SENSOR 2	<Ref. to EN(H6DO)(diag)-627, DTC P2270 O2 SENSOR SIGNAL BIASED/STUCK LEAN BANK 1 SENSOR 2, Diagnostic Procedure with Diagnostic Trouble Code (DTC).>
P2271	O2 SENSOR SIGNAL BIASED/STUCK RICH BANK 1 SENSOR 2	<Ref. to EN(H6DO)(diag)-630, DTC P2271 O2 SENSOR SIGNAL BIASED/STUCK RICH BANK 1 SENSOR 2, Diagnostic Procedure with Diagnostic Trouble Code (DTC).>
P2272	O2 SENSOR SIGNAL BIASED/STUCK LEAN BANK 2 SENSOR 2	<Ref. to EN(H6DO)(diag)-633, DTC P2272 O2 SENSOR SIGNAL BIASED/STUCK LEAN BANK 2 SENSOR 2, Diagnostic Procedure with Diagnostic Trouble Code (DTC).>
P2273	O2 SENSOR SIGNAL BIASED/STUCK RICH BANK 2 SENSOR 2	<Ref. to EN(H6DO)(diag)-635, DTC P2273 O2 SENSOR SIGNAL BIASED/STUCK RICH BANK 2 SENSOR 2, Diagnostic Procedure with Diagnostic Trouble Code (DTC).>

DTC	Item	Note
P2401	EVAP SYSTEM LEAK DETECTION PUMP CONTROL CIRCUIT LOW	<Ref. to EN(H6DO)(diag)-637, DTC P2401 EVAP SYSTEM LEAK DETECTION PUMP CONTROL CIRCUIT LOW, Diagnostic Procedure with Diagnostic Trouble Code (DTC).>
P2402	EVAP SYSTEM LEAK DETECTION PUMP CONTROL CIRCUIT HIGH	<Ref. to EN(H6DO)(diag)-640, DTC P2402 EVAP SYSTEM LEAK DETECTION PUMP CONTROL CIRCUIT HIGH, Diagnostic Procedure with Diagnostic Trouble Code (DTC).>
P2404	EVAP SYSTEM LEAK DETECTION PUMP SENSE CIRCUIT RANGE/PERFORMANCE	<Ref. to EN(H6DO)(diag)-642, DTC P2404 EVAP SYSTEM LEAK DETECTION PUMP SENSE CIRCUIT RANGE/PERFORMANCE, Diagnostic Procedure with Diagnostic Trouble Code (DTC).>
P2419	EVAP SYSTEM SWITCHING VALVE CONTROL CIRCUIT LOW	<Ref. to EN(H6DO)(diag)-645, DTC P2419 EVAP SYSTEM SWITCHING VALVE CONTROL CIRCUIT LOW, Diagnostic Procedure with Diagnostic Trouble Code (DTC).>
P2420	EVAP SYSTEM SWITCHING VALVE CONTROL CIRCUIT HIGH	<Ref. to EN(H6DO)(diag)-648, DTC P2420 EVAP SYSTEM SWITCHING VALVE CONTROL CIRCUIT HIGH, Diagnostic Procedure with Diagnostic Trouble Code (DTC).>
P2530	IGNITION SWITCH RUN POSITION CIRCUIT	<Ref. to EN(H6DO)(diag)-650, DTC P2530 IGNITION SWITCH RUN POSITION CIRCUIT, Diagnostic Procedure with Diagnostic Trouble Code (DTC).>
P2610	ECM/PCM ENGINE OFF TIMER PERFORMANCE	<Ref. to EN(H6DO)(diag)-653, DTC P2610 ECM/PCM ENGINE OFF TIMER PERFORMANCE, Diagnostic Procedure with Diagnostic Trouble Code (DTC).>
U0073	CONTROL MODULE COMMUNICATION BUS OFF	<Ref. to EN(H6DO)(diag)-661, DTC U0073 CONTROL MODULE COMMUNICATION BUS OFF, Diagnostic Procedure with Diagnostic Trouble Code (DTC).>
U0077	LIN COMMUNICATION BUS "ECM/PCM" OFF	<Ref. to EN(H6DO)(diag)-662, DTC U0077 LIN COMMUNICATION BUS "ECM/PCM" OFF, Diagnostic Procedure with Diagnostic Trouble Code (DTC).>
U0101	LOST COMMUNICATION WITH TCM	<Ref. to EN(H6DO)(diag)-665, DTC U0101 LOST COMMUNICATION WITH TCM, Diagnostic Procedure with Diagnostic Trouble Code (DTC).>
U0122	LOST COMMUNICATION WITH VEHICLE DYNAMICS CONTROL MODULE	<Ref. to EN(H6DO)(diag)-665, DTC U0122 LOST COMMUNICATION WITH VEHICLE DYNAMICS CONTROL MODULE, Diagnostic Procedure with Diagnostic Trouble Code (DTC).>
U0155	LOST COMMUNICATION WITH INSTRUMENT PANEL CLUSTER (IPC) CONTROL MODULE	<Ref. to EN(H6DO)(diag)-665, DTC U0155 LOST COMMUNICATION WITH INSTRUMENT PANEL CLUSTER (IPC) CONTROL MODULE, Diagnostic Procedure with Diagnostic Trouble Code (DTC).>
U0402	INVALID DATA RECEIVED FROM TCM	<Ref. to EN(H6DO)(diag)-666, DTC U0402 INVALID DATA RECEIVED FROM TCM, Diagnostic Procedure with Diagnostic Trouble Code (DTC).>
U0416	INVALID DATA RECEIVED FROM VEHICLE DYNAMICS CONTROL MODULE	<Ref. to EN(H6DO)(diag)-666, DTC U0416 INVALID DATA RECEIVED FROM VEHICLE DYNAMICS CONTROL MODULE, Diagnostic Procedure with Diagnostic Trouble Code (DTC).>
U0423	INVALID DATA RECEIVED FROM INSTRUMENT PANEL CLUSTER CONTROL MODULE	<Ref. to EN(H6DO)(diag)-666, DTC U0423 INVALID DATA RECEIVED FROM INSTRUMENT PANEL CLUSTER CONTROL MODULE, Diagnostic Procedure with Diagnostic Trouble Code (DTC).>
U1712	LOST LIN COMMUNICATION WITH BATTERY "1" MONITOR MODULE	<Ref. to EN(H6DO)(diag)-667, DTC U1712 LOST LIN COMMUNICATION WITH BATTERY "1" MONITOR MODULE, Diagnostic Procedure with Diagnostic Trouble Code (DTC).>

17.Diagnostic Procedure with Diagnostic Trouble Code (DTC)

A: DTC P000A "A" CAMSHAFT POSITION SLOW RESPONSE BANK 1

NOTE:
For the diagnostic procedure, refer to DTC P0011. <Ref. to EN(H6DO)(diag)-127, DTC P0011 "A" CAMSHAFT POSITION - TIMING OVER-ADVANCED OR SYSTEM PERFORMANCE BANK 1, Diagnostic Procedure with Diagnostic Trouble Code (DTC).>

1. OUTLINE OF DIAGNOSIS

Detect the AVCS system malfunction.
Judge NG when the amount of AVCS actual timing advance does not approach to the amount of AVCS target timing advance.

2. COMPONENT DESCRIPTION

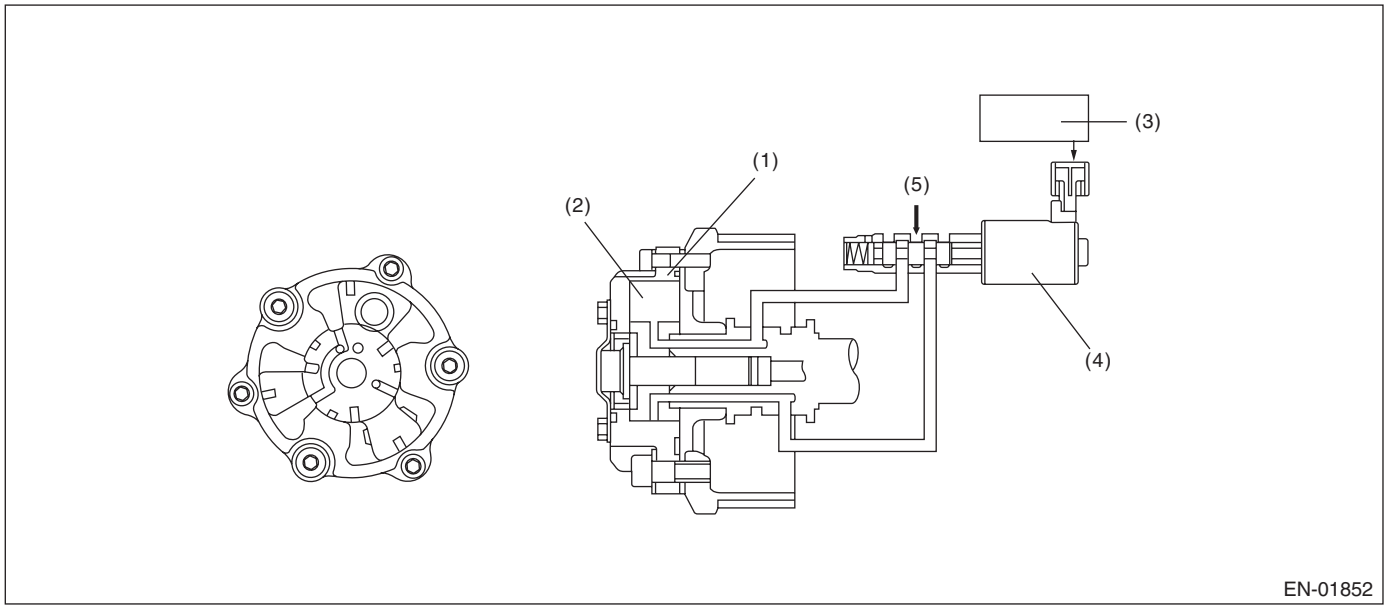

(1) AVCS timing controller
(2) Vane
(3) Engine control module (ECM)
(4) Oil flow control solenoid valve
(5) Hydraulic

3. EXECUTION CONDITION

Secondary Parameters	Execution condition
Battery voltage	≥ 10.9 V
AVCS control	Operation
Absolute value	
Target timing advance change amount (per 64 ms)	< 1.5 °CA
Engine oil temperature	≥ 50 °C (122 °F)

4. GENERAL DRIVING CYCLE

Perform the diagnosis continuously while AVCS is operating.

5. DIAGNOSTIC METHOD

When the differences of target timing advance amount and actual timing advance amount is calculated during AVCS control, and the difference per predetermined time is the specified value or larger.
Judge as NG when the following conditions are established within the predetermined time.

Judgment Value

Malfunction Criteria	Threshold Value
Absolute value Σ(Target position – Actual position)	 > 4000 °CA (Bank 1) > 4000 °CA (Bank 2)

Time Needed for Diagnosis: 25000 ms
Malfunction Indicator Light Illumination: Illuminates when malfunction occurs in 2 continuous driving cycles.

B: DTC P000B "B" CAMSHAFT POSITION SLOW RESPONSE BANK 1

NOTE:
For the diagnostic procedure, refer to DTC P0014. <Ref. to EN(H6DO)(diag)-132, DTC P0014 "B" CAMSHAFT POSITION - TIMING OVER-ADVANCED OR SYSTEM PERFORMANCE BANK 1, Diagnostic Procedure with Diagnostic Trouble Code (DTC).>

1. OUTLINE OF DIAGNOSIS

Detect the exhaust AVCS system malfunction.
Judge NG when the amount of exhaust AVCS actual timing advance does not approach the amount of exhaust AVCS target timing advance.

2. COMPONENT DESCRIPTION

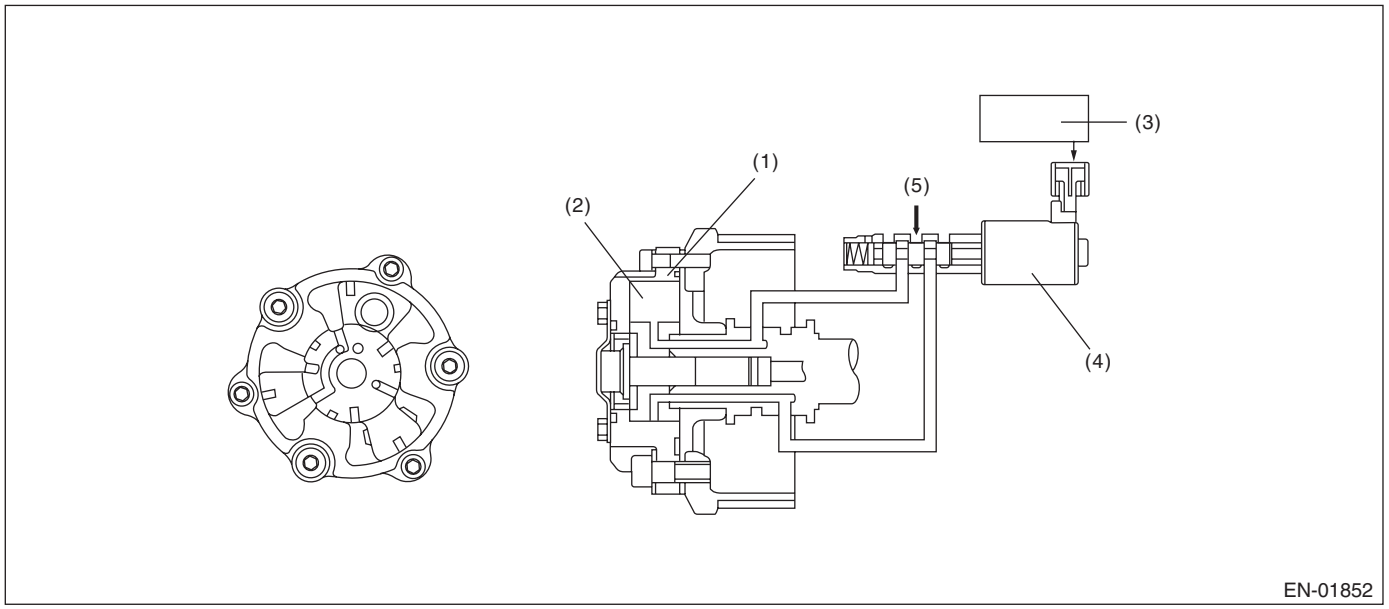

(1) AVCS timing controller
(2) Vane
(3) Engine control module (ECM)
(4) Oil flow control solenoid valve
(5) Hydraulic

3. EXECUTION CONDITION

Secondary Parameters	Execution condition
Battery voltage	≥ 10.9 V
Exhaust AVCS control	Operation
Absolute value	
Target timing advance change amount (per 64 ms)	< 1.5 °CA
Engine oil temperature	≥ 50 °C (122 °F)

4. GENERAL DRIVING CYCLE

Perform the diagnosis continuously while exhaust AVCS is operating.

5. DIAGNOSTIC METHOD

When the differences of target timing advance amount and actual timing advance amount is calculated during exhaust AVCS control, and the difference per predetermined time is the specified value or larger. Judge as NG when the following conditions are established within the predetermined time.

Judgment Value

Malfunction Criteria	Threshold Value
Absolute value Σ(Target position – Actual position)	 > 3500 °CA (Bank 1) > 3500 °CA (Bank 2)

Time Needed for Diagnosis: 25000 ms
Malfunction Indicator Light Illumination: Illuminates when malfunction occurs in 2 continuous driving cycles.

C: DTC P000C "A" CAMSHAFT POSITION SLOW RESPONSE BANK 2

NOTE:
For the diagnostic procedure, refer to DTC P0021. <Ref. to EN(H6DO)(diag)-142, DTC P0021 "A" CAMSHAFT POSITION - TIMING OVER-ADVANCED OR SYSTEM PERFORMANCE BANK 2, Diagnostic Procedure with Diagnostic Trouble Code (DTC).>

1. OUTLINE OF DIAGNOSIS

NOTE:
For the detection standard, refer to P000A. <Ref. to EN(H6DO)(diag)-120, DTC P000A "A" CAMSHAFT POSITION SLOW RESPONSE BANK 1, Diagnostic Procedure with Diagnostic Trouble Code (DTC).>

D: DTC P000D "B" CAMSHAFT POSITION SLOW RESPONSE BANK 2

NOTE:
For the diagnostic procedure, refer to DTC P0024. <Ref. to EN(H6DO)(diag)-145, DTC P0024 "B" CAMSHAFT POSITION - TIMING OVER-ADVANCED OR SYSTEM PERFORMANCE BANK 2, Diagnostic Procedure with Diagnostic Trouble Code (DTC).>

1. OUTLINE OF DIAGNOSIS

NOTE:
For the detection standard, refer to P000B. <Ref. to EN(H6DO)(diag)-122, DTC P000B "B" CAMSHAFT POSITION SLOW RESPONSE BANK 1, Diagnostic Procedure with Diagnostic Trouble Code (DTC).>

E: DTC P0010 "A" CAMSHAFT POSITION ACTUATOR CONTROL CIRCUIT/ OPEN BANK 1

DTC DETECTING CONDITION:
Immediately at fault recognition
TROUBLE SYMPTOM:
Improper idling

CAUTION:
After servicing or replacing faulty parts, perform Clear Memory Mode <Ref. to EN(H6DO)(diag)-85, OPERATION, Clear Memory Mode.>, and Inspection Mode <Ref. to EN(H6DO)(diag)-69, PROCEDURE, Inspection Mode.>.
WIRING DIAGRAM:
• Engine Electrical System ENGINE TYPE EZ (WITHOUT PUSH BUTTON START) <Ref. to WI-198, ENGINE TYPE EZ (WITHOUT PUSH BUTTON START), WIRING DIAGRAM, Engine Electrical System.>
• Engine Electrical System ENGINE TYPE EZ (WITH PUSH BUTTON START) <Ref. to WI-214, ENGINE TYPE EZ (WITH PUSH BUTTON START), WIRING DIAGRAM, Engine Electrical System.>

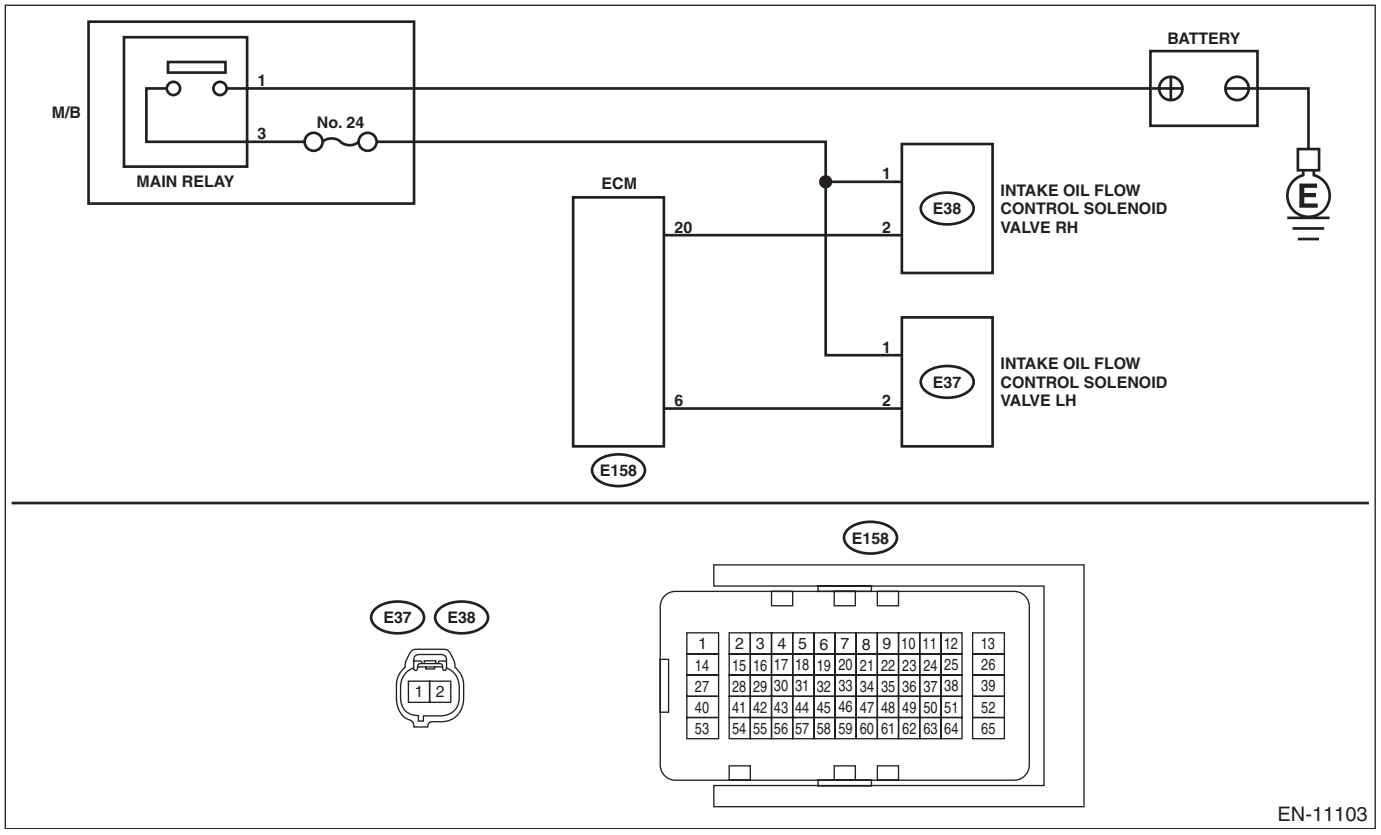

Step		Check	Yes	No
1	**CHECK OUTPUT SIGNAL OF ECM.** 1) Turn the ignition switch to ON. 2) Measure the voltage between ECM connector and engine ground. ***Connector & terminal*** ***(E158) No. 20 (+) — Engine ground (–):***	Is the voltage 10 V or more?	Go to step **2**.	Go to step **3**.

	Step	Check	Yes	No
2	**CHECK FOR POOR CONTACT.** Check for poor contact of ECM connector.	Is there poor contact of ECM connector?	Repair the poor contact of ECM connector.	Even if DTC is detected, the circuit has returned to a normal condition at this time. Reproduce the failure, and then perform the diagnosis again. NOTE: In this case, temporary poor contact of connector, temporary open or short circuit of harness may be the cause.
3	**CHECK POWER SUPPLY TO THE INTAKE OIL FLOW CONTROL SOLENOID VALVE RH.** Measure the voltage between intake oil flow control solenoid valve RH connector and engine ground. ***Connector & terminal*** ***(E38) No. 1 (+) — Engine ground (–):***	Is the voltage 10 V or more?	Go to step **4**.	Repair the power supply circuit.
4	**CHECK HARNESS BETWEEN ECM AND INTAKE OIL FLOW CONTROL SOLENOID VALVE RH CONNECTOR.** 1) Turn the ignition switch to OFF. 2) Disconnect the connectors from the ECM and intake oil flow control solenoid valve RH. 3) Measure the resistance between intake oil flow control solenoid valve RH connector and engine ground. ***Connector & terminal*** ***(E38) No. 2 — Engine ground:***	Is the resistance 1 MΩ or more?	Go to step **5**.	Repair the short circuit to ground in harness between ECM connector and intake oil flow control solenoid valve RH connector.
5	**CHECK HARNESS BETWEEN ECM AND INTAKE OIL FLOW CONTROL SOLENOID VALVE RH CONNECTOR.** Measure the resistance of harness between ECM connector and intake oil flow control solenoid valve RH. ***Connector & terminal*** ***(E158) No. 20 — (E38) No. 2:***	Is the resistance less than 1 Ω?	Go to step **6**.	Repair the open circuit in harness between ECM connector and intake oil flow control solenoid valve RH connector.
6	**CHECK INTAKE OIL FLOW CONTROL SOLENOID VALVE RH.** Measure the resistance between intake oil flow control solenoid valve RH terminals. ***Terminals*** ***No. 1 — No. 2:***	Is the resistance 6 — 12 Ω?	Repair the poor contact of intake oil flow control solenoid valve RH connector.	Replace the intake oil flow control solenoid valve RH. <Ref. to FU(H6DO)-72, Oil Flow Control Solenoid Valve.>

1. OUTLINE OF DIAGNOSIS

Detect open or short circuit of the oil control solenoid.
Judge as NG when the current is small even though the duty signal is large.

2. EXECUTION CONDITION

Secondary Parameters	Execution condition
Battery voltage	≥ 10.9 V
Oil control solenoid control duty	≥ 99.61 %

3. GENERAL DRIVING CYCLE

Always perform the diagnosis continuously.

4. DIAGNOSTIC METHOD

If the duration of time while the following conditions are met is longer than the time indicated, judge as NG.

Judgment Value

Malfunction Criteria	Threshold Value
Oil control solenoid control present current	< 0.306 A

Time Needed for Diagnosis: 2000 ms
Malfunction Indicator Light Illumination: Illuminates as soon as a malfunction occurs.

F: DTC P0011 "A" CAMSHAFT POSITION - TIMING OVER-ADVANCED OR SYSTEM PERFORMANCE BANK 1

DTC DETECTING CONDITION:
Detected when two consecutive driving cycles with fault occur.
TROUBLE SYMPTOM:
- Engine stalls.
- Improper idling

CAUTION:
After servicing or replacing faulty parts, perform Clear Memory Mode <Ref. to EN(H6DO)(diag)-85, OPERATION, Clear Memory Mode.>, and Inspection Mode <Ref. to EN(H6DO)(diag)-69, PROCEDURE, Inspection Mode.>.

	Step	Check	Yes	No
1	**IDENTIFYING FAULTY PART.** 1) Perform the Clear Memory Mode. <Ref. to EN(H6DO)(diag)-85, Clear Memory Mode.> 2) Replace the defective oil control solenoid by the other (RH or LH, intake side or exhaust side) oil control solenoid. 3) Perform appropriate drive cycle. <Ref. to EN(H6DO)(diag)-73, Drive Cycle.> 4) Make sure that the fault occurrence (DTC and incorrect advancing) has shifted to the other location.	Did the detected DTC shift to the location where the oil control solenoid was replaced?	Replace the faulty oil control solenoid.	Go to step **2**.
2	**CHECK CURRENT DATA.** 1) Start the engine and let it idle. 2) Read the value of «VVT Adv. Ang. Amount R» using the Subaru Select Monitor. NOTE: For detailed operation procedures, refer to “Read Current Data For Engine”. <Ref. to EN(H6DO)(diag)-50, Subaru Select Monitor.>	Is the value of «VVT Adv. Ang. Amount R» approx. 0 deg?	Go to step **3**.	Check the following item and repair or replace if necessary. • Oil pipe (clog) • Oil flow control solenoid valve (clog or dirt of oil routing, setting of spring) • Intake camshaft (dirt, damage of camshaft)
3	**CHECK CURRENT DATA.** 1) Drive with acceleration and deceleration at 80 km/h (50 MPH) or less. NOTE: Drive to an extent that the duty output of oil flow control solenoid valve increases. 2) Read the values of «OCV Duty R» and «VVT Adv. Ang. Amount R» using the Subaru Select Monitor. NOTE: For detailed operation procedures, refer to “Read Current Data For Engine”. <Ref. to EN(H6DO)(diag)-50, Subaru Select Monitor.>	When the value of «OCV Duty R» increases more than 10%, is the value of «VVT Adv. Ang. Amount R» approx. 0 deg?	Check the following item and repair or replace if necessary. • Oil pipe (clog) • Oil flow control solenoid valve (clog or dirt of oil routing, setting of spring) • Intake camshaft (dirt, damage of camshaft)	Perform the following procedures, and clean the oil routing. Replace the engine oil and idle the engine for 5 minutes, and then replace the oil filter and engine oil. <Ref. to LU(H6DO)-12, REPLACEMENT, Engine Oil.> <Ref. to LU(H6DO)-21, Engine Oil Filter.>

1. OUTLINE OF DIAGNOSIS

Detect the AVCS system malfunction.
Judge NG when the amount of AVCS actual timing advance does not approach to the amount of AVCS target timing advance.

2. COMPONENT DESCRIPTION

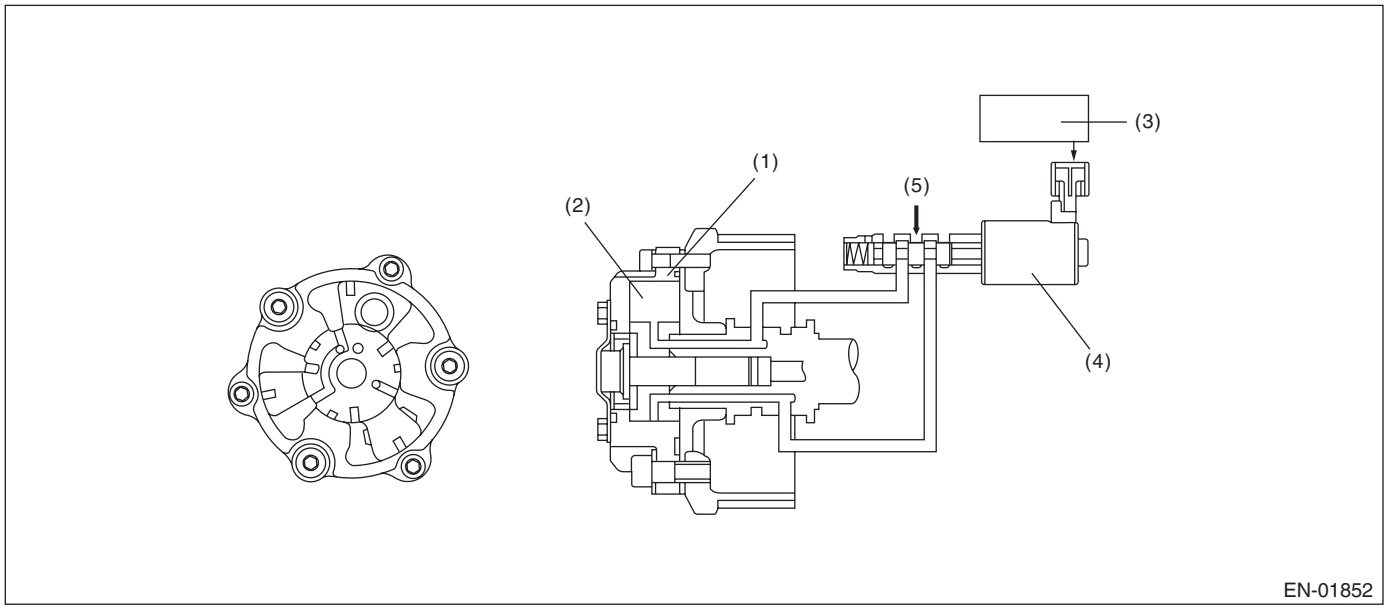

(1) AVCS timing controller
(2) Vane
(3) Engine control module (ECM)
(4) Oil flow control solenoid valve
(5) Hydraulic

3. EXECUTION CONDITION

Secondary Parameters	Execution condition
Battery voltage	≥ 10.9 V
AVCS control	Operation
Engine oil temperature	≥ 50 °C (122 °F)

4. GENERAL DRIVING CYCLE

Perform the diagnosis continuously while AVCS is operating.

5. DIAGNOSTIC METHOD

When the conditions during which the differences of AVCS target timing advance amount and AVCS actual timing advance amount is large continues for certain amount of time.
Judge as NG when the following conditions are established within the predetermined time.

Judgment Value

Malfunction Criteria	Threshold Value
(Target position – Actual position)	> 10 °CA or < –10 °CA

Time Needed for Diagnosis: 10000 ms
Malfunction Indicator Light Illumination: Illuminates when malfunction occurs in 2 continuous driving cycles.

G: DTC P0013 "B" CAMSHAFT POSITION ACTUATOR CONTROL CIRCUIT/ OPEN BANK 1

DTC DETECTING CONDITION:
Immediately at fault recognition
TROUBLE SYMPTOM:
Improper idling

CAUTION:
After servicing or replacing faulty parts, perform Clear Memory Mode <Ref. to EN(H6DO)(diag)-85, OPERATION, Clear Memory Mode.>, and Inspection Mode <Ref. to EN(H6DO)(diag)-69, PROCEDURE, Inspection Mode.>.
WIRING DIAGRAM:
• Engine Electrical System ENGINE TYPE EZ (WITHOUT PUSH BUTTON START) <Ref. to WI-198, ENGINE TYPE EZ (WITHOUT PUSH BUTTON START), WIRING DIAGRAM, Engine Electrical System.>
• Engine Electrical System ENGINE TYPE EZ (WITH PUSH BUTTON START) <Ref. to WI-214, ENGINE TYPE EZ (WITH PUSH BUTTON START), WIRING DIAGRAM, Engine Electrical System.>

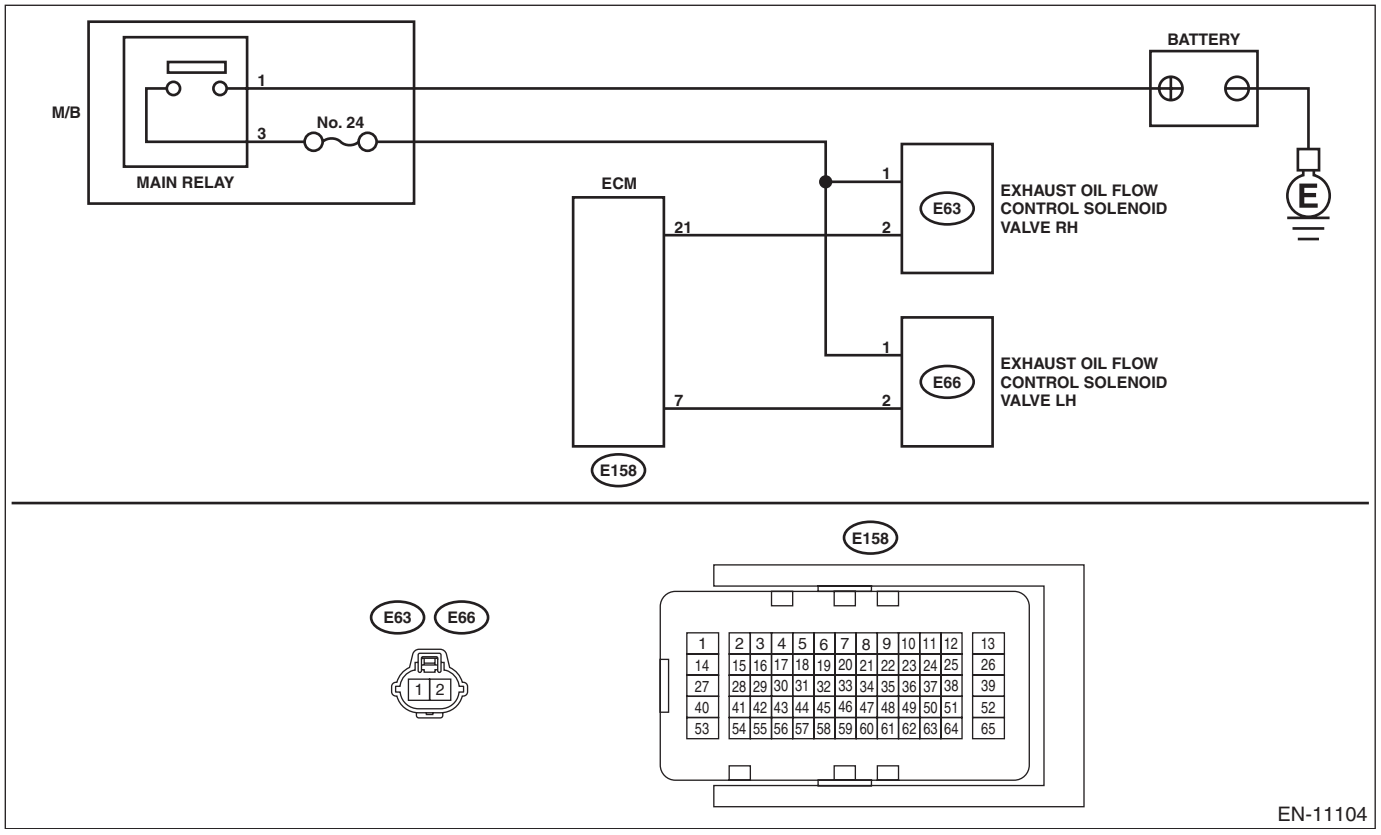

Step		Check	Yes	No
1	**CHECK OUTPUT SIGNAL OF ECM.** 1) Turn the ignition switch to ON. 2) Measure the voltage between ECM connector and engine ground. ***Connector & terminal*** ***(E158) No. 23 (+) — Engine ground (–):***	Is the voltage 10 V or more?	Go to step **2**.	Go to step **3**.

	Step	Check	Yes	No
2	**CHECK FOR POOR CONTACT.** Check for poor contact of ECM connector.	Is there poor contact of ECM connector?	Repair the poor contact of ECM connector.	Even if DTC is detected, the circuit has returned to a normal condition at this time. Reproduce the failure, and then perform the diagnosis again. NOTE: In this case, temporary poor contact of connector, temporary open or short circuit of harness may be the cause.
3	**CHECK POWER SUPPLY TO THE EXHAUST OIL FLOW CONTROL SOLENOID VALVE RH.** Measure the voltage between exhaust oil flow control solenoid valve RH connector and engine ground. ***Connector & terminal*** ***(E63) No. 1 (+) — Engine ground (–):***	Is the voltage 10 V or more?	Go to step **4**.	Repair the power supply circuit.
4	**CHECK HARNESS BETWEEN ECM AND EXHAUST OIL FLOW CONTROL SOLENOID VALVE RH CONNECTOR.** 1) Turn the ignition switch to OFF. 2) Disconnect the connectors from ECM and exhaust oil flow control solenoid valve RH. 3) Measure the resistance between exhaust oil flow control solenoid valve RH connector and engine ground. ***Connector & terminal*** ***(E63) No. 2 — Engine ground:***	Is the resistance 1 MΩ or more?	Go to step **5**.	Repair the short circuit to ground in harness between ECM connector and exhaust oil flow control solenoid valve RH connector.
5	**CHECK HARNESS BETWEEN ECM AND EXHAUST OIL FLOW CONTROL SOLENOID VALVE RH CONNECTOR.** Measure the resistance of harness between ECM connector and exhaust oil flow control solenoid valve RH. ***Connector & terminal*** ***(E158) No. 21 — (E63) No. 2:***	Is the resistance less than 1 Ω?	Go to step **6**.	Repair the open circuit in harness between ECM connector and exhaust oil flow control solenoid valve RH connector.
6	**CHECK EXHAUST OIL FLOW CONTROL SOLENOID VALVE RH.** Measure the resistance between exhaust oil flow control solenoid valve RH terminals. ***Terminals*** ***No. 1 — No. 2:***	Is the resistance 6 — 12 Ω?	Repair the poor contact of exhaust oil flow control solenoid valve RH connector.	Replace the exhaust oil flow control solenoid valve RH. <Ref. to FU(H6DO)-72, Oil Flow Control Solenoid Valve.>

1. OUTLINE OF DIAGNOSIS

Detect open or short circuit of the oil control solenoid.
Judge as NG when the current is small even though the duty signal is large.

2. EXECUTION CONDITION

Secondary Parameters	Execution condition
Battery voltage	≥ 10.9 V
Oil control solenoid control duty	≥ 99.61 %

3. GENERAL DRIVING CYCLE

Always perform the diagnosis continuously.

4. DIAGNOSTIC METHOD

If the duration of time while the following conditions are met is longer than the time indicated, judge as NG.

Judgment Value

Malfunction Criteria	Threshold Value
Oil control solenoid control present current	< 0.306 A

Time Needed for Diagnosis: 2000 ms
Malfunction Indicator Light Illumination: Illuminates as soon as a malfunction occurs.

H: DTC P0014 "B" CAMSHAFT POSITION - TIMING OVER-ADVANCED OR SYSTEM PERFORMANCE BANK 1

DTC DETECTING CONDITION:
Detected when two consecutive driving cycles with fault occur.
TROUBLE SYMPTOM:
- Engine stalls.
- Improper idling

CAUTION:
After servicing or replacing faulty parts, perform Clear Memory Mode <Ref. to EN(H6DO)(diag)-85, OPERATION, Clear Memory Mode.>, and Inspection Mode <Ref. to EN(H6DO)(diag)-69, PROCEDURE, Inspection Mode.>.

	Step	Check	Yes	No
1	**IDENTIFYING FAULTY PART.** 1) Perform the Clear Memory Mode. <Ref. to EN(H6DO)(diag)-85, Clear Memory Mode.> 2) Replace the defective oil control solenoid by the other (RH or LH, intake side or exhaust side) oil control solenoid. 3) Perform appropriate drive cycle. <Ref. to EN(H6DO)(diag)-73, Drive Cycle.> 4) Make sure that the fault occurrence (DTC and incorrect advancing) has shifted to the other location.	Did the detected DTC shift to the location where the oil control solenoid was replaced?	Replace the faulty oil control solenoid.	Go to step **2**.
2	**CHECK CURRENT DATA.** 1) Start the engine and let it idle. 2) Read the value of «Exh. VVT Retard Ang. R» using the Subaru Select Monitor. NOTE: For detailed operation procedures, refer to "Read Current Data For Engine". <Ref. to EN(H6DO)(diag)-50, Subaru Select Monitor.>	Is the value of «Exh. VVT Retard Ang. R» approx. 0 deg?	Go to step **3**.	Check the following item and repair or replace if necessary. • Oil pipe (clog) • Oil flow control solenoid valve (clog or dirt of oil routing, setting of spring) • Exhaust camshaft (dirt, damage of camshaft)
3	**CHECK CURRENT DATA.** 1) Drive with acceleration and deceleration at 80 km/h (50 MPH) or less. NOTE: Drive to an extent that the duty output of oil flow control solenoid valve increases. 2) Read the values of «Exh. OCV Duty R» and «Exh. VVT Retard Ang. R» using the Subaru Select Monitor. NOTE: For detailed operation procedures, refer to "Read Current Data For Engine". <Ref. to EN(H6DO)(diag)-50, Subaru Select Monitor.>	When the value of «Exh. OCV Duty R» increases more than 10%, is the value of «Exh. VVT Retard Ang. R» approx. 0 deg?	Check the following item and repair or replace if necessary. • Oil pipe (clog) • Oil flow control solenoid valve (clog or dirt of oil routing, setting of spring) • Exhaust camshaft (dirt, damage of camshaft)	Perform the following procedures, and clean the oil routing. Replace the engine oil and idle the engine for 5 minutes, and then replace the oil filter and engine oil. <Ref. to LU(H6DO)-12, REPLACEMENT, Engine Oil.> <Ref. to LU(H6DO)-21, Engine Oil Filter.>

1. OUTLINE OF DIAGNOSIS

Detect the exhaust AVCS system malfunction.
Judge NG when the amount of exhaust AVCS actual timing advance does not approach the amount of exhaust AVCS target timing advance.

2. COMPONENT DESCRIPTION

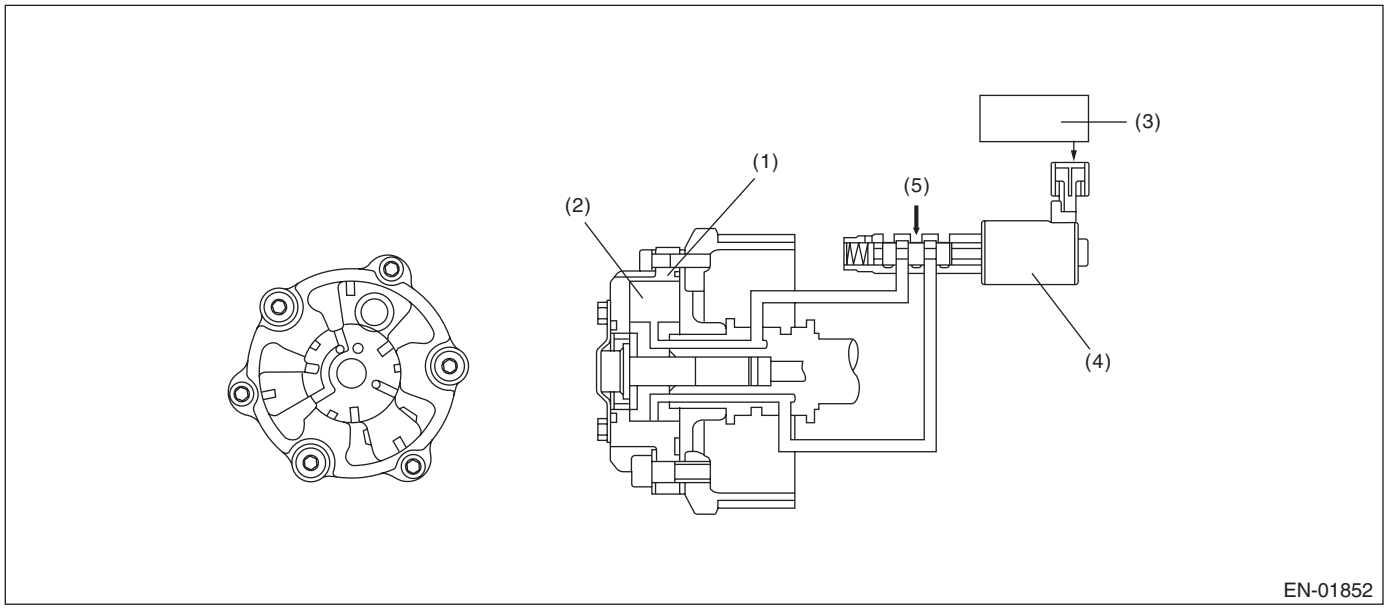

(1) Exhaust AVCS timing controller
(2) Vane
(3) Engine control module (ECM)
(4) Oil flow control solenoid valve
(5) Hydraulic

3. EXECUTION CONDITION

Secondary Parameters	Execution condition
Battery voltage	≥ 10.9 V
Exhaust AVCS control	Operation
Engine oil temperature	≥ 50 °C (122 °F)

4. GENERAL DRIVING CYCLE

Perform the diagnosis continuously while exhaust AVCS is operating.

5. DIAGNOSTIC METHOD

When the conditions during which the differences of exhaust AVCS target timing advance amount and exhaust AVCS actual timing advance amount is large continues for certain amount of time.
Judge as NG when the following conditions are established within the predetermined time.

Judgment Value

Malfunction Criteria	Threshold Value
(Target position – Actual position)	> 10 °CA or < –10 °CA

Time Needed for Diagnosis:
10000 ms
Malfunction Indicator Light Illumination: Illuminates when malfunction occurs in 2 continuous driving cycles.

I: DTC P0016 CRANKSHAFT POSITION - CAMSHAFT POSITION CORRELATION BANK 1 SENSOR A

DTC DETECTING CONDITION:
Detected when two consecutive driving cycles with fault occur.
TROUBLE SYMPTOM:
- Engine stalls.
- Improper idling

CAUTION:
After servicing or replacing faulty parts, perform Clear Memory Mode <Ref. to EN(H6DO)(diag)-85, OPERATION, Clear Memory Mode.>, and Inspection Mode <Ref. to EN(H6DO)(diag)-69, PROCEDURE, Inspection Mode.>.

	Step	Check	Yes	No
1	**CHECK CURRENT DATA.** 1) Start the engine and let it idle. 2) Read the values of «VVT Adv. Ang. Amount R» and «OCV Duty R» using the Subaru Select Monitor. NOTE: For detailed operation procedures, refer to “Read Current Data For Engine”. <Ref. to EN(H6DO)(diag)-50, Subaru Select Monitor.>	Is the value of «VVT Adv. Ang. Amount R» approx. 0 deg, and the value of «OCV Duty R» approx. 10%?	Perform the following procedures, and clean the oil routing. Replace the engine oil and idle the engine for 5 minutes, and then replace the oil filter and engine oil. <Ref. to LU(H6DO)-12, REPLACEMENT, Engine Oil.> <Ref. to LU(H6DO)-21, Engine Oil Filter.>	Check the following item and repair or replace if necessary. • Oil pipe (clog) • Oil flow control solenoid valve (clog or dirt of oil routing, setting of spring) • Intake camshaft (dirt, damage of camshaft) • Timing chain (matching of timing mark)

1. OUTLINE OF DIAGNOSIS

Detect the AVCS system malfunction.
Judge as NG when standard timing advance amount is far from learning angle.

2. COMPONENT DESCRIPTION

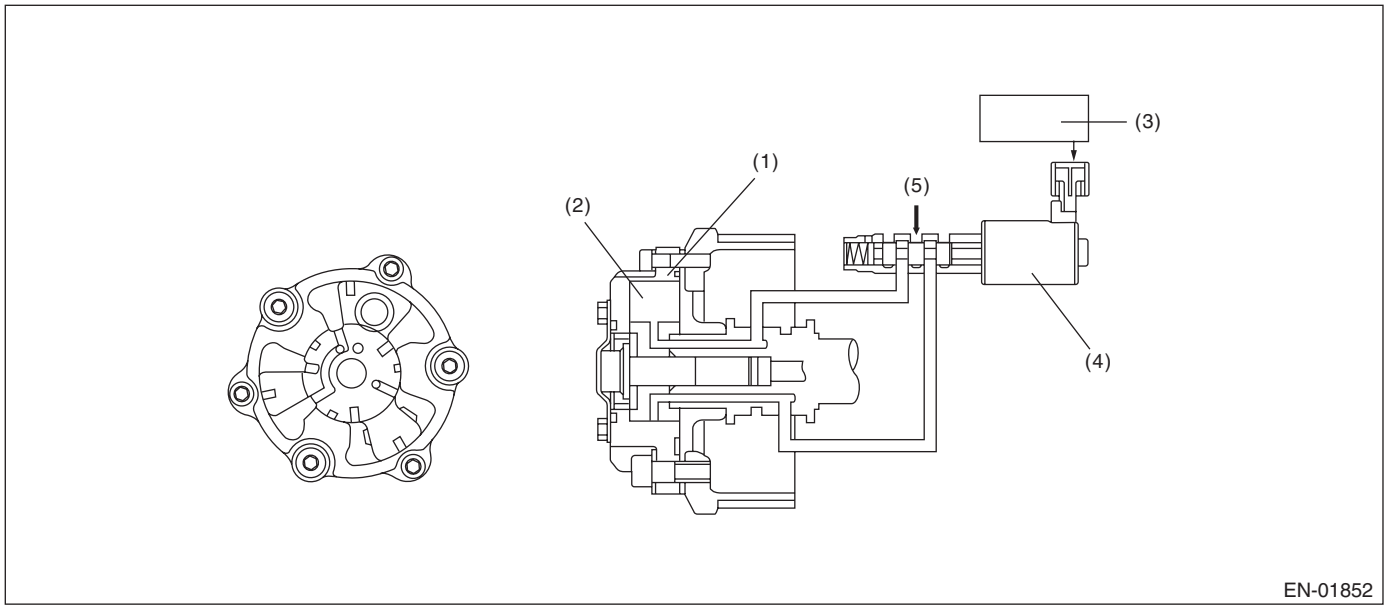

(1) AVCS timing controller
(2) Vane
(3) Engine control module (ECM)
(4) Oil flow control solenoid valve
(5) Hydraulic

3. EXECUTION CONDITION

Secondary Parameters	Execution condition
Battery voltage	≥ 10.9 V
Elapsed time after the neutral position switch changed	≥ 3000 ms
AVCS learning	In operation

4. GENERAL DRIVING CYCLE

Perform the diagnosis continuously after starting engine and while AVCS is not operating.

5. DIAGNOSTIC METHOD

Judge as NG when the absolute value of the difference between cam signal input position and learning value is out of specification.

Diagnosis 1

If the duration of time while the following conditions are met is longer than the time indicated, judge as NG.

Judgment Value

Malfunction Criteria	Threshold Value
|Crankshaft position when camshaft position sensor signal is input – Learning value|	> 12 °CA

Time Needed for Diagnosis: 5000 ms

Diagnosis 2

Judgment Value

Malfunction Criteria	Threshold Value
Camshaft position sensor signal input position	< 18.80 °CA or > 56.80 °CA

Time Needed for Diagnosis: 5000 ms

Malfunction Indicator Light Illumination: Illuminates when malfunction occurs in 2 continuous driving cycles.

NOTE:

Initial standard learning value is the value of crank angle initially input at the production plant. And then it will be updated every time normal judgment has been completed. Learning value will not be updated if NG judgment occurs because timing belt or chain derails suddenly in process or because wrong assembly occurs during servicing.

J: DTC P0017 CRANKSHAFT POSITION - CAMSHAFT POSITION CORRELATION BANK 1 SENSOR B

DTC DETECTING CONDITION:
Detected when two consecutive driving cycles with fault occur.
TROUBLE SYMPTOM:
- Engine stalls.
- Improper idling

CAUTION:
After servicing or replacing faulty parts, perform Clear Memory Mode <Ref. to EN(H6DO)(diag)-85, OPERATION, Clear Memory Mode.>, and Inspection Mode <Ref. to EN(H6DO)(diag)-69, PROCEDURE, Inspection Mode.>.

	Step	Check	Yes	No
1	**CHECK CURRENT DATA.** 1) Start the engine and let it idle. 2) Read the values of «Exh. VVT Retard Ang. R» and «Exh. OCV Duty R» using the Subaru Select Monitor. NOTE: For detailed operation procedures, refer to “Read Current Data For Engine”. <Ref. to EN(H6DO)(diag)-50, Subaru Select Monitor.>	Is the value of «Exh. VVT Retard Ang. R» approx. 0 deg, and the value of «Exh. OCV Duty R» approx. 10%?	Perform the following procedures, and clean the oil routing. Replace the engine oil and idle the engine for 5 minutes, and then replace the oil filter and engine oil. <Ref. to LU(H6DO)-12, REPLACEMENT, Engine Oil.> <Ref. to LU(H6DO)-21, Engine Oil Filter.>	Check the following item and repair or replace if necessary. • Oil pipe (clog) • Oil flow control solenoid valve (clog or dirt of oil routing, setting of spring) • Exhaust camshaft (dirt, damage of camshaft) • Timing chain (matching of timing mark)

1. OUTLINE OF DIAGNOSIS

Detect the exhaust AVCS system malfunction.
Judge as NG when standard timing advance amount is far from learning angle.

2. COMPONENT DESCRIPTION

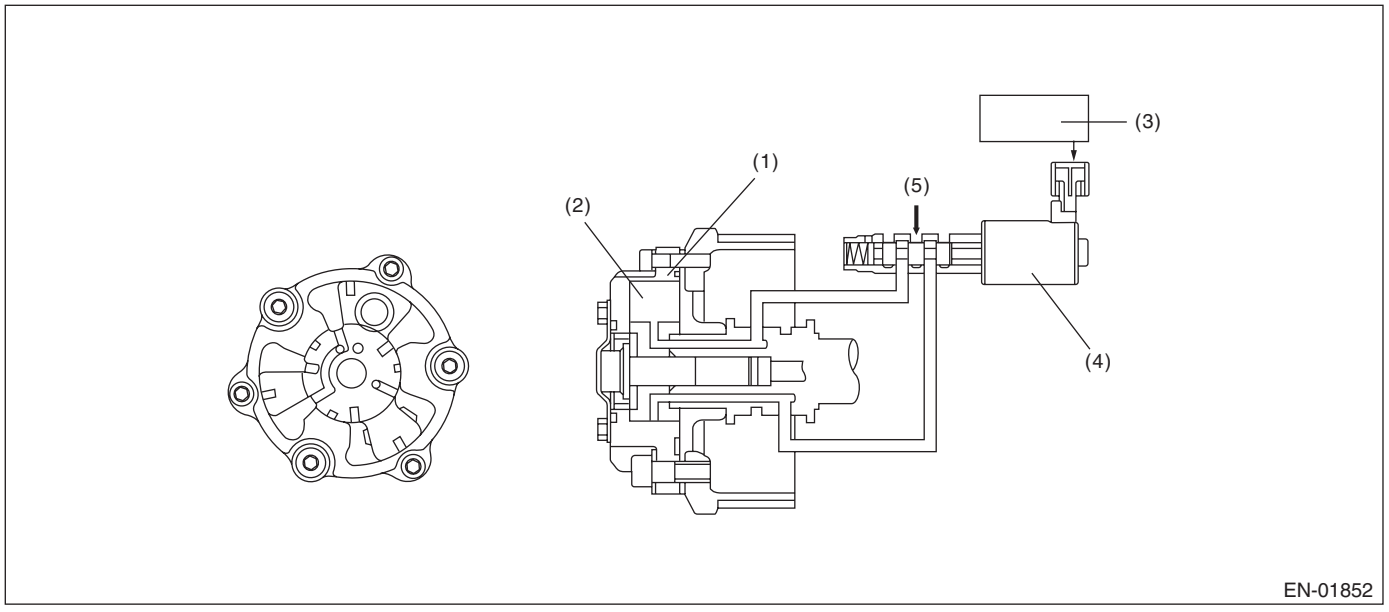

(1) Exhaust AVCS timing controller
(2) Vane
(3) Engine control module (ECM)
(4) Oil flow control solenoid valve
(5) Hydraulic

3. EXECUTION CONDITION

Secondary Parameters	Execution condition
Battery voltage	≥ 10.9 V
Elapsed time after the neutral position switch changed	≥ 3000 ms
Exhaust AVCS learning	In operation

4. GENERAL DRIVING CYCLE

Perform the diagnosis continuously while the exhaust AVCS is not operating after warming up.

5. DIAGNOSTIC METHOD

Judge as NG when the absolute value of the difference between cam signal input position and learning value is out of specification.

Diagnosis 1

If the duration of time while the following conditions are met is longer than the time indicated, judge as NG.

Judgment Value

Malfunction Criteria	Threshold Value
|Crankshaft position when camshaft position sensor signal is input – Learning value|	> 12 °CA

Time Needed for Diagnosis: 5000 ms

Diagnosis 2

Judgment Value

Malfunction Criteria	Threshold Value
Camshaft position sensor signal input position	< 33.28 °CA or > 71.28 °CA

Time Needed for Diagnosis: 5000 ms

Malfunction Indicator Light Illumination: Illuminates when malfunction occurs in 2 continuous driving cycles.

NOTE:

Initial standard learning value is the value of crank angle initially input at the production plant. And then it will be updated every time normal judgment has been completed. Learning value will not be updated if NG judgment occurs because timing belt or chain derails suddenly in process or because wrong assembly occurs during servicing.

K: DTC P0018 CRANKSHAFT POSITION - CAMSHAFT POSITION CORRELATION BANK 2 SENSOR A

DTC DETECTING CONDITION:
Detected when two consecutive driving cycles with fault occur.
TROUBLE SYMPTOM:
- Engine stalls.
- Improper idling

CAUTION:
After servicing or replacing faulty parts, perform Clear Memory Mode <Ref. to EN(H6DO)(diag)-85, OPERATION, Clear Memory Mode.>, and Inspection Mode <Ref. to EN(H6DO)(diag)-69, PROCEDURE, Inspection Mode.>.

Step		Check	Yes	No
1	**CHECK CURRENT DATA.** 1) Start the engine and let it idle. 2) Read the values of «VVT Adv. Ang. Amount L» and «OCV Duty L» using the Subaru Select Monitor. NOTE: For detailed operation procedures, refer to “Read Current Data For Engine”. <Ref. to EN(H6DO)(diag)-50, Subaru Select Monitor.>	Is the value of «VVT Adv. Ang. Amount L» approx. 0 deg, and the value of «OCV Duty L» approx. 10%?	Perform the following procedures, and clean the oil routing. Replace the engine oil and idle the engine for 5 minutes, and then replace the oil filter and engine oil. <Ref. to LU(H6DO)-12, REPLACEMENT, Engine Oil.> <Ref. to LU(H6DO)-21, Engine Oil Filter.>	Check the following item and repair or replace if necessary. • Oil pipe (clog) • Oil flow control solenoid valve (clog or dirt of oil routing, setting of spring) • Intake camshaft (dirt, damage of camshaft) • Timing chain (matching of timing mark)

1. OUTLINE OF DIAGNOSIS

NOTE:
For the detection standard, refer to DTC P0016. <Ref. to EN(H6DO)(diag)-134, DTC P0016 CRANKSHAFT POSITION - CAMSHAFT POSITION CORRELATION BANK 1 SENSOR A, Diagnostic Procedure with Diagnostic Trouble Code (DTC).>

L: DTC P0019 CRANKSHAFT POSITION - CAMSHAFT POSITION CORRELATION BANK 2 SENSOR B

DTC DETECTING CONDITION:
Detected when two consecutive driving cycles with fault occur.
TROUBLE SYMPTOM:
- Engine stalls.
- Improper idling

CAUTION:
After servicing or replacing faulty parts, perform Clear Memory Mode <Ref. to EN(H6DO)(diag)-85, OPERATION, Clear Memory Mode.>, and Inspection Mode <Ref. to EN(H6DO)(diag)-69, PROCEDURE, Inspection Mode.>.

Step		Check	Yes	No
1	**CHECK CURRENT DATA.** 1) Start the engine and let it idle. 2) Read the values of «Exh. VVT Retard Ang. L» and «Exh. OCV Duty L» using the Subaru Select Monitor. NOTE: For detailed operation procedures, refer to “Read Current Data For Engine”. <Ref. to EN(H6DO)(diag)-50, Subaru Select Monitor.>	Is the value of «Exh. VVT Retard Ang. L» approx. 0 deg, and the value of «Exh. OCV Duty L» approx. 10%?	Perform the following procedures, and clean the oil routing. Replace the engine oil and idle the engine for 5 minutes, and then replace the oil filter and engine oil. <Ref. to LU(H6DO)-12, REPLACEMENT, Engine Oil.> <Ref. to LU(H6DO)-21, Engine Oil Filter.>	Check the following item and repair or replace if necessary. • Oil pipe (clog) • Oil flow control solenoid valve (clog or dirt of oil routing, setting of spring) • Exhaust camshaft (dirt, damage of camshaft) • Timing chain (matching of timing mark)

1. OUTLINE OF DIAGNOSIS

NOTE:
For the detection standard, refer to DTC P0017. <Ref. to EN(H6DO)(diag)-136, DTC P0017 CRANKSHAFT POSITION - CAMSHAFT POSITION CORRELATION BANK 1 SENSOR B, Diagnostic Procedure with Diagnostic Trouble Code (DTC).>

M: DTC P0020 "A" CAMSHAFT POSITION ACTUATOR CONTROL CIRCUIT/ OPEN BANK 2

DTC DETECTING CONDITION:
Immediately at fault recognition
TROUBLE SYMPTOM:
Improper idling

CAUTION:
After servicing or replacing faulty parts, perform Clear Memory Mode <Ref. to EN(H6DO)(diag)-85, OPERATION, Clear Memory Mode.>, and Inspection Mode <Ref. to EN(H6DO)(diag)-69, PROCEDURE, Inspection Mode.>.
WIRING DIAGRAM:
• Engine Electrical System ENGINE TYPE EZ (WITHOUT PUSH BUTTON START) <Ref. to WI-198, ENGINE TYPE EZ (WITHOUT PUSH BUTTON START), WIRING DIAGRAM, Engine Electrical System.>
• Engine Electrical System ENGINE TYPE EZ (WITH PUSH BUTTON START) <Ref. to WI-214, ENGINE TYPE EZ (WITH PUSH BUTTON START), WIRING DIAGRAM, Engine Electrical System.>

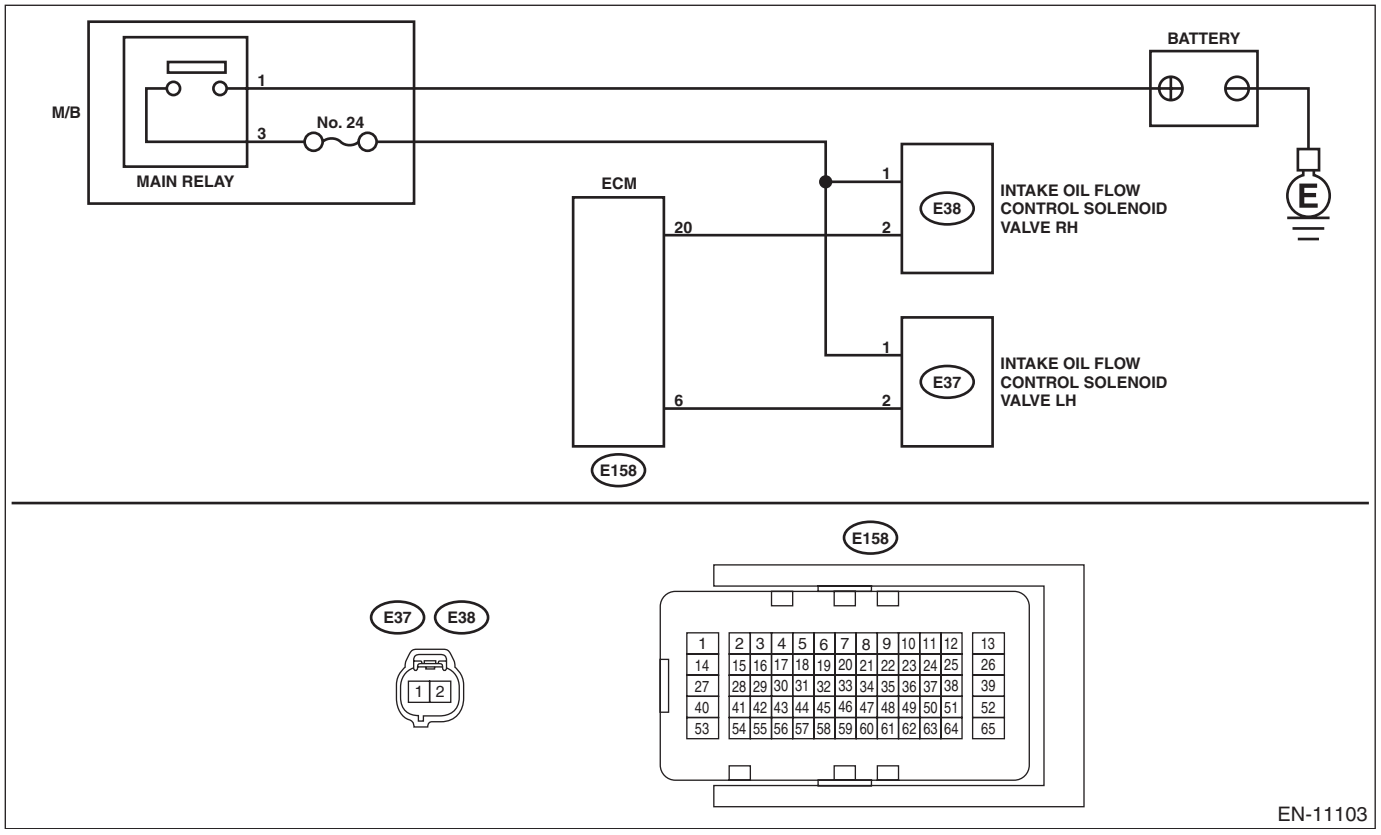

Step		Check	Yes	No
1	**CHECK OUTPUT SIGNAL OF ECM.** 1) Turn the ignition switch to ON. 2) Measure the voltage between ECM connector and engine ground. ***Connector & terminal*** ***(E158) No. 6 (+) — Engine ground (–):***	Is the voltage 10 V or more?	Go to step **2**.	Go to step **3**.

	Step	Check	Yes	No
2	**CHECK FOR POOR CONTACT.** Check for poor contact of ECM connector.	Is there poor contact of ECM connector?	Repair the poor contact of ECM connector.	Even if DTC is detected, the circuit has returned to a normal condition at this time. Reproduce the failure, and then perform the diagnosis again. NOTE: In this case, temporary poor contact of connector, temporary open or short circuit of harness may be the cause.
3	**CHECK POWER SUPPLY TO THE INTAKE OIL FLOW CONTROL SOLENOID VALVE LH.** Measure the voltage between intake oil flow control solenoid valve LH connector and engine ground. ***Connector & terminal*** ***(E37) No. 1 (+) — Engine ground (–):***	Is the voltage 10 V or more?	Go to step **4**.	Repair the power supply circuit.
4	**CHECK HARNESS BETWEEN ECM AND INTAKE OIL FLOW CONTROL SOLENOID VALVE LH CONNECTOR.** 1) Turn the ignition switch to OFF. 2) Disconnect the connectors from ECM and intake oil flow control solenoid valve LH. 3) Measure the resistance between intake oil flow control solenoid valve LH connector and engine ground. ***Connector & terminal*** ***(E37) No. 2 — Engine ground:***	Is the resistance 1 MΩ or more?	Go to step **5**.	Repair the short circuit to ground in harness between ECM connector and intake oil flow control solenoid valve LH connector.
5	**CHECK HARNESS BETWEEN ECM AND INTAKE OIL FLOW CONTROL SOLENOID VALVE LH CONNECTOR.** Measure the resistance of harness between ECM connector and intake oil flow control solenoid valve LH. ***Connector & terminal*** ***(E158) No. 6 — (E37) No. 2:***	Is the resistance less than 1 Ω?	Go to step **6**.	Repair the open circuit in harness between ECM connector and intake oil flow control solenoid valve LH connector.
6	**CHECK INTAKE OIL FLOW CONTROL SOLENOID VALVE LH.** Measure the resistance between intake oil flow control solenoid valve LH terminals. ***Terminals*** ***No. 1 — No. 2:***	Is the resistance 6 — 12 Ω?	Repair the poor contact of intake oil flow control solenoid valve LH connector.	Replace the intake oil flow control solenoid valve LH. <Ref. to FU(H6DO)-72, Oil Flow Control Solenoid Valve.>

1. OUTLINE OF DIAGNOSIS

NOTE:
For the detection standard, refer to DTC P0010. <Ref. to EN(H6DO)(diag)-124, DTC P0010 "A" CAMSHAFT POSITION ACTUATOR CONTROL CIRCUIT/OPEN BANK 1, Diagnostic Procedure with Diagnostic Trouble Code (DTC).>

N: DTC P0021 "A" CAMSHAFT POSITION - TIMING OVER-ADVANCED OR SYSTEM PERFORMANCE BANK 2

DTC DETECTING CONDITION:
Detected when two consecutive driving cycles with fault occur.
TROUBLE SYMPTOM:
- Engine stalls.
- Improper idling

CAUTION:
After servicing or replacing faulty parts, perform Clear Memory Mode <Ref. to EN(H6DO)(diag)-85, OPERATION, Clear Memory Mode.>, and Inspection Mode <Ref. to EN(H6DO)(diag)-69, PROCEDURE, Inspection Mode.>.

	Step	Check	Yes	No
1	**IDENTIFYING FAULTY PART.** 1) Perform the Clear Memory Mode. <Ref. to EN(H6DO)(diag)-85, Clear Memory Mode.> 2) Replace the defective oil control solenoid by the other (RH or LH, intake side or exhaust side) oil control solenoid. 3) Perform appropriate drive cycle. <Ref. to EN(H6DO)(diag)-73, Drive Cycle.> 4) Make sure that the fault occurrence (DTC and incorrect advancing) has shifted to the other location.	Did the detected DTC shift to the location where the oil control solenoid was replaced?	Replace the faulty oil control solenoid.	Go to step **2**.
2	**CHECK CURRENT DATA.** 1) Start the engine and let it idle. 2) Read the value of «VVT Adv. Ang. Amount L» using the Subaru Select Monitor. NOTE: For detailed operation procedures, refer to "Read Current Data For Engine". <Ref. to EN(H6DO)(diag)-50, Subaru Select Monitor.>	Is the value of «VVT Adv. Ang. Amount L» approx. 0 deg?	Go to step **3**.	Check the following item and repair or replace if necessary. • Oil pipe (clog) • Oil flow control solenoid valve (clog or dirt of oil routing, setting of spring) • Intake camshaft (dirt, damage of camshaft)
3	**CHECK CURRENT DATA.** 1) Drive with acceleration and deceleration at 80 km/h (50 MPH) or less. NOTE: Drive to an extent that the duty output of oil flow control solenoid valve increases. 2) Read the values of «OCV Duty L» and «VVT Adv. Ang. Amount L» using the Subaru Select Monitor. NOTE: For detailed operation procedures, refer to "Read Current Data For Engine". <Ref. to EN(H6DO)(diag)-50, Subaru Select Monitor.>	When the value of «OCV Duty L» increases more than 10%, is the value of «VVT Adv. Ang. Amount L» approx. 0 deg?	Check the following item and repair or replace if necessary. • Oil pipe (clog) • Oil flow control solenoid valve (clog or dirt of oil routing, setting of spring) • Intake camshaft (dirt, damage of camshaft)	Perform the following procedures, and clean the oil routing. Replace the engine oil and idle the engine for 5 minutes, and then replace the oil filter and engine oil. <Ref. to LU(H6DO)-12, REPLACEMENT, Engine Oil.> <Ref. to LU(H6DO)-21, Engine Oil Filter.>

1. OUTLINE OF DIAGNOSIS

NOTE:
For the detection standard, refer to DTC P0011. <Ref. to EN(H6DO)(diag)-127, DTC P0011 "A" CAMSHAFT POSITION - TIMING OVER-ADVANCED OR SYSTEM PERFORMANCE BANK 1, Diagnostic Procedure with Diagnostic Trouble Code (DTC).>

O: DTC P0023 "B" CAMSHAFT POSITION ACTUATOR CONTROL CIRCUIT/ OPEN BANK 2

DTC DETECTING CONDITION:
Immediately at fault recognition
TROUBLE SYMPTOM:
Improper idling

CAUTION:
After servicing or replacing faulty parts, perform Clear Memory Mode <Ref. to EN(H6DO)(diag)-85, OPERATION, Clear Memory Mode.>, and Inspection Mode <Ref. to EN(H6DO)(diag)-69, PROCEDURE, Inspection Mode.>.
WIRING DIAGRAM:
• Engine Electrical System ENGINE TYPE EZ (WITHOUT PUSH BUTTON START) <Ref. to WI-198, ENGINE TYPE EZ (WITHOUT PUSH BUTTON START), WIRING DIAGRAM, Engine Electrical System.>
• Engine Electrical System ENGINE TYPE EZ (WITH PUSH BUTTON START) <Ref. to WI-214, ENGINE TYPE EZ (WITH PUSH BUTTON START), WIRING DIAGRAM, Engine Electrical System.>

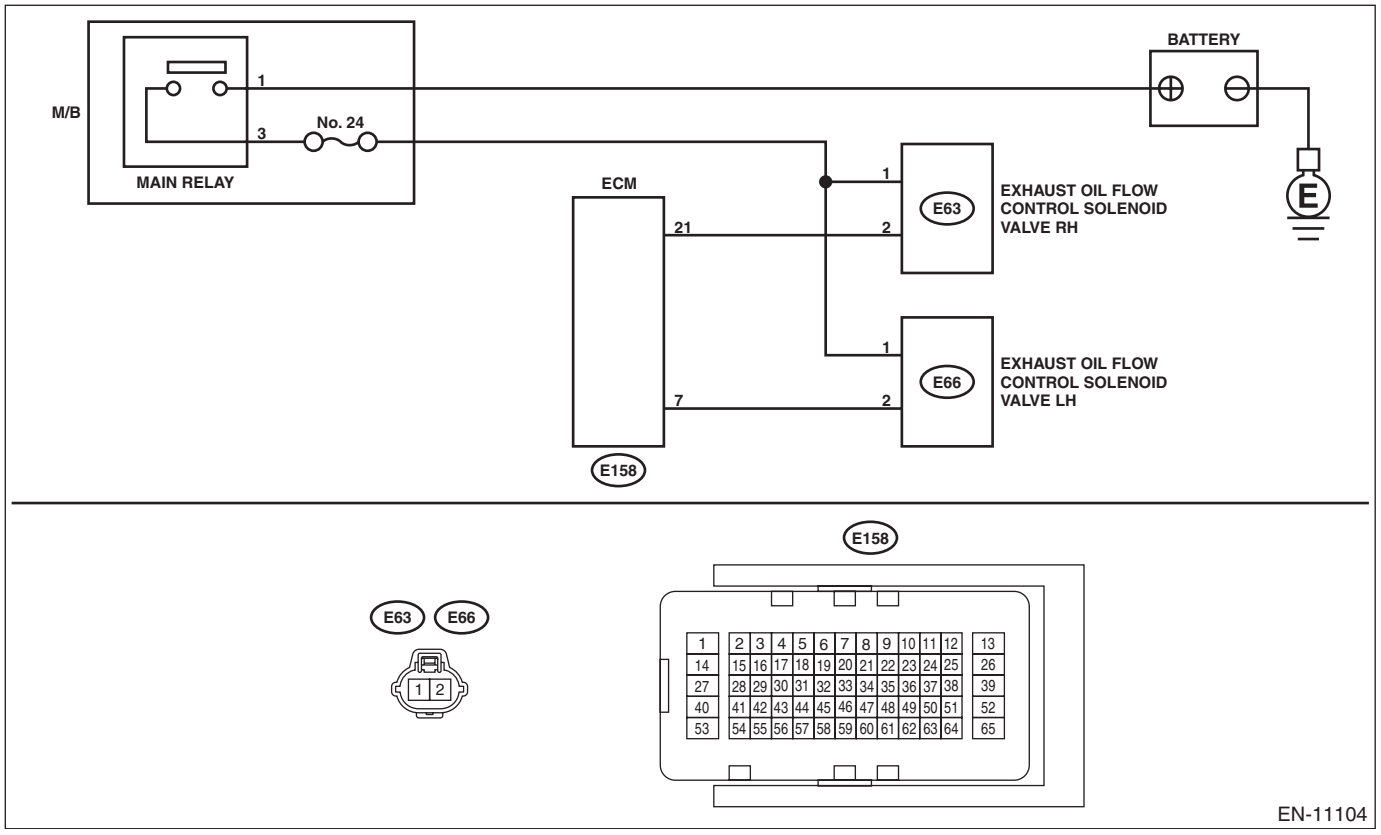

Step		Check	Yes	No
1	**CHECK OUTPUT SIGNAL OF ECM.** 1) Turn the ignition switch to ON. 2) Measure the voltage between ECM connector and engine ground. ***Connector & terminal*** ***(E158) No. 7 (+) — Engine ground (–):***	Is the voltage 10 V or more?	Go to step **2**.	Go to step **3**.

	Step	Check	Yes	No
2	**CHECK FOR POOR CONTACT.** Check for poor contact of ECM connector.	Is there poor contact of ECM connector?	Repair the poor contact of ECM connector.	Even if DTC is detected, the circuit has returned to a normal condition at this time. Reproduce the failure, and then perform the diagnosis again. NOTE: In this case, temporary poor contact of connector, temporary open or short circuit of harness may be the cause.
3	**CHECK POWER SUPPLY TO EXHAUST OIL FLOW CONTROL SOLENOID VALVE LH.** Measure the voltage between exhaust oil flow control solenoid valve LH connector and engine ground. ***Connector & terminal*** ***(E66) No. 1 (+) — Engine ground (–):***	Is the voltage 10 V or more?	Go to step **4**.	Repair the power supply circuit.
4	**CHECK HARNESS BETWEEN ECM AND EXHAUST OIL FLOW CONTROL SOLENOID VALVE LH CONNECTOR.** 1) Turn the ignition switch to OFF. 2) Disconnect the connectors from ECM and exhaust oil flow control solenoid valve LH. 3) Measure the resistance between exhaust oil flow control solenoid valve LH connector and engine ground. ***Connector & terminal*** ***(E66) No. 2 — Engine ground:***	Is the resistance 1 MΩ or more?	Go to step **5**.	Repair the short circuit to ground in harness between ECM connector and exhaust oil flow control solenoid valve LH connector.
5	**CHECK HARNESS BETWEEN ECM AND EXHAUST OIL FLOW CONTROL SOLENOID VALVE LH CONNECTOR.** Measure the resistance of harness between ECM connector and exhaust oil flow control solenoid valve LH. ***Connector & terminal*** ***(E158) No. 7 — (E66) No. 2:***	Is the resistance less than 1 Ω?	Go to step **6**.	Repair the open circuit in harness between ECM connector and exhaust oil flow control solenoid valve LH connector.
6	**CHECK EXHAUST OIL FLOW CONTROL SOLENOID VALVE LH.** Measure the resistance between exhaust oil flow control solenoid valve LH terminals. ***Terminals*** ***No. 1 — No. 2:***	Is the resistance 6 — 12 Ω?	Repair the poor contact of exhaust oil flow control solenoid valve LH connector.	Replace the exhaust oil flow control solenoid valve LH. <Ref. to FU(H6DO)-72, Oil Flow Control Solenoid Valve.>

1. OUTLINE OF DIAGNOSIS

NOTE:
For the detection standard, refer to DTC P0013. <Ref. to EN(H6DO)(diag)-129, DTC P0013 "B" CAMSHAFT POSITION ACTUATOR CONTROL CIRCUIT/OPEN BANK 1, Diagnostic Procedure with Diagnostic Trouble Code (DTC).>

P: DTC P0024 "B" CAMSHAFT POSITION - TIMING OVER-ADVANCED OR SYSTEM PERFORMANCE BANK 2

DTC DETECTING CONDITION:
Detected when two consecutive driving cycles with fault occur.
TROUBLE SYMPTOM:
- Engine stalls.
- Improper idling

CAUTION:
After servicing or replacing faulty parts, perform Clear Memory Mode <Ref. to EN(H6DO)(diag)-85, OPERATION, Clear Memory Mode.>, and Inspection Mode <Ref. to EN(H6DO)(diag)-69, PROCEDURE, Inspection Mode.>.

	Step	Check	Yes	No
1	**IDENTIFYING FAULTY PART.** 1) Perform the Clear Memory Mode. <Ref. to EN(H6DO)(diag)-85, Clear Memory Mode.> 2) Replace the defective oil control solenoid by the other (RH or LH, intake side or exhaust side) oil control solenoid. 3) Perform appropriate drive cycle. <Ref. to EN(H6DO)(diag)-73, Drive Cycle.> 4) Make sure that the fault occurrence (DTC and incorrect advancing) has shifted to the other location.	Did the detected DTC shift to the location where the oil control solenoid was replaced?	Replace the faulty oil control solenoid.	Go to step **2**.
2	**CHECK CURRENT DATA.** 1) Start the engine and let it idle. 2) Read the value of «Exh. VVT Retard Ang. L» using the Subaru Select Monitor. NOTE: For detailed operation procedures, refer to "Read Current Data For Engine". <Ref. to EN(H6DO)(diag)-50, Subaru Select Monitor.>	Is the value of «Exh. VVT Retard Ang. L» approx. 0 deg?	Go to step **3**.	Check the following item and repair or replace if necessary. • Oil pipe (clog) • Oil flow control solenoid valve (clog or dirt of oil routing, setting of spring) • Exhaust camshaft (dirt, damage of camshaft)
3	**CHECK CURRENT DATA.** 1) Drive with acceleration and deceleration at 80 km/h (50 MPH) or less. NOTE: Drive to an extent that the duty output of oil flow control solenoid valve increases. 2) Read the values of «Exh. OCV Duty L» and «Exh. VVT Retard Ang. L» using the Subaru Select Monitor. NOTE: For detailed operation procedures, refer to "Read Current Data For Engine". <Ref. to EN(H6DO)(diag)-50, Subaru Select Monitor.>	When the value of «Exh. OCV Duty L» increases more than 10%, is the value of «Exh. VVT Retard Ang. L» approx. 0 deg?	Check the following item and repair or replace if necessary. • Oil pipe (clog) • Oil flow control solenoid valve (clog or dirt of oil routing, setting of spring) • Exhaust camshaft (dirt, damage of camshaft)	Perform the following procedures, and clean the oil routing. Replace the engine oil and idle the engine for 5 minutes, and then replace the oil filter and engine oil. <Ref. to LU(H6DO)-12, REPLACEMENT, Engine Oil.> <Ref. to LU(H6DO)-21, Engine Oil Filter.>

1. OUTLINE OF DIAGNOSIS

NOTE:
For the detection standard, refer to DTC P0014. <Ref. to EN(H6DO)(diag)-132, DTC P0014 "B" CAMSHAFT POSITION - TIMING OVER-ADVANCED OR SYSTEM PERFORMANCE BANK 1, Diagnostic Procedure with Diagnostic Trouble Code (DTC).>

Q: DTC P0030 A/F / O2 HEATER CONTROL CIRCUIT BANK 1 SENSOR 1

DTC DETECTING CONDITION:

Detected when two consecutive driving cycles with fault occur.

CAUTION:

After servicing or replacing faulty parts, perform Clear Memory Mode <Ref. to EN(H6DO)(diag)-85, OPERATION, Clear Memory Mode.>, and Inspection Mode <Ref. to EN(H6DO)(diag)-69, PROCEDURE, Inspection Mode.>.

WIRING DIAGRAM:

- Engine Electrical System ENGINE TYPE EZ (WITHOUT PUSH BUTTON START) <Ref. to WI-198, ENGINE TYPE EZ (WITHOUT PUSH BUTTON START), WIRING DIAGRAM, Engine Electrical System.>
- Engine Electrical System ENGINE TYPE EZ (WITH PUSH BUTTON START) <Ref. to WI-214, ENGINE TYPE EZ (WITH PUSH BUTTON START), WIRING DIAGRAM, Engine Electrical System.>

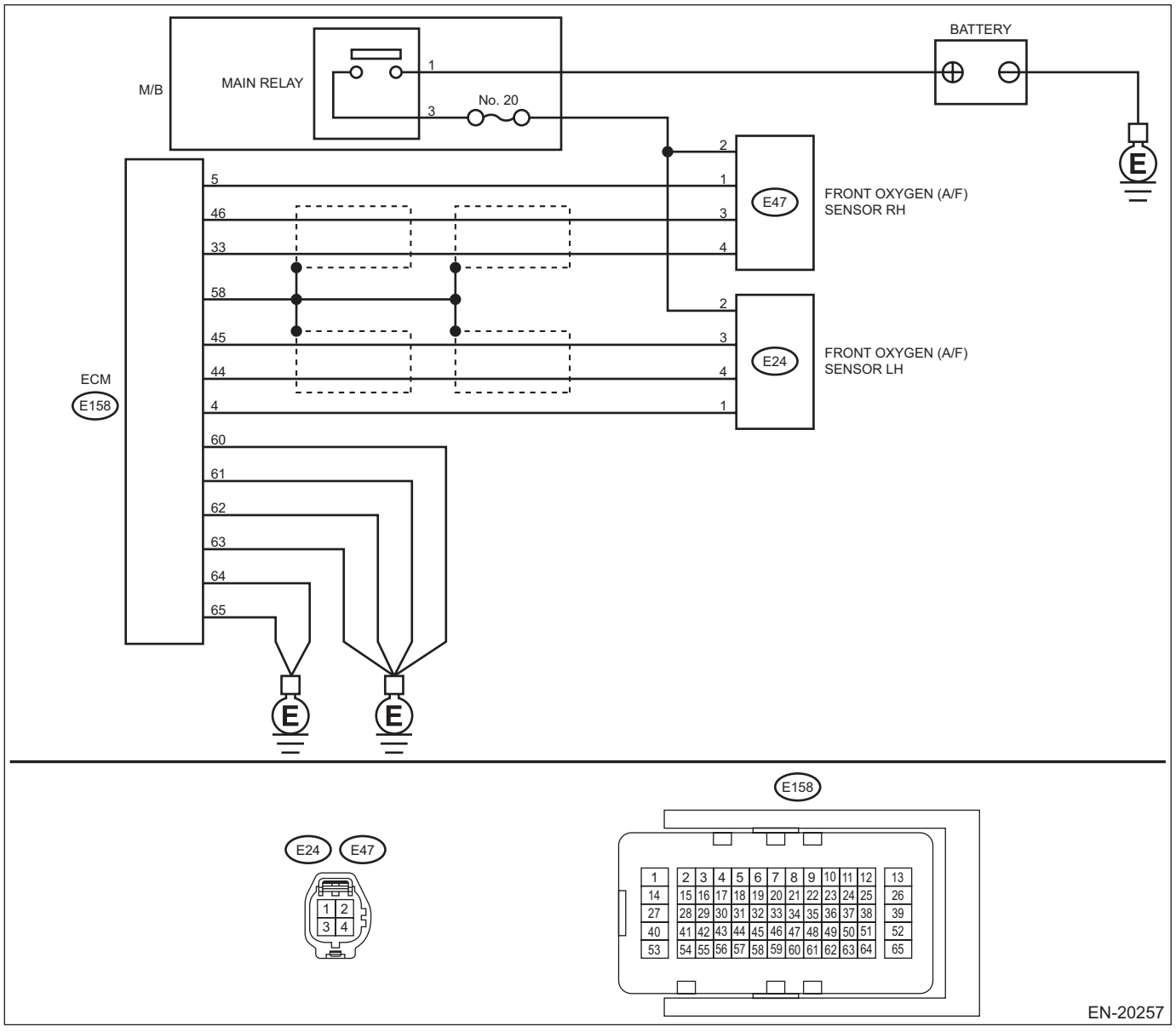

	Step	Check	Yes	No
1	**CHECK HARNESS BETWEEN ECM AND FRONT OXYGEN (A/F) SENSOR CONNECTOR.** 1) Start and warm up the engine. 2) Turn the ignition switch to OFF. 3) Disconnect the connectors from ECM and front oxygen (A/F) sensor. 4) Measure the resistance of harness between ECM connector and front oxygen (A/F) sensor connector. ***Connector & terminal*** ***(E158) No. 5 — (E47) No. 1:*** ***(E158) No. 46 — (E47) No. 3:*** ***(E158) No. 33 — (E47) No. 4:***	Is the resistance less than 1 Ω?	Go to step **2**.	Repair the harness and connector. NOTE: In this case, repair the following item: • Open circuit in harness between ECM connector and front oxygen (A/F) sensor connector • Poor contact of coupling connector
2	**CHECK FRONT OXYGEN (A/F) SENSOR.** Measure the resistance between front oxygen (A/F) sensor connector terminals. ***Terminals*** ***No. 2 — No. 1:***	Is the resistance 2 — 3 Ω?	Go to step **3**.	Replace the front oxygen (A/F) sensor. <Ref. to FU(H6DO)-78, Front Oxygen (A/F) Sensor.>
3	**CHECK FOR POOR CONTACT.** Check for poor contact of ECM and front oxygen (A/F) sensor connector.	Is there poor contact of ECM or front oxygen (A/F) sensor connector?	Repair the poor contact of ECM or front oxygen (A/F) sensor connector.	Replace the front oxygen (A/F) sensor. <Ref. to FU(H6DO)-78, Front Oxygen (A/F) Sensor.>

1. OUTLINE OF DIAGNOSIS

Detect functional errors of the front oxygen (A/F) sensor heater.
Judge as NG when it is determined that the front oxygen (A/F) sensor impedance is large when looking at engine status such as deceleration fuel cut.

2. COMPONENT DESCRIPTION

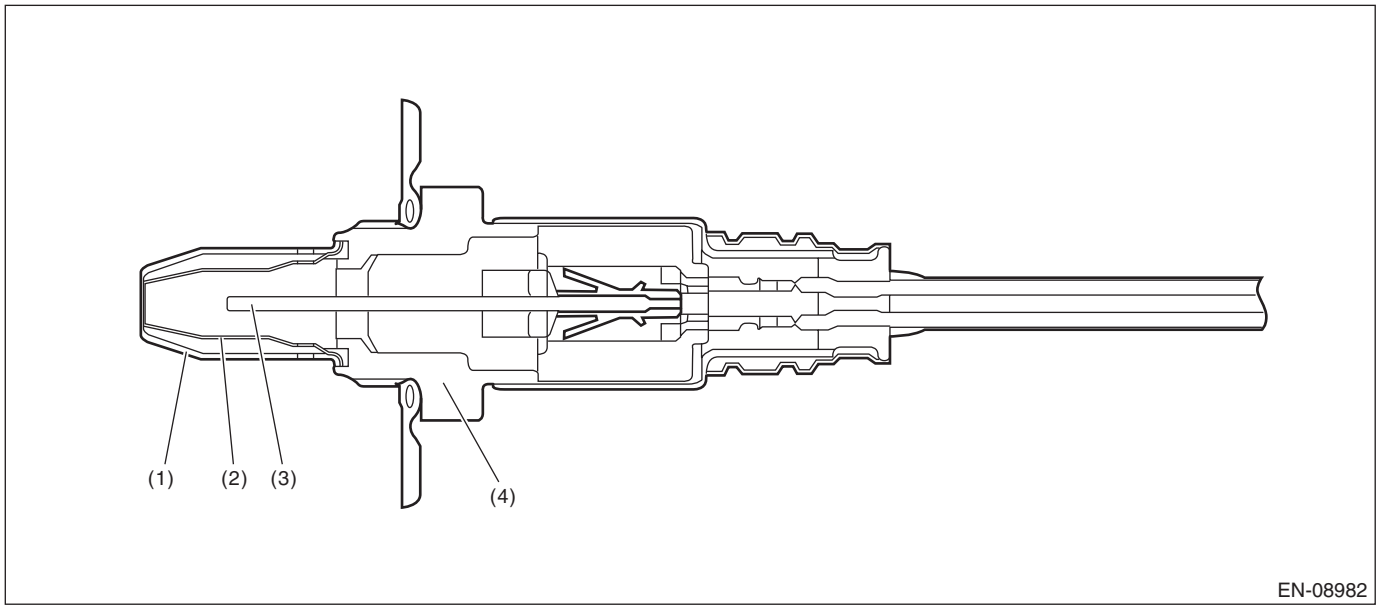

(1) Element cover (outer)
(2) Element cover (inner)
(3) Sensor element
(4) Sensor housing

3. EXECUTION CONDITION

Secondary Parameters	Execution condition
Battery voltage	≥ 10.9 V
Front oxygen (A/F) sensor heater control duty	> 17 %
After fuel cut	≥ 20000 ms

4. GENERAL DRIVING CYCLE

Perform the diagnosis continuously when 20000 ms have elapsed since the fuel cut was initiated after starting the heater control.

5. DIAGNOSTIC METHOD

If the duration of time while the following conditions are met is longer than the time indicated, judge as NG.

Judgment Value

Malfunction Criteria	Threshold Value
Front oxygen (A/F) sensor impedance	> 82 Ω

Time Needed for Diagnosis: 10000 ms
Malfunction Indicator Light Illumination: Illuminates when malfunction occurs in 2 continuous driving cycles.

R: DTC P0031 A/F / O2 HEATER CONTROL CIRCUIT LOW BANK 1 SENSOR 1

DTC DETECTING CONDITION:
Immediately at fault recognition

CAUTION:
After servicing or replacing faulty parts, perform Clear Memory Mode <Ref. to EN(H6DO)(diag)-85, OPERATION, Clear Memory Mode.>, and Inspection Mode <Ref. to EN(H6DO)(diag)-69, PROCEDURE, Inspection Mode.>.

WIRING DIAGRAM:

- Engine Electrical System ENGINE TYPE EZ (WITHOUT PUSH BUTTON START) <Ref. to WI-198, ENGINE TYPE EZ (WITHOUT PUSH BUTTON START), WIRING DIAGRAM, Engine Electrical System.>
- Engine Electrical System ENGINE TYPE EZ (WITH PUSH BUTTON START) <Ref. to WI-214, ENGINE TYPE EZ (WITH PUSH BUTTON START), WIRING DIAGRAM, Engine Electrical System.>

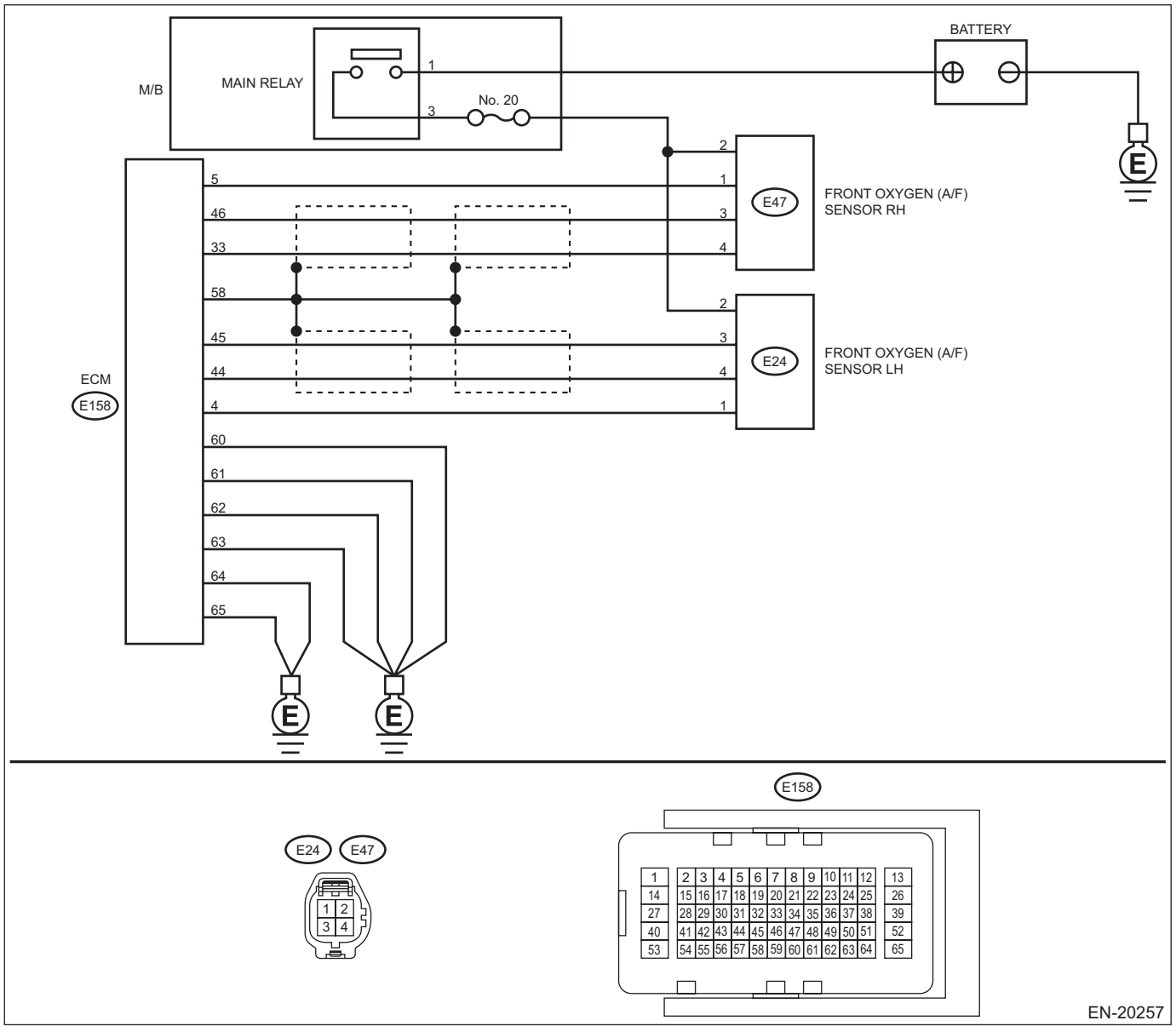

	Step	Check	Yes	No
1	**CHECK POWER SUPPLY TO FRONT OXYGEN (A/F) SENSOR.** 1) Turn the ignition switch to OFF. 2) Disconnect the connectors from front oxygen (A/F) sensor. 3) Turn the ignition switch to ON. 4) Measure the voltage between front oxygen (A/F) sensor connector and engine ground. ***Connector & terminal*** ***(E47) No. 2 (+) — Engine ground (–):***	Is the voltage 10 V or more?	Go to step **2**.	Repair the power supply line. NOTE: In this case, repair the following item: • Open circuit of harness between M/B main relay and front oxygen (A/F) sensor connector • Poor contact of M/B main relay connector • Poor contact of coupling connector • Defective M/B main relay • Blown out of fuse (M/B No. 20)
2	**CHECK HARNESS BETWEEN ECM AND FRONT OXYGEN (A/F) SENSOR CONNECTOR.** 1) Turn the ignition switch to OFF. 2) Disconnect the connector from ECM. 3) Measure the resistance between ECM connector and front oxygen (A/F) sensor connector. ***Connector & terminal*** ***(E158) No. 5 — (E47) No. 1:***	Is the resistance less than 1 Ω?	Go to step **3**.	Repair the harness and connector. NOTE: In this case, repair the following item: • Open circuit in harness between ECM connector and front oxygen (A/F) sensor connector • Poor contact of coupling connector
3	**CHECK GROUND CIRCUIT FOR ECM.** Measure the resistance of harness between ECM connector and chassis ground. ***Connector & terminal*** ***(E158) No. 60 — Chassis ground:*** ***(E158) No. 61 — Chassis ground:*** ***(E158) No. 62 — Chassis ground:*** ***(E158) No. 63 — Chassis ground:*** ***(E158) No. 64 — Chassis ground:*** ***(E158) No. 65 — Chassis ground:***	Is the resistance less than 5 Ω?	Go to step **4**.	Repair the open circuit in harness between ECM connector and engine ground.
4	**CHECK FRONT OXYGEN (A/F) SENSOR.** Measure the resistance between front oxygen (A/F) sensor connector terminals. ***Terminals*** ***No. 2 — No. 1:***	Is the resistance 2 — 3 Ω?	Repair the poor contact of ECM connector.	Replace the front oxygen (A/F) sensor. <Ref. to FU(H6DO)-78, Front Oxygen (A/F) Sensor.>

1. OUTLINE OF DIAGNOSIS

Detect front oxygen (A/F) sensor heater open or short circuit.
The front oxygen (A/F) sensor heater performs duty control, and the output terminal voltage at ON is 0 V, and the output terminal voltage at OFF is the battery voltage.
Judge as NG when the terminal voltage remains Low.

2. COMPONENT DESCRIPTION

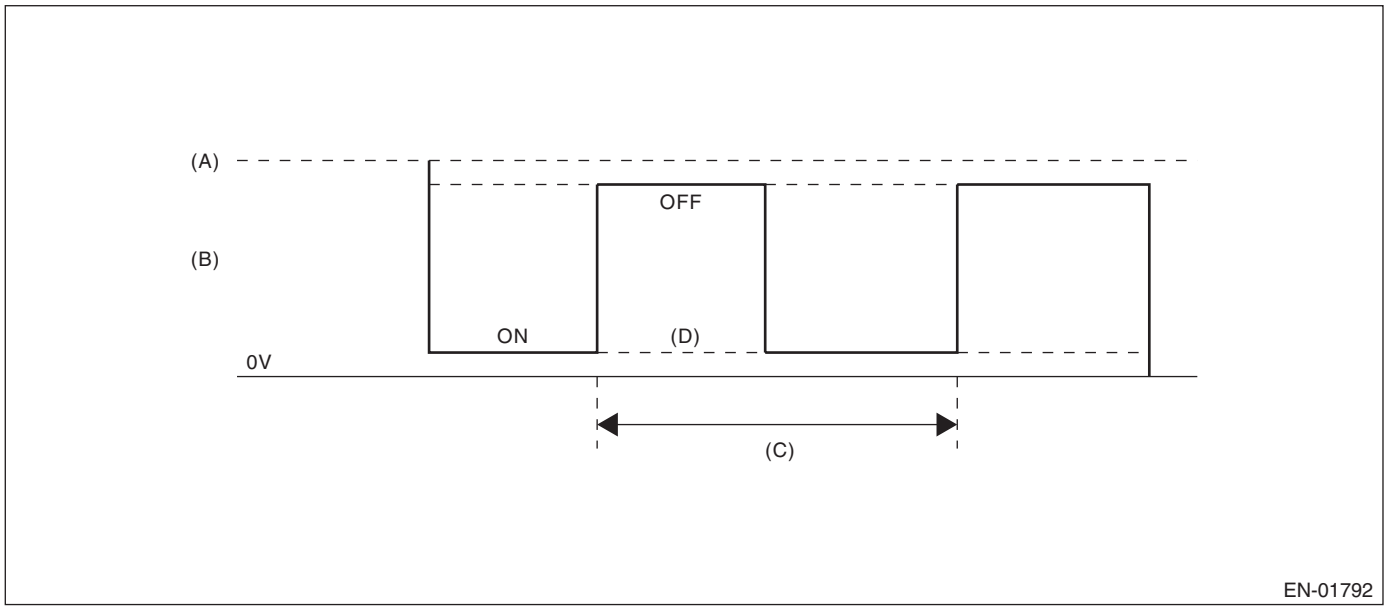

(A) Battery voltage
(B) Front oxygen (A/F) sensor heater output voltage
(C) 128 ms
(D) Low error

3. EXECUTION CONDITION

Secondary Parameters	Execution condition
Battery voltage	≥ 10.9 V
Front oxygen (A/F) sensor heater control duty	< 87.5 %

4. GENERAL DRIVING CYCLE

Perform the diagnosis continuously after the enable conditions have been established.

5. DIAGNOSTIC METHOD

If the duration of time while the following conditions are met is longer than the time indicated, judge as NG.

Judgment Value

Malfunction Criteria	Threshold Value
Output voltage	< 0.66 V

Time Needed for Diagnosis: 4 ms × 250 time(s)
Malfunction Indicator Light Illumination: Illuminates as soon as a malfunction occurs.

S: DTC P0032 A/F / O2 HEATER CONTROL CIRCUIT HIGH BANK 1 SENSOR 1

DTC DETECTING CONDITION:
Immediately at fault recognition

CAUTION:
After servicing or replacing faulty parts, perform Clear Memory Mode <Ref. to EN(H6DO)(diag)-85, OPERATION, Clear Memory Mode.>, and Inspection Mode <Ref. to EN(H6DO)(diag)-69, PROCEDURE, Inspection Mode.>.

WIRING DIAGRAM:

- Engine Electrical System ENGINE TYPE EZ (WITHOUT PUSH BUTTON START) <Ref. to WI-198, ENGINE TYPE EZ (WITHOUT PUSH BUTTON START), WIRING DIAGRAM, Engine Electrical System.>
- Engine Electrical System ENGINE TYPE EZ (WITH PUSH BUTTON START) <Ref. to WI-214, ENGINE TYPE EZ (WITH PUSH BUTTON START), WIRING DIAGRAM, Engine Electrical System.>

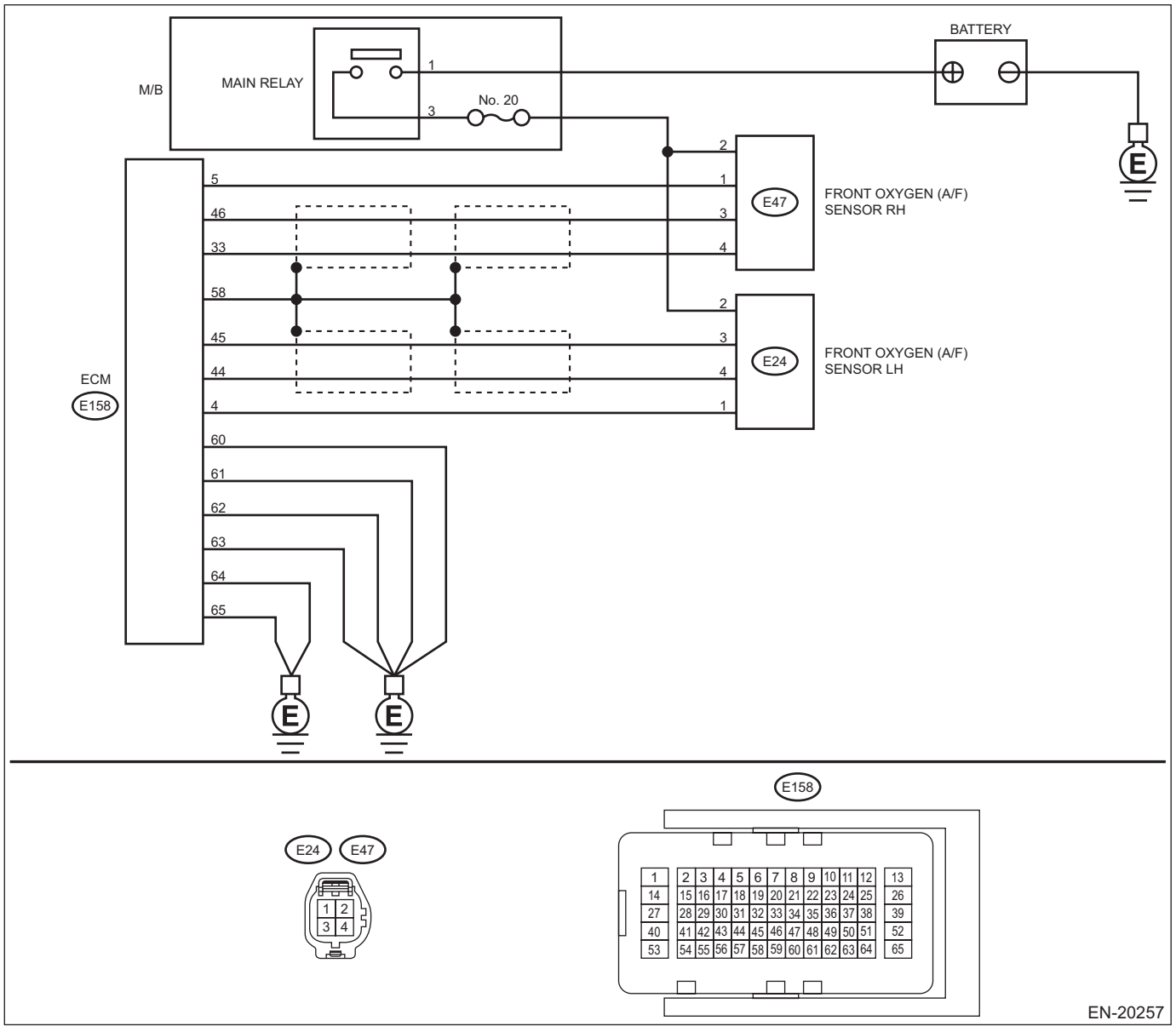

	Step	Check	Yes	No
1	**CHECK HARNESS BETWEEN ECM AND FRONT OXYGEN (A/F) SENSOR CONNECTOR.** 1) Turn the ignition switch to OFF. 2) Measure the voltage between ECM connector and chassis ground. ***Connector & terminal*** ***(E158) No. 5 (+) — Chassis ground (–):***	Is the voltage 10 V or more?	Repair the short circuit to power in the harness between ECM connector and front oxygen (A/F) sensor connector.	Go to step **2**.
2	**CHECK GROUND CIRCUIT FOR ECM.** 1) Disconnect the connector from ECM. 2) Measure the resistance between ECM connector and chassis ground. ***Connector & terminal*** ***(E158) No. 60 — Chassis ground:*** ***(E158) No. 61 — Chassis ground:*** ***(E158) No. 62 — Chassis ground:*** ***(E158) No. 63 — Chassis ground:*** ***(E158) No. 64 — Chassis ground:*** ***(E158) No. 65 — Chassis ground:***	Is the resistance less than 5 Ω?	Repair the poor contact of ECM connector.	Repair the open circuit in harness between ECM connector and engine ground.

1. OUTLINE OF DIAGNOSIS

Detect front oxygen (A/F) sensor heater open or short circuit.
The front oxygen (A/F) sensor heater performs duty control, and the output terminal voltage at ON is 0 V, and the output terminal voltage at OFF is the battery voltage.
Judge as NG when the terminal voltage remains High.

2. COMPONENT DESCRIPTION

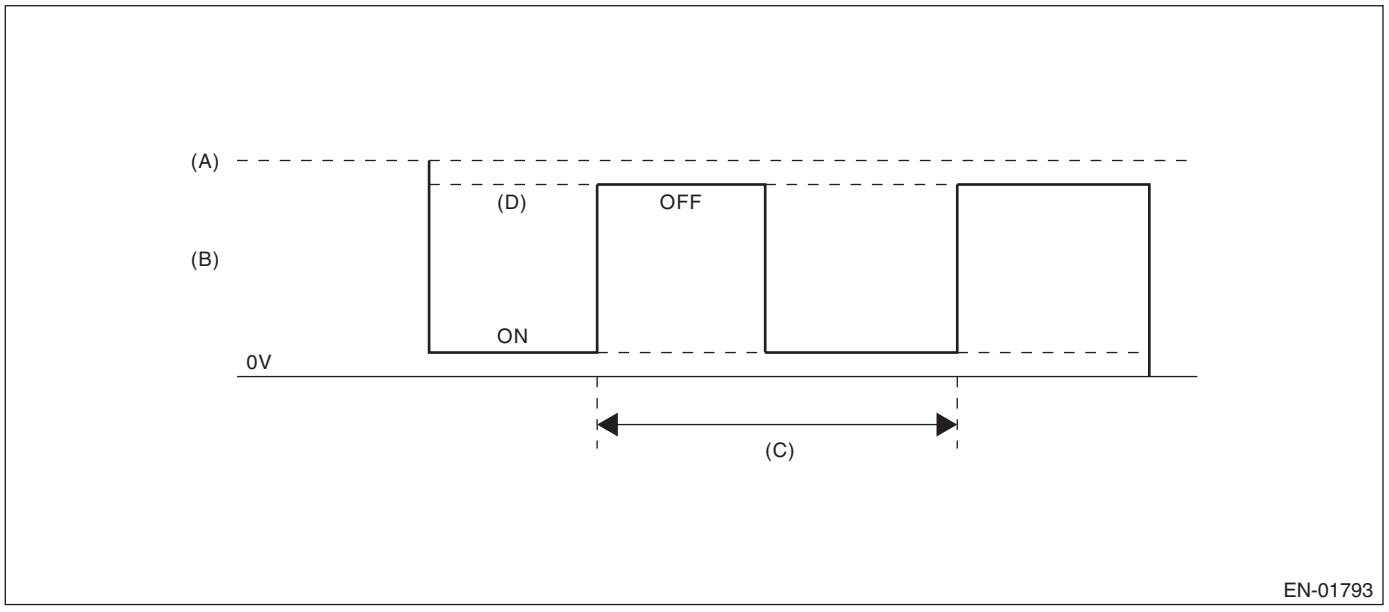

(A) Battery voltage
(B) Front oxygen (A/F) sensor heater output voltage
(C) 128 ms
(D) High error

3. EXECUTION CONDITION

Secondary Parameters	Execution condition
Battery voltage	≥ 10.9 V
Front oxygen (A/F) sensor heater control duty	> 12.5 %

4. GENERAL DRIVING CYCLE

Perform the diagnosis continuously after the enable conditions have been established.

5. DIAGNOSTIC METHOD

If the duration of time while the following conditions are met is longer than the time indicated, judge as NG.

Judgment Value

Malfunction Criteria	Threshold Value
Output voltage	≥ 5.62 V

Time Needed for Diagnosis: 4 ms × 500 time(s)
Malfunction Indicator Light Illumination: Illuminates as soon as a malfunction occurs.

T: DTC P0037 A/F / O2 HEATER CONTROL CIRCUIT LOW BANK 1 SENSOR 2

DTC DETECTING CONDITION:

Detected when two consecutive driving cycles with fault occur.

CAUTION:

After servicing or replacing faulty parts, perform Clear Memory Mode <Ref. to EN(H6DO)(diag)-85, OPERATION, Clear Memory Mode.>, and Inspection Mode <Ref. to EN(H6DO)(diag)-69, PROCEDURE, Inspection Mode.>.

WIRING DIAGRAM:

- Engine Electrical System ENGINE TYPE EZ (WITHOUT PUSH BUTTON START) <Ref. to WI-198, ENGINE TYPE EZ (WITHOUT PUSH BUTTON START), WIRING DIAGRAM, Engine Electrical System.>
- Engine Electrical System ENGINE TYPE EZ (WITH PUSH BUTTON START) <Ref. to WI-214, ENGINE TYPE EZ (WITH PUSH BUTTON START), WIRING DIAGRAM, Engine Electrical System.>

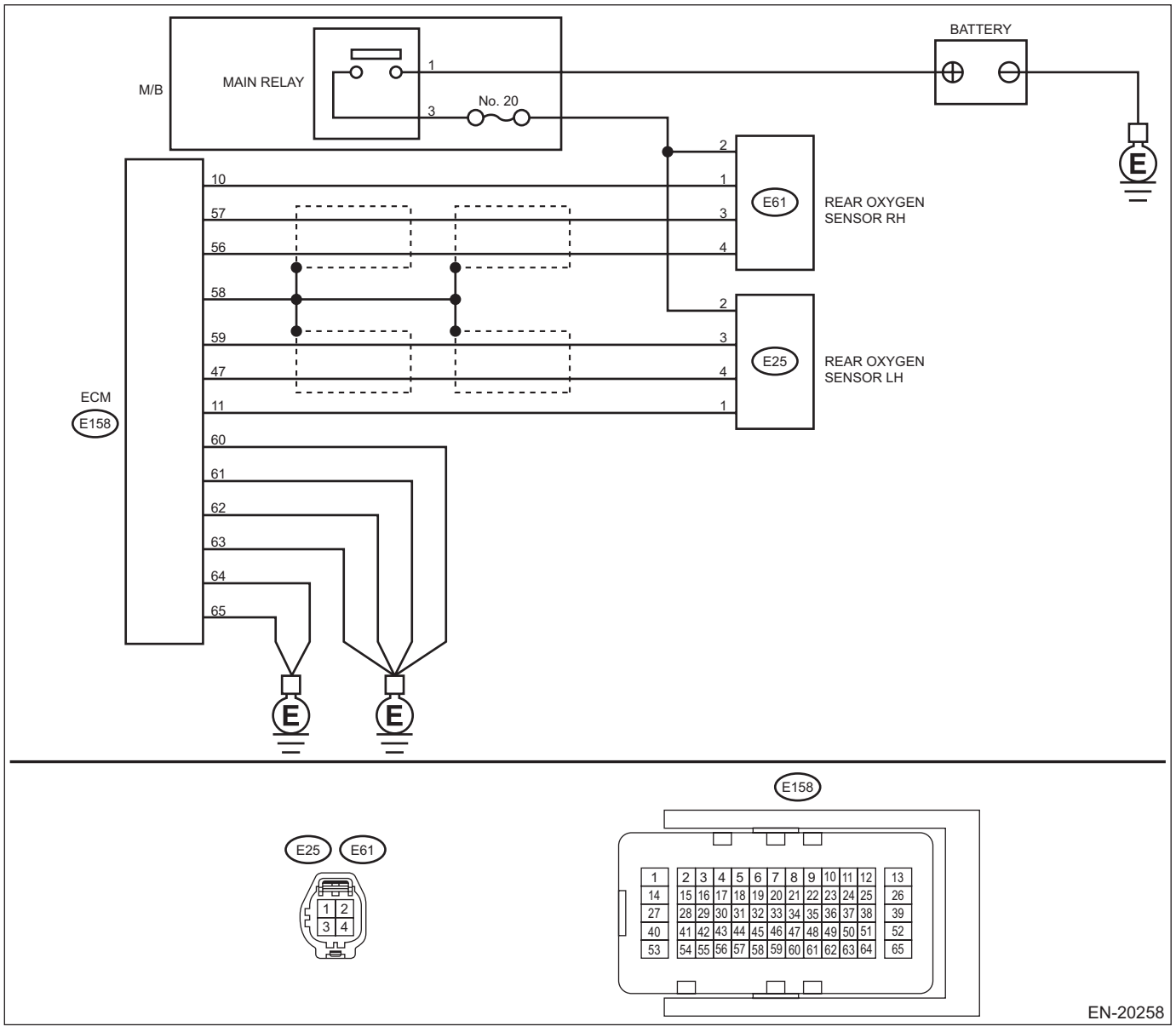

	Step	Check	Yes	No
1	**CHECK POWER SUPPLY TO REAR OXYGEN SENSOR.** 1) Turn the ignition switch to OFF. 2) Disconnect the connector from rear oxygen sensor. 3) Turn the ignition switch to ON. 4) Measure the voltage between rear oxygen sensor connector and engine ground. ***Connector & terminal*** ***(E61) No. 2 (+) — Engine ground (–):***	Is the voltage 10 V or more?	Go to step **2**.	Repair the power supply line. NOTE: In this case, repair the following item: • Open circuit of harness between M/B main relay and front oxygen (A/F) sensor connector • Poor contact of M/B main relay connector • Poor contact of coupling connector • Defective M/B main relay • Blown out of fuse (M/B No. 20)
2	**CHECK HARNESS BETWEEN ECM AND REAR OXYGEN SENSOR CONNECTOR.** 1) Turn the ignition switch to OFF. 2) Disconnect the connector from ECM. 3) Measure the resistance between ECM connector and oxygen sensor connector. ***Connector & terminal*** ***(E158) No. 10 — (E61) No. 1:***	Is the resistance less than 1 Ω?	Go to step **3**.	Repair the harness and connector. NOTE: In this case, repair the following item: • Open circuit in harness between ECM connector and rear oxygen sensor connector • Poor contact of coupling connector
3	**CHECK GROUND CIRCUIT FOR ECM.** Measure the resistance of harness between ECM connector and chassis ground. ***Connector & terminal*** ***(E158) No. 60 — Chassis ground:*** ***(E158) No. 61 — Chassis ground:*** ***(E158) No. 62 — Chassis ground:*** ***(E158) No. 63 — Chassis ground:*** ***(E158) No. 64 — Chassis ground:*** ***(E158) No. 65 — Chassis ground:***	Is the resistance less than 5 Ω?	Go to step **4**.	Repair the open circuit in harness between ECM connector and engine ground.
4	**CHECK REAR OXYGEN SENSOR.** Measure the resistance between rear oxygen sensor connector terminals. ***Terminals*** ***No. 2 — No. 1:***	Is the resistance 5 — 6.4 Ω?	Repair the poor contact of ECM connector.	Replace the rear oxygen sensor. <Ref. to FU(H6DO)-81, Rear Oxygen Sensor.>

1. OUTLINE OF DIAGNOSIS

Detect the rear oxygen sensor heater open or short circuit.
The rear oxygen sensor heater performs duty control, and the output terminal voltage at ON is 0 V, and the output terminal voltage at OFF is the battery voltage.
Judge as NG when the terminal voltage remains Low.

2. COMPONENT DESCRIPTION

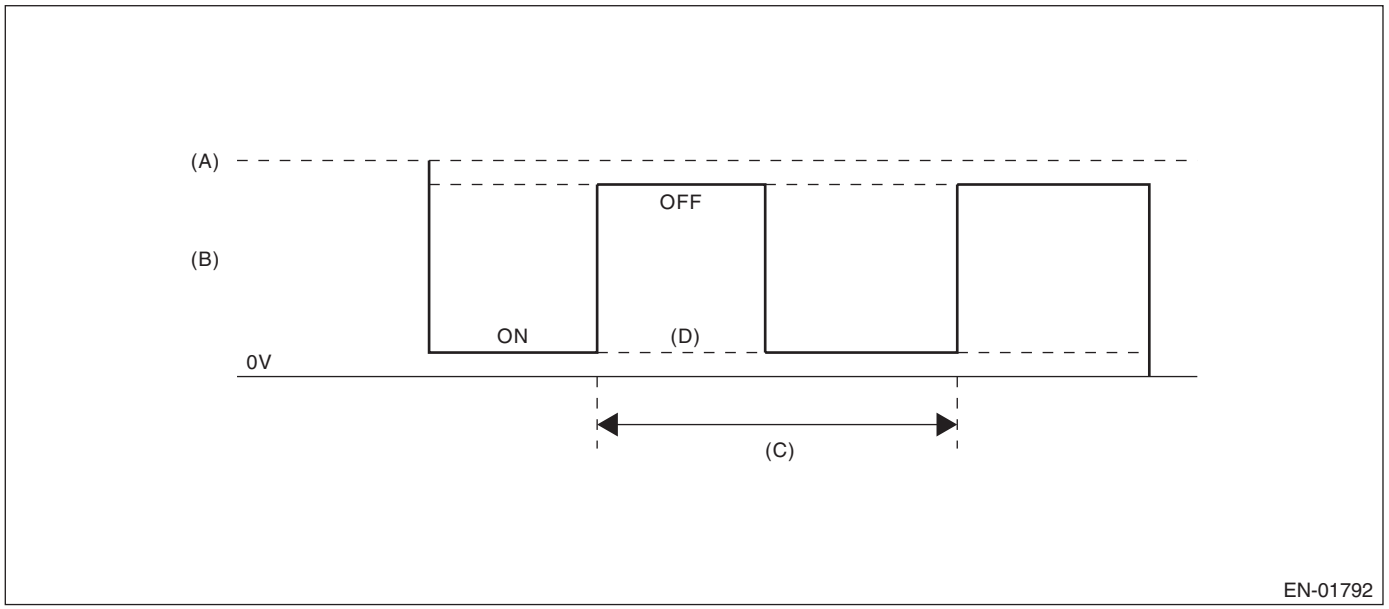

(A) Battery voltage
(B) Output voltage of the rear oxygen sensor heater
(C) 256 ms (cycles)
(D) Low error

3. EXECUTION CONDITION

Secondary Parameters	Execution condition
Battery voltage	≥ 10.9 V
Rear oxygen sensor heater control duty	< 75 %

4. GENERAL DRIVING CYCLE

Perform the diagnosis continuously after the enable conditions have been established.

5. DIAGNOSTIC METHOD

If the duration of time while the following conditions are met is longer than the time indicated, judge as NG.

Judgment Value

Malfunction Criteria	Threshold Value
Output voltage	< Battery voltage × 0.2

Time Needed for Diagnosis: 8 ms × 1250 time(s)
Malfunction Indicator Light Illumination: Illuminates when malfunction occurs in 2 continuous driving cycles.

U: DTC P0038 A/F / O2 HEATER CONTROL CIRCUIT HIGH BANK 1 SENSOR 2

DTC DETECTING CONDITION:

Detected when two consecutive driving cycles with fault occur.

CAUTION:

After servicing or replacing faulty parts, perform Clear Memory Mode <Ref. to EN(H6DO)(diag)-85, OPERATION, Clear Memory Mode.>, and Inspection Mode <Ref. to EN(H6DO)(diag)-69, PROCEDURE, Inspection Mode.>.

WIRING DIAGRAM:

- Engine Electrical System ENGINE TYPE EZ (WITHOUT PUSH BUTTON START) <Ref. to WI-198, ENGINE TYPE EZ (WITHOUT PUSH BUTTON START), WIRING DIAGRAM, Engine Electrical System.>
- Engine Electrical System ENGINE TYPE EZ (WITH PUSH BUTTON START) <Ref. to WI-214, ENGINE TYPE EZ (WITH PUSH BUTTON START), WIRING DIAGRAM, Engine Electrical System.>

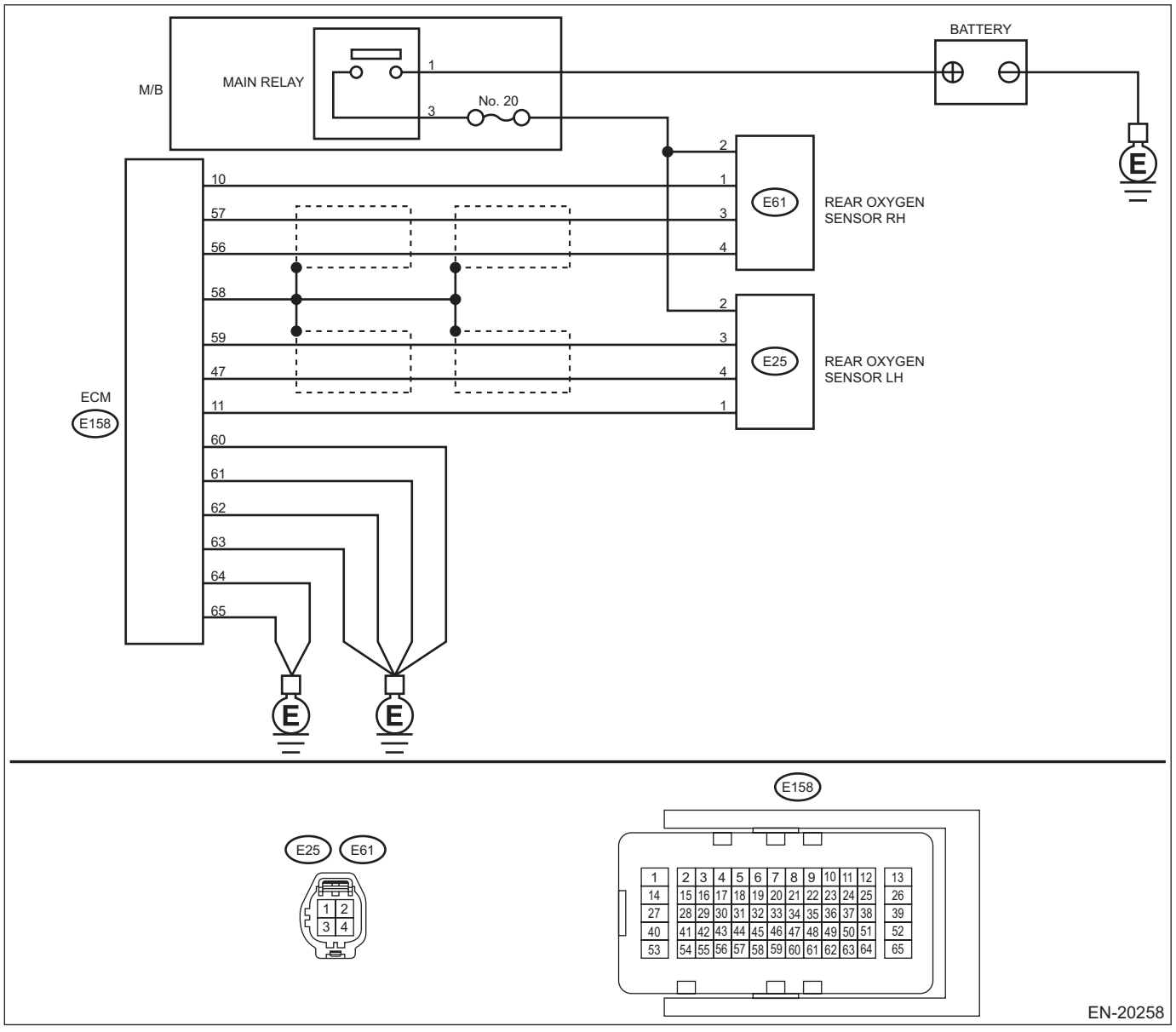

	Step	Check	Yes	No
1	**CHECK HARNESS BETWEEN ECM AND REAR OXYGEN SENSOR CONNECTOR.** 1) Turn the ignition switch to OFF. 2) Measure the voltage between ECM connector and chassis ground. ***Connector & terminal*** ***(E158) No. 10 (+) — Chassis ground (–):***	Is the voltage 10 V or more?	Repair the short circuit to power in the harness between ECM connector and rear oxygen sensor connector.	Go to step **2**.
2	**CHECK GROUND CIRCUIT FOR ECM.** 1) Disconnect the connector from ECM. 2) Measure the resistance between ECM connector and chassis ground. ***Connector & terminal*** ***(E158) No. 60 — Chassis ground:*** ***(E158) No. 61 — Chassis ground:*** ***(E158) No. 62 — Chassis ground:*** ***(E158) No. 63 — Chassis ground:*** ***(E158) No. 64 — Chassis ground:*** ***(E158) No. 65 — Chassis ground:***	Is the resistance less than 5 Ω?	Repair the poor contact of ECM connector.	Repair the open circuit in harness between ECM connector and engine ground.

1. OUTLINE OF DIAGNOSIS

Detect the rear oxygen sensor heater open or short circuit.
The rear oxygen sensor heater performs duty control, and the output terminal voltage at ON is 0 V, and the output terminal voltage at OFF is the battery voltage.
Judge as NG when the terminal voltage remains High.

2. COMPONENT DESCRIPTION

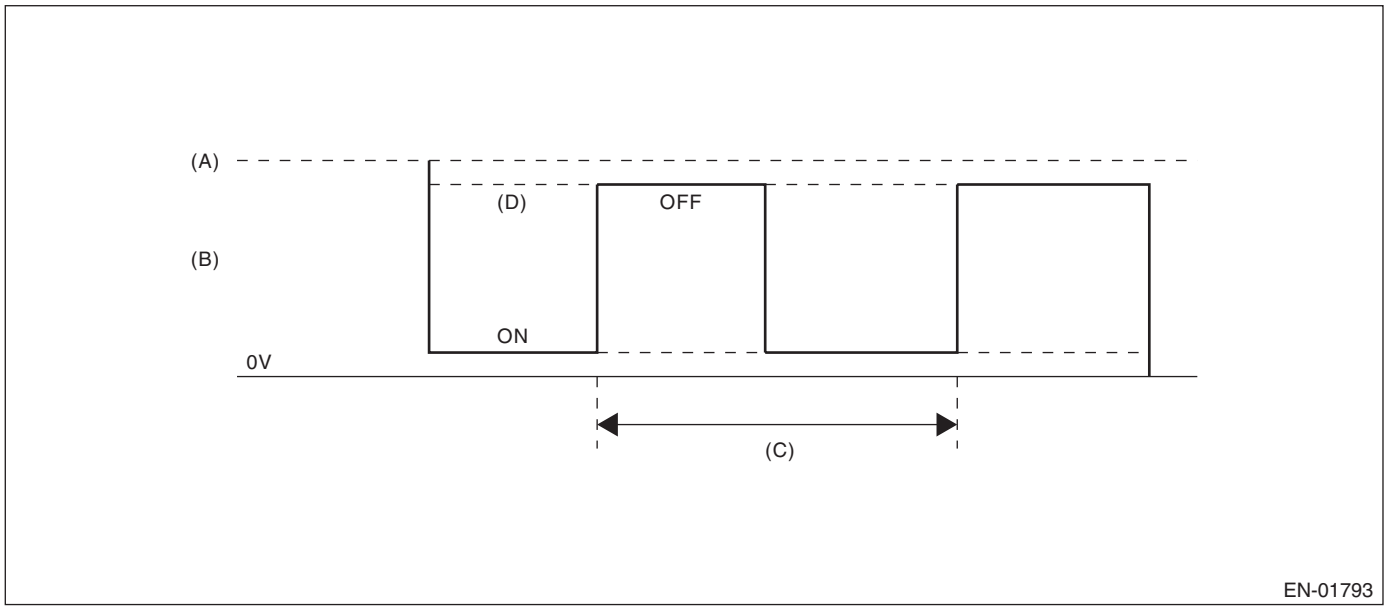

(A) Battery voltage
(B) Output voltage of the rear oxygen sensor heater
(C) 256 ms (cycles)
(D) High error

3. EXECUTION CONDITION

Secondary Parameters	Execution condition
Battery voltage	≥ 10.9 V
Rear oxygen sensor heater control duty	≥ 20 %

4. GENERAL DRIVING CYCLE

Perform the diagnosis continuously after the enable conditions have been established.

5. DIAGNOSTIC METHOD

If the duration of time while the following conditions are met is longer than the time indicated, judge as NG.

Judgment Value

Malfunction Criteria	Threshold Value
Output voltage	> Battery voltage × 0.3

Time Needed for Diagnosis: 8 ms × 320 time(s)
Malfunction Indicator Light Illumination: Illuminates when malfunction occurs in 2 continuous driving cycles.

V: DTC P0050 A/F / O2 HEATER CONTROL CIRCUIT BANK 2 SENSOR 1

DTC DETECTING CONDITION:

Detected when two consecutive driving cycles with fault occur.

CAUTION:

After servicing or replacing faulty parts, perform Clear Memory Mode <Ref. to EN(H6DO)(diag)-85, OPERATION, Clear Memory Mode.>, and Inspection Mode <Ref. to EN(H6DO)(diag)-69, PROCEDURE, Inspection Mode.>.

WIRING DIAGRAM:

- Engine Electrical System ENGINE TYPE EZ (WITHOUT PUSH BUTTON START) <Ref. to WI-198, ENGINE TYPE EZ (WITHOUT PUSH BUTTON START), WIRING DIAGRAM, Engine Electrical System.>
- Engine Electrical System ENGINE TYPE EZ (WITH PUSH BUTTON START) <Ref. to WI-214, ENGINE TYPE EZ (WITH PUSH BUTTON START), WIRING DIAGRAM, Engine Electrical System.>

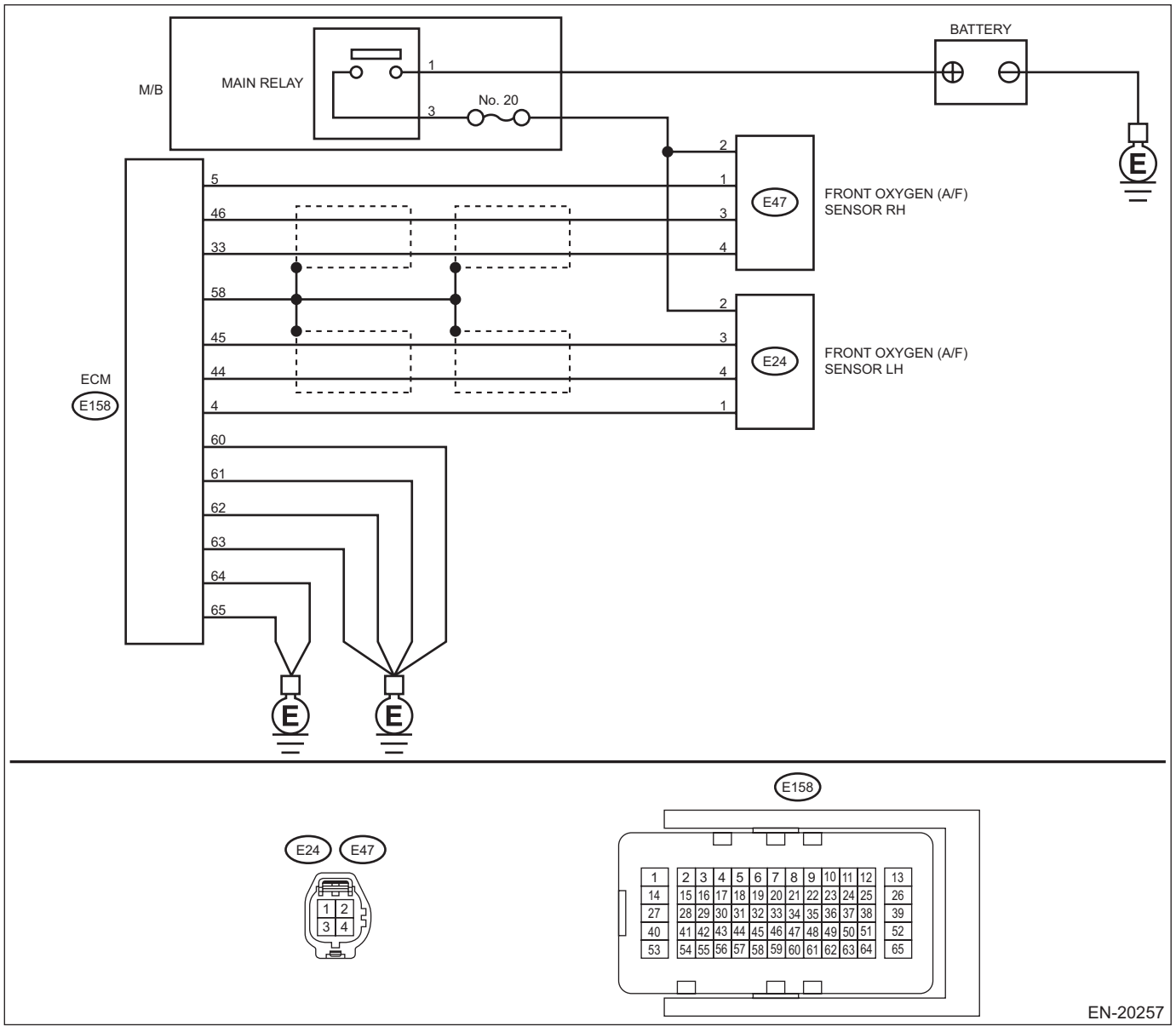

	Step	Check	Yes	No
1	**CHECK HARNESS BETWEEN ECM AND FRONT OXYGEN (A/F) SENSOR CONNECTOR.** 1) Start and warm up the engine. 2) Turn the ignition switch to OFF. 3) Disconnect the connectors from ECM and front oxygen (A/F) sensor. 4) Measure the resistance of harness between ECM connector and front oxygen (A/F) sensor connector. ***Connector & terminal*** ***(E158) No. 4 — (E24) No. 1:*** ***(E158) No. 45 — (E24) No. 3:*** ***(E158) No. 44 — (E24) No. 4:***	Is the resistance less than 1 Ω?	Go to step **2**.	Repair the harness and connector. NOTE: In this case, repair the following item: • Open circuit in harness between ECM connector and front oxygen (A/F) sensor connector • Poor contact of coupling connector
2	**CHECK FRONT OXYGEN (A/F) SENSOR.** Measure the resistance between front oxygen (A/F) sensor connector terminals. ***Terminals*** ***No. 2 — No. 1:***	Is the resistance 2 — 3 Ω?	Go to step **3**.	Replace the front oxygen (A/F) sensor. <Ref. to FU(H6DO)-78, Front Oxygen (A/F) Sensor.>
3	**CHECK FOR POOR CONTACT.** Check for poor contact of ECM and front oxygen (A/F) sensor connector.	Is there poor contact of ECM or front oxygen (A/F) sensor connector?	Repair the poor contact of ECM or front oxygen (A/F) sensor connector.	Replace the front oxygen (A/F) sensor. <Ref. to FU(H6DO)-78, Front Oxygen (A/F) Sensor.>

1. OUTLINE OF DIAGNOSIS

NOTE:
For the detection standard, refer to DTC P0030. <Ref. to EN(H6DO)(diag)-146, DTC P0030 A/F / O2 HEATER CONTROL CIRCUIT BANK 1 SENSOR 1, Diagnostic Procedure with Diagnostic Trouble Code (DTC).>

W: DTC P0051 A/F / O2 HEATER CONTROL CIRCUIT LOW BANK 2 SENSOR 1

DTC DETECTING CONDITION:
Immediately at fault recognition

CAUTION:
After servicing or replacing faulty parts, perform Clear Memory Mode <Ref. to EN(H6DO)(diag)-85, OPERATION, Clear Memory Mode.>, and Inspection Mode <Ref. to EN(H6DO)(diag)-69, PROCEDURE, Inspection Mode.>.

WIRING DIAGRAM:

- Engine Electrical System ENGINE TYPE EZ (WITHOUT PUSH BUTTON START) <Ref. to WI-198, ENGINE TYPE EZ (WITHOUT PUSH BUTTON START), WIRING DIAGRAM, Engine Electrical System.>
- Engine Electrical System ENGINE TYPE EZ (WITH PUSH BUTTON START) <Ref. to WI-214, ENGINE TYPE EZ (WITH PUSH BUTTON START), WIRING DIAGRAM, Engine Electrical System.>

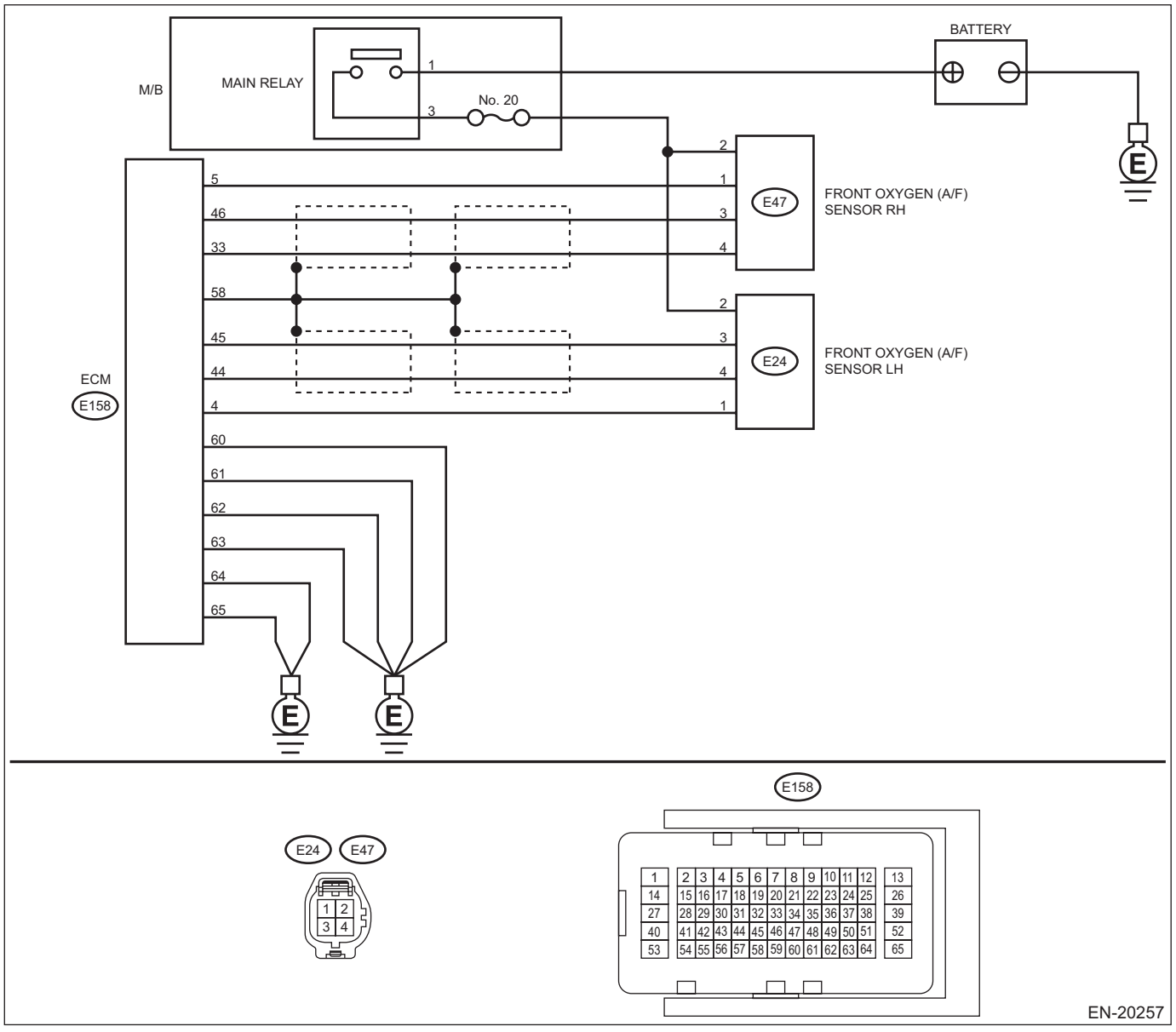

	Step	Check	Yes	No
1	**CHECK POWER SUPPLY TO FRONT OXYGEN (A/F) SENSOR.** 1) Turn the ignition switch to OFF. 2) Disconnect the connectors from front oxygen (A/F) sensor. 3) Turn the ignition switch to ON. 4) Measure the voltage between front oxygen (A/F) sensor connector and engine ground. ***Connector & terminal*** ***(E24) No. 2 (+) — Engine ground (–):***	Is the voltage 10 V or more?	Go to step **2**.	Repair the power supply line. NOTE: In this case, repair the following item: • Open circuit of harness between M/B main relay and front oxygen (A/F) sensor connector • Poor contact of M/B main relay connector • Poor contact of coupling connector • Defective M/B main relay • Blown out of fuse (M/B No. 20)
2	**CHECK HARNESS BETWEEN ECM AND FRONT OXYGEN (A/F) SENSOR CONNECTOR.** 1) Turn the ignition switch to OFF. 2) Disconnect the connector from ECM. 3) Measure the resistance between ECM connector and front oxygen (A/F) sensor connector. ***Connector & terminal*** ***(E158) No. 4 — (E24) No. 1:***	Is the resistance less than 1 Ω?	Go to step **3**.	Repair the harness and connector. NOTE: In this case, repair the following item: • Open circuit in harness between ECM connector and front oxygen (A/F) sensor connector • Poor contact of coupling connector
3	**CHECK GROUND CIRCUIT FOR ECM.** Measure the resistance of harness between ECM connector and chassis ground. ***Connector & terminal*** ***(E158) No. 60 — Chassis ground:*** ***(E158) No. 61 — Chassis ground:*** ***(E158) No. 62 — Chassis ground:*** ***(E158) No. 63 — Chassis ground:*** ***(E158) No. 64 — Chassis ground:*** ***(E158) No. 65 — Chassis ground:***	Is the resistance less than 5 Ω?	Go to step **4**.	Repair the open circuit in harness between ECM connector and engine ground.
4	**CHECK FRONT OXYGEN (A/F) SENSOR.** Measure the resistance between front oxygen (A/F) sensor connector terminals. ***Terminals*** ***No. 2 — No. 1:***	Is the resistance 2 — 3 Ω?	Repair the poor contact of ECM connector.	Replace the front oxygen (A/F) sensor. <Ref. to FU(H6DO)-78, Front Oxygen (A/F) Sensor.>

1. OUTLINE OF DIAGNOSIS

NOTE:
For the detection standard, refer to DTC P0031. <Ref. to EN(H6DO)(diag)-149, DTC P0031 A/F / O2 HEATER CONTROL CIRCUIT LOW BANK 1 SENSOR 1, Diagnostic Procedure with Diagnostic Trouble Code (DTC).>

X: DTC P0052 A/F / O2 HEATER CONTROL CIRCUIT HIGH BANK 2 SENSOR 1

DTC DETECTING CONDITION:
Immediately at fault recognition

CAUTION:
After servicing or replacing faulty parts, perform Clear Memory Mode <Ref. to EN(H6DO)(diag)-85, OPERATION, Clear Memory Mode.>, and Inspection Mode <Ref. to EN(H6DO)(diag)-69, PROCEDURE, Inspection Mode.>.

WIRING DIAGRAM:

- Engine Electrical System ENGINE TYPE EZ (WITHOUT PUSH BUTTON START) <Ref. to WI-198, ENGINE TYPE EZ (WITHOUT PUSH BUTTON START), WIRING DIAGRAM, Engine Electrical System.>
- Engine Electrical System ENGINE TYPE EZ (WITH PUSH BUTTON START) <Ref. to WI-214, ENGINE TYPE EZ (WITH PUSH BUTTON START), WIRING DIAGRAM, Engine Electrical System.>

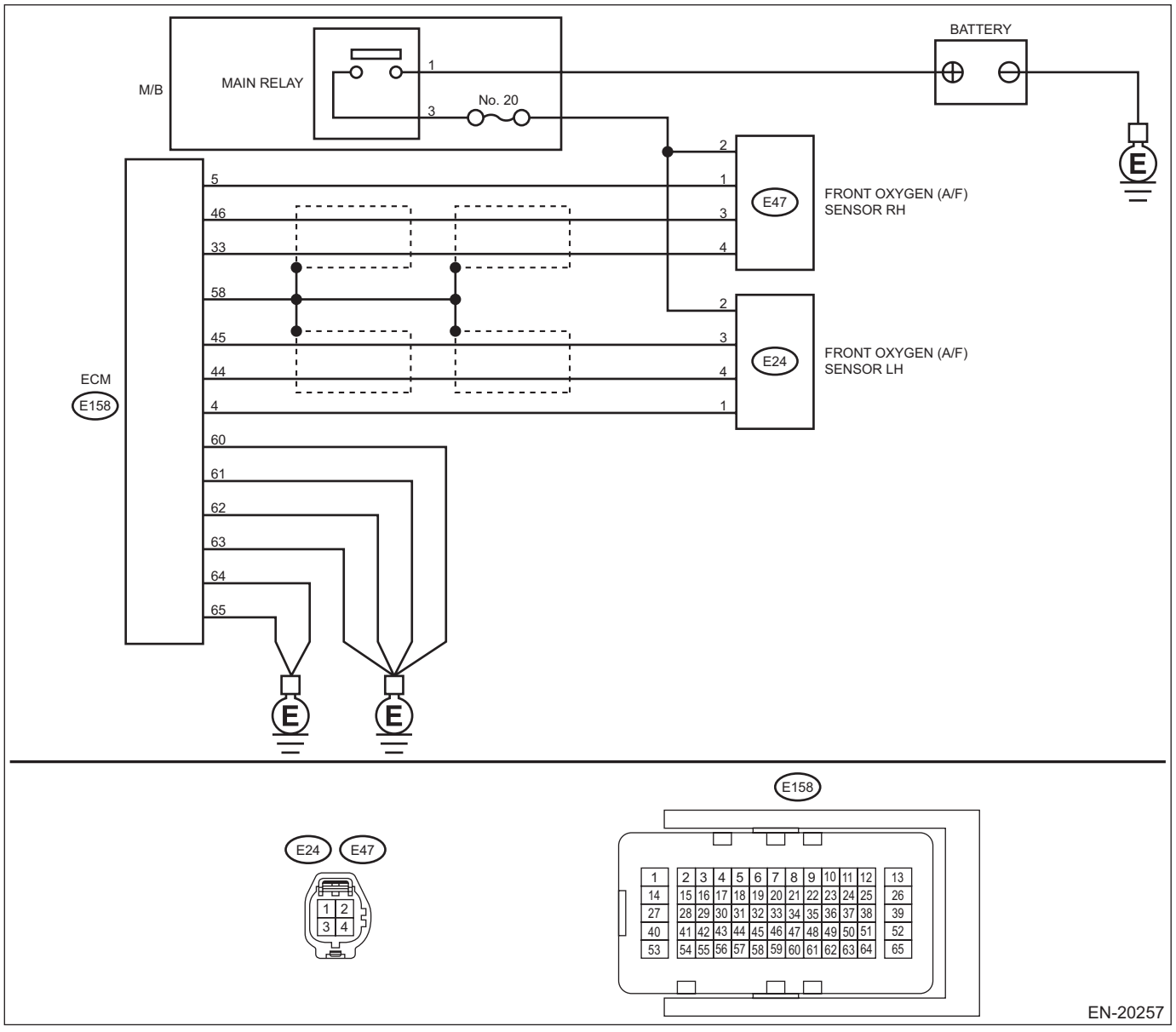

	Step	Check	Yes	No
1	**CHECK HARNESS BETWEEN ECM AND FRONT OXYGEN (A/F) SENSOR CONNECTOR.** 1) Turn the ignition switch to OFF. 2) Measure the voltage between ECM connector and chassis ground. ***Connector & terminal*** ***(E158) No. 4 (+) — Chassis ground (–):***	Is the voltage 10 V or more?	Repair the short circuit to power in the harness between ECM connector and front oxygen (A/F) sensor connector.	Go to step **2**.
2	**CHECK GROUND CIRCUIT FOR ECM.** 1) Disconnect the connector from ECM. 2) Measure the resistance between ECM connector and chassis ground. ***Connector & terminal*** ***(E158) No. 60 — Chassis ground:*** ***(E158) No. 61 — Chassis ground:*** ***(E158) No. 62 — Chassis ground:*** ***(E158) No. 63 — Chassis ground:*** ***(E158) No. 64 — Chassis ground:*** ***(E158) No. 65 — Chassis ground:***	Is the resistance less than 5 Ω?	Repair the poor contact of ECM connector.	Repair the open circuit in harness between ECM connector and engine ground.

1. OUTLINE OF DIAGNOSIS

NOTE:
For the detection standard, refer to DTC P0032. <Ref. to EN(H6DO)(diag)-152, DTC P0032 A/F / O2 HEATER CONTROL CIRCUIT HIGH BANK 1 SENSOR 1, Diagnostic Procedure with Diagnostic Trouble Code (DTC).>

Y: DTC P0057 A/F / O2 HEATER CONTROL CIRCUIT LOW BANK 2 SENSOR 2

DTC DETECTING CONDITION:

Detected when two consecutive driving cycles with fault occur.

CAUTION:

After servicing or replacing faulty parts, perform Clear Memory Mode <Ref. to EN(H6DO)(diag)-85, OPERATION, Clear Memory Mode.>, and Inspection Mode <Ref. to EN(H6DO)(diag)-69, PROCEDURE, Inspection Mode.>.

WIRING DIAGRAM:

- Engine Electrical System ENGINE TYPE EZ (WITHOUT PUSH BUTTON START) <Ref. to WI-198, ENGINE TYPE EZ (WITHOUT PUSH BUTTON START), WIRING DIAGRAM, Engine Electrical System.>
- Engine Electrical System ENGINE TYPE EZ (WITH PUSH BUTTON START) <Ref. to WI-214, ENGINE TYPE EZ (WITH PUSH BUTTON START), WIRING DIAGRAM, Engine Electrical System.>

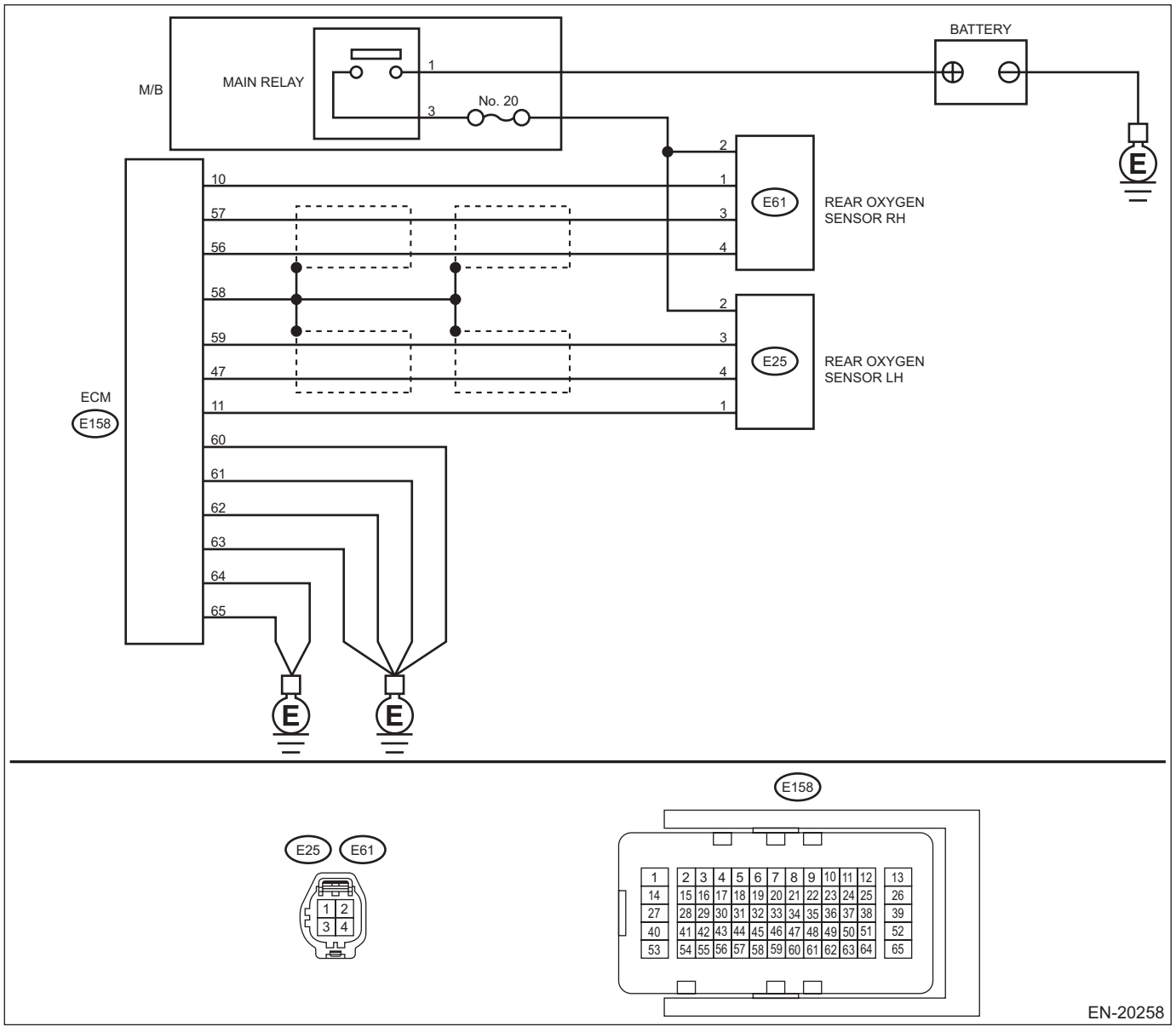

	Step	Check	Yes	No
1	**CHECK POWER SUPPLY TO REAR OXYGEN SENSOR.** 1) Turn the ignition switch to OFF. 2) Disconnect the connector from rear oxygen sensor. 3) Turn the ignition switch to ON. 4) Measure the voltage between rear oxygen sensor connector and engine ground. ***Connector & terminal*** ***(E25) No. 2 (+) — Engine ground (–):***	Is the voltage 10 V or more?	Go to step **2**.	Repair the power supply line. NOTE: In this case, repair the following item: • Open circuit of harness between M/B main relay and front oxygen (A/F) sensor connector • Poor contact of M/B main relay connector • Poor contact of coupling connector • Defective M/B main relay • Blown out of fuse (M/B No. 20)
2	**CHECK HARNESS BETWEEN ECM AND REAR OXYGEN SENSOR CONNECTOR.** 1) Turn the ignition switch to OFF. 2) Disconnect the connector from ECM. 3) Measure the resistance between ECM connector and oxygen sensor connector. ***Connector & terminal*** ***(E158) No. 11 — (E25) No. 1:***	Is the resistance less than 1 Ω?	Go to step **3**.	Repair the harness and connector. NOTE: In this case, repair the following item: • Open circuit in harness between ECM connector and rear oxygen sensor connector • Poor contact of coupling connector
3	**CHECK GROUND CIRCUIT FOR ECM.** Measure the resistance of harness between ECM connector and chassis ground. ***Connector & terminal*** ***(E158) No. 60 — Chassis ground:*** ***(E158) No. 61 — Chassis ground:*** ***(E158) No. 62 — Chassis ground:*** ***(E158) No. 63 — Chassis ground:*** ***(E158) No. 64 — Chassis ground:*** ***(E158) No. 65 — Chassis ground:***	Is the resistance less than 5 Ω?	Go to step **4**.	Repair the open circuit in harness between ECM connector and engine ground.
4	**CHECK REAR OXYGEN SENSOR.** Measure the resistance between rear oxygen sensor connector terminals. ***Terminals*** ***No. 2 — No. 1:***	Is the resistance 5 — 7 Ω?	Repair the poor contact of ECM connector.	Replace the rear oxygen sensor. <Ref. to FU(H6DO)-81, Rear Oxygen Sensor.>

1. OUTLINE OF DIAGNOSIS

NOTE:
For the detection standard, refer to DTC P0037. <Ref. to EN(H6DO)(diag)-155, DTC P0037 A/F / O2 HEATER CONTROL CIRCUIT LOW BANK 1 SENSOR 2, Diagnostic Procedure with Diagnostic Trouble Code (DTC).>

Z: DTC P0058 A/F / O2 HEATER CONTROL CIRCUIT LOW BANK 2 SENSOR 2

DTC DETECTING CONDITION:

Detected when two consecutive driving cycles with fault occur.

CAUTION:

After servicing or replacing faulty parts, perform Clear Memory Mode <Ref. to EN(H6DO)(diag)-85, OPERATION, Clear Memory Mode.>, and Inspection Mode <Ref. to EN(H6DO)(diag)-69, PROCEDURE, Inspection Mode.>.

WIRING DIAGRAM:

- Engine Electrical System ENGINE TYPE EZ (WITHOUT PUSH BUTTON START) <Ref. to WI-198, ENGINE TYPE EZ (WITHOUT PUSH BUTTON START), WIRING DIAGRAM, Engine Electrical System.>
- Engine Electrical System ENGINE TYPE EZ (WITH PUSH BUTTON START) <Ref. to WI-214, ENGINE TYPE EZ (WITH PUSH BUTTON START), WIRING DIAGRAM, Engine Electrical System.>

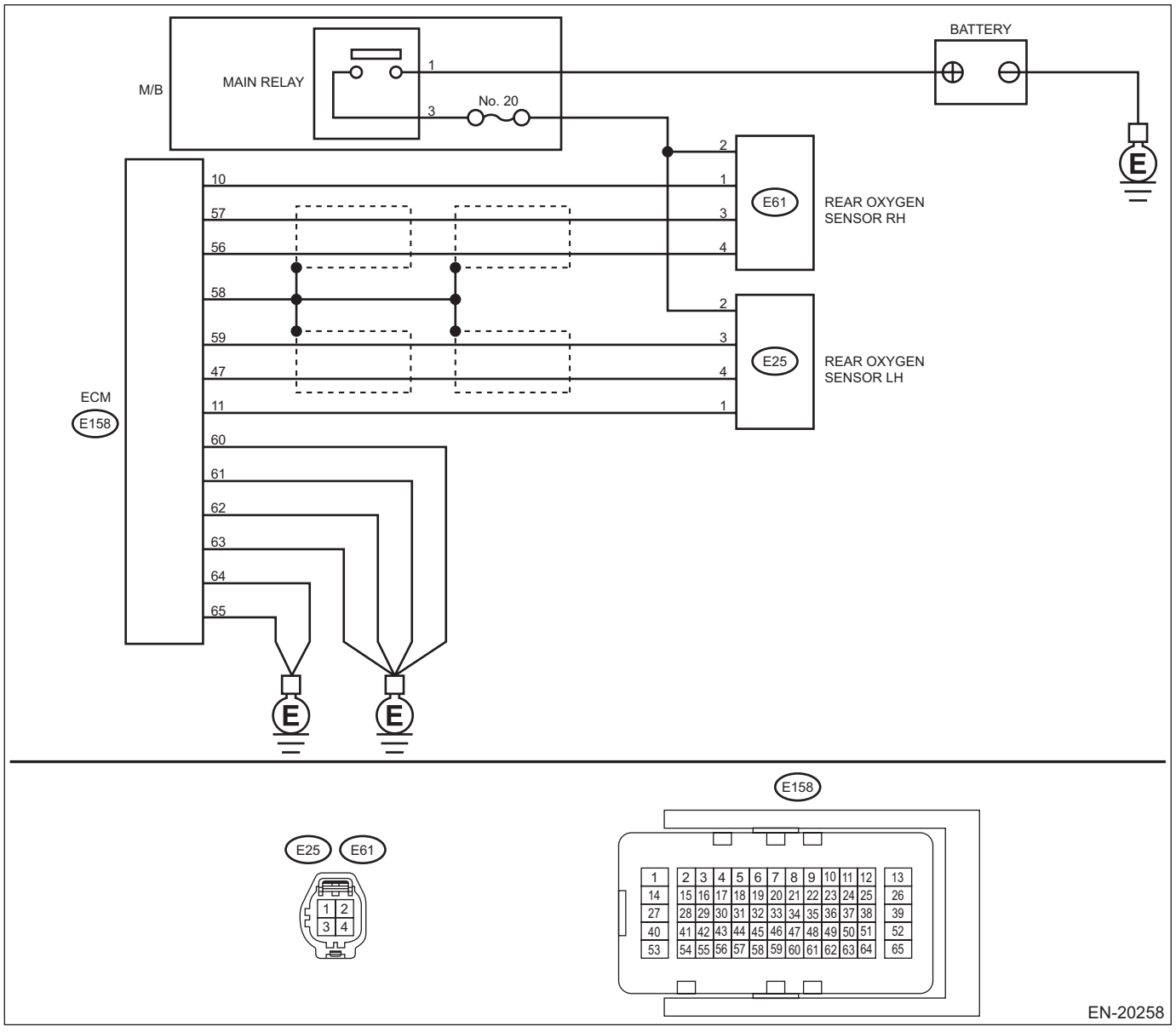

	Step	Check	Yes	No
1	**CHECK HARNESS BETWEEN ECM AND REAR OXYGEN SENSOR CONNECTOR.** 1) Turn the ignition switch to OFF. 2) Measure the voltage between ECM connector and chassis ground. ***Connector & terminal*** ***(E158) No. 11 (+) — Chassis ground (–):***	Is the voltage 10 V or more?	Repair the short circuit to power in the harness between ECM connector and rear oxygen sensor connector.	Go to step **2**.
2	**CHECK GROUND CIRCUIT FOR ECM.** 1) Disconnect the connector from ECM. 2) Measure the resistance between ECM connector and chassis ground. ***Connector & terminal*** ***(E158) No. 60 — Chassis ground:*** ***(E158) No. 61 — Chassis ground:*** ***(E158) No. 62 — Chassis ground:*** ***(E158) No. 63 — Chassis ground:*** ***(E158) No. 64 — Chassis ground:*** ***(E158) No. 65 — Chassis ground:***	Is the resistance less than 5 Ω?	Repair the poor contact of ECM connector.	Repair the open circuit in harness between ECM connector and engine ground.

1. OUTLINE OF DIAGNOSIS

NOTE:
For the detection standard, refer to DTC P0038. <Ref. to EN(H6DO)(diag)-158, DTC P0038 A/F / O2 HEATER CONTROL CIRCUIT HIGH BANK 1 SENSOR 2, Diagnostic Procedure with Diagnostic Trouble Code (DTC).>

AA:DTC P0068 MAP/MAF - THROTTLE POSITION CORRELATION

DTC DETECTING CONDITION:
Detected when two consecutive driving cycles with fault occur.

CAUTION:
After servicing or replacing faulty parts, perform Clear Memory Mode <Ref. to EN(H6DO)(diag)-85, OPERATION, Clear Memory Mode.>, and Inspection Mode <Ref. to EN(H6DO)(diag)-69, PROCEDURE, Inspection Mode.>.

	Step	Check	Yes	No
1	**CHECK AIR INTAKE SYSTEM.**	Are there holes, loose bolts or disconnection of hose on air intake system?	Repair the air intake system.	Go to step **2**.
2	**CHECK MANIFOLD ABSOLUTE PRESSURE SENSOR.** 1) Start the engine and warm up engine until coolant temperature is higher than 75°C (167°F). 2) Place the select lever in “P” range or “N” range. 3) Turn the A/C switch to OFF. 4) Turn all the accessory switches to OFF. 5) Read the value of «Mani. Absolute Pressure» using the Subaru Select Monitor or a general scan tool. NOTE: • Subaru Select Monitor For detailed operation procedures, refer to “Read Current Data For Engine”. <Ref. to EN(H6DO)(diag)-50, Subaru Select Monitor.> • General scan tool For detailed operation procedures, refer to the general scan tool operation manual.	Is the value in «Mani. Absolute Pressure» 73.3 — 106.6 kPa (550 — 800 mmHg, 21.65 — 31.50 inHg) when the ignition is turned ON, and 20.0 — 46.7 kPa (150 — 350 mmHg, 5.91 — 13.78 inHg) during idling?	Go to step **3**.	Replace the manifold absolute pressure sensor. <Ref. to FU(H6DO)-55, Manifold Absolute Pressure Sensor.>
3	**CHECK THROTTLE OPENING ANGLE.** Using the Subaru Select Monitor or a general scan tool, read the value in «Throttle Opening Angle». NOTE: • Subaru Select Monitor For detailed operation procedures, refer to “Read Current Data For Engine”. <Ref. to EN(H6DO)(diag)-50, Subaru Select Monitor.> • General scan tool For detailed operation procedures, refer to the general scan tool operation manual.	Is the value in «Throttle Opening Angle» with the throttle fully closed less than 5%?	Go to step **4**.	Replace the electronic throttle control. <Ref. to FU(H6DO)-19, Throttle Body.>
4	**CHECK THROTTLE OPENING ANGLE.**	Is the value in «Throttle Opening Angle» with the throttle fully open 85% or more?	Replace the manifold absolute pressure sensor. <Ref. to FU(H6DO)-55, Manifold Absolute Pressure Sensor.>	Replace the electronic throttle control. <Ref. to FU(H6DO)-19, Throttle Body.>

1. OUTLINE OF DIAGNOSIS

Detect problems in the intake manifold pressure sensor output properties.
Judge as NG when the intake air pressure AD value is Low whereas it seemed to be High from the viewpoint of engine condition, or when it is High whereas it seemed to be Low from the engine condition.

2. COMPONENT DESCRIPTION

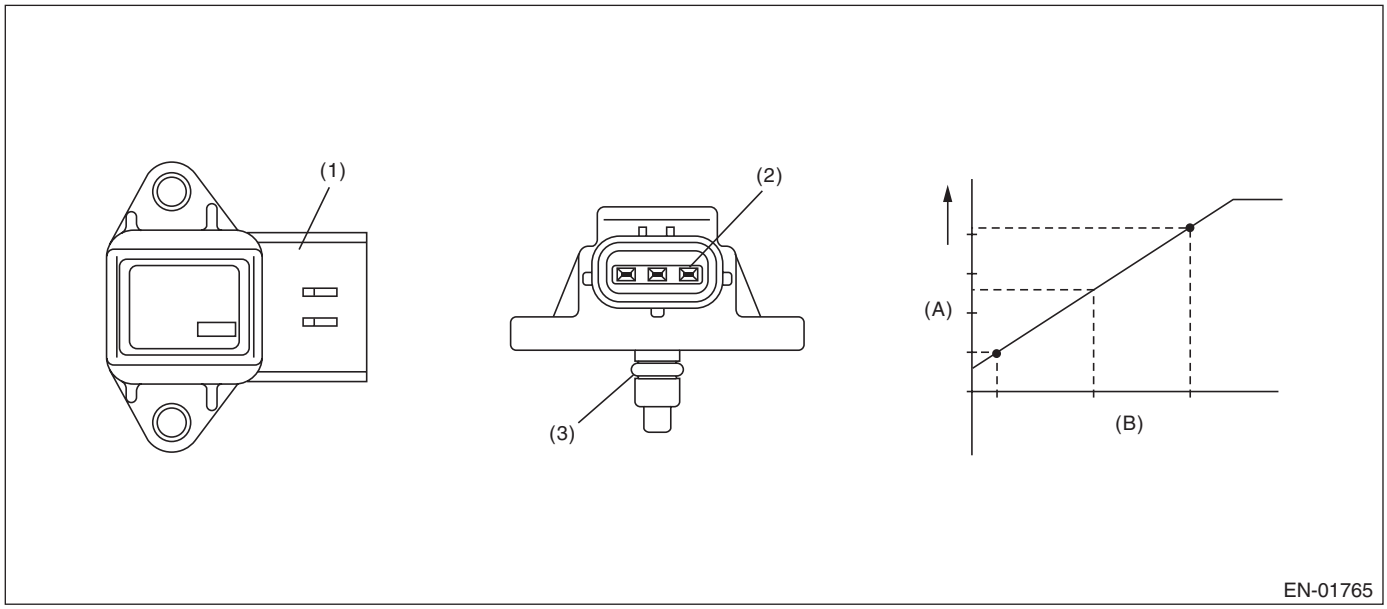

(A) Output voltage
(B) Absolute pressure
(1) Connector
(2) Terminals
(3) O-ring

3. EXECUTION CONDITION

Secondary Parameters	Execution condition
Low	
Engine coolant temperature	≥ 75 °C (167 °F)
Engine speed	< 3000 rpm
Throttle position	≥ 15 °
Engine load	> 0.75 g/rev (0.03 oz/rev)
High	
Engine coolant temperature	≥ 75 °C (167 °F)
Engine speed	525 rpm — 800 rpm
Throttle position	< 5.2 °
Engine load	< 0.6 g/rev (0.02 oz/rev)

4. GENERAL DRIVING CYCLE

Perform the diagnosis continuously after idling.

5. DIAGNOSTIC METHOD

Judge as NG when Low side or High side becomes NG.
If the duration of time while the following conditions are met is longer than the time indicated, judge as NG.

Judgment Value

Malfunction Criteria	Threshold Value
Low	
Output voltage	< 1.53 V
High	
Output voltage	≥ 2.78 V

Time Needed for Diagnosis:
Low side: 5000 ms
High side: 5000 ms
Malfunction Indicator Light Illumination: Illuminates when malfunction occurs in 2 continuous driving cycles.

AB:DTC P0071 AMBIENT AIR TEMPERATURE SENSOR CIRCUIT "A" RANGE/ PERFORMANCE

DTC DETECTING CONDITION:
Detected when two consecutive driving cycles with fault occur.

CAUTION:
After servicing or replacing faulty parts, perform Clear Memory Mode <Ref. to EN(H6DO)(diag)-85, OPERATION, Clear Memory Mode.>, and Inspection Mode <Ref. to EN(H6DO)(diag)-69, PROCEDURE, Inspection Mode.>.

	Step	Check	Yes	No
1	**CHECK FOR ANY OTHER DTC ON DISPLAY.**	Is any other DTC displayed?	Check the appropriate DTC using the “List of Diagnostic Trouble Code (DTC)”. <Ref. to EN(H6DO)(diag)-109, List of Diagnostic Trouble Code (DTC).>	Go to step **2**.
2	**CHECK CURRENT DATA.** 1) Turn the ignition switch to ON. 2) Read the value of «Ambient Air Temperature» using the Subaru Select Monitor or a general scan tool. NOTE: • Subaru Select Monitor For detailed operation procedures, refer to “Current Data Display For HVAC System”. <Ref. to AC(diag)-47, Read Current Data.> • General scan tool For detailed operation procedures, refer to the general scan tool operation manual. 3) Read the change of the value in «Ambient Air Temperature» while heating and cooling the ambient sensor using a hair dryer. **CAUTION:** **Do not heat the part to the temperature where you cannot touch it with your bare hand in order to prevent burning yourself and protect the part.**	Does the value of «Ambient Air Temperature» change between heating and cooling?	Repair the poor contact of ECM connector.	Replace the ambient sensor. <Ref. to AC-71, Ambient Sensor.>

1. OUTLINE OF DIAGNOSIS

Detect the malfunction of ambient temperature sensor characteristics.
After the engine starts after the specified period of soaking time has elapsed, judge by correlation between ambient temperature sensor value, intake air temperature sensor value and engine coolant temperature sensor value. Judge as NG when the differences are both above the specified value by comparing between ambient air temperature and intake air temperature, ambient air temperature and engine coolant temperature.

2. COMPONENT DESCRIPTION

Ambient temperature sensor is connected to combination meter. ECM receives the data of ambient temperature sensor via CAN communication with combination meter.

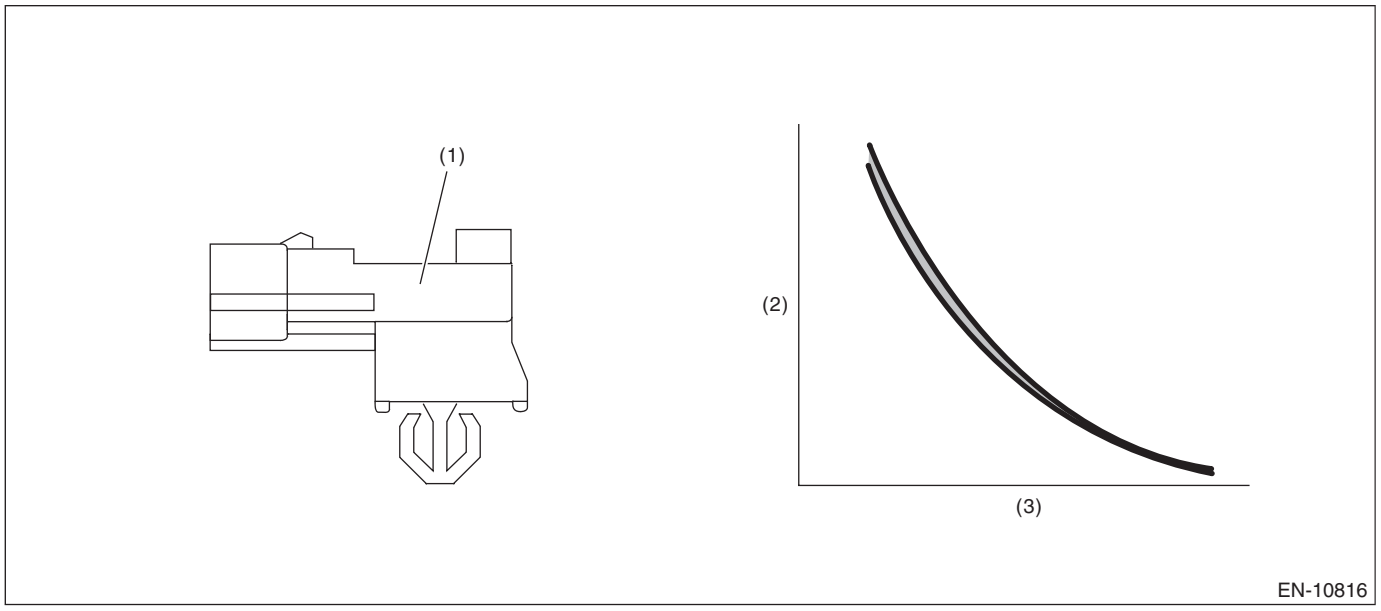

(1) Ambient sensor (2) Resistance value (kΩ) (3) Ambient air temperature (°C (°F))

3. EXECUTION CONDITION

Secondary Parameters	Execution condition
Soaking time	≥ 21600 s
Block heater judgment	Completed
Block heater operation	Not in operation

4. GENERAL DRIVING CYCLE

Perform the diagnosis only once after the engine starts after a certain period of soaking time.

5. DIAGNOSTIC METHOD

If the duration of time while the following conditions are met is longer than the time indicated, judge as NG.

Judgment Value

Malfunction Criteria	Threshold Value
|Ambient air temperature 30 sec. after engine start – Intake air temperature 30 sec. after engine start|	> Value from Map
|Ambient air temperature at engine start – Engine coolant temperature at engine start|	> 25 °C (45°F)

Map

Ambient temperature °C (°F)	–30 (–22)	30 (86)	45 (113)	60 (140)
|Ambient air temperature 30 sec. after engine start – Intake air temperature 30 sec. after engine start| °C (°F)	20 (36°F)	20 (36°F)	32 (57.6°F)	32 (57.6°F)

Time Needed for Diagnosis: Less than 1 second
Malfunction Indicator Light Illumination: Illuminates when malfunction occurs in 2 continuous driving cycles.

AC:DTC P0072 AMBIENT AIR TEMPERATURE SENSOR CIRCUIT "A" LOW

DTC DETECTING CONDITION:

Immediately at fault recognition

	Step	Check	Yes	No
1	**CHECK DTC.** Check for DTC. <Ref. to EN(H6DO)(diag)-68, Read Diagnostic Trouble Code (DTC).>	Is P0072 or P0073 displayed in «Present fault»?	Go to step **2**.	Even if DTC is detected, the circuit has returned to a normal condition at this time. Reproduce the failure, and then perform the diagnosis again. NOTE: In this case, temporary poor contact of connector, temporary open or short circuit of harness may be the cause.
2	**CHECK COMBINATION METER.** Check the combination meter system. <Ref. to MET(diag)-15, System Operation Check Mode.>	Is the combination meter system normal?	Repair the poor contact of ECM connector.	Repair or replace the combination meter system. <Ref. to IDI-11, Combination Meter.>

1. OUTLINE OF DIAGNOSIS

Detect the open or short circuit of ambient temperature sensor.
Judge as NG if out of specification.

2. COMPONENT DESCRIPTION

Ambient temperature sensor is connected to combination meter. ECM receives the data of ambient temperature sensor via CAN communication with combination meter.

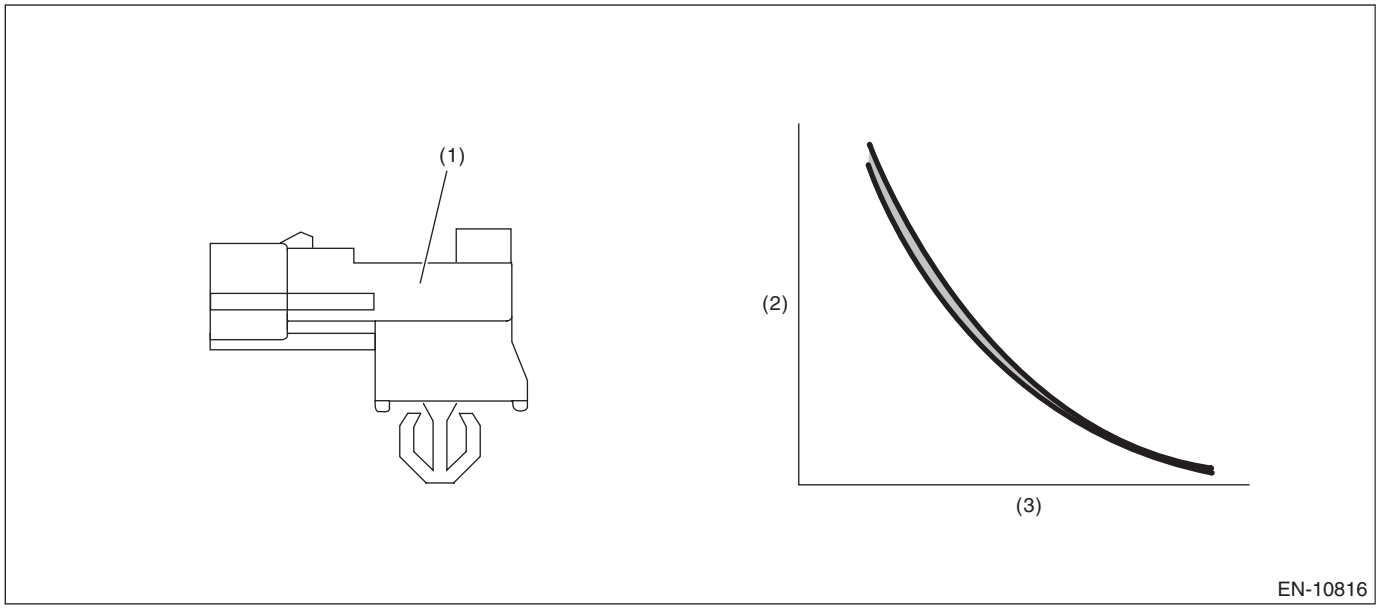

(1) Ambient sensor (2) Resistance value (kΩ) (3) Ambient air temperature (°C (°F))

3. EXECUTION CONDITION

Secondary Parameters	Execution condition
Battery voltage	≥ 10.9 V

4. GENERAL DRIVING CYCLE

Always perform the diagnosis continuously.

5. DIAGNOSTIC METHOD

If the duration of time while the following conditions are met is longer than the time indicated, judge as NG.

Judgment Value

Malfunction Criteria	Threshold Value
Output voltage	< 0.42 V

Time Needed for Diagnosis: 2500 ms
Malfunction Indicator Light Illumination: Illuminates as soon as a malfunction occurs.

AD:DTC P0073 AMBIENT AIR TEMPERATURE SENSOR CIRCUIT "A" HIGH

NOTE:
For the diagnostic procedure, refer to DTC P0072. <Ref. to EN(H6DO)(diag)-176, DTC P0072 AMBIENT AIR TEMPERATURE SENSOR CIRCUIT "A" LOW, Diagnostic Procedure with Diagnostic Trouble Code (DTC).>

1. OUTLINE OF DIAGNOSIS

Detect the open or short circuit of ambient temperature sensor.
Judge as NG if out of specification.

2. COMPONENT DESCRIPTION

Ambient temperature sensor is connected to combination meter. ECM receives the data of ambient temperature sensor via CAN communication with combination meter.

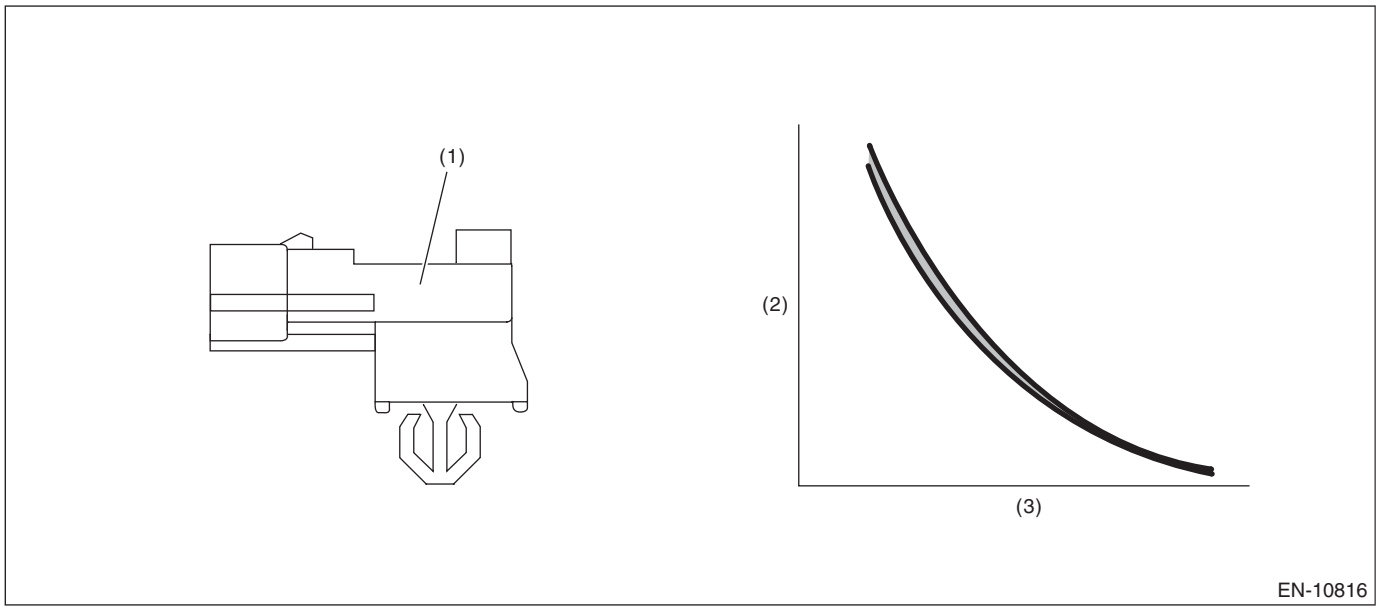

(1) Ambient sensor (2) Resistance value (kΩ) (3) Ambient air temperature (°C (°F))

3. EXECUTION CONDITION

Secondary Parameters	Execution condition
Battery voltage	≥ 10.9 V

4. GENERAL DRIVING CYCLE

Always perform the diagnosis continuously.

5. DIAGNOSTIC METHOD

If the duration of time while the following conditions are met is longer than the time indicated, judge as NG.

Judgment Value

Malfunction Criteria	Threshold Value
Output voltage	> 4.88 V

Time Needed for Diagnosis: 2500 ms
Malfunction Indicator Light Illumination: Illuminates as soon as a malfunction occurs.

AE:DTC P0101 MASS OR VOLUME AIR FLOW SENSOR "A" CIRCUIT RANGE/ PERFORMANCE

DTC DETECTING CONDITION:
Detected when two consecutive driving cycles with fault occur.
TROUBLE SYMPTOM:
- Improper idling
- Engine stalls.
- Poor driving performance

CAUTION:
After servicing or replacing faulty parts, perform Clear Memory Mode <Ref. to EN(H6DO)(diag)-85, OPERATION, Clear Memory Mode.>, and Inspection Mode <Ref. to EN(H6DO)(diag)-69, PROCEDURE, Inspection Mode.>.

Step		Check	Yes	No
1	**CHECK FOR ANY OTHER DTC ON DISPLAY.**	Is any other DTC displayed?	Check the appropriate DTC using the “List of Diagnostic Trouble Code (DTC)”. <Ref. to EN(H6DO)(diag)-109, List of Diagnostic Trouble Code (DTC).>	Replace the mass air flow and intake air temperature sensor. <Ref. to FU(H6DO)-58, Mass Air Flow and Intake Air Temperature Sensor.>

1. OUTLINE OF DIAGNOSIS

Detect the malfunction of air flow sensor output properties.
Judge as a low side NG when the air flow voltage indicates a small value regardless of running in a state where the air flow voltage increases. Judge as a high side NG when the air flow voltage indicates a large value regardless of running in a state where the air flow voltage decreases. Judge air flow sensor property NG when the Low side or High side becomes NG.

2. COMPONENT DESCRIPTION

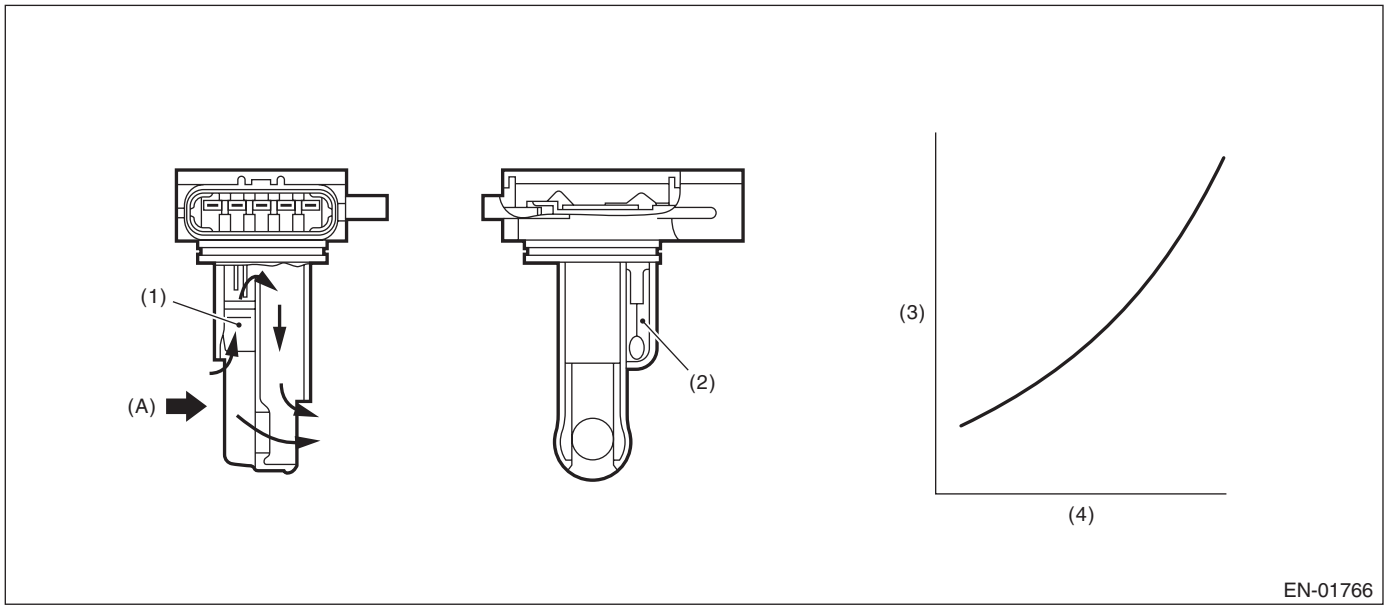

(A) Air

(1) Air flow sensor
(2) Intake air temperature sensor
(3) Voltage (V)
(4) Amount of intake air (kg (lb)/s)

3. EXECUTION CONDITION

Secondary Parameters	Execution condition
Low	
Engine coolant temperature	≥ 75 °C (167 °F)
Engine speed	≥ 1600 rpm
Throttle valve opening angle	≥ 15 °
Intake manifold pressure	≥ 73.3 kPa (550 mmHg, 21.7 inHg)
High	
Engine coolant temperature	≥ 75 °C (167 °F)
Engine speed	525 rpm — 800 rpm
Throttle valve opening angle	< 5.2 °
Intake manifold pressure	≥ 47.3 kPa (355 mmHg, 14 inHg)

4. GENERAL DRIVING CYCLE

Perform the diagnosis continuously after idling.

5. DIAGNOSTIC METHOD

Judge as NG when Low side or High side becomes NG.
If the duration of time while the following conditions are met is longer than the time indicated, judge as NG.

Judgment Value

Malfunction Criteria	Threshold Value
Low	
Output voltage	< 1.41 V
High	
Output voltage	≥ 1.82 V

Time Needed for Diagnosis:
Low: 5000 ms
High: 5000 ms
Malfunction Indicator Light Illumination: Illuminates when malfunction occurs in 2 continuous driving cycles.

AF:DTC P0102 MASS OR VOLUME AIR FLOW SENSOR "A" CIRCUIT LOW

DTC DETECTING CONDITION:
Immediately at fault recognition
TROUBLE SYMPTOM:

- Improper idling
- Engine stalls.
- Poor driving performance

CAUTION:
After servicing or replacing faulty parts, perform Clear Memory Mode <Ref. to EN(H6DO)(diag)-85, OPERATION, Clear Memory Mode.>, and Inspection Mode <Ref. to EN(H6DO)(diag)-69, PROCEDURE, Inspection Mode.>.
WIRING DIAGRAM:

- Engine Electrical System ENGINE TYPE EZ (WITHOUT PUSH BUTTON START) <Ref. to WI-198, ENGINE TYPE EZ (WITHOUT PUSH BUTTON START), WIRING DIAGRAM, Engine Electrical System.>
- Engine Electrical System ENGINE TYPE EZ (WITH PUSH BUTTON START) <Ref. to WI-214, ENGINE TYPE EZ (WITH PUSH BUTTON START), WIRING DIAGRAM, Engine Electrical System.>

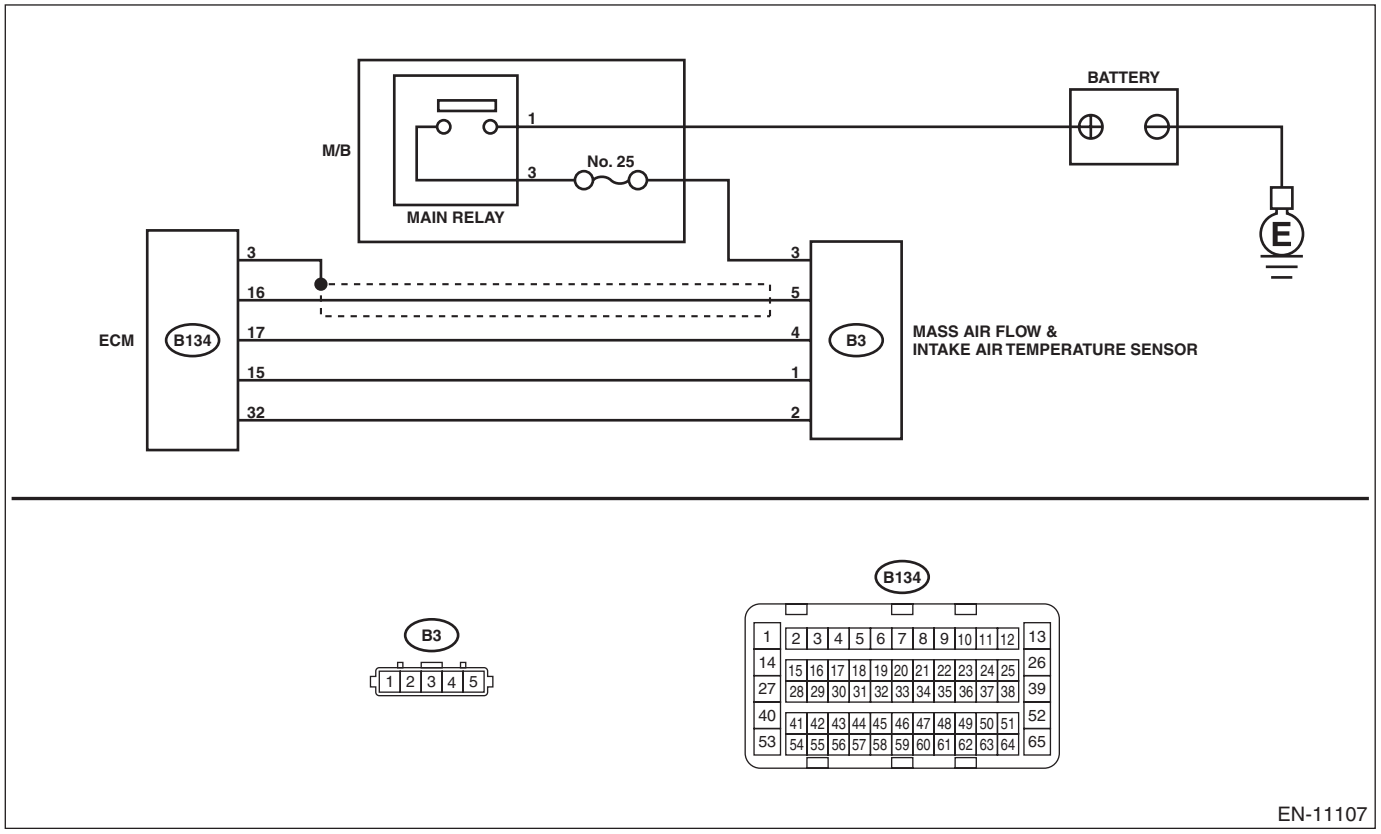

	Step	Check	Yes	No
1	**CHECK CURRENT DATA.** 1) Start the engine. 2) Read the value of «Air Flow Sensor Voltage» using Subaru Select Monitor. NOTE: For detailed operation procedures, refer to "Read Current Data For Engine". <Ref. to EN(H6DO)(diag)-50, Subaru Select Monitor.>	Is the value of «Air Flow Sensor Voltage» less than 0.2 V?	Go to step **2**.	Even if DTC is detected, the circuit has returned to a normal condition at this time. Reproduce the failure, and then perform the diagnosis again. NOTE: In this case, temporary poor contact of connector, temporary open or short circuit of harness may be the cause.
2	**CHECK POWER SUPPLY OF MASS AIR FLOW AND INTAKE AIR TEMPERATURE SENSOR.** 1) Turn the ignition switch to OFF. 2) Disconnect the connectors from the mass air flow and intake air temperature sensor. 3) Turn the ignition switch to ON. 4) Measure the voltage between mass air flow and intake air temperature sensor connector and engine ground. ***Connector & terminal*** ***(B3) No. 3 (+) — Engine ground (–):***	Is the voltage 10 V or more?	Go to step **3**.	Repair the harness and connector. NOTE: In this case, repair the following item: • Open circuit in harness between main relay and mass air flow and intake air temperature sensor connector • Poor contact of main relay connector • Blown out of fuse (M/B No. 25)
3	**CHECK HARNESS BETWEEN ECM AND MASS AIR FLOW AND INTAKE AIR TEMPERATURE SENSOR CONNECTOR.** 1) Turn the ignition switch to OFF. 2) Disconnect the connector from ECM. 3) Measure the resistance of harness between ECM connector and the mass air flow and intake air temperature sensor connector. ***Connector & terminal*** ***(B134) No. 16 — (B3) No. 5:***	Is the resistance less than 1 Ω?	Go to step **4**.	Repair the open circuit of harness between ECM connector and the mass air flow and intake air temperature sensor connector.
4	**CHECK HARNESS BETWEEN ECM AND MASS AIR FLOW AND INTAKE AIR TEMPERATURE SENSOR CONNECTOR.** Measure the resistance between ECM connector and chassis ground. ***Connector & terminal*** ***(B134) No. 16 — Chassis ground:***	Is the resistance 1 MΩ or more?	Go to step **5**.	Repair the ground short circuit of harness between ECM connector and the mass air flow and intake air temperature sensor connector.
5	**CHECK FOR POOR CONTACT.** Check for poor contact of ECM and mass air flow and intake air temperature sensor connector.	Is there poor contact of ECM or mass air flow and intake air temperature sensor connector?	Repair the poor contact of ECM or mass air flow and intake air temperature sensor connector.	Replace the mass air flow and intake air temperature sensor. <Ref. to FU(H6DO)-58, Mass Air Flow and Intake Air Temperature Sensor.>

1. OUTLINE OF DIAGNOSIS

Detect open or short circuits of the air flow sensor.
Judge as NG if out of specification.

2. COMPONENT DESCRIPTION

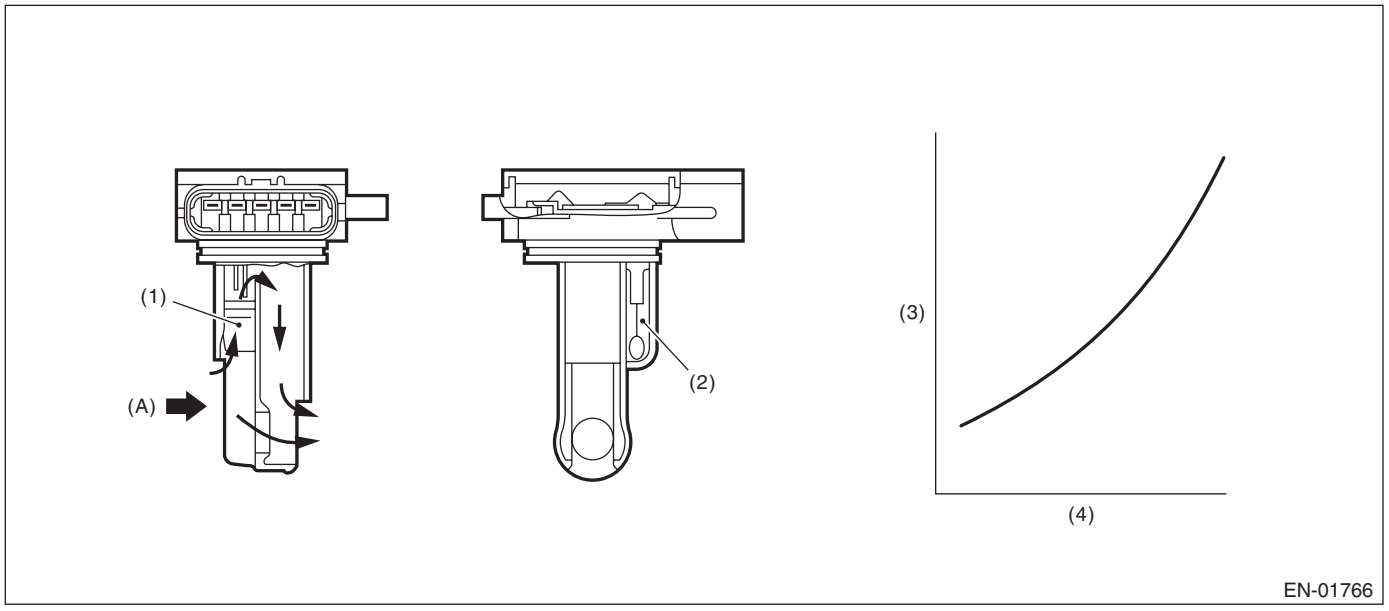

(A) Air

(1) Air flow sensor
(2) Intake air temperature sensor
(3) Voltage (V)
(4) Amount of intake air (kg (lb)/s)

3. EXECUTION CONDITION

Secondary Parameters	Execution condition
None	

4. GENERAL DRIVING CYCLE

Always perform the diagnosis continuously.

5. DIAGNOSTIC METHOD

If the duration of time while the following conditions are met is longer than the time indicated, judge as NG.

Judgment Value

Malfunction Criteria	Threshold Value
Output voltage	< 0.22 V

Time Needed for Diagnosis: 500 ms
Malfunction Indicator Light Illumination: Illuminates as soon as a malfunction occurs.

AG:DTC P0103 MASS OR VOLUME AIR FLOW SENSOR "A" CIRCUIT HIGH

DTC DETECTING CONDITION:
Immediately at fault recognition
TROUBLE SYMPTOM:

- Improper idling
- Engine stalls.
- Poor driving performance

CAUTION:
After servicing or replacing faulty parts, perform Clear Memory Mode <Ref. to EN(H6DO)(diag)-85, OPERATION, Clear Memory Mode.>, and Inspection Mode <Ref. to EN(H6DO)(diag)-69, PROCEDURE, Inspection Mode.>.
WIRING DIAGRAM:

- Engine Electrical System ENGINE TYPE EZ (WITHOUT PUSH BUTTON START) <Ref. to WI-198, ENGINE TYPE EZ (WITHOUT PUSH BUTTON START), WIRING DIAGRAM, Engine Electrical System.>
- Engine Electrical System ENGINE TYPE EZ (WITH PUSH BUTTON START) <Ref. to WI-214, ENGINE TYPE EZ (WITH PUSH BUTTON START), WIRING DIAGRAM, Engine Electrical System.>

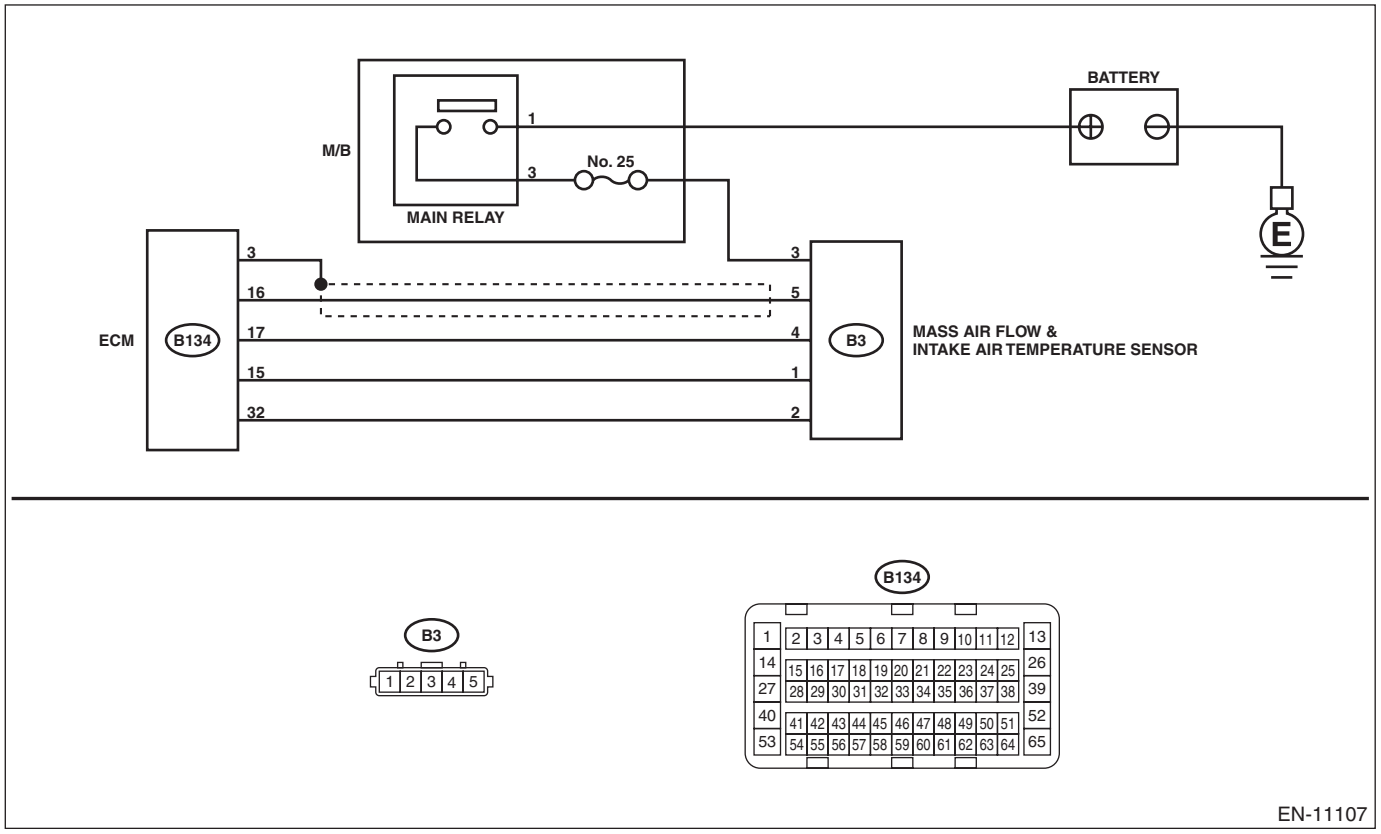

	Step	Check	Yes	No
1	**CHECK CURRENT DATA.** 1) Start the engine. 2) Read the value of «Air Flow Sensor Voltage» using Subaru Select Monitor. NOTE: For detailed operation procedures, refer to "Read Current Data For Engine". <Ref. to EN(H6DO)(diag)-50, Subaru Select Monitor.>	Is the value of «Air Flow Sensor Voltage» 5 V or more?	Go to step **2**.	Even if DTC is detected, the circuit has returned to a normal condition at this time. Reproduce the failure, and then perform the diagnosis again. NOTE: In this case, temporary poor contact of connector, temporary open or short circuit of harness may be the cause.
2	**CHECK HARNESS BETWEEN ECM AND MASS AIR FLOW AND INTAKE AIR TEMPERATURE SENSOR CONNECTOR.** 1) Turn the ignition switch to OFF. 2) Disconnect the connectors from the mass air flow and intake air temperature sensor. 3) Start the engine. 4) Read the value of «Air Flow Sensor Voltage» using Subaru Select Monitor. NOTE: For detailed operation procedures, refer to "Read Current Data For Engine". <Ref. to EN(H6DO)(diag)-50, Subaru Select Monitor.>	Is the value of «Air Flow Sensor Voltage» 5 V or more?	Repair the short circuit of harness to power supply between ECM connector and the mass air flow and intake air temperature sensor connector.	Go to step **3**.
3	**CHECK HARNESS BETWEEN ECM AND MASS AIR FLOW AND INTAKE AIR TEMPERATURE SENSOR CONNECTOR.** 1) Turn the ignition switch to OFF. 2) Measure the resistance of harness between mass air flow and intake air temperature sensor connector and engine ground. ***Connector & terminal*** ***(B3) No. 4 — Engine ground:***	Is the resistance less than 5 Ω?	Go to step **4**.	Repair the harness and connector. NOTE: In this case, repair the following item: • Open circuit in harness between ECM connector and the mass air flow and intake air temperature sensor connector • Poor contact of ECM connector
4	**CHECK FOR POOR CONTACT.** Check for poor contact of mass air flow and intake air temperature sensor connector.	Is there poor contact of mass air flow and intake air temperature sensor connector?	Repair the poor contact of mass air flow and intake air temperature sensor connector.	Replace the mass air flow and intake air temperature sensor. <Ref. to FU(H6DO)-58, Mass Air Flow and Intake Air Temperature Sensor.>

1. OUTLINE OF DIAGNOSIS

Detect open or short circuits of the air flow sensor.
Judge as NG if out of specification.

2. COMPONENT DESCRIPTION

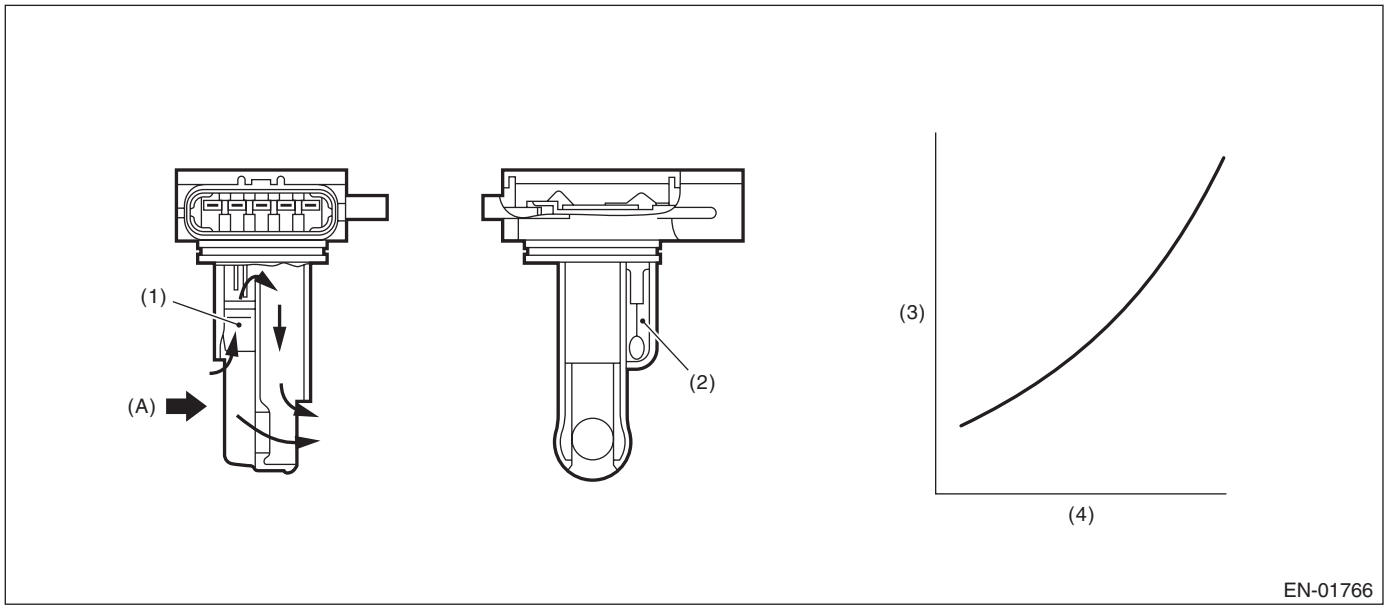

(A) Air

(1) Air flow sensor
(2) Intake air temperature sensor
(3) Voltage (V)
(4) Amount of intake air (kg (lb)/s)

3. EXECUTION CONDITION

Secondary Parameters	Execution condition
None	

4. GENERAL DRIVING CYCLE

Always perform the diagnosis continuously.

5. DIAGNOSTIC METHOD

If the duration of time while the following conditions are met is longer than the time indicated, judge as NG.

Judgment Value

Malfunction Criteria	Threshold Value
Output voltage	≥ 4.832 V

Time Needed for Diagnosis: 500 ms
Malfunction Indicator Light Illumination: Illuminates as soon as a malfunction occurs.

AH:DTC P0107 MANIFOLD ABSOLUTE PRESSURE/BAROMETRIC PRESSURE SENSOR CIRCUIT LOW

DTC DETECTING CONDITION:
Immediately at fault recognition

CAUTION:
After servicing or replacing faulty parts, perform Clear Memory Mode <Ref. to EN(H6DO)(diag)-85, OPERATION, Clear Memory Mode.>, and Inspection Mode <Ref. to EN(H6DO)(diag)-69, PROCEDURE, Inspection Mode.>.

WIRING DIAGRAM:

- Engine Electrical System ENGINE TYPE EZ (WITHOUT PUSH BUTTON START) <Ref. to WI-198, ENGINE TYPE EZ (WITHOUT PUSH BUTTON START), WIRING DIAGRAM, Engine Electrical System.>
- Engine Electrical System ENGINE TYPE EZ (WITH PUSH BUTTON START) <Ref. to WI-214, ENGINE TYPE EZ (WITH PUSH BUTTON START), WIRING DIAGRAM, Engine Electrical System.>

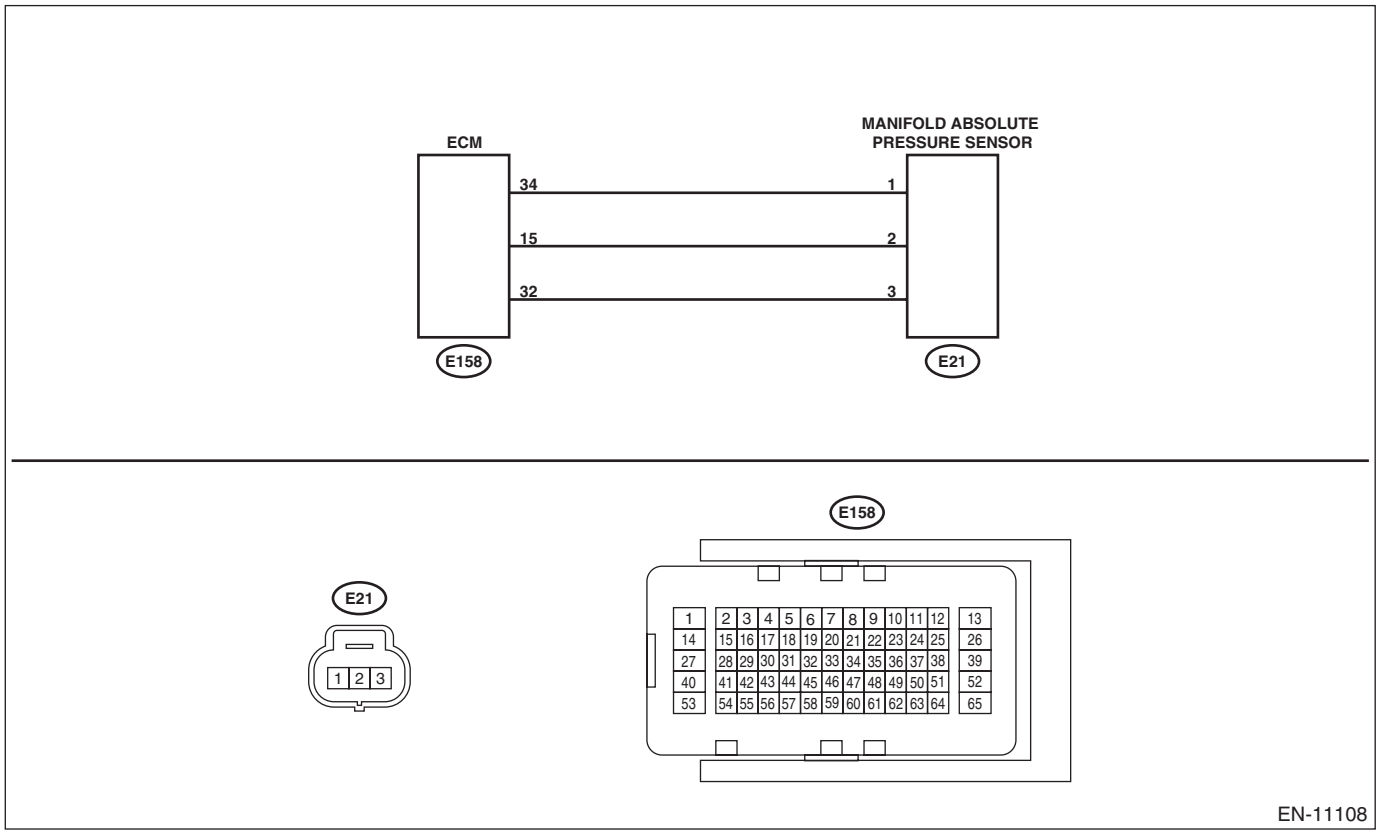

	Step	Check	Yes	No
1	**CHECK CURRENT DATA.** 1) Start the engine. 2) Using the Subaru Select Monitor, read the value in «Mani. Absolute Pressure». NOTE: • Subaru Select Monitor For detailed operation procedures, refer to "Read Current Data For Engine". <Ref. to EN(H6DO)(diag)-50, Subaru Select Monitor.> • General scan tool For detailed operation procedures, refer to the general scan tool operation manual.	Is the value of «Mani. Absolute Pressure» less than 13.3 kPa (100 mmHg, 3.94 inHg)?	Go to step **2**.	Even if DTC is detected, the circuit has returned to a normal condition at this time. Reproduce the failure, and then perform the diagnosis again. NOTE: In this case, temporary poor contact of connector, temporary open or short circuit of harness may be the cause.
2	**CHECK POWER SUPPLY OF MANIFOLD ABSOLUTE PRESSURE SENSOR.** 1) Turn the ignition switch to OFF. 2) Disconnect the connector from manifold absolute pressure sensor. 3) Turn the ignition switch to ON. 4) Measure the voltage between manifold absolute pressure sensor connector and engine ground. ***Connector & terminal*** ***(E21) No. 3 (+) — Engine ground (–):***	Is the voltage 4.5 V or more?	Go to step **3**.	Repair the harness and connector. NOTE: In this case, repair the following item: • Open circuit of harness between ECM connector and manifold absolute pressure sensor connector • Poor contact of ECM connector • Poor contact of coupling connector
3	**CHECK HARNESS BETWEEN ECM AND MANIFOLD ABSOLUTE PRESSURE SENSOR CONNECTOR.** 1) Turn the ignition switch to OFF. 2) Disconnect the connector from ECM. 3) Measure the resistance of harness between ECM connector and manifold absolute pressure sensor connector. ***Connector & terminal*** ***(E158) No. 15 — (E21) No. 2:***	Is the resistance less than 1 Ω?	Go to step **4**.	Repair the harness and connector. NOTE: In this case, repair the following item: • Open circuit of harness between ECM connector and manifold absolute pressure sensor connector • Poor contact of coupling connector
4	**CHECK HARNESS BETWEEN ECM AND MANIFOLD ABSOLUTE PRESSURE SENSOR CONNECTOR.** Measure the resistance between ECM connector and chassis ground. ***Connector & terminal*** ***(E158) No. 15 — Chassis ground:***	Is the resistance 1 MΩ or more?	Go to step **5**.	Repair short circuit to ground in harness between ECM connector and manifold absolute pressure sensor connector.
5	**CHECK FOR POOR CONTACT.** Check for poor contact of ECM and manifold absolute pressure sensor connector.	Is there poor contact of ECM or manifold absolute pressure sensor connector?	Repair the poor contact of ECM or manifold absolute pressure sensor connector.	Replace the manifold absolute pressure sensor. <Ref. to FU(H6DO)-55, Manifold Absolute Pressure Sensor.>

1. OUTLINE OF DIAGNOSIS

Detect the open or short circuit of intake manifold pressure sensor.
Judge as NG if out of specification.

2. COMPONENT DESCRIPTION

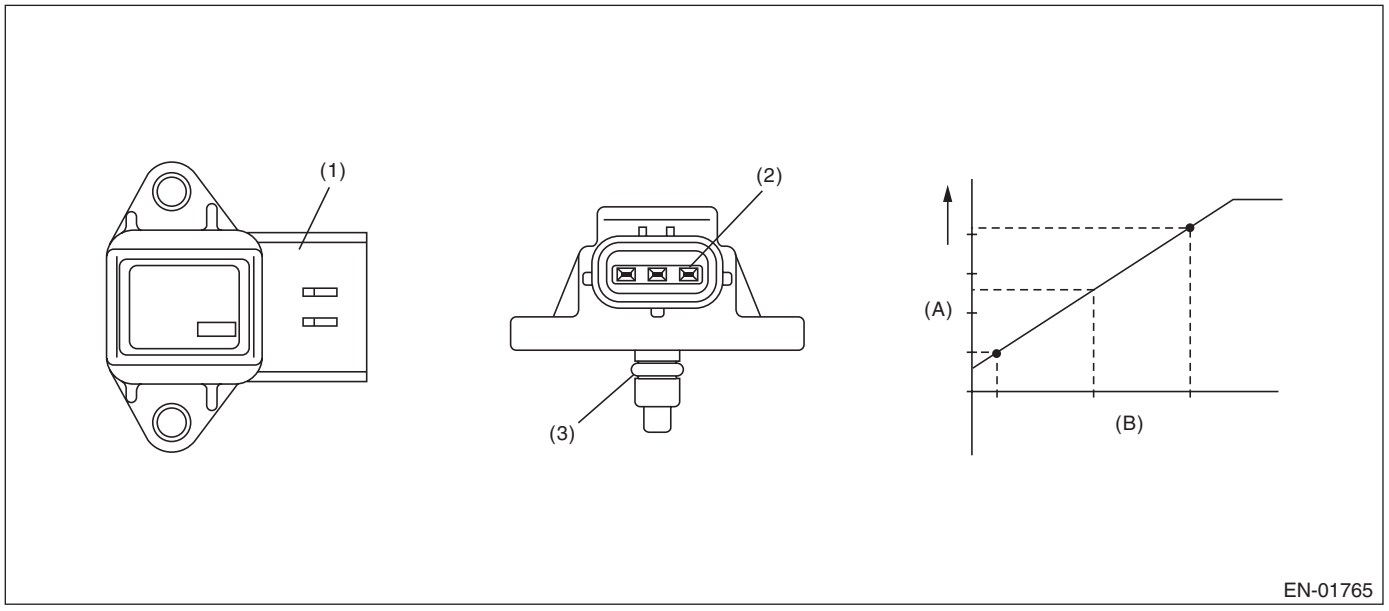

(A) Output voltage
(B) Absolute pressure
(1) Connector
(2) Terminals
(3) O-ring

3. EXECUTION CONDITION

Secondary Parameters	Execution condition
None	

4. GENERAL DRIVING CYCLE

Always perform the diagnosis continuously.

5. DIAGNOSTIC METHOD

If the duration of time while the following conditions are met is longer than the time indicated, judge as NG.

Judgment Value

Malfunction Criteria	Threshold Value
Output voltage	< 0.608 V

Time Needed for Diagnosis: 2000 ms
Malfunction Indicator Light Illumination: Illuminates as soon as a malfunction occurs.

AI: DTC P0108 MANIFOLD ABSOLUTE PRESSURE/BAROMETRIC PRESSURE SENSOR CIRCUIT HIGH

DTC DETECTING CONDITION:
Immediately at fault recognition

CAUTION:
After servicing or replacing faulty parts, perform Clear Memory Mode <Ref. to EN(H6DO)(diag)-85, OPERATION, Clear Memory Mode.>, and Inspection Mode <Ref. to EN(H6DO)(diag)-69, PROCEDURE, Inspection Mode.>.

WIRING DIAGRAM:

- Engine Electrical System ENGINE TYPE EZ (WITHOUT PUSH BUTTON START) <Ref. to WI-198, ENGINE TYPE EZ (WITHOUT PUSH BUTTON START), WIRING DIAGRAM, Engine Electrical System.>
- Engine Electrical System ENGINE TYPE EZ (WITH PUSH BUTTON START) <Ref. to WI-214, ENGINE TYPE EZ (WITH PUSH BUTTON START), WIRING DIAGRAM, Engine Electrical System.>

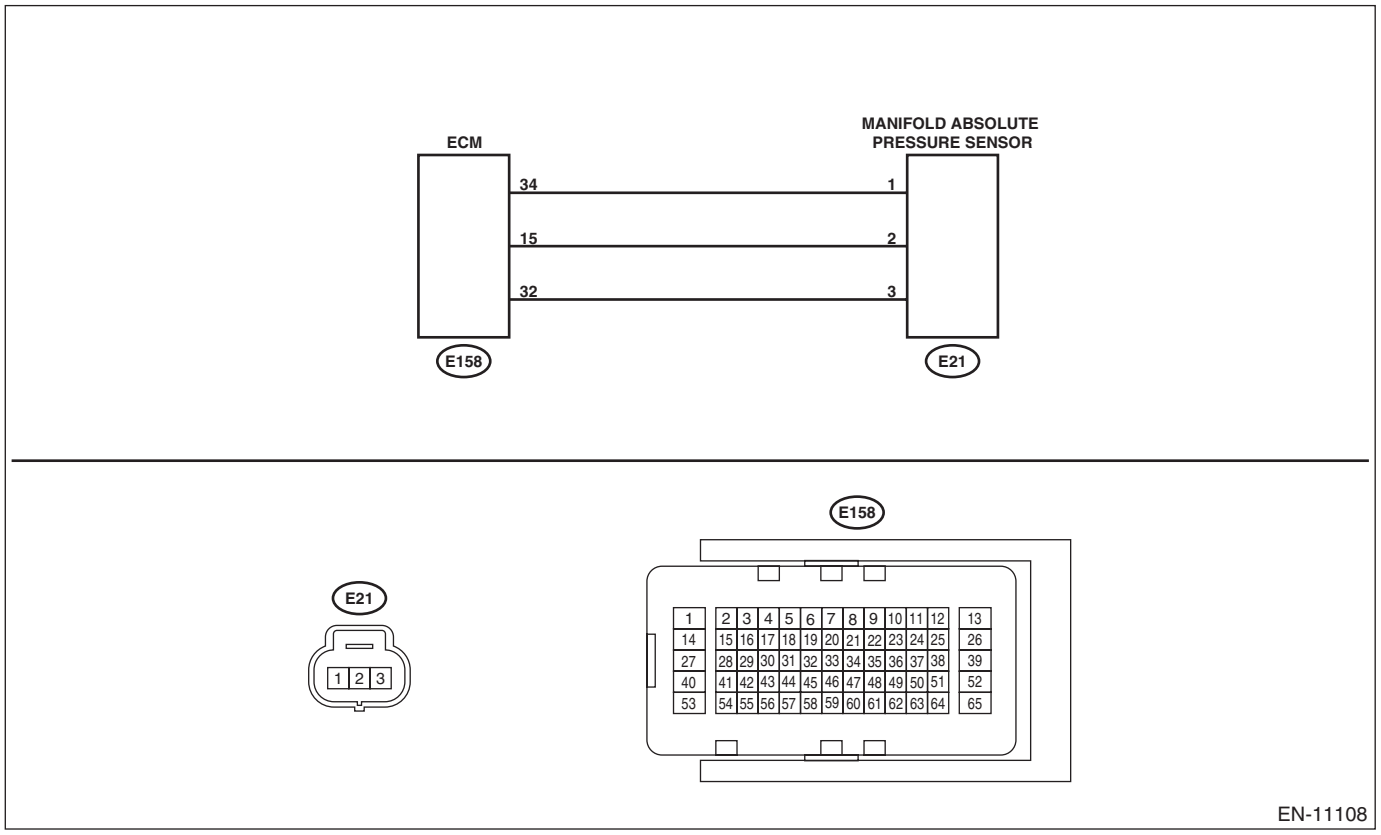

	Step	Check	Yes	No
1	**CHECK CURRENT DATA.** 1) Start the engine. 2) Read the value of «Mani. Absolute Pressure» using the Subaru Select Monitor or a general scan tool. NOTE: • Subaru Select Monitor For detailed operation procedures, refer to "Read Current Data For Engine". <Ref. to EN(H6DO)(diag)-50, Subaru Select Monitor.> • General scan tool For detailed operation procedures, refer to the general scan tool operation manual.	Is the value of «Mani. Absolute Pressure» 119.5 kPa (896.5 mmHg, 35.29 inHg) or more?	Go to step **2**.	Even if DTC is detected, the circuit has returned to a normal condition at this time. Reproduce the failure, and then perform the diagnosis again. NOTE: In this case, temporary poor contact of connector, temporary open or short circuit of harness may be the cause.
2	**CHECK HARNESS BETWEEN ECM AND MANIFOLD ABSOLUTE PRESSURE SENSOR CONNECTOR.** 1) Turn the ignition switch to OFF. 2) Disconnect the connector from manifold absolute pressure sensor. 3) Start the engine. 4) Read the value of «Mani. Absolute Pressure» using the Subaru Select Monitor or a general scan tool. NOTE: • Subaru Select Monitor For detailed operation procedures, refer to "Read Current Data For Engine". <Ref. to EN(H6DO)(diag)-50, Subaru Select Monitor.> • General scan tool For detailed operation procedures, refer to the general scan tool operation manual.	Is the value of «Mani. Absolute Pressure» 119.5 kPa (896.5 mmHg, 35.29 inHg) or more?	Repair the short circuit to power in harness between ECM connector and manifold absolute pressure sensor connector.	Go to step **3**.
3	**CHECK HARNESS BETWEEN ECM AND MANIFOLD ABSOLUTE PRESSURE SENSOR CONNECTOR.** 1) Turn the ignition switch to OFF. 2) Measure the resistance of harness between manifold absolute pressure sensor connector and engine ground. ***Connector & terminal*** ***(E21) No. 1 — Engine ground:***	Is the resistance less than 5 Ω?	Go to step **4**.	Repair the harness and connector. NOTE: In this case, repair the following item: • Open circuit of harness between ECM connector and manifold absolute pressure sensor connector • Poor contact of ECM connector • Poor contact of coupling connector
4	**CHECK FOR POOR CONTACT.** Check for poor contact of manifold absolute pressure sensor connector.	Is there poor contact of manifold absolute pressure sensor connector?	Repair the poor contact of manifold absolute pressure sensor connector.	Replace the manifold absolute pressure sensor. <Ref. to FU(H6DO)-55, Manifold Absolute Pressure Sensor.>

1. OUTLINE OF DIAGNOSIS

Detect the open or short circuit of intake manifold pressure sensor.
Judge as NG if out of specification.

2. COMPONENT DESCRIPTION

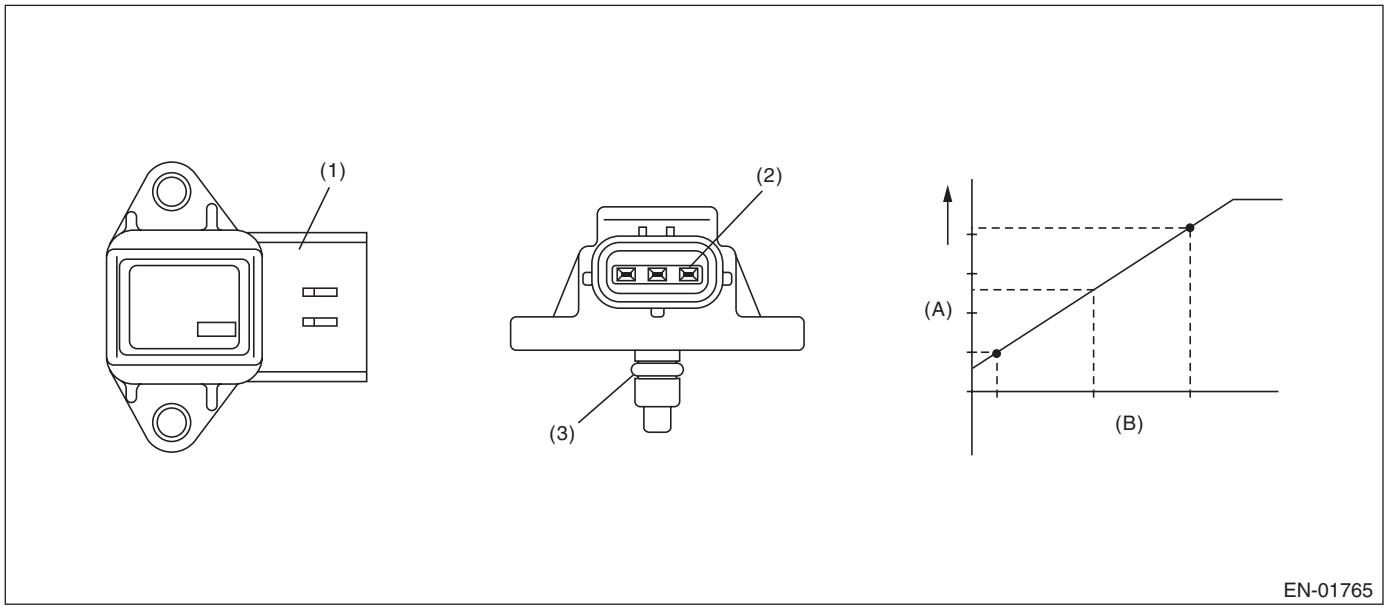

(A) Output voltage
(B) Absolute pressure
(1) Connector
(2) Terminals
(3) O-ring

3. EXECUTION CONDITION

Secondary Parameters	Execution condition
None	

4. GENERAL DRIVING CYCLE

Always perform the diagnosis continuously.

5. DIAGNOSTIC METHOD

If the duration of time while the following conditions are met is longer than the time indicated, judge as NG.

Judgment Value

Malfunction Criteria	Threshold Value
Output voltage	≥ 3.906 V

Time Needed for Diagnosis: 2000 ms
Malfunction Indicator Light Illumination: Illuminates as soon as a malfunction occurs.

AJ:DTC P0111 INTAKE AIR TEMPERATURE SENSOR 1 CIRCUIT RANGE/PERFORMANCE BANK 1

DTC DETECTING CONDITION:
Detected when two consecutive driving cycles with fault occur.
TROUBLE SYMPTOM:
- Improper idling
- Poor driving performance

CAUTION:
After servicing or replacing faulty parts, perform Clear Memory Mode <Ref. to EN(H6DO)(diag)-85, OPERATION, Clear Memory Mode.>, and Inspection Mode <Ref. to EN(H6DO)(diag)-69, PROCEDURE, Inspection Mode.>.

	Step	Check	Yes	No
1	**CHECK ENGINE COOLANT TEMPERATURE.** 1) Start the engine and warm up completely. 2) Read the value of «Coolant Temp.» using the Subaru Select Monitor or a general scan tool. NOTE: • Subaru Select Monitor For detailed operation procedures, refer to “Read Current Data For Engine”. <Ref. to EN(H6DO)(diag)-50, Subaru Select Monitor.> • General scan tool For detailed operation procedures, refer to the general scan tool operation manual.	Is the value of «Coolant Temp.» 75°C (167°F) or more?	Replace the mass air flow and intake air temperature sensor. <Ref. to FU(H6DO)-58, Mass Air Flow and Intake Air Temperature Sensor.>	Check for DTC P0125. <Ref. to EN(H6DO)(diag)-218, DTC P0125 INSUFFICIENT COOLANT TEMPERATURE FOR CLOSED LOOP FUEL CONTROL, Diagnostic Procedure with Diagnostic Trouble Code (DTC).>

1. OUTLINE OF DIAGNOSIS

Detect the malfunction of the intake air temperature sensor output properties. Using the following two diagnoses, judge as NG when either is NG.

- **Diagnosis 1 (correlation diagnosis):** After the engine starts after the specified period of soaking time has elapsed, diagnose by correlation between intake air temperature sensor value, engine coolant temperature sensor value and ambient temperature sensor value. Judge as NG when the differences are both above the specified value by comparing between intake air temperature and engine coolant temperature, intake air temperature and ambient air temperature.
- **Diagnosis 2 (stuck diagnosis):** Judge as NG when intake air temperature does not change under the driving condition where it should change, considering engine condition.

2. COMPONENT DESCRIPTION

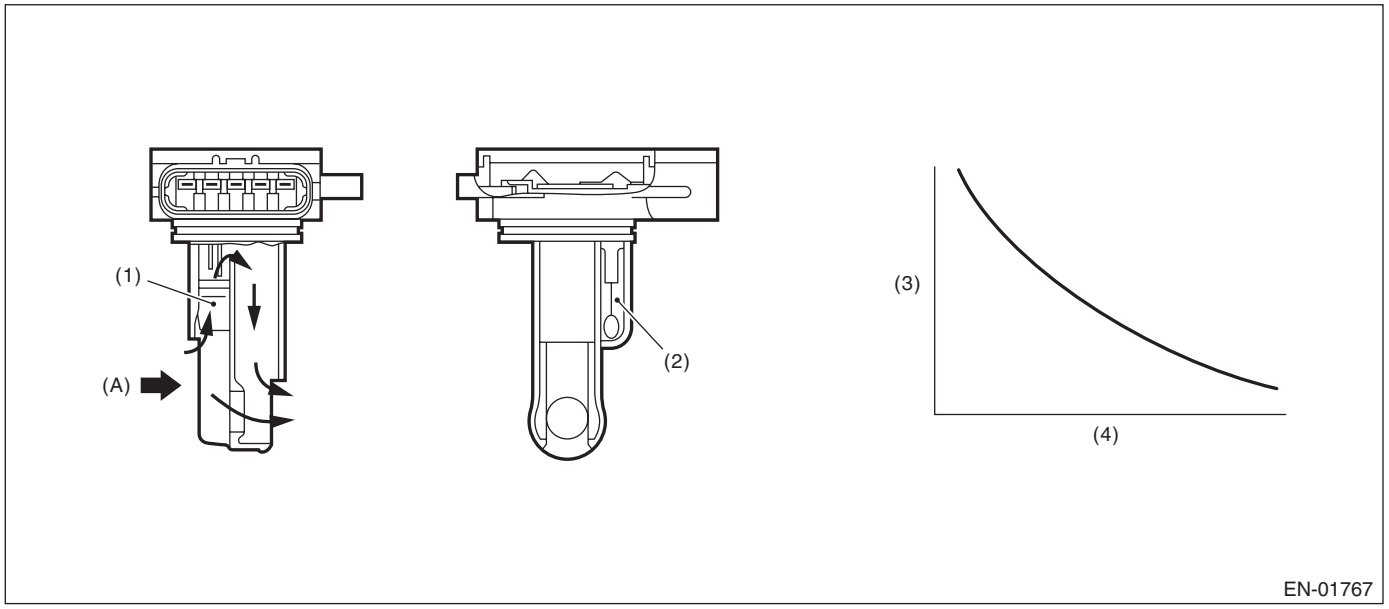

(A) Air

(1) Air flow sensor
(2) Intake air temperature sensor
(3) Resistance value (Ω)
(4) Intake air temperature °C (°F)

3. EXECUTION CONDITION

Diagnosis 1

Secondary Parameters	Execution condition
Soaking time	≥ 21600 s
Block heater judgment	Completed
Block heater operation	Not in operation

Diagnosis 2

Secondary Parameters	Execution condition
Battery voltage	≥ 10.9 V
Engine coolant temperature	≥ 75 °C (167 °F)
Intake air amount sum value	≥ Value of Map 1
Number of experiences under conditions below	≥ 3 time(s)
• Continuous time when vehicle speed is less than 4 km/h (2.5 MPH)	≥ Value from Map 2
• Continuous time when vehicle speed is 40 km/h (24.9 MPH) or more, and intake air amount is 10 g/s (0.35 oz/s) or more	≥ 15 s

Map 1

Engine coolant temperature °C (°F)	–20 (–4)	–10 (14)	0 (32)	10 (50)	20 (68)
Intake air amount sum value (g (oz))	50000 (1763.5)	7400 (261)	6600 (232.78)	5800 (204.57)	5000 (176.35)

Map 2

Engine coolant temperature °C (°F)	–30 (–22)	0 (32)	10 (50)	20 (68)
Continuous time (s) when vehicle speed is less than 4 km/h (2.5 MPH)	250	40	32	24

4. GENERAL DRIVING CYCLE

- **Diagnosis 1:** Perform the diagnosis only once after the engine starts after a certain period of soaking time.
- **Diagnosis 2:** Perform the diagnosis when the vehicle speed condition is met after warming up from a cold condition.

5. DIAGNOSTIC METHOD

Judge as NG when Diagnosis 1 or Diagnosis 2 becomes NG.

Diagnosis 1

If the duration of time while the following conditions are met is longer than the time indicated, judge as NG.

Judgment Value

Malfunction Criteria	Threshold Value
|Intake air temperature 30 sec. after engine start – Engine coolant temperature at engine start|	> Value of Map 3
|Intake air temperature 30 sec. after engine start – Ambient air temperature 30 sec. after engine start|	> Value of Map 4

Map 3

Ambient temperature °C (°F)	–30 (–22)	30 (86)	45 (113)	60 (140)
|Intake air temperature 30 sec. after engine start – Engine coolant temperature at engine start| °C (°F)	12 (21.6°F)	12 (21.6°F)	22 (39.6°F)	22 (39.6°F)

Map 4

Ambient temperature °C (°F)	–30 (–22)	30 (86)	45 (113)	60 (140)
|Intake air temperature 30 sec. after engine start – Ambient air temperature 30 sec. after engine start| °C (°F)	20 (36°F)	20 (36°F)	32 (57.6°F)	32 (57.6°F)

Time Needed for Diagnosis: Less than 1 second

Diagnosis 2

Judge as NG when the following conditions are established.

Judgment Value

Malfunction Criteria	Threshold Value
Output voltage difference between Max. and Min.	< 0.02 V (Equivalent to approximately 0.5°C (0.9°F) near 25°C (77°F)) (Equivalent to approximately 0.9°C (1.6°F) near –7°C (19.4°F))

Time Needed for Diagnosis: Less than 1 second

Malfunction Indicator Light Illumination: Illuminates when malfunction occurs in 2 continuous driving cycles.

AK:DTC P0112 INTAKE AIR TEMPERATURE SENSOR 1 CIRCUIT LOW BANK 1

DTC DETECTING CONDITION:
Immediately at fault recognition
TROUBLE SYMPTOM:
- Improper idling
- Poor driving performance

CAUTION:
After servicing or replacing faulty parts, perform Clear Memory Mode <Ref. to EN(H6DO)(diag)-85, OPERATION, Clear Memory Mode.>, and Inspection Mode <Ref. to EN(H6DO)(diag)-69, PROCEDURE, Inspection Mode.>.
WIRING DIAGRAM:
- Engine Electrical System ENGINE TYPE EZ (WITHOUT PUSH BUTTON START) <Ref. to WI-198, ENGINE TYPE EZ (WITHOUT PUSH BUTTON START), WIRING DIAGRAM, Engine Electrical System.>
- Engine Electrical System ENGINE TYPE EZ (WITH PUSH BUTTON START) <Ref. to WI-214, ENGINE TYPE EZ (WITH PUSH BUTTON START), WIRING DIAGRAM, Engine Electrical System.>

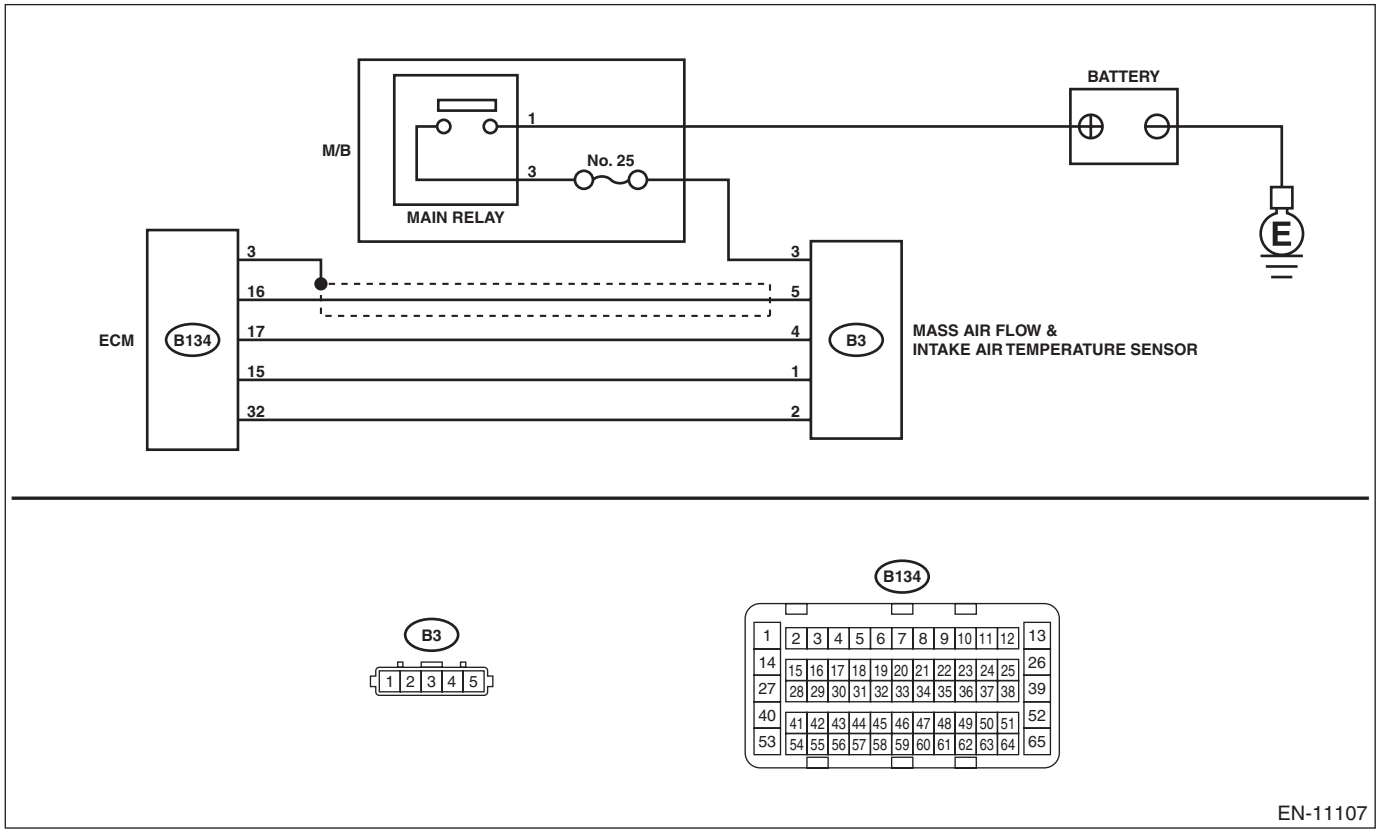

	Step	Check	Yes	No
1	**CHECK CURRENT DATA.** 1) Start the engine. 2) Read the value of «Intake Air Temp.» using the Subaru Select Monitor or a general scan tool. NOTE: • Subaru Select Monitor For detailed operation procedures, refer to “Read Current Data For Engine”. <Ref. to EN(H6DO)(diag)-50, Subaru Select Monitor.> • General scan tool For detailed operation procedures, refer to the general scan tool operation manual.	Is the value of «Intake Air Temp.» 120°C (248°F) or more?	Go to step **2**.	Even if DTC is detected, the circuit has returned to a normal condition at this time. Reproduce the failure, and then perform the diagnosis again. NOTE: In this case, temporary poor contact of connector, temporary open or short circuit of harness may be the cause.
2	**CHECK HARNESS BETWEEN ECM AND MASS AIR FLOW AND INTAKE AIR TEMPERATURE SENSOR CONNECTOR.** 1) Turn the ignition switch to OFF. 2) Disconnect the connector from ECM and the mass air flow and intake air temperature sensor. 3) Measure the resistance between ECM connector and chassis ground. ***Connector & terminal*** ***(B134) No. 15 — Chassis ground:***	Is the resistance 1 MΩ or more?	Replace the mass air flow and intake air temperature sensor. <Ref. to FU(H6DO)-58, Mass Air Flow and Intake Air Temperature Sensor.>	Repair the ground short circuit of harness between ECM connector and the mass air flow and intake air temperature sensor connector.

1. OUTLINE OF DIAGNOSIS

Detect open or short circuit of the intake air temperature sensor.
Judge as NG if out of specification.

2. COMPONENT DESCRIPTION

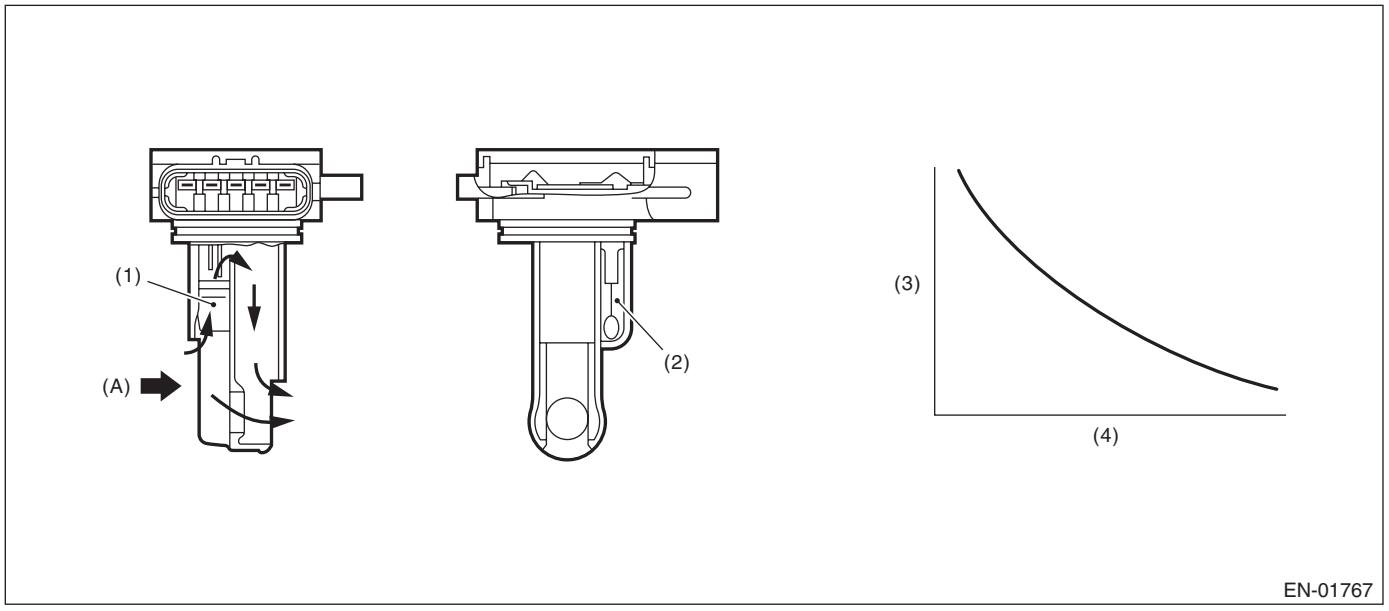

(A) Air

(1) Air flow sensor
(2) Intake air temperature sensor
(3) Resistance value (Ω)
(4) Intake air temperature °C (°F)

3. EXECUTION CONDITION

Secondary Parameters	Execution condition
None	

4. GENERAL DRIVING CYCLE

Always perform the diagnosis continuously.

5. DIAGNOSTIC METHOD

If the duration of time while the following conditions are met is longer than the time indicated, judge as NG.

Judgment Value

Malfunction Criteria	Threshold Value
Output voltage	< 0.4 V

Time Needed for Diagnosis: 500 ms
Malfunction Indicator Light Illumination: Illuminates as soon as a malfunction occurs.

AL:DTC P0113 INTAKE AIR TEMPERATURE SENSOR 1 CIRCUIT HIGH BANK 1

DTC DETECTING CONDITION:
Immediately at fault recognition
TROUBLE SYMPTOM:
- Improper idling
- Poor driving performance

CAUTION:
After servicing or replacing faulty parts, perform Clear Memory Mode <Ref. to EN(H6DO)(diag)-85, OPERATION, Clear Memory Mode.>, and Inspection Mode <Ref. to EN(H6DO)(diag)-69, PROCEDURE, Inspection Mode.>.
WIRING DIAGRAM:
- Engine Electrical System ENGINE TYPE EZ (WITHOUT PUSH BUTTON START) <Ref. to WI-198, ENGINE TYPE EZ (WITHOUT PUSH BUTTON START), WIRING DIAGRAM, Engine Electrical System.>
- Engine Electrical System ENGINE TYPE EZ (WITH PUSH BUTTON START) <Ref. to WI-214, ENGINE TYPE EZ (WITH PUSH BUTTON START), WIRING DIAGRAM, Engine Electrical System.>

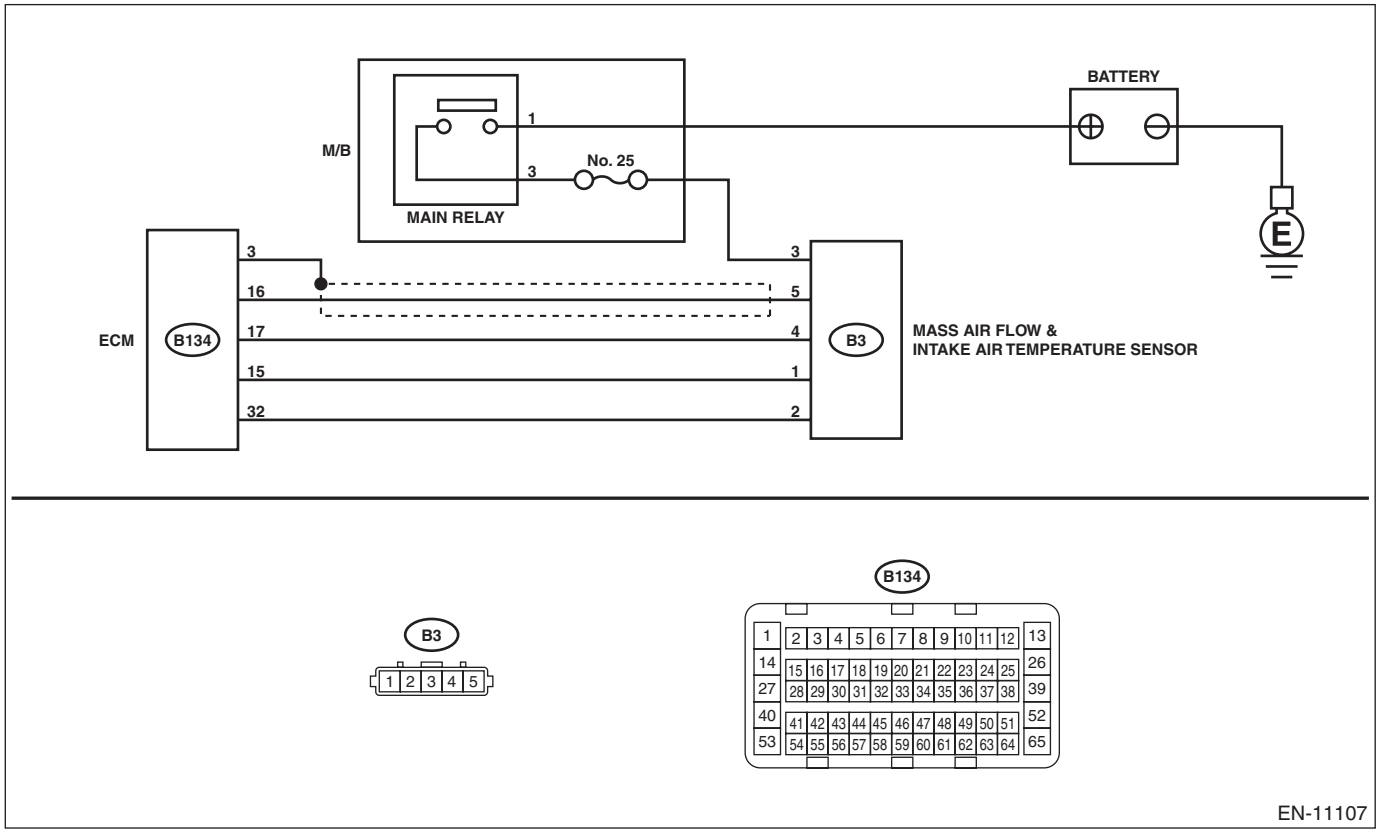

	Step	Check	Yes	No
1	**CHECK CURRENT DATA.** 1) Start the engine. 2) Read the value of «Intake Air Temp.» using the Subaru Select Monitor or a general scan tool. NOTE: • Subaru Select Monitor For detailed operation procedures, refer to "Read Current Data For Engine". <Ref. to EN(H6DO)(diag)-50, Subaru Select Monitor.> • General scan tool For detailed operation procedures, refer to the general scan tool operation manual.	Is the value of «Intake Air Temp.» less than –40°C (–40°F)?	Go to step **2**.	Even if DTC is detected, the circuit has returned to a normal condition at this time. Reproduce the failure, and then perform the diagnosis again. NOTE: In this case, temporary poor contact of connector, temporary open or short circuit of harness may be the cause.
2	**CHECK FOR POOR CONTACT.** Check for poor contact of ECM and mass air flow and intake air temperature sensor connector.	Is there poor contact of ECM or mass air flow and intake air temperature sensor connector?	Repair the poor contact of ECM or mass air flow and intake air temperature sensor connector.	Go to step **3**.
3	**CHECK HARNESS BETWEEN ECM AND MASS AIR FLOW AND INTAKE AIR TEMPERATURE SENSOR CONNECTOR.** 1) Turn the ignition switch to OFF. 2) Disconnect the connector from ECM and the mass air flow and intake air temperature sensor. 3) Measure the resistance of harness between ECM connector and the mass air flow and intake air temperature sensor connector. ***Connector & terminal*** ***(B134) No. 15 — (B3) No. 1:*** ***(B134) No. 32 — (B3) No. 2:***	Is the resistance less than 1 Ω?	Go to step **4**.	Repair the harness and connector. NOTE: In this case, repair the following item: • Open circuit in harness between ECM connector and the mass air flow and intake air temperature sensor connector • Poor contact of joint connector
4	**CHECK HARNESS BETWEEN ECM AND MASS AIR FLOW AND INTAKE AIR TEMPERATURE SENSOR CONNECTOR.** 1) Connect all connectors. 2) Turn the ignition switch to ON. 3) Disconnect the connectors from the mass air flow and intake air temperature sensor. 4) Measure the voltage between ECM connector and chassis ground. ***Connector & terminal*** ***(B134) No. 15 (+) — Chassis ground (–):***	Is the voltage 5 V or more?	Repair the short circuit of harness to power supply between ECM connector and the mass air flow and intake air temperature sensor connector.	Replace the mass air flow and intake air temperature sensor. <Ref. to FU(H6DO)-58, Mass Air Flow and Intake Air Temperature Sensor.>

1. OUTLINE OF DIAGNOSIS

Detect open or short circuit of the intake air temperature sensor.
Judge as NG if out of specification.

2. COMPONENT DESCRIPTION

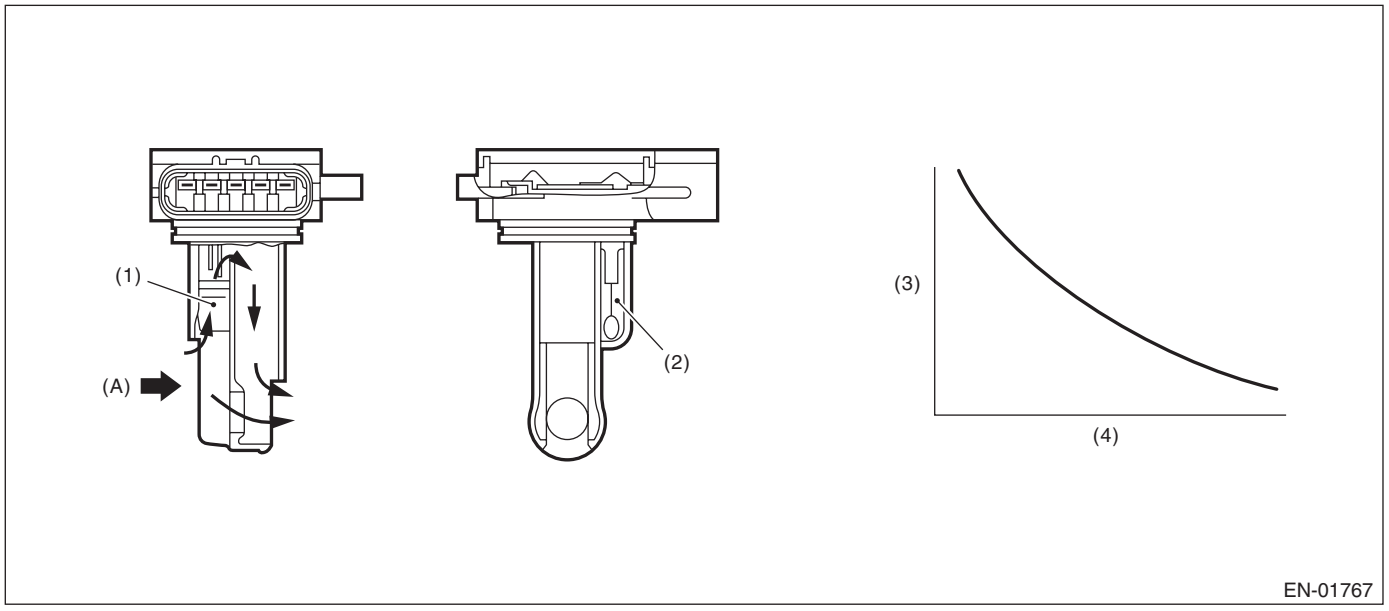

(A) Air

(1) Air flow sensor
(2) Intake air temperature sensor
(3) Resistance value (Ω)
(4) Intake air temperature °C (°F)

3. EXECUTION CONDITION

Secondary Parameters	Execution condition
None	

4. GENERAL DRIVING CYCLE

Always perform the diagnosis continuously.

5. DIAGNOSTIC METHOD

If the duration of time while the following conditions are met is longer than the time indicated, judge as NG.

Judgment Value

Malfunction Criteria	Threshold Value
Output voltage	≥ 4.707 V

Time Needed for Diagnosis: 500 ms
Malfunction Indicator Light Illumination: Illuminates as soon as a malfunction occurs.

AM:DTC P0116 ENGINE COOLANT TEMPERATURE SENSOR 1 CIRCUIT RANGE/PERFORMANCE

DTC DETECTING CONDITION:
Detected when two consecutive driving cycles with fault occur.
TROUBLE SYMPTOM:
- Hard to start
- Improper idling
- Poor driving performance

CAUTION:
After servicing or replacing faulty parts, perform Clear Memory Mode <Ref. to EN(H6DO)(diag)-85, OPERATION, Clear Memory Mode.>, and Inspection Mode <Ref. to EN(H6DO)(diag)-69, PROCEDURE, Inspection Mode.>.

	Step	Check	Yes	No
1	**CHECK FOR ANY OTHER DTC ON DISPLAY.**	Is any other DTC displayed?	Check the appropriate DTC using the "List of Diagnostic Trouble Code (DTC)". <Ref. to EN(H6DO)(diag)-109, List of Diagnostic Trouble Code (DTC).>	Go to step **2**.
2	**CHECK ENGINE COOLANT TEMPERATURE SENSOR.** 1) Disconnect the connectors from the engine coolant temperature sensor. 2) Measure the resistance between engine coolant temperature sensor terminals when the engine coolant is cold and after warmed up. ***Terminals*** ***No. 1 — No. 2:***	Is the resistance of engine coolant temperature sensor different between when engine coolant is cold and after warmed up?	Repair the poor contact of ECM connector.	Replace the engine coolant temperature sensor. <Ref. to FU(H6DO)-39, Engine Coolant Temperature Sensor.>

1. OUTLINE OF DIAGNOSIS

Detect the malfunction of the engine coolant temperature sensor characteristics.
After the engine starts after the specified period of soaking time has elapsed, diagnose by correlation between engine coolant temperature sensor value, intake air temperature sensor value and ambient temperature sensor value. Judge as NG when the differences are both above the specified value by comparing between engine coolant temperature and ambient air temperature, engine coolant temperature and intake air temperature.

2. COMPONENT DESCRIPTION

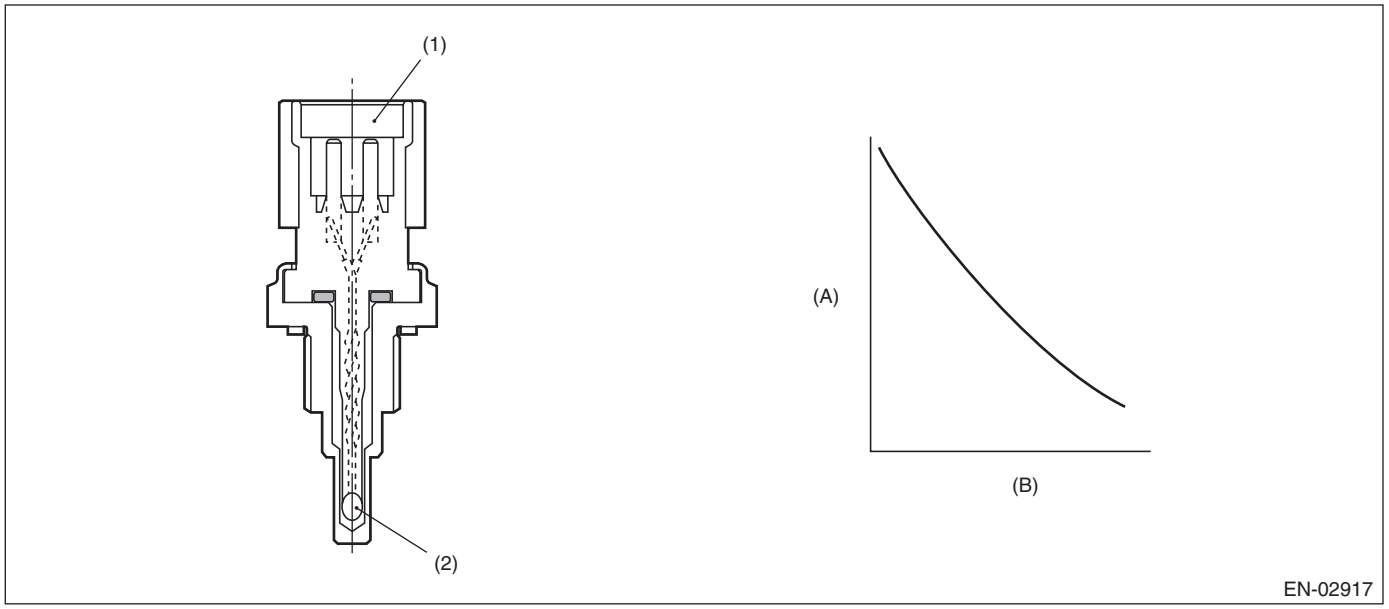

(A) Resistance value (kΩ)
(B) Temperature °C (°F)
(1) Connector
(2) Thermistor element

3. EXECUTION CONDITION

Secondary Parameters	Execution condition
Soaking time	≥ 21600 s
Block heater judgment	Completed
Block heater operation	Not in operation

4. GENERAL DRIVING CYCLE

Perform the diagnosis only once after the engine starts after a certain period of soaking time.

5. DIAGNOSTIC METHOD

If the duration of time while the following conditions are met is longer than the time indicated, judge as NG.

Judgment Value

Malfunction Criteria	Threshold Value
|Engine coolant temperature at engine start – Intake air temperature 30 sec. after engine start|	> Value from Map
|Engine coolant temperature at engine start – Ambient air temperature at engine start|	> 25 °C (45°F)

Map

Ambient temperature °C (°F)	–30 (–22)	30 (86)	45 (113)	60 (140)
|Engine coolant temperature at engine start – Intake air temperature 30 sec. after engine start| °C (°F)	12 (21.6°F)	12 (21.6°F)	22 (39.6°F)	22 (39.6°F)

Time Needed for Diagnosis: Less than 1 second
Malfunction Indicator Light Illumination: Illuminates when malfunction occurs in 2 continuous driving cycles.

AN:DTC P0117 ENGINE COOLANT TEMPERATURE SENSOR 1 CIRCUIT LOW

DTC DETECTING CONDITION:
Immediately at fault recognition
TROUBLE SYMPTOM:
- Hard to start
- Improper idling
- Poor driving performance

CAUTION:
After servicing or replacing faulty parts, perform Clear Memory Mode <Ref. to EN(H6DO)(diag)-85, OPERATION, Clear Memory Mode.>, and Inspection Mode <Ref. to EN(H6DO)(diag)-69, PROCEDURE, Inspection Mode.>.
WIRING DIAGRAM:
- Engine Electrical System ENGINE TYPE EZ (WITHOUT PUSH BUTTON START) <Ref. to WI-198, ENGINE TYPE EZ (WITHOUT PUSH BUTTON START), WIRING DIAGRAM, Engine Electrical System.>
- Engine Electrical System ENGINE TYPE EZ (WITH PUSH BUTTON START) <Ref. to WI-214, ENGINE TYPE EZ (WITH PUSH BUTTON START), WIRING DIAGRAM, Engine Electrical System.>

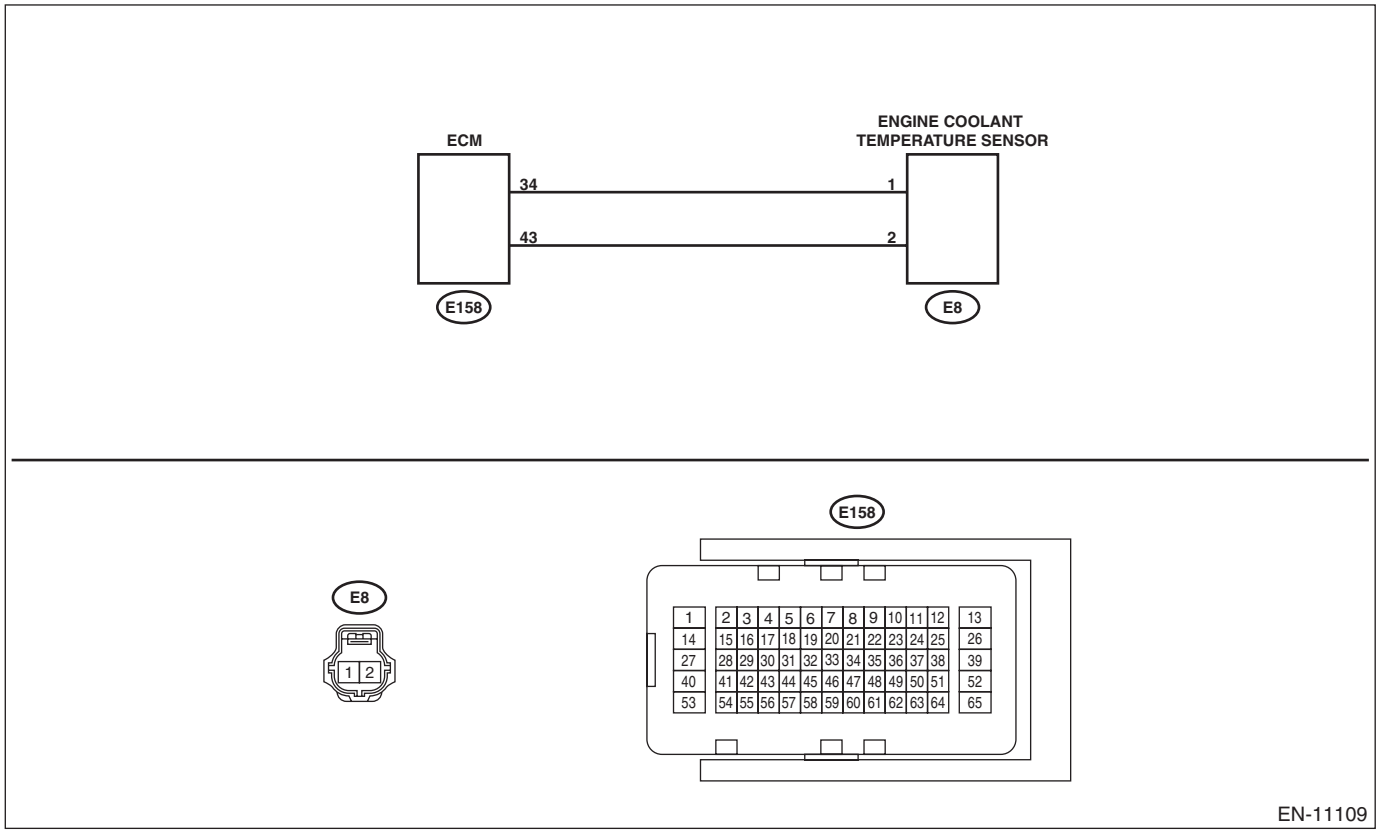

	Step	Check	Yes	No
1	**CHECK CURRENT DATA.** 1) Start the engine. 2) Read the value of «Coolant Temp.» using the Subaru Select Monitor or a general scan tool. NOTE: • Subaru Select Monitor For detailed operation procedures, refer to “Read Current Data For Engine”. <Ref. to EN(H6DO)(diag)-50, Subaru Select Monitor.> • General scan tool For detailed operation procedures, refer to the general scan tool operation manual.	Is the value of «Coolant Temp.» 150°C (302°F) or more?	Go to step **2**.	Even if DTC is detected, the circuit has returned to a normal condition at this time. Reproduce the failure, and then perform the diagnosis again. NOTE: In this case, temporary poor contact of connector, temporary open or short circuit of harness may be the cause.
2	**CHECK HARNESS BETWEEN ECM AND ENGINE COOLANT TEMPERATURE SENSOR CONNECTOR.** 1) Turn the ignition switch to OFF. 2) Disconnect the connectors from ECM and engine coolant temperature sensor. 3) Measure the resistance between ECM connector and chassis ground. ***Connector & terminal*** ***(E158) No. 43 — Chassis ground:***	Is the resistance 1 MΩ or more?	Replace the engine coolant temperature sensor. <Ref. to FU(H6DO)-39, Engine Coolant Temperature Sensor.>	Repair the short circuit to ground in harness between ECM connector and engine coolant temperature sensor connector.

1. OUTLINE OF DIAGNOSIS

Detect the open or short circuit of the engine coolant temperature sensor.
Judge as NG if out of specification.

2. COMPONENT DESCRIPTION

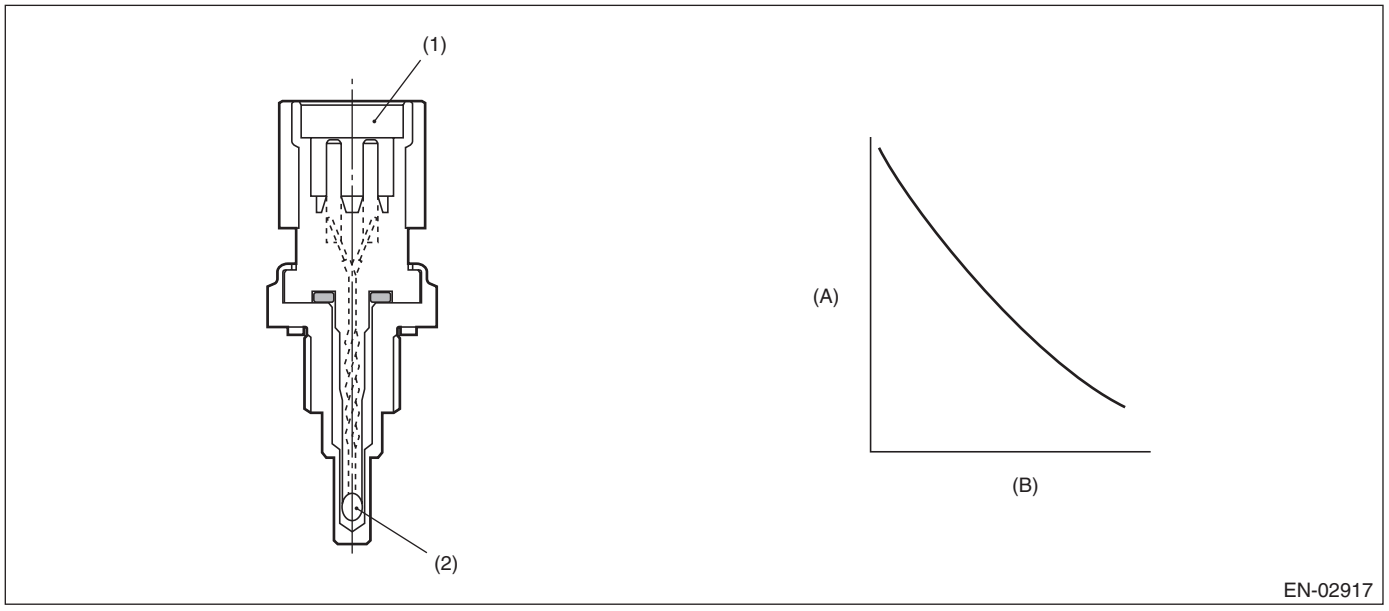

(A) Resistance value (kΩ)
(B) Temperature °C (°F)
(1) Connector
(2) Thermistor element

3. EXECUTION CONDITION

Secondary Parameters	Execution condition
None	

4. GENERAL DRIVING CYCLE

Always perform the diagnosis continuously.

5. DIAGNOSTIC METHOD

If the duration of time while the following conditions are met is longer than the time indicated, judge as NG.

Judgment Value

Malfunction Criteria	Threshold Value
Output voltage	< 0.349 V

Time Needed for Diagnosis: 500 ms
Malfunction Indicator Light Illumination: Illuminates as soon as a malfunction occurs.

AO:DTC P0118 ENGINE COOLANT TEMPERATURE SENSOR 1 CIRCUIT HIGH

DTC DETECTING CONDITION:
Immediately at fault recognition
TROUBLE SYMPTOM:
- Hard to start
- Improper idling
- Poor driving performance

CAUTION:
After servicing or replacing faulty parts, perform Clear Memory Mode <Ref. to EN(H6DO)(diag)-85, OPERATION, Clear Memory Mode.>, and Inspection Mode <Ref. to EN(H6DO)(diag)-69, PROCEDURE, Inspection Mode.>.
WIRING DIAGRAM:
- Engine Electrical System ENGINE TYPE EZ (WITHOUT PUSH BUTTON START) <Ref. to WI-198, ENGINE TYPE EZ (WITHOUT PUSH BUTTON START), WIRING DIAGRAM, Engine Electrical System.>
- Engine Electrical System ENGINE TYPE EZ (WITH PUSH BUTTON START) <Ref. to WI-214, ENGINE TYPE EZ (WITH PUSH BUTTON START), WIRING DIAGRAM, Engine Electrical System.>

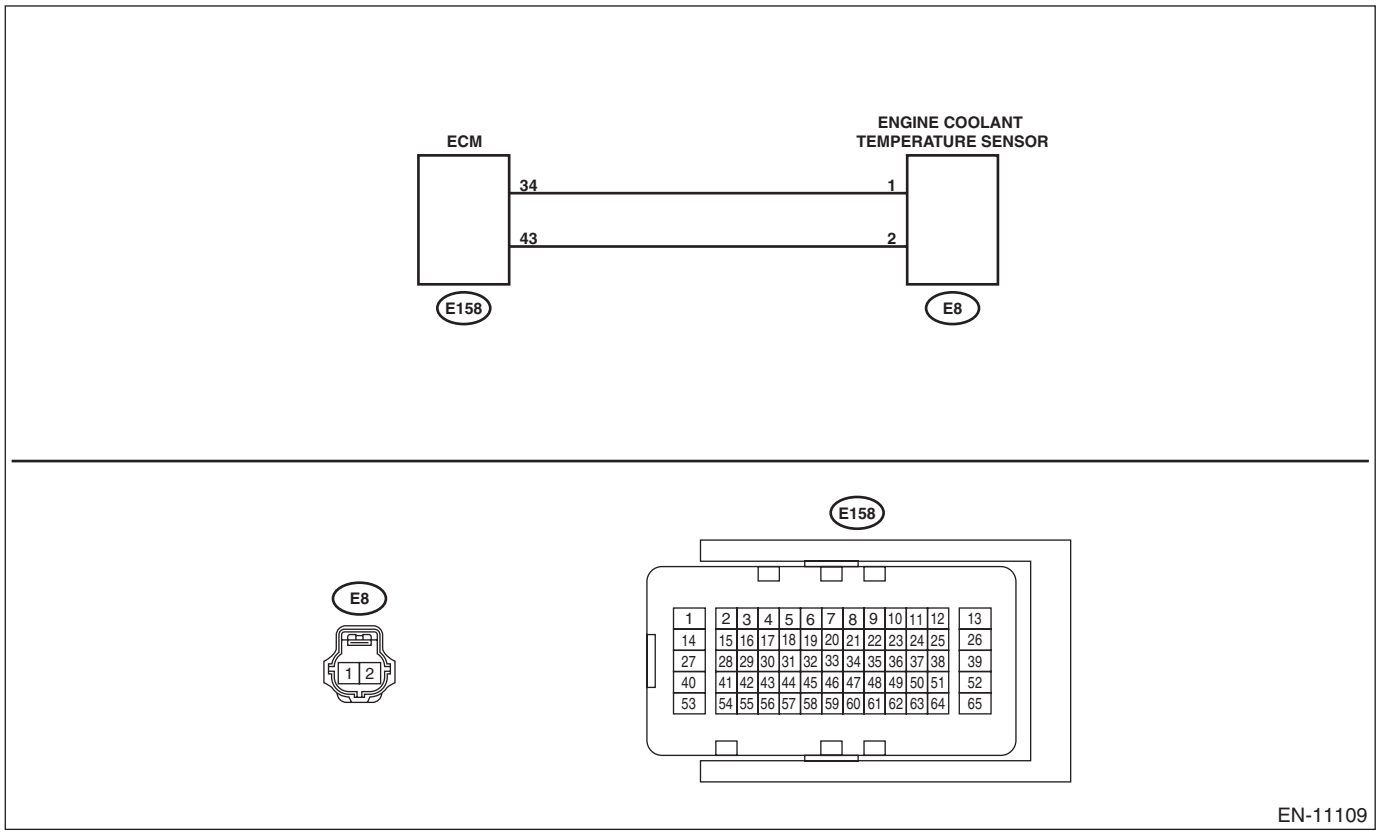

	Step	Check	Yes	No
1	**CHECK CURRENT DATA.** 1) Start the engine. 2) Read the value of «Coolant Temp.» using the Subaru Select Monitor or a general scan tool. NOTE: • Subaru Select Monitor For detailed operation procedures, refer to "Read Current Data For Engine". <Ref. to EN(H6DO)(diag)-50, Subaru Select Monitor.> • General scan tool For detailed operation procedures, refer to the general scan tool operation manual.	Is the value of «Coolant Temp.» less than –40°C (–40°F)?	Go to step **2**.	Even if DTC is detected, the circuit has returned to a normal condition at this time. Reproduce the failure, and then perform the diagnosis again. NOTE: In this case, temporary poor contact of connector, temporary open or short circuit of harness may be the cause.
2	**CHECK FOR POOR CONTACT.** Check for poor contact of ECM and engine coolant temperature sensor connector.	Is there poor contact of ECM or engine coolant temperature sensor connector?	Repair the poor contact of ECM or engine coolant temperature sensor connector.	Go to step **3**.
3	**CHECK HARNESS BETWEEN ECM AND ENGINE COOLANT TEMPERATURE SENSOR CONNECTOR.** 1) Turn the ignition switch to OFF. 2) Disconnect the connectors from ECM and engine coolant temperature sensor. 3) Measure the resistance of harness between ECM connector and engine coolant temperature sensor connector. ***Connector & terminal*** ***(E158) No. 34 — (E8) No. 1:*** ***(E158) No. 43 — (E8) No. 2:***	Is the resistance less than 1 Ω?	Go to step **4**.	Repair the open circuit of the harness between the ECM connector and engine coolant temperature sensor connector.
4	**CHECK HARNESS BETWEEN ECM AND ENGINE COOLANT TEMPERATURE SENSOR CONNECTOR.** 1) Connect all connectors. 2) Turn the ignition switch to ON. 3) Measure the voltage between ECM connector and chassis ground. ***Connector & terminal*** ***(E158) No. 43 (+) — Chassis ground (–):***	Is the voltage 5 V or more?	Repair the short circuit of harness to power supply between ECM connector and engine coolant temperature sensor connector.	Replace the engine coolant temperature sensor. <Ref. to FU(H6DO)-39, Engine Coolant Temperature Sensor.>

1. OUTLINE OF DIAGNOSIS

Detect the open or short circuit of the engine coolant temperature sensor.
Judge as NG if out of specification.

2. COMPONENT DESCRIPTION

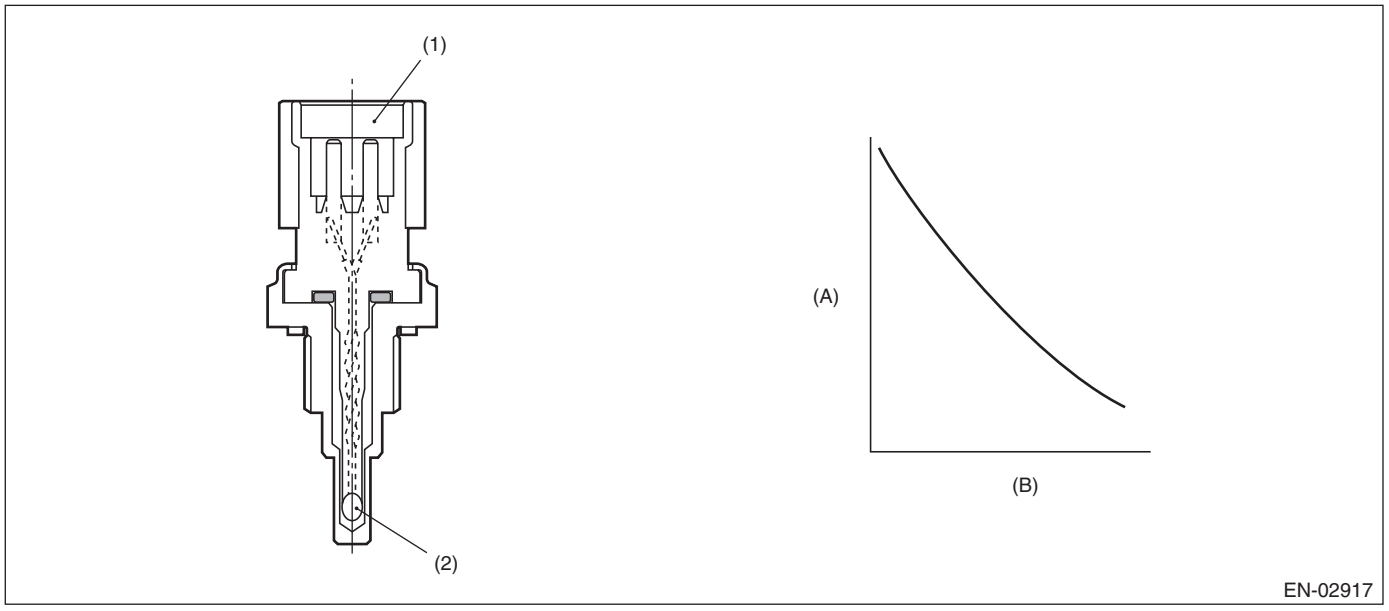

(A) Resistance value (kΩ)
(B) Temperature °C (°F)
(1) Connector
(2) Thermistor element

3. EXECUTION CONDITION

Secondary Parameters	Execution condition
None	

4. GENERAL DRIVING CYCLE

Always perform the diagnosis continuously.

5. DIAGNOSTIC METHOD

If the duration of time while the following conditions are met is longer than the time indicated, judge as NG.

Judgment Value

Malfunction Criteria	Threshold Value
Output voltage	≥ 4.698 V

Time Needed for Diagnosis: 500 ms
Malfunction Indicator Light Illumination: Illuminates as soon as a malfunction occurs.

AP:DTC P0122 THROTTLE/PEDAL POSITION SENSOR/SWITCH "A" CIRCUIT LOW

DTC DETECTING CONDITION:
Immediately at fault recognition
TROUBLE SYMPTOM:
- Improper idling
- Engine stalls.
- Poor driving performance

CAUTION:
After servicing or replacing faulty parts, perform Clear Memory Mode <Ref. to EN(H6DO)(diag)-85, OPERATION, Clear Memory Mode.>, and Inspection Mode <Ref. to EN(H6DO)(diag)-69, PROCEDURE, Inspection Mode.>.
WIRING DIAGRAM:
- Engine Electrical System ENGINE TYPE EZ (WITHOUT PUSH BUTTON START) <Ref. to WI-198, ENGINE TYPE EZ (WITHOUT PUSH BUTTON START), WIRING DIAGRAM, Engine Electrical System.>
- Engine Electrical System ENGINE TYPE EZ (WITH PUSH BUTTON START) <Ref. to WI-214, ENGINE TYPE EZ (WITH PUSH BUTTON START), WIRING DIAGRAM, Engine Electrical System.>

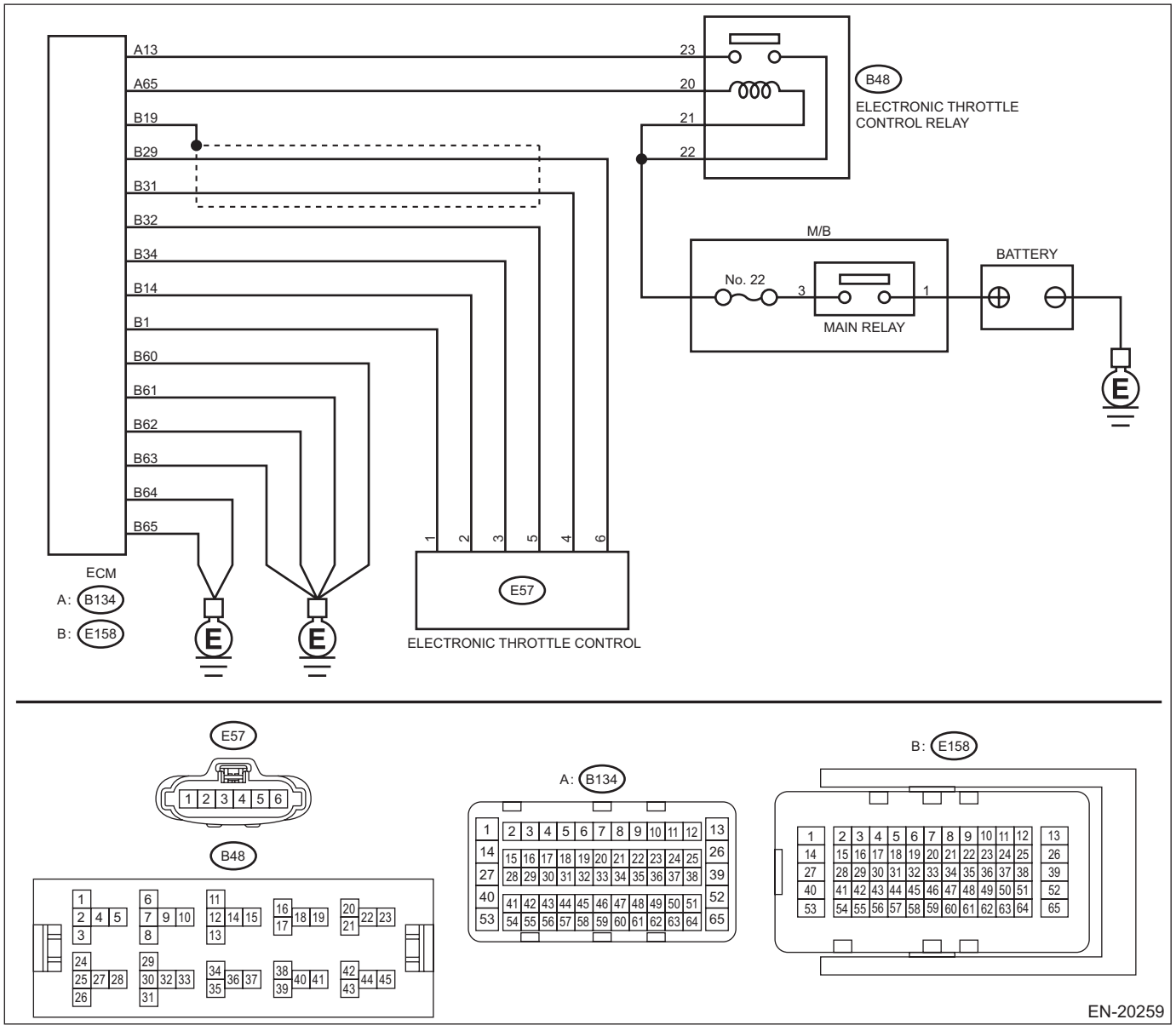

	Step	Check	Yes	No
1	**CHECK HARNESS BETWEEN ECM AND ELECTRONIC THROTTLE CONTROL.** 1) Turn the ignition switch to OFF. 2) Disconnect the connectors from ECM and electronic throttle control. 3) Measure the resistance between ECM connector and chassis ground. ***Connector & terminal*** ***(E158) No. 32 — Chassis ground:*** ***(E158) No. 29 — Chassis ground:*** ***(E158) No. 29 — (E158) No. 19:***	Is the resistance 1 MΩ or more?	Go to step **2**.	Repair the ground short circuit of harness between ECM connector and electronic throttle control connector.
2	**CHECK SHORT CIRCUIT INSIDE THE ECM.** 1) Connect the connector to ECM. 2) Measure the resistance between electronic throttle control connector and engine ground. ***Connector & terminal*** ***(E57) No. 6 — Engine ground:***	Is the resistance 1 MΩ or more?	Replace the electronic throttle control. <Ref. to FU(H6DO)-19, Throttle Body.>	Repair the ground short circuit of harness between ECM connector and electronic throttle control connector. Replace the ECM if defective. <Ref. to FU(H6DO)-83, Engine Control Module (ECM).>

1. OUTLINE OF DIAGNOSIS

Detect the open or short circuit of throttle position sensor 1.
Judge as NG if out of specification.

2. COMPONENT DESCRIPTION

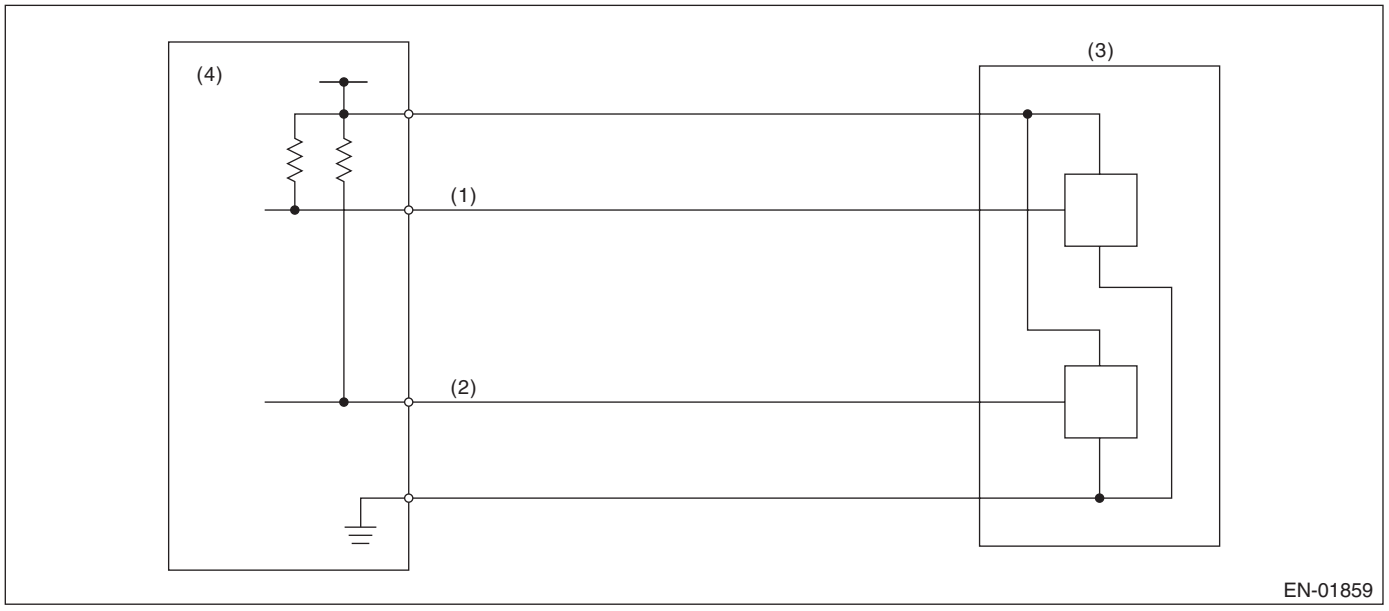

(1) Throttle position sensor 1 signal
(2) Throttle position sensor 2 signal
(3) Throttle position sensor
(4) Engine control module (ECM)

3. EXECUTION CONDITION

Secondary Parameters	Execution condition
Battery voltage	≥ 6 V

4. GENERAL DRIVING CYCLE

Always perform the diagnosis continuously.

5. DIAGNOSTIC METHOD

If the duration of time while the following conditions are met is longer than the time indicated, judge as NG.

Judgment Value

Malfunction Criteria	Threshold Value
Sensor 1 input voltage	≤ 0.267 V

Time Needed for Diagnosis: 24 ms
Malfunction Indicator Light Illumination: Illuminates as soon as a malfunction occurs.

AQ:DTC P0123 THROTTLE/PEDAL POSITION SENSOR/SWITCH "A" CIRCUIT HIGH

DTC DETECTING CONDITION:
Immediately at fault recognition
TROUBLE SYMPTOM:
- Improper idling
- Engine stalls.
- Poor driving performance

CAUTION:
After servicing or replacing faulty parts, perform Clear Memory Mode <Ref. to EN(H6DO)(diag)-85, OPERATION, Clear Memory Mode.>, and Inspection Mode <Ref. to EN(H6DO)(diag)-69, PROCEDURE, Inspection Mode.>.
WIRING DIAGRAM:
- Engine Electrical System ENGINE TYPE EZ (WITHOUT PUSH BUTTON START) <Ref. to WI-198, ENGINE TYPE EZ (WITHOUT PUSH BUTTON START), WIRING DIAGRAM, Engine Electrical System.>
- Engine Electrical System ENGINE TYPE EZ (WITH PUSH BUTTON START) <Ref. to WI-214, ENGINE TYPE EZ (WITH PUSH BUTTON START), WIRING DIAGRAM, Engine Electrical System.>

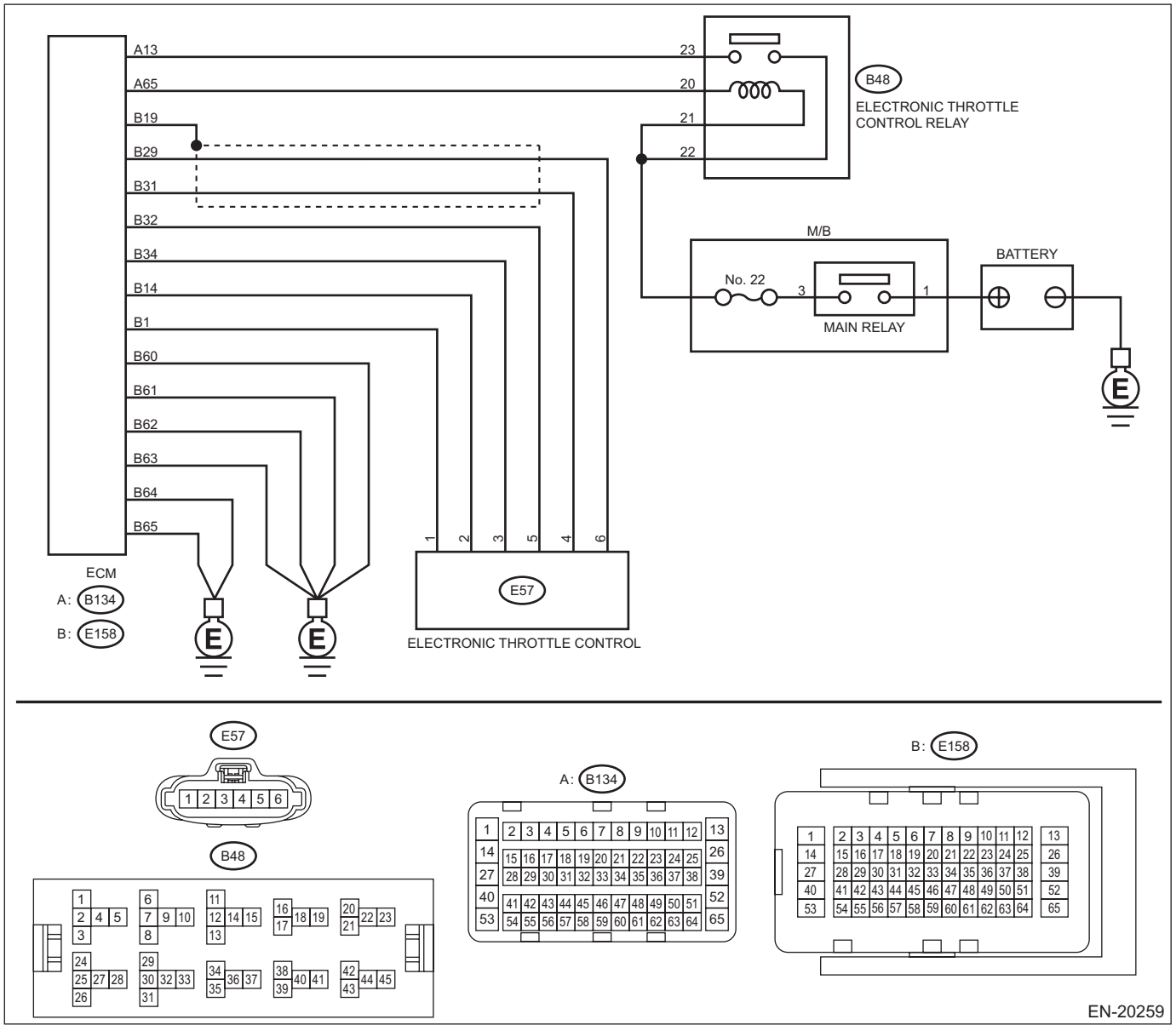

	Step	Check	Yes	No
1	**CHECK HARNESS BETWEEN ECM AND ELECTRONIC THROTTLE CONTROL.** 1) Turn the ignition switch to OFF. 2) Disconnect the connectors from ECM and electronic throttle control. 3) Measure the resistance of harness between ECM connector and electronic throttle control connector. ***Connector & terminal*** ***(E158) No. 29 — (E57) No. 6:*** ***(E158) No. 34 — (E57) No. 3:***	Is the resistance less than 1 Ω?	Go to step **2**.	Repair the open circuit of harness between ECM connector and electronic throttle control connector.
2	**CHECK HARNESS BETWEEN ECM AND ELECTRONIC THROTTLE CONTROL.** 1) Connect the connector to ECM. 2) Measure the resistance between electronic throttle control connector and engine ground. ***Connector & terminal*** ***(E57) No. 3 — Engine ground:***	Is the resistance less than 5 Ω?	Go to step **3**.	Repair the harness and connector. NOTE: In this case, repair the following item: • Open circuit of harness between ECM connector and engine ground • Poor contact of ECM connector
3	**CHECK HARNESS BETWEEN ECM AND ELECTRONIC THROTTLE CONTROL.** 1) Turn the ignition switch to ON. 2) Measure the voltage between electronic throttle control connector and engine ground. ***Connector & terminal*** ***(E57) No. 6 (+) — Engine ground (–):***	Is the voltage 5 V or more?	Repair the short circuit to power in the harness between ECM connector and electronic throttle control connector.	Go to step **4**.
4	**CHECK HARNESS BETWEEN ECM AND ELECTRONIC THROTTLE CONTROL.** 1) Turn the ignition switch to OFF. 2) Disconnect the connector from ECM. 3) Measure the resistance between ECM connectors. ***Connector & terminal*** ***(E158) No. 32 — (E158) No. 29:***	Is the resistance 1 MΩ or more?	Repair the poor contact of electronic throttle control connector. Replace the electronic throttle control if defective. <Ref. to FU(H6DO)-19, Throttle Body.>	Repair the short circuit to power in the harness between ECM connector and electronic throttle control connector.

1. OUTLINE OF DIAGNOSIS

Detect the open or short circuit of throttle position sensor 1.
Judge as NG if out of specification.

2. COMPONENT DESCRIPTION

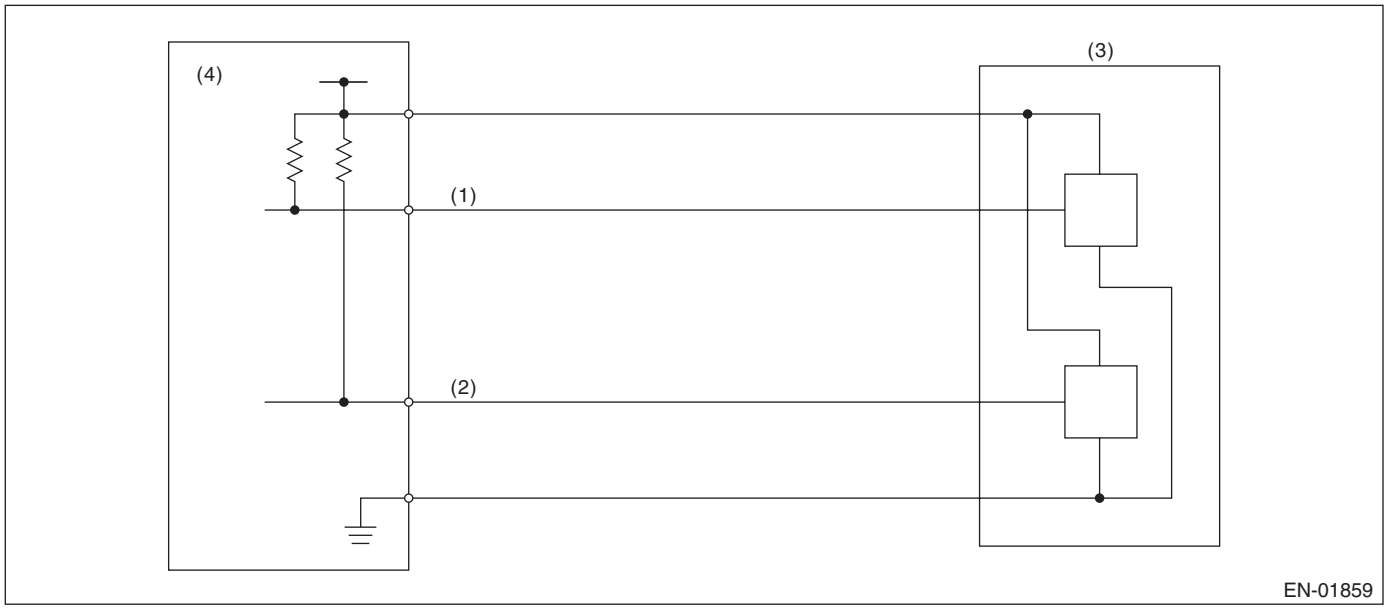

(1) Throttle position sensor 1 signal
(2) Throttle position sensor 2 signal
(3) Throttle position sensor
(4) Engine control module (ECM)

3. EXECUTION CONDITION

Secondary Parameters	Execution condition
Battery voltage	≥ 6 V

4. GENERAL DRIVING CYCLE

Always perform the diagnosis continuously.

5. DIAGNOSTIC METHOD

If the duration of time while the following conditions are met is longer than the time indicated, judge as NG.

Judgment Value

Malfunction Criteria	Threshold Value
Sensor 1 input voltage	≥ 4.725 V

Time Needed for Diagnosis: 24 ms
Malfunction Indicator Light Illumination: Illuminates as soon as a malfunction occurs.

AR:DTC P0125 INSUFFICIENT COOLANT TEMPERATURE FOR CLOSED LOOP FUEL CONTROL

DTC DETECTING CONDITION:
Detected when two consecutive driving cycles with fault occur.
TROUBLE SYMPTOM:
Engine does not return to idle.

CAUTION:
After servicing or replacing faulty parts, perform Clear Memory Mode <Ref. to EN(H6DO)(diag)-85, OPERATION, Clear Memory Mode.>, and Inspection Mode <Ref. to EN(H6DO)(diag)-69, PROCEDURE, Inspection Mode.>.

	Step	Check	Yes	No
1	**CHECK TIRE SIZE.**	Is the tire size as specified and the same size as three other wheels?	Go to step **2**.	Replace the tire.
2	**CHECK ENGINE COOLANT.** Check the following items: • Amount of engine coolant • Engine coolant freeze • Contamination of engine coolant	Is the engine coolant normal?	Go to step **3**.	Fill or replace the engine coolant. <Ref. to CO(H6DO)-13, Engine Coolant.>
3	**CHECK THERMOSTAT.**	Does the thermostat remain opened?	Replace the thermostat. <Ref. to CO(H6DO)-18, Thermostat.>	Replace the engine coolant temperature sensor. <Ref. to FU(H6DO)-39, Engine Coolant Temperature Sensor.>

1. OUTLINE OF DIAGNOSIS

Detect the malfunction of engine coolant temperature output property.
Judge as NG when engine coolant temperature does not rise to the specified value after predetermined time has elapsed since engine start.

2. COMPONENT DESCRIPTION

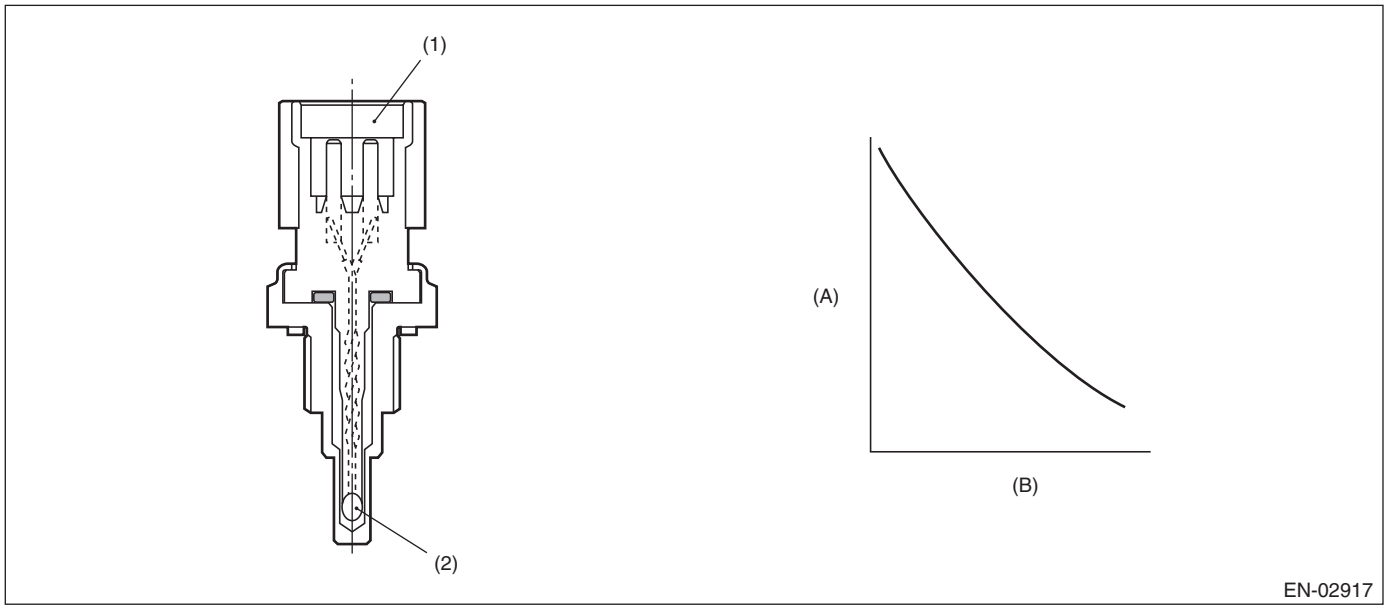

(A) Resistance value (kΩ)
(B) Temperature °C (°F)
(1) Connector
(2) Thermistor element

3. EXECUTION CONDITION

Secondary Parameters	Execution condition
Engine coolant temperature at engine start	< –15 °C (5 °F)
Engine speed	> 500 rpm

4. GENERAL DRIVING CYCLE

Perform the diagnosis only once after starting the engine from cold condition.

5. DIAGNOSTIC METHOD

If the duration of time while the following conditions are met is longer than the time indicated, judge as NG.

Judgment Value

Malfunction Criteria	Threshold Value
Engine coolant temperature	< –15 °C (5 °F)
Elapsed time after starting the engine (At the time of (The smaller value of either Engine coolant temperature or Intake air temperature at engine start) ≥ –23.3°C (–9.9°F)) or (At the time of (The smaller value of either Engine coolant temperature or Intake air temperature at engine start) < –23.3°C (–9.9°F))	≥ 120 s ≥ 300 s

Time Needed for Diagnosis: 120 or 300 seconds
Malfunction Indicator Light Illumination: Illuminates when malfunction occurs in 2 continuous driving cycles.

AS:DTC P0128 COOLANT THERMOSTAT (ENGINE COOLANT TEMPERATURE BELOW THERMOSTAT REGULATING TEMPERATURE)

DTC DETECTING CONDITION:
Detected when two consecutive driving cycles with fault occur.
TROUBLE SYMPTOM:
Thermostat remains open.

CAUTION:
After servicing or replacing faulty parts, perform Clear Memory Mode <Ref. to EN(H6DO)(diag)-85, OPERATION, Clear Memory Mode.>, and Inspection Mode <Ref. to EN(H6DO)(diag)-69, PROCEDURE, Inspection Mode.>.

	Step	Check	Yes	No
1	**CHECK FOR ANY OTHER DTC ON DISPLAY.**	Is any other DTC displayed?	Check the appropriate DTC using the "List of Diagnostic Trouble Code (DTC)". <Ref. to EN(H6DO)(diag)-109, List of Diagnostic Trouble Code (DTC).>	Go to step **2**.
2	**CHECK ENGINE COOLANT.**	Is the engine coolant amount normal?	Go to step **3**.	Refill the engine coolant. <Ref. to CO(H6DO)-13, Engine Coolant.>
3	**CHECK RADIATOR FAN.** 1) Start the engine. 2) Check the radiator fan operation.	Does the radiator fan continuously rotate for 3 minutes or more during idling?	Repair radiator fan circuit. <Ref. to CO(H6DO)-37, Radiator Fan and Fan Motor Assembly.>	Replace the thermostat. <Ref. to CO(H6DO)-18, Thermostat.>

1. OUTLINE OF DIAGNOSIS

Detect malfunctions of the thermostat function.
Judge as NG when any one of the following conditions is established.

- When the actual engine coolant temperature does not reach the maximum temperature necessary to perform other OBDII diagnosis and Σ (Estimated engine coolant temperature – actual engine coolant temperature) exceeded the predetermined value. (Judgment 1)
- When the actual engine coolant temperature does not reach the range within –11°C (–19.8°F) from the regulated temperature and Σ (Estimated engine coolant temperature – actual engine coolant temperature) exceeded the predetermined value. (Judgment 2)
- When the difference between the estimated coolant temperature and the actual engine coolant temperature exceeds the predetermined value, and Σ (Estimated engine coolant temperature – actual engine coolant temperature) exceeded the predetermined value. (Judgment 3)

2. COMPONENT DESCRIPTION

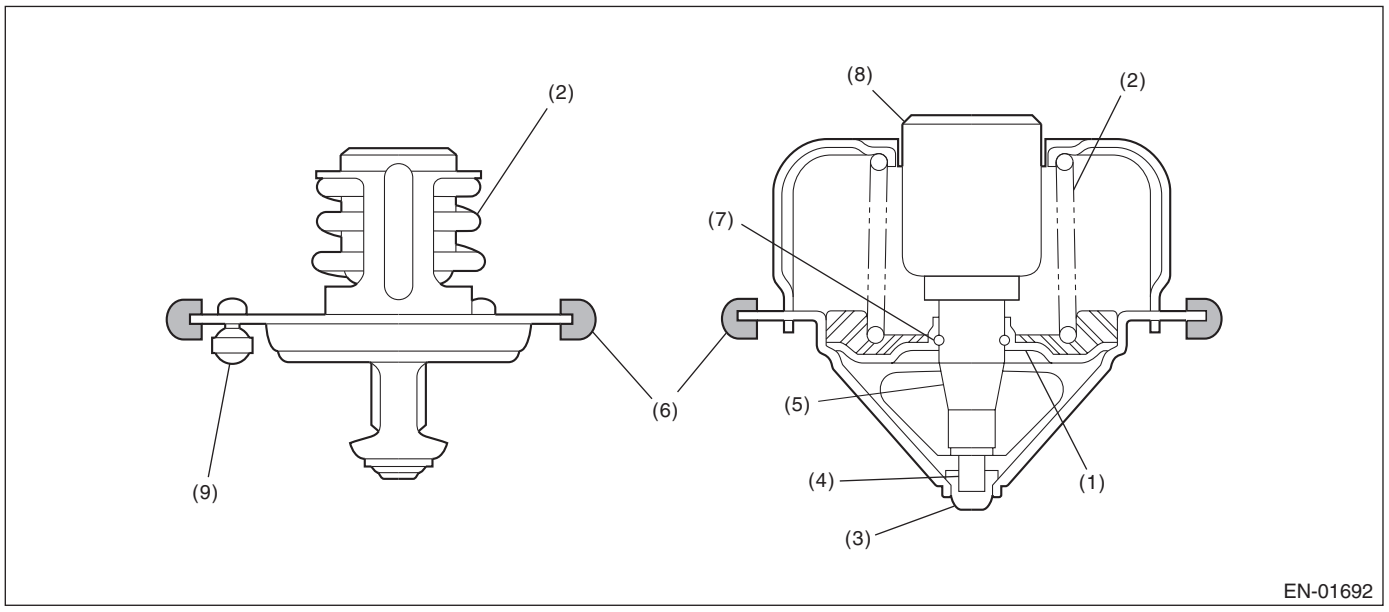

(1) Valve
(2) Spring
(3) Stopper
(4) Piston
(5) Guide
(6) Rubber seal
(7) Stop ring
(8) Wax element
(9) Jiggle valve

3. EXECUTION CONDITION

Secondary Parameters	Execution condition
<Judgment 1>	
Battery voltage	≥ 10.9 V
Ambient air temperature	≥ –7 °C (19.4 °F)
Vehicle speed	≥ 30 km/h (18.6 MPH)
Estimated coolant temperature	≥ Value of Map 1
Engine coolant temperature at engine starting	< 68 °C (154.4 °F)
<Judgment 2>	
Battery voltage	≥ 10.9 V
Ambient air temperature	≥ –7 °C (19.4 °F)
Vehicle speed	≥ 30 km/h (18.6 MPH)
Estimated coolant temperature	≥ Value from Map 2
Engine coolant temperature at engine starting	< 68 °C (154.4 °F)
<Judgment 3>	
Battery voltage	≥ 10.9 V
Ambient air temperature	≥ –7 °C (19.4 °F)
Vehicle speed	≥ 30 km/h (18.6 MPH)
Estimated coolant temperature	≥ Value from Map 3
Engine coolant temperature at engine starting	< 68 °C (154.4 °F)

Map 1

Engine coolant temperature at engine starting °C (°F)	–7 (19.4)	8 (46.4)	10 (50)	25 (77)
Estimated coolant temperature °C (°F)	75 (167)	75 (167)	75 (167)	75 (167)

Map 2

Engine coolant temperature at engine starting °C (°F)	–7 (19.4)	8 (46.4)	10 (50)	25 (77)
Estimated coolant temperature °C (°F)	85.5 (185.9)	85.5 (185.9)	85.5 (185.9)	85.5 (185.9)

Map 3

Engine coolant temperature at engine starting °C (°F)	–7 (19.4)	10 (50)	47 (116.6)	60 (140)
Estimated coolant temperature °C (°F)	61 (141.8)	68 (154.4)	85.5 (185.9)	85.5 (185.9)

4. GENERAL DRIVING CYCLE

Perform the diagnosis only once after starting the engine.

5. DIAGNOSTIC METHOD

If the duration of time while the following conditions are met is longer than the time indicated, judge as NG.

Judgment Value

Malfunction Criteria	Threshold Value
When any one of the followings is established:	
<Judgment 1>	
Actual engine coolant temperature and Σ (Estimated engine coolant temperature – actual engine coolant temperature)	< Value of Map 4 > Value of Map 5
<Judgment 2>	
Actual engine coolant temperature and Σ (Estimated engine coolant temperature – actual engine coolant temperature)	< Regulated temperature – Value of Map 6 > Value of Map 7
<Judgment 3>	
Estimated engine coolant temperature – actual engine coolant temperature and Σ (Estimated engine coolant temperature – actual engine coolant temperature)	> Value of Map 8 > Value of Map 9

Map 4

Estimate ambient temperature °C (°F)	–7 (19.4)	8 (46.4)	10 (50)	25 (77)
Threshold Value °C (°F)	75 (167)	75 (167)	75 (167)	75 (167)

Map 5

Engine coolant temperature at engine starting °C (°F)	–7 (19.4)	0 (32)	8 (46.4)	10 (50)	25 (77)	30 (86)	35 (95)
Threshold Value °C (°F)	1731.6 (3116.9)	1731.6 (3116.9)	1731.6 (3116.9)	1731.6 (3116.9)	1731.6 (3116.9)	1731.6 (3116.9)	1200 (2160)

Map 6

Estimate ambient temperature °C (°F)	–7 (19.4)	8 (46.4)	10 (50)	25 (77)
Threshold Value °C (°F)	11.1 (20)	11.1 (20)	11.1 (20)	11.1 (20)

Map 7

Engine coolant temperature at engine starting °C (°F)	–7 (19.4)	0 (32)	8 (46.4)	10 (50)	25 (77)	35 (95)	45 (113)
Threshold Value °C (°F)	1731.6 (3116.9)	1731.6 (3116.9)	1731.6 (3116.9)	1731.6 (3116.9)	1731.6 (3116.9)	1731.6 (3116.9)	1200 (2160)

Map 8

Estimate ambient temperature °C (°F)	–7 (19.4)	8 (46.4)	10 (50)	25 (77)
Threshold Value °C (°F)	11.1 (20)	11.1 (20)	11.1 (20)	11.1 (20)

Map 9

Engine coolant temperature at engine starting °C (°F)	–7 (19.4)	8 (46.4)	10 (50)	25 (77)
Threshold Value °C (°F)	1731.6 (3116.9)	1731.6 (3116.9)	1731.6 (3116.9)	1731.6 (3116.9)

Time Needed for Diagnosis: Less than 1 second

Malfunction Indicator Light Illumination: Illuminates when malfunction occurs in 2 continuous driving cycles.

AT:DTC P0131 A/F / O2 SENSOR CIRCUIT LOW VOLTAGE BANK 1 SENSOR 1

DTC DETECTING CONDITION:
Immediately at fault recognition

CAUTION:
After servicing or replacing faulty parts, perform Clear Memory Mode <Ref. to EN(H6DO)(diag)-85, OPERATION, Clear Memory Mode.>, and Inspection Mode <Ref. to EN(H6DO)(diag)-69, PROCEDURE, Inspection Mode.>.

WIRING DIAGRAM:

- Engine Electrical System ENGINE TYPE EZ (WITHOUT PUSH BUTTON START) <Ref. to WI-198, ENGINE TYPE EZ (WITHOUT PUSH BUTTON START), WIRING DIAGRAM, Engine Electrical System.>
- Engine Electrical System ENGINE TYPE EZ (WITH PUSH BUTTON START) <Ref. to WI-214, ENGINE TYPE EZ (WITH PUSH BUTTON START), WIRING DIAGRAM, Engine Electrical System.>

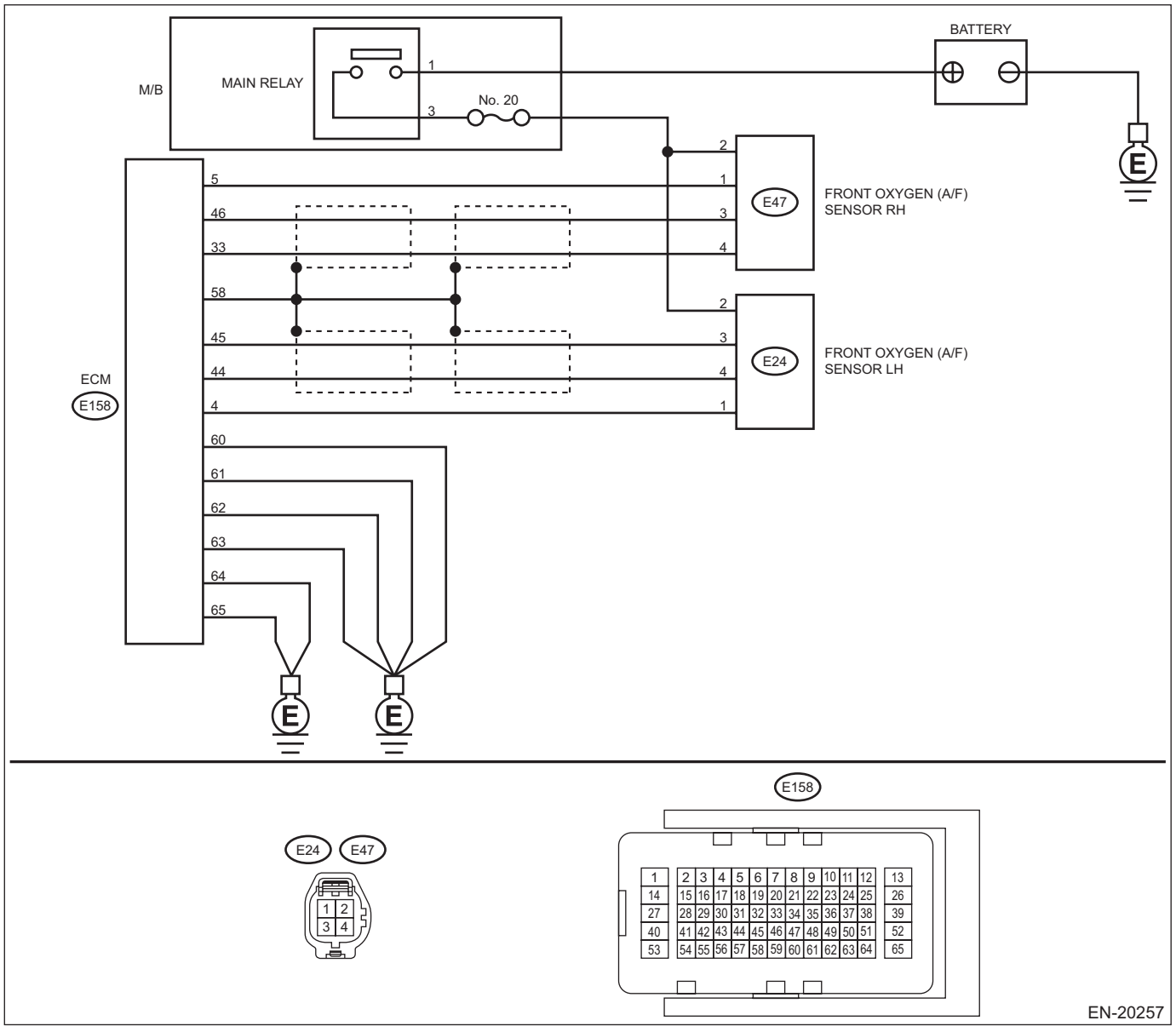

Step		Check	Yes	No
1	**CHECK FRONT OXYGEN (A/F) SENSOR CONNECTOR AND COUPLING CONNECTOR.**	Has water entered the connector?	Completely remove any water inside.	Go to step **2**.

	Step	Check	Yes	No
2	**CHECK HARNESS BETWEEN ECM AND FRONT OXYGEN (A/F) SENSOR CONNECTOR.** 1) Turn the ignition switch to OFF. 2) Disconnect the connectors from ECM and front oxygen (A/F) sensor. 3) Measure the resistance between ECM connector and chassis ground. ***Connector & terminal*** ***(E158) No. 33 — Chassis ground:*** ***(E158) No. 46 — Chassis ground:***	Is the resistance 1 MΩ or more?	Go to step **3**.	Repair the short circuit to ground in harness between ECM connector and front oxygen (A/F) sensor connector.
3	**CHECK FOR POOR CONTACT.** Check for poor contact of the front oxygen (A/F) sensor connector.	Is there poor contact of front oxygen (A/F) sensor connector?	Repair the poor contact of front oxygen (A/F) sensor connector.	Replace the front oxygen (A/F) sensor. <Ref. to FU(H6DO)-78, Front Oxygen (A/F) Sensor.>

1. OUTLINE OF DIAGNOSIS

Detect the open or short circuit of sensor.
Judge as NG, when the element voltage is out of the specified range.

2. COMPONENT DESCRIPTION

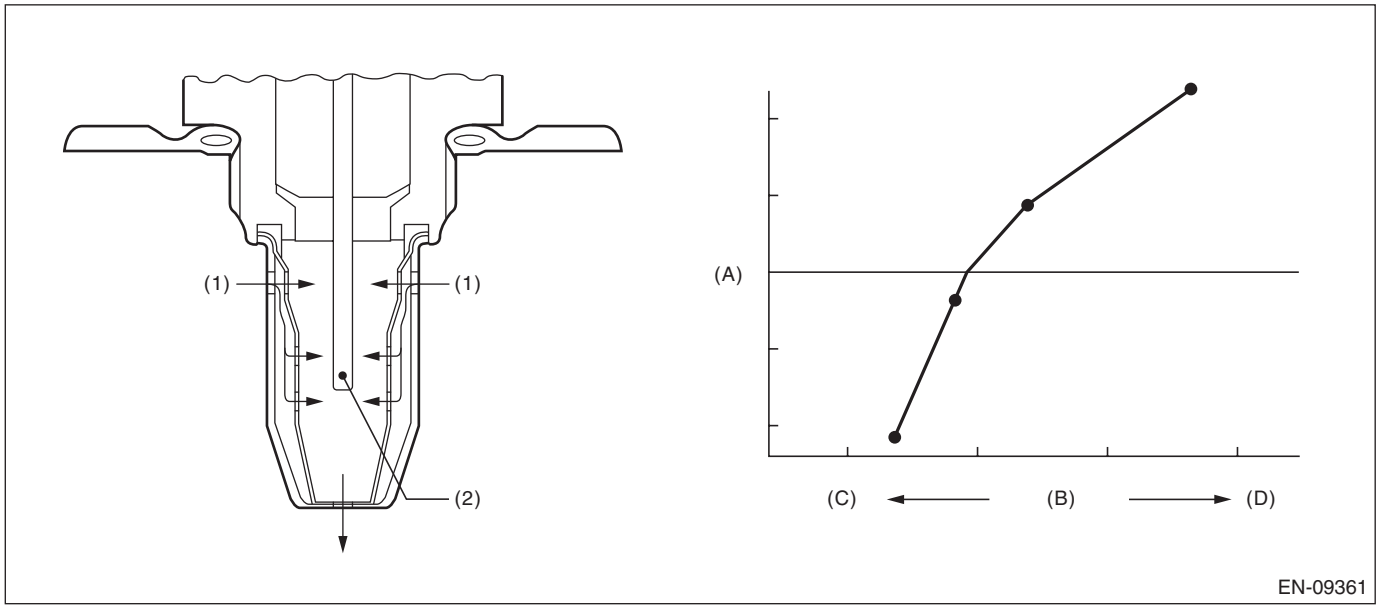

(A) Electromotive force (B) Air fuel ratio (C) Rich
(D) Lean

(1) Exhaust gas (2) ZrO_2

3. EXECUTION CONDITION

Secondary Parameters	Execution condition
Battery voltage	≥ 10.9 V

4. GENERAL DRIVING CYCLE

Always perform the diagnosis continuously.

5. DIAGNOSTIC METHOD

If the duration of time while the following conditions are met is longer than the time indicated, judge as NG.

Judgment Value

Malfunction Criteria	Threshold Value
(1) Input voltage (+) or (2) Input voltage (–) or (3) |Input voltage (+) – Input voltage (–)| and 3.8 V < Input voltage (–) < 4.7 V	< 0.4 V < 0.4 V < 0.1 V

Time Needed for Diagnosis:
(1): 1000 ms
(2): 1000 ms
(3): 1000 ms
Malfunction Indicator Light Illumination: Illuminates as soon as a malfunction occurs.

AU:DTC P0132 A/F / O2 SENSOR CIRCUIT HIGH VOLTAGE BANK 1 SENSOR 1

DTC DETECTING CONDITION:
Immediately at fault recognition

CAUTION:
After servicing or replacing faulty parts, perform Clear Memory Mode <Ref. to EN(H6DO)(diag)-85, OPERATION, Clear Memory Mode.>, and Inspection Mode <Ref. to EN(H6DO)(diag)-69, PROCEDURE, Inspection Mode.>.

WIRING DIAGRAM:

- Engine Electrical System ENGINE TYPE EZ (WITHOUT PUSH BUTTON START) <Ref. to WI-198, ENGINE TYPE EZ (WITHOUT PUSH BUTTON START), WIRING DIAGRAM, Engine Electrical System.>
- Engine Electrical System ENGINE TYPE EZ (WITH PUSH BUTTON START) <Ref. to WI-214, ENGINE TYPE EZ (WITH PUSH BUTTON START), WIRING DIAGRAM, Engine Electrical System.>

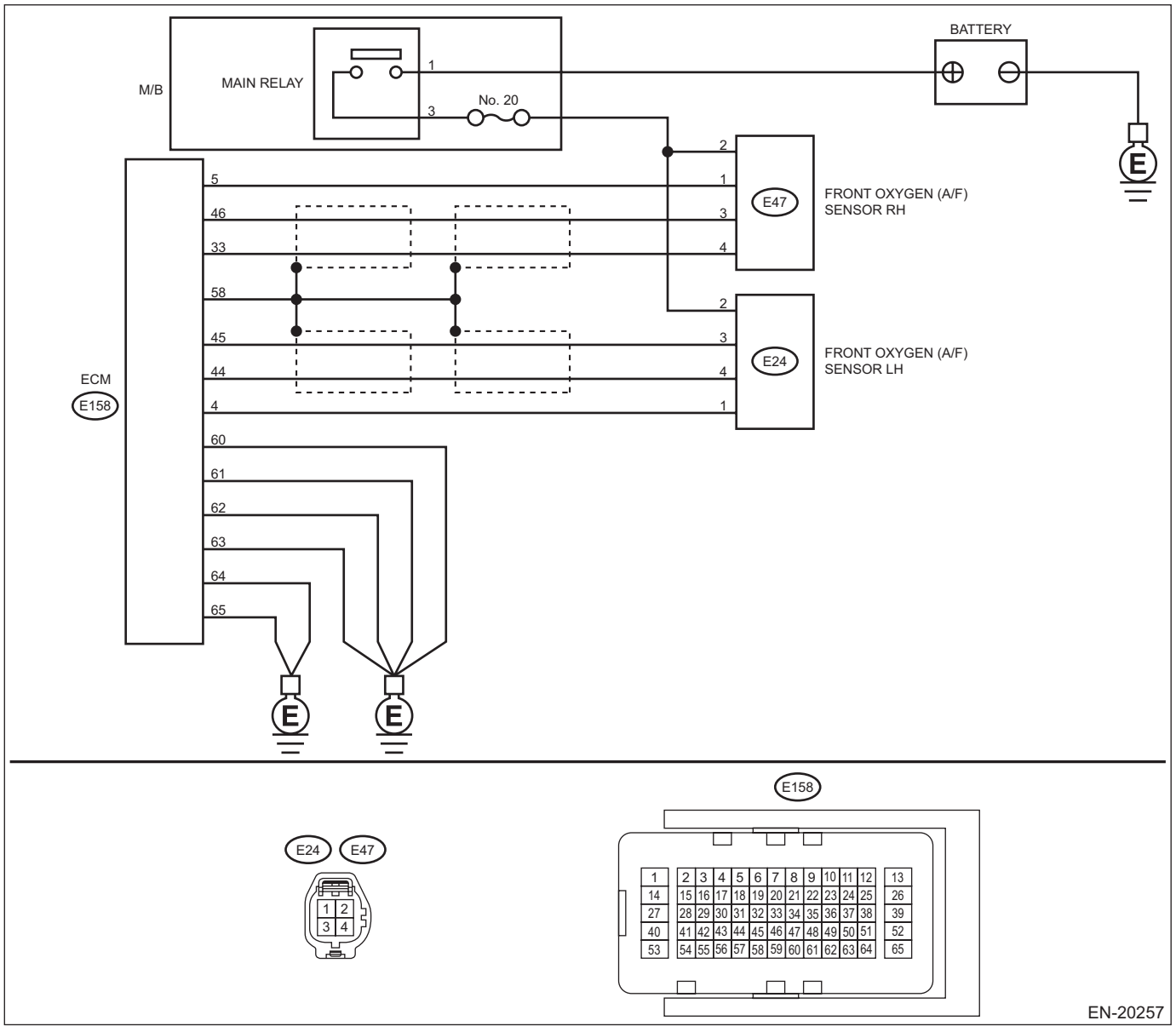

Step		Check	Yes	No
1	**CHECK FRONT OXYGEN (A/F) SENSOR CONNECTOR AND COUPLING CONNECTOR.**	Has water entered the connector?	Completely remove any water inside.	Go to step **2**.

Step		Check	Yes	No
2	**CHECK HARNESS BETWEEN ECM AND FRONT OXYGEN (A/F) SENSOR CONNECTOR.** 1) Turn the ignition switch to OFF. 2) Disconnect the connectors from front oxygen (A/F) sensor. 3) Turn the ignition switch to ON. 4) Measure the voltage between ECM connector and chassis ground. ***Connector & terminal*** ***(E158) No. 33 (+) — Chassis ground (–):*** ***(E158) No. 46 (+) — Chassis ground (–):***	Is the voltage 8 V or more?	Repair the short circuit to power in the harness between ECM connector and front oxygen (A/F) sensor connector.	Replace the front oxygen (A/F) sensor. <Ref. to FU(H6DO)-78, Front Oxygen (A/F) Sensor.>

1. OUTLINE OF DIAGNOSIS

Detect the open or short circuit of sensor.
Judge as NG, when the element voltage is out of the specified range.

2. COMPONENT DESCRIPTION

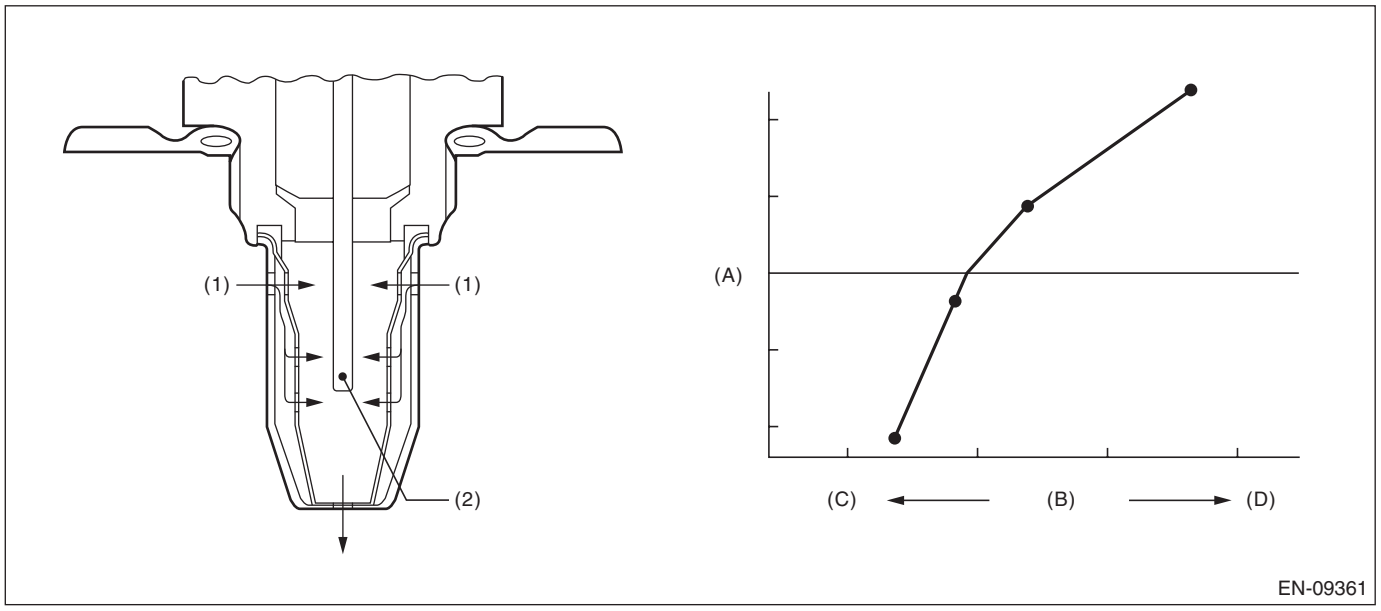

(A) Electromotive force (B) Air fuel ratio (C) Rich
(D) Lean

(1) Exhaust gas (2) ZrO_2

3. EXECUTION CONDITION

Secondary Parameters	Execution condition
Battery voltage	≥ 10.9 V

4. GENERAL DRIVING CYCLE

Always perform the diagnosis continuously.

5. DIAGNOSTIC METHOD

If the duration of time while the following conditions are met is longer than the time indicated, judge as NG.

Judgment Value

Malfunction Criteria	Threshold Value
(1) Input voltage (+) or (2) Input voltage (–)	> 4.7 V > 4.7 V

Time Needed for Diagnosis:
(1): 1000 ms
(2): 1000 ms
Malfunction Indicator Light Illumination: Illuminates as soon as a malfunction occurs.

AV:DTC P0134 A/F / O2 SENSOR CIRCUIT NO ACTIVITY DETECTED BANK 1 SENSOR 1

DTC DETECTING CONDITION:
Immediately at fault recognition

CAUTION:
After servicing or replacing faulty parts, perform Clear Memory Mode <Ref. to EN(H6DO)(diag)-85, OPERATION, Clear Memory Mode.>, and Inspection Mode <Ref. to EN(H6DO)(diag)-69, PROCEDURE, Inspection Mode.>.

WIRING DIAGRAM:

- Engine Electrical System ENGINE TYPE EZ (WITHOUT PUSH BUTTON START) <Ref. to WI-198, ENGINE TYPE EZ (WITHOUT PUSH BUTTON START), WIRING DIAGRAM, Engine Electrical System.>
- Engine Electrical System ENGINE TYPE EZ (WITH PUSH BUTTON START) <Ref. to WI-214, ENGINE TYPE EZ (WITH PUSH BUTTON START), WIRING DIAGRAM, Engine Electrical System.>

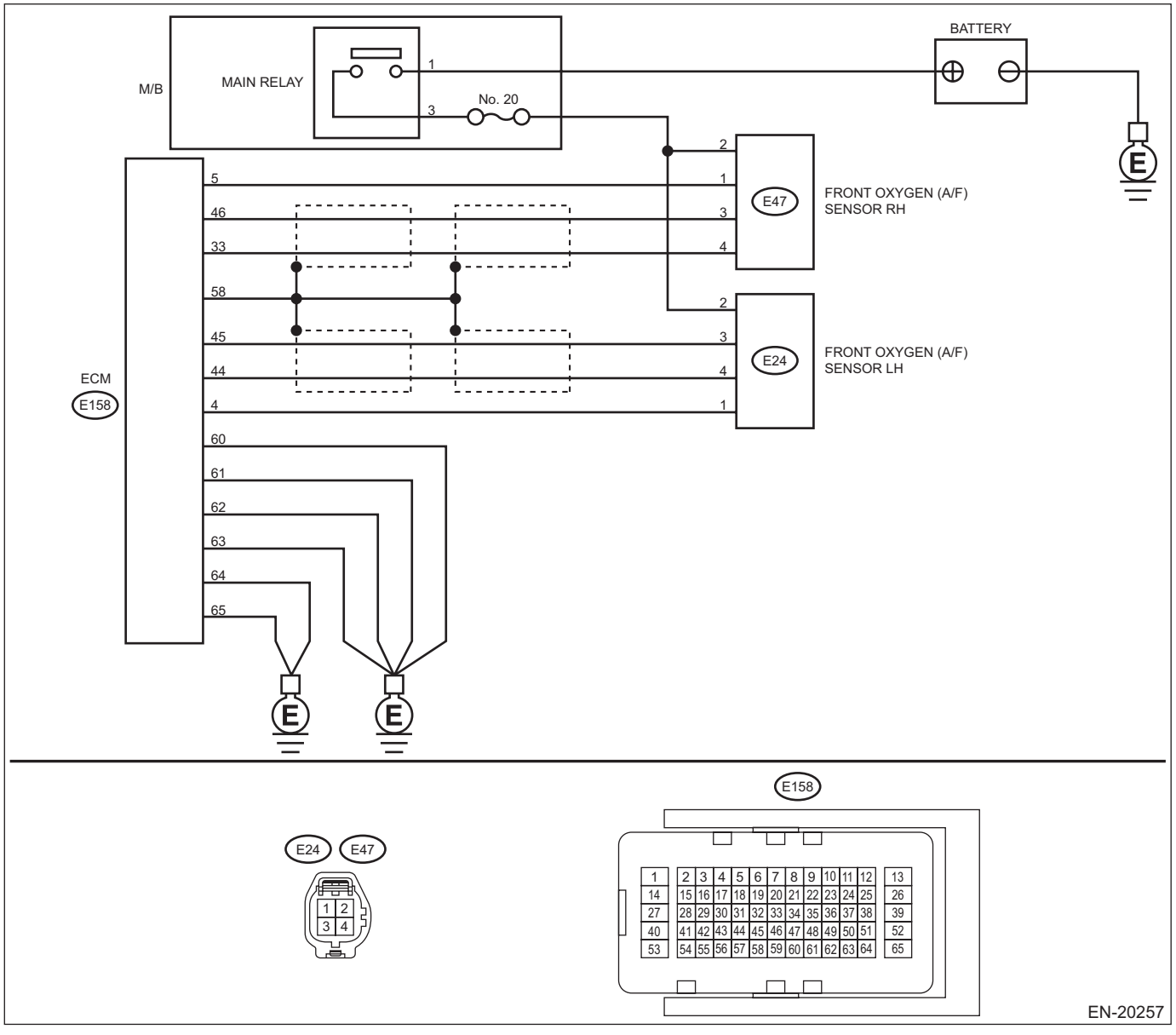

	Step	Check	Yes	No
1	**CHECK HARNESS BETWEEN ECM AND FRONT OXYGEN (A/F) SENSOR CONNECTOR.** 1) Turn the ignition switch to OFF. 2) Disconnect the connectors from ECM and front oxygen (A/F) sensor. 3) Measure the resistance of harness between ECM connector and front oxygen (A/F) sensor connector. ***Connector & terminal*** ***(E158) No. 46 — (E47) No. 3:*** ***(E158) No. 33 — (E47) No. 4:***	Is the resistance less than 1 Ω?	Go to step **2**.	Repair the harness and connector. NOTE: In this case, repair the following item: • Open circuit in harness between ECM connector and front oxygen (A/F) sensor connector • Poor contact of coupling connector
2	**CHECK FOR POOR CONTACT.** Check for poor contact of ECM and front oxygen (A/F) sensor connector.	Is there poor contact of ECM or front oxygen (A/F) sensor connector?	Repair the poor contact of ECM or front oxygen (A/F) sensor connector.	Replace the front oxygen (A/F) sensor. <Ref. to FU(H6DO)-78, Front Oxygen (A/F) Sensor.>

1. OUTLINE OF DIAGNOSIS

Detect open circuits of the sensor.
Judge as NG when the impedance of the element is large.

2. COMPONENT DESCRIPTION

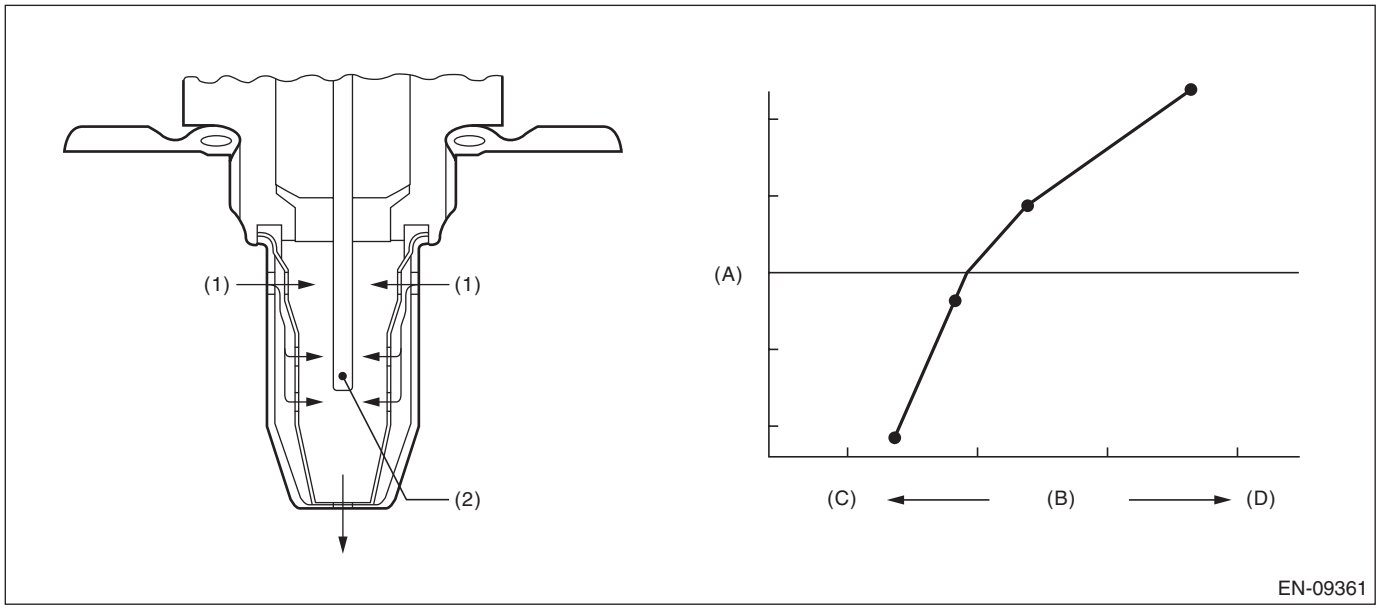

(A) Electromotive force (B) Air fuel ratio (C) Rich
(D) Lean

(1) Exhaust gas (2) ZrO_2

3. EXECUTION CONDITION

Secondary Parameters	Execution condition
Battery voltage	≥ 10.9 V
Time of heater control duty at 70 % or more	≥ 36000 ms

4. GENERAL DRIVING CYCLE

Perform the diagnosis continuously after the enable conditions have been established.

5. DIAGNOSTIC METHOD

If the duration of time while the following conditions are met is longer than the time indicated, judge as NG.

Judgment Value

Malfunction Criteria	Threshold Value
Front oxygen (A/F) sensor impedance	> 450 Ω

Time Needed for Diagnosis: 5000 ms
Malfunction Indicator Light Illumination: Illuminates as soon as a malfunction occurs.

AW:DTC P0137 O2 SENSOR CIRCUIT LOW VOLTAGE BANK 1 SENSOR 2

DTC DETECTING CONDITION:

Detected when two consecutive driving cycles with fault occur.

CAUTION:

After servicing or replacing faulty parts, perform Clear Memory Mode <Ref. to EN(H6DO)(diag)-85, OPERATION, Clear Memory Mode.>, and Inspection Mode <Ref. to EN(H6DO)(diag)-69, PROCEDURE, Inspection Mode.>.

WIRING DIAGRAM:

- Engine Electrical System ENGINE TYPE EZ (WITHOUT PUSH BUTTON START) <Ref. to WI-198, ENGINE TYPE EZ (WITHOUT PUSH BUTTON START), WIRING DIAGRAM, Engine Electrical System.>
- Engine Electrical System ENGINE TYPE EZ (WITH PUSH BUTTON START) <Ref. to WI-214, ENGINE TYPE EZ (WITH PUSH BUTTON START), WIRING DIAGRAM, Engine Electrical System.>

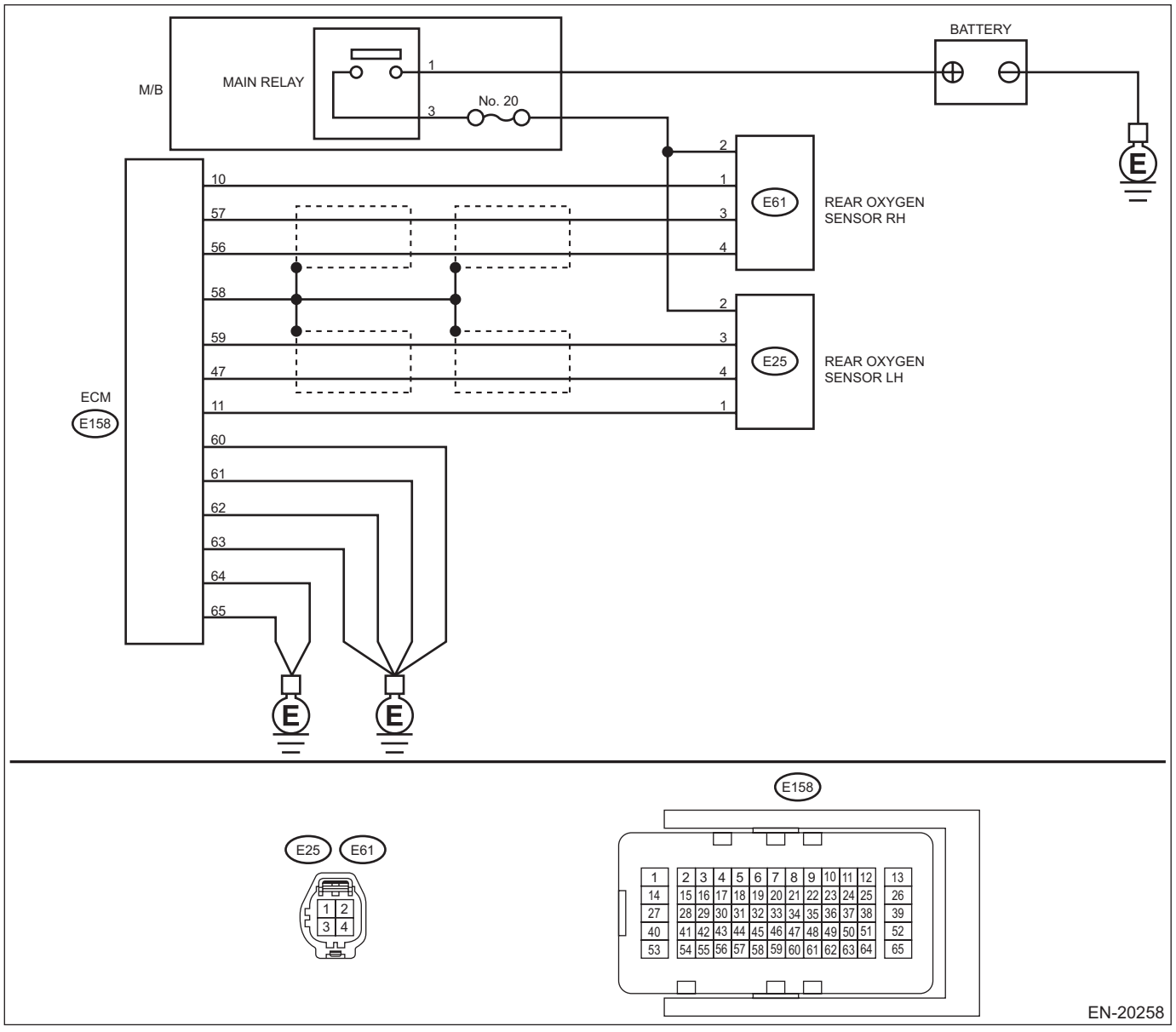

	Step	Check	Yes	No
1	**CHECK REAR OXYGEN SENSOR DATA.** 1) Warm up the engine until engine coolant temperature is higher than 75°C (167°F), and keep the engine speed at 3,000 rpm. (2 minutes maximum) 2) Keep the engine speed at idle. (One minute) 3) Read the value of «Front O2 Sensor #1» using the Subaru Select Monitor or a general scan tool. NOTE: • Subaru Select Monitor For detailed operation procedures, refer to "Read Current Data For Engine". <Ref. to EN(H6DO)(diag)-50, Subaru Select Monitor.> • General scan tool For detailed operation procedures, refer to the general scan tool operation manual.	Is the value of «Front O2 Sensor #1» 0.490 V or more?	Go to step **5**.	Go to step **2**.
2	**CHECK REAR OXYGEN SENSOR CONNECTOR AND COUPLING CONNECTOR.**	Has water entered the connector?	Completely remove any water inside.	Go to step **3**.
3	**CHECK HARNESS BETWEEN ECM AND REAR OXYGEN SENSOR CONNECTOR.** 1) Turn the ignition switch to OFF. 2) Disconnect the connector from ECM and rear oxygen sensor. 3) Measure the resistance of harness between ECM connector and rear oxygen sensor connector. ***Connector & terminal*** ***(E158) No. 57 — (E61) No. 3:*** ***(E158) No. 56 — (E61) No. 4:***	Is the resistance less than 1 Ω?	Go to step **4**.	Repair the harness and connector. NOTE: In this case, repair the following item: • Open circuit in harness between ECM connector and rear oxygen sensor connector • Poor contact of coupling connector
4	**CHECK HARNESS BETWEEN ECM AND REAR OXYGEN SENSOR CONNECTOR.** 1) Connect the connector to ECM. 2) Turn the ignition switch to ON. 3) Measure the voltage between rear oxygen sensor connector and chassis ground. ***Connector & terminal*** ***(E61) No. 3 (+) — Chassis ground (–):***	Is the voltage 1.18 V or more?	Replace the rear oxygen sensor. <Ref. to FU(H6DO)-81, Rear Oxygen Sensor.>	Repair the harness and connector. NOTE: In this case, repair the following item: • Open circuit in harness between ECM connector and rear oxygen sensor connector • Poor contact of ECM connector • Poor contact of coupling connector
5	**CHECK EXHAUST SYSTEM.** Check exhaust system parts. NOTE: Check the following items. • Looseness and improper fitting of exhaust system parts • Damage (crack, hole etc.) of parts • Loose part and improper installation between front oxygen (A/F) sensor and rear oxygen sensor	Is there any fault in exhaust system?	Repair or replace faulty parts.	Replace the rear oxygen sensor. <Ref. to FU(H6DO)-81, Rear Oxygen Sensor.>

1. OUTLINE OF DIAGNOSIS

Detect for NG of the rear oxygen sensor continuity.
Judge as NG if the rear oxygen sensor voltage value is not within the range.

2. COMPONENT DESCRIPTION

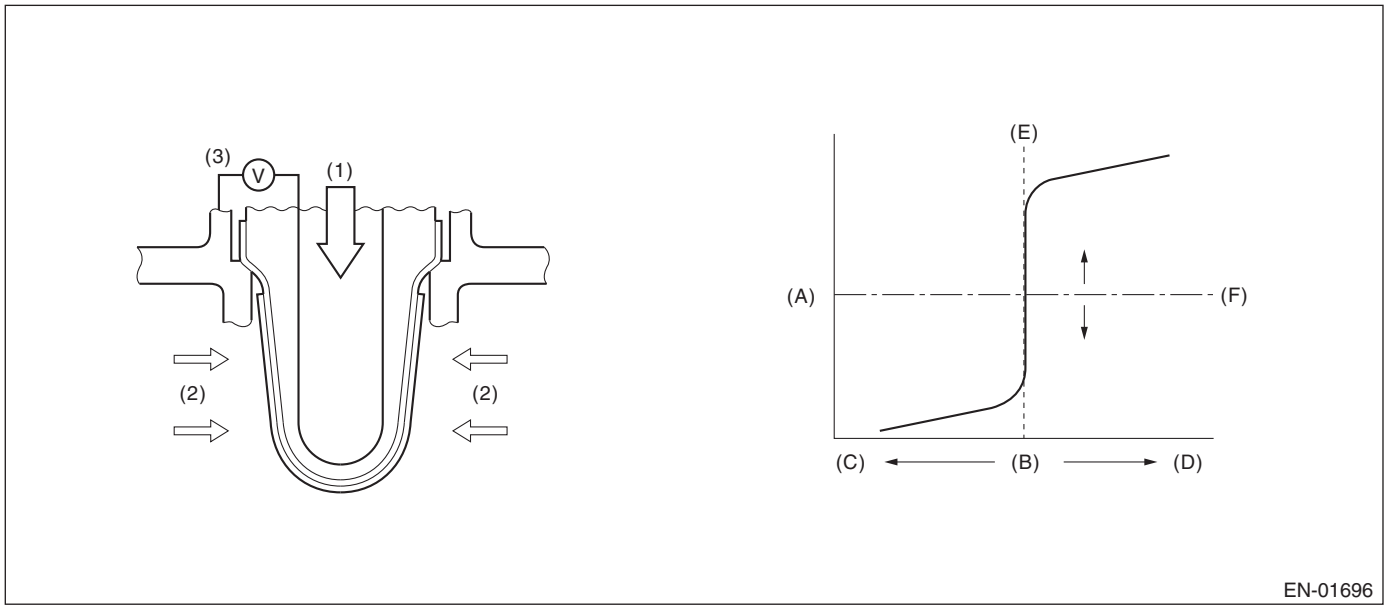

(A)	Electromotive force	(B)	Air fuel ratio	(C)	Lean
(D)	Rich	(E)	Theoretical air fuel ratio	(F)	Comparative voltage
(1)	Atmosphere	(2)	Exhaust gas	(3)	Electromotive force

3. EXECUTION CONDITION

Secondary Parameters	Execution condition
Judgment 1	
Battery voltage	≥ 10.9 V
Judgment 2,3	
Battery voltage	≥ 10.9 V
Estimated secondary oxygen sensor element temperature	≥ 500 °C (932 °F)
Rear oxygen sensor offset voltage	≥ 1.28 V and > 1.68 V
Accumulated duty ratio of the rear oxygen sensor heater operation since engine started	≥ Value from Map

Map

Engine coolant temperature at engine starting °C (°F)	–40 (–40)	–30 (–22)	–20 (–4)	–10 (14)	0 (32)	10 (50)	20 (68)	30 (86)
Accumulated duty ratio of the rear oxygen sensor heater operation since engine started %	10500	10500	10500	10500	10500	10500	10500	10500

Engine coolant temperature at engine starting °C (°F)	40 (104)	50 (122)	60 (140)	70 (158)	80 (176)	90 (194)	100 (212)	110 (230)
Accumulated duty ratio of the rear oxygen sensor heater operation since engine started %	10500	10500	10500	10500	10500	10500	10500	10500

4. GENERAL DRIVING CYCLE

Perform the diagnosis continuously after the enable conditions have been established.

5. DIAGNOSTIC METHOD

If the duration of time while the following conditions are met is longer than the time indicated, judge as NG.

Judgment Value

Malfunction Criteria	Threshold Value
Judgment 1: Short to ground	
Secondary oxygen sensor offset signal	< 1.28 V
Judgment 2: Circuit open	
Secondary oxygen sensor signal	< 1.18 V
Judgment 3: Out of range	
Secondary oxygen sensor output voltage	< –0.22 V

Time Needed for Diagnosis: 1000 ms
Malfunction Indicator Light Illumination: Illuminates when malfunction occurs in 2 continuous driving cycles.

AX:DTC P0138 O2 SENSOR CIRCUIT HIGH VOLTAGE BANK 1 SENSOR 2

DTC DETECTING CONDITION:

Detected when two consecutive driving cycles with fault occur.

CAUTION:

After servicing or replacing faulty parts, perform Clear Memory Mode <Ref. to EN(H6DO)(diag)-85, OPERATION, Clear Memory Mode.>, and Inspection Mode <Ref. to EN(H6DO)(diag)-69, PROCEDURE, Inspection Mode.>.

WIRING DIAGRAM:

- Engine Electrical System ENGINE TYPE EZ (WITHOUT PUSH BUTTON START) <Ref. to WI-198, ENGINE TYPE EZ (WITHOUT PUSH BUTTON START), WIRING DIAGRAM, Engine Electrical System.>
- Engine Electrical System ENGINE TYPE EZ (WITH PUSH BUTTON START) <Ref. to WI-214, ENGINE TYPE EZ (WITH PUSH BUTTON START), WIRING DIAGRAM, Engine Electrical System.>

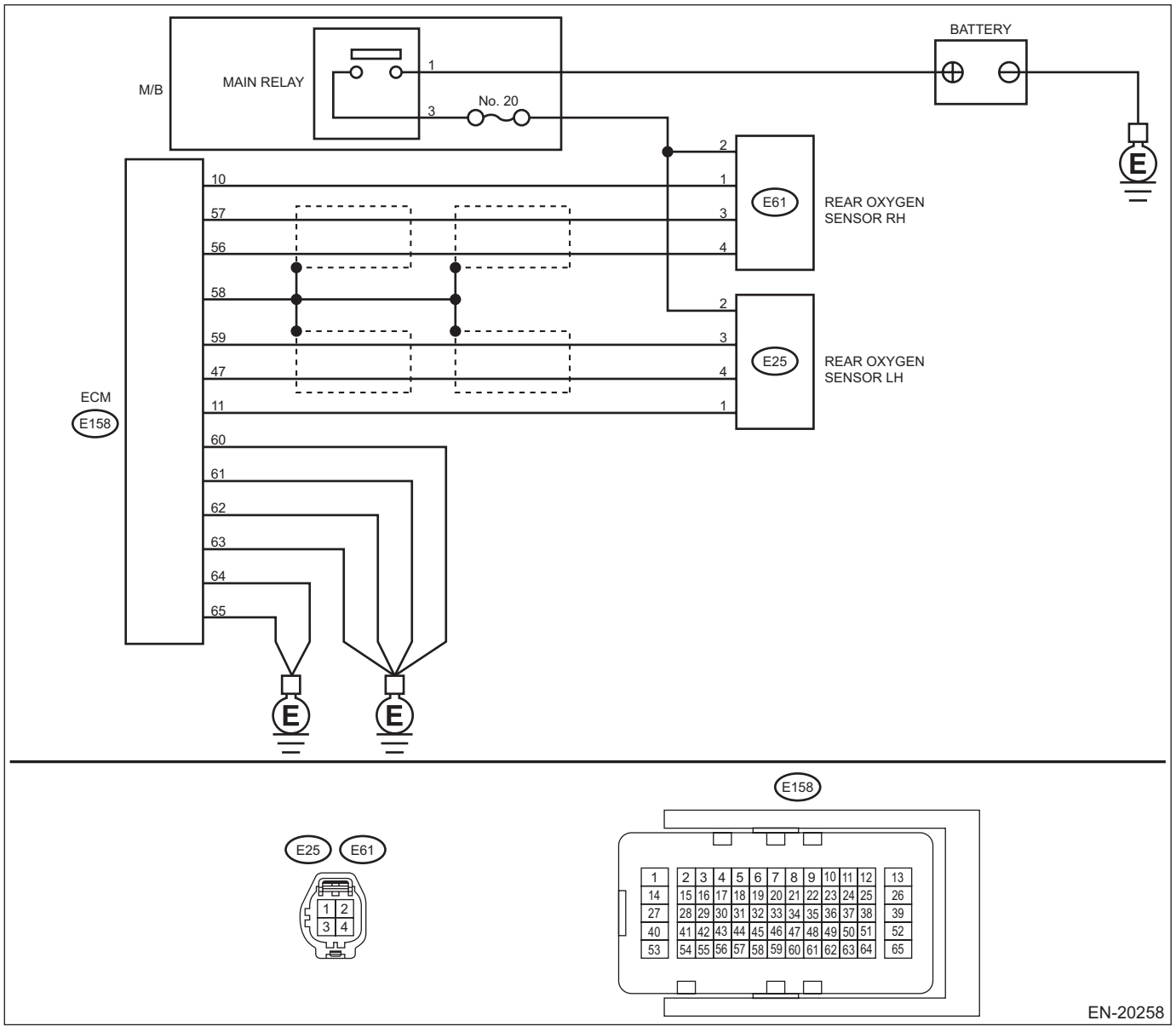

	Step	Check	Yes	No
1	**CHECK REAR OXYGEN SENSOR DATA.** 1) Warm up the engine until engine coolant temperature is higher than 75°C (167°F), and rapidly reduce the engine speed from 3,000 rpm. 2) Read the value of «Front O2 Sensor #1» using the Subaru Select Monitor or a general scan tool. NOTE: • Subaru Select Monitor For detailed operation procedures, refer to "Read Current Data For Engine". <Ref. to EN(H6DO)(diag)-50, Subaru Select Monitor.> • General scan tool For detailed operation procedures, refer to the general scan tool operation manual.	Is the value of «Front O2 Sensor #1» 0.250 V or less?	Go to step **5**.	Go to step **2**.
2	**CHECK REAR OXYGEN SENSOR CONNECTOR AND COUPLING CONNECTOR.**	Has water entered the connector?	Completely remove any water inside.	Go to step **3**.
3	**CHECK HARNESS BETWEEN ECM AND REAR OXYGEN SENSOR CONNECTOR.** 1) Turn the ignition switch to OFF. 2) Disconnect the connector from ECM and rear oxygen sensor. 3) Measure the resistance of harness between ECM connector and rear oxygen sensor connector. ***Connector & terminal*** ***(E158) No. 57 — (E61) No. 3:*** ***(E158) No. 56 — (E61) No. 4:***	Is the resistance less than 1 Ω?	Go to step **4**.	Repair the harness and connector. NOTE: In this case, repair the following item: • Open circuit in harness between ECM connector and rear oxygen sensor connector • Poor contact of coupling connector
4	**CHECK HARNESS BETWEEN ECM AND REAR OXYGEN SENSOR CONNECTOR.** 1) Connect the connector to ECM. 2) Turn the ignition switch to ON. 3) Measure the voltage between rear oxygen sensor connector and chassis ground. ***Connector & terminal*** ***(E61) No. 3 (+) — Chassis ground (–):***	Is the voltage 1.78 V or less?	Replace the rear oxygen sensor. <Ref. to FU(H6DO)-81, Rear Oxygen Sensor.>	Repair the harness and connector. NOTE: In this case, repair the following item: • Open circuit in harness between ECM connector and rear oxygen sensor connector • Poor contact of ECM connector • Poor contact of coupling connector
5	**CHECK EXHAUST SYSTEM.** Check exhaust system parts. NOTE: Check the following items. • Looseness and improper fitting of exhaust system parts • Damage (crack, hole etc.) of parts • Loose part and improper installation between front oxygen (A/F) sensor and rear oxygen sensor	Is there any fault in exhaust system?	Repair or replace faulty parts.	Replace the rear oxygen sensor. <Ref. to FU(H6DO)-81, Rear Oxygen Sensor.>

1. OUTLINE OF DIAGNOSIS

Detect for NG of the rear oxygen sensor continuity.
Judge as NG if the rear oxygen sensor voltage is not within the possible range.

2. COMPONENT DESCRIPTION

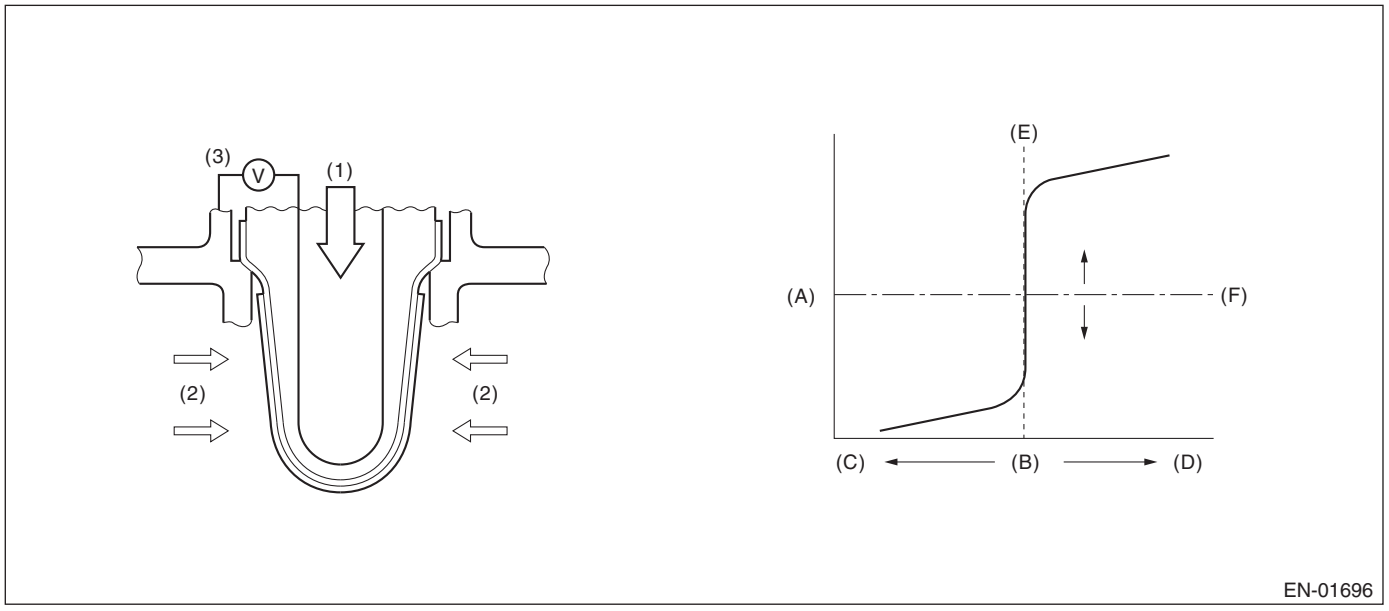

(A) Electromotive force
(B) Air fuel ratio
(C) Lean
(D) Rich
(E) Theoretical air fuel ratio
(F) Comparative voltage

(1) Atmosphere
(2) Exhaust gas
(3) Electromotive force

3. EXECUTION CONDITION

Secondary Parameters	Execution condition
Battery voltage	≥ 10.9 V

4. GENERAL DRIVING CYCLE

Always perform the diagnosis continuously.

5. DIAGNOSTIC METHOD

If the duration of time while the following conditions are met is longer than the time indicated, judge as NG.

Judgment Value

Malfunction Criteria	Threshold Value
Judgment 1: Short to battery	
Secondary oxygen sensor offset signal	> 1.68 V
Judgment 2: Short to battery	
Secondary oxygen sensor signal	> 2.73 V
Judgment 3: Out of range	
Secondary oxygen sensor output voltage	> 1.2 V

Time Needed for Diagnosis: 1000 ms
Malfunction Indicator Light Illumination: Illuminates when malfunction occurs in 2 continuous driving cycles.

AY:DTC P013A O2 SENSOR SLOW RESPONSE - RICH TO LEAN BANK 1 SENSOR 2

DTC DETECTING CONDITION:

Detected when two consecutive driving cycles with fault occur.

CAUTION:

After servicing or replacing faulty parts, perform Clear Memory Mode <Ref. to EN(H6DO)(diag)-85, OPERATION, Clear Memory Mode.>, and Inspection Mode <Ref. to EN(H6DO)(diag)-69, PROCEDURE, Inspection Mode.>.

WIRING DIAGRAM:

- Engine Electrical System ENGINE TYPE EZ (WITHOUT PUSH BUTTON START) <Ref. to WI-198, ENGINE TYPE EZ (WITHOUT PUSH BUTTON START), WIRING DIAGRAM, Engine Electrical System.>
- Engine Electrical System ENGINE TYPE EZ (WITH PUSH BUTTON START) <Ref. to WI-214, ENGINE TYPE EZ (WITH PUSH BUTTON START), WIRING DIAGRAM, Engine Electrical System.>

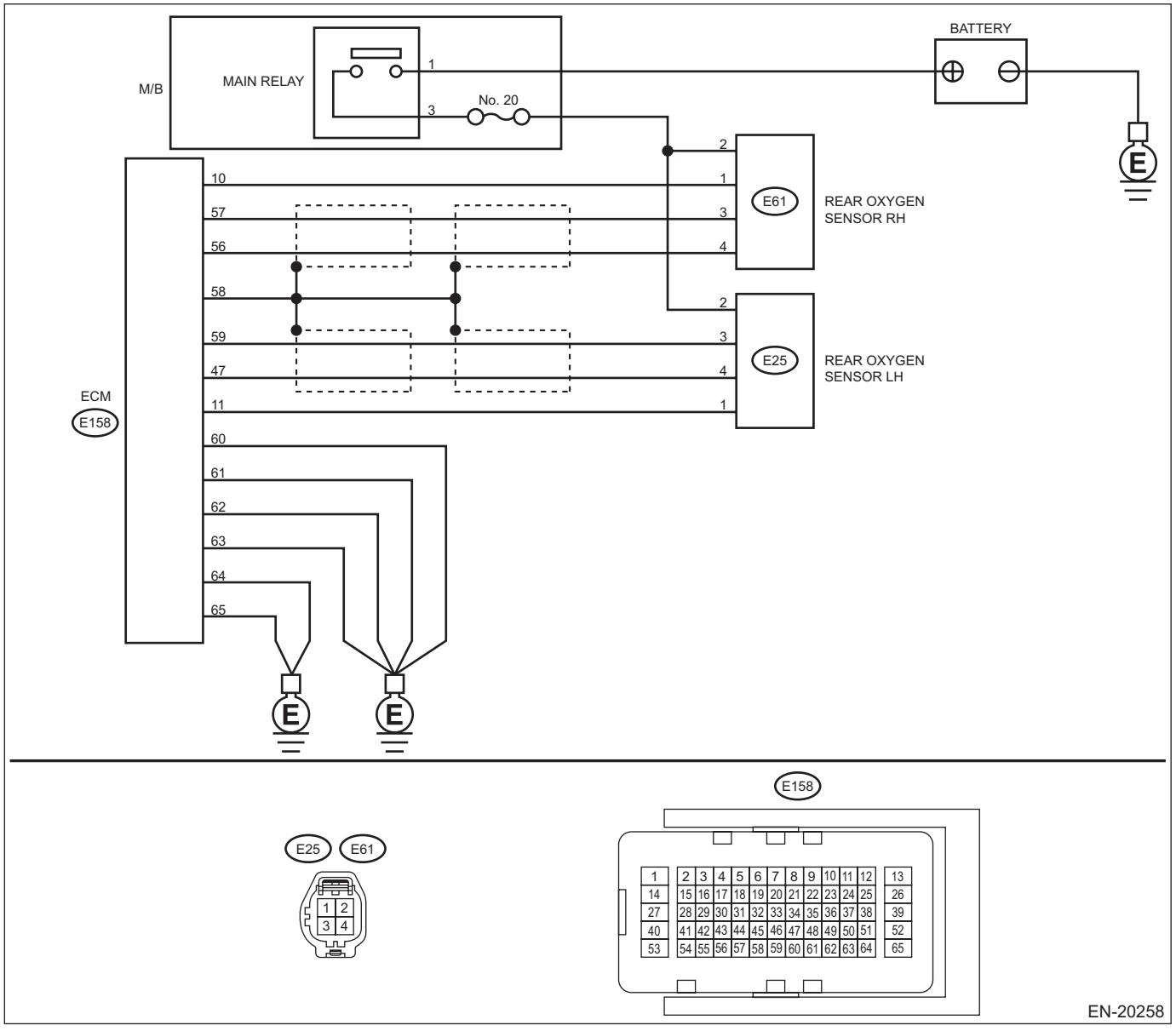

	Step	Check	Yes	No
1	**CHECK HARNESS BETWEEN ECM AND REAR OXYGEN SENSOR CONNECTOR.** 1) Turn the ignition switch to OFF. 2) Disconnect the connector from ECM and rear oxygen sensor. 3) Measure the resistance of harness between ECM connector and rear oxygen sensor connector. ***Connector & terminal*** ***(E158) No. 57 — (E61) No. 3:***	Is the resistance less than 1 Ω?	Go to step **2**.	Repair the harness and connector. NOTE: In this case, repair the following item: • Open circuit in harness between ECM connector and rear oxygen sensor connector • Poor contact of coupling connector
2	**CHECK HARNESS BETWEEN ECM AND REAR OXYGEN SENSOR CONNECTOR.** Measure the resistance between rear oxygen sensor connector and chassis ground. ***Connector & terminal*** ***(E61) No. 3 — Chassis ground:***	Is the resistance 1 MΩ or more?	Go to step **3**.	Repair the short circuit to ground in harness between ECM connector and rear oxygen sensor connector.
3	**CHECK REAR OXYGEN SENSOR.** Measure the resistance between rear oxygen sensor terminals. ***Terminals*** ***No. 3 — No. 4:***	Is the resistance less than 1 Ω?	Replace the rear oxygen sensor. <Ref. to FU(H6DO)-81, Rear Oxygen Sensor.>	Even if DTC is detected, the circuit has returned to a normal condition at this time. Reproduce the failure, and then perform the diagnosis again. NOTE: In this case, temporary poor contact of connector, temporary open or short circuit of harness may be the cause.

1. OUTLINE OF DIAGNOSIS

Detect the slow response of rich → lean for rear oxygen sensor output.
When the deceleration fuel cut has occurred, detect the trouble by calculating the time when the rear oxygen sensor output passes through the predetermined range of voltages.
Judge as NG when the response time is larger than the threshold value.

2. COMPONENT DESCRIPTION

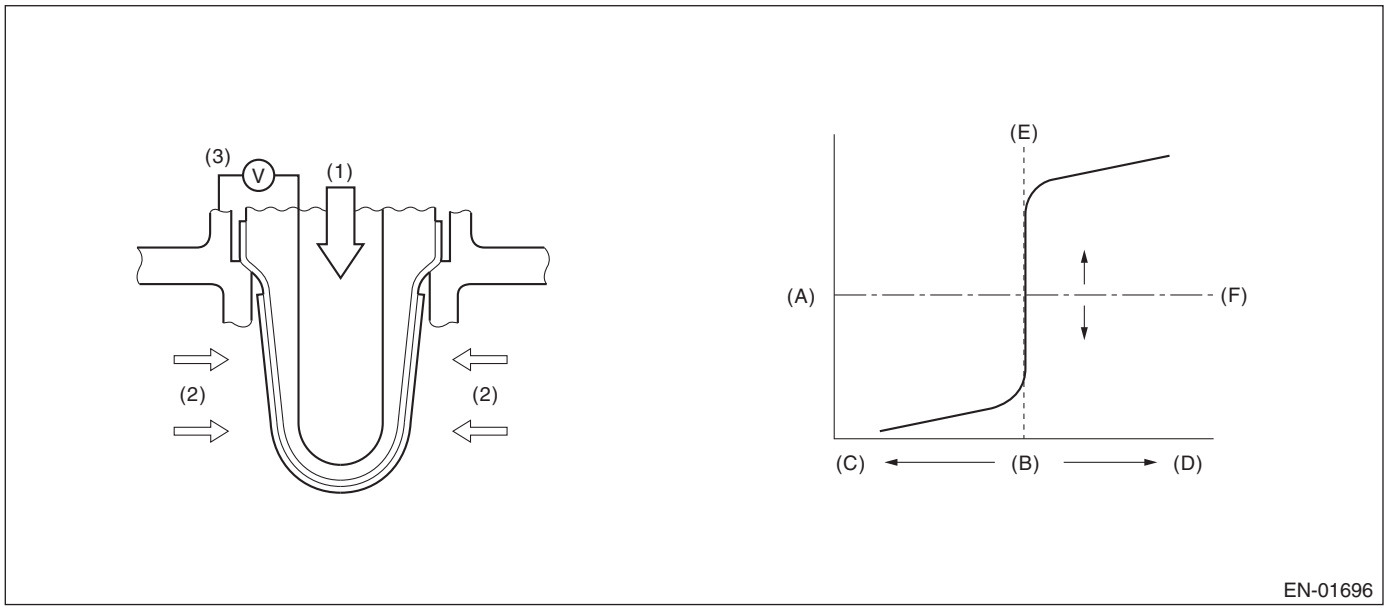

(A) Electromotive force
(B) Air fuel ratio
(C) Lean
(D) Rich
(E) Theoretical air fuel ratio
(F) Comparative voltage

(1) Atmosphere
(2) Exhaust gas
(3) Electromotive force

3. EXECUTION CONDITION

Secondary Parameters	Execution condition
Battery voltage	> 10.9 V
Current calculation time of the rear oxygen sensor heater after starting	≥ 180000 ms
Rear oxygen sensor voltage when fuel cut starts	≥ 0.55 V
Estimated temperature of rear oxygen sensor element when fuel cut starts	≥ 500 °C (932 °F)
Status of fuel system	= Fuel cut

4. GENERAL DRIVING CYCLE

Perform the diagnosis only once when the deceleration fuel cut is activated from a high and constant speed driving.

5. DIAGNOSTIC METHOD

Detect the trouble by calculating the response time of the rear oxygen sensor during fuel cut.

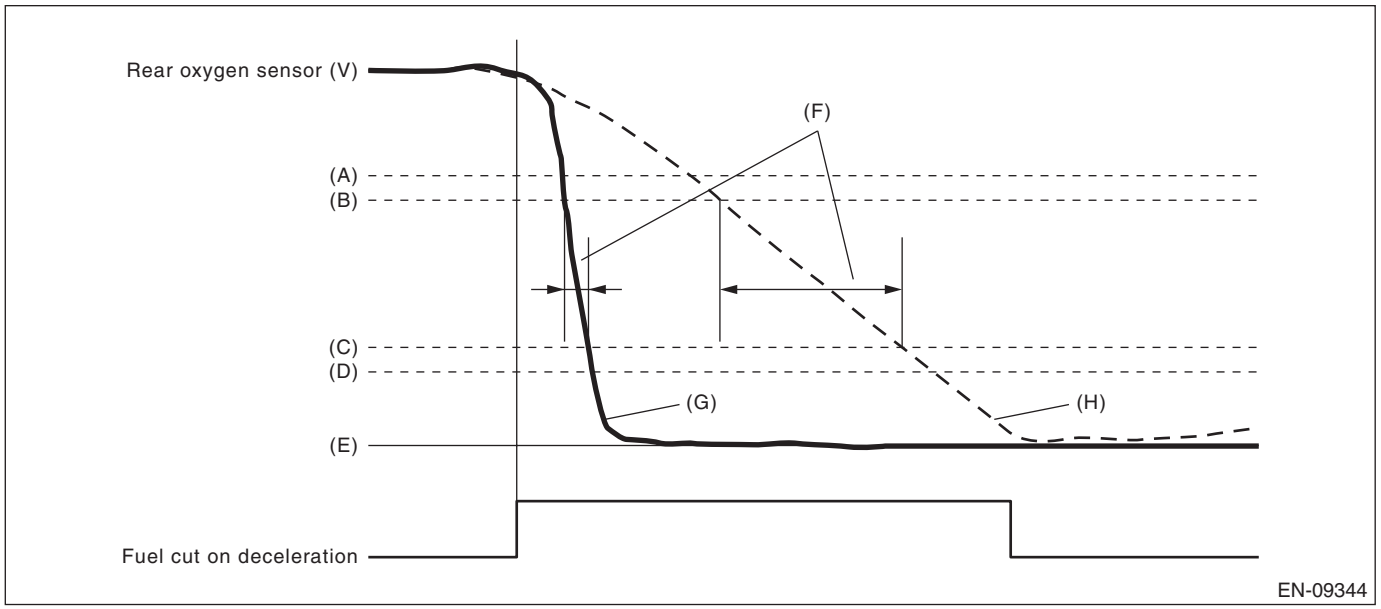

(A) 0.55 V
(B) 0.50 V
(C) 0.20 V
(D) 0.15 V
(E) 0 V
(F) Diagnostic parameter
(G) Normal
(H) Malfunction

Judge as NG when the following conditions are established.

Judgment Value

Malfunction Criteria	Threshold Value
Time needed for rear oxygen sensor voltage to change from 0.5 V to 0.2 V	> 491 ms

Time Needed for Diagnosis: 5000 ms
Malfunction Indicator Light Illumination: Illuminates when malfunction occurs in 2 continuous driving cycles.

AZ:DTC P013B O2 SENSOR SLOW RESPONSE - LEAN TO RICH BANK 1 SENSOR 2

NOTE:
For the diagnostic procedure, refer to DTC P013A. <Ref. to EN(H6DO)(diag)-240, DTC P013A O2 SENSOR SLOW RESPONSE - RICH TO LEAN BANK 1 SENSOR 2, Diagnostic Procedure with Diagnostic Trouble Code (DTC).>

1. OUTLINE OF DIAGNOSIS

Detect the slow response of lean → rich for rear oxygen sensor output.
After the deceleration fuel cut has occurred, detect the trouble by calculating the time when the rear oxygen sensor output passes through the predetermined range of voltages.
Judge as NG when the response time is larger than the threshold value.

2. COMPONENT DESCRIPTION

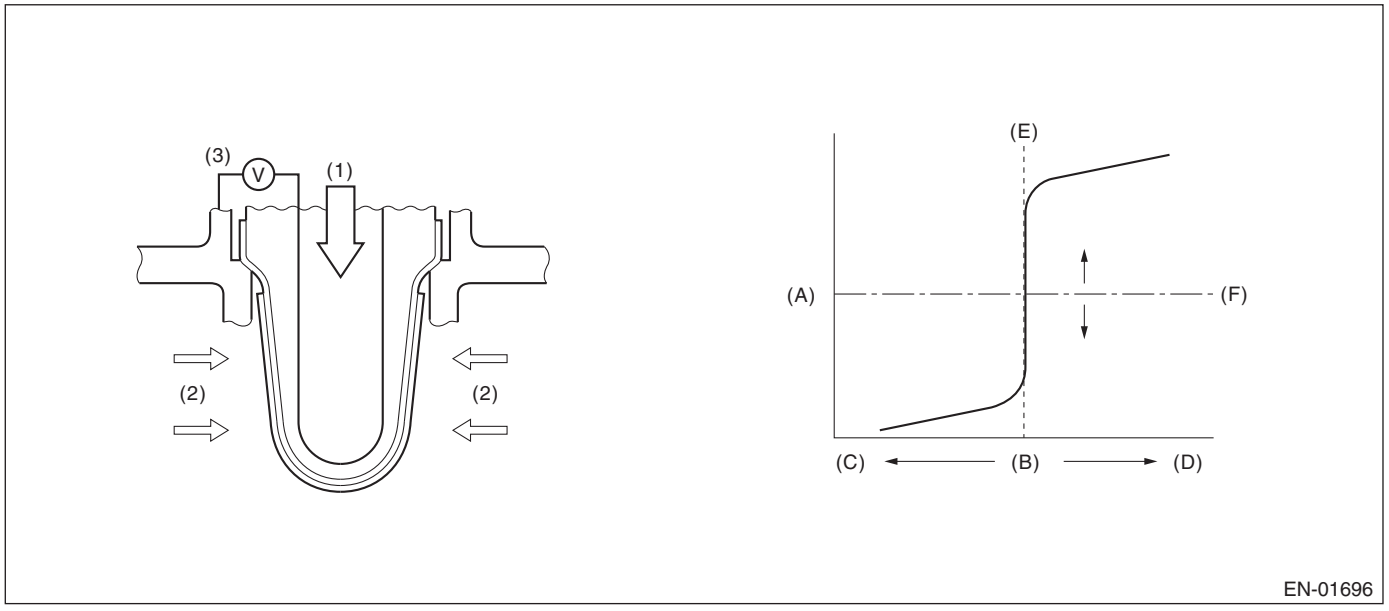

(A)	Electromotive force	(B)	Air fuel ratio	(C)	Lean
(D)	Rich	(E)	Theoretical air fuel ratio	(F)	Comparative voltage
(1)	Atmosphere	(2)	Exhaust gas	(3)	Electromotive force

3. EXECUTION CONDITION

Secondary Parameters	Execution condition
Battery voltage	> 10.9 V
Front oxygen (A/F) sensor closed loop control	Operation
((Fuel system status for time) followed by Fuel system status)	= Fuel cut ≥ 5000 ms ≠ Fuel cut

4. GENERAL DRIVING CYCLE

Perform diagnosis only once after recovering from a deceleration fuel cut continued for more than predetermined time.

5. DIAGNOSTIC METHOD

Detect the trouble by calculating the response time of the rear oxygen sensor after fuel cut.

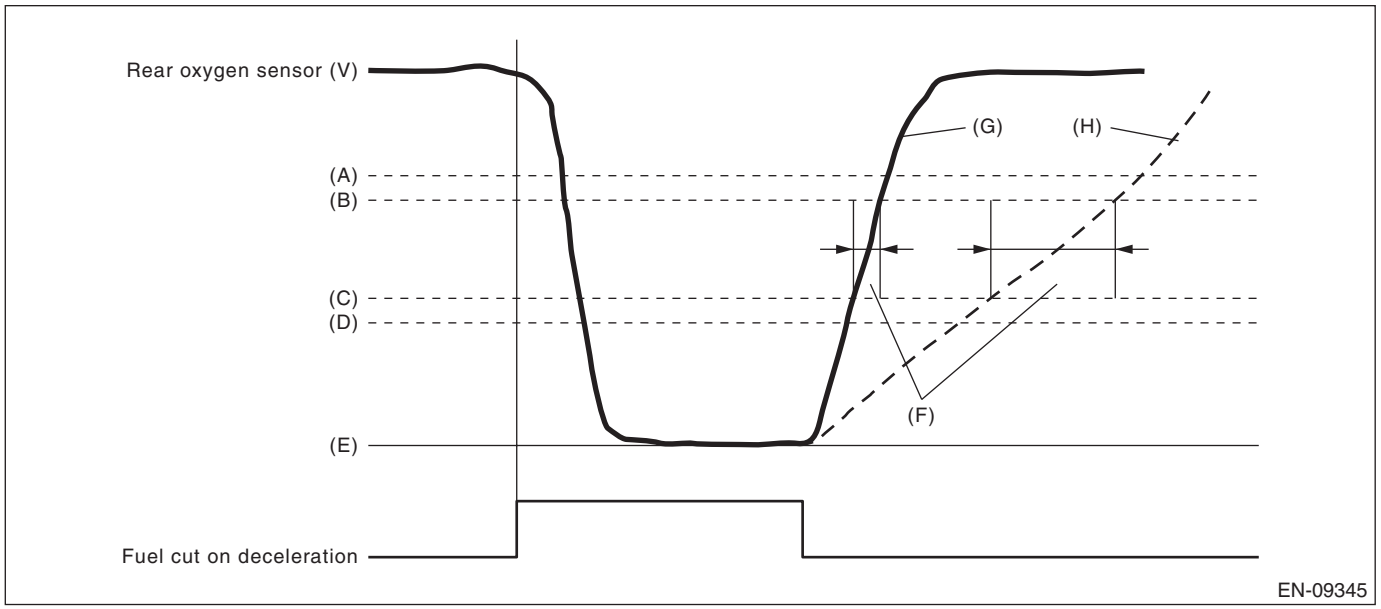

(A) 0.55 V
(B) 0.50 V
(C) 0.30 V
(D) 0.25 V
(E) 0 V
(F) Diagnostic parameter
(G) Normal
(H) Malfunction

Judge as NG when the following conditions are established.

Judgment Value

Malfunction Criteria	Threshold Value
Time when rear oxygen sensor voltage changed from 0.3 V to 0.5 V	> 4000 ms

Time Needed for Diagnosis: 4000 ms
Malfunction Indicator Light Illumination: Illuminates when malfunction occurs in 2 continuous driving cycles.

BA:DTC P013C O2 SENSOR SLOW RESPONSE - RICH TO LEAN BANK 2 SENSOR 2

DTC DETECTING CONDITION:

Detected when two consecutive driving cycles with fault occur.

CAUTION:

After servicing or replacing faulty parts, perform Clear Memory Mode <Ref. to EN(H6DO)(diag)-85, OPERATION, Clear Memory Mode.>, and Inspection Mode <Ref. to EN(H6DO)(diag)-69, PROCEDURE, Inspection Mode.>.

WIRING DIAGRAM:

- Engine Electrical System ENGINE TYPE EZ (WITHOUT PUSH BUTTON START) <Ref. to WI-198, ENGINE TYPE EZ (WITHOUT PUSH BUTTON START), WIRING DIAGRAM, Engine Electrical System.>
- Engine Electrical System ENGINE TYPE EZ (WITH PUSH BUTTON START) <Ref. to WI-214, ENGINE TYPE EZ (WITH PUSH BUTTON START), WIRING DIAGRAM, Engine Electrical System.>

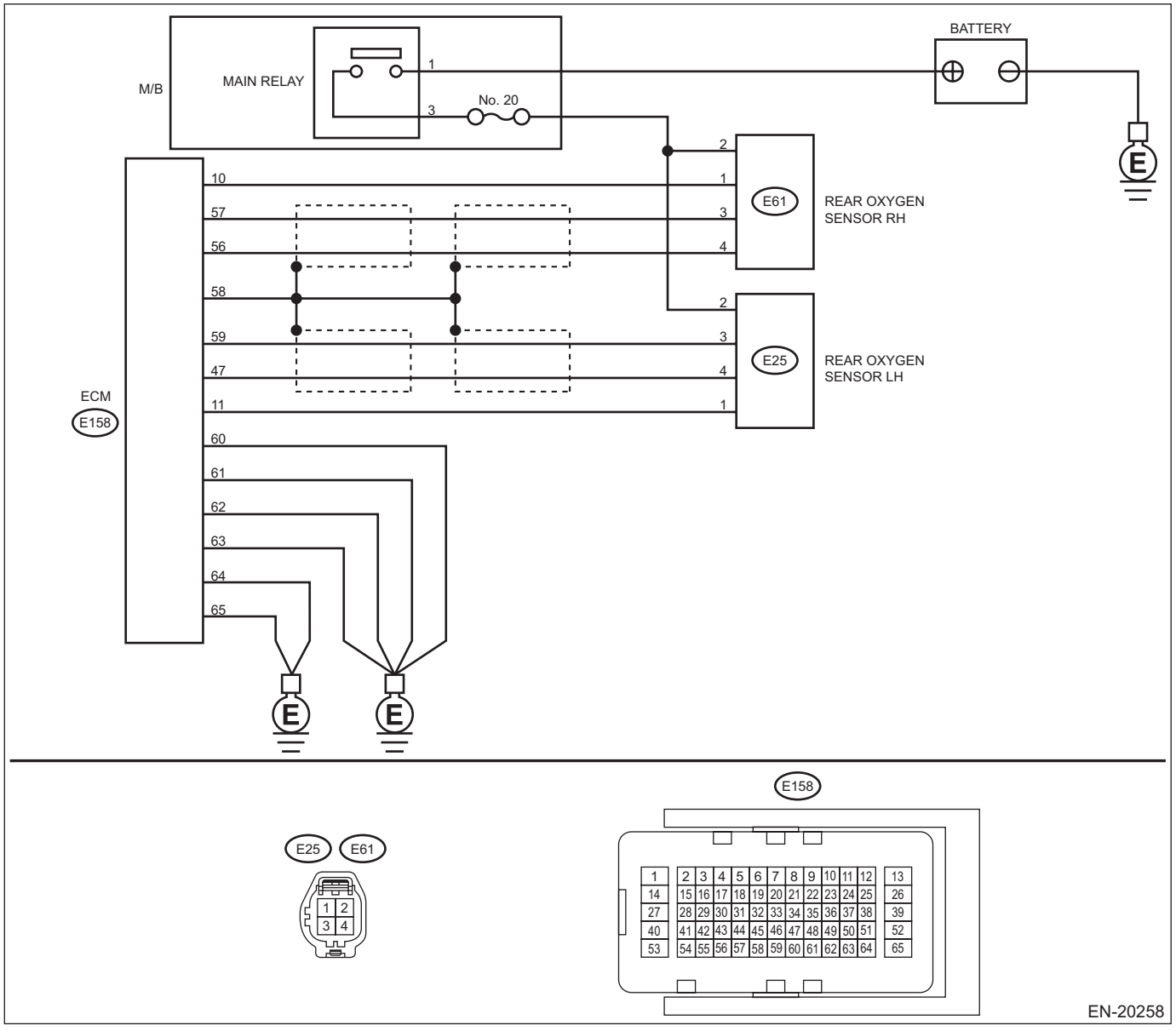

	Step	Check	Yes	No
1	**CHECK HARNESS BETWEEN ECM AND REAR OXYGEN SENSOR CONNECTOR.** 1) Turn the ignition switch to OFF. 2) Disconnect the connector from ECM and rear oxygen sensor. 3) Measure the resistance of harness between ECM connector and rear oxygen sensor connector. ***Connector & terminal*** ***(E158) No. 59 — (E25) No. 3:***	Is the resistance less than 1 Ω?	Go to step **2**.	Repair the harness and connector. NOTE: In this case, repair the following item: • Open circuit in harness between ECM connector and rear oxygen sensor connector • Poor contact of coupling connector
2	**CHECK HARNESS BETWEEN ECM AND REAR OXYGEN SENSOR CONNECTOR.** Measure the resistance between rear oxygen sensor connector and chassis ground. ***Connector & terminal*** ***(E25) No. 3 — Chassis ground:***	Is the resistance 1 MΩ or more?	Go to step **3**.	Repair the short circuit to ground in harness between ECM connector and rear oxygen sensor connector.
3	**CHECK REAR OXYGEN SENSOR.** Measure the resistance between rear oxygen sensor terminals. ***Terminals*** ***No. 3 — No. 4:***	Is the resistance less than 1 Ω?	Replace the rear oxygen sensor. <Ref. to FU(H6DO)-81, Rear Oxygen Sensor.>	Even if DTC is detected, the circuit has returned to a normal condition at this time. Reproduce the failure, and then perform the diagnosis again. NOTE: In this case, temporary poor contact of connector, temporary open or short circuit of harness may be the cause.

1. OUTLINE OF DIAGNOSIS

NOTE:
For the detection standard, refer to DTC P013A. <Ref. to EN(H6DO)(diag)-240, DTC P013A O2 SENSOR SLOW RESPONSE - RICH TO LEAN BANK 1 SENSOR 2, Diagnostic Procedure with Diagnostic Trouble Code (DTC).>

BB:DTC P013D O2 SENSOR SLOW RESPONSE - LEAN TO RICH BANK 2 SENSOR 2

NOTE:
For the diagnostic procedure, refer to DTC P013C. <Ref. to EN(H6DO)(diag)-246, DTC P013C O2 SENSOR SLOW RESPONSE - RICH TO LEAN BANK 2 SENSOR 2, Diagnostic Procedure with Diagnostic Trouble Code (DTC).>

1. OUTLINE OF DIAGNOSIS

NOTE:
For the detection standard, refer to DTC P013B. <Ref. to EN(H6DO)(diag)-244, DTC P013B O2 SENSOR SLOW RESPONSE - LEAN TO RICH BANK 1 SENSOR 2, Diagnostic Procedure with Diagnostic Trouble Code (DTC).>

BC:DTC P013E O2 SENSOR DELAYED RESPONSE - RICH TO LEAN BANK 1 SENSOR 2

NOTE:
For the diagnostic procedure, refer to DTC P013A. <Ref. to EN(H6DO)(diag)-240, DTC P013A O2 SENSOR SLOW RESPONSE - RICH TO LEAN BANK 1 SENSOR 2, Diagnostic Procedure with Diagnostic Trouble Code (DTC).>

1. OUTLINE OF DIAGNOSIS

Detect the delayed response of rear oxygen sensor output for rich → lean.
After the deceleration fuel cut has started, detect the trouble by calculating the time when the rear oxygen sensor output decreases to the predetermined voltages.
Judge as NG when the response time is larger than the threshold value.

2. COMPONENT DESCRIPTION

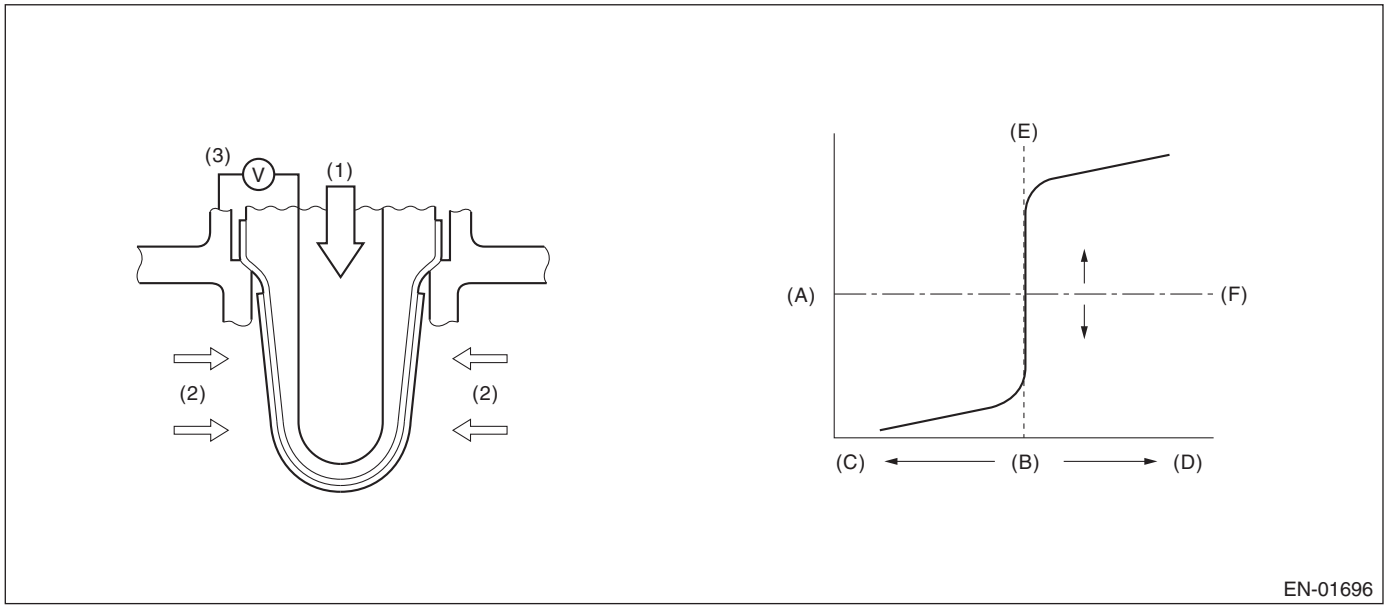

(A)	Electromotive force	(B)	Air fuel ratio	(C)	Lean
(D)	Rich	(E)	Theoretical air fuel ratio	(F)	Comparative voltage
(1)	Atmosphere	(2)	Exhaust gas	(3)	Electromotive force

3. EXECUTION CONDITION

Secondary Parameters	Execution condition
Battery voltage	> 10.9 V
Rear oxygen sensor voltage when fuel cut starts	≥ 0.55 V
Estimated temperature of rear oxygen sensor element when fuel cut starts	≥ 500 °C (932 °F)
Status of fuel system	= Fuel cut

4. GENERAL DRIVING CYCLE

Perform the diagnosis only once when the deceleration fuel cut is activated from a high and constant speed driving.

5. DIAGNOSTIC METHOD

Detect the trouble by calculating the time from the beginning of the fuel cut to the beginning of the rear oxygen sensor voltage starting to drop.

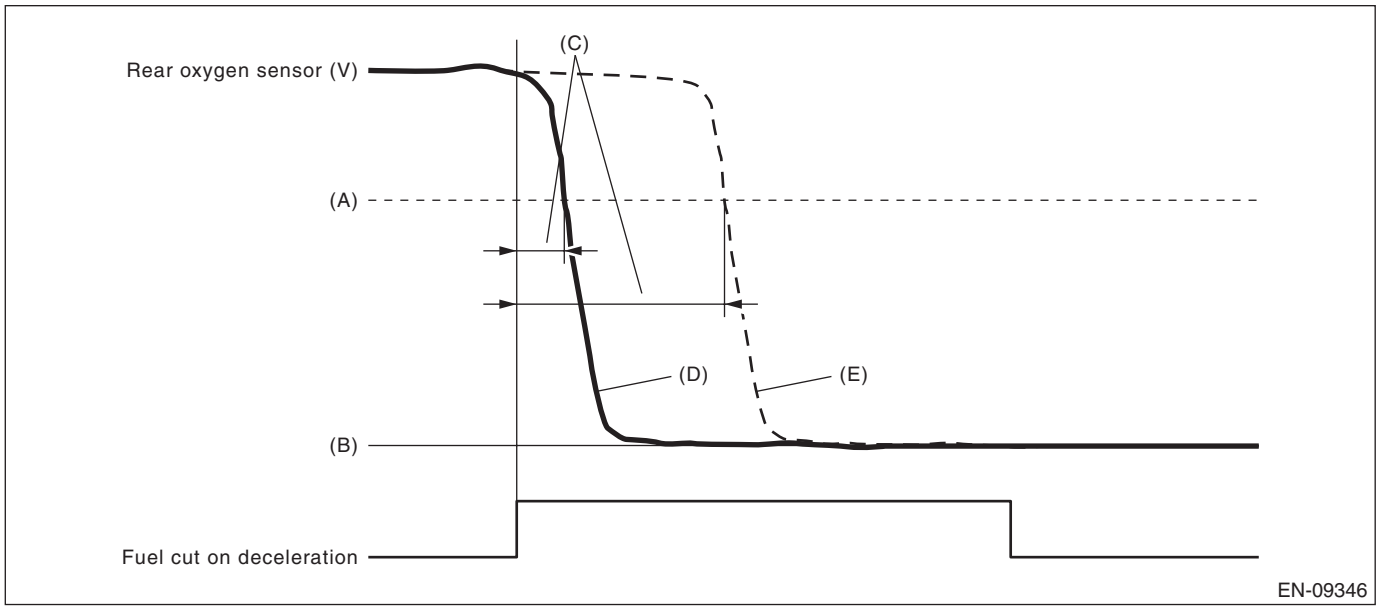

(A) 0.5 V
(B) 0 V
(C) Diagnostic parameter
(D) Normal
(E) Malfunction

Judge as NG when the following conditions are established.

Judgment Value

Malfunction Criteria	Threshold Value
Time when rear oxygen sensor voltage changed to 0.5 V after the fuel cut started	> 4000 ms

Time Needed for Diagnosis: 5000 ms
Malfunction Indicator Light Illumination: Illuminates when malfunction occurs in 2 continuous driving cycles.

BD:DTC P013F O2 SENSOR DELAYED RESPONSE - LEAN TO RICH BANK 1 SENSOR 2

NOTE:
For the diagnostic procedure, refer to DTC P013A. <Ref. to EN(H6DO)(diag)-240, DTC P013A O2 SENSOR SLOW RESPONSE - RICH TO LEAN BANK 1 SENSOR 2, Diagnostic Procedure with Diagnostic Trouble Code (DTC).>

1. OUTLINE OF DIAGNOSIS

Detect the delayed response of rear oxygen sensor output for lean → rich.
After the deceleration fuel cut has completed, detect the trouble by calculating the time when the rear oxygen sensor output increases to the predetermined voltages.
Judge as NG when the response time is larger than the threshold value.

2. COMPONENT DESCRIPTION

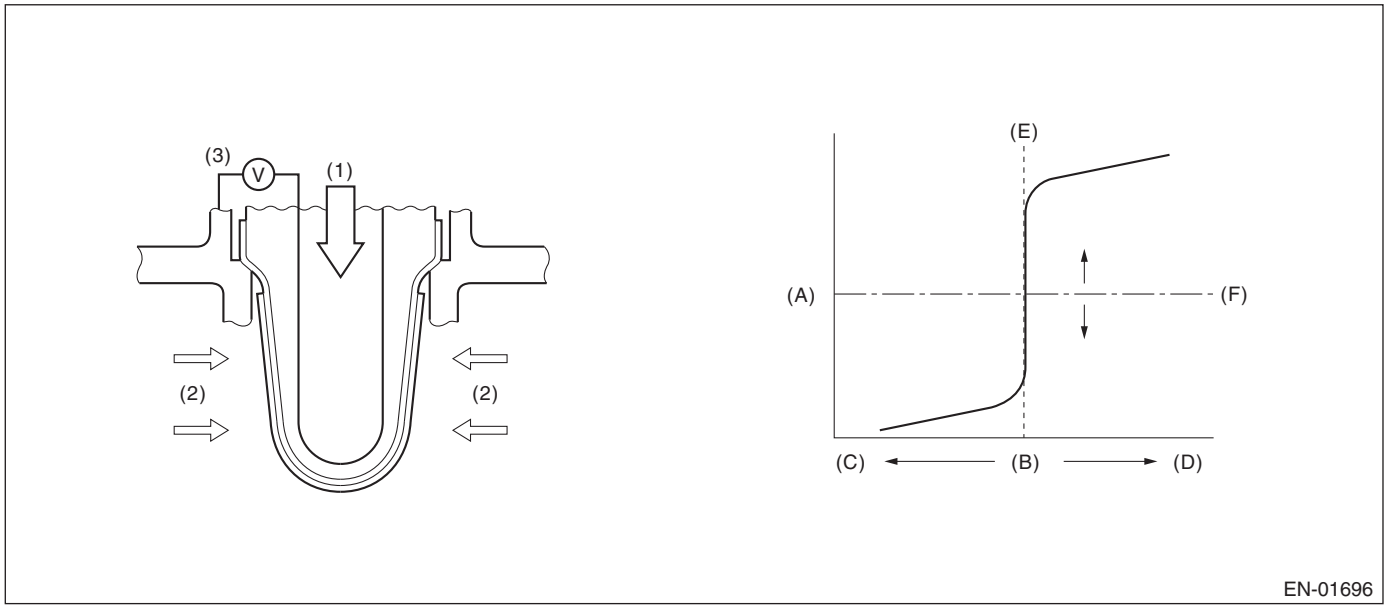

(A)	Electromotive force	(B)	Air fuel ratio	(C)	Lean
(D)	Rich	(E)	Theoretical air fuel ratio	(F)	Comparative voltage
(1)	Atmosphere	(2)	Exhaust gas	(3)	Electromotive force

3. EXECUTION CONDITION

Secondary Parameters	Execution condition
Battery voltage	> 10.9 V
Front oxygen (A/F) sensor closed loop control	Operation
Rear oxygen sensor voltage when fuel cut has completed	< 0.15 V
Estimated element temperature of rear oxygen sensor when fuel cut has completed	≥ 500 °C (932 °F)
Fuel cut time	≥ 5000 ms

4. GENERAL DRIVING CYCLE

Perform diagnosis only once when recovering from the deceleration fuel cut continued for more than predetermined time with the rear oxygen sensor warmed up sufficiently.

5. DIAGNOSTIC METHOD

Detect the trouble by calculating the time from the completion of the fuel cut to the beginning of the rear oxygen sensor voltage starting to rise.

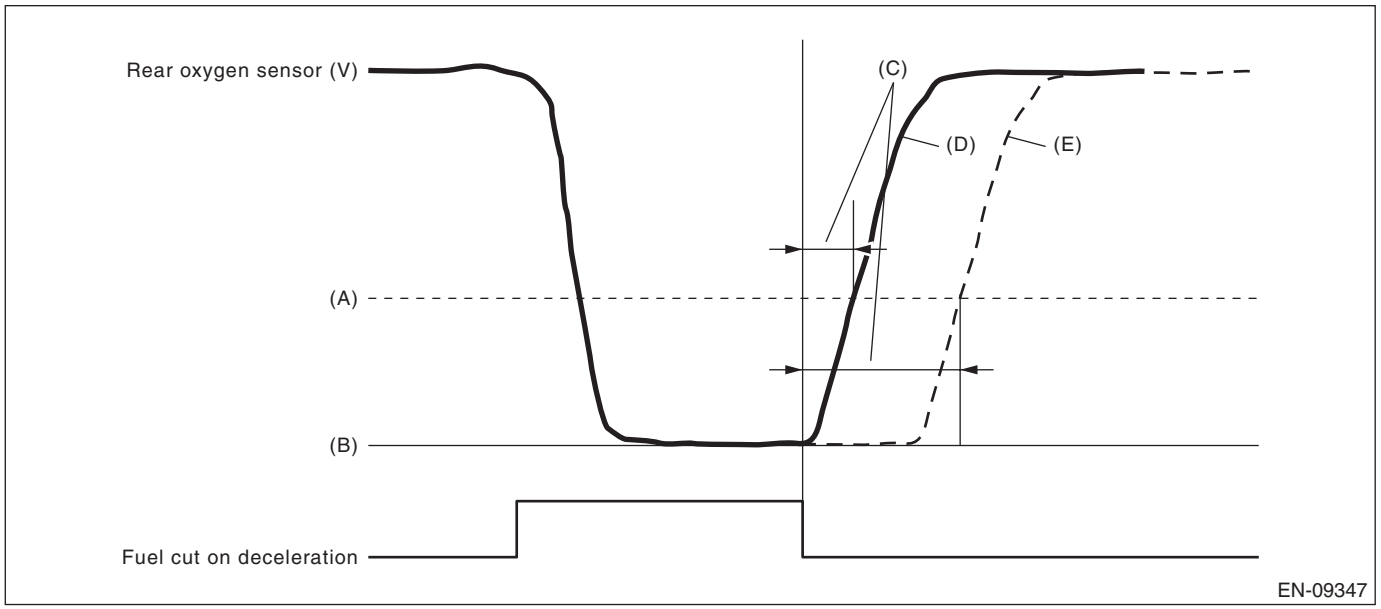

(A) 0.3 V
(B) 0 V
(C) Diagnostic parameter
(D) Normal
(E) Malfunction

Judge as NG when the following conditions are established.

Judgment Value

Malfunction Criteria	Threshold Value
Time needed for the rear oxygen sensor voltage to change up to 0.3 V after the fuel cut was deactivated	> 3750 time(s) × 32 ms

Time Needed for Diagnosis: 3750 time(s) × 32 ms
Malfunction Indicator Light Illumination: Illuminates when malfunction occurs in 2 continuous driving cycles.

BE:DTC P0141 O2 SENSOR HEATER CIRCUIT BANK 1 SENSOR 2

NOTE:
Refer to DTC P0037 for diagnostic procedure. <Ref. to EN(H6DO)(diag)-155, DTC P0037 A/F / O2 HEATER CONTROL CIRCUIT LOW BANK 1 SENSOR 2, Diagnostic Procedure with Diagnostic Trouble Code (DTC).>

1. OUTLINE OF DIAGNOSIS

Detect malfunction of the rear oxygen sensor heater.
Judge as NG if it is determined that the rear oxygen sensor impedance is large by observing the engine conditions.

2. COMPONENT DESCRIPTION

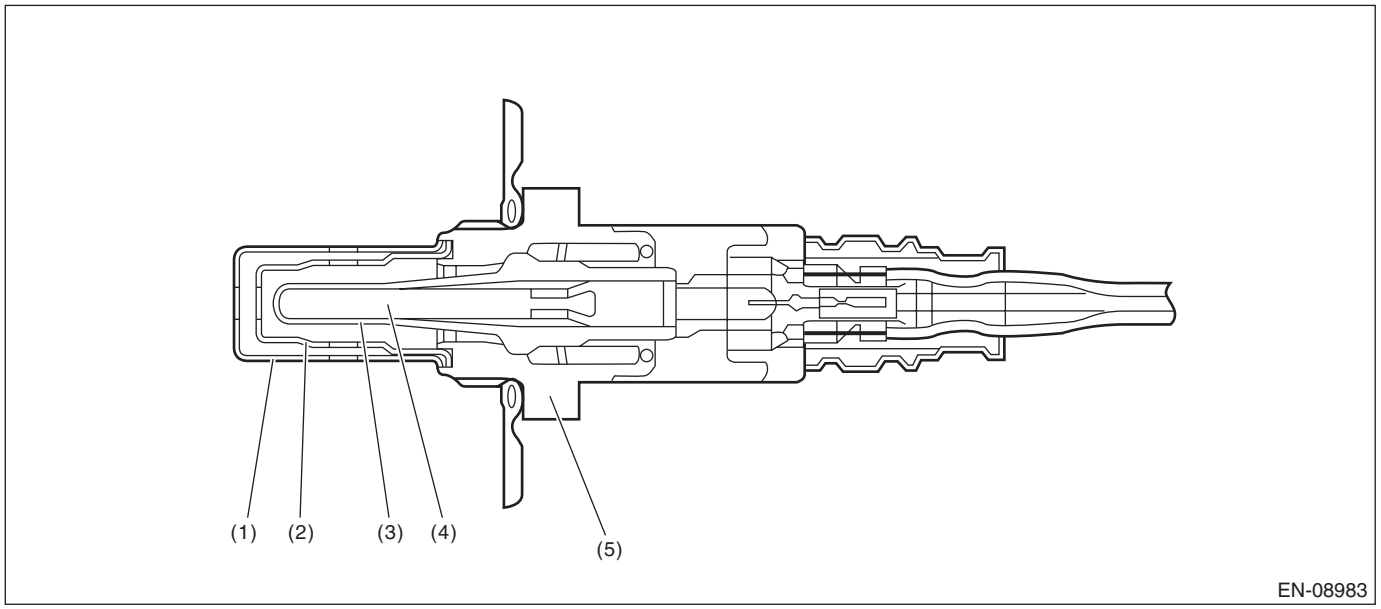

(1) Element cover (outer)
(2) Element cover (inner)
(3) Sensor element
(4) Ceramic heater
(5) Sensor housing

3. EXECUTION CONDITION

Secondary Parameters	Execution condition
Battery voltage	≥ 10.9 V
Elapsed time after starting the engine	≥ 1000 ms
A/F sensor element impedance	≤ 82 Ω
Rear oxygen sensor heater control duty	< 70 %
A/F sensor heater control duty	≤ 75 %

4. GENERAL DRIVING CYCLE

Perform the diagnosis continuously after the enable conditions have been established.

5. DIAGNOSTIC METHOD

If the duration of time while the following conditions are met is longer than the time indicated, judge as NG.

Judgment Value

Malfunction Criteria	Threshold Value
Output voltage	< Battery voltage × 0.91

Time Needed for Diagnosis: 4 ms × 2500 time(s)
Malfunction Indicator Light Illumination: Illuminates when malfunction occurs in 2 continuous driving cycles.

BF:DTC P014A O2 SENSOR DELAYED RESPONSE - RICH TO LEAN BANK 2 SENSOR 2

NOTE:
For the diagnostic procedure, refer to DTC P013C. <Ref. to EN(H6DO)(diag)-246, DTC P013C O2 SENSOR SLOW RESPONSE - RICH TO LEAN BANK 2 SENSOR 2, Diagnostic Procedure with Diagnostic Trouble Code (DTC).>

1. OUTLINE OF DIAGNOSIS

NOTE:
For the detection standard, refer to DTC P013E. <Ref. to EN(H6DO)(diag)-248, DTC P013E O2 SENSOR DELAYED RESPONSE - RICH TO LEAN BANK 1 SENSOR 2, Diagnostic Procedure with Diagnostic Trouble Code (DTC).>

BG:DTC P014B O2 SENSOR DELAYED RESPONSE - LEAN TO RICH BANK 2 SENSOR 2

NOTE:
For the diagnostic procedure, refer to DTC P013C. <Ref. to EN(H6DO)(diag)-246, DTC P013C O2 SENSOR SLOW RESPONSE - RICH TO LEAN BANK 2 SENSOR 2, Diagnostic Procedure with Diagnostic Trouble Code (DTC).>

1. OUTLINE OF DIAGNOSIS

NOTE:
For the detection standard, refer to DTC P013F. <Ref. to EN(H6DO)(diag)-250, DTC P013F O2 SENSOR DELAYED RESPONSE - LEAN TO RICH BANK 1 SENSOR 2, Diagnostic Procedure with Diagnostic Trouble Code (DTC).>

BH:DTC P014C A/F / O2 SENSOR SLOW RESPONSE - RICH TO LEAN BANK 1 SENSOR 1

DTC DETECTING CONDITION:
Detected when two consecutive driving cycles with fault occur.

CAUTION:
After servicing or replacing faulty parts, perform Clear Memory Mode <Ref. to EN(H6DO)(diag)-85, OPERATION, Clear Memory Mode.>, and Inspection Mode <Ref. to EN(H6DO)(diag)-69, PROCEDURE, Inspection Mode.>.

	Step	Check	Yes	No
1	**CHECK EXHAUST SYSTEM.** NOTE: Check the following items. • Loose installation of front portion of exhaust pipe onto cylinder heads • Loose connection between front exhaust pipe and front catalytic converter • Damage of exhaust pipe resulting in a hole	Is there any fault in exhaust system?	Repair the exhaust system.	Replace the front oxygen (A/F) sensor. <Ref. to FU(H6DO)-78, Front Oxygen (A/F) Sensor.>

1. OUTLINE OF DIAGNOSIS

Detect the slow response of front oxygen (A/F) sensor.
For diagnosis, detect the trouble by processing the λ waveform in normal driving without forcibly changing the target air fuel ratio.

2. COMPONENT DESCRIPTION

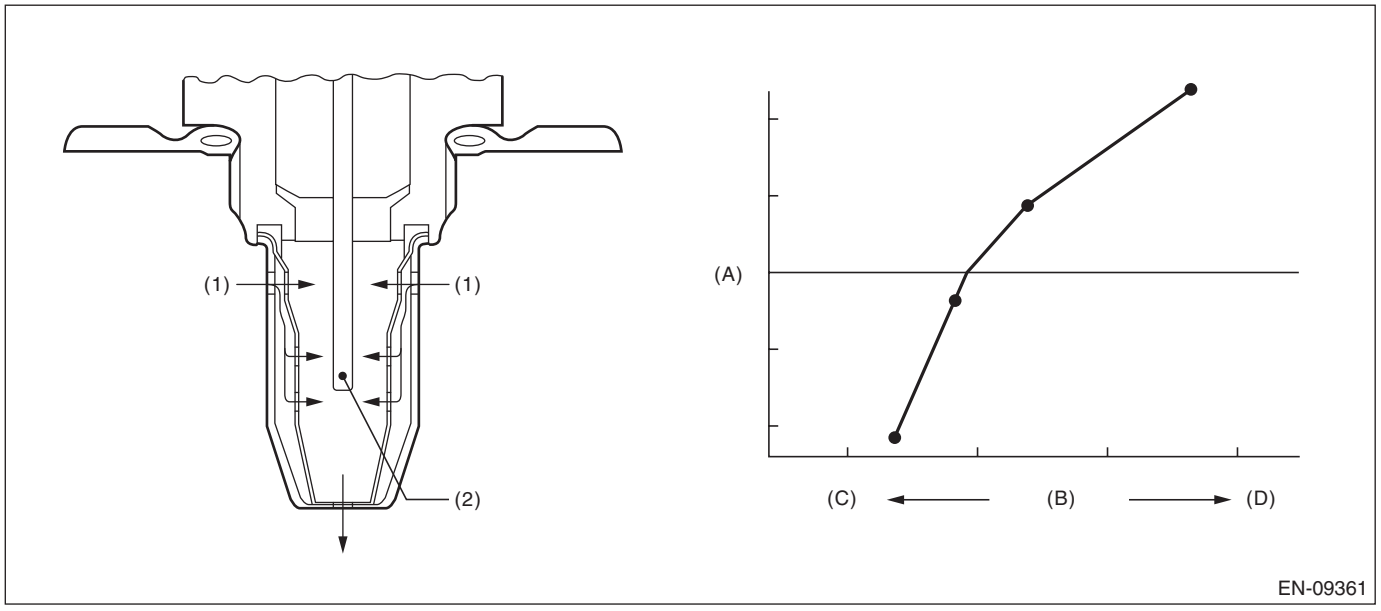

(A) Electromotive force (B) Air fuel ratio (C) Rich
(D) Lean

(1) Exhaust gas (2) ZrO_2

3. EXECUTION CONDITION

Secondary Parameters	Execution condition
Battery voltage	> 10.9 V
Closed loop control of 3000 ms or more with main feedback	Operation
Engine speed	≥ 1000 rpm
Intake air amount	≥ 10 g/s (0.35 oz/s)

4. GENERAL DRIVING CYCLE

Perform diagnosis only once in a city driving including normal acceleration and deceleration.

5. DIAGNOSTIC METHOD 1

Detect the malfunction by checking “Cumulative value of time when λ changes from lean → rich” in comparison to “Time during which diagnosis is in progress”.

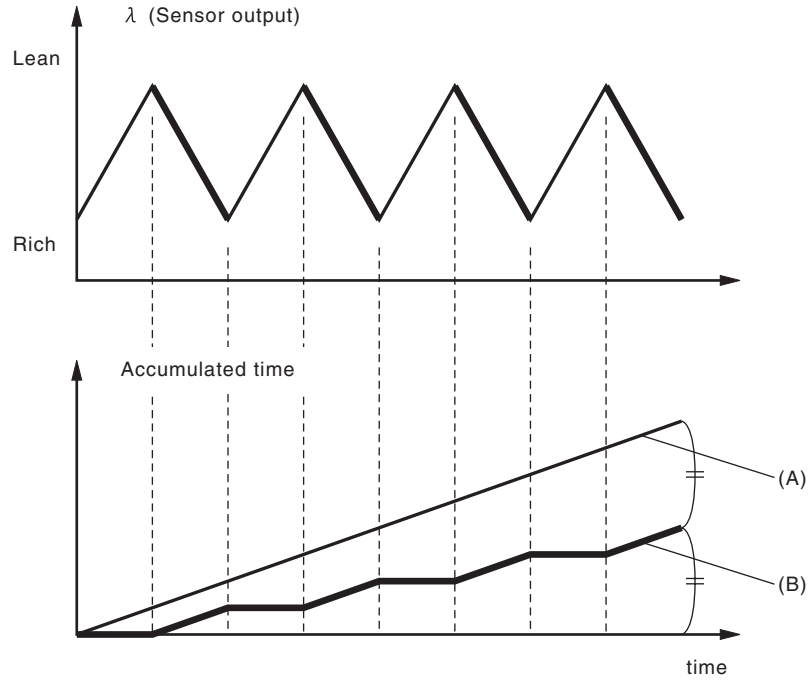

(A) Time during which diagnosis is in progress

(B) Cumulative value of time when λ changes from lean → rich

Judge as NG when the following conditions are established.

Judgment Value

Malfunction Criteria	Threshold Value	DTC
(Cumulative value of time when λ changes from lean → rich) / (Time during which diagnosis is in progress)	< 0.39	P014C and P014E
	> 0.61	P014D and P014F

Time Needed for Diagnosis: 90000 ms

Malfunction Indicator Light Illumination: Illuminates when malfunction occurs in 2 continuous driving cycles.

6. DIAGNOSTIC METHOD 2

Detect the malfunction by the cumulative value obtained from the amount of variation in λ change.

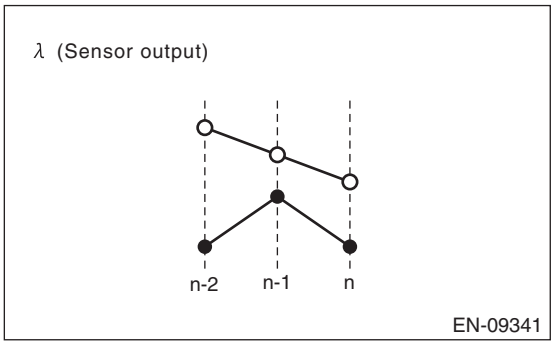

Judge as NG when the following conditions are established.

Judgment Value

Malfunction Criteria	Threshold Value	DTC
Cumulative value obtained from the amount of variation in λ change Σ |(lambda(n) – lambda(n-1)) – (lambda(n-1) – lambda(n-2))|	< Value from Map	A pair of P014C/P014D and a pair of P014E/P014F are diagnosed respectively.

Map

Cumulative value obtained from the amount of variation in λ Σ |lambda(n) – lambda(n-1)|	0.00	2.00
Cumulative value obtained from the amount of variation in λ change	0.00	2.00

Time Needed for Diagnosis: 90000 ms
Malfunction Indicator Light Illumination: Illuminates when malfunction occurs in 2 continuous driving cycles.

BI: DTC P014D A/F / O2 SENSOR SLOW RESPONSE - LEAN TO RICH BANK 1 SENSOR 1

NOTE:
For the diagnostic procedure, refer to DTC P014C. <Ref. to EN(H6DO)(diag)-254, DTC P014C A/F / O2 SENSOR SLOW RESPONSE - RICH TO LEAN BANK 1 SENSOR 1, Diagnostic Procedure with Diagnostic Trouble Code (DTC).>

1. OUTLINE OF DIAGNOSIS

NOTE:
For the detection standard, refer to DTC P014C. <Ref. to EN(H6DO)(diag)-254, DTC P014C A/F / O2 SENSOR SLOW RESPONSE - RICH TO LEAN BANK 1 SENSOR 1, Diagnostic Procedure with Diagnostic Trouble Code (DTC).>

BJ:DTC P014E A/F / O2 SENSOR SLOW RESPONSE - RICH TO LEAN BANK 2 SENSOR 1

DTC DETECTING CONDITION:
Detected when two consecutive driving cycles with fault occur.

CAUTION:
After servicing or replacing faulty parts, perform Clear Memory Mode <Ref. to EN(H6DO)(diag)-85, OPERATION, Clear Memory Mode.>, and Inspection Mode <Ref. to EN(H6DO)(diag)-69, PROCEDURE, Inspection Mode.>.

	Step	Check	Yes	No
1	**CHECK EXHAUST SYSTEM.** NOTE: Check the following items. • Loose installation of front portion of exhaust pipe onto cylinder heads • Loose connection between front exhaust pipe and front catalytic converter • Damage of exhaust pipe resulting in a hole	Is there any fault in exhaust system?	Repair the exhaust system.	Replace the front oxygen (A/F) sensor. <Ref. to FU(H6DO)-78, Front Oxygen (A/F) Sensor.>

1. OUTLINE OF DIAGNOSIS

NOTE:
For the detection standard, refer to DTC P014C. <Ref. to EN(H6DO)(diag)-254, DTC P014C A/F / O2 SENSOR SLOW RESPONSE - RICH TO LEAN BANK 1 SENSOR 1, Diagnostic Procedure with Diagnostic Trouble Code (DTC).>

BK:DTC P014F A/F / O2 SENSOR SLOW RESPONSE - LEAN TO RICH BANK 2 SENSOR 1

NOTE:
For the diagnostic procedure, refer to DTC P014E. <Ref. to EN(H6DO)(diag)-257, DTC P014E A/F / O2 SENSOR SLOW RESPONSE - RICH TO LEAN BANK 2 SENSOR 1, Diagnostic Procedure with Diagnostic Trouble Code (DTC).>

1. OUTLINE OF DIAGNOSIS

NOTE:
For the detection standard, refer to DTC P014C. <Ref. to EN(H6DO)(diag)-254, DTC P014C A/F / O2 SENSOR SLOW RESPONSE - RICH TO LEAN BANK 1 SENSOR 1, Diagnostic Procedure with Diagnostic Trouble Code (DTC).>

BL:DTC P0151 A/F / O2 SENSOR CIRCUIT LOW VOLTAGE BANK 2 SENSOR 1

DTC DETECTING CONDITION:
Immediately at fault recognition

CAUTION:
After servicing or replacing faulty parts, perform Clear Memory Mode <Ref. to EN(H6DO)(diag)-85, OPERATION, Clear Memory Mode.>, and Inspection Mode <Ref. to EN(H6DO)(diag)-69, PROCEDURE, Inspection Mode.>.

WIRING DIAGRAM:

- Engine Electrical System ENGINE TYPE EZ (WITHOUT PUSH BUTTON START) <Ref. to WI-198, ENGINE TYPE EZ (WITHOUT PUSH BUTTON START), WIRING DIAGRAM, Engine Electrical System.>
- Engine Electrical System ENGINE TYPE EZ (WITH PUSH BUTTON START) <Ref. to WI-214, ENGINE TYPE EZ (WITH PUSH BUTTON START), WIRING DIAGRAM, Engine Electrical System.>

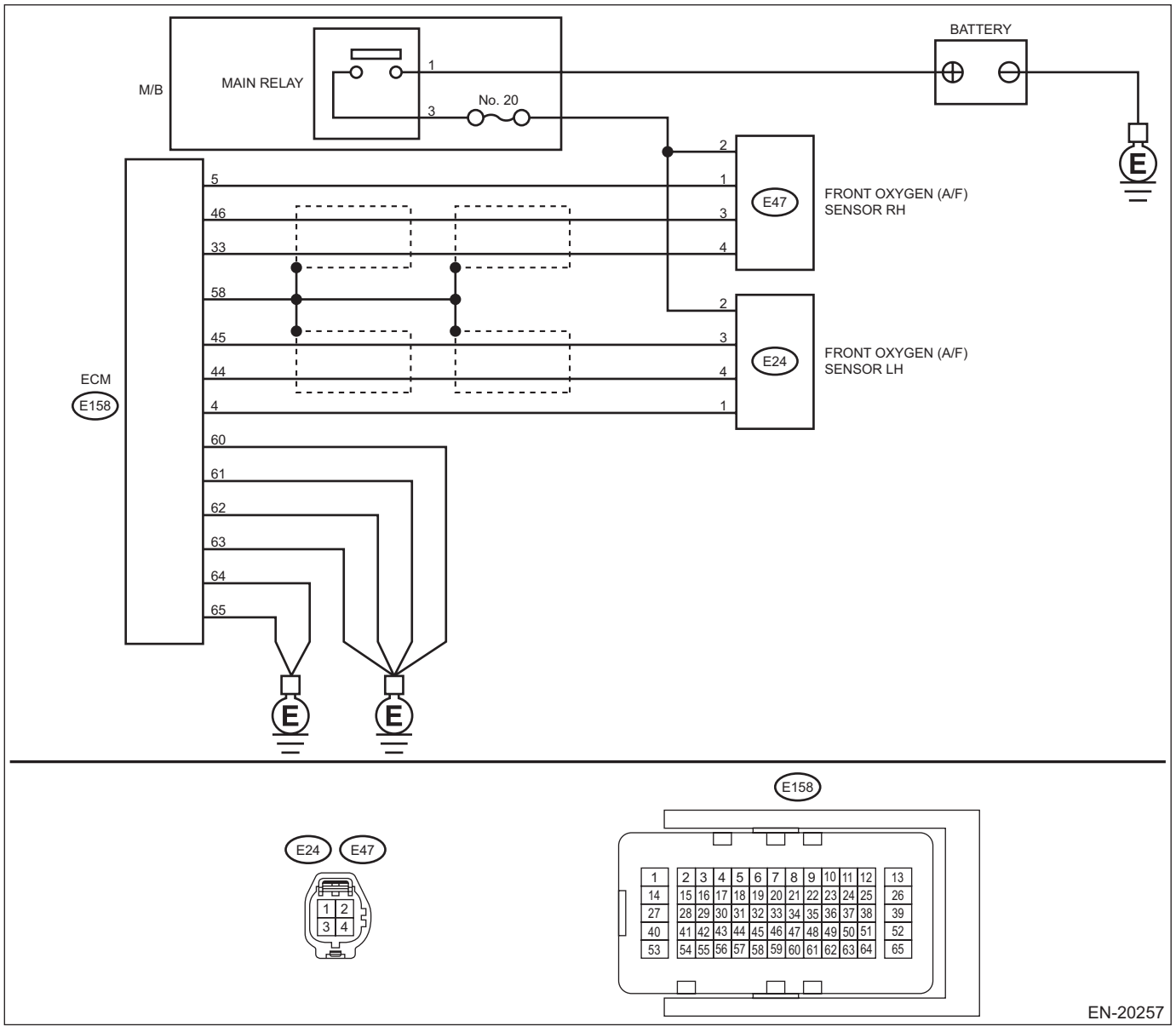

Step		Check	Yes	No
1	**CHECK FRONT OXYGEN (A/F) SENSOR CONNECTOR AND COUPLING CONNECTOR.**	Has water entered the connector?	Completely remove any water inside.	Go to step **2**.

	Step	Check	Yes	No
2	**CHECK HARNESS BETWEEN ECM AND FRONT OXYGEN (A/F) SENSOR CONNECTOR.** 1) Turn the ignition switch to OFF. 2) Disconnect the connectors from ECM and front oxygen (A/F) sensor. 3) Measure the resistance between ECM connector and chassis ground. ***Connector & terminal*** ***(E158) No. 45 — Chassis ground:*** ***(E158) No. 44 — Chassis ground:***	Is the resistance 1 MΩ or more?	Go to step **3**.	Repair the short circuit to ground in harness between ECM connector and front oxygen (A/F) sensor connector.
3	**CHECK FOR POOR CONTACT.** Check for poor contact of the front oxygen (A/F) sensor connector.	Is there poor contact of front oxygen (A/F) sensor connector?	Repair the poor contact of front oxygen (A/F) sensor connector.	Replace the front oxygen (A/F) sensor. <Ref. to FU(H6DO)-78, Front Oxygen (A/F) Sensor.>

1. OUTLINE OF DIAGNOSIS

NOTE:
For the detection standard, refer to DTC P0131. <Ref. to EN(H6DO)(diag)-224, DTC P0131 A/F / O2 SENSOR CIRCUIT LOW VOLTAGE BANK 1 SENSOR 1, Diagnostic Procedure with Diagnostic Trouble Code (DTC).>

BM:DTC P0152 A/F / O2 SENSOR CIRCUIT HIGH VOLTAGE BANK 2 SENSOR 1

DTC DETECTING CONDITION:
Immediately at fault recognition

CAUTION:
After servicing or replacing faulty parts, perform Clear Memory Mode <Ref. to EN(H6DO)(diag)-85, OPERATION, Clear Memory Mode.>, and Inspection Mode <Ref. to EN(H6DO)(diag)-69, PROCEDURE, Inspection Mode.>.

WIRING DIAGRAM:

- Engine Electrical System ENGINE TYPE EZ (WITHOUT PUSH BUTTON START) <Ref. to WI-198, ENGINE TYPE EZ (WITHOUT PUSH BUTTON START), WIRING DIAGRAM, Engine Electrical System.>
- Engine Electrical System ENGINE TYPE EZ (WITH PUSH BUTTON START) <Ref. to WI-214, ENGINE TYPE EZ (WITH PUSH BUTTON START), WIRING DIAGRAM, Engine Electrical System.>

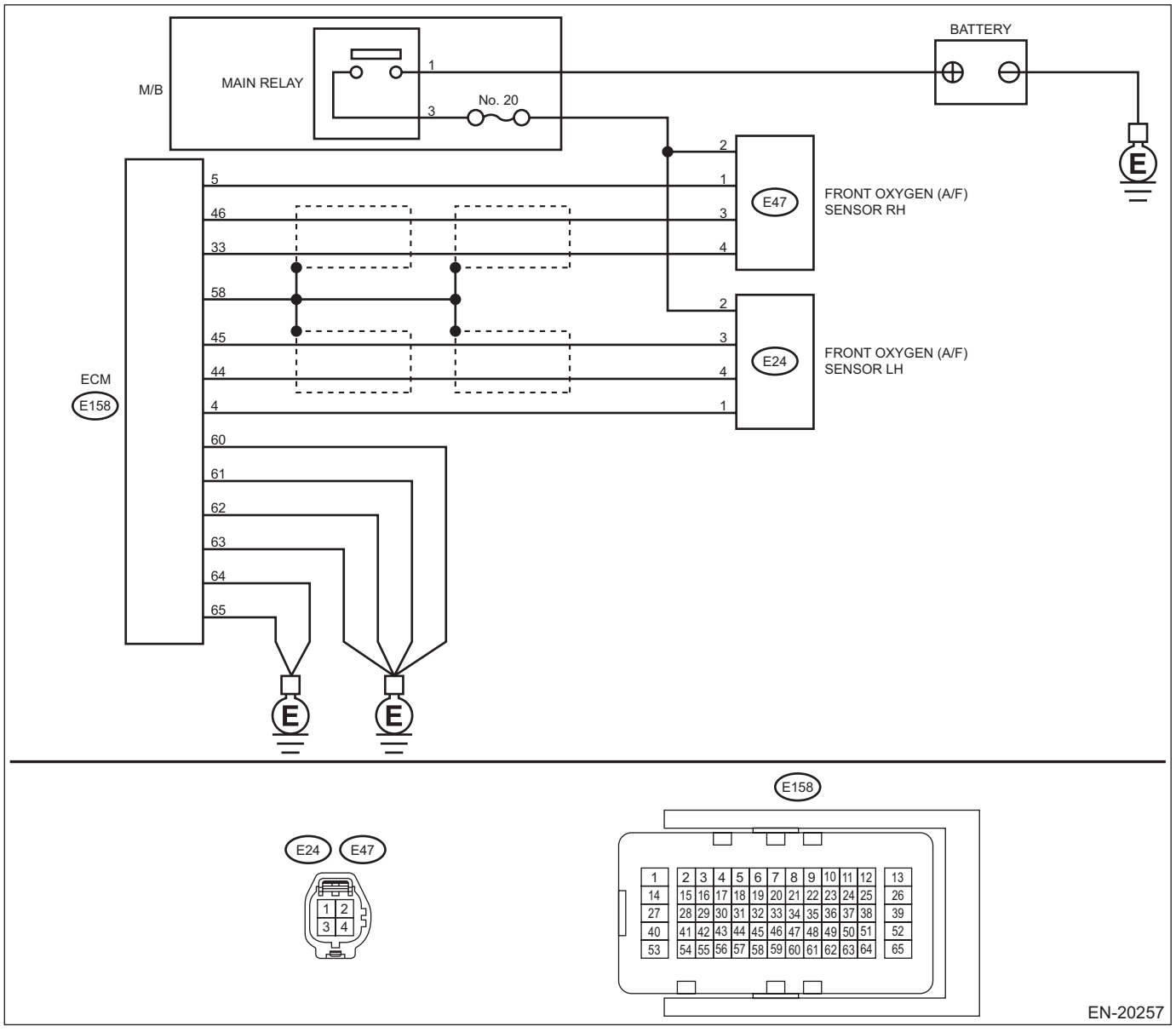

Step		Check	Yes	No
1	**CHECK FRONT OXYGEN (A/F) SENSOR CONNECTOR AND COUPLING CONNECTOR.**	Has water entered the connector?	Completely remove any water inside.	Go to step **2**.

	Step	Check	Yes	No
2	**CHECK HARNESS BETWEEN ECM AND FRONT OXYGEN (A/F) SENSOR CONNECTOR.** 1) Turn the ignition switch to OFF. 2) Disconnect the connectors from front oxygen (A/F) sensor. 3) Turn the ignition switch to ON. 4) Measure the voltage between ECM connector and chassis ground. ***Connector & terminal*** ***(E158) No. 45 (+) — Chassis ground (–):*** ***(E158) No. 44 (+) — Chassis ground (–):***	Is the voltage 8 V or more?	Repair the short circuit to power in the harness between ECM connector and front oxygen (A/F) sensor connector.	Replace the front oxygen (A/F) sensor. <Ref. to FU(H6DO)-78, Front Oxygen (A/F) Sensor.>

1. OUTLINE OF DIAGNOSIS

NOTE:
For the detection standard, refer to DTC P0132. <Ref. to EN(H6DO)(diag)-227, DTC P0132 A/F / O2 SENSOR CIRCUIT HIGH VOLTAGE BANK 1 SENSOR 1, Diagnostic Procedure with Diagnostic Trouble Code (DTC).>

BN:DTC P0154 A/F / O2 SENSOR CIRCUIT NO ACTIVITY DETECTED BANK 2 SENSOR 1

DTC DETECTING CONDITION:
Immediately at fault recognition

CAUTION:
After servicing or replacing faulty parts, perform Clear Memory Mode <Ref. to EN(H6DO)(diag)-85, OPERATION, Clear Memory Mode.>, and Inspection Mode <Ref. to EN(H6DO)(diag)-69, PROCEDURE, Inspection Mode.>.

WIRING DIAGRAM:

- Engine Electrical System ENGINE TYPE EZ (WITHOUT PUSH BUTTON START) <Ref. to WI-198, ENGINE TYPE EZ (WITHOUT PUSH BUTTON START), WIRING DIAGRAM, Engine Electrical System.>
- Engine Electrical System ENGINE TYPE EZ (WITH PUSH BUTTON START) <Ref. to WI-214, ENGINE TYPE EZ (WITH PUSH BUTTON START), WIRING DIAGRAM, Engine Electrical System.>

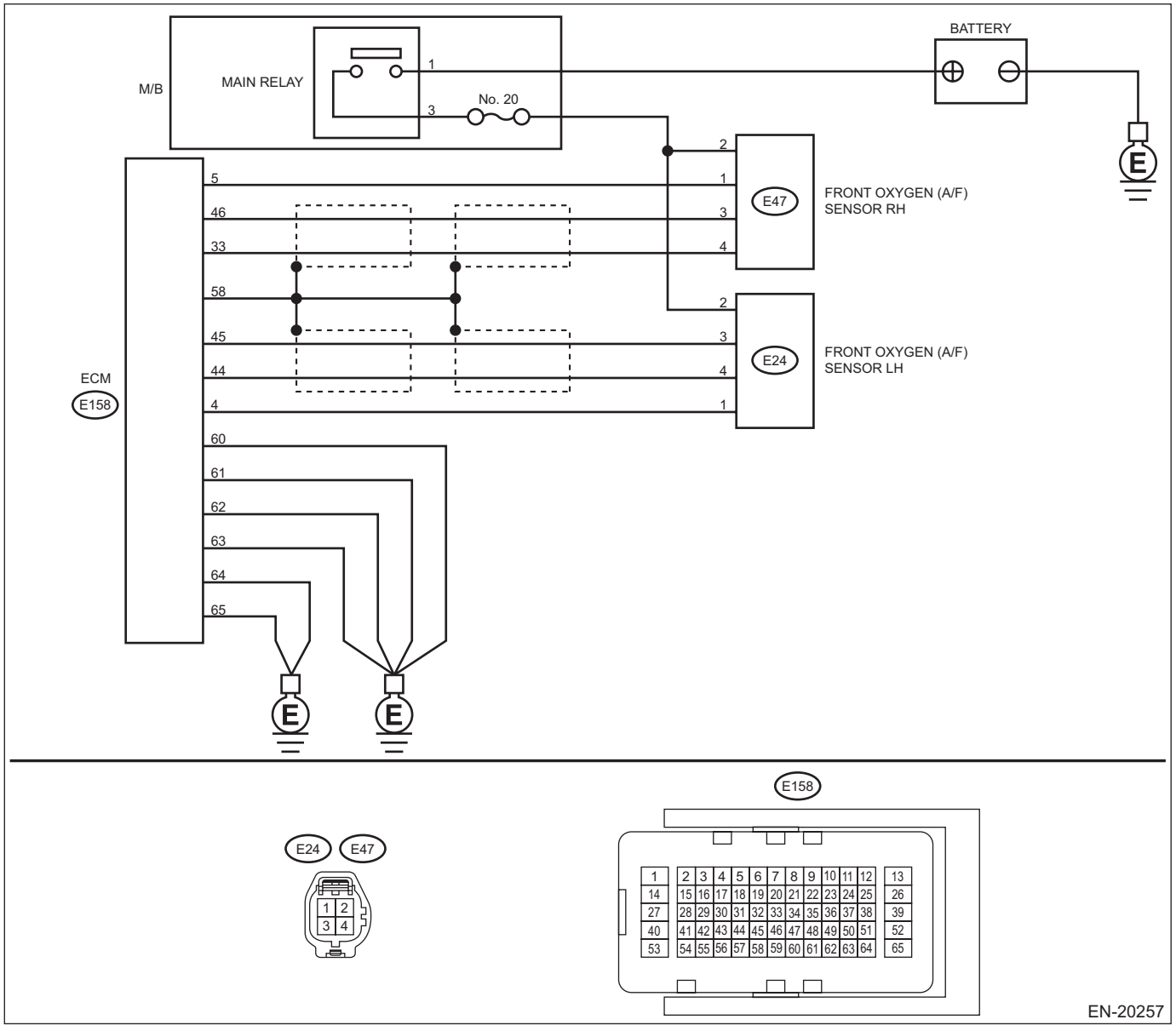

	Step	Check	Yes	No
1	**CHECK HARNESS BETWEEN ECM AND FRONT OXYGEN (A/F) SENSOR CONNECTOR.** 1) Turn the ignition switch to OFF. 2) Disconnect the connectors from ECM and front oxygen (A/F) sensor. 3) Measure the resistance of harness between ECM connector and front oxygen (A/F) sensor connector. ***Connector & terminal*** ***(E158) No. 45 — (E24) No. 3:*** ***(E158) No. 44 — (E24) No. 4:***	Is the resistance less than 1 Ω?	Go to step **2**.	Repair the harness and connector. NOTE: In this case, repair the following item: • Open circuit in harness between ECM connector and front oxygen (A/F) sensor connector • Poor contact of coupling connector
2	**CHECK FOR POOR CONTACT.** Check for poor contact of ECM and front oxygen (A/F) sensor connector.	Is there poor contact of ECM or front oxygen (A/F) sensor connector?	Repair the poor contact of ECM or front oxygen (A/F) sensor connector.	Replace the front oxygen (A/F) sensor. <Ref. to FU(H6DO)-78, Front Oxygen (A/F) Sensor.>

1. OUTLINE OF DIAGNOSIS

NOTE:
For the detection standard, refer to DTC P0134. <Ref. to EN(H6DO)(diag)-230, DTC P0134 A/F / O2 SENSOR CIRCUIT NO ACTIVITY DETECTED BANK 1 SENSOR 1, Diagnostic Procedure with Diagnostic Trouble Code (DTC).>

BO:DTC P0157 O2 SENSOR CIRCUIT LOW VOLTAGE BANK 2 SENSOR 2

DTC DETECTING CONDITION:

Detected when two consecutive driving cycles with fault occur.

CAUTION:

After servicing or replacing faulty parts, perform Clear Memory Mode <Ref. to EN(H6DO)(diag)-85, OPERATION, Clear Memory Mode.>, and Inspection Mode <Ref. to EN(H6DO)(diag)-69, PROCEDURE, Inspection Mode.>.

WIRING DIAGRAM:

- Engine Electrical System ENGINE TYPE EZ (WITHOUT PUSH BUTTON START) <Ref. to WI-198, ENGINE TYPE EZ (WITHOUT PUSH BUTTON START), WIRING DIAGRAM, Engine Electrical System.>
- Engine Electrical System ENGINE TYPE EZ (WITH PUSH BUTTON START) <Ref. to WI-214, ENGINE TYPE EZ (WITH PUSH BUTTON START), WIRING DIAGRAM, Engine Electrical System.>

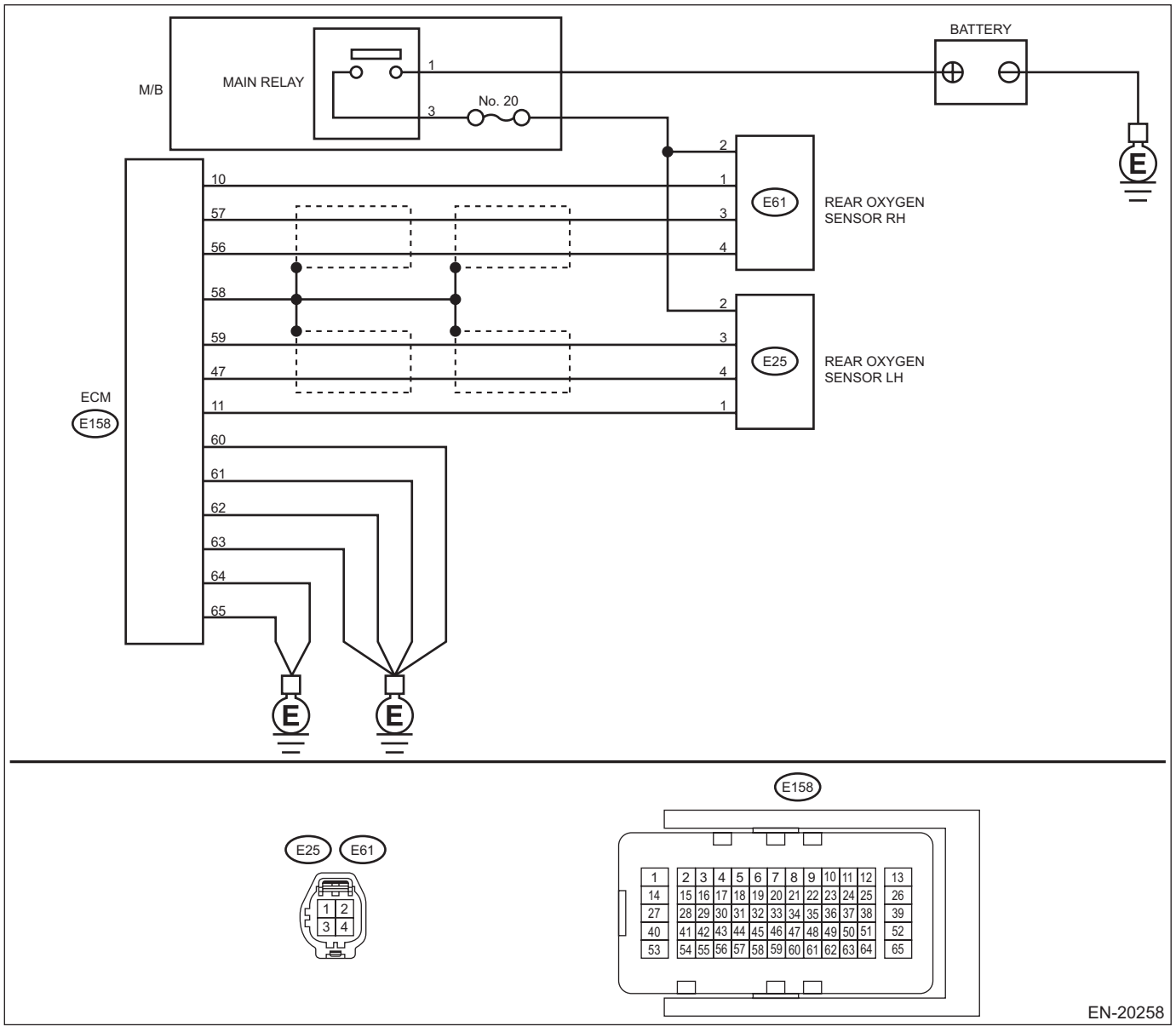

	Step	Check	Yes	No
1	**CHECK REAR OXYGEN SENSOR DATA.** 1) Warm up the engine until engine coolant temperature is higher than 75°C (167°F), and keep the engine speed at 3,000 rpm. (2 minutes maximum) 2) Read the value of «Front O2 Sensor #2» using the Subaru Select Monitor or a general scan tool. NOTE: • Subaru Select Monitor For detailed operation procedures, refer to "Read Current Data For Engine". <Ref. to EN(H6DO)(diag)-50, Subaru Select Monitor.> • General scan tool For detailed operation procedures, refer to the general scan tool operation manual.	Is the value of «Front O2 Sensor #2» 0.490 V or more?	Go to step **5**.	Go to step **2**.
2	**CHECK REAR OXYGEN SENSOR CONNECTOR AND COUPLING CONNECTOR.**	Has water entered the connector?	Completely remove any water inside.	Go to step **3**.
3	**CHECK HARNESS BETWEEN ECM AND REAR OXYGEN SENSOR CONNECTOR.** 1) Turn the ignition switch to OFF. 2) Disconnect the connector from ECM and rear oxygen sensor. 3) Measure the resistance of harness between ECM connector and rear oxygen sensor connector. ***Connector & terminal*** ***(E158) No. 59 — (E25) No. 3:*** ***(E158) No. 47 — (E25) No. 4:***	Is the resistance less than 1 Ω?	Go to step **4**.	Repair the harness and connector. NOTE: In this case, repair the following item: • Open circuit in harness between ECM connector and rear oxygen sensor connector • Poor contact of coupling connector
4	**CHECK HARNESS BETWEEN ECM AND REAR OXYGEN SENSOR CONNECTOR.** 1) Connect the connector to ECM. 2) Turn the ignition switch to ON. 3) Measure the voltage between rear oxygen sensor connector and chassis ground. ***Connector & terminal*** ***(E25) No. 3 (+) — Chassis ground (–):***	Is the voltage 0.2 — 0.5 V?	Replace the rear oxygen sensor. <Ref. to FU(H6DO)-81, Rear Oxygen Sensor.>	Repair the harness and connector. NOTE: In this case, repair the following item: • Open circuit in harness between ECM connector and rear oxygen sensor connector • Poor contact of ECM connector • Poor contact of coupling connector
5	**CHECK EXHAUST SYSTEM.** Check exhaust system parts. NOTE: Check the following items. • Looseness and improper fitting of exhaust system parts • Damage (crack, hole etc.) of parts • Loose part and improper installation between front oxygen (A/F) sensor and rear oxygen sensor	Is there any fault in exhaust system?	Repair or replace faulty parts.	Replace the rear oxygen sensor. <Ref. to FU(H6DO)-81, Rear Oxygen Sensor.>

1. OUTLINE OF DIAGNOSIS

NOTE:
For the detection standard, refer to DTC P0137. <Ref. to EN(H6DO)(diag)-233, DTC P0137 O2 SENSOR CIRCUIT LOW VOLTAGE BANK 1 SENSOR 2, Diagnostic Procedure with Diagnostic Trouble Code (DTC).>

BP:DTC P0158 O2 SENSOR CIRCUIT HIGH VOLTAGE BANK 2 SENSOR 2

DTC DETECTING CONDITION:

Detected when two consecutive driving cycles with fault occur.

CAUTION:

After servicing or replacing faulty parts, perform Clear Memory Mode <Ref. to EN(H6DO)(diag)-85, OPERATION, Clear Memory Mode.>, and Inspection Mode <Ref. to EN(H6DO)(diag)-69, PROCEDURE, Inspection Mode.>.

WIRING DIAGRAM:

- Engine Electrical System ENGINE TYPE EZ (WITHOUT PUSH BUTTON START) <Ref. to WI-198, ENGINE TYPE EZ (WITHOUT PUSH BUTTON START), WIRING DIAGRAM, Engine Electrical System.>
- Engine Electrical System ENGINE TYPE EZ (WITH PUSH BUTTON START) <Ref. to WI-214, ENGINE TYPE EZ (WITH PUSH BUTTON START), WIRING DIAGRAM, Engine Electrical System.>

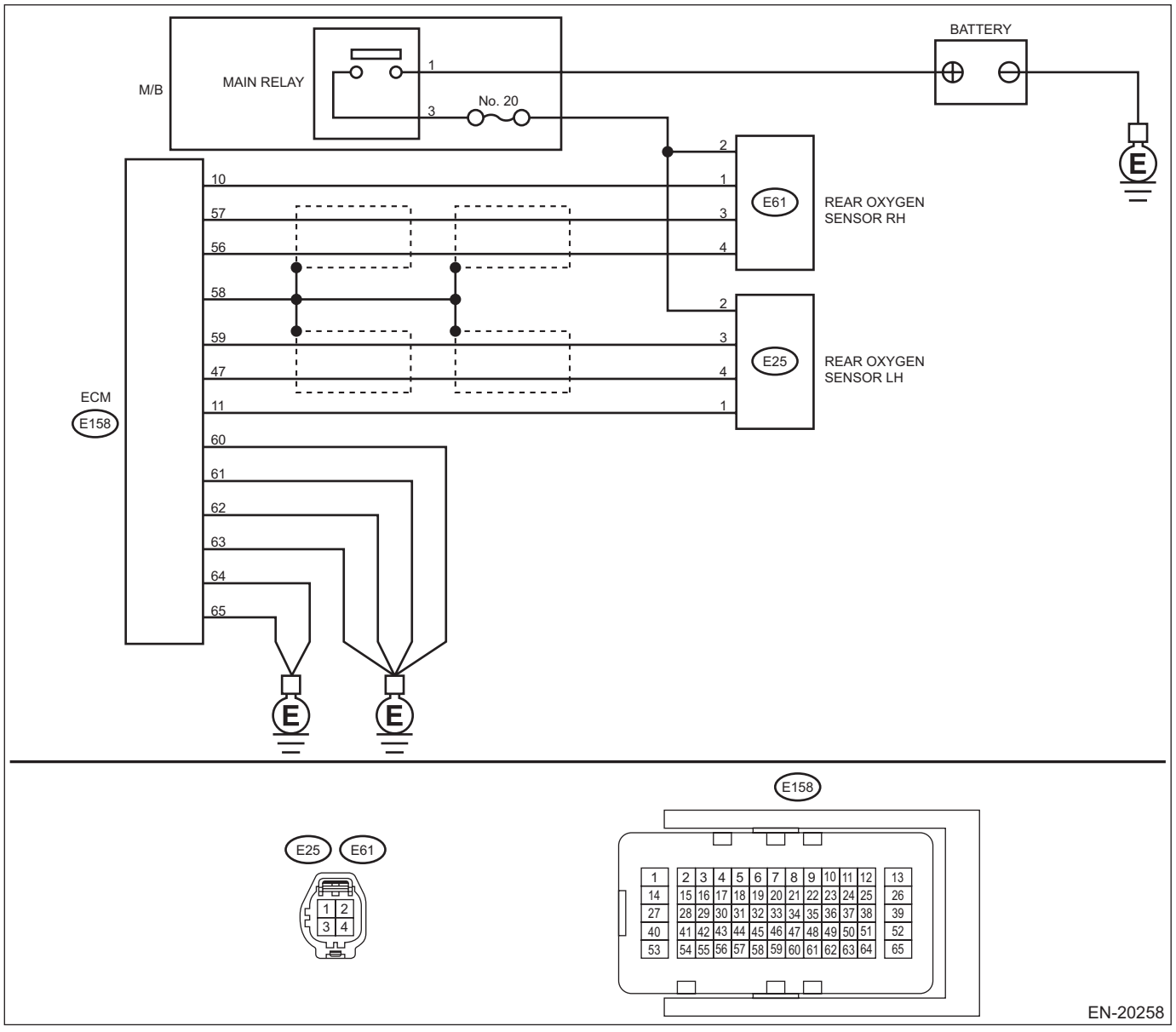

	Step	Check	Yes	No
1	**CHECK REAR OXYGEN SENSOR DATA.** 1) Warm up the engine until engine coolant temperature is higher than 75°C (167°F), and rapidly reduce the engine speed from 3,000 rpm. 2) Read the value of «Front O2 Sensor #2» using the Subaru Select Monitor or a general scan tool. NOTE: • Subaru Select Monitor For detailed operation procedures, refer to "Read Current Data For Engine". <Ref. to EN(H6DO)(diag)-50, Subaru Select Monitor.> • General scan tool For detailed operation procedures, refer to the general scan tool operation manual.	Is the value of «Front O2 Sensor #2» 0.250 V or less?	Go to step **5**.	Go to step **2**.
2	**CHECK REAR OXYGEN SENSOR CONNECTOR AND COUPLING CONNECTOR.**	Has water entered the connector?	Completely remove any water inside.	Go to step **3**.
3	**CHECK HARNESS BETWEEN ECM AND REAR OXYGEN SENSOR CONNECTOR.** 1) Turn the ignition switch to OFF. 2) Disconnect the connector from ECM and rear oxygen sensor. 3) Measure the resistance of harness between ECM connector and rear oxygen sensor connector. ***Connector & terminal*** ***(E158) No. 59 — (E25) No. 3:*** ***(E158) No. 47 — (E25) No. 4:***	Is the resistance less than 1 Ω?	Go to step **4**.	Repair the harness and connector. NOTE: In this case, repair the following item: • Open circuit in harness between ECM connector and rear oxygen sensor connector • Poor contact of coupling connector
4	**CHECK HARNESS BETWEEN ECM AND REAR OXYGEN SENSOR CONNECTOR.** 1) Connect the connector to ECM. 2) Turn the ignition switch to ON. 3) Measure the voltage between rear oxygen sensor connector and chassis ground. ***Connector & terminal*** ***(E25) No. 3 (+) — Chassis ground (–):***	Is the voltage 0.2 — 0.5 V?	Replace the rear oxygen sensor. <Ref. to FU(H6DO)-81, Rear Oxygen Sensor.>	Repair the harness and connector. NOTE: In this case, repair the following item: • Open circuit in harness between ECM connector and rear oxygen sensor connector • Poor contact of ECM connector • Poor contact of coupling connector
5	**CHECK EXHAUST SYSTEM.** Check exhaust system parts. NOTE: Check the following items. • Looseness and improper fitting of exhaust system parts • Damage (crack, hole etc.) of parts • Loose part and improper installation between front oxygen (A/F) sensor and rear oxygen sensor	Is there any fault in exhaust system?	Repair or replace faulty parts.	Replace the rear oxygen sensor. <Ref. to FU(H6DO)-81, Rear Oxygen Sensor.>

1. OUTLINE OF DIAGNOSIS

NOTE:
For the detection standard, refer to DTC P0138. <Ref. to EN(H6DO)(diag)-237, DTC P0138 O2 SENSOR CIRCUIT HIGH VOLTAGE BANK 1 SENSOR 2, Diagnostic Procedure with Diagnostic Trouble Code (DTC).>

BQ:DTC P015A A/F / O2 SENSOR DELAYED RESPONSE - RICH TO LEAN BANK 1 SENSOR 1

NOTE:
For the diagnostic procedure, refer to DTC P014C. <Ref. to EN(H6DO)(diag)-254, DTC P014C A/F / O2 SENSOR SLOW RESPONSE - RICH TO LEAN BANK 1 SENSOR 1, Diagnostic Procedure with Diagnostic Trouble Code (DTC).>

1. OUTLINE OF DIAGNOSIS

Detect the slow response of front oxygen (A/F) sensor.
For diagnosis, detect the trouble by processing the λ waveform in normal driving without forcibly changing the target air fuel ratio.

2. COMPONENT DESCRIPTION

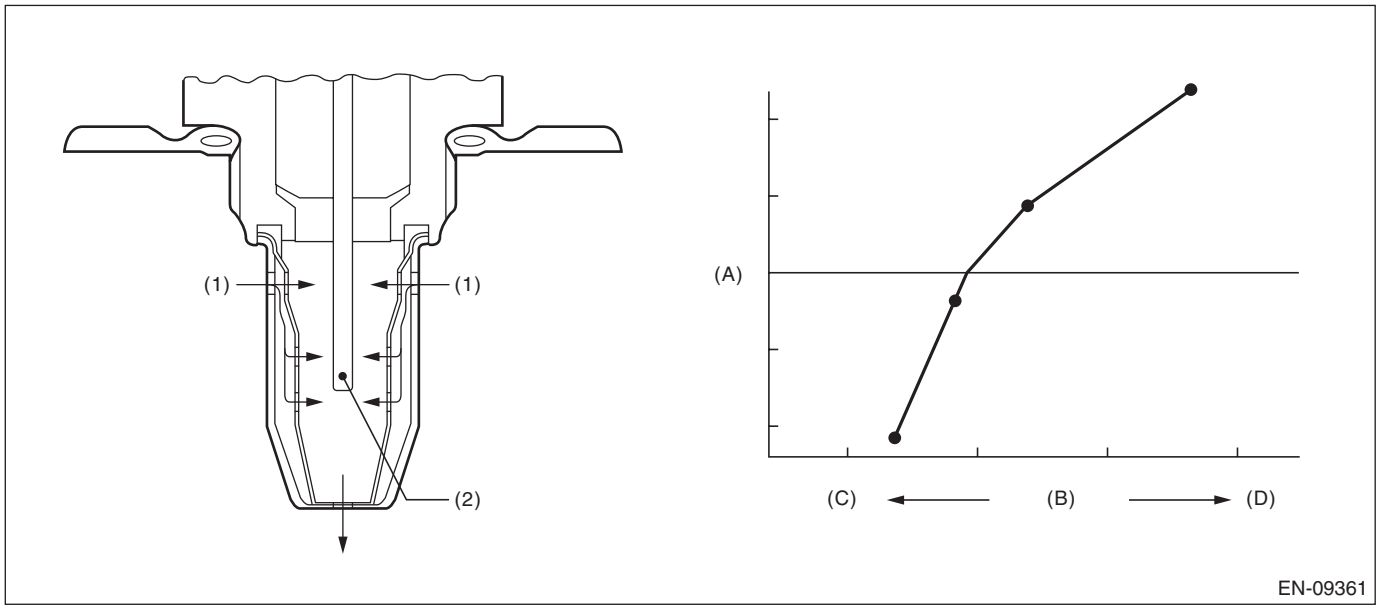

(A) Electromotive force (B) Air fuel ratio (C) Rich
(D) Lean

(1) Exhaust gas (2) ZrO_2

3. EXECUTION CONDITION

Diagnostic method 1 and 2

Secondary Parameters	Execution condition
Battery voltage	> 10.9 V
Closed loop control of 3000 ms or more with main feedback	Operation
Engine speed	≥ 1000 rpm
Intake air amount	≥ 10 g/s (0.35 oz/s)

4. GENERAL DRIVING CYCLE

Perform diagnosis only once in a city driving including normal acceleration and deceleration.

5. DIAGNOSTIC METHOD 1

Detect the malfunction depending on the average value of time necessary for λ to inverse the air fuel ratio from “Lean → Rich → Lean” to “Rich → Lean → Rich”.

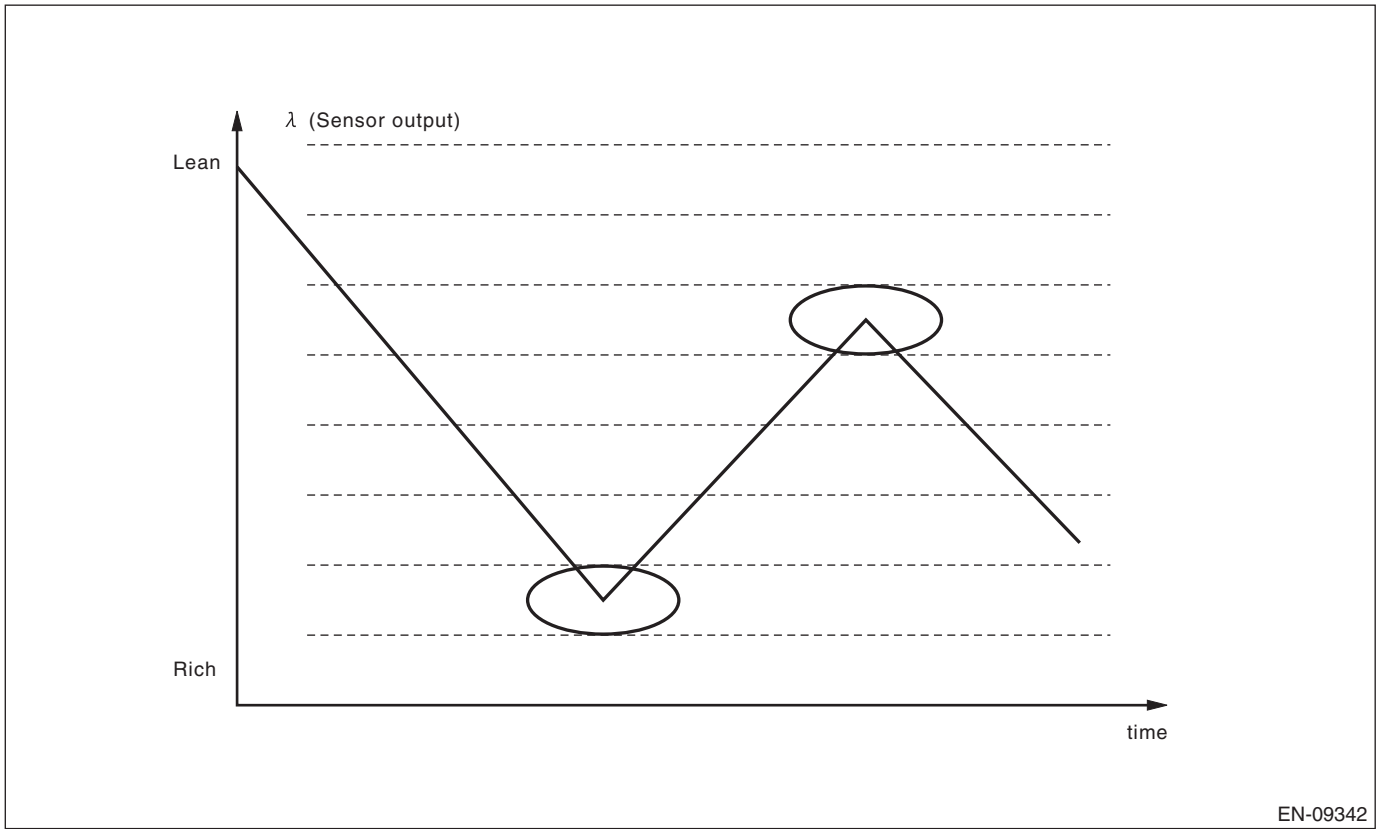

Judge as NG when the following conditions are established.

Judgment Value

Malfunction Criteria	Threshold Value	DTC
Average value of time necessary for λ to inverse the air fuel ratio to Lean → Rich → Lean	> 220 ms	P015A and P015C
Average value of time necessary for λ to inverse the air fuel ratio to Rich → Lean → Rich	> 320 ms	P015B and P015D

Time Needed for Diagnosis: 90000 ms
Malfunction Indicator Light Illumination: Illuminates when malfunction occurs in 2 continuous driving cycles.

6. DIAGNOSTIC METHOD 2

Detect the malfunction by calculating the average amplitude of λ.

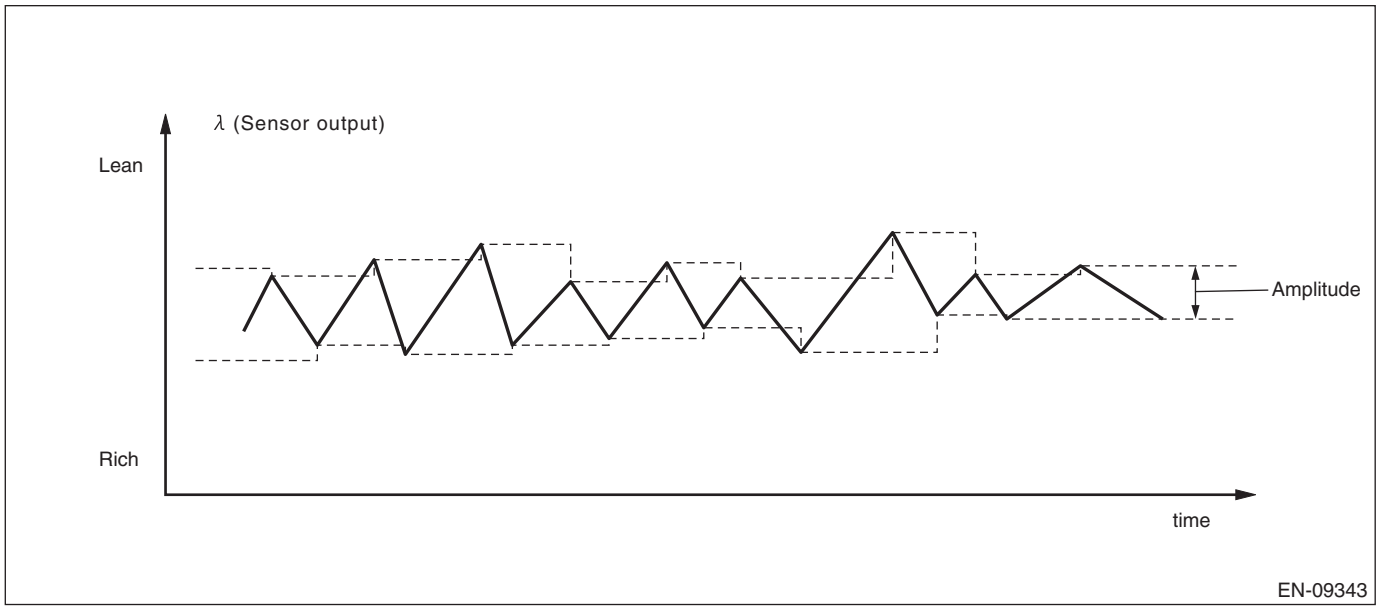

Judge as NG when the following conditions are established.

Judgment Value

Malfunction Criteria	Threshold Value	DTC
Average value for λ amplitude	> 0.06	A pair of P015A/P015B and a pair of P015C/P015D are diagnosed respectively.

Time Needed for Diagnosis: 90000 ms
Malfunction Indicator Light Illumination: Illuminates when malfunction occurs in 2 continuous driving cycles.

BR:DTC P015B A/F / O2 SENSOR DELAYED RESPONSE - LEAN TO RICH BANK 1 SENSOR 1

NOTE:
For the diagnostic procedure, refer to DTC P014C. <Ref. to EN(H6DO)(diag)-254, DTC P014C A/F / O2 SENSOR SLOW RESPONSE - RICH TO LEAN BANK 1 SENSOR 1, Diagnostic Procedure with Diagnostic Trouble Code (DTC).>

1. OUTLINE OF DIAGNOSIS

NOTE:
For the detection standard, refer to DTC P015A. <Ref. to EN(H6DO)(diag)-268, DTC P015A A/F / O2 SENSOR DELAYED RESPONSE - RICH TO LEAN BANK 1 SENSOR 1, Diagnostic Procedure with Diagnostic Trouble Code (DTC).>

BS:DTC P015C A/F / O2 SENSOR DELAYED RESPONSE - RICH TO LEAN BANK 2 SENSOR 1

NOTE:
For the diagnostic procedure, refer to DTC P014E. <Ref. to EN(H6DO)(diag)-257, DTC P014E A/F / O2 SENSOR SLOW RESPONSE - RICH TO LEAN BANK 2 SENSOR 1, Diagnostic Procedure with Diagnostic Trouble Code (DTC).>

1. OUTLINE OF DIAGNOSIS

NOTE:
For the detection standard, refer to DTC P015A. <Ref. to EN(H6DO)(diag)-268, DTC P015A A/F / O2 SENSOR DELAYED RESPONSE - RICH TO LEAN BANK 1 SENSOR 1, Diagnostic Procedure with Diagnostic Trouble Code (DTC).>

BT:DTC P015D A/F / O2 SENSOR DELAYED RESPONSE - LEAN TO RICH BANK 2 SENSOR 1

NOTE:
For the diagnostic procedure, refer to DTC P014E. <Ref. to EN(H6DO)(diag)-257, DTC P014E A/F / O2 SENSOR SLOW RESPONSE - RICH TO LEAN BANK 2 SENSOR 1, Diagnostic Procedure with Diagnostic Trouble Code (DTC).>

1. OUTLINE OF DIAGNOSIS

NOTE:
For the detection standard, refer to DTC P015A. <Ref. to EN(H6DO)(diag)-268, DTC P015A A/F / O2 SENSOR DELAYED RESPONSE - RICH TO LEAN BANK 1 SENSOR 1, Diagnostic Procedure with Diagnostic Trouble Code (DTC).>

BU:DTC P0161 O2 SENSOR HEATER CIRCUIT BANK 2 SENSOR 2

NOTE:
Refer to DTC P0057 for diagnostic procedure. <Ref. to EN(H6DO)(diag)-167, DTC P0057 A/F / O2 HEATER CONTROL CIRCUIT LOW BANK 2 SENSOR 2, Diagnostic Procedure with Diagnostic Trouble Code (DTC).>

1. OUTLINE OF DIAGNOSIS

NOTE:
For the detection standard, refer to DTC P0141. <Ref. to EN(H6DO)(diag)-252, DTC P0141 O2 SENSOR HEATER CIRCUIT BANK 1 SENSOR 2, Diagnostic Procedure with Diagnostic Trouble Code (DTC).>

BV:DTC P0171 SYSTEM TOO LEAN BANK 1

NOTE:
Refer to DTC P0175 for diagnostic procedure. <Ref. to EN(H6DO)(diag)-274, DTC P0175 SYSTEM TOO RICH BANK 2, Diagnostic Procedure with Diagnostic Trouble Code (DTC).>

1. OUTLINE OF DIAGNOSIS

Detect fuel system malfunction by the amount of main feedback control.

2. EXECUTION CONDITION

Secondary Parameters	Execution condition
Closed loop control with main feedback	Operation

3. GENERAL DRIVING CYCLE

Perform the diagnosis continuously during the closed loop.

4. DIAGNOSTIC METHOD

Compare the diagnostic value (fsobd) with the threshold value, and if a condition meeting the malfunction criteria listed below continues for 10 s × 3 time(s) or more, judge that there is a fault in the fuel system.

Judgment Value

Malfunction Criteria	Threshold Value
fsobd = (sglmd – tglmda) + faf + flaf In this case: sglmd = measured lambda tglmda = target lambda faf = main feedback compensation coefficient (every 64 milliseconds) flaf = main feedback learning compensation coefficient	≥ Value from Map

Map

Amount of air (g (oz)/s)	0 (0)	3.2 (0.11)	6.4 (0.23)	9.6 (0.34)	12.8 (0.45)	16 (0.56)	19.2 (0.68)
fsobdL1 (%)	1.33	1.33	1.33	1.33	1.33	1.33	1.33

Time Needed for Diagnosis: 10 s × 3 time(s)
Malfunction Indicator Light Illumination: Illuminates when malfunction occurs in 2 continuous driving cycles.

BW:DTC P0172 SYSTEM TOO RICH BANK 1

NOTE:
Refer to DTC P0175 for diagnostic procedure. <Ref. to EN(H6DO)(diag)-274, DTC P0175 SYSTEM TOO RICH BANK 2, Diagnostic Procedure with Diagnostic Trouble Code (DTC).>

1. OUTLINE OF DIAGNOSIS

Detect fuel system malfunction by the amount of main feedback control.

2. EXECUTION CONDITION

Secondary Parameters	Execution condition
A/F main feedback function	In operation

3. GENERAL DRIVING CYCLE

Perform the diagnosis continuously during the closed loop.

4. DIAGNOSTIC METHOD

Compare the diagnostic value (fsobd) with the threshold value, and if a condition meeting the malfunction criteria listed below continues for 10 s × 3 time(s) or more, judge that there is a fault in the fuel system.

Judgment Value

Malfunction Criteria	Threshold Value
fsobd = (sglmd – tglmda) + faf + flaf In this case: sglmd = measured lambda tglmda = target lambda faf = main feedback compensation coefficient (every 64 milliseconds) flaf = main feedback learning compensation coefficient	< Value from Map

Map

Warm-up increase compensation coefficient	0.000	0.102	0.199	0.301
Threshold Value	0.67 – 0.000	0.67 – 0.105	0.67 – 0.177	0.67 – 0.241

Warm-up increase compensation coefficient	0.398	0.450
Threshold Value	0.67 – 0.295	0.67 – 0.319

Time Needed for Diagnosis: 10 s × 3 time(s)
Malfunction Indicator Light Illumination: Illuminates when malfunction occurs in 2 continuous driving cycles.

BX:DTC P0174 SYSTEM TOO LEAN BANK 2

NOTE:
Refer to DTC P0175 for diagnostic procedure. <Ref. to EN(H6DO)(diag)-274, DTC P0175 SYSTEM TOO RICH BANK 2, Diagnostic Procedure with Diagnostic Trouble Code (DTC).>

1. OUTLINE OF DIAGNOSIS

NOTE:
For the detection standard, refer to DTC P0171. <Ref. to EN(H6DO)(diag)-272, DTC P0171 SYSTEM TOO LEAN BANK 1, Diagnostic Procedure with Diagnostic Trouble Code (DTC).>

BY:DTC P0175 SYSTEM TOO RICH BANK 2

DTC DETECTING CONDITION:
Detected when two consecutive driving cycles with fault occur.
TROUBLE SYMPTOM:
- Improper idling
- Engine stalls.
- Poor driving performance

CAUTION:
After servicing or replacing faulty parts, perform Clear Memory Mode <Ref. to EN(H6DO)(diag)-85, OPERATION, Clear Memory Mode.>, and Inspection Mode <Ref. to EN(H6DO)(diag)-69, PROCEDURE, Inspection Mode.>.

	Step	Check	Yes	No
1	**CHECK EXHAUST SYSTEM.**	Are there holes or loose bolts on exhaust system?	Repair the exhaust system.	Go to step **2**.
2	**CHECK AIR INTAKE SYSTEM.**	Are there holes, loose bolts or disconnection of hose on air intake system?	Repair the air intake system.	Go to step **3**.
3	**CHECK FUEL PRESSURE.** **WARNING:** **Place "NO OPEN FLAMES" signs near the working area.** **CAUTION:** **Be careful not to spill fuel.** Measure the fuel pressure. <Ref. to ME(H6DO)-31, INSPECTION, Fuel Pressure.> **CAUTION:** **Before attaching/detaching a fuel pressure gauge, release the fuel pressure.**	Is the measured value 340 — 400 kPa (3.5 — 4.1 kgf/cm^2, 49 — 58 psi)?	Go to step **4**.	Check the fuel pump and fuel delivery line. <Ref. to FU(H6DO)-124, INSPECTION, Fuel Pump.> <Ref. to FU(H6DO)-167, INSPECTION, Fuel Delivery and Evaporation Lines.>
4	**CHECK ENGINE COOLANT TEMPERATURE SENSOR.** 1) Start the engine and warm up completely. 2) Read the value of «Coolant Temp.» using the Subaru Select Monitor or a general scan tool. NOTE: • Subaru Select Monitor For detailed operation procedures, refer to "Read Current Data For Engine". <Ref. to EN(H6DO)(diag)-50, Subaru Select Monitor.> • General scan tool For detailed operation procedures, refer to the general scan tool operation manual.	Is the value of «Coolant Temp.» 75°C (167°F) or more?	Go to step **5**.	Replace the engine coolant temperature sensor. <Ref. to FU(H6DO)-39, Engine Coolant Temperature Sensor.>

	Step	Check	Yes	No
5	**CHECK MASS AIR FLOW AND INTAKE AIR TEMPERATURE SENSOR SIGNAL.** 1) Start the engine and warm up engine until coolant temperature is higher than 75°C (167°F). 2) Place the select lever in “P” range or “N” range. 3) Turn the A/C switch to OFF. 4) Turn all the accessory switches to OFF. 5) Read the value of «Mass Air Flow» using the Subaru Select Monitor or a general scan tool. NOTE: • Subaru Select Monitor For detailed operation procedures, refer to “Read Current Data For Engine”. <Ref. to EN(H6DO)(diag)-50, Subaru Select Monitor.> • General scan tool For detailed operation procedures, refer to the general scan tool operation manual.	Is the value of «Mass Air Flow» 2.0 — 5.0 g/s (0.26 — 0.66 lb/m)?	Go to step **6**.	Replace the mass air flow and intake air temperature sensor. <Ref. to FU(H6DO)-58, Mass Air Flow and Intake Air Temperature Sensor.>
6	**CHECK MASS AIR FLOW AND INTAKE AIR TEMPERATURE SENSOR.** 1) Start the engine and warm up engine until coolant temperature is higher than 75°C (167°F). 2) Place the select lever in “P” range or “N” range. 3) Turn the A/C switch to OFF. 4) Turn all the accessory switches to OFF. 5) Open the front hood. 6) Measure the ambient temperature. 7) Read the value of «Intake Air Temp.» using the Subaru Select Monitor or a general scan tool. NOTE: • Subaru Select Monitor For detailed operation procedures, refer to “Read Current Data For Engine”. <Ref. to EN(H6DO)(diag)-50, Subaru Select Monitor.> • General scan tool For detailed operation procedures, refer to the general scan tool operation manual.	Subtract ambient temperature from «Intake Air Temp.». Is the obtained value –10 — 50°C (–18 — 90°F)?	Repair the poor contact of ECM connector.	Check the mass air flow and intake air temperature sensor. <Ref. to FU(H6DO)-58, Mass Air Flow and Intake Air Temperature Sensor.>

1. OUTLINE OF DIAGNOSIS

NOTE:
For the detection standard, refer to DTC P0172. <Ref. to EN(H6DO)(diag)-273, DTC P0172 SYSTEM TOO RICH BANK 1, Diagnostic Procedure with Diagnostic Trouble Code (DTC).>

BZ:DTC P0196 ENGINE OIL TEMPERATURE SENSOR "A" RANGE/PERFORMANCE

DTC DETECTING CONDITION:
Detected when two consecutive driving cycles with fault occur.
TROUBLE SYMPTOM:
- Hard to start
- Improper idling
- Poor driving performance

CAUTION:
After servicing or replacing faulty parts, perform Clear Memory Mode <Ref. to EN(H6DO)(diag)-85, OPERATION, Clear Memory Mode.>, and Inspection Mode <Ref. to EN(H6DO)(diag)-69, PROCEDURE, Inspection Mode.>.

Step		Check	Yes	No
1	**CHECK FOR ANY OTHER DTC ON DISPLAY.**	Is any other DTC displayed?	Check the appropriate DTC using the “List of Diagnostic Trouble Code (DTC)”. <Ref. to EN(H6DO)(diag)-109, List of Diagnostic Trouble Code (DTC).>	Replace the engine oil temperature sensor. <Ref. to FU(H6DO)-76, Oil Temperature Sensor.>

1. OUTLINE OF DIAGNOSIS

Detect the malfunction of the engine oil temperature sensor output properties. Using the following two diagnoses, judge as NG when either is NG.

- **Diagnosis 1 (correlation diagnosis):** After the engine starts after the specified period of soaking time has elapsed, diagnose by correlation between engine oil temperature sensor value, engine coolant temperature sensor value and intake air temperature sensor value. Judge as NG when the differences are both above the specified value by comparing between engine oil temperature and engine coolant temperature, engine oil temperature and intake air temperature.
- **Diagnosis 2 (function diagnosis):** Judge as NG when engine oil temperature does not rise to the specified value regardless of an engine running condition that clears certain conditions.

2. COMPONENT DESCRIPTION

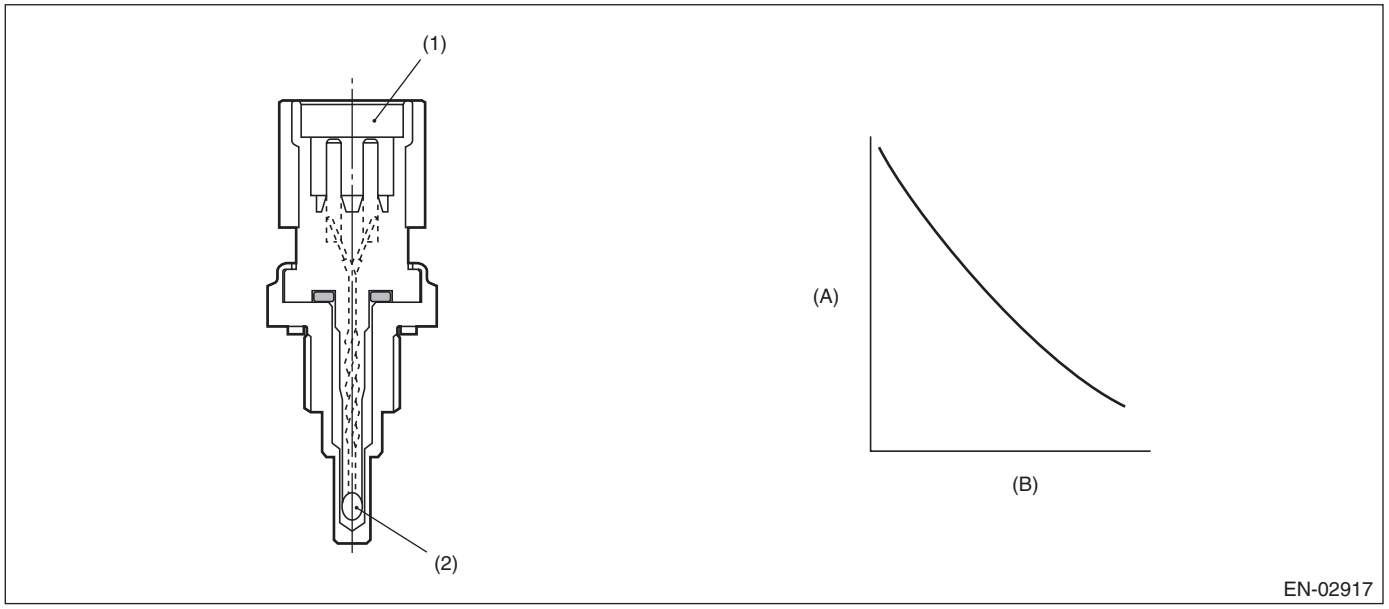

(A) Resistance value (kΩ)
(B) Temperature °C (°F)
(1) Connector
(2) Thermistor element

3. EXECUTION CONDITION

Diagnosis 1

Secondary Parameters	Execution condition
Soaking time	≥ 21600 s
Block heater judgment	Completed
Block heater operation	Not in operation

Diagnosis 2

Secondary Parameters	Execution condition
Engine oil temperature at engine starting	< 50 °C (122 °F)
Engine speed	> 500 rpm
Percentage of idling	≤ 0.5 × 100

4. GENERAL DRIVING CYCLE

- **Diagnosis 1:** Perform the diagnosis only once after the engine starts after a certain period of soaking time.
- **Diagnosis 2:** Perform the diagnosis only once after starting the engine from cold condition.

5. DIAGNOSTIC METHOD

Judge as NG when Diagnosis 1 or Diagnosis 2 becomes NG.
If the duration of time while the following conditions are met is longer than the time indicated, judge as NG.

Diagnosis 1

Judgment Value

Malfunction Criteria	Threshold Value
|Engine oil temperature at engine start – Engine coolant temperature at engine start|	> 10 °C (18°F)
|Engine oil temperature at engine start – Intake air temperature 30 sec. after engine start|	> Value of Map 1

Map 1

Ambient temperature °C (°F)	–30 (–22)	30 (86)	45 (113)	60 (140)
|Engine oil temperature at engine start – Intake air temperature 30 sec. after engine start| °C (°F)	10 (18°F)	10 (18°F)	22 (39.6°F)	22 (39.6°F)

Time Needed for Diagnosis: Less than 1 second

Diagnosis 2

Judgment Value

Malfunction Criteria	Threshold Value
Engine oil temperature	< 50 °C (122 °F)
Elapsed time after starting the engine	≥ Value from Map 2

Map 2

		Intake air temperature at engine start °C (°F)							
		–30 (–22)	–20 (–4)	–10 (14)	0 (32)	10 (50)	20 (68)	30 (86)	40 (104)
Percentage of time when engine is at stop against time elapsed since engine start	0.0	2000000	1500000	1050000	700000	550000	450000	350000	300000
	0.3	2000000	1500000	1050000	700000	550000	450000	350000	300000
	0.6	2000000	1500000	1050000	700000	550000	450000	350000	300000
	1.0	2000000	1500000	1050000	700000	550000	450000	350000	300000
ms									

Time Needed for Diagnosis: Value of Map 2

Malfunction Indicator Light Illumination: Illuminates when malfunction occurs in 2 continuous driving cycles.

CA:DTC P0197 ENGINE OIL TEMPERATURE SENSOR "A" CIRCUIT LOW

DTC DETECTING CONDITION:
Immediately at fault recognition
TROUBLE SYMPTOM:

- Hard to start
- Improper idling
- Poor driving performance

CAUTION:
After servicing or replacing faulty parts, perform Clear Memory Mode <Ref. to EN(H6DO)(diag)-85, OPERATION, Clear Memory Mode.>, and Inspection Mode <Ref. to EN(H6DO)(diag)-69, PROCEDURE, Inspection Mode.>.
WIRING DIAGRAM:

- Engine Electrical System ENGINE TYPE EZ (WITHOUT PUSH BUTTON START) <Ref. to WI-198, ENGINE TYPE EZ (WITHOUT PUSH BUTTON START), WIRING DIAGRAM, Engine Electrical System.>
- Engine Electrical System ENGINE TYPE EZ (WITH PUSH BUTTON START) <Ref. to WI-214, ENGINE TYPE EZ (WITH PUSH BUTTON START), WIRING DIAGRAM, Engine Electrical System.>

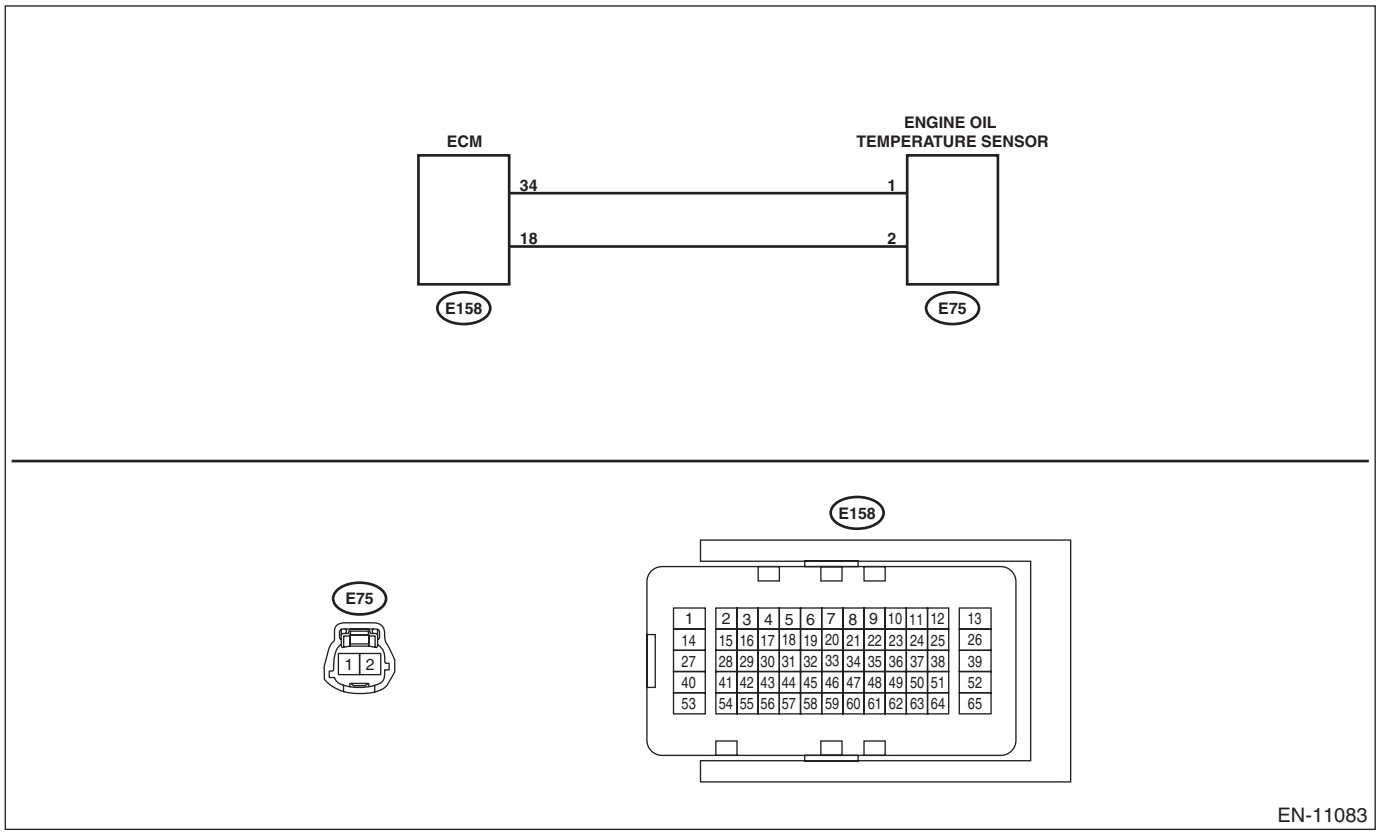

	Step	Check	Yes	No
1	**CHECK CURRENT DATA.** 1) Start the engine. 2) Read the value of «Oil Temperature» using Subaru Select Monitor. NOTE: For detailed operation procedures, refer to "Read Current Data For Engine". <Ref. to EN(H6DO)(diag)-50, Subaru Select Monitor.>	Is the value of «Oil Temperature» 215°C (419°F) or more?	Go to step **2**.	Even if DTC is detected, the circuit has returned to a normal condition at this time. Reproduce the failure, and then perform the diagnosis again. NOTE: In this case, temporary poor contact of connector, temporary open or short circuit of harness may be the cause.
2	**CHECK HARNESS BETWEEN ECM AND ENGINE OIL TEMPERATURE SENSOR CONNECTOR.** 1) Turn the ignition switch to OFF. 2) Disconnect the connectors from the ECM and engine oil temperature sensor. 3) Measure the resistance between ECM connector and chassis ground. ***Connector & terminal*** ***(E158) No. 18 — Chassis ground:***	Is the resistance 1 MΩ or more?	Replace the engine oil temperature sensor. <Ref. to FU(H6DO)-76, Oil Temperature Sensor.>	Repair the short circuit to ground in the harness between the ECM connector and engine oil temperature sensor connector.

1. OUTLINE OF DIAGNOSIS

Detect the open or short circuit of the oil temperature sensor.
Judge as NG when outside of the judgment value.

2. COMPONENT DESCRIPTION

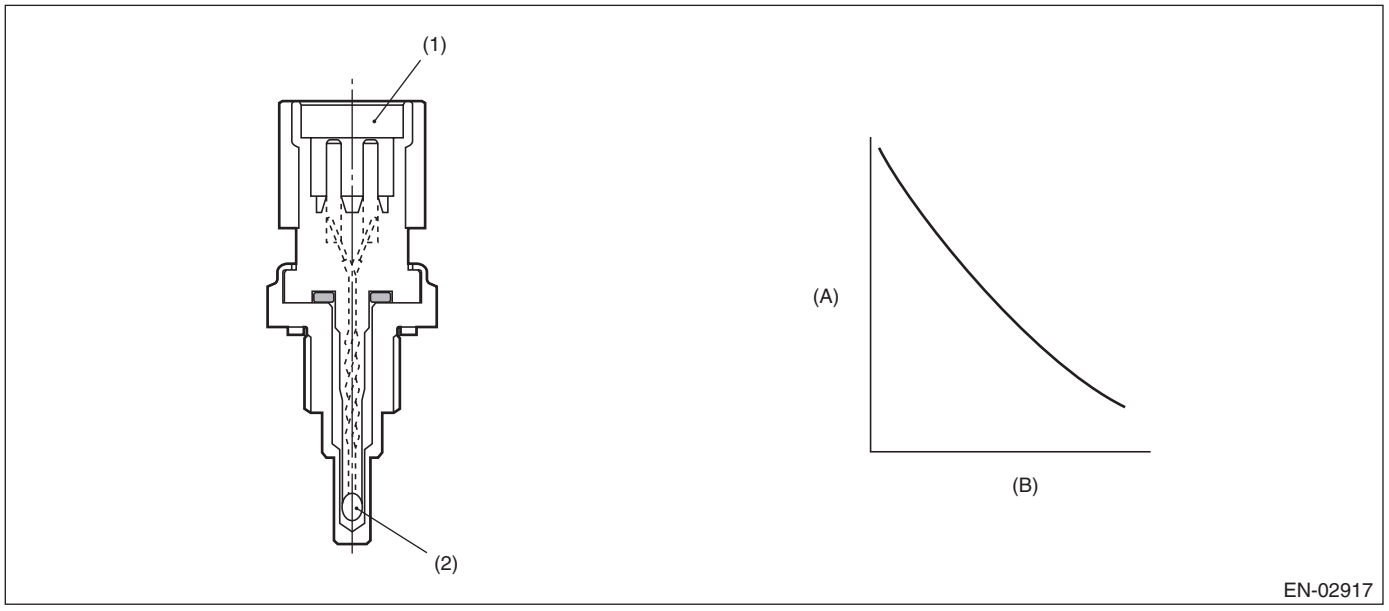

(A) Resistance value (kΩ)
(B) Temperature °C (°F)
(1) Connector
(2) Thermistor element

3. EXECUTION CONDITION

Secondary Parameters	Execution condition
None	

4. GENERAL DRIVING CYCLE

Always perform the diagnosis continuously.

5. DIAGNOSTIC METHOD

If the duration of time while the following conditions are met is longer than the time indicated, judge as NG.

Judgment Value

Malfunction Criteria	Threshold Value
Output voltage	< 0.203 V

Time Needed for Diagnosis: 500 ms
Malfunction Indicator Light Illumination: Illuminates as soon as a malfunction occurs.

CB:DTC P0198 ENGINE OIL TEMPERATURE SENSOR "A" CIRCUIT HIGH

DTC DETECTING CONDITION:
Immediately at fault recognition
TROUBLE SYMPTOM:

- Hard to start
- Improper idling
- Poor driving performance

CAUTION:
After servicing or replacing faulty parts, perform Clear Memory Mode <Ref. to EN(H6DO)(diag)-85, OPERATION, Clear Memory Mode.>, and Inspection Mode <Ref. to EN(H6DO)(diag)-69, PROCEDURE, Inspection Mode.>.
WIRING DIAGRAM:

- Engine Electrical System ENGINE TYPE EZ (WITHOUT PUSH BUTTON START) <Ref. to WI-198, ENGINE TYPE EZ (WITHOUT PUSH BUTTON START), WIRING DIAGRAM, Engine Electrical System.>
- Engine Electrical System ENGINE TYPE EZ (WITH PUSH BUTTON START) <Ref. to WI-214, ENGINE TYPE EZ (WITH PUSH BUTTON START), WIRING DIAGRAM, Engine Electrical System.>

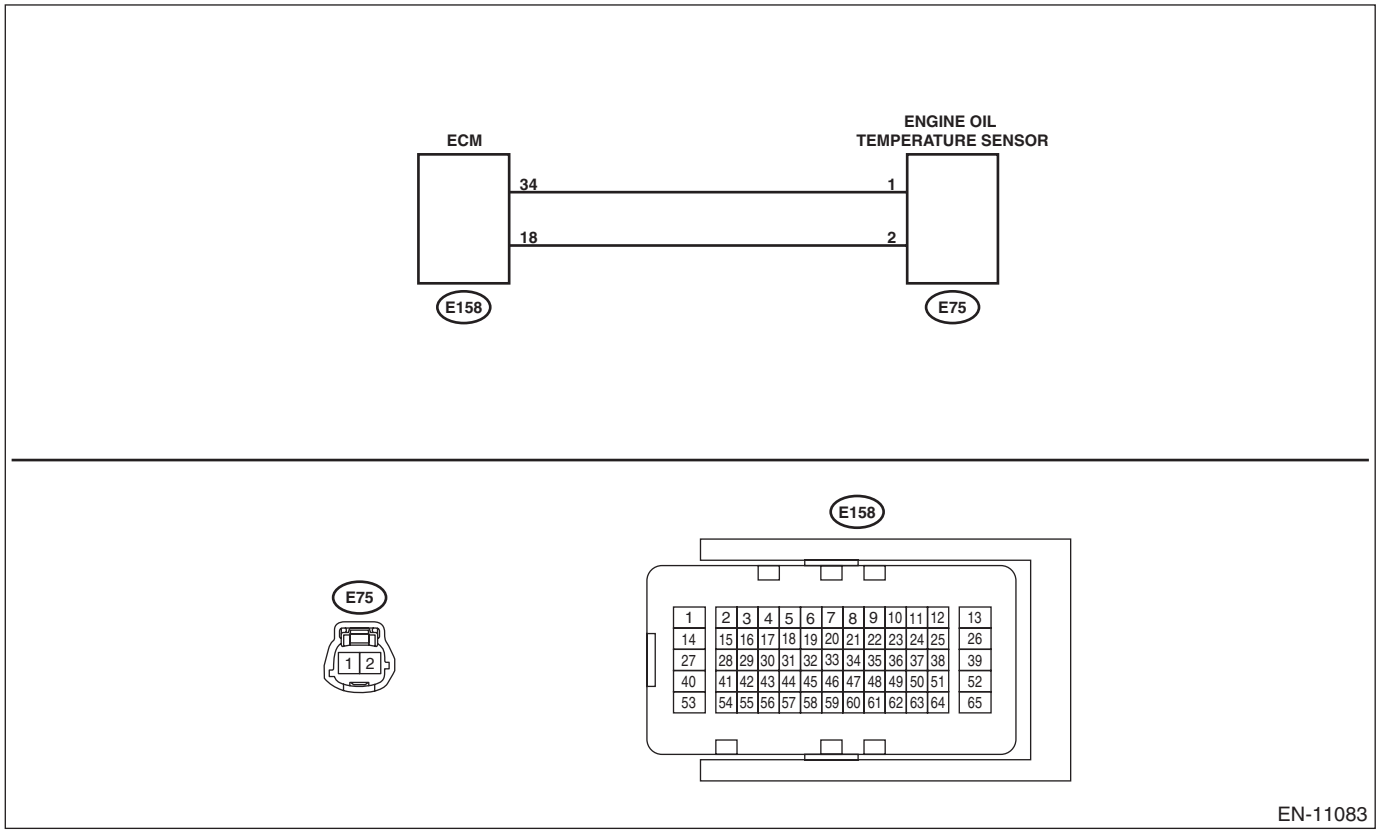

	Step	Check	Yes	No
1	**CHECK CURRENT DATA.** 1) Start the engine. 2) Read the value of «Oil Temperature» using Subaru Select Monitor. NOTE: For detailed operation procedures, refer to "Read Current Data For Engine". <Ref. to EN(H6DO)(diag)-50, Subaru Select Monitor.>	Is the value of «Oil Temperature» less than –40°C (–40°F)?	Go to step **2**.	Even if DTC is detected, the circuit has returned to a normal condition at this time. Reproduce the failure, and then perform the diagnosis again. NOTE: In this case, temporary poor contact of connector, temporary open or short circuit of harness may be the cause.
2	**CHECK FOR POOR CONTACT.** Check for poor contact between the ECM and engine oil temperature sensor connectors.	Is there poor contact of the ECM or engine oil temperature sensor connectors?	Repair the poor contact of ECM or engine oil temperature sensor connector.	Go to step **3**.
3	**CHECK HARNESS BETWEEN ECM AND ENGINE OIL TEMPERATURE SENSOR CONNECTOR.** 1) Turn the ignition switch to OFF. 2) Disconnect the connectors from the ECM and engine oil temperature sensor. 3) Measure the resistance of the harness between the ECM connector and engine oil temperature sensor connector. ***Connector & terminal*** ***(E158) No. 34 — (E75) No. 1:*** ***(E158) No. 18 — (E75) No. 2:***	Is the resistance less than 1 Ω?	Go to step **4**.	Repair the open circuit in the harness between ECM connector and engine oil temperature sensor connector.
4	**CHECK HARNESS BETWEEN ECM AND ENGINE OIL TEMPERATURE SENSOR CONNECTOR.** 1) Connect all connectors. 2) Turn the ignition switch to ON. 3) Measure the voltage between ECM connector and chassis ground. ***Connector & terminal*** ***(E158) No. 18 (+) — Chassis ground (–):***	Is the voltage 5 V or more?	Repair the short circuit to power in harness between ECM connector and engine oil temperature sensor connector.	Replace the engine oil temperature sensor. <Ref. to FU(H6DO)-76, Oil Temperature Sensor.>

1. OUTLINE OF DIAGNOSIS

Detect the open or short circuit of the oil temperature sensor.
Judge as NG when outside of the judgment value.

2. COMPONENT DESCRIPTION

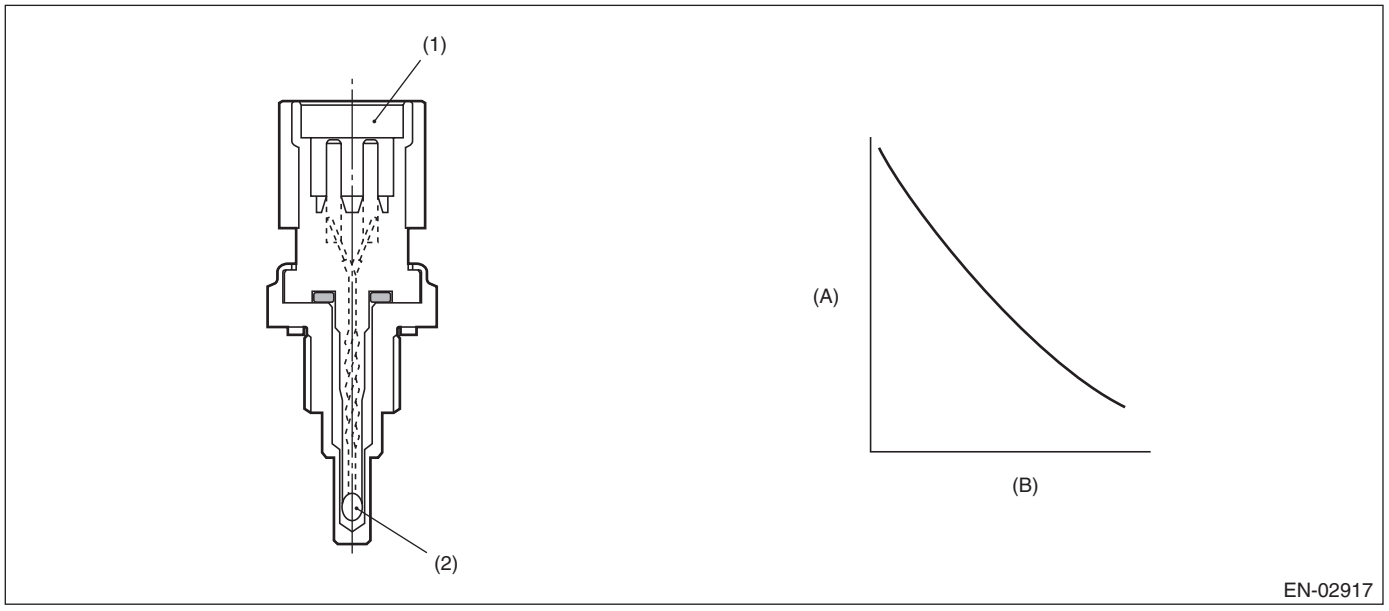

(A) Resistance value (kΩ)
(B) Temperature °C (°F)
(1) Connector
(2) Thermistor element

3. EXECUTION CONDITION

Secondary Parameters	Execution condition
None	

4. GENERAL DRIVING CYCLE

Always perform the diagnosis continuously.

5. DIAGNOSTIC METHOD

If the duration of time while the following conditions are met is longer than the time indicated, judge as NG.

Judgment Value

Malfunction Criteria	Threshold Value
Output voltage	≥ 4.698 V

Time Needed for Diagnosis: 500 ms
Malfunction Indicator Light Illumination: Illuminates as soon as a malfunction occurs.

CC:DTC P0201 CYLINDER 1 INJECTOR "A" CIRCUIT

DTC DETECTING CONDITION:
Immediately at fault recognition
TROUBLE SYMPTOM:
- Improper idling
- Poor driving performance

CAUTION:
After servicing or replacing faulty parts, perform Clear Memory Mode <Ref. to EN(H6DO)(diag)-85, OPERATION, Clear Memory Mode.>, and Inspection Mode <Ref. to EN(H6DO)(diag)-69, PROCEDURE, Inspection Mode.>.
WIRING DIAGRAM:
- Engine Electrical System ENGINE TYPE EZ (WITHOUT PUSH BUTTON START) <Ref. to WI-198, ENGINE TYPE EZ (WITHOUT PUSH BUTTON START), WIRING DIAGRAM, Engine Electrical System.>
- Engine Electrical System ENGINE TYPE EZ (WITH PUSH BUTTON START) <Ref. to WI-214, ENGINE TYPE EZ (WITH PUSH BUTTON START), WIRING DIAGRAM, Engine Electrical System.>

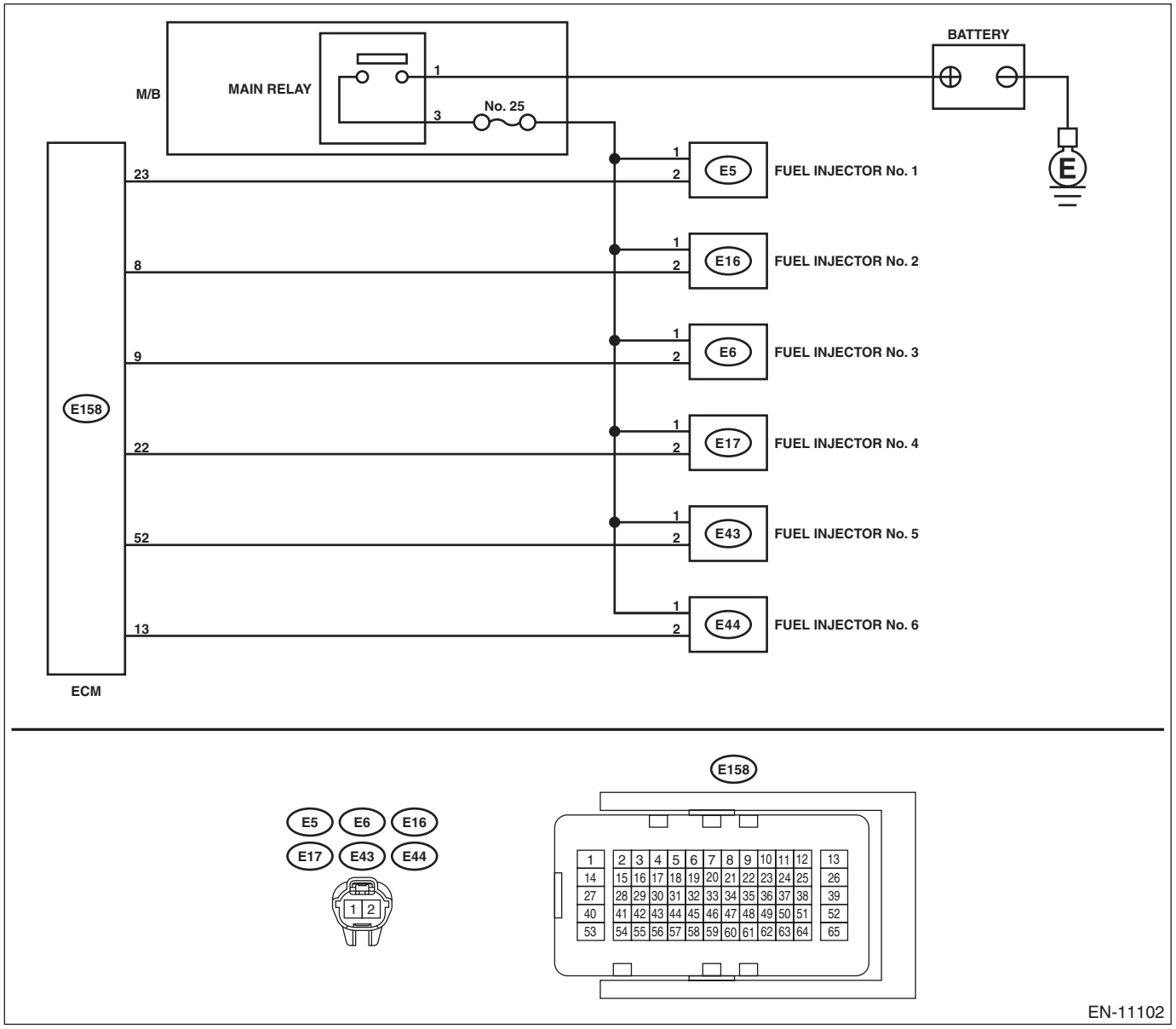

	Step	Check	Yes	No
1	**CHECK POWER SUPPLY TO FUEL INJECTOR.** 1) Turn the ignition switch to OFF. 2) Disconnect the connector from fuel injector. 3) Turn the ignition switch to ON. 4) Measure the voltage between fuel injector connector and the engine ground. ***Connector & terminal*** ***DTC P0201; (E5) No. 1 (+) — Engine ground (–):*** ***DTC P0202; (E16) No. 1 (+) — Engine ground (–):*** ***DTC P0203; (E6) No. 1 (+) — Engine ground (–):*** ***DTC P0204; (E17) No. 1 (+) — Engine ground (–):*** ***DTC P0205; (E43) No. 1 (+) — Engine ground (–):*** ***DTC P0206; (E44) No. 1 (+) — Engine ground (–):***	Is the voltage 10 V or more?	Go to step **2**.	Repair the harness and connector. NOTE: In this case, repair the following item: • Open circuit in harness between main relay and fuel injector connector • Poor contact of main relay connector • Poor contact of coupling connector • Blown out of fuse (M/B No. 25)
2	**CHECK HARNESS BETWEEN ECM AND FUEL INJECTOR CONNECTOR.** 1) Turn the ignition switch to OFF. 2) Disconnect the connector from ECM. 3) Measure the resistance between fuel injector connector and engine ground. ***Connector & terminal*** ***DTC P0201; (E5) No. 2 — Engine ground:*** ***DTC P0202; (E16) No. 2 — Engine ground:*** ***DTC P0203; (E6) No. 2 — Engine ground:*** ***DTC P0204; (E17) No. 2 — Engine ground:*** ***DTC P0205; (E43) No. 2 — Engine ground:*** ***DTC P0206; (E44) No. 2 — Engine ground:***	Is the resistance 1 MΩ or more?	Go to step **3**.	Repair the short circuit to ground in harness between ECM connector and fuel injector connector.
3	**CHECK HARNESS BETWEEN ECM AND FUEL INJECTOR CONNECTOR.** Measure the resistance of harness between ECM connector and fuel injector connector. ***Connector & terminal*** ***DTC P0201; (E158) No. 23 — (E5) No. 2:*** ***DTC P0202; (E158) No. 8 — (E16) No. 2:*** ***DTC P0203; (E158) No. 9 — (E6) No. 2:*** ***DTC P0204; (E158) No. 22 — (E17) No. 2:*** ***DTC P0205; (E158) No. 52 — (E43) No. 2:*** ***DTC P0206; (E158) No. 13 — (E44) No. 2:***	Is the resistance less than 1 Ω?	Go to step **4**.	Repair the open circuit of the harness between the ECM connector and fuel injector connector.
4	**CHECK FUEL INJECTOR.** Measure the resistance between fuel injector terminals on the corresponding cylinder. ***Terminals*** ***No. 1 — No. 2:***	Is the resistance 5 — 20 Ω?	Go to step **5**.	Replace the fuel injector. <Ref. to FU(H6DO)-61, Fuel Injector.>
5	**CHECK FOR POOR CONTACT.** Check for poor contact of ECM connector.	Is there poor contact of ECM connector?	Repair the poor contact of ECM connector.	Go to step **6**.

Step		Check	Yes	No
6	**CHECK FUEL INJECTOR OPERATION.** 1) Connect all connectors. 2) Start the engine. 3) Check if the corresponding fuel injector emits operating sound. NOTE: Use a sound scope to check the operating sound.	Does the fuel injector emit operating sound?	Even if DTC is detected, the circuit has returned to a normal condition at this time. Reproduce the failure, and then perform the diagnosis again. NOTE: In this case, temporary poor contact of connector, temporary open or short circuit of harness may be the cause.	Repair the poor contact of fuel injector connector.

1. OUTLINE OF DIAGNOSIS

Based on the self-diagnostic result of the injector driving IC, judge the injector driving circuit as normal or abnormal.
Injector driving IC detects the status of “fuel remains injected” or “fuel is not injected” as a malfunction.

2. EXECUTION CONDITION

Secondary Parameters	Execution condition
Battery voltage	≥ 10.9 V
Elapsed time after starting the engine	> 1 s
Engine speed	> 500 rpm
Injection status	Not during fuel cut

3. GENERAL DRIVING CYCLE

Perform the diagnosis continuously after the enable conditions have been established.

4. DIAGNOSTIC METHOD

Judge as NG when the following conditions are established.

Judgment Value

Malfunction Criteria	Threshold Value
Injector driving IC information	Trouble

Time Needed for Diagnosis: 256/1000 seconds × 10 time(s)
Malfunction Indicator Light Illumination: Illuminates as soon as a malfunction occurs.

CD:DTC P0202 CYLINDER 2 INJECTOR "A" CIRCUIT

NOTE:
For the diagnostic procedure, refer to DTC P0201. <Ref. to EN(H6DO)(diag)-285, DTC P0201 CYLINDER 1 INJECTOR "A" CIRCUIT, Diagnostic Procedure with Diagnostic Trouble Code (DTC).>

1. OUTLINE OF DIAGNOSIS

NOTE:
For the detection standard, refer to DTC P0201. <Ref. to EN(H6DO)(diag)-285, DTC P0201 CYLINDER 1 INJECTOR "A" CIRCUIT, Diagnostic Procedure with Diagnostic Trouble Code (DTC).>

CE:DTC P0203 CYLINDER 3 INJECTOR "A" CIRCUIT

NOTE:
For the diagnostic procedure, refer to DTC P0201. <Ref. to EN(H6DO)(diag)-285, DTC P0201 CYLINDER 1 INJECTOR "A" CIRCUIT, Diagnostic Procedure with Diagnostic Trouble Code (DTC).>

1. OUTLINE OF DIAGNOSIS

NOTE:
For the detection standard, refer to DTC P0201. <Ref. to EN(H6DO)(diag)-285, DTC P0201 CYLINDER 1 INJECTOR "A" CIRCUIT, Diagnostic Procedure with Diagnostic Trouble Code (DTC).>

CF:DTC P0204 CYLINDER 4 INJECTOR "A" CIRCUIT

NOTE:
For the diagnostic procedure, refer to DTC P0201. <Ref. to EN(H6DO)(diag)-285, DTC P0201 CYLINDER 1 INJECTOR "A" CIRCUIT, Diagnostic Procedure with Diagnostic Trouble Code (DTC).>

1. OUTLINE OF DIAGNOSIS

NOTE:
For the detection standard, refer to DTC P0201. <Ref. to EN(H6DO)(diag)-285, DTC P0201 CYLINDER 1 INJECTOR "A" CIRCUIT, Diagnostic Procedure with Diagnostic Trouble Code (DTC).>

CG:DTC P0205 CYLINDER 5 INJECTOR "A" CIRCUIT

NOTE:
For the diagnostic procedure, refer to DTC P0201. <Ref. to EN(H6DO)(diag)-285, DTC P0201 CYLINDER 1 INJECTOR "A" CIRCUIT, Diagnostic Procedure with Diagnostic Trouble Code (DTC).>

1. OUTLINE OF DIAGNOSIS

NOTE:
For the detection standard, refer to DTC P0201. <Ref. to EN(H6DO)(diag)-285, DTC P0201 CYLINDER 1 INJECTOR "A" CIRCUIT, Diagnostic Procedure with Diagnostic Trouble Code (DTC).>

CH:DTC P0206 CYLINDER 6 INJECTOR "A" CIRCUIT

NOTE:
For the diagnostic procedure, refer to DTC P0201. <Ref. to EN(H6DO)(diag)-285, DTC P0201 CYLINDER 1 INJECTOR "A" CIRCUIT, Diagnostic Procedure with Diagnostic Trouble Code (DTC).>

1. OUTLINE OF DIAGNOSIS

NOTE:
For the detection standard, refer to DTC P0201. <Ref. to EN(H6DO)(diag)-285, DTC P0201 CYLINDER 1 INJECTOR "A" CIRCUIT, Diagnostic Procedure with Diagnostic Trouble Code (DTC).>

CI: DTC P0222 THROTTLE/PEDAL POSITION SENSOR/SWITCH "B" CIRCUIT LOW

DTC DETECTING CONDITION:
Immediately at fault recognition
TROUBLE SYMPTOM:
- Improper idling
- Poor driving performance
- Engine stalls.

CAUTION:
After servicing or replacing faulty parts, perform Clear Memory Mode <Ref. to EN(H6DO)(diag)-85, OPERATION, Clear Memory Mode.>, and Inspection Mode <Ref. to EN(H6DO)(diag)-69, PROCEDURE, Inspection Mode.>.
WIRING DIAGRAM:
- Engine Electrical System ENGINE TYPE EZ (WITHOUT PUSH BUTTON START) <Ref. to WI-198, ENGINE TYPE EZ (WITHOUT PUSH BUTTON START), WIRING DIAGRAM, Engine Electrical System.>
- Engine Electrical System ENGINE TYPE EZ (WITH PUSH BUTTON START) <Ref. to WI-214, ENGINE TYPE EZ (WITH PUSH BUTTON START), WIRING DIAGRAM, Engine Electrical System.>

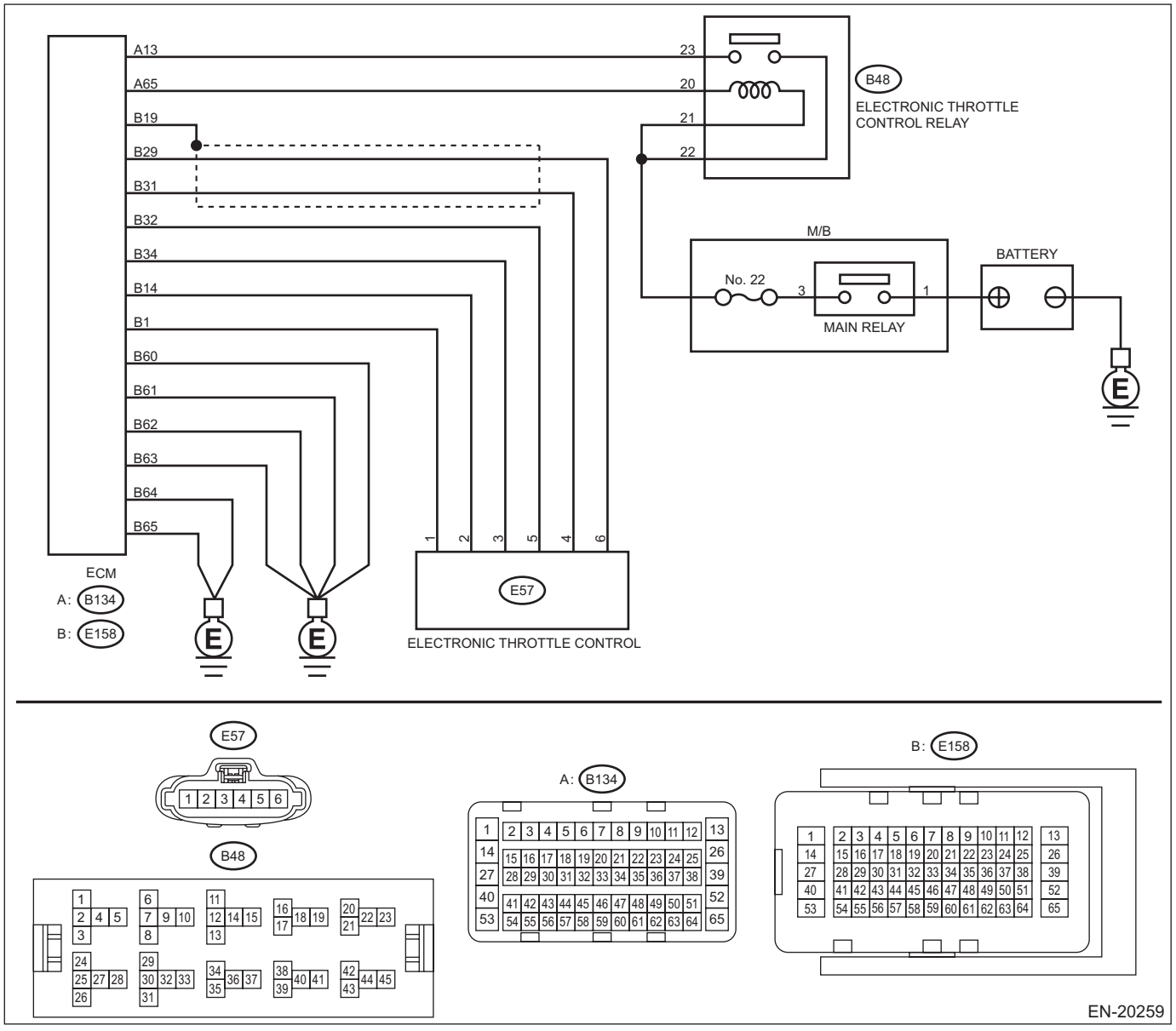

	Step	Check	Yes	No
1	**CHECK HARNESS BETWEEN ECM AND ELECTRONIC THROTTLE CONTROL.** 1) Turn the ignition switch to OFF. 2) Disconnect the connectors from ECM and electronic throttle control. 3) Measure the resistance between ECM connector and chassis ground. ***Connector & terminal*** ***(E158) No. 32 — Chassis ground:*** ***(E158) No. 31 — Chassis ground:***	Is the resistance 1 MΩ or more?	Go to step **2**.	Repair the ground short circuit of harness between ECM connector and electronic throttle control connector.
2	**CHECK SHORT CIRCUIT INSIDE THE ECM.** 1) Connect the connector to ECM. 2) Measure the resistance between electronic throttle control connector and engine ground. ***Connector & terminal*** ***(E57) No. 4 — Engine ground:***	Is the resistance 1 MΩ or more?	Replace the electronic throttle control. <Ref. to FU(H6DO)-19, Throttle Body.>	Repair the ground short circuit of harness between ECM connector and electronic throttle control connector. Replace the ECM if defective. <Ref. to FU(H6DO)-83, Engine Control Module (ECM).>

1. OUTLINE OF DIAGNOSIS

Detect the open or short circuit of throttle position sensor 2.
Judge as NG if out of specification.

2. COMPONENT DESCRIPTION

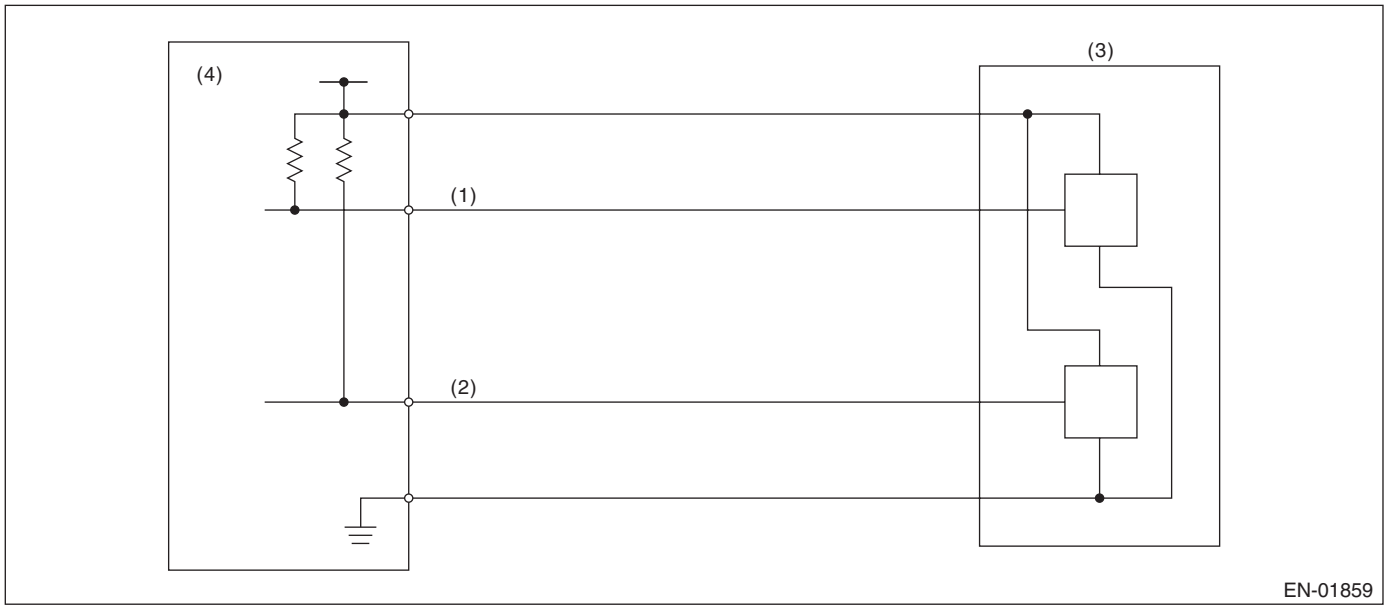

(1) Throttle position sensor 1 signal
(2) Throttle position sensor 2 signal
(3) Throttle position sensor
(4) Engine control module (ECM)

3. EXECUTION CONDITION

Secondary Parameters	Execution condition
Battery voltage	≥ 6 V

4. GENERAL DRIVING CYCLE

Always perform the diagnosis continuously.

5. DIAGNOSTIC METHOD

If the duration of time while the following conditions are met is longer than the time indicated, judge as NG.

Judgment Value

Malfunction Criteria	Threshold Value
Sensor 2 input voltage	≤ 1.134 V

Time Needed for Diagnosis: 24 ms
Malfunction Indicator Light Illumination: Illuminates as soon as a malfunction occurs.

CJ:DTC P0223 THROTTLE/PEDAL POSITION SENSOR/SWITCH "B" CIRCUIT HIGH

DTC DETECTING CONDITION:
Immediately at fault recognition
TROUBLE SYMPTOM:
- Improper idling
- Poor driving performance
- Engine stalls.

CAUTION:
After servicing or replacing faulty parts, perform Clear Memory Mode <Ref. to EN(H6DO)(diag)-85, OPERATION, Clear Memory Mode.>, and Inspection Mode <Ref. to EN(H6DO)(diag)-69, PROCEDURE, Inspection Mode.>.
WIRING DIAGRAM:
- Engine Electrical System ENGINE TYPE EZ (WITHOUT PUSH BUTTON START) <Ref. to WI-198, ENGINE TYPE EZ (WITHOUT PUSH BUTTON START), WIRING DIAGRAM, Engine Electrical System.>
- Engine Electrical System ENGINE TYPE EZ (WITH PUSH BUTTON START) <Ref. to WI-214, ENGINE TYPE EZ (WITH PUSH BUTTON START), WIRING DIAGRAM, Engine Electrical System.>

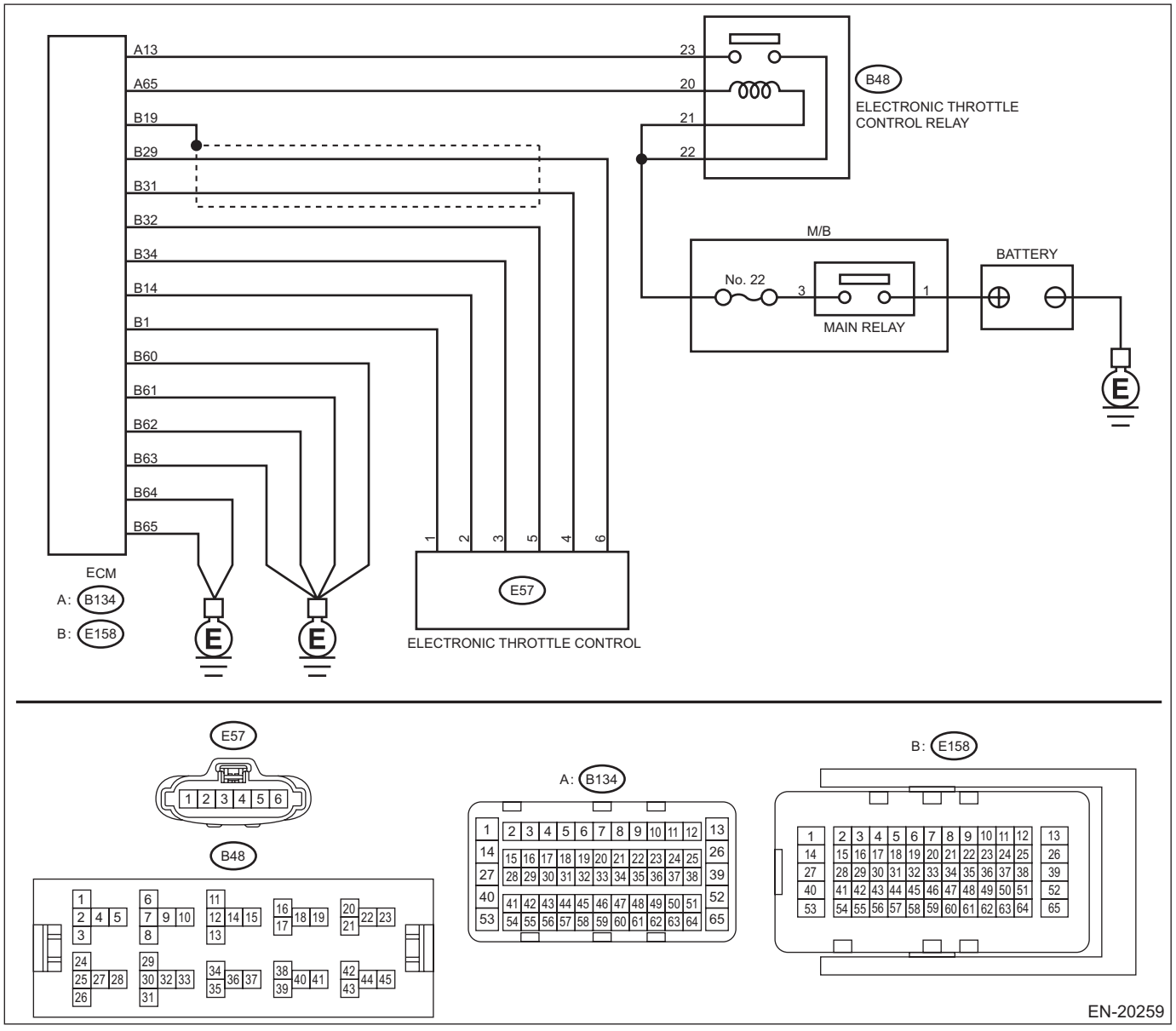

	Step	Check	Yes	No
1	**CHECK HARNESS BETWEEN ECM AND ELECTRONIC THROTTLE CONTROL.** 1) Turn the ignition switch to OFF. 2) Disconnect the connectors from ECM and electronic throttle control. 3) Measure the resistance of harness between ECM connector and electronic throttle control connector. ***Connector & terminal*** ***(E158) No. 31 — (E57) No. 4:*** ***(E158) No. 34 — (E57) No. 3:***	Is the resistance less than 1 Ω?	Go to step **2**.	Repair the open circuit of harness between ECM connector and electronic throttle control connector.
2	**CHECK HARNESS BETWEEN ECM AND ELECTRONIC THROTTLE CONTROL.** 1) Connect the connector to ECM. 2) Measure the resistance between electronic throttle control connector and engine ground. ***Connector & terminal*** ***(E57) No. 3 — Engine ground:***	Is the resistance less than 5 Ω?	Go to step **3**.	Repair the harness and connector. NOTE: In this case, repair the following item: • Open circuit of harness between ECM connector and engine ground • Poor contact of ECM connector
3	**CHECK HARNESS BETWEEN ECM AND ELECTRONIC THROTTLE CONTROL.** 1) Turn the ignition switch to ON. 2) Measure the voltage between electronic throttle control connector and engine ground. ***Connector & terminal*** ***(E57) No. 4 (+) — Engine ground (–):***	Is the voltage 5 V or more?	Repair the short circuit to power in the harness between ECM connector and electronic throttle control connector.	Go to step **4**.
4	**CHECK HARNESS BETWEEN ECM AND ELECTRONIC THROTTLE CONTROL.** 1) Turn the ignition switch to OFF. 2) Disconnect the connector from ECM. 3) Measure the resistance between ECM connectors. ***Connector & terminal*** ***(E158) No. 32 — (E158) No. 31:***	Is the resistance 1 MΩ or more?	Repair the poor contact of electronic throttle control connector. Replace the electronic throttle control if defective. <Ref. to FU(H6DO)-19, Throttle Body.>	Repair the short circuit to power in the harness between ECM connector and electronic throttle control connector.

1. OUTLINE OF DIAGNOSIS

Detect the open or short circuit of throttle position sensor 2.
Judge as NG if out of specification.

2. COMPONENT DESCRIPTION

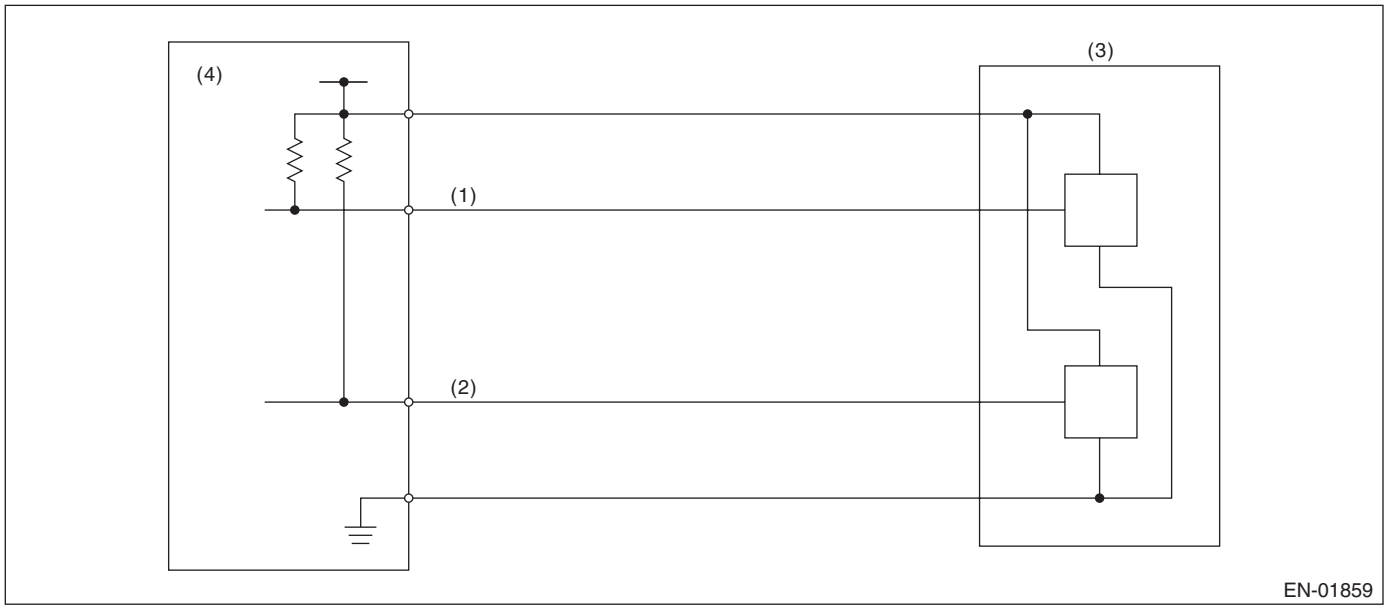

(1) Throttle position sensor 1 signal
(2) Throttle position sensor 2 signal
(3) Throttle position sensor
(4) Engine control module (ECM)

3. EXECUTION CONDITION

Secondary Parameters	Execution condition
Battery voltage	≥ 6 V

4. GENERAL DRIVING CYCLE

Always perform the diagnosis continuously.

5. DIAGNOSTIC METHOD

If the duration of time while the following conditions are met is longer than the time indicated, judge as NG.

Judgment Value

Malfunction Criteria	Threshold Value
Sensor 2 input voltage	≥ 4.782 V

Time Needed for Diagnosis: 24 ms
Malfunction Indicator Light Illumination: Illuminates as soon as a malfunction occurs.

CK:DTC P0230 FUEL PUMP PRIMARY CIRCUIT

DTC DETECTING CONDITION:

Detected when two consecutive driving cycles with fault occur.

CAUTION:

After servicing or replacing faulty parts, perform Clear Memory Mode <Ref. to EN(H6DO)(diag)-85, OPERATION, Clear Memory Mode.>, and Inspection Mode <Ref. to EN(H6DO)(diag)-69, PROCEDURE, Inspection Mode.>.

WIRING DIAGRAM:

- Engine Electrical System ENGINE TYPE EZ (WITHOUT PUSH BUTTON START) <Ref. to WI-198, ENGINE TYPE EZ (WITHOUT PUSH BUTTON START), WIRING DIAGRAM, Engine Electrical System.>
- Engine Electrical System ENGINE TYPE EZ (WITH PUSH BUTTON START) <Ref. to WI-214, ENGINE TYPE EZ (WITH PUSH BUTTON START), WIRING DIAGRAM, Engine Electrical System.>

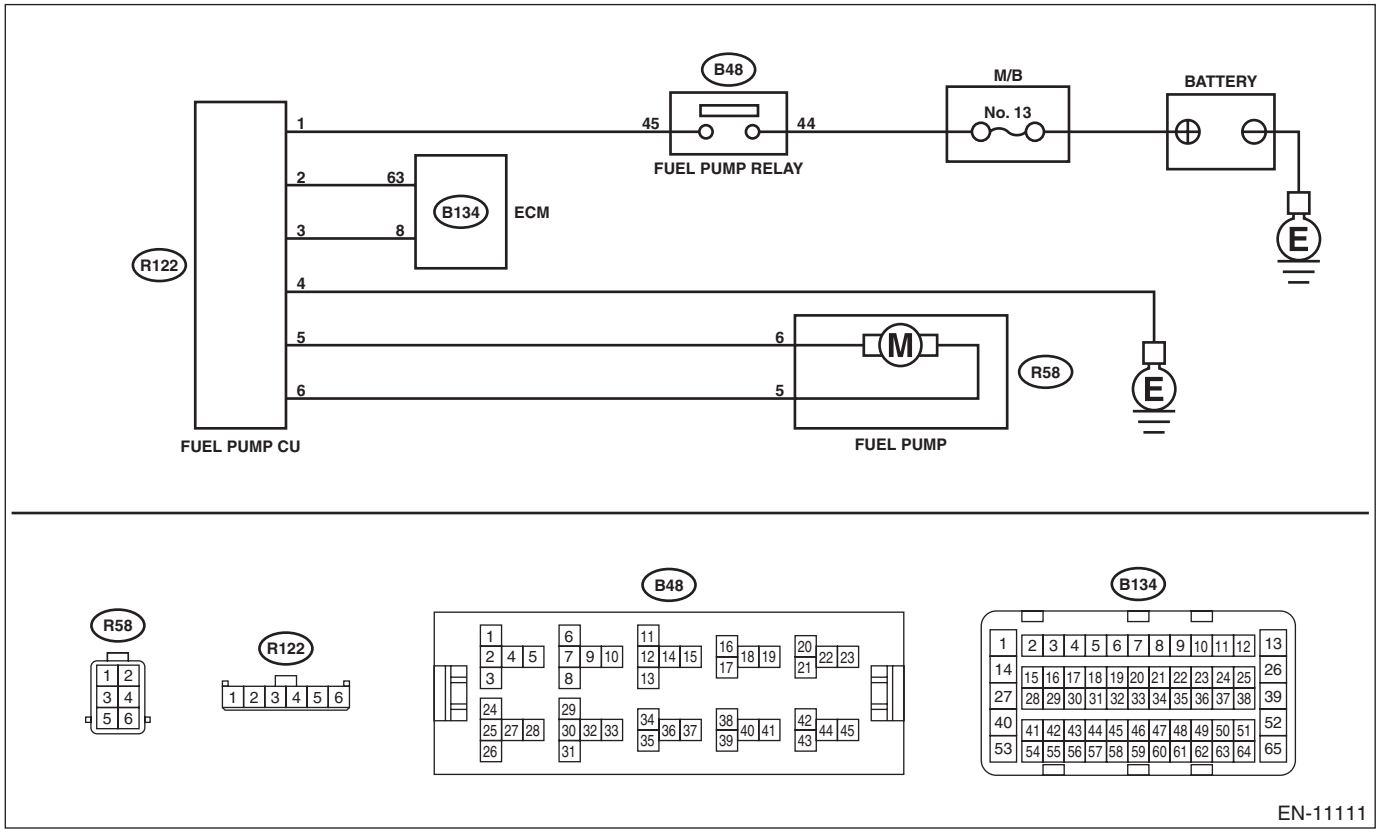

	Step	Check	Yes	No
1	**CHECK POWER SUPPLY CIRCUIT TO FUEL PUMP CONTROL UNIT.** 1) Turn the ignition switch to OFF. 2) Disconnect the connector from fuel pump control unit. 3) Turn the ignition switch to ON. 4) Measure the voltage between fuel pump control unit and chassis ground. ***Connector & terminal*** ***(R122) No. 1 (+) — Chassis ground (–):***	Is the voltage 10 V or more?	Go to step **2**.	Repair the power supply circuit. NOTE: In this case, repair the following item: • Open circuit or short circuit to ground in harness between fuel pump relay connector and fuel pump control unit connector • Poor contact of fuel pump relay connector • Poor contact of coupling connector • Blown out of fuse (M/B No. 13)
2	**CHECK GROUND CIRCUIT OF FUEL PUMP CONTROL UNIT.** 1) Turn the ignition switch to OFF. 2) Measure the resistance of harness between fuel pump control unit and chassis ground. ***Connector & terminal*** ***(R122) No. 4 — Chassis ground:***	Is the resistance less than 5 Ω?	Go to step **3**.	Repair the open circuit in harness between fuel pump control unit connector and chassis ground.
3	**CHECK HARNESS BETWEEN FUEL PUMP CONTROL UNIT AND FUEL PUMP CONNECTOR.** 1) Disconnect the connector from fuel pump. 2) Measure the resistance of harness between fuel pump control unit and fuel pump connector. ***Connector & terminal*** ***(R122) No. 6 — (R58) No. 5:*** ***(R122) No. 5 — (R58) No. 6:***	Is the resistance less than 1 Ω?	Go to step **4**.	Repair the open circuit in harness between fuel pump control unit connector and fuel pump connector.
4	**CHECK HARNESS BETWEEN FUEL PUMP CONTROL UNIT AND FUEL PUMP CONNECTOR.** Measure the resistance between fuel pump control unit and chassis ground. ***Connector & terminal*** ***(R122) No. 5 — Chassis ground:*** ***(R122) No. 6 — Chassis ground:***	Is the resistance 1 MΩ or more?	Go to step **5**.	Repair the short circuit to ground in harness between fuel pump control unit connector and fuel pump connector.
5	**CHECK HARNESS BETWEEN ECM AND FUEL PUMP CONTROL UNIT.** 1) Disconnect the connector from ECM. 2) Measure the resistance of harness between ECM connector and fuel pump control unit. ***Connector & terminal*** ***(B134) No. 63 — (R122) No. 2:*** ***(B134) No. 8 — (R122) No. 3:***	Is the resistance less than 1 Ω?	Go to step **6**.	Repair the harness and connector. NOTE: In this case, repair the following item: • Open circuit in harness between ECM connector and fuel pump control unit connector • Poor contact of coupling connector

	Step	Check	Yes	No
6	**CHECK HARNESS BETWEEN ECM AND FUEL PUMP CONTROL UNIT.** Measure the resistance between fuel pump control unit and chassis ground. ***Connector & terminal*** ***(R122) No. 2 — Chassis ground:*** ***(R122) No. 3 — Chassis ground:***	Is the resistance 1 MΩ or more?	Go to step **7**.	Repair the short circuit to ground in harness between ECM connector and fuel pump control unit connector.
7	**CHECK FOR POOR CONTACT.** Check for poor contact of ECM and fuel pump control unit connector.	Is there poor contact of ECM or fuel pump control unit connector?	Repair the poor contact of ECM or fuel pump control unit connector.	Go to step **8**.
8	**CHECK EXPERIENCE OF RUNNING OUT OF FUEL.**	Has the vehicle experienced running out of fuel?	Finish the diagnosis. NOTE: DTC may be recorded as a result of fuel pump idling while running out of fuel.	Replace the fuel pump control unit. <Ref. to FU(H6DO)-91, Fuel Pump Control Unit.>

1. OUTLINE OF DIAGNOSIS

Detect the malfunction of fuel pump control unit.
Judge as NG when the NG signal is sent through a diagnostic line coming from the fuel pump control unit.
Fuel pump control unit detects the open or short circuit malfunction for each line, and then sends NG signals if one of them is found NG.

2. COMPONENT DESCRIPTION

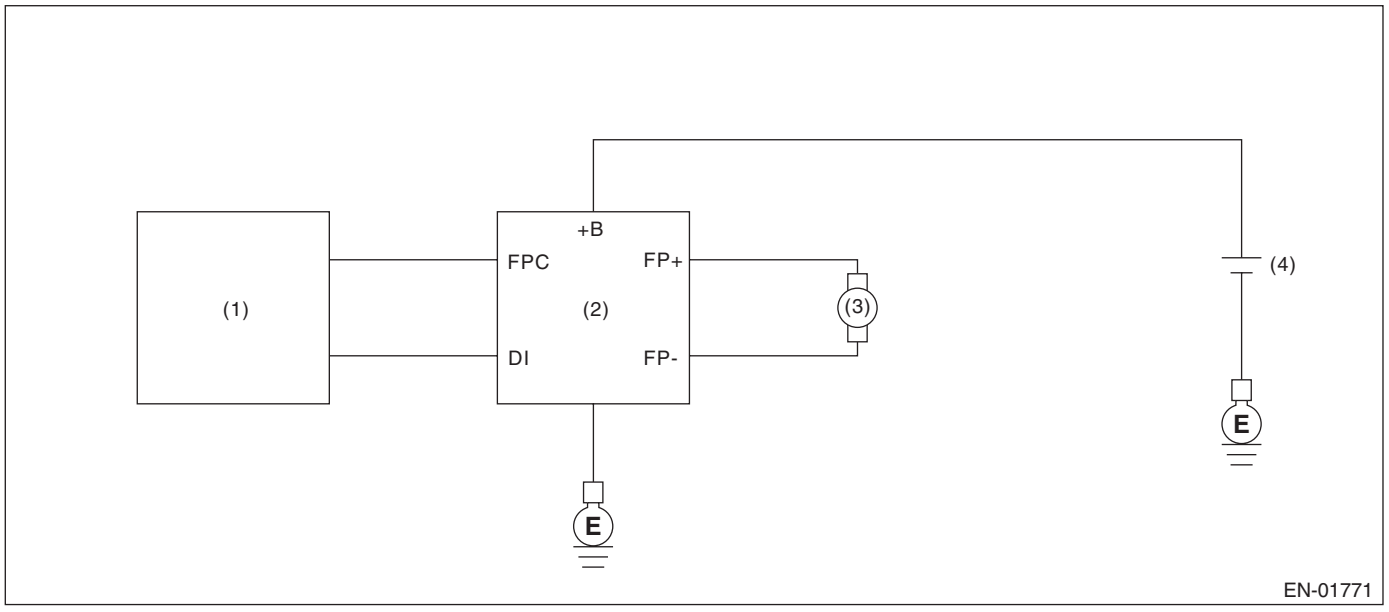

(1) Engine control module (ECM)
(2) Fuel pump control unit
(3) Fuel pump
(4) Battery

3. EXECUTION CONDITION

Secondary Parameters	Execution condition
Battery voltage	≥ 8 V
Remaining fuel level	≥ 10.5 ℓ (2.77 US gal, 2.31 Imp gal)
Elapsed time after starting the engine	≥ 180000 ms

4. GENERAL DRIVING CYCLE

Perform the diagnosis continuously after the enable conditions have been established.

5. DIAGNOSTIC METHOD

If the duration of time while the following conditions are met is longer than the time indicated, judge as NG.

Judgment Value

Malfunction Criteria	Threshold Value
Output voltage	≤ Battery voltage × 0.4

Time Needed for Diagnosis: 2500 ms
Malfunction Indicator Light Illumination: Illuminates when malfunction occurs in 2 continuous driving cycles.

CL:DTC P0300 RANDOM/MULTIPLE CYLINDER MISFIRE DETECTED

DTC DETECTING CONDITION:

- Detected when two consecutive driving cycles with fault occur.
- Immediately at fault recognition (A misfire which could damage catalyst occurs.)

TROUBLE SYMPTOM:

- Engine stalls.
- Improper idling
- Rough driving

CAUTION:

After servicing or replacing faulty parts, perform Clear Memory Mode <Ref. to EN(H6DO)(diag)-85, OPERATION, Clear Memory Mode.>, and Inspection Mode <Ref. to EN(H6DO)(diag)-69, PROCEDURE, Inspection Mode.>.

WIRING DIAGRAM:

- Engine Electrical System ENGINE TYPE EZ (WITHOUT PUSH BUTTON START) <Ref. to WI-198, ENGINE TYPE EZ (WITHOUT PUSH BUTTON START), WIRING DIAGRAM, Engine Electrical System.>
- Engine Electrical System ENGINE TYPE EZ (WITH PUSH BUTTON START) <Ref. to WI-214, ENGINE TYPE EZ (WITH PUSH BUTTON START), WIRING DIAGRAM, Engine Electrical System.>

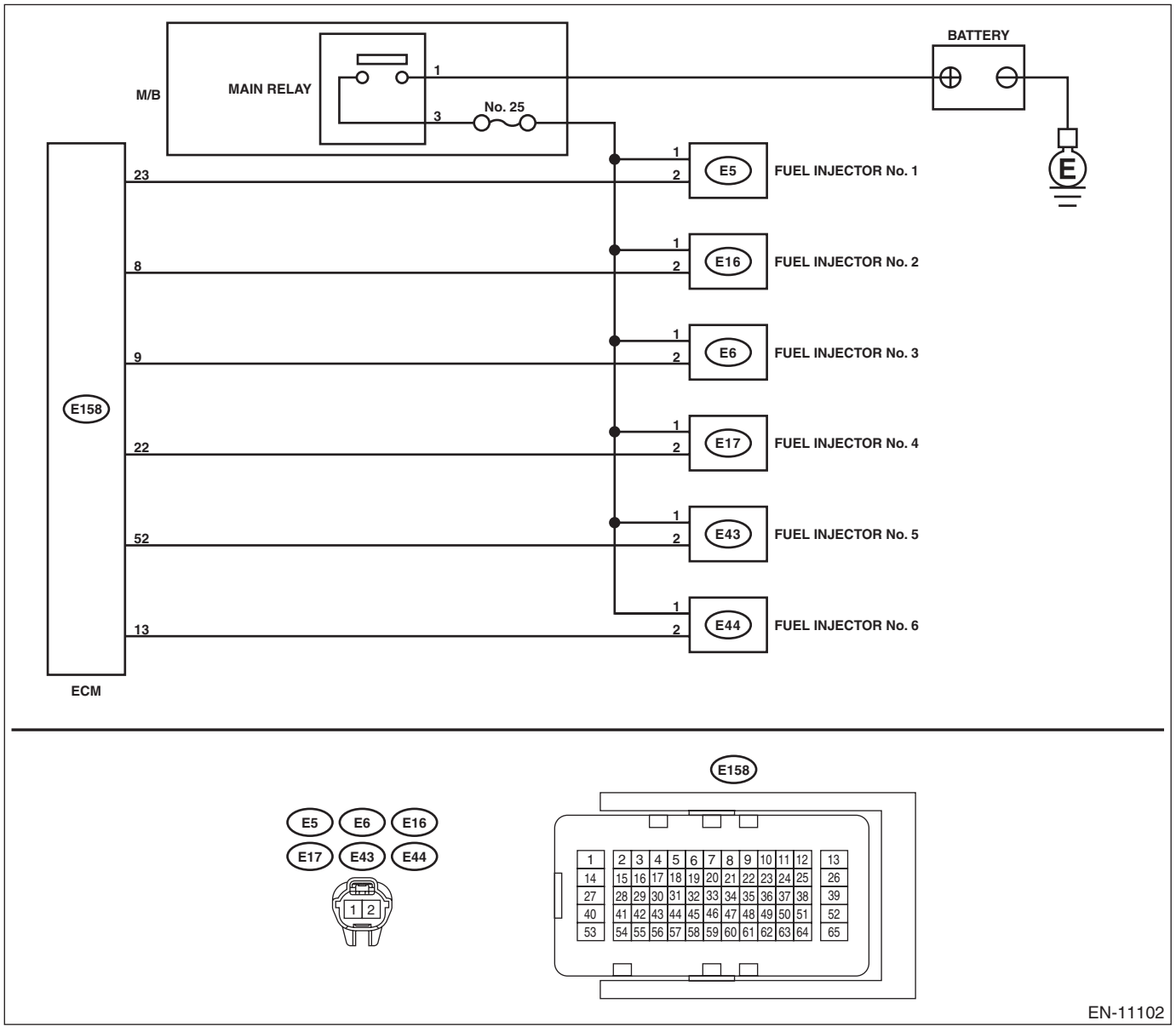

	Step	Check	Yes	No
1	**CHECK OUTPUT SIGNAL OF ECM.** 1) Turn the ignition switch to ON. 2) Measure the voltage between ECM and chassis ground on all cylinders. ***Connector & terminal*** ***#1 (B134) No. 23 (+) — Chassis ground (–):*** ***#2 (B134) No. 8 (+) — Chassis ground (–):*** ***#3 (B134) No. 9 (+) — Chassis ground (–):*** ***#4 (B134) No. 22 (+) — Chassis ground (–):*** ***#5 (B134) No. 52 (+) — Chassis ground (–):*** ***#6 (B134) No. 13 (+) — Chassis ground (–):***	Is the voltage 10 V or more?	Go to step **6**.	Go to step **2**.
2	**CHECK HARNESS BETWEEN ECM AND FUEL INJECTOR.** 1) Turn the ignition switch to OFF. 2) Disconnect the connector from all fuel injectors. 3) Measure the resistance between all fuel injector connectors and engine ground. ***Connector & terminal*** ***#1 (E5) No. 2 — Engine ground:*** ***#2 (E16) No. 2 — Engine ground:*** ***#3 (E6) No. 2 — Engine ground:*** ***#4 (E17) No. 2 — Engine ground:*** ***#5 (E43) No. 2 — Engine ground:*** ***#6 (E44) No. 2 — Engine ground:***	Is the resistance 1 MΩ or more?	Go to step **3**.	Repair the short circuit to ground in harness between ECM connector and fuel injector connector.
3	**CHECK HARNESS BETWEEN ECM AND FUEL INJECTOR.** Measure the resistance of harness between ECM and fuel injector connector on all cylinders. ***Connector & terminal*** ***#1 (E158) No. 23 — (E5) No. 2:*** ***#2 (E158) No. 8 — (E16) No. 2:*** ***#3 (E158) No. 9 — (E6) No. 2:*** ***#4 (E158) No. 22 — (E17) No. 2:*** ***#5 (E158) No. 52 — (E43) No. 2:*** ***#6 (E158) No. 13 — (E44) No. 2:***	Is the resistance less than 1 Ω?	Go to step **4**.	Repair the open circuit of the harness between the ECM connector and fuel injector connector.
4	**CHECK FUEL INJECTOR.** Measure the resistance between all fuel injector terminals. ***Terminals*** ***No. 1 — No. 2:***	Is the resistance 5 — 20 Ω?	Go to step **5**.	Replace the faulty fuel injector. <Ref. to FU(H6DO)-61, Fuel Injector.>
5	**CHECK POWER SUPPLY LINE.** 1) Turn the ignition switch to ON. 2) Measure the voltage between all fuel injector connectors and the engine ground. ***Connector & terminal*** ***#1 (E5) No. 1 (+) — Engine ground (–):*** ***#2 (E16) No. 1 (+) — Engine ground (–):*** ***#3 (E6) No. 1 (+) — Engine ground (–):*** ***#4 (E17) No. 1 (+) — Engine ground (–):*** ***#5 (E43) No. 1 (+) — Engine ground (–):*** ***#6 (E44) No. 1 (+) — Engine ground (–):***	Is the voltage 10 V or more?	Repair the poor contact of all connectors in fuel injector circuit.	Repair the harness and connector. NOTE: In this case, repair the following item: • Open circuit in harness between the main relay and fuel injector connector on faulty cylinders • Poor contact of coupling connector • Poor contact of main relay connector • Blown out of fuse (M/B No. 25)

	Step	Check	Yes	No
6	**CHECK HARNESS BETWEEN ECM AND FUEL INJECTOR.** 1) Turn the ignition switch to OFF. 2) Disconnect the connector from all fuel injectors. 3) Turn the ignition switch to ON. 4) Measure the voltage between ECM and chassis ground on all cylinders. ***Connector & terminal*** ***#1 (E158) No. 23 (+) — Chassis ground (–):*** ***#2 (E158) No. 8 (+) — Chassis ground (–):*** ***#3 (E158) No. 9 (+) — Chassis ground (–):*** ***#4 (E158) No. 22 (+) — Chassis ground (–):*** ***#5 (E158) No. 52 (+) — Chassis ground (–):*** ***#6 (E158) No. 13 (+) — Chassis ground (–):***	Is the voltage 10 V or more?	Repair the short circuit to power in harness between ECM connector and fuel injector connectors.	Go to step **7**.
7	**CHECK FUEL INJECTOR.** 1) Turn the ignition switch to OFF. 2) Measure the resistance between all fuel injector terminals. ***Terminals*** ***No. 1 — No. 2:***	Is the resistance 5 — 20 Ω?	Go to step **8**.	Replace the faulty fuel injector. <Ref. to FU(H6DO)-61, Fuel Injector.>
8	**CHECK INSTALLATION OF CAMSHAFT POSITION SENSOR/CRANKSHAFT POSITION SENSOR.**	Is the camshaft position sensor or crankshaft position sensor loosely installed?	Tighten the camshaft position sensor or crankshaft position sensor. <Ref. to FU(H6DO)-49, INSTALLATION, Camshaft Position Sensor.> <Ref. to FU(H6DO)-44, INSTALLATION, Crankshaft Position Sensor.>	Go to step **9**.
9	**CHECK CRANK PLATE.**	Is the crank sprocket rusted or the teeth of crank plate broken?	Replace the crank plate. <Ref. to ME(H6DO)-134, Cylinder Block.>	Go to step **10**.
10	**CHECK INSTALLATION CONDITION OF TIMING CHAIN.** Turn the crankshaft using ST, and align the alignment mark on crank sprocket with alignment mark on cylinder block. ST 18252AA000 CRANKSHAFT SOCKET	Is the timing chain dislocated from its proper position?	Correct the installation condition of timing chain. <Ref. to ME(H6DO)-87, Timing Chain Assembly.>	Go to step **11**.
11	**CHECK FUEL LEVEL.**	Is the fuel meter indication lower than the “Lower” level?	Refill the fuel so that the fuel meter indication is higher than the “Lower” level, and proceed to the next step. Go to step **13**.	Go to step **12**.
12	**CHECK STATUS OF MALFUNCTION INDICATOR LIGHT.** 1) Clear the memory using the Subaru Select Monitor or general scan tool. <Ref. to EN(H6DO)(diag)-85, Clear Memory Mode.> 2) Start the engine, and drive the vehicle 10 minutes or more.	Does the malfunction indicator light illuminate or blink?	Go to step **14**.	Go to step **13**.

Step		Check	Yes	No
13	**CHECK CAUSE OF MISFIRE.**	Was the cause of misfire identified when the engine is running?	Finish diagnostics operation, if the engine has no abnormality.	Repair the poor contact of connector. NOTE: In this case, repair the following item: • Poor contact of ignition coil connector • Poor contact of fuel injector connector on faulty cylinders • Poor contact of ECM connector • Poor contact of coupling connector
14	**CHECK AIR INTAKE SYSTEM.**	Is there any fault in air intake system?	Repair the air intake system. NOTE: Check the following items. • Are there air leaks or air suction caused by loose or dislocated nuts and bolts? • Are there cracks or any disconnection of hoses?	Go to step **15**.
15	**CHECK ALL CYLINDERS.**	Is there a fault in any cylinder?	Repair or replace the faulty part of the faulty cylinder. NOTE: Check the following items. • Spark plug • Ignition coil • Fuel injector • Compression • Skipping timing chain teeth	Go to DTC P0171. <Ref. to EN(H6DO)(diag)-272, DTC P0171 SYSTEM TOO LEAN BANK 1, Diagnostic Procedure with Diagnostic Trouble Code (DTC).>

1. OUTLINE OF DIAGNOSIS

NOTE:
For the detection standard, refer to DTC P0301. <Ref. to EN(H6DO)(diag)-303, DTC P0301 CYLINDER 1 MISFIRE DETECTED, Diagnostic Procedure with Diagnostic Trouble Code (DTC).>

CM:DTC P0301 CYLINDER 1 MISFIRE DETECTED

NOTE:
For the diagnostic procedure, refer to DTC P0306. <Ref. to EN(H6DO)(diag)-311, DTC P0306 CYLINDER 6 MISFIRE DETECTED, Diagnostic Procedure with Diagnostic Trouble Code (DTC).>

1. OUTLINE OF DIAGNOSIS

Detect the presence of misfire occurrence. (Revolution fluctuation method)
Monitoring Misfire which influences exhaust deterioration (1.5 times of FTP) and catalyst damage is made obligatory by the law. Misfire affecting these two has two patterns below:
- Intermittent misfire (The same cylinder misfires in random, or different cylinders misfire in random.): FTP 1.5 times misfire
- Every time misfire (The same cylinder misfires every time.): FTP 1.5 times misfire, Catalyst damage misfire

The following detecting methods are adopted for these detection.
1) Intermittent misfire: FTP 1.5 times misfire
- 120° Interval Difference Method
- 360° Interval Difference Method (whole range)
- 720° Interval Difference Method (3,000 rpm or more)

2) Misfire every time: FTP 1.5 times misfire, Catalyst damage misfire
- 360° Interval Difference Method

2. EXECUTION CONDITION

Secondary Parameters	Execution condition
Throttle position change during 16 milliseconds	< 20 °
Fuel shut-off function	Not in operation
Fuel level	≥ 10.5 ℓ (2.77 US gal, 2.31 Imp gal)
Engine speed	475 rpm — 6500 rpm
Intake manifold pressure	≥ Value of Map 1
Battery voltage	≥ 8 V
Elapsed time after starting the engine	≥ 2 crankshaft revolutions
Engine coolant temperature at engine start	> –7°C (19.4°F) or ≤ –7°C (19.4°F)
Engine coolant temperature	≥ 21°C (69.8°F)

Map 1

- Normal ignition

		Barometric pressure (kPa (mmHg, inHg))						
		66 (495 , 19.5)	72.8 (546 , 21.5)	76.4 (573 , 22.6)	80 (600 , 23.6)	87.1 (653 , 25.7)	91.9 (689 , 27.1)	100.3 (752, 29.6)
Engine speed (rpm)	700	18.5 (138.6 , 5.5)	20.1 (151.0 , 5.9)	20.4 (152.7 , 6)	21.3 (160.0 , 6.3)	22.8 (170.9 , 6.7)	24.2 (181.5 , 7.1)	25 (187.8 , 7.4)
	1000	19.6 (147.1 , 5.8)	21.1 (158.2 , 6.2)	22 (164.7 , 6.5)	23.7 (177.9 , 7)	24.2 (181.9 , 7.2)	24.4 (182.9 , 7.2)	24.4 (182.9 , 7.2)
	1200	19.3 (144.4 , 5.7)	19.4 (145.9 , 5.7)	19.4 (145.9 , 5.7)	20.4 (153.3 , 6)	21.8 (163.7 , 6.4)	23.2 (173.8 , 6.8)	23.2 (173.9 , 6.8)
	1600	18 (135.0 , 5.3)	19.8 (148.4 , 5.8)	20.1 (150.6 , 5.9)	20.9 (157.1 , 6.2)	22.5 (168.5 , 6.6)	23.5 (176.5 , 7)	23.5 (176.5 , 7)
	2000	19.2 (143.8 , 5.7)	21.3 (159.5 , 6.3)	21.9 (164.2 , 6.5)	22.9 (171.8 , 6.8)	24.2 (181.3 , 7.1)	25.7 (192.4 , 7.6)	25.7 (192.5 , 7.6)
	2400	19.2 (144.2 , 5.7)	19.8 (148.8 , 5.9)	20.4 (152.9 , 6)	21.2 (159.2 , 6.3)	22.2 (166.4 , 6.6)	23.4 (175.6 , 6.9)	23.4 (175.6 , 6.9)
	2800	20.1 (150.6 , 5.9)	20.1 (150.6 , 5.9)	21.4 (160.3 , 6.3)	21.4 (160.3 , 6.3)	21.9 (164.0 , 6.5)	23 (172.7 , 6.8)	25.8 (193.8 , 7.6)
	3000	20.3 (151.9 , 6)	20.3 (151.9 , 6)	22.2 (166.2 , 6.5)	22.2 (166.2 , 6.5)	22.2 (166.2 , 6.5)	23 (172.7 , 6.8)	24.6 (184.6 , 7.3)
	3200	22.5 (169.1 , 6.7)	24.4 (182.9 , 7.2)	25.4 (190.4 , 7.5)	26.2 (196.3 , 7.7)	27.3 (204.5 , 8.1)	27.3 (204.5 , 8.1)	27.3 (204.5 , 8.1)
	3600	21.5 (161.2 , 6.3)	25 (187.6 , 7.4)	26.1 (195.5 , 7.7)	26.9 (202.1 , 8)	27.7 (207.5 , 8.2)	28.5 (213.5 , 8.4)	28.5 (213.5 , 8.4)
	4000	23 (172.7 , 6.8)	24.8 (186.3 , 7.3)	25.7 (192.7 , 7.6)	26.3 (197.0 , 7.8)	27.4 (205.3 , 8.1)	27.4 (205.3 , 8.1)	27.4 (205.3 , 8.1)
	4400	24.6 (184.5 , 7.3)	26.4 (198.1 , 7.8)	27.3 (204.5 , 8.1)	27.8 (208.8 , 8.2)	28.9 (217.1 , 8.5)	28.9 (217.1 , 8.5)	28.9 (217.1 , 8.5)
	4800	26.2 (196.2 , 7.7)	28 (209.8 , 8.3)	28.8 (216.3 , 8.5)	29.4 (220.5 , 8.7)	30.5 (228.8 , 9)	30.5 (228.8 , 9)	30.5 (228.8 , 9)
	5200	27.7 (208.0 , 8.2)	29.5 (221.6 , 8.7)	30.4 (228.0 , 9)	31 (232.3 , 9.1)	32.1 (240.6 , 9.5)	32.1 (240.6 , 9.5)	32.1 (240.6 , 9.5)
	5600	29.3 (219.7 , 8.7)	31.1 (233.4 , 9.2)	32 (239.8 , 9.4)	32.5 (244.0 , 9.6)	33.6 (252.3 , 9.9)	33.6 (252.3 , 9.9)	33.6 (252.3 , 9.9)
	6000	30.9 (231.5 , 9.1)	32.7 (245.1 , 9.7)	33.5 (251.6 , 9.9)	34.1 (255.8 , 10.1)	35.2 (264.1 , 10.4)	35.2 (264.1 , 10.4)	35.2 (264.1 , 10.4)
	6500	32.4 (243.3 , 9.6)	34.3 (256.9 , 10.1)	35.1 (263.3 , 10.4)	35.7 (267.6 , 10.5)	36.8 (275.9 , 10.9)	36.8 (275.9 , 10.9)	36.8 (275.9 , 10.9)
kPa (mmHg, inHg)								

- Idling ignition

		Barometric pressure (kPa (mmHg, inHg))						
		66 (495 , 19.5)	72.8 (546 , 21.5)	76.4 (573 , 22.6)	80 (600 , 23.6)	87.1 (653 , 25.7)	91.9 (689 , 27.1)	100.3 (752, 29.6)
Engine speed (rpm)	700	18.5 (138.6 , 5.5)	20.1 (151.0 , 5.9)	20.4 (152.7 , 6)	21.3 (160.0 , 6.3)	22.8 (170.9 , 6.7)	24.2 (181.5 , 7.1)	25 (187.8 , 7.4)
	1000	19.6 (147.1 , 5.8)	21.1 (158.2 , 6.2)	22 (164.7 , 6.5)	24.2 (181.9 , 7.2)	24.2 (181.9 , 7.2)	25.4 (190.2 , 7.5)	26.1 (196.1 , 7.7)
	1200	19.3 (144.4 , 5.7)	21.1 (158.1 , 6.2)	21.6 (161.7 , 6.4)	22.4 (168.3 , 6.6)	23.7 (178.0 , 7)	25 (187.7 , 7.4)	25.5 (191.5 , 7.5)
	1600	20.9 (157.1 , 6.2)	22.1 (165.7 , 6.5)	22.7 (170.0 , 6.7)	23.5 (176.2 , 6.9)	24.8 (185.7 , 7.3)	25.7 (192.8 , 7.6)	26.5 (198.4 , 7.8)
	2000	19.7 (148.0 , 5.8)	21.3 (159.5 , 6.3)	22.2 (166.5 , 6.6)	22.9 (171.9 , 6.8)	24.6 (184.4 , 7.3)	25.7 (192.4 , 7.6)	25.7 (192.9 , 7.6)
	2400	19.4 (145.8 , 5.7)	20.1 (150.7 , 5.9)	20.5 (154.1 , 6.1)	21.2 (159.2 , 6.3)	22.4 (167.9 , 6.6)	23.6 (177.1 , 7)	23.8 (178.4 , 7)
	2800	21 (157.3 , 6.2)	21.9 (164.6 , 6.5)	22.6 (169.2 , 6.7)	23.3 (174.4 , 6.9)	24.2 (181.8 , 7.2)	25.6 (192.4 , 7.6)	26.6 (199.8 , 7.9)
	3000	21.3 (160.0 , 6.3)	22.6 (169.6 , 6.7)	23.6 (176.9 , 7)	24.3 (182.0 , 7.2)	25.5 (191.2 , 7.5)	26.7 (200.1 , 7.9)	27.2 (204.0 , 8)
	3200	23.1 (173.4 , 6.8)	24.8 (186.1 , 7.3)	25.9 (194.0 , 7.6)	26.7 (200.4 , 7.9)	27.8 (208.8 , 8.2)	28.9 (217.0 , 8.5)	28.9 (217.0 , 8.5)
	3600	23.6 (177.4 , 7)	25.6 (191.7 , 7.5)	26.7 (199.9 , 7.9)	27.3 (205.0 , 8.1)	28.2 (211.4 , 8.3)	28.7 (215.0 , 8.5)	28.7 (215.0 , 8.5)
	4000	23.6 (177.2 , 7)	25.3 (189.4 , 7.5)	26.4 (198.2 , 7.8)	26.9 (201.5 , 7.9)	27.5 (206.4 , 8.1)	27.5 (206.4 , 8.1)	27.5 (206.4 , 8.1)
	4400	25.2 (189.0 , 7.4)	26.8 (201.2 , 7.9)	28 (209.9 , 8.3)	28.4 (213.3 , 8.4)	29.1 (218.2 , 8.6)	29.1 (218.2 , 8.6)	29.1 (218.2 , 8.6)
	4800	26.8 (200.8 , 7.9)	28.4 (212.9 , 8.4)	29.6 (221.7 , 8.7)	30 (225.1 , 8.9)	30.7 (229.9 , 9.1)	30.7 (229.9 , 9.1)	30.7 (229.9 , 9.1)
	5200	28.3 (212.5 , 8.4)	30 (224.7 , 8.8)	31.1 (233.5 , 9.2)	31.6 (236.8 , 9.3)	32.2 (241.7 , 9.5)	32.2 (241.7 , 9.5)	32.2 (241.7 , 9.5)
	5600	29.9 (224.3 , 8.8)	31.5 (236.5 , 9.3)	32.7 (245.2 , 9.7)	33.1 (248.6 , 9.8)	33.8 (253.4 , 10)	33.8 (253.4 , 10)	33.8 (253.4 , 10)
	6000	31.5 (236.1 , 9.3)	33.1 (248.2 , 9.8)	34.3 (257.0 , 10.1)	34.7 (260.4 , 10.3)	35.4 (265.2 , 10.4)	35.4 (265.2 , 10.4)	35.4 (265.2 , 10.4)
	6500	33 (247.8 , 9.8)	34.7 (260.0 , 10.2)	35.8 (268.7 , 10.6)	36.3 (272.1 , 10.7)	36.9 (277.0 , 10.9)	36.9 (277.0 , 10.9)	36.9 (277.0 , 10.9)
kPa (mmHg, inHg)								

3. GENERAL DRIVING CYCLE

- If conditions are met, it is possible to detect the misfires from idling to high engine speed. However, in case any engine load or breakage occurs, perform with the engine at idle.
- Perform the diagnosis continuously.

4. DIAGNOSTIC METHOD

When a misfire occurs, the engine speed will decrease and the crankshaft position speed will change. Calculate the interval difference value (diagnostic value) from crankshaft position speed by the following formula, and judge whether a misfire is occurring or not comparing the calculated result with judgment value. Count the number of misfires, if the misfire ratio is higher during 1000 revs. or 200 revs., judge corresponding cylinders as NG.

Diagnostic value calculation (Calculate from angle speed) →	Misfire detection every single ignition (Compare diagnostic value with judgment value) →	NG judgment (Misfire occurrence judgment required by the law) (Compare number of misfire with judgment value)
	• 120° Interval Difference Method • 360° Interval Difference Method • 720° Interval Difference Method	• FTP 1.5 times misfire NG judgment • NG judgment for catalyst-damaging misfire

As shown in the following figure, pick a cylinder as the standard and name it omg 0. And the former crankshaft position speed is named omg 1, the second former crankshaft position speed is named omg 2, the third is named omg 3, etc.

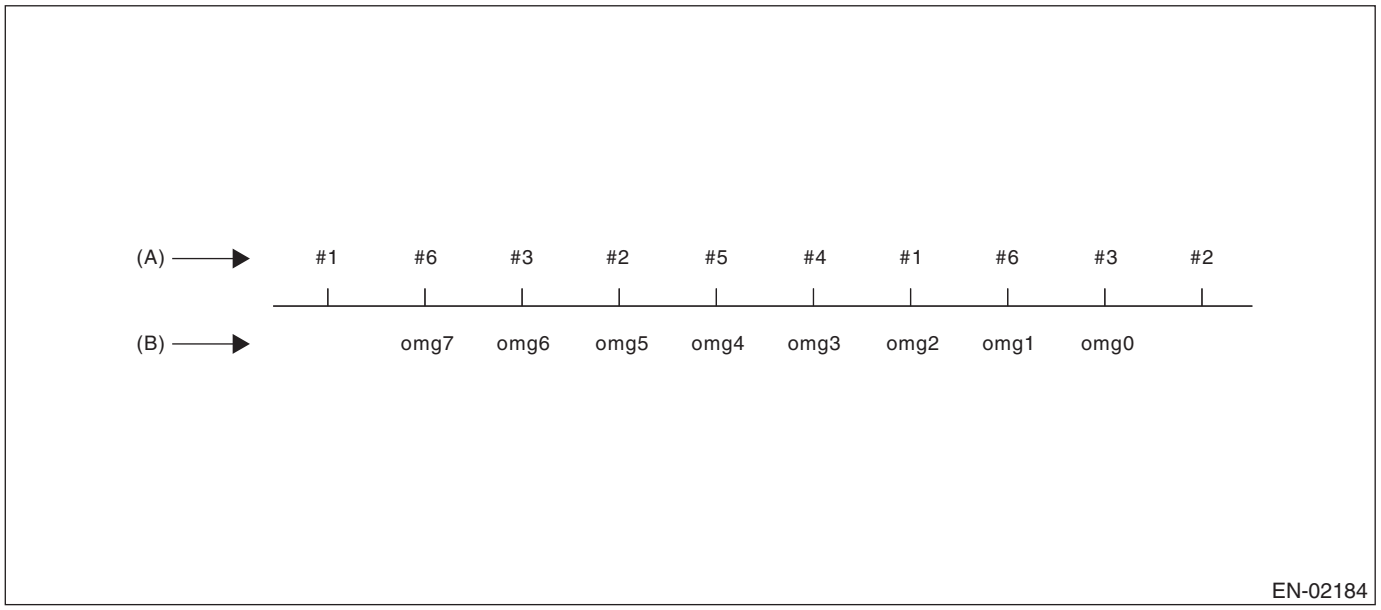

(A) Ignition order (B) Crankshaft position speed

120° Interval Difference Method

Diagnostic value	domg 120 = (omg 1 – omg 0) – (omg 7 – omg 1)/6
Judge as a misfire in the following cases. • domg 120 > judgment value of positive side • domg 121 ≤ judgment value of negative side (Diagnostic value before 120° CA)	

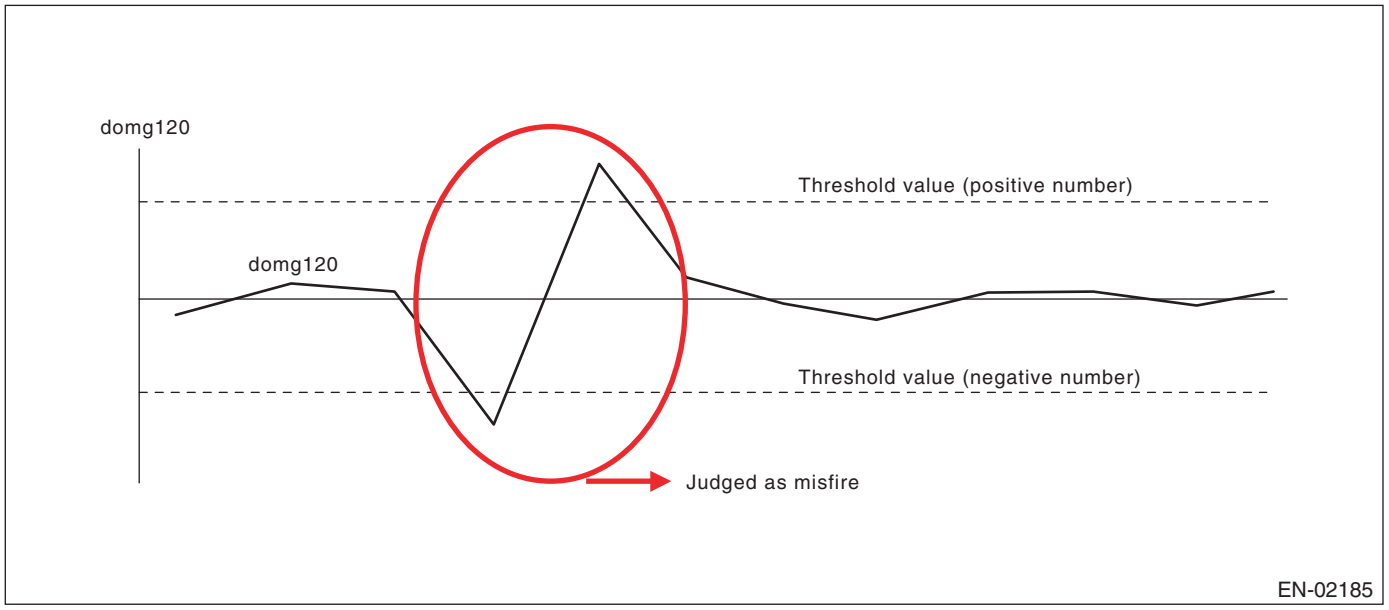

360° Interval Difference Method

Diagnostic value	domg 360 = (omg 1 – omg 0) – (omg 4 – omg 3)
Misfire judgment	domg 360 > Judgment value → Judge as misfire

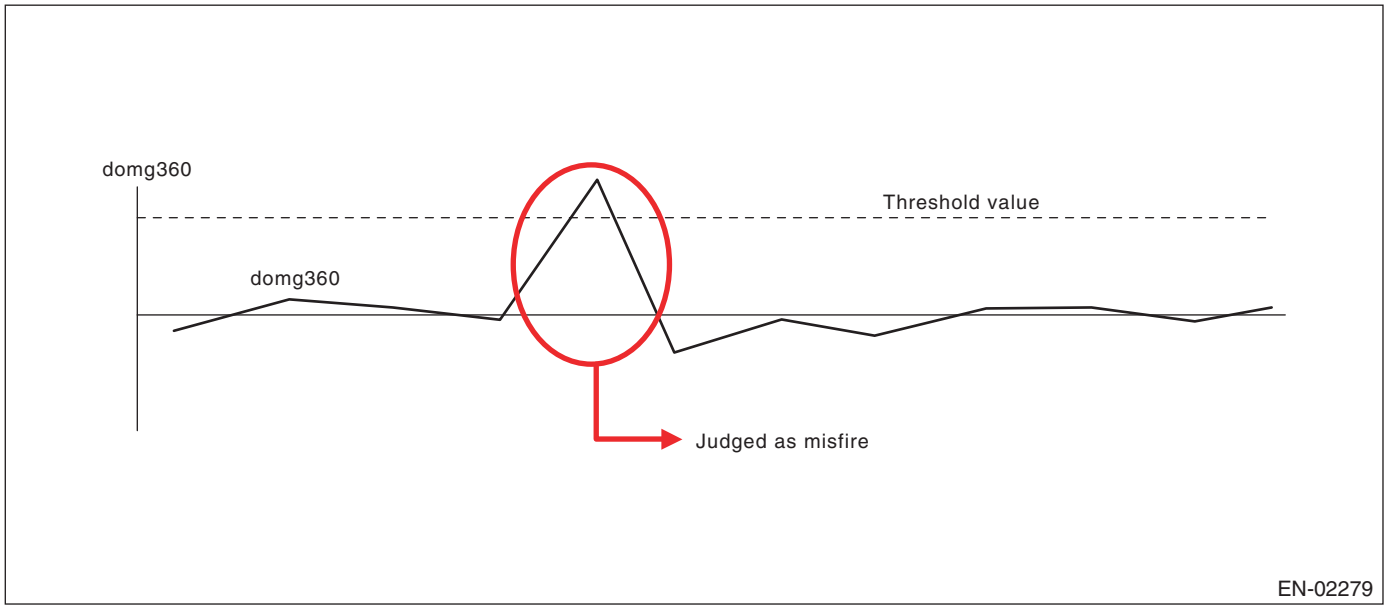

720° Interval Difference Method

Diagnostic value	domg 720 = (omg 1 – omg 0) – (omg 7 – omg 6)
Misfire judgment	domg 720 > Judgment value → Judge as misfire

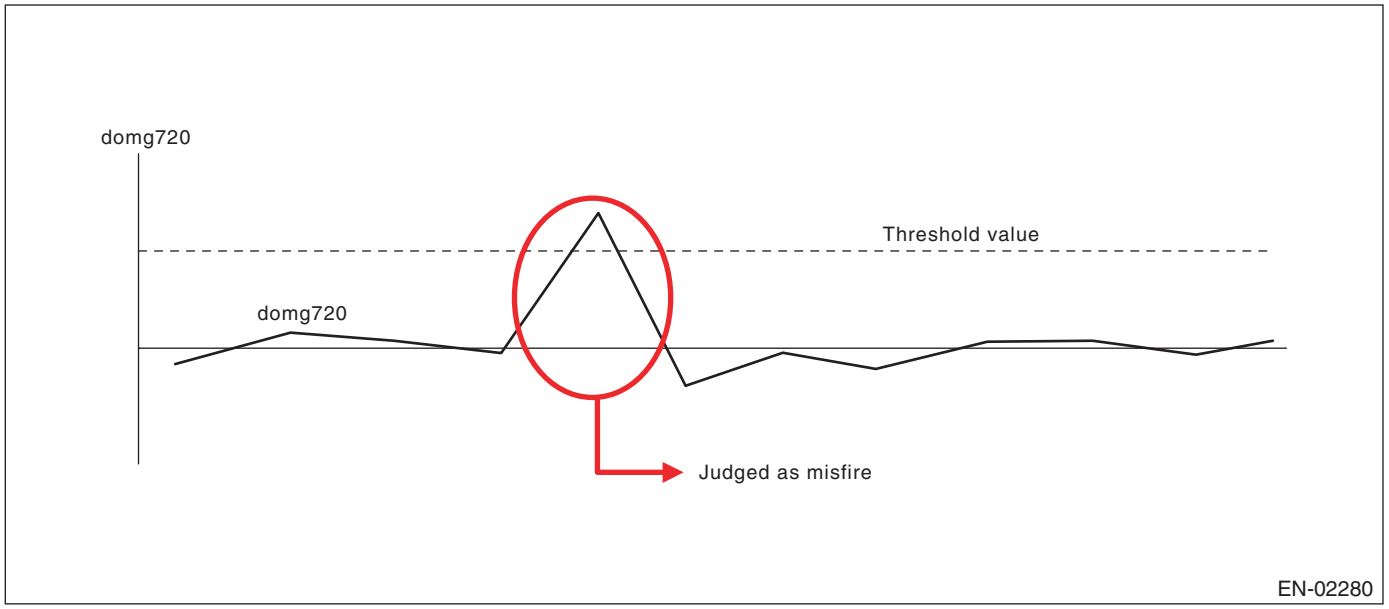

- **FTP 1.5 times misfire (Misfire occurrence level which influences exhaust gas)**

Judgment Value (Judge that malfunction occurs when the misfire ratio is high in 1000 engine revs.)

Malfunction Criteria	Threshold Value
FTP emission diagnostic value	≥ 63 × 100/3000% in 1000 revs.

Time Needed for Diagnosis: 1000 engine revs.
Malfunction Indicator Light Illumination: Illuminates when malfunction occurs in 2 continuous driving cycles.

- **Catalyst-damaging misfire (misfire occurrence level that will damage catalyst)**

Judgment Value

Malfunction Criteria	Threshold Value
Catalyst-damaging misfire diagnostic value	≥ Value from Map 2

Map 2

		Intake air (g(oz)/rev)									
		0.16 (0.01)	0.28 (0.01)	0.4 (0.01)	0.52 (0.02)	0.64 (0.02)	0.76 (0.03)	0.92 (0.03)	1.1 (0.04)	1.5 (0.05)	2 (0.07)
Engine speed (rpm)	650	150	150	150	150	150	120	96	72	72	72
	1000	150	150	150	120	120	120	78	36	36	36
	1500	150	150	120	120	120	85.5	54.6	40.2	40.2	40.2
	2000	120	120	120	120	120	66.6	40.2	40.2	40.2	40.2
	2500	102.75	102.75	102.9	87.3	87.3	53.4	40.2	40.2	40.2	40.2
	3000	85.8	85.8	85.8	54.6	54.6	40.2	40.2	40.2	40.2	40.2
	3500	70.02	70.02	63	45	42	30	30	30	30	30
	4000	54.6	54.6	40.2	30	30	30	30	30	30	30
	4500	42.3	42.3	30	30	30	30	30	30	30	30
	5000	30	30	30	30	30	30	30	30	30	30
	5500	30	30	30	30	30	30	30	30	30	30
	6000	30	30	30	30	30	30	30	30	30	30
	6400	30	30	30	30	30	30	30	30	30	30
	7000	30	30	30	30	30	30	30	30	30	30

Time Needed for Diagnosis: 200 engine revs.
Malfunction Indicator Light Illumination: Illuminates as soon as a malfunction occurs.

CN:DTC P0302 CYLINDER 2 MISFIRE DETECTED

NOTE:
For the diagnostic procedure, refer to DTC P0306. <Ref. to EN(H6DO)(diag)-311, DTC P0306 CYLINDER 6 MISFIRE DETECTED, Diagnostic Procedure with Diagnostic Trouble Code (DTC).>

1. OUTLINE OF DIAGNOSIS

NOTE:
For the detection standard, refer to DTC P0301. <Ref. to EN(H6DO)(diag)-303, DTC P0301 CYLINDER 1 MISFIRE DETECTED, Diagnostic Procedure with Diagnostic Trouble Code (DTC).>

CO:DTC P0303 CYLINDER 3 MISFIRE DETECTED

NOTE:
For the diagnostic procedure, refer to DTC P0306. <Ref. to EN(H6DO)(diag)-311, DTC P0306 CYLINDER 6 MISFIRE DETECTED, Diagnostic Procedure with Diagnostic Trouble Code (DTC).>

1. OUTLINE OF DIAGNOSIS

NOTE:
For the detection standard, refer to DTC P0301. <Ref. to EN(H6DO)(diag)-303, DTC P0301 CYLINDER 1 MISFIRE DETECTED, Diagnostic Procedure with Diagnostic Trouble Code (DTC).>

CP:DTC P0304 CYLINDER 4 MISFIRE DETECTED

NOTE:
For the diagnostic procedure, refer to DTC P0306. <Ref. to EN(H6DO)(diag)-311, DTC P0306 CYLINDER 6 MISFIRE DETECTED, Diagnostic Procedure with Diagnostic Trouble Code (DTC).>

1. OUTLINE OF DIAGNOSIS

NOTE:
For the detection standard, refer to DTC P0301. <Ref. to EN(H6DO)(diag)-303, DTC P0301 CYLINDER 1 MISFIRE DETECTED, Diagnostic Procedure with Diagnostic Trouble Code (DTC).>

CQ:DTC P0305 CYLINDER 5 MISFIRE DETECTED

NOTE:
For the diagnostic procedure, refer to DTC P0306. <Ref. to EN(H6DO)(diag)-311, DTC P0306 CYLINDER 6 MISFIRE DETECTED, Diagnostic Procedure with Diagnostic Trouble Code (DTC).>

1. OUTLINE OF DIAGNOSIS

NOTE:
For the detection standard, refer to DTC P0301. <Ref. to EN(H6DO)(diag)-303, DTC P0301 CYLINDER 1 MISFIRE DETECTED, Diagnostic Procedure with Diagnostic Trouble Code (DTC).>

CR:DTC P0306 CYLINDER 6 MISFIRE DETECTED

DTC DETECTING CONDITION:

- Detected when two consecutive driving cycles with fault occur.
- Immediately at fault recognition (A misfire which could damage catalyst occurs.)

TROUBLE SYMPTOM:

- Engine stalls.
- Improper idling
- Rough driving

CAUTION:

After servicing or replacing faulty parts, perform Clear Memory Mode <Ref. to EN(H6DO)(diag)-85, OPERATION, Clear Memory Mode.>, and Inspection Mode <Ref. to EN(H6DO)(diag)-69, PROCEDURE, Inspection Mode.>.

WIRING DIAGRAM:

- Engine Electrical System ENGINE TYPE EZ (WITHOUT PUSH BUTTON START) <Ref. to WI-198, ENGINE TYPE EZ (WITHOUT PUSH BUTTON START), WIRING DIAGRAM, Engine Electrical System.>
- Engine Electrical System ENGINE TYPE EZ (WITH PUSH BUTTON START) <Ref. to WI-214, ENGINE TYPE EZ (WITH PUSH BUTTON START), WIRING DIAGRAM, Engine Electrical System.>

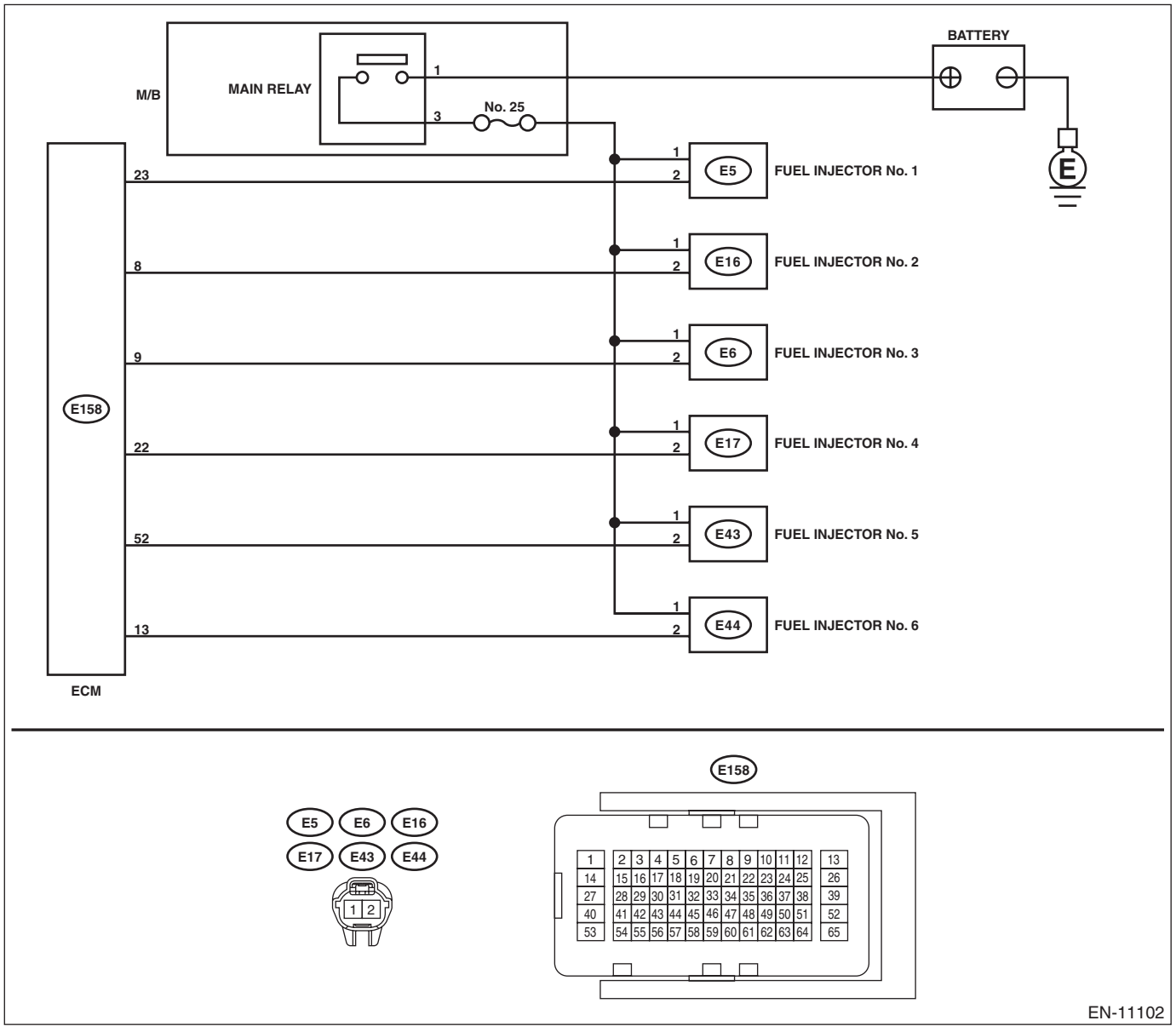

	Step	Check	Yes	No
1	**CHECK OUTPUT SIGNAL OF ECM.** 1) Turn the ignition switch to ON. 2) Measure the voltage between ECM and chassis ground on faulty cylinders. ***Connector & terminal*** ***#1 (B134) No. 23 (+) — Chassis ground (–):*** ***#2 (B134) No. 8 (+) — Chassis ground (–):*** ***#3 (B134) No. 9 (+) — Chassis ground (–):*** ***#4 (B134) No. 22 (+) — Chassis ground (–):*** ***#5 (B134) No. 52 (+) — Chassis ground (–):*** ***#6 (B134) No. 13 (+) — Chassis ground (–):***	Is the voltage 10 V or more?	Go to step **6**.	Go to step **2**.
2	**CHECK HARNESS BETWEEN ECM AND FUEL INJECTOR.** 1) Turn the ignition switch to OFF. 2) Disconnect the connector from fuel injector on faulty cylinders. 3) Measure the resistance between fuel injector connector and engine ground on faulty cylinders. ***Connector & terminal*** ***#1 (E5) No. 2 — Engine ground:*** ***#2 (E16) No. 2 — Engine ground:*** ***#3 (E6) No. 2 — Engine ground:*** ***#4 (E17) No. 2 — Engine ground:*** ***#5 (E43) No. 2 — Engine ground:*** ***#6 (E44) No. 2 — Engine ground:***	Is the resistance 1 MΩ or more?	Go to step **3**.	Repair the short circuit to ground in harness between ECM connector and fuel injector connector.
3	**CHECK HARNESS BETWEEN ECM AND FUEL INJECTOR.** Measure the resistance of harness between ECM and fuel injector connector on faulty cylinders. ***Connector & terminal*** ***#1 (E158) No. 23 — (E5) No. 2:*** ***#2 (E158) No. 8 — (E16) No. 2:*** ***#3 (E158) No. 9 — (E6) No. 2:*** ***#4 (E158) No. 22 — (E17) No. 2:*** ***#5 (E158) No. 52 — (E43) No. 2:*** ***#6 (E158) No. 13 — (E44) No. 2:***	Is the resistance less than 1 Ω?	Go to step **4**.	Repair the open circuit of the harness between the ECM connector and fuel injector connector.
4	**CHECK FUEL INJECTOR.** Measure the resistance between fuel injector terminals on faulty cylinder. ***Terminals*** ***No. 1 — No. 2:***	Is the resistance 5 — 20 Ω?	Go to step **5**.	Replace the faulty fuel injector. <Ref. to FU(H6DO)-61, Fuel Injector.>

	Step	Check	Yes	No
5	**CHECK POWER SUPPLY LINE.** 1) Turn the ignition switch to ON. 2) Measure the voltage between fuel injector connector and engine ground on faulty cylinders. ***Connector & terminal*** ***#1 (E5) No. 1 (+) — Engine ground (–):*** ***#2 (E16) No. 1 (+) — Engine ground (–):*** ***#3 (E6) No. 1 (+) — Engine ground (–):*** ***#4 (E17) No. 1 (+) — Engine ground (–):*** ***#5 (E43) No. 1 (+) — Engine ground (–):*** ***#6 (E44) No. 1 (+) — Engine ground (–):***	Is the voltage 10 V or more?	Repair the poor contact of all connectors in fuel injector circuit.	Repair the harness and connector. NOTE: In this case, repair the following item: • Open circuit in harness between the main relay and fuel injector connector on faulty cylinders • Poor contact of coupling connector • Poor contact of main relay connector • Blown out of fuse (M/B No. 25)
6	**CHECK HARNESS BETWEEN ECM AND FUEL INJECTOR.** 1) Turn the ignition switch to OFF. 2) Disconnect the connector from fuel injector on faulty cylinders. 3) Turn the ignition switch to ON. 4) Measure the voltage between ECM and chassis ground on faulty cylinders. ***Connector & terminal*** ***#1 (E158) No. 23 (+) — Chassis ground (–):*** ***#2 (E158) No. 8 (+) — Chassis ground (–):*** ***#3 (E158) No. 9 (+) — Chassis ground (–):*** ***#4 (E158) No. 22 (+) — Chassis ground (–):*** ***#5 (E158) No. 52 (+) — Chassis ground (–):*** ***#6 (E158) No. 13 (+) — Chassis ground (–):***	Is the voltage 10 V or more?	Repair the short circuit to power in harness between ECM connector and fuel injector connectors.	Go to step **7**.
7	**CHECK FUEL INJECTOR.** 1) Turn the ignition switch to OFF. 2) Measure the resistance between fuel injector terminals on faulty cylinder. ***Terminals*** ***No. 1 — No. 2:***	Is the resistance 5 — 20 Ω?	Go to step **8**.	Replace the faulty fuel injector. <Ref. to FU(H6DO)-61, Fuel Injector.>
8	**CHECK INSTALLATION OF CAMSHAFT POSITION SENSOR/CRANKSHAFT POSITION SENSOR.**	Is the camshaft position sensor or crankshaft position sensor loosely installed?	Tighten the camshaft position sensor or crankshaft position sensor. <Ref. to FU(H6DO)-49, INSTALLATION, Camshaft Position Sensor.> <Ref. to FU(H6DO)-44, INSTALLATION, Crankshaft Position Sensor.>	Go to step **9**.
9	**CHECK CRANK PLATE.**	Is the crank sprocket rusted or the teeth of crank plate broken?	Replace the crank plate. <Ref. to ME(H6DO)-134, Cylinder Block.>	Go to step **10**.

	Step	Check	Yes	No
10	**CHECK INSTALLATION CONDITION OF TIMING CHAIN.** Turn the crankshaft using ST, and align the alignment mark on crank sprocket with alignment mark on cylinder block. ST 18252AA000 CRANKSHAFT SOCKET	Is the timing chain dislocated from its proper position?	Correct the installation condition of timing chain. <Ref. to ME(H6DO)-87, Timing Chain Assembly.>	Go to step **11**.
11	**CHECK FUEL LEVEL.**	Is the fuel meter indication lower than the “Lower” level?	Refill the fuel so that the fuel meter indication is higher than the “Lower” level, and proceed to the next step. Go to step **13**.	Go to step **12**.
12	**CHECK STATUS OF MALFUNCTION INDICATOR LIGHT.** 1) Clear the memory using the Subaru Select Monitor or general scan tool. <Ref. to EN(H6DO)(diag)-85, Clear Memory Mode.> 2) Start the engine, and drive the vehicle 10 minutes or more.	Does the malfunction indicator light illuminate or blink?	Go to step **14**.	Go to step **13**.
13	**CHECK CAUSE OF MISFIRE.**	Was the cause of misfire identified when the engine is running?	Finish diagnostics operation, if the engine has no abnormality.	Repair the poor contact of connector. NOTE: In this case, repair the following item: • Poor contact of ignition coil connector • Poor contact of fuel injector connector on faulty cylinders • Poor contact of ECM connector • Poor contact of coupling connector
14	**CHECK AIR INTAKE SYSTEM.**	Is there any fault in air intake system?	Repair the air intake system. NOTE: Check the following items. • Are there air leaks or air suction caused by loose or dislocated nuts and bolts? • Are there cracks or any disconnection of hoses?	Go to step **15**.

Step	Check	Yes	No
15 CHECK CYLINDER.	Is there any fault in the cylinder?	Repair or replace faulty parts. NOTE: Check the following items. • Spark plug • Ignition coil • Fuel injector • Compression • Skipping timing chain teeth	Go to DTC P0171. <Ref. to EN(H6DO)(diag)-272, DTC P0171 SYSTEM TOO LEAN BANK 1, Diagnostic Procedure with Diagnostic Trouble Code (DTC).>

1. OUTLINE OF DIAGNOSIS

NOTE:
For the detection standard, refer to DTC P0301. <Ref. to EN(H6DO)(diag)-303, DTC P0301 CYLINDER 1 MISFIRE DETECTED, Diagnostic Procedure with Diagnostic Trouble Code (DTC).>

CS:DTC P0327 KNOCK/COMBUSTION VIBRATION SENSOR 1 CIRCUIT LOW BANK 1 OR SINGLE SENSOR

DTC DETECTING CONDITION:
Immediately at fault recognition
TROUBLE SYMPTOM:
- Poor driving performance
- Knocking occurs

CAUTION:
After servicing or replacing faulty parts, perform Clear Memory Mode <Ref. to EN(H6DO)(diag)-85, OPERATION, Clear Memory Mode.>, and Inspection Mode <Ref. to EN(H6DO)(diag)-69, PROCEDURE, Inspection Mode.>.
WIRING DIAGRAM:
- Engine Electrical System ENGINE TYPE EZ (WITHOUT PUSH BUTTON START) <Ref. to WI-198, ENGINE TYPE EZ (WITHOUT PUSH BUTTON START), WIRING DIAGRAM, Engine Electrical System.>
- Engine Electrical System ENGINE TYPE EZ (WITH PUSH BUTTON START) <Ref. to WI-214, ENGINE TYPE EZ (WITH PUSH BUTTON START), WIRING DIAGRAM, Engine Electrical System.>

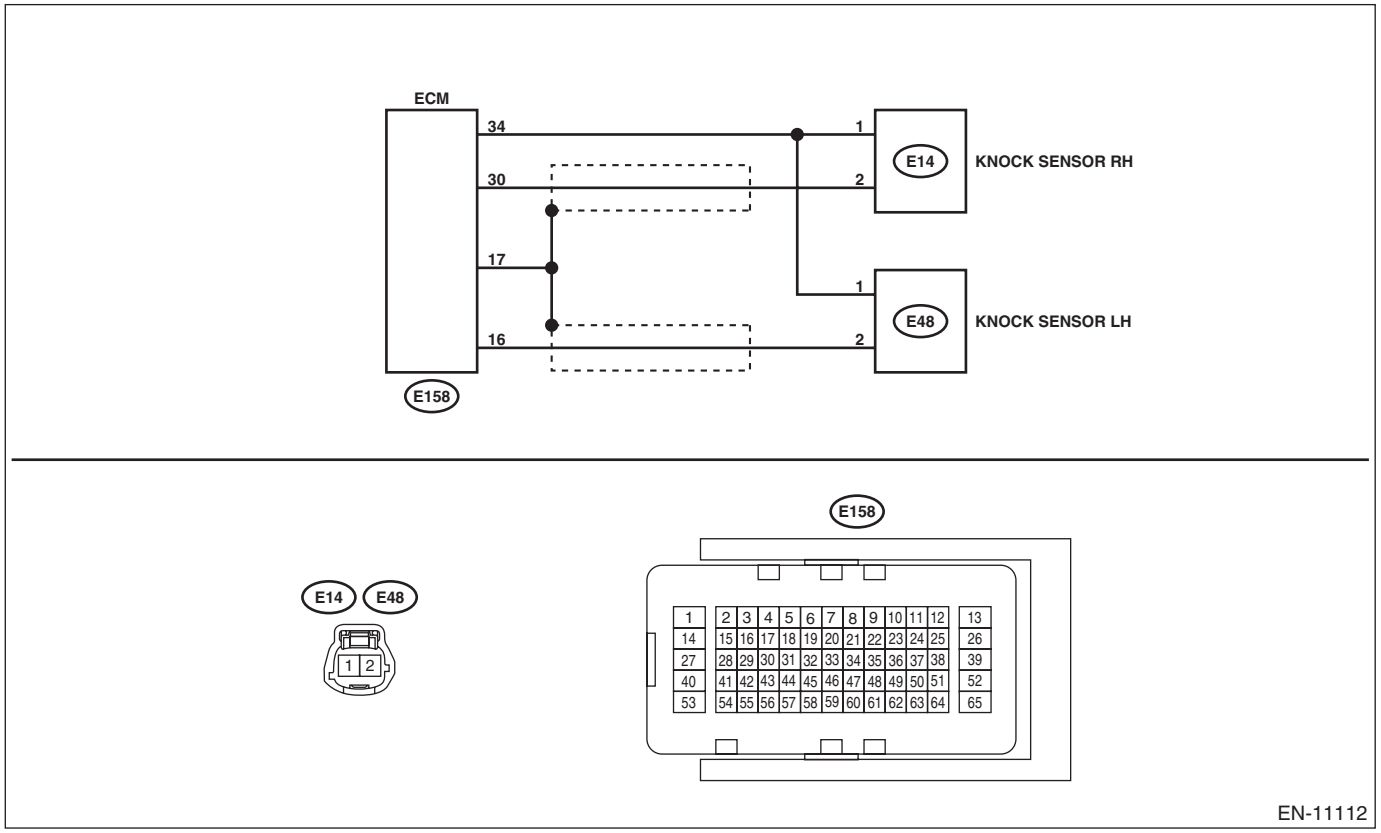

Step		Check	Yes	No
1	**CHECK HARNESS BETWEEN ECM AND KNOCK SENSOR CONNECTOR.** 1) Turn the ignition switch to OFF. 2) Disconnect the connector from ECM. 3) Measure the resistance between ECM connectors. ***Connector & terminal*** ***(E158) No. 30 — (E158) No. 34:***	Is the resistance less than 500 kΩ?	Go to step **2**.	Go to step **3**.

	Step	Check	Yes	No
2	**CHECK KNOCK SENSOR.** 1) Disconnect the connector from the knock sensor. 2) Measure the resistance between knock sensor connectors. ***Terminals*** ***No. 1 — No. 2:***	Is the resistance less than 500 kΩ?	Replace the knock sensor. <Ref. to FU(H6DO)-52, Knock Sensor.>	Repair the short circuit to ground in harness between ECM connector and knock sensor connector. NOTE: The harness between both connectors are shielded. Remove the shield and repair the short circuit of harness.
3	**CHECK INPUT SIGNAL OF ECM.** 1) Connect the connector to ECM. 2) Turn the ignition switch to ON. 3) Measure the voltage between ECM connector and chassis ground. ***Connector & terminal*** ***(E158) No. 30 (+) — Chassis ground (–):***	Is the voltage 2 V or more?	Even if DTC is detected, the circuit has returned to a normal condition at this time. Reproduce the failure, and then perform the diagnosis again. NOTE: In this case, temporary poor contact of connector, temporary open or short circuit of harness may be the cause.	Repair the short circuit to ground in harness between ECM connector and knock sensor connector. NOTE: The harness between both connectors are shielded. Remove the shield and repair the short circuit of harness.

1. OUTLINE OF DIAGNOSIS

Detect the open or short circuit of knock sensor.
Judge as NG if out of specification.

2. COMPONENT DESCRIPTION

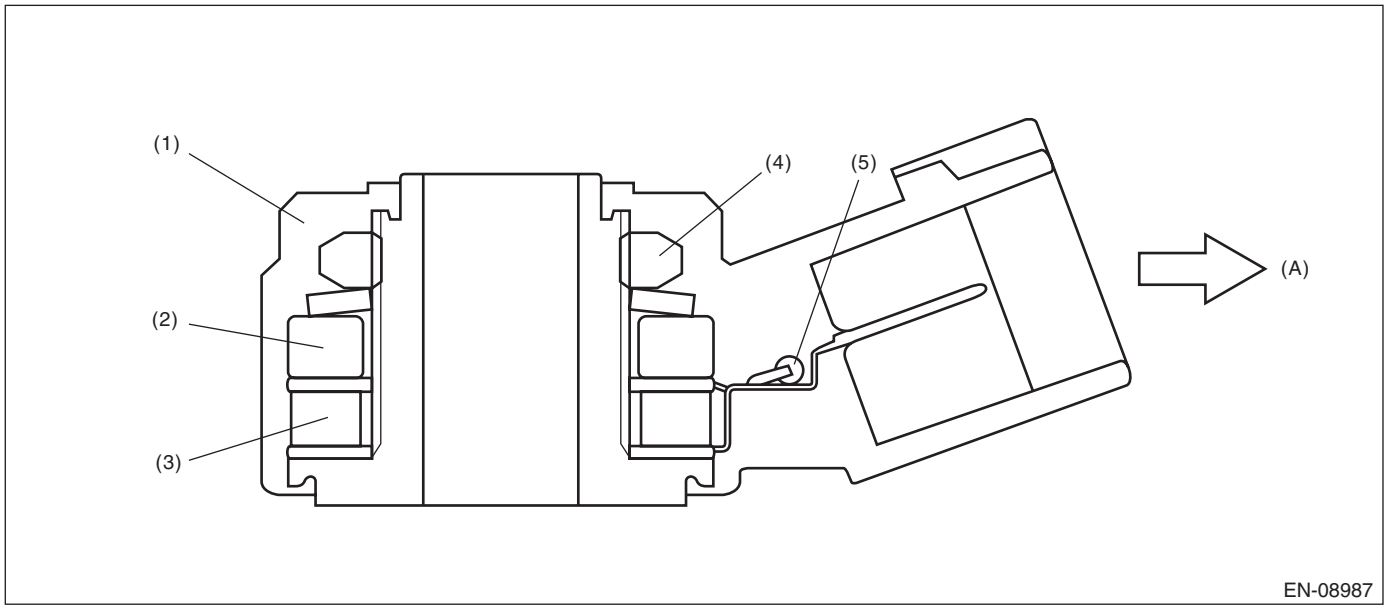

(A) To knock sensor harness

(1) Case
(2) Weight
(3) Piezoelectric element
(4) Nut
(5) Resistance

3. EXECUTION CONDITION

Secondary Parameters	Execution condition
None	

4. GENERAL DRIVING CYCLE

Always perform the diagnosis continuously.

5. DIAGNOSTIC METHOD

If the duration of time while the following conditions are met is longer than the time indicated, judge as NG.

Judgment Value

Malfunction Criteria	Threshold Value
Output voltage	< 0.278 V

Time Needed for Diagnosis: 1000 ms
Malfunction Indicator Light Illumination: Illuminates as soon as a malfunction occurs.

CT:DTC P0328 KNOCK/COMBUSTION VIBRATION SENSOR 1 CIRCUIT HIGH BANK 1 OR SINGLE SENSOR

DTC DETECTING CONDITION:
Immediately at fault recognition
TROUBLE SYMPTOM:
- Poor driving performance
- Knocking occurs

CAUTION:
After servicing or replacing faulty parts, perform Clear Memory Mode <Ref. to EN(H6DO)(diag)-85, OPERATION, Clear Memory Mode.>, and Inspection Mode <Ref. to EN(H6DO)(diag)-69, PROCEDURE, Inspection Mode.>.
WIRING DIAGRAM:
- Engine Electrical System ENGINE TYPE EZ (WITHOUT PUSH BUTTON START) <Ref. to WI-198, ENGINE TYPE EZ (WITHOUT PUSH BUTTON START), WIRING DIAGRAM, Engine Electrical System.>
- Engine Electrical System ENGINE TYPE EZ (WITH PUSH BUTTON START) <Ref. to WI-214, ENGINE TYPE EZ (WITH PUSH BUTTON START), WIRING DIAGRAM, Engine Electrical System.>

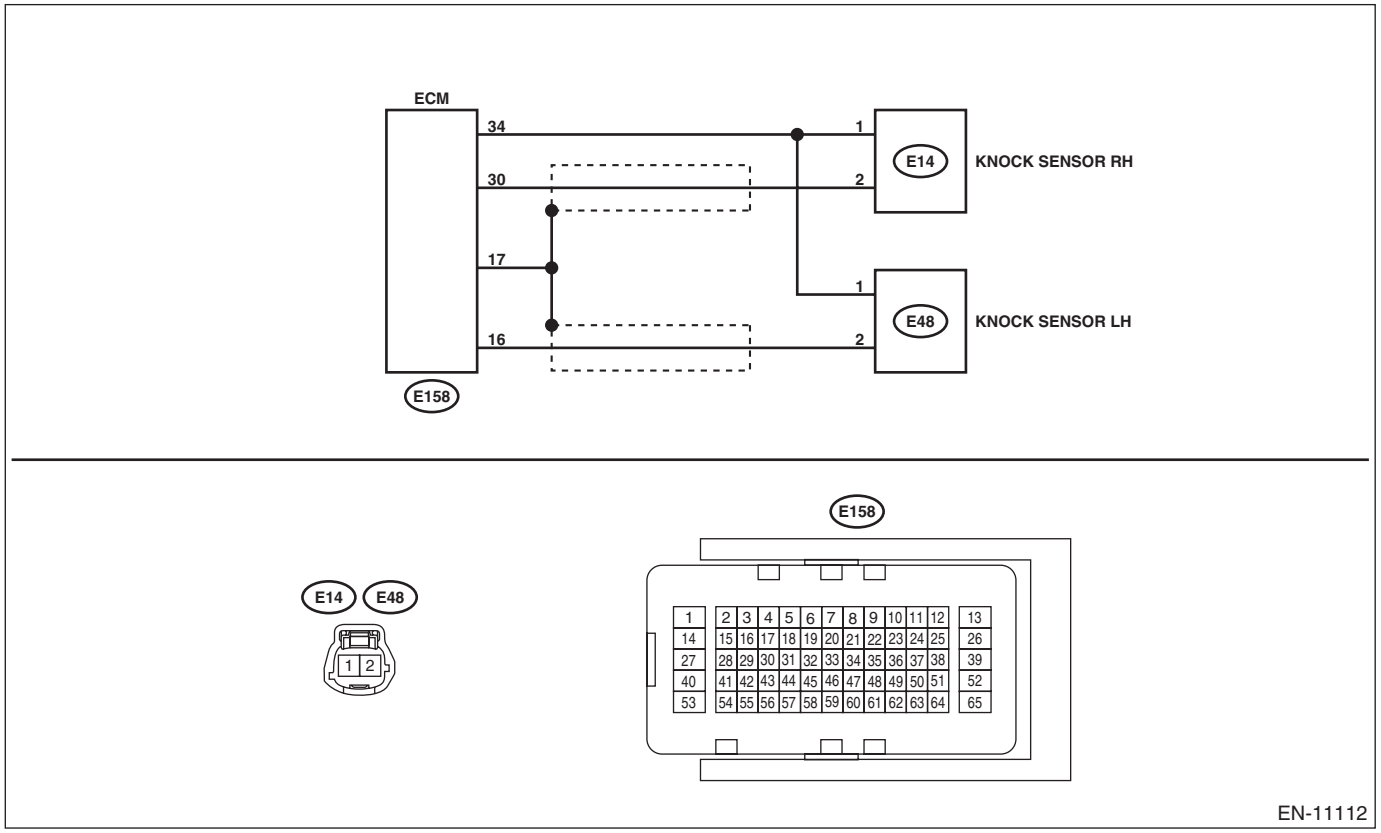

Step		Check	Yes	No
1	**CHECK HARNESS BETWEEN ECM AND KNOCK SENSOR CONNECTOR.** 1) Turn the ignition switch to OFF. 2) Disconnect the connector from ECM. 3) Measure the resistance between ECM connectors. ***Connector & terminal*** ***(E158) No. 30 — (E158) No. 34:***	Is the resistance 600 kΩ or more?	Go to step **2**.	Repair the poor contact of ECM connector.

Step		Check	Yes	No
2	**CHECK KNOCK SENSOR.** 1) Disconnect the connector from the knock sensor. 2) Measure the resistance between knock sensor terminals. ***Terminals*** ***No. 1 — No. 2:***	Is the resistance 600 kΩ or more?	Replace the knock sensor. <Ref. to FU(H6DO)-52, Knock Sensor.>	Repair the harness and connector. NOTE: In this case, repair the following item: • Open circuit in harness between ECM connector and knock sensor connector • Poor contact of knock sensor connector • Poor contact of coupling connector

1. OUTLINE OF DIAGNOSIS

Detect the open or short circuit of knock sensor.
Judge as NG if out of specification.

2. COMPONENT DESCRIPTION

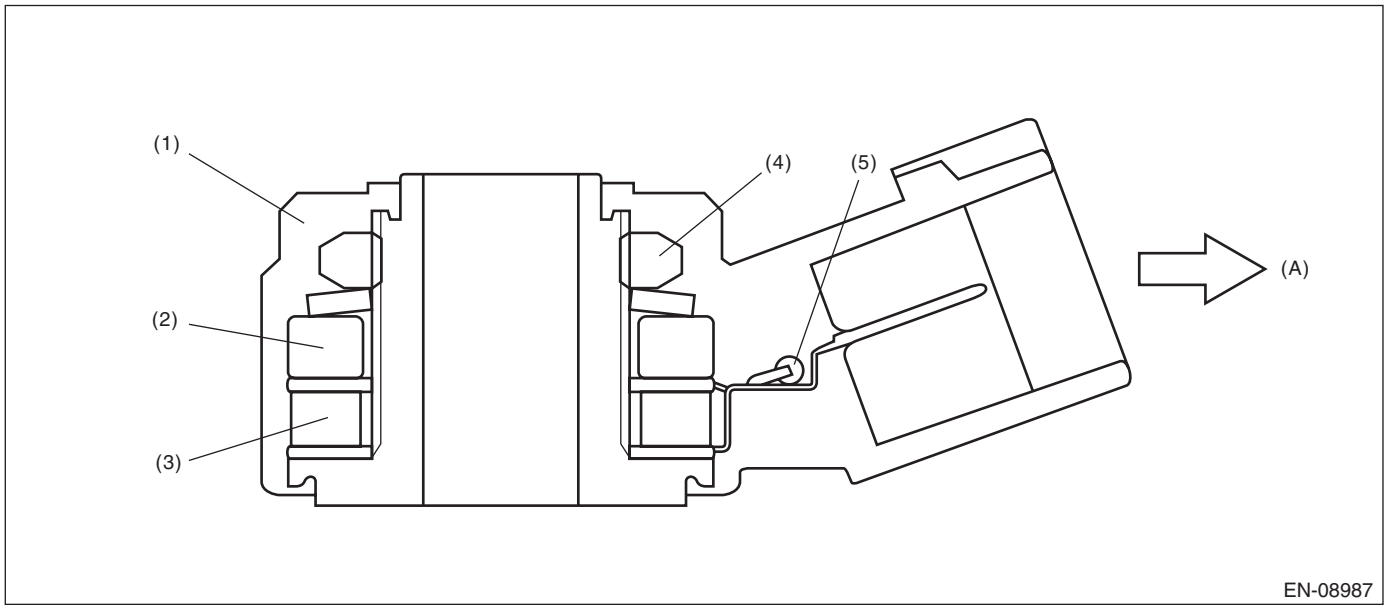

(A) To knock sensor harness

(1) Case
(2) Weight
(3) Piezoelectric element
(4) Nut
(5) Resistance

3. EXECUTION CONDITION

Secondary Parameters	Execution condition
None	

4. GENERAL DRIVING CYCLE

Always perform the diagnosis continuously.

5. DIAGNOSTIC METHOD

If the duration of time while the following conditions are met is longer than the time indicated, judge as NG.

Judgment Value

Malfunction Criteria	Threshold Value
Output voltage	≥ 4.591 V

Time Needed for Diagnosis: 1000 ms
Malfunction Indicator Light Illumination: Illuminates as soon as a malfunction occurs.

CU:DTC P0332 KNOCK/COMBUSTION VIBRATION SENSOR 2 CIRCUIT LOW BANK 2

DTC DETECTING CONDITION:
Immediately at fault recognition
TROUBLE SYMPTOM:
- Driving performance problem
- Knocking is occurred.

CAUTION:
After servicing or replacing faulty parts, perform Clear Memory Mode <Ref. to EN(H6DO)(diag)-85, OPERATION, Clear Memory Mode.>, and Inspection Mode <Ref. to EN(H6DO)(diag)-69, PROCEDURE, Inspection Mode.>.
WIRING DIAGRAM:
- Engine Electrical System ENGINE TYPE EZ (WITHOUT PUSH BUTTON START) <Ref. to WI-198, ENGINE TYPE EZ (WITHOUT PUSH BUTTON START), WIRING DIAGRAM, Engine Electrical System.>
- Engine Electrical System ENGINE TYPE EZ (WITH PUSH BUTTON START) <Ref. to WI-214, ENGINE TYPE EZ (WITH PUSH BUTTON START), WIRING DIAGRAM, Engine Electrical System.>

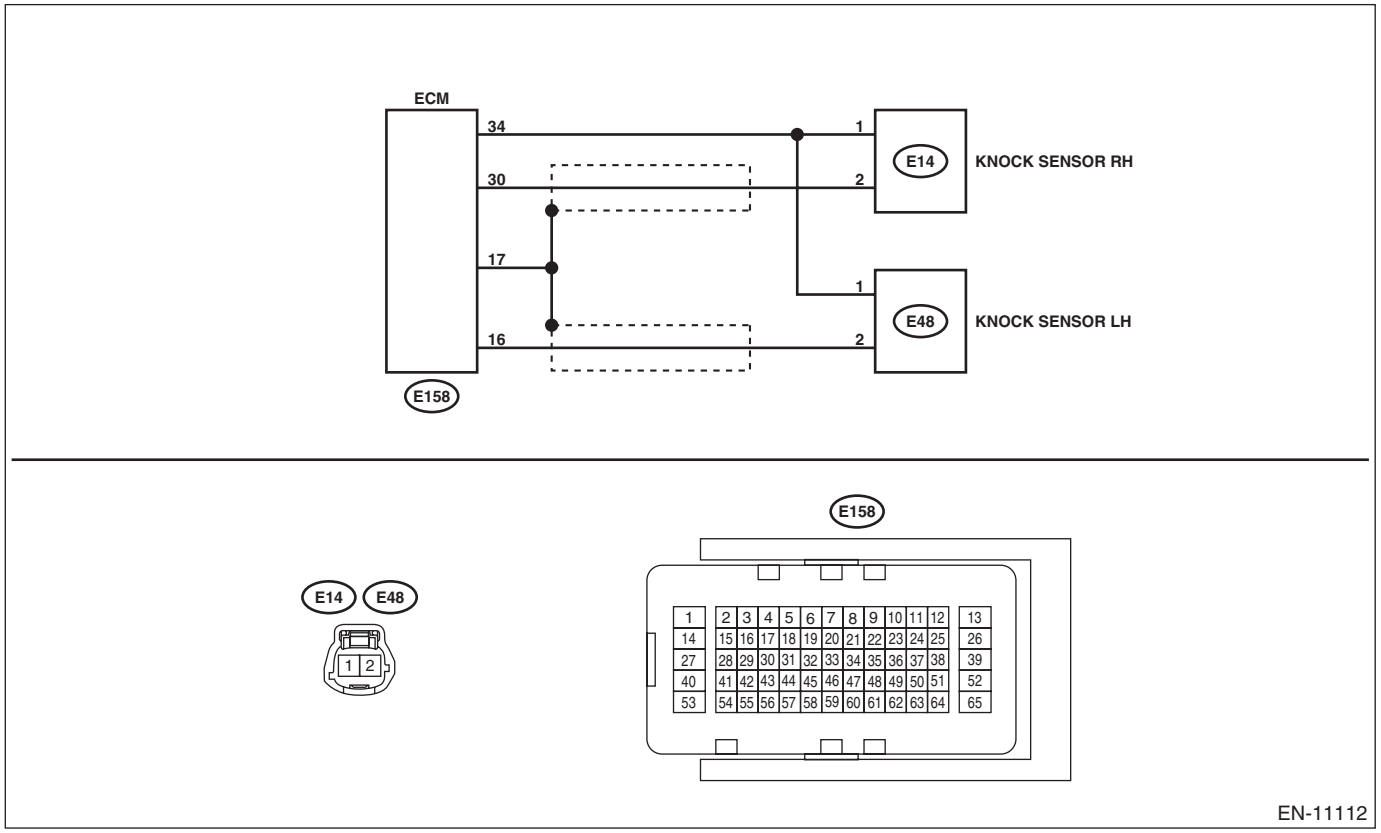

Step		Check	Yes	No
1	**CHECK HARNESS BETWEEN ECM AND KNOCK SENSOR CONNECTOR.** 1) Turn the ignition switch to OFF. 2) Disconnect the connector from ECM. 3) Measure the resistance between ECM connectors. ***Connector & terminal*** ***(E158) No. 16 — (E158) No. 34:***	Is the resistance less than 500 kΩ?	Go to step **2**.	Go to step **3**.

	Step	Check	Yes	No
2	**CHECK KNOCK SENSOR.** 1) Disconnect the connector from the knock sensor. 2) Measure the resistance between knock sensor connectors. ***Terminals*** ***No. 1 — No. 2:***	Is the resistance less than 500 kΩ?	Replace the knock sensor. <Ref. to FU(H6DO)-52, Knock Sensor.>	Repair the short circuit to ground in harness between ECM connector and knock sensor connector. NOTE: The harness between both connectors are shielded. Remove the shield and repair the short circuit of harness.
3	**CHECK INPUT SIGNAL OF ECM.** 1) Connect the connector to ECM. 2) Turn the ignition switch to ON. 3) Measure the voltage between ECM connector and chassis ground. ***Connector & terminal*** ***(E183) No. 16 (+) — Chassis ground (–):***	Is the voltage 2 V or more?	Even if DTC is detected, the circuit has returned to a normal condition at this time. Reproduce the failure, and then perform the diagnosis again. NOTE: In this case, temporary poor contact of connector, temporary open or short circuit of harness may be the cause.	Repair the short circuit to ground in harness between ECM connector and knock sensor connector. NOTE: The harness between both connectors are shielded. Remove the shield and repair the short circuit of harness.

1. OUTLINE OF DIAGNOSIS

NOTE:
For the detection standard, refer to DTC P0327. <Ref. to EN(H6DO)(diag)-316, DTC P0327 KNOCK/COMBUSTION VIBRATION SENSOR 1 CIRCUIT LOW BANK 1 OR SINGLE SENSOR, Diagnostic Procedure with Diagnostic Trouble Code (DTC).>

CV:DTC P0333 KNOCK/COMBUSTION VIBRATION SENSOR 2 CIRCUIT HIGH BANK 2

DTC DETECTING CONDITION:
Immediately at fault recognition
TROUBLE SYMPTOM:
- Driving performance problem
- Knocking occurs

CAUTION:
After servicing or replacing faulty parts, perform Clear Memory Mode <Ref. to EN(H6DO)(diag)-85, OPERATION, Clear Memory Mode.>, and Inspection Mode <Ref. to EN(H6DO)(diag)-69, PROCEDURE, Inspection Mode.>.
WIRING DIAGRAM:
- Engine Electrical System ENGINE TYPE EZ (WITHOUT PUSH BUTTON START) <Ref. to WI-198, ENGINE TYPE EZ (WITHOUT PUSH BUTTON START), WIRING DIAGRAM, Engine Electrical System.>
- Engine Electrical System ENGINE TYPE EZ (WITH PUSH BUTTON START) <Ref. to WI-214, ENGINE TYPE EZ (WITH PUSH BUTTON START), WIRING DIAGRAM, Engine Electrical System.>

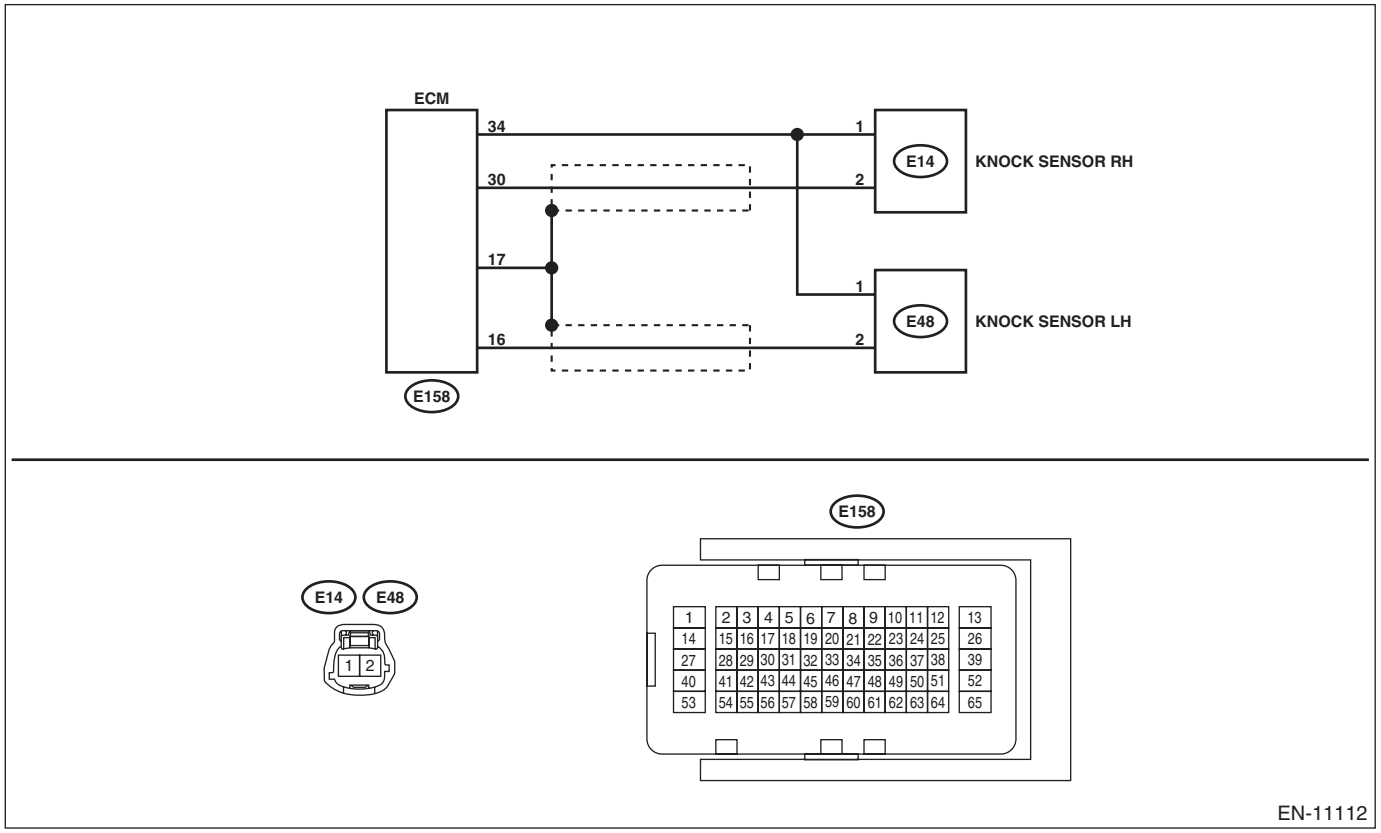

Step		Check	Yes	No
1	**CHECK HARNESS BETWEEN ECM AND KNOCK SENSOR CONNECTOR.** 1) Turn the ignition switch to OFF. 2) Disconnect the connector from ECM. 3) Measure the resistance between ECM connectors. ***Connector & terminal*** ***(E158) No. 16 — (E158) No. 34:***	Is the resistance 600 kΩ or more?	Go to step **2**.	Repair the poor contact of ECM connector.

Step		Check	Yes	No
2	**CHECK KNOCK SENSOR.** 1) Disconnect the connector from the knock sensor. 2) Measure the resistance between knock sensor terminals. ***Terminals*** ***No. 1 — No. 2:***	Is the resistance 600 kΩ or more?	Replace the knock sensor. <Ref. to FU(H6DO)-52, Knock Sensor.>	Repair the harness and connector. NOTE: In this case, repair the following item: • Open circuit in harness between ECM connector and knock sensor connector • Poor contact of knock sensor connector

1. OUTLINE OF DIAGNOSIS

NOTE:
For the detection standard, refer to DTC P0328. <Ref. to EN(H6DO)(diag)-319, DTC P0328 KNOCK/COMBUSTION VIBRATION SENSOR 1 CIRCUIT HIGH BANK 1 OR SINGLE SENSOR, Diagnostic Procedure with Diagnostic Trouble Code (DTC).>

CW:DTC P0335 CRANKSHAFT POSITION SENSOR "A" CIRCUIT

DTC DETECTING CONDITION:
Immediately at fault recognition
TROUBLE SYMPTOM:
- Engine stalls.
- Failure of engine to start

CAUTION:
After servicing or replacing faulty parts, perform Clear Memory Mode <Ref. to EN(H6DO)(diag)-85, OPERATION, Clear Memory Mode.>, and Inspection Mode <Ref. to EN(H6DO)(diag)-69, PROCEDURE, Inspection Mode.>.
WIRING DIAGRAM:
- Engine Electrical System ENGINE TYPE EZ (WITHOUT PUSH BUTTON START) <Ref. to WI-198, ENGINE TYPE EZ (WITHOUT PUSH BUTTON START), WIRING DIAGRAM, Engine Electrical System.>
- Engine Electrical System ENGINE TYPE EZ (WITH PUSH BUTTON START) <Ref. to WI-214, ENGINE TYPE EZ (WITH PUSH BUTTON START), WIRING DIAGRAM, Engine Electrical System.>

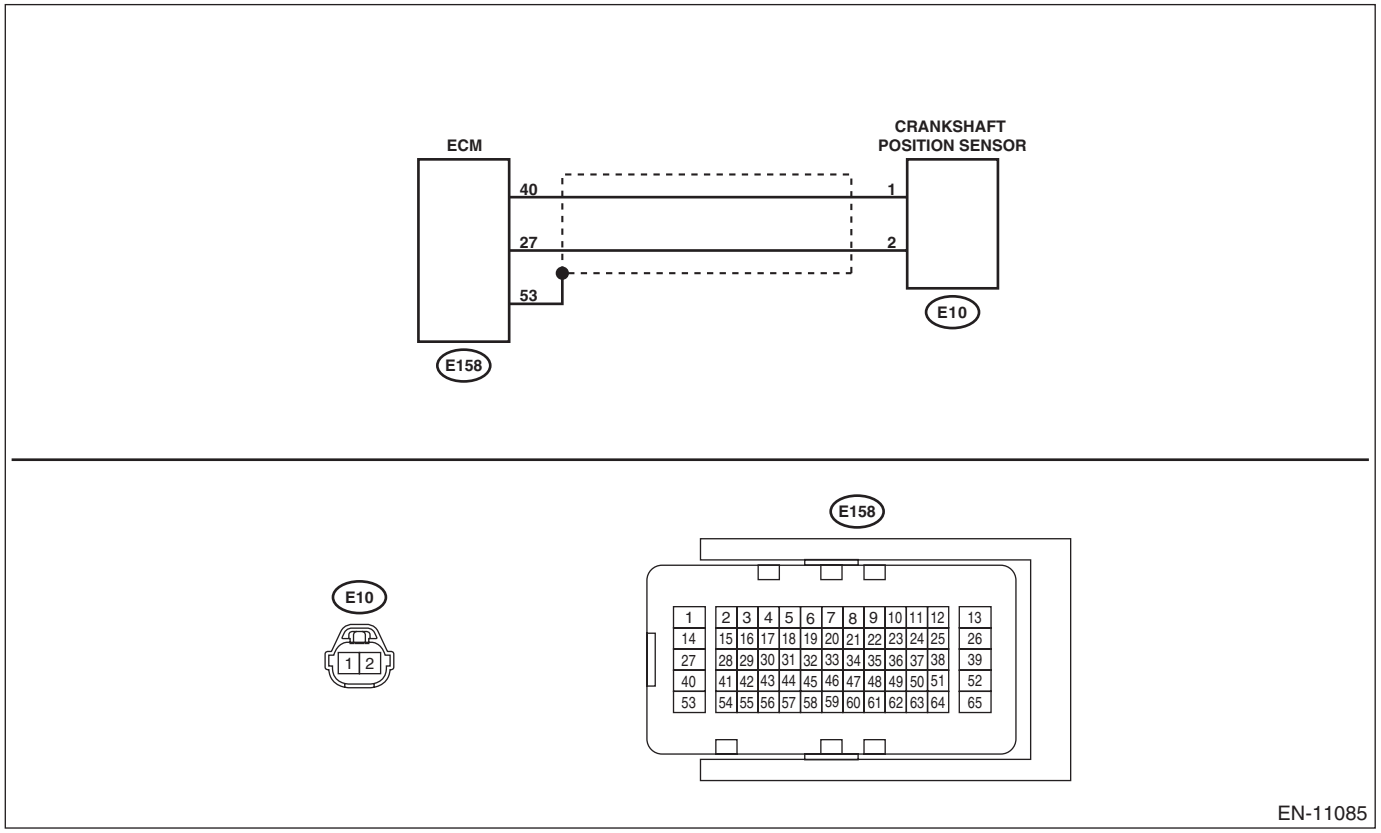

Step		Check	Yes	No
1	**CHECK CONDITION OF CRANKSHAFT POSITION SENSOR.**	Is the crankshaft position sensor installation bolt tightened securely?	Go to step **2**.	Tighten the crankshaft position sensor installation bolt securely.
2	**CHECK CRANKSHAFT POSITION SENSOR.** 1) Turn the ignition switch to OFF. 2) Remove the crankshaft position sensor. 3) Measure the resistance between terminals of crankshaft position sensor connector. ***Terminals*** ***No. 1 — No. 2:***	Is the resistance between 1 and 4 kΩ?	Go to step **3**.	Replace the crankshaft position sensor. <Ref. to FU(H6DO)-42, Crankshaft Position Sensor.>

Step		Check	Yes	No
3	**CHECK HARNESS BETWEEN ECM AND CRANKSHAFT POSITION SENSOR CONNECTOR.** 1) Disconnect the connector from ECM. 2) Measure the resistance of harness between ECM connector and crankshaft position sensor connector. ***Connector & terminal*** ***(E158) No. 40 — (E10) No. 1:*** ***(E158) No. 27 — (E10) No. 2:***	Is the resistance less than 1 Ω?	Repair the poor contact of ECM and crankshaft position sensor connector.	Repair the open circuit in the harness between the ECM connector and crankshaft position sensor connector.

1. OUTLINE OF DIAGNOSIS

Detect the open or short circuit of the crankshaft position sensor.
Judge as NG when the crank signal is not input even though the starter was rotated.

2. COMPONENT DESCRIPTION

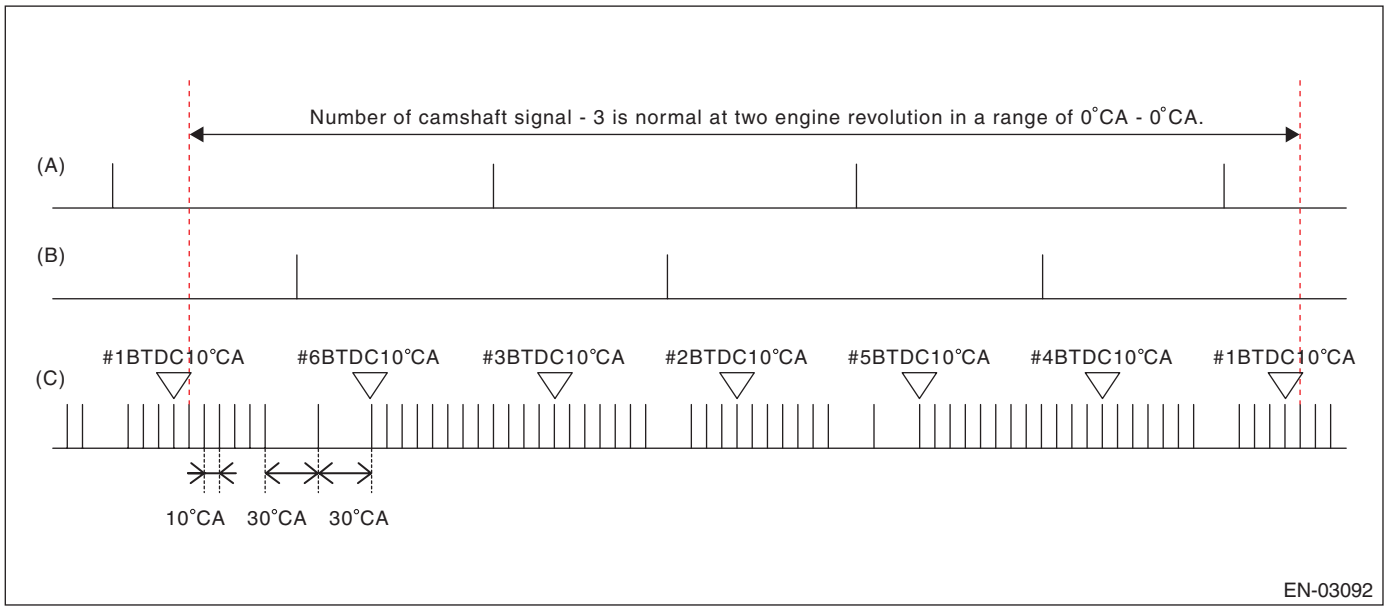

(A) Camshaft signal (RH) (B) Camshaft signal (LH) (C) Crankshaft signal

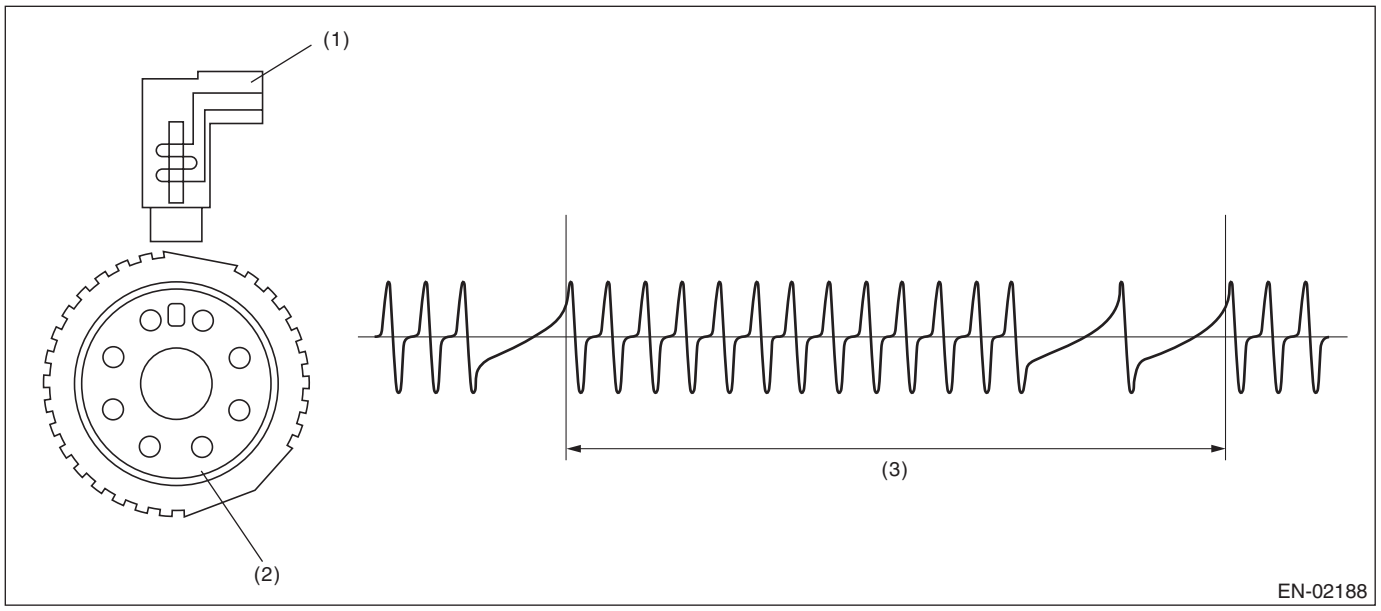

(1) Crankshaft position sensor (2) Crankshaft position sensor plate (3) Crankshaft half-turn

3. EXECUTION CONDITION

Secondary Parameters	Execution condition
Battery voltage	≥ 8 V

4. GENERAL DRIVING CYCLE

Always perform the diagnosis continuously.

5. DIAGNOSTIC METHOD

If the duration of time while the following conditions are met is longer than the time indicated, judge as NG.

Judgment Value

Malfunction Criteria	Threshold Value
Number of crankshaft position sensor signals during cranking	= 0

Time Needed for Diagnosis: 3000 ms
Malfunction Indicator Light Illumination: Illuminates as soon as a malfunction occurs.

CX:DTC P0336 CRANKSHAFT POSITION SENSOR "A" CIRCUIT RANGE/PERFORMANCE

DTC DETECTING CONDITION:
Detected when two consecutive driving cycles with fault occur.
TROUBLE SYMPTOM:
- Engine stalls.
- Failure of engine to start

CAUTION:
After servicing or replacing faulty parts, perform Clear Memory Mode <Ref. to EN(H6DO)(diag)-85, OPERATION, Clear Memory Mode.>, and Inspection Mode <Ref. to EN(H6DO)(diag)-69, PROCEDURE, Inspection Mode.>.

	Step	Check	Yes	No
1	**CHECK CONDITION OF CRANKSHAFT POSITION SENSOR.** Turn the ignition switch to OFF.	Is the crankshaft position sensor installation bolt tightened securely?	Go to step **2**.	Tighten the crankshaft position sensor installation bolt securely. <Ref. to FU(H6DO)-44, INSTALLATION, Crankshaft Position Sensor.>
2	**CHECK CRANKSHAFT PLATE.**	Is there crack or damage in the crankshaft plate teeth?	Replace the crankshaft plate.	Go to step **3**.
3	**CHECK INSTALLATION CONDITION OF TIMING CHAIN.** Turn the crankshaft, and align alignment mark on crank sprocket with alignment mark on cylinder block. ST 18252AA000 CRANKSHAFT SOCKET	Is the timing chain dislocated from its proper position?	Correct the installation condition of timing chain. <Ref. to ME(H6DO)-87, Timing Chain Assembly.>	Replace the crankshaft position sensor. <Ref. to FU(H6DO)-42, Crankshaft Position Sensor.>

1. OUTLINE OF DIAGNOSIS

Detect for faults in crankshaft position sensor output properties.
Judge as NG when there is a problem in the number of crankshaft signals for every revolution of crankshaft.

2. COMPONENT DESCRIPTION

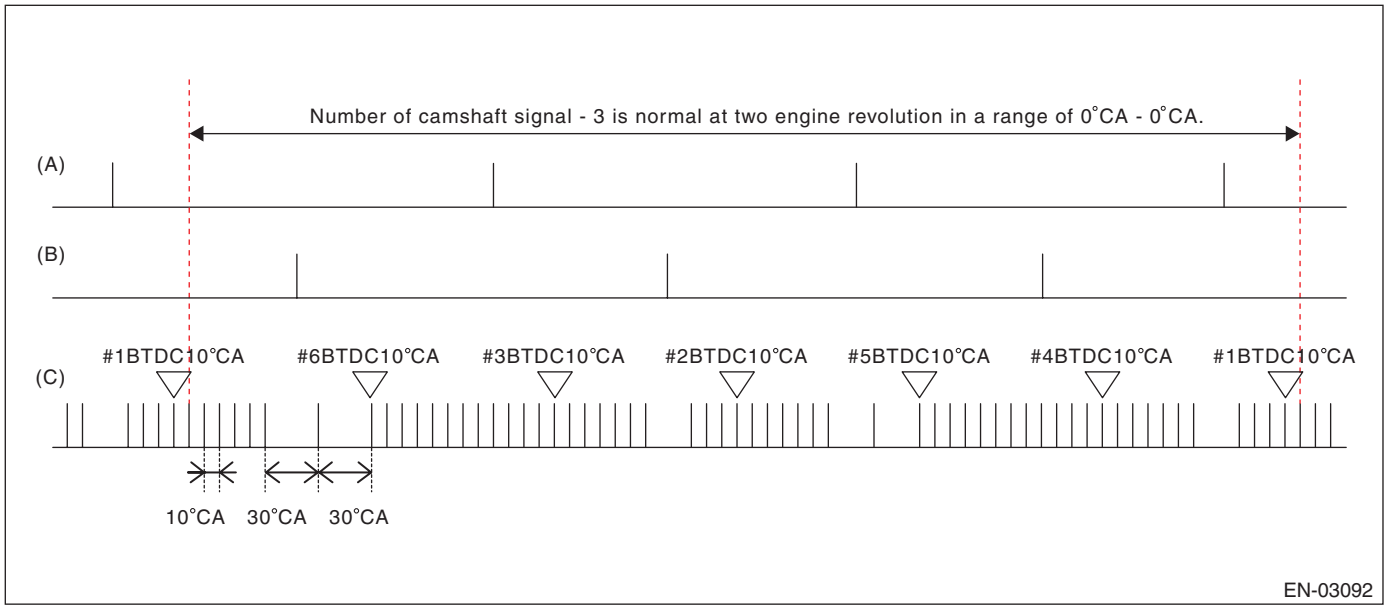

(A) Camshaft signal (RH) (B) Camshaft signal (LH) (C) Crankshaft signal

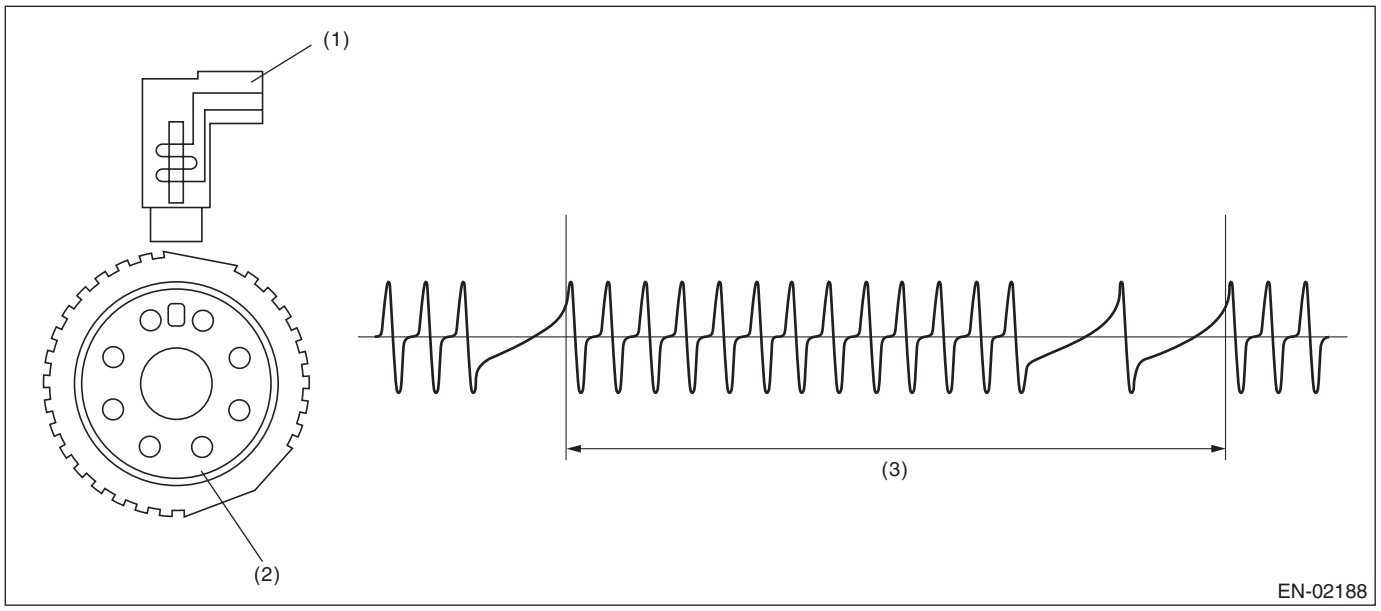

(1) Crankshaft position sensor (2) Crankshaft position sensor plate (3) Crankshaft half-turn

3. EXECUTION CONDITION

Secondary Parameters	Execution condition
Battery voltage	≥ 8 V

4. GENERAL DRIVING CYCLE

Always perform the diagnosis continuously.

5. DIAGNOSTIC METHOD

Judge as NG when the following conditions are established.

Judgment Value

Malfunction Criteria	Threshold Value
The number of crankshaft position sensor signals in one crankshaft revolution during driving	≠ 30

Time Needed for Diagnosis: 10 time(s) engine revs.
Malfunction Indicator Light Illumination: Illuminates when malfunction occurs in 2 continuous driving cycles.

CY:DTC P0340 CAMSHAFT POSITION SENSOR "A" CIRCUIT BANK 1 OR SINGLE SENSOR

DTC DETECTING CONDITION:
Immediately at fault recognition
TROUBLE SYMPTOM:
- Engine stalls.
- Failure of engine to start

CAUTION:
After servicing or replacing faulty parts, perform Clear Memory Mode <Ref. to EN(H6DO)(diag)-85, OPERATION, Clear Memory Mode.>, and Inspection Mode <Ref. to EN(H6DO)(diag)-69, PROCEDURE, Inspection Mode.>.
WIRING DIAGRAM:
- Engine Electrical System ENGINE TYPE EZ (WITHOUT PUSH BUTTON START) <Ref. to WI-198, ENGINE TYPE EZ (WITHOUT PUSH BUTTON START), WIRING DIAGRAM, Engine Electrical System.>
- Engine Electrical System ENGINE TYPE EZ (WITH PUSH BUTTON START) <Ref. to WI-214, ENGINE TYPE EZ (WITH PUSH BUTTON START), WIRING DIAGRAM, Engine Electrical System.>

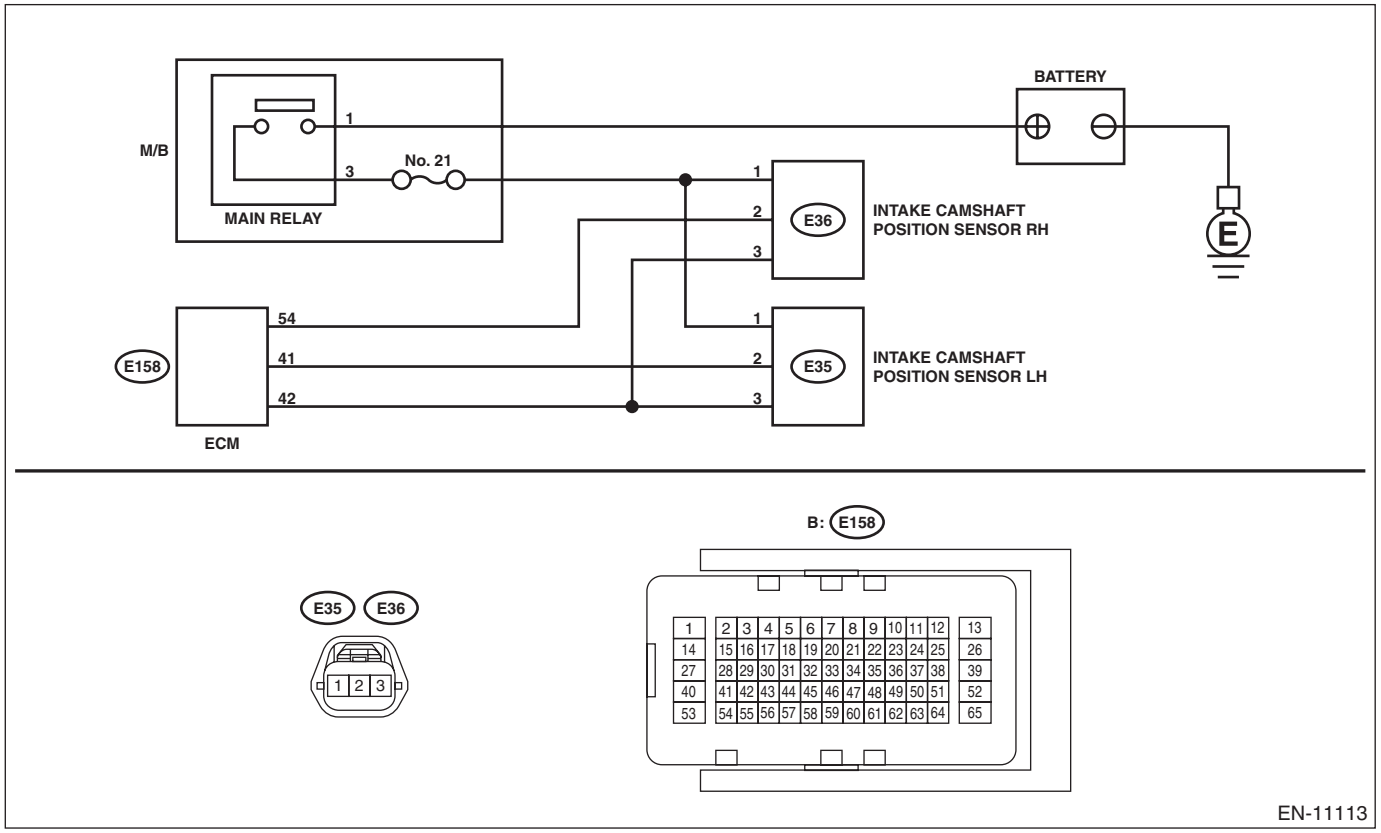

Step		Check	Yes	No
1	**CHECK POWER SUPPLY OF CAMSHAFT POSITION SENSOR.** 1) Turn the ignition switch to OFF. 2) Disconnect the connector from camshaft position sensor. 3) Turn the ignition switch to ON. 4) Measure the voltage between camshaft position sensor connector and engine ground. ***Connector & terminal*** ***(E36) No. 1 (+) — Engine ground (–):***	Is the voltage 10 V or more?	Go to step **2**.	Repair the open circuit or ground short circuit in harness between main relay connector and camshaft position sensor connector.

	Step	Check	Yes	No
2	**CHECK HARNESS BETWEEN ECM AND CAMSHAFT POSITION SENSOR CONNECTOR.** 1) Turn the ignition switch to OFF. 2) Disconnect the connector from ECM. 3) Measure the resistance between ECM connector and camshaft position sensor connector. ***Connector & terminal*** ***(E158) No. 54 — (E36) No. 2:*** ***(E158) No. 42 — (E36) No. 3:***	Is the resistance less than 1 Ω?	Go to step **3**.	Repair the open circuit in the harness between the ECM connector and camshaft position sensor connector.
3	**CHECK HARNESS BETWEEN ECM AND CAMSHAFT POSITION SENSOR CONNECTOR.** Measure the resistance between camshaft position sensor connector and engine ground. ***Connector & terminal*** ***(E36) No. 2 — Engine ground:***	Is the resistance 1 MΩ or more?	Go to step **4**.	Repair short circuit to ground in harness between ECM connector and camshaft position sensor connector.
4	**CHECK HARNESS BETWEEN ECM AND CAMSHAFT POSITION SENSOR CONNECTOR.** Measure the voltage between camshaft position sensor connector and engine ground. ***Connector & terminal*** ***(E36) No. 2 (+) — Engine ground (–):***	Is the voltage 5 V or more?	Repair the short circuit to power in the harness between ECM connector and camshaft position sensor connector.	Go to step **5**.
5	**CHECK CONDITION OF CAMSHAFT POSITION SENSOR.**	Is the camshaft position sensor installation bolt tightened securely?	Go to step **6**.	Tighten the camshaft position sensor installation bolt securely. <Ref. to FU(H6DO)-49, INSTALLATION, Camshaft Position Sensor.>
6	**CHECK CAMSHAFT POSITION SENSOR.** Check the waveform of the camshaft position sensor. <Ref. to EN(H6DO)(diag)-20, Engine Control Module (ECM) I/O Signal.>	Is there any abnormality in waveform?	Replace the camshaft position sensor. <Ref. to FU(H6DO)-47, Camshaft Position Sensor.>	Repair the following item. • Poor contact of ECM connector • Poor contact of camshaft position sensor connector • Poor contact of coupling connector

1. OUTLINE OF DIAGNOSIS

Detect the open or short circuit of the camshaft position sensor.
When there is no camshaft position signal input continuously, judge as NG.

2. COMPONENT DESCRIPTION

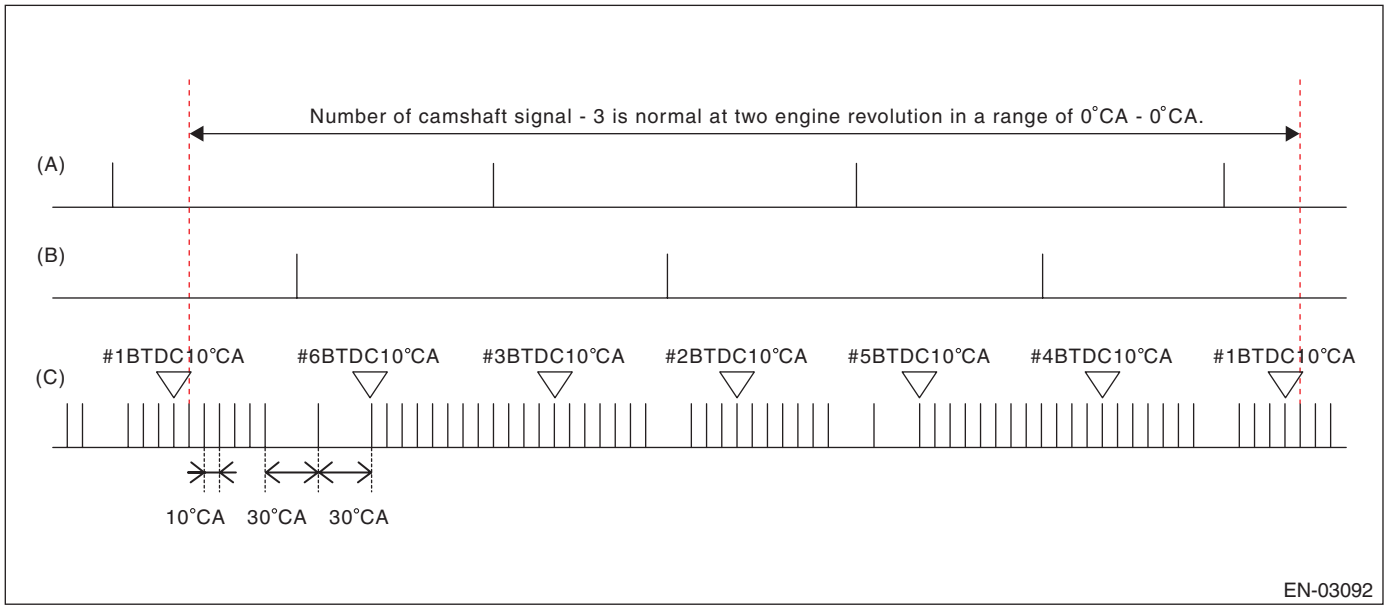

(A) Camshaft signal (RH)
(B) Camshaft signal (LH)
(C) Crankshaft signal

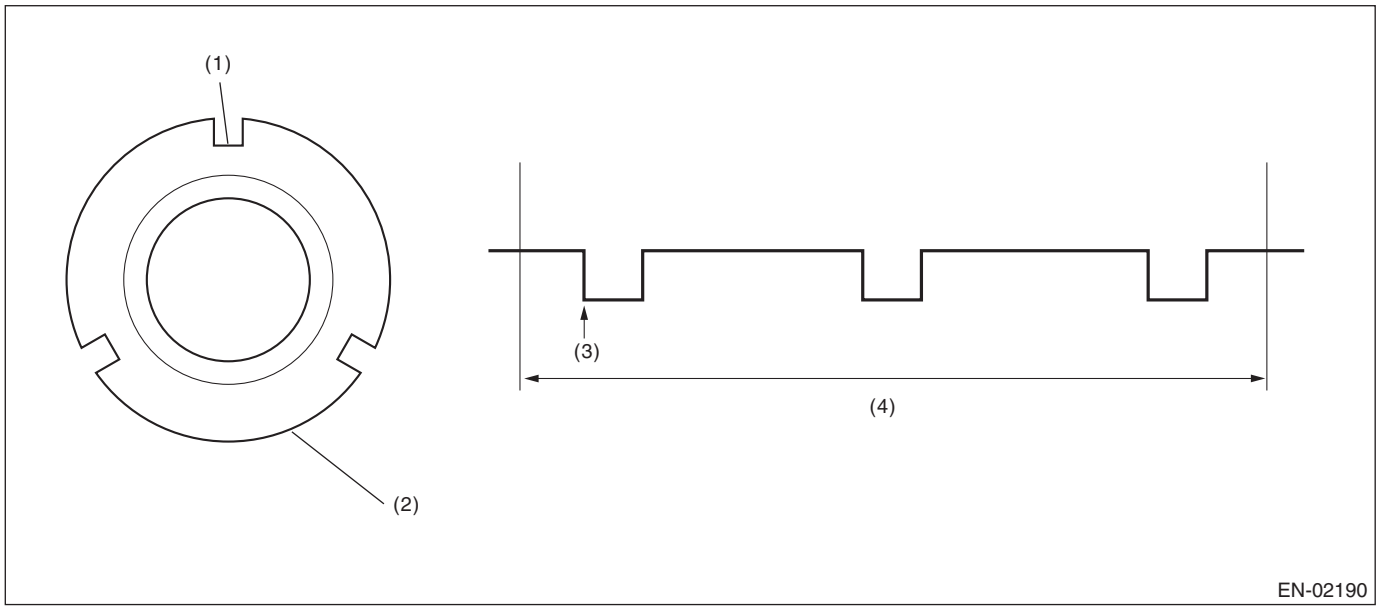

(1) Slot
(2) Camshaft plate
(3) Detecting point
(4) Camshaft one revolution (crankshaft two revolutions)

3. EXECUTION CONDITION

Diagnosis 1

Secondary Parameters	Execution condition
Battery voltage	≥ 8 V

Diagnosis 2

Secondary Parameters	Execution condition
Battery voltage	≥ 8 V
Elapsed time after starting the engine	≥ 200 ms

4. GENERAL DRIVING CYCLE

Diagnosis 1: Perform the diagnosis only once.
Diagnosis 2: Always perform the diagnosis continuously.

5. DIAGNOSTIC METHOD

Diagnosis 1
If the duration of time while the following conditions are met is longer than the time indicated, judge as NG.
Judgment Value

Malfunction Criteria	Threshold Value
Number of camshaft position sensor signals during cranking	= 0

Time Needed for Diagnosis: 3000 ms
Diagnosis 2
Judge as NG if there is no input signal from the camshaft position sensor for (16 time(s) +2)/3 revs.
Judgment Value

Malfunction Criteria	Threshold Value
Amount of camshaft sensor signal during 0.33 revs of crankshaft	= 0

Time Needed for Diagnosis:
Diagnosis 1
3000 ms
Diagnosis 2
Engine revolutions of (16 time(s) +2)/2 revs
Malfunction Indicator Light Illumination: Illuminates as soon as a malfunction occurs.

CZ:DTC P0341 CAMSHAFT POSITION SENSOR "A" CIRCUIT RANGE/PERFORMANCE BANK 1 OR SINGLE SENSOR

NOTE:
For the diagnostic procedure, refer to DTC P0340. <Ref. to EN(H6DO)(diag)-331, DTC P0340 CAMSHAFT POSITION SENSOR "A" CIRCUIT BANK 1 OR SINGLE SENSOR, Diagnostic Procedure with Diagnostic Trouble Code (DTC).>

1. OUTLINE OF DIAGNOSIS

Detect the malfunction of camshaft position sensor property.
Judge as NG when the number of camshaft signals remains abnormal.

2. COMPONENT DESCRIPTION

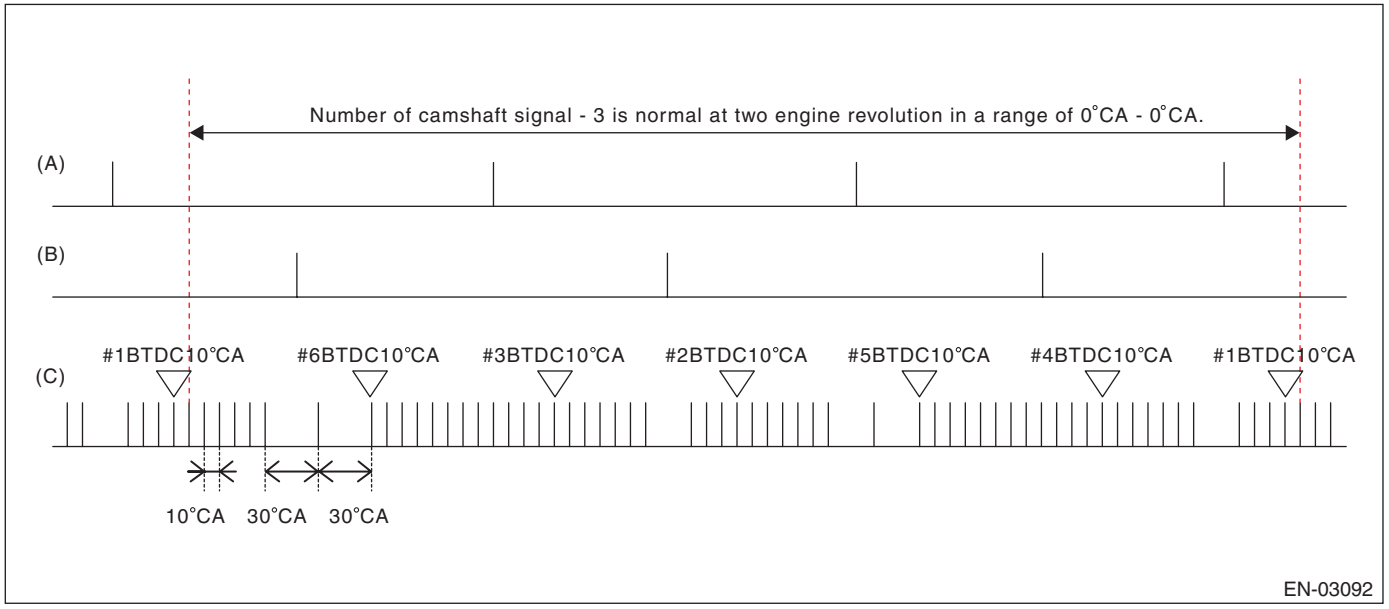

(A) Camshaft signal (RH)
(B) Camshaft signal (LH)
(C) Crankshaft signal

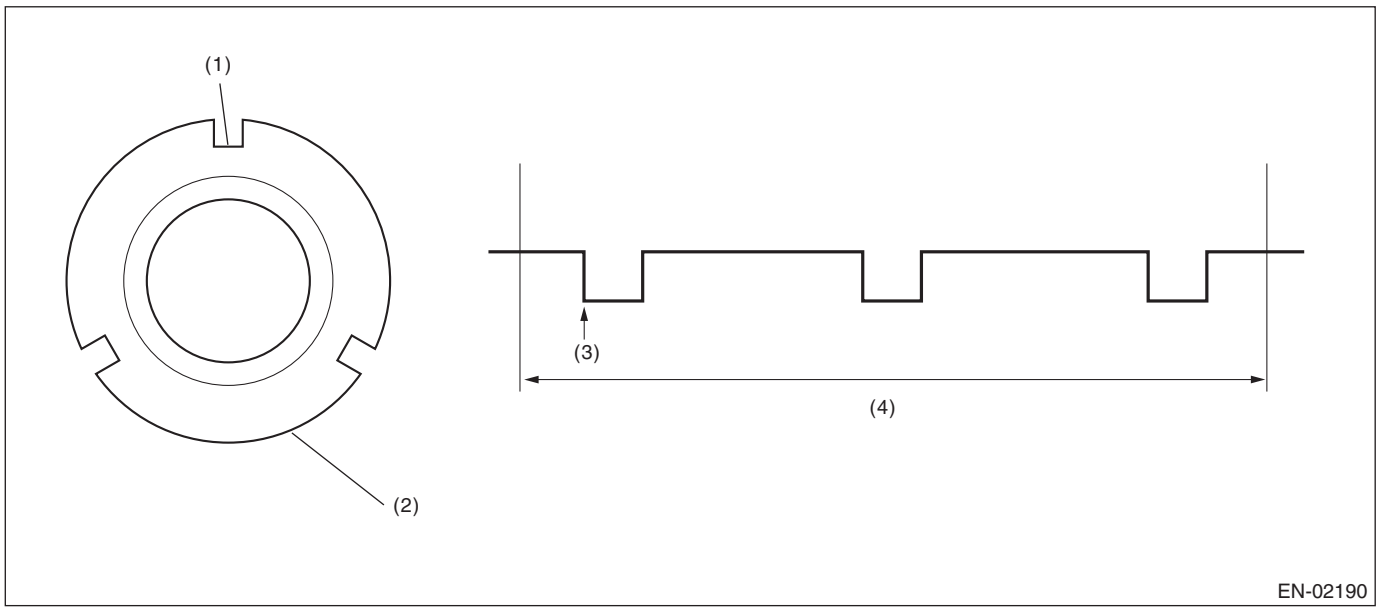

(1) Slot
(2) Camshaft plate
(3) Detecting point
(4) Camshaft one revolution (crankshaft two revolutions)

3. EXECUTION CONDITION

Secondary Parameters	Execution condition
Battery voltage	≥ 8 V
Elapsed time after starting the engine	≥ 200 ms

4. GENERAL DRIVING CYCLE

Always perform the diagnosis continuously.

5. DIAGNOSTIC METHOD

Judge as NG when the status where the number of camshaft position sensor signal in two crankshaft revolutions is other than 3 time(s).

Judgment Value

Malfunction Criteria	Threshold Value
Amount of camshaft sensor signal during 2 revs of crankshaft	≠ 3 time(s)

Time Needed for Diagnosis: 2 engine revs. × 4 time(s)
Malfunction Indicator Light Illumination: Illuminates as soon as a malfunction occurs.

DA:DTC P0345 CAMSHAFT POSITION SENSOR "A" CIRCUIT BANK 2

DTC DETECTING CONDITION:
Immediately at fault recognition
TROUBLE SYMPTOM:
- Engine stalls.
- Failure of engine to start

CAUTION:
After servicing or replacing faulty parts, perform Clear Memory Mode <Ref. to EN(H6DO)(diag)-85, OPERATION, Clear Memory Mode.>, and Inspection Mode <Ref. to EN(H6DO)(diag)-69, PROCEDURE, Inspection Mode.>.
WIRING DIAGRAM:
- Engine Electrical System ENGINE TYPE EZ (WITHOUT PUSH BUTTON START) <Ref. to WI-198, ENGINE TYPE EZ (WITHOUT PUSH BUTTON START), WIRING DIAGRAM, Engine Electrical System.>
- Engine Electrical System ENGINE TYPE EZ (WITH PUSH BUTTON START) <Ref. to WI-214, ENGINE TYPE EZ (WITH PUSH BUTTON START), WIRING DIAGRAM, Engine Electrical System.>

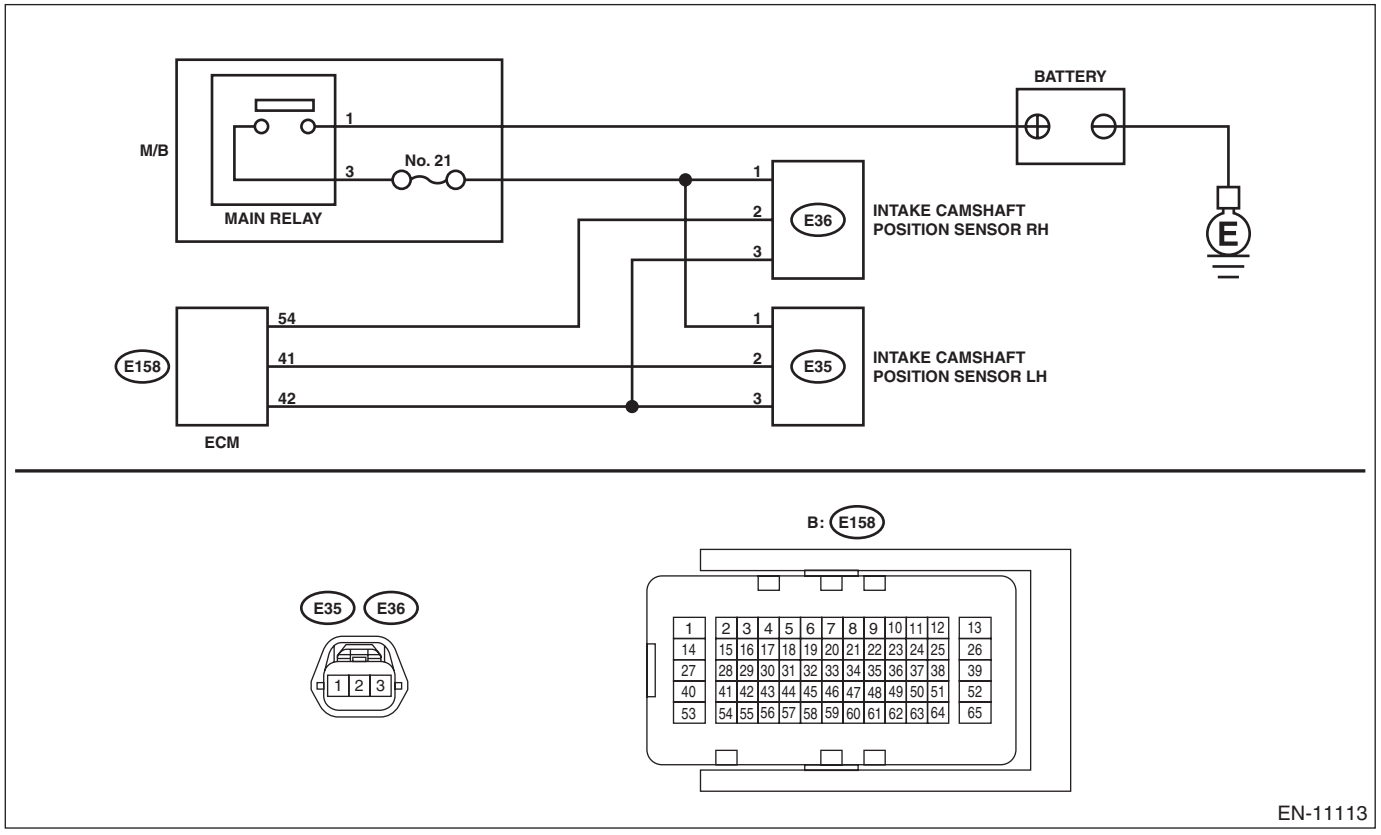

Step		Check	Yes	No
1	**CHECK POWER SUPPLY OF CAMSHAFT POSITION SENSOR.** 1) Turn the ignition switch to OFF. 2) Disconnect the connector from camshaft position sensor. 3) Turn the ignition switch to ON. 4) Measure the voltage between camshaft position sensor connector and engine ground. ***Connector & terminal*** ***(E35) No. 1 (+) — Engine ground (–):***	Is the voltage 10 V or more?	Go to step **2**.	Repair the power supply circuit.

	Step	Check	Yes	No
2	**CHECK HARNESS BETWEEN ECM AND CAMSHAFT POSITION SENSOR CONNECTOR.** 1) Turn the ignition switch to OFF. 2) Disconnect the connector from ECM. 3) Measure the resistance between ECM connector and camshaft position sensor connector. ***Connector & terminal*** ***(E158) No. 41 — (E35) No. 2:*** ***(E158) No. 42 — (E35) No. 3:***	Is the resistance less than 1 Ω?	Go to step **3**.	Repair the open circuit in the harness between the ECM connector and camshaft position sensor connector.
3	**CHECK HARNESS BETWEEN ECM AND CAMSHAFT POSITION SENSOR CONNECTOR.** Measure the resistance between camshaft position sensor connector and engine ground. ***Connector & terminal*** ***(E35) No. 2 — Engine ground:***	Is the resistance 1 MΩ or more?	Go to step **4**.	Repair short circuit to ground in harness between ECM connector and camshaft position sensor connector.
4	**CHECK HARNESS BETWEEN ECM AND CAMSHAFT POSITION SENSOR CONNECTOR.** Measure the voltage between camshaft position sensor connector and engine ground. ***Connector & terminal*** ***(E35) No. 2 (+) — Engine ground (–):***	Is the voltage 5 V or more?	Repair the short circuit to power in the harness between ECM connector and camshaft position sensor connector.	Go to step **5**.
5	**CHECK CONDITION OF CAMSHAFT POSITION SENSOR.**	Is the camshaft position sensor installation bolt tightened securely?	Go to step **6**.	Tighten the camshaft position sensor installation bolt securely. <Ref. to FU(H6DO)-49, INSTALLATION, Camshaft Position Sensor.>
6	**CHECK CAMSHAFT POSITION SENSOR.** Check the waveform of the camshaft position sensor. <Ref. to EN(H6DO)(diag)-20, Engine Control Module (ECM) I/O Signal.>	Is there any abnormality in waveform?	Replace the camshaft position sensor. <Ref. to FU(H6DO)-47, Camshaft Position Sensor.>	Repair the following item. • Poor contact of ECM connector • Poor contact of camshaft position sensor connector

1. OUTLINE OF DIAGNOSIS

NOTE:
For the detection standard, refer to DTC P0340. <Ref. to EN(H6DO)(diag)-331, DTC P0340 CAMSHAFT POSITION SENSOR "A" CIRCUIT BANK 1 OR SINGLE SENSOR, Diagnostic Procedure with Diagnostic Trouble Code (DTC).>

DB:DTC P0346 CAMSHAFT POSITION SENSOR "A" CIRCUIT RANGE/PERFORMANCE BANK 2

NOTE:
For the diagnostic procedure, refer to DTC P0345. <Ref. to EN(H6DO)(diag)-337, DTC P0345 CAMSHAFT POSITION SENSOR "A" CIRCUIT BANK 2 , Diagnostic Procedure with Diagnostic Trouble Code (DTC).>

1. OUTLINE OF DIAGNOSIS

NOTE:
For the detection standard, refer to DTC P0341. <Ref. to EN(H6DO)(diag)-335, DTC P0341 CAMSHAFT POSITION SENSOR "A" CIRCUIT RANGE/PERFORMANCE BANK 1 OR SINGLE SENSOR, Diagnostic Procedure with Diagnostic Trouble Code (DTC).>

DC:DTC P0351 IGNITION COIL "A" PRIMARY CONTROL CIRCUIT/OPEN

DTC DETECTING CONDITION:
Immediately at fault recognition
TROUBLE SYMPTOM:
- Improper idling
- Poor driving performance

CAUTION:
After servicing or replacing faulty parts, perform Clear Memory Mode <Ref. to EN(H6DO)(diag)-85, OPERATION, Clear Memory Mode.>, and Inspection Mode <Ref. to EN(H6DO)(diag)-69, PROCEDURE, Inspection Mode.>.
WIRING DIAGRAM:
- Engine Electrical System ENGINE TYPE EZ (WITHOUT PUSH BUTTON START) <Ref. to WI-198, ENGINE TYPE EZ (WITHOUT PUSH BUTTON START), WIRING DIAGRAM, Engine Electrical System.>
- Engine Electrical System ENGINE TYPE EZ (WITH PUSH BUTTON START) <Ref. to WI-214, ENGINE TYPE EZ (WITH PUSH BUTTON START), WIRING DIAGRAM, Engine Electrical System.>

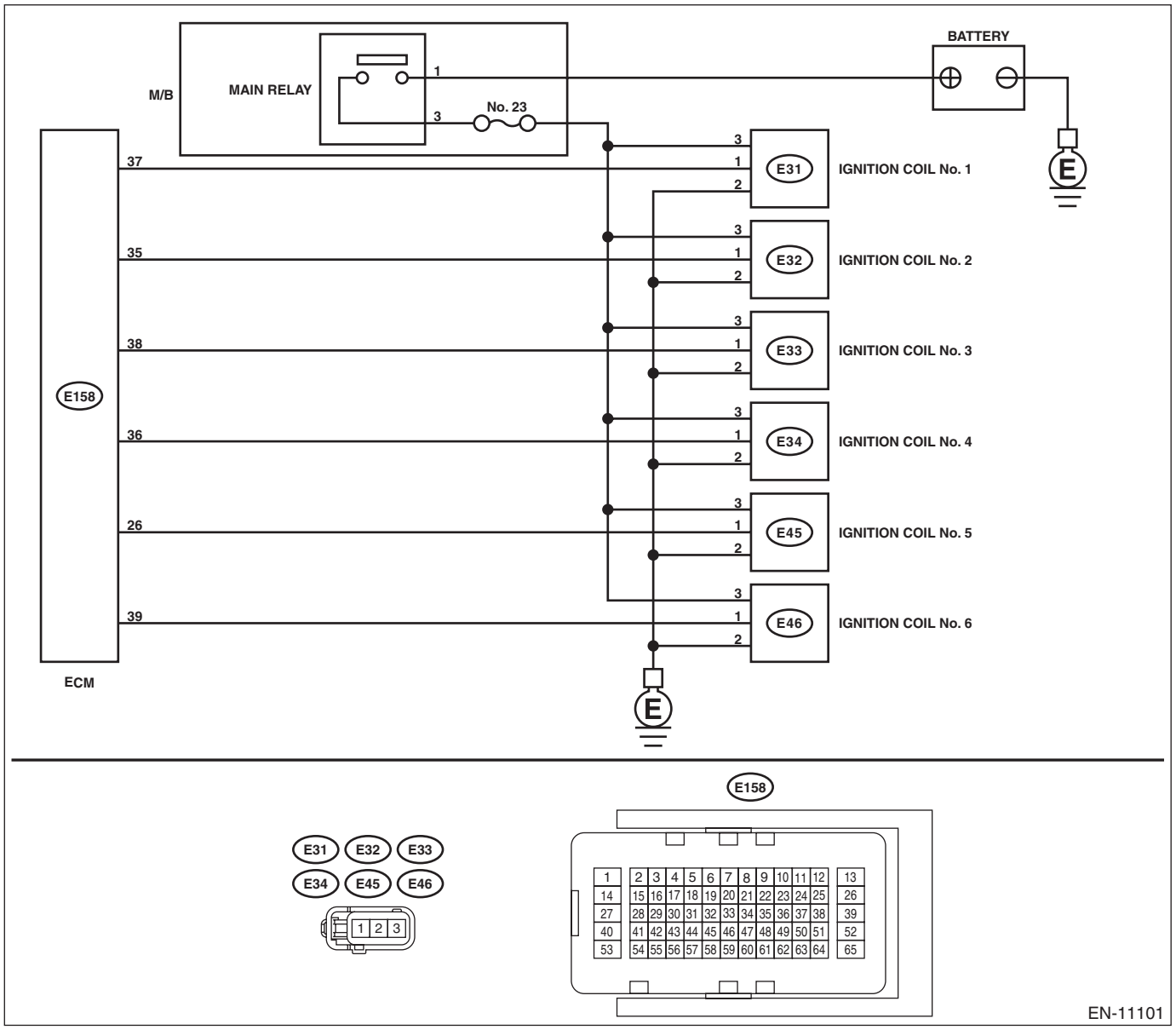

	Step	Check	Yes	No
1	**CHECK IGNITION COIL POWER SUPPLY CIRCUIT.** 1) Turn the ignition switch to OFF. 2) Disconnect the connector from ignition coil. 3) Turn the ignition switch to ON. 4) Measure the voltage between ignition coil connector and engine ground. ***Connector & terminal*** ***DTC P0351; (E31) No. 3 (+) — Engine ground (–):*** ***DTC P0352; (E32) No. 3 (+) — Engine ground (–):*** ***DTC P0353; (E33) No. 3 (+) — Engine ground (–):*** ***DTC P0354; (E34) No. 3 (+) — Engine ground (–):*** ***DTC P0355; (E45) No. 3 (+) — Engine ground (–):*** ***DTC P0356; (E46) No. 3 (+) — Engine ground (–):***	Is the voltage 10 V or more?	Go to step **2**.	Repair the harness and connector. NOTE: In this case, repair the following item: • Open or short to ground in harness of power supply circuit • Blown out of fuse (M/B No. 23) • Poor contact of IG relay connector • Poor contact of coupling connector • Faulty IG relay
2	**CHECK HARNESS OF IGNITION COIL GROUND CIRCUIT.** 1) Turn the ignition switch to OFF. 2) Measure the resistance of harness between ignition coil connector and engine ground. ***Connector & terminal*** ***DTC P0351; (E31) No. 2 — Engine ground:*** ***DTC P0352; (E32) No. 2 — Engine ground:*** ***DTC P0353; (E33) No. 2 — Engine ground:*** ***DTC P0354; (E34) No. 2 — Engine ground:*** ***DTC P0355; (E45) No. 2 — Engine ground:*** ***DTC P0356; (E46) No. 2 — Engine ground:***	Is the resistance less than 5 Ω?	Go to step **3**.	Repair the open circuit in harness between ignition coil connector and engine grounding terminal.
3	**CHECK HARNESS BETWEEN ECM AND IGNITION COIL CONNECTOR.** 1) Disconnect the connector from ECM. 2) Measure the resistance between ignition coil connector and engine ground. ***Connector & terminal*** ***DTC P0351; (E31) No. 1 — Engine ground:*** ***DTC P0352; (E32) No. 1 — Engine ground:*** ***DTC P0353; (E33) No. 1 — Engine ground:*** ***DTC P0354; (E34) No. 1 — Engine ground:*** ***DTC P0355; (E45) No. 1 — Engine ground:*** ***DTC P0356; (E46) No. 1 — Engine ground:***	Is the resistance 1 MΩ or more?	Go to step **4**.	Repair the ground short circuit of harness between ECM connector and ignition coil connector.
4	**CHECK HARNESS BETWEEN ECM AND IGNITION COIL CONNECTOR.** Measure the resistance of harness between ECM connector and ignition coil connector. ***Connector & terminal*** ***DTC P0351; (E158) No. 37 — (E31) No. 1:*** ***DTC P0352; (E158) No. 35 — (E32) No. 1:*** ***DTC P0353; (E158) No. 38 — (E33) No. 1:*** ***DTC P0354; (E158) No. 36 — (E34) No. 1:*** ***DTC P0355; (E158) No. 26 — (E45) No. 1:*** ***DTC P0356; (E158) No. 39 — (E46) No. 1:***	Is the resistance less than 1 Ω?	Go to step **5**.	Repair the open circuit in harness between ECM connector and ignition coil connector.
5	**CHECK FOR POOR CONTACT.** Check for poor contact of ECM connector.	Is there poor contact of ECM connector?	Repair the poor contact of ECM connector.	Go to step **6**.

Step		Check	Yes	No
6	**CHECK SPARK PLUG CONDITION.** 1) Remove the spark plug of the corresponding cylinder. <Ref. to IG(H6DO)-4, REMOVAL, Spark Plug.> 2) Check the spark plug condition. <Ref. to IG(H6DO)-11, INSPECTION, Spark Plug.>	Is the spark plug condition normal?	Replace the ignition coil. <Ref. to IG(H6DO)-15, Ignition Coil.>	Replace the spark plug. <Ref. to IG(H6DO)-4, Spark Plug.>

1. OUTLINE OF DIAGNOSIS

Based on the self-diagnostic result of the ignition coil driving IC, judge the ignition coil driving circuit as normal or abnormal.
The ignition coil driving IC detects “no ignition” status as a malfunction.

2. EXECUTION CONDITION

Secondary Parameters	Execution condition
Battery voltage	≥ 10.9 V
Elapsed time after starting the engine	> 1 s
Engine speed	> 500 rpm

3. GENERAL DRIVING CYCLE

Always perform the diagnosis continuously.

4. DIAGNOSTIC METHOD

Judge as NG when the following conditions are established.

Judgment Value

Malfunction Criteria	Threshold Value
Ignition driving IC information	Trouble

Time Needed for Diagnosis: 256/1000 seconds × 10 time(s)
Malfunction Indicator Light Illumination: Illuminates as soon as a malfunction occurs.

DD:DTC P0352 IGNITION COIL "B" PRIMARY CONTROL CIRCUIT/OPEN

NOTE:
For the diagnostic procedure, refer to DTC P0351. <Ref. to EN(H6DO)(diag)-339, DTC P0351 IGNITION COIL "A" PRIMARY CONTROL CIRCUIT/OPEN, Diagnostic Procedure with Diagnostic Trouble Code (DTC).>

1. OUTLINE OF DIAGNOSIS

NOTE:
For the detection standard, refer to DTC P0351. <Ref. to EN(H6DO)(diag)-339, DTC P0351 IGNITION COIL "A" PRIMARY CONTROL CIRCUIT/OPEN, Diagnostic Procedure with Diagnostic Trouble Code (DTC).>

DE:DTC P0353 IGNITION COIL "C" PRIMARY CONTROL CIRCUIT/OPEN

NOTE:
For the diagnostic procedure, refer to DTC P0351. <Ref. to EN(H6DO)(diag)-339, DTC P0351 IGNITION COIL "A" PRIMARY CONTROL CIRCUIT/OPEN, Diagnostic Procedure with Diagnostic Trouble Code (DTC).>

1. OUTLINE OF DIAGNOSIS

NOTE:
For the detection standard, refer to DTC P0351. <Ref. to EN(H6DO)(diag)-339, DTC P0351 IGNITION COIL "A" PRIMARY CONTROL CIRCUIT/OPEN, Diagnostic Procedure with Diagnostic Trouble Code (DTC).>

DF:DTC P0354 IGNITION COIL "D" PRIMARY CONTROL CIRCUIT/OPEN

NOTE:
For the diagnostic procedure, refer to DTC P0351. <Ref. to EN(H6DO)(diag)-339, DTC P0351 IGNITION COIL "A" PRIMARY CONTROL CIRCUIT/OPEN, Diagnostic Procedure with Diagnostic Trouble Code (DTC).>

1. OUTLINE OF DIAGNOSIS

NOTE:
For the detection standard, refer to DTC P0351. <Ref. to EN(H6DO)(diag)-339, DTC P0351 IGNITION COIL "A" PRIMARY CONTROL CIRCUIT/OPEN, Diagnostic Procedure with Diagnostic Trouble Code (DTC).>

DG:DTC P0355 IGNITION COIL "E" PRIMARY CONTROL CIRCUIT/OPEN

NOTE:
For the diagnostic procedure, refer to DTC P0351. <Ref. to EN(H6DO)(diag)-339, DTC P0351 IGNITION COIL "A" PRIMARY CONTROL CIRCUIT/OPEN, Diagnostic Procedure with Diagnostic Trouble Code (DTC).>

1. OUTLINE OF DIAGNOSIS

NOTE:
For the detection standard, refer to DTC P0351. <Ref. to EN(H6DO)(diag)-339, DTC P0351 IGNITION COIL "A" PRIMARY CONTROL CIRCUIT/OPEN, Diagnostic Procedure with Diagnostic Trouble Code (DTC).>

DH:DTC P0356 IGNITION COIL "F" PRIMARY CONTROL CIRCUIT/OPEN

NOTE:
For the diagnostic procedure, refer to DTC P0351. <Ref. to EN(H6DO)(diag)-339, DTC P0351 IGNITION COIL "A" PRIMARY CONTROL CIRCUIT/OPEN, Diagnostic Procedure with Diagnostic Trouble Code (DTC).>

1. OUTLINE OF DIAGNOSIS

NOTE:
For the detection standard, refer to DTC P0351. <Ref. to EN(H6DO)(diag)-339, DTC P0351 IGNITION COIL "A" PRIMARY CONTROL CIRCUIT/OPEN, Diagnostic Procedure with Diagnostic Trouble Code (DTC).>

DI: DTC P0365 CAMSHAFT POSITION SENSOR "B" CIRCUIT BANK 1

DTC DETECTING CONDITION:
Immediately at fault recognition
TROUBLE SYMPTOM:
- Engine stalls.
- Failure of engine to start

CAUTION:
After servicing or replacing faulty parts, perform Clear Memory Mode <Ref. to EN(H6DO)(diag)-85, OPERATION, Clear Memory Mode.>, and Inspection Mode <Ref. to EN(H6DO)(diag)-69, PROCEDURE, Inspection Mode.>.
WIRING DIAGRAM:
- Engine Electrical System ENGINE TYPE EZ (WITHOUT PUSH BUTTON START) <Ref. to WI-198, ENGINE TYPE EZ (WITHOUT PUSH BUTTON START), WIRING DIAGRAM, Engine Electrical System.>
- Engine Electrical System ENGINE TYPE EZ (WITH PUSH BUTTON START) <Ref. to WI-214, ENGINE TYPE EZ (WITH PUSH BUTTON START), WIRING DIAGRAM, Engine Electrical System.>

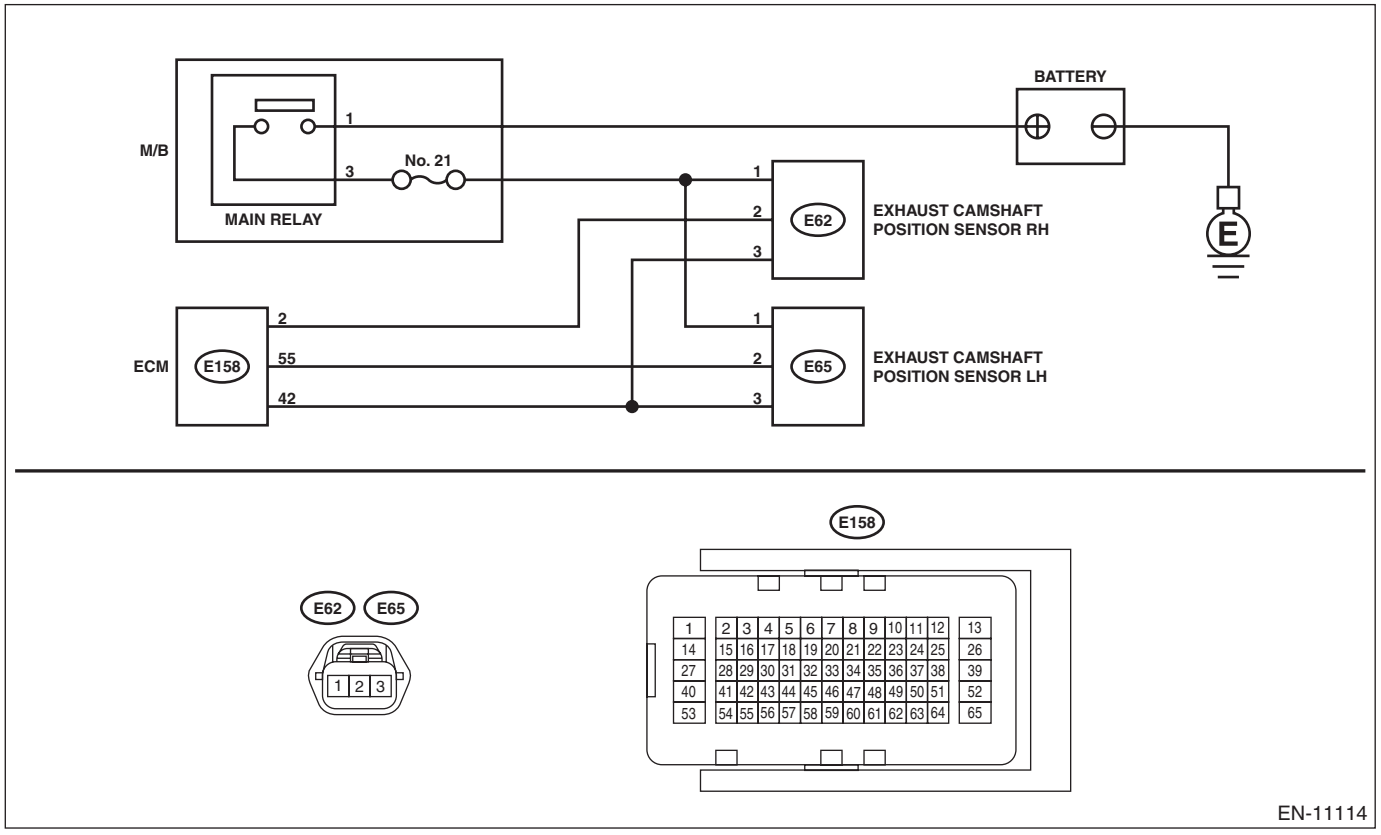

	Step	Check	Yes	No
1	**CHECK POWER SUPPLY OF CAMSHAFT POSITION SENSOR.** 1) Turn the ignition switch to OFF. 2) Disconnect the connector from camshaft position sensor. 3) Turn the ignition switch to ON. 4) Measure the voltage between camshaft position sensor connector and engine ground. ***Connector & terminal*** ***(E62) No. 1 (+) — Engine ground (–):***	Is the voltage 10 V or more?	Go to step **2**.	Repair the power supply circuit. NOTE: In this case, repair the following item: • Open circuit or short circuit to ground in harness between main relay connector and camshaft position sensor connector • Blown out of fuse (M/B No. 21)
2	**CHECK HARNESS BETWEEN ECM AND CAMSHAFT POSITION SENSOR CONNECTOR.** 1) Turn the ignition switch to OFF. 2) Disconnect the connector from ECM. 3) Measure the resistance between ECM connector and camshaft position sensor connector. ***Connector & terminal*** ***(E158) No. 2 — (E62) No. 2:*** ***(E158) No. 42 — (E62) No. 3:***	Is the resistance less than 1 Ω?	Go to step **3**.	Repair the open circuit in the harness between the ECM connector and camshaft position sensor connector.
3	**CHECK HARNESS BETWEEN ECM AND CAMSHAFT POSITION SENSOR CONNECTOR.** Measure the resistance between camshaft position sensor connector and engine ground. ***Connector & terminal*** ***(E62) No. 2 — Engine ground:***	Is the resistance 1 MΩ or more?	Go to step **4**.	Repair short circuit to ground in harness between ECM connector and camshaft position sensor connector.
4	**CHECK HARNESS BETWEEN ECM AND CAMSHAFT POSITION SENSOR CONNECTOR.** Measure the voltage between camshaft position sensor connector and engine ground. ***Connector & terminal*** ***(E62) No. 2 (+) — Engine ground (–):***	Is the voltage 5 V or more?	Repair the short circuit to power in the harness between ECM connector and camshaft position sensor connector.	Go to step **5**.
5	**CHECK CONDITION OF CAMSHAFT POSITION SENSOR.**	Is the camshaft position sensor installation bolt tightened securely?	Go to step **6**.	Tighten the camshaft position sensor installation bolt securely. <Ref. to FU(H6DO)-49, INSTALLATION, Camshaft Position Sensor.>
6	**CHECK CAMSHAFT POSITION SENSOR.** Check the waveform of the camshaft position sensor. <Ref. to EN(H6DO)(diag)-20, Engine Control Module (ECM) I/O Signal.>	Is there any abnormality in waveform?	Replace the camshaft position sensor. <Ref. to FU(H6DO)-47, Camshaft Position Sensor.>	Repair the following item. • Poor contact of ECM connector • Poor contact of camshaft position sensor connector

1. OUTLINE OF DIAGNOSIS

Detect the open or short circuit of the camshaft position sensor.
When there is no camshaft position signal input continuously, judge as NG.

2. COMPONENT DESCRIPTION

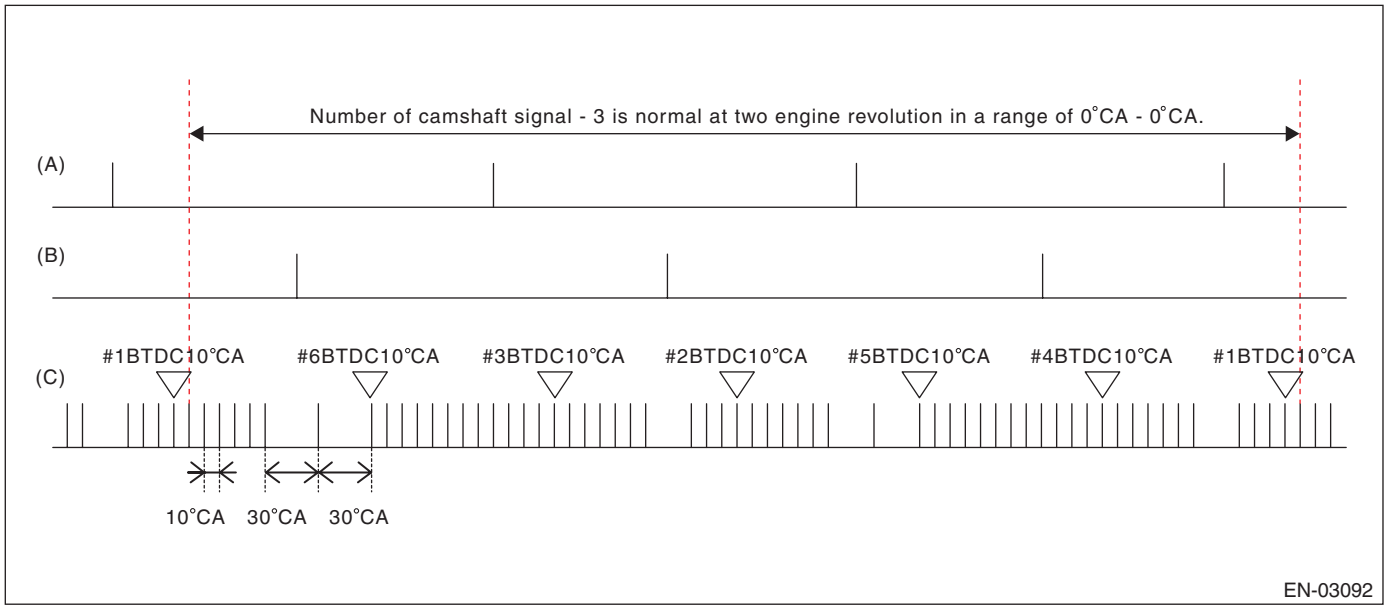

(A) Camshaft signal (RH)
(B) Camshaft signal (LH)
(C) Crankshaft signal

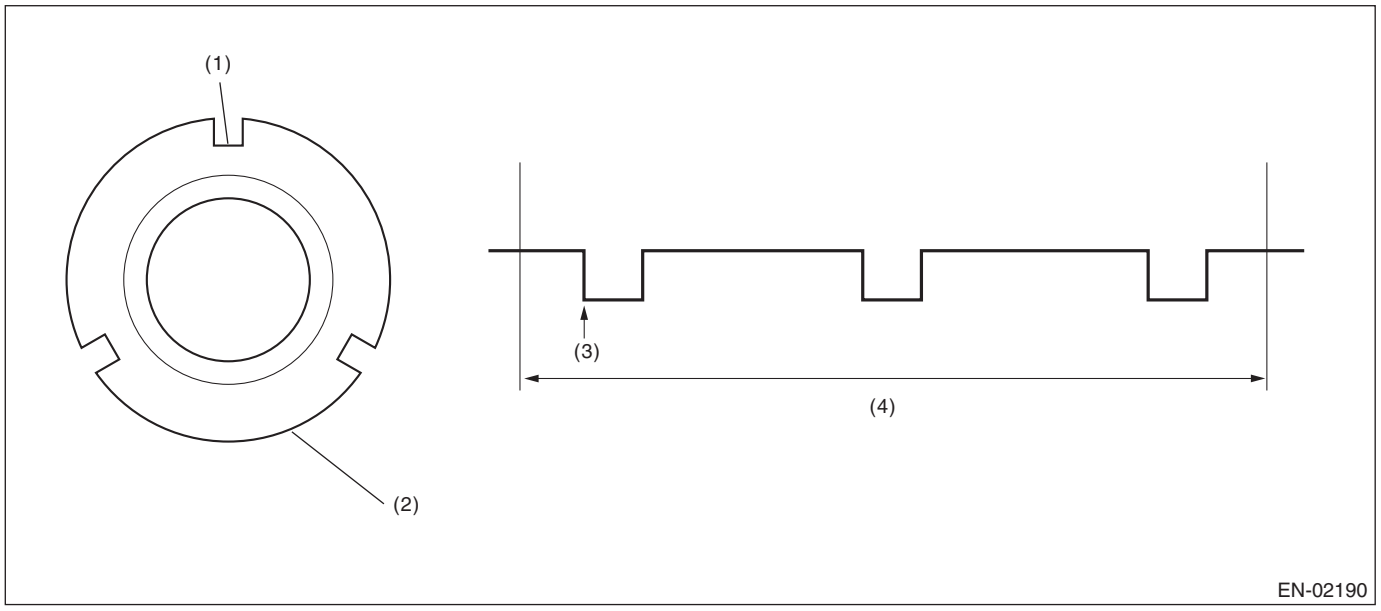

(1) Slot
(2) Camshaft plate
(3) Detecting point
(4) Camshaft one revolution (crankshaft two revolutions)

3. EXECUTION CONDITION

Secondary Parameters	Execution condition
Battery voltage	≥ 10.9 V
Elapsed time after starting the engine	≥ 200 ms

4. GENERAL DRIVING CYCLE

Always perform the diagnosis continuously.

5. DIAGNOSTIC METHOD

Judge as NG if there is no input signal from the camshaft position sensor for (16 time(s) +2)/3 revs.

Judgment Value

Malfunction Criteria	Threshold Value
Amount of camshaft sensor signal during 0.33 revs of crankshaft	= 0

Time Needed for Diagnosis: (16 time(s) +2)/3 engine revs.
Malfunction Indicator Light Illumination: Illuminates as soon as a malfunction occurs.

DJ:DTC P0366 CAMSHAFT POSITION SENSOR "B" CIRCUIT RANGE/PERFORMANCE BANK 1

NOTE:
For the diagnostic procedure, refer to DTC P0365. <Ref. to EN(H6DO)(diag)-343, DTC P0365 CAMSHAFT POSITION SENSOR "B" CIRCUIT BANK 1, Diagnostic Procedure with Diagnostic Trouble Code (DTC).>

1. OUTLINE OF DIAGNOSIS

Detect the malfunction of camshaft position sensor property.
Judge as NG when the number of camshaft signals remains abnormal.

2. COMPONENT DESCRIPTION

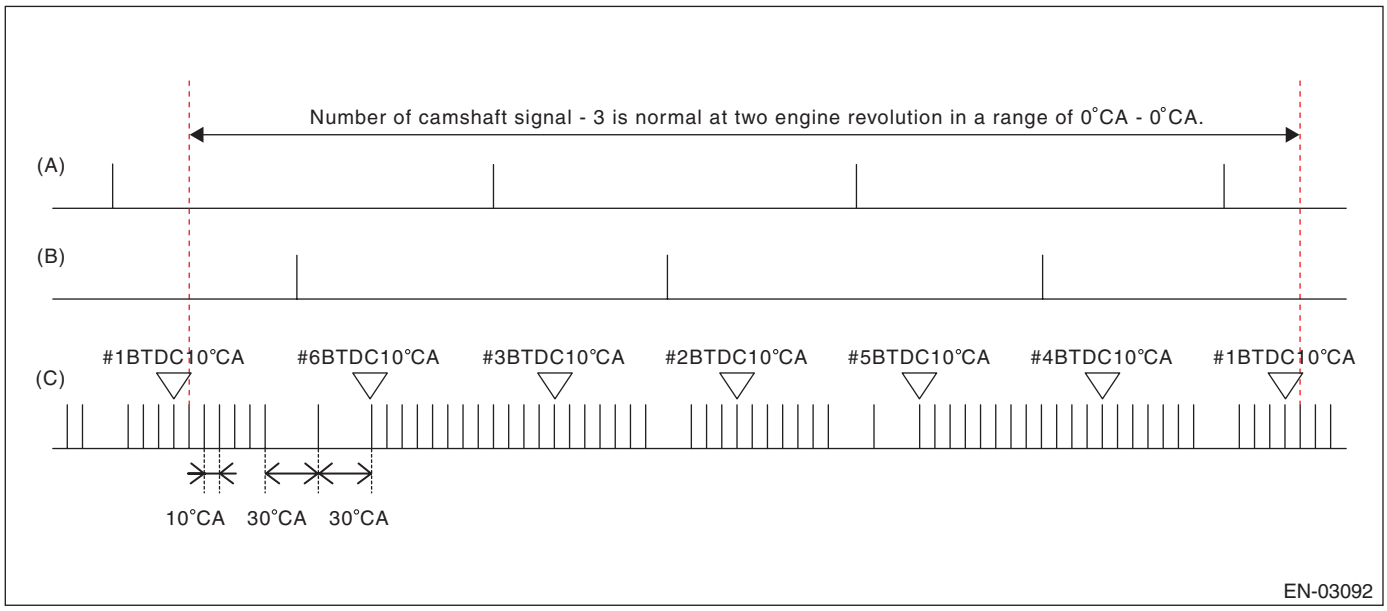

(A) Camshaft signal (RH)
(B) Camshaft signal (LH)
(C) Crankshaft signal

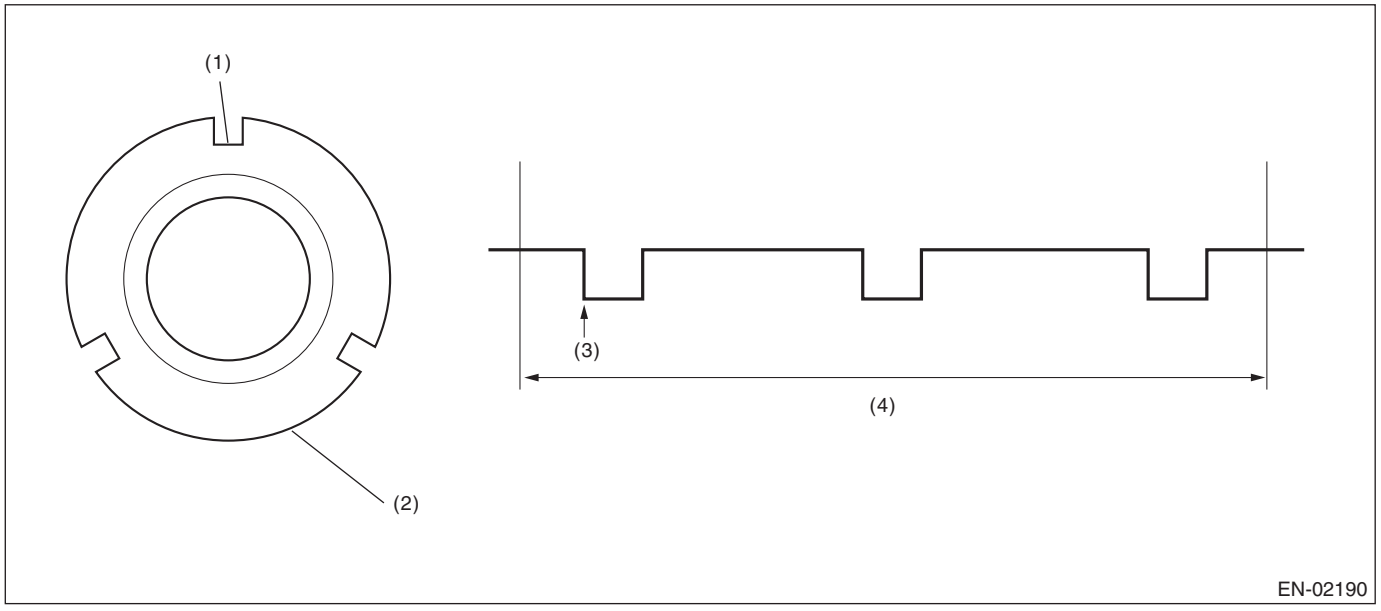

(1) Slot
(2) Camshaft plate
(3) Detecting point
(4) Camshaft one revolution (crankshaft two revolutions)

3. EXECUTION CONDITION

Secondary Parameters	Execution condition
Battery voltage	≥ 10.9 V
Elapsed time after starting the engine	≥ 200 ms

4. GENERAL DRIVING CYCLE

Always perform the diagnosis continuously.

5. DIAGNOSTIC METHOD

Judge as NG when the status where the number of camshaft position sensor signal in two crankshaft revolutions is other than 3 time(s).

Judgment Value

Malfunction Criteria	Threshold Value
Amount of camshaft sensor signal during 2 revs of crankshaft	≠ 3 time(s)

Time Needed for Diagnosis: 2 engine revs. × 4 time(s)
Malfunction Indicator Light Illumination: Illuminates as soon as a malfunction occurs.

DK:DTC P0390 CAMSHAFT POSITION SENSOR "B" CIRCUIT BANK 2

DTC DETECTING CONDITION:
Immediately at fault recognition
TROUBLE SYMPTOM:
- Engine stalls.
- Failure of engine to start

CAUTION:
After servicing or replacing faulty parts, perform Clear Memory Mode <Ref. to EN(H6DO)(diag)-85, OPERATION, Clear Memory Mode.>, and Inspection Mode <Ref. to EN(H6DO)(diag)-69, PROCEDURE, Inspection Mode.>.
WIRING DIAGRAM:
- Engine Electrical System ENGINE TYPE EZ (WITHOUT PUSH BUTTON START) <Ref. to WI-198, ENGINE TYPE EZ (WITHOUT PUSH BUTTON START), WIRING DIAGRAM, Engine Electrical System.>
- Engine Electrical System ENGINE TYPE EZ (WITH PUSH BUTTON START) <Ref. to WI-214, ENGINE TYPE EZ (WITH PUSH BUTTON START), WIRING DIAGRAM, Engine Electrical System.>

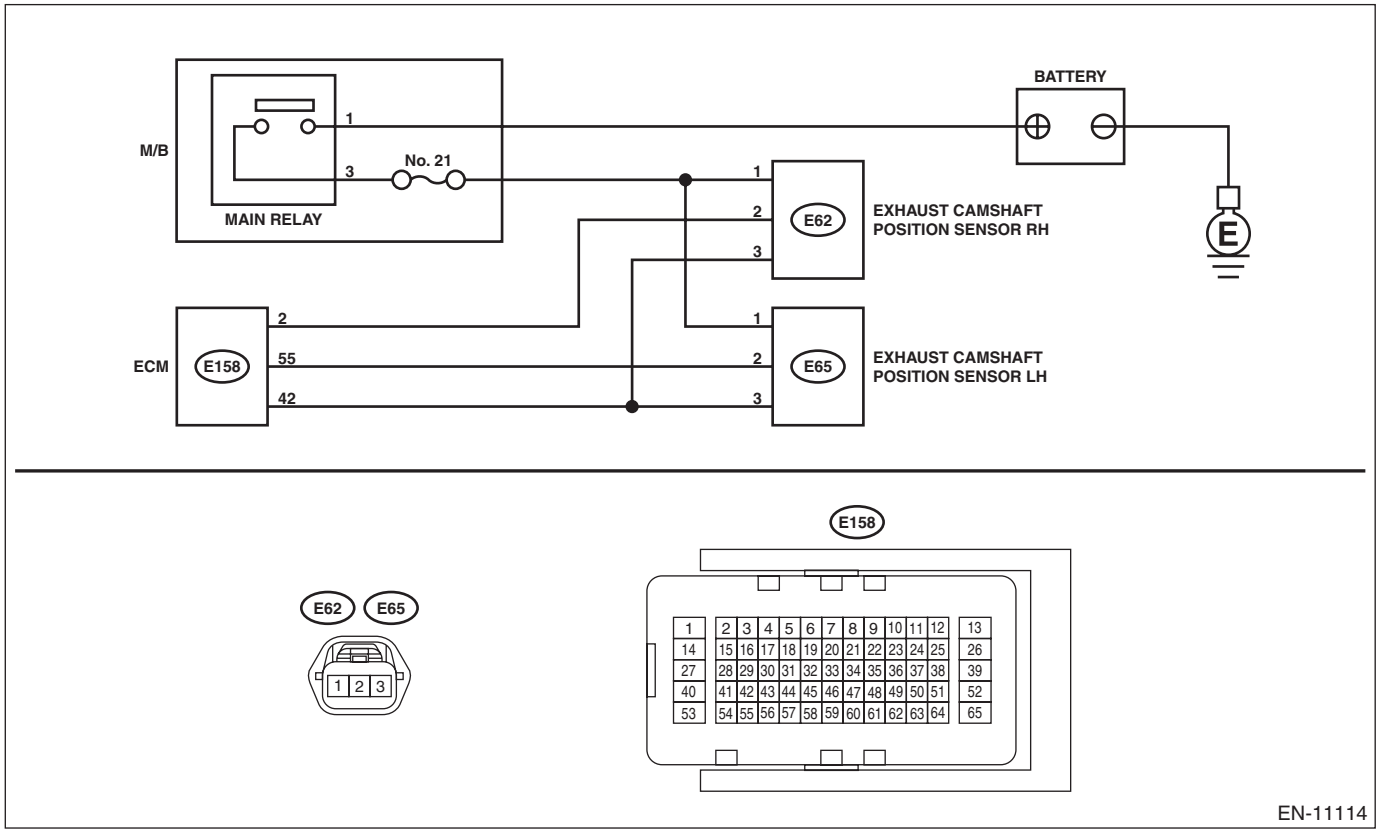

	Step	Check	Yes	No
1	**CHECK POWER SUPPLY OF CAMSHAFT POSITION SENSOR.** 1) Turn the ignition switch to OFF. 2) Disconnect the connector from camshaft position sensor. 3) Turn the ignition switch to ON. 4) Measure the voltage between camshaft position sensor connector and engine ground. ***Connector & terminal*** ***(E65) No. 1 (+) — Engine ground (–):***	Is the voltage 10 V or more?	Go to step **2**.	Repair the power supply circuit. NOTE: In this case, repair the following item: • Open circuit or short circuit to ground in harness between main relay connector and camshaft position sensor connector • Blown out of fuse (M/B No. 21)
2	**CHECK HARNESS BETWEEN ECM AND CAMSHAFT POSITION SENSOR CONNECTOR.** 1) Turn the ignition switch to OFF. 2) Disconnect the connector from ECM. 3) Measure the resistance between ECM connector and camshaft position sensor connector. ***Connector & terminal*** ***(E158) No. 55 — (E65) No. 2:*** ***(E158) No. 42 — (E65) No. 3:***	Is the resistance less than 1 Ω?	Go to step **3**.	Repair the open circuit in the harness between the ECM connector and camshaft position sensor connector.
3	**CHECK HARNESS BETWEEN ECM AND CAMSHAFT POSITION SENSOR CONNECTOR.** Measure the resistance between camshaft position sensor connector and engine ground. ***Connector & terminal*** ***(E65) No. 2 — Engine ground:***	Is the resistance 1 MΩ or more?	Go to step **4**.	Repair short circuit to ground in harness between ECM connector and camshaft position sensor connector.
4	**CHECK HARNESS BETWEEN ECM AND CAMSHAFT POSITION SENSOR CONNECTOR.** Measure the voltage between camshaft position sensor connector and engine ground. ***Connector & terminal*** ***(E65) No. 2 (+) — Engine ground (–):***	Is the voltage 5 V or more?	Repair the short circuit to power in the harness between ECM connector and camshaft position sensor connector.	Go to step **5**.
5	**CHECK CONDITION OF CAMSHAFT POSITION SENSOR.**	Is the camshaft position sensor installation bolt tightened securely?	Go to step **6**.	Tighten the camshaft position sensor installation bolt securely. <Ref. to FU(H6DO)-49, INSTALLATION, Camshaft Position Sensor.>
6	**CHECK CAMSHAFT POSITION SENSOR.** Check the waveform of the camshaft position sensor. <Ref. to EN(H6DO)(diag)-20, Engine Control Module (ECM) I/O Signal.>	Is there any abnormality in waveform?	Replace the camshaft position sensor. <Ref. to FU(H6DO)-47, Camshaft Position Sensor.>	Repair the following item. • Poor contact of ECM connector • Poor contact of camshaft position sensor connector

1. OUTLINE OF DIAGNOSIS

NOTE:
For the detection standard, refer to DTC P0365. <Ref. to EN(H6DO)(diag)-343, DTC P0365 CAMSHAFT POSITION SENSOR "B" CIRCUIT BANK 1, Diagnostic Procedure with Diagnostic Trouble Code (DTC).>

DL:DTC P0391 CAMSHAFT POSITION SENSOR "B" CIRCUIT RANGE/PERFORMANCE BANK 2

NOTE:
For the diagnostic procedure, refer to DTC P0390. <Ref. to EN(H6DO)(diag)-349, DTC P0390 CAMSHAFT POSITION SENSOR "B" CIRCUIT BANK 2, Diagnostic Procedure with Diagnostic Trouble Code (DTC).>

1. OUTLINE OF DIAGNOSIS

NOTE:
For the detection standard, refer to DTC P0366. <Ref. to EN(H6DO)(diag)-347, DTC P0366 CAMSHAFT POSITION SENSOR "B" CIRCUIT RANGE/PERFORMANCE BANK 1, Diagnostic Procedure with Diagnostic Trouble Code (DTC).>

DM:DTC P0400 EGR "A" FLOW

DTC DETECTING CONDITION:
Detected when two consecutive driving cycles with fault occur.
TROUBLE SYMPTOM:
- Movement performance problem when engine is low speed
- Improper idling
- Movement performance problem

CAUTION:
After servicing or replacing faulty parts, perform Clear Memory Mode <Ref. to EN(H6DO)(diag)-85, OPERATION, Clear Memory Mode.>, and Inspection Mode <Ref. to EN(H6DO)(diag)-69, PROCEDURE, Inspection Mode.>.

	Step	Check	Yes	No
1	**CHECK CURRENT DATA.** 1) Start the engine. 2) Read the value of «Mani. Absolute Pressure» using the Subaru Select Monitor or a general scan tool. NOTE: • Subaru Select Monitor For detailed operation procedures, refer to “Read Current Data For Engine”. <Ref. to EN(H6DO)(diag)-50, Subaru Select Monitor.> • General scan tool For detailed operation procedures, refer to the general scan tool operation manual.	Is the value of «Mani. Absolute Pressure» 53.3 kPa (400 mmHg, 15.75 inHg) or more?	Make sure that the EGR control valve, manifold absolute pressure sensor and throttle body are installed securely.	Go to step **2**.
2	**CHECK EGR CONTROL VALVE.** Remove the EGR control valve.	Are there any holes, clogged lines or foreign matters in the EGR system?	Repair the EGR system.	Replace EGR control valve. <Ref. to EC(H6DO)-22, EGR Control Valve.>

1. OUTLINE OF DIAGNOSIS

Detect EGR system malfunction.
Intake manifold pressure (negative pressure) is constant because the throttle valve is fully closed during deceleration fuel cut. At this time, when the EGR valve is opened/closed, the intake manifold pressure will change. EGR System OK/NG is judged by the range of this change.

2. COMPONENT DESCRIPTION

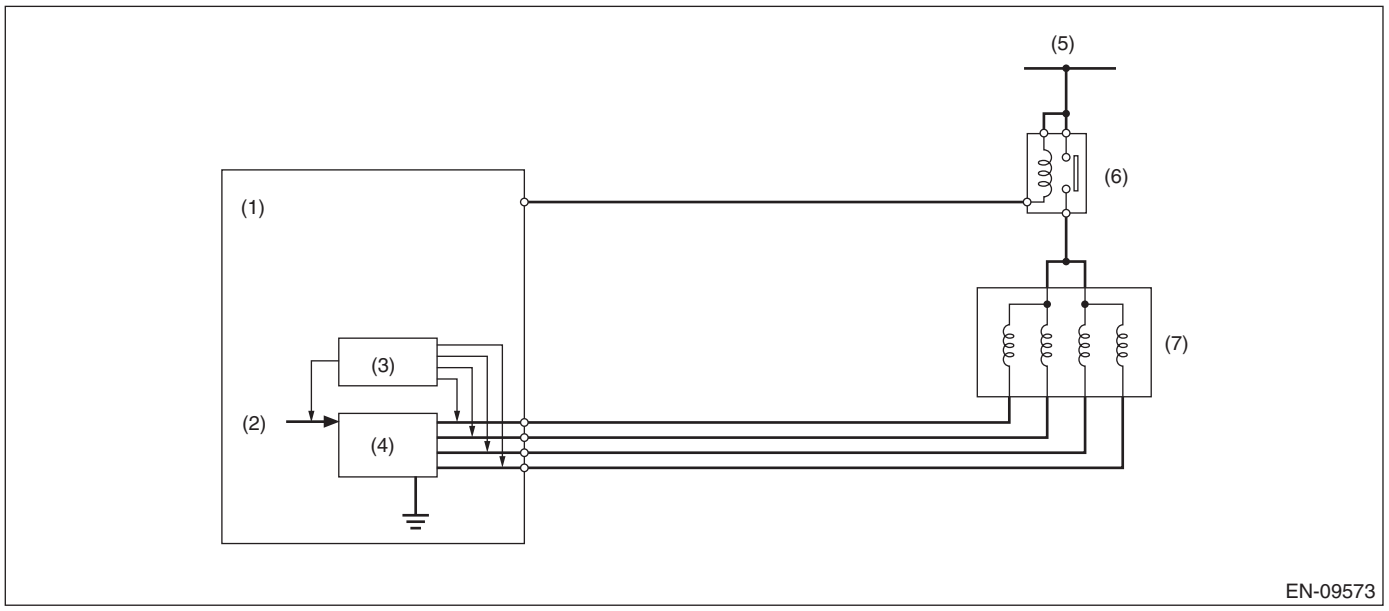

(1) Engine control module (ECM)
(2) Computer unit (CPU)
(3) Detecting circuit
(4) Switch circuit
(5) Battery voltage
(6) Main relay
(7) EGR control valve

3. EXECUTION CONDITION

Secondary Parameters	Execution condition
Engine speed	1200 rpm — 5000 rpm
Intake air temperature	≥ 0 °C(32 °F)
Battery voltage	≥ 10.9 V
Barometric pressure	≥ 75.1 kPa (563 mmHg, 22.2 inHg)
Vehicle speed	≥38 km/h (23.6 MPH)
Fuel shut-off function of 3000 ms or more	In operation
Neutral switch	OFF

4. GENERAL DRIVING CYCLE

Perform the diagnosis only once during deceleration fuel cut from a vehicle speed of 38 km/h (23.6 MPH) or more.
Be careful of vehicle speed and engine speed. (Diagnosis will not be completed if the vehicle speed and engine speed conditions become out of specification due to deceleration.)

5. DIAGNOSTIC METHOD

Measure the pressure values when the enable conditions are established, and perform diagnosis by calculating those results.
1. Label the intake manifold pressure value as PMOF1, which is observed when enable conditions are established, and set the EGR target step to 50 step(s) (nearly full open).
2. Label the intake manifold pressure value as PMON, which is observed after 1000 ms has passed since EGR target step was set to 50 step(s) (when the enable conditions were established), and set the EGR target step to 0.
3. Label the intake manifold pressure as PMOF2, which is observed after 1000 ms has passed since EGR target step was set to 0 (after (1000 ms + 1000 ms) have passed since the enable conditions were established).

Judge as NG when the following conditions are established.

Judgment Value

Malfunction Criteria	Threshold Value
PMON – (PMOF1 + PMOF2)/2	< 2.5 kPa (18.63 mmHg, 0.7 inHg)

Time Needed for Diagnosis: 1000 ms × 2
Malfunction Indicator Light Illumination: Illuminates when malfunction occurs in 2 continuous driving cycles.

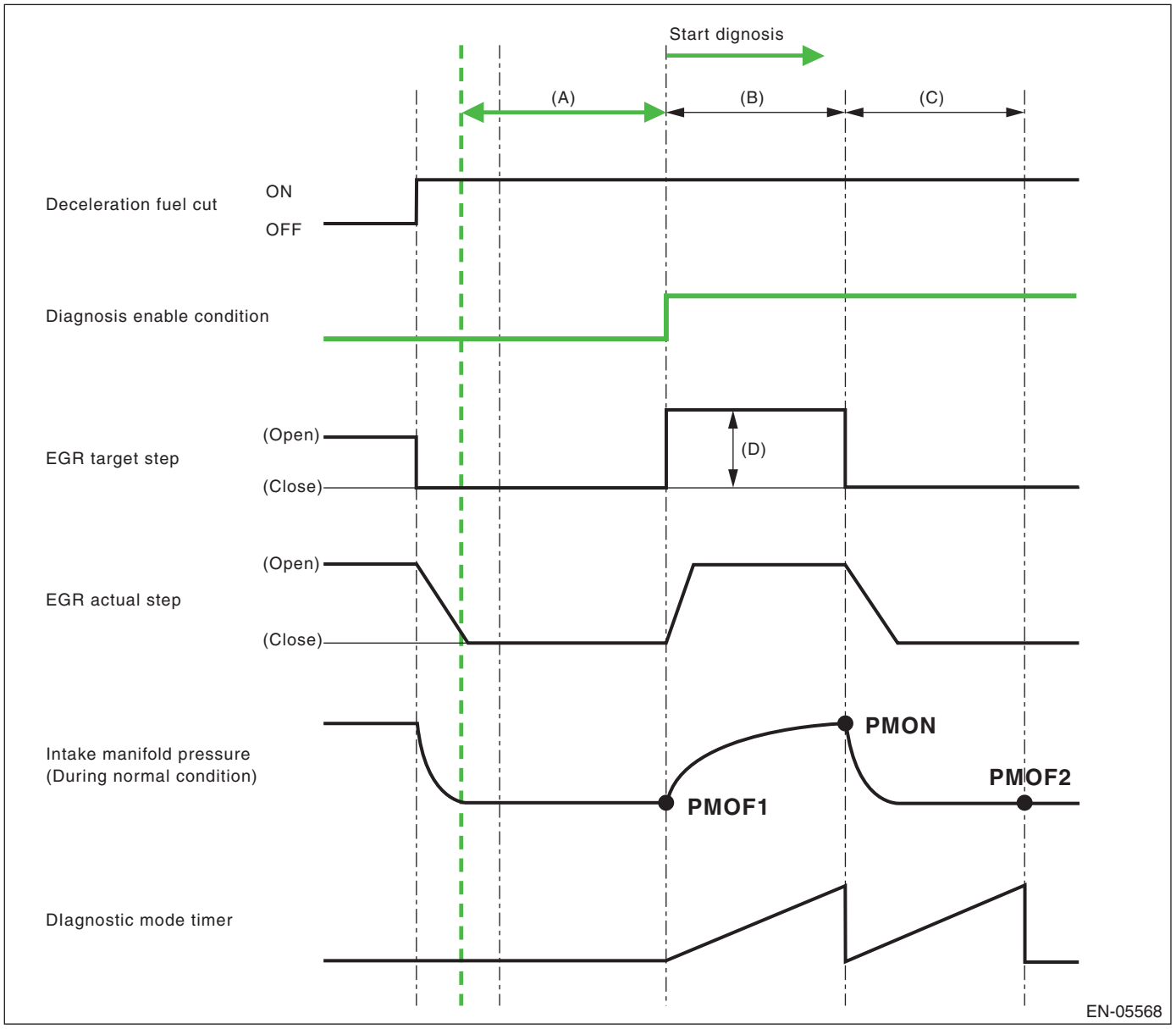

(A) 3000 ms (B) 1000 ms (C) 1000 ms
(D) 50 step(s)

DN:DTC P0420 CATALYST SYSTEM EFFICIENCY BELOW THRESHOLD BANK 1

DTC DETECTING CONDITION:

Detected when two consecutive driving cycles with fault occur.

TROUBLE SYMPTOM:

- Engine stalls.
- Idle mixture is out of specifications.

CAUTION:

After servicing or replacing faulty parts, perform Clear Memory Mode <Ref. to EN(H6DO)(diag)-85, OPERATION, Clear Memory Mode.>, and Inspection Mode <Ref. to EN(H6DO)(diag)-69, PROCEDURE, Inspection Mode.>.

WIRING DIAGRAM:

- Engine Electrical System ENGINE TYPE EZ (WITHOUT PUSH BUTTON START) <Ref. to WI-198, ENGINE TYPE EZ (WITHOUT PUSH BUTTON START), WIRING DIAGRAM, Engine Electrical System.>
- Engine Electrical System ENGINE TYPE EZ (WITH PUSH BUTTON START) <Ref. to WI-214, ENGINE TYPE EZ (WITH PUSH BUTTON START), WIRING DIAGRAM, Engine Electrical System.>

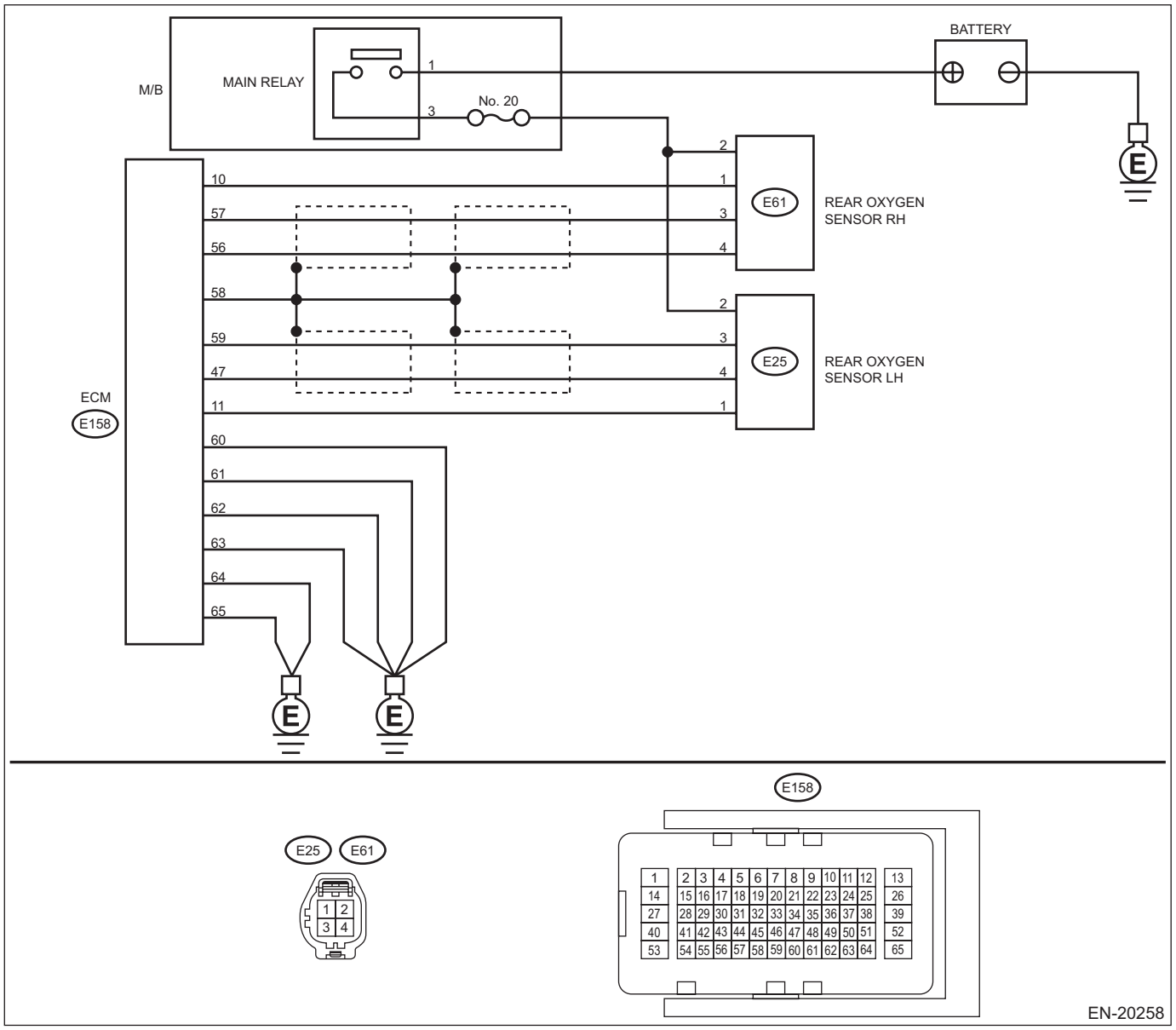

	Step	Check	Yes	No
1	**CHECK EXHAUST SYSTEM.** Check for gas leaks or air suction caused by loose or dislocated nuts and bolts, and open hole at exhaust pipes. NOTE: Check the following positions. • Between cylinder head and front exhaust pipe • Between front exhaust pipe and front catalytic converter • Between front catalytic converter and rear catalytic converter • Loose or improperly attached front oxygen (A/F) sensor or rear oxygen sensor	Is there any fault in exhaust system?	Repair or replace the exhaust system. <Ref. to EX(H6DO)-2, General Description.>	Go to step **2**.
2	**CHECK WAVEFORM DATA ON THE SUBARU SELECT MONITOR (WHILE DRIVING).** 1) Drive at a constant speed between 80 — 112 km/h (50 — 70 MPH). 2) After 5 minutes have elapsed in the condition of step 1), use the Subaru Select Monitor while still driving to read the waveform data. • At normal condition 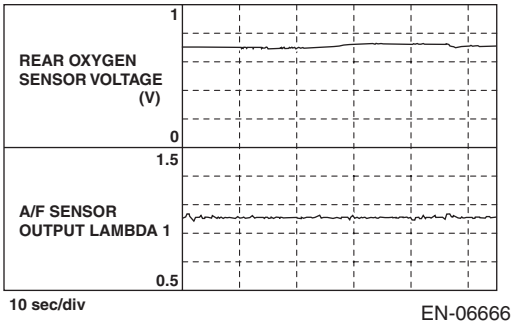 EN-06666 • At abnormal condition (numerous inversion) 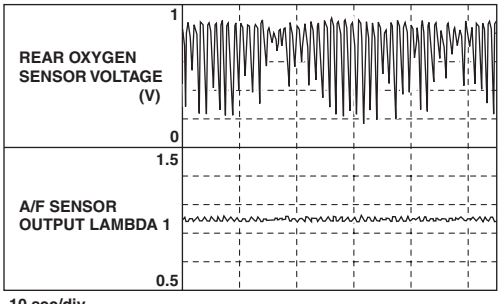 EN-06667	Is a normal waveform displayed?	Even if DTC is detected, the circuit has returned to a normal condition at this time. Reproduce the failure, and then perform the diagnosis again. NOTE: In this case, temporary poor contact of connector, temporary open or short circuit of harness may be the cause.	Go to step **3**.

	Step	Check	Yes	No
3	**CHECK WAVEFORM DATA ON THE SUBARU SELECT MONITOR (WHILE IDLING).** 1) Run the engine at idle. 2) In the condition of step 1), use the Subaru Select Monitor to read the waveform data. • At normal condition 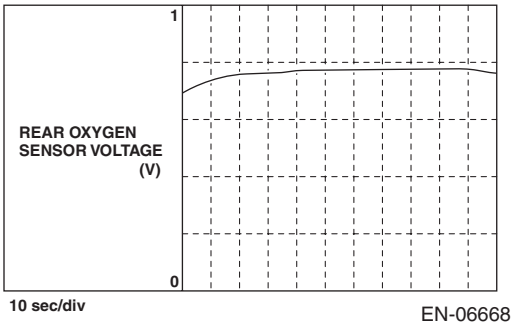 EN-06668 • At abnormal condition 1 (numerous inversion) 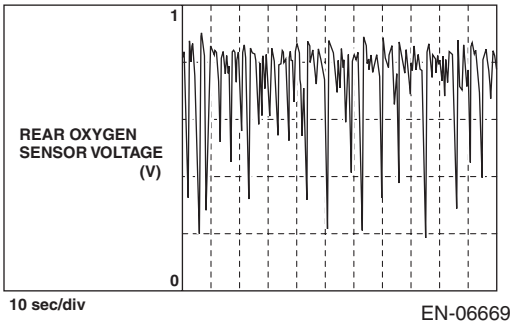 EN-06669 • At abnormal condition 2 (noise input) 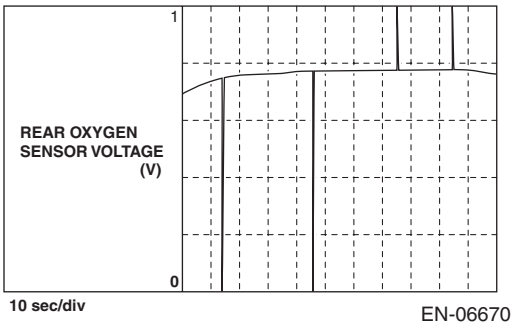 EN-06670	Is a normal waveform displayed?	Go to step **4**.	• The waveform is displayed at abnormal condition 1: Go to step **4**. • The waveform is displayed at abnormal condition 2: Go to step **5**.
4	**CHECK CATALYTIC CONVERTER.**	Is the catalytic converter damaged?	Replace the catalytic converters RH and LH. <Ref. to EC(H6DO)-3, Front Catalytic Converter.> <Ref. to EC(H6DO)-4, Rear Catalytic Converter.>	Go to step **5**.
5	**CHECK REAR OXYGEN SENSOR CONNECTOR AND COUPLING CONNECTOR.**	Has water entered the connector?	Completely remove any water inside.	Go to step **6**.

	Step	Check	Yes	No
6	**CHECK HARNESS BETWEEN ECM AND REAR OXYGEN SENSOR CONNECTOR.** 1) Turn the ignition switch to OFF. 2) Disconnect the connector from ECM and rear oxygen sensor RH. 3) Measure the resistance of harness between ECM connector and rear oxygen sensor RH connector. ***Connector & terminal*** ***(E158) No. 57 — (E61) No. 3:*** ***(E158) No. 56 — (E61) No. 4:*** ***(E158) No. 59 — (E25) No. 3:*** ***(E158) No. 47 — (E25) No. 4:***	Is the resistance less than 1 Ω?	Go to step **7**.	Repair the harness and connector. NOTE: In this case, repair the following item: • Open circuit in harness between ECM connector and rear oxygen sensor RH connector • Poor contact of coupling connector
7	**CHECK REAR OXYGEN SENSOR SHIELD.** 1) Turn the ignition switch to OFF. 2) Expose the rear oxygen sensor RH connector body side harness sensor shield. 3) Measure the resistance between sensor shield and chassis ground.	Is the resistance less than 1 Ω?	Go to step **8**.	Repair the open circuit of rear oxygen sensor RH harness.
8	**CHECK ENGINE OIL AMOUNT AND EXHAUST GAS.** 1) Check the engine oil amount. <Ref. to LU(H6DO)-11, INSPECTION, Engine Oil.> 2) Check exhaust gas during idling.	Does the engine oil amount drop or white smoke emit from the muffler?	Check the engine, and repair the defective part. <Ref. to ME(H6DO)-172, INSPECTION, Engine Trouble in General.> After engine is repaired, replace the catalytic converters RH and LH. <Ref. to EC(H6DO)-3, Front Catalytic Converter.> <Ref. to EC(H6DO)-4, Rear Catalytic Converter.> After the catalytic converter is replaced, perform step 2 to check the normal waveform is displayed, and then exit the procedure.	Go to step **9**.

	Step	Check	Yes	No
9	**CHECK IGNITION SYSTEM.** 1) Check the spark plug. <Ref. to IG(H6DO)-11, INSPECTION, Spark Plug.> 2) Check the status of the ignition coil connector and the spark plug terminal.	Is there any fault in the ignition system?	After ignition system is repaired, replace the catalytic converters RH and LH. <Ref. to EC(H6DO)-3, Front Catalytic Converter.> <Ref. to EC(H6DO)-4, Rear Catalytic Converter.> After the catalytic converter is replaced, perform step 2 to check the normal waveform is displayed, and then exit the procedure.	Go to step **10**.
10	**CHECK FUEL SYSTEM.** 1) Refer to and check the items in “Insufficient fuel supply to fuel injector” (except for “a. Fuel pump does not operate.”) and “Leakage or blow out of fuel”. <Ref. to FU(H6DO)-168, INSPECTION, Fuel System Trouble in General.> 2) Check throttle body. <Ref. to FU(H6DO)-22, INSPECTION, Throttle Body.> 3) Check intake manifold. <Ref. to FU(H6DO)-38, INSPECTION, Intake Manifold.>	Is there any fault in the fuel system?	After fuel system is repaired, replace the catalytic converters RH and LH. <Ref. to EC(H6DO)-3, Front Catalytic Converter.> <Ref. to EC(H6DO)-4, Rear Catalytic Converter.> After the catalytic converter is replaced, perform step 2 to check the normal waveform is displayed, and then exit the procedure.	Go to step **11**.

Step	Check	Yes	No
11 CHECK DTC.	Is any other DTC displayed?	Check the appropriate DTC using the “List of Diagnostic Trouble Code (DTC)”. <Ref. to EN(H6DO)(diag)-109, List of Diagnostic Trouble Code (DTC).> After checking DTCs, replace the catalytic converters RH and LH. <Ref. to EC(H6DO)-3, Front Catalytic Converter.> <Ref. to EC(H6DO)-4, Rear Catalytic Converter.> After the catalytic converter is replaced, perform step 2 to check the normal waveform is displayed, and then exit the procedure.	Replace the rear oxygen sensor RH. <Ref. to FU(H6DO)-81, Rear Oxygen Sensor.>

1. OUTLINE OF DIAGNOSIS

Detect the deterioration of the catalyst function.
Though the rear oxygen sensor output changes slowly with a new catalyst, the sensor output with a deteriorated catalyst becomes high and the inversion time is shortened.
For this reason, the catalyst diagnosis is carried out by monitoring the rear oxygen sensor output and comparing it with the front oxygen (A/F) sensor output.

2. COMPONENT DESCRIPTION

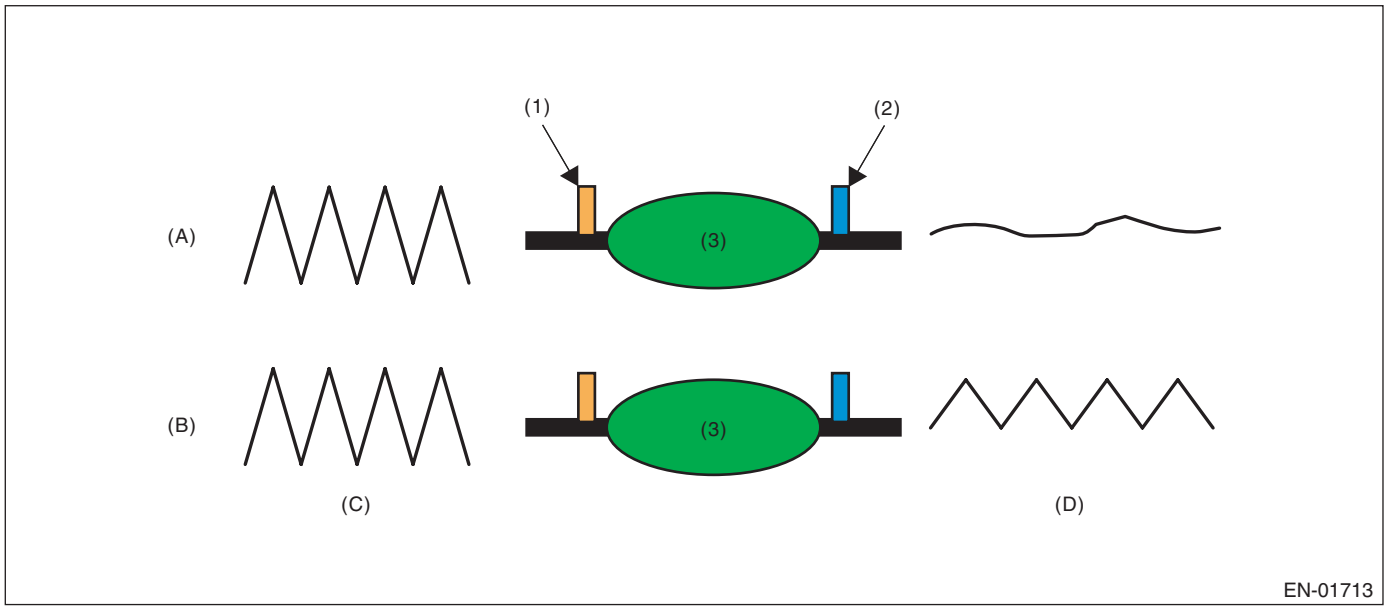

(A) Normal
(B) Deterioration
(C) Output waveform from the front oxygen (A/F) sensor
(D) Output waveform from the rear oxygen sensor
(1) Front oxygen (A/F) sensor
(2) Rear oxygen sensor
(3) Catalytic converter

3. EXECUTION CONDITION

Secondary Parameters	Execution condition
Battery voltage	≥ 10.9 V
Barometric pressure	≥ 75.1 kPa (563 mmHg, 22.2 inHg)
Sub feedback (bank 1)	In operation
Intake air amount	≥ 10 g/s (0.35 oz/s) and < 50 g/s (1.76 oz/s)
Estimated catalyst temperature	≥ 510 °C (950 °F)
Vehicle speed	≥ 40 km/h (24.9 MPH)
Change of rear oxygen sensor output (bank 1) from 0.55 V or less to 0.55 V or more	Experienced after fuel cut
ELCM switching valve	Open
Estimated temperature of the rear oxygen sensor element	≥ 500 °C (932 °F)

4. GENERAL DRIVING CYCLE

Perform the diagnosis only once at a constant vehicle speed of 40 km/h (24.9 MPH) or more.

5. DIAGNOSTIC METHOD

After establishing the execution conditions, calculate the front oxygen (A/F) sensor lambda deviation cumulative value per 32 milliseconds × 4 (Σ |(sglmd$_n$ – sglmd$_{n-1}$)|) and rear oxygen sensor output voltage deviation cumulative value (Σ |(ro2sad$_n$ – ro2sad$_{n-1}$)|), and when the front oxygen (A/F) sensor lambda deviation cumulative value (Σ |(sglmd$_n$ – sglmd$_{n-1}$)|) becomes the predetermined value or more, calculate the diagnostic value.
If the duration of time while the following conditions are met is within the time indicated, judge as NG.

Judgment Value

Malfunction Criteria	Threshold Value
Σ |(ro2sad$_n$ – ro2sad$_{n-1}$)| / Σ |(sglmd$_n$ – sglmd$_{n-1}$)| (bank 1)	> 7

Time Needed for Diagnosis: 30 — 55 seconds
Malfunction Indicator Light Illumination: Illuminates when malfunction occurs in 2 continuous driving cycles.

DO:DTC P0430 CATALYST SYSTEM EFFICIENCY BELOW THRESHOLD BANK 2

DTC DETECTING CONDITION:

Detected when two consecutive driving cycles with fault occur.

TROUBLE SYMPTOM:

- Engine stalls.
- Idle mixture is out of specifications.

CAUTION:

After servicing or replacing faulty parts, perform Clear Memory Mode <Ref. to EN(H6DO)(diag)-85, OPERATION, Clear Memory Mode.>, and Inspection Mode <Ref. to EN(H6DO)(diag)-69, PROCEDURE, Inspection Mode.>.

WIRING DIAGRAM:

- Engine Electrical System ENGINE TYPE EZ (WITHOUT PUSH BUTTON START) <Ref. to WI-198, ENGINE TYPE EZ (WITHOUT PUSH BUTTON START), WIRING DIAGRAM, Engine Electrical System.>
- Engine Electrical System ENGINE TYPE EZ (WITH PUSH BUTTON START) <Ref. to WI-214, ENGINE TYPE EZ (WITH PUSH BUTTON START), WIRING DIAGRAM, Engine Electrical System.>

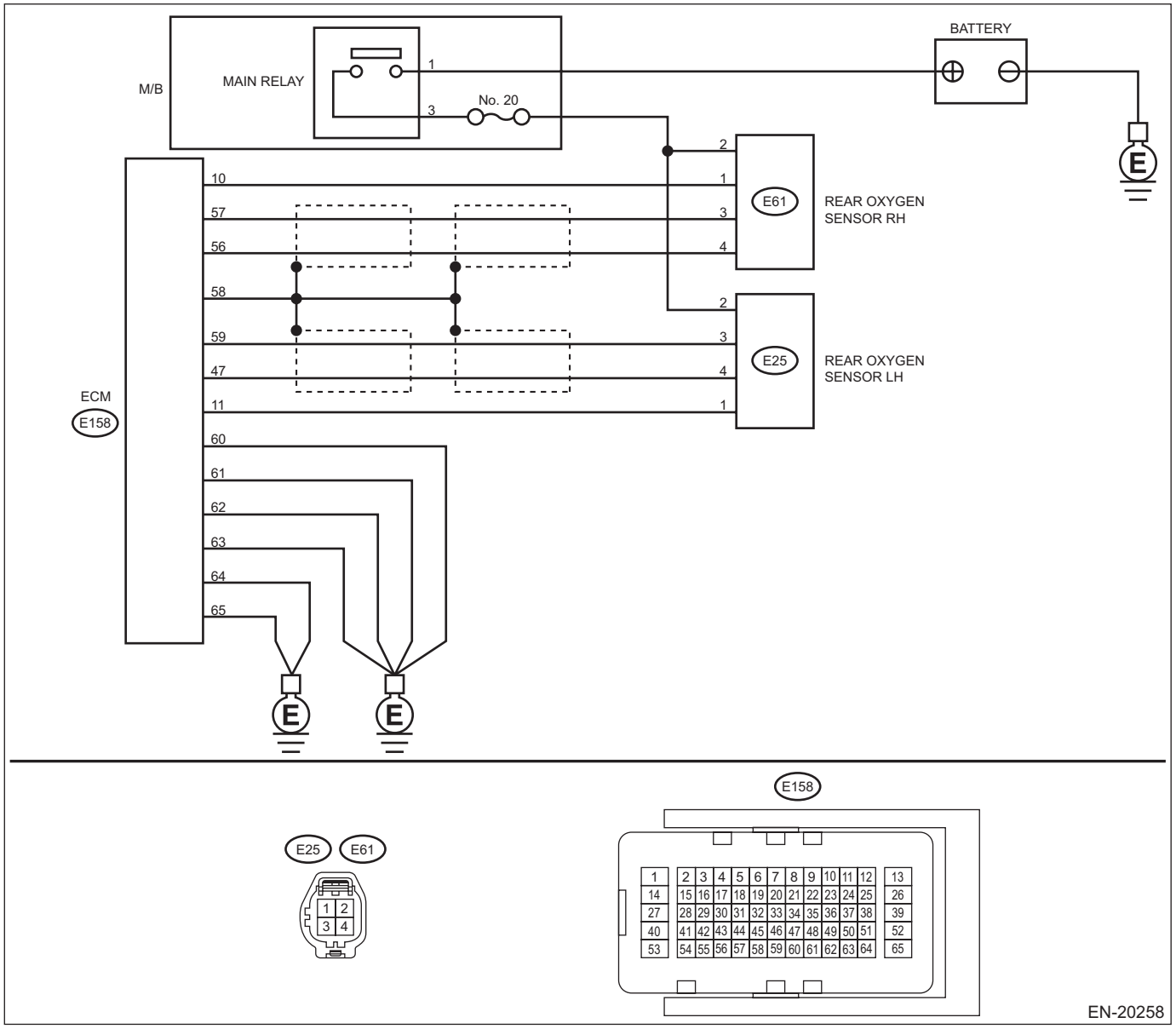

	Step	Check	Yes	No
1	**CHECK EXHAUST SYSTEM.** Check for gas leaks or air suction caused by loose or dislocated nuts and bolts, and open hole at exhaust pipes. NOTE: Check the following positions. • Between cylinder head and front exhaust pipe • Between front exhaust pipe and front catalytic converter • Between front catalytic converter and rear catalytic converter • Loose or improperly attached front oxygen (A/F) sensor or rear oxygen sensor	Is there any fault in exhaust system?	Repair or replace the exhaust system. <Ref. to EX(H6DO)-2, General Description.>	Go to step **2**.
2	**CHECK WAVEFORM DATA ON THE SUBARU SELECT MONITOR (WHILE DRIVING).** 1) Drive at a constant speed between 80 — 112 km/h (50 — 70 MPH). 2) After 5 minutes have elapsed in the condition of step 1), use the Subaru Select Monitor while still driving to read the waveform data. • At normal condition 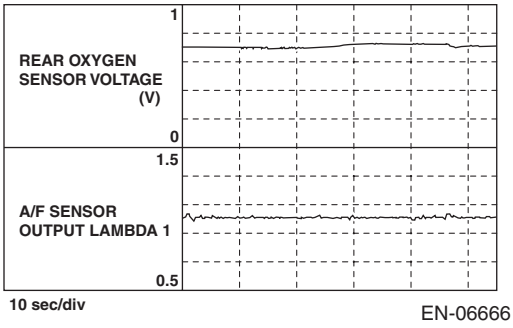 EN-06666 • At abnormal condition (numerous inversion) 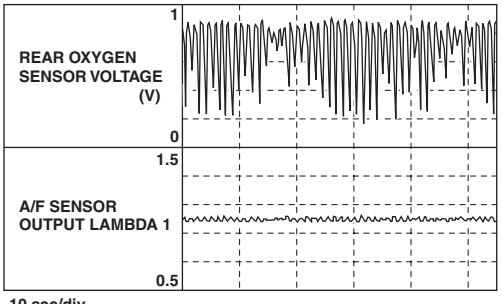 EN-06667	Is a normal waveform displayed?	Even if DTC is detected, the circuit has returned to a normal condition at this time. Reproduce the failure, and then perform the diagnosis again. NOTE: In this case, temporary poor contact of connector, temporary open or short circuit of harness may be the cause.	Go to step **3**.

	Step	Check	Yes	No
3	**CHECK WAVEFORM DATA ON THE SUBARU SELECT MONITOR (WHILE IDLING).** 1) Run the engine at idle. 2) In the condition of step 1), use the Subaru Select Monitor to read the waveform data. • At normal condition 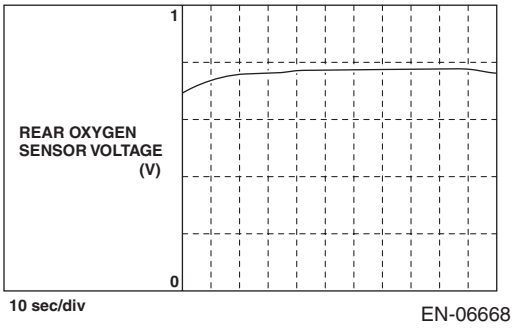 EN-06668 • At abnormal condition 1 (numerous inversion) 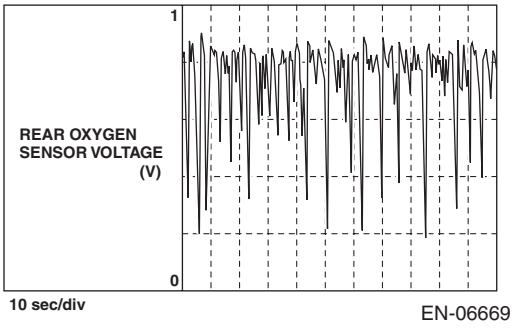 EN-06669 • At abnormal condition 2 (noise input) 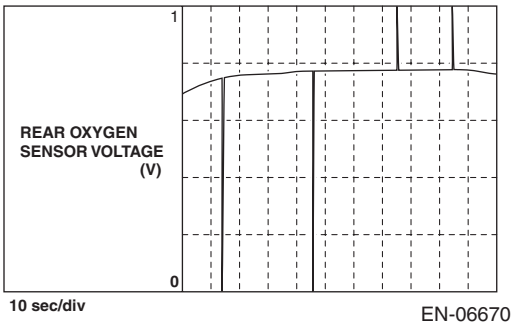 EN-06670	Is a normal waveform displayed?	Go to step **4**.	• The waveform is displayed at abnormal condition 1: Go to step **4**. • The waveform is displayed at abnormal condition 2: Go to step **5**.
4	**CHECK CATALYTIC CONVERTER.**	Is the catalytic converter damaged?	Replace the catalytic converters RH and LH. <Ref. to EC(H6DO)-3, Front Catalytic Converter.> <Ref. to EC(H6DO)-4, Rear Catalytic Converter.>	Go to step **5**.
5	**CHECK REAR OXYGEN SENSOR CONNECTOR AND COUPLING CONNECTOR.**	Has water entered the connector?	Completely remove any water inside.	Go to step **6**.

	Step	Check	Yes	No
6	**CHECK HARNESS BETWEEN ECM AND REAR OXYGEN SENSOR CONNECTOR.** 1) Turn the ignition switch to OFF. 2) Disconnect the connector from ECM and rear oxygen sensor LH. 3) Measure the resistance of harness between ECM connector and rear oxygen sensor LH connector. ***Connector & terminal*** ***(E158) No. 57 — (E61) No. 3:*** ***(E158) No. 47 — (E61) No. 4:*** ***(E158) No. 59 — (E25) No. 3:*** ***(E158) No. 47 — (E25) No. 4:***	Is the resistance less than 1 Ω?	Go to step **7**.	Repair the harness and connector. NOTE: In this case, repair the following item: • Open circuit in harness between ECM connector and rear oxygen sensor LH connector • Poor contact of coupling connector
7	**CHECK REAR OXYGEN SENSOR SHIELD.** 1) Turn the ignition switch to OFF. 2) Expose the rear oxygen sensor LH connector body side harness sensor shield. 3) Measure the resistance between sensor shield and chassis ground.	Is the resistance less than 1 Ω?	Go to step **8**.	Repair the open circuit of rear oxygen sensor LH harness.
8	**CHECK ENGINE OIL AMOUNT AND EXHAUST GAS.** 1) Check the engine oil amount. <Ref. to LU(H6DO)-11, INSPECTION, Engine Oil.> 2) Check exhaust gas during idling.	Does the engine oil amount drop or white smoke emit from the muffler?	Check the engine, and repair the defective part. <Ref. to ME(H6DO)-172, INSPECTION, Engine Trouble in General.> After engine is repaired, replace the catalytic converters RH and LH. <Ref. to EC(H6DO)-3, Front Catalytic Converter.> <Ref. to EC(H6DO)-4, Rear Catalytic Converter.> After the catalytic converter is replaced, perform step 2 to check the normal waveform is displayed, and then exit the procedure.	Go to step **9**.

	Step	Check	Yes	No
9	**CHECK IGNITION SYSTEM.** 1) Check the spark plug. <Ref. to IG(H6DO)-11, INSPECTION, Spark Plug.> 2) Check the status of the ignition coil connector and the spark plug terminal.	Is there any fault in the ignition system?	After ignition system is repaired, replace the catalytic converters RH and LH. <Ref. to EC(H6DO)-3, Front Catalytic Converter.> <Ref. to EC(H6DO)-4, Rear Catalytic Converter.> After the catalytic converter is replaced, perform step 2 to check the normal waveform is displayed, and then exit the procedure.	Go to step **10**.
10	**CHECK FUEL SYSTEM.** 1) Refer to and check the items in “Insufficient fuel supply to fuel injector” (except for “a. Fuel pump does not operate.”) and “Leakage or blow out of fuel”. <Ref. to FU(H6DO)-168, INSPECTION, Fuel System Trouble in General.> 2) Check throttle body. <Ref. to FU(H6DO)-22, INSPECTION, Throttle Body.> 3) Check intake manifold. <Ref. to FU(H6DO)-38, INSPECTION, Intake Manifold.>	Is there any fault in the fuel system?	After fuel system is repaired, replace the catalytic converters RH and LH. <Ref. to EC(H6DO)-3, Front Catalytic Converter.> <Ref. to EC(H6DO)-4, Rear Catalytic Converter.> After the catalytic converter is replaced, perform step 2 to check the normal waveform is displayed, and then exit the procedure.	Go to step **11**.

Step	Check	Yes	No
11 CHECK DTC.	Is any other DTC displayed?	Check the appropriate DTC using the “List of Diagnostic Trouble Code (DTC)”. <Ref. to EN(H6DO)(diag)-109, List of Diagnostic Trouble Code (DTC).> After checking DTCs, replace the catalytic converters RH and LH. <Ref. to EC(H6DO)-3, Front Catalytic Converter.> <Ref. to EC(H6DO)-4, Rear Catalytic Converter.> After the catalytic converter is replaced, perform step 2 to check the normal waveform is displayed, and then exit the procedure.	Replace the rear oxygen sensor LH. <Ref. to FU(H6DO)-81, Rear Oxygen Sensor.>

1. OUTLINE OF DIAGNOSIS

Detect the deterioration of the catalyst function.
Though the rear oxygen sensor output changes slowly with a new catalyst, the sensor output with a deteriorated catalyst becomes high and the inversion time is shortened.
For this reason, the catalyst diagnosis is carried out by monitoring the rear oxygen sensor output and comparing it with the front oxygen (A/F) sensor output.

2. COMPONENT DESCRIPTION

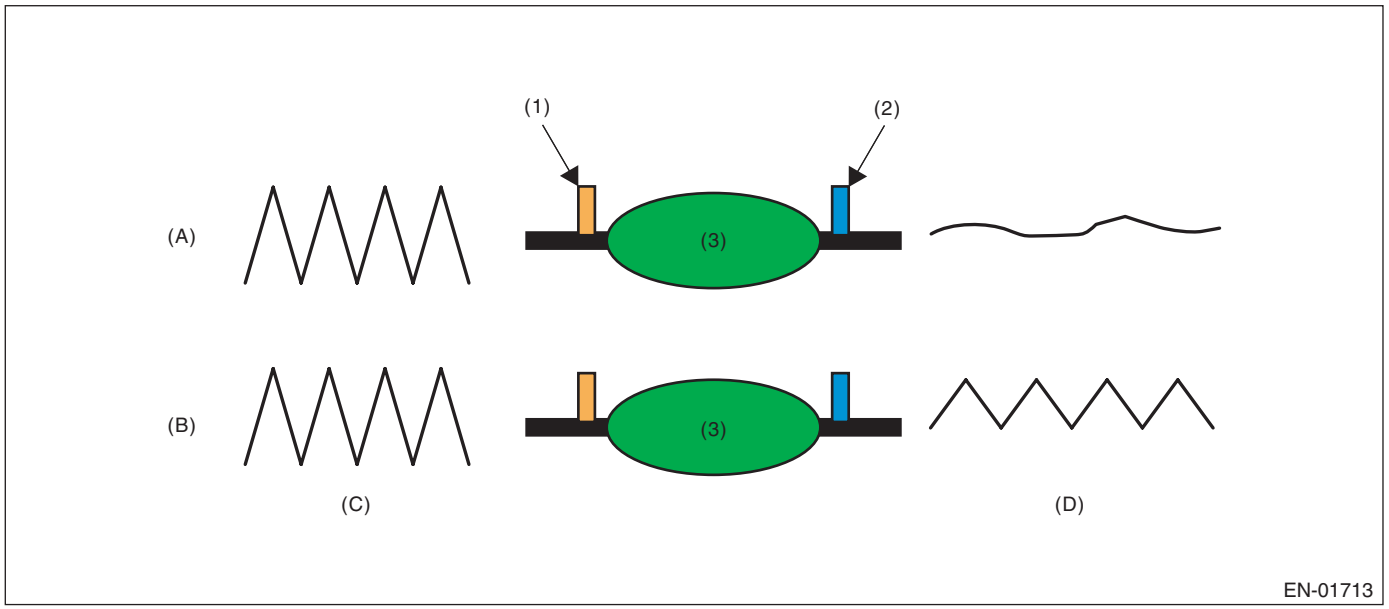

(A) Normal
(B) Deterioration
(C) Output waveform from the front oxygen (A/F) sensor
(D) Output waveform from the rear oxygen sensor
(1) Front oxygen (A/F) sensor
(2) Rear oxygen sensor
(3) Catalytic converter

3. EXECUTION CONDITION

Secondary Parameters	Execution condition
Battery voltage	≥ 10.9 V
Barometric pressure	≥ 75.1 kPa (563 mmHg, 22.2 inHg)
Sub feedback (bank 2)	In operation
Intake air amount	≥ 10 g/s (0.35 oz/s) and < 50 g/s (1.76 oz/s)
Estimated catalyst temperature	≥ 510 °C (950 °F)
Vehicle speed	≥ 40 km/h (24.9 MPH)
Change of rear oxygen sensor output (bank 2) from 0.55 V or less to 0.55 V or more	Experienced after fuel cut
ELCM switching valve	Open
Estimated temperature of the rear oxygen sensor element	≥ 500 °C (932 °F)

4. GENERAL DRIVING CYCLE

Perform the diagnosis only once at a constant vehicle speed of 40 km/h (24.9 MPH) or more.

5. DIAGNOSTIC METHOD

After establishing the execution conditions, calculate the front oxygen (A/F) sensor lambda deviation cumulative value per 32 milliseconds × 4 (Σ |(sglmd$_n$ – sglmd$_{n-1}$)|) and rear oxygen sensor output voltage deviation cumulative value (Σ |(ro2sad$_n$ – ro2sad$_{n-1}$)|), and when the front oxygen (A/F) sensor lambda deviation cumulative value (Σ |(sglmd$_n$ – sglmd$_{n-1}$)|) becomes the predetermined value or more, calculate the diagnostic value.
If the duration of time while the following conditions are met is within the time indicated, judge as NG.

Judgment Value

Malfunction Criteria	Threshold Value
Σ |(ro2sad$_n$ – ro2sad$_{n-1}$)| / Σ |(sglmd$_n$ – sglmd$_{n-1}$)| (bank 2)	> 7

Time Needed for Diagnosis: 30 — 55 seconds
Malfunction Indicator Light Illumination: Illuminates when malfunction occurs in 2 continuous driving cycles.

DP:DTC P0441 EVAP SYSTEM (CPC) INCORRECT PURGE FLOW

DTC DETECTING CONDITION:
Detected when two consecutive driving cycles with fault occur.
TROUBLE SYMPTOM:
Improper idling

CAUTION:
After servicing or replacing faulty parts, perform Clear Memory Mode <Ref. to EN(H6DO)(diag)-85, OPERATION, Clear Memory Mode.>, and Inspection Mode <Ref. to EN(H6DO)(diag)-69, PROCEDURE, Inspection Mode.>.

	Step	Check	Yes	No
1	**CHECK FOR ANY OTHER DTC ON DISPLAY.**	Is any other DTC displayed?	Check the appropriate DTC using the "List of Diagnostic Trouble Code (DTC)". <Ref. to EN(H6DO)(diag)-109, List of Diagnostic Trouble Code (DTC).>	Go to step **2**.
2	**CHECK PURGE CONTROL SOLENOID VALVE.** Operate the purge control solenoid valve using the Subaru Select Monitor. NOTE: For detailed operation procedures, refer to the "Active Test". <Ref. to EN(H6DO)(diag)-86, Active Test.>	Does the purge control solenoid valve operate?	Go to step **3**.	Replace the purge control solenoid valve. <Ref. to EC(H6DO)-17, Purge Control Solenoid Valve.>
3	**CHECK EVAPORATIVE EMISSION CONTROL SYSTEM LINE.** 1) Turn the ignition switch to OFF. 2) Check the delivery (test) mode fuse is removed.	Are there holes, cracks, clogging, or disconnection, misconnection of hoses or pipes in evaporative emission control system?	Repair or replace the hoses or pipes.	Repair the poor contact of ECM connector.

1. OUTLINE OF DIAGNOSIS

This monitor intrusively performs a functional check to detect incorrect purge flow. The monitor seals the EVAP system (i.e. isolate from atmosphere) by closing the ELCM switching valve intrusively after recovering from a fuel cut event. In the case of normal condition, and the commanded purge control duty ratio is more than 0%, ELCM pressure (gauge) will decrease due to engine vacuum and reach to the threshold value. However, in the case of malfunction condition (e.g. fuel cap open, purge valve stuck closed, purge line disconnected or blocked), if the ELCM pressure (gauge) does not reach the threshold within a predetermined time, the monitor determines a malfunction and stores a fault code.

Malfunction Criteria

ELCM pressure (gauge) > Threshold

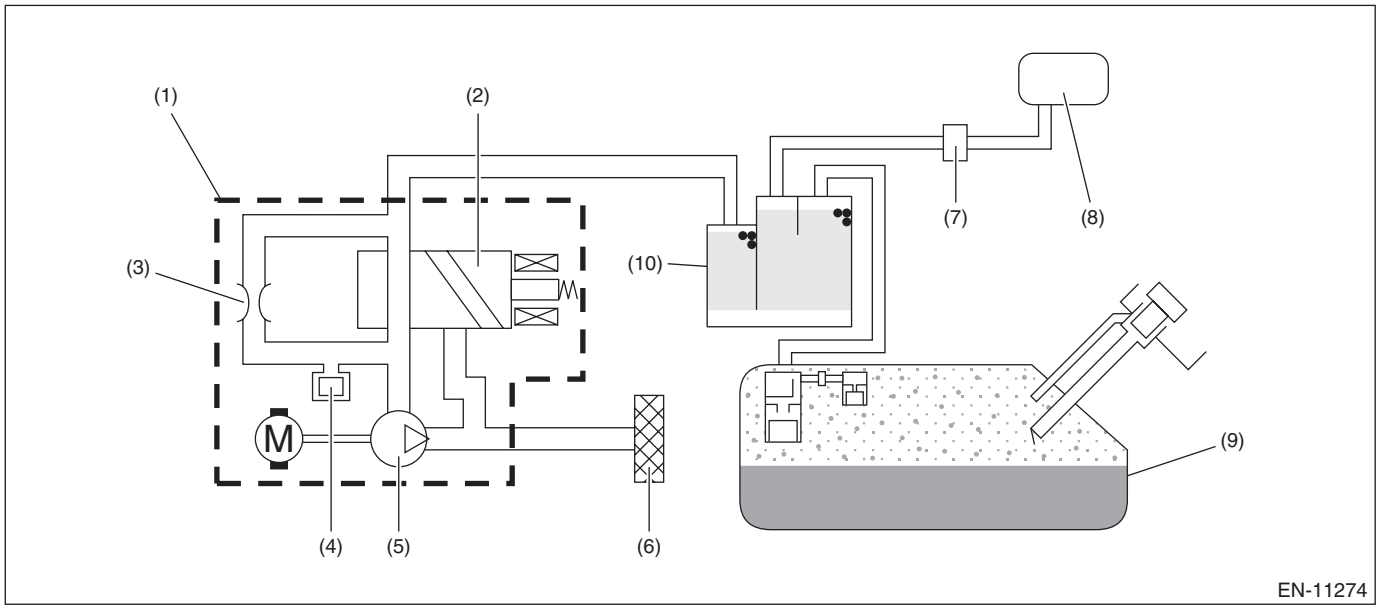

(1)	ELCM	(5)	Vacuum pump	(9)	Fuel tank
(2)	Switching valve (closed)	(6)	Drain filter	(10)	Canister
(3)	Reference orifice (0.02 inch orifice)	(7)	Purge control solenoid valve		
(4)	Pressure sensor	(8)	Intake manifold		

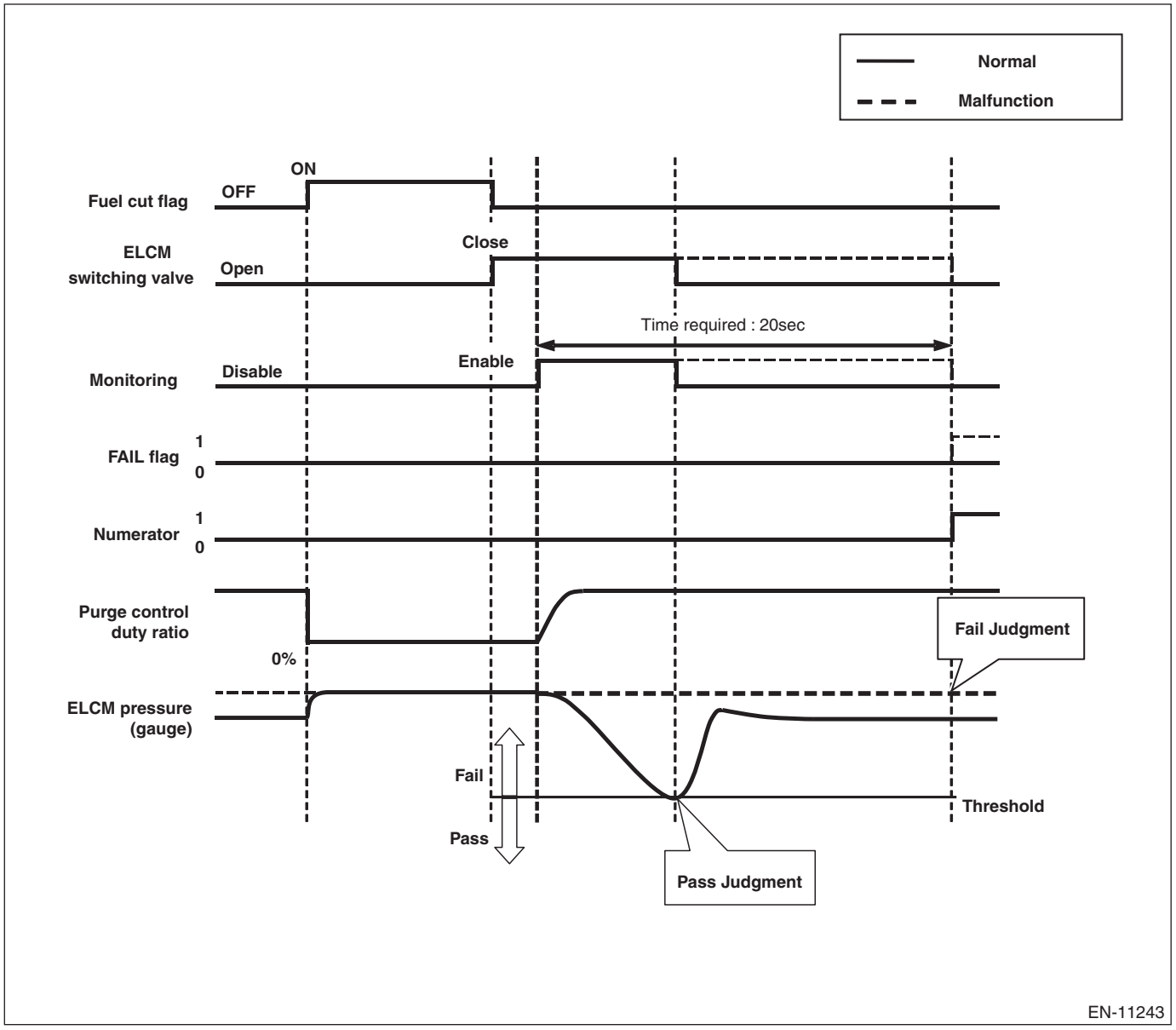
Normal
Malfunction
Fuel cut flag
ON
OFF
ELCM switching valve
Close
Open
Time required : 20sec
Monitoring
Disable
Enable
FAIL flag
1
0
Numerator
1
0
Purge control duty ratio
0%
Fail Judgment
ELCM pressure (gauge)
Fail
Pass
Threshold
Pass Judgment
EN-11243

2. EXECUTION CONDITION

Secondary Parameters	Execution condition
Time when ELCM switching valve is closed	< 120000 ms
Purge control solenoid valve control duty	> 0%
Precondition Conditions to close the switching valve of ELCM intrusively.	
Battery voltage	≥ 10.9 V
Barometric pressure	≥ 75.1 kPa (563 mmHg, 22.2 inHg)
Integrated value of calculated purge airflow since engine start	≥ Value from Map (g)*
Atmospheric pressure – Intake manifold absolute pressure	≥ 6.7 kPa (50 mmHg, 2 inHg)
((Fuel system status for time) followed by Fuel system status)	= Fuel cut ≥ 1 s ≠ Fuel cut
Ambient temperature	≥ –25 °C (–13 °F)

* It takes approximately 2 min at 40 MPH

Map

Ambient temperature °C (°F)	0 (32)	10 (50)	20 (68)	30 (86)	40 (104)	50 (122)
Integrated value of calculated purge airflow since engine start g (oz)	72 (2.54)	72 (2.54)	72 (2.54)	72 (2.54)	72 (2.54)	72 (2.54)

3. GENERAL DRIVING CYCLE

Perform the diagnosis only once during ordinary driving.

4. DIAGNOSTIC METHOD

Judge as NG when the following conditions are established.

Judgment Value

Malfunction Criteria	Threshold Value
ELCM pressure	> 666.6 Pa × –1 (5 mmHg × –1, 0.2 inHg × –1)

Time Needed for Diagnosis: 30000 ms – 10000 ms
Malfunction Indicator Light Illumination: Illuminates when malfunction occurs in 2 continuous driving cycles.

DQ:DTC P0451 EVAP SYSTEM (CPC) PRESSURE SENSOR/SWITCH CIRCUIT RANGE/PERFORMANCE

DTC DETECTING CONDITION:

Detected when two consecutive driving cycles with fault occur.

CAUTION:

After servicing or replacing faulty parts, perform Clear Memory Mode <Ref. to EN(H6DO)(diag)-85, OPERATION, Clear Memory Mode.>, and Inspection Mode <Ref. to EN(H6DO)(diag)-69, PROCEDURE, Inspection Mode.>.

	Step	Check	Yes	No
1	**CHECK FOR ANY OTHER DTC ON DISPLAY.**	Is any other DTC displayed?	Check the appropriate DTC using the “List of Diagnostic Trouble Code (DTC)”. <Ref. to EN(H6DO)(diag)-109, List of Diagnostic Trouble Code (DTC).>	Go to step **2**.
2	**CHECK CURRENT DATA.** 1) Turn the ignition switch to ON (engine OFF). 2) Using the Subaru Select Monitor or general scan tool, read the value in «Absolute Evap Sys. Pressure» and «Mani. Absolute Pressure», and compare them with the actual atmospheric pressure. NOTE: • Subaru Select Monitor For detailed operation procedures, refer to “Read Current Data For Engine”. <Ref. to EN(H6DO)(diag)-50, Subaru Select Monitor.> • General scan tool For detailed operation procedures, refer to the general scan tool operation manual. • To read the actual atmospheric pressure, connect the Subaru Select Monitor or general scan tool to the other known good vehicle.	Is the difference with the actual atmospheric pressure 2.4 kPa (17.8 mmHg, 0.7 inHg) or more?	Replace the part that showed larger deviation from the actual atmospheric pressure than the other. • If deviations in value for «Absolute Evap Sys. Pressure» is larger: Replace the leak check valve assembly. <Ref. to EC(H6DO)-36, Leak Check Valve Assembly.> • If deviations in value for «Mani. Absolute Pressure» is larger: Replace the manifold absolute pressure sensor. <Ref. to FU(H6DO)-55, Manifold Absolute Pressure Sensor.>	Even if DTC is detected, the circuit has returned to a normal condition at this time. Reproduce the failure, and then perform the diagnosis again. NOTE: In this case, temporary poor contact of connector, temporary open or short circuit of harness may be the cause.

1. OUTLINE OF DIAGNOSIS

Detect the malfunction of ELCM pressure sensor output properties.
Judge as NG when the ELCM pressure sensor output value is largely different from the intake manifold pressure when the ignition switch is ON.

2. COMPONENT DESCRIPTION

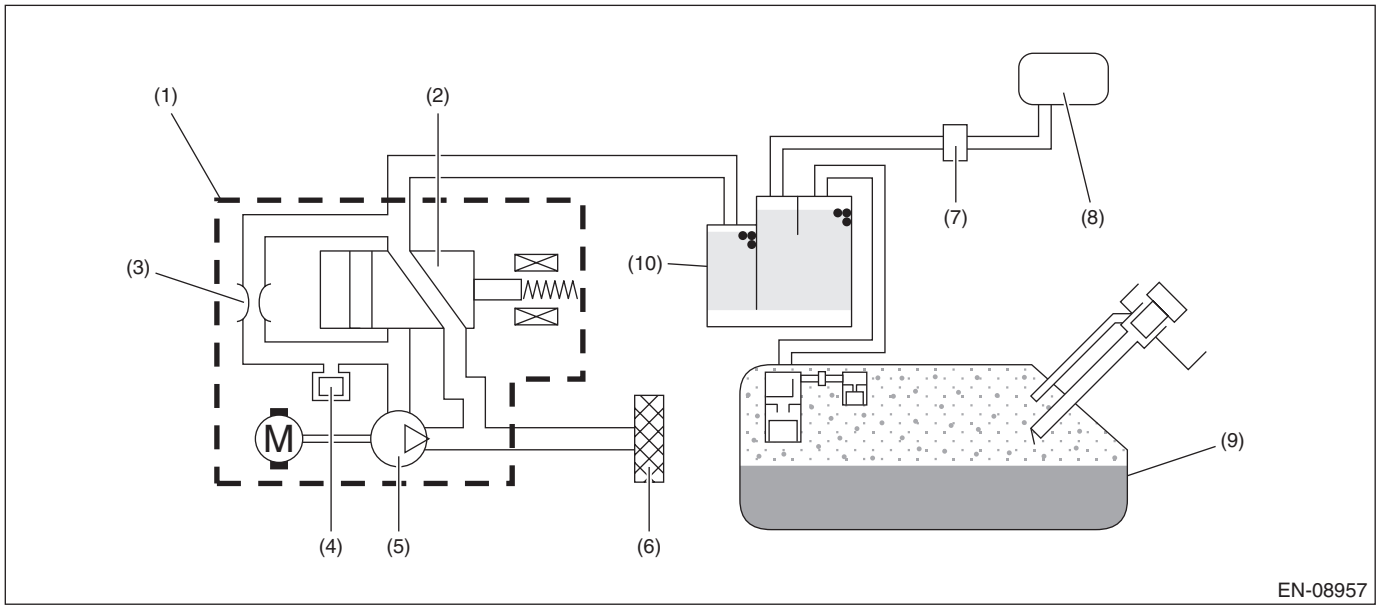

(1) ELCM
(2) Switching valve
(3) Reference orifice (0.02 inch orifice)
(4) Pressure sensor
(5) Vacuum pump
(6) Drain filter
(7) Purge control solenoid valve
(8) Intake manifold
(9) Fuel tank
(10) Canister

3. EXECUTION CONDITION

Secondary Parameters	Execution condition
Elapsed time after ignition switch is turned to ON	≥ 500 ms and < 60000 ms
Soaking time	≥ 60 s
ELCM vacuum pump	Not in operation
ELCM switching valve	Open
Purge control	Not in operation

4. GENERAL DRIVING CYCLE

Perform the diagnosis once at ignition ON.

5. DIAGNOSTIC METHOD

If the duration of time while the following conditions are met is longer than the time indicated, judge as NG.

Judgment Value

Malfunction Criteria	Threshold Value
|ELCM pressure sensor output value – intake manifold pressure (absolute pressure) when ignition switch is ON|	> 4732.9 Pa (35.5 mmHg, 1.4 inHg)

Time Needed for Diagnosis: 320 ms
Malfunction Indicator Light Illumination: Illuminates when malfunction occurs in 2 continuous driving cycles.

DR:DTC P0452 EVAP SYSTEM (CPC) PRESSURE SENSOR/SWITCH CIRCUIT LOW

DTC DETECTING CONDITION:
Immediately at fault recognition

CAUTION:
After servicing or replacing faulty parts, perform Clear Memory Mode <Ref. to EN(H6DO)(diag)-85, OPERATION, Clear Memory Mode.>, and Inspection Mode <Ref. to EN(H6DO)(diag)-69, PROCEDURE, Inspection Mode.>.

WIRING DIAGRAM:

- Engine Electrical System ENGINE TYPE EZ (WITHOUT PUSH BUTTON START) <Ref. to WI-198, ENGINE TYPE EZ (WITHOUT PUSH BUTTON START), WIRING DIAGRAM, Engine Electrical System.>
- Engine Electrical System ENGINE TYPE EZ (WITH PUSH BUTTON START) <Ref. to WI-214, ENGINE TYPE EZ (WITH PUSH BUTTON START), WIRING DIAGRAM, Engine Electrical System.>

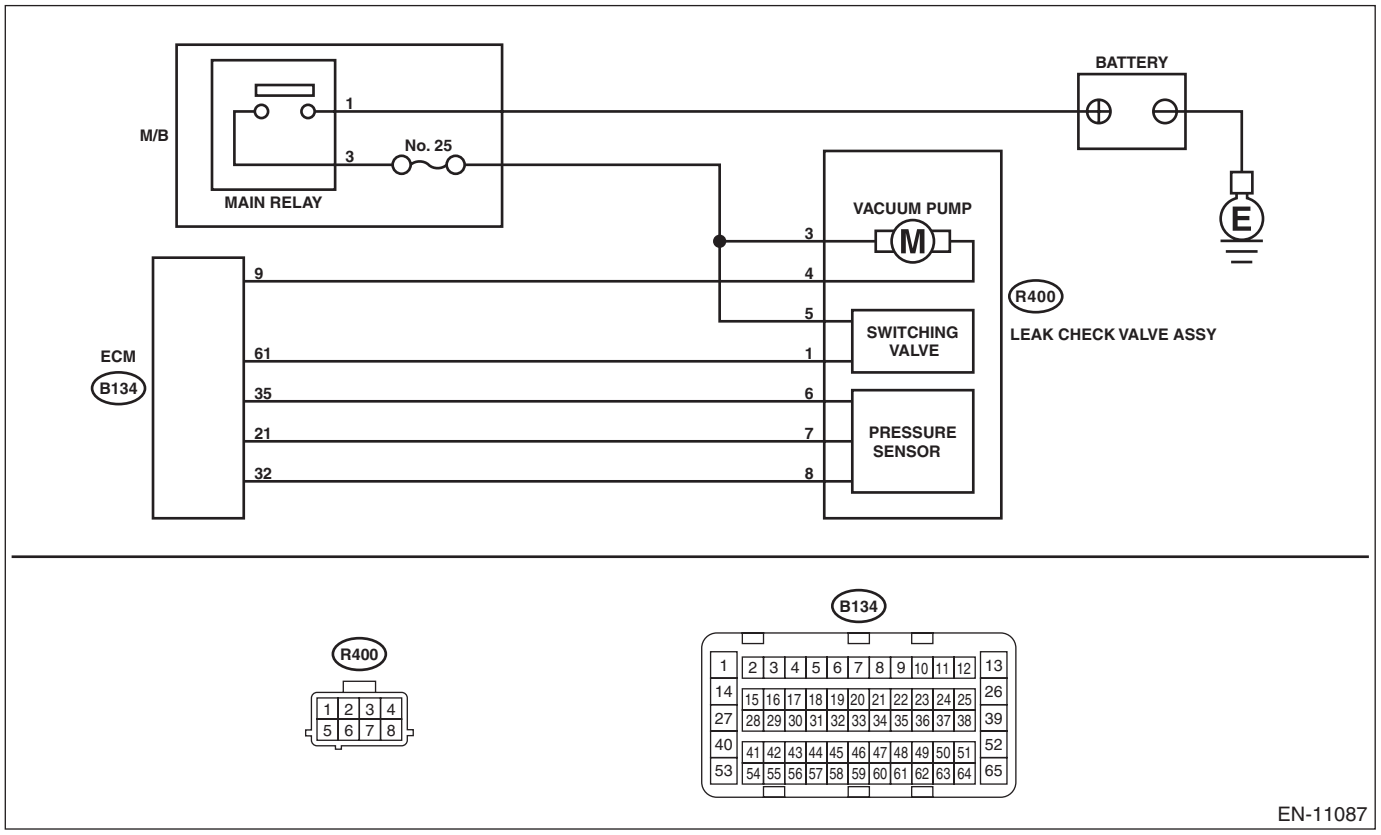

	Step	Check	Yes	No
1	**CHECK CURRENT DATA.** 1) Turn the ignition switch to ON. 2) Read the value of «Atmosphere Pressure» using the Subaru Select Monitor or a general scan tool. NOTE: • Subaru Select Monitor For detailed operation procedures, refer to "Read Current Data For Engine". <Ref. to EN(H6DO)(diag)-50, Subaru Select Monitor.> • General scan tool For detailed operation procedures, refer to the general scan tool operation manual.	Is the value in «Atmosphere Pressure» 34 kPa (255 mmHg, 10 inHg) or less?	Go to step **2**.	Even if DTC is detected, the circuit has returned to a normal condition at this time. Reproduce the failure, and then perform the diagnosis again. NOTE: In this case, temporary poor contact of connector, temporary open or short circuit of harness may be the cause.
2	**CHECK POWER SUPPLY OF LEAK CHECK VALVE ASSEMBLY.** 1) Turn the ignition switch to OFF. 2) Disconnect the connector from the leak check valve assembly. 3) Turn the ignition switch to ON. 4) Measure the voltage between the leak check valve assembly connector and chassis ground. ***Connector & terminal*** ***(R400) No. 6 (+) — Chassis ground (–):***	Is the voltage 4.5 V or more?	Go to step **3**.	Repair the harness and connector. NOTE: In this case, repair the following item: • Open circuit in harness between ECM connector and the leak check valve assembly connector • Poor contact of ECM connector • Poor contact of coupling connector
3	**CHECK HARNESS BETWEEN ECM AND LEAK CHECK VALVE ASSEMBLY CONNECTOR.** 1) Turn the ignition switch to OFF. 2) Disconnect the connector from ECM. 3) Measure the resistance between ECM connector and chassis ground. ***Connector & terminal*** ***(B134) No. 21 — Chassis ground:***	Is the resistance 1 MΩ or more?	Go to step **4**.	Repair the short circuit to ground in harness between ECM connector and leak check valve assembly connector.
4	**CHECK FOR POOR CONTACT.** Check for poor contact of leak check valve assembly connector.	Is there poor contact in the leak check valve assembly connector?	Repair the poor contact in the leak check valve assembly connector.	Replace the leak check valve assembly. <Ref. to EC(H6DO)-36, Leak Check Valve Assembly.>

1. OUTLINE OF DIAGNOSIS

Detect the open or short circuit of the ELCM pressure sensor.
Judge as NG if out of specification.

2. COMPONENT DESCRIPTION

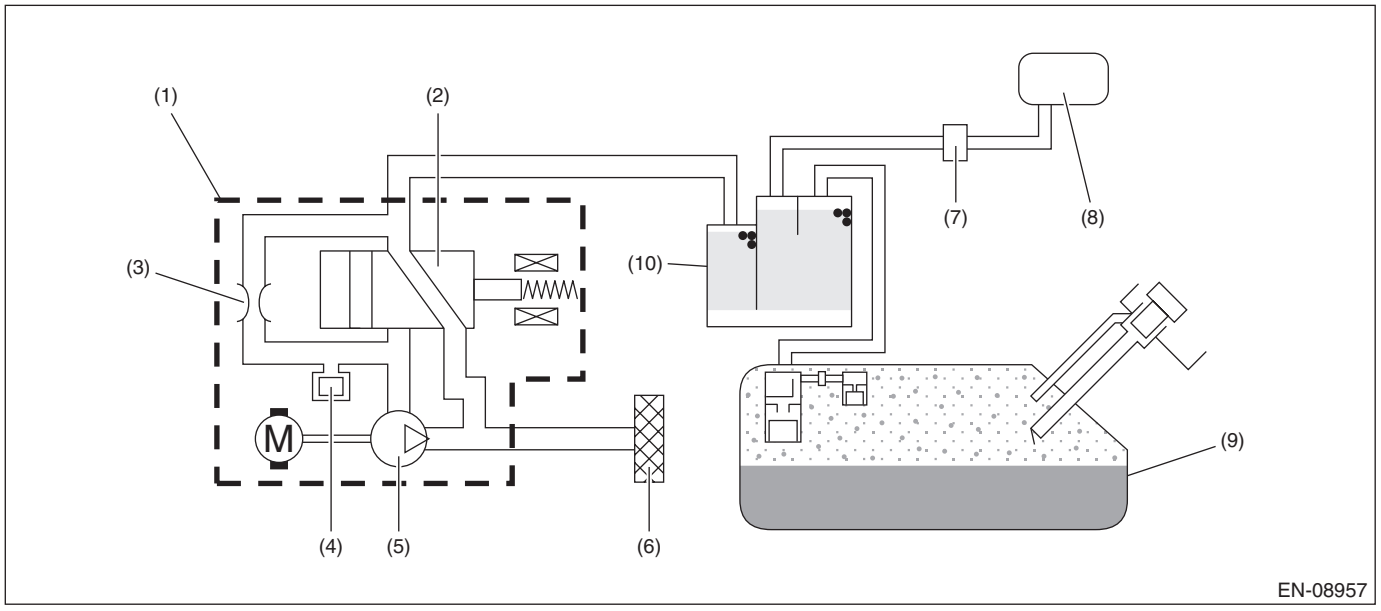

(1) ELCM
(2) Switching valve
(3) Reference orifice (0.02 inch orifice)
(4) Pressure sensor
(5) Vacuum pump
(6) Drain filter
(7) Purge control solenoid valve
(8) Intake manifold
(9) Fuel tank
(10) Canister

3. EXECUTION CONDITION

Secondary Parameters	Execution condition
Battery voltage	≥ 10.9 V

4. GENERAL DRIVING CYCLE

Always perform the diagnosis continuously.

5. DIAGNOSTIC METHOD

If the duration of time while the following conditions are met is longer than the time indicated, judge as NG.

Judgment Value

Malfunction Criteria	Threshold Value
Output voltage	< 0.973 V

Time Needed for Diagnosis: 1000 ms
Malfunction Indicator Light Illumination: Illuminates as soon as a malfunction occurs.

DS:DTC P0453 EVAP SYSTEM (CPC) PRESSURE SENSOR/SWITCH CIRCUIT HIGH

DTC DETECTING CONDITION:
Immediately at fault recognition

CAUTION:
After servicing or replacing faulty parts, perform Clear Memory Mode <Ref. to EN(H6DO)(diag)-85, OPERATION, Clear Memory Mode.>, and Inspection Mode <Ref. to EN(H6DO)(diag)-69, PROCEDURE, Inspection Mode.>.

WIRING DIAGRAM:

- Engine Electrical System ENGINE TYPE EZ (WITHOUT PUSH BUTTON START) <Ref. to WI-198, ENGINE TYPE EZ (WITHOUT PUSH BUTTON START), WIRING DIAGRAM, Engine Electrical System.>
- Engine Electrical System ENGINE TYPE EZ (WITH PUSH BUTTON START) <Ref. to WI-214, ENGINE TYPE EZ (WITH PUSH BUTTON START), WIRING DIAGRAM, Engine Electrical System.>

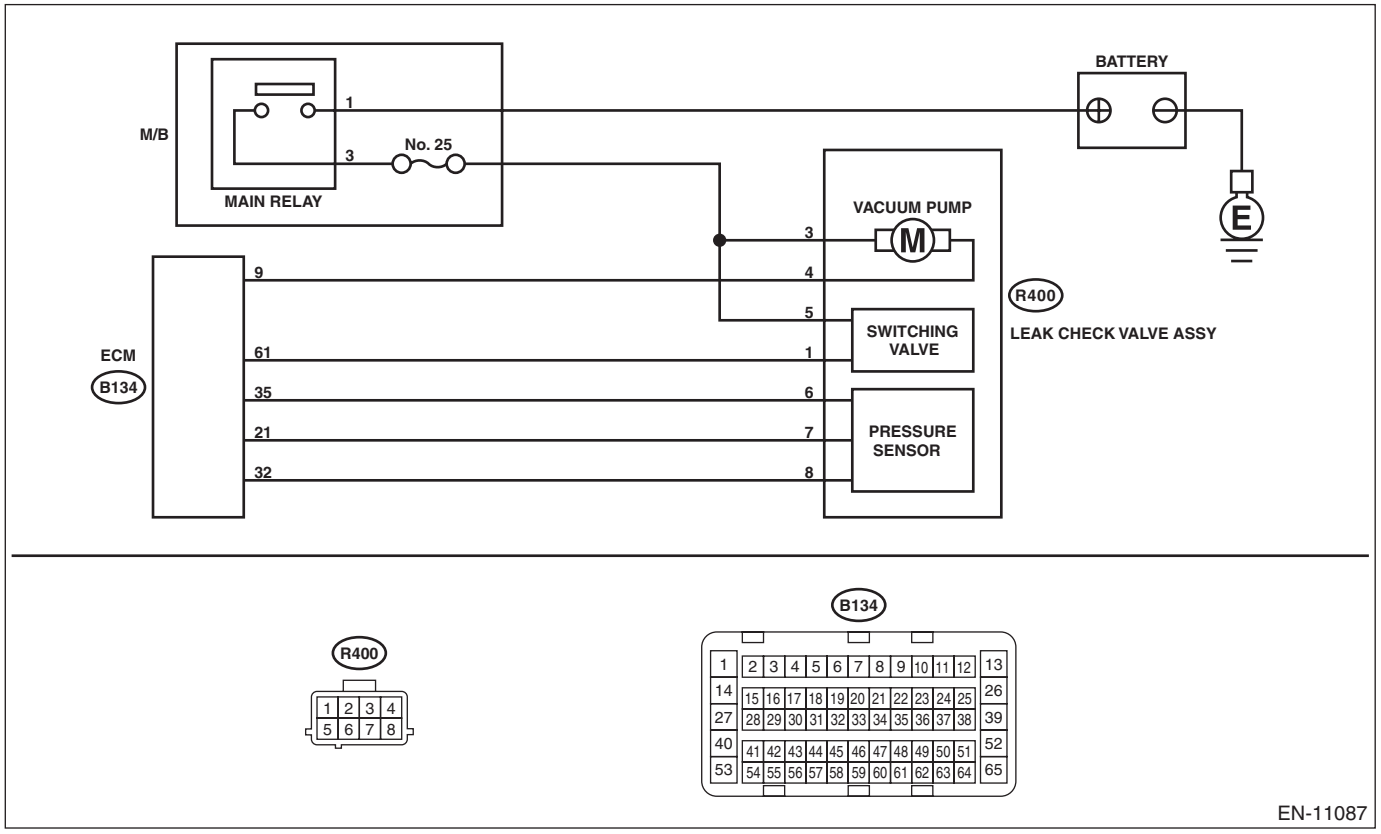

	Step	Check	Yes	No
1	**CHECK CURRENT DATA.** 1) Turn the ignition switch to ON. 2) Read the value of «Atmosphere Pressure» using the Subaru Select Monitor or a general scan tool. NOTE: • Subaru Select Monitor For detailed operation procedures, refer to "Read Current Data For Engine". <Ref. to EN(H6DO)(diag)-50, Subaru Select Monitor.> • General scan tool For detailed operation procedures, refer to the general scan tool operation manual.	Is the value in «Atmosphere Pressure» 125 kPa (938 mmHg, 36.9 inHg) or more?	Go to step **2**.	Even if DTC is detected, the circuit has returned to a normal condition at this time. Reproduce the failure, and then perform the diagnosis again. NOTE: In this case, temporary poor contact of connector, temporary open or short circuit of harness may be the cause.
2	**CHECK HARNESS BETWEEN ECM AND LEAK CHECK VALVE ASSEMBLY CONNECTOR.** 1) Turn the ignition switch to OFF. 2) Disconnect the connector from ECM and the leak check valve assembly. 3) Measure the resistance of harness between ECM connector and the leak check valve assembly connector. ***Connector & terminal*** ***(B134) No. 21 — (R400) No. 7:*** ***(B134) No. 32 — (R400) No. 8:***	Is the resistance less than 1 Ω?	Go to step **3**.	Repair the harness and connector. NOTE: In this case, repair the following item: • Open circuit in harness between ECM connector and the leak check valve assembly connector • Poor contact of coupling connector • Poor contact of joint connector
3	**CHECK FOR POOR CONTACT.** Check for poor contact of ECM and the leak check valve assembly connector.	Is there poor contact in ECM and the leak check valve assembly connector?	Repair the poor contact of ECM and the leak check valve assembly connector.	Go to step **4**.
4	**CHECK LEAK CHECK VALVE ASSEMBLY.** Check the pressure sensor of the leak check valve assembly. <Ref. to EC(H6DO)-37, CHECK PRESSURE SENSOR, INSPECTION, Leak Check Valve Assembly.>	Is the pressure sensor of the leak check valve assembly OK?	Repair the short circuit to power in harness between ECM connector and leak check valve assembly connector.	Replace the leak check valve assembly. <Ref. to EC(H6DO)-36, Leak Check Valve Assembly.>

1. OUTLINE OF DIAGNOSIS

Detect the open or short circuit of the ELCM pressure sensor.
Judge as NG if out of specification.

2. COMPONENT DESCRIPTION

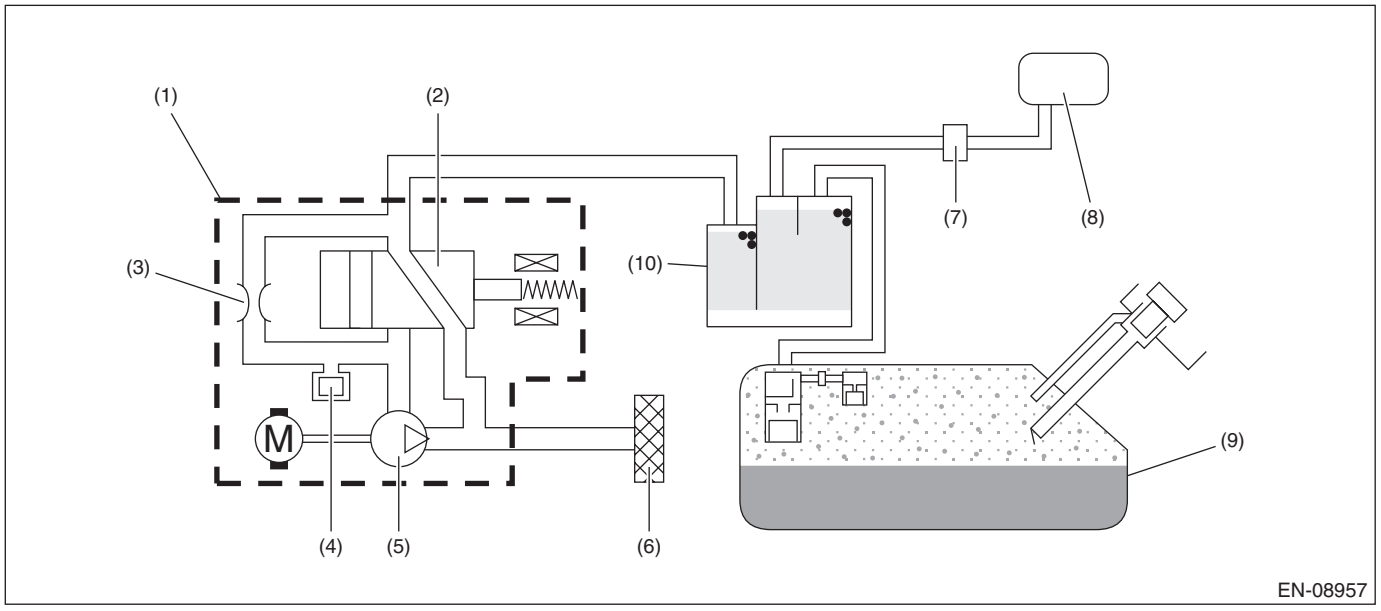

(1) ELCM
(2) Switching valve
(3) Reference orifice (0.02 inch orifice)
(4) Pressure sensor
(5) Vacuum pump
(6) Drain filter
(7) Purge control solenoid valve
(8) Intake manifold
(9) Fuel tank
(10) Canister

3. EXECUTION CONDITION

Secondary Parameters	Execution condition
Battery voltage	≥ 10.9 V

4. GENERAL DRIVING CYCLE

Always perform the diagnosis continuously.

5. DIAGNOSTIC METHOD

If the duration of time while the following conditions are met is longer than the time indicated, judge as NG.

Judgment Value

Malfunction Criteria	Threshold Value
Output voltage	≥ 4.095 V

Time Needed for Diagnosis: 1000 ms
Malfunction Indicator Light Illumination: Illuminates as soon as a malfunction occurs.

DT:DTC P0455 EVAP SYSTEM (CPC) LEAK DETECTED (LARGE LEAK)

DTC DETECTING CONDITION:
Detected when two consecutive driving cycles with fault occur.
TROUBLE SYMPTOM:
- Fuel odor
- There is a hole of more than 1.0 mm (0.04 in) dia. in evaporation system or fuel tank.
- Fuel filler cap loose or lost

CAUTION:
After servicing or replacing faulty parts, perform Clear Memory Mode <Ref. to EN(H6DO)(diag)-85, OPERATION, Clear Memory Mode.>, and Inspection Mode <Ref. to EN(H6DO)(diag)-69, PROCEDURE, Inspection Mode.>.

	Step	Check	Yes	No
1	**CHECK FUEL FILLER CAP.** 1) Turn the ignition switch to OFF. 2) Check the fuel filler cap. NOTE: The DTC is stored in memory if fuel filler cap is or was loose or if the cap chain has caught while tightening.	Is the fuel filler cap tightened securely?	Go to step **2**.	Tighten fuel filler cap securely.
2	**CHECK FUEL FILLER CAP.**	Is the fuel filler cap genuine?	Go to step **3**.	Replace with a genuine fuel filler cap.
3	**CHECK FUEL FILLER PIPE GASKET.**	Is there any damage to the seal between fuel filler cap and fuel filler pipe?	Repair or replace the fuel filler cap and fuel filler pipe. <Ref. to FU(H6DO)-113, Fuel Filler Pipe.>	Go to step **4**.
4	**CHECK PURGE CONTROL SOLENOID VALVE.** Check air-tightness of the purge control solenoid valve. <Ref. to EC(H6DO)-20, INSPECTION, Purge Control Solenoid Valve.>	Is the purge control solenoid valve OK?	Go to step **5**.	Replace the purge control solenoid valve. <Ref. to EC(H6DO)-17, Purge Control Solenoid Valve.>
5	**CHECK EVAPORATIVE EMISSION CONTROL SYSTEM LINE.**	Are there holes on the evaporation line?	Repair or replace the evaporation line. <Ref. to FU(H6DO)-154, Fuel Delivery and Evaporation Lines.>	Go to step **6**.
6	**CHECK CANISTER.**	Are there holes on the canister?	Replace the canister. <Ref. to EC(H6DO)-5, Canister.>	Go to step **7**.
7	**CHECK LEAK CHECK VALVE ASSEMBLY.**	Are there damage or holes on the leak check valve assembly?	Replace the leak check valve assembly. <Ref. to EC(H6DO)-36, Leak Check Valve Assembly.>	Go to step **8**.
8	**CHECK FUEL TANK.** Remove the fuel tank. <Ref. to FU(H6DO)-99, Fuel Tank.>	Are there damage or holes on the fuel tank?	Repair or replace the fuel tank. <Ref. to FU(H6DO)-99, Fuel Tank.>	Go to step **9**.

Step		Check	Yes	No
9	**CHECK ANY OTHER MECHANICAL TROUBLE IN EVAPORATIVE EMISSION CONTROL SYSTEM.**	Are there holes, cracks, clogging, or disconnection, misconnection of hoses or pipes in evaporative emission control system?	Repair or replace the hoses or pipes.	Repair the poor contact of ECM connector.

1. OUTLINE OF DIAGNOSIS

This diagnosis judges whether the ELCM operation is normal or not, and whether the evaporative emission system has leak and clogging or not.
To purge the canister, after driving, perform the five hours soaking after ignition switch OFF in order to stabilize the evaporative gas status. * After 5 or 7 or 9.5 hours passed, ECM is activated by soaking timer, and the leak check is started.
Judges whether the ELCM operation is normal or not, by measuring the reference pressure status via reference orifice (0.02 inch orifice). Judge as malfunction if the reference pressure is out of specified range. Then, judge whether there is a leak or not, by comparing the pressure (leak pressure) when the reference pressure and the evaporative emission system are in negative pressure condition. Judge as system leak in the evaporative emission system if the leak pressure is higher than reference pressure. Judge as clogging of pipe if the leak pressure becomes lower than the reference pressure within the specified amount of time.
0.02 inch leak and 0.04 inch leak can be distinguished by measuring the leak pressure.
The diagnosis results are stored inside ECM until the engine is started again.
*: When the test conditions are not met in 5 hours, perform diagnosis at elapsed time of 7 hours. When the test conditions are not met in 7 hours, perform diagnosis at elapsed time of 9.5 hours.

Diagnostic item	
ELCM system (ELCM body)	Vacuum pump stuck Switching valve stuck to open Switching valve stuck to close Reference orifice flow large Reference orifice flow small
Leak check	Large leak • 0.04 inch leak • Fuel cap loose • Fuel cap off • System malfunction
	Very small leak • 0.02 inch leak
Clogging of pipe	—

OUTLINE OF DIAGNOSIS

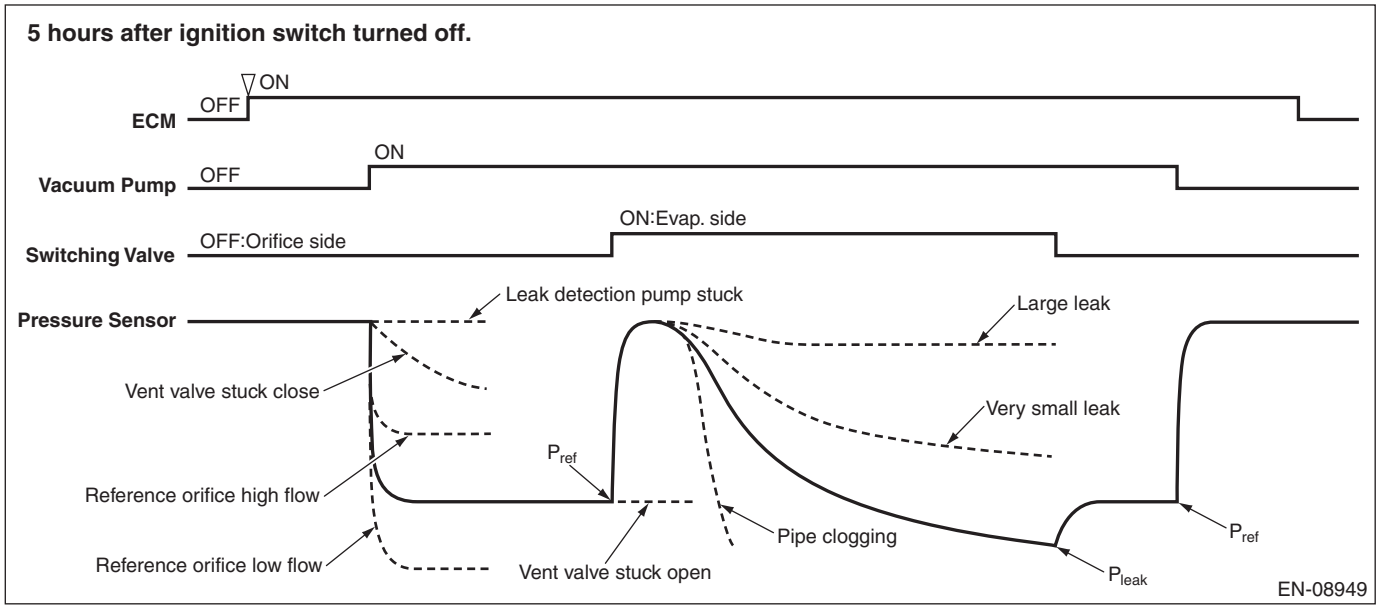

2. COMPONENT DESCRIPTION

ELCM consists of the pressure sensor, the reference orifice (diameter of 0.02 inch), the vacuum pump which introduces the negative pressure into evaporative emission system, and the switching valve which switches the passage to introduce the negative pressure.

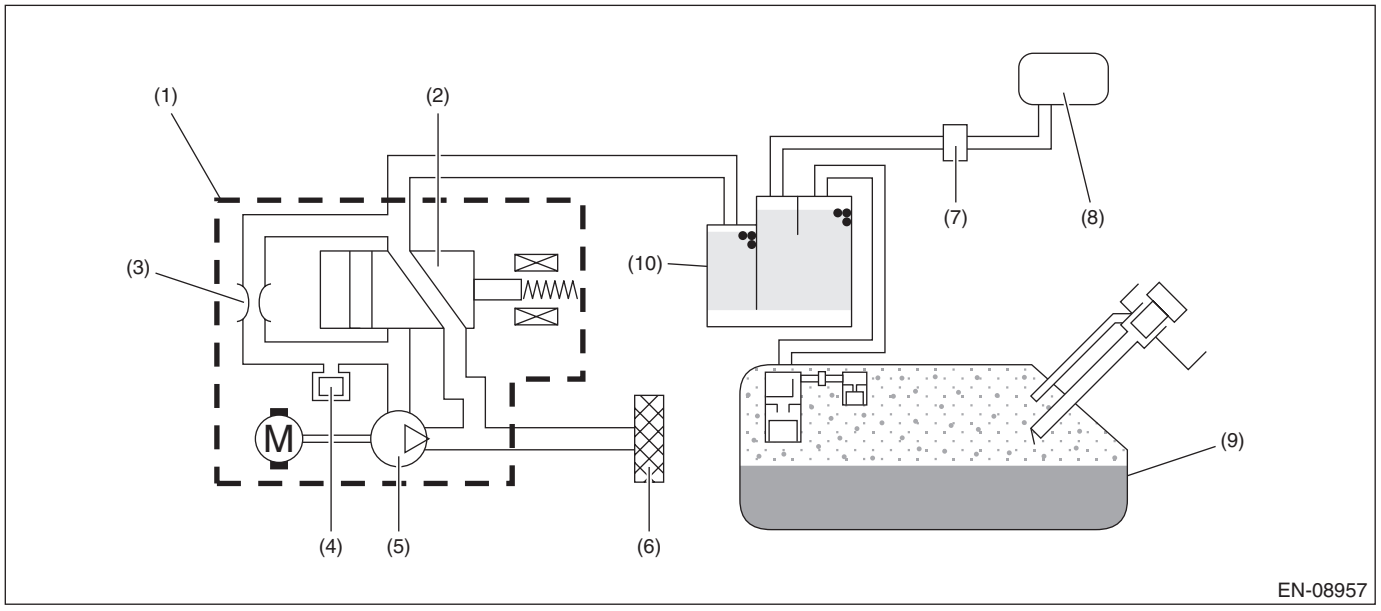

(1)	ELCM	(5)	Vacuum pump	(9)	Fuel tank
(2)	Switching valve	(6)	Drain filter	(10)	Canister
(3)	Reference orifice (0.02 inch orifice)	(7)	Purge control solenoid valve		
(4)	Pressure sensor	(8)	Intake manifold		

3. EXECUTION CONDITION

Secondary Parameters	Execution condition
Battery voltage	≥ 10.9 V
Barometric pressure	≥ 75.1 kPa (563 mmHg, 22.2 inHg)
Activation of soaking timer	Completed
Engine coolant temperature	≥ 4.4 °C (39.9 °F) and < 45 °C (113 °F)
Accumulated purge amount during previous driving cycle	≥ Value of Map 1 (g)

Map 1

Engine coolant temperature °C (°F)	0 (32)	30 (86)	35 (95)	40 (104)	45 (113)
Accumulated purge amount during previous driving cycle g (oz)	128 (4.51)	128 (4.51)	480 (16.93)	832 (29.34)	1184 (41.76)

4. GENERAL DRIVING CYCLE

Perform the diagnosis only once when 5 or 7 or 9.5 hours has passed after ignition switch is OFF. For more detail, refer to “OUTLINE OF DIAGNOSIS”. <Ref. to EN(H6DO)(diag)-384, OUTLINE OF DIAGNOSIS, DTC P0455 EVAP SYSTEM (CPC) LEAK DETECTED (LARGE LEAK), Diagnostic Procedure with Diagnostic Trouble Code (DTC).>

5. DIAGNOSTIC METHOD

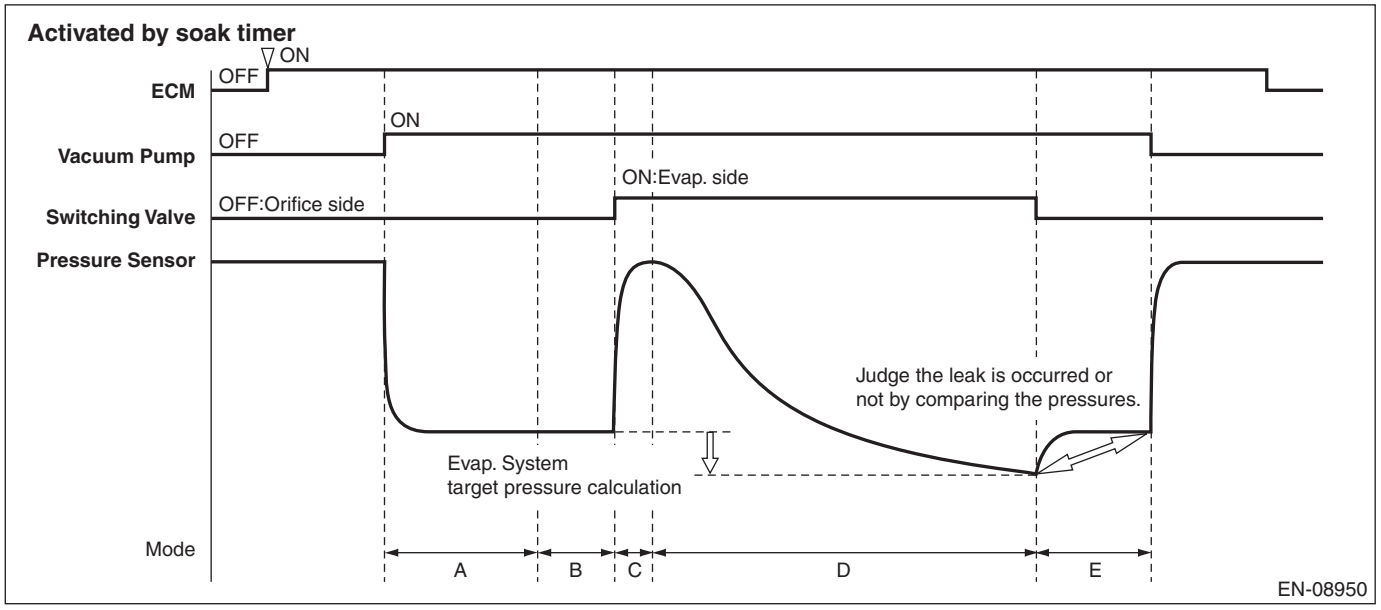

Mode	Explanation of Mode	Diagnosis Period
A	Vacuum pump operation confirmation and characteristics stability	7 s or less & 300 s
B	Measurement of reference pressure for setting the target negative pressure	40 s or less
C	Switching valve operation confirmation	12 s or less
D	Clogging of pipe diagnosis and leak pressure measurement	900 s or less
E	Reference pressure measurement for judgment	40 s or less

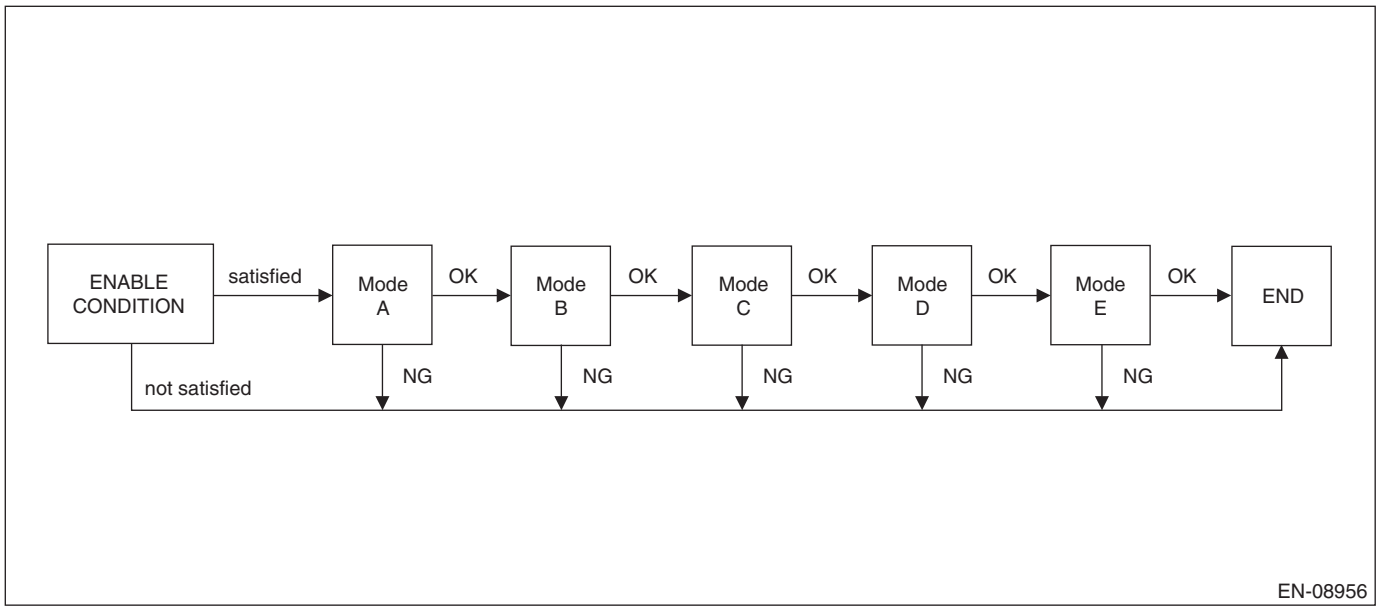

Mode A (Vacuum pump operation confirmation and characteristics stability)

Purpose: Detect the vacuum pump operation trouble.
Judge as NG when the following conditions are established.
Judge as OK if the following conditions are not established, and warm up for five minutes to stabilize the vacuum pump characteristics.

Judgment Value

Malfunction Criteria	Threshold Value	DTC
Pressure sensor output value	> –224 Pa (–1.68 mmHg, –0.1 inHg)	P2404

Mode B (Measurement of reference pressure for setting the target negative pressure)

1. Purpose: Judge the reference pressure stability.
Judge as NG when the following conditions are established.

Judgment Value

Malfunction Criteria	Threshold Value	DTC
|Pressure sensor maximum output value – Pressure sensor minimum output value|	> 314 Pa (2.355 mmHg, 0.1 inHg)	P2404

2. Purpose: Judge whether the reference pressure is within the normal range, and detect the vacuum pump and orifice malfunctions.
Judge as NG when the following conditions are established.

Judgment Value

Malfunction Criteria	Threshold Value	DTC
Reference pressure for setting the target negative pressure Reference pressure for judgment	< Value of Map 2 > Value of Map 3	P2404

Map 2

Barometric pressure kPa (mmHg, inHg)	70 (525, 20.7)	80 (600, 23.6)	90 (675, 26.6)	100 (750, 29.5)
Reference pressure for setting the target negative pressure kPa (mmHg, inHg)	–4 (–29.79, –1.2)	–4.1 (–30.593, –1.2)	–4.2 (–31.395, –1.2)	–4.3 (–32.19, –1.3)

Map 3

Barometric pressure kPa (mmHg, inHg)	70 (525, 20.7)	80 (600, 23.6)	90 (675, 26.6)	100 (750, 29.5)
Reference pressure for judgment kPa (mmHg, inHg)	–0.9 (–7.065, –0.3)	–1 (–7.86, –0.3)	–1.2 (–8.663, –0.3)	–1.3 (–9.465, –0.4)

Mode C (Switching valve operation confirmation)

Purpose: Measure the pressure increase when switching valve is changed from open to close, and detect the stuck to open/close malfunctions of the switching valve.
Judge as NG when the following conditions are established.

Judgment Value

Malfunction Criteria	Threshold Value	DTC
Pressure sensor output value – Reference pressure for setting the target negative pressure	< 224 Pa (1.68 mmHg, 0.1 inHg)	P2404

Mode D (Clogging of pipe diagnosis and leak pressure measurement)

1. **Clogging of pipe**
   Purpose: Measure the time required for the evaporative emission system to reach the target negative pressure by the vacuum pump, and detect the clogging of pipe trouble.
   Judge as clogging of pipe malfunction if the evaporative emission system reaches to the target negative pressure within the specified time.

Judgment Value

Malfunction Criteria	Threshold Value	DTC
Time required to reach to the target negative pressure For target vacuum, use one of the followings. • Reference pressure for target vacuum setting – value of Map 4 • –5 kPa (–37.298 mmHg, –1.5 inHg)	≤ 27500 ms	P1451

Map 4

Time of negative pressure introduction ms	0	100000	200000	300000	400000	500000	600000	700000	800000	900000	1000000	1100000	1200000
Reference pressure for setting the target negative pressure – Pressure sensor output value kPa (mmHg, inHg)	0.9 (7.058, 0.3)	0.9 (7.058, 0.3)	0.9 (7.058, 0.3)	0.9 (7.058, 0.3)	0.9 (7.058, 0.3)	0.9 (7.058, 0.3)	0.9 (7.058, 0.3)	0.9 (7.058, 0.3)	0.9 (7.058, 0.3)	0.9 (7.058, 0.3)	0.9 (7.058, 0.3)	0.9 (7.058, 0.3)	0.9 (7.058, 0.3)

2. **Leak pressure measurement**
   Purpose: Measure the pressure (leak pressure) when the evaporative emission system becomes the negative pressure by the vacuum pump.
   Store the pressure as a leak pressure while the following conditions are met.

Judgment Value

Conditions for storing the leak pressure	Threshold Value
When any one of the followings is established:	
• Reference pressure for setting the target negative pressure – Pressure sensor output value	≥ Value of Map 4
• Pressure sensor output value	< –5 kPa (–37.298 mmHg, –1.5 inHg)
• Time of negative pressure introduction	≥ 900000 ms

Mode E (Measurement of reference pressure for judgment)

1. Purpose: Judge the reference pressure stability.
Judge as NG when the following conditions are established.

Judgment Value

Malfunction Criteria	Threshold Value	DTC
|Pressure sensor maximum output value – Pressure sensor minimum output value|	> 314 Pa (2.355 mmHg, 0.1 inHg)	P2404

2. Purpose: Judge whether the reference pressure is within the normal range, and detect the vacuum pump and orifice malfunctions. Judge the vacuum pump performance stability.
Judge as NG when the following conditions are established.

Judgment Value

Malfunction Criteria	Threshold Value	DTC
Reference pressure for judgment	< Value of Map 5 or > Value of Map 6	P2404

Map 5

Barometric pressure kPa (mmHg, inHg)	70 (525, 20.7)	80 (600, 23.6)	90 (675, 26.6)	100 (750, 29.5)
Reference pressure for judgment kPa (mmHg, inHg)	–4.5 (–34.02, –1.3)	–4.6 (–34.815, –1.4)	–4.7 (–35.618, –1.4)	–4.9 (–36.42, –1.4)

Map 6

Barometric pressure kPa (mmHg, inHg)	70 (525, 20.7)	80 (600, 23.6)	90 (675, 26.6)	100 (750, 29.5)
Reference pressure for judgment kPa (mmHg, inHg)	–0.8 (–6.18, –0.2)	–0.9 (–6.983, –0.3)	–1 (–7.785, –0.3)	–1.1 (–8.58, –0.3)

3. Purpose: Judge the presence of evaporative emission system leak.
Judge as NG when the following conditions are established.

Judgment Value

Malfunction Criteria	Threshold Value	DTC
<Large leak (0.04 inch)> Leak pressure lleakjdg = (Reference pressure for judgment) × 0.377 – (–45.5 Pa)	≥ lleakjdg (Pa)	P0455
<Very small leak (0.02 inch)> Leak pressure	> Reference pressure of 0.018 inch and < lleakjdg (Pa)	P0456

Time Needed for Diagnosis: Approx. 23 min
At next engine start, confirm whether the enable conditions are satisfied even though refueling has been done during soaking, and determine the malfunction.
Malfunction Indicator Light Illumination: Illuminates when malfunction occurs in 2 continuous driving cycles.

DU:DTC P0456 EVAP SYSTEM (CPC) LEAK DETECTED (VERY SMALL LEAK)

NOTE:
For the diagnostic procedure, refer to DTC P0455. <Ref. to EN(H6DO)(diag)-383, DTC P0455 EVAP SYSTEM (CPC) LEAK DETECTED (LARGE LEAK), Diagnostic Procedure with Diagnostic Trouble Code (DTC).>

1. OUTLINE OF DIAGNOSIS

NOTE:
For the detection standard, refer to DTC P0455. <Ref. to EN(H6DO)(diag)-383, DTC P0455 EVAP SYSTEM (CPC) LEAK DETECTED (LARGE LEAK), Diagnostic Procedure with Diagnostic Trouble Code (DTC).>

DV:DTC P0458 EVAP SYSTEM (CPC) PURGE CONTROL VALVE "A" CIRCUIT LOW

DTC DETECTING CONDITION:
Detected when two consecutive driving cycles with fault occur.
TROUBLE SYMPTOM:
Improper idling

CAUTION:
After servicing or replacing faulty parts, perform Clear Memory Mode <Ref. to EN(H6DO)(diag)-85, OPERATION, Clear Memory Mode.>, and Inspection Mode <Ref. to EN(H6DO)(diag)-69, PROCEDURE, Inspection Mode.>.
WIRING DIAGRAM:
• Engine Electrical System ENGINE TYPE EZ (WITHOUT PUSH BUTTON START) <Ref. to WI-198, ENGINE TYPE EZ (WITHOUT PUSH BUTTON START), WIRING DIAGRAM, Engine Electrical System.>
• Engine Electrical System ENGINE TYPE EZ (WITH PUSH BUTTON START) <Ref. to WI-214, ENGINE TYPE EZ (WITH PUSH BUTTON START), WIRING DIAGRAM, Engine Electrical System.>

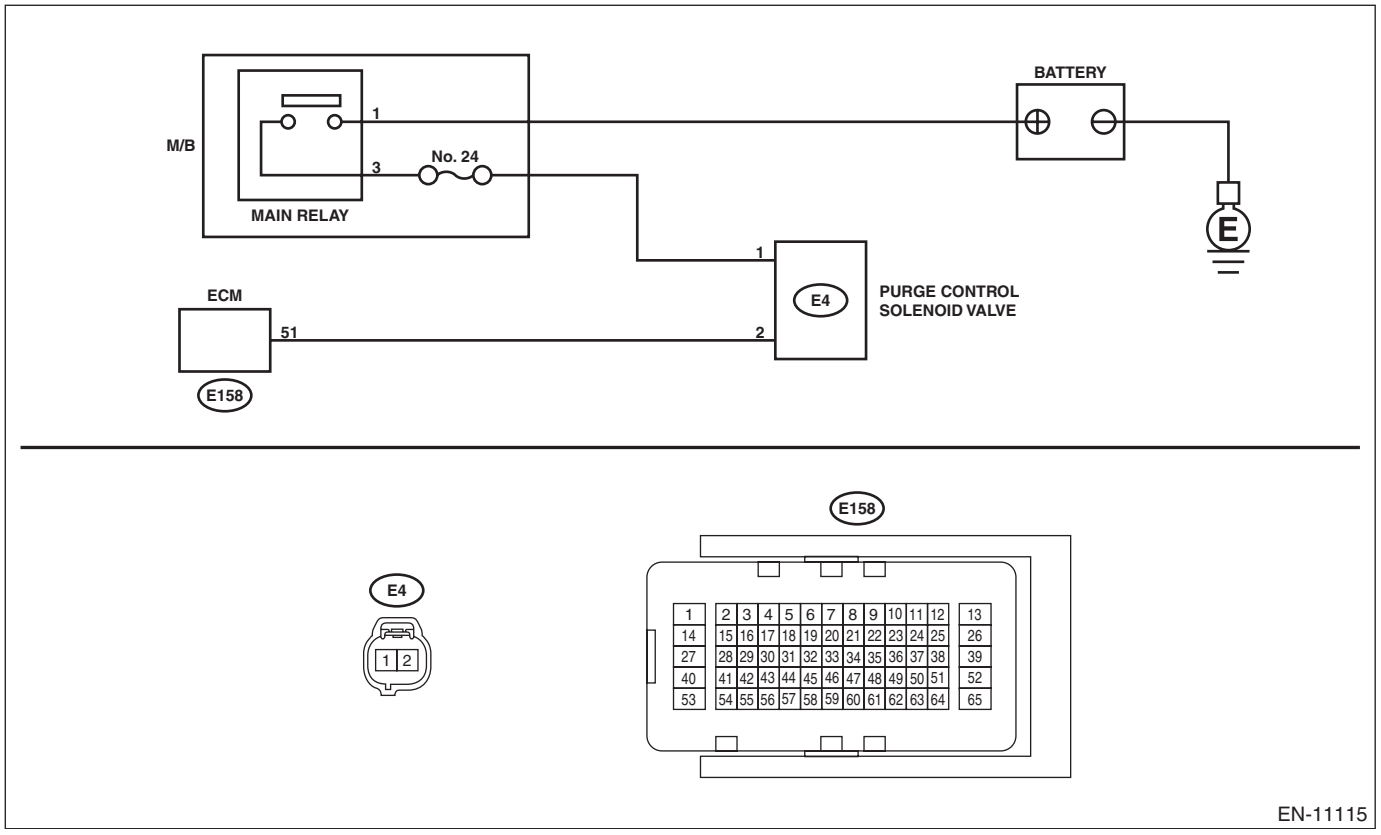

Step		Check	Yes	No
1	**CHECK OUTPUT SIGNAL OF ECM.** 1) Turn the ignition switch to ON. 2) Measure the voltage between ECM connector and chassis ground. ***Connector & terminal*** ***(E158) No. 51 (+) — Chassis ground (–):***	Is the voltage 10 V or more?	Go to step **2**.	Go to step **3**.

	Step	Check	Yes	No
2	**CHECK FOR POOR CONTACT.** Check for poor contact of ECM connector.	Is there poor contact of ECM connector?	Repair the poor contact of ECM connector.	Even if DTC is detected, the circuit has returned to a normal condition at this time. Reproduce the failure, and then perform the diagnosis again. NOTE: In this case, temporary open or short circuit of harness or temporary poor contact of connector may be the cause.
3	**CHECK POWER SUPPLY TO PURGE CONTROL SOLENOID VALVE.** Measure the voltage between purge control solenoid valve and engine ground. ***Connector & terminal*** ***(E4) No. 1 (+) — Engine ground (–):***	Is the voltage 10 V or more?	Go to step **4**.	Repair the power supply circuit.
4	**CHECK HARNESS BETWEEN ECM AND PURGE CONTROL SOLENOID VALVE CONNECTOR.** 1) Turn the ignition switch to OFF. 2) Disconnect the connectors from ECM and purge control solenoid valve. 3) Measure the resistance between the purge control solenoid valve connector and engine ground. ***Connector & terminal*** ***(E4) No. 2 — Engine ground:***	Is the resistance 1 MΩ or more?	Go to step **5**.	Repair the short circuit to ground in harness between ECM connector and purge control solenoid valve connector.
5	**CHECK HARNESS BETWEEN ECM AND PURGE CONTROL SOLENOID VALVE CONNECTOR.** Measure the resistance of harness between ECM connector and purge control solenoid valve. ***Connector & terminal*** ***(E158) No. 51 — (E4) No. 2:***	Is the resistance less than 1 Ω?	Go to step **6**.	Repair the harness and connector. NOTE: In this case, repair the following item: • Open circuit in harness between ECM connector and purge control solenoid valve connector • Poor contact of coupling connector
6	**CHECK PURGE CONTROL SOLENOID VALVE.** 1) Remove the purge control solenoid valve. 2) Measure the resistance between purge control solenoid valve terminals. ***Terminals*** ***No. 1 — No. 2:***	Is the resistance 10 — 100 Ω?	Repair the poor contact of purge control solenoid valve connector.	Replace the purge control solenoid valve. <Ref. to EC(H6DO)-17, Purge Control Solenoid Valve.>

1. OUTLINE OF DIAGNOSIS

Detect open or short circuit of the purge control solenoid valve.
Judge as NG when the ECM output level differs from the actual terminal level.

2. COMPONENT DESCRIPTION

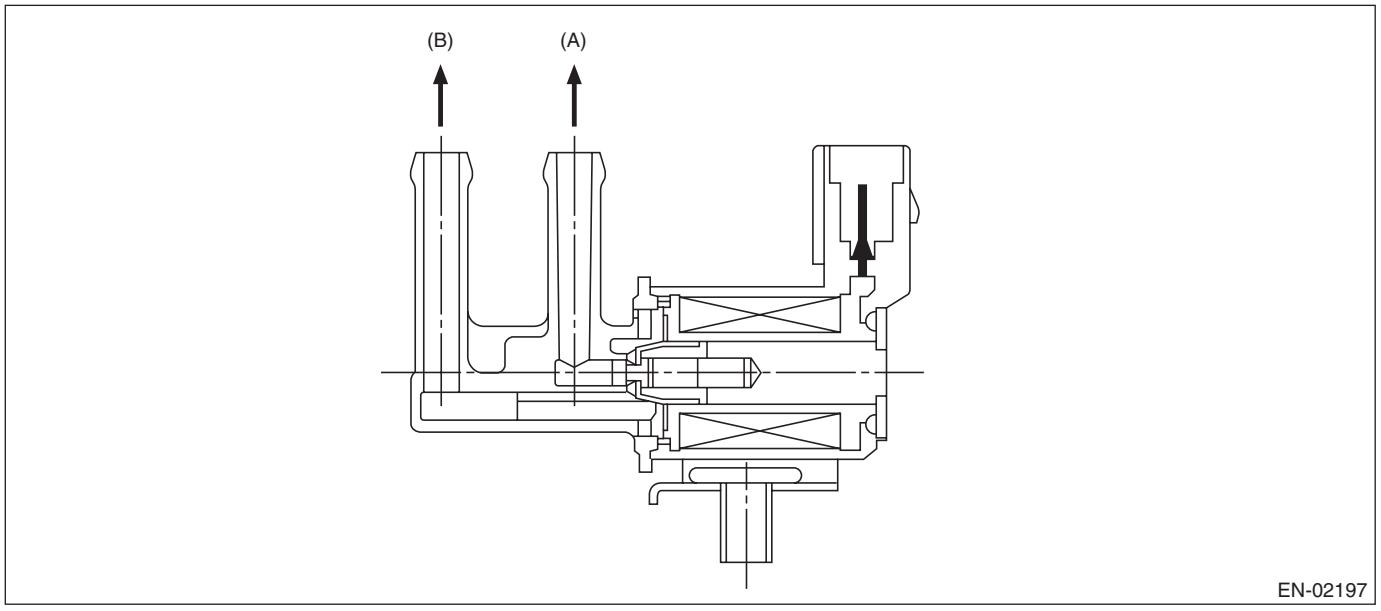

(A) To canister (B) To intake manifold

3. EXECUTION CONDITION

Secondary Parameters	Execution condition
Battery voltage	≥ 10.9 V
Purge control solenoid valve control duty	< 0.75 × 100%

4. GENERAL DRIVING CYCLE

Perform the diagnosis continuously after the enable conditions have been established.

5. DIAGNOSTIC METHOD

If the duration of time while the following conditions are met is longer than the time indicated, judge as NG.

Judgment Value

Malfunction Criteria	Threshold Value
Terminal output voltage	≤ Battery voltage × 0.34

Time Needed for Diagnosis: 2500 ms
Malfunction Indicator Light Illumination: Illuminates when malfunction occurs in 2 continuous driving cycles.

DW:DTC P0459 EVAP SYSTEM (CPC) PURGE CONTROL VALVE "A" CIRCUIT HIGH

DTC DETECTING CONDITION:
Detected when two consecutive driving cycles with fault occur.
TROUBLE SYMPTOM:
Improper idling

CAUTION:
After servicing or replacing faulty parts, perform Clear Memory Mode <Ref. to EN(H6DO)(diag)-85, OPERATION, Clear Memory Mode.>, and Inspection Mode <Ref. to EN(H6DO)(diag)-69, PROCEDURE, Inspection Mode.>.
WIRING DIAGRAM:
• Engine Electrical System ENGINE TYPE EZ (WITHOUT PUSH BUTTON START) <Ref. to WI-198, ENGINE TYPE EZ (WITHOUT PUSH BUTTON START), WIRING DIAGRAM, Engine Electrical System.>
• Engine Electrical System ENGINE TYPE EZ (WITH PUSH BUTTON START) <Ref. to WI-214, ENGINE TYPE EZ (WITH PUSH BUTTON START), WIRING DIAGRAM, Engine Electrical System.>

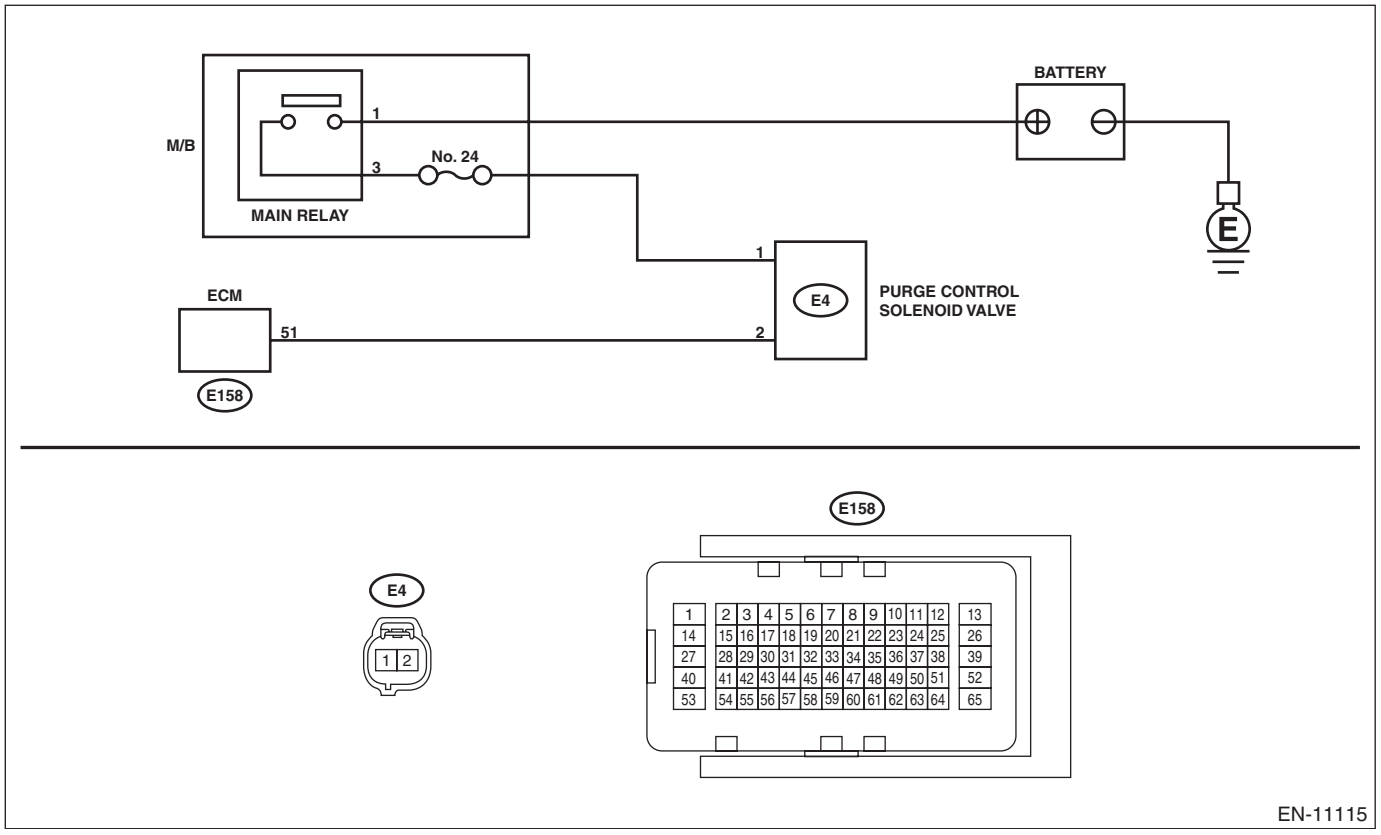

Step		Check	Yes	No
1	**CHECK HARNESS BETWEEN ECM AND PURGE CONTROL SOLENOID VALVE.** 1) Turn the ignition switch to OFF. 2) Disconnect the connectors from ECM and purge control solenoid valve. 3) Turn the ignition switch to ON. 4) Measure the voltage between ECM connector and chassis ground. ***Connector & terminal*** ***(E158) No. 51 (+) — Chassis ground (–):***	Is the voltage 10 V or more?	Repair the short circuit to power in the harness between ECM connector and purge control solenoid valve connector.	Go to step **2**.

Step		Check	Yes	No
2	**CHECK PURGE CONTROL SOLENOID VALVE.** 1) Turn the ignition switch to OFF. 2) Measure the resistance between purge control solenoid valve terminals. ***Terminals*** ***No. 1 — No. 2:***	Is the resistance less than 1 Ω?	Replace the purge control solenoid valve. <Ref. to EC(H6DO)-17, Purge Control Solenoid Valve.>	Repair the poor contact of ECM connector.

1. OUTLINE OF DIAGNOSIS

Detect open or short circuit of the purge control solenoid valve.
Judge as NG when the ECM output level differs from the actual terminal level.

2. COMPONENT DESCRIPTION

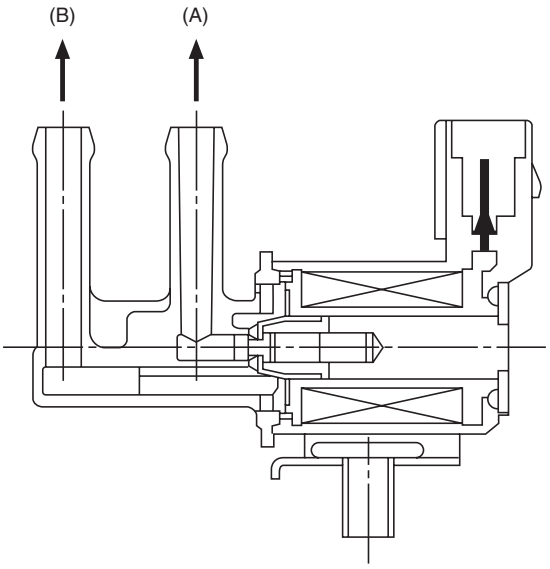

EN-02197

(A) To canister (B) To intake manifold

3. EXECUTION CONDITION

Secondary Parameters	Execution condition
Battery voltage	≥ 10.9 V
Purge control solenoid valve control duty	≥ 0.25 × 100%

4. GENERAL DRIVING CYCLE

Perform the diagnosis continuously after the enable conditions have been established.

5. DIAGNOSTIC METHOD

If the duration of time while the following conditions are met is longer than the time indicated, judge as NG.

Judgment Value

Malfunction Criteria	Threshold Value
Terminal output current	≥ 12 A

Time Needed for Diagnosis: 2500 ms
Malfunction Indicator Light Illumination: Illuminates when malfunction occurs in 2 continuous driving cycles.

DX:DTC P0461 FUEL LEVEL SENSOR "A" CIRCUIT RANGE/PERFORMANCE

DTC DETECTING CONDITION:
Detected when two consecutive driving cycles with fault occur.

CAUTION:
After servicing or replacing faulty parts, perform Clear Memory Mode <Ref. to EN(H6DO)(diag)-85, OPERATION, Clear Memory Mode.>, and Inspection Mode <Ref. to EN(H6DO)(diag)-69, PROCEDURE, Inspection Mode.>.

Step	Check	Yes	No
1 CHECK FOR ANY OTHER DTC ON DISPLAY.	Is any other DTC displayed?	Check the appropriate DTC using the "List of Diagnostic Trouble Code (DTC)". <Ref. to EN(H6DO)(diag)-109, List of Diagnostic Trouble Code (DTC).>	Replace the fuel level sensor and fuel sub level sensor. <Ref. to FU(H6DO)-125, Fuel Level Sensor.> <Ref. to FU(H6DO)-128, Fuel Sub Level Sensor.>

1. OUTLINE OF DIAGNOSIS

Detect malfunctions of the fuel level sensor output property.
If the fuel level does not vary in a particular driving condition / engine condition where it should, judge as NG.

2. COMPONENT DESCRIPTION

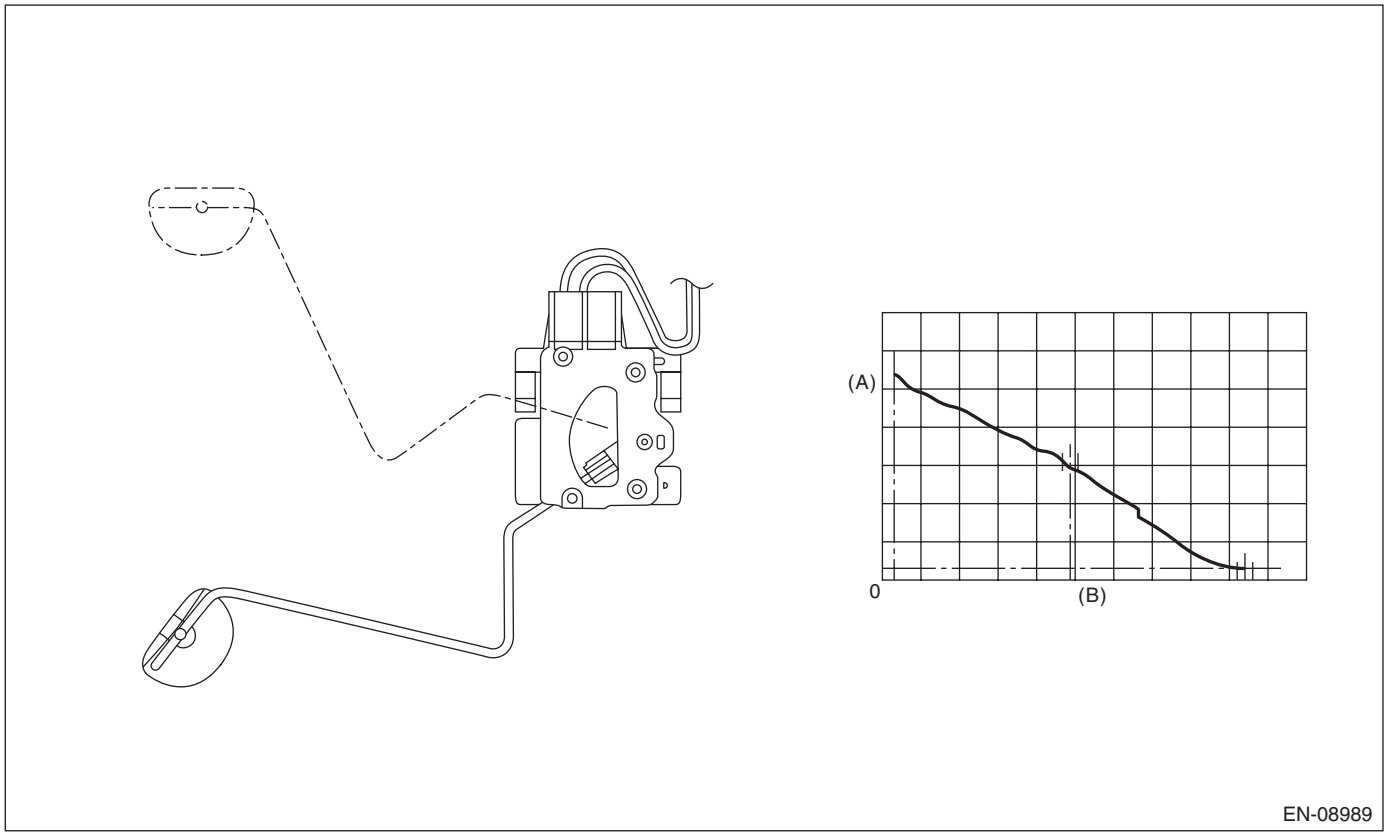

(A) Fuel level (B) Resistance

3. EXECUTION CONDITION

Secondary Parameters	Execution condition
Accumulated amount of intake air	≥ 165375 g (5832.78 oz)
Battery voltage	≥ 10.9 V
Elapsed time after starting the engine	≥ 5000 ms

4. GENERAL DRIVING CYCLE

Always perform the diagnosis continuously.

5. DIAGNOSTIC METHOD

Judge as NG when the following conditions are established.

Judgment Value

Malfunction Criteria	Threshold Value
Max. – min. values of fuel level output	< 2.6 ℓ (0.69 US gal, 0.57 Imp gal)

Time Needed for Diagnosis: Less than 1 second
Malfunction Indicator Light Illumination: Illuminates when malfunction occurs in 2 continuous driving cycles.

DY:DTC P0462 FUEL LEVEL SENSOR "A" CIRCUIT LOW

NOTE:
For the diagnostic procedure, refer to DTC P0463. <Ref. to EN(H6DO)(diag)-400, DTC P0463 FUEL LEVEL SENSOR "A" CIRCUIT HIGH, Diagnostic Procedure with Diagnostic Trouble Code (DTC).>

1. OUTLINE OF DIAGNOSIS

Detect the open or short circuit of fuel level sensor. Judge as NG if out of specification.

2. COMPONENT DESCRIPTION

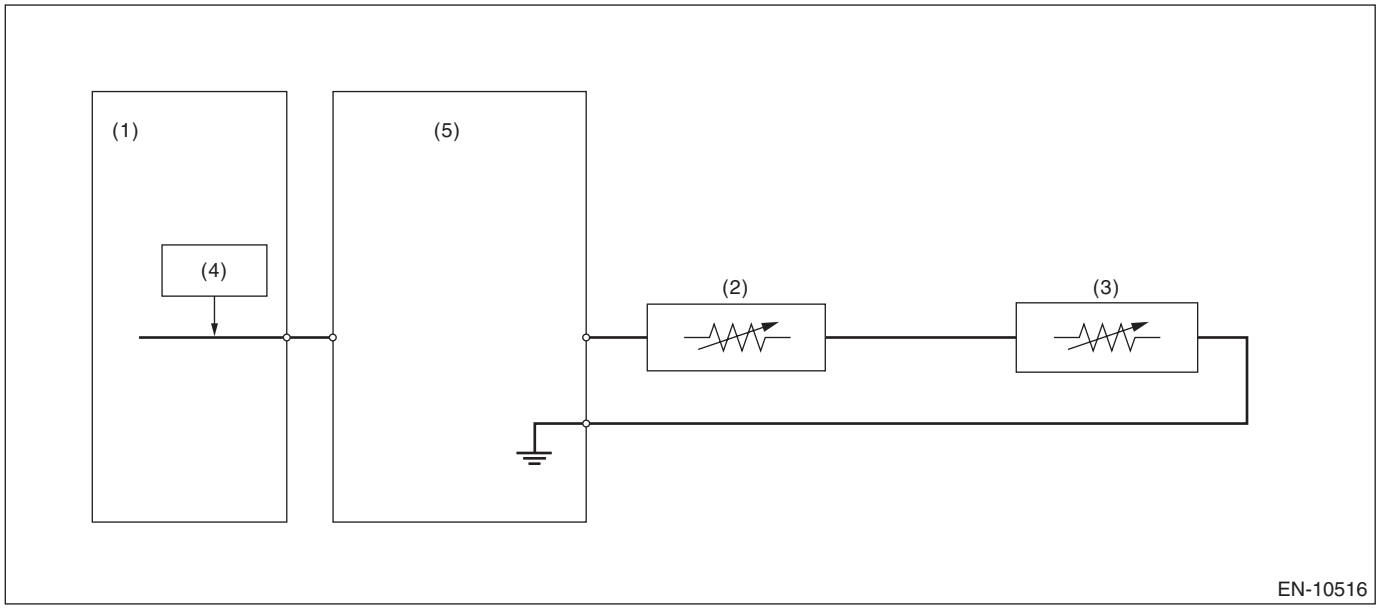

(1) Engine control module (ECM)
(2) Fuel sub level sensor
(3) Fuel level sensor
(4) Detecting circuit
(5) Body integrated unit

3. EXECUTION CONDITION

Secondary Parameters	Execution condition
Battery voltage	≥ 10.9 V
Elapsed time after ignition switch is turned to ON	≥ 3000 ms

4. GENERAL DRIVING CYCLE

Always perform the diagnosis continuously.

5. DIAGNOSTIC METHOD

If the duration of time while the following conditions are met is longer than the time indicated, judge as NG.

Judgment Value

Malfunction Criteria	Threshold Value
Output voltage	< 2.211 V

Time Needed for Diagnosis: 2500 ms
Malfunction Indicator Light Illumination: Illuminates when malfunction occurs in 2 continuous driving cycles.

DZ:DTC P0463 FUEL LEVEL SENSOR "A" CIRCUIT HIGH

DTC DETECTING CONDITION:
Detected when two consecutive driving cycles with fault occur.

CAUTION:
After servicing or replacing faulty parts, perform Clear Memory Mode <Ref. to EN(H6DO)(diag)-85, OPERATION, Clear Memory Mode.>, and Inspection Mode <Ref. to EN(H6DO)(diag)-69, PROCEDURE, Inspection Mode.>.

Step	Check	Yes	No
1 **CHECK FOR ANY OTHER DTC ON DISPLAY.**	Is DTC P0462 or P0463 displayed on the Subaru Select Monitor?	Check the combination meter. <Ref. to IDI-10, INSPECTION, Combination Meter System.>	Even if DTC is detected, the circuit has returned to a normal condition at this time. Reproduce the failure, and then perform the diagnosis again. NOTE: In this case, temporary poor contact of connector, temporary open or short circuit of harness may be the cause.

1. OUTLINE OF DIAGNOSIS

Detect the open or short circuit of fuel level sensor. Judge as NG if out of specification.

2. COMPONENT DESCRIPTION

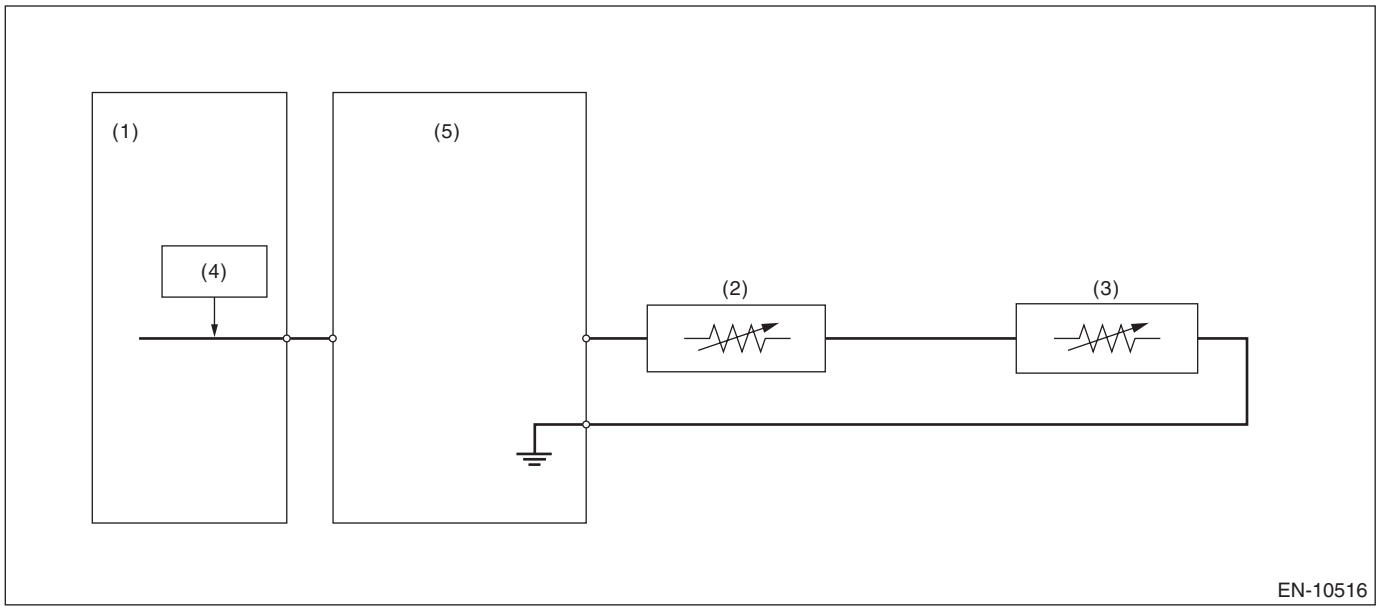

(1) Engine control module (ECM)
(2) Fuel sub level sensor
(3) Fuel level sensor
(4) Detecting circuit
(5) Body integrated unit

3. EXECUTION CONDITION

Secondary Parameters	Execution condition
Battery voltage	≥ 10.9 V

4. GENERAL DRIVING CYCLE

Always perform the diagnosis continuously.

5. DIAGNOSTIC METHOD

If the duration of time while the following conditions are met is longer than the time indicated, judge as NG.

Judgment Value

Malfunction Criteria	Threshold Value
Output voltage	≥ 12 V

Time Needed for Diagnosis: 1000 ms
Malfunction Indicator Light Illumination: Illuminates when malfunction occurs in 2 continuous driving cycles.

EA:DTC P0500 VEHICLE SPEED SENSOR "A" CIRCUIT

DTC DETECTING CONDITION:
Immediately at fault recognition

CAUTION:
After servicing or replacing faulty parts, perform Clear Memory Mode <Ref. to EN(H6DO)(diag)-85, OPERATION, Clear Memory Mode.>, and Inspection Mode <Ref. to EN(H6DO)(diag)-69, PROCEDURE, Inspection Mode.>.

Step		Check	Yes	No
1	**CHECK DTC OF VDC.** Check DTC of VDC.	Is DTC of VDC displayed?	Perform the diagnosis according to DTC. <Ref. to VDC(diag)-40, List of Diagnostic Trouble Code (DTC).>	Repair the poor contact of ECM connector.

1. OUTLINE OF DIAGNOSIS

Judge as NG when outside of the judgment value.
Judge NG when the received data from VDCCM&H/U is abnormal vehicle speed, and the vehicle speed data is impossible.

2. COMPONENT DESCRIPTION

Vehicle speed signals are taken in to the VDC control module and hydraulic control unit, and normal/erroneous data of the ABS wheel speed sensor is received by CAN communication from the VDC control module and hydraulic control unit.

3. EXECUTION CONDITION

Secondary Parameters	Execution condition
Battery voltage	≥ 10.9 V

4. GENERAL DRIVING CYCLE

Always perform the diagnosis continuously.

5. DIAGNOSTIC METHOD

If the duration of time while the following conditions are met is longer than the time indicated, judge as NG.

Judgment Value

Malfunction Criteria	Threshold Value
Speed of the front wheels received from VDC control module & hydraulic control unit	≥ 300 km/h (186.4 MPH)

Time Needed for Diagnosis: 2500 ms
Malfunction Indicator Light Illumination: Illuminates as soon as a malfunction occurs.

EB:DTC P0506 IDLE CONTROL SYSTEM RPM - LOWER THAN EXPECTED

DTC DETECTING CONDITION:

Detected when two consecutive driving cycles with fault occur.

TROUBLE SYMPTOM:

- Hard to start the engine.
- Engine does not start.
- Improper idling
- Engine stalls.

CAUTION:

After servicing or replacing faulty parts, perform Clear Memory Mode <Ref. to EN(H6DO)(diag)-85, OPERATION, Clear Memory Mode.>, and Inspection Mode <Ref. to EN(H6DO)(diag)-69, PROCEDURE, Inspection Mode.>.

	Step	Check	Yes	No
1	**CHECK FOR ANY OTHER DTC ON DISPLAY.**	Is any other DTC displayed?	Check the appropriate DTC using the “List of Diagnostic Trouble Code (DTC)”. <Ref. to EN(H6DO)(diag)-109, List of Diagnostic Trouble Code (DTC).>	Go to step **2**.
2	**CHECK AIR CLEANER ELEMENT.** 1) Turn the ignition switch to OFF. 2) Check the air cleaner element.	Is there excessive clogging on air cleaner element?	Replace the air cleaner element. <Ref. to IN(H6DO)-4, Air Cleaner Element.>	Go to step **3**.
3	**CHECK ELECTRONIC THROTTLE CONTROL.** 1) Remove the electronic throttle control. 2) Check the electronic throttle control.	Are foreign matter found inside electronic throttle control?	Remove foreign matter from electronic throttle control.	Perform the diagnosis of DTC P2101. <Ref. to EN(H6DO)(diag)-556, DTC P2101 THROTTLE ACTUATOR "A" CONTROL MOTOR CIRCUIT RANGE/PERFORMANCE, Diagnostic Procedure with Diagnostic Trouble Code (DTC).>

1. OUTLINE OF DIAGNOSIS

Detect the malfunction that actual engine speed is not close to target engine speed during idling. Judge as NG when actual engine speed is not close to target engine speed during idling.

2. EXECUTION CONDITION

Secondary Parameters	Execution condition
Battery voltage	≥ 10.9 V
Barometric pressure	≥ 75.1 kPa (563 mmHg, 22.2 inHg)
Lambda value (left and right)	≥ 0.85 and < 1.151
Vehicle speed	= 0 km/h (0 MPH)
Engine coolant temperature	≥ 60 °C (140 °F)
Elapsed time after starting the engine	≥ 10 s
Accelerator pedal position	= 0%
Elapsed time after switching neutral position switch to ON/OFF	> 5 s
Cold start diagnosis	Not in operation

3. GENERAL DRIVING CYCLE

Perform the diagnosis continuously at idling after warming up engine.

4. DIAGNOSTIC METHOD

If the duration of time while the following conditions are met is longer than the time indicated, judge as NG.

Judgment Value

Malfunction Criteria	Threshold Value
Actual engine speed – Targeted engine speed	< –100 rpm

Time Needed for Diagnosis: 15 s × 1 time(s)
Malfunction Indicator Light Illumination: Illuminates when malfunction occurs in 2 continuous driving cycles.

EC:DTC P0507 IDLE CONTROL SYSTEM RPM - HIGHER THAN EXPECTED

DTC DETECTING CONDITION:
Detected when two consecutive driving cycles with fault occur.
TROUBLE SYMPTOM:
Engine keeps running at higher speed than specified idle speed.

CAUTION:
After servicing or replacing faulty parts, perform Clear Memory Mode <Ref. to EN(H6DO)(diag)-85, OPERATION, Clear Memory Mode.>, and Inspection Mode <Ref. to EN(H6DO)(diag)-69, PROCEDURE, Inspection Mode.>.

	Step	Check	Yes	No
1	**CHECK FOR ANY OTHER DTC ON DISPLAY.**	Is any other DTC displayed?	Check the appropriate DTC using the “List of Diagnostic Trouble Code (DTC)”. <Ref. to EN(H6DO)(diag)-109, List of Diagnostic Trouble Code (DTC).>	Go to step **2**.
2	**CHECK AIR INTAKE SYSTEM.** 1) Start and idle the engine. 2) Check the following items. • Loose installation of intake manifold and throttle body • Cracks of intake manifold gasket and throttle body gasket • Disconnection of vacuum hoses	Is there any fault in air intake system?	Repair air suction and leaks.	Go to step **3**.
3	**CHECK ELECTRONIC THROTTLE CONTROL.** 1) Turn the ignition switch to OFF. 2) Remove the electronic throttle control. 3) Check the electronic throttle control.	Are foreign matter found inside electronic throttle control?	Remove foreign matter from electronic throttle control.	Perform the diagnosis of DTC P2101. <Ref. to EN(H6DO)(diag)-556, DTC P2101 THROTTLE ACTUATOR "A" CONTROL MOTOR CIRCUIT RANGE/PERFORMANCE, Diagnostic Procedure with Diagnostic Trouble Code (DTC).>

1. OUTLINE OF DIAGNOSIS

Detect the malfunction that actual engine speed is not close to target engine speed during idling. Judge as NG when actual engine speed is not close to target engine speed during idling.

2. EXECUTION CONDITION

Secondary Parameters	Execution condition
Battery voltage	≥ 10.9 V
Barometric pressure	≥ 75.1 kPa (563 mmHg, 22.2 inHg)
Lambda value (left and right)	≥ 0.85 and < 1.151
Vehicle speed	= 0 km/h (0 MPH)
Engine coolant temperature	≥ 60 °C (140 °F)
Elapsed time after starting the engine	≥ 10 s
Accelerator pedal position	= 0%
Elapsed time after switching neutral position switch to ON/OFF	> 5 s
Cold start diagnosis	Not in operation

3. GENERAL DRIVING CYCLE

Perform the diagnosis continuously at idling after warming up engine.

4. DIAGNOSTIC METHOD

If the duration of time while the following conditions are met is longer than the time indicated, judge as NG.

Judgment Value

Malfunction Criteria	Threshold Value
Actual engine speed – Targeted engine speed	> 200 rpm

Time Needed for Diagnosis: 15 s × 1 time(s)
Malfunction Indicator Light Illumination: Illuminates when malfunction occurs in 2 continuous driving cycles.

ED:DTC P050A COLD START IDLE CONTROL SYSTEM PERFORMANCE

DTC DETECTING CONDITION:

Detected when two consecutive driving cycles with fault occur.

TROUBLE SYMPTOM:

- Engine keeps running at higher speed than specified idle speed.
- Engine keeps running at a lower speed than the specified idle speed.
- Engine stalls.

CAUTION:

After servicing or replacing faulty parts, perform Clear Memory Mode <Ref. to EN(H6DO)(diag)-85, OPERATION, Clear Memory Mode.>, and Inspection Mode <Ref. to EN(H6DO)(diag)-69, PROCEDURE, Inspection Mode.>.

WIRING DIAGRAM:

- Engine Electrical System ENGINE TYPE EZ (WITHOUT PUSH BUTTON START) <Ref. to WI-198, ENGINE TYPE EZ (WITHOUT PUSH BUTTON START), WIRING DIAGRAM, Engine Electrical System.>
- Engine Electrical System ENGINE TYPE EZ (WITH PUSH BUTTON START) <Ref. to WI-214, ENGINE TYPE EZ (WITH PUSH BUTTON START), WIRING DIAGRAM, Engine Electrical System.>

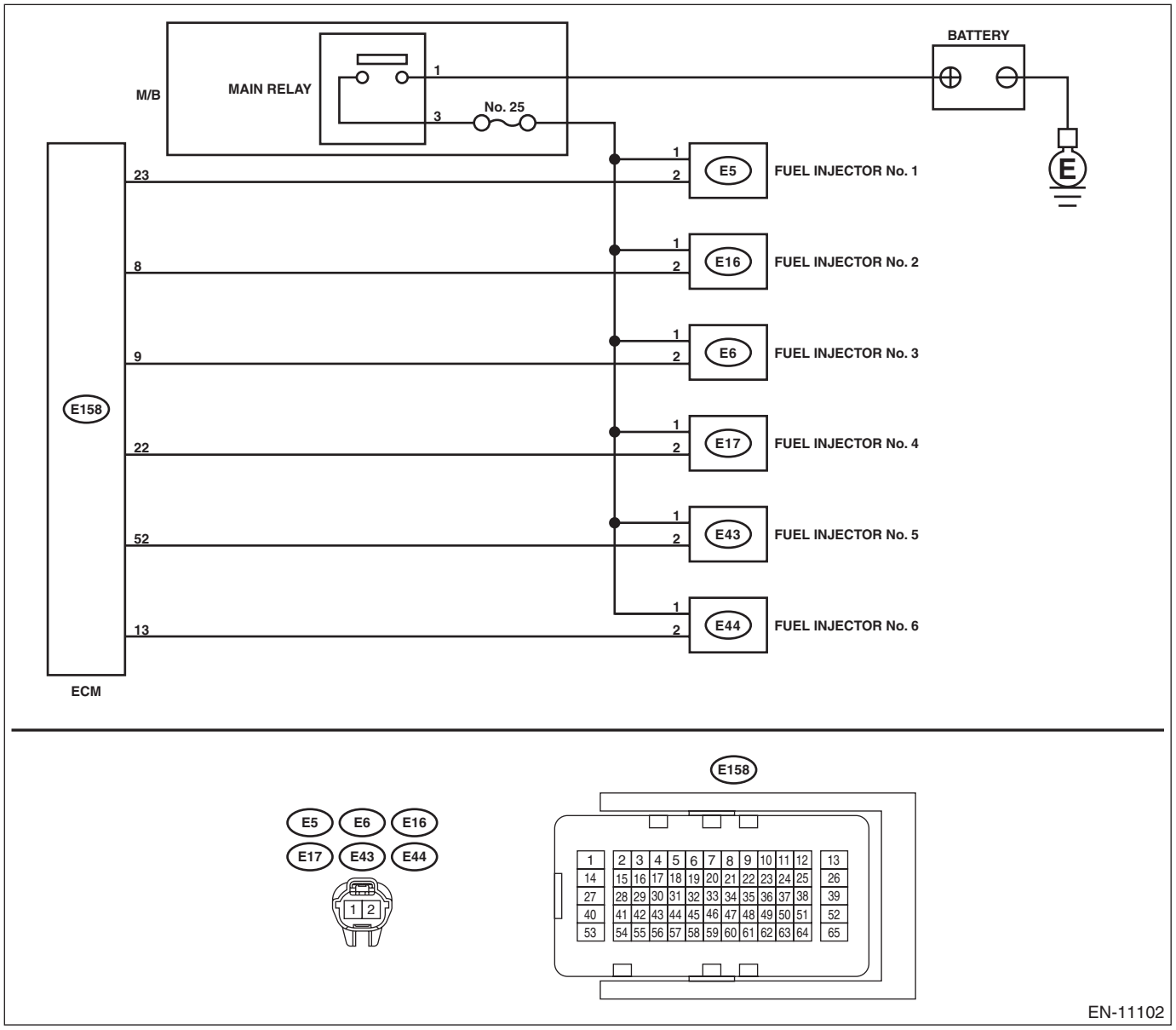

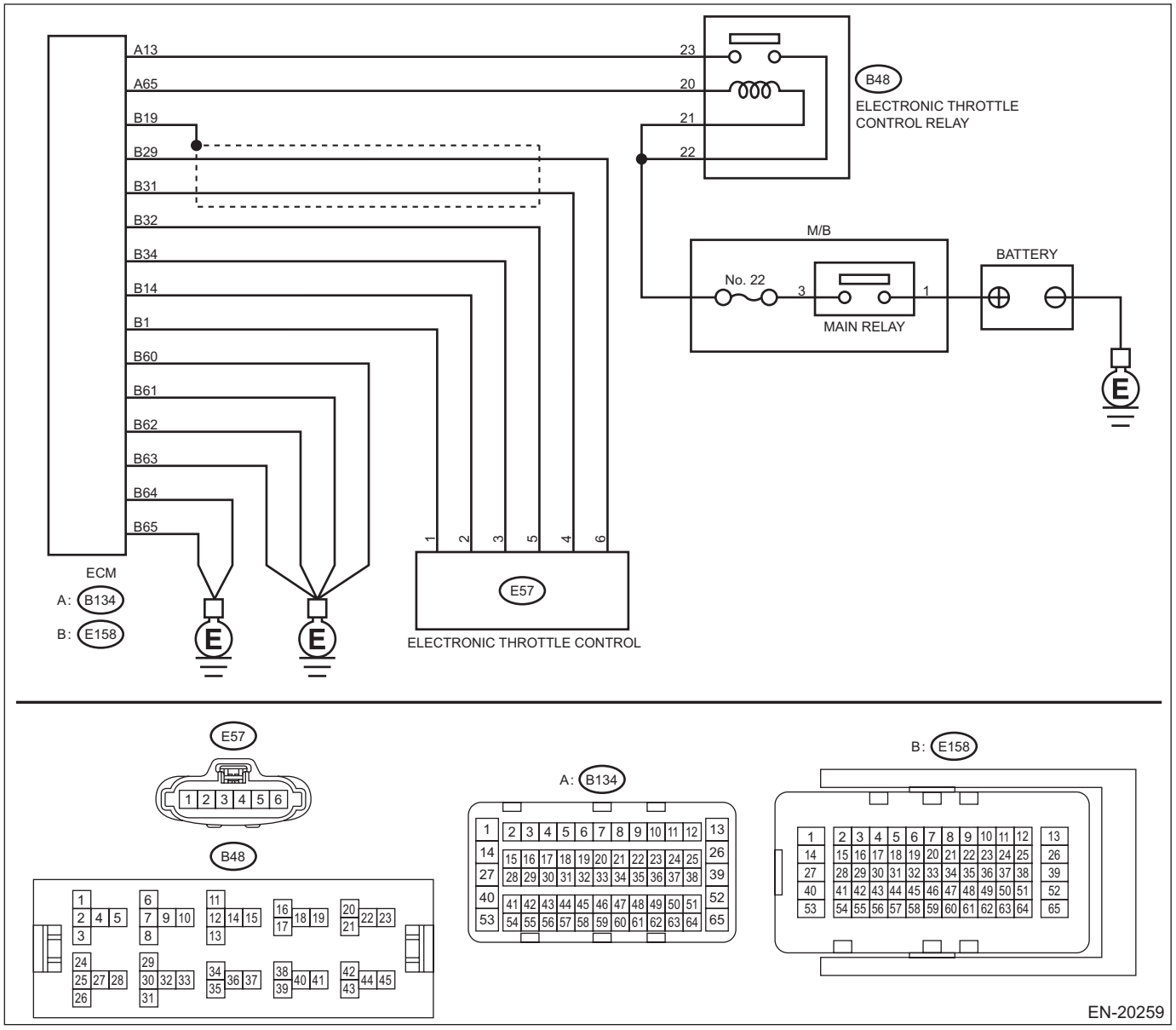

Step		Check	Yes	No
1	**CHECK FOR ANY OTHER DTC ON DISPLAY.**	Is any other DTC displayed?	Check the appropriate DTC using the "List of Diagnostic Trouble Code (DTC)". <Ref. to EN(H6DO)(diag)-109, List of Diagnostic Trouble Code (DTC).>	Go to step **2**.
2	**CHECK ENGINE OIL.**	Is there a proper amount of engine oil?	Go to step **3**.	Replace engine oil. <Ref. to LU(H6DO)-12, REPLACEMENT, Engine Oil.>
3	**CHECK EXHAUST SYSTEM.**	Are there holes or loose bolts on exhaust system?	Repair the exhaust system.	Go to step **4**.

	Step	Check	Yes	No
4	**CHECK AIR INTAKE SYSTEM.**	Are there holes, loose bolts or disconnection of hose on air intake system?	Repair the air intake system.	Go to step **5**.
5	**CHECK FUEL PRESSURE.** **WARNING:** **Place "NO OPEN FLAMES" signs near the working area.** **CAUTION:** **Be careful not to spill fuel.** Measure the fuel pressure. <Ref. to ME(H6DO)-31, INSPECTION, Fuel Pressure.> **CAUTION:** **Before attaching/detaching a fuel pressure gauge, release the fuel pressure.**	Is the measured value 340 — 400 kPa (3.5 — 4.1 kgf/cm^2, 49 — 58 psi)?	Go to step **6**.	Check the fuel pump and fuel delivery line. <Ref. to FU(H6DO)-124, INSPECTION, Fuel Pump.> <Ref. to FU(H6DO)-167, INSPECTION, Fuel Delivery and Evaporation Lines.>
6	**CHECK ENGINE COOLANT TEMPERATURE SENSOR.** 1) Start the engine and warm up completely. 2) Read the value of «Coolant Temp.» using the Subaru Select Monitor or a general scan tool. NOTE: • Subaru Select Monitor For detailed operation procedures, refer to "Read Current Data For Engine". <Ref. to EN(H6DO)(diag)-50, Subaru Select Monitor.> • General scan tool For detailed operation procedures, refer to the general scan tool operation manual.	Is the value of «Coolant Temp.» 75°C (167°F) or more?	Go to step **7**.	Replace the engine coolant temperature sensor. <Ref. to FU(H6DO)-39, Engine Coolant Temperature Sensor.>
7	**CHECK MASS AIR FLOW AND INTAKE AIR TEMPERATURE SENSOR.** 1) Start the engine and warm up engine until coolant temperature is higher than 75°C (167°F). 2) Place the select lever in "P" range or "N" range. 3) Turn the A/C switch to OFF. 4) Turn all the accessory switches to OFF. 5) Read the value of «Mass Air Flow» using the Subaru Select Monitor or a general scan tool. NOTE: • Subaru Select Monitor For detailed operation procedures, refer to "Read Current Data For Engine". <Ref. to EN(H6DO)(diag)-50, Subaru Select Monitor.> • General scan tool For detailed operation procedures, refer to the general scan tool operation manual.	Is the value of «Mass Air Flow» 2.0 — 5.0 g/s (0.26 — 0.66 lb/m)?	Go to step **8**.	Replace the mass air flow and intake air temperature sensor. <Ref. to FU(H6DO)-58, Mass Air Flow and Intake Air Temperature Sensor.>

	Step	Check	Yes	No
8	**CHECK MASS AIR FLOW AND INTAKE AIR TEMPERATURE SENSOR.** 1) Start the engine and warm up engine until coolant temperature is higher than 75°C (167°F). 2) Place the select lever in "P" range or "N" range. 3) Turn the A/C switch to OFF. 4) Turn all the accessory switches to OFF. 5) Open the front hood. 6) Measure the ambient temperature. 7) Read the value of «Intake Air Temp.» using the Subaru Select Monitor or a general scan tool. NOTE: • Subaru Select Monitor For detailed operation procedures, refer to "Read Current Data For Engine". <Ref. to EN(H6DO)(diag)-50, Subaru Select Monitor.> • General scan tool For detailed operation procedures, refer to the general scan tool operation manual.	Subtract ambient temperature from «Intake Air Temp.». Is the obtained value –10 — 50°C (–18 — 90°F)?	Go to step **9**.	Check the mass air flow and intake air temperature sensor. <Ref. to FU(H6DO)-58, Mass Air Flow and Intake Air Temperature Sensor.>
9	**CHECK OUTPUT SIGNAL OF ECM.** 1) Turn the ignition switch to ON. 2) Measure the voltage between ECM and chassis ground on faulty cylinders. ***Connector & terminal*** ***#1 (E158) No. 23 (+) — Chassis ground (–):*** ***#2 (E158) No. 8 (+) — Chassis ground (–):*** ***#3 (E158) No. 9 (+) — Chassis ground (–):*** ***#4 (E158) No. 22 (+) — Chassis ground (–):*** ***#5 (E158) No. 52 (+) — Chassis ground (–):*** ***#6 (E158) No. 13 (+) — Chassis ground (–):***	Is the voltage 10 V or more?	Go to step **14**.	Go to step **10**.
10	**CHECK HARNESS BETWEEN ECM AND FUEL INJECTOR.** 1) Turn the ignition switch to OFF. 2) Disconnect the connector from fuel injector on faulty cylinders. 3) Measure the resistance between fuel injector connector and engine ground on faulty cylinders. ***Connector & terminal*** ***#1 (E5) No. 2 — Engine ground:*** ***#2 (E16) No. 2 — Engine ground:*** ***#3 (E6) No. 2 — Engine ground:*** ***#4 (E17) No. 2 — Engine ground:*** ***#5 (E43) No. 2 — Engine ground:*** ***#6 (E44) No. 2 — Engine ground:***	Is the resistance 1 MΩ or more?	Go to step **11**.	Repair the short circuit to ground in harness between ECM connector and fuel injector.
11	**CHECK HARNESS BETWEEN ECM AND FUEL INJECTOR.** Measure the resistance of harness between ECM and fuel injector on faulty cylinders. ***Connector & terminal*** ***#1 (E158) No. 23 — (E5) No. 2:*** ***#2 (E158) No. 8 — (E16) No. 2:*** ***#3 (E158) No. 9 — (E6) No. 2:*** ***#4 (E158) No. 22 — (E17) No. 2:*** ***#5 (E158) No. 52 — (E43) No. 2:*** ***#6 (E158) No. 13 — (E44) No. 2:***	Is the resistance less than 1 Ω?	Go to step **12**.	Repair the open circuit of the harness between the ECM connector and fuel injector connector.

	Step	Check	Yes	No
12	**CHECK FUEL INJECTOR.** Measure the resistance between fuel injector terminals on faulty cylinder. ***Terminals*** ***No. 1 — No. 2:***	Is the resistance 5 — 20 Ω?	Go to step **13**.	Replace the faulty fuel injector. <Ref. to FU(H6DO)-61, Fuel Injector.>
13	**CHECK POWER SUPPLY LINE.** 1) Turn the ignition switch to ON. 2) Measure the voltage between fuel injector and engine ground on faulty cylinders. ***Connector & terminal*** ***#1 (E5) No. 1 (+) — Engine ground (–):*** ***#2 (E16) No. 1 (+) — Engine ground (–):*** ***#3 (E6) No. 1 (+) — Engine ground (–):*** ***#4 (E17) No. 1 (+) — Engine ground (–):*** ***#5 (E43) No. 1 (+) — Engine ground (–):*** ***#6 (E44) No. 1 (+) — Engine ground (–):***	Is the voltage 10 V or more?	Repair the poor contact of all connectors in fuel injector circuit.	Repair the harness and connector. NOTE: In this case, repair the following item: • Open circuit in harness between the main relay and fuel injector on faulty cylinders • Poor contact of coupling connector • Poor contact of main relay connector
14	**CHECK HARNESS BETWEEN ECM AND FUEL INJECTOR.** 1) Turn the ignition switch to OFF. 2) Disconnect the connector from fuel injector on faulty cylinders. 3) Turn the ignition switch to ON. 4) Measure the voltage between ECM and chassis ground on faulty cylinders. ***Connector & terminal*** ***#1 (E158) No. 23 (+) — Chassis ground (–):*** ***#2 (E158) No. 8 (+) — Chassis ground (–):*** ***#3 (E158) No. 9 (+) — Chassis ground (–):*** ***#4 (E158) No. 22 (+) — Chassis ground (–):*** ***#5 (E158) No. 52 (+) — Chassis ground (–):*** ***#6 (E158) No. 13 (+) — Chassis ground (–):***	Is the voltage 10 V or more?	Repair the short circuit to power in harness between ECM connector and fuel injector.	Go to step **15**.
15	**CHECK FUEL INJECTOR.** 1) Turn the ignition switch to OFF. 2) Measure the resistance between fuel injector terminals on faulty cylinder. ***Terminals*** ***No. 1 — No. 2:***	Is the resistance 5 — 20 Ω?	Go to step **16**.	Replace the faulty fuel injector. <Ref. to FU(H6DO)-61, Fuel Injector.>
16	**CHECK INSTALLATION OF CAMSHAFT POSITION SENSOR/CRANKSHAFT POSITION SENSOR.**	Is the camshaft position sensor or crankshaft position sensor loosely installed?	Tighten the camshaft position sensor or crankshaft position sensor.	Go to step **17**.
17	**CHECK CRANK PLATE.**	Is the crank sprocket rusted or the teeth of crank plate broken?	Replace the crank plate. <Ref. to ME(H6DO)-134, Cylinder Block.>	Go to step **18**.
18	**CHECK INSTALLATION CONDITION OF TIMING CHAIN.** Turn the crankshaft using ST, and align the alignment mark on crank sprocket with alignment mark on cylinder block. ST 18252AA000 CRANKSHAFT SOCKET	Is the timing chain dislocated from its proper position?	Correct the installation condition of timing chain. <Ref. to ME(H6DO)-87, Timing Chain Assembly.>	Go to step **19**.

	Step	Check	Yes	No
19	**CHECK ELECTRONIC THROTTLE CONTROL RELAY.** 1) Turn the ignition switch to OFF. 2) Remove the electronic throttle control relay. 3) Connect the battery to terminals No. 13 and No. 14 of electronic throttle control relay. 4) Measure the resistance between electronic throttle control relay terminals. ***Terminals*** ***No. 22 — No. 22:***	Is the resistance less than 1 Ω?	Go to step **20**.	Replace the electronic throttle control relay. <Ref. to EN(H6DO)(diag)-11, Electrical Component Location.>
20	**CHECK POWER SUPPLY OF ELECTRONIC THROTTLE CONTROL RELAY.** Measure the voltage between electronic throttle control relay connector and chassis ground. ***Connector & terminal*** ***(B48) No. 22 (+) — Chassis ground (–):***	Is the voltage 10 V or more?	Go to step **21**.	Repair the open or short to ground in the power supply circuit.
21	**CHECK HARNESS BETWEEN ECM AND ELECTRONIC THROTTLE CONTROL RELAY.** 1) Disconnect the connector from ECM. 2) Turn the ignition switch to ON. 3) Measure the voltage between electronic throttle control relay connector and chassis ground. ***Connector & terminal*** ***(B48) No. 20 (+) — Chassis ground (–):***	Is the voltage 10 V or more?	Repair the short circuit to power in the harness between ECM connector and electronic throttle control relay.	Go to step **22**.
22	**CHECK HARNESS BETWEEN ECM AND ELECTRONIC THROTTLE CONTROL RELAY.** 1) Turn the ignition switch to OFF. 2) Measure the resistance between electronic throttle control relay connector and chassis ground. ***Connector & terminal*** ***(B48) No. 20 — Chassis ground:*** ***(B48) No. 23 — Chassis ground:***	Is the resistance 1 MΩ or more?	Go to step **23**.	Repair the short circuit to ground in harness between ECM connector and electronic throttle control relay.
23	**CHECK HARNESS BETWEEN ECM AND ELECTRONIC THROTTLE CONTROL RELAY.** Measure the resistance between ECM connector and electronic throttle control relay connector. ***Connector & terminal*** ***(B134) No. 65 — (B48) No. 20:*** ***(B134) No. 13 — (B48) No. 23:***	Is the resistance less than 1 Ω?	Go to step **24**.	Repair the open circuit in harness between ECM connector and electronic throttle control relay.
24	**CHECK HARNESS BETWEEN ECM AND ELECTRONIC THROTTLE CONTROL.** 1) Turn the ignition switch to OFF. 2) Disconnect the connectors from ECM and electronic throttle control. 3) Measure the resistance between ECM connector and chassis ground. ***Connector & terminal*** ***(E158) No. 32 — Chassis ground:*** ***(E158) No. 29 — Chassis ground:*** ***(E158) No. 29 — (B136) No. 4:*** ***(E158) No. 31 — Chassis ground:***	Is the resistance 1 MΩ or more?	Go to step **25**.	Repair the ground short circuit of harness between ECM connector and electronic throttle control connector.

	Step	Check	Yes	No
25	**CHECK SHORT CIRCUIT INSIDE THE ECM.** 1) Connect the connector to ECM. 2) Measure the resistance between electronic throttle control connector and engine ground. ***Connector & terminal*** ***(E57) No. 6 — Engine ground:*** ***(E57) No. 4 — Engine ground:***	Is the resistance 1 MΩ or more?	Go to step **26**.	Repair the ground short circuit of harness between ECM connector and electronic throttle control connector. Replace the ECM if defective. <Ref. to FU(H6DO)-83, Engine Control Module (ECM).>
26	**CHECK HARNESS BETWEEN ECM AND ELECTRONIC THROTTLE CONTROL.** 1) Disconnect the connector from ECM. 2) Measure the resistance of harness between ECM connector and electronic throttle control connector. ***Connector & terminal*** ***(E158) No. 29 — (E57) No. 6:*** ***(E158) No. 31 — (E57) No. 4:*** ***(E158) No. 34 — (E57) No. 3:***	Is the resistance less than 1 Ω?	Go to step **27**.	Repair the open circuit of harness between ECM connector and electronic throttle control connector.
27	**CHECK HARNESS BETWEEN ECM AND ELECTRONIC THROTTLE CONTROL.** 1) Connect the connector to ECM. 2) Measure the resistance between electronic throttle control connector and engine ground. ***Connector & terminal*** ***(E57) No. 3 — Engine ground:***	Is the resistance less than 5 Ω?	Go to step **28**.	Repair the harness and connector. NOTE: In this case, repair the following item: • Open circuit of harness between ECM connector and engine ground • Poor contact of ECM connector
28	**CHECK HARNESS BETWEEN ECM AND ELECTRONIC THROTTLE CONTROL.** 1) Turn the ignition switch to ON. 2) Measure the voltage between electronic throttle control connector and engine ground. ***Connector & terminal*** ***(E57) No. 6 (+) — Engine ground (–):*** ***(E57) No. 4 (+) — Engine ground (–):***	Is the voltage 5 V or more?	Repair the short circuit to power in the harness between ECM connector and electronic throttle control connector.	Go to step **29**.
29	**CHECK HARNESS BETWEEN ECM AND ELECTRONIC THROTTLE CONTROL.** 1) Turn the ignition switch to OFF. 2) Disconnect the connector from ECM. 3) Measure the resistance between ECM connectors. ***Connector & terminal*** ***(E158) No. 32 — (E158) No. 29:*** ***(E158) No. 32 — (E158) No. 31:***	Is the resistance 1 MΩ or more?	Go to step **30**.	Repair the short circuit to power in the harness between ECM connector and electronic throttle control connector.
30	**CHECK SENSOR OUTPUT.** 1) Connect all connectors. 2) Turn the ignition switch to ON. 3) Read the value of «Main-Throttle Sensor» using Subaru Select Monitor. NOTE: For detailed operation procedures, refer to “Read Current Data For Engine”. <Ref. to EN(H6DO)(diag)-50, Subaru Select Monitor.>	Is the value of «Main-Throttle Sensor» 0.81 — 0.87 V?	Go to step **31**.	Repair the poor contact of electronic throttle control connector. Replace the electronic throttle control if defective. <Ref. to FU(H6DO)-19, Throttle Body.>

	Step	Check	Yes	No
31	**CHECK SENSOR OUTPUT.** Read the value of «Sub-Throttle Sensor» using Subaru Select Monitor. NOTE: For detailed operation procedures, refer to "Read Current Data For Engine". <Ref. to EN(H6DO)(diag)-50, Subaru Select Monitor.>	Is the value of «Sub-Throttle Sensor» 1.64 — 1.70 V?	Go to step **32**.	Repair the poor contact of electronic throttle control connector. Replace the electronic throttle control if defective. <Ref. to FU(H6DO)-19, Throttle Body.>
32	**CHECK HARNESS BETWEEN ECM AND ELECTRONIC THROTTLE CONTROL MOTOR.** 1) Turn the ignition switch to OFF. 2) Disconnect the connectors from ECM and electronic throttle control. 3) Measure the resistance between ECM connector and electronic throttle control connector. ***Connector & terminal*** ***(E158) No. 1 — (E57) No. 1:*** ***(E158) No. 14 — (E57) No. 2:***	Is the resistance less than 1 Ω?	Go to step **33**.	Repair the harness and connector. NOTE: In this case, repair the following item: • Open circuit in harness between ECM connector and electronic throttle control • Poor contact of coupling connector
33	**CHECK HARNESS BETWEEN ECM AND ELECTRONIC THROTTLE CONTROL MOTOR.** 1) Connect the connector to ECM. 2) Turn the ignition switch to ON. 3) Measure the voltage between electronic throttle control connector and engine ground. ***Connector & terminal*** ***(E57) No. 2 (+) — Engine ground (–):*** ***(E57) No. 1 (+) — Engine ground (–):***	Is the voltage 5 V or more?	Repair the short circuit to power in the harness between ECM connector and electronic throttle control.	Go to step **34**.
34	**CHECK HARNESS BETWEEN ECM AND ELECTRONIC THROTTLE CONTROL MOTOR.** 1) Turn the ignition switch to OFF. 2) Disconnect the connector from ECM. 3) Measure the resistance between electronic throttle control connector and engine ground. ***Connector & terminal*** ***(E57) No. 2 — Engine ground:*** ***(E57) No. 1 — Engine ground:***	Is the resistance 1 MΩ or more?	Go to step **35**.	Repair the short circuit to ground in harness between ECM connector and electronic throttle control.
35	**CHECK ELECTRONIC THROTTLE CONTROL MOTOR HARNESS.** Measure the resistance between electronic throttle control connectors. ***Connector & terminal*** ***(E57) No. 2 — (E57) No. 1:***	Is the resistance 1 MΩ or more?	Go to step **36**.	Repair the short circuit in harness between ECM connector and electronic throttle control.
36	**CHECK ELECTRONIC THROTTLE CONTROL GROUND CIRCUIT.** Measure the resistance between ECM connector and chassis ground. ***Connector & terminal*** ***(E158) No. 60 — Chassis ground:*** ***(E158) No. 61 — Chassis ground:*** ***(E158) No. 62 — Chassis ground:*** ***(E158) No. 63 — Chassis ground:*** ***(E158) No. 64 — Chassis ground:*** ***(E158) No. 65 — Chassis ground:***	Is the resistance less than 5 Ω?	Go to step **37**.	Repair the harness and connector. NOTE: In this case, repair the following item: • Open circuit of harness between ECM connector and engine ground • Poor contact of coupling connector

	Step	Check	Yes	No
37	**CHECK ELECTRONIC THROTTLE CONTROL.** Measure the resistance between electronic throttle control terminals. ***Terminals*** ***No. 2 — No. 1:***	Is the resistance 50 Ω or less?	Go to step **38**.	Replace the electronic throttle control. <Ref. to FU(H6DO)-19, Throttle Body.>
38	**CHECK ELECTRONIC THROTTLE CONTROL.** Move the throttle valve to the fully opened and fully closed positions with fingers. Check that the valve returns to the specified position when releasing fingers.	Does the valve return to the specified position? Standard value: 3 mm (0.12 in) from fully closed position	Repair the poor contact of ECM connector.	Replace the electronic throttle control. <Ref. to FU(H6DO)-19, Throttle Body.>

1. OUTLINE OF DIAGNOSIS

- **When cold, the abnormality in the control of target engine speed increase is detected. (P050A)**
- Idle speed diagnosis

Judge as NG when actual engine speed is not close to target engine speed at cold start.

- **Detect malfunctions of the catalyst advanced idling retard angle control. (P050B)**

Judge as NG when ECM is not controlling the angle properly during catalyst advanced idling retard angle control.

- Final ignition timing diagnosis

Judge as NG when actual retard amount is under the specified value at cold start.

2. EXECUTION CONDITION

Secondary Parameters	Execution condition
<Idle speed diagnosis>	
Barometric pressure	≥ 75.1 kPa (563 mmHg, 22.2 inHg)
Battery voltage	> 10.9 V
Vehicle speed	≤ 2 km/h (1.2 MPH)
Engine coolant temperature	≤ 60 °C (140 °F)
Intake air amount sum value	≤ Value of Map 1
Elapsed time after gear position change (P ←→ D or N ←→ D)	≥ 3000 ms
Throttle valve opening angle	< 0.37 °
Elapsed time after starting the engine	≥ 2000 ms
<Final ignition timing diagnosis>	
Barometric pressure	≥ 75.1 kPa (563 mmHg, 22.2 inHg)
Battery voltage	> 10.9 V
Vehicle speed	≤ 2 km/h (1.2 MPH)
Engine coolant temperature	≤ 60 °C (140 °F)
Intake air amount sum value	≤ Value of Map 2
Elapsed time after gear position change (P ←→ D or N ←→ D)	≥ 3000 ms
Throttle valve opening angle	< 0.37 °
Commanded ignition timing retard	≥ Value from Map 3

Map 1

Engine coolant temperature at engine starting °C (°F)	–40 (–40)	–30 (–22)	–20 (–4)	–10 (14)	0 (32)	10 (50)	20 (68)	30 (86)
Intake air amount sum value g (oz)	2300 (81.12)	2170 (76.54)	2040 (71.95)	1490 (52.55)	1070 (37.74)	780 (27.51)	630 (22.22)	615 (21.69)

Engine coolant temperature at engine starting °C (°F)	40 (104)	50 (122)	60 (140)	70 (158)	80 (176)	90 (194)	100 (212)	110 (230)
Intake air amount sum value g (oz)	600 (21.16)	585 (20.63)	548 (19.31)	375 (13.23)	360 (12.7)	360 (12.7)	360 (12.7)	360 (12.7)

Map 2

Engine coolant temperature at engine starting °C (°F)	–40 (–40)	–30 (–22)	–20 (–4)	–10 (14)	0 (32)	10 (50)	20 (68)	30 (86)
Intake air amount sum value g (oz)	2300 (81.12)	2170 (76.54)	2040 (71.95)	1490 (52.55)	1070 (37.74)	780 (27.51)	630 (22.22)	615 (21.69)

Engine coolant temperature at engine starting °C (°F)	40 (104)	50 (122)	60 (140)	70 (158)	80 (176)	90 (194)	100 (212)	110 (230)
Intake air amount sum value g (oz)	600 (21.16)	585 (20.63)	548 (19.31)	375 (13.23)	360 (12.7)	360 (12.7)	360 (12.7)	360 (12.7)

Map 3

Engine coolant temperature	–40 °C (–40 °F)	–30 °C (–22 °F)	–20 °C (–4 °F)	–10 °C (14 °F)	0 °C (32 °F)	10 °C (50 °F)	20 °C (68 °F)	30 °C (86 °F)	40 °C (104 °F)	50 °C (122 °F)	60 °C (140 °F)
Commanded ignition timing retard	8 °CA	8 °CA	8 °CA	8 °CA	8 °CA	8 °CA	8 °CA	8 °CA	8 °CA	8 °CA	8 °CA

3. GENERAL DRIVING CYCLE

Perform the diagnosis at cold start.

4. DIAGNOSTIC METHOD

• Idle speed diagnosis

Judge as NG when the following conditions are established.

Judgment Value

Malfunction Criteria	Threshold Value
Actual engine speed – Target engine speed	< Value of Map 4

Map 4

Engine coolant temperature	–40 °C (–40 °F)	–30 °C (–22 °F)	–20 °C (–4 °F)	–10 °C (14 °F)	0 °C (32 °F)	10 °C (50 °F)	20 °C (68 °F)	30 °C (86 °F)	40 °C (104 °F)	50 °C (122 °F)	60 °C (140 °F)
Threshold Value	–235 rpm	–235 rpm	–235 rpm	–235 rpm	–235 rpm	–285 rpm	–300 rpm	–300 rpm	–260 rpm	–260 rpm	–260 rpm

Time Needed for Diagnosis: 7000 ms
Malfunction Indicator Light Illumination: Illuminates when malfunction occurs in 2 continuous driving cycles.

• Final ignition timing diagnosis

Judge as NG when the following conditions are established.

Judgment Value

Malfunction Criteria	Threshold Value
Final CIT – CSERS CIT* *: • CIT = Commanded Ignition Timing • CSERS = Cold Start Emission Reduction Strategy	> Value of Map 5

Map 5

Engine coolant temperature at engine starting	–40 °C (–40 °F)	–30 °C (–22 °F)	–20 °C (–4 °F)	–10 °C (14 °F)	0 °C (32 °F)	10 °C (50 °F)	20 °C (68 °F)	30 °C (86 °F)	40 °C (104 °F)	50 °C (122 °F)	60 °C (140 °F)
Threshold Value	7.5 °CA	7.5 °CA	7.5 °CA	7.5 °CA	7.5 °CA	7.5 °CA	7.5 °CA	7.5 °CA	7.5 °CA	7.5 °CA	7.5 °CA

Time Needed for Diagnosis: 7000 ms
Malfunction Indicator Light Illumination: Illuminates when malfunction occurs in 2 continuous driving cycles.

EE:DTC P050B COLD START IGNITION TIMING PERFORMANCE

NOTE:
For the diagnostic procedure, refer to DTC P050A. <Ref. to EN(H6DO)(diag)-407, DTC P050A COLD START IDLE CONTROL SYSTEM PERFORMANCE, Diagnostic Procedure with Diagnostic Trouble Code (DTC).>

1. OUTLINE OF DIAGNOSIS

NOTE:
For the detection standard, refer to DTC P050A. <Ref. to EN(H6DO)(diag)-407, DTC P050A COLD START IDLE CONTROL SYSTEM PERFORMANCE, Diagnostic Procedure with Diagnostic Trouble Code (DTC).>

EF:DTC P0512 STARTER (SWITCH) REQUEST CIRCUIT

DTC DETECTING CONDITION:
Immediately at fault recognition
TROUBLE SYMPTOM:
Failure of engine to start

CAUTION:
After servicing or replacing faulty parts, perform Clear Memory Mode <Ref. to EN(H6DO)(diag)-85, OPERATION, Clear Memory Mode.>, and Inspection Mode <Ref. to EN(H6DO)(diag)-69, PROCEDURE, Inspection Mode.>.

WIRING DIAGRAM:

Engine Electrical System ENGINE TYPE EZ (WITH PUSH BUTTON START) <Ref. to WI-214, ENGINE TYPE EZ (WITH PUSH BUTTON START), WIRING DIAGRAM, Engine Electrical System.>

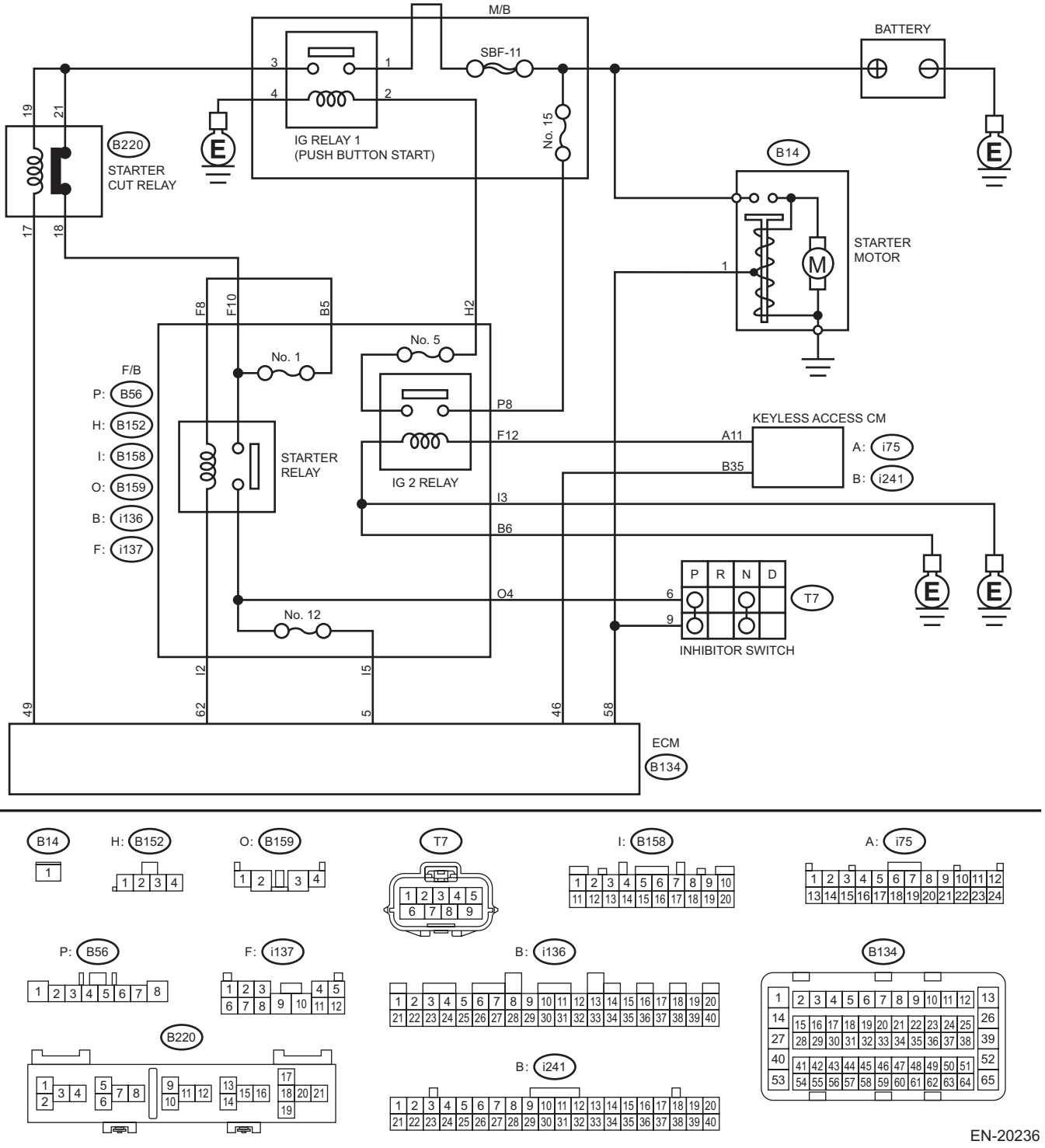

EN-20236

	Step	Check	Yes	No
1	**CHECK PUSH BUTTON IGNITION SWITCH.** Operate the push button ignition switch.	Does it operate smoothly without catch?	Go to step **2**.	Replace the push button ignition switch. <Ref. to SL-106, Push Button Ignition Switch.>
2	**CHECK DTC.** 1) Clear the memory using the Subaru Select Monitor. <Ref. to EN(H6DO)(diag)-85, Clear Memory Mode.> 2) Start and idle the engine for three minutes or more.	Is the same DTC as current diagnosis output?	Go to step **3**.	Even if DTC is detected, the circuit has returned to a normal condition at this time. Reproduce the failure, and then perform the diagnosis again. NOTE: In this case, temporary poor contact of connector, temporary open or short circuit of harness may be the cause.
3	**CHECK HARNESS BETWEEN ECM AND KEYLESS ACCESS CM.** 1) Turn the ignition to OFF. 2) Disconnect the connector from ECM. 3) Turn the ignition to ON. 4) Measure the voltage between ECM connector and chassis ground. ***Connector & terminal*** ***(B134) No. 46 (+) — Chassis ground (–):***	Is the voltage 10 V or more?	Repair the short circuit to power supply in harness between ECM connector and keyless access CM connector.	Repair the poor contact of ECM connector.

1. OUTLINE OF DIAGNOSIS

Detect abnormal continuity in the starter SW1.
Judge as ON NG when the starter SW 1 signal remains ON.

2. EXECUTION CONDITION

Secondary Parameters	Execution condition
Battery voltage	≥ 8 V
Engine speed	> 500 rpm

3. GENERAL DRIVING CYCLE

Perform the diagnosis continuously after starting the engine.

4. DIAGNOSTIC METHOD

If the duration of time while the following conditions are met is longer than the time indicated, judge as NG.

Judgment Value

Malfunction Criteria	Threshold Value
Starter SW1 voltage	≥ Battery voltage × 0.6

Time Needed for Diagnosis: 30000 ms
Malfunction Indicator Light Illumination: Illuminates as soon as a malfunction occurs.

EG:DTC P0560 SYSTEM VOLTAGE

DTC DETECTING CONDITION:
Immediately at fault recognition

CAUTION:
After servicing or replacing faulty parts, perform Clear Memory Mode <Ref. to EN(H6DO)(diag)-85, OPERATION, Clear Memory Mode.>, and Inspection Mode <Ref. to EN(H6DO)(diag)-69, PROCEDURE, Inspection Mode.>.

WIRING DIAGRAM:

- Engine Electrical System ENGINE TYPE EZ (WITHOUT PUSH BUTTON START) <Ref. to WI-198, ENGINE TYPE EZ (WITHOUT PUSH BUTTON START), WIRING DIAGRAM, Engine Electrical System.>
- Engine Electrical System ENGINE TYPE EZ (WITH PUSH BUTTON START) <Ref. to WI-214, ENGINE TYPE EZ (WITH PUSH BUTTON START), WIRING DIAGRAM, Engine Electrical System.>

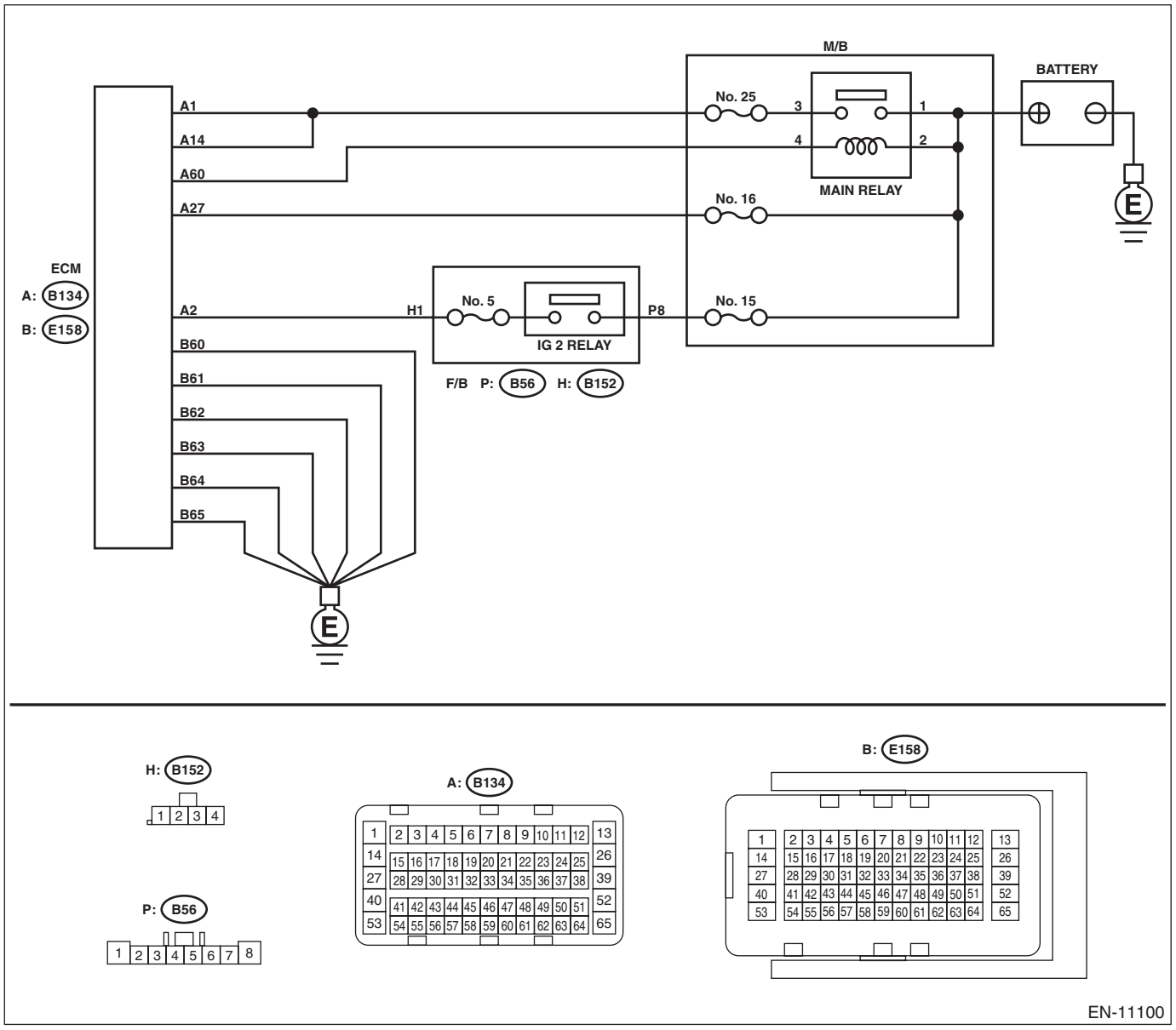

	Step	Check	Yes	No
1	**CHECK INPUT SIGNAL OF ECM.** 1) Turn the ignition switch to OFF. 2) Measure the voltage between ECM connector and chassis ground. ***Connector & terminal*** ***(B134) No. 27 (+) — Chassis ground (–):***	Is the voltage 10 V or more?	Repair the poor contact of ECM connector.	Go to step **2**.
2	**CHECK HARNESS BETWEEN ECM AND MAIN FUSE BOX CONNECTOR.** 1) Disconnect the connector from ECM. 2) Measure the resistance between ECM connector and chassis ground. ***Connector & terminal*** ***(B134) No. 27 — Chassis ground:***	Is the resistance 1 MΩ or more?	Go to step **3**.	Repair the short circuit to ground in harness between ECM connector and battery terminal.
3	**CHECK M/B FUSE NO. 12.**	Is the fuse blown out?	Replace the fuse.	Repair the harness and connector. NOTE: In this case, repair the following item: • Open circuit in harness between ECM connector and battery • Poor contact of ECM connector • Poor contact of battery terminal

1. OUTLINE OF DIAGNOSIS

Detect the open/short circuit of back-up power supply circuit.
Judge as NG when the backup power voltage is low.

2. EXECUTION CONDITION

Secondary Parameters	Execution condition
Battery voltage	≥ 10.9 V

3. GENERAL DRIVING CYCLE

Always perform the diagnosis continuously.

4. DIAGNOSTIC METHOD

If the duration of time while the following conditions are met is longer than the time indicated, judge as NG.

Judgment Value

Malfunction Criteria	Threshold Value
Voltage of back-up power supply	≤ 2.5 V

Time Needed for Diagnosis: 2500 ms
Malfunction Indicator Light Illumination: Illuminates as soon as a malfunction occurs.

EH:DTC P0604 INTERNAL CONTROL MODULE RANDOM ACCESS MEMORY (RAM) ERROR

DTC DETECTING CONDITION:
Immediately at fault recognition
TROUBLE SYMPTOM:
- Engine does not start.
- Engine stalls.

CAUTION:
After servicing or replacing faulty parts, perform Clear Memory Mode <Ref. to EN(H6DO)(diag)-85, OPERATION, Clear Memory Mode.>, and Inspection Mode <Ref. to EN(H6DO)(diag)-69, PROCEDURE, Inspection Mode.>.

Step	Check	Yes	No
1 **CHECK FOR ANY OTHER DTC ON DISPLAY.**	Is any other DTC displayed?	Check the appropriate DTC using the "List of Diagnostic Trouble Code (DTC)". <Ref. to EN(H6DO)(diag)-109, List of Diagnostic Trouble Code (DTC).>	Even if DTC is detected, the circuit has returned to a normal condition at this time. Reproduce the failure, and then perform the diagnosis again. NOTE: In this case, temporary poor contact of connector, temporary open or short circuit of harness may be the cause.

1. OUTLINE OF DIAGNOSIS

Detect the malfunction of microcomputer (RAM).
When there is a problem in the CPU normal RAM, judge as NG.
If it is possible to write data to the whole area of RAM in the initial routine, and is possible to read the same data, it is judged as OK, and if not, NG.

2. EXECUTION CONDITION

Secondary Parameters	Execution condition
None	

Diagnosis with the initial routine.

3. GENERAL DRIVING CYCLE

Perform the diagnosis as soon as the ignition switch is turned to ON.

4. DIAGNOSTIC METHOD

Judge as NG when the following conditions are established.

Judgment Value

Malfunction Criteria	Threshold Value
Written value to RAM	≠ Read out value

Time Needed for Diagnosis: 32 ms × 16 time(s)
Malfunction Indicator Light Illumination: Illuminates as soon as a malfunction occurs.

EI: DTC P0605 INTERNAL CONTROL MODULE READ ONLY MEMORY (ROM) ERROR

NOTE:
For the diagnostic procedure, refer to DTC P0606. <Ref. to EN(H6DO)(diag)-427, DTC P0606 CONTROL MODULE PROCESSOR, Diagnostic Procedure with Diagnostic Trouble Code (DTC).>

1. OUTLINE OF DIAGNOSIS

Judge as NG when SUM value of ROM is outside the standard value.

2. EXECUTION CONDITION

Secondary Parameters	Execution condition
None	

Diagnosis with the initial routine.

3. GENERAL DRIVING CYCLE

Perform the diagnosis as soon as the ignition switch is turned to ON.

4. DIAGNOSTIC METHOD

Judge as NG if the criteria below are met.

Judgment Value

Malfunction Criteria	Threshold Value
SUM value of ROM	Malfunction

Time Needed for Diagnosis: 32 time(s) × 16 ms
Malfunction Indicator Light Illumination: Illuminates as soon as a malfunction occurs.

EJ: DTC P0606 CONTROL MODULE PROCESSOR

DTC DETECTING CONDITION:
Immediately at fault recognition
TROUBLE SYMPTOM:

- Improper idling
- Poor driving performance

CAUTION:
After servicing or replacing faulty parts, perform Clear Memory Mode <Ref. to EN(H6DO)(diag)-85, OPERATION, Clear Memory Mode.>, and Inspection Mode <Ref. to EN(H6DO)(diag)-69, PROCEDURE, Inspection Mode.>.
WIRING DIAGRAM:

- Engine Electrical System ENGINE TYPE EZ (WITHOUT PUSH BUTTON START) <Ref. to WI-198, ENGINE TYPE EZ (WITHOUT PUSH BUTTON START), WIRING DIAGRAM, Engine Electrical System.>
- Engine Electrical System ENGINE TYPE EZ (WITH PUSH BUTTON START) <Ref. to WI-214, ENGINE TYPE EZ (WITH PUSH BUTTON START), WIRING DIAGRAM, Engine Electrical System.>

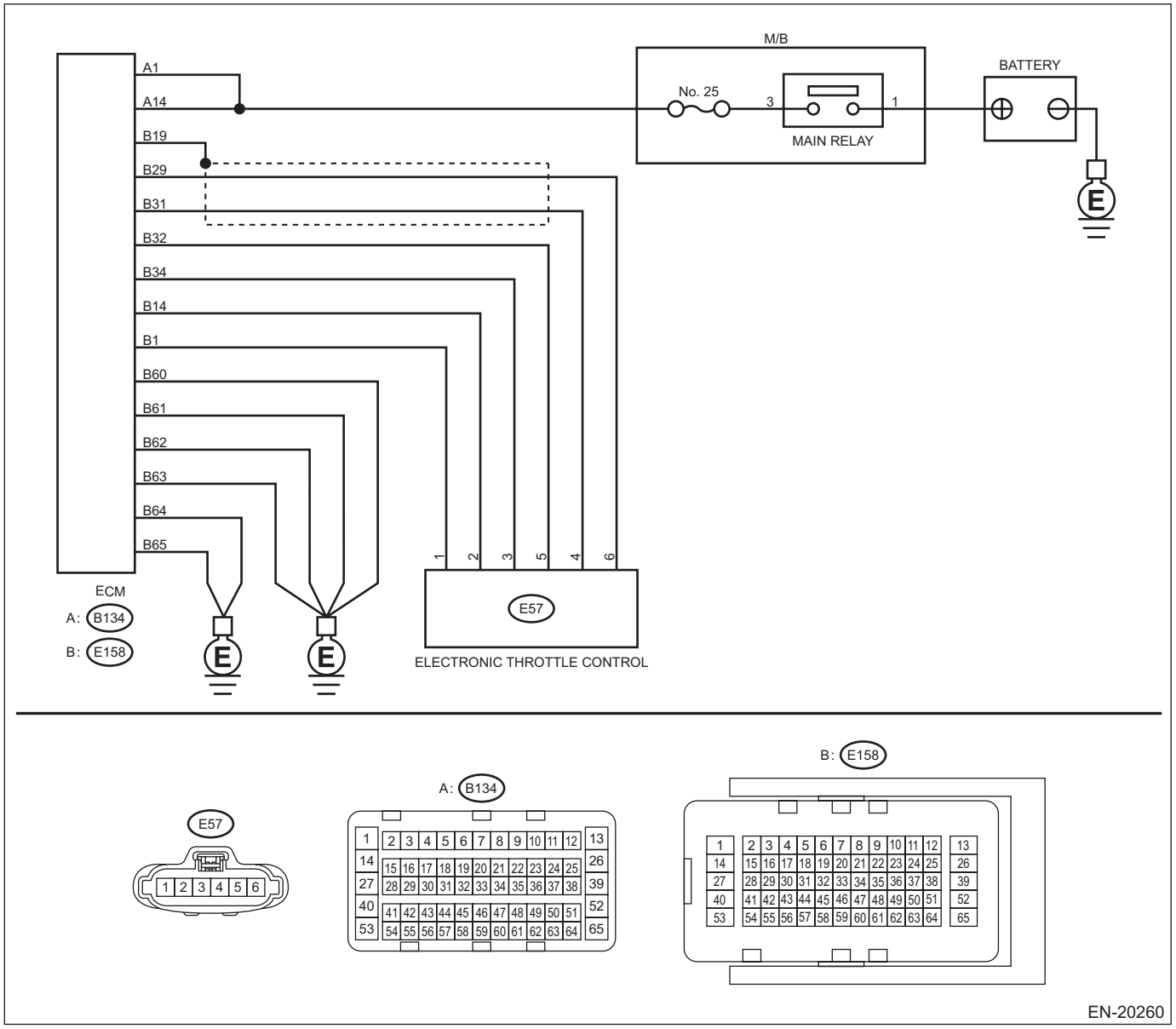

	Step	Check	Yes	No
1	**CHECK INPUT VOLTAGE OF ECM.** 1) Turn the ignition switch to ON. 2) Measure the voltage between ECM connector and chassis ground. ***Connector & terminal*** ***(B134) No. 1 (+) — Chassis ground (–):*** ***(B134) No. 14 (+) — Chassis ground (–):***	Is the voltage 10 — 13 V?	Go to step **2**.	Repair the open or short to ground in the power supply circuit.
2	**CHECK INPUT VOLTAGE OF ECM.** 1) Start the engine. 2) Measure the voltage between ECM connector and chassis ground. ***Connector & terminal*** ***(B134) No. 1 (+) — Chassis ground (–):*** ***(B134) No. 14 (+) — Chassis ground (–):***	Is the voltage 13 — 15 V?	Go to step **3**.	Repair the open or short to ground in the power supply circuit.
3	**CHECK HARNESS BETWEEN ECM AND ELECTRONIC THROTTLE CONTROL.** 1) Turn the ignition switch to OFF. 2) Disconnect the connectors from ECM and electronic throttle control. 3) Measure the resistance of harness between ECM connector and electronic throttle control connector. ***Connector & terminal*** ***(E158) No. 32 — (E57) No. 5:*** ***(E158) No. 34 — (E57) No. 3:***	Is the resistance less than 1 Ω?	Go to step **4**.	Repair the open circuit of harness between ECM connector and electronic throttle control connector.
4	**CHECK ECM GROUND HARNESS.** 1) Connect all connectors. 2) Turn the ignition switch to ON. 3) Measure the voltage between ECM connector and chassis ground. ***Connector & terminal*** ***(E158) No. 60 (+) — Chassis ground (–):*** ***(E158) No. 61 (+) — Chassis ground (–):*** ***(E158) No. 62 (+) — Chassis ground (–):*** ***(E158) No. 63 (+) — Chassis ground (–):*** ***(E158) No. 64 (+) — Chassis ground (–):*** ***(E158) No. 65 (+) — Chassis ground (–):***	Is the voltage less than 1 V?	Check the connector for poor contact and check the harness. Replace the ECM if no fault is found. <Ref. to FU(H6DO)-83, Engine Control Module (ECM).>	Repair the harness and connector. NOTE: In this case, repair the following item: • Open circuit in ground circuit • Loose engine ground terminal

1. OUTLINE OF DIAGNOSIS

Judge as NG when the CPU operation is abnormal.
(1) Instruction check
(2) Software flow check
(3) Software monitor check
(4) If the output IC operation is abnormal
(5) CAN register check

2. COMPONENT DESCRIPTION

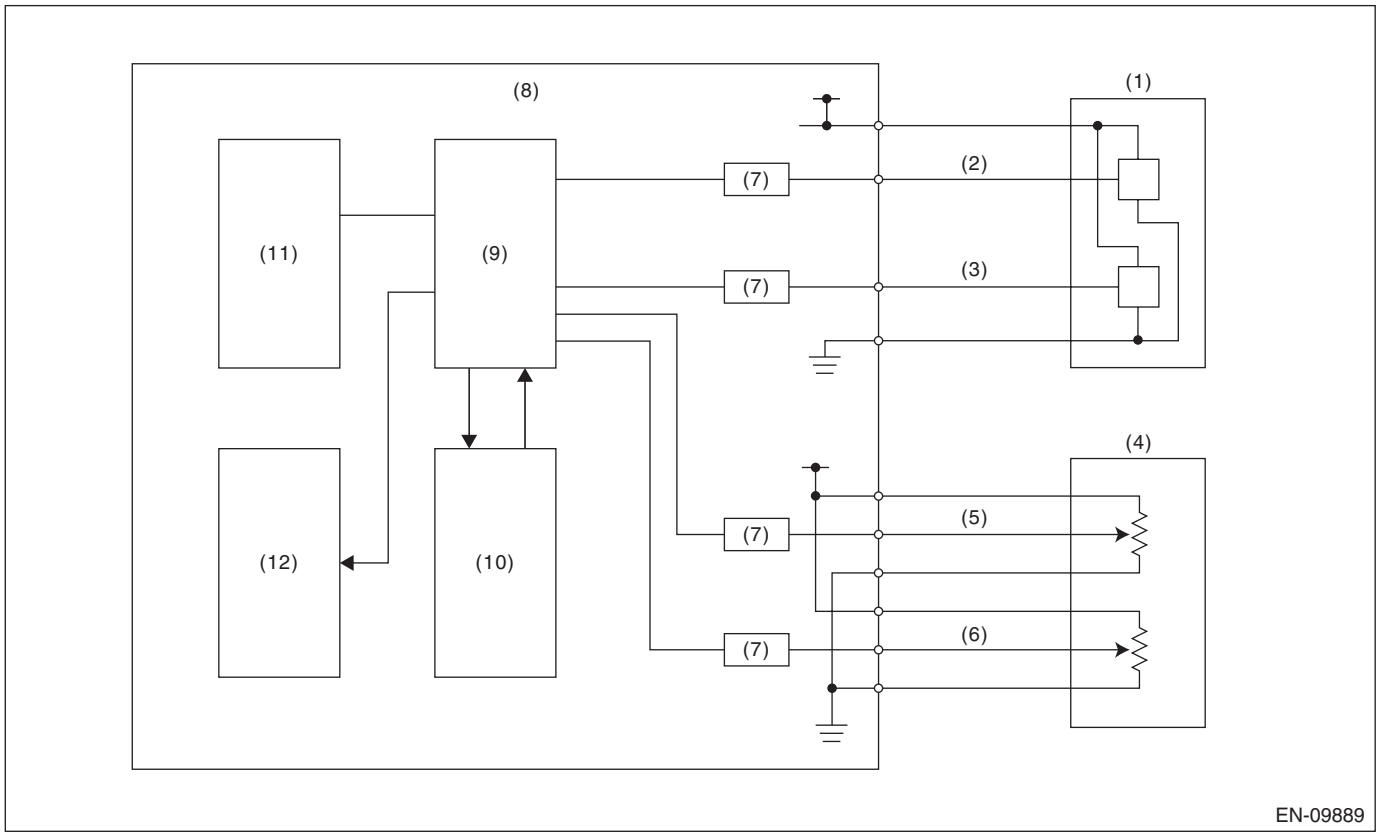

(1)	Throttle position sensor	(5)	Accelerator pedal position sensor 1	(9)	CPU
(2)	Throttle position sensor 1	(6)	Accelerator pedal position sensor 2	(10)	Monitoring IC
(3)	Throttle position sensor 2	(7)	I/F circuit	(11)	EEPROM
(4)	Accelerator pedal position sensor	(8)	Engine control module (ECM)	(12)	Output IC

3. EXECUTION CONDITION

Secondary Parameters	Execution condition
(1) — 1 Initial routine	
(1) — 2 Ignition switch	ON
(1) — 2 Battery voltage	≥ 6.2 V
(1) — 2 Electronic throttle control relay	ON
(2) Ignition switch	ON
(3) Ignition switch	ON
(3) Battery voltage	≥ 6.2 V
(3) Electronic throttle control relay	ON
(4) Ignition switch	ON
(5) Initial routine	

4. GENERAL DRIVING CYCLE

Always perform the diagnosis continuously.

5. DIAGNOSTIC METHOD

Judge as NG when the following conditions are established.

Judgment Value

Malfunction Criteria	Threshold Value
(1) — 1 Instruction value	Different from expected value
(1) — 2 Calculated result from CPU and FPU	Different from expected value
(2) Process flow result	The result and expected value do not match.
(3) High integrated IC motor continuity cut demand	Exist
(4) Communication between output driver ICs	Communication failure
(5) Writing value to CAN register	≠ Read out value

Time Needed for Diagnosis:
(1) — 1:2 time(s)
(1) — 2:512 ms
(2): 504 ms
(3): 48 ms
(4): 2500 ms
(5): Less than 1 second
Malfunction Indicator Light Illumination: Illuminates as soon as a malfunction occurs.

EK:DTC P060A INTERNAL CONTROL MODULE MONITORING PROCESSOR PERFORMANCE

NOTE:
For the diagnostic procedure, refer to DTC P0606. <Ref. to EN(H6DO)(diag)-427, DTC P0606 CONTROL MODULE PROCESSOR, Diagnostic Procedure with Diagnostic Trouble Code (DTC).>

1. OUTLINE OF DIAGNOSIS

Judge as NG when the monitoring IC operation is abnormal.
(1) Monitoring IC Disable (motor continuity cut demand) diagnosis
(2) Monitoring IC function diagnosis
(3) Monitoring IC register diagnosis

2. COMPONENT DESCRIPTION

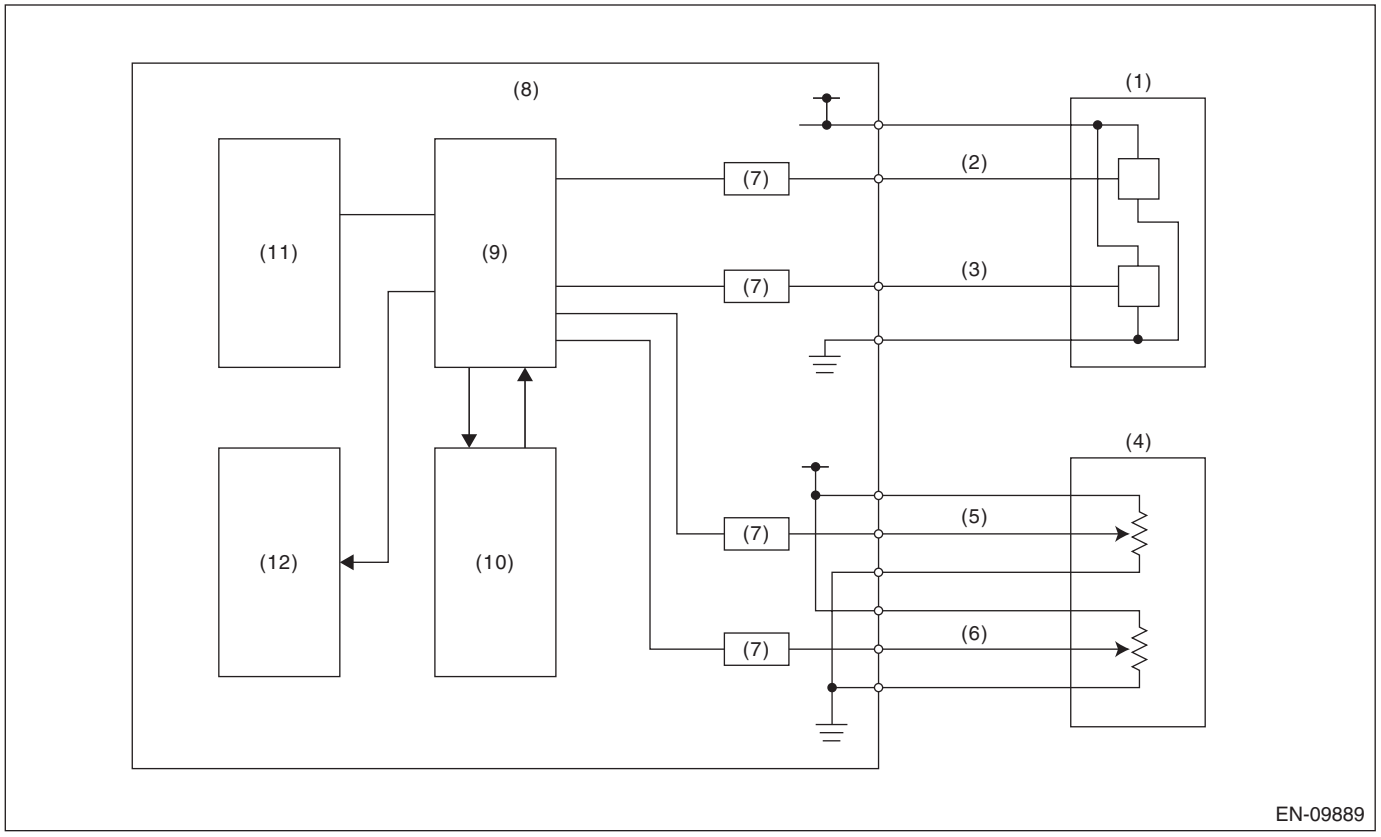

(1)	Throttle position sensor	(5)	Accelerator pedal position sensor 1	(9)	CPU
(2)	Throttle position sensor 1	(6)	Accelerator pedal position sensor 2	(10)	Monitoring IC
(3)	Throttle position sensor 2	(7)	I/F circuit	(11)	EEPROM
(4)	Accelerator pedal position sensor	(8)	Engine control module (ECM)	(12)	Output IC

3. EXECUTION CONDITION

Secondary Parameters	Execution condition
(1) Battery voltage	≥ 6 V
(1) When CPU intentionally sends motor continuity cut demand	
(2) Battery voltage	≥ 6 V
(2) CPU intentionally sends incorrect data	
(3) Battery voltage	≥ 6 V

4. GENERAL DRIVING CYCLE

Always perform the diagnosis continuously.

5. DIAGNOSTIC METHOD

Judge as NG when one of the following conditions is established.

Judgment Value

Malfunction Criteria	Threshold Value
(1) Main throttle opening angle – Main throttle opening angle at monitoring start	≥ 2 °
(2) Monitoring IC motor continuity cut demand	None
(3) Monitoring IC register writing value	≠ Reading value

Time Needed for Diagnosis:
(1): 24 ms
(2): 2984 ms = (25 + 6) × 0.008 + (4 × 25 + 4) × 0.008 + (5 × 25 + 9) × 0.008 + (2 × 25) × 0.008 + (25 + 2) × 0.008 × 2
(3): 200 ms
Malfunction Indicator Light Illumination: Illuminates as soon as a malfunction occurs.

EL:DTC P060B INTERNAL CONTROL MODULE A/D PROCESSING PERFORMANCE

NOTE:
For the diagnostic procedure, refer to DTC P0606. <Ref. to EN(H6DO)(diag)-427, DTC P0606 CONTROL MODULE PROCESSOR, Diagnostic Procedure with Diagnostic Trouble Code (DTC).>

1. OUTLINE OF DIAGNOSIS

Judge as NG when the AD converter operation is abnormal.

2. COMPONENT DESCRIPTION

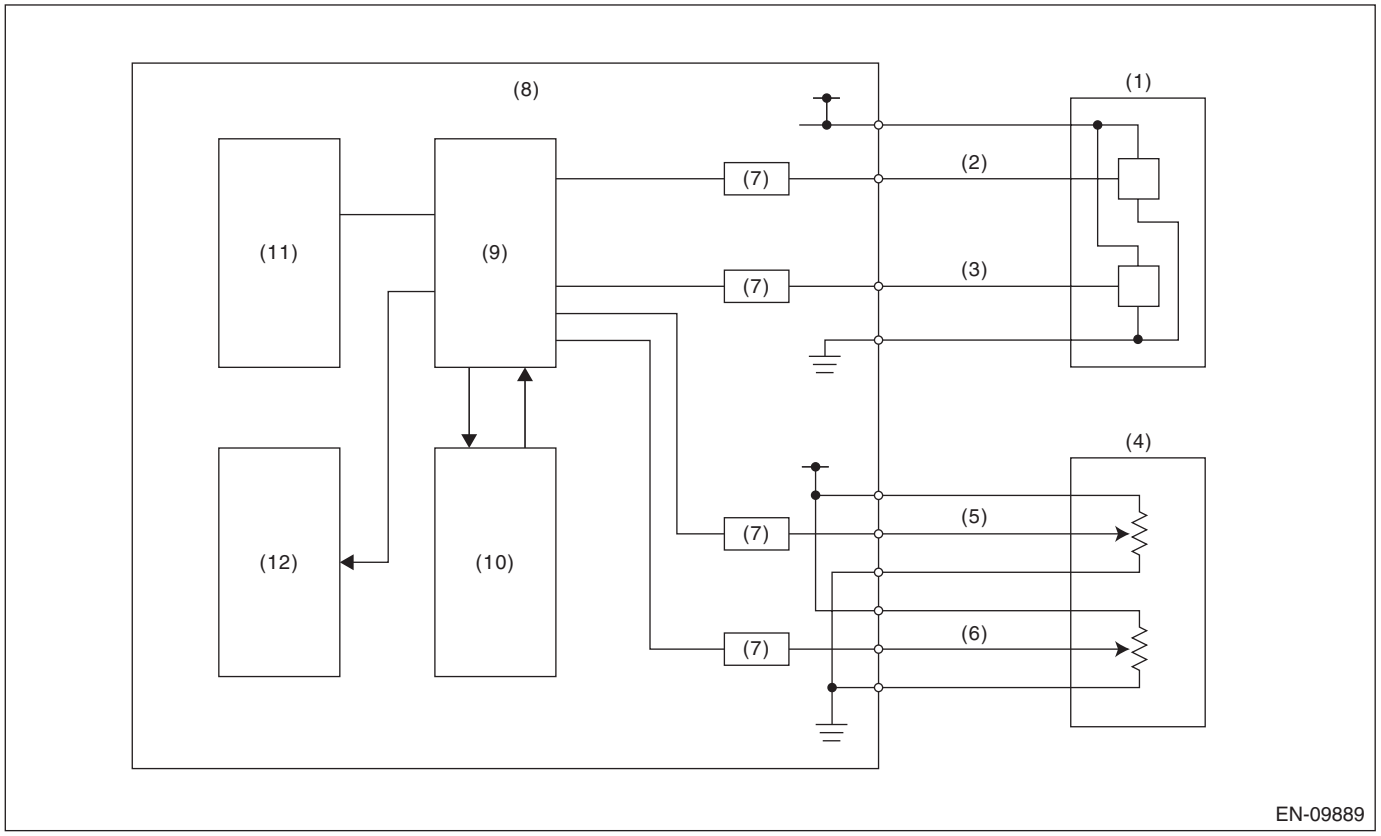

(1)	Throttle position sensor	(5)	Accelerator pedal position sensor 1	(9)	CPU
(2)	Throttle position sensor 1	(6)	Accelerator pedal position sensor 2	(10)	Monitoring IC
(3)	Throttle position sensor 2	(7)	I/F circuit	(11)	EEPROM
(4)	Accelerator pedal position sensor	(8)	Engine control module (ECM)	(12)	Output IC

3. EXECUTION CONDITION

Diagnosis 1

Secondary Parameters	Execution condition
Battery voltage	≥ 6 V
Target voltage	= 0 V

Diagnosis 2

Secondary Parameters	Execution condition
Battery voltage	≥ 6 V
Target voltage	= 5 V

4. GENERAL DRIVING CYCLE

Always perform the diagnosis continuously.

5. DIAGNOSTIC METHOD

Diagnosis 1

Judge as NG when the following conditions are established.

Judgment Value

Malfunction Criteria	Threshold Value
Actual voltage	> 0.01953125 V

Time Needed for Diagnosis: 200 ms

Diagnosis 2

Judge as NG when the following conditions are established.

Judgment Value

Malfunction Criteria	Threshold Value
Actual voltage	> 4.979248047 V

Time Needed for Diagnosis: 200 ms

Malfunction Indicator Light Illumination: Illuminates as soon as a malfunction occurs.

EM:DTC P0616 STARTER RELAY "A" CIRCUIT LOW

1. MODEL WITHOUT PUSH BUTTON START

DTC DETECTING CONDITION:
Immediately at fault recognition
TROUBLE SYMPTOM:
Failure of engine to start

CAUTION:
After servicing or replacing faulty parts, perform Clear Memory Mode <Ref. to EN(H6DO)(diag)-85, OPERATION, Clear Memory Mode.>, and Inspection Mode <Ref. to EN(H6DO)(diag)-69, PROCEDURE, Inspection Mode.>.
WIRING DIAGRAM:
Engine Electrical System ENGINE TYPE EZ (WITHOUT PUSH BUTTON START) <Ref. to WI-198, ENGINE TYPE EZ (WITHOUT PUSH BUTTON START), WIRING DIAGRAM, Engine Electrical System.>

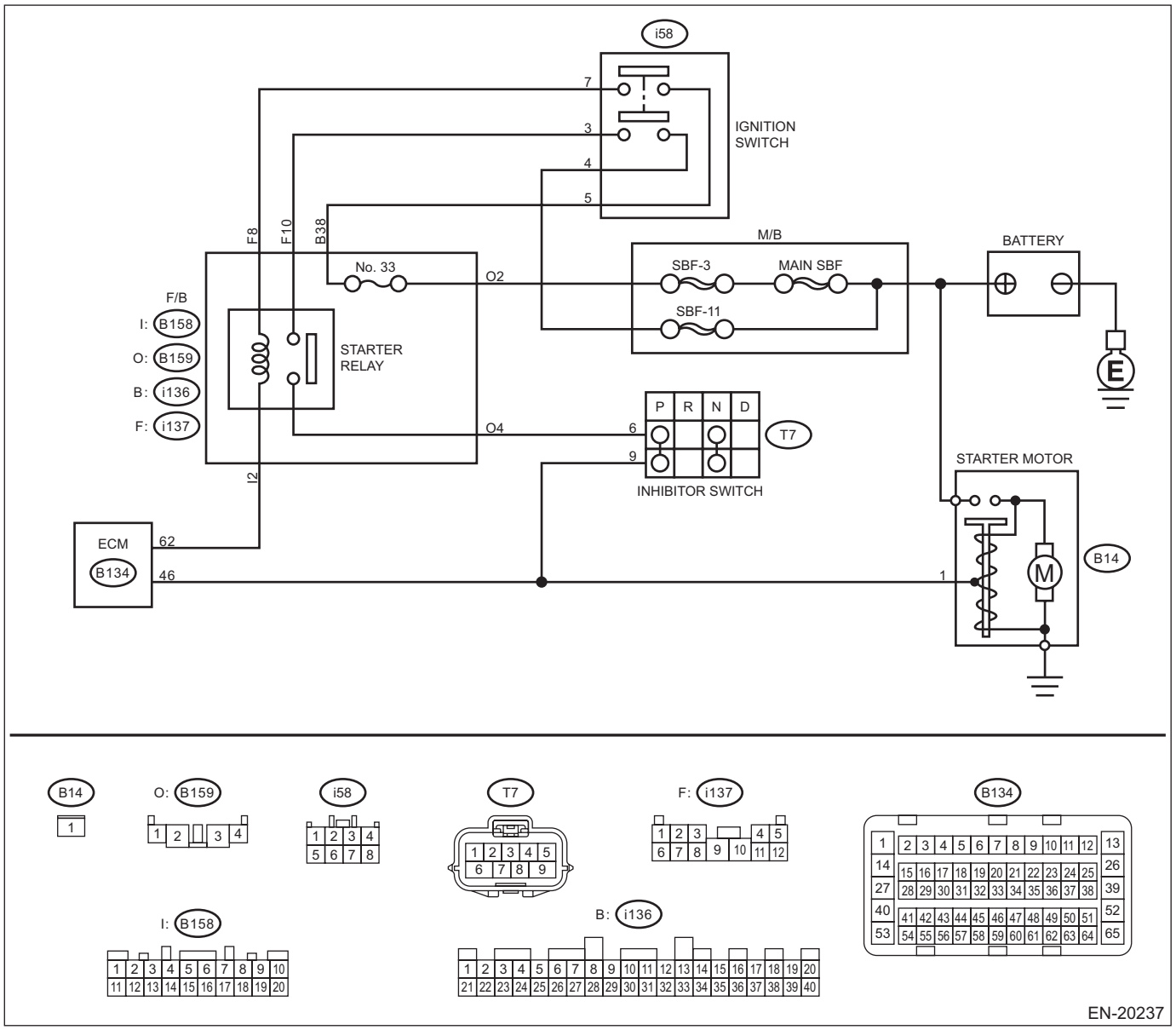

	Step	Check	Yes	No
1	**CHECK FOR ANY OTHER DTC ON DISPLAY.**	Is any other DTC displayed?	Check DTC using "List of Diagnostic Trouble Code (DTC)". <Ref. to EN(H6DO)(diag)-109, List of Diagnostic Trouble Code (DTC).>	Go to step **2**.
2	**CHECK HARNESS BETWEEN ECM AND STARTER RELAY CONNECTOR.** 1) Turn the ignition switch to OFF. 2) Disconnect the F/B (starter relay) connector. 3) Disconnect the connectors from ECM and starter motor. 4) Measure the resistance of harness between ECM connector and F/B (starter relay) connector. ***Connector & terminal*** ***(B134) No. 46 — (B159) No. 4:***	Is the resistance less than 1 Ω?	Go to step **3**.	Repair the harness and connector. NOTE: In this case, repair the following item: • Open circuit of harness between ECM connector and starter relay connector • Poor contact of coupling connector
3	**CHECK HARNESS BETWEEN ECM AND STARTER RELAY CONNECTOR.** Measure the resistance between ECM connector and chassis ground. ***Connector & terminal*** ***(B134) No. 46 — Chassis ground:***	Is the resistance 1 MΩ or more?	Repair the poor contact of ECM connector.	Repair the short circuit to ground in harness between ECM connector and starter relay connector.

2. MODEL WITH PUSH BUTTON START

DTC DETECTING CONDITION:
Immediately at fault recognition
TROUBLE SYMPTOM:
Failure of engine to start

CAUTION:
After servicing or replacing faulty parts, perform Clear Memory Mode <Ref. to EN(H6DO)(diag)-85, OPERATION, Clear Memory Mode.>, and Inspection Mode <Ref. to EN(H6DO)(diag)-69, PROCEDURE, Inspection Mode.>.

WIRING DIAGRAM:

Engine Electrical System ENGINE TYPE EZ (WITH PUSH BUTTON START) <Ref. to WI-214, ENGINE TYPE EZ (WITH PUSH BUTTON START), WIRING DIAGRAM, Engine Electrical System.>

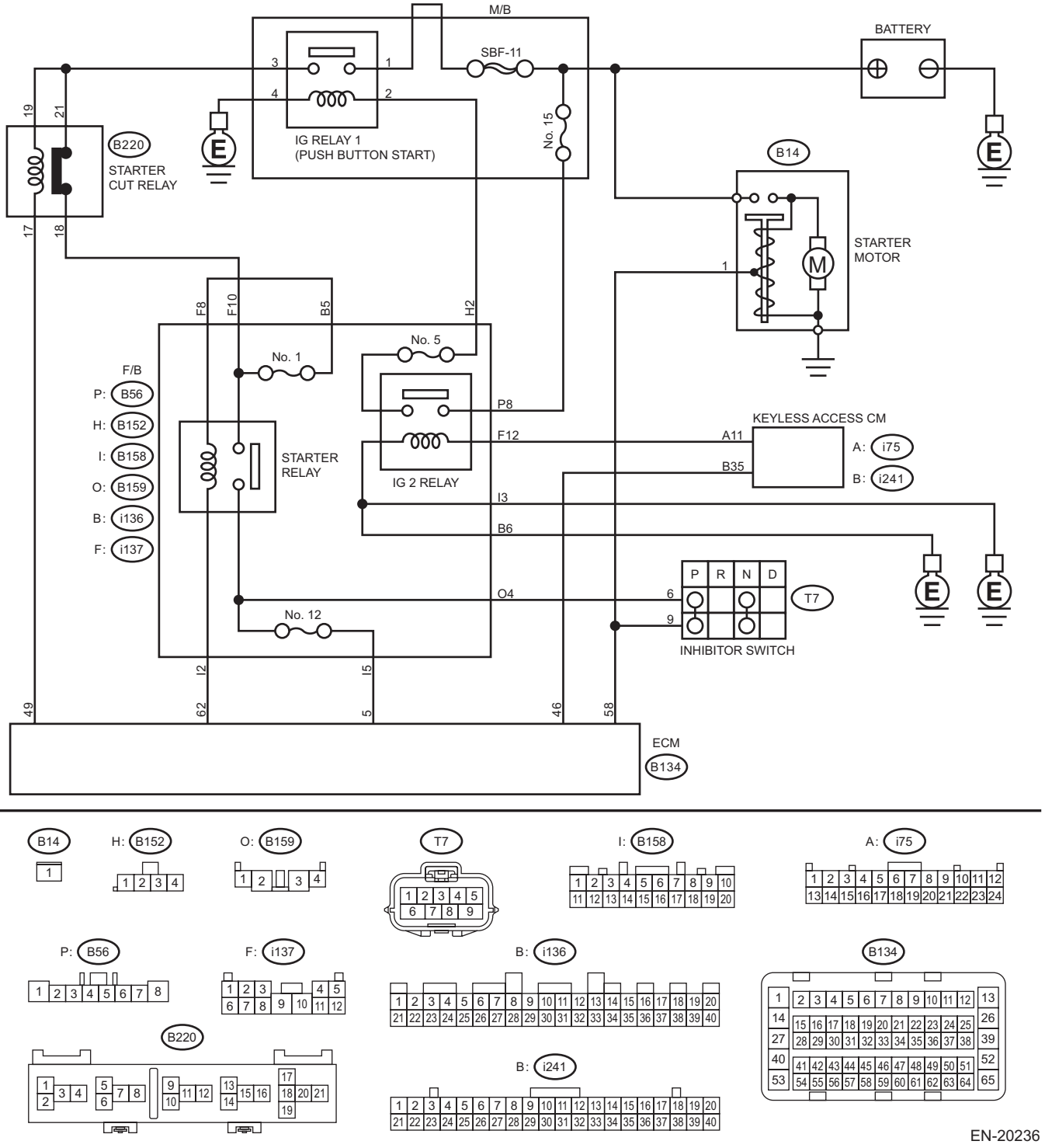

EN-20236

	Step	Check	Yes	No
1	**CHECK HARNESS BETWEEN ECM AND STARTER RELAY CONNECTOR.** 1) Turn the ignition to OFF. 2) Disconnect the connector from ECM. 3) Remove the starter relay. 4) Measure the resistance of harness between ECM connector and starter relay connector. NOTE: Place the select lever in "P" range or "N" range. ***Connector & terminal*** ***(B164) No. 58 — (B159) No. 4:***	Is the resistance less than 1 Ω?	Go to step **2**.	Repair the harness and connector. NOTE: In this case, repair the following item: • Open circuit of harness between ECM connector and starter relay connector • Poor contact of coupling connector
2	**CHECK HARNESS BETWEEN ECM AND STARTER RELAY CONNECTOR.** 1) Disconnect the connector from starter motor. 2) Measure the resistance between ECM connector and chassis ground. ***Connector & terminal*** ***(B134) No. 58 — Chassis ground:***	Is the resistance 1 MΩ or more?	Repair the poor contact of ECM connector.	Repair the short circuit to ground in harness between ECM connector and starter relay connector.

3. OUTLINE OF DIAGNOSIS

• Model without push button start
Detect abnormal continuity in the starter SW1.
Judge as OFF NG when the starter SW 1 signal remains OFF.
• Model with push button start
Detect abnormal continuity in the starter SW 2.
Judge as OFF NG when the starter SW 2 signal remains OFF.

4. EXECUTION CONDITION

Secondary Parameters	Execution condition
Battery voltage	≥ 8 V
Engine speed	Increase from 0 rpm to 500 rpm or more
Vehicle speed	< 1 km/h (0.6 MPH)
Starter relay command	ON

5. GENERAL DRIVING CYCLE

Perform the diagnosis only once after the enable conditions have been established.

6. DIAGNOSTIC METHOD

Judge as OFF NG when the following conditions are established.

Judgment Value

Malfunction Criteria	Threshold Value
Starter SW1 signal with battery voltage × 0.6 or more (models without push button start) Starter SW2 signal with battery voltage × 0.6 or more (models with push button start)	Not detected

Time Needed for Diagnosis: Less than 1 second
Malfunction Indicator Light Illumination: Illuminates as soon as a malfunction occurs.

EN:DTC P0617 STARTER RELAY "A" CIRCUIT HIGH

1. MODEL WITHOUT PUSH BUTTON START

DTC DETECTING CONDITION:
Immediately at fault recognition
TROUBLE SYMPTOM:
Failure of engine to start

CAUTION:
After servicing or replacing faulty parts, perform Clear Memory Mode <Ref. to EN(H6DO)(diag)-85, OPERATION, Clear Memory Mode.>, and Inspection Mode <Ref. to EN(H6DO)(diag)-69, PROCEDURE, Inspection Mode.>.
WIRING DIAGRAM:
Engine Electrical System ENGINE TYPE EZ (WITHOUT PUSH BUTTON START) <Ref. to WI-198, ENGINE TYPE EZ (WITHOUT PUSH BUTTON START), WIRING DIAGRAM, Engine Electrical System.>

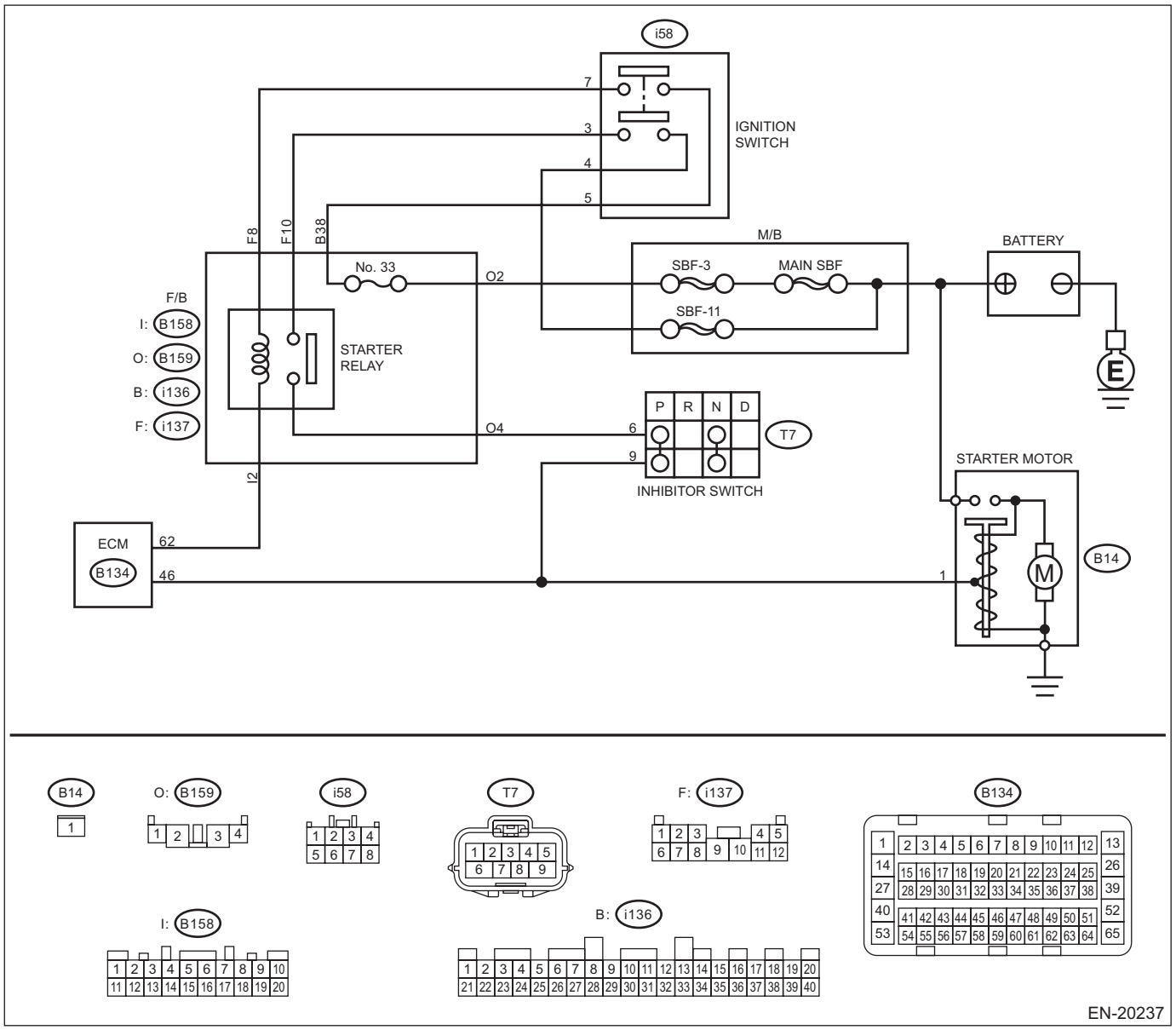

	Step	Check	Yes	No
1	**CHECK FOR ANY OTHER DTC ON DISPLAY.**	Is any other DTC displayed?	Check the appropriate DTC using the "List of Diagnostic Trouble Code (DTC)". <Ref. to EN(H6DO)(diag)-109, List of Diagnostic Trouble Code (DTC).>	Go to step **2**.
2	**CHECK HARNESS BETWEEN ECM AND STARTER RELAY CONNECTOR.** 1) Turn the ignition switch to OFF. 2) Disconnect the connector from ECM. 3) Turn the ignition switch to ON. 4) Measure the voltage between ECM connector and chassis ground. ***Connector & terminal*** ***(B134) No. 46 (+) — Chassis ground (–):***	Is the voltage 10 V or more?	Repair the short circuit to power in harness between ECM connector and starter relay connector.	Repair the poor contact of ECM connector.

2. MODEL WITH PUSH BUTTON START

DTC DETECTING CONDITION:
Immediately at fault recognition
TROUBLE SYMPTOM:
Failure of engine to start

CAUTION:
After servicing or replacing faulty parts, perform Clear Memory Mode <Ref. to EN(H6DO)(diag)-85, OPERATION, Clear Memory Mode.>, and Inspection Mode <Ref. to EN(H6DO)(diag)-69, PROCEDURE, Inspection Mode.>.

WIRING DIAGRAM:

Engine Electrical System ENGINE TYPE EZ (WITH PUSH BUTTON START) <Ref. to WI-214, ENGINE TYPE EZ (WITH PUSH BUTTON START), WIRING DIAGRAM, Engine Electrical System.>

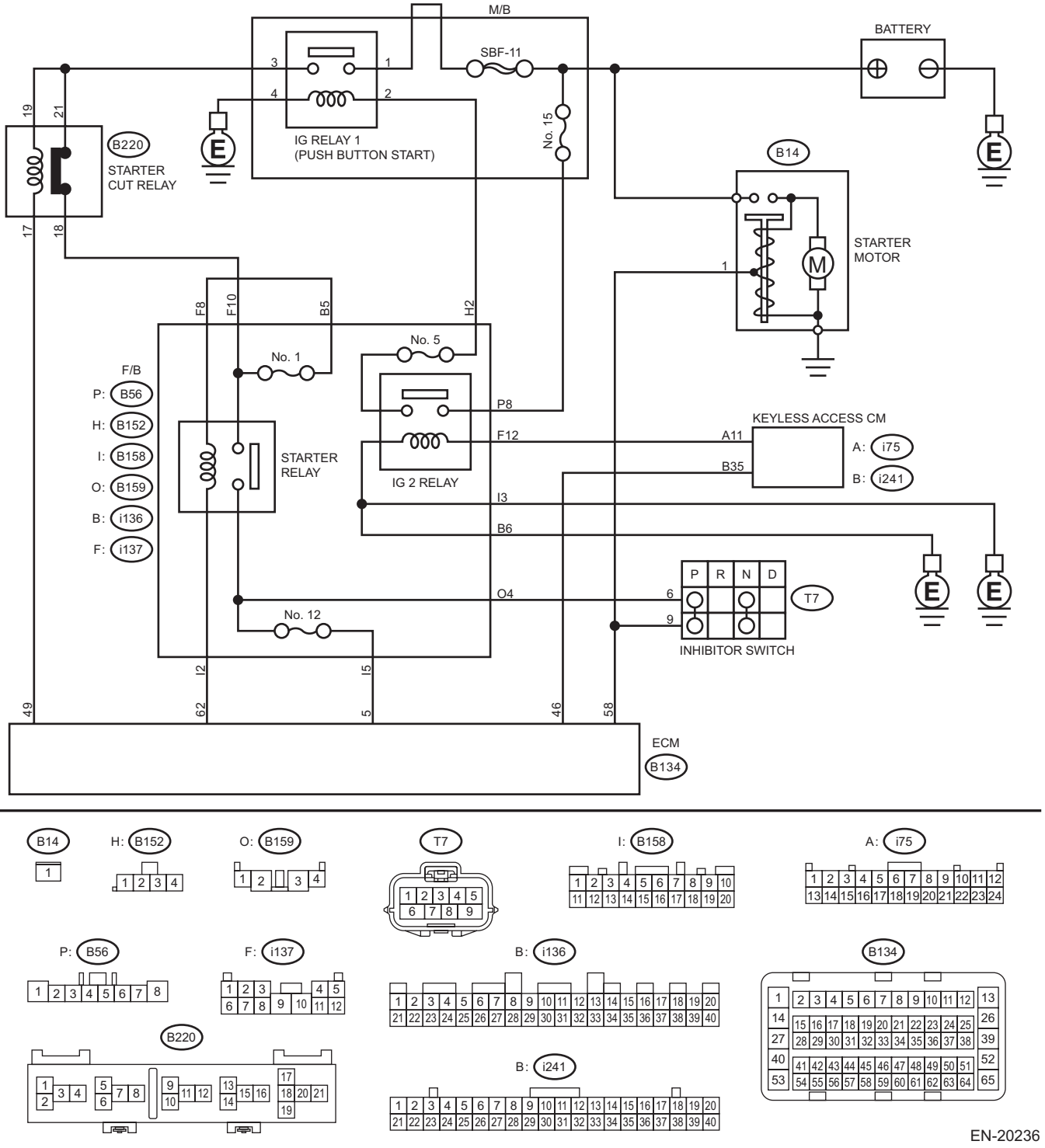

EN-20236

	Step	Check	Yes	No
1	**CHECK STARTER MOTOR.** 1) Turn the ignition to ON. 2) Check the starter motor condition.	Is the starter motor rotating?	Go to step **2**.	Repair the short circuit to power supply. NOTE: In this case, repair the following harnesses: • Short circuit to power supply in harness between ECM connector and starter relay connector • Short circuit to power supply in harness between ECM connector and starter motor • Short circuit to power supply in harness between starter relay connector and starter motor
2	**CHECK HARNESS BETWEEN STARTER CUT RELAY CONNECTOR AND STARTER RELAY CONNECTOR.** 1) Turn the ignition to OFF. 2) Disconnect the connector from starter motor. 3) Remove the starter cut relay, starter relay and inhibitor relay. 4) Turn the ignition to ON. 5) Measure the voltage between starter relay connector and chassis ground. ***Connector & terminal*** ***(i137) No. 8 (+) — Chassis ground (–):***	Is the voltage 10 V or more?	Repair the short circuit to power supply in harness between starter cut relay connector and starter relay connector.	Go to step **3**.
3	**CHECK STARTER CUT RELAY.** 1) Connect the battery to starter cut relay terminals No. 17 and No. 19. 2) Measure the resistance between starter cut relay terminals. ***Terminals*** ***No. 18 — No. 21:***	Is the resistance 1 MΩ or more?	Go to step **6**.	Replace the starter cut relay. <Ref. to SL-9, Relay and Fuse.> Go to step **4**.
4	**CHECK HARNESS BETWEEN ECM AND F/B STARTER RELAY CONNECTOR.** 1) Disconnect the connector from ECM. 2) Measure the resistance between ECM connector and chassis ground. ***Connector & terminal*** ***(B134) No. 62 — Chassis ground:***	Is the resistance 1 MΩ or more?	Go to step **5**.	Repair the short circuit to ground in harness between ECM connector and starter relay connector.
5	**CHECK F/B STARTER RELAY.** Measure the resistance between F/B starter relay terminals. <Ref. to SL-9, Relay and Fuse.>	Is the resistance 1 MΩ or more?	Go to step **6**.	Replace the starter relay. <Ref. to EN(H6DO)(diag)-11, LOCATION, Electrical Component Location.>

Step		Check	Yes	No
6	**CHECK HARNESS BETWEEN ECM, F/B STARTER RELAY CONNECTOR AND STARTER MOTOR.** 1) Disconnect the connector from ECM. 2) Turn the ignition to ON. 3) Measure the voltage between ECM connector and chassis ground. ***Connector & terminal*** ***(B134) No. 58 (+) — Chassis ground (–):***	Is the voltage 10 V or more?	Repair the short circuit to power supply. NOTE: In this case, repair the following harnesses: • Short circuit to power supply in harness between ECM connector and starter relay connector • Short circuit to power supply in harness between ECM connector and starter motor • Short circuit to power supply in harness between starter relay connector and starter motor	Repair the poor contact of ECM connector.

3. OUTLINE OF DIAGNOSIS

• Model without push button start
Detect abnormal continuity in the starter SW1.
Judge as ON NG when the starter SW 1 signal remains ON.
• Model with push button start
Detect abnormal continuity in the starter SW 2.
Judge as ON NG when the starter SW 2 signal remains ON.

4. EXECUTION CONDITION

Secondary Parameters	Execution condition
Battery voltage	≥ 8 V
Engine speed	> 500 rpm
Starter relay command	OFF

5. GENERAL DRIVING CYCLE

Perform the diagnosis continuously after the enable conditions have been established.

6. DIAGNOSTIC METHOD

If the duration of time while the following conditions are met is longer than the time indicated, judge as NG.

Judgment Value

Malfunction Criteria	Threshold Value
Starter SW 1 signal (model without push button start) Starter SW 2 signal (model with push button start)	≥ Battery voltage × 0.6

Time Needed for Diagnosis: 30000 ms
Malfunction Indicator Light Illumination: Illuminates as soon as a malfunction occurs.

EO:DTC P062F INTERNAL CONTROL MODULE EEPROM ERROR

NOTE:
For the diagnostic procedure, refer to DTC P0606. <Ref. to EN(H6DO)(diag)-427, DTC P0606 CONTROL MODULE PROCESSOR, Diagnostic Procedure with Diagnostic Trouble Code (DTC).>

1. OUTLINE OF DIAGNOSIS

Judge as NG when the EEPROM operation is abnormal.

2. COMPONENT DESCRIPTION

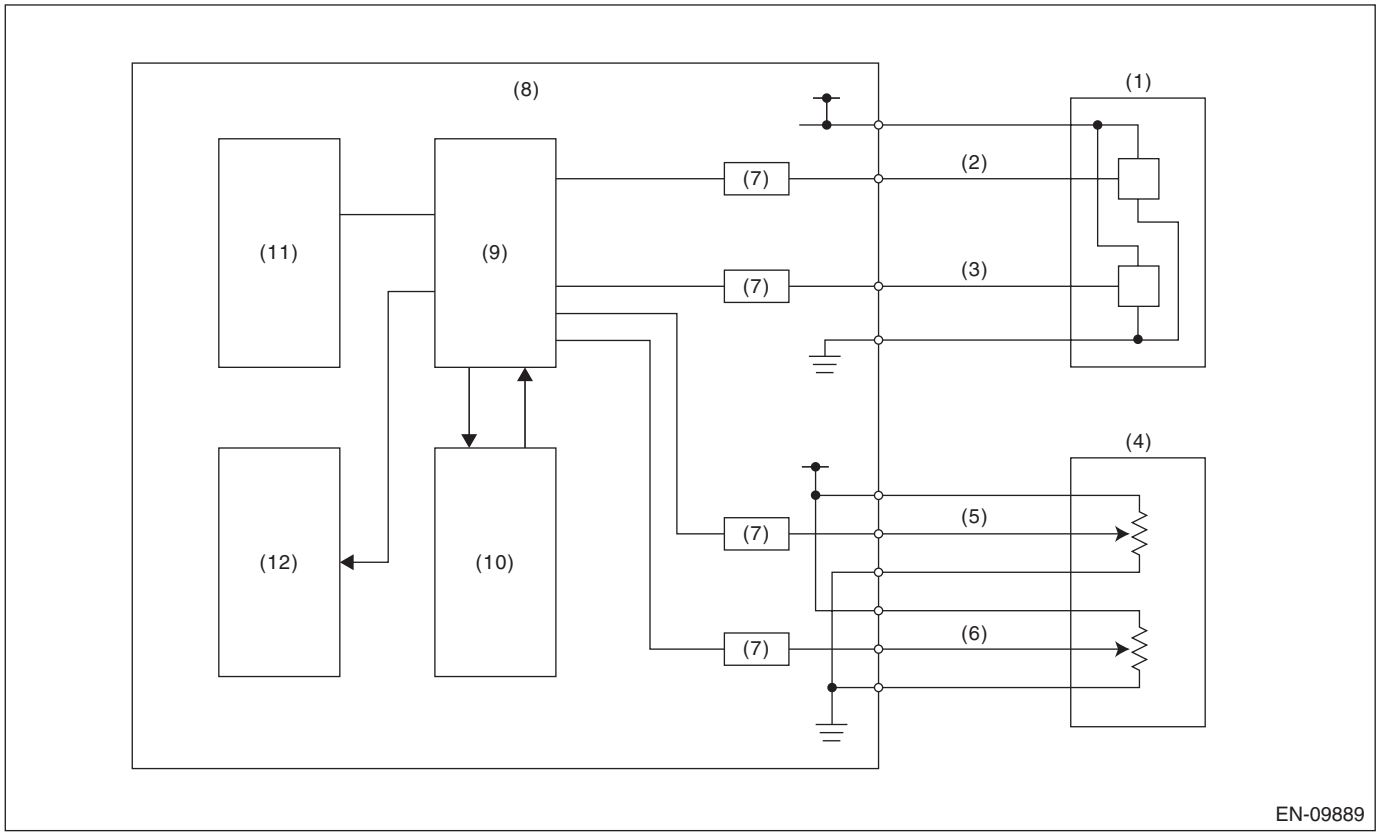

(1)	Throttle position sensor	(5)	Accelerator pedal position sensor 1	(9)	CPU
(2)	Throttle position sensor 1	(6)	Accelerator pedal position sensor 2	(10)	Monitoring IC
(3)	Throttle position sensor 2	(7)	I/F circuit	(11)	EEPROM
(4)	Accelerator pedal position sensor	(8)	Engine control module (ECM)	(12)	Output IC

3. EXECUTION CONDITION

Secondary Parameters	Execution condition
None	

4. GENERAL DRIVING CYCLE

Perform the diagnosis during self shut.

5. DIAGNOSTIC METHOD

Judge as NG when the following conditions are established.

Judgment Value

Malfunction Criteria	Threshold Value
Writing result to EEPROM	Malfunction

Time Needed for Diagnosis: 2 times
Malfunction Indicator Light Illumination: Illuminates as soon as a malfunction occurs.

EP:DTC P0685 ECM/PCM POWER RELAY CONTROL CIRCUIT/OPEN

DTC DETECTING CONDITION:

Detected when two consecutive driving cycles with fault occur.

CAUTION:

After servicing or replacing faulty parts, perform Clear Memory Mode <Ref. to EN(H6DO)(diag)-85, OPERATION, Clear Memory Mode.>, and Inspection Mode <Ref. to EN(H6DO)(diag)-69, PROCEDURE, Inspection Mode.>.

WIRING DIAGRAM:

- Engine Electrical System ENGINE TYPE EZ (WITHOUT PUSH BUTTON START) <Ref. to WI-198, ENGINE TYPE EZ (WITHOUT PUSH BUTTON START), WIRING DIAGRAM, Engine Electrical System.>
- Engine Electrical System ENGINE TYPE EZ (WITH PUSH BUTTON START) <Ref. to WI-214, ENGINE TYPE EZ (WITH PUSH BUTTON START), WIRING DIAGRAM, Engine Electrical System.>

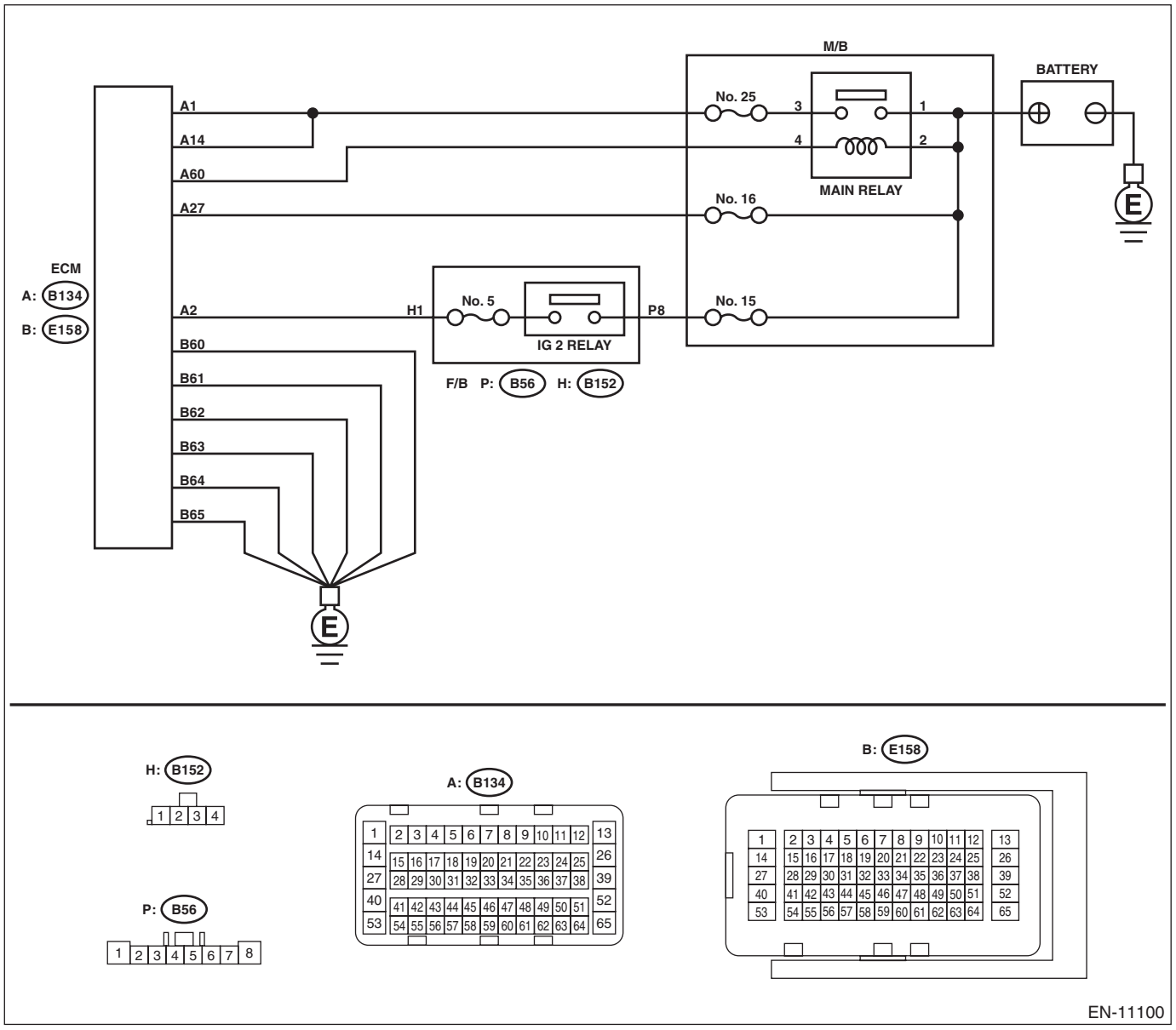

Step		Check	Yes	No
1	**CHECK ECM CONNECTOR.** Check the connecting condition of ECM connector.	Is the ECM connector correctly connected?	Go to step **2**.	Connect the ECM connector correctly.

	Step	Check	Yes	No
2	**CHECK HARNESS BETWEEN ECM AND MAIN RELAY CONNECTOR.** 1) Turn the ignition switch to OFF. 2) Measure the voltage between ECM connector and engine ground. ***Connector & terminal*** ***(B134) No. 1 (+) — Engine ground (–):*** ***(B134) No. 14 (+) — Engine ground (–):***	Is the voltage 10 V or more?	Repair the harness and connector. NOTE: In this case, repair the following item: • Short circuit to power supply in harness between ECM connector and main relay connector • Defective main relay	Go to step **3**.
3	**CHECK HARNESS BETWEEN ECM AND MAIN RELAY CONNECTOR.** 1) Turn the ignition switch to OFF. 2) Remove the main relay. 3) Disconnect the connector from ECM. 4) Measure the resistance between the ECM connector and engine ground. ***Connector & terminal*** ***(B134) No. 60 — Engine ground:***	Is the resistance 1 MΩ or more?	Repair the poor contact of ECM connector.	Repair the short circuit to ground in harness between ECM connector and main relay connector.

1. OUTLINE OF DIAGNOSIS

Detect the main relay stuck to ON.
Judge as NG when ECM keeps operating for more than predetermined time although the main relay does not turn to OFF after ignition switch is turned to OFF.

2. COMPONENT DESCRIPTION

The main relay controls current of coils by receiving instructions from the ignition switch and ELCM to switch ECM to ON/OFF.

3. EXECUTION CONDITION

Secondary Parameters	Execution condition
Main relay	OFF instruction

4. GENERAL DRIVING CYCLE

Perform the diagnosis only once when the enable conditions are established with the ignition switch OFF → ON.

5. DIAGNOSTIC METHOD

If the duration of time while the following conditions are met is longer than the time indicated, judge as NG.

Judgment Value

Malfunction Criteria	Threshold Value
ECM status	In operation

Time Needed for Diagnosis: 2500 ms
Malfunction Indicator Light Illumination: Illuminates when malfunction occurs in 2 continuous driving cycles.

EQ:DTC P0700 TRANSMISSION CONTROL SYSTEM (MIL REQUEST)

NOTE:
For the diagnostic procedure, refer to CVT section. <Ref. to CVT(diag)-2, Basic Diagnostic Procedure.>

1. OUTLINE OF DIAGNOSIS

Judge as NG when there is CAN communication with the TCM and there is a MIL lighting request.

2. EXECUTION CONDITION

Secondary Parameters	Execution condition
Battery voltage	≥ 10.9 V

3. GENERAL DRIVING CYCLE

Always perform the diagnosis continuously.

4. DIAGNOSTIC METHOD

If the duration of time while the following conditions are met is longer than the time indicated, judge as NG.

Judgment Value

Malfunction Criteria	Threshold Value
MIL lighting request from TCM	Yes

Time Needed for Diagnosis: 128 ms
Malfunction Indicator Light Illumination: Illuminates as soon as a malfunction occurs.

ER:DTC P081A STARTER DISABLE CIRCUIT LOW

DTC DETECTING CONDITION:
Immediately at fault recognition
TROUBLE SYMPTOM:
Failure of engine to start

CAUTION:
After servicing or replacing faulty parts, perform Clear Memory Mode <Ref. to EN(H6DO)(diag)-85, OPERATION, Clear Memory Mode.>, and Inspection Mode <Ref. to EN(H6DO)(diag)-69, PROCEDURE, Inspection Mode.>.

WIRING DIAGRAM:

Engine Electrical System ENGINE TYPE EZ (WITH PUSH BUTTON START) <Ref. to WI-214, ENGINE TYPE EZ (WITH PUSH BUTTON START), WIRING DIAGRAM, Engine Electrical System.>

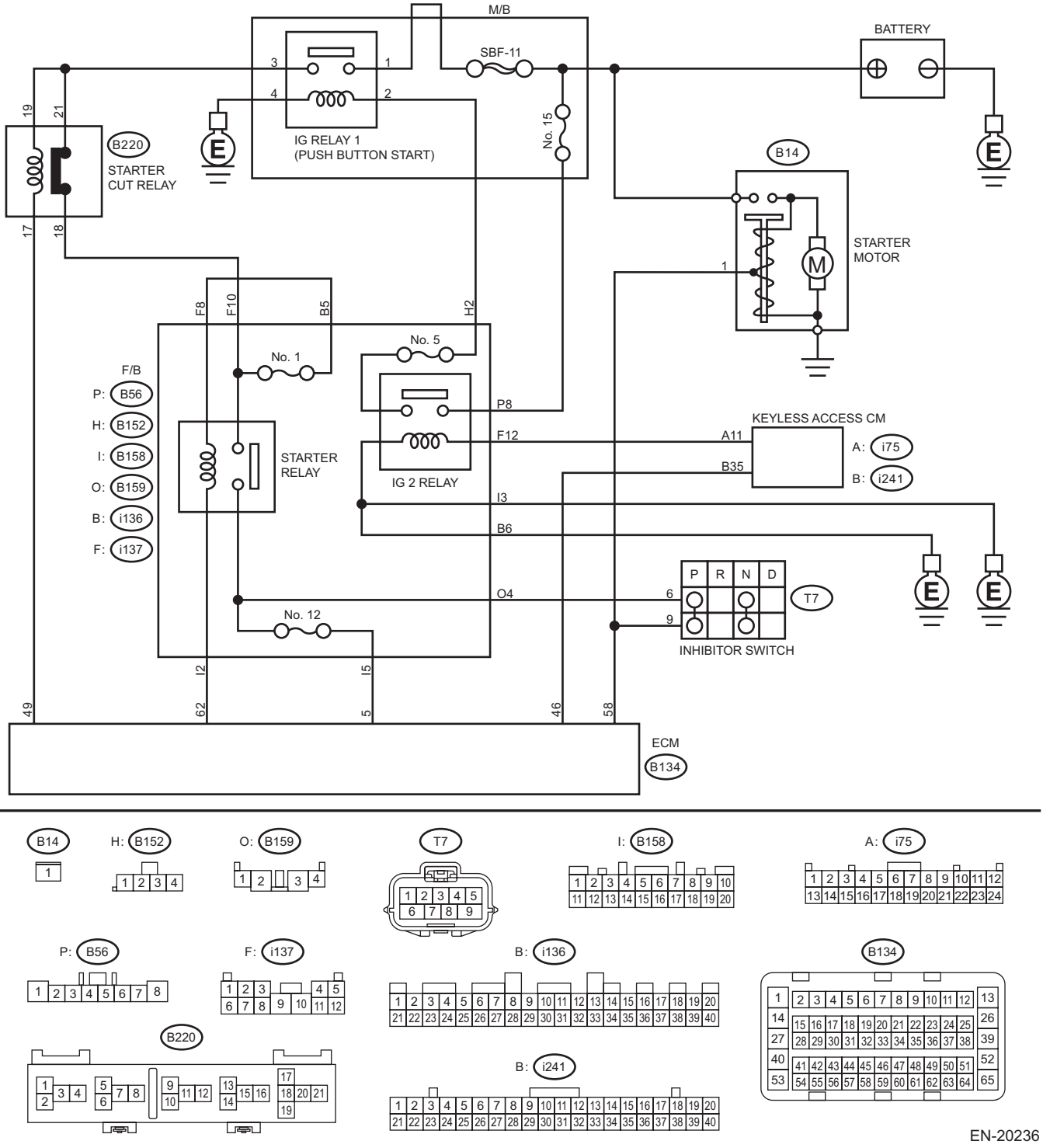

EN-20236

	Step	Check	Yes	No
1	**CHECK HARNESS BETWEEN STARTER RELAY (PUSH BUTTON START) CONNECTOR AND STARTER CUT RELAY CONNECTOR.** 1) Turn the ignition to OFF. 2) Remove the starter relay (push button start) and starter cut relay. 3) Measure the resistance of harness between starter relay (push button start) connector and starter cut relay connector. ***Connector & terminal*** ***(B220) No. 18 — (i137) No. 8:***	Is the resistance less than 1 Ω?	Go to step **2**.	Repair the open circuit in harness between starter relay (push button start) connector and starter cut relay connector.
2	**CHECK HARNESS BETWEEN ECM AND STARTER CUT RELAY CONNECTOR.** 1) Disconnect the connector from ECM. 2) Measure the resistance of harness between ECM connector and starter cut relay connector. ***Connector & terminal*** ***(B134) No. 62 — (B225) No. 2:***	Is the resistance less than 1 Ω?	Go to step **3**.	Repair the open circuit of harness between ECM connector and starter cut relay connector.
3	**CHECK STARTER CUT RELAY.** 1) Connect the battery to starter cut relay terminals No. 18 and No. 20. 2) Measure the resistance between starter cut relay terminals. ***Terminals*** ***No. 18 — No. 21:***	Is the resistance 1 MΩ or more?	Repair the poor contact of ECM connector.	Replace the starter cut relay. <Ref. to SL-9, Relay and Fuse.>

1. OUTLINE OF DIAGNOSIS

Detect abnormal continuity in the starter cut relay.
Judge as NG when the starter cut relay output line is open.

2. EXECUTION CONDITION

Secondary Parameters	Execution condition
Battery voltage	≥ 8 V
Engine speed	Increase from 0 rpm to 500 rpm or more
Vehicle speed	< 1 km/h (0.6 MPH)
Starter cut relay command	OFF

3. GENERAL DRIVING CYCLE

Perform the diagnosis only once after the enable conditions have been established.

4. DIAGNOSTIC METHOD

Judge as NG when the following conditions are established.

Judgment Value

Malfunction Criteria	Threshold Value
Starter cut relay control voltage that exceeds battery voltage × 0.34	Not detected

Time Needed for Diagnosis: Less than 1 second
Malfunction Indicator Light Illumination: Illuminates as soon as a malfunction occurs.

ES:DTC P0851 PARK/NEUTRAL SWITCH INPUT CIRCUIT LOW

DTC DETECTING CONDITION:
Detected when two consecutive driving cycles with fault occur.
TROUBLE SYMPTOM:
Improper idling

CAUTION:
After servicing or replacing faulty parts, perform Clear Memory Mode <Ref. to EN(H6DO)(diag)-85, OPERATION, Clear Memory Mode.>, and Inspection Mode <Ref. to EN(H6DO)(diag)-69, PROCEDURE, Inspection Mode.>.
WIRING DIAGRAM:
• Engine Electrical System ENGINE TYPE EZ (WITHOUT PUSH BUTTON START) <Ref. to WI-198, ENGINE TYPE EZ (WITHOUT PUSH BUTTON START), WIRING DIAGRAM, Engine Electrical System.>
• Engine Electrical System ENGINE TYPE EZ (WITH PUSH BUTTON START) <Ref. to WI-214, ENGINE TYPE EZ (WITH PUSH BUTTON START), WIRING DIAGRAM, Engine Electrical System.>

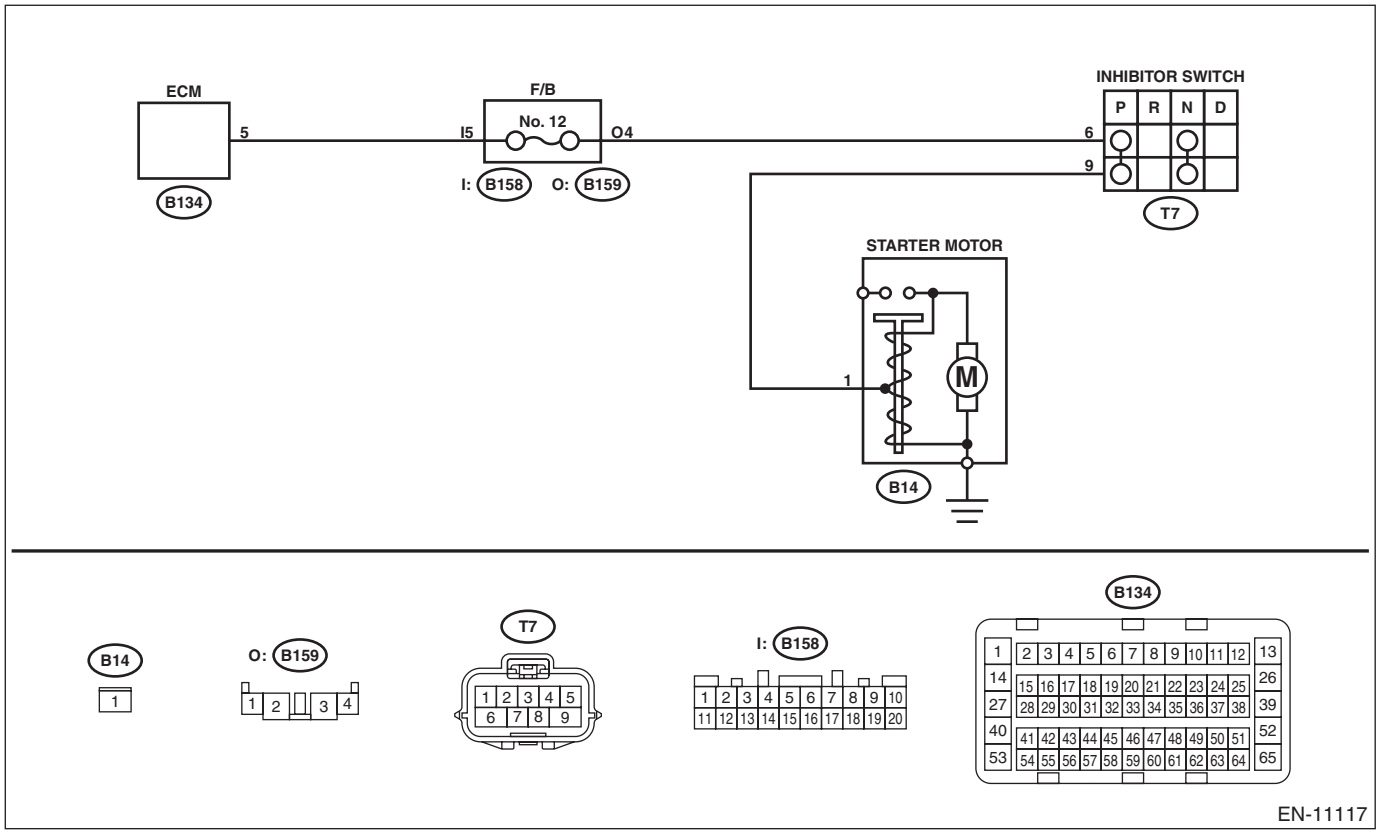

	Step	Check	Yes	No
1	**CHECK SELECT CABLE.**	Is there any fault in select cable?	Repair or adjust the select cable. <Ref. to CS-41, Select Cable.>	Go to step **2**.
2	**CHECK INPUT SIGNAL OF ECM.** 1) Turn the ignition switch to ON. 2) Place the select lever in other than “P” range and “N” range. 3) Measure the voltage between ECM connector and chassis ground. ***Connector & terminal*** ***(B134) No. 5 (+) — Chassis ground (–):***	Is the voltage 10 V or more?	Repair the poor contact of ECM connector.	Go to step **3**.

	Step	Check	Yes	No
3	**CHECK HARNESS BETWEEN ECM AND TRANSMISSION HARNESS CONNECTOR.** 1) Turn the ignition switch to OFF. 2) Disconnect the connectors from ECM and inhibitor switch. 3) Measure the resistance between ECM connector and chassis ground. ***Connector & terminal*** ***(B134) No. 5 — Chassis ground:***	Is the resistance 1 MΩ or more?	Replace the inhibitor switch. <Ref. to CVT(TR690)-102, Inhibitor Switch.>	Repair the short circuit to ground in harness between ECM connector and inhibitor switch connector.

1. OUTLINE OF DIAGNOSIS

Detect the open or short circuit of neutral SW.
Judge as NG when the ECM neutral terminal input differs from the reception data from TCM.

2. EXECUTION CONDITION

Secondary Parameters	Execution condition
Battery voltage	≥ 10.9 V
Starter relay feedback voltage	< Battery voltage × 0.35
Data received from TCM	≠ “P” range/“N” range

3. GENERAL DRIVING CYCLE

Perform the diagnosis only once after the enable conditions have been established.

4. DIAGNOSTIC METHOD

If the duration of time while the following conditions are met is longer than the time indicated, judge as NG.

Judgment Value

Malfunction Criteria	Threshold Value
Voltage of the neutral position switch signal	≤ Battery voltage × 0.19

Time Needed for Diagnosis: 64 ms × 100 time(s)
Malfunction Indicator Light Illumination: Illuminates when malfunction occurs in 2 continuous driving cycles.

ET:DTC P0852 PARK/NEUTRAL SWITCH INPUT CIRCUIT HIGH

DTC DETECTING CONDITION:
Detected when two consecutive driving cycles with fault occur.
TROUBLE SYMPTOM:
Improper idling

CAUTION:
After servicing or replacing faulty parts, perform Clear Memory Mode <Ref. to EN(H6DO)(diag)-85, OPERATION, Clear Memory Mode.>, and Inspection Mode <Ref. to EN(H6DO)(diag)-69, PROCEDURE, Inspection Mode.>.
WIRING DIAGRAM:
• Engine Electrical System ENGINE TYPE EZ (WITHOUT PUSH BUTTON START) <Ref. to WI-198, ENGINE TYPE EZ (WITHOUT PUSH BUTTON START), WIRING DIAGRAM, Engine Electrical System.>
• Engine Electrical System ENGINE TYPE EZ (WITH PUSH BUTTON START) <Ref. to WI-214, ENGINE TYPE EZ (WITH PUSH BUTTON START), WIRING DIAGRAM, Engine Electrical System.>

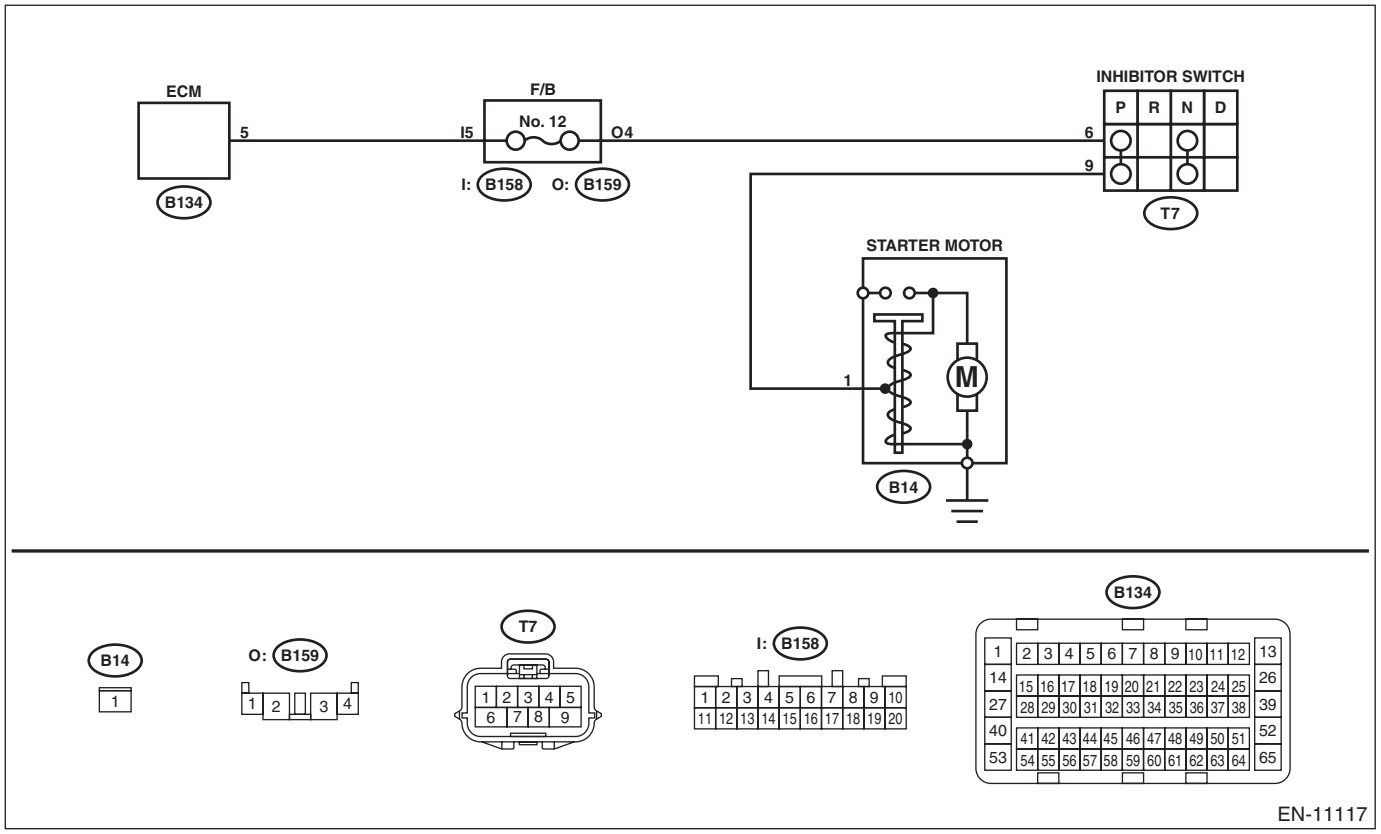

	Step	Check	Yes	No
1	**CHECK SELECT CABLE.**	Is there any fault in select cable?	Repair or adjust the select cable. <Ref. to CS-41, Select Cable.>	Go to step **2**.
2	**CHECK INPUT SIGNAL OF ECM.** 1) Turn the ignition switch to ON. 2) Measure the voltage between ECM and chassis ground with select lever at “P” range and “N” range. ***Connector & terminal*** ***(B134) No. 5 (+) — Chassis ground (–):***	Is the voltage less than 1 V?	Repair the poor contact of ECM connector.	Go to step **3**.

Step		Check	Yes	No
3	**CHECK HARNESS BETWEEN ECM AND INHIBITOR SWITCH CONNECTOR.** 1) Turn the ignition switch to OFF. 2) Disconnect the connectors from ECM and inhibitor switch. 3) Measure the resistance of harness between ECM connector and inhibitor switch connector. ***Connector & terminal*** ***(B134) No. 5 — (T7) No. 6:***	Is the resistance less than 1 Ω?	Go to step **4**.	Repair the harness and connector. NOTE: In this case, repair the following item: • Blown out of fuse • Open circuit in harness between ECM connector and inhibitor switch connector • Poor contact of coupling connector
4	**CHECK INHIBITOR SWITCH GROUND LINE.** Measure the resistance of harness between inhibitor switch connector and engine ground. ***Connector & terminal*** ***(T7) No. 9 — Engine ground:***	Is the resistance less than 5 Ω?	Replace the inhibitor switch. <Ref. to CVT(TR690)-102, Inhibitor Switch.>	Repair the harness and connector. NOTE: In this case, repair the following item: • Open circuit of harness between inhibitor switch connector and starter motor ground line • Poor contact of coupling connector • Poor contact of starter motor connector • Poor contact of starter motor ground • Starter motor

1. OUTLINE OF DIAGNOSIS

Detect the open or short circuit of neutral SW.
Judge as NG when the ECM neutral terminal input differs from the reception data from TCM.

2. EXECUTION CONDITION

Secondary Parameters	Execution condition
Battery voltage	≥ 10.9 V
Starter relay feedback voltage	< Battery voltage × 0.35
Data received from TCM	= “P” range/“N” range

3. GENERAL DRIVING CYCLE

Perform the diagnosis only once after the enable conditions have been established.

4. DIAGNOSTIC METHOD

If the duration of time while the following conditions are met is longer than the time indicated, judge as NG.

Judgment Value

Malfunction Criteria	Threshold Value
Voltage of the neutral position switch signal	≥ Battery voltage × 0.6

Time Needed for Diagnosis: 64 ms × 100 time(s)
Malfunction Indicator Light Illumination: Illuminates when malfunction occurs in 2 continuous driving cycles.

EU:DTC P1160 THROTTLE RETURN SPRING

NOTE:
For the diagnostic procedure, refer to DTC P2101. <Ref. to EN(H6DO)(diag)-556, DTC P2101 THROTTLE ACTUATOR "A" CONTROL MOTOR CIRCUIT RANGE/PERFORMANCE, Diagnostic Procedure with Diagnostic Trouble Code (DTC).>

1. OUTLINE OF DIAGNOSIS

Judge as NG when the valve is opened more than the default opening angle, but does not move to the close direction with the motor power stopped.

2. COMPONENT DESCRIPTION

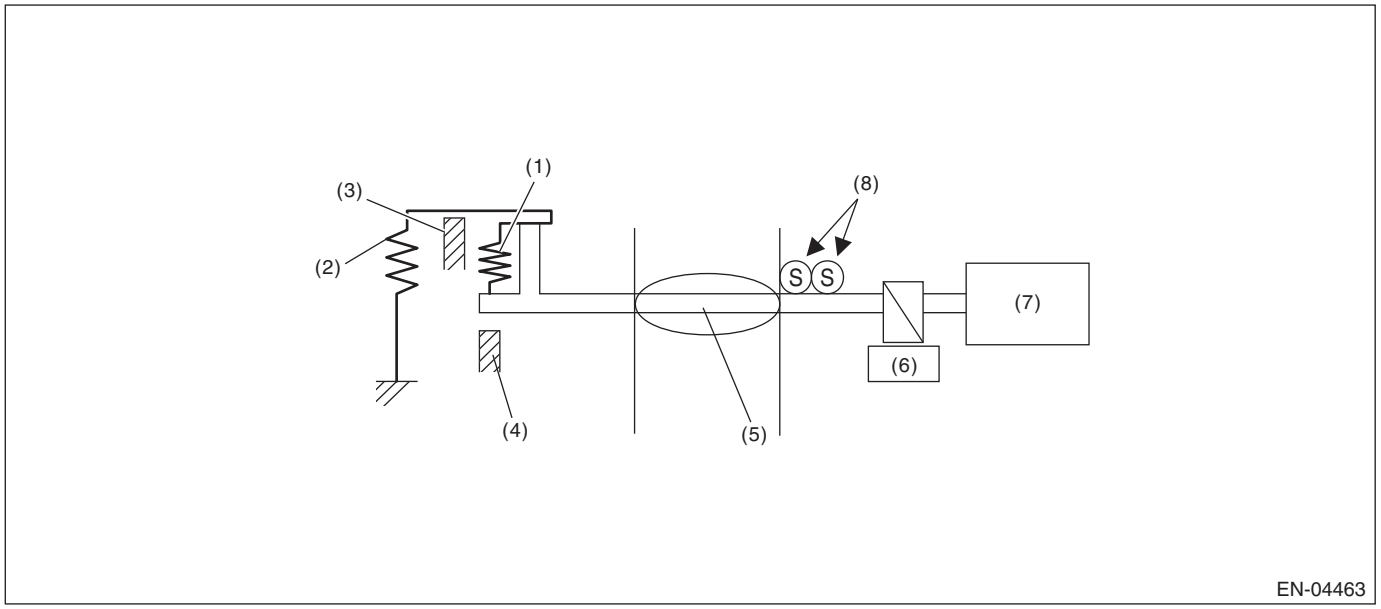

(1) Opener spring
(2) Return spring
(3) Intermediate stopper
(4) Full closed stopper
(5) Throttle valve
(6) Gear
(7) DC motor
(8) Main and sub throttle position sensor

3. EXECUTION CONDITION

Secondary Parameters	Execution condition
Ignition switch	OFF
Battery voltage	≥ 6 V
Elapsed time after motor continuity OFF	= 1.6 s

4. GENERAL DRIVING CYCLE

- Ignition switch ON → OFF
- Ignition switch OFF → ON (Only after clearing memory)

5. DIAGNOSTIC METHOD

Judge as NG when the following conditions are established.

Judgment Value

Malfunction Criteria	Threshold Value
Change of the opening angle after the motor current is cut OFF	< 2 °

Time Needed for Diagnosis: Less than 1 second
Malfunction Indicator Light Illumination: Illuminates as soon as a malfunction occurs.

EV:DTC P1449 EVAP SYSTEM CLOG DETECTED (AIR FILTER)

DTC DETECTING CONDITION:
Detected when two consecutive driving cycles with fault occur.

CAUTION:
After servicing or replacing faulty parts, perform Clear Memory Mode <Ref. to EN(H6DO)(diag)-85, OPERATION, Clear Memory Mode.>, and Inspection Mode <Ref. to EN(H6DO)(diag)-69, PROCEDURE, Inspection Mode.>.

	Step	Check	Yes	No
1	**CHECK FOR ANY OTHER DTC ON DISPLAY.**	Is any other DTC displayed?	Check the appropriate DTC using the "List of Diagnostic Trouble Code (DTC)". <Ref. to EN(H6DO)(diag)-109, List of Diagnostic Trouble Code (DTC).>	Go to step **2**.
2	**CHECK CANISTER TUBE ASSEMBLY AND DRAIN TUBE ASSEMBLY BETWEEN CANISTER AND DRAIN FILTER.**	Is the canister tube assembly and/or the drain tube assembly clogged between canister and drain filter?	Replace the canister tube assembly and/or the drain tube assembly between canister and drain filter. <Ref. to EC(H6DO)-5, Canister.> <Ref. to EC(H6DO)-31, Drain Filter.>	Go to step **3**.
3	**CHECK DRAIN FILTER.**	Is the drain filter clogged?	Replace the drain filter. <Ref. to EC(H6DO)-31, Drain Filter.>	Replace the canister. <Ref. to EC(H6DO)-5, Canister.>

1. OUTLINE OF DIAGNOSIS

Detect the drain filter clogging by the pressure change during purge introduction.
Judge as drain filter clogging malfunction if the pressure in the evaporative emission system piping suddenly decreases by the purging.

2. COMPONENT DESCRIPTION

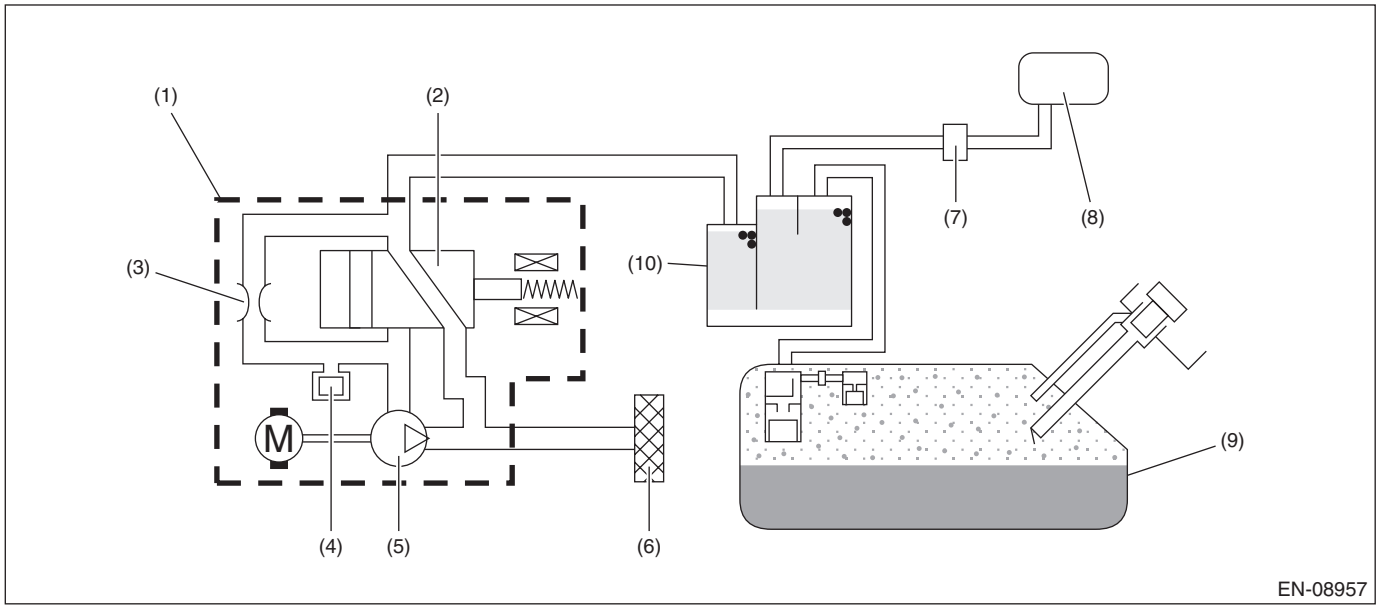

(1) ELCM
(2) Switching valve
(3) Reference orifice (0.02 inch orifice)
(4) Pressure sensor
(5) Vacuum pump
(6) Drain filter
(7) Purge control solenoid valve
(8) Intake manifold
(9) Fuel tank
(10) Canister

3. EXECUTION CONDITION

Secondary Parameters	Execution condition
Battery voltage	≥ 10.9 V
Elapsed time after starting the engine	≥ 20000 ms
• ELCM vacuum pump	Not in operation
• ELCM switching valve	Open

4. GENERAL DRIVING CYCLE

Perform the diagnosis continuously when purging is performed after 20000 ms have passed since the engine started.

5. DIAGNOSTIC METHOD

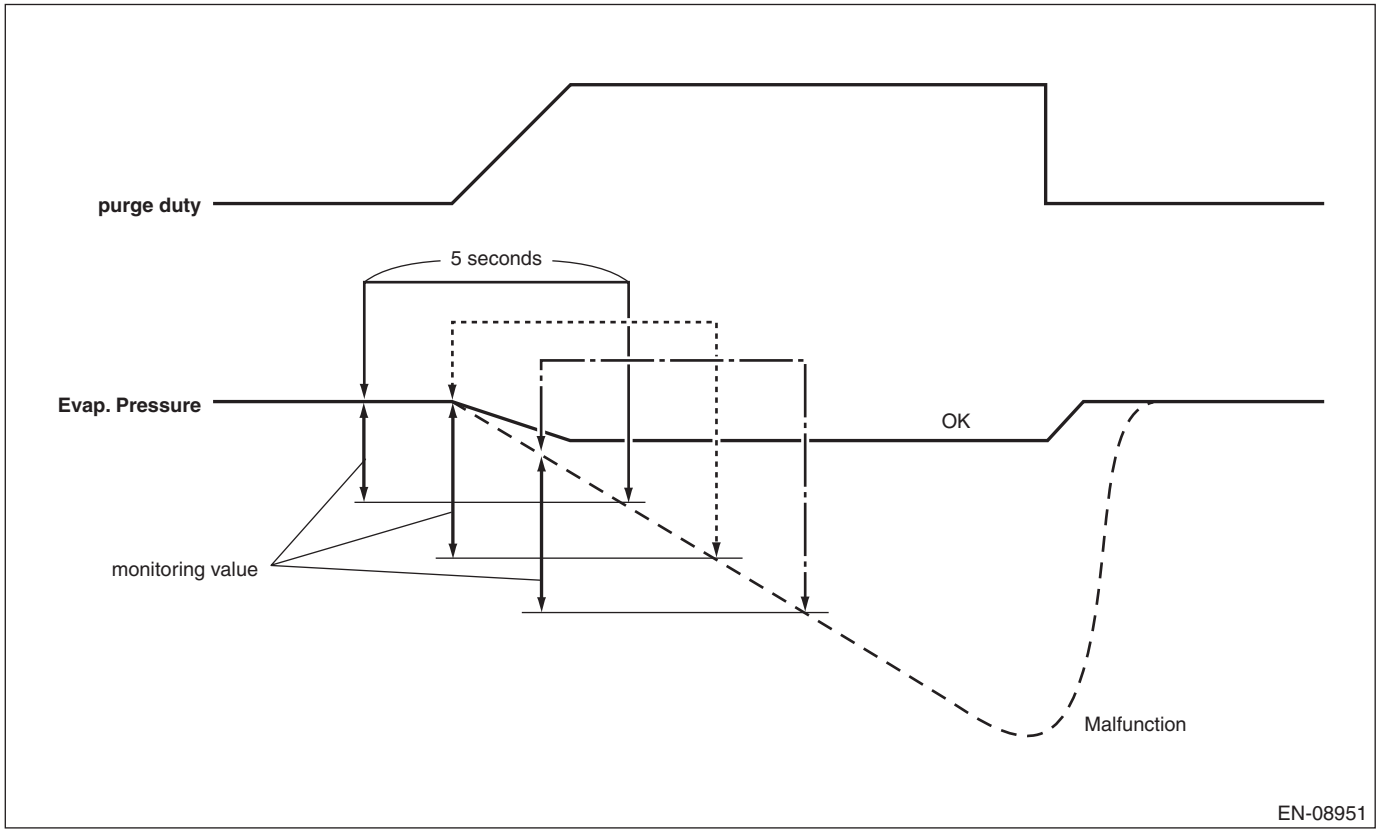

Calculate the difference between the ELCM pressure sensor output value as of 5 seconds ago and the current one, and if the value is greater than judgment value, detect and judge as filter clogging trouble.
Judge as NG when the following conditions are established.

Judgment Value

Malfunction Criteria	Threshold Value
|Pressure sensor output value as of 5 seconds ago – Current pressure sensor output value|	> Value from Map
Number of above conditions established	> 2 time(s)

Map

Vehicle speed km/h (MPH)	0 (0)	20 (12.4)	40 (24.9)	60 (37.3)	80 (49.7)	100 (62.1)	120 (74.6)	300 (186.4)
|Pressure sensor output value as of 5 seconds ago – Current pressure sensor output value| kPa (mmHg, inHg)	1002.6 (7.52, 0.3)	1002.6 (7.52, 0.3)	1002.6 (7.52, 0.3)	1002.6 (7.52, 0.3)	1002.6 (7.52, 0.3)	1002.6 (7.52, 0.3)	1002.6 (7.52, 0.3)	2059.8 (15.45, 0.6)

Time Needed for Diagnosis: Approx. 5.5 seconds
Malfunction Indicator Light Illumination: Illuminates when malfunction occurs in 2 continuous driving cycles.

EW:DTC P1451 EVAP SYSTEM CLOG DETECTED (PIPE)

DTC DETECTING CONDITION:
Detected when two consecutive driving cycles with fault occur.

CAUTION:
After servicing or replacing faulty parts, perform Clear Memory Mode <Ref. to EN(H6DO)(diag)-85, OPERATION, Clear Memory Mode.>, and Inspection Mode <Ref. to EN(H6DO)(diag)-69, PROCEDURE, Inspection Mode.>.

	Step	Check	Yes	No
1	**CHECK DRAIN TUBE BETWEEN CANISTER AND LEAK CHECK VALVE ASSEMBLY.**	Is the drain tube between canister and leak check valve assembly clogged?	Replace the drain tube between the canister and leak check valve assembly. <Ref. to EC(H6DO)-5, Canister.>	Go to step **2**.
2	**CHECK HOSE AND TUBE BETWEEN CANISTER AND FUEL TANK.**	Are the hose and tube between the canister and fuel tank clogged?	Replace the hose or tube between the canister and fuel tank. <Ref. to EC(H6DO)-5, Canister.> <Ref. to FU(H6DO)-99, Fuel Tank.>	Replace the canister. <Ref. to EC(H6DO)-5, Canister.> After the operation is complete, go to the next step. Go to step **3**.
3	**CHECK EVAPORATIVE EMISSION CONTROL SYSTEM.** Perform drive cycle I. <Ref. to EN(H6DO)(diag)-79, DRIVE CYCLE I, PROCEDURE, Drive Cycle.>	Is DTC P1451 displayed on the display?	Replace the leak check valve assembly. <Ref. to EC(H6DO)-36, Leak Check Valve Assembly.>	End.

1. OUTLINE OF DIAGNOSIS

NOTE:
For the detection standard, refer to DTC P0455. <Ref. to EN(H6DO)(diag)-383, DTC P0455 EVAP SYSTEM (CPC) LEAK DETECTED (LARGE LEAK), Diagnostic Procedure with Diagnostic Trouble Code (DTC).>

EX:DTC P1492 COIL 1 EGR "A" CONTROL CIRCUIT LOW

NOTE:
For the diagnostic procedure, refer to DTC P1498. <Ref. to EN(H6DO)(diag)-464, DTC P1498 COIL 4 EGR "A" CONTROL CIRCUIT LOW, Diagnostic Procedure with Diagnostic Trouble Code (DTC).>

1. OUTLINE OF DIAGNOSIS

Detects open or short circuit of EGR.
Judge as NG when the ECM output level differs from the actual terminal level.

2. COMPONENT DESCRIPTION

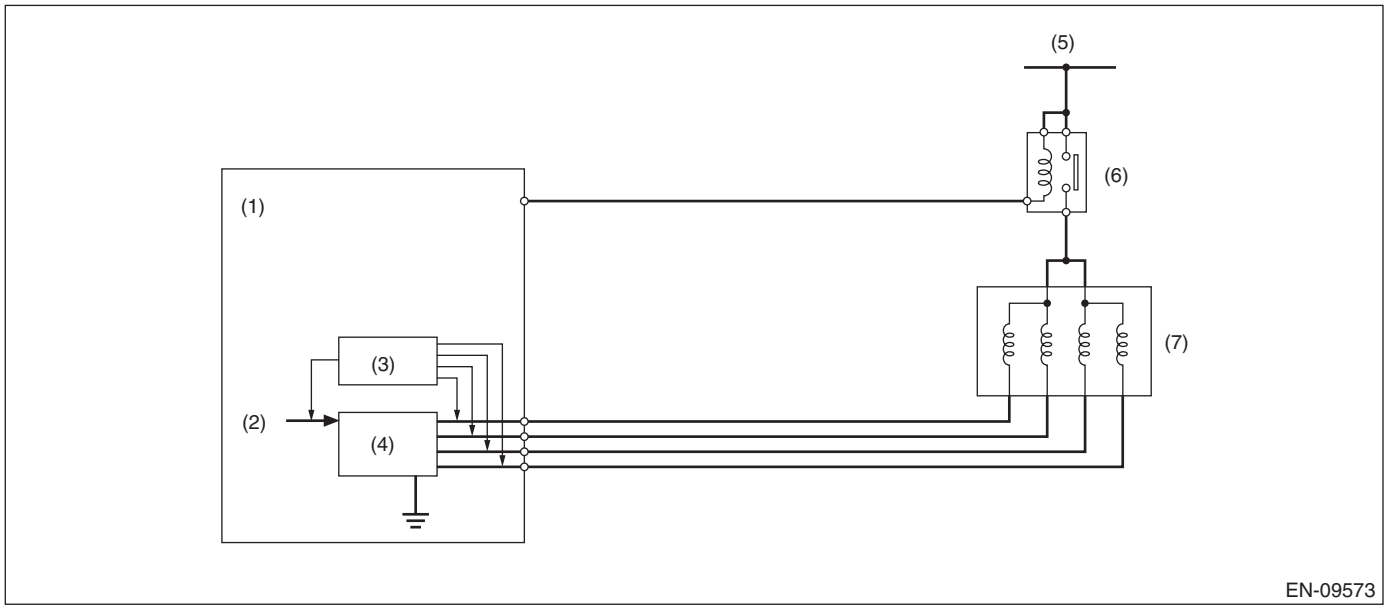

(1) Engine control module (ECM)
(2) Computer unit (CPU)
(3) Detecting circuit
(4) Switch circuit
(5) Battery voltage
(6) Main relay
(7) EGR control valve

3. EXECUTION CONDITION

Secondary Parameters	Execution condition
Battery voltage	≥ 10.9 V
EGR drive signal	OFF

4. GENERAL DRIVING CYCLE

Perform the diagnosis continuously after the enable conditions have been established.

5. DIAGNOSTIC METHOD

If the duration of time while the following conditions are met is longer than the time indicated, judge as NG.

Judgment Value

Malfunction Criteria	Threshold Value
EGR terminal voltage	≤ Battery voltage × 0.34

Time Needed for Diagnosis: 2500 ms
Malfunction Indicator Light Illumination: Illuminates as soon as a malfunction occurs.

EY:DTC P1493 COIL 1 EGR "A" CONTROL CIRCUIT HIGH

NOTE:
For the diagnostic procedure, refer to DTC P1499. <Ref. to EN(H6DO)(diag)-466, DTC P1499 COIL 4 EGR "A" CONTROL CIRCUIT HIGH, Diagnostic Procedure with Diagnostic Trouble Code (DTC).>

1. OUTLINE OF DIAGNOSIS

Detects open or short circuit of EGR.
Judge as NG when the ECM output level differs from the actual terminal level.

2. COMPONENT DESCRIPTION

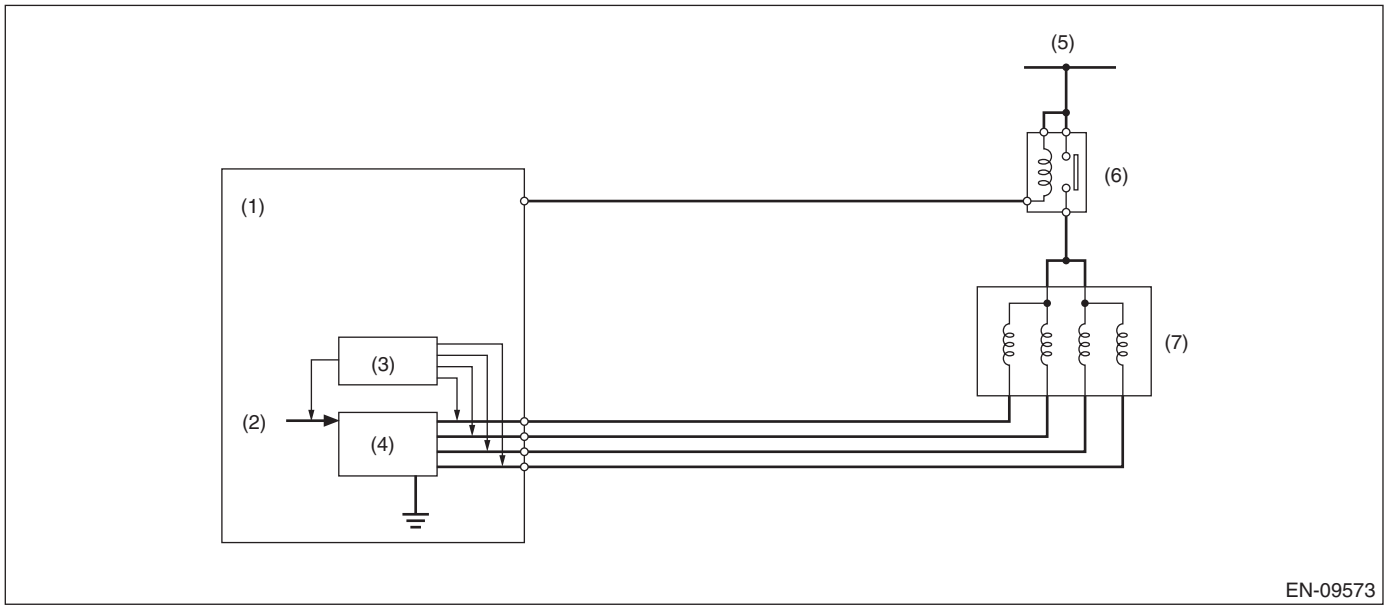

(1) Engine control module (ECM)
(2) Computer unit (CPU)
(3) Detecting circuit
(4) Switch circuit
(5) Battery voltage
(6) Main relay
(7) EGR control valve

3. EXECUTION CONDITION

Secondary Parameters	Execution condition
Battery voltage	≥ 10.9 V
EGR drive signal	ON

4. GENERAL DRIVING CYCLE

Perform the diagnosis continuously after the enable conditions have been established.

5. DIAGNOSTIC METHOD

If the duration of time while the following conditions are met is longer than the time indicated, judge as NG.

Judgment Value

Malfunction Criteria	Threshold Value
EGR terminal current	≥ 6 A

Time Needed for Diagnosis: 2500 ms
Malfunction Indicator Light Illumination: Illuminates as soon as a malfunction occurs.

EZ:DTC P1494 COIL 2 EGR "A" CONTROL CIRCUIT LOW

NOTE:
For the diagnostic procedure, refer to DTC P1498. <Ref. to EN(H6DO)(diag)-464, DTC P1498 COIL 4 EGR "A" CONTROL CIRCUIT LOW, Diagnostic Procedure with Diagnostic Trouble Code (DTC).>

1. OUTLINE OF DIAGNOSIS

NOTE:
For the detection standard, refer to DTC P1492. <Ref. to EN(H6DO)(diag)-461, DTC P1492 COIL 1 EGR "A" CONTROL CIRCUIT LOW, Diagnostic Procedure with Diagnostic Trouble Code (DTC).>

FA:DTC P1495 COIL 2 EGR "A" CONTROL CIRCUIT HIGH

NOTE:
For the diagnostic procedure, refer to DTC P1499. <Ref. to EN(H6DO)(diag)-466, DTC P1499 COIL 4 EGR "A" CONTROL CIRCUIT HIGH, Diagnostic Procedure with Diagnostic Trouble Code (DTC).>

1. OUTLINE OF DIAGNOSIS

NOTE:
For the detection standard, refer to DTC P1493. <Ref. to EN(H6DO)(diag)-462, DTC P1493 COIL 1 EGR "A" CONTROL CIRCUIT HIGH, Diagnostic Procedure with Diagnostic Trouble Code (DTC).>

FB:DTC P1496 COIL 3 EGR "A" CONTROL CIRCUIT LOW

NOTE:
For the diagnostic procedure, refer to DTC P1498. <Ref. to EN(H6DO)(diag)-464, DTC P1498 COIL 4 EGR "A" CONTROL CIRCUIT LOW, Diagnostic Procedure with Diagnostic Trouble Code (DTC).>

1. OUTLINE OF DIAGNOSIS

NOTE:
For the detection standard, refer to DTC P1492. <Ref. to EN(H6DO)(diag)-461, DTC P1492 COIL 1 EGR "A" CONTROL CIRCUIT LOW, Diagnostic Procedure with Diagnostic Trouble Code (DTC).>

FC:DTC P1497 COIL 3 EGR "A" CONTROL CIRCUIT HIGH

NOTE:
For the diagnostic procedure, refer to DTC P1499. <Ref. to EN(H6DO)(diag)-466, DTC P1499 COIL 4 EGR "A" CONTROL CIRCUIT HIGH, Diagnostic Procedure with Diagnostic Trouble Code (DTC).>

1. OUTLINE OF DIAGNOSIS

NOTE:
For the detection standard, refer to DTC P1493. <Ref. to EN(H6DO)(diag)-462, DTC P1493 COIL 1 EGR "A" CONTROL CIRCUIT HIGH, Diagnostic Procedure with Diagnostic Trouble Code (DTC).>

FD:DTC P1498 COIL 4 EGR "A" CONTROL CIRCUIT LOW

DTC DETECTING CONDITION:
Immediately at fault recognition
TROUBLE SYMPTOM:
- Improper idling
- Poor driving performance
- Engine breathing

CAUTION:
After servicing or replacing faulty parts, perform Clear Memory Mode <Ref. to EN(H6DO)(diag)-85, OPERATION, Clear Memory Mode.>, and Inspection Mode <Ref. to EN(H6DO)(diag)-69, PROCEDURE, Inspection Mode.>.
WIRING DIAGRAM:
- Engine Electrical System ENGINE TYPE EZ (WITHOUT PUSH BUTTON START) <Ref. to WI-198, ENGINE TYPE EZ (WITHOUT PUSH BUTTON START), WIRING DIAGRAM, Engine Electrical System.>
- Engine Electrical System ENGINE TYPE EZ (WITH PUSH BUTTON START) <Ref. to WI-214, ENGINE TYPE EZ (WITH PUSH BUTTON START), WIRING DIAGRAM, Engine Electrical System.>

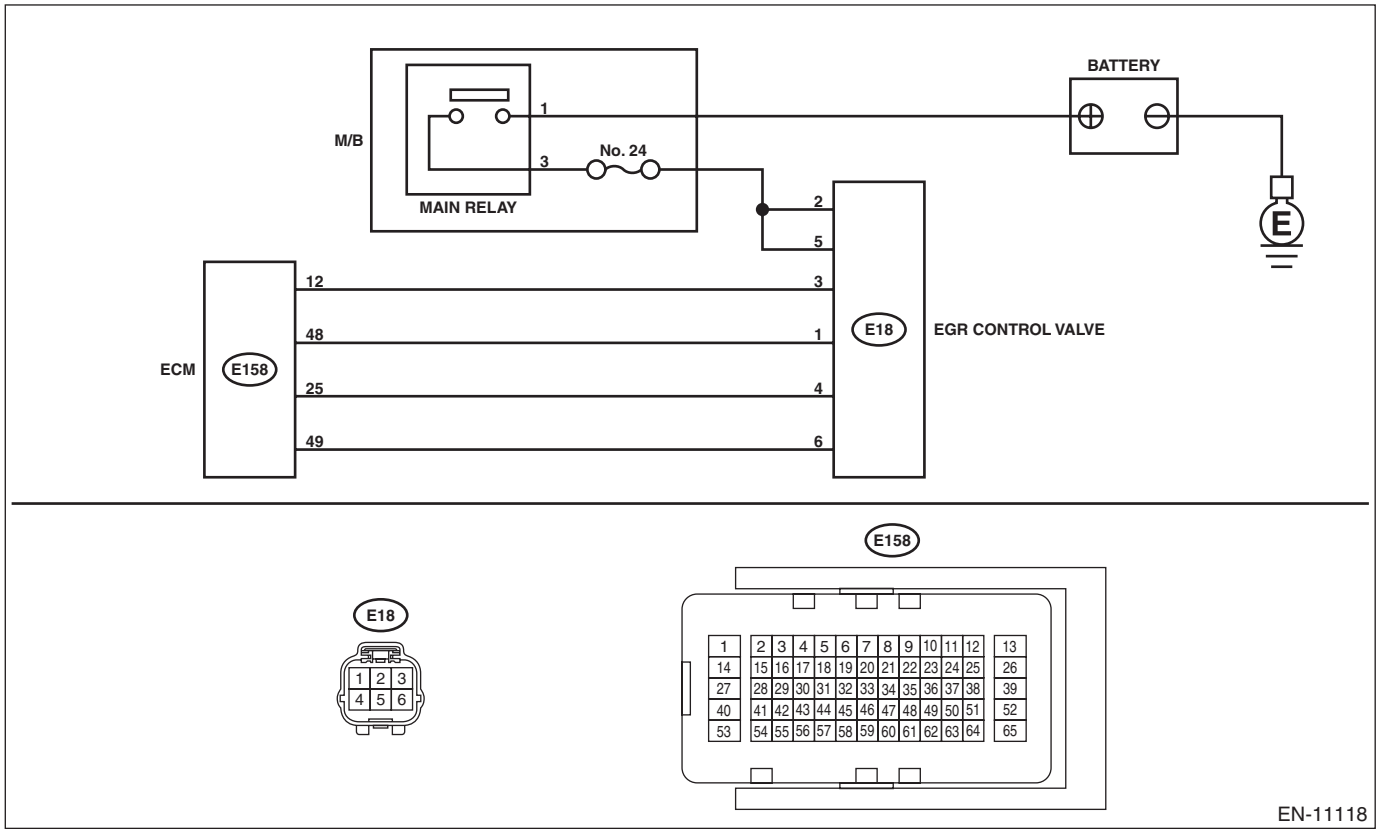

Step		Check	Yes	No
1	**CHECK POWER SUPPLY TO EGR CONTROL VALVE.** 1) Turn the ignition switch to OFF. 2) Disconnect the connector from the EGR control valve. 3) Turn the ignition switch to ON. 4) Measure the voltage between EGR control valve connector and engine ground. ***Connector & terminal*** ***(E18) No. 2 (+) — Engine ground (–):*** ***(E18) No. 5 (+) — Engine ground (–):***	Is the voltage 10 V or more?	Go to step **2**.	Repair the harness and connector. NOTE: In this case, repair the following item: • Open circuit in harness between EGR control valve connector and main relay connector • Poor contact of coupling connector

	Step	Check	Yes	No
2	**CHECK HARNESS BETWEEN ECM AND EGR CONTROL VALVE CONNECTOR.** 1) Turn the ignition switch to OFF. 2) Disconnect the connector from ECM. 3) Measure the resistance of harness between ECM connector and EGR control valve connector. ***Connector & terminal*** ***DTC P1492; (E158) No. 12 — (E18) No. 3:*** ***DTC P1494; (E158) No. 48 — (E18) No. 1:*** ***DTC P1496; (E158) No. 25 — (E18) No. 4:*** ***DTC P1498; (E158) No. 49 — (E18) No. 6:***	Is the resistance less than 1 Ω?	Go to step **3**.	Repair the harness and connector. NOTE: In this case, repair the following item: • Open circuit of harness between ECM connector and EGR control valve connector • Poor contact of coupling connector
3	**CHECK HARNESS BETWEEN ECM AND EGR CONTROL VALVE CONNECTOR.** 1) Disconnect the connector from ECM. 2) Measure the resistance between ECM connector and chassis ground. ***Connector & terminal*** ***DTC P1492; (E158) No. 12 — Chassis ground:*** ***DTC P1494; (E158) No. 48 — Chassis ground:*** ***DTC P1496; (E158) No. 25 — Chassis ground:*** ***DTC P1498; (B134) No. 41 — Chassis ground:***	Is the resistance 1 MΩ or more?	Go to step **4**.	Repair ground short circuit of harness between ECM connector and EGR control valve connector.
4	**CHECK FOR POOR CONTACT.** Check poor contact of ECM and EGR control valve connectors.	Is there poor contact in ECM or EGR control valve connector?	Repair the poor contact of ECM or EGR control valve connector.	Replace EGR control valve. <Ref. to EC(H4DO)-26, EGR Control Valve.>

1. OUTLINE OF DIAGNOSIS

NOTE:
For the detection standard, refer to DTC P1492. <Ref. to EN(H6DO)(diag)-461, DTC P1492 COIL 1 EGR "A" CONTROL CIRCUIT LOW, Diagnostic Procedure with Diagnostic Trouble Code (DTC).>

FE:DTC P1499 COIL 4 EGR "A" CONTROL CIRCUIT HIGH

DTC DETECTING CONDITION:
Immediately at fault recognition
TROUBLE SYMPTOM:

- Improper idling
- Poor driving performance
- Engine breathing

CAUTION:
After servicing or replacing faulty parts, perform Clear Memory Mode <Ref. to EN(H6DO)(diag)-85, OPERATION, Clear Memory Mode.>, and Inspection Mode <Ref. to EN(H6DO)(diag)-69, PROCEDURE, Inspection Mode.>.
WIRING DIAGRAM:

- Engine Electrical System ENGINE TYPE EZ (WITHOUT PUSH BUTTON START) <Ref. to WI-198, ENGINE TYPE EZ (WITHOUT PUSH BUTTON START), WIRING DIAGRAM, Engine Electrical System.>
- Engine Electrical System ENGINE TYPE EZ (WITH PUSH BUTTON START) <Ref. to WI-214, ENGINE TYPE EZ (WITH PUSH BUTTON START), WIRING DIAGRAM, Engine Electrical System.>

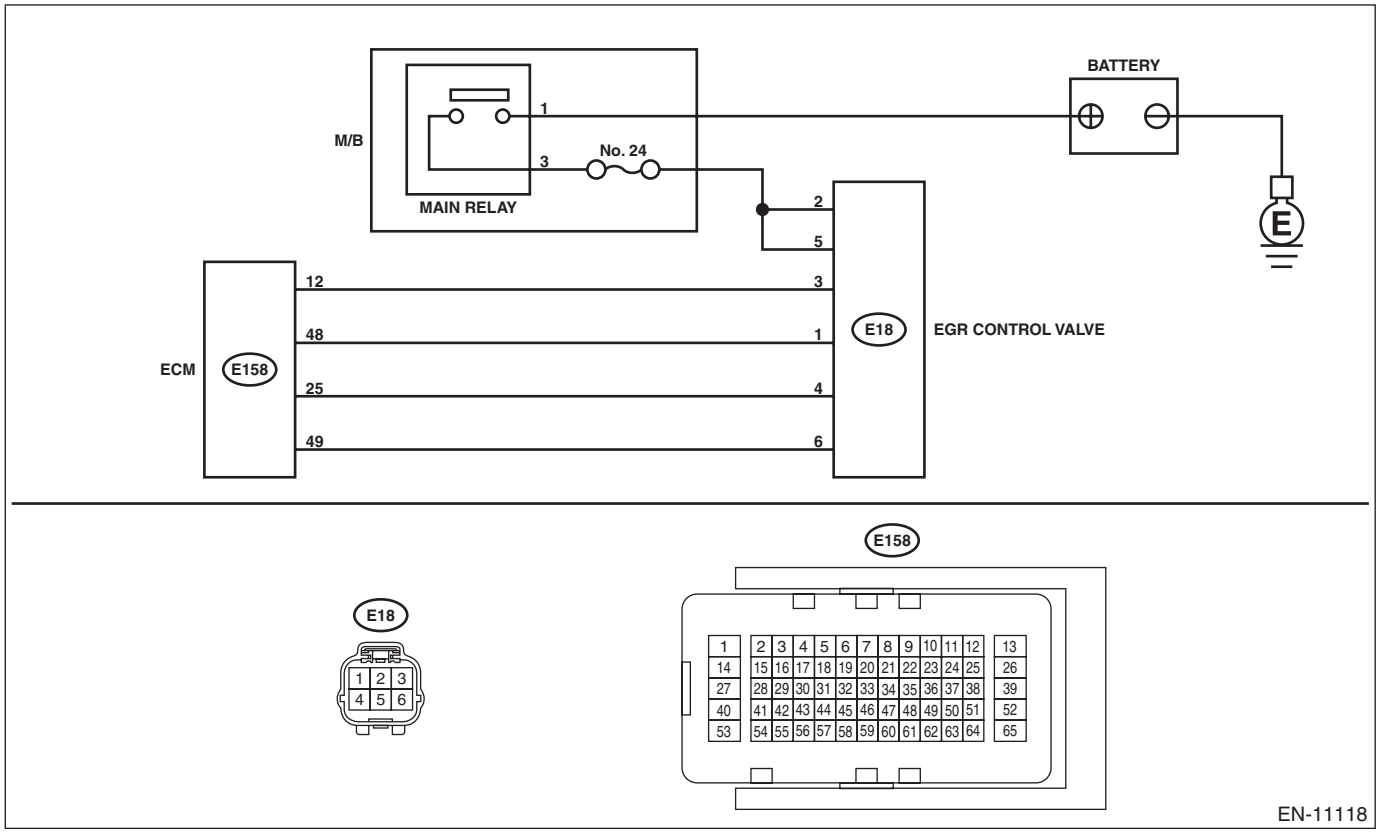

	Step	Check	Yes	No
1	**CHECK HARNESS BETWEEN ECM AND EGR CONTROL VALVE CONNECTOR.** 1) Turn the ignition switch to OFF. 2) Disconnect the connector from ECM and EGR control valve. 3) Turn the ignition switch to ON. 4) Measure the voltage between ECM connector and chassis ground. ***Connector & terminal*** ***DTC P1493; (E158) No. 12 (+) — Chassis ground (–):*** ***DTC P1495; (E158) No. 48 (+) — Chassis ground (–):*** ***DTC P1497; (E158) No. 25 (+) — Chassis ground (–):*** ***DTC P1499; (E158) No. 49 (+) — Chassis ground (–):***	Is the voltage 10 V or more?	Repair the short circuit to power supply in the harness between the ECM connector and EGR control valve connector.	Go to step **2**.
2	**CHECK EGR CONTROL VALVE.** Measure the resistance between EGR control valve terminals. ***Terminals*** ***DTC P1493; No. 2 — No. 3:*** ***DTC P1495; No. 2 — No. 1:*** ***DTC P1497; No. 5 — No. 4:*** ***DTC P1499; No. 5 — No. 6:***	Is the resistance 20 Ω or more?	Repair the poor contact of ECM connector.	Replace EGR control valve. <Ref. to EC(H4DO)-26, EGR Control Valve.>

1. OUTLINE OF DIAGNOSIS

NOTE:
For the detection standard, refer to DTC P1493. <Ref. to EN(H6DO)(diag)-462, DTC P1493 COIL 1 EGR "A" CONTROL CIRCUIT HIGH, Diagnostic Procedure with Diagnostic Trouble Code (DTC).>

FF: DTC P1603 ENGINE STALL HISTORY

DTC DETECTING CONDITION:
Immediately at fault recognition

CAUTION:
After servicing or replacing faulty parts, perform Clear Memory Mode. <Ref. to EN(H6DO)(diag)-85, OPERATION, Clear Memory Mode.>

NOTE:
This DTC may be detected even if fault does not occur in the vehicle. If the customer does not ask for inspection, perform the clear memory mode without inspection and return the vehicle to the user.

WIRING DIAGRAM:

- Engine Electrical System ENGINE TYPE EZ (WITHOUT PUSH BUTTON START) <Ref. to WI-198, ENGINE TYPE EZ (WITHOUT PUSH BUTTON START), WIRING DIAGRAM, Engine Electrical System.>
- Engine Electrical System ENGINE TYPE EZ (WITH PUSH BUTTON START) <Ref. to WI-214, ENGINE TYPE EZ (WITH PUSH BUTTON START), WIRING DIAGRAM, Engine Electrical System.>

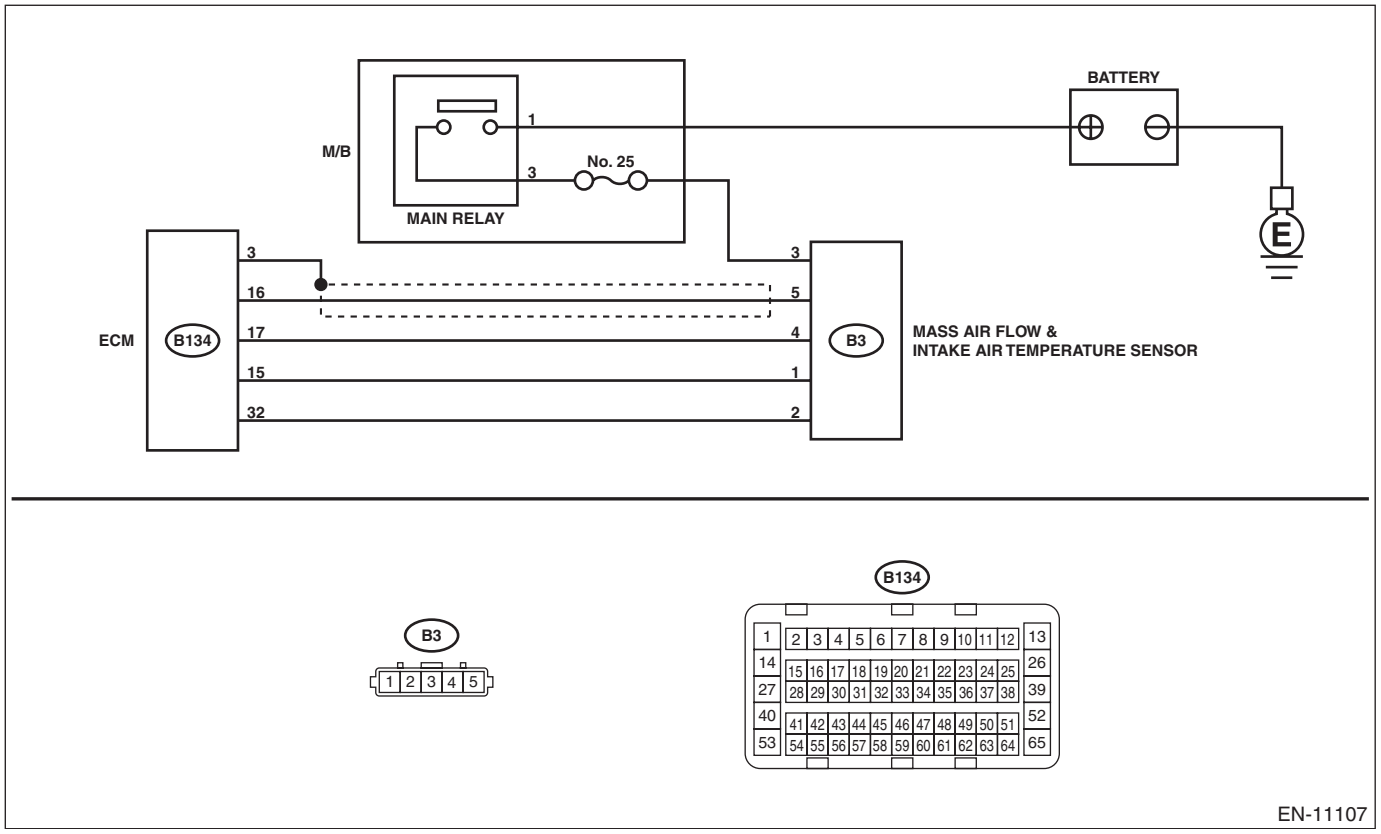

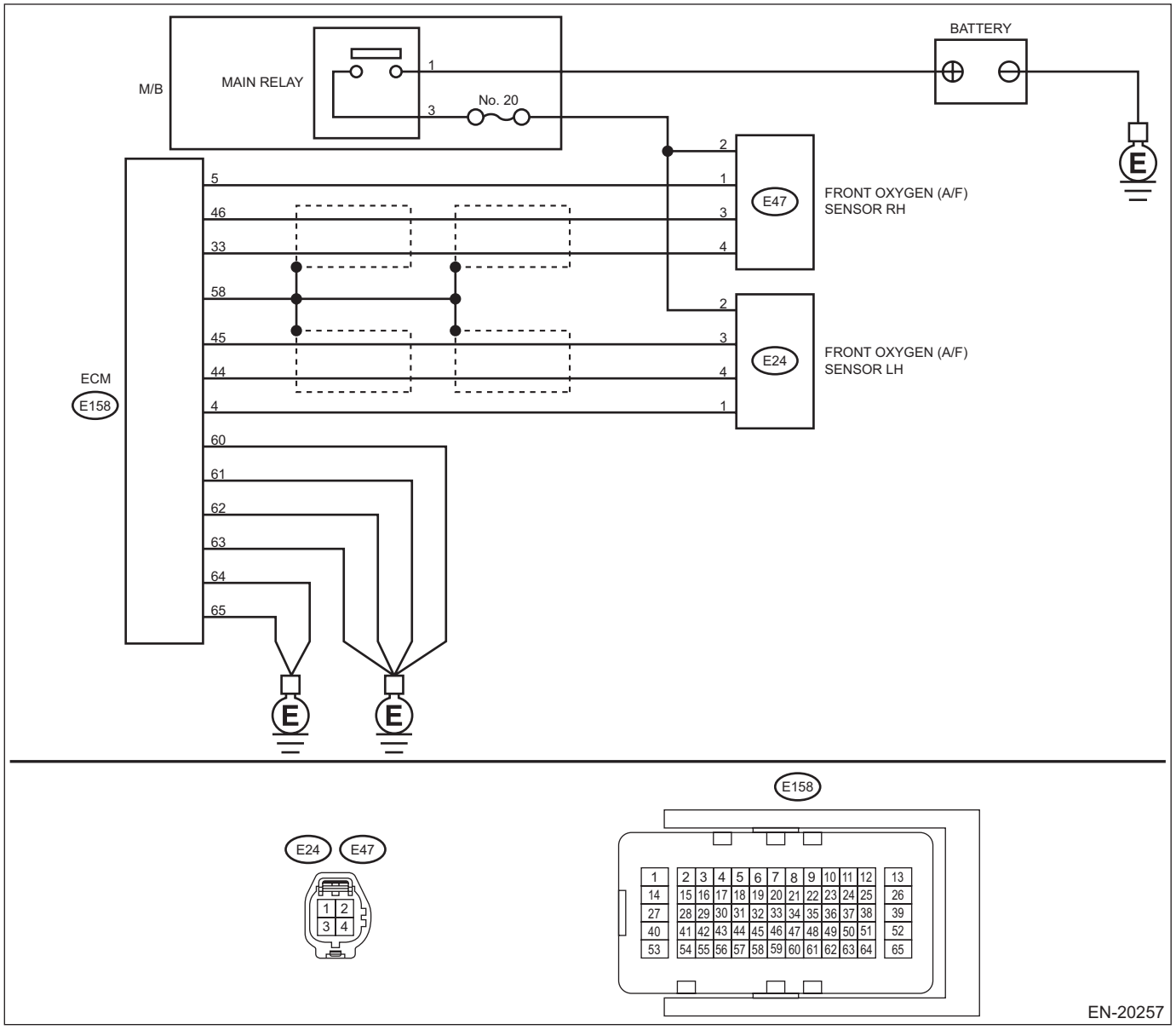
BATTERY
M/B
MAIN RELAY
1
3
No. 20
2
E47
FRONT OXYGEN (A/F) SENSOR RH
2
E24
FRONT OXYGEN (A/F) SENSOR LH
ECM
E158
5
46
33
58
45
44
4
60
61
62
63
64
65
E
E
E
E158
E24
E47
EN-20257

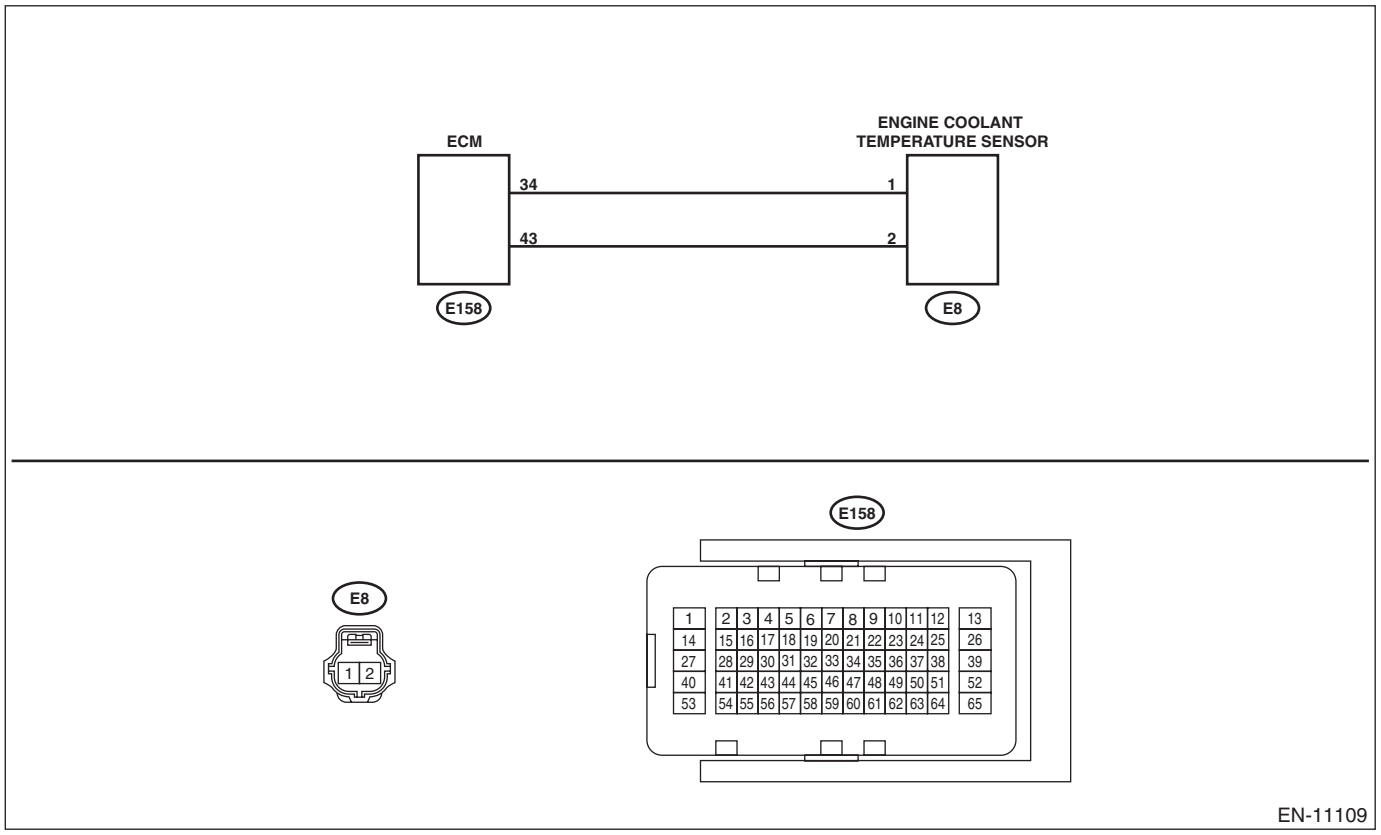
ECM
ENGINE COOLANT TEMPERATURE SENSOR
34
43
1
2
E158
E8
E8
1 2
E158
1 2 3 4 5 6 7 8 9 10 11 12 13
14 15 16 17 18 19 20 21 22 23 24 25 26
27 28 29 30 31 32 33 34 35 36 37 38 39
40 41 42 43 44 45 46 47 48 49 50 51 52
53 54 55 56 57 58 59 60 61 62 63 64 65
EN-11109

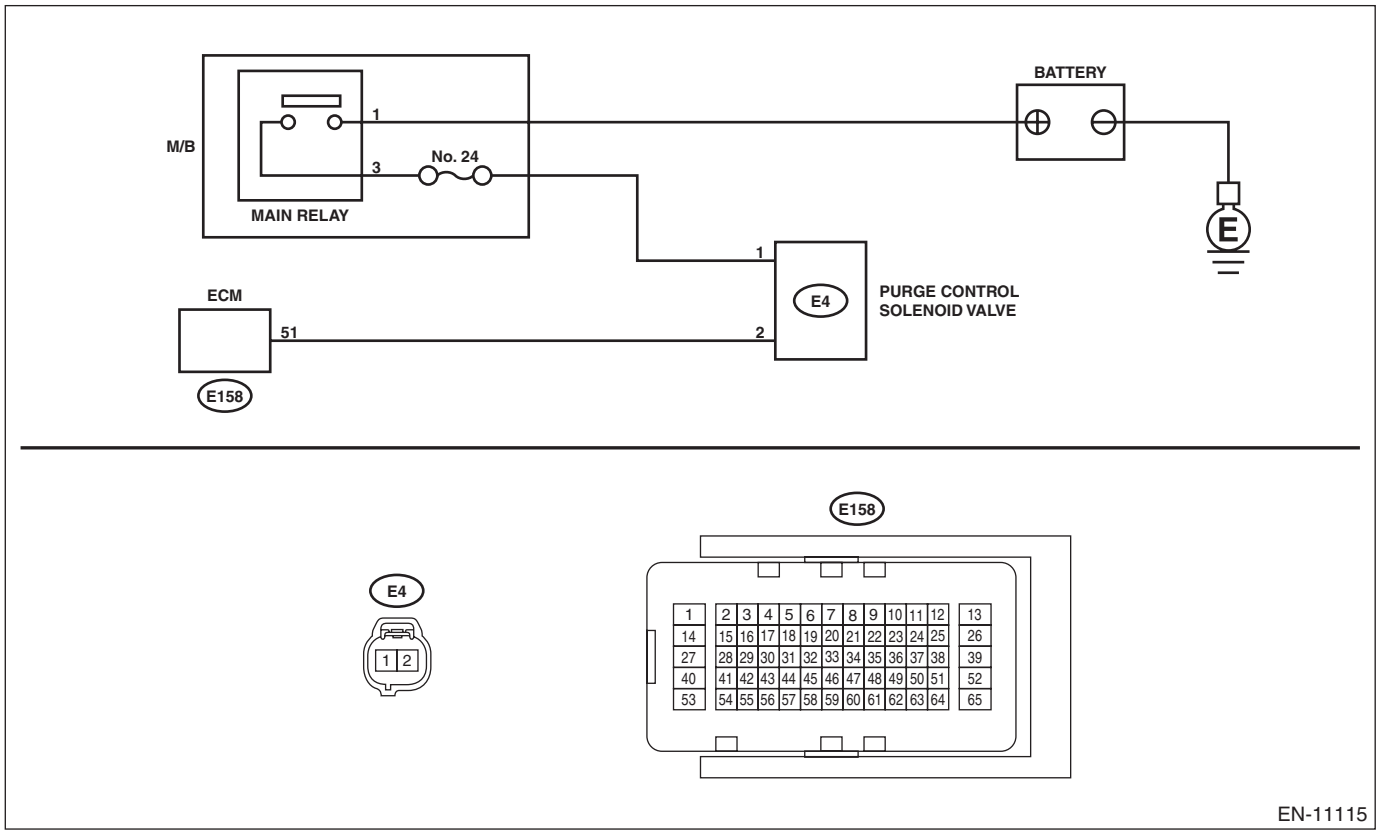
M/B
MAIN RELAY
1
3
No. 24
BATTERY
E
1
E4
PURGE CONTROL SOLENOID VALVE
ECM
51
2
E158
E4
1 2
E158
1 2 3 4 5 6 7 8 9 10 11 12 13
14 15 16 17 18 19 20 21 22 23 24 25 26
27 28 29 30 31 32 33 34 35 36 37 38 39
40 41 42 43 44 45 46 47 48 49 50 51 52
53 54 55 56 57 58 59 60 61 62 63 64 65
EN-11115

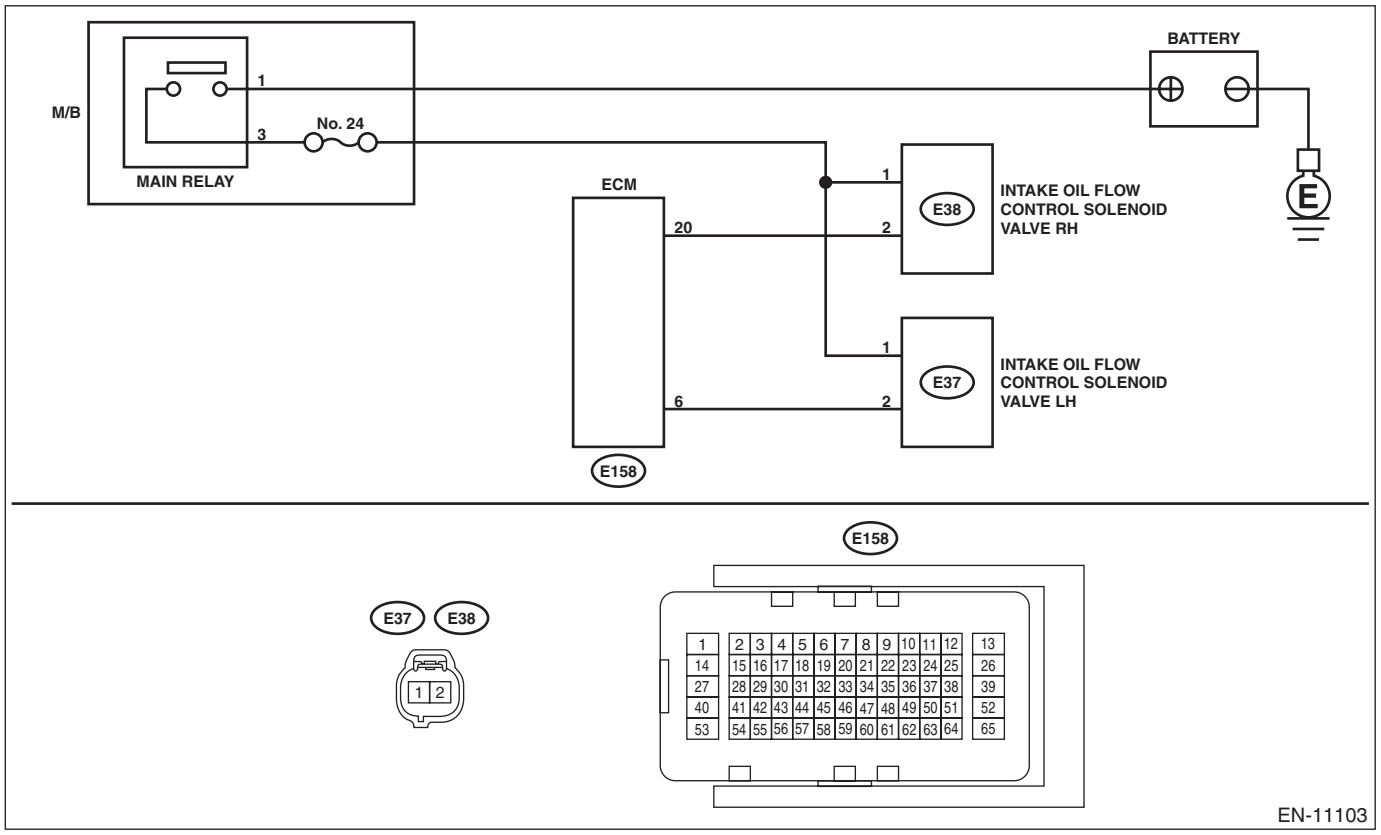
BATTERY
M/B
1
3
No. 24
MAIN RELAY
ECM
20
6
E158
1
2
E38
INTAKE OIL FLOW CONTROL SOLENOID VALVE RH
1
2
E37
INTAKE OIL FLOW CONTROL SOLENOID VALVE LH
E
E158
E37
E38
1 2
1 2 3 4 5 6 7 8 9 10 11 12 13
14 15 16 17 18 19 20 21 22 23 24 25 26
27 28 29 30 31 32 33 34 35 36 37 38 39
40 41 42 43 44 45 46 47 48 49 50 51 52
53 54 55 56 57 58 59 60 61 62 63 64 65
EN-11103

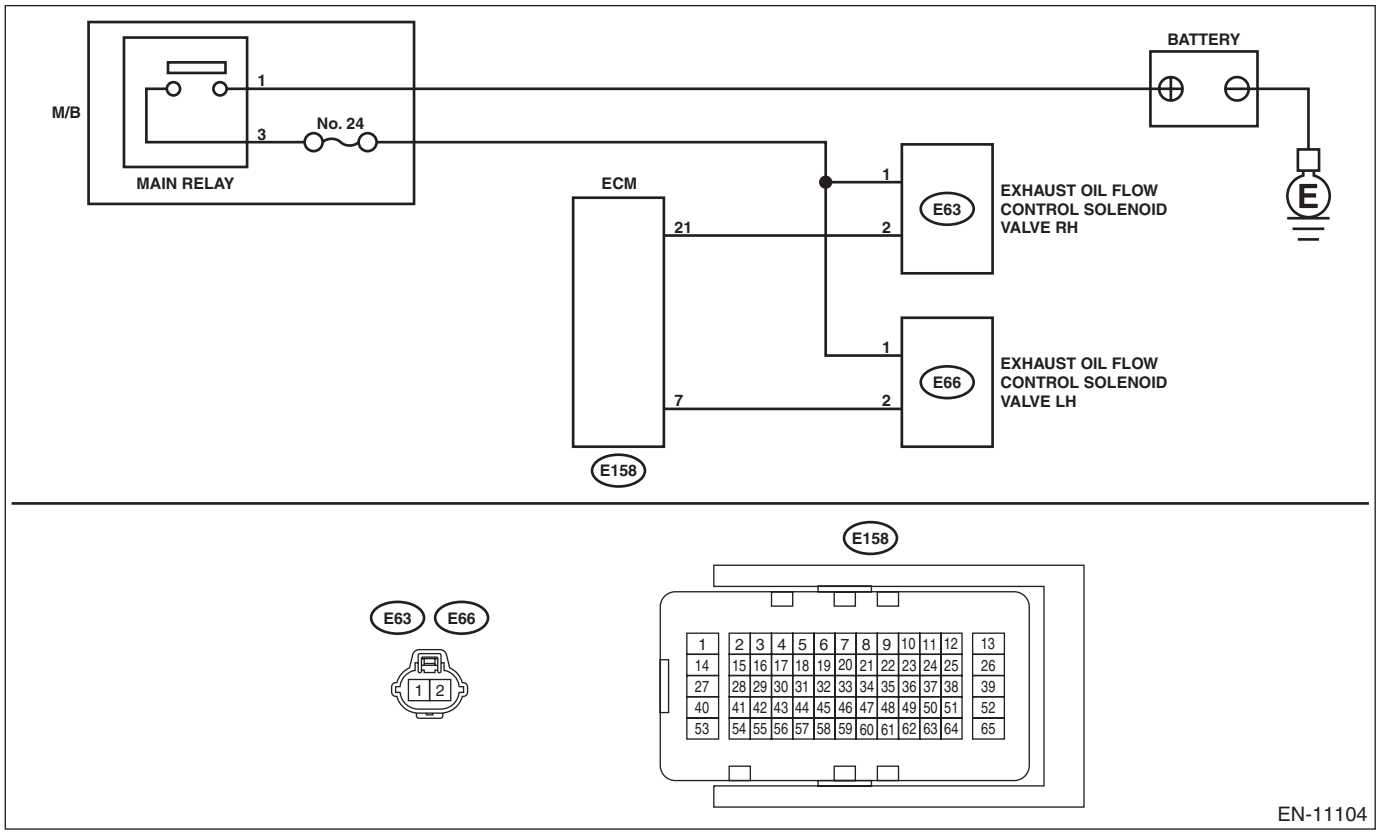
BATTERY
M/B
1
3
No. 24
MAIN RELAY
ECM
21
7
E158
1
2
E63
EXHAUST OIL FLOW CONTROL SOLENOID VALVE RH
1
2
E66
EXHAUST OIL FLOW CONTROL SOLENOID VALVE LH
E
E158
E63
E66
1 2
1 2 3 4 5 6 7 8 9 10 11 12 13
14 15 16 17 18 19 20 21 22 23 24 25 26
27 28 29 30 31 32 33 34 35 36 37 38 39
40 41 42 43 44 45 46 47 48 49 50 51 52
53 54 55 56 57 58 59 60 61 62 63 64 65
EN-11104

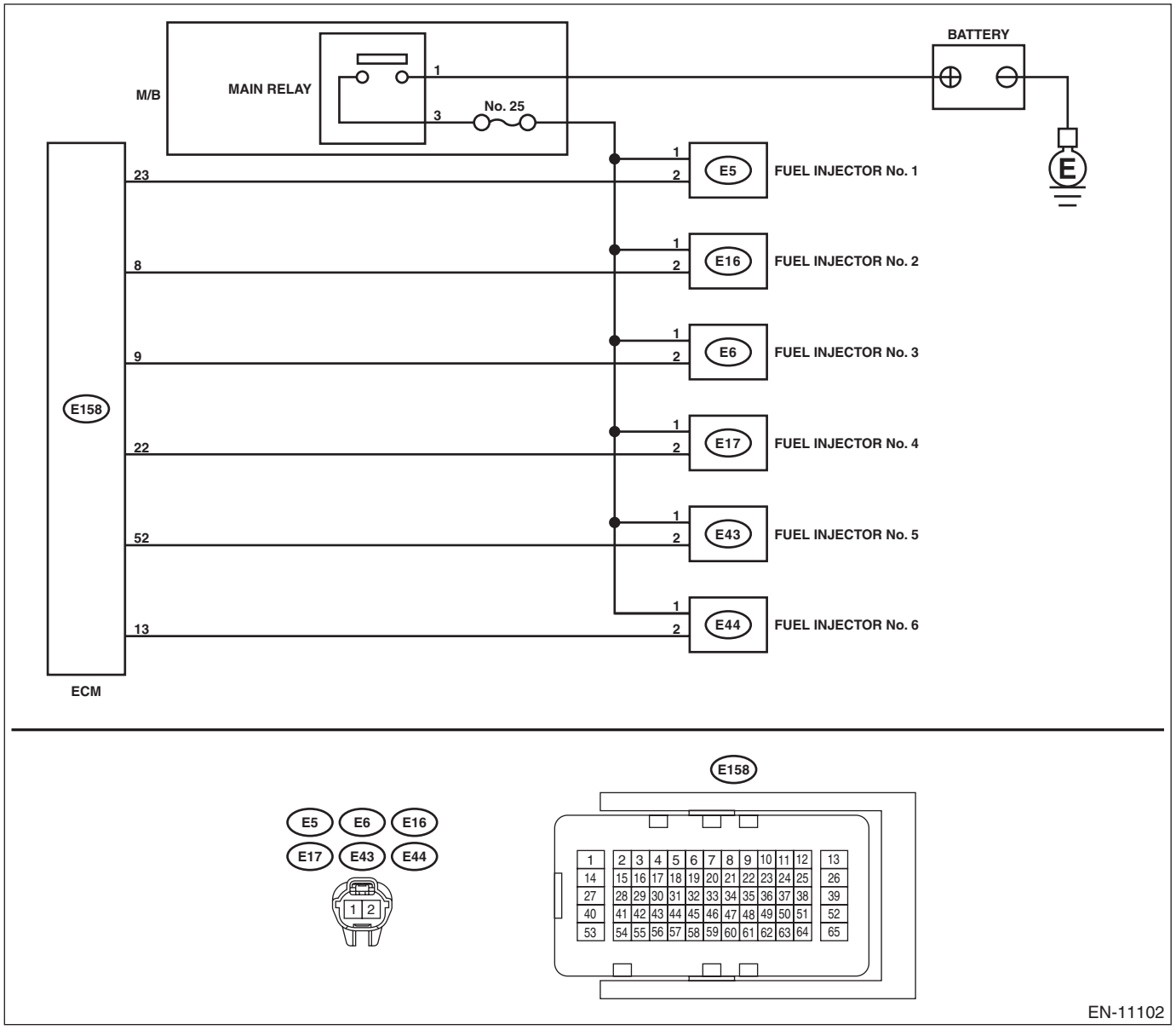

Step		Check	Yes	No
1	**CHECK DTC.**	Is any other DTC displayed?	Check DTC using “List of Diagnostic Trouble Code (DTC)”. <Ref. to EN(H6DO)(diag)-109, List of Diagnostic Trouble Code (DTC).>	Go to step **2**.
2	**CHECK FREEZE FRAME DATA.** Using the Subaru Select Monitor, read the value in «Fuel Level». NOTE: For detailed operation procedures, refer to “Freeze Frame Data Display For Engine”. <Ref. to EN(H6DO)(diag)-63, DISPLAY OF ENGINE FREEZE FRAME DATA, OPERATION, Subaru Select Monitor.>	Is the value of «Fuel Level» 16.4% or more?	Go to step **3**.	Fuel may be run out. If the fault occurs after refueling, continue the diagnosis. Go to step **3**.

	Step	Check	Yes	No
3	**CHECK FREEZE FRAME DATA.** Read the value of «Control module voltage» using Subaru Select Monitor. NOTE: For detailed operation procedures, refer to "Freeze Frame Data Display For Engine". <Ref. to EN(H6DO)(diag)-63, DISPLAY OF ENGINE FREEZE FRAME DATA, OPERATION, Subaru Select Monitor.>	Is the value of «Control module voltage» 11 V or more?	Go to step **4**.	Check the battery and generator. <Ref. to SC(H6DO)-59, INSPECTION, Battery.> <Ref. to SC(H6DO)-51, INSPECTION, Generator.>
4	**CHECK FOR MALFUNCTION OCCURRENCE.**	Did you ask the customer about the driving condition and engine speed status when the fault occurred?	• The engine speed dropped slowly and then the engine stalled during idling or deceleration: Go to step **5**. • The engine speed dropped rapidly and then the engine stalled during idling or deceleration: Go to step **81**. • The engine stalled during standing start, acceleration, or constant speed driving: Go to step **89**.	Ask the customer about the driving condition and engine speed status when fault occurred.
5	**CHECK FREEZE FRAME DATA.** 1) Using the Subaru Select Monitor, read the values of «Short term fuel trim B1», «Short term fuel trim B2», and «Long term fuel trim B1», «Long term fuel trim B2». NOTE: For detailed operation procedures, refer to "Freeze Frame Data Display For Engine". <Ref. to EN(H6DO)(diag)-63, DISPLAY OF ENGINE FREEZE FRAME DATA, OPERATION, Subaru Select Monitor.> 2) Obtain the sum of the values «Short term fuel trim B1», «Short term fuel trim B2», and «Long term fuel trim B1», «Long term fuel trim B2» in every freeze frame data.	Is the sum of the following values within ±15% in every freeze frame data? «Short term fuel trim B1», «Short term fuel trim B2» and «Long term fuel trim B1», «Long term fuel trim B2»	Go to step **54**.	• More than 15% in each freeze frame data: Go to step **6**. • Less than –15% in any one of freeze frame data: Go to step **39**.
6	**CHECK AIR INTAKE SYSTEM.** Check the installing condition of the air intake system.	Are there holes, loose bolts or disconnection of hose on air intake system?	Repair the air intake system. <Ref. to IN(H6DO)-2, General Description.>	Go to step **7**.
7	**CHECK PURGE CONTROL SOLENOID VALVE.** Check the purge control solenoid valve. <Ref. to EC(H6DO)-20, INSPECTION, Purge Control Solenoid Valve.>	Is the purge control solenoid valve OK?	Go to step **8**.	Replace the faulty purge control solenoid valve. <Ref. to EC(H6DO)-17, Purge Control Solenoid Valve.>

	Step	Check	Yes	No
8	**CHECK FREEZE FRAME DATA.** Read the value of «Stop Light Switch» using Subaru Select Monitor. NOTE: For detailed operation procedures, refer to "Freeze Frame Data Display For Engine". <Ref. to EN(H6DO)(diag)-63, DISPLAY OF ENGINE FREEZE FRAME DATA, OPERATION, Subaru Select Monitor.>	Does the value of «Stop Light Switch» indicate OFF in all freeze frame data?	Go to step **11**.	Go to step **9**.
9	**CHECK CURRENT DATA.** 1) Start the engine and warm up completely. 2) Read the values of «Short term fuel trim B1», «Short term fuel trim B2» when the brake pedal is released and depressed using Subaru Select Monitor. NOTE: For detailed operation procedures, refer to "Current Data Display For Engine". <Ref. to EN(H6DO)(diag)-50, DISPLAY CURRENT ENGINE DATA, OPERATION, Subaru Select Monitor.>	Do the values of «Short term fuel trim B1», «Short term fuel trim B2» with the brake pedal depressed increase by 10% or more compared to when the pedal is released?	Replace the brake booster. <Ref. to BR-55, Brake Booster.>	Go to step **10**.
10	**CHECK CURRENT DATA.** 1) Start the engine and warm up completely. 2) While reproducing a vehicle faulty condition, use the Subaru Select Monitor to read the values of «Short term fuel trim B1», «Short term fuel trim B2», and «Long term fuel trim B1», «Long term fuel trim B2». NOTE: For detailed operation procedures, refer to "Current Data Display For Engine". <Ref. to EN(H6DO)(diag)-50, DISPLAY CURRENT ENGINE DATA, OPERATION, Subaru Select Monitor.> 3) Obtain the sum of the values «Short term fuel trim B1», «Short term fuel trim B2», and «Long term fuel trim B1», «Long term fuel trim B2».	Is the sum of the following values within ±15%? «Short term fuel trim B1», «Short term fuel trim B2» and «Long term fuel trim B1», «Long term fuel trim B2»	Go to step **11**.	Replace the brake booster. <Ref. to BR-55, Brake Booster.>
11	**CHECK IGNITION SYSTEM.** Check the ignition system. <Ref. to EN(H6DO)(diag)-104, IGNITION CONTROL SYSTEM, Diagnostics for Engine Starting Failure.>	Is the ignition system normal?	Go to step **12**.	Repair the ignition system. <Ref. to IG(H6DO)-2, General Description.>
12	**CHECK FREEZE FRAME DATA.** Read the value of «A/F Sensor #1» using the Subaru Select Monitor. NOTE: • For detailed operation procedures, refer to "Freeze Frame Data Display For Engine". <Ref. to EN(H6DO)(diag)-63, DISPLAY OF ENGINE FREEZE FRAME DATA, OPERATION, Subaru Select Monitor.> • When the value of "Injection Quantity Control" under "Active Test" is changed from –12% — +12% while «Long term fuel trim B1» is –5%, the value of «A/F Sensor #1» will be changed to 0.92 or 1.17.	Is the value of «A/F Sensor #1» 1.00 or more?	Go to step **17**.	Go to step **13**.

	Step	Check	Yes	No
13	**CHECK MASS AIR FLOW AND INTAKE AIR TEMPERATURE SENSOR.** Check the mass air flow and intake air temperature sensor. <Ref. to FU(H6DO)-59, INSPECTION, Mass Air Flow and Intake Air Temperature Sensor.>	Is the mass air flow and intake air temperature sensor normal?	Go to step **14**.	Replace the mass air flow and intake air temperature sensor. <Ref. to FU(H6DO)-58, Mass Air Flow and Intake Air Temperature Sensor.>
14	**CHECK HARNESS BETWEEN ECM AND MASS AIR FLOW AND INTAKE AIR TEMPERATURE SENSOR CONNECTOR.** 1) Turn the ignition switch to OFF. 2) Disconnect the connector from ECM and the mass air flow and intake air temperature sensor. 3) Measure the resistance of harness between ECM connector and the mass air flow and intake air temperature sensor connector. ***Connector & terminal*** ***(B134) No. 16 — (B3) No. 5:*** ***(B134) No. 15 — (B3) No. 1:***	Is the resistance less than 1 Ω?	Go to step **15**.	Repair the open circuit of harness between ECM connector and the mass air flow and intake air temperature sensor connector.
15	**CHECK HARNESS BETWEEN ECM AND MASS AIR FLOW AND INTAKE AIR TEMPERATURE SENSOR CONNECTOR.** Measure the resistance between the ECM connector and engine ground. ***Connector & terminal*** ***(B134) No. 16 — Engine ground:*** ***(B134) No. 15 — Engine ground:***	Is the resistance 1 MΩ or more?	Go to step **16**.	Repair the ground short circuit of harness between ECM connector and the mass air flow and intake air temperature sensor connector.
16	**CHECK CURRENT DATA.** 1) Start the engine and warm up completely. 2) Using the Subaru Select Monitor, read the value of «Calculated load value», then compare it with that of «Calculated load value» listed in "Engine Current Data Display". <Ref. to EN(H6DO)(diag)-50, DISPLAY CURRENT ENGINE DATA, OPERATION, Subaru Select Monitor.> NOTE: • The value of «Calculated load value» change depending on how the engine internal parts settle in. If the value is out of standard, judge it again by comparing the vehicle with another one with the same specifications and similar conditions such as travel distance. • For detailed operation procedures, refer to "Current Data Display For Engine". <Ref. to EN(H6DO)(diag)-50, DISPLAY CURRENT ENGINE DATA, OPERATION, Subaru Select Monitor.>	Does the value of «Calculated load value» falls between 90 — 110% of the value described in the list?	Go to step **21**.	Replace the mass air flow and intake air temperature sensor. <Ref. to FU(H6DO)-58, Mass Air Flow and Intake Air Temperature Sensor.>

	Step	Check	Yes	No
17	**CHECK FRONT OXYGEN (A/F) SENSOR DATA.** 1) Start the engine and warm up completely. 2) Raise the engine speed up to 2,500 rpm and maintain it for approx. three minutes. 3) Release the accelerator pedal and idle the engine. 4) Using «Injection Quantity Control» in «Active Test», read the value of «A/F Sensor #1» at the increase rate of both 12% and –12%. NOTE: • Perform the operation immediately after the engine comes into idling condition, otherwise the front oxygen (A/F) sensor will be cooled. • For detailed operation procedures, refer to the “Active Test”. <Ref. to EN(H6DO)(diag)-86, Active Test.> • When the value of “Injection Quantity Control” under “Active Test” is changed from –12% — +12% while «Long term fuel trim B1» is –5%, the value of «A/F Sensor #1» will be changed to 0.92 or 1.17.	Does the value of «A/F Sensor #1» change to less than 0.88 at the increase rate of 12%, and to 1.12 or more at the rate of –12%?	Go to step **21**.	Go to step **18**.
18	**CHECK POWER SUPPLY TO FRONT OXYGEN (A/F) SENSOR.** 1) Turn the ignition switch to OFF. 2) Disconnect the connectors from front oxygen (A/F) sensor. 3) Turn the ignition switch to ON. 4) Measure the voltage between front oxygen (A/F) sensor connector and engine ground. ***Connector & terminal*** ***(E24) No. 2 (+) — Engine ground (–):*** ***(E47) No. 2 (+) — Engine ground (–):***	Is the voltage 10 V or more?	Go to step **19**.	Repair the power supply line. NOTE: In this case, repair the following item: • Open circuit in harness between A/F, oxygen sensor relay and front oxygen (A/F) sensor connector • Poor contact of A/F, oxygen sensor relay connector • Poor contact of coupling connector • Malfunction of A/F, oxygen sensor relay
19	**CHECK HARNESS BETWEEN ECM AND FRONT OXYGEN (A/F) SENSOR CONNECTOR.** 1) Turn the ignition switch to OFF. 2) Disconnect the connector from ECM. 3) Measure the resistance of harness between ECM connector and front oxygen (A/F) sensor connector. ***Connector & terminal*** ***(E158) No. 5 — (E47) No. 1:*** ***(E158) No. 46 — (E47) No. 3:*** ***(E158) No. 33 — (E47) No. 4:*** ***(E159) No. 45 — (E24) No. 3:*** ***(E158) No. 44 — (E24) No. 4:*** ***(E158) No. 4 — (E24) No. 1:***	Is the resistance less than 1 Ω?	Go to step **20**.	Repair the open circuit of harness between ECM connector and front oxygen (A/F) sensor connector.

	Step	Check	Yes	No
20	**CHECK HARNESS BETWEEN ECM AND FRONT OXYGEN (A/F) SENSOR CONNECTOR.** Measure the resistance between the ECM connector and engine ground. ***Connector & terminal*** ***(E158) No. 5 — Engine ground:*** ***(E158) No. 46 — Engine ground:*** ***(E158) No. 33 — Engine ground:*** ***(E159) No. 45 — Engine ground:*** ***(E158) No. 44 — Engine ground:*** ***(E158) No. 4 — Engine ground:***	Is the resistance 1 MΩ or more?	Go to step **21**.	Repair the short circuit to ground in harness between ECM connector and front oxygen (A/F) sensor connector.
21	**CHECK FREEZE FRAME DATA.** Using the Subaru Select Monitor, read the values in «Coolant Temp.» and «Ambient Temperature». NOTE: For detailed operation procedures, refer to "Freeze Frame Data Display For Engine". <Ref. to EN(H6DO)(diag)-63, DISPLAY OF ENGINE FREEZE FRAME DATA, OPERATION, Subaru Select Monitor.>	Is the value of «Coolant Temp.» 120°C (248°F) or more? Or, is the value of «Coolant Temp.» lower than «Ambient Temperature» by 15°C (27°F) or more?	Go to step **22**.	Go to step **25**.
22	**CHECK ENGINE COOLANT TEMPERATURE SENSOR.** Check the engine coolant temperature sensor. <Ref. to FU(H6DO)-40, INSPECTION, Engine Coolant Temperature Sensor.>	Is the engine coolant temperature sensor normal?	Go to step **23**.	Replace the engine coolant temperature sensor. <Ref. to FU(H6DO)-39, Engine Coolant Temperature Sensor.>
23	**CHECK HARNESS BETWEEN ECM AND ENGINE COOLANT TEMPERATURE SENSOR CONNECTOR.** 1) Turn the ignition switch to OFF. 2) Disconnect the connectors from ECM and engine coolant temperature sensor. 3) Measure the resistance of harness between ECM connector and engine coolant temperature sensor connector. ***Connector & terminal*** ***(E158) No. 34 — (E8) No. 1:*** ***(E158) No. 43 — (E8) No. 2:***	Is the resistance less than 1 Ω?	Go to step **24**.	Repair the open circuit of the harness between the ECM connector and engine coolant temperature sensor connector.
24	**CHECK HARNESS BETWEEN ECM AND ENGINE COOLANT TEMPERATURE SENSOR CONNECTOR.** Measure the resistance between the ECM connector and engine ground. ***Connector & terminal*** ***(E158) No. 34 — Engine ground:*** ***(E158) No. 43 — Engine ground:***	Is the resistance 1 MΩ or more?	Go to step **25**.	Repair the short circuit to ground in harness between ECM connector and engine coolant temperature sensor connector.
25	**CHECK FREEZE FRAME DATA.** Using the Subaru Select Monitor, read the value in «Evap Purge Flow». NOTE: For detailed operation procedures, refer to "Freeze Frame Data Display For Engine". <Ref. to EN(H6DO)(diag)-63, DISPLAY OF ENGINE FREEZE FRAME DATA, OPERATION, Subaru Select Monitor.>	Is the value of «Evap Purge Flow» 0% in all freeze frame data?	Go to step **35**.	Go to step **26**.

	Step	Check	Yes	No
26	**CHECK PURGE CONTROL SOLENOID VALVE 1.** 1) Select «CPC Solenoid Valve» from "Actuator ON/OFF Operation" in "Active Test". NOTE: For detailed operation procedures, refer to the "Active Test". <Ref. to EN(H6DO)(diag)-86, Active Test.> 2) Check if the ventilation changes according to ON/OFF switching operation.	Does the ventilation of purge control solenoid valve 1 change correctly?	Go to step **30**.	Go to step **27**.
27	**CHECK POWER SUPPLY TO PURGE CONTROL SOLENOID VALVE 1 CONNECTOR.** 1) Turn the ignition switch to OFF. 2) Disconnect the connector from purge control solenoid valve 1. 3) Turn the ignition switch to ON. 4) Measure the voltage between purge control solenoid valve 1 connector and engine ground. ***Connector & terminal*** ***(E4) No. 1 (+) — Engine ground (–):***	Is the voltage 10 V or more?	Go to step **28**.	Repair the power supply circuit.
28	**CHECK HARNESS BETWEEN ECM AND PURGE CONTROL SOLENOID VALVE 1 CONNECTOR.** 1) Turn the ignition switch to OFF. 2) Disconnect the connector from ECM. 3) Measure the resistance of harness between ECM connector and purge control solenoid valve 1 connector. ***Connector & terminal*** ***(E158) No. 51 — (E4) No. 2:***	Is the resistance less than 1 Ω?	Go to step **29**.	Repair the harness and connector. NOTE: In this case, repair the following item: • Open circuit of harness between ECM connector and purge control solenoid valve 1 connector • Poor contact of coupling connector
29	**CHECK HARNESS BETWEEN ECM AND PURGE CONTROL SOLENOID VALVE 1 CONNECTOR.** Measure the resistance between the purge control solenoid valve 1 connector and engine ground. ***Connector & terminal*** ***(E4) No. 2 — Engine ground:***	Is the resistance 1 MΩ or more?	Go to step **30**.	Repair the ground short circuit of harness between ECM connector and purge control solenoid valve 1 connector.
30	**CHECK PURGE CONTROL SOLENOID VALVE 2.** 1) Connect all connectors. 2) Select «CPC Solenoid 2» from "Actuator ON/OFF Operation" in "Active Test". NOTE: For detailed operation procedures, refer to the "Active Test". <Ref. to EN(H6DO)(diag)-86, Active Test.> 3) Check if the ventilation changes according to ON/OFF switching operation.	Does the ventilation of purge control solenoid valve 2 change correctly?	Go to step **35**.	Go to step **31**.

	Step	Check	Yes	No
31	**CHECK POWER SUPPLY TO PURGE CONTROL SOLENOID VALVE 2 CONNECTOR.** 1) Turn the ignition switch to OFF. 2) Disconnect the connector from purge control solenoid valve 2. 3) Turn the ignition switch to ON. 4) Measure the voltage between purge control solenoid valve 2 connector and engine ground. ***Connector & terminal*** ***(E52) No. 1 (+) — Engine ground (–):***	Is the voltage 10 V or more?	Go to step **32**.	Repair the power supply circuit.
32	**CHECK HARNESS BETWEEN ECM AND PURGE CONTROL SOLENOID VALVE 2 CONNECTOR.** 1) Turn the ignition switch to OFF. 2) Disconnect the connector from ECM. 3) Measure the resistance of harness between ECM connector and purge control solenoid valve 2 connector. ***Connector & terminal*** ***(E159) No. 12 — (E52) No. 2:***	Is the resistance less than 1 Ω?	Go to step **33**.	Repair the open circuit in harness between ECM connector and purge control solenoid valve 2 connector.
33	**CHECK HARNESS BETWEEN ECM AND PURGE CONTROL SOLENOID VALVE 2 CONNECTOR.** Measure the resistance between the purge control solenoid valve 2 connector and engine ground. ***Connector & terminal*** ***(E52) No. 2 — Engine ground:***	Is the resistance 1 MΩ or more?	Go to step **34**.	Repair the ground short circuit of harness between ECM connector and purge control solenoid valve 2 connector.
34	**CHECK FOR POOR CONTACT.** Check for poor contact of ECM connector.	Is there poor contact of ECM connector?	Repair the poor contact of ECM connector.	Replace the ECM. <Ref. to FU(H6DO)-83, Engine Control Module (ECM).>
35	**CHECK OF FUEL PUMP.** 1) Select «Fuel Pump» from “Actuator ON/OFF Operation” in “Active Test”. NOTE: For detailed operation procedures, refer to the “Active Test”. <Ref. to EN(H6DO)(diag)-86, Active Test.> 2) Check if operating sound occurs in the fuel pump according to ON/OFF switching operation.	Does the fuel pump emit operating sound?	Go to step **37**.	Go to step **36**.
36	**CHECK OF FUEL PUMP.** Check fuel pump. <Ref. to FU(H6DO)-124, INSPECTION, Fuel Pump.>	Is the fuel pump normal?	Check fuel pump system. <Ref. to EN(H6DO)(diag)-295, DTC P0230 FUEL PUMP PRIMARY CIRCUIT, Diagnostic Procedure with Diagnostic Trouble Code (DTC).>	Replace the fuel pump. <Ref. to FU(H6DO)-119, Fuel Pump.>
37	**CHECK FUEL TANK.** Check if any foreign matters such as iron powder exist in the fuel tank.	Is there any foreign matter in the fuel tank?	Remove foreign matter from the fuel tank.	Go to step **38**.

	Step	Check	Yes	No
38	**CHECK FUEL PRESSURE.** **WARNING:** **Place "NO OPEN FLAMES" signs near the working area.** **CAUTION:** **Be careful not to spill fuel.** Measure the fuel pressure. <Ref. to ME(H6DO)-31, INSPECTION, Fuel Pressure.> **CAUTION:** **Before attaching/detaching a fuel pressure gauge, release the fuel pressure.**	Is the measured value 340 — 400 kPa (3.5 — 4.1 kgf/cm^2, 49 — 58 psi)?	Go to step **39**.	Check the fuel pump and fuel delivery line. <Ref. to FU(H6DO)-124, INSPECTION, Fuel Pump.> <Ref. to FU(H6DO)-167, INSPECTION, Fuel Delivery and Evaporation Lines.>
39	**CHECK IGNITION SYSTEM.** Check the ignition system. <Ref. to EN(H6DO)(diag)-104, IGNITION CONTROL SYSTEM, Diagnostics for Engine Starting Failure.>	Is the ignition system normal?	Go to step **40**.	Repair the ignition system. <Ref. to IG(H6DO)-2, General Description.>
40	**CHECK FREEZE FRAME DATA.** Using the Subaru Select Monitor, read the value of «Calculated load value», then compare it with that of «Calculated load value» listed in "Engine Current Data Display". <Ref. to EN(H6DO)(diag)-50, DISPLAY CURRENT ENGINE DATA, OPERATION, Subaru Select Monitor.> NOTE: • The value of «Calculated load value» change depending on how the engine internal parts settle in. If the value is out of standard, judge it again by comparing the vehicle with another one with the same specifications and similar conditions such as travel distance. • For detailed operation procedures, refer to "Freeze Frame Data Display For Engine". <Ref. to EN(H6DO)(diag)-63, DISPLAY OF ENGINE FREEZE FRAME DATA, OPERATION, Subaru Select Monitor.>	Is the value of «Calculated load value» 110% or more of the value described in the list?	Go to step **41**.	Go to step **45**.
41	**CHECK MASS AIR FLOW AND INTAKE AIR TEMPERATURE SENSOR.** Check the mass air flow and intake air temperature sensor. <Ref. to FU(H6DO)-59, INSPECTION, Mass Air Flow and Intake Air Temperature Sensor.>	Is the mass air flow and intake air temperature sensor normal?	Go to step **42**.	Replace the mass air flow and intake air temperature sensor. <Ref. to FU(H6DO)-58, Mass Air Flow and Intake Air Temperature Sensor.>
42	**CHECK HARNESS BETWEEN ECM AND MASS AIR FLOW AND INTAKE AIR TEMPERATURE SENSOR CONNECTOR.** 1) Turn the ignition switch to OFF. 2) Disconnect the connector from ECM and the mass air flow and intake air temperature sensor. 3) Measure the resistance of harness between ECM connector and the mass air flow and intake air temperature sensor connector. ***Connector & terminal*** ***(B134) No. 16 — (B3) No. 5:*** ***(B134) No. 15 — (B3) No. 1:***	Is the resistance less than 1 Ω?	Go to step **43**.	Repair the open circuit of harness between ECM connector and the mass air flow and intake air temperature sensor connector.

	Step	Check	Yes	No
43	**CHECK HARNESS BETWEEN ECM AND MASS AIR FLOW AND INTAKE AIR TEMPERATURE SENSOR CONNECTOR.** Measure the resistance between the ECM connector and engine ground. ***Connector & terminal*** ***(B134) No. 16 — Engine ground:*** ***(B134) No. 15 — Engine ground:***	Is the resistance 1 MΩ or more?	Go to step **44**.	Repair the ground short circuit of harness between ECM connector and the mass air flow and intake air temperature sensor connector.
44	**CHECK CURRENT DATA.** 1) Start the engine and warm up completely. 2) Using the Subaru Select Monitor, read the value of «Calculated load value», then compare it with that of «Calculated load value» listed in "Engine Current Data Display". <Ref. to EN(H6DO)(diag)-50, DISPLAY CURRENT ENGINE DATA, OPERATION, Subaru Select Monitor.> NOTE: • The value of «Calculated load value» change depending on how the engine internal parts settle in. If the value is out of standard, judge it again by comparing the vehicle with another one with the same specifications and similar conditions such as travel distance. • For detailed operation procedures, refer to "Current Data Display For Engine". <Ref. to EN(H6DO)(diag)-50, DISPLAY CURRENT ENGINE DATA, OPERATION, Subaru Select Monitor.>	Does the value of «Calculated load value» falls between 90 — 110% of the value described in the list?	Go to step **45**.	Replace the mass air flow and intake air temperature sensor. <Ref. to FU(H6DO)-58, Mass Air Flow and Intake Air Temperature Sensor.>
45	**CHECK CURRENT DATA.** 1) Start the engine and warm up completely. 2) Raise the engine speed up to 2,500 rpm and maintain it for approx. three minutes. 3) Release the accelerator pedal and idle the engine. 4) Using «Injection Quantity Control» in «Active Test», read the value of «A/F Sensor #1» at the increase rate of both 12% and –12%. NOTE: • Perform the operation immediately after the engine comes into idling condition, otherwise the front oxygen (A/F) sensor will be cooled. • For detailed operation procedures, refer to the "Active Test". <Ref. to EN(H6DO)(diag)-86, Active Test.> • When the value of "Injection Quantity Control" under "Active Test" is changed from –12% — +12% while «Long term fuel trim B1» is –5%, the value of «A/F Sensor #1» will be changed to 0.92 or 1.17.	Does the value of «A/F Sensor #1» change to less than 0.88 at the increase rate of 12%, and to 1.12 or more at the rate of –12%?	Go to step **50**.	Go to step **46**.
46	**CHECK FREEZE FRAME DATA.** Read the value of «A/F Sensor #1 Resistance» using the Subaru Select Monitor. NOTE: For detailed operation procedures, refer to "Freeze Frame Data Display For Engine". <Ref. to EN(H6DO)(diag)-63, DISPLAY OF ENGINE FREEZE FRAME DATA, OPERATION, Subaru Select Monitor.>	Is the value of «A/F Sensor #1 Resistance» 500 Ω or more?	Replace the front oxygen (A/F) sensor. <Ref. to FU(H6DO)-78, Front Oxygen (A/F) Sensor.>	Go to step **47**.

Step		Check	Yes	No
47	**CHECK POWER SUPPLY TO FRONT OXYGEN (A/F) SENSOR.** 1) Turn the ignition switch to OFF. 2) Disconnect the connectors from front oxygen (A/F) sensor. 3) Turn the ignition switch to ON. 4) Measure the voltage between front oxygen (A/F) sensor connector and engine ground. ***Connector & terminal*** ***(E24) No. 3 (+) — Engine ground (–):*** ***(E47) No. 3 (+) — Engine ground (–):***	Is the voltage 10 V or more?	Go to step **48**.	Repair the power supply line. NOTE: In this case, repair the following item: • Open circuit in harness between A/F, oxygen sensor relay and front oxygen (A/F) sensor connector • Poor contact of A/F, oxygen sensor relay connector • Poor contact of coupling connector • Malfunction of A/F, oxygen sensor relay • Blown out of fuse (M/B No. 20)
48	**CHECK HARNESS BETWEEN ECM AND FRONT OXYGEN (A/F) SENSOR CONNECTOR.** 1) Turn the ignition switch to OFF. 2) Disconnect the connector from ECM. 3) Measure the resistance of harness between ECM connector and front oxygen (A/F) sensor connector. ***Connector & terminal*** ***(E158) No. 45 — (E24) No. 1:*** ***(E158) No. 44 — (E24) No. 4:*** ***(E158) No. 4 — (E24) No. 5:*** ***(E159) No. 5 — (E47) No. 1:*** ***(E158) No. 46 — (E47) No. 3:*** ***(E158) No. 33 — (E47) No. 4:***	Is the resistance less than 1 Ω?	Go to step **49**.	Repair the open circuit of harness between ECM connector and front oxygen (A/F) sensor connector.
49	**CHECK HARNESS BETWEEN ECM AND FRONT OXYGEN (A/F) SENSOR CONNECTOR.** Measure the resistance between the ECM connector and engine ground. ***Connector & terminal*** ***(E158) No. 45 — Engine ground:*** ***(E158) No. 44 — Engine ground:*** ***(E158) No. 4 — Engine ground:*** ***(E159) No. 5 — Engine ground:*** ***(E158) No. 46 — Engine ground:*** ***(E158) No. 33 — Engine ground:***	Is the resistance 1 MΩ or more?	Go to step **50**.	Repair the short circuit to ground in harness between ECM connector and front oxygen (A/F) sensor connector.
50	**CHECK FREEZE FRAME DATA.** Using the Subaru Select Monitor, read the values in «Coolant Temp.» and «Ambient Temperature». NOTE: For detailed operation procedures, refer to “Freeze Frame Data Display For Engine”. <Ref. to EN(H6DO)(diag)-63, DISPLAY OF ENGINE FREEZE FRAME DATA, OPERATION, Subaru Select Monitor.>	Is the value of «Coolant Temp.» 120°C (248°F) or more? Or, is the value of «Coolant Temp.» lower than «Ambient Temperature» by 15°C (27°F) or more?	Go to step **51**.	Perform the Clear Memory Mode to complete. <Ref. to EN(H6DO)(diag)-85, Clear Memory Mode.>

	Step	Check	Yes	No
51	**CHECK ENGINE COOLANT TEMPERATURE SENSOR.** Check the engine coolant temperature sensor. <Ref. to FU(H6DO)-40, INSPECTION, Engine Coolant Temperature Sensor.>	Is the engine coolant temperature sensor normal?	Go to step **52**.	Replace the engine coolant temperature sensor. <Ref. to FU(H6DO)-39, Engine Coolant Temperature Sensor.>
52	**CHECK HARNESS BETWEEN ECM AND ENGINE COOLANT TEMPERATURE SENSOR CONNECTOR.** 1) Turn the ignition switch to OFF. 2) Disconnect the connectors from ECM and engine coolant temperature sensor. 3) Measure the resistance of harness between ECM connector and engine coolant temperature sensor connector. ***Connector & terminal*** ***(E158) No. 34 — (E8) No. 1:*** ***(E158) No. 43 — (E8) No. 2:***	Is the resistance less than 1 Ω?	Go to step **53**.	Repair the open circuit of the harness between the ECM connector and engine coolant temperature sensor connector.
53	**CHECK HARNESS BETWEEN ECM AND ENGINE COOLANT TEMPERATURE SENSOR CONNECTOR.** Measure the resistance between the ECM connector and engine ground. ***Connector & terminal*** ***(E158) No. 34 — Engine ground:*** ***(E158) No. 43 — Engine ground:***	Is the resistance 1 MΩ or more?	Even if DTC is detected, it has returned to a normal condition at this time. Reproduce the failure, and then perform the diagnosis again. NOTE: In this case, temporary poor contact of connector, temporary open or short circuit of harness may be the cause. Go to step **54**.	Repair the short circuit to ground in harness between ECM connector and engine coolant temperature sensor connector.
54	**CHECK IGNITION SYSTEM.** Check the ignition system. <Ref. to EN(H6DO)(diag)-104, IGNITION CONTROL SYSTEM, Diagnostics for Engine Starting Failure.>	Is the ignition system normal?	Go to step **55**.	Repair the ignition system. <Ref. to IG(H6DO)-2, General Description.>

Step		Check	Yes	No
55	**CHECK FREEZE FRAME DATA.** 1) Using Subaru Select Monitor, read the values of «Idle Mass Air Flow Feedback correct», «ISC Learning Value» and «Idle dirty throttle correct» in freeze frame data. NOTE: For detailed operation procedures, refer to "Freeze Frame Data Display For Engine". <Ref. to EN(H6DO)(diag)-63, DISPLAY OF ENGINE FREEZE FRAME DATA, OPERATION, Subaru Select Monitor.> 2) Obtain the sum value of «Idle Mass Air Flow Feedback correct», «ISC Learning Value» and «Idle dirty throttle correct». 3) Start the engine and warm up completely. 4) Using Subaru Select Monitor, read the values of «Idle Mass Air Flow Feedback correct», «ISC Learning Value» and «Idle dirty throttle correct» in current data at normal idling. NOTE: For detailed operation procedures, refer to "Current Data Display For Engine". <Ref. to EN(H6DO)(diag)-50, DISPLAY CURRENT ENGINE DATA, OPERATION, Subaru Select Monitor.> 5) Obtain the sum value of «Idle Mass Air Flow Feedback correct», «ISC Learning Value» and «Idle dirty throttle correct».	Is the sum value of freeze frame data less than 80% of the sum value of current data?	Go to step **56**.	Go to step **58**.
56	**CHECK AIR INTAKE SYSTEM.** Check the installing condition of the air intake system.	Are there holes, loose bolts or disconnection of hose on air intake system?	Repair the air intake system. <Ref. to IN(H6DO)-2, General Description.>	Go to step **57**.
57	**CHECK AIR INTAKE SYSTEM.** Check the air intake system related parts. • Brake booster: <Ref. to BR-60, INSPECTION, Brake Booster.> • Mass air flow and intake air temperature sensor: <Ref. to FU(H6DO)-59, INSPECTION, Mass Air Flow and Intake Air Temperature Sensor.> • PCV valve: <Ref. to EC(H6DO)-41, INSPECTION, PCV Valve.> • Purge control solenoid valve 1 and purge control solenoid valve 2: <Ref. to EC(H6DO)-20, INSPECTION, Purge Control Solenoid Valve.>	Are all of the air intake system related parts normal?	Go to step **75**.	Replace the parts if defective.

	Step	Check	Yes	No
58	**CHECK FREEZE FRAME DATA.** 1) Using the Subaru Select Monitor, read the values of the followings: «VVT Adv. Ang. Amount R», «VVT Advance Target Angle Amount R», «VVT Adv. Ang. Amount L», «VVT Advance Target Angle Amount L», «Exh. VVT Retard Ang. R», «Ex VVT Retard Target Angle R», «Exh. VVT Retard Ang. L» and «Ex VVT Retard Target Angle L». NOTE: For detailed operation procedures, refer to "Freeze Frame Data Display For Engine". <Ref. to EN(H6DO)(diag)-63, DISPLAY OF ENGINE FREEZE FRAME DATA, OPERATION, Subaru Select Monitor.> 2) Using the Subaru Select Monitor, compare the respective values between the followings: «VVT Adv. Ang. Amount R» and «VVT Advance Target Angle Amount R», «VVT Adv. Ang. Amount L» and «VVT Advance Target Angle Amount L», «Exh. VVT Retard Ang. R» and «Ex VVT Retard Target Angle R», «Exh. VVT Retard Ang. L» and «Ex VVT Retard Target Angle L».	Does all of the advance angle amount and retard angle amount synchronize with their target values?	Go to step **75**.	Diagnose the part that does not synchronize. • Intake RH: Go to step **59**. • Intake LH: Go to step **63**. • Exhaust RH: Go to step **67**. • Exhaust LH: Go to step **71**.
59	**CHECK POWER SUPPLY TO THE INTAKE OIL FLOW CONTROL SOLENOID VALVE RH.** 1) Turn the ignition switch to OFF. 2) Disconnect the connector from the intake oil flow control solenoid valve RH. 3) Turn the ignition switch to ON. 4) Measure the voltage between intake oil flow control solenoid valve RH connector and engine ground. ***Connector & terminal*** ***(E38) No. 1 (+) — Engine ground (–):***	Is the voltage 10 V or more?	Go to step **60**.	Repair the power supply circuit.
60	**CHECK HARNESS BETWEEN ECM AND INTAKE OIL FLOW CONTROL SOLENOID VALVE RH CONNECTOR.** 1) Turn the ignition switch to OFF. 2) Disconnect the connector from ECM. 3) Measure the resistance of harness between ECM connector and intake oil flow control solenoid valve RH. ***Connector & terminal*** ***(E158) No. 20 — (E38) No. 2:***	Is the resistance less than 1 Ω?	Go to step **61**.	Repair the open circuit in harness between ECM connector and intake oil flow control solenoid valve RH connector.
61	**CHECK HARNESS BETWEEN ECM AND INTAKE OIL FLOW CONTROL SOLENOID VALVE RH CONNECTOR.** Measure the resistance between intake oil flow control solenoid valve RH connector and engine ground. ***Connector & terminal*** ***(E38) No. 2 — Engine ground:***	Is the resistance 1 MΩ or more?	Go to step **62**.	Repair the short circuit to ground in harness between ECM connector and intake oil flow control solenoid valve RH connector.

	Step	Check	Yes	No
62	**CHECK INTAKE OIL FLOW CONTROL SOLENOID VALVE RH.** Check the intake oil flow control solenoid valve RH. <Ref. to FU(H6DO)-72, Oil Flow Control Solenoid Valve.>	Is the intake oil flow control solenoid valve RH normal?	Replace the intake cam sprocket RH. <Ref. to ME(H6DO)-107, Cam Sprocket.>	Replace the intake oil flow control solenoid valve RH. <Ref. to FU(H6DO)-72, Oil Flow Control Solenoid Valve.>
63	**CHECK POWER SUPPLY TO THE INTAKE OIL FLOW CONTROL SOLENOID VALVE LH.** 1) Turn the ignition switch to OFF. 2) Disconnect the connector from the intake oil flow control solenoid valve LH. 3) Turn the ignition switch to ON. 4) Measure the voltage between intake oil flow control solenoid valve LH connector and engine ground. ***Connector & terminal*** ***(E37) No. 1 (+) — Engine ground (–):***	Is the voltage 10 V or more?	Go to step **64**.	Repair the power supply circuit.
64	**CHECK HARNESS BETWEEN ECM AND INTAKE OIL FLOW CONTROL SOLENOID VALVE LH CONNECTOR.** 1) Turn the ignition switch to OFF. 2) Disconnect the connector from ECM. 3) Measure the resistance of harness between ECM connector and intake oil flow control solenoid valve LH. ***Connector & terminal*** ***(E158) No. 6 — (E37) No. 2:***	Is the resistance less than 1 Ω?	Go to step **65**.	Repair the open circuit in harness between ECM connector and intake oil flow control solenoid valve LH connector.
65	**CHECK HARNESS BETWEEN ECM AND INTAKE OIL FLOW CONTROL SOLENOID VALVE LH CONNECTOR.** Measure the resistance between intake oil flow control solenoid valve LH connector and engine ground. ***Connector & terminal*** ***(E37) No. 2 — Engine ground:***	Is the resistance 1 MΩ or more?	Go to step **66**.	Repair the short circuit to ground in harness between ECM connector and intake oil flow control solenoid valve LH connector.
66	**CHECK INTAKE OIL FLOW CONTROL SOLENOID VALVE LH.** Check the intake oil flow control solenoid valve LH. <Ref. to FU(H6DO)-75, INSPECTION, Oil Flow Control Solenoid Valve.>	Is the intake oil flow control solenoid valve LH normal?	Replace the intake cam sprocket LH. <Ref. to ME(H6DO)-107, Cam Sprocket.>	Replace the intake oil flow control solenoid valve LH. <Ref. to FU(H6DO)-72, INTAKE SIDE, REMOVAL, Oil Flow Control Solenoid Valve.>
67	**CHECK POWER SUPPLY TO THE EXHAUST OIL FLOW CONTROL SOLENOID VALVE RH.** 1) Turn the ignition switch to OFF. 2) Disconnect the connector from the exhaust oil flow control solenoid valve RH. 3) Turn the ignition switch to ON. 4) Measure the voltage between exhaust oil flow control solenoid valve RH connector and engine ground. ***Connector & terminal*** ***(E63) No. 1 (+) — Engine ground (–):***	Is the voltage 10 V or more?	Go to step **68**.	Repair the power supply circuit.

	Step	Check	Yes	No
68	**CHECK HARNESS BETWEEN ECM AND EXHAUST OIL FLOW CONTROL SOLENOID VALVE RH CONNECTOR.** 1) Turn the ignition switch to OFF. 2) Disconnect the connector from ECM. 3) Measure the resistance of harness between ECM connector and exhaust oil flow control solenoid valve RH. ***Connector & terminal*** ***(E158) No. 21 — (E63) No. 2:***	Is the resistance less than 1 Ω?	Go to step **69**.	Repair the open circuit in harness between ECM connector and exhaust oil flow control solenoid valve RH connector.
69	**CHECK HARNESS BETWEEN ECM AND EXHAUST OIL FLOW CONTROL SOLENOID VALVE RH CONNECTOR.** Measure the resistance between exhaust oil flow control solenoid valve RH connector and engine ground. ***Connector & terminal*** ***(E63) No. 2 — Engine ground:***	Is the resistance 1 MΩ or more?	Go to step **70**.	Repair the short circuit to ground in harness between ECM connector and exhaust oil flow control solenoid valve RH connector.
70	**CHECK EXHAUST OIL FLOW CONTROL SOLENOID VALVE RH.** Check the exhaust oil flow control solenoid valve RH. <Ref. to FU(H6DO)-72, Oil Flow Control Solenoid Valve.>	Is the exhaust oil flow control solenoid valve RH normal?	Replace the exhaust cam sprocket RH. <Ref. to ME(H6DO)-107, Cam Sprocket.>	Replace the exhaust oil flow control solenoid valve RH. <Ref. to FU(H6DO)-73, EXHAUST SIDE, REMOVAL, Oil Flow Control Solenoid Valve.>
71	**CHECK POWER SUPPLY TO EXHAUST OIL FLOW CONTROL SOLENOID VALVE LH.** 1) Turn the ignition switch to OFF. 2) Disconnect the connector from the exhaust oil flow control solenoid valve LH. 3) Turn the ignition switch to ON. 4) Measure the voltage between exhaust oil flow control solenoid valve LH connector and engine ground. ***Connector & terminal*** ***(E66) No. 1 (+) — Engine ground (–):***	Is the voltage 10 V or more?	Go to step **72**.	Repair the power supply circuit.
72	**CHECK HARNESS BETWEEN ECM AND EXHAUST OIL FLOW CONTROL SOLENOID VALVE LH CONNECTOR.** 1) Turn the ignition switch to OFF. 2) Disconnect the connector from ECM. 3) Measure the resistance of harness between ECM connector and exhaust oil flow control solenoid valve LH. ***Connector & terminal*** ***(E158) No. 7 — (E66) No. 2:***	Is the resistance less than 1 Ω?	Go to step **73**.	Repair the open circuit in harness between ECM connector and exhaust oil flow control solenoid valve LH connector.
73	**CHECK HARNESS BETWEEN ECM AND EXHAUST OIL FLOW CONTROL SOLENOID VALVE LH CONNECTOR.** Measure the resistance between exhaust oil flow control solenoid valve LH connector and engine ground. ***Connector & terminal*** ***(E66) No. 2 — Engine ground:***	Is the resistance 1 MΩ or more?	Go to step **74**.	Repair the short circuit to ground in harness between ECM connector and exhaust oil flow control solenoid valve LH connector.

	Step	Check	Yes	No
74	**CHECK EXHAUST OIL FLOW CONTROL SOLENOID VALVE LH.** Check the exhaust oil flow control solenoid valve LH. <Ref. to FU(H6DO)-72, Oil Flow Control Solenoid Valve.>	Is the exhaust oil flow control solenoid valve LH normal?	Replace the exhaust cam sprocket LH. <Ref. to ME(H6DO)-107, Cam Sprocket.>	Replace the exhaust oil flow control solenoid valve LH. <Ref. to FU(H6DO)-72, INTAKE SIDE, REMOVAL, Oil Flow Control Solenoid Valve.>
75	**CHECK ENGINE COOLANT TEMPERATURE SENSOR.** Check the engine coolant temperature sensor. <Ref. to FU(H6DO)-40, INSPECTION, Engine Coolant Temperature Sensor.>	Is the engine coolant temperature sensor normal?	Go to step **76**.	Replace the engine coolant temperature sensor. <Ref. to FU(H6DO)-39, Engine Coolant Temperature Sensor.>
76	**CHECK HARNESS BETWEEN ECM AND ENGINE COOLANT TEMPERATURE SENSOR CONNECTOR.** 1) Turn the ignition switch to OFF. 2) Disconnect the connectors from ECM and engine coolant temperature sensor. 3) Measure the resistance of harness between ECM connector and engine coolant temperature sensor connector. ***Connector & terminal*** ***(E158) No. 34 — (E8) No. 1:*** ***(E158) No. 43 — (E8) No. 2:***	Is the resistance less than 1 Ω?	Go to step **77**.	Repair the open circuit of the harness between the ECM connector and engine coolant temperature sensor connector.
77	**CHECK HARNESS BETWEEN ECM AND ENGINE COOLANT TEMPERATURE SENSOR CONNECTOR.** Measure the resistance between the ECM connector and engine ground. ***Connector & terminal*** ***(E158) No. 34 — Engine ground:*** ***(E158) No. 43 — Engine ground:***	Is the resistance 1 MΩ or more?	Go to step **78**.	Repair the short circuit to ground in harness between ECM connector and engine coolant temperature sensor connector.
78	**CHECK MASS AIR FLOW AND INTAKE AIR TEMPERATURE SENSOR.** Check the mass air flow and intake air temperature sensor. <Ref. to FU(H6DO)-59, INSPECTION, Mass Air Flow and Intake Air Temperature Sensor.>	Is the mass air flow and intake air temperature sensor normal?	Go to step **79**.	Replace the mass air flow and intake air temperature sensor. <Ref. to FU(H6DO)-58, Mass Air Flow and Intake Air Temperature Sensor.>
79	**CHECK MANIFOLD ABSOLUTE PRESSURE SENSOR.** Check the manifold absolute pressure sensor. <Ref. to FU(H6DO)-55, Manifold Absolute Pressure Sensor.>	Is the manifold absolute pressure sensor normal?	Go to step **80**.	Check the manifold absolute pressure sensor. <Ref. to FU(H6DO)-55, Manifold Absolute Pressure Sensor.>

	Step	Check	Yes	No
80	**CHECK POWER SUPPLY CIRCUIT OF FUEL INJECTOR.** 1) Turn the ignition switch to OFF. 2) Disconnect the connector from fuel injector. 3) Turn the ignition switch to ON. 4) Measure the voltage in harness between fuel injector connector and engine ground. ***Connector & terminal*** ***#1 (E5) No. 1 (+) — Engine ground (–):*** ***#2 (E16) No. 1 (+) — Engine ground (–):*** ***#3 (E6) No. 1 (+) — Engine ground (–):*** ***#4 (E17) No. 1 (+) — Engine ground (–):*** ***#5 (E43) No. 1 (+) — Engine ground (–):*** ***#6 (E44) No. 1 (+) — Engine ground (–):***	Is the voltage 10 V or more?	Go to step **81**.	Repair the power supply circuit.
81	**CHECK HARNESS BETWEEN ECM AND FUEL INJECTOR CONNECTOR.** 1) Turn the ignition switch to OFF. 2) Disconnect the connectors from ECM and fuel injectors. 3) Measure the resistance of harness between ECM connector and fuel injector connector. ***Connector & terminal*** ***#1 (E158) No. 23 — (E5) No. 2:*** ***#2 (E158) No. 8 — (E16) No. 2:*** ***#3 (E158) No. 9 — (E6) No. 2:*** ***#4 (E158) No. 22 — (E17) No. 2:*** ***#5 (E158) No. 52 — (E43) No. 2:*** ***#6 (E158) No. 13 — (E44) No. 2:***	Is the resistance less than 1 Ω?	Go to step **82**.	Repair the open circuit of the harness between the ECM connector and fuel injector connector.
82	**CHECK HARNESS BETWEEN ECM AND FUEL INJECTOR CONNECTOR.** Measure the resistance between the ECM connector and engine ground. ***Connector & terminal*** ***#1 (E158) No. 23 — Engine ground:*** ***#2 (E158) No. 8 — Engine ground:*** ***#3 (E158) No. 9 — Engine ground:*** ***#4 (E158) No. 22 — Engine ground:*** ***#5 (E158) No. 52 — Engine ground:*** ***#6 (E158) No. 13 — Engine ground:***	Is the resistance 1 MΩ or more?	Go to step **83**.	Repair the short circuit to ground in harness between ECM connector and fuel injector connector.
83	**CHECK IGNITION SYSTEM.** Check the ignition system. <Ref. to EN(H6DO)(diag)-104, IGNITION CONTROL SYSTEM, Diagnostics for Engine Starting Failure.>	Is the ignition system normal?	Go to step **84**.	Repair the ignition system. <Ref. to IG(H6DO)-2, General Description.>
84	**CHECK FREEZE FRAME DATA.** Using the Subaru Select Monitor, read the value of «A/C Compressor Signal». NOTE: For detailed operation procedures, refer to “Freeze Frame Data Display For Engine”. <Ref. to EN(H6DO)(diag)-63, DISPLAY OF ENGINE FREEZE FRAME DATA, OPERATION, Subaru Select Monitor.>	Is the value of «A/C Compressor Signal» ON output?	Go to step **85**.	Go to step **86**.

	Step	Check	Yes	No
85	**CHECK FREEZE FRAME DATA.** Using the Subaru Select Monitor, read the value of «Idle A/C load correct». NOTE: For detailed operation procedures, refer to "Freeze Frame Data Display For Engine". <Ref. to EN(H6DO)(diag)-63, DISPLAY OF ENGINE FREEZE FRAME DATA, OPERATION, Subaru Select Monitor.>	Is the value of «Idle A/C load correct» increasing?	Check the air conditioner. <Ref. to AC(diag)-9, Diagnostics with Phenomenon.> <Ref. to BC(diag)-2, PROCEDURE, Basic Diagnostic Procedure.>	Go to step **86**.
86	**CHECK FREEZE FRAME DATA.** 1) Using the Subaru Select Monitor, read the value of «Electric Load Feedback Val». NOTE: For detailed operation procedures, refer to "Freeze Frame Data Display For Engine". <Ref. to EN(H6DO)(diag)-63, DISPLAY OF ENGINE FREEZE FRAME DATA, OPERATION, Subaru Select Monitor.> 2) Compare the value of «Electric Load Feedback Val» with that of «Idle Mass Air Flow», which is described in "Engine Current Data Display". <Ref. to EN(H6DO)(diag)-50, DISPLAY CURRENT ENGINE DATA, OPERATION, Subaru Select Monitor.> NOTE: For detailed operation procedures, refer to "Current Data Display For Engine". <Ref. to EN(H6DO)(diag)-50, DISPLAY CURRENT ENGINE DATA, OPERATION, Subaru Select Monitor.>	Is the value of «Electric Load Feedback Val» 25% or more than «Idle Mass Air Flow»?	Check the generator and power assisted system. <Ref. to SC(H6DO)-51, INSPECTION, Generator.> <Ref. to PS(diag)-2, Basic Diagnostic Procedure.>	Go to step **87**.
87	**CHECK FREEZE FRAME DATA.** 1) Using the Subaru Select Monitor, read the values of «Vehicle Speed», «Engine Speed» and «AT turbine speed». NOTE: For detailed operation procedures, refer to "Freeze Frame Data Display For Engine". <Ref. to EN(H6DO)(diag)-63, DISPLAY OF ENGINE FREEZE FRAME DATA, OPERATION, Subaru Select Monitor.>	Is there any freeze frame data indicating that the value of «Vehicle Speed» is less than 6 km/h (18.6 MPH), and that the difference in values between «Engine Speed» and «AT turbine speed» is less than 100 rpm?	Repair the CVT. <Ref. to CVT(TR690)-3, General Description.>	Go to step **88**.
88	**CHECK DTC.**	Is DTC of CVT displayed? <Ref. to CVT(diag)-25, OPERATION, Read Diagnostic Trouble Code (DTC).>	Check the appropriate DTC using the "List of Diagnostic Trouble Code (DTC)". <Ref. to CVT(diag)-44, List of Diagnostic Trouble Code (DTC).>	Even if DTC is detected, it has returned to a normal condition at this time. Reproduce the failure, and then perform the diagnosis again. NOTE: In this case, temporary poor contact of connector, temporary open or short circuit of harness may be the cause. Go to step **89**.

	Step	Check	Yes	No
89	**CHECK FREEZE FRAME DATA.** Using the Subaru Select Monitor, read the values in «Calculated load value» and «Relative Throttle Pos.». NOTE: For detailed operation procedures, refer to "Freeze Frame Data Display For Engine". <Ref. to EN(H6DO)(diag)-63, DISPLAY OF ENGINE FREEZE FRAME DATA, OPERATION, Subaru Select Monitor.>	Is the value of «Calculated load value» decreasing while that of «Relative Throttle Pos.» is increasing?	Go to step **90**.	Go to step **94**.
90	**CHECK MASS AIR FLOW AND INTAKE AIR TEMPERATURE SENSOR.** Check the mass air flow and intake air temperature sensor. <Ref. to FU(H6DO)-59, INSPECTION, Mass Air Flow and Intake Air Temperature Sensor.>	Is the mass air flow and intake air temperature sensor normal?	Go to step **91**.	Replace the mass air flow and intake air temperature sensor. <Ref. to FU(H6DO)-58, Mass Air Flow and Intake Air Temperature Sensor.>
91	**CHECK HARNESS BETWEEN ECM AND MASS AIR FLOW AND INTAKE AIR TEMPERATURE SENSOR CONNECTOR.** 1) Turn the ignition switch to OFF. 2) Disconnect the connector from ECM and the mass air flow and intake air temperature sensor. 3) Measure the resistance of harness between ECM connector and the mass air flow and intake air temperature sensor connector. ***Connector & terminal*** ***(B134) No. 16 — (B3) No. 5:*** ***(B134) No. 15 — (B3) No. 1:***	Is the resistance less than 1 Ω?	Go to step **92**.	Repair the open circuit of harness between ECM connector and the mass air flow and intake air temperature sensor connector.
92	**CHECK HARNESS BETWEEN ECM AND MASS AIR FLOW AND INTAKE AIR TEMPERATURE SENSOR CONNECTOR.** Measure the resistance between the ECM connector and engine ground. ***Connector & terminal*** ***(B134) No. 16 — Engine ground:*** ***(B134) No. 15 — Engine ground:***	Is the resistance 1 MΩ or more?	Go to step **93**.	Repair the ground short circuit of harness between ECM connector and the mass air flow and intake air temperature sensor connector.
93	**CHECK CURRENT DATA.** 1) Start the engine and warm up completely. 2) Using the Subaru Select Monitor, read the value of «Calculated load value», then compare it with that of «Calculated load value» listed in "Engine Current Data Display". <Ref. to EN(H6DO)(diag)-50, DISPLAY CURRENT ENGINE DATA, OPERATION, Subaru Select Monitor.> NOTE: • The value of «Calculated load value» change depending on how the engine internal parts settle in. If the value is out of standard, judge it again by comparing the vehicle with another one with the same specifications and similar conditions such as travel distance. • For detailed operation procedures, refer to "Current Data Display For Engine". <Ref. to EN(H6DO)(diag)-50, DISPLAY CURRENT ENGINE DATA, OPERATION, Subaru Select Monitor.>	Does the value of «Calculated load value» falls between 90 — 110% of the value described in the list?	Go to step **95**.	Replace the mass air flow and intake air temperature sensor. <Ref. to FU(H6DO)-58, Mass Air Flow and Intake Air Temperature Sensor.>

	Step	Check	Yes	No
94	**CHECK POWER SUPPLY CIRCUIT OF FUEL INJECTOR.** 1) Turn the ignition switch to OFF. 2) Disconnect the connector from fuel injector. 3) Turn the ignition switch to ON. 4) Measure the voltage in harness between fuel injector connector and engine ground. ***Connector & terminal*** ***#1 (E5) No. 1 (+) — Engine ground (–):*** ***#2 (E16) No. 1 (+) — Engine ground (–):*** ***#3 (E6) No. 1 (+) — Engine ground (–):*** ***#4 (E17) No. 1 (+) — Engine ground (–):*** ***#5 (E43) No. 1 (+) — Engine ground (–):*** ***#6 (E44) No. 1 (+) — Engine ground (–):***	Is the voltage 10 V or more?	Go to step **95**.	Repair the power supply circuit.
95	**CHECK HARNESS BETWEEN ECM AND FUEL INJECTOR CONNECTOR.** 1) Turn the ignition switch to OFF. 2) Disconnect the connectors from ECM and fuel injectors. 3) Measure the resistance of harness between ECM connector and fuel injector connector. ***Connector & terminal*** ***#1 (E158) No. 23 — (E5) No. 2:*** ***#2 (E158) No. 8 — (E16) No. 2:*** ***#3 (E158) No. 9 — (E6) No. 2:*** ***#4 (E158) No. 22 — (E17) No. 2:*** ***#5 (E158) No. 52 — (E43) No. 2:*** ***#6 (E158) No. 13 — (E44) No. 2:***	Is the resistance less than 1 Ω?	Go to step **96**.	Repair the open circuit of the harness between the ECM connector and fuel injector connector.
96	**CHECK HARNESS BETWEEN ECM AND FUEL INJECTOR CONNECTOR.** Measure the resistance between the ECM connector and engine ground. ***Connector & terminal*** ***#1 (E158) No. 23 — Engine ground:*** ***#2 (E158) No. 8 — Engine ground:*** ***#3 (E158) No. 9 — Engine ground:*** ***#4 (E158) No. 22 — Engine ground:*** ***#5 (E158) No. 52 — Engine ground:*** ***#6 (E158) No. 13 — Engine ground:***	Is the resistance 1 MΩ or more?	Go to step **97**.	Repair the short circuit to ground in harness between ECM connector and fuel injector connector.
97	**CHECK IGNITION SYSTEM.** Check the ignition system. <Ref. to EN(H6DO)(diag)-104, IGNITION CONTROL SYSTEM, Diagnostics for Engine Starting Failure.>	Is the ignition system normal?	Go to step **98**.	Repair the ignition system. <Ref. to IG(H6DO)-2, General Description.>
98	**CHECK OF FUEL PUMP.** 1) Select «Fuel Pump» from “Actuator ON/OFF Operation” in “Active Test”. NOTE: For detailed operation procedures, refer to the “Active Test”. <Ref. to EN(H6DO)(diag)-86, Active Test.> 2) Check if operating sound occurs in the fuel pump according to ON/OFF switching operation.	Does the fuel pump emit operating sound?	Go to step **100**.	Go to step **99**.

Step		Check	Yes	No
99	**CHECK OF FUEL PUMP.** Check fuel pump. <Ref. to FU(H6DO)-124, INSPECTION, Fuel Pump.>	Is the fuel pump normal?	Check fuel pump system. <Ref. to EN(H6DO)(diag)-295, DTC P0230 FUEL PUMP PRIMARY CIRCUIT, Diagnostic Procedure with Diagnostic Trouble Code (DTC).>	Replace the fuel pump. <Ref. to FU(H6DO)-119, Fuel Pump.>
100	**CHECK FUEL TANK.** Check if any foreign matters such as iron powder exist in the fuel tank.	Is there any foreign matter in the fuel tank?	Remove foreign matter from the fuel tank.	Go to step **101**.
101	**CHECK FUEL PRESSURE.** **WARNING:** **Place "NO OPEN FLAMES" signs near the working area.** **CAUTION:** **Be careful not to spill fuel.** Measure the fuel pressure. <Ref. to ME(H6DO)-31, INSPECTION, Fuel Pressure.> **CAUTION:** **Before attaching/detaching a fuel pressure gauge, release the fuel pressure.**	Is the measured value 340 — 400 kPa (3.5 — 4.1 kgf/cm^2, 49 — 58 psi)?	Go to step **102**.	Check the fuel pump and fuel delivery line. <Ref. to FU(H6DO)-124, INSPECTION, Fuel Pump.> <Ref. to FU(H6DO)-167, INSPECTION, Fuel Delivery and Evaporation Lines.>
102	**CHECK ENGINE RUNNING CONDITION.** Check the engine running condition using "Roughness monitor" in the Subaru Select Monitor. NOTE: For detailed operation procedures, refer to "Application help".	Is there a large difference in the speed between each cylinder?	It is possible that the compression pressure of the engine is not sufficient. Check the engine. <Ref. to ME(H6DO)-172, INSPECTION, Engine Trouble in General.>	Perform the Clear Memory Mode to complete. <Ref. to EN(H6DO)(diag)-85, Clear Memory Mode.>

1. OUTLINE OF DIAGNOSIS

Judge as NG when the engine stops except by operating the ignition switch after starting the engine.

2. EXECUTION CONDITION

Secondary Parameters	Execution condition
Engine condition	After engine starting

3. GENERAL DRIVING CYCLE

Perform the diagnosis continuously after the enable conditions have been established.

4. DIAGNOSTIC METHOD

If the duration of time while the following conditions are met is longer than the time indicated, judge as NG.

Judgment Value

Malfunction Criteria	Threshold Value
Engine speed	≤ 300 rpm

Time Needed for Diagnosis: 48 ms
Malfunction Indicator Light Illumination: Does not illuminate.

FG:DTC P1604 STARTABILITY MALFUNCTION

DTC DETECTING CONDITION:
Immediately at fault recognition

CAUTION:
After servicing or replacing faulty parts, perform Clear Memory Mode. <Ref. to EN(H6DO)(diag)-85, OPERATION, Clear Memory Mode.>

NOTE:
This DTC may be detected even if fault does not occur in the vehicle. If the customer does not ask for inspection, perform the clear memory mode without inspection and return the vehicle to the user.

WIRING DIAGRAM:

- Engine Electrical System ENGINE TYPE EZ (WITHOUT PUSH BUTTON START) <Ref. to WI-198, ENGINE TYPE EZ (WITHOUT PUSH BUTTON START), WIRING DIAGRAM, Engine Electrical System.>
- Engine Electrical System ENGINE TYPE EZ (WITH PUSH BUTTON START) <Ref. to WI-214, ENGINE TYPE EZ (WITH PUSH BUTTON START), WIRING DIAGRAM, Engine Electrical System.>

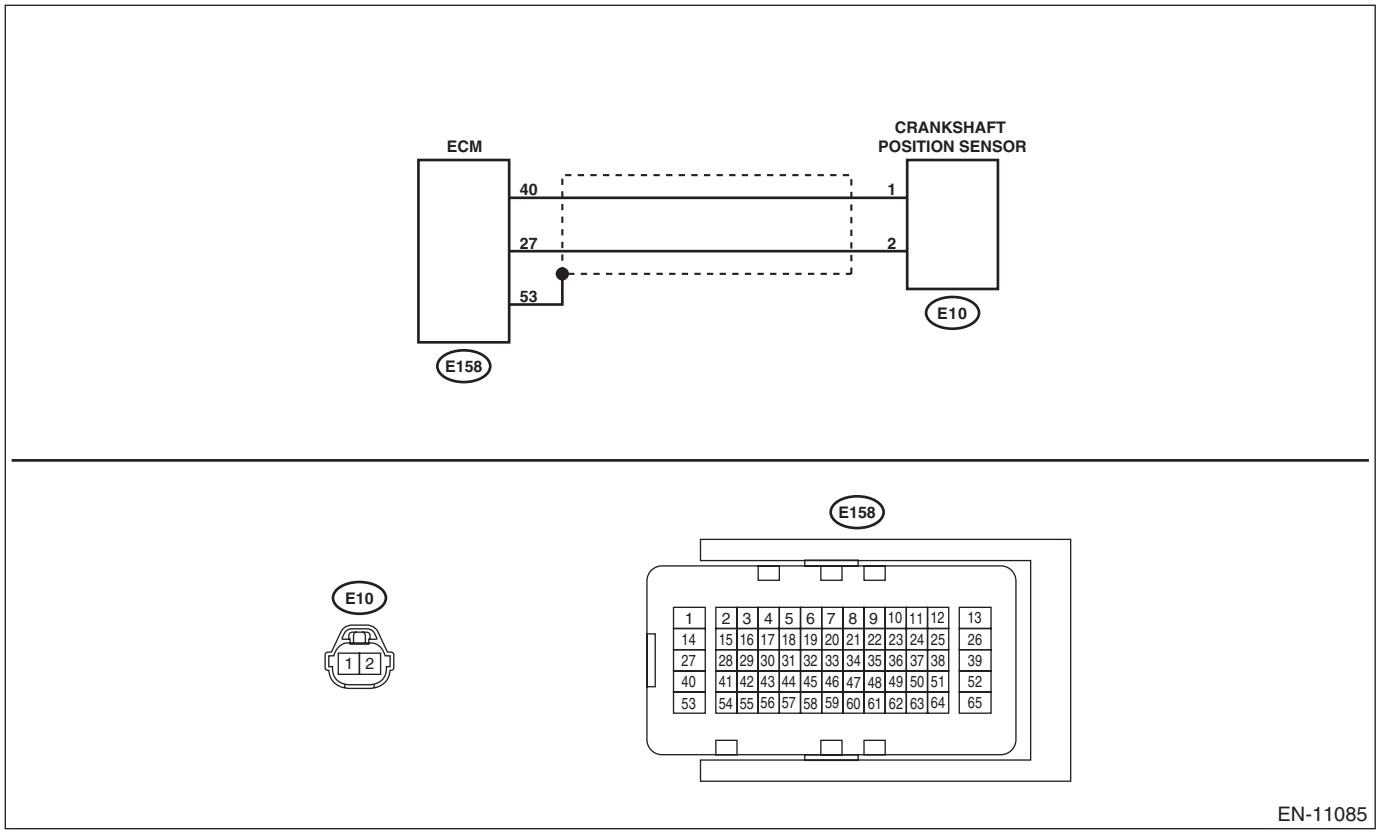

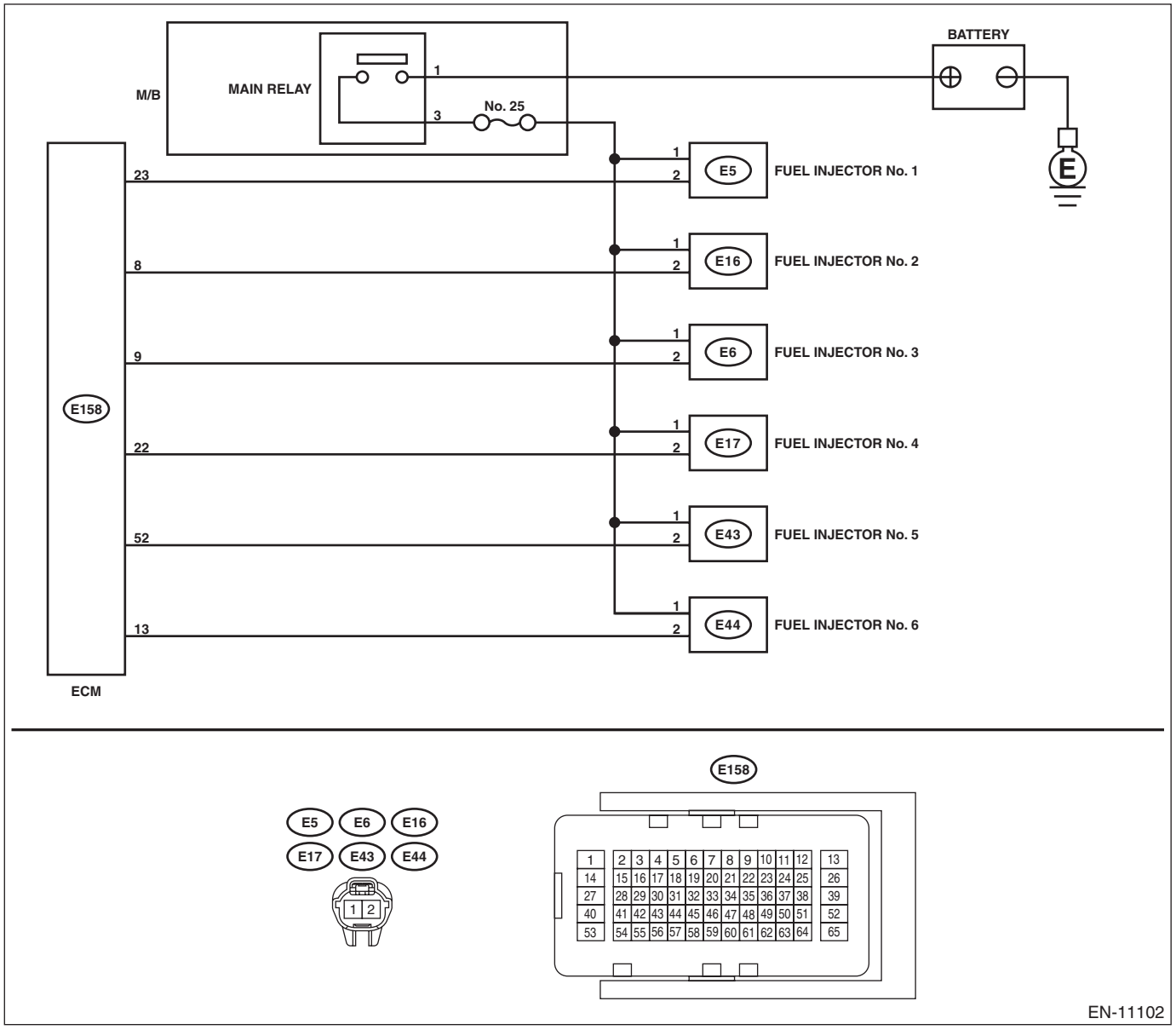
BATTERY
M/B
MAIN RELAY
1
3
No. 25
E
E158
23
8
9
22
52
13
ECM
E5
E16
E6
E17
E43
E44
FUEL INJECTOR No. 1
FUEL INJECTOR No. 2
FUEL INJECTOR No. 3
FUEL INJECTOR No. 4
FUEL INJECTOR No. 5
FUEL INJECTOR No. 6
1
2
E158
1 2 3 4 5 6 7 8 9 10 11 12 13
14 15 16 17 18 19 20 21 22 23 24 25 26
27 28 29 30 31 32 33 34 35 36 37 38 39
40 41 42 43 44 45 46 47 48 49 50 51 52
53 54 55 56 57 58 59 60 61 62 63 64 65
EN-11102

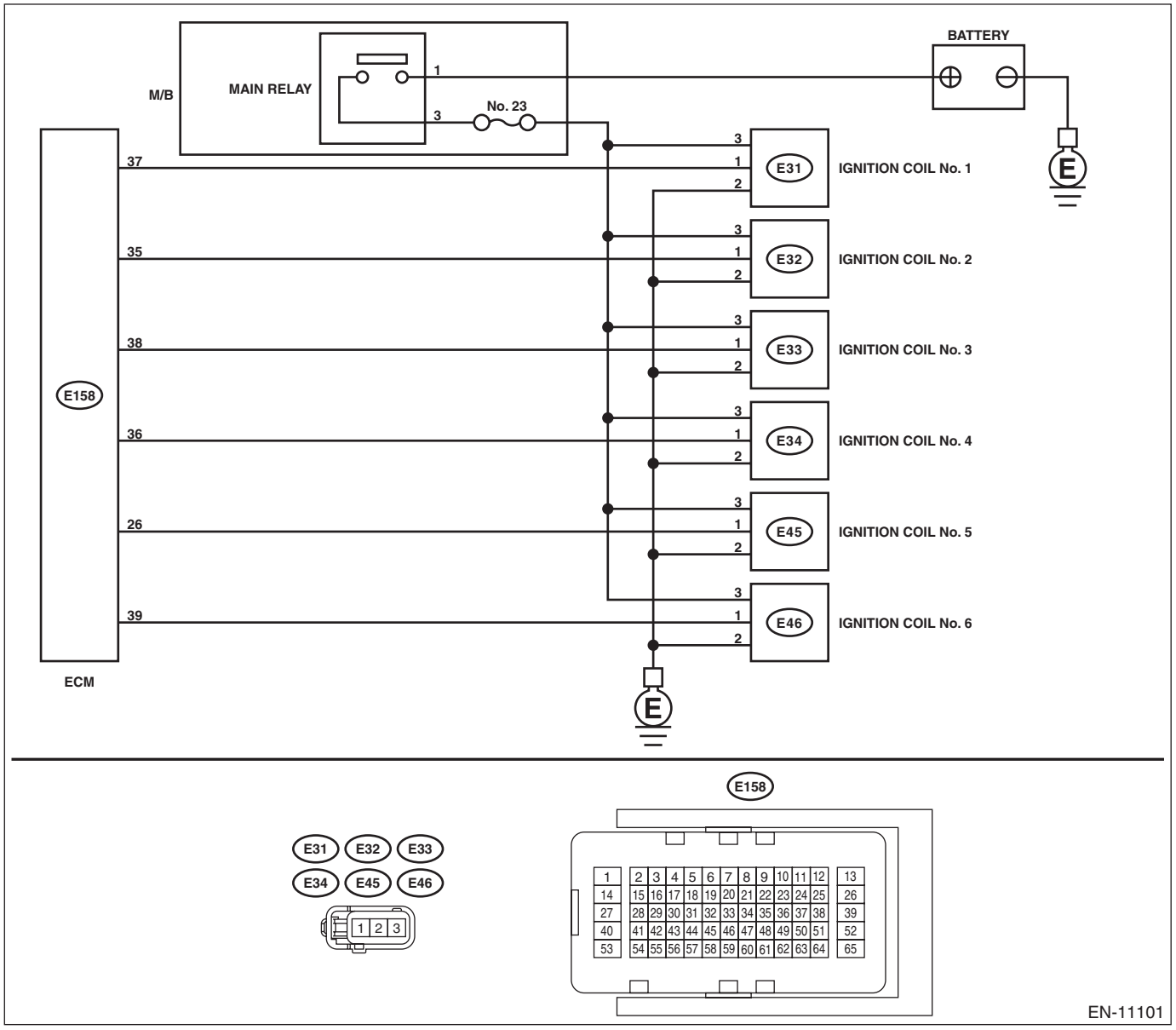
BATTERY
M/B
MAIN RELAY
1
3
No. 23
E158
37
35
38
36
26
39
ECM
E31
E32
E33
E34
E45
E46
IGNITION COIL No. 1
IGNITION COIL No. 2
IGNITION COIL No. 3
IGNITION COIL No. 4
IGNITION COIL No. 5
IGNITION COIL No. 6
E
E158
1 2 3
1 2 3 4 5 6 7 8 9 10 11 12 13
14 15 16 17 18 19 20 21 22 23 24 25 26
27 28 29 30 31 32 33 34 35 36 37 38 39
40 41 42 43 44 45 46 47 48 49 50 51 52
53 54 55 56 57 58 59 60 61 62 63 64 65
EN-11101

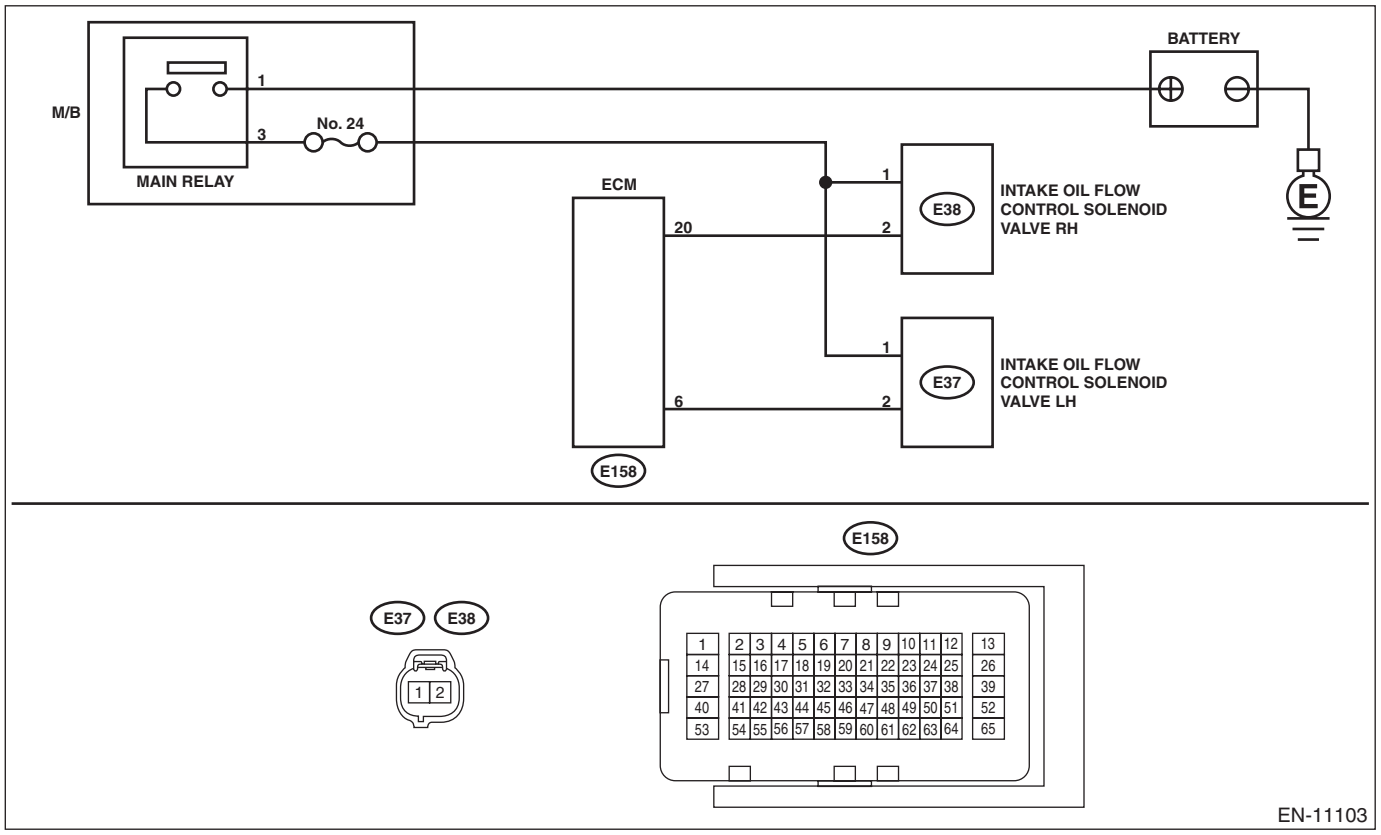
BATTERY
M/B
1
3
No. 24
MAIN RELAY
ECM
20
6
E158
1
2
E38
INTAKE OIL FLOW CONTROL SOLENOID VALVE RH
E37
INTAKE OIL FLOW CONTROL SOLENOID VALVE LH
E
E158
E37
E38
1 2
1 2 3 4 5 6 7 8 9 10 11 12 13
14 15 16 17 18 19 20 21 22 23 24 25 26
27 28 29 30 31 32 33 34 35 36 37 38 39
40 41 42 43 44 45 46 47 48 49 50 51 52
53 54 55 56 57 58 59 60 61 62 63 64 65
EN-11103

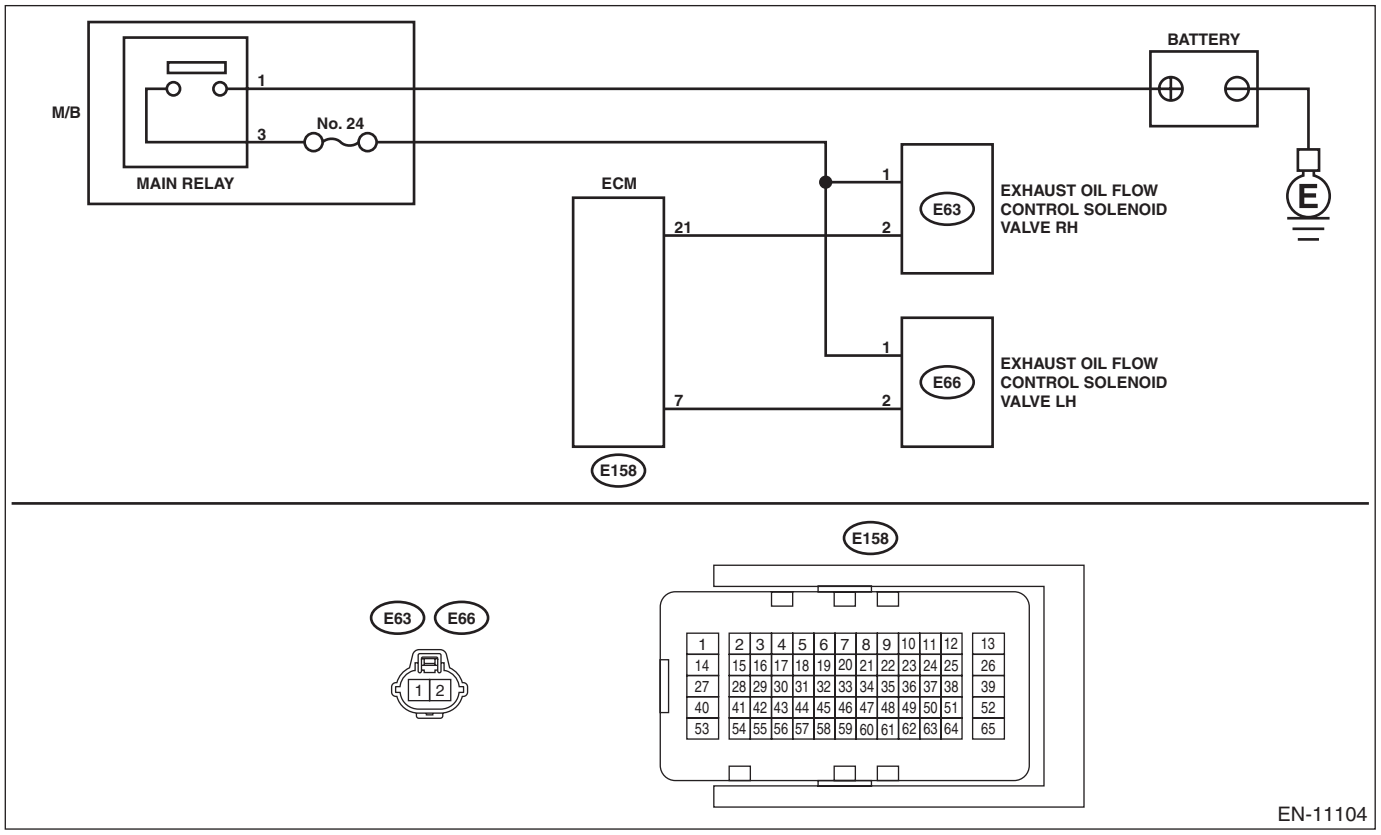
BATTERY
M/B
1
3
No. 24
MAIN RELAY
ECM
21
7
E158
1
2
E63
EXHAUST OIL FLOW CONTROL SOLENOID VALVE RH
E66
EXHAUST OIL FLOW CONTROL SOLENOID VALVE LH
E
E158
E63
E66
1 2
1 2 3 4 5 6 7 8 9 10 11 12 13
14 15 16 17 18 19 20 21 22 23 24 25 26
27 28 29 30 31 32 33 34 35 36 37 38 39
40 41 42 43 44 45 46 47 48 49 50 51 52
53 54 55 56 57 58 59 60 61 62 63 64 65
EN-11104

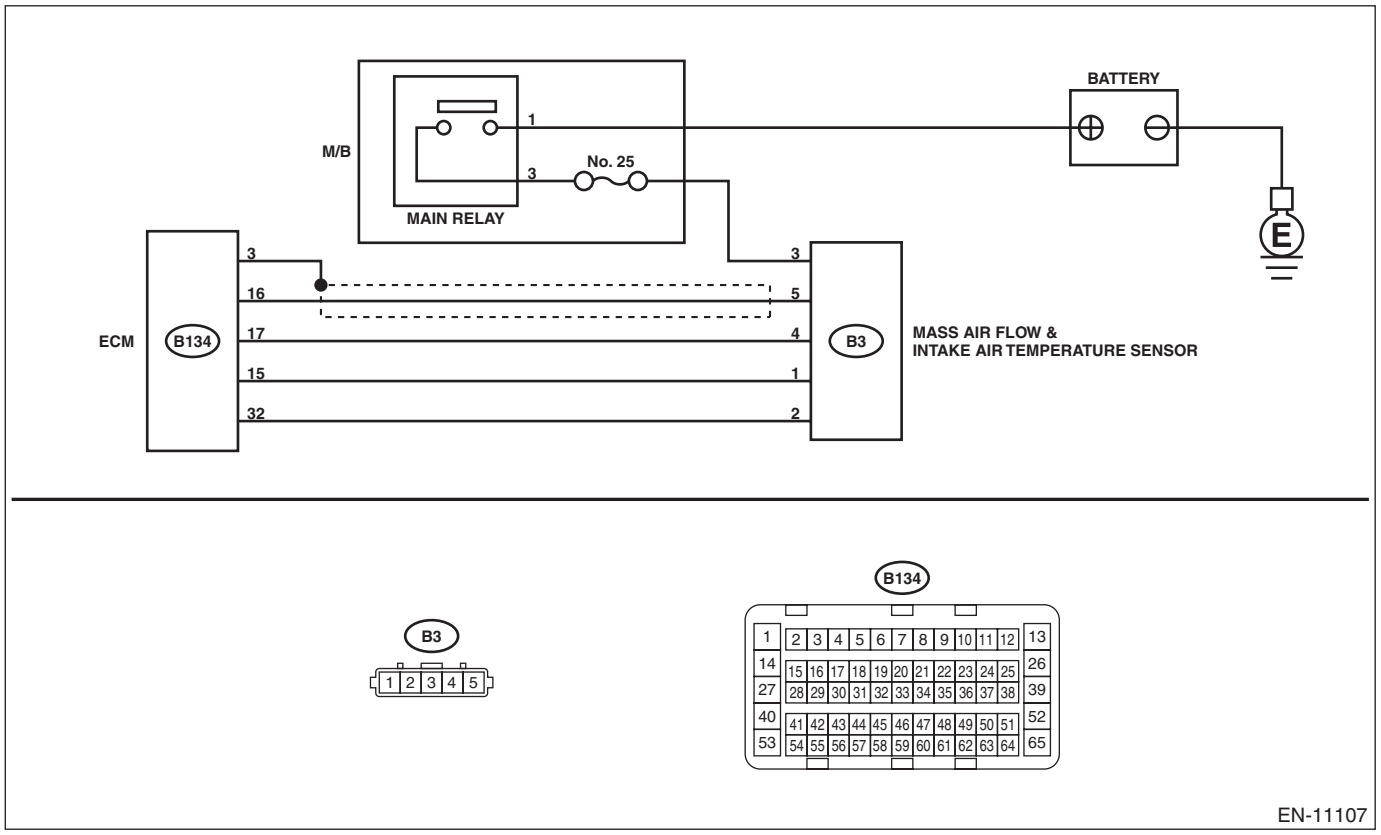

EN-11107

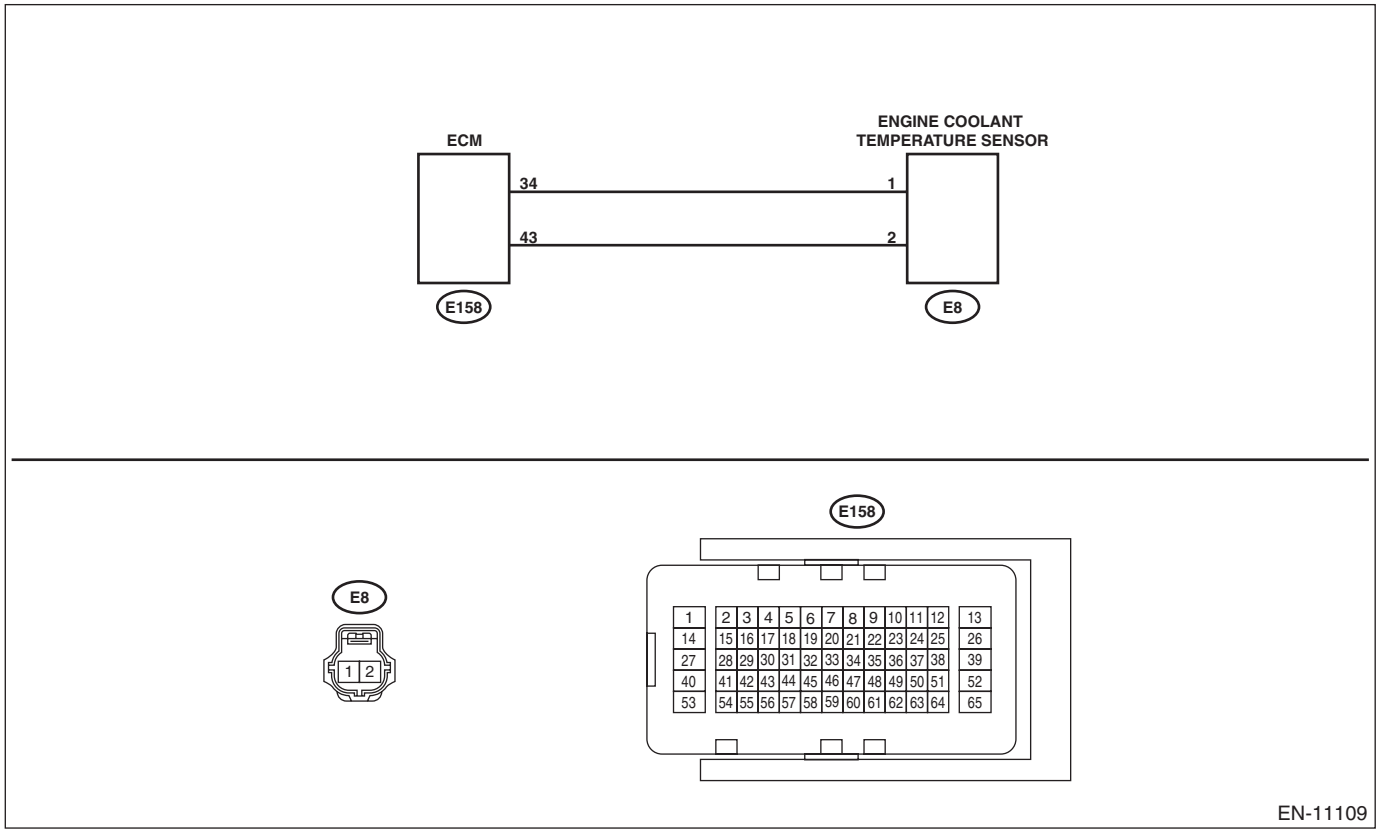

EN-11109

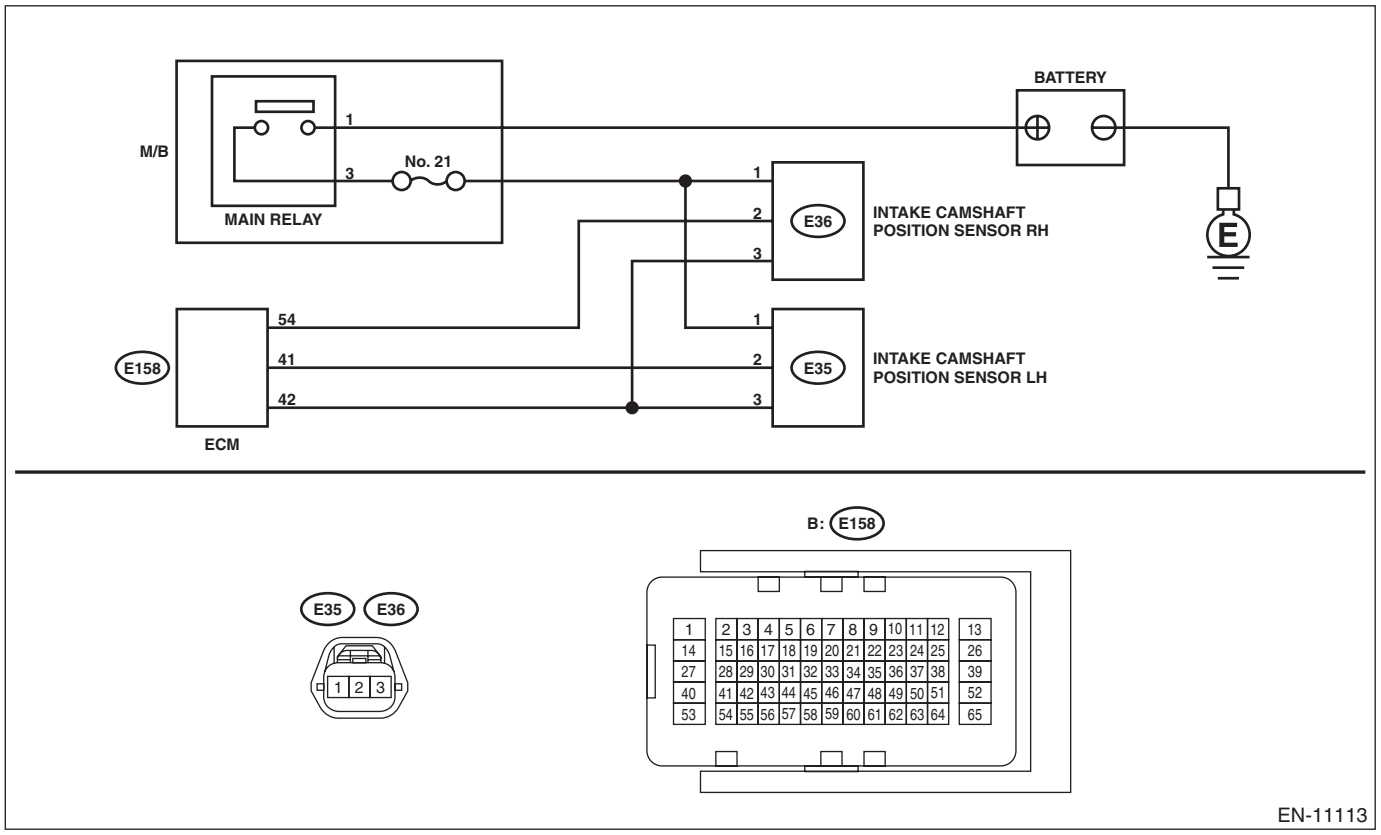

EN-11113

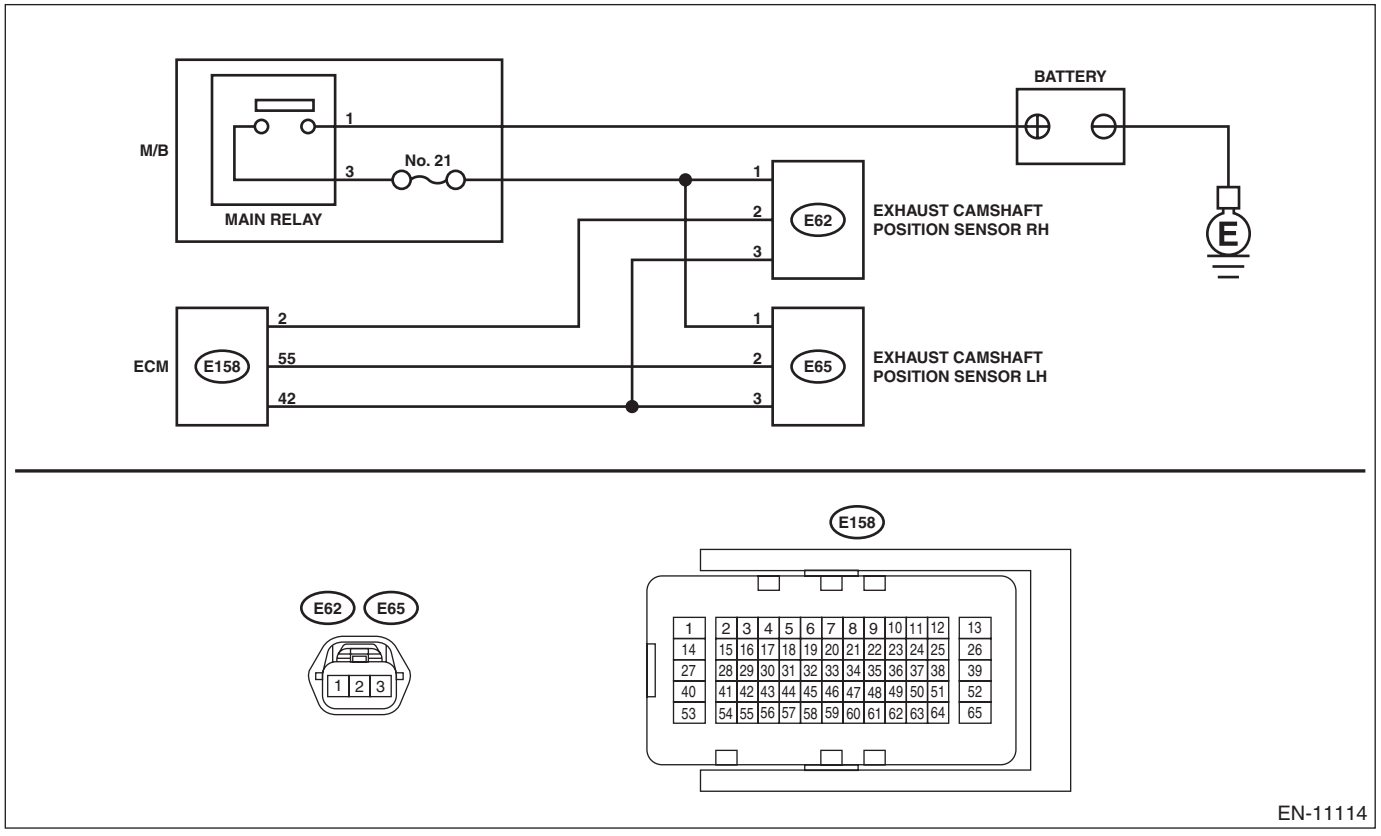

EN-11114

	Step	Check	Yes	No
1	**CHECK DTC.**	Is any other DTC displayed?	Check DTC using "List of Diagnostic Trouble Code (DTC)". <Ref. to EN(H6DO)(diag)-109, List of Diagnostic Trouble Code (DTC).>	Go to step **2**.
2	**CHECK IMMOBILIZER.** Check the immobilizer. <Ref. to IM(diag)-2, Basic Diagnostic Procedure.>	Is the immobilizer normal?	Go to step **3**.	Repair the immobilizer. <Ref. to IM(diag)-2, Basic Diagnostic Procedure.>
3	**CHECK FOR MALFUNCTION OCCURRENCE.**	Is it possible to reproduce the faulty phenomenon or to identify the faulty condition?	Go to step **29**.	Go to step **4**.
4	**CHECK FREEZE FRAME DATA.** Using the Subaru Select Monitor, read the values in «Engine Speed» and «Control module voltage». NOTE: For detailed operation procedures, refer to "Freeze Frame Data Display For Engine". <Ref. to EN(H6DO)(diag)-63, DISPLAY OF ENGINE FREEZE FRAME DATA, OPERATION, Subaru Select Monitor.>	Is the value of «Engine Speed» 0 rpm?	• When the value of «Control module voltage» is less than 5 V: Check the battery. <Ref. to SC(H6DO)-59, INSPECTION, Battery.> • When the value of «Control module voltage» is 5 V or more: Go to step **5**.	• When the value of «Engine Speed» is less than 250 rpm: Go to step **11**. • When the value of «Engine Speed» is 250 rpm or more: Go to step **19**.
5	**CHECK FREEZE FRAME DATA.** Read the value of «Control module voltage» using Subaru Select Monitor. NOTE: For detailed operation procedures, refer to "Freeze Frame Data Display For Engine". <Ref. to EN(H6DO)(diag)-63, DISPLAY OF ENGINE FREEZE FRAME DATA, OPERATION, Subaru Select Monitor.>	Is the value of «Control module voltage» less than 9 V?	It is possible that the engine friction is too large. Check the engine. <Ref. to ME(H6DO)-172, INSPECTION, Engine Trouble in General.>	• When the value of «Control module voltage» changes in any one of freeze frame data: Go to step **6**. • When the value of «Control module voltage» does not change in all freeze frame data: Check the starter motor circuit. <Ref. to EN(H6DO)(diag)-93, STARTER MOTOR CIRCUIT, Diagnostics for Engine Starting Failure.>
6	**CHECK INSTALLATION CONDITION OF CRANKSHAFT POSITION SENSOR.**	Is the crankshaft position sensor installed correctly?	Go to step **7**.	Install the crankshaft position sensor correctly. <Ref. to FU(H6DO)-44, INSTALLATION, Crankshaft Position Sensor.>

	Step	Check	Yes	No
7	**CHECK CRANKSHAFT POSITION SENSOR.** Check the crankshaft position sensor. <Ref. to FU(H6DO)-45, INSPECTION, Crankshaft Position Sensor.>	Is the crankshaft position sensor normal?	Go to step **8**.	Replace the crankshaft position sensor. <Ref. to FU(H6DO)-42, Crankshaft Position Sensor.>
8	**CHECK HARNESS BETWEEN ECM AND CRANKSHAFT POSITION SENSOR CONNECTOR.** 1) Turn the ignition switch to OFF. 2) Disconnect the connector from ECM. 3) Measure the resistance of harness between ECM connector and crankshaft position sensor connector. ***Connector & terminal*** ***(E158) No. 40 — (E10) No. 1:*** ***(E158) No. 27 — (E10) No. 2:***	Is the resistance less than 1 Ω?	Go to step **9**.	Repair the open circuit in the harness between the ECM connector and crankshaft position sensor connector.
9	**CHECK HARNESS BETWEEN ECM AND CRANKSHAFT POSITION SENSOR CONNECTOR.** Measure the resistance between crankshaft position sensor connector and engine ground. ***Connector & terminal*** ***(E10) No. 1 — Engine ground:*** ***(E10) No. 2 — Engine ground:***	Is the resistance 1 MΩ or more?	Go to step **10**.	Repair short circuit to ground in harness between ECM connector and crankshaft position sensor connector.
10	**CHECK FOR MALFUNCTION OCCURRENCE.** 1) Replace the crankshaft position sensor. <Ref. to FU(H6DO)-42, Crankshaft Position Sensor.> 2) Check that the fault is removed.	Is the fault removed?	Perform the Clear Memory Mode to complete. <Ref. to EN(H6DO)(diag)-85, Clear Memory Mode.>	Replace the ECM. <Ref. to FU(H6DO)-83, Engine Control Module (ECM).>
11	**CHECK FREEZE FRAME DATA.** Using the Subaru Select Monitor, read the values in «Coolant Temp.», «Ambient Temperature» and «Fuel Pump Duty». NOTE: For detailed operation procedures, refer to "Freeze Frame Data Display For Engine". <Ref. to EN(H6DO)(diag)-63, DISPLAY OF ENGINE FREEZE FRAME DATA, OPERATION, Subaru Select Monitor.>	Is the value of «Coolant Temp.» 120°C (248°F) or more? Or, is the value of «Coolant Temp.» lower than «Ambient Temperature» by 15°C (27°F) or more?	Replace the engine coolant temperature sensor. <Ref. to FU(H6DO)-39, Engine Coolant Temperature Sensor.>	• When the value of «Fuel Pump Duty» is 60% or more: Go to step **12**. • When the value of «Fuel Pump Duty» is less than 60%: Check the fuel pump system. <Ref. to EN(H6DO)(diag)-295, DTC P0230 FUEL PUMP PRIMARY CIRCUIT, Diagnostic Procedure with Diagnostic Trouble Code (DTC).>
12	**CHECK OF FUEL PUMP.** 1) Select «Fuel Pump» from "Actuator ON/OFF Operation" in "Active Test". NOTE: For detailed operation procedures, refer to the "Active Test". <Ref. to EN(H6DO)(diag)-86, Active Test.> 2) Check if operating sound occurs in the fuel pump according to ON/OFF switching operation.	Does the fuel pump emit operating sound?	Go to step **14**.	Go to step **13**.

	Step	Check	Yes	No
13	**CHECK OF FUEL PUMP.** Check fuel pump. <Ref. to FU(H6DO)-124, INSPECTION, Fuel Pump.>	Is the fuel pump normal?	Check fuel pump system. <Ref. to EN(H6DO)(diag)-295, DTC P0230 FUEL PUMP PRIMARY CIRCUIT, Diagnostic Procedure with Diagnostic Trouble Code (DTC).>	Replace the fuel pump. <Ref. to FU(H6DO)-119, Fuel Pump.>
14	**CHECK FUEL TANK.** Check if any foreign matters such as iron powder exist in the fuel tank.	Is there any foreign matter in the fuel tank?	Remove foreign matter from the fuel tank.	Go to step **15**.
15	**CHECK FUEL PRESSURE.** **WARNING:** **Place "NO OPEN FLAMES" signs near the working area.** **CAUTION:** **Be careful not to spill fuel.** Measure the fuel pressure. <Ref. to ME(H6DO)-31, INSPECTION, Fuel Pressure.> **CAUTION:** **Before attaching/detaching a fuel pressure gauge, release the fuel pressure.**	Is the measured value 340 — 400 kPa (3.5 — 4.1 kgf/cm^2, 49 — 58 psi)?	Go to step **16**.	Check the fuel pump and fuel delivery line. <Ref. to FU(H6DO)-124, INSPECTION, Fuel Pump.> <Ref. to FU(H6DO)-167, INSPECTION, Fuel Delivery and Evaporation Lines.>
16	**CHECK POWER SUPPLY CIRCUIT OF FUEL INJECTOR.** 1) Turn the ignition switch to OFF. 2) Disconnect the connector from fuel injector. 3) Turn the ignition switch to ON. 4) Measure the voltage in harness between fuel injector connector and engine ground. ***Connector & terminal*** ***#1 (E5) No. 1 (+) — Engine ground (–):*** ***#2 (E16) No. 1 (+) — Engine ground (–):*** ***#3 (E6) No. 1 (+) — Engine ground (–):*** ***#4 (E17) No. 1 (+) — Engine ground (–):*** ***#5 (E43) No. 1 (+) — Engine ground (–):*** ***#6 (E44) No. 1 (+) — Engine ground (–):***	Is the voltage 10 V or more?	Go to step **17**.	Repair the power supply circuit.
17	**CHECK HARNESS BETWEEN ECM AND FUEL INJECTOR CONNECTOR.** 1) Turn the ignition switch to OFF. 2) Disconnect the connectors from ECM and fuel injectors. 3) Measure the resistance of harness between ECM connector and fuel injector connector. ***Connector & terminal*** ***#1 (E158) No. 23 — (E5) No. 2:*** ***#2 (E158) No. 8 — (E16) No. 2:*** ***#3 (E158) No. 9 — (E6) No. 2:*** ***#4 (E158) No. 22 — (E17) No. 2:*** ***#5 (E158) No. 52 — (E43) No. 2:*** ***#6 (E158) No. 13 — (E44) No. 2:***	Is the resistance less than 1 Ω?	Go to step **18**.	Repair the open circuit of the harness between the ECM connector and fuel injector connector.

	Step	Check	Yes	No
18	**CHECK HARNESS BETWEEN ECM AND FUEL INJECTOR CONNECTOR.** Measure the resistance between the ECM connector and engine ground. ***Connector & terminal*** ***#1 (E158) No. 23 — Engine ground:*** ***#2 (E158) No. 8 — Engine ground:*** ***#3 (E158) No. 9 — Engine ground:*** ***#4 (E158) No. 22 — Engine ground:*** ***#5 (E158) No. 52 — Engine ground:*** ***#6 (E158) No. 13 — Engine ground:***	Is the resistance 1 MΩ or more?	Go to step **28**.	Repair the short circuit to ground in harness between ECM connector and fuel injector connector.
19	**CHECK FREEZE FRAME DATA.** Using the Subaru Select Monitor, read the values in «Coolant Temp.», «Ambient Temperature» and «Engine Speed». NOTE: For detailed operation procedures, refer to "Freeze Frame Data Display For Engine". <Ref. to EN(H6DO)(diag)-63, DISPLAY OF ENGINE FREEZE FRAME DATA, OPERATION, Subaru Select Monitor.>	Is the value of «Coolant Temp.» 120°C (248°F) or more? Or, is the value of «Coolant Temp.» lower than «Ambient Temperature» by 15°C (27°F) or more?	Replace the engine coolant temperature sensor. <Ref. to FU(H6DO)-39, Engine Coolant Temperature Sensor.>	• When the minimum value of «Engine Speed» is less than 300 rpm: Go to step **20**. • When the minimum value of «Engine Speed» is 300 rpm or more: It is possible that the engine compression pressure is not sufficient. Check the engine. <Ref. to ME(H6DO)-172, INSPECTION, Engine Trouble in General.>
20	**CHECK FUEL INJECTOR.** Check fuel injector. <Ref. to FU(H6DO)-71, INSPECTION, Fuel Injector.>	Is there any deposit in the fuel injectors?	Replace the fuel injector. <Ref. to FU(H6DO)-61, Fuel Injector.>	Go to step **21**.
21	**CHECK FUEL TANK.** Check if any foreign matters such as iron powder exist in the fuel tank.	Is there any foreign matter in the fuel tank?	Remove foreign matter from the fuel tank.	Go to step **22**.
22	**CHECK FREEZE FRAME DATA.** Using the Subaru Select Monitor, read the value in «Coolant Temp.». NOTE: For detailed operation procedures, refer to "Freeze Frame Data Display For Engine". <Ref. to EN(H6DO)(diag)-63, DISPLAY OF ENGINE FREEZE FRAME DATA, OPERATION, Subaru Select Monitor.>	Is the value of «Coolant Temp.» 40 — 90°C (104 — 194°F)?	Go to step **24**.	Go to step **23**.

	Step	Check	Yes	No
23	**CHECK FUEL PRESSURE.** **WARNING:** **Place "NO OPEN FLAMES" signs near the working area.** **CAUTION:** **Be careful not to spill fuel.** Measure the fuel pressure five minutes after the engine is stopped. <Ref. to ME(H6DO)-31, INSPECTION, Fuel Pressure.> **CAUTION:** **Before attaching/detaching a fuel pressure gauge, release the fuel pressure.** NOTE: If the engine does not start, measure the fuel pressure five minutes after cranking is completed.	Is the measured value 147 kPa (1.5 kgf/cm^2, 21 psi) or more?	Go to step **28**.	Replace the pressure regulator. <Ref. to FU(H6DO)-135, Fuel Filter.>
24	**CHECK FUEL INJECTOR.** 1) After the engine is stopped, scavenge inside of the intake manifold by applying compressed air. 2) Measure the HC concentration inside the intake manifold 15 minutes after scavenging is completed. NOTE: • Perform measurement using HC concentration gauge. If HC concentration gauge is not available, go to the next step. • For measuring HC concentration, remove the hose between intake manifold and purge control solenoid valve to measure the HC concentration in the intake manifold.	Is the HC concentration less than 4,000 ppm?	Go to step **26**.	Go to step **25**.
25	**CHECK FUEL INJECTOR.** Check fuel injector. <Ref. to FU(H6DO)-71, INSPECTION, Fuel Injector.>	Are fuel injectors OK?	Go to step **26**.	Replace the fuel injector. <Ref. to FU(H6DO)-61, Fuel Injector.>
26	**CHECK THROTTLE BODY.** Check throttle body. <Ref. to FU(H6DO)-22, INSPECTION, Throttle Body.>	Is there any deposit in the throttle body?	Replace the throttle body. <Ref. to FU(H6DO)-19, Throttle Body.>	Go to step **27**.
27	**CHECK AIR INTAKE SYSTEM.** Check the installing condition of the air intake system.	Are there holes, loose bolts or disconnection of hose on air intake system?	Repair the air intake system. <Ref. to IN(H6DO)-2, General Description.>	Go to step **28**.
28	**CHECK FOR MALFUNCTION OCCURRENCE.**	Is the fault removed?	Perform the Clear Memory Mode to complete. <Ref. to EN(H6DO)(diag)-85, Clear Memory Mode.>	Go to step **29**.

	Step	Check	Yes	No
29	**CHECK FOR MALFUNCTION OCCURRENCE.**	Does cranking occur?	• When the engine speed is abnormal during cranking: Go to step **36**. • When an initial combustion does not occur: Go to step **39**. • When the engine stalls immediately after engine start: Go to step **57**. • When the engine takes time to start: Go to step **80**.	Go to step **30**.
30	**CHECK FOR MALFUNCTION OCCURRENCE.**	Does the sound occur by a protruding starter pinion gear during cranking?	• When the starter motor does not rotate: Go to step **31**. • When the starter motor rotates but does not engage: Go to step **33**.	Go to step **34**.
31	**CHECK BATTERY.** Check the battery. <Ref. to SC(H6DO)-59, INSPECTION, Battery.>	Is the battery OK?	Go to step **32**.	Charge or replace the battery. <Ref. to SC(H6DO)-57, Battery.>
32	**CHECK ENGINE MAIN BODY.** Using the ST, rotate the crankshaft. ST 18252AA000 CRANKSHAFT SOCKET	Does the crankshaft rotate smoothly?	Check the starter motor. <Ref. to SC(H6DO)-23, INSPECTION, Starter.> NOTE: It is possible that the engine friction increased temporarily. Check if any foreign matter is mixed in engine oil. If a foreign matter is found, check the engine. <Ref. to ME(H6DO)-172, INSPECTION, Engine Trouble in General.>	It is possible that the engine friction is too large. Check the engine. <Ref. to ME(H6DO)-172, INSPECTION, Engine Trouble in General.>
33	**CHECK STARTER MOTOR.** Check the starter motor. <Ref. to SC(H6DO)-23, INSPECTION, Starter.>	Is there any wear or damage in the starter pinion gear?	Repair the starter motor. <Ref. to SC(H6DO)-7, Starter.>	Replace the torque converter assembly. <Ref. to CVT(TR690)-158, Torque Converter Assembly.>
34	**CHECK BATTERY.** Check the battery. <Ref. to SC(H6DO)-59, INSPECTION, Battery.>	Is the battery OK?	Go to step **35**.	Charge or replace the battery. <Ref. to SC(H6DO)-57, Battery.>

	Step	Check	Yes	No
35	**CHECK STARTER MOTOR.** Check the starter motor. <Ref. to SC(H6DO)-23, INSPECTION, Starter.>	Is the starter motor OK?	Check the starter motor circuit. <Ref. to EN(H6DO)(diag)-93, STARTER MOTOR CIRCUIT, Diagnostics for Engine Starting Failure.>	Repair the starter motor. <Ref. to SC(H6DO)-7, Starter.>
36	**CHECK CURRENT DATA.** Read the value of «Engine Speed» during cranking using Subaru Select Monitor. NOTE: For detailed operation procedures, refer to "Current Data Display For Engine". <Ref. to EN(H6DO)(diag)-50, DISPLAY CURRENT ENGINE DATA, OPERATION, Subaru Select Monitor.>	Is the value of «Engine Speed» 300 rpm or more?	It is possible that the compression pressure of the engine is not sufficient. Check the engine. <Ref. to ME(H6DO)-172, INSPECTION, Engine Trouble in General.>	Go to step **37**.
37	**CHECK BATTERY.** Check the battery. <Ref. to SC(H6DO)-59, INSPECTION, Battery.>	Is the battery OK?	Go to step **38**.	Charge or replace the battery. <Ref. to SC(H6DO)-57, Battery.>
38	**CHECK ENGINE MAIN BODY.** Using the ST, rotate the crankshaft. ST 18252AA000 CRANKSHAFT SOCKET	Does the crankshaft rotate smoothly?	Check the starter motor. <Ref. to SC(H6DO)-23, INSPECTION, Starter.> NOTE: It is possible that the engine friction increased temporarily. Check if any foreign matter is mixed in engine oil. If a foreign matter is found, check the engine. <Ref. to ME(H6DO)-172, INSPECTION, Engine Trouble in General.>	It is possible that the engine friction is too large. Check the engine. <Ref. to ME(H6DO)-172, INSPECTION, Engine Trouble in General.>
39	**CHECK OPERATION OF EACH FUEL INJECTOR.** Using a sound scope, check each fuel injector for operation sound during cranking.	Does the fuel injector emit operating sound?	Go to step **40**.	Go to step **53**.
40	**CHECK FUEL PRESSURE.** **WARNING:** **Place "NO OPEN FLAMES" signs near the working area.** **CAUTION:** **Be careful not to spill fuel.** Measure the fuel pressure. <Ref. to ME(H6DO)-31, INSPECTION, Fuel Pressure.> **CAUTION:** **Before attaching/detaching a fuel pressure gauge, release the fuel pressure.**	Is the measured value 340 — 400 kPa (3.5 — 4.1 kgf/cm^2, 49 — 58 psi)?	Go to step **41**.	Go to step **51**.

Step		Check	Yes	No
41	**CHECK IGNITION CONDITION.** Check the ignition condition. <Ref. to EN(H6DO)(diag)-104, IGNITION CONTROL SYSTEM, Diagnostics for Engine Starting Failure.>	Is the ignition condition normal?	Go to step **42**.	Go to step **45**.
42	**CHECK FOR MALFUNCTION OCCURRENCE.** Check for the condition of fault occurrence.	Does the fault occur only within approx. 15 to 120 minutes after the engine is stopped?	Go to step **44**.	• When the fault occurs in two or three minutes or a long time after the engine is stopped: Go to step **43**. • When the fault occurrence pattern is inconsistent: Go to step **94**.
43	**CHECK FUEL PRESSURE.** **WARNING:** **Place "NO OPEN FLAMES" signs near the working area.** **CAUTION:** **Be careful not to spill fuel.** Measure the fuel pressure five minutes after the engine is stopped. <Ref. to ME(H6DO)-31, INSPECTION, Fuel Pressure.> **CAUTION:** **Before attaching/detaching a fuel pressure gauge, release the fuel pressure.** NOTE: If the engine does not start, measure the fuel pressure five minutes after cranking is completed.	Is the measured value 147 kPa (1.5 kgf/cm^2, 21 psi) or more?	Go to step **93**.	Replace the pressure regulator. <Ref. to FU(H6DO)-135, Fuel Filter.>
44	**CHECK FUEL INJECTOR.** 1) After the engine is stopped, scavenge inside of the intake manifold by applying compressed air. 2) Measure the HC concentration inside the intake manifold 15 minutes after scavenging is completed. NOTE: • Perform measurement using HC concentration gauge. If HC concentration gauge is not available, go to the next step. • For measuring HC concentration, remove the hose between intake manifold and purge control solenoid valve to measure the HC concentration in the intake manifold.	Is the HC concentration less than 4,000 ppm?	Go to step **93**.	Replace the fuel injector. <Ref. to FU(H6DO)-61, Fuel Injector.>
45	**CHECK SPARK PLUG.** Check the spark plug. <Ref. to IG(H6DO)-11, INSPECTION, Spark Plug.>	Are the spark plugs normal?	Go to step **46**.	Replace all spark plugs on all cylinders. <Ref. to IG(H6DO)-4, Spark Plug.>

	Step	Check	Yes	No
46	**CHECK CURRENT DATA.** Record the value of «Engine Speed» during cranking using Subaru Select Monitor. NOTE: For detailed operation procedures, refer to "Current Data Display For Engine". <Ref. to EN(H6DO)(diag)-50, DISPLAY CURRENT ENGINE DATA, OPERATION, Subaru Select Monitor.>	Does the recorded value of «Engine Speed» contain data of 0 rpm?	It is possible that temporary fault occurs in the crankshaft position sensor circuit. Check the crankshaft position sensor circuit. <Ref. to EN(H6DO)(diag)-326, DTC P0335 CRANKSHAFT POSITION SENSOR "A" CIRCUIT, Diagnostic Procedure with Diagnostic Trouble Code (DTC).>	Go to step **47**.
47	**CHECK IGNITION COIL POWER SUPPLY CIRCUIT.** 1) Turn the ignition switch to OFF. 2) Disconnect the connector from ignition coil. 3) Turn the ignition switch to ON. 4) Measure the voltage between ignition coil connector and engine ground. ***Connector & terminal*** ***(E31) No. 3 (+) — Engine ground (–):*** ***(E32) No. 3 (+) — Engine ground (–):*** ***(E33) No. 3 (+) — Engine ground (–):*** ***(E34) No. 3 (+) — Engine ground (–):*** ***(E45) No. 3 (+) — Engine ground (–):*** ***(E46) No. 3 (+) — Engine ground (–):***	Is the voltage 10 V or more?	Go to step **48**.	Repair the harness and connector. NOTE: In this case, repair the following item: • Open or short to ground in power supply circuit • Poor contact of coupling connector • Blown out of fuse
48	**CHECK HARNESS BETWEEN ECM AND IGNITION COIL CONNECTOR.** 1) Disconnect the connector from ECM. 2) Measure the resistance of harness between ECM connector and ignition coil connector. ***Connector & terminal*** ***(E158) No. 37 — (E31) No. 1:*** ***(E158) No. 35 — (E32) No. 1:*** ***(E158) No. 38 — (E33) No. 1:*** ***(E158) No. 36 — (E34) No. 1:*** ***(E158) No. 26 — (E45) No. 1:*** ***(E158) No. 39 — (E4) No. 1:***	Is the resistance less than 1 Ω?	Go to step **49**.	Repair the open circuit in harness between ECM connector and ignition coil connector.
49	**CHECK HARNESS BETWEEN ECM AND IGNITION COIL CONNECTOR.** Measure the resistance of harness between ECM connector and engine ground. ***Connector & terminal*** ***(E158) No. 37 — Engine ground:*** ***(E158) No. 35 — Engine ground:*** ***(E158) No. 38 — Engine ground:*** ***(E158) No. 36 — Engine ground:*** ***(E158) No. 26 — Engine ground:*** ***(E158) No. 39 — Engine ground:***	Is the resistance 1 MΩ or more?	Go to step **50**.	Repair the ground short circuit of harness between ECM connector and ignition coil connector.

	Step	Check	Yes	No
50	**CHECK HARNESS OF IGNITION COIL GROUND CIRCUIT.** 1) Turn the ignition switch to OFF. 2) Measure the resistance of harness between ignition coil connector and engine ground. ***Connector & terminal*** ***(E31) No. 2 — Engine ground:*** ***(E32) No. 2 — Engine ground:*** ***(E33) No. 2 — Engine ground:*** ***(E34) No. 2 — Engine ground:*** ***(E45) No. 2 — Engine ground:*** ***(E46) No. 2 — Engine ground:***	Is the resistance less than 5 Ω?	Replace the ignition coil. <Ref. to IG(H6DO)-15, Ignition Coil.> If the fault occurs after servicing, continue the diagnosis. Go to step **99**.	Repair the open circuit in harness between ignition coil connector and engine grounding terminal.
51	**CHECK OF FUEL PUMP.** 1) Select «Fuel Pump» from “Actuator ON/OFF Operation” in “Active Test”. NOTE: For detailed operation procedures, refer to the “Active Test”. <Ref. to EN(H6DO)(diag)-86, Active Test.> 2) Check if operating sound occurs in the fuel pump according to ON/OFF switching operation.	Does the fuel pump emit operating sound?	Check the fuel pump and fuel delivery line. <Ref. to FU(H6DO)-124, INSPECTION, Fuel Pump.> <Ref. to FU(H6DO)-167, INSPECTION, Fuel Delivery and Evaporation Lines.>	Go to step **52**.
52	**CHECK OF FUEL PUMP.** Check fuel pump. <Ref. to FU(H6DO)-124, INSPECTION, Fuel Pump.>	Is the fuel pump normal?	Check fuel pump system. <Ref. to EN(H6DO)(diag)-295, DTC P0230 FUEL PUMP PRIMARY CIRCUIT, Diagnostic Procedure with Diagnostic Trouble Code (DTC).> If the fault occurs after servicing, continue the diagnosis. Go to step **95**.	Replace the fuel pump. <Ref. to FU(H6DO)-119, Fuel Pump.>
53	**CHECK CURRENT DATA.** Record the value of «Engine Speed» during cranking using Subaru Select Monitor. NOTE: For detailed operation procedures, refer to “Current Data Display For Engine”. <Ref. to EN(H6DO)(diag)-50, DISPLAY CURRENT ENGINE DATA, OPERATION, Subaru Select Monitor.>	Does the recorded value of «Engine Speed» contain data of 0 rpm?	It is possible that temporary fault occurs in the crankshaft position sensor circuit. Check the crankshaft position sensor circuit. <Ref. to EN(H6DO)(diag)-326, DTC P0335 CRANKSHAFT POSITION SENSOR "A" CIRCUIT, Diagnostic Procedure with Diagnostic Trouble Code (DTC).>	Go to step **54**.

	Step	Check	Yes	No
54	**CHECK POWER SUPPLY CIRCUIT OF FUEL INJECTOR.** 1) Turn the ignition switch to OFF. 2) Disconnect the connector from fuel injector. 3) Turn the ignition switch to ON. 4) Measure the voltage in harness between fuel injector connector and engine ground. ***Connector & terminal*** ***#1 (E5) No. 1 (+) — Engine ground (–):*** ***#2 (E16) No. 1 (+) — Engine ground (–):*** ***#3 (E6) No. 1 (+) — Engine ground (–):*** ***#4 (E17) No. 1 (+) — Engine ground (–):*** ***#5 (E43) No. 1 (+) — Engine ground (–):*** ***#6 (E44) No. 1 (+) — Engine ground (–):***	Is the voltage 10 V or more?	Go to step **55**.	Repair the power supply circuit.
55	**CHECK HARNESS BETWEEN ECM AND FUEL INJECTOR CONNECTOR.** 1) Turn the ignition switch to OFF. 2) Disconnect the connectors from ECM and fuel injectors. 3) Measure the resistance of harness between ECM connector and fuel injector connector. ***Connector & terminal*** ***#1 (E158) No. 23 — (E5) No. 2:*** ***#2 (E158) No. 8 — (E16) No. 2:*** ***#3 (E158) No. 9 — (E6) No. 2:*** ***#4 (E158) No. 22 — (E17) No. 2:*** ***#5 (E158) No. 52 — (E43) No. 2:*** ***#6 (E158) No. 13 — (E43) No. 2:***	Is the resistance less than 1 Ω?	Go to step **56**.	Repair the open circuit of the harness between the ECM connector and fuel injector connector.
56	**CHECK HARNESS BETWEEN ECM AND FUEL INJECTOR CONNECTOR.** Measure the resistance between the ECM connector and engine ground. ***Connector & terminal*** ***#1 (E158) No. 23 — Engine ground:*** ***#2 (E158) No. 8 — Engine ground:*** ***#3 (E158) No. 9 — Engine ground:*** ***#4 (E158) No. 22 — Engine ground:*** ***#5 (E158) No. 52 — Engine ground:*** ***#6 (E158) No. 13 — Engine ground:***	Is the resistance 1 MΩ or more?	Replace the ECM. <Ref. to FU(H6DO)-83, Engine Control Module (ECM).>	Repair the short circuit to ground in harness between ECM connector and fuel injector connector.
57	**CHECK MASS AIR FLOW AND INTAKE AIR TEMPERATURE SENSOR.** Check the mass air flow and intake air temperature sensor. <Ref. to FU(H6DO)-59, INSPECTION, Mass Air Flow and Intake Air Temperature Sensor.>	Is the mass air flow and intake air temperature sensor normal?	Go to step **58**.	Go to step **78**.
58	**CHECK AIR INTAKE SYSTEM.** Check the installing condition of the air intake system.	Are there holes, loose bolts or disconnection of hose on air intake system?	Repair the air intake system. <Ref. to IN(H6DO)-2, General Description.>	Go to step **59**.
59	**CHECK ELECTRONIC THROTTLE CONTROL.** 1) Disconnect the connectors from electronic throttle control. 2) Start the engine with the electronic throttle control connector disconnected.	Does the engine start?	Go to step **60**.	Go to step **61**.
60	**CHECK THROTTLE BODY.** Check throttle body. <Ref. to FU(H6DO)-22, INSPECTION, Throttle Body.>	Is there any deposit in the throttle body?	Replace the throttle body. <Ref. to FU(H6DO)-19, Throttle Body.>	Go to step **61**.

	Step	Check	Yes	No
61	**CHECK FREEZE FRAME DATA.** 1) Using the Subaru Select Monitor, read the values of the followings: «VVT Adv. Ang. Amount R», «VVT Advance Target Angle Amount R», «VVT Adv. Ang. Amount L», «VVT Advance Target Angle Amount L», «Exh. VVT Retard Ang. R», «Ex VVT Retard Target Angle R», «Exh. VVT Retard Ang. L» and «Ex VVT Retard Target Angle L». NOTE: For detailed operation procedures, refer to "Freeze Frame Data Display For Engine". <Ref. to EN(H6DO)(diag)-63, DISPLAY OF ENGINE FREEZE FRAME DATA, OPERATION, Subaru Select Monitor.> 2) Using the Subaru Select Monitor, compare the respective values between the followings: «VVT Adv. Ang. Amount R» and «VVT Advance Target Angle Amount R», «VVT Adv. Ang. Amount L» and «VVT Advance Target Angle Amount L», «Exh. VVT Retard Ang. R» and «Ex VVT Retard Target Angle R», «Exh. VVT Retard Ang. L» and «Ex VVT Retard Target Angle L».	Does all of the advance angle amount and retard angle amount synchronize with their target values?	Go to step **112**.	Diagnose the part where there is difference of 10 deg or more. • Intake RH: Go to step **62**. • Intake LH: Go to step **66**. • Exhaust RH: Go to step **70**. • Exhaust LH: Go to step **74**.
62	**CHECK POWER SUPPLY TO THE INTAKE OIL FLOW CONTROL SOLENOID RH.** 1) Turn the ignition switch to OFF. 2) Disconnect the connector from the intake oil flow control solenoid RH. 3) Turn the ignition switch to ON. 4) Measure the voltage between intake oil flow control solenoid RH connector and engine ground. ***Connector & terminal*** ***(E38) No. 1 (+) — Engine ground (–):***	Is the voltage 10 V or more?	Go to step **63**.	Repair the power supply circuit.
63	**CHECK HARNESS BETWEEN ECM AND INTAKE OIL FLOW CONTROL SOLENOID RH CONNECTOR.** 1) Turn the ignition switch to OFF. 2) Disconnect the connector from ECM. 3) Measure the resistance of harness between ECM connector and intake oil flow control solenoid RH. ***Connector & terminal*** ***(E158) No. 20 — (E38) No. 2:***	Is the resistance less than 1 Ω?	Go to step **64**.	Repair the open circuit in harness between ECM connector and intake oil flow control solenoid RH connector.
64	**CHECK HARNESS BETWEEN ECM AND INTAKE OIL FLOW CONTROL SOLENOID RH CONNECTOR.** Measure the resistance between intake oil flow control solenoid RH connector and engine ground. ***Connector & terminal*** ***(E38) No. 2 — Engine ground:***	Is the resistance 1 MΩ or more?	Go to step **65**.	Repair the short circuit to ground in harness between ECM connector and intake oil flow control solenoid RH connector.
65	**CHECK INTAKE OIL FLOW CONTROL SOLENOID RH.** Check the intake oil flow control solenoid RH. <Ref. to FU(H6DO)-72, Oil Flow Control Solenoid Valve.>	Is the intake oil flow control solenoid RH normal?	Replace the intake cam sprocket RH. <Ref. to ME(H6DO)-107, Cam Sprocket.>	Replace the intake oil flow control solenoid RH. <Ref. to FU(H6DO)-72, Oil Flow Control Solenoid Valve.>

	Step	Check	Yes	No
66	**CHECK POWER SUPPLY TO THE INTAKE OIL FLOW CONTROL SOLENOID LH.** 1) Turn the ignition switch to OFF. 2) Disconnect the connector from the intake oil flow control solenoid LH. 3) Turn the ignition switch to ON. 4) Measure the voltage between intake oil flow control solenoid LH connector and engine ground. ***Connector & terminal*** ***(E37) No. 1 (+) — Engine ground (–):***	Is the voltage 10 V or more?	Go to step **67**.	Repair the power supply circuit.
67	**CHECK HARNESS BETWEEN ECM AND INTAKE OIL FLOW CONTROL SOLENOID LH CONNECTOR.** 1) Turn the ignition switch to OFF. 2) Disconnect the connector from ECM. 3) Measure the resistance of harness between ECM connector and intake oil flow control solenoid LH. ***Connector & terminal*** ***(E158) No. 6 — (E37) No. 2:***	Is the resistance less than 1 Ω?	Go to step **68**.	Repair the open circuit in harness between ECM connector and intake oil flow control solenoid LH connector.
68	**CHECK HARNESS BETWEEN ECM AND INTAKE OIL FLOW CONTROL SOLENOID LH CONNECTOR.** Measure the resistance between intake oil flow control solenoid LH connector and engine ground. ***Connector & terminal*** ***(E37) No. 2 — Engine ground:***	Is the resistance 1 MΩ or more?	Go to step **69**.	Repair the short circuit to ground in harness between ECM connector and intake oil flow control solenoid LH connector.
69	**CHECK INTAKE OIL FLOW CONTROL SOLENOID LH.** Check the intake oil flow control solenoid LH. <Ref. to FU(H6DO)-74, INSTALLATION, Oil Flow Control Solenoid Valve.>	Is the intake oil flow control solenoid LH normal?	Replace the intake cam sprocket LH. <Ref. to ME(H6DO)-107, Cam Sprocket.>	Replace the intake oil flow control solenoid LH. <Ref. to FU(H6DO)-72, INTAKE SIDE, REMOVAL, Oil Flow Control Solenoid Valve.>
70	**CHECK POWER SUPPLY TO THE EXHAUST OIL FLOW CONTROL SOLENOID RH.** 1) Turn the ignition switch to OFF. 2) Disconnect the connector from the exhaust oil flow control solenoid RH. 3) Turn the ignition switch to ON. 4) Measure the voltage between exhaust oil flow control solenoid RH connector and engine ground. ***Connector & terminal*** ***(E63) No. 1 (+) — Engine ground (–):***	Is the voltage 10 V or more?	Go to step **71**.	Repair the power supply circuit.
71	**CHECK HARNESS BETWEEN ECM AND EXHAUST OIL FLOW CONTROL SOLENOID RH CONNECTOR.** 1) Turn the ignition switch to OFF. 2) Disconnect the connector from ECM. 3) Measure the resistance of harness between ECM connector and exhaust oil flow control solenoid RH. ***Connector & terminal*** ***(E158) No. 21 — (E63) No. 2:***	Is the resistance less than 1 Ω?	Go to step **72**.	Repair the open circuit in harness between ECM connector and exhaust oil flow control solenoid RH connector.

	Step	Check	Yes	No
72	**CHECK HARNESS BETWEEN ECM AND EXHAUST OIL FLOW CONTROL SOLENOID RH CONNECTOR.** Measure the resistance between exhaust oil flow control solenoid RH connector and engine ground. ***Connector & terminal*** ***(E63) No. 2 — Engine ground:***	Is the resistance 1 MΩ or more?	Go to step **73**.	Repair the short circuit to ground in harness between ECM connector and exhaust oil flow control solenoid RH connector.
73	**CHECK EXHAUST OIL FLOW CONTROL SOLENOID RH.** Check the exhaust oil flow control solenoid RH. <Ref. to FU(H6DO)-72, Oil Flow Control Solenoid Valve.>	Is the exhaust oil flow control solenoid RH normal?	Replace the exhaust cam sprocket RH. <Ref. to ME(H6DO)-107, Cam Sprocket.>	Replace the exhaust oil flow control solenoid RH. <Ref. to FU(H6DO)-73, EXHAUST SIDE, REMOVAL, Oil Flow Control Solenoid Valve.>
74	**CHECK POWER SUPPLY TO THE EXHAUST OIL FLOW CONTROL SOLENOID LH.** 1) Turn the ignition switch to OFF. 2) Disconnect the connector from the exhaust oil flow control solenoid LH. 3) Turn the ignition switch to ON. 4) Measure the voltage between exhaust oil flow control solenoid LH connector and engine ground. ***Connector & terminal*** ***(E66) No. 1 (+) — Engine ground (–):***	Is the voltage 10 V or more?	Go to step **75**.	Repair the power supply circuit.
75	**CHECK HARNESS BETWEEN ECM AND EXHAUST OIL FLOW CONTROL SOLENOID LH CONNECTOR.** 1) Turn the ignition switch to OFF. 2) Disconnect the connector from ECM. 3) Measure the resistance of harness between ECM connector and exhaust oil flow control solenoid LH. ***Connector & terminal*** ***(E158) No. 7 — (E66) No. 2:***	Is the resistance less than 1 Ω?	Go to step **76**.	Repair the open circuit in harness between ECM connector and exhaust oil flow control solenoid LH connector.
76	**CHECK HARNESS BETWEEN ECM AND EXHAUST OIL FLOW CONTROL SOLENOID LH CONNECTOR.** Measure the resistance between exhaust oil flow control solenoid LH connector and engine ground. ***Connector & terminal*** ***(E66) No. 2 — Engine ground:***	Is the resistance 1 MΩ or more?	Go to step **77**.	Repair the short circuit to ground in harness between ECM connector and exhaust oil flow control solenoid LH connector.
77	**CHECK EXHAUST OIL FLOW CONTROL SOLENOID LH.** Check the exhaust oil flow control solenoid LH. <Ref. to FU(H6DO)-72, Oil Flow Control Solenoid Valve.>	Is the exhaust oil flow control solenoid LH normal?	Replace the exhaust cam sprocket LH. <Ref. to ME(H6DO)-107, Cam Sprocket.>	Replace the exhaust oil flow control solenoid LH. <Ref. to FU(H6DO)-73, EXHAUST SIDE, REMOVAL, Oil Flow Control Solenoid Valve.>

	Step	Check	Yes	No
78	**CHECK HARNESS BETWEEN ECM AND MASS AIR FLOW AND INTAKE AIR TEMPERATURE SENSOR CONNECTOR.** 1) Turn the ignition switch to OFF. 2) Disconnect the connector from ECM and the mass air flow and intake air temperature sensor. 3) Measure the resistance of harness between ECM connector and the mass air flow and intake air temperature sensor connector. ***Connector & terminal*** ***(B134) No. 15 — (B3) No. 1:*** ***(B134) No. 16 — (B3) No. 5:***	Is the resistance less than 1 Ω?	Go to step **79**.	Repair the open circuit of harness between ECM connector and the mass air flow and intake air temperature sensor connector.
79	**CHECK HARNESS BETWEEN ECM AND MASS AIR FLOW AND INTAKE AIR TEMPERATURE SENSOR CONNECTOR.** Measure the resistance between the ECM connector and engine ground. ***Connector & terminal*** ***(B134) No. 15 — Engine ground:*** ***(B134) No. 16 — Engine ground:***	Is the resistance 1 MΩ or more?	Replace the mass air flow and intake air temperature sensor. <Ref. to FU(H6DO)-58, Mass Air Flow and Intake Air Temperature Sensor.> If the fault occurs after servicing, continue the diagnosis. Go to step **112**.	Repair the ground short circuit of harness between ECM connector and the mass air flow and intake air temperature sensor connector.
80	**CHECK ENGINE COOLANT TEMPERATURE SENSOR.** Check the engine coolant temperature sensor. <Ref. to FU(H6DO)-40, INSPECTION, Engine Coolant Temperature Sensor.>	Is the engine coolant temperature sensor normal?	Go to step **81**.	Replace the engine coolant temperature sensor. <Ref. to FU(H6DO)-39, Engine Coolant Temperature Sensor.> If the fault occurs after servicing, replace the ECM. <Ref. to FU(H6DO)-83, Engine Control Module (ECM).> If the fault still occurs after replacing the ECM, continue the diagnosis. Go to step **124**.

	Step	Check	Yes	No
81	**CHECK HARNESS BETWEEN ECM AND ENGINE COOLANT TEMPERATURE SENSOR CONNECTOR.** 1) Turn the ignition switch to OFF. 2) Disconnect the connectors from ECM and engine coolant temperature sensor. 3) Measure the resistance of harness between ECM connector and engine coolant temperature sensor connector. ***Connector & terminal*** ***(E158) No. 34 — (E8) No. 1:*** ***(E158) No. 43 — (E8) No. 2:***	Is the resistance less than 1 Ω?	Go to step **82**.	Repair the open circuit of the harness between the ECM connector and engine coolant temperature sensor connector. If the fault occurs after servicing, replace the ECM. <Ref. to FU(H6DO)-83, Engine Control Module (ECM).> If the fault still occurs after replacing the ECM, continue the diagnosis. Go to step **124**.
82	**CHECK HARNESS BETWEEN ECM AND ENGINE COOLANT TEMPERATURE SENSOR CONNECTOR.** Measure the resistance between the ECM connector and engine ground. ***Connector & terminal*** ***(E158) No. 34 — Engine ground:*** ***(E158) No. 43 — Engine ground:***	Is the resistance 1 MΩ or more?	Go to step **83**.	Repair the short circuit to ground in harness between ECM connector and engine coolant temperature sensor connector. If the fault occurs after servicing, replace the ECM. <Ref. to FU(H6DO)-83, Engine Control Module (ECM).> If the fault still occurs after replacing the ECM, continue the diagnosis. Go to step **124**.
83	**CHECK CURRENT DATA.** 1) Turn the ignition switch to ON. (Engine OFF) 2) Read the values of «Long term fuel trim B1» and «Atmosphere Pressure», using the Subaru Select Monitor. NOTE: For detailed operation procedures, refer to “Current Data Display For Engine”. <Ref. to EN(H6DO)(diag)-50, DISPLAY CURRENT ENGINE DATA, OPERATION, Subaru Select Monitor.>	Is the value of «Long term fuel trim B1» –25 — 25%, and «Atmosphere Pressure» 80 kPa (600 mmHg, 23.6 inHg) or more?	Go to step **86**.	Go to step **84**.
84	**CHECK FOR MALFUNCTION OCCURRENCE.** 1) Perform the Clear Memory Mode. <Ref. to EN(H6DO)(diag)-85, Clear Memory Mode.> 2) Start the engine.	Does the engine start?	Go to step **85**.	Go to step **86**.

	Step	Check	Yes	No
85	**CHECK IDLE SPEED.** Check the idle speed.	Is the idle speed stable?	Replace the mass air flow and intake air temperature sensor. <Ref. to FU(H6DO)-58, Mass Air Flow and Intake Air Temperature Sensor.> If the fault occurs after servicing, replace the ECM. <Ref. to FU(H6DO)-83, Engine Control Module (ECM).> If the fault still occurs after replacing the ECM, continue the diagnosis. Go to step **124**.	Replace the fuel injector. <Ref. to FU(H6DO)-61, Fuel Injector.> If the fault occurs after servicing, replace the ECM. <Ref. to FU(H6DO)-83, Engine Control Module (ECM).> If the fault still occurs after replacing the ECM, continue the diagnosis. Go to step **124**.
86	**CHECK FUEL PRESSURE.** **WARNING:** **Place "NO OPEN FLAMES" signs near the working area.** **CAUTION:** **Be careful not to spill fuel.** Measure the fuel pressure. <Ref. to ME(H6DO)-31, INSPECTION, Fuel Pressure.> **CAUTION:** **Before attaching/detaching a fuel pressure gauge, release the fuel pressure.**	Is the measured value 340 — 400 kPa (3.5 — 4.1 kgf/cm^2, 49 — 58 psi)?	Go to step **87**.	Go to step **92**.
87	**CHECK SPARK PLUG.** Check the spark plug. <Ref. to IG(H6DO)-11, INSPECTION, Spark Plug.>	Are all spark plug in all cylinders normal?	Go to step **88**.	• When spark plugs in some cylinders are faulty: Replace the faulty spark plugs of the cylinders, then check the ignition system and fuel system in the faulty cylinders. <Ref. to IG(H6DO)-4, Spark Plug.> If the fault occurs after servicing, continue the diagnosis. Go to step **124**. • When all spark plugs in all cylinders are faulty: Replace faulty spark plugs in all cylinders. <Ref. to IG(H6DO)-4, Spark Plug.> If the fault occurs after servicing, continue the diagnosis. Go to step **124**.

	Step	Check	Yes	No
88	**CHECK FOR MALFUNCTION OCCURRENCE.** Check for the condition of fault occurrence.	Does the fault occur only within approx. 15 to 120 minutes after the engine is stopped?	Go to step **90**.	• When the fault occurs in two or three minutes or a long time after the engine is stopped: Go to step **89**. • When the fault occurrence pattern is inconsistent: Go to step **124**.
89	**CHECK FUEL PRESSURE.** **WARNING:** **Place "NO OPEN FLAMES" signs near the working area.** **CAUTION:** **Be careful not to spill fuel.** Measure the fuel pressure five minutes after the engine is stopped. <Ref. to ME(H6DO)-31, INSPECTION, Fuel Pressure.> **CAUTION:** **Before attaching/detaching a fuel pressure gauge, release the fuel pressure.** NOTE: If the engine does not start, measure the fuel pressure five minutes after cranking is completed.	Is the measured value 147 kPa (1.5 kgf/cm^2, 21 psi) or more?	Go to step **124**.	Replace the pressure regulator. <Ref. to FU(H6DO)-135, Fuel Filter.>
90	**CHECK PURGE CONTROL SOLENOID VALVE.** Check purge control solenoid valve 1 and purge control solenoid valve 2. <Ref. to EC(H6DO)-20, INSPECTION, Purge Control Solenoid Valve.>	Are the purge control solenoid valve 1 and the purge control solenoid valve 2 normal?	Go to step **91**.	Replace the faulty purge control solenoid valve. <Ref. to EC(H6DO)-17, Purge Control Solenoid Valve.>
91	**CHECK FUEL INJECTOR.** 1) After the engine is stopped, scavenge inside of the intake manifold by applying compressed air. 2) Measure the HC concentration inside the intake manifold 15 minutes after scavenging is completed. NOTE: • Perform measurement using HC concentration gauge. If HC concentration gauge is not available, go to the next step. • For measuring HC concentration, remove the hose between intake manifold and purge control solenoid valve to measure the HC concentration in the intake manifold.	Is the HC concentration less than 4,000 ppm?	Go to step **125**.	Replace the fuel injector. <Ref. to FU(H6DO)-61, Fuel Injector.>

	Step	Check	Yes	No
92	**CHECK OF FUEL PUMP.** Check fuel pump. <Ref. to FU(H6DO)-124, INSPECTION, Fuel Pump.>	Is the fuel pump normal?	Check fuel pump system. <Ref. to EN(H6DO)(diag)-295, DTC P0230 FUEL PUMP PRIMARY CIRCUIT, Diagnostic Procedure with Diagnostic Trouble Code (DTC).> If the fault occurs after servicing, continue the diagnosis. Go to step **124**.	Replace the fuel pump. <Ref. to FU(H6DO)-119, Fuel Pump.>
93	**CHECK POWER SUPPLY CIRCUIT OF FUEL INJECTOR.** 1) Turn the ignition switch to OFF. 2) Disconnect the connector from fuel injector. 3) Turn the ignition switch to ON. 4) Measure the voltage in harness between fuel injector connector and engine ground. ***Connector & terminal*** ***#1 (E5) No. 1 (+) — Engine ground (–):*** ***#2 (E16) No. 1 (+) — Engine ground (–):*** ***#3 (E6) No. 1 (+) — Engine ground (–):*** ***#4 (E17) No. 1 (+) — Engine ground (–):*** ***#5 (E43) No. 1 (+) — Engine ground (–):*** ***#6 (E44) No. 1 (+) — Engine ground (–):***	Is the voltage 10 V or more?	Go to step **94**.	Repair the power supply circuit.
94	**CHECK FUEL INJECTOR.** Check fuel injector. <Ref. to FU(H6DO)-71, INSPECTION, Fuel Injector.>	Are fuel injectors OK?	Go to step **95**.	Replace the fuel injector. <Ref. to FU(H6DO)-61, Fuel Injector.>
95	**CHECK HARNESS BETWEEN ECM AND FUEL INJECTOR CONNECTOR.** 1) Turn the ignition switch to OFF. 2) Disconnect the connectors from ECM and fuel injectors. 3) Measure the resistance of harness between ECM connector and fuel injector connector. ***Connector & terminal*** ***#1 (E158) No. 23 — (E5) No. 2:*** ***#2 (E158) No. 8 — (E16) No. 2:*** ***#3 (E158) No. 9 — (E6) No. 2:*** ***#4 (E158) No. 22 — (E17) No. 2:*** ***#5 (E158) No. 52 — (E43) No. 2:*** ***#6 (E158) No. 13 — (E44) No. 2:***	Is the resistance less than 1 Ω?	Go to step **96**.	Repair the open circuit of the harness between the ECM connector and fuel injector connector.
96	**CHECK HARNESS BETWEEN ECM AND FUEL INJECTOR CONNECTOR.** Measure the resistance between the ECM connector and engine ground. ***Connector & terminal*** ***#1 (E158) No. 23 — Engine ground:*** ***#2 (E158) No. 8 — Engine ground:*** ***#3 (E158) No. 9 — Engine ground:*** ***#4 (E158) No. 22 — Engine ground:*** ***#5 (E158) No. 52 — Engine ground:*** ***#6 (E158) No. 13 — Engine ground:***	Is the resistance 1 MΩ or more?	Go to step **97**.	Repair the short circuit to ground in harness between ECM connector and fuel injector connector.

	Step	Check	Yes	No
97	**CHECK FOR MALFUNCTION OCCURRENCE.** 1) Replace the crankshaft position sensor. <Ref. to FU(H6DO)-42, Crankshaft Position Sensor.> 2) Check that the fault is removed.	Is the fault removed?	Perform the Clear Memory Mode to complete. <Ref. to EN(H6DO)(diag)-85, Clear Memory Mode.>	Go to step **98**.
98	**CHECK FOR MALFUNCTION OCCURRENCE.** 1) Replace the camshaft position sensor. <Ref. to FU(H6DO)-47, Camshaft Position Sensor.> 2) Check that the fault is removed.	Is the fault removed?	Perform the Clear Memory Mode to complete. <Ref. to EN(H6DO)(diag)-85, Clear Memory Mode.>	Replace the ECM. <Ref. to FU(H6DO)-83, Engine Control Module (ECM).>
99	**CHECK INSTALLATION CONDITION OF CRANKSHAFT POSITION SENSOR.**	Is the crankshaft position sensor installed correctly?	Go to step **100**.	Install the crankshaft position sensor correctly. <Ref. to FU(H6DO)-44, INSTALLATION, Crankshaft Position Sensor.>
100	**CHECK INSTALLATION CONDITION OF CAMSHAFT POSITION SENSOR.**	Is the camshaft position sensor installed correctly?	Go to step **101**.	Install the camshaft position sensor correctly. <Ref. to FU(H6DO)-49, INSTALLATION, Camshaft Position Sensor.>
101	**CHECK POWER SUPPLY TO CRANKSHAFT POSITION SENSOR.** 1) Turn the ignition switch to OFF. 2) Disconnect the connector from the crankshaft position sensor. 3) Turn the ignition switch to ON. 4) Measure the voltage between crankshaft position sensor connector and engine ground. ***Connector & terminal*** ***(E10) No. 1 (+) — Engine ground (–):***	Is the voltage 5 V or more?	Go to step **102**.	Repair the power supply circuit.
102	**CHECK HARNESS BETWEEN ECM AND CRANKSHAFT POSITION SENSOR CONNECTOR.** 1) Turn the ignition switch to OFF. 2) Disconnect the connector from ECM. 3) Measure the resistance of harness between ECM connector and crankshaft position sensor connector. ***Connector & terminal*** ***(E158) No. 40 — (E10) No. 1:*** ***(E158) No. 27 — (E10) No. 2:***	Is the resistance less than 1 Ω?	Go to step **103**.	Repair the open circuit in the harness between the ECM connector and crankshaft position sensor connector.
103	**CHECK HARNESS BETWEEN ECM AND CRANKSHAFT POSITION SENSOR CONNECTOR.** Measure the resistance between crankshaft position sensor connector and engine ground. ***Connector & terminal*** ***(E10) No. 1 — Engine ground:*** ***(E10) No. 2 — Engine ground:***	Is the resistance 1 MΩ or more?	Go to step **104**.	Repair short circuit to ground in harness between ECM connector and crankshaft position sensor connector.

	Step	Check	Yes	No
104	**CHECK POWER SUPPLY OF INTAKE CAMSHAFT POSITION SENSOR.** 1) Turn the ignition switch to OFF. 2) Disconnect the connector from the intake camshaft position sensor. 3) Turn the ignition switch to ON. 4) Measure the voltage between intake camshaft position sensor connector and engine ground. ***Connector & terminal*** ***(E35) No. 1 (+) — Engine ground (–):*** ***(E36) No. 1 (+) — Engine ground (–):***	Is the voltage 10 V or more?	Go to step **105**.	Repair the open circuit or ground short circuit of harness between main relay connector and intake camshaft position sensor connector.
105	**CHECK HARNESS BETWEEN ECM AND INTAKE CAMSHAFT POSITION SENSOR CONNECTOR.** 1) Turn the ignition switch to OFF. 2) Disconnect the connector from ECM. 3) Measure the resistance between ECM connector and intake camshaft position sensor connector. ***Connector & terminal*** ***(E158) No. 41 — (E35) No. 2:*** ***(E158) No. 42 — (E35) No. 3:*** ***(E158) No. 54 — (E36) No. 2:*** ***(E158) No. 42 — (E36) No. 3:***	Is the resistance less than 1 Ω?	Go to step **106**.	Repair the open circuit in the harness between ECM connector and intake camshaft position sensor connector.
106	**CHECK HARNESS BETWEEN ECM AND INTAKE CAMSHAFT POSITION SENSOR CONNECTOR.** Measure the resistance between intake camshaft position sensor connector and engine ground. ***Connector & terminal*** ***(E35) No. 2 — Engine ground:*** ***(E36) No. 2 — Engine ground:***	Is the resistance 1 MΩ or more?	Go to step **107**.	Repair short circuit to ground in the harness between ECM connector and intake camshaft position sensor connector.
107	**CHECK POWER SUPPLY OF EXHAUST CAMSHAFT POSITION SENSOR.** 1) Turn the ignition switch to OFF. 2) Disconnect the connector from the exhaust camshaft position sensor. 3) Turn the ignition switch to ON. 4) Measure the voltage between exhaust camshaft position sensor connector and engine ground. ***Connector & terminal*** ***(E62) No. 1 (+) — Engine ground (–):*** ***(E65) No. 1 (+) — Engine ground (–):***	Is the voltage 10 V or more?	Go to step **108**.	Repair the open circuit in the harness between main relay and exhaust camshaft position sensor connector.
108	**CHECK HARNESS BETWEEN ECM AND EXHAUST CAMSHAFT POSITION SENSOR.** 1) Turn the ignition switch to OFF. 2) Disconnect the connector from ECM. 3) Measure the resistance between ECM connector and exhaust crankshaft position sensor connector. ***Connector & terminal*** ***(E158) No. 2 — (E62) No. 2:*** ***(E158) No. 42 — (E62) No. 3:*** ***(E158) No. 55 — (E65) No. 2:*** ***(E158) No. 42 — (E65) No. 3:***	Is the resistance less than 1 Ω?	Go to step **109**.	Repair the open circuit in the harness between ECM connector and exhaust camshaft position sensor connector.

	Step	Check	Yes	No
109	**CHECK HARNESS BETWEEN ECM AND EXHAUST CAMSHAFT POSITION SENSOR.** Measure the resistance between exhaust camshaft position sensor connector and engine ground. ***Connector & terminal*** ***(E62) No. 2 — Engine ground:*** ***(E65) No. 2 — Engine ground:***	Is the resistance 1 MΩ or more?	Go to step **110**.	Repair short circuit to ground in the harness between ECM connector and exhaust camshaft position sensor connector.
110	**CHECK FOR MALFUNCTION OCCURRENCE.** 1) Replace the crankshaft position sensor. <Ref. to FU(H6DO)-42, Crankshaft Position Sensor.> 2) Check that the fault is removed.	Is the fault removed?	Perform the Clear Memory Mode to complete. <Ref. to EN(H6DO)(diag)-85, Clear Memory Mode.>	Go to step **111**.
111	**CHECK FOR MALFUNCTION OCCURRENCE.** 1) Replace the camshaft position sensor. <Ref. to FU(H6DO)-47, Camshaft Position Sensor.> 2) Check that the fault is removed.	Is the fault removed?	Perform the Clear Memory Mode to complete. <Ref. to EN(H6DO)(diag)-85, Clear Memory Mode.>	Replace the ECM. <Ref. to FU(H6DO)-83, Engine Control Module (ECM).>
112	**CHECK ENGINE COOLANT TEMPERATURE SENSOR.** Check the engine coolant temperature sensor. <Ref. to FU(H6DO)-40, INSPECTION, Engine Coolant Temperature Sensor.>	Is the engine coolant temperature sensor normal?	Go to step **113**.	Replace the engine coolant temperature sensor. <Ref. to FU(H6DO)-39, Engine Coolant Temperature Sensor.>
113	**CHECK FUEL PRESSURE.** **WARNING:** **Place "NO OPEN FLAMES" signs near the working area.** **CAUTION:** **Be careful not to spill fuel.** Measure the fuel pressure. <Ref. to ME(H6DO)-31, INSPECTION, Fuel Pressure.> **CAUTION:** **Before attaching/detaching a fuel pressure gauge, release the fuel pressure.**	Is the measured value 340 — 400 kPa (3.5 — 4.1 kgf/cm^2, 49 — 58 psi)?	Go to step **114**.	Go to step **115**.
114	**CHECK FUEL PRESSURE.** **WARNING:** **Place "NO OPEN FLAMES" signs near the working area.** **CAUTION:** **Be careful not to spill fuel.** Measure the fuel pressure five minutes after the engine is stopped. <Ref. to ME(H6DO)-31, INSPECTION, Fuel Pressure.> **CAUTION:** **Before attaching/detaching a fuel pressure gauge, release the fuel pressure.**	Is the fuel pressure 147 kPa (1.5 kgf/cm^2, 21 psi) or more five minutes after engine stops?	Go to step **115**.	Go to step **123**.

	Step	Check	Yes	No
115	**CHECK CURRENT DATA.** 1) Turn the ignition switch to ON. (Engine OFF) 2) Read the value of «Long term fuel trim B1» using the Subaru Select Monitor. NOTE: For detailed operation procedures, refer to "Current Data Display For Engine". <Ref. to EN(H6DO)(diag)-50, DISPLAY CURRENT ENGINE DATA, OPERATION, Subaru Select Monitor.>	Does the value of «Long term fuel trim B1» fall within a range of –15 — 15%?	Go to step **116**.	Replace the fuel injector. <Ref. to FU(H6DO)-61, Fuel Injector.>
116	**CHECK FOR MALFUNCTION OCCURRENCE.** Start the engine and check the idling speed.	Is the idling speed stable all time?	It is possible that the fault comes from fuel. Replace fuel.	Go to step **117**.
117	**CHECK INSTALLATION CONDITION OF CRANKSHAFT POSITION SENSOR.**	Is the crankshaft position sensor installed correctly?	Go to step **118**.	Install the crankshaft position sensor correctly. <Ref. to FU(H6DO)-44, INSTALLATION, Crankshaft Position Sensor.>
118	**CHECK POWER SUPPLY TO CRANKSHAFT POSITION SENSOR.** 1) Turn the ignition switch to OFF. 2) Disconnect the connector from the crankshaft position sensor. 3) Turn the ignition switch to ON. 4) Measure the voltage between crankshaft position sensor connector and engine ground. ***Connector & terminal*** ***(E10) No. 1 (+) — Engine ground (–):***	Is the voltage 5 V or more?	Go to step **119**.	Repair the power supply circuit.
119	**CHECK HARNESS BETWEEN ECM AND CRANKSHAFT POSITION SENSOR CONNECTOR.** 1) Turn the ignition switch to OFF. 2) Disconnect the connector from ECM. 3) Measure the resistance of harness between ECM connector and crankshaft position sensor connector. ***Connector & terminal*** ***(E158) No. 40 — (E10) No. 1:*** ***(E158) No. 27 — (E10) No. 2:***	Is the resistance less than 1 Ω?	Go to step **120**.	Repair the open circuit in the harness between the ECM connector and crankshaft position sensor connector.
120	**CHECK HARNESS BETWEEN ECM AND CRANKSHAFT POSITION SENSOR CONNECTOR.** Measure the resistance between crankshaft position sensor connector and engine ground. ***Connector & terminal*** ***(E10) No. 1 — Engine ground:*** ***(E10) No. 2 — Engine ground:***	Is the resistance 1 MΩ or more?	Go to step **121**.	Repair short circuit to ground in harness between ECM connector and crankshaft position sensor connector.
121	**CHECK COMPRESSION PRESSURE.** Check the compression pressure. <Ref. to ME(H6DO)-22, INSPECTION, Compression.>	Is the compression pressure normal?	Go to step **122**.	Check the engine. <Ref. to ME(H6DO)-172, INSPECTION, Engine Trouble in General.>

	Step	Check	Yes	No
122	**CHECK FOR MALFUNCTION OCCURRENCE.** 1) Replace the crankshaft position sensor. <Ref. to FU(H6DO)-42, Crankshaft Position Sensor.> 2) Check that the fault is removed.	Is the fault removed?	Perform the Clear Memory Mode to complete. <Ref. to EN(H6DO)(diag)-85, Clear Memory Mode.>	Check the valve timing. <Ref. to ME(H6DO)-87, Timing Chain Assembly.> When the valve timing is normal, replace the ECM. <Ref. to FU(H6DO)-83, Engine Control Module (ECM).>
123	**CHECK OF FUEL PUMP.** Check fuel pump. <Ref. to FU(H6DO)-124, INSPECTION, Fuel Pump.>	Is the fuel pump normal?	Check fuel pump system. <Ref. to EN(H6DO)(diag)-295, DTC P0230 FUEL PUMP PRIMARY CIRCUIT, Diagnostic Procedure with Diagnostic Trouble Code (DTC).>	Replace the fuel pump. <Ref. to FU(H6DO)-119, Fuel Pump.>
124	**CHECK FUEL PRESSURE.** **WARNING:** **Place "NO OPEN FLAMES" signs near the working area.** **CAUTION:** **Be careful not to spill fuel.** Measure the fuel pressure. <Ref. to ME(H6DO)-31, INSPECTION, Fuel Pressure.> **CAUTION:** **Before attaching/detaching a fuel pressure gauge, release the fuel pressure.**	Is the measured value 340 — 400 kPa (3.5 — 4.1 kgf/cm^2, 49 — 58 psi)?	Go to step **125**.	Go to step **126**.
125	**CHECK FUEL PRESSURE.** **WARNING:** **Place "NO OPEN FLAMES" signs near the working area.** **CAUTION:** **Be careful not to spill fuel.** Measure the fuel pressure five minutes after the engine is stopped. <Ref. to ME(H6DO)-31, INSPECTION, Fuel Pressure.> **CAUTION:** **Before attaching/detaching a fuel pressure gauge, release the fuel pressure.**	Is the fuel pressure 147 kPa (1.5 kgf/cm^2, 21 psi) or more five minutes after engine stops?	Go to step **126**.	Go to step **133**.
126	**CHECK CURRENT DATA.** 1) Turn the ignition switch to ON. (Engine OFF) 2) Read the value of «Long term fuel trim B1» using the Subaru Select Monitor. NOTE: For detailed operation procedures, refer to "Current Data Display For Engine". <Ref. to EN(H6DO)(diag)-50, DISPLAY CURRENT ENGINE DATA, OPERATION, Subaru Select Monitor.>	Does the value of «Long term fuel trim B1» fall within a range of –15 — 15%?	Go to step **127**.	Replace the fuel injector. <Ref. to FU(H6DO)-61, Fuel Injector.>
127	**CHECK FOR MALFUNCTION OCCURRENCE.** Start the engine and check the idling speed.	Is the idling speed stable all time?	It is possible that the fault comes from fuel. Replace fuel.	Go to step **128**.

	Step	Check	Yes	No
128	**CHECK INSTALLATION CONDITION OF CRANKSHAFT POSITION SENSOR.**	Is the crankshaft position sensor installed correctly?	Go to step **129**.	Install the crankshaft position sensor correctly. <Ref. to FU(H6DO)-44, INSTALLATION, Crankshaft Position Sensor.>
129	**CHECK POWER SUPPLY TO CRANKSHAFT POSITION SENSOR.** 1) Turn the ignition switch to OFF. 2) Disconnect the connector from the crankshaft position sensor. 3) Turn the ignition switch to ON. 4) Measure the voltage between crankshaft position sensor connector and engine ground. ***Connector & terminal*** ***(E10) No. 1 (+) — Engine ground (–):***	Is the voltage 5 V or more?	Go to step **130**.	Repair the power supply circuit.
130	**CHECK HARNESS BETWEEN ECM AND CRANKSHAFT POSITION SENSOR CONNECTOR.** 1) Turn the ignition switch to OFF. 2) Disconnect the connector from ECM. 3) Measure the resistance of harness between ECM connector and crankshaft position sensor connector. ***Connector & terminal*** ***(E158) No. 40 — (E10) No. 1:*** ***(E158) No. 27 — (E10) No. 2:***	Is the resistance less than 1 Ω?	Go to step **131**.	Repair the open circuit in the harness between the ECM connector and crankshaft position sensor connector.
131	**CHECK HARNESS BETWEEN ECM AND CRANKSHAFT POSITION SENSOR CONNECTOR.** Measure the resistance between crankshaft position sensor connector and engine ground. ***Connector & terminal*** ***(E10) No. 1 — Engine ground:*** ***(E10) No. 2 — Engine ground:***	Is the resistance 1 MΩ or more?	Go to step **132**.	Repair short circuit to ground in harness between ECM connector and crankshaft position sensor connector.
132	**CHECK FOR MALFUNCTION OCCURRENCE.** 1) Replace the crankshaft position sensor. <Ref. to FU(H6DO)-42, Crankshaft Position Sensor.> 2) Check that the fault is removed.	Is the fault removed?	Perform the Clear Memory Mode to complete. <Ref. to EN(H6DO)(diag)-85, Clear Memory Mode.>	Replace the ECM. <Ref. to FU(H6DO)-83, Engine Control Module (ECM).>
133	**CHECK OF FUEL PUMP.** Check fuel pump. <Ref. to FU(H6DO)-124, INSPECTION, Fuel Pump.>	Is the fuel pump normal?	Go to step **134**.	Replace the fuel pump. <Ref. to FU(H6DO)-119, Fuel Pump.>
134	**CHECK FUEL PUMP SYSTEM.** Check fuel pump system. <Ref. to EN(H6DO)(diag)-295, DTC P0230 FUEL PUMP PRIMARY CIRCUIT, Diagnostic Procedure with Diagnostic Trouble Code (DTC).>	Is the fuel pump system normal?	Go to step **135**.	Repair the fuel pump system. <Ref. to EN(H6DO)(diag)-295, DTC P0230 FUEL PUMP PRIMARY CIRCUIT, Diagnostic Procedure with Diagnostic Trouble Code (DTC).>

	Step	Check	Yes	No
135	**CHECK PURGE CONTROL SOLENOID VALVE.** Check purge control solenoid valve 1 and purge control solenoid valve 2. <Ref. to EC(H6DO)-20, INSPECTION, Purge Control Solenoid Valve.>	Are the purge control solenoid valve 1 and the purge control solenoid valve 2 normal?	Go to step **136**.	Replace the faulty purge control solenoid valve. <Ref. to EC(H6DO)-17, Purge Control Solenoid Valve.>
136	**CHECK FUEL INJECTOR.** 1) After the engine is stopped, scavenge inside of the intake manifold by applying compressed air. 2) Measure the HC concentration inside the intake manifold 15 minutes after scavenging is completed. NOTE: • Perform measurement using HC concentration gauge. If HC concentration gauge is not available, go to the next step. • For measuring HC concentration, remove the hose between intake manifold and purge control solenoid valve to measure the HC concentration in the intake manifold.	Is the HC concentration less than 4,000 ppm?	Go to step **137**.	Replace the fuel injector. <Ref. to FU(H6DO)-61, Fuel Injector.>
137	**CHECK INTAKE VALVE.** Check the intake valve. <Ref. to ME(H6DO)-128, INSPECTION, Cylinder Head.>	Is there any deposit in the intake valve?	Clean the intake valve. <Ref. to ME(H6DO)-119, Cylinder Head.>	Go to step **138**.
138	**CHECK ENGINE COOLANT TEMPERATURE SENSOR.** Check the engine coolant temperature sensor. <Ref. to FU(H6DO)-40, INSPECTION, Engine Coolant Temperature Sensor.>	Is the engine coolant temperature sensor normal?	Go to step **139**.	Replace the engine coolant temperature sensor. <Ref. to FU(H6DO)-39, Engine Coolant Temperature Sensor.>
139	**CHECK INSTALLATION CONDITION OF CRANKSHAFT POSITION SENSOR.**	Is the crankshaft position sensor installed correctly?	Go to step **140**.	Install the crankshaft position sensor correctly. <Ref. to FU(H6DO)-44, INSTALLATION, Crankshaft Position Sensor.>
140	**CHECK INSTALLATION CONDITION OF CAMSHAFT POSITION SENSOR.**	Is the camshaft position sensor installed correctly?	Go to step **141**.	Install the camshaft position sensor correctly. <Ref. to FU(H6DO)-49, INSTALLATION, Camshaft Position Sensor.>
141	**CHECK POWER SUPPLY TO CRANKSHAFT POSITION SENSOR.** 1) Turn the ignition switch to OFF. 2) Disconnect the connector from the crankshaft position sensor. 3) Turn the ignition switch to ON. 4) Measure the voltage between crankshaft position sensor connector and engine ground. ***Connector & terminal*** ***(E10) No. 1 (+) — Engine ground (–):***	Is the voltage 10 V or more?	Go to step **142**.	Repair the power supply circuit.

	Step	Check	Yes	No
142	**CHECK HARNESS BETWEEN ECM AND CRANKSHAFT POSITION SENSOR CONNECTOR.** 1) Turn the ignition switch to OFF. 2) Disconnect the connector from ECM. 3) Measure the resistance of harness between ECM connector and crankshaft position sensor connector. ***Connector & terminal*** ***(E158) No. 40 — (E10) No. 1:*** ***(E158) No. 27 — (E10) No. 2:***	Is the resistance less than 1 Ω?	Go to step **143**.	Repair the open circuit in the harness between the ECM connector and crankshaft position sensor connector.
143	**CHECK HARNESS BETWEEN ECM AND CRANKSHAFT POSITION SENSOR CONNECTOR.** Measure the resistance between crankshaft position sensor connector and engine ground. ***Connector & terminal*** ***(E10) No. 1 — Engine ground:*** ***(E10) No. 2 — Engine ground:***	Is the resistance 1 MΩ or more?	Go to step **144**.	Repair short circuit to ground in harness between ECM connector and crankshaft position sensor connector.
144	**CHECK POWER SUPPLY OF INTAKE CAMSHAFT POSITION SENSOR.** 1) Turn the ignition switch to OFF. 2) Disconnect the connector from the intake camshaft position sensor. 3) Turn the ignition switch to ON. 4) Measure the voltage between intake camshaft position sensor connector and engine ground. ***Connector & terminal*** ***(E35) No. 1 (+) — Engine ground (–):*** ***(E36) No. 1 (+) — Engine ground (–):***	Is the voltage 10 V or more?	Go to step **145**.	Repair the open circuit or ground short circuit of harness between main relay connector and intake camshaft position sensor connector.
145	**CHECK HARNESS BETWEEN ECM AND INTAKE CAMSHAFT POSITION SENSOR CONNECTOR.** 1) Turn the ignition switch to OFF. 2) Disconnect the connector from ECM. 3) Measure the resistance between ECM connector and intake camshaft position sensor connector. ***Connector & terminal*** ***(E158) No. 41 — (E35) No. 2:*** ***(E158) No. 42 — (E35) No. 3:*** ***(E158) No. 54 — (E36) No. 2:*** ***(E158) No. 42 — (E36) No. 3:***	Is the resistance less than 1 Ω?	Go to step **146**.	Repair the open circuit in the harness between ECM connector and intake camshaft position sensor connector.
146	**CHECK HARNESS BETWEEN ECM AND INTAKE CAMSHAFT POSITION SENSOR CONNECTOR.** Measure the resistance between intake camshaft position sensor connector and engine ground. ***Connector & terminal*** ***(E35) No. 2 — Engine ground:*** ***(E36) No. 2 — Engine ground:***	Is the resistance 1 MΩ or more?	Go to step **147**.	Repair short circuit to ground in the harness between ECM connector and intake camshaft position sensor connector.

	Step	Check	Yes	No
147	**CHECK POWER SUPPLY OF EXHAUST CAMSHAFT POSITION SENSOR.** 1) Turn the ignition switch to OFF. 2) Disconnect the connector from the exhaust camshaft position sensor. 3) Turn the ignition switch to ON. 4) Measure the voltage between exhaust camshaft position sensor connector and engine ground. ***Connector & terminal*** ***(E62) No. 1 (+) — Engine ground (–):*** ***(E65) No. 1 (+) — Engine ground (–):***	Is the voltage 10 V or more?	Go to step **148**.	Repair the open circuit in the harness between main relay and exhaust camshaft position sensor connector.
148	**CHECK HARNESS BETWEEN ECM AND EXHAUST CAMSHAFT POSITION SENSOR.** 1) Turn the ignition switch to OFF. 2) Disconnect the connector from ECM. 3) Measure the resistance between ECM connector and exhaust crankshaft position sensor connector. ***Connector & terminal*** ***(E158) No. 2 — (E62) No. 2:*** ***(E158) No. 42 — (E62) No. 3:*** ***(E158) No. 55 — (E65) No. 2:*** ***(E158) No. 42 — (E65) No. 3:***	Is the resistance less than 1 Ω?	Go to step **149**.	Repair the open circuit in the harness between ECM connector and exhaust camshaft position sensor connector.
149	**CHECK HARNESS BETWEEN ECM AND EXHAUST CAMSHAFT POSITION SENSOR.** Measure the resistance between exhaust camshaft position sensor connector and engine ground. ***Connector & terminal*** ***(E62) No. 2 — Engine ground:*** ***(E65) No. 2 — Engine ground:***	Is the resistance 1 MΩ or more?	Go to step **150**.	Repair short circuit to ground in the harness between ECM connector and exhaust camshaft position sensor connector.
150	**CHECK COMPRESSION PRESSURE.** Check the compression pressure. <Ref. to ME(H6DO)-22, INSPECTION, Compression.>	Is the compression pressure normal?	Go to step **151**.	Check the engine. <Ref. to ME(H6DO)-172, INSPECTION, Engine Trouble in General.>
151	**CHECK FOR MALFUNCTION OCCURRENCE.** 1) Replace the crankshaft position sensor. <Ref. to FU(H6DO)-42, Crankshaft Position Sensor.> 2) Check that the fault is removed.	Is the fault removed?	Perform the Clear Memory Mode to complete. <Ref. to EN(H6DO)(diag)-85, Clear Memory Mode.>	Go to step **152**.
152	**CHECK FOR MALFUNCTION OCCURRENCE.** 1) Replace the camshaft position sensor. <Ref. to FU(H6DO)-47, Camshaft Position Sensor.> 2) Check that the fault is removed.	Is the fault removed?	Perform the Clear Memory Mode to complete. <Ref. to EN(H6DO)(diag)-85, Clear Memory Mode.>	Check the valve timing. <Ref. to ME(H6DO)-87, Timing Chain Assembly.> When the valve timing is normal, replace the ECM. <Ref. to FU(H6DO)-83, Engine Control Module (ECM).>

1. OUTLINE OF DIAGNOSIS

Judge as NG when the status enters into any one of the followings.
- Although starter signal input is present in ECM, the engine does not start (diagnosis 1)
- Although starter signal input is present in ECM, starting takes more time than it should (diagnosis 1)
- The engine stops immediately after starting except by operating the ignition switch (diagnosis 2)

2. EXECUTION CONDITION

Diagnosis 1

Secondary Parameters	Execution condition
Starter signal	ON

Diagnosis 2

Secondary Parameters	Execution condition
Elapsed time after starting the engine	≤ 2 s

3. GENERAL DRIVING CYCLE

Perform the diagnosis continuously after the enable conditions have been established.

4. DIAGNOSTIC METHOD

Diagnosis 1

If the duration of time while the following conditions are met is longer than the time indicated, judge as NG.

Judgment Value

Malfunction Criteria	Threshold Value
Engine speed	< 500 rpm

Time Needed for Diagnosis: 2 — 26 seconds

Diagnosis 2

Judge as NG when the following conditions are established.

Judgment Value

Malfunction Criteria	Threshold Value
Engine speed	< 300 rpm

Time Needed for Diagnosis: Less than 1 second
Malfunction Indicator Light Illumination: Does not illuminate.

FH:DTC P1C00 BATTERY MONITOR MODULE "A" PERFORMANCE

DTC DETECTING CONDITION:
Immediately at fault recognition

CAUTION:
After servicing or replacing faulty parts, perform Clear Memory Mode <Ref. to EN(H6DO)(diag)-85, OPERATION, Clear Memory Mode.>, and Inspection Mode <Ref. to EN(H6DO)(diag)-69, PROCEDURE, Inspection Mode.>.

	Step	Check	Yes	No
1	**CHECK DTC.** Check for DTC. <Ref. to EN(H6DO)(diag)-68, Read Diagnostic Trouble Code (DTC).>	Is P1C00 displayed in «Present fault»?	Replace the battery sensor. <Ref. to SC(H6DO)-66, Battery Sensor.>	Even if DTC is detected, it has returned to a normal condition at this time. Reproduce the failure, and then perform the diagnosis again.

1. OUTLINE OF DIAGNOSIS

Judge as NG when faulty signal of each part is sent from the battery sensor.

2. COMPONENT DESCRIPTION

The battery sensor monitors the data of battery voltage, current, temperature, etc. ECM receives these data via LIN communication with the battery sensor.

3. EXECUTION CONDITION

Secondary Parameters	Execution condition
Ignition switch	ON

4. GENERAL DRIVING CYCLE

Perform the diagnosis continuously after the enable conditions have been established.

5. DIAGNOSTIC METHOD

Judge as NG when the following conditions are established.

Judgment Value

Malfunction Criteria	Threshold Value
Receives «Internal abnormal»	ON
or	
Receives «Temperature Sensor Error»	ON
or	
Receives «Voltage Sensor Error»	ON
or	
Receives «Current Sensor Error»	ON

Time Needed for Diagnosis: Less than 1 second
Malfunction Indicator Light Illumination: Does not illuminate.

FI: DTC P2096 POST CATALYST FUEL TRIM SYSTEM TOO LEAN BANK 1

DTC DETECTING CONDITION:

Detected when two consecutive driving cycles with fault occur.

CAUTION:

After servicing or replacing faulty parts, perform Clear Memory Mode <Ref. to EN(H6DO)(diag)-85, OPERATION, Clear Memory Mode.>, and Inspection Mode <Ref. to EN(H6DO)(diag)-69, PROCEDURE, Inspection Mode.>.

WIRING DIAGRAM:

- Engine Electrical System ENGINE TYPE EZ (WITHOUT PUSH BUTTON START) <Ref. to WI-198, ENGINE TYPE EZ (WITHOUT PUSH BUTTON START), WIRING DIAGRAM, Engine Electrical System.>
- Engine Electrical System ENGINE TYPE EZ (WITH PUSH BUTTON START) <Ref. to WI-214, ENGINE TYPE EZ (WITH PUSH BUTTON START), WIRING DIAGRAM, Engine Electrical System.>

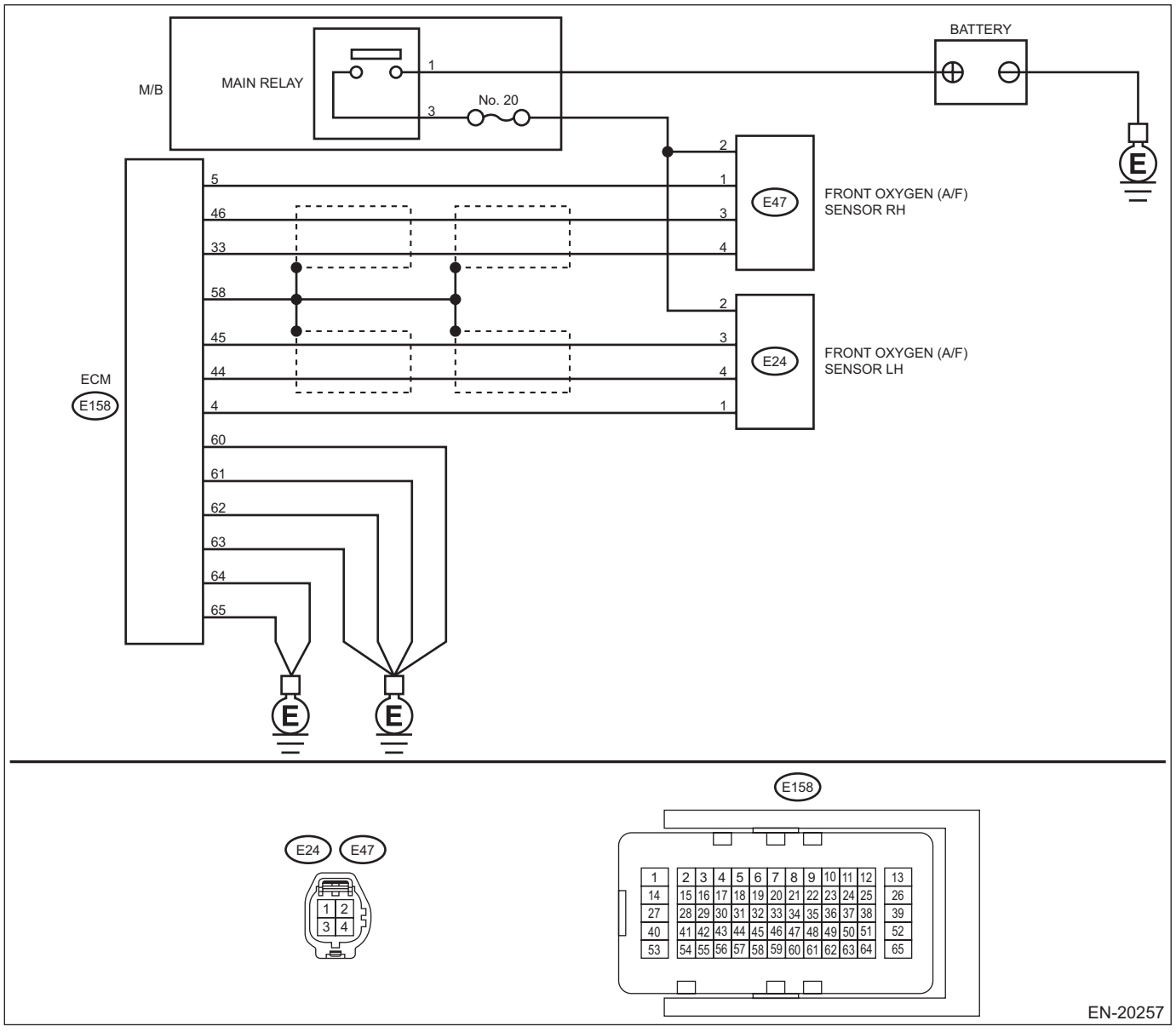

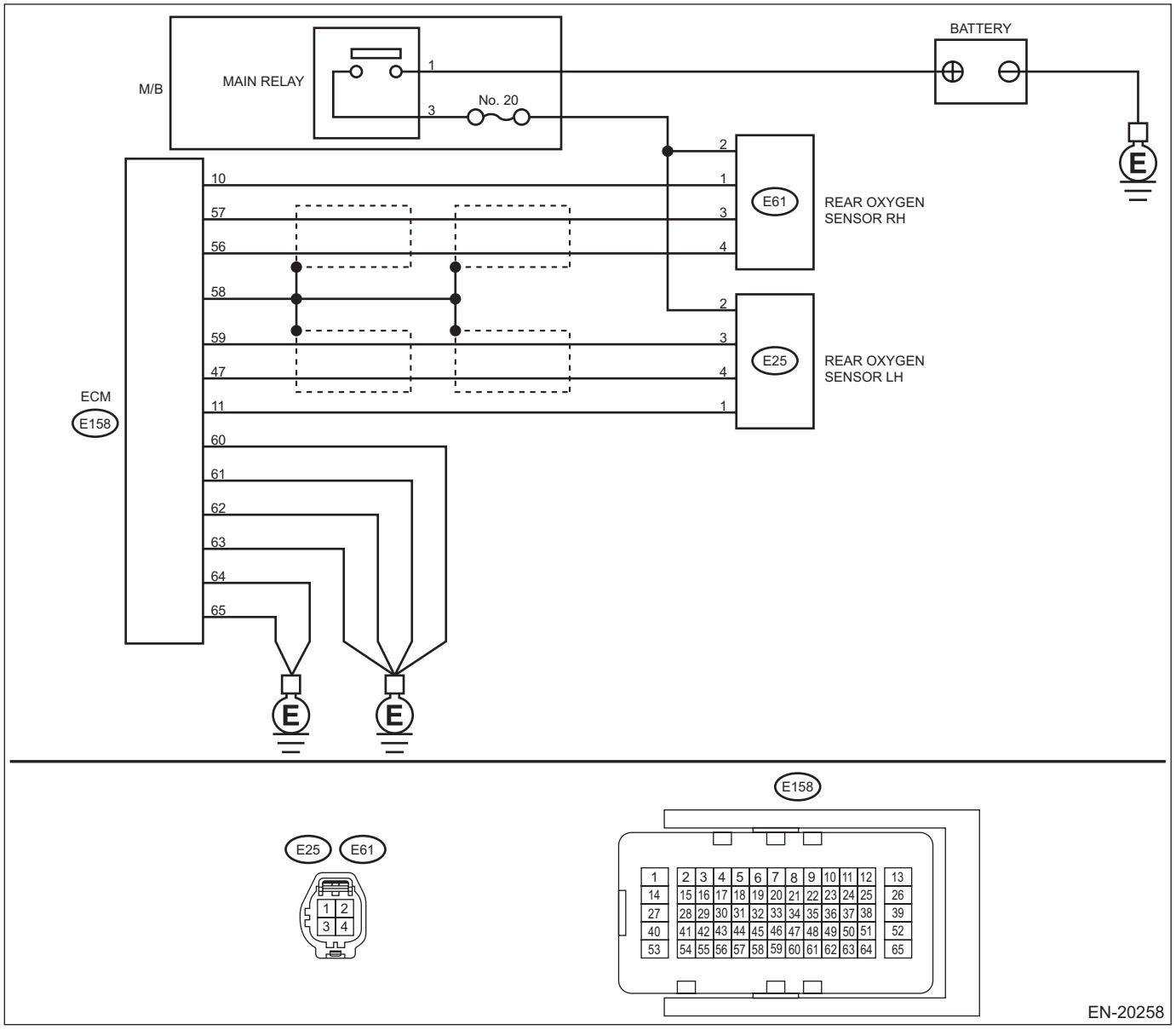

Step		Check	Yes	No
1	**CHECK FOR ANY OTHER DTC ON DISPLAY.**	Is any other DTC displayed?	Check DTC using "List of Diagnostic Trouble Code (DTC)". <Ref. to EN(H6DO)(diag)-109, List of Diagnostic Trouble Code (DTC).>	Go to step **2**.
2	**CHECK FRONT OXYGEN (A/F) SENSOR CONNECTOR AND COUPLING CONNECTOR.**	Has water entered the connector?	Completely remove any water inside.	Go to step **3**.

	Step	Check	Yes	No
3	**CHECK HARNESS BETWEEN ECM AND FRONT OXYGEN (A/F) SENSOR CONNECTOR.** 1) Turn the ignition switch to OFF. 2) Disconnect the connectors from ECM and front oxygen (A/F) sensor. 3) Measure the resistance of harness between ECM connector and front oxygen (A/F) sensor connector. ***Connector & terminal*** ***(E158) No. 46 — (E47) No. 3:*** ***(E158) No. 33 — (E47) No. 4:***	Is the resistance less than 1 Ω?	Go to step **4**.	Repair the harness and connector. NOTE: In this case, repair the following item: • Open circuit in harness between ECM connector and front oxygen (A/F) sensor connector • Poor contact of coupling connector
4	**CHECK HARNESS BETWEEN ECM AND FRONT OXYGEN (A/F) SENSOR CONNECTOR.** Measure the resistance between ECM connector and chassis ground. ***Connector & terminal*** ***(E158) No. 46 — Chassis ground:*** ***(E158) No. 33 — Chassis ground:***	Is the resistance 1 MΩ or more?	Go to step **5**.	Repair the short circuit to ground in harness between ECM connector and front oxygen (A/F) sensor connector.
5	**CHECK OUTPUT SIGNAL FOR ECM.** 1) Connect the connector to ECM. 2) Turn the ignition switch to ON. 3) Measure the voltage between front oxygen (A/F) sensor connector and chassis ground. ***Connector & terminal*** ***(E47) No. 3 (+) — Chassis ground (–):***	Is the voltage 4.5 V or more?	Go to step **7**.	Go to step **6**.
6	**CHECK OUTPUT SIGNAL FOR ECM.** Measure the voltage between front oxygen (A/F) sensor connector and chassis ground. ***Connector & terminal*** ***(E47) No. 4 (+) — Chassis ground (–):***	Is the voltage 4.95 V or more?	Go to step **7**.	Go to step **8**.
7	**CHECK OUTPUT SIGNAL FOR ECM.** Measure the voltage between front oxygen (A/F) sensor connector and chassis ground. ***Connector & terminal*** ***(E47) No. 3 (+) — Chassis ground (–):*** ***(E47) No. 4 (+) — Chassis ground (–):***	Is the voltage 8 V or more?	Repair the short circuit to power in the harness between ECM connector and front oxygen (A/F) sensor connector. After repair, replace the ECM. <Ref. to FU(H6DO)-83, Engine Control Module (ECM).>	Repair the poor contact of ECM connector.
8	**CHECK EXHAUST SYSTEM.**	Are there holes or loose bolts on exhaust system?	Repair the exhaust system.	Go to step **9**.
9	**CHECK AIR INTAKE SYSTEM.**	Are there holes, loose bolts or disconnection of hose on air intake system?	Repair the air intake system.	Go to step **10**.

	Step	Check	Yes	No
10	**CHECK FUEL PRESSURE.** **WARNING:** **Place "NO OPEN FLAMES" signs near the working area.** **CAUTION:** **Be careful not to spill fuel.** 1) Connect the front oxygen (A/F) sensor connector. 2) Measure the fuel pressure. <Ref. to ME(H6DO)-31, INSPECTION, Fuel Pressure.> **CAUTION:** **Before attaching/detaching a fuel pressure gauge, release the fuel pressure.**	Is the measured value 340 — 400 kPa (3.5 — 4.1 kgf/cm^2, 49 — 58 psi)?	Go to step **11**.	Check the fuel pump and fuel delivery line. <Ref. to FU(H6DO)-124, INSPECTION, Fuel Pump.> <Ref. to FU(H6DO)-167, INSPECTION, Fuel Delivery and Evaporation Lines.>
11	**CHECK ENGINE COOLANT TEMPERATURE SENSOR.** 1) Start the engine and warm up completely. 2) Read the value of «Coolant Temp.» using the Subaru Select Monitor or a general scan tool. NOTE: • Subaru Select Monitor For detailed operation procedures, refer to "Read Current Data For Engine". <Ref. to EN(H6DO)(diag)-50, Subaru Select Monitor.> • General scan tool For detailed operation procedures, refer to the general scan tool operation manual.	Is the value of «Coolant Temp.» 75°C (167°F) or more?	Go to step **12**.	Replace the engine coolant temperature sensor. <Ref. to FU(H6DO)-39, Engine Coolant Temperature Sensor.>
12	**CHECK MASS AIR FLOW AND INTAKE AIR TEMPERATURE SENSOR.** 1) Start the engine and warm up engine until coolant temperature is higher than 75°C (167°F). 2) Place the select lever in "P" range or "N" range. 3) Turn the A/C switch to OFF. 4) Turn all the accessory switches to OFF. 5) Read the value of «Mass Air Flow» using the Subaru Select Monitor or a general scan tool. NOTE: • Subaru Select Monitor For detailed operation procedures, refer to "Read Current Data For Engine". <Ref. to EN(H6DO)(diag)-50, Subaru Select Monitor.> • General scan tool For detailed operation procedures, refer to the general scan tool operation manual.	Is the value of «Mass Air Flow» 2.0 — 5.0 g/s (0.26 — 0.66 lb/m)?	Go to step **13**.	Replace the mass air flow and intake air temperature sensor. <Ref. to FU(H6DO)-58, Mass Air Flow and Intake Air Temperature Sensor.>

	Step	Check	Yes	No
13	**CHECK MASS AIR FLOW AND INTAKE AIR TEMPERATURE SENSOR.** 1) Start the engine and warm up engine until coolant temperature is higher than 75°C (167°F). 2) Place the select lever in “P” range or “N” range. 3) Turn the A/C switch to OFF. 4) Turn all the accessory switches to OFF. 5) Open the front hood. 6) Measure the ambient temperature. 7) Read the value of «Intake Air Temp.» using the Subaru Select Monitor or a general scan tool. NOTE: • Subaru Select Monitor For detailed operation procedures, refer to “Read Current Data For Engine”. <Ref. to EN(H6DO)(diag)-50, Subaru Select Monitor.> • General scan tool For detailed operation procedures, refer to the general scan tool operation manual.	Subtract ambient temperature from «Intake Air Temp.». Is the obtained value –10 — 50°C (–18 — 90°F)?	Go to step **14**.	Check the mass air flow and intake air temperature sensor. <Ref. to FU(H6DO)-58, Mass Air Flow and Intake Air Temperature Sensor.>
14	**CHECK REAR OXYGEN SENSOR DATA.** 1) Warm up the engine until engine coolant temperature is higher than 75°C (167°F), and keep the engine speed at 3,000 rpm. (2 minutes maximum) 2) Read the value of «Front O2 Sensor #1» using the Subaru Select Monitor or a general scan tool. NOTE: • Subaru Select Monitor For detailed operation procedures, refer to “Read Current Data For Engine”. <Ref. to EN(H6DO)(diag)-50, Subaru Select Monitor.> • General scan tool For detailed operation procedures, refer to the general scan tool operation manual.	Is the value of «Front O2 Sensor #1» 0.490 V or more?	Go to step **15**.	Go to step **16**.
15	**CHECK REAR OXYGEN SENSOR DATA.** 1) Warm up the engine until engine coolant temperature is higher than 75°C (167°F), and rapidly reduce the engine speed from 3,000 rpm. 2) Read the value of «Front O2 Sensor #1» using the Subaru Select Monitor or a general scan tool. NOTE: • Subaru Select Monitor For detailed operation procedures, refer to “Read Current Data For Engine”. <Ref. to EN(H6DO)(diag)-50, Subaru Select Monitor.> • General scan tool For detailed operation procedures, refer to the general scan tool operation manual.	Is the value of «Front O2 Sensor #1» 0.250 V or less?	Go to step **17**.	Go to step **16**.
16	**CHECK REAR OXYGEN SENSOR CONNECTOR AND COUPLING CONNECTOR.**	Has water entered the connector?	Completely remove any water inside.	Go to step **18**.

	Step	Check	Yes	No
17	**CHECK FRONT OXYGEN (A/F) SENSOR USING REAR OXYGEN SENSOR SIGNAL.** 1) Warm up the engine until engine coolant temperature is higher than 75°C (167°F), then keep the engine idling for 5 minutes or more. 2) Read the value of «Front O2 Sensor #1» using the Subaru Select Monitor or a general scan tool. NOTE: • Subaru Select Monitor For detailed operation procedures, refer to "Read Current Data For Engine". <Ref. to EN(H6DO)(diag)-50, Subaru Select Monitor.> • General scan tool For detailed operation procedures, refer to the general scan tool operation manual.	Does the value of «Front O2 Sensor #1» remain at 0.250 V or less for 5 minutes or more?	Replace the front oxygen (A/F) sensor. <Ref. to FU(H6DO)-78, Front Oxygen (A/F) Sensor.>	Go to step **18**.
18	**CHECK HARNESS BETWEEN ECM AND REAR OXYGEN SENSOR CONNECTOR.** 1) Turn the ignition switch to OFF. 2) Disconnect the connector from ECM and rear oxygen sensor. 3) Measure the resistance of harness between ECM connector and rear oxygen sensor connector. ***Connector & terminal*** ***(E158) No. 59 — (E61) No. 3:*** ***(E158) No. 47 — (E61) No. 4:***	Is the resistance less than 1 Ω?	Go to step **19**.	Repair the harness and connector. NOTE: In this case, repair the following item: • Open circuit in harness between ECM connector and rear oxygen sensor connector • Poor contact of coupling connector
19	**CHECK HARNESS BETWEEN ECM AND REAR OXYGEN SENSOR CONNECTOR.** 1) Connect the connector to ECM. 2) Turn the ignition switch to ON. 3) Measure the voltage between rear oxygen sensor connector and chassis ground. ***Connector & terminal*** ***(E61) No. 3 (+) — Chassis ground (–):***	Is the voltage 0.2 — 0.5 V?	Replace the rear oxygen sensor. <Ref. to FU(H6DO)-81, Rear Oxygen Sensor.>	Repair the harness and connector. NOTE: In this case, repair the following item: • Open circuit in harness between ECM connector and rear oxygen sensor connector • Poor contact of ECM connector • Poor contact of coupling connector

1. OUTLINE OF DIAGNOSIS

Detect the malfunction of fuel system from the size of the sub feedback learning value.
Control the sub feedback learning and judge as NG when the learning value is in the lean zone.

2. COMPONENT DESCRIPTION

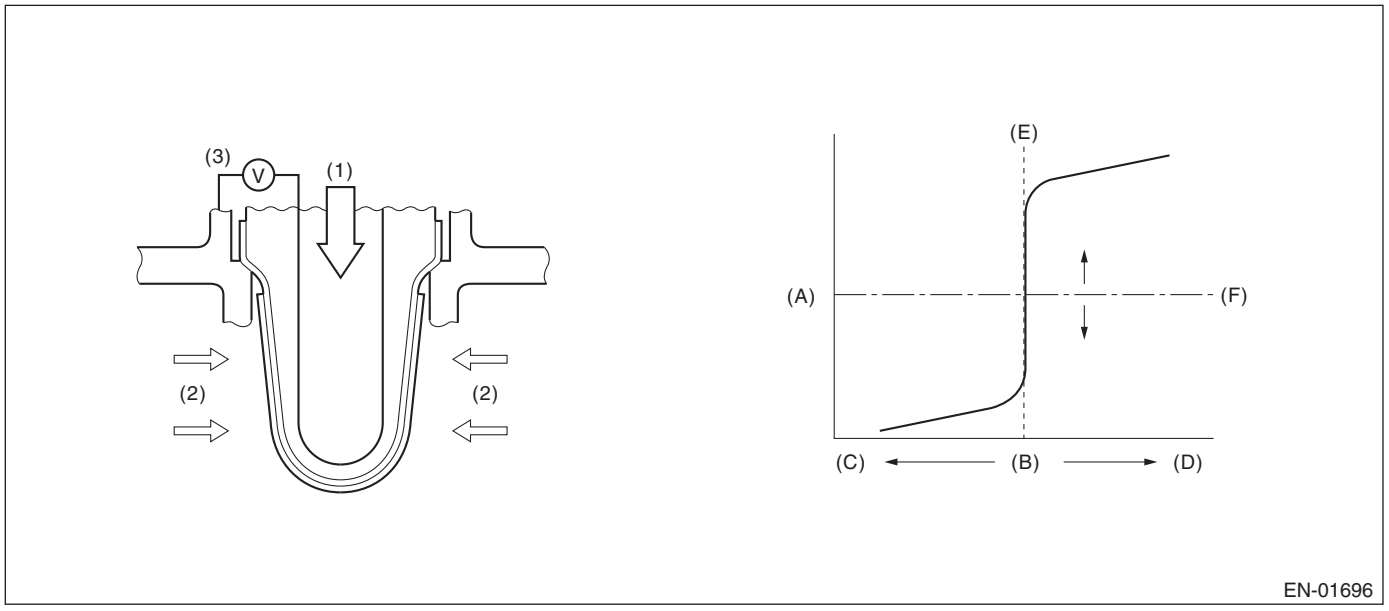

(A)	Electromotive force	(B)	Air fuel ratio	(C)	Lean
(D)	Rich	(E)	Theoretical air fuel ratio	(F)	Comparative voltage
(1)	Atmosphere	(2)	Exhaust gas	(3)	Electromotive force

3. EXECUTION CONDITION

Secondary Parameters	Execution condition
Closed loop control with sub feedback	Operation
Intake air amount	≥ 10 g/s (0.35 oz/s)
Change of the intake air amount during 0.5 crankshaft revs.	< 0.02 g/rev (0 oz/rev)

4. GENERAL DRIVING CYCLE

Perform the diagnosis continuously after the enable conditions have been established.

5. DIAGNOSTIC METHOD

If the duration of time while the following conditions are met is longer than the time indicated, judge as NG.

Judgment Value

Malfunction Criteria	Threshold Value
Sub feedback learning value	< –0.0375

Time Needed for Diagnosis: 1 s × 1 time(s)
Malfunction Indicator Light Illumination: Illuminates when malfunction occurs in 2 continuous driving cycles.

FJ: DTC P2097 POST CATALYST FUEL TRIM SYSTEM TOO RICH BANK 1

DTC DETECTING CONDITION:

Detected when two consecutive driving cycles with fault occur.

CAUTION:

After servicing or replacing faulty parts, perform Clear Memory Mode <Ref. to EN(H6DO)(diag)-85, OPERATION, Clear Memory Mode.>, and Inspection Mode <Ref. to EN(H6DO)(diag)-69, PROCEDURE, Inspection Mode.>.

WIRING DIAGRAM:

- Engine Electrical System ENGINE TYPE EZ (WITHOUT PUSH BUTTON START) <Ref. to WI-198, ENGINE TYPE EZ (WITHOUT PUSH BUTTON START), WIRING DIAGRAM, Engine Electrical System.>
- Engine Electrical System ENGINE TYPE EZ (WITH PUSH BUTTON START) <Ref. to WI-214, ENGINE TYPE EZ (WITH PUSH BUTTON START), WIRING DIAGRAM, Engine Electrical System.>

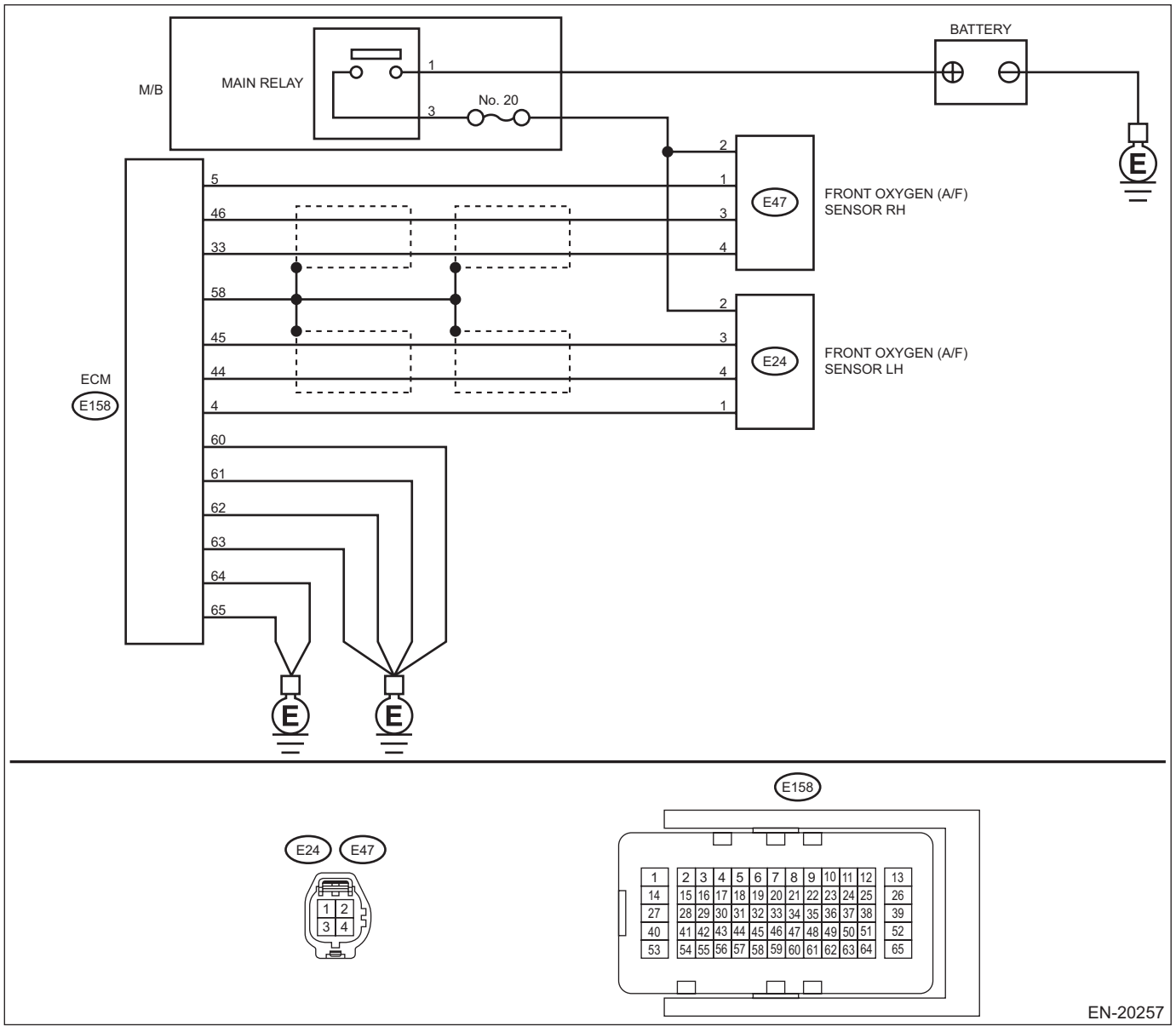

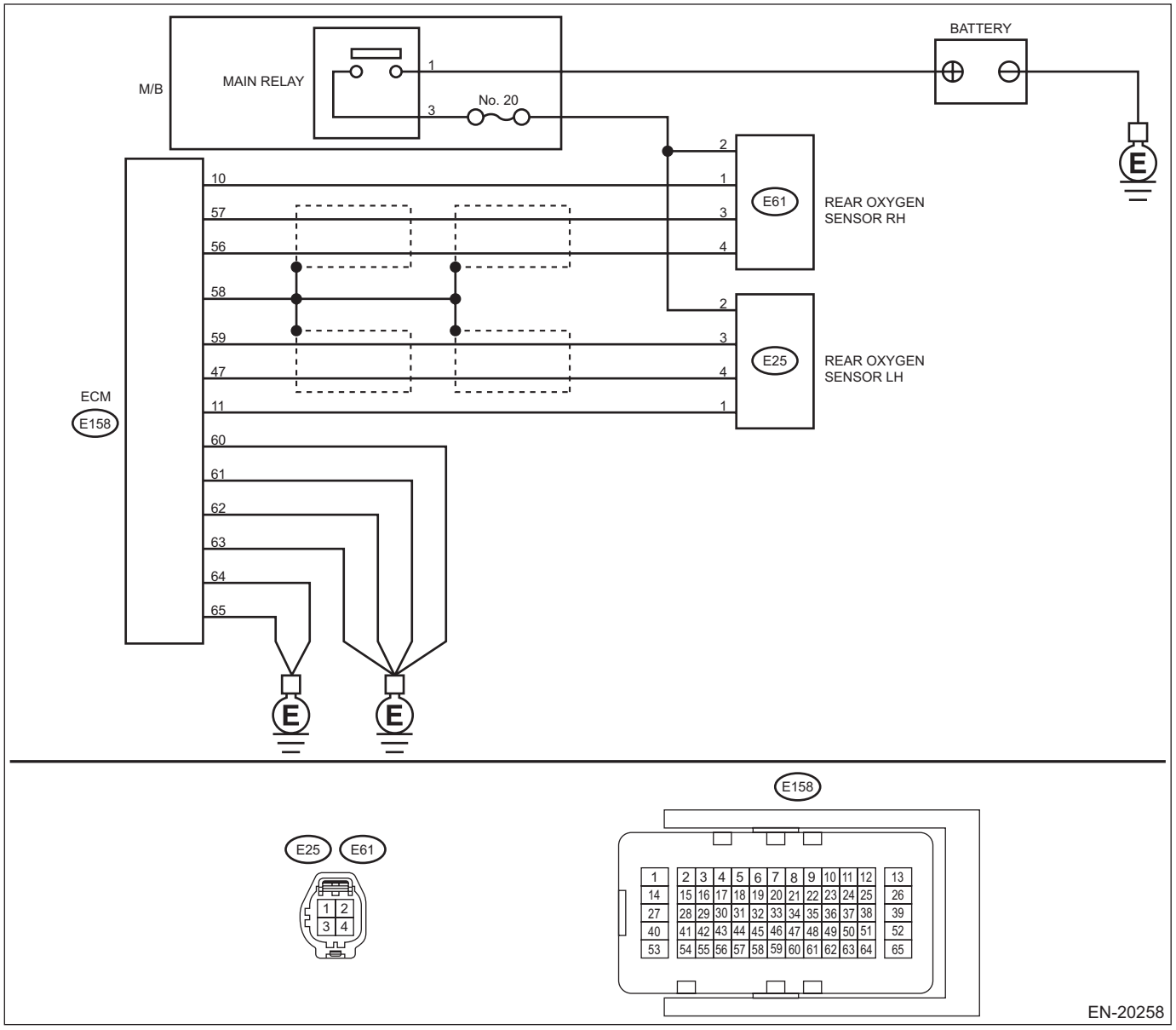

Step		Check	Yes	No
1	**CHECK FOR ANY OTHER DTC ON DISPLAY.**	Is any other DTC displayed?	Check DTC using "List of Diagnostic Trouble Code (DTC)". <Ref. to EN(H6DO)(diag)-109, List of Diagnostic Trouble Code (DTC).>	Go to step **2**.
2	**CHECK FRONT OXYGEN (A/F) SENSOR CONNECTOR AND COUPLING CONNECTOR.**	Has water entered the connector?	Completely remove any water inside.	Go to step **3**.

	Step	Check	Yes	No
3	**CHECK HARNESS BETWEEN ECM AND FRONT OXYGEN (A/F) SENSOR CONNECTOR.** 1) Turn the ignition switch to OFF. 2) Disconnect the connectors from ECM and front oxygen (A/F) sensor. 3) Measure the resistance of harness between ECM connector and front oxygen (A/F) sensor connector. ***Connector & terminal*** ***(E158) No. 46 — (E47) No. 3:*** ***(E158) No. 33 — (E47) No. 4:***	Is the resistance less than 1 Ω?	Go to step **4**.	Repair the harness and connector. NOTE: In this case, repair the following item: • Open circuit in harness between ECM connector and front oxygen (A/F) sensor connector • Poor contact of coupling connector
4	**CHECK HARNESS BETWEEN ECM AND FRONT OXYGEN (A/F) SENSOR CONNECTOR.** Measure the resistance between ECM connector and chassis ground. ***Connector & terminal*** ***(E158) No. 46 — Chassis ground:*** ***(E158) No. 33 — Chassis ground:***	Is the resistance 1 MΩ or more?	Go to step **5**.	Repair the short circuit to ground in harness between ECM connector and front oxygen (A/F) sensor connector.
5	**CHECK OUTPUT SIGNAL FOR ECM.** 1) Connect the connector to ECM. 2) Turn the ignition switch to ON. 3) Measure the voltage between front oxygen (A/F) sensor connector and chassis ground. ***Connector & terminal*** ***(E47) No. 3 (+) — Chassis ground (–):***	Is the voltage 4.5 V or more?	Go to step **7**.	Go to step **6**.
6	**CHECK OUTPUT SIGNAL FOR ECM.** Measure the voltage between front oxygen (A/F) sensor connector and chassis ground. ***Connector & terminal*** ***(E47) No. 4 (+) — Chassis ground (–):***	Is the voltage 4.95 V or more?	Go to step **7**.	Go to step **8**.
7	**CHECK OUTPUT SIGNAL FOR ECM.** Measure the voltage between front oxygen (A/F) sensor connector and chassis ground. ***Connector & terminal*** ***(E47) No. 3 (+) — Chassis ground (–):*** ***(E47) No. 4 (+) — Chassis ground (–):***	Is the voltage 8 V or more?	Repair the short circuit to power in the harness between ECM connector and front oxygen (A/F) sensor connector. After repair, replace the ECM. <Ref. to FU(H6DO)-83, Engine Control Module (ECM).>	Repair the poor contact of ECM connector.
8	**CHECK EXHAUST SYSTEM.**	Are there holes or loose bolts on exhaust system?	Repair the exhaust system.	Go to step **9**.
9	**CHECK AIR INTAKE SYSTEM.**	Are there holes, loose bolts or disconnection of hose on air intake system?	Repair the air intake system.	Go to step **10**.

	Step	Check	Yes	No
10	**CHECK FUEL PRESSURE.** **WARNING:** **Place "NO OPEN FLAMES" signs near the working area.** **CAUTION:** **Be careful not to spill fuel.** 1) Connect the front oxygen (A/F) sensor connector. 2) Measure the fuel pressure. <Ref. to ME(H6DO)-31, INSPECTION, Fuel Pressure.> **CAUTION:** **Before attaching/detaching a fuel pressure gauge, release the fuel pressure.**	Is the measured value 340 — 400 kPa (3.5 — 4.1 kgf/cm^2, 49 — 58 psi)?	Go to step **11**.	Check the fuel pump and fuel delivery line. <Ref. to FU(H6DO)-124, INSPECTION, Fuel Pump.> <Ref. to FU(H6DO)-167, INSPECTION, Fuel Delivery and Evaporation Lines.>
11	**CHECK ENGINE COOLANT TEMPERATURE SENSOR.** 1) Start the engine and warm up completely. 2) Read the value of «Coolant Temp.» using the Subaru Select Monitor or a general scan tool. NOTE: • Subaru Select Monitor For detailed operation procedures, refer to "Read Current Data For Engine". <Ref. to EN(H6DO)(diag)-50, Subaru Select Monitor.> • General scan tool For detailed operation procedures, refer to the general scan tool operation manual.	Is the value of «Coolant Temp.» 75°C (167°F) or more?	Go to step **12**.	Replace the engine coolant temperature sensor. <Ref. to FU(H6DO)-39, Engine Coolant Temperature Sensor.>
12	**CHECK MASS AIR FLOW AND INTAKE AIR TEMPERATURE SENSOR.** 1) Start the engine and warm up engine until coolant temperature is higher than 75°C (167°F). 2) Place the select lever in "P" range or "N" range. 3) Turn the A/C switch to OFF. 4) Turn all the accessory switches to OFF. 5) Read the value of «Mass Air Flow» using the Subaru Select Monitor or a general scan tool. NOTE: • Subaru Select Monitor For detailed operation procedures, refer to "Read Current Data For Engine". <Ref. to EN(H6DO)(diag)-50, Subaru Select Monitor.> • General scan tool For detailed operation procedures, refer to the general scan tool operation manual.	Is the value of «Mass Air Flow» 2.0 — 5.0 g/s (0.26 — 0.66 lb/m)?	Go to step **13**.	Replace the mass air flow and intake air temperature sensor. <Ref. to FU(H6DO)-58, Mass Air Flow and Intake Air Temperature Sensor.>

	Step	Check	Yes	No
13	**CHECK MASS AIR FLOW AND INTAKE AIR TEMPERATURE SENSOR.** 1) Start the engine and warm up engine until coolant temperature is higher than 75°C (167°F). 2) Place the select lever in "P" range or "N" range. 3) Turn the A/C switch to OFF. 4) Turn all the accessory switches to OFF. 5) Open the front hood. 6) Measure the ambient temperature. 7) Read the value of «Intake Air Temp.» using the Subaru Select Monitor or a general scan tool. NOTE: • Subaru Select Monitor For detailed operation procedures, refer to "Read Current Data For Engine". <Ref. to EN(H6DO)(diag)-50, Subaru Select Monitor.> • General scan tool For detailed operation procedures, refer to the general scan tool operation manual.	Subtract ambient temperature from «Intake Air Temp.». Is the obtained value –10 — 50°C (–18 — 90°F)?	Go to step **14**.	Check the mass air flow and intake air temperature sensor. <Ref. to FU(H6DO)-58, Mass Air Flow and Intake Air Temperature Sensor.>
14	**CHECK REAR OXYGEN SENSOR DATA.** 1) Warm up the engine until engine coolant temperature is higher than 75°C (167°F), and keep the engine speed at 3,000 rpm. (2 minutes maximum) 2) Read the value of «Front O2 Sensor #1» using the Subaru Select Monitor or a general scan tool. NOTE: • Subaru Select Monitor For detailed operation procedures, refer to "Read Current Data For Engine". <Ref. to EN(H6DO)(diag)-50, Subaru Select Monitor.> • General scan tool For detailed operation procedures, refer to the general scan tool operation manual.	Is the value of «Front O2 Sensor #1» 0.490 V or more?	Go to step **15**.	Go to step **16**.
15	**CHECK REAR OXYGEN SENSOR DATA.** 1) Warm up the engine until engine coolant temperature is higher than 75°C (167°F), and rapidly reduce the engine speed from 3,000 rpm. 2) Read the value of «Front O2 Sensor #1» using the Subaru Select Monitor or a general scan tool. NOTE: • Subaru Select Monitor For detailed operation procedures, refer to "Read Current Data For Engine". <Ref. to EN(H6DO)(diag)-50, Subaru Select Monitor.> • General scan tool For detailed operation procedures, refer to the general scan tool operation manual.	Is the value of «Front O2 Sensor #1» 0.250 V or less?	Go to step **17**.	Go to step **16**.
16	**CHECK REAR OXYGEN SENSOR CONNECTOR AND COUPLING CONNECTOR.**	Has water entered the connector?	Completely remove any water inside.	Go to step **18**.

	Step	Check	Yes	No
17	**CHECK FRONT OXYGEN (A/F) SENSOR USING REAR OXYGEN SENSOR SIGNAL.** 1) Warm up the engine until engine coolant temperature is higher than 75°C (167°F), then keep the engine idling for 5 minutes or more. 2) Read the value of «Front O2 Sensor #1» using the Subaru Select Monitor or a general scan tool. NOTE: • Subaru Select Monitor For detailed operation procedures, refer to "Read Current Data For Engine". <Ref. to EN(H6DO)(diag)-50, Subaru Select Monitor.> • General scan tool For detailed operation procedures, refer to the general scan tool operation manual.	Does the value of «Front O2 Sensor #1» remain at 0.8 V or more for 5 minutes or more?	Replace the front oxygen (A/F) sensor. <Ref. to FU(H6DO)-78, Front Oxygen (A/F) Sensor.>	Go to step **18**.
18	**CHECK HARNESS BETWEEN ECM AND REAR OXYGEN SENSOR CONNECTOR.** 1) Turn the ignition switch to OFF. 2) Disconnect the connector from ECM and rear oxygen sensor. 3) Measure the resistance of harness between ECM connector and rear oxygen sensor connector. ***Connector & terminal*** ***(E158) No. 59 — (E61) No. 3:*** ***(E158) No. 56 — (E61) No. 4:***	Is the resistance less than 1 Ω?	Go to step **19**.	Repair the harness and connector. NOTE: In this case, repair the following item: • Open circuit in harness between ECM connector and rear oxygen sensor connector • Poor contact of coupling connector
19	**CHECK HARNESS BETWEEN ECM AND REAR OXYGEN SENSOR CONNECTOR.** 1) Connect the connector to ECM. 2) Turn the ignition switch to ON. 3) Measure the voltage between rear oxygen sensor connector and chassis ground. ***Connector & terminal*** ***(E61) No. 3 (+) — Chassis ground (–):***	Is the voltage 0.2 — 0.5 V?	Replace the rear oxygen sensor. <Ref. to FU(H6DO)-81, Rear Oxygen Sensor.>	Repair the harness and connector. NOTE: In this case, repair the following item: • Open circuit in harness between ECM connector and rear oxygen sensor connector • Poor contact of ECM connector • Poor contact of coupling connector

1. OUTLINE OF DIAGNOSIS

Detect the malfunction of fuel system from the size of the sub feedback learning value.
Sub feedback learning is being performed. When the learning value goes to the rich side, judge as NG.

2. COMPONENT DESCRIPTION

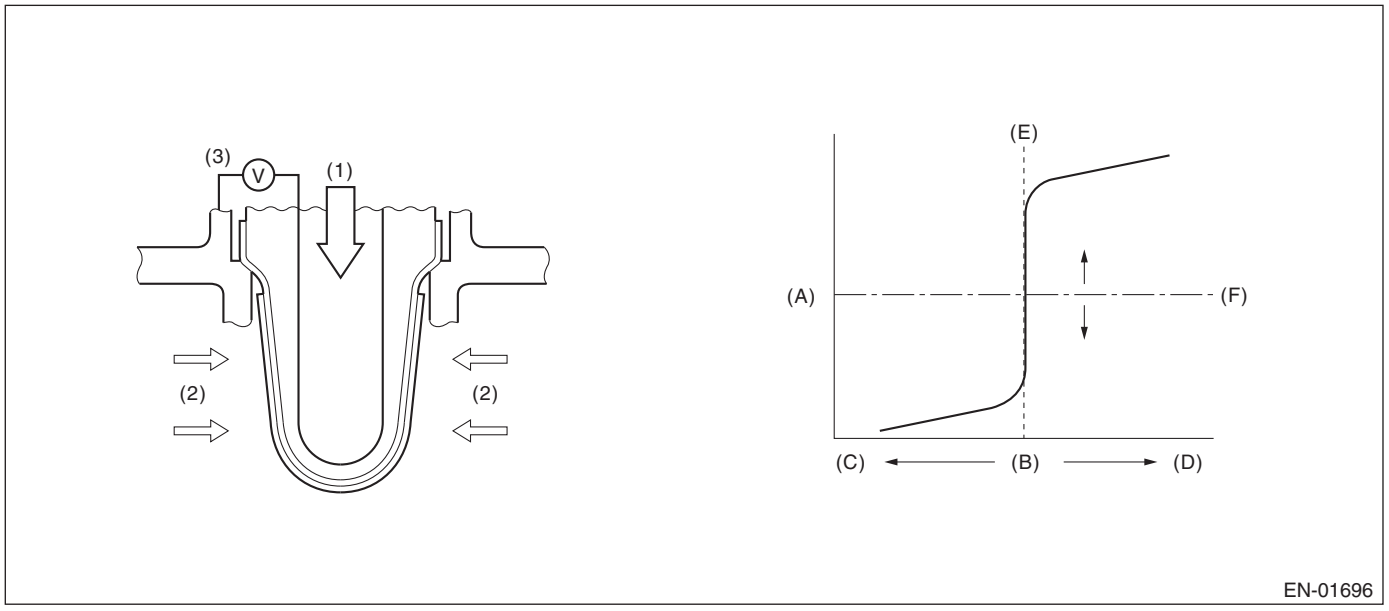

(A)	Electromotive force	(B)	Air fuel ratio	(C)	Lean
(D)	Rich	(E)	Theoretical air fuel ratio	(F)	Comparative voltage
(1)	Atmosphere	(2)	Exhaust gas	(3)	Electromotive force

3. EXECUTION CONDITION

Secondary Parameters	Execution condition
Closed loop control with sub feedback	Operation
Intake air amount	≥ 10 g/s (0.35 oz/s)
Change of the intake air amount during 0.5 crankshaft revs.	< 0.02 g/rev (0 oz/rev)

4. GENERAL DRIVING CYCLE

Perform the diagnosis continuously after the enable conditions have been established.

5. DIAGNOSTIC METHOD

If the duration of time while the following conditions are met is longer than the time indicated, judge as NG.

Judgment Value

Malfunction Criteria	Threshold Value
Sub feedback learning value	≥ 0.033

Time Needed for Diagnosis: 1 s × 1 time(s)
Malfunction Indicator Light Illumination: Illuminates when malfunction occurs in 2 continuous driving cycles.

FK:DTC P2098 POST CATALYST FUEL TRIM SYSTEM TOO LEAN BANK 2

DTC DETECTING CONDITION:

Detected when two consecutive driving cycles with fault occur.

CAUTION:

After servicing or replacing faulty parts, perform Clear Memory Mode <Ref. to EN(H6DO)(diag)-85, OPERATION, Clear Memory Mode.>, and Inspection Mode <Ref. to EN(H6DO)(diag)-69, PROCEDURE, Inspection Mode.>.

WIRING DIAGRAM:

- Engine Electrical System ENGINE TYPE EZ (WITHOUT PUSH BUTTON START) <Ref. to WI-198, ENGINE TYPE EZ (WITHOUT PUSH BUTTON START), WIRING DIAGRAM, Engine Electrical System.>
- Engine Electrical System ENGINE TYPE EZ (WITH PUSH BUTTON START) <Ref. to WI-214, ENGINE TYPE EZ (WITH PUSH BUTTON START), WIRING DIAGRAM, Engine Electrical System.>

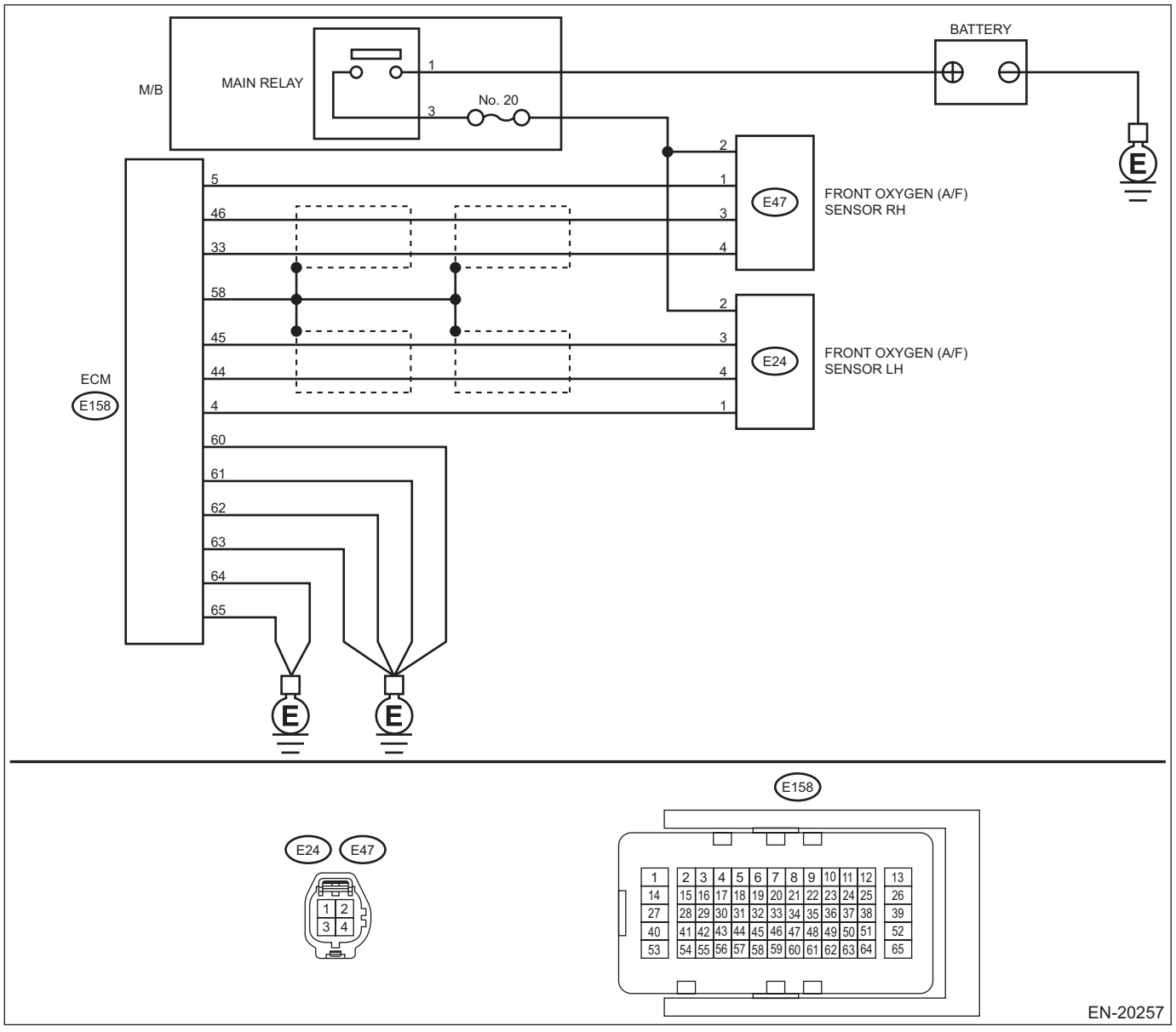

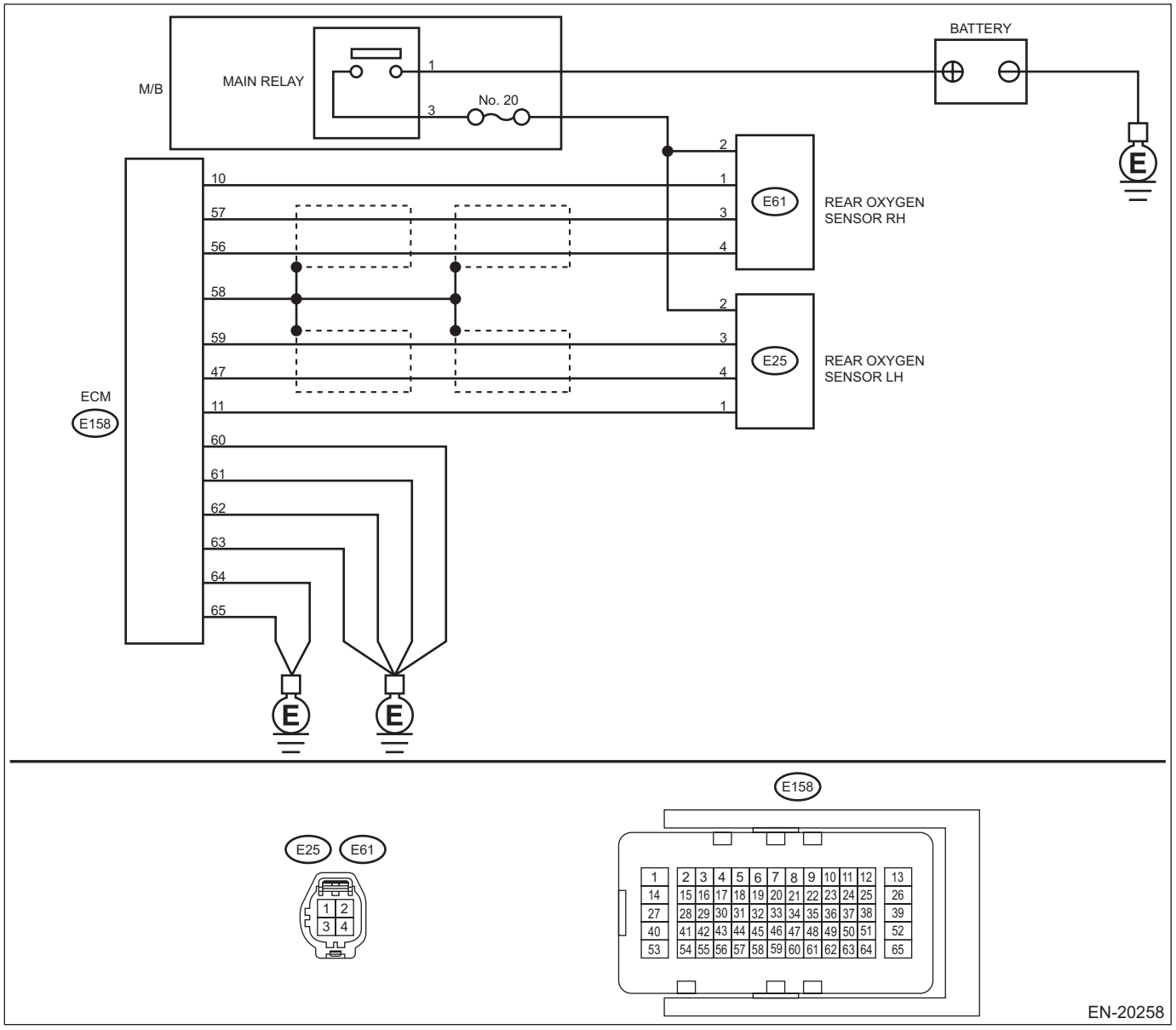

Step		Check	Yes	No
1	**CHECK FOR ANY OTHER DTC ON DISPLAY.**	Is any other DTC displayed?	Check DTC using "List of Diagnostic Trouble Code (DTC)". <Ref. to EN(H6DO)(diag)-109, List of Diagnostic Trouble Code (DTC).>	Go to step **2**.
2	**CHECK FRONT OXYGEN (A/F) SENSOR CONNECTOR AND COUPLING CONNECTOR.**	Has water entered the connector?	Completely remove any water inside.	Go to step **3**.

	Step	Check	Yes	No
3	**CHECK HARNESS BETWEEN ECM AND FRONT OXYGEN (A/F) SENSOR CONNECTOR.** 1) Turn the ignition switch to OFF. 2) Disconnect the connectors from ECM and front oxygen (A/F) sensor. 3) Measure the resistance of harness between ECM connector and front oxygen (A/F) sensor connector. ***Connector & terminal*** ***(E158) No. 45 — (E24) No. 3:*** ***(E158) No. 44 — (E24) No. 4:***	Is the resistance less than 1 Ω?	Go to step **4**.	Repair the harness and connector. NOTE: In this case, repair the following item: • Open circuit in harness between ECM connector and front oxygen (A/F) sensor connector • Poor contact of coupling connector
4	**CHECK HARNESS BETWEEN ECM AND FRONT OXYGEN (A/F) SENSOR CONNECTOR.** Measure the resistance between ECM connector and chassis ground. ***Connector & terminal*** ***(E158) No. 45 — Chassis ground:*** ***(E158) No. 44 — Chassis ground:***	Is the resistance 1 MΩ or more?	Go to step **5**.	Repair the short circuit to ground in harness between ECM connector and front oxygen (A/F) sensor connector.
5	**CHECK OUTPUT SIGNAL FOR ECM.** 1) Connect the connector to ECM. 2) Turn the ignition switch to ON. 3) Measure the voltage between front oxygen (A/F) sensor connector and chassis ground. ***Connector & terminal*** ***(E24) No. 3 (+) — Chassis ground (–):***	Is the voltage 4.5 V or more?	Go to step **7**.	Go to step **6**.
6	**CHECK OUTPUT SIGNAL FOR ECM.** Measure the voltage between front oxygen (A/F) sensor connector and chassis ground. ***Connector & terminal*** ***(E24) No. 4 (+) — Chassis ground (–):***	Is the voltage 4.95 V or more?	Go to step **7**.	Go to step **8**.
7	**CHECK OUTPUT SIGNAL FOR ECM.** Measure the voltage between front oxygen (A/F) sensor connector and chassis ground. ***Connector & terminal*** ***(E24) No. 3 (+) — Chassis ground (–):*** ***(E24) No. 4 (+) — Chassis ground (–):***	Is the voltage 8 V or more?	Repair the short circuit to power in the harness between ECM connector and front oxygen (A/F) sensor connector. After repair, replace the ECM. <Ref. to FU(H6DO)-83, Engine Control Module (ECM).>	Repair the poor contact of ECM connector.
8	**CHECK EXHAUST SYSTEM.**	Are there holes or loose bolts on exhaust system?	Repair the exhaust system.	Go to step **9**.
9	**CHECK AIR INTAKE SYSTEM.**	Are there holes, loose bolts or disconnection of hose on air intake system?	Repair the air intake system.	Go to step **10**.

	Step	Check	Yes	No
10	**CHECK FUEL PRESSURE.** **WARNING:** **Place "NO OPEN FLAMES" signs near the working area.** **CAUTION:** **Be careful not to spill fuel.** 1) Connect the front oxygen (A/F) sensor connector. 2) Measure the fuel pressure. <Ref. to ME(H6DO)-31, INSPECTION, Fuel Pressure.> **CAUTION:** **Before attaching/detaching a fuel pressure gauge, release the fuel pressure.**	Is the measured value 340 — 400 kPa (3.5 — 4.1 kgf/cm^2, 49 — 58 psi)?	Go to step **11**.	Check the fuel pump and fuel delivery line. <Ref. to FU(H6DO)-124, INSPECTION, Fuel Pump.> <Ref. to FU(H6DO)-167, INSPECTION, Fuel Delivery and Evaporation Lines.>
11	**CHECK ENGINE COOLANT TEMPERATURE SENSOR.** 1) Start the engine and warm up completely. 2) Read the value of «Coolant Temp.» using the Subaru Select Monitor or a general scan tool. NOTE: • Subaru Select Monitor For detailed operation procedures, refer to "Read Current Data For Engine". <Ref. to EN(H6DO)(diag)-50, Subaru Select Monitor.> • General scan tool For detailed operation procedures, refer to the general scan tool operation manual.	Is the value of «Coolant Temp.» 75°C (167°F) or more?	Go to step **12**.	Replace the engine coolant temperature sensor. <Ref. to FU(H6DO)-39, Engine Coolant Temperature Sensor.>
12	**CHECK MASS AIR FLOW AND INTAKE AIR TEMPERATURE SENSOR.** 1) Start the engine and warm up engine until coolant temperature is higher than 75°C (167°F). 2) Place the select lever in "P" range or "N" range. 3) Turn the A/C switch to OFF. 4) Turn all the accessory switches to OFF. 5) Read the value of «Mass Air Flow» using the Subaru Select Monitor or a general scan tool. NOTE: • Subaru Select Monitor For detailed operation procedures, refer to "Read Current Data For Engine". <Ref. to EN(H6DO)(diag)-50, Subaru Select Monitor.> • General scan tool For detailed operation procedures, refer to the general scan tool operation manual.	Is the value of «Mass Air Flow» 2.0 — 5.0 g/s (0.26 — 0.66 lb/m)?	Go to step **13**.	Replace the mass air flow and intake air temperature sensor. <Ref. to FU(H6DO)-58, Mass Air Flow and Intake Air Temperature Sensor.>

	Step	Check	Yes	No
13	**CHECK MASS AIR FLOW AND INTAKE AIR TEMPERATURE SENSOR.** 1) Start the engine and warm up engine until coolant temperature is higher than 75°C (167°F). 2) Place the select lever in “P” range or “N” range. 3) Turn the A/C switch to OFF. 4) Turn all the accessory switches to OFF. 5) Open the front hood. 6) Measure the ambient temperature. 7) Read the value of «Intake Air Temp.» using the Subaru Select Monitor or a general scan tool. NOTE: • Subaru Select Monitor For detailed operation procedures, refer to “Read Current Data For Engine”. <Ref. to EN(H6DO)(diag)-50, Subaru Select Monitor.> • General scan tool For detailed operation procedures, refer to the general scan tool operation manual.	Subtract ambient temperature from «Intake Air Temp.». Is the obtained value –10 — 50°C (–18 — 90°F)?	Go to step **14**.	Check the mass air flow and intake air temperature sensor. <Ref. to FU(H6DO)-58, Mass Air Flow and Intake Air Temperature Sensor.>
14	**CHECK REAR OXYGEN SENSOR DATA.** 1) Warm up the engine until engine coolant temperature is higher than 75°C (167°F), and keep the engine speed at 3,000 rpm. (2 minutes maximum) 2) Read the value of «Front O2 Sensor #2» using the Subaru Select Monitor or a general scan tool. NOTE: • Subaru Select Monitor For detailed operation procedures, refer to “Read Current Data For Engine”. <Ref. to EN(H6DO)(diag)-50, Subaru Select Monitor.> • General scan tool For detailed operation procedures, refer to the general scan tool operation manual.	Is the value of «Front O2 Sensor #2» 0.490 V or more?	Go to step **15**.	Go to step **16**.
15	**CHECK REAR OXYGEN SENSOR DATA.** 1) Warm up the engine until engine coolant temperature is higher than 75°C (167°F), and rapidly reduce the engine speed from 3,000 rpm. 2) Read the value of «Front O2 Sensor #2» using the Subaru Select Monitor or a general scan tool. NOTE: • Subaru Select Monitor For detailed operation procedures, refer to “Read Current Data For Engine”. <Ref. to EN(H6DO)(diag)-50, Subaru Select Monitor.> • General scan tool For detailed operation procedures, refer to the general scan tool operation manual.	Is the value of «Front O2 Sensor #2» 0.250 V or less?	Go to step **17**.	Go to step **16**.
16	**CHECK REAR OXYGEN SENSOR CONNECTOR AND COUPLING CONNECTOR.**	Has water entered the connector?	Completely remove any water inside.	Go to step **18**.

	Step	Check	Yes	No
17	**CHECK FRONT OXYGEN (A/F) SENSOR USING REAR OXYGEN SENSOR SIGNAL.** 1) Warm up the engine until engine coolant temperature is higher than 75°C (167°F), then keep the engine idling for 5 minutes or more. 2) Read the value of «Front O2 Sensor #2» using the Subaru Select Monitor or a general scan tool. NOTE: • Subaru Select Monitor For detailed operation procedures, refer to "Read Current Data For Engine". <Ref. to EN(H6DO)(diag)-50, Subaru Select Monitor.> • General scan tool For detailed operation procedures, refer to the general scan tool operation manual.	Does the value of «Front O2 Sensor #2» remain at 0.250 V or less for 5 minutes or more?	Replace the front oxygen (A/F) sensor. <Ref. to FU(H6DO)-78, Front Oxygen (A/F) Sensor.>	Go to step **18**.
18	**CHECK HARNESS BETWEEN ECM AND REAR OXYGEN SENSOR CONNECTOR.** 1) Turn the ignition switch to OFF. 2) Disconnect the connector from ECM and rear oxygen sensor. 3) Measure the resistance of harness between ECM connector and rear oxygen sensor connector. ***Connector & terminal*** ***(E158) No. 59 — (E25) No. 3:*** ***(E158) No. 47 — (E25) No. 4:***	Is the resistance less than 1 Ω?	Go to step **19**.	Repair the harness and connector. NOTE: In this case, repair the following item: • Open circuit in harness between ECM connector and rear oxygen sensor connector • Poor contact of coupling connector
19	**CHECK HARNESS BETWEEN ECM AND REAR OXYGEN SENSOR CONNECTOR.** 1) Connect the connector to ECM. 2) Turn the ignition switch to ON. 3) Measure the voltage between rear oxygen sensor connector and chassis ground. ***Connector & terminal*** ***(E25) No. 3 (+) — Chassis ground (–):***	Is the voltage 0.2 — 0.5 V?	Replace the rear oxygen sensor. <Ref. to FU(H6DO)-81, Rear Oxygen Sensor.>	Repair the harness and connector. NOTE: In this case, repair the following item: • Open circuit in harness between ECM connector and rear oxygen sensor connector • Poor contact of ECM connector • Poor contact of coupling connector

1. OUTLINE OF DIAGNOSIS

NOTE:
For the detection standard, refer to DTC P2096. <Ref. to EN(H6DO)(diag)-530, DTC P2096 POST CATALYST FUEL TRIM SYSTEM TOO LEAN BANK 1, Diagnostic Procedure with Diagnostic Trouble Code (DTC).>

FL: DTC P2099 POST CATALYST FUEL TRIM SYSTEM TOO RICH BANK 2

DTC DETECTING CONDITION:

Detected when two consecutive driving cycles with fault occur.

CAUTION:

After servicing or replacing faulty parts, perform Clear Memory Mode <Ref. to EN(H6DO)(diag)-85, OPERATION, Clear Memory Mode.>, and Inspection Mode <Ref. to EN(H6DO)(diag)-69, PROCEDURE, Inspection Mode.>.

WIRING DIAGRAM:

- Engine Electrical System ENGINE TYPE EZ (WITHOUT PUSH BUTTON START) <Ref. to WI-198, ENGINE TYPE EZ (WITHOUT PUSH BUTTON START), WIRING DIAGRAM, Engine Electrical System.>
- Engine Electrical System ENGINE TYPE EZ (WITH PUSH BUTTON START) <Ref. to WI-214, ENGINE TYPE EZ (WITH PUSH BUTTON START), WIRING DIAGRAM, Engine Electrical System.>

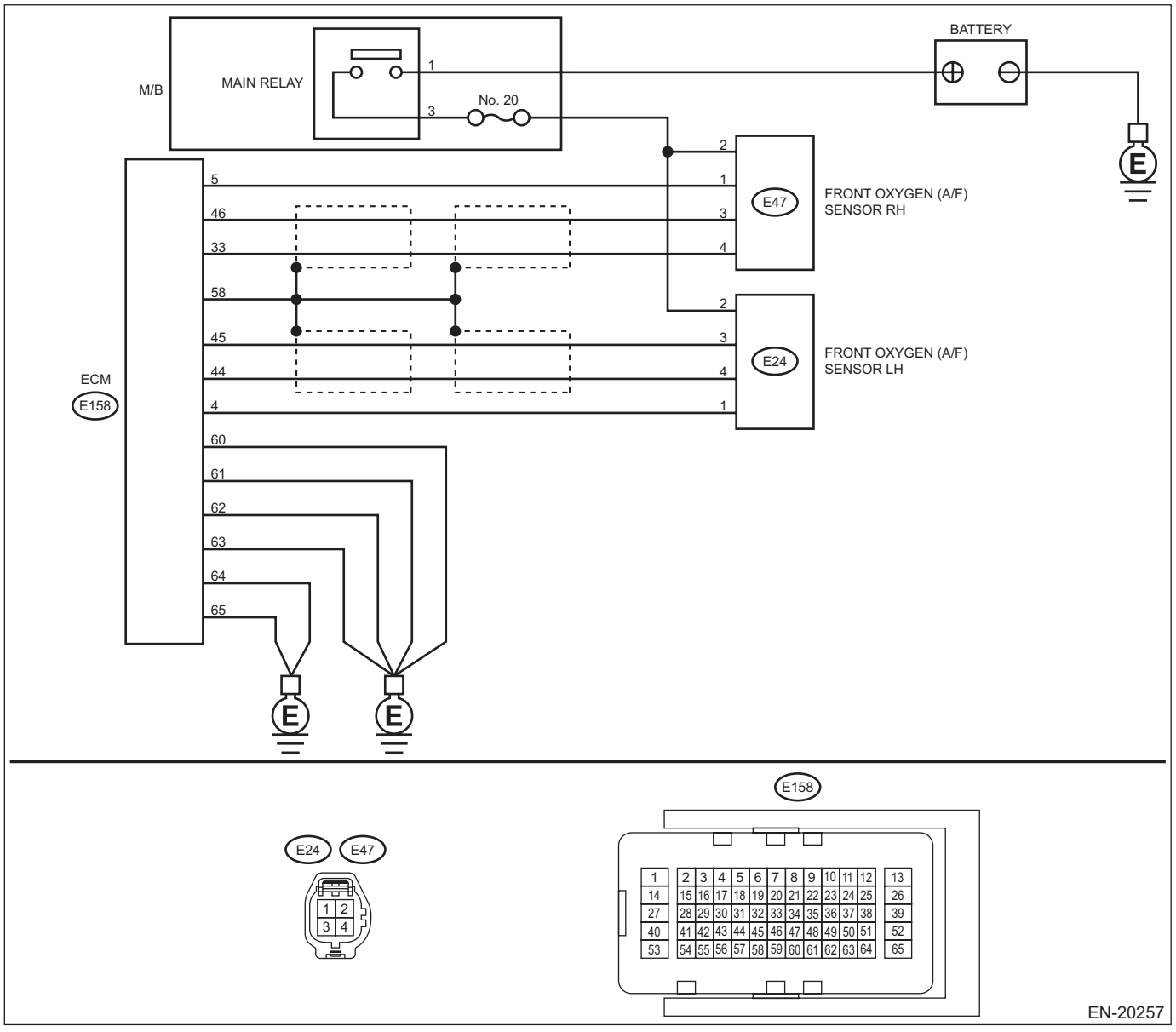

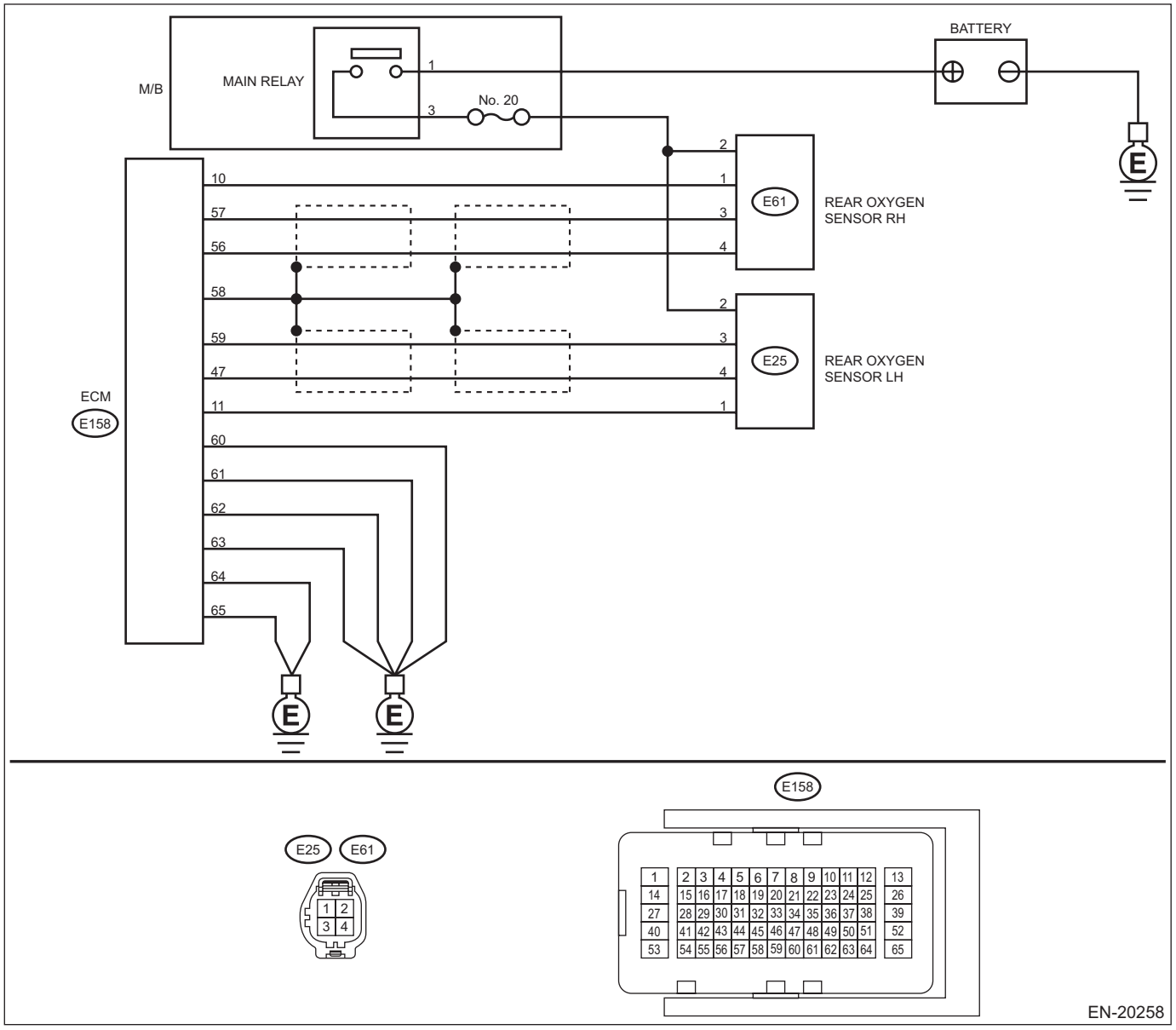

Step		Check	Yes	No
1	**CHECK FOR ANY OTHER DTC ON DISPLAY.**	Is any other DTC displayed?	Check DTC using "List of Diagnostic Trouble Code (DTC)". <Ref. to EN(H6DO)(diag)-109, List of Diagnostic Trouble Code (DTC).>	Go to step **2**.
2	**CHECK FRONT OXYGEN (A/F) SENSOR CONNECTOR AND COUPLING CONNECTOR.**	Has water entered the connector?	Completely remove any water inside.	Go to step **3**.

	Step	Check	Yes	No
3	**CHECK HARNESS BETWEEN ECM AND FRONT OXYGEN (A/F) SENSOR CONNECTOR.** 1) Turn the ignition switch to OFF. 2) Disconnect the connectors from ECM and front oxygen (A/F) sensor. 3) Measure the resistance of harness between ECM connector and front oxygen (A/F) sensor connector. ***Connector & terminal*** ***(E158) No. 45 — (E24) No. 3:*** ***(E158) No. 44 — (E24) No. 4:***	Is the resistance less than 1 Ω?	Go to step **4**.	Repair the harness and connector. NOTE: In this case, repair the following item: • Open circuit in harness between ECM connector and front oxygen (A/F) sensor connector • Poor contact of coupling connector
4	**CHECK HARNESS BETWEEN ECM AND FRONT OXYGEN (A/F) SENSOR CONNECTOR.** Measure the resistance between ECM connector and chassis ground. ***Connector & terminal*** ***(E158) No. 45 — Chassis ground:*** ***(E158) No. 44 — Chassis ground:***	Is the resistance 1 MΩ or more?	Go to step **5**.	Repair the short circuit to ground in harness between ECM connector and front oxygen (A/F) sensor connector.
5	**CHECK OUTPUT SIGNAL FOR ECM.** 1) Connect the connector to ECM. 2) Turn the ignition switch to ON. 3) Measure the voltage between front oxygen (A/F) sensor connector and chassis ground. ***Connector & terminal*** ***(E24) No. 3 (+) — Chassis ground (–):***	Is the voltage 4.5 V or more?	Go to step **7**.	Go to step **6**.
6	**CHECK OUTPUT SIGNAL FOR ECM.** Measure the voltage between front oxygen (A/F) sensor connector and chassis ground. ***Connector & terminal*** ***(E24) No. 4 (+) — Chassis ground (–):***	Is the voltage 4.95 V or more?	Go to step **7**.	Go to step **8**.
7	**CHECK OUTPUT SIGNAL FOR ECM.** Measure the voltage between front oxygen (A/F) sensor connector and chassis ground. ***Connector & terminal*** ***(E24) No. 3 (+) — Chassis ground (–):*** ***(E24) No. 4 (+) — Chassis ground (–):***	Is the voltage 8 V or more?	Repair the short circuit to power in the harness between ECM connector and front oxygen (A/F) sensor connector. After repair, replace the ECM. <Ref. to FU(H6DO)-83, Engine Control Module (ECM).>	Repair the poor contact of ECM connector.
8	**CHECK EXHAUST SYSTEM.**	Are there holes or loose bolts on exhaust system?	Repair the exhaust system.	Go to step **9**.
9	**CHECK AIR INTAKE SYSTEM.**	Are there holes, loose bolts or disconnection of hose on air intake system?	Repair the air intake system.	Go to step **10**.

	Step	Check	Yes	No
10	**CHECK FUEL PRESSURE.** **WARNING:** **Place "NO OPEN FLAMES" signs near the working area.** **CAUTION:** **Be careful not to spill fuel.** 1) Connect the front oxygen (A/F) sensor connector. 2) Measure the fuel pressure. <Ref. to ME(H6DO)-31, INSPECTION, Fuel Pressure.> **CAUTION:** **Before attaching/detaching a fuel pressure gauge, release the fuel pressure.**	Is the measured value 340 — 400 kPa (3.5 — 4.1 kgf/cm^2, 49 — 58 psi)?	Go to step **11**.	Check the fuel pump and fuel delivery line. <Ref. to FU(H6DO)-124, INSPECTION, Fuel Pump.> <Ref. to FU(H6DO)-167, INSPECTION, Fuel Delivery and Evaporation Lines.>
11	**CHECK ENGINE COOLANT TEMPERATURE SENSOR.** 1) Start the engine and warm up completely. 2) Read the value of «Coolant Temp.» using the Subaru Select Monitor or a general scan tool. NOTE: • Subaru Select Monitor For detailed operation procedures, refer to "Read Current Data For Engine". <Ref. to EN(H6DO)(diag)-50, Subaru Select Monitor.> • General scan tool For detailed operation procedures, refer to the general scan tool operation manual.	Is the value of «Coolant Temp.» 75°C (167°F) or more?	Go to step **12**.	Replace the engine coolant temperature sensor. <Ref. to FU(H6DO)-39, Engine Coolant Temperature Sensor.>
12	**CHECK MASS AIR FLOW AND INTAKE AIR TEMPERATURE SENSOR.** 1) Start the engine and warm up engine until coolant temperature is higher than 75°C (167°F). 2) Place the select lever in "P" range or "N" range. 3) Turn the A/C switch to OFF. 4) Turn all the accessory switches to OFF. 5) Read the value of «Mass Air Flow» using the Subaru Select Monitor or a general scan tool. NOTE: • Subaru Select Monitor For detailed operation procedures, refer to "Read Current Data For Engine". <Ref. to EN(H6DO)(diag)-50, Subaru Select Monitor.> • General scan tool For detailed operation procedures, refer to the general scan tool operation manual.	Is the value of «Mass Air Flow» 2.0 — 5.0 g/s (0.26 — 0.66 lb/m)?	Go to step **13**.	Replace the mass air flow and intake air temperature sensor. <Ref. to FU(H6DO)-58, Mass Air Flow and Intake Air Temperature Sensor.>

	Step	Check	Yes	No
13	**CHECK MASS AIR FLOW AND INTAKE AIR TEMPERATURE SENSOR.** 1) Start the engine and warm up engine until coolant temperature is higher than 75°C (167°F). 2) Place the select lever in “P” range or “N” range. 3) Turn the A/C switch to OFF. 4) Turn all the accessory switches to OFF. 5) Open the front hood. 6) Measure the ambient temperature. 7) Read the value of «Intake Air Temp.» using the Subaru Select Monitor or a general scan tool. NOTE: • Subaru Select Monitor For detailed operation procedures, refer to “Read Current Data For Engine”. <Ref. to EN(H6DO)(diag)-50, Subaru Select Monitor.> • General scan tool For detailed operation procedures, refer to the general scan tool operation manual.	Subtract ambient temperature from «Intake Air Temp.». Is the obtained value –10 — 50°C (–18 — 90°F)?	Go to step **14**.	Check the mass air flow and intake air temperature sensor. <Ref. to FU(H6DO)-58, Mass Air Flow and Intake Air Temperature Sensor.>
14	**CHECK REAR OXYGEN SENSOR DATA.** 1) Warm up the engine until engine coolant temperature is higher than 75°C (167°F), and keep the engine speed at 3,000 rpm. (2 minutes maximum) 2) Read the value of «Front O2 Sensor #2» using the Subaru Select Monitor or a general scan tool. NOTE: • Subaru Select Monitor For detailed operation procedures, refer to “Read Current Data For Engine”. <Ref. to EN(H6DO)(diag)-50, Subaru Select Monitor.> • General scan tool For detailed operation procedures, refer to the general scan tool operation manual.	Is the value of «Front O2 Sensor #2» 0.490 V or more?	Go to step **15**.	Go to step **16**.
15	**CHECK REAR OXYGEN SENSOR DATA.** 1) Warm up the engine until engine coolant temperature is higher than 75°C (167°F), and rapidly reduce the engine speed from 3,000 rpm. 2) Read the value of «Front O2 Sensor #2» using the Subaru Select Monitor or a general scan tool. NOTE: • Subaru Select Monitor For detailed operation procedures, refer to “Read Current Data For Engine”. <Ref. to EN(H6DO)(diag)-50, Subaru Select Monitor.> • General scan tool For detailed operation procedures, refer to the general scan tool operation manual.	Is the value of «Front O2 Sensor #2» 0.250 V or less?	Go to step **17**.	Go to step **16**.
16	**CHECK REAR OXYGEN SENSOR CONNECTOR AND COUPLING CONNECTOR.**	Has water entered the connector?	Completely remove any water inside.	Go to step **18**.

	Step	Check	Yes	No
17	**CHECK FRONT OXYGEN (A/F) SENSOR USING REAR OXYGEN SENSOR SIGNAL.** 1) Warm up the engine until engine coolant temperature is higher than 75°C (167°F), then keep the engine idling for 5 minutes or more. 2) Read the value of «Front O2 Sensor #2» using the Subaru Select Monitor or a general scan tool. NOTE: • Subaru Select Monitor For detailed operation procedures, refer to "Read Current Data For Engine". <Ref. to EN(H6DO)(diag)-50, Subaru Select Monitor.> • General scan tool For detailed operation procedures, refer to the general scan tool operation manual.	Does the value of «Front O2 Sensor #2» remain at 0.8 V or more for 5 minutes or more?	Replace the front oxygen (A/F) sensor. <Ref. to FU(H6DO)-78, Front Oxygen (A/F) Sensor.>	Go to step **18**.
18	**CHECK HARNESS BETWEEN ECM AND REAR OXYGEN SENSOR CONNECTOR.** 1) Turn the ignition switch to OFF. 2) Disconnect the connector from ECM and rear oxygen sensor. 3) Measure the resistance of harness between ECM connector and rear oxygen sensor connector. ***Connector & terminal*** ***(E158) No. 59 — (E25) No. 3:*** ***(E158) No. 47 — (E25) No. 4:***	Is the resistance less than 1 Ω?	Go to step **19**.	Repair the harness and connector. NOTE: In this case, repair the following item: • Open circuit in harness between ECM connector and rear oxygen sensor connector • Poor contact of coupling connector
19	**CHECK HARNESS BETWEEN ECM AND REAR OXYGEN SENSOR CONNECTOR.** 1) Connect the connector to ECM. 2) Turn the ignition switch to ON. 3) Measure the voltage between rear oxygen sensor connector and chassis ground. ***Connector & terminal*** ***(E25) No. 3 (+) — Chassis ground (–):***	Is the voltage 0.2 — 0.5 V?	Replace the rear oxygen sensor. <Ref. to FU(H6DO)-81, Rear Oxygen Sensor.>	Repair the harness and connector. NOTE: In this case, repair the following item: • Open circuit in harness between ECM connector and rear oxygen sensor connector • Poor contact of ECM connector • Poor contact of coupling connector

1. OUTLINE OF DIAGNOSIS

NOTE:
For the detection standard, refer to DTC P2097. <Ref. to EN(H6DO)(diag)-537, DTC P2097 POST CATALYST FUEL TRIM SYSTEM TOO RICH BANK 1, Diagnostic Procedure with Diagnostic Trouble Code (DTC).>

FM:DTC P2101 THROTTLE ACTUATOR "A" CONTROL MOTOR CIRCUIT RANGE/PERFORMANCE

DTC DETECTING CONDITION:
Immediately at fault recognition
TROUBLE SYMPTOM:
- Improper idling
- Poor driving performance
- Engine stalls.

CAUTION:
After servicing or replacing faulty parts, perform Clear Memory Mode <Ref. to EN(H6DO)(diag)-85, OPERATION, Clear Memory Mode.>, and Inspection Mode <Ref. to EN(H6DO)(diag)-69, PROCEDURE, Inspection Mode.>.
WIRING DIAGRAM:
- Engine Electrical System ENGINE TYPE EZ (WITHOUT PUSH BUTTON START) <Ref. to WI-198, ENGINE TYPE EZ (WITHOUT PUSH BUTTON START), WIRING DIAGRAM, Engine Electrical System.>
- Engine Electrical System ENGINE TYPE EZ (WITH PUSH BUTTON START) <Ref. to WI-214, ENGINE TYPE EZ (WITH PUSH BUTTON START), WIRING DIAGRAM, Engine Electrical System.>

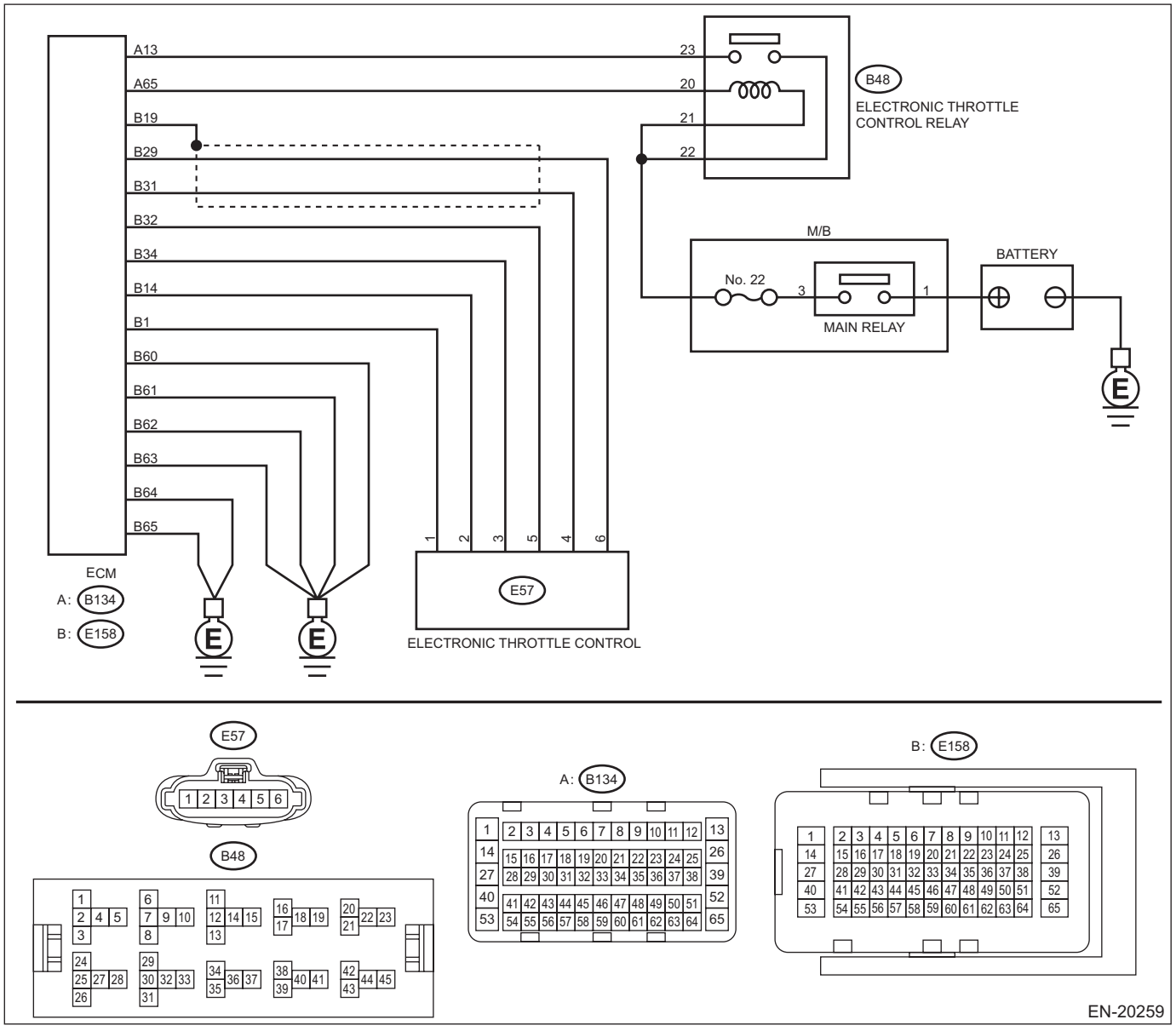

	Step	Check	Yes	No
1	**CHECK ELECTRONIC THROTTLE CONTROL RELAY.** 1) Turn the ignition switch to OFF. 2) Remove the electronic throttle control relay. 3) Connect the battery to terminals No. 13 and No. 14 of electronic throttle control relay. 4) Measure the resistance between electronic throttle control relay terminals. ***Terminals*** ***No. 22 — No. 23:***	Is the resistance less than 1 Ω?	Go to step **2**.	Replace the electronic throttle control relay. <Ref. to EN(H6DO)(diag)-11, Electrical Component Location.>
2	**CHECK POWER SUPPLY OF ELECTRONIC THROTTLE CONTROL RELAY.** Measure the voltage between electronic throttle control relay connector and chassis ground. ***Connector & terminal*** ***(B48) No. 22 (+) — Chassis ground (–):***	Is the voltage 10 V or more?	Go to step **3**.	Repair the open or short to ground in the power supply circuit.
3	**CHECK HARNESS BETWEEN ECM AND ELECTRONIC THROTTLE CONTROL RELAY.** 1) Disconnect the connector from ECM. 2) Turn the ignition switch to ON. 3) Measure the voltage between electronic throttle control relay connector and chassis ground. ***Connector & terminal*** ***(B48) No. 20 (+) — Chassis ground (–):***	Is the voltage 10 V or more?	Repair the short circuit to power in the harness between ECM connector and electronic throttle control relay.	Go to step **4**.
4	**CHECK HARNESS BETWEEN ECM AND ELECTRONIC THROTTLE CONTROL RELAY.** 1) Turn the ignition switch to OFF. 2) Measure the resistance between electronic throttle control relay connector and chassis ground. ***Connector & terminal*** ***(B48) No. 20 — Chassis ground:*** ***(B48) No. 23 — Chassis ground:***	Is the resistance 1 MΩ or more?	Go to step **5**.	Repair the short circuit to ground in harness between ECM connector and electronic throttle control relay.
5	**CHECK HARNESS BETWEEN ECM AND ELECTRONIC THROTTLE CONTROL RELAY.** Measure the resistance between ECM connector and electronic throttle control relay connector. ***Connector & terminal*** ***(B134) No. 13 — (B48) No. 23:*** ***(B134) No. 65 — (B48) No. 20:***	Is the resistance less than 1 Ω?	Go to step **6**.	Repair the open circuit in harness between ECM connector and electronic throttle control relay.
6	**CHECK HARNESS BETWEEN ECM AND ELECTRONIC THROTTLE CONTROL.** 1) Turn the ignition switch to OFF. 2) Disconnect the connectors from electronic throttle control. 3) Measure the resistance between ECM connector and chassis ground. ***Connector & terminal*** ***(E158) No. 32 — Chassis ground:*** ***(E158) No. 29 — Chassis ground:*** ***(E158) No. 29 — (B158) No. 19:*** ***(E158) No. 31 — Chassis ground:***	Is the resistance 1 MΩ or more?	Go to step **7**.	Repair the ground short circuit of harness between ECM connector and electronic throttle control connector.

	Step	Check	Yes	No
7	**CHECK SHORT CIRCUIT INSIDE THE ECM.** 1) Connect the connector to ECM. 2) Measure the resistance between electronic throttle control connector and engine ground. ***Connector & terminal*** ***(E57) No. 6 — Engine ground:*** ***(E57) No. 4 — Engine ground:***	Is the resistance 1 MΩ or more?	Go to step **8**.	Repair the ground short circuit of harness between ECM connector and electronic throttle control connector. Replace the ECM if defective. <Ref. to FU(H6DO)-83, Engine Control Module (ECM).>
8	**CHECK HARNESS BETWEEN ECM AND ELECTRONIC THROTTLE CONTROL.** 1) Disconnect the connector from ECM. 2) Measure the resistance of harness between ECM connector and electronic throttle control connector. ***Connector & terminal*** ***(E158) No. 29 — (E57) No. 6:*** ***(E158) No. 31 — (E57) No. 4:*** ***(E158) No. 34 — (E57) No. 3:***	Is the resistance less than 1 Ω?	Go to step **9**.	Repair the open circuit of harness between ECM connector and electronic throttle control connector.
9	**CHECK HARNESS BETWEEN ECM AND ELECTRONIC THROTTLE CONTROL.** 1) Connect the connector to ECM. 2) Measure the resistance between electronic throttle control connector and engine ground. ***Connector & terminal*** ***(E57) No. 3 — Engine ground:***	Is the resistance less than 5 Ω?	Go to step **10**.	Repair the harness and connector. NOTE: In this case, repair the following item: • Open circuit of harness between ECM connector and engine ground • Poor contact of ECM connector
10	**CHECK HARNESS BETWEEN ECM AND ELECTRONIC THROTTLE CONTROL.** 1) Turn the ignition switch to ON. 2) Measure the voltage between electronic throttle control connector and engine ground. ***Connector & terminal*** ***(E57) No. 6 (+) — Engine ground (–):*** ***(E57) No. 4 (+) — Engine ground (–):***	Is the voltage 5 V or more?	Repair the short circuit to power in the harness between ECM connector and electronic throttle control connector.	Go to step **11**.
11	**CHECK HARNESS BETWEEN ECM AND ELECTRONIC THROTTLE CONTROL.** 1) Turn the ignition switch to OFF. 2) Disconnect the connector from ECM. 3) Measure the resistance between ECM connectors. ***Connector & terminal*** ***(E158) No. 32 — (E158) No. 29:*** ***(E158) No. 32 — (E158) No. 31:***	Is the resistance 1 MΩ or more?	Go to step **12**.	Repair the short circuit to power in the harness between ECM connector and electronic throttle control connector.

	Step	Check	Yes	No
12	**CHECK SENSOR OUTPUT.** 1) Connect all connectors. 2) Start the engine and warm up completely. 3) Stop the engine, and turn the ignition switch to ON. (Engine OFF) 4) Read the value of «Main-Throttle Sensor» using Subaru Select Monitor. NOTE: For detailed operation procedures, refer to "Read Current Data For Engine". <Ref. to EN(H6DO)(diag)-50, Subaru Select Monitor.>	Is the value of «Main-Throttle Sensor» 0.81 — 0.87 V?	Go to step **13**.	Repair the poor contact of electronic throttle control connector. Replace the electronic throttle control if defective. <Ref. to FU(H6DO)-19, Throttle Body.>
13	**CHECK SENSOR OUTPUT.** Read the value of «Sub-Throttle Sensor» using Subaru Select Monitor. NOTE: For detailed operation procedures, refer to "Read Current Data For Engine". <Ref. to EN(H6DO)(diag)-50, Subaru Select Monitor.>	Is the value of «Sub-Throttle Sensor» 1.64 — 1.70 V?	Go to step **14**.	Repair the poor contact of electronic throttle control connector. Replace the electronic throttle control if defective. <Ref. to FU(H6DO)-19, Throttle Body.>
14	**CHECK HARNESS BETWEEN ECM AND ELECTRONIC THROTTLE CONTROL MOTOR.** 1) Turn the ignition switch to OFF. 2) Disconnect the connectors from ECM and electronic throttle control. 3) Measure the resistance between ECM connector and electronic throttle control connector. ***Connector & terminal*** ***(E158) No. 1 — (E57) No. 1:*** ***(E158) No. 14 — (E57) No. 2:***	Is the resistance less than 1 Ω?	Go to step **15**.	Repair the open circuit of harness between ECM connector and electronic throttle control.
15	**CHECK HARNESS BETWEEN ECM AND ELECTRONIC THROTTLE CONTROL MOTOR.** 1) Connect the connector to ECM. 2) Turn the ignition switch to ON. 3) Measure the voltage between electronic throttle control connector and engine ground. ***Connector & terminal*** ***(E57) No. 2 (+) — Engine ground (–):*** ***(E57) No. 1 (+) — Engine ground (–):***	Is the voltage 5 V or more?	Repair the short circuit to power in the harness between ECM connector and electronic throttle control.	Go to step **16**.
16	**CHECK HARNESS BETWEEN ECM AND ELECTRONIC THROTTLE CONTROL MOTOR.** 1) Turn the ignition switch to OFF. 2) Disconnect the connector from ECM. 3) Measure the resistance between electronic throttle control connector and engine ground. ***Connector & terminal*** ***(E57) No. 2 — Engine ground:*** ***(E57) No. 1 — Engine ground:***	Is the resistance 1 MΩ or more?	Go to step **17**.	Repair the short circuit to ground in harness between ECM connector and electronic throttle control.
17	**CHECK ELECTRONIC THROTTLE CONTROL MOTOR HARNESS.** Measure the resistance between electronic throttle control connectors. ***Connector & terminal*** ***(E57) No. 2 — (E57) No. 1:***	Is the resistance 1 MΩ or more?	Go to step **18**.	Repair the short circuit in harness between ECM connector and electronic throttle control.

	Step	Check	Yes	No
18	**CHECK ELECTRONIC THROTTLE CONTROL GROUND CIRCUIT.** Measure the resistance between ECM connector and chassis ground. ***Connector & terminal*** ***(E158) No. 60 — Chassis ground:*** ***(E158) No. 61 — Chassis ground:*** ***(E158) No. 62 — Chassis ground:*** ***(E158) No. 63 — Chassis ground:*** ***(E158) No. 64 — Chassis ground:*** ***(E158) No. 65 — Chassis ground:***	Is the resistance less than 5 Ω?	Go to step **19**.	Repair the open circuit in harness between ECM connector and engine ground.
19	**CHECK ELECTRONIC THROTTLE CONTROL.** Measure the resistance between electronic throttle control terminals. ***Terminals*** ***No. 2 — No. 1:***	Is the resistance 50 Ω or less?	Go to step **20**.	Replace the electronic throttle control. <Ref. to FU(H6DO)-19, Throttle Body.>
20	**CHECK ELECTRONIC THROTTLE CONTROL.** Move the throttle valve to the fully opened and fully closed positions with fingers. Check that the valve returns to the specified position when releasing fingers.	Does the valve return to the specified position? Standard value: 3 mm (0.12 in) from fully closed position	Repair the poor contact of ECM connector.	Replace the electronic throttle control. <Ref. to FU(H6DO)-19, Throttle Body.>

1. OUTLINE OF DIAGNOSIS

Judge as NG when the motor current becomes large or drive circuit is heated.

2. COMPONENT DESCRIPTION

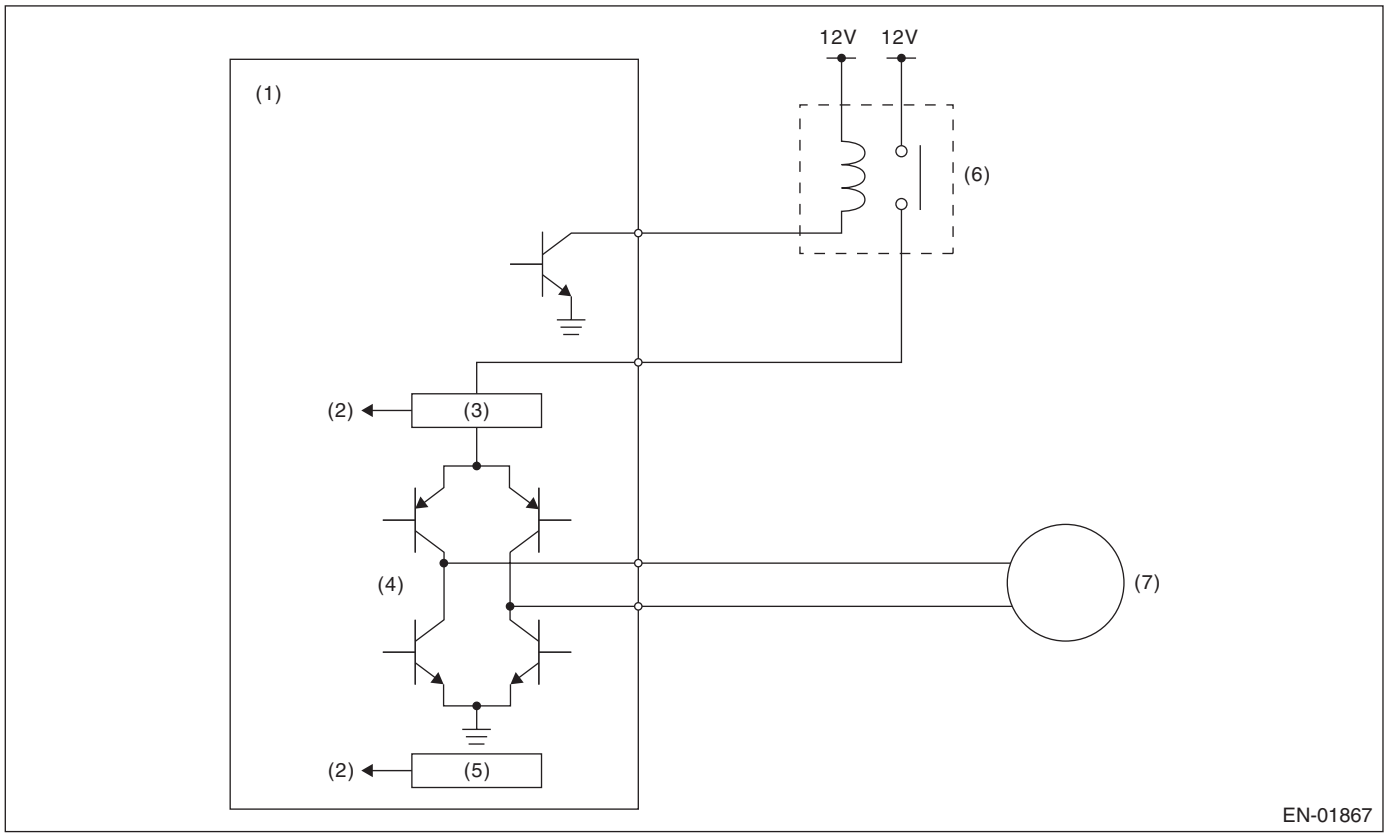

(1) Engine control module (ECM)
(2) Detecting circuit
(3) Overcurrent detection circuit
(4) Drive circuit
(5) Temperature detection circuit
(6) Electronic throttle control relay
(7) Motor

3. EXECUTION CONDITION

Secondary Parameters	Execution condition
Battery voltage	≥ 6.2 V
Electronic throttle control relay output	ON

4. GENERAL DRIVING CYCLE

Always perform the diagnosis continuously.

5. DIAGNOSTIC METHOD

If the duration of time while the following conditions are met is longer than the time indicated, judge as NG.

Judgment Value

Malfunction Criteria	Threshold Value
Overcurrent signal from the electronic throttle control drive IC	ON

Time Needed for Diagnosis: 512 ms
Malfunction Indicator Light Illumination: Illuminates as soon as a malfunction occurs.

FN:DTC P2102 THROTTLE ACTUATOR "A" CONTROL MOTOR CIRCUIT LOW

DTC DETECTING CONDITION:
Immediately at fault recognition
TROUBLE SYMPTOM:

- Improper idling
- Poor driving performance
- Engine stalls.

CAUTION:
After servicing or replacing faulty parts, perform Clear Memory Mode <Ref. to EN(H6DO)(diag)-85, OPERATION, Clear Memory Mode.>, and Inspection Mode <Ref. to EN(H6DO)(diag)-69, PROCEDURE, Inspection Mode.>.
WIRING DIAGRAM:

- Engine Electrical System ENGINE TYPE EZ (WITHOUT PUSH BUTTON START) <Ref. to WI-198, ENGINE TYPE EZ (WITHOUT PUSH BUTTON START), WIRING DIAGRAM, Engine Electrical System.>
- Engine Electrical System ENGINE TYPE EZ (WITH PUSH BUTTON START) <Ref. to WI-214, ENGINE TYPE EZ (WITH PUSH BUTTON START), WIRING DIAGRAM, Engine Electrical System.>

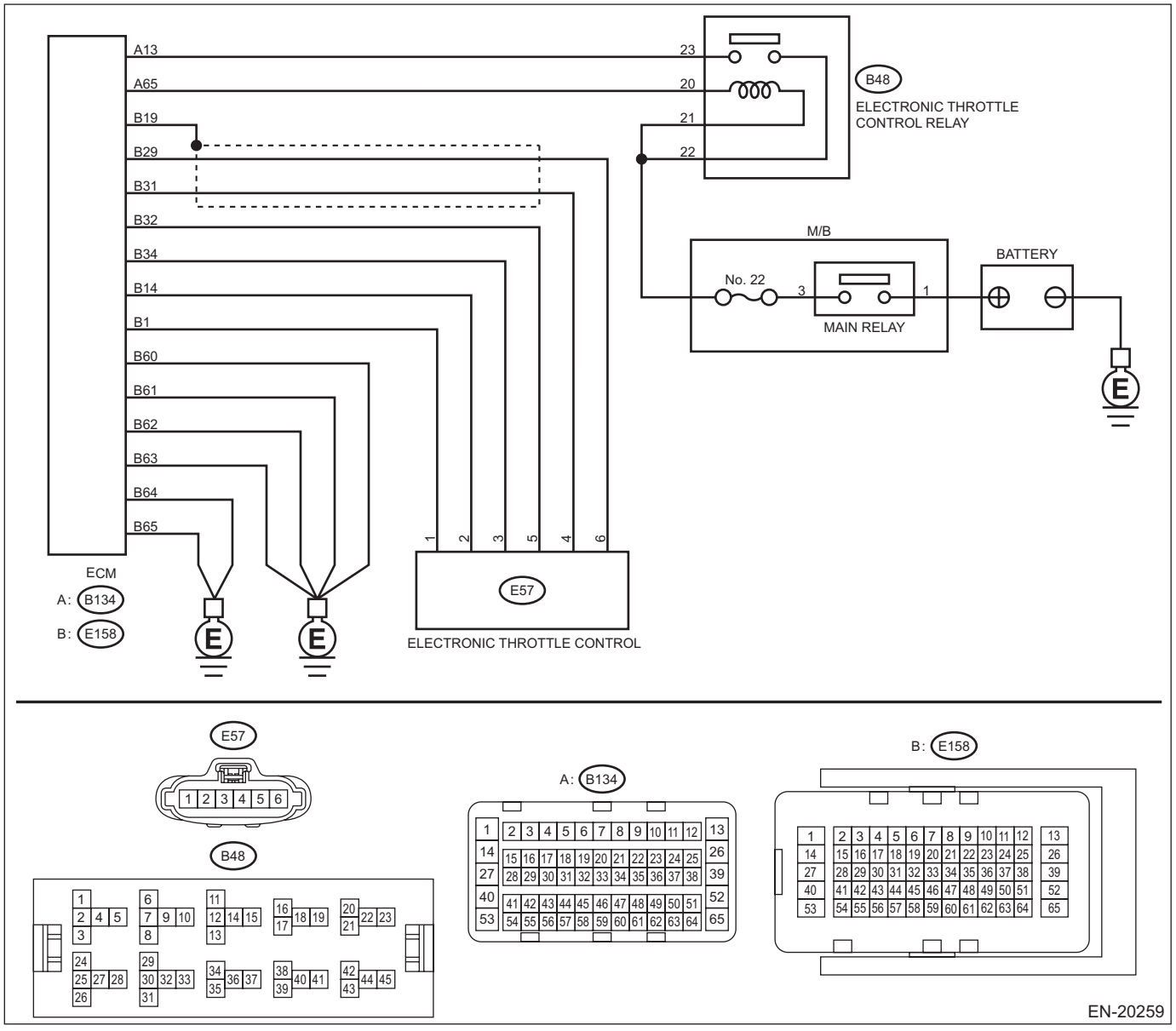

	Step	Check	Yes	No
1	**CHECK ELECTRONIC THROTTLE CONTROL RELAY.** 1) Turn the ignition switch to OFF. 2) Remove the electronic throttle control relay. 3) Connect the battery to terminals No. 13 and No. 14 of electronic throttle control relay. 4) Measure the resistance between electronic throttle control relay terminals. ***Terminals*** ***No. 22 — No. 23:***	Is the resistance less than 1 Ω?	Go to step **2**.	Replace the electronic throttle control relay. <Ref. to EN(H6DO)(diag)-11, Electrical Component Location.>
2	**CHECK POWER SUPPLY OF ELECTRONIC THROTTLE CONTROL RELAY.** Measure the voltage between electronic throttle control relay connector and chassis ground. ***Connector & terminal*** ***(B48) No. 22 (+) — Chassis ground (–):***	Is the voltage 10 V or more?	Go to step **3**.	Repair the open or short to ground in the power supply circuit.
3	**CHECK HARNESS BETWEEN ECM AND ELECTRONIC THROTTLE CONTROL RELAY.** 1) Disconnect the connector from ECM. 2) Turn the ignition switch to ON. 3) Measure the voltage between electronic throttle control relay connector and chassis ground. ***Connector & terminal*** ***(B48) No. 20 (+) — Chassis ground (–):***	Is the voltage 10 V or more?	Repair the short circuit to power in the harness between ECM connector and electronic throttle control relay.	Go to step **4**.
4	**CHECK HARNESS BETWEEN ECM AND ELECTRONIC THROTTLE CONTROL RELAY.** 1) Turn the ignition switch to OFF. 2) Measure the resistance between electronic throttle control relay connector and chassis ground. ***Connector & terminal*** ***(B48) No. 20 — Chassis ground:*** ***(B48) No. 23 — Chassis ground:***	Is the resistance 1 MΩ or more?	Go to step **5**.	Repair the short circuit to ground in harness between ECM connector and electronic throttle control relay.
5	**CHECK HARNESS BETWEEN ECM AND ELECTRONIC THROTTLE CONTROL RELAY.** Measure the resistance between ECM connector and electronic throttle control relay connector. ***Connector & terminal*** ***(B134) No. 13 — (B220) No. 15:*** ***(B134) No. 65 — (B220) No. 14:***	Is the resistance less than 1 Ω?	Repair the poor contact of ECM connector.	Repair the open circuit in harness between ECM connector and electronic throttle control relay.

1. OUTLINE OF DIAGNOSIS

Judge as NG when the electronic throttle control power is not supplied even when ECM sets the electric control throttle relay to ON.

2. COMPONENT DESCRIPTION

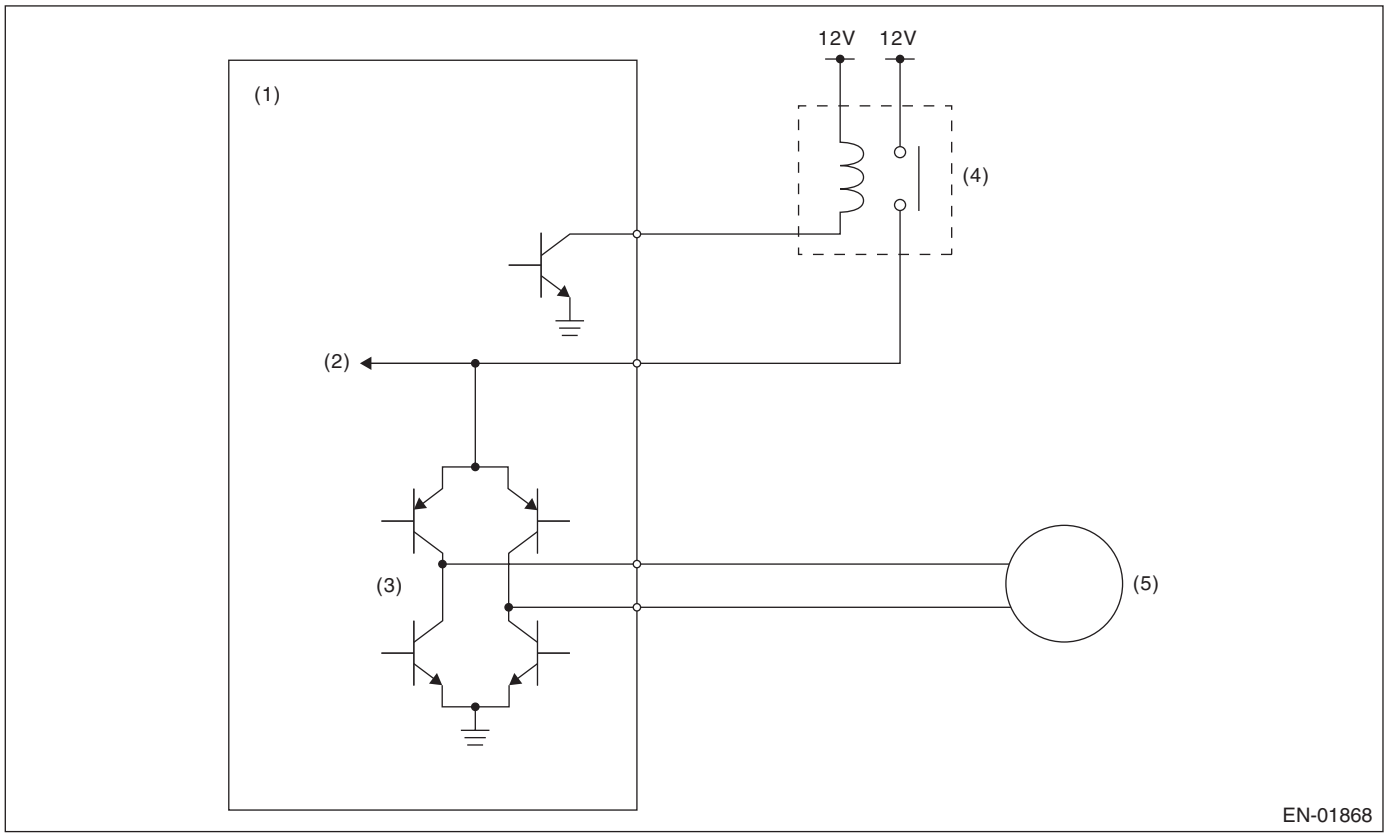

(1) Engine control module (ECM)
(2) Voltage detection circuit
(3) Drive circuit
(4) Electronic throttle control relay
(5) Motor

3. EXECUTION CONDITION

Secondary Parameters	Execution condition
Battery voltage	≥ 11 V
Electronic throttle control relay output	ON

4. GENERAL DRIVING CYCLE

Always perform the diagnosis continuously.

5. DIAGNOSTIC METHOD

If the duration of time while the following conditions are met is longer than the time indicated, judge as NG.

Judgment Value

Malfunction Criteria	Threshold Value
Motor power voltage	≤ 5 V

Time Needed for Diagnosis: 352 ms
Malfunction Indicator Light Illumination: Illuminates as soon as a malfunction occurs.

FO:DTC P2103 THROTTLE ACTUATOR "A" CONTROL MOTOR CIRCUIT HIGH

DTC DETECTING CONDITION:
Immediately at fault recognition

CAUTION:
After servicing or replacing faulty parts, perform Clear Memory Mode <Ref. to EN(H6DO)(diag)-85, OPERATION, Clear Memory Mode.>, and Inspection Mode <Ref. to EN(H6DO)(diag)-69, PROCEDURE, Inspection Mode.>.

WIRING DIAGRAM:

- Engine Electrical System ENGINE TYPE EZ (WITHOUT PUSH BUTTON START) <Ref. to WI-198, ENGINE TYPE EZ (WITHOUT PUSH BUTTON START), WIRING DIAGRAM, Engine Electrical System.>
- Engine Electrical System ENGINE TYPE EZ (WITH PUSH BUTTON START) <Ref. to WI-214, ENGINE TYPE EZ (WITH PUSH BUTTON START), WIRING DIAGRAM, Engine Electrical System.>

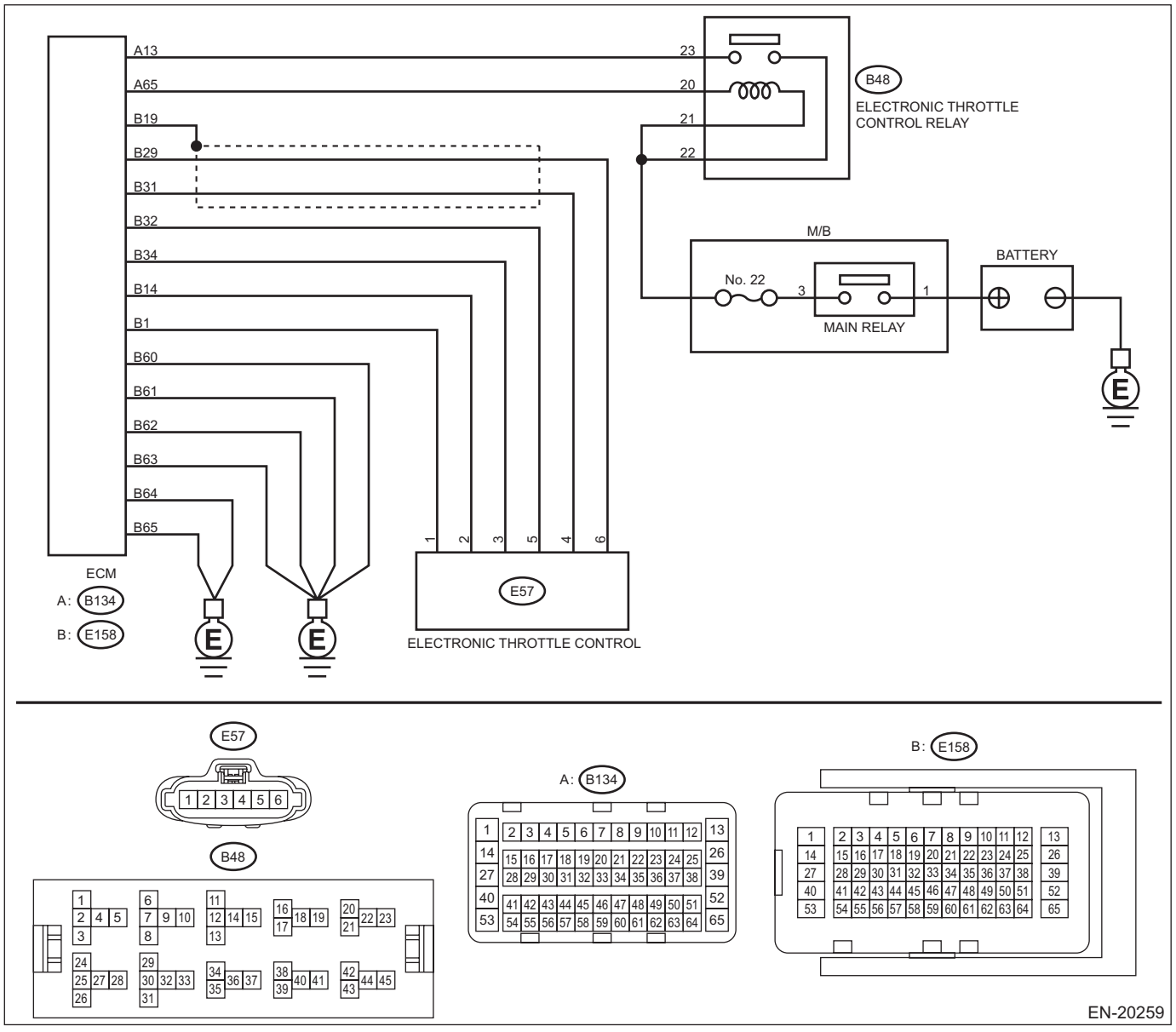

	Step	Check	Yes	No
1	**CHECK ELECTRONIC THROTTLE CONTROL RELAY.** 1) Turn the ignition switch to OFF. 2) Remove the electronic throttle control relay. 3) Measure the resistance between electronic throttle control relay terminals. ***Terminals*** ***No. 22 — No. 23:***	Is the resistance 1 MΩ or more?	Go to step **2**.	Replace the electronic throttle control relay. <Ref. to EN(H6DO)(diag)-11, Electrical Component Location.>
2	**CHECK SHORT CIRCUIT OF ELECTRONIC THROTTLE CONTROL RELAY POWER SUPPLY.** 1) Turn the ignition switch to ON. 2) Measure the voltage between electronic throttle control relay connector and chassis ground. ***Connector & terminal*** ***(B48) No. 22 (+) — Chassis ground (–):***	Is the voltage 10 V or more?	Repair the short circuit to power in the harness between ECM connector and electronic throttle control relay.	Go to step **3**.
3	**CHECK HARNESS BETWEEN ECM AND ELECTRONIC THROTTLE CONTROL RELAY.** 1) Turn the ignition switch to OFF. 2) Disconnect the connector from ECM. 3) Measure the resistance between ECM connector and chassis ground. ***Connector & terminal*** ***(B134) No. 65 — Chassis ground:***	Is the resistance 1 MΩ or more?	Repair the poor contact of ECM connector.	Repair the short circuit to ground in harness between ECM connector and electronic throttle control relay.

1. OUTLINE OF DIAGNOSIS

Judge as NG when the electronic throttle control power is supplied even when ECM sets the electronic throttle control relay to OFF.

2. COMPONENT DESCRIPTION

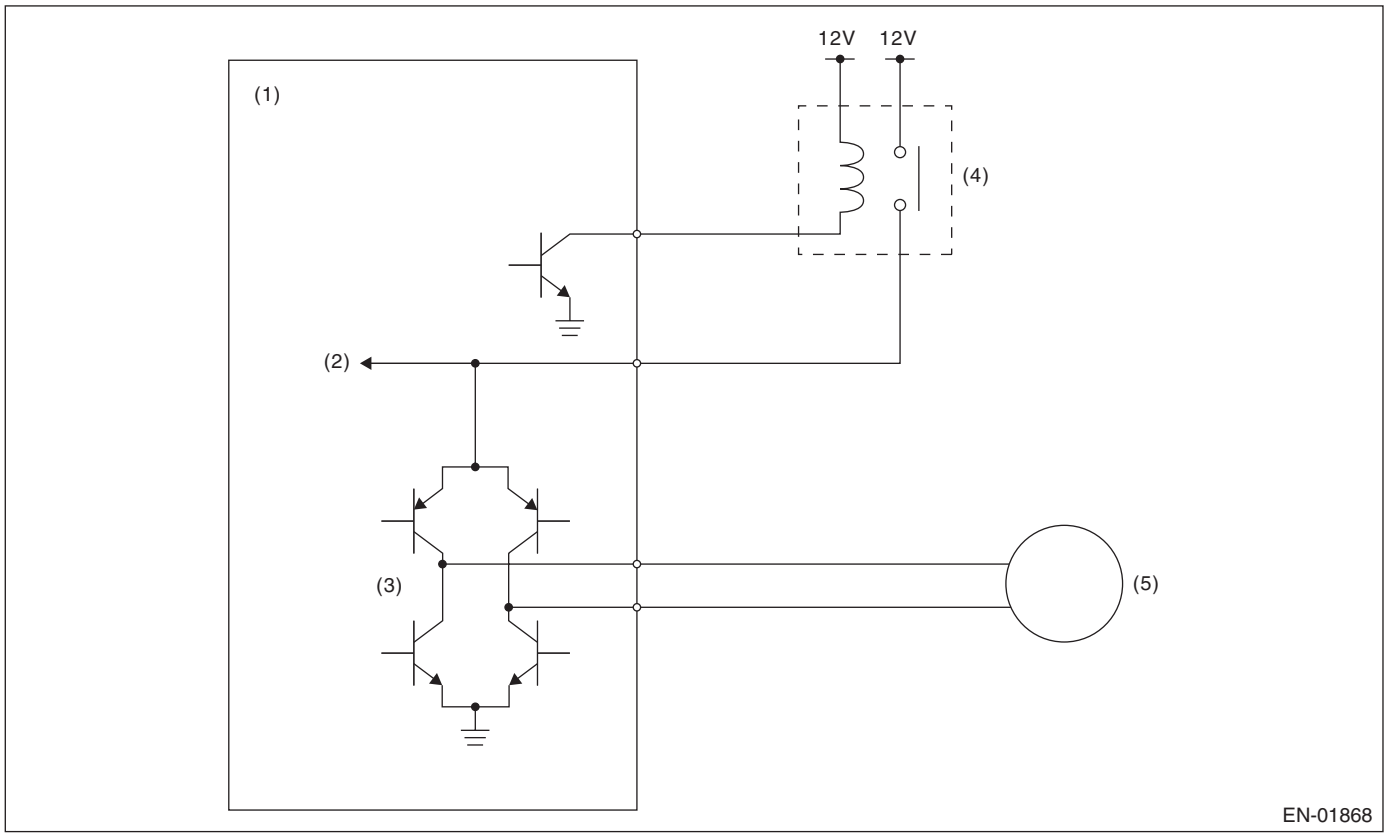

(1) Engine control module (ECM)
(2) Voltage detection circuit
(3) Drive circuit
(4) Electronic throttle control relay
(5) Motor

3. EXECUTION CONDITION

Secondary Parameters	Execution condition
Battery voltage	≥ 6 V
Electronic throttle control relay output	OFF

4. GENERAL DRIVING CYCLE

- When ignition switch ON → OFF
- Ignition switch OFF → ON (Only after clearing memory)

5. DIAGNOSTIC METHOD

If the duration of time while the following conditions are met is longer than the time indicated, judge as NG.

Judgment Value

Malfunction Criteria	Threshold Value
Motor power voltage	≥ 5 V

Time Needed for Diagnosis: 600 ms
Malfunction Indicator Light Illumination: Illuminates as soon as a malfunction occurs.

FP:DTC P2109 THROTTLE/PEDAL POSITION SENSOR "A" MINIMUM STOP PERFORMANCE

NOTE:
For the diagnostic procedure, refer to DTC P2101. <Ref. to EN(H6DO)(diag)-556, DTC P2101 THROTTLE ACTUATOR "A" CONTROL MOTOR CIRCUIT RANGE/PERFORMANCE, Diagnostic Procedure with Diagnostic Trouble Code (DTC).>

1. OUTLINE OF DIAGNOSIS

Judge as NG when full close point learning cannot conducted or abnormal value is detected.

2. COMPONENT DESCRIPTION

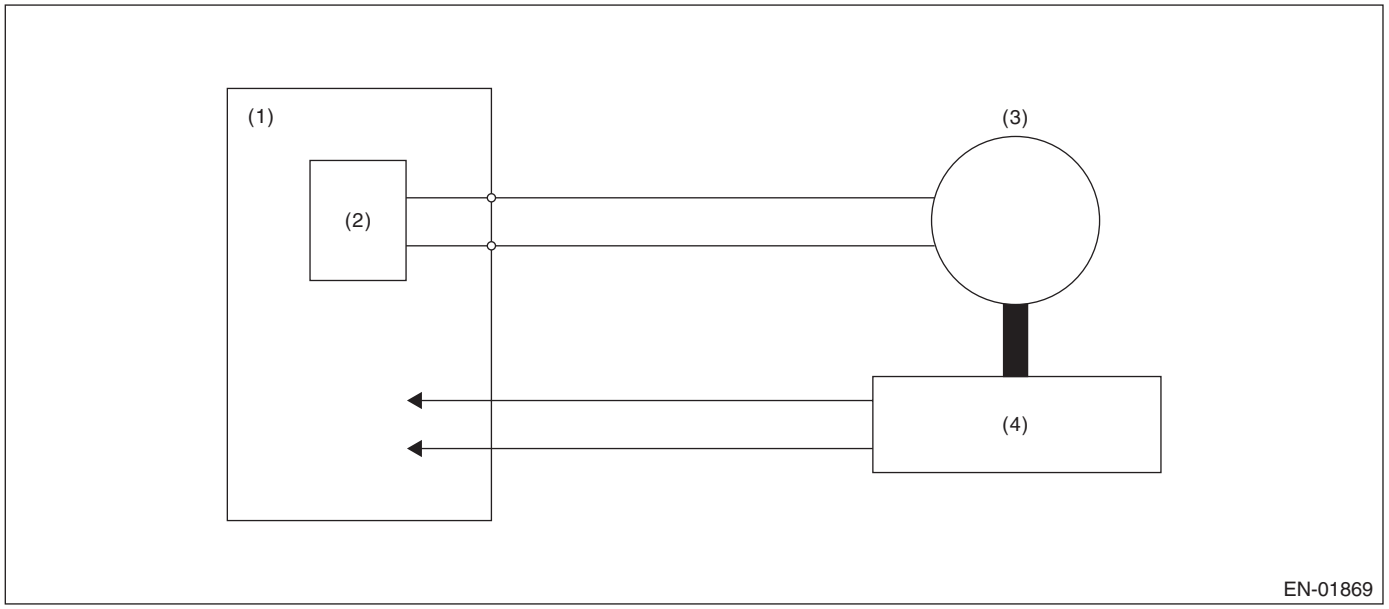

(1) Engine control module (ECM)
(2) Drive circuit
(3) Motor
(4) Throttle position sensor

3. EXECUTION CONDITION

Secondary Parameters	Execution condition
Battery voltage	≥ 6 V

4. GENERAL DRIVING CYCLE

Perform the diagnosis at full closed point learning.

5. DIAGNOSTIC METHOD

If the duration of time while the following conditions are met is longer than the time indicated, judge as NG.

Judgment Value

Malfunction Criteria	Threshold Value
Throttle sensor opening angle at full close point learning	< 9.975 ° or > 20.025 °
or	
Throttle opening angle when the ignition switch is ON – Throttle minimum stop position	< 1.162 °

Time Needed for Diagnosis: 8 ms — 80 ms
Malfunction Indicator Light Illumination: Illuminates as soon as a malfunction occurs.

FQ:DTC P2119 THROTTLE ACTUATOR "A" CONTROL THROTTLE BODY RANGE/PERFORMANCE

NOTE:
For the diagnostic procedure, refer to DTC P2101. <Ref. to EN(H6DO)(diag)-556, DTC P2101 THROTTLE ACTUATOR "A" CONTROL MOTOR CIRCUIT RANGE/PERFORMANCE, Diagnostic Procedure with Diagnostic Trouble Code (DTC).>

1. OUTLINE OF DIAGNOSIS

Judge as NG when the target opening angle and actual opening angle is mismatched or the current to motor is the specified duty or more for specified time continuously.

2. COMPONENT DESCRIPTION

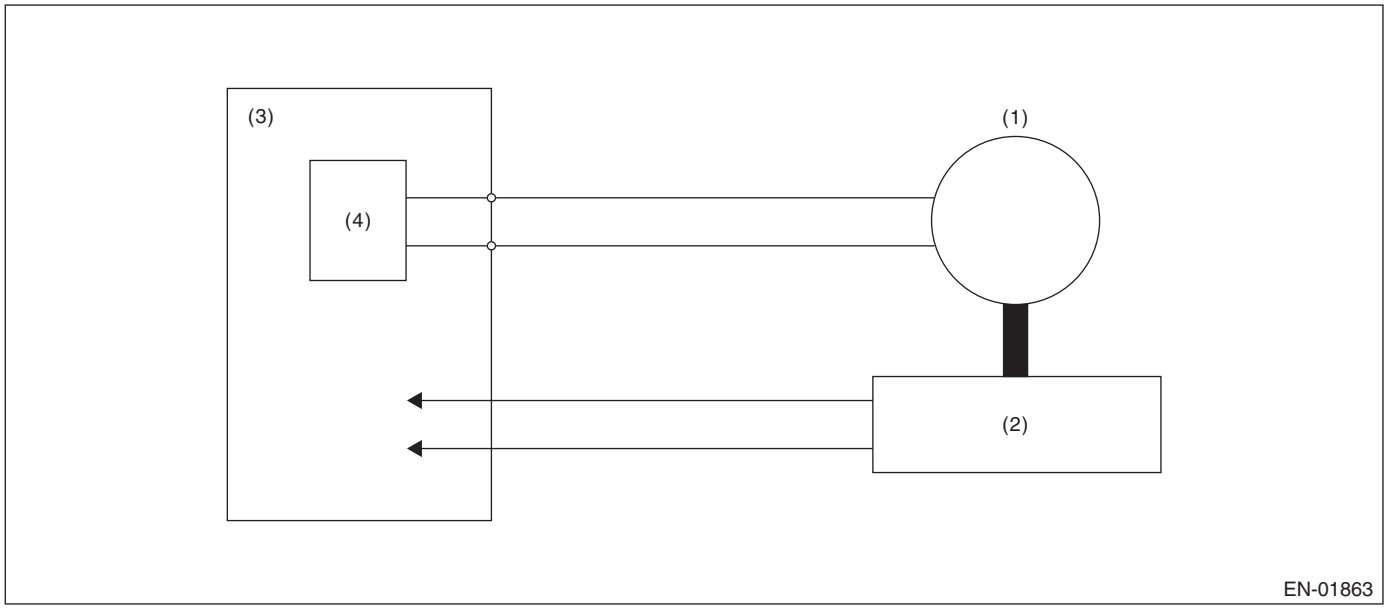

(1) Motor
(2) Throttle position sensor
(3) Engine control module (ECM)
(4) Drive circuit

3. EXECUTION CONDITION

Secondary Parameters	Execution condition
Battery voltage	≥ 6.2 V
Electronic throttle control relay output	ON

4. GENERAL DRIVING CYCLE

Always perform the diagnosis continuously when the electronic throttle control is operating.

5. DIAGNOSTIC METHOD

Judge as NG if the criteria below are met.

Diagnosis 1

Judgment Value

Malfunction Criteria	Threshold Value
Output duty to drive circuit	≥ 95 %

Time Needed for Diagnosis:

- Engine speed ≥ 500 rpm: 2000 ms
- Engine speed < 500 rpm: 5000 ms

Diagnosis 2

Judgment Value

Malfunction Criteria	Threshold Value
Difference between target opening angle and actual opening angle	Within NG range of **Details of Judgment value**

Time Needed for Diagnosis:

- Engine speed ≥ 500 rpm: Refer to **Details of Judgment time**.
- Engine speed < 500 rpm: 5000 ms

Details of Judgment Value

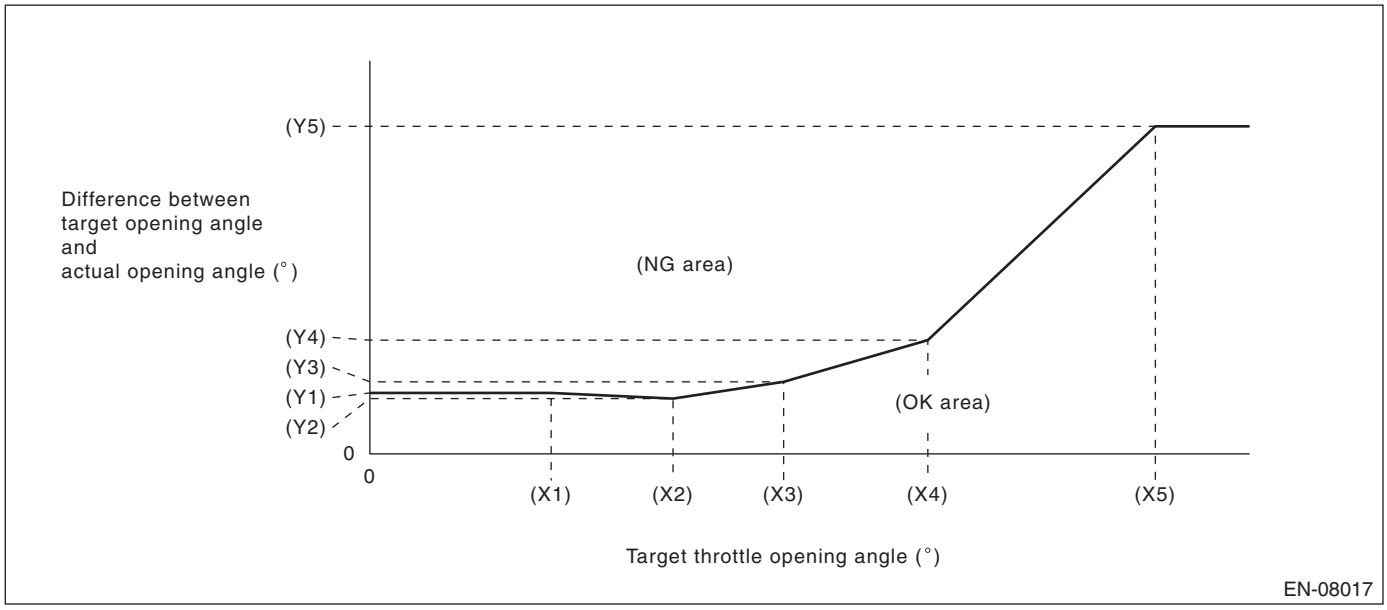

(X1) 6.915 °
(X2) 11.565 °
(X3) 15.785 °
(X4) 21.285 °
(X5) 29.965 °

(Y1) 4.65 °
(Y2) 4.22 °
(Y3) 5.5 °
(Y4) 8.68 °
(Y5) 25 °

Details of Judgment time

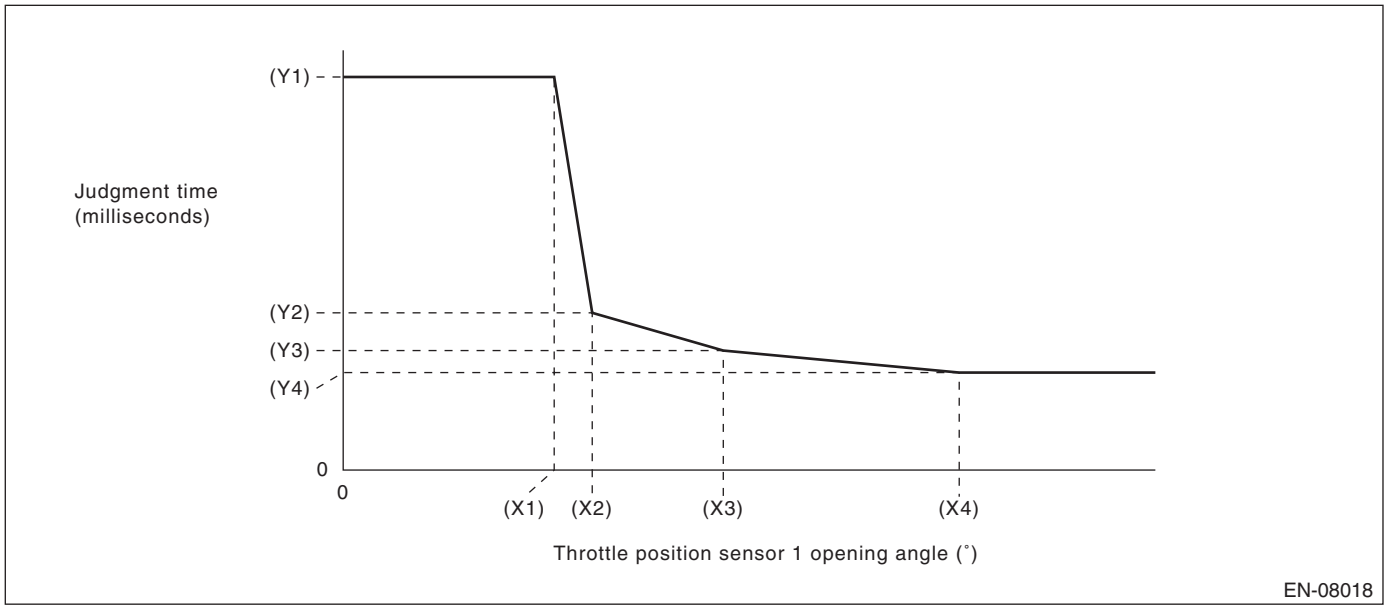

(X1)	8.049999237 °	(X2)	9.5 °	(X3)	14.5 °
(X4)	23.5 °				

(Y1)	1000 ms	(Y2)	400 ms	(Y3)	304 ms
(Y4)	248 ms				

NOTE:
Judgment time is always 1000 milliseconds when actual opening angle < target opening angle.
Malfunction Indicator Light Illumination: Illuminates as soon as a malfunction occurs.

FR:DTC P2122 THROTTLE/PEDAL POSITION SENSOR/SWITCH "D" CIRCUIT LOW

DTC DETECTING CONDITION:
Immediately at fault recognition
TROUBLE SYMPTOM:
- Improper idling
- Poor driving performance

CAUTION:
After servicing or replacing faulty parts, perform Clear Memory Mode <Ref. to EN(H6DO)(diag)-85, OPERATION, Clear Memory Mode.>, and Inspection Mode <Ref. to EN(H6DO)(diag)-69, PROCEDURE, Inspection Mode.>.
WIRING DIAGRAM:
- Engine Electrical System ENGINE TYPE EZ (WITHOUT PUSH BUTTON START) <Ref. to WI-198, ENGINE TYPE EZ (WITHOUT PUSH BUTTON START), WIRING DIAGRAM, Engine Electrical System.>
- Engine Electrical System ENGINE TYPE EZ (WITH PUSH BUTTON START) <Ref. to WI-214, ENGINE TYPE EZ (WITH PUSH BUTTON START), WIRING DIAGRAM, Engine Electrical System.>

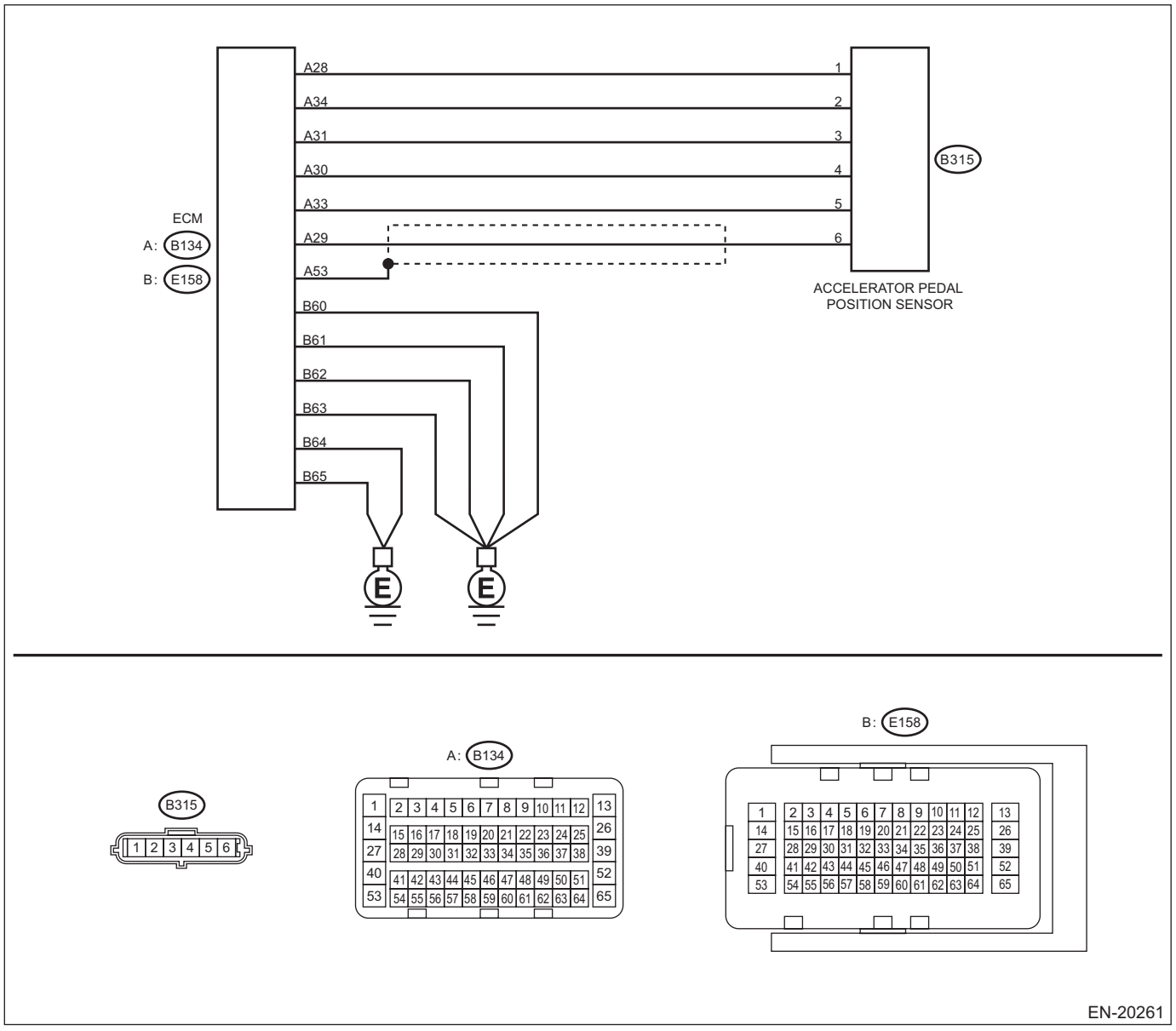

	Step	Check	Yes	No
1	**CHECK HARNESS BETWEEN ECM AND ACCELERATOR PEDAL POSITION SENSOR CONNECTOR.** 1) Turn the ignition switch to OFF. 2) Disconnect the connectors from ECM and accelerator pedal position sensor. 3) Measure the resistance between ECM connector and chassis ground. ***Connector & terminal*** ***(B134) No. 30 — Chassis ground:*** ***(B134) No. 29 — Chassis ground:*** ***(B134) No. 29 — (B134) No. 53:***	Is the resistance 1 MΩ or more?	Go to step **2**.	Repair the short circuit to ground in harness between ECM connector and accelerator pedal position sensor connector.
2	**CHECK SHORT CIRCUIT INSIDE THE ECM.** 1) Connect the connector to ECM. 2) Measure the resistance between accelerator pedal position sensor connector and chassis ground. ***Connector & terminal*** ***(B315) No. 6 — Chassis ground:***	Is the resistance 1 MΩ or more?	Replace the accelerator pedal. <Ref. to SP(H4DO)-4, Accelerator Pedal.>	Repair the short circuit to ground in harness between ECM connector and accelerator pedal position sensor connector. Replace the ECM if defective. <Ref. to FU(H6DO)-83, Engine Control Module (ECM).>

1. OUTLINE OF DIAGNOSIS

Detect the open or short circuit of accelerator pedal position sensor 1.
Judge as NG if out of specification.

2. COMPONENT DESCRIPTION

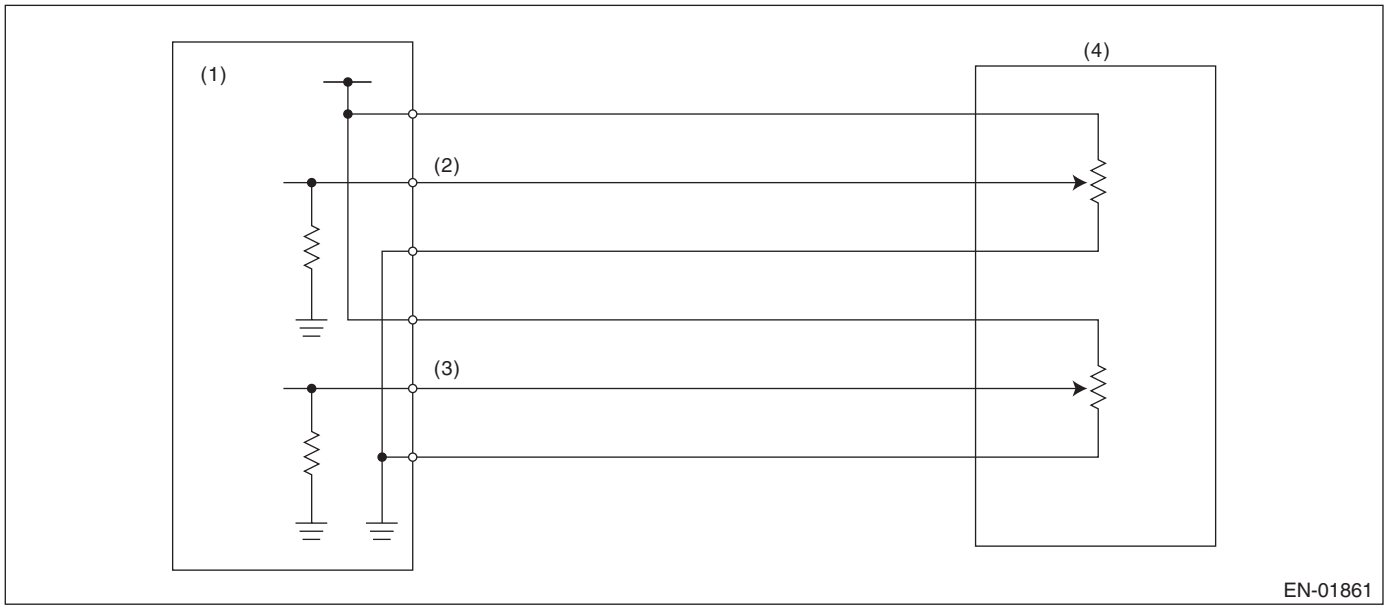

(1) Engine control module (ECM)
(2) Accelerator pedal position sensor 1 signal
(3) Accelerator pedal position sensor 2 signal
(4) Accelerator pedal position sensor

3. EXECUTION CONDITION

Secondary Parameters	Execution condition
Battery voltage	≥ 6 V

4. GENERAL DRIVING CYCLE

Always perform the diagnosis continuously.

5. DIAGNOSTIC METHOD

If the duration of time while the following conditions are met is longer than the time indicated, judge as NG.

Judgment Value

Malfunction Criteria	Threshold Value
Sensor 1 output voltage	< 0.298 V

Time Needed for Diagnosis: 100 ms
Malfunction Indicator Light Illumination: Illuminates as soon as a malfunction occurs.

FS:DTC P2123 THROTTLE/PEDAL POSITION SENSOR/SWITCH "D" CIRCUIT HIGH

DTC DETECTING CONDITION:
Immediately at fault recognition
TROUBLE SYMPTOM:
- Improper idling
- Poor driving performance

CAUTION:
After servicing or replacing faulty parts, perform Clear Memory Mode <Ref. to EN(H6DO)(diag)-85, OPERATION, Clear Memory Mode.>, and Inspection Mode <Ref. to EN(H6DO)(diag)-69, PROCEDURE, Inspection Mode.>.
WIRING DIAGRAM:
- Engine Electrical System ENGINE TYPE EZ (WITHOUT PUSH BUTTON START) <Ref. to WI-198, ENGINE TYPE EZ (WITHOUT PUSH BUTTON START), WIRING DIAGRAM, Engine Electrical System.>
- Engine Electrical System ENGINE TYPE EZ (WITH PUSH BUTTON START) <Ref. to WI-214, ENGINE TYPE EZ (WITH PUSH BUTTON START), WIRING DIAGRAM, Engine Electrical System.>

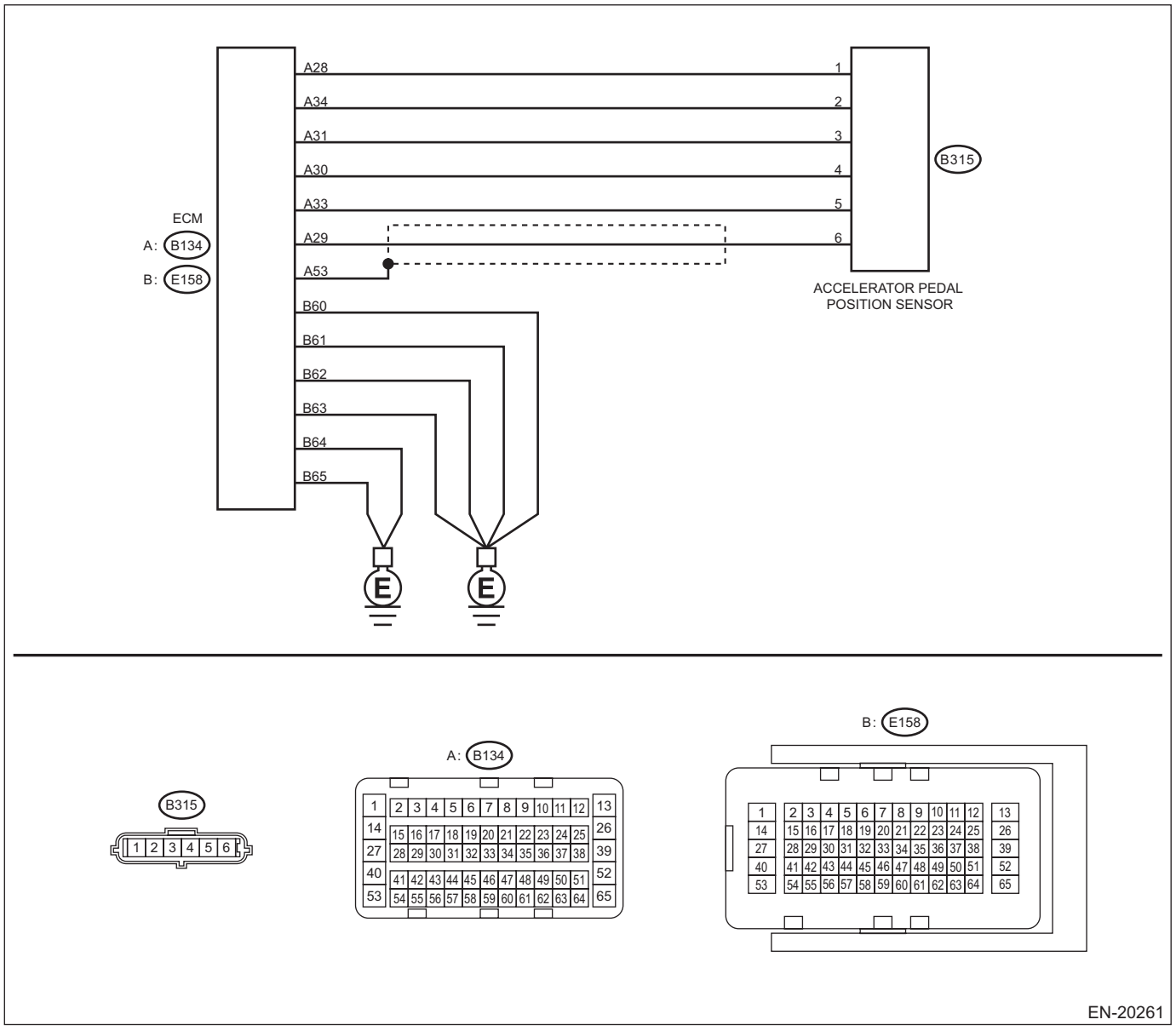

	Step	Check	Yes	No
1	**CHECK HARNESS BETWEEN ECM AND ACCELERATOR PEDAL POSITION SENSOR CONNECTOR.** 1) Turn the ignition switch to OFF. 2) Disconnect the connectors from ECM and accelerator pedal position sensor. 3) Measure the resistance of harness between ECM connector and accelerator pedal position sensor connector. ***Connector & terminal*** ***(B315) No. 29 — (B315) No. 6:*** ***(B315) No. 23 — (B315) No. 5:***	Is the resistance less than 1 Ω?	Go to step **2**.	Repair the open circuit of harness between ECM connector and accelerator pedal position sensor connector.
2	**CHECK HARNESS BETWEEN ECM AND ACCELERATOR PEDAL POSITION SENSOR CONNECTOR.** 1) Connect the connector to ECM. 2) Measure the resistance between accelerator pedal position sensor connector and chassis ground. ***Connector & terminal*** ***(B315) No. 5 — Chassis ground:***	Is the resistance less than 5 Ω?	Go to step **3**.	Repair the harness and connector. NOTE: In this case, repair the following item: • Open circuit of harness between ECM connector and engine ground • Poor contact of ECM connector • Poor contact of coupling connector
3	**CHECK HARNESS BETWEEN ECM AND ACCELERATOR PEDAL POSITION SENSOR CONNECTOR.** 1) Turn the ignition switch to ON. 2) Measure the voltage between accelerator pedal position sensor connector and chassis ground. ***Connector & terminal*** ***(B315) No. 6 (+) — Chassis ground (–):***	Is the voltage 5 V or more?	Repair the short circuit to power supply in harness between ECM connector and accelerator pedal position sensor connector.	Go to step **4**.
4	**CHECK HARNESS BETWEEN ECM AND ACCELERATOR PEDAL POSITION SENSOR CONNECTOR.** 1) Turn the ignition switch to OFF. 2) Disconnect the connector from ECM. 3) Measure the resistance between ECM connectors. ***Connector & terminal*** ***(B134) No. 30 — (B134) No. 29:***	Is the resistance 1 MΩ or more?	Repair the poor contact of accelerator pedal position sensor connector. Replace the accelerator pedal if defective. <Ref. to SP(H4DO)-4, Accelerator Pedal.>	Repair the short circuit to power supply in harness between ECM connector and accelerator pedal position sensor connector.

1. OUTLINE OF DIAGNOSIS

Detect the open or short circuit of accelerator pedal position sensor 1.
Judge as NG if out of specification.

2. COMPONENT DESCRIPTION

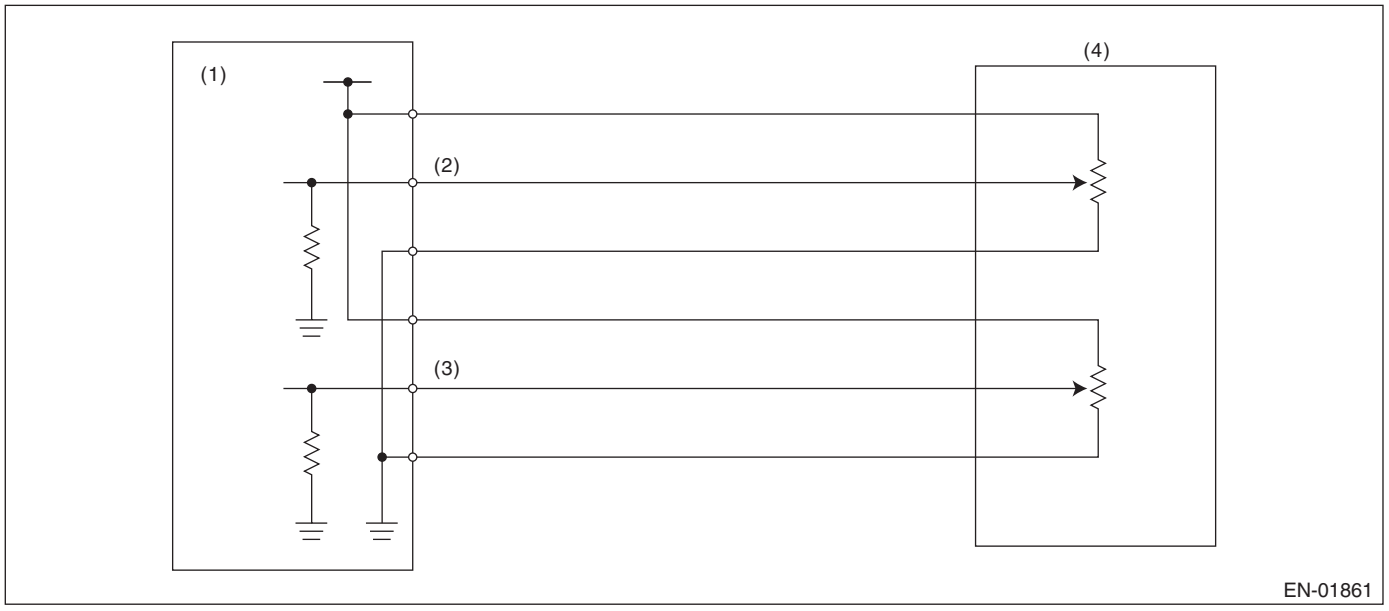

(1) Engine control module (ECM)
(2) Accelerator pedal position sensor 1 signal
(3) Accelerator pedal position sensor 2 signal
(4) Accelerator pedal position sensor

3. EXECUTION CONDITION

Secondary Parameters	Execution condition
Battery voltage	≥ 6 V

4. GENERAL DRIVING CYCLE

Always perform the diagnosis continuously.

5. DIAGNOSTIC METHOD

If the duration of time while the following conditions are met is longer than the time indicated, judge as NG.

Judgment Value

Malfunction Criteria	Threshold Value
Sensor 1 output voltage	≥ 4.757 V

Time Needed for Diagnosis: 32 ms
Malfunction Indicator Light Illumination: Illuminates as soon as a malfunction occurs.

FT: DTC P2127 THROTTLE/PEDAL POSITION SENSOR/SWITCH "E" CIRCUIT LOW

DTC DETECTING CONDITION:
Immediately at fault recognition
TROUBLE SYMPTOM:
- Improper idling
- Poor driving performance

CAUTION:
After servicing or replacing faulty parts, perform Clear Memory Mode <Ref. to EN(H6DO)(diag)-85, OPERATION, Clear Memory Mode.>, and Inspection Mode <Ref. to EN(H6DO)(diag)-69, PROCEDURE, Inspection Mode.>.
WIRING DIAGRAM:
- Engine Electrical System ENGINE TYPE EZ (WITHOUT PUSH BUTTON START) <Ref. to WI-198, ENGINE TYPE EZ (WITHOUT PUSH BUTTON START), WIRING DIAGRAM, Engine Electrical System.>
- Engine Electrical System ENGINE TYPE EZ (WITH PUSH BUTTON START) <Ref. to WI-214, ENGINE TYPE EZ (WITH PUSH BUTTON START), WIRING DIAGRAM, Engine Electrical System.>

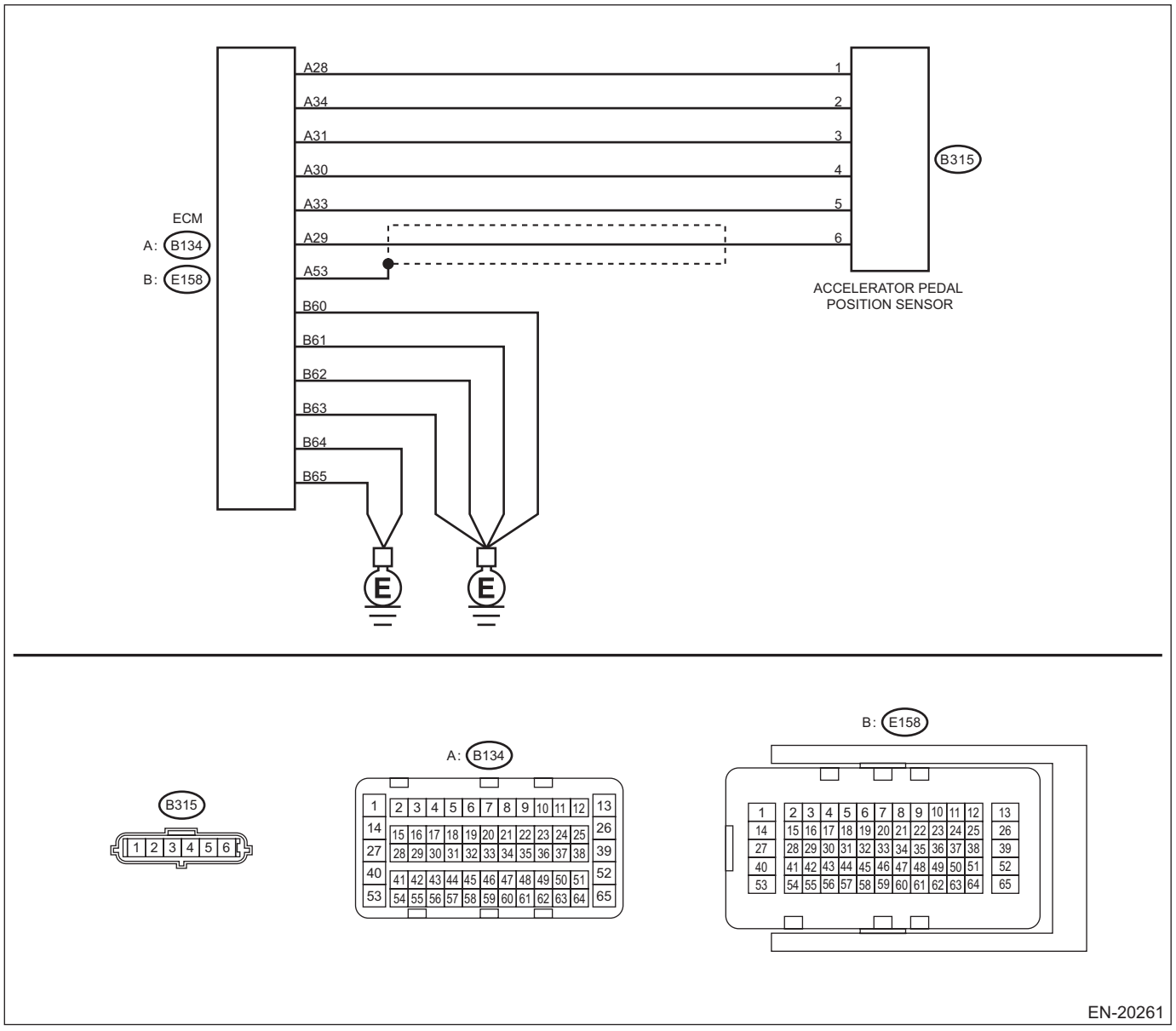

	Step	Check	Yes	No
1	**CHECK HARNESS BETWEEN ECM AND ACCELERATOR PEDAL POSITION SENSOR CONNECTOR.** 1) Turn the ignition switch to OFF. 2) Disconnect the connectors from ECM and accelerator pedal position sensor. 3) Measure the resistance between ECM connector and chassis ground. ***Connector & terminal*** ***(B134) No. 28 — Chassis ground:*** ***(B134) No. 31 — Chassis ground:***	Is the resistance 1 MΩ or more?	Go to step **2**.	Repair the short circuit to ground in harness between ECM connector and accelerator pedal position sensor connector.
2	**CHECK SHORT CIRCUIT INSIDE THE ECM.** 1) Connect the connector to ECM. 2) Measure the resistance between accelerator pedal position sensor connector and chassis ground. ***Connector & terminal*** ***(B315) No. 3 — Chassis ground:***	Is the resistance 1 MΩ or more?	Replace the accelerator pedal. <Ref. to SP(H4DO)-4, Accelerator Pedal.>	Repair the short circuit to ground in harness between ECM connector and accelerator pedal position sensor connector. Replace the ECM if defective. <Ref. to FU(H6DO)-83, Engine Control Module (ECM).>

1. OUTLINE OF DIAGNOSIS

Detect the open or short circuit of accelerator pedal position sensor 2.
Judge as NG if out of specification.

2. COMPONENT DESCRIPTION

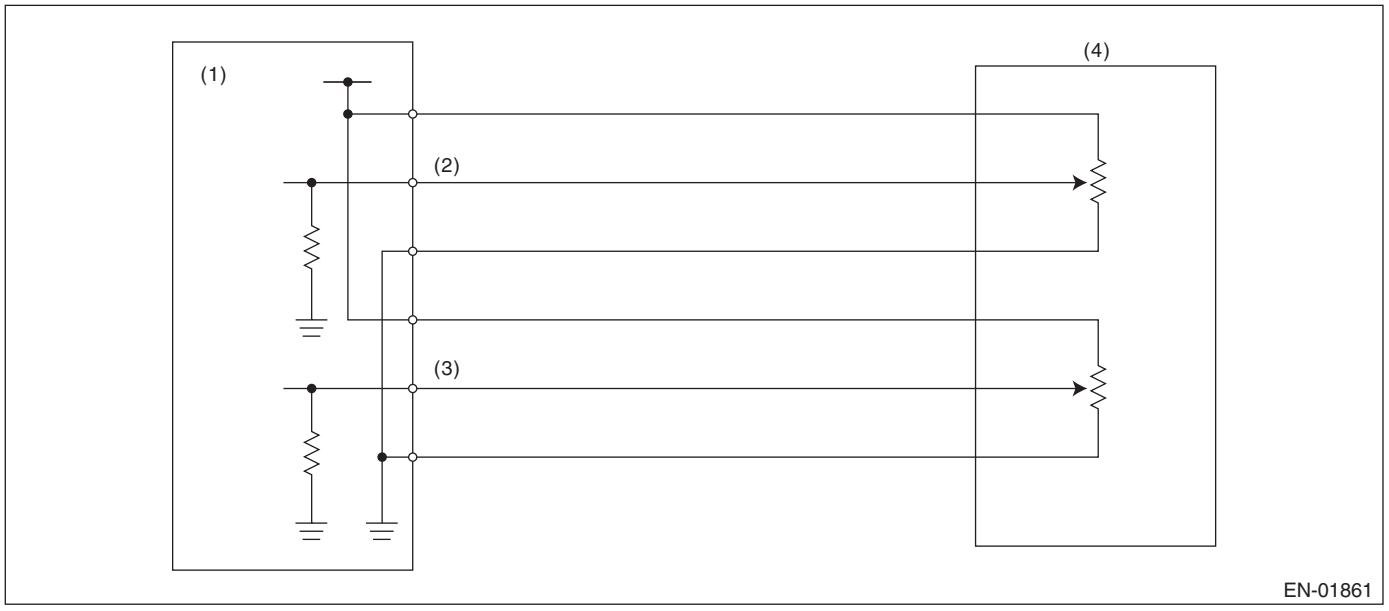

(1) Engine control module (ECM)
(2) Accelerator pedal position sensor 1 signal
(3) Accelerator pedal position sensor 2 signal
(4) Accelerator pedal position sensor

3. EXECUTION CONDITION

Secondary Parameters	Execution condition
Battery voltage	≥ 6 V

4. GENERAL DRIVING CYCLE

Always perform the diagnosis continuously.

5. DIAGNOSTIC METHOD

If the duration of time while the following conditions are met is longer than the time indicated, judge as NG.

Judgment Value

Malfunction Criteria	Threshold Value
Sensor 2 output voltage	< 0.298 V

Time Needed for Diagnosis: 100 ms
Malfunction Indicator Light Illumination: Illuminates as soon as a malfunction occurs.

FU:DTC P2128 THROTTLE/PEDAL POSITION SENSOR/SWITCH "E" CIRCUIT HIGH

DTC DETECTING CONDITION:
Immediately at fault recognition
TROUBLE SYMPTOM:
- Improper idling
- Poor driving performance

CAUTION:
After servicing or replacing faulty parts, perform Clear Memory Mode <Ref. to EN(H6DO)(diag)-85, OPERATION, Clear Memory Mode.>, and Inspection Mode <Ref. to EN(H6DO)(diag)-69, PROCEDURE, Inspection Mode.>.
WIRING DIAGRAM:
- Engine Electrical System ENGINE TYPE EZ (WITHOUT PUSH BUTTON START) <Ref. to WI-198, ENGINE TYPE EZ (WITHOUT PUSH BUTTON START), WIRING DIAGRAM, Engine Electrical System.>
- Engine Electrical System ENGINE TYPE EZ (WITH PUSH BUTTON START) <Ref. to WI-214, ENGINE TYPE EZ (WITH PUSH BUTTON START), WIRING DIAGRAM, Engine Electrical System.>

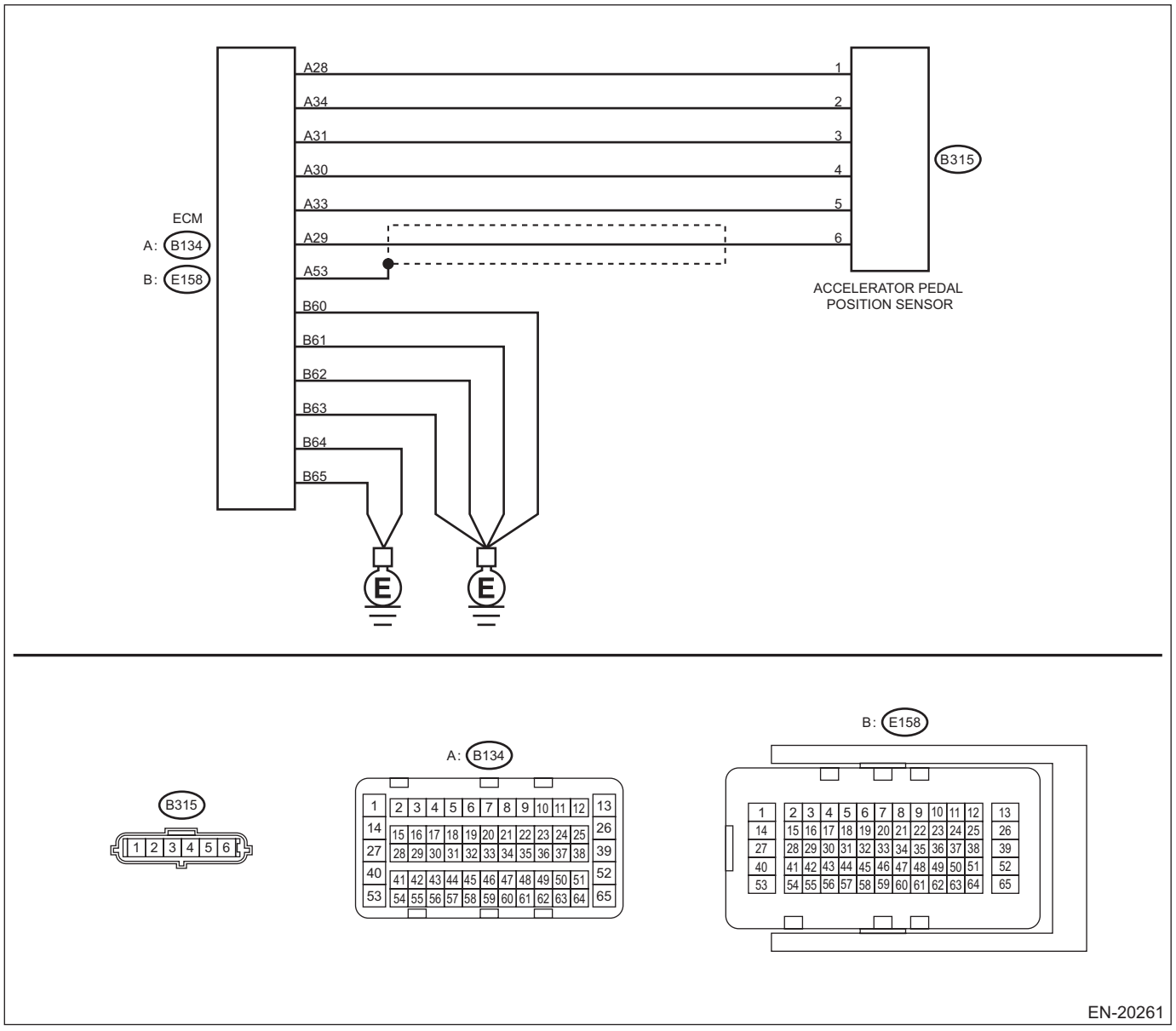

	Step	Check	Yes	No
1	**CHECK HARNESS BETWEEN ECM AND ACCELERATOR PEDAL POSITION SENSOR CONNECTOR.** 1) Turn the ignition switch to OFF. 2) Disconnect the connectors from ECM and accelerator pedal position sensor. 3) Measure the resistance of harness between ECM connector and accelerator pedal position sensor connector. ***Connector & terminal*** ***(B134) No. 31 — (B315) No. 3:*** ***(B134) No. 34 — (B315) No. 2:***	Is the resistance less than 1 Ω?	Go to step **2**.	Repair the open circuit of harness between ECM connector and accelerator pedal position sensor connector.
2	**CHECK HARNESS BETWEEN ECM AND ACCELERATOR PEDAL POSITION SENSOR CONNECTOR.** 1) Connect the connector to ECM. 2) Measure the resistance between accelerator pedal position sensor connector and chassis ground. ***Connector & terminal*** ***(B315) No. 2 — Chassis ground:***	Is the resistance less than 5 Ω?	Go to step **3**.	Repair the harness and connector. NOTE: In this case, repair the following item: • Open circuit of harness between ECM connector and engine ground • Poor contact of ECM connector
3	**CHECK HARNESS BETWEEN ECM AND ACCELERATOR PEDAL POSITION SENSOR CONNECTOR.** 1) Turn the ignition switch to ON. 2) Measure the voltage between accelerator pedal position sensor connector and chassis ground. ***Connector & terminal*** ***(B315) No. 3 (+) — Chassis ground (–):***	Is the voltage 5 V or more?	Repair the short circuit to power supply in harness between ECM connector and accelerator pedal position sensor connector.	Go to step **4**.
4	**CHECK HARNESS BETWEEN ECM AND ACCELERATOR PEDAL POSITION SENSOR CONNECTOR.** 1) Turn the ignition switch to OFF. 2) Disconnect the connector from ECM. 3) Measure the resistance between ECM connectors. ***Connector & terminal*** ***(B134) No. 28 — (B134) No. 31:***	Is the resistance 1 MΩ or more?	Repair the poor contact of accelerator pedal position sensor connector. Replace the accelerator pedal if defective. <Ref. to SP(H4DO)-4, Accelerator Pedal.>	Repair the short circuit to power supply in harness between ECM connector and accelerator pedal position sensor connector.

1. OUTLINE OF DIAGNOSIS

Detect the open or short circuit of accelerator pedal position sensor 2.
Judge as NG if out of specification.

2. COMPONENT DESCRIPTION

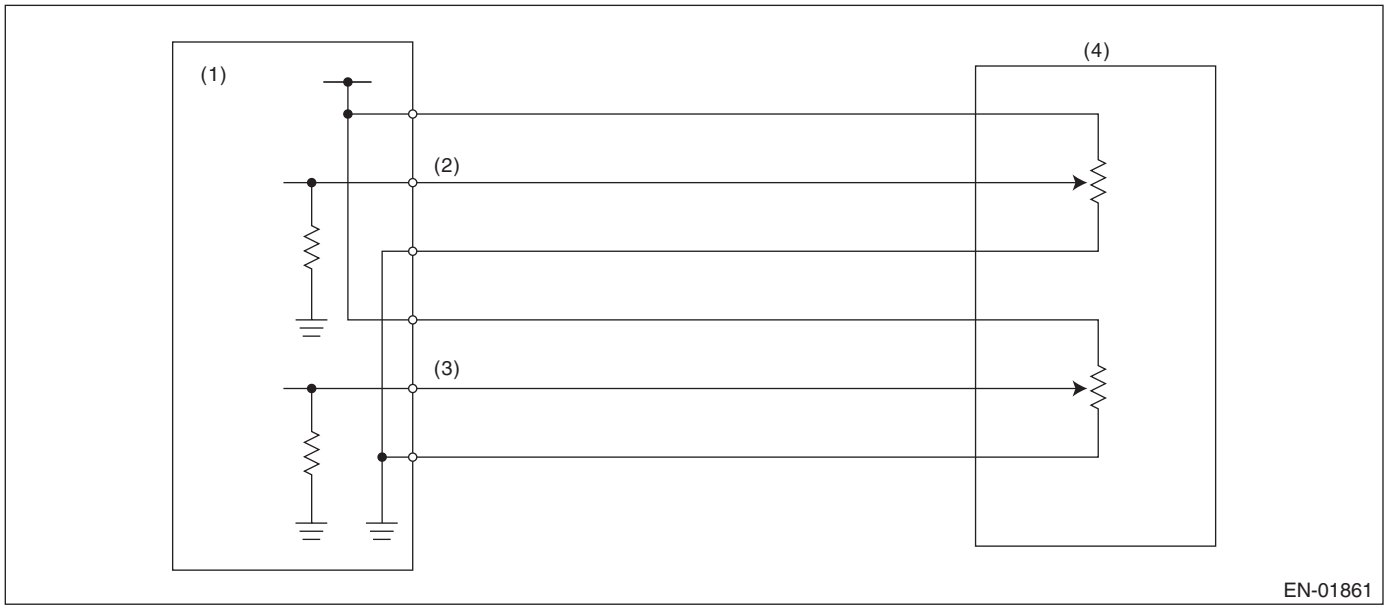

(1) Engine control module (ECM)
(2) Accelerator pedal position sensor 1 signal
(3) Accelerator pedal position sensor 2 signal
(4) Accelerator pedal position sensor

3. EXECUTION CONDITION

Secondary Parameters	Execution condition
Battery voltage	≥ 6 V

4. GENERAL DRIVING CYCLE

Always perform the diagnosis continuously.

5. DIAGNOSTIC METHOD

If the duration of time while the following conditions are met is longer than the time indicated, judge as NG.

Judgment Value

Malfunction Criteria	Threshold Value
Sensor 2 output voltage	≥ 4.757 V

Time Needed for Diagnosis: 100 ms
Malfunction Indicator Light Illumination: Illuminates as soon as a malfunction occurs.

FV:DTC P2135 THROTTLE/PEDAL POSITION SENSOR/SWITCH "A"/"B" VOLTAGE CORRELATION

DTC DETECTING CONDITION:
Immediately at fault recognition
TROUBLE SYMPTOM:
- Improper idling
- Poor driving performance

CAUTION:
After servicing or replacing faulty parts, perform Clear Memory Mode <Ref. to EN(H6DO)(diag)-85, OPERATION, Clear Memory Mode.>, and Inspection Mode <Ref. to EN(H6DO)(diag)-69, PROCEDURE, Inspection Mode.>.
WIRING DIAGRAM:
- Engine Electrical System ENGINE TYPE EZ (WITHOUT PUSH BUTTON START) <Ref. to WI-198, ENGINE TYPE EZ (WITHOUT PUSH BUTTON START), WIRING DIAGRAM, Engine Electrical System.>
- Engine Electrical System ENGINE TYPE EZ (WITH PUSH BUTTON START) <Ref. to WI-214, ENGINE TYPE EZ (WITH PUSH BUTTON START), WIRING DIAGRAM, Engine Electrical System.>

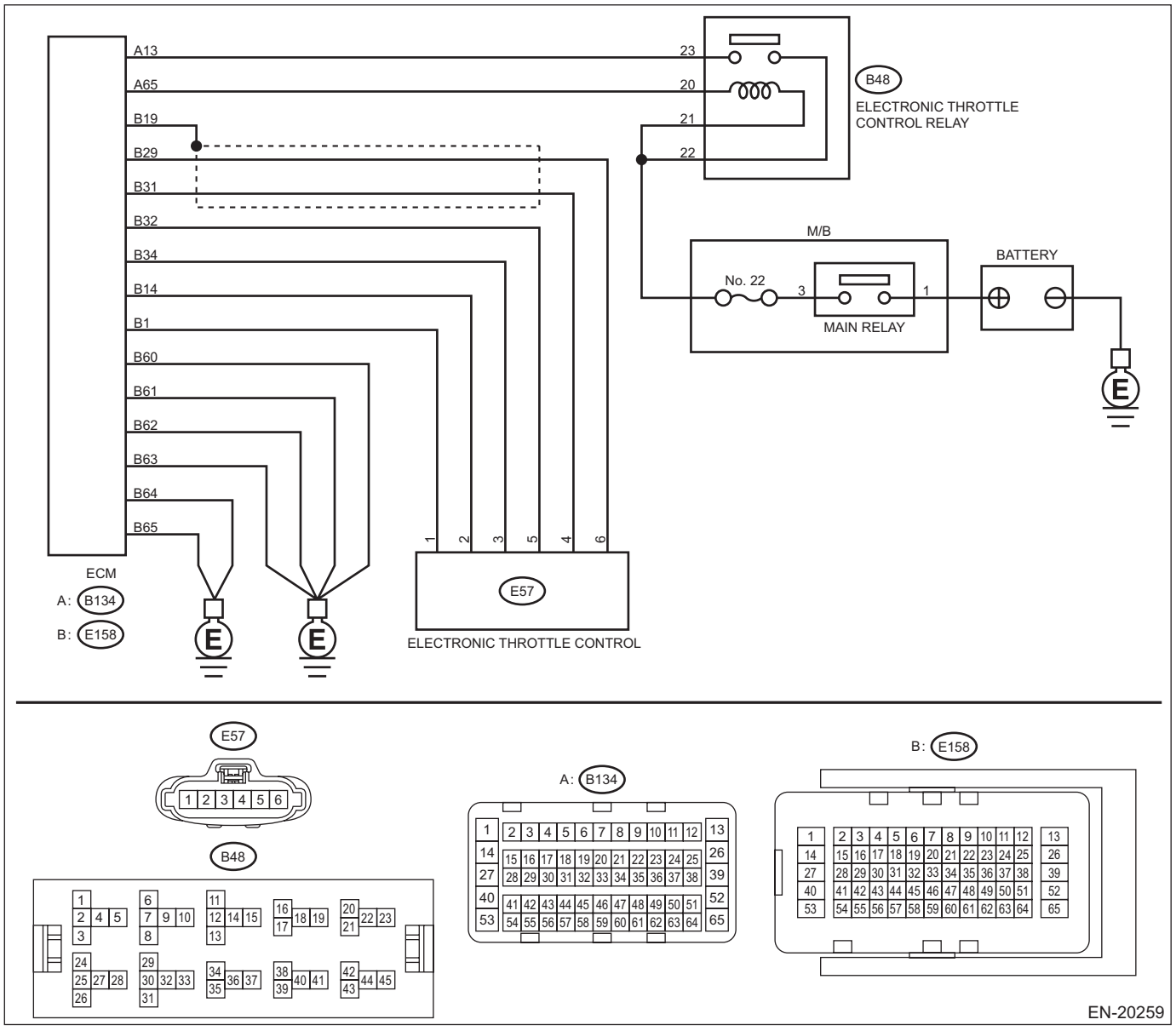

	Step	Check	Yes	No
1	**CHECK HARNESS BETWEEN ECM AND ELECTRONIC THROTTLE CONTROL.** 1) Turn the ignition switch to OFF. 2) Disconnect the connectors from ECM and electronic throttle control. 3) Measure the resistance between ECM connector and chassis ground. ***Connector & terminal*** ***(E158) No. 32 — Chassis ground:*** ***(E158) No. 29 — Chassis ground:*** ***(E158) No. 29 — (B136) No. 19:*** ***(E158) No. 31 — Chassis ground:***	Is the resistance 1 MΩ or more?	Go to step **2**.	Repair the ground short circuit of harness between ECM connector and electronic throttle control connector.
2	**CHECK SHORT CIRCUIT INSIDE THE ECM.** 1) Connect the connector to ECM. 2) Measure the resistance between electronic throttle control connector and engine ground. ***Connector & terminal*** ***(E57) No. 6 — Engine ground:*** ***(E57) No. 4 — Engine ground:***	Is the resistance 1 MΩ or more?	Go to step **3**.	Repair the ground short circuit of harness between ECM connector and electronic throttle control connector. Replace the ECM if defective. <Ref. to FU(H6DO)-83, Engine Control Module (ECM).>
3	**CHECK HARNESS BETWEEN ECM AND ELECTRONIC THROTTLE CONTROL.** 1) Disconnect the connector from ECM. 2) Measure the resistance of harness between ECM connector and electronic throttle control connector. ***Connector & terminal*** ***(E158) No. 29 — (E57) No. 6:*** ***(E158) No. 31 — (E57) No. 4:*** ***(E158) No. 34 — (E57) No. 3:***	Is the resistance less than 1 Ω?	Go to step **4**.	Repair the open circuit of harness between ECM connector and electronic throttle control connector.
4	**CHECK HARNESS BETWEEN ECM AND ELECTRONIC THROTTLE CONTROL.** 1) Connect the connector to ECM. 2) Measure the resistance between electronic throttle control connector and engine ground. ***Connector & terminal*** ***(E57) No. 3 — Engine ground:***	Is the resistance less than 5 Ω?	Go to step **5**.	Repair the harness and connector. NOTE: In this case, repair the following item: • Open circuit of harness between ECM connector and engine ground • Poor contact of ECM connector
5	**CHECK HARNESS BETWEEN ECM AND ELECTRONIC THROTTLE CONTROL.** 1) Turn the ignition switch to ON. 2) Measure the voltage between electronic throttle control connector and engine ground. ***Connector & terminal*** ***(E57) No. 6 (+) — Engine ground (–):*** ***(E57) No. 4 (+) — Engine ground (–):***	Is the voltage 5 V or more?	Repair the short circuit to power in the harness between ECM connector and electronic throttle control connector.	Go to step **6**.

Step		Check	Yes	No
6	**CHECK HARNESS BETWEEN ECM AND ELECTRONIC THROTTLE CONTROL.** 1) Turn the ignition switch to OFF. 2) Disconnect the connector from ECM. 3) Measure the resistance between ECM connectors. ***Connector & terminal*** ***(E158) No. 32 — (E158) No. 29:*** ***(E158) No. 32 — (E158) No. 31:***	Is the resistance 1 MΩ or more?	Repair the poor contact of electronic throttle control connector. Replace the electronic throttle control if defective. <Ref. to FU(H6DO)-19, Throttle Body.>	Repair the short circuit to power in the harness between ECM connector and electronic throttle control connector.

1. OUTLINE OF DIAGNOSIS

Judge as NG when the signal level of throttle position sensor 1 is different from the throttle position sensor 2.

2. COMPONENT DESCRIPTION

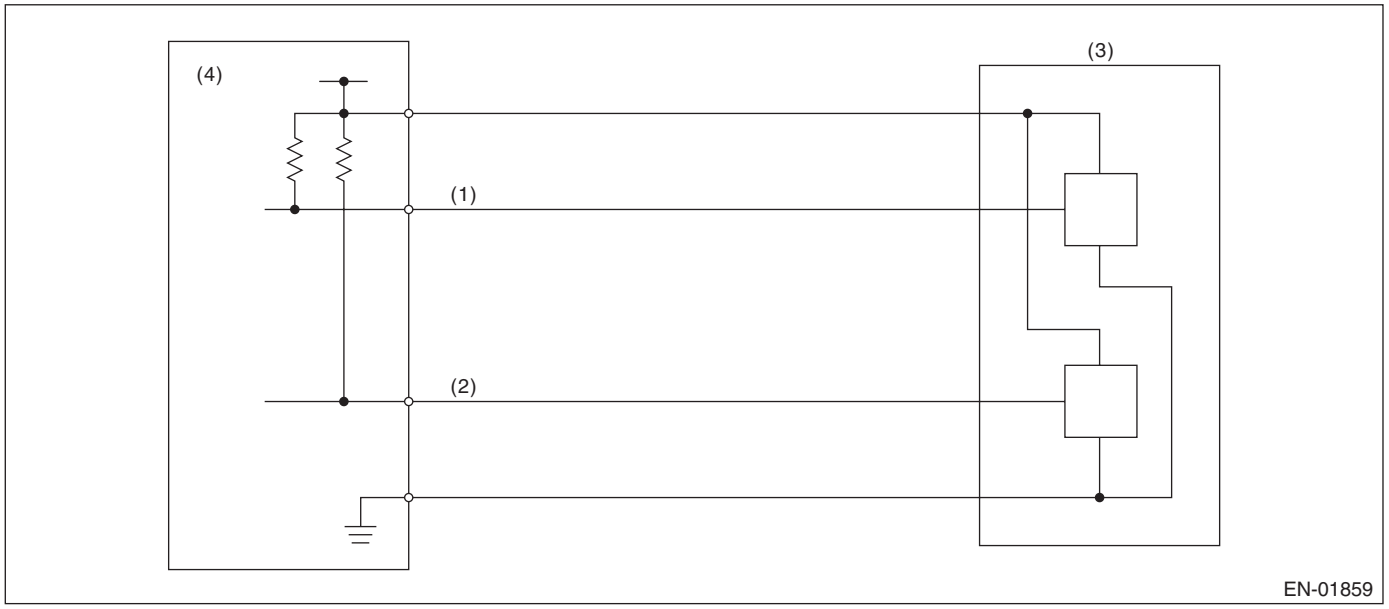

(1) Throttle position sensor 1 signal
(2) Throttle position sensor 2 signal
(3) Throttle position sensor
(4) Engine control module (ECM)

3. EXECUTION CONDITION

Secondary Parameters	Execution condition
Battery voltage	≥ 6 V

4. GENERAL DRIVING CYCLE

Always perform the diagnosis continuously.

5. DIAGNOSTIC METHOD

If the duration of time while the following conditions are met is longer than the time indicated, judge as NG.

Judgment Value

Malfunction Criteria	Threshold Value
Signal difference between two sensors	Within NG range of **Details of Judgment value**

Details of Judgment Value

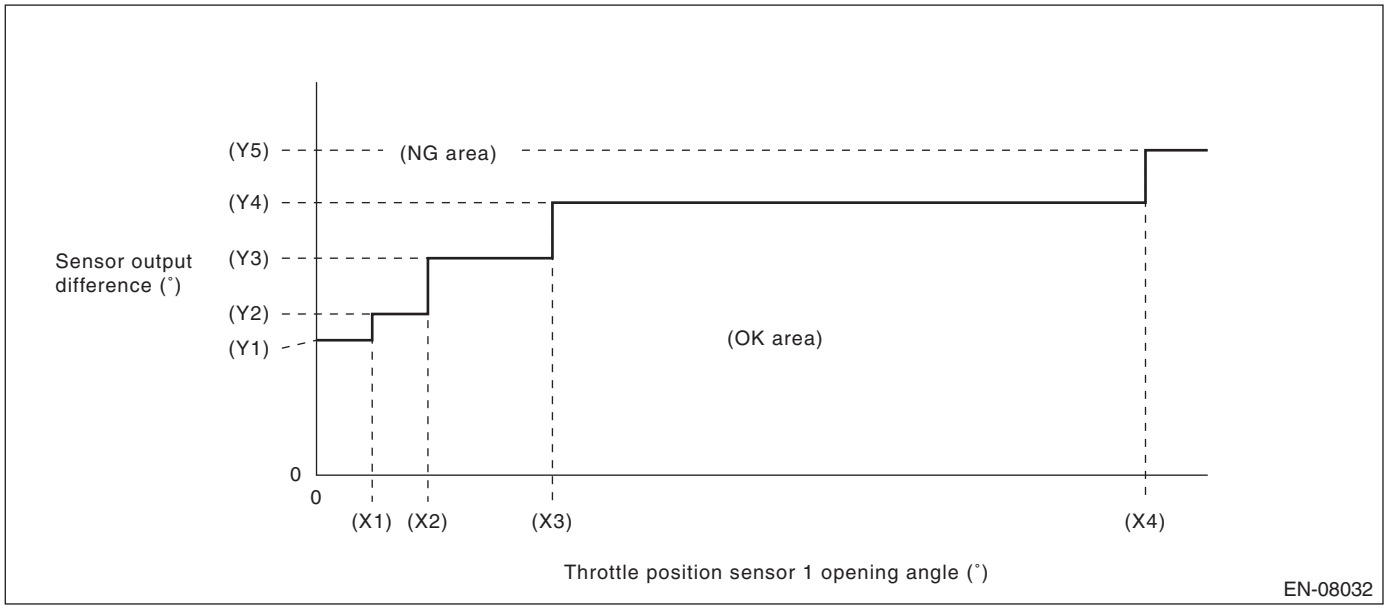

(X1) 2.125 °
(X2) 4.25 °
(X3) 9 °
(X4) 31.625 °

(Y1) 4.736 °
(Y2) 5.736 °
(Y3) 7.861 °
(Y4) 9.986 °
(Y5) 11.986 °

Time Needed for Diagnosis: 212 ms
Malfunction Indicator Light Illumination: Illuminates as soon as a malfunction occurs.

FW:DTC P2138 THROTTLE/PEDAL POSITION SENSOR/SWITCH "D"/"E" VOLTAGE CORRELATION

DTC DETECTING CONDITION:
Immediately at fault recognition

CAUTION:
After servicing or replacing faulty parts, perform Clear Memory Mode <Ref. to EN(H6DO)(diag)-85, OPERATION, Clear Memory Mode.>, and Inspection Mode <Ref. to EN(H6DO)(diag)-69, PROCEDURE, Inspection Mode.>.

TROUBLE SYMPTOM:
- Improper idling
- Poor driving performance

WIRING DIAGRAM:
- Engine Electrical System ENGINE TYPE EZ (WITHOUT PUSH BUTTON START) <Ref. to WI-198, ENGINE TYPE EZ (WITHOUT PUSH BUTTON START), WIRING DIAGRAM, Engine Electrical System.>
- Engine Electrical System ENGINE TYPE EZ (WITH PUSH BUTTON START) <Ref. to WI-214, ENGINE TYPE EZ (WITH PUSH BUTTON START), WIRING DIAGRAM, Engine Electrical System.>

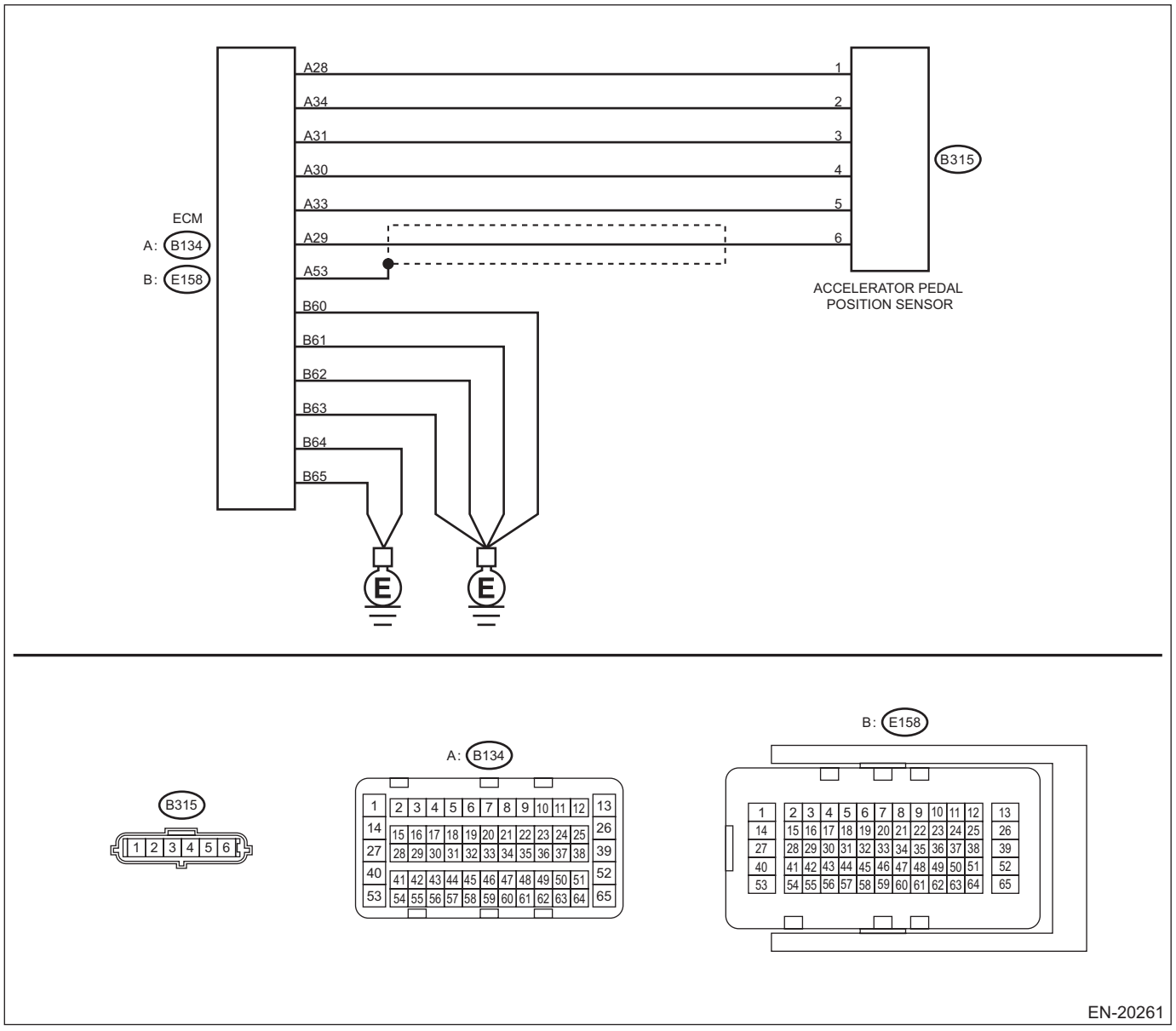

	Step	Check	Yes	No
1	**CHECK ACCELERATOR PEDAL POSITION SENSOR OUTPUT.** 1) Turn the ignition switch to ON. 2) Measure the voltage between ECM connector and chassis ground. ***Connector & terminal*** ***Main accelerator pedal position sensor signal*** ***(B134) No. 29 (+) — Chassis ground (–):*** ***Sub accelerator pedal position sensor signal*** ***(B134) No. 31 (+) — Chassis ground (–):***	Is the difference in measured values for the main accelerator pedal position sensor signal and the sub accelerator pedal position sensor signal 0 V?	Go to step **3**.	Go to step **2**.
2	**CHECK ACCELERATOR PEDAL POSITION SENSOR OUTPUT.** 1) Measure the voltage between accelerator pedal position sensor connector and chassis ground. ***Connector & terminal*** ***(B315) No. 6 (+) — Chassis ground (–):*** ***(B315) No. 3 (+) — Chassis ground (–):***	Is the difference in measured values for the main accelerator pedal position sensor signal and the sub accelerator pedal position sensor signal 0 V?	Replace the accelerator pedal. <Ref. to SP(H4DO)-4, Accelerator Pedal.>	Repair the harness and connector. NOTE: In this case, repair the following item: • Open circuit of harness between ECM connector and accelerator pedal position sensor connector • Short circuit to ground in harness between ECM connector and accelerator pedal position sensor connector • Poor contact of coupling connector
3	**CHECK HARNESS BETWEEN ECM AND ACCELERATOR PEDAL POSITION SENSOR CONNECTOR.** Measure the resistance of harness between the accelerator pedal position sensor connector and chassis ground. ***Connector & terminal*** ***(B315) No. 5 — Chassis ground:*** ***(B315) No. 2 — Chassis ground:***	Is the resistance less than 5 Ω?	Repair the poor contact of ECM connector.	Repair the harness and connector. NOTE: In this case, repair the following item: • Open circuit of harness between ECM connector and accelerator pedal position sensor connector • Open circuit of harness between ECM connector and engine ground • Poor contact of ECM connector

1. OUTLINE OF DIAGNOSIS

Judge as NG when the signal level of accelerator pedal position sensor 1 is different from the accelerator pedal position sensor 2.

2. COMPONENT DESCRIPTION

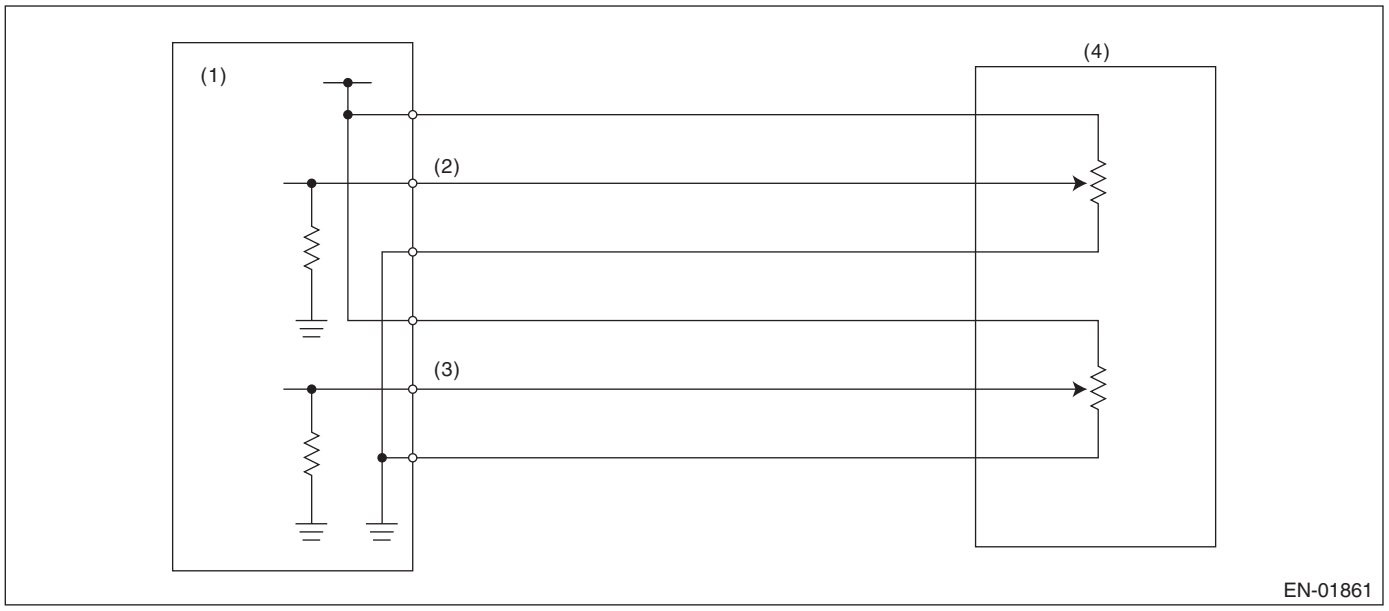

(1) Engine control module (ECM)
(2) Accelerator pedal position sensor 1 signal
(3) Accelerator pedal position sensor 2 signal
(4) Accelerator pedal position sensor

3. EXECUTION CONDITION

Secondary Parameters	Execution condition
Battery voltage	≥ 6 V

4. GENERAL DRIVING CYCLE

Always perform the diagnosis continuously.

5. DIAGNOSTIC METHOD

If the duration of time while the following conditions are met is longer than the time indicated, judge as NG.

Judgment Value

Malfunction Criteria	Threshold Value
Signal difference between two sensors	Within NG range of **Details of Judgment value**

Details of Judgment Value

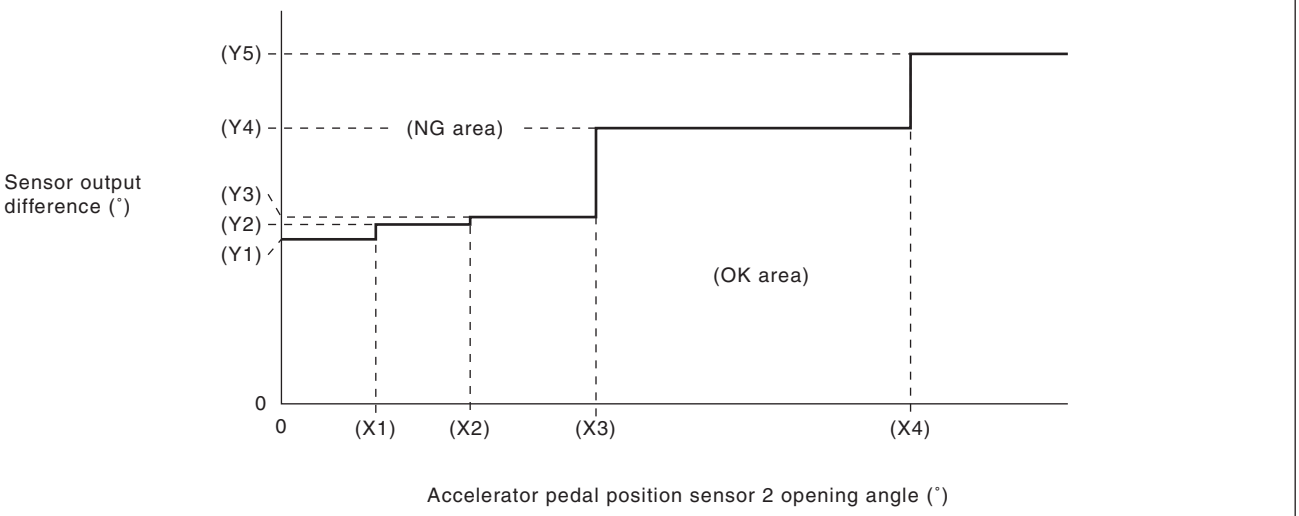

(X1) 0.6 °
(X2) 1.2 °
(X3) 2 °
(X4) 4 °

(Y1) 1.465 °
(Y2) 1.597 °
(Y3) 1.663 °
(Y4) 2.455 °
(Y5) 3.116 °

Time Needed for Diagnosis: 116 ms
Malfunction Indicator Light Illumination: Illuminates as soon as a malfunction occurs.

FX:DTC P2195 A/F /O2 SENSOR SIGNAL BIASED/STUCK LEAN BANK 1 SENSOR 1

DTC DETECTING CONDITION:
Detected when two consecutive driving cycles with fault occur.

CAUTION:
After servicing or replacing faulty parts, perform Clear Memory Mode <Ref. to EN(H6DO)(diag)-85, OPERATION, Clear Memory Mode.>, and Inspection Mode <Ref. to EN(H6DO)(diag)-69, PROCEDURE, Inspection Mode.>.

WIRING DIAGRAM:
- Engine Electrical System ENGINE TYPE EZ (WITHOUT PUSH BUTTON START) <Ref. to WI-198, ENGINE TYPE EZ (WITHOUT PUSH BUTTON START), WIRING DIAGRAM, Engine Electrical System.>
- Engine Electrical System ENGINE TYPE EZ (WITH PUSH BUTTON START) <Ref. to WI-214, ENGINE TYPE EZ (WITH PUSH BUTTON START), WIRING DIAGRAM, Engine Electrical System.>

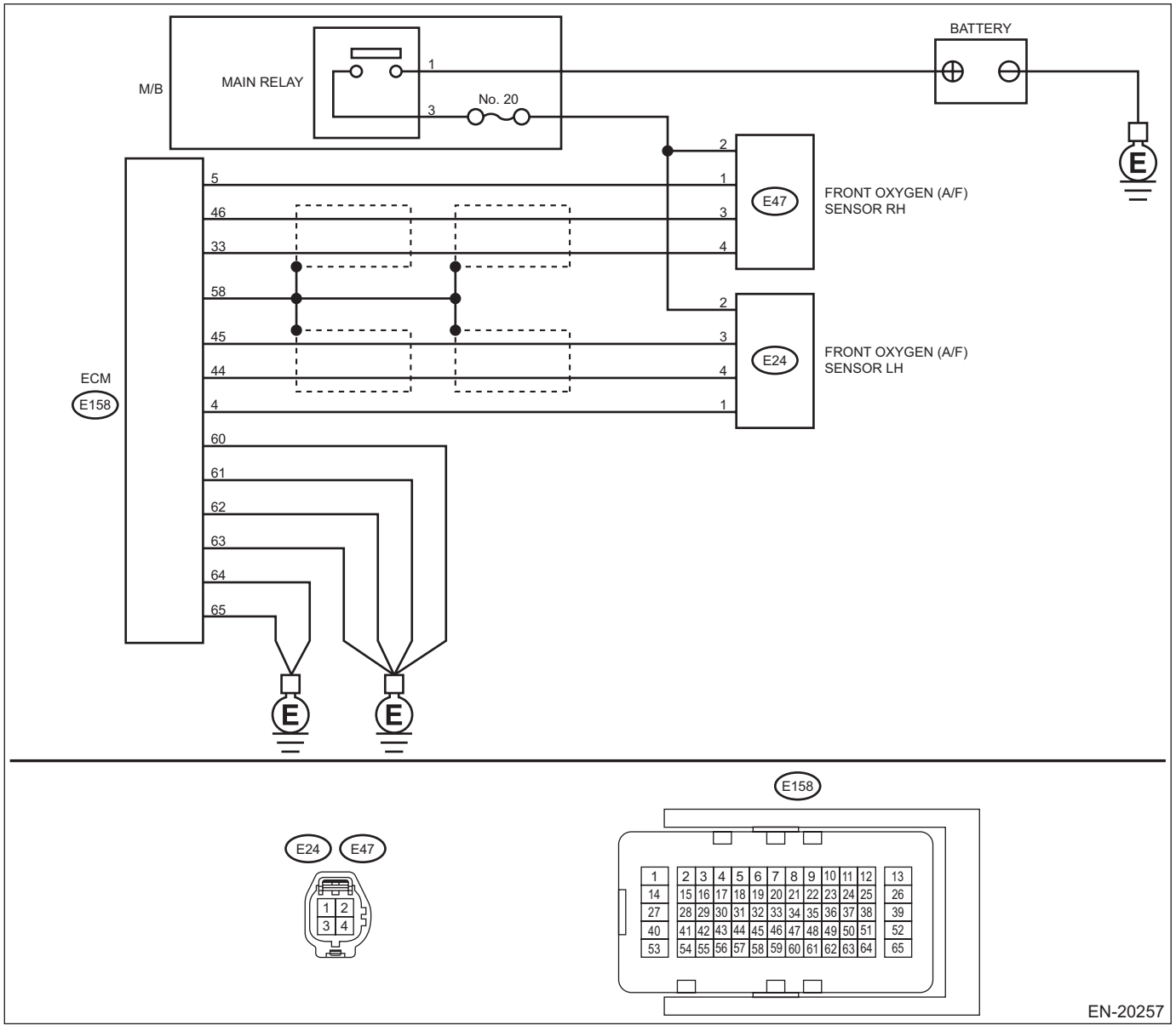

Step		Check	Yes	No
1	**CHECK FRONT OXYGEN (A/F) SENSOR CONNECTOR AND COUPLING CONNECTOR.**	Has water entered the connector?	Completely remove any water inside.	Go to step **2**.

	Step	Check	Yes	No
2	**CHECK HARNESS BETWEEN ECM AND FRONT OXYGEN (A/F) SENSOR CONNECTOR.** 1) Turn the ignition switch to OFF. 2) Disconnect the connectors from ECM and front oxygen (A/F) sensor. 3) Measure the resistance of harness between ECM connector and front oxygen (A/F) sensor connector. ***Connector & terminal*** ***(E158) No. 46 — (E47) No. 3:*** ***(E158) No. 33 — (E47) No. 4:***	Is the resistance less than 1 Ω?	Go to step **3**.	Repair the harness and connector. NOTE: In this case, repair the following item: • Open circuit in harness between ECM connector and front oxygen (A/F) sensor connector • Poor contact of coupling connector
3	**CHECK FOR POOR CONTACT.** Check for poor contact of the front oxygen (A/F) sensor connector.	Is there poor contact of front oxygen (A/F) sensor connector?	Repair the poor contact of front oxygen (A/F) sensor connector.	Replace the front oxygen (A/F) sensor. <Ref. to FU(H6DO)-78, Front Oxygen (A/F) Sensor.>

1. OUTLINE OF DIAGNOSIS

Detect that λ value remains low.
Judge as NG if the lambda value can be determined as abnormal in accordance with driving conditions such as vehicle speed, intake air amount, and rear oxygen sensor voltage as well as front oxygen (A/F) sensor λ value.

λ value = Actual air fuel ratio/Theoretical air fuel ratio
λ > 1: Lean
λ < 1: Rich

2. COMPONENT DESCRIPTION

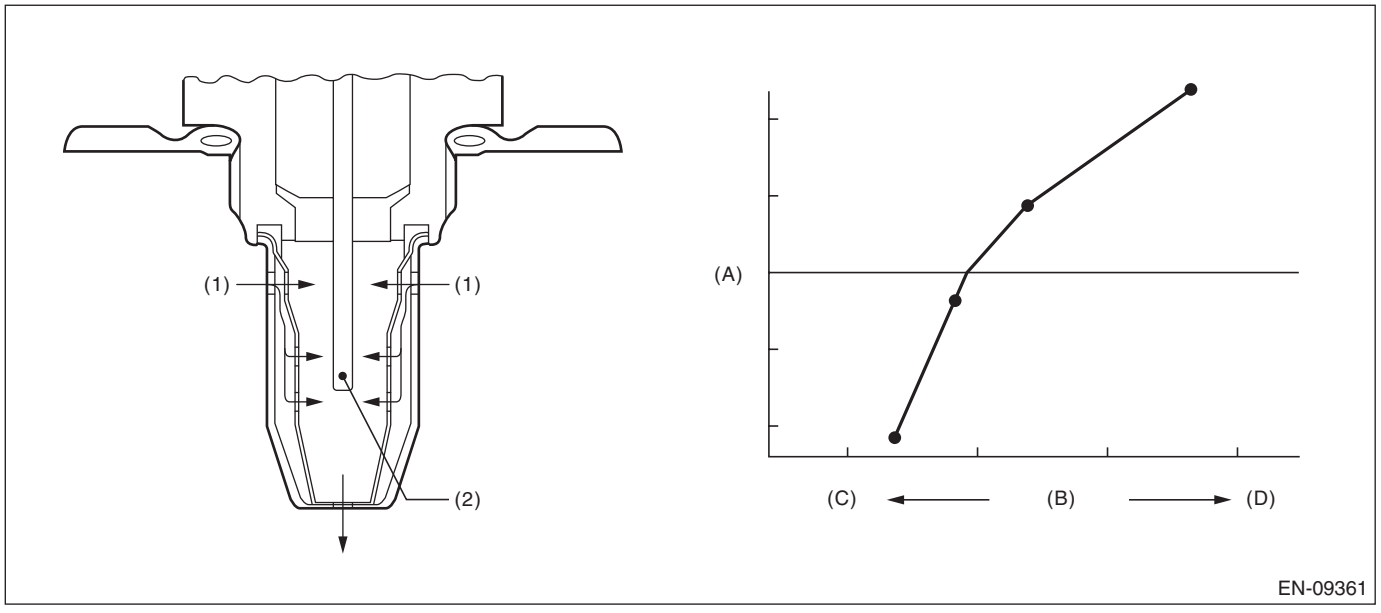

(A) Electromotive force
(B) Air fuel ratio
(C) Rich
(D) Lean

(1) Exhaust gas
(2) ZrO_2

3. EXECUTION CONDITION

Secondary Parameters	Execution condition
Battery voltage	≥ 10.9 V
Barometric pressure	≥ 75.1 kPa (563 mmHg, 22.2 inHg)
Rear oxygen sensor sub feedback	Execution
Rear oxygen sensor output voltage – Feedback target voltage	–0.2 V — 0.1 V
or rear oxygen sensor sub feedback compensation coefficient	On Min.
or rear oxygen sensor sub feedback compensation coefficient	On Max.
Intake air amount	≥ 8 g/s (0.28 oz/s)

4. GENERAL DRIVING CYCLE

Perform the diagnosis continuously after the enable conditions have been established.

5. DIAGNOSTIC METHOD

If the duration of time while the following conditions are met is longer than the time indicated, judge as NG.

Judgment Value

Malfunction Criteria	Threshold Value
λ value	≤ 0.85

Time Needed for Diagnosis: 10000 ms
Malfunction Indicator Light Illumination: Illuminates when malfunction occurs in 2 continuous driving cycles.

FY:DTC P2196 A/F /O2 SENSOR SIGNAL BIASED/STUCK RICH BANK 1 SENSOR 1

DTC DETECTING CONDITION:

Detected when two consecutive driving cycles with fault occur.

CAUTION:

After servicing or replacing faulty parts, perform Clear Memory Mode <Ref. to EN(H6DO)(diag)-85, OPERATION, Clear Memory Mode.>, and Inspection Mode <Ref. to EN(H6DO)(diag)-69, PROCEDURE, Inspection Mode.>.

WIRING DIAGRAM:

- Engine Electrical System ENGINE TYPE EZ (WITHOUT PUSH BUTTON START) <Ref. to WI-198, ENGINE TYPE EZ (WITHOUT PUSH BUTTON START), WIRING DIAGRAM, Engine Electrical System.>
- Engine Electrical System ENGINE TYPE EZ (WITH PUSH BUTTON START) <Ref. to WI-214, ENGINE TYPE EZ (WITH PUSH BUTTON START), WIRING DIAGRAM, Engine Electrical System.>

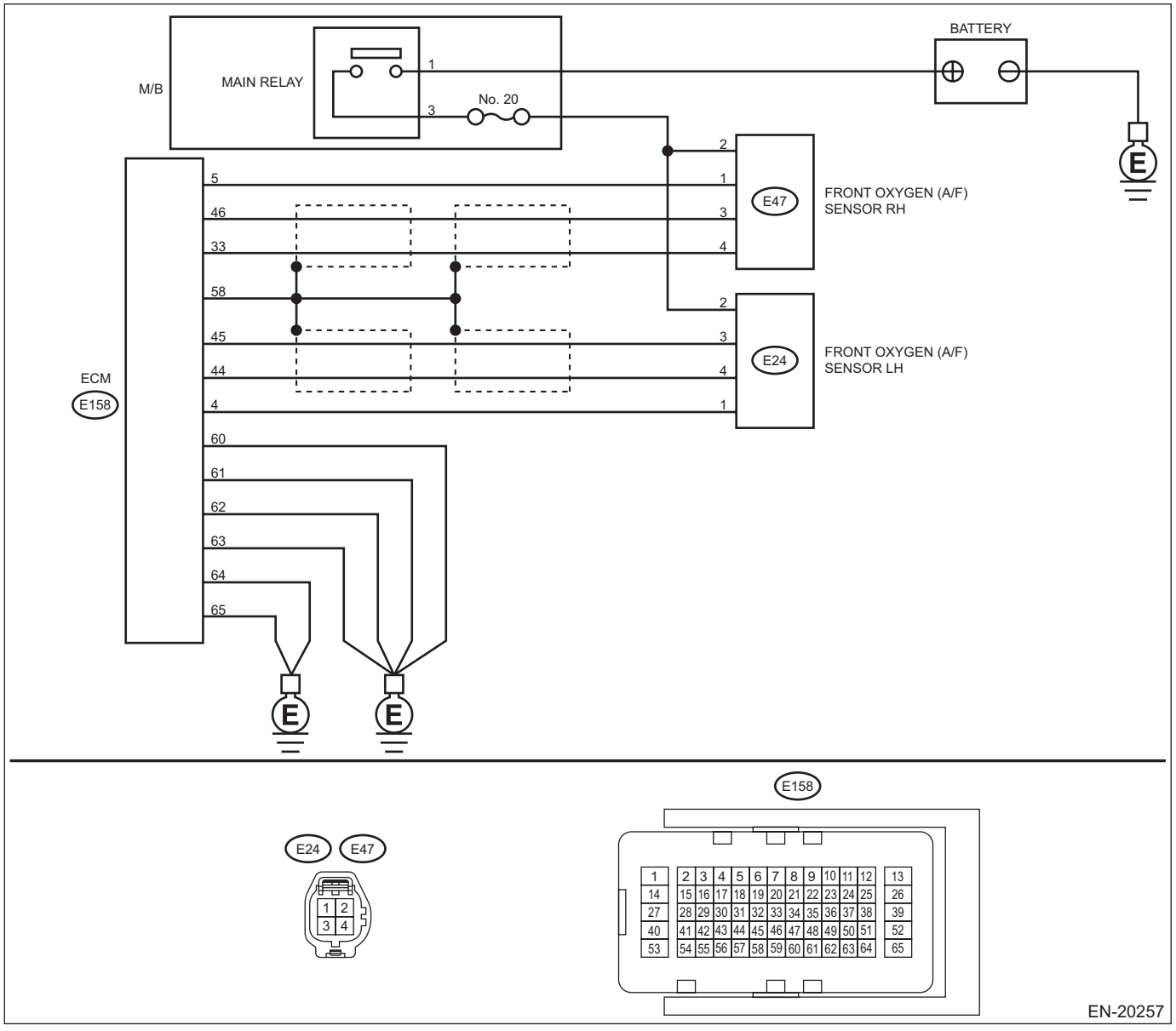

Step		Check	Yes	No
1	**CHECK FRONT OXYGEN (A/F) SENSOR CONNECTOR AND COUPLING CONNECTOR.**	Has water entered the connector?	Completely remove any water inside.	Go to step **2**.

	Step	Check	Yes	No
2	**CHECK HARNESS BETWEEN ECM AND FRONT OXYGEN (A/F) SENSOR CONNECTOR.** 1) Turn the ignition switch to OFF. 2) Disconnect the connector from ECM. 3) Measure the resistance between ECM connector and chassis ground. ***Connector & terminal*** ***(E158) No. 46 — Chassis ground:*** ***(E158) No. 33 — Chassis ground:***	Is the resistance 1 MΩ or more?	Go to step **3**.	Repair the short circuit to ground in harness between ECM connector and front oxygen (A/F) sensor connector.
3	**CHECK OUTPUT SIGNAL FOR ECM.** 1) Connect the connector to ECM. 2) Turn the ignition switch to ON. 3) Measure the voltage between ECM connector and chassis ground. ***Connector & terminal*** ***(B136) No. 19 (+) — Chassis ground (–):***	Is the voltage 4.5 V or more?	Go to step **5**.	Go to step **4**.
4	**CHECK OUTPUT SIGNAL FOR ECM.** Measure the voltage between ECM connector and chassis ground. ***Connector & terminal*** ***(E158) No. 33 (+) — Chassis ground (–):***	Is the voltage 4.95 V or more?	Go to step **5**.	Replace the front oxygen (A/F) sensor. <Ref. to FU(H6DO)-78, Front Oxygen (A/F) Sensor.>
5	**CHECK OUTPUT SIGNAL FOR ECM.** Measure the voltage between ECM connector and chassis ground. ***Connector & terminal*** ***(E158) No. 46 (+) — Chassis ground (–):*** ***(E158) No. 33 (+) — Chassis ground (–):***	Is the voltage 8 V or more?	Repair the short circuit to power in the harness between ECM connector and front oxygen (A/F) sensor connector. After repair, replace the ECM. <Ref. to FU(H6DO)-83, Engine Control Module (ECM).>	Repair the poor contact of ECM connector.

1. OUTLINE OF DIAGNOSIS

Detect that λ value remains high.
Judge as NG if the lambda value can be determined as abnormal in accordance with driving conditions such as vehicle speed, intake air amount, and rear oxygen sensor voltage as well as front oxygen (A/F) sensor λ value.

λ value = Actual air fuel ratio/Theoretical air fuel ratio
λ > 1: Lean
λ < 1: Rich

2. COMPONENT DESCRIPTION

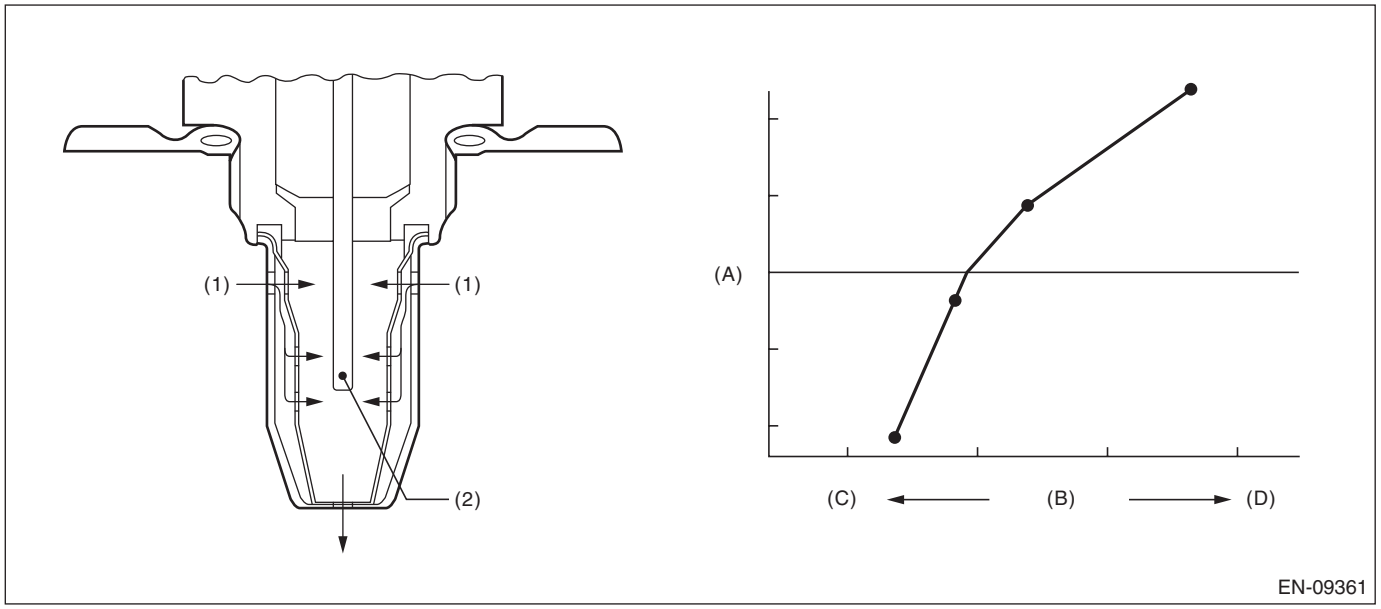

(A) Electromotive force (B) Air fuel ratio (C) Rich
(D) Lean

(1) Exhaust gas (2) ZrO_2

3. EXECUTION CONDITION

Secondary Parameters	Execution condition
Battery voltage	≥ 10.9 V
Barometric pressure	≥ 75.1 kPa (563 mmHg, 22.2 inHg)
Rear oxygen sensor sub feedback	Execution
Rear oxygen sensor output voltage – Feedback target voltage	–0.2 V — 0.1 V
or rear oxygen sensor sub feedback compensation coefficient	On Min.
or rear oxygen sensor sub feedback compensation coefficient	On Max.
Intake air amount	≥ 8 g/s (0.28 oz/s)

4. GENERAL DRIVING CYCLE

Perform the diagnosis continuously after the enable conditions have been established.

5. DIAGNOSTIC METHOD

If the duration of time while the following conditions are met is longer than the time indicated, judge as NG.

Judgment Value

Malfunction Criteria	Threshold Value
λ value	≥ 1.15

Time Needed for Diagnosis: 10000 ms
Malfunction Indicator Light Illumination: Illuminates when malfunction occurs in 2 continuous driving cycles.

FZ: DTC P2197 A/F / O2 SENSOR SIGNAL BIASED/STUCK LEAN BANK 2 SENSOR 1

DTC DETECTING CONDITION:

Detected when two consecutive driving cycles with fault occur.

CAUTION:

After servicing or replacing faulty parts, perform Clear Memory Mode <Ref. to EN(H6DO)(diag)-85, OPERATION, Clear Memory Mode.>, and Inspection Mode <Ref. to EN(H6DO)(diag)-69, PROCEDURE, Inspection Mode.>.

WIRING DIAGRAM:

- Engine Electrical System ENGINE TYPE EZ (WITHOUT PUSH BUTTON START) <Ref. to WI-198, ENGINE TYPE EZ (WITHOUT PUSH BUTTON START), WIRING DIAGRAM, Engine Electrical System.>
- Engine Electrical System ENGINE TYPE EZ (WITH PUSH BUTTON START) <Ref. to WI-214, ENGINE TYPE EZ (WITH PUSH BUTTON START), WIRING DIAGRAM, Engine Electrical System.>

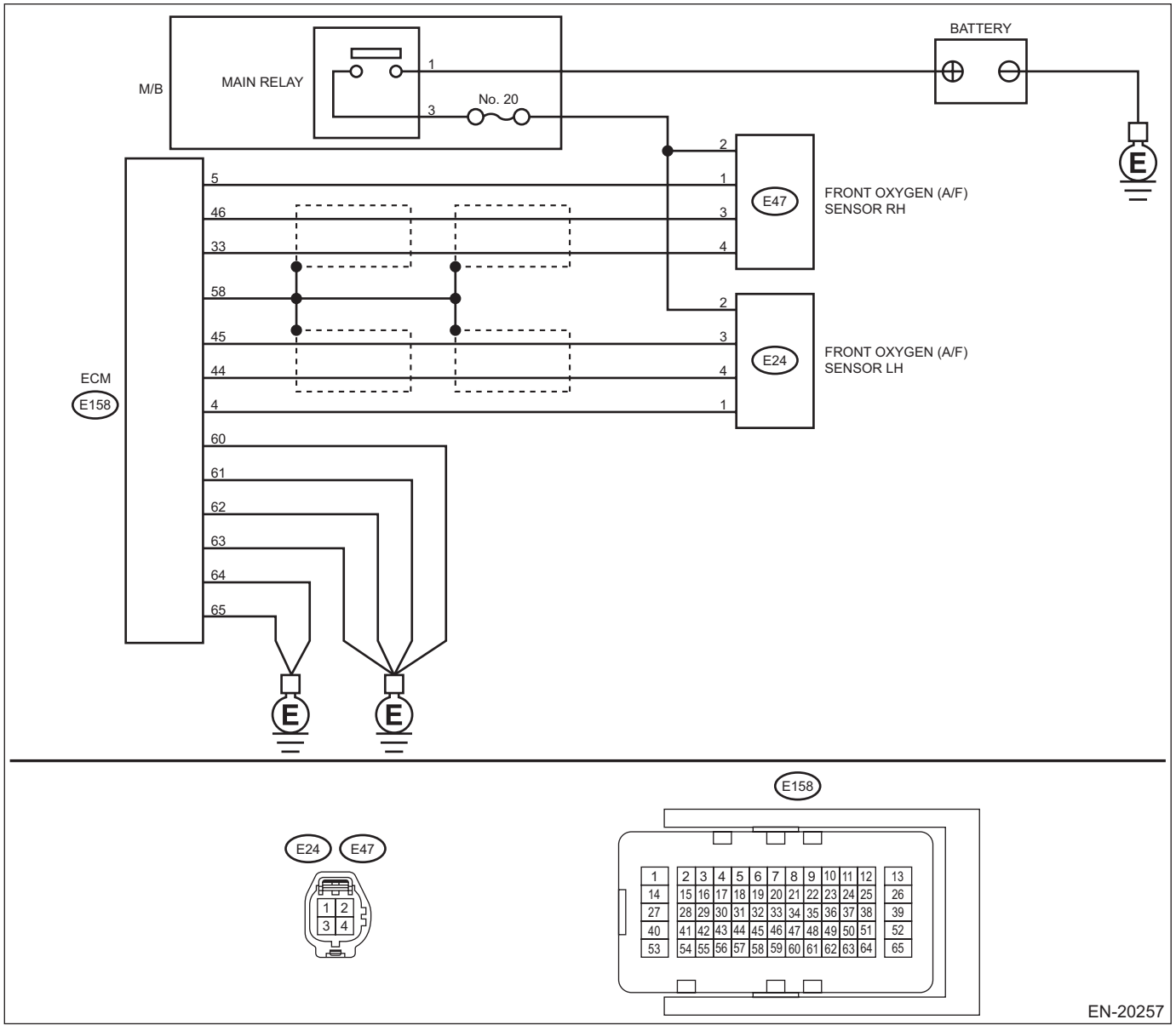

Step		Check	Yes	No
1	**CHECK FRONT OXYGEN (A/F) SENSOR CONNECTOR AND COUPLING CONNECTOR.**	Has water entered the connector?	Completely remove any water inside.	Go to step **2**.

	Step	Check	Yes	No
2	**CHECK HARNESS BETWEEN ECM AND FRONT OXYGEN (A/F) SENSOR CONNECTOR.** 1) Turn the ignition switch to OFF. 2) Disconnect the connectors from ECM and front oxygen (A/F) sensor. 3) Measure the resistance of harness between ECM connector and front oxygen (A/F) sensor connector. ***Connector & terminal*** ***(E158) No. 45 — (E24) No. 3:*** ***(E158) No. 44 — (E24) No. 4:***	Is the resistance less than 1 Ω?	Go to step **3**.	Repair the harness and connector. NOTE: In this case, repair the following item: • Open circuit in harness between ECM connector and front oxygen (A/F) sensor connector • Poor contact of coupling connector
3	**CHECK FOR POOR CONTACT.** Check for poor contact of the front oxygen (A/F) sensor connector.	Is there poor contact of front oxygen (A/F) sensor connector?	Repair the poor contact of front oxygen (A/F) sensor connector.	Replace the front oxygen (A/F) sensor. <Ref. to FU(H6DO)-78, Front Oxygen (A/F) Sensor.>

1. OUTLINE OF DIAGNOSIS

NOTE:
For the detection standard, refer to DTC P2195. <Ref. to EN(H6DO)(diag)-592, DTC P2195 A/F /O2 SENSOR SIGNAL BIASED/STUCK LEAN BANK 1 SENSOR 1, Diagnostic Procedure with Diagnostic Trouble Code (DTC).>

GA:DTC P2198 A/F / O2 SENSOR SIGNAL BIASED/STUCK RICH BANK 2 SENSOR 1

DTC DETECTING CONDITION:
Detected when two consecutive driving cycles with fault occur.

CAUTION:
After servicing or replacing faulty parts, perform Clear Memory Mode <Ref. to EN(H6DO)(diag)-85, OPERATION, Clear Memory Mode.>, and Inspection Mode <Ref. to EN(H6DO)(diag)-69, PROCEDURE, Inspection Mode.>.

WIRING DIAGRAM:
- Engine Electrical System ENGINE TYPE EZ (WITHOUT PUSH BUTTON START) <Ref. to WI-198, ENGINE TYPE EZ (WITHOUT PUSH BUTTON START), WIRING DIAGRAM, Engine Electrical System.>
- Engine Electrical System ENGINE TYPE EZ (WITH PUSH BUTTON START) <Ref. to WI-214, ENGINE TYPE EZ (WITH PUSH BUTTON START), WIRING DIAGRAM, Engine Electrical System.>

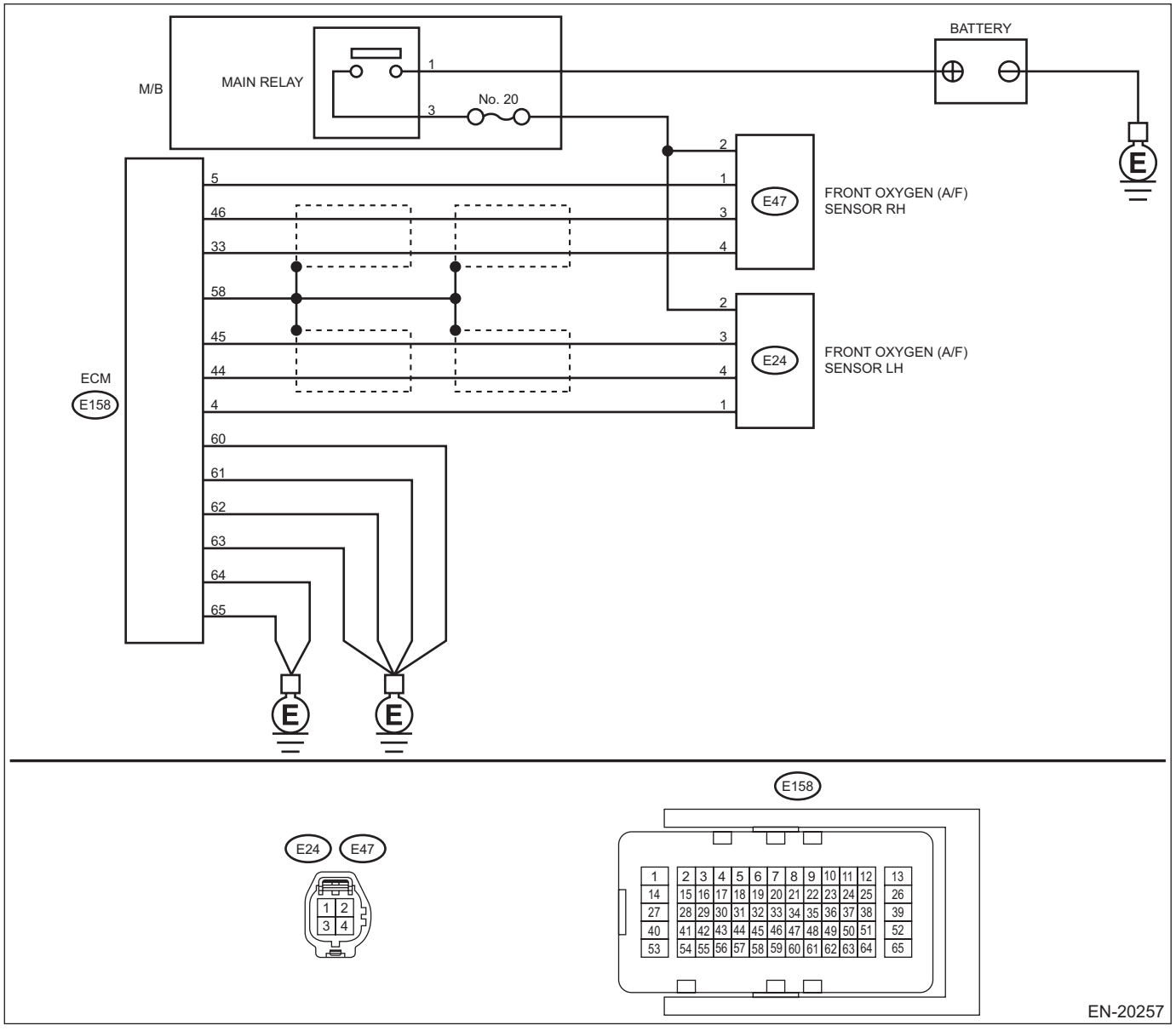

Step		Check	Yes	No
1	**CHECK FRONT OXYGEN (A/F) SENSOR CONNECTOR AND COUPLING CONNECTOR.**	Has water entered the connector?	Completely remove any water inside.	Go to step **2**.

	Step	Check	Yes	No
2	**CHECK HARNESS BETWEEN ECM AND FRONT OXYGEN (A/F) SENSOR CONNECTOR.** 1) Turn the ignition switch to OFF. 2) Disconnect the connector from ECM. 3) Measure the resistance between ECM connector and chassis ground. ***Connector & terminal*** ***(E158) No. 45 — Chassis ground:*** ***(E158) No. 44 — Chassis ground:***	Is the resistance 1 MΩ or more?	Go to step **3**.	Repair the short circuit to ground in harness between ECM connector and front oxygen (A/F) sensor connector.
3	**CHECK OUTPUT SIGNAL FOR ECM.** 1) Connect the connector to ECM. 2) Turn the ignition switch to ON. 3) Measure the voltage between ECM connector and chassis ground. ***Connector & terminal*** ***(E158) No. 45 (+) — Chassis ground (–):***	Is the voltage 4.5 V or more?	Go to step **5**.	Go to step **4**.
4	**CHECK OUTPUT SIGNAL FOR ECM.** Measure the voltage between ECM connector and chassis ground. ***Connector & terminal*** ***(E158) No. 44 (+) — Chassis ground (–):***	Is the voltage 4.95 V or more?	Go to step **5**.	Replace the front oxygen (A/F) sensor. <Ref. to FU(H6DO)-78, Front Oxygen (A/F) Sensor.>
5	**CHECK OUTPUT SIGNAL FOR ECM.** Measure the voltage between ECM connector and chassis ground. ***Connector & terminal*** ***(E158) No. 45 (+) — Chassis ground (–):*** ***(E158) No. 44 (+) — Chassis ground (–):***	Is the voltage 8 V or more?	Repair the short circuit to power in the harness between ECM connector and front oxygen (A/F) sensor connector. After repair, replace the ECM. <Ref. to FU(H6DO)-83, Engine Control Module (ECM).>	Repair the poor contact of ECM connector.

1. OUTLINE OF DIAGNOSIS

NOTE:
For the detection standard, refer to DTC P2196. <Ref. to EN(H6DO)(diag)-595, DTC P2196 A/F /O2 SENSOR SIGNAL BIASED/STUCK RICH BANK 1 SENSOR 1, Diagnostic Procedure with Diagnostic Trouble Code (DTC).>

GB:DTC P219A BANK 1 AIR-FUEL RATIO IMBALANCE

DTC DETECTING CONDITION:

Detected when two consecutive driving cycles with fault occur.

TROUBLE SYMPTOM:

- Engine stalls.
- Improper idling

CAUTION:

After servicing or replacing faulty parts, perform Clear Memory Mode <Ref. to EN(H6DO)(diag)-85, OPERATION, Clear Memory Mode.>, and Inspection Mode <Ref. to EN(H6DO)(diag)-69, PROCEDURE, Inspection Mode.>.

WIRING DIAGRAM:

- Engine Electrical System ENGINE TYPE EZ (WITHOUT PUSH BUTTON START) <Ref. to WI-198, ENGINE TYPE EZ (WITHOUT PUSH BUTTON START), WIRING DIAGRAM, Engine Electrical System.>
- Engine Electrical System ENGINE TYPE EZ (WITH PUSH BUTTON START) <Ref. to WI-214, ENGINE TYPE EZ (WITH PUSH BUTTON START), WIRING DIAGRAM, Engine Electrical System.>

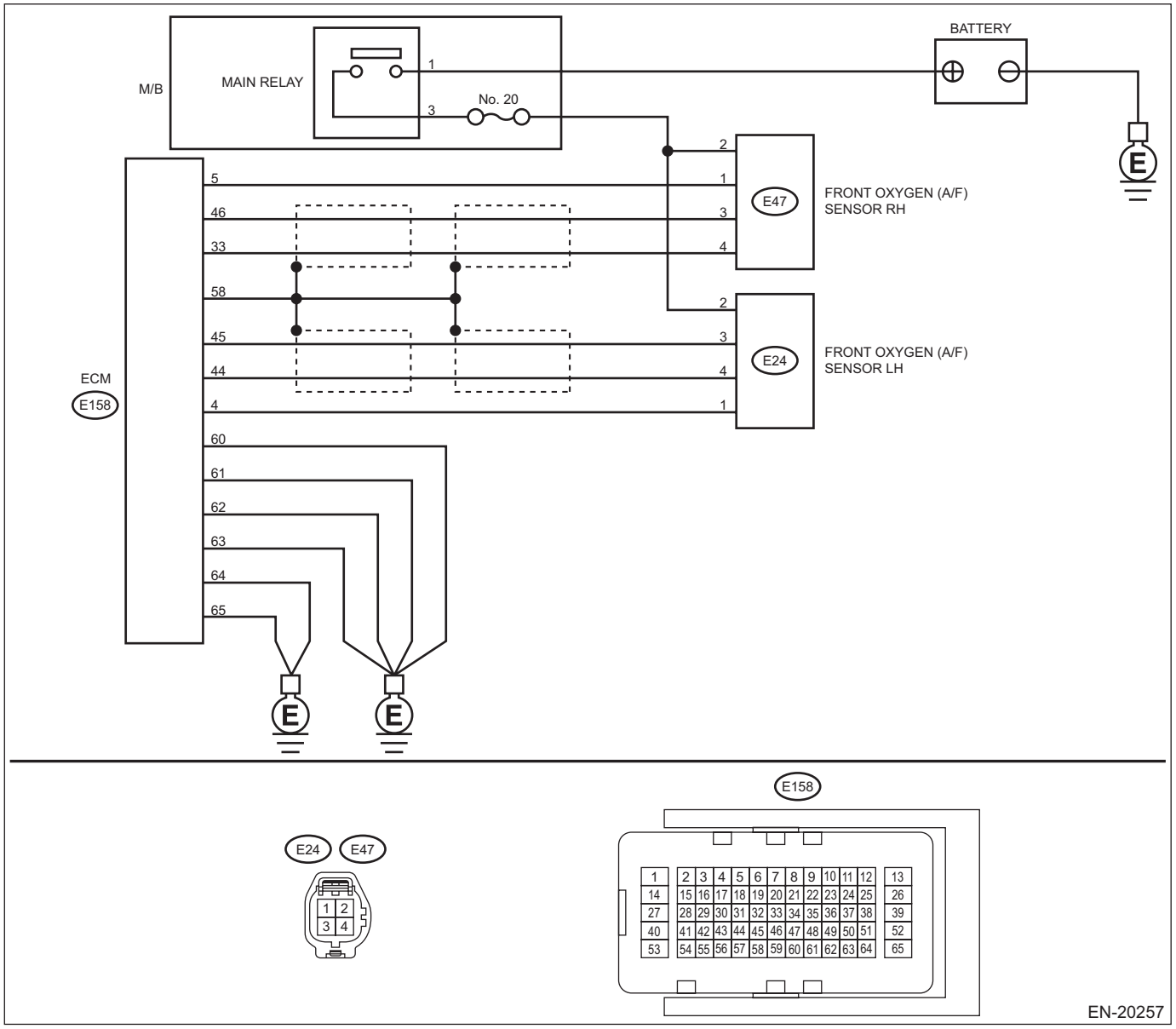

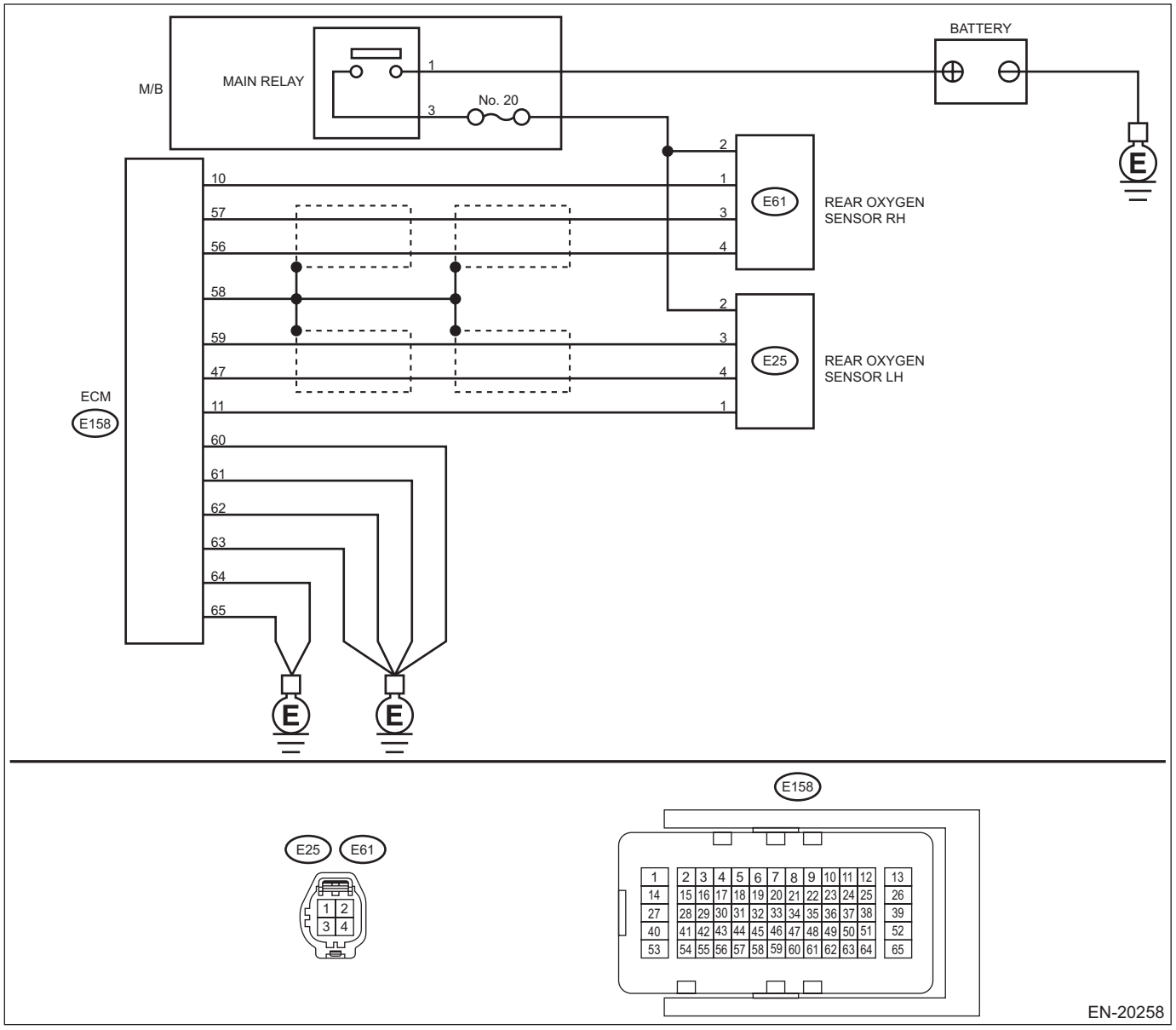
BATTERY
M/B
MAIN RELAY
1
3
No. 20
2
1
E61
REAR OXYGEN SENSOR RH
3
4
2
3
E25
REAR OXYGEN SENSOR LH
4
1
ECM
E158
10
57
56
58
59
47
11
60
61
62
63
64
65
E
E
E
E25
E61
1 2
3 4
E158
1 2 3 4 5 6 7 8 9 10 11 12 13
14 15 16 17 18 19 20 21 22 23 24 25 26
27 28 29 30 31 32 33 34 35 36 37 38 39
40 41 42 43 44 45 46 47 48 49 50 51 52
53 54 55 56 57 58 59 60 61 62 63 64 65
EN-20258

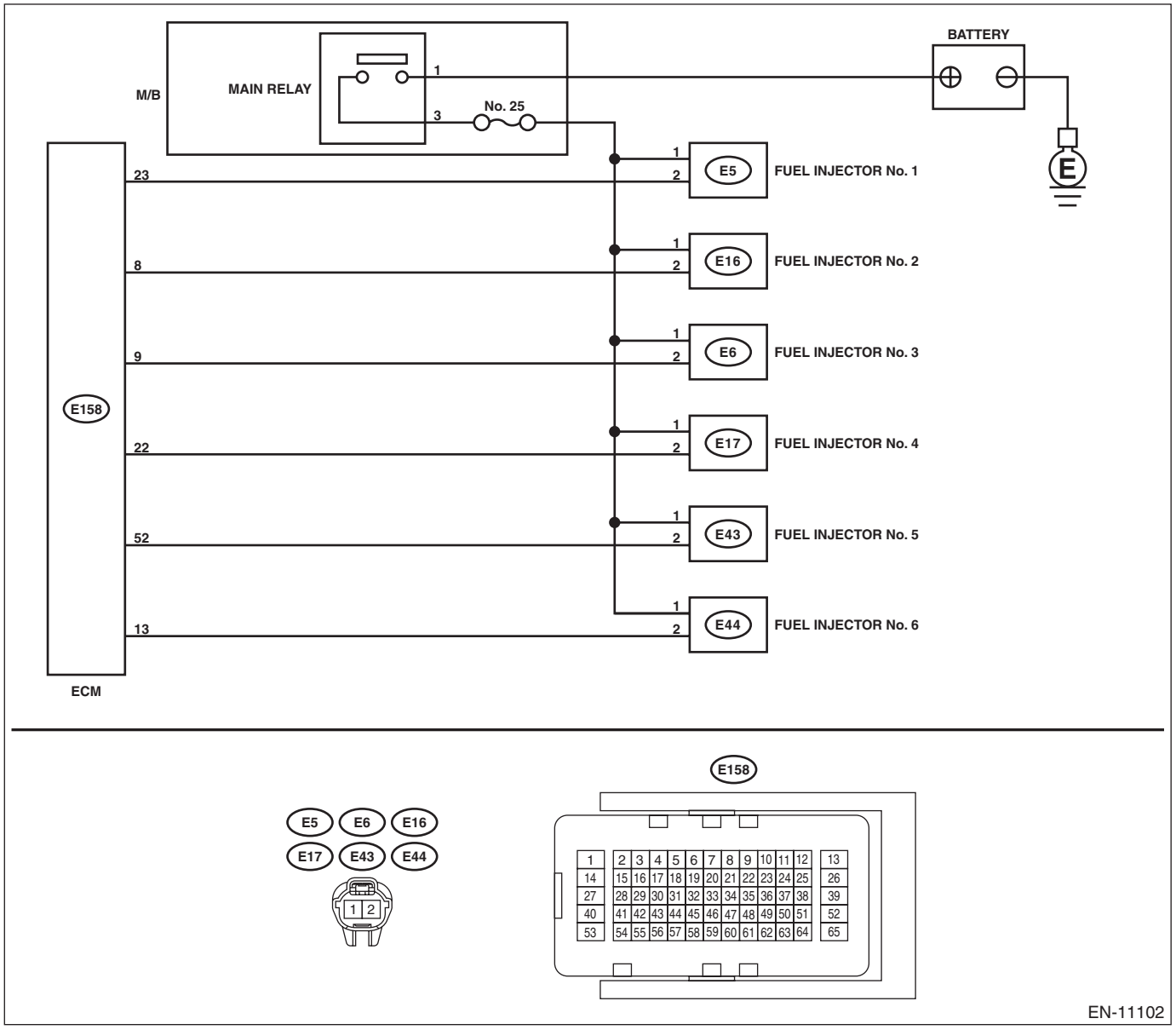

Step		Check	Yes	No
1	**CHECK FRONT OXYGEN (A/F) SENSOR CONNECTOR AND COUPLING CONNECTOR.**	Has water entered the connector?	Completely remove any water inside.	Go to step **2**.
2	**CHECK HARNESS BETWEEN ECM AND FRONT OXYGEN (A/F) SENSOR CONNECTOR.** 1) Turn the ignition switch to OFF. 2) Disconnect the connectors from ECM and front oxygen (A/F) sensor. 3) Measure the resistance of harness between ECM connector and front oxygen (A/F) sensor connector. ***Connector & terminal*** ***(E158) No. 46 — (E47) No. 3:*** ***(E158) No. 33 — (E47) No. 4:***	Is the resistance less than 1 Ω?	Go to step **3**.	Repair the harness and connector. NOTE: In this case, repair the following item: • Open circuit in harness between ECM connector and front oxygen (A/F) sensor connector • Poor contact of coupling connector

	Step	Check	Yes	No
3	**CHECK HARNESS BETWEEN ECM AND FRONT OXYGEN (A/F) SENSOR CONNECTOR.** Measure the resistance between ECM connector and chassis ground. ***Connector & terminal*** ***(E158) No. 46 — Chassis ground:*** ***(E158) No. 33 — Chassis ground:***	Is the resistance 1 MΩ or more?	Go to step **4**.	Repair the short circuit to ground in harness between ECM connector and front oxygen (A/F) sensor connector.
4	**CHECK OUTPUT SIGNAL FOR ECM.** 1) Connect the connector to ECM. 2) Turn the ignition switch to ON. 3) Measure the voltage between front oxygen (A/F) sensor connector and chassis ground. ***Connector & terminal*** ***(E47) No. 3 (+) — Chassis ground (–):***	Is the voltage 4.5 V or more?	Go to step **6**.	Go to step **5**.
5	**CHECK OUTPUT SIGNAL FOR ECM.** Measure the voltage between front oxygen (A/F) sensor connector and chassis ground. ***Connector & terminal*** ***(E47) No. 4 (+) — Chassis ground (–):***	Is the voltage 4.95 V or more?	Go to step **6**.	Go to step **7**.
6	**CHECK OUTPUT SIGNAL FOR ECM.** Measure the voltage between front oxygen (A/F) sensor connector and chassis ground. ***Connector & terminal*** ***(E47) No. 3 (+) — Chassis ground (–):*** ***(E47) No. 4 (+) — Chassis ground (–):***	Is the voltage 8 V or more?	Repair the short circuit to power in the harness between ECM connector and front oxygen (A/F) sensor connector. After repair, replace the ECM. <Ref. to FU(H6DO)-83, Engine Control Module (ECM).>	Repair the poor contact of ECM connector.
7	**CHECK EXHAUST SYSTEM.**	Are there holes or loose bolts on exhaust system?	Repair the exhaust system.	Go to step **8**.
8	**CHECK AIR INTAKE SYSTEM.**	Are there holes, loose bolts or disconnection of hose on air intake system?	Repair the air intake system.	Go to step **9**.
9	**CHECK FUEL PRESSURE.** **WARNING:** **Place "NO OPEN FLAMES" signs near the working area.** **CAUTION:** **Be careful not to spill fuel.** 1) Connect the front oxygen (A/F) sensor connector. 2) Measure the fuel pressure. <Ref. to ME(H6DO)-31, INSPECTION, Fuel Pressure.> **CAUTION:** **Before attaching/detaching a fuel pressure gauge, release the fuel pressure.**	Is the measured value 340 — 400 kPa (3.5 — 4.1 kgf/cm^2, 49 — 58 psi)?	Go to step **10**.	Check the fuel pump and fuel delivery line. <Ref. to FU(H6DO)-124, INSPECTION, Fuel Pump.> <Ref. to FU(H6DO)-167, INSPECTION, Fuel Delivery and Evaporation Lines.>

	Step	Check	Yes	No
10	**CHECK ENGINE COOLANT TEMPERATURE SENSOR.** 1) Start the engine and warm up completely. 2) Read the value of «Coolant Temp.» using the Subaru Select Monitor or a general scan tool. NOTE: • Subaru Select Monitor For detailed operation procedures, refer to "Read Current Data For Engine". <Ref. to EN(H6DO)(diag)-50, Subaru Select Monitor.> • General scan tool For detailed operation procedures, refer to the general scan tool operation manual.	Is the value of «Coolant Temp.» 75°C (167°F) or more?	Go to step **11**.	Replace the engine coolant temperature sensor. <Ref. to FU(H6DO)-39, Engine Coolant Temperature Sensor.>
11	**CHECK MASS AIR FLOW AND INTAKE AIR TEMPERATURE SENSOR.** 1) Start the engine and warm up engine until coolant temperature is higher than 75°C (167°F). 2) Place the select lever in "P" range or "N" range. 3) Turn the A/C switch to OFF. 4) Turn all the accessory switches to OFF. 5) Read the value of «Mass Air Flow» using the Subaru Select Monitor or a general scan tool. NOTE: • Subaru Select Monitor For detailed operation procedures, refer to "Read Current Data For Engine". <Ref. to EN(H6DO)(diag)-50, Subaru Select Monitor.> • General scan tool For detailed operation procedures, refer to the general scan tool operation manual.	Is the value of «Mass Air Flow» 2.0 — 5.0 g/s (0.26 — 0.66 lb/m)?	Go to step **12**.	Replace the mass air flow and intake air temperature sensor. <Ref. to FU(H6DO)-58, Mass Air Flow and Intake Air Temperature Sensor.>
12	**CHECK MASS AIR FLOW AND INTAKE AIR TEMPERATURE SENSOR.** 1) Start the engine and warm up engine until coolant temperature is higher than 75°C (167°F). 2) Place the select lever in "P" range or "N" range. 3) Turn the A/C switch to OFF. 4) Turn all the accessory switches to OFF. 5) Open the front hood. 6) Measure the ambient temperature. 7) Read the value of «Intake Air Temp.» using the Subaru Select Monitor or a general scan tool. NOTE: • Subaru Select Monitor For detailed operation procedures, refer to "Read Current Data For Engine". <Ref. to EN(H6DO)(diag)-50, Subaru Select Monitor.> • General scan tool For detailed operation procedures, refer to the general scan tool operation manual.	Subtract ambient temperature from «Intake Air Temp.». Is the obtained value –10 — 50°C (–18 — 90°F)?	Go to step **13**.	Check the mass air flow and intake air temperature sensor. <Ref. to FU(H6DO)-58, Mass Air Flow and Intake Air Temperature Sensor.>

	Step	Check	Yes	No
13	**CHECK REAR OXYGEN SENSOR DATA.** 1) Warm up the engine until engine coolant temperature is higher than 75°C (167°F), and keep the engine speed at 3,000 rpm. (2 minutes maximum) 2) Read the value of «Front O2 Sensor #1» using the Subaru Select Monitor or a general scan tool. NOTE: • Subaru Select Monitor For detailed operation procedures, refer to "Read Current Data For Engine". <Ref. to EN(H6DO)(diag)-50, Subaru Select Monitor.> • General scan tool For detailed operation procedures, refer to the general scan tool operation manual.	Is the value of «Front O2 Sensor #1» 0.490 V or more?	Go to step **14**.	Go to step **15**.
14	**CHECK REAR OXYGEN SENSOR DATA.** 1) Warm up the engine until engine coolant temperature is higher than 75°C (167°F), and rapidly reduce the engine speed from 3,000 rpm. 2) Read the value of «Front O2 Sensor #1» using the Subaru Select Monitor or a general scan tool. NOTE: • Subaru Select Monitor For detailed operation procedures, refer to "Read Current Data For Engine". <Ref. to EN(H6DO)(diag)-50, Subaru Select Monitor.> • General scan tool For detailed operation procedures, refer to the general scan tool operation manual.	Is the value of «Front O2 Sensor #1» 0.250 V or less?	Go to step **16**.	Go to step **15**.
15	**CHECK REAR OXYGEN SENSOR CONNECTOR AND COUPLING CONNECTOR.**	Has water entered the connector?	Completely remove any water inside.	Go to step **17**.
16	**CHECK FRONT OXYGEN (A/F) SENSOR USING REAR OXYGEN SENSOR SIGNAL.** 1) Warm up the engine until engine coolant temperature is higher than 75°C (167°F), then keep the engine idling for 5 minutes or more. 2) Read the value of «Front O2 Sensor #1» using the Subaru Select Monitor or a general scan tool. NOTE: • Subaru Select Monitor For detailed operation procedures, refer to "Read Current Data For Engine". <Ref. to EN(H6DO)(diag)-50, Subaru Select Monitor.> • General scan tool For detailed operation procedures, refer to the general scan tool operation manual.	Does the value of «Front O2 Sensor #1» remain at 0.250 V or less for 5 minutes or more?	Replace the front oxygen (A/F) sensor. <Ref. to FU(H6DO)-78, Front Oxygen (A/F) Sensor.>	Go to step **17**.

	Step	Check	Yes	No
17	**CHECK HARNESS BETWEEN ECM AND REAR OXYGEN SENSOR CONNECTOR.** 1) Turn the ignition switch to OFF. 2) Disconnect the connector from ECM and rear oxygen sensor. 3) Measure the resistance of harness between ECM connector and rear oxygen sensor connector. ***Connector & terminal*** ***(E158) No. 59 — (E61) No. 3:*** ***(E158) No. 47 — (E61) No. 4:***	Is the resistance less than 1 Ω?	Go to step **18**.	Repair the harness and connector. NOTE: In this case, repair the following item: • Open circuit in harness between ECM connector and rear oxygen sensor connector • Poor contact of coupling connector
18	**CHECK HARNESS BETWEEN ECM AND REAR OXYGEN SENSOR CONNECTOR.** 1) Connect the connector to ECM. 2) Turn the ignition switch to ON. 3) Measure the voltage between rear oxygen sensor connector and chassis ground. ***Connector & terminal*** ***(E61) No. 3 (+) — Chassis ground (–):***	Is the voltage 0.2 — 0.5 V?	Replace the rear oxygen sensor. <Ref. to FU(H6DO)-81, Rear Oxygen Sensor.>	Go to step **19**.
19	**CHECK OUTPUT SIGNAL OF ECM.** 1) Turn the ignition switch to ON. 2) Measure the voltage between ECM and chassis ground on faulty cylinders. ***Connector & terminal*** ***#1 (E158) No. 23 (+) — Chassis ground (–):*** ***#2 (E158) No. 8 (+) — Chassis ground (–):*** ***#3 (E158) No. 9 (+) — Chassis ground (–):*** ***#4 (E158) No. 22 (+) — Chassis ground (–):*** ***#5 (E158) No. 52 (+) — Chassis ground (–):*** ***#6 (E158) No. 13 (+) — Chassis ground (–):***	Is the voltage 10 V or more?	Go to step **24**.	Go to step **20**.
20	**CHECK HARNESS BETWEEN ECM AND FUEL INJECTOR.** 1) Turn the ignition switch to OFF. 2) Disconnect the connector from fuel injector on faulty cylinders. 3) Measure the resistance between fuel injector connector and engine ground on faulty cylinders. ***Connector & terminal*** ***#1 (E5) No. 1 — Engine ground:*** ***#2 (E16) No. 1 — Engine ground:*** ***#3 (E6) No. 1 — Engine ground:*** ***#4 (E17) No. 1 — Engine ground:*** ***#5 (E43) No. 1 — Engine ground:*** ***#6 (E44) No. 1 — Engine ground:***	Is the resistance 1 MΩ or more?	Go to step **21**.	Repair the short circuit to ground in harness between ECM connector and fuel injector connector.
21	**CHECK HARNESS BETWEEN ECM AND FUEL INJECTOR.** Measure the resistance of harness between ECM and fuel injector connector on faulty cylinders. ***Connector & terminal*** ***#1 (E158) No. 23 — (E5) No. 1:*** ***#2 (E158) No. 8 — (E16) No. 1:*** ***#3 (E158) No. 9 — (E6) No. 1:*** ***#4 (E158) No. 22 — (E17) No. 1:*** ***#5 (E158) No. 52 — (E43) No. 1:*** ***#6 (E158) No. 13 — (E44) No. 1:***	Is the resistance less than 1 Ω?	Go to step **22**.	Repair the open circuit of the harness between the ECM connector and fuel injector connector.

	Step	Check	Yes	No
22	**CHECK FUEL INJECTOR.** Measure the resistance between fuel injector terminals on faulty cylinder. ***Terminals*** ***No. 1 — No. 2:***	Is the resistance 5 — 20 Ω?	Go to step **23**.	Replace the faulty fuel injector. <Ref. to FU(H6DO)-61, Fuel Injector.>
23	**CHECK POWER SUPPLY LINE.** 1) Turn the ignition switch to ON. 2) Measure the voltage between fuel injector connector of faulty cylinders and engine ground. ***Connector & terminal*** ***#1 (E5) No. 2 (+) — Engine ground (–):*** ***#2 (E16) No. 2 (+) — Engine ground (–):*** ***#3 (E6) No. 2 (+) — Engine ground (–):*** ***#4 (E17) No. 2 (+) — Engine ground (–):*** ***#5 (E43) No. 2 (+) — Engine ground (–):*** ***#6 (E44) No. 2 (+) — Engine ground (–):***	Is the voltage 10 V or more?	Repair the poor contact of all connectors in fuel injector circuit.	Repair the harness and connector. NOTE: In this case, repair the following item: • Open circuit in harness between the main relay and fuel injector connector on faulty cylinders • Poor contact of main relay connector
24	**CHECK HARNESS BETWEEN ECM AND FUEL INJECTOR.** 1) Turn the ignition switch to OFF. 2) Disconnect the connector from fuel injector on faulty cylinders. 3) Turn the ignition switch to ON. 4) Measure the voltage between ECM and chassis ground on faulty cylinders. ***Connector & terminal*** ***#1 (E158) No. 23 (+) — Chassis ground (–):*** ***#2 (E158) No. 8 (+) — Chassis ground (–):*** ***#3 (E158) No. 9 (+) — Chassis ground (–):*** ***#4 (E158) No. 22 (+) — Chassis ground (–):*** ***#5 (E158) No. 52 (+) — Chassis ground (–):*** ***#6 (E158) No. 13 (+) — Chassis ground (–):***	Is the voltage 10 V or more?	Repair the short circuit to power in harness between ECM connector and fuel injector connectors.	Go to step **25**.
25	**CHECK FUEL INJECTOR.** 1) Turn the ignition switch to OFF. 2) Measure the resistance between fuel injector terminals on faulty cylinder. ***Terminals*** ***No. 1 — No. 2:***	Is the resistance 5 — 20 Ω?	Go to step **26**.	Replace the faulty fuel injector. <Ref. to FU(H6DO)-61, Fuel Injector.>
26	**CHECK INSTALLATION OF CAMSHAFT POSITION SENSOR/CRANKSHAFT POSITION SENSOR.**	Is the camshaft position sensor or crankshaft position sensor loosely installed?	Tighten the camshaft position sensor or crankshaft position sensor.	Go to step **27**.
27	**CHECK CRANK PLATE.**	Is the crank sprocket rusted or the teeth of crank plate broken?	Replace the crank plate. <Ref. to ME(H6DO)-134, Cylinder Block.>	Go to step **28**.
28	**CHECK INSTALLATION CONDITION OF TIMING CHAIN.** Turn the crankshaft using ST, and align the alignment mark on crank sprocket with alignment mark on cylinder block. ST 18252AA000 CRANKSHAFT SOCKET	Is the timing chain dislocated from its proper position?	Correct the installation condition of timing chain. <Ref. to ME(H6DO)-87, Timing Chain Assembly.>	Go to step **29**.

Step		Check	Yes	No
29	**CHECK FUEL LEVEL.**	Is the fuel meter indication lower than the “Lower” level?	Refill the fuel so that the fuel meter indication is higher than the “Lower” level, and proceed to the next step. Go to step **30**.	Go to step **30**.
30	**CHECK STATUS OF MALFUNCTION INDICATOR LIGHT.** 1) Clear the memory using the Subaru Select Monitor or general scan tool. <Ref. to EN(H6DO)(diag)-85, Clear Memory Mode.> 2) Start the engine, and drive the vehicle 10 minutes or more.	Does the malfunction indicator light illuminate or blink?	Go to step **32**.	Go to step **31**.
31	**CHECK CAUSE OF MISFIRE.**	Was the cause of misfire identified when the engine is running?	Finish diagnostics operation, if the engine has no abnormality.	Repair the poor contact of connector. NOTE: In this case, repair the following item: • Poor contact of ignition coil connector • Poor contact of fuel injector connector on faulty cylinders • Poor contact of ECM connector • Poor contact of coupling connector
32	**CHECK AIR INTAKE SYSTEM.**	Is there any fault in air intake system?	Repair the air intake system. NOTE: Check the following items. • Are there air leaks or air suction caused by loose or dislocated nuts and bolts? • Are there cracks or any disconnection of hoses?	Go to step **33**.
33	**CHECK MISFIRE SYMPTOM.** 1) Turn the ignition switch to ON. 2) Check for DTC. <Ref. to EN(H6DO)(diag)-68, Read Diagnostic Trouble Code (DTC).>	Does the Subaru Select Monitor or general scan tool indicate only one DTC?	Go to step **36**.	Go to step **34**.
34	**CHECK DTC ON DISPLAY.**	Is DTC P0301, P0303 and P0305 displayed?	Go to step **37**.	Go to step **35**.
35	**CHECK DTC ON DISPLAY.**	Is DTC P0302, P0304 and P0306 displayed?	Go to step **38**.	Go to step **39**.

Step		Check	Yes	No
36	ONLY ONE CYLINDER.	Is there any fault in the cylinder?	Repair or replace faulty parts. NOTE: Check the following items. • Spark plug • Ignition coil • Fuel injector • Compression	Check DTC P0171, P0172, P0174 or P0175 using “List of Diagnostic Trouble Code (DTC)”. <Ref. to EN(H6DO)(diag)-109, List of Diagnostic Trouble Code (DTC).>
37	GROUP OF #1, #3 AND #5 CYLINDERS.	Is there any fault in #1, #3 and #5 cylinders?	Repair or replace faulty parts. NOTE: Check the following items. • Spark plug • Ignition coil • Fuel injector • Compression • Skipping timing chain teeth	Check DTC P0171, P0172, P0174 or P0175 using “List of Diagnostic Trouble Code (DTC)”. <Ref. to EN(H6DO)(diag)-109, List of Diagnostic Trouble Code (DTC).>
38	GROUP OF #2, #4 AND #6 CYLINDERS.	Is there any fault in #2, #4 and #6 cylinders?	Repair or replace faulty parts. NOTE: Check the following items. • Spark plug • Ignition coil • Fuel injector • Compression • Skipping timing chain teeth	Check DTC P0171, P0172, P0174 or P0175 using “List of Diagnostic Trouble Code (DTC)”. <Ref. to EN(H6DO)(diag)-109, List of Diagnostic Trouble Code (DTC).>
39	CYLINDER AT RANDOM.	Is the engine idle rough?	Check DTC P0171, P0172, P0174 or P0175 using “List of Diagnostic Trouble Code (DTC)”. <Ref. to EN(H6DO)(diag)-109, List of Diagnostic Trouble Code (DTC).>	Repair or replace faulty parts. NOTE: Check the following items. • Spark plug • Ignition coil • Fuel injector • Compression ratio

1. OUTLINE OF DIAGNOSIS

This diagnostic monitor performs a functional check of the fuel system to determine an air-fuel ratio cylinder imbalance.
This diagnosis is composed of two monitors.
The outline of “monitor A1” is as follows. When an air-fuel ratio cylinder imbalance occurs, the primary oxygen sensor output signal will oscillate with increased amplitude. This monitor utilizes this behavior to make a diagnosis. The monitor integrates the difference between the amplification value and the mean value of the first oxygen sensor output signal and compares it to a threshold to make a judgment.
The outline of “monitor B1” is as follows. Similarly, when an imbalance occurs, the engine speed also fluctuates with increased amplitude. This monitor utilizes this behavior to make a diagnosis. For reference, it should be noted that this imbalance monitor method is actually similar to the current misfire diagnostic monitor, and the parameter “domg360” (units: degrees CA) is shared between the imbalance and misfire monitors. The imbalance monitor is performed during idle condition when the engine is warm. The monitor integrates the count of “domg360” which exceeds a threshold in 1000 revolution.
When both the “monitor A1” value and the “monitor B1” value exceed a predetermined threshold, this monitor determines a malfunction and stores a fault code.

Monitor A1

When there is an air-fuel ratio cylinder imbalance malfunction, the primary oxygen sensor output fluctuates widely compared with a normal sensor, as shown by the chain line in Figure 1 below. This monitor makes a diagnosis based on this phenomenon. Each primary oxygen sensor signal (PS) and mean value of the primary oxygen sensor signal (MS) is calculated from the primary oxygen sensor signal. The absolute values of (PS – MS) are sampled every 4 ms as shown in the figure. Condition Value 1 (CV1) is obtained by integrating the absolute value of (PS – MS) for 2500 times. A malfunction is determined when CV1 exceeds the threshold. The judgment values are determined experimentally.

Figure 1. Compare malfunctioned primary oxygen sensor output with a normal sensor

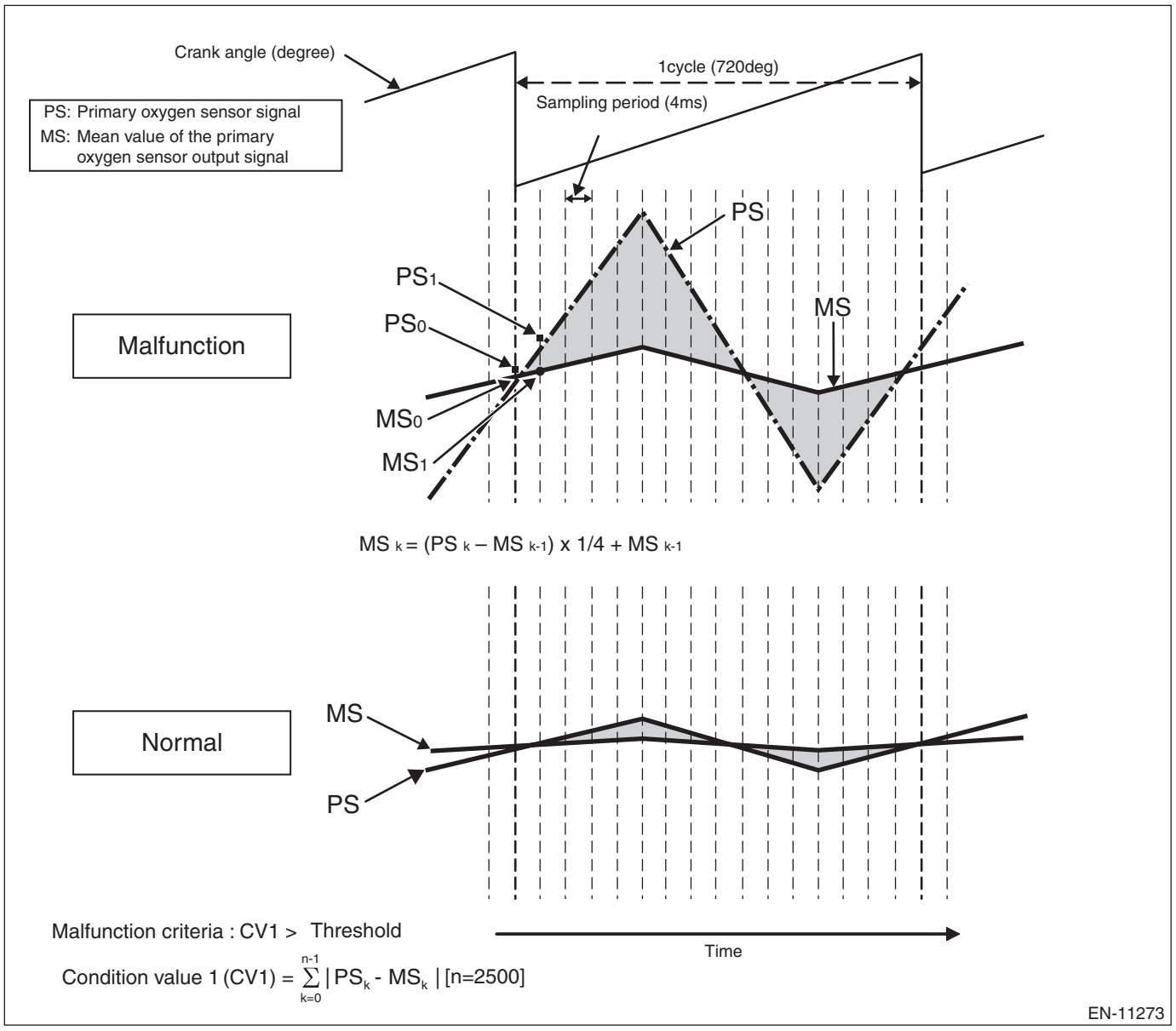

Monitor B1

Method used: Difference method of 360 degrees CA
Monitor value: domg360 = (omg 1 – omg 0) – (omg 4 – omg 3) = angular speed
Each crankshaft angular speed is defined as Figure 2 below.
Figure 2. Description of domg360 output

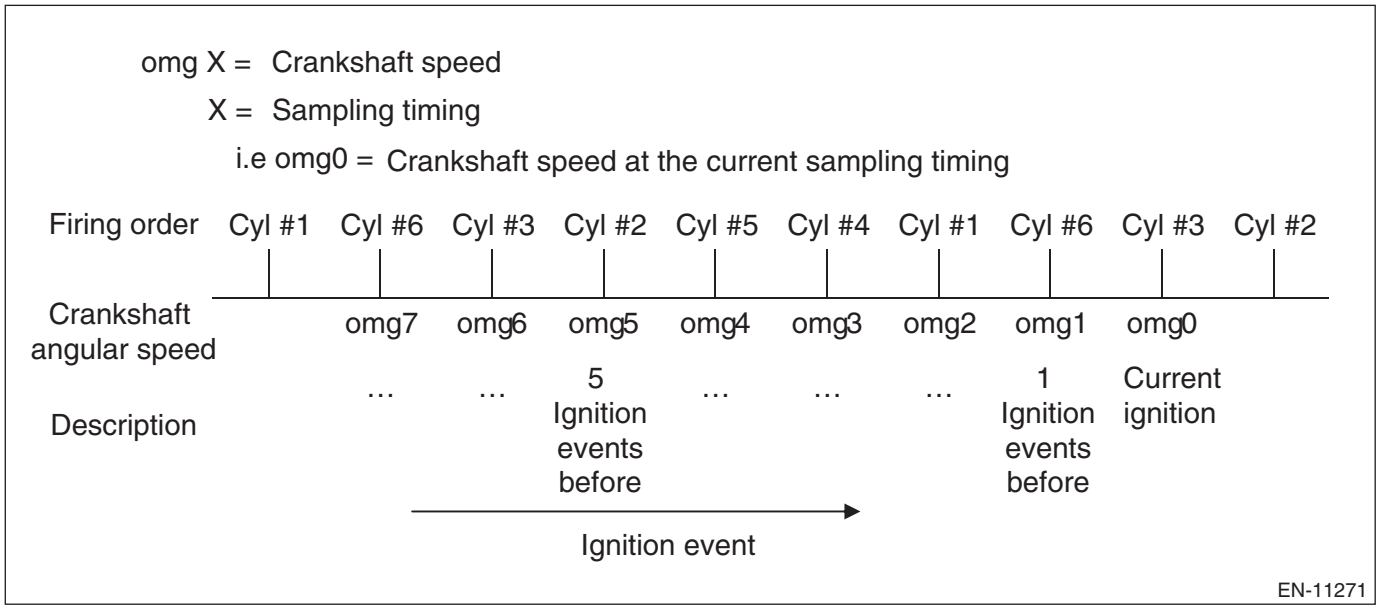

This method uses the fact that the domg360 of lean conditioned cylinder caused by imbalance malfunction indicates big value, as shown by the chain line in Figure 3 below.
The number of times for domg360 to exceed the judgment value in 667 revolutions (333 cycles) is calculated as condition value 2 (CV2). A malfunction is determined when CV2 exceeds the threshold.
Figure 3. Compare malfunctioned domg360 output with a normal output

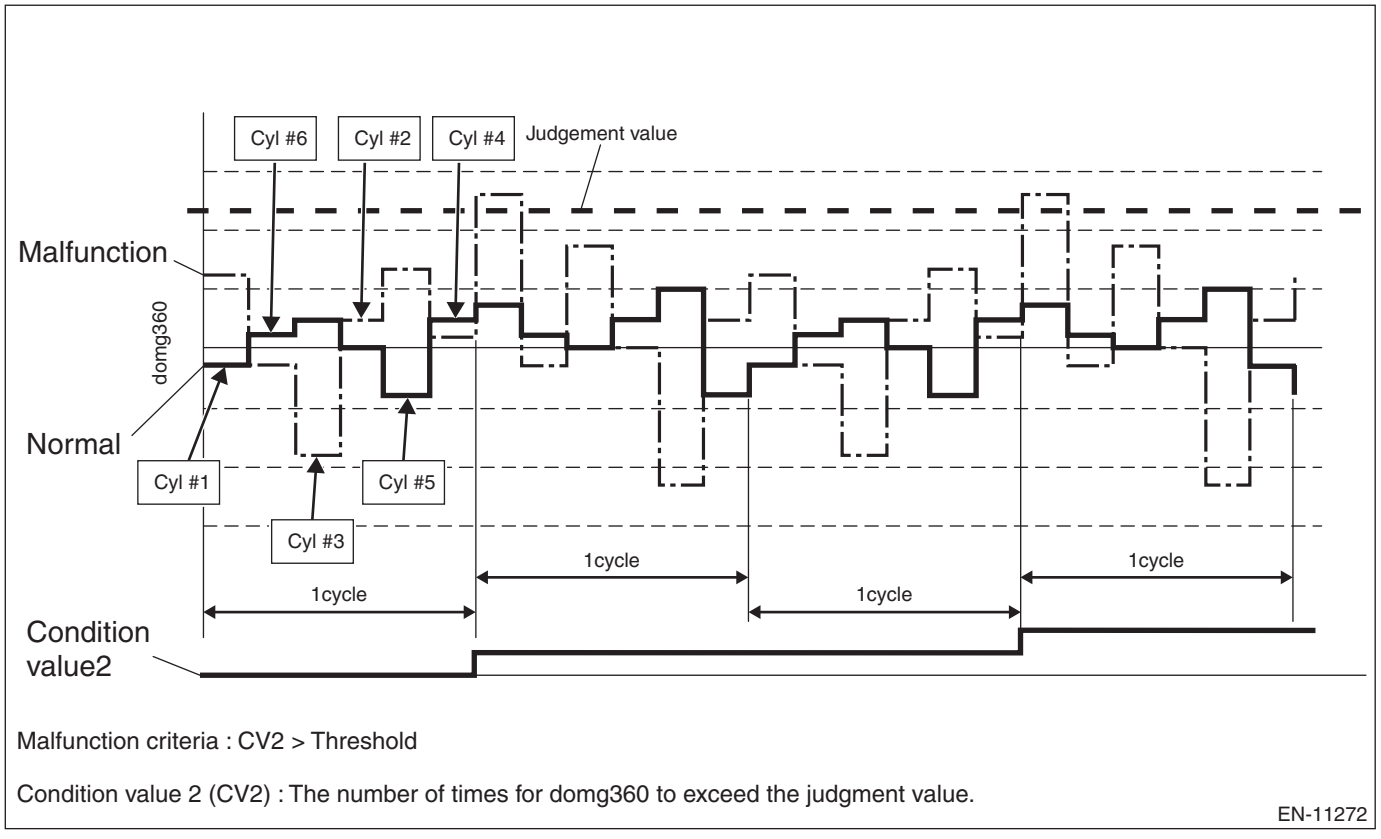

2. EXECUTION CONDITION

Monitor A1: Primary oxygen sensor fluctuation

Secondary Parameters	Execution condition
Battery voltage	≥ 10.9 V
Barometric pressure	≥ 75.1 kPa (563 mmHg, 22.2 inHg)
Closed loop control with primary oxygen sensor	Active
Engine speed	> 1200 rpm and < 3400 rpm
Intake air mass per crankshaft revolution	> 0.8 g/rev (0.03 oz/rev)

Monitor B1: Crankshaft speed fluctuation

Secondary Parameters	Execution condition
Misfire diagnosis monitor	Active
Accelerator pedal position	= 0%
Vehicle speed	≤ 2 km/h (1.2 MPH)
Engine speed	> 475 rpm and < 1050 rpm
Closed loop control with primary oxygen sensor	Active
Intake air mass per crankshaft revolution	> 0 g/rev (0 oz/rev) and < 1000 g/rev (35.27 oz/rev)

3. GENERAL DRIVING CYCLE

Always perform the diagnosis continuously.

4. DIAGNOSTIC METHOD

Judge as NG when Monitor A1 and Monitor B1 are both NG, and when either is OK, judge as OK.

Monitor A1

Judge as NG when the following conditions are established.

Judgment Value

Malfunction Criteria	Threshold Value
Condition value 1 (CV1)	> Threshold value 1 (TV1)

Threshold value 1 (TV1):

$$\sum_{k=0}^{n-1} Map_k \quad [n=2500]$$

EN-09888

Map

		Intake air mass per crankshaft revolution (g/rev (oz/rev))						
		0.8 (0.03)	1 (0.04)	1.2 (0.04)	1.4 (0.05)	1.6 (0.06)	1.8 (0.06)	2 (0.07)
Engine speed (rpm)	1200	0.017	0.018	0.018	0.023	0.034	0.046	0.057
	1400	0.022	0.022	0.027	0.033	0.042	0.051	0.060
	1600	0.025	0.029	0.031	0.037	0.043	0.049	0.054
	1800	0.022	0.028	0.032	0.038	0.059	0.067	0.076
	2000	0.021	0.027	0.035	0.040	0.058	0.076	0.094
	2200	0.024	0.030	0.034	0.039	0.056	0.074	0.091
	2400	0.025	0.031	0.037	0.059	0.080	0.102	0.124
	2600	0.026	0.030	0.041	0.071	0.101	0.131	0.162
	2800	0.026	0.029	0.039	0.062	0.085	0.108	0.131
	3000	0.027	0.028	0.043	0.060	0.077	0.094	0.110
	3200	0.025	0.031	0.042	0.063	0.084	0.106	0.127
	3400	0.027	0.033	0.043	0.058	0.074	0.089	0.105

Time Needed for Diagnosis:

4 ms × 2500 time(s)

Monitor B1

Judge as NG when the following conditions are established.

Judgment Value

Malfunction Criteria	Threshold Value
Condition Value 2 (CV2)	> 17 time(s)

Time Needed for Diagnosis: (2000 time(s)/3) engine revs.

Malfunction Indicator Light Illumination: Illuminates when malfunction occurs in 2 continuous driving cycles.

GC:DTC P219B BANK 2 AIR-FUEL RATIO IMBALANCE

DTC DETECTING CONDITION:

Detected when two consecutive driving cycles with fault occur.

TROUBLE SYMPTOM:

- Engine stalls.
- Improper idling

CAUTION:

After servicing or replacing faulty parts, perform Clear Memory Mode <Ref. to EN(H6DO)(diag)-85, OPERATION, Clear Memory Mode.>, and Inspection Mode <Ref. to EN(H6DO)(diag)-69, PROCEDURE, Inspection Mode.>.

WIRING DIAGRAM:

- Engine Electrical System ENGINE TYPE EZ (WITHOUT PUSH BUTTON START) <Ref. to WI-198, ENGINE TYPE EZ (WITHOUT PUSH BUTTON START), WIRING DIAGRAM, Engine Electrical System.>
- Engine Electrical System ENGINE TYPE EZ (WITH PUSH BUTTON START) <Ref. to WI-214, ENGINE TYPE EZ (WITH PUSH BUTTON START), WIRING DIAGRAM, Engine Electrical System.>

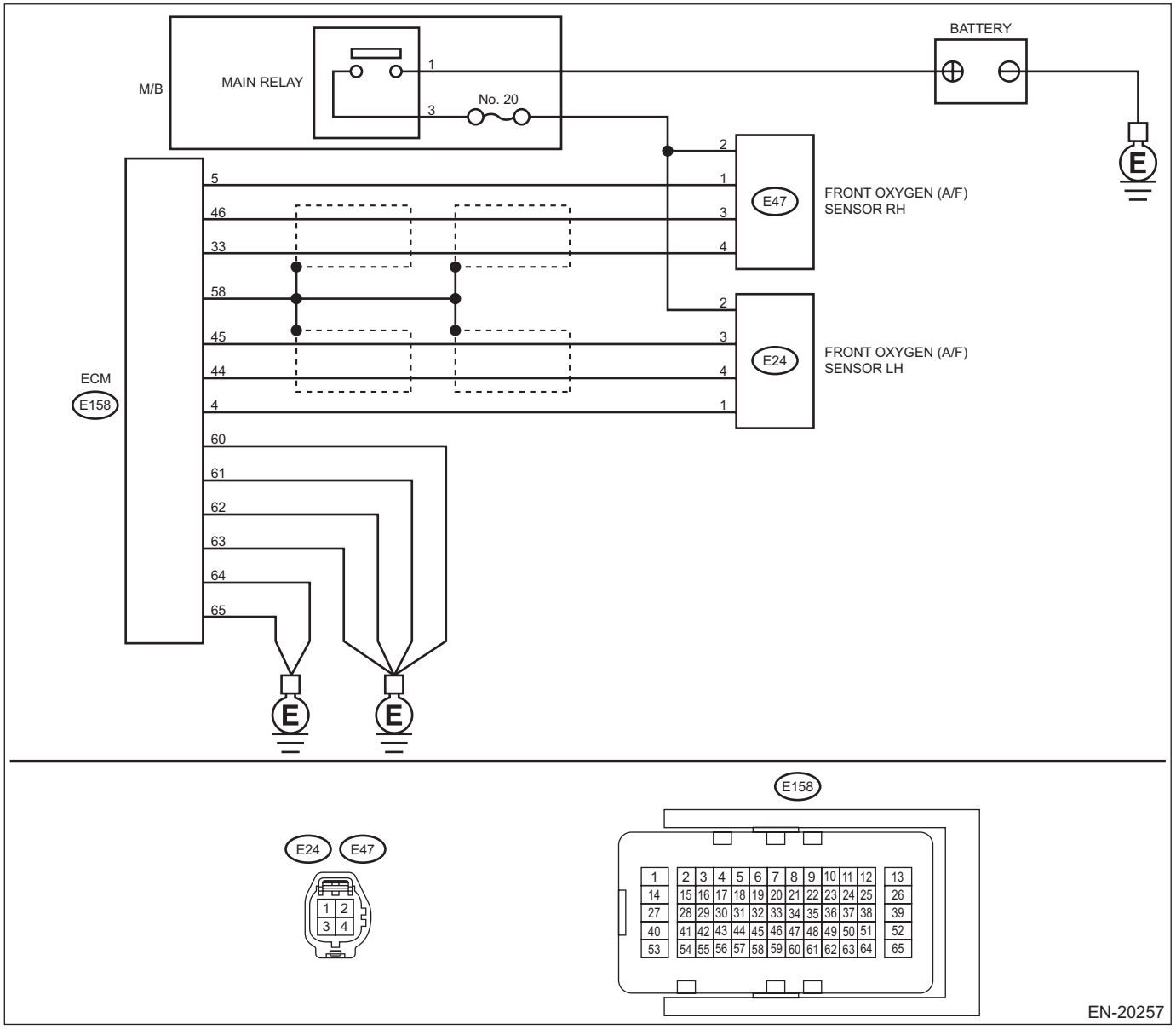

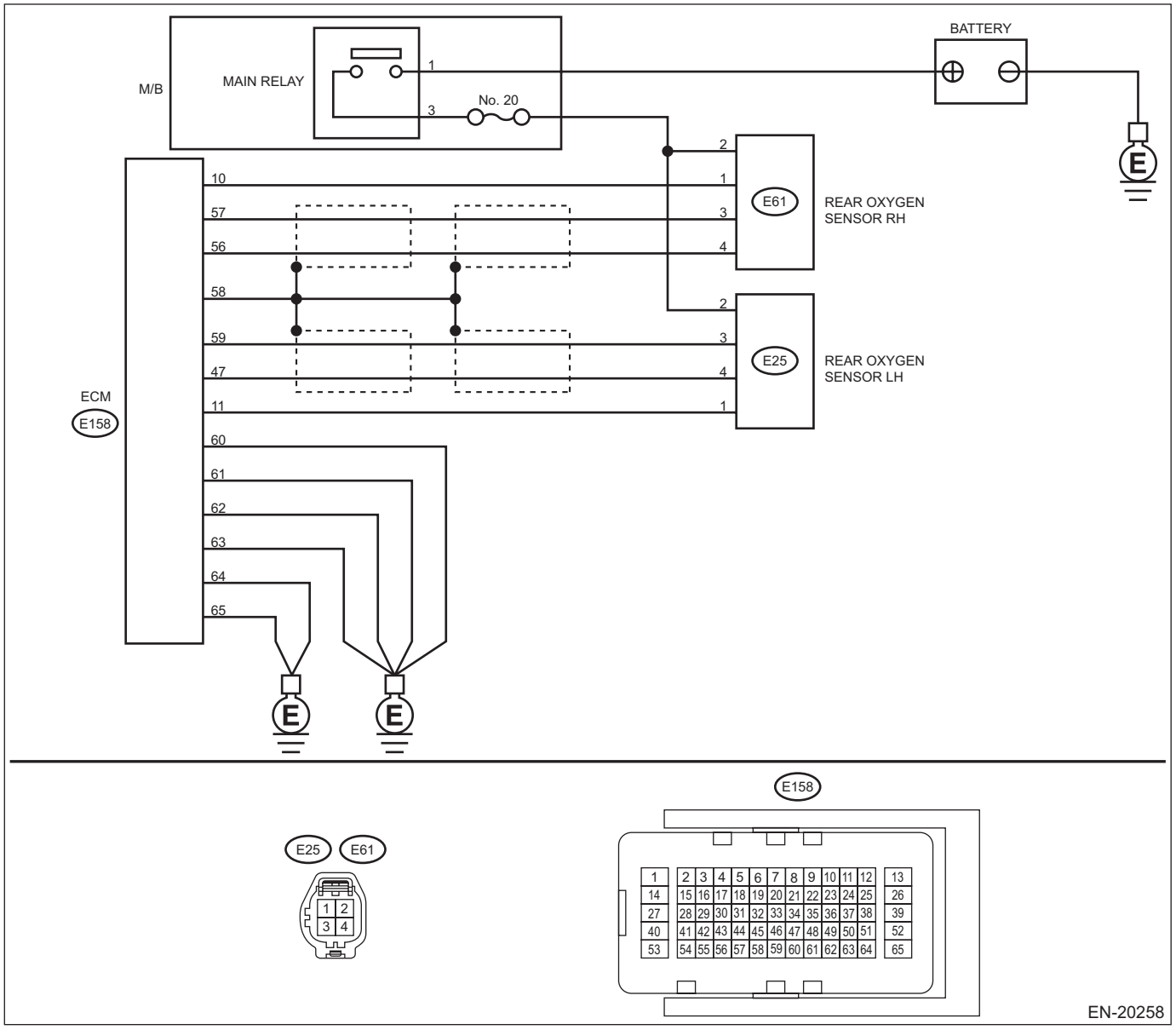
BATTERY
M/B
MAIN RELAY
1
3
No. 20
2
10
57
56
58
59
47
11
60
61
62
63
64
65
ECM
E158
E61
REAR OXYGEN SENSOR RH
E25
REAR OXYGEN SENSOR LH
E
E158
E25
E61
1 2
3 4
1 2 3 4 5 6 7 8 9 10 11 12 13
14 15 16 17 18 19 20 21 22 23 24 25 26
27 28 29 30 31 32 33 34 35 36 37 38 39
40 41 42 43 44 45 46 47 48 49 50 51 52
53 54 55 56 57 58 59 60 61 62 63 64 65
EN-20258

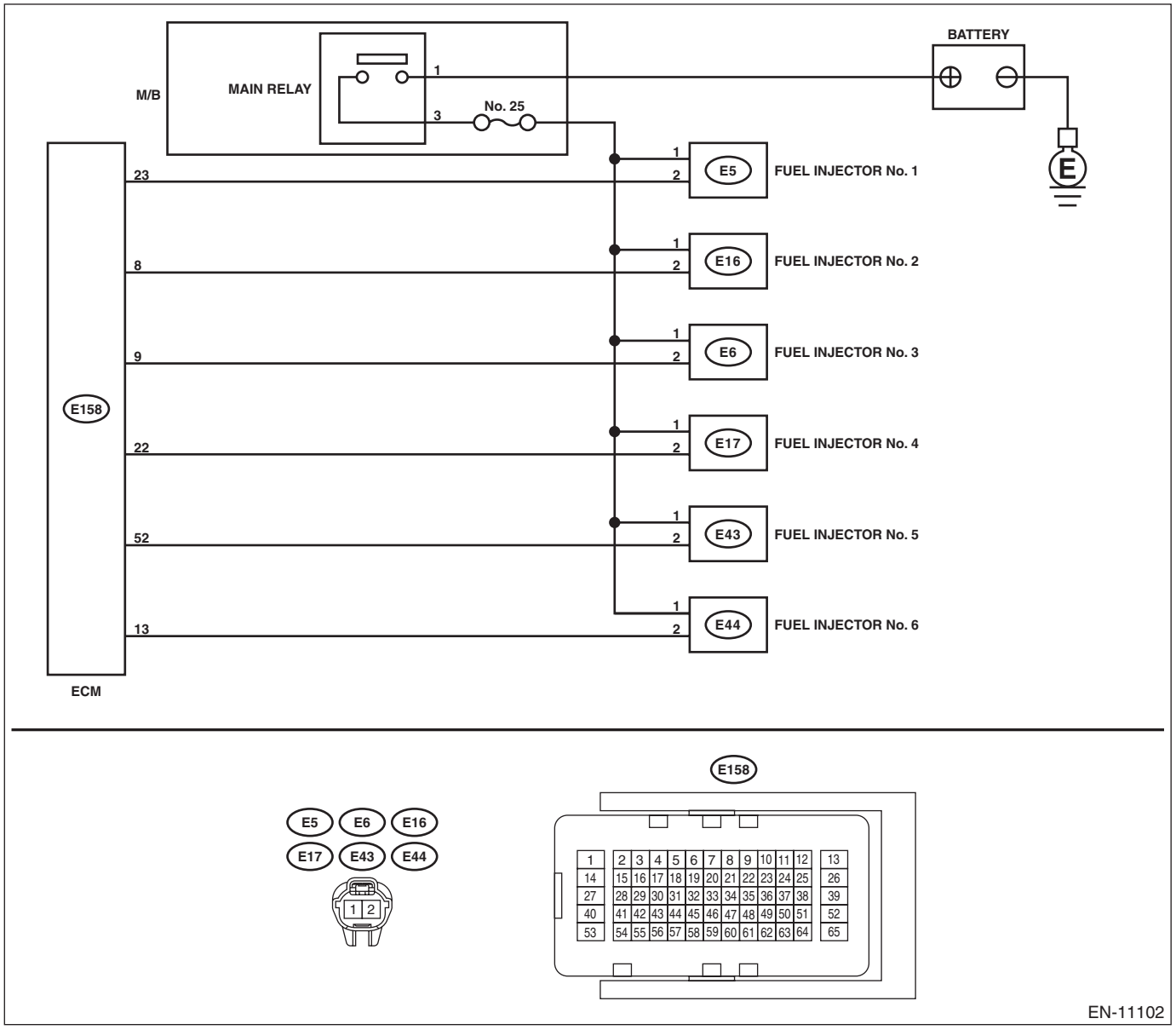

Step		Check	Yes	No
1	**CHECK FRONT OXYGEN (A/F) SENSOR CONNECTOR AND COUPLING CONNECTOR.**	Has water entered the connector?	Completely remove any water inside.	Go to step **2**.
2	**CHECK HARNESS BETWEEN ECM AND FRONT OXYGEN (A/F) SENSOR CONNECTOR.** 1) Turn the ignition switch to OFF. 2) Disconnect the connectors from ECM and front oxygen (A/F) sensor. 3) Measure the resistance of harness between ECM connector and front oxygen (A/F) sensor connector. ***Connector & terminal*** ***(E158) No. 45 — (E24) No. 3:*** ***(E158) No. 44 — (E24) No. 4:***	Is the resistance less than 1 Ω?	Go to step **3**.	Repair the harness and connector. NOTE: In this case, repair the following item: • Open circuit in harness between ECM connector and front oxygen (A/F) sensor connector • Poor contact of coupling connector

	Step	Check	Yes	No
3	**CHECK HARNESS BETWEEN ECM AND FRONT OXYGEN (A/F) SENSOR CONNECTOR.** Measure the resistance between ECM connector and chassis ground. ***Connector & terminal*** ***(E158) No. 45 — Chassis ground:*** ***(E158) No. 44 — Chassis ground:***	Is the resistance 1 MΩ or more?	Go to step **4**.	Repair the short circuit to ground in harness between ECM connector and front oxygen (A/F) sensor connector.
4	**CHECK OUTPUT SIGNAL FOR ECM.** 1) Connect the connector to ECM. 2) Turn the ignition switch to ON. 3) Measure the voltage between front oxygen (A/F) sensor connector and chassis ground. ***Connector & terminal*** ***(E24) No. 3 (+) — Chassis ground (–):***	Is the voltage 4.5 V or more?	Go to step **6**.	Go to step **5**.
5	**CHECK OUTPUT SIGNAL FOR ECM.** Measure the voltage between front oxygen (A/F) sensor connector and chassis ground. ***Connector & terminal*** ***(E24) No. 4 (+) — Chassis ground (–):***	Is the voltage 4.95 V or more?	Go to step **6**.	Go to step **7**.
6	**CHECK OUTPUT SIGNAL FOR ECM.** Measure the voltage between front oxygen (A/F) sensor connector and chassis ground. ***Connector & terminal*** ***(E24) No. 3 (+) — Chassis ground (–):*** ***(E24) No. 4 (+) — Chassis ground (–):***	Is the voltage 8 V or more?	Repair the short circuit to power in the harness between ECM connector and front oxygen (A/F) sensor connector. After repair, replace the ECM. <Ref. to FU(H6DO)-83, Engine Control Module (ECM).>	Repair the poor contact of ECM connector.
7	**CHECK EXHAUST SYSTEM.**	Are there holes or loose bolts on exhaust system?	Repair the exhaust system.	Go to step **8**.
8	**CHECK AIR INTAKE SYSTEM.**	Are there holes, loose bolts or disconnection of hose on air intake system?	Repair the air intake system.	Go to step **9**.
9	**CHECK FUEL PRESSURE.** **WARNING:** **Place "NO OPEN FLAMES" signs near the working area.** **CAUTION:** **Be careful not to spill fuel.** 1) Connect the front oxygen (A/F) sensor connector. 2) Measure the fuel pressure. <Ref. to ME(H6DO)-31, INSPECTION, Fuel Pressure.> **CAUTION:** **Before attaching/detaching a fuel pressure gauge, release the fuel pressure.**	Is the measured value 340 — 400 kPa (3.5 — 4.1 kgf/cm^2, 49 — 58 psi)?	Go to step **10**.	Check the fuel pump and fuel delivery line. <Ref. to FU(H6DO)-124, INSPECTION, Fuel Pump.> <Ref. to FU(H6DO)-167, INSPECTION, Fuel Delivery and Evaporation Lines.>

	Step	Check	Yes	No
10	**CHECK ENGINE COOLANT TEMPERATURE SENSOR.** 1) Start the engine and warm up completely. 2) Read the value of «Coolant Temp.» using the Subaru Select Monitor or a general scan tool. NOTE: • Subaru Select Monitor For detailed operation procedures, refer to "Read Current Data For Engine". <Ref. to EN(H6DO)(diag)-50, Subaru Select Monitor.> • General scan tool For detailed operation procedures, refer to the general scan tool operation manual.	Is the value of «Coolant Temp.» 75°C (167°F) or more?	Go to step **11**.	Replace the engine coolant temperature sensor. <Ref. to FU(H6DO)-39, Engine Coolant Temperature Sensor.>
11	**CHECK MASS AIR FLOW AND INTAKE AIR TEMPERATURE SENSOR.** 1) Start the engine and warm up engine until coolant temperature is higher than 75°C (167°F). 2) Place the select lever in "P" range or "N" range. 3) Turn the A/C switch to OFF. 4) Turn all the accessory switches to OFF. 5) Read the value of «Mass Air Flow» using the Subaru Select Monitor or a general scan tool. NOTE: • Subaru Select Monitor For detailed operation procedures, refer to "Read Current Data For Engine". <Ref. to EN(H6DO)(diag)-50, Subaru Select Monitor.> • General scan tool For detailed operation procedures, refer to the general scan tool operation manual.	Is the value of «Mass Air Flow» 2.0 — 5.0 g/s (0.26 — 0.66 lb/m)?	Go to step **12**.	Replace the mass air flow and intake air temperature sensor. <Ref. to FU(H6DO)-58, Mass Air Flow and Intake Air Temperature Sensor.>
12	**CHECK MASS AIR FLOW AND INTAKE AIR TEMPERATURE SENSOR.** 1) Start the engine and warm up engine until coolant temperature is higher than 75°C (167°F). 2) Place the select lever in "P" range or "N" range. 3) Turn the A/C switch to OFF. 4) Turn all the accessory switches to OFF. 5) Open the front hood. 6) Measure the ambient temperature. 7) Read the value of «Intake Air Temp.» using the Subaru Select Monitor or a general scan tool. NOTE: • Subaru Select Monitor For detailed operation procedures, refer to "Read Current Data For Engine". <Ref. to EN(H6DO)(diag)-50, Subaru Select Monitor.> • General scan tool For detailed operation procedures, refer to the general scan tool operation manual.	Subtract ambient temperature from «Intake Air Temp.». Is the obtained value –10 — 50°C (–18 — 90°F)?	Go to step **13**.	Check the mass air flow and intake air temperature sensor. <Ref. to FU(H6DO)-58, Mass Air Flow and Intake Air Temperature Sensor.>

	Step	Check	Yes	No
13	**CHECK REAR OXYGEN SENSOR DATA.** 1) Warm up the engine until engine coolant temperature is higher than 75°C (167°F), and keep the engine speed at 3,000 rpm. (2 minutes maximum) 2) Read the value of «Front O2 Sensor #2» using the Subaru Select Monitor or a general scan tool. NOTE: • Subaru Select Monitor For detailed operation procedures, refer to "Read Current Data For Engine". <Ref. to EN(H6DO)(diag)-50, Subaru Select Monitor.> • General scan tool For detailed operation procedures, refer to the general scan tool operation manual.	Is the value of «Front O2 Sensor #2» 0.490 V or more?	Go to step **14**.	Go to step **15**.
14	**CHECK REAR OXYGEN SENSOR DATA.** 1) Warm up the engine until engine coolant temperature is higher than 75°C (167°F), and rapidly reduce the engine speed from 3,000 rpm. 2) Read the value of «Front O2 Sensor #2» using the Subaru Select Monitor or a general scan tool. NOTE: • Subaru Select Monitor For detailed operation procedures, refer to "Read Current Data For Engine". <Ref. to EN(H6DO)(diag)-50, Subaru Select Monitor.> • General scan tool For detailed operation procedures, refer to the general scan tool operation manual.	Is the value of «Front O2 Sensor #2» 0.250 V or less?	Go to step **16**.	Go to step **15**.
15	**CHECK REAR OXYGEN SENSOR CONNECTOR AND COUPLING CONNECTOR.**	Has water entered the connector?	Completely remove any water inside.	Go to step **17**.
16	**CHECK FRONT OXYGEN (A/F) SENSOR USING REAR OXYGEN SENSOR SIGNAL.** 1) Warm up the engine until engine coolant temperature is higher than 75°C (167°F), then keep the engine idling for 5 minutes or more. 2) Read the value of «Front O2 Sensor #2» using the Subaru Select Monitor or a general scan tool. NOTE: • Subaru Select Monitor For detailed operation procedures, refer to "Read Current Data For Engine". <Ref. to EN(H6DO)(diag)-50, Subaru Select Monitor.> • General scan tool For detailed operation procedures, refer to the general scan tool operation manual.	Does the value of «Front O2 Sensor #2» remain at 0.250 V or less for 5 minutes or more?	Replace the front oxygen (A/F) sensor. <Ref. to FU(H6DO)-78, Front Oxygen (A/F) Sensor.>	Go to step **17**.

	Step	Check	Yes	No
17	**CHECK HARNESS BETWEEN ECM AND REAR OXYGEN SENSOR CONNECTOR.** 1) Turn the ignition switch to OFF. 2) Disconnect the connector from ECM and rear oxygen sensor. 3) Measure the resistance of harness between ECM connector and rear oxygen sensor connector. ***Connector & terminal*** ***(E158) No. 59 — (E25) No. 3:*** ***(E158) No. 47 — (E25) No. 4:***	Is the resistance less than 1 Ω?	Go to step **18**.	Repair the harness and connector. NOTE: In this case, repair the following item: • Open circuit in harness between ECM connector and rear oxygen sensor connector • Poor contact of coupling connector
18	**CHECK HARNESS BETWEEN ECM AND REAR OXYGEN SENSOR CONNECTOR.** 1) Connect the connector to ECM. 2) Turn the ignition switch to ON. 3) Measure the voltage between rear oxygen sensor connector and chassis ground. ***Connector & terminal*** ***(E25) No. 3 (+) — Chassis ground (–):***	Is the voltage 0.2 — 0.5 V?	Replace the rear oxygen sensor. <Ref. to FU(H6DO)-81, Rear Oxygen Sensor.>	Go to step **19**.
19	**CHECK OUTPUT SIGNAL OF ECM.** 1) Turn the ignition switch to ON. 2) Measure the voltage between ECM and chassis ground on faulty cylinders. ***Connector & terminal*** ***#1 (E158) No. 23 (+) — Chassis ground (–):*** ***#2 (E158) No. 8 (+) — Chassis ground (–):*** ***#3 (E158) No. 9 (+) — Chassis ground (–):*** ***#4 (E158) No. 22 (+) — Chassis ground (–):*** ***#5 (E158) No. 52 (+) — Chassis ground (–):*** ***#6 (E158) No. 13 (+) — Chassis ground (–):***	Is the voltage 10 V or more?	Go to step **24**.	Go to step **20**.
20	**CHECK HARNESS BETWEEN ECM AND FUEL INJECTOR.** 1) Turn the ignition switch to OFF. 2) Disconnect the connector from fuel injector on faulty cylinders. 3) Measure the resistance between fuel injector connector and engine ground on faulty cylinders. ***Connector & terminal*** ***#1 (E5) No. 2 — Engine ground:*** ***#2 (E16) No. 2 — Engine ground:*** ***#3 (E6) No. 2 — Engine ground:*** ***#4 (E17) No. 2 — Engine ground:*** ***#5 (E43) No. 2 — Engine ground:*** ***#6 (E44) No. 2 — Engine ground:***	Is the resistance 1 MΩ or more?	Go to step **21**.	Repair the short circuit to ground in harness between ECM connector and fuel injector connector.
21	**CHECK HARNESS BETWEEN ECM AND FUEL INJECTOR.** Measure the resistance of harness between ECM and fuel injector connector on faulty cylinders. ***Connector & terminal*** ***#1 (E158) No. 23 — (E5) No. 2:*** ***#2 (E158) No. 8 — (E16) No. 2:*** ***#3 (E158) No. 9 — (E6) No. 2:*** ***#4 (E158) No. 22 — (E17) No. 2:*** ***#5 (E158) No. 52 — (E43) No. 2:*** ***#6 (E158) No. 13 — (E44) No. 2:***	Is the resistance less than 1 Ω?	Go to step **22**.	Repair the harness and connector. NOTE: In this case, repair the following item: • Open circuit in harness between ECM connector and fuel injector connector • Poor contact of coupling connector

	Step	Check	Yes	No
22	**CHECK FUEL INJECTOR.** Measure the resistance between fuel injector terminals on faulty cylinder. ***Terminals*** ***No. 1 — No. 2:***	Is the resistance 5 — 20 Ω?	Go to step **23**.	Replace the faulty fuel injector. <Ref. to FU(H6DO)-61, Fuel Injector.>
23	**CHECK POWER SUPPLY LINE.** 1) Turn the ignition switch to ON. 2) Measure the voltage between fuel injector connector of faulty cylinders and engine ground. ***Connector & terminal*** ***#1 (E5) No. 1 (+) — Engine ground (–):*** ***#2 (E16) No. 1 (+) — Engine ground (–):*** ***#3 (E6) No. 1 (+) — Engine ground (–):*** ***#4 (E17) No. 1 (+) — Engine ground (–):*** ***#5 (E43) No. 1 (+) — Engine ground (–):*** ***#6 (E44) No. 1 (+) — Engine ground (–):***	Is the voltage 10 V or more?	Repair the poor contact of all connectors in fuel injector circuit.	Repair the harness and connector. NOTE: In this case, repair the following item: • Open circuit in harness between the main relay and fuel injector connector on faulty cylinders • Poor contact of coupling connector • Poor contact of main relay connector • Blown out of fuse (M/B No. 20)
24	**CHECK HARNESS BETWEEN ECM AND FUEL INJECTOR.** 1) Turn the ignition switch to OFF. 2) Disconnect the connector from fuel injector on faulty cylinders. 3) Turn the ignition switch to ON. 4) Measure the voltage between ECM and chassis ground on faulty cylinders. ***Connector & terminal*** ***#1 (E158) No. 23 (+) — Chassis ground (–):*** ***#2 (E158) No. 8 (+) — Chassis ground (–):*** ***#3 (E158) No. 9 (+) — Chassis ground (–):*** ***#4 (E158) No. 22 (+) — Chassis ground (–):*** ***#5 (E158) No. 52 (+) — Chassis ground (–):*** ***#6 (E158) No. 13 (+) — Chassis ground (–):***	Is the voltage 10 V or more?	Repair the short circuit to power in harness between ECM connector and fuel injector connectors.	Go to step **25**.
25	**CHECK FUEL INJECTOR.** 1) Turn the ignition switch to OFF. 2) Measure the resistance between fuel injector terminals on faulty cylinder. ***Terminals*** ***No. 1 — No. 2:***	Is the resistance 5 — 20 Ω?	Go to step **26**.	Replace the faulty fuel injector. <Ref. to FU(H6DO)-61, Fuel Injector.>
26	**CHECK INSTALLATION OF CAMSHAFT POSITION SENSOR/CRANKSHAFT POSITION SENSOR.**	Is the camshaft position sensor or crankshaft position sensor loosely installed?	Tighten the camshaft position sensor or crankshaft position sensor.	Go to step **27**.
27	**CHECK CRANK PLATE.**	Is the crank sprocket rusted or the teeth of crank plate broken?	Replace the crank plate. <Ref. to ME(H6DO)-134, Cylinder Block.>	Go to step **28**.
28	**CHECK INSTALLATION CONDITION OF TIMING CHAIN.** Turn the crankshaft using ST, and align the alignment mark on crank sprocket with alignment mark on cylinder block. ST 18252AA000 CRANKSHAFT SOCKET	Is the timing chain dislocated from its proper position?	Correct the installation condition of timing chain. <Ref. to ME(H6DO)-87, Timing Chain Assembly.>	Go to step **29**.

Step		Check	Yes	No
29	**CHECK FUEL LEVEL.**	Is the fuel meter indication lower than the “Lower” level?	Refill the fuel so that the fuel meter indication is higher than the “Lower” level, and proceed to the next step. Go to step **30**.	Go to step **30**.
30	**CHECK STATUS OF MALFUNCTION INDICATOR LIGHT.** 1) Clear the memory using the Subaru Select Monitor or general scan tool. <Ref. to EN(H6DO)(diag)-85, Clear Memory Mode.> 2) Start the engine, and drive the vehicle 10 minutes or more.	Does the malfunction indicator light illuminate or blink?	Go to step **32**.	Go to step **31**.
31	**CHECK CAUSE OF MISFIRE.**	Was the cause of misfire identified when the engine is running?	Finish diagnostics operation, if the engine has no abnormality.	Repair the poor contact of connector. NOTE: In this case, repair the following item: • Poor contact of ignition coil connector • Poor contact of fuel injector connector on faulty cylinders • Poor contact of ECM connector • Poor contact of coupling connector
32	**CHECK AIR INTAKE SYSTEM.**	Is there any fault in air intake system?	Repair the air intake system. NOTE: Check the following items. • Are there air leaks or air suction caused by loose or dislocated nuts and bolts? • Are there cracks or any disconnection of hoses?	Go to step **33**.
33	**CHECK MISFIRE SYMPTOM.** 1) Turn the ignition switch to ON. 2) Check for DTC. <Ref. to EN(H6DO)(diag)-68, Read Diagnostic Trouble Code (DTC).>	Does the Subaru Select Monitor or general scan tool indicate only one DTC?	Go to step **36**.	Go to step **34**.
34	**CHECK DTC ON DISPLAY.**	Is DTC P0301, P0303 and P0305 displayed?	Go to step **37**.	Go to step **35**.
35	**CHECK DTC ON DISPLAY.**	Is DTC P0302, P0304 and P0306 displayed?	Go to step **38**.	Go to step **39**.

Step		Check	Yes	No
36	**ONLY ONE CYLINDER.**	Is there any fault in the cylinder?	Repair or replace faulty parts. NOTE: Check the following items. • Spark plug • Ignition coil • Fuel injector • Compression	Check DTC P0171, P0172, P0174 or P0175 using “List of Diagnostic Trouble Code (DTC)”. <Ref. to EN(H6DO)(diag)-109, List of Diagnostic Trouble Code (DTC).>
37	**GROUP OF #1, #3 AND #5 CYLINDERS.**	Is there any fault in #1, #3 and #5 cylinders?	Repair or replace faulty parts. NOTE: Check the following items. • Spark plug • Ignition coil • Fuel injector • Compression • Skipping timing chain teeth	Check DTC P0171, P0172, P0174 or P0175 using “List of Diagnostic Trouble Code (DTC)”. <Ref. to EN(H6DO)(diag)-109, List of Diagnostic Trouble Code (DTC).>
38	**GROUP OF #2, #4 AND #6 CYLINDERS.**	Is there any fault in #2, #4 and #6 cylinders?	Repair or replace faulty parts. NOTE: Check the following items. • Spark plug • Ignition coil • Fuel injector • Compression • Skipping timing chain teeth	Check DTC P0171, P0172, P0174 or P0175 using “List of Diagnostic Trouble Code (DTC)”. <Ref. to EN(H6DO)(diag)-109, List of Diagnostic Trouble Code (DTC).>
39	**CYLINDER AT RANDOM.**	Is the engine idle rough?	Check DTC P0171, P0172, P0174 or P0175 using “List of Diagnostic Trouble Code (DTC)”. <Ref. to EN(H6DO)(diag)-109, List of Diagnostic Trouble Code (DTC).>	Repair or replace faulty parts. NOTE: Check the following items. • Spark plug • Ignition coil • Fuel injector • Compression

1. OUTLINE OF DIAGNOSIS

NOTE:
For the detection standard, refer to DTC P219A. <Ref. to EN(H6DO)(diag)-602, DTC P219A BANK 1 AIR-FUEL RATIO IMBALANCE, Diagnostic Procedure with Diagnostic Trouble Code (DTC).>

GD:DTC P2270 O2 SENSOR SIGNAL BIASED/STUCK LEAN BANK 1 SENSOR 2

DTC DETECTING CONDITION:

Detected when two consecutive driving cycles with fault occur.

CAUTION:

After servicing or replacing faulty parts, perform Clear Memory Mode <Ref. to EN(H6DO)(diag)-85, OPERATION, Clear Memory Mode.>, and Inspection Mode <Ref. to EN(H6DO)(diag)-69, PROCEDURE, Inspection Mode.>.

WIRING DIAGRAM:

- Engine Electrical System ENGINE TYPE EZ (WITHOUT PUSH BUTTON START) <Ref. to WI-198, ENGINE TYPE EZ (WITHOUT PUSH BUTTON START), WIRING DIAGRAM, Engine Electrical System.>
- Engine Electrical System ENGINE TYPE EZ (WITH PUSH BUTTON START) <Ref. to WI-214, ENGINE TYPE EZ (WITH PUSH BUTTON START), WIRING DIAGRAM, Engine Electrical System.>

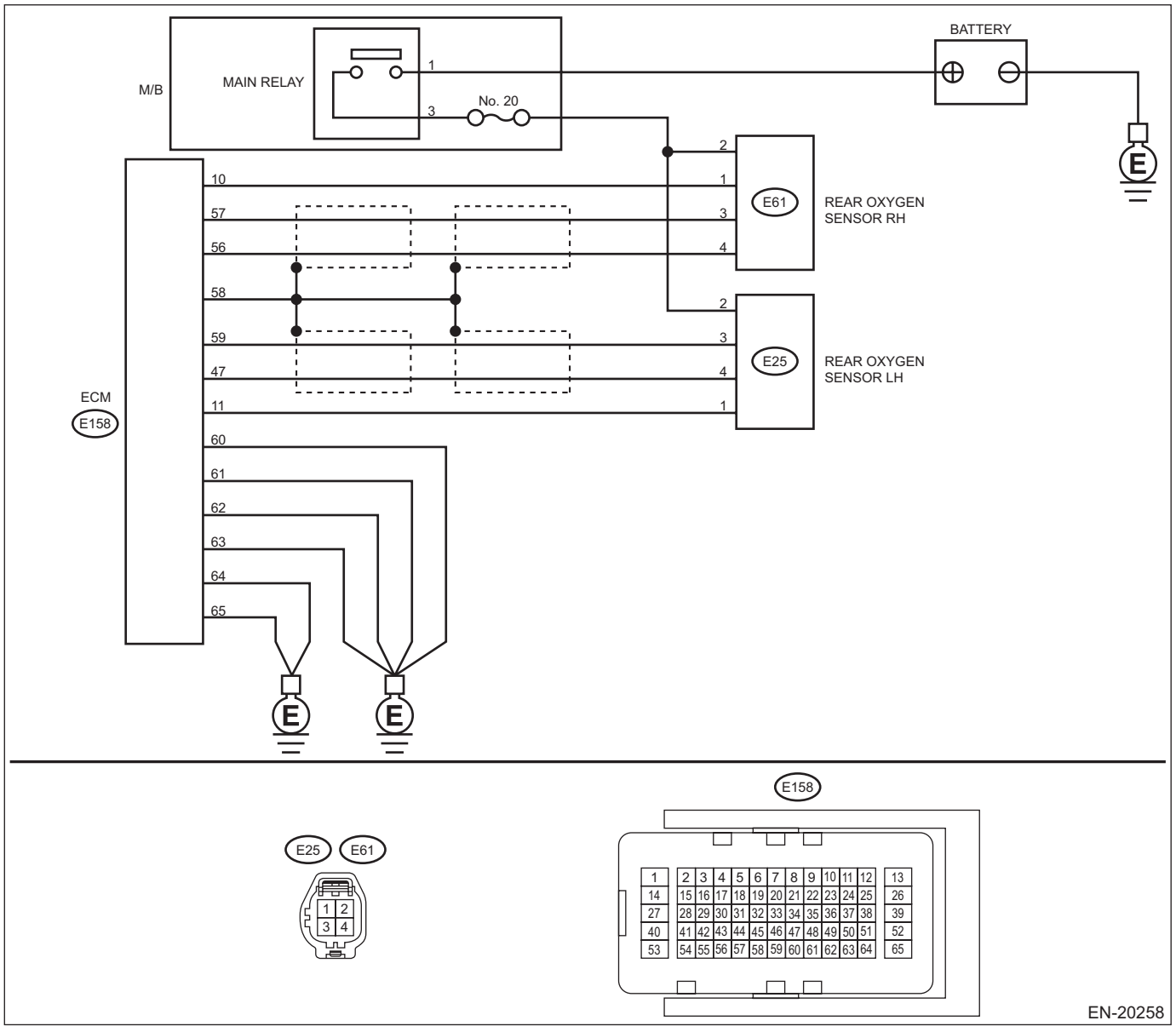

Step		Check	Yes	No
1	**CHECK REAR OXYGEN SENSOR CONNECTOR.**	Has water entered the connector?	Completely remove any water inside.	Go to step **2**.

	Step	Check	Yes	No
2	**CHECK HARNESS BETWEEN ECM AND REAR OXYGEN SENSOR CONNECTOR.** 1) Turn the ignition switch to OFF. 2) Disconnect the connector from ECM and rear oxygen sensor LH. 3) Measure the resistance of harness between ECM connector and rear oxygen sensor connector. ***Connector & terminal*** ***(E158) No. 59 — (E25) No. 3:*** ***(E158) No. 47 — (E25) No. 4:***	Is the resistance less than 1 Ω?	Go to step **3**.	Repair the open circuit of harness between ECM connector and rear oxygen sensor connector.
3	**CHECK HARNESS BETWEEN ECM AND REAR OXYGEN SENSOR CONNECTOR.** 1) Connect the connector to ECM. 2) Turn the ignition switch to ON. 3) Measure the voltage between rear oxygen sensor connector and engine ground. ***Connector & terminal*** ***(E25) No. 3 (+) — Engine ground (–):***	Is the voltage 0.15 V or more?	Repair the short circuit to power in the harness between ECM connector and rear oxygen sensor connector.	Go to step **4**.
4	**CHECK EXHAUST SYSTEM.** Check exhaust system parts. NOTE: Check the following items. • Looseness and improper fitting of exhaust system parts • Damage (crack, hole etc.) of parts • Damage (crack, hole etc.) between front oxygen (A/F) sensor and rear oxygen sensor LH	Is there any fault in exhaust system?	Repair or replace faulty parts.	Replace the rear oxygen sensor LH. <Ref. to FU(H6DO)-81, Rear Oxygen Sensor.>

1. OUTLINE OF DIAGNOSIS

Detect the stuck of rear oxygen sensor voltage in lean state.
When rear oxygen sensor voltage remains below the threshold value for predetermined time, diagnosis interrupts target air fuel ratio for control and raises output voltage.
Judge as NG detecting the stuck in lean state when rear oxygen sensor voltage remains below the threshold value even after the interrupt control.

2. COMPONENT DESCRIPTION

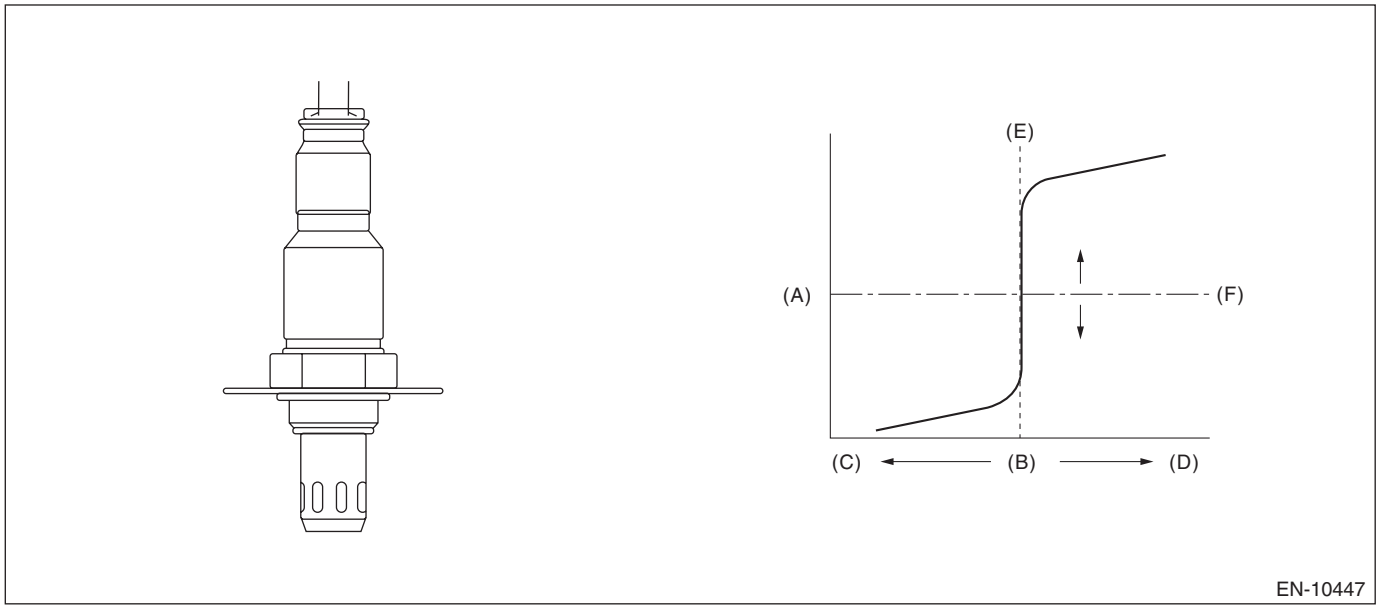

(A) Electromotive force
(B) Air fuel ratio
(C) Lean
(D) Rich
(E) Theoretical air fuel ratio
(F) Comparative voltage

3. EXECUTION CONDITION

Secondary Parameters	Execution condition
Battery voltage	≥ 10.9 V
Sub feedback	In operation
Amount of intake air	≥ 5 g/s (0.18 oz/s)
Estimated temperature of the rear oxygen sensor element	≥ 500 °C (932 °F)
Enable conditions at interrupt control are as follows	
Air fuel ratio reduced from target air fuel ratio	= Value of Map
Continuous time when rear oxygen sensor output voltage is less than 0.55 V	≥ 30000 ms

Map

Output voltage of rear oxygen sensor V	0	0.15	0.2	0.4	0.6
Air fuel ratio reduced from target air fuel ratio %	15	15	5	5	5

4. GENERAL DRIVING CYCLE

Perform the diagnosis only once after the enable conditions have been established.

5. DIAGNOSTIC METHOD

If the duration of time while the following conditions are met is longer than the time indicated, judge as NG.

Judgment Value

Malfunction Criteria	Threshold Value
Output voltage of rear oxygen sensor	< 0.55 V

Time Needed for Diagnosis: 60000 ms
Malfunction Indicator Light Illumination: Illuminates when malfunction occurs in 2 continuous driving cycles.

GE:DTC P2271 O2 SENSOR SIGNAL BIASED/STUCK RICH BANK 1 SENSOR 2

DTC DETECTING CONDITION:

Detected when two consecutive driving cycles with fault occur.

CAUTION:

After servicing or replacing faulty parts, perform Clear Memory Mode <Ref. to EN(H6DO)(diag)-85, OPERATION, Clear Memory Mode.>, and Inspection Mode <Ref. to EN(H6DO)(diag)-69, PROCEDURE, Inspection Mode.>.

WIRING DIAGRAM:

- Engine Electrical System ENGINE TYPE EZ (WITHOUT PUSH BUTTON START) <Ref. to WI-198, ENGINE TYPE EZ (WITHOUT PUSH BUTTON START), WIRING DIAGRAM, Engine Electrical System.>
- Engine Electrical System ENGINE TYPE EZ (WITH PUSH BUTTON START) <Ref. to WI-214, ENGINE TYPE EZ (WITH PUSH BUTTON START), WIRING DIAGRAM, Engine Electrical System.>

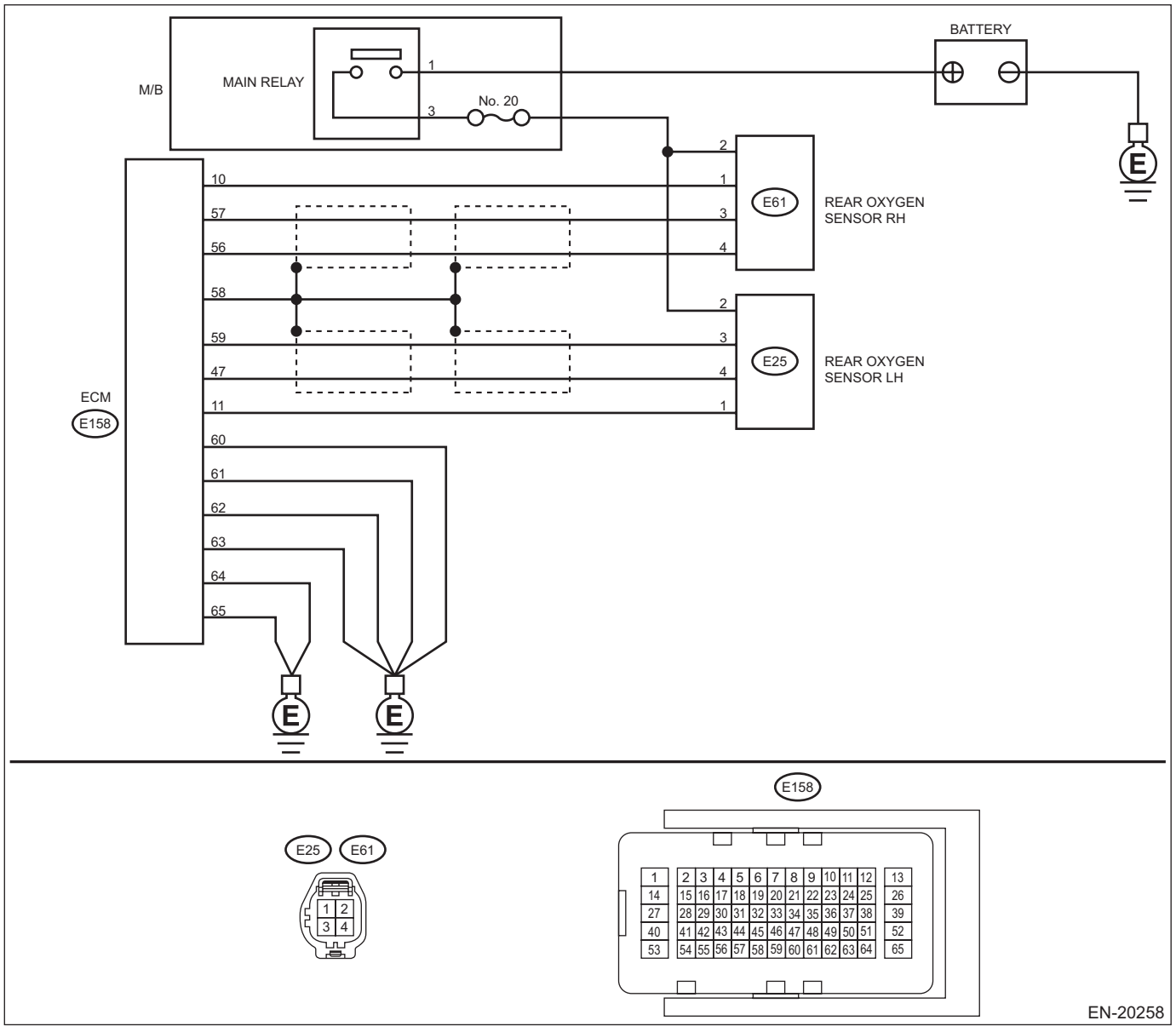

Step		Check	Yes	No
1	**CHECK REAR OXYGEN SENSOR CONNECTOR.**	Has water entered the connector?	Completely remove any water inside.	Go to step **2**.

	Step	Check	Yes	No
2	**CHECK HARNESS BETWEEN ECM AND REAR OXYGEN SENSOR CONNECTOR.** 1) Turn the ignition switch to OFF. 2) Disconnect the connector from ECM and rear oxygen sensor LH. 3) Measure the resistance of harness between ECM connector and rear oxygen sensor connector. ***Connector & terminal*** ***(E158) No. 59 — (E25) No. 3:*** ***(E158) No. 47 — (E25) No. 4:***	Is the resistance less than 1 Ω?	Go to step **3**.	Repair the open circuit of harness between ECM connector and rear oxygen sensor connector.
3	**CHECK HARNESS BETWEEN ECM AND REAR OXYGEN SENSOR CONNECTOR.** Measure the resistance between the ECM connector and engine ground. ***Connector & terminal*** ***(E158) No. 47 — Engine ground:***	Is the resistance 1 MΩ or more?	Go to step **4**.	Repair the short circuit to ground in harness between ECM connector and rear oxygen sensor connector.
4	**CHECK EXHAUST SYSTEM.** Check exhaust system parts. NOTE: Check the following items. • Looseness and improper fitting of exhaust system parts • Damage (crack, hole etc.) of parts • Damage (crack, hole etc.) between front oxygen (A/F) sensor and rear oxygen sensor LH	Is there any fault in exhaust system?	Repair or replace faulty parts.	Replace the rear oxygen sensor LH. <Ref. to FU(H6DO)-81, Rear Oxygen Sensor.>

1. OUTLINE OF DIAGNOSIS

Detect the stuck of rear oxygen sensor voltage in rich state.
Detect the stuck in rich state and judge as NG if rear oxygen sensor voltage remains above the threshold value for predetermined time.

2. COMPONENT DESCRIPTION

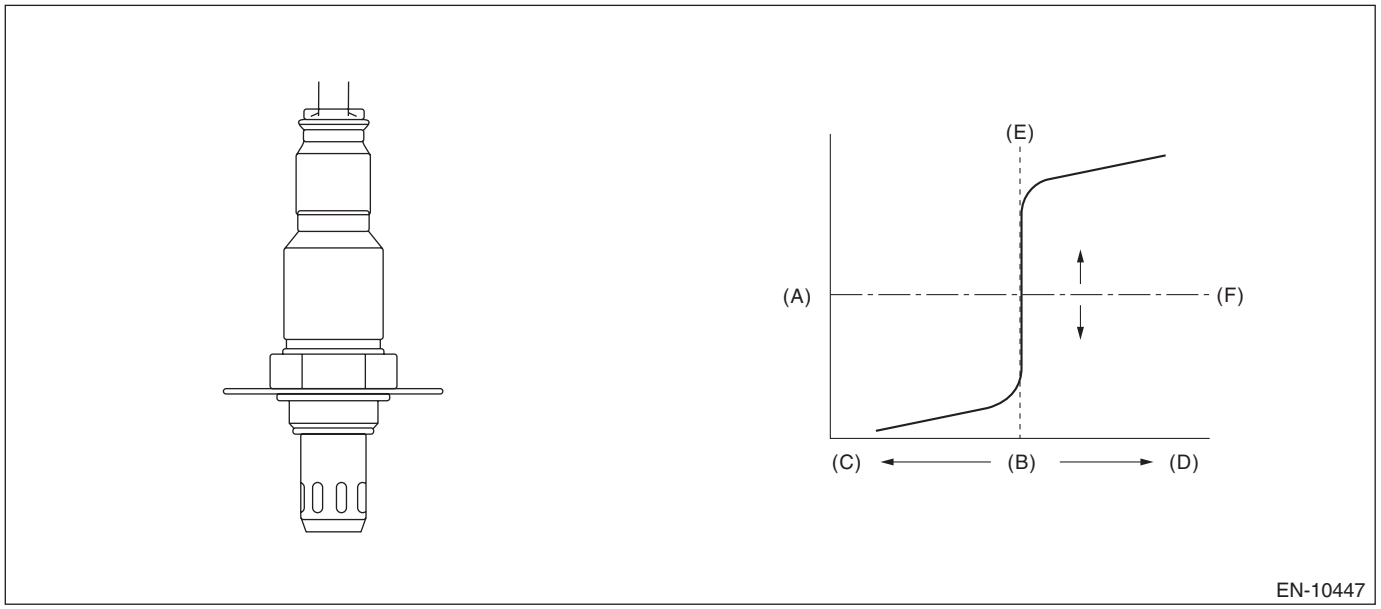

(A) Electromotive force
(B) Air fuel ratio
(C) Lean
(D) Rich
(E) Theoretical air fuel ratio
(F) Comparative voltage

3. EXECUTION CONDITION

Secondary Parameters	Execution condition
Battery voltage	≥ 10.9 V
Fuel cut time	≥ 5000 ms
Estimated temperature of the rear oxygen sensor element	≥ 500 °C (932 °F)

4. GENERAL DRIVING CYCLE

Perform the diagnosis only once after the enable conditions have been established.

5. DIAGNOSTIC METHOD

If the duration of time while the following conditions are met is longer than the time indicated, judge as NG.

Judgment Value

Malfunction Criteria	Threshold Value
Output voltage of rear oxygen sensor	> 0.15 V

Time Needed for Diagnosis: 500 ms
Malfunction Indicator Light Illumination: Illuminates when malfunction occurs in 2 continuous driving cycles.

GF:DTC P2272 O2 SENSOR SIGNAL BIASED/STUCK LEAN BANK 2 SENSOR 2

DTC DETECTING CONDITION:

Detected when two consecutive driving cycles with fault occur.

CAUTION:

After servicing or replacing faulty parts, perform Clear Memory Mode <Ref. to EN(H6DO)(diag)-85, OPERATION, Clear Memory Mode.>, and Inspection Mode <Ref. to EN(H6DO)(diag)-69, PROCEDURE, Inspection Mode.>.

WIRING DIAGRAM:

- Engine Electrical System ENGINE TYPE EZ (WITHOUT PUSH BUTTON START) <Ref. to WI-198, ENGINE TYPE EZ (WITHOUT PUSH BUTTON START), WIRING DIAGRAM, Engine Electrical System.>
- Engine Electrical System ENGINE TYPE EZ (WITH PUSH BUTTON START) <Ref. to WI-214, ENGINE TYPE EZ (WITH PUSH BUTTON START), WIRING DIAGRAM, Engine Electrical System.>

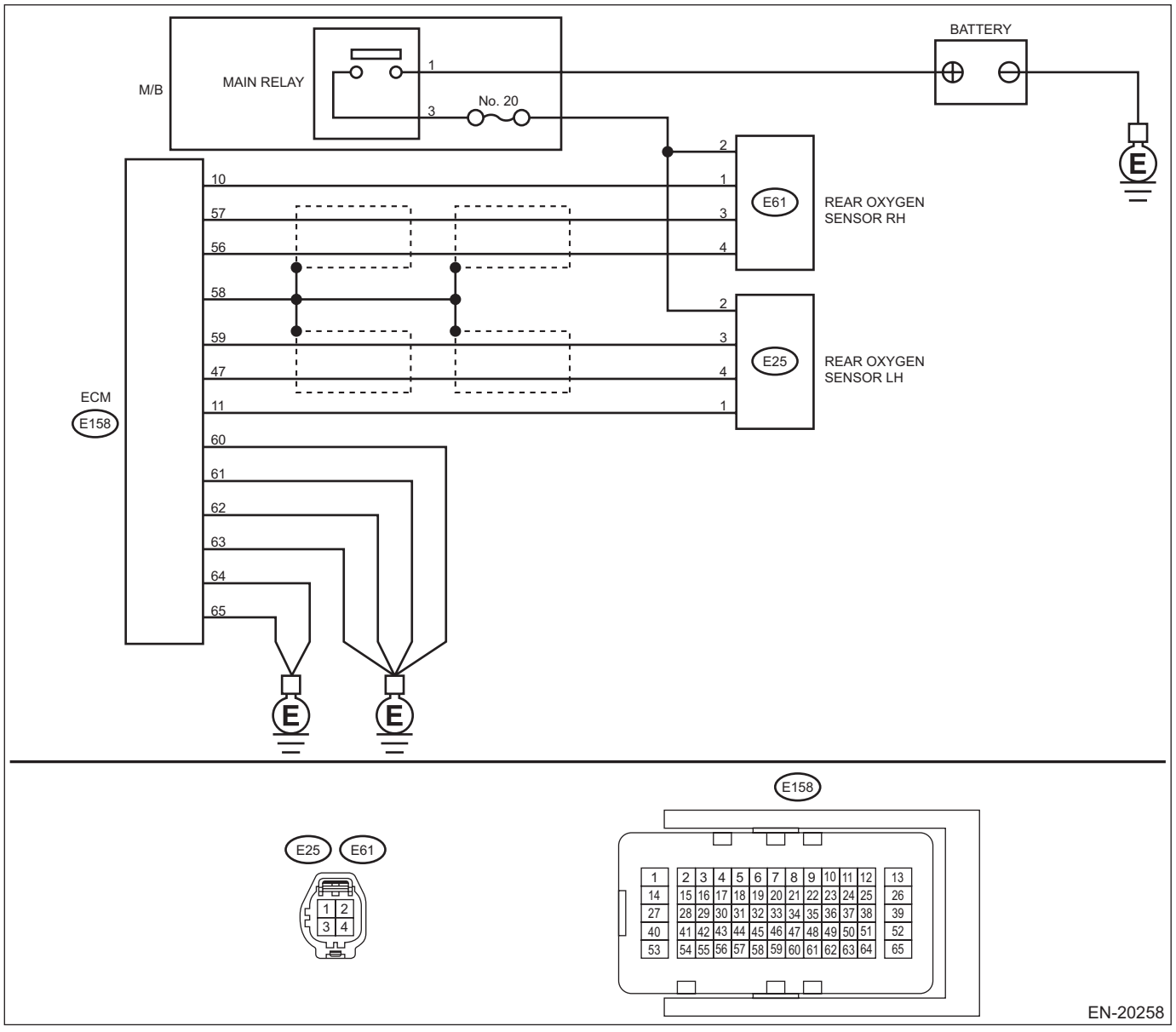

Step		Check	Yes	No
1	**CHECK REAR OXYGEN SENSOR CONNECTOR.**	Has water entered the connector?	Completely remove any water inside.	Go to step **2**.

	Step	Check	Yes	No
2	**CHECK HARNESS BETWEEN ECM AND REAR OXYGEN SENSOR CONNECTOR.** 1) Turn the ignition switch to OFF. 2) Disconnect the connector from ECM and rear oxygen sensor RH. 3) Measure the resistance of harness between ECM connector and rear oxygen sensor connector. ***Connector & terminal*** ***(E158) No. 57 — (E61) No. 3:*** ***(E158) No. 56 — (E61) No. 4:***	Is the resistance less than 1 Ω?	Go to step **3**.	Repair the open circuit of harness between ECM connector and rear oxygen sensor connector.
3	**CHECK HARNESS BETWEEN ECM AND REAR OXYGEN SENSOR CONNECTOR.** 1) Connect the connector to ECM. 2) Turn the ignition switch to ON. 3) Measure the voltage between rear oxygen sensor connector and engine ground. ***Connector & terminal*** ***(E61) No. 3 (+) — Engine ground (–):***	Is the voltage 0.15 V or more?	Repair the short circuit to power in the harness between ECM connector and rear oxygen sensor connector.	Go to step **4**.
4	**CHECK EXHAUST SYSTEM.** Check exhaust system parts. NOTE: Check the following items. • Looseness and improper fitting of exhaust system parts • Damage (crack, hole etc.) of parts • Damage (crack, hole etc.) between front oxygen (A/F) sensor and rear oxygen sensor RH	Is there any fault in exhaust system?	Repair or replace faulty parts.	Replace the rear oxygen sensor RH. <Ref. to FU(H6DO)-81, Rear Oxygen Sensor.>

1. OUTLINE OF DIAGNOSIS

NOTE:
For the detection standard, refer to DTC P2270. <Ref. to EN(H6DO)(diag)-627, DTC P2270 O2 SENSOR SIGNAL BIASED/STUCK LEAN BANK 1 SENSOR 2, Diagnostic Procedure with Diagnostic Trouble Code (DTC).>

GG:DTC P2273 O2 SENSOR SIGNAL BIASED/STUCK RICH BANK 2 SENSOR 2

DTC DETECTING CONDITION:

Detected when two consecutive driving cycles with fault occur.

CAUTION:

After servicing or replacing faulty parts, perform Clear Memory Mode <Ref. to EN(H6DO)(diag)-85, OPERATION, Clear Memory Mode.>, and Inspection Mode <Ref. to EN(H6DO)(diag)-69, PROCEDURE, Inspection Mode.>.

WIRING DIAGRAM:

- Engine Electrical System ENGINE TYPE EZ (WITHOUT PUSH BUTTON START) <Ref. to WI-198, ENGINE TYPE EZ (WITHOUT PUSH BUTTON START), WIRING DIAGRAM, Engine Electrical System.>
- Engine Electrical System ENGINE TYPE EZ (WITH PUSH BUTTON START) <Ref. to WI-214, ENGINE TYPE EZ (WITH PUSH BUTTON START), WIRING DIAGRAM, Engine Electrical System.>

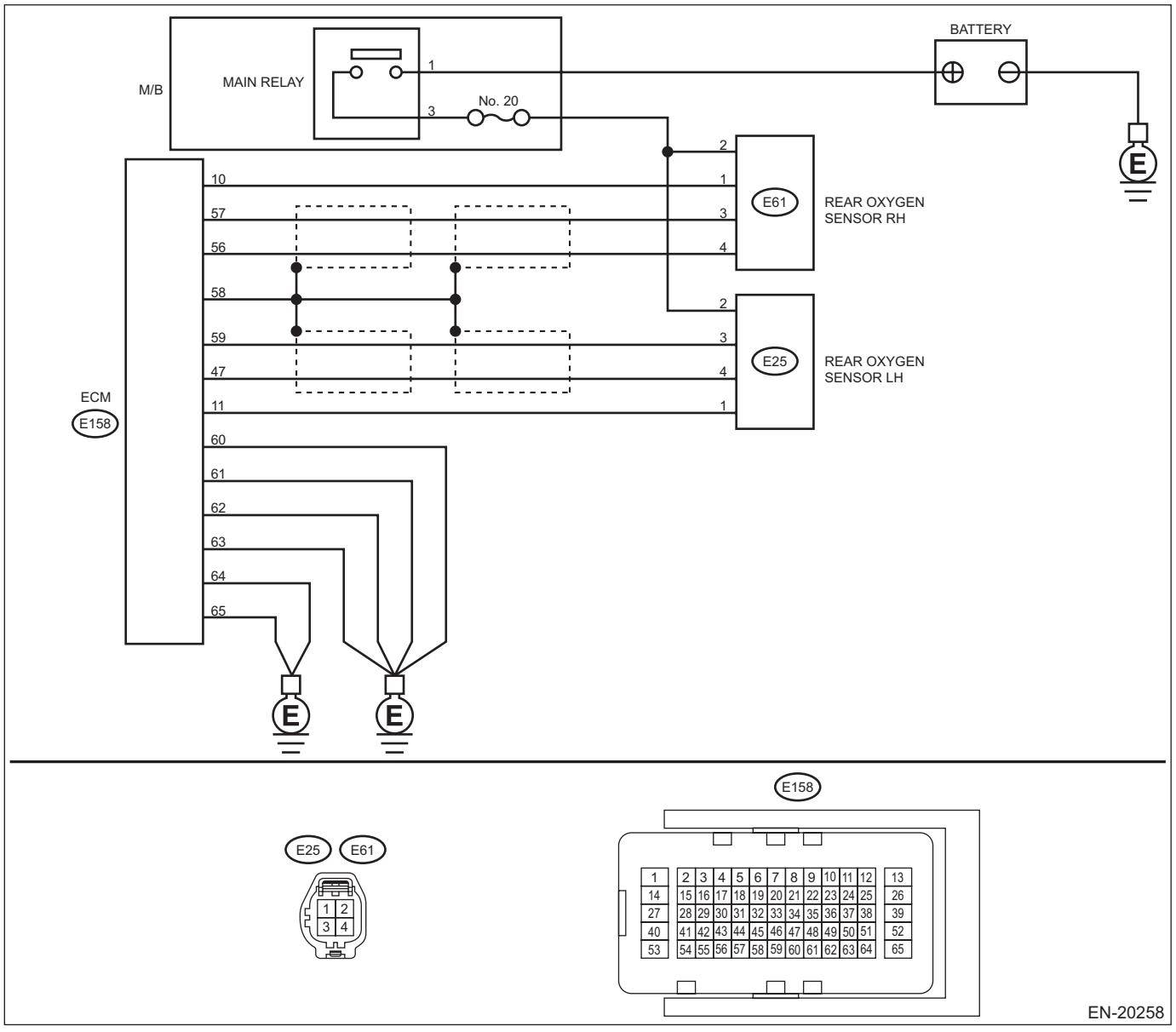

Step		Check	Yes	No
1	**CHECK REAR OXYGEN SENSOR CONNECTOR.**	Has water entered the connector?	Completely remove any water inside.	Go to step **2**.

	Step	Check	Yes	No
2	**CHECK HARNESS BETWEEN ECM AND REAR OXYGEN SENSOR CONNECTOR.** 1) Turn the ignition switch to OFF. 2) Disconnect the connector from ECM and rear oxygen sensor RH. 3) Measure the resistance of harness between ECM connector and rear oxygen sensor connector. ***Connector & terminal*** ***(E158) No. 57 — (E61) No. 3:*** ***(E158) No. 56 — (E61) No. 4:***	Is the resistance less than 1 Ω?	Go to step **3**.	Repair the open circuit of harness between ECM connector and rear oxygen sensor connector.
3	**CHECK HARNESS BETWEEN ECM AND REAR OXYGEN SENSOR CONNECTOR.** Measure the resistance between the ECM connector and engine ground. ***Connector & terminal*** ***(E61) No. 3 — Engine ground:***	Is the resistance 1 MΩ or more?	Go to step **4**.	Repair the short circuit to ground in harness between ECM connector and rear oxygen sensor connector.
4	**CHECK EXHAUST SYSTEM.** Check exhaust system parts. NOTE: Check the following items. • Looseness and improper fitting of exhaust system parts • Damage (crack, hole etc.) of parts • Damage (crack, hole etc.) between front oxygen (A/F) sensor and rear oxygen sensor RH	Is there any fault in exhaust system?	Repair or replace faulty parts.	Replace the rear oxygen sensor RH. <Ref. to FU(H6DO)-81, Rear Oxygen Sensor.>

1. OUTLINE OF DIAGNOSIS

NOTE:
For the detection standard, refer to DTC P2271. <Ref. to EN(H6DO)(diag)-630, DTC P2271 O2 SENSOR SIGNAL BIASED/STUCK RICH BANK 1 SENSOR 2, Diagnostic Procedure with Diagnostic Trouble Code (DTC).>

GH:DTC P2401 EVAP SYSTEM LEAK DETECTION PUMP CONTROL CIRCUIT LOW

DTC DETECTING CONDITION:
Immediately at fault recognition

CAUTION:
After servicing or replacing faulty parts, perform Clear Memory Mode <Ref. to EN(H6DO)(diag)-85, OPERATION, Clear Memory Mode.>, and Inspection Mode <Ref. to EN(H6DO)(diag)-69, PROCEDURE, Inspection Mode.>.

WIRING DIAGRAM:

- Engine Electrical System ENGINE TYPE EZ (WITHOUT PUSH BUTTON START) <Ref. to WI-198, ENGINE TYPE EZ (WITHOUT PUSH BUTTON START), WIRING DIAGRAM, Engine Electrical System.>
- Engine Electrical System ENGINE TYPE EZ (WITH PUSH BUTTON START) <Ref. to WI-214, ENGINE TYPE EZ (WITH PUSH BUTTON START), WIRING DIAGRAM, Engine Electrical System.>

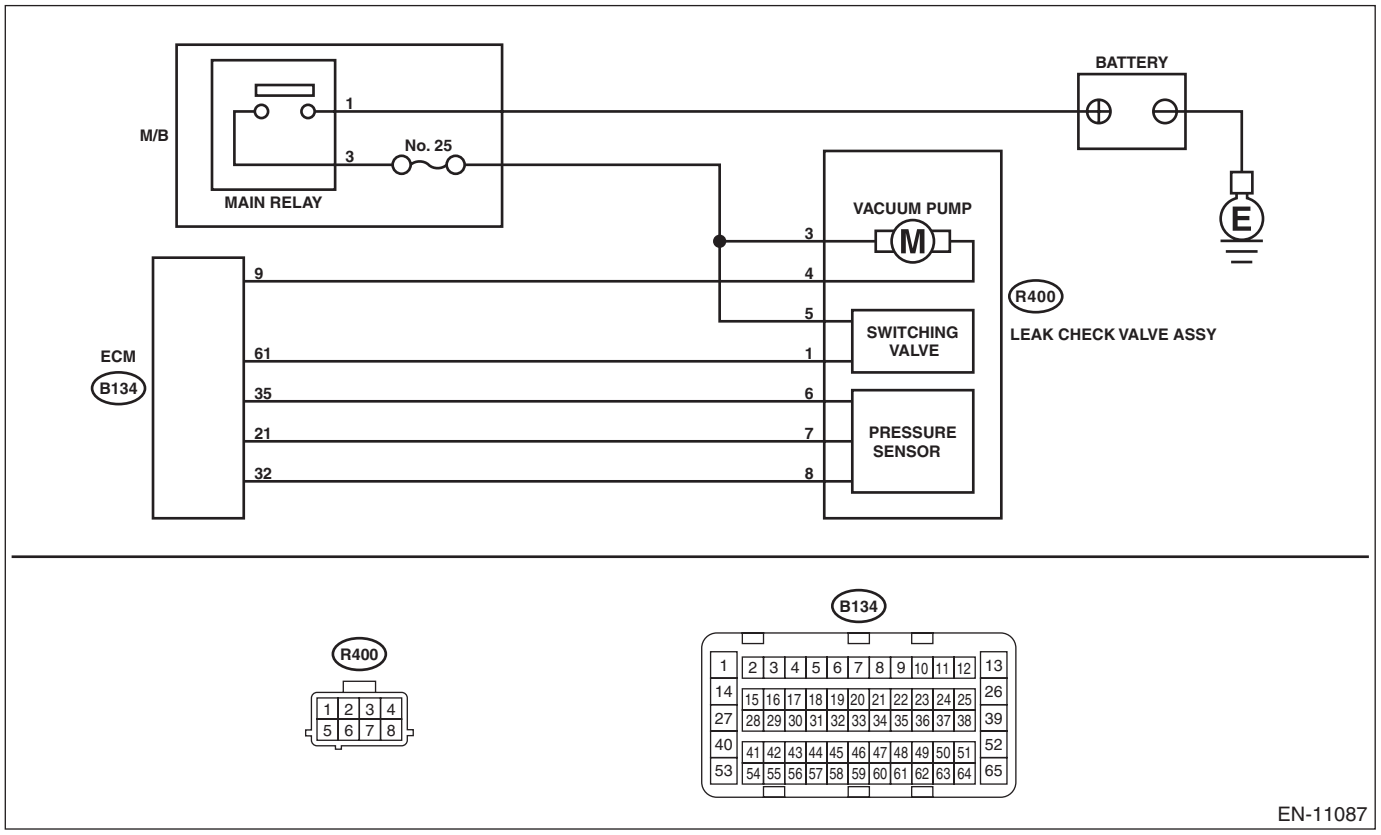

Step		Check	Yes	No
1	**CHECK HARNESS BETWEEN ECM AND LEAK CHECK VALVE ASSEMBLY CONNECTOR.** 1) Turn the ignition switch to ON. 2) Measure the voltage between ECM connector and chassis ground. ***Connector & terminal*** ***(B134) No. 9 (+) — Chassis ground (–):***	Is the voltage 10 V or more?	Go to step **2**.	Go to step **3**.

	Step	Check	Yes	No
2	**CHECK FOR POOR CONTACT.** Check for poor contact of ECM connector.	Is there poor contact of ECM connector?	Repair the poor contact of ECM connector.	Even if DTC is detected, the circuit has returned to a normal condition at this time. Reproduce the failure, and then perform the diagnosis again. NOTE: In this case, temporary open or short circuit of harness or temporary poor contact of connector may be the cause.
3	**CHECK POWER SUPPLY TO LEAK CHECK VALVE ASSEMBLY.** Measure the voltage between the leak check valve assembly connector and engine ground. ***Connector & terminal*** ***(R400) No. 3 (+) — Engine ground (–):***	Is the voltage 10 V or more?	Go to step **4**.	Repair the power supply circuit.
4	**CHECK HARNESS BETWEEN ECM AND LEAK CHECK VALVE ASSEMBLY CONNECTOR.** 1) Turn the ignition switch to OFF. 2) Disconnect the connector from ECM and the leak check valve assembly. 3) Measure the resistance between leak check valve assembly and chassis ground. ***Connector & terminal*** ***(R400) No. 4 — Chassis ground:***	Is the resistance 1 MΩ or more?	Go to step **5**.	Repair the short circuit to ground in harness between ECM connector and leak check valve assembly connector.
5	**CHECK HARNESS BETWEEN ECM AND LEAK CHECK VALVE ASSEMBLY CONNECTOR.** Measure the resistance of harness between ECM connector and the leak check valve assembly connector. ***Connector & terminal*** ***(B134) No. 9 — (R400) No. 4:***	Is the resistance less than 1 Ω?	Go to step **6**.	Repair the harness and connector. NOTE: In this case, repair the following item: • Open circuit in harness between ECM connector and the leak check valve assembly connector • Poor contact of coupling connector
6	**CHECK LEAK CHECK VALVE ASSEMBLY.** Check the vacuum pump of the leak check valve assembly. <Ref. to EC(H6DO)-37, CHECK VACUUM PUMP, INSPECTION, Leak Check Valve Assembly.>	Is the vacuum pump of the leak check valve assembly OK?	Repair the poor contact in the leak check valve assembly connector.	Replace the leak check valve assembly. <Ref. to EC(H6DO)-36, Leak Check Valve Assembly.>

1. OUTLINE OF DIAGNOSIS

Detect the open or short circuit of the ELCM vacuum pump.
Judge as NG if out of specification.

2. COMPONENT DESCRIPTION

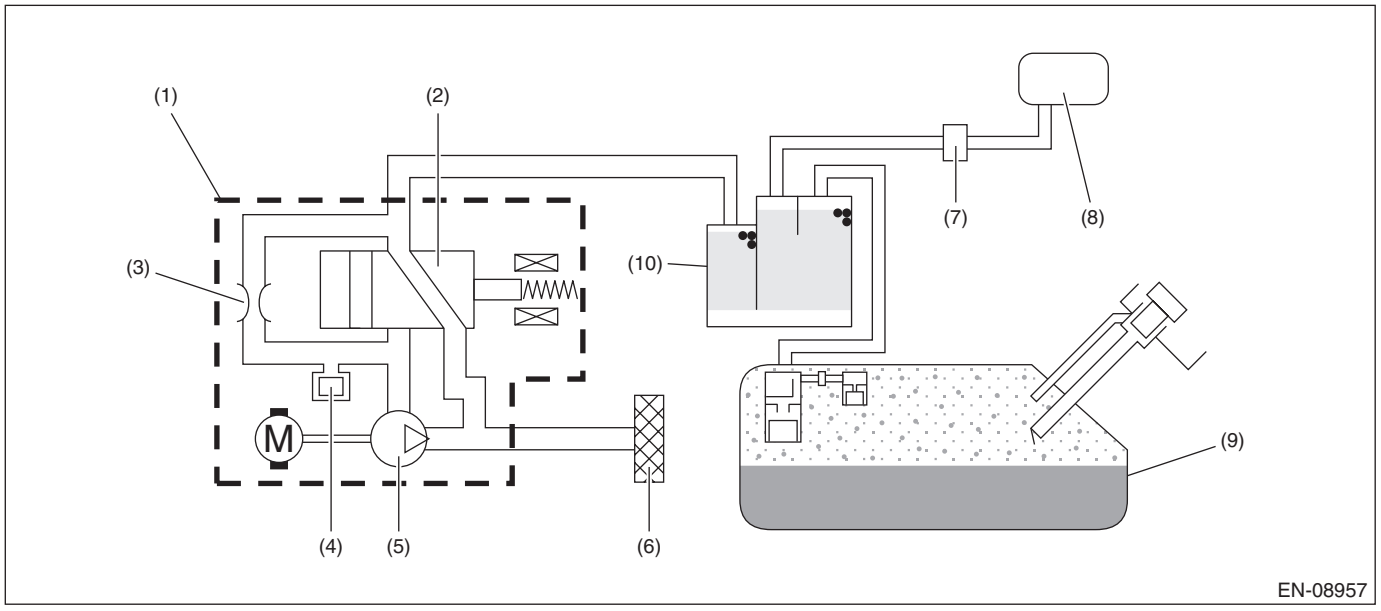

(1) ELCM
(2) Switching valve
(3) Reference orifice (0.02 inch orifice)
(4) Pressure sensor
(5) Vacuum pump
(6) Drain filter
(7) Purge control solenoid valve
(8) Intake manifold
(9) Fuel tank
(10) Canister

3. EXECUTION CONDITION

Secondary Parameters	Execution condition
Battery voltage	≥ 10.9
ELCM vacuum pump drive signal	OFF

4. GENERAL DRIVING CYCLE

Perform the diagnosis only once after the enable conditions have been established.

5. DIAGNOSTIC METHOD

If the duration of time while the following conditions are met is longer than the time indicated, judge as NG.

Judgment Value

Malfunction Criteria	Threshold Value
Output voltage	≤ Battery voltage × 0.34

Time Needed for Diagnosis: 2500 ms
Malfunction Indicator Light Illumination: Illuminates as soon as a malfunction occurs.

GI: DTC P2402 EVAP SYSTEM LEAK DETECTION PUMP CONTROL CIRCUIT HIGH

DTC DETECTING CONDITION:
Immediately at fault recognition

CAUTION:
After servicing or replacing faulty parts, perform Clear Memory Mode <Ref. to EN(H6DO)(diag)-85, OPERATION, Clear Memory Mode.>, and Inspection Mode <Ref. to EN(H6DO)(diag)-69, PROCEDURE, Inspection Mode.>.

WIRING DIAGRAM:

- Engine Electrical System ENGINE TYPE EZ (WITHOUT PUSH BUTTON START) <Ref. to WI-198, ENGINE TYPE EZ (WITHOUT PUSH BUTTON START), WIRING DIAGRAM, Engine Electrical System.>
- Engine Electrical System ENGINE TYPE EZ (WITH PUSH BUTTON START) <Ref. to WI-214, ENGINE TYPE EZ (WITH PUSH BUTTON START), WIRING DIAGRAM, Engine Electrical System.>

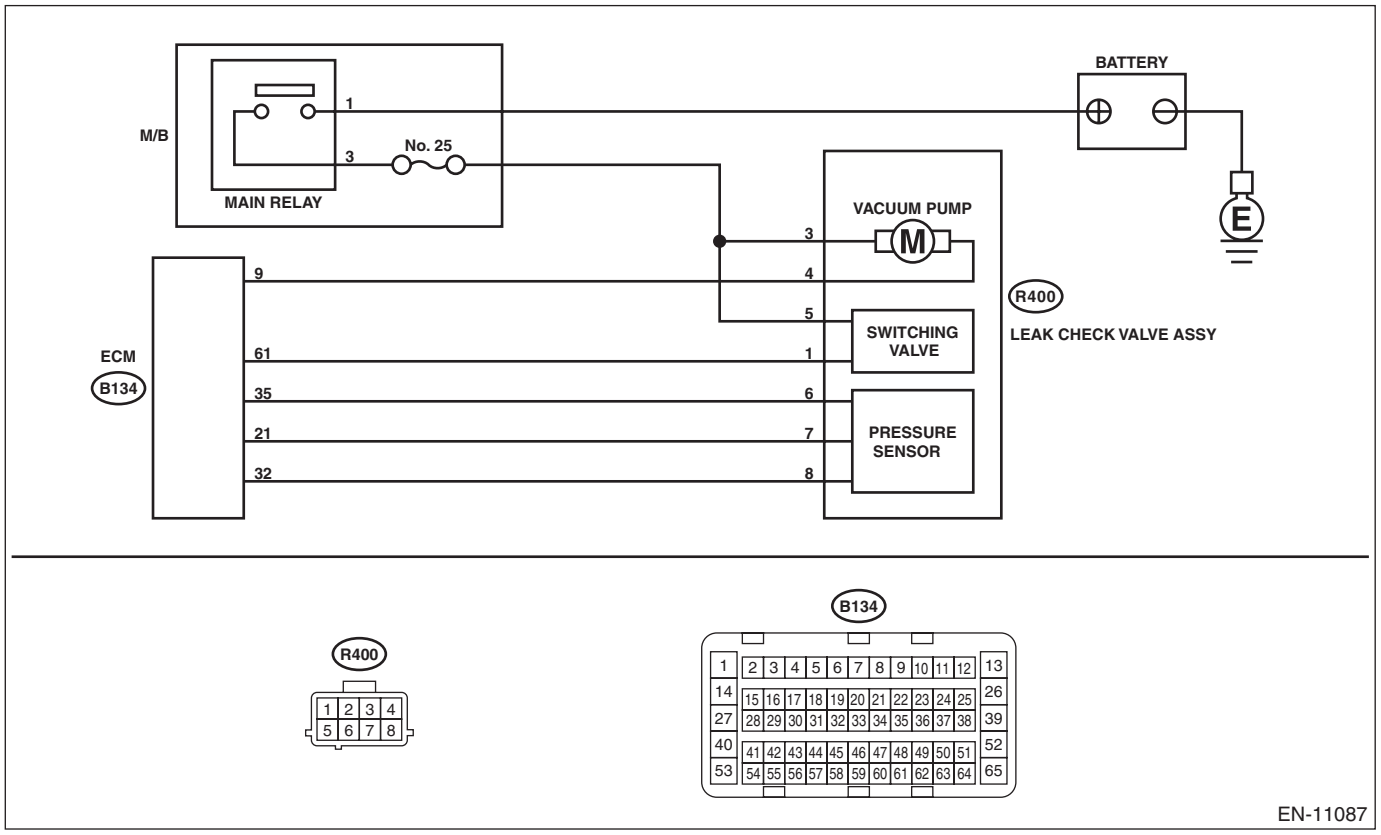

Step		Check	Yes	No
1	**CHECK HARNESS BETWEEN ECM AND LEAK CHECK VALVE ASSEMBLY CONNECTOR.** 1) Turn the ignition switch to OFF. 2) Disconnect the connector from the leak check valve assembly. 3) Turn the ignition switch to ON. 4) Measure the voltage between leak check valve assembly and chassis ground. ***Connector & terminal*** ***(R400) No. 4 (+) — Chassis ground (–):***	Is the voltage 10 V or more?	Repair the short circuit to power in harness between ECM connector and leak check valve assembly connector.	Go to step **2**.

	Step	Check	Yes	No
2	**CHECK LEAK CHECK VALVE ASSEMBLY.** 1) Turn the ignition switch to OFF. 2) Check the vacuum pump of the leak check valve assembly. <Ref. to EC(H6DO)-37, CHECK VACUUM PUMP, INSPECTION, Leak Check Valve Assembly.>	Is the vacuum pump of the leak check valve assembly OK?	Repair the poor contact in the leak check valve assembly connector.	Replace the leak check valve assembly. <Ref. to EC(H6DO)-36, Leak Check Valve Assembly.>

1. OUTLINE OF DIAGNOSIS

Detect the open or short circuit of the ELCM vacuum pump.
Judge as NG if out of specification.

2. COMPONENT DESCRIPTION

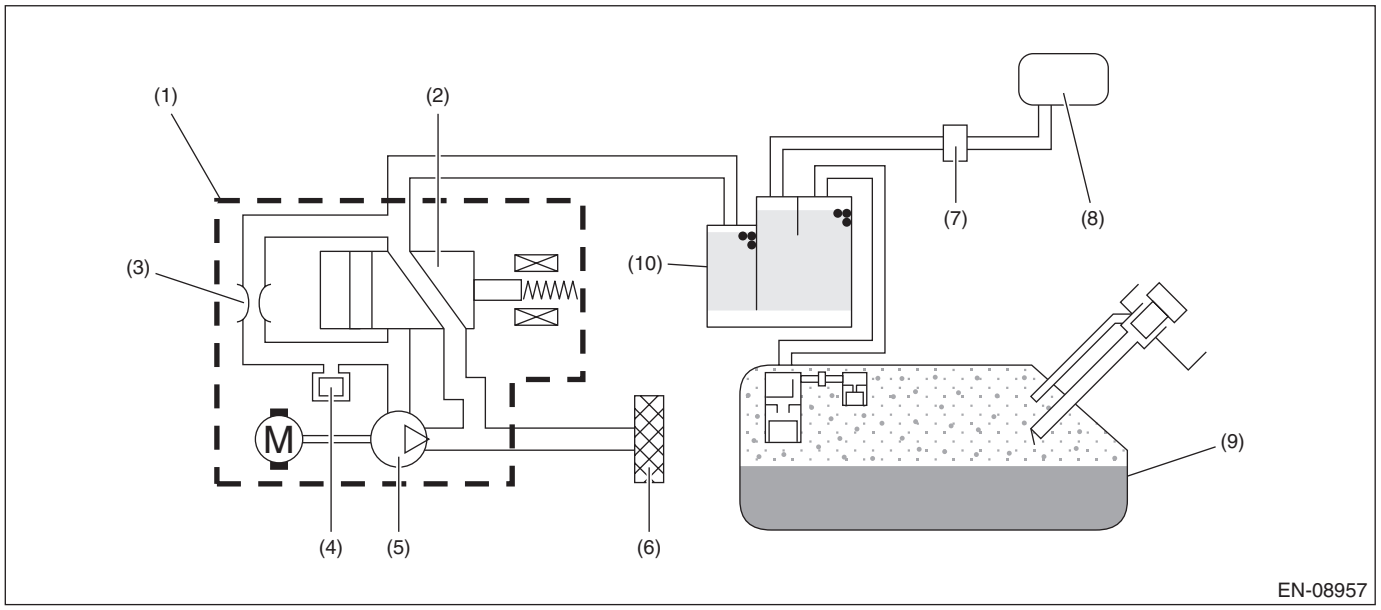

(1) ELCM
(2) Switching valve
(3) Reference orifice (0.02 inch orifice)
(4) Pressure sensor
(5) Vacuum pump
(6) Drain filter
(7) Purge control solenoid valve
(8) Intake manifold
(9) Fuel tank
(10) Canister

3. EXECUTION CONDITION

Secondary Parameters	Execution condition
Battery voltage	≥ 10.9
ELCM vacuum pump drive signal	ON

4. GENERAL DRIVING CYCLE

Perform the diagnosis only once after the enable conditions have been established.

5. DIAGNOSTIC METHOD

If the duration of time while the following conditions are met is longer than the time indicated, judge as NG.

Judgment Value

Malfunction Criteria	Threshold Value
Output current	≥ 12 A

Time Needed for Diagnosis: 2500 ms
Malfunction Indicator Light Illumination: Illuminates as soon as a malfunction occurs.

GJ:DTC P2404 EVAP SYSTEM LEAK DETECTION PUMP SENSE CIRCUIT RANGE/PERFORMANCE

DTC DETECTING CONDITION:

Detected when two consecutive driving cycles with fault occur.

CAUTION:

After servicing or replacing faulty parts, perform Clear Memory Mode <Ref. to EN(H6DO)(diag)-85, OPERATION, Clear Memory Mode.>, and Inspection Mode <Ref. to EN(H6DO)(diag)-69, PROCEDURE, Inspection Mode.>.

WIRING DIAGRAM:

- Engine Electrical System ENGINE TYPE EZ (WITHOUT PUSH BUTTON START) <Ref. to WI-198, ENGINE TYPE EZ (WITHOUT PUSH BUTTON START), WIRING DIAGRAM, Engine Electrical System.>
- Engine Electrical System ENGINE TYPE EZ (WITH PUSH BUTTON START) <Ref. to WI-214, ENGINE TYPE EZ (WITH PUSH BUTTON START), WIRING DIAGRAM, Engine Electrical System.>

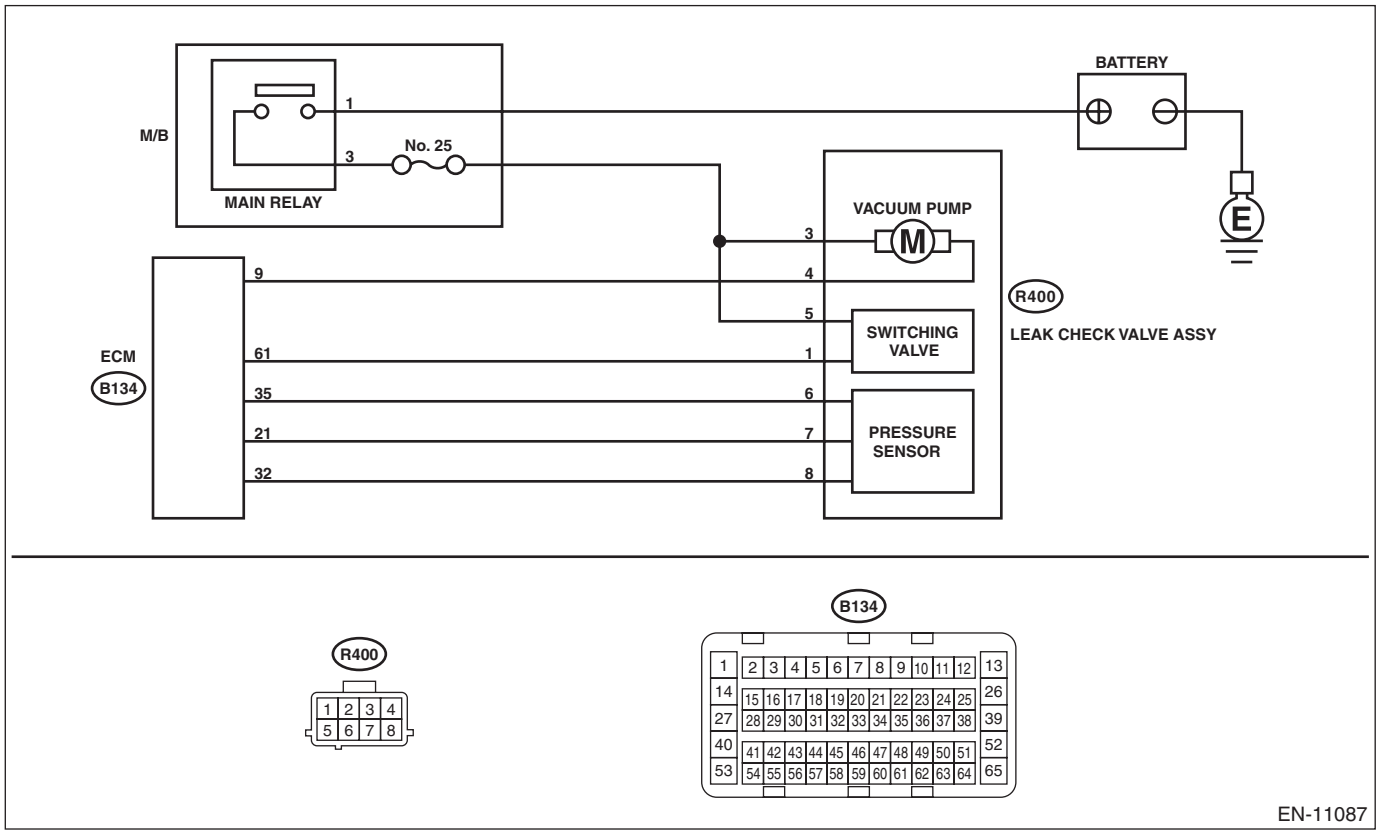

Step	Check	Yes	No
1 **CHECK FOR ANY OTHER DTC ON DISPLAY.**	Is any other DTC displayed?	Check the appropriate DTC using the “List of Diagnostic Trouble Code (DTC)”. <Ref. to EN(H6DO)(diag)-109, List of Diagnostic Trouble Code (DTC).>	Go to step **2**.

	Step	Check	Yes	No
2	**CHECK ELCM PUMP.** Operate the ELCM pump using the Subaru Select Monitor. NOTE: For detailed operation procedures, refer to the "Active Test". <Ref. to EN(H6DO)(diag)-86, Active Test.>	Does the ELCM pump operate?	Go to step **6**.	Go to step **3**.
3	**CHECK POWER SUPPLY OF LEAK CHECK VALVE ASSEMBLY.** 1) Turn the ignition switch to OFF. 2) Disconnect the connector from the leak check valve assembly. 3) Turn the ignition switch to ON. 4) Measure the voltage between the leak check valve assembly connector and chassis ground. ***Connector & terminal*** ***(R400) No. 3 (+) — Chassis ground (–):***	Is the voltage 10 V or more?	Go to step **4**.	Repair the harness and connector. NOTE: In this case, repair the following item: • Open circuit in harness between the main relay and the leak check valve assembly connector • Poor contact of main relay connector • Poor contact of coupling connector
4	**CHECK HARNESS BETWEEN ECM AND LEAK CHECK VALVE ASSEMBLY CONNECTOR.** 1) Turn the ignition switch to OFF. 2) Disconnect the connector from ECM. 3) Measure the resistance of harness between ECM connector and the leak check valve assembly connector. ***Connector & terminal*** ***(B134) No. 9 — (R400) No. 4:***	Is the resistance less than 1 Ω?	Go to step **5**.	Repair the harness and connector. NOTE: In this case, repair the following item: • Open circuit in harness between ECM connector and the leak check valve assembly connector • Poor contact of coupling connector
5	**CHECK HARNESS BETWEEN ECM AND LEAK CHECK VALVE ASSEMBLY CONNECTOR.** 1) Measure the resistance of harness between ECM connector and chassis ground. ***Connector & terminal*** ***(B134) No. 9 — Chassis ground:***	Is the resistance 1 MΩ or more?	Replace the leak check valve assembly. <Ref. to EC(H6DO)-36, Leak Check Valve Assembly.>	Repair the short circuit to ground in harness between ECM connector and leak check valve assembly connector.
6	**CHECK ELCM SWITCHING VALVE.** Operate the ELCM switching valve using the Subaru Select Monitor. NOTE: For detailed operation procedures, refer to the "Active Test". <Ref. to EN(H6DO)(diag)-86, Active Test.>	Does the ELCM switching valve operate?	Go to step **10**.	Go to step **7**.

	Step	Check	Yes	No
7	**CHECK POWER SUPPLY OF LEAK CHECK VALVE ASSEMBLY.** 1) Turn the ignition switch to OFF. 2) Disconnect the connector from the leak check valve assembly. 3) Turn the ignition switch to ON. 4) Measure the voltage between the leak check valve assembly connector and chassis ground. ***Connector & terminal*** ***(R400) No. 5 (+) — Chassis ground (–):***	Is the voltage 10 V or more?	Go to step **8**.	Repair the harness and connector. NOTE: In this case, repair the following item: • Open circuit in harness between the main relay and the leak check valve assembly connector • Poor contact of main relay connector • Poor contact of coupling connector
8	**CHECK HARNESS BETWEEN ECM AND LEAK CHECK VALVE ASSEMBLY CONNECTOR.** 1) Turn the ignition switch to OFF. 2) Disconnect the connector from ECM. 3) Measure the resistance of harness between ECM connector and the leak check valve assembly connector. ***Connector & terminal*** ***(B134) No. 61 — (R400) No. 1:***	Is the resistance less than 1 Ω?	Go to step **9**.	Repair the harness and connector. NOTE: In this case, repair the following item: • Open circuit in harness between ECM connector and the leak check valve assembly connector • Poor contact of coupling connector
9	**CHECK HARNESS BETWEEN ECM AND LEAK CHECK VALVE ASSEMBLY CONNECTOR.** 1) Measure the resistance of harness between ECM connector and chassis ground. ***Connector & terminal*** ***(B134) No. 61 — Chassis ground:***	Is the resistance 1 MΩ or more?	Replace the leak check valve assembly. <Ref. to EC(H6DO)-36, Leak Check Valve Assembly.>	Repair the short circuit to ground in harness between ECM connector and leak check valve assembly connector.
10	**CHECK EVAPORATIVE EMISSION CONTROL SYSTEM.** Perform drive cycle I. <Ref. to EN(H6DO)(diag)-79, DRIVE CYCLE I, PROCEDURE, Drive Cycle.>	Is DTC P2404 displayed on the display?	Replace the leak check valve assembly. <Ref. to EC(H6DO)-36, Leak Check Valve Assembly.>	Even if DTC is detected, the circuit has returned to a normal condition at this time. Reproduce the failure, and then perform the diagnosis again. NOTE: In this case, temporary poor contact of connector, temporary open or short circuit of harness may be the cause.

1. OUTLINE OF DIAGNOSIS

NOTE:
For the detection standard, refer to DTC P0455. <Ref. to EN(H6DO)(diag)-383, DTC P0455 EVAP SYSTEM (CPC) LEAK DETECTED (LARGE LEAK), Diagnostic Procedure with Diagnostic Trouble Code (DTC).>

GK:DTC P2419 EVAP SYSTEM SWITCHING VALVE CONTROL CIRCUIT LOW

DTC DETECTING CONDITION:
Immediately at fault recognition

CAUTION:
After servicing or replacing faulty parts, perform Clear Memory Mode <Ref. to EN(H6DO)(diag)-85, OPERATION, Clear Memory Mode.>, and Inspection Mode <Ref. to EN(H6DO)(diag)-69, PROCEDURE, Inspection Mode.>.

WIRING DIAGRAM:

- Engine Electrical System ENGINE TYPE EZ (WITHOUT PUSH BUTTON START) <Ref. to WI-198, ENGINE TYPE EZ (WITHOUT PUSH BUTTON START), WIRING DIAGRAM, Engine Electrical System.>
- Engine Electrical System ENGINE TYPE EZ (WITH PUSH BUTTON START) <Ref. to WI-214, ENGINE TYPE EZ (WITH PUSH BUTTON START), WIRING DIAGRAM, Engine Electrical System.>

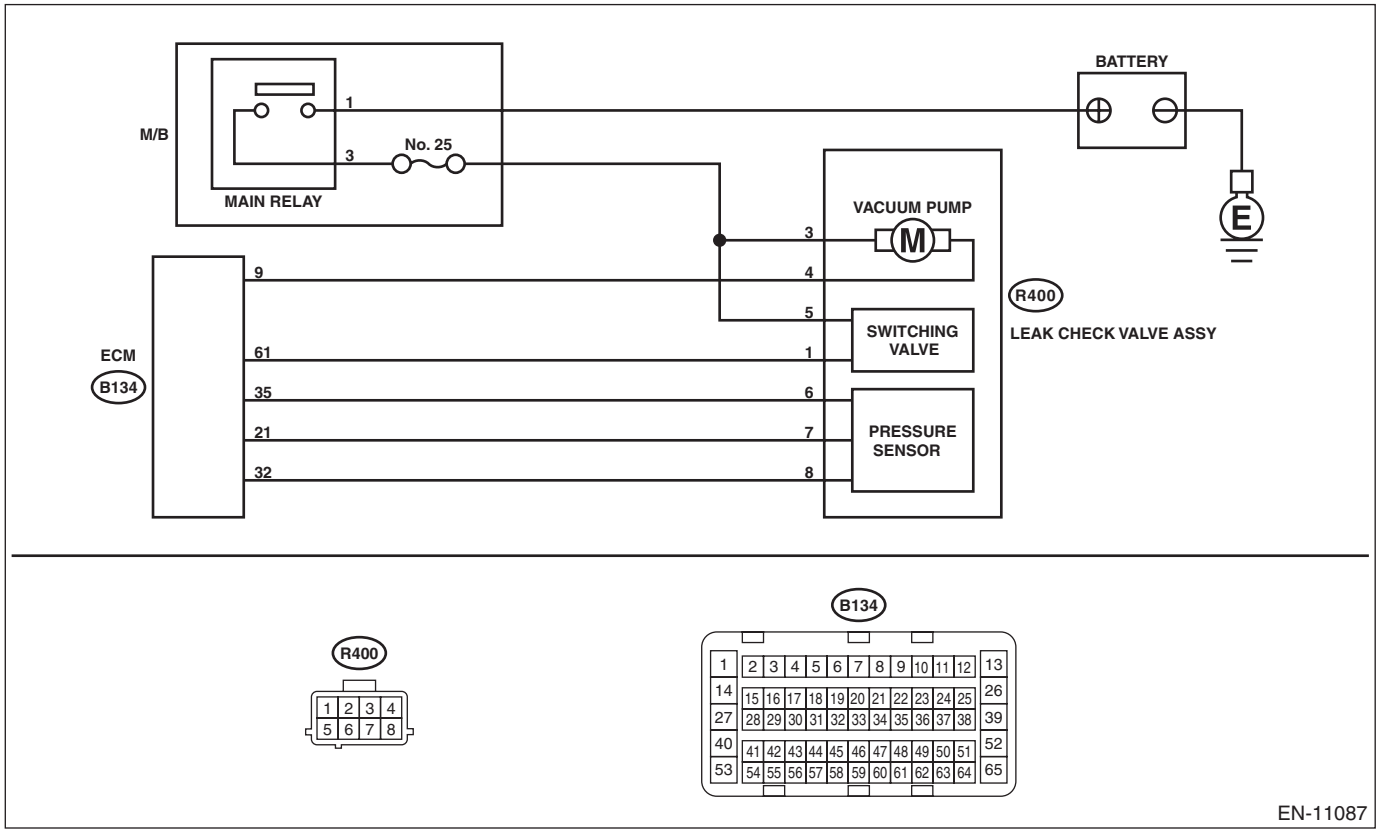

Step		Check	Yes	No
1	**CHECK HARNESS BETWEEN ECM AND LEAK CHECK VALVE ASSEMBLY CONNECTOR.** 1) Turn the ignition switch to ON. 2) Measure the voltage between ECM connector and chassis ground. ***Connector & terminal*** ***(B134) No. 61 (+) — Chassis ground (–):***	Is the voltage 10 V or more?	Go to step **2**.	Go to step **3**.

	Step	Check	Yes	No
2	**CHECK FOR POOR CONTACT.** Check for poor contact of ECM connector.	Is there poor contact of ECM connector?	Repair the poor contact of ECM connector.	Even if DTC is detected, the circuit has returned to a normal condition at this time. Reproduce the failure, and then perform the diagnosis again. NOTE: In this case, temporary open or short circuit of harness or temporary poor contact of connector may be the cause.
3	**CHECK POWER SUPPLY TO LEAK CHECK VALVE ASSEMBLY.** Measure the voltage between the leak check valve assembly connector and engine ground. ***Connector & terminal*** ***(R400) No. 5 (+) — Engine ground (–):***	Is the voltage 10 V or more?	Go to step **4**.	Repair the power supply circuit.
4	**CHECK HARNESS BETWEEN ECM AND LEAK CHECK VALVE ASSEMBLY CONNECTOR.** 1) Turn the ignition switch to OFF. 2) Disconnect the connector from ECM and the leak check valve assembly. 3) Measure the resistance between leak check valve assembly and chassis ground. ***Connector & terminal*** ***(R400) No. 1 — Chassis ground:***	Is the resistance 1 MΩ or more?	Go to step **5**.	Repair the short circuit to ground in harness between ECM connector and leak check valve assembly connector.
5	**CHECK HARNESS BETWEEN ECM AND LEAK CHECK VALVE ASSEMBLY CONNECTOR.** Measure the resistance of harness between ECM connector and the leak check valve assembly connector. ***Connector & terminal*** ***(B134) No. 61 — (R400) No. 1:***	Is the resistance less than 1 Ω?	Go to step **6**.	Repair the harness and connector. NOTE: In this case, repair the following item: • Open circuit in harness between ECM connector and the leak check valve assembly connector • Poor contact of coupling connector
6	**CHECK LEAK CHECK VALVE ASSEMBLY.** Check the switching valve of the leak check valve assembly. <Ref. to EC(H6DO)-36, CHECK SWITCHING VALVE, INSPECTION, Leak Check Valve Assembly.>	Is the switching valve of the leak check valve assembly OK?	Repair the poor contact in the leak check valve assembly connector.	Replace the leak check valve assembly. <Ref. to EC(H6DO)-36, Leak Check Valve Assembly.>

1. OUTLINE OF DIAGNOSIS

Detect the open or short circuit of the ELCM switching valve.
Judge as NG if out of specification.

2. COMPONENT DESCRIPTION

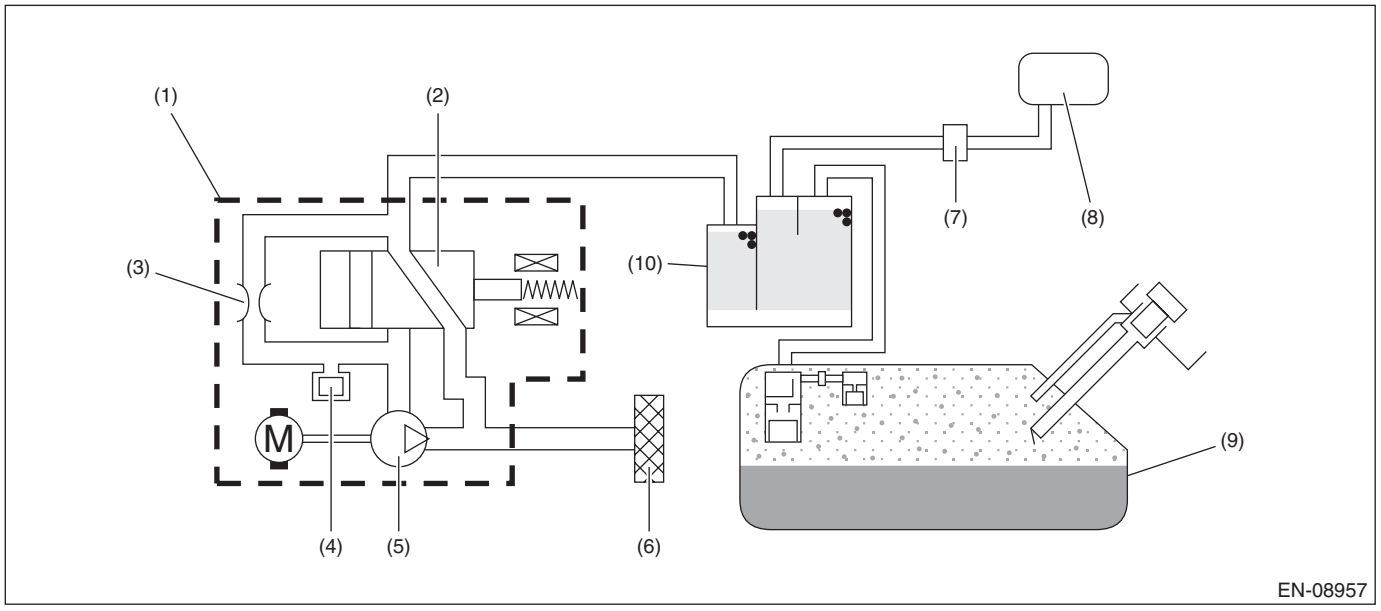

(1) ELCM
(2) Switching valve
(3) Reference orifice (0.02 inch orifice)
(4) Pressure sensor
(5) Vacuum pump
(6) Drain filter
(7) Purge control solenoid valve
(8) Intake manifold
(9) Fuel tank
(10) Canister

3. EXECUTION CONDITION

Secondary Parameters	Execution condition
Battery voltage	≥ 10.9
ELCM switching valve drive signal	OFF

4. GENERAL DRIVING CYCLE

Perform the diagnosis continuously after the enable conditions have been established.

5. DIAGNOSTIC METHOD

If the duration of time while the following conditions are met is longer than the time indicated, judge as NG.

Judgment Value

Malfunction Criteria	Threshold Value
Output voltage	≤ Battery voltage × 0.34

Time Needed for Diagnosis: 2500 ms
Malfunction Indicator Light Illumination: Illuminates as soon as a malfunction occurs.

GL:DTC P2420 EVAP SYSTEM SWITCHING VALVE CONTROL CIRCUIT HIGH

DTC DETECTING CONDITION:
Immediately at fault recognition

CAUTION:
After servicing or replacing faulty parts, perform Clear Memory Mode <Ref. to EN(H6DO)(diag)-85, OPERATION, Clear Memory Mode.>, and Inspection Mode <Ref. to EN(H6DO)(diag)-69, PROCEDURE, Inspection Mode.>.

WIRING DIAGRAM:

- Engine Electrical System ENGINE TYPE EZ (WITHOUT PUSH BUTTON START) <Ref. to WI-198, ENGINE TYPE EZ (WITHOUT PUSH BUTTON START), WIRING DIAGRAM, Engine Electrical System.>
- Engine Electrical System ENGINE TYPE EZ (WITH PUSH BUTTON START) <Ref. to WI-214, ENGINE TYPE EZ (WITH PUSH BUTTON START), WIRING DIAGRAM, Engine Electrical System.>

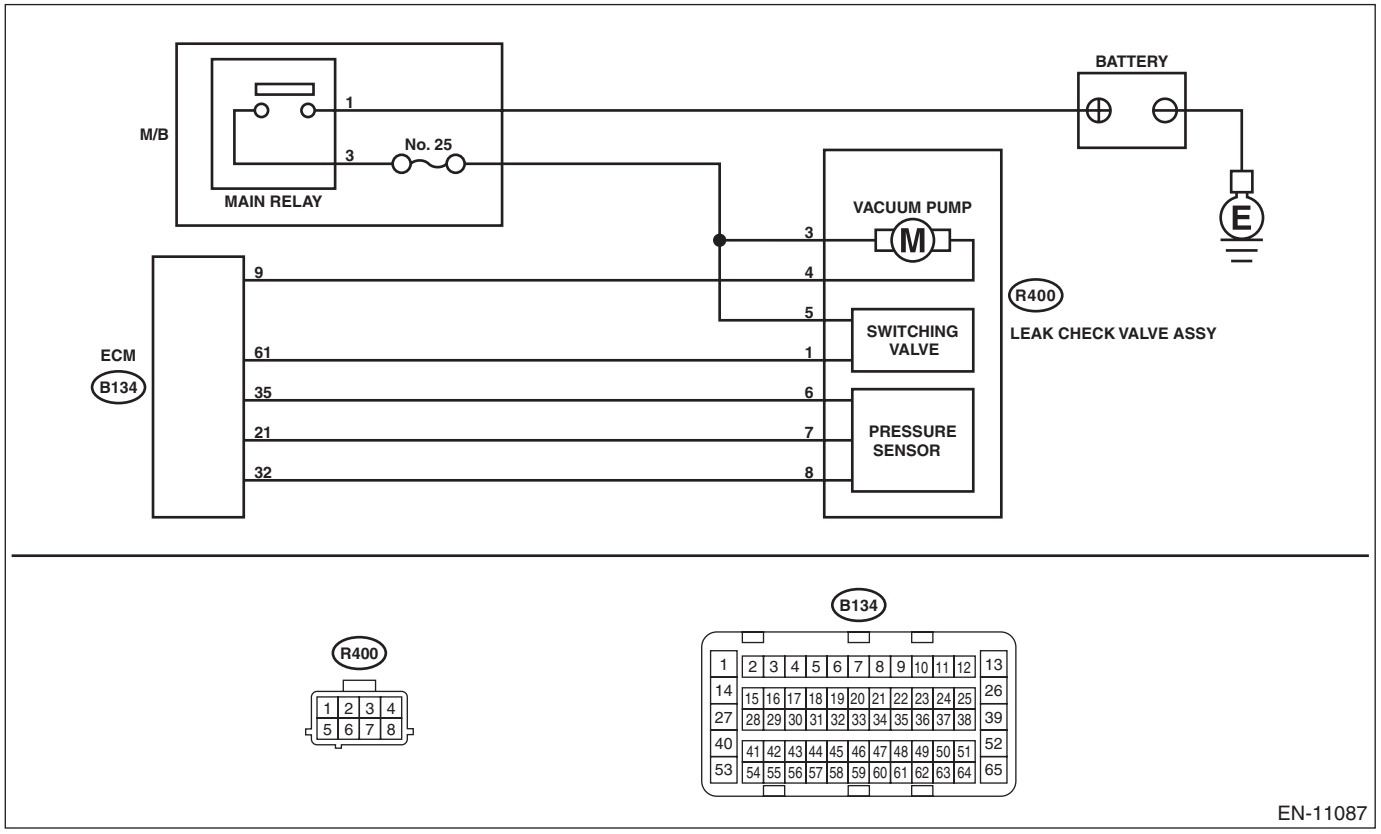

	Step	Check	Yes	No
1	**CHECK HARNESS BETWEEN ECM AND LEAK CHECK VALVE ASSEMBLY CONNECTOR.** 1) Turn the ignition switch to OFF. 2) Disconnect the connector from the leak check valve assembly. 3) Turn the ignition switch to ON. 4) Measure the voltage between leak check valve assembly and chassis ground. ***Connector & terminal*** ***(R400) No. 1 (+) — Chassis ground (–):***	Is the voltage 10 V or more?	Repair the short circuit to power in harness between ECM connector and leak check valve assembly connector.	Go to step **2**.
2	**CHECK LEAK CHECK VALVE ASSEMBLY.** 1) Turn the ignition switch to OFF. 2) Check the switching valve of the leak check valve assembly. <Ref. to EC(H6DO)-36, CHECK SWITCHING VALVE, INSPECTION, Leak Check Valve Assembly.>	Is the switching valve of the leak check valve assembly OK?	Repair the poor contact in the leak check valve assembly connector.	Replace the leak check valve assembly. <Ref. to EC(H6DO)-36, Leak Check Valve Assembly.>

1. OUTLINE OF DIAGNOSIS

Detect the open or short circuit of the ELCM switching valve.
Judge as NG if out of specification.

2. COMPONENT DESCRIPTION

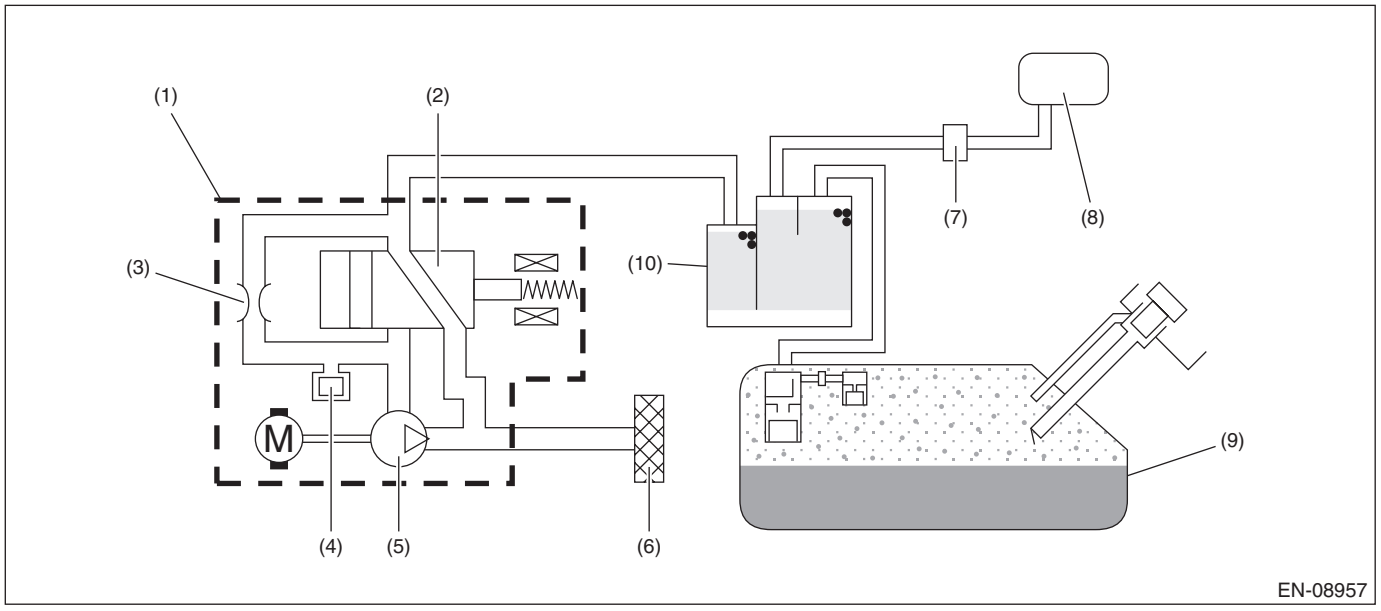

(1) ELCM
(2) Switching valve
(3) Reference orifice (0.02 inch orifice)
(4) Pressure sensor
(5) Vacuum pump
(6) Drain filter
(7) Purge control solenoid valve
(8) Intake manifold
(9) Fuel tank
(10) Canister

3. EXECUTION CONDITION

Secondary Parameters	Execution condition
Battery voltage	≥ 10.9
ELCM switching valve drive signal	ON

4. GENERAL DRIVING CYCLE

Perform the diagnosis continuously after the enable conditions have been established.

5. DIAGNOSTIC METHOD

If the duration of time while the following conditions are met is longer than the time indicated, judge as NG.

Judgment Value

Malfunction Criteria	Threshold Value
Output current	≥ 12 A

Time Needed for Diagnosis: 2500 ms
Malfunction Indicator Light Illumination: Illuminates as soon as a malfunction occurs.

GM:DTC P2530 IGNITION SWITCH RUN POSITION CIRCUIT

DTC DETECTING CONDITION:
Immediately at fault recognition
TROUBLE SYMPTOM:
Improper idling

CAUTION:
After servicing or replacing faulty parts, perform Clear Memory Mode <Ref. to EN(H6DO)(diag)-85, OPERATION, Clear Memory Mode.>, and Inspection Mode <Ref. to EN(H6DO)(diag)-69, PROCEDURE, Inspection Mode.>.
WIRING DIAGRAM:
• Engine Electrical System ENGINE TYPE EZ (WITHOUT PUSH BUTTON START) <Ref. to WI-198, ENGINE TYPE EZ (WITHOUT PUSH BUTTON START), WIRING DIAGRAM, Engine Electrical System.>
• Engine Electrical System ENGINE TYPE EZ (WITH PUSH BUTTON START) <Ref. to WI-214, ENGINE TYPE EZ (WITH PUSH BUTTON START), WIRING DIAGRAM, Engine Electrical System.>

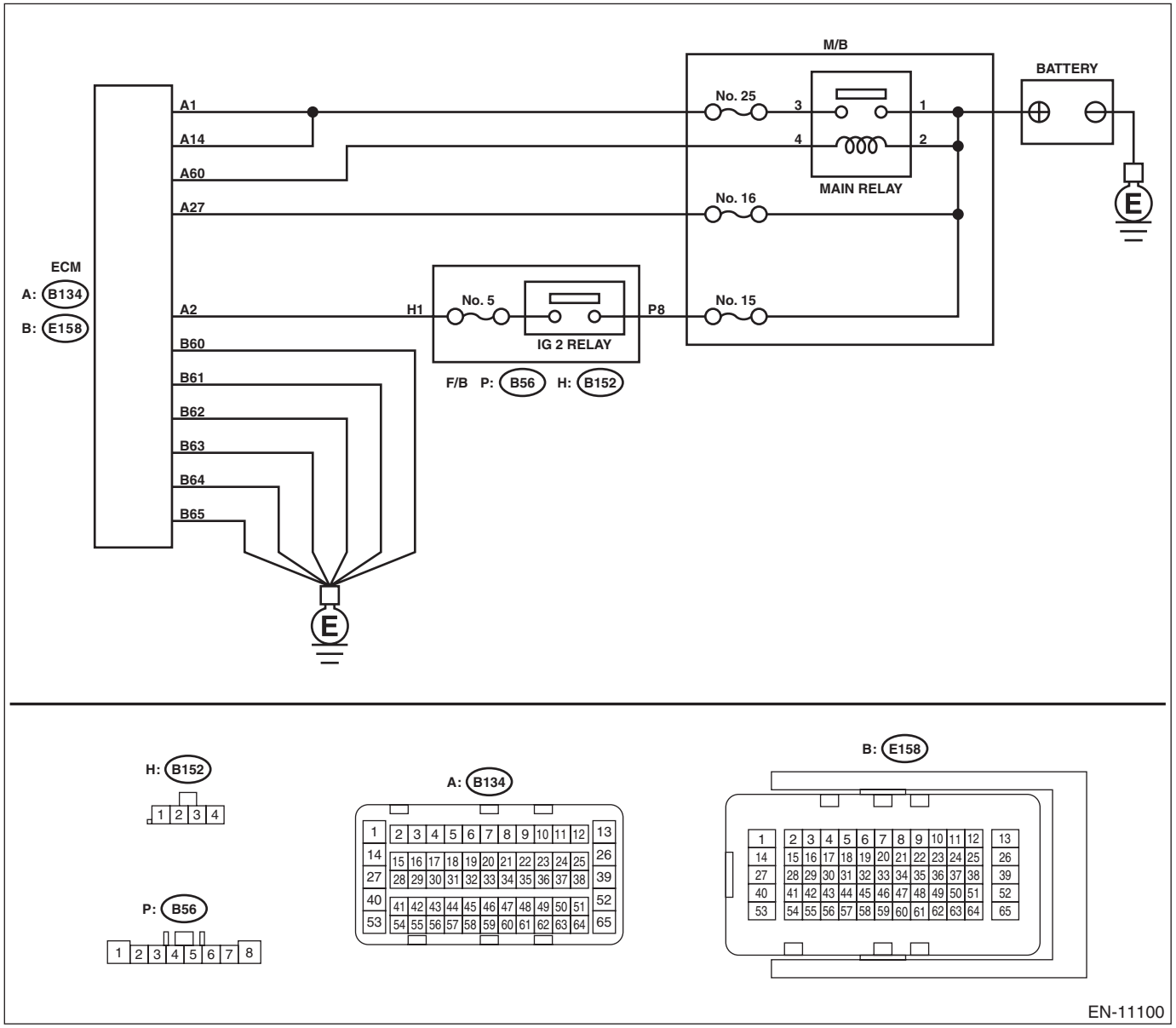

	Step	Check	Yes	No
1	**CHECK ECM CONNECTOR.** Check the connecting condition of ECM connector.	Is the ECM connector correctly connected?	Go to step **2**.	Connect the ECM connector correctly.
2	**CHECK INPUT VOLTAGE OF ECM.** 1) Turn the ignition switch to ON. 2) Connect the check board. ST 18460AA030 CHECK BOARD 3) Measure the voltage between ECM connector and engine ground while wiggling the harness between ECM connector and ignition switch connector (for models without push button start), or between ECM connector and IG relay 1 (push button start) connector (for models with push button start). ***Connector & terminal*** ***(B134) No. 2 (+) — Engine ground (–):***	Is the voltage 8 V or more all the time?	Even if DTC is detected, the circuit has returned to a normal condition at this time. Reproduce the failure, and then perform the diagnosis again. NOTE: In this case, the following items may be the cause of fault. Model without push button start • Open circuit or short circuit to ground in harness between ECM connector and ignition switch connector • Poor contact of ignition switch connector • Poor contact of ignition switch Model with push button start • Open circuit or short circuit to ground in harness between ECM connector and IG relay 1 (push button start) connector • Poor contact in IG relay 1 (push button start) connector • Poor contact in IG relay 1 (push button start)	Repair the harness and connector. NOTE: In this case, repair the following item: Model without push button start • Open circuit or short circuit to ground in harness between ECM connector and ignition switch connector • Poor contact of ignition switch connector • Poor contact of ignition switch • Faulty fuse (F/B No. 12) Model with push button start • Open circuit or short circuit to ground in harness between ECM connector and IG relay 1 (push button start) connector • Poor contact in IG relay 1 (push button start) connector • Poor contact in IG relay 1 (push button start) • Faulty fuse (F/B No. 12)

1. OUTLINE OF DIAGNOSIS

Detect instantaneous open in ignition switch input circuit to ECM.
Judge as NG if out of specification.

2. COMPONENT DESCRIPTION

ECM monitors the voltage of the ignition switch input circuit. Judge as ignition switch ON when the voltage is the specified value or more.

3. EXECUTION CONDITION

Secondary Parameters	Execution condition
Battery voltage	≥ 10.9 V
Engine speed	≥ 525 rpm

4. GENERAL DRIVING CYCLE

Perform the diagnosis continuously after the enable conditions have been established.

5. DIAGNOSTIC METHOD

Judge as NG when the following conditions are established within the predetermined time.

Judgment Value

Malfunction Criteria	Threshold Value
Number of instantaneous opens in ignition switch input circuit	≥ 5 time(s)

Time Needed for Diagnosis: 5000 ms
Malfunction Indicator Light Illumination: Illuminates as soon as a malfunction occurs.

GN:DTC P2610 ECM/PCM ENGINE OFF TIMER PERFORMANCE

DTC DETECTING CONDITION:
Detected when two consecutive driving cycles with fault occur.

CAUTION:
After servicing or replacing faulty parts, perform Clear Memory Mode <Ref. to EN(H6DO)(diag)-85, OPERATION, Clear Memory Mode.>, and Inspection Mode <Ref. to EN(H6DO)(diag)-69, PROCEDURE, Inspection Mode.>.

Step	Check	Yes	No
1 CHECK FOR ANY OTHER DTC ON DISPLAY.	Is any other DTC displayed?	Check DTC using "List of Diagnostic Trouble Code (DTC)". <Ref. to EN(H6DO)(diag)-109, List of Diagnostic Trouble Code (DTC).>	Replace the ECM. <Ref. to FU(H6DO)-83, Engine Control Module (ECM).> NOTE: The soaking timer IC is built into the ECM.

1. OUTLINE OF DIAGNOSIS

Detect malfunction of soaking timer IC by the five diagnoses below.

Monitor Number	Explanation	Time required for diagnosis
Monitor #1 <Timer diagnosis>	Perform diagnosis of the soaking timer IC accuracy	128 ms
Monitor #2 <Full count diagnosis>	Perform diagnosis of the soaking timer IC counter function	128 ms
Monitor #3 <Soaking timer IC setting diagnosis>	Perform diagnosis of communication between ECM and soaking timer IC	128 ms
Monitor #4 <Timer diagnosis (during soaking)>	Perform diagnosis of the soaking timer IC accuracy during soaking	None
Monitor #5 <Wake-up diagnosis>	Perform diagnosis of wake-up function	None

This is an example of ELCM monitor execution at soak time of 5 hours.

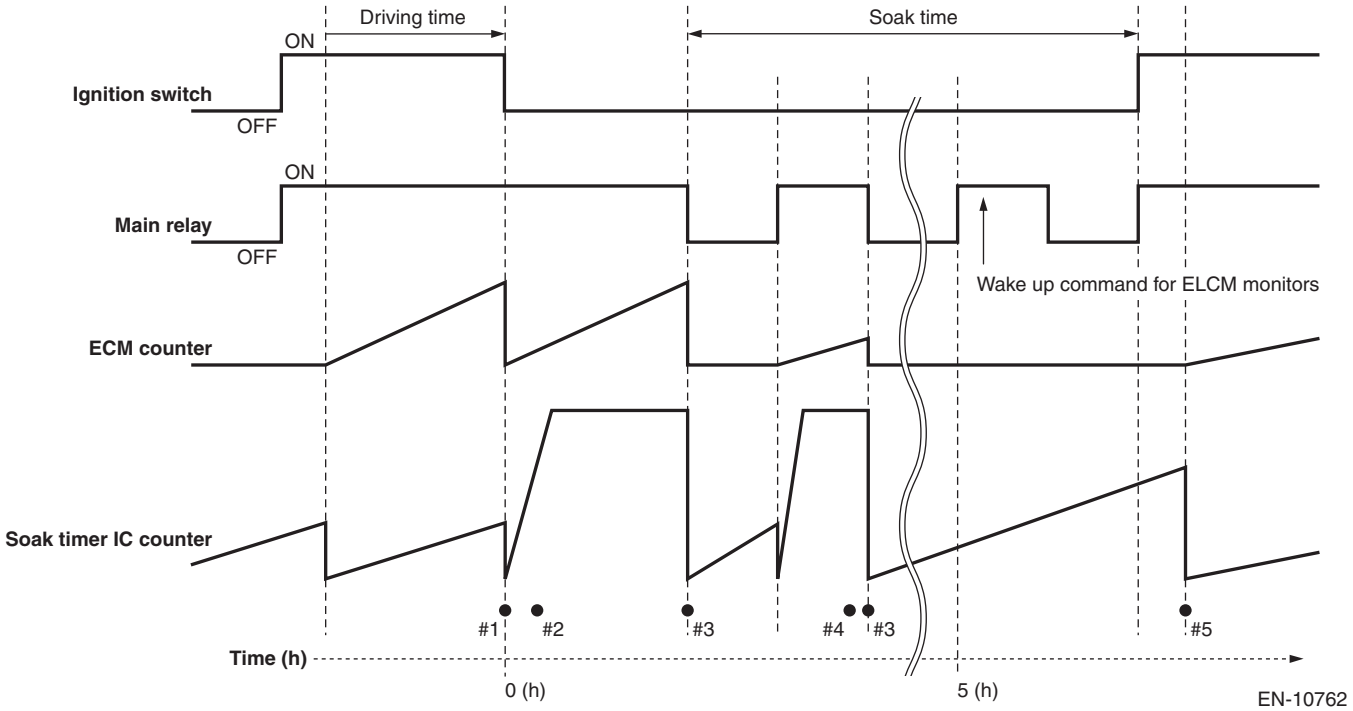

This is an example of ELCM monitor execution at soak time of 9.5 hours.

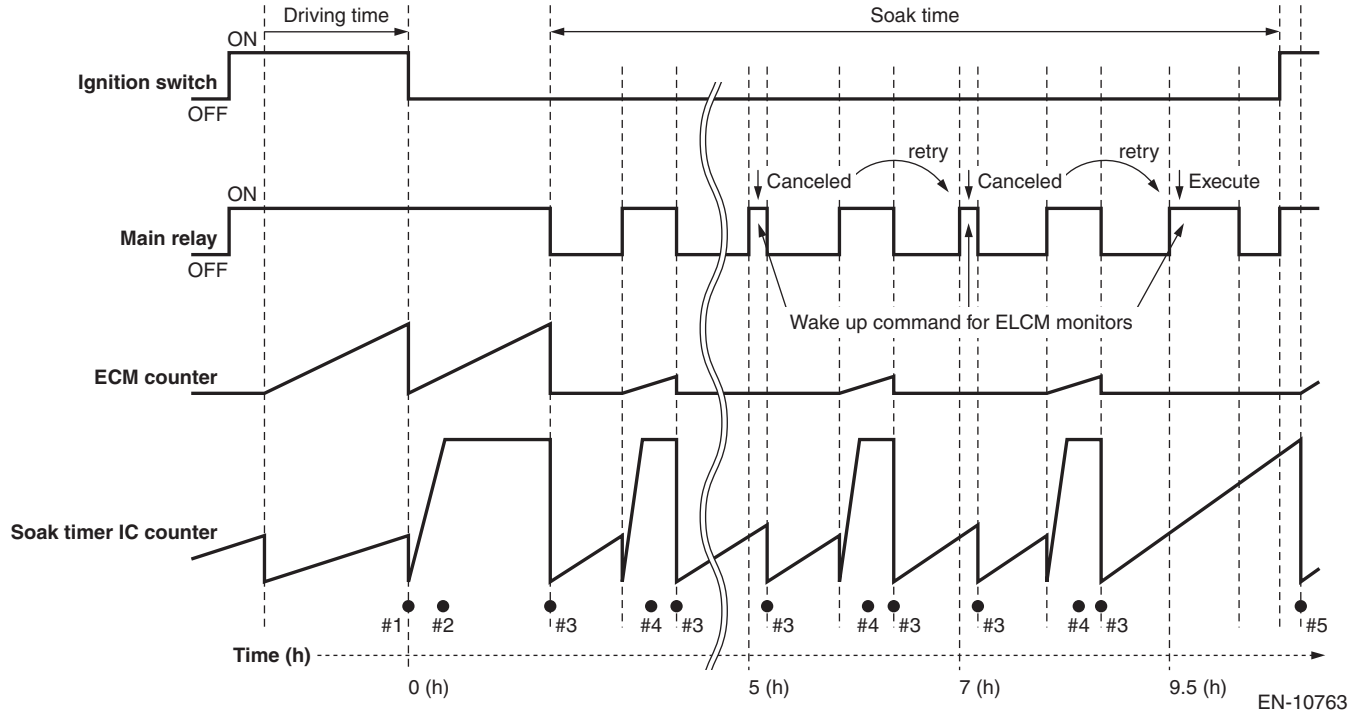

2. COMPONENT DESCRIPTION

The soaking timer IC is built into the ECM.

3. EXECUTION CONDITION

Secondary Parameters	Execution condition
<Timer diagnosis>	
Battery voltage	≥ 10.9 V
Ignition switch	OFF
Elapsed time after starting the engine	> 600 s and < 61380 s
<Full count diagnosis>	
Battery voltage	≥ 10.9 V
Ignition switch	OFF
Counter in ECM	≥ 4 s
<Soaking timer IC setting diagnosis>	
Battery voltage	≥ 10.9 V
Ignition switch	OFF
<Timer diagnosis (during soaking)>	
Battery voltage	≥ 10.9 V
Ignition switch	OFF
<Wake-up diagnosis>	
Ignition switch	ON
Time in the soaking timer IC	> 3600 s

4. GENERAL DRIVING CYCLE

Perform the diagnosis only once when the ignition switch is OFF and when the ignition switch is ON after the soaking of one hour or more.

5. DIAGNOSTIC METHOD

<Timer diagnosis>

Start the count up operation of counters in ECM and in soaking timer IC when the engine is started.
Judge as timer malfunction if the difference between the counter in ECM and counter in soaking timer IC exceeds the allowable limit when the ignition switch is OFF.

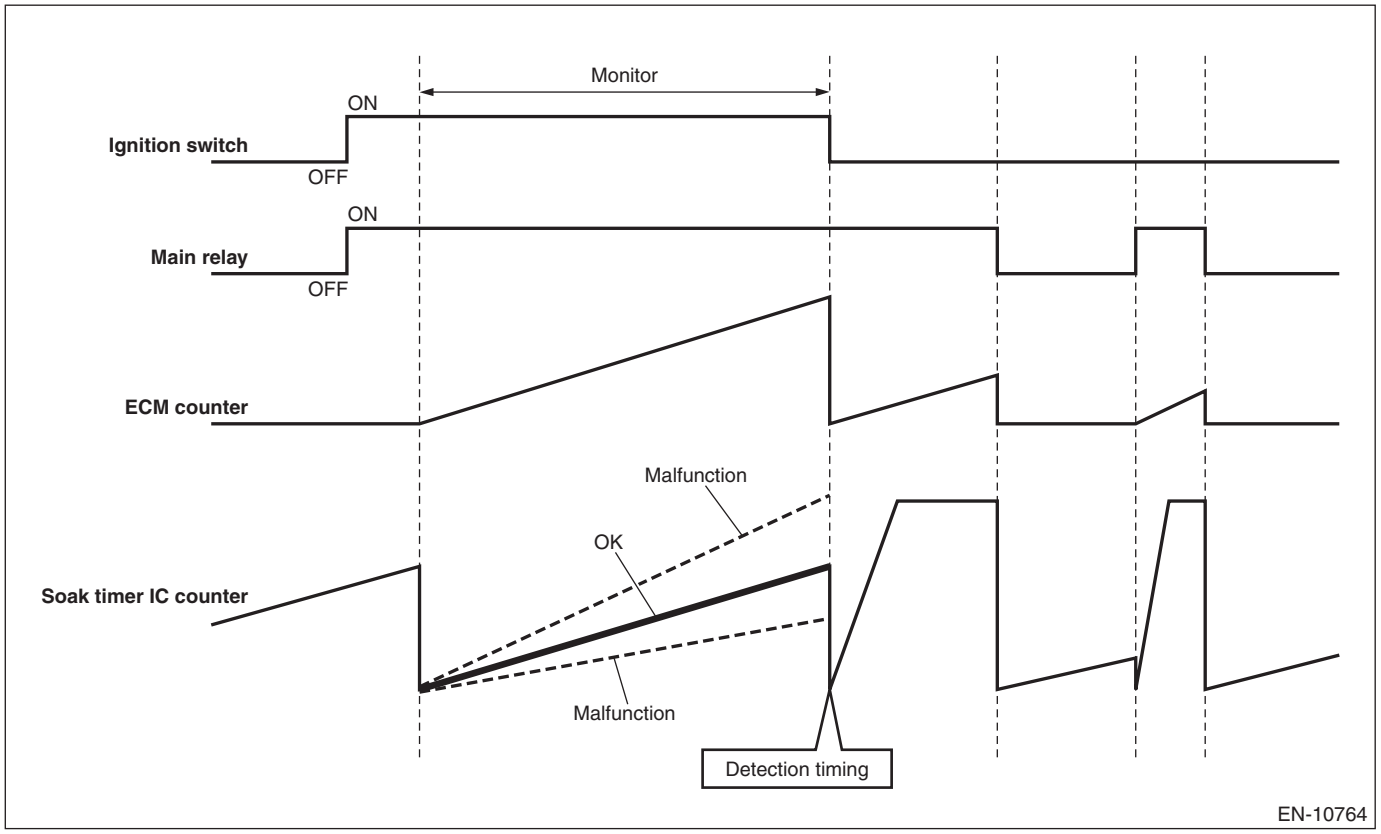

Judge as NG when the following conditions are established.

Judgment Value

Malfunction Criteria	Threshold Value
|osoaktimcpu – osoaktimic| / osoaktimcpu osoaktimcpu = Counter in ECM osoaktimic = Counter in soaking timer IC	> 0.24

<Full count diagnosis>

Reset the counter in soaking timer IC and start the count up operation.
Judge as full count diagnosis malfunction if counter in soaking timer IC is not $3FF (1023 count) after 4 seconds.

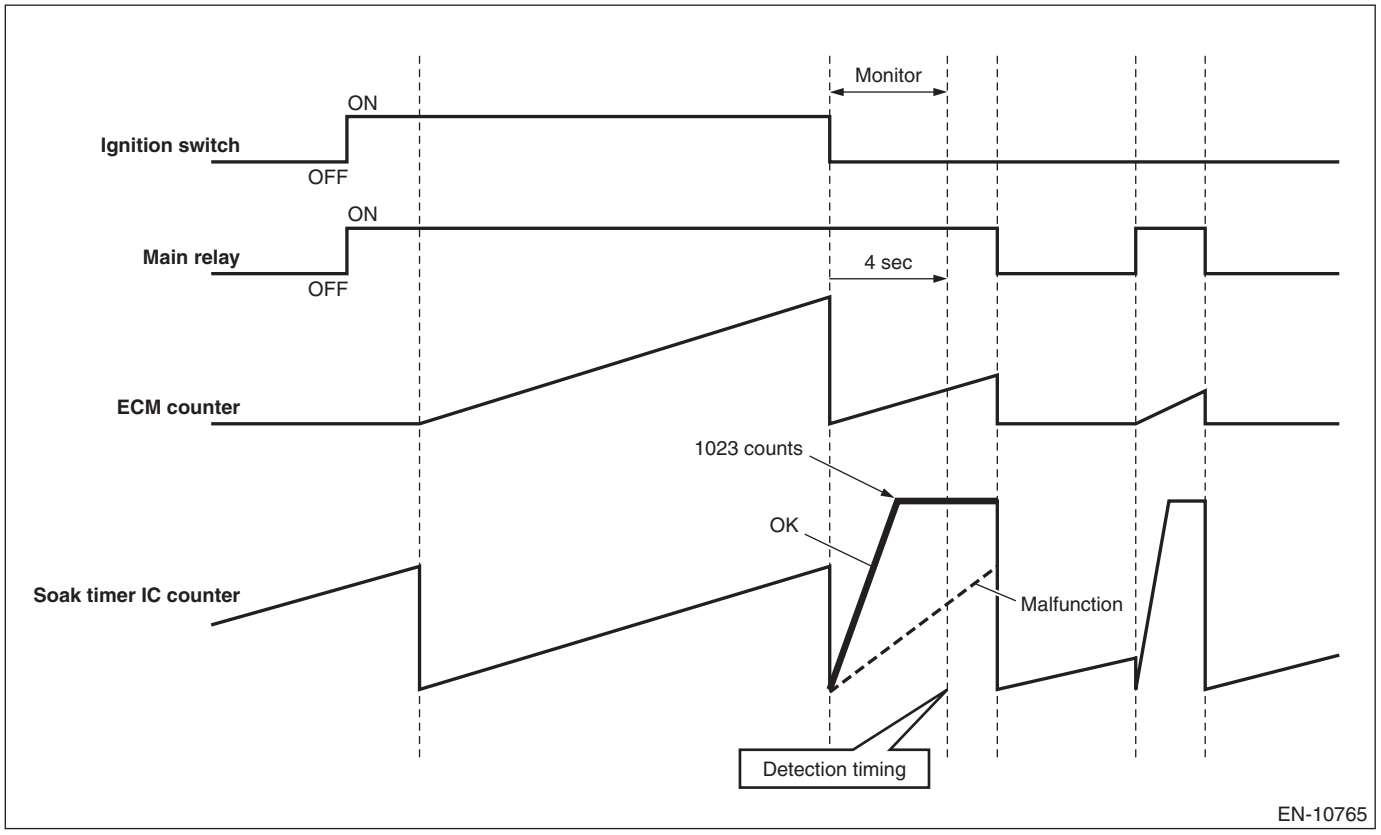

Judge as NG when the following conditions are established.

Judgment Value

Malfunction Criteria	Threshold Value
osoakfcntic osoakfcntic = Counter in soaking timer IC	≠ $3FF (1023 count)

<Soaking timer IC setting diagnosis>

When setting the activation setting time to soaking timer IC, compare the writing value to soaking timer IC with read out value. Judge as malfunction if the values do not match 3 times in a row.

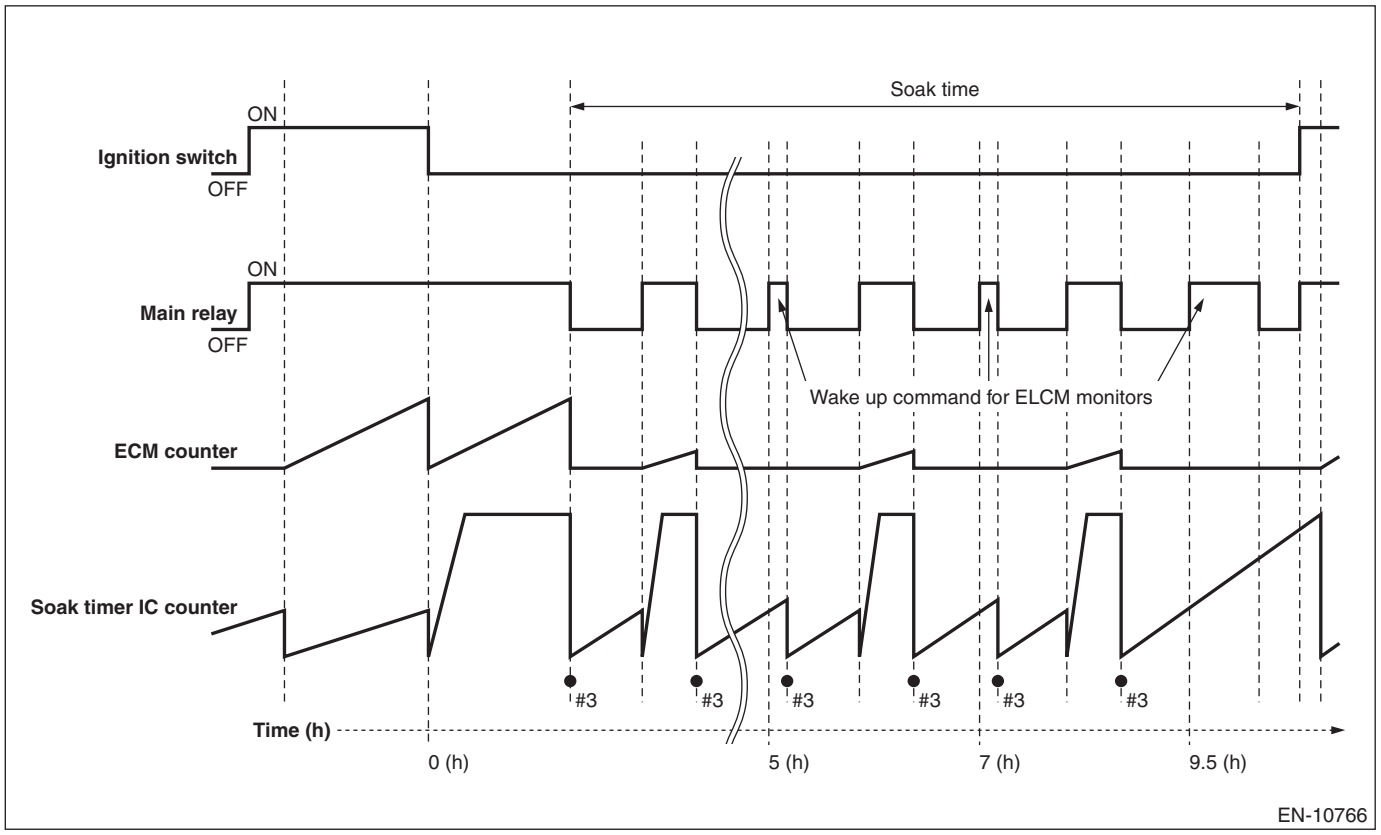

Judge as NG when the following conditions are established.

Judgment Value

Malfunction Criteria	Threshold Value
Writing value and read out value when setting the soaking timer	Unmatch

<Timer diagnosis (during soaking)>

Wake-up at the predetermined interval until 5 or 7 or 9.5 hours have passed after the ignition switch is OFF, and compare the counter in soaking timer IC with the counter in ECM.
Judge as malfunction if the counter in soaking timer IC is counted up to maximum value (1023 count) when the counter in ECM is 1636 ms, or if the counter in soaking timer IC is not counted up to maximum value (1023 count) when the counter in ECM is 2456 ms.

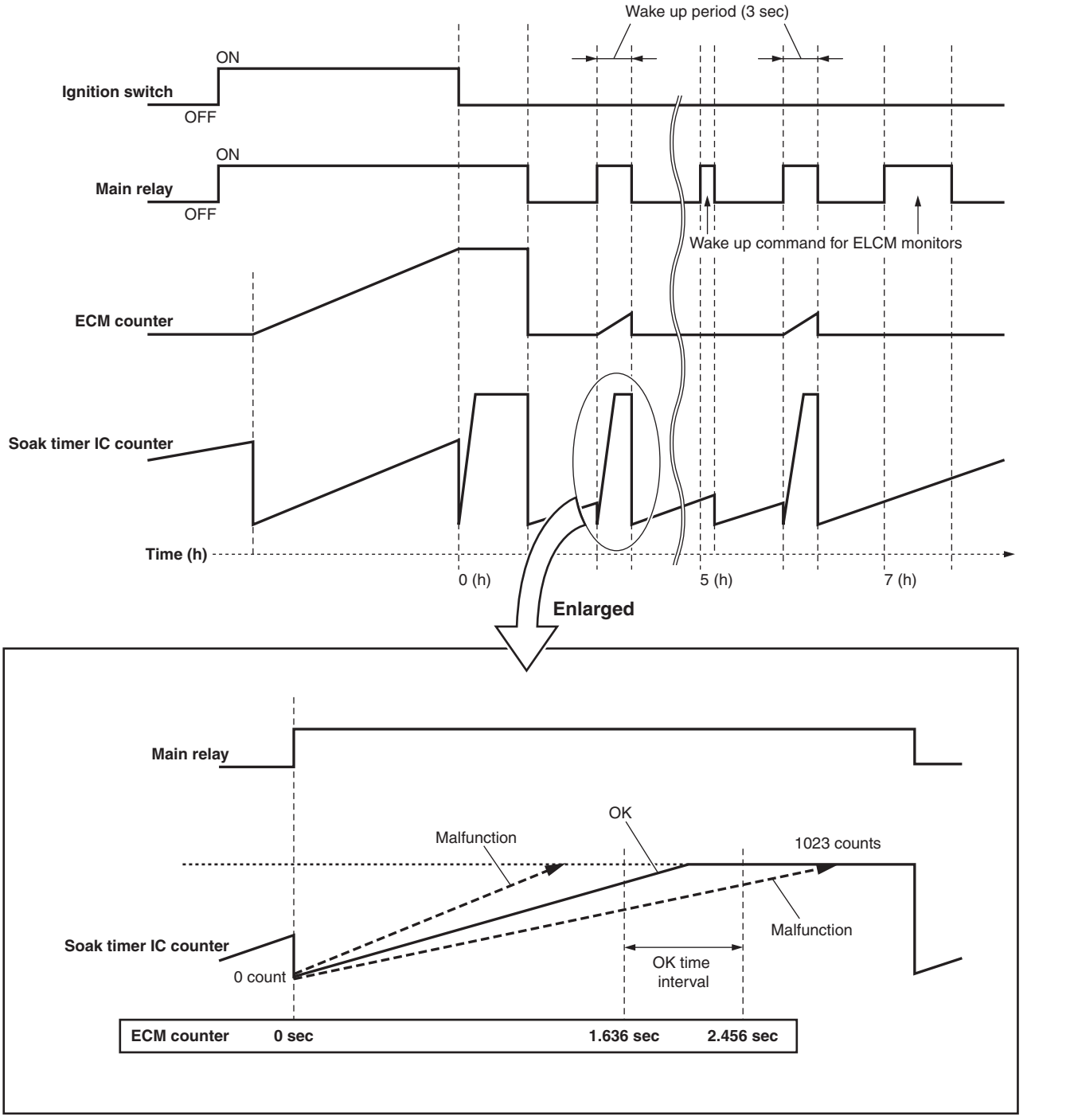

EN-10767

Judge as NG when the following conditions are established.

Judgment Value

Malfunction Criteria	Threshold Value
When any one of the followings is established:	
• All of the following conditions are established.	
Counter in ECM	≤ 1636 ms
Counter in soaking timer IC	= $3FF (1023 count)
• All of the following conditions are established.	
Counter in ECM	≥ 2456 ms
Counter in soaking timer IC	≠ $3FF (1023 count)

<Wake-up diagnosis>

Store the number of wake-up activation when the ECM wakes up by the soaking timer IC.
Next time when the ignition switch is ON, if the number of wake-up activation does not reach the predetermined value even though the counter in soaking timer IC operates 1 hour or more, judge as wake-up malfunction.

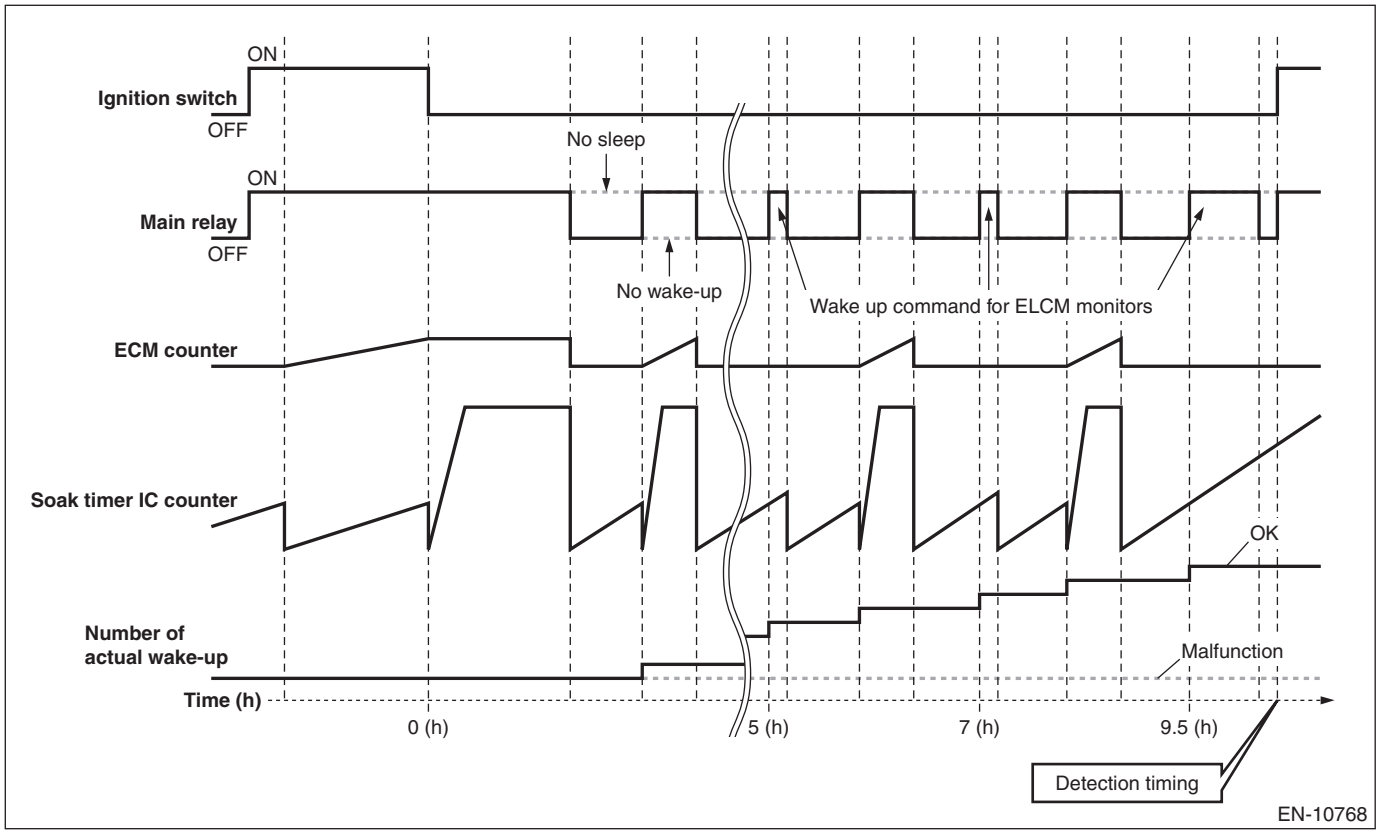

Judge as NG when the following conditions are established.

Judgment Value

Malfunction Criteria	Threshold Value
Number of wake-up	≠ Wake-up indication count

Judge as NG when the following conditions are established.

Judgment Value

Malfunction Criteria	Threshold Value
Ignition switch	ON
Driving cycle	Completed
When any one of the followings is established:	
• Timer diagnosis	NG
• Full count diagnosis	NG
• Soaking timer IC setting diagnosis	NG
• Timer diagnosis (during soaking)	NG
• Wake-up diagnosis	NG

Time Needed for Diagnosis: Approx. 5 — 9.5 hours
Malfunction Indicator Light Illumination: Illuminates when malfunction occurs in 2 continuous driving cycles.

GO:DTC U0073 CONTROL MODULE COMMUNICATION BUS OFF

NOTE:
For the diagnostic procedure, refer to LAN section. <Ref. to LAN(diag)-2, Basic Diagnostic Procedure.>

1. OUTLINE OF DIAGNOSIS

Detect malfunction of CAN communication.
Judge as NG when CAN communication failure has occurred.

2. COMPONENT DESCRIPTION

(Common Specifications)
CAN Protocol 2.0 B (Active)
Frame Format: 11 Bit ID Frame (Standard Frame)
Conforms to ISO11898
Communication Speed: 500 kbps

3. EXECUTION CONDITION

Secondary Parameters	Execution condition
Battery voltage	≥ 10.9 V

4. GENERAL DRIVING CYCLE

Perform the diagnosis continuously after starting the engine.

5. DIAGNOSTIC METHOD

Judge as NG when the following conditions are established.

Judgment Value

Malfunction Criteria	Threshold Value
CAN bus condition	= Bus off

Time Needed for Diagnosis: 436 ms
Malfunction Indicator Light Illumination: Illuminates as soon as a malfunction occurs.

GP:DTC U0077 LIN COMMUNICATION BUS "ECM/PCM" OFF

DTC DETECTING CONDITION:
Immediately at fault recognition

CAUTION:
After servicing or replacing faulty parts, perform Clear Memory Mode <Ref. to EN(H6DO)(diag)-85, OPERATION, Clear Memory Mode.>, and Inspection Mode <Ref. to EN(H6DO)(diag)-69, PROCEDURE, Inspection Mode.>.

WIRING DIAGRAM:

- Engine Electrical System ENGINE TYPE EZ (WITHOUT PUSH BUTTON START) <Ref. to WI-198, ENGINE TYPE EZ (WITHOUT PUSH BUTTON START), WIRING DIAGRAM, Engine Electrical System.>
- Engine Electrical System ENGINE TYPE EZ (WITH PUSH BUTTON START) <Ref. to WI-214, ENGINE TYPE EZ (WITH PUSH BUTTON START), WIRING DIAGRAM, Engine Electrical System.>

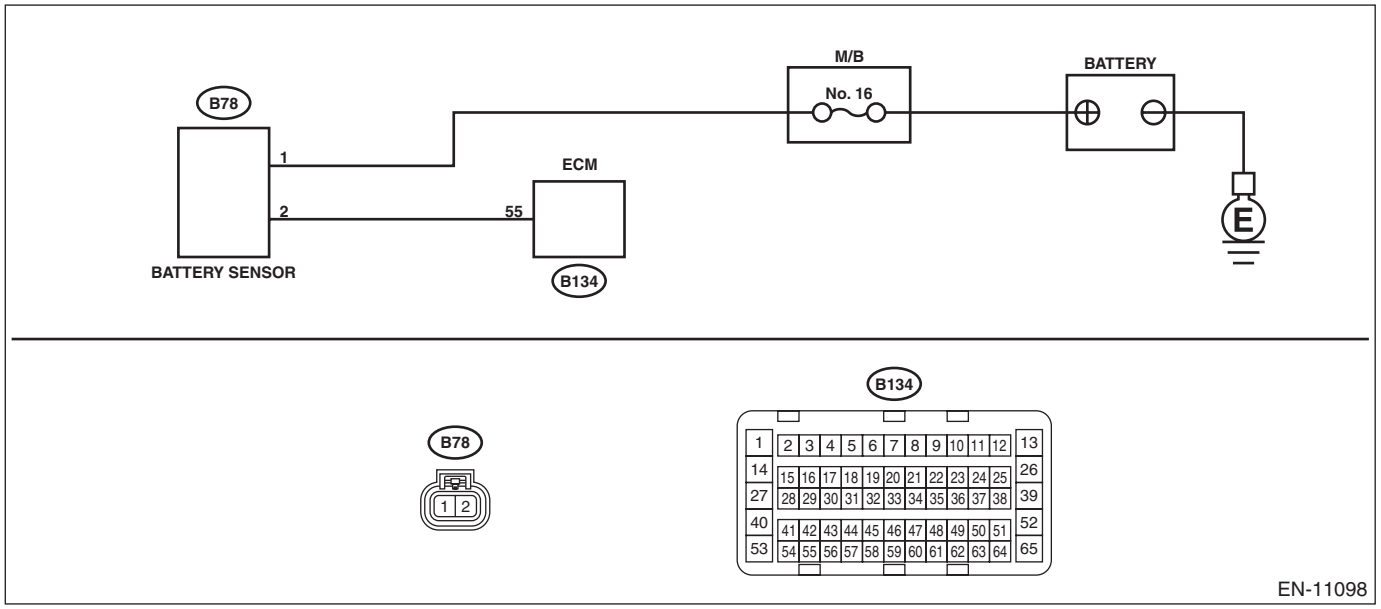

	Step	Check	Yes	No
1	**CHECK DTC.** Check for DTC. <Ref. to EN(H6DO)(diag)-68, Read Diagnostic Trouble Code (DTC).>	Is U0077 displayed in «Present fault»?	Go to step **2**.	Even if DTC is detected, the circuit has returned to a normal condition at this time. Reproduce the failure, and then perform the diagnosis again.
2	**CHECK ECM CONNECTOR.** Check the connecting condition of ECM connector.	Is the ECM connector correctly connected?	Go to step **3**.	Connect the ECM connector correctly.

	Step	Check	Yes	No
3	**CHECK HARNESS BETWEEN BATTERY AND BATTERY SENSOR CONNECTOR.** 1) Turn the ignition switch to OFF. 2) Disconnect the ground terminal from battery sensor. <Ref. to RC-4, BATTERY, NOTE, Repair Contents.> 3) Disconnect the connector from battery sensor. 4) Disconnect the positive terminal of battery. 5) Measure the resistance of the harness between battery positive cable terminal and battery sensor connector. ***Connector & terminal*** ***Positive cable terminal — (B9) No. 1:***	Is the resistance less than 1 Ω?	Go to step **4**.	Repair the open circuit in harness between battery positive cable terminal and battery sensor connector.
4	**CHECK HARNESS BETWEEN ECM AND BATTERY SENSOR CONNECTOR.** Measure the resistance between ECM connector and chassis ground. ***Connector & terminal*** ***(B134) No. 55 — Chassis ground:***	Is the resistance 1 MΩ?	Go to step **5**.	Repair the short circuit to ground in harness between ECM connector and battery sensor connector.
5	**CHECK HARNESS BETWEEN ECM AND BATTERY SENSOR CONNECTOR.** 1) Disconnect the connector from ECM. 2) Measure the resistance of harness between ECM connector and battery sensor connector. ***Connector & terminal*** ***(B134) No. 55 — (B78) No. 2:***	Is the resistance less than 1 Ω?	Check for the poor contact of ECM connector or battery sensor connector. Repair or replace if defective. Go to step **6**.	Repair the harness and connector. NOTE: In this case, repair the following item: • Open circuit in harness between ECM connector and battery sensor connector • Poor contact of coupling connector
6	**CHECK DTC.** 1) Connect ECM connector and battery sensor connector. 2) Check for DTC. <Ref. to EN(H6DO)(diag)-68, Read Diagnostic Trouble Code (DTC).>	Is U0077 displayed in «Present fault»?	ECM is faulty. Replace the ECM. <Ref. to FU(H6DO)-83, Engine Control Module (ECM).>	The circuit has returned to a normal condition at this time. Reproduce the failure, and then perform the diagnosis again.

1. OUTLINE OF DIAGNOSIS

Detect malfunction of LIN communication.
Judge as NG when the data sent/received via LIN communication is abnormal.

2. COMPONENT DESCRIPTION

LIN communication is used to send/receive data between ECM and battery sensor.

3. EXECUTION CONDITION

Secondary Parameters	Execution condition
Battery voltage	≥ 10.9 V

4. GENERAL DRIVING CYCLE

Always perform the diagnosis continuously.

5. DIAGNOSTIC METHOD

If the duration of time while the following conditions are met is longer than the time indicated, judge as NG.

Judgment Value

Malfunction Criteria	Threshold Value
Data sent/received with control modules connected to LIN	No change or Checksum error

Time Needed for Diagnosis: 1280 ms
Malfunction Indicator Light Illumination: Illuminates as soon as a malfunction occurs.

GQ:DTC U0101 LOST COMMUNICATION WITH TCM

NOTE:
For the diagnostic procedure, refer to LAN section. <Ref. to LAN(diag)-2, Basic Diagnostic Procedure.>

1. OUTLINE OF DIAGNOSIS

Detect malfunction of CAN communication.
Judge as NG when CAN communication failure between TCM, VDC CM and combination meter has occurred.

2. COMPONENT DESCRIPTION

(Common Specifications)
CAN Protocol 2.0 B (Active)
Frame Format: 11 Bit ID Frame (Standard Frame)
Conforms to ISO11898
Communication Speed: 500 kbps

3. EXECUTION CONDITION

Secondary Parameters	Execution condition
Battery voltage	≥ 10.9 V

4. GENERAL DRIVING CYCLE

Always perform the diagnosis continuously.

5. DIAGNOSTIC METHOD

Judge as NG when the following conditions are established.

Judgment Value

Malfunction Criteria	Threshold Value
Data from control modules connected to CAN	None

Time Needed for Diagnosis: 500 ms
Malfunction Indicator Light Illumination: Illuminates as soon as a malfunction occurs.

GR:DTC U0122 LOST COMMUNICATION WITH VEHICLE DYNAMICS CONTROL MODULE

NOTE:
For the diagnostic procedure, refer to LAN section. <Ref. to LAN(diag)-2, Basic Diagnostic Procedure.>

1. OUTLINE OF DIAGNOSIS

NOTE:
For the detection standard, refer to DTC U0101. <Ref. to EN(H6DO)(diag)-665, DTC U0101 LOST COMMUNICATION WITH TCM, Diagnostic Procedure with Diagnostic Trouble Code (DTC).>

GS:DTC U0155 LOST COMMUNICATION WITH INSTRUMENT PANEL CLUSTER (IPC) CONTROL MODULE

NOTE:
For the diagnostic procedure, refer to LAN section. <Ref. to LAN(diag)-2, Basic Diagnostic Procedure.>

1. OUTLINE OF DIAGNOSIS

NOTE:
For the detection standard, refer to DTC U0101. <Ref. to EN(H6DO)(diag)-665, DTC U0101 LOST COMMUNICATION WITH TCM, Diagnostic Procedure with Diagnostic Trouble Code (DTC).>

GT:DTC U0402 INVALID DATA RECEIVED FROM TCM

NOTE:
For the diagnostic procedure, refer to LAN section. <Ref. to LAN(diag)-2, Basic Diagnostic Procedure.>

1. OUTLINE OF DIAGNOSIS

Detect malfunction of CAN communication.
Judge as NG when data received from TCM, VDC CM and combination meter is not normal.

2. COMPONENT DESCRIPTION

(Common Specifications)
CAN Protocol 2.0 B (Active)
Frame Format: 11 Bit ID Frame (Standard Frame)
Conforms to ISO11898
Communication Speed: 500 kbps

3. EXECUTION CONDITION

Secondary Parameters	Execution condition
Battery voltage	≥ 10.9 V

4. GENERAL DRIVING CYCLE

Always perform the diagnosis continuously.

5. DIAGNOSTIC METHOD

Judge as NG when the following conditions are established.

Judgment Value

Malfunction Criteria	Threshold Value
Data from control modules connected to CAN	No change

Time Needed for Diagnosis: 2 seconds
Malfunction Indicator Light Illumination: Illuminates as soon as a malfunction occurs.

GU:DTC U0416 INVALID DATA RECEIVED FROM VEHICLE DYNAMICS CONTROL MODULE

NOTE:
For the diagnostic procedure, refer to LAN section. <Ref. to LAN(diag)-2, Basic Diagnostic Procedure.>

1. OUTLINE OF DIAGNOSIS

NOTE:
For the detection standard, refer to DTC U0402. <Ref. to EN(H6DO)(diag)-666, DTC U0402 INVALID DATA RECEIVED FROM TCM, Diagnostic Procedure with Diagnostic Trouble Code (DTC).>

GV:DTC U0423 INVALID DATA RECEIVED FROM INSTRUMENT PANEL CLUSTER CONTROL MODULE

NOTE:
For the diagnostic procedure, refer to LAN section. <Ref. to LAN(diag)-2, Basic Diagnostic Procedure.>

1. OUTLINE OF DIAGNOSIS

NOTE:
For the detection standard, refer to DTC U0402. <Ref. to EN(H6DO)(diag)-666, DTC U0402 INVALID DATA RECEIVED FROM TCM, Diagnostic Procedure with Diagnostic Trouble Code (DTC).>

GW:DTC U1712 LOST LIN COMMUNICATION WITH BATTERY "1" MONITOR MODULE

NOTE:
For the diagnostic procedure, refer to DTC U0077. <Ref. to EN(H6DO)(diag)-661, DTC U0073 CONTROL MODULE COMMUNICATION BUS OFF, Diagnostic Procedure with Diagnostic Trouble Code (DTC).>

1. OUTLINE OF DIAGNOSIS

Detect malfunction of LIN communication.
Judge as NG when LIN communication failure has occurred with the battery sensor.

2. COMPONENT DESCRIPTION

(Common Specifications)
Communication protocol: LIN 2.0
Communication Speed: 19.20 kbps

3. EXECUTION CONDITION

Secondary Parameters	Execution condition
Battery voltage	≥ 10.9 V

4. GENERAL DRIVING CYCLE

Always perform the diagnosis continuously.

5. DIAGNOSTIC METHOD

If the duration of time while the following conditions are met is longer than the time indicated, judge as NG.

Judgment Value

Malfunction Criteria	Threshold Value
Data received from control modules connected to LIN	No change or Checksum error

Time Needed for Diagnosis: 2 seconds
Malfunction Indicator Light Illumination: Does not illuminate.

18.General Diagnostic Table

A: INSPECTION

NOTE:
Malfunction of parts other than those listed is also possible. <Ref. to ME(H6DO)-172, Engine Trouble in General.>

Symptoms	Faulty parts
1. Engine stalls during idling.	1) Manifold absolute pressure sensor 2) Mass air flow and intake air temperature sensor 3) Ignition parts (*1) 4) Engine coolant temperature sensor (*2) 5) Crankshaft position sensor (*3) 6) Camshaft position sensor (*3) 7) Fuel injection parts (*4) 8) Electronic throttle control
2. Rough idling	1) Manifold absolute pressure sensor 2) Mass air flow and intake air temperature sensor 3) Engine coolant temperature sensor (*2) 4) Ignition parts (*1) 5) Air intake system (*5) 6) Fuel injection parts (*4) 7) Electronic throttle control 8) Crankshaft position sensor (*3) 9) Camshaft position sensor (*3) 10) Oxygen sensor 11) Fuel pump and fuel pump relay 12) EGR control valve
3. Engine does not return to idle.	1) Engine coolant temperature sensor 2) Electronic throttle control 3) Manifold absolute pressure sensor 4) Mass air flow and intake air temperature sensor 5) Accelerator pedal position sensor 6) Engine oil temperature sensor 7) EGR control valve
4. Poor acceleration	1) Manifold absolute pressure sensor 2) Mass air flow and intake air temperature sensor 3) Electronic throttle control 4) Fuel injection parts (*4) 5) Fuel pump and fuel pump relay 6) Engine coolant temperature sensor (*2) 7) Crankshaft position sensor (*3) 8) Camshaft position sensor (*3) 9) EGR control valve 10) Engine torque control signal circuit 11) Ignition parts (*1) 12) Accelerator pedal position sensor 13) Engine oil temperature sensor
5. Engine stalls, hesitates, or sputters at acceleration.	1) Manifold absolute pressure sensor 2) Mass air flow and intake air temperature sensor 3) Engine coolant temperature sensor (*2) 4) Crankshaft position sensor (*3) 5) Camshaft position sensor (*3) 6) Purge control solenoid valve 7) Fuel injection parts (*4) 8) Electronic throttle control 9) Fuel pump and fuel pump relay 10) EGR control valve

Symptoms	Faulty parts
6. Surging	1) Mass air flow and intake air temperature sensor 2) Manifold absolute pressure sensor 3) Engine coolant temperature sensor (*2) 4) Crankshaft position sensor (*3) 5) Camshaft position sensor (*3) 6) Fuel injection parts (*4) 7) Electronic throttle control 8) Fuel pump and fuel pump relay 9) EGR control valve
7. Spark knock	1) Mass air flow and intake air temperature sensor 2) Manifold absolute pressure sensor 3) Engine coolant temperature sensor 4) Knock sensor 5) Fuel injection parts (*4) 6) Fuel pump and fuel pump relay 7) EGR control valve
8. After burning in exhaust system	1) Mass air flow and intake air temperature sensor 2) Manifold absolute pressure sensor 3) Engine coolant temperature sensor (*2) 4) Fuel injection parts (*4) 5) Fuel pump and fuel pump relay

*1: Check ignition coil and spark plug.
*2: Indicate the symptom occurring only in cold temperatures.
*3: Ensure secure installation.
*4: Check the fuel injector and fuel pressure regulator.
*5: Inspect for air leak in air intake system.

TRANSMISSION SECTION

CONTROL SYSTEMS	CS
CONTINUOUSLY VARIABLE TRANSMISSION	CVT(TR580)
CONTINUOUSLY VARIABLE TRANSMISSION	CVT(TR690)
CONTINUOUSLY VARIABLE TRANSMISSION (DIAGNOSTICS)	CVT(diag)
MANUAL TRANSMISSION AND DIFFERENTIAL	6MT
CLUTCH SYSTEM	CL

This service manual has been prepared to provide SUBARU service personnel with the necessary information and data for the correct maintenance and repair of SUBARU vehicles.
This manual includes the procedures for maintenance, disassembling, reassembling, inspection and adjustment of components and diagnostics for guidance of experienced mechanics.
Please peruse and utilize this manual fully to ensure complete repair work for satisfying our customers by keeping their vehicle in optimum condition. When replacement of parts during repair work is needed, be sure to use SUBARU genuine parts.

All information, illustration and specifications contained in this manual are based on the latest product information available at the time of publication approval.

FUJI HEAVY INDUSTRIES LTD. G2520BE4

CONTROL SYSTEMS

CS

		Page
1.	General Description	2
2.	AT Shift Lock Control System	8
3.	Select Lever	26
4.	Select Cable	41
5.	AT Shift Lock Solenoid and “P” Range Switch	49
6.	Body Integrated Unit	55
7.	MT Gear Shift Lever	56
8.	MT Gear Shift Cable	62
9.	MT Gear Select Cable	70
10.	General Diagnostic Table	92

1. General Description

A: COMPONENT

1. AT SELECT LEVER

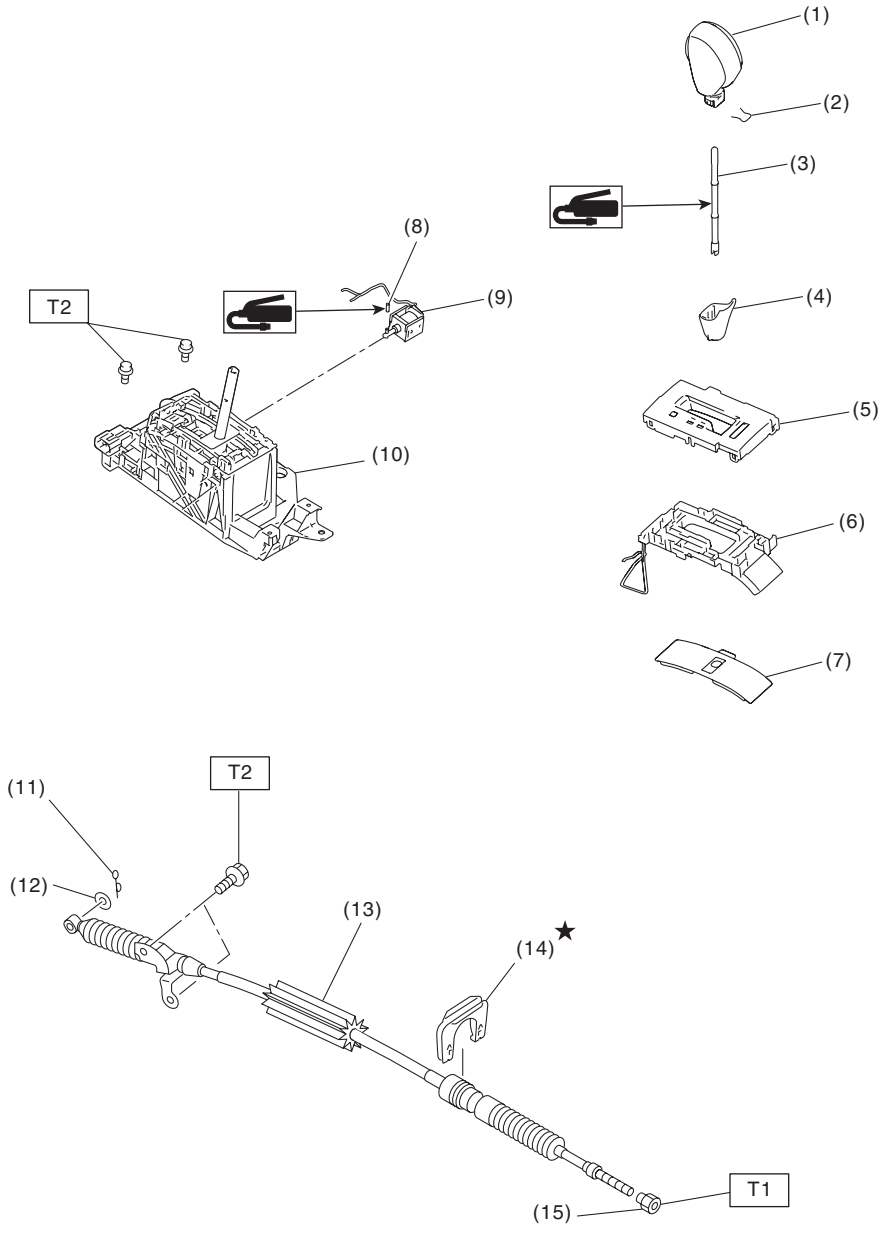

CS-01907

(1) Grip ASSY
(2) Clamp grip pin
(3) Rod COMPL
(4) Cover grip AT
(5) Indicator cover
(6) Housing
(7) Blind
(8) Cushion solenoid
(9) Solenoid unit
(10) Selector lever COMPL
(11) Snap pin
(12) Washer
(13) Select cable
(14) Clamp
(15) Nut

Tightening torque: N·m (kgf-m, ft-lb)
T1: 7.5 (0.8, 5.5)
T2: 18 (1.8, 13.3)

2. 6MT GEAR SHIFT LEVER

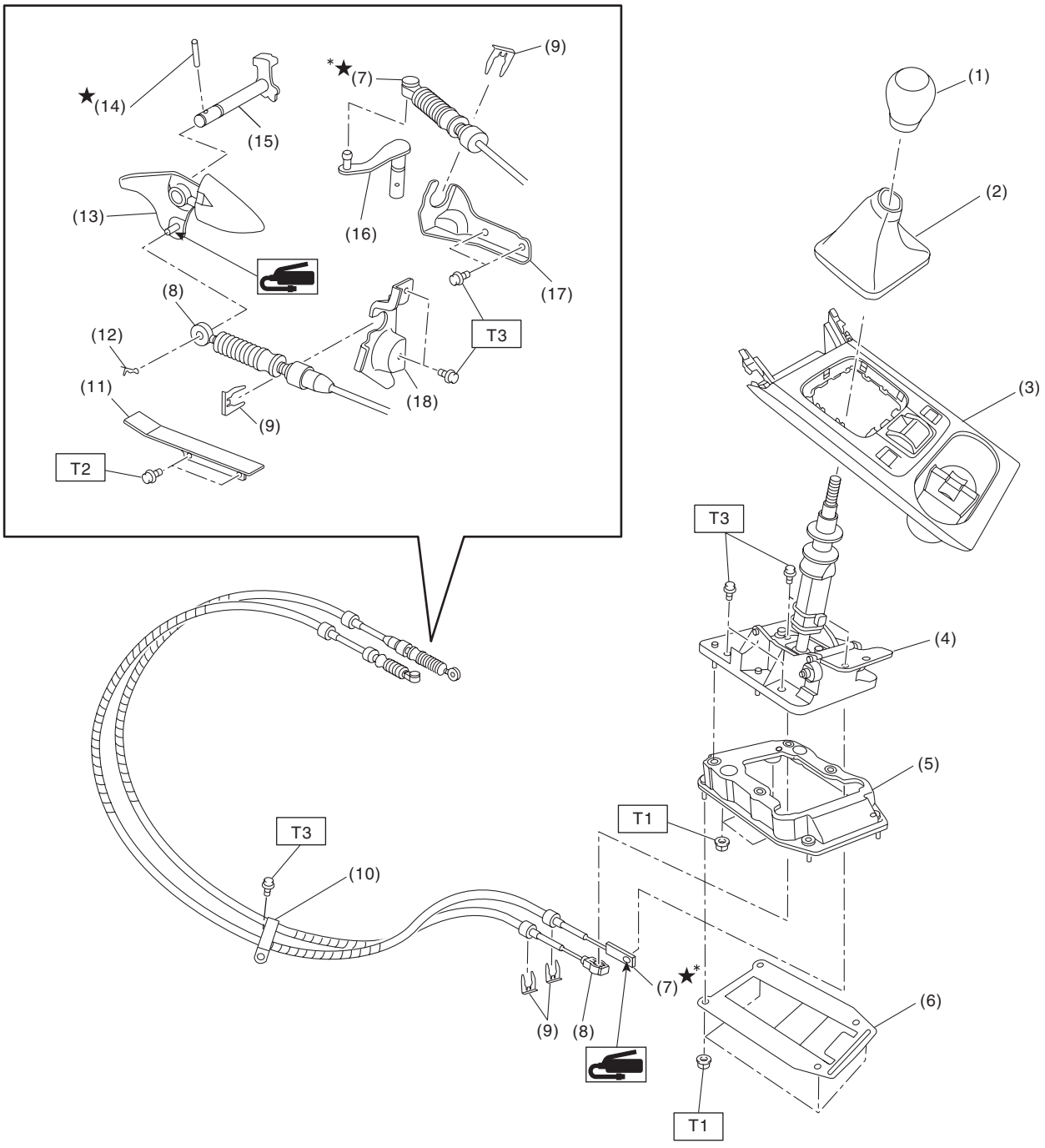

CS-01908

(1) Shift knob
(2) Shift boot
(3) Console front cover ASSY
(4) Gear shift lever ASSY
(5) Cover cable ASSY
(6) Plate cable ASSY
(7) MT gear select cable (identification tape color: green)
(8) MT gear shift cable (identification tape color: yellow)
(9) Clamp
(10) Clamp cable
(11) Dust cover
(12) Snap pin
(13) Shift lever COMPL
(14) Spring pin
(15) Shifter arm No. 2
(16) Selector lever
(17) Select bracket
(18) Shift bracket

Tightening torque: N·m (kgf-m, ft-lb)
T1: 7.5 (0.8, 5.5)
T2: 15 (1.5, 11.1)
T3: 18 (1.8, 13.3)

*: Always use new MT gear select cable if the cable is removed from select lever COMPL of transmission side.

B: CAUTION

- Remove contamination including dirt and corrosion before removal, installation or disassembly.
- Keep the disassembled parts in order and protect them from dust and dirt.
- Before removal, installation or disassembly, be sure to clarify the failure. Avoid unnecessary removal, installation, disassembly and replacement.
- Use SUBARU genuine fluid, grease etc. or equivalent. Do not mix fluid, grease, etc. of different grades or manufacturers.
- Be sure to tighten fasteners including bolts and nuts to the specified torque.
- Place shop jacks or rigid racks at the specified points.
- Apply grease onto sliding or revolving surfaces before installation.
- Before installing O-rings or snap rings, apply sufficient amount of grease to avoid damage and deformation.
- Before securing a part in a vise, place cushioning material such as wood blocks, aluminum plate or cloth between the part and the vise.
- Before disconnecting electrical connectors, be sure to disconnect the negative terminal from battery.

C: PREPARATION TOOL

1. SPECIAL TOOL

ILLUSTRATION	TOOL NUMBER	DESCRIPTION	REMARKS
 STSSM4	— (Newly adopted tool)	SUBARU SELECT MONITOR 4	Used for setting of each function and trouble-shooting for electrical system. NOTE: For detailed operation procedures of Subaru Select Monitor 4, refer to “Application help”.
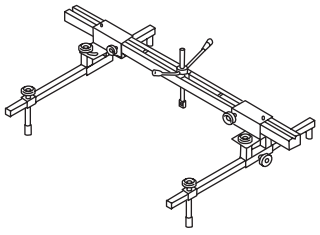 ST99099AJ000	99099AJ000	ENGINE HANGER	• Used for holding and balancing the engine unit when removing and installing the MT gear select cable. • Used together with CHAIN BALANCER (99099AJ010).
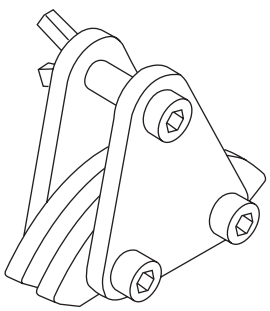 ST99099AJ010	99099AJ010	CHAIN BALANCER	• Used for holding and balancing the engine unit when removing and installing the MT gear select cable. • Used together with ENGINE HANGER (99099AJ000).

ILLUSTRATION	TOOL NUMBER	DESCRIPTION	REMARKS
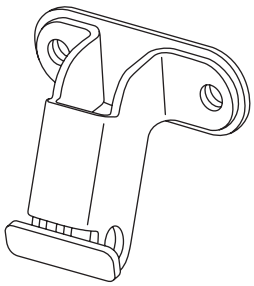 ST41099AJ130	41099AJ130	SPECIAL TOOL FB	Used for holding and balancing the engine unit when removing and installing the MT gear select cable.
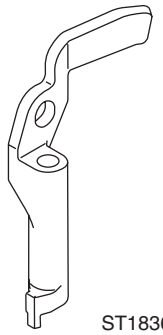 ST18360AA040	18360AA040	HANGER	• Used for holding and balancing the engine unit when removing and installing the MT gear select cable. • Used together with BOLT (18363AA050).
 ST18363AA050	18363AA050	BOLT	• Used for holding and balancing the engine unit when removing and installing the MT gear select cable. • Used together with HANGER (18360AA040).

2. GENERAL TOOL

TOOL NAME	REMARKS
Chain sling	Used for holding and balancing the engine unit when removing and installing the MT gear select cable. • Length: 0.8 — 1 m (2.6 — 3.3 ft) • Load capacity: 1.2 t (2646 lb) or more • Diameter: 6 mm (0.24 in) or 6.3 mm (0.25 in) • Chain external width: 23.5 mm (0.93 in) or less • Chain internal width: 8.5 mm (0.33 in) or more
Screw shackle	Used for holding and balancing the engine unit when removing and installing the MT gear select cable. • Load capacity: 250 kg (551 lb) or more • Use two pieces.
Circuit tester	Used for measuring resistance, voltage and current.
DST-i	Used together with Subaru Select Monitor 4.

2. AT Shift Lock Control System

A: LOCATION

1. MODEL WITHOUT PUSH BUTTON IGNITION SWITCH

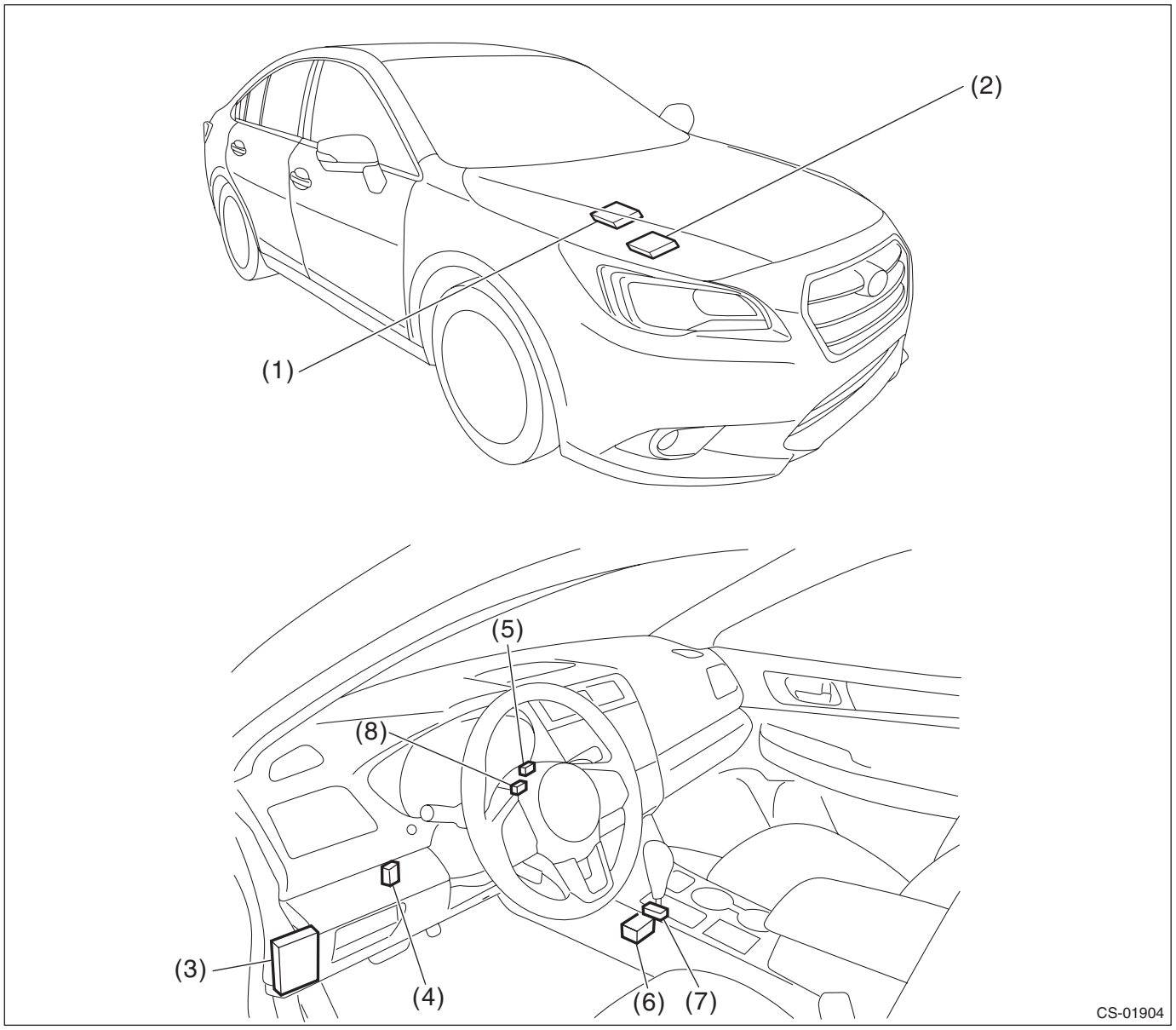

(1) TCM (engine type: EZ)
(2) TCM (engine type: FB)
(3) Body integrated unit
(4) Stop light switch
(5) Key cylinder (with built-in key warning switch)
(6) Solenoid unit
(7) “P” range switch
(8) Key lock solenoid

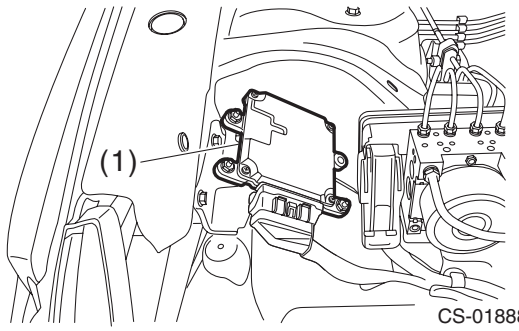

CS-01888

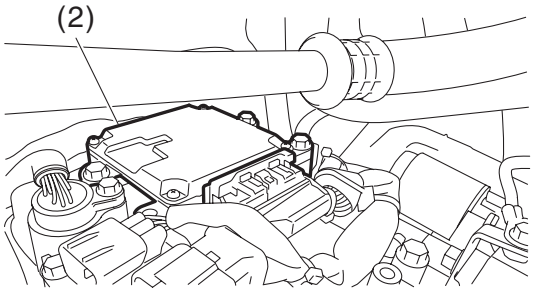

CS-01906

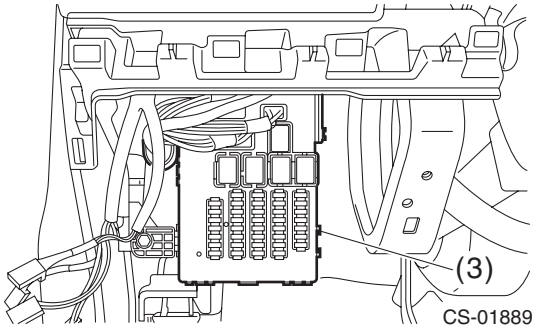

CS-01889

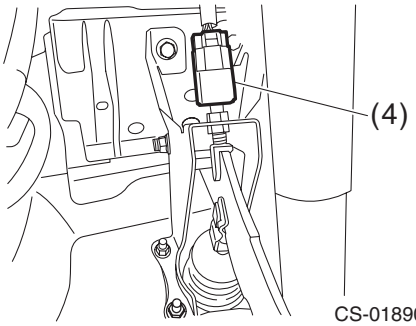

CS-01890

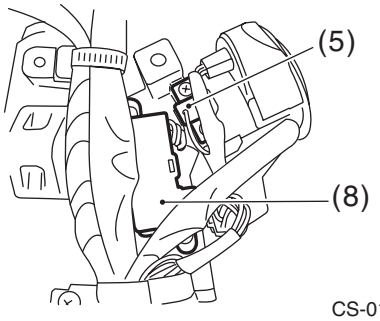

CS-01919

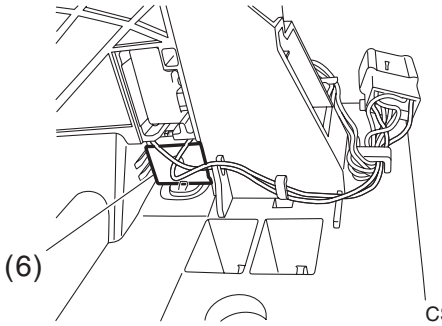

CS-01892

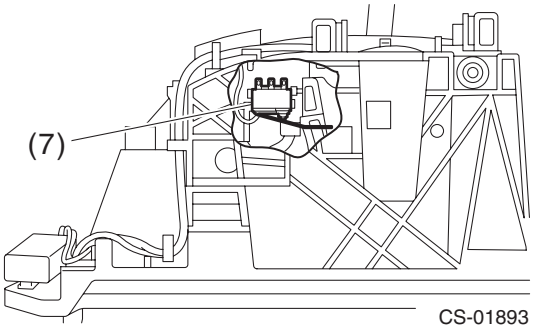

CS-01893

2. MODEL WITH PUSH BUTTON IGNITION SWITCH

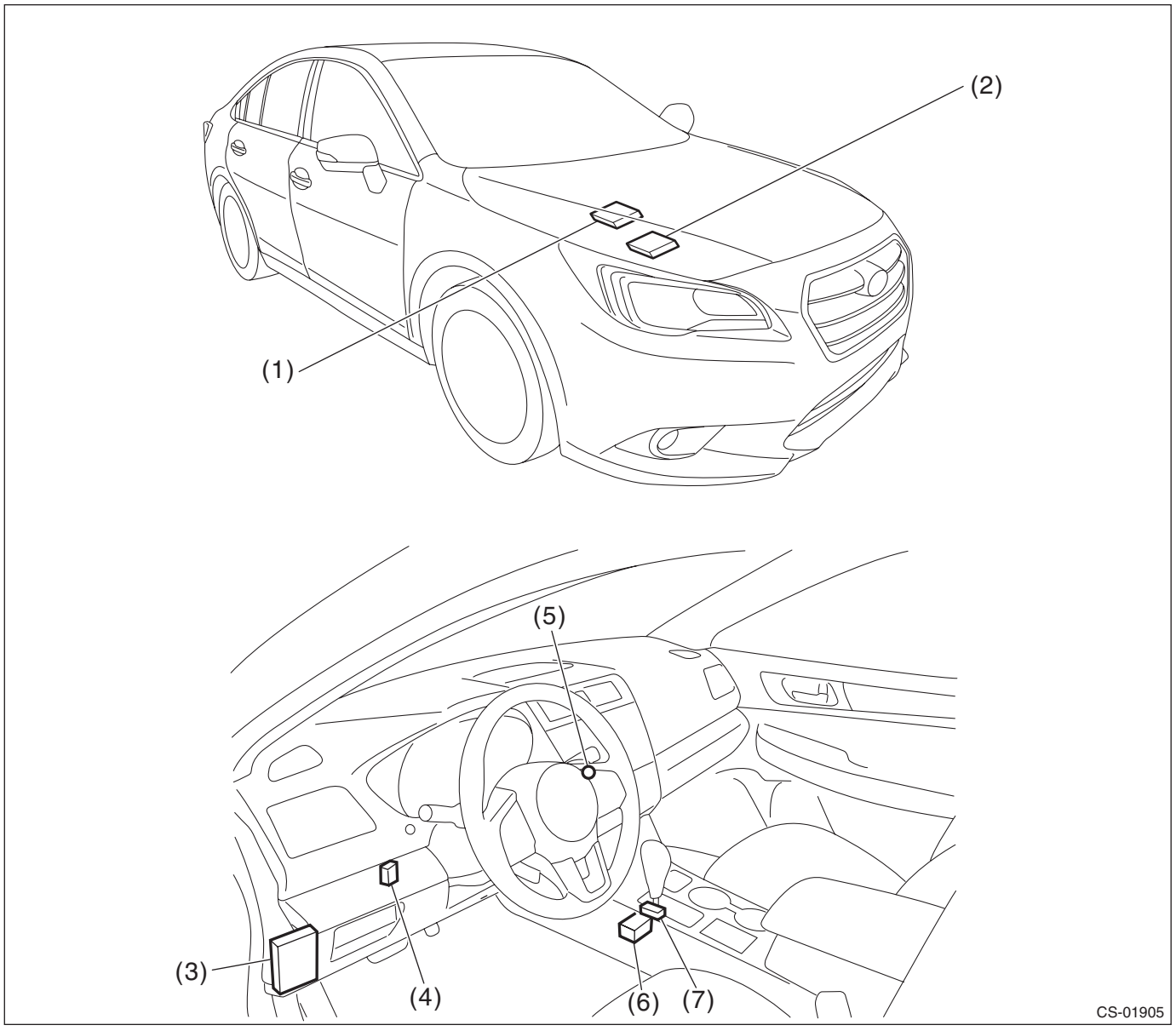

(1) TCM (engine type: EZ)
(2) TCM (engine type: FB)
(3) Body integrated unit
(4) Stop light switch
(5) Push button ignition switch
(6) Solenoid unit
(7) "P" range switch

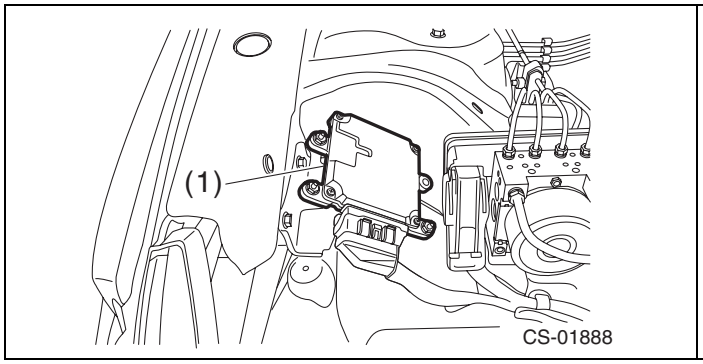

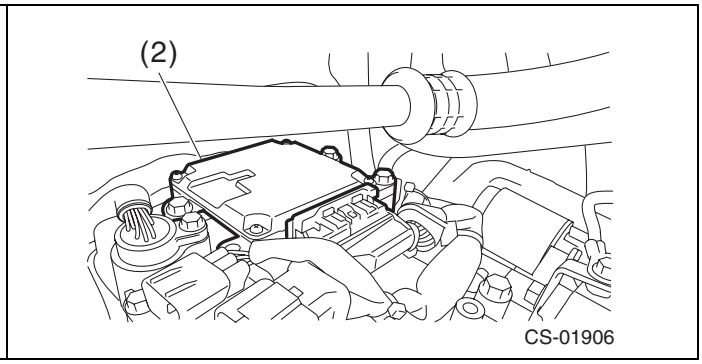

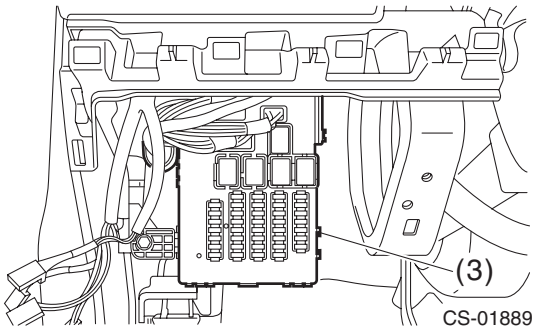

CS-01889

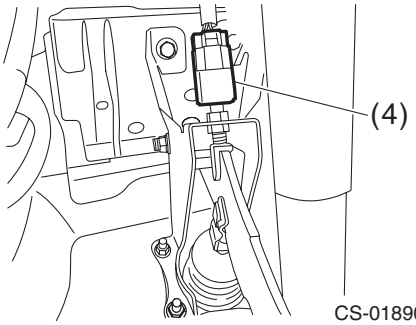

CS-01890

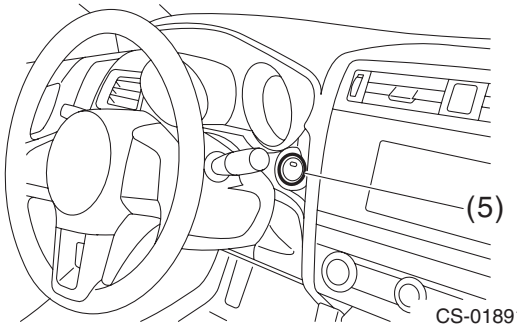

CS-01891

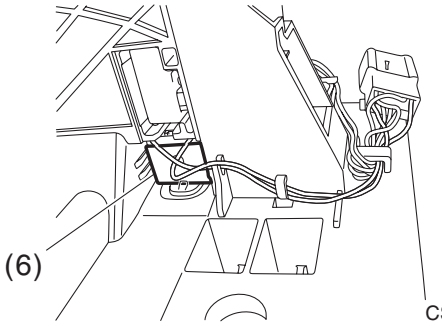

CS-01892

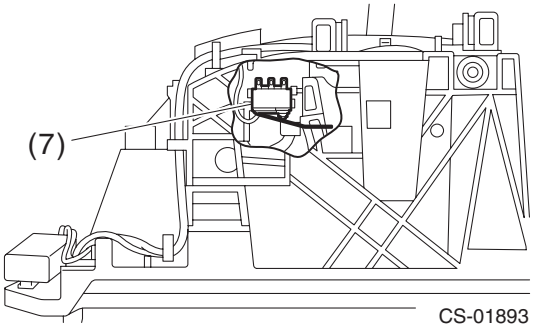

CS-01893

B: ELECTRICAL SPECIFICATION

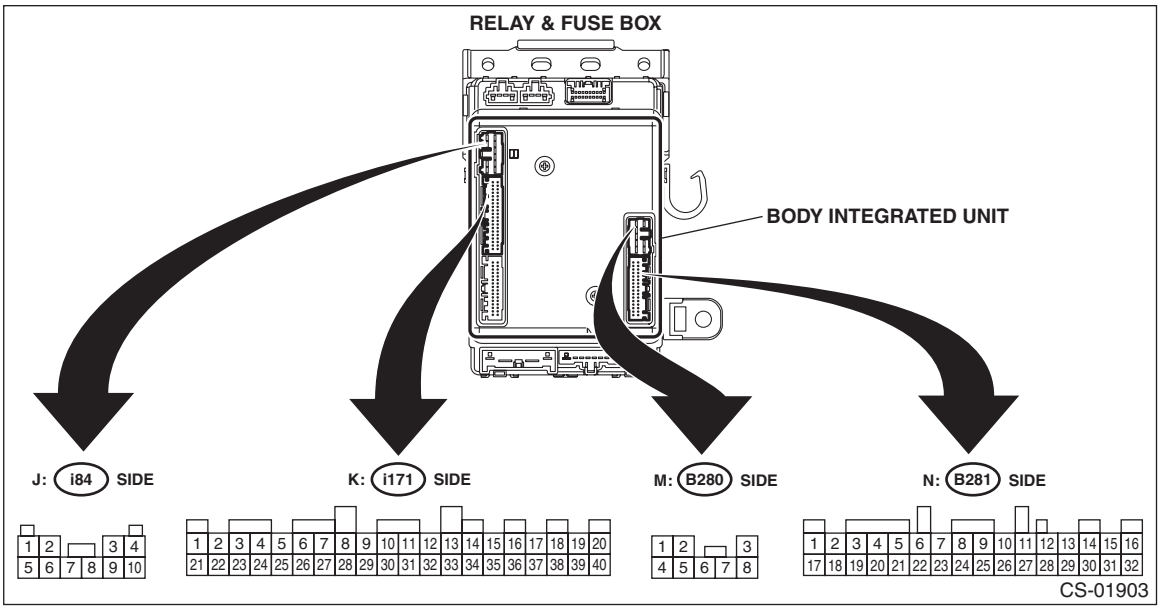

Item	Connector No.	Terminal No.	Input/Output signal Measured value and measuring conditions
Battery power supply	B280	4	9 — 16 V
		7	
	B281	32	
TCM (“P” range)	i171	2	Pulse signal (CAN communication)
		22	
Stop light switch	B281	12	9 — 16 V when stop light switch is ON. Less than 1.5 V when stop light switch is OFF.
“P” range switch	i171	25	Less than 1.5 V when select lever is in “P” range. 9 — 16 V when select lever is in other positions than “P” range.
Solenoid unit output	i84	3	8.5 — 16 V when shift lock is released. Less than 1.5 V when shift lock is operating.
Key warning switch signal (Model without push button ignition switch)	i84	10	9 — 16 V when key is inserted. Less than 1.5 V when key is removed.
Key lock solenoid signal (Model without push button ignition switch)	B280	5	7.5 — 16 V when the key is inserted with the select lever shifted in positions other than “P” range. 0 V at other conditions than above.
Ground	i84	4	1 V or less
	B280	2	

C: WIRING DIAGRAM

1. MODEL WITHOUT PUSH BUTTON IGNITION SWITCH

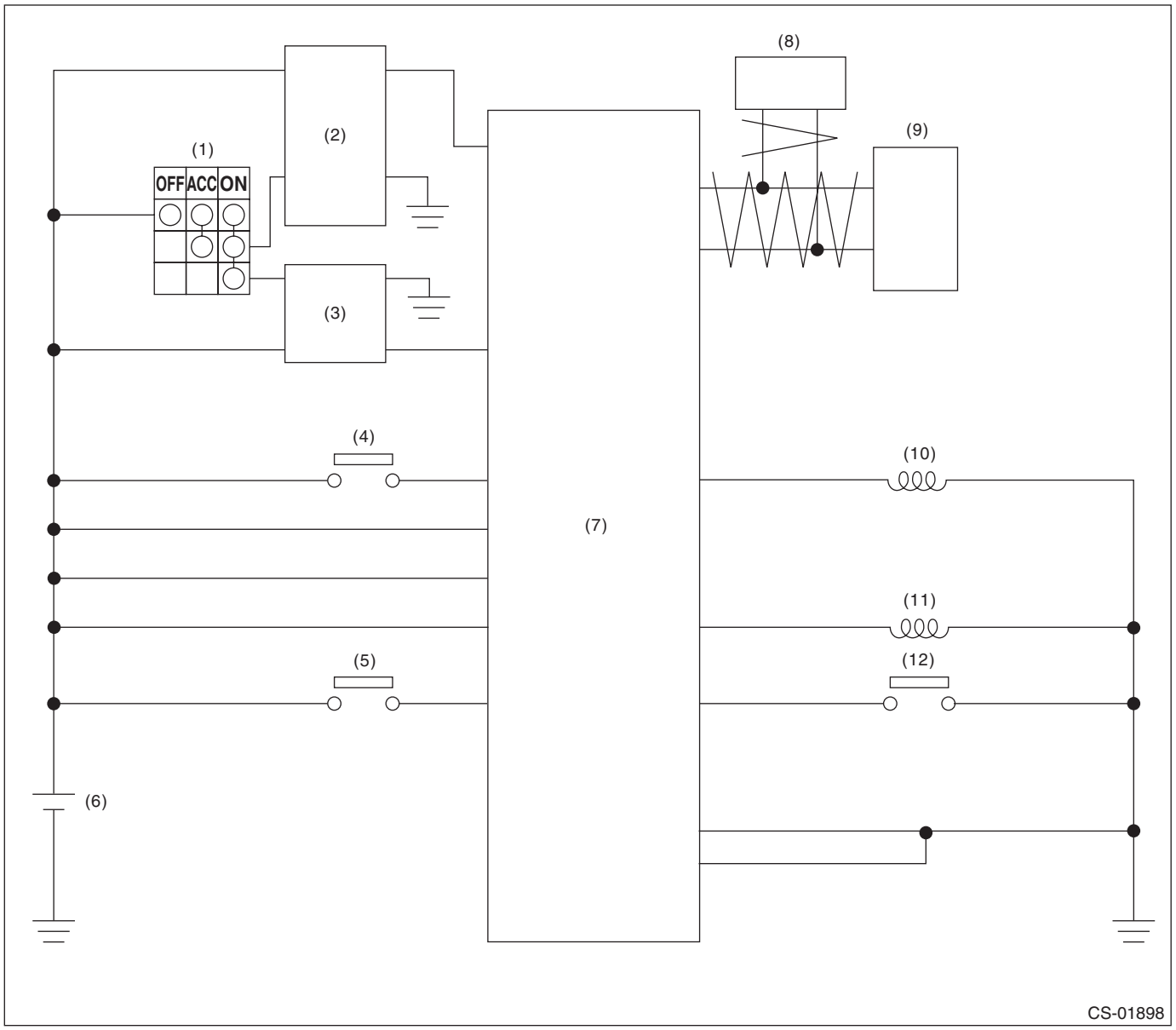

(1) Ignition switch
(2) Accessory 1 relay
(3) IG2 relay
(4) Stop light switch
(5) Key warning switch
(6) Battery
(7) Body integrated unit
(8) VDC CM (vehicle speed information)
(9) TCM (shift range information)
(10) Key lock solenoid
(11) Shift lock solenoid
(12) “P” range switch

2. MODEL WITH PUSH BUTTON IGNITION SWITCH

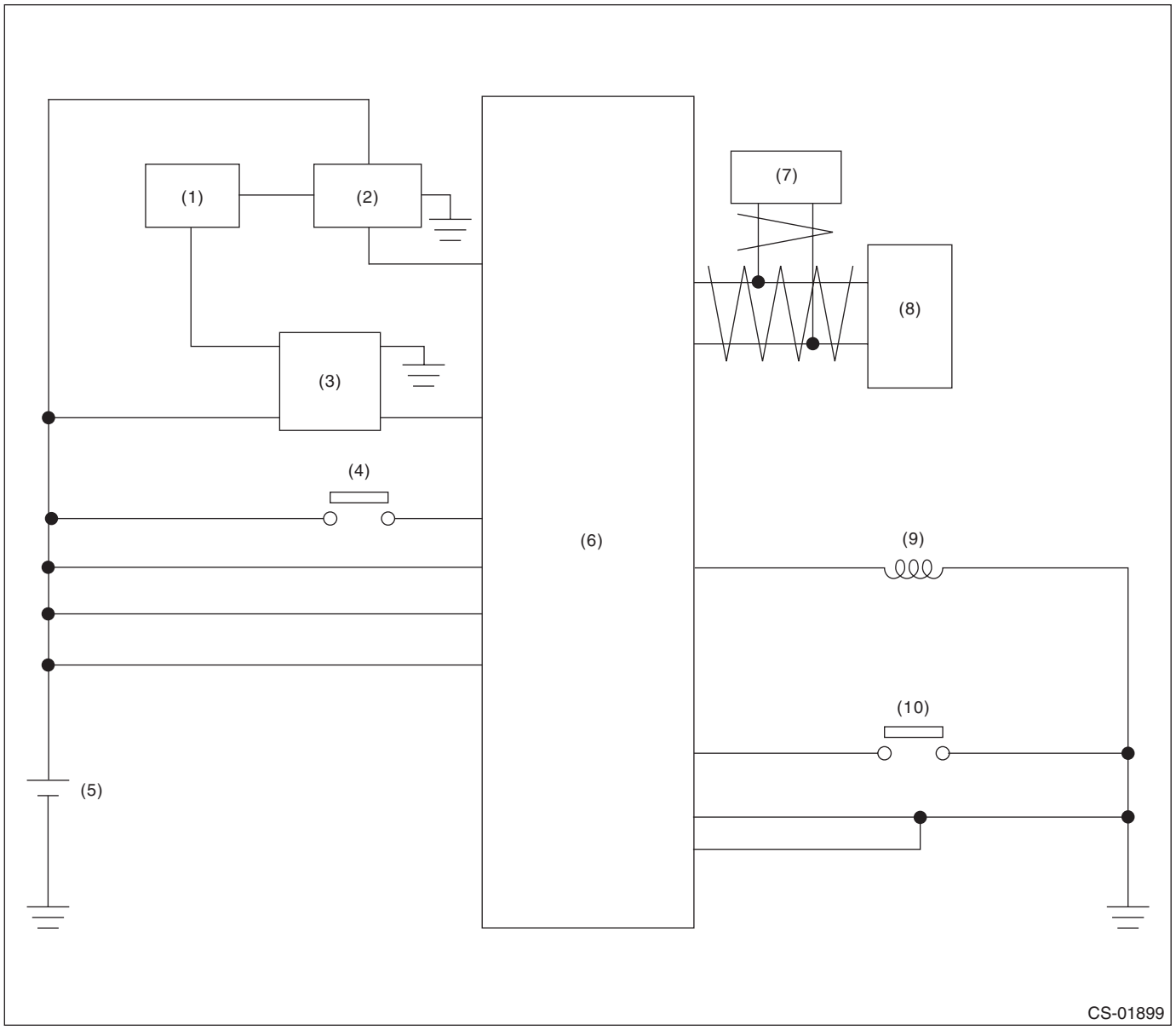

(1) Keyless access CM
(2) IG2 relay
(3) Accessory 1 relay
(4) Stop light switch
(5) Battery
(6) Body integrated unit
(7) VDC CM (vehicle speed information)
(8) TCM (shift range information)
(9) Shift lock solenoid
(10) “P” range switch

D: INSPECTION

1. SHIFT LOCK OPERATION

• Model without push button ignition switch

	Step	Check	Yes	No
1	**CHECK COMMUNICATION OF SUBARU SELECT MONITOR.** 1) Turn the ignition switch to ON. 2) Using the Subaru Select Monitor, check whether communication to all systems can be executed normally.	Is the system name displayed?	Go to step **2**.	For diagnostic procedures, refer to the LAN section. <Ref. to LAN(diag)-2, Basic Diagnostic Procedure.>
2	**CHECK SHIFT LOCK.** 1) Turn the ignition switch to ON. 2) Shift the select lever to “P” range.	While brake pedal is not depressed, is it possible to move the select lever from the “P” range to other ranges?	Perform the inspection of “SELECT LEVER CANNOT BE LOCKED OR RELEASED”. <Ref. to CS-20, SELECT LEVER CANNOT BE LOCKED OR RELEASED, INSPECTION, AT Shift Lock Control System.>	Go to step **3**.
3	**CHECK SHIFT LOCK.**	While brake pedal is depressed, is it possible to move the select lever from the “P” range to other ranges?	Go to step **4**.	Perform the inspection of “SELECT LEVER CANNOT BE LOCKED OR RELEASED”. <Ref. to CS-20, SELECT LEVER CANNOT BE LOCKED OR RELEASED, INSPECTION, AT Shift Lock Control System.>
4	**CHECK SHIFT LOCK.** Shift the select lever to “N” range.	Is it possible to move the select lever from the “N” range to the “P” range?	Go to step **5**.	Perform the inspection of “SELECT LEVER CANNOT BE LOCKED OR RELEASED”. <Ref. to CS-20, SELECT LEVER CANNOT BE LOCKED OR RELEASED, INSPECTION, AT Shift Lock Control System.>

	Step	Check	Yes	No
5	**CHECK SHIFT LOCK.** 1) Shift the select lever to “N” range. 2) Turn the ignition switch to ACC.	While brake pedal is depressed, is it possible to move the select lever from the “N” range to the “P” range?	Go to step **6**.	Perform the inspection of “SELECT LEVER CANNOT BE LOCKED OR RELEASED”. <Ref. to CS-20, SELECT LEVER CANNOT BE LOCKED OR RELEASED, INSPECTION, AT Shift Lock Control System.>
6	**CHECK KEY INTERLOCK.** 1) Shift the select lever to other than “P” range. 2) Turn the ignition switch to OFF.	Can the ignition key be removed?	Perform the inspection of “KEY INTERLOCK CANNOT BE LOCKED OR RELEASED”. <Ref. to CS-23, KEY INTERLOCK CANNOT BE LOCKED OR RELEASED, INSPECTION, AT Shift Lock Control System.>	Go to step **7**.
7	**CHECK KEY INTERLOCK.** Shift the select lever to “P” range.	Can the ignition key be removed?	AT shift lock system is normal.	Perform the inspection of “KEY INTERLOCK CANNOT BE LOCKED OR RELEASED”. <Ref. to CS-23, KEY INTERLOCK CANNOT BE LOCKED OR RELEASED, INSPECTION, AT Shift Lock Control System.>

• Model with push button ignition switch

	Step	Check	Yes	No
1	**CHECK COMMUNICATION OF SUBARU SELECT MONITOR.** 1) Turn the ignition switch to ON. 2) Using the Subaru Select Monitor, check whether communication to all systems can be executed normally.	Is the system name displayed?	Go to step **2**.	For diagnostic procedures, refer to the LAN section. <Ref. to LAN(diag)-2, Basic Diagnostic Procedure.>

	Step	Check	Yes	No
2	**CHECK SHIFT LOCK.** 1) Turn the ignition switch to ON. 2) Shift the select lever to “P” range.	While brake pedal is not depressed, is it possible to move the select lever from the “P” range to other ranges?	Perform the inspection of “SELECT LEVER CANNOT BE LOCKED OR RELEASED”. <Ref. to CS-20, SELECT LEVER CANNOT BE LOCKED OR RELEASED, INSPECTION, AT Shift Lock Control System.>	Go to step **3**.
3	**CHECK SHIFT LOCK.**	While brake pedal is depressed, is it possible to move the select lever from the “P” range to other ranges?	Go to step **4**.	Perform the inspection of “SELECT LEVER CANNOT BE LOCKED OR RELEASED”. <Ref. to CS-20, SELECT LEVER CANNOT BE LOCKED OR RELEASED, INSPECTION, AT Shift Lock Control System.>
4	**CHECK SHIFT LOCK.** Shift the select lever to “N” range.	Is it possible to move the select lever from the “N” range to the “P” range?	Go to step **5**.	Perform the inspection of “SELECT LEVER CANNOT BE LOCKED OR RELEASED”. <Ref. to CS-20, SELECT LEVER CANNOT BE LOCKED OR RELEASED, INSPECTION, AT Shift Lock Control System.>
5	**CHECK SHIFT LOCK.** 1) Shift the select lever to “N” range. 2) Turn the ignition switch to ACC.	While brake pedal is depressed, is it possible to move the select lever from the “N” range to the “P” range?	AT shift lock system is normal.	Perform the inspection of “SELECT LEVER CANNOT BE LOCKED OR RELEASED”. <Ref. to CS-20, SELECT LEVER CANNOT BE LOCKED OR RELEASED, INSPECTION, AT Shift Lock Control System.>

2. BODY INTEGRATED UNIT POWER SUPPLY AND GROUND CIRCUIT

NOTE:
For the DC power supply circuit, refer to “WIRING DIAGRAMS”. <Ref. to WI-21, Power Supply Circuit.>

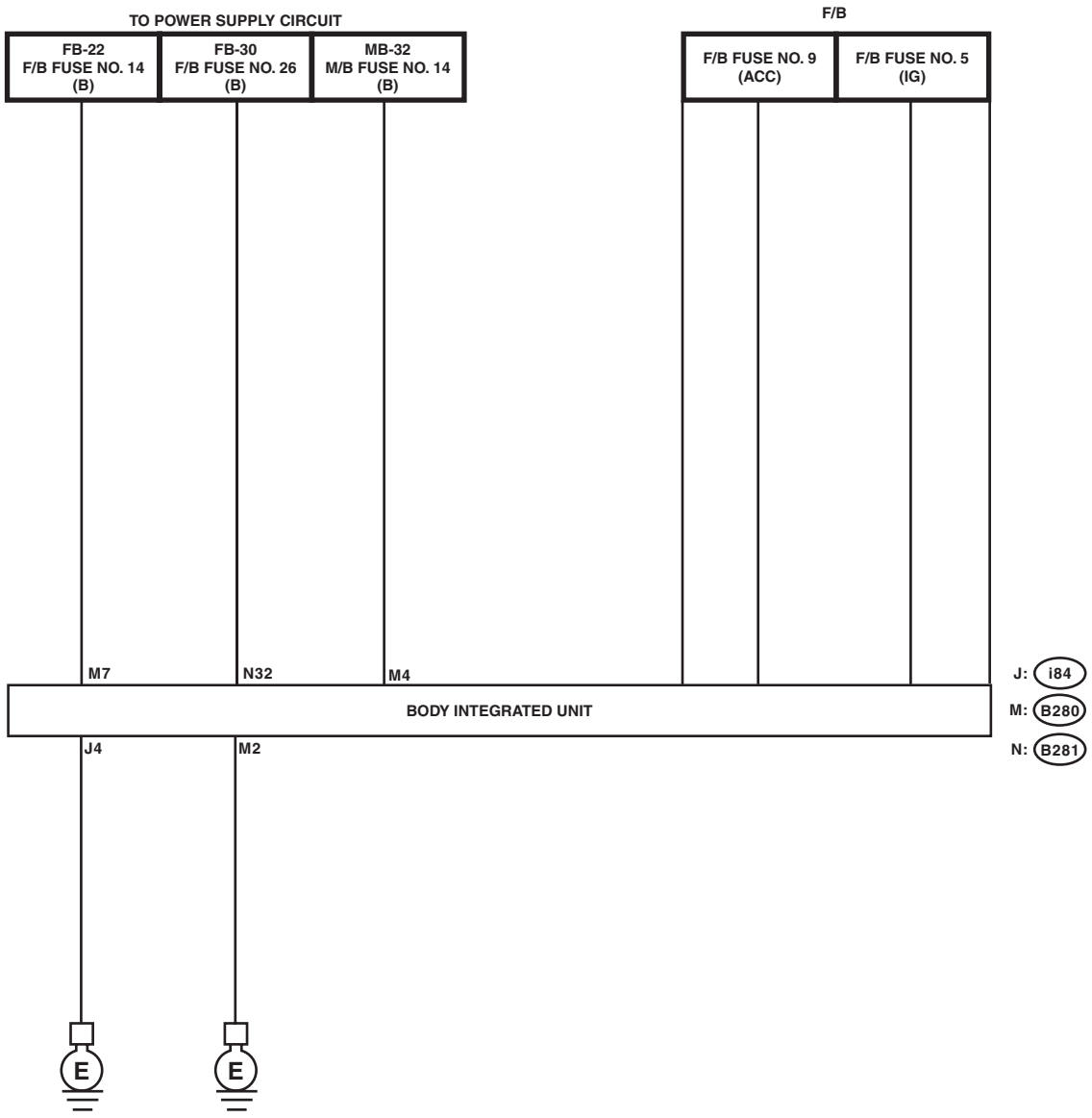

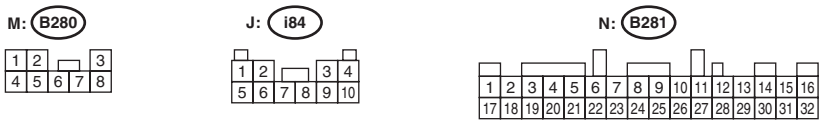

CS-01900

Step		Check	Yes	No
1	**CHECK DTC OF BODY INTEGRATED UNIT.** Check DTC of body integrated unit. <Ref. to BC(diag)-14, Read Diagnostic Trouble Code (DTC).>	Is the DTC of power line displayed on body integrated unit?	Repair or replace it according to the DTC.	Go to step **2**.

	Step	Check	Yes	No
2	**CHECK CURRENT DATA.** Check the current data «BATT voltage (control)» display of body integrated unit. <Ref. to BC(diag)-20, OPERATION, Read Current Data.>	Is the display 10 — 15 V?	Go to step **4**.	Go to step **3**.
3	**CHECK HARNESS BETWEEN BODY INTEGRATED UNIT AND BATTERY.** 1) Turn the ignition switch to ON. 2) Measure the voltage between body integrated unit and chassis ground. ***Connector & terminal*** ***(B280) No. 4 (+) — Chassis ground (–):*** ***(B280) No. 7 (+) — Chassis ground (–):*** ***(B281) No. 32 (+) — Chassis ground (–):***	Is the voltage 9 — 16 V?	Go to step **4**.	Check harness for open circuit between the body integrated unit and the battery or a blown fuse.
4	**CHECK BODY INTEGRATED UNIT IGN POWER SUPPLY CIRCUIT.** 1) Turn the ignition switch to ON. 2) Measure the voltage between F/B fuse No. 5 and chassis ground. ***Connector & terminal*** ***F/B fuse No. 5 (+) — Chassis ground (–):***	Is the voltage 10 V or more?	Go to step **5**.	Repair the open circuit of the harness between body integrated unit and ignition switch.
5	**CHECK BODY INTEGRATED UNIT AND ACC VOLTAGE SUPPLY CIRCUIT.** 1) Turn the ignition switch to ACC. 2) Measure the voltage between F/B fuse No. 9 and chassis ground. ***Connector & terminal*** ***F/B fuse No. 9 (+) — Chassis ground (–):***	Is the voltage 10 V or more?	Go to step **6**.	Repair the open circuit of the harness between body integrated unit and ignition switch.
6	**CHECK HARNESS BETWEEN BODY INTEGRATED UNIT AND CHASSIS GROUND.** 1) Turn the ignition switch to OFF. 2) Measure the harness resistance between the body integrated unit and chassis ground. ***Connector & terminal*** ***(i84) No. 4 — Chassis ground:*** ***(B280) No. 2 — Chassis ground:***	Is the resistance less than 1 Ω?	Go to step **7**.	Repair the open circuit of harness between the body integrated unit and chassis ground.
7	**CHECK FOR POOR CONTACT.**	Is there poor contact of connector?	Repair the poor contact.	End.

3. SELECT LEVER CANNOT BE LOCKED OR RELEASED

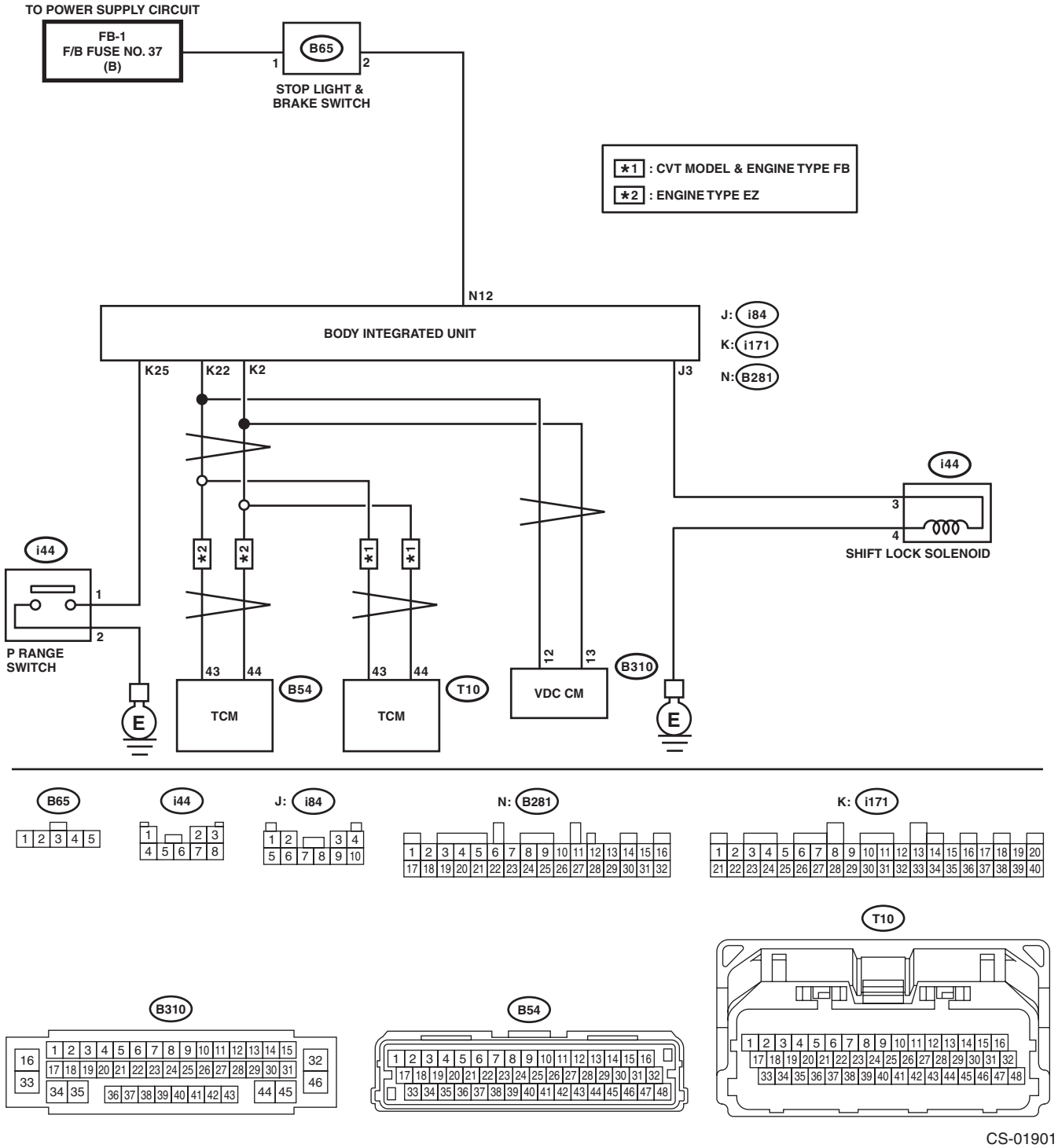

CS-01901

Step		Check	Yes	No
1	**CHECK BODY INTEGRATED UNIT POWER SUPPLY AND GROUND CIRCUIT.** <Ref. to CS-18, BODY INTEGRATED UNIT POWER SUPPLY AND GROUND CIRCUIT, INSPECTION, AT Shift Lock Control System.>	Is there any fault?	Follow the procedures to perform inspection and repair.	Go to step **2**.

	Step	Check	Yes	No
2	**CHECK CURRENT DATA.** 1) Connect the Subaru Select Monitor. 2) Shift the select lever to “P” range. 3) Turn the ignition switch to ON. 4) Select the current data display and display «P SW». <Ref. to BC(diag)-20, Read Current Data.>	Is the display “ON” in the P range and “OFF” in ranges other than P?	Go to step **3**.	Go to step **8**.
3	**CHECK CURRENT DATA.** Select the current data display and display «Stop Light Switch». <Ref. to BC(diag)-20, Read Current Data.>	Is “ON” displayed when the brake pedal is depressed and “OFF” displayed when the brake pedal is released?	Go to step **4**.	Go to step **11**.
4	**CHECK BODY INTEGRATED UNIT DTC.** Check the DTC of the body integrated unit when the brake pedal is pressed and when it is released. (Hold each condition for 5 seconds or more.)	Is there a DTC of a current malfunction?	Follow the DTC to perform inspection and repair.	Go to step **5**.
5	**CHECK CURRENT DATA.** Select the current data display and display «Shift lock solenoid output». <Ref. to BC(diag)-20, Read Current Data.>	Is “ON” displayed when the brake pedal is depressed and “OFF” displayed when the brake pedal is released?	Go to step **6**.	Replace the body integrated unit. <Ref. to SL-83, Body Integrated Unit.>
6	**CHECK CURRENT DATA.** Select the current data display and display «Shift Position». <Ref. to BC(diag)-20, Read Current Data.>	Is the display “7” in the “P” range and other than “7” in ranges other than “P”?	Go to step **7**.	Check the following items. • Inhibitor switch • Harness between inhibitor switch and TCM • TCM input signal • TCM CAN communication • Body integrated unit CAN receive
7	**CHECK CURRENT DATA.** 1) Select the current data display and display «Front Wheel Speed». 2) Start the engine. 3) Raise vehicle speed gradually up to approximately 20 km/h (12 MPH).	Is a figure equivalent to the speedometer being indicated?	Go to step **12**.	Check the following items. • Vehicle speed sensor • VDC CM CAN communication • Body integrated unit CAN receive Replace the vehicle speed sensor, VDC CM or body integrated unit, or both.
8	**CHECK HARNESS BETWEEN BODY INTEGRATED UNIT AND “P” RANGE SWITCH.** 1) Disconnect the connector from body integrated unit. 2) Disconnect the connector of “P” range switch. 3) Check for open circuit of harness, short circuit to battery or short circuit to ground between the body integrated unit and “P” range switch. ***Connector & terminal*** ***(i171) No. 25 — (i44) No. 1:***	Is there any fault in the harness?	Repair or replace the harness between the body integrated unit and the “P” range switch.	Go to step **9**.

	Step	Check	Yes	No
9	**CHECK HARNESS BETWEEN "P" RANGE SWITCH AND CHASSIS GROUND.** Measure the resistance of harness between "P" range switch and chassis ground. ***Connector & terminal*** ***(i44) No. 2 — Chassis ground:***	Is the resistance less than 10 Ω?	Go to step **10**.	Repair the harness between the "P" range switch and chassis ground.
10	**CHECK "P" RANGE SWITCH.** Measure the resistance between "P" range switch connector terminals. ***Terminals*** ***No. 2 — No. 1:***	Is it less than 10 Ω in the "P" range, and 1 MΩ or more in ranges other than "P"?	Replace the body integrated unit. <Ref. to SL-83, Body Integrated Unit.>	Replace the AT select lever COMPL. <Ref. to CS-26, REMOVAL, Select Lever.>
11	**CHECK STOP LIGHT SWITCH INPUT SIGNAL.** 1) Disconnect the connector from body integrated unit. 2) Measure the voltage between the body integrated unit connector terminal and chassis ground. ***Connector & terminal*** ***(B281) No. 12 (+) — Chassis ground (–):***	Is the voltage 9 — 16 V when the brake pedal is depressed, and less than 1.5 V when not pressed?	Replace the body integrated unit. <Ref. to SL-83, Body Integrated Unit.>	Check the stop light system.
12	**CHECK SOLENOID UNIT OPERATION.** Connect the battery to the solenoid unit connector terminal, and operate the solenoid unit. ***Terminals*** ***No. 3 (+) — No. 4 (–):***	Does the solenoid unit operate normally?	Check the lock mechanism of the select lever body.	Replace the solenoid unit. <Ref. to CS-49, AT Shift Lock Solenoid and "P" Range Switch.>

4. KEY INTERLOCK CANNOT BE LOCKED OR RELEASED

NOTE:
Check of this item only applies to models without a push button ignition switch.

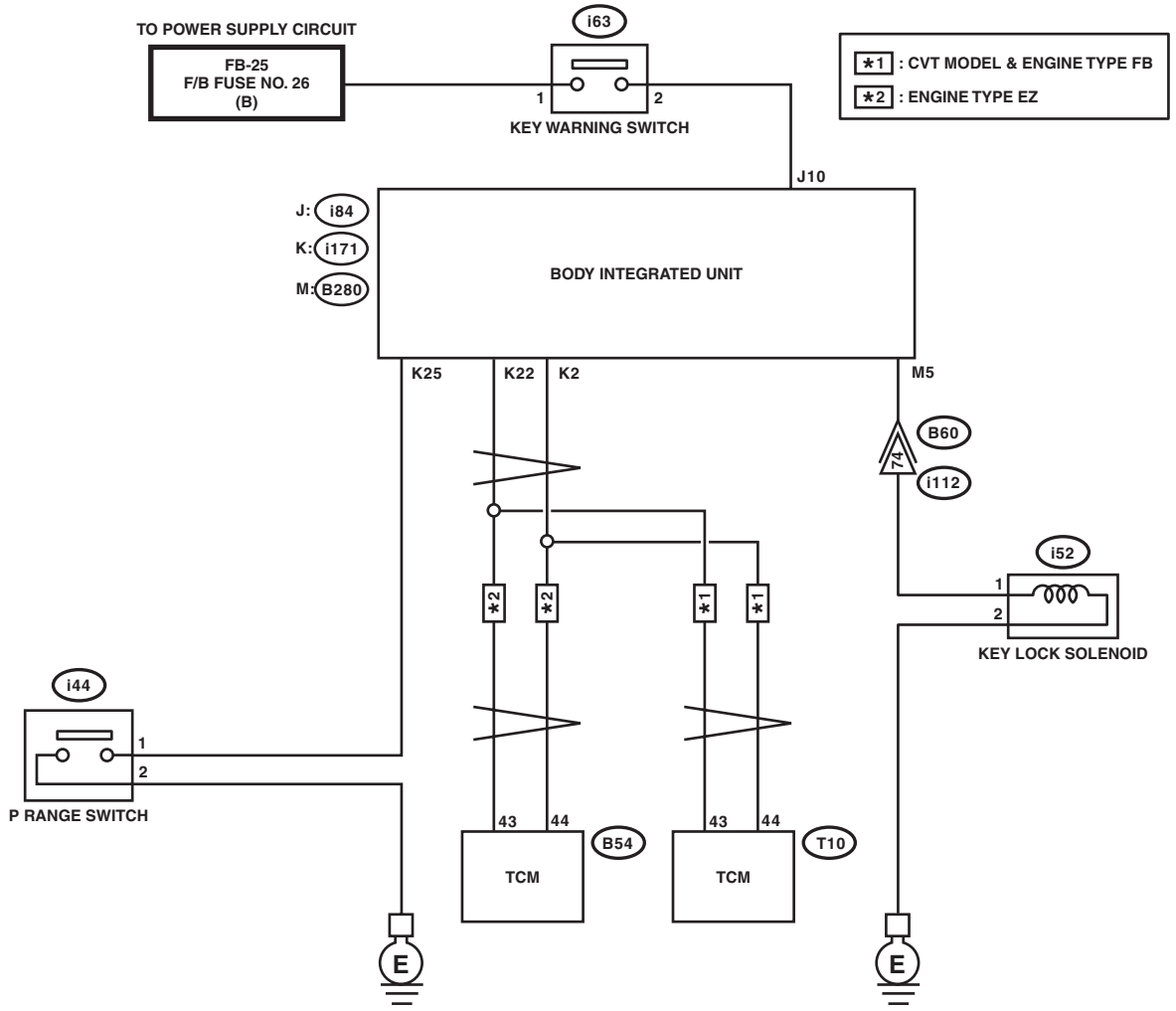

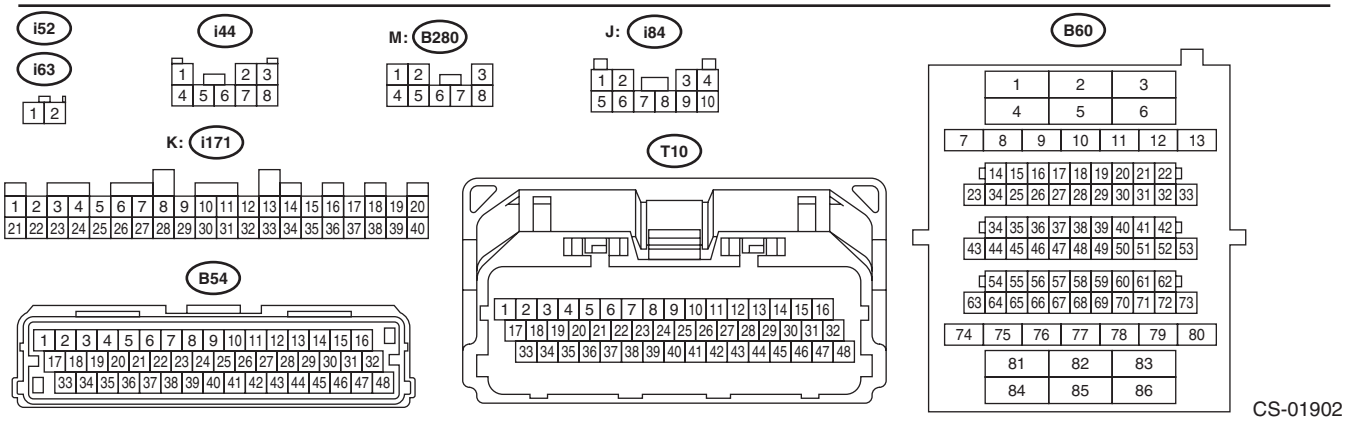

Step		Check	Yes	No
1	**CHECK BODY INTEGRATED UNIT POWER SUPPLY AND GROUND CIRCUIT.** <Ref. to CS-18, BODY INTEGRATED UNIT POWER SUPPLY AND GROUND CIRCUIT, INSPECTION, AT Shift Lock Control System.>	Is there any fault?	Follow the procedures to inspect and repair.	Go to step **2**.

	Step	Check	Yes	No
2	**CHECK CURRENT DATA.** 1) Connect the Subaru Select Monitor. 2) Shift the select lever to "P" range. 3) Turn the ignition switch to ON. 4) Select the current data display and display «P SW». <Ref. to BC(diag)-20, Read Current Data.>	Is the display "ON" in the P range and "OFF" in ranges other than P?	Go to step **3**.	Go to step **5**.
3	**CHECK CURRENT DATA.** 1) Select the current data display and display the «key-lock warning SW». <Ref. to BC(diag)-20, Read Current Data.> 2) Turn the ignition switch to OFF.	Does the display change from "ON" ←→ "OFF" when the key is inserted and removed?	Go to step **4**.	Go to step **8**.
4	**CHECK CURRENT DATA.** 1) Turn the ignition switch to OFF. 2) Select the current data display and display «Key lock solenoid output». <Ref. to BC(diag)-20, Read Current Data.>	Is the display "Unlock" in the "P" range and "Lock" in ranges other than "P"?	Go to step **9**.	Go to step **5**.
5	**CHECK HARNESS BETWEEN BODY INTEGRATED UNIT AND "P" RANGE SWITCH.** 1) Disconnect the connector from body integrated unit. 2) Disconnect the connector of "P" range switch. 3) Check for open circuit of harness, short circuit to battery or short circuit to ground between the body integrated unit and "P" range switch. ***Connector & terminal*** ***(i171) No. 25 — (i44) No. 1:***	Is there any fault in the harness?	Repair or replace the harness between the body integrated unit and the "P" range switch.	Go to step **6**.
6	**CHECK HARNESS BETWEEN "P" RANGE SWITCH AND CHASSIS GROUND.** Measure the resistance of harness between "P" range switch and chassis ground. ***Connector & terminal*** ***(i44) No. 2 — Chassis ground:***	Is the resistance less than 10 Ω?	Go to step **7**.	Repair the harness between the "P" range switch and chassis ground.
7	**CHECK "P" RANGE SWITCH.** Measure the resistance between "P" range switch connector terminals. ***Terminals*** ***No. 2 — No. 1:***	Is it less than 10 Ω in the "P" range, and 1 MΩ or more in ranges other than "P"?	Replace the body integrated unit. <Ref. to SL-83, Body Integrated Unit.>	Replace the AT select lever COMPL. <Ref. to CS-26, REMOVAL, Select Lever.>
8	**CHECK HARNESS BETWEEN BATTERY AND KEY WARNING SWITCH AND BODY INTEGRATED UNIT.** 1) Disconnect the connector from body integrated unit. 2) Measure the voltage between body integrated unit and chassis ground. ***Connector & terminal*** ***(i84) No. 10 (+) — Chassis ground (–):***	Is the display 9 — 16 V when the key is inserted, and less than 1.5 V with the key removed?	Replace the body integrated unit. <Ref. to SL-83, Body Integrated Unit.>	Check the following items. • Key warning switch • Harness/fuse • Ignition circuit
9	**CHECK HARNESS BETWEEN BODY INTEGRATED UNIT AND KEY LOCK SOLENOID.** 1) Disconnect the connector from body integrated unit. 2) Disconnect the connector of key lock solenoid. 3) Check for open circuit of harness, short circuit to battery or short circuit to ground between the body integrated unit and key lock solenoid. ***Connector & terminal*** ***(B280) No. 5 — (i52) No. 1:***	Is there any fault in the harness?	Repair or replace the harness between the body integrated unit and the key lock solenoid.	Go to step **10**.

	Step	Check	Yes	No
10	**CHECK HARNESS BETWEEN KEY LOCK SOLENOID AND CHASSIS GROUND.** Measure the resistance of harness between key lock solenoid and chassis ground. ***Connector & terminal*** ***(i52) No. 2 — Chassis ground:***	Is the resistance less than 10 Ω?	Go to step **11**.	Repair or replace the harness between the key lock solenoid and chassis ground.
11	**CHECK KEY LOCK SOLENOID OPERATION.** Connect the battery to the key lock solenoid connector terminal, and operate the solenoid. ***Terminals*** ***No. 1 (+) — No. 2 (–):***	Does the key lock solenoid operate normally?	Go to step **12**.	Replace the key lock solenoid.
12	**CHECK OUTPUT OF BODY INTEGRATED UNIT.** 1) Connect all connectors. 2) Insert the key. 3) Measure the voltage between body integrated unit and chassis ground. ***Connector & terminal*** ***(B280) No. 5 — Chassis ground:***	Is it 7.5 V to 16 V in ranges other than “P”, and 0 V in the “P” range?	Check the lock mechanism of the steering lock body.	Replace the body integrated unit. <Ref. to SL-83, Body Integrated Unit.>

3. Select Lever

A: REMOVAL

1) Shift the select lever to “N” range.
2) Disconnect the ground terminal from battery sensor. <Ref. to RC-4, BATTERY, NOTE, Repair Contents.>
3) Lift up the vehicle.
4) Remove the center exhaust pipe. (2.5 L model) <Ref. to EX(H4DO)-12, REMOVAL, Center Exhaust Pipe.>
5) Remove the front exhaust pipe and rear exhaust pipe. (3.6 L model) <Ref. to EX(H6DO)-6, REMOVAL, Front Exhaust Pipe.> <Ref. to EX(H6DO)-12, REMOVAL, Rear Exhaust Pipe.>
6) Remove the center exhaust cover.

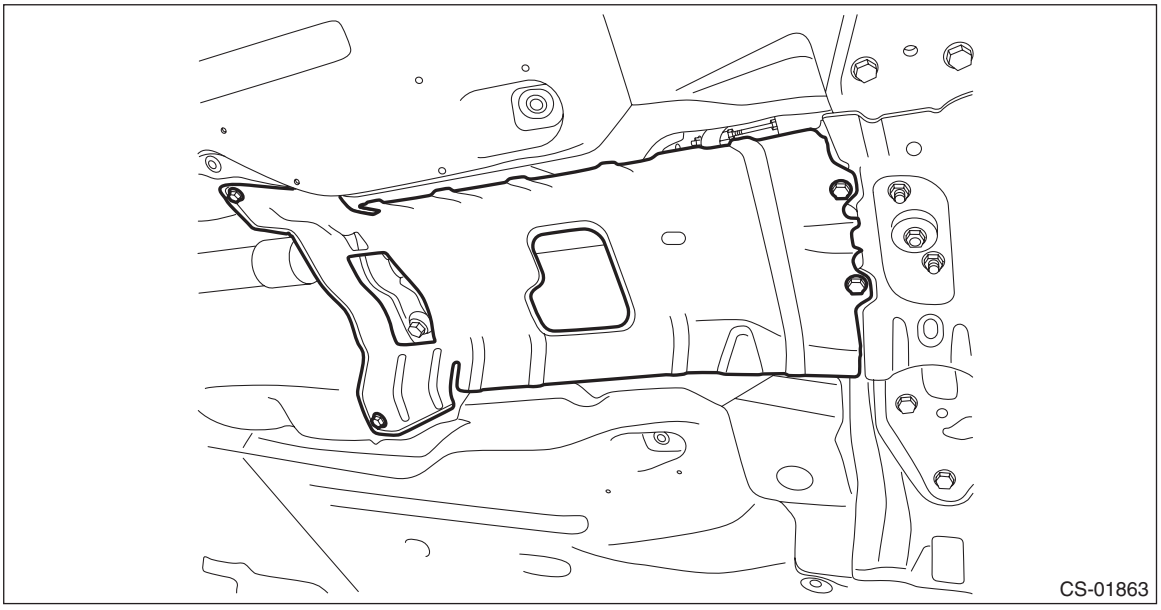

7) Remove the cable from arm assembly.

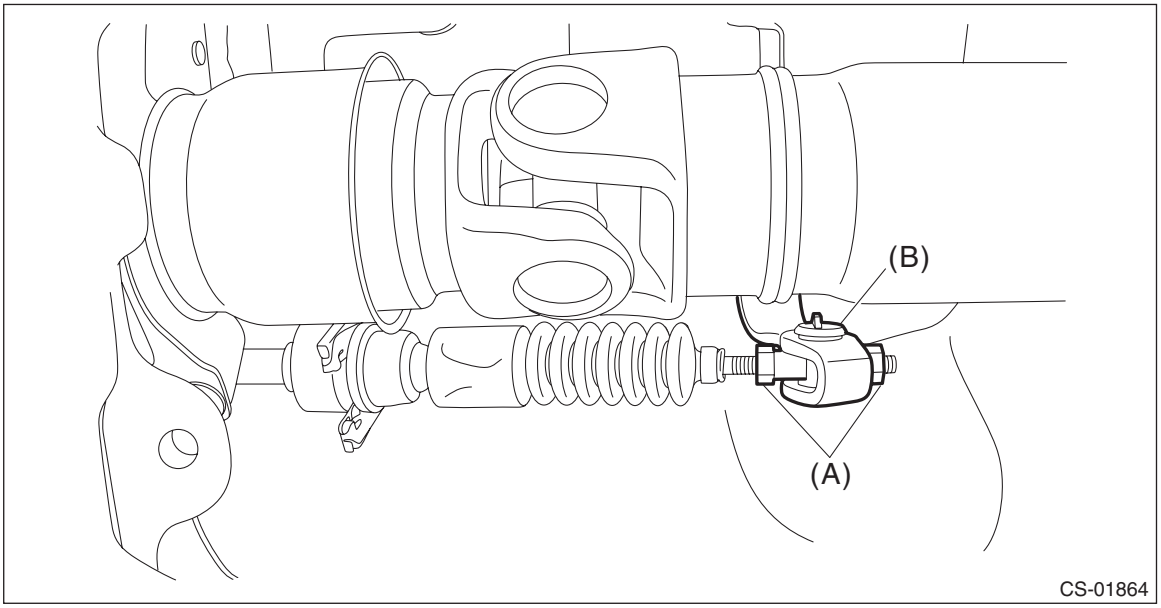

(A) Nut
(B) Arm ASSY

8) Raise the claw of clamp and remove the cable.

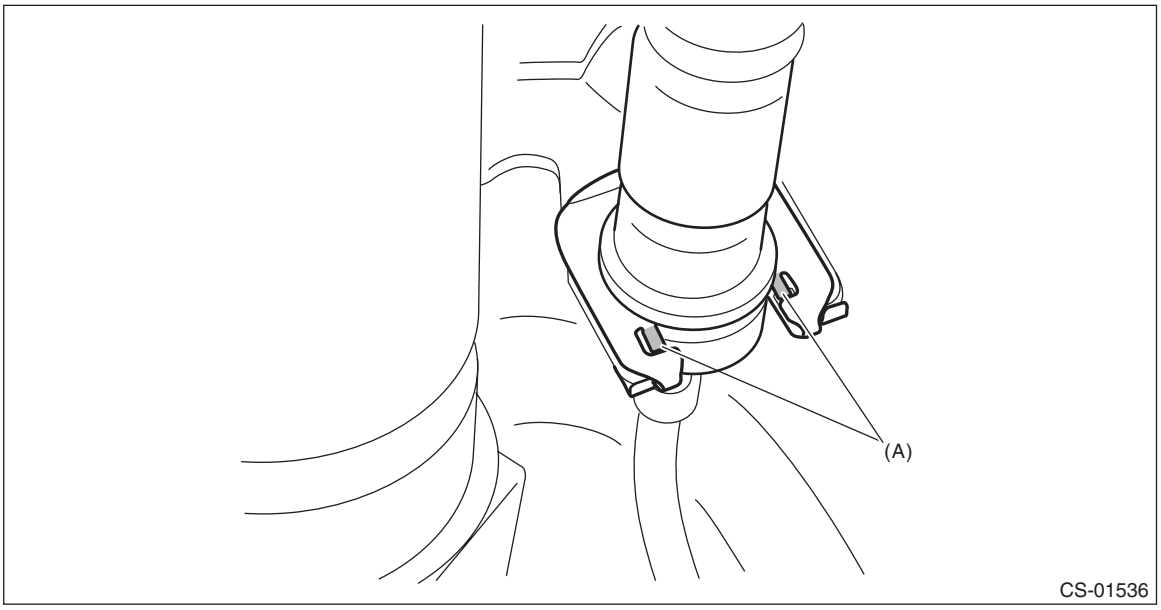

(A) Claw

9) Lower the vehicle.
10) Lower the cover grip AT vertically toward the lever.

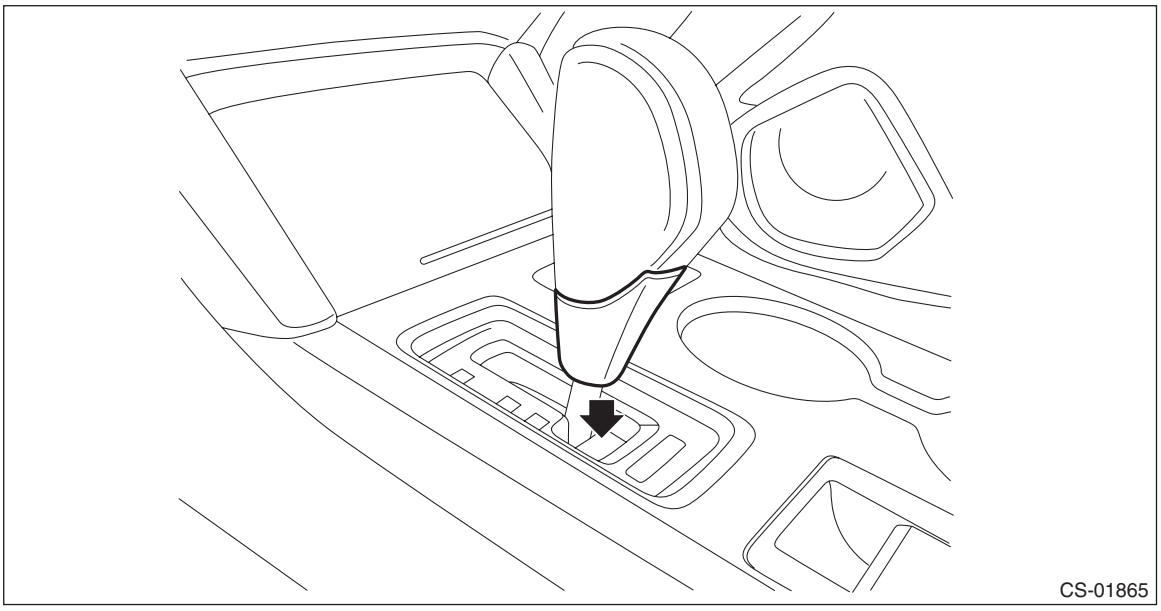

11) Remove the clamp grip pin.

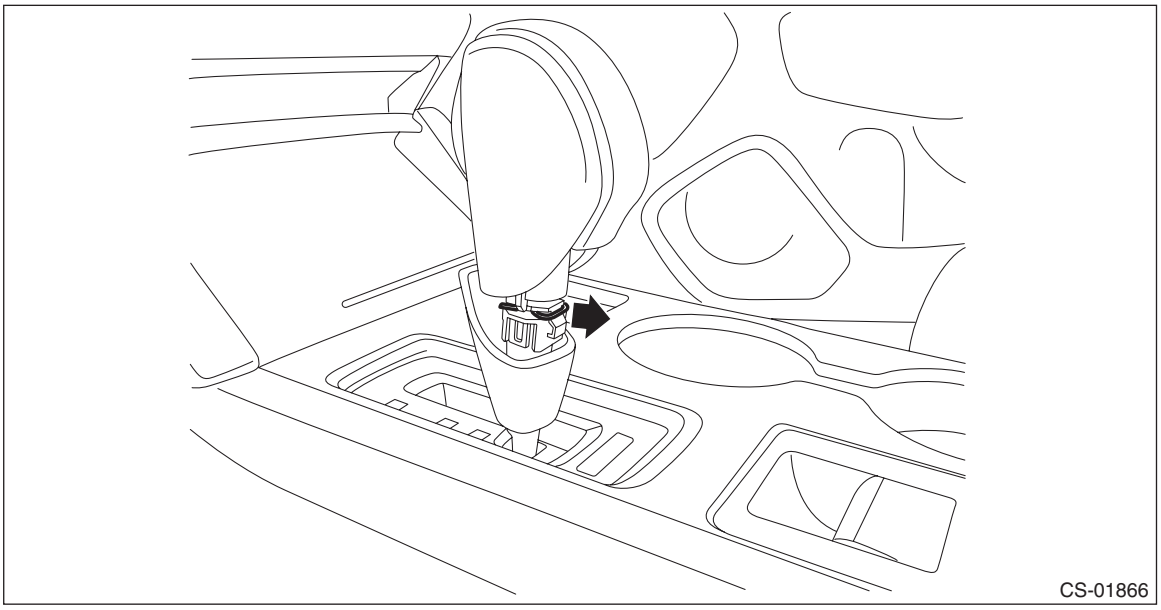

12) Remove the grip assembly.

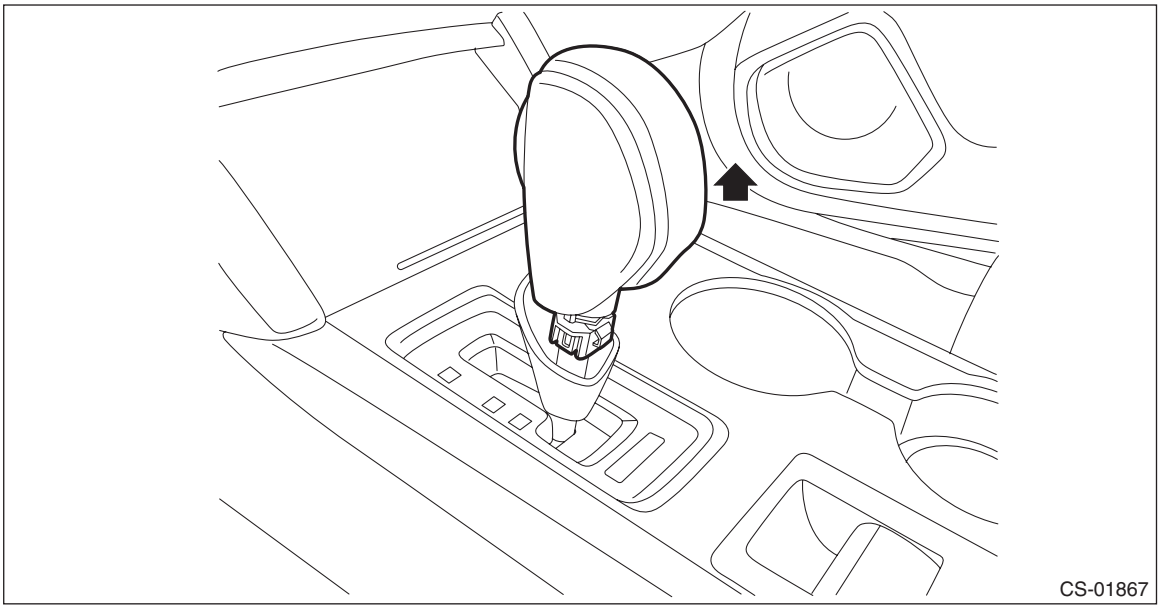

13) Remove the rod COMPL.

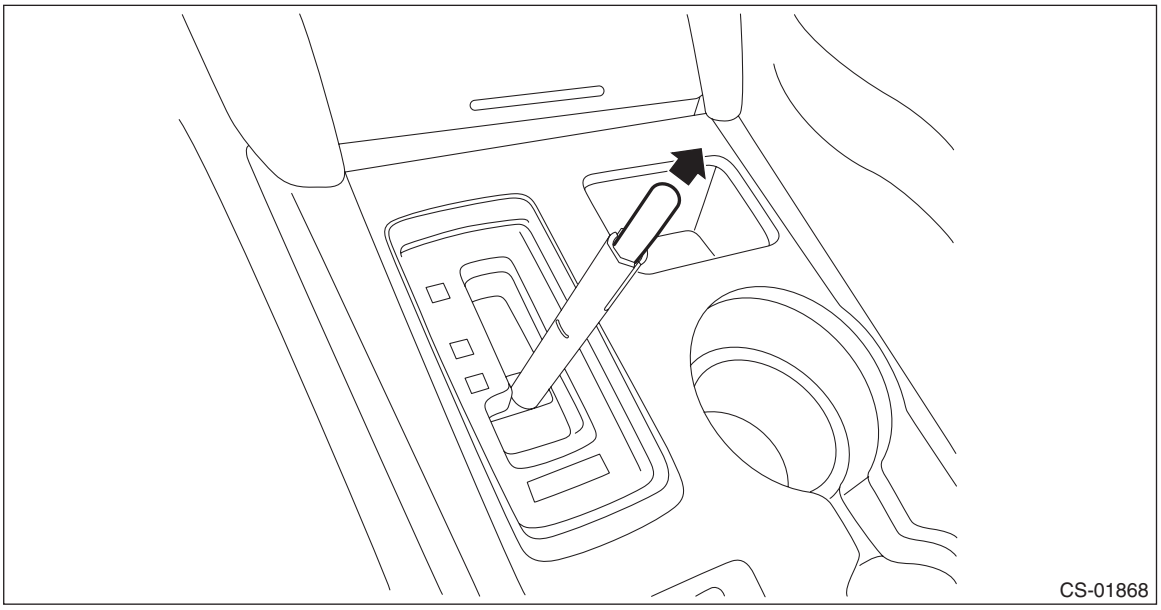

14) Remove the console front cover assembly. <Ref. to EI-80, REMOVAL, Console Box.>
15) Remove the console box. <Ref. to EI-80, REMOVAL, Console Box.>
16) Remove the console front side cover assemblies RH and LH. <Ref. to EI-80, REMOVAL, Console Box.>
17) Disconnect the harness connector.

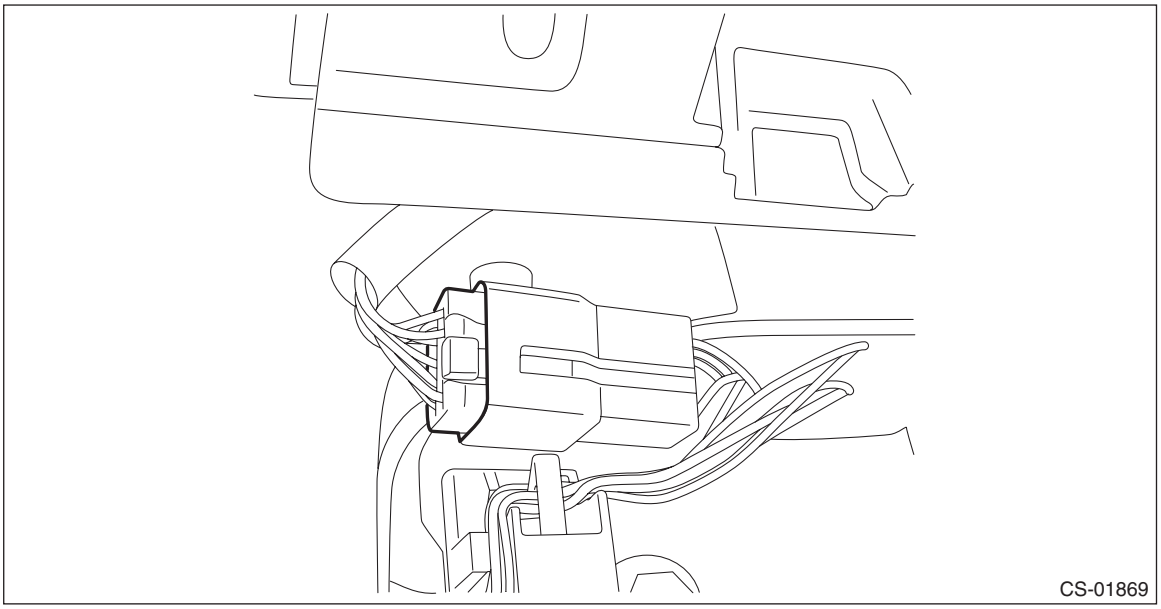

18) Remove the four bolts to remove the select lever assembly.

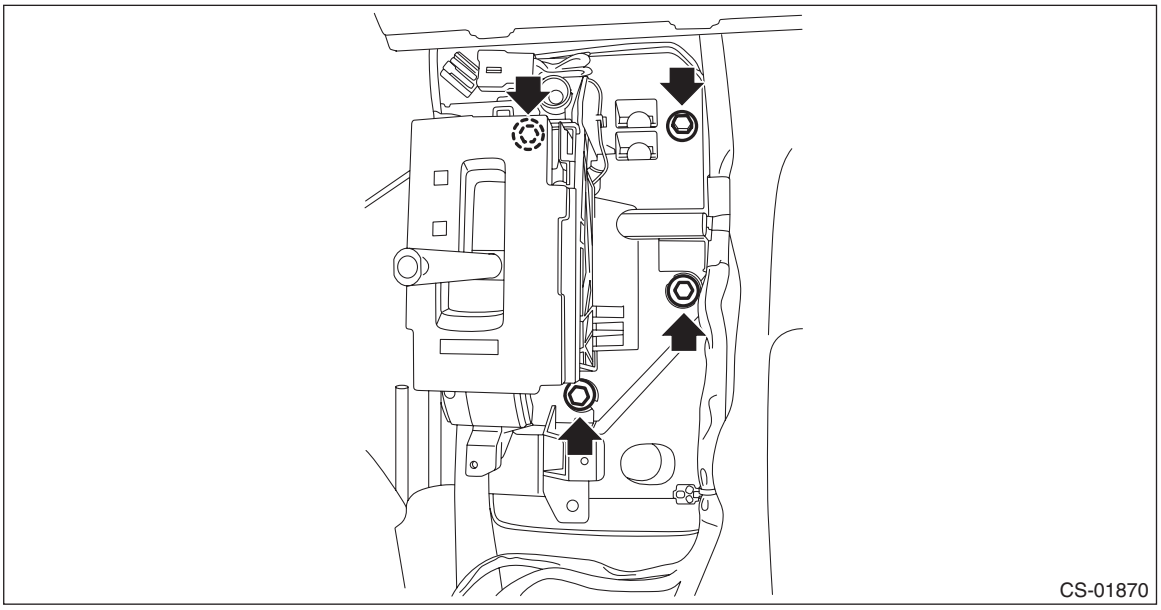

19) Turn over the gasket and remove the harness clip from the select lever.

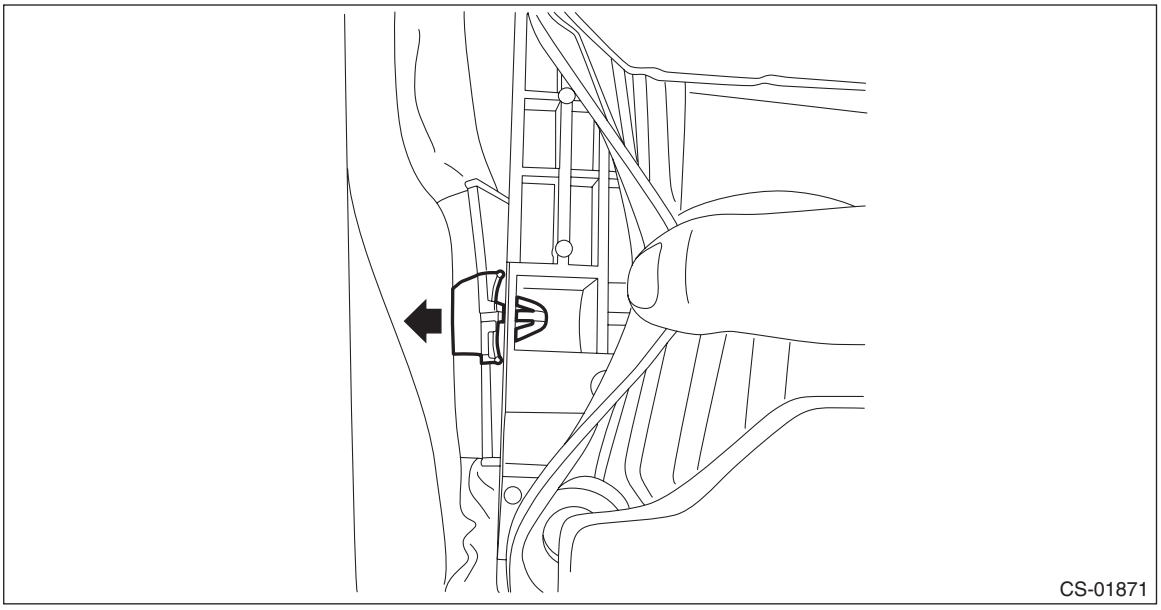

20) Remove the indicator cover.

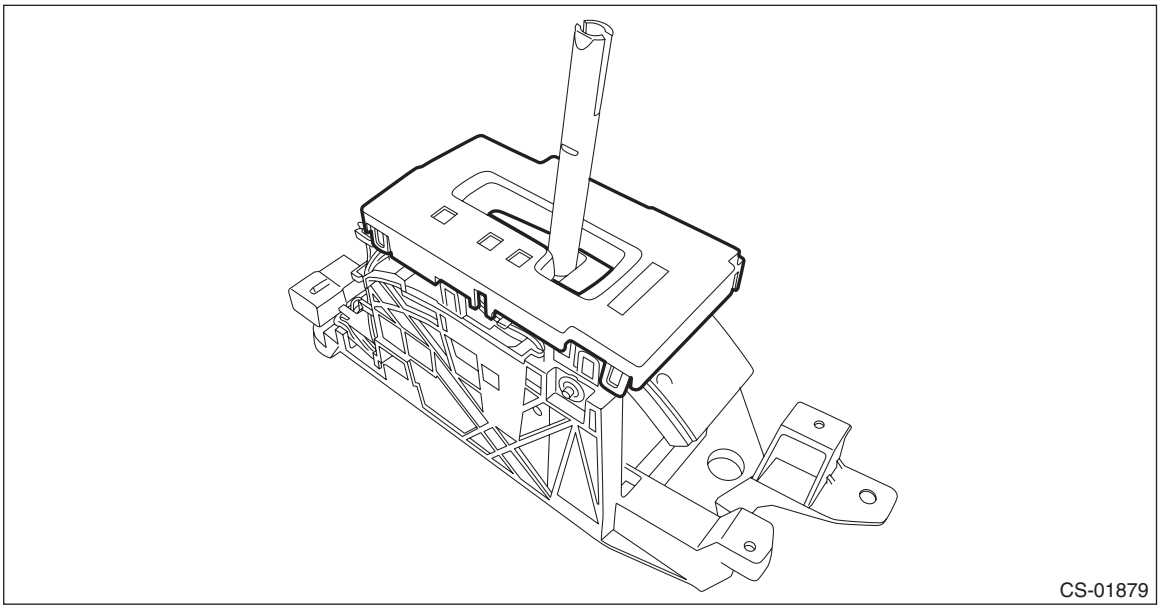

21) Remove the harness connector from the select lever COMPL.

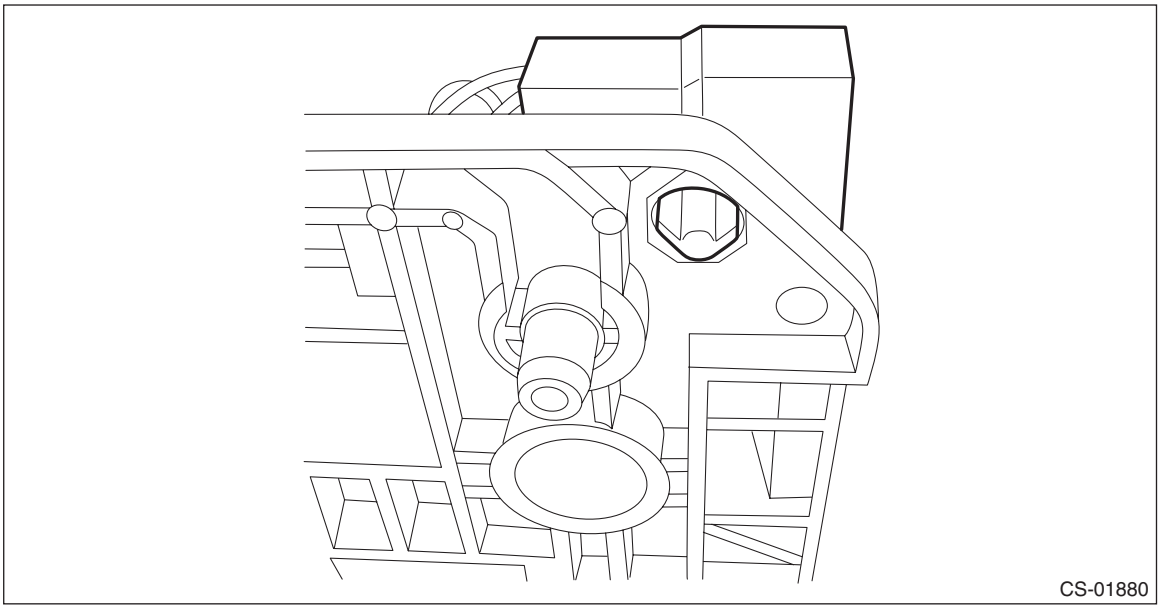

22) Remove the harness from the select lever COMPL.

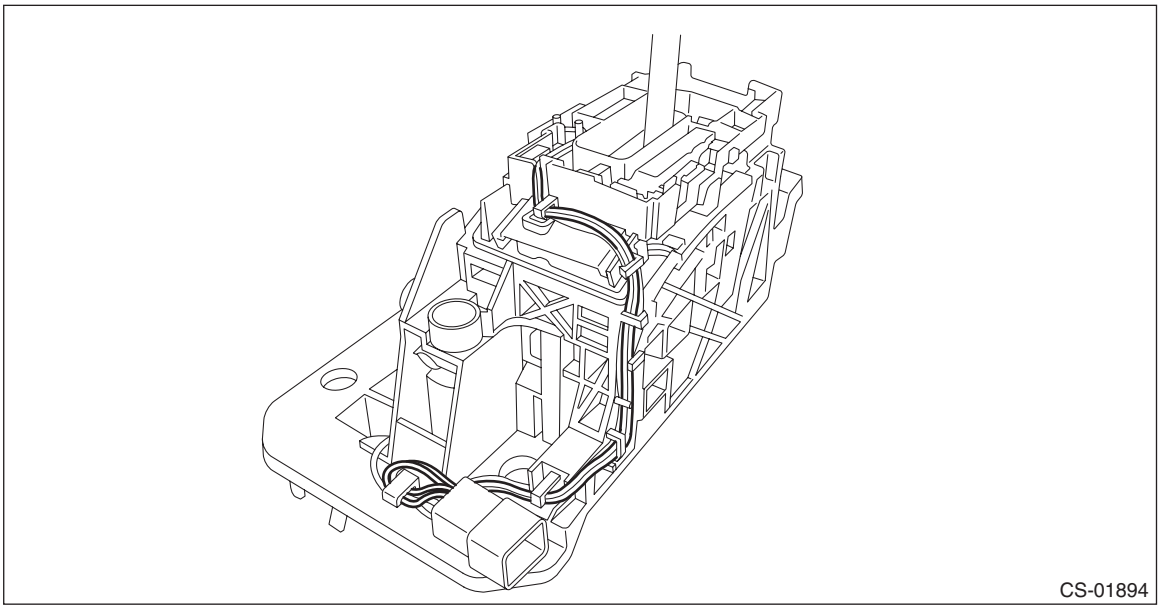

23) Remove the housing and the blind.

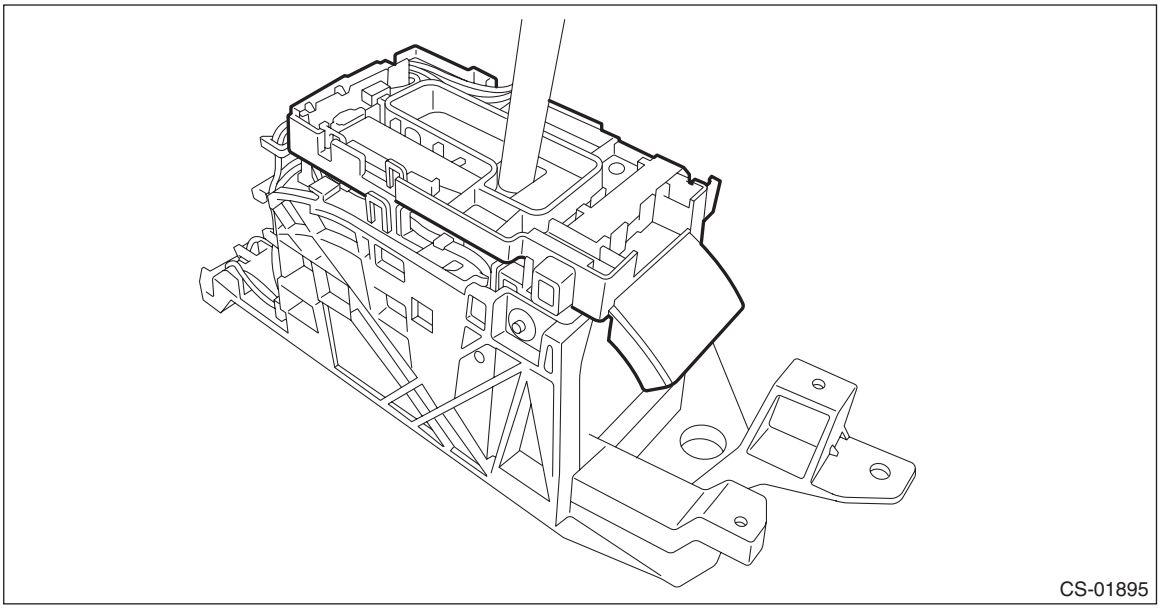

24) Remove the terminal of the indicator light using a flat tip precision screwdriver with a tip width of 1.3 mm (0.05 in) or less, KTC connector terminal tool ECC-1T or equivalent.

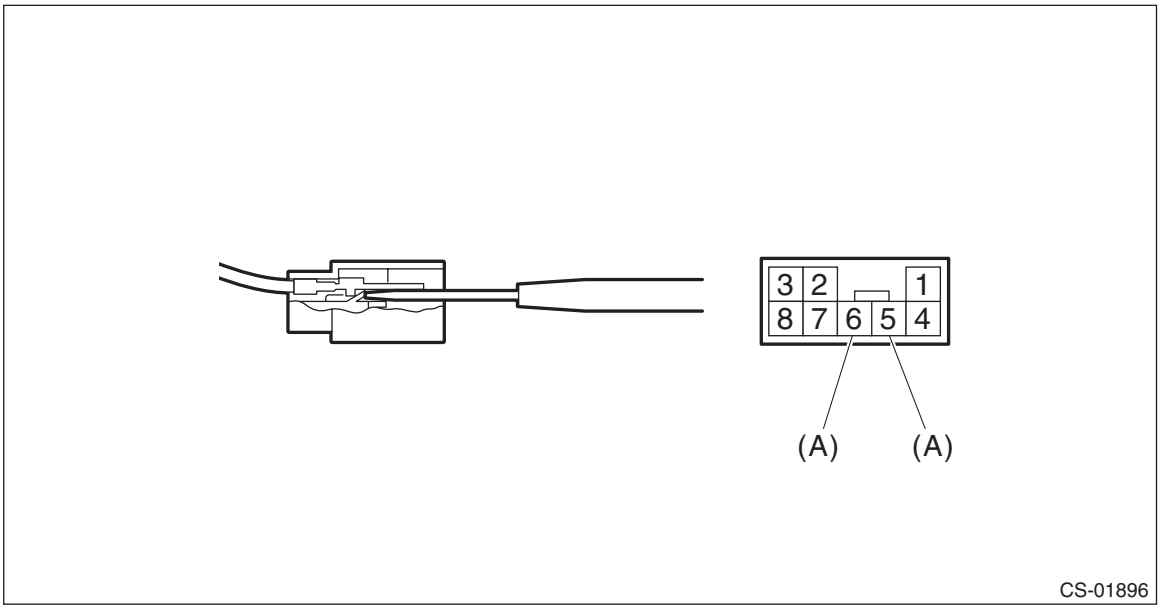

(A) Indicator light terminal

B: INSTALLATION

1) Insert the indicator light terminal to the harness connector.

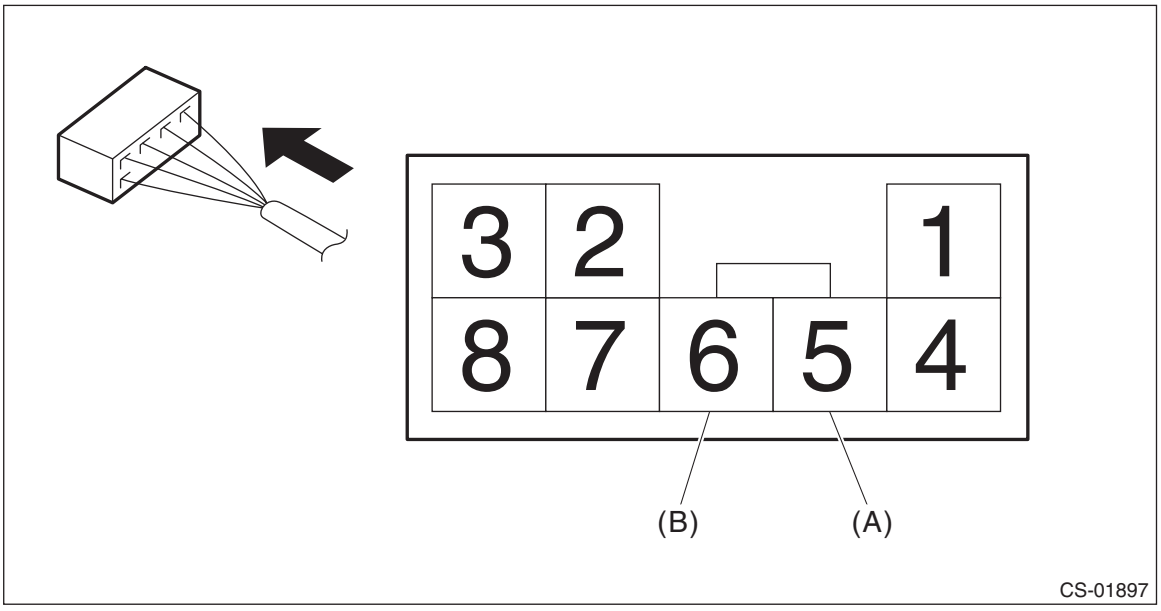

(A) Indicator light (color code: red/white)
(B) Indicator light (color code: blue/white)

2) Install the housing and the blind.

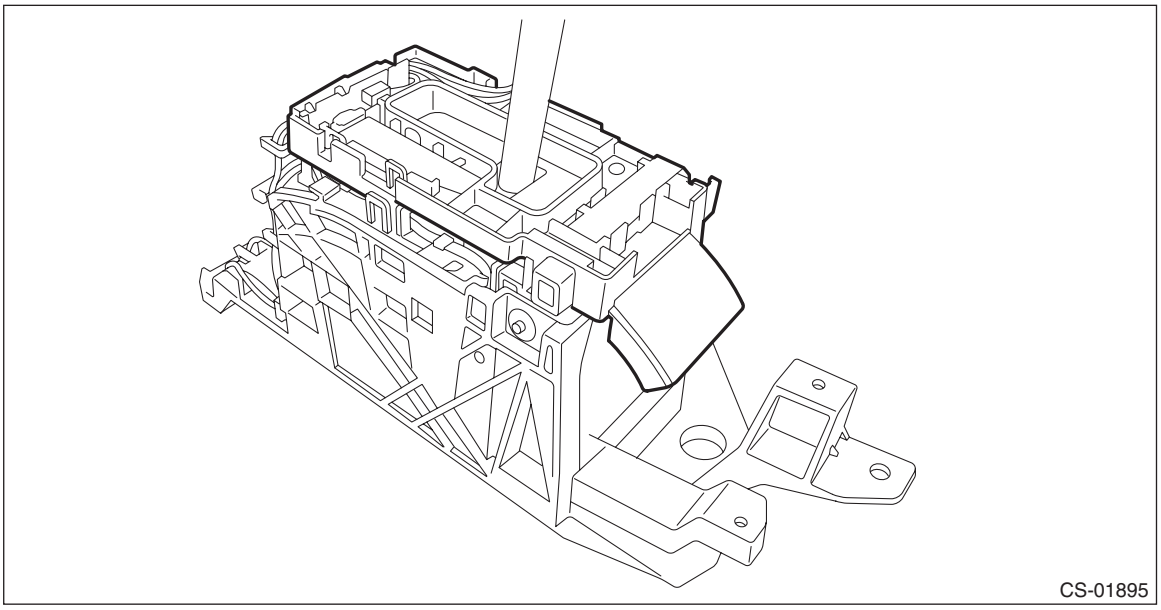

3) Install the harness to the select cover COMPL.

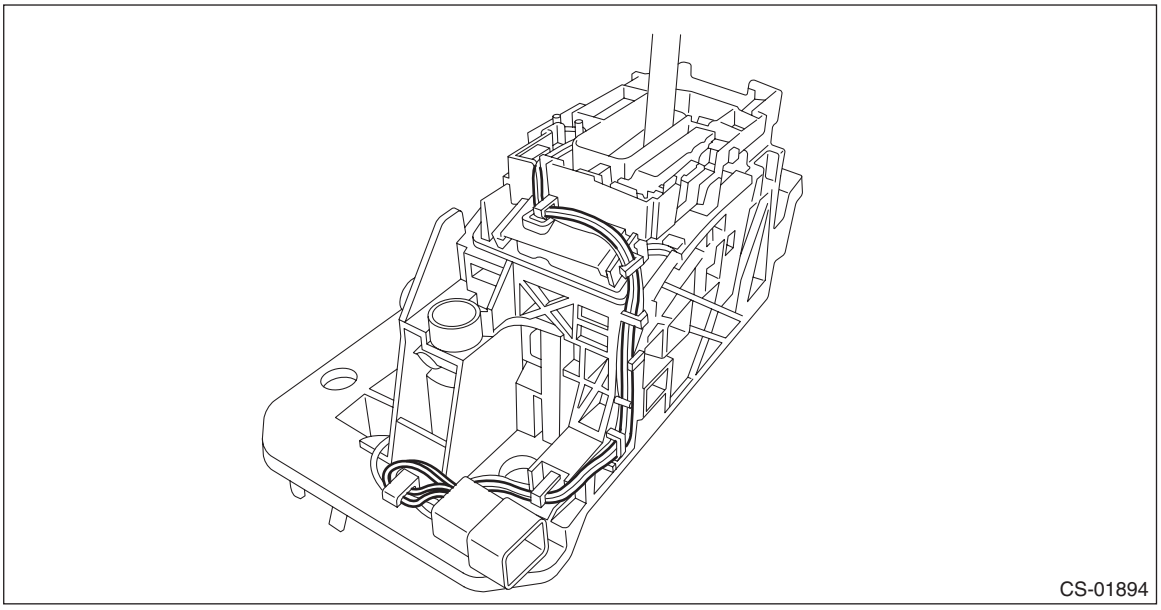

4) Install the harness connector to the select cover COMPL.

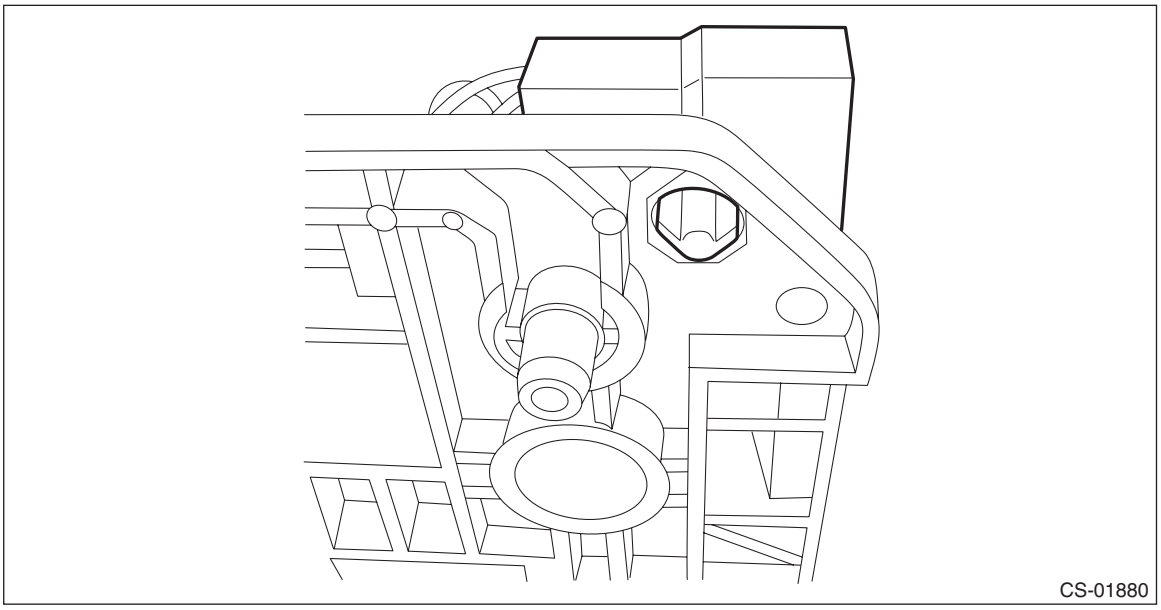

5) Install the indicator cover.

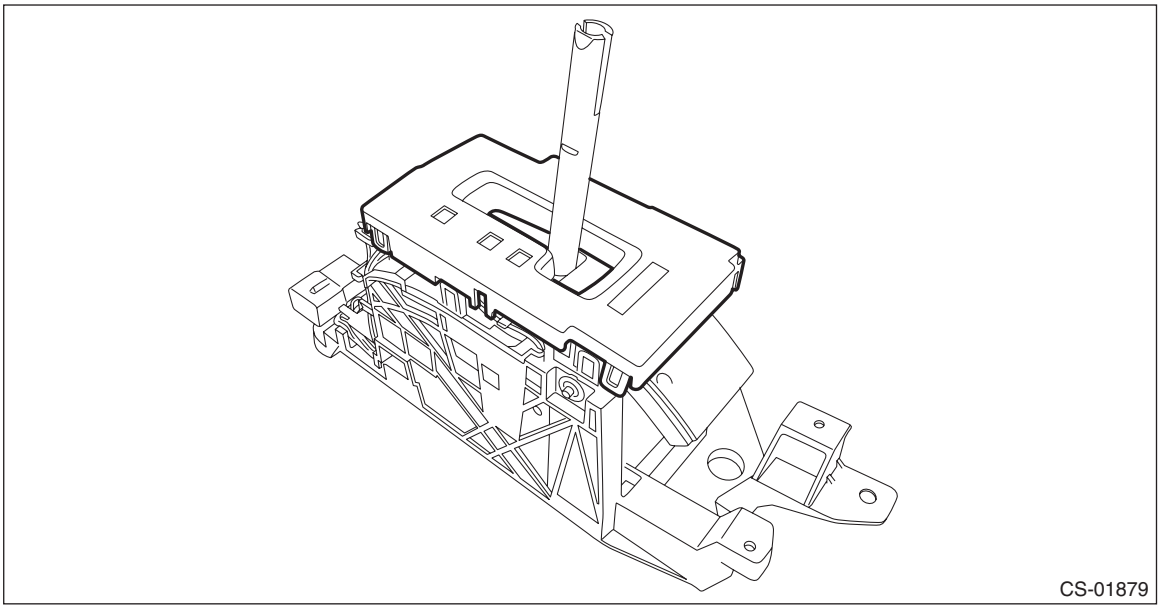

6) Install the select lever COMPL after setting it to the vehicle body.

Tightening torque:
18 N·m (1.8 kgf-m, 13.3 ft-lb)

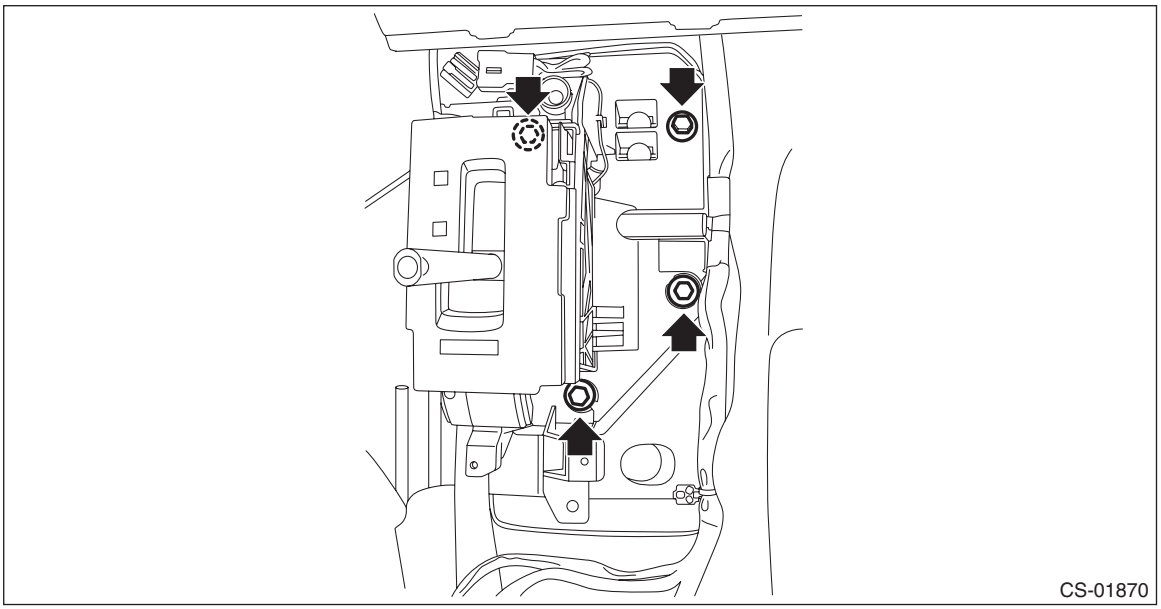

7) Connect the harness connector.

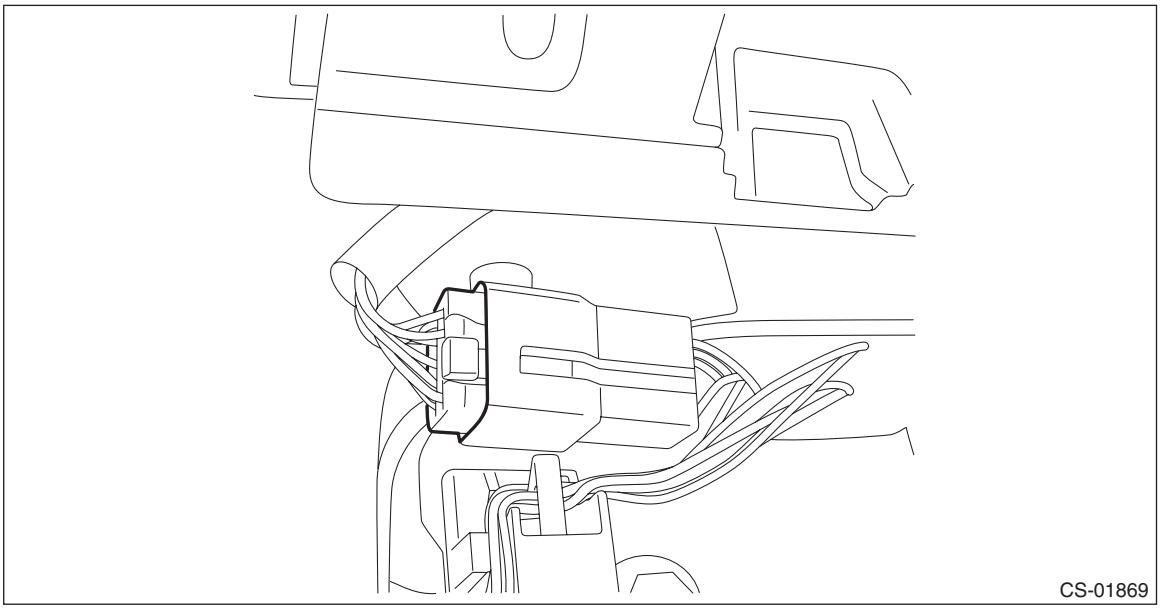

8) Install the harness clip to the select lever COMPL.

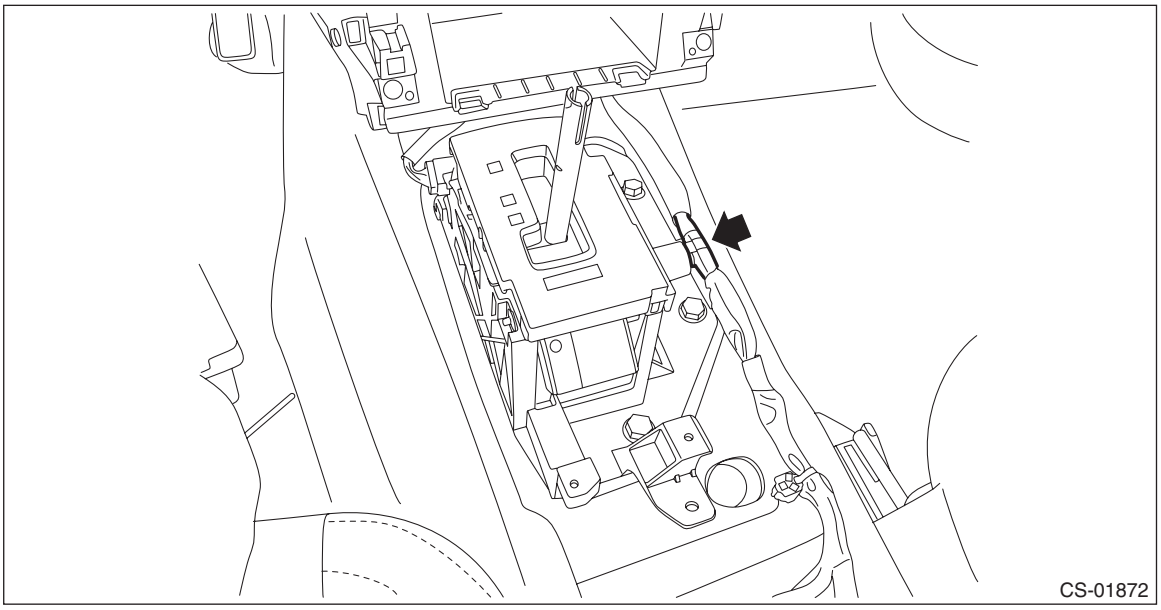

9) Shift the select lever to “N” range.
10) Install the console front side cover assemblies RH and LH. <Ref. to EI-82, INSTALLATION, Console Box.>
11) Install the console box. <Ref. to EI-82, INSTALLATION, Console Box.>
12) Install the console front cover assembly. <Ref. to EI-82, INSTALLATION, Console Box.>
13) Insert the rod COMPL in the direction shown in the figure.

CAUTION:
Be careful not to insert the rod COMPL in the wrong direction by 90°.

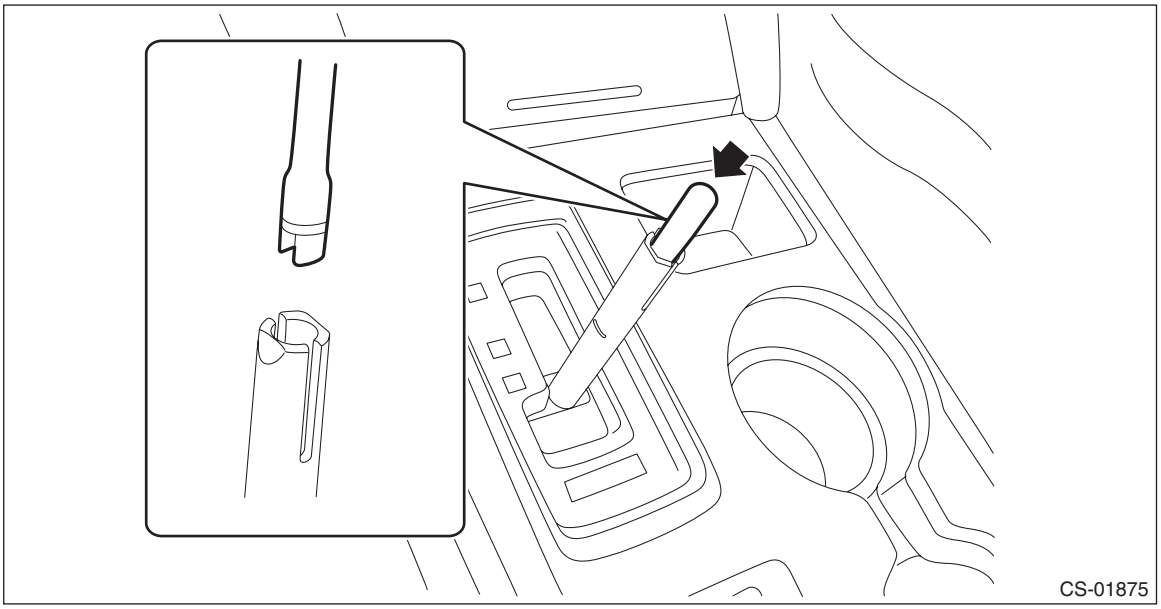

14) Install the clamp grip pin to the grip.

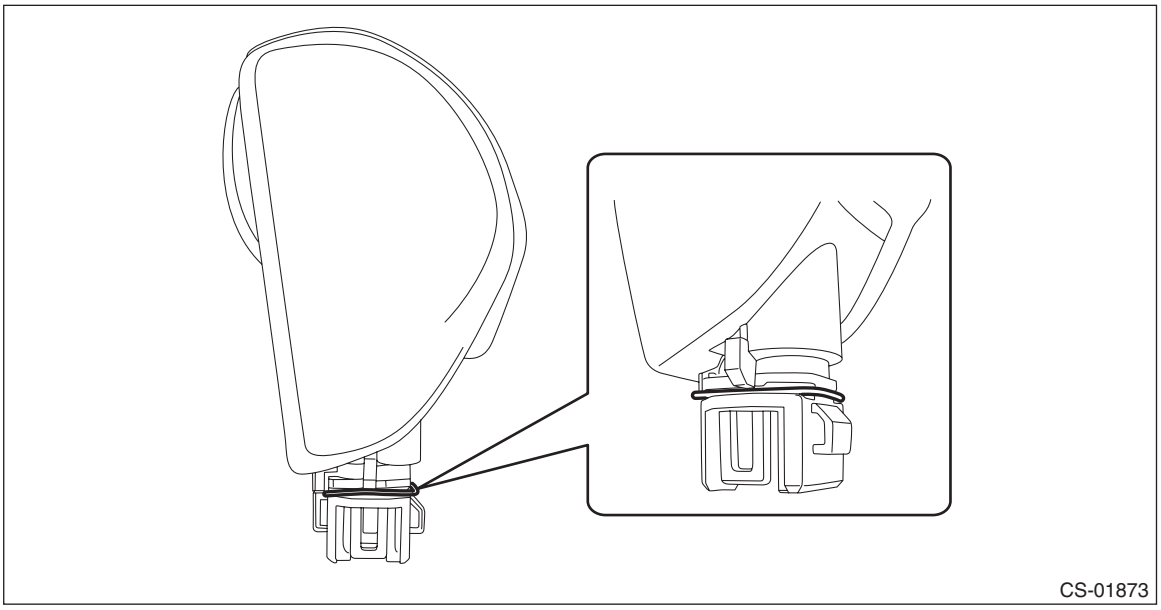

15) Install the cover grip AT securely.

NOTE:
After installation, check that the cover grip AT cannot be detached.

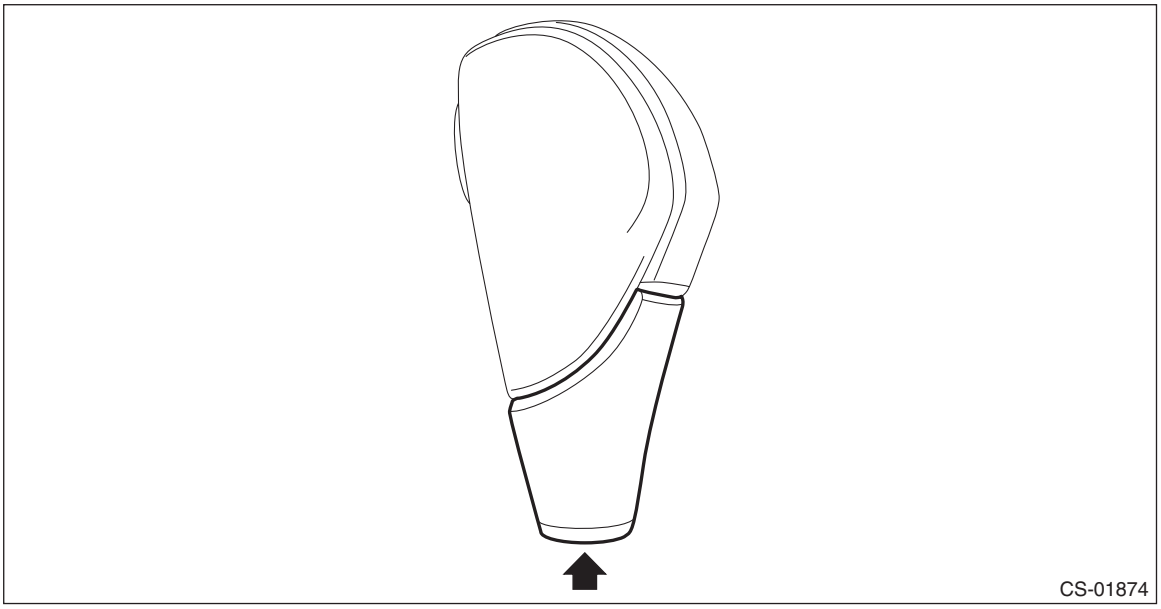

16) Insert the grip assembly to the select lever and press it down until a click is heard.

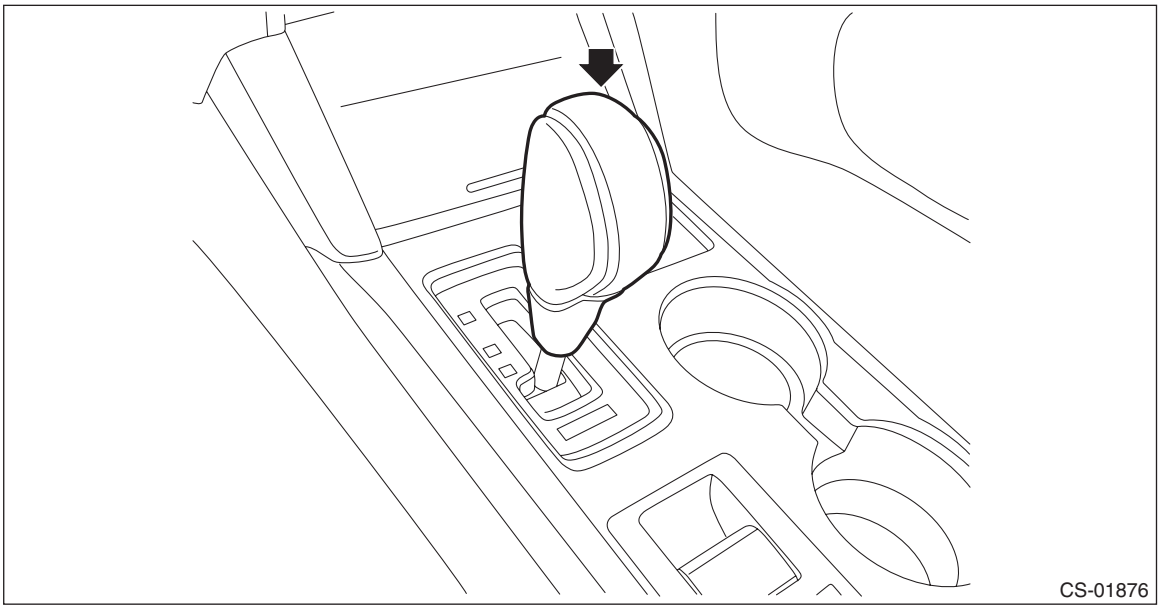

17) After installation of grip, check the following points.
- The grip will not come off.
- The button on the grip operates normally.
- Make sure that the select lever will not shift to another range unless the button on the grip is pressed.

NOTE:
If it shifts to another range with the button not pressed, check if the rod COMPL is inserted in the wrong direction.

18) Lift up the vehicle.
19) Shift the range select lever to “N” range.
20) Secure the cable to the bracket. <Ref. to CS-43, INSTALLATION, Select Cable.>
21) Adjust the select cable position. <Ref. to CS-46, ADJUSTMENT, Select Cable.>
22) After adjustment, confirm that the select lever operates properly at all range positions using the shift lock release button.
23) Install the center exhaust cover.

Tightening torque:
18 N·m (1.8 kgf-m, 13.3 ft-lb)

24) Install the center exhaust pipe. (2.5 L model) <Ref. to EX(H4DO)-13, INSTALLATION, Center Exhaust Pipe.>
25) Install the front exhaust pipe and rear exhaust pipe. (3.6 L model) <Ref. to EX(H6DO)-8, INSTALLATION, Front Exhaust Pipe.> <Ref. to EX(H6DO)-13, INSTALLATION, Rear Exhaust Pipe.>
26) Connect the ground terminal to battery sensor. <Ref. to RC-4, BATTERY, NOTE, Repair Contents.>
27) Inspect the following items. If a malfunction is found in the inspection, adjust the select cable or inhibitor switch.
(1) The shift lock operates normally. <Ref. to CS-15, SHIFT LOCK OPERATION, INSPECTION, AT Shift Lock Control System.>
(2) Engine starts when the select lever is in “P” or “N” range, but not in other ranges.
(3) Back-up light illuminates when the select lever is in the “R” range, but not in other ranges.
(4) Select lever and indicator positions are matched.
(5) Make sure that the door open alarm will not sound when the door is opened in the “P” range after the ignition switch is turned to OFF.

NOTE:
If the door open alarm sounds, check if the rod COMPL is inserted in the wrong direction.

C: INSPECTION

1) The shift lock operates normally. <Ref. to CS-15, SHIFT LOCK OPERATION, INSPECTION, AT Shift Lock Control System.>
2) Engine starts when the select lever is in “P” or “N” range, but not in other ranges.
3) Back-up light illuminates when the select lever is in the “R” range, but not in other ranges.
4) Select lever and indicator positions are matched.
5) Make sure that the door open alarm will not sound when the door is opened in the “P” range after the ignition switch is turned to OFF.

NOTE:
If the door open alarm sounds, check if the rod COMPL is inserted in the wrong direction.

4. Select Cable

A: REMOVAL

1) Shift the select lever to “N” range.
2) Disconnect the ground terminal from battery sensor. <Ref. to RC-4, BATTERY, NOTE, Repair Contents.>
3) Lift up the vehicle.
4) Remove the center exhaust pipe. (2.5 L model) <Ref. to EX(H4DO)-12, REMOVAL, Center Exhaust Pipe.>
5) Remove the front exhaust pipe and rear exhaust pipe. (3.6 L model) <Ref. to EX(H6DO)-6, REMOVAL, Front Exhaust Pipe.> <Ref. to EX(H6DO)-12, REMOVAL, Rear Exhaust Pipe.>
6) Remove the center exhaust cover.

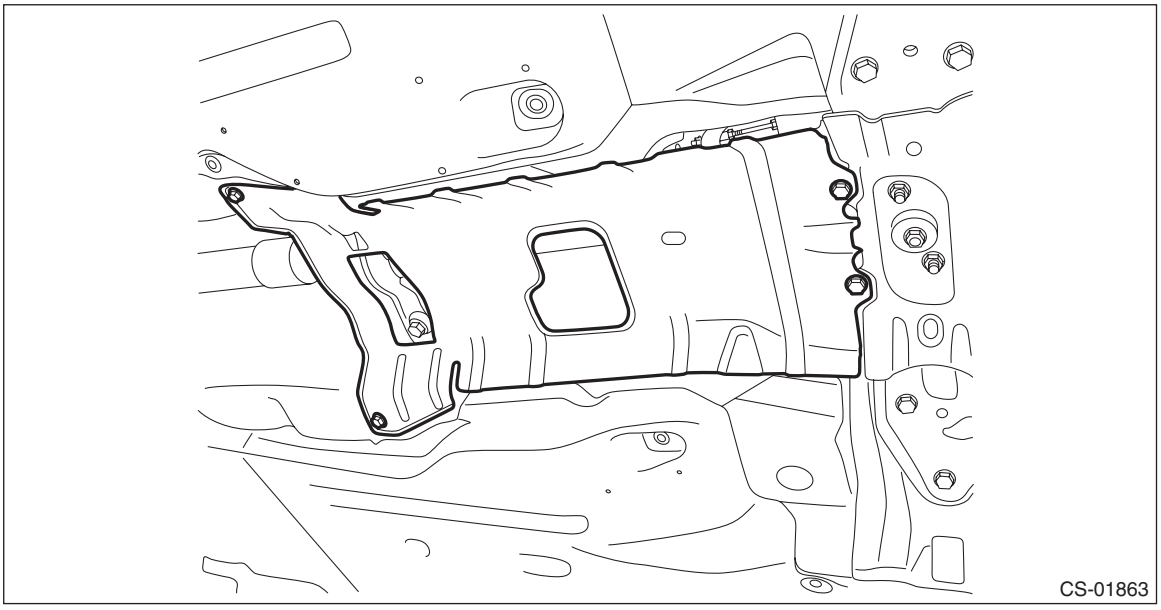

7) Remove the snap pin and washer from the shifter arm and remove the select cable from the shifter arm.

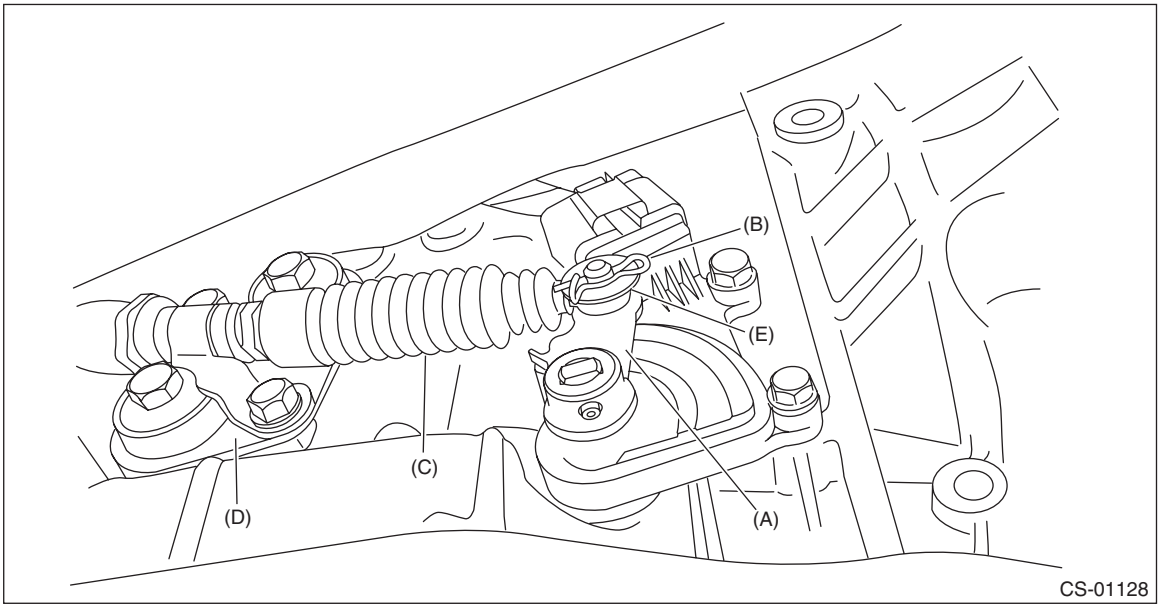

(A) Shifter arm
(B) Snap pin
(C) Select cable
(D) Plate ASSY
(E) Washer

8) Remove the plate assembly from the transmission case.

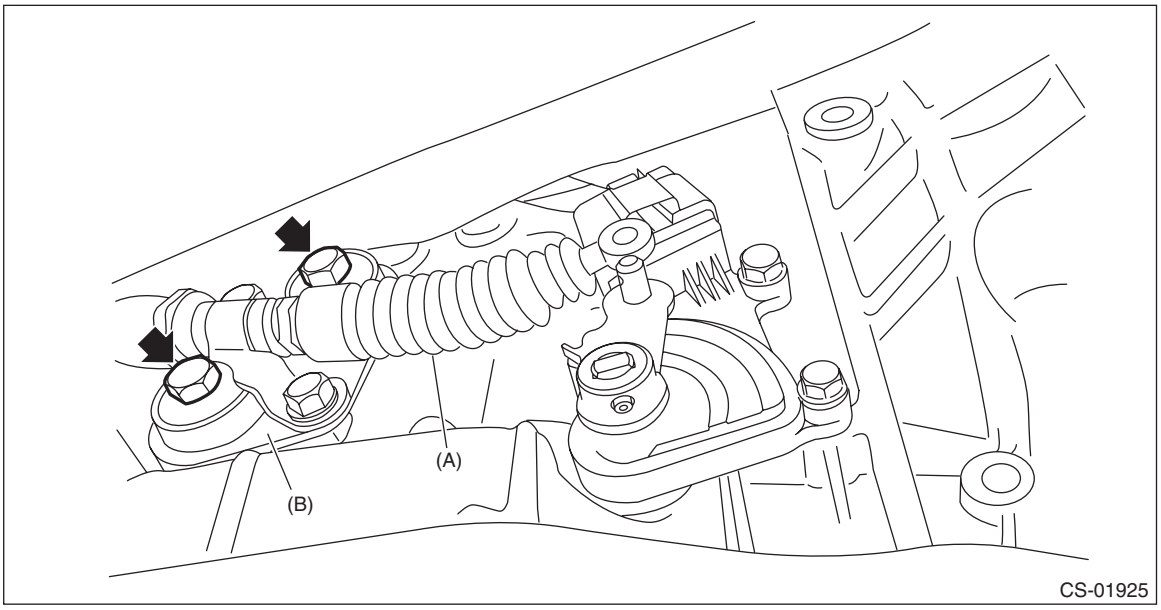

(A) Select cable
(B) Plate ASSY

9) Disconnect the cable from arm assembly.

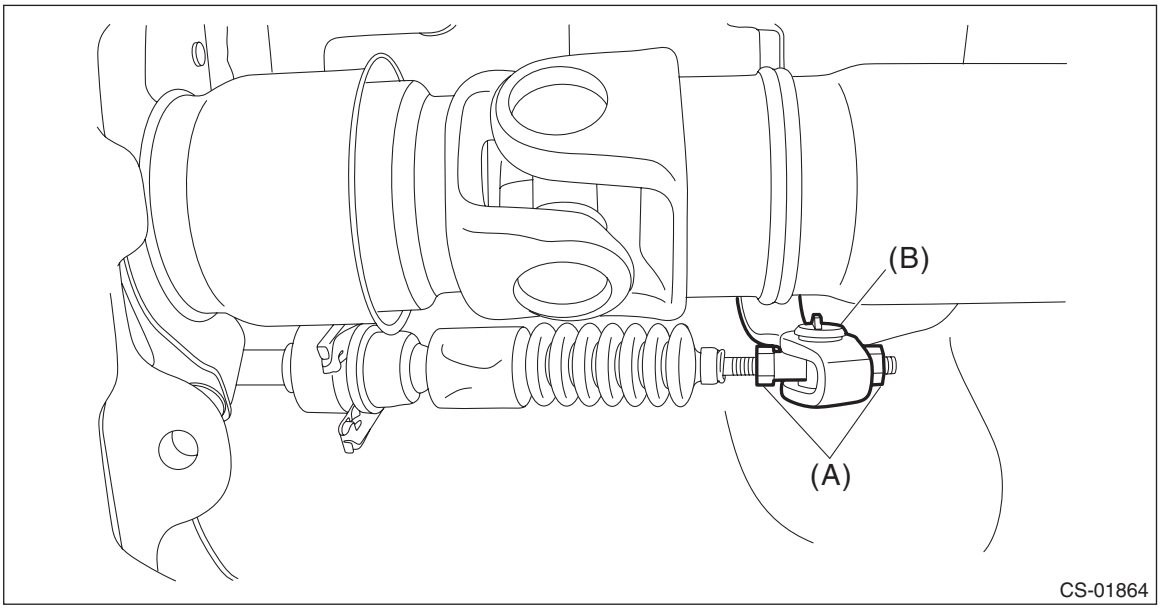

(A) Nut
(B) Arm ASSY

10) Raise the claw of clamp to remove the cable from bracket.

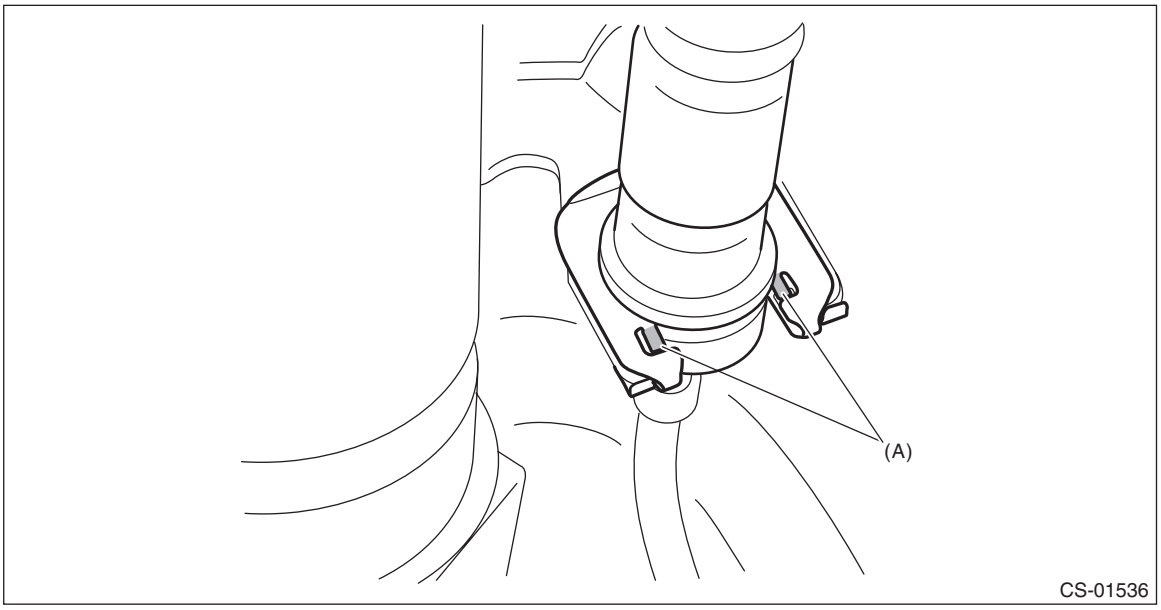

(A) Claw

11) Remove the select cable from plate assembly.

B: INSTALLATION

1) Position the select cable as shown in the figure, and install it to the plate assembly.

CAUTION:
• If the cable is installed in the wrong direction, loosen the bracket bolts, and then reinstall the cable in the correct direction.
• Do not adjust the cable end direction by turning it forcibly to prevent the boot from being twisted.

Tightening torque:
T: 18 N·m (1.8 kgf-m, 13.3 ft-lb)

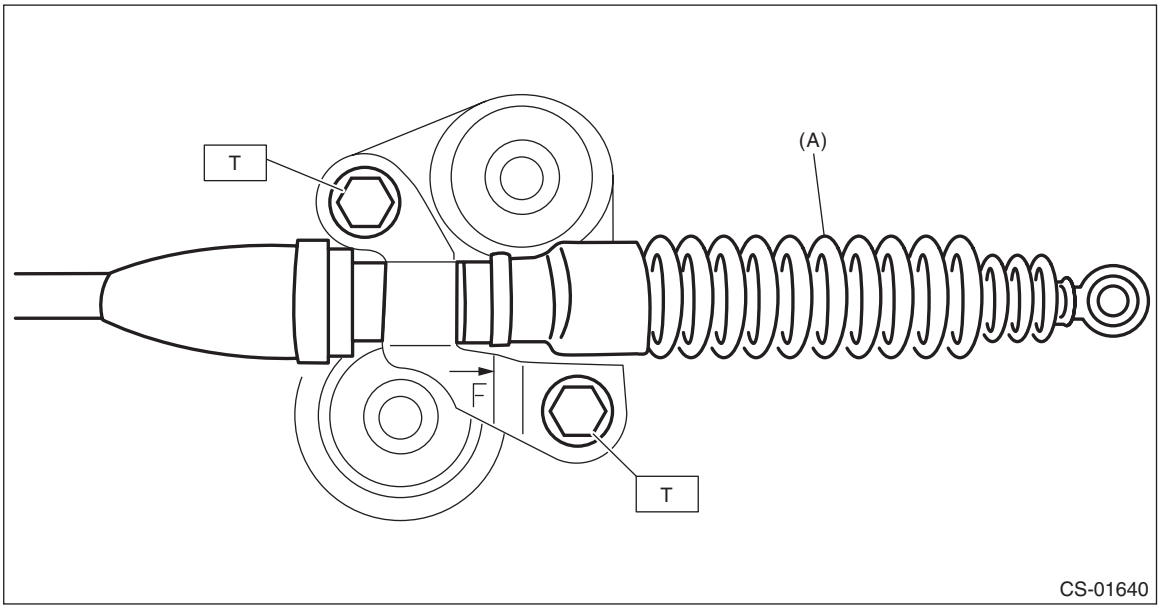

(A) Select cable

2) Install the select cable to the shifter arm.

3) Install the plate assembly.

Tightening torque:
T: 25 N·m (2.5 kgf-m, 18.4 ft-lb)

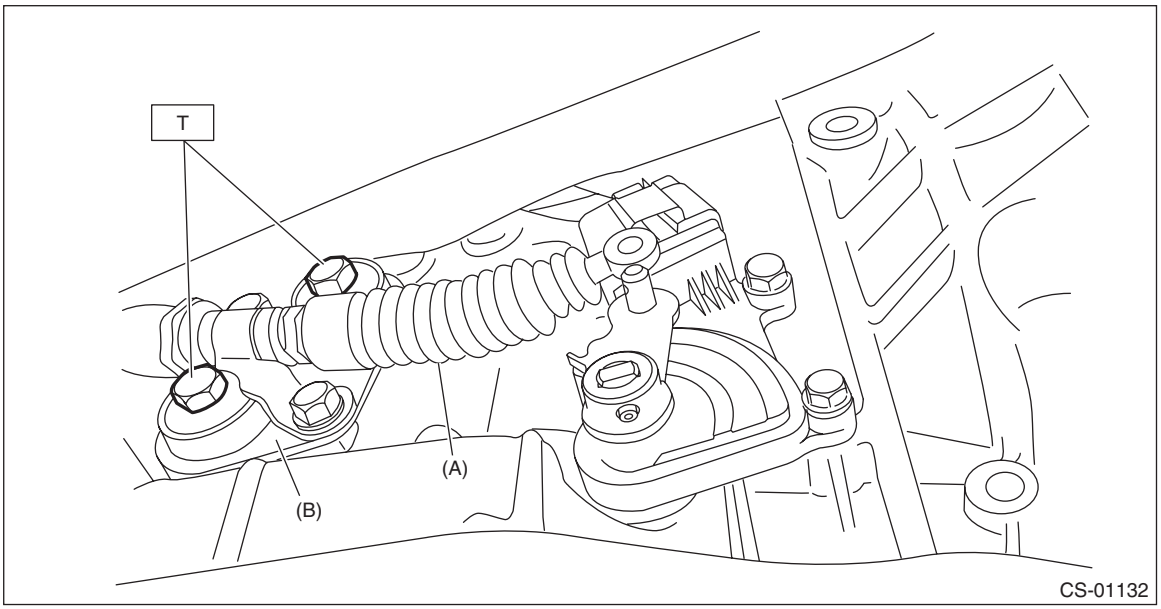

(A) Select cable
(B) Plate ASSY

4) Install the washer and snap pin to the shifter arm.

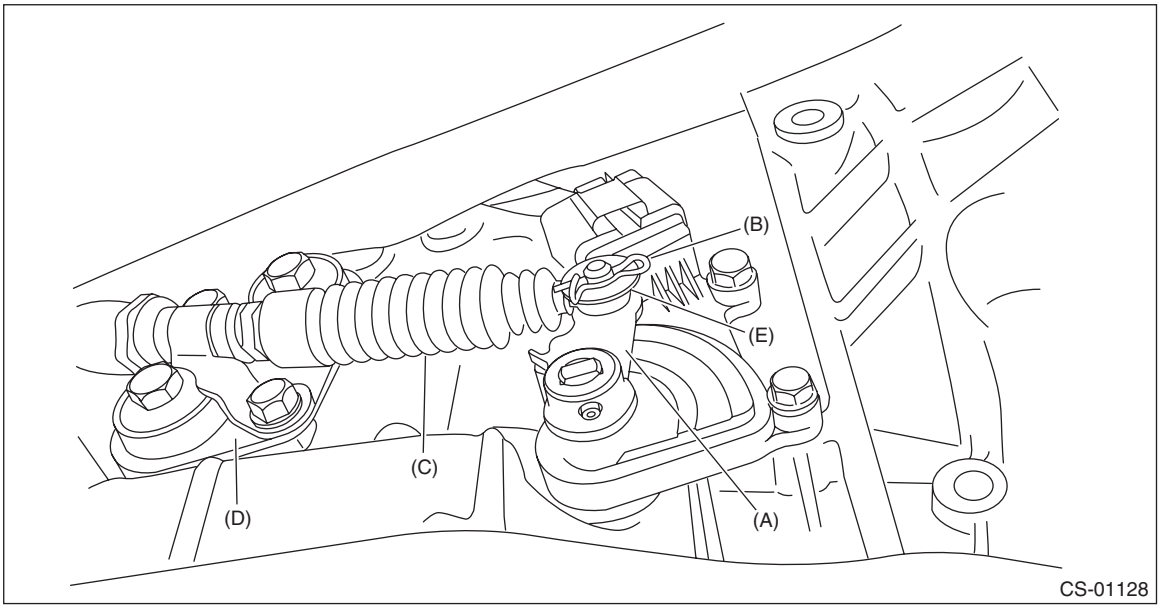

(A) Shifter arm
(B) Snap pin
(C) Select cable
(D) Plate ASSY
(E) Washer

5) Install new clamp paying attention to the installing direction.

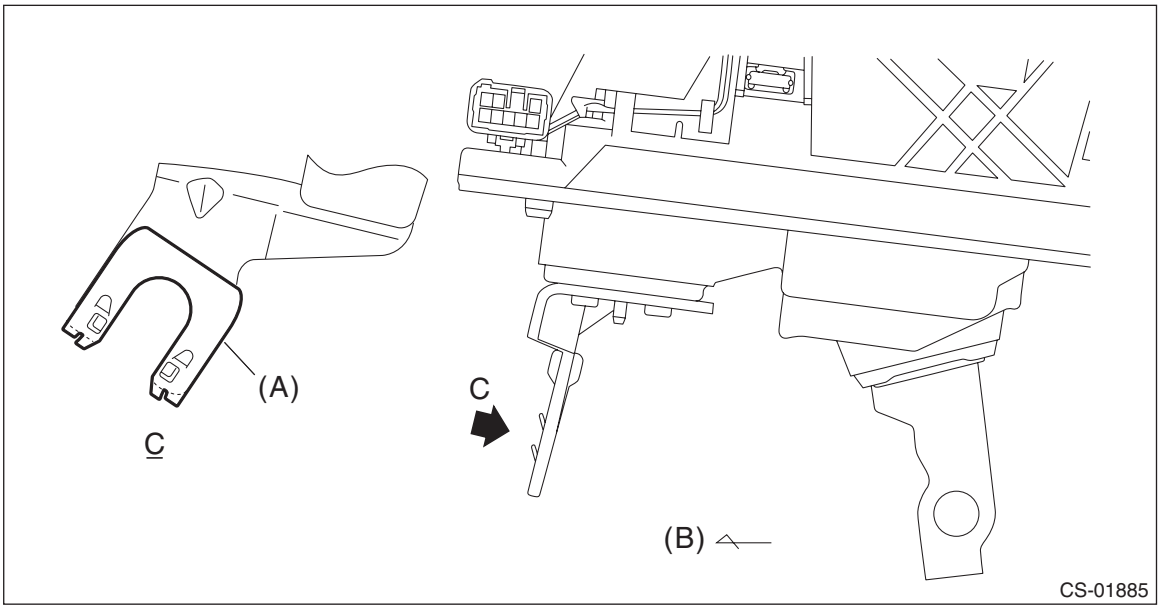

(A) Clamp
(B) Forward

6) Insert the cable socket into the bracket and the connector in the arrow direction from the side to assemble the cable.

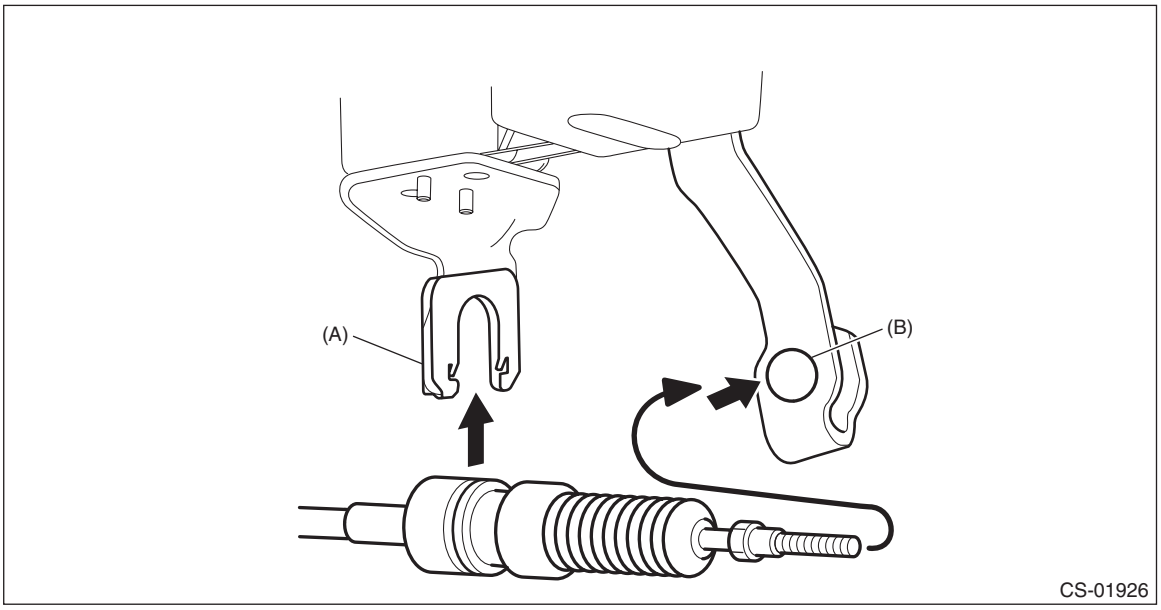

(A) Bracket
(B) Connector

7) Shift the select lever to the “N” range, and then adjust the select cable position. <Ref. to CS-46, ADJUSTMENT, Select Cable.>
8) Install the center exhaust cover.

Tightening torque:
18 N·m (1.8 kgf-m, 13.3 ft-lb)

9) Install the center exhaust pipe. (2.5 L model) <Ref. to EX(H4DO)-13, INSTALLATION, Center Exhaust Pipe.>

10) Install the front exhaust pipe and rear exhaust pipe. (3.6 L model) <Ref. to EX(H6DO)-8, INSTALLATION, Front Exhaust Pipe.> <Ref. to EX(H6DO)-13, INSTALLATION, Rear Exhaust Pipe.>
11) Connect the ground terminal to battery sensor. <Ref. to RC-4, BATTERY, NOTE, Repair Contents.>

C: INSPECTION

Check the removed cable and replace or adjust if damaged, rusty or malfunctioning.
1) Check that the inner cable moves smoothly without drag.
2) Check the inner cable for damage and rust.
3) Check the outer cable for damage, bends and cracks.
4) Check the boot for damage, cracks and deterioration.
5) Shift the select lever from “P” range to “D” range. Check the existence of feel to contact the detents in each range. If the detents cannot be felt or the position pointer is improperly aligned, adjust the cable.
6) Check that the starter motor rotates when the select lever is set to “P” or “N” range.
7) Check the back-up light illumination when the select lever is in “R” range.
8) Check the shift lock operation when the select lever is in “P” range.

D: ADJUSTMENT

1) Shift the select lever to “N” range.
2) Lift up the vehicle.
3) Remove the center exhaust pipe. (2.5 L model) <Ref. to EX(H4DO)-12, REMOVAL, Center Exhaust Pipe.>
4) Remove the front exhaust pipe and rear exhaust pipe. (3.6 L model) <Ref. to EX(H6DO)-6, REMOVAL, Front Exhaust Pipe.> <Ref. to EX(H6DO)-12, REMOVAL, Rear Exhaust Pipe.>
5) Remove the center exhaust cover.

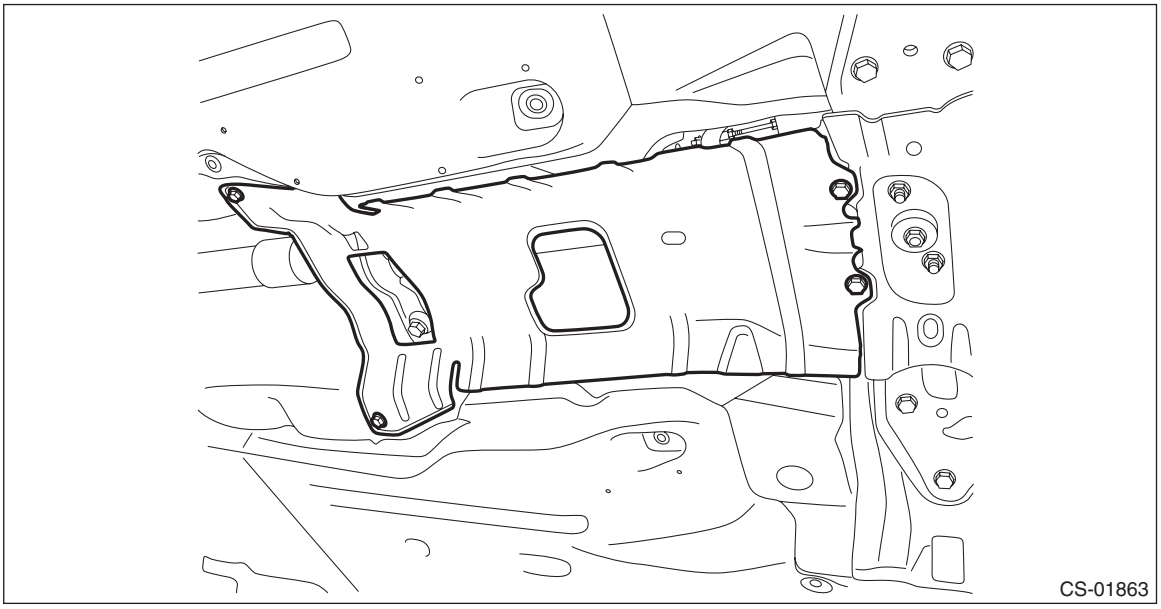

6) Loosen the nuts on both sides.

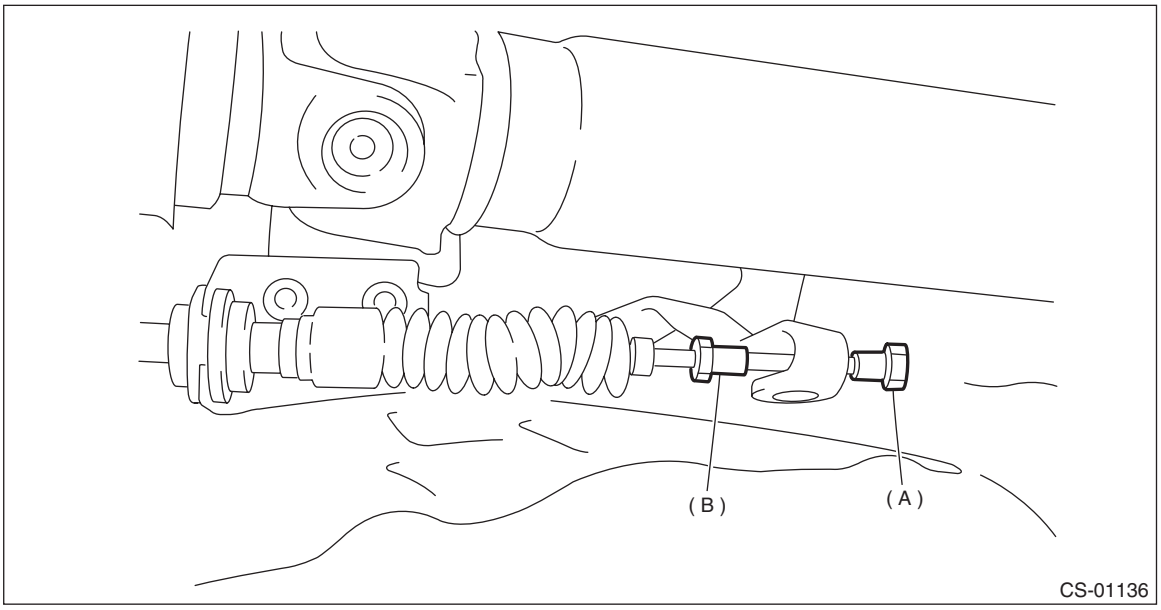

(A) Nut A
(B) Nut B

7) Turn the nut B until it lightly touches the connector.

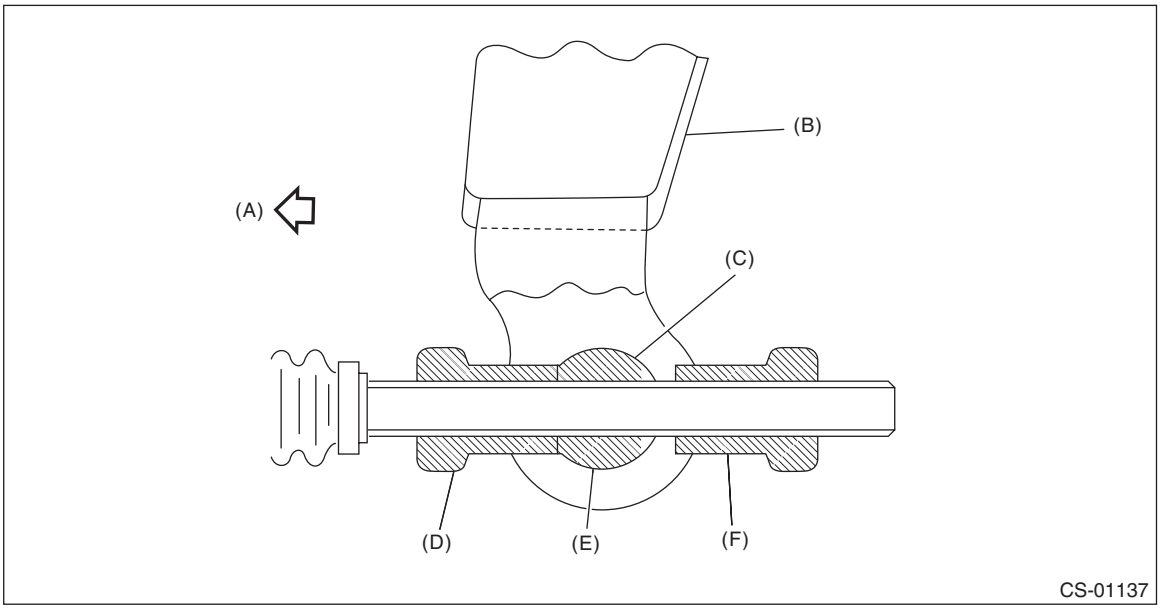

(A) Forward side
(B) Select lever
(C) Connector
(D) Nut B
(E) Contact point
(F) Nut A

8) Set a spanner wrench to the nut B so that it does not rotate, and then tighten the nut A.

Tightening torque:
7.5 N·m (0.8 kgf-m, 5.5 ft-lb)

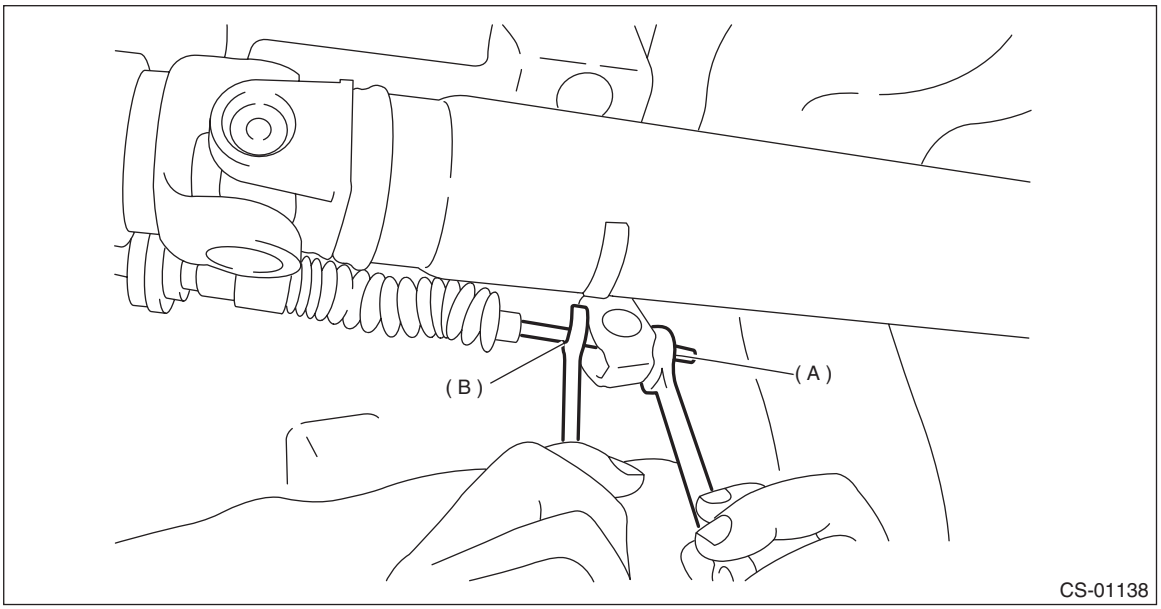

(A) Nut A
(B) Nut B

9) After the completion of adjustment, confirm that the select lever operates normally at all ranges.
10) Install the center exhaust cover.

Tightening torque:
18 N·m (1.8 kgf-m, 13.3 ft-lb)
11) Install the center exhaust pipe. (2.5 L model) <Ref. to EX(H4DO)-13, INSTALLATION, Center Exhaust Pipe.>
12) Install the front exhaust pipe and rear exhaust pipe. (3.6 L model) <Ref. to EX(H6DO)-8, INSTALLATION, Front Exhaust Pipe.> <Ref. to EX(H6DO)-13, INSTALLATION, Rear Exhaust Pipe.>

5. AT Shift Lock Solenoid and “P” Range Switch

A: REMOVAL

1. SOLENOID UNIT

1) Remove the select lever with the select cable connected. <Ref. to CS-26, REMOVAL, Select Lever.>
2) Remove the spacer and gasket. <Ref. to CS-26, REMOVAL, Select Lever.>
3) Remove the harness connector from the select lever COMPL.

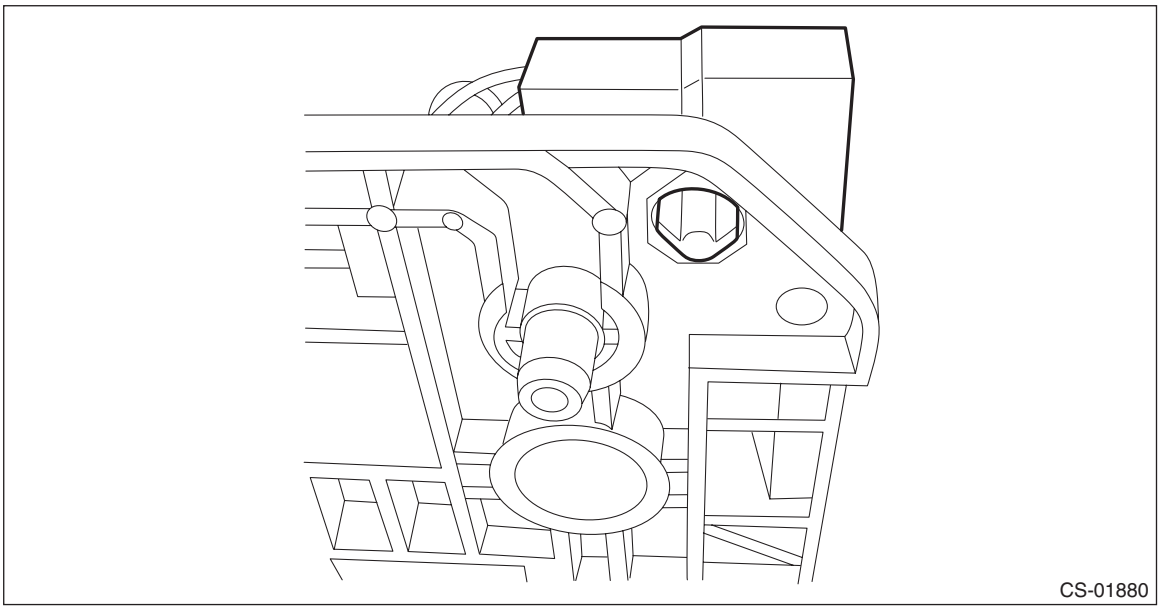
CS-01880

4) Remove the harness from the select lever COMPL.

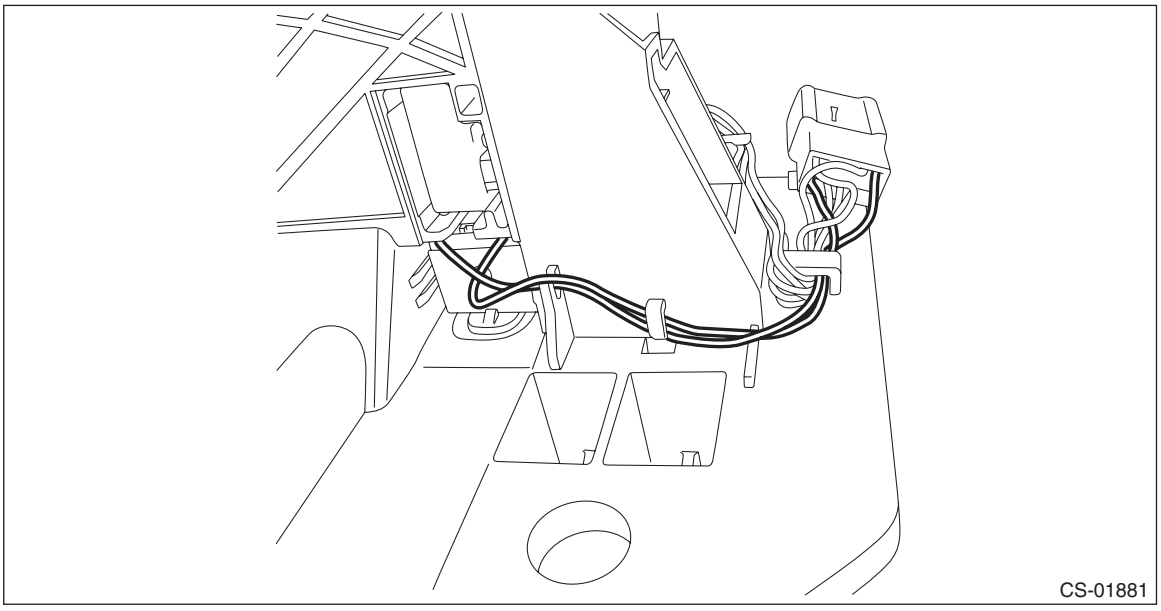
CS-01881

5) Raise the claw using a flat tip screwdriver with a thin tip, and remove the solenoid unit from the select lever COMPL.

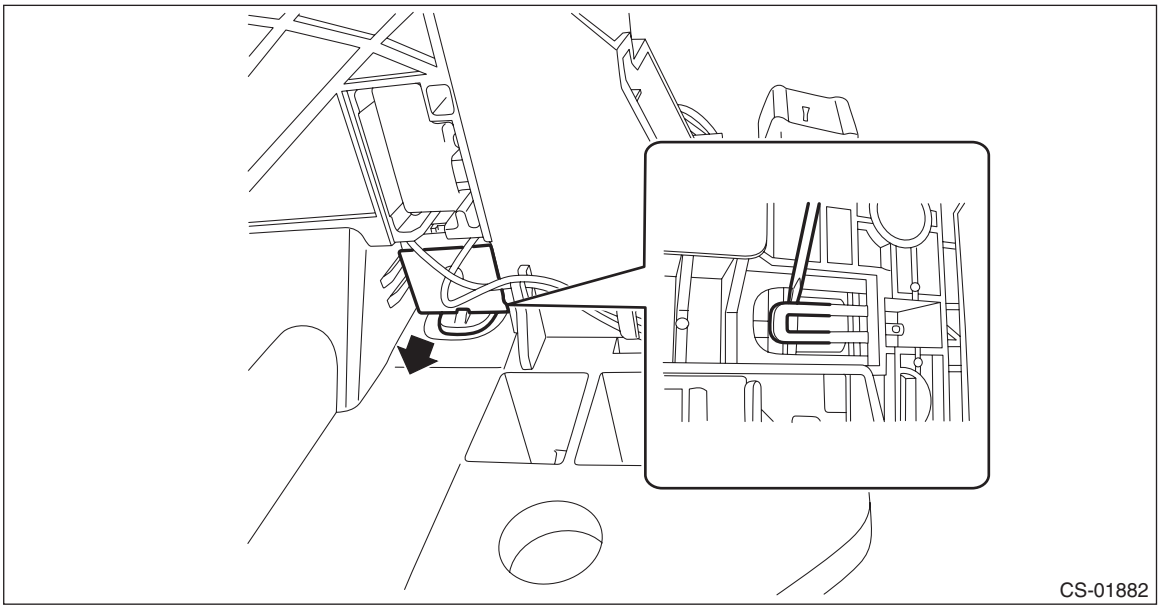

6) Remove the terminal of the solenoid unit using a flat tip precision screwdriver with a tip width of 1.3 mm (0.05 in) or less, KTC connector terminal tool ECC-1T or equivalent.

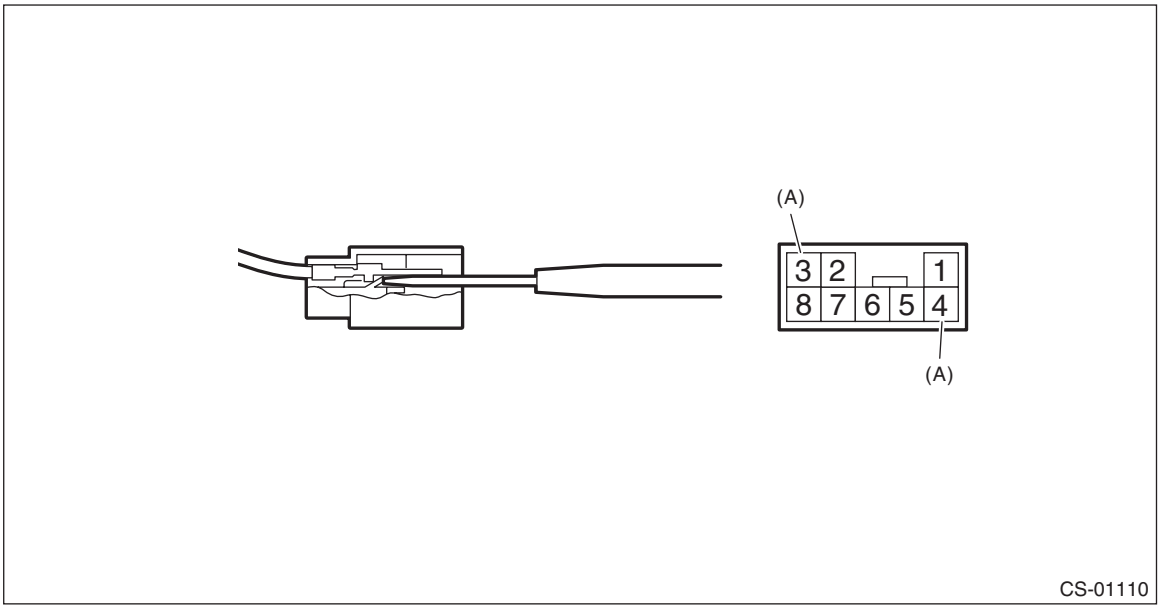

(A) Solenoid unit terminals

2. “P” RANGE SWITCH

The “P” range switch cannot be removed as a single unit. Therefore, replace the AT select lever COMPL. <Ref. to CS-26, REMOVAL, Select Lever.>

B: INSTALLATION

1) Clean all the parts before assembly.
2) Insert the solenoid unit terminals to the harness connector.

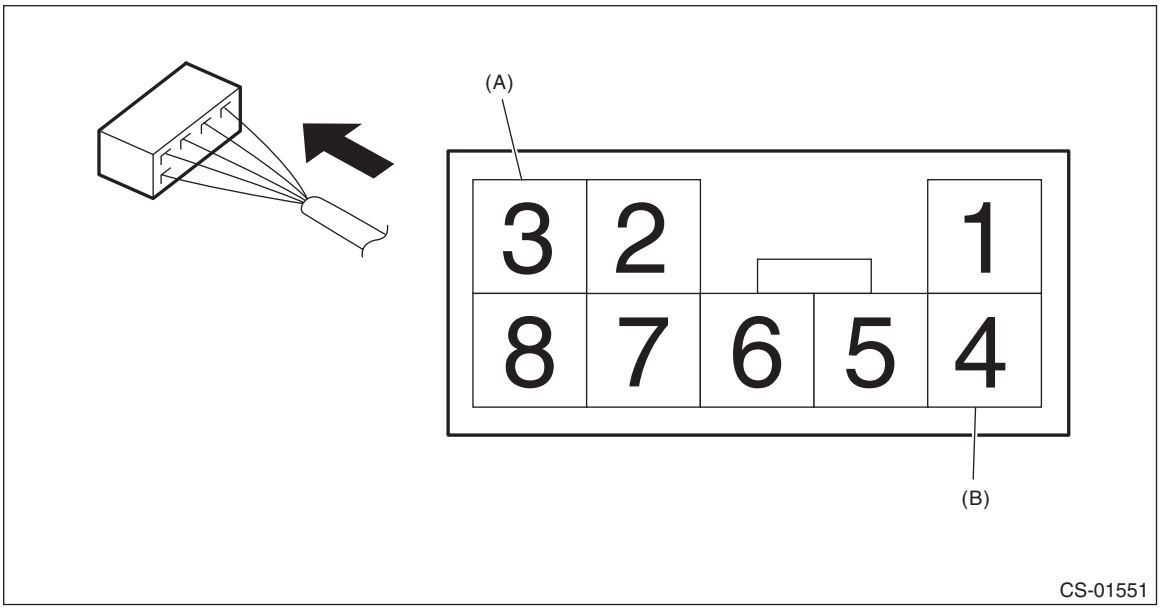

(A) Solenoid unit (color code: blue)
(B) Solenoid unit (color code: black)

3) Install the solenoid unit.

NOTE:
• Insert the solenoid unit while raising the shift lock plate upward by finger, and insert the tip of cushion solenoid into the hole of shift lock plate.
• Apply 0.2 g (0.007 oz) of Multemp D to the tip of cushion solenoid.

• After installation, make sure that the tip of cushion solenoid is securely inserted in the shift lock plate by visually checking from the side of plate COMPL.

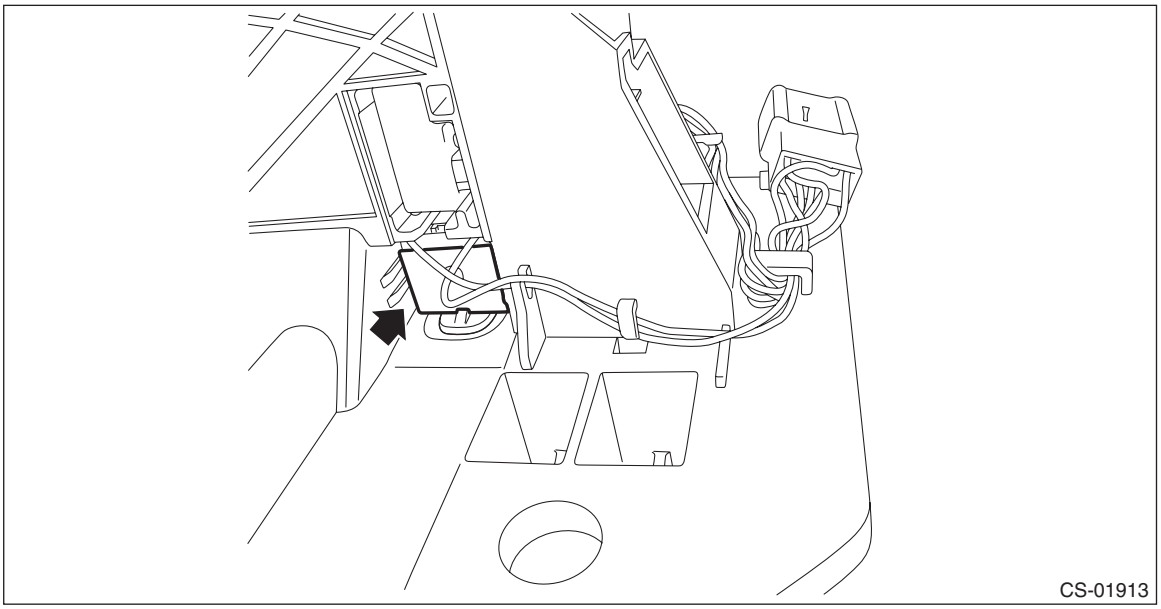
CS-01913

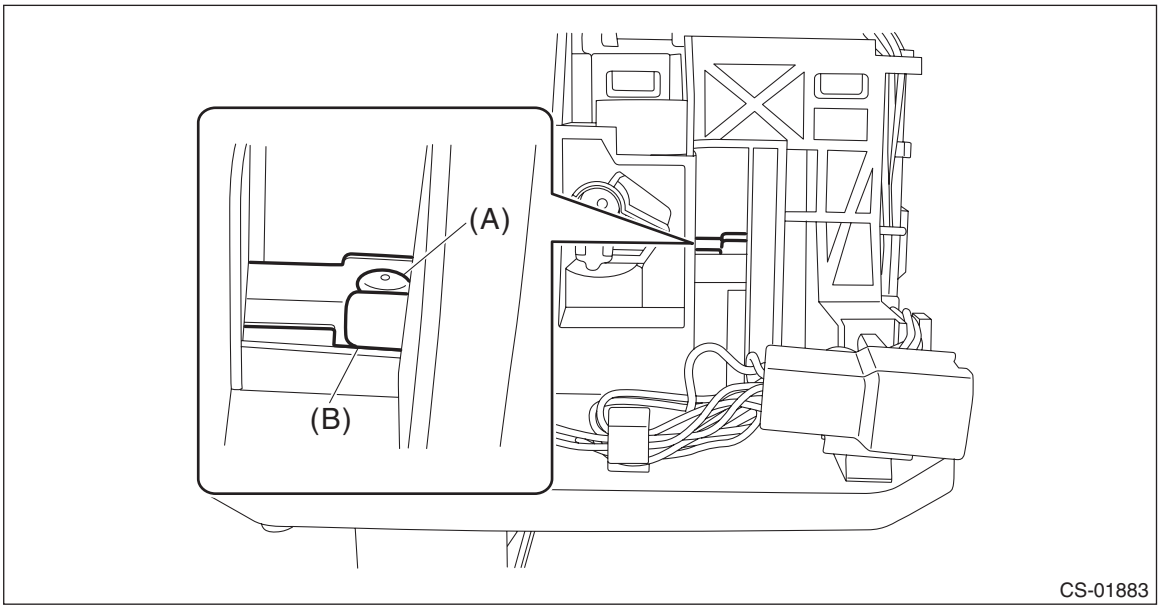

CS-01883

(A) Cushion solenoid
(B) Shift lock plate

4) Install the harness to the select cover COMPL.

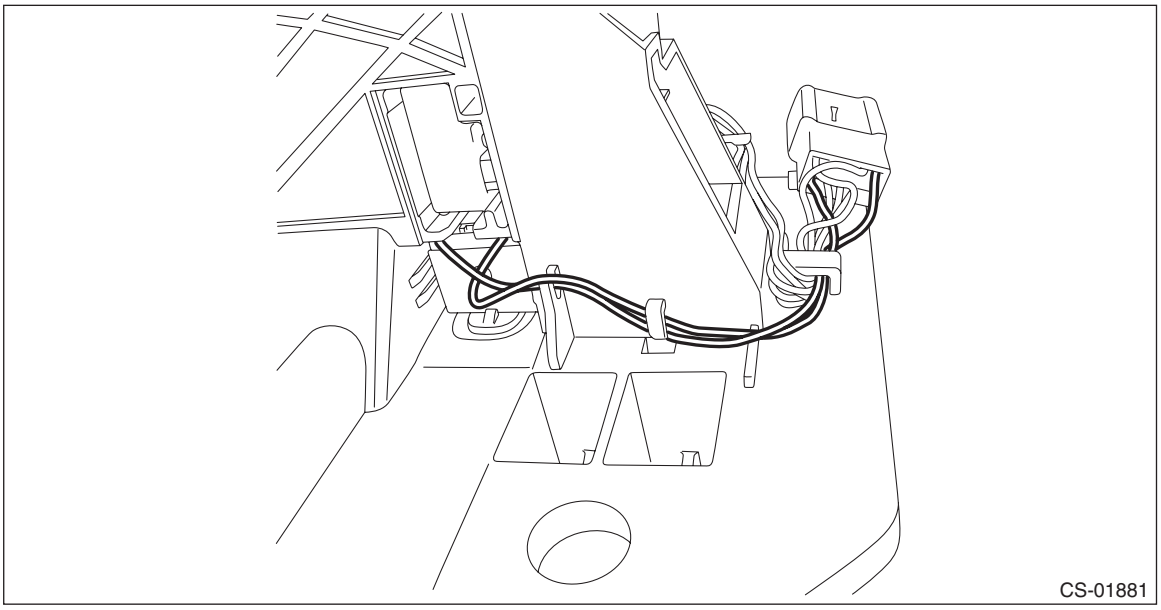

5) Attach the harness connector.

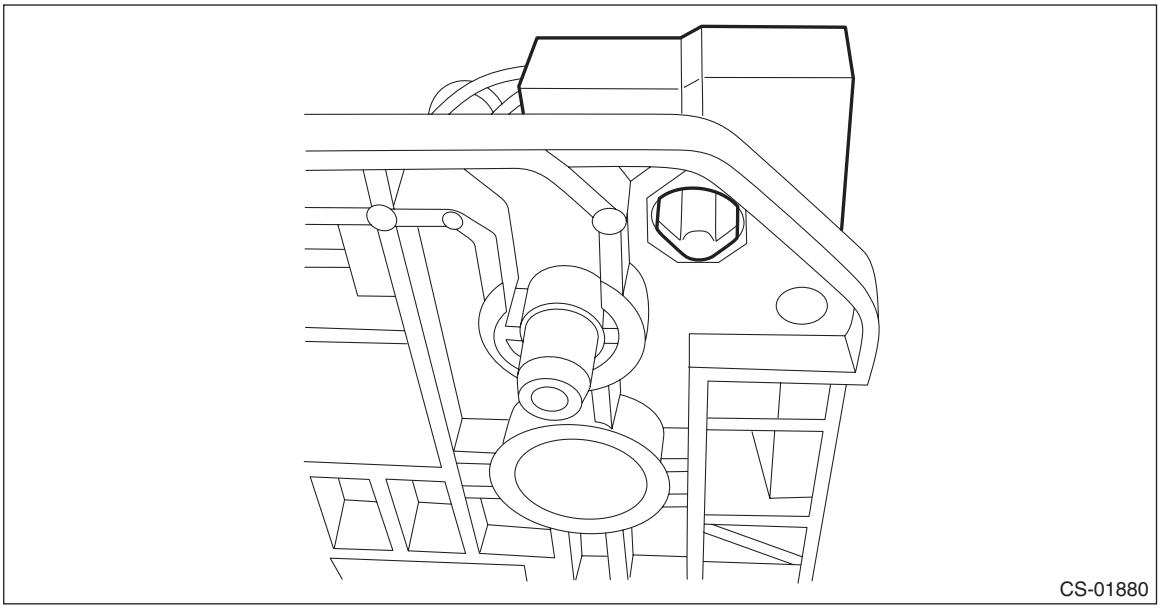

6) Install the spacer and the gasket. <Ref. to CS-33, INSTALLATION, Select Lever.>
7) Install the select lever. <Ref. to CS-33, INSTALLATION, Select Lever.>

C: INSPECTION

	Step	Check	Yes	No
1	**CHECK SOLENOID UNIT.** Measure the resistance of solenoid unit connector terminals. ***Terminals*** ***No. 4 — No. 3:***	Is the resistance 27.6 — 30.5 Ω?	Go to step **2**.	Replace the solenoid unit. <Ref. to CS-49, AT Shift Lock Solenoid and “P” Range Switch.>
2	**CHECK SOLENOID UNIT.** Connect the battery to the solenoid unit connector terminals, and then operate the solenoid. ***Terminals*** ***No. 3 (+) — No. 4 (–):***	Does the solenoid unit operate normally?	Go to step **3**.	Replace the solenoid unit. <Ref. to CS-49, AT Shift Lock Solenoid and “P” Range Switch.>
3	**CHECK “P” RANGE SWITCH.** 1) Shift the select lever to “P” range. 2) Measure the resistance between “P” range switch connector terminals. ***Terminals*** ***No. 1 — No. 2:***	Is the resistance less than 1 Ω?	Go to step **4**.	Replace the AT select lever COMPL. <Ref. to CS-26, REMOVAL, Select Lever.>
4	**CHECK “P” RANGE SWITCH.** 1) Set the select lever to other than “P” range. 2) Measure the resistance between “P” range switch connector terminals. ***Terminals*** ***No. 1 — No. 2:***	Is the resistance 1 MΩ or more?	Normal	Replace the AT select lever COMPL. <Ref. to CS-26, REMOVAL, Select Lever.>

6. Body Integrated Unit

A: NOTE

Refer to “Body Integrated Unit” for removal and installation procedure. <Ref. to SL-83, Body Integrated Unit.>

7. MT Gear Shift Lever

A: REMOVAL

1) Disconnect the ground terminal from battery sensor. <Ref. to RC-4, BATTERY, NOTE, Repair Contents.>
2) Lift up the vehicle.
3) Remove the center exhaust pipe. <Ref. to EX(H4DO)-12, REMOVAL, Center Exhaust Pipe.>
4) Remove the center exhaust cover.

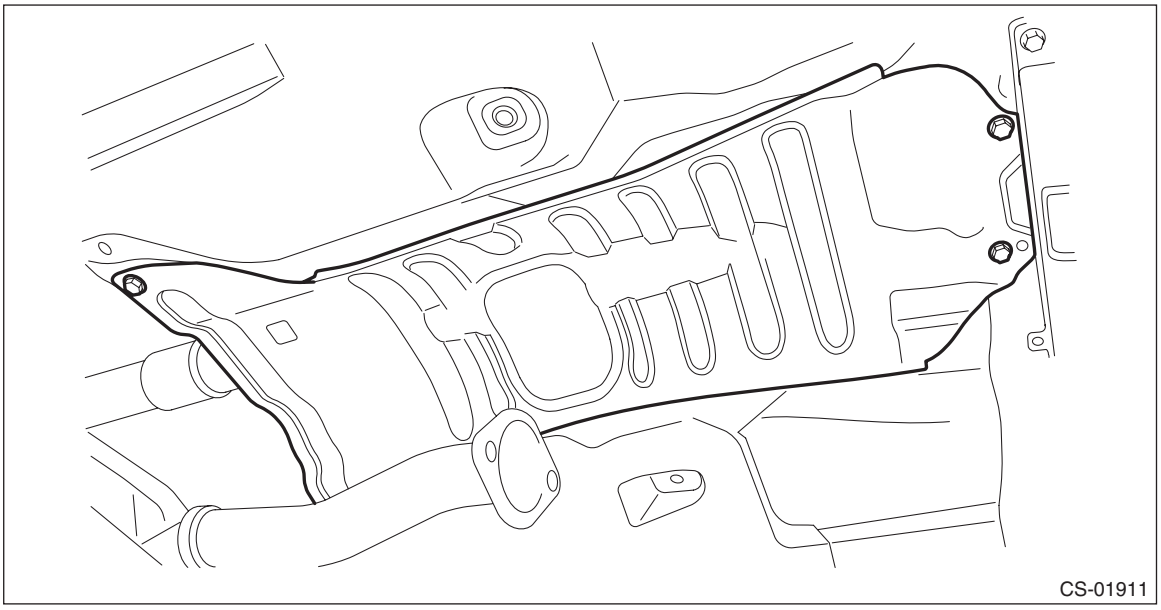
CS-01911

5) Remove the plate cable assembly.

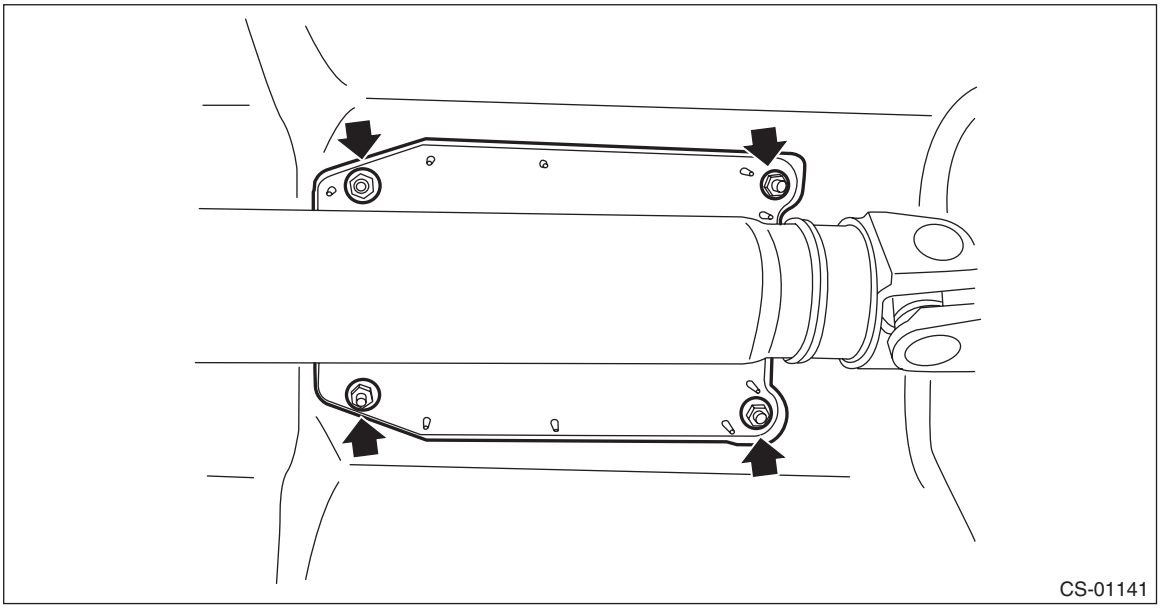
CS-01141

6) Remove the spring at the MT gear shift cable by expanding it and pulling down, and remove the MT gear shift cable from the gear shift lever assembly.

CAUTION:
Be careful not to deform the cable inner.

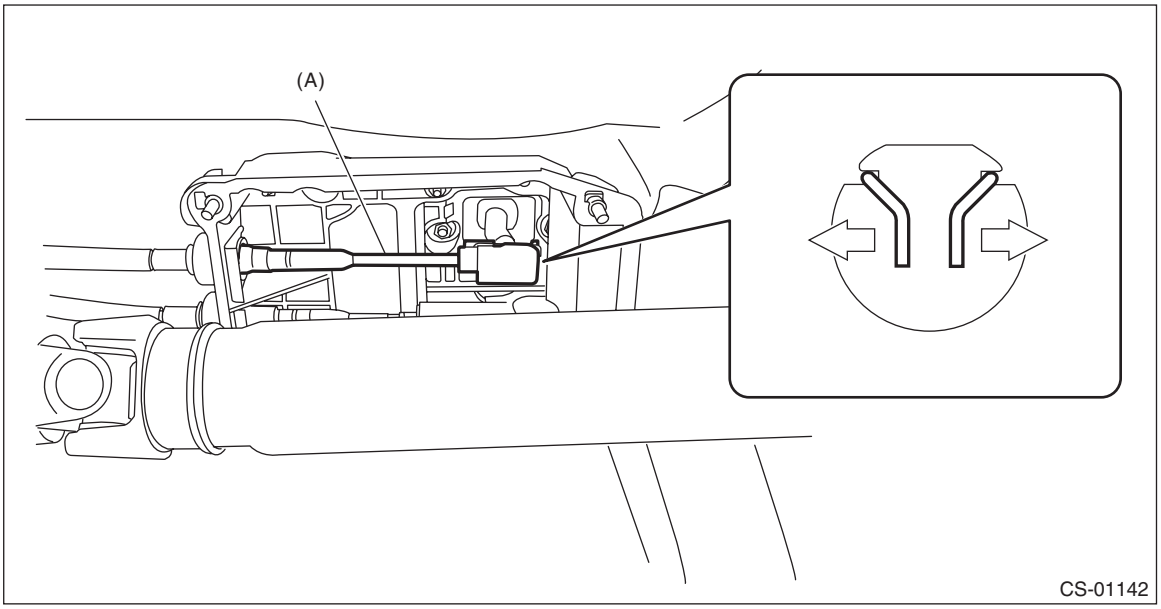

(A) MT gear shift cable

7) Remove the MT gear select cable from the gear shift lever assembly by pulling it in the direction of arrow in the figure.

CAUTION:
Be careful not to deform the cable inner.

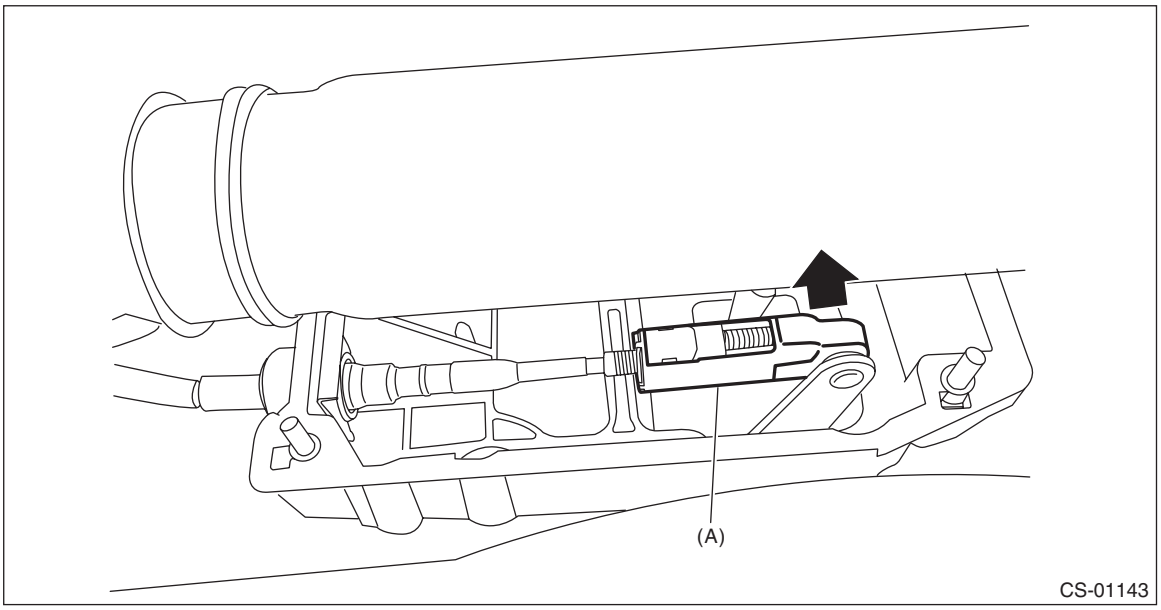

(A) MT gear select cable

8) Remove the cover cable assembly.

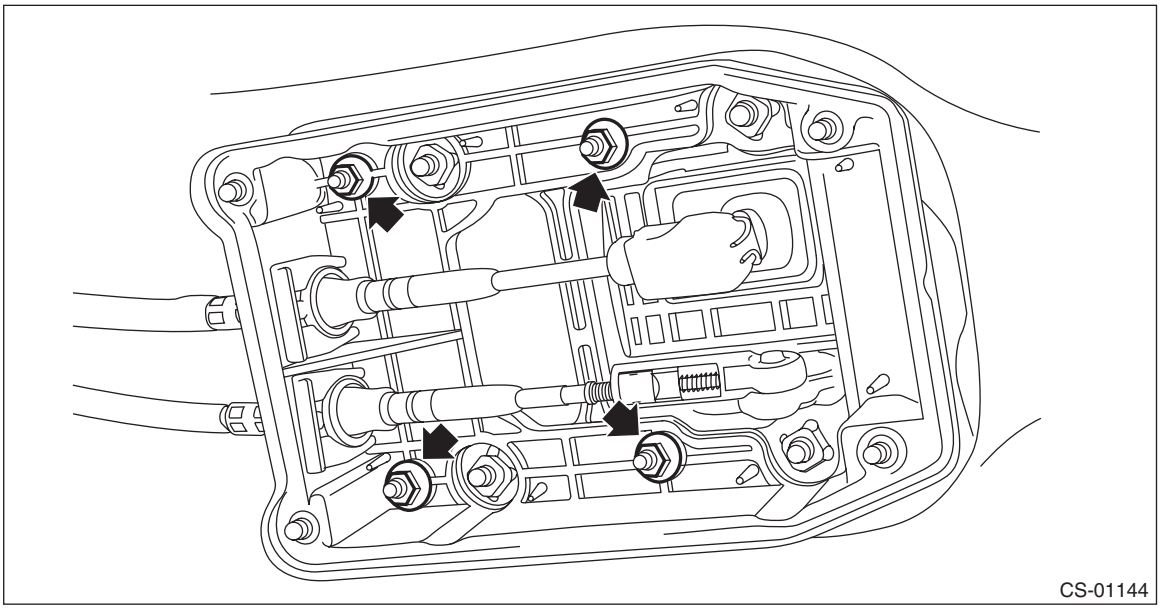

9) Lower the vehicle.
10) Remove the shift knob.
11) Remove the console front cover assembly and console box. <Ref. to EI-80, REMOVAL, Console Box.>
12) Remove the console front side cover assemblies RH and LH. <Ref. to EI-80, REMOVAL, Console Box.>
13) Remove the bolts, and then remove the gear shift lever assembly from the vehicle.

NOTE:
The MT gear shift lever cannot be disassembled.

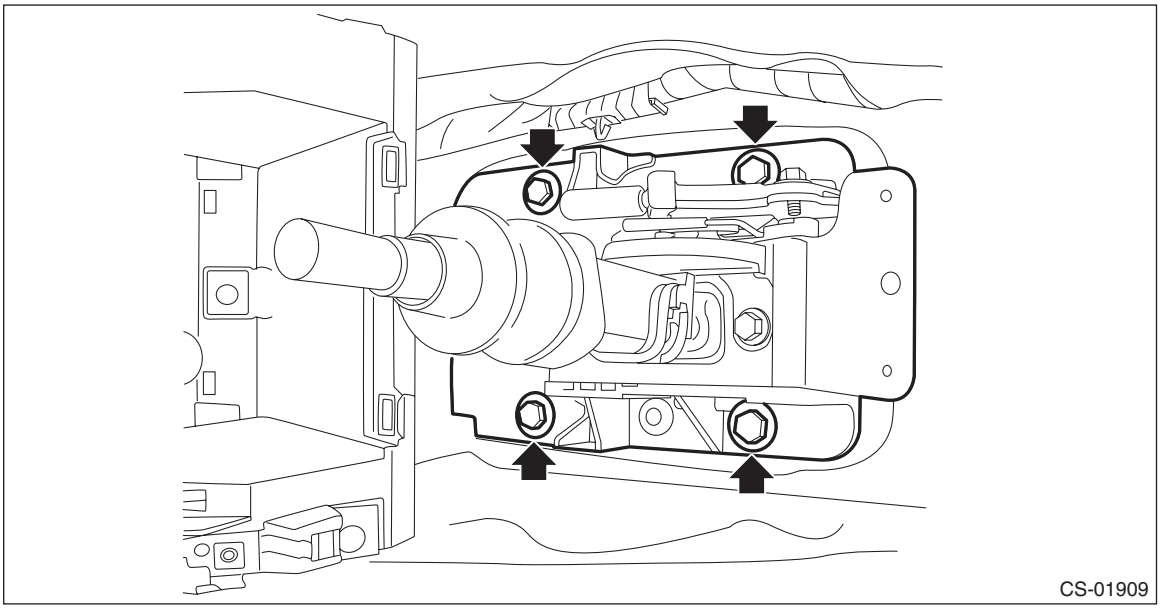

B: INSTALLATION

1) Install the gear shift lever assembly.

Tightening torque:
18 N·m (1.8 kgf-m, 13.3 ft-lb)

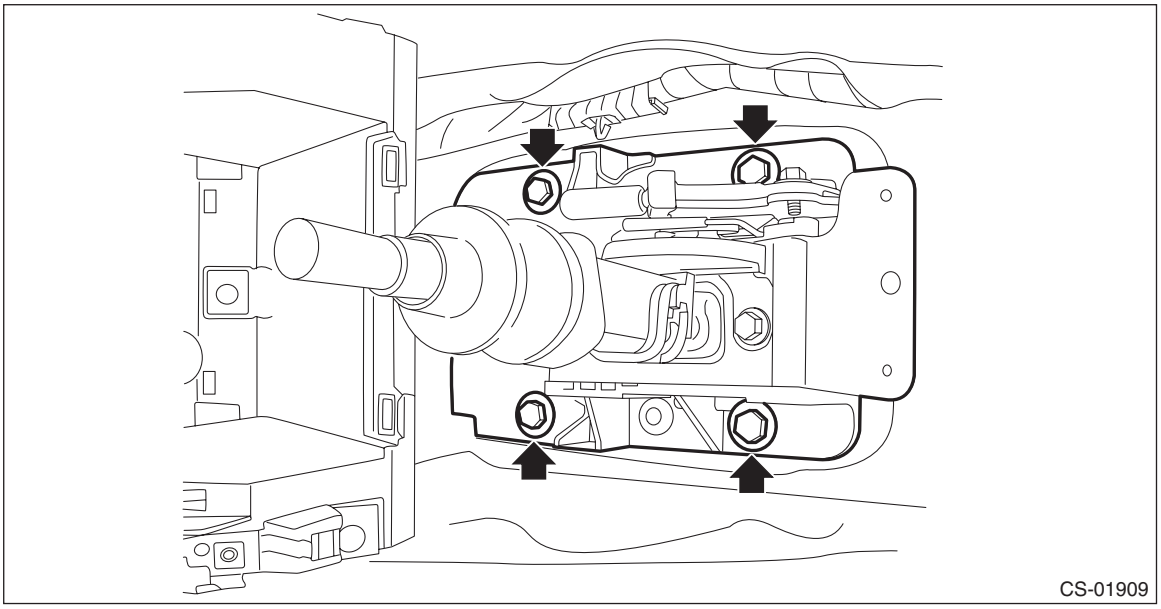

2) Lift up the vehicle.
3) Install the cover cable assembly.

Tightening torque:
7.5 N·m (0.8 kgf-m, 5.5 ft-lb)
4) Connect the MT gear shift cable and MT gear select cable.

CAUTION:
- **Be careful not to deform the cable inner.**
- **Do not twist the cable inner excessively.**

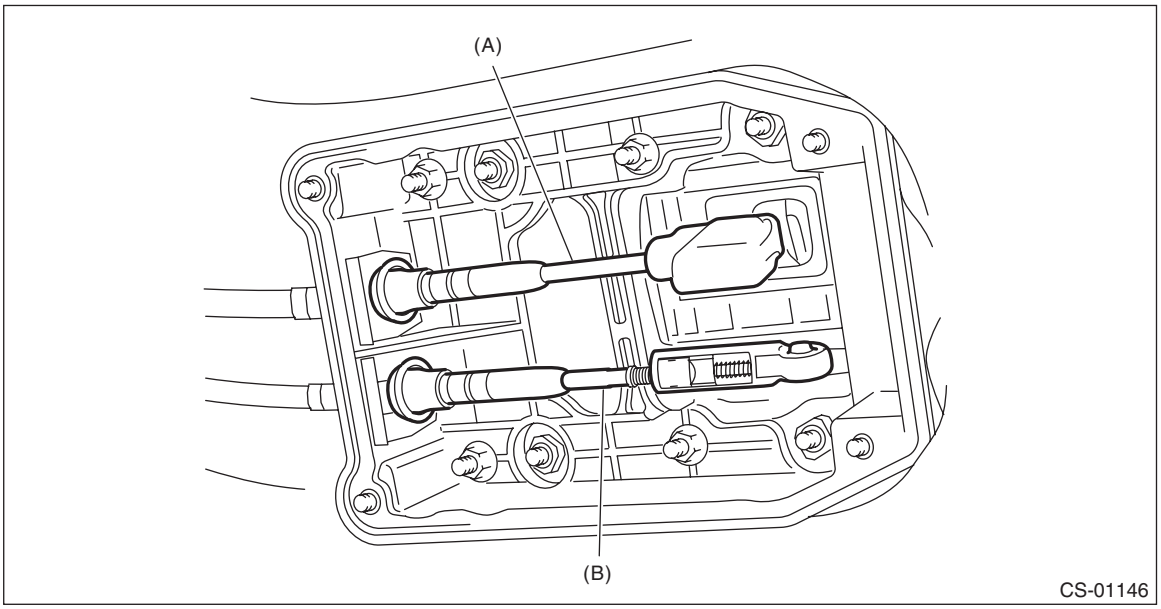

(A) MT gear shift cable
(B) MT gear select cable

5) Install the plate cable assembly.

Tightening torque:
7.5 N·m (0.8 kgf-m, 5.5 ft-lb)
6) Install the center exhaust cover.

Tightening torque:
18 N·m (1.8 kgf-m, 13.3 ft-lb)
7) Install the center exhaust pipe. <Ref. to EX(H4DO)-13, INSTALLATION, Center Exhaust Pipe.>
8) Lower the vehicle.
9) Install the console front side cover assemblies RH and LH. <Ref. to EI-82, INSTALLATION, Console Box.>
10) Install the console front cover assembly and the console box. <Ref. to EI-82, INSTALLATION, Console Box.>
11) Install the gear shift knob by rotating it clockwise from 14 to 18 turns so that the distance “A” from the gear shift knob end surface to the slider end surface becomes the specified value or more.

CAUTION:
Do not turn the gear shift knob excessively to prevent it from being damaged.

Specification:
11.5 mm (0.435 in)

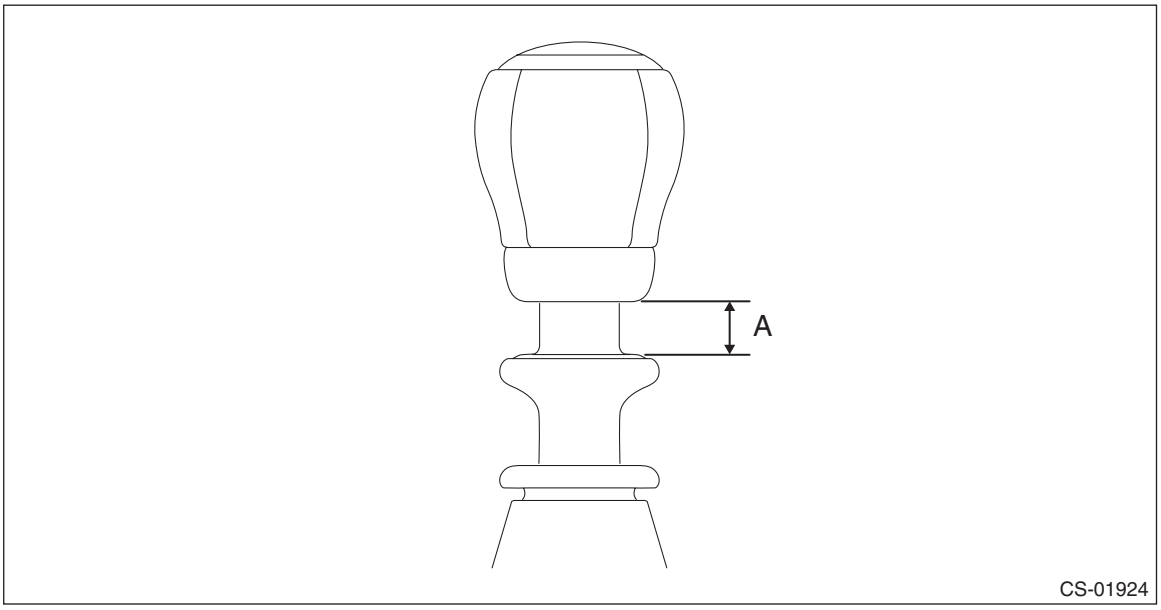

12) Connect the ground terminal to battery sensor. <Ref. to RC-4, BATTERY, NOTE, Repair Contents.>
13) Make sure the gears can be shifted accurately into each gear. Adjust the MT gear select cable, if the gears cannot be shifted correctly. <Ref. to CS-88, ADJUSTMENT, MT Gear Select Cable.>

C: INSPECTION

1) Check the parts for deformation, damage and wear. Repair or replace if necessary. Compare the removed parts with new parts to confirm if there are damages or not.
2) Check that selecting to the reverse direction is disable unless the slider is pulled up.
3) Check that selecting to the reverse direction is possible when the slider is pulled up to the full.
4) Check that the shift lever moves to initial position, when the slider backs to the neutral position from step 3).

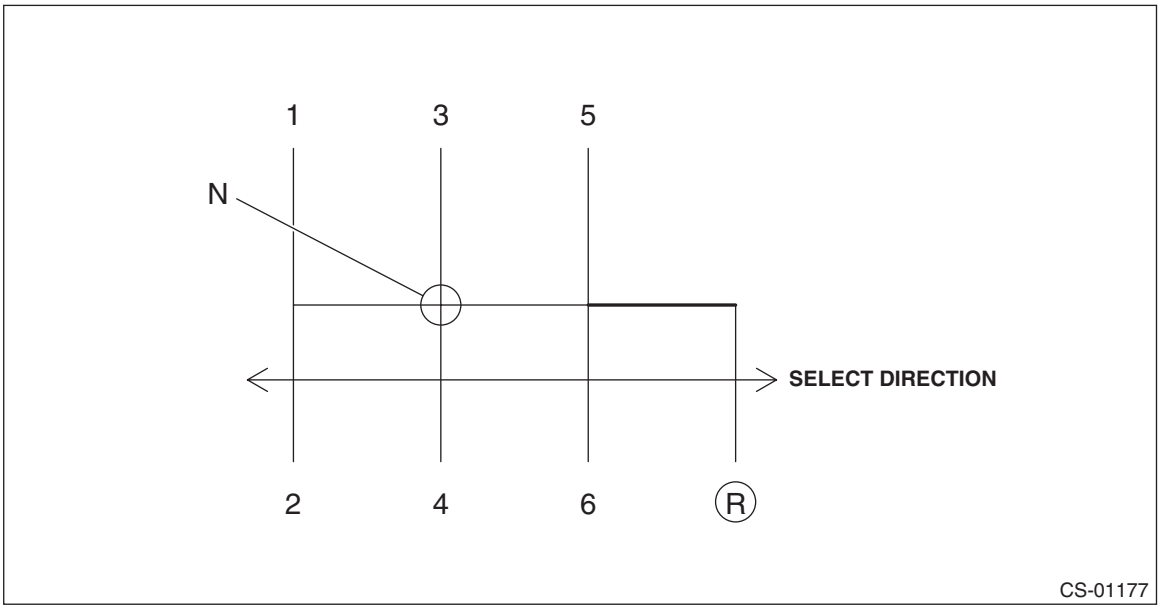

8. MT Gear Shift Cable

A: REMOVAL

1) Disconnect the ground terminal from battery sensor. <Ref. to RC-4, BATTERY, NOTE, Repair Contents.>
2) Lift up the vehicle.
3) Remove the center exhaust pipe. <Ref. to EX(H4DO)-12, REMOVAL, Center Exhaust Pipe.>
4) Remove the center exhaust cover.

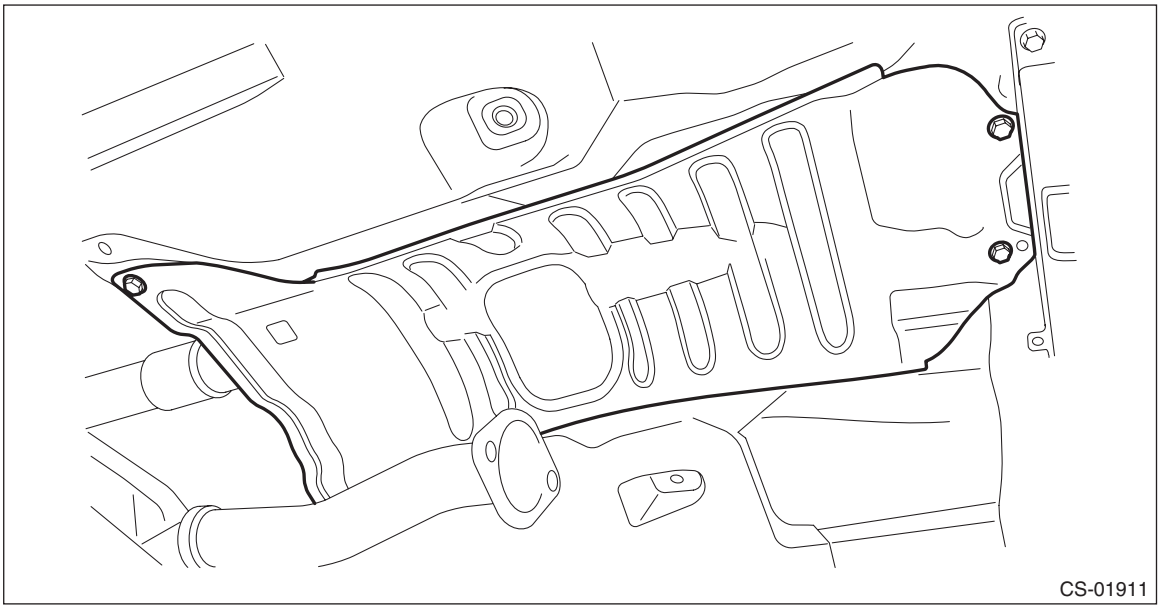
CS-01911

5) Remove the clamp cable and take out the MT gear shift cable from the clamp.

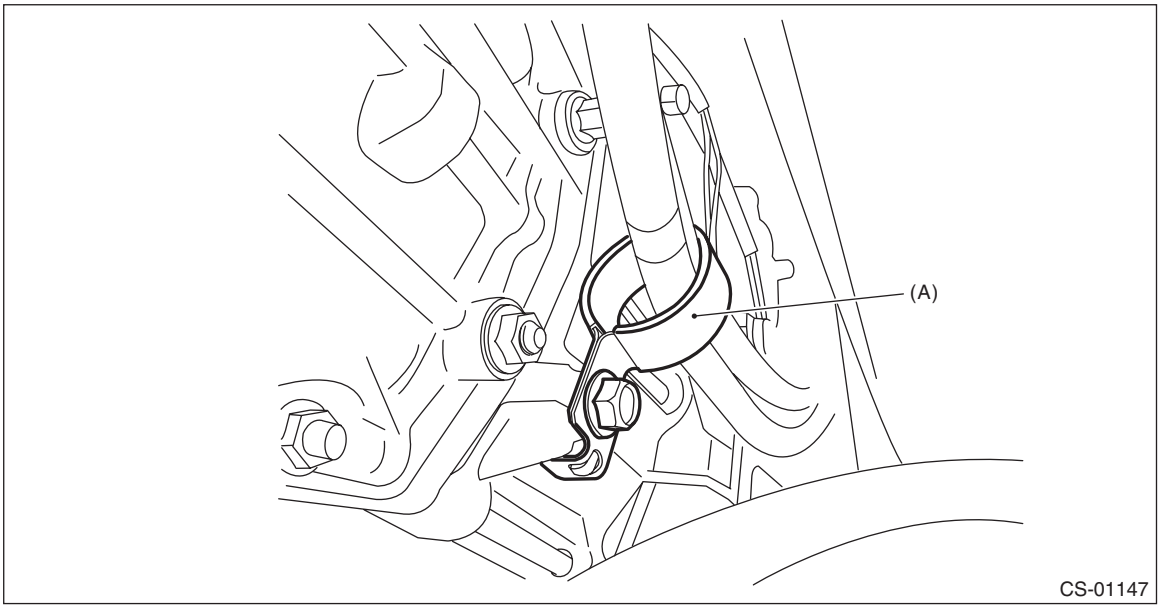

CS-01147

(A) Clamp cable

6) Remove the dust cover. (OUTBACK model)

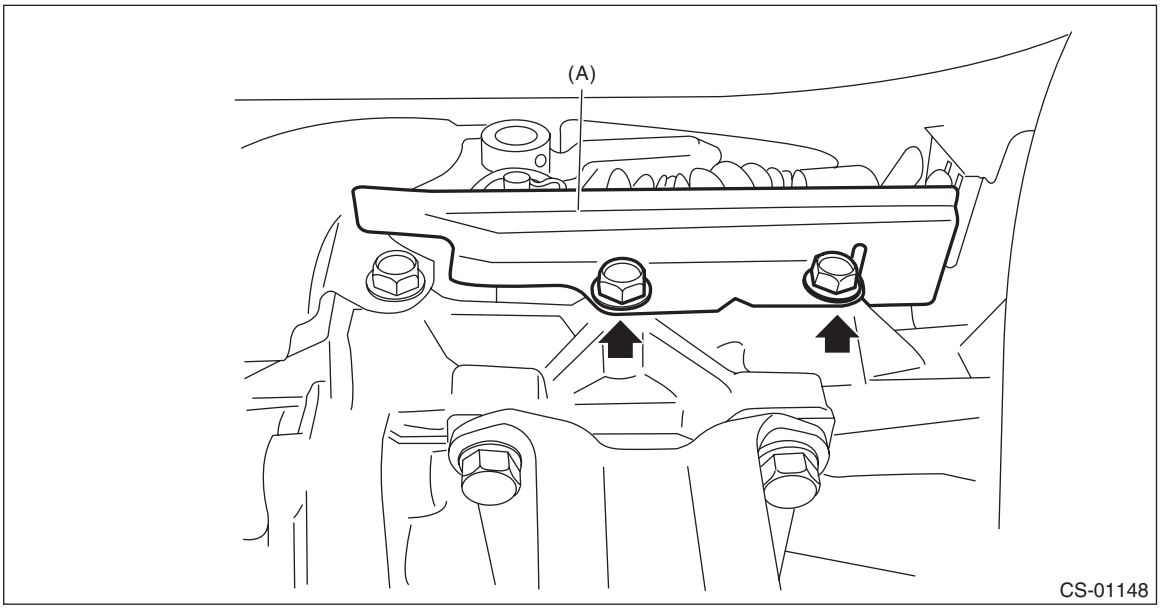

(A) Dust cover

7) Apply a mark on the top end of the MT gear shift cable.
8) Remove the snap pin.

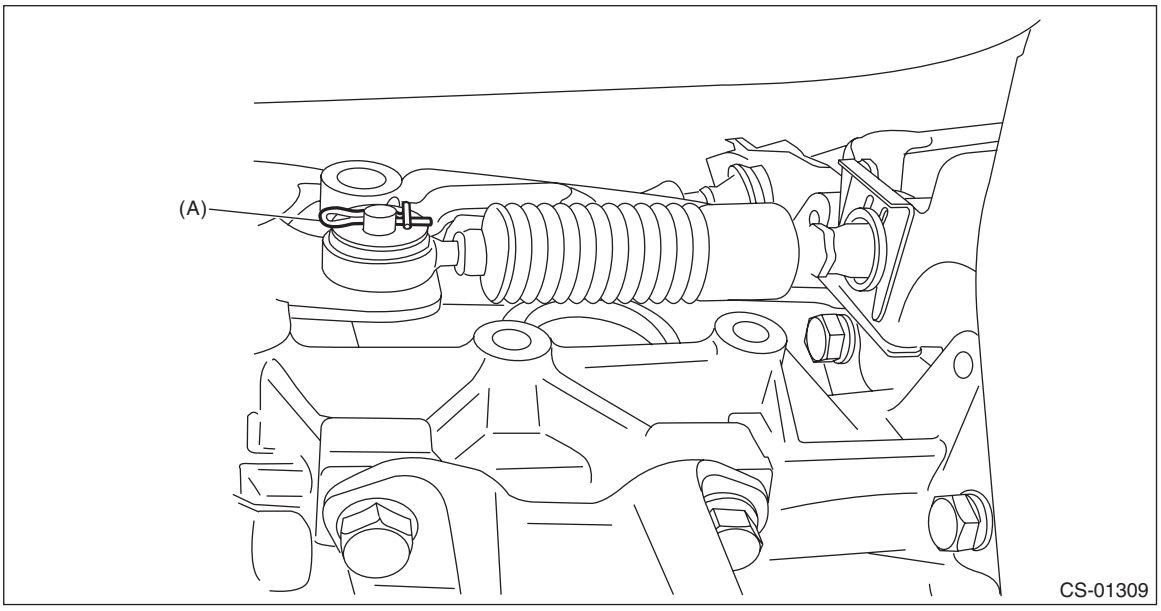

(A) Snap pin

9) Remove the shift bracket together with the MT gear shift cable.

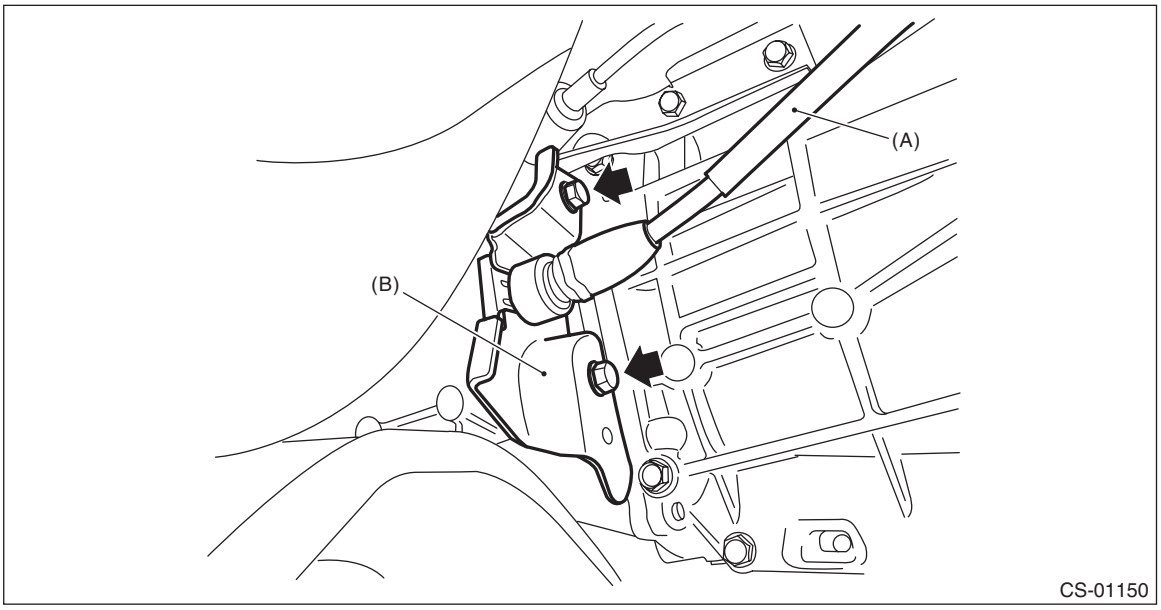

(A) MT gear shift cable
(B) Shift bracket

10) Remove the plate cable assembly.

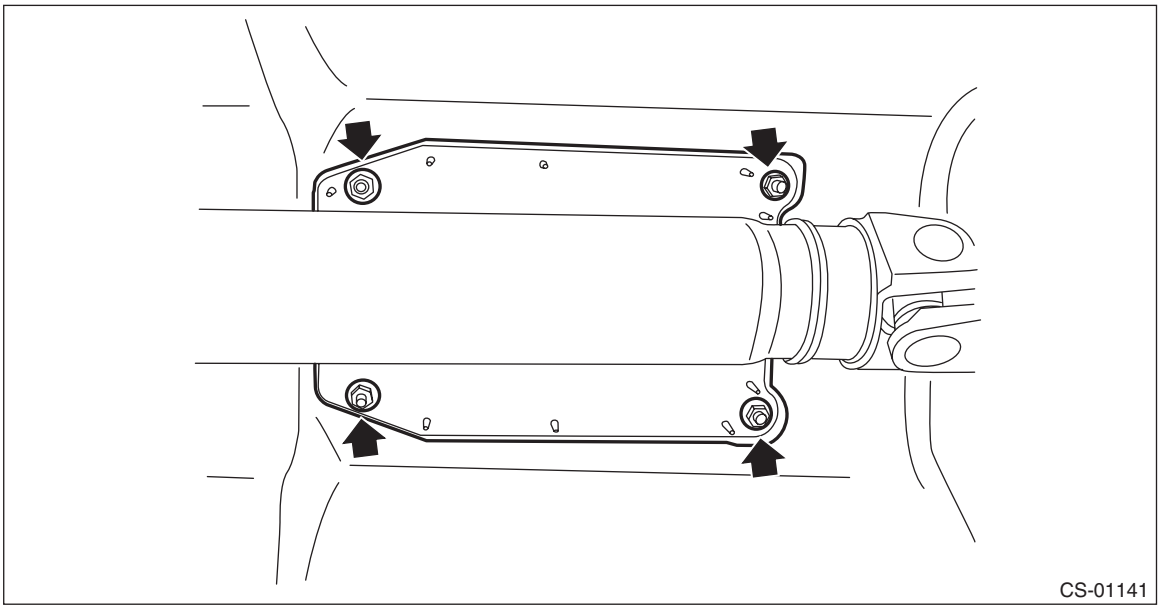

11) Remove the spring at the MT gear shift cable by expanding it and pulling down, and remove the MT gear shift cable from the gear shift lever assembly.

CAUTION:
Be careful not to deform the cable inner.

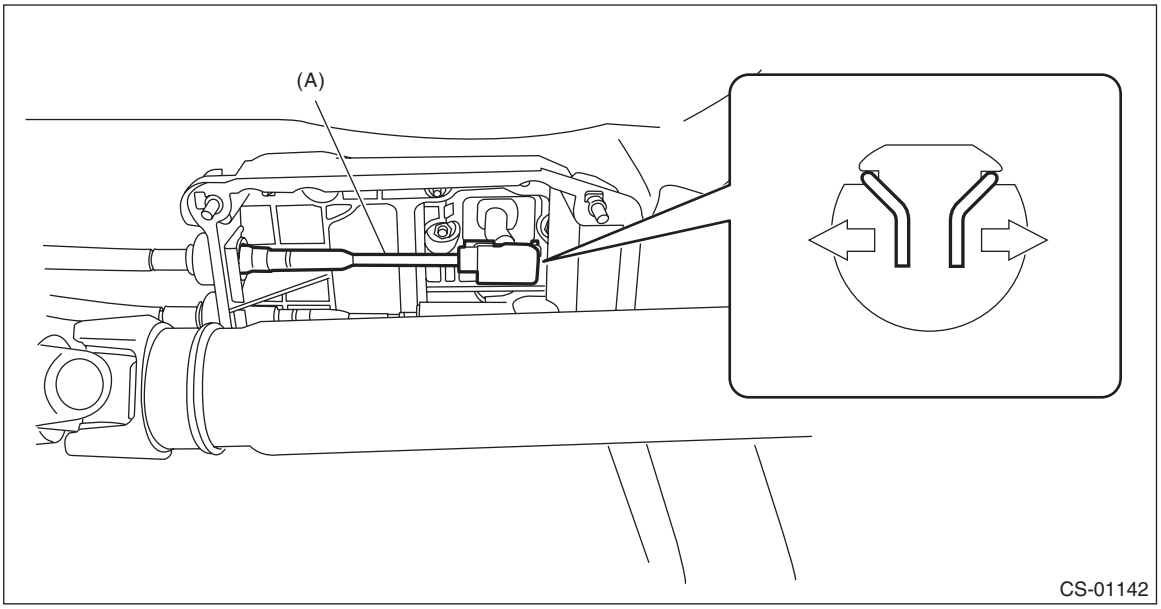

(A) MT gear shift cable

12) Remove the clamp which holds the MT gear shift cable.

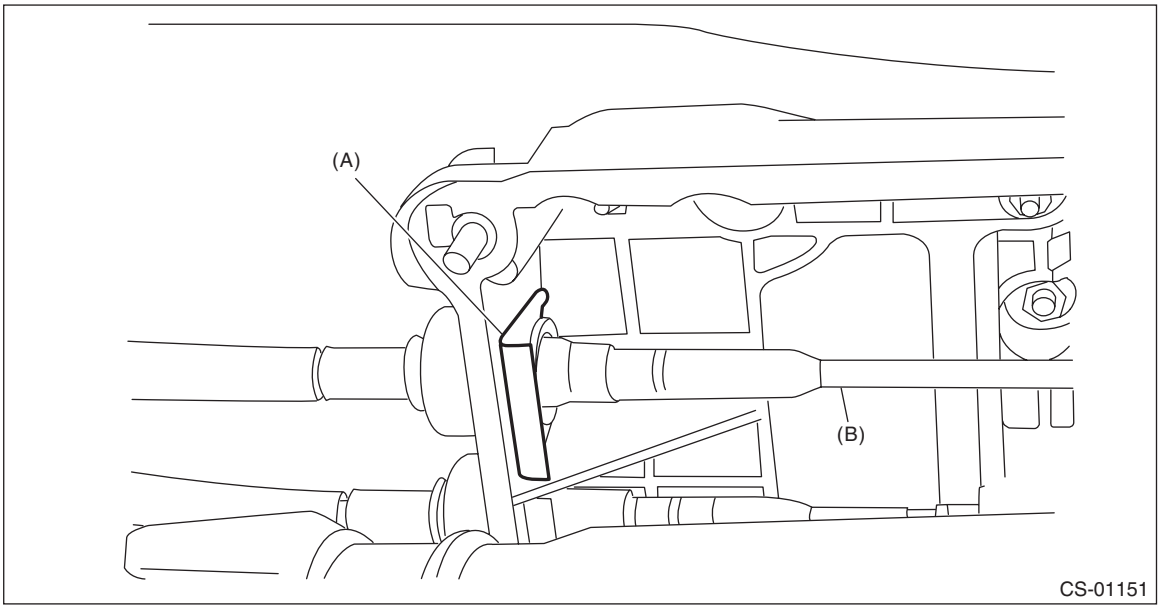

(A) Clamp
(B) MT gear shift cable

13) Pull out the MT gear shift cable.

B: INSTALLATION

1) When replacing the new MT gear shift cable, secure it to shift bracket with the clamps, be careful not to mistake the installing direction.

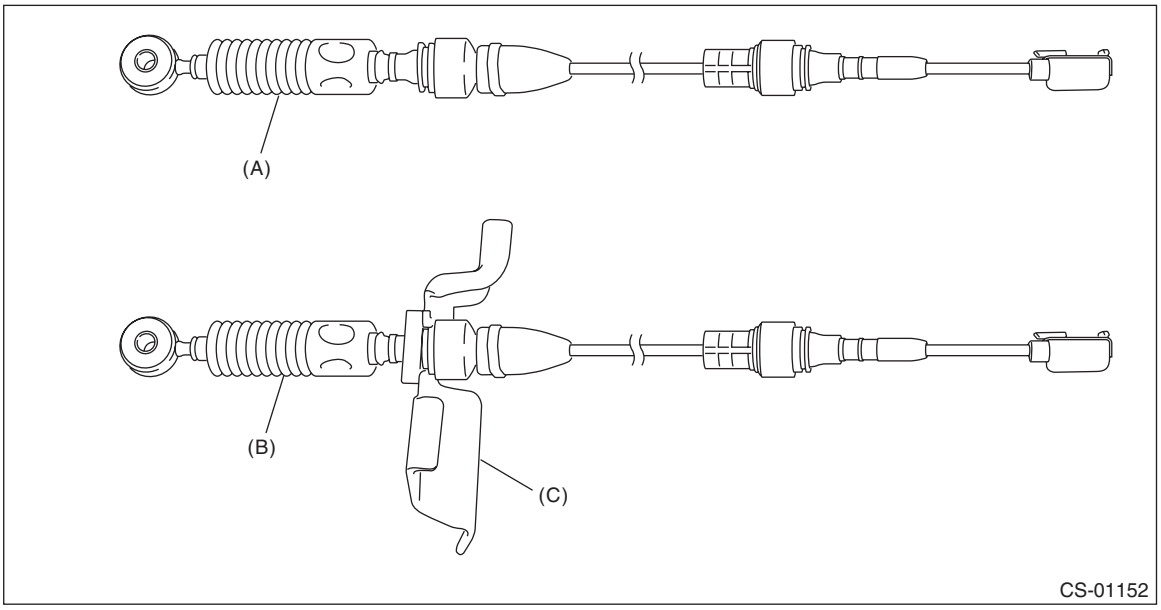

(A) Old MT gear shift cable
(B) New MT gear shift cable
(C) Shift bracket

2) Install the shift bracket together with the MT gear shift cable.

CAUTION:
- **Do not bend MT gear shift cable at a sharp angle.**
- **Do not twist the cable inner excessively.**

NOTE:
When installing the MT gear shift cable, make sure that the mark or blue mark on the cable faces up.

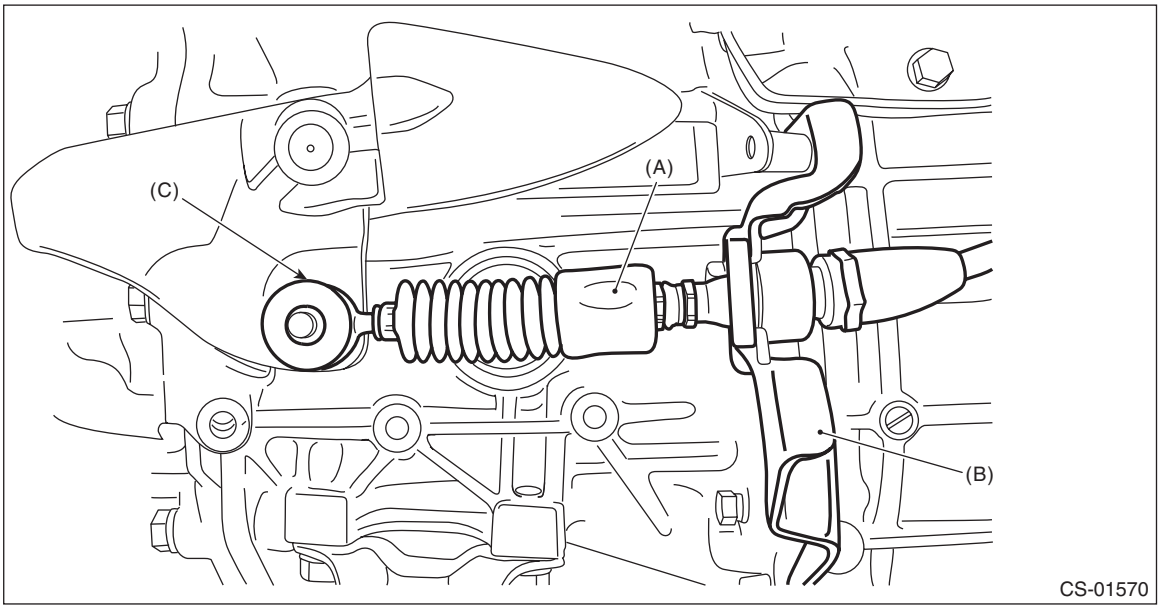

(A) MT gear shift cable
(B) Shift bracket
(C) Mark

3) Tighten the shift bracket with specified torque.

Tightening torque:
18 N·m (1.8 kgf-m, 13.3 ft-lb)

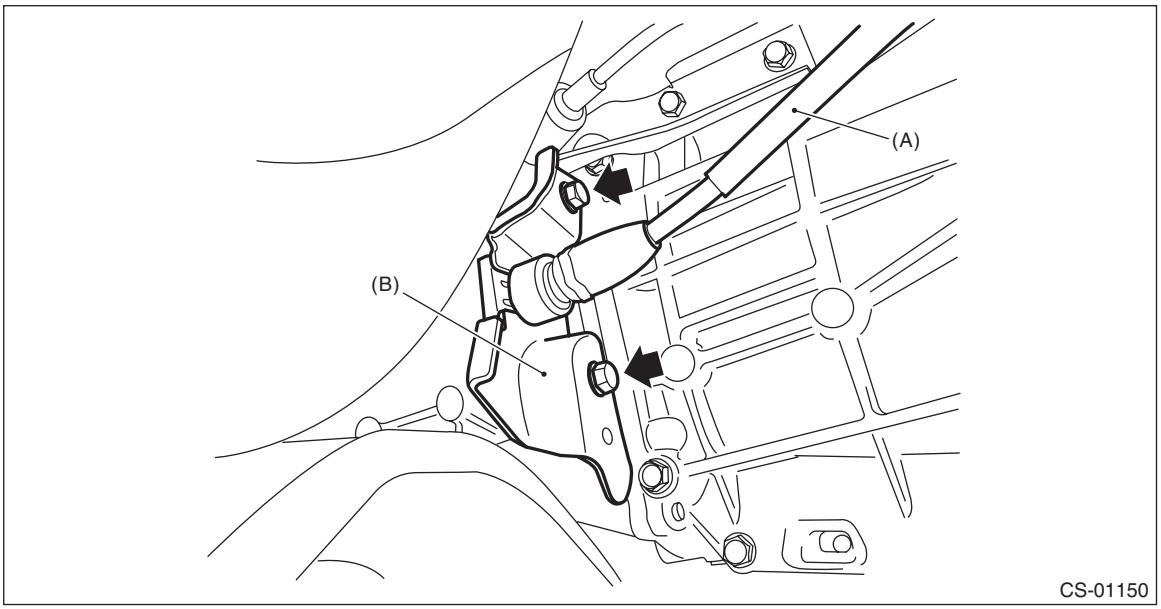

(A) MT gear shift cable
(B) Shift bracket

4) Install the snap pin.

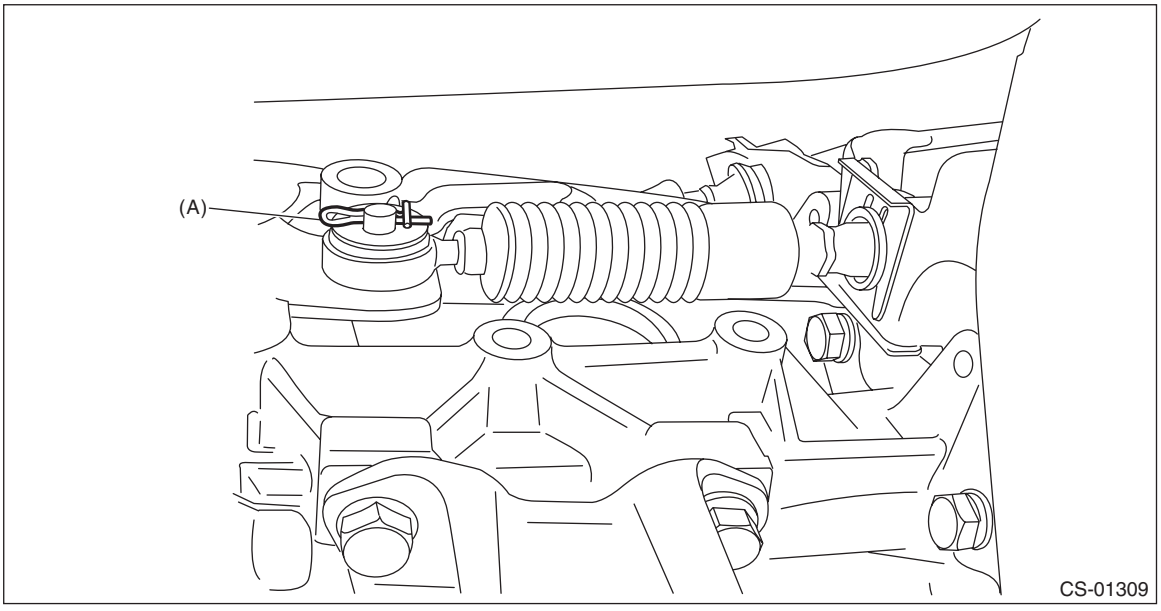

(A) Snap pin

5) Install the dust cover. (OUTBACK model)

Tightening torque:
15 N·m (1.5 kgf-m, 11.1 ft-lb)

6) Insert the MT gear shift cable into the cover cable assembly, and secure it with the clamp.

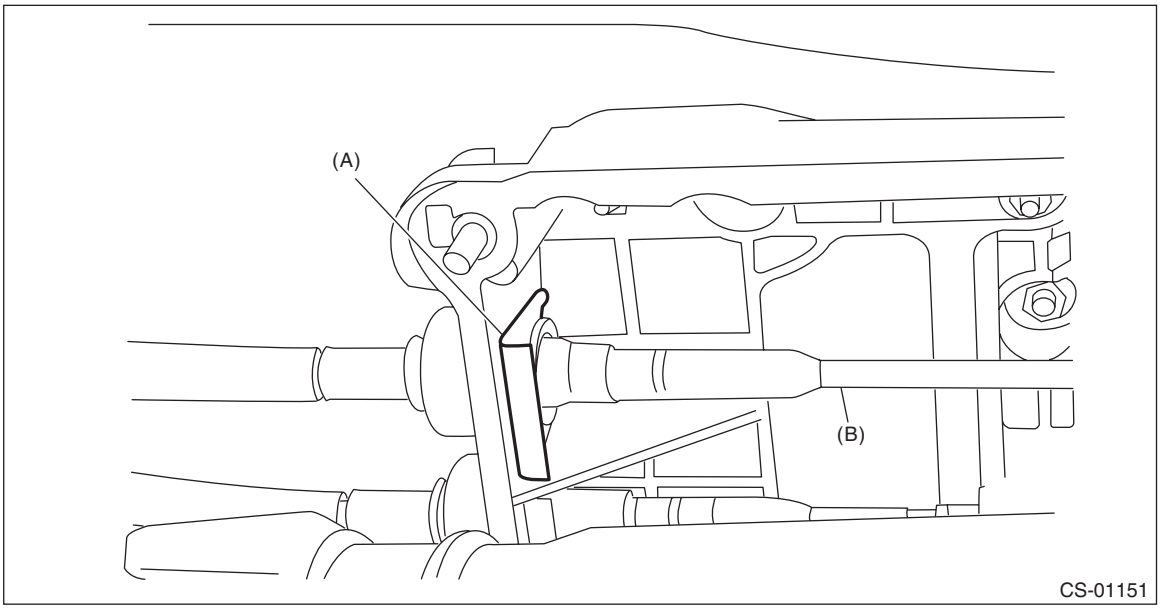

(A) Clamp
(B) MT gear shift cable

7) Connect the MT gear shift cable.
8) Install the plate cable assembly.

Tightening torque:
7.5 N·m (0.8 kgf-m, 5.5 ft-lb)

9) Insert the MT gear shift cable into clamp cable, and install to the transmission.

Tightening torque:
18 N·m (1.8 kgf-m, 13.3 ft-lb)

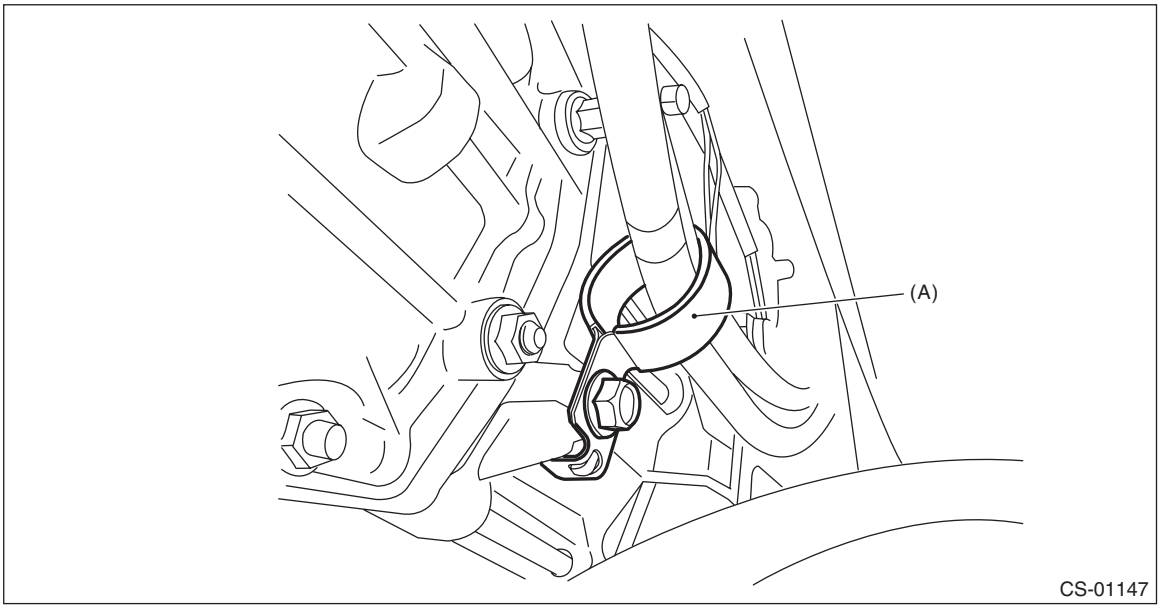

(A) Clamp cable

10) Install the center exhaust cover.

Tightening torque:
18 N·m (1.8 kgf-m, 13.3 ft-lb)

11) Install the center exhaust pipe. <Ref. to EX(H4DO)-13, INSTALLATION, Center Exhaust Pipe.>
12) Lower the vehicle.
13) Connect the ground terminal to battery sensor. <Ref. to RC-4, BATTERY, NOTE, Repair Contents.>
14) Make sure the gears can be shifted accurately into each gear.

9. MT Gear Select Cable

A: REMOVAL

CAUTION:
Always use new MT gear select cable if the cable is removed from selector lever COMPL of transmission side.

1) Disconnect the ground terminal from battery sensor. <Ref. to RC-4, BATTERY, NOTE, Repair Contents.>
2) Remove the air intake duct. <Ref. to IN(H4DO)-12, REMOVAL, Air Intake Duct.>
3) Remove the V-belt covers.

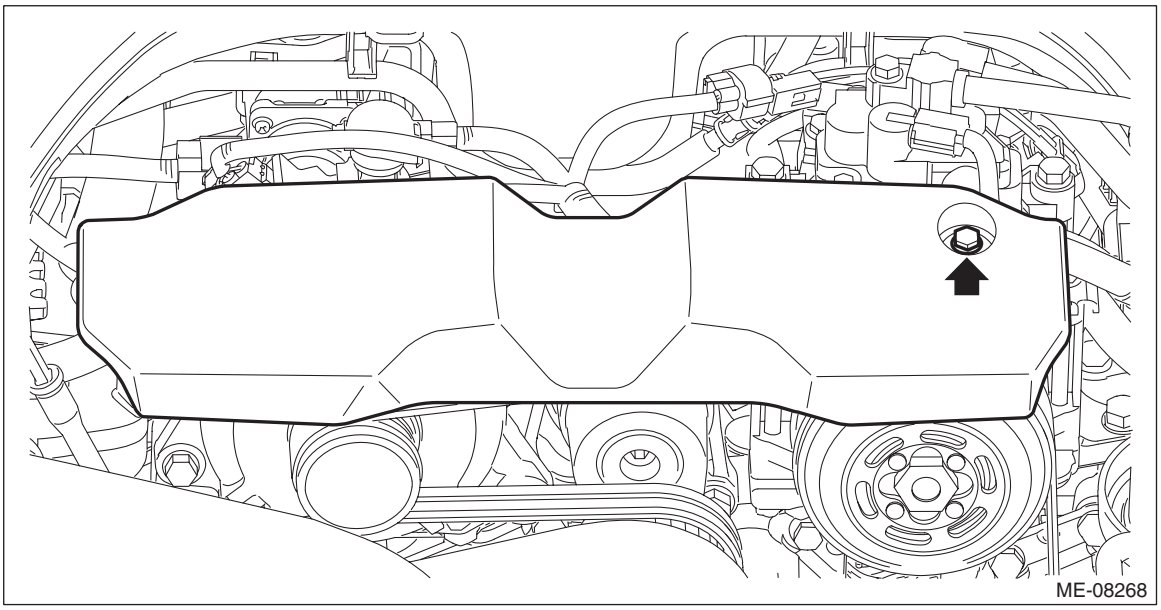

4) Remove the clip (A) from the air intake boot, and loosen the clamps (B) and (C) securing the air intake boot to the throttle body.

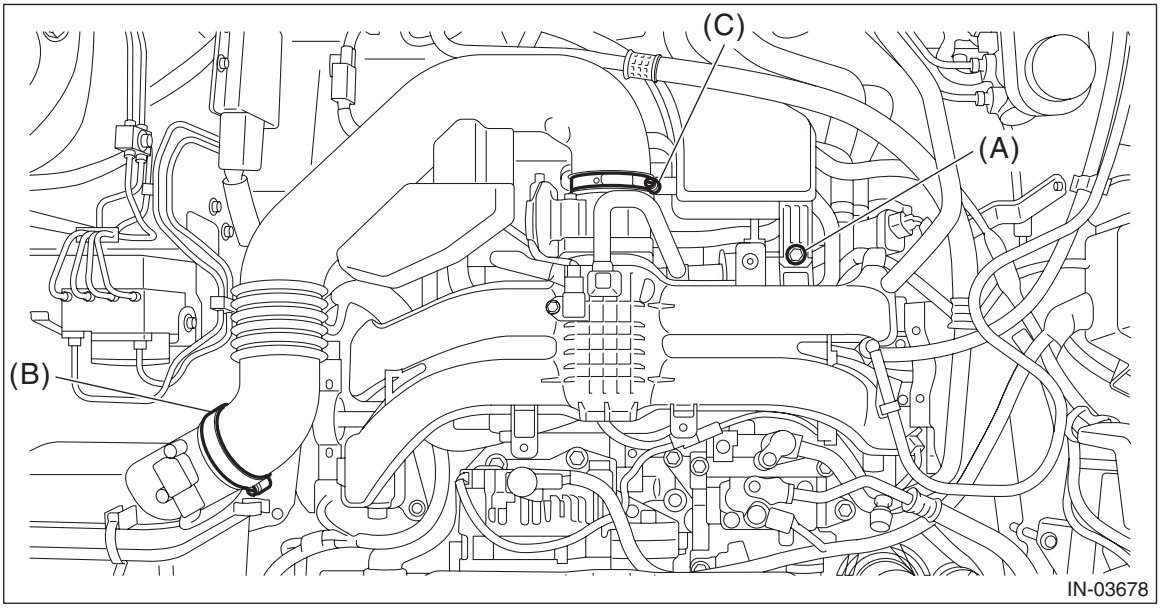

5) Remove the air intake boot from the throttle body, and move it to the left side wheel apron.

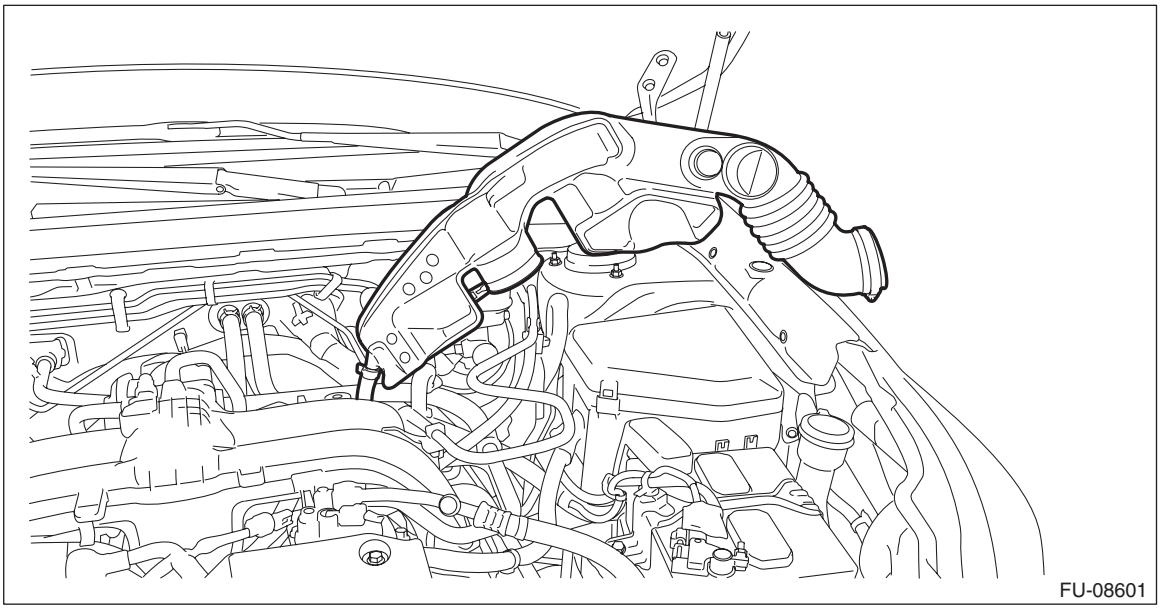
FU-08601

6) Lift up the vehicle.
7) Remove the front under cover. <Ref. to EI-28, REMOVAL, Front Under Cover.>
8) Remove the center exhaust pipe. <Ref. to EX(H4DO)-12, REMOVAL, Center Exhaust Pipe.>
9) Remove the center exhaust cover.

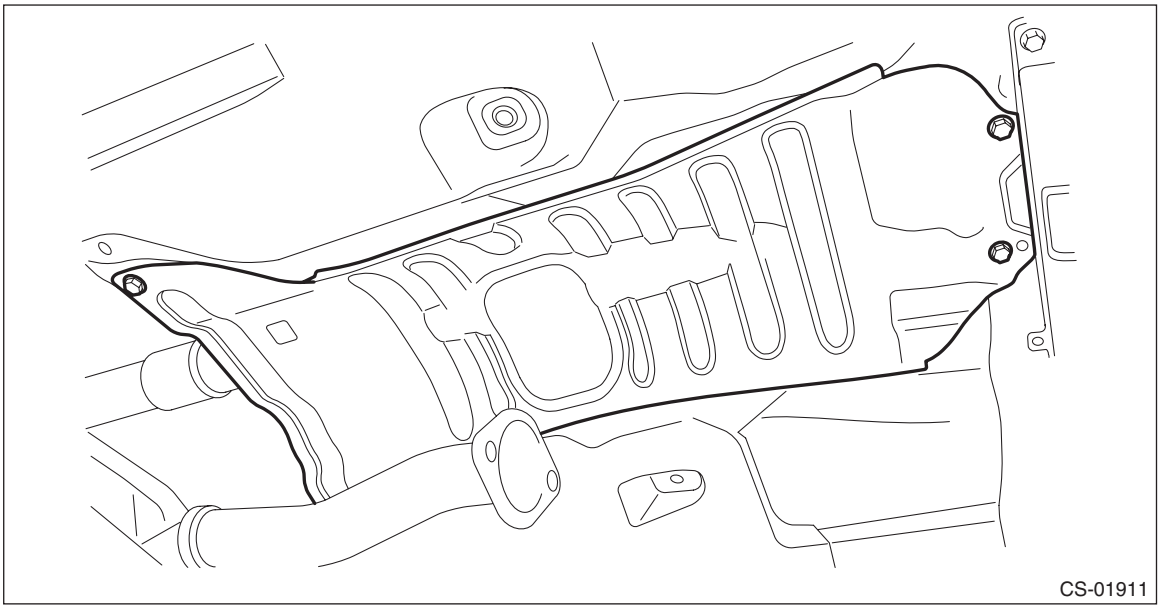
CS-01911

10) Lower the vehicle.

11) Remove the nuts from left and right transmission mounting brackets.

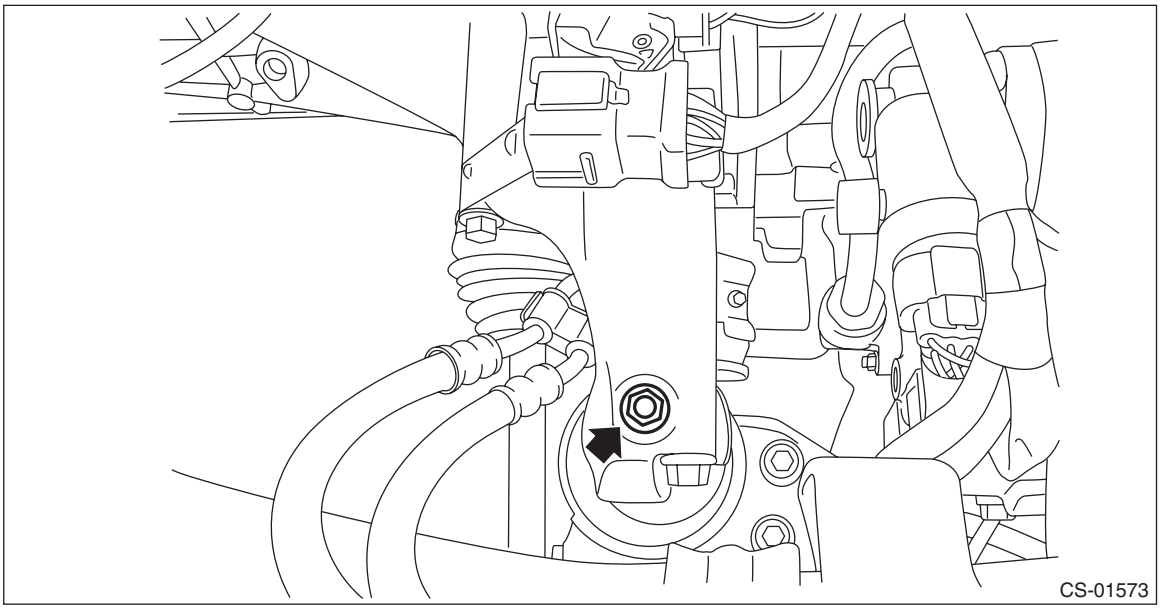

12) Using the ST1, install the ST2 to the engine unit.
ST1 18363AA050 BOLT
ST2 18360AA040 HANGER

Tightening torque:
43 N·m (4.4 kgf-m, 31.7 ft-lb)

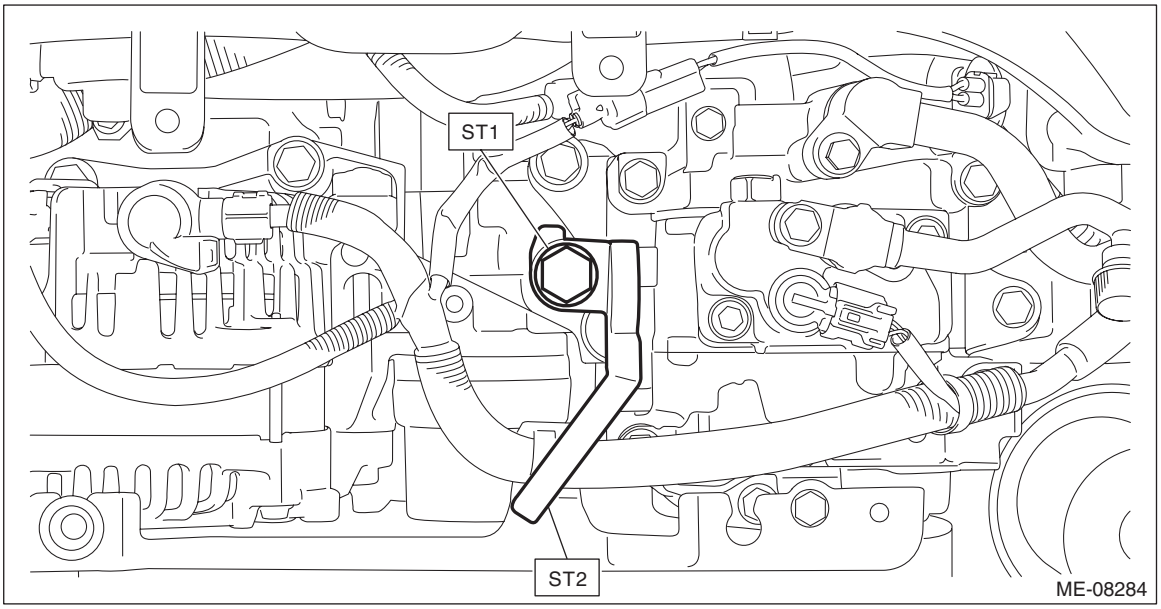

13) Set the ST1 and ST2 to vehicle.
ST1 99099AJ000 ENGINE HANGER
ST2 99099AJ010 CHAIN BALANCER

CAUTION:
- **Set so that the chain sling does not hit the engine parts.**
- **Install a bolt of ϕ8 mm (0.3 in) at the locations shown in the figure, and place the front side arms of ST (ENGINE HANGER).**
- **Set the rear arms of ST (ENGINE HANGER) at the locations shown in the figure.**

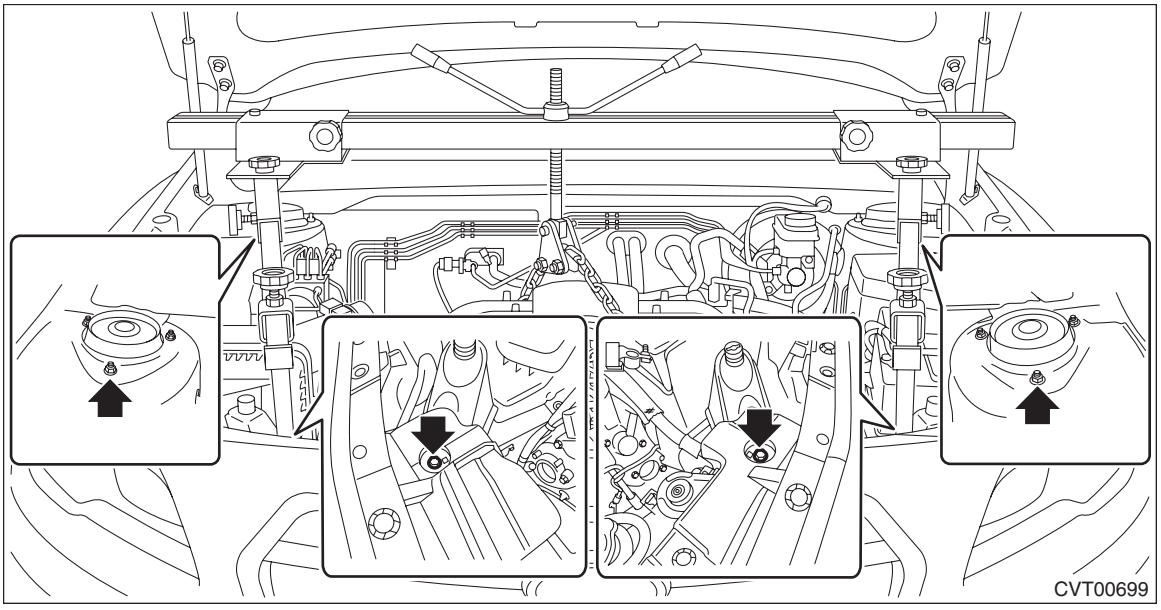

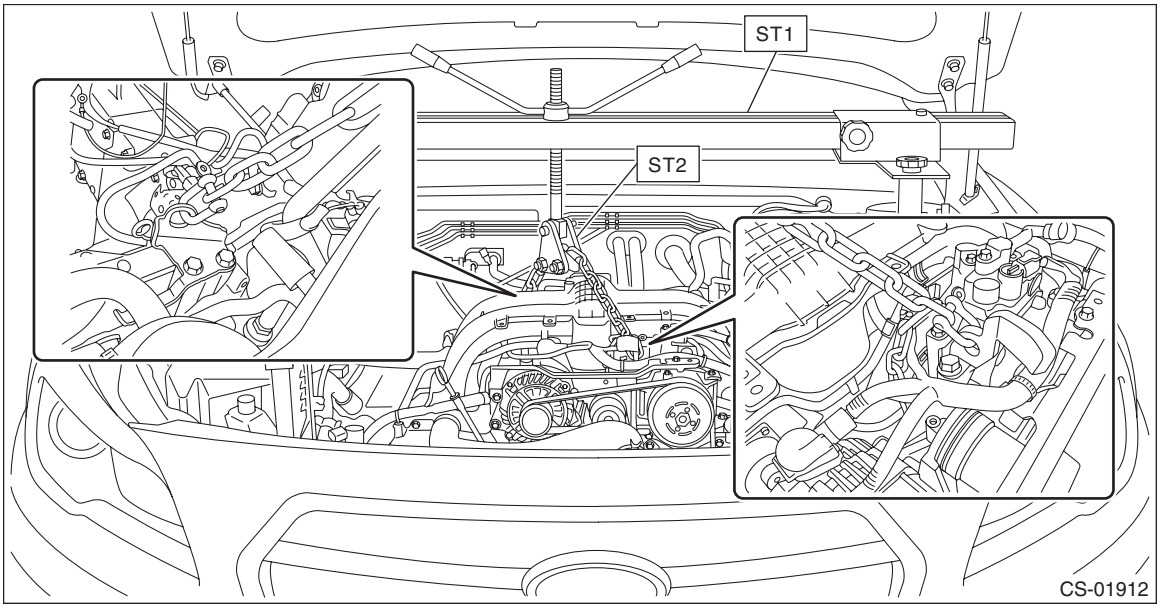

14) Lift the engine slightly and remove the engine mounting bolts.

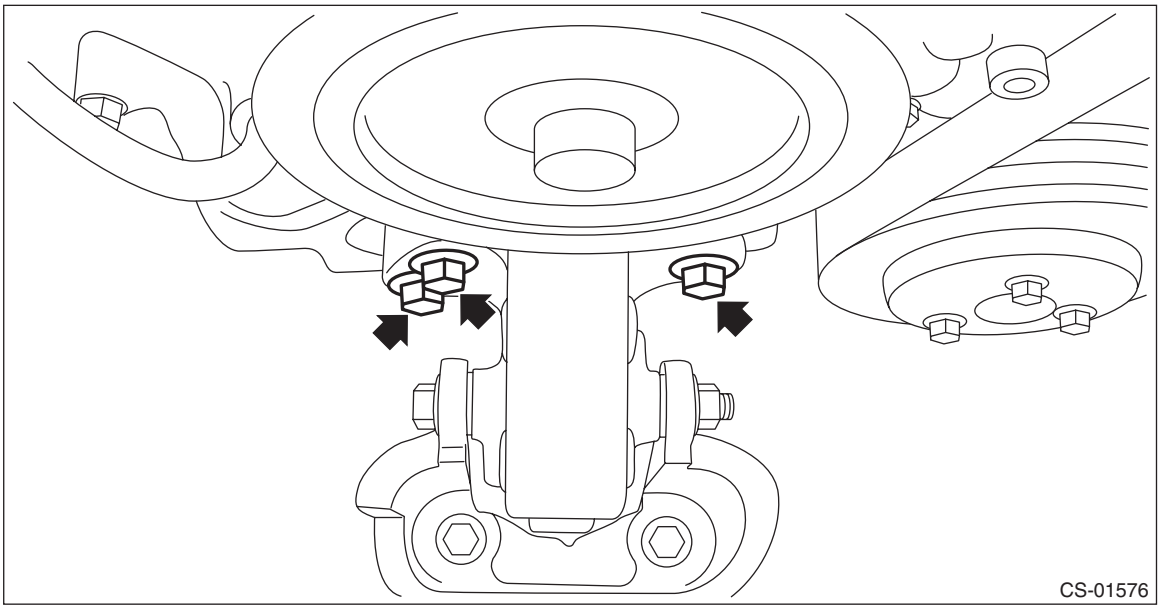

15) Remove the engine mounting nut and bolt to remove the engine mounting.

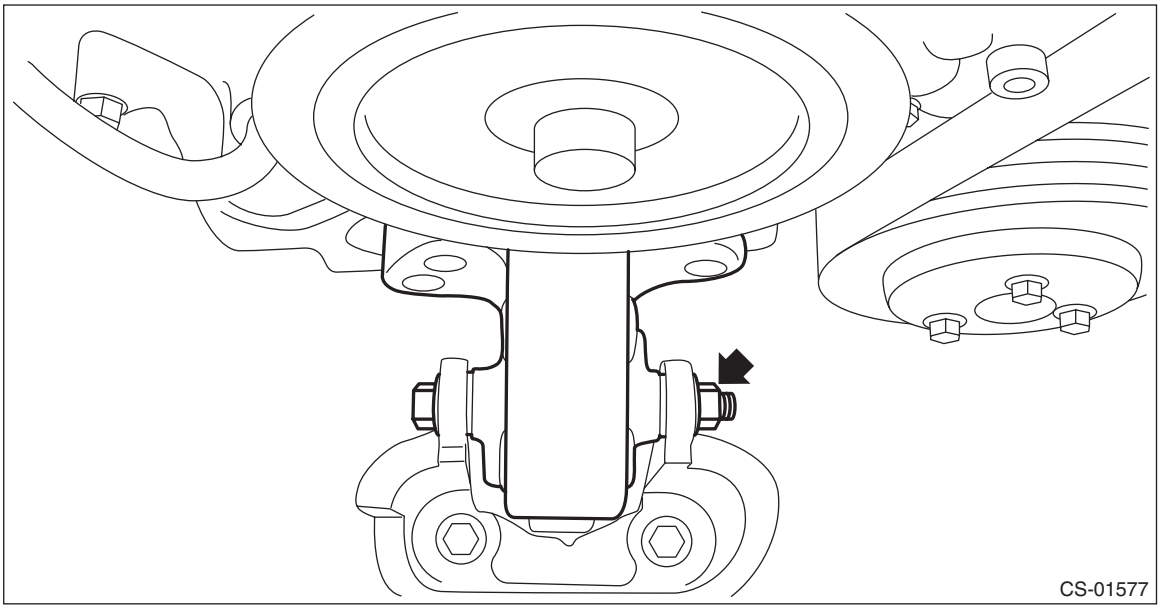

16) Temporarily attach ST by using two bolts.
ST 41099AJ130 SPECIAL TOOL FB

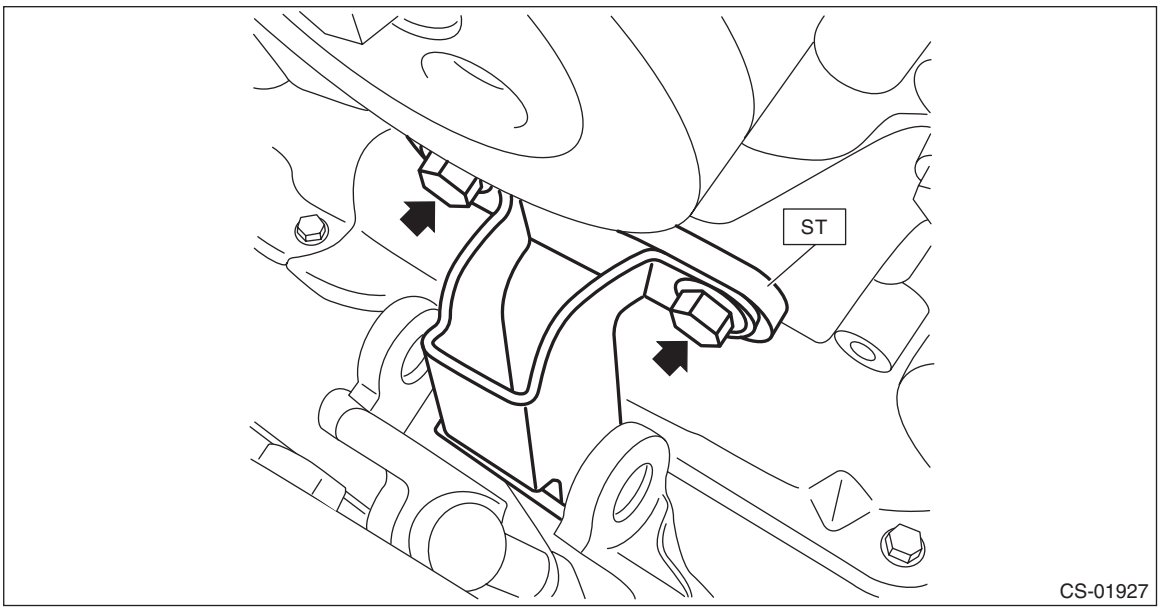

17) Lift up the engine unit high enough to install the bolt and nut to vehicle.

CAUTION:
Do not lift up higher than enough level to install the ST to avoid damage to the hoses and pipes inside the engine room.

NOTE:
If it is difficult to pull out the stud bolt from transmission mounting bracket, slightly shake the engine unit while lifting up.

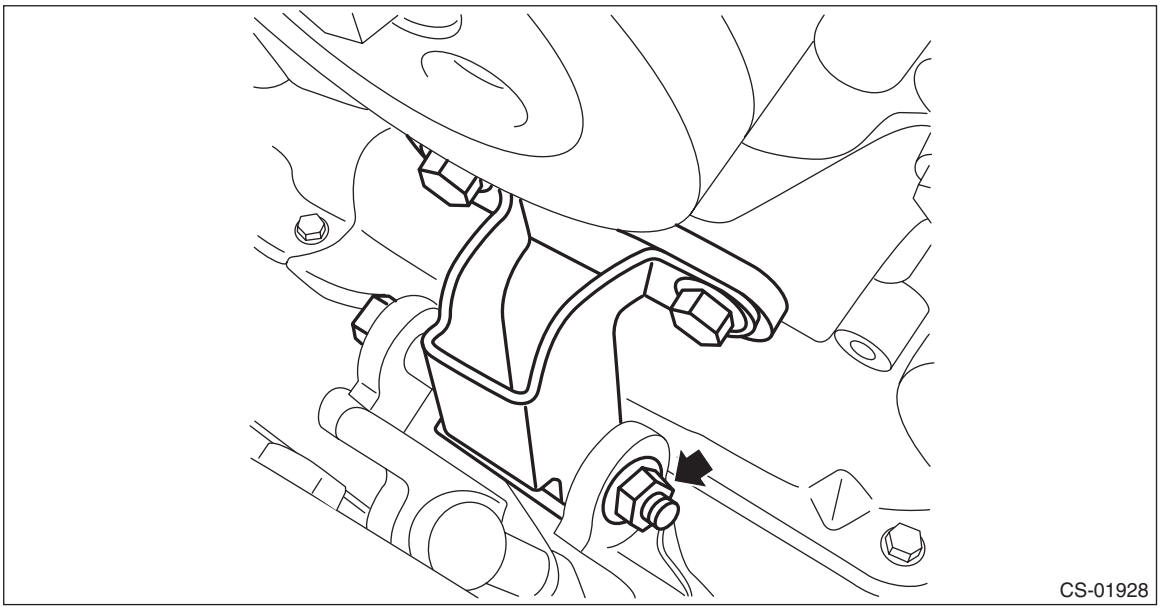

18) Tighten the mounting bolts on the engine side.

Tightening torque:
25 N·m (2.5 kgf-m, 18.4 ft-lb)

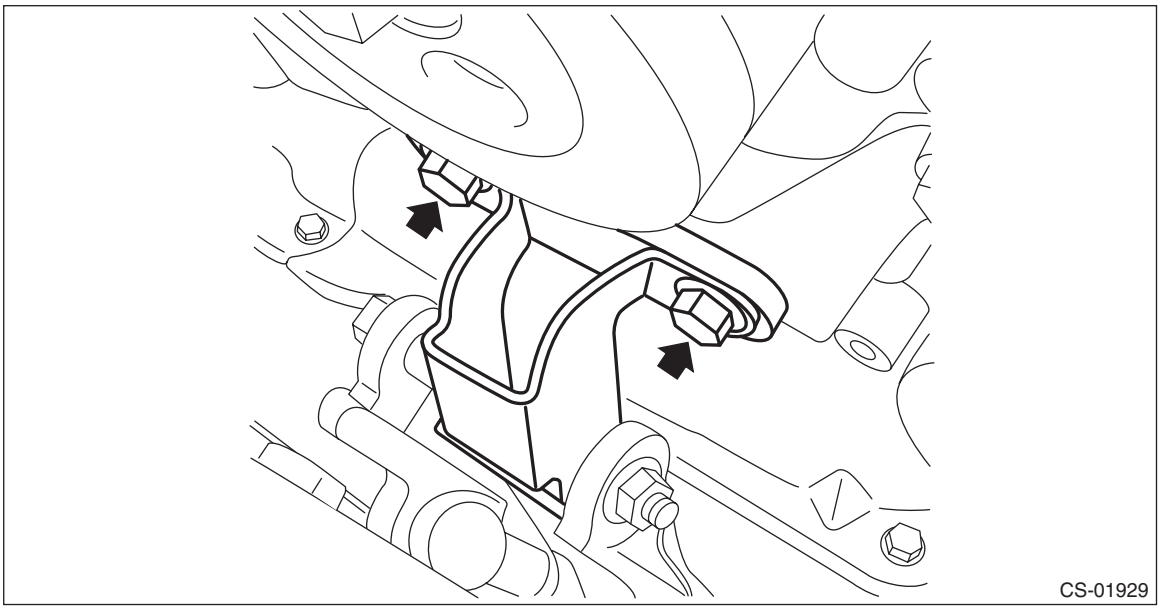

19) Rotate the handle of the ST (ENGINE HANGER) to loosen the sling chain.
20) Lift up the vehicle.
21) Set the transmission jack to the transmission.
22) Remove the clamp cable and take out the MT gear select cable from the clamp.

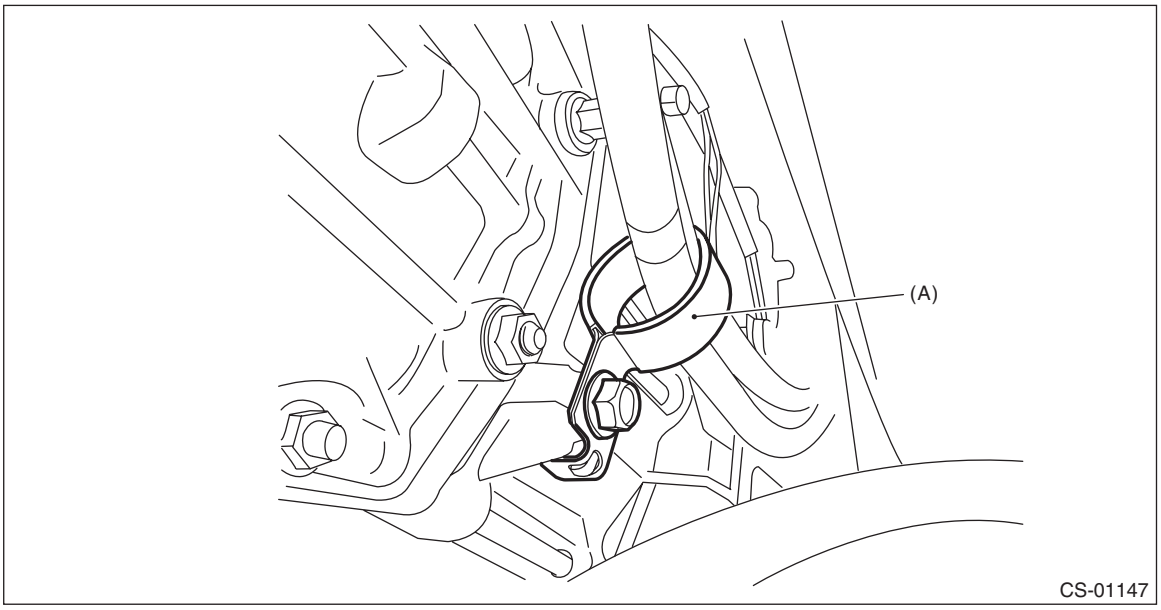

(A) Clamp cable

23) Remove the mounting bolts from the front crossmember and rear crossmember, and lower the transmission.

CAUTION:
When lowering the transmission, make sure that the transmission jack does not come off from the transmission.

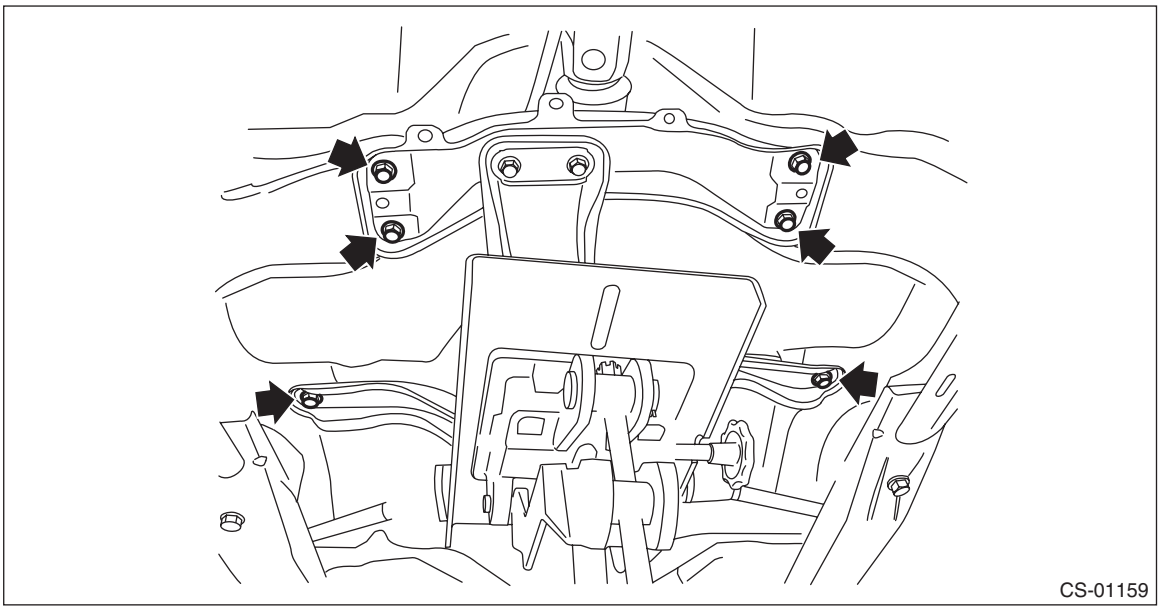

24) Insert a spanner between the selector lever COMPL and the MT gear select cable and remove the MT gear select cable by raising the handle.

NOTE:
- Use a spanner with 11 to 13 in size.
- The thickness of the spanner must not exceed 6 mm (0.2 in).

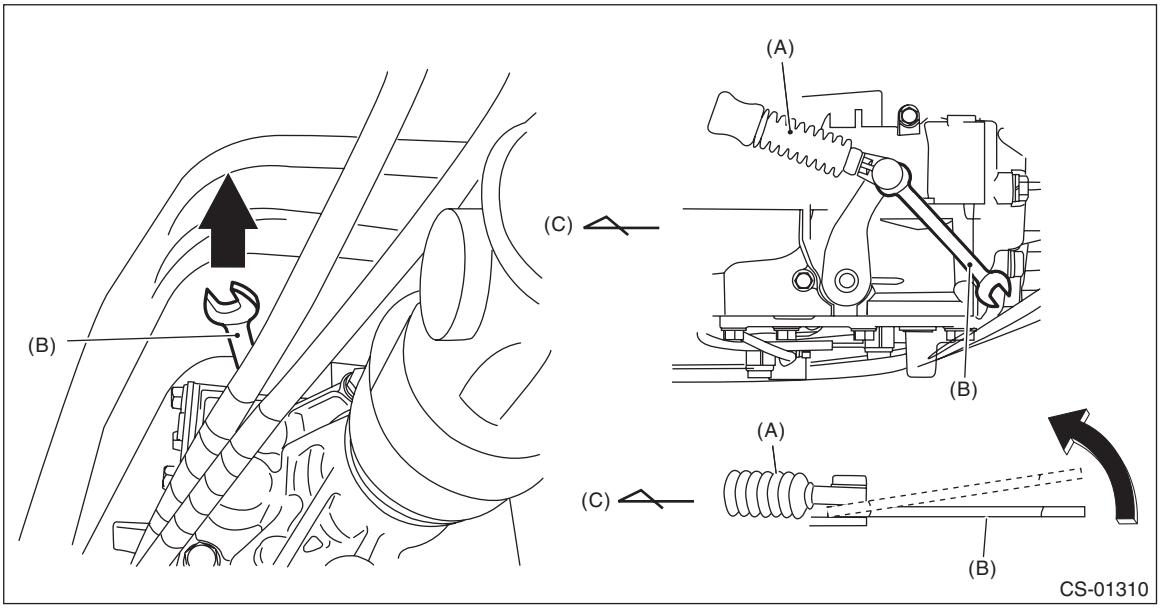

(A) MT gear select cable
(B) Spanner
(C) Forward

25) Remove the MT gear select cable and select bracket as a single unit from the transmission body.

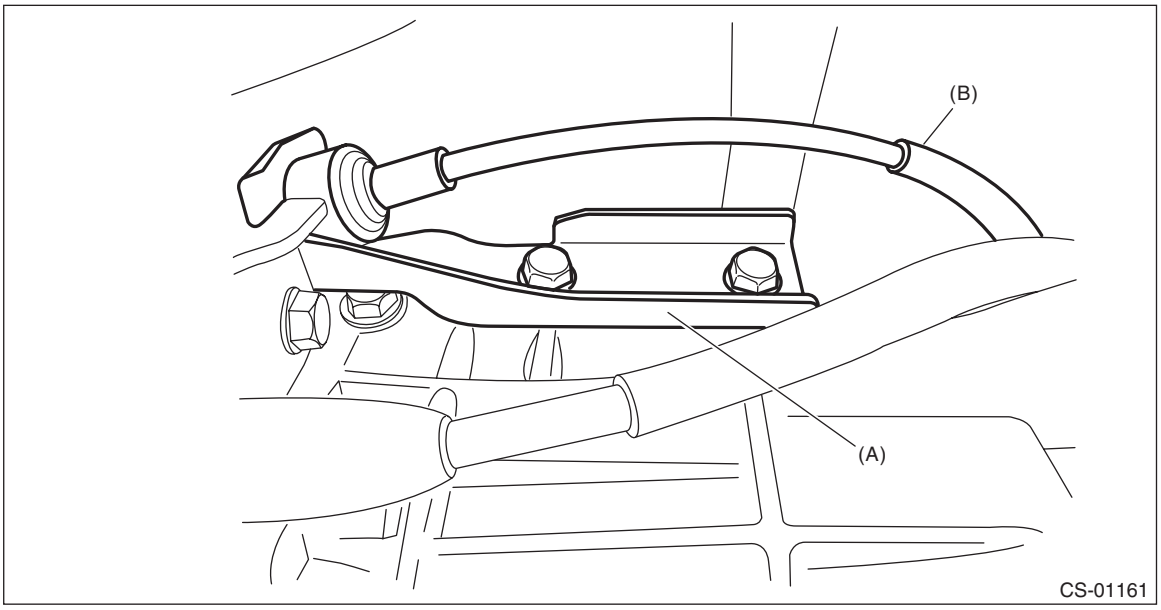

(A) Select bracket
(B) MT gear select cable

26) Remove the plate cable assembly.

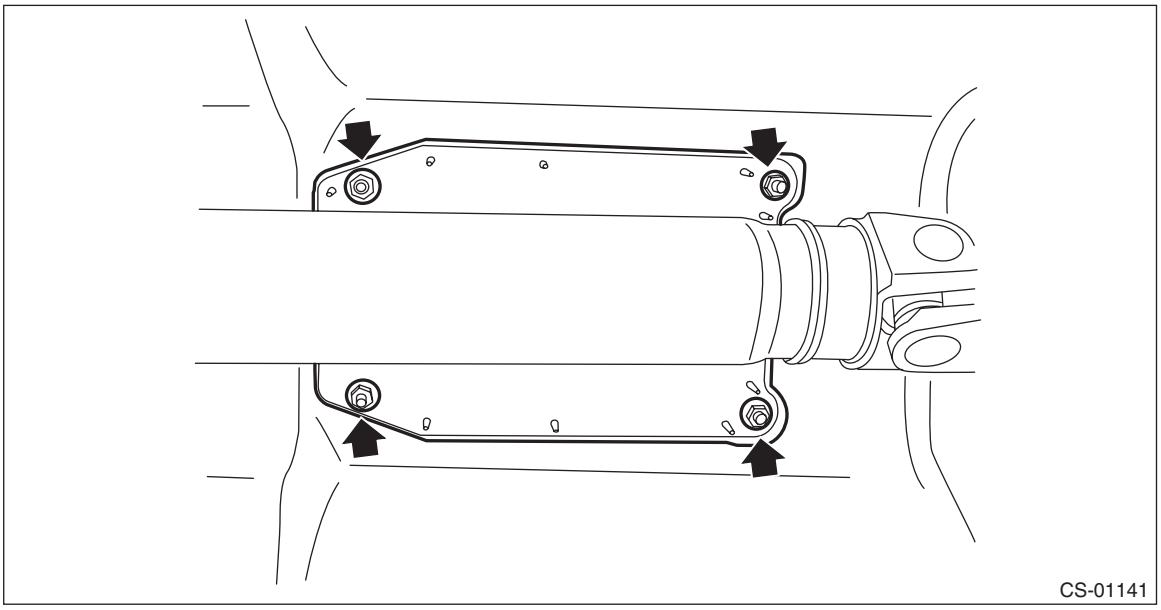

27) Disconnect the MT gear select cable.

CAUTION:
Be careful not to deform the cable inner.

NOTE:
Push the MT gear select cable in the direction of arrow, and remove it.

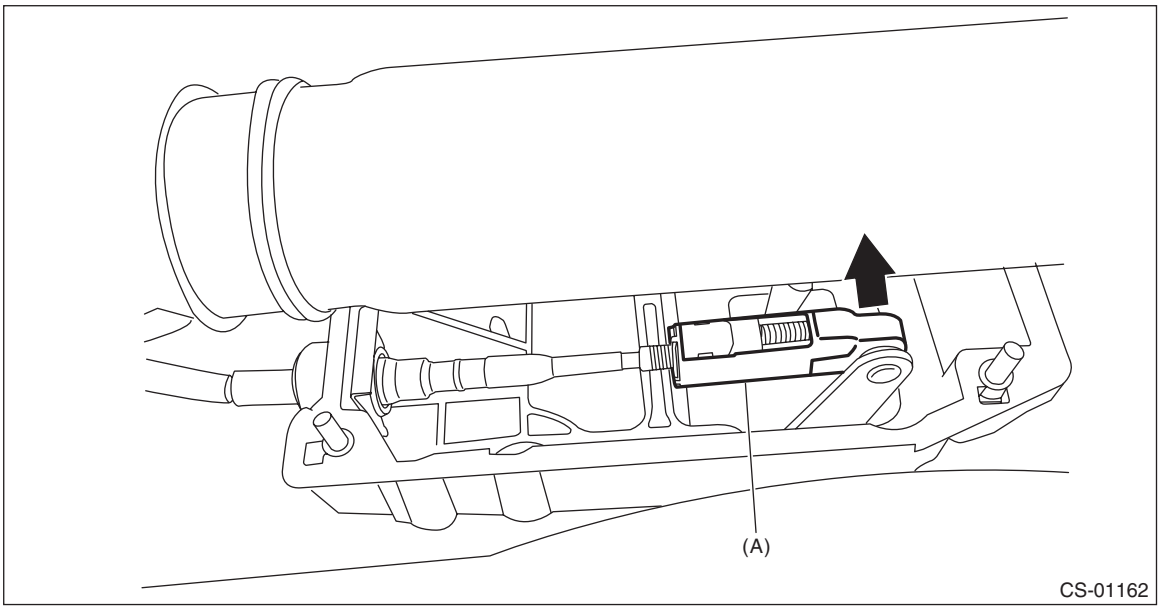

(A) MT gear select cable

28) Remove the clamp which holds the MT gear select cable.

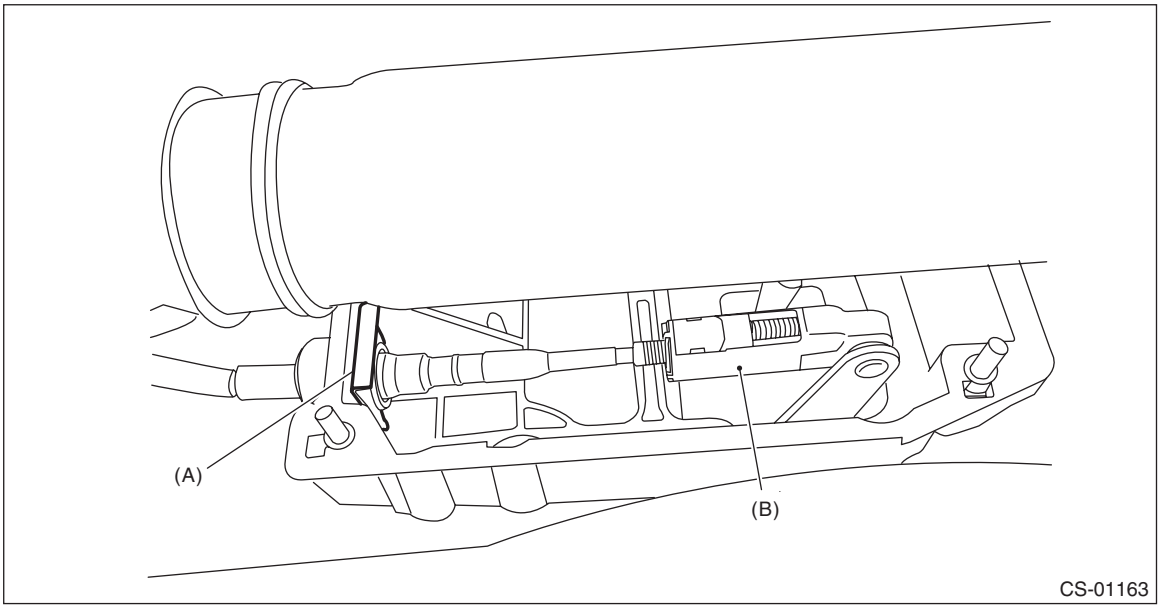

(A) Clamp
(B) MT gear select cable

29) Pull out the MT gear select cable from the cover cable assembly.

CAUTION:
Do not bend the MT gear select cable sharply.

B: INSTALLATION

CAUTION:
• Always use new MT gear select cable if the cable is removed from selector lever COMPL of transmission side.
• Do not bend the MT gear select cable sharply.
• Do not twist the inner cable excessively.
1) Remove the MT gear select cable from the select bracket.

CAUTION:
Check for assembling position before removing the MT gear select cable from the select bracket.

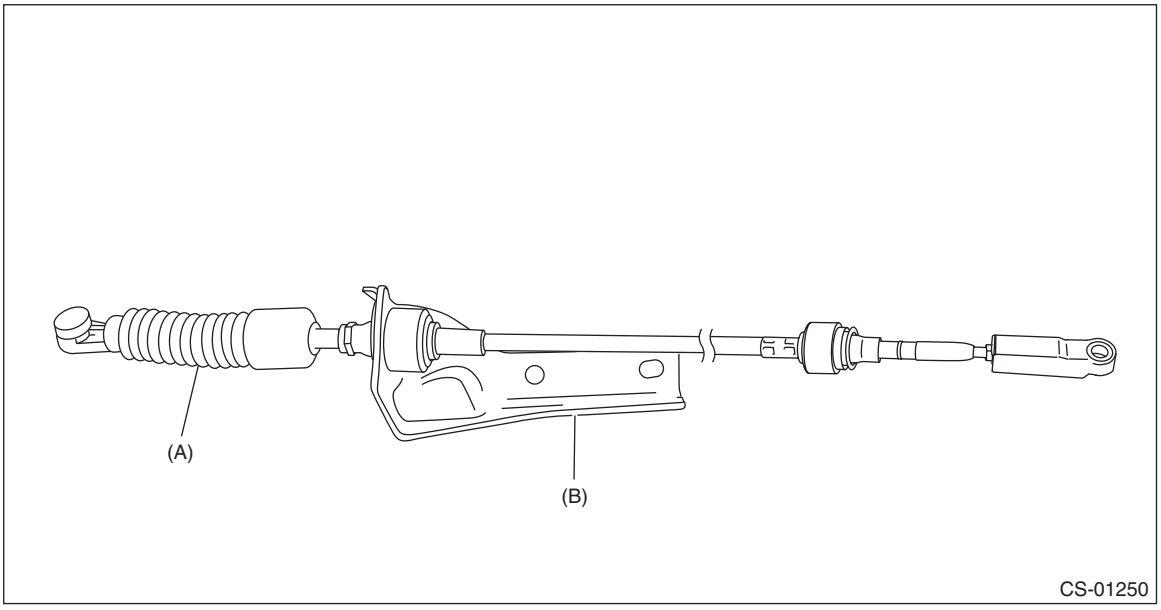

(A) MT gear select cable
(B) Select bracket

2) Set to the new MT gear select cable to the select bracket and secure it with the clamp.

CAUTION:
Be careful not to mistake the MT gear select cable installing direction.

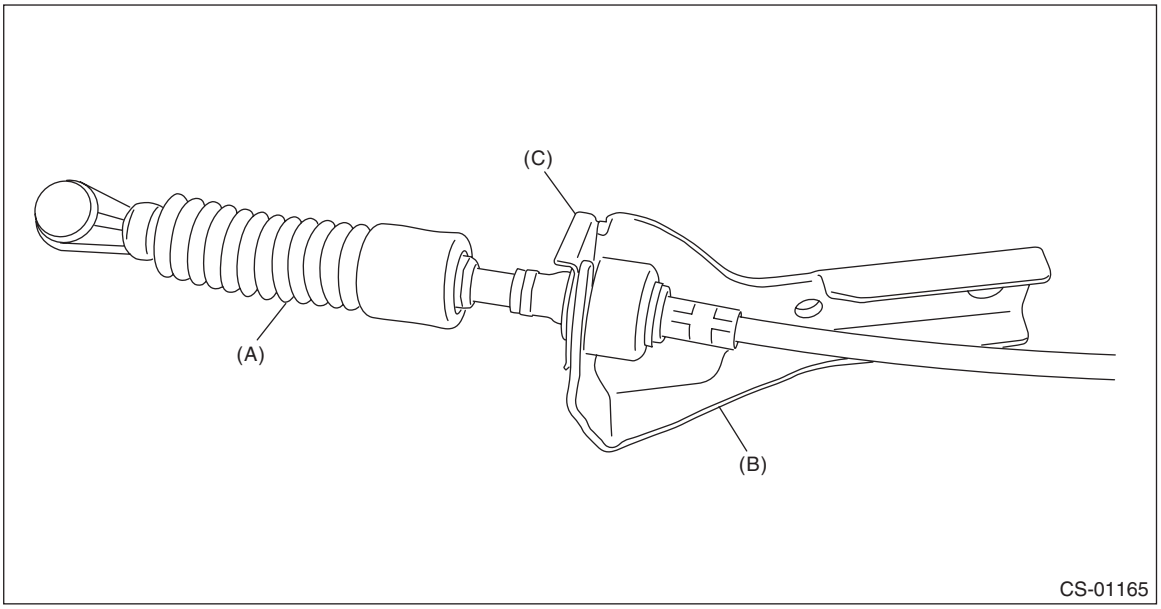

(A) MT gear select cable
(B) Select bracket
(C) Clamp

3) Install the MT gear select cable and select bracket as a single unit to the transmission body.

Tightening torque:
18 N·m (1.8 kgf-m, 13.3 ft-lb)

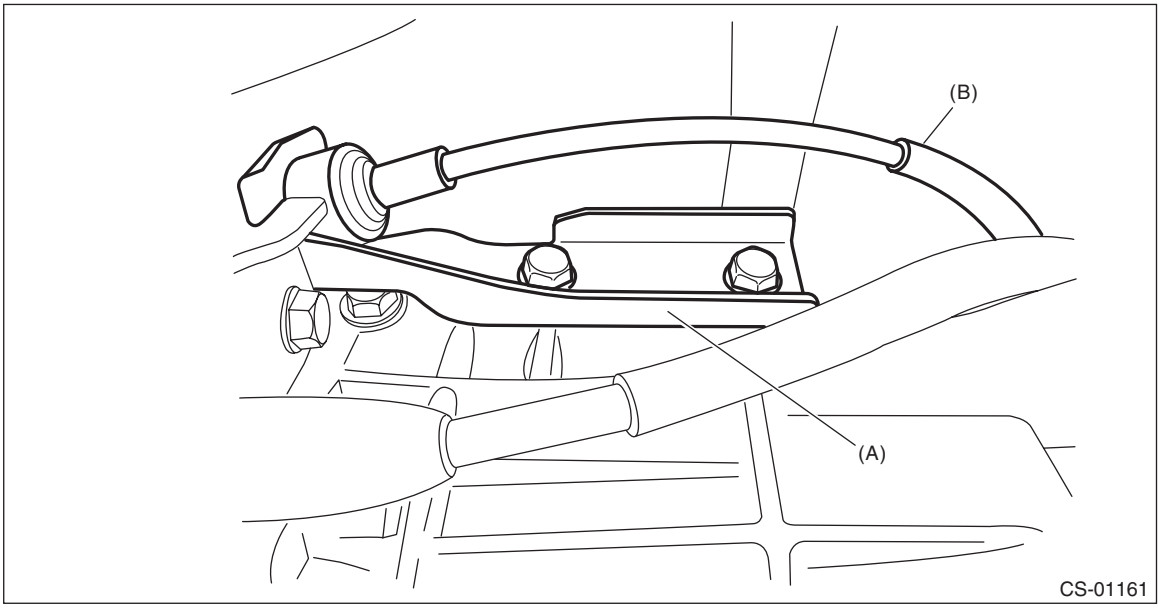

(A) Select bracket
(B) MT gear select cable

4) Install the MT gear select cable to the select lever COMPL.

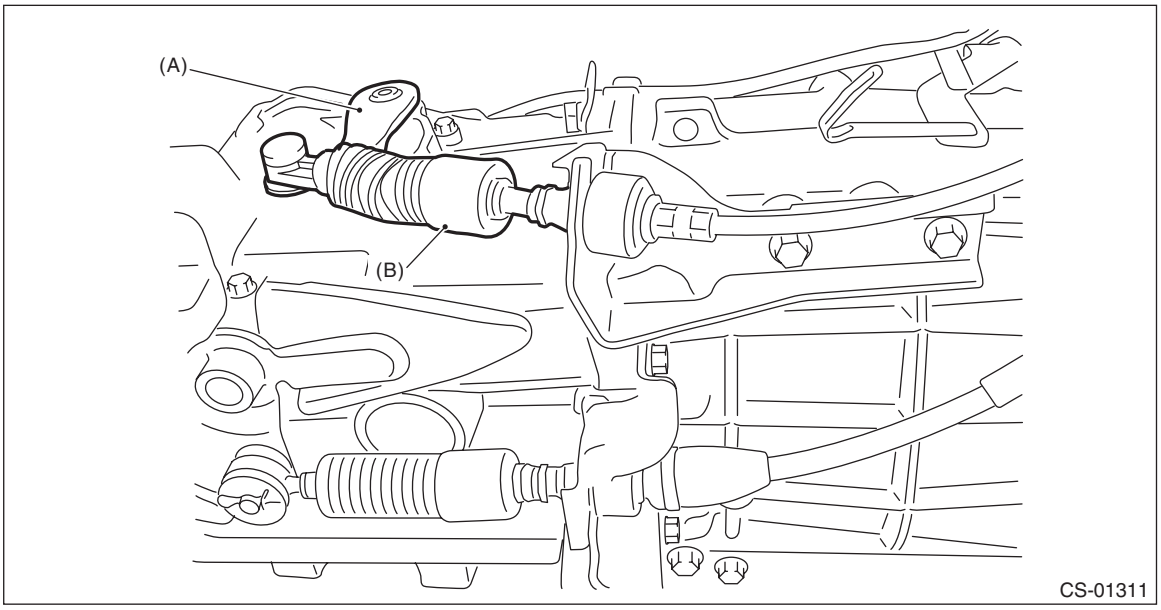

(A) Selector lever COMPL
(B) MT gear select cable

5) Measure the exposed length (a) of MT gear select cable. If the value is out of specification, adjust the MT gear select cable. <Ref. to CS-88, ADJUSTMENT, MT Gear Select Cable.>

Exposed length (a) of MT gear select cable:
Specification: 11 mm (0.4 in)

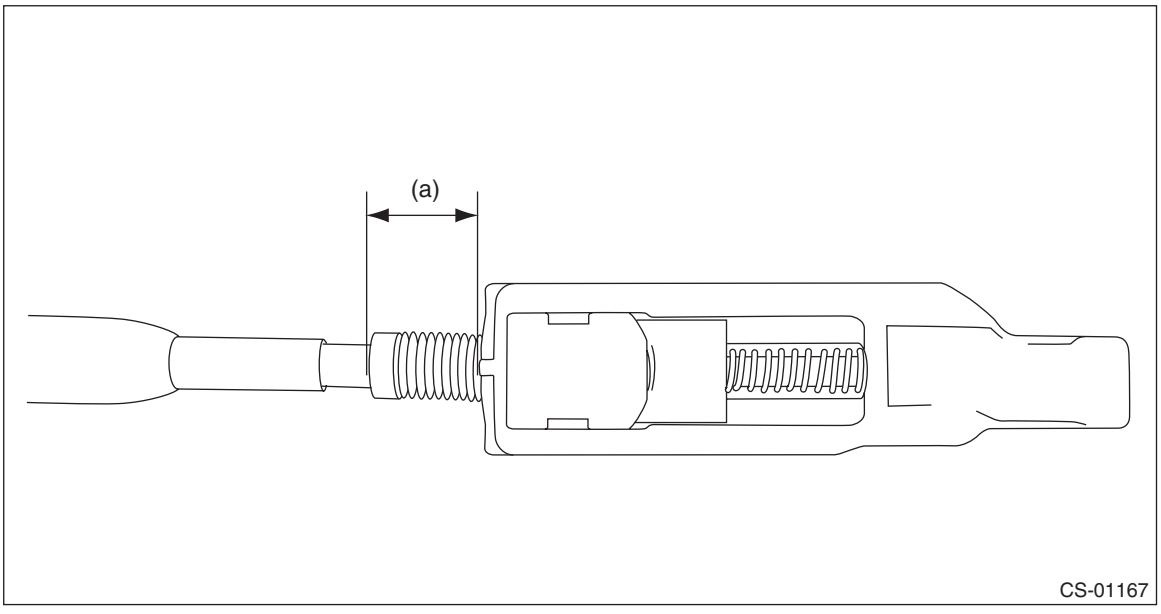

6) Connect the MT gear select cable.
7) Install the plate cable assembly.

Tightening torque:
7.5 N·m (0.8 kgf-m, 5.5 ft-lb)

8) Insert the MT gear select cable into clamp cable, and install to the transmission.

Tightening torque:
18 N·m (1.8 kgf-m, 13.3 ft-lb)

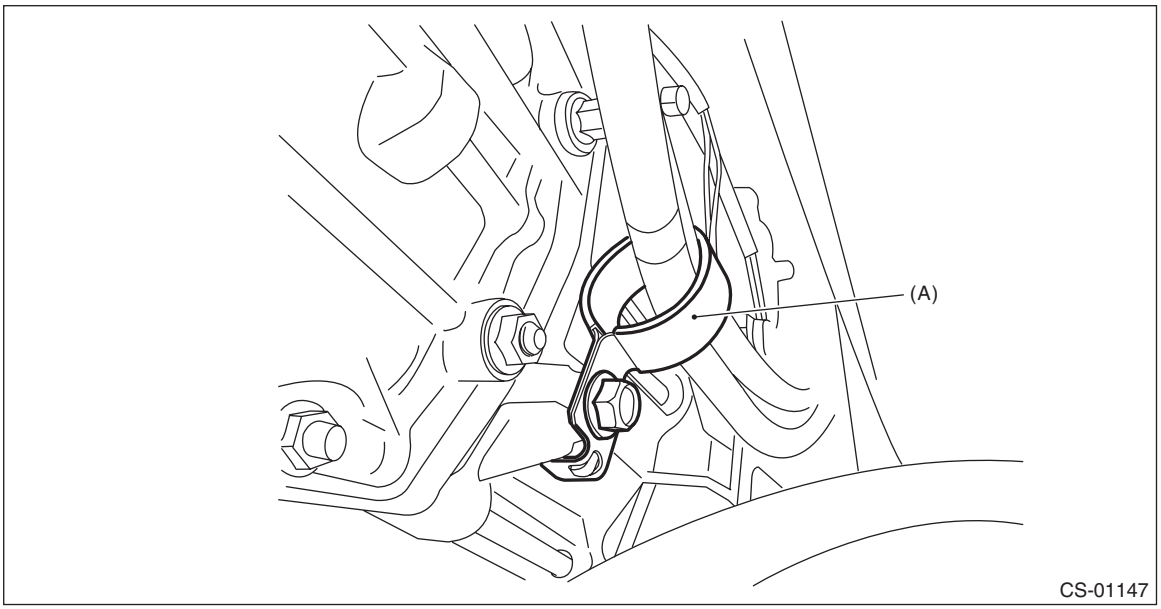

(A) Clamp cable

9) Raise the transmission jack, install the front crossmember and rear crossmember.

Tightening torque:
T1: 75 N·m (7.6 kgf-m, 55.3 ft-lb)
T2: 140 N·m (14.3 kgf-m, 103.3 ft-lb)

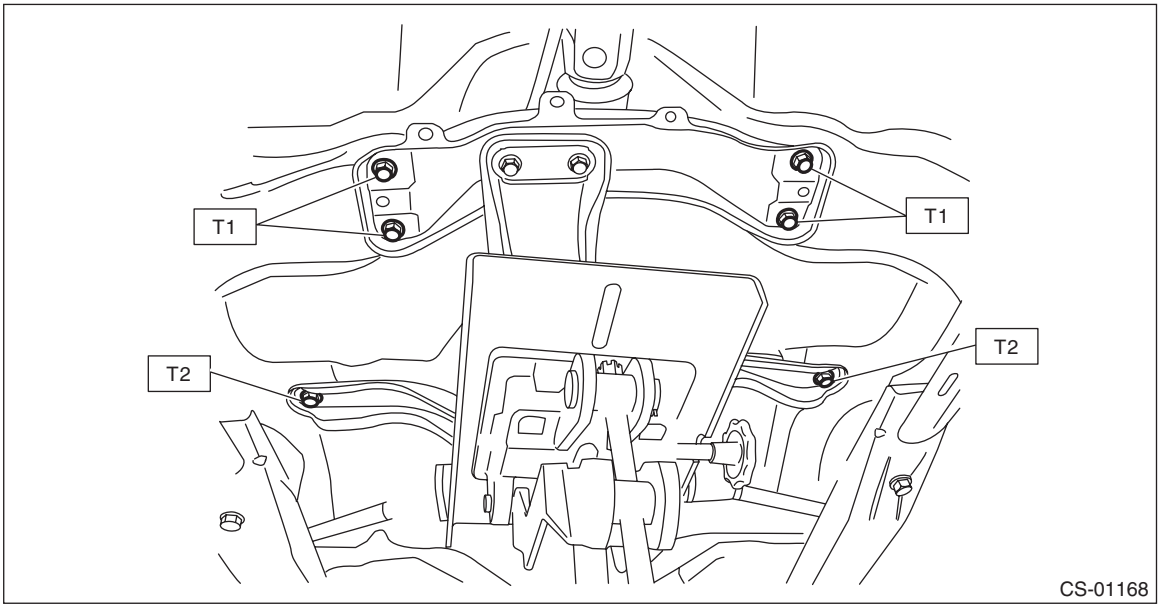

10) Rotate the handle of ST (ENGINE HANGER) to apply tension to the sling chain.
11) Take out the transmission jack.
12) Install the center exhaust cover.

Tightening torque:
18 N·m (1.8 kgf-m, 13.3 ft-lb)
13) Install the center exhaust pipe. <Ref. to EX(H4DO)-13, INSTALLATION, Center Exhaust Pipe.>
14) Install the front under cover. <Ref. to EI-28, INSTALLATION, Front Under Cover.>

15) Lower the vehicle.
16) Rotate the handle of ST (ENGINE HANGER) to lift up the engine slightly.
17) Remove the bolts from ST (SPECIAL TOOL FB).

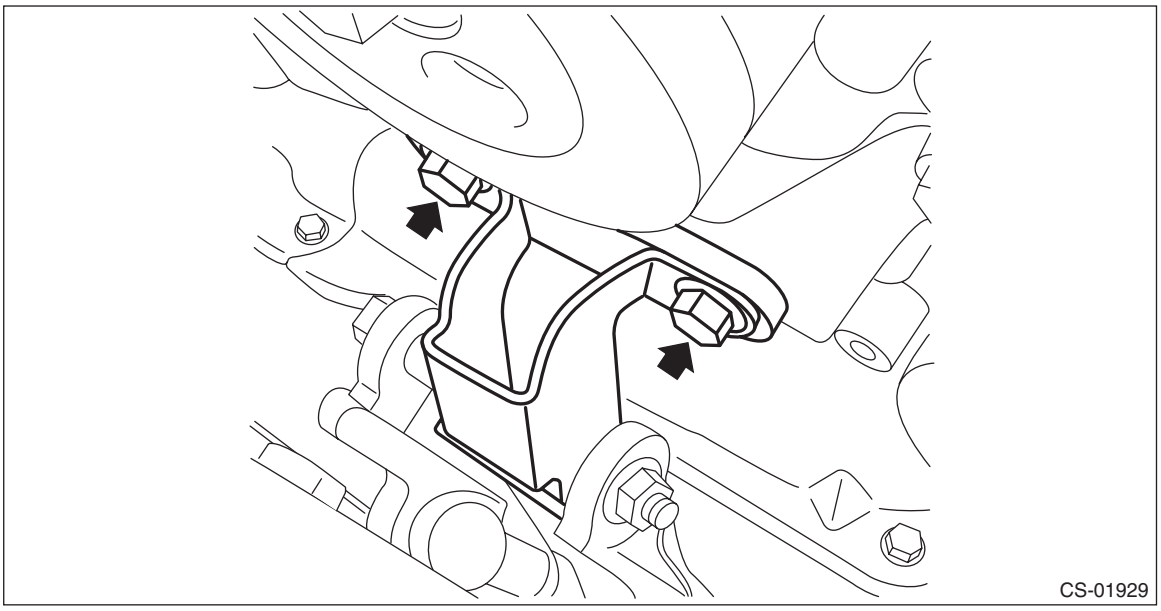

18) Remove the bolt and nut to remove ST (SPECIAL TOOL FB).

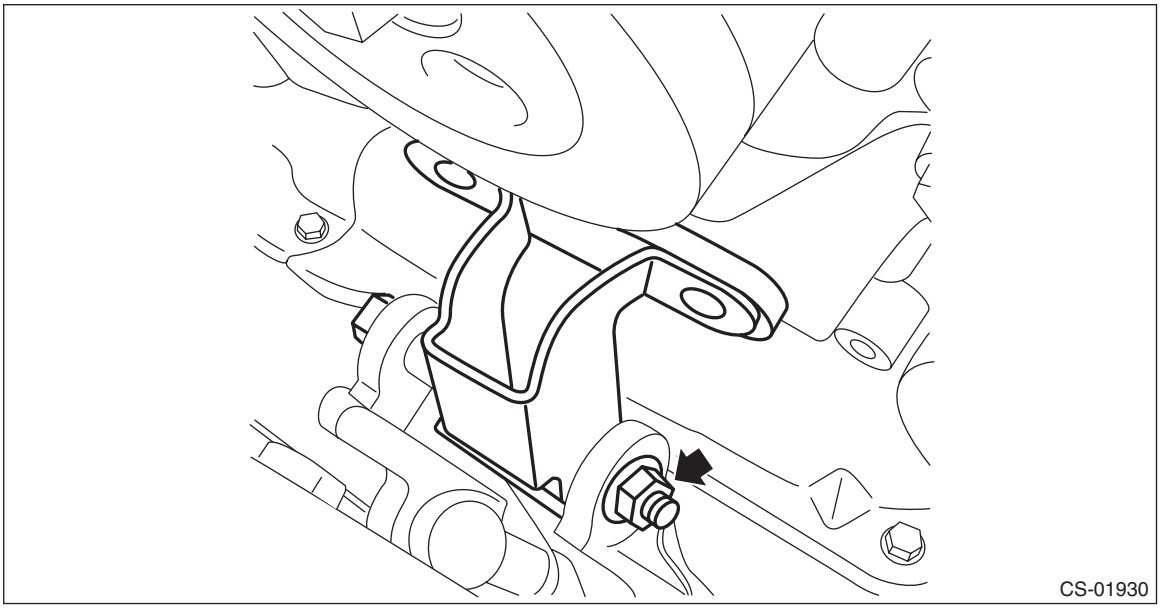

19) Temporarily attach the front engine mounting with bolts.

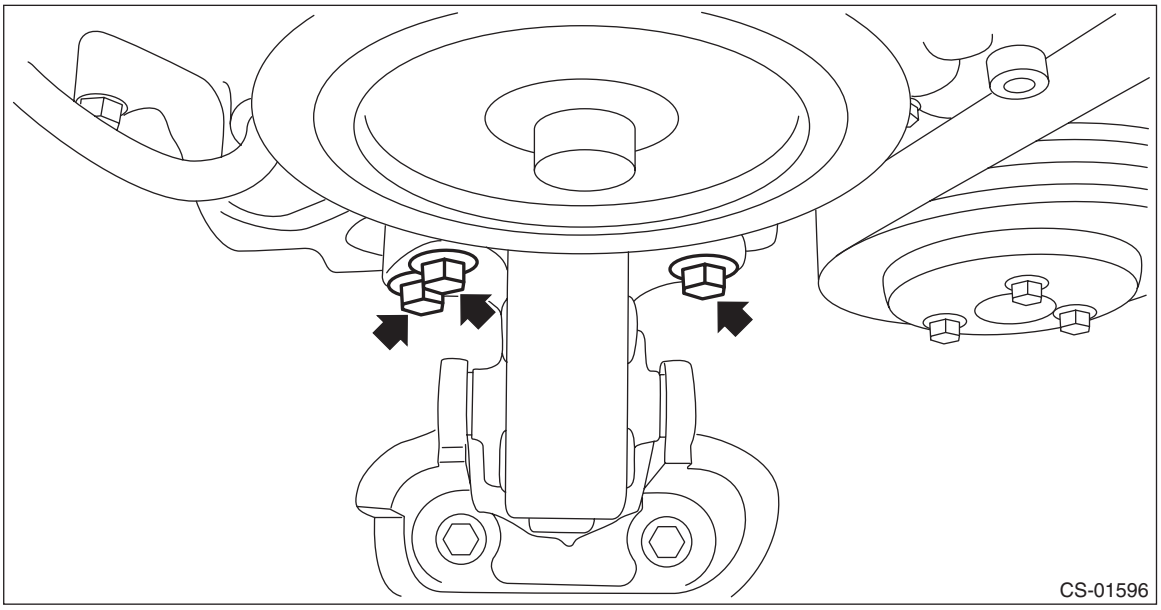

20) Install the bolt and nut to the front engine mounting.

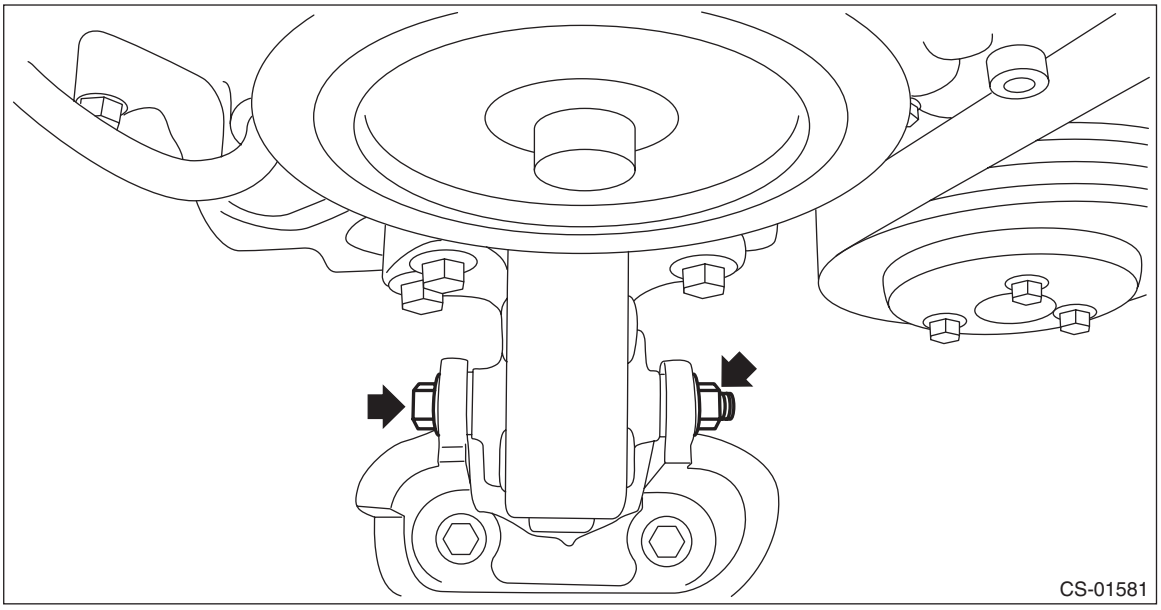

21) Tighten the bolts and nuts of front engine mounting.

Tightening torque:
T1: 25 N·m (2.5 kgf-m, 18.4 ft-lb)
T2: 45 N·m (4.6 kgf-m, 33.2 ft-lb)

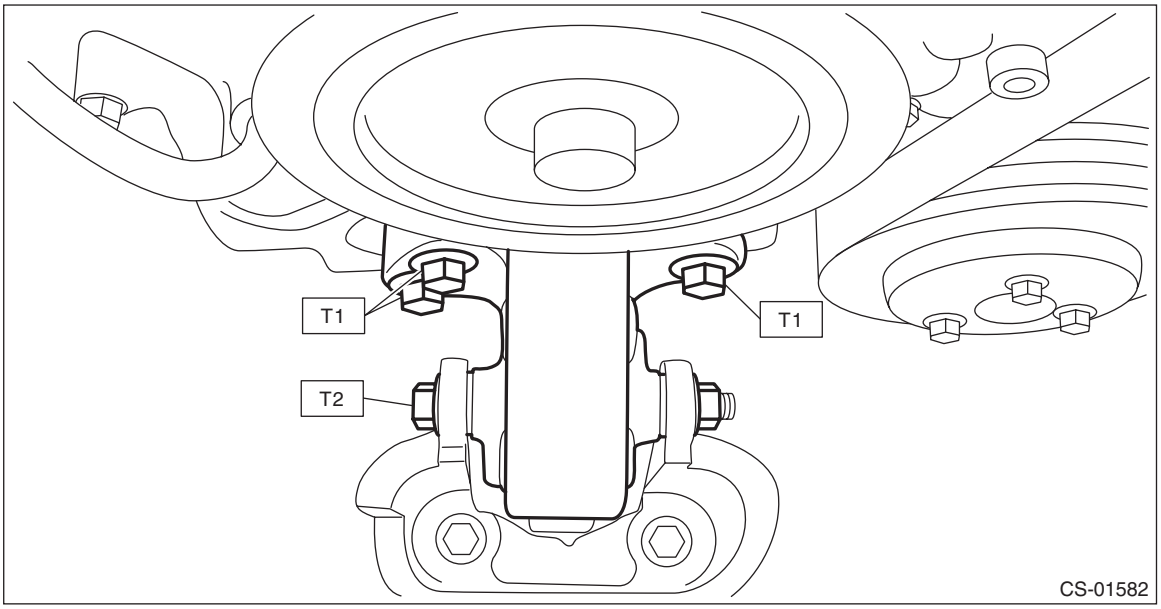

22) Remove the ST (ENGINE HANGER).

CAUTION:
Be sure to remove the M8 bolt.
23) Remove the ST1 and ST2 from the engine unit.
ST1 18363AA050 BOLT
ST2 18360AA040 HANGER

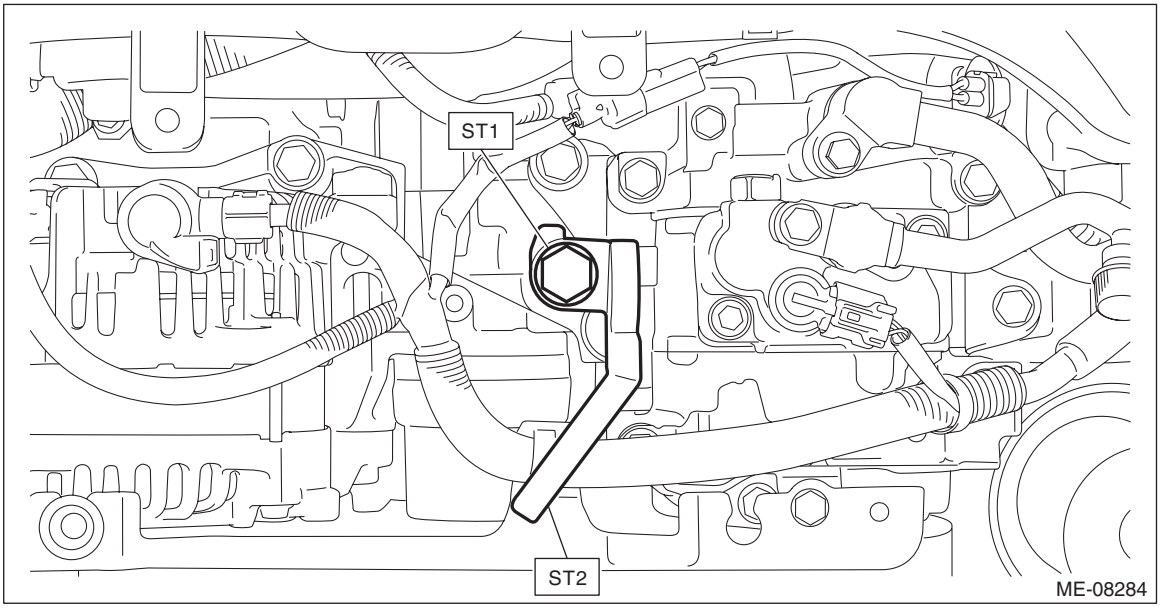

24) Attach the nuts to the left and right transmission mounting brackets.

Tightening torque:
45 N·m (4.6 kgf-m, 33.2 ft-lb)

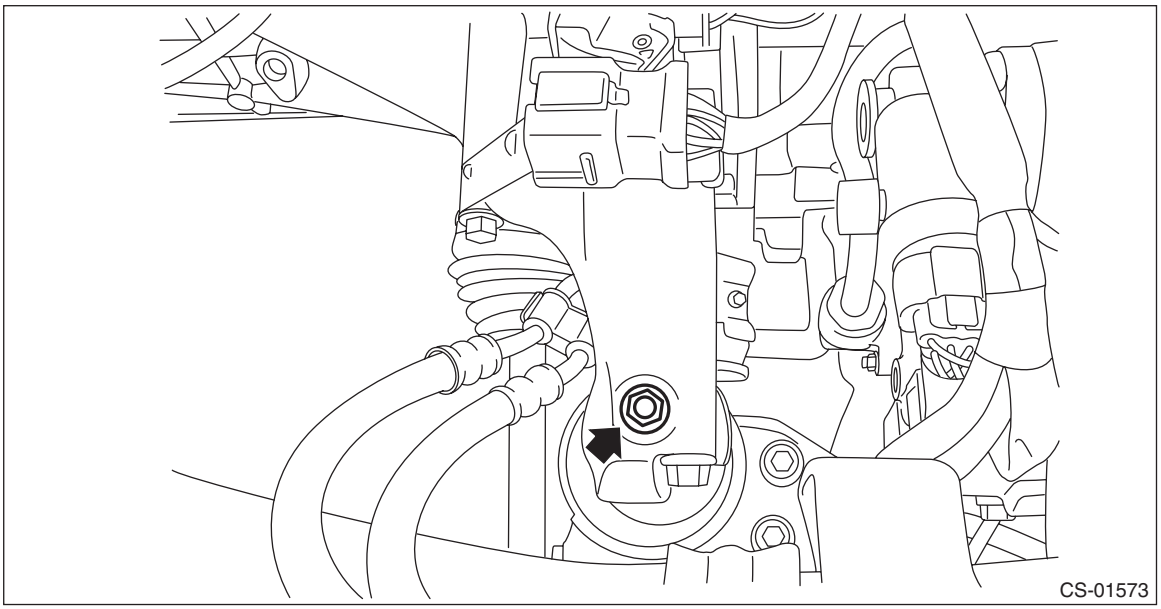

25) Install the air intake boot assembly. <Ref. to IN(H4DO)-10, INSTALLATION, Air Intake Boot.>
26) Install the V-belt cover.

Tightening torque:
6.5 N·m (0.7 kgf-m, 4.8 ft-lb)
27) Install the air intake duct. <Ref. to IN(H4DO)-12, INSTALLATION, Air Intake Duct.>
28) Connect the ground terminal to battery sensor. <Ref. to RC-4, BATTERY, NOTE, Repair Contents.>
29) Make sure the gears can be shifted accurately into each gear.

C: INSPECTION

1) Check that exposed length (a) of MT gear select cable is within specification.

Exposed length (a) of MT gear select cable:
Specification: 11 mm (0.4 in)

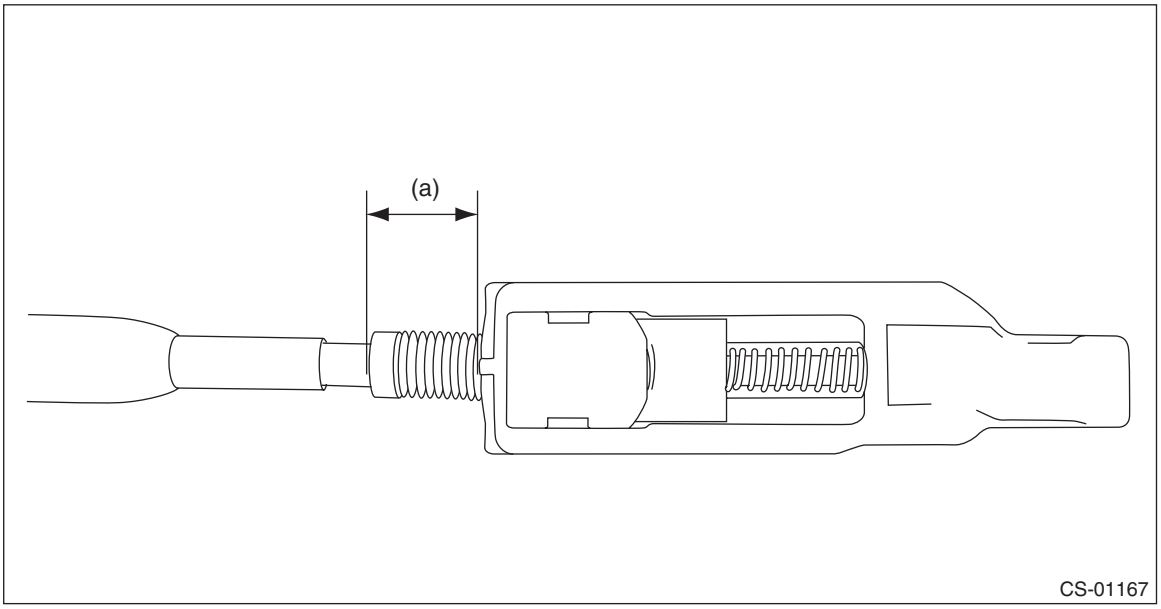

2) If it is not within the specification, perform the adjustment. <Ref. to CS-88, ADJUSTMENT, MT Gear Select Cable.>

D: ADJUSTMENT

NOTE:
Two persons are required to perform the MT gear select cable adjustment. Only the step 6) requires two workers.
1) Move the shift lever to the 6th.
2) Remove the plate cable assembly.

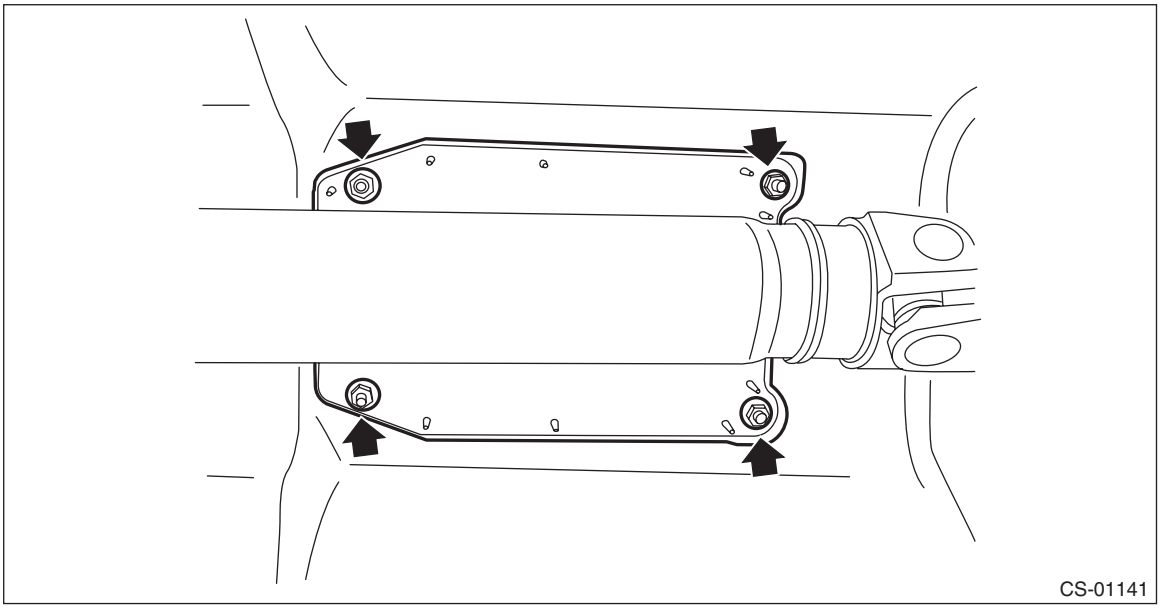

3) Disconnect the MT gear select cable.

NOTE:
Push the MT gear select cable in the direction of arrow, and remove it.

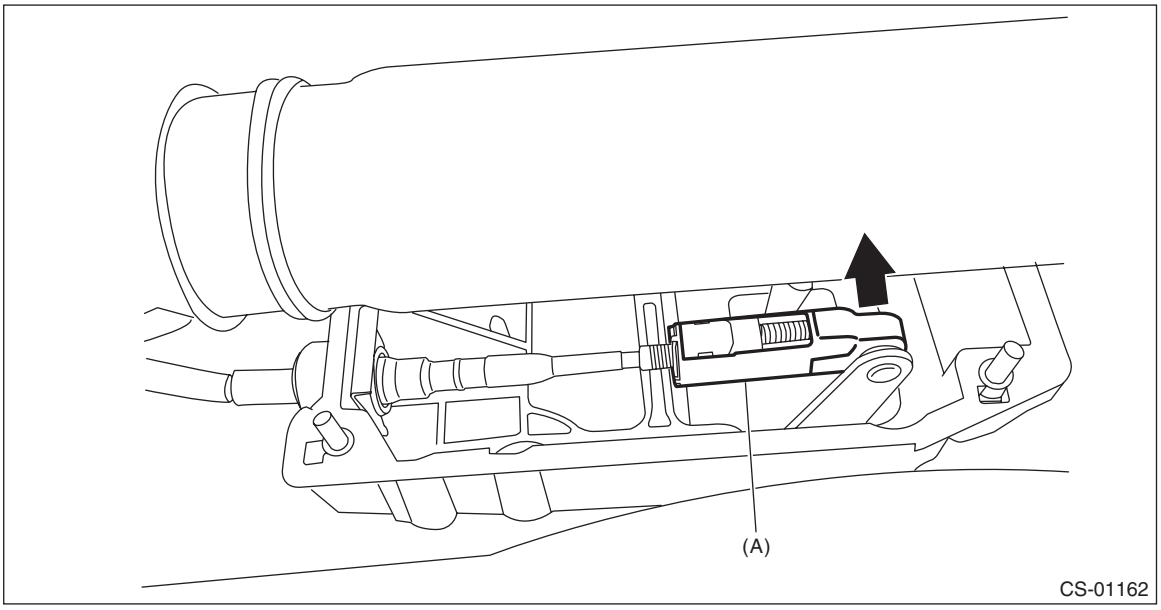

(A) MT gear select cable

4) Measure the exposed length (a) of MT gear select cable.

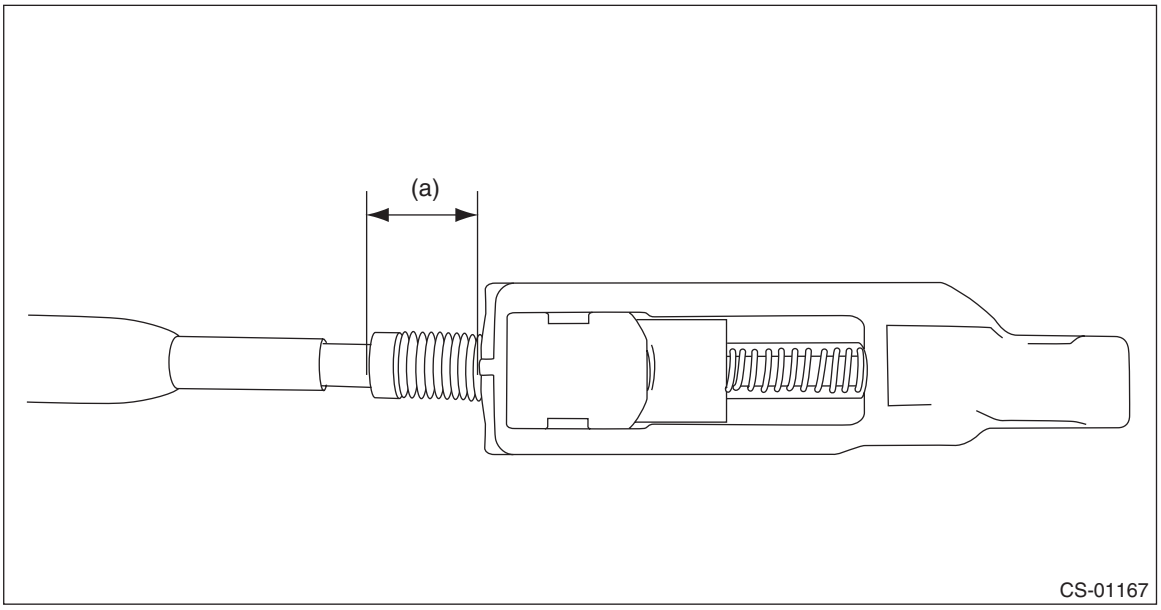

5) With the slider (green) moved in the direction of arrow, release the lock piece (pink) using a flat tip screwdriver or equivalent tool.

CAUTION:
Lock piece is easily damaged for the resin. If the lock piece is damaged, replace the MT gear select cable with a new one.

NOTE:
Rotate the MT gear select cable to 180 degrees, slide the slider in the direction of the arrow and push the claw of lock piece.

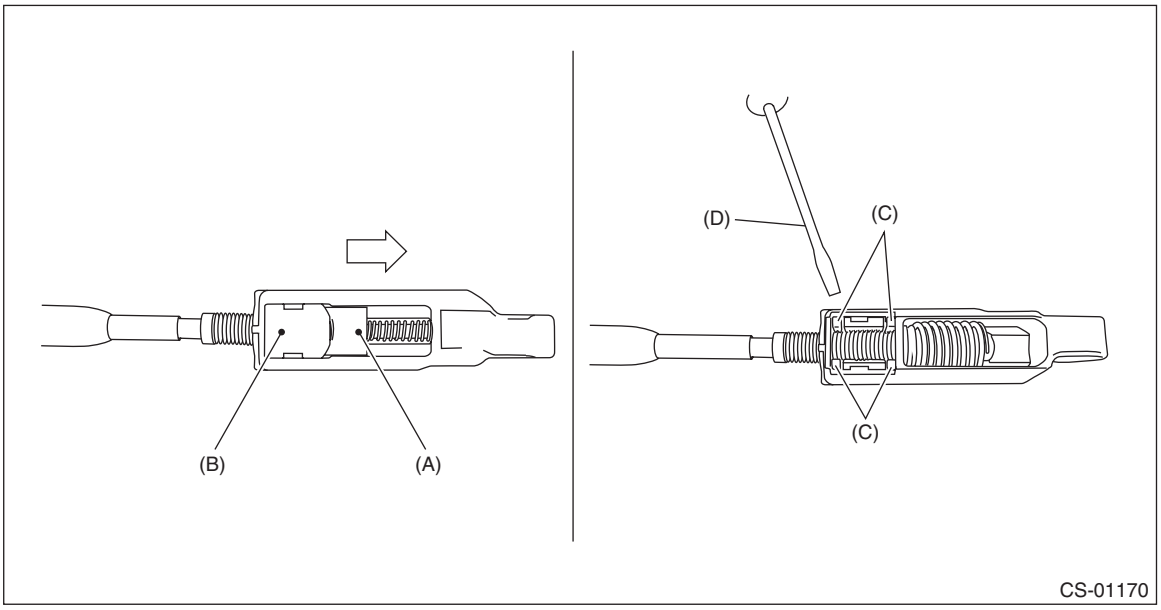

(A) Slider
(B) Lock piece
(C) Claw
(D) Flat tip screwdriver

6) Connect the MT gear select cable to the select lever, with the lock piece released.

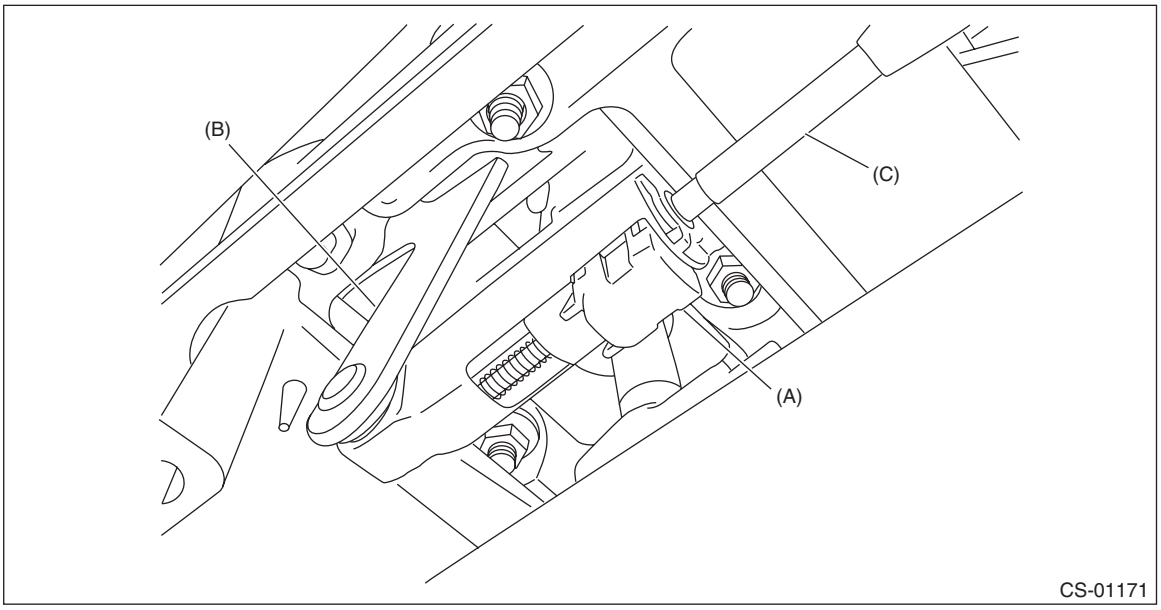

(A) Lock piece
(B) Select lever
(C) MT gear select cable

7) Move the shift lever to the reverse side, keep the exposed length (a) of MT gear select cable to 11 mm (0.4 in), and push the lock piece.

NOTE:
While pulling up the gear shift lever assembly slider, operate the lever to the reverse side.

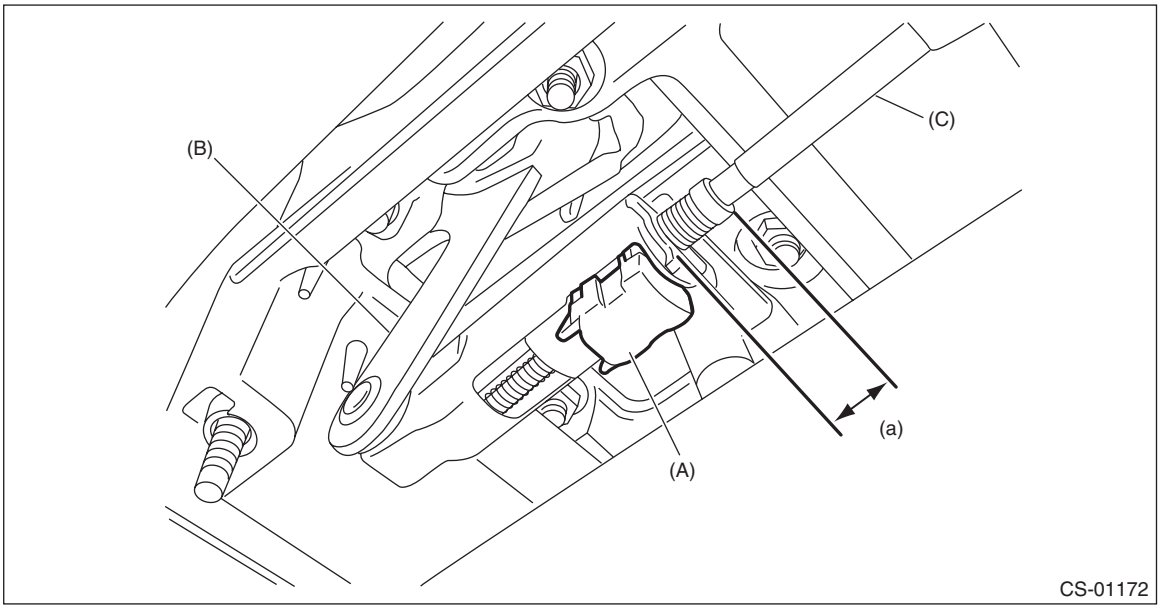

(a) Exposed length 11 mm (0.4 in)
(A) Lock piece
(B) Select lever
(C) MT gear select cable

8) Shift to 5th ←→ 6th and reverse, and check for stuck.

9) If the shift operation is not smooth, readjust the exposed length (a) of the MT gear select cable referring to the figure below.

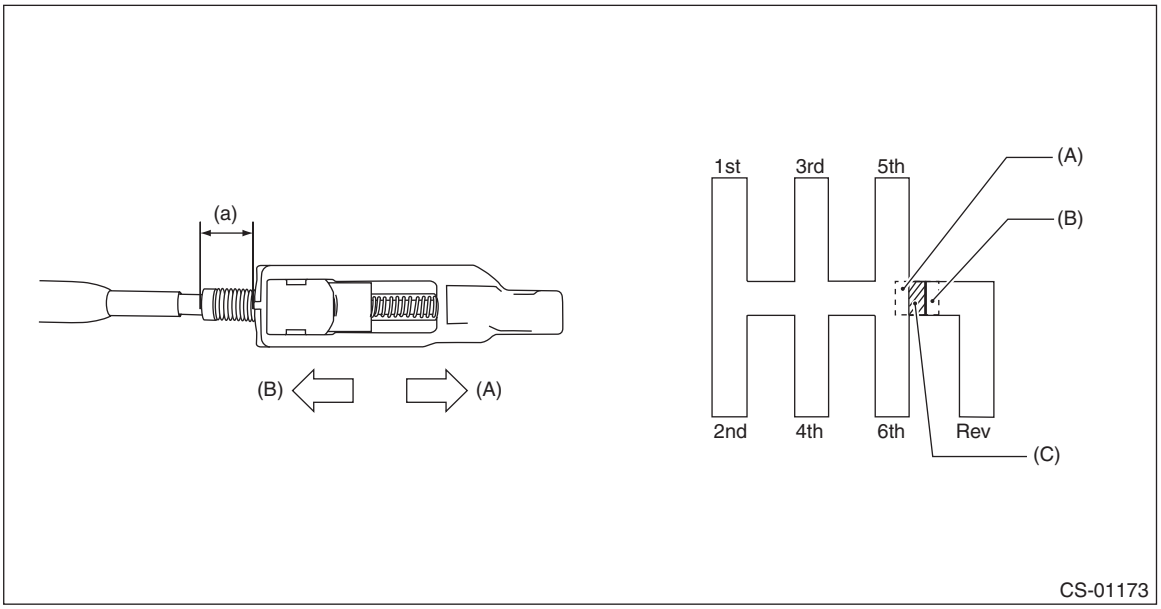

(a) Exposed length of MT gear select cable
(A) Extend direction of exposed length of MT gear select cable
(B) Shorten direction of exposed length of MT gear select cable
(C) Specification of exposed length (a)

- If 5th or 6th gear cannot be selected when cable is pressed to reverse lock bracket:
→ Extend the exposed length (a) of MT gear select cable.
- If the shift lever does not move along the cranking line when it is operated from 4th → 5th gear:
→ Shorten the exposed length (a) of MT gear select cable.

NOTE:
If it cannot adjust, replace the MT gear select cable.

10) If no fault is found in the shift and select operation, restore the vehicle.

10.General Diagnostic Table

A: INSPECTION

Symptoms	Possible cause	Corrective action
AT select lever	Starter does not run.	Adjust the select cable and inhibitor switch, or inspect the circuit.
	Back-up light does not illuminate.	Adjust the select cable and inhibitor switch, or inspect the circuit.
	AT shift lock system does not operate normally.	Adjust the select cable and inhibitor switch, or inspect the circuit.
	Manual mode can not be set.	Inspect the mode switch and select lever, or inspect the circuit.
	Up-shift is not engaged at manual mode.	Check the shift-up switch and circuit.
	Down-shift is not engaged at manual mode.	Check the shift-down switch and circuit.
MT gear shift lever	Cannot shift into reverse.	Adjust the MT gear select cable.
	Shifted to 6th though it shifted to reverse.	Adjust or replace the MT gear select cable.
	Can shift into reverse when the slider is not pulled up.	Adjust or replace the MT gear select cable.
	Slider cannot be pulled up or sticks in the pulled-up position.	• Check the shift link system of the transmission. • Replace the MT gear shift lever.

CONTINUOUSLY VARIABLE TRANSMISSION

CVT(TR580)

		Page
1.	General Description	3
2.	CVTF	39
3.	Differential Gear Oil	43
4.	AWD ON/OFF Switching Mode	47
5.	Road Test	48
6.	Stall Test	49
7.	Time Lag Test	50
8.	Secondary Pressure (Line Pressure) Test	51
9.	Transfer Clutch Pressure Test	54
10.	Automatic Transmission Assembly	63
11.	Transmission Mounting System	96
12.	Extension Case Oil Seal	99
13.	Differential Side Retainer Oil Seal	100
14.	Inhibitor Switch	104
15.	Turbine Speed Sensor	113
16.	Secondary Speed Sensor	118
17.	Primary Speed Sensor	123
18.	Secondary Pressure Sensor	128
19.	Oil Pan and Strainer	130
20.	Control Valve Body	133
21.	Transmission Harness	147
22.	X MODE Switch	155
23.	Transmission Control Module (TCM)	159
24.	Relay and Fuse	165
25.	CVTF Cooler (With Warmer Function)	166
26.	CVTF Cooler Pipe and Hose	177
27.	CVTF Cooler (Air Cooling)	189
28.	Air Breather Hose	190
29.	Drive Plate	194
30.	Torque Converter Assembly	196
31.	Preparation for Overhaul	198
32.	Extension Case	200
33.	Transfer Clutch	204
34.	Transfer Driven Gear	218
35.	Parking Pawl	221
36.	Reduction Driven Gear	223
37.	Transmission Control Device	231
38.	Transmission Case	237
39.	CVTF Filter	255
40.	Reduction Drive Gear	256
41.	Primary Pulley and Secondary Pulley	261
42.	Variator Chain	281
43.	Reverse Brake Assembly	282

44. Forward Clutch Assembly 297
45. Drive Pinion Shaft Assembly 317
46. Front Differential Assembly 346
47. Oil Pump Chain 366
48. Oil Pump 375
49. Converter Case 378
50. Diagnostics with Phenomenon 381

1. General Description

A: SPECIFICATION

1. TORQUE CONVERTER

Model	DOHC non-turbo
Type	Symmetric, 3-element, single stage, 2-phase torque converter
Stall torque ratio	2.07
Nominal mm (in)	236 (9.29)
Stall speed (at sea level) r/min	1,900 — 2,700 (D range) 1,800 — 2,600 (R range)
One-way clutch	Sprag type one-way clutch

2. OIL PUMP

Type		Internal gear pump
Driving method		Driven by chain
Number of teeth	Inner rotor	8
	Outer rotor	9

3. TRANSMISSION CONTROL ELEMENT

Type	Forward continuously variable speed change, 1 reverse, planetary gear
Multi-plate clutch	1 set
Multi-plate brake	1 set

4. TRANSMISSION GEAR RATIO

Forward	3.581 — 0.570
Rev	3.667

5. PLATE

Number of forward clutch drive plates	3
Number of reverse brake drive plates	4

6. SELECTOR POSITION

P (Park)	Transmission neutral, output shaft locked, engine start enabled
R (Reverse)	Rev
N (Neutral)	Transmission neutral, engine start enabled
D (Drive)	Forward continuously variable speed change
M (Manual mode) (paddle shift +side)	Manual gear change 1st → 2nd → 3rd → 4th → 5th → 6th
M (Manual mode) (paddle shift –side)	Manual gear change 1st ← 2nd ← 3rd ← 4th ← 5th ← 6th

7. HYDRAULIC CONTROL AND LUBRICATION

Type		Electronic hydraulic control (gear ratio is changed by signals of vehicle speed and accelerator opening angle.)
Fluid		Specified fluid: SUBARU CVT FLUID LINEARTRONIC II **CAUTION:** **Always use specified CVTF. Using other fluid will cause malfunction.**
Fluid capacity L (US qt, Imp qt)	Sedan	10.95 — 11.45 (11.6 — 12.1, 9.6 — 10.1)
	OUTBACK	11.36 — 11.86 (12.0 — 12.5, 10.0 — 10.4)
Lubrication system		Forced feed lubrication with oil pump

8. COOLING AND HARNESS

Cooling system	Sedan	CVTF cooler (with warmer feature)
	OUTBACK	CVTF cooler (with warmer feature) + air cooler
Transmission harness	Power supply circuit, CAN communication circuit, paddle shift circuit, etc.	16 poles
	Back-up light circuit, starter circuit	5 poles

9. TRANSFER

Transfer type	Multi-plate transfer (MP-T)
Number of transfer clutch drives & driven plates	5
Control method	Electronic hydraulic type
Reduction gear ratio	1.000 (43/43)

10.REDUCTION GEAR RATIO

	Sedan	OUTBACK
Front final reduction gear ratio	3.900	4.111

11.FRONT DIFFERENTIAL GEAR OIL

Fluid	SUBARU GEAR OIL EXTRA MT or equivalent
Fluid capacity L (US qt, Imp qt)	1.14 — 1.24 (1.2 — 1.3, 1.0 — 1.1)

B: COMPONENT

1. TORQUE CONVERTER ASSEMBLY AND CONVERTER CASE

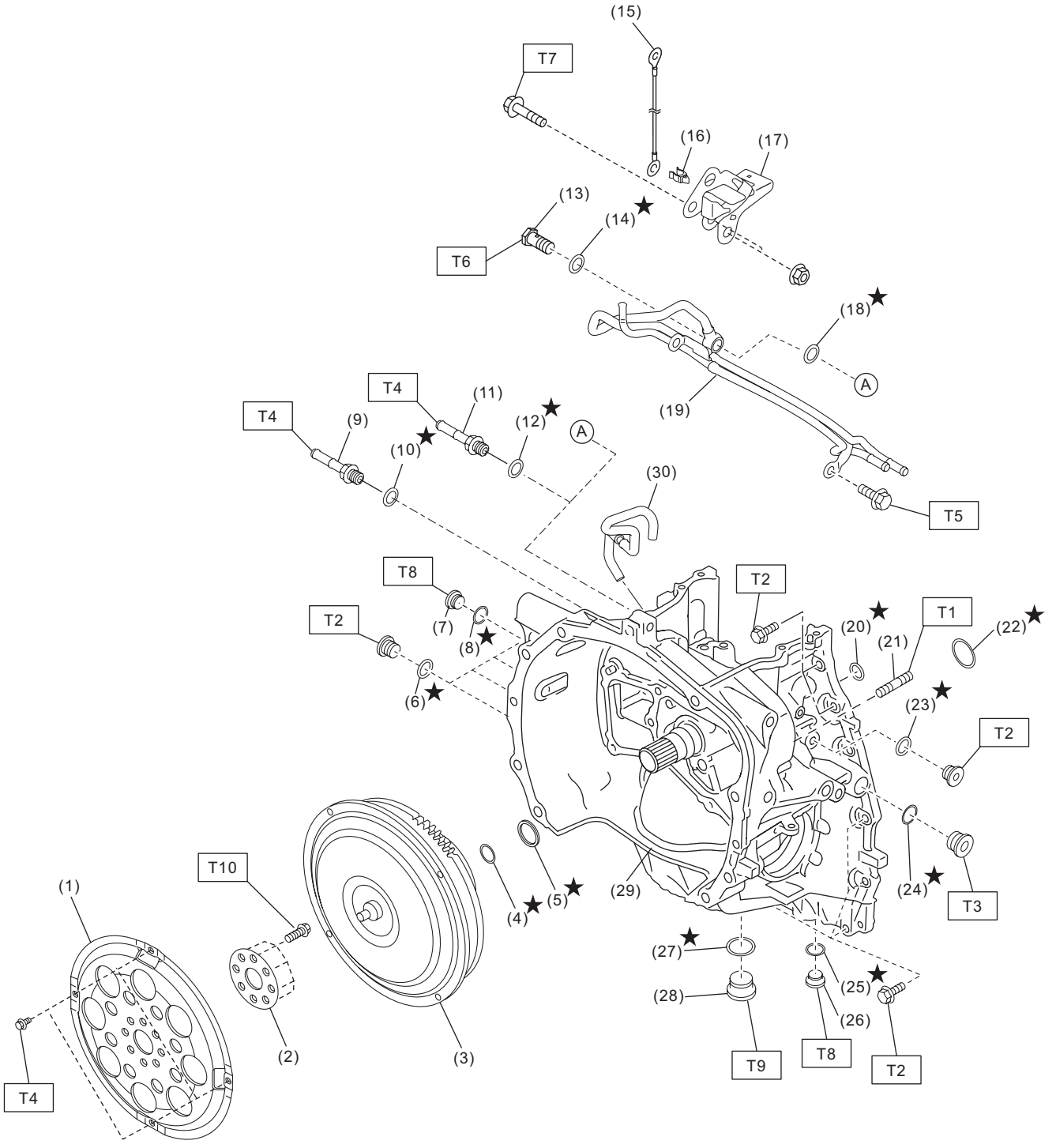

CVT10066

(1)	Drive plate	(15)	Transmission radio ground cord	(29)	Converter case
(2)	Reinforcement drive plate	(16)	Clip	(30)	Air breather hose
(3)	Torque converter ASSY	(17)	Transmission hanger		
(4)	O-ring	(18)	Gasket (with CVTF cooler (air cool))	***Tightening torque: N·m (kgf-m, ft-lb)***	
(5)	Seal ring	(19)	CVTF cooler pipe COMPL (with CVTF cooler (air cool))	***T1:***	***18 (1.8, 13.3)***
(6)	O-ring	(20)	O-ring	***T2:***	***22 (2.2, 16.2)***
(7)	Front differential gear oil filler plug	(21)	Stud bolt	***T3:***	***22.5 (2.3, 16.6)***
(8)	O-ring	(22)	O-ring	***T4:***	***25 (2.5, 18.4)***
(9)	Oil cooler pipe	(23)	O-ring	***T5:***	***35 (3.6, 25.8)***
(10)	O-ring	(24)	O-ring	***T6:***	***40 (4.1, 29.5)***
(11)	Oil cooler pipe (without CVTF cooler (air cool))	(25)	Gasket	***T7:***	***41 (4.2, 30.2)***
(12)	O-ring (without CVTF cooler (air cool))	(26)	Overflow drain plug	***T8:***	***50 (5.1, 36.9)***
(13)	Union screw (with CVTF cooler (air cool))	(27)	Gasket	***T9:***	***70 (7.1, 51.6)***
(14)	Gasket (with CVTF cooler (air cool))	(28)	Front differential gear oil drain plug	***T10:***	***<Ref. to CVT(TR580)-194, INSTALLATION, Drive Plate.>***

2. OIL PUMP ASSEMBLY

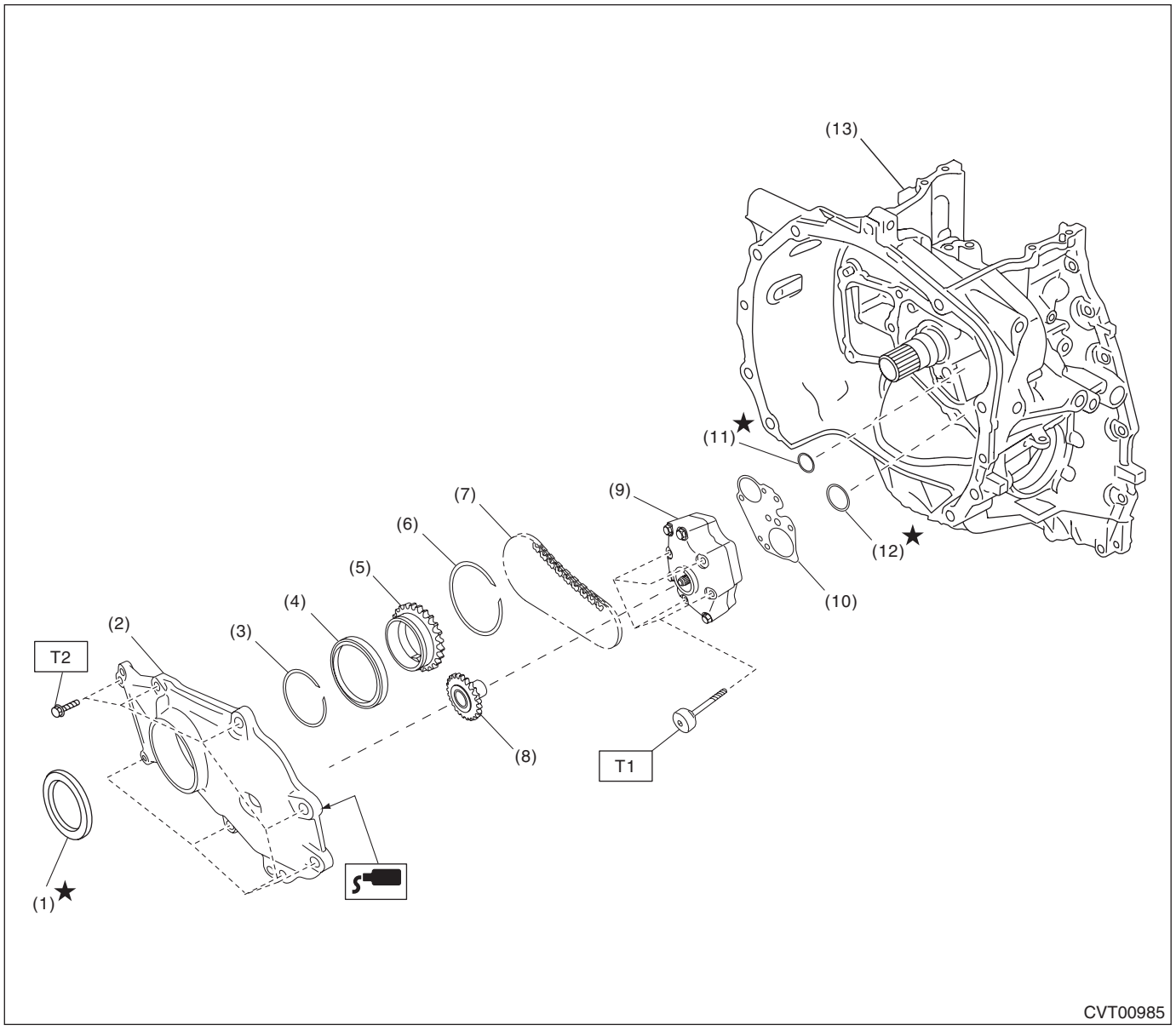

(1) Oil seal
(2) Oil pump chain cover
(3) Snap ring
(4) Ball bearing
(5) Drive sprocket
(6) Snap ring
(7) Oil pump chain
(8) Driven sprocket
(9) Oil pump ASSY
(10) Plate
(11) O-ring (small)
(12) O-ring (large)
(13) Converter case

Tightening torque: N·m (kgf-m, ft-lb)
T1: 8.5 (0.9, 6.3)
T2: 21 (2.1, 15.5)

3. TRANSMISSION CASE

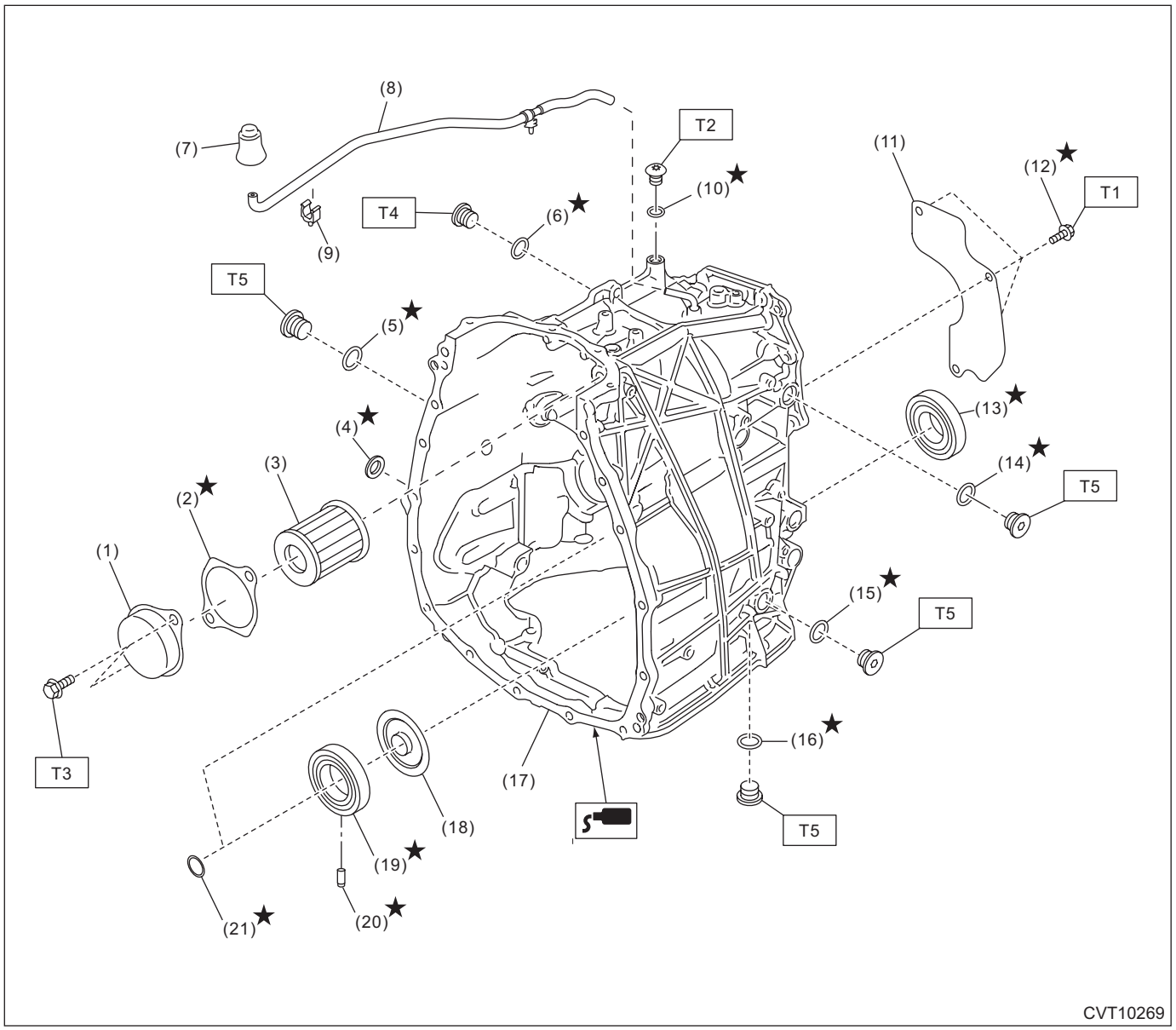

(1) CVTF filter cover
(2) Gasket
(3) CVTF filter
(4) Oil seal
(5) Gasket
(6) O-ring
(7) Air breather cap
(8) Air breather hose ASSY
(9) Clip
(10) O-ring
(11) Oil stopper plate
(12) Micro-encapsulated bolt
(13) Ball bearing
(14) O-ring
(15) Gasket
(16) O-ring
(17) Transmission case
(18) Oil guide
(19) Ball bearing
(20) Roll pin
(21) Seal ring

Tightening torque: N·m (kgf-m, ft-lb)
T1: 9 (0.9, 6.6)
T2: 13 (1.3, 9.6)
T3: 17 (1.7, 12.5)
T4: 22 (2.2, 16.2)
T5: 50 (5.1, 36.9)

4. CONTROL VALVE BODY

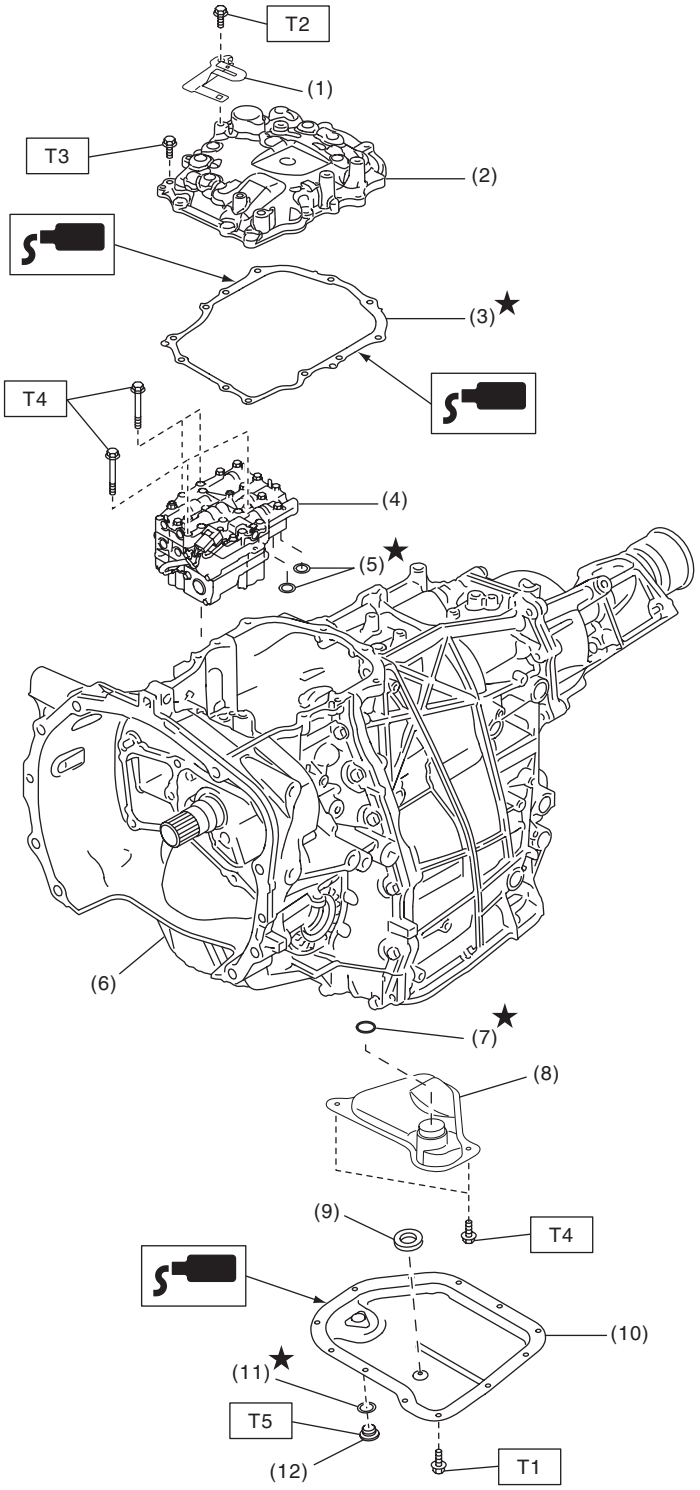

CVT00900

(1)	Transmission harness stay	(7)	O-ring	***Tightening torque: N·m (kgf-m, ft-lb)***
(2)	Valve cover	(8)	Oil strainer	***T1: 5 (0.5, 3.7)***
(3)	Gasket	(9)	Magnet	***T2: 7 (0.7, 5.2)***
(4)	Control valve body	(10)	Oil pan	***T3: 8 (0.8, 5.9)***
(5)	O-ring	(11)	Gasket	***T4: 9 (0.9, 6.6)***
(6)	Transmission ASSY	(12)	CVTF drain plug	***T5: 31 (3.2, 22.9)***

5. REVERSE BRAKE ASSEMBLY

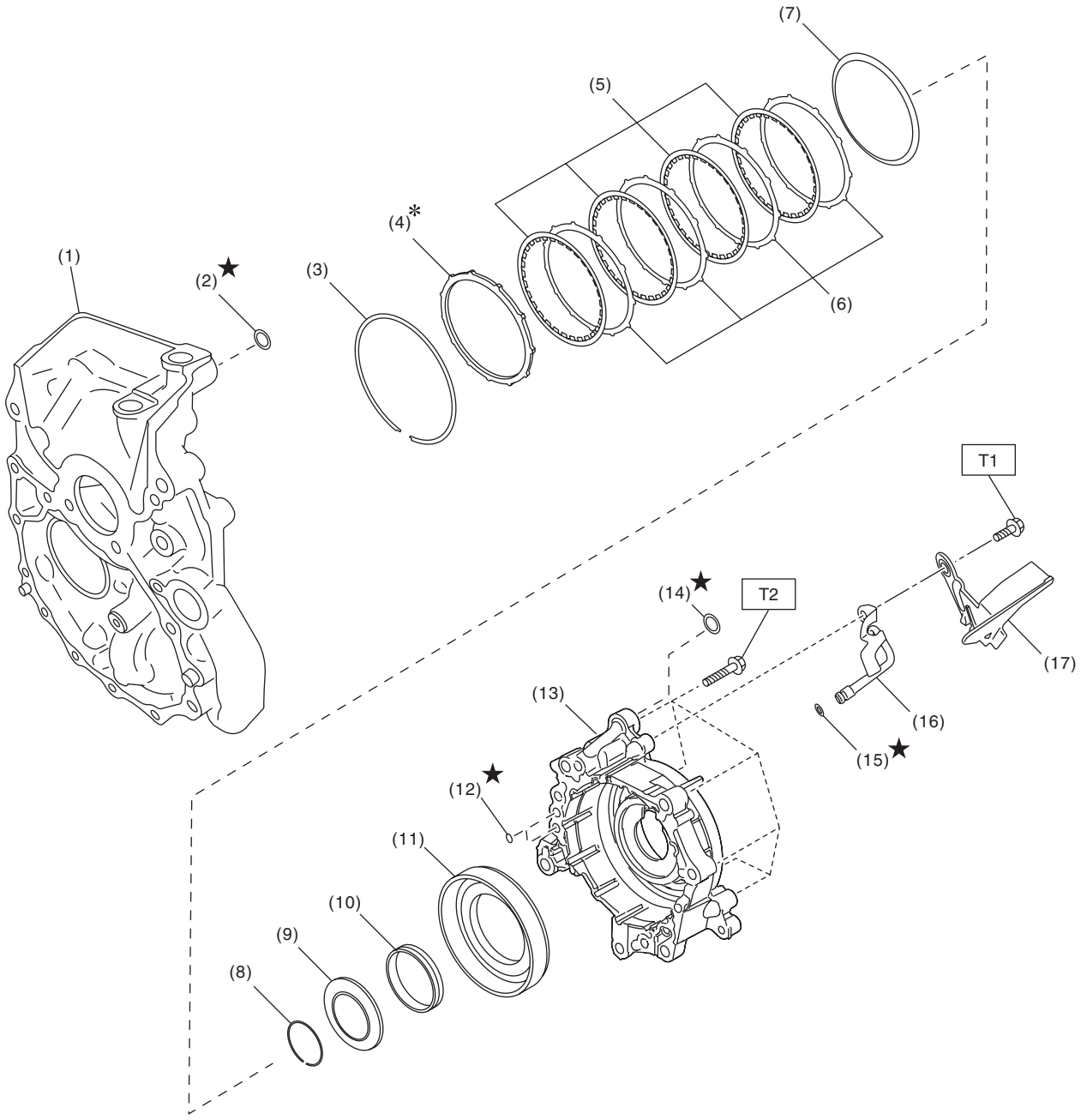

CVT00901

(1) Drive pinion retainer
(2) O-ring
(3) Snap ring
(4) Retaining plate
(5) Drive plate
(6) Driven plate
(7) Dish plate
(8) Snap ring
(9) Spring retainer
(10) Return spring
(11) Reverse brake piston
(12) O-ring
(13) Reverse brake housing
(14) O-ring
(15) O-ring
(16) Lubrication pipe
(17) Oil guide

Tightening torque: N·m (kgf-m, ft-lb)
T1: 16 (1.6, 11.8)
T2: 37 (3.8, 27.3)

6. FORWARD CLUTCH ASSEMBLY

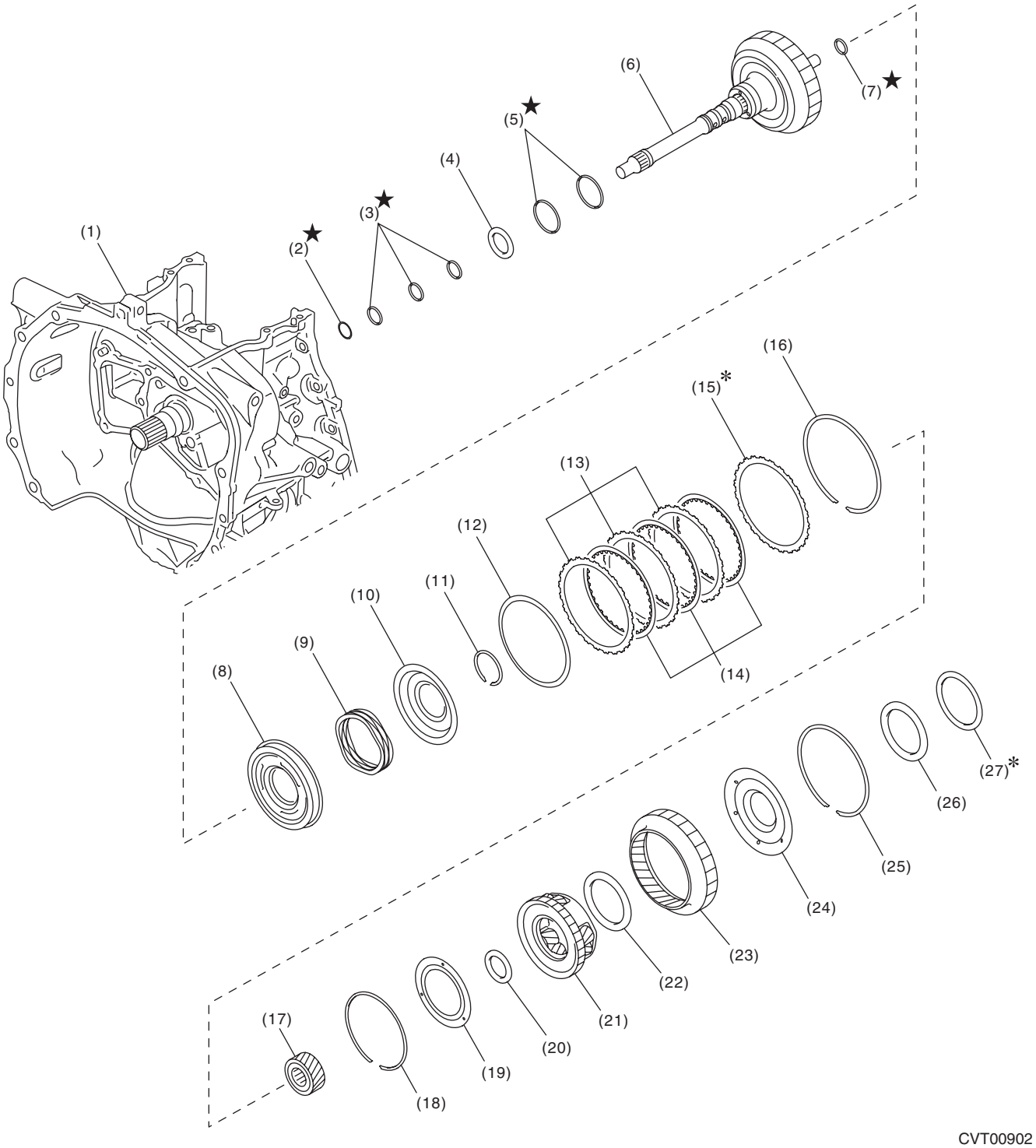

(1) Converter case
(2) O-ring
(3) Seal ring
(4) Thrust bearing
(5) Seal ring
(6) Forward clutch drum ASSY
(7) Seal ring
(8) Forward clutch piston
(9) Return spring
(10) Chamber COMPL
(11) Snap ring
(12) Dish plate
(13) Driven plate
(14) Drive plate
(15) Retaining plate
(16) Snap ring
(17) Sun gear
(18) Snap ring
(19) Balance oil guide
(20) Thrust bearing
(21) Planetary carrier ASSY
(22) Thrust bearing
(23) Internal gear
(24) Thrust gear plate
(25) Snap ring
(26) Thrust bearing
(27) Washer

7. TRANSMISSION CONTROL DEVICE

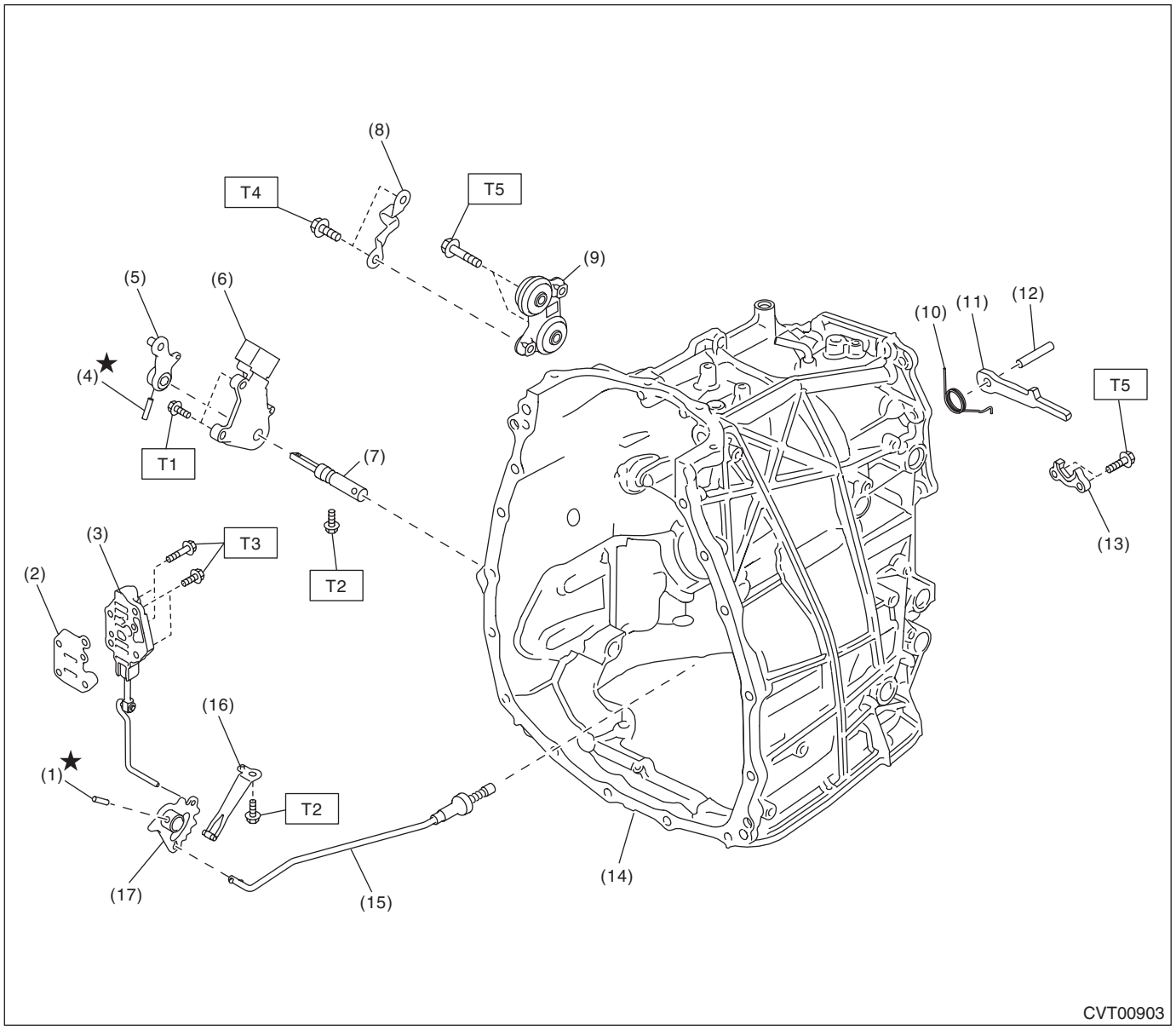

(1) Spring pin
(2) Separator plate
(3) Manual valve ASSY
(4) Spring pin
(5) Shifter arm
(6) Inhibitor switch
(7) Shifter arm shaft
(8) Cable bracket
(9) Plate ASSY
(10) Return spring
(11) Parking pawl
(12) Shaft
(13) Parking support
(14) Transmission case
(15) Parking rod
(16) Detent spring
(17) Manual plate

Tightening torque: N·m (kgf-m, ft-lb)
T1: 5 (0.5, 3.7)
T2: 7 (0.7, 5.2)
T3: 9 (0.9, 6.6)
T4: 18 (1.8, 13.3)
T5: 25 (2.5, 18.4)

8. PRIMARY PULLEY, SECONDARY PULLEY & VARIATOR CHAIN AND REDUCTION DRIVE GEAR

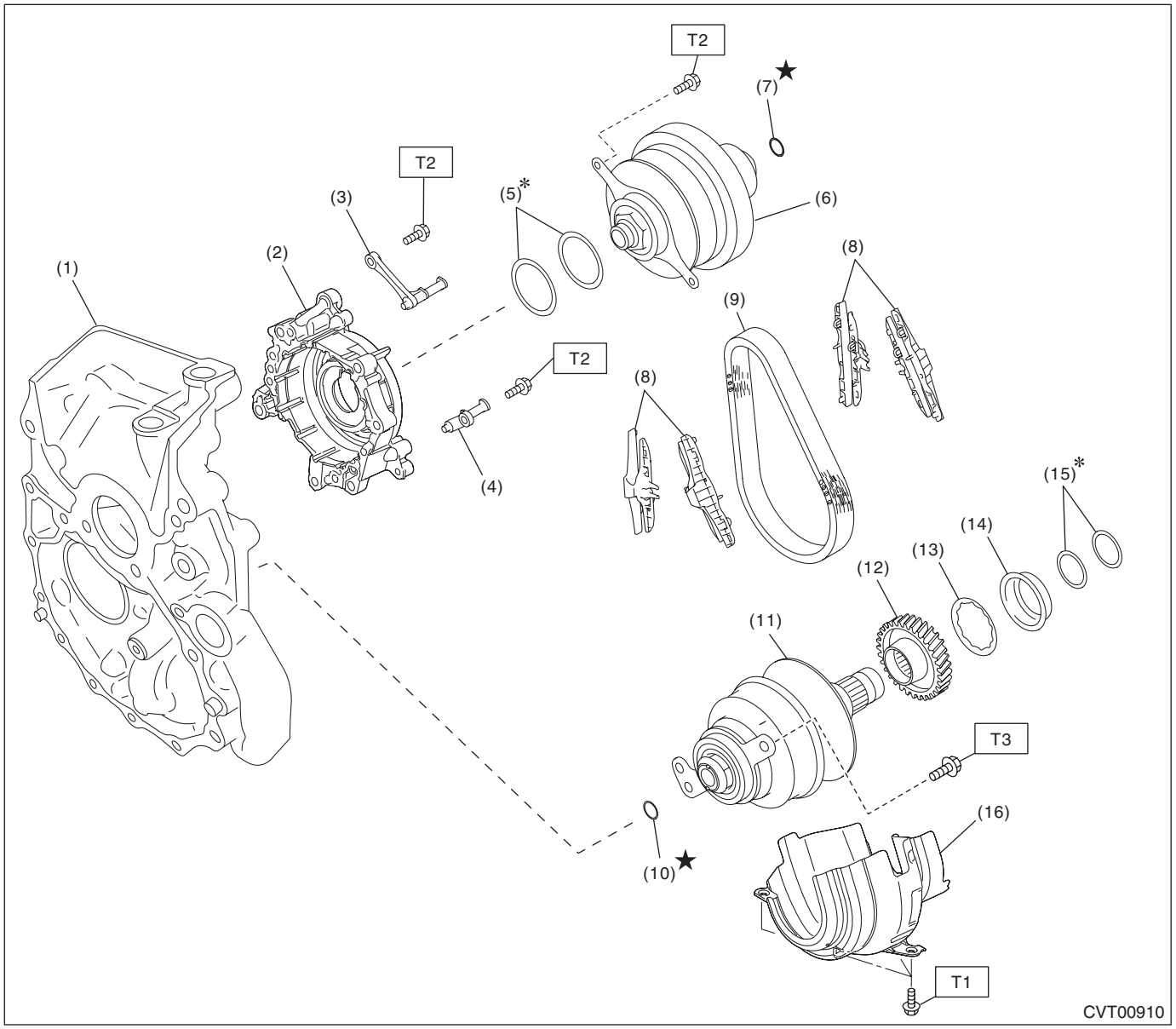

(1) Drive pinion retainer
(2) Reverse brake housing
(3) Support rod
(4) Lubrication pipe
(5) Primary pulley shim
(6) Primary pulley ASSY
(7) Seal ring
(8) Chain guide
(9) Variator chain
(10) Seal ring
(11) Secondary pulley ASSY
(12) Reduction drive gear
(13) Dish plate
(14) Spring retainer
(15) Reduction gear shim
(16) Oil baffle

Tightening torque: N·m (kgf-m, ft-lb)
T1: 16 (1.6, 11.8)
T2: 21 (2.1, 15.5)
T3: 67.5 (6.9, 49.8)

9. FRONT DIFFERENTIAL GEAR

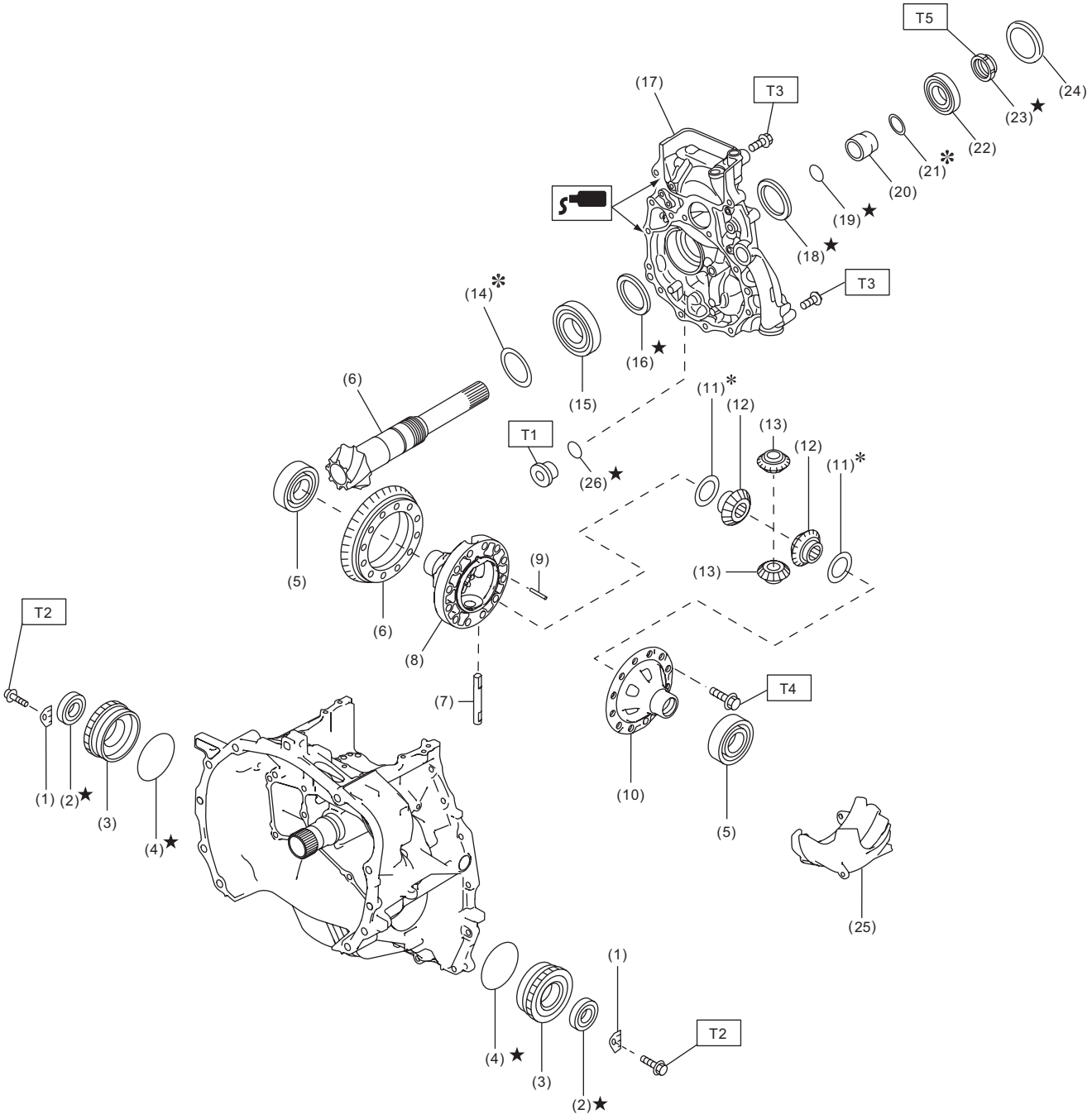

CVT10053

(1) Lock plate
(2) Oil seal
(3) Differential side retainer
(4) O-ring
(5) Taper roller bearing
(6) Drive pinion gear set
(7) Pinion shaft
(8) Differential case RH
(9) Straight pin
(10) Differential case LH
(11) Washer
(12) Differential bevel gear
(13) Differential bevel pinion
(14) Drive pinion shim
(15) Taper roller bearing
(16) Oil seal
(17) Drive pinion retainer
(18) Oil seal
(19) O-ring
(20) Drive pinion spacer
(21) Drive pinion washer
(22) Taper roller bearing
(23) Lock nut
(24) Plug
(25) Oil baffle
(26) O-ring

Tightening torque: N·m (kgf-m, ft-lb)

T1: 22 (2.2, 16.2)
T2: 25 (2.5, 18.4)
T3: 43 (4.4, 31.7)
T4: 64 (6.5, 47.2)
T5: <Ref. to CVT(TR580)-325, ASSEMBLY, Drive Pinion Shaft Assembly.>

10.TRANSFER AND EXTENSION CASE

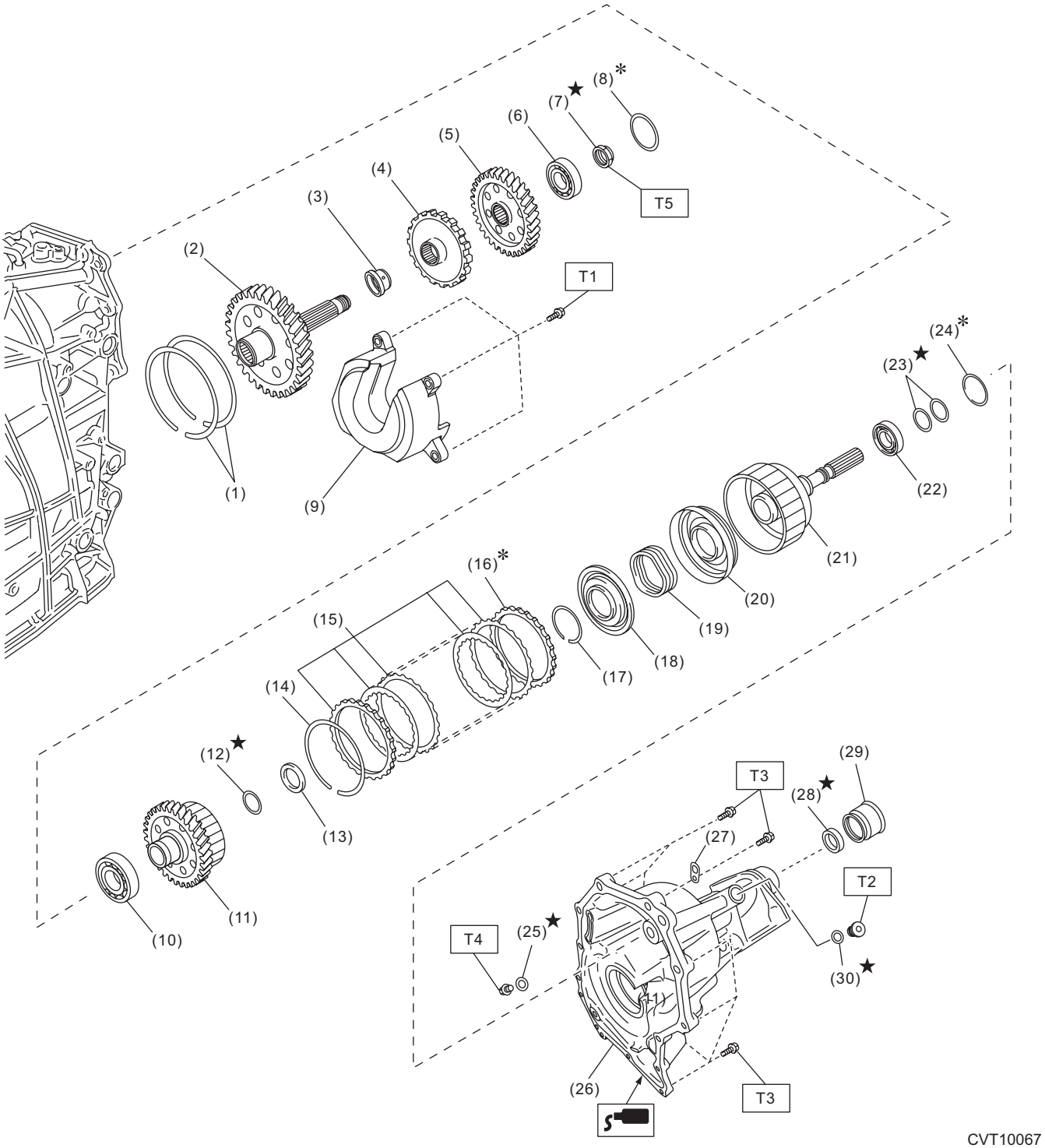

(1) Snap ring
(2) Reduction driven gear COMPL
(3) Collar
(4) Parking gear
(5) Transfer drive gear
(6) Ball bearing
(7) Lock nut
(8) Transfer drive gear shim
(9) Spacer oil
(10) Ball bearing
(11) Transfer driven gear
(12) Seal ring
(13) Thrust bearing
(14) Snap ring
(15) Transfer clutch plate set
(16) Pressure plate
(17) Snap ring
(18) Transfer clutch piston seal
(19) Transfer clutch piston return spring
(20) Transfer clutch piston
(21) Rear drive shaft
(22) Ball bearing
(23) Seal ring
(24) Transfer driven gear shim
(25) Gasket
(26) Extension case
(27) Transmission hanger
(28) Oil seal
(29) Dust cover
(30) O-ring

Tightening torque: N·m (kgf-m, ft-lb)

T1: 17 (1.7, 12.5)
T2: 22 (2.2, 16.2)
T3: 25 (2.5, 18.4)
T4: 35 (3.6, 25.8)
T5: 95 (9.7, 70.1)

11.TRANSMISSION HARNESS AND SENSOR

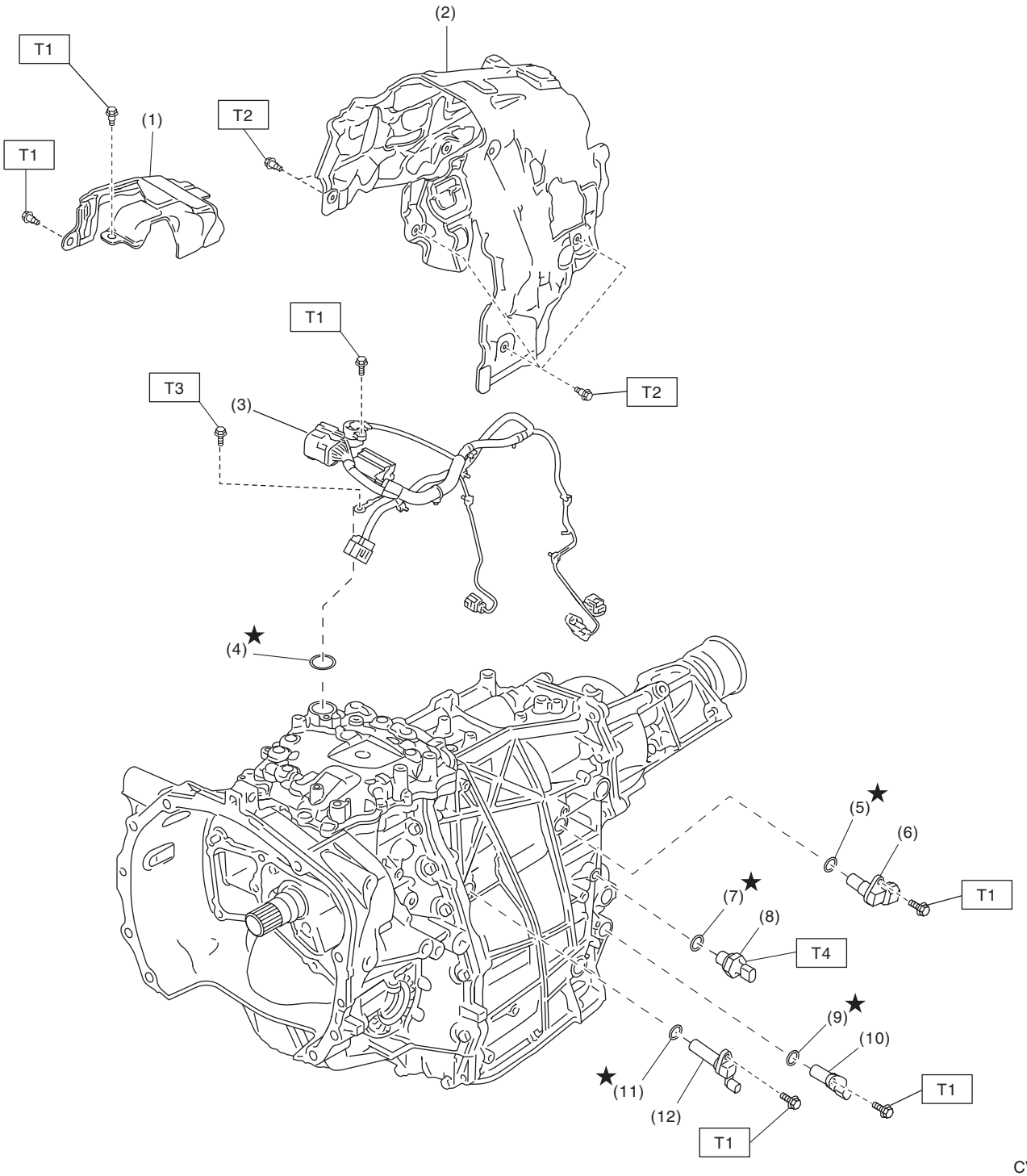

(1)	Transmission case cover	(7)	O-ring
(2)	Transmission case cover	(8)	Secondary pressure sensor
(3)	Transmission harness	(9)	O-ring
(4)	O-ring	(10)	Secondary speed sensor
(5)	O-ring	(11)	O-ring
(6)	Primary speed sensor	(12)	Turbine speed sensor

Tightening torque: N·m (kgf-m, ft-lb)
T1: 7 (0.7, 3.7)
T2: 8 (0.8, 5.9)
T3: 14 (1.4, 10.3)
T4: 39 (4.0, 28.8)

12.CVTF COOLER (WITH WARMER FEATURE)

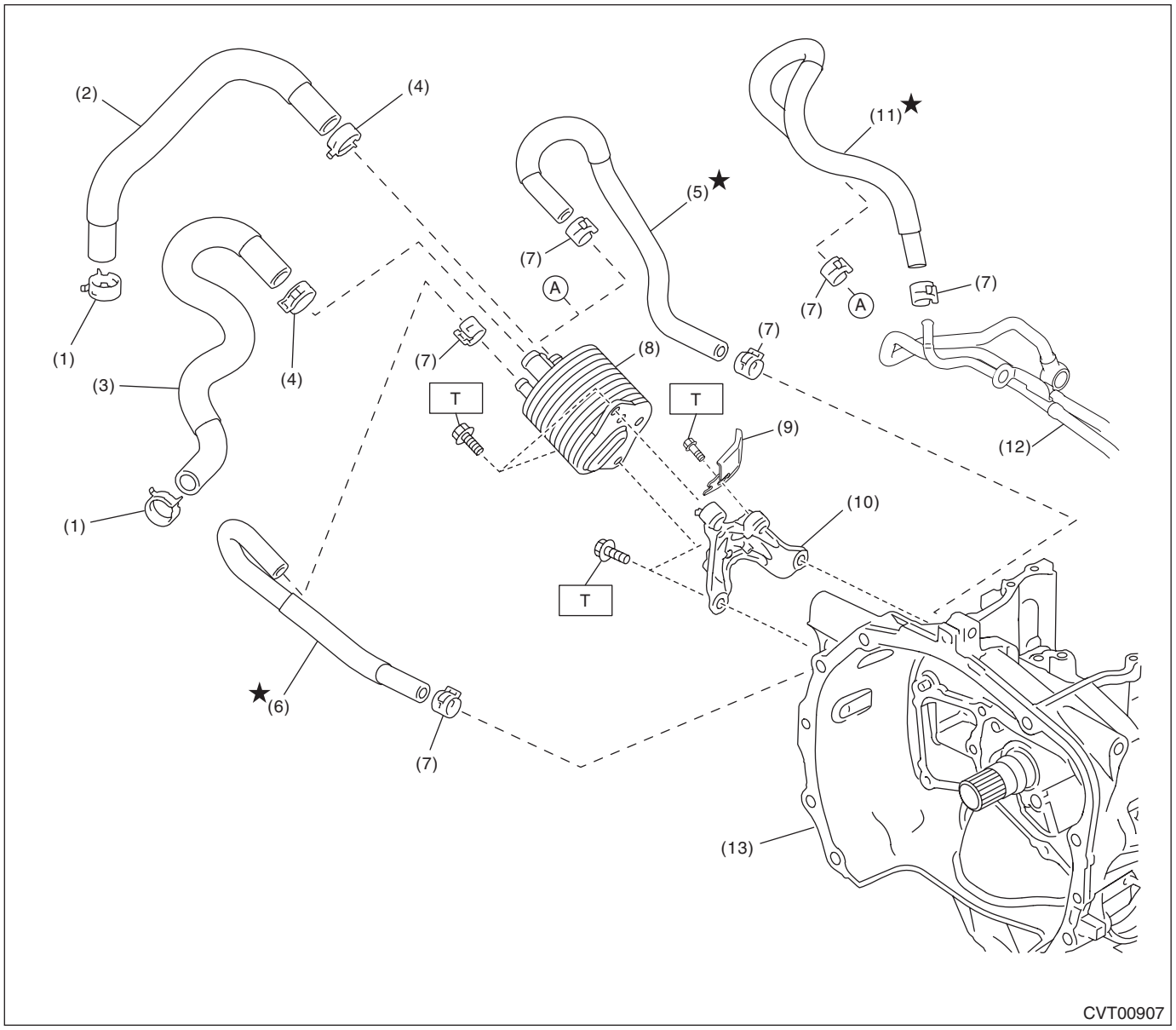

(1) Hose clamp
(2) Engine coolant outlet hose
(3) Engine coolant inlet hose
(4) Hose clamp
(5) CVTF cooler inlet hose (except for OUTBACK model)
(6) CVTF cooler outlet hose
(7) Hose clamp
(8) CVTF cooler (with warmer feature)
(9) Harness stay
(10) CVTF cooler bracket
(11) CVTF cooler inlet hose (OUTBACK model)
(12) Oil cooler pipe COMPL (OUTBACK model)
(13) Converter case

Tightening torque: N·m (kgf-m, ft-lb)
T: 23 (2.3, 17.0)

13.CVTF COOLER PIPE AND HOSE

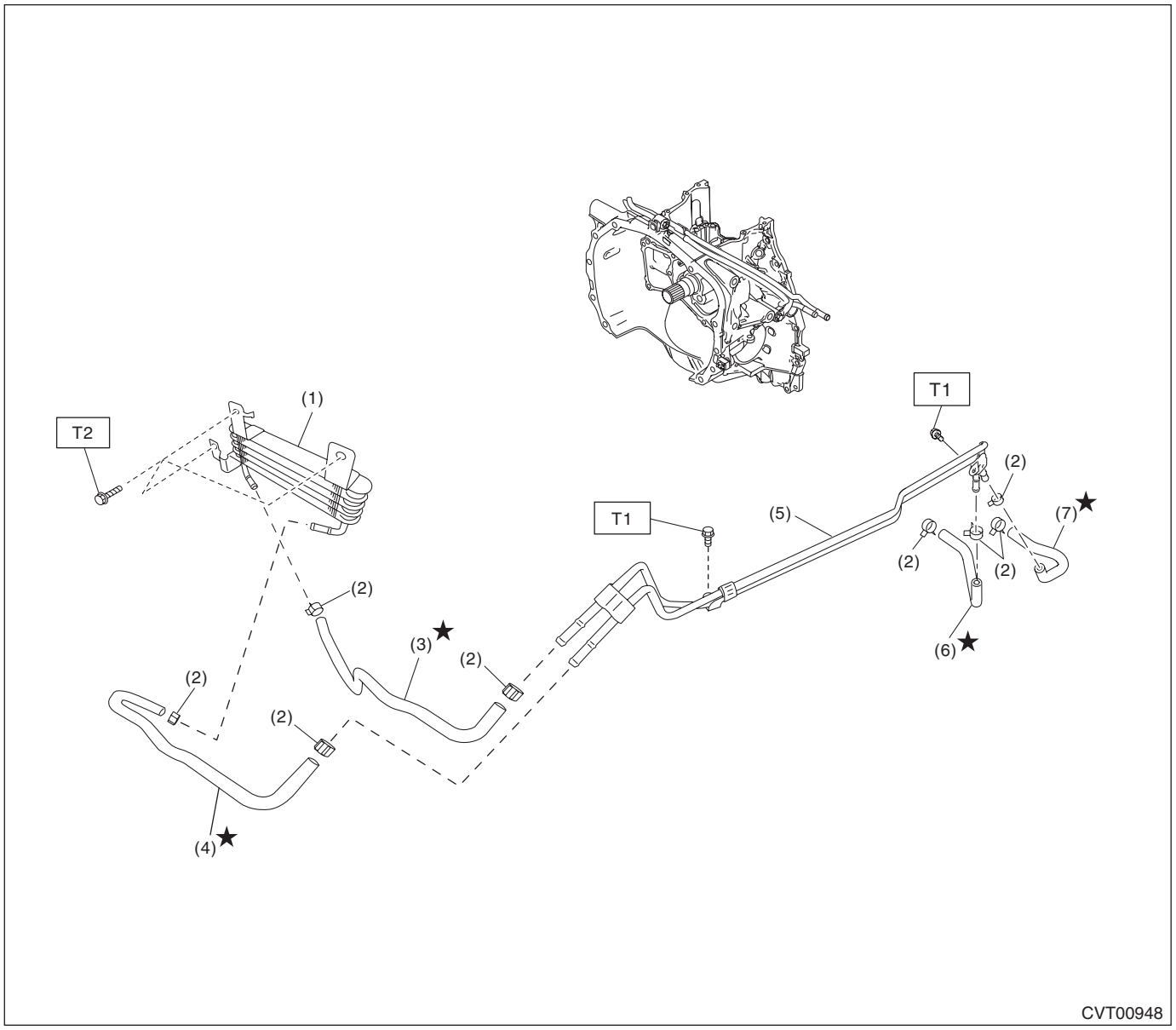

(1) CVTF cooler (air cool)
(2) CVTF hose clip
(3) CVTF cooler (air cool) inlet hose
(4) CVTF cooler (air cool) outlet hose
(5) CVTF cooler pipe ASSY
(6) CVTF CVT outlet hose
(7) CVTF CVT inlet hose

Tightening torque: N·m (kgf-m, ft-lb)
T1: 7.5 (0.8, 5.5)
T2: 12 (1.2 8.9)

14.TRANSMISSION CONTROL MODULE

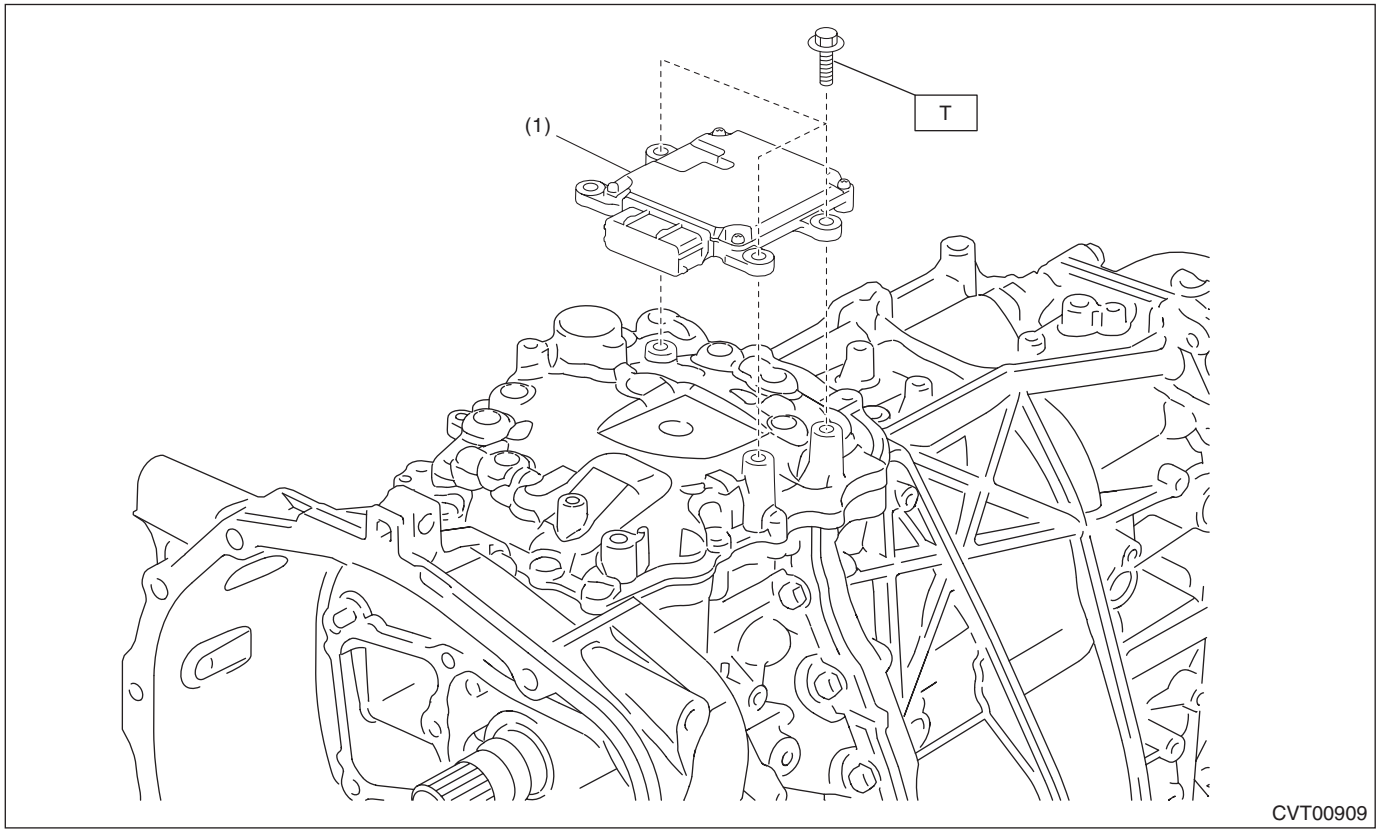

(1) Transmission control module (TCM)

Tightening torque: N·m (kgf-m, ft-lb)

T: 7 (0.7, 5.3)

15.TRANSMISSION MOUNTING

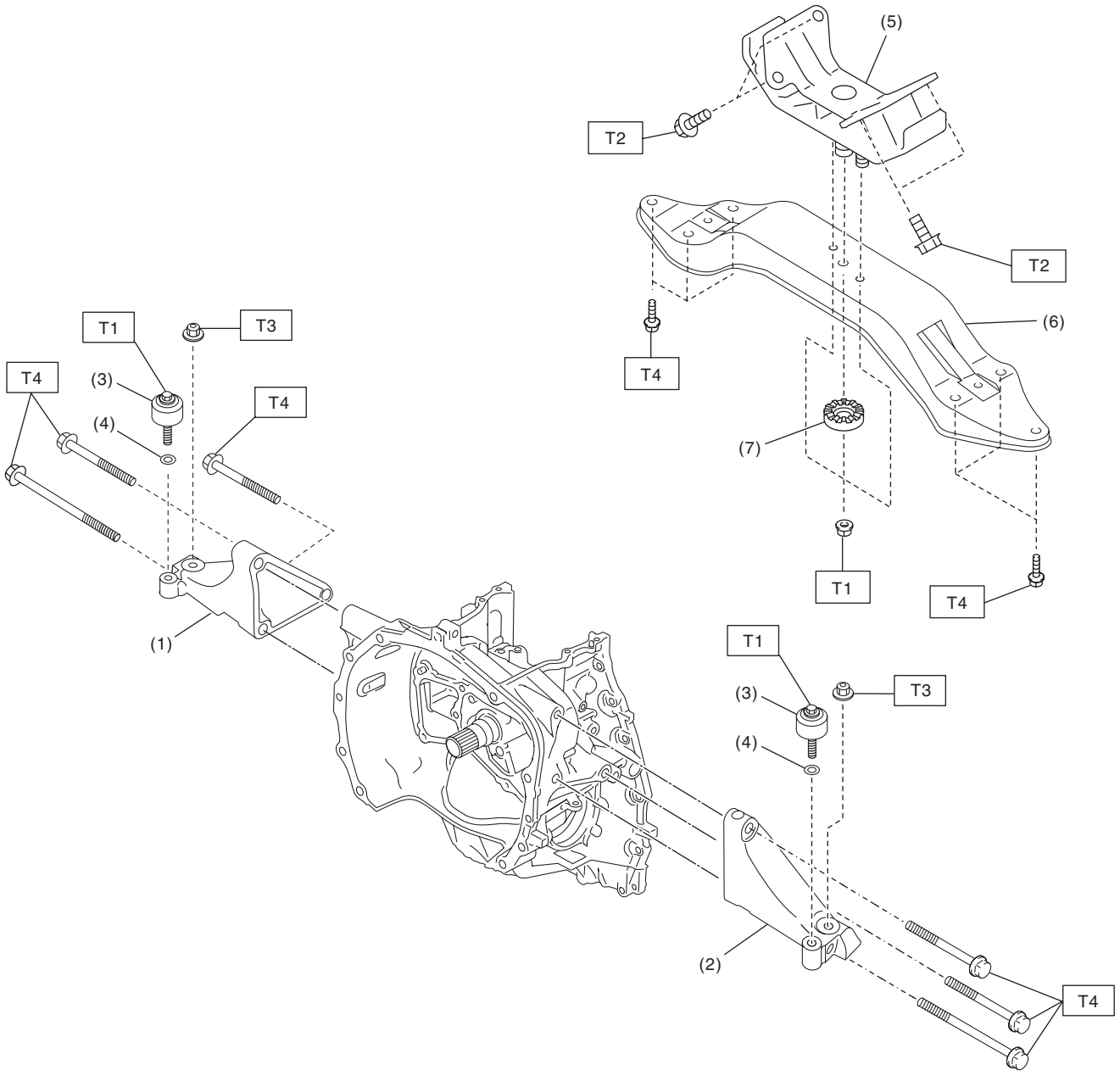

CVT00908

(1)	Transmission mounting bracket (RH)	(5)	Rear cushion rubber	***Tightening torque: N·m (kgf-m, ft-lb)***
(2)	Transmission mounting bracket (LH)	(6)	Transmission rear crossmember	***T1: 35 (3.6, 25.8)***
(3)	Dynamic damper	(7)	Stopper	***T2: 40 (4.1, 29.5)***
(4)	Washer			***T3: 45 (4.6, 33.2)***
				T4: 75 (7.6, 55.3)

C: CAUTION

- Remove contamination including dirt and corrosion before removal, installation or disassembly.
- Keep the disassembled parts in order and protect them from dust and dirt.
- Do not place the valve cover with its inner side facing up until it is installed, to prevent intrusion of foreign matter into the control valve body.
- Before removal, installation or disassembly, be sure to clarify the failure. Avoid unnecessary removal, installation, disassembly and replacement.
- When disassembling the case and other light alloy parts, use a plastic hammer to force it apart. Do not pry apart with screwdrivers or other tools.
- Vehicle components are extremely hot after driving. Be wary of receiving burns from heated parts.
- Use SUBARU genuine CVTF and recommended grease. Do not mix CVTF, grease etc. of different grades or manufacturers.
- Be sure to tighten bolts and nuts to the specified torque.
- Apply CVTF onto sliding or revolving surfaces before installation.
- Replace deformed or damaged snap rings with new parts.
- Before installing O-rings or oil seals, apply sufficient amount of CVTF or gear oil to appropriate locations in order to avoid damage and deformation.
- Be careful not to incorrectly install or fail to install O-rings, snap rings and other such parts.
- Before securing a part on a vise, place cushioning material such as wood blocks, aluminum plate, or cloth between the part and the vise.
- Avoid damaging the mating surface of the case.
- Before applying liquid gasket, completely remove the old liquid gasket.
- After removing the sensors, breather hose and plugs, plug the holes to avoid foreign materials intruding as necessary.
- During disassembly or assembly, be sure to use nylon gloves or paper towels. Do not use cloth gloves or waste cloth.
- Be careful of handling the oil seal, O-ring and gasket. If the contact surface of them is damaged, oil leakage may occur.
- When pressing-in the oil seal, make sure that the oil seal lip portion and outer surface are not damaged or tilted.
- When replacing the taper roller bearing, replace the outer race and inner race as a set.
- When replacing the hypoid gear, replace the hypoid gear and drive pinion shaft as a set.
- Replace the bolts if the seating surface or the thread surface is excessively rusted.

D: PREPARATION TOOL

1. SPECIAL TOOL

ILLUSTRATION	TOOL NUMBER	DESCRIPTION	REMARKS
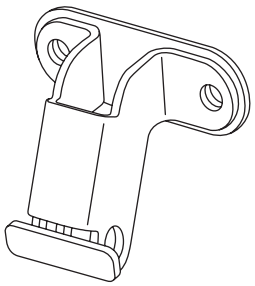 ST41099AJ130	41099AJ130	ST H4 (FA, FB)	Used for holding and balancing the engine unit.

ILLUSTRATION	TOOL NUMBER	DESCRIPTION	REMARKS
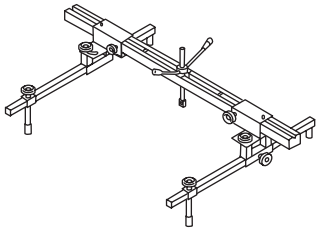 ST99099AJ000	99099AJ000	ENGINE HANGER	• Used for removing and installing transmission assembly. • Used together with CHAIN BALANCER (99099AJ010).
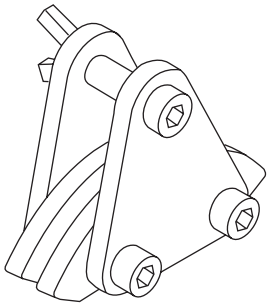 ST99099AJ010	99099AJ010	CHAIN BALANCER	• Used for removing and installing transmission assembly. • Used together with ENGINE HANGER (99099AJ000).
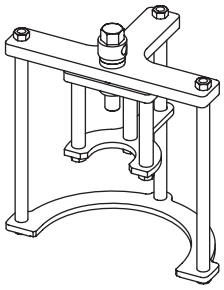 ST18769AA010	18769AA010	EXPANDER PULLEY	Used for removing and installing the secondary pulley assembly.
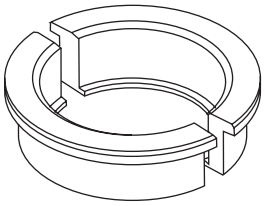 ST18767AA010	18767AA010	BEARING REMOVER	Used for removing the ball bearing of transfer clutch assembly.
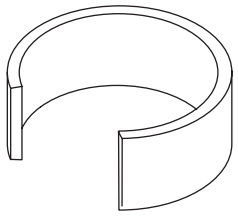 ST18762AA010	18762AA010	COMPRESSOR SPECIAL TOOL	Used for removing and installing snap ring of forward clutch assembly.

ILLUSTRATION	TOOL NUMBER	DESCRIPTION	REMARKS
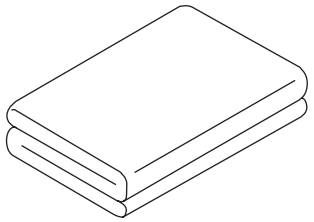 ST18761AA010	18761AA010	SHEET SPECIAL TOOL	• Used for removing and installing control valve body. • Used for removing and installing valve cover. • Used for removing and installing transmission harness.
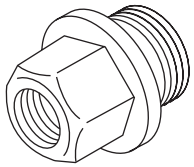 ST18681AA010	18681AA010	PRESSURE GAUGE ADAPTER	Used for measuring the secondary pressure (line pressure). NOTE: Used together with the genuine O-ring (part No. 806916050).
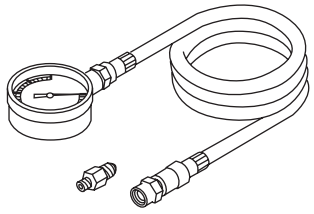 ST18801AA000	18801AA000	OIL PRESSURE GAUGE ASSY	Used for measuring the secondary pressure (line pressure).
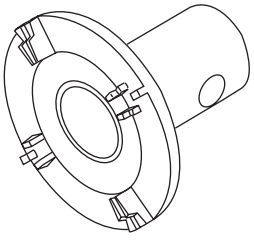 ST18658AA020	18658AA020	WRENCH COMPL RETAINER	Used for removing and installing the differential side retainer.
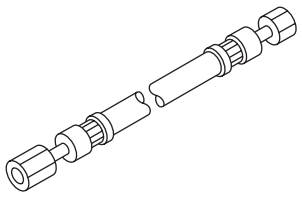 ST34099AC010	34099AC010	ADAPTER HOSE A	Used for measuring the transfer clutch hydraulic pressure.

ILLUSTRATION	TOOL NUMBER	DESCRIPTION	REMARKS
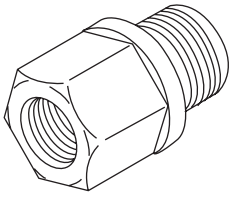 ST18681AA000	18681AA000	PRESSURE GAUGE ADAPTER	Used for measuring the transfer clutch hydraulic pressure. NOTE: Used together with the genuine O-ring (Part No. 806911080).
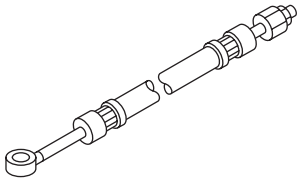 ST34099AC020	34099AC020	ADAPTER HOSE B	Used for measuring the transfer clutch hydraulic pressure. NOTE: Used together with genuine union screw (Part No. 801914010) and gasket (Part No. 803914060).
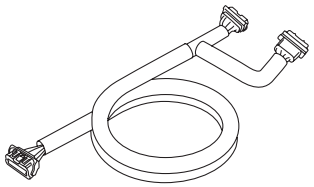 ST18460AA040	18460AA040	CHECK BOARD	Used for measuring the TCM terminal voltage.
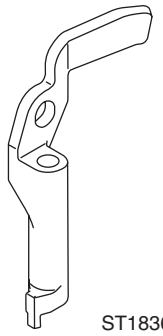 ST18360AA040	18360AA040	HANGER	Used for removing and installing transmission assembly.
 ST18363AA050	18363AA050	BOLT	Used for removing and installing transmission assembly.

ILLUSTRATION	TOOL NUMBER	DESCRIPTION	REMARKS
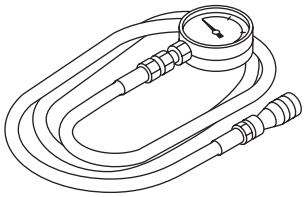 ST-498575400	498575400	OIL PRESSURE GAUGE ASSY	Used for measuring the transfer clutch hydraulic pressure.
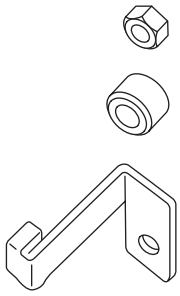 ST-498277200	498277200	STOPPER SET	• Used for removing and installing transmission assembly to engine. • Used for preventing the torque converter from dropping off.
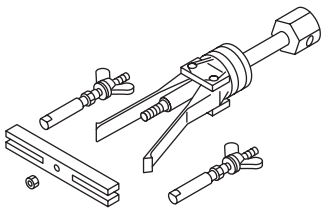 ST-398527700	398527700	PULLER ASSY	• Used for removing the extension case oil seal. • Used for removing the bearing outer race of the drive pinion shaft.
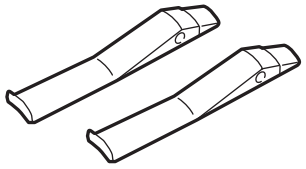 ST18760AA000	18760AA000	CLAW	• Used for removing the bearing of transmission case. • Used together with PULLER ASSY (398527700).
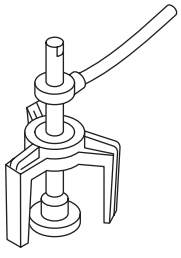 ST-398673600	398673600	COMPRESSOR	Used for removing and installing snap ring of forward clutch assembly.

ILLUSTRATION	TOOL NUMBER	DESCRIPTION	REMARKS
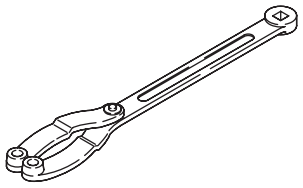 ST18355AA000	18355AA000	PULLEY WRENCH	• Used for removing and installing the lock nut of reduction driven gear. • Used together with PIN SET (18334AA000).
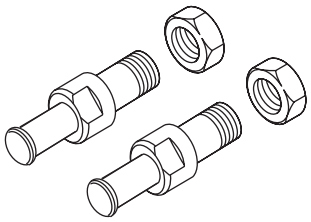 ST18334AA000	18334AA000	PIN SET	• Used for removing and installing the lock nut of reduction driven gear. • Used together with PULLEY WRENCH (18355AA000).
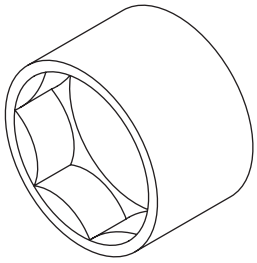 ST-499987003	499987003	SOCKET WRENCH (35)	Used for removing and installing the lock nut of reduction driven gear.
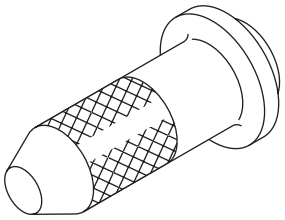 ST-498057300	498057300	INSTALLER	Used for installing the extension case oil seal.
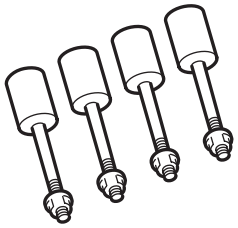 ST18632AA000	18632AA000	STAND ASSY	Used for disassembling and assembling the transmission.

ILLUSTRATION	TOOL NUMBER	DESCRIPTION	REMARKS
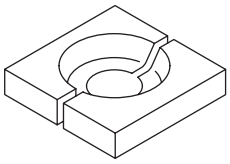 ST-498515500	498515500	REMOVER	Used for removing the bearing inner race of the drive pinion shaft.
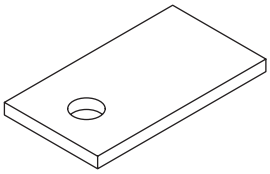 ST-498255400	498255400	PLATE	Used for measuring the backlash of hypoid gear.
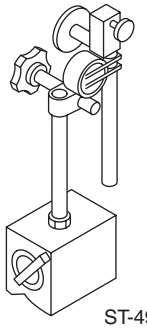 ST-498247001	498247001	MAGNET BASE	• Used for measuring the backlash of differential bevel pinion gear. • Used for measuring the backlash of hypoid gear. • Used together with DIAL GAUGE (498247100).
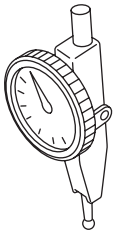 ST-498247100	498247100	DIAL GAUGE	• Used for measuring the backlash of differential bevel pinion gear. • Used for measuring the backlash of hypoid gear. • Used together with DIAL GAUGE (498247101).
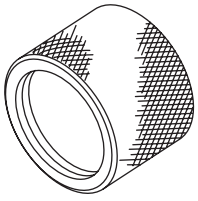 ST18675AA000	18675AA000	DIFFERENTIAL SIDE OIL SEAL INSTALLER	Used for installing the differential side retainer oil seal.

ILLUSTRATION	TOOL NUMBER	DESCRIPTION	REMARKS
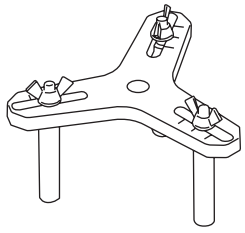 ST18762AA001	18762AA001	COMPRESSOR SPECIAL TOOL	• Used for disassembling and installing the multi-plate clutch piston. • COMPRESSOR SPECIAL TOOL (18762AA000) can also be used.
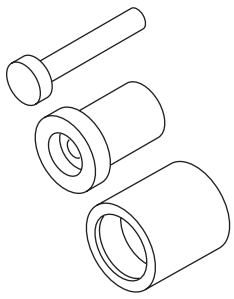 ST-927720000	927720000	HOUSING BUSHING INSTALLER AND REMOVER	• Used for installing the oil seal. • Use BUSHING SHAFT (927880000).
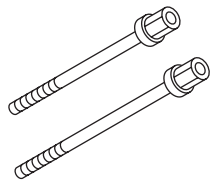 ST18763AA000	18763AA000	COMPRESSOR SHAFT	Used for measuring the backlash of hypoid gear.
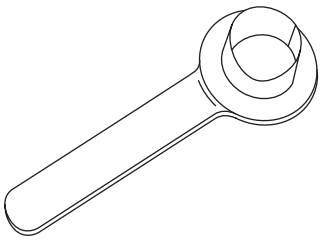 ST28399SA010	28399SA010	OIL SEAL PROTECTOR	Used for protecting oil seal when installing front drive shaft.
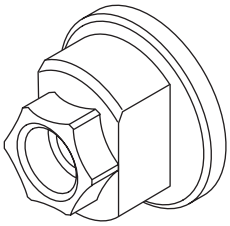 ST-498937110	498937110	HOLDER	• Used for removing and installing the drive pinion lock nut. • Used as a holder to rotate gear when checking tooth contact.

ILLUSTRATION	TOOL NUMBER	DESCRIPTION	REMARKS
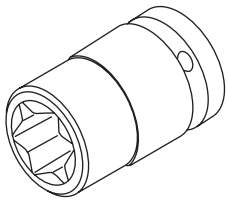 ST18270KA020	18270KA020	SOCKET (E20)	• Used for removing and installing the hypoid driven gear. • Used for removing and installing the drive pinion shaft retainer.
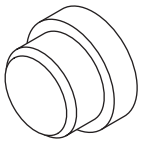 ST-398497701	398497701	SEAT	Used for removing and installing the bearing.
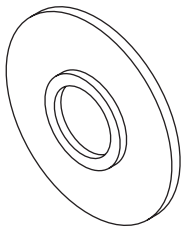 ST-398177700	398177700	INSTALLER	• Used for installing the ball bearing. • Used for installing the parking gear. • Used for installing the bearing outer race. • Used for installing the plug.
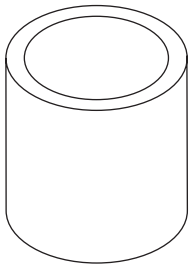 ST28499TC010	28499TC010	PRESS SNAP RING	• Used for installing the bearing outer race of drive pinion shaft. • Used for installing the ball bearing of the transmission case.
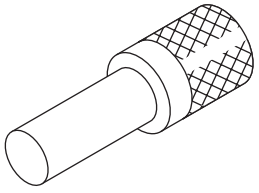 ST-899864100	899864100	REMOVER	• Used for removing and installing the ball bearing. • Used for removing the parking gear and transfer drive gear. • Used for removing the bearing inner race of the front differential.

ILLUSTRATION	TOOL NUMBER	DESCRIPTION	REMARKS
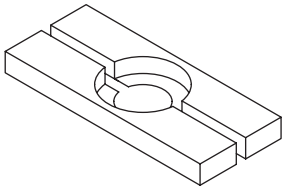 ST-498077000	498077000	REMOVER	Used for removing the bearing inner race of the front differential.
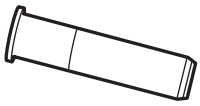 ST18657AA010	18657AA010	INSTALLER	Used for installing the oil seal at shifter arm shaft portion.
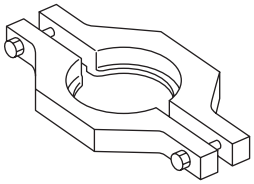 ST-498077600	498077600	REMOVER	Used for removing the ball bearing of drive sprocket.
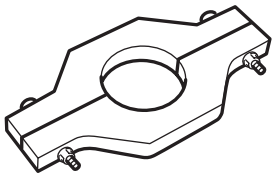 ST18723AA000	18723AA000	REMOVER	Used for removing the ball bearing of transfer clutch assembly.
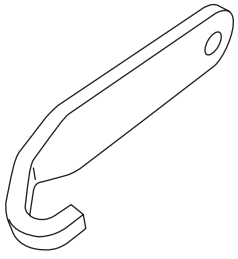 ST-498497300	498497300	CRANKSHAFT STOPPER	Used for stopping the drive plate rotation when removing and installing the drive plate.

ILLUSTRATION	TOOL NUMBER	DESCRIPTION	REMARKS
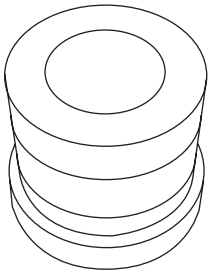 ST-399513600	399513600	INSTALLER	Used for removing the ball bearing of drive sprocket.
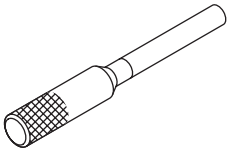 ST-499267300	499267300	STOPPER PIN	Used for adjusting the inhibitor switch.
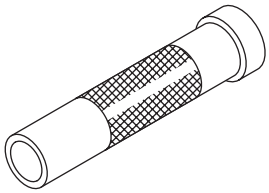 ST-499277100	499277100	BUSHING 1-2 INSTALLER	• Used for installing the ball bearing. • Used for installing the bearing inner race.
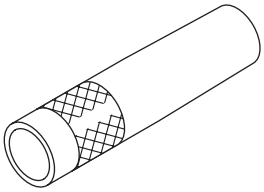 ST-499277200	499277200	INSTALLER	Used for installing the ball bearing of the transfer clutch assembly.
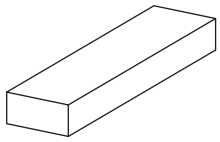 ST-499575400	499575400	GAUGE	Used for measuring height of end play.

ILLUSTRATION	TOOL NUMBER	DESCRIPTION	REMARKS
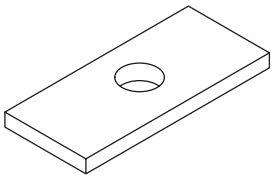 ST-499575500	499575500	GAUGE	Used for measuring height of end play.
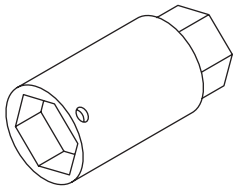 ST-499787500	499787500	ADAPTER	• Used for removing and installing the drive pinion shaft lock nut. • Used for measuring the preload of the drive pinion shaft. • Used for measuring the backlash of hypoid gear.
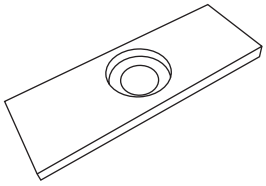 ST-499575600	499575600	GAUGE	Used for measuring height of end play.
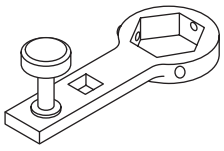 ST-499787700	499787700	WRENCH	• Used for removing and installing the drive pinion shaft lock nut. • Used for measuring the preload of the drive pinion shaft. • Used for measuring the backlash of hypoid gear.
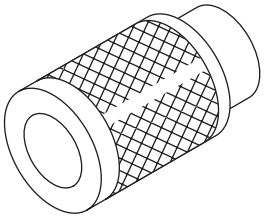 ST-499757002	499757002	INSTALLER	• Used for removing the bearing of reduction driven gear. • Used for installing the parking gear. • Used for installing the transfer drive gear.

ILLUSTRATION	TOOL NUMBER	DESCRIPTION	REMARKS
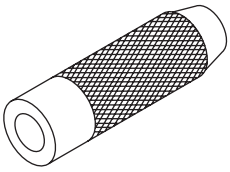 ST-899580100	899580100	INSTALLER	• Used for installing the collar of reduction driven gear. • Used for installing the ball bearing of the transfer driven gear. • Used for installing the bearing inner race of drive pinion shaft.
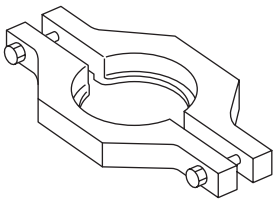 ST-498077300	498077300	REMOVER	Used for installing the ball bearing of reduction driven gear.
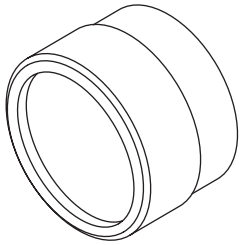 ST-499755502	499755502	PRESS SNAP RING	Used for installing the drive sprocket ball bearing.
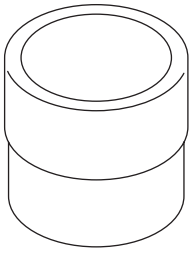 ST-499755602	499755602	PRESS SNAP RING	• Used for installing the oil seal. • Used for installing the plug.
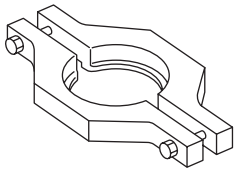 ST-498077400	498077400	REMOVER	Used for removing the ball bearing of transfer driven gear.

ILLUSTRATION	TOOL NUMBER	DESCRIPTION	REMARKS
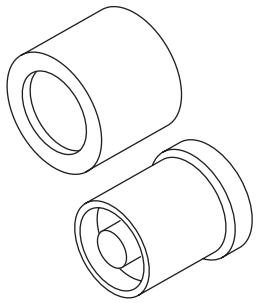 ST20099AE020	20099AE020	INSTALLER	Used for installing the bearing outer race of drive pinion shaft.
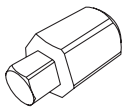 ST18270AA040	18270AA040	SOCKET	Used for removing and installing the transfer clutch pressure test plug.
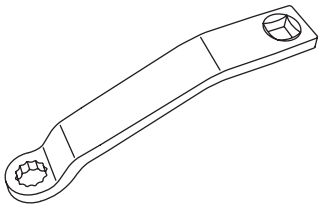 ST73099SG000	73099SG000	SPECIAL TOOL CONDENSER	Used for installing the transfer clutch pressure test plug.
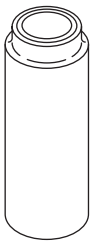 ST-927130000	927130000	EXTENSION DRIVE SHAFT	Used for installing the bearing inner race of drive pinion shaft.
 STSSM4	— (Newly adopted tool)	SUBARU SELECT MONITOR 4	Used for setting of each function and trouble-shooting for electrical system. NOTE: For detailed operation procedures of Subaru Select Monitor 4, refer to “Application help”.

2. GENERAL TOOL

TOOL NAME	REMARKS
Circuit tester	Used for measuring resistance, voltage and current.
Thickness gauge	Used for measuring the clearance in reverse brake, forward clutch and transfer clutch.
Caliper	Used for measuring the dimension.
Spring scale	Used for measuring the starting torque of the drive pinion.
TORX® bit T70	Used for removing and installing differential gear oil drain plug.
Straight pin remover	Used for removing and installing the straight pin and spring pin.
Push/pull gauge	Used for measuring clutch clearance.
Chain sling	Used for removing and installing transmission. • Length: 0.8 — 1 m (2.6 — 3.3 ft) • Load capacity: 1.2 t (2646 lb) or more • Diameter: 6 mm (0.24 in) or 6.3 mm (0.25 in) • Chain external width: 23.5 mm (0.93 in) or less • Chain internal width: 8.5 mm (0.33 in) or more
Screw shackle	Used for removing and installing transmission. • Load capacity: 250 kg (551 lb) or more • Use two pieces.
Angle gauge	Used for installing the drive plate.
DST-i	Used together with Subaru Select Monitor 4.

2. CVTF

A: INSPECTION

Check for leakage of CVTF from transmission.

B: ADJUSTMENT

CAUTION:
• CVTF level changes along with CVTF temperature. When inspecting CVTF level, observe the specified CVTF temperature.
• Always use specified CVTF. Using other fluid will cause malfunction.

1) Start the engine to raise CVTF temperature to 35 — 45°C (95 — 113°F) on Subaru Select Monitor.
2) Operate the select lever in P → R → N → D and D → N → R → P to circulate CVTF with the engine idling.
3) With the engine idling, lift up the vehicle and remove the filler plug.

CAUTION:
Pay special attention to the following operations as the engine is at idle.

NOTE:
CVTF is at the specified level when it is up to the filler plug hole lower section.

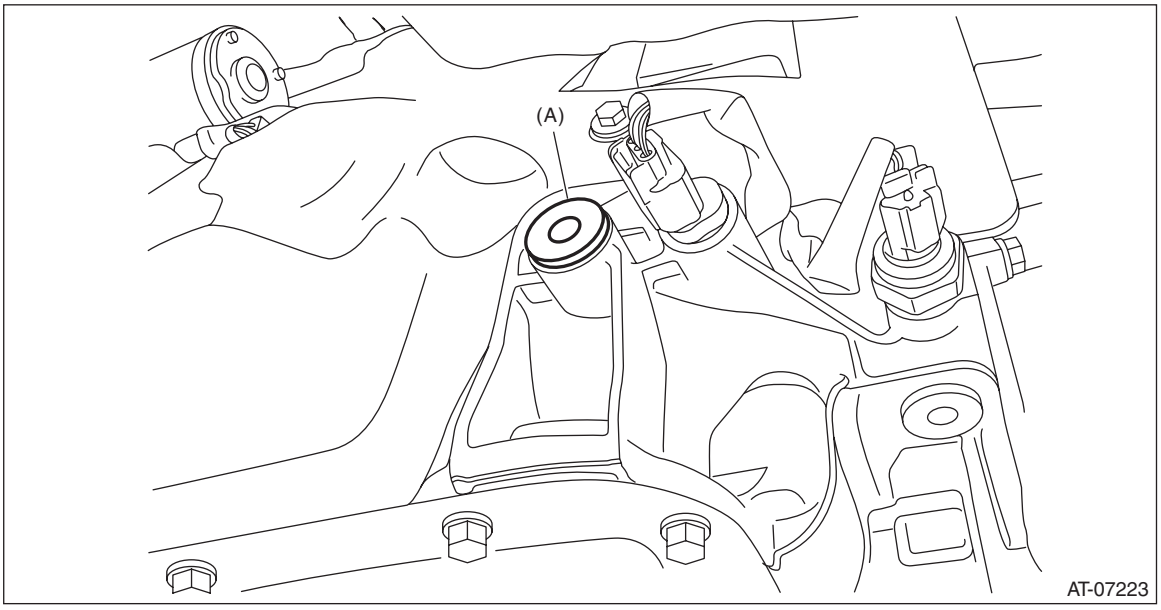

(A) Filler plug

4) When there is no CVTF leakage from the transmission, add the specified fluid up to the filler plug hole lower section.

Specified fluid:
<Ref. to CVT(TR580)-4, HYDRAULIC CONTROL AND LUBRICATION, SPECIFICATION, General Description.>

CAUTION:
Note that when CVTF is added up to the lower section of filler plug while the transmission is in cold condition, overfilling of CVTF occurs, causing the oil to spill out.

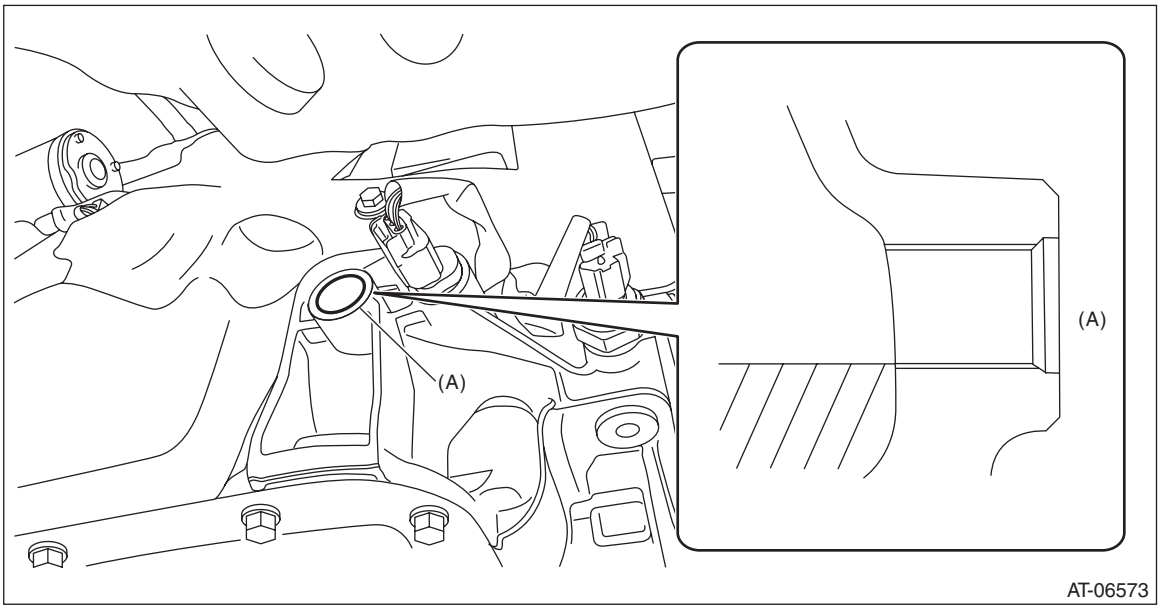

(A) Filler plug hole

5) Install the filler plug.

NOTE:
Use a new gasket.

Tightening torque:
50 N·m (5.1 kgf-m, 36.9 ft-lb)

C: REPLACEMENT

CAUTION:
• Directly after the vehicle has been running or the engine has been idling for a long time, the CVTF is hot. Be careful not to burn yourself.
• Be careful not to spill the CVTF on exhaust pipe to prevent it from emitting smoke or causing fires. If CVTF adheres, wipe it off completely.
• Always use specified CVTF. Using other fluid will cause malfunction.

1) Lift up the vehicle, and remove the CVTF drain plug.

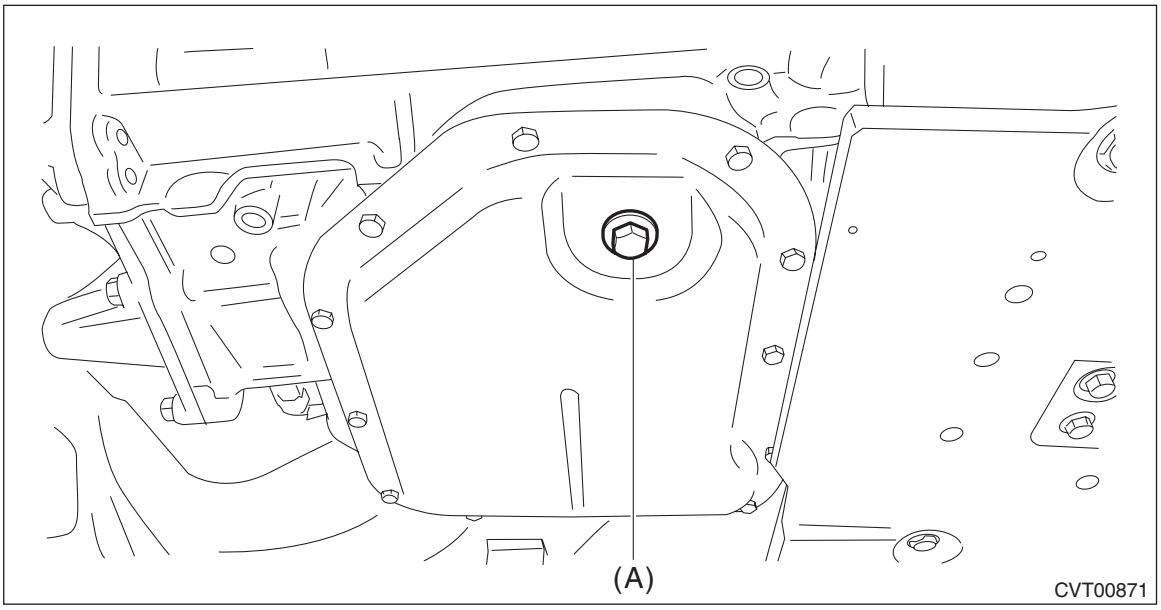

(A) CVTF drain plug

2) Check the CVTF condition. <Ref. to CVT(TR580)-42, CONDITION CHECK, CVTF.>
3) Install the CVTF drain plug and gasket.

NOTE:
Use a new gasket.

Tightening torque:
31 N·m (3.2 kgf-m, 22.9 ft-lb)

4) Remove the filler plug.

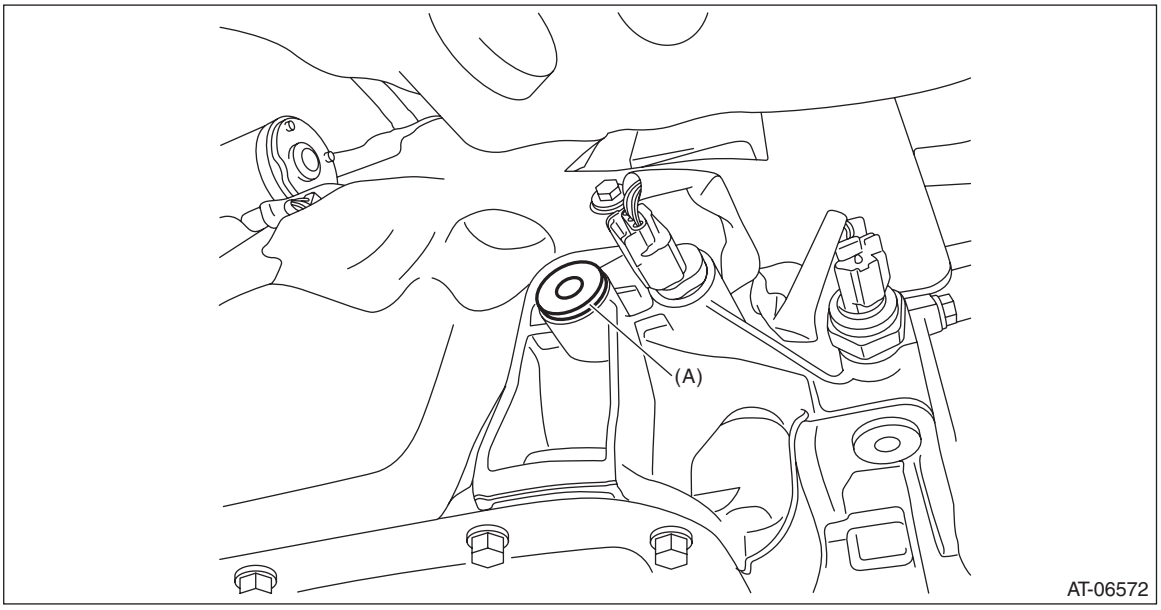

(A) Filler plug

5) Add the specified fluid up to the filler plug hole lower section.

Specified fluid:
<Ref. to CVT(TR580)-4, HYDRAULIC CONTROL AND LUBRICATION, SPECIFICATION, General Description.>

6) Temporarily tighten the filler plug.
7) Idle the engine to raise CVTF temperature to 35 — 45°C (95 — 113°F) on Subaru Select Monitor.
8) Operate the select lever in P → R → N → D and D → N → R → P to circulate CVTF with the engine idling.

CAUTION:
Pay special attention to the following operations as the engine is at idle.
9) With the select lever shifted to "P" range and the engine started, lift up the vehicle. Adjust the CVTF level and check for leakage. <Ref. to CVT(TR580)-39, ADJUSTMENT, CVTF.>
10) Replace with a new gasket, and attach the filler plug.

Tightening torque:
50 N·m (5.1 kgf-m, 36.9 ft-lb)

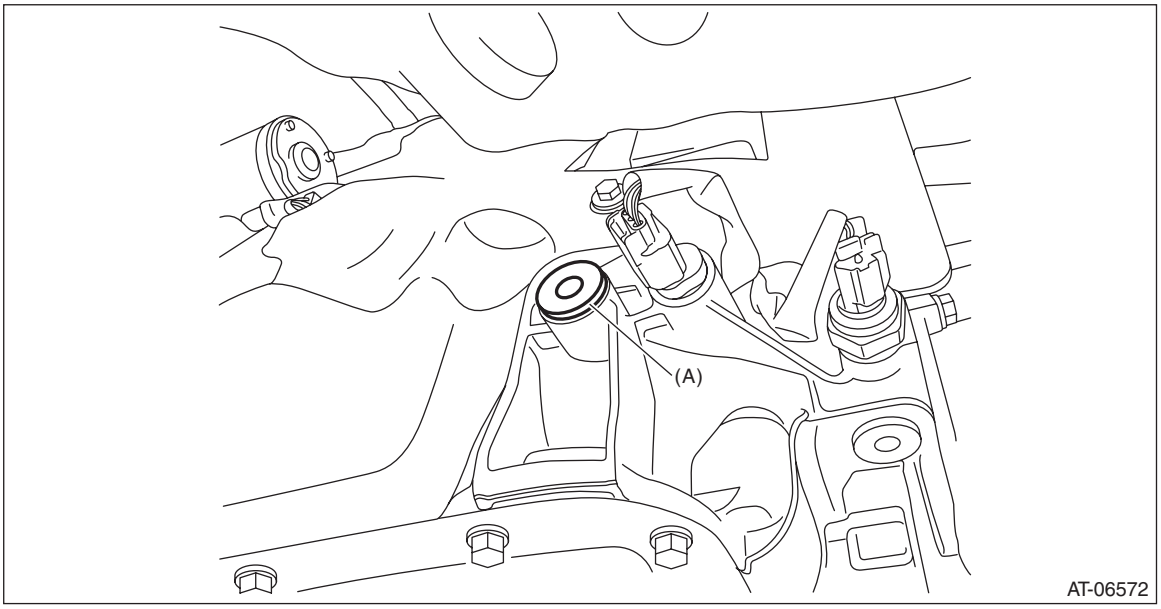

(A) Filler plug

D: CONDITION CHECK

NOTE:
When replacing CVTF, determine the condition inside the transmission body by inspecting the drained CVTF.

Fluid condition	Trouble and possible cause	Corrective action
Metal particles.	Excessive wear of the internal of the transmission body.	Replace CVTF and check if CVT operates correctly.
Thick and varnish-form fluid.	Burnt clutches	Replace CVTF and check the CVT body or vehicle for faulty.
Clouded CVTF or bubbles.	Water mixed in fluid.	Replace CVTF and check the water entering point.

3. Differential Gear Oil

A: INSPECTION

Check that there is no leakage of differential gear oil from the converter case.

B: ADJUSTMENT

NOTE:
Immediately after removing the overflow drain plug, remaining gear oil (approx. 8 cc) may come out of the overflow pipe. This is not included in the specified amount. When removing the overflow drain plug, make sure the gear oil flows out of the overflow drain plug hole by filling with gear oil.

1) Lift up the vehicle.
2) Remove the under cover - front.
3) Remove the filler plug.

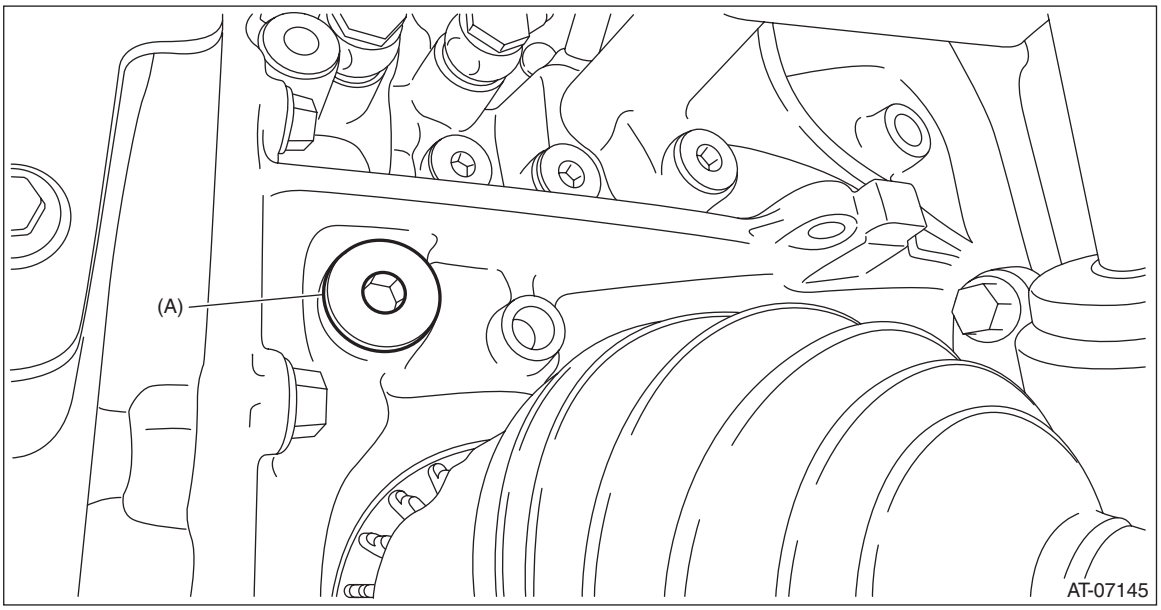

(A) Filler plug

4) Remove the overflow drain plug.

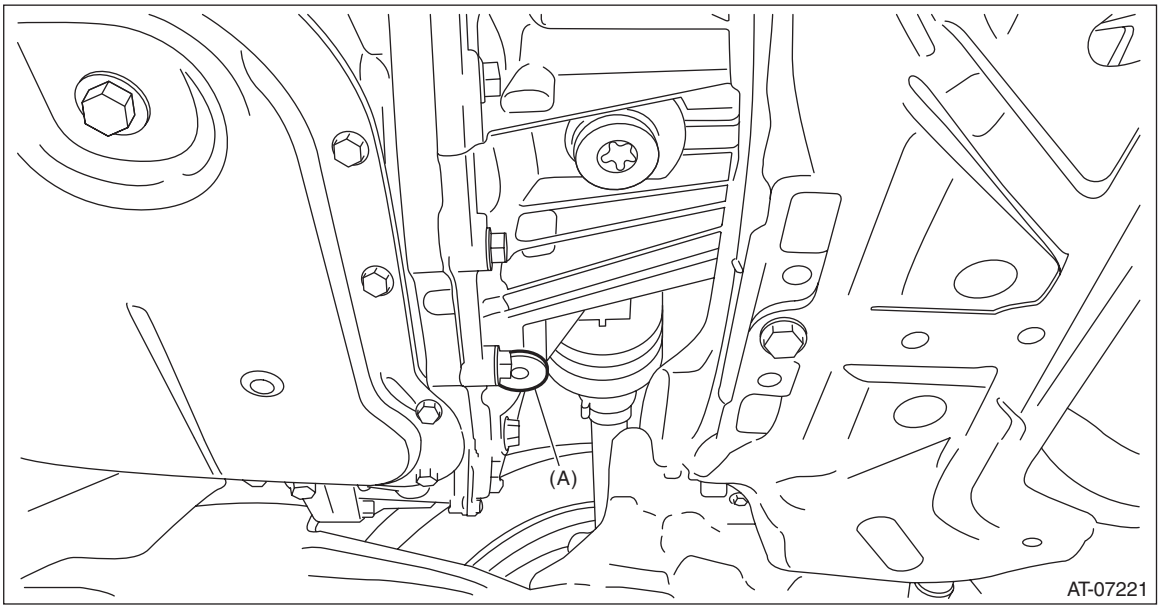

(A) Overflow drain plug

5) Fill in the differential gear oil through the filler plug hole up to where the oil flows out of the overflow drain plug.

Recommended gear oil:
<Ref. to CVT(TR580)-4, FRONT DIFFERENTIAL GEAR OIL, SPECIFICATION, General Description.>
6) When the flow of the differential gear oil turns into a narrow stream, install the overflow drain plug.

NOTE:
Use a new gasket.

Tightening torque:
50 N·m (5.1 kgf-m, 36.9 ft-lb)

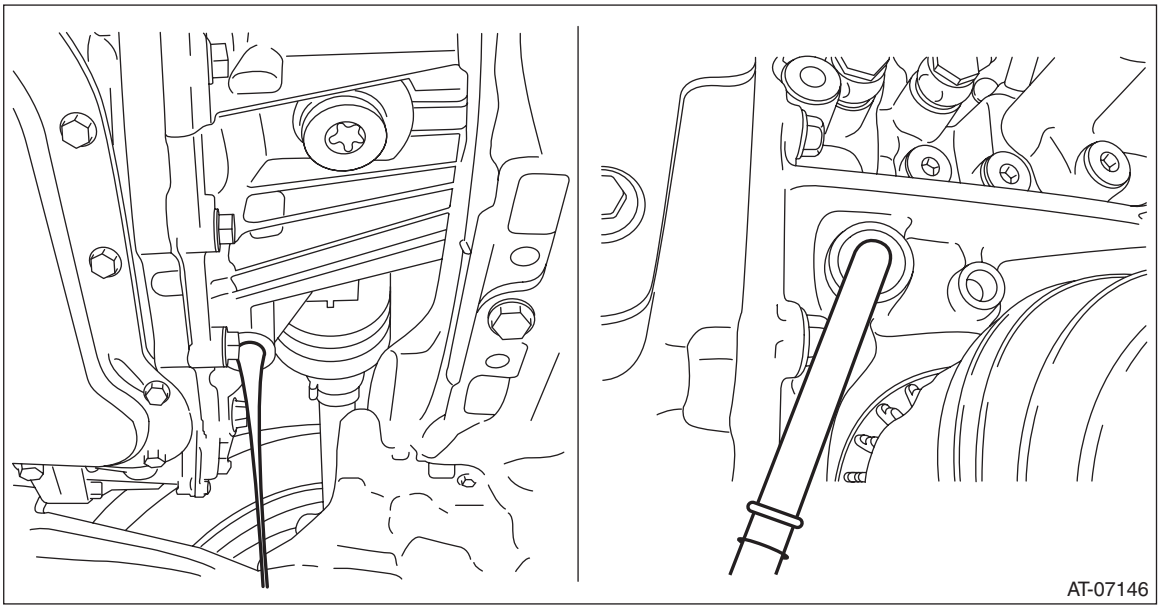

7) Install the filler plug.

NOTE:
Use a new gasket.

Tightening torque:
50 N·m (5.1 kgf-m, 36.9 ft-lb)

C: REPLACEMENT

CAUTION:
• Immediately after the vehicle has been running or after idling for a long time, the differential gear oil will be hot. Be careful not to burn yourself.
• Be careful not to spill differential gear oil on the exhaust pipe to prevent it from emitting smoke or causing a fire. If gear oil adheres, wipe it off completely.
1) Lift up the vehicle.
2) Remove the under cover - front.
3) Remove the differential gear oil drain plug using TORX® bit T70. Drain differential gear oil.

4) Install the differential gear oil drain plug using TORX® bit T70.

NOTE:
Use a new gasket.

Tightening torque:
70 N·m (7.1 kgf-m, 51.6 ft-lb)

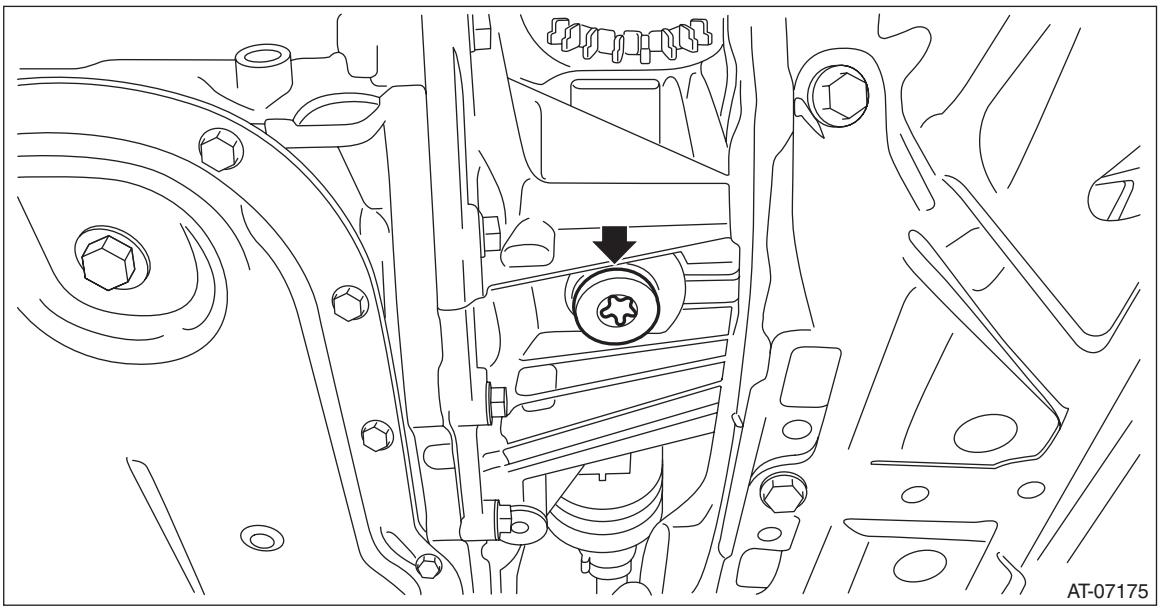

5) Remove the filler plug.

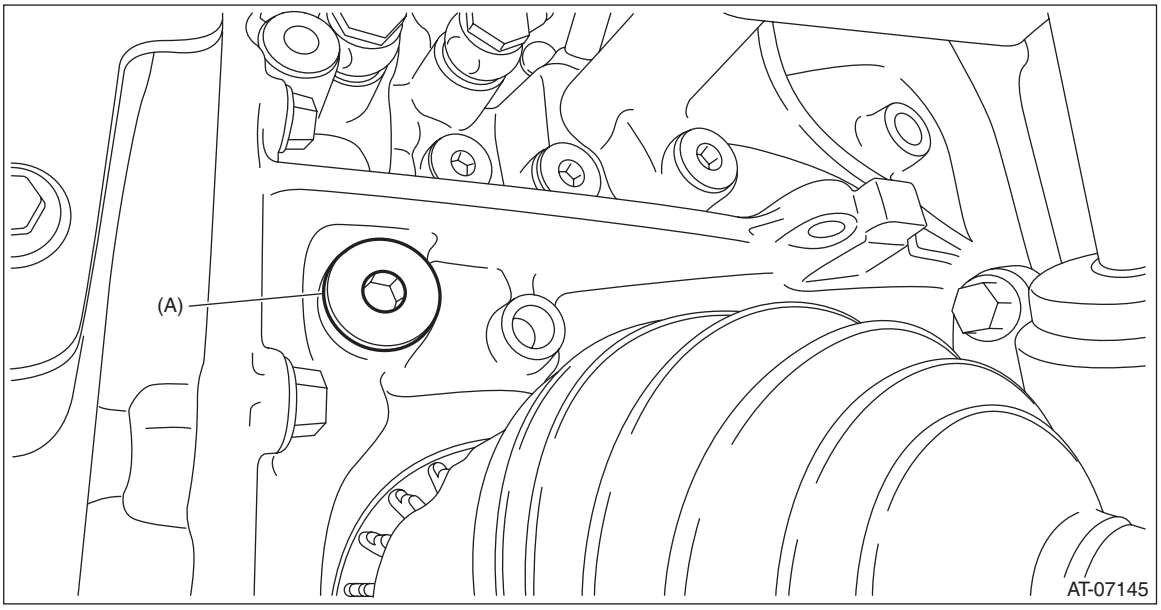

(A) Filler plug

6) Pour gear oil into the filler plug hole.

Recommended gear oil:
<Ref. to CVT(TR580)-4, FRONT DIFFERENTIAL GEAR OIL, SPECIFICATION, General Description.>

Gear oil capacity:
<Ref. to CVT(TR580)-4, FRONT DIFFERENTIAL GEAR OIL, SPECIFICATION, General Description.>

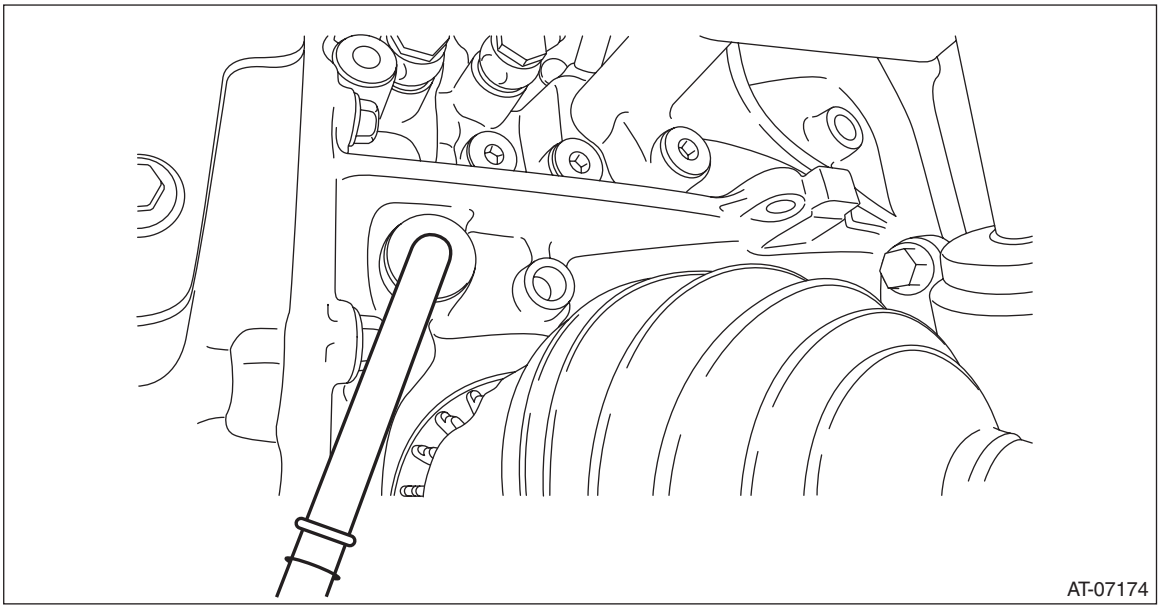

7) Adjust the level of differential gear oil. <Ref. to CVT(TR580)-43, ADJUSTMENT, Differential Gear Oil.>

4. AWD ON/OFF Switching Mode

A: GENERAL DESCRIPTION

- Follow the messages displayed on the Subaru Select Monitor when working.
- Perform as necessary in FWD mode.
- When switched to FWD, AWD light illuminates.

B: PROCEDURE

CAUTION:
• Do not turn the power of the Subaru Select Monitor OFF during work, and do not disconnect the data link connector.
• On completing the work in FWD, switch back in AWD.
1) Shift the select lever to “P” range.
2) Connect the Subaru Select Monitor to data link connector.
3) Turn the ignition to ON. (For model with push button ignition switch, press the push button ignition switch twice without depressing brake pedal.)
4) Turn off all switches causing an electrical load, such as headlights, A/C, seat heater and rear defogger.
5) Select «Diagnosis» in the «Start» screen of Subaru Select Monitor.
6) On «Vehicle selection» display, input the vehicle information and select «Confirmed».
7) On «Main Menu» display, select «Each System Check».
8) On «Select System» display, select «Transmission Control System».
9) On «Select Function» display, select «Work Support».
10) Select «AWD ON/OFF switching mode» in the «Work Support» screen.
11) Follow the messages displayed on the Subaru Select Monitor screen when working.
Switching completes successfully if any of the following messages is displayed.
- When switching from AWD to FWD: «Switched to FF. To return to AWD, perform basic mode again.»
- When switching from FWD to AWD: «Switched to AWD. To return to FF, perform basic mode again.»

NOTE:
- If communication error occurs during switching mode, start in the “AWD ON/OFF switching mode” again.
- If operation is interrupted before the successful end message is displayed, perform the «AWD ON/OFF switching mode» from the beginning until confirming the operation is successfully ended. If this mode fails to complete successfully, the cause is as follows.
  - Select lever is not in “P” range.
  - Engine is running.
- For detailed operation procedures, refer to “Application help”.

5. Road Test

A: INSPECTION

1. GENERAL PRECAUTION

Road tests should be conducted to properly diagnose the condition of CVT.

CAUTION:
Always observe the local traffic laws when performing the test.

2. D RANGE SHIFT FUNCTION

Make sure that the engine speed is 1,100 — 1,400 r/min while driving on the level road at 50 km/h (31 MPH) after accelerating from halting up to 1/4 of accelerator opening angle. Then stop the vehicle. Check normal gear change has occurred while the vehicle speed changes from a constant speed to zero.

3. KICK-DOWN FUNCTION

Check if engine speed will rise by operating the accelerator opening angle to the full from a constant speed of 50 km/h (31 MPH) or more.

4. ENGINE BRAKE OPERATION

- Drive in “6th speed of manual mode” [70 — 80 km/h (43 — 50 MPH)], and shift down from 6th to 5th. Check if the indicator of combination meter switches “6” → “5”. At the same time, check the engine brake in 5th gear.
- Drive in “5th speed of manual mode” [60 — 70 km/h (37 — 43 MPH)], and shift down from 5th to 4th. Check if the indicator of combination meter switches “5” → “4”. At the same time, check the engine brake in 4th gear.
- Drive in “4th speed of manual mode” [50 — 60 km/h (31 — 37 MPH)], and shift down from 4th to 3rd. Check if the indicator of combination meter switches “4” → “3”. At the same time, check the engine brake in 3rd gear.
- Drive in “3rd speed of manual mode” [40 — 50 km/h (25 — 31 MPH)], and shift down from 3rd to 2nd. Check if the indicator of combination meter switches “3” → “2”. At the same time, check the engine brake in 2nd gear.
- Drive in “2nd speed of manual mode” [20 — 30 km/h (12 — 19 MPH)], and shift down from 2nd to 1st. Check if the indicator of combination meter switches “2” → “1”. At the same time, check the engine brake in 1st gear.

5. LOCK-UP FUNCTION

When the accelerator is lightly depressed while driving on a flat road in “D” range, check that rpm does not change abruptly.

6. P RANGE OPERATION

Stop the vehicle on an uphill grade of 5% or more and shift to the “P” range and apply the parking brake. Check that the vehicle does not move when the parking brake is released.

7. NOISE AND VIBRATION

Check for noise and vibration during driving at a constant speed, accelerating, decelerating and manual shift operation.

8. OIL LEAKAGE

After the driving test, inspect for leakage of CVTF and differential gear oil from the transmission body.

6. Stall Test

A: INSPECTION

CAUTION:
Make sure no other person is around the vehicle during stall test measurement.

NOTE:
Stall test is extremely important in diagnosing the condition of CVT and engine. The test is necessary to measure the engine stall speeds in “R” and “D” range.
Purposes of the stall test:
- Operational check of forward clutch and reverse brake
- Operational check of the torque converter assembly
- Engine performance check

1) Place wheel chocks at the front and rear of all wheels and engage the parking brake.
2) Turn the A/C OFF.
3) Using the Subaru Select Monitor, check if the throttle valve operates when you depress the accelerator pedal. <Ref. to EN(H4DO)(diag)-57, DISPLAY OF ENGINE FREEZE FRAME DATA, OPERATION, Subaru Select Monitor.>
4) Check the engine oil level. <Ref. to LU(H4DO)-9, Engine Oil.>
5) Check the coolant level. <Ref. to CO(H4DO)-15, Engine Coolant.>
6) Adjust the CVTF level. <Ref. to CVT(TR580)-39, ADJUSTMENT, CVTF.>
7) Increase the CVTF temperature to 60 — 80°C (140 — 176°F) with the engine running and the select lever shifted to “N” or “P” range.
8) Shift the select lever to “D” range.
9) Depress the accelerator pedal to the full while fully depressing the foot brake pedal with your left foot.
10) When the engine speed stabilizes, quickly record the engine speed and release accelerator pedal. Shift the select lever to “N” range. Let the engine idle for one minute or more to cool it down.
11) Shift to “R” range and perform the same stall test.

NOTE:
- Do not perform a stall test for over 5 seconds at a time. (From closed throttle, fully open throttle to stall speed reading.) Failure to follow this instruction will cause the engine oil and CVTF to deteriorate and the clutch and brake to be adversely affected.
- Be sure to cool down the engine for at least one minute after each stall test with the select lever set in the “P” or “N” range and with the idle speed of 1,200 r/min or less.
- If the stall speed is higher than the specified range, attempt to finish the stall test in as short a time as possible, in order to prevent the CVT from sustaining damage.

Stall speed standard:
D range: 1,900 — 2,700 r/min
R range: 1,800 — 2,600 r/min

Stall test judgment

Range	Range	Probable cause
Lower than standard value	D, R	• Insufficient engine output • Torque converter malfunction
Higher than standard value	D	• Forward clutch slippage • Secondary pressure (line pressure) is low. • Variator chain malfunction
	R	• Reverse brake slippage • Secondary pressure (line pressure) is low. • Variator chain malfunction
	D, R	• Torque converter malfunction • Control valve body malfunction • TCM malfunction • Damaged harness and harness connector

7. Time Lag Test

A: INSPECTION

NOTE:
When the select lever is shifted while the engine is idling, there will be a certain time elapse or lag before shock is felt. This symptom helps to check the condition of forward clutch and reverse brake.
- Perform the test at normal operation CVTF temperature of 60 — 80°C (140 — 176°F).
- Be sure to allow one minute or more interval between tests.
- Make three measurements and take the average value.

1) Apply the parking brake.
2) Start the engine. Check the idle speed. (A/C OFF)
3) Shift the select lever from “N” to “D” range. Using a stop watch, measure the time elapsed from shifting the lever until the shock is felt.

Time lag standard:
1.5 seconds or less

If “N” → “D” time lag is longer than specified:
- Secondary pressure (line pressure) is too low.
- Forward clutch worn
- Forward clutch piston malfunction
- Control valve body malfunction
- Learning incomplete

4) In the same manner, measure the time lag when shifting from “N” range to “R” range.

Time lag standard:
1.5 seconds or less

If “N” → “R” time lag is longer than specified:
- Secondary pressure (line pressure) is too low.
- Reverse brake worn
- Reverse brake piston malfunction
- Control valve body malfunction
- Learning incomplete

8. Secondary Pressure (Line Pressure) Test

A: INSPECTION

CAUTION:
• Directly after the vehicle has been running or the engine has been idling for a long time, the CVTF is hot. Be careful not to burn yourself.
• Make sure no other person is around the vehicle during secondary pressure (line pressure) test measurement.
• After performing the secondary pressure (line pressure) test measurement, adjust the CVTF level.

NOTE:
• If the pulley and variator chain, clutch or brake show signs of slipping or shift feel is not correct, check the secondary pressure (line pressure).
• Connect Subaru Select Monitor to vehicle so as to measure the engine speed and actual secondary pressure (secondary pressure (line pressure)).
• In many cases, slippage or inability to operate the vehicle may be due to insufficient oil pressure for the operation of clutch, brake or control valve.
1) Lift up the vehicle.

2) Remove the secondary pressure (line pressure) test plug, and install ST1 and ST2.

CAUTION:
Removal of the test plug and installation of the ST shall be both performed quickly.

NOTE:
Use ST2 PRESSURE GAUGE ADAPTER with genuine O-ring (Part No. 806916050) attached.
ST1 18801AA000 OIL PRESSURE GAUGE ASSY
ST2 18681AA010 PRESSURE GAUGE ADAPTER

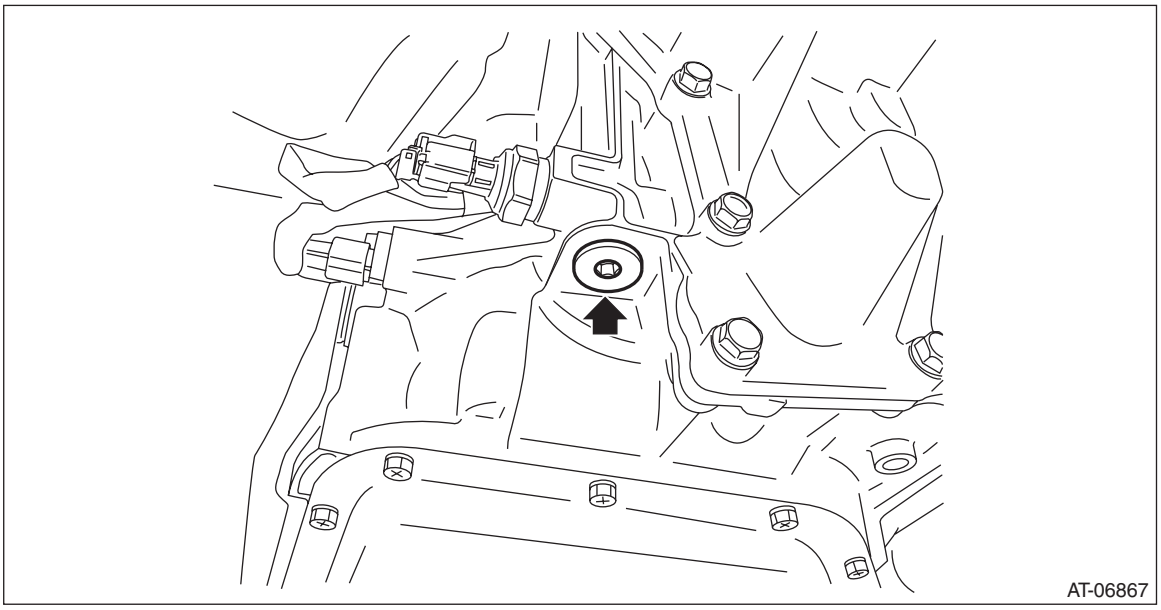

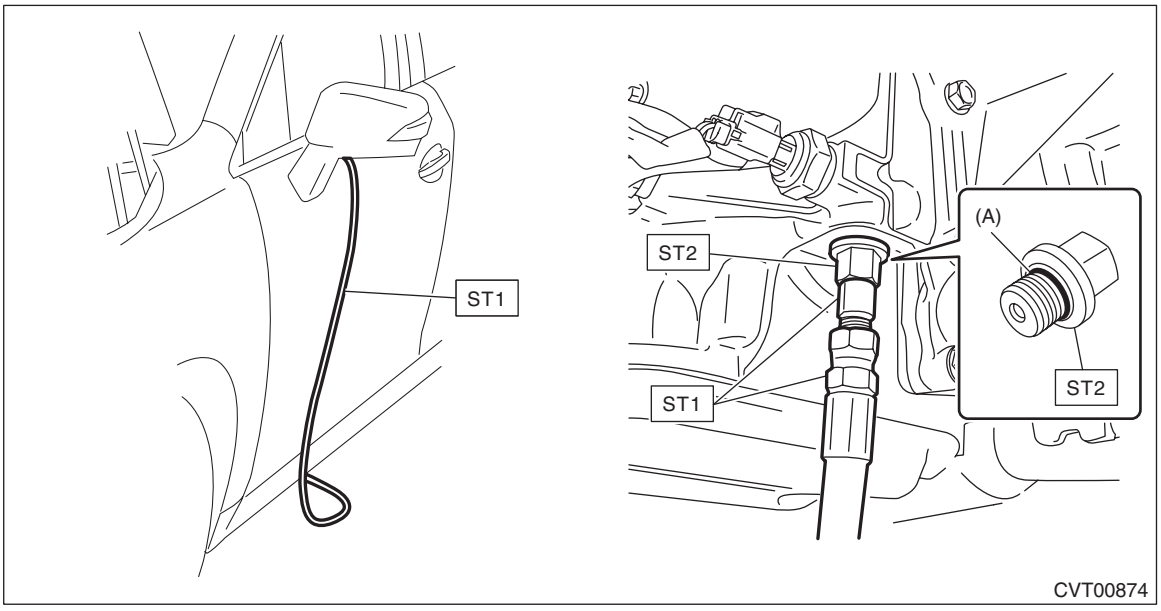

(A) O-ring (genuine part)

3) Lower the vehicle.
4) Set the gauge so that it can be seen from the driver's seat.
5) Using the Subaru Select Monitor, check if the throttle valve operates when you depress the accelerator pedal. <Ref. to EN(H4DO)(diag)-57, DISPLAY OF ENGINE FREEZE FRAME DATA, OPERATION, Subaru Select Monitor.>
6) Check the engine oil level. <Ref. to LU(H4DO)-9, Engine Oil.>
7) Check the coolant level. <Ref. to CO(H4DO)-15, Engine Coolant.>
8) Adjust the CVTF level. <Ref. to CVT(TR580)-39, ADJUSTMENT, CVTF.>
9) Increase the CVTF temperature to 60 — 80°C (140 — 176°F) with the engine running and the select lever shifted to "N" or "P" range.
10) Shift the select lever to "D" range.
11) Depress the accelerator pedal to the full while fully depressing the foot brake pedal with your left foot.
12) Immediately after the engine speed becomes steady, record the reading of the secondary pressure (line pressure), engine speed and actual secondary pressure on Subaru Select Monitor. And then release the accelerator pedal. Shift the select lever to "N" range. Let the engine idle for one minute or more to cool it down.

NOTE:
• Do not continue the stall test for 5 seconds or more at a time (from fully closed throttle, fully open throttle to secondary pressure (line pressure) reading). Failure to follow this instruction will cause the engine oil and CVTF to deteriorate and the clutch and brake to be adversely affected.
• After performing the secondary pressure (line pressure) test, be sure to cool down the engine for at least one minute with the select lever set in "P" or "N" range and with the idle speed at 1,200 r/min or less.
• Under each condition, check that the measured pressure matches almost totally with actual secondary pressure.
• When both measured pressure and actual secondary pressure are out of specification, judge as control valve malfunction.
• The value at stall is for reference because the pressure changes under different conditions or circumstances.
• The value at idling is steady because it is not affected by any condition or circumstance.
• When the engine is started with the select lever in the "P" range and the secondary pressure at idling is measured without shifting the select lever, the value may be higher than the standard. Shift the select lever to the "D" or "R" range, then measure the value.

Secondary pressure (line pressure) standard				
	Range	Throttle	Brake	Secondary pressure (line pressure) (MPa (kgf/cm^2, psi))
Stall	D, R	Full open	ON	4.5 — 6.0 (45.9 — 61.2, 652 — 870)
Idling	P, N	Full closed	OFF	0.5 — 1.5 (5.1 — 15.3, 72 — 218)

13) Remove the ST and install the plug after measurement.

CAUTION:
Removal of the ST and installation of the test plug shall be both performed quickly.

NOTE:
• Use new O-rings.
• Apply CVTF to the O-rings.

Tightening torque:
50 N·m (5.1 kgf-m, 36.9 ft-lb)
14) Adjust the CVTF level. <Ref. to CVT(TR580)-39, ADJUSTMENT, CVTF.>

9. Transfer Clutch Pressure Test

A: INSPECTION

1. EXCEPT FOR OUTBACK MODEL

1) Lift up the vehicle.
2) Remove the rear exhaust pipe from center exhaust pipe.

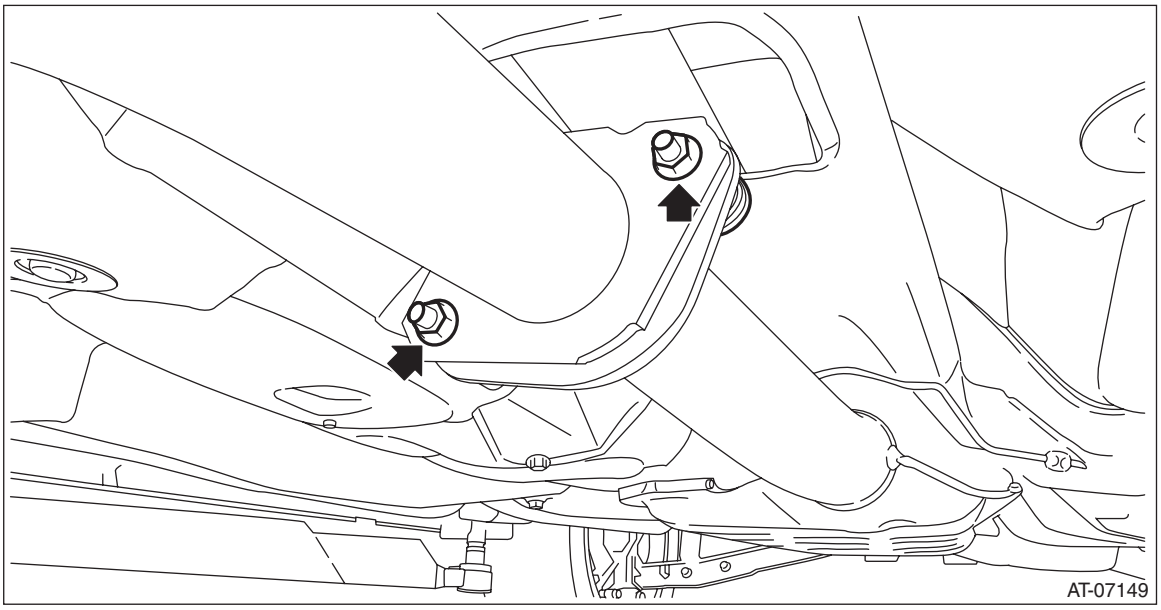

3) Remove the center exhaust cover.
4) Set the transmission jack under the transmission.
5) Remove the mounting bolt of rear crossmember.

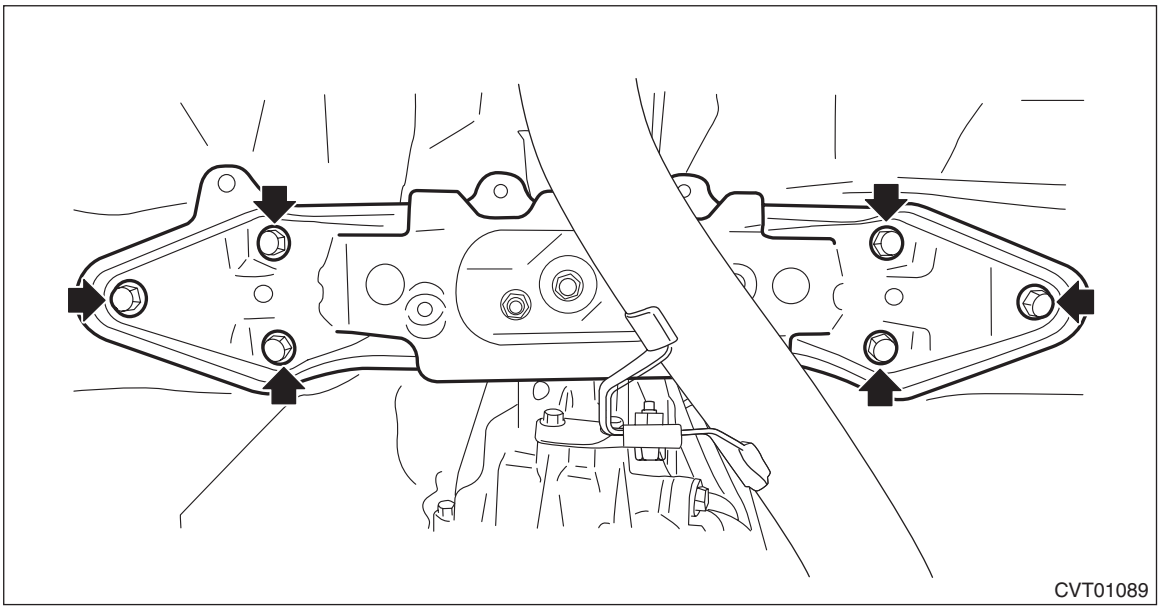

6) Lower the rear side of transmission until the transfer clutch pressure test plug can be removed.

7) Using the ST, remove the transfer clutch pressure test plug.
ST 18270AA040 SOCKET

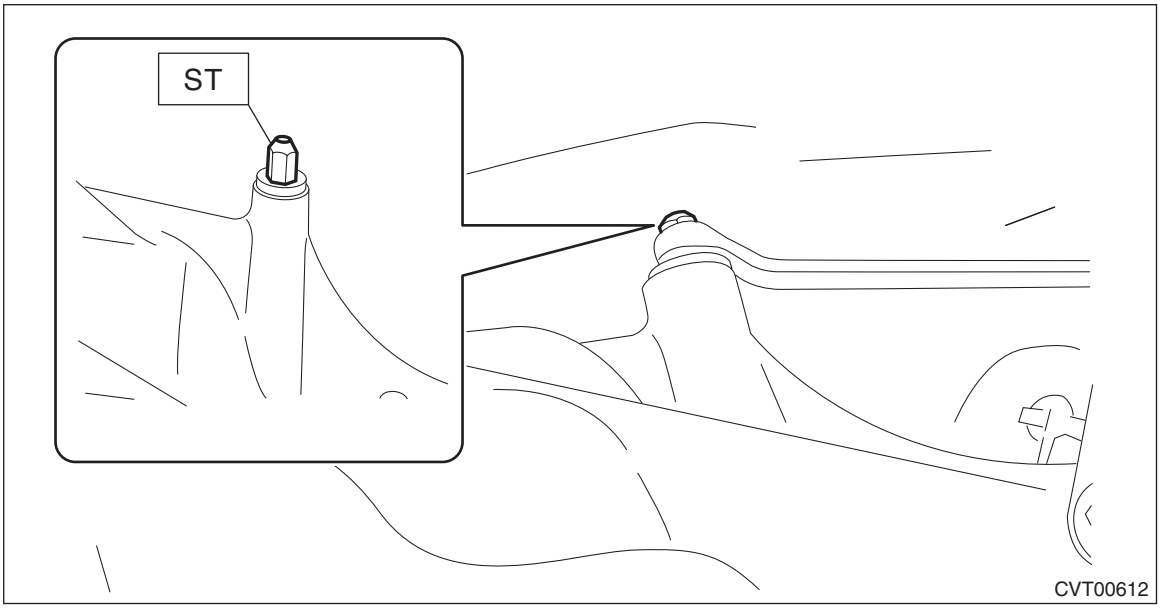

8) Set the ST1, ST2, ST3 and ST4 to the transmission.

NOTE:
• Use ST1 ADAPTER HOSE B with genuine union screw (Part No. 801914010) and gasket (Part No. 803914060) attached.

- Use ST3 PRESSURE GAUGE ADAPTER with genuine O-ring (Part No. 806911080) attached.

ST1 34099AC020 ADAPTER HOSE B
ST2 34099AC010 ADAPTER HOSE A
ST3 18681AA000 PRESSURE GAUGE ADAPTER
ST4 498575400 OIL PRESSURE GAUGE ASSY

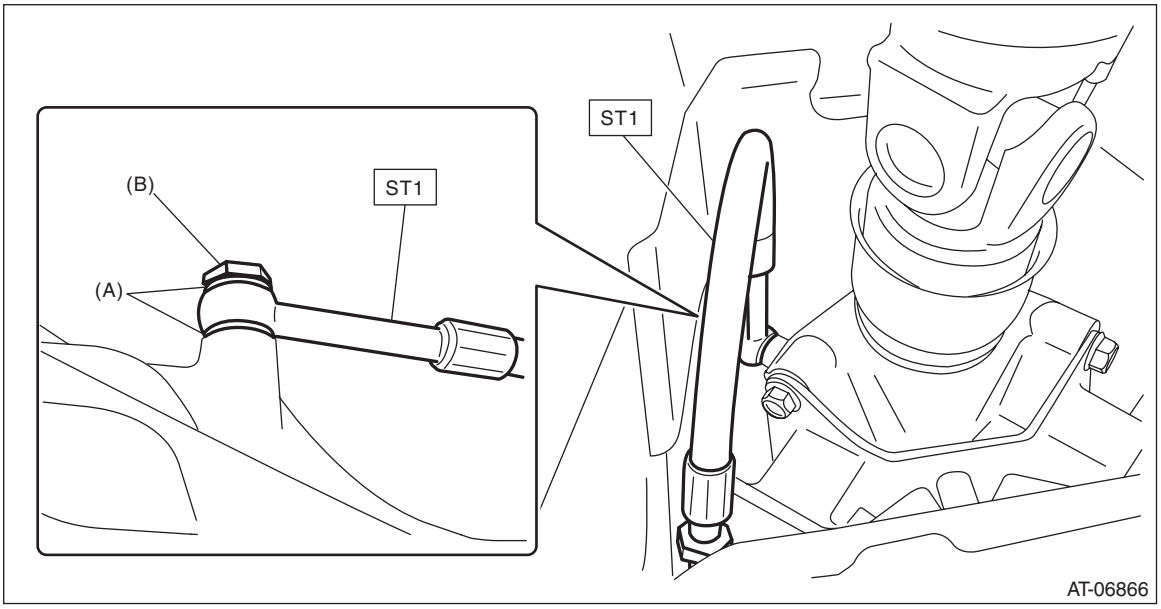

(A) Gasket (genuine part)
(B) Union screw (genuine part)

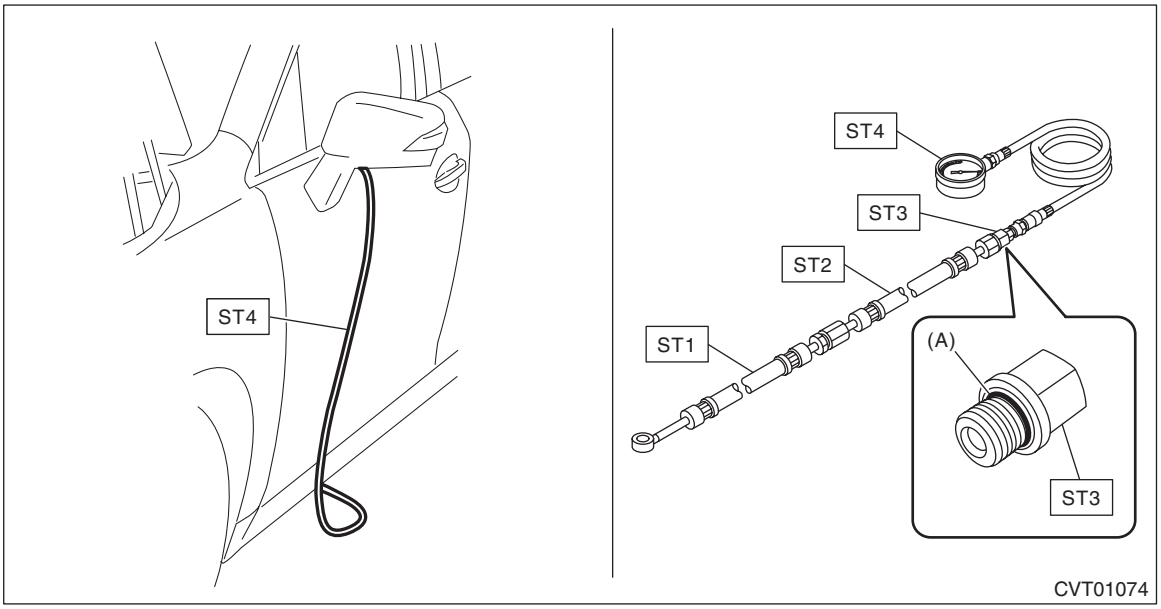

(A) O-ring (genuine part)

9) Raise the transmission, and install the rear crossmember.

Tightening torque:
75 N·m (7.6 kgf-m, 55.3 ft-lb)

10) Install the rear exhaust pipe to center exhaust pipe.

Tightening torque:
18 N·m (1.8 kgf-m, 13.3 ft-lb)

11) Lower the vehicle.

12) Connect the Subaru Select Monitor to the data link connector and read the current data.
13) Check the transfer clutch pressure as in secondary pressure (line pressure) test. <Ref. to CVT(TR580)-51, Secondary Pressure (Line Pressure) Test.>

NOTE:
• Use Subaru Select Monitor for switching to FWD mode. <Ref. to CVT(TR580)-47, AWD ON/OFF Switching Mode.>
• If no oil pressure is produced, if it does not change in AWD mode or if oil pressure is produced in FWD mode, there may be a problem in the control valve body.

Range position	ON Duty ratio (%)	Accelerator pedal opening angle (%)	Standard transfer clutch pressure kPa (kgf/cm^2, psi)	
			AWD mode	FWD mode
D	95 — 100	Fully opened (100)	1,000 — 1,200 (10.2 — 12.2, 145 — 174)	—
	60	Adjust ON Duty ratio to 60%.	400 — 700 (4.1 — 7.1, 58 — 102)	—
	0	Fully closed (0)	—	0 (0, 0)
N or P	0	Fully closed (0)	0	—

14) Lift up the vehicle.
15) Remove the rear exhaust pipe from center exhaust pipe.
16) Set the transmission jack under the transmission.
17) Remove the mounting bolt of rear crossmember.

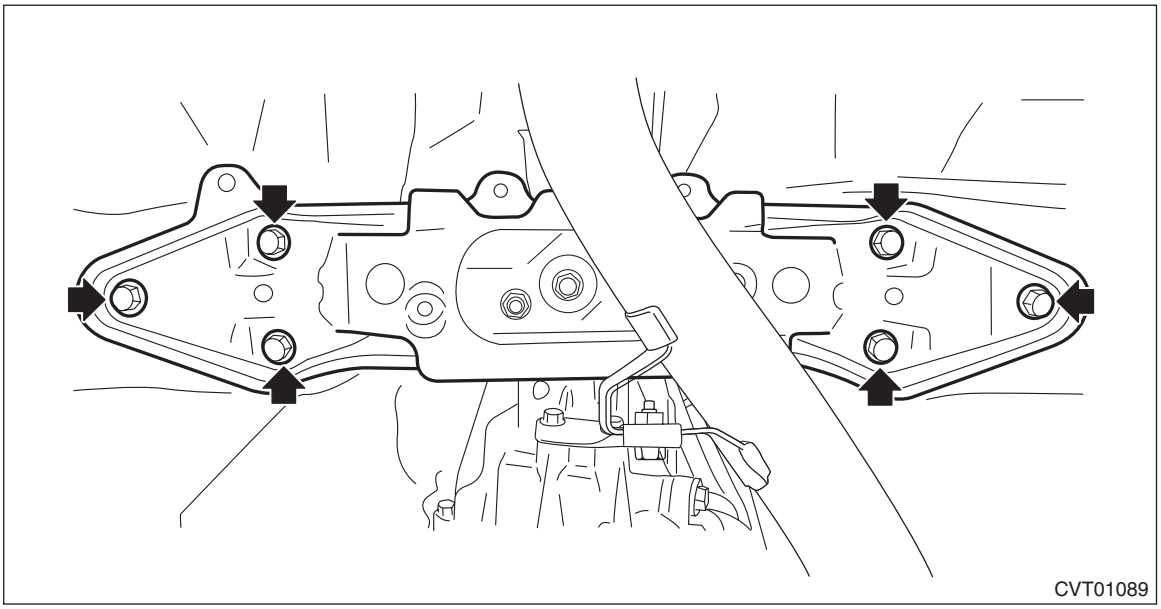

18) Lower the rear side of transmission until the ST can be removed.

19) Install the test plug using ST1 and ST2.

NOTE:
- Use new O-rings.
- Apply CVTF to the O-rings.
- Tighten the test plug while directly aligning ST2 and torque wrench.

ST1 18270AA040 SOCKET
ST2 73099SG000 SPECIAL TOOL CONDENSER
Using the following formula, calculate the tightening torque for a torque wrench.
T2 = L2/(L1 + L2) × T1
T1: 22 N·m (2.2 kgf-m, 16.2 ft-lb)
L1: ST2 length 0.1 m (3.94 in) (a)
L2: Torque wrench length (b) m (in)

[Required torque setting]
T2: Tightening torque: N·m (kgf-m, ft-lb)

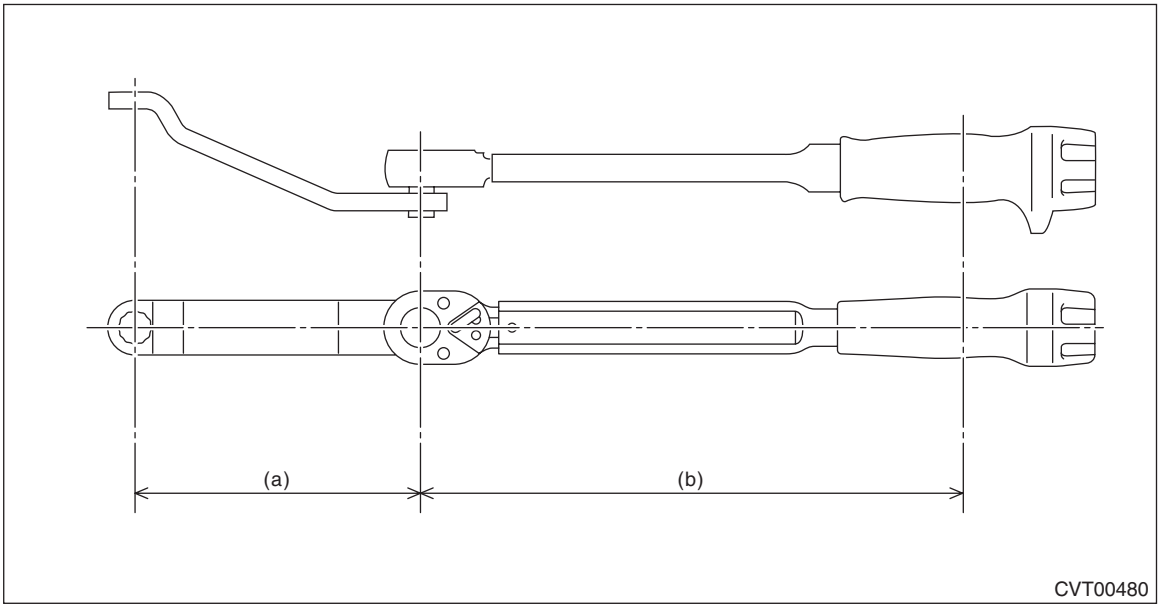

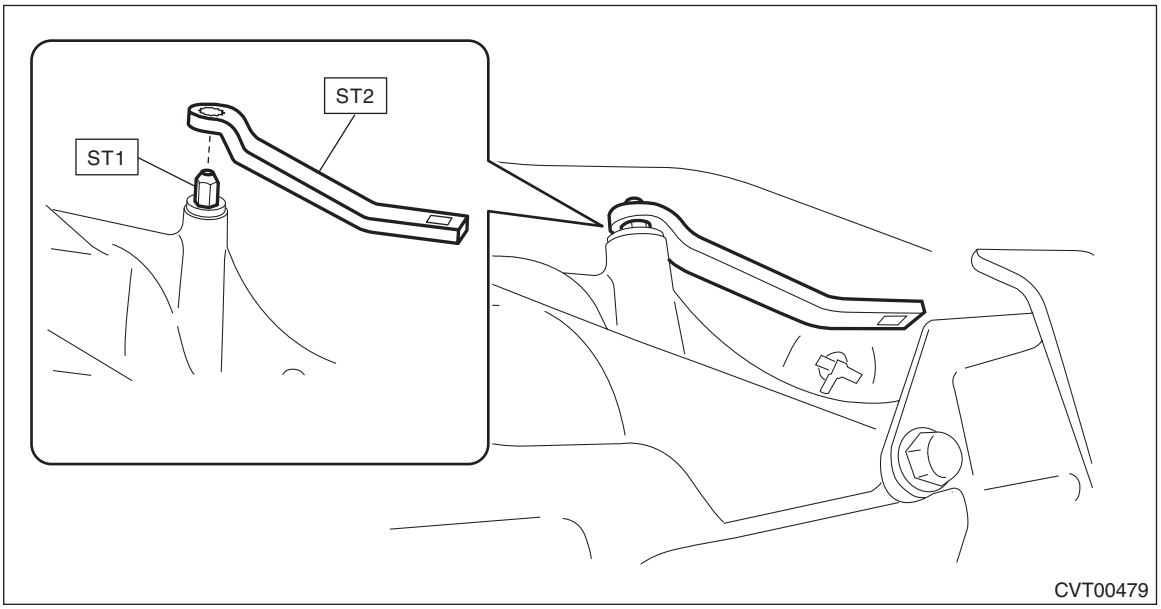

20) Raise the transmission, and install the rear crossmember.

Tightening torque:
75 N·m (7.6 kgf-m, 55.3 ft-lb)

21) Install the center exhaust cover.

Tightening torque:
18 N·m (1.8 kgf-m, 13.3 ft-lb)
22) Install the rear exhaust pipe to center exhaust pipe.

NOTE:
Use a new gasket.

Tightening torque:
18 N·m (1.8 kgf-m, 13.3 ft-lb)
23) Lower the vehicle.

2. OUTBACK MODEL

1) Lift up the vehicle.
2) Remove the center exhaust cover.
3) Using the ST, remove the transfer clutch pressure test plug.
ST 18270AA040 SOCKET

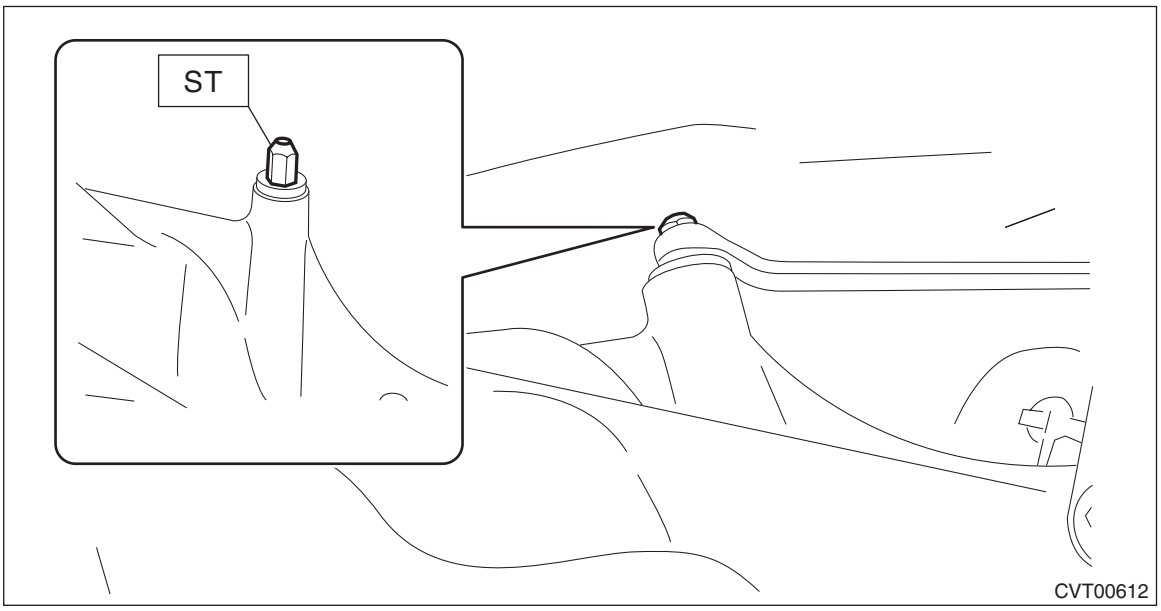

4) Set the ST1, ST2, ST3 and ST4 to the transmission.

NOTE:
• Use ST1 ADAPTER HOSE B with genuine union screw (Part No. 801914010) and gasket (Part No. 803914060) attached.
• Use ST3 PRESSURE GAUGE ADAPTER with genuine O-ring (Part No. 806911080) attached.

ST1 34099AC020 ADAPTER HOSE B
ST2 34099AC010 ADAPTER HOSE A
ST3 18681AA000 PRESSURE GAUGE ADAPTER
ST4 498575400 OIL PRESSURE GAUGE ASSY

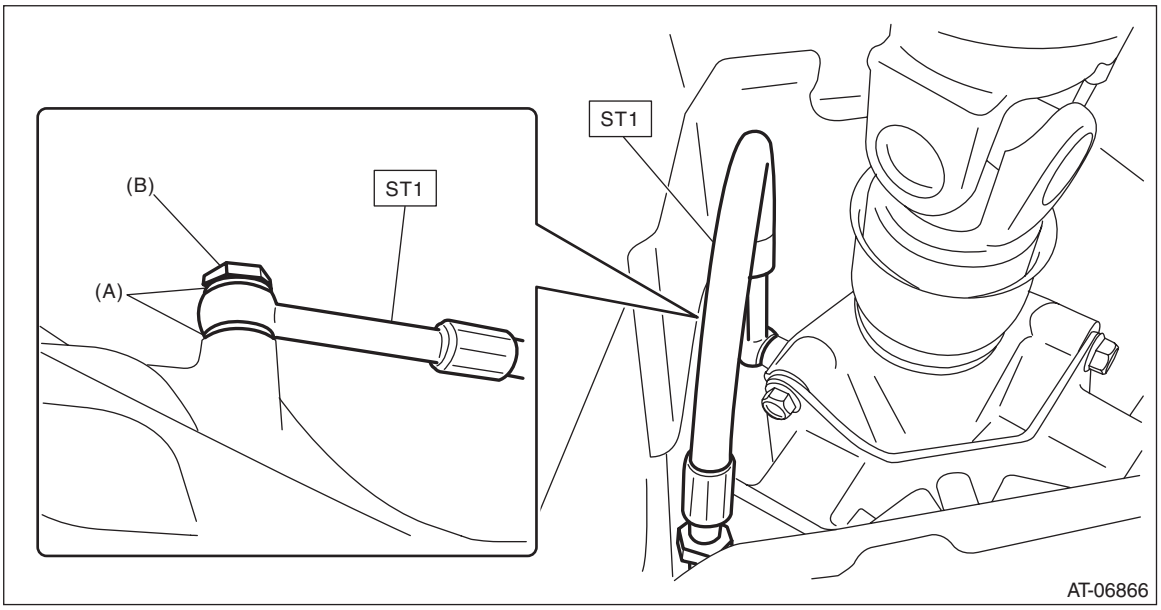

(A) Gasket (genuine part)
(B) Union screw (genuine part)

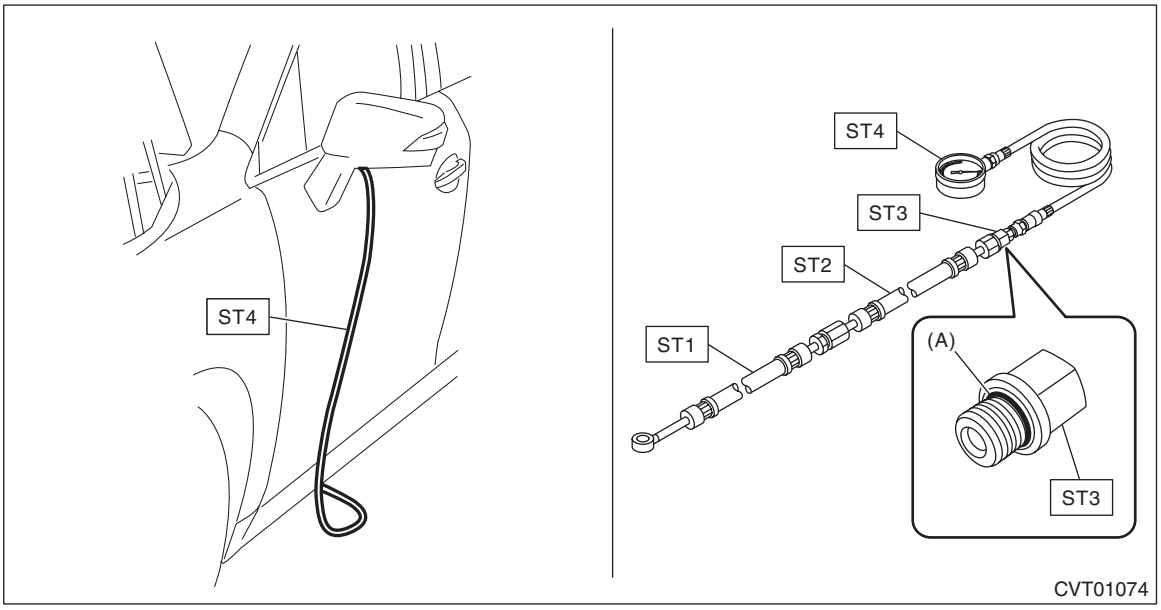

(A) O-ring (genuine part)

5) Connect the Subaru Select Monitor to the data link connector and read the current data.
6) Check the transfer clutch pressure as in secondary pressure (line pressure) test. <Ref. to CVT(TR580)-51, Secondary Pressure (Line Pressure) Test.>

NOTE:
• Use Subaru Select Monitor for switching to FWD mode. <Ref. to CVT(TR580)-47, AWD ON/OFF Switching Mode.>
• If no oil pressure is produced, if it does not change in AWD mode or if oil pressure is produced in FWD mode, there may be a problem in the control valve body.

Range position	ON Duty ratio (%)	Accelerator pedal opening angle (%)	Standard transfer clutch pressure kPa (kgf/cm^2, psi)	
			AWD mode	FWD mode
D	95 — 100	Fully opened (100)	1,000 — 1,200 (10.2 — 12.2, 145 — 174)	—
	60	Adjust ON Duty ratio to 60%.	400 — 700 (4.1 — 7.1, 58 — 102)	—
	0	Fully closed (0)	—	0 (0, 0)
N or P	0	Fully closed (0)	0	—

7) Lift up the vehicle.
8) Remove the ST.
9) Install the test plug using ST1 and ST2.

NOTE:
• Use new O-rings.
• Apply CVTF to the O-rings.
• Tighten the test plug while directly aligning ST2 and torque wrench.

ST1 18270AA040 SOCKET
ST2 73099SG000 SPECIAL TOOL CONDENSER
Using the following formula, calculate the tightening torque for a torque wrench.
$T2 = L2/(L1 + L2) \times T1$
T1: 22 N·m (2.2 kgf-m, 16.2 ft-lb)
L1: ST2 length 0.1 m (3.94 in) (a)
L2: Torque wrench length (b) m (in)

[Required torque setting]
T2: Tightening torque: N·m (kgf-m, ft-lb)

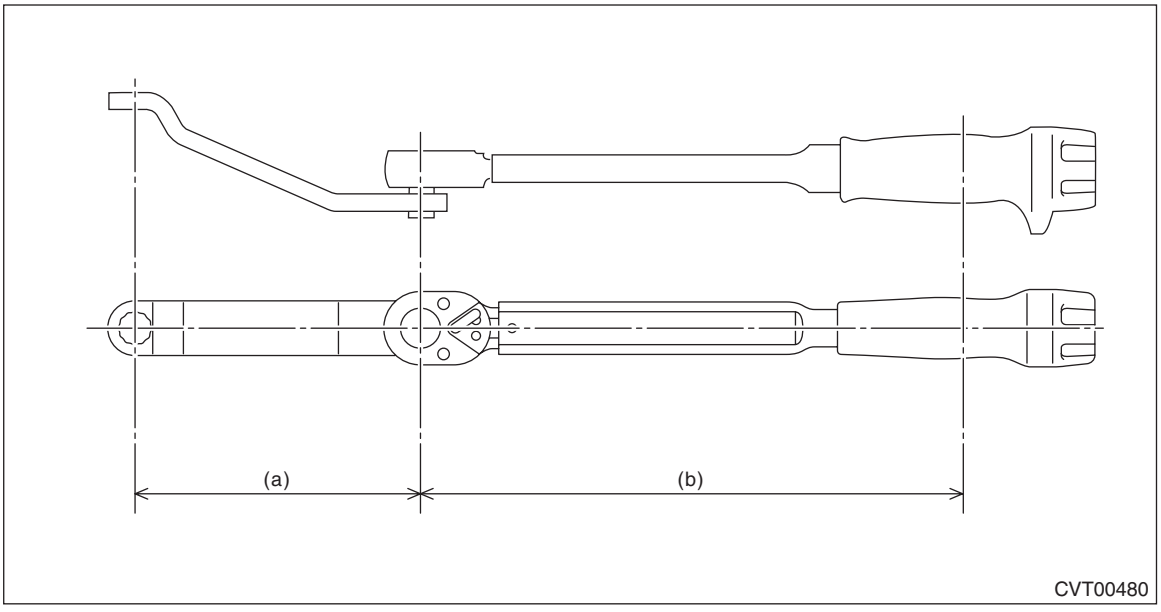

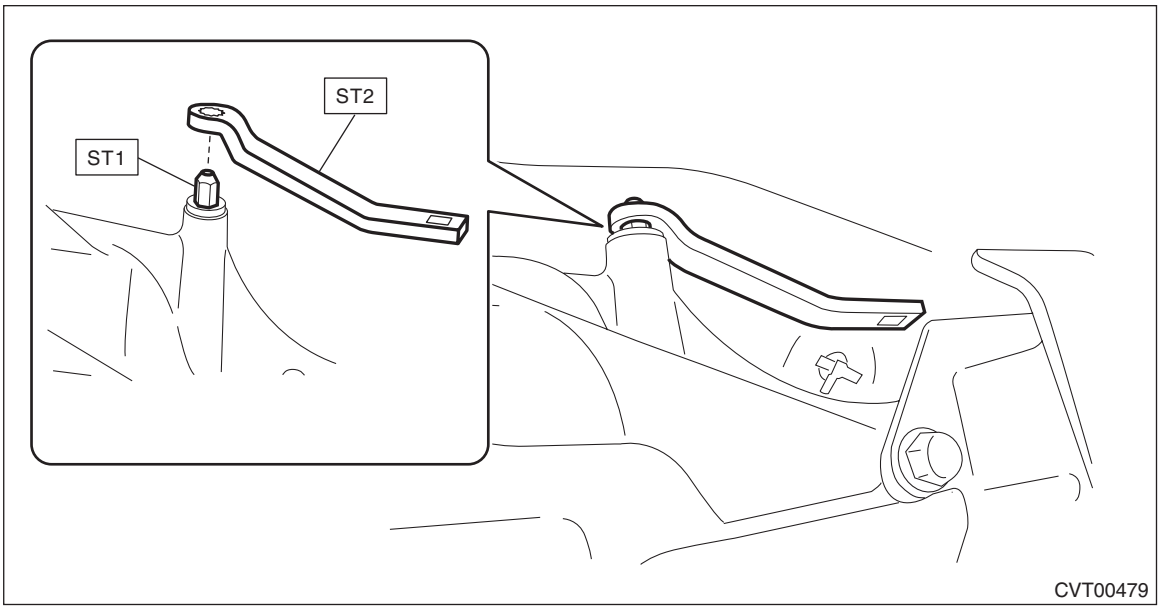

10) Install the center exhaust cover.

Tightening torque:
18 N·m (1.8 kgf-m, 13.3 ft-lb)

11) Lower the vehicle.

10.Automatic Transmission Assembly

A: REMOVAL

1) Disconnect the ground terminal from battery sensor. <Ref. to RC-4, BATTERY, NOTE, Repair Contents.>
2) Lock the steering wheel.
3) Remove the air intake duct. <Ref. to IN(H4DO)-12, REMOVAL, Air Intake Duct.>
4) Remove the clip (A), and loosen the clamps (B) and (C).

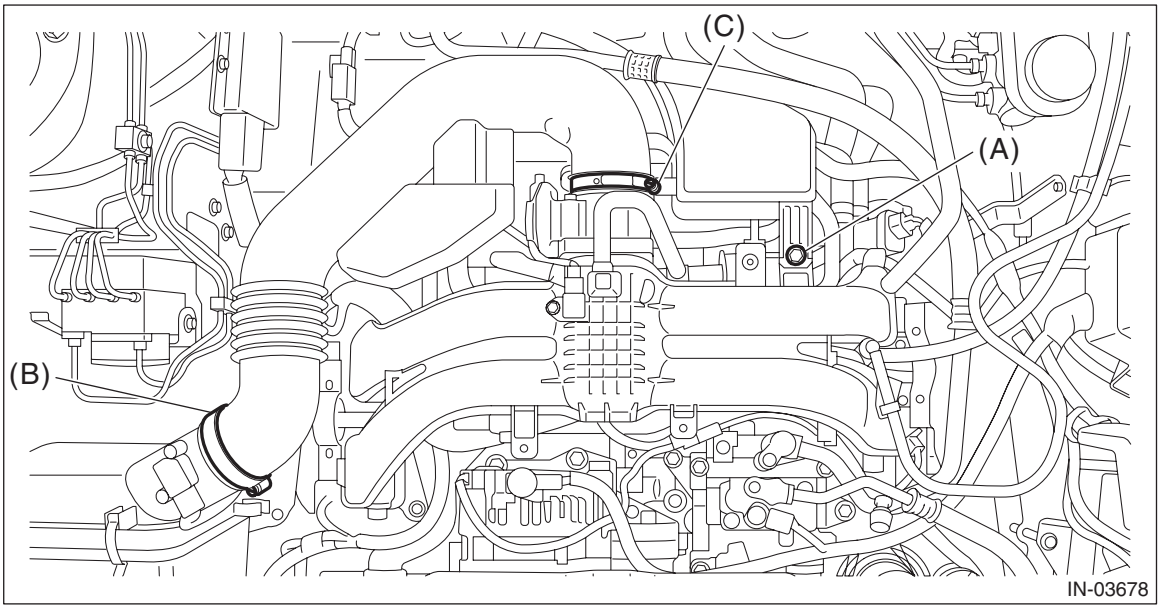

5) Remove the air intake boot from the throttle body, and move it to the left side wheel apron, etc.

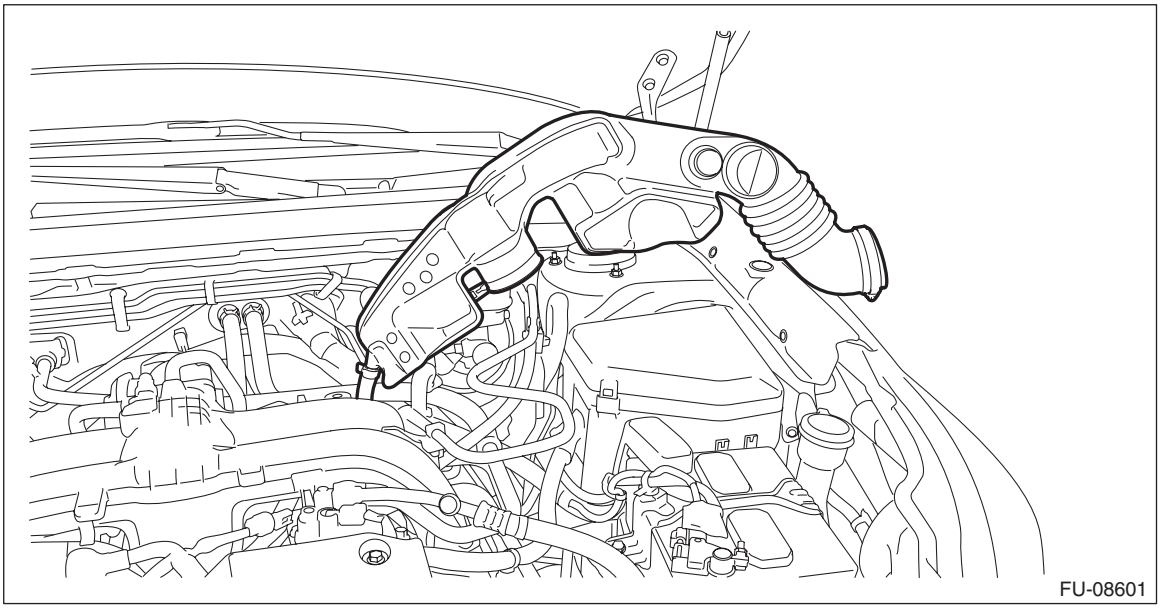

6) Disconnect the transmission radio ground terminal and transmission harness connector, and remove the harness clip.

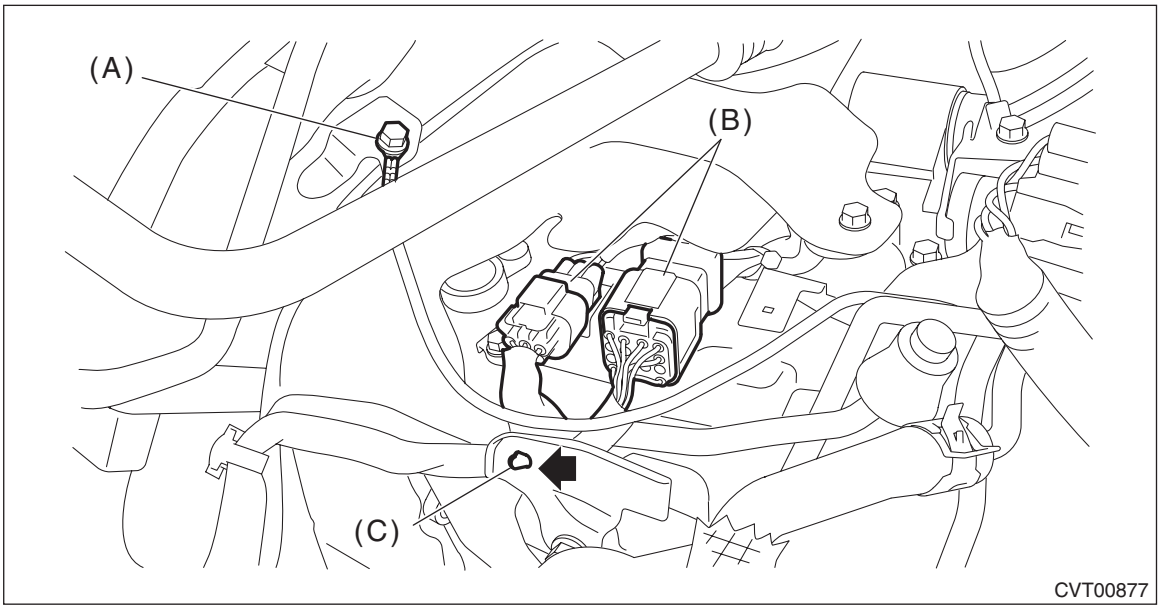

(A) Transmission radio ground terminal
(B) Transmission harness connectors
(C) Harness clip

7) Remove the CVTF cooler hose. (With CVTF cooler (air cool))

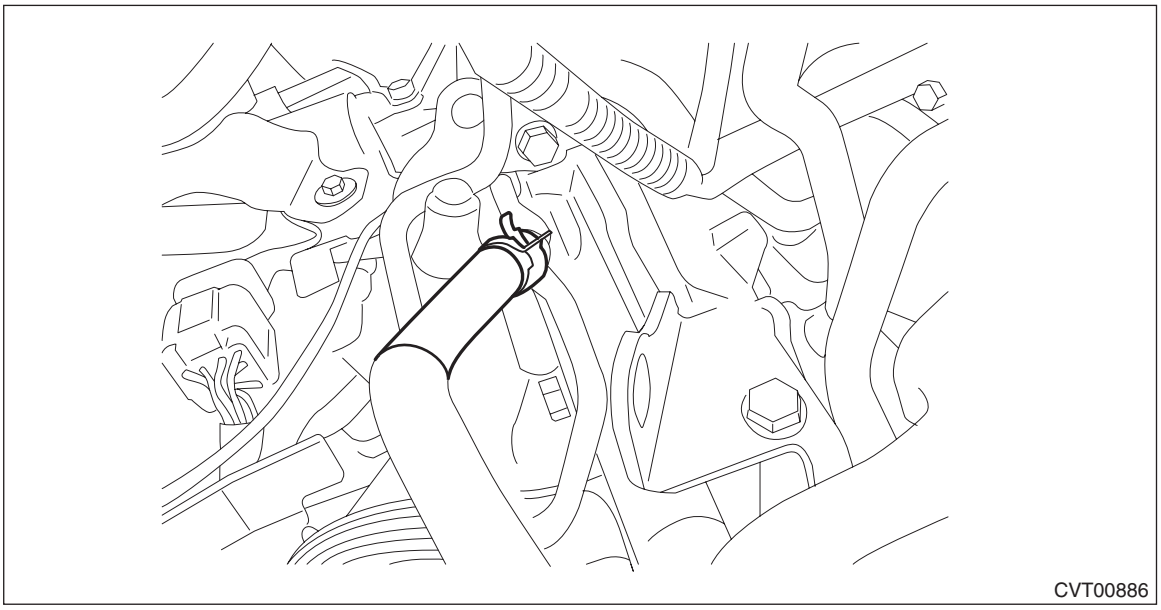

8) Remove the CVTF cooler (with warmer feature), and using a piece of wire, affix to a location of the body where it will not interfere with the removal/installation of the transmission.

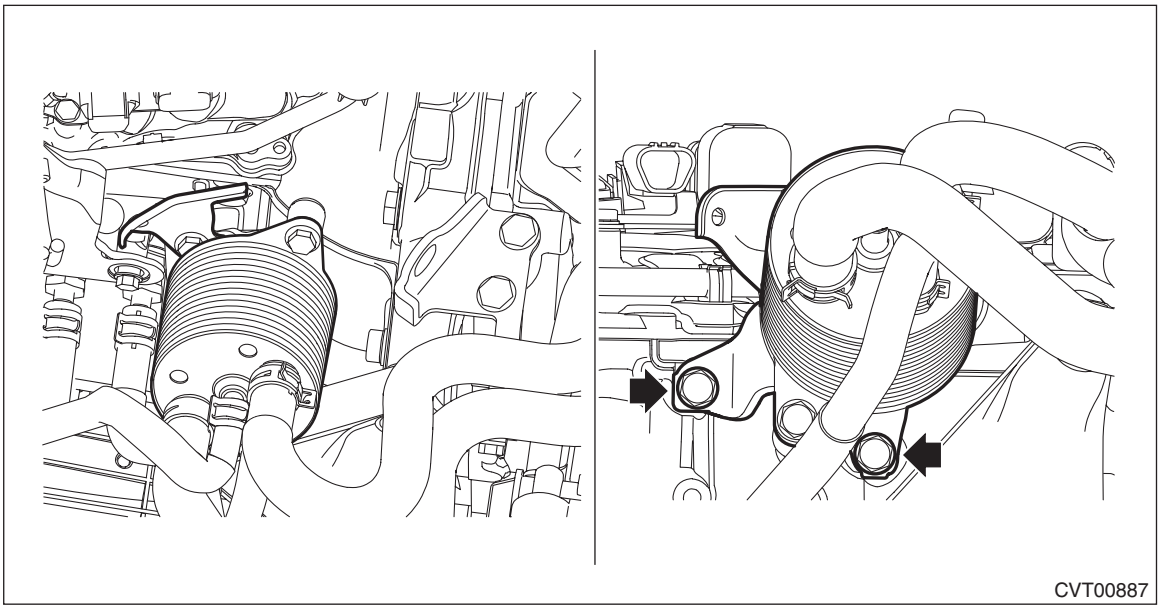
CVT00887

9) Remove the CVTF inlet hose and outlet hose. (Without CVTF cooler (air cool))

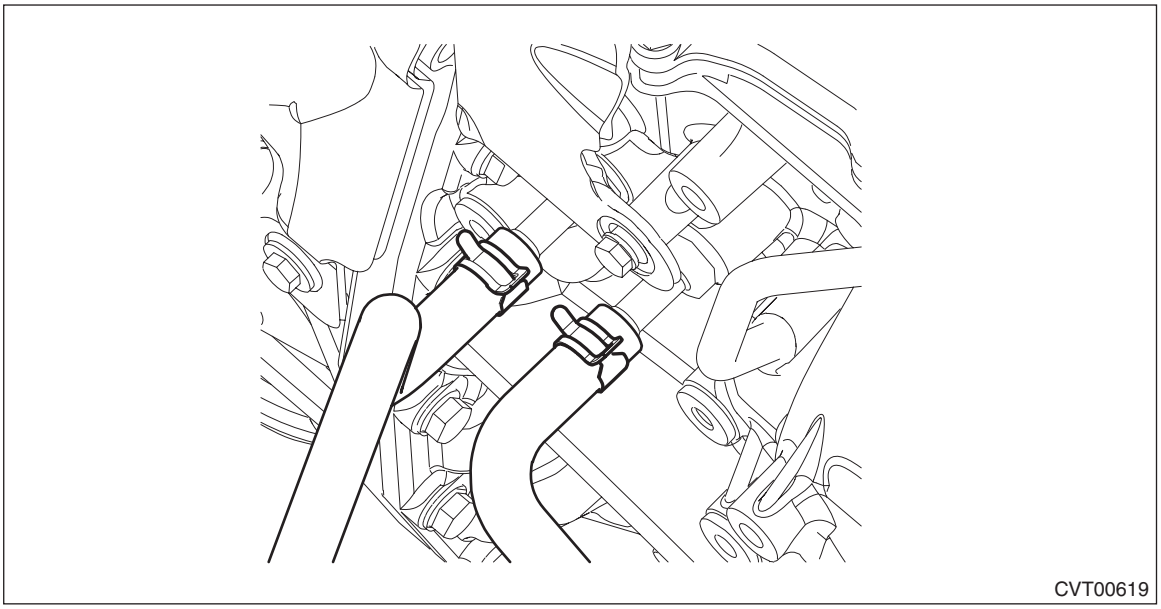
CVT00619

10) Remove the CVTF outlet hose. (With CVTF cooler (air cool))

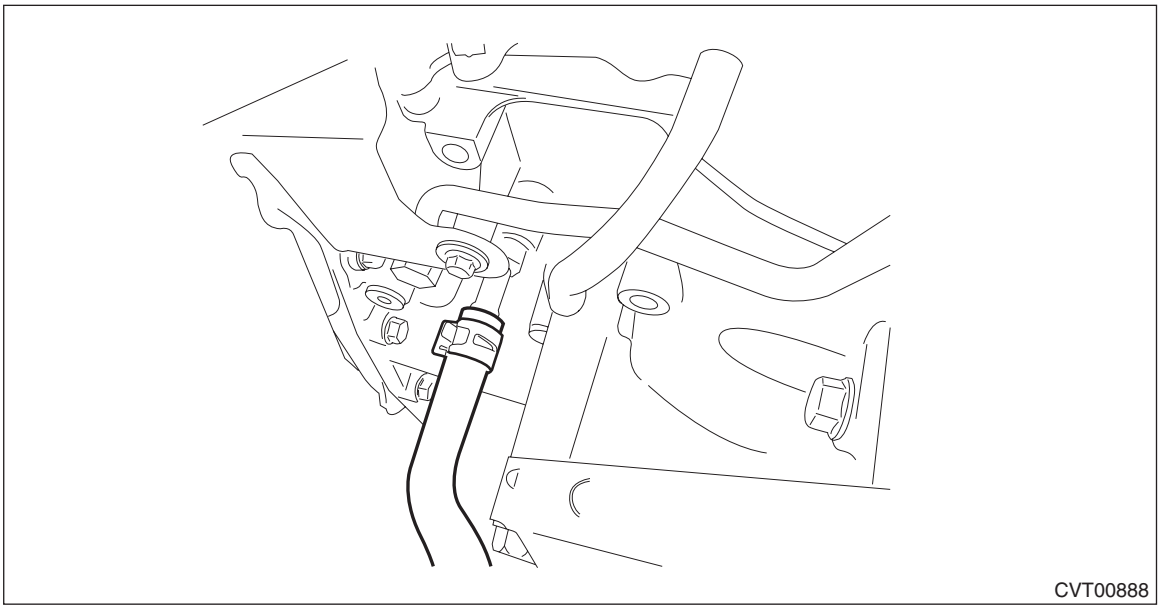

11) Remove the transmission case cover.

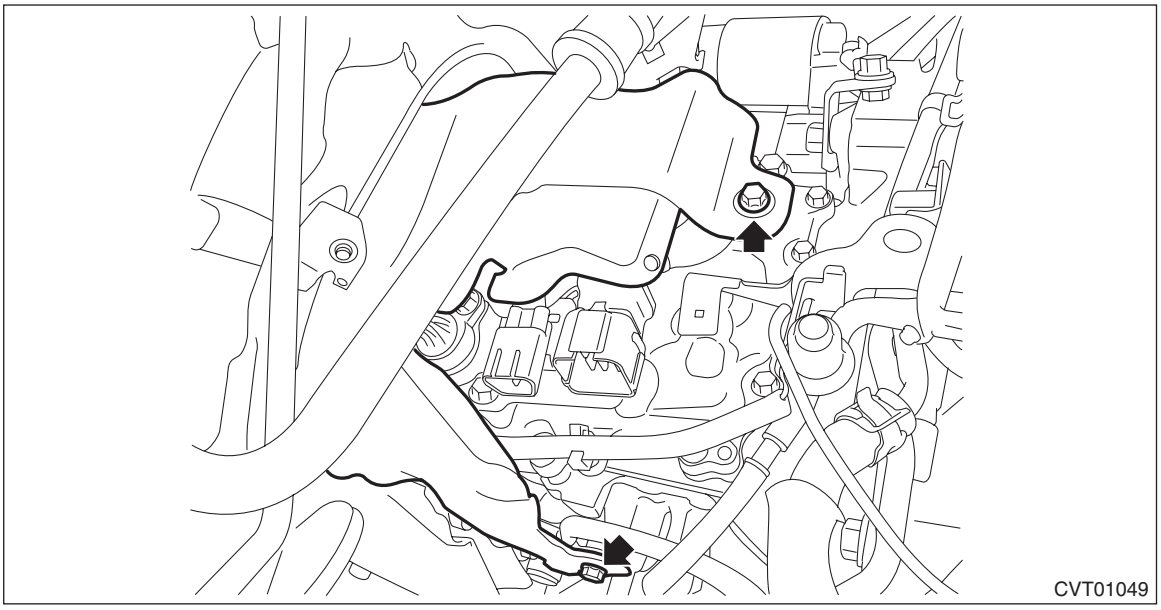

12) Remove the TCM. <Ref. to CVT(TR580)-159, REMOVAL, Transmission Control Module (TCM).>

13) Remove the transmission harness stay.

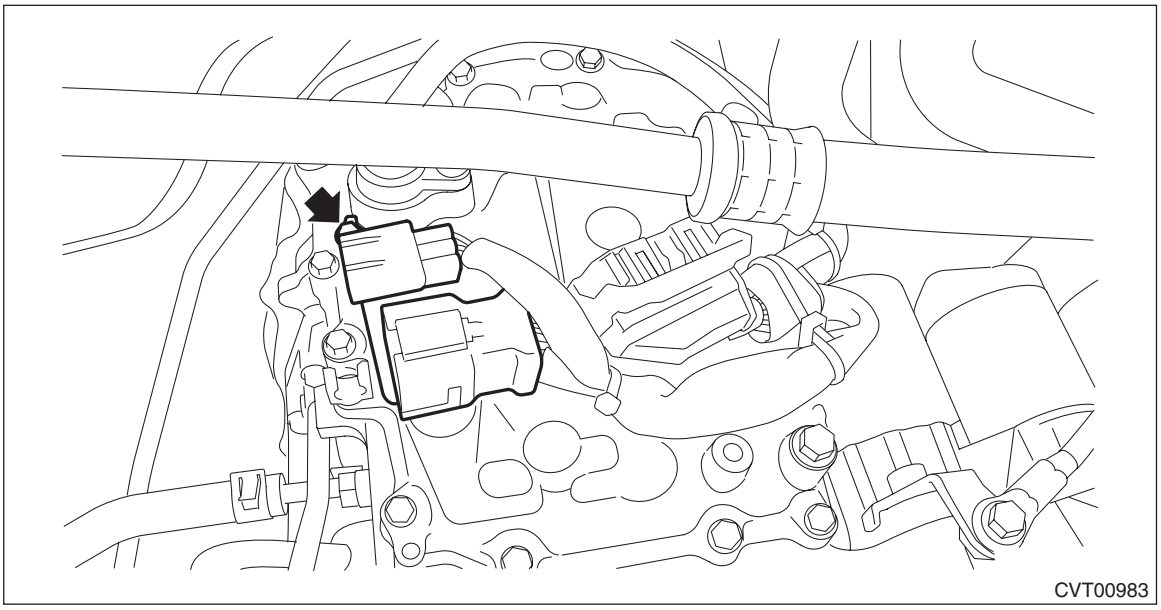

14) Remove the front tire LH and RH.
15) Lift up the vehicle.
16) Remove the under cover - front.
17) Remove the CVTF drain plug to drain CVTF. <Ref. to CVT(TR580)-40, REPLACEMENT, CVTF.>
18) Drain differential gear oil. <Ref. to CVT(TR580)-44, REPLACEMENT, Differential Gear Oil.>
19) Remove the center exhaust pipe (rear). <Ref. to EX(H4DO)-12, REMOVAL, Center Exhaust Pipe.>
20) Remove the center exhaust cover.

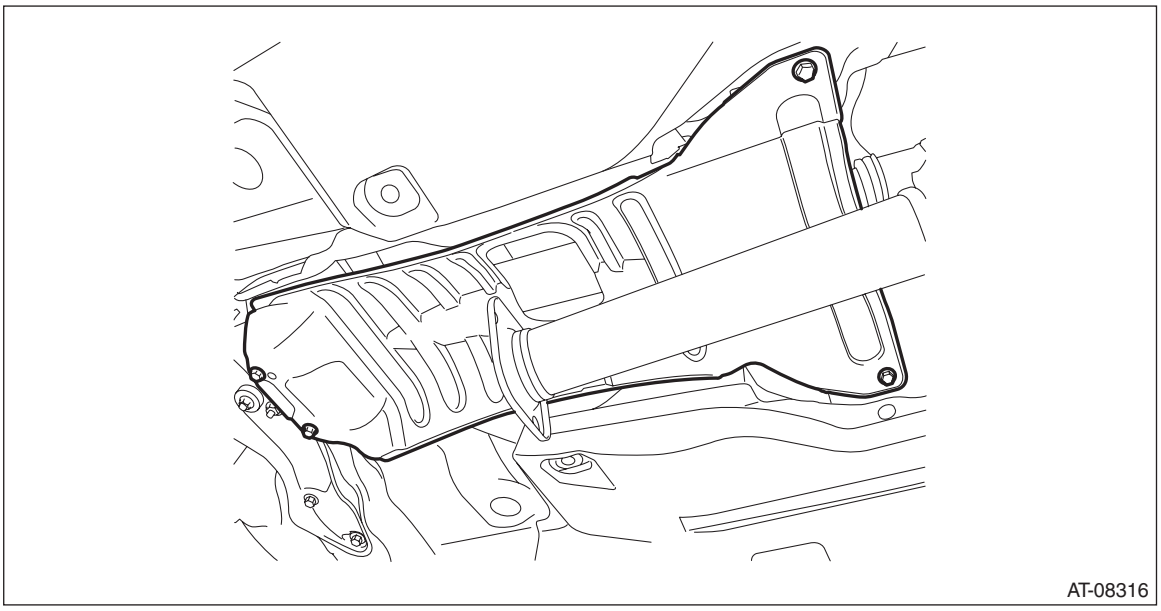

21) Remove the propeller shaft. <Ref. to DS-10, REMOVAL, Propeller Shaft.>

22) Remove the snap pin and washer from shifter arm and remove the select cable.

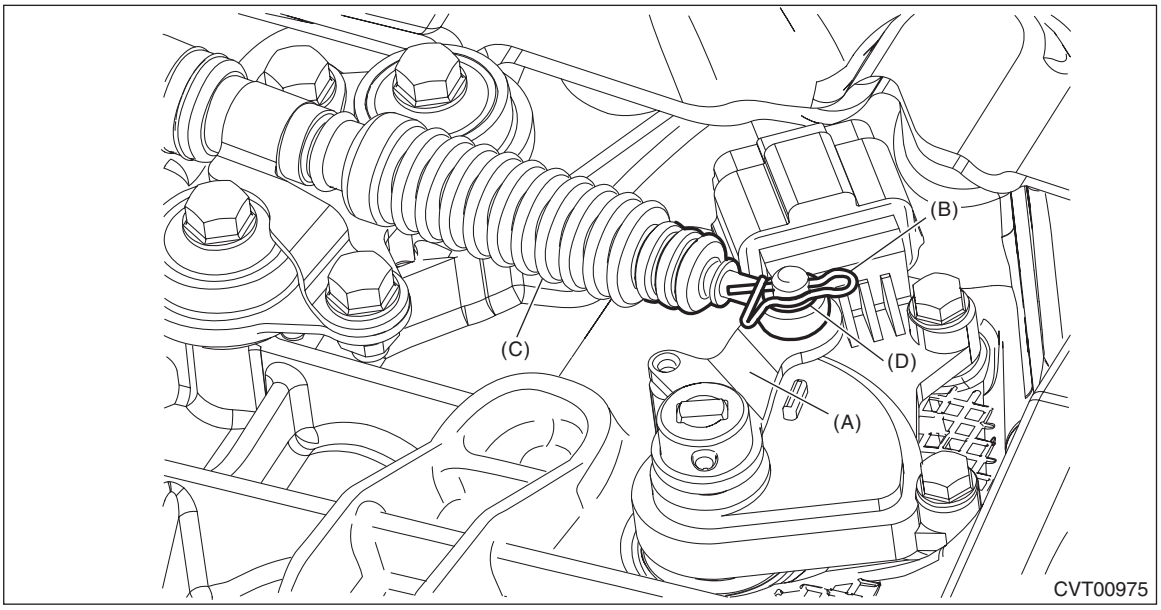

(A) Shifter arm
(B) Snap pin
(C) Select cable
(D) Washer

23) Remove the plate assembly.

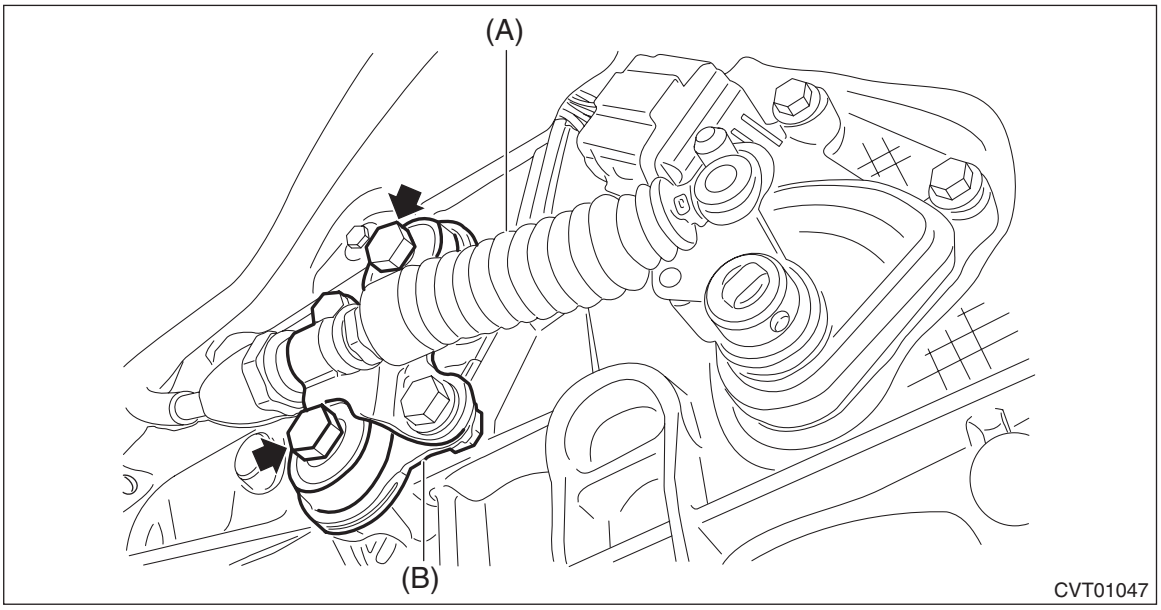

(A) Select cable
(B) Plate ASSY

24) Remove the CVTF CVT inlet hose and CVTF CVT outlet hose. (With CVTF cooler (air cool))

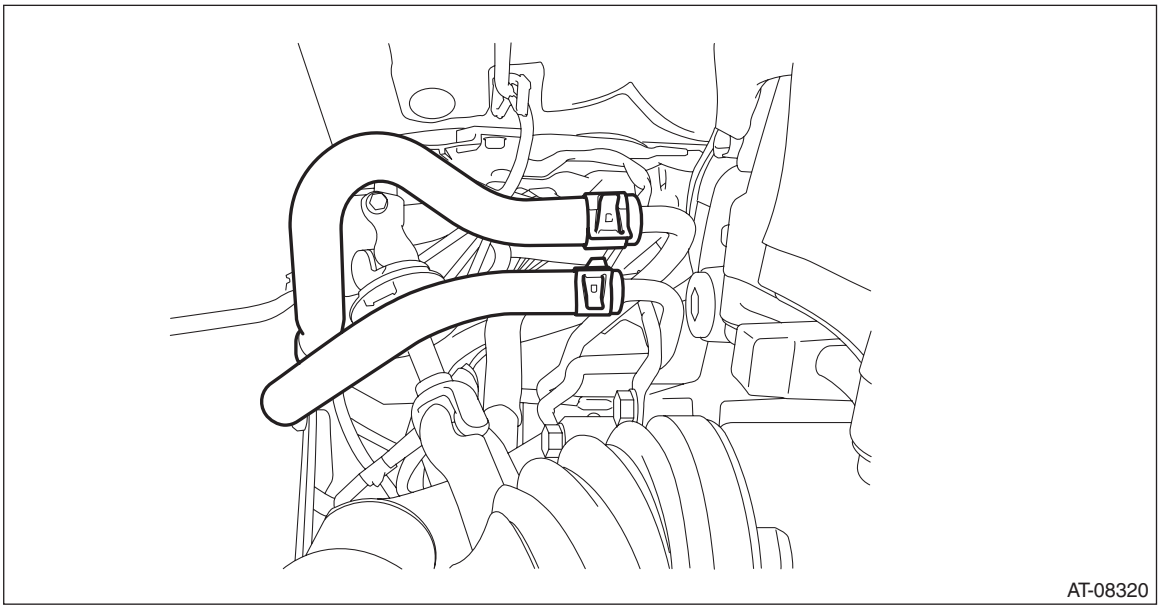

25) Remove the universal joint. <Ref. to PS-14, REMOVAL, Universal Joint.>
26) After pulling off the cotter pin and removing the castle nut, use a puller to remove the tie-rod end.

NOTE:
Use a tool appropriate to the structure, and be careful not to damage the boot of the joint while removing. The boot may be damaged depending on the tool used.

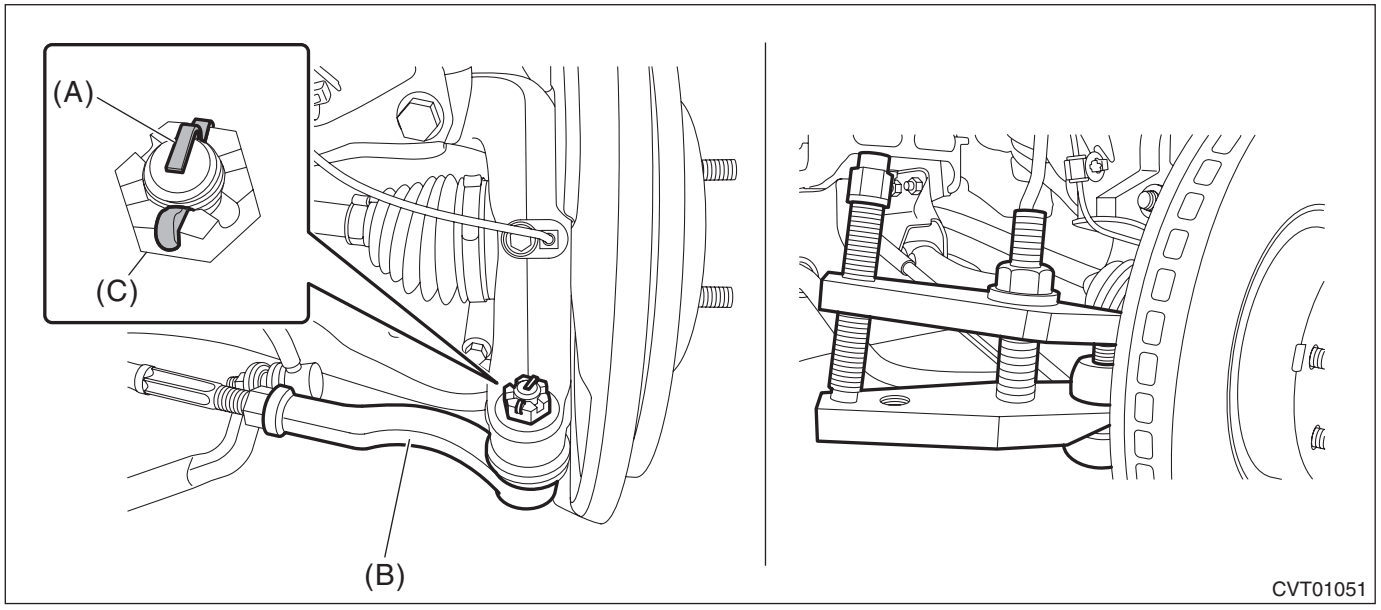

(A) Cotter pin
(B) Tie-rod end
(C) Castle nut

27) Remove the stabilizer link, and disconnect the lower arm ball joint and housing.

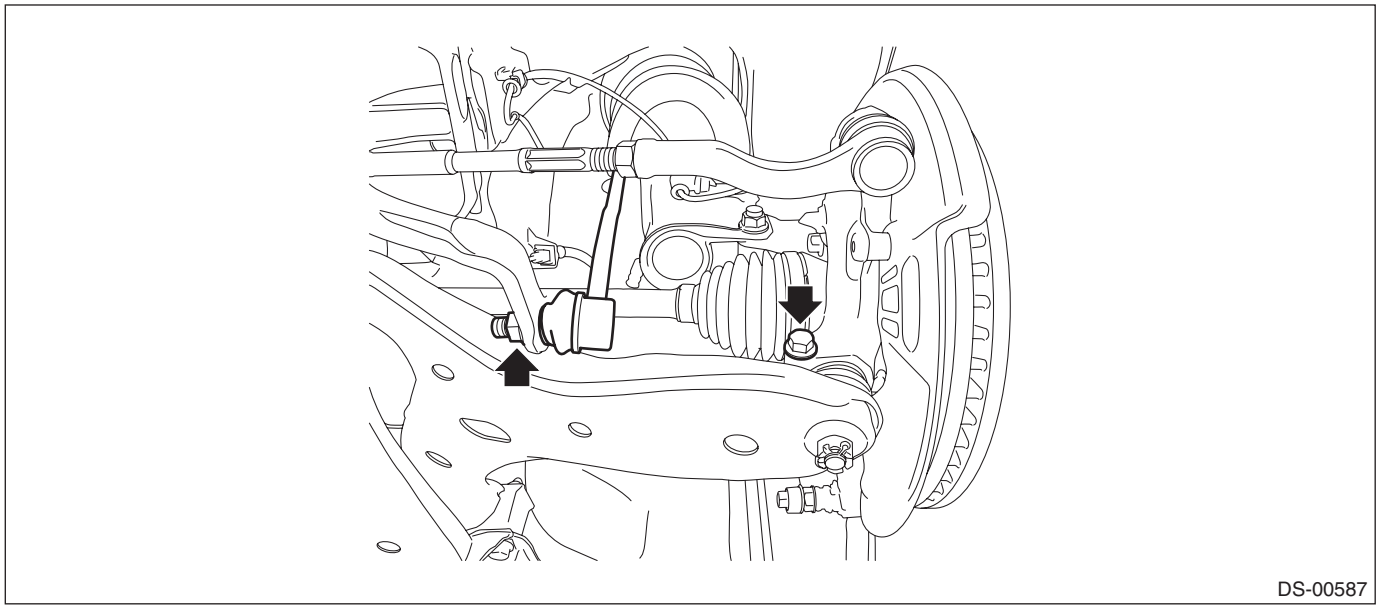

28) Pull out the front drive shaft from transmission using a crowbar.

NOTE:
Holding the joint of front drive shaft from transmission side, pull out the drive shaft from transmission with care not to stretch the boot.

29) Loosen the bolt at the bottom of the transmission mounting bracket.

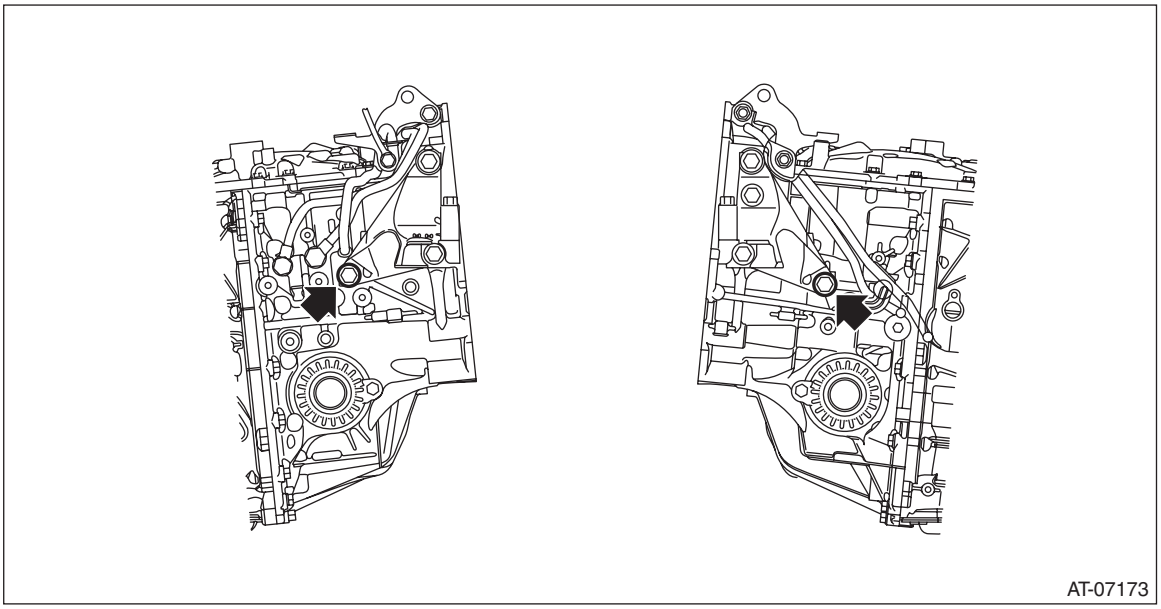

30) Lower the vehicle.

31) Detach the battery cable clip, and remove the battery cable bracket.

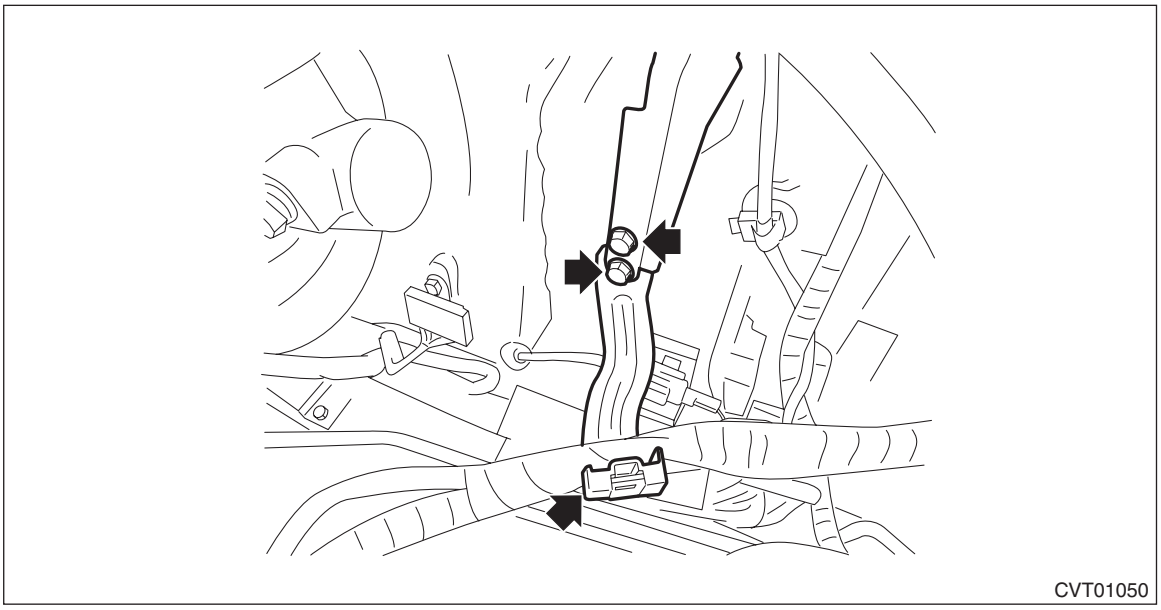

32) Remove the starter. <Ref. to SC(H4DO)-7, REMOVAL, Starter.>
33) Remove the service hole plug.

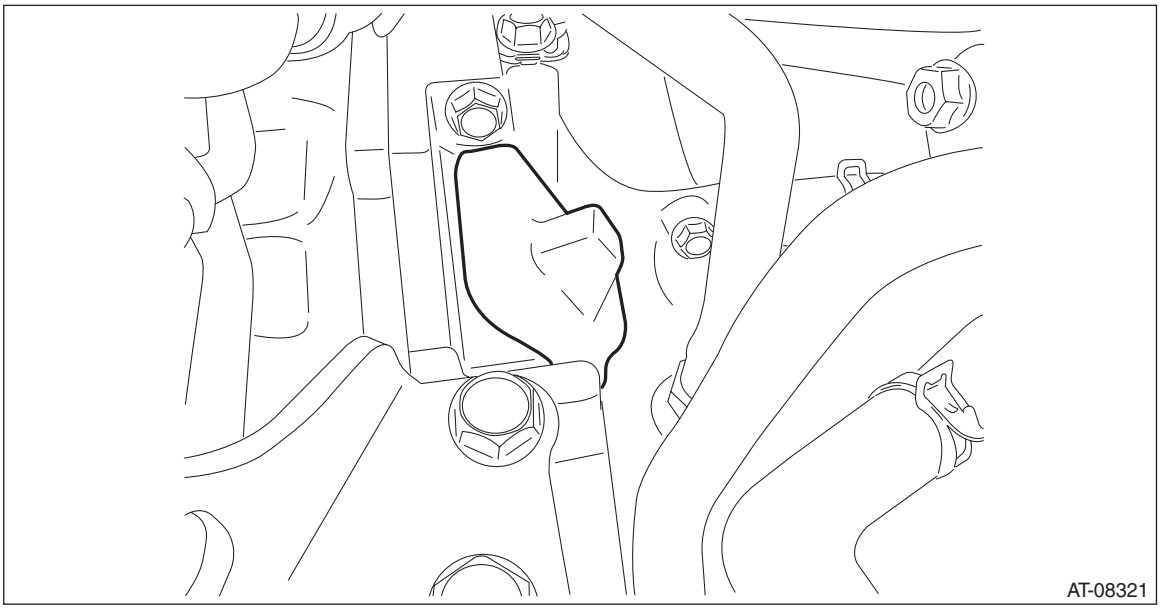

34) Remove the four bolts combining the torque converter and drive plate while rotating the crank pulley a little at a time in the same direction as engine revolution.

CAUTION:
- **Be careful not to drop bolts into converter housing.**
- **Be careful not to damage the mounting bolts.**

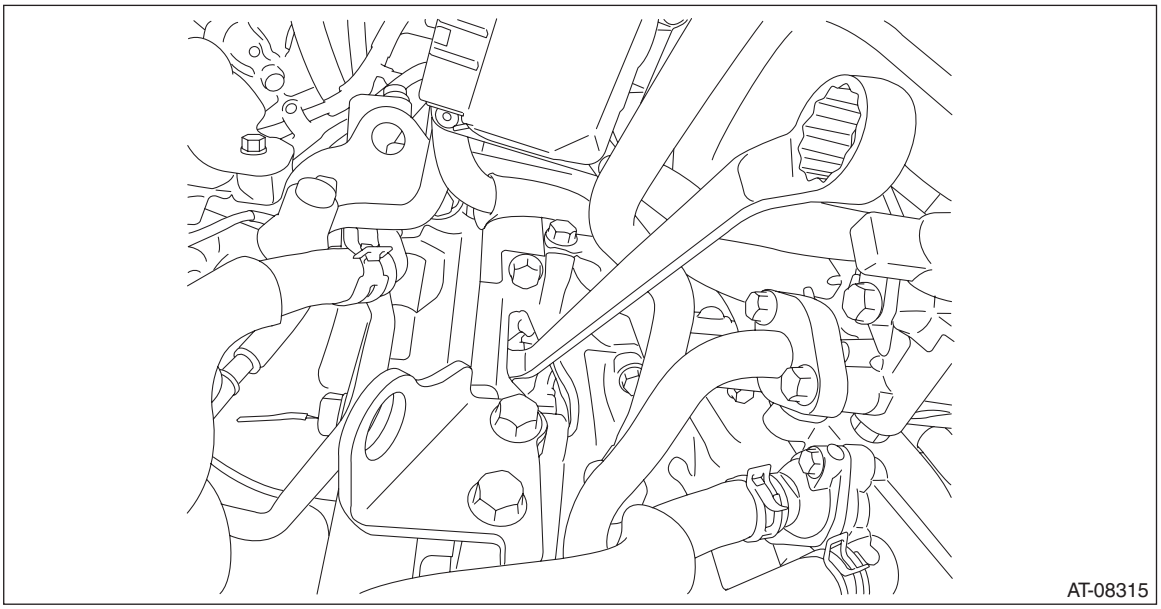

35) Make sure the torque converter moves freely by rotating with finger through the starter installation hole.
36) Attach the ST to the converter case.
ST 498277200 STOPPER SET

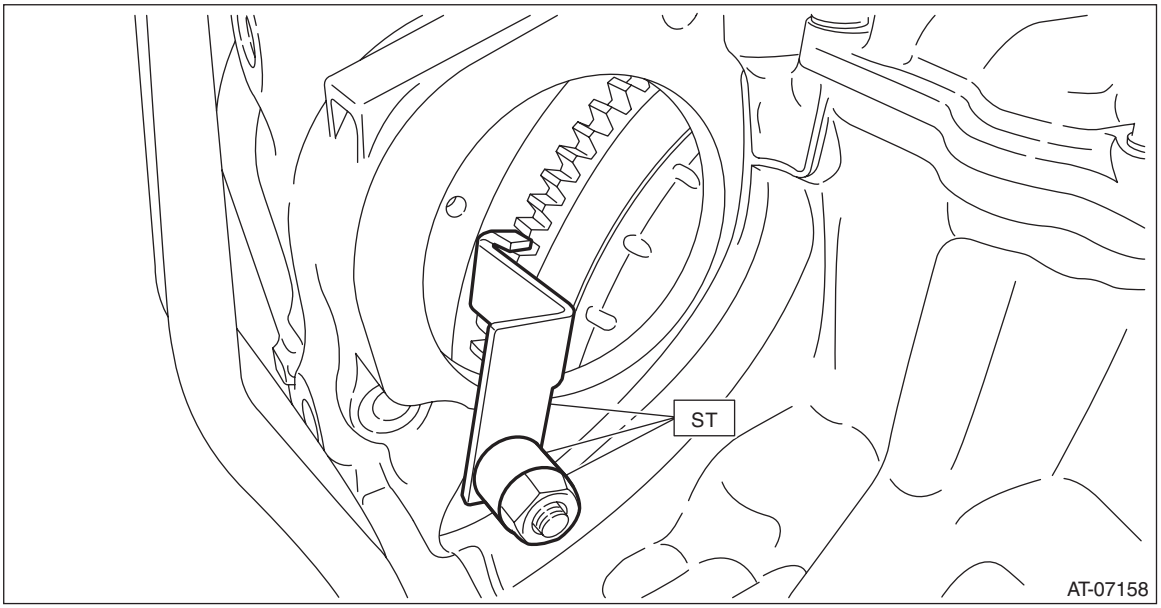

37) Remove the nuts from the transmission mounting brackets LH and RH.

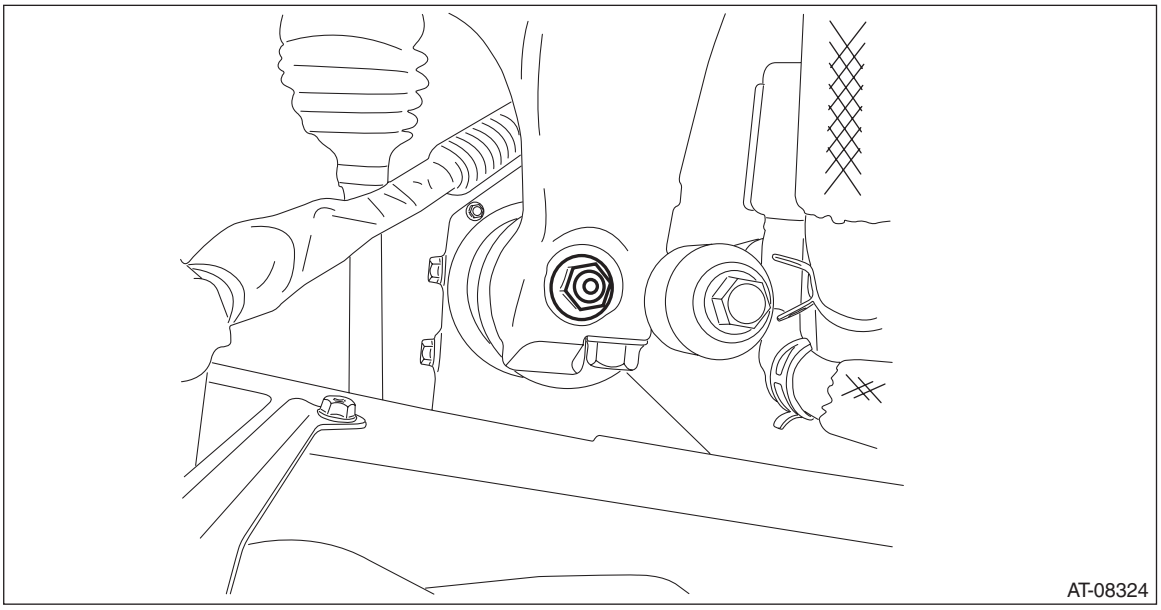

38) Remove the V-belt covers.
39) Set the ST to the engine.
ST1 18363AA050 BOLT
ST2 18360AA040 HANGER

Tightening torque:
43 N·m (4.4 kgf-m, 31.7 ft-lb)

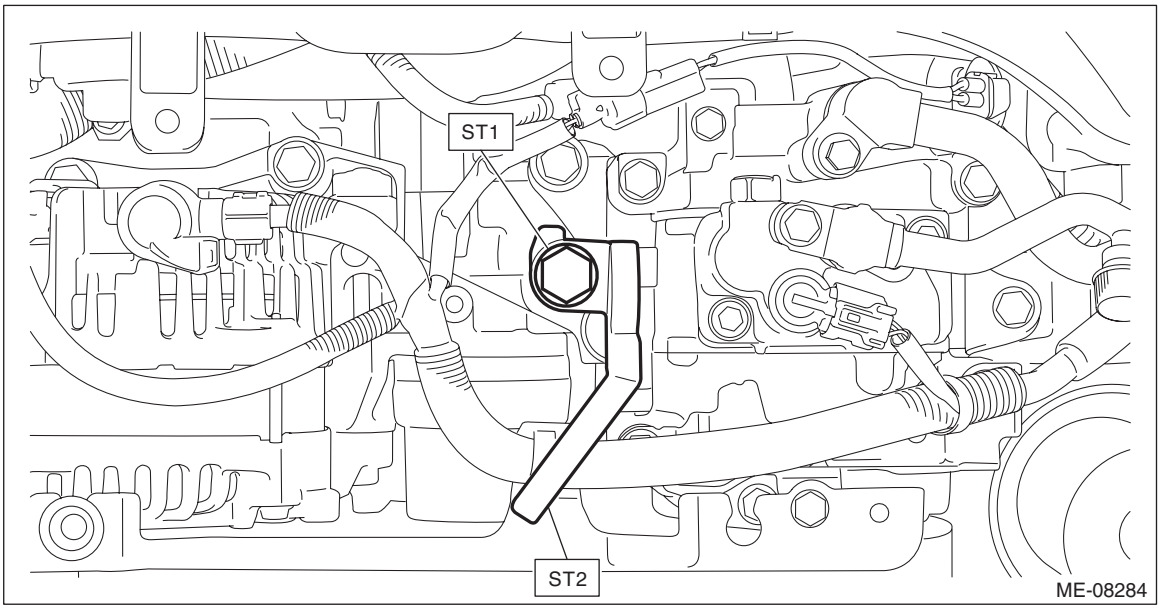

40) Set the ST1 and ST2 to vehicle.
ST1 99099AJ000 ENGINE HANGER
ST2 99099AJ010 CHAIN BALANCER

CAUTION:
- **Set so that the chain sling does not contact the engine parts.**
- **Install a bolt of ϕ8 mm (0.3 in) at the locations shown in the figure, and place the front side arms of ST (ENGINE HANGER).**
- **Set the arms of ST (ENGINE HANGER) at the locations shown in the figure.**

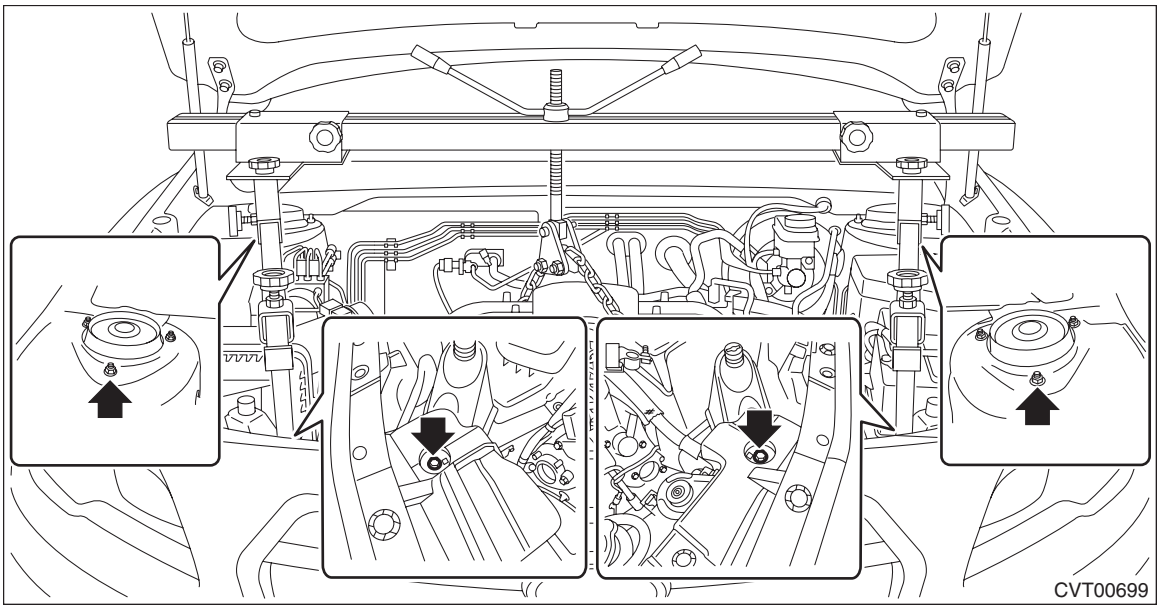

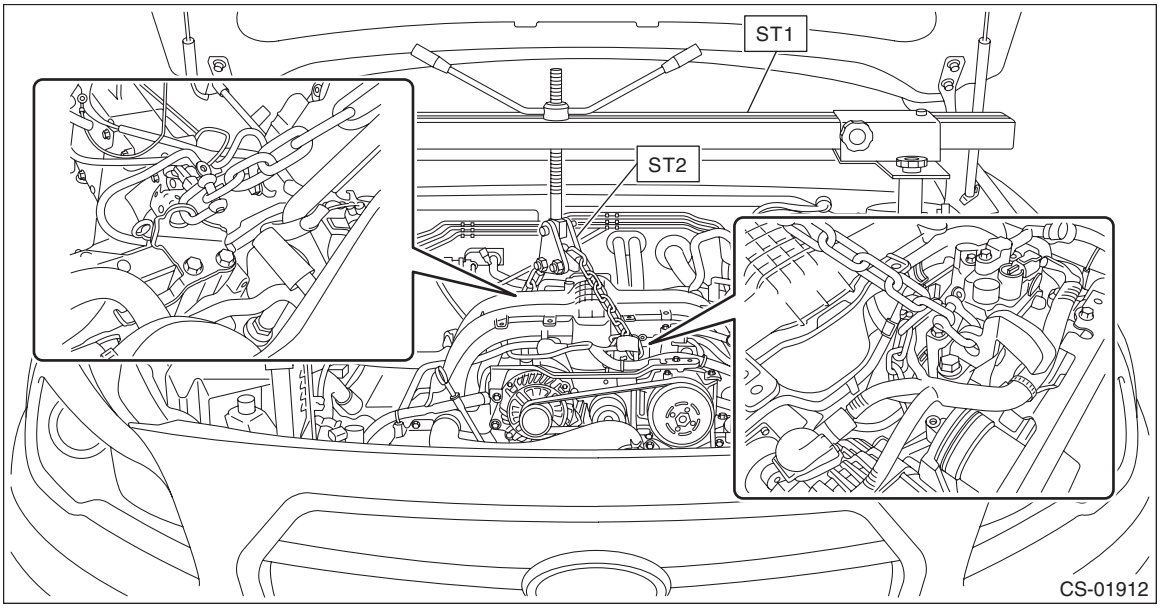

41) Lift the engine slightly and remove the engine mounting bolts.

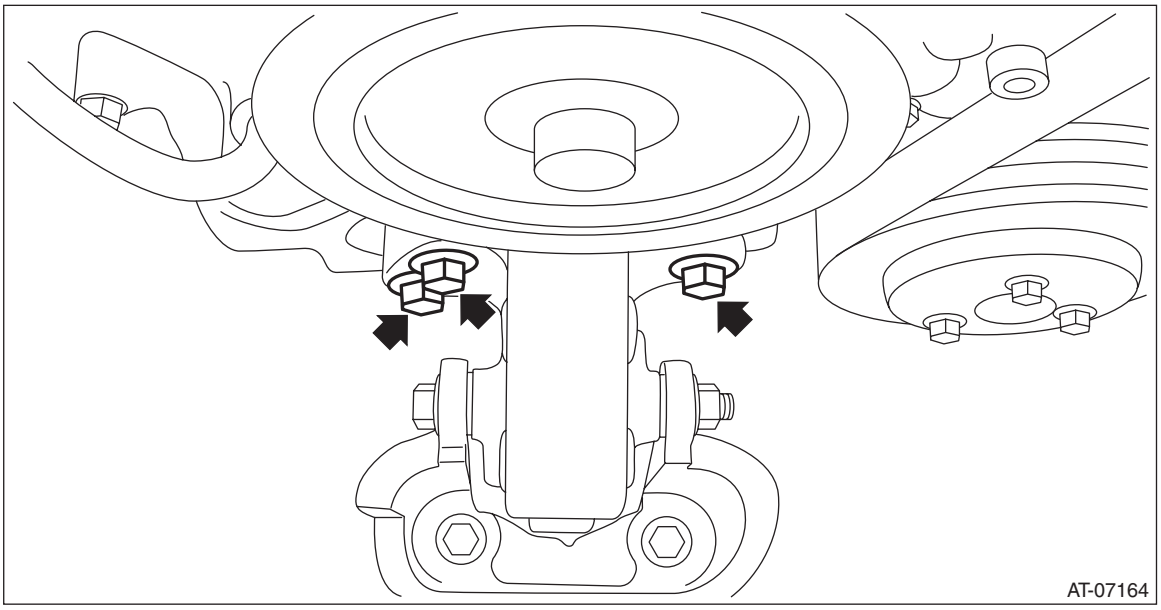

42) Remove the engine mounting nut and bolt to remove the front cushion rubber.

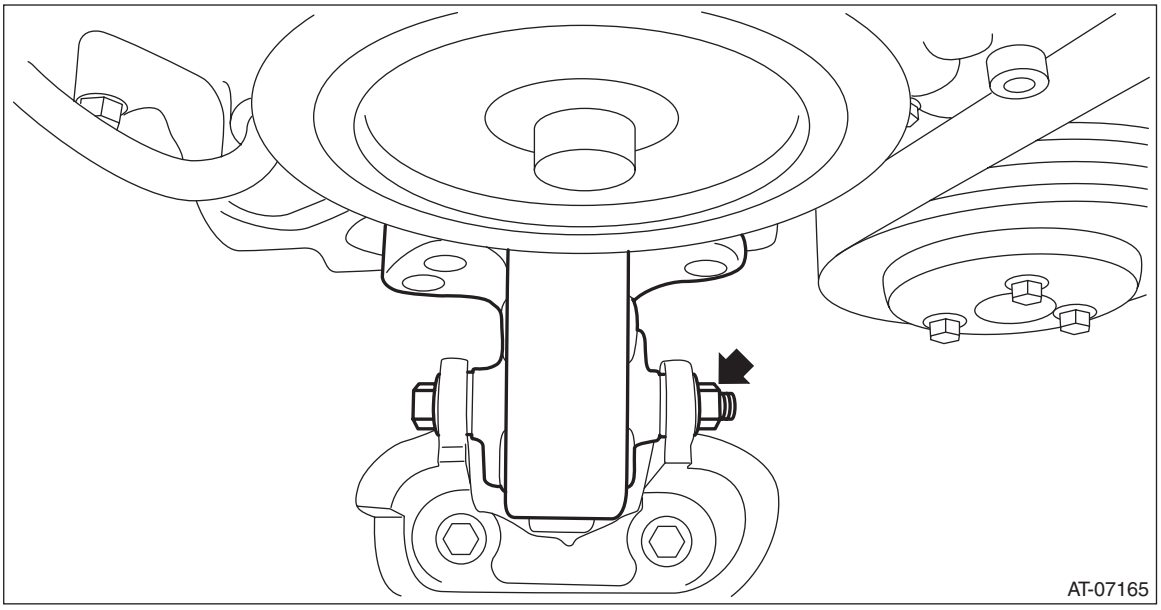

43) Temporarily attach ST by using two bolts.
ST 41099AJ130 ST H4 (FA, FB)

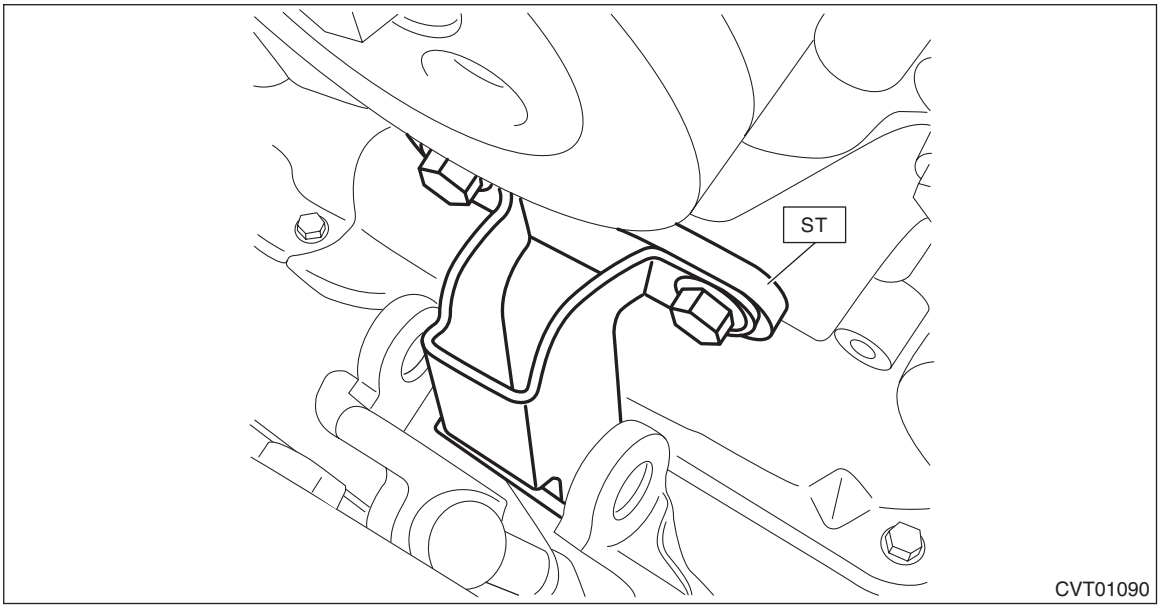

44) Lift up the engine unit high enough to install the bolt and nut.

CAUTION:
Do not lift up higher than enough level to install the ST to avoid damage to the hoses and pipes inside the engine room.

NOTE:
If it is difficult to pull out the stud bolt from transmission mounting bracket, slightly shake the engine unit while lifting up.

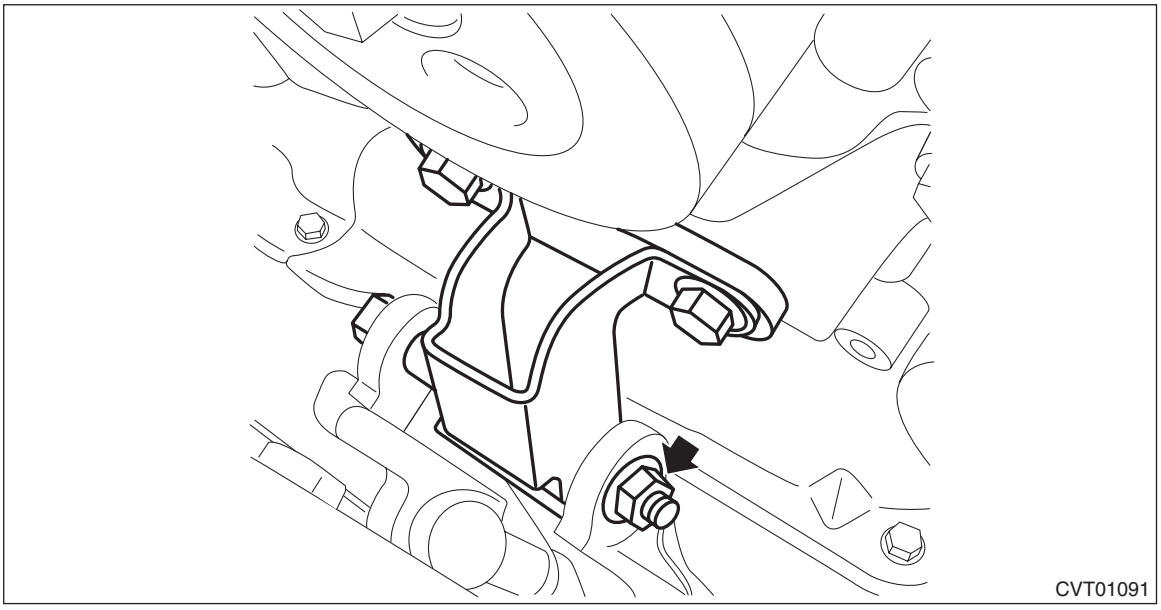

45) Tighten the mounting bolts on the engine side.

Tightening torque:
25 N·m (2.5 kgf-m, 18.4 ft-lb)

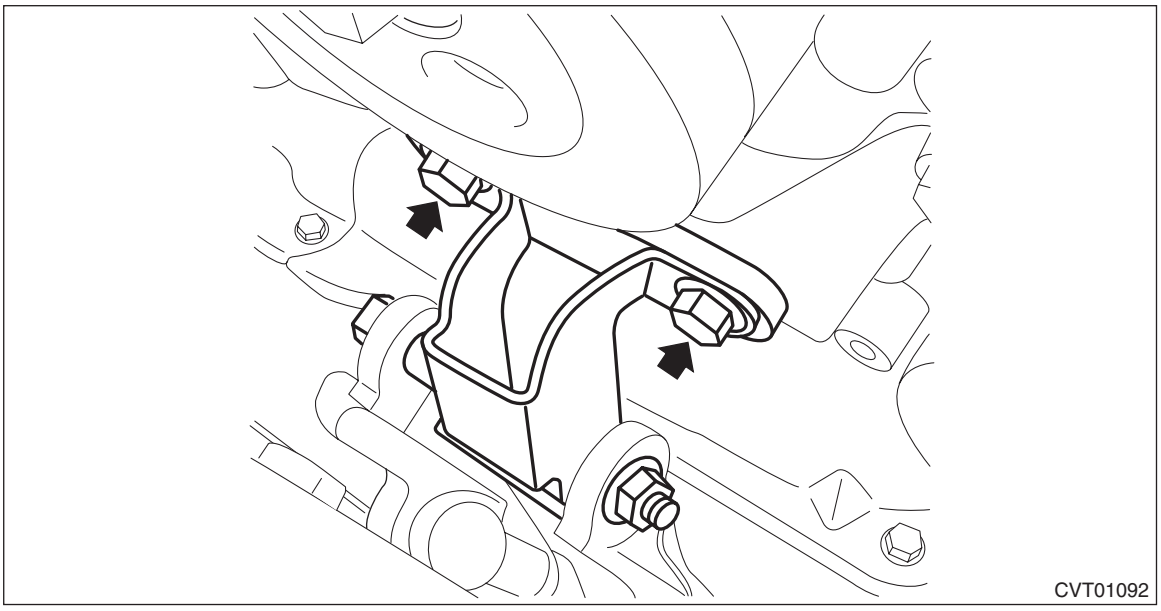

46) Remove the ST (ENGINE HANGER).
47) Remove the transmission mounting bracket LH and RH.

NOTE:
First, remove the transmission mounting bracket RH, and then tilt the engine unit to remove the transmission mounting bracket LH.

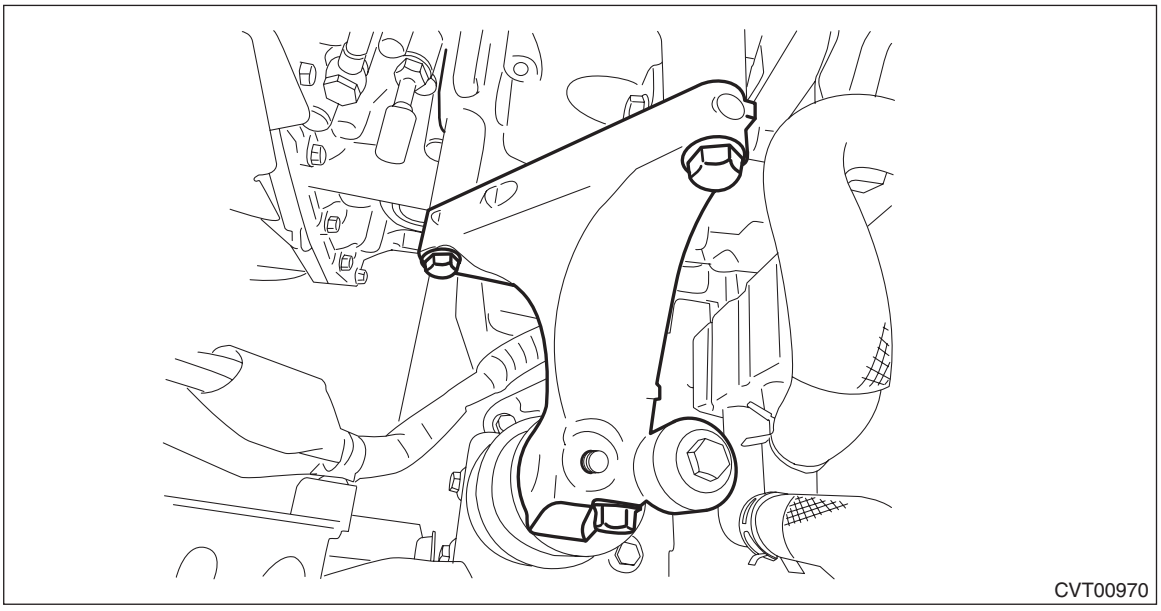

48) Remove the three transmission connecting bolts.

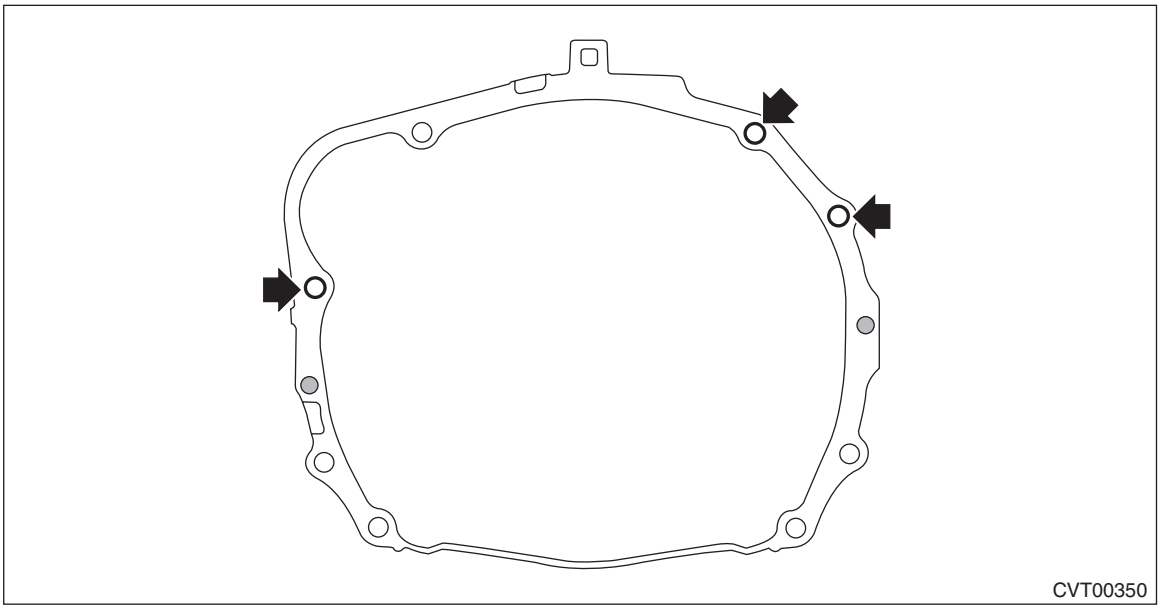

49) Set the ST (ENGINE HANGER) again to loosen the chain sling.
50) Lift up the vehicle.
51) Set the transmission jack under the transmission.
52) Remove the hanger bracket.

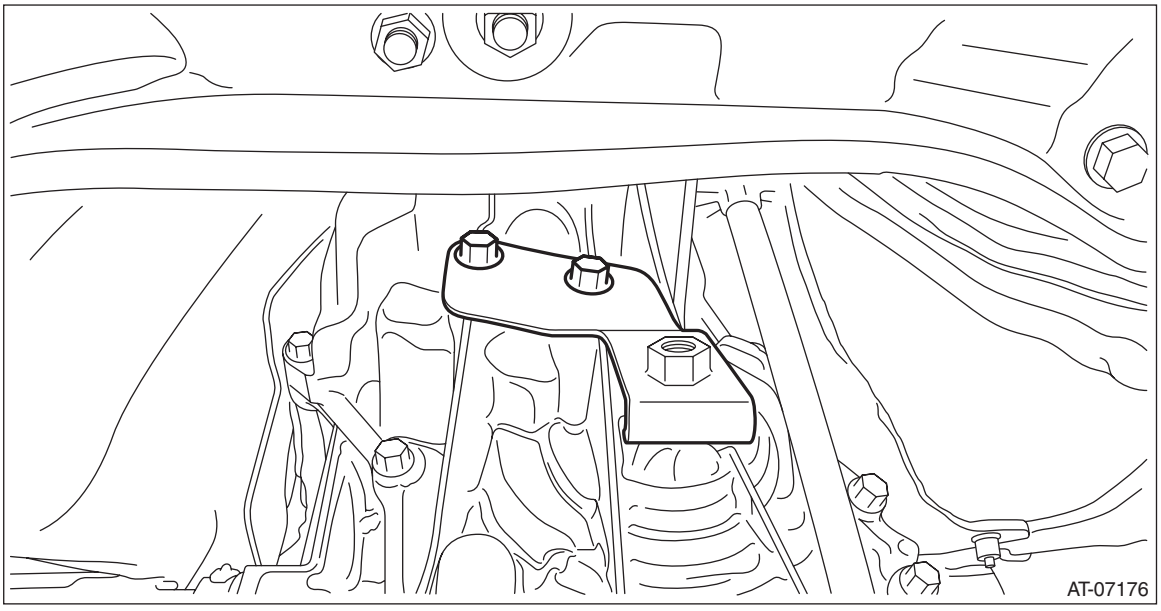

53) Remove the rear crossmember. <Ref. to CVT(TR580)-97, TRANSMISSION REAR CROSSMEMBER AND REAR CUSHION RUBBER, INSTALLATION, Transmission Mounting System.>
54) Lower the transmission rear end (dust cover rear end).

CAUTION:
When lowering the transmission rear end, be careful not to let the converter case and steering mechanical parts contact each other.

NOTE:
Lower the transmission rear end by approx. 80 mm (3.1 in) (reference).
55) Rotate the handle of ST (ENGINE HANGER) to apply tension to the chain sling.

56) Remove the two transmission connecting bolts and two nuts (lower side).

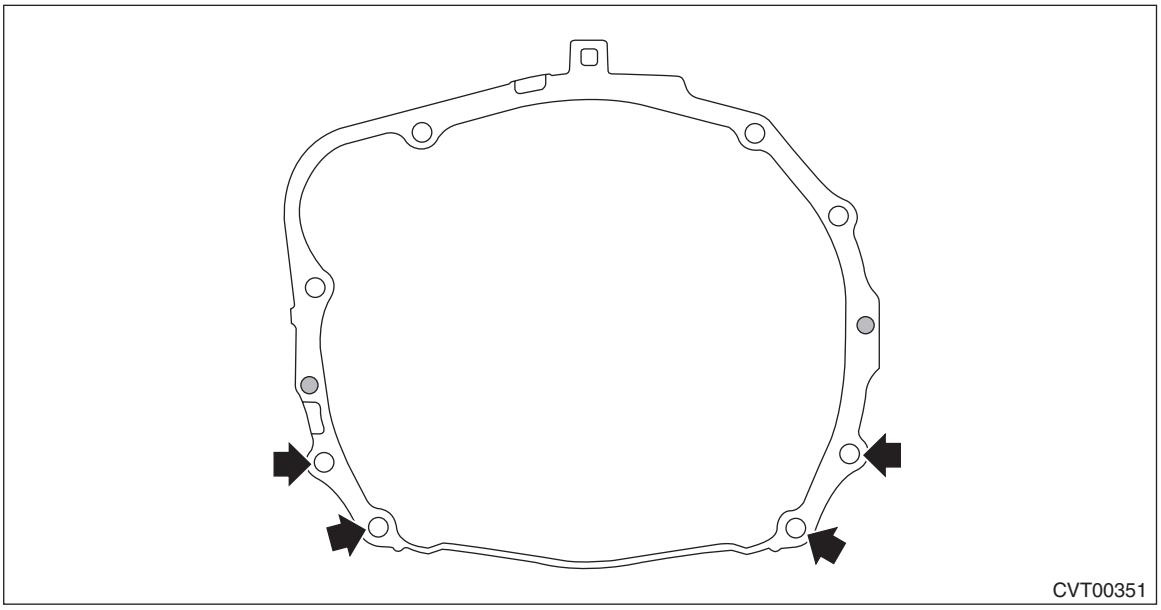

57) Remove the transmission assembly.

NOTE:
Remove it while moving the transmission jack up and down so that the engine and transmission axes are aligned straight.

58) Remove the cushion rubber. <Ref. to CVT(TR580)-96, TRANSMISSION REAR CROSSMEMBER AND REAR CUSHION RUBBER, REMOVAL, Transmission Mounting System.>

B: INSTALLATION

1) Attach the ST to converter case.
ST 498277200 STOPPER SET

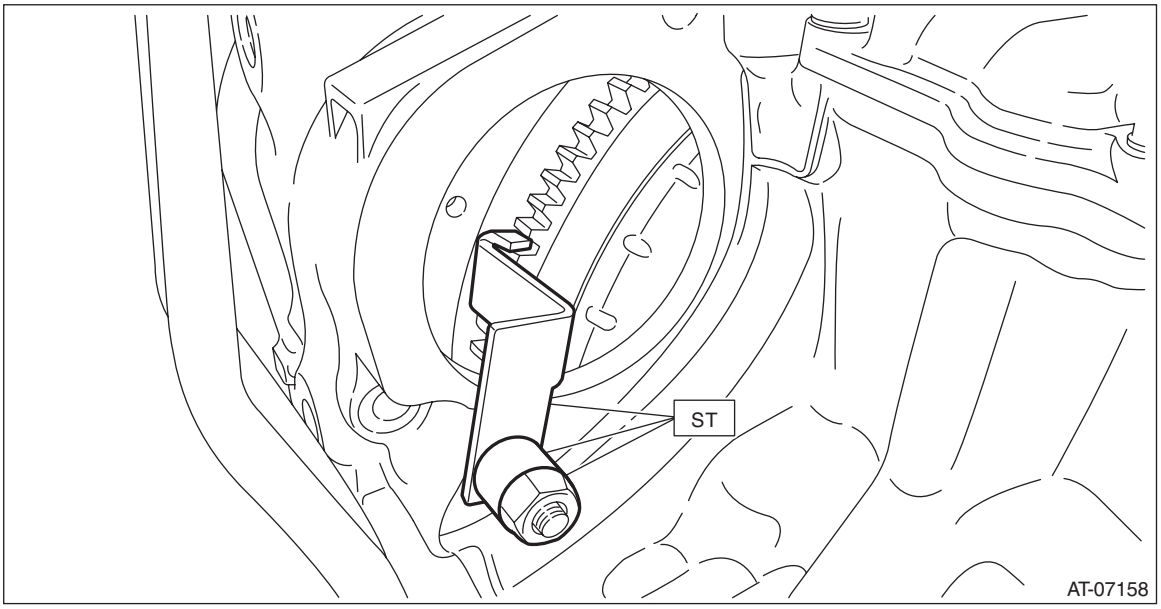

2) Replace the front differential side retainer oil seal. <Ref. to CVT(TR580)-100, REPLACEMENT, Differential Side Retainer Oil Seal.>

NOTE:
- Be sure to replace the differential side retainer oil seal with a new part whenever the front drive shaft is removed from the transmission.
- When a new differential side retainer oil seal has been installed, replacement is not required.

3) Install the cushion rubber on the transmission. <Ref. to CVT(TR580)-97, INSTALLATION, Transmission Mounting System.>
4) Mount the transmission onto the transmission jack.
5) Strike and bend the transmission hanger of transmission rear with a soft rubber hammer etc. so that it gets in contact with the transmission case.

CAUTION:
Do not apply extra overload or impact to the transmission case.

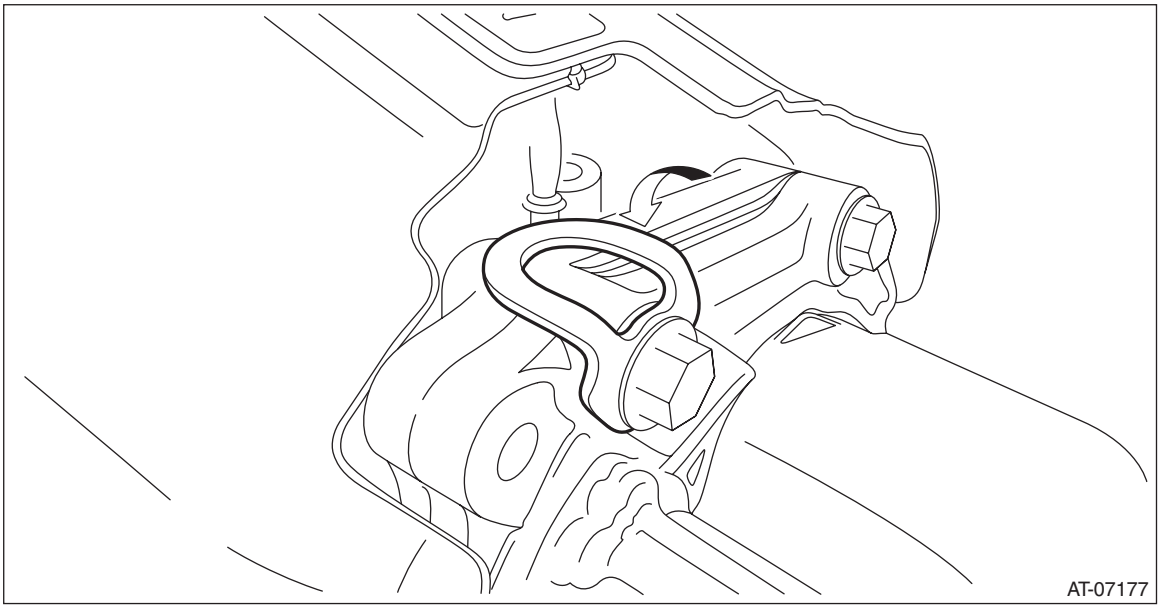

6) While lifting up the transmission gradually, install the transmission to the engine.

CAUTION:
This operation requires at least two persons.

NOTE:
Keep the engine level.
7) Install the two engine connecting bolts and two nuts (lower side).

Tightening torque:
50 N·m (5.1 kgf-m, 36.9 ft-lb)

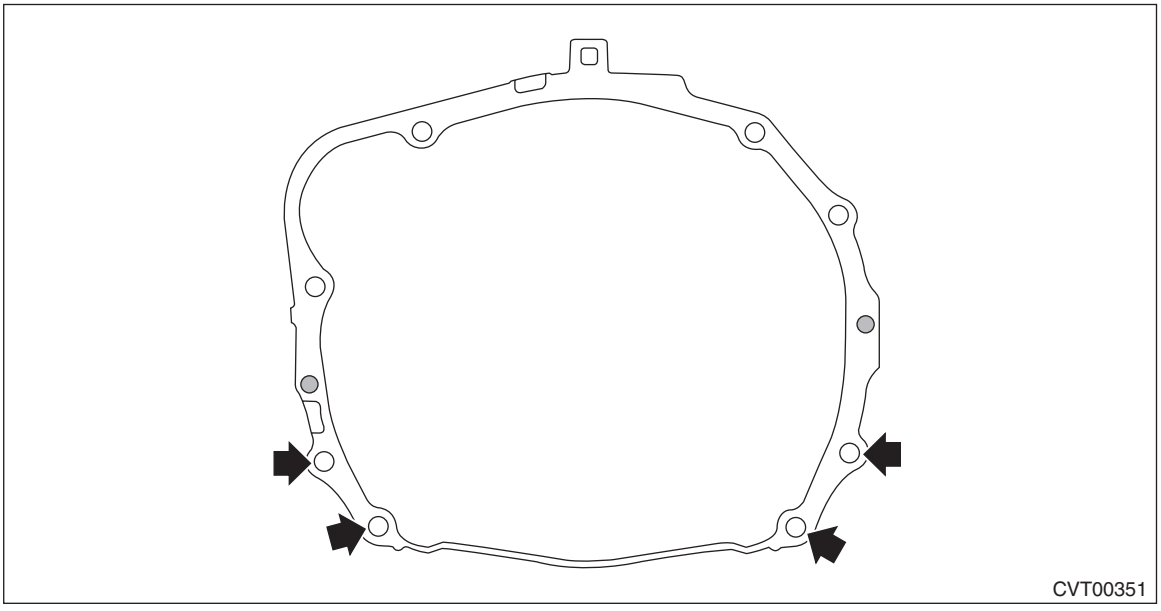

8) Install the transmission rear crossmember. <Ref. to CVT(TR580)-97, TRANSMISSION REAR CROSS-MEMBER AND REAR CUSHION RUBBER, INSTALLATION, Transmission Mounting System.>

9) Install the hanger bracket.

Tightening torque:
23 N·m (2.3 kgf-m, 17.0 ft-lb)

10) Remove the transmission jack.
11) Lower the vehicle.
12) Remove the ST (ENGINE HANGER).
13) Install the three engine mounting bolts (upper side).

Tightening torque:
50 N·m (5.1 kgf-m, 36.9 ft-lb)

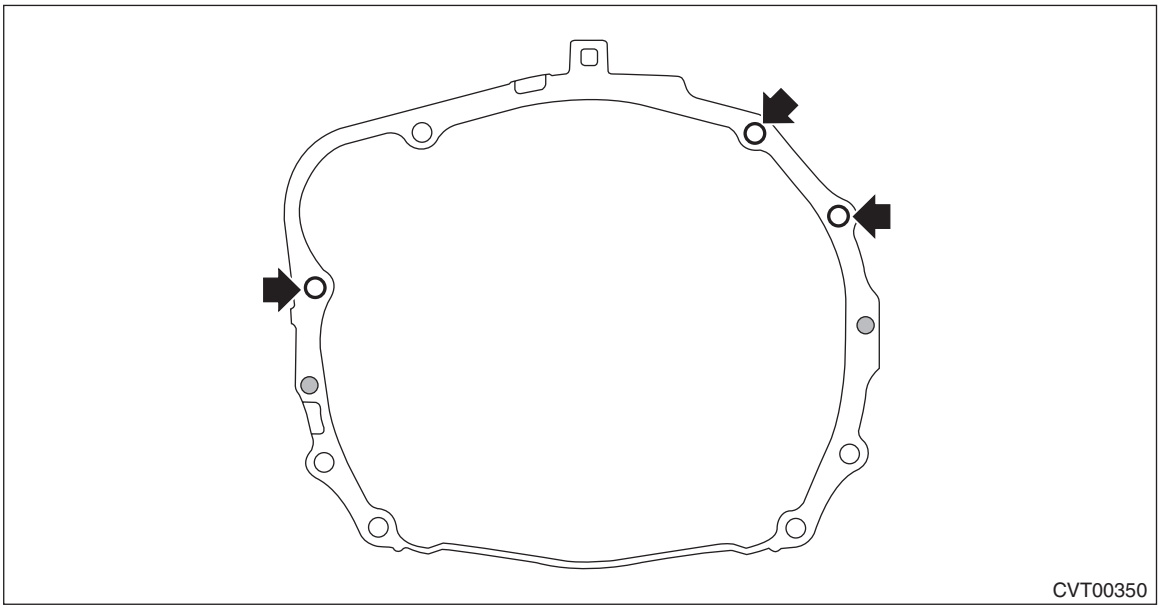
CVT00350

14) Install the transmission mounting bracket LH and RH.

NOTE:
- Install to the left side of vehicle first because the engine inclines to the left.
- Temporarily tighten the bolt arrowed in the figure.

Tightening torque:
75 N·m (7.6 kgf-m, 55.3 ft-lb)

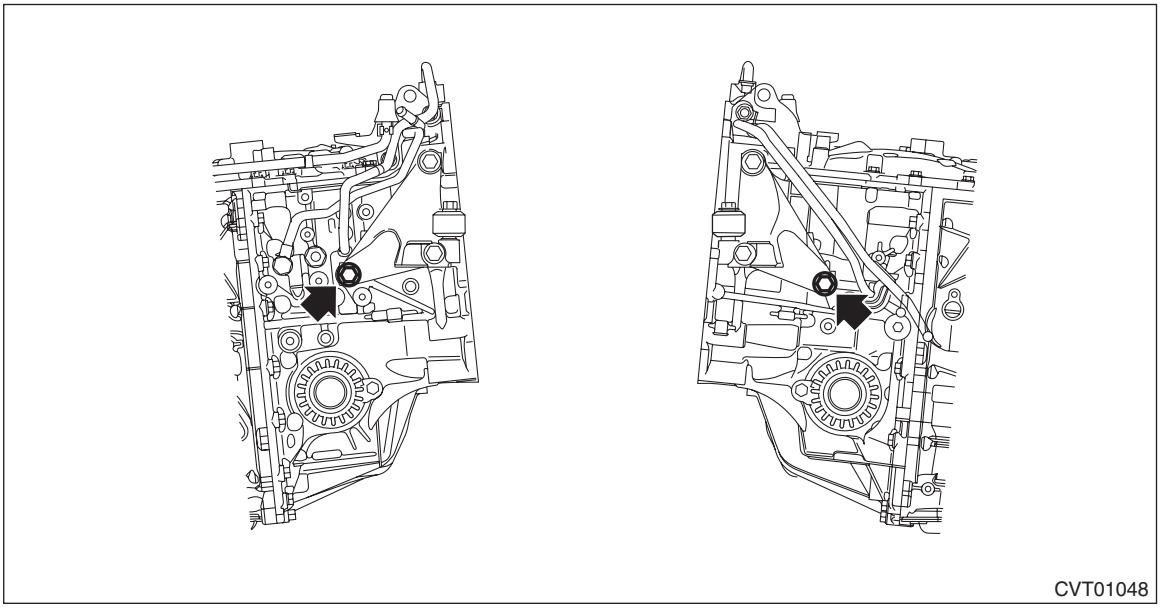
CVT01048

15) Set the ST to vehicle body and lift up the engine unit slightly.
ST1 99099AJ000 ENGINE HANGER
ST2 99099AJ010 CHAIN BALANCER

CAUTION:
- **Set so that the chain sling does not contact the engine parts.**
- **Set the arms of ST (ENGINE HANGER) at the locations shown in the figure.**

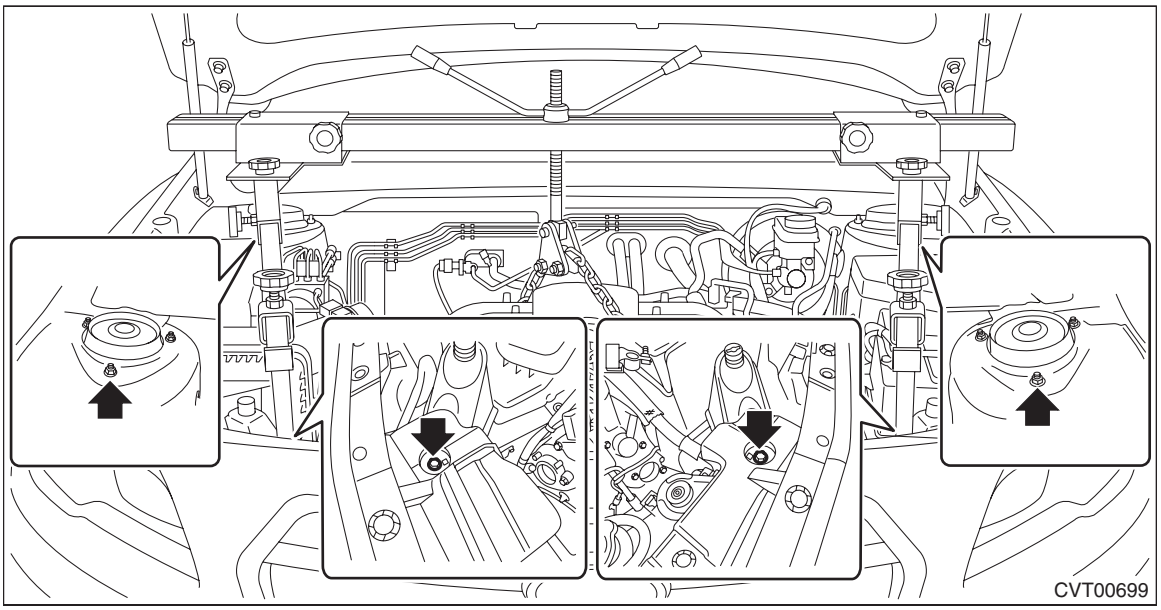

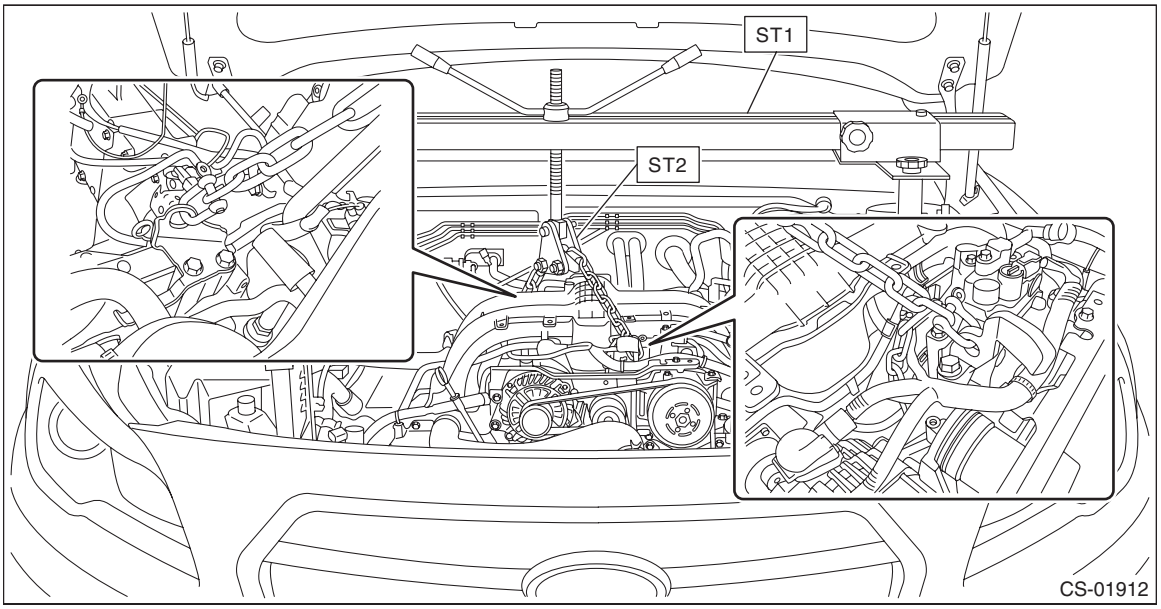

16) Remove the bolts from ST (ST H4 (FA, FB)).

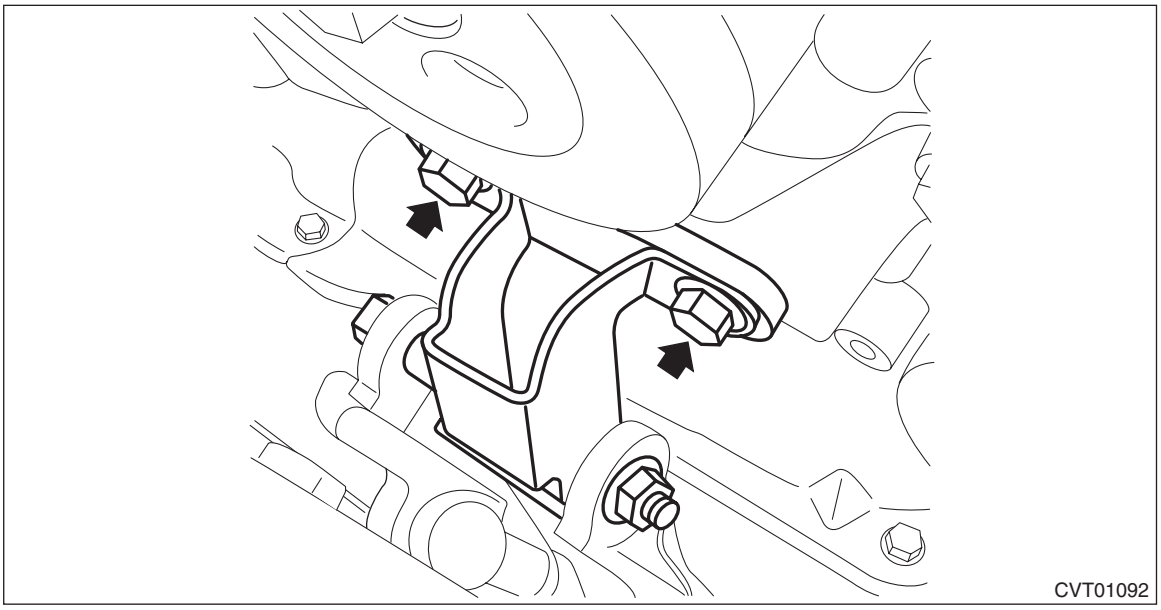

17) Remove the bolt and nut to remove ST (ST H4 (FA, FB)).

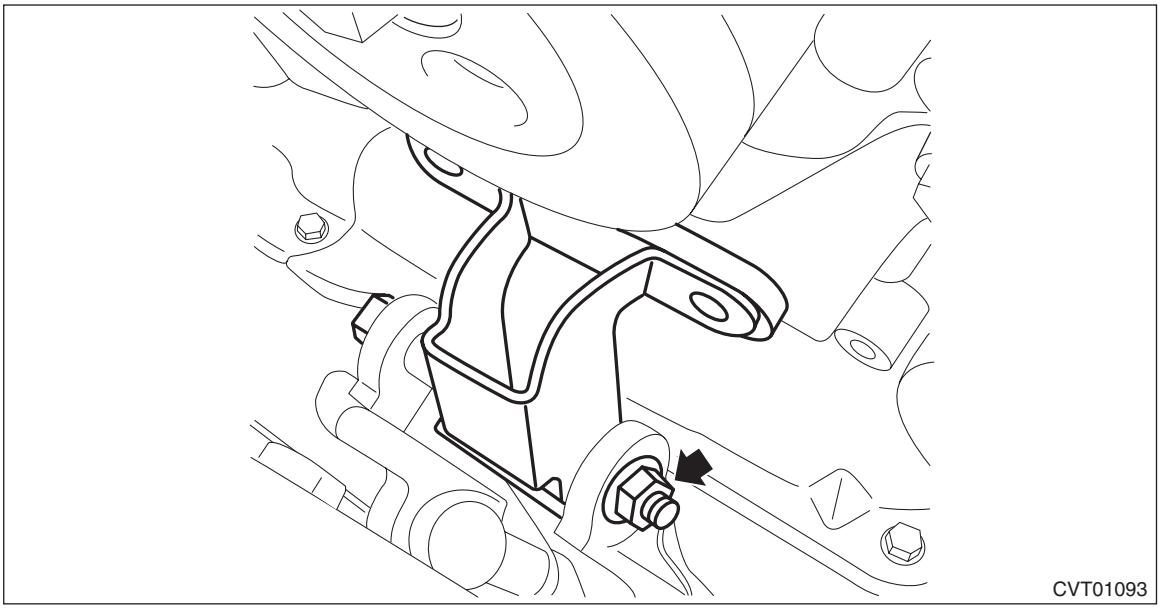

18) Temporarily attach the front cushion rubber with bolts.

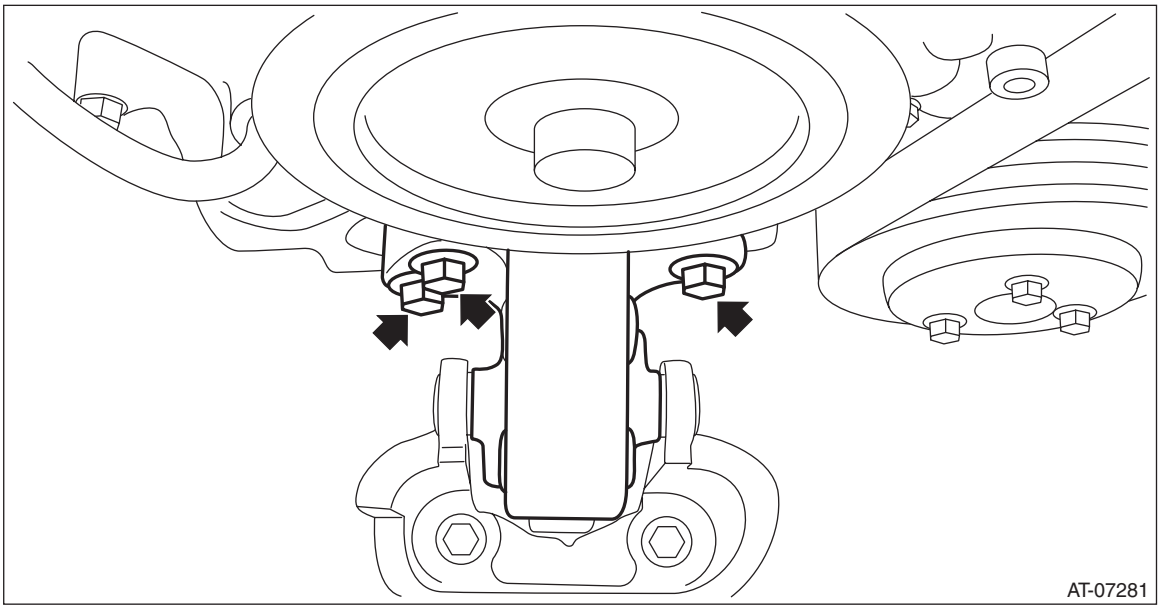

19) Install the bolt and nut to the front cushion rubber.

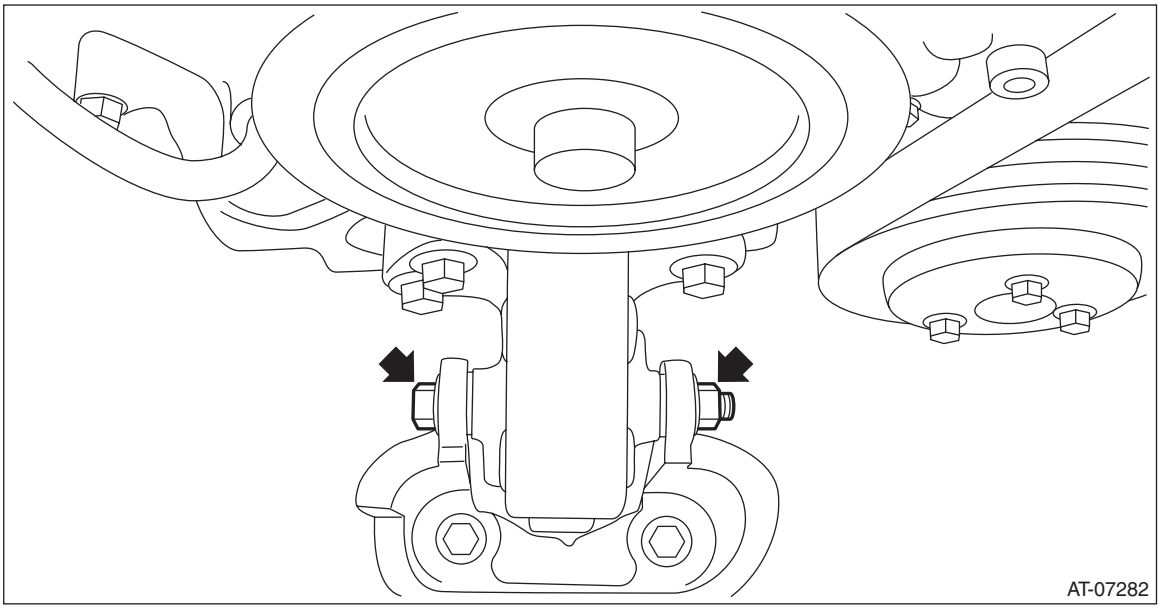

20) Tighten the bolts and nuts of front cushion rubber.

NOTE:
Always start tightening from the bolts on the engine side.

Tightening torque:
T1: 25 N·m (2.5 kgf-m, 18.4 ft-lb)
T2: 45 N·m (4.6 kgf-m, 33.2 ft-lb)

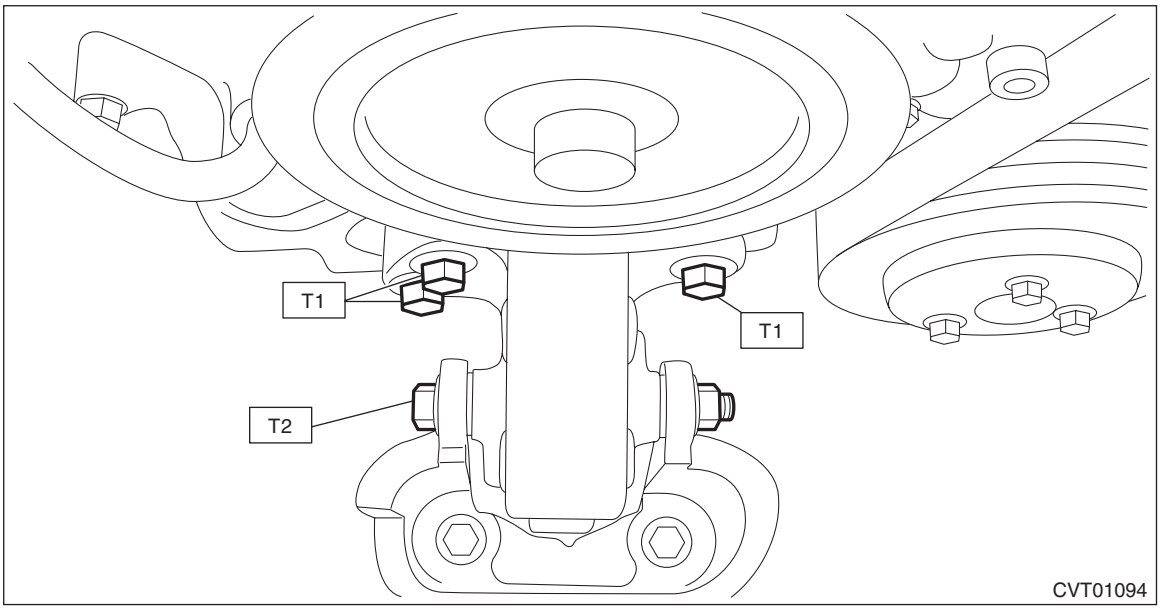

21) Remove the ST (ENGINE HANGER and CHAIN SLING) and the bolt of ϕ8 mm (0.3 in).
22) Install the V-belt cover.

Tightening torque:
6.5 N·m (0.7 kgf-m, 4.7 ft-lb)
23) Install the nut to the transmission mounting bracket.

Tightening torque:
45 N·m (4.6 kgf-m, 33.2 ft-lb)

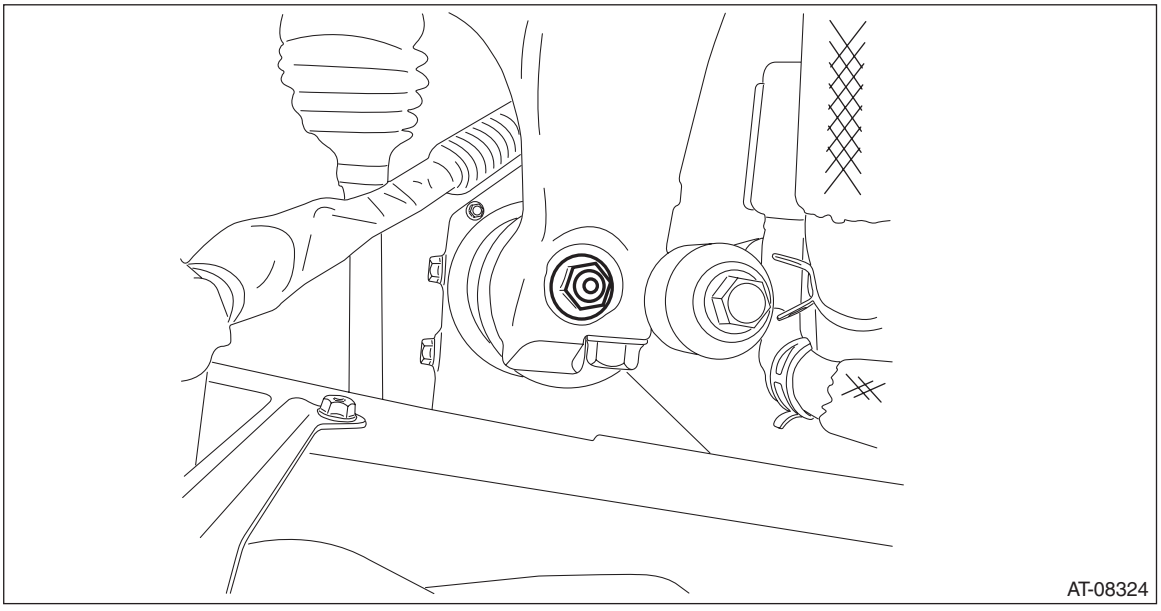

24) Install the transmission harness stay.

Tightening torque:
7 N·m (0.7 kgf-m, 5.2 ft-lb)

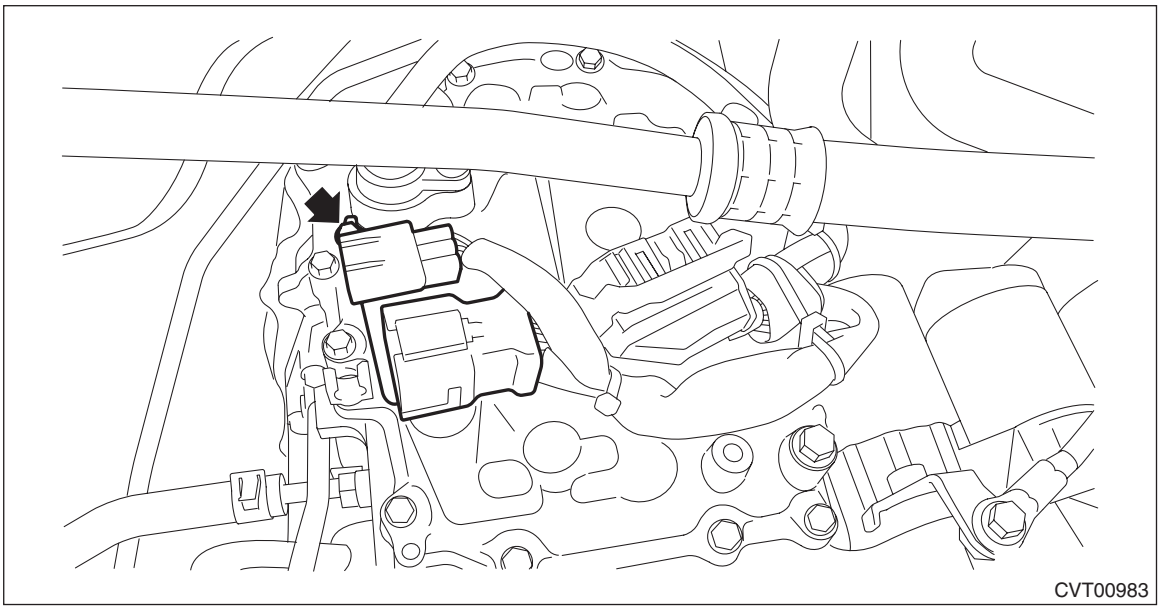

25) Install the TCM. <Ref. to CVT(TR580)-162, INSTALLATION, Transmission Control Module (TCM).>
26) Insert the transmission case cover (small) between transmission case cover (large) and transmission to install.

NOTE:
When inserting, be careful that the insulator inside transmission case cover is not turned over.

Tightening torque:
7 N·m (0.7 kgf-m, 5.3 ft-lb)

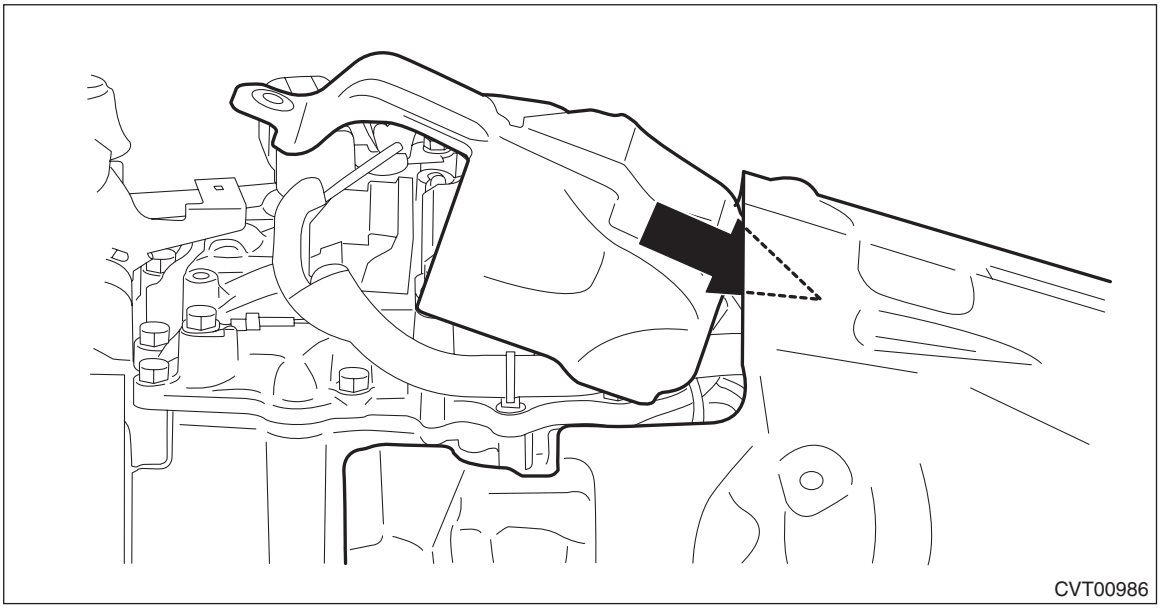

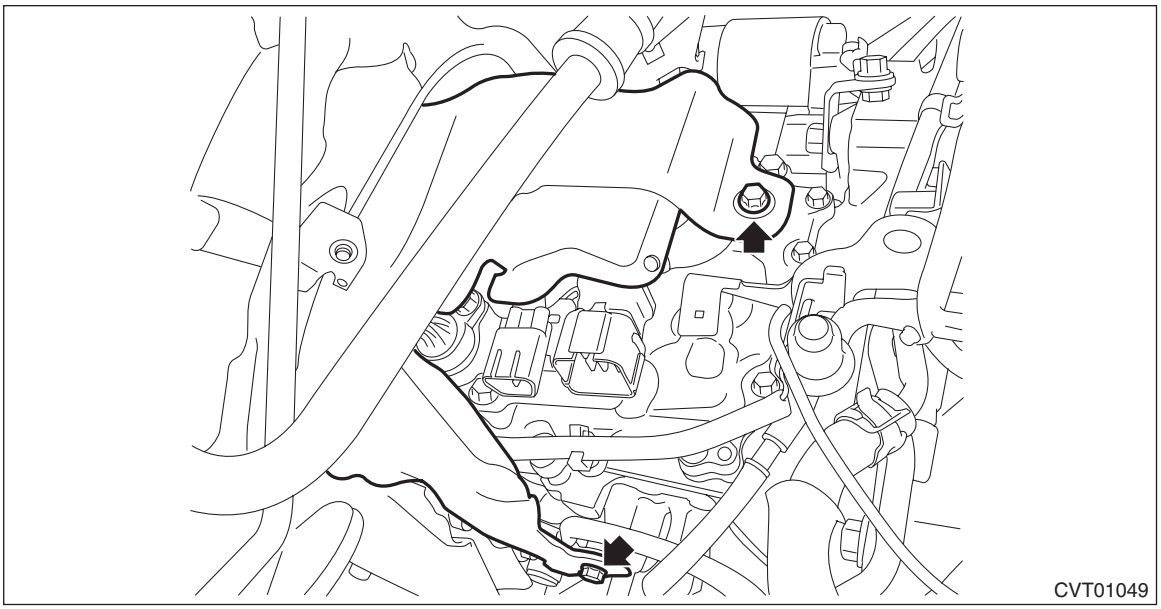

27) Remove the ST (STOPPER SET) from converter case.
28) Match the torque converter screw hole with drive plate hole to install the bolt.

CAUTION:
- **Do not drop the mounting bolt in the converter housing.**
- **Do not damage the mounting bolt.**

Tightening torque:
25 N·m (2.5 kgf-m, 18.4 ft-lb)
29) Install the remaining three bolts by rotating the crank pulley a little at a time in the same direction as engine revolution.

Tightening torque:
25 N·m (2.5 kgf-m, 18.4 ft-lb)
30) Install the service hole plug.

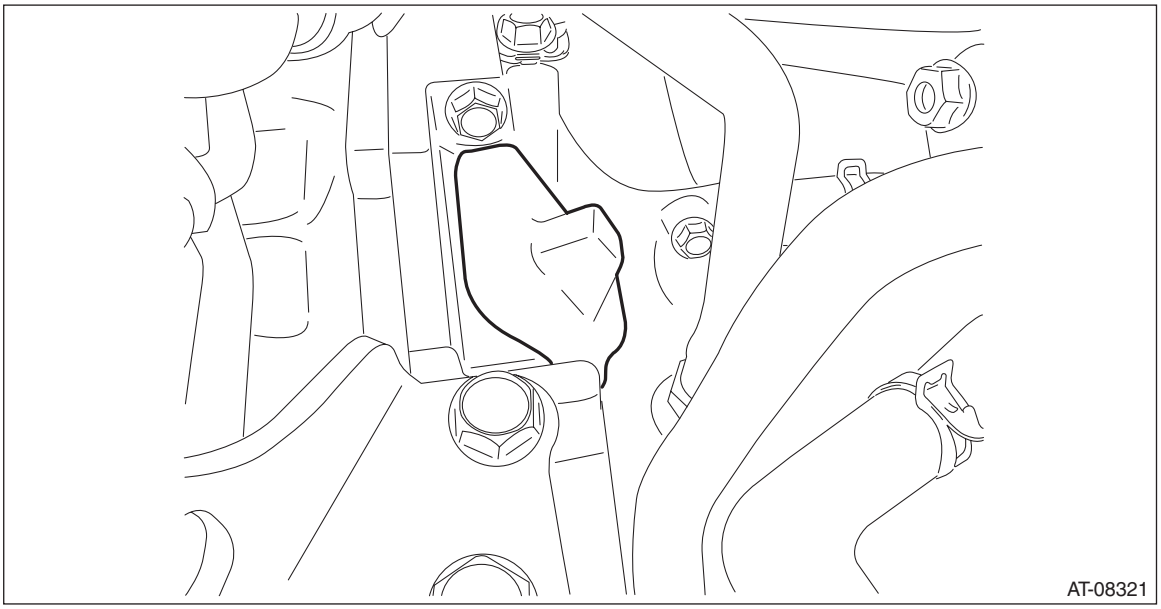

31) Install the starter. <Ref. to SC(H4DO)-9, INSTALLATION, Starter.>
32) Lift up the vehicle.

33) Tighten the single mounting bolt of transmission mounting bracket.

Tightening torque:
75 N·m (7.6 kgf-m, 55.3 ft-lb)

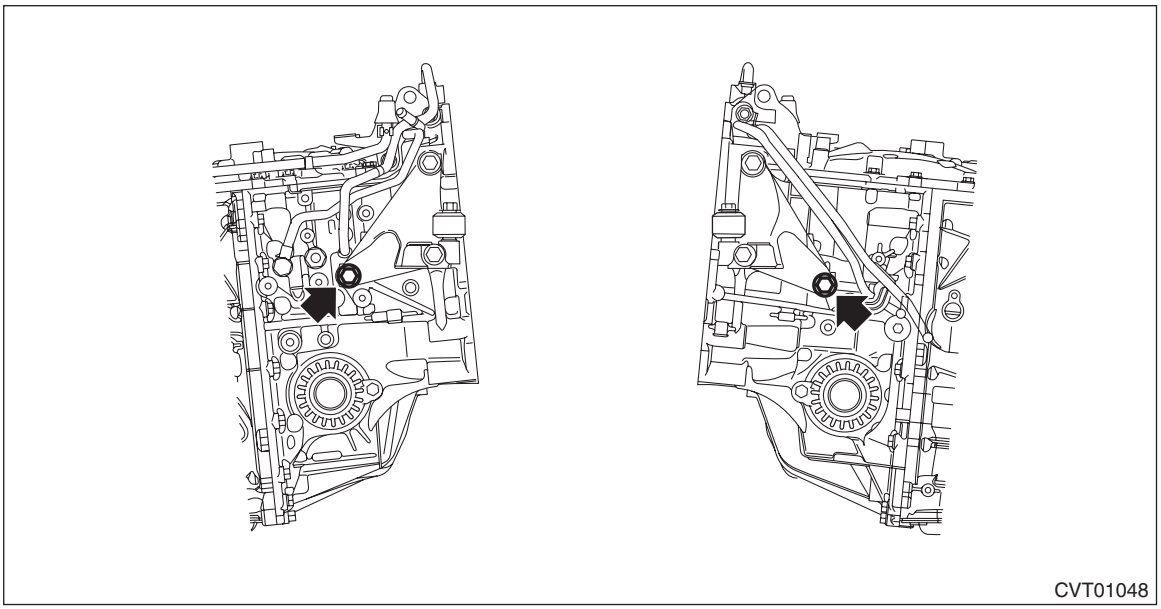

34) Set the ST to differential side retainer.
ST 28399SA010 OIL SEAL PROTECTOR

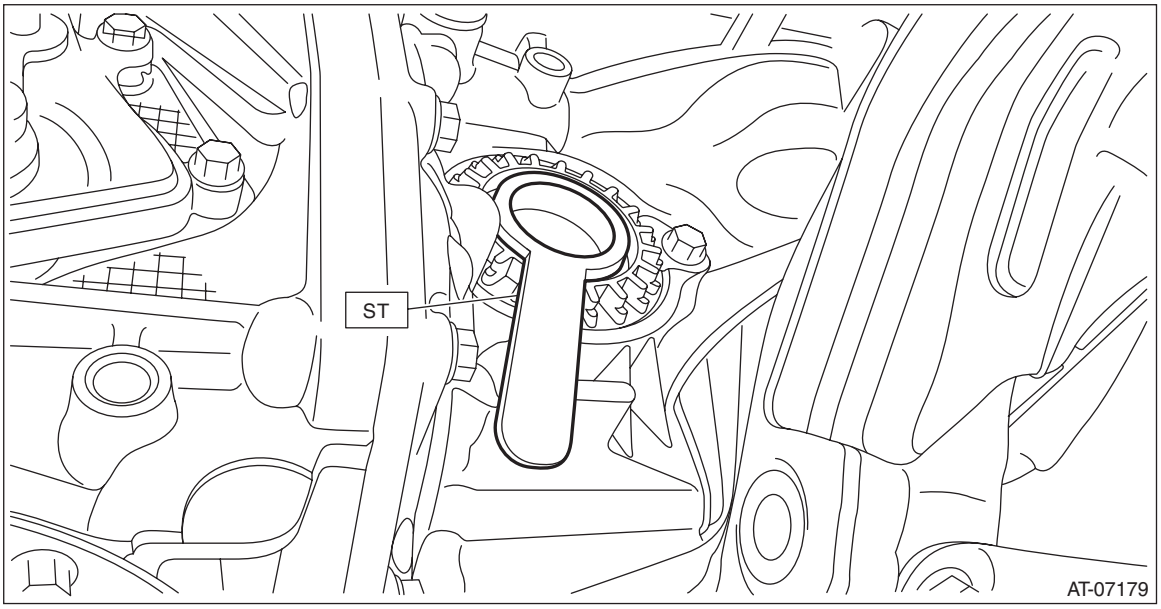

35) Replace the circlip of the drive shaft with a new part.
36) Insert the front drive shaft spline section into transmission and remove the ST (OIL SEAL PROTECTOR).
37) Insert the drive shaft into the transmission securely by pressing the housing from outside of the vehicle.

38) Install the CVTF CVT inlet hose and CVTF CVT outlet hose. (With CVTF cooler (air cool))

NOTE:
Use new CVTF CVT inlet hose and CVTF CVT outlet hose.

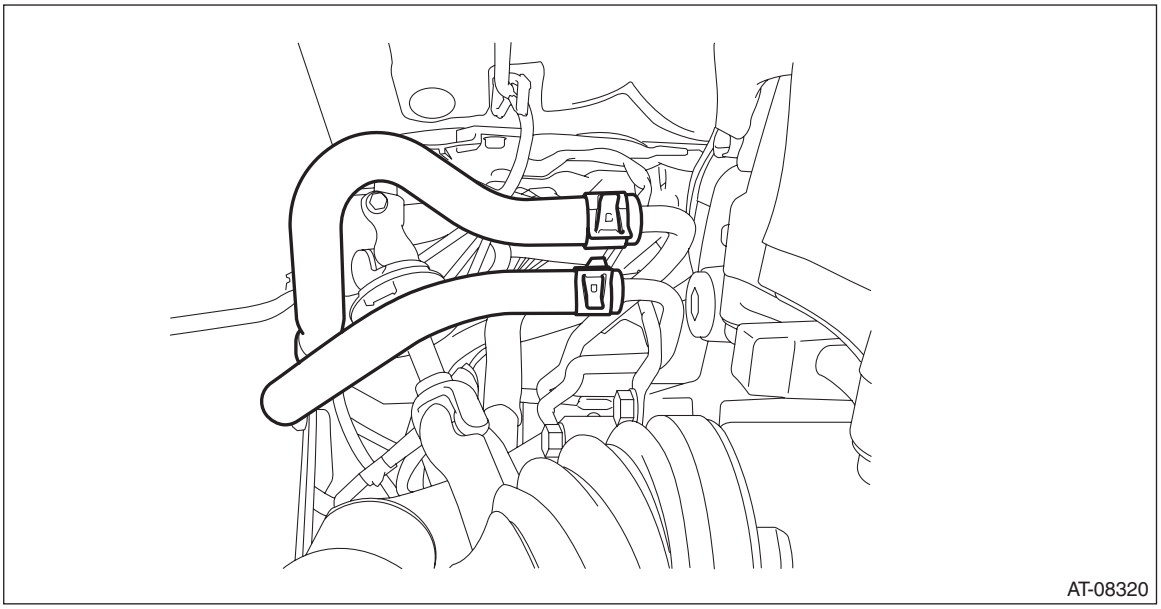

39) Insert the ball joint into housing and secure with bolt.

CAUTION:
• Before tightening, make sure the bottom surface of the housing assembly - front axle and the stepped section of ball joint are in contact.
• Be careful not to damage the boot of the joint.

Tightening torque:
50 N·m (5.1 kgf-m, 36.9 ft-lb)

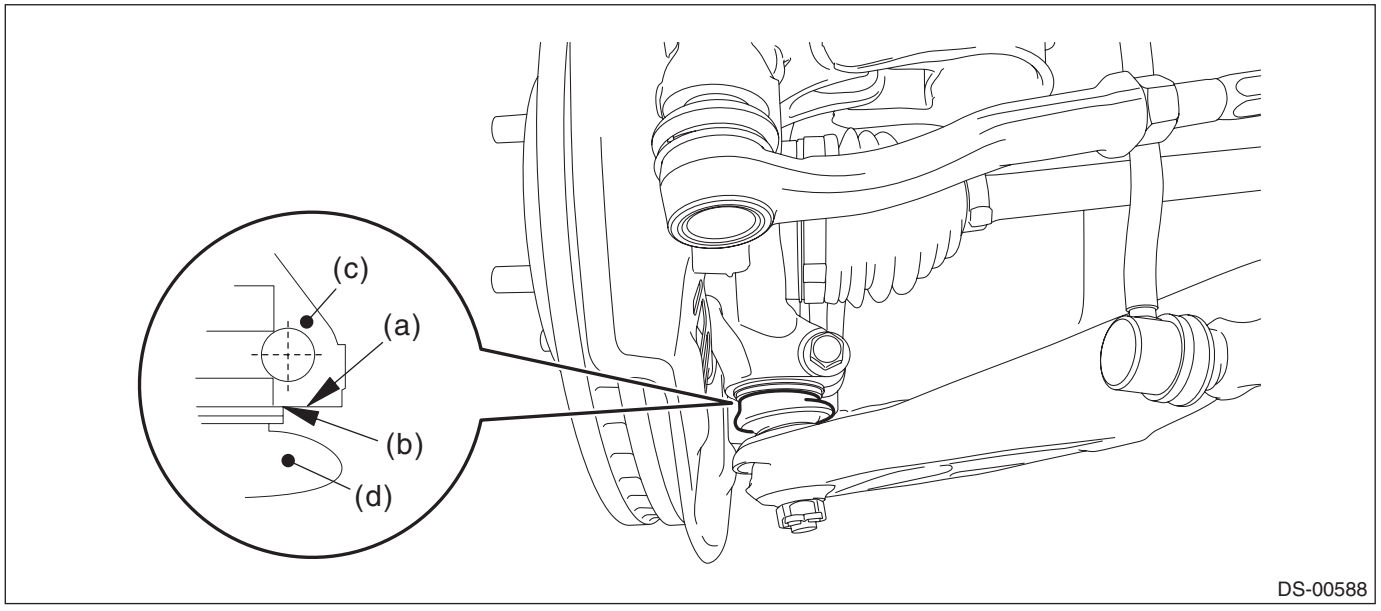

(a) Bottom surface of housing ASSY - front axle
(b) Raised section of ball joint
(c) Housing ASSY - front axle
(d) Ball joint ASSY

40) Install the stabilizer link.

Tightening torque:
60 N·m (6.1 kgf-m, 44.3 ft-lb)

41) Connect the tie-rod end and knuckle arm, and attach the castle nut.

CAUTION:
When connecting the tie-rod end, do not hit the cap at the bottom of tie-rod end with a hammer.

Tightening torque:
27 N·m (2.8 kgf-m, 19.9 ft-lb)

42) After tightening the castle nut to the specified tightening torque, tighten it further within 60° until the cotter pin hole is aligned with slot in the nut. Fit the cotter pin into the nut, and then bend the pin to lock.

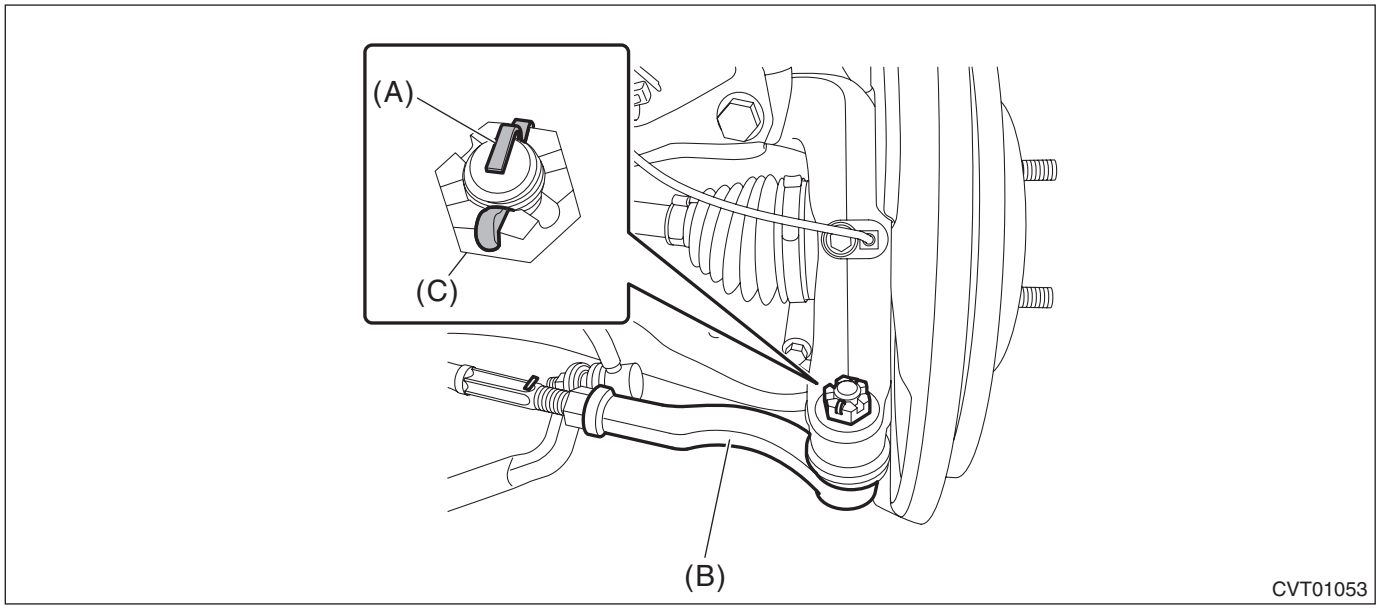

(A) Cotter pin
(B) Tie-rod end
(C) Castle nut

43) Install the propeller shaft. <Ref. to DS-12, INSTALLATION, Propeller Shaft.>
44) Install the universal joint. <Ref. to PS-15, INSTALLATION, Universal Joint.>

45) Install the plate assembly to transmission.

Tightening torque:
25 N·m (2.5 kgf-m, 18.4 ft-lb)

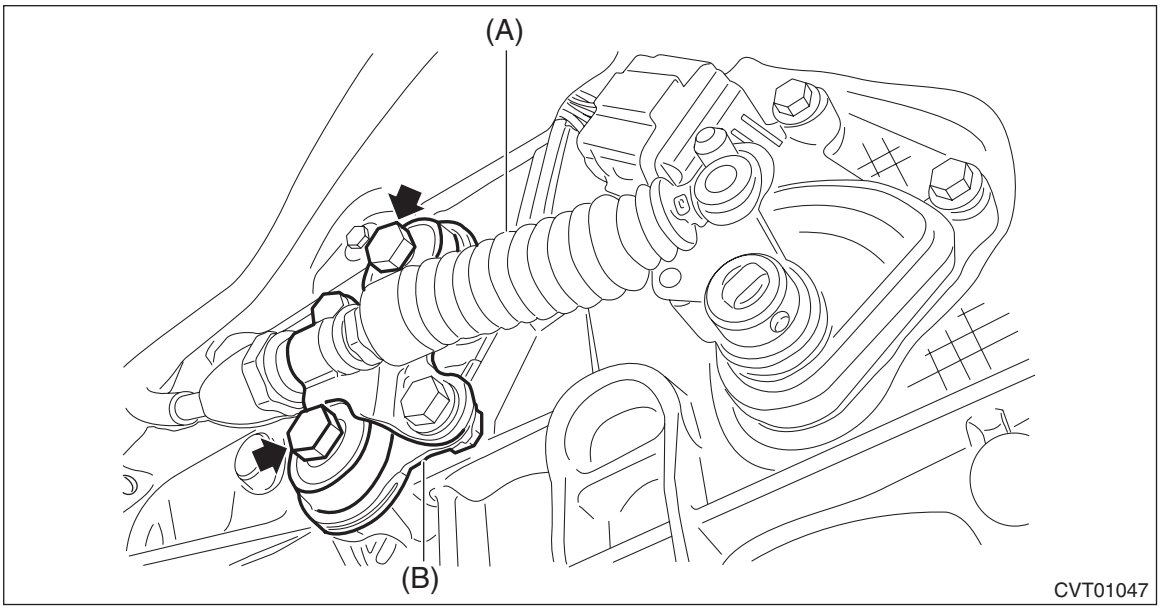

(A) Select cable
(B) Plate ASSY

46) Install the washer and snap pin to the shifter arm.

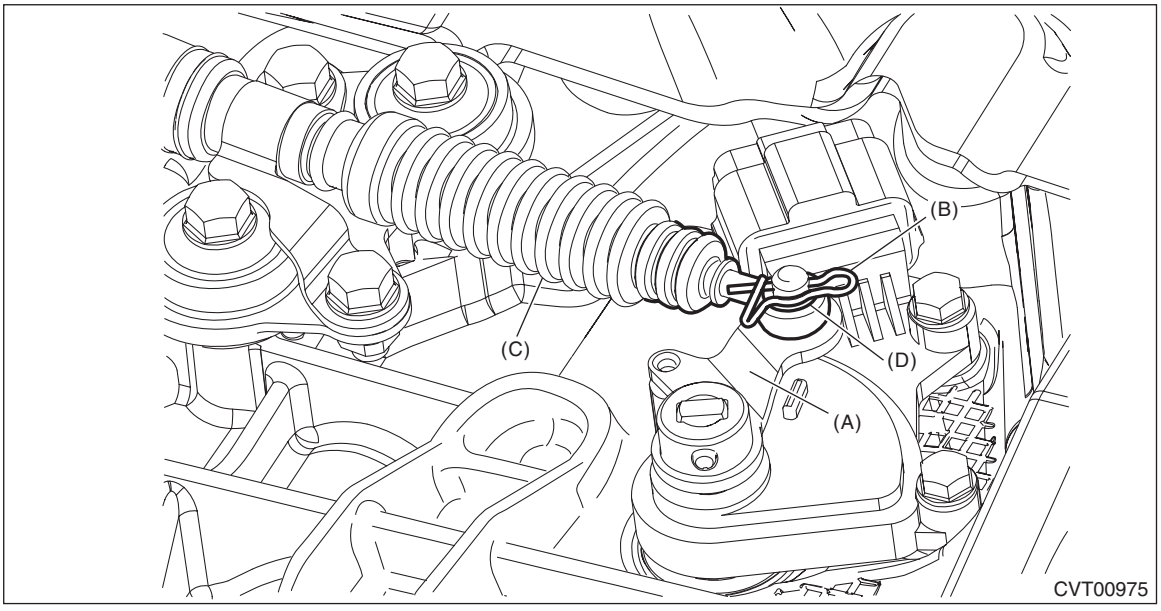

(A) Shifter arm
(B) Snap pin
(C) Select cable
(D) Washer

47) Install the center exhaust cover.

Tightening torque:
18 N·m (1.8 kgf-m, 13.3 ft-lb)

48) Install the center exhaust pipe. <Ref. to EX(H4DO)-13, INSTALLATION, Center Exhaust Pipe.>

49) Install the under cover - front.
50) Lower the vehicle.
51) Install the front tire LH and RH. <Ref. to WT-5, INSTALLATION, Tire and Wheel.>
52) Replace the CVTF inlet hose and CVTF outlet hose with new parts. <Ref. to CVT(TR580)-166, CVTF Cooler (With Warmer Function).>
53) Install the CVTF inlet hose and CVTF outlet hose. (Without CVTF cooler (air cool))

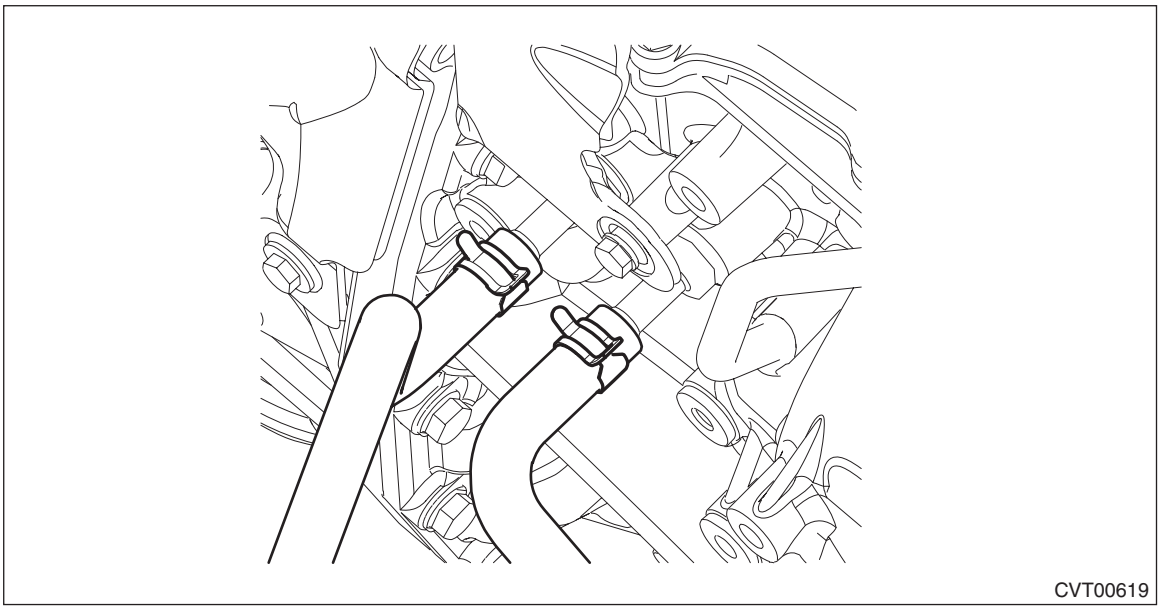
CVT00619

54) Install the CVTF outlet hose. (With CVTF cooler (air cool))

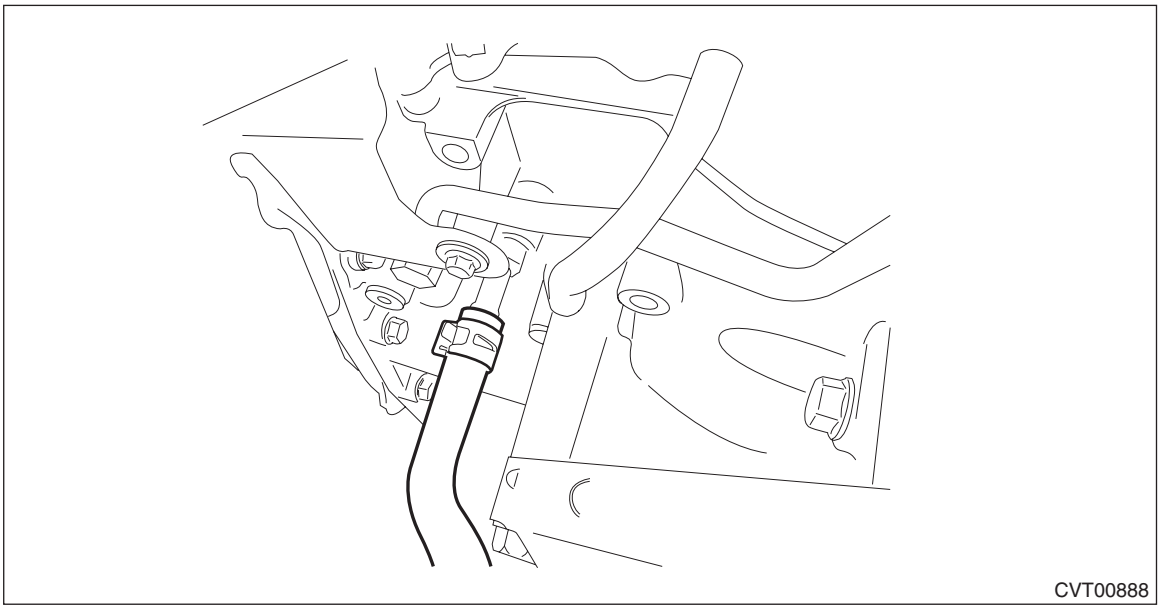
CVT00888

55) Install the CVTF cooler (with warmer feature).

Tightening torque:
23 N·m (2.3 kgf-m, 17.0 ft-lb)

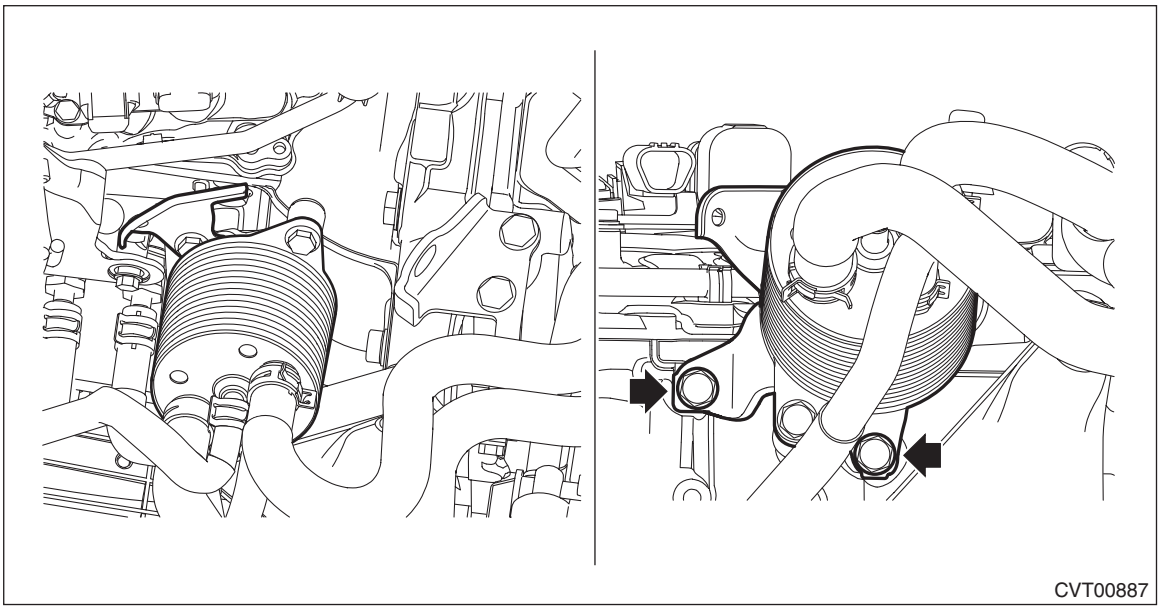

56) Install the CVTF cooler hose. (With CVTF cooler (air cool))

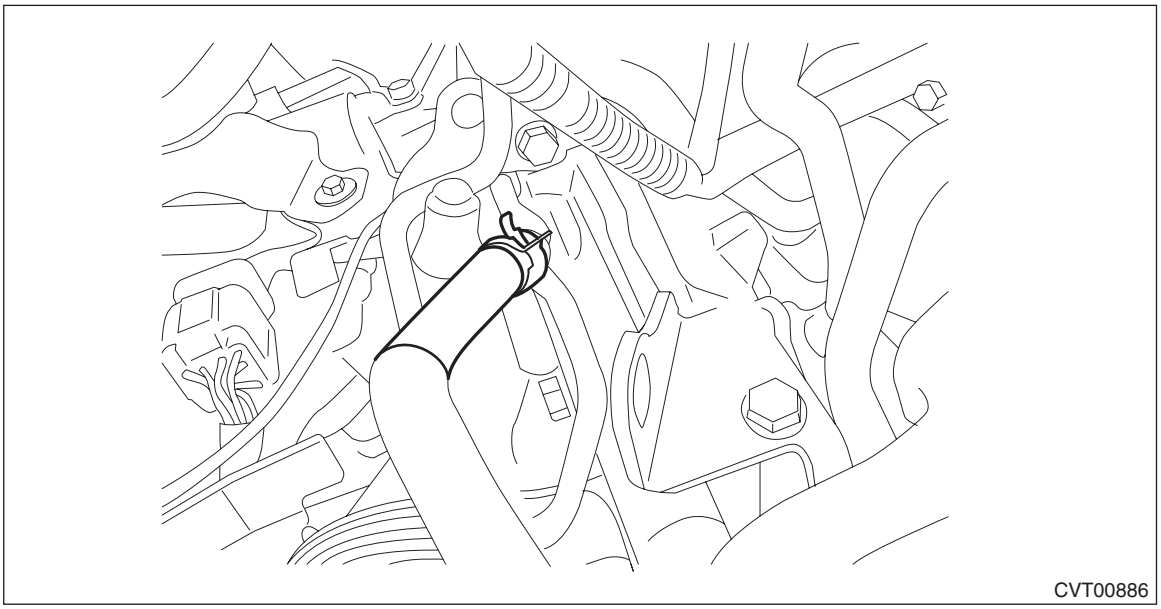

57) Connect the harness connector, and install the clip and transmission radio ground cord terminal.

Tightening torque:
13 N·m (1.3 kgf-m, 9.6 ft-lb)

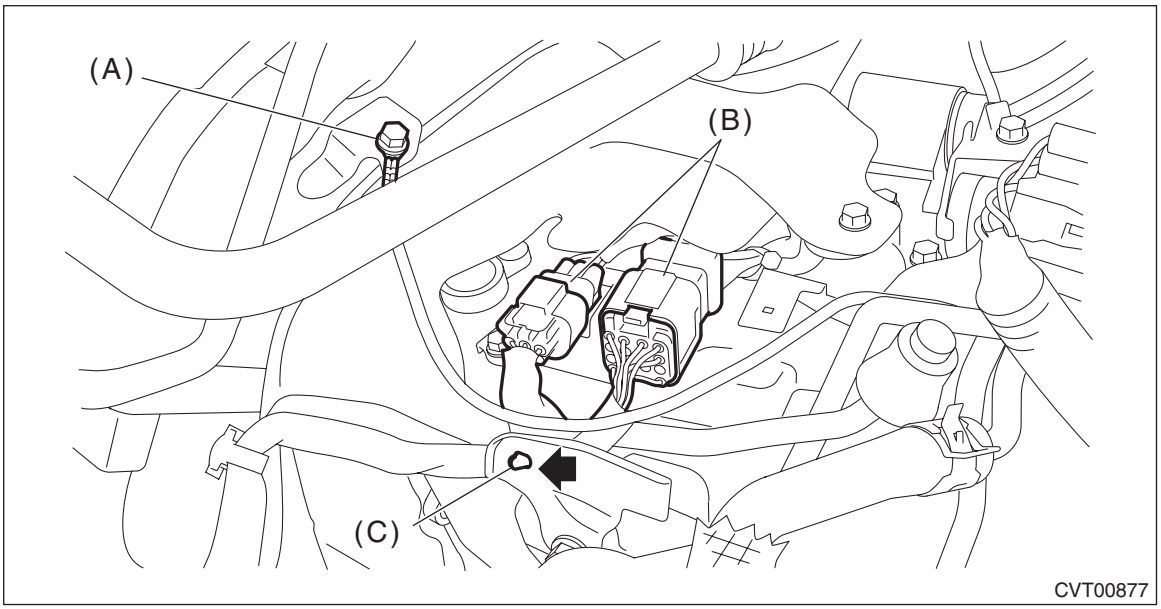

(A) Transmission radio ground terminal
(B) Transmission harness connectors
(C) Harness clip

58) Install the battery cable bracket, and install the battery cable clip to the bracket.

Tightening torque:
7.5 N·m (0.76 kgf-m, 5.5 ft-lb)

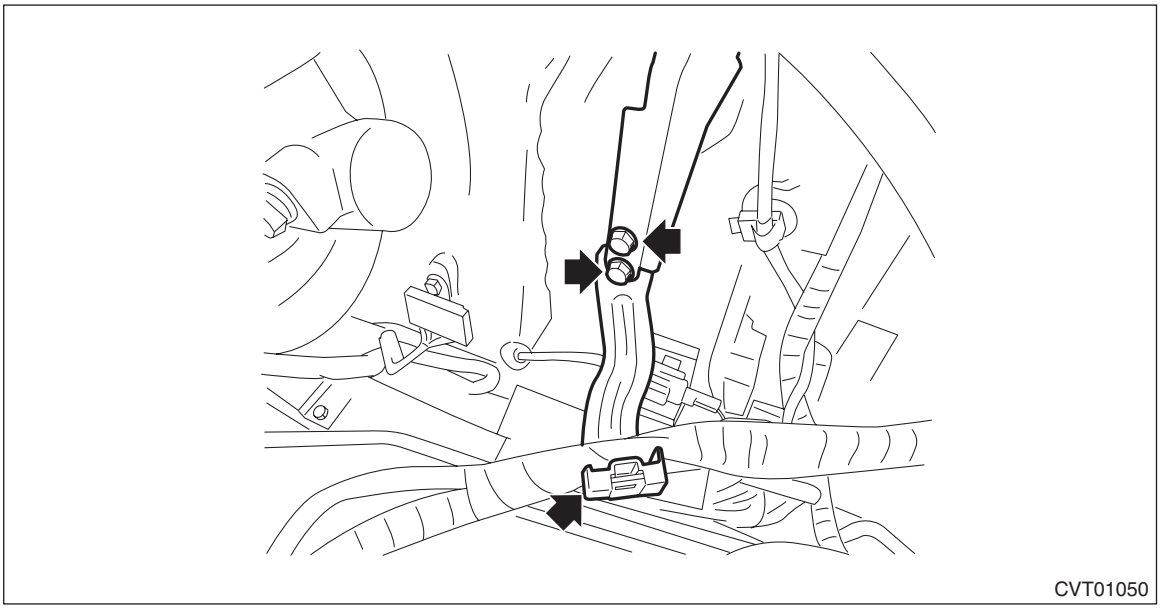

59) Install the air intake boot assembly. <Ref. to IN(H4DO)-10, INSTALLATION, Air Intake Boot.>
60) Install the air intake duct. <Ref. to IN(H4DO)-12, INSTALLATION, Air Intake Duct.>
61) Connect the battery ground terminal.
62) Refill differential gear oil to adjust the differential gear oil amount. <Ref. to CVT(TR580)-43, Differential Gear Oil.>
63) Refill CVTF to adjust the CVTF amount. <Ref. to CVT(TR580)-39, CVTF.>
64) Perform the operation for clearing AT learning value. <Ref. to CVT(diag)-26, Clear Memory Mode.>
65) Perform the operation of AT learning mode. <Ref. to CVT(diag)-33, Learning Control.>
66) Execute the rear differential inspection mode. <Ref. to DI-83, Rear Differential Inspection Mode.>

CAUTION:
Always execute the rear differential inspection mode at the replacement of the following.
- **Replacement of transmission assembly**
- **Replacement of front differential hypoid gear set**

67) Perform the road test to make sure there is no fault. <Ref. to CVT(TR580)-48, INSPECTION, Road Test.>

11.Transmission Mounting System

A: REMOVAL

1. TRANSMISSION REAR CROSSMEMBER AND REAR CUSHION RUBBER

1) Disconnect the ground terminal from battery sensor. <Ref. to RC-4, BATTERY, NOTE, Repair Contents.>
2) Lift up the vehicle.
3) Remove the center exhaust pipe. <Ref. to EX(H4DO)-12, REMOVAL, Center Exhaust Pipe.>
4) Remove the center exhaust cover.

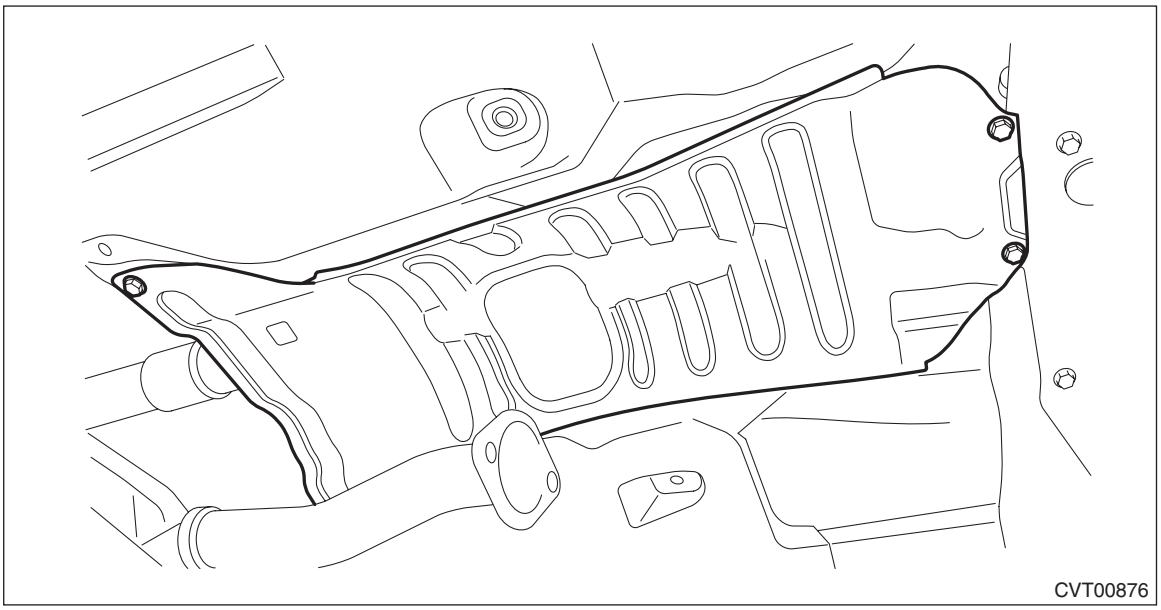
CVT00876

5) Set the transmission jack under the transmission. Make sure that the support plate of transmission jack does not touch the oil pan.
6) Remove the transmission rear crossmember.

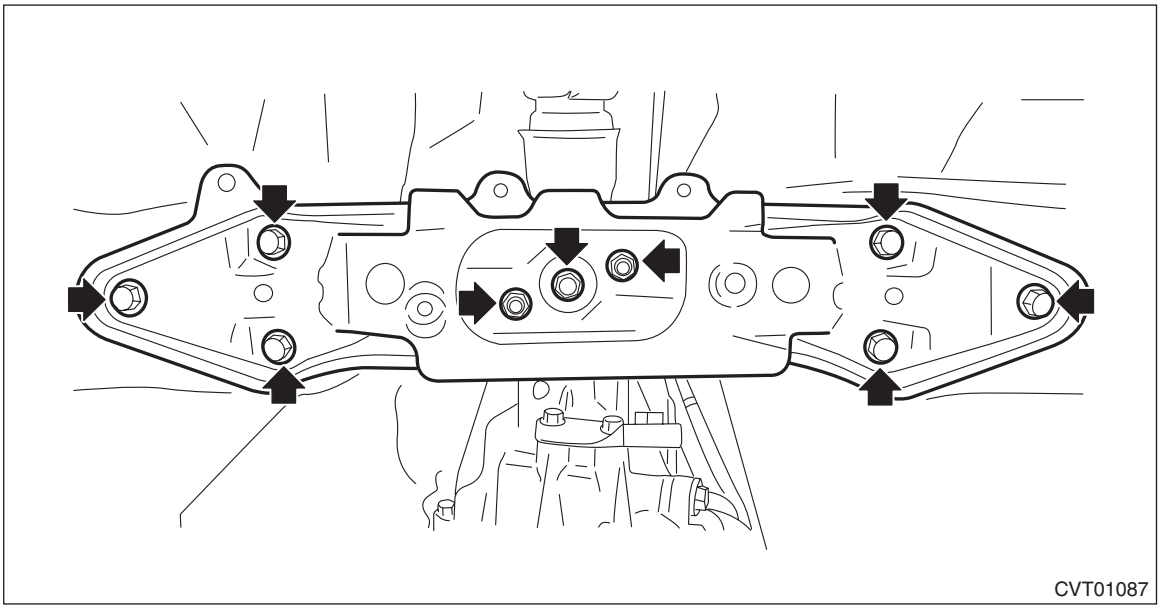
CVT01087

7) Remove the rear cushion rubber.

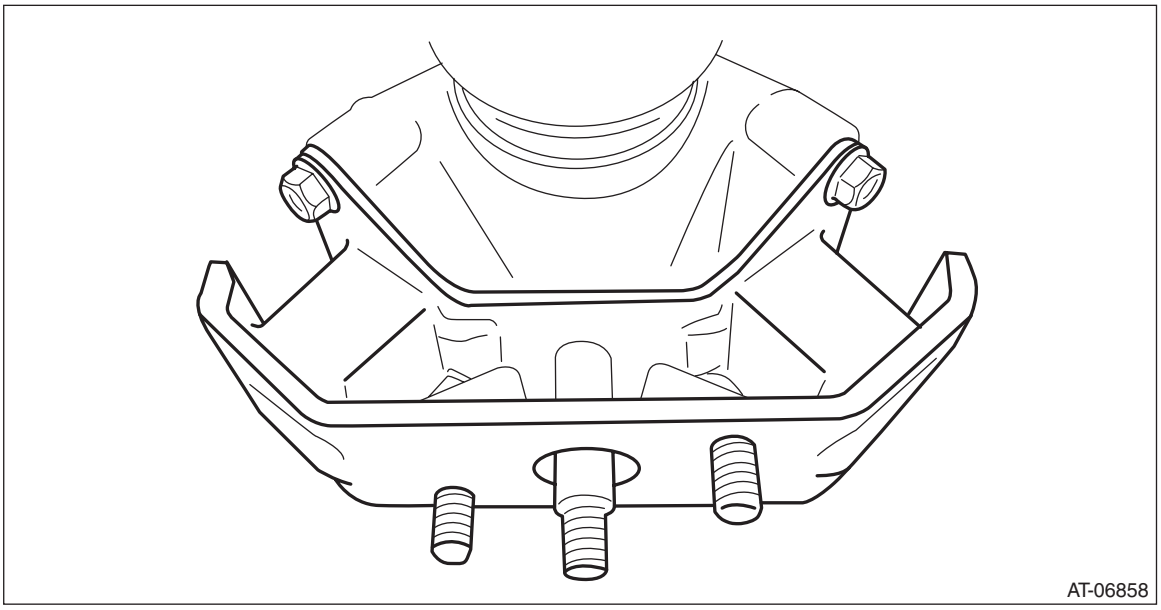

B: INSTALLATION

1. TRANSMISSION REAR CROSSMEMBER AND REAR CUSHION RUBBER

1) Attach the rear cushion rubber to the transmission.

Tightening torque:
40 N·m (4.1 kgf-m, 29.5 ft-lb)

2) Install the crossmember.

Tightening torque:
T1: 35 N·m (3.6 kgf-m, 25.8 ft-lb)
T2: 75 N·m (7.6 kgf-m, 55.3 ft-lb)

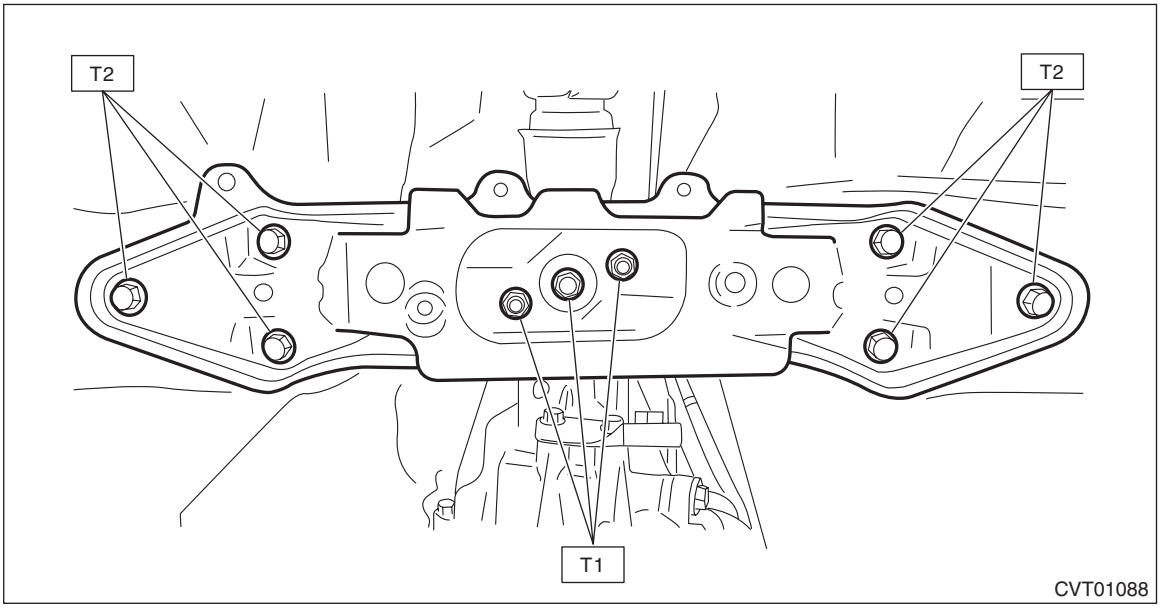

3) Remove the transmission jack.
4) Install the center exhaust cover.

Tightening torque:
18 N·m (1.8 kgf-m, 13.3 ft-lb)

5) Install the center exhaust pipe. <Ref. to EX(H4DO)-13, INSTALLATION, Center Exhaust Pipe.>
6) Connect the ground terminal to battery sensor. <Ref. to RC-4, BATTERY, NOTE, Repair Contents.>

C: INSPECTION

- Check the crossmember for bends or damage.
- Check that the cushion rubber is not stiff, cracked or otherwise damaged.

12.Extension Case Oil Seal

A: INSPECTION

Check for leakage of CVTF from the joint section of transmission and propeller shaft. If a leak is found, inspect the propeller shaft and replace the oil seal.

B: REPLACEMENT

CAUTION:
Immediately after the vehicle has been running or after idling for a long time, the CVTF will be hot. Be careful not to burn yourself.

1) Lift up the vehicle.
2) Remove the center exhaust pipe. <Ref. to EX(H4DO)-12, REMOVAL, Center Exhaust Pipe.>
3) Remove the center exhaust cover.

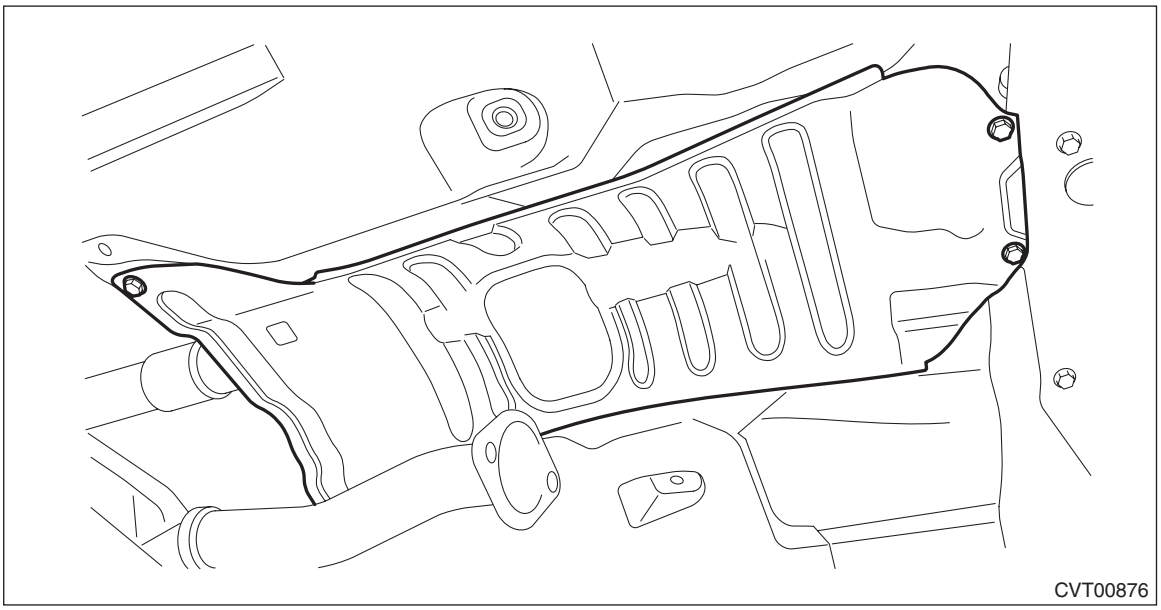

4) Clean the transmission exterior.
5) Remove the propeller shaft. <Ref. to DS-10, REMOVAL, Propeller Shaft.>
6) Using a screwdriver or ST, remove the oil seal trying not to damage the extension case.
ST 398527700 PULLER ASSY
7) Using the ST, install the oil seal.

NOTE:
- Use a new oil seal.
- Apply CVTF to the oil seal lip and press-fitting surface.

ST 498057300 INSTALLER
8) Install the propeller shaft. <Ref. to DS-12, INSTALLATION, Propeller Shaft.>
9) Install the center exhaust cover.

Tightening torque:
18 N·m (1.8 kgf-m, 13.3 ft-lb)

10) Install the center exhaust pipe. <Ref. to EX(H4DO)-13, INSTALLATION, Center Exhaust Pipe.>
11) Adjust the CVTF level and check there is no leakage. <Ref. to CVT(TR580)-39, ADJUSTMENT, CVTF.>

13.Differential Side Retainer Oil Seal

A: INSPECTION

Check for leakage of gear oil from differential side retainer oil seal part. If there is an oil leak, inspect the front drive shaft and replace the oil seal.

B: REPLACEMENT

CAUTION:
• Immediately after the vehicle has been running or after idling for a long time, the differential gear oil will be hot. Be careful not to burn yourself.
• Be careful not to spill the differential gear oil on exhaust pipe to prevent it from emitting smoke or fire. If differential gear oil is spilled on the exhaust pipe, wipe it off completely.
1) Lift up the vehicle, and remove the front wheels.
2) After pulling off the cotter pin and removing the castle nut, use a puller to remove the tie-rod end.

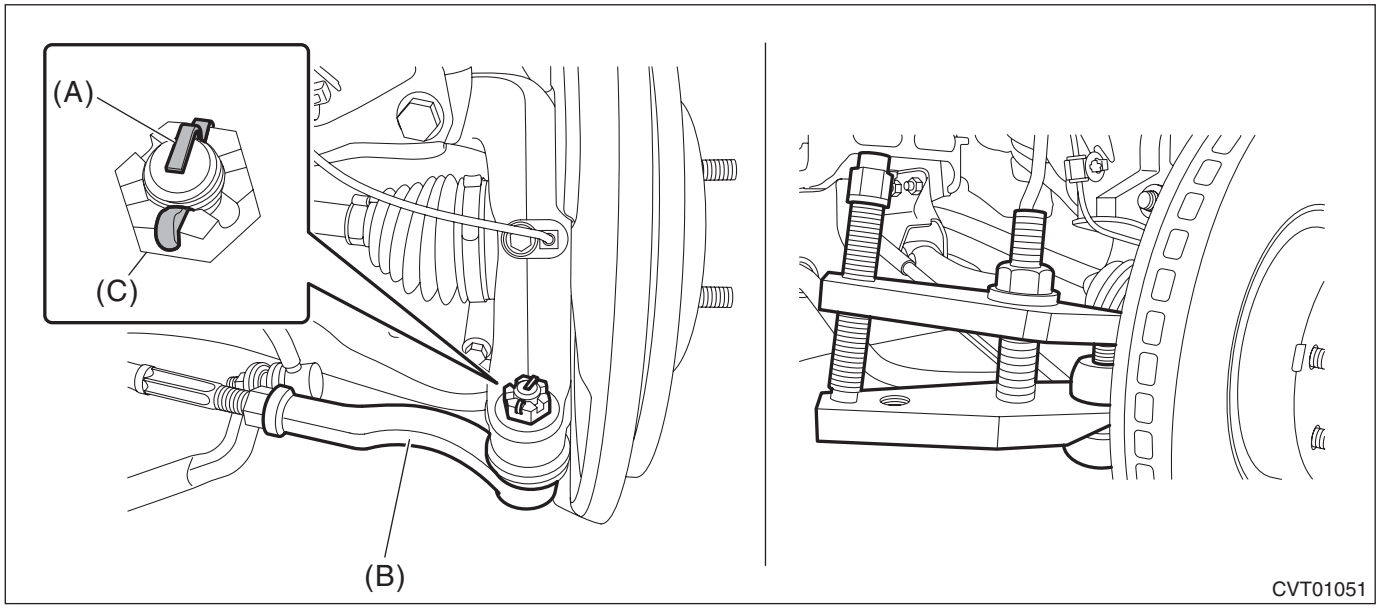

(A) Cotter pin
(B) Tie-rod end
(C) Castle nut

3) Lift up the vehicle.
4) Remove the under cover - front.
5) Remove the center exhaust pipe. <Ref. to EX(H4DO)-12, REMOVAL, Center Exhaust Pipe.>
6) Drain differential gear oil. <Ref. to CVT(TR580)-44, REPLACEMENT, Differential Gear Oil.>
7) Tighten the differential gear oil drain plug.

NOTE:
Use a new gasket.

Tightening torque:
70 N·m (7.1 kgf-m, 51.6 ft-lb)
8) Remove the stabilizer link. <Ref. to FS-34, REMOVAL, Front Stabilizer.>
9) Disconnect the ball joint and housing.
10) Pull out the front drive shaft from transmission using a crowbar.

NOTE:
Holding the joint of front drive shaft from transmission side, pull out the drive shaft from transmission with care not to stretch the boot.
11) Remove the differential side retainer oil seal using driver wrapped with vinyl tape etc.

12) Using the ST, install the differential side retainer oil seal by lightly tapping with a hammer.

NOTE:
- Apply differential gear oil to the lip surface, so that the oil seal lip is not deformed.
- Apply differential gear oil to the press-fitting surface of oil seal and the differential side retainer.
- Oil seal has an identification mark (R, L). When installing oil seals, do not confuse the left and right.

ST 18675AA000 DIFFERENTIAL SIDE OIL SEAL INSTALLER

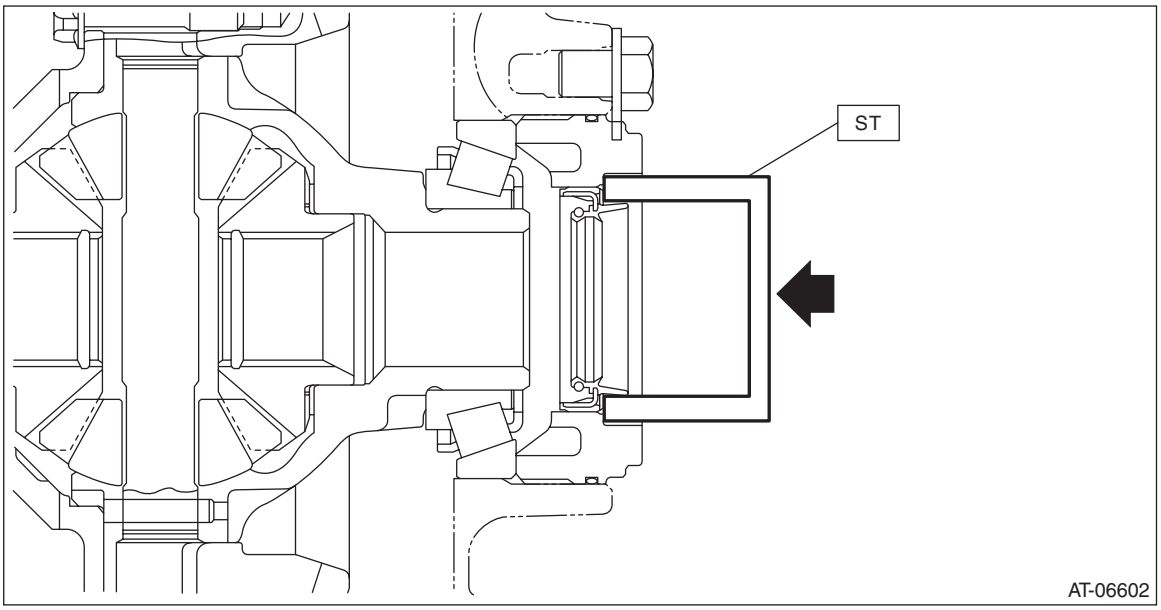

13) Apply grease to the side retainer oil seal lip.
14) Set the ST to side retainer.

ST 28399SA010 OIL SEAL PROTECTOR

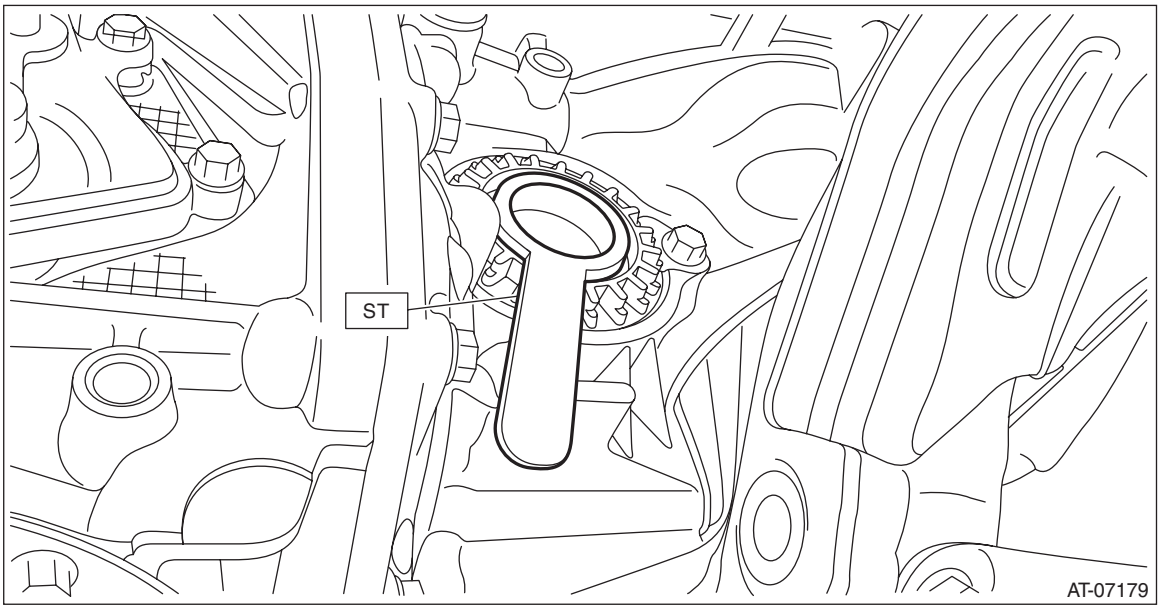

15) Replace the circlip of the drive shaft with a new part.
16) Insert the front drive shaft spline section into transmission and remove the ST (DIFFERENTIAL SIDE OIL SEAL INSTALLER).
17) Insert the drive shaft into the transmission securely by pressing the housing from outside of the vehicle.

18) Insert the ball joint into housing and secure with bolt.

CAUTION:
• Before tightening, make sure the bottom surface of the housing assembly - front axle and the stepped section of ball joint are in contact.
• Do not apply grease to the tapered portion of ball stud.

Tightening torque:
50 N·m (5.1 kgf-m, 36.9 ft-lb)

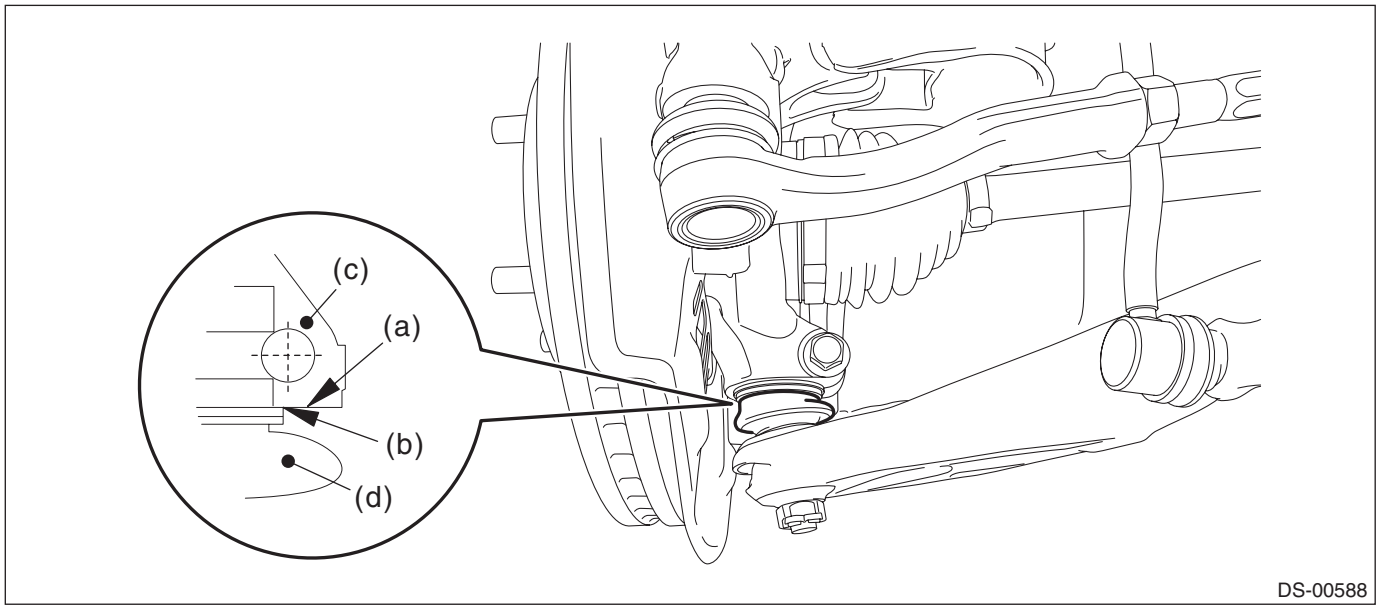

(a) Bottom surface of housing ASSY - front axle
(b) Raised section of ball joint
(c) Housing ASSY - front axle
(d) Ball joint ASSY

19) Install the stabilizer link.

Tightening torque:
60 N·m (6.1 kgf-m, 44.3 ft-lb)
20) Install the center exhaust pipe. <Ref. to EX(H4DO)-13, INSTALLATION, Center Exhaust Pipe.>
21) Install the under cover - front.
22) Lower the vehicle.
23) Connect the tie-rod end and knuckle arm, and attach the castle nut.

Tightening torque:
27 N·m (2.8 kgf-m, 19.9 ft-lb)

CAUTION:
When connecting, do not hit the cap at the bottom of tie-rod end with hammer.

24) After tightening the castle nut to the specified tightening torque, tighten it further within 60° until the cotter pin hole is aligned with slot in the nut. Fit the cotter pin into the nut, and then bend the pin to lock.

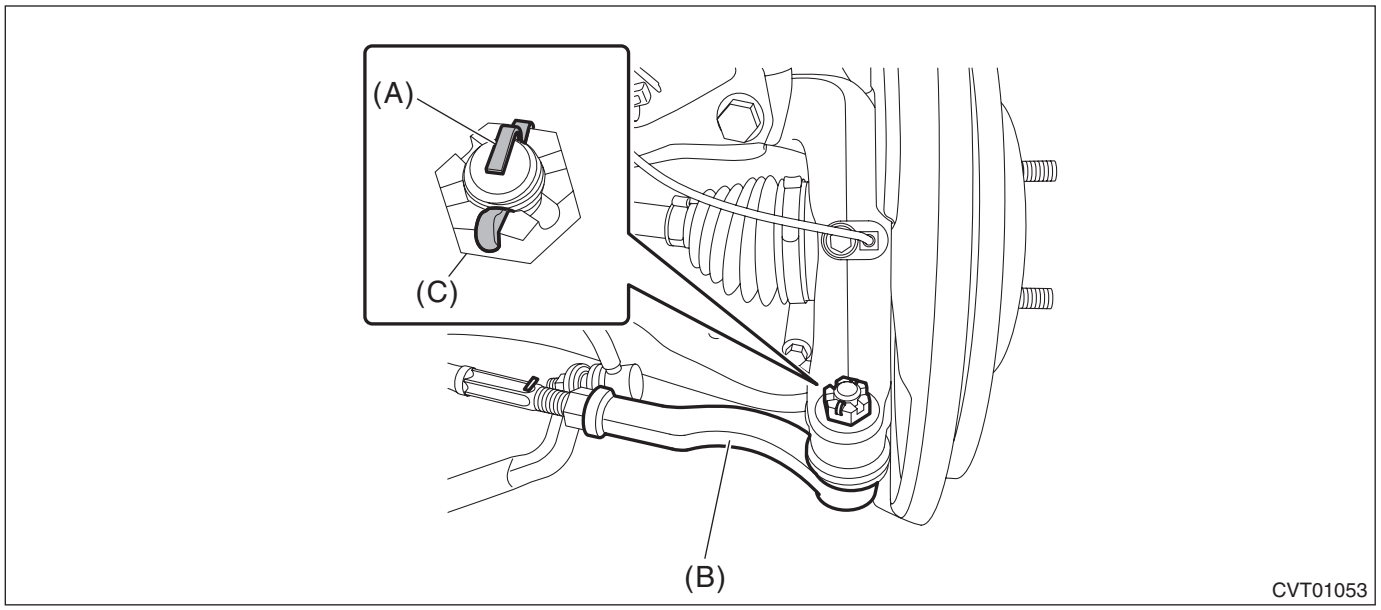

(A) Cotter pin
(B) Tie-rod end
(C) Castle nut

25) Fill differential gear oil. <Ref. to CVT(TR580)-43, Differential Gear Oil.>
26) Adjust the differential gear oil level, and check for leakage. <Ref. to CVT(TR580)-43, ADJUSTMENT, Differential Gear Oil.>
27) Install the front tires. <Ref. to WT-5, INSTALLATION, Tire and Wheel.>

14.Inhibitor Switch

A: INSPECTION

When the driving condition or starter motor operation is improper, first check the shift linkage for improper operation. If the shift linkage is functioning properly, check the inhibitor switch.

1) Disconnect the ground terminal from battery sensor. <Ref. to RC-4, BATTERY, NOTE, Repair Contents.>
2) Remove the clip (A), and loosen the clamps (B) and (C).

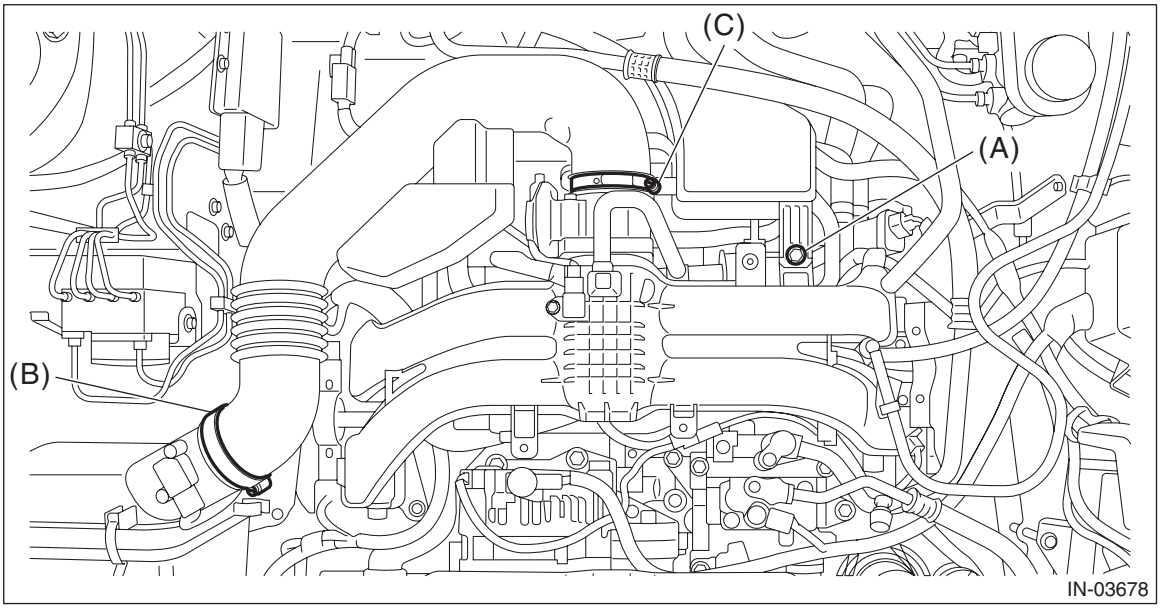

3) Remove the air intake boot from the throttle body, and move it to the left side wheel apron.

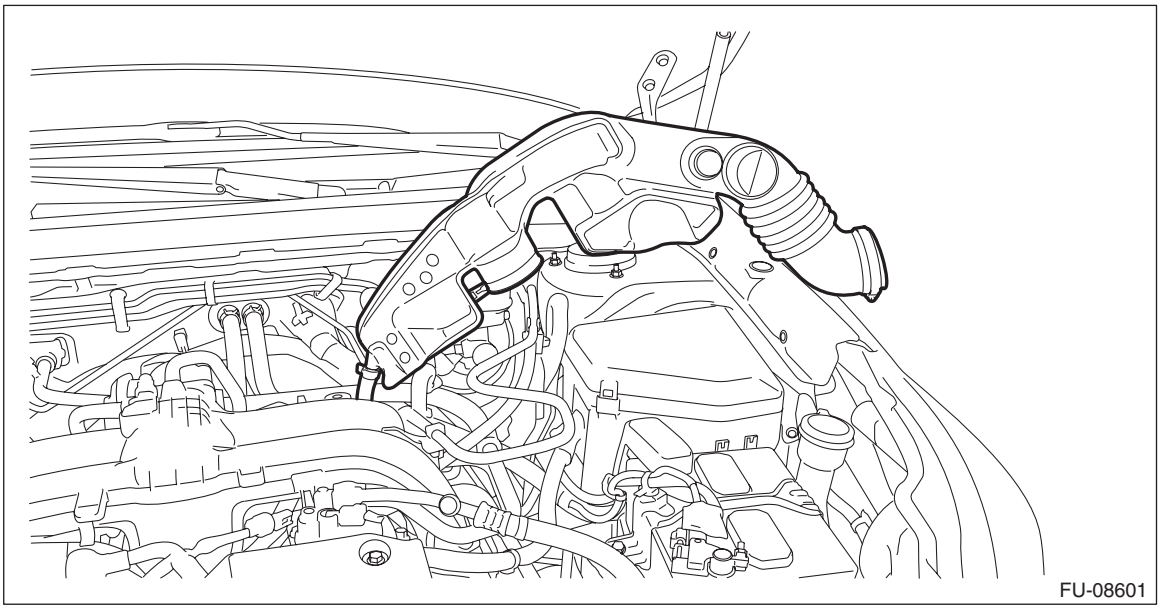

4) Disconnect the transmission radio ground terminal and transmission harness connector, and remove the harness clip.

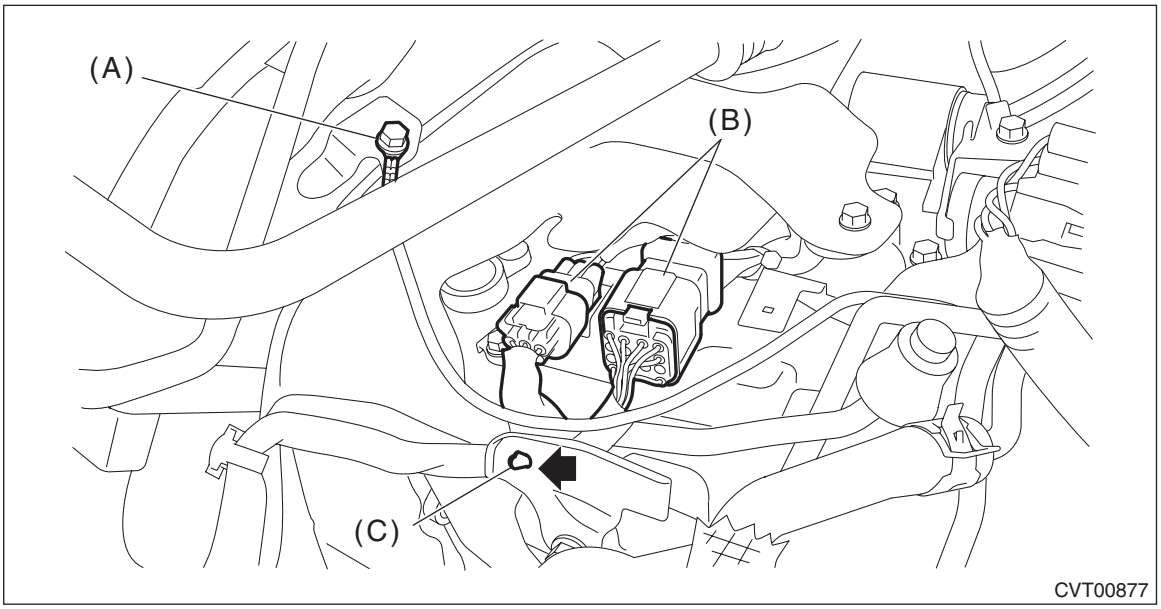

(A) Transmission radio ground terminal
(B) Transmission harness connectors
(C) Harness clip

5) Remove the transmission case cover.

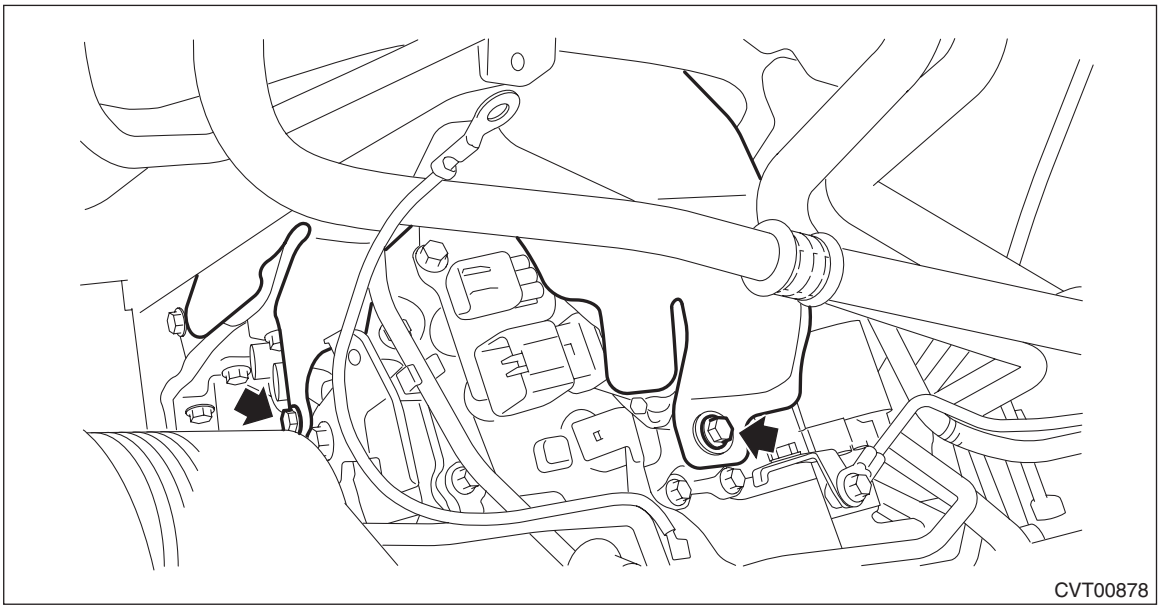

6) Move the lock lever in the arrow direction while pressing the lock button, and disconnect the connector.

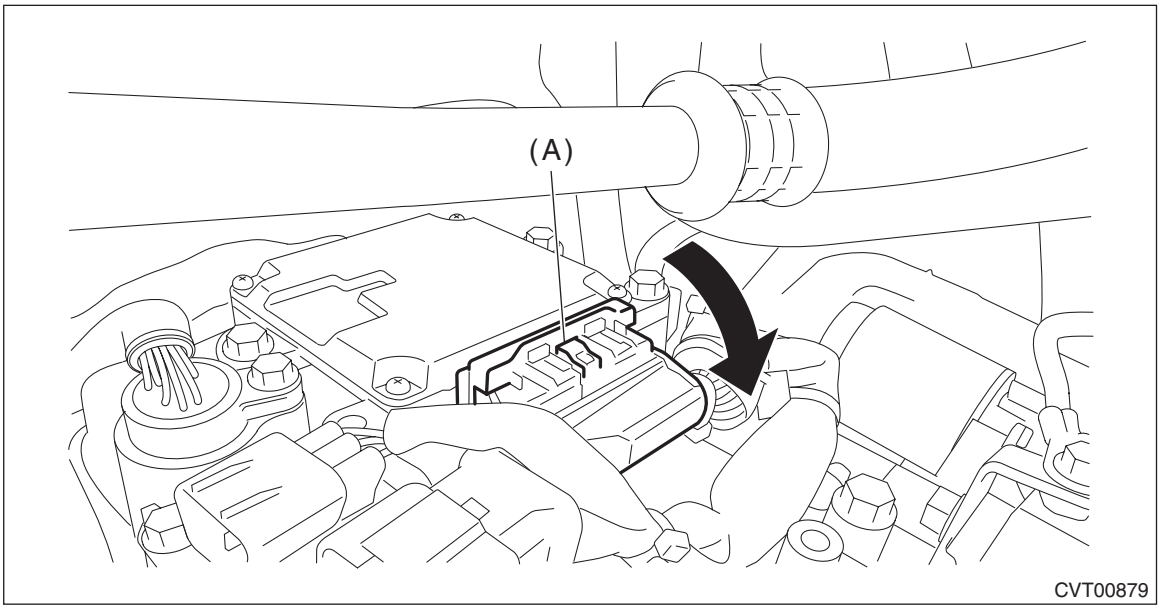

(A) Lock button

7) Attach the ST to the bulkhead harness. <Ref. to CVT(diag)-5, CAUTION, General Description.>
ST 18460AA040 CHECK BOARD
8) Check for continuity in inhibitor switch circuit by shifting the select lever in “P”, “R”, “N” and “D” respectively.

NOTE:
- Check that there is no continuity in the starter circuit when the select lever is in the “R” and “D” ranges.

• When inhibitor switch is normal, check there is no poor contact in vehicle side connector and no open circuit in harness.

	Range	Terminal No.	Standard
Signal sent to TCM	P	38 — 42	Less than 1 Ω
	R	37 — 42	
	N	36 — 42	
	D	35 — 42	

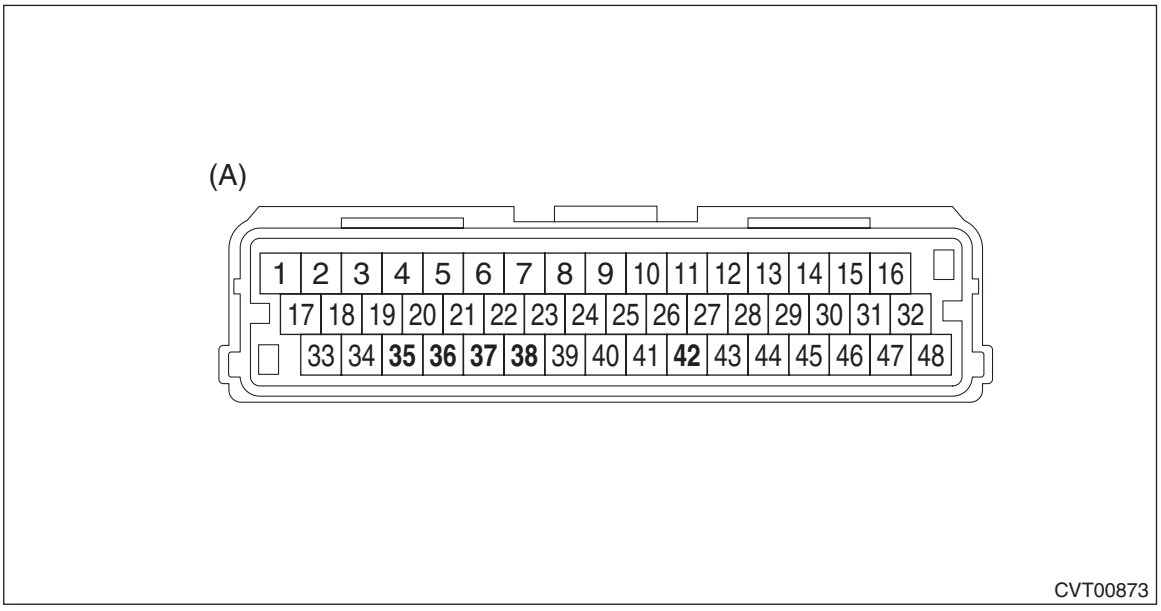

(A) Check board connector

	Range	Terminal No.	Standard
Starter circuit	P/N	1 — 5	Less than 1 Ω
Back-up light circuit	R	2 — 3	

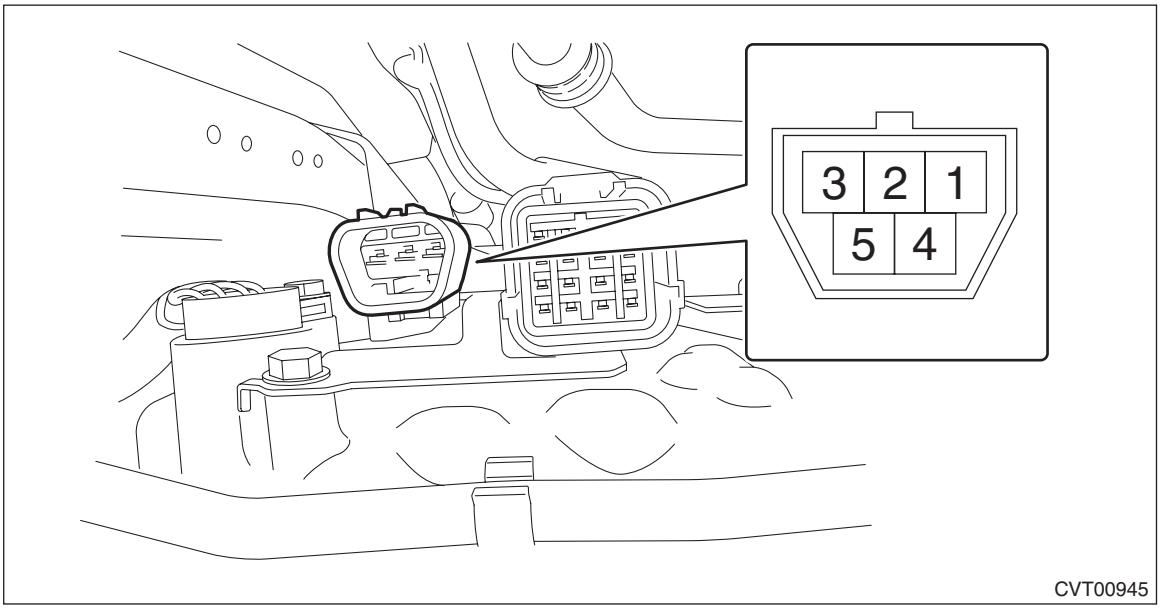

9) Check that there is continuity at equal points when the select lever is moved 1.5° in both directions from the “N” range.
If there is continuity in only one direction or in other points, adjust the inhibitor switch. <Ref. to CVT(TR580)-108, ADJUSTMENT, Inhibitor Switch.>

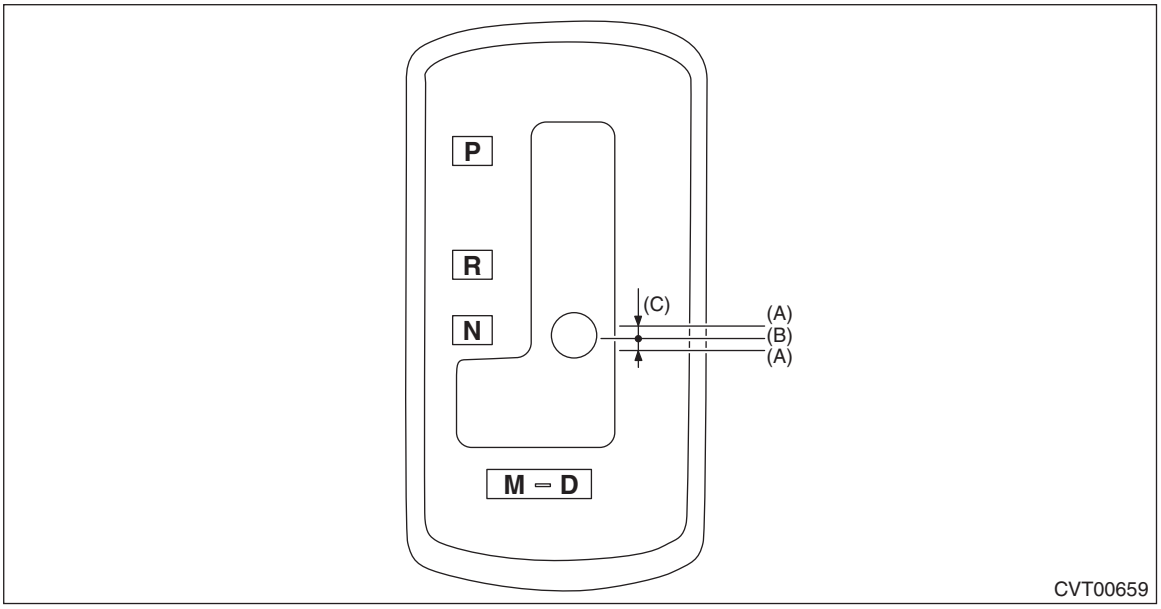

(A) Continuity does not exist.
(B) Continuity exists.
(C) 1.5°

10) Repeat the above inspection in other gear ranges. If there is fault, adjust the inhibitor switch and select cable. <Ref. to CVT(TR580)-108, ADJUSTMENT, Inhibitor Switch.> <Ref. to CS-46, ADJUSTMENT, Select Cable.>

B: ADJUSTMENT

1) Disconnect the ground terminal from battery sensor. <Ref. to RC-4, BATTERY, NOTE, Repair Contents.>
2) Release the shift lock using a screwdriver to shift the select lever to the “N” range.

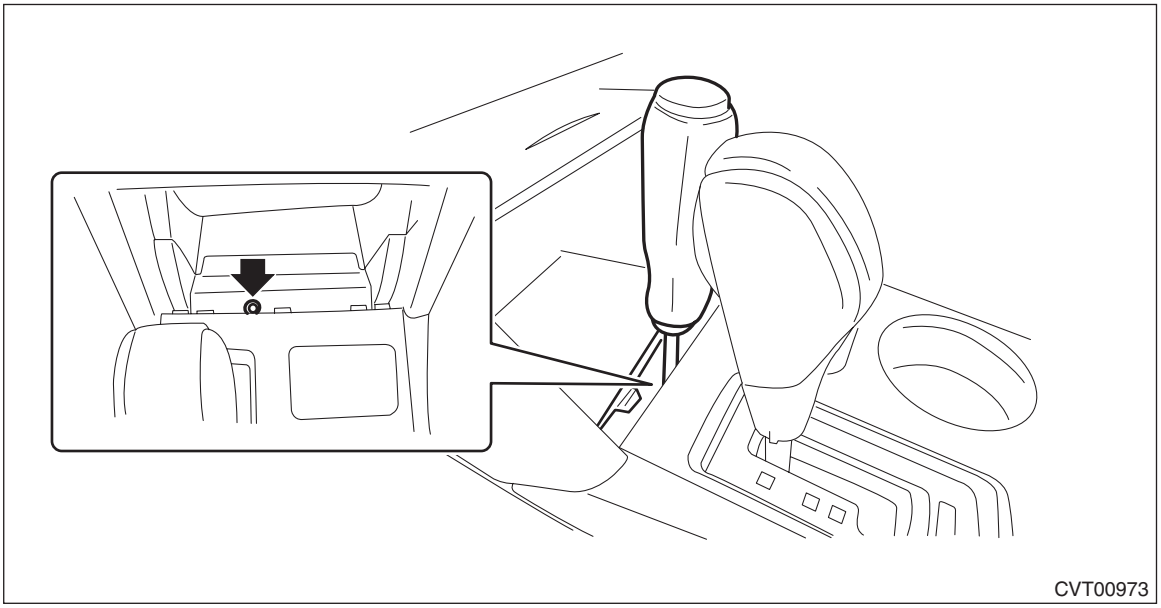

3) Lift up the vehicle.
4) Remove the center exhaust pipe. <Ref. to EX(H4DO)-12, REMOVAL, Center Exhaust Pipe.>
5) Loosen the two bolts holding the inhibitor switch.

6) Insert the ST vertically into the holes of the shifter arm and switch body.
ST 499267300 STOPPER PIN

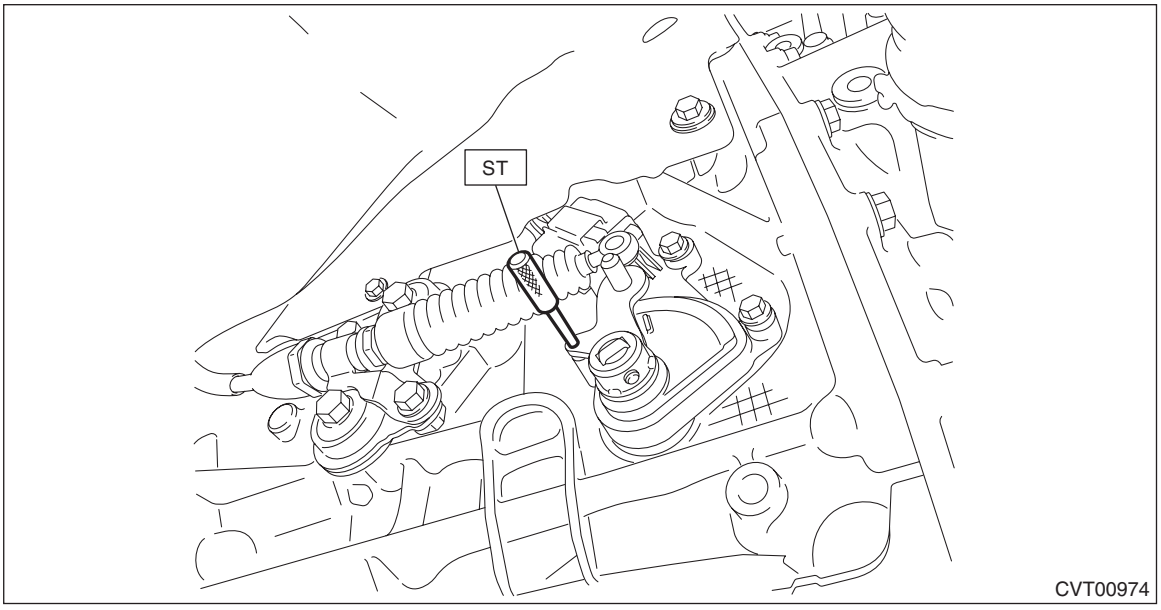

7) Tighten the two bolts holding the inhibitor switch.

Tightening torque:
5 N·m (0.5 kgf-m, 3.7 ft-lb)

8) Repeat the inspection of the inhibitor switch. If the inhibitor switch is determined to be “faulty”, replace it.

C: REMOVAL

1) Disconnect the ground terminal from battery sensor. <Ref. to RC-4, BATTERY, NOTE, Repair Contents.>
2) While pressing the shift lock release button, shift the select lever to the “N” range.
3) Lift up the vehicle.
4) Remove the center exhaust pipe. <Ref. to EX(H4DO)-12, REMOVAL, Center Exhaust Pipe.>
5) Remove the snap pin and washer.

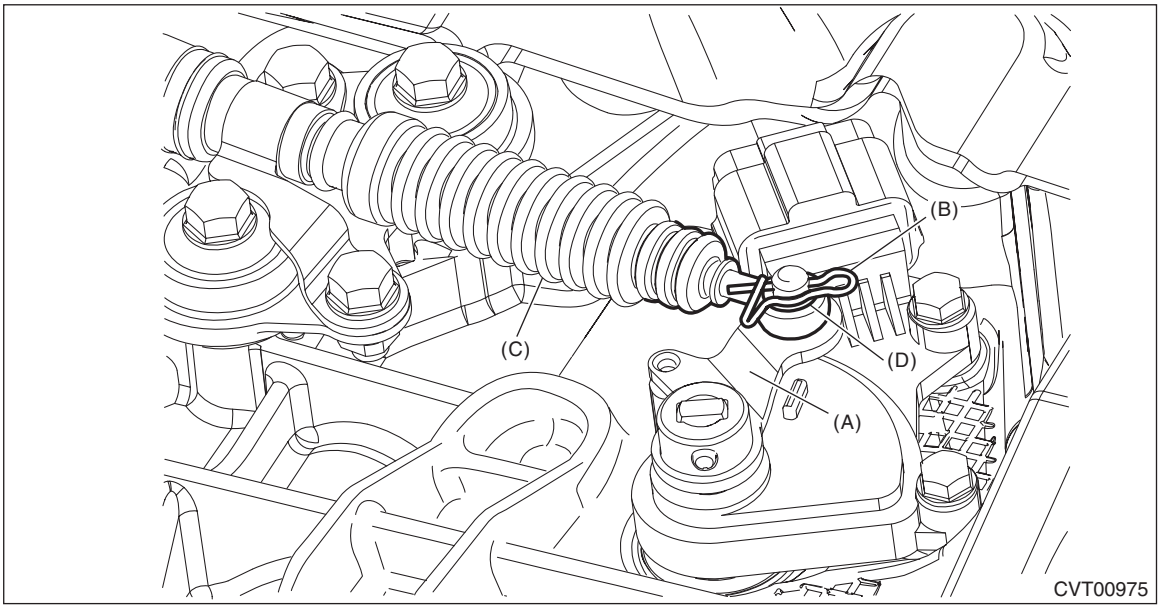

(A) Shifter arm
(B) Snap pin
(C) Select cable
(D) Washer

6) Remove the spring pin and shifter arm.

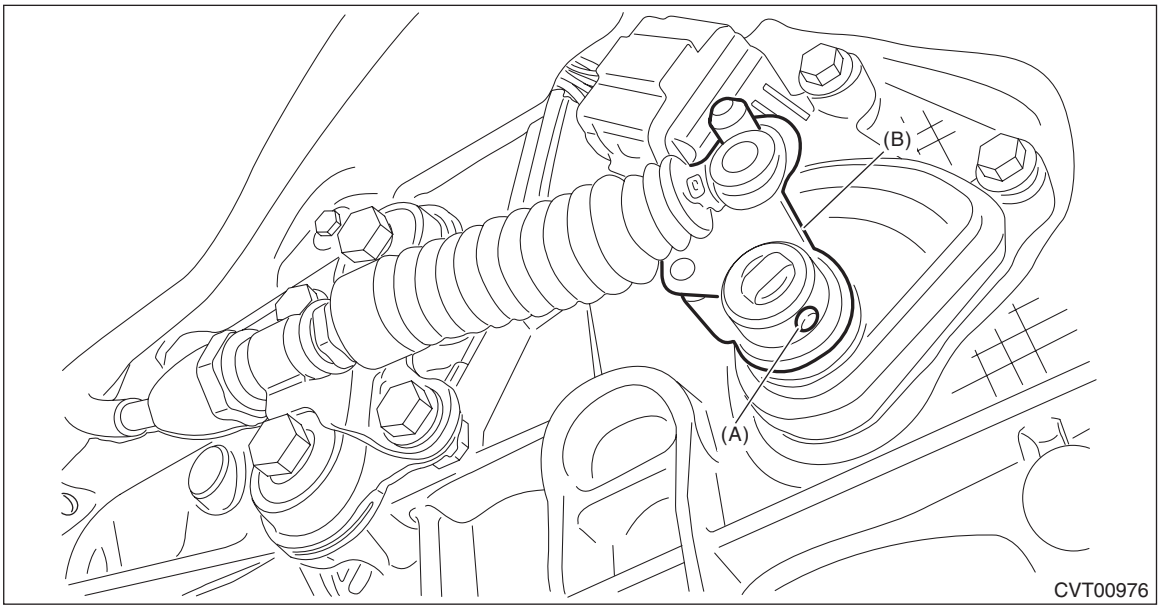

(A) Spring pin
(B) Shifter arm

7) Disconnect the inhibitor harness connector.
8) Remove the inhibitor switch.

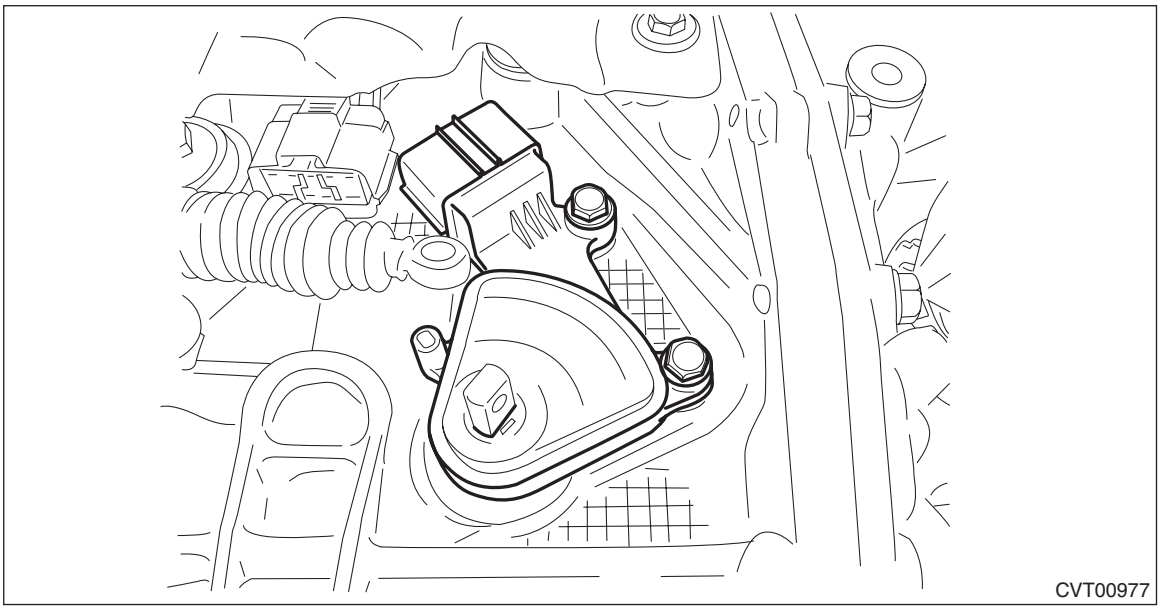

D: INSTALLATION

1) Install the inhibitor switch to the transmission case temporarily.

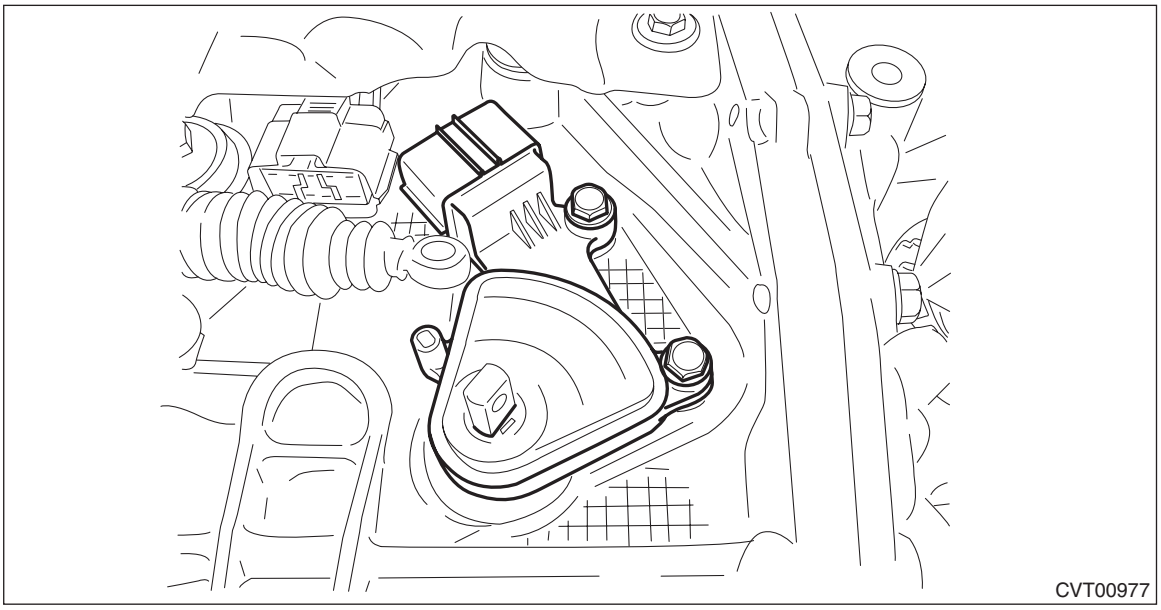

2) Connect the inhibitor harness connector.
3) Install the shifter arm and fix with the spring pin.

NOTE:
Use new spring pin.

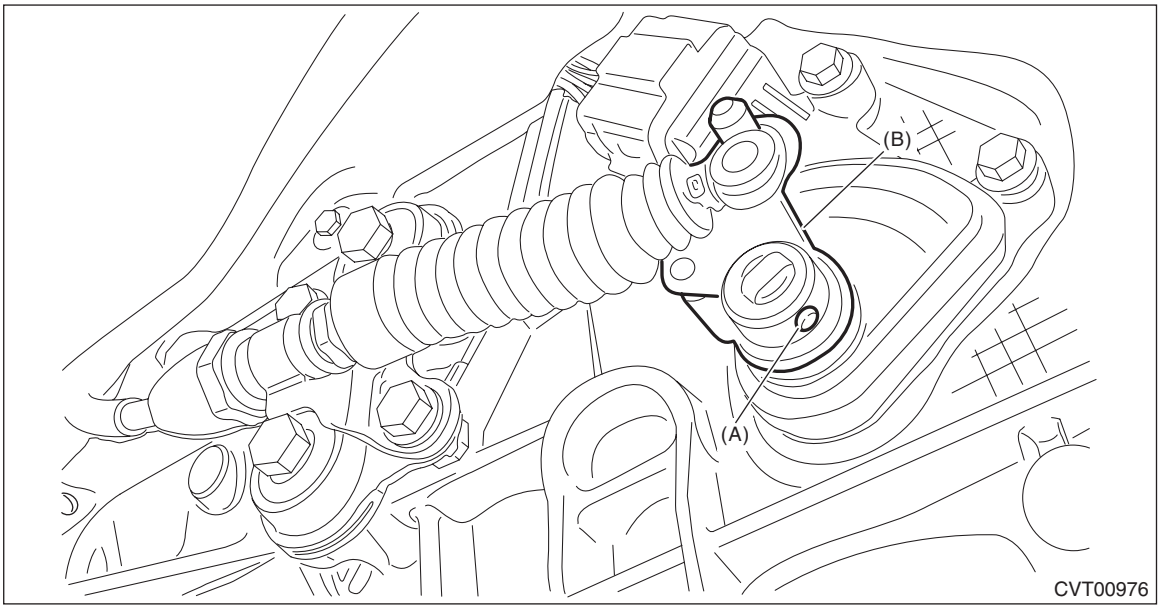

(A) Spring pin
(B) Shifter arm

4) Shift the shifter arm to “N” range.

5) Install the ST vertically in the cutout of shifter arm and the hole of switch body.
ST 499267300 STOPPER PIN

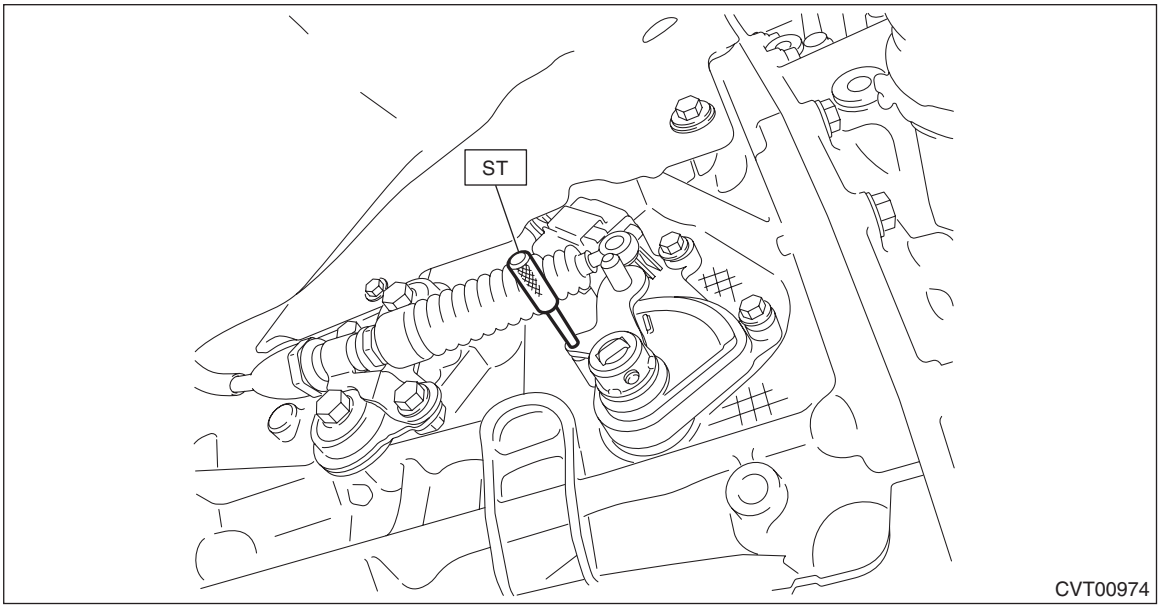

6) Tighten the two bolts holding the inhibitor switch.

Tightening torque:
5 N·m (0.5 kgf-m, 3.7 ft-lb)

7) Install the select cable to the shifter arm.
8) Install the washer and snap pin.

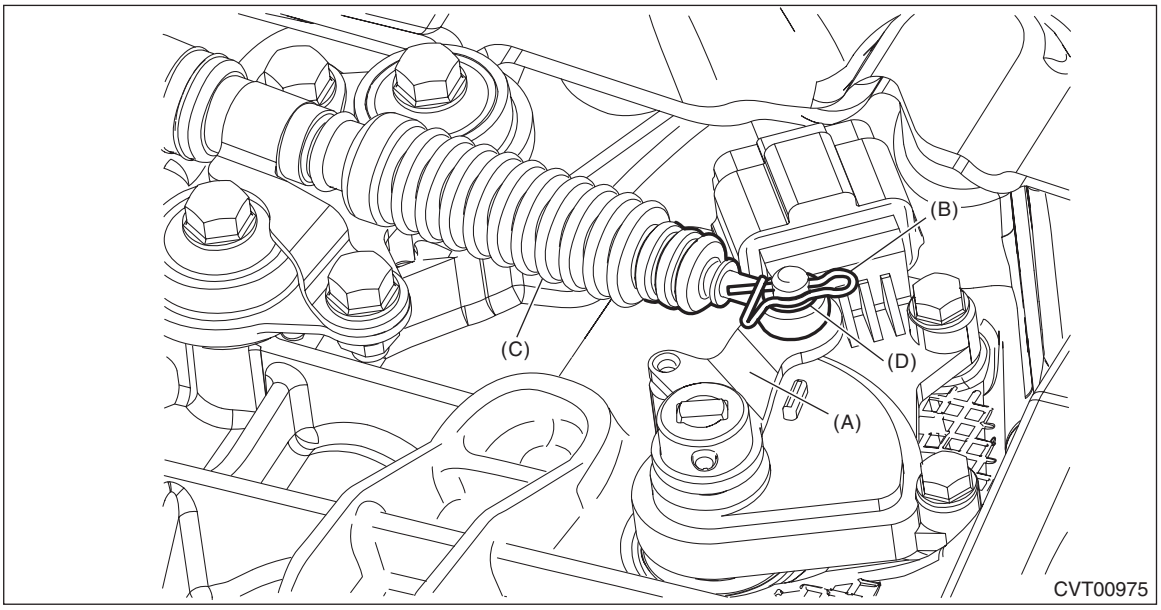

(A) Shifter arm
(B) Snap pin
(C) Select cable
(D) Washer

9) Install the center exhaust pipe. <Ref. to EX(H4DO)-13, INSTALLATION, Center Exhaust Pipe.>
10) Lower the vehicle.
11) Connect the ground terminal to battery sensor. <Ref. to RC-4, BATTERY, NOTE, Repair Contents.>
12) Check the inhibitor switch. <Ref. to CVT(TR580)-104, INSPECTION, Inhibitor Switch.>

15.Turbine Speed Sensor

A: REMOVAL

CAUTION:
Be sure to prevent water or oil from contacting the connector terminal of turbine speed sensor. If adhesion occurs, replace with a new part.

1) Disconnect the ground terminal from battery sensor. <Ref. to RC-4, BATTERY, NOTE, Repair Contents.>
2) Lift up the vehicle.
3) Disconnect the harness connector from the turbine speed sensor.
4) Remove the turbine speed sensor.

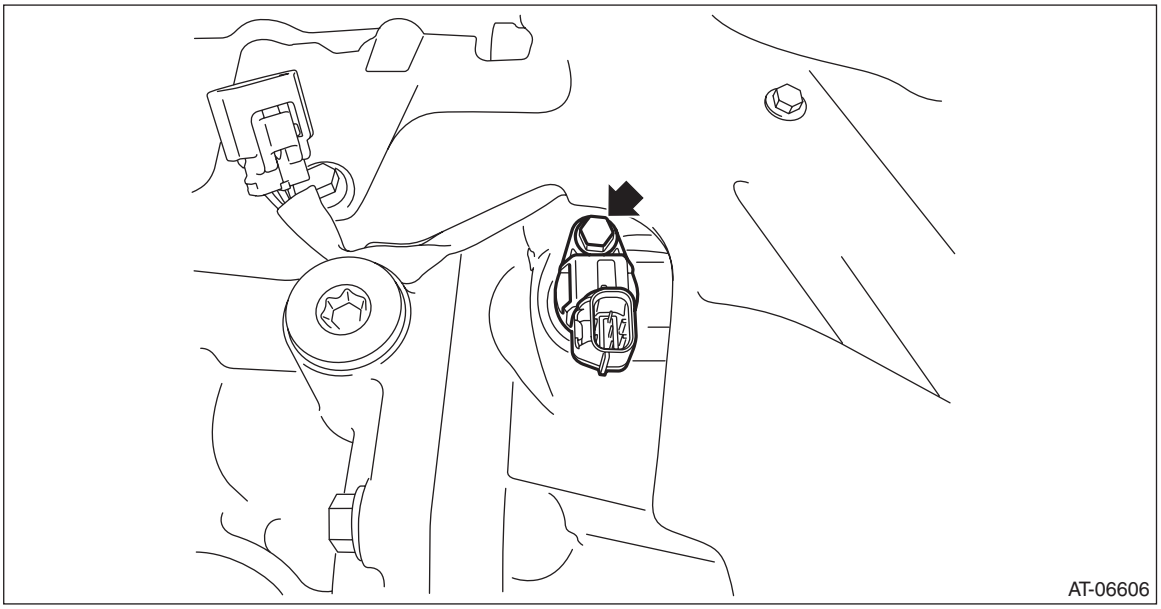

B: INSTALLATION

CAUTION:
Be sure to prevent water or oil from contacting the connector terminal of turbine speed sensor. If adhesion occurs, replace with a new part.

1) Install the turbine speed sensor.

NOTE:
- Use new O-rings.
- Apply CVTF to the O-rings.

Tightening torque:
7 N·m (0.7 kgf-m, 5.2 ft-lb)

2) Connect the harness connector.
3) Lower the vehicle.
4) Connect the ground terminal to battery sensor. <Ref. to RC-4, BATTERY, NOTE, Repair Contents.>

C: INSPECTION

1) Disconnect the ground terminal from battery sensor. <Ref. to RC-4, BATTERY, NOTE, Repair Contents.>

2) Remove the clip (A), and loosen the clamps (B) and (C).

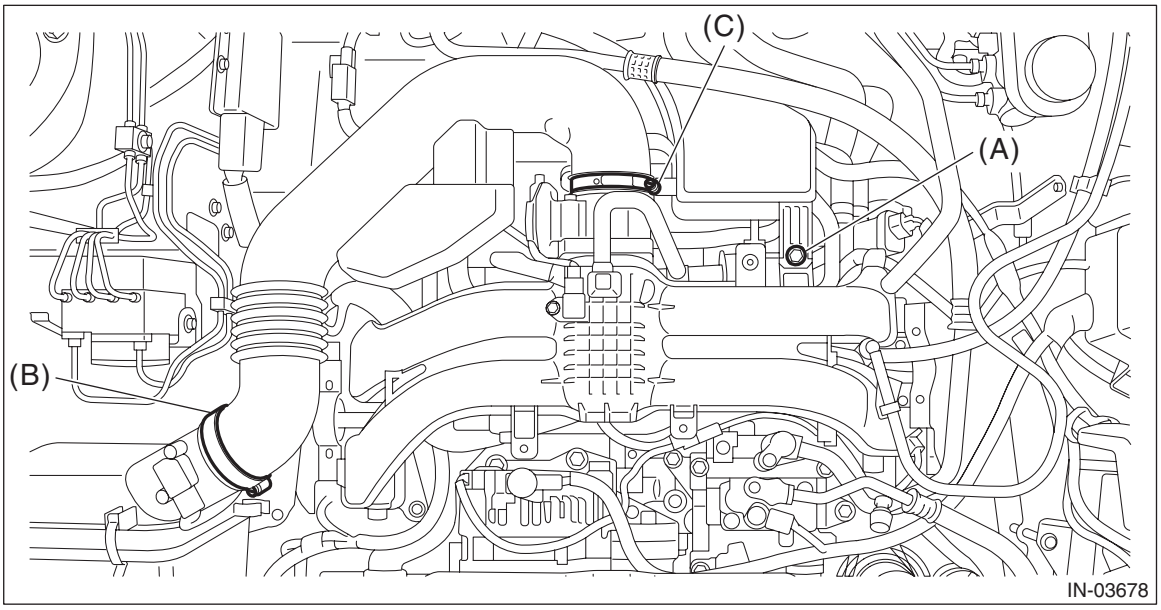

3) Remove the air intake boot from the throttle body, and move it to the left side wheel apron.

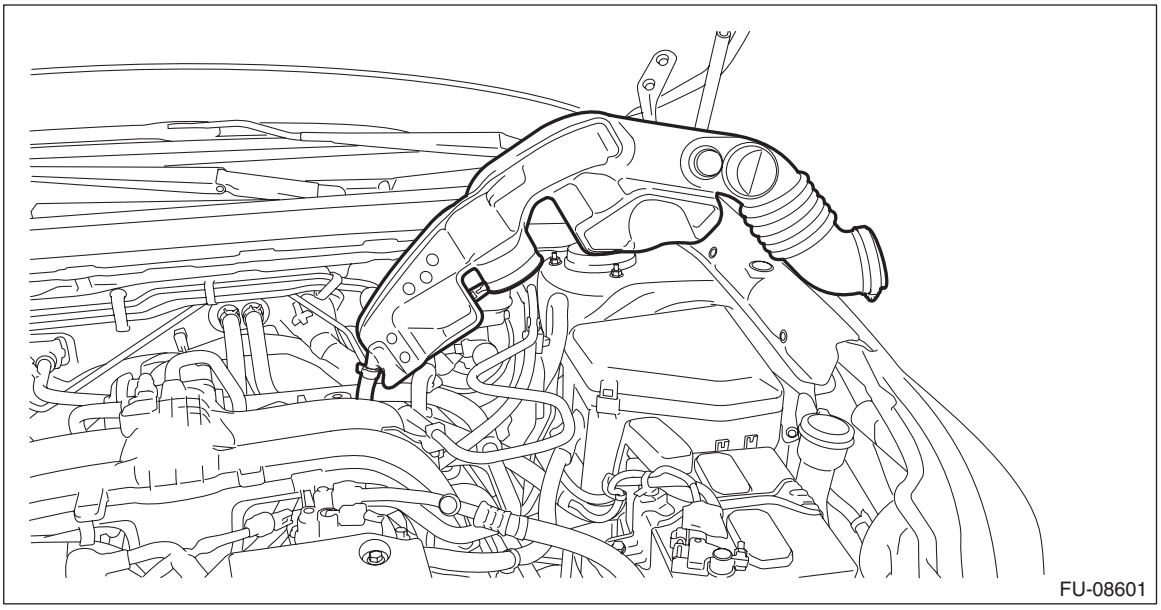

4) Disconnect the transmission radio ground terminal and transmission harness connector, and remove the harness clip.

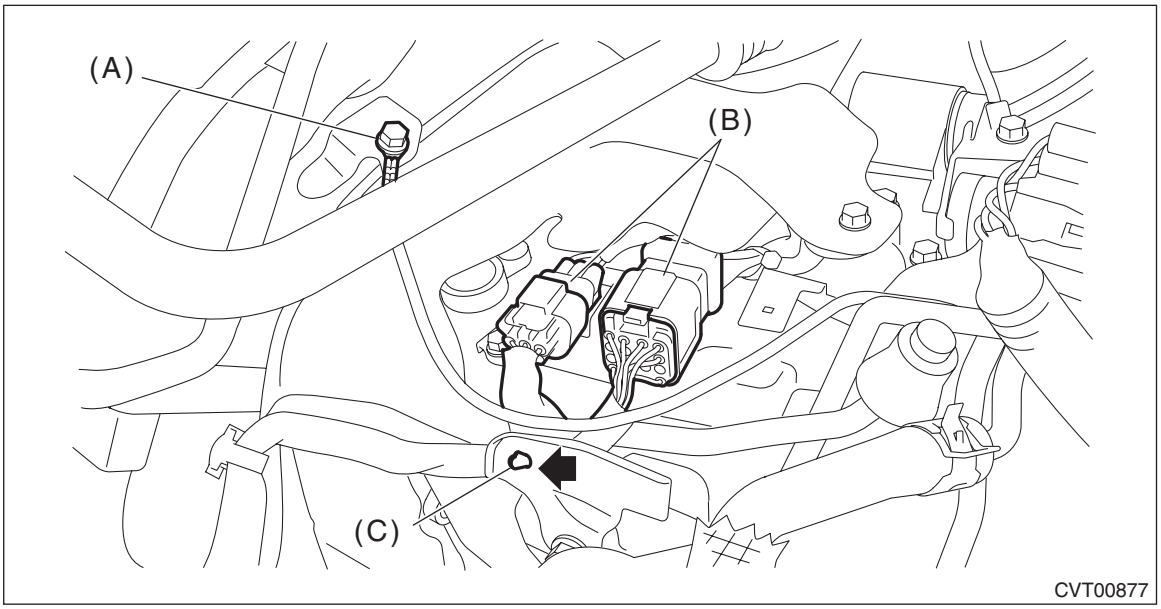

(A) Transmission radio ground terminal
(B) Transmission harness connectors
(C) Harness clip

5) Remove the transmission case cover.

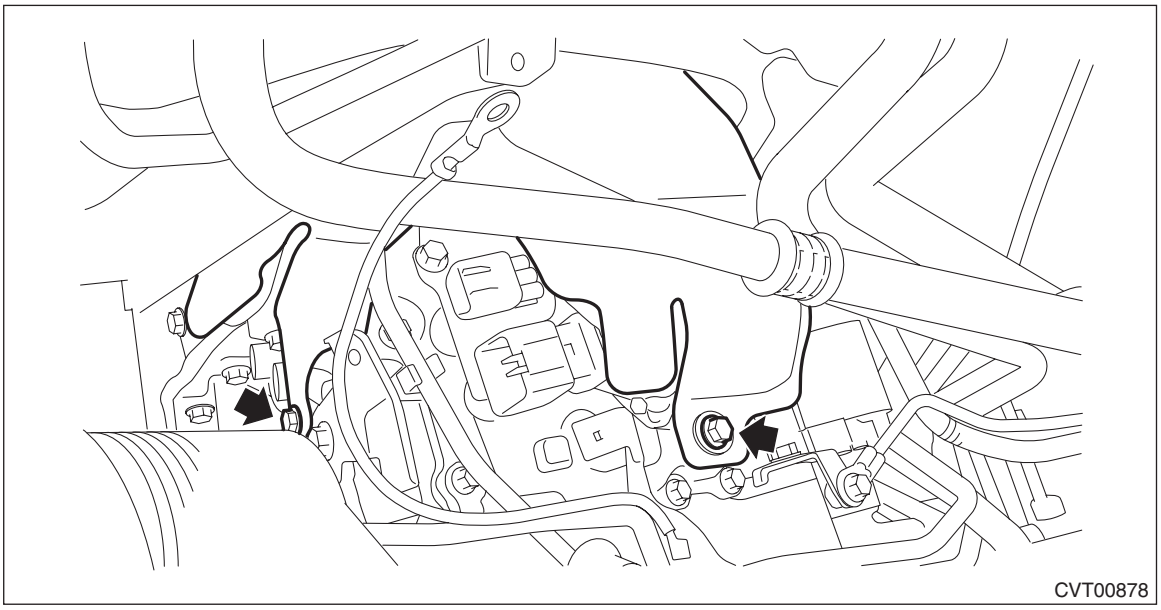

6) Move the lock lever in the arrow direction while pressing the lock button, and disconnect the connector.

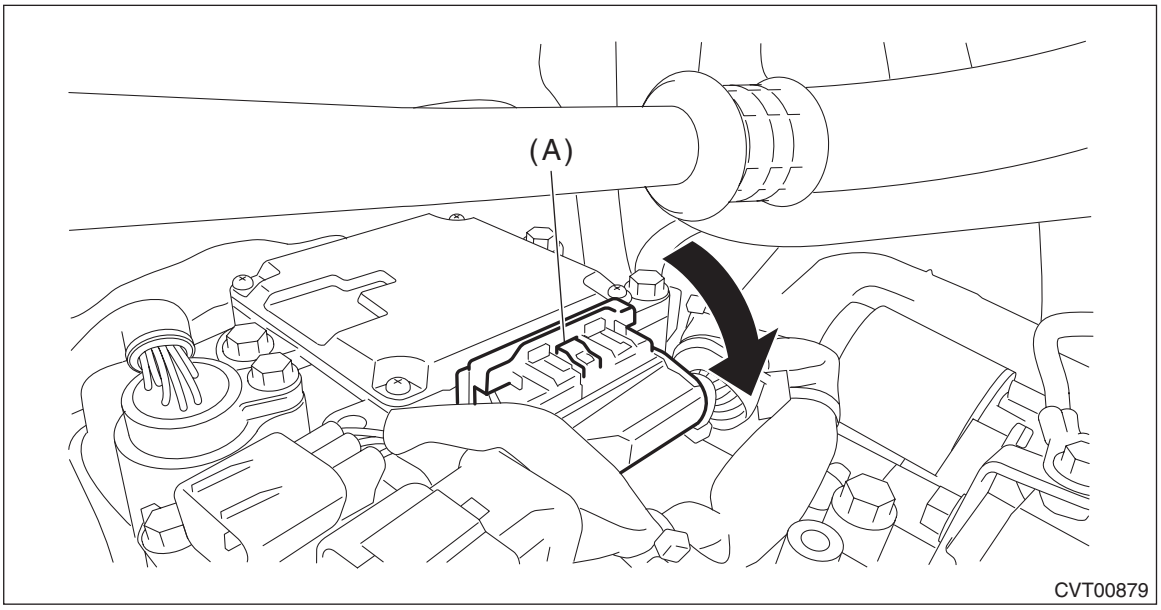

(A) Lock button

7) Set the ST between TCM and transmission harness. <Ref. to CVT(diag)-5, CAUTION, General Description.>
ST 18460AA040 CHECK BOARD
8) Connect the transmission radio ground terminal and transmission harness connector, and install the harness clip.

Tightening torque:
13 N·m (1.3 kgf-m, 9.6 ft-lb)
9) Install the air intake boot assembly. <Ref. to IN(H4DO)-10, INSTALLATION, Air Intake Boot.>
10) Connect the ground terminal to battery sensor. <Ref. to RC-4, BATTERY, NOTE, Repair Contents.>

11) Set the probe of oscilloscope to the check board connector.

Connector & terminal:
(B54) No. 12 (+) — No. 26 (–):

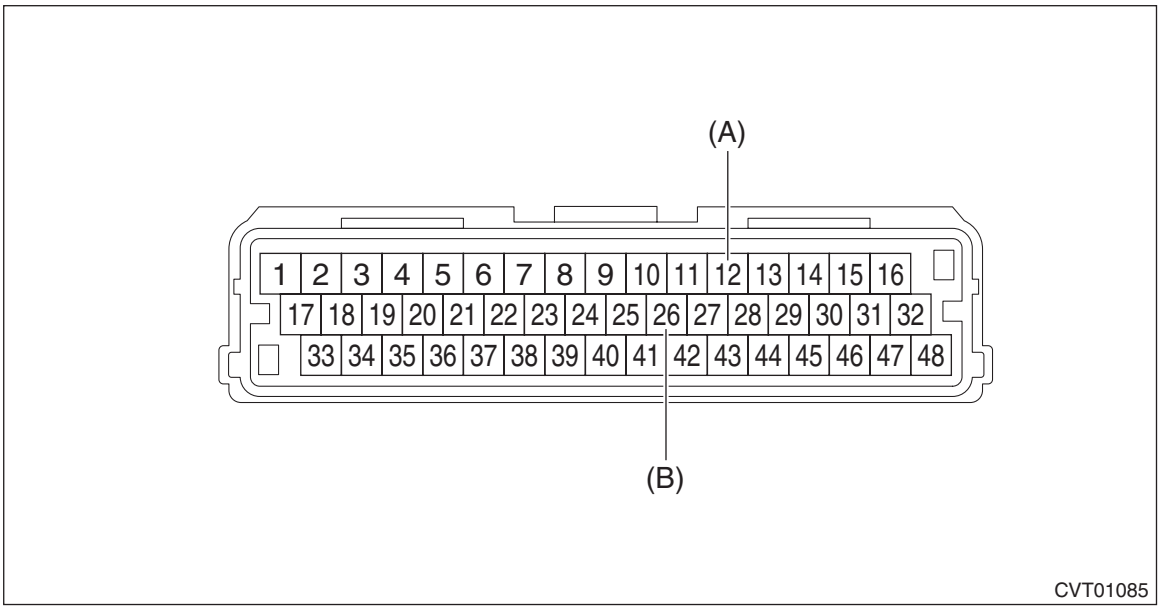

(A) + probe
(B) – probe

12) Start and warm up the engine.
13) Check the waveform and output voltage of the turbine speed sensor with engine idling.

NOTE:
The waveform cycle changes as the speed changes.

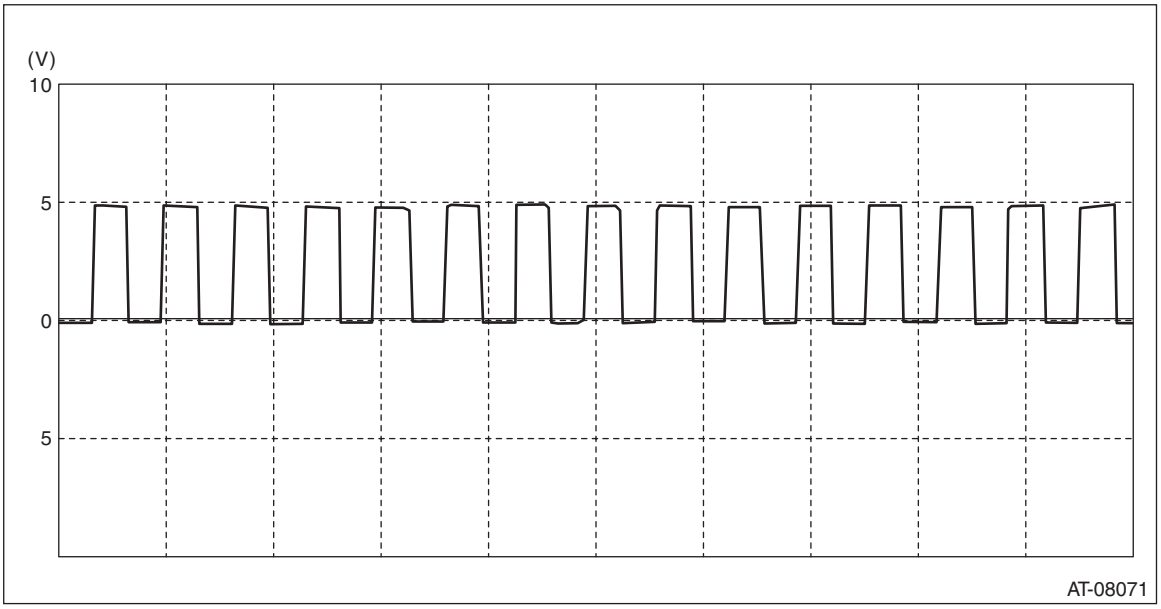

16.Secondary Speed Sensor

A: REMOVAL

CAUTION:
• Be sure to prevent water or oil from contacting the connector terminal of secondary speed sensor. If adhesion occurs, replace with a new part.
• When secondary speed sensor is removed, CVTF leaks. After installing the secondary speed sensor, adjust the CVTF level.

1) Disconnect the ground terminal from battery sensor. <Ref. to RC-4, BATTERY, NOTE, Repair Contents.>
2) Lift up the vehicle.
3) Disconnect the harness connector from the secondary speed sensor.
4) Remove the secondary speed sensor.

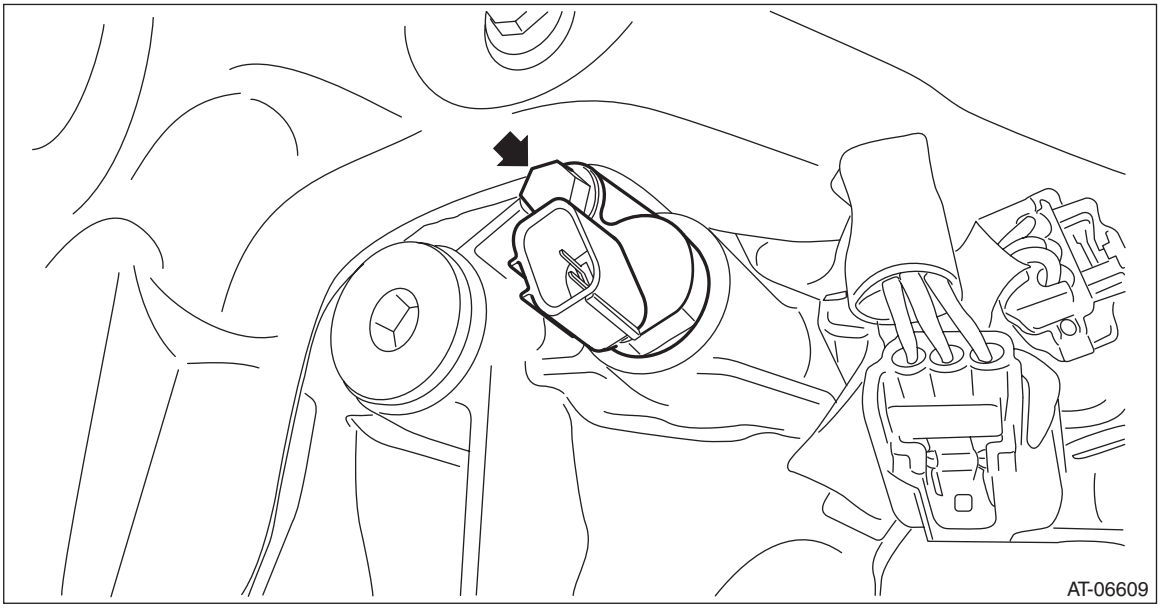

B: INSTALLATION

CAUTION:
• Be sure to prevent water or oil from contacting the connector terminal of secondary speed sensor. If adhesion occurs, replace with a new part.
• After installing the secondary speed sensor, adjust the CVTF level.

1) Install the secondary speed sensor.

NOTE:
• Use new O-rings.
• Apply CVTF to the O-rings.

Tightening torque:
7 N·m (0.7 kgf-m, 5.2 ft-lb)

2) Connect the harness connector.
3) Lower the vehicle.
4) Connect the ground terminal to battery sensor. <Ref. to RC-4, BATTERY, NOTE, Repair Contents.>
5) Refill CVTF to adjust the CVTF level. <Ref. to CVT(TR580)-39, CVTF.>

C: INSPECTION

1) Disconnect the ground terminal from battery sensor. <Ref. to RC-4, BATTERY, NOTE, Repair Contents.>
2) Remove the clip (A), and loosen the clamps (B) and (C).

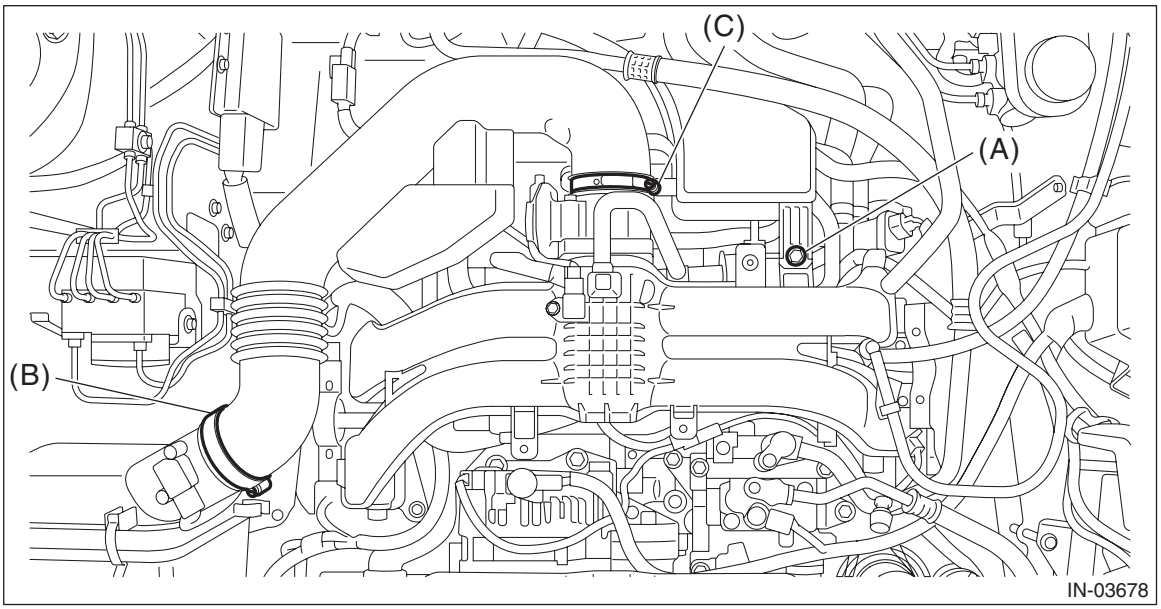

3) Remove the air intake boot, and move it to the left side wheel apron.

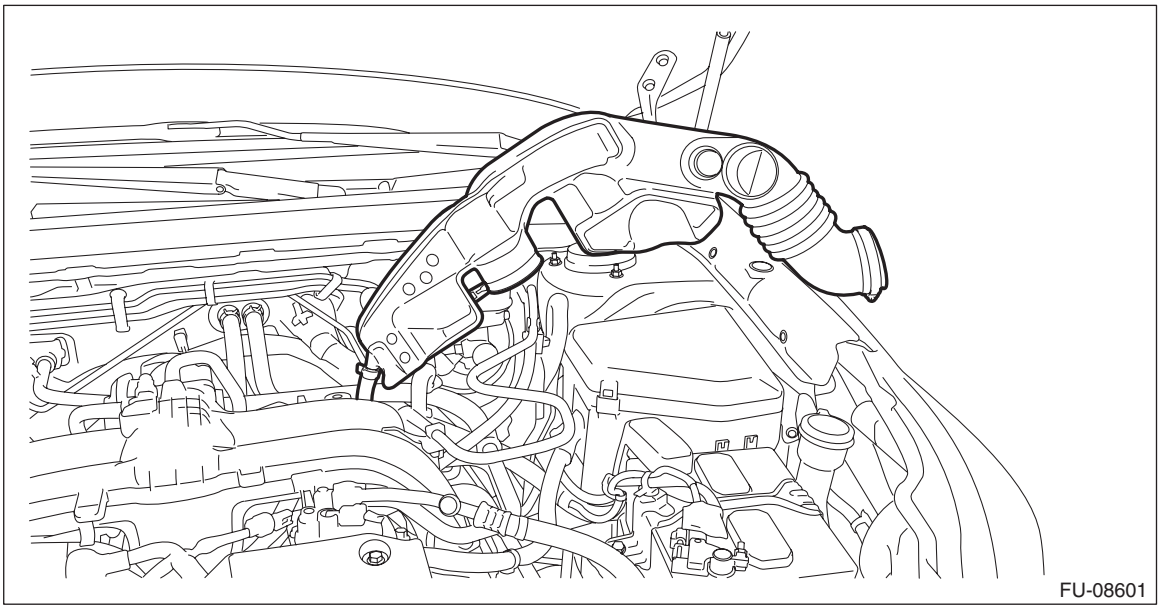

4) Disconnect the transmission radio ground terminal and transmission harness connector, and remove the harness clip.

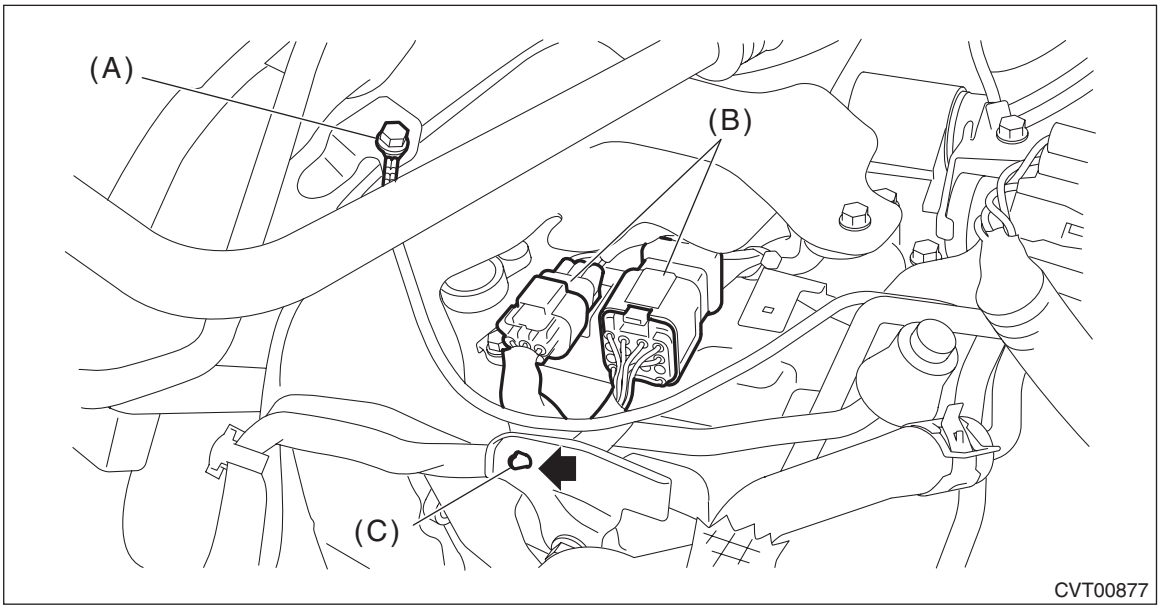

(A) Transmission radio ground terminal
(B) Transmission harness connectors
(C) Harness clip

5) Remove the transmission case cover.

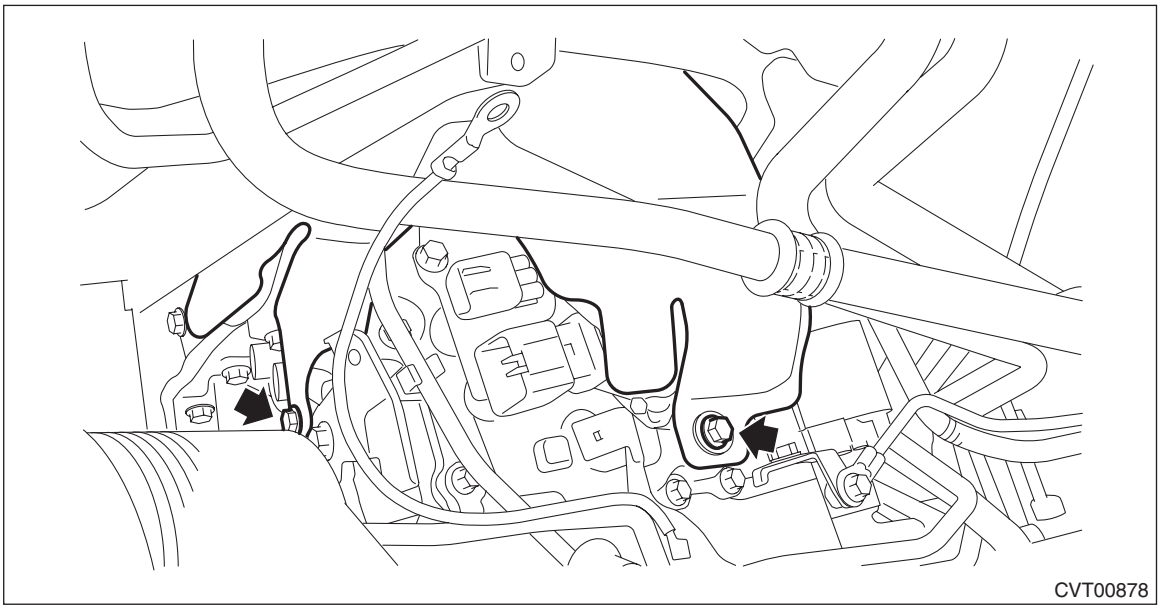

6) Move the lock lever in the arrow direction while pressing the lock button, and disconnect the connector.

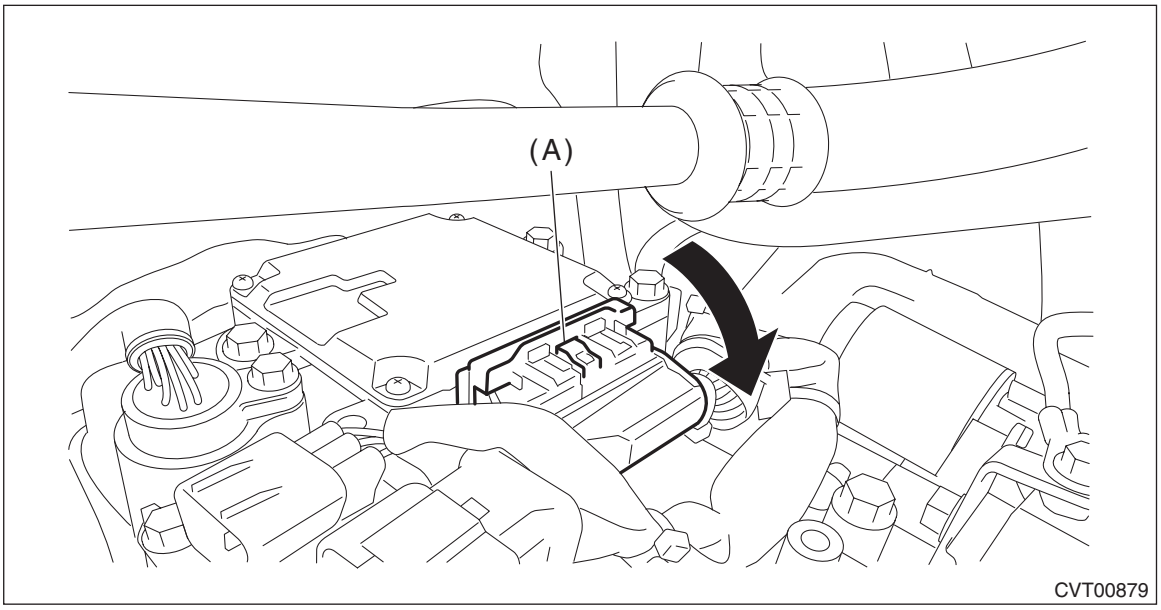

(A) Lock button

7) Set the ST between TCM and transmission harness. <Ref. to CVT(diag)-5, CAUTION, General Description.>
ST 18460AA040 CHECK BOARD
8) Connect the transmission radio ground terminal and transmission harness connector, and install the harness clip.

Tightening torque:
13 N·m (1.3 kgf-m, 9.6 ft-lb)
9) Install the air intake boot assembly. <Ref. to IN(H4DO)-10, INSTALLATION, Air Intake Boot.>
10) Connect the ground terminal to battery sensor. <Ref. to RC-4, BATTERY, NOTE, Repair Contents.>

11) Set the probe of oscilloscope to the check board connector.

Connector & terminal:
(B54) No. 13 (+) — No. 26 (–):

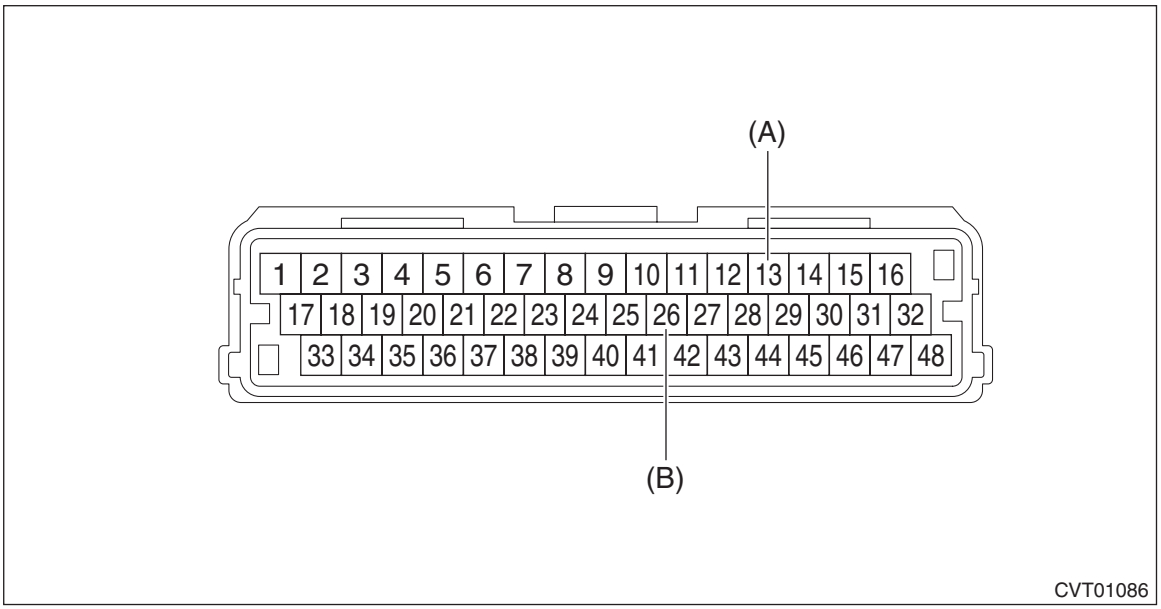

(A) + probe
(B) – probe

12) Start and warm up the engine.
13) Lift up the vehicle.

CAUTION:
Lift up the vehicle until the tire bottom is 0.3 m (0.98 ft) or more above the ground.
14) Shift the select lever to “D” range.
15) Check the waveform and output voltage of the secondary speed sensor with engine idling.

NOTE:
The waveform cycle changes as the speed changes.

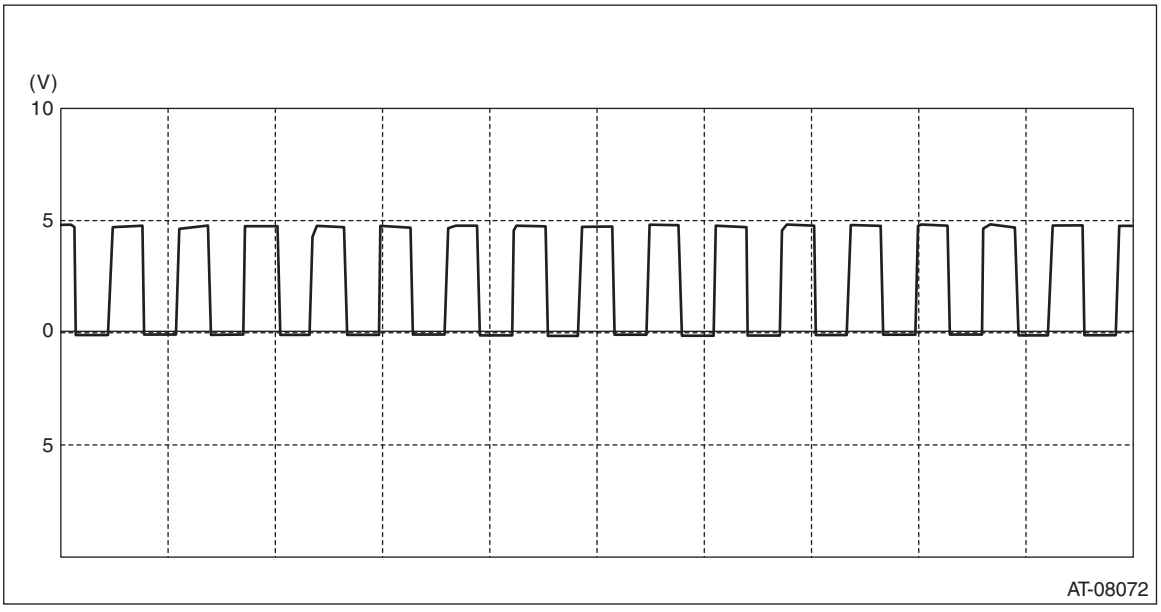

17.Primary Speed Sensor

A: REMOVAL

CAUTION:
Be sure to prevent water or oil from contacting the connector terminal of primary speed sensor. If adhesion occurs, replace with a new part.

1) Remove the transmission assembly. <Ref. to CVT(TR580)-63, REMOVAL, Automatic Transmission Assembly.>
2) Remove the primary speed sensor.

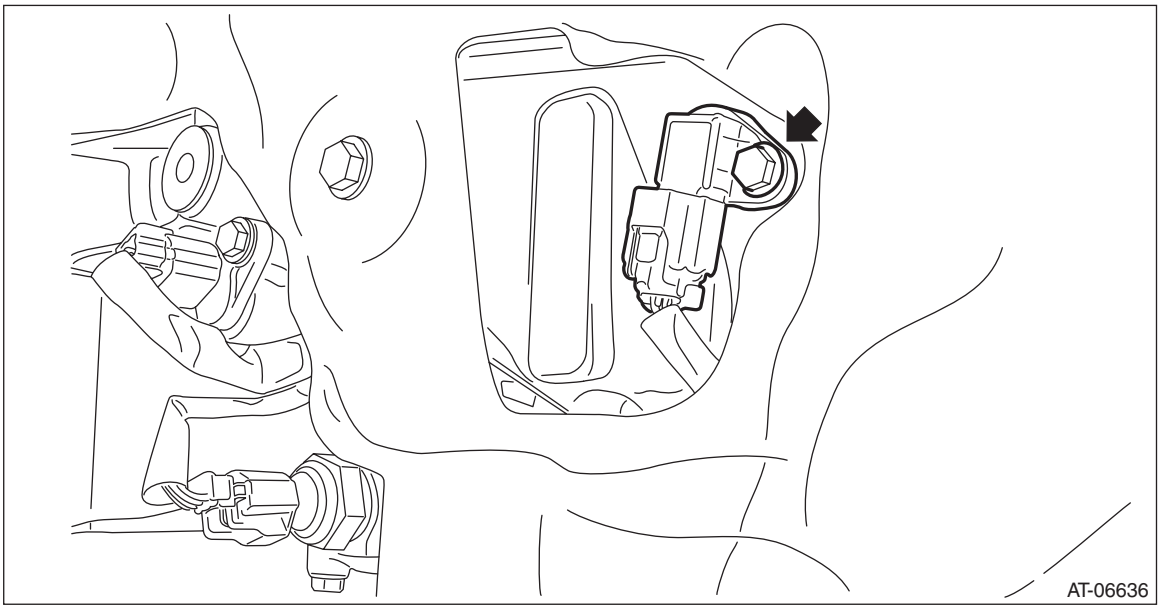

3) Disconnect the harness connector from primary speed sensor.

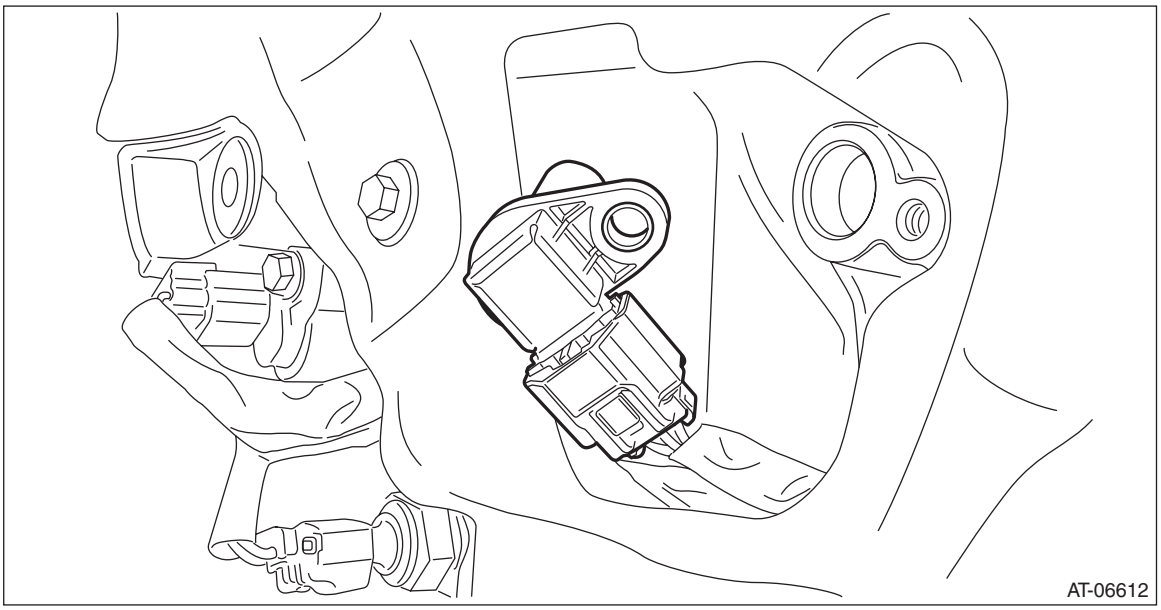

B: INSTALLATION

CAUTION:
Be sure to prevent water or oil from contacting the connector terminal of primary speed sensor. If adhesion occurs, replace with a new part.

1) Connect the harness connector.
2) Install the primary speed sensor.

NOTE:
- Use new O-rings.
- Apply CVTF to the O-rings.

Tightening torque:
7 N·m (0.7 kgf-m, 5.2 ft-lb)

3) Install the transmission assembly. <Ref. to CVT(TR580)-79, INSTALLATION, Automatic Transmission Assembly.>

C: INSPECTION

1) Disconnect the ground terminal from battery sensor. <Ref. to RC-4, BATTERY, NOTE, Repair Contents.>
2) Remove the clip (A), and loosen the clamps (B) and (C).

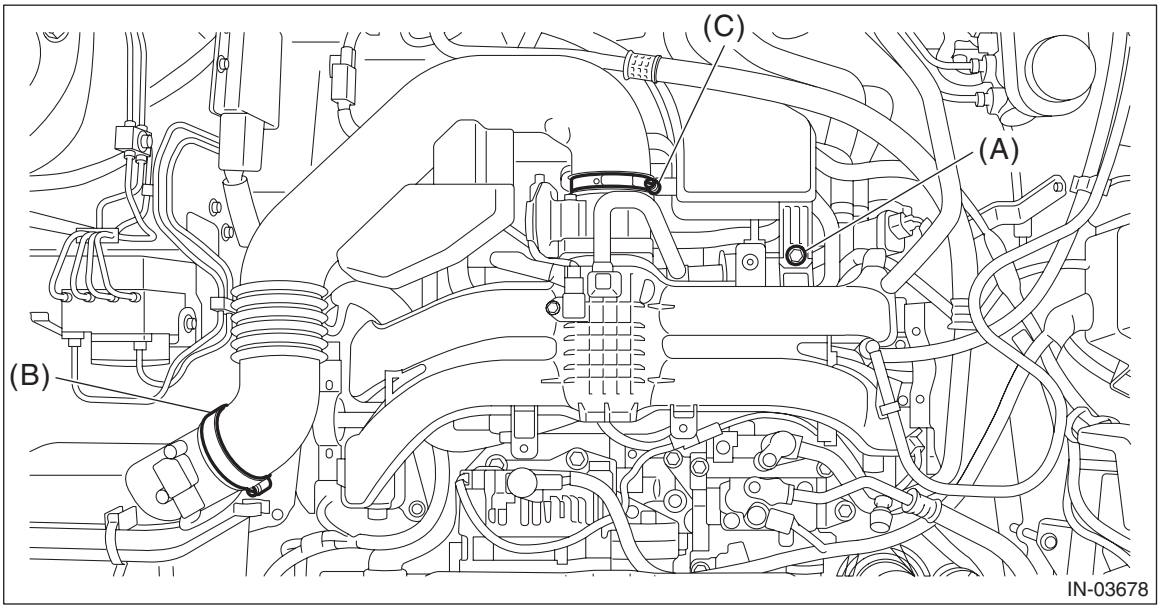

3) Remove the air intake boot from the throttle body, and move it to the left side wheel apron.

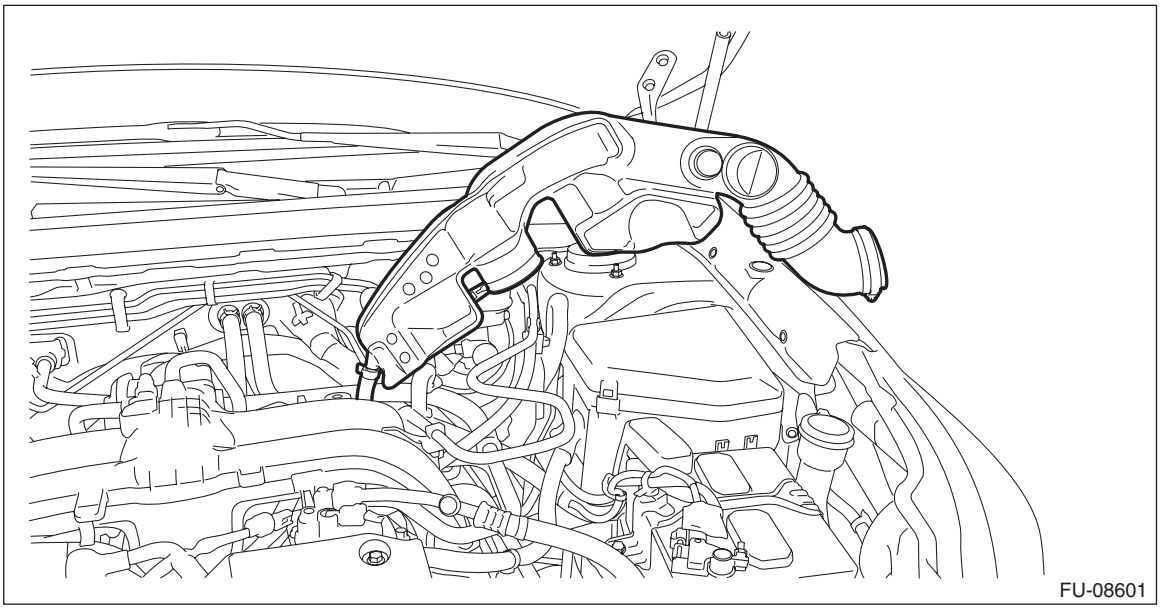

4) Disconnect the transmission radio ground terminal and transmission harness connector, and remove the harness clip.

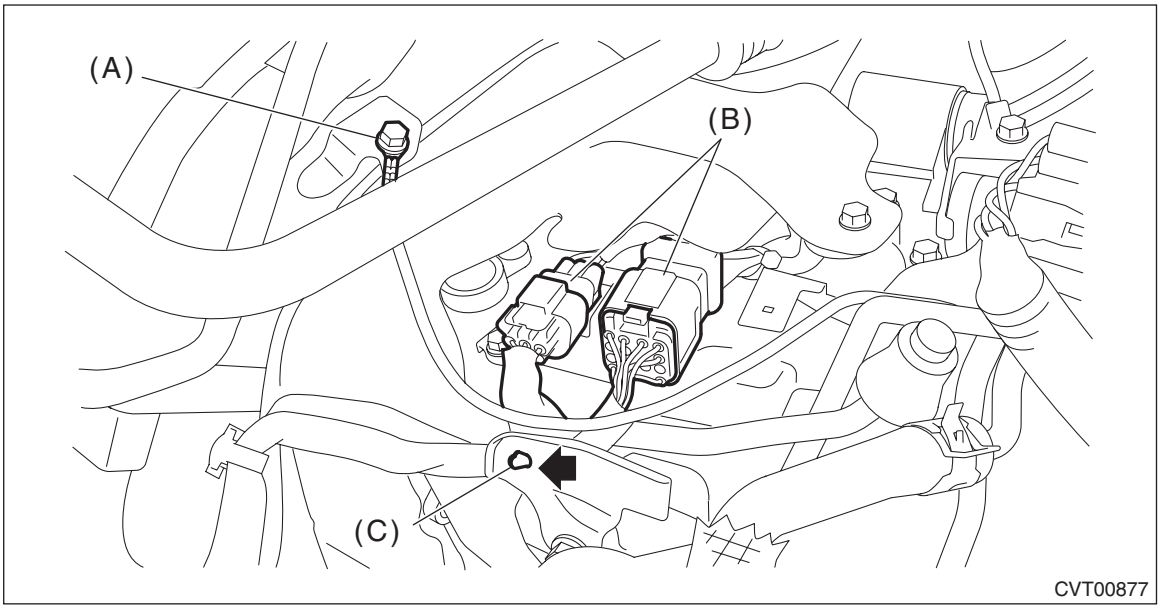

(A) Transmission radio ground terminal
(B) Transmission harness connectors
(C) Harness clip

5) Remove the transmission case cover.

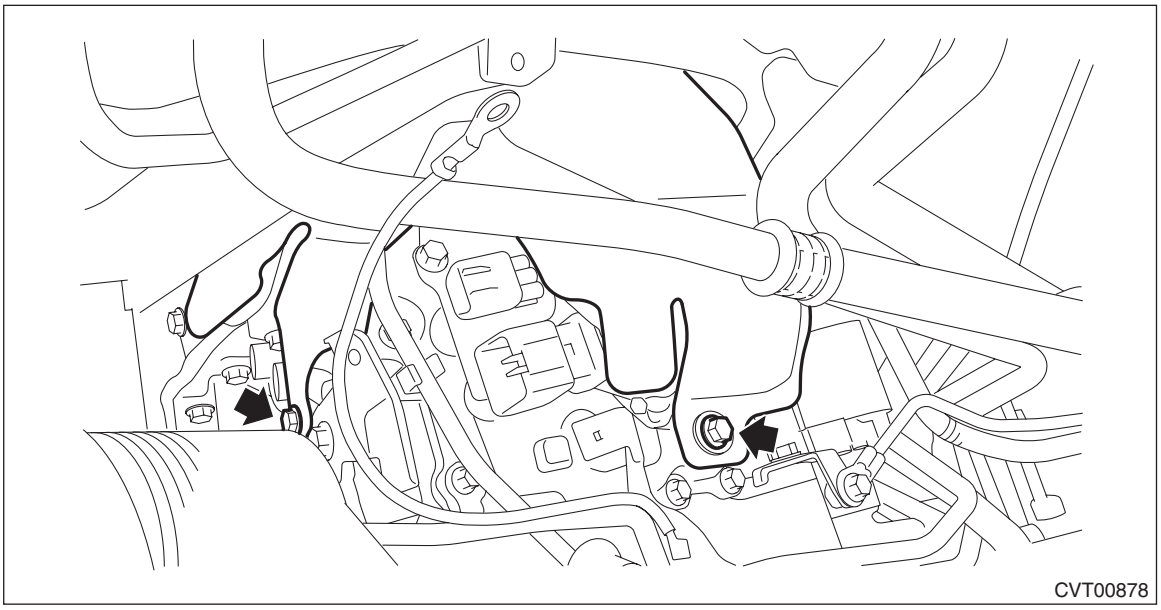

6) Move the lock lever in the arrow direction while pressing the lock button, and disconnect the connector.

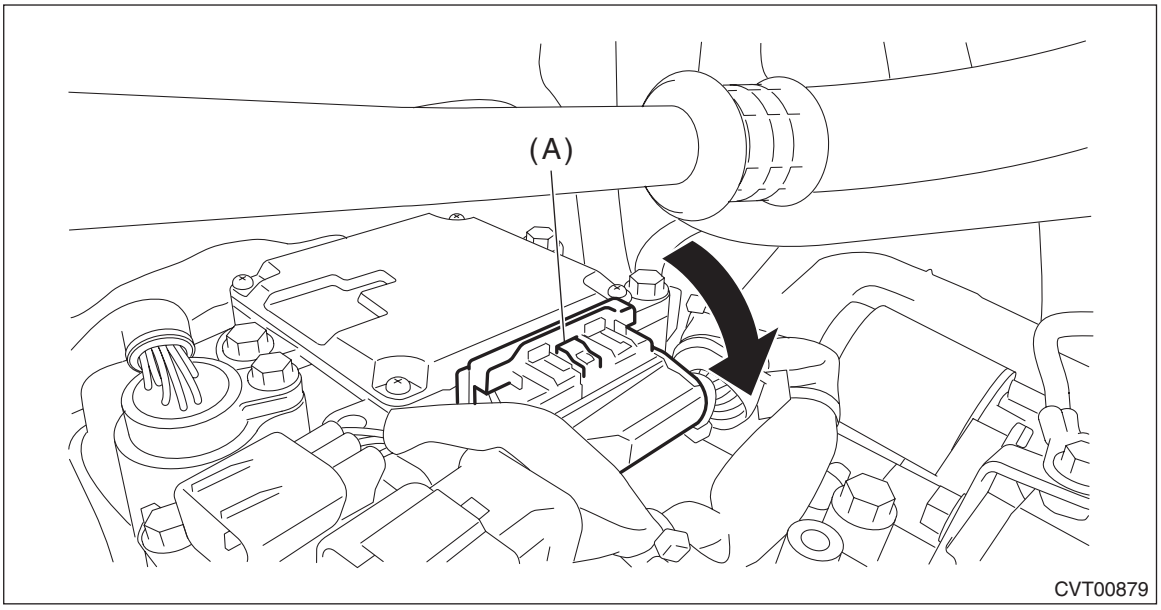

(A) Lock button

7) Set the ST between TCM and transmission harness. <Ref. to CVT(diag)-5, CAUTION, General Description.>
ST 18460AA040 CHECK BOARD
8) Connect the transmission radio ground terminal and transmission harness connector, and install the harness clip.

Tightening torque:
13 N·m (1.3 kgf-m, 9.6 ft-lb)
9) Install the air intake boot assembly. <Ref. to IN(H4DO)-10, INSTALLATION, Air Intake Boot.>
10) Connect the ground terminal to battery sensor. <Ref. to RC-4, BATTERY, NOTE, Repair Contents.>

11) Set the probe of oscilloscope to the check board connector.

Connector & terminal:
(B54) No. 14 (+) — No. 42 (–):

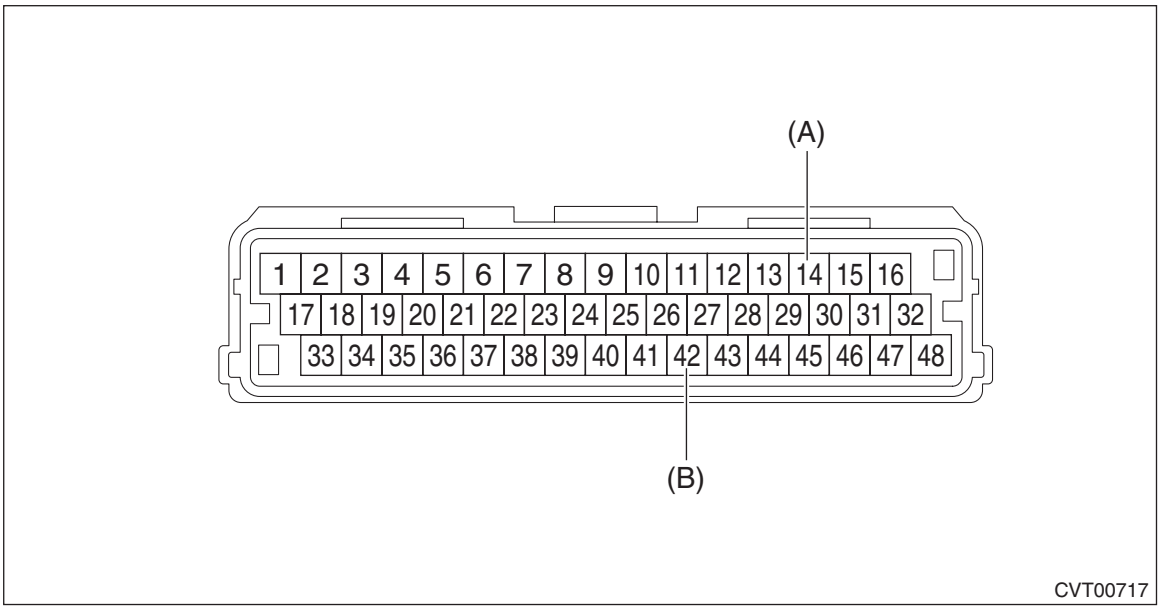

(A) + probe
(B) – probe

12) Start and warm up the engine.
13) Lift up the vehicle.

CAUTION:
Lift up the vehicle until the tire bottom is 0.3 m (0.98 ft) or more above the ground.
14) Shift the select lever to “D” range.
15) Check the waveform and output voltage of the primary speed sensor with engine idling.

NOTE:
The waveform cycle changes as the speed changes.

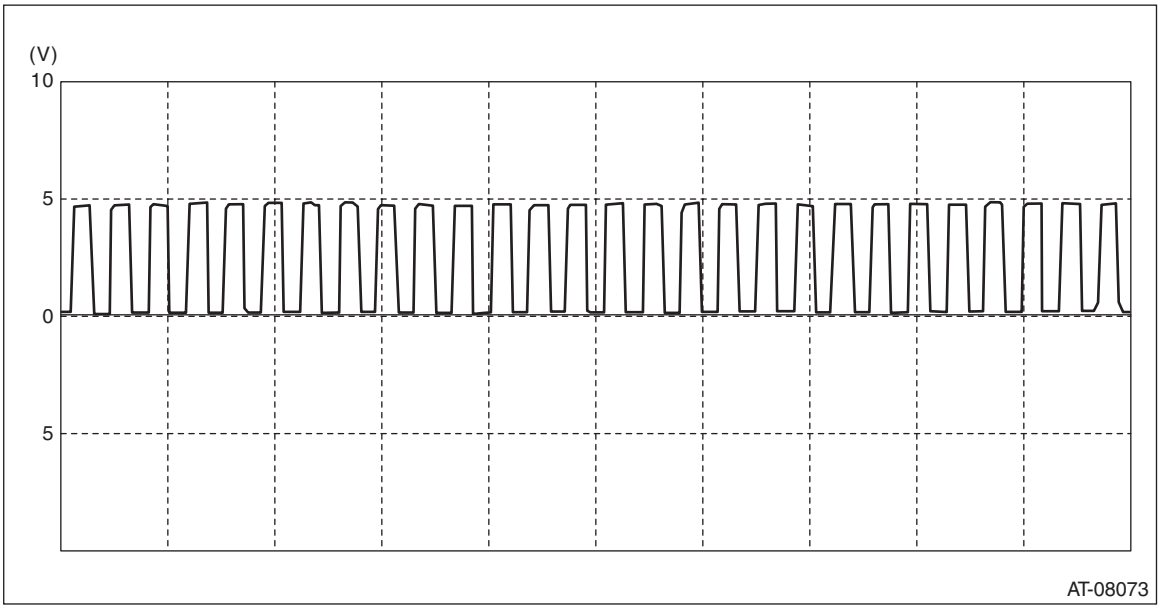

18.Secondary Pressure Sensor

A: REMOVAL

CAUTION:
• Be sure to prevent water or oil from contacting the connector terminal of secondary pressure sensor. If adhesion occurs, replace with a new part.
• When secondary pressure sensor is removed, CVTF leaks. After installing the secondary pressure sensor, adjust the CVTF level.
1) Disconnect the ground terminal from battery sensor. <Ref. to RC-4, BATTERY, NOTE, Repair Contents.>
2) Lift up the vehicle.
3) Remove the secondary pressure sensor connector.
4) Remove the secondary pressure sensor.

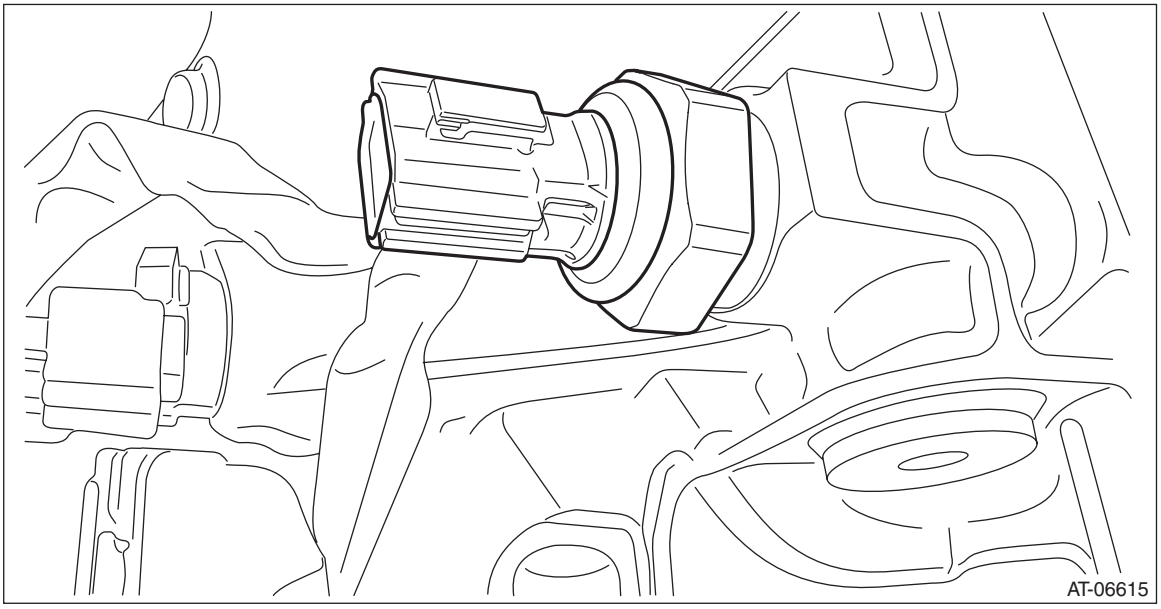

B: INSTALLATION

CAUTION:
• Be sure to prevent water or oil from contacting the connector terminal of secondary pressure sensor. If adhesion occurs, replace with a new part.
• After installing the secondary pressure sensor, adjust the CVTF level.
1) Install the secondary pressure sensor.

NOTE:
• Use new O-rings.
• Apply CVTF to the O-rings.

Tightening torque:
39 N·m (4.0 kgf-m, 28.8 ft-lb)
2) Connect the harness connector.
3) Lower the vehicle.
4) Connect the ground terminal to battery sensor. <Ref. to RC-4, BATTERY, NOTE, Repair Contents.>
5) Refill CVTF to adjust the CVTF level. <Ref. to CVT(TR580)-39, CVTF.>

C: INSPECTION

1) Start and warm up the engine.
2) Depress the brake pedal, and shift the select lever to “D” range.
3) Shift the select lever to “P” or “N” range.
4) Depress the brake pedal and hold it.
5) Check “secondary pressure sensor voltage” by using Subaru Select Monitor while the engine is idling. <Ref. to CVT(diag)-18, OPERATION, Subaru Select Monitor.>

Specification:
Approx. 0.8 V

6) Check “secondary pressure sensor voltage” with engine stopped and ignition switch turned on by using Subaru Select Monitor. <Ref. to CVT(diag)-18, OPERATION, Subaru Select Monitor.>

Specification:
Approx. 0.5 V

19.Oil Pan and Strainer

A: REMOVAL

CAUTION:
• Directly after the vehicle has been running or the engine has been idling for a long time, the CVTF is hot. Be careful not to burn yourself.
• Be careful not to spill CVTF on the exhaust pipe to prevent it from emitting smoke or causing a fire. If the CVTF adheres, wipe it off completely.

1) Lift up the vehicle.
2) Remove the under cover - front.
3) Clean the transmission exterior.
4) Remove the CVTF drain plug to drain CVTF.
5) Remove the oil pan.

CAUTION:
Be careful not to allow foreign matter such as dust or dirt to enter the oil pan.

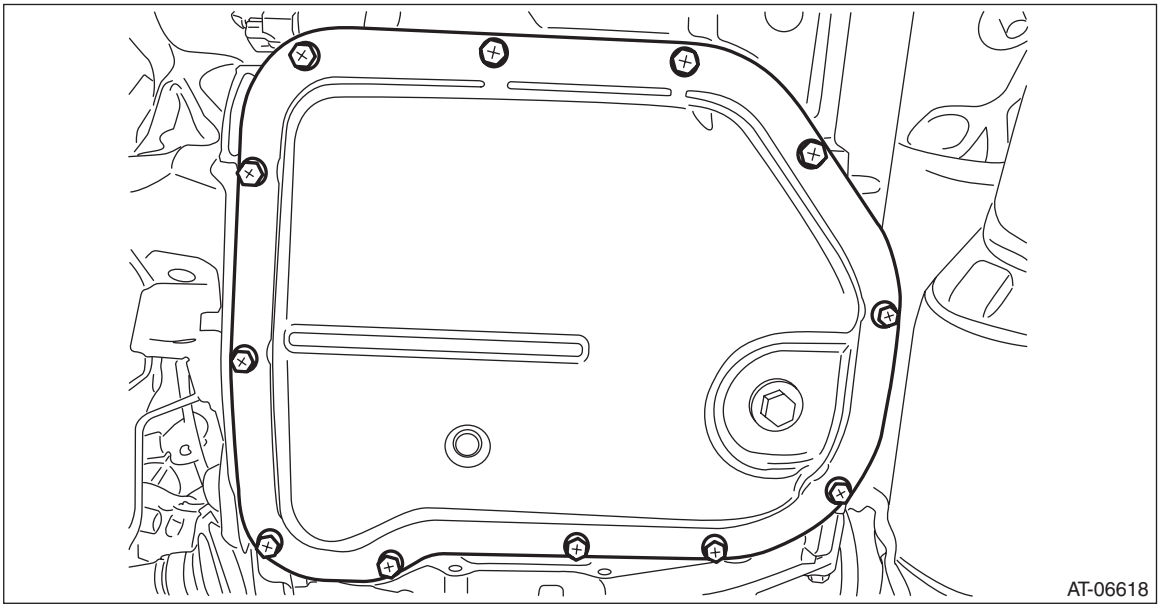

6) Remove the magnet.
7) Remove the oil strainer.

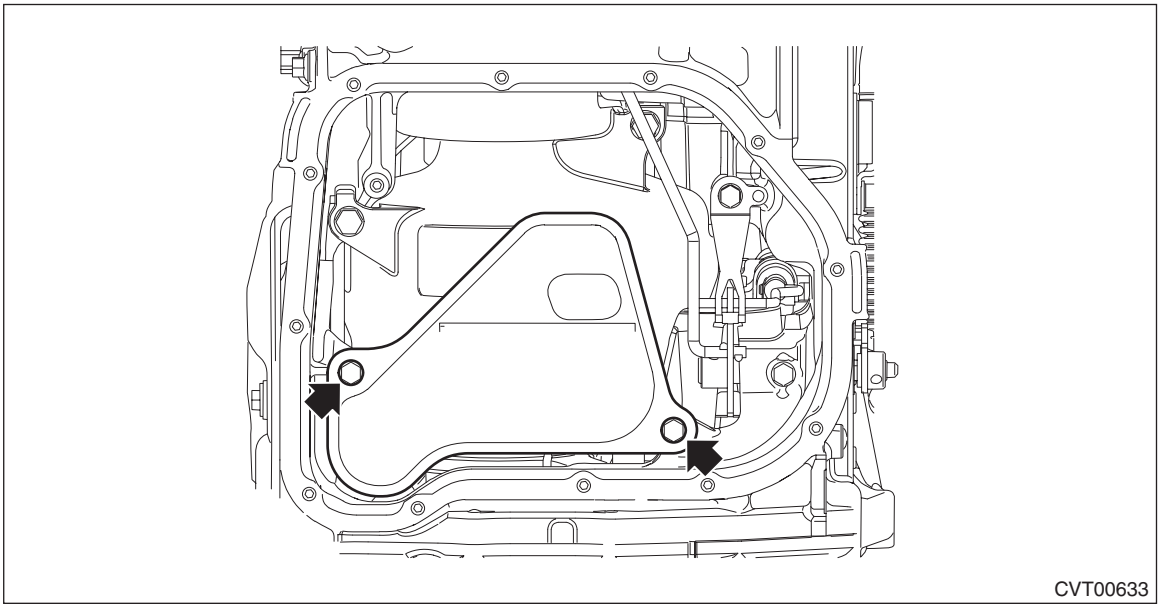

8) Remove the O-ring from oil strainer.

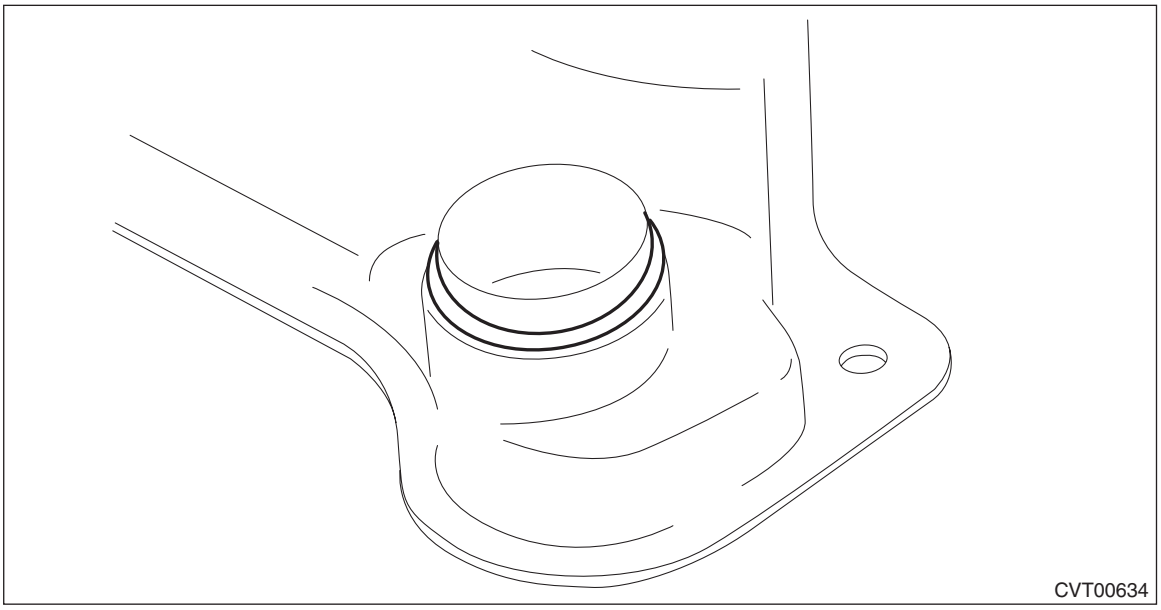

B: INSTALLATION

1) Clean the mating surface of oil pan and transmission case.
2) Install the O-rings.

NOTE:
- Use new O-rings.
- Apply CVTF to the O-rings.

3) Install the oil strainer.

Tightening torque:
9 N·m (0.9 kgf-m, 6.6 ft-lb)

4) Clean the magnet.
5) Attach the magnet at the specified position of the oil pan.
6) Apply liquid gasket all around the oil pan mating surface seamlessly.

Liquid gasket:
THREE BOND 1217B (Part No. K0877YA020) or equivalent

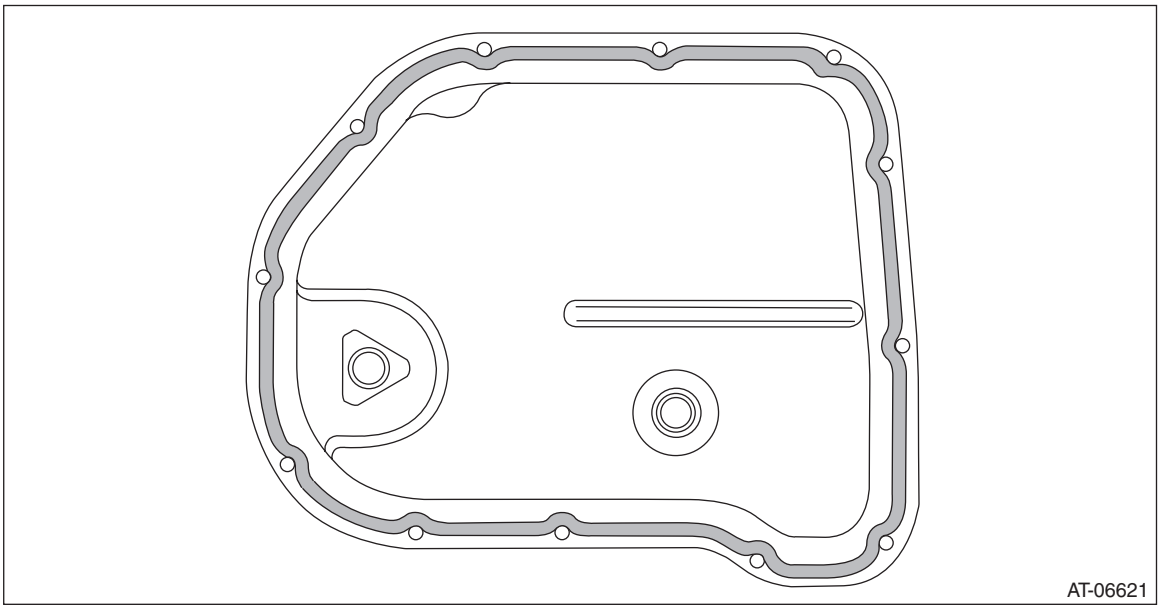

7) Install the oil pan by equally tightening the bolts.

Tightening torque:
5 N·m (0.5 kgf-m, 3.7 ft-lb)

8) Install the under cover - front.
9) Refill CVTF and adjust the level. <Ref. to CVT(TR580)-40, REPLACEMENT, CVTF.>

C: INSPECTION

- Check each part for damage or dust.
- Check oil strainer for clogging.

20.Control Valve Body

A: REMOVAL

CAUTION:
• Directly after the vehicle has been running or the engine has been idling for a long time, the CVTF is hot. Be careful not to burn yourself.
• Be careful not to spill CVTF on the exhaust pipe to prevent it from emitting smoke or causing a fire. If the CVTF adheres, wipe it off completely.
• Always clean the engine compartment before removal.

NOTE:
The control valve body is replaced as an assembly only, because it is a non-disassembly part.
1) Disconnect the ground terminal from battery sensor. <Ref. to RC-4, BATTERY, NOTE, Repair Contents.>
2) Remove the clip (A), and loosen the clamps (B) and (C).

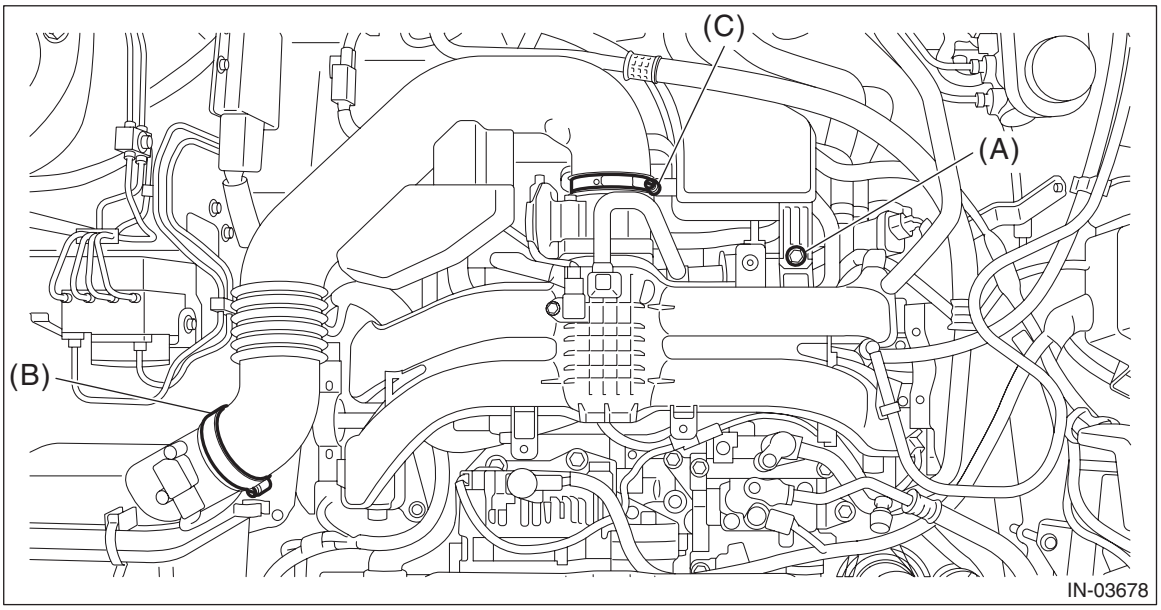

3) Remove the air intake boot from the throttle body, and move it to the left side wheel apron.

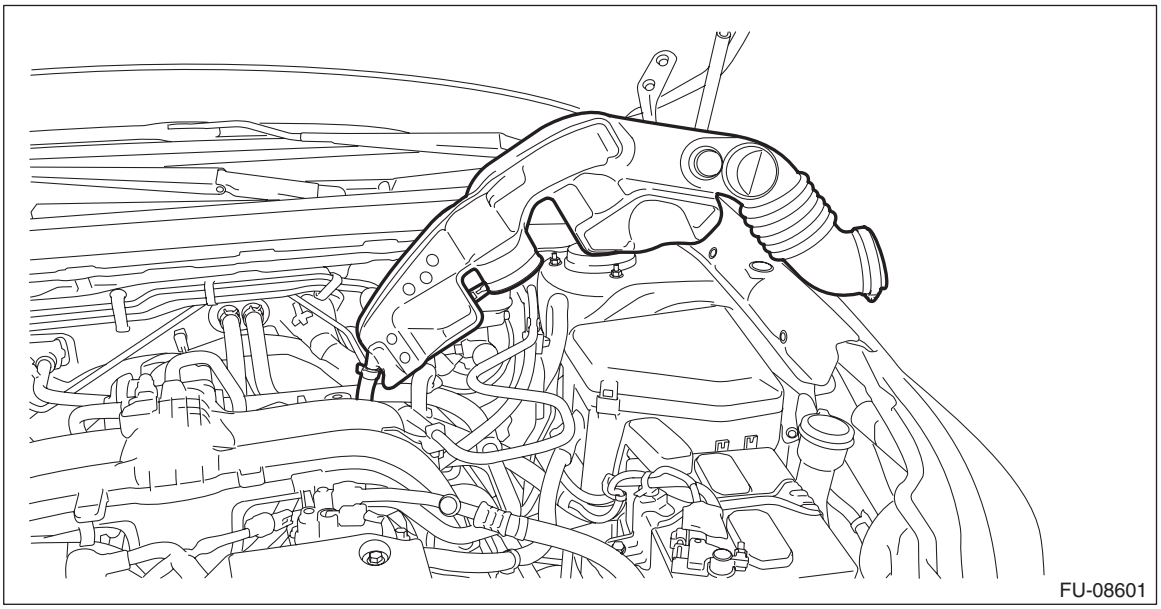

4) Disconnect the transmission radio ground terminal and transmission harness connector, and remove the harness clip.

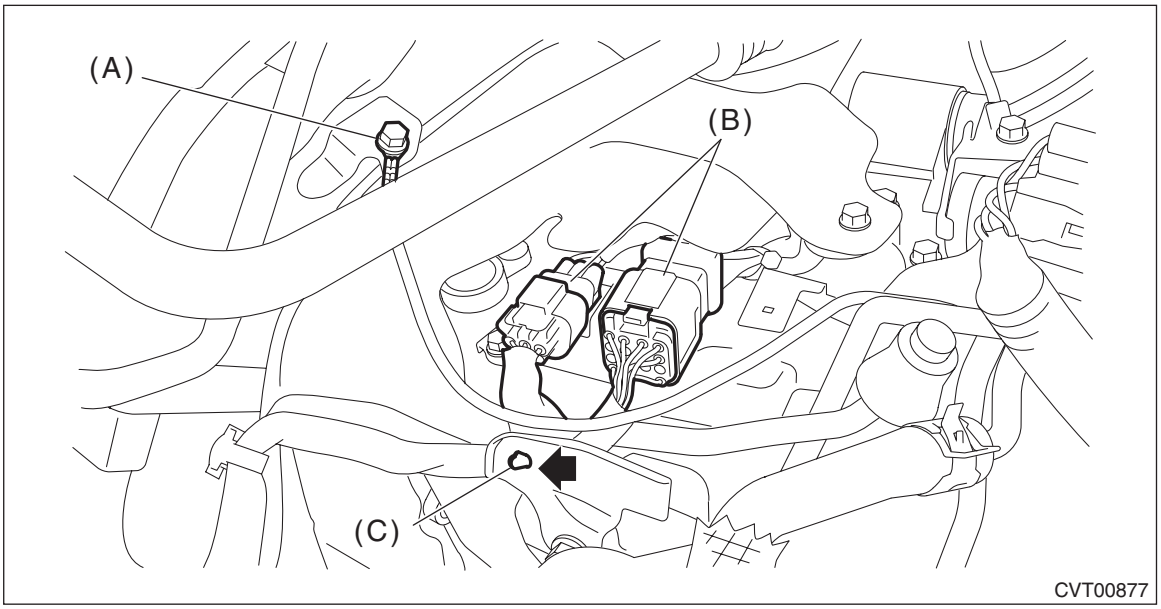

(A) Transmission radio ground terminal
(B) Transmission harness connectors
(C) Harness clip

5) Remove the transmission case cover.

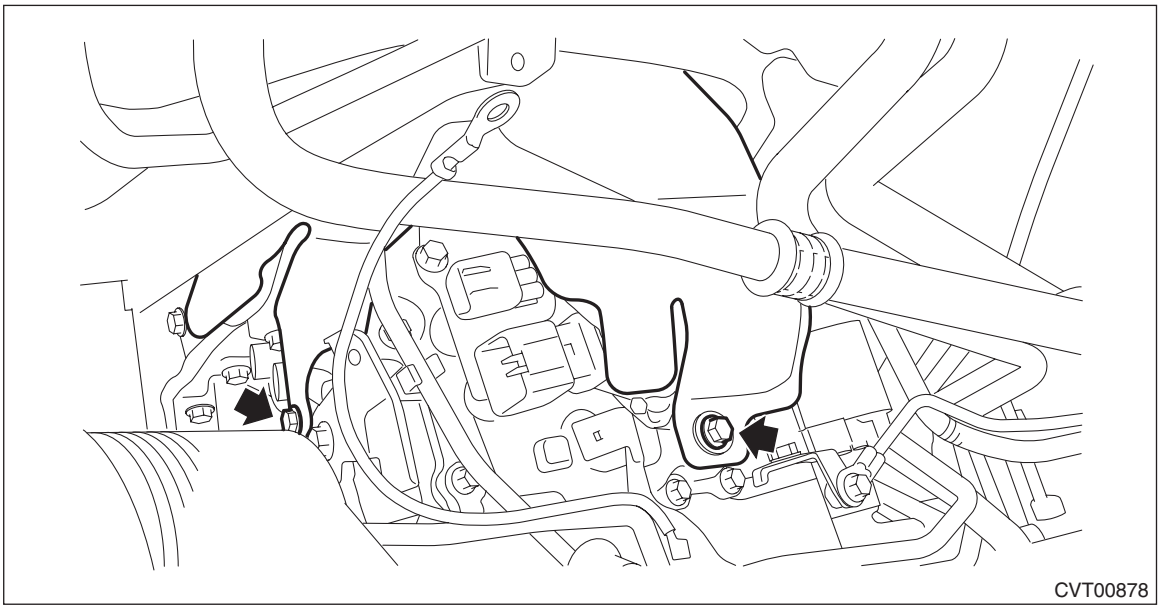

6) Detach the air breather hose.

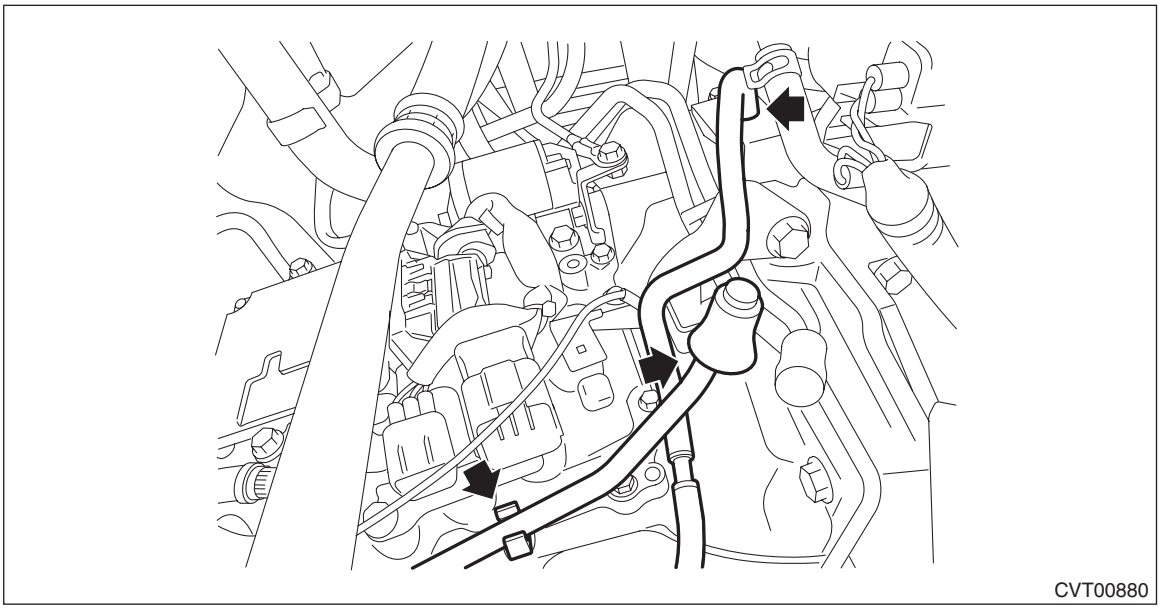

7) Remove the transmission hanger and transmission radio ground cord.

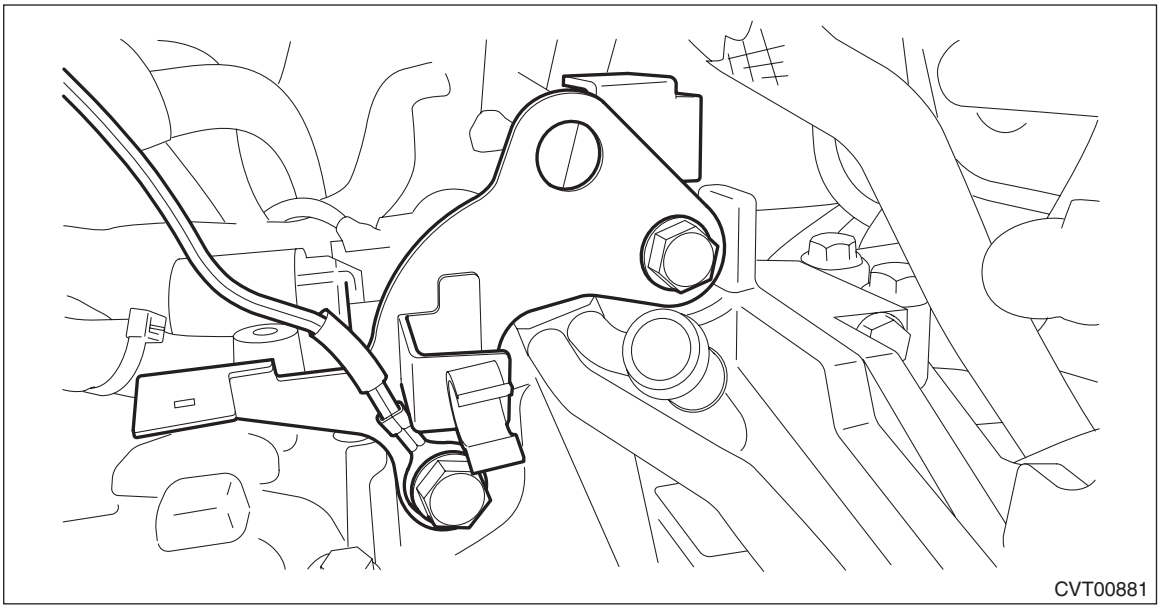

8) Remove the TCM. <Ref. to CVT(TR580)-159, REMOVAL, Transmission Control Module (TCM).>

9) Detach the transmission harness stay and ground terminal, and remove the harness clip.

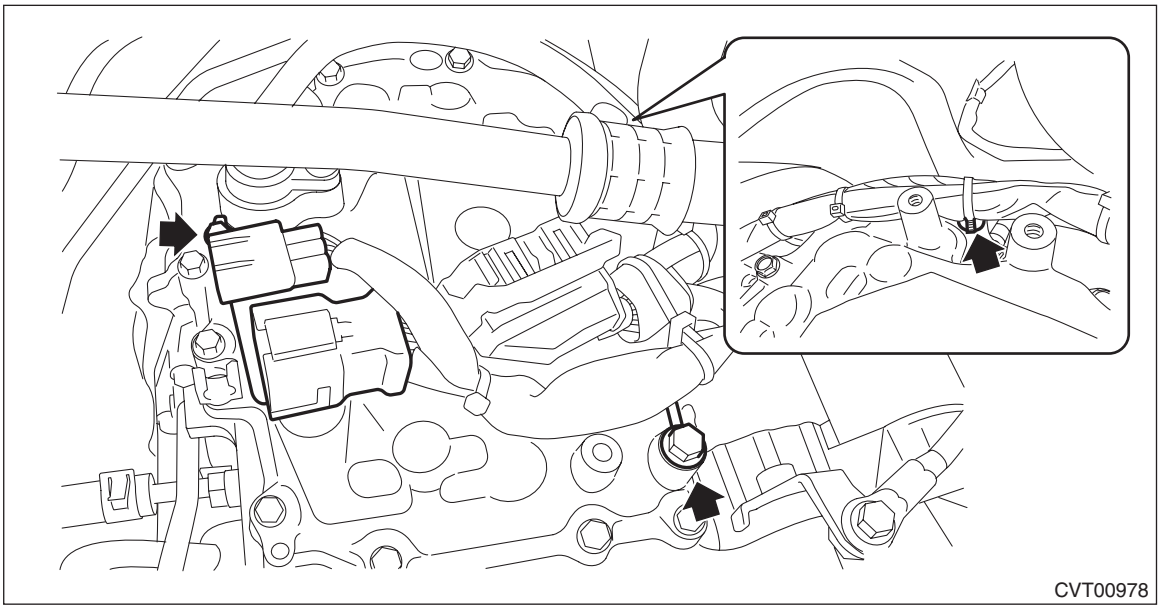

10) Remove the transmission harness connector from the harness stay.
11) Remove the TCM. <Ref. to CVT(TR580)-159, REMOVAL, Transmission Control Module (TCM).>
12) Remove the throttle body, and move it aside so that it will not interfere with the removal of the control valve. <Ref. to FU(H4DO)-14, REMOVAL, Throttle Body.>

NOTE:
Do not remove the preheater hose.
13) Clean the transmission exterior.
14) Fix the ST with tape, and set the ST to the vehicle.

NOTE:
When replacing the control valve body, the sheet is included in the control valve body for repairs.
ST 18761AA010 SHEET SPECIAL TOOL

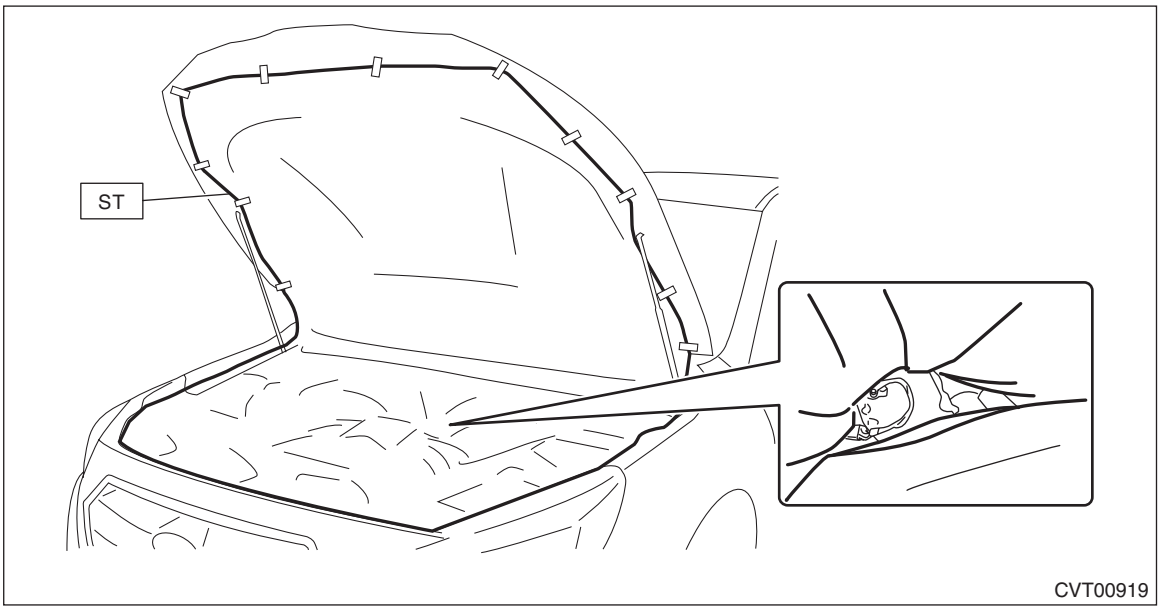

15) Remove the valve cover and gasket.

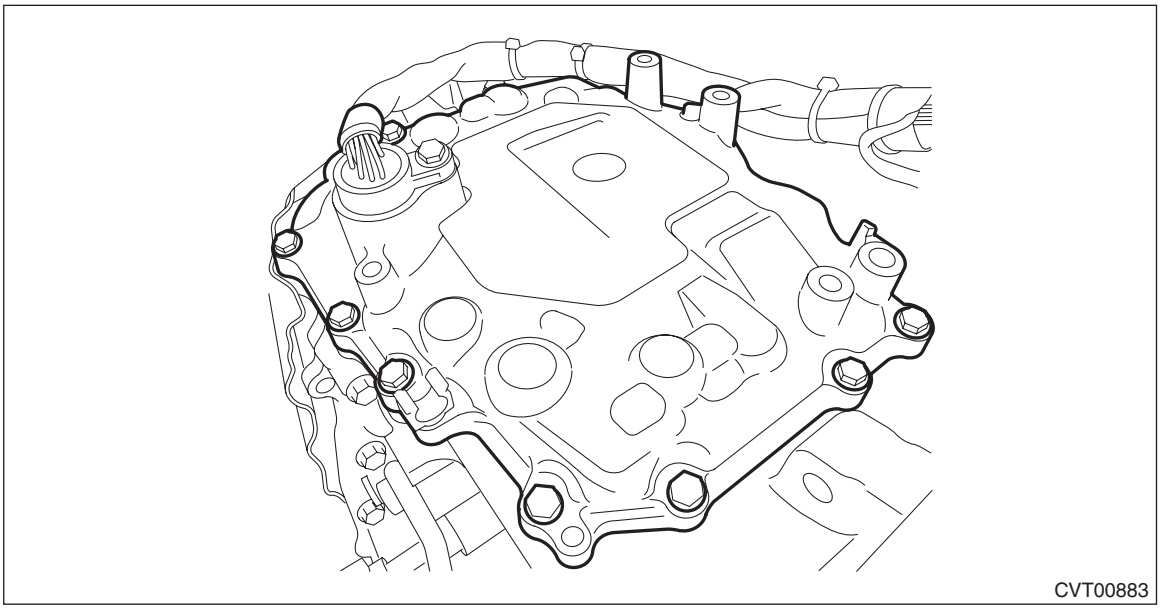
CVT00883

16) Disconnect the harness connector from the control valve body.
17) Remove the transmission harness.

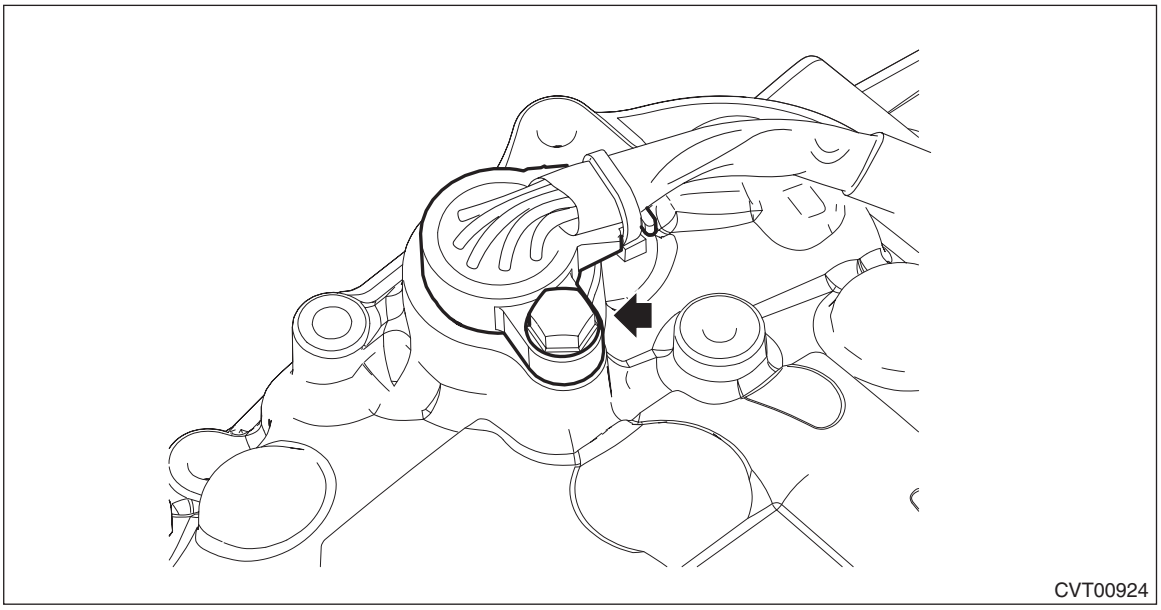
CVT00924

18) Remove the O-rings.

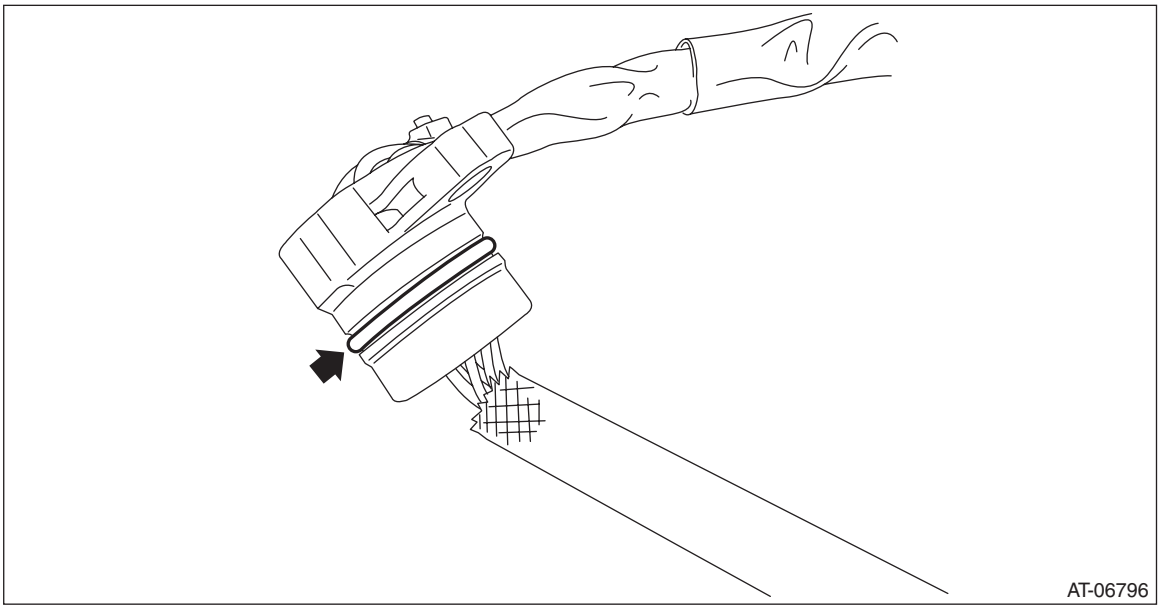

19) Remove the control valve body.

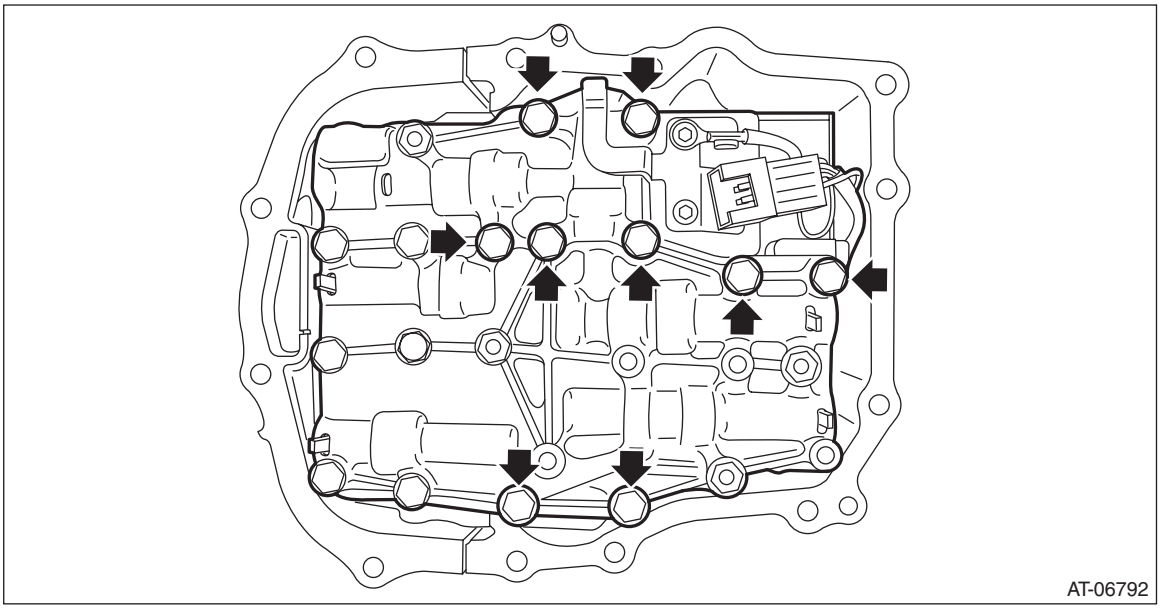

20) Remove the O-rings.

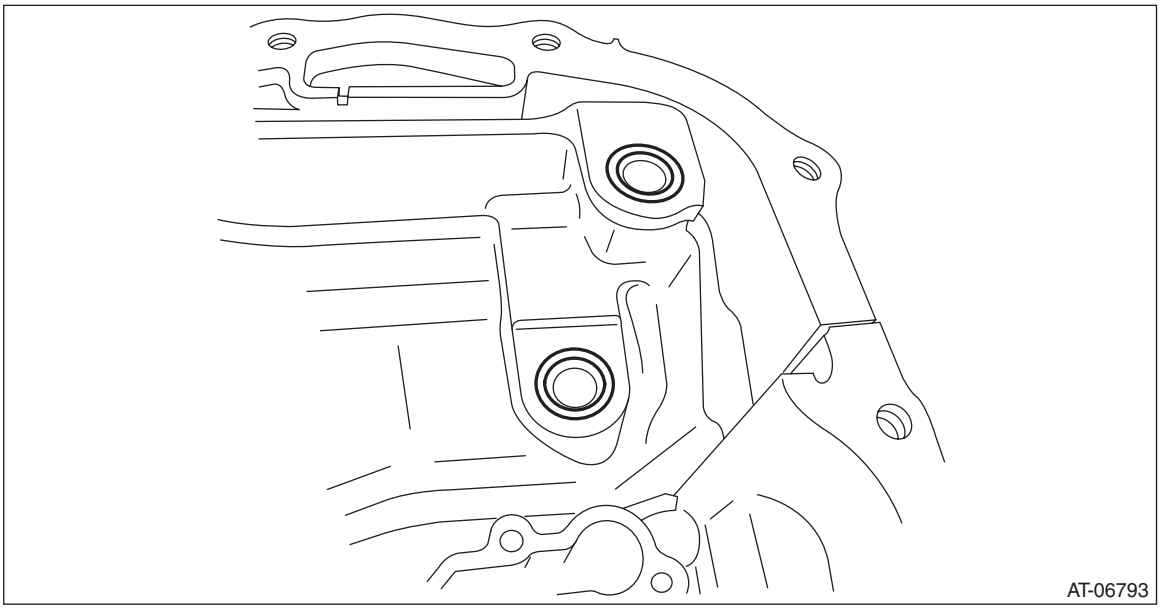

B: INSTALLATION

1) Clean the mating surface of valve cover and transmission side.

CAUTION:
When cleaning the mating surface of the transmission side, be careful not to allow any dust, foreign matter and used liquid gasket to enter the transmission.

2) Check the control valve body for dust and other foreign matter.
3) Install the O-rings.

NOTE:
- Use new O-rings.
- Apply CVTF to the O-rings.

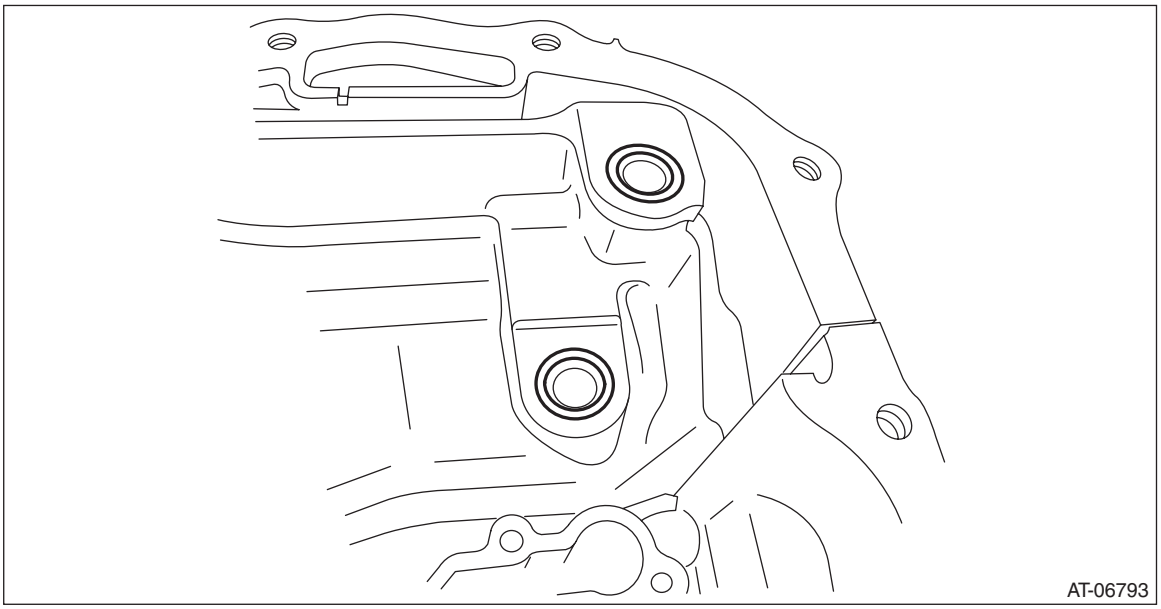

4) Install the control valve body.
(1) Install the control valve body.

CAUTION:
- **Do not damage the O-ring.**
- **Perform installation so that the O-ring is not displaced.**

(2) Temporarily tighten the bolt (A: silver).

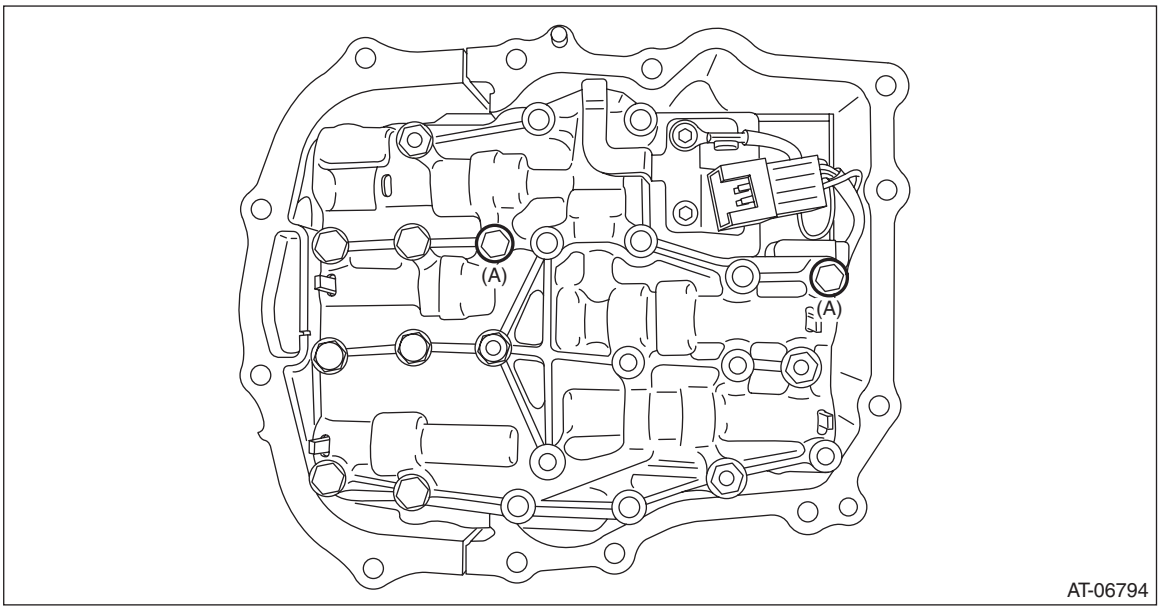

(3) Attach the bolt (B).

Tightening torque:
9 N·m (0.9 kgf-m, 6.6 ft-lb)

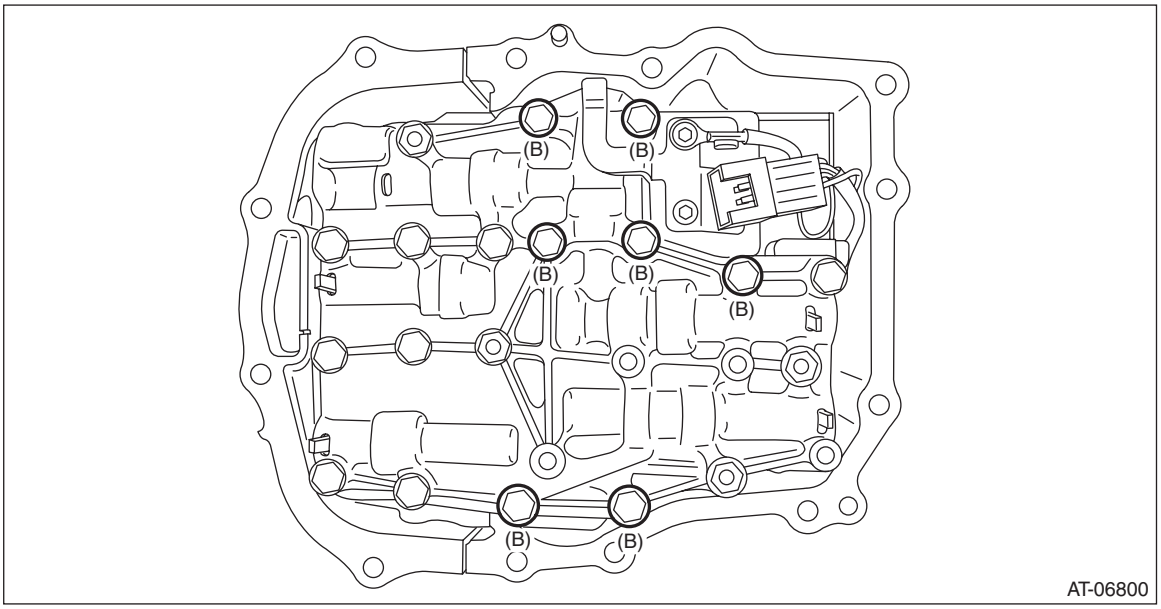

(4) Tighten the bolt (A: silver).

Tightening torque:
9 N·m (0.9 kgf-m, 6.6 ft-lb)

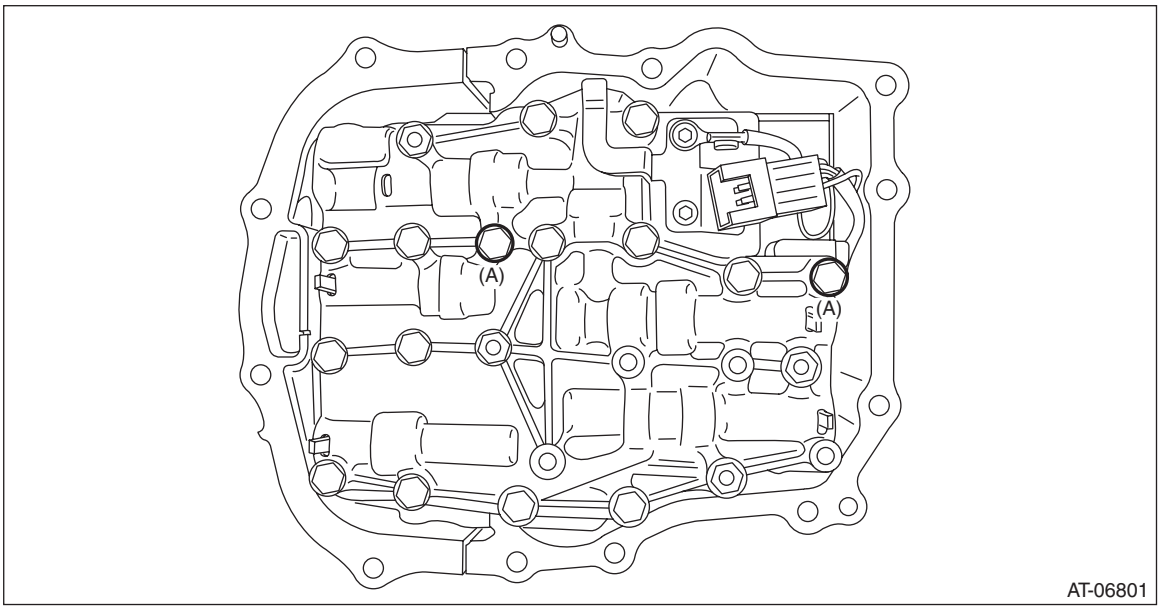

5) Install the O-rings.

NOTE:
- Use new O-rings.
- Apply CVTF to the O-rings.

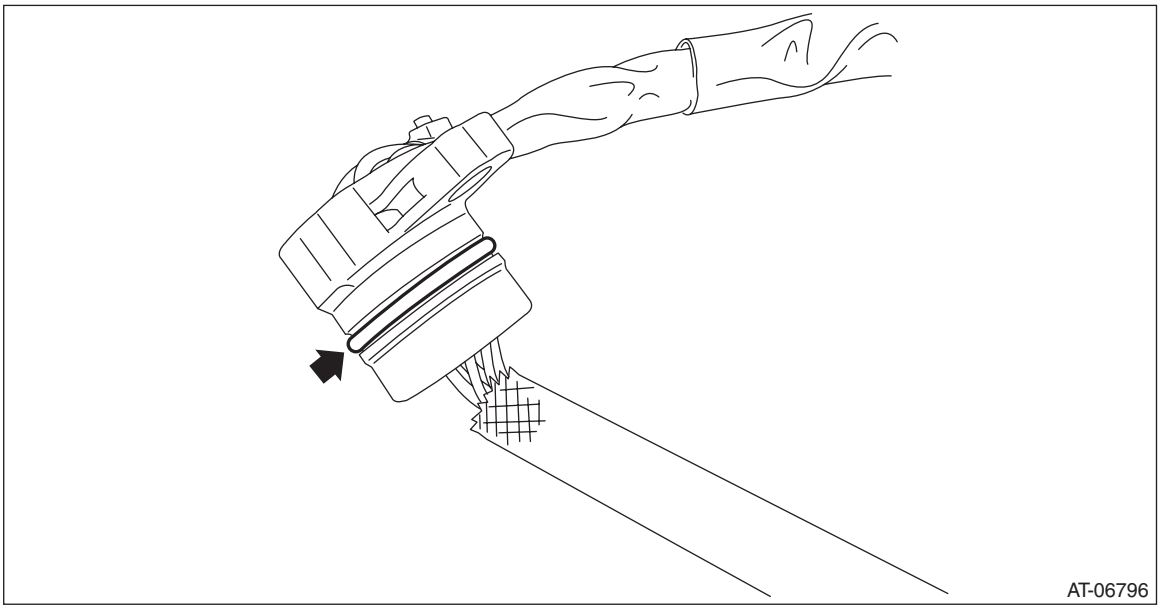

6) Install the transmission harness.

Tightening torque:
7 N·m (0.7 kgf-m, 5.2 ft-lb)

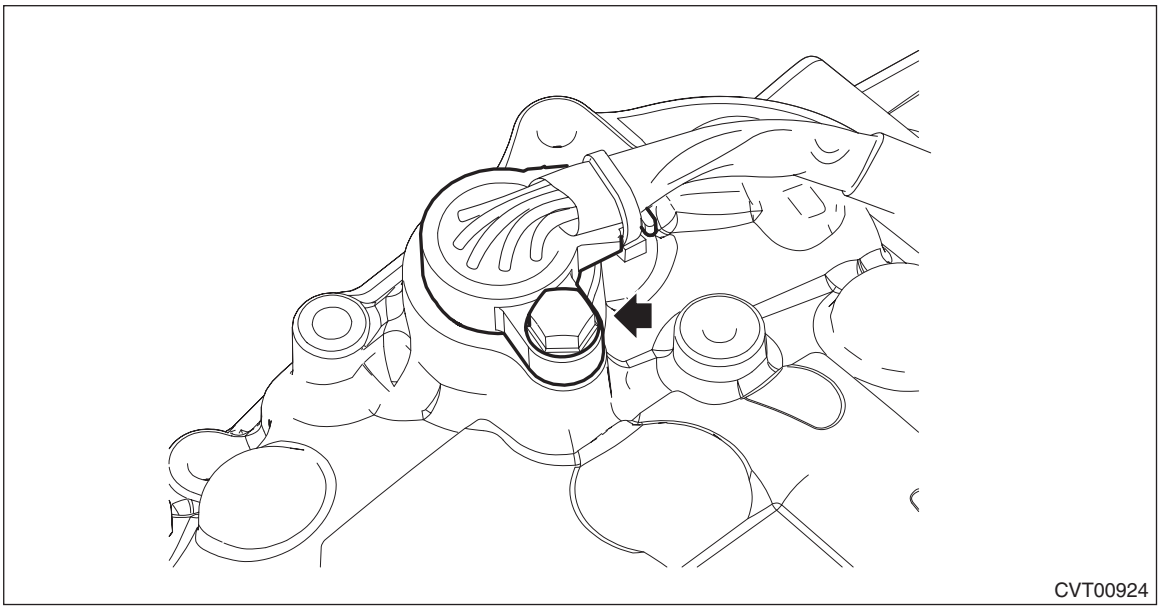

7) Attach the gasket.

NOTE:
Use a new gasket.

8) Apply liquid gasket to the oval hole of gasket.

Liquid gasket:
THREE BOND 1215B or equivalent

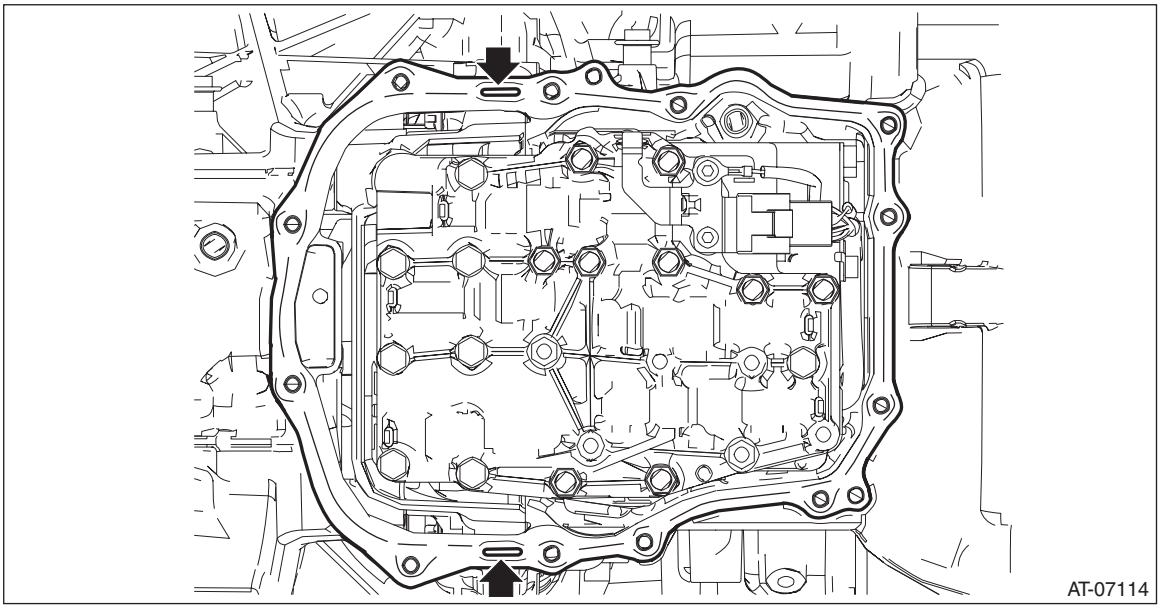

9) Connect the transmission harness connector to the control valve body, and install the valve cover.

CAUTION:
Be careful not to catch the sheet of the ST.

Tightening torque:
8 N·m (0.8 kgf-m, 5.9 ft-lb)

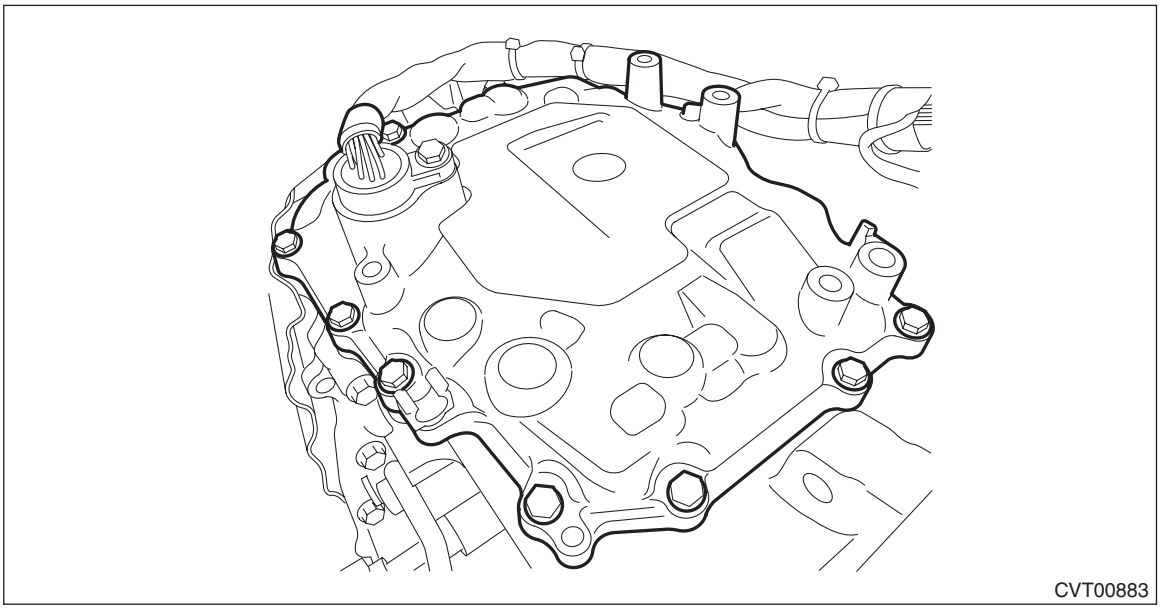

10) Remove the ST (SHEET SPECIAL TOOL).
11) Install the throttle body. <Ref. to FU(H4DO)-15, INSTALLATION, Throttle Body.>
12) Install the transmission harness connector to the harness stay.
13) Install the transmission harness clip, and install the transmission harness stay and transmission ground terminal.

Tightening torque:
T1: 7 N·m (0.7 kgf-m, 5.2 ft-lb)
T2: 14 N·m (1.4 kgf-m, 10.3 ft-lb)

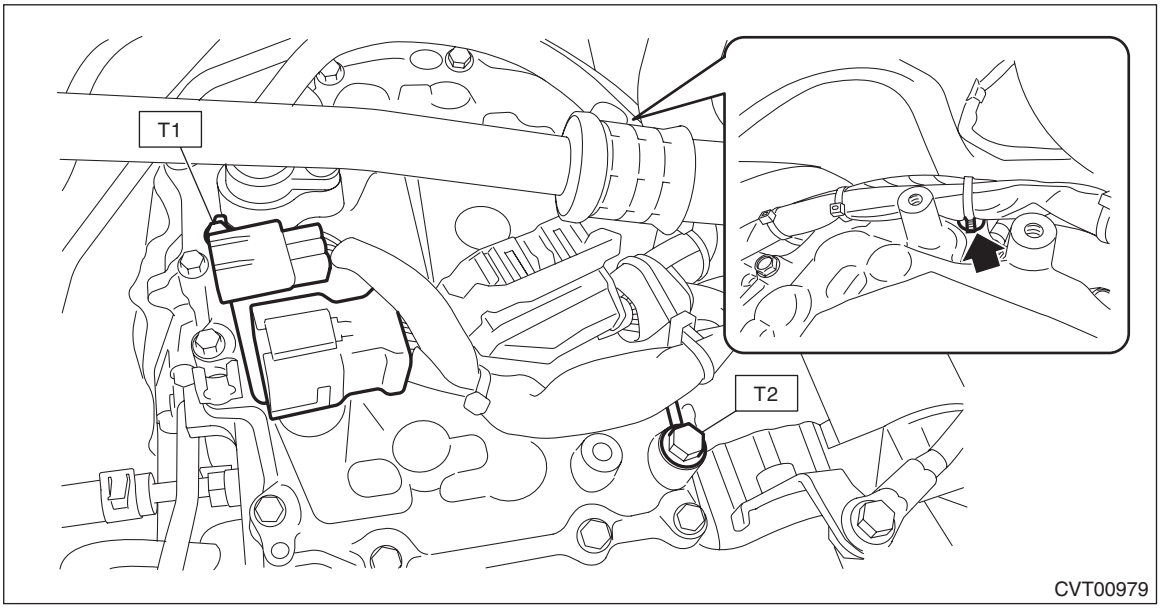

14) Install the TCM. <Ref. to CVT(TR580)-162, INSTALLATION, Transmission Control Module (TCM).>

15) Insert the transmission case cover (small) between transmission case cover (large) and transmission to install.

NOTE:
When inserting, be careful that the insulator inside transmission case cover is not turned over.

Tightening torque:
7 N·m (0.7 kgf-m, 5.3 ft-lb)

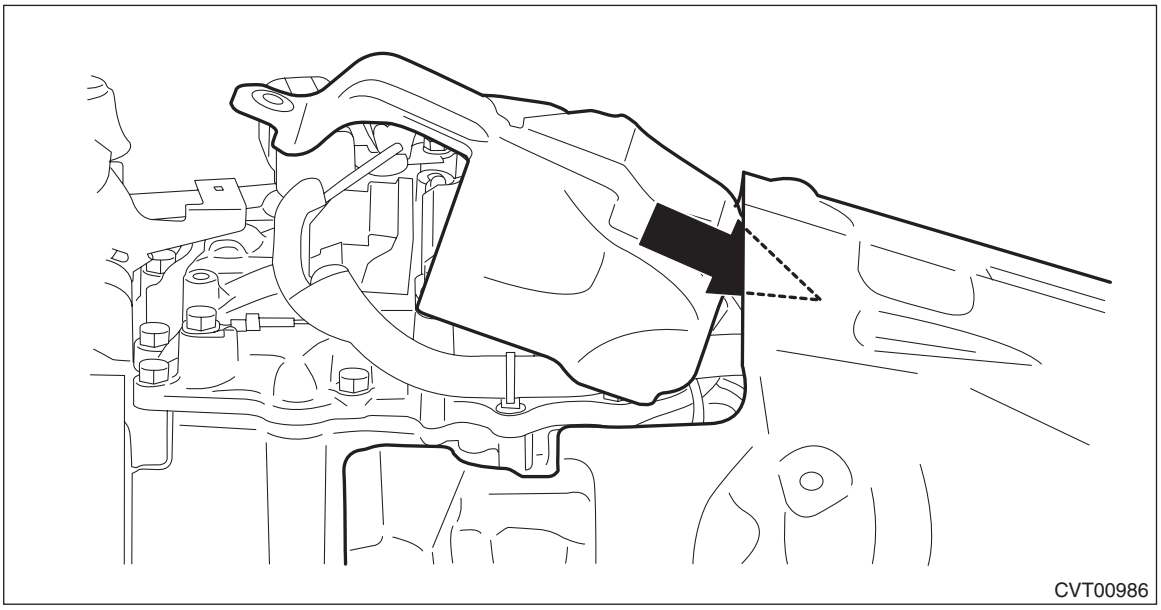
CVT00986

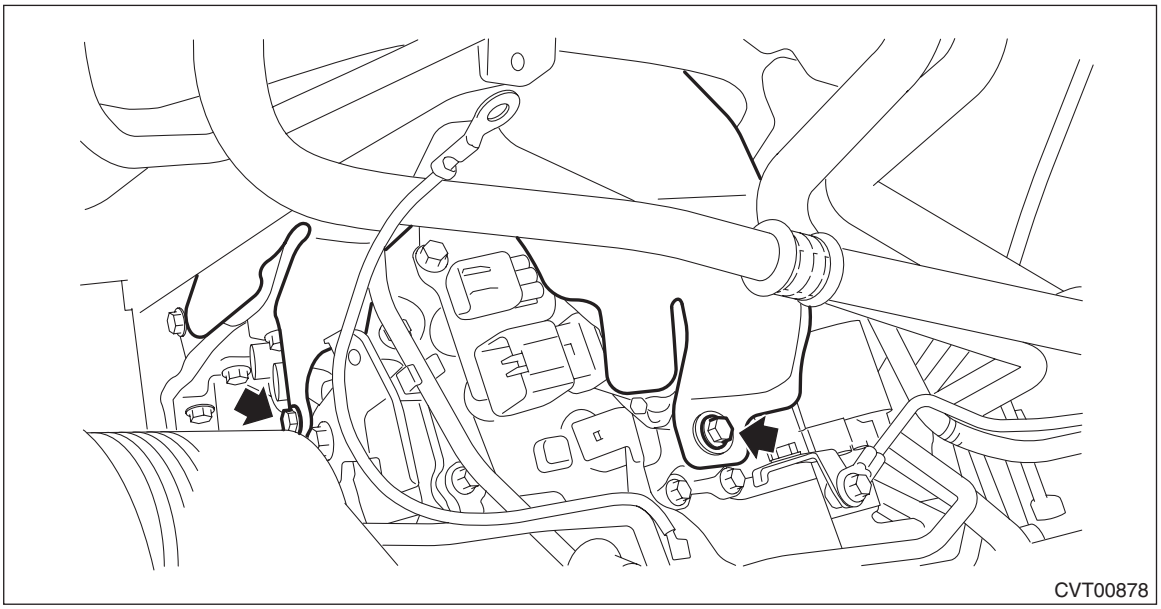
CVT00878

16) Install the transmission hanger and transmission radio ground cord.

Tightening torque:
41 N·m (4.2 kgf-m, 30.2 ft-lb)

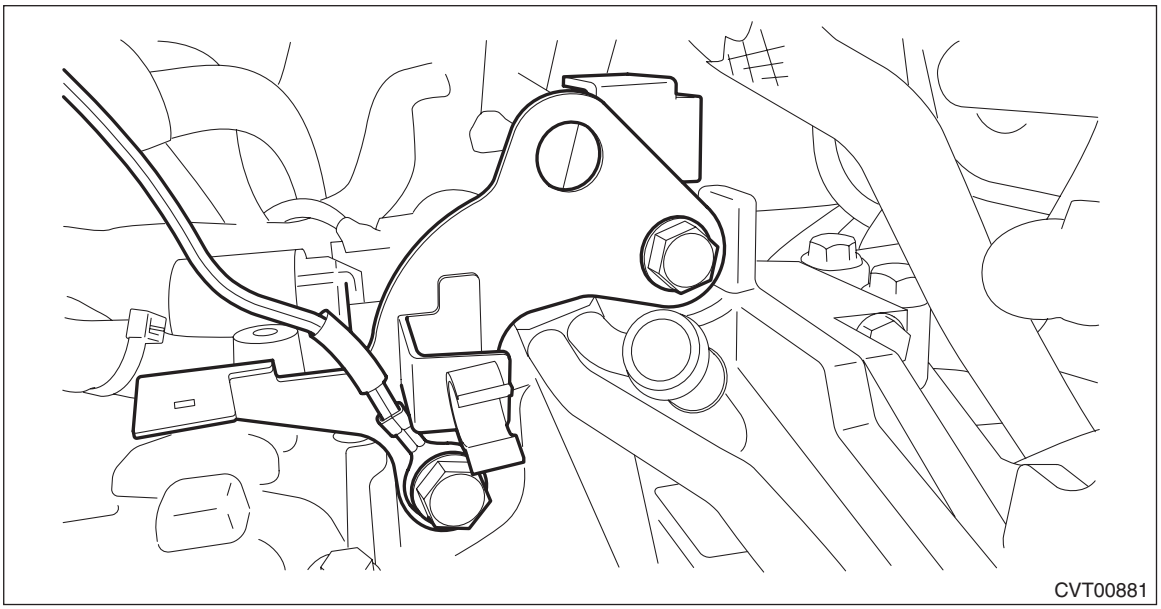

17) Install the air breather hose. <Ref. to CVT(TR580)-192, INSTALLATION, Air Breather Hose.>
18) Connect the transmission radio ground terminal and transmission harness connector, and install the harness clip.

Tightening torque:
13 N·m (1.3 kgf-m, 9.6 ft-lb)

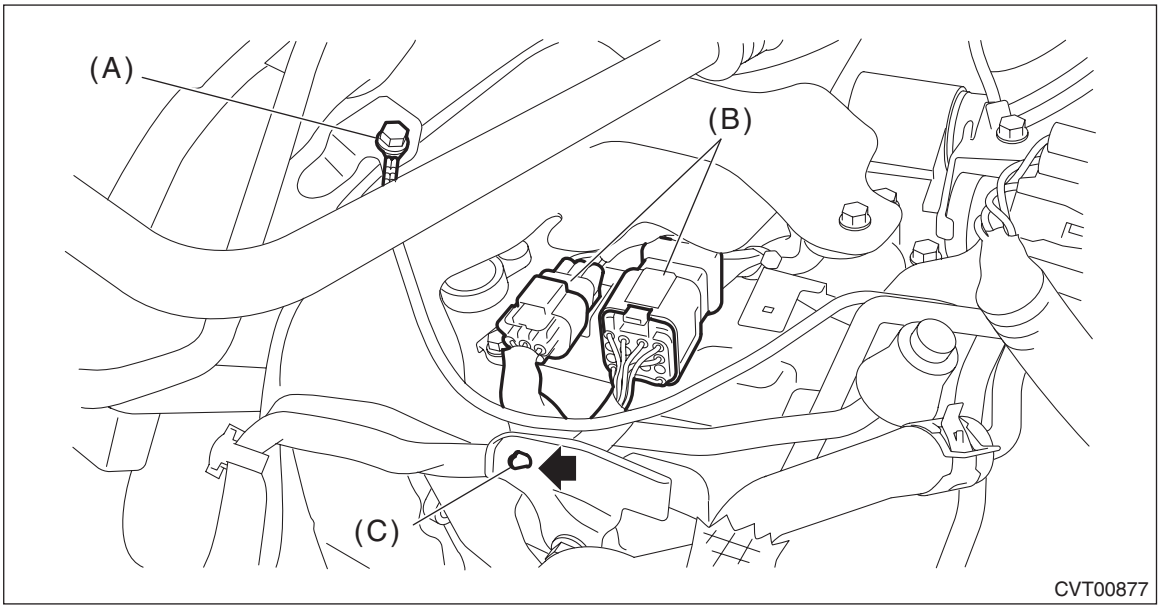

(A) Transmission radio ground terminal
(B) Transmission harness connectors
(C) Harness clip

19) Install the air intake boot assembly. <Ref. to IN(H4DO)-10, INSTALLATION, Air Intake Boot.>
20) Connect the ground terminal to battery sensor. <Ref. to RC-4, BATTERY, NOTE, Repair Contents.>
21) Adjust the CVTF level. <Ref. to CVT(TR580)-39, ADJUSTMENT, CVTF.>
22) Perform the operation of AT learning mode. <Ref. to CVT(diag)-33, Learning Control.>

C: INSPECTION

- Check each part for damage or dust.
- Measure the resistance of each solenoid, sensor and ground wire.

NOTE:
Measurement should be performed at a temperature of 20°C (68°F).

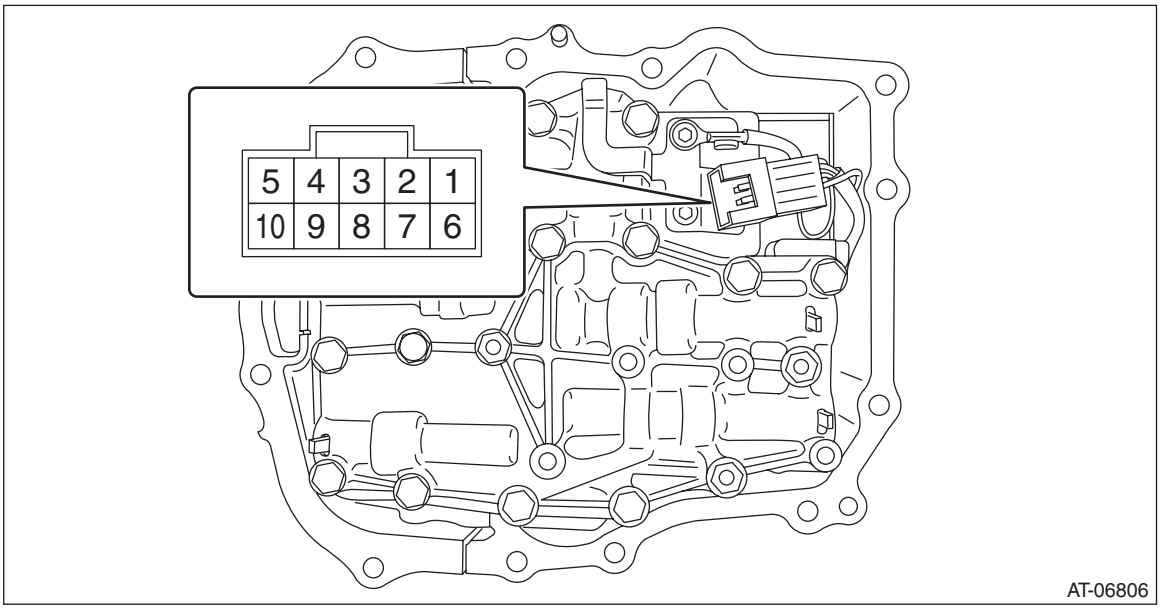

• Solenoid

Solenoid	Terminal No.	Standard
Primary UP solenoid	No. 2 — control valve body	Approx. 10 — 13.5 Ω
Secondary solenoid	No. 3 — control valve body	Approx. 5 — 7 Ω
F&R clutch solenoid	No. 4 — control valve body	Approx. 4 — 6 Ω
Primary DOWN solenoid	No. 7 — control valve body	Approx. 10 — 13.5 Ω
Lock-up duty solenoid	No. 9 — control valve body	Approx. 10 — 13.5 Ω
AWD solenoid	No. 10 — control valve body	Approx. 2 — 4.5 Ω

• Oil temperature sensor

Sensor	Terminal No.	Standard At 20°C (68°F)
Oil temperature sensor	No. 1 — No. 6	Approx. 2.5 kΩ

• Transmission ground

Terminal No.	Standard
No. 8 — control valve body	Less than 1 Ω

21.Transmission Harness

A: REMOVAL

1) Remove the transmission assembly. <Ref. to CVT(TR580)-63, REMOVAL, Automatic Transmission Assembly.>
2) Remove the transmission case cover.

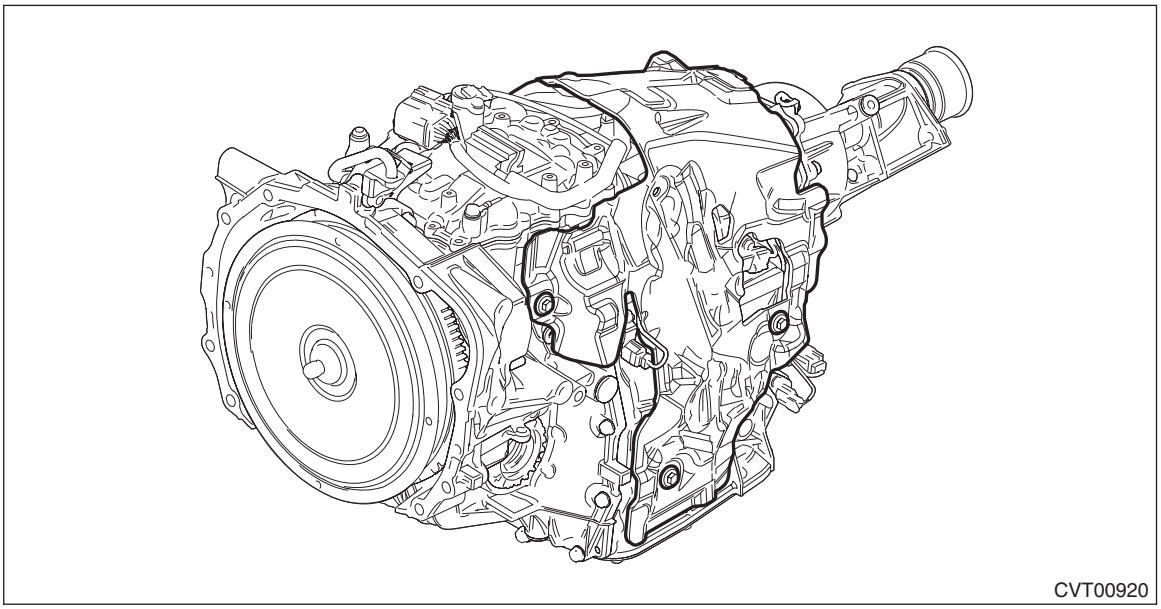
CVT00920

3) Remove the air breather hose. <Ref. to CVT(TR580)-190, REMOVAL, Air Breather Hose.>
4) Remove the transmission hanger and transmission radio ground cord.
5) Disconnect the harness connector from the turbine speed sensor, primary speed sensor, secondary speed sensor and secondary pressure sensor.

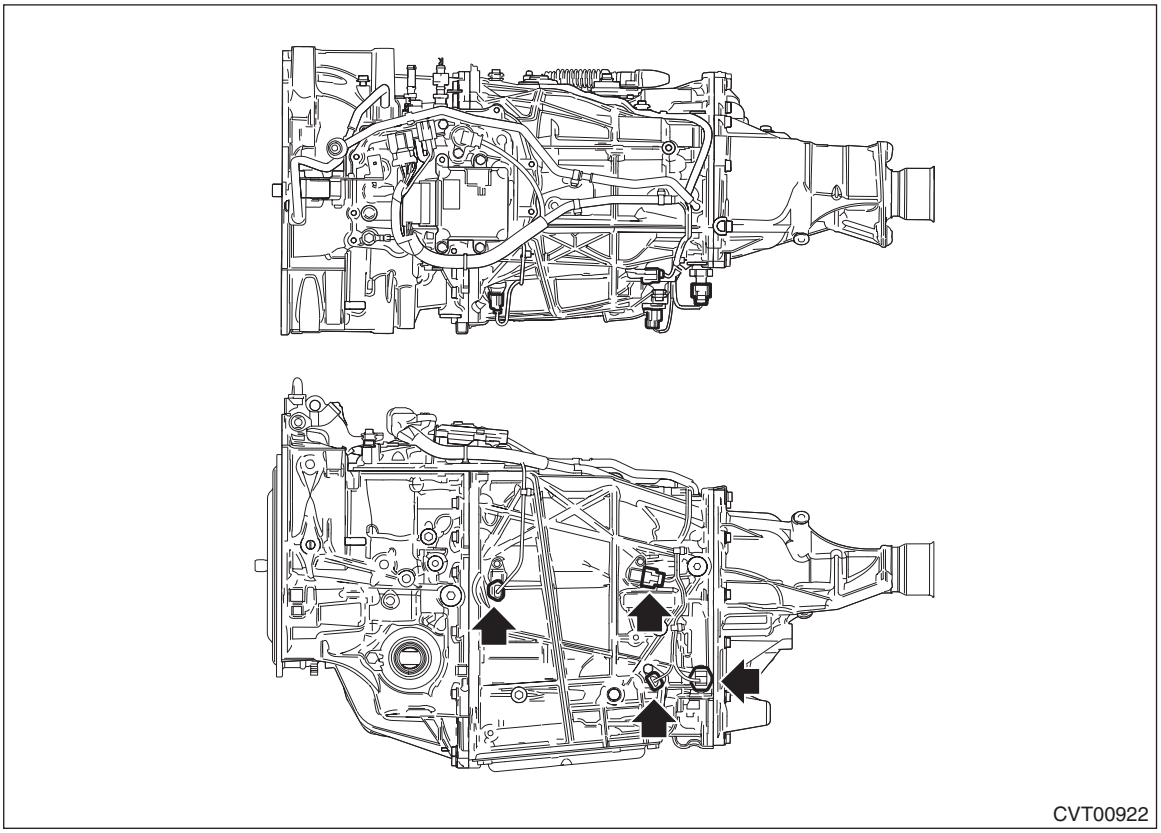
CVT00922

6) Disconnect the harness connector from the inhibitor switch.

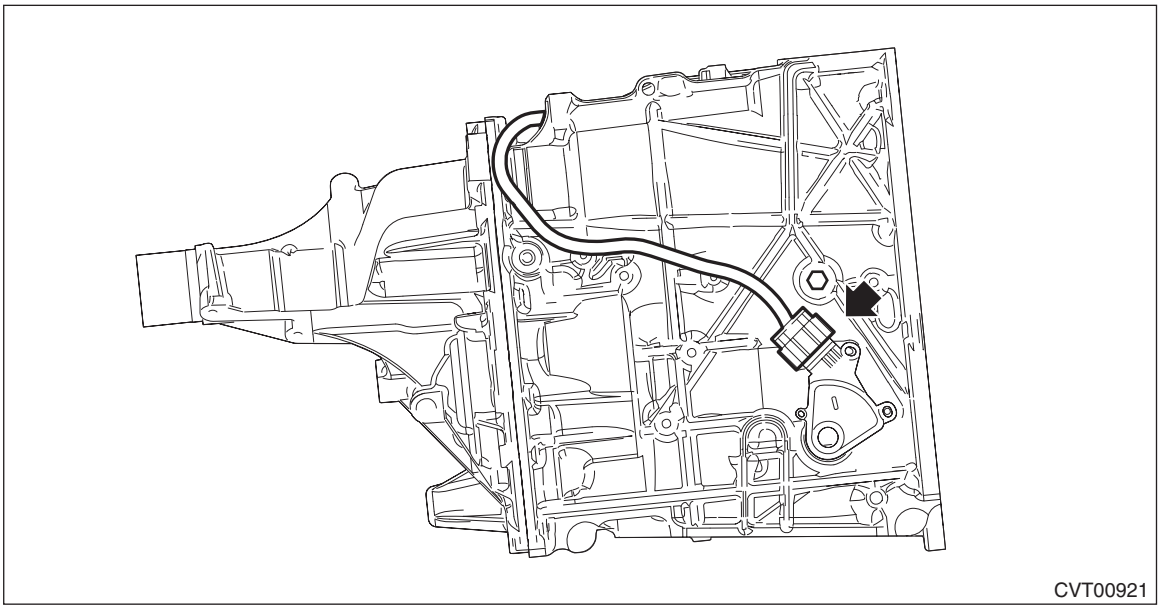

7) Disconnect the transmission harness stay and ground terminal, and remove the harness clip.

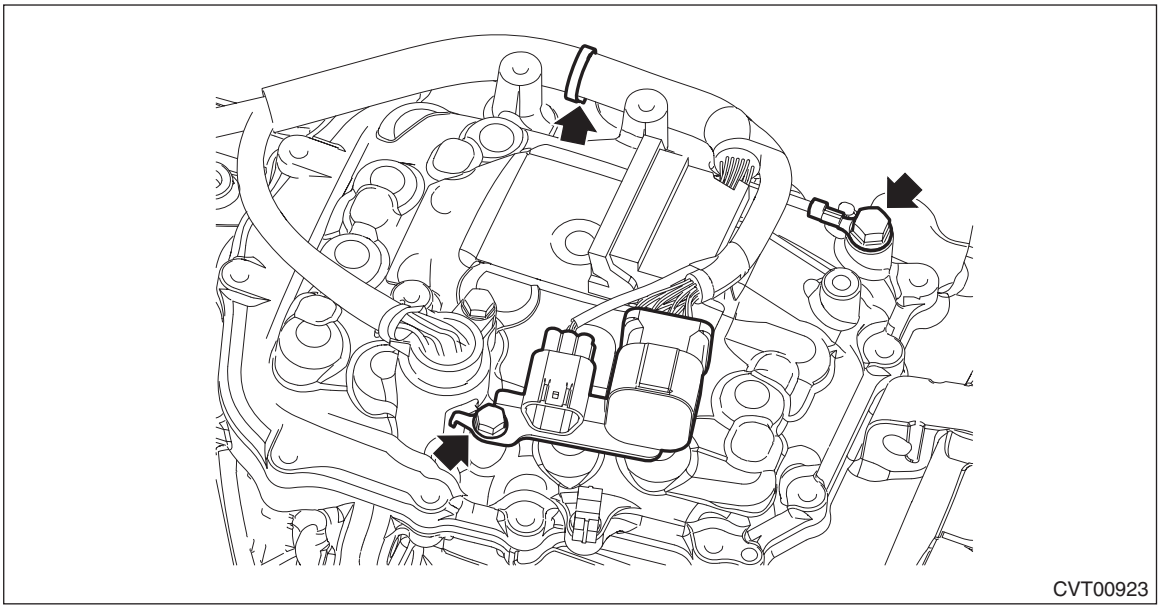

8) Remove the transmission harness connector from the transmission harness stay.
9) Clean the transmission exterior.

10) Remove the valve cover and gasket.

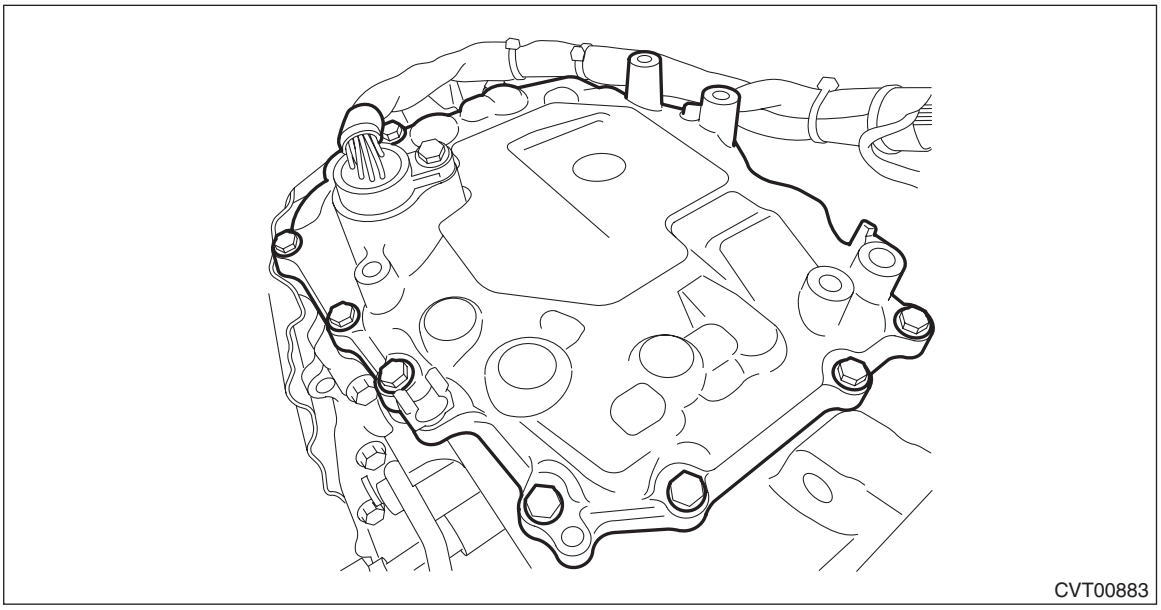
CVT00883

11) Disconnect the harness connector from the control valve body.
12) Remove the transmission harness.

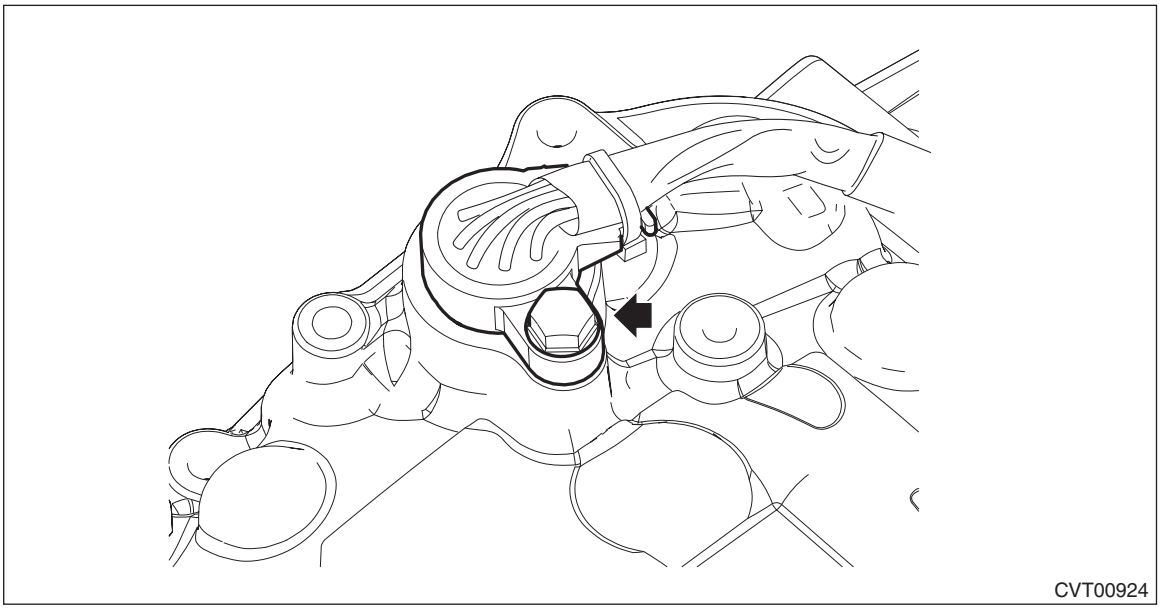
CVT00924

13) Remove the O-rings.

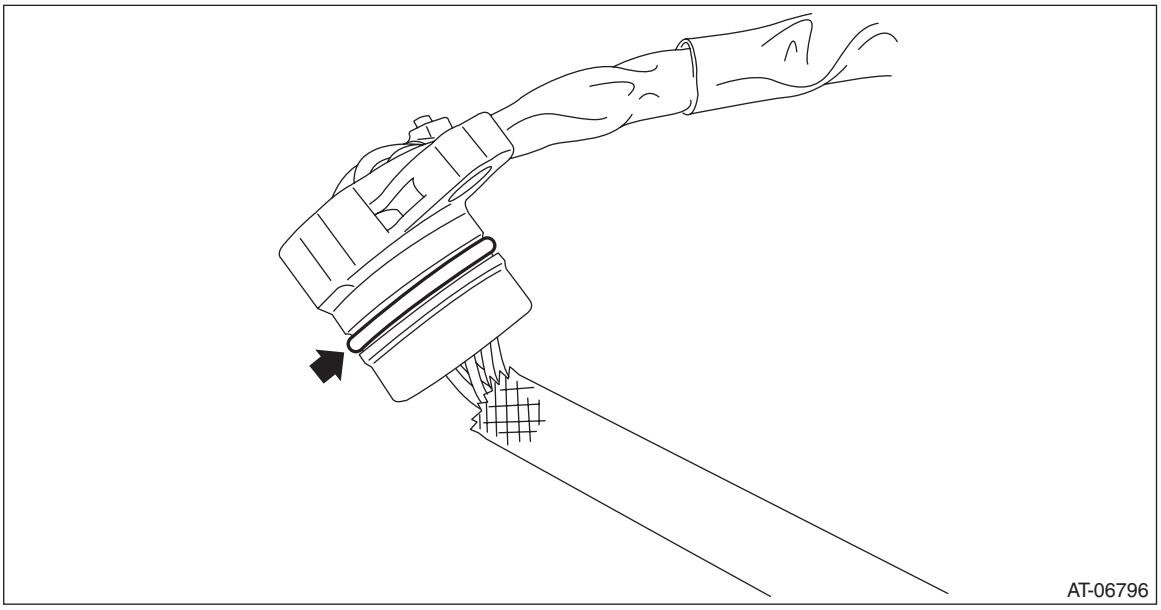

B: INSTALLATION

1) Clean the mating surface of valve cover and transmission side.
2) Check the control valve body for dust and other foreign matter.
3) Install the O-rings.

NOTE:
- Use new O-rings.
- Apply CVTF to the O-rings.

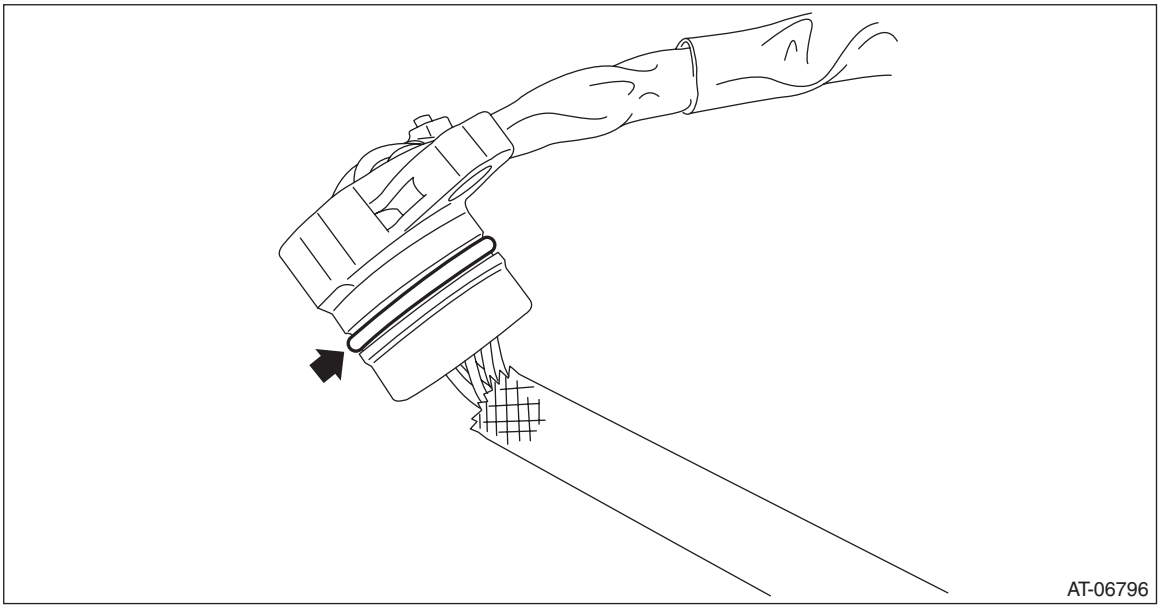

4) Install the transmission harness.

Tightening torque:
7 N·m (0.7 kgf-m, 5.2 ft-lb)

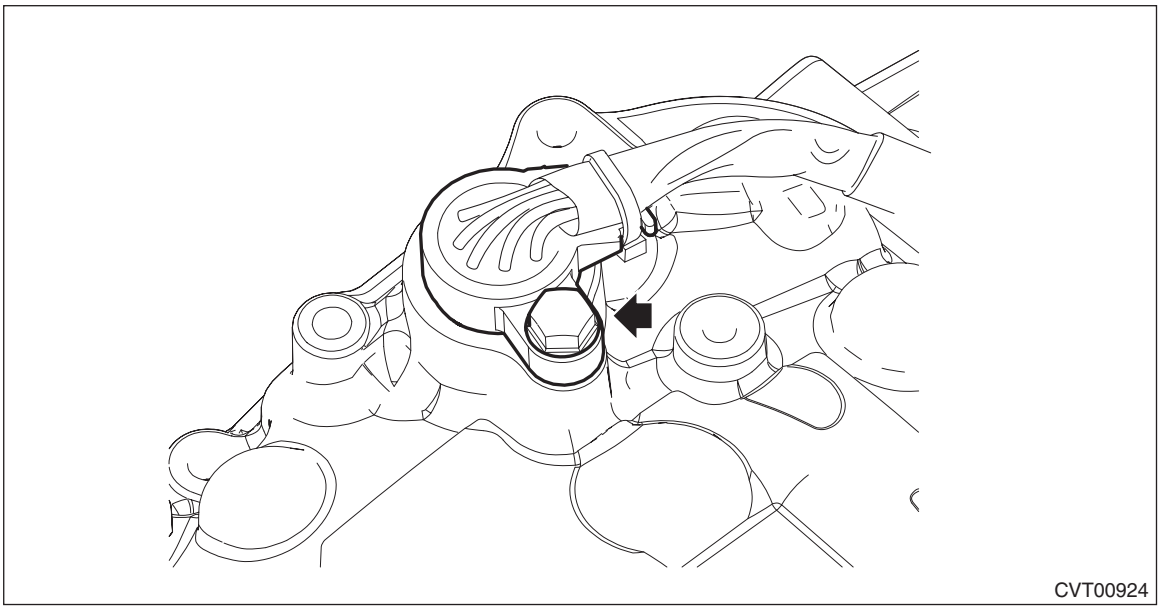

5) Attach the gasket.

NOTE:
Use a new gasket.

6) Apply liquid gasket to the oval hole of gasket.

Liquid gasket:
THREE BOND 1215B or equivalent

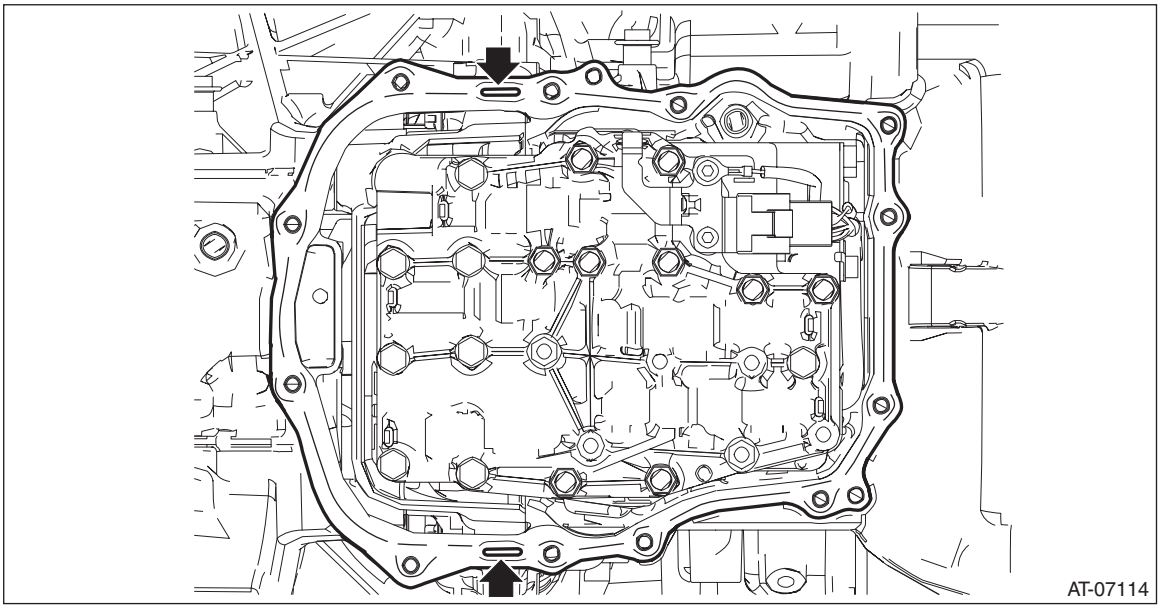

7) Connect the transmission harness connector to the control valve body, and install the valve cover.

Tightening torque:
8 N·m (0.8 kgf-m, 5.9 ft-lb)

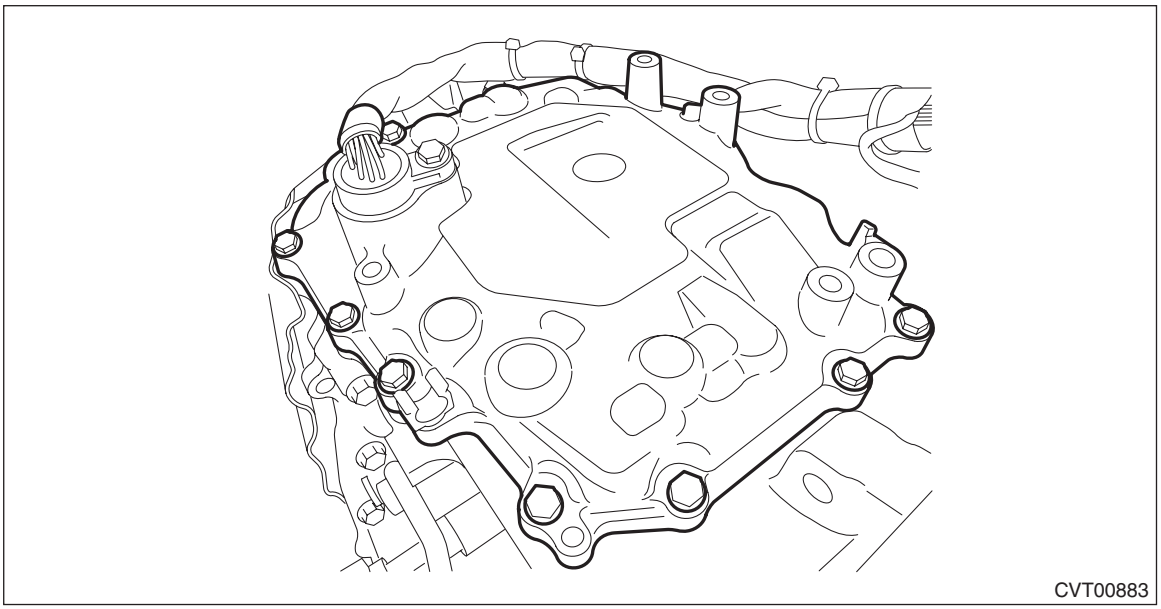

8) Install the transmission harness connector to the harness stay.
9) Install the transmission harness stay, transmission ground terminal and harness clip.

Tightening torque:
T1: 14 N·m (1.4 kgf-m, 10.3 ft-lb)
T2: 7 N·m (0.7 kgf-m, 5.2 ft-lb)

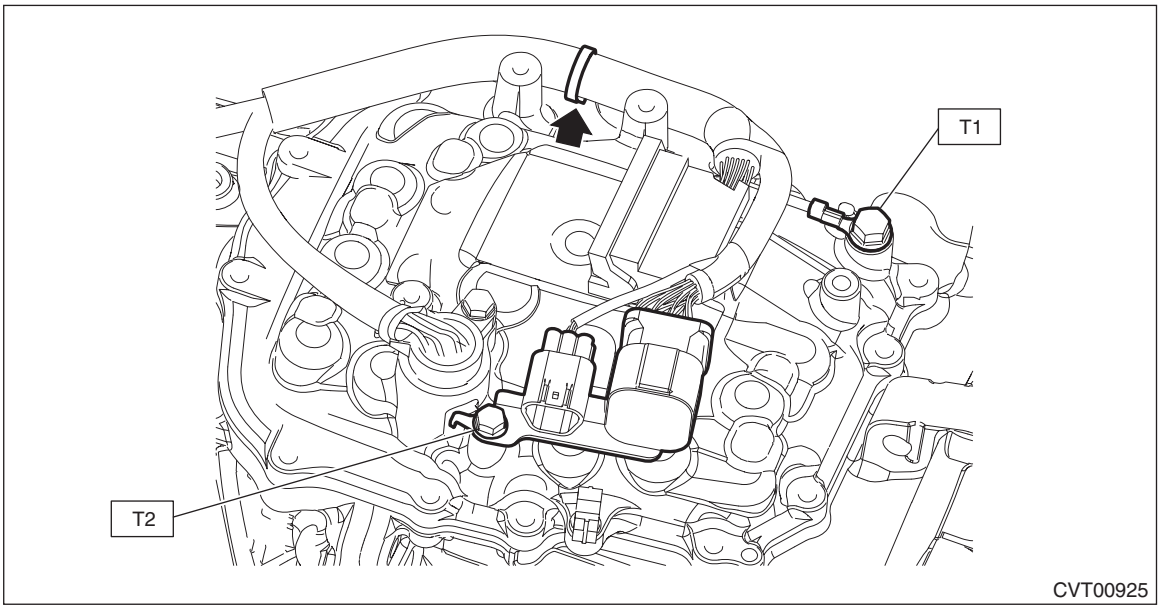

10) Connect the harness connector to the inhibitor switch.

11) Connect the harness connector to the turbine speed sensor, primary speed sensor, secondary speed sensor and secondary pressure sensor.

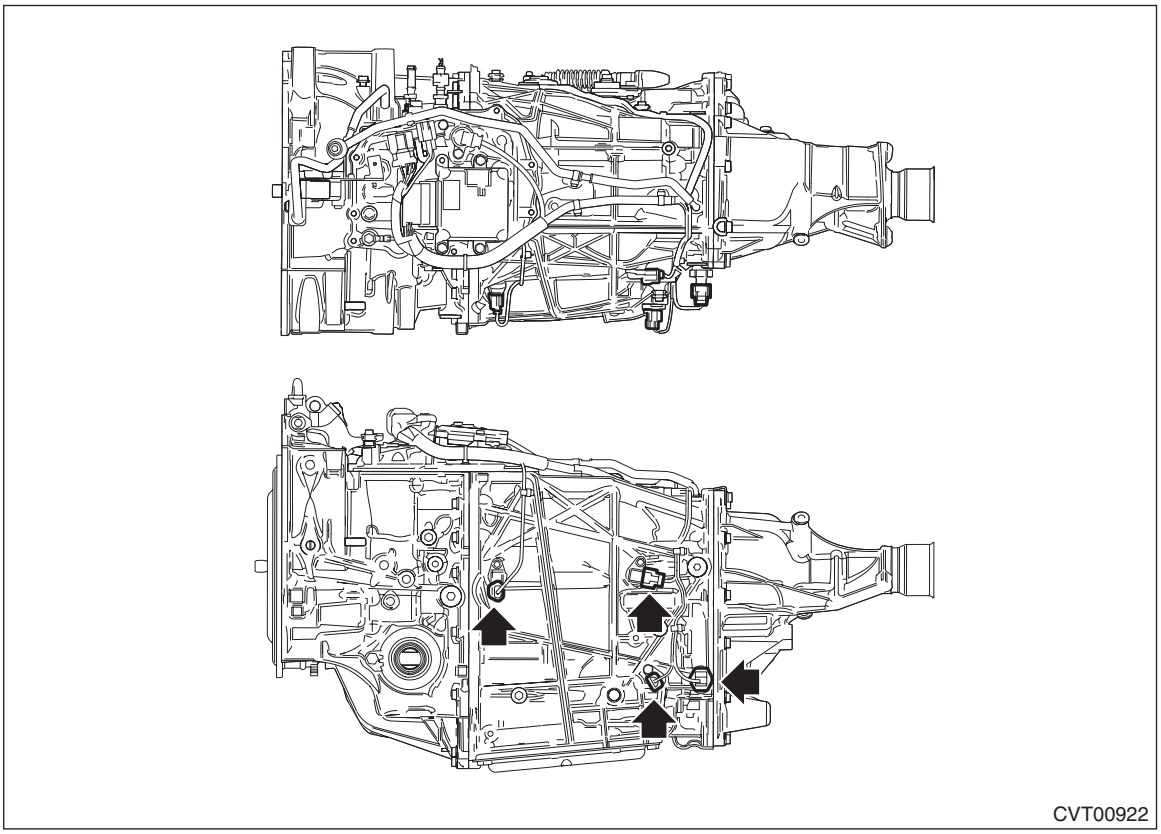
CVT00922

12) Install the transmission hanger and transmission radio ground cord.

Tightening torque:
41 N·m (4.2 kgf-m, 30.2 ft-lb)

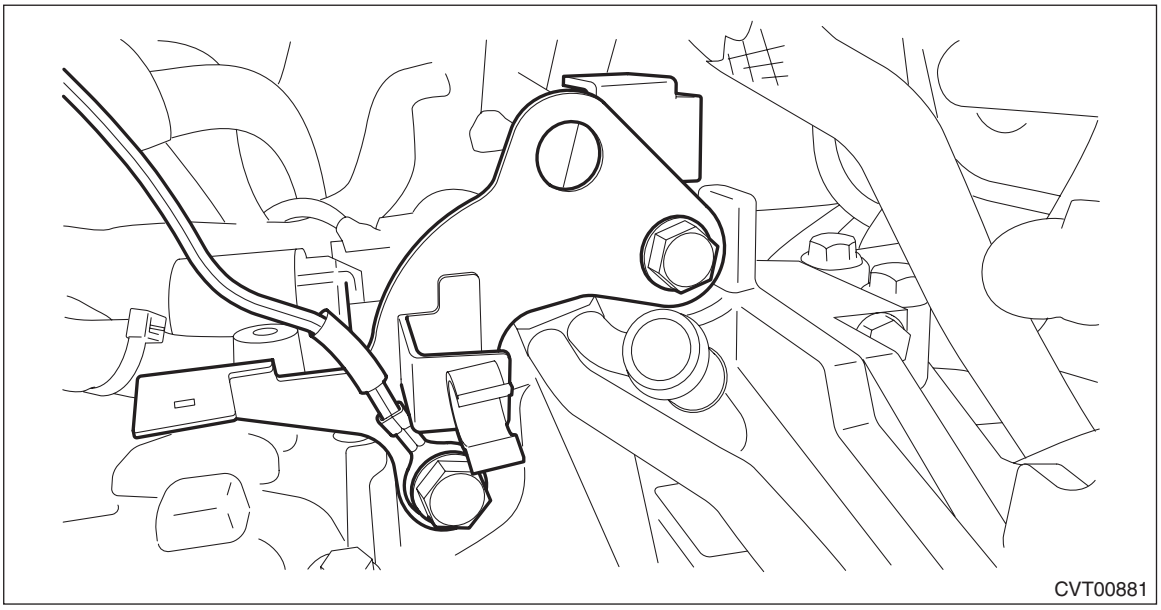
CVT00881

13) Install the air breather hose. <Ref. to CVT(TR580)-192, INSTALLATION, Air Breather Hose.>
14) Install the transmission case cover (large).

Tightening torque:
8 N·m (0.8 kgf-m, 5.9 ft-lb)

15) Install the transmission assembly. <Ref. to CVT(TR580)-79, INSTALLATION, Automatic Transmission Assembly.>
16) Adjust the CVTF level. <Ref. to CVT(TR580)-39, ADJUSTMENT, CVTF.>

C: INSPECTION

1) Visually check the harness and connector for damage or crack.
2) Check the harness terminal for rust, disconnection or poor contact.
3) Check the continuity between harness terminals.

NOTE:
For details of transmission harness circuit, refer to wiring diagram. <Ref. to WI-156, WIRING DIAGRAM, CVT Control System.>

Harness continuity standard:
Less than 1 Ω

22.X MODE Switch

A: REMOVAL

NOTE:
Refer to “X Mode Switch” for removal of the X mode switch. <Ref. to CVT(TR690)-140, REMOVAL, X MODE Switch.>

B: INSTALLATION

NOTE:
Refer to “X Mode Switch” for installation of the X mode switch. <Ref. to CVT(TR690)-140, INSTALLATION, X MODE Switch.>

C: INSPECTION

1. CHECK SWITCH UNIT

Measure the resistance between harness connector terminals of the X mode switch.

	Terminal No.	Standard
OFF (when measured without operating the switch)	No. 1 — No. 4	1 MΩ or more
ON (when measured with the switch held down)		Less than 1 Ω

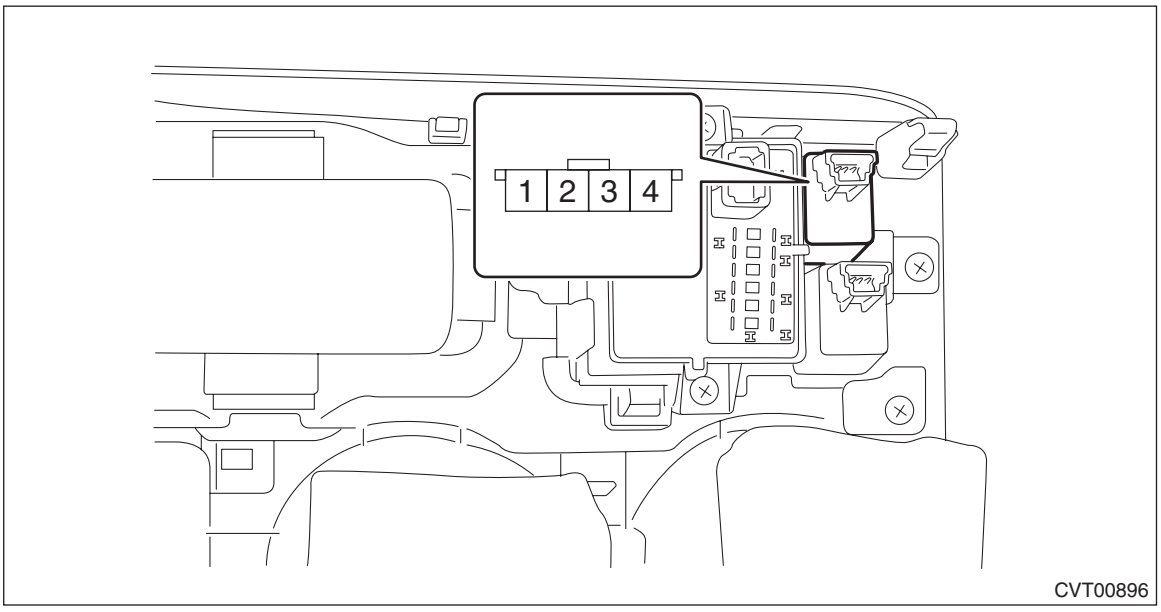

2. CHECK X MODE SYSTEM

DIAGNOSIS:
It does not switch to X mode.

CAUTION:
Note that the system performs the following controls when switching to X mode.
1. When the malfunction indicator light comes on while the engine is running, it cannot switch to X mode.
2. If there is a possible engine coolant or engine oil temperature overheat condition, it will not be possible to switch to X mode.
3. If the ignition switch is in ON position before starting engine, switching to X mode is not available.

3. PRESSING X MODE SWITCH DOES NOT CHANGE THE X MODE DISPLAY IN THE COMBINATION METER AND MODE DOES NOT SWITCH TO X MODE

WIRING DIAGRAM:

<Ref. to WI-156, WIRING DIAGRAM, CVT Control System.>

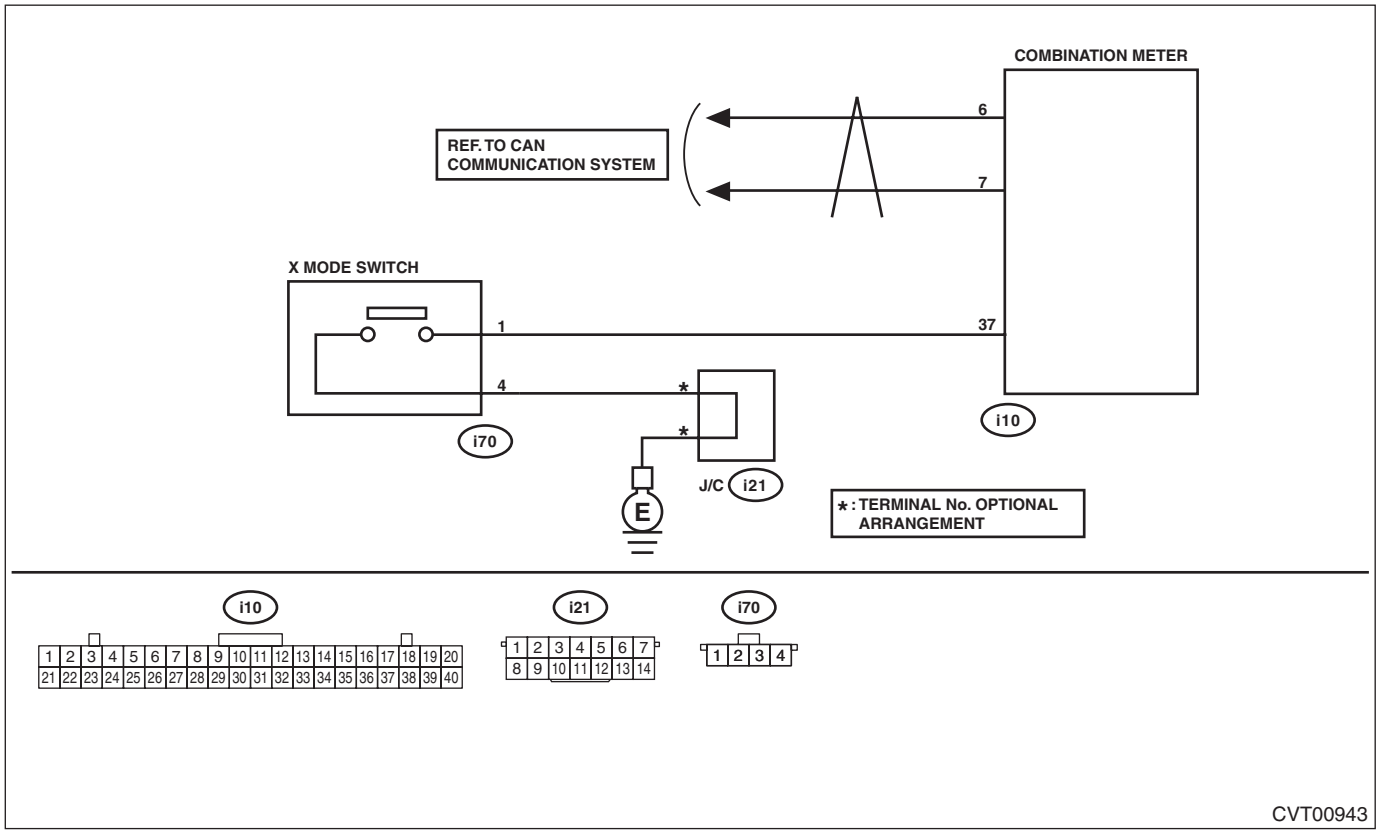

Step		Check	Yes	No
1	**CHECK X MODE SWITCH.** 1) Turn the ignition switch to OFF. 2) Disconnect the connector from the combination meter. 3) Measure the resistance when the X mode switch is operated. ***Connector & terminal*** ***(i10) No. 37 — Chassis ground:***	Does the resistance change as below? 1 MΩ or more → less than 10 Ω	Go to step **5**.	Go to step **2**.
2	**CHECK HARNESS BETWEEN COMBINATION METER AND X MODE SWITCH CONNECTOR.** Measure the resistance of harness between combination meter and X mode switch connector. ***Connector & terminal*** ***(i10) No. 37 — (i70) No. 1:***	Is the resistance less than 10 Ω?	Go to step **3**.	Repair the harness and connector. NOTE: In this case, repair the following item: • Open circuit in harness between combination meter and X mode switch connector • Poor contact of connector

	Step	Check	Yes	No
3	**CHECK HARNESS BETWEEN COMBINATION METER AND X MODE SWITCH CONNECTOR.** Measure the resistance of harness between X mode switch connector and chassis ground. ***Connector & terminal*** ***(i70) No. 1 — Chassis ground:***	Is the resistance 1 MΩ or more?	Go to step **4**.	Repair the short circuit to ground in harness between combination meter and X mode switch connector.
4	**CHECK HARNESS BETWEEN X MODE SWITCH CONNECTOR AND CHASSIS GROUND.** Measure the resistance between combination meter and chassis ground. ***Connector & terminal*** ***(i70) No. 4 — Chassis ground:***	Is the resistance less than 10 Ω?	Repair the poor contact of X mode switch connector. Replace the X mode switch if faulty. <Ref. to CVT(TR580)-155, X MODE Switch.> <Ref. to CVT(TR690)-140, X MODE Switch.>	Repair the harness and connector. NOTE: In this case, repair the following item: • Open circuit in harness between X mode switch connector and chassis ground • Poor contact of joint connector
5	**RECHECK FAULT.** 1) Connect all connectors. 2) Switch to X mode.	Is there any fault?	Repair the poor contact of combination meter. Replace the meter case assembly if defective.	The circuit has returned to a normal condition at this time. Reproduce the failure, and then perform the diagnosis again. NOTE: In this case, temporary poor contact of connector, temporary open or short circuit of harness may be the cause.

4. WHEN SWITCHED TO X MODE, “X” MODE DISPLAY IN COMBINATION METER FLASHES IN AFTER APPROX. 5 SECONDS

	Step	Check	Yes	No
1	**CHECK DTC.**	Is DTC displayed?	Check the appropriate DTC using the “List of Diagnostic Trouble Code (DTC)” concerning the respective units.	Go to step **2**.
2	**CHECK COMBINATION METER AND CLOCK DISPLAY.** Check for abnormal indication other than “X” blinking. Examples: • Malfunction indicator light illuminates. • Fuel economy display area is not ON. NOTE: The system enters into fail mode with ignition ON and engine OFF.	Is there any abnormal indication other than “X” blinking?	For the diagnostic procedure, refer to LAN section. <Ref. to LAN(diag)-2, Basic Diagnostic Procedure.>	Go to step **3**.

	Step	Check	Yes	No
3	**CHECK ECM AND COMBINATION METER.**	Is the part number of ECM and combination meter correct?	Replace the meter case assembly. <Ref. to IDI-11, Combination Meter.>	Replace ECM or meter case assembly with the one with the correct part number. <Ref. to FU(H4DO)-82, Engine Control Module (ECM).> <Ref. to IDI-11, Combination Meter.>

5. WHEN SWITCHED TO X MODE, “X” MODE DISPLAY IN COMBINATION METER FLASHES

NOTE:
In this case, there may be a fault other than in X mode system.

	Step	Check	Yes	No
1	**CHECK MALFUNCTION INDICATOR LIGHT.** 1) Start the engine. 2) Check if malfunction indicator light illuminates.	Does the malfunction indicator light illuminate?	Read the DTC using Subaru Select Monitor and check the indicated DTC. <Ref. to EN(H4DO)(diag)-63, Read Diagnostic Trouble Code (DTC).>	Go to step **2**.
2	**CHECK COOLANT TEMPERATURE WARNING LIGHT.** 1) Turn the ignition switch to ON. 2) Check the coolant temperature warning light.	Does it indicate overheating?	Inspect for the cause of overheating and repair.	Go to step **3**.
3	**CHECK ENGINE OIL TEMPERATURE.** 1) Turn the ignition switch to ON. 2) Check the value of «Oil Temperature» using Subaru Select Monitor. NOTE: For detailed operation procedures, refer to “Current Data Display For Engine”. <Ref. to EN(H4DO)(diag)-45, Subaru Select Monitor.>	Is the value of «Oil Temperature» 117°C (243°F) or more?	Inspect and repair the cause of engine oil temperature rise. NOTE: Ask the customer whether the vehicle has experienced a long drive in low gear or towing of heavy load. If not, drive the vehicle again after the engine oil temperature lowers, and check if the engine oil temperature rises.	Go to step **4**.
4	**CHECK COMBINATION METER INDICATION.** 1) Start the engine. 2) Switch to X mode. 3) Check X mode display in the combination meter.	Does “X” mode indication in the combination meter blink?	Replace the meter case assembly. <Ref. to IDI-11, Combination Meter.>	Perform test operation and check the malfunction indicator light, engine coolant temperature warning light, and engine oil temperature. If they are normal, finish the diagnosis.

23.Transmission Control Module (TCM)

A: REMOVAL

1) Disconnect the ground terminal from battery sensor. <Ref. to RC-4, BATTERY, NOTE, Repair Contents.>
2) Remove the air intake duct. <Ref. to IN(H4DO)-12, REMOVAL, Air Intake Duct.>
3) Remove the clip (A), and loosen the clamps (B) and (C).

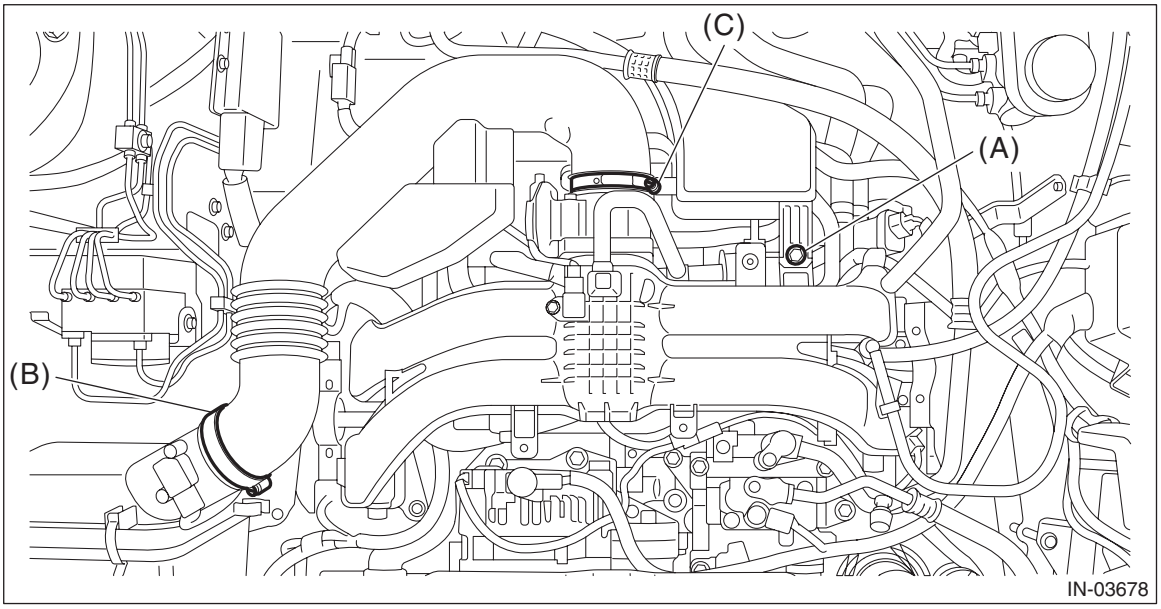

4) Remove the air intake boot from the throttle body, and move it to the left side wheel apron.

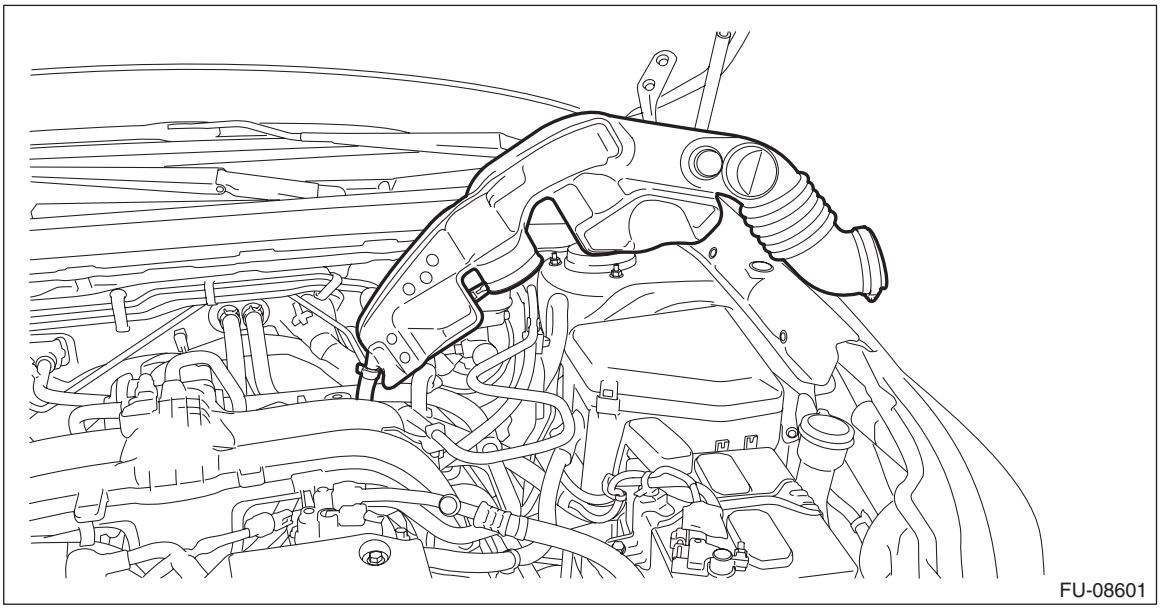

5) Disconnect the transmission radio ground terminal and transmission harness connector, and remove the harness clip.

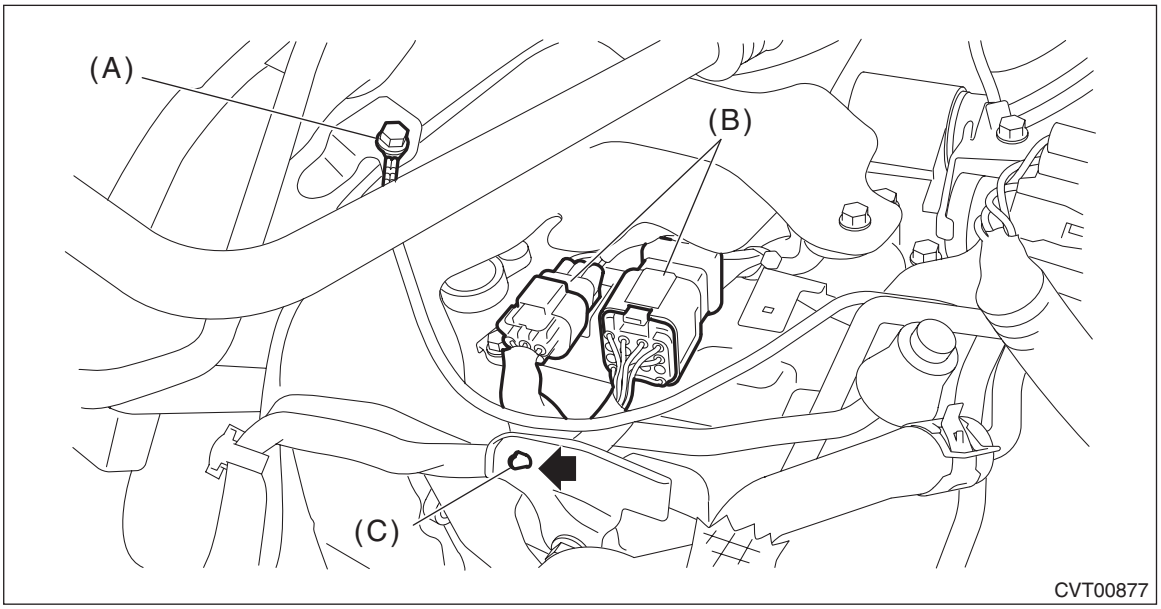

(A) Transmission radio ground terminal
(B) Transmission harness connectors
(C) Harness clip

6) Remove the transmission case cover.

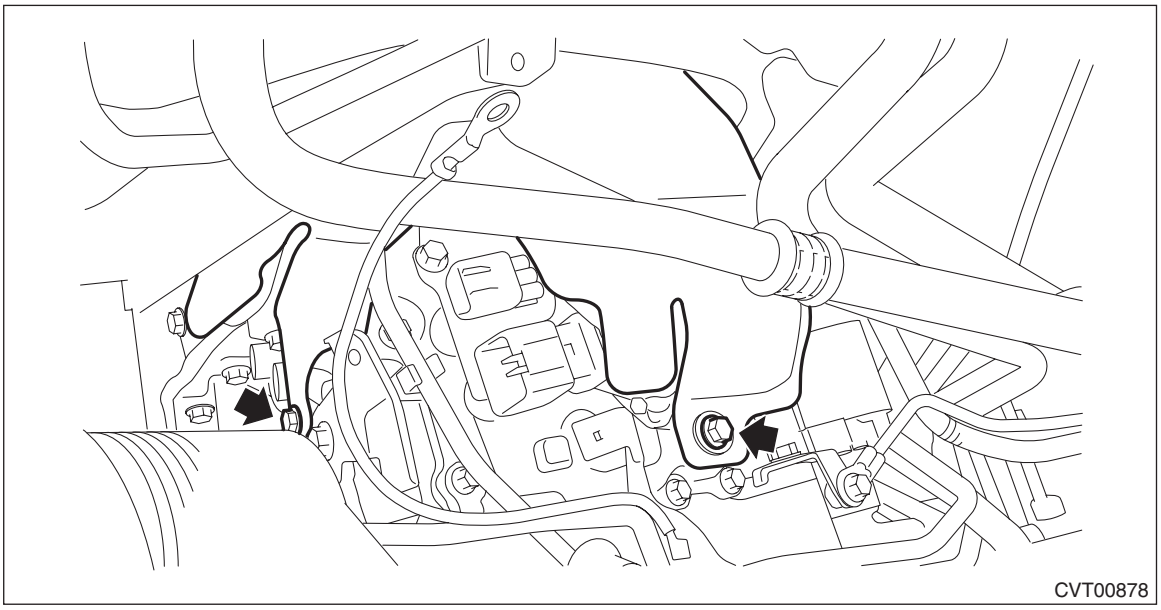

7) Move the lock lever in the arrow direction while pressing the lock button, and disconnect the connector.

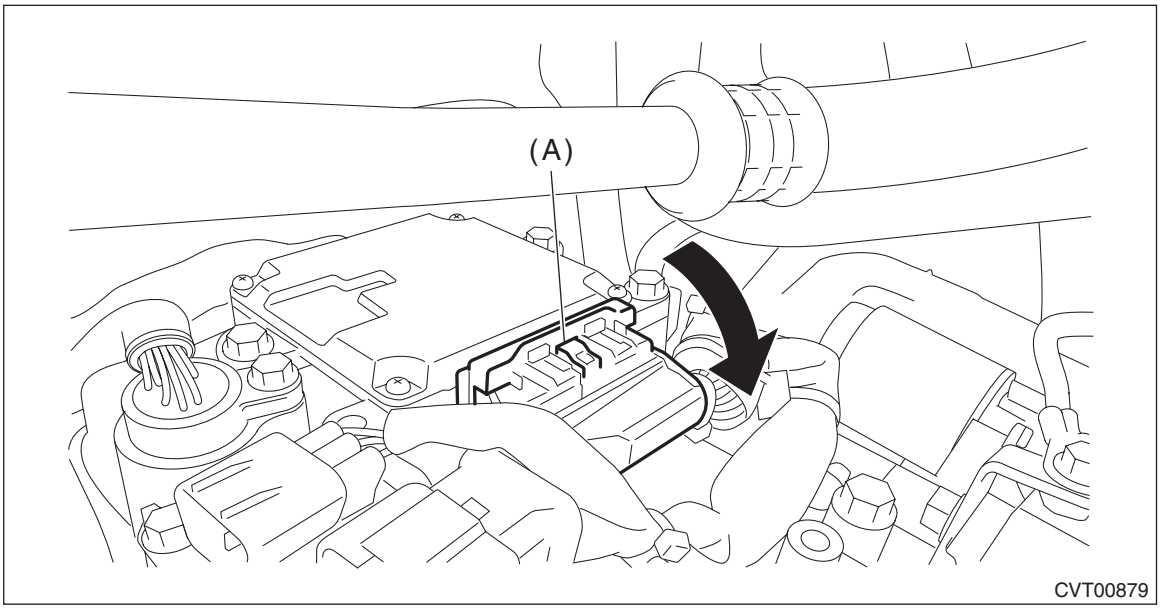

(A) Lock button

8) Remove the TCM.

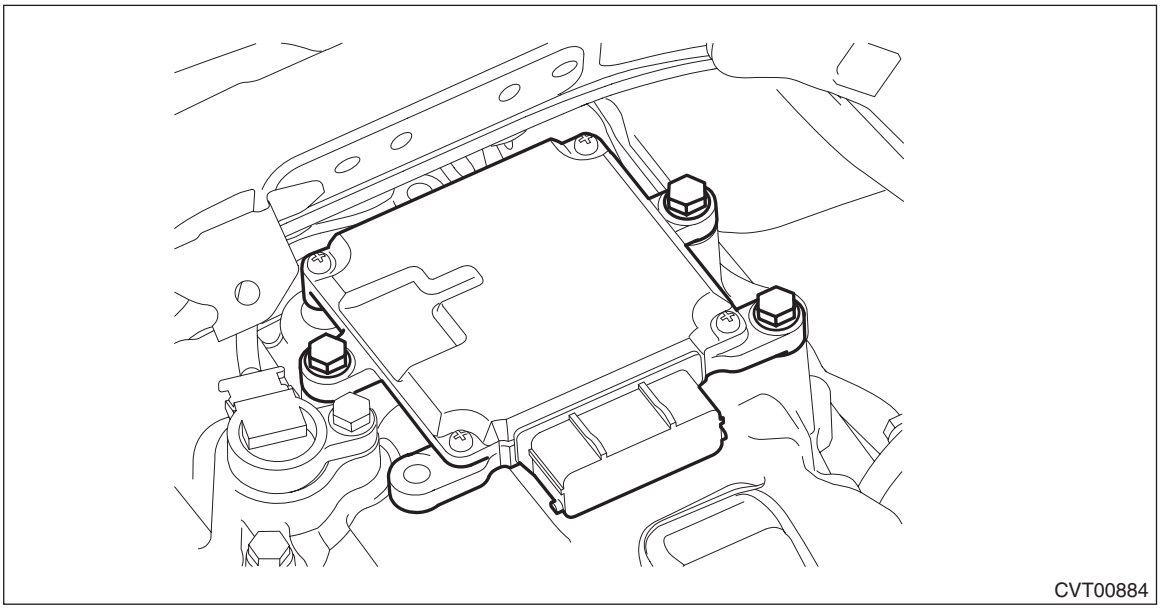

B: INSTALLATION

1) Install the TCM.

Tightening torque:
7 N·m (0.7 kgf-m, 5.2 ft-lb)

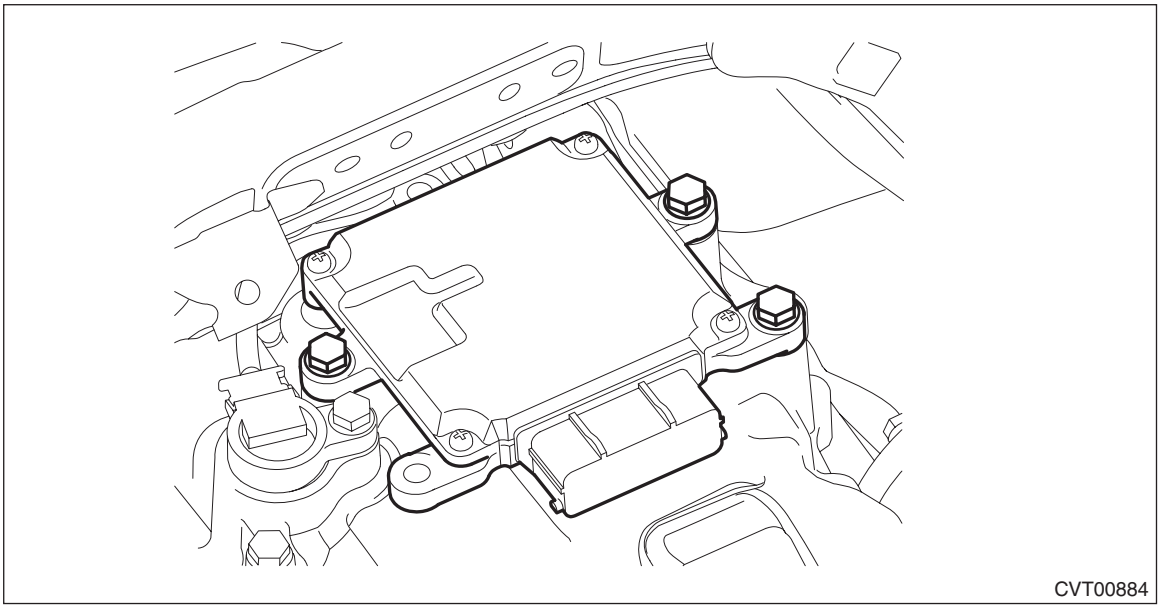
CVT00884

2) Install the harness connector to TCM.

NOTE:
Move the lock lever in the arrow direction, and confirm that a clicking sound is heard.

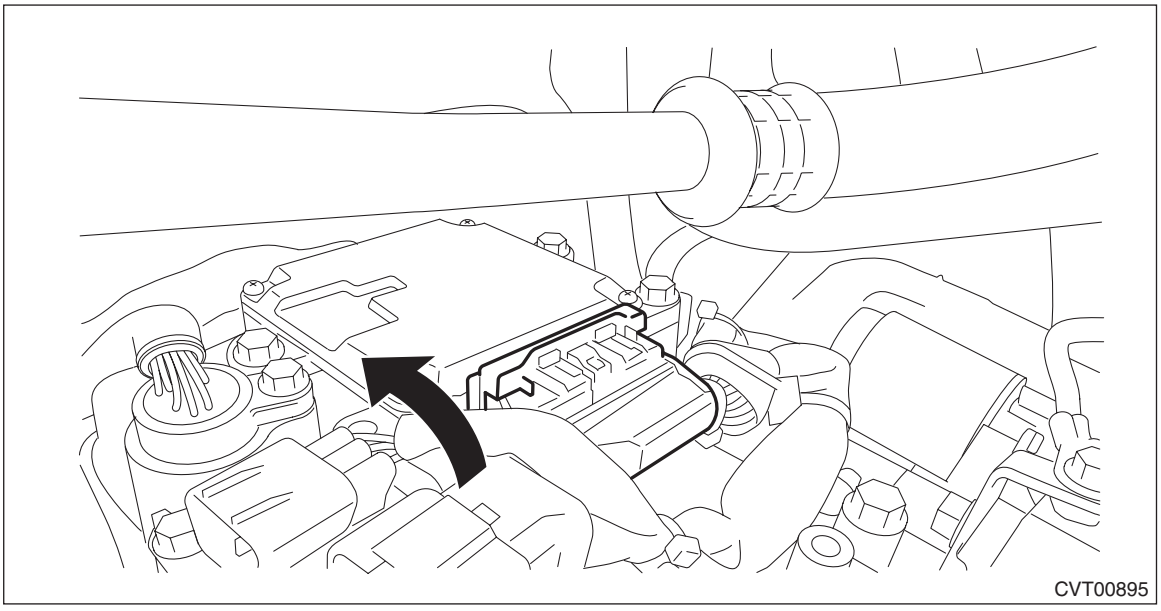
CVT00895

3) Insert the transmission case cover (small) between transmission case cover (large) and transmission to install.

NOTE:
When inserting, be careful that the insulator inside transmission case cover is not turned over.

Tightening torque:
7 N·m (0.7 kgf-m, 5.2 ft-lb)

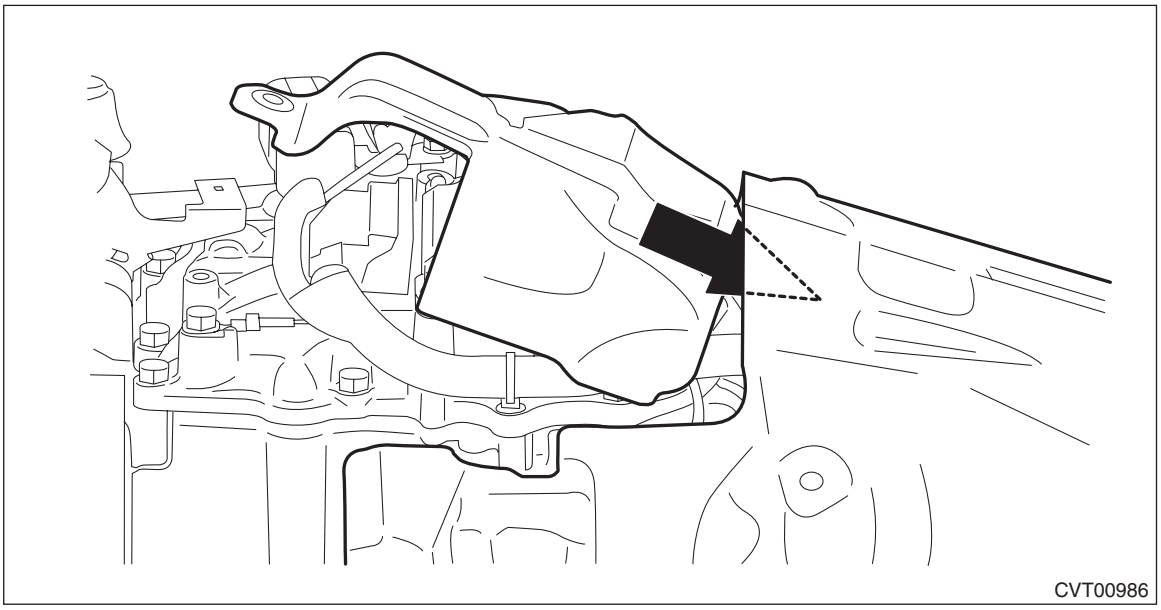
CVT00986

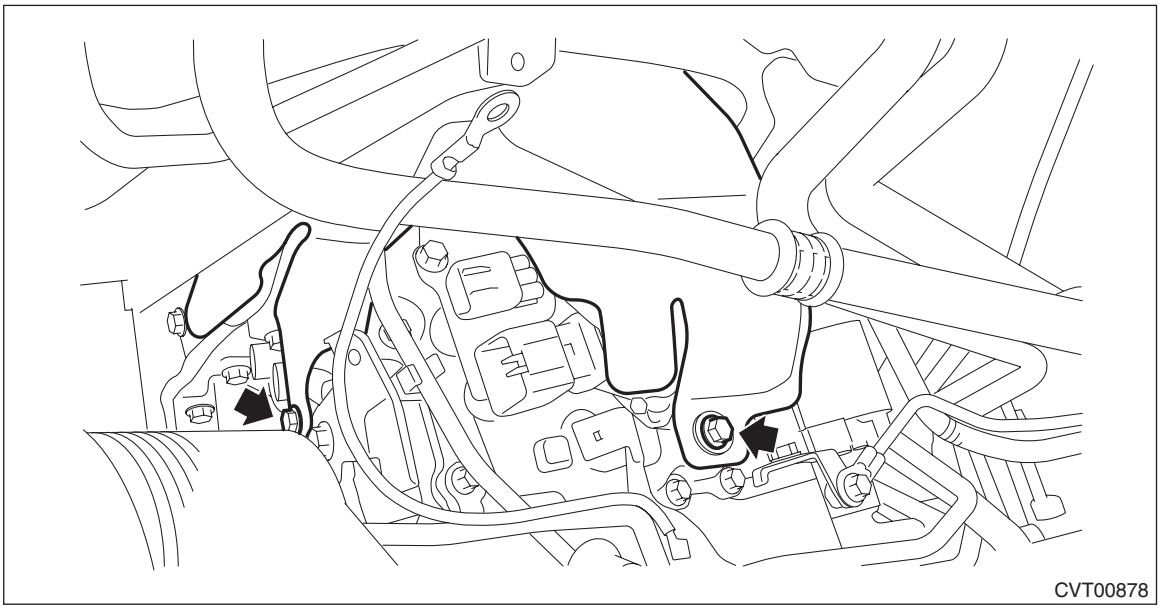
CVT00878

4) Install the harness clip, and connect the following transmission radio ground terminal and transmission harness connector.

Tightening torque:
13 N·m (1.3 kgf-m, 9.6 ft-lb)

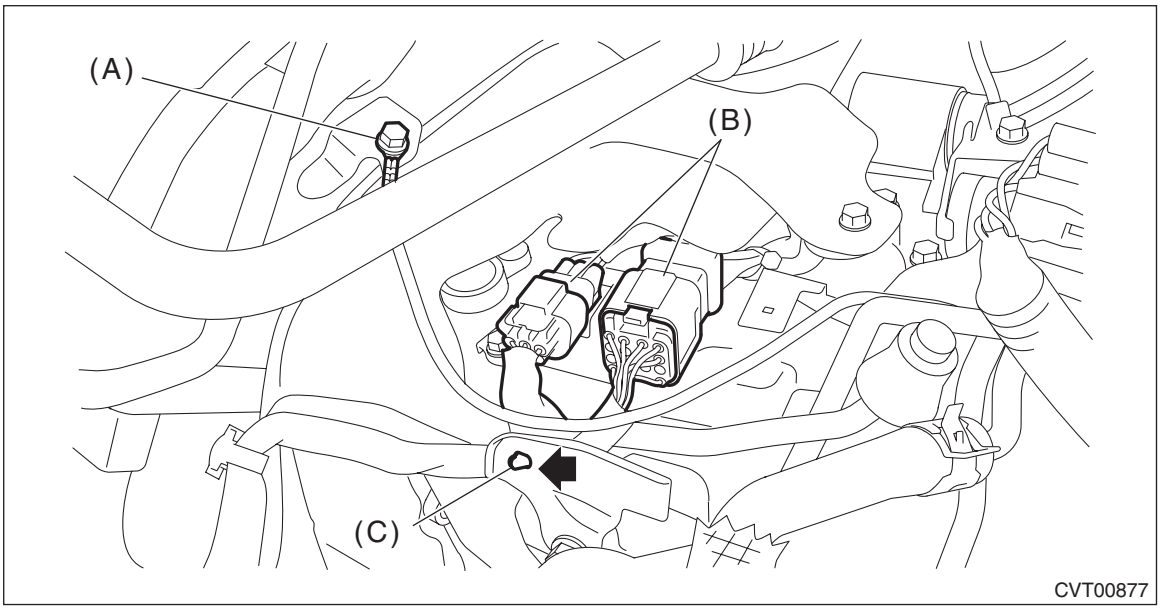

(A) Transmission radio ground terminal
(B) Transmission harness connectors
(C) Harness clip

5) Install the air intake boot assembly. <Ref. to IN(H4DO)-10, INSTALLATION, Air Intake Boot.>
6) Connect the ground terminal to battery sensor. <Ref. to RC-4, BATTERY, NOTE, Repair Contents.>
7) Perform the operation of AT learning mode. <Ref. to CVT(diag)-33, Learning Control.>

24.Relay and Fuse

A: LOCATION

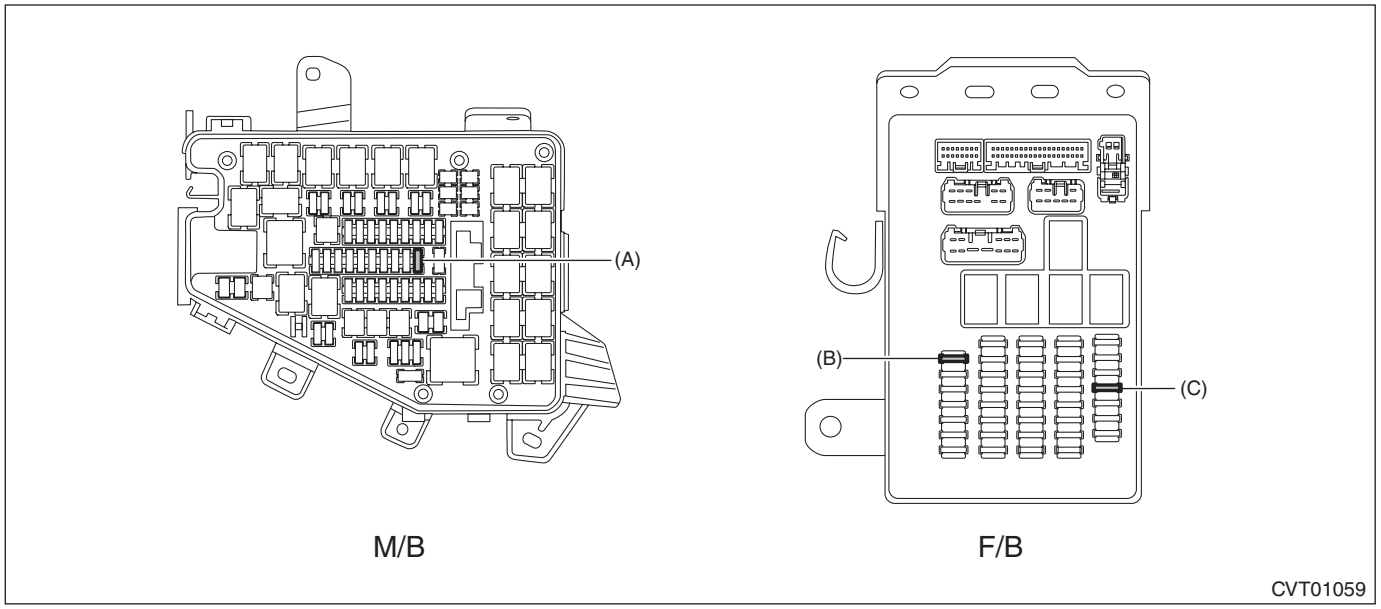

Main fuse box	Fuse 20 A	(A)
Relay & fuse box	Fuse 15 A	(B)
Relay & fuse box	Fuse 7.5 A	(C)

B: INSPECTION

1. CHECK FUSE

Remove the fuse and inspect visually. If the fuse is blown out, replace the fuse.

NOTE:
If the fuse is blown again, check the system.

25.CVTF Cooler (With Warmer Function)

A: REMOVAL

CAUTION:
If the CVTF and engine coolant is spilt over exhaust pipe, wipe it off with cloth to avoid emitting smoke or causing a fire.

1) Disconnect the ground terminal from battery sensor. <Ref. to RC-4, BATTERY, NOTE, Repair Contents.>
2) Drain engine coolant. <Ref. to CO(H4DO)-15, REPLACEMENT, Engine Coolant.>
3) Remove the clip (A), and loosen the clamps (B) and (C).

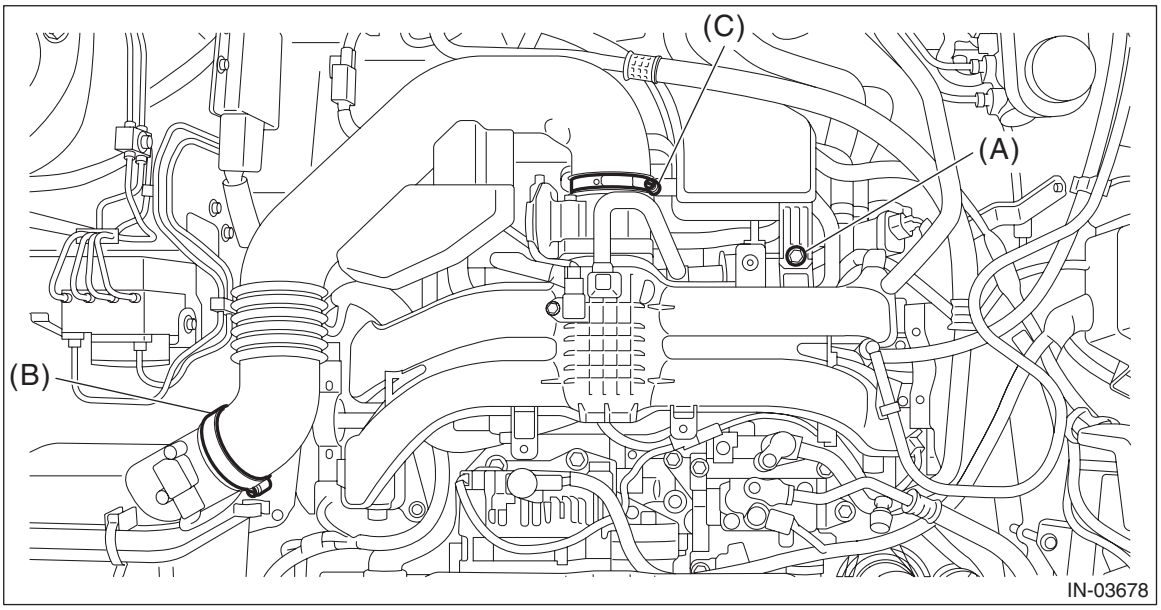

4) Remove the air intake boot assembly, and move it to the left side wheel apron.

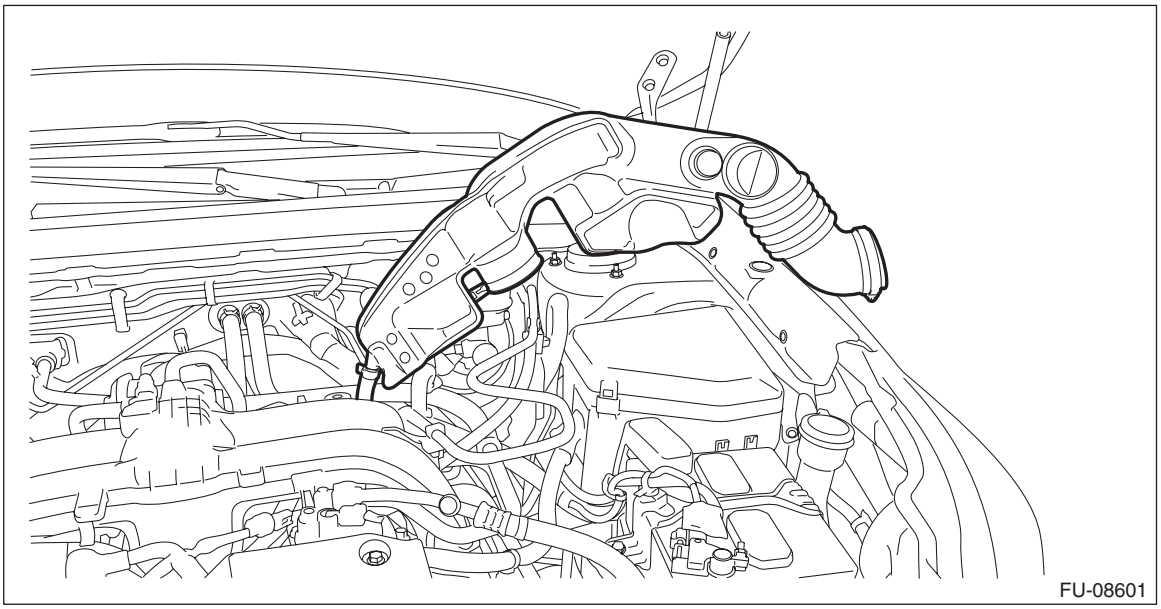

5) Remove the harness clip.

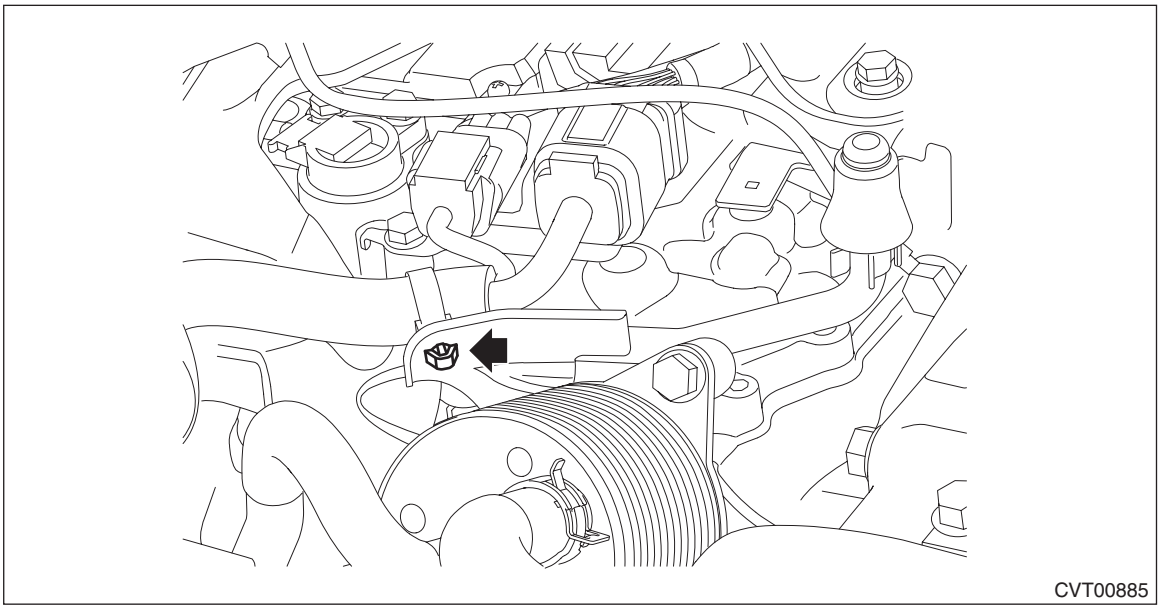

6) Remove the engine coolant outlet hose.

- Without CVTF cooler (air cool)

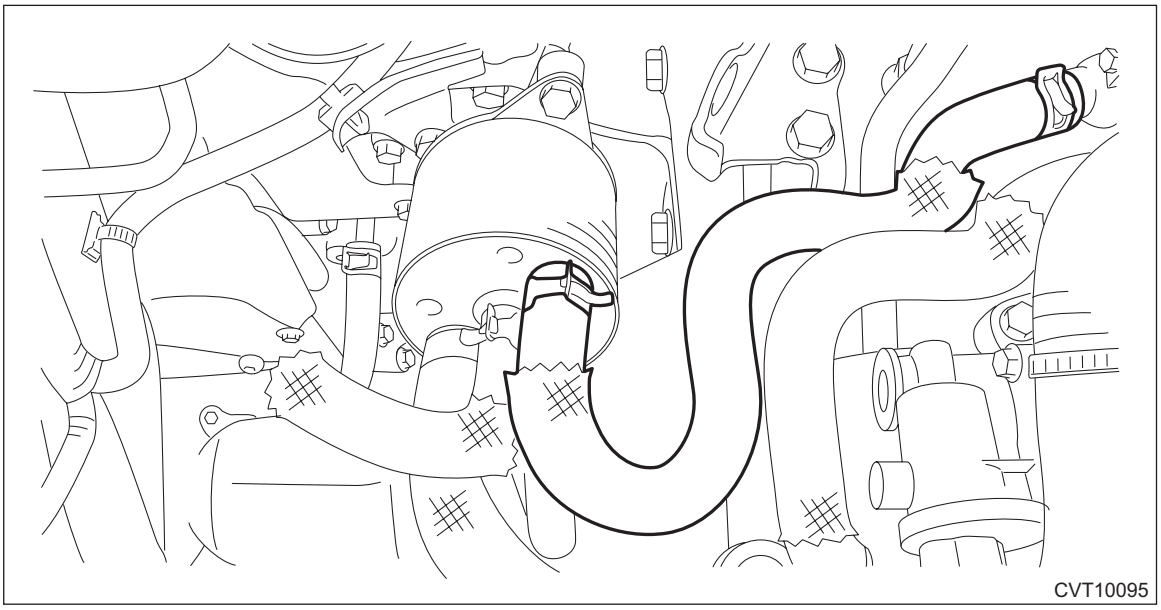

- With CVTF cooler (air cool)

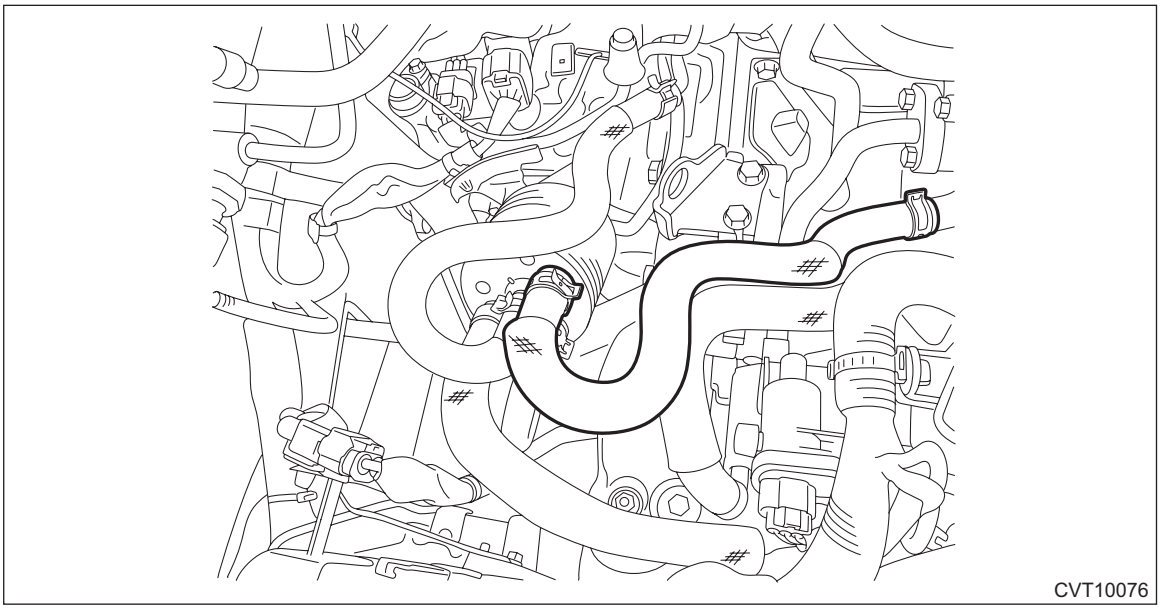

7) Remove the CVTF inlet hose and outlet hose.

- Without CVTF cooler (air cool)

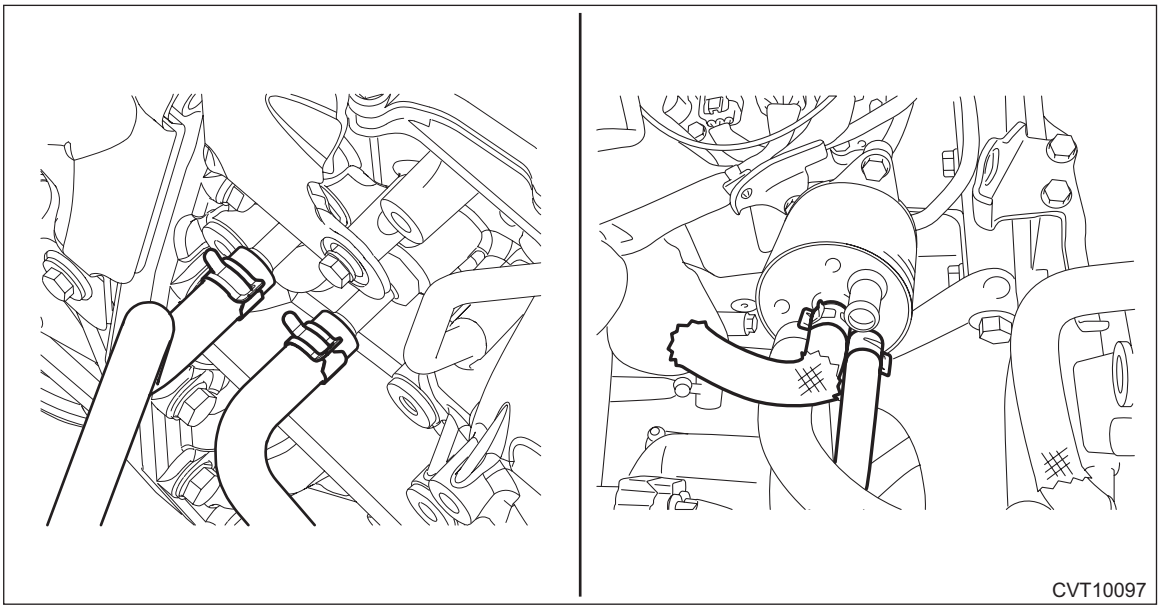

- With CVTF cooler (air cool)

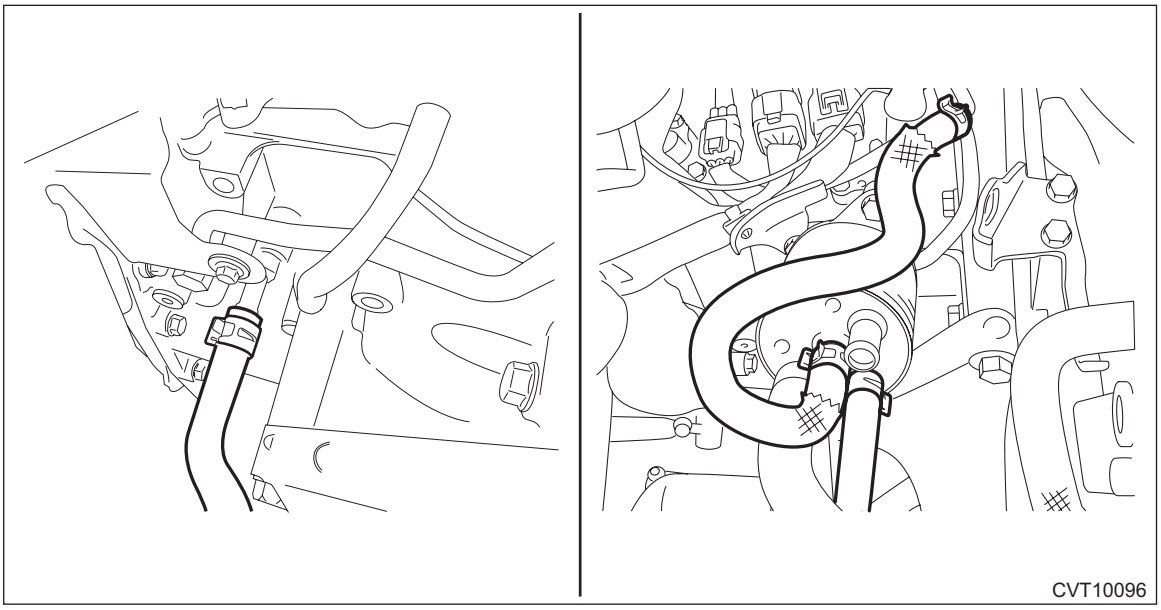

8) Remove the engine coolant inlet hose.

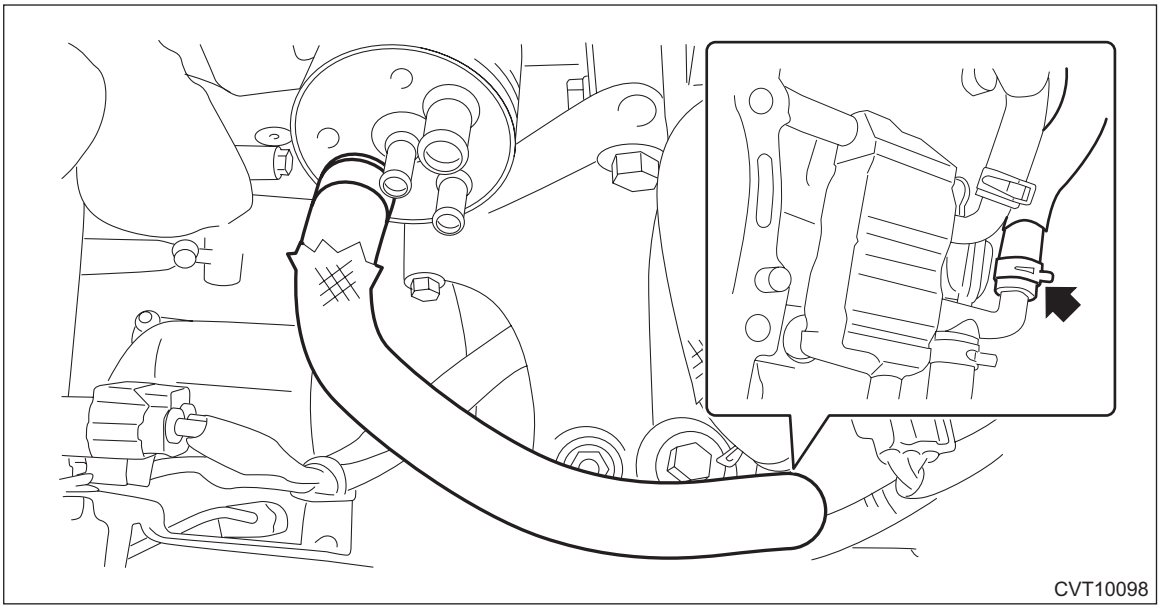

9) Remove the CVTF cooler (with warmer feature).

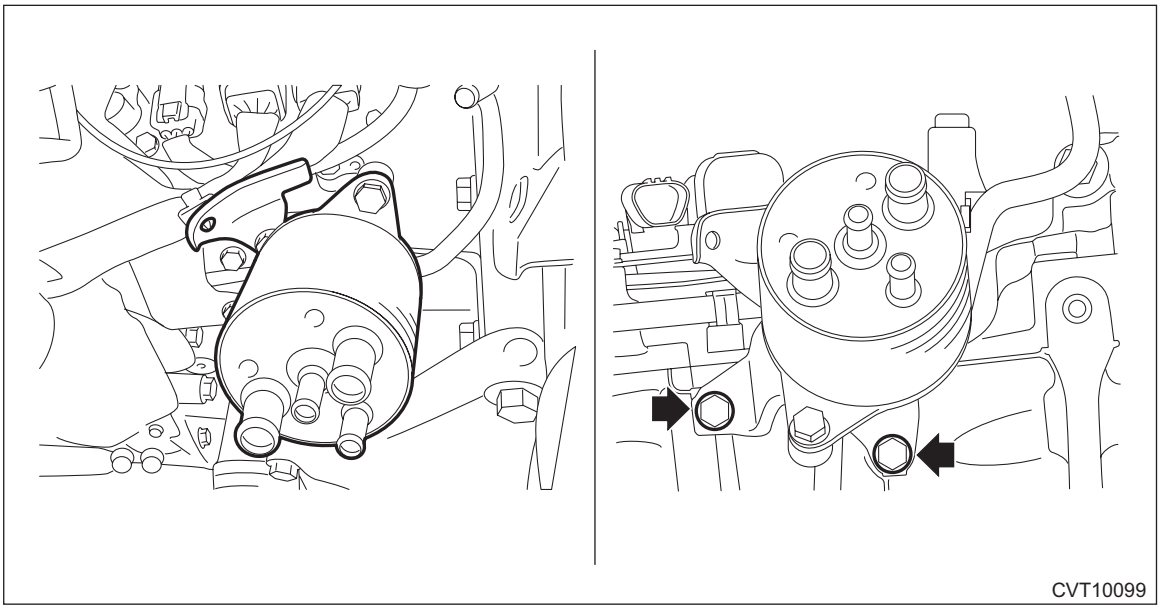

B: INSTALLATION

1) Install the CVTF cooler (with warmer feature).

Tightening torque:
23 N·m (2.3 kgf-m, 17.0 ft-lb)

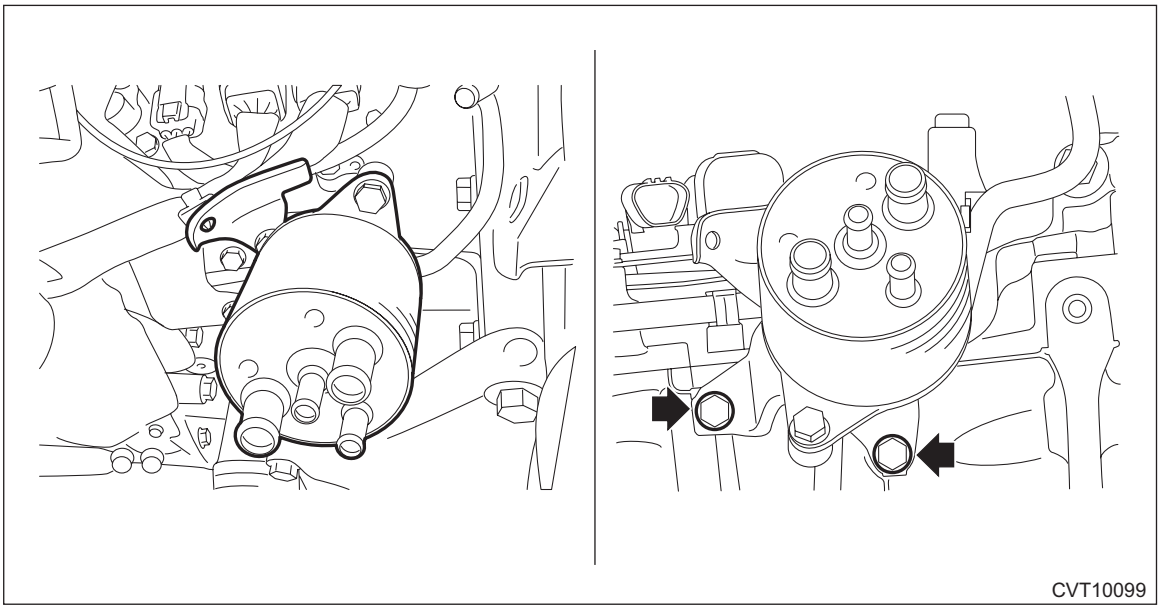

2) Install the engine coolant inlet hose.

NOTE:
With the paint on the engine coolant inlet hose facing the vehicle outside, install the hose to the engine side pipe.

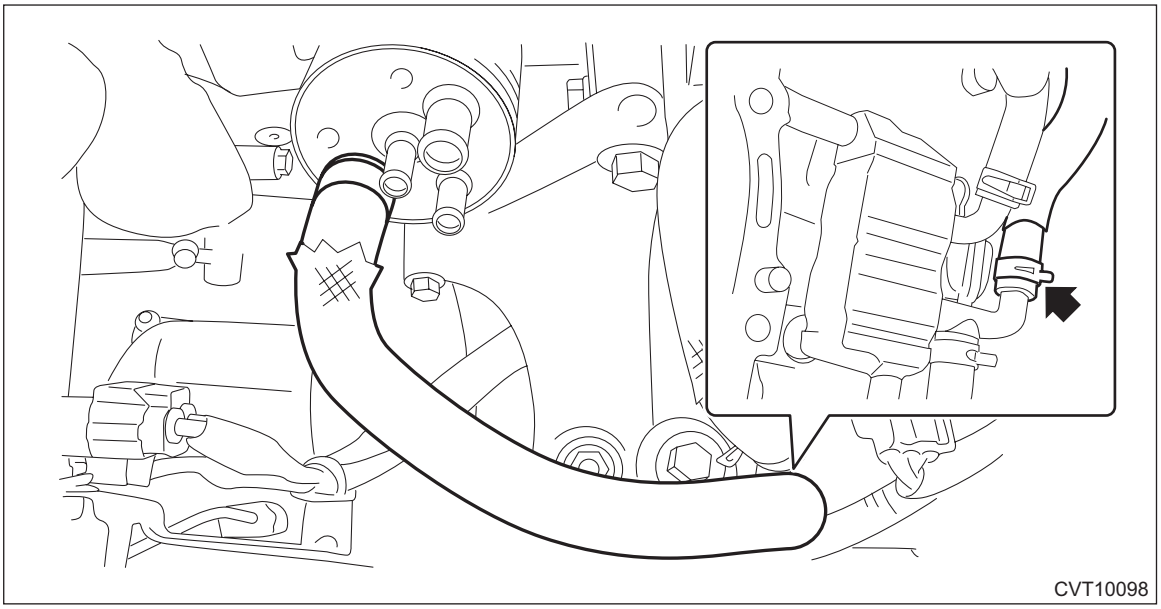

3) Install the CVTF inlet hose and CVTF outlet hose.

NOTE:
Use the new CVTF inlet hose and CVTF outlet hose.

- Without CVTF cooler (air cool)

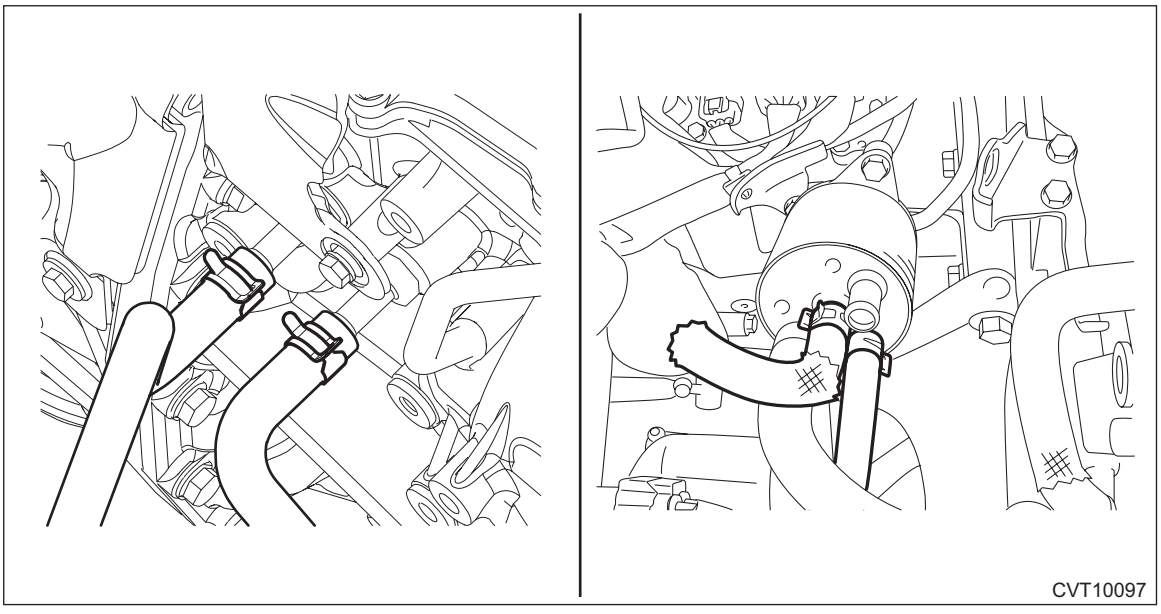

- With CVTF cooler (air cool)

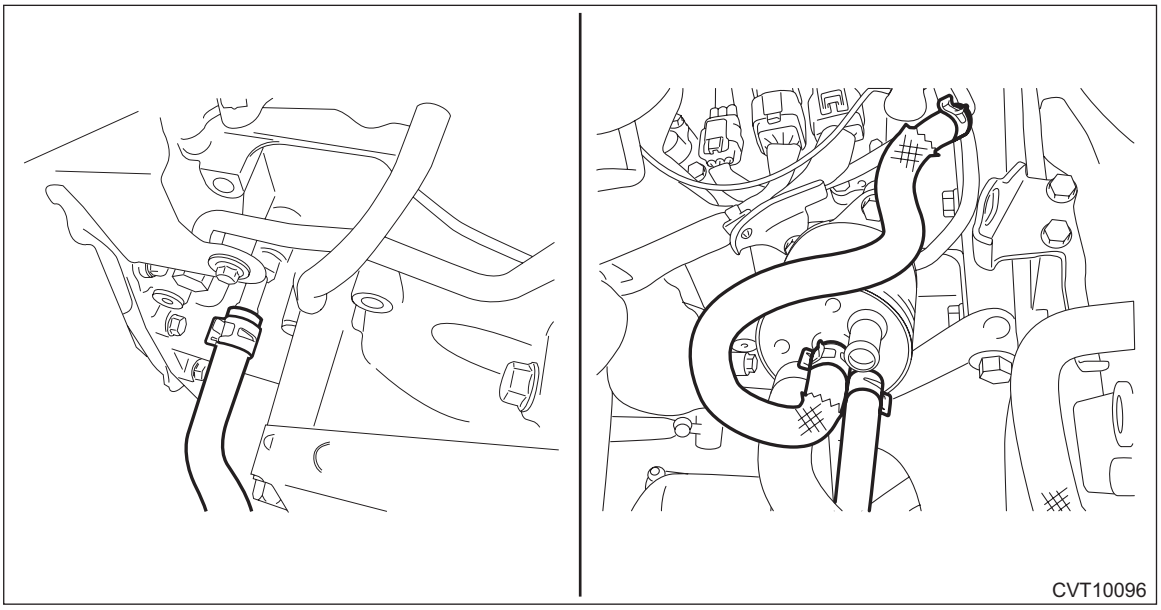

4) Connect the engine coolant outlet hose.

- Without CVTF cooler (air cool)

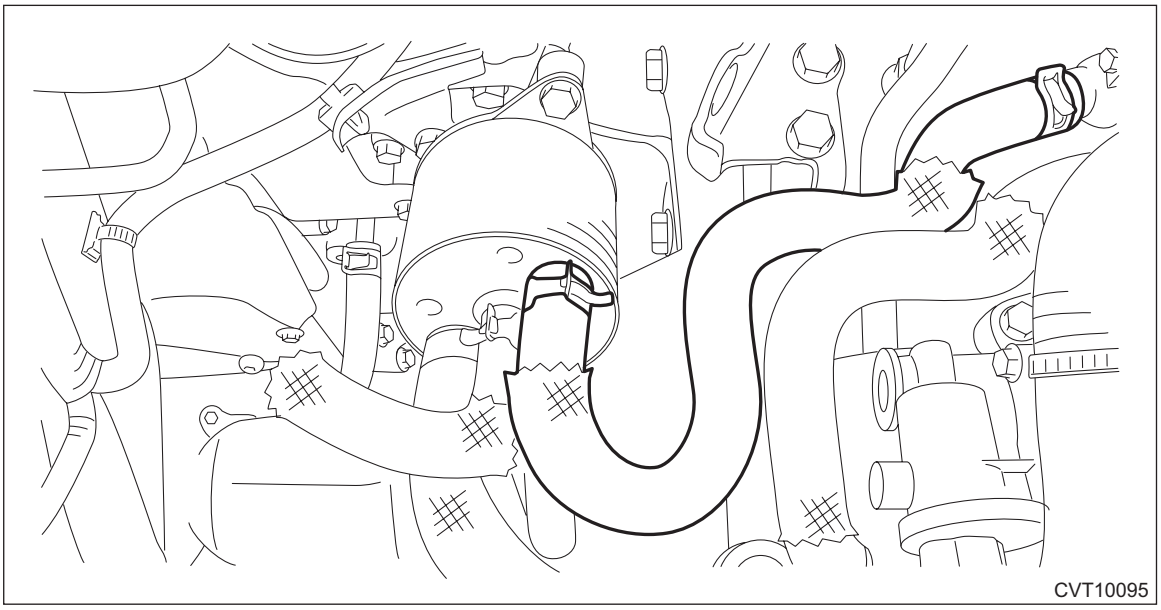

- With CVTF cooler (air cool)

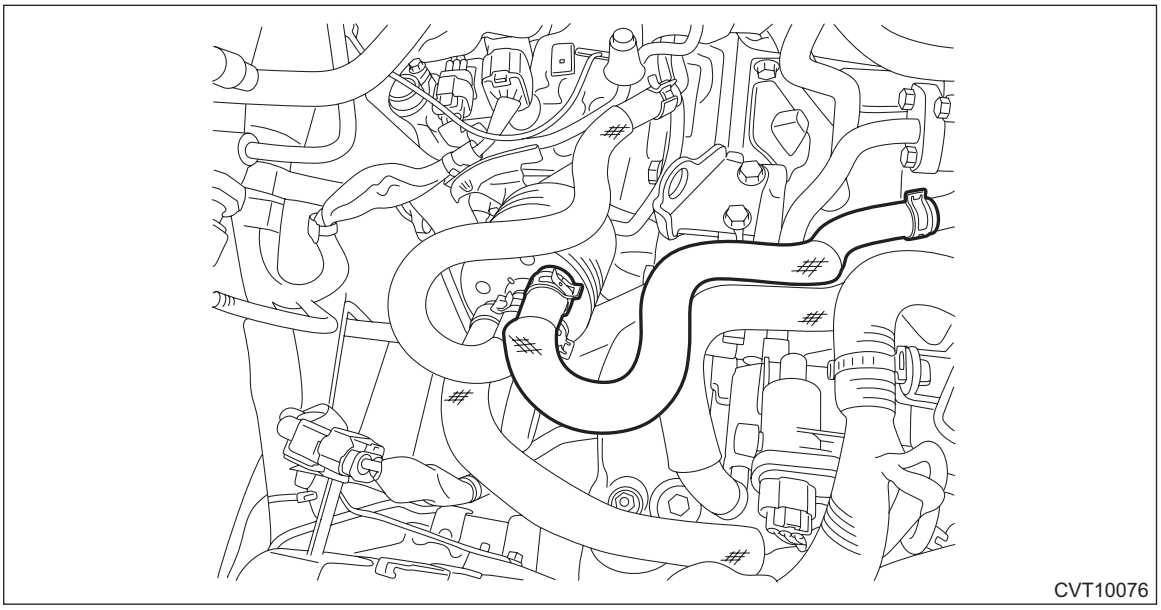
CVT10076

5) Check installation condition of each hose.
- Make sure the hoses do not interfere with each other or with other components.
- Check each hose for bent, excess curve, and twisting conditions.
- Without CVTF cooler (air cool)

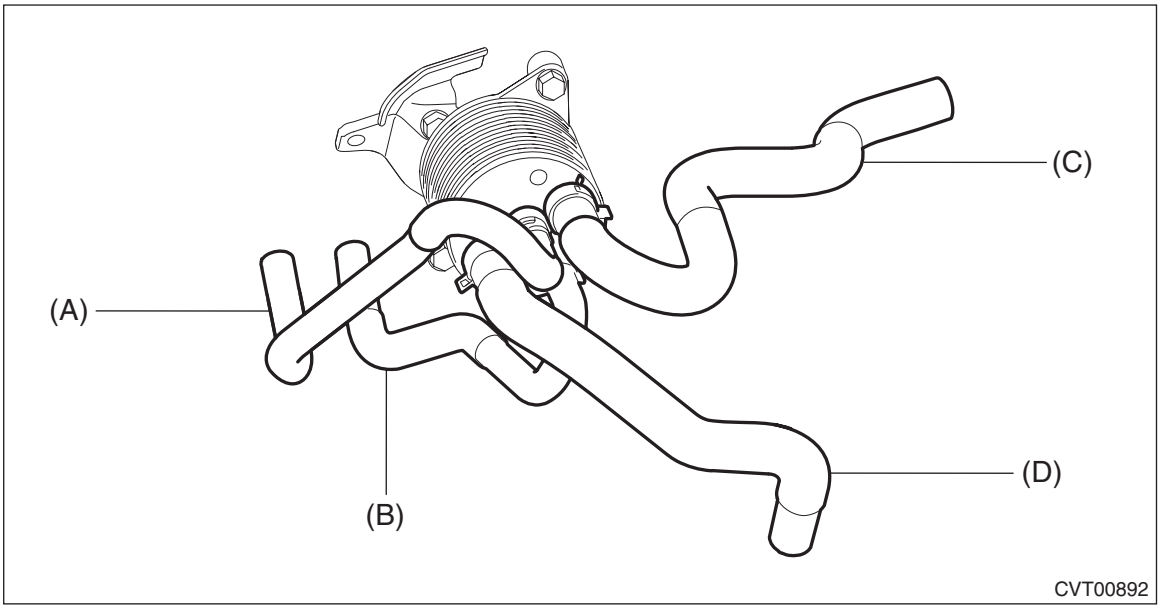

CVT00892

(A) CVTF cooler inlet hose
(B) CVTF cooler outlet hose
(C) Engine coolant outlet hose
(D) Engine coolant inlet hose

- With CVTF cooler (air cool)

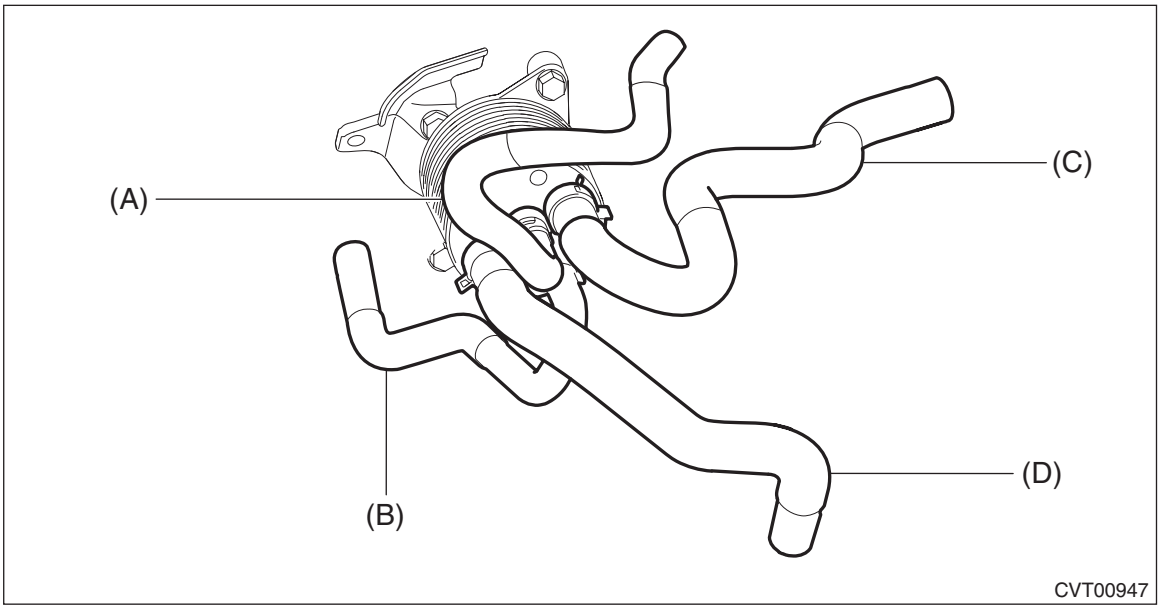

(A) CVTF cooler inlet hose
(B) CVTF cooler outlet hose
(C) Engine coolant outlet hose
(D) Engine coolant inlet hose

6) Install the harness clip.

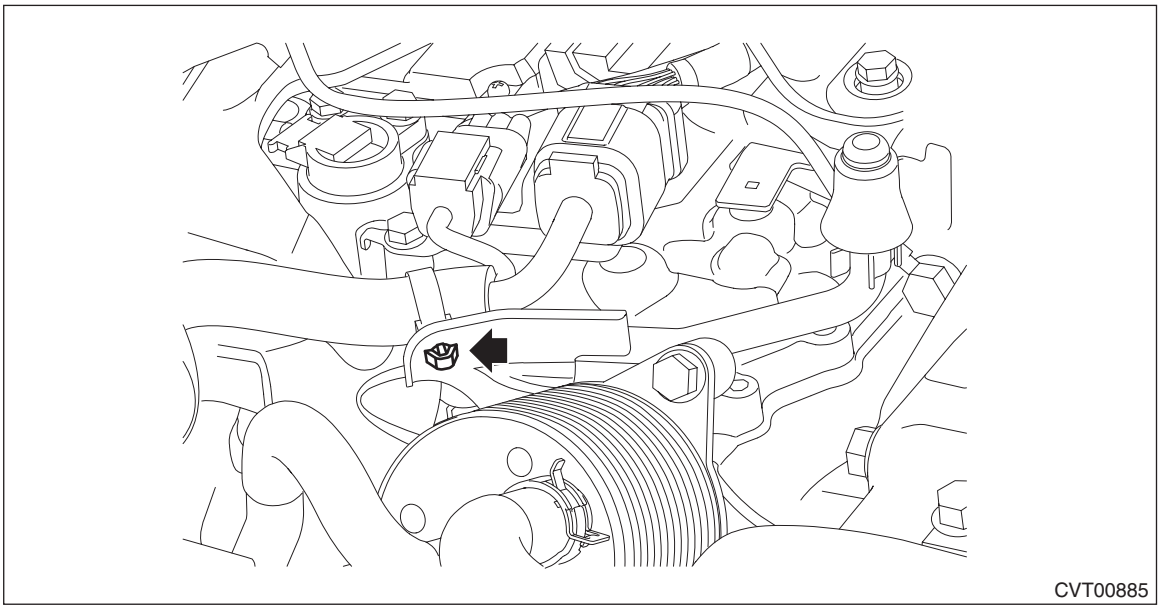

7) Install the air intake boot assembly. <Ref. to IN(H4DO)-10, INSTALLATION, Air Intake Boot.>
8) Connect the ground terminal to battery sensor. <Ref. to RC-4, BATTERY, NOTE, Repair Contents.>
9) Fill engine coolant. <Ref. to CO(H4DO)-15, REPLACEMENT, Engine Coolant.>
10) Adjust the CVTF level. <Ref. to CVT(TR580)-39, ADJUSTMENT, CVTF.>

C: DISASSEMBLY

1) Remove the CVTF cooler (with warmer feature).

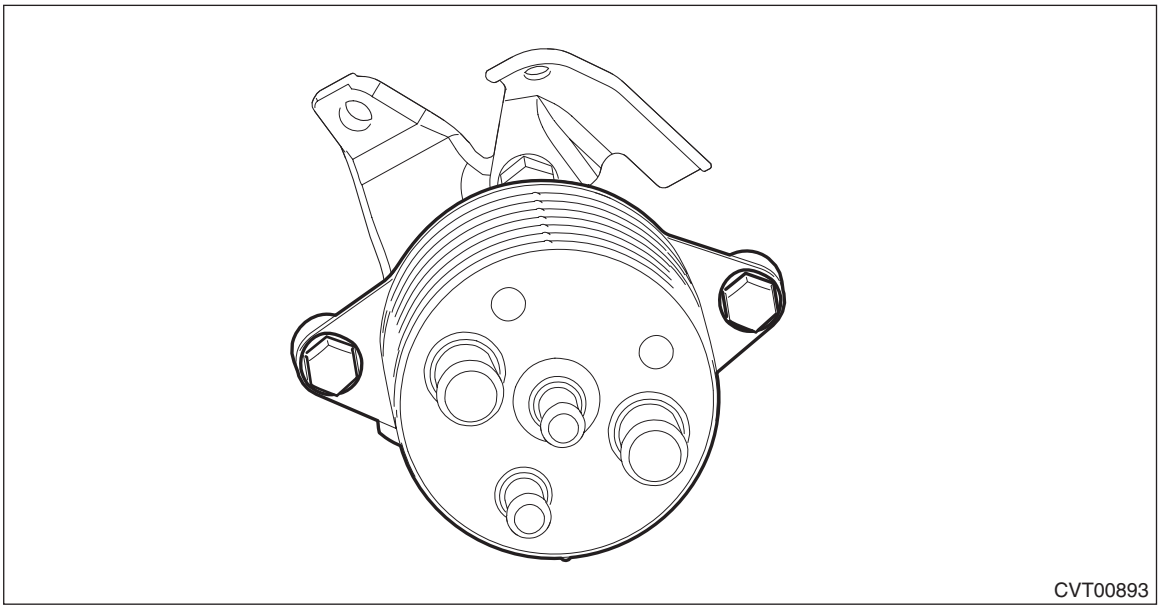

2) Remove the harness stay.

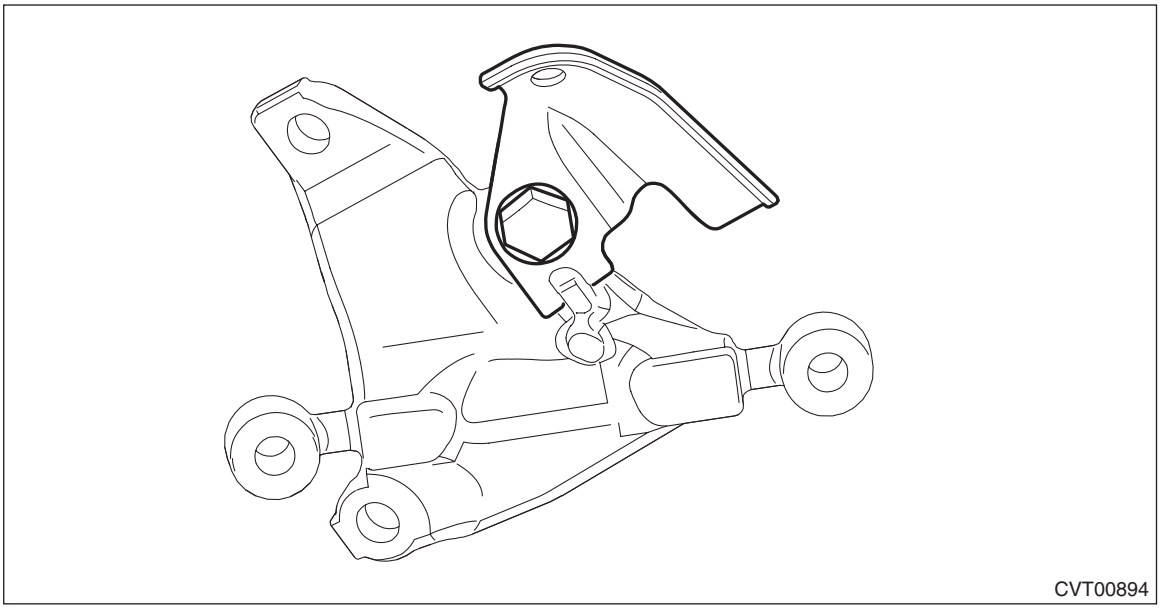

D: ASSEMBLY

1) Install the harness stay.

Tightening torque:
23 N·m (2.3 kgf-m, 17.0 ft-lb)

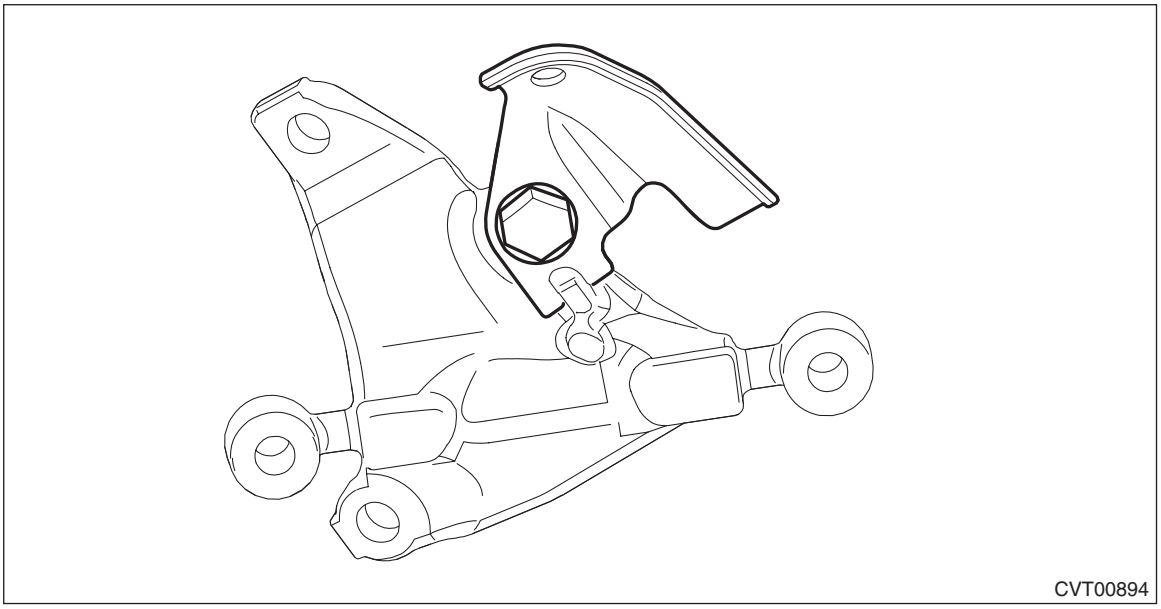

2) Install the CVTF cooler (with warmer feature).

Tightening torque:
23 N·m (2.3 kgf-m, 17.0 ft-lb)

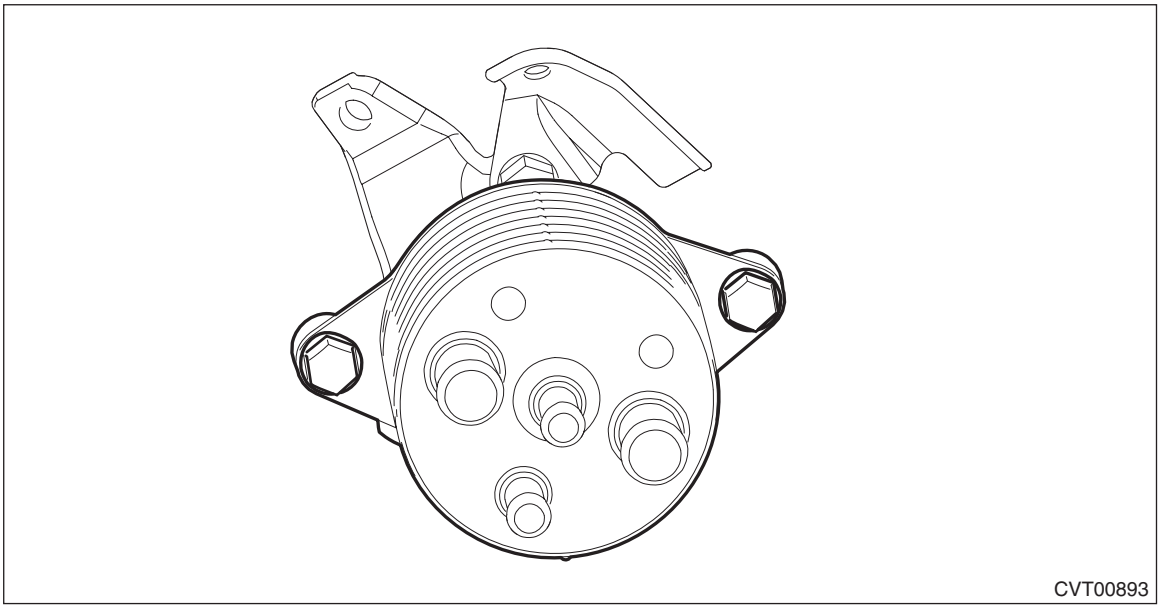

E: INSPECTION

Replace any faulty CVTF cooler hoses, CVTF cooler pipes and clamps found in the inspection below.
1) Check that there are no CVTF or engine coolant leaks from the connections.
2) Check the clamp for deformation.
3) Lightly bend the CVTF cooler hose and check for cracks in the surface or other damages.
4) Pinch the CVTF cooler hose with your fingers and check for poor elasticity. Also check for poor elasticity in the parts where the clamp was installed by pressing with your fingernail.
5) Check for peeling, cracks, and deformation at the tip of the hose.
6) Check the CVTF cooler (with warmer feature) for any damage.

26.CVTF Cooler Pipe and Hose

A: REMOVAL

CAUTION:
• Immediately after the vehicle has been running or after idling for a long time, the CVTF will be hot. Be careful not to burn yourself.
• If the CVTF is spilt over exhaust pipe, wipe it off with cloth to avoid emitting smoke or causing a fire.
• When removing the CVTF cooler pipe assembly on vehicle side, be careful not to bend the A/C pipe.

1) Lift up the vehicle.
2) Remove the under cover - front.
3) Remove the CVTF CVT inlet hose and CVTF CVT outlet hose.

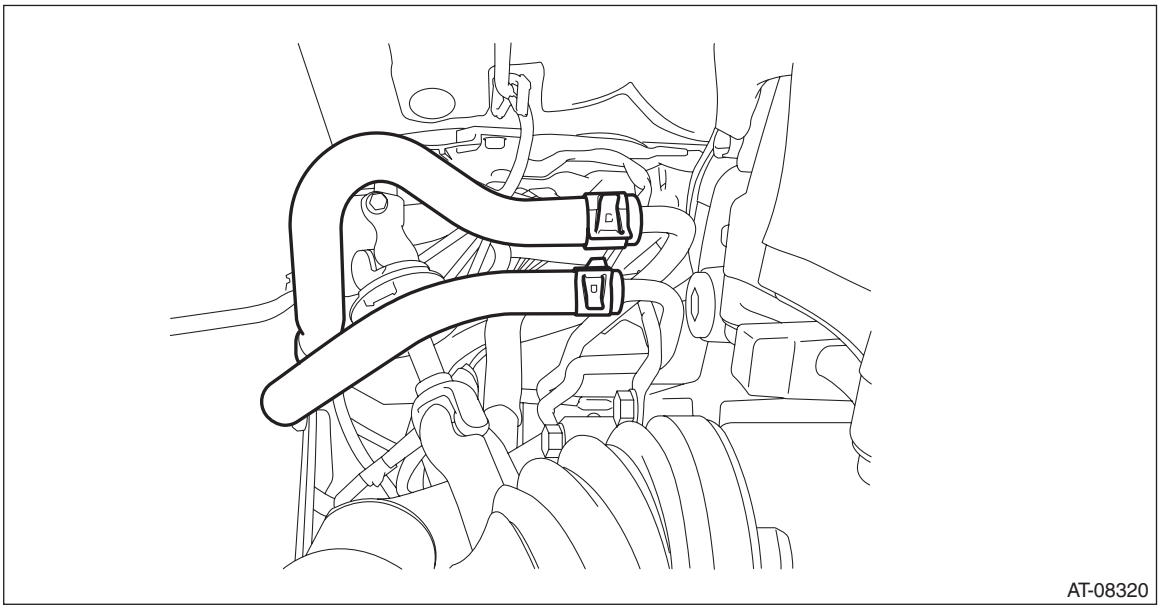

4) Lower the vehicle.
5) Remove the battery and battery box. <Ref. to SC(H4DO)-63, REMOVAL, Battery.>
6) Remove the front bumper. <Ref. to EI-34, REMOVAL, Front Bumper.>
7) Remove the headlight assembly LH. <Ref. to LI-30, REMOVAL, Headlight Assembly.>
8) Remove the CVTF cooler (air cool) inlet hose and the CVTF cooler (air cool) outlet hose.

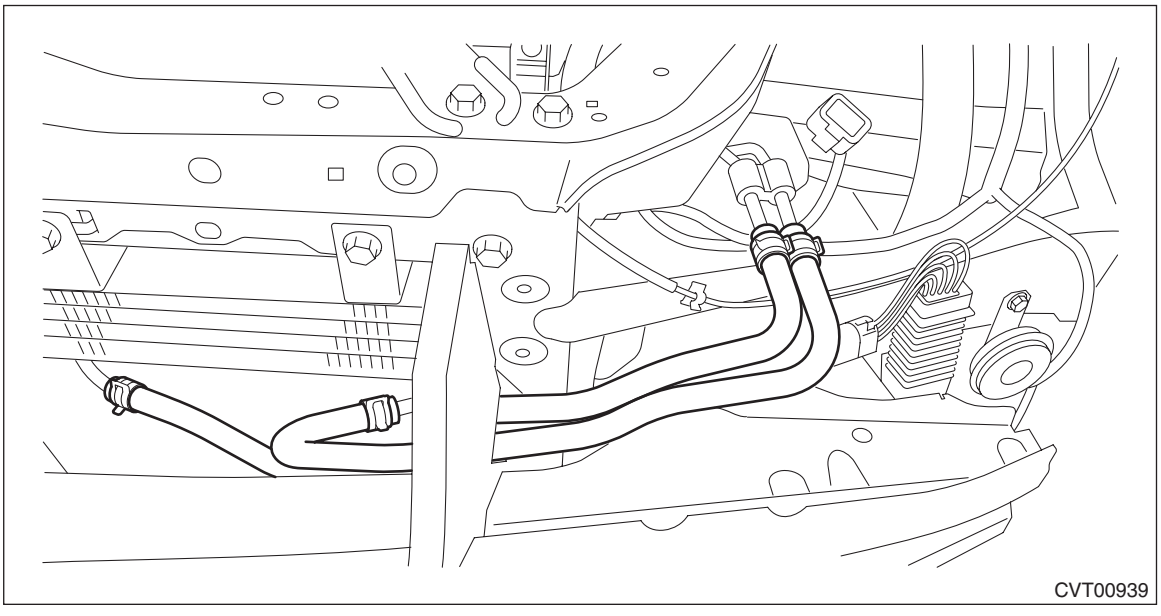

9) Remove the CVTF cooler pipe assembly mounting bolt.

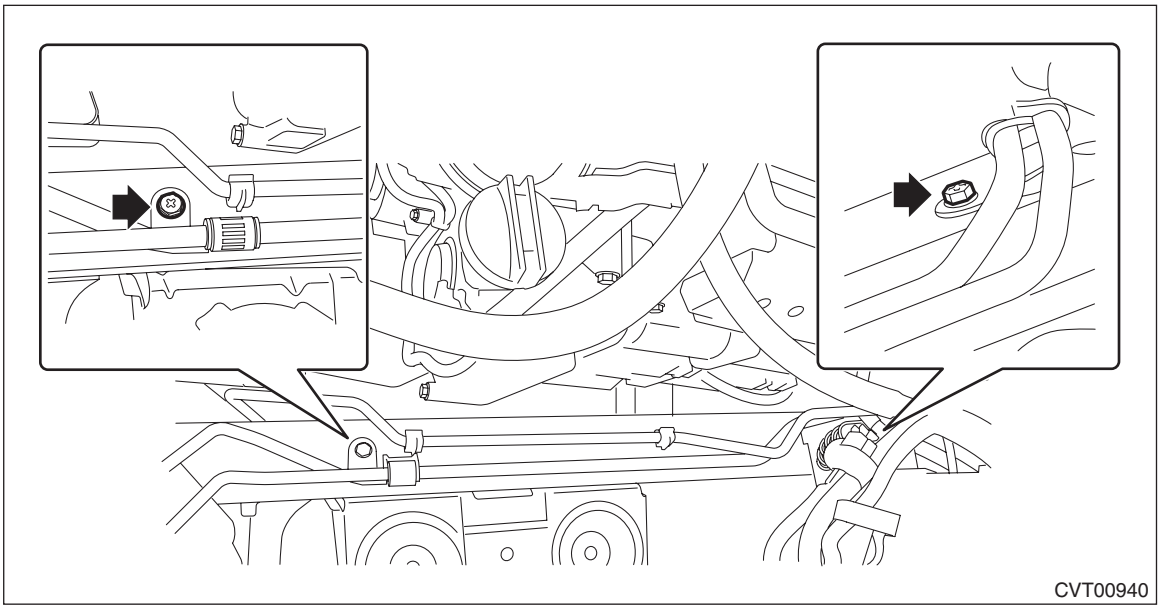

10) Detach the A/C pipe from clip.
11) Remove the CVTF cooler pipe assembly.
12) Remove the clip (A), and loosen the clamps (B) and (C).

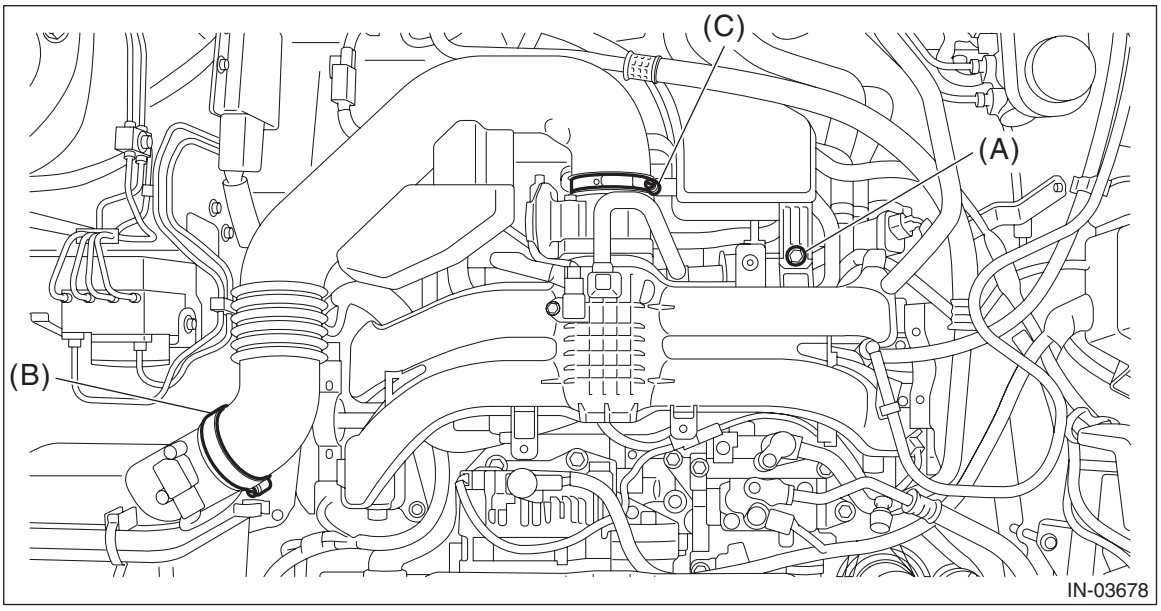

13) Remove the air intake boot assembly, and move it to the left side wheel apron.

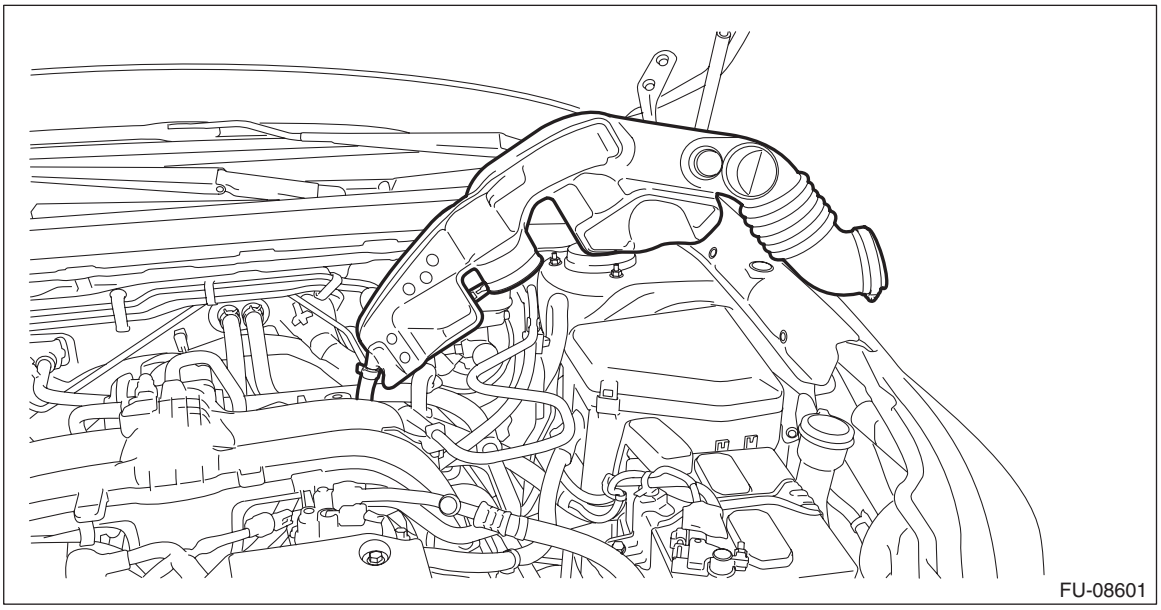

14) Disconnect the transmission radio ground terminal and transmission harness connector, and remove the harness clip.

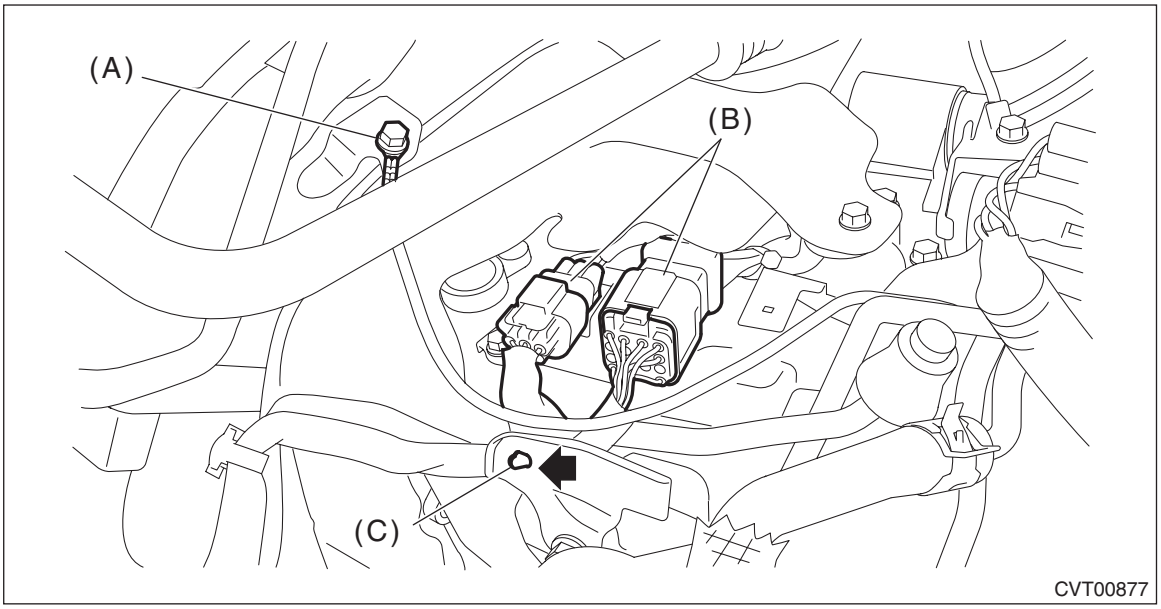

(A) Transmission radio ground terminal
(B) Transmission harness connectors
(C) Harness clip

15) Remove the CVTF cooler hose.

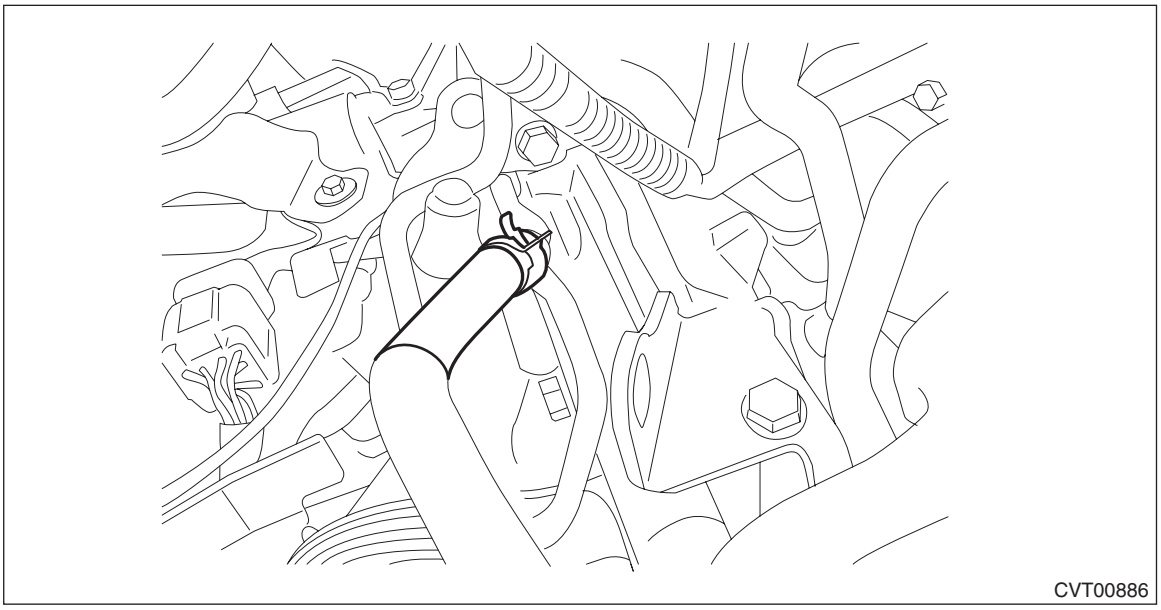

16) Remove the CVTF cooler (with warmer feature), and fix it on the vehicle with a string.

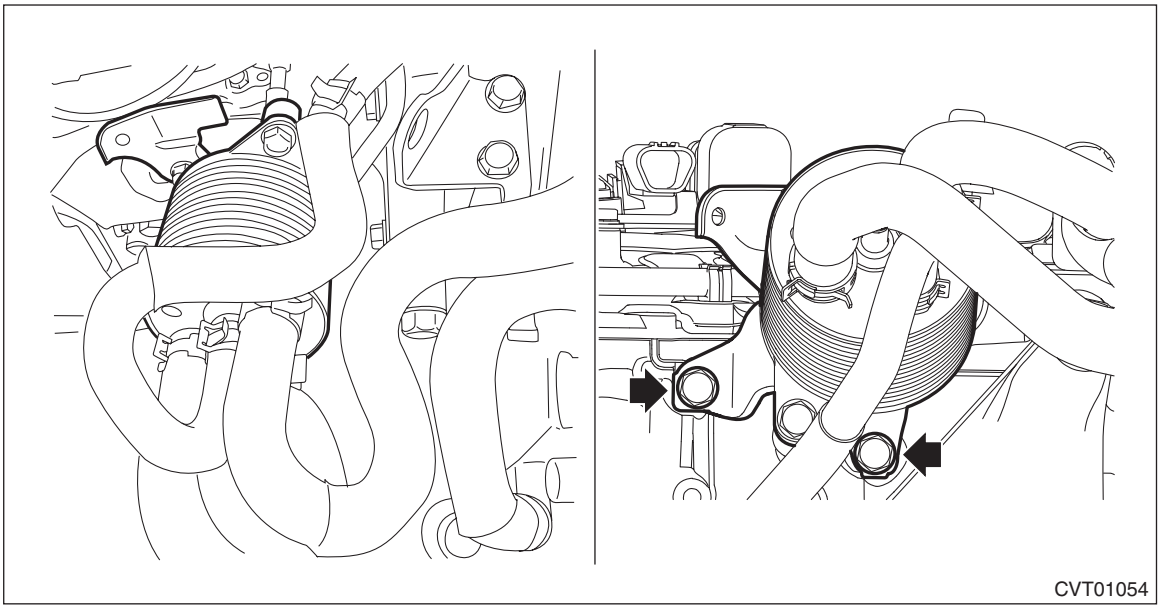

17) Remove the transmission case cover.

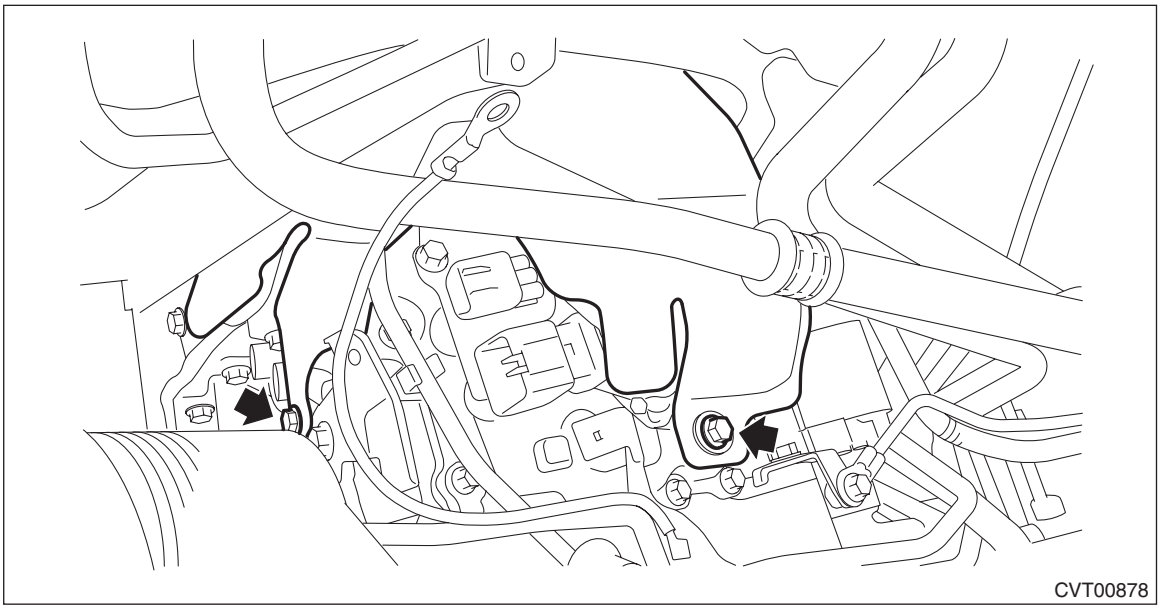

18) Remove the air breather hose from the transmission hanger, and remove the transmission hanger and the transmission radio ground cord.

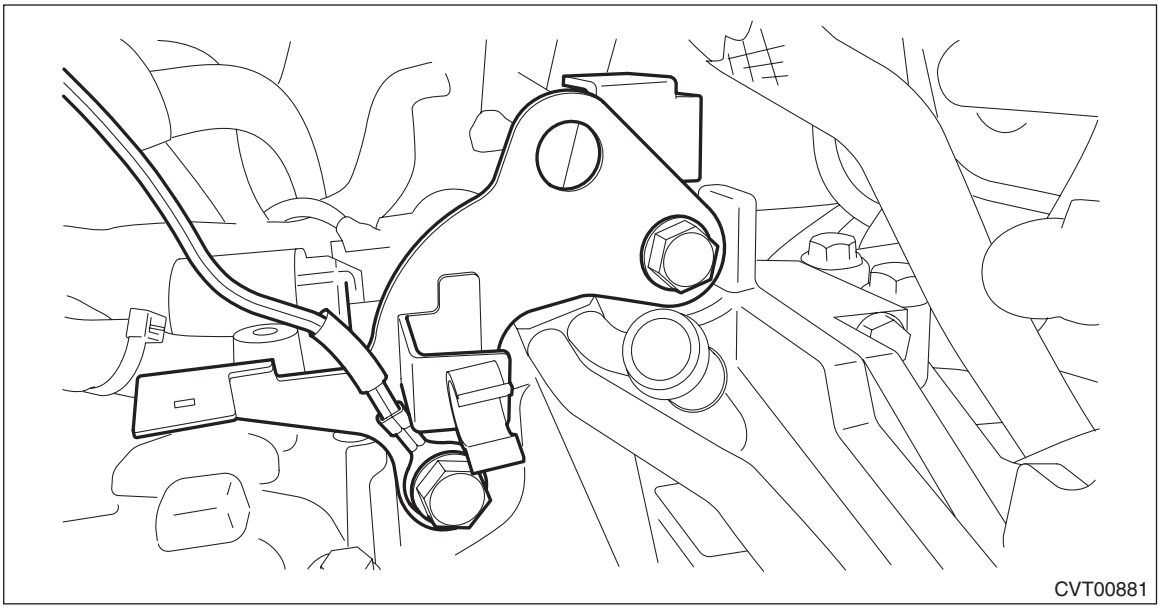

19) Remove the CVTF cooler pipe COMPL from the transmission body.

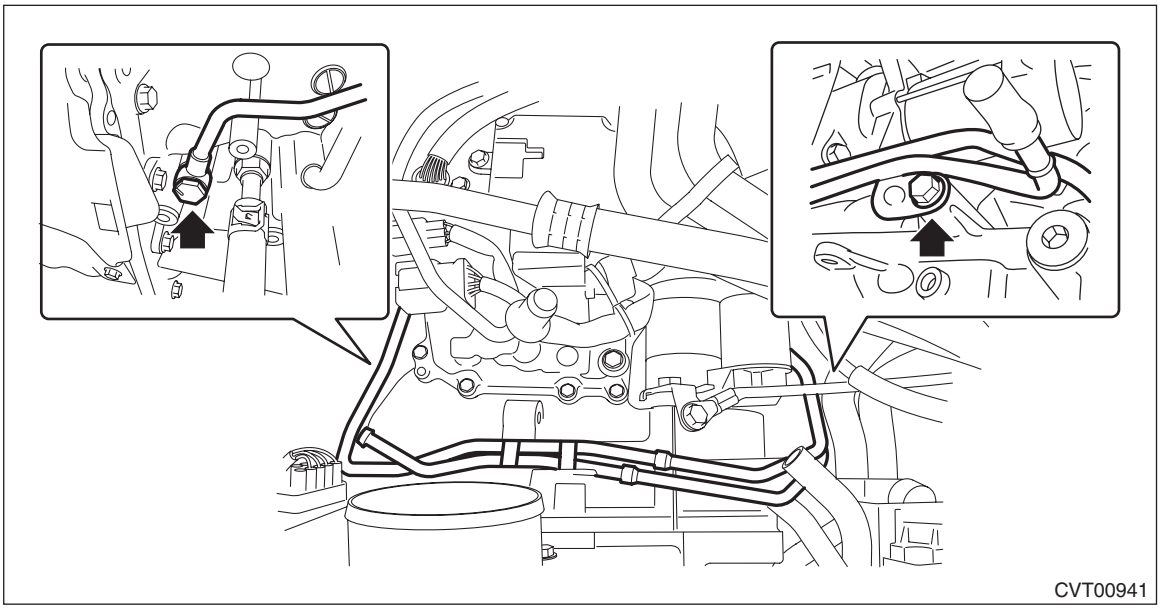

B: INSTALLATION

CAUTION:
When installing the CVTF cooler pipe assembly on vehicle side, be careful not to bend the A/C pipe.
1) Temporarily install the CVTF cooler pipe COMPL, transmission hanger and transmission radio ground cord to the transmission.

NOTE:
Use a new gasket.
2) Tighten the union screws and bolts in the order of (A) → (B) → (C).

Tightening torque:
T1: 35 N·m (3.6 kgf-m, 25.8 ft-lb)
T2: 40 N·m (4.1 kgf-m, 29.5 ft-lb)
T3: 41 N·m (4.2 kgf-m, 30.2 ft-lb)

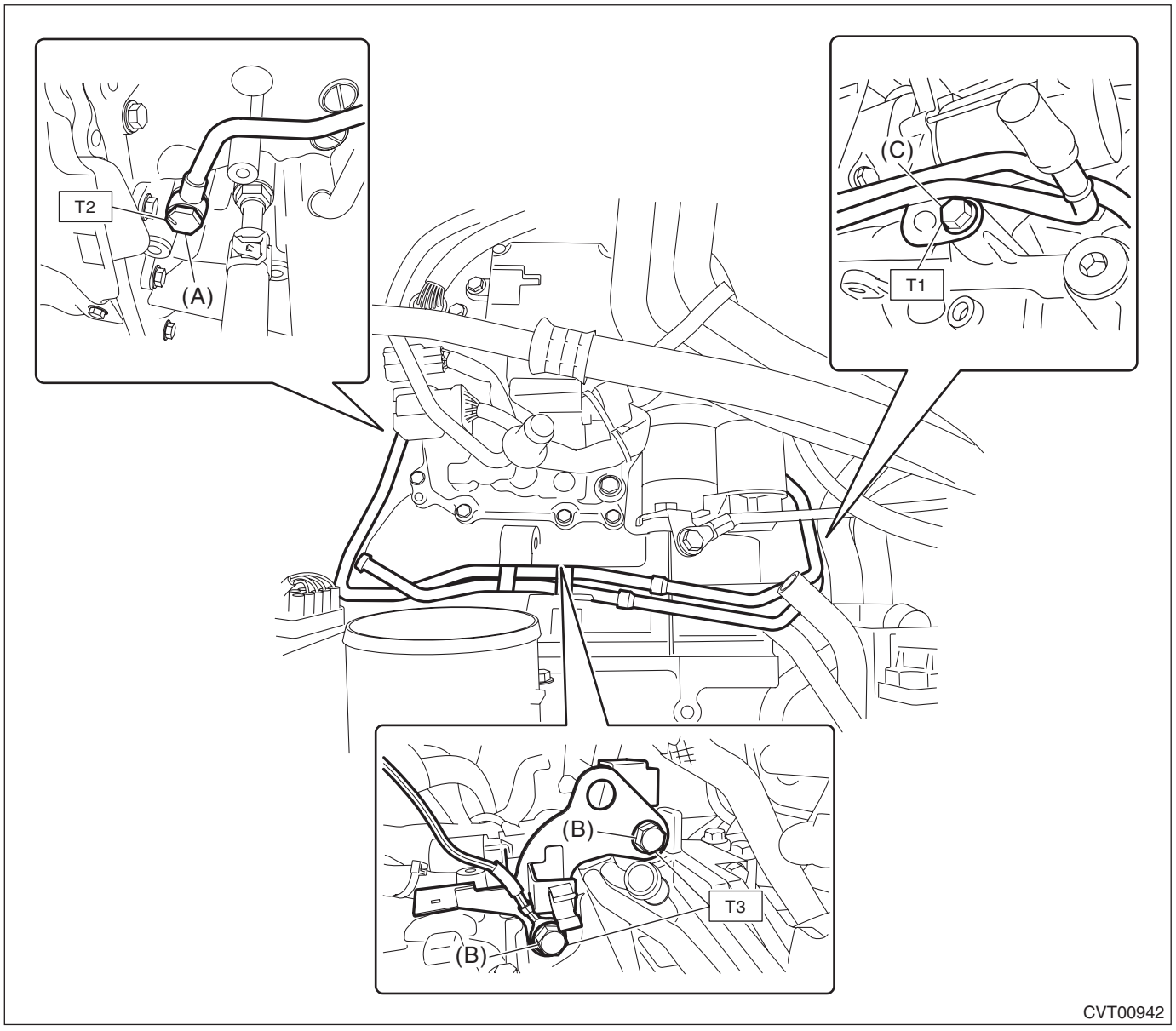

3) Install the air breather hose. <Ref. to CVT(TR580)-192, INSTALLATION, Air Breather Hose.>
4) Insert the transmission case cover (small) between transmission case cover (large) and transmission to install.

NOTE:
When inserting, be careful that the insulator inside transmission case cover is not turned over.

Tightening torque:
7 N·m (0.7 kgf-m, 5.3 ft-lb)

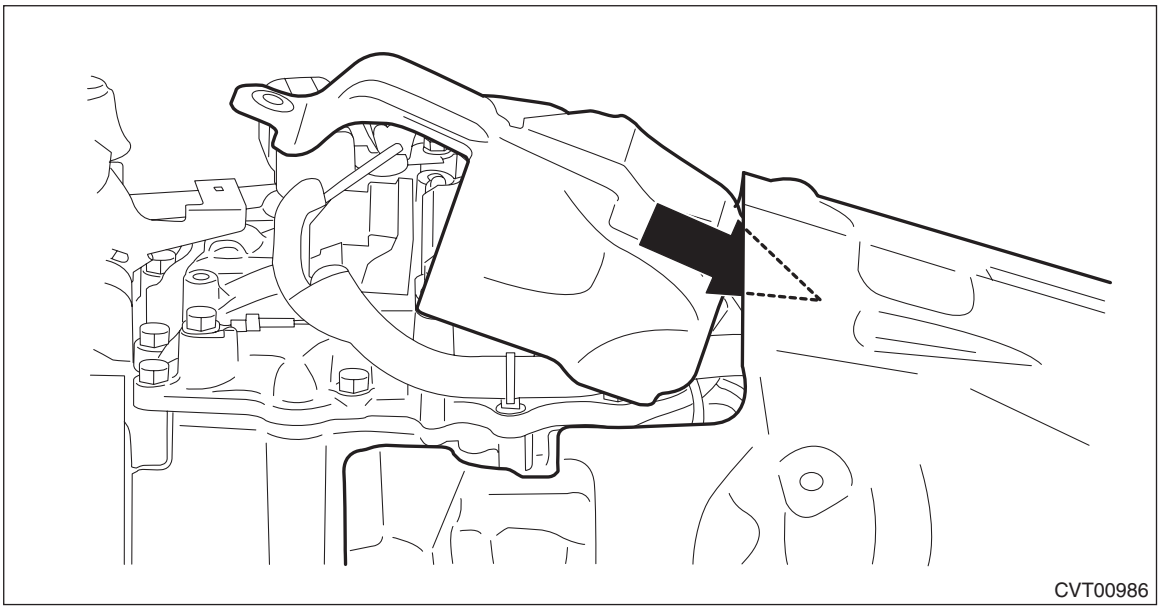
CVT00986

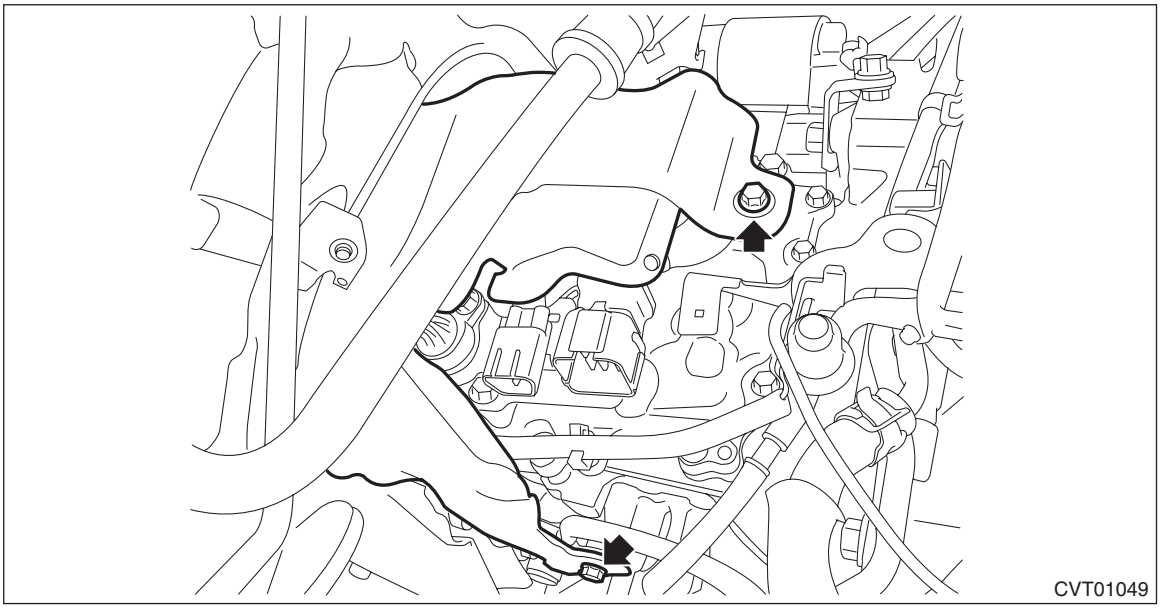
CVT01049

5) Install the CVTF cooler (with warmer feature).

Tightening torque:
23 N·m (2.3 kgf-m, 17.0 ft-lb)

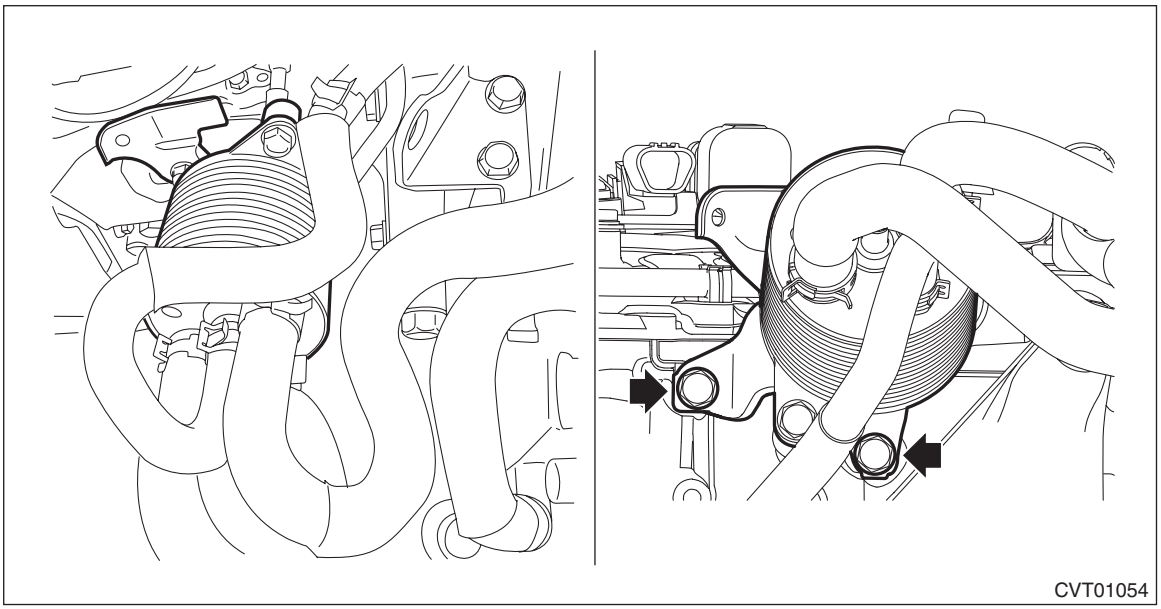

6) Replace the CVTF cooler hose with a new part. <Ref. to CVT(TR580)-175, DISASSEMBLY, CVTF Cooler (With Warmer Function).> <Ref. to CVT(TR580)-176, ASSEMBLY, CVTF Cooler (With Warmer Function).>
7) Install the CVTF cooler hose.

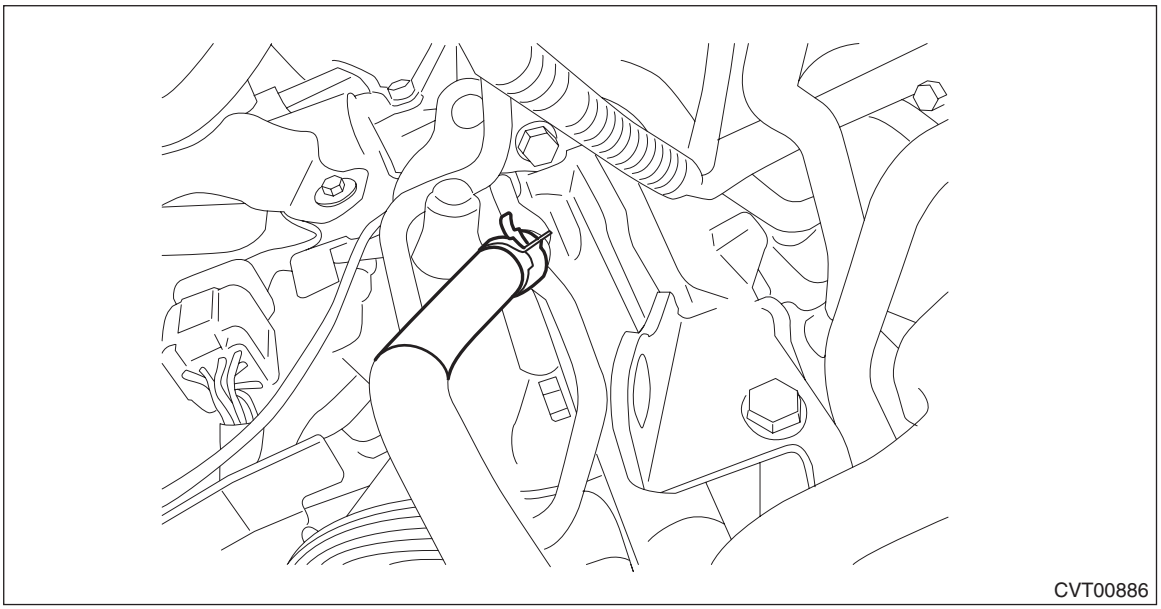

8) Install the harness clip, and connect the following transmission radio ground terminal and transmission harness connector.

Tightening torque:
13 N·m (1.3 kgf-m, 9.6 ft-lb)

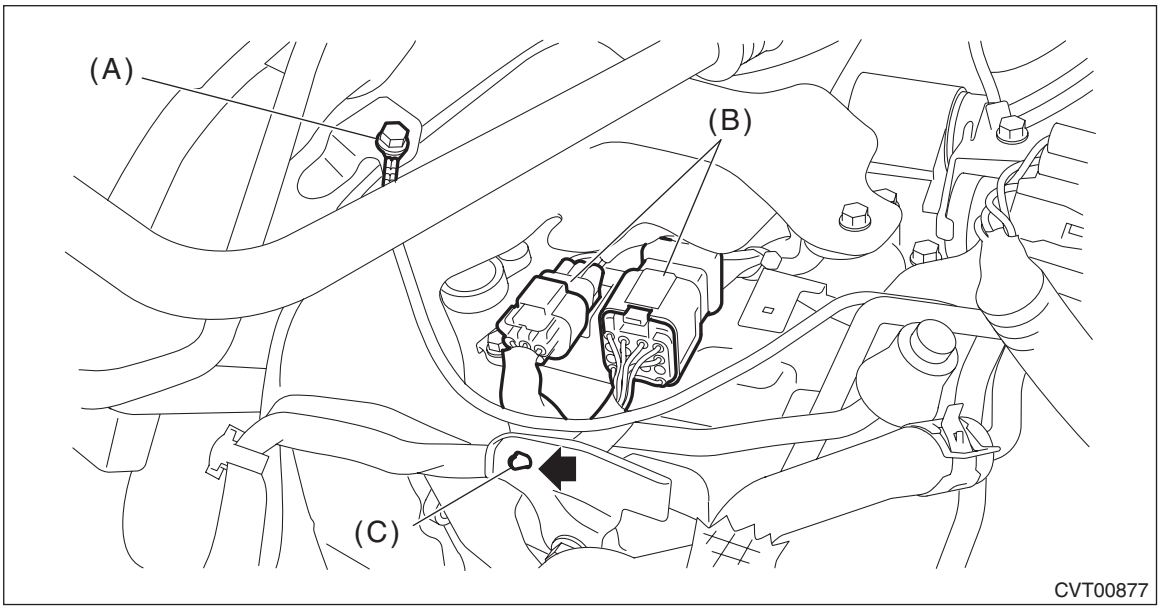

(A) Transmission radio ground terminal
(B) Transmission harness connectors
(C) Harness clip

9) Install the CVTF cooler pipe assembly.

Tightening torque:
7.5 N·m (0.8 kgf-m, 5.5 ft-lb)

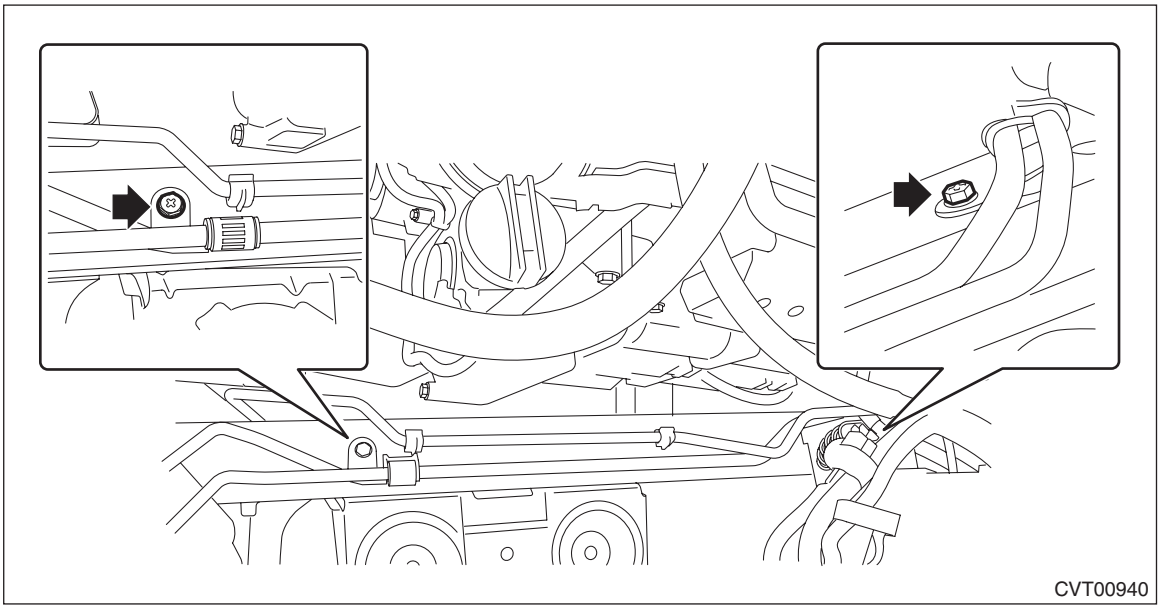

10) Install the A/C pipe to clip.
11) Install the CVTF cooler (air cool) inlet hose and the CVTF cooler (air cool) outlet hose.

NOTE:
Use new CVTF cooler (air cool) inlet hose and the CVTF cooler (air cool) outlet hose.

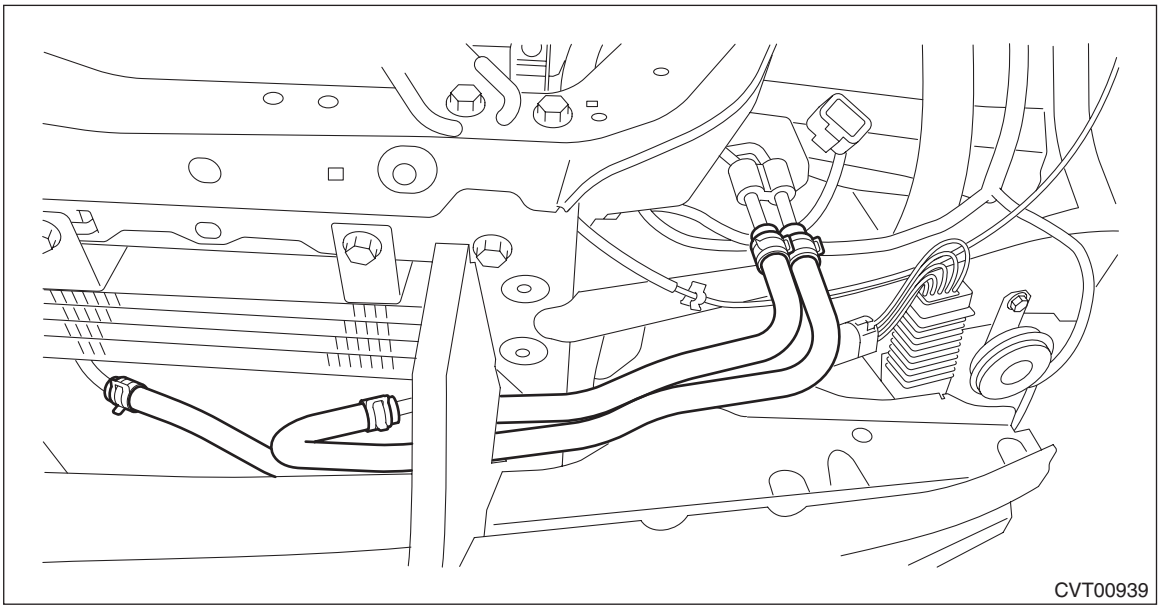

12) Install the headlight assembly LH. <Ref. to LI-31, INSTALLATION, Headlight Assembly.>
13) Install the front bumper. <Ref. to EI-38, INSTALLATION, Front Bumper.>
14) Lift up the vehicle.
15) Install the CVTF CVT inlet hose and CVTF CVT outlet hose.

NOTE:
Use new CVTF CVT inlet hose and CVTF CVT outlet hose.

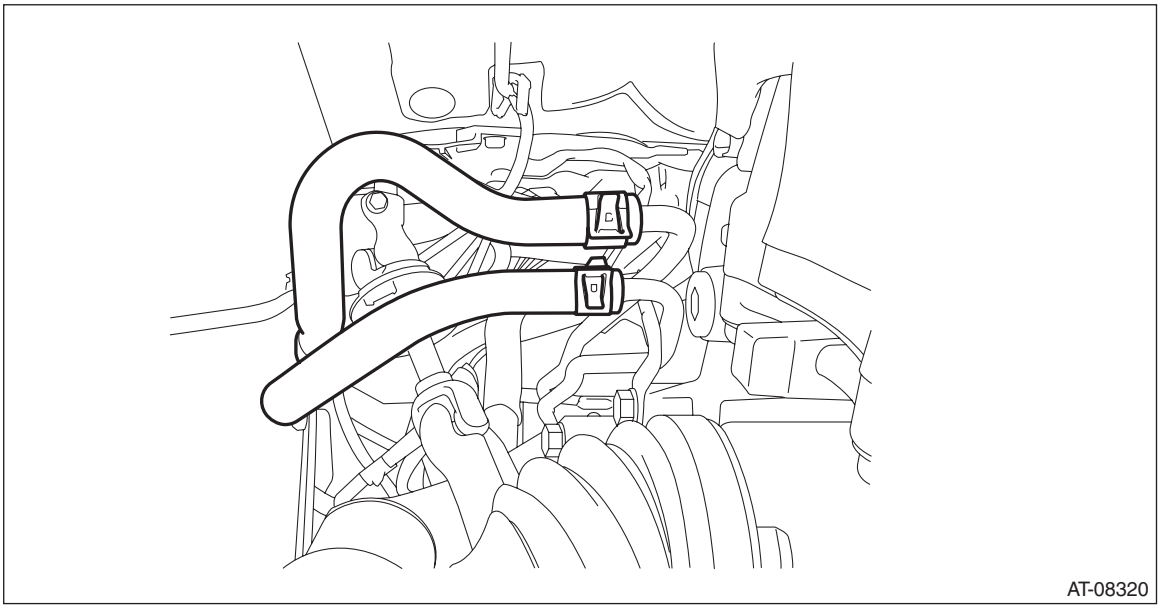

16) Lower the vehicle.
17) Install the air intake boot assembly. <Ref. to IN(H4DO)-10, INSTALLATION, Air Intake Boot.>
18) Install the battery box and battery. <Ref. to SC(H4DO)-64, INSTALLATION, Battery.>
19) Adjust the CVTF level and check there is no leakage. <Ref. to CVT(TR580)-39, ADJUSTMENT, CVTF.>

C: INSPECTION

Repair or replace any faulty hoses, pipes, clamps, and washers found in the inspection below.

- Check for CVTF leaks in joints at the transmission, CVTF cooler (air cool), pipes, and hoses.
- Check the clamp for deformation.
- Lightly bend the hose and check for cracks in the surface or other damages.
- Pinch the hose with your fingers and check for poor elasticity. Also check for poor elasticity in the parts where the clamp was installed by pressing with your fingernail.
- Check for peeling, cracks, and deformation at the tip of the hose.

27.CVTF Cooler (Air Cooling)

A: REMOVAL

1) Disconnect the ground terminal from battery sensor. <Ref. to RC-4, BATTERY, NOTE, Repair Contents.>
2) Remove the front bumper. <Ref. to EI-34, REMOVAL, Front Bumper.>
3) Remove the headlight assembly LH. <Ref. to LI-30, REMOVAL, Headlight Assembly.>
4) Remove the CVTF cooler (air cool) inlet hose and the CVTF cooler (air cool) outlet hose.

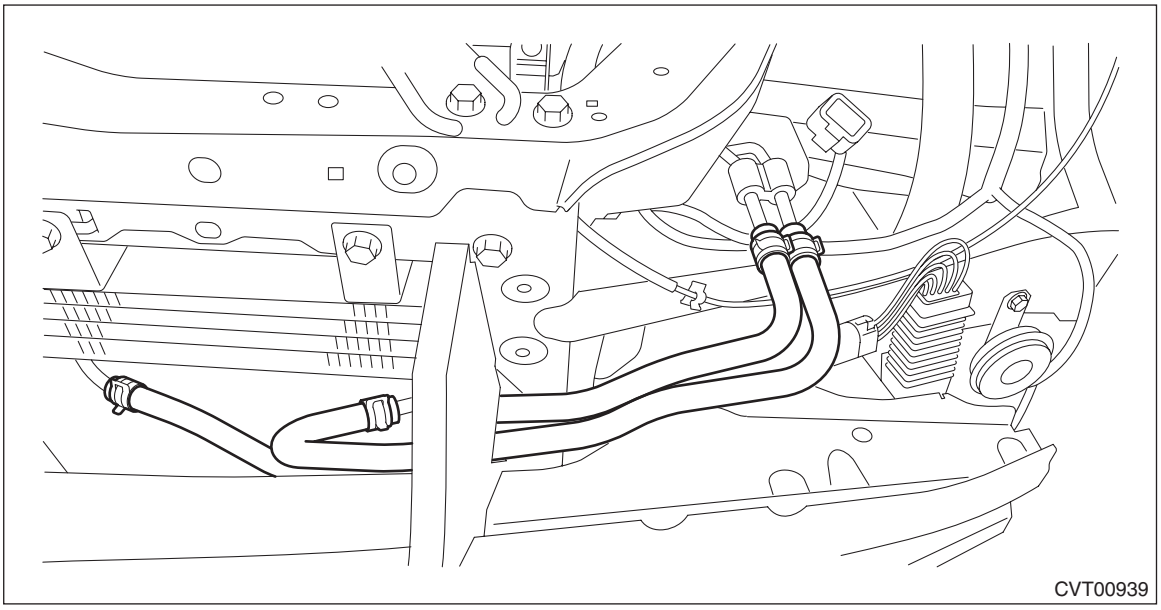
CVT00939

5) Remove the CVTF cooler (air cool).

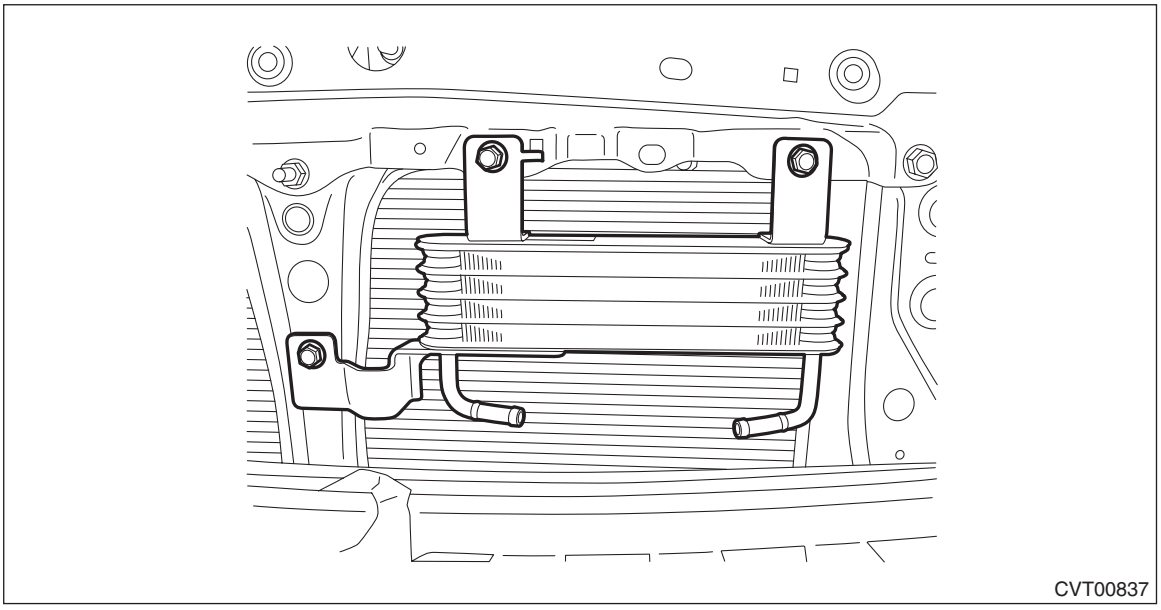
CVT00837

B: INSTALLATION

Install in the reverse order of removal.

Tightening torque:
12 N·m (1.2 kgf-m, 8.9 ft-lb)

NOTE:
Use new CVTF cooler (air cool) inlet hose and the CVTF cooler (air cool) outlet hose.

C: INSPECTION

Check that the CVTF cooler (air cool) has no deformation, cracks or other damages.

28.Air Breather Hose

A: REMOVAL

1. FRONT DIFFERENTIAL SIDE

1) Remove the clip (A), and loosen the clamps (B) and (C).

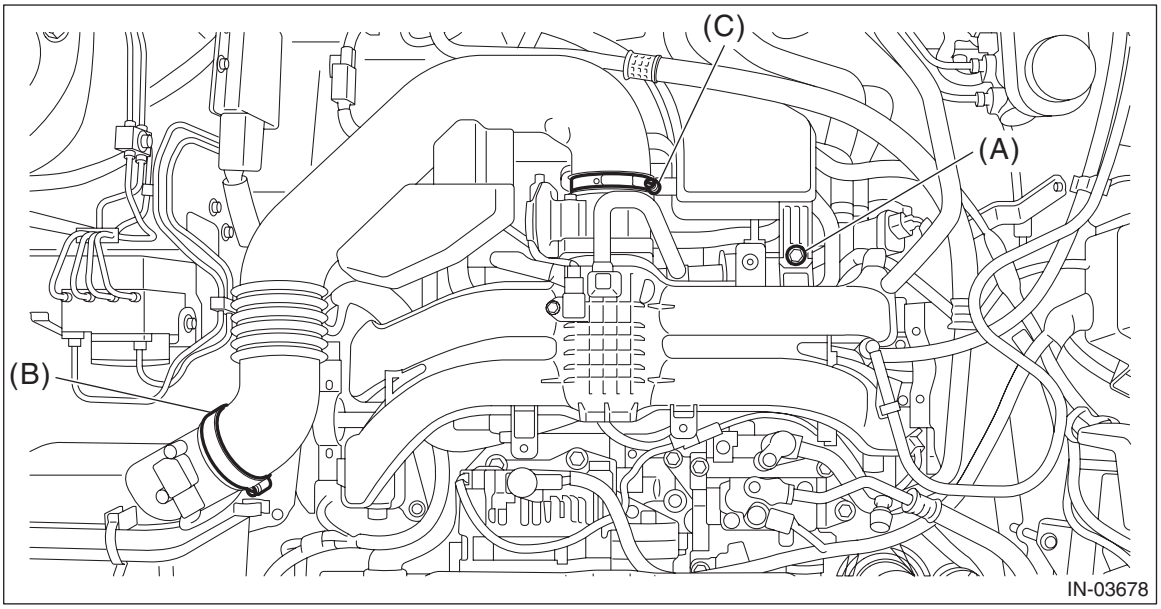

2) Remove the air intake boot assembly, and move it to the left side wheel apron.

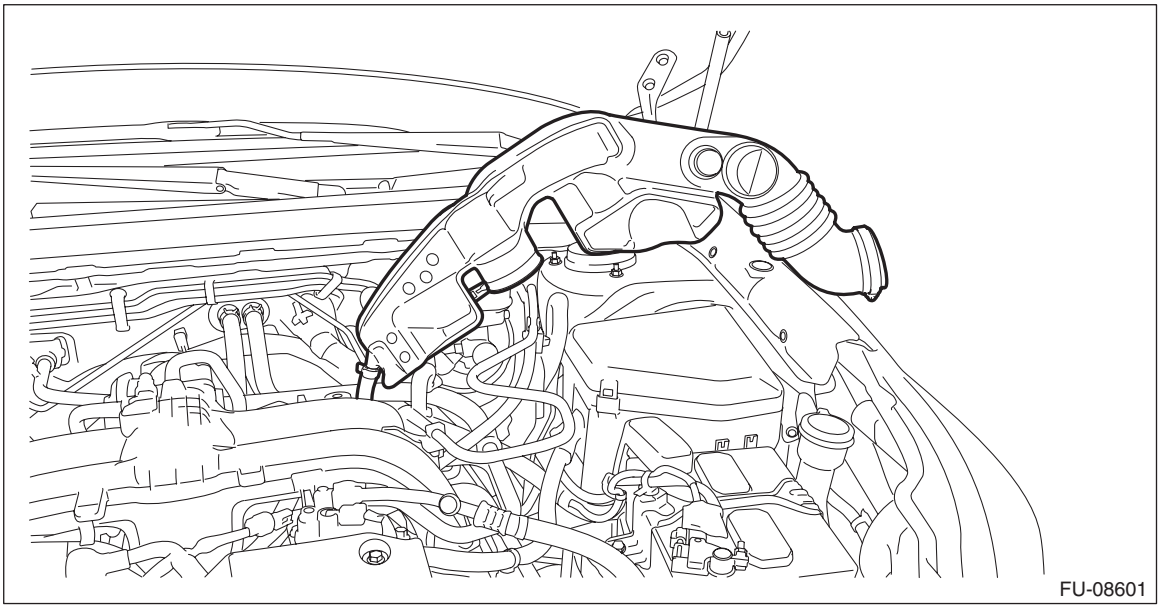

3) Remove the air breather hose.

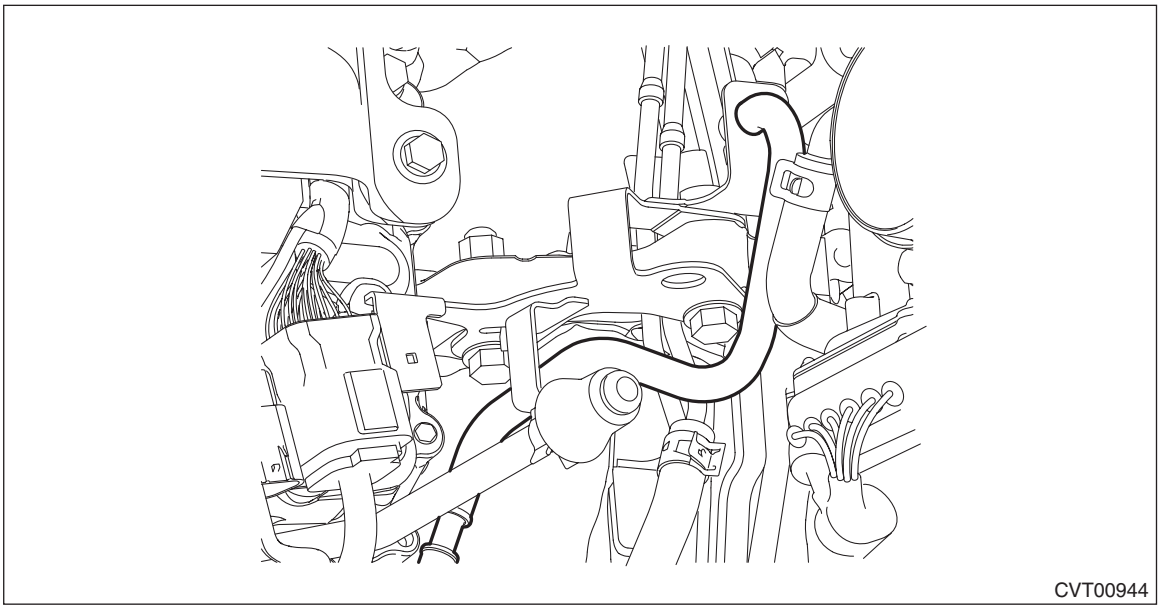

2. TRANSMISSION CASE SIDE

1) Remove the transmission assembly. <Ref. to CVT(TR580)-63, REMOVAL, Automatic Transmission Assembly.>
2) Remove the transmission case cover.

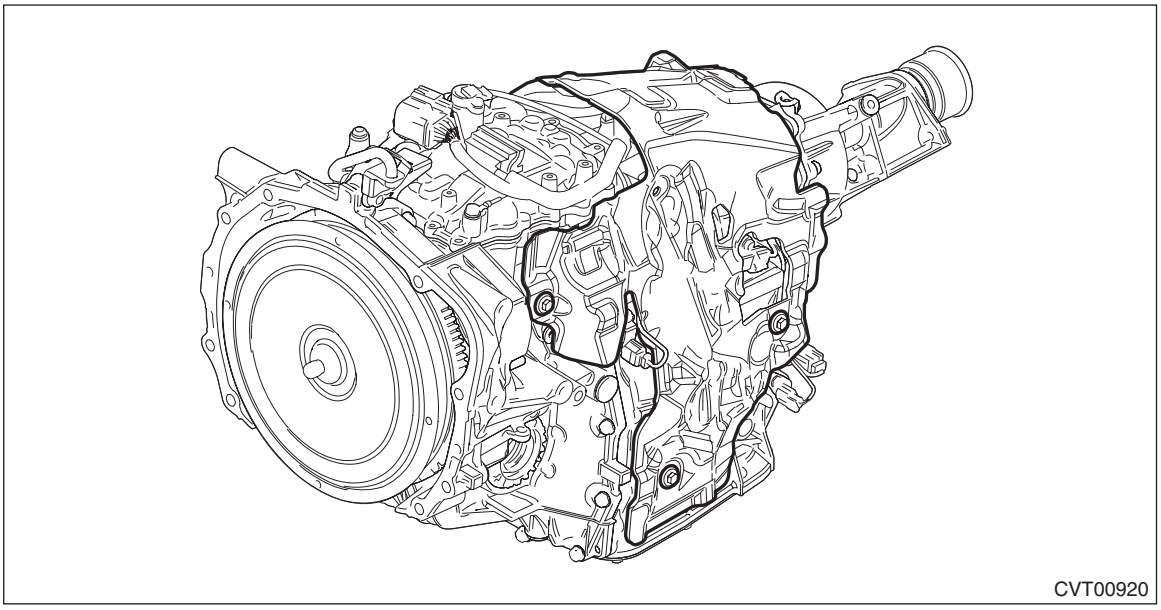

3) Remove the air breather hose.

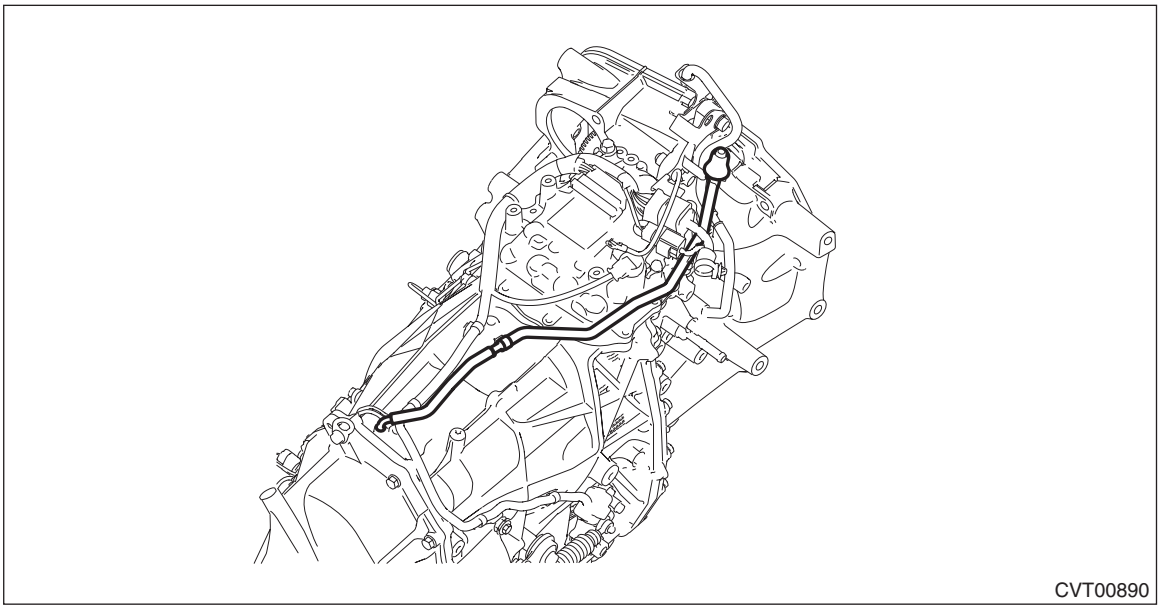
CVT00890

B: INSTALLATION

1. FRONT DIFFERENTIAL SIDE

1) Install the air breather hose.

NOTE:
Securely insert the air breather hose until the hose end contacts the catch of the transmission hanger.

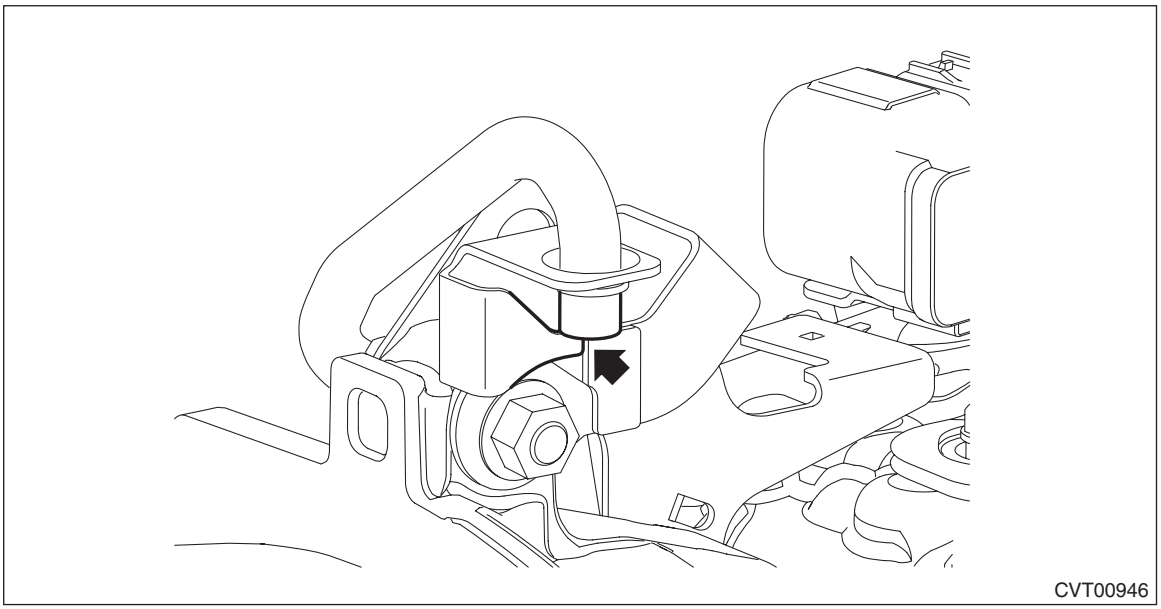
CVT00946

2) Install the air intake boot assembly. <Ref. to IN(H4DO)-10, INSTALLATION, Air Intake Boot.>

2. TRANSMISSION CASE SIDE

1) Install the air breather hose.
2) Install the transmission case cover.

Tightening torque:
8 N·m (0.8 kgf-m, 5.9 ft-lb)

3) Install the transmission assembly. <Ref. to CVT(TR580)-79, INSTALLATION, Automatic Transmission Assembly.>

C: INSPECTION

Check the hose for peeling, crack or clogging.

29.Drive Plate

A: REMOVAL

1) Remove the transmission assembly. <Ref. to CVT(TR580)-63, REMOVAL, Automatic Transmission Assembly.>
2) Set the ST.

NOTE:
Set the ST to the drive plate referring to the illustration.
ST 498497300 CRANKSHAFT STOPPER

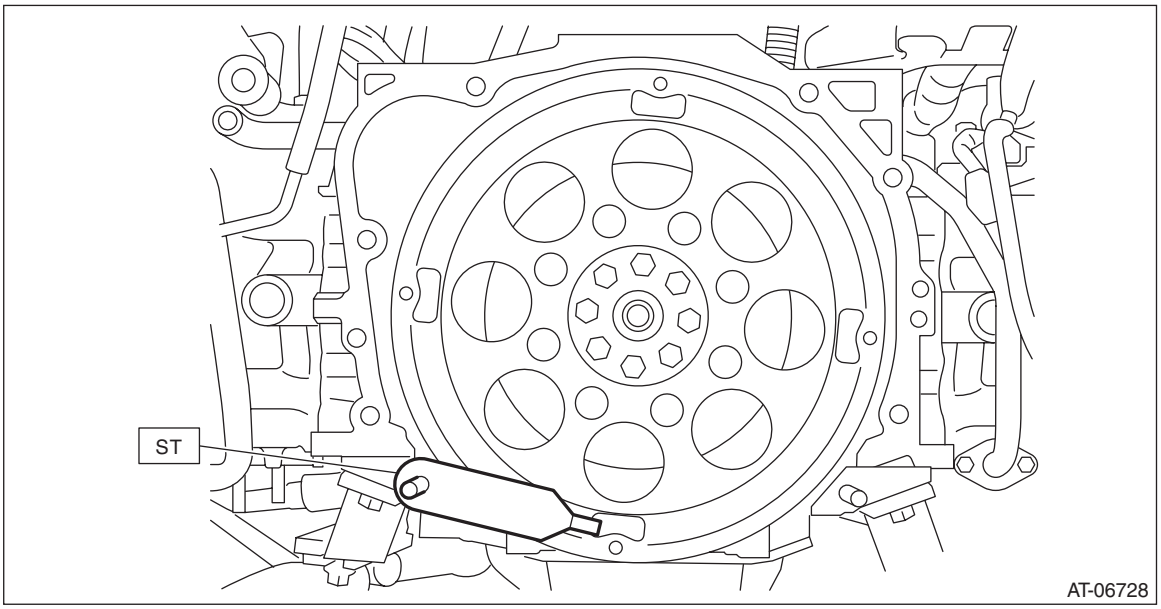

3) Remove the drive plate and reinforcement drive plate.

B: INSTALLATION

1) Temporarily install the drive plate and reinforcement drive plate.

NOTE:
Align the knock pin hole of the crankshaft position sensor plate to the knock pin of the crankshaft to secure the knock pin.

2) Set the ST.

NOTE:
Set the ST to the drive plate referring to the illustration.
ST 498497300 CRANKSHAFT STOPPER

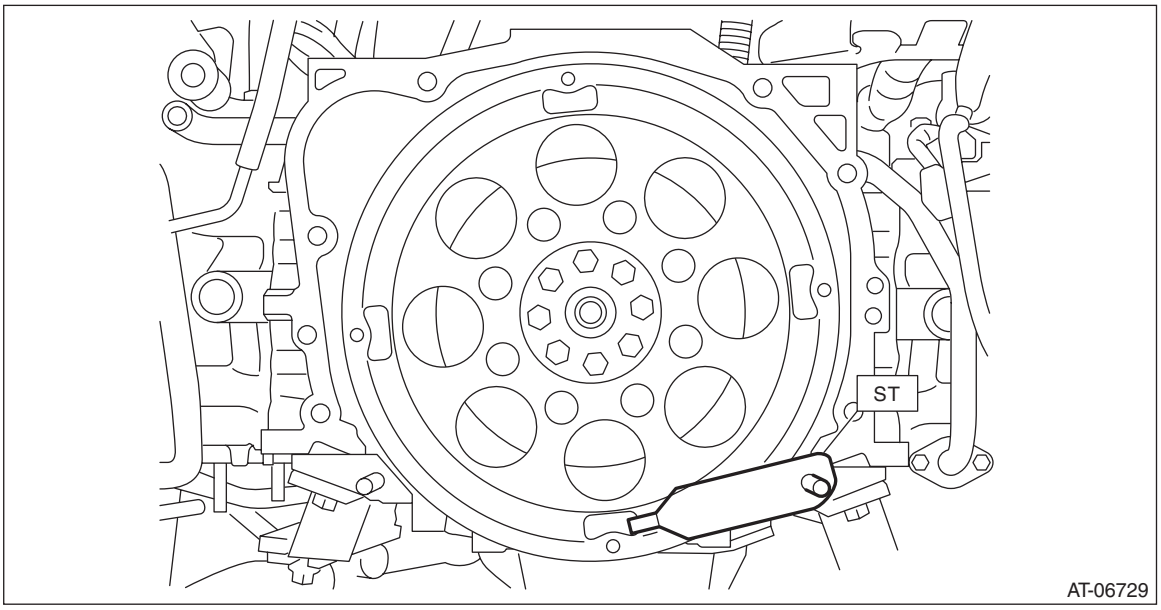

3) Tighten the drive plate mounting bolt in two stages.
(1) Tighten the drive plate mounting bolt.

Tightening torque:
30 N·m (3.1 kgf-m, 22.1 ft-lb)

(2) While checking the tightening angle with the angle gauge, tighten the drive plate mounting bolts to the specified angle.

Tightening angle:
30° — 35°

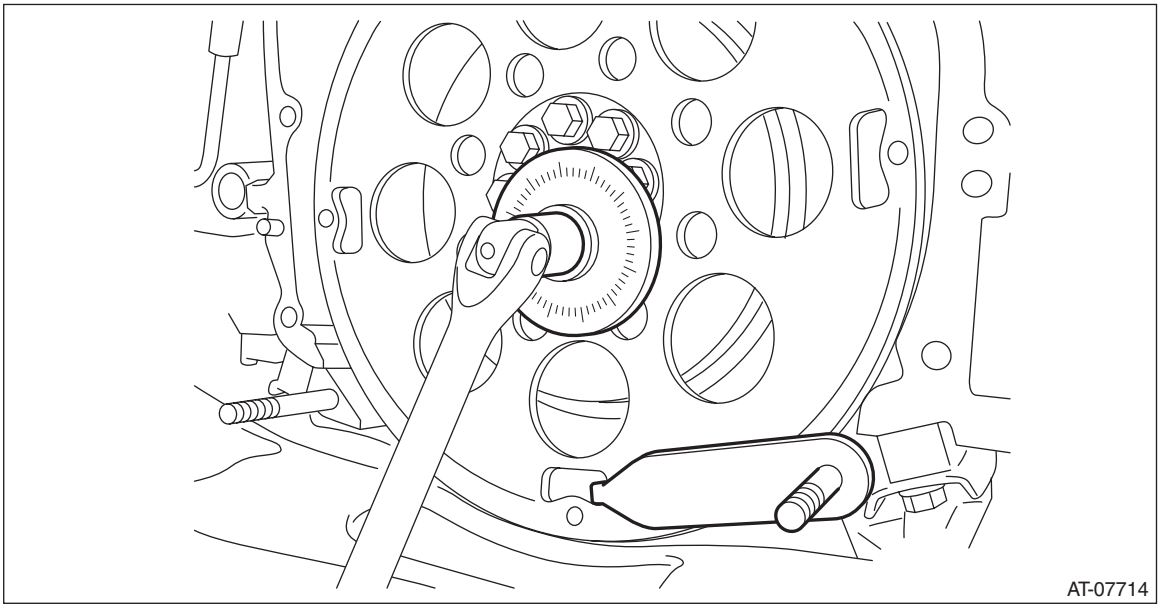

4) Install the transmission assembly. <Ref. to CVT(TR580)-79, INSTALLATION, Automatic Transmission Assembly.>

C: INSPECTION

Check the drive cable for damage.

30.Torque Converter Assembly

A: REMOVAL

1) Remove the transmission assembly. <Ref. to CVT(TR580)-63, REMOVAL, Automatic Transmission Assembly.>
2) Pull out the torque converter assembly horizontally.

CAUTION:
Do not scratch the inside of engaging parts.

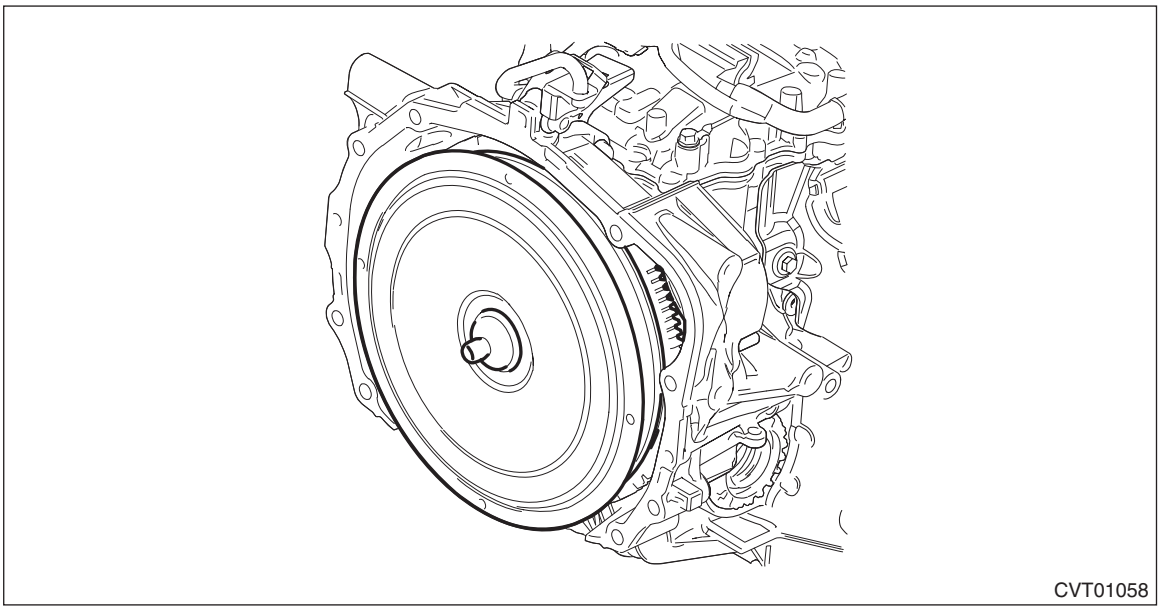

3) Remove the O-ring from the input shaft.

B: INSTALLATION

1) Install the O-ring to the input shaft.

NOTE:
- Use new O-rings.
- Apply CVTF to the O-rings.

2) While holding the torque converter assembly by hand, carefully install it into the torque converter case.

NOTE:
- Apply CVTF to the oil seal lip.
- Do not damage the oil seal and O-ring.

3) Engage the splines while gently rotating the torque converter assembly by hand, and securely insert the assembly.

4) Measure depth “A”, from converter case end surface to drive plate contacting surface.

Standard (reference):
6.8 mm (0.268 in) or less

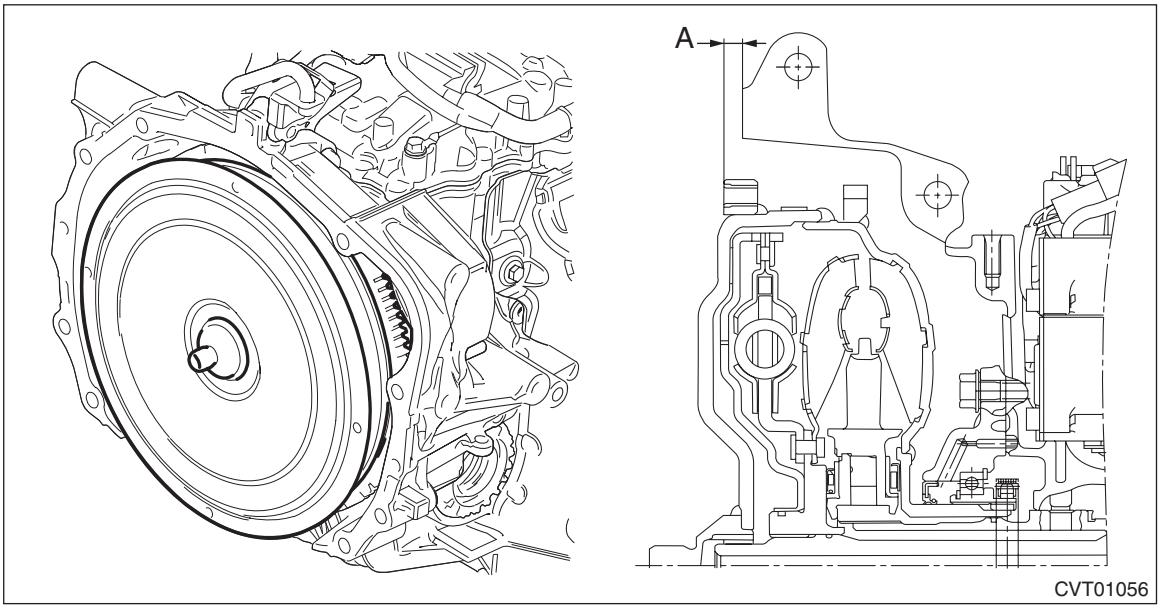

5) Install the transmission assembly. <Ref. to CVT(TR580)-79, INSTALLATION, Automatic Transmission Assembly.>

C: INSPECTION

- Check the protrusion of torque converter center (front boss) is not deformed or damaged.
- Check the ring gear and exterior for break or damage.

31.Preparation for Overhaul

A: GENERAL DESCRIPTION

Before disassembling and assembling the transmission, follow the following procedures to prepare.

B: PROCEDURE

1) Clean the transmission exterior.
2) Attach the ST on the transmission assembly.
ST 18632AA000 STAND ASSY

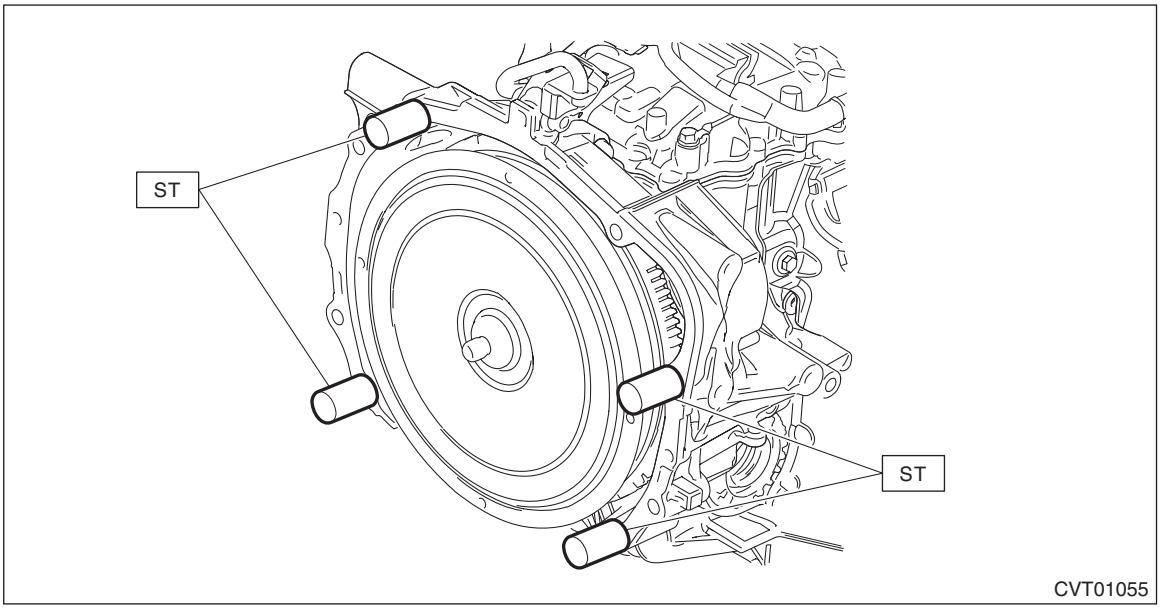

3) Remove the torque converter assembly. <Ref. to CVT(TR580)-196, Torque Converter Assembly.>
4) Remove the transmission case cover on the transmission upper side.

NOTE:
Install using the following tightening torque.

Tightening torque:
8 N·m (0.8 kgf-m, 5.9 ft-lb)

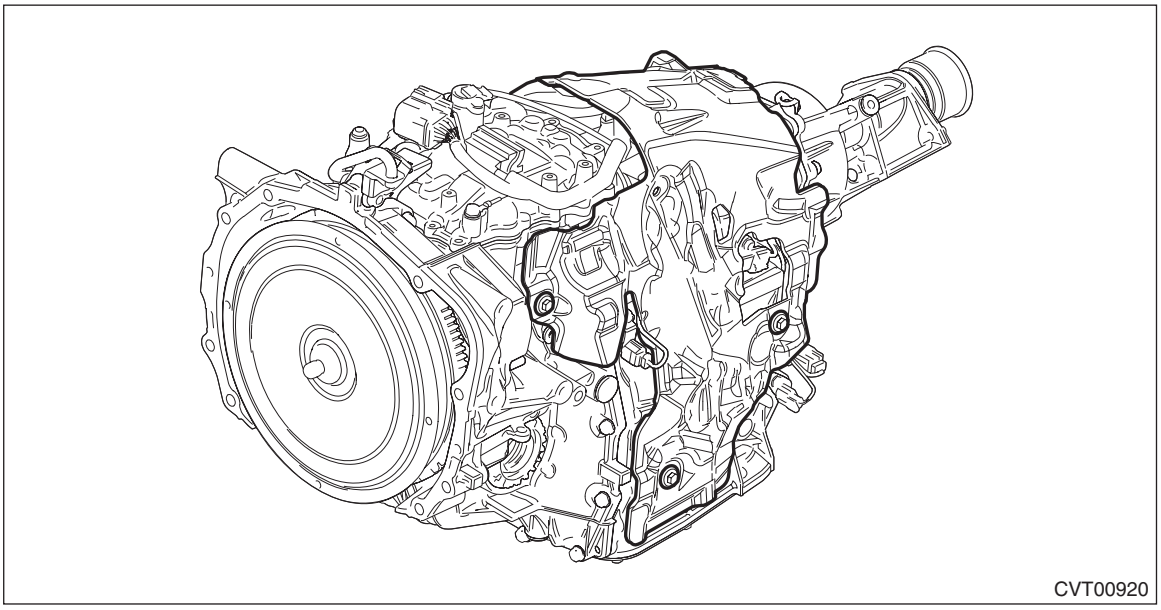

5) Place the transmission assembly on end.

6) When completely overhauling the transmission, refill approx. 10 L (2.6 US qt, 8.8 Imp qt) of CVTF through the transmission right side plug, and install the plug. Then, install the transmission case cover.

CAUTION:
Always use specified CVTF. Using other fluid will cause malfunction. <Ref. to CVT(TR580)-4, HYDRAULIC CONTROL AND LUBRICATION, SPECIFICATION, General Description.>

NOTE:
Use a new gasket.

Tightening torque:
50 N·m (5.1 kgf-m, 36.9 ft-lb)

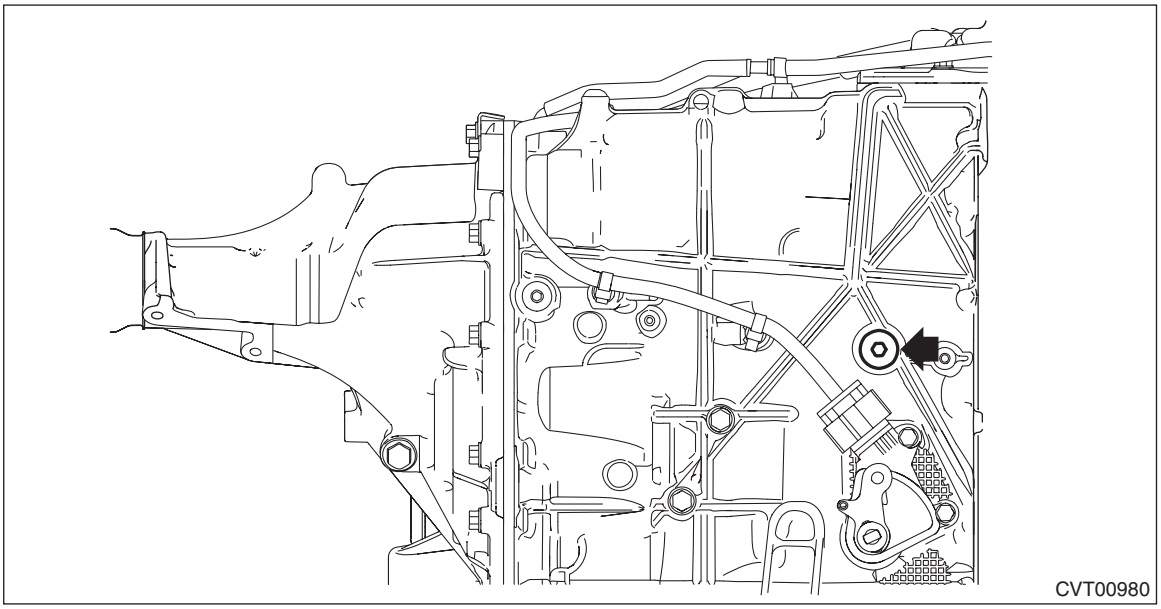

32.Extension Case

A: REMOVAL

1) Remove the transmission assembly. <Ref. to CVT(TR580)-63, REMOVAL, Automatic Transmission Assembly.>
2) Remove the extension case and transmission hanger.

NOTE:
The total number of extension case mounting bolts is 13.

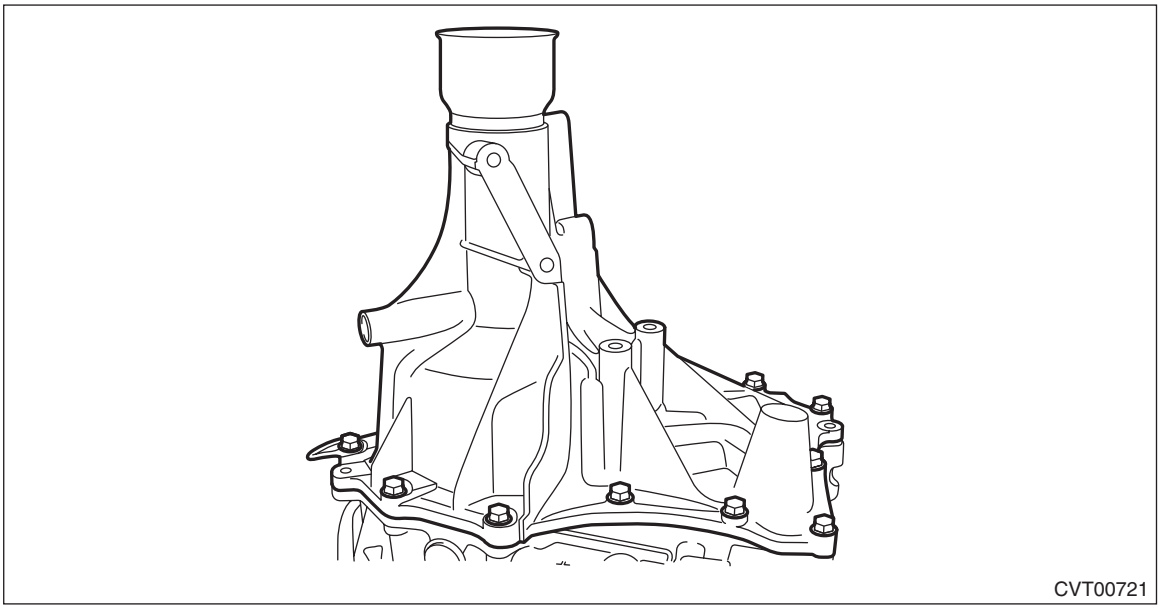
CVT00721

3) Remove the O-rings.

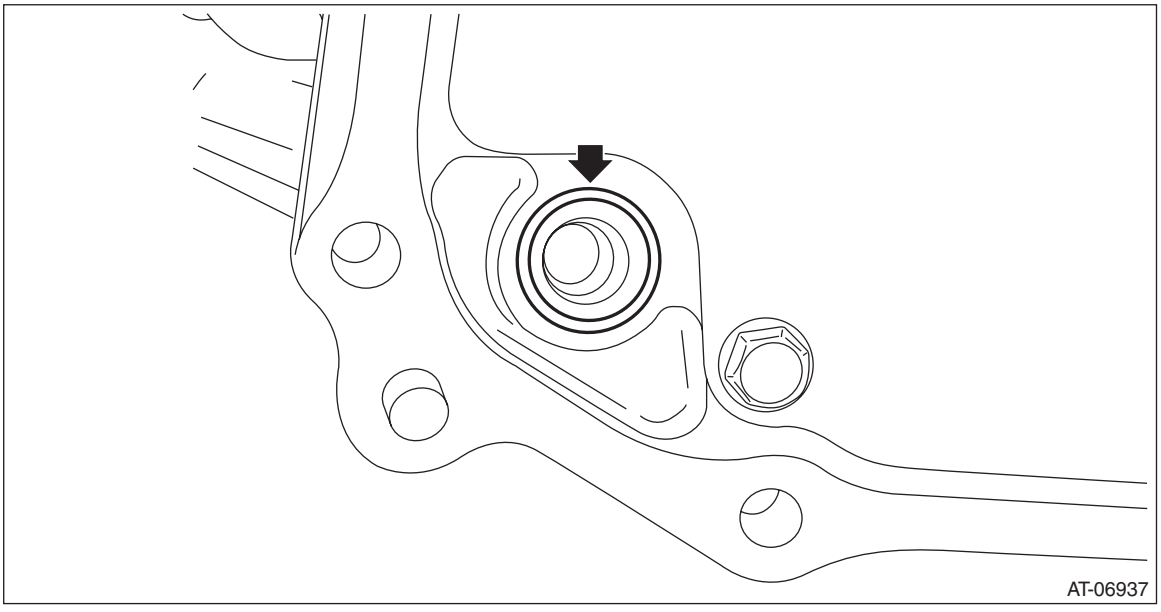
AT-06937

B: INSTALLATION

1) Clean the mating surface of extension case and transmission case.
2) Select the transfer drive gear shim. <Ref. to CVT(TR580)-259, ADJUSTMENT, Reduction Drive Gear.>
3) Select the transfer driven gear shim. <Ref. to CVT(TR580)-215, ADJUSTMENT, Transfer Clutch.>
4) Attach the selected transfer drive gear shim to extension case with vaseline.
5) Attach the selected transfer driven gear shim to extension case with vaseline.
6) Install the O-ring to the transmission case.

NOTE:
- Use new O-rings.
- Apply CVTF to the O-rings.

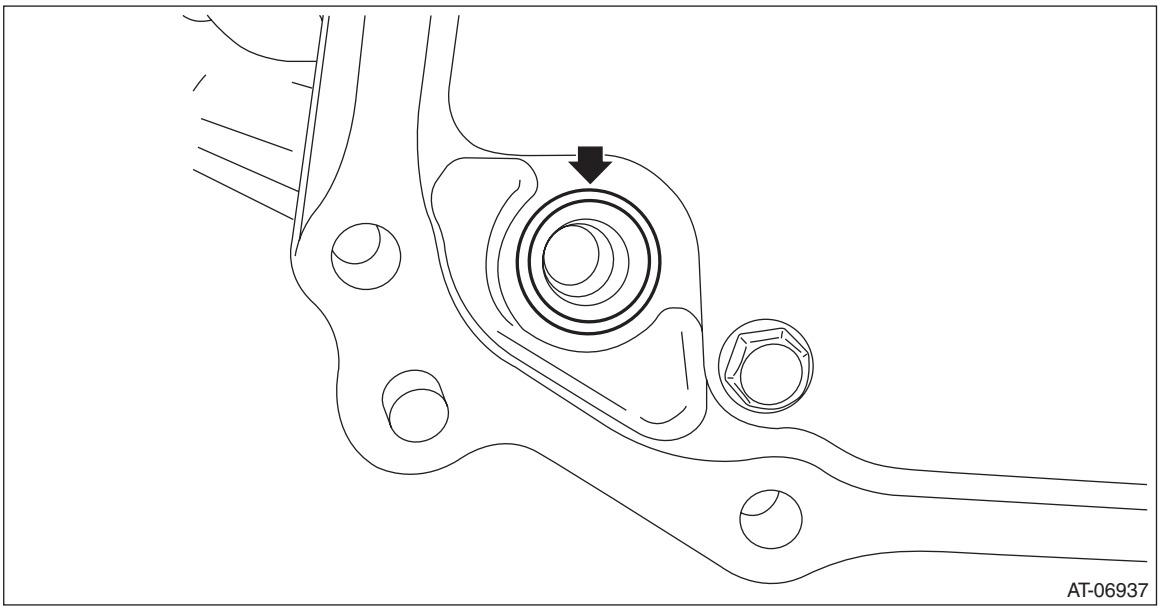

7) Apply liquid gasket to extension case seamlessly.

Liquid gasket:
THREE BOND 1215B or equivalent

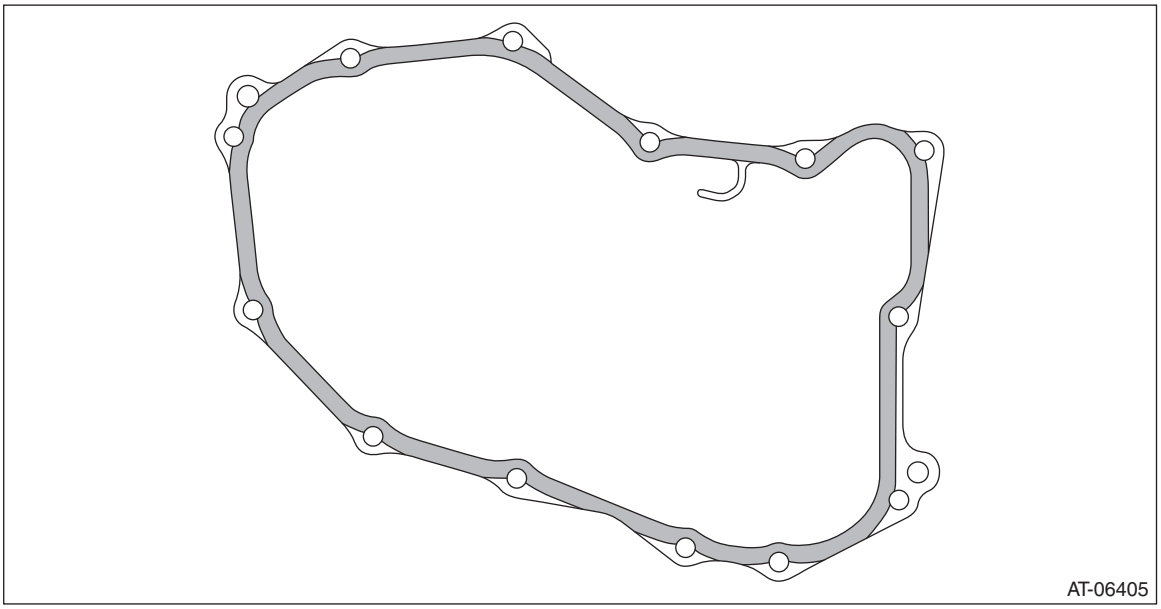

8) Install the extension case to transmission hanger.

Tightening torque:
25 N·m (2.5 kgf-m, 18.4 ft-lb)

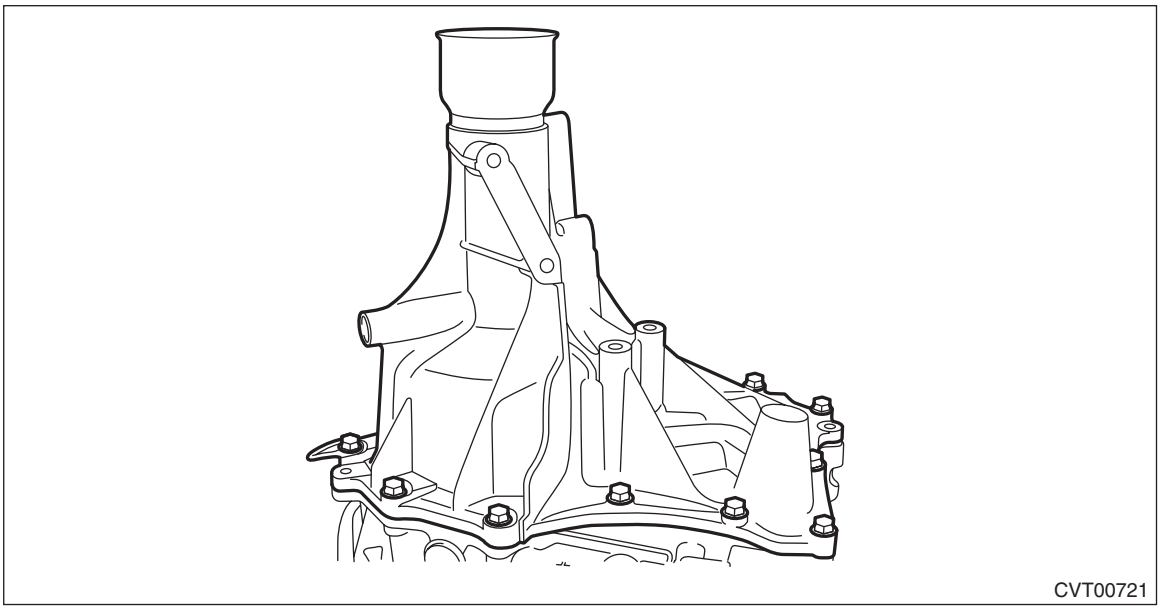

9) Install the transmission assembly. <Ref. to CVT(TR580)-79, INSTALLATION, Automatic Transmission Assembly.>

C: DISASSEMBLY

1) Remove the dust cover from extension case.
2) Remove the extension case oil seal from the extension case. <Ref. to CVT(TR580)-100, REPLACEMENT, Differential Side Retainer Oil Seal.>
3) Remove all plugs.

D: ASSEMBLY

1) Press-fit the dust cover into extension case.
2) Install the extension case oil seal to extension case. <Ref. to CVT(TR580)-100, REPLACEMENT, Differential Side Retainer Oil Seal.>
3) Install all plugs.

NOTE:
- Use a new O-ring or a gasket.
- Apply CVTF to the O-rings.

Tightening torque:
T1: 22 N·m (2.2 kgf-m, 16.2 ft-lb)
T2: 35 N·m (3.6 kgf-m, 25.8 ft-lb)

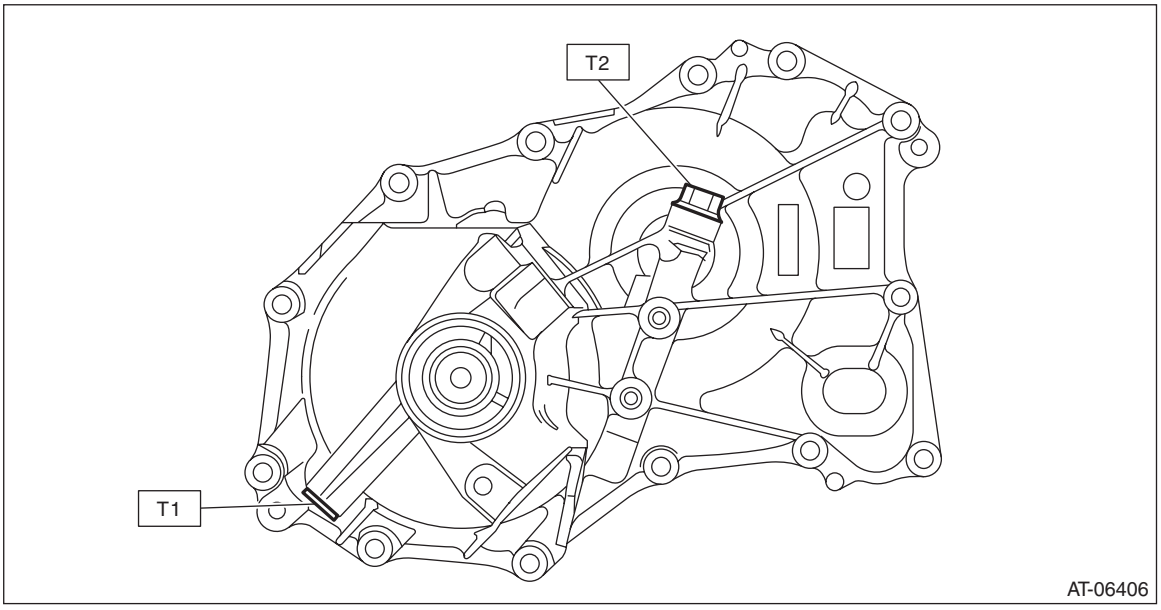

E: INSPECTION

- Check there is no leak of CVTF from the joint between extension case and transmission case.
- Check there is no damage or cracks on the extension case and other parts.

F: ADJUSTMENT

NOTE:
When replacing the extension case, select the transfer drive gear shim and transfer driven gear shim. <Ref. to CVT(TR580)-259, ADJUSTMENT, Reduction Drive Gear.> <Ref. to CVT(TR580)-215, ADJUSTMENT, Transfer Clutch.>

33.Transfer Clutch

A: REMOVAL

1) Remove the transmission assembly. <Ref. to CVT(TR580)-63, REMOVAL, Automatic Transmission Assembly.>
2) Remove the extension case. <Ref. to CVT(TR580)-200, REMOVAL, Extension Case.>
3) Remove the transfer clutch assembly.

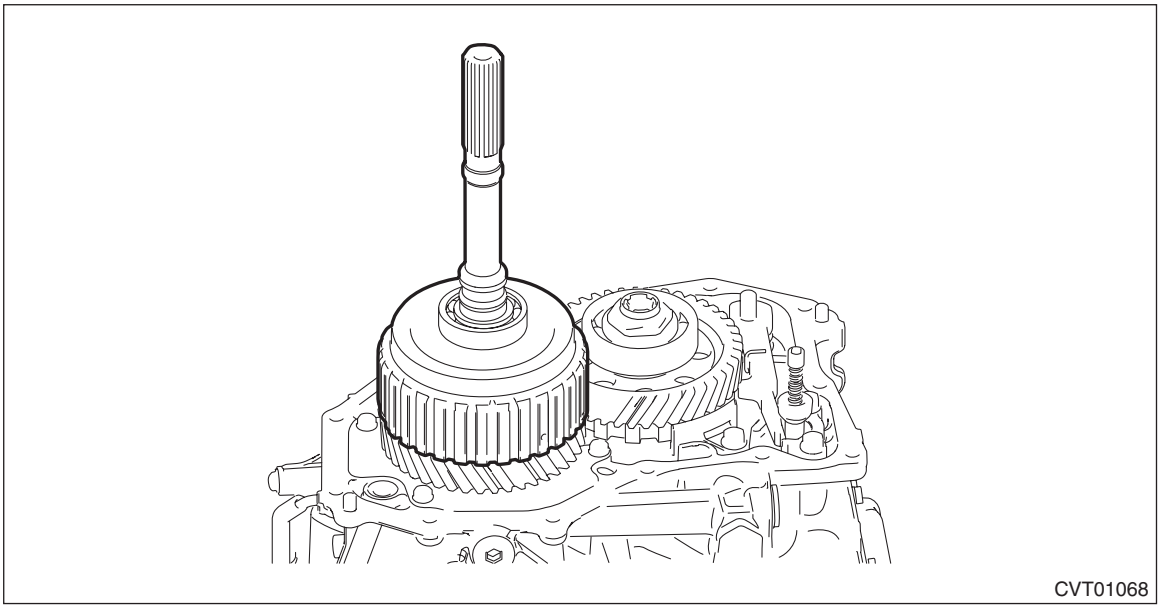
CVT01068

4) Remove the thrust bearing.

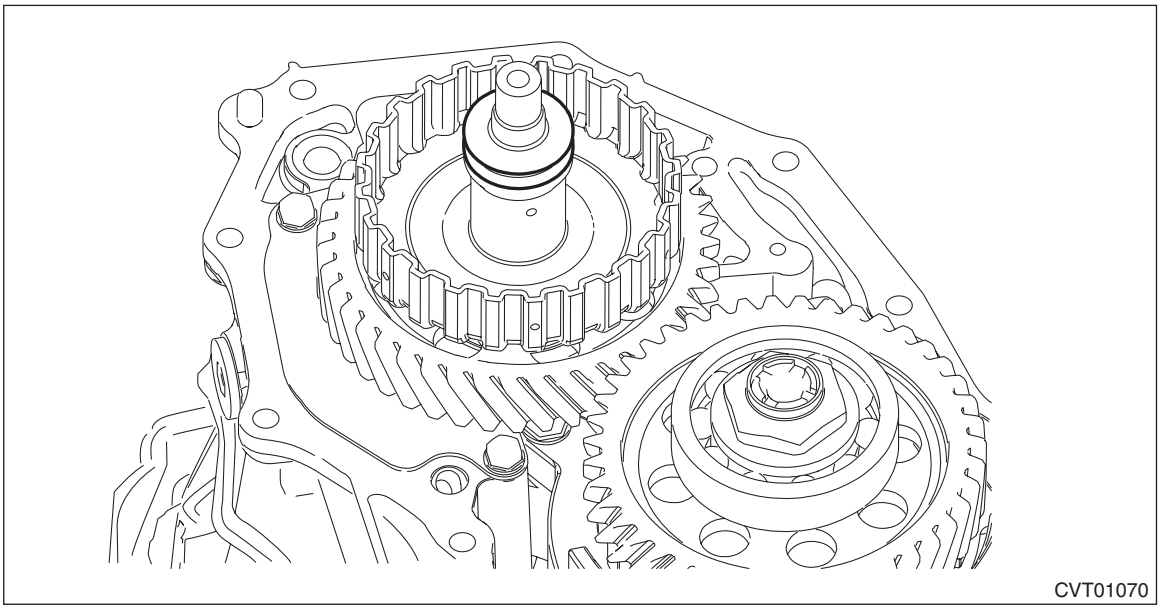
CVT01070

5) Remove the seal ring from transfer clutch assembly.

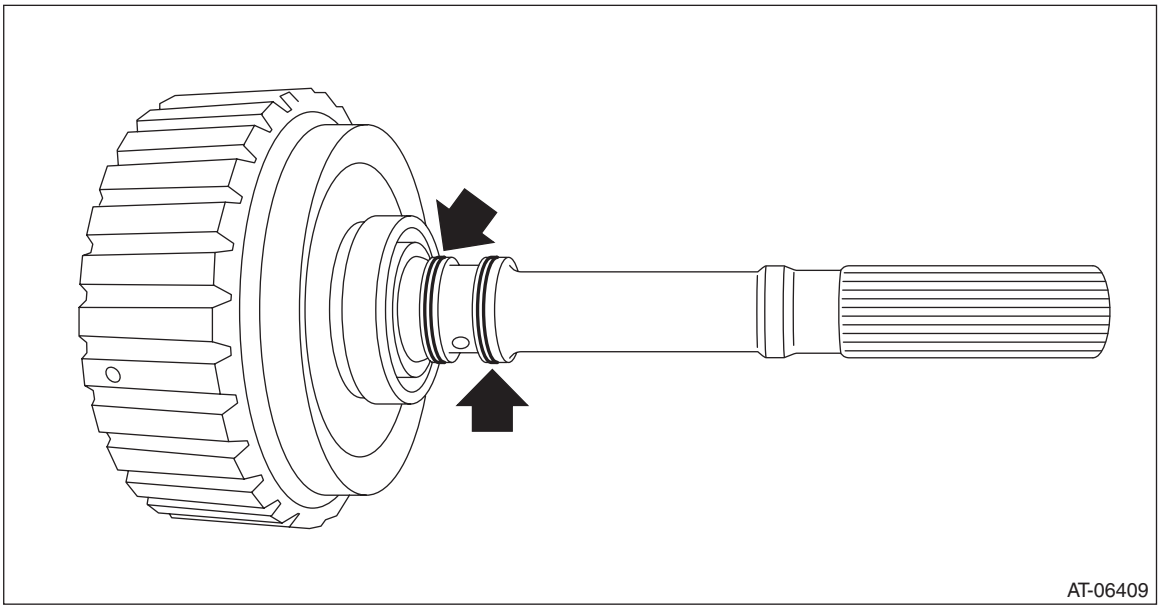

6) Remove the seal ring from the transfer driven gear assembly.

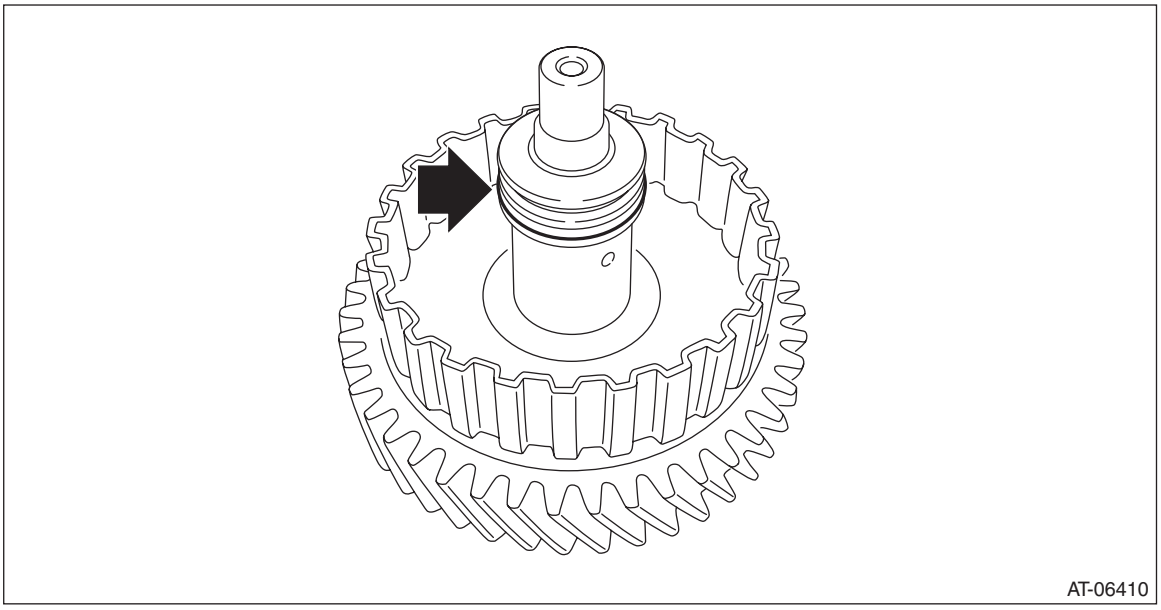

B: INSTALLATION

1) Install the thrust bearing.

NOTE:
Make sure to install in the right direction.

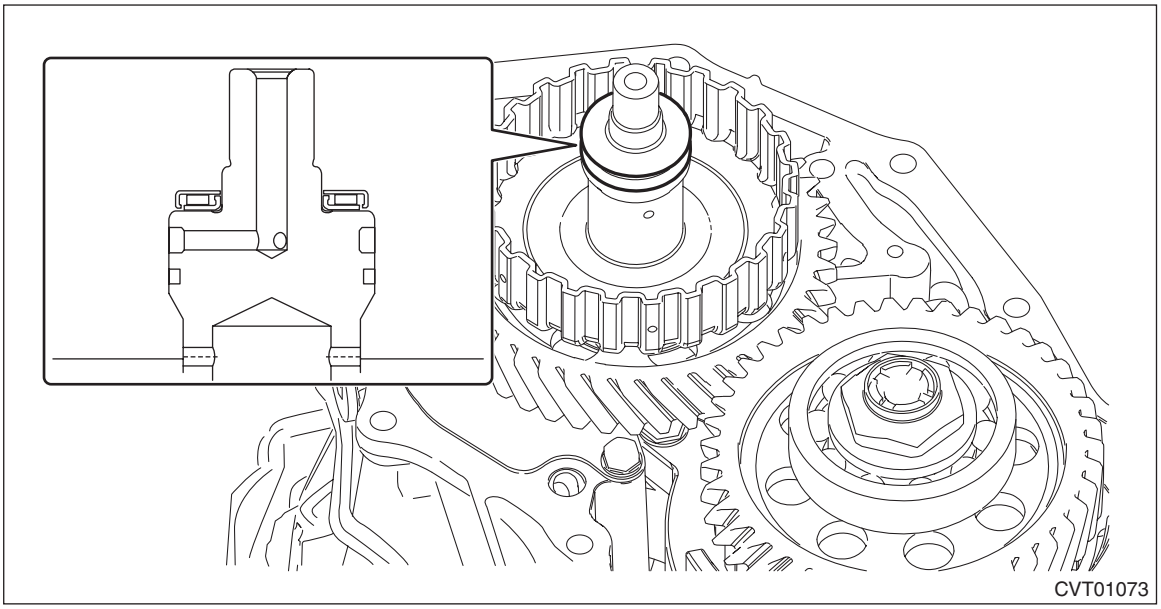
CVT01073

2) Install the transfer clutch assembly.

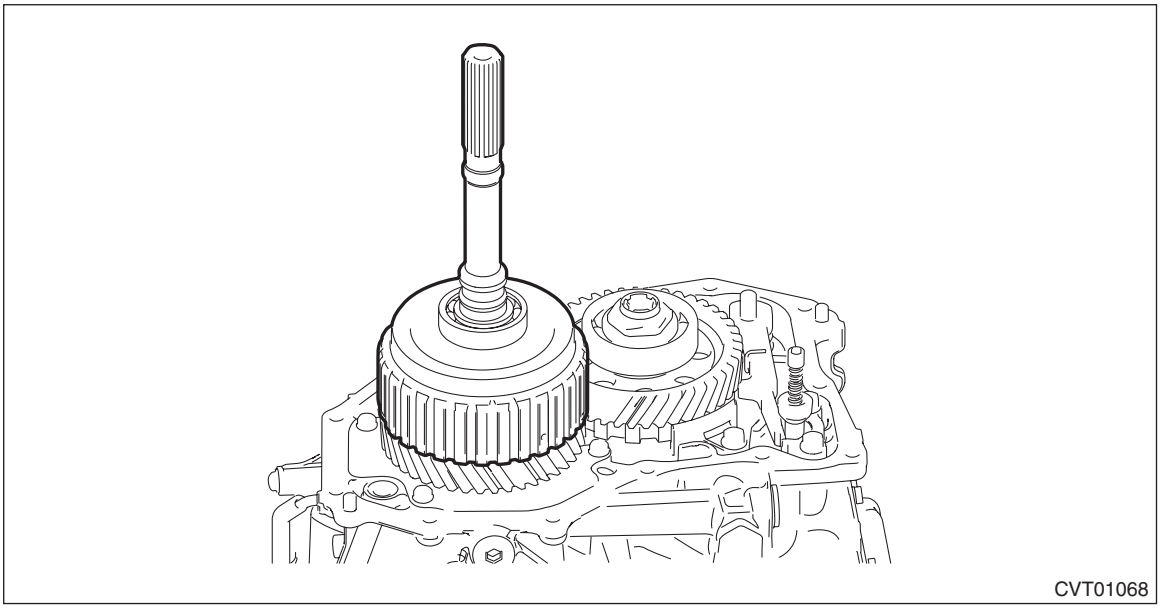
CVT01068

3) Select the transfer driven gear shim. <Ref. to CVT(TR580)-215, ADJUSTMENT, Transfer Clutch.>
4) Attach the selected transfer driven gear shim to extension case with vaseline.
5) Remove the transfer clutch assembly.

6) Install the seal ring to the transfer clutch assembly.

NOTE:
- Use new seal rings.
- When installing the seal rings, do not expand the seal rings too much.
- Apply CVTF to the seal rings.

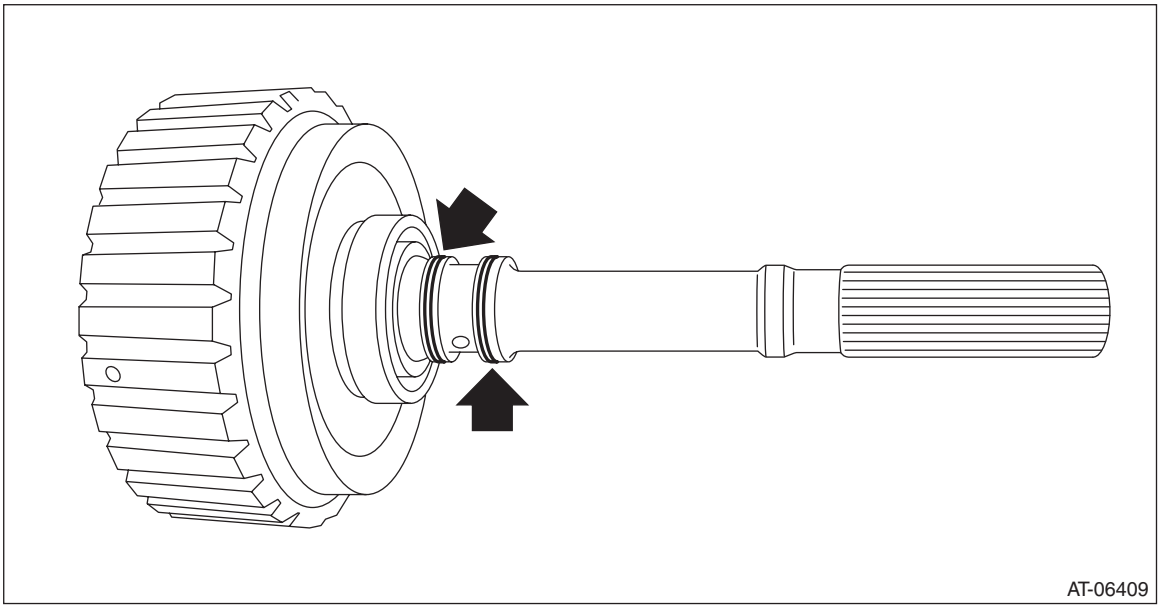

7) Install the seal ring to the transfer driven gear assembly.

NOTE:
- Use new seal rings.
- When installing the seal rings, do not expand the seal rings too much.
- Apply CVTF to the seal rings.

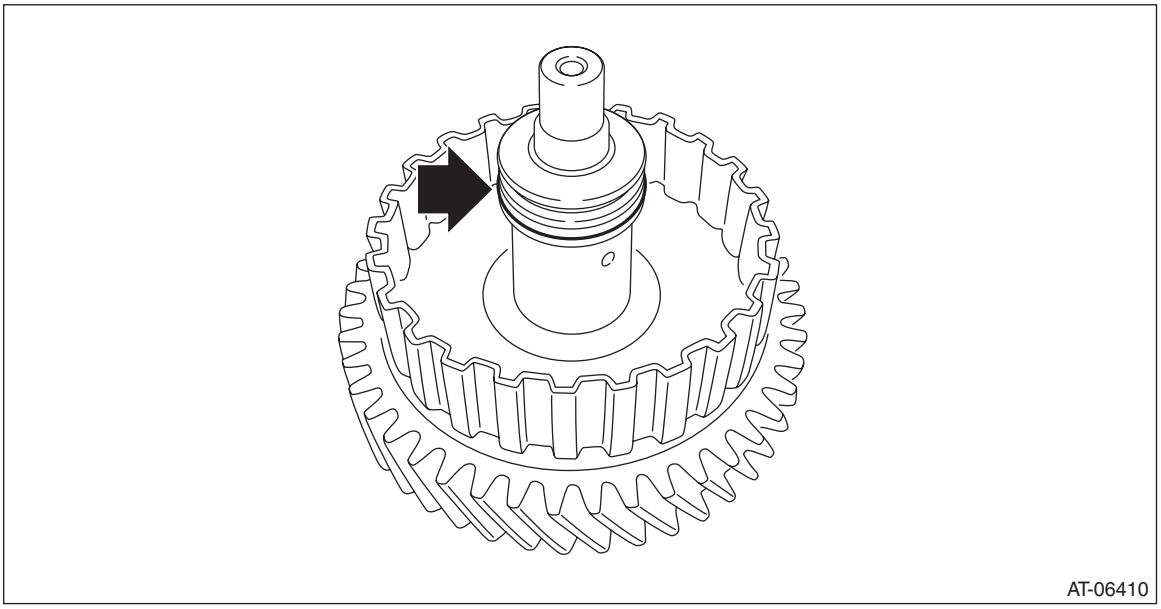

8) Install the transfer clutch assembly.
9) Install the extension case. <Ref. to CVT(TR580)-201, INSTALLATION, Extension Case.>
10) Install the transmission assembly. <Ref. to CVT(TR580)-79, INSTALLATION, Automatic Transmission Assembly.>

C: DISASSEMBLY

1) Remove the snap ring, and then remove the retaining plate, drive plate and driven plate.

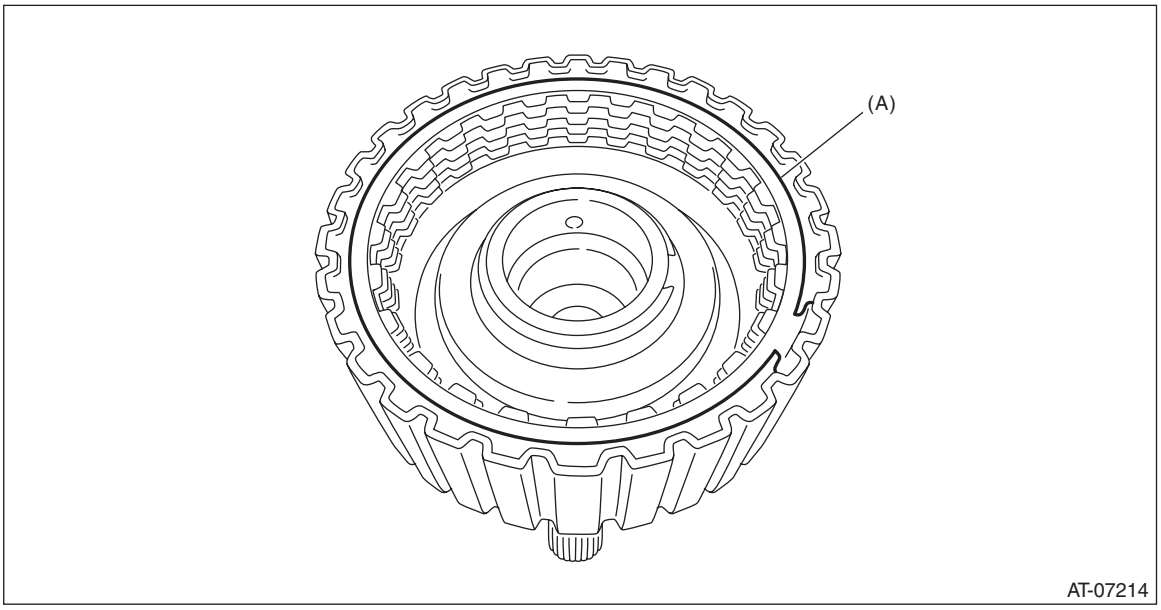

(A) Snap ring

2) Compress the return spring using the ST to remove the snap ring.
ST 18762AA001 COMPRESSOR SPECIAL TOOL

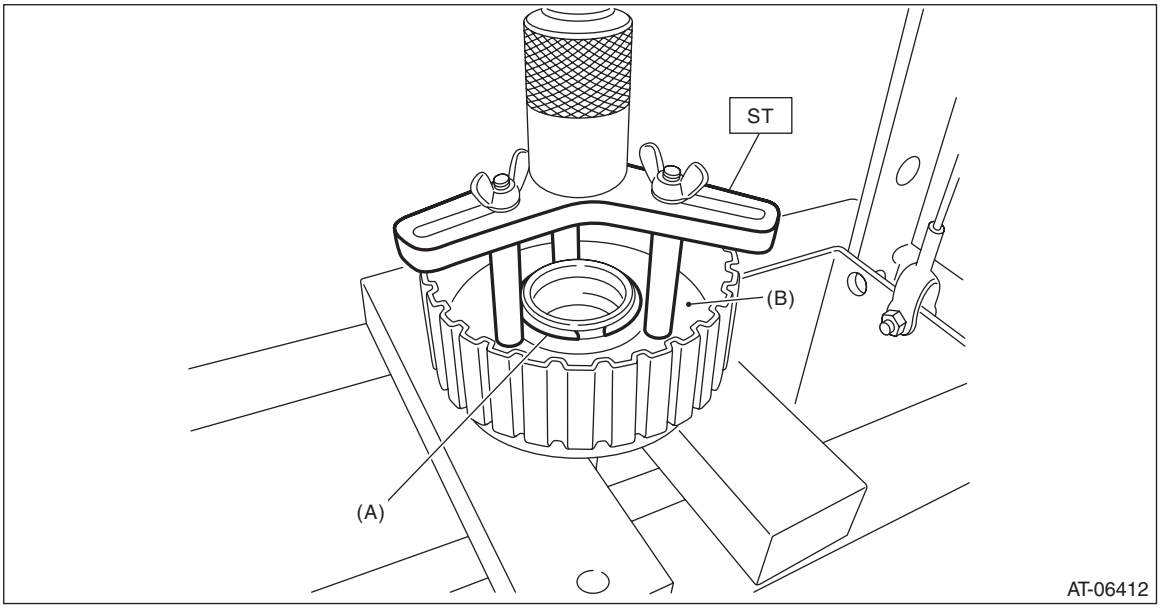

(A) Snap ring
(B) Transfer clutch piston seal

3) Remove the transfer clutch piston seal.

4) Remove the return spring.

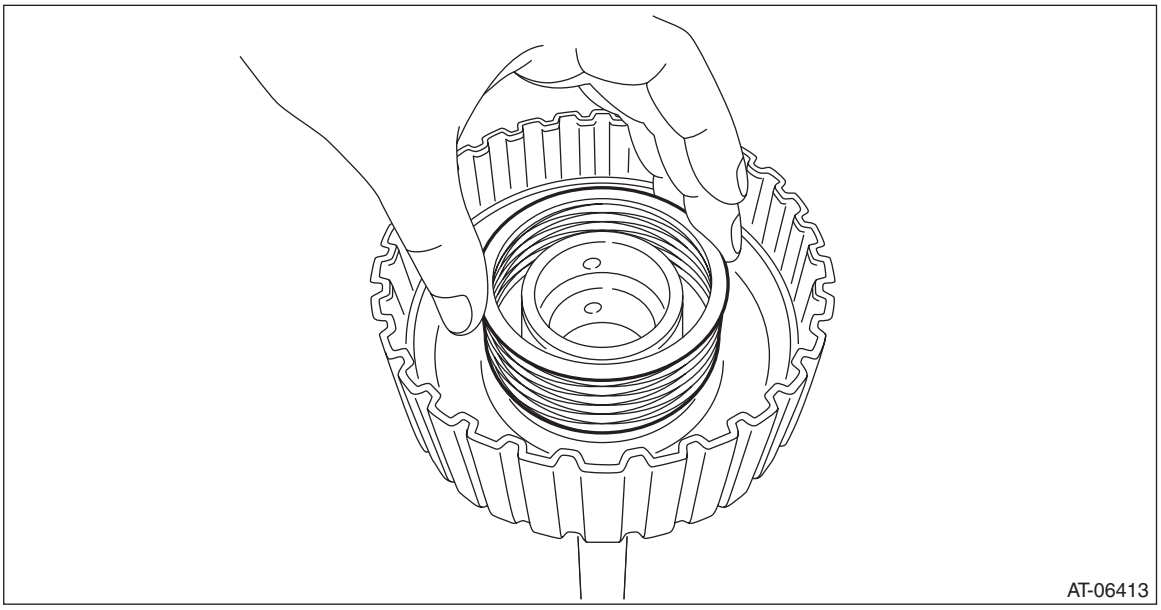

5) Remove the transfer clutch piston by blowing compressed air through transfer clutch assembly hole.

NOTE:
Plug the holes through which the compressed air is not blown.

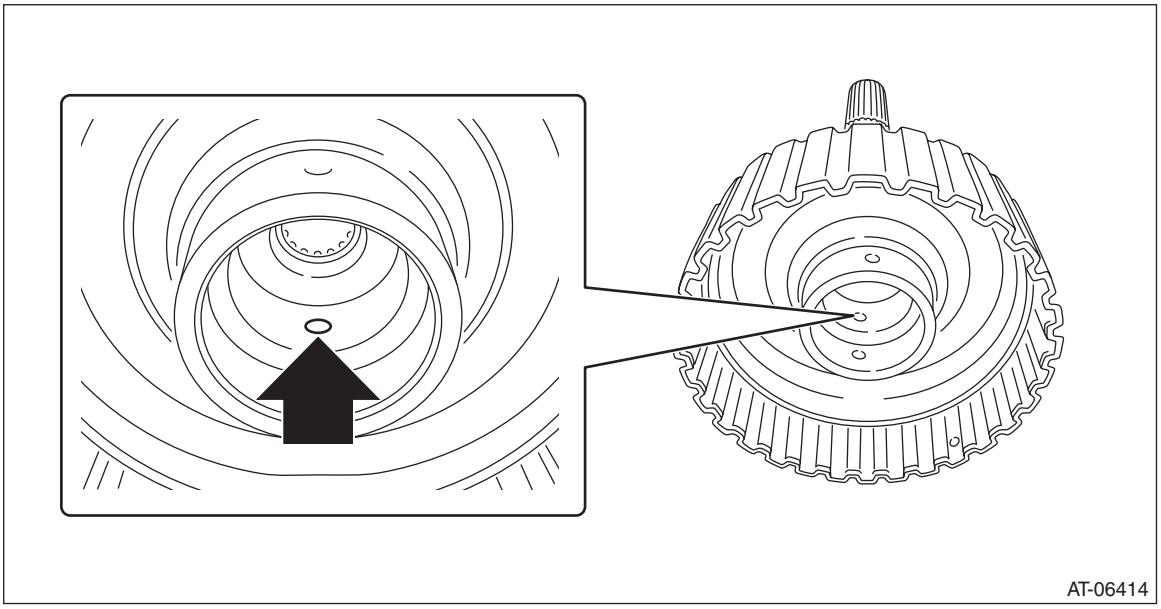

6) Remove the ball bearing using ST.
ST1 18767AA010 BEARING REMOVER
ST2 18723AA000 REMOVER

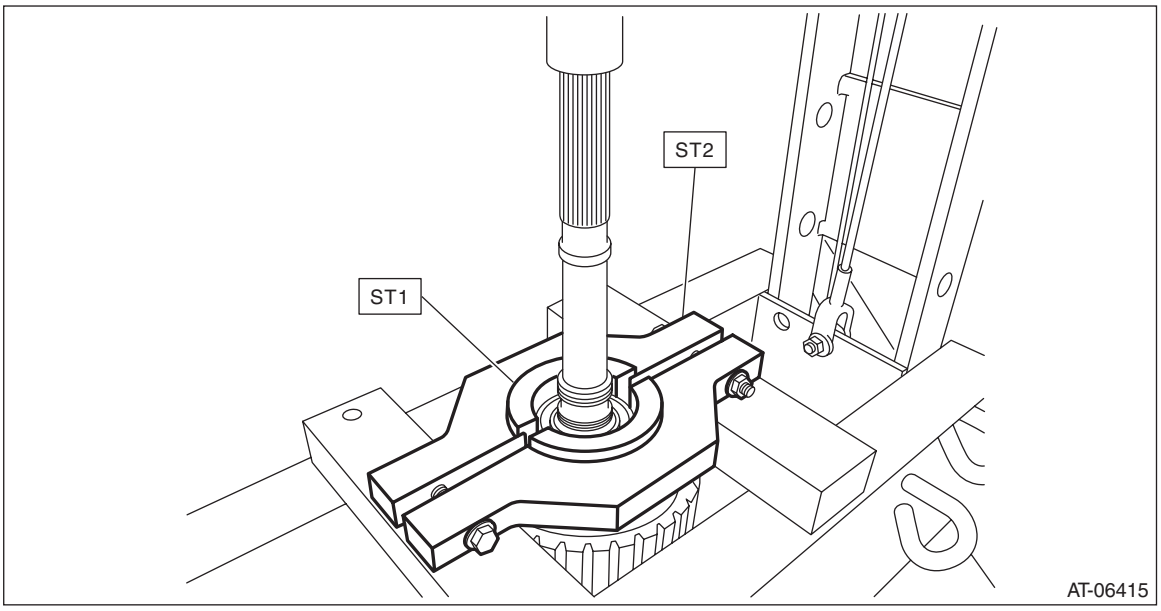

D: ASSEMBLY

1) Install the transfer clutch piston.

NOTE:
Apply CVTF to the transfer clutch piston lip.
2) Install the return spring.

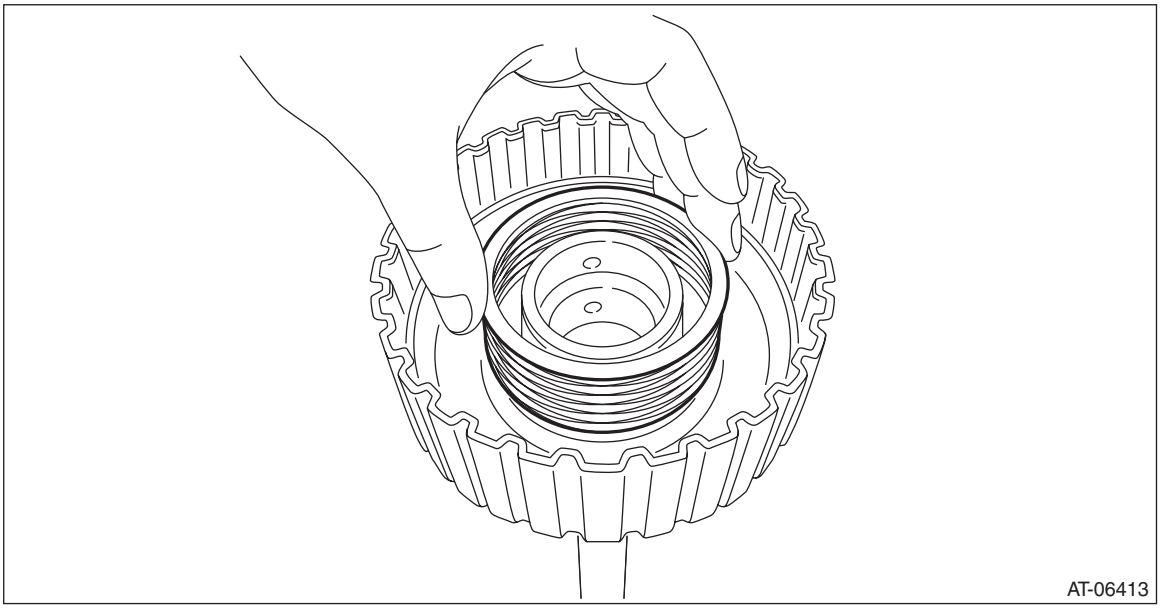

3) Install the transfer clutch piston seal.

NOTE:
Apply CVTF to the lip section of transfer clutch piston seal.

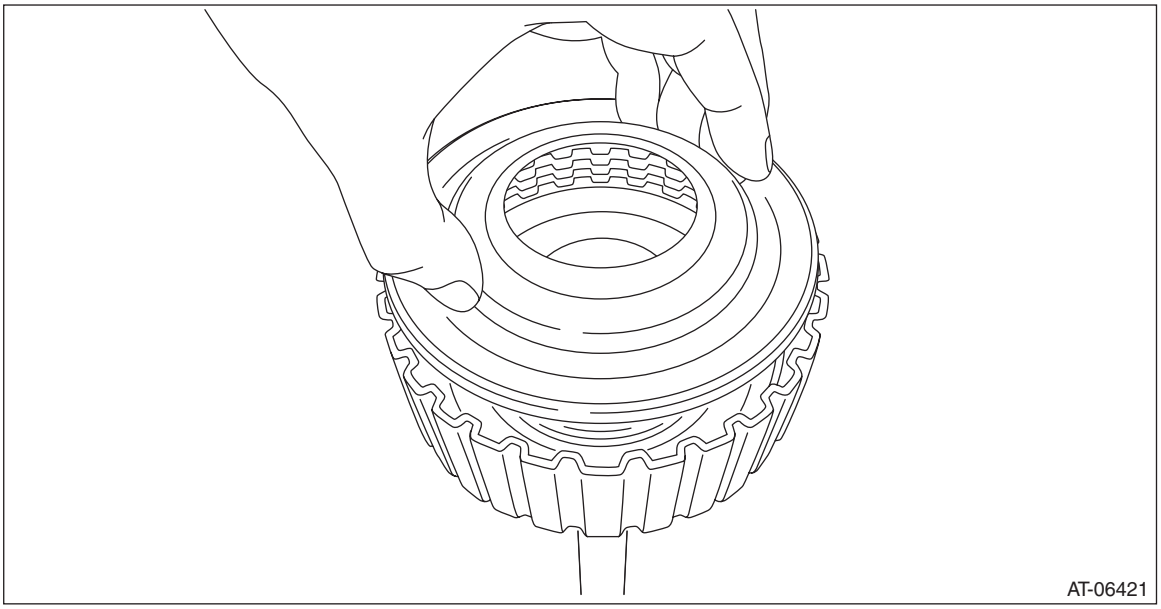

4) Compress the return spring using the ST to install the snap ring.
ST 18762AA001 COMPRESSOR SPECIAL TOOL

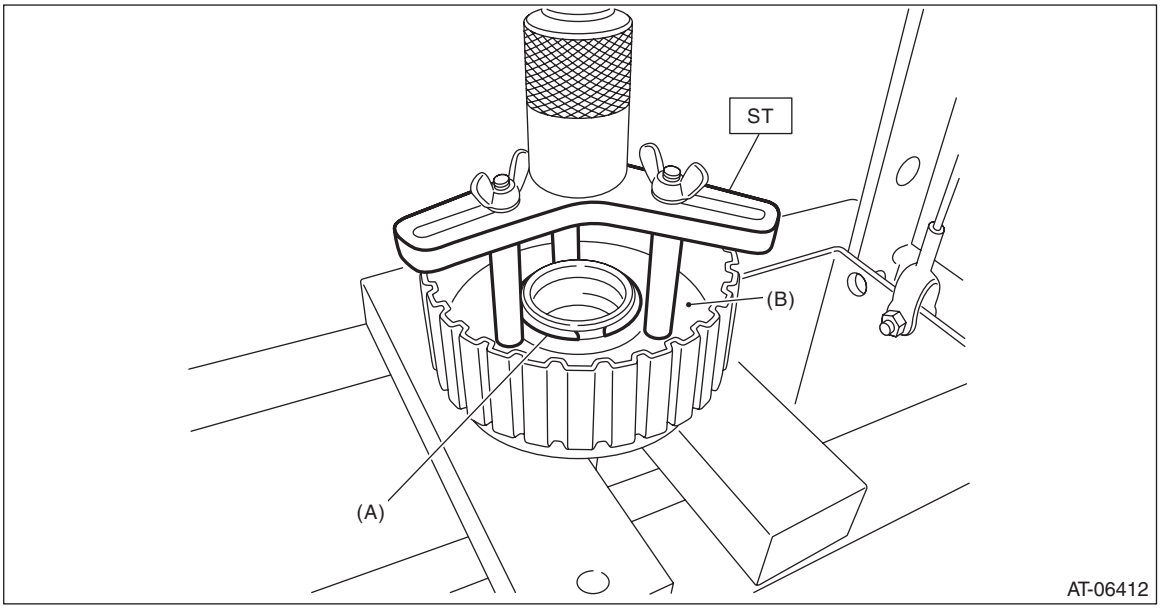

(A) Snap ring
(B) Transfer clutch piston seal

5) Install the pressure plate, driven plate, drive plate and snap ring.

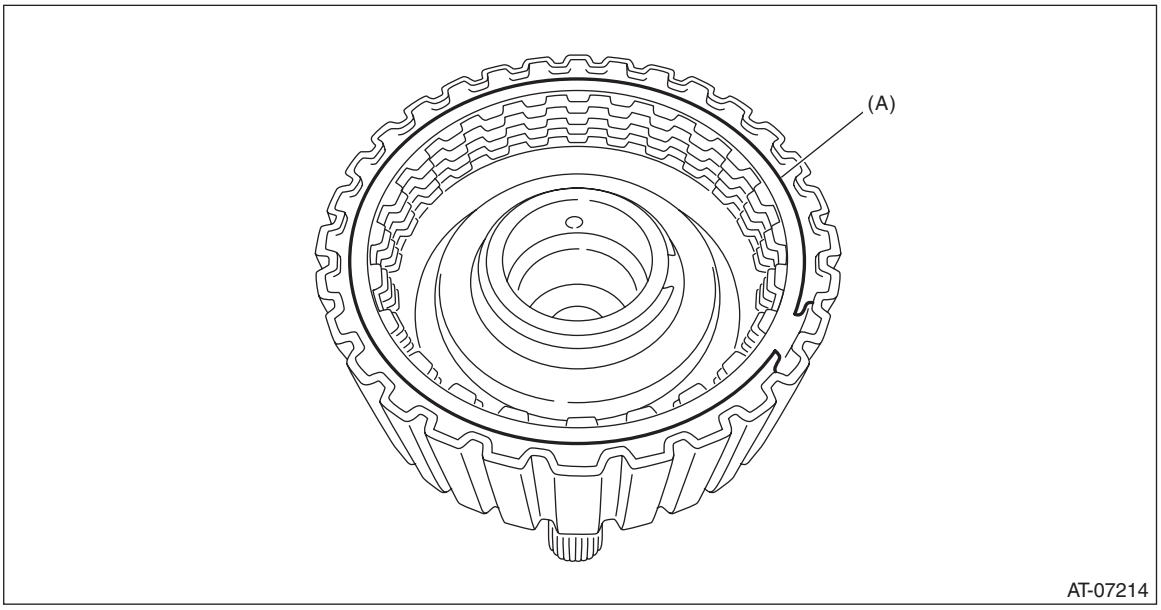

(A) Snap ring

6) Blow compressed air through transfer clutch assembly hole, and check the transfer clutch piston operation.

NOTE:
Plug the holes through which the compressed air is not blown.

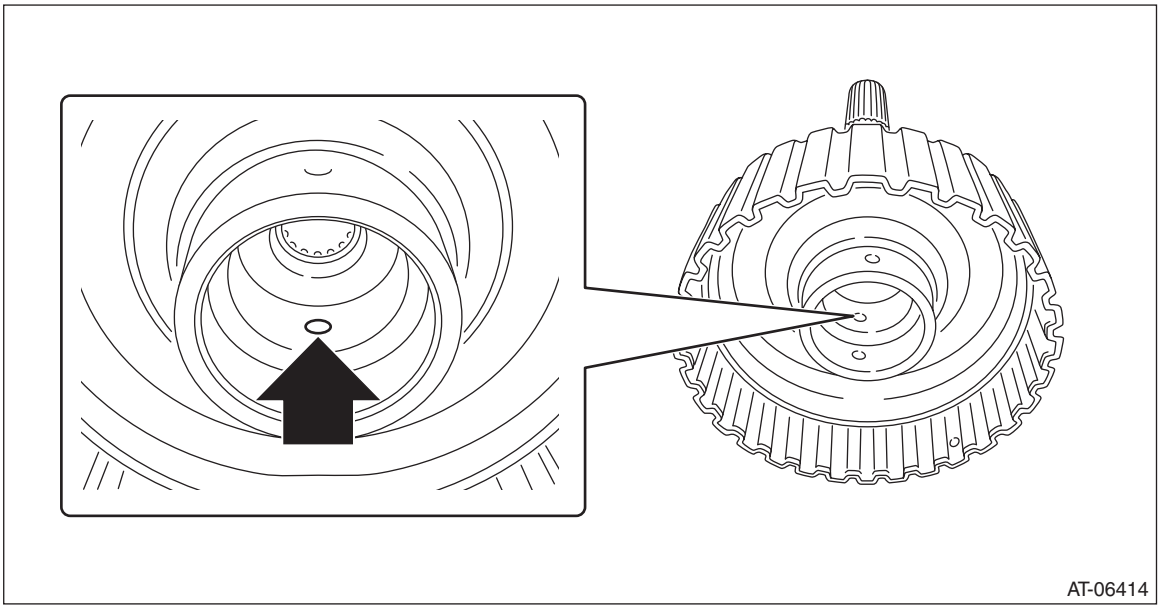

7) Before measuring clearance “A”, place same thickness shims on both sides to prevent the plate from tilting.

8) When clearance “A” exceeds the limit for use, replace the drive plate and driven plate as a set, and select and adjust the pressure plate within the initial specified value.

Initial standard:
0.7 — 1.1 mm (0.028 — 0.043 in)

Limit thickness:
1.45 mm (0.057 in)

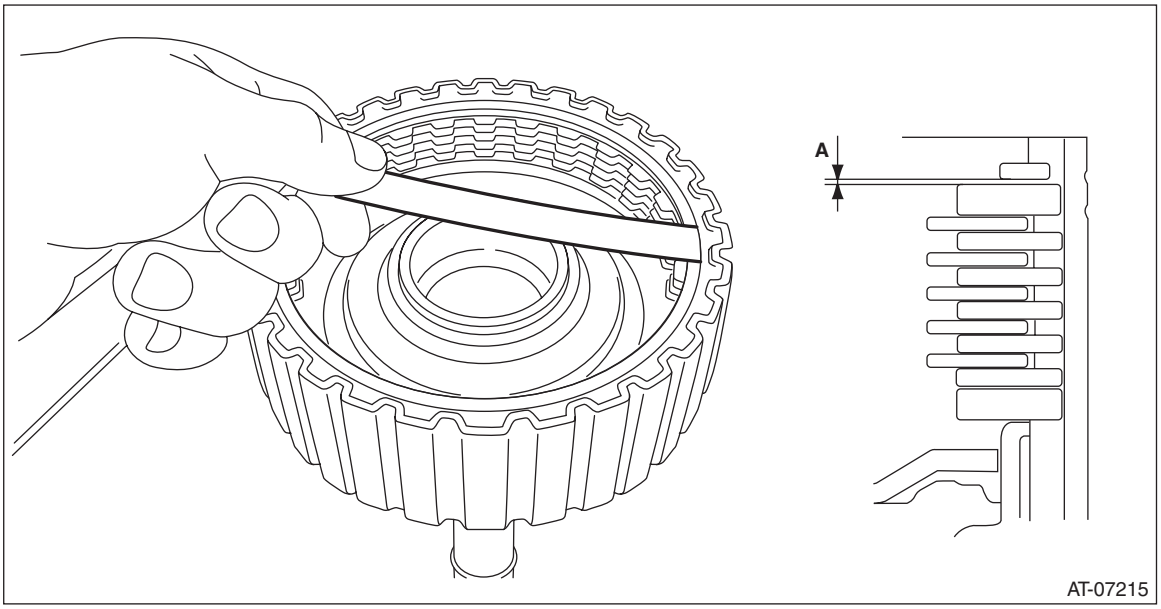

Pressure plate	
Part No.	Thickness mm (in)
31593AA151	3.3 (0.130)
31593AA161	3.7 (0.146)

9) Recheck the clearance. <Ref. to CVT(TR580)-214, INSPECTION, Transfer Clutch.>

10) Using the ST, install the ball bearing.

NOTE:
Use a new ball bearing.
ST1 398177700 INSTALLER
ST2 499277200 INSTALLER

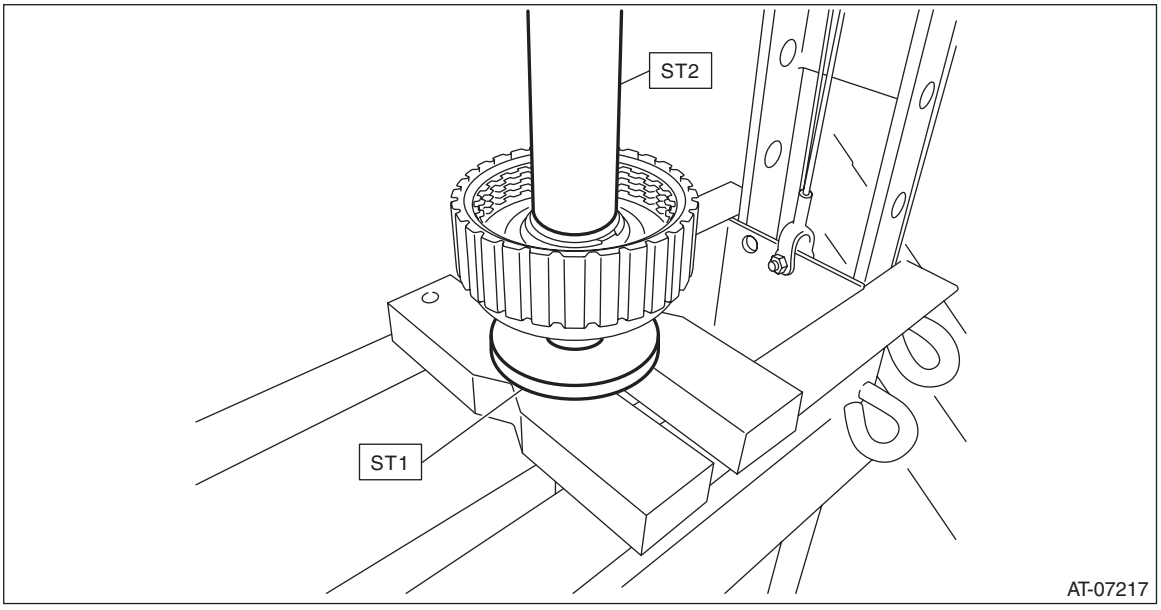

E: INSPECTION

- Inspect the drive plate facing for wear and damage.
- Driven plate for discoloration (burned color)
- Make sure the snap ring is not worn and the return spring has no permanent distortion, damage, or deformation.
- Check the lip seal for damage.
- Inspect the extension end play, and adjust it to within the standard value. <Ref. to CVT(TR580)-215, ADJUSTMENT, Transfer Clutch.>

1) Before measuring clearance “A” between snap ring and driven plate, place same thickness shims on both sides to prevent the plate from tilting.

2) When clearance “A” exceeds the limit for use, replace the drive plate and driven plate as a set, and select the pressure plate within the initial specified value.

Initial standard:
0.7 — 1.1 mm (0.028 — 0.043 in)

Limit thickness:
1.45 mm (0.057 in)

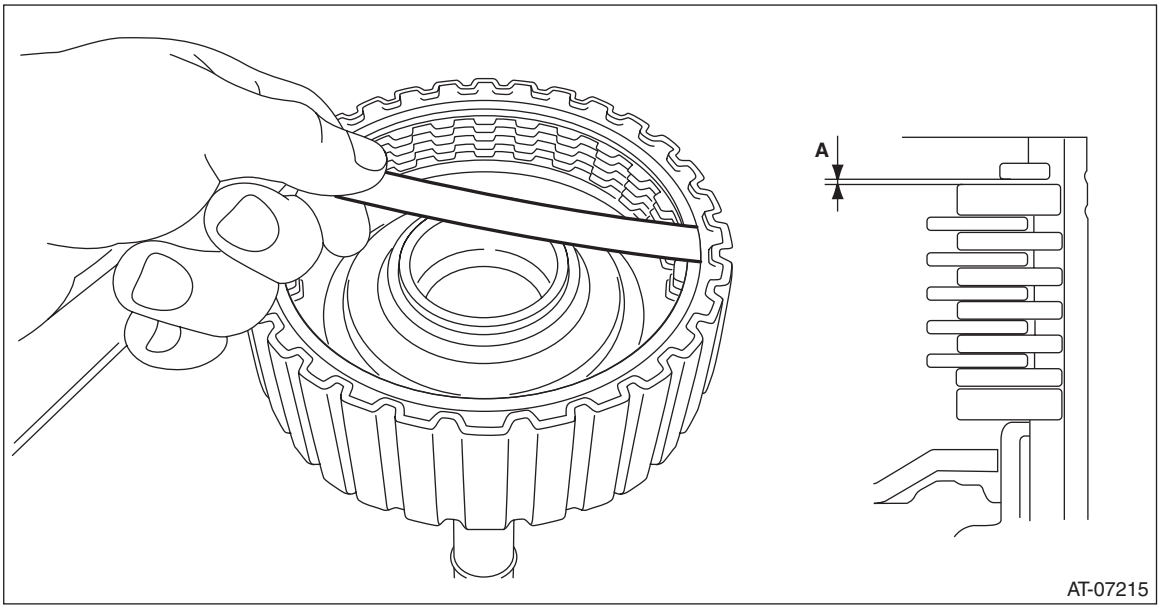

3) Check for tight corner braking phenomenon when the vehicle is moved forward with the steering fully turned. If tight corner braking occurs, perform the following procedures.
(1) With the steering wheel held at fully turned position, drive the vehicle in “D” range and with vehicle speed at approx. 5 km/h (3 MPH) in both clockwise and counterclockwise directions for approx. ten times each, while repeating acceleration and braking intermittently.
(2) If the tight corner braking phenomenon still persists, drive the vehicle again in a circle for several laps.

F: ADJUSTMENT

1) Install the transfer clutch assembly to the extension case with the transfer driven gear shims and thrust bearings removed.

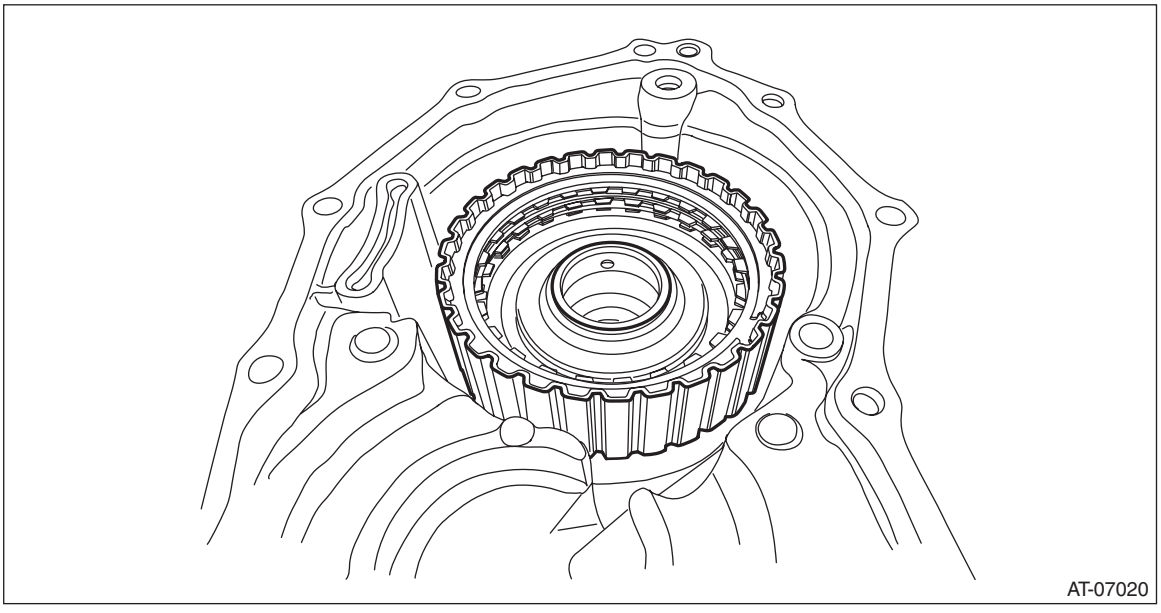

2) Install the thrust bearing.

NOTE:
Make sure to install in the right direction.

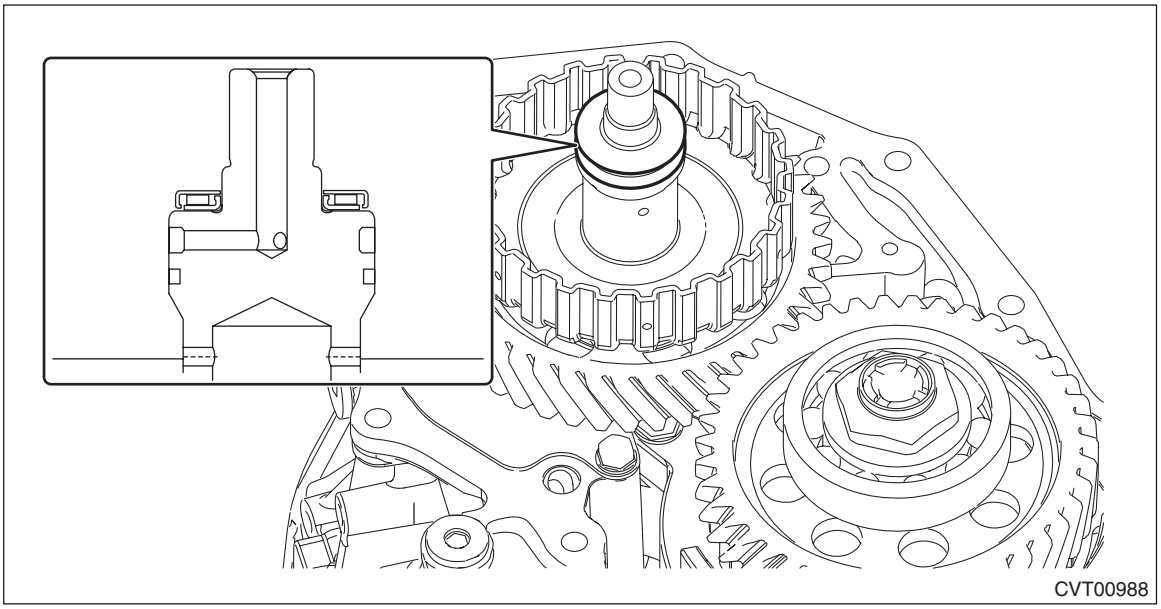

3) Using the ST, measure the height “A” from the ST end face to the thrust bearing catch surface of the transfer clutch assembly.
ST 499575500 GAUGE

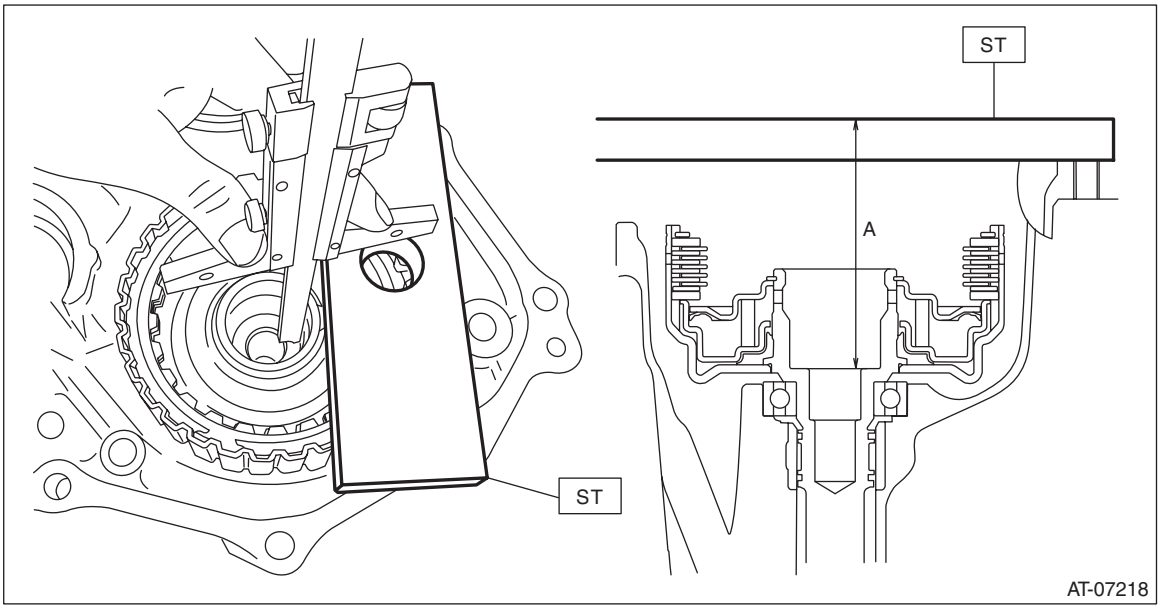

4) Using the ST, measure the height “B” from the transmission case mating surface to the end of ST.
ST 499575500 GAUGE

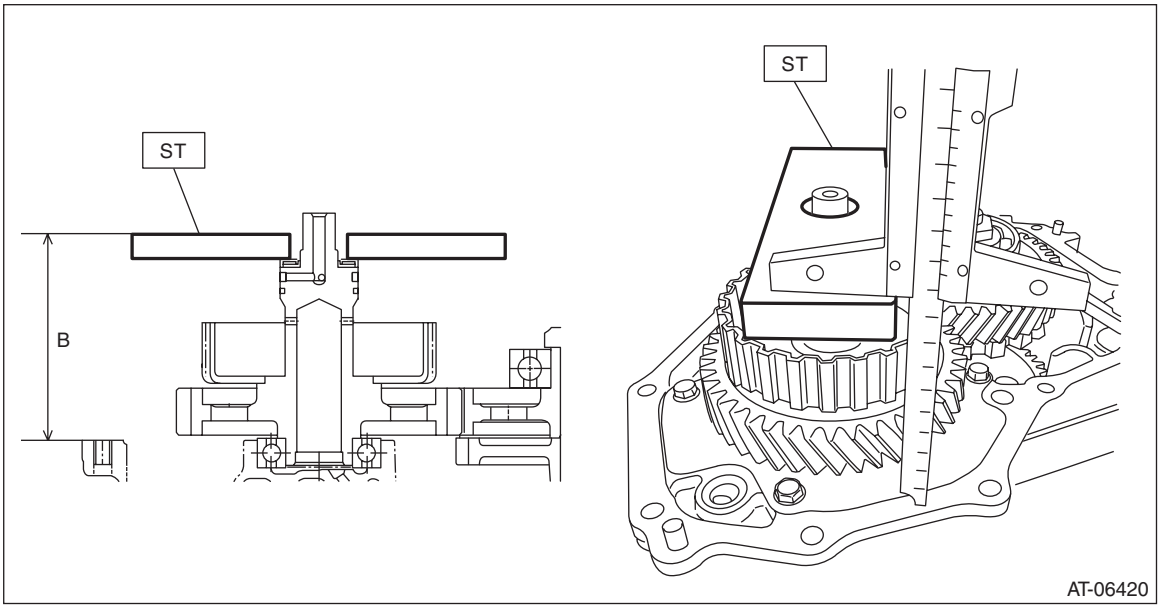

5) Obtain the thickness of transfer driven gear shim using the following formula to select one to three transfer driven gear shims.
T (mm) = A – B – (0.05 — 0.25)
[T (in) = A – B – (0.002 — 0.01)]
T: Transfer driven gear shim thickness
A: Height from the ST end face to the transfer clutch assembly thrust bearing catch surface
B: Height from the mating surface of the transmission case to the end of the ST
0.05 — 0.25 mm (0.002 — 0.01 in): Clearance

Transfer driven gear shim	
Part No.	Thickness mm (in)
33280AA030	0.3 (0.012)
33280AA040	0.4 (0.016)
33280AA050	0.5 (0.020)

34.Transfer Driven Gear

A: REMOVAL

1) Remove the transmission assembly. <Ref. to CVT(TR580)-63, REMOVAL, Automatic Transmission Assembly.>
2) Remove the extension case. <Ref. to CVT(TR580)-200, REMOVAL, Extension Case.>
3) Remove the transfer clutch assembly. <Ref. to CVT(TR580)-204, REMOVAL, Transfer Clutch.>
4) Remove the transfer driven gear assembly.

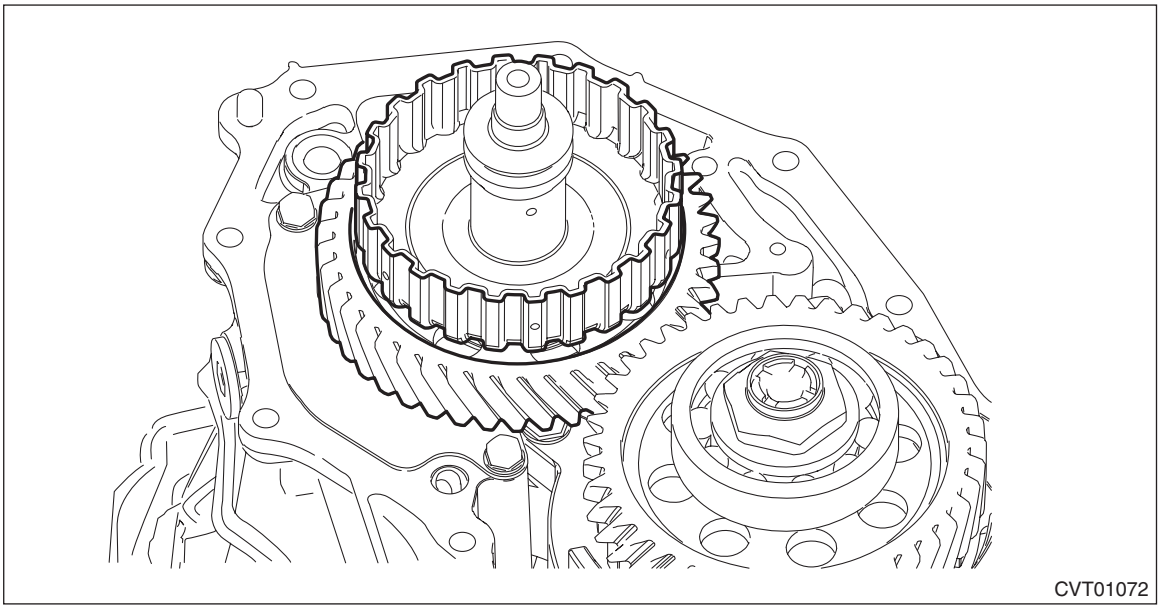
CVT01072

5) Remove the seal ring from the transfer driven gear assembly.

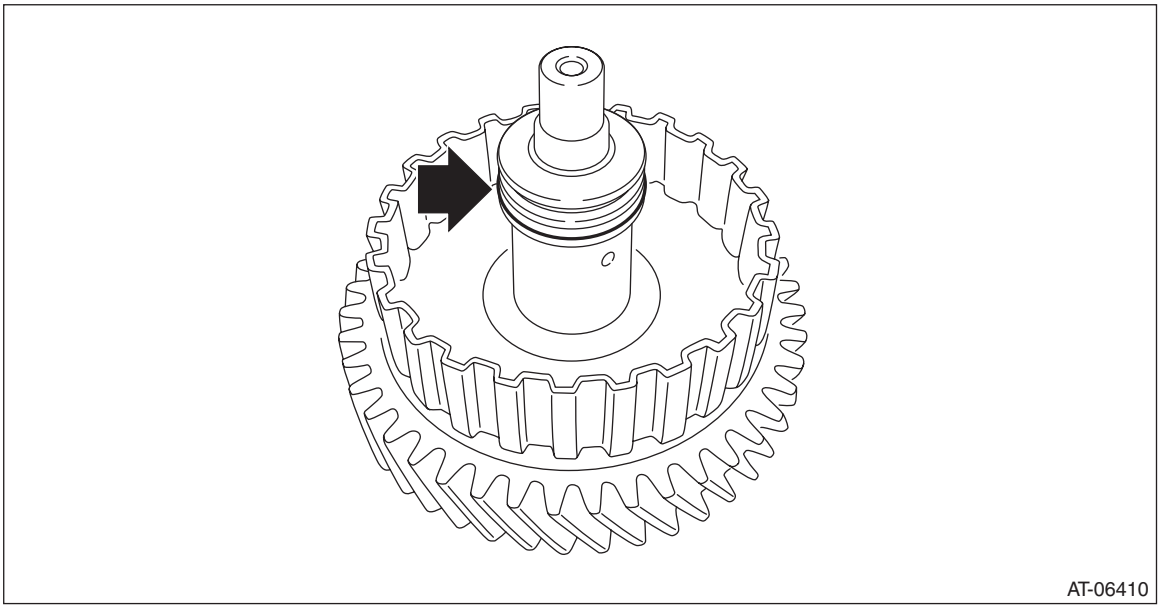
AT-06410

B: INSTALLATION

1) Install the transfer driven gear assembly.

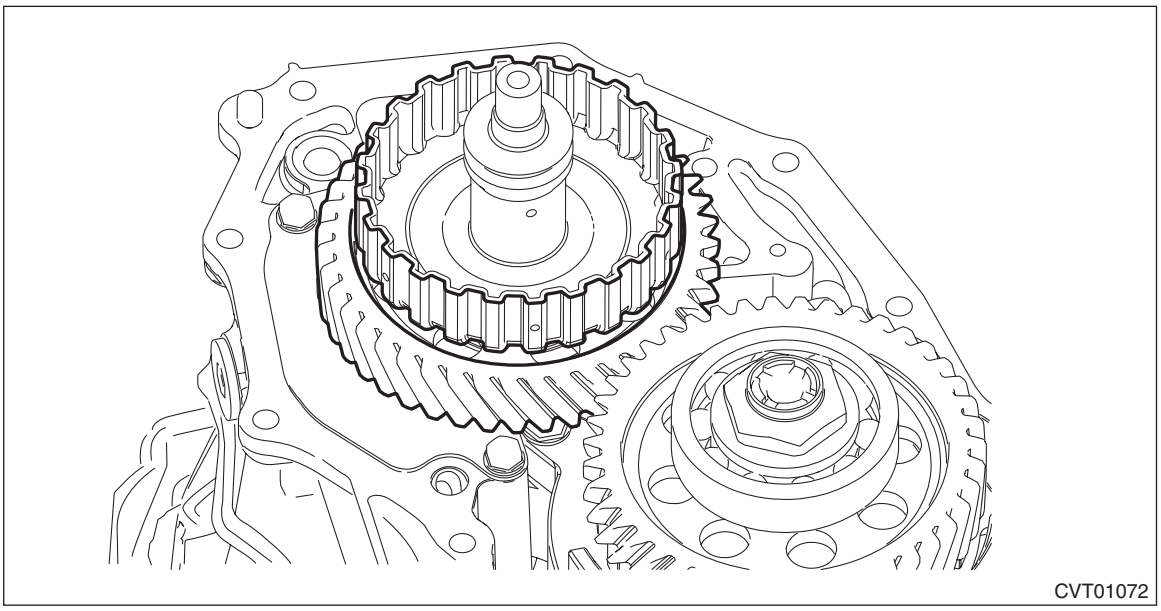

2) Install the transfer clutch assembly. <Ref. to CVT(TR580)-206, INSTALLATION, Transfer Clutch.>
3) Select the transfer driven gear shim. <Ref. to CVT(TR580)-215, ADJUSTMENT, Transfer Clutch.>
4) Install the extension case. <Ref. to CVT(TR580)-201, INSTALLATION, Extension Case.>
5) Install the transmission assembly. <Ref. to CVT(TR580)-79, INSTALLATION, Automatic Transmission Assembly.>

C: DISASSEMBLY

1) Remove the ball bearing using ST.
ST1 498077400 BEARING REMOVER
ST2 899864100 REMOVER

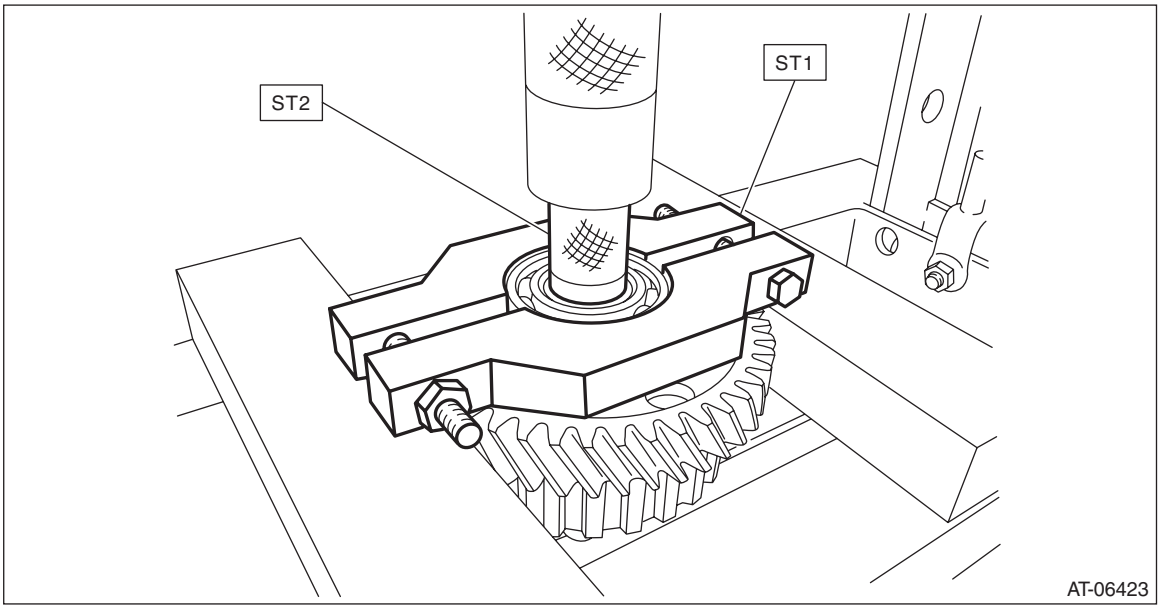

D: ASSEMBLY

1) Using the ST, install the ball bearing.
ST 899580100 INSTALLER

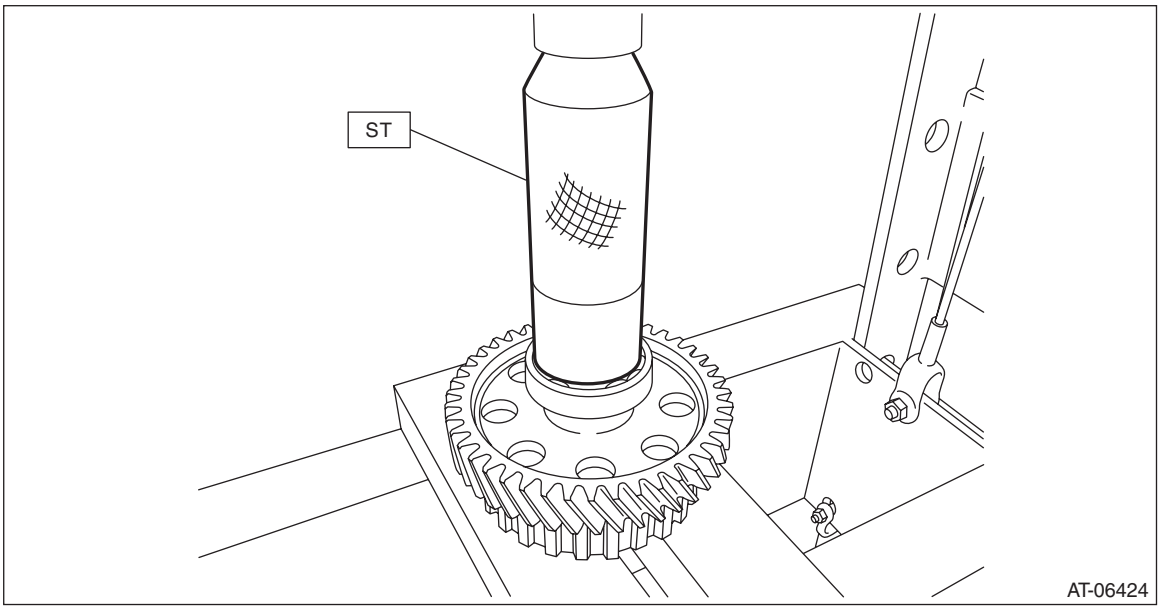

E: INSPECTION

- Check the ball bearing for smooth rotation.
- Check the ball bearing for excessive looseness.
- Check the transfer driven gear for breakage or damage.

F: ADJUSTMENT

NOTE:
When the transfer driven gear or bearing is replaced, select the transfer driven gear shim. <Ref. to CVT(TR580)-215, ADJUSTMENT, Transfer Clutch.>

35.Parking Pawl

A: REMOVAL

1) Remove the transmission assembly. <Ref. to CVT(TR580)-63, REMOVAL, Automatic Transmission Assembly.>
2) Shift the range select lever to “N” range.
3) Remove the extension case. <Ref. to CVT(TR580)-200, REMOVAL, Extension Case.>
4) Remove the parking pawl shaft, return spring and parking pawl.

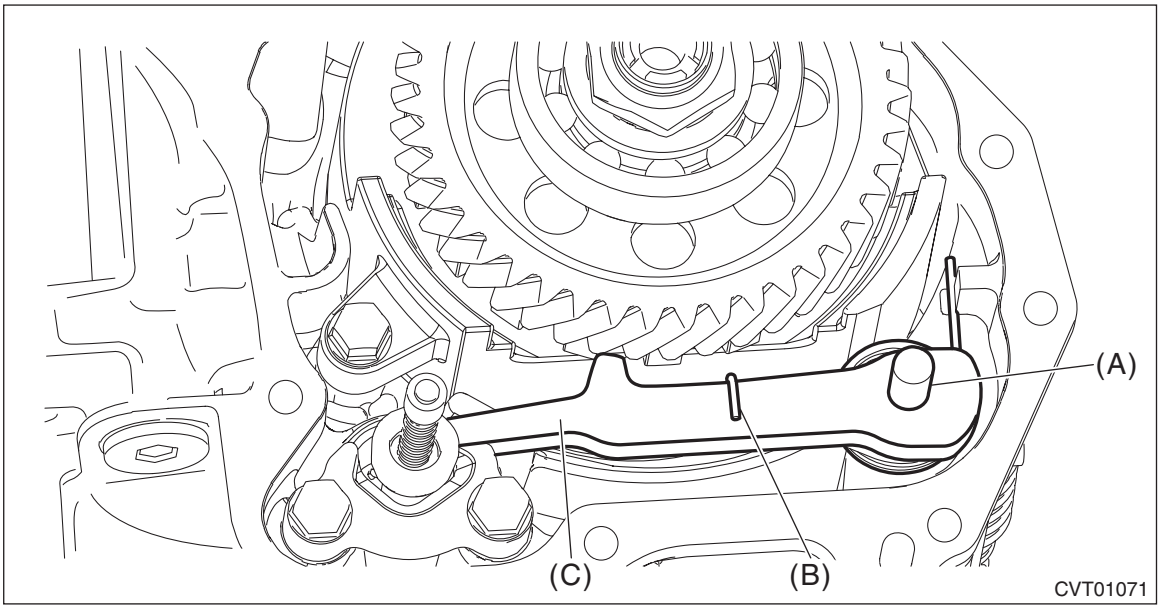

(A) Parking pawl shaft
(B) Return spring
(C) Parking pawl

B: INSTALLATION

1) Set the range select lever to the “N” range.
2) Install the parking pawl shaft, return spring and parking pawl.

NOTE:
Make sure that the end of return spring sticks out of parking pawl as shown in (a). Make sure that the other end contacts the rib of transmission case as shown in (b).

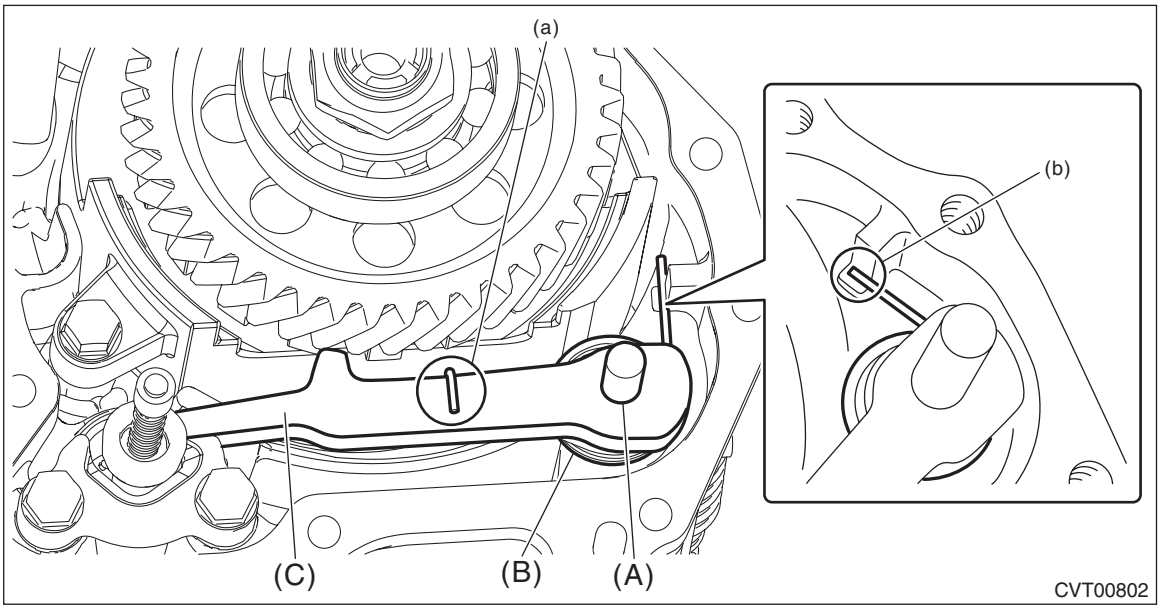

(A) Parking pawl shaft
(B) Return spring
(C) Parking pawl

3) Install the extension case. <Ref. to CVT(TR580)-201, INSTALLATION, Extension Case.>
4) Install the transmission assembly. <Ref. to CVT(TR580)-79, INSTALLATION, Automatic Transmission Assembly.>

C: INSPECTION

- Check the parking pawl for breakage or damage.
- Check for worn, broken and/or damaged return spring.

36.Reduction Driven Gear

A: REMOVAL

1) Remove the transmission assembly. <Ref. to CVT(TR580)-63, REMOVAL, Automatic Transmission Assembly.>
2) Remove the extension case. <Ref. to CVT(TR580)-200, REMOVAL, Extension Case.>
3) Remove the transfer clutch assembly. <Ref. to CVT(TR580)-204, REMOVAL, Transfer Clutch.>
4) Remove the transfer driven gear assembly. <Ref. to CVT(TR580)-218, REMOVAL, Transfer Driven Gear.>
5) Remove the parking pawl. <Ref. to CVT(TR580)-221, REMOVAL, Parking Pawl.>
6) Remove the reduction driven gear assembly and spacer oil.

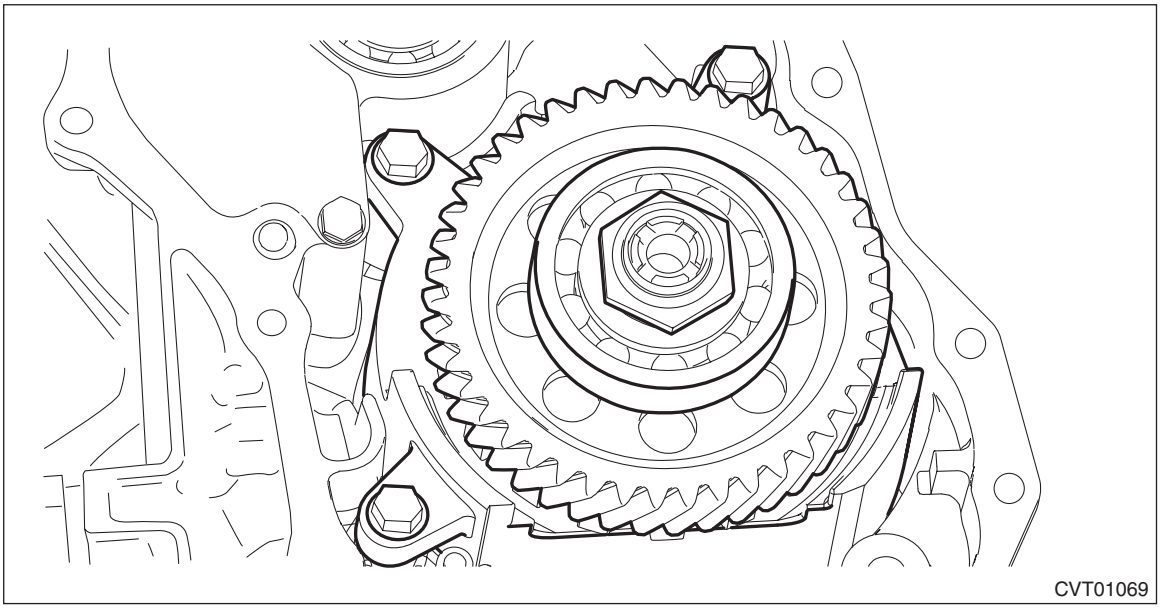

B: INSTALLATION

1) Install the reduction driven gear assembly and spacer oil.

Tightening torque:
17 N·m (1.7 kgf-m, 12.5 ft-lb)

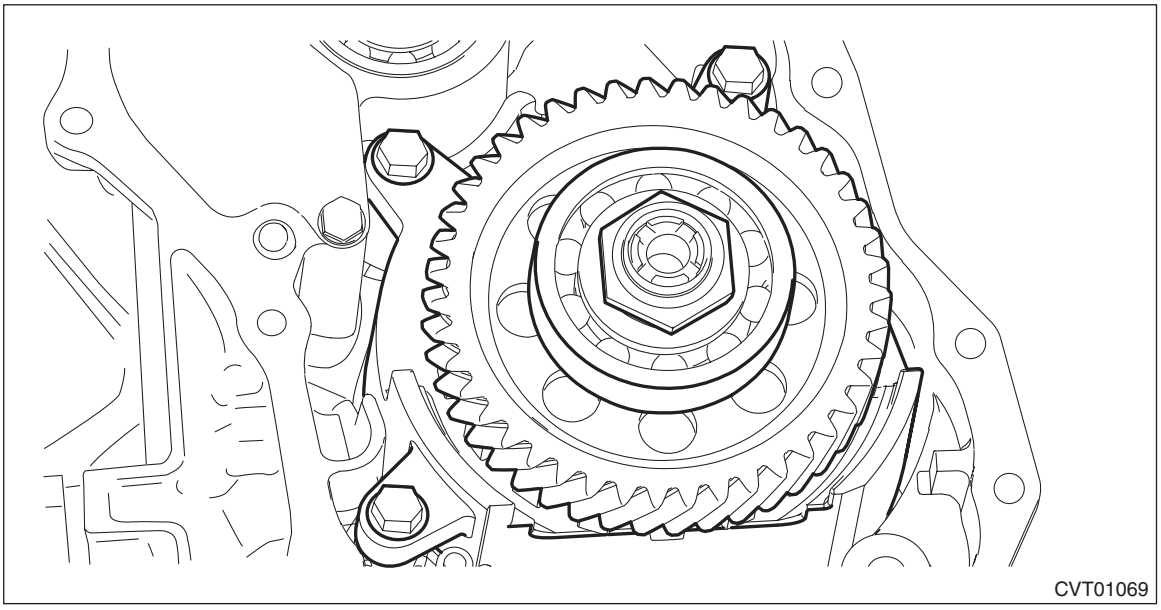

2) Select the transfer drive gear shim. <Ref. to CVT(TR580)-259, ADJUSTMENT, Reduction Drive Gear.>
3) Install the parking pawl. <Ref. to CVT(TR580)-222, INSTALLATION, Parking Pawl.>

4) Attach the selected transfer drive gear shim to extension case with vaseline.
5) Install the transfer driven gear assembly. <Ref. to CVT(TR580)-219, INSTALLATION, Transfer Driven Gear.>
6) Install the transfer clutch assembly. <Ref. to CVT(TR580)-206, INSTALLATION, Transfer Clutch.>
7) Install the extension case. <Ref. to CVT(TR580)-201, INSTALLATION, Extension Case.>
8) Install the transmission assembly. <Ref. to CVT(TR580)-79, INSTALLATION, Automatic Transmission Assembly.>

C: DISASSEMBLY

1) Flatten the tab of the lock nut.
2) Using the ST, counter the rotation of the reduction driven gear assembly, and remove the lock nut.
ST1 18355AA000 PULLEY WRENCH
ST2 18334AA000 PIN SET
ST3 499987003 SOCKET WRENCH (35)

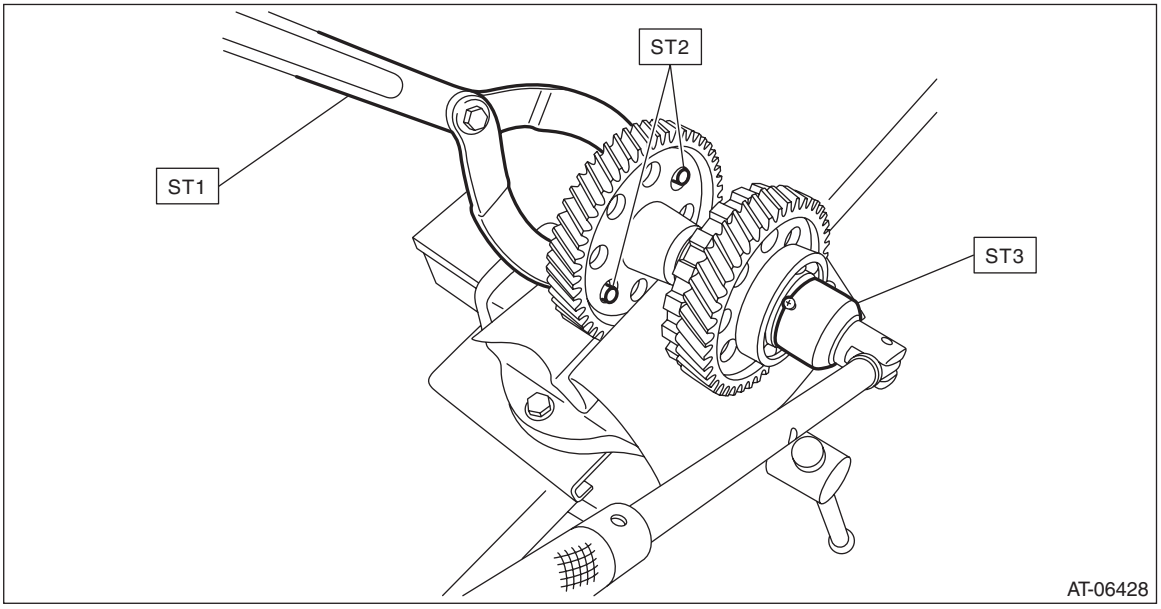

3) Remove the ball bearing using ST.
ST1 499757002 INSTALLER
ST2 498077300 REMOVER

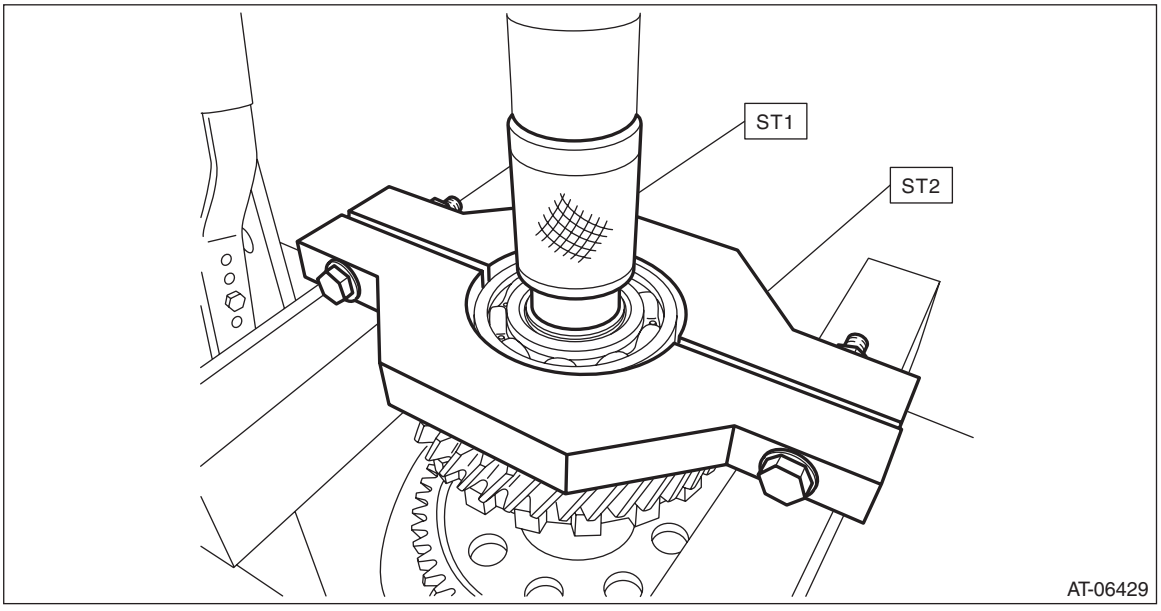

4) Using the ST, remove the parking gear and transfer drive gear.
ST 899864100 REMOVER

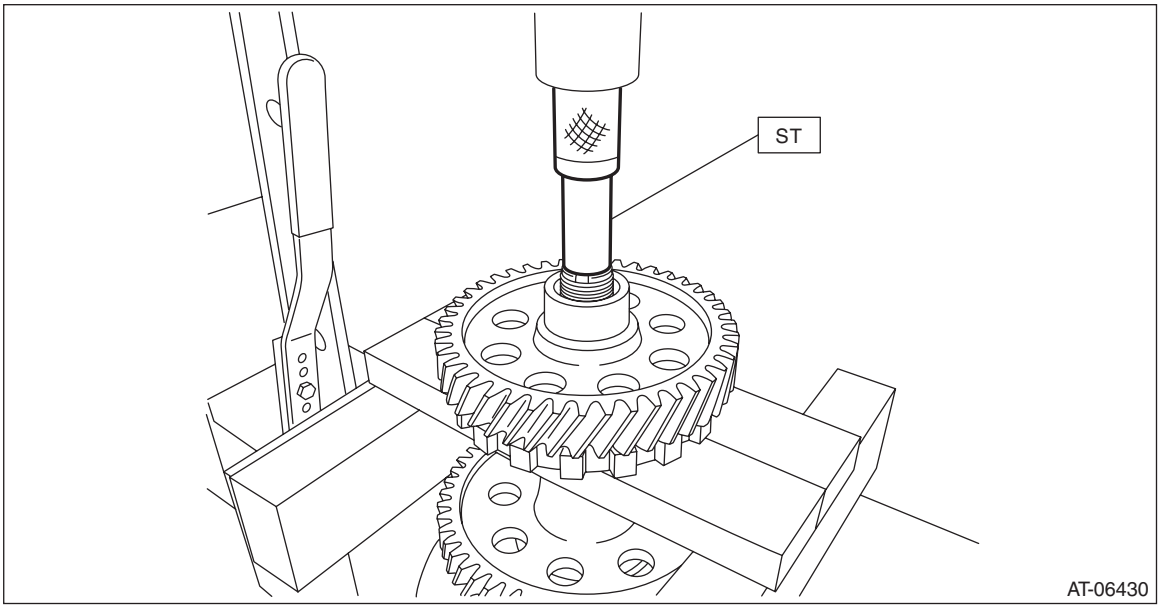

5) Remove the collar.

NOTE:
When collar has been removed, do not reuse the reduction driven gear and/or shaft, and replace it with reduction driven gear COMPL.

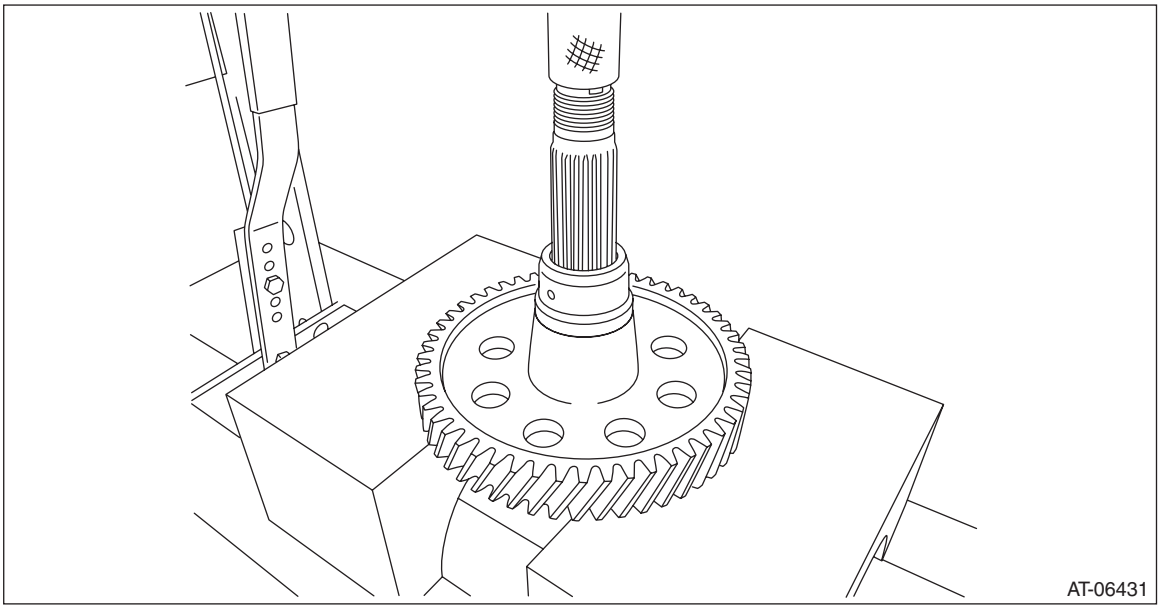

6) Remove the snap ring from reduction driven gear.

D: ASSEMBLY

1) Install the snap ring to reduction driven gear.

NOTE:
Use a new reduction driven gear COMPL.

2) Using the ST, attach the collar.

NOTE:
Attach the collar in the correct direction.

ST 899580100 INSTALLER

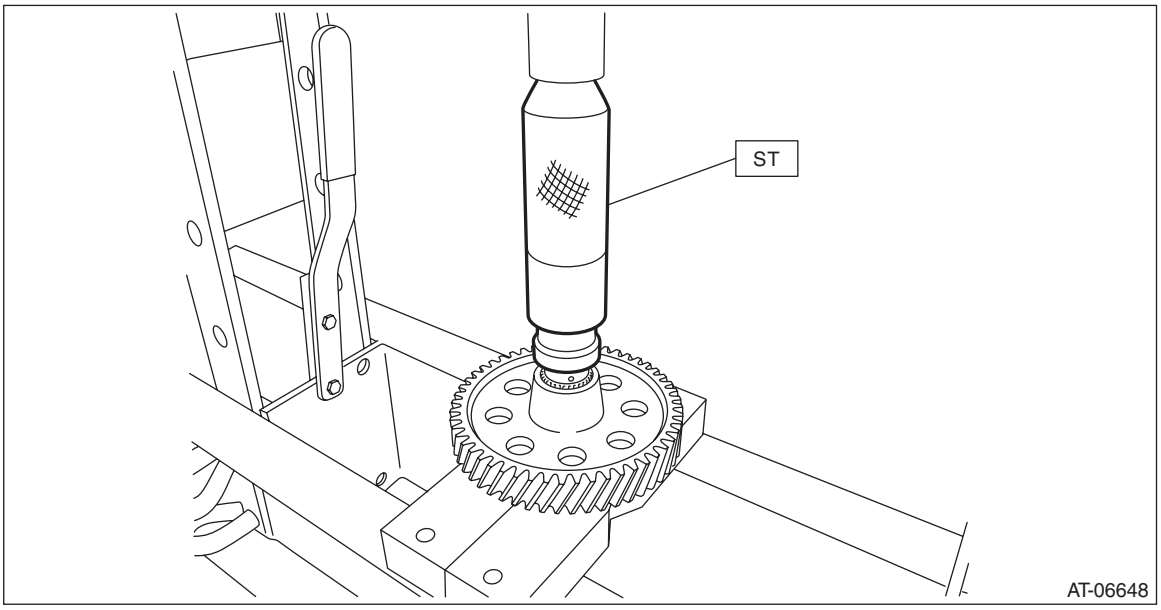

3) Using the ST, install the parking gear.

ST 499757002 INSTALLER

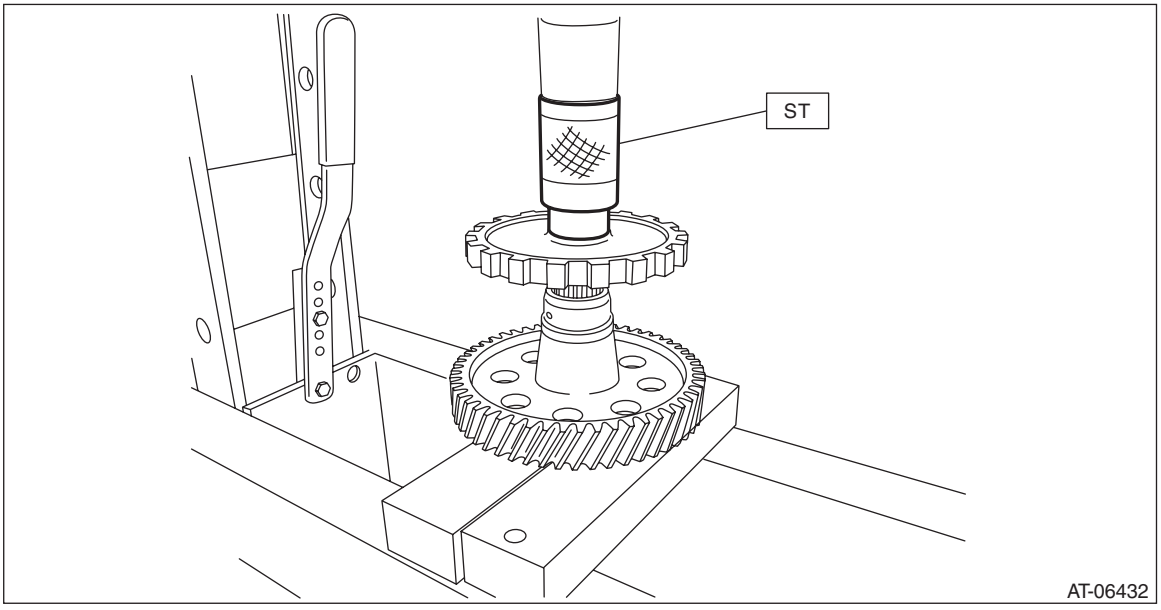

4) Using the ST, install the transfer drive gear.
ST 499757002 INSTALLER

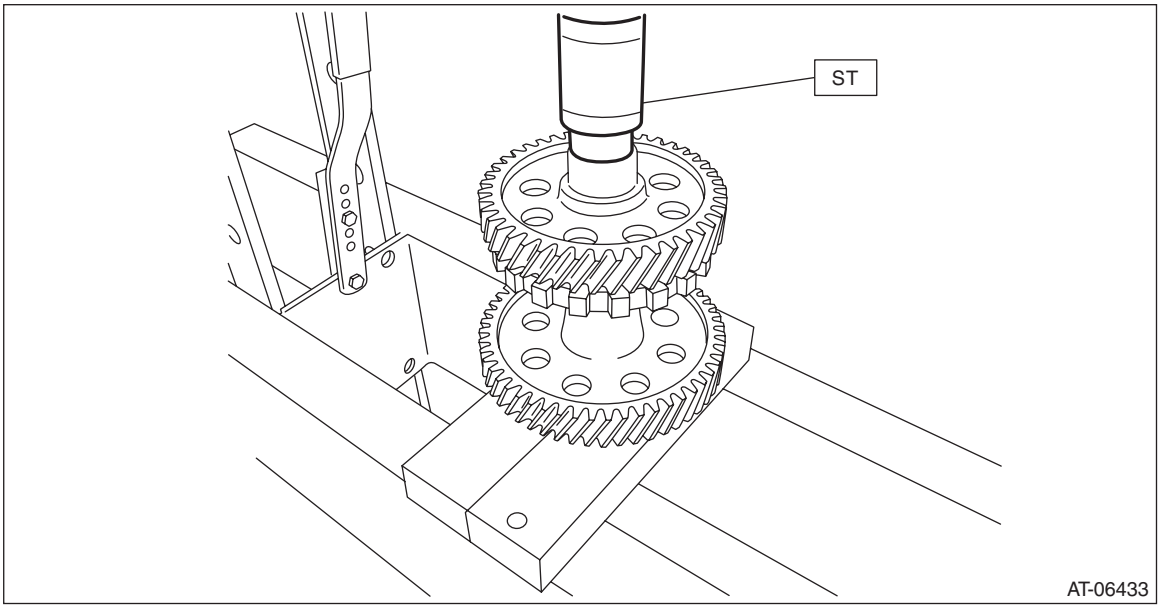

5) Using the ST, install the ball bearing.

NOTE:
Use a new ball bearing.
ST 499277100 BUSHING 1-2 INSTALLER

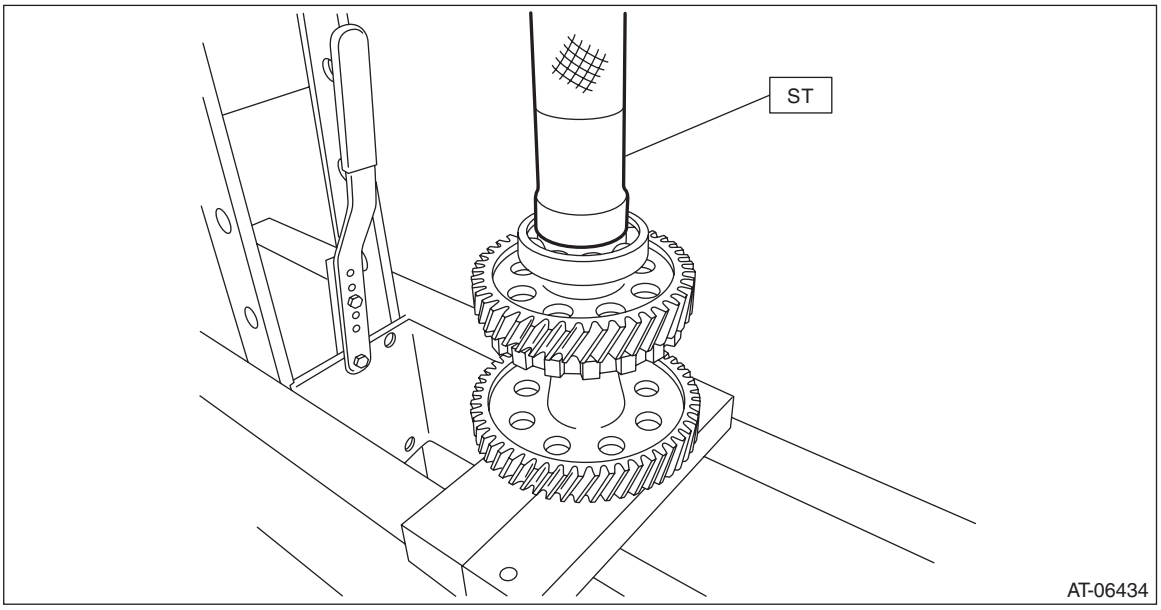

6) Using the ST, counter the rotation of the reduction drive gear assembly, and install the lock nut.

NOTE:
Use a new lock nut.
ST1 18355AA000 PULLEY WRENCH
ST2 18334AA000 PIN SET
ST3 499987003 SOCKET WRENCH (35)

Tightening torque:
95 N·m (9.7 kgf-m, 70.1 ft-lb)

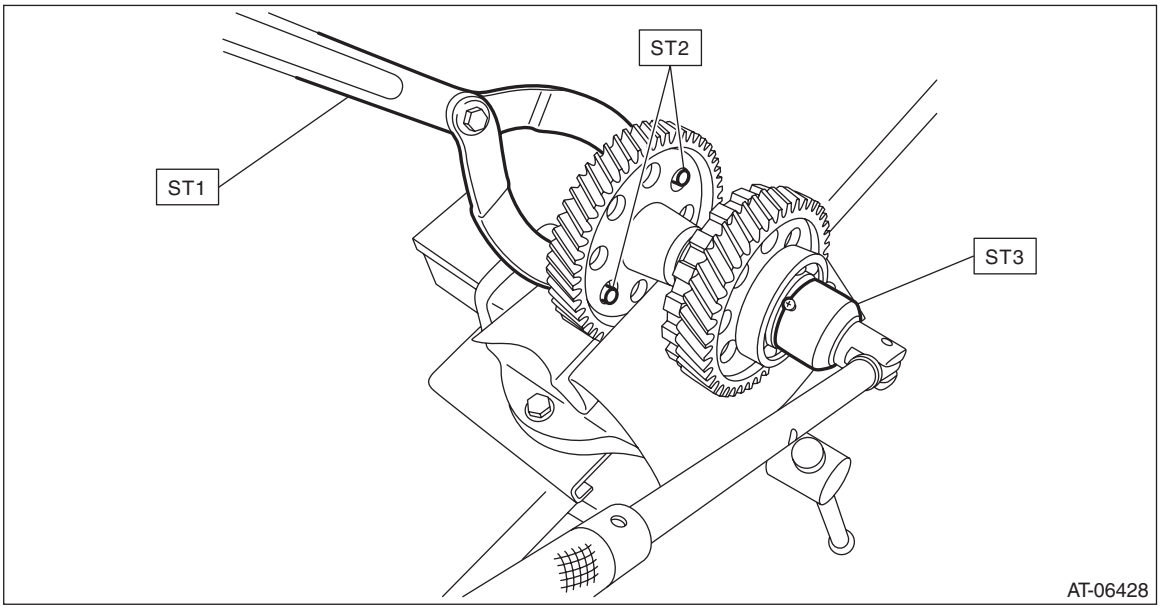

7) Crimp the lock nut at four locations so that the dimension of A becomes 18.9 mm (0.74 in) or less.

CAUTION:
Do not allow the lock nut to be cracked during crimping operation.

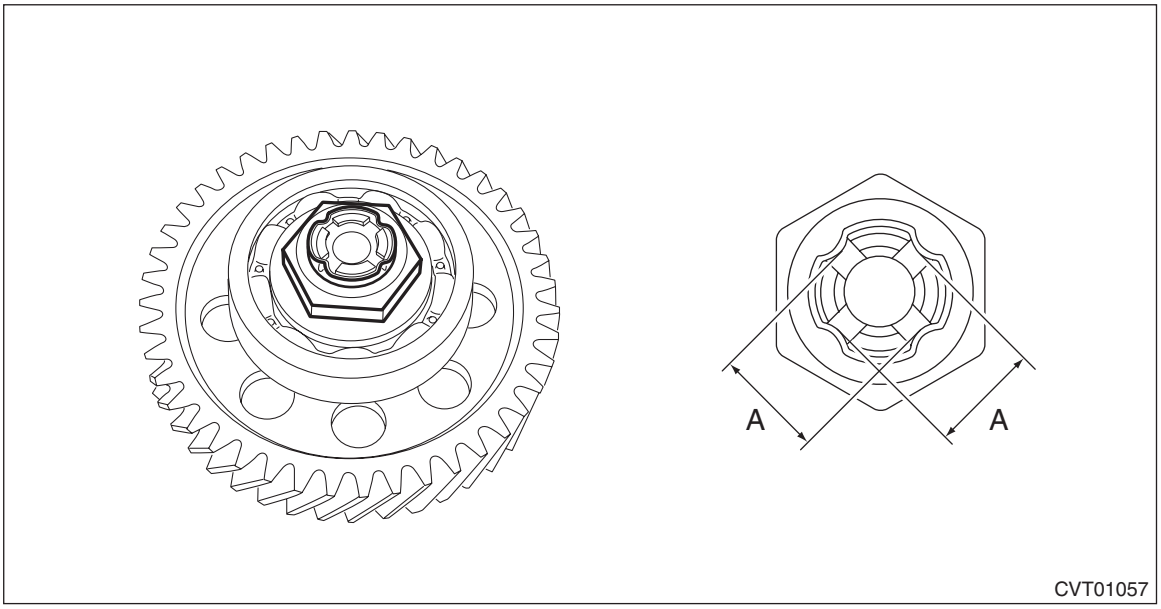

E: INSPECTION

- Check the ball bearing for smooth rotation.
- Check the ball bearing for excessive looseness.
- Make sure each gear is not broken or damaged.

F: ADJUSTMENT

1) Measure the height “A” from the ST upper face to the ball bearing catch surface.
ST 499575600 GAUGE

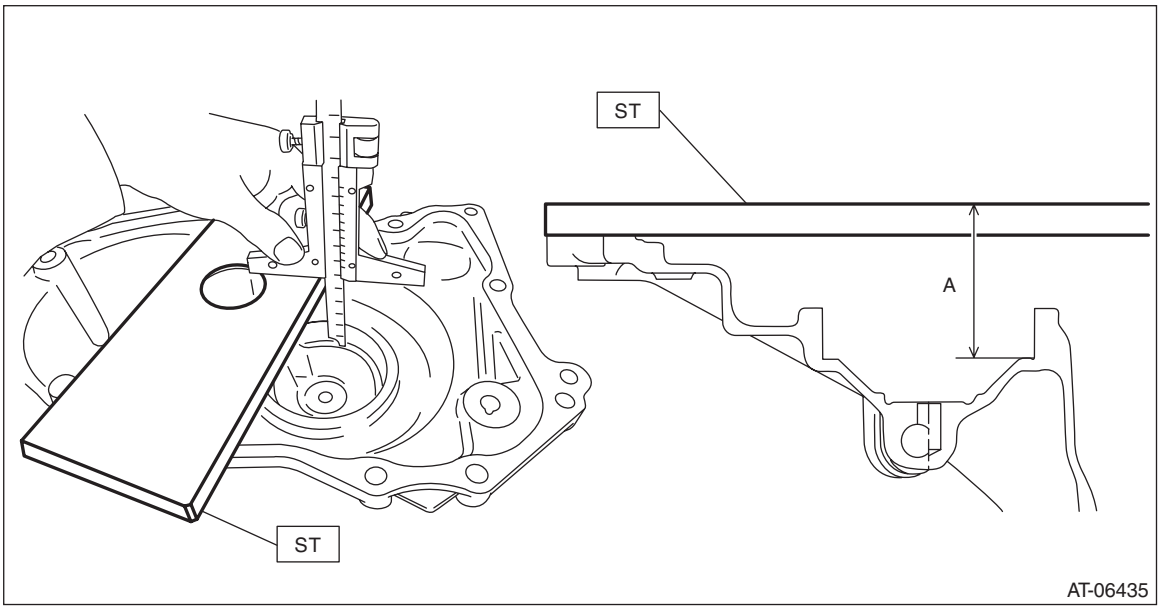

2) Measure the height “B” from the ST to the mating surface of the transmission case.
ST 499575600 GAUGE

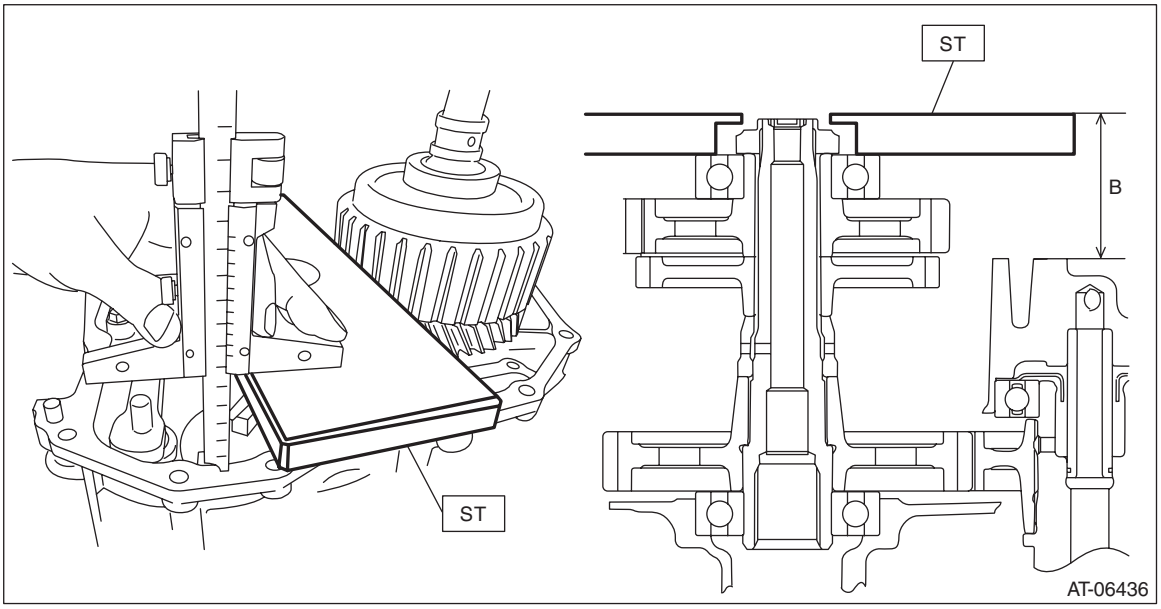

3) Obtain the thickness of transfer drive gear shim using the following formula to select one to three transfer drive gear shims.
T (mm) = A – B – (0.05 — 0.25)
[T (in) = A – B – (0.002 — 0.01)]
T: Shim thickness
A: Height from the ST upper face to the ball bearing catch surface
B: Height from ST to transmission case mating surface
0.05 — 0.25 mm (0.002 — 0.01 in): Clearance

Transfer drive gear shim	
Part No.	Thickness mm (in)
33279AA090	0.3 (0.012)
33279AA100	0.4 (0.016)
33279AA110	0.5 (0.020)

37.Transmission Control Device

A: REMOVAL

1) Remove the transmission assembly. <Ref. to CVT(TR580)-63, REMOVAL, Automatic Transmission Assembly.>
2) Remove the inhibitor switch. <Ref. to CVT(TR580)-109, REMOVAL, Inhibitor Switch.>
3) Remove the oil pan and oil strainer. <Ref. to CVT(TR580)-130, REMOVAL, Oil Pan and Strainer.>
4) Shift the manual plate to “N” range, and remove the spring pin.

NOTE:
Prevent the spring pin from dropping in the transmission using paper towel etc.

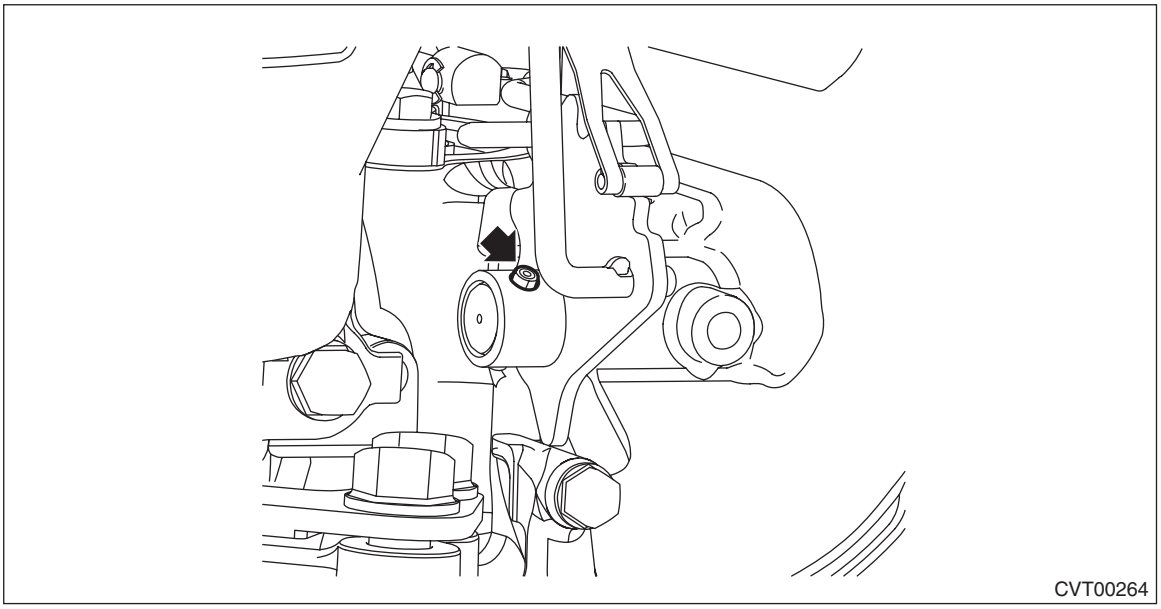
CVT00264

5) Remove the detent spring.

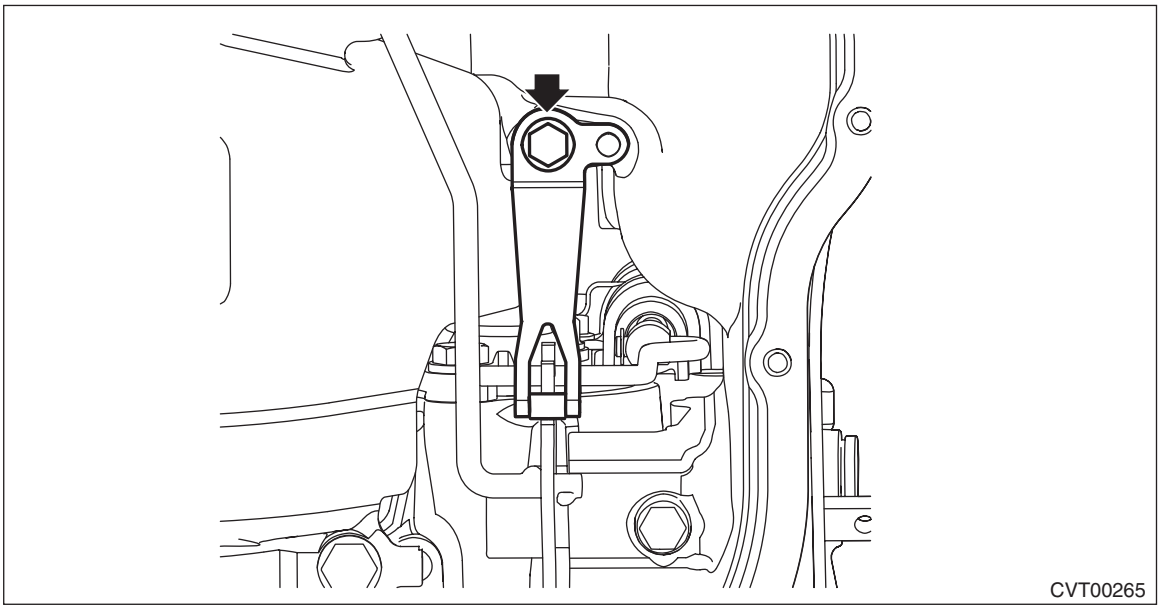
CVT00265

6) Remove the bolt, and remove the shifter arm shaft.

NOTE:
Do not damage the lip of oil seal press-fitted in the case.

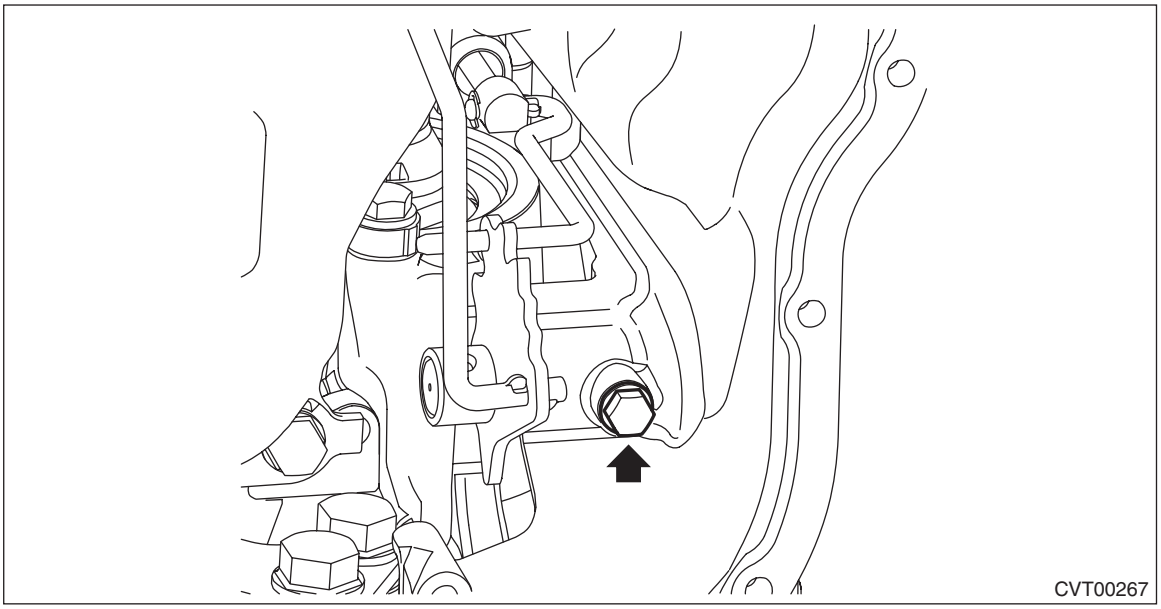

7) Remove the manual plate from the shifter arm shaft, and remove the shift connecting rod of the manual valve.

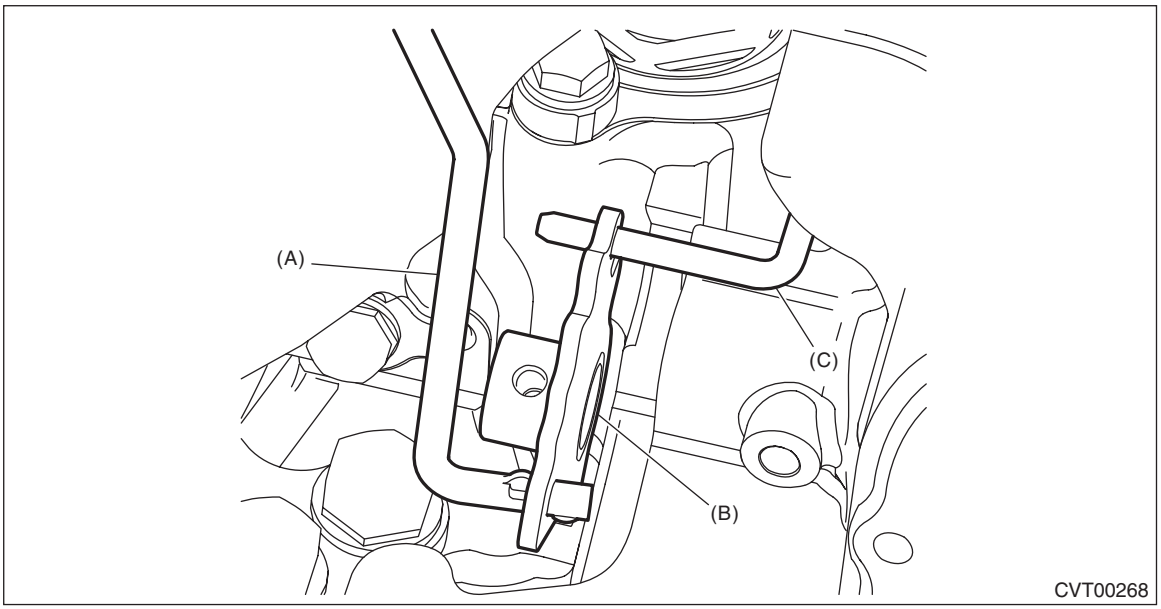

(A) Parking rod
(B) Manual plate
(C) Shift connecting rod

8) Remove the manual plate and parking rod.

9) Remove the manual valve.

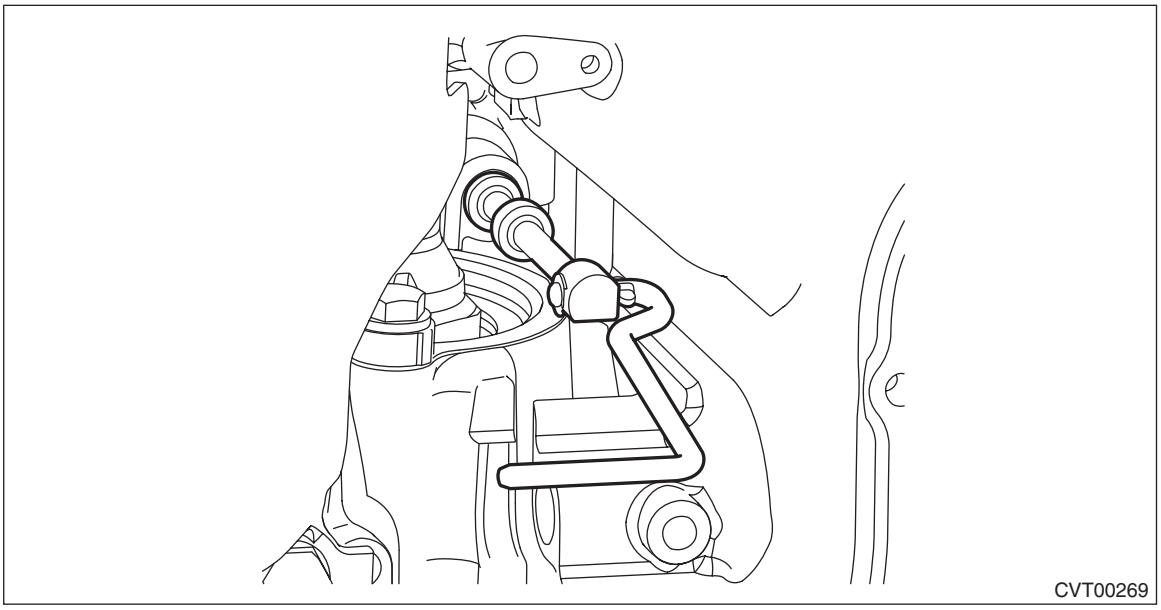

10) Remove the extension case. <Ref. to CVT(TR580)-200, REMOVAL, Extension Case.>
11) Remove the parking support.

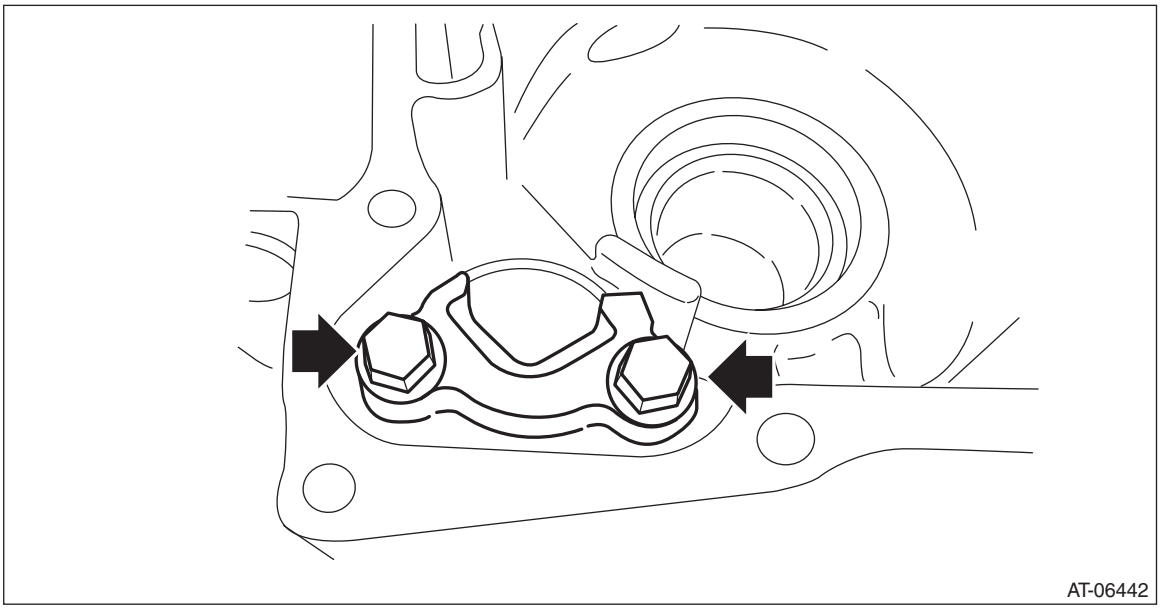

B: INSTALLATION

1) Install the parking support.

Tightening torque:
25 N·m (2.5 kgf-m, 18.4 ft-lb)

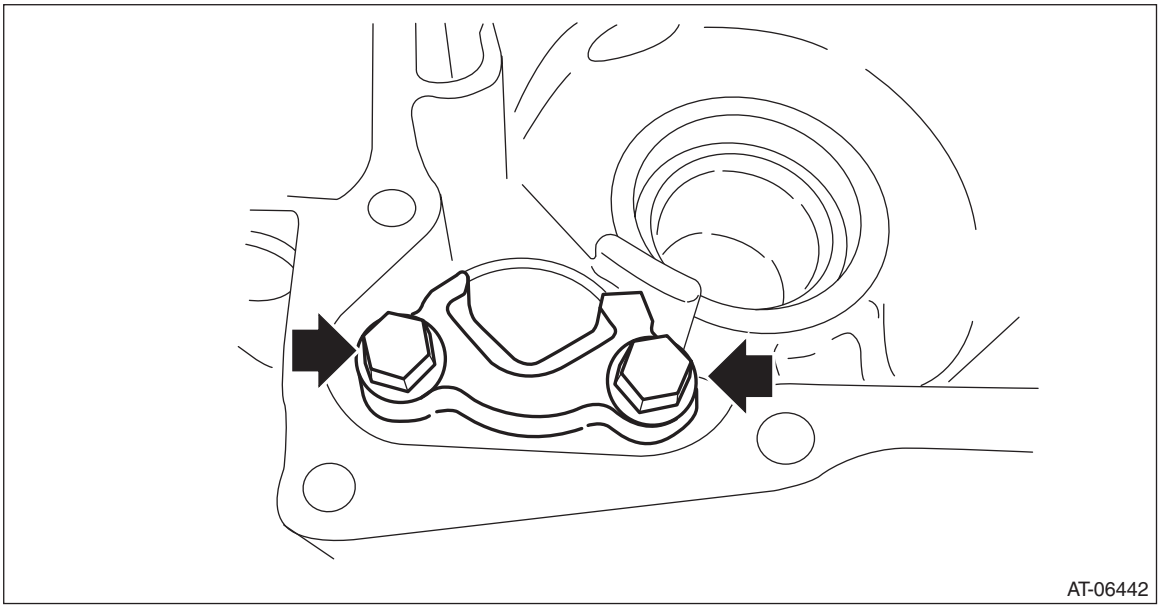

2) Install the extension case. <Ref. to CVT(TR580)-201, INSTALLATION, Extension Case.>
3) Install the manual valve.

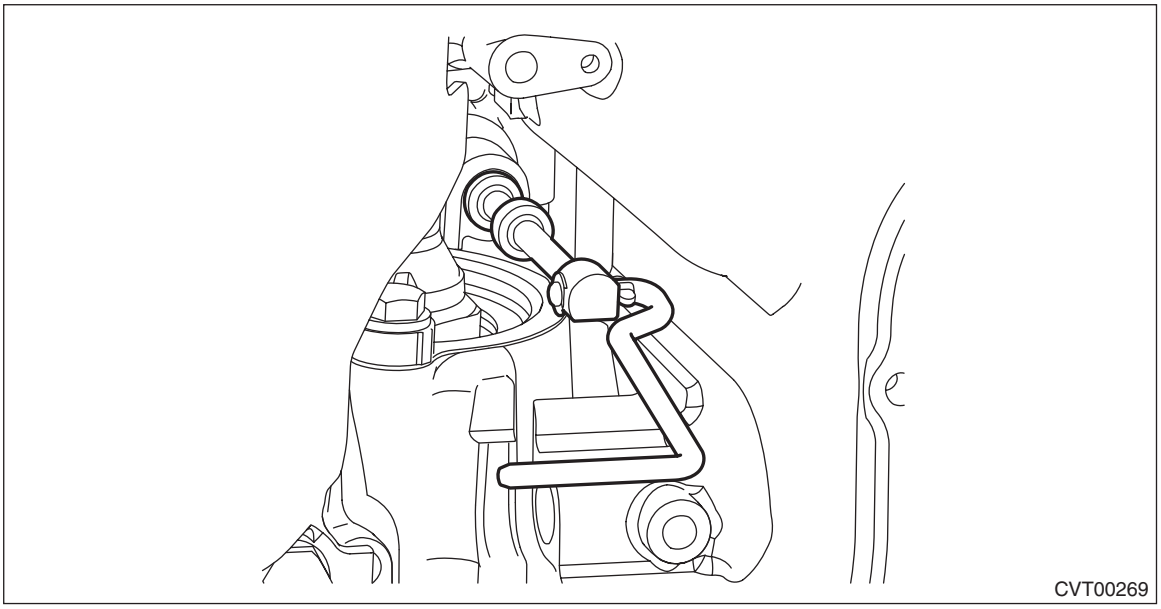

4) Install the parking rod to the manual plate.

5) Insert the parking rod into the transmission case, and install the shift connecting rod of the manual valve to the manual plate.

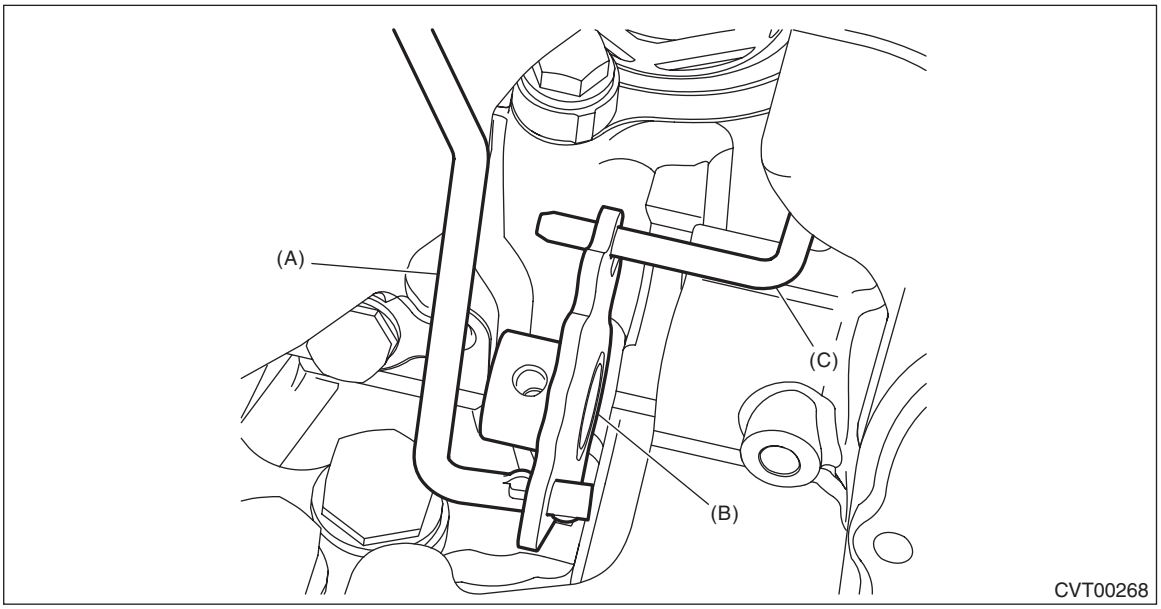

(A) Parking rod
(B) Manual plate
(C) Shift connecting rod

6) Insert the shifter arm shaft to the transmission assembly, install the manual plate to the shifter arm shaft, and secure the shifter arm shaft with a bolt.

NOTE:
Do not damage the lip of oil seal press-fitted in the case.

Tightening torque:
7 N·m (0.7 kgf-m, 5.2 ft-lb)

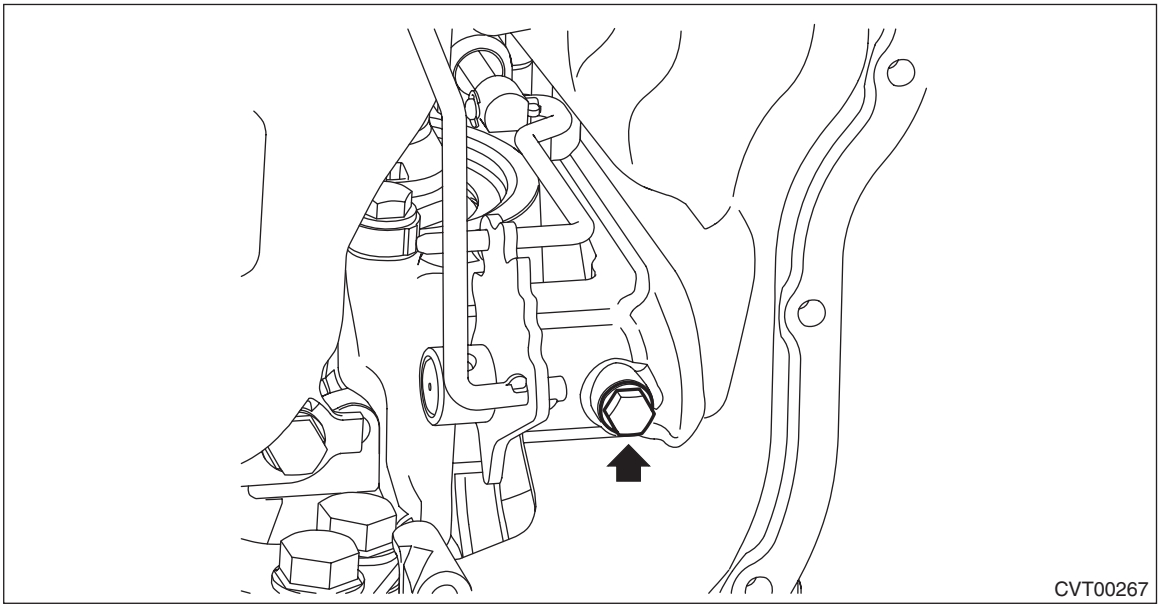

7) Install the detent spring.

Tightening torque:
7 N·m (0.7 kgf-m, 5.2 ft-lb)

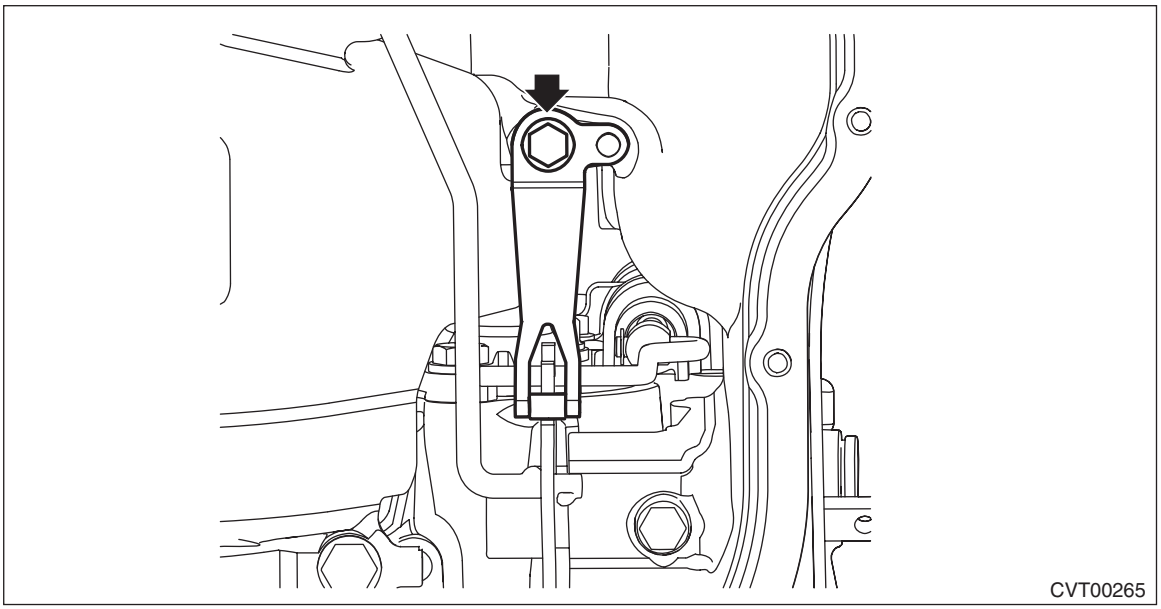

8) Install the spring pin.

NOTE:
Use new spring pin.

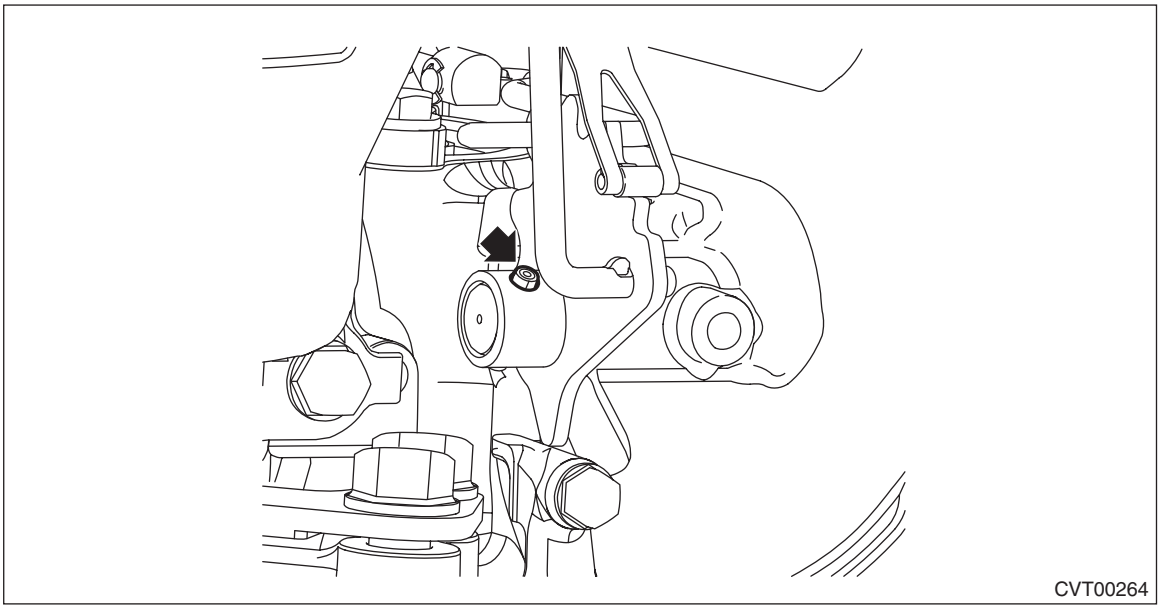

9) Install the inhibitor switch. <Ref. to CVT(TR580)-111, INSTALLATION, Inhibitor Switch.>
10) Adjust the inhibitor switch. <Ref. to CVT(TR580)-108, ADJUSTMENT, Inhibitor Switch.>
11) Install the oil strainer and oil pan. <Ref. to CVT(TR580)-131, INSTALLATION, Oil Pan and Strainer.>
12) Install the transmission assembly. <Ref. to CVT(TR580)-79, INSTALLATION, Automatic Transmission Assembly.>

C: INSPECTION

Make sure that the manual plate and detent spring are not worn or otherwise damaged.

38.Transmission Case

A: REMOVAL

1) Remove the transmission assembly. <Ref. to CVT(TR580)-63, REMOVAL, Automatic Transmission Assembly.>
2) Remove the air breather hose. <Ref. to CVT(TR580)-190, REMOVAL, Air Breather Hose.>
3) Remove the control valve body. <Ref. to CVT(TR580)-133, REMOVAL, Control Valve Body.>
4) Remove the transmission harness. <Ref. to CVT(TR580)-147, REMOVAL, Transmission Harness.>
5) Remove the turbine speed sensor. <Ref. to CVT(TR580)-113, REMOVAL, Turbine Speed Sensor.>
6) Remove the secondary speed sensor. <Ref. to CVT(TR580)-118, REMOVAL, Secondary Speed Sensor.>
7) Remove the primary speed sensor. <Ref. to CVT(TR580)-123, REMOVAL, Primary Speed Sensor.>
8) Remove the inhibitor switch. <Ref. to CVT(TR580)-109, REMOVAL, Inhibitor Switch.>
9) Remove the extension case. <Ref. to CVT(TR580)-200, REMOVAL, Extension Case.>
10) Remove the transfer clutch assembly. <Ref. to CVT(TR580)-204, REMOVAL, Transfer Clutch.>
11) Remove the transfer driven gear assembly. <Ref. to CVT(TR580)-218, REMOVAL, Transfer Driven Gear.>
12) Remove the parking pawl. <Ref. to CVT(TR580)-221, REMOVAL, Parking Pawl.>
13) Remove the reduction driven gear assembly. <Ref. to CVT(TR580)-223, REMOVAL, Reduction Driven Gear.>
14) Remove the oil pan and oil strainer. <Ref. to CVT(TR580)-130, REMOVAL, Oil Pan and Strainer.>
15) Remove the transmission control device. <Ref. to CVT(TR580)-231, REMOVAL, Transmission Control Device.>
16) Remove the oil baffle securing bolt.

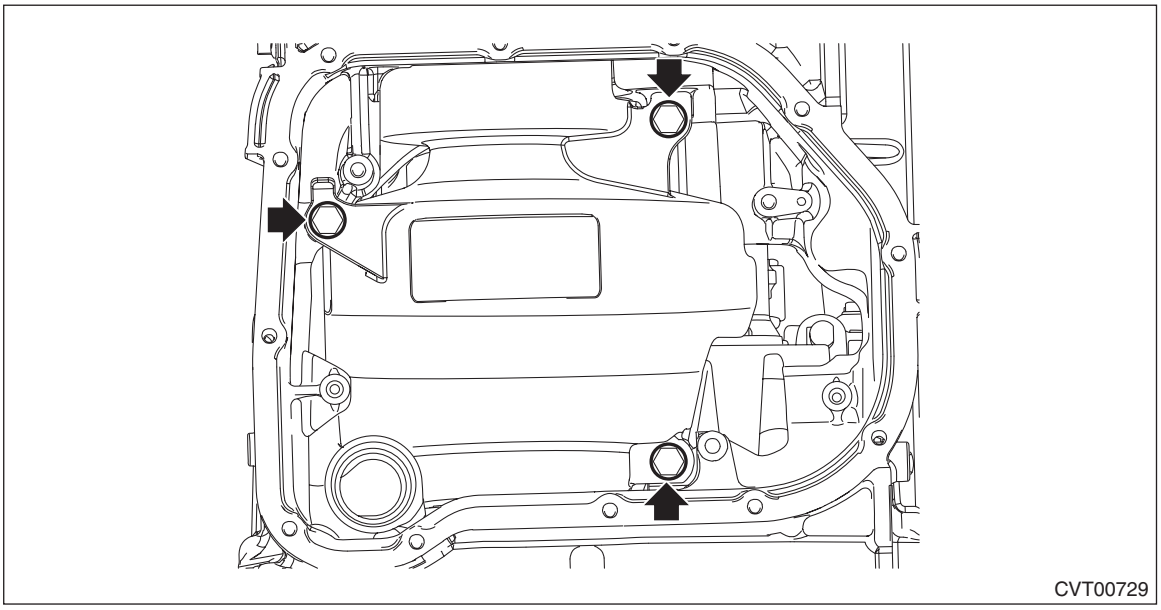
CVT00729

17) Remove the oil cooler pipe. (With CVTF cooler (air cool))
18) Remove the CVTF cooler pipe COMPL. (With CVTF cooler (air cool)) <Ref. to CVT(TR580)-177, REMOVAL, CVTF Cooler Pipe and Hose.>

19) Remove the oil cooler pipe. (Without CVTF cooler (air cool))

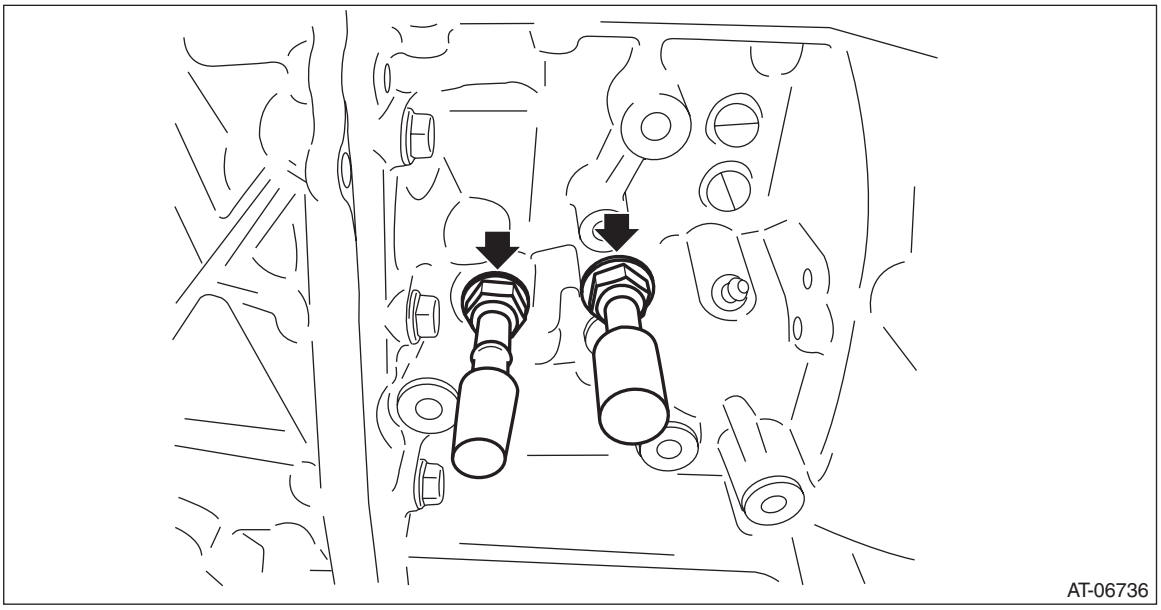

20) Remove the transmission case.

NOTE:
The total number of transmission case mounting bolts is 15.

21) Remove the oil baffle.

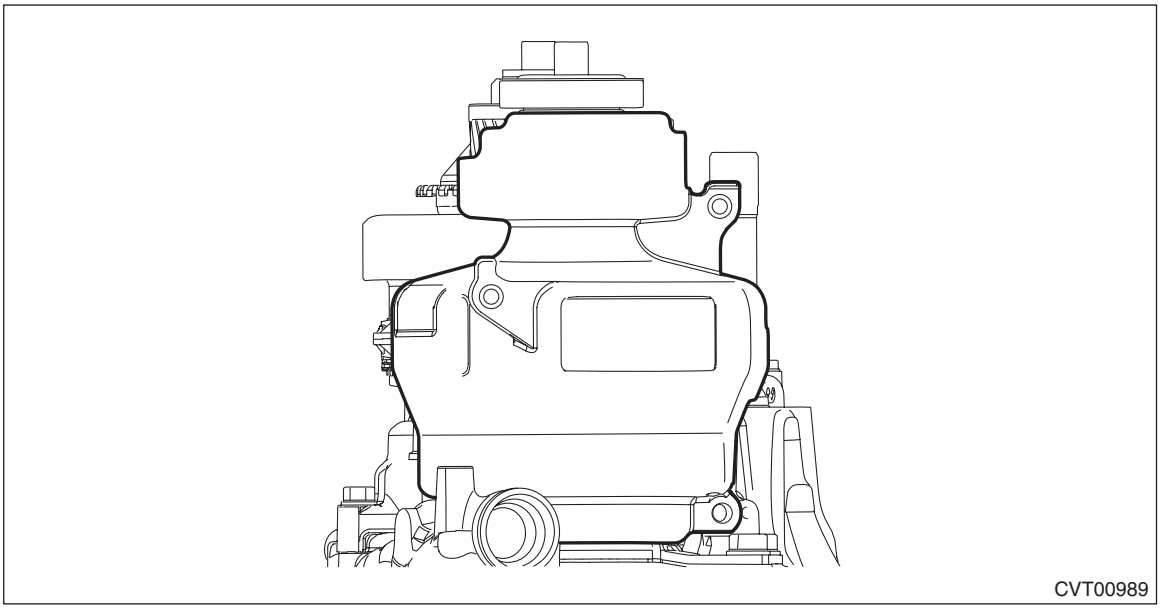

22) Remove the O-rings.

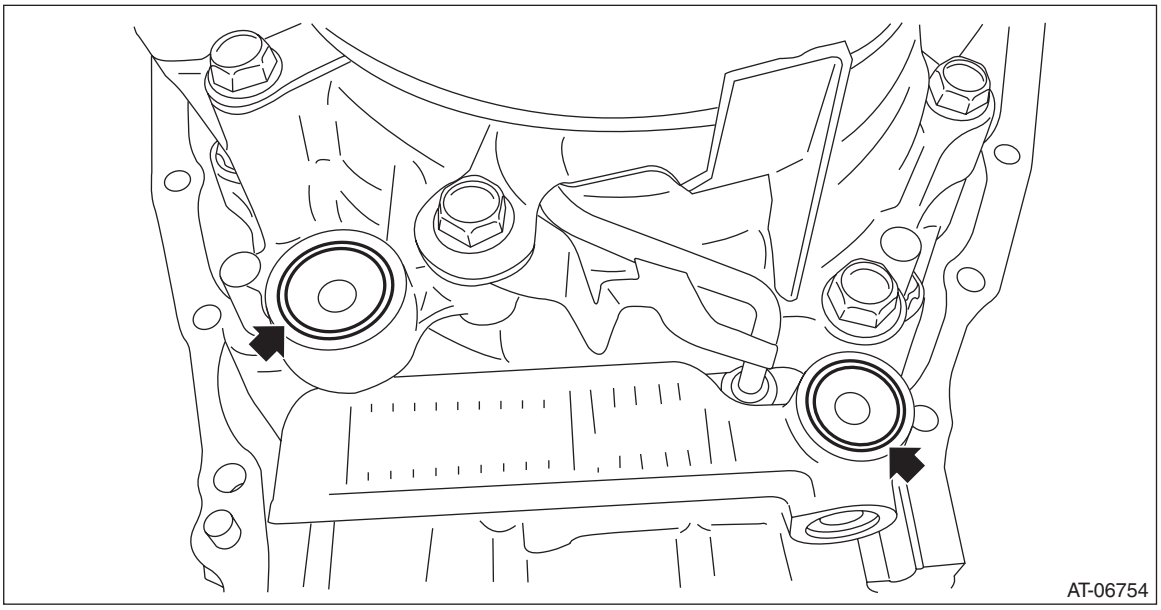

23) Remove the seal rings.

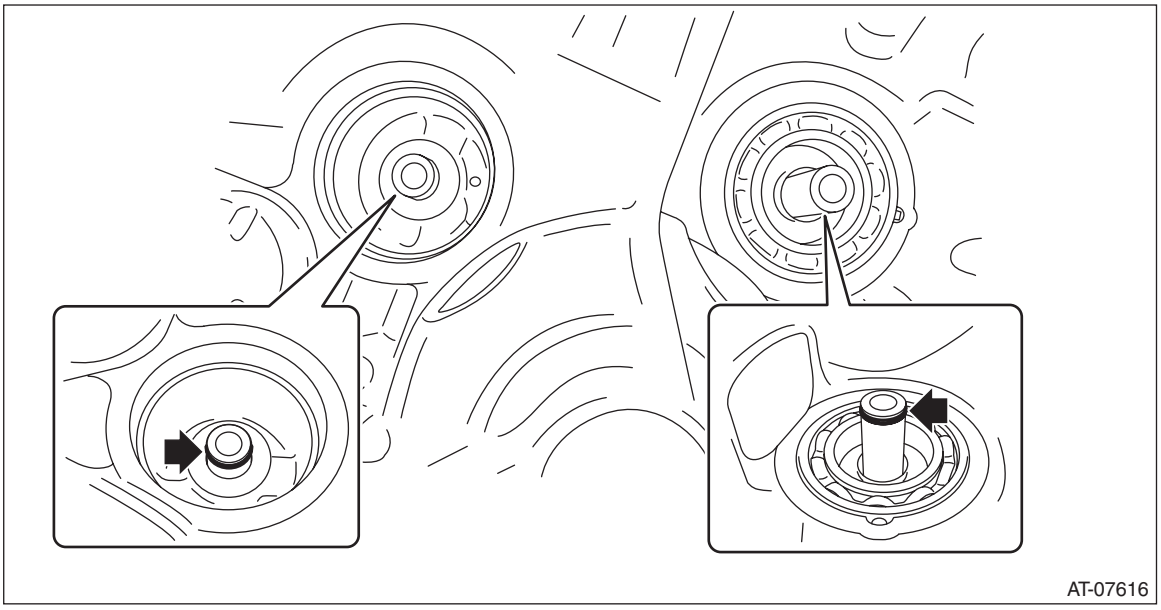

B: INSTALLATION

1) Clean the mating surface of transmission case and converter case.
2) Select the reduction gear shim. <Ref. to CVT(TR580)-259, ADJUSTMENT, Reduction Drive Gear.>
3) Remove the transmission case, and install the selected reduction gear shim to the reduction drive gear.
4) Install the O-rings to the reverse clutch housing and drive pinion retainer.

NOTE:
- Use new O-rings.
- Apply CVTF to the O-rings.

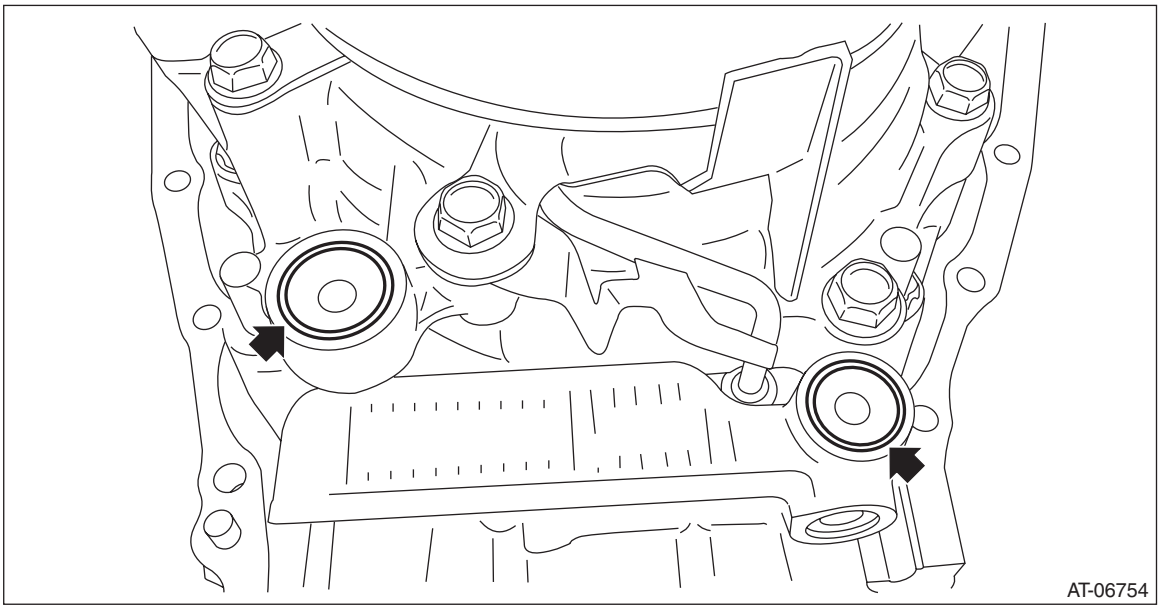

5) Install the seal rings.

NOTE:
- Use new seal rings.
- When installing the seal rings, do not expand the seal rings too much.
- Apply CVTF to the seal rings.

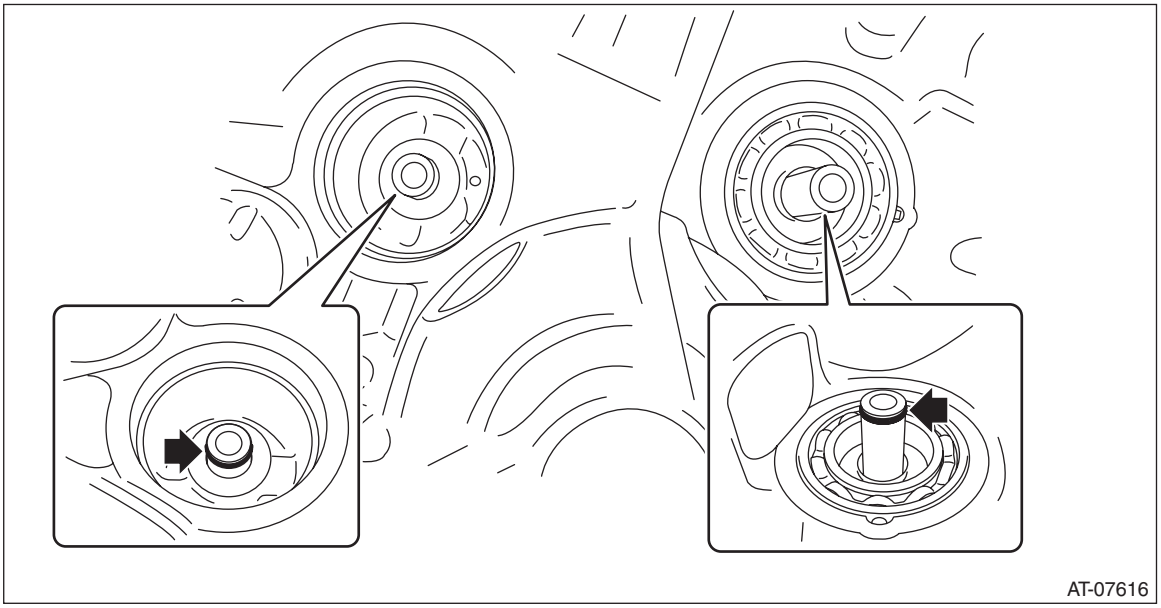

6) Cover the secondary pulley with the oil baffle, and temporarily install it with bolts.

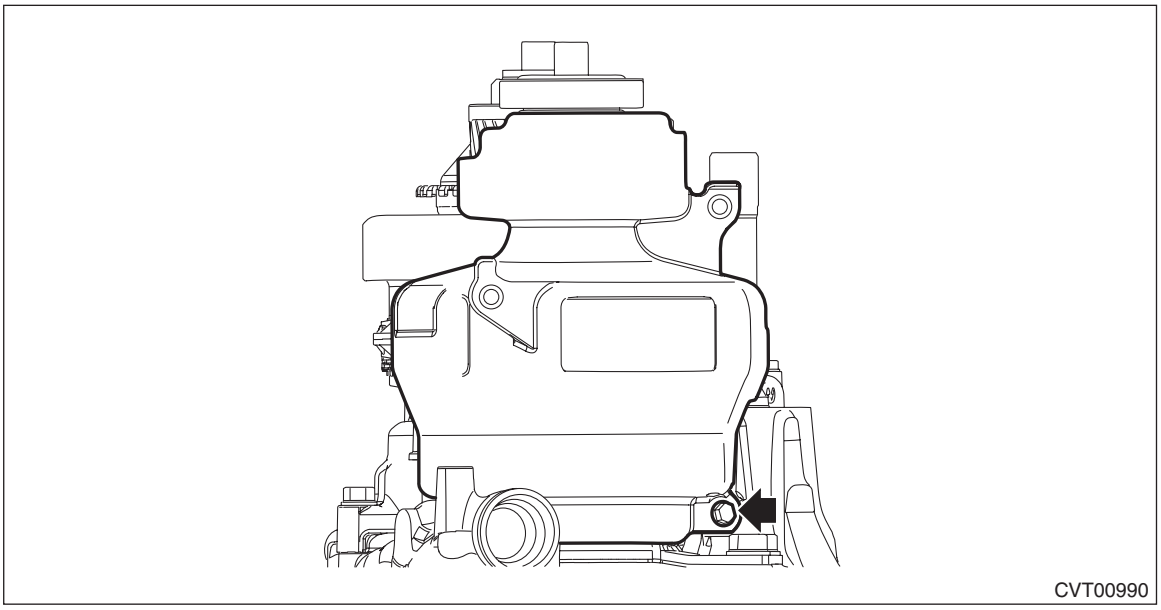

7) Apply liquid gasket seamlessly to the mating surface of transmission case.

Liquid gasket:
THREE BOND 1215B or equivalent

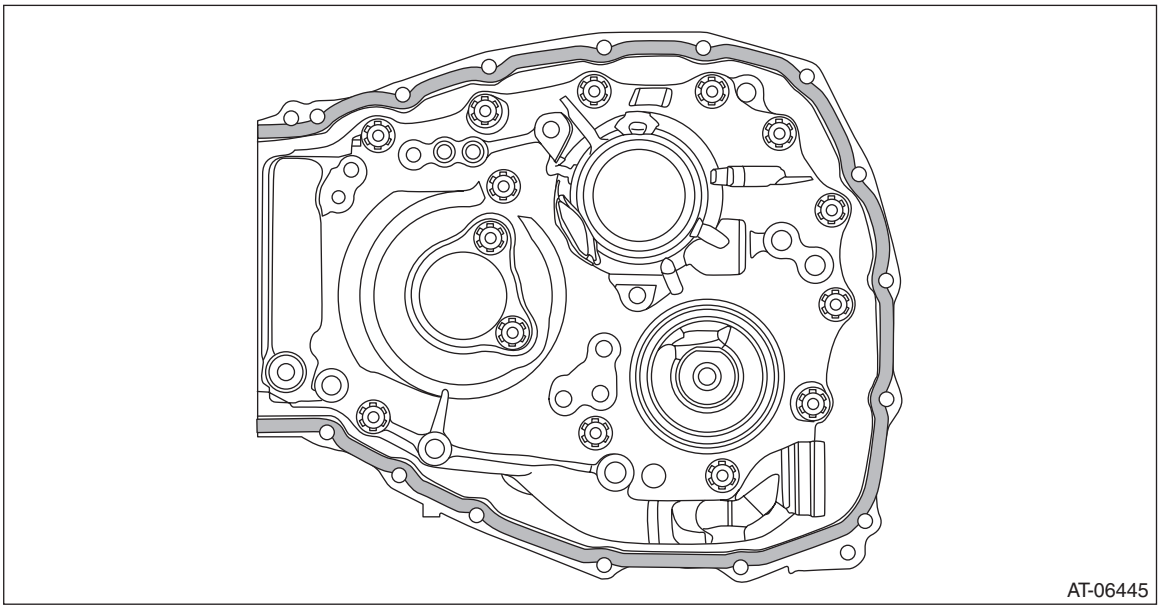

8) Install the transmission case.

NOTE:
The total number of transmission case mounting bolts is 15.

Tightening torque:
22 N·m (2.2 kgf-m, 16.2 ft-lb)

9) Install the oil cooler pipe. (Without CVTF cooler (air cool))

NOTE:
- Use new O-rings.
- Apply CVTF to the O-rings.

Tightening torque:
25 N·m (2.5 kgf-m, 18.4 ft-lb)

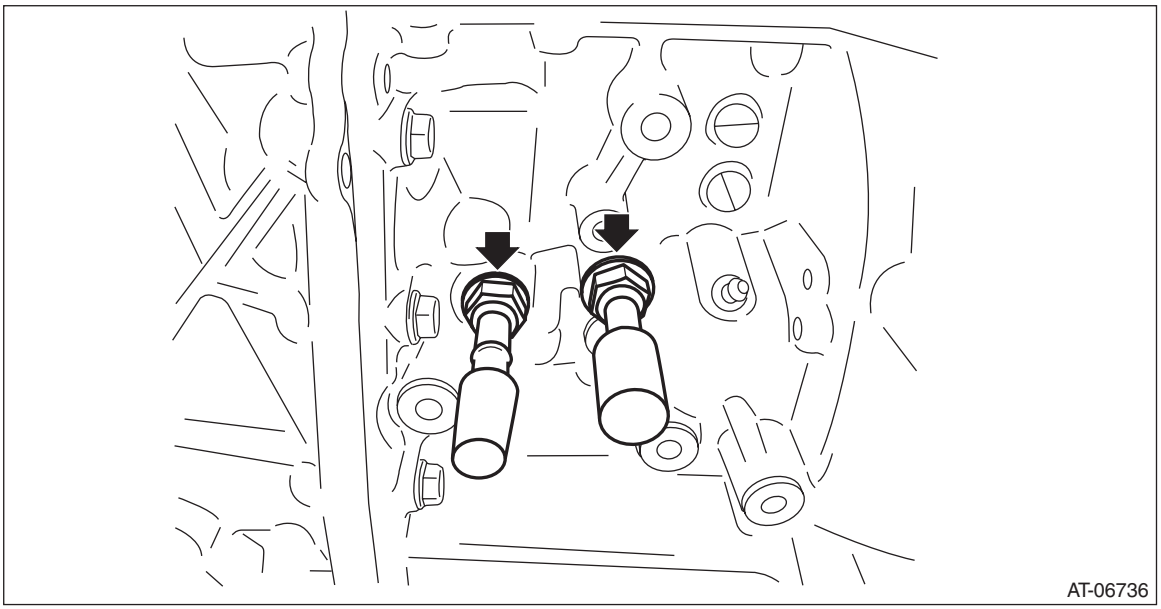

10) Install the CVTF cooler pipe COMPL and oil cooler pipe. (With CVTF cooler (air cool)) <Ref. to CVT(TR580)-183, INSTALLATION, CVTF Cooler Pipe and Hose.>
11) Install the oil cooler pipe. (With CVTF cooler (air cool))

NOTE:
- Use new O-rings.
- Apply CVTF to the O-rings.

Tightening torque:
25 N·m (2.5 kgf-m, 18.4 ft-lb)

12) Install the oil baffle securing bolt.

Tightening torque:
16 N·m (1.6 kgf-m, 11.8 ft-lb)

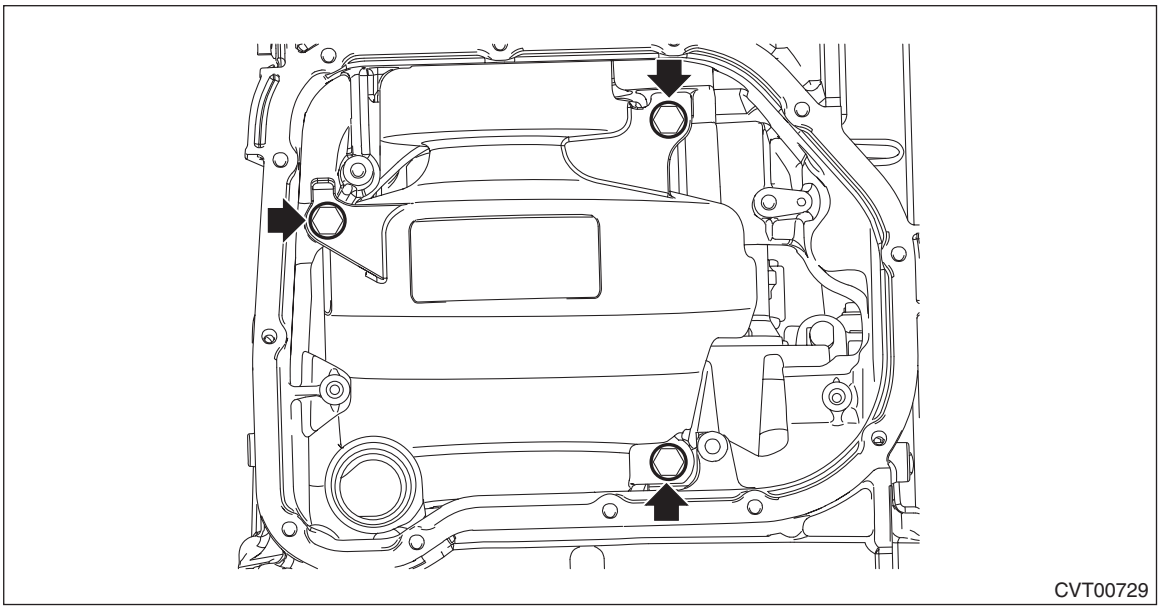

13) Install the transmission control device. <Ref. to CVT(TR580)-234, INSTALLATION, Transmission Control Device.>
14) Install the oil pan and oil strainer. <Ref. to CVT(TR580)-131, INSTALLATION, Oil Pan and Strainer.>
15) Install the reduction driven gear assembly. <Ref. to CVT(TR580)-223, INSTALLATION, Reduction Driven Gear.>
16) Install the parking pawl. <Ref. to CVT(TR580)-222, INSTALLATION, Parking Pawl.>
17) Install the transfer driven gear assembly. <Ref. to CVT(TR580)-219, INSTALLATION, Transfer Driven Gear.>
18) Install the transfer clutch assembly. <Ref. to CVT(TR580)-206, INSTALLATION, Transfer Clutch.>
19) Install the extension case. <Ref. to CVT(TR580)-201, INSTALLATION, Extension Case.>
20) Install the inhibitor switch. <Ref. to CVT(TR580)-111, INSTALLATION, Inhibitor Switch.>
21) Install the secondary speed sensor. <Ref. to CVT(TR580)-118, INSTALLATION, Secondary Speed Sensor.>
22) Install the primary speed sensor. <Ref. to CVT(TR580)-124, INSTALLATION, Primary Speed Sensor.>
23) Install the turbine speed sensor. <Ref. to CVT(TR580)-113, INSTALLATION, Turbine Speed Sensor.>
24) Install the transmission harness. <Ref. to CVT(TR580)-150, INSTALLATION, Transmission Harness.>
25) Install the control valve body. <Ref. to CVT(TR580)-139, INSTALLATION, Control Valve Body.>
26) Install the air breather hose. <Ref. to CVT(TR580)-192, INSTALLATION, Air Breather Hose.>
27) Install the transmission assembly. <Ref. to CVT(TR580)-79, INSTALLATION, Automatic Transmission Assembly.>

C: DISASSEMBLY

1) Remove the oil stopper plate.

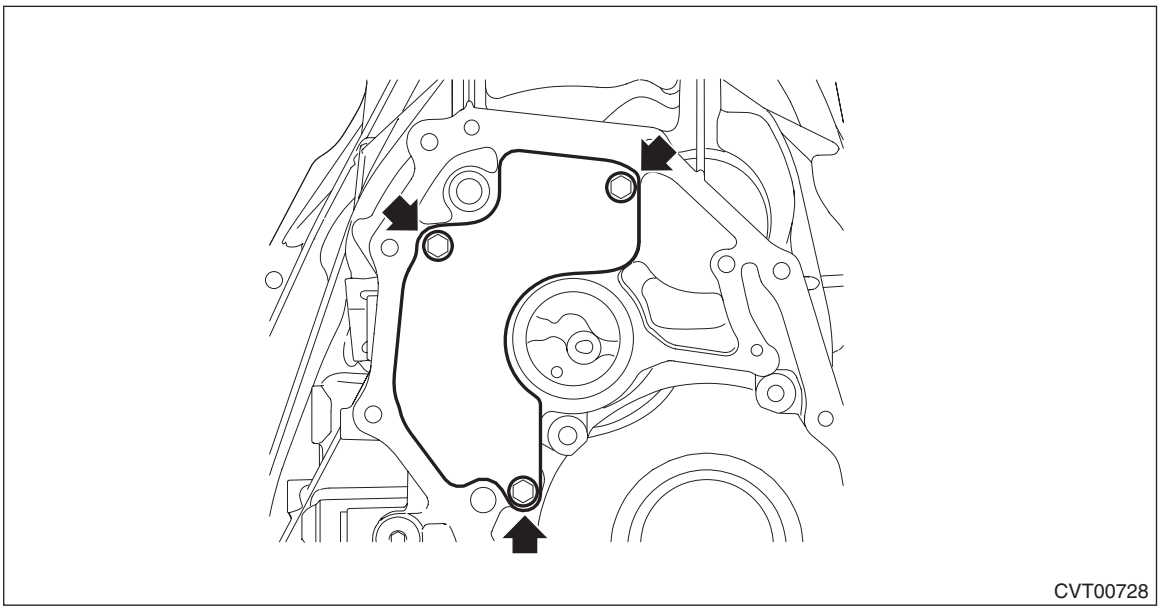

2) Remove all plugs from the transmission case.

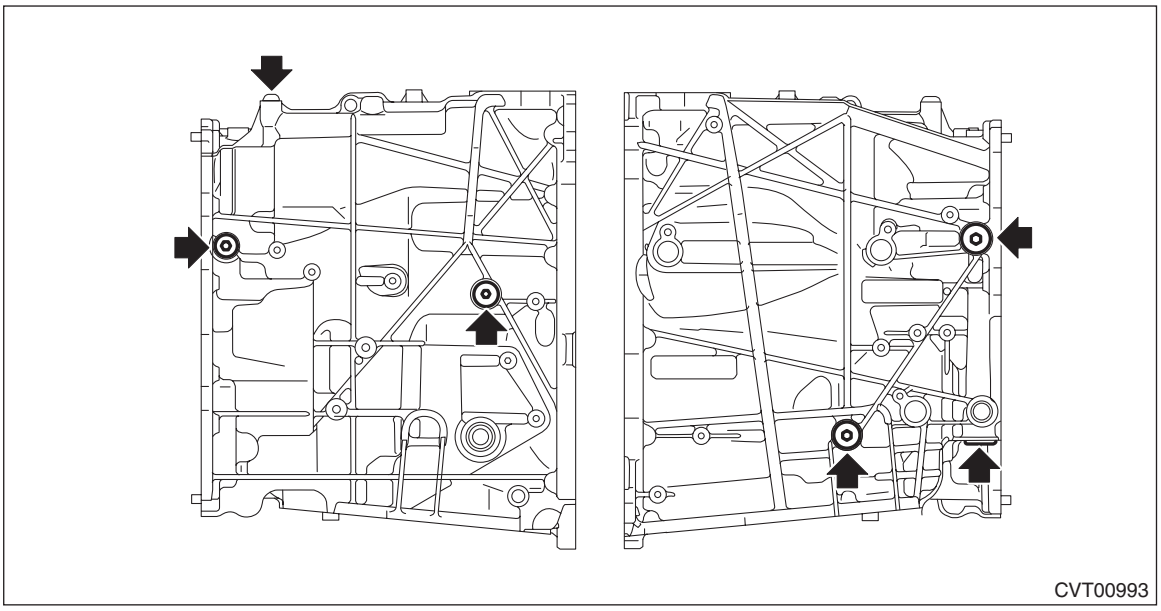

3) Remove the oil seal using a screwdriver wrapped with cloth etc.

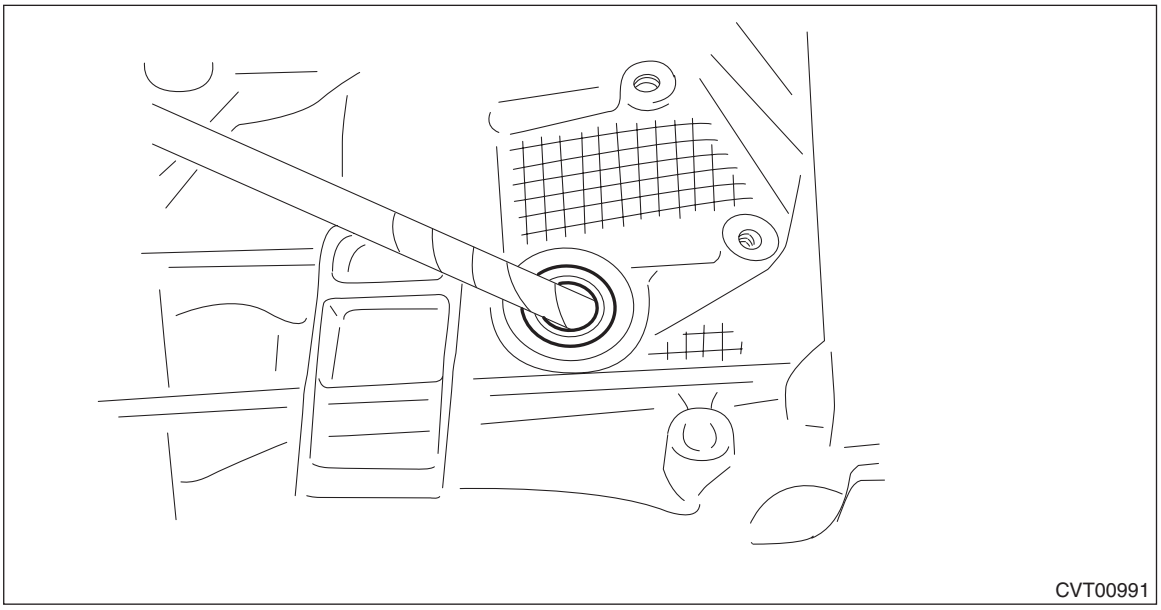

4) Using the ST, remove the ball bearing of the secondary pulley.
(1) Remove the claw of ST1, and attach the claw of ST2.

ST1 398527700 PULLER ASSY
ST2 18760AA000 CLAW

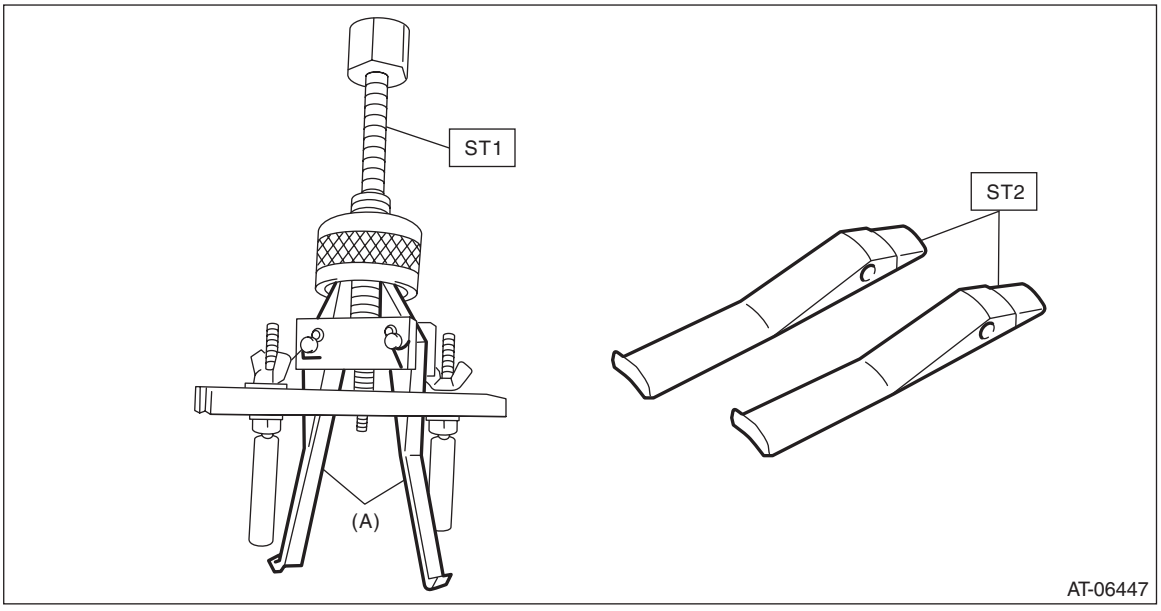

(A) Claw

(2) Using the ST, remove the ball bearing of the secondary pulley.

ST1 398527700 PULLER ASSY
ST2 18760AA000 CLAW

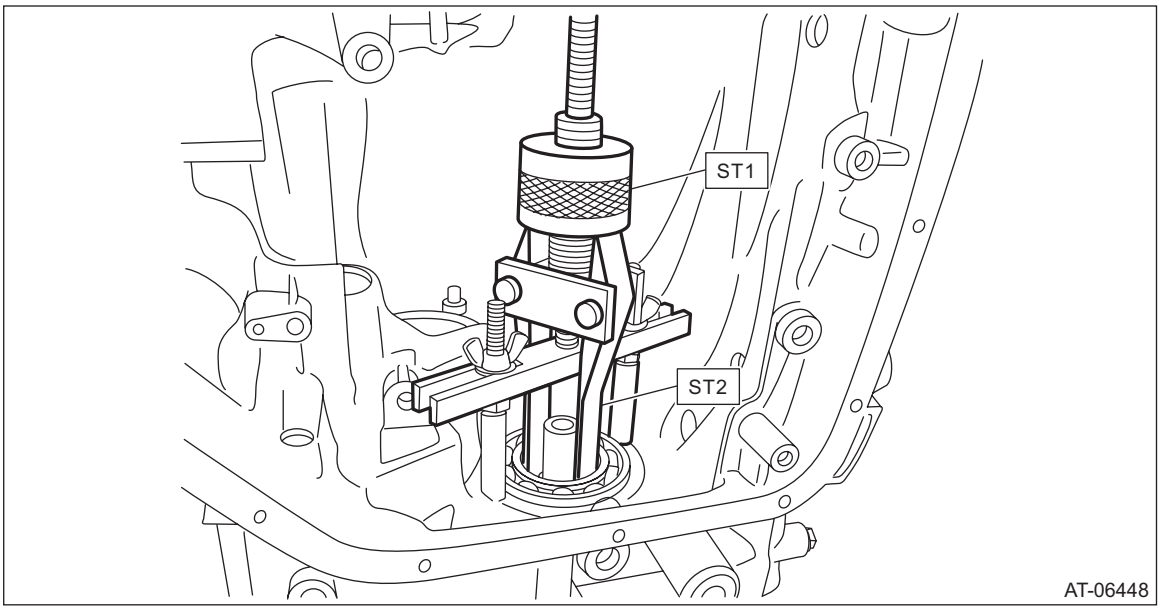

5) Remove the oil guide.

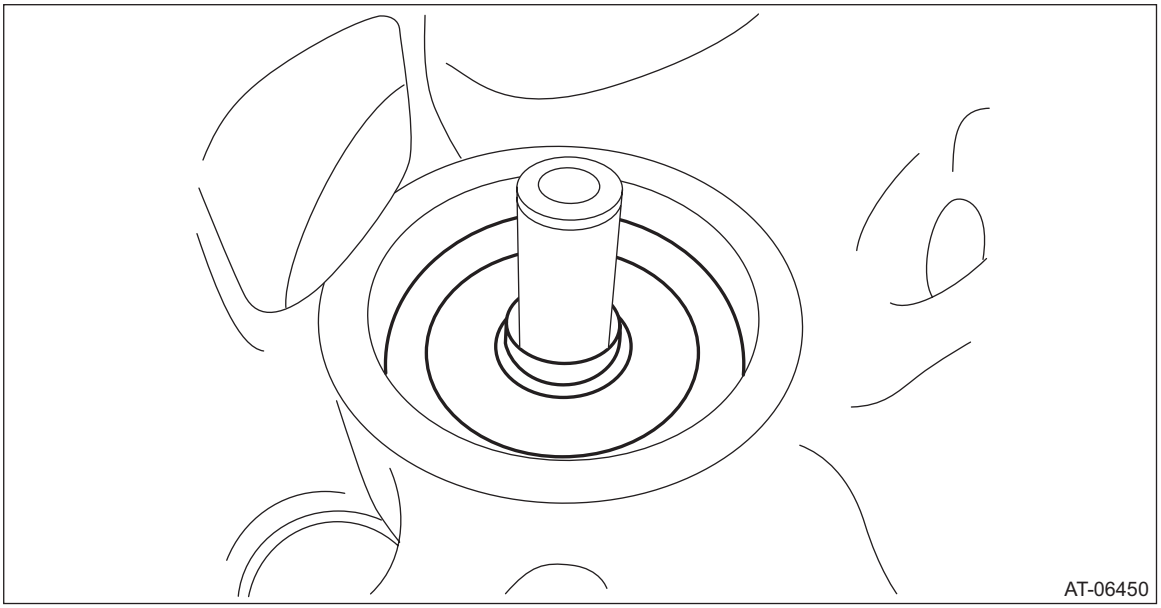

6) Remove the ball bearing from reduction driven gear using ST.
ST 398527700 PULLER ASSY

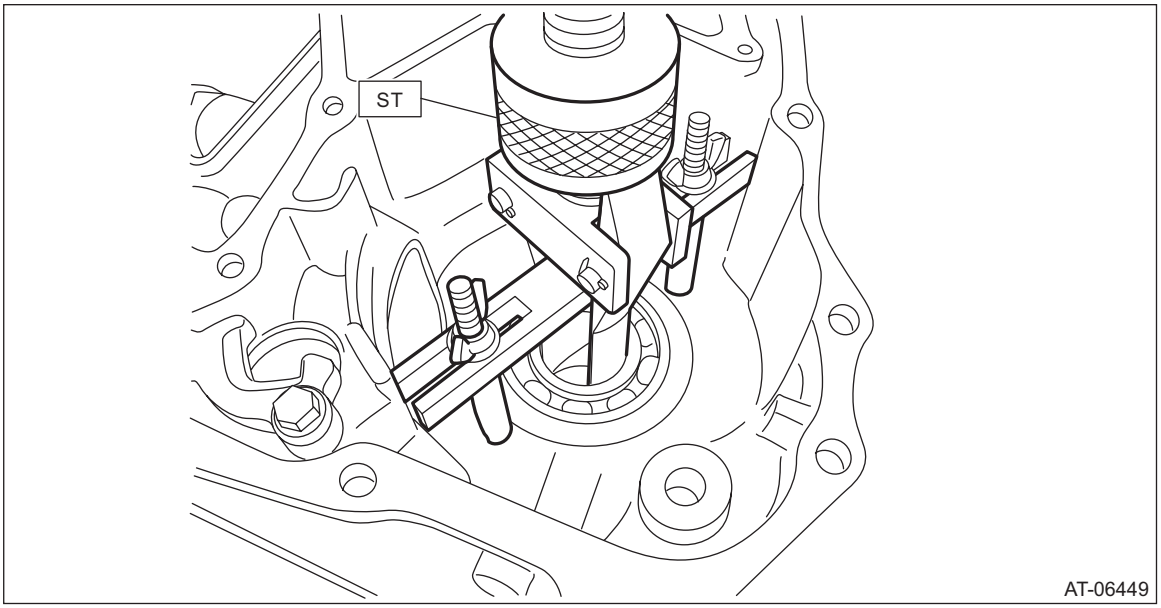

7) Remove the CVTF filter cover and gasket.

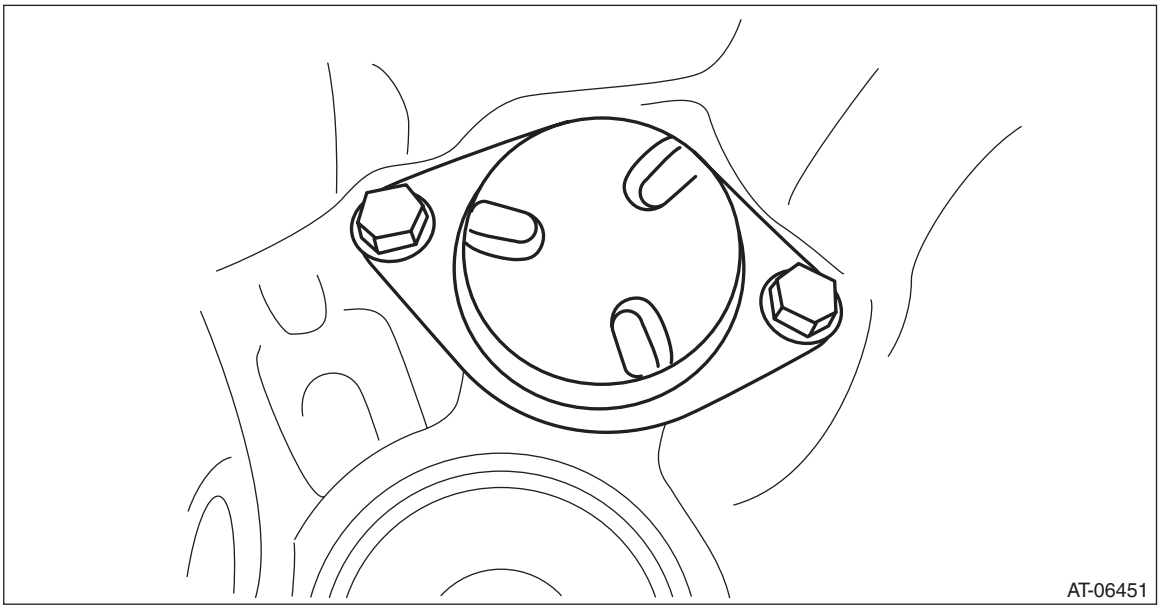

8) Remove the CVTF filter.

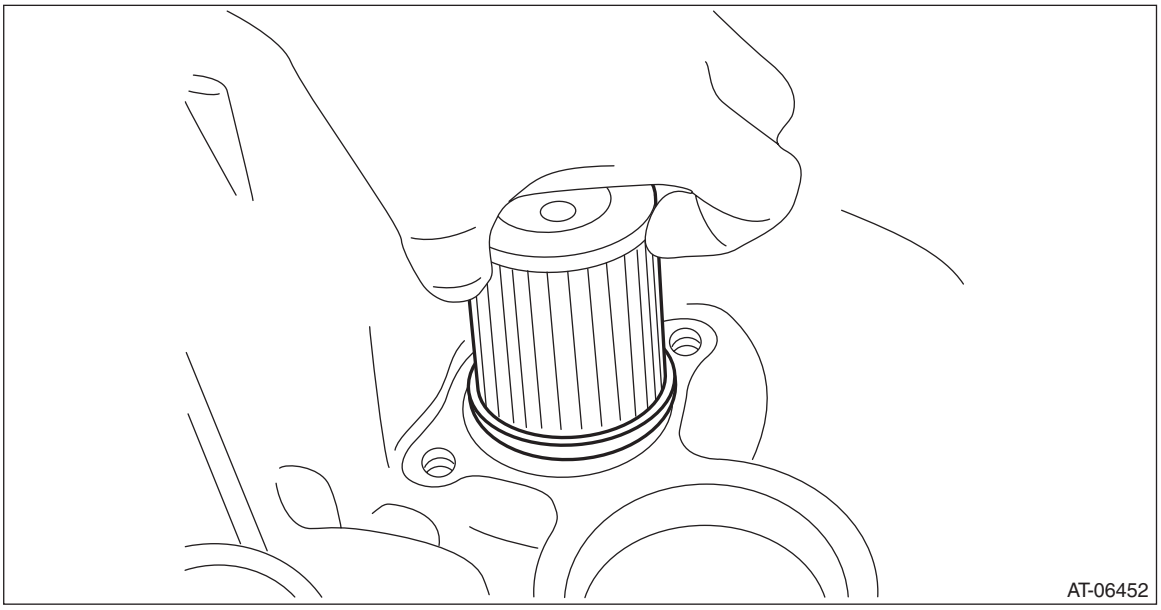

D: ASSEMBLY

1) Face the O-ring side of the CVTF filter to the transmission case side, and install the CVTF filter.

NOTE:
Apply CVTF to the O-ring of CVTF filter.

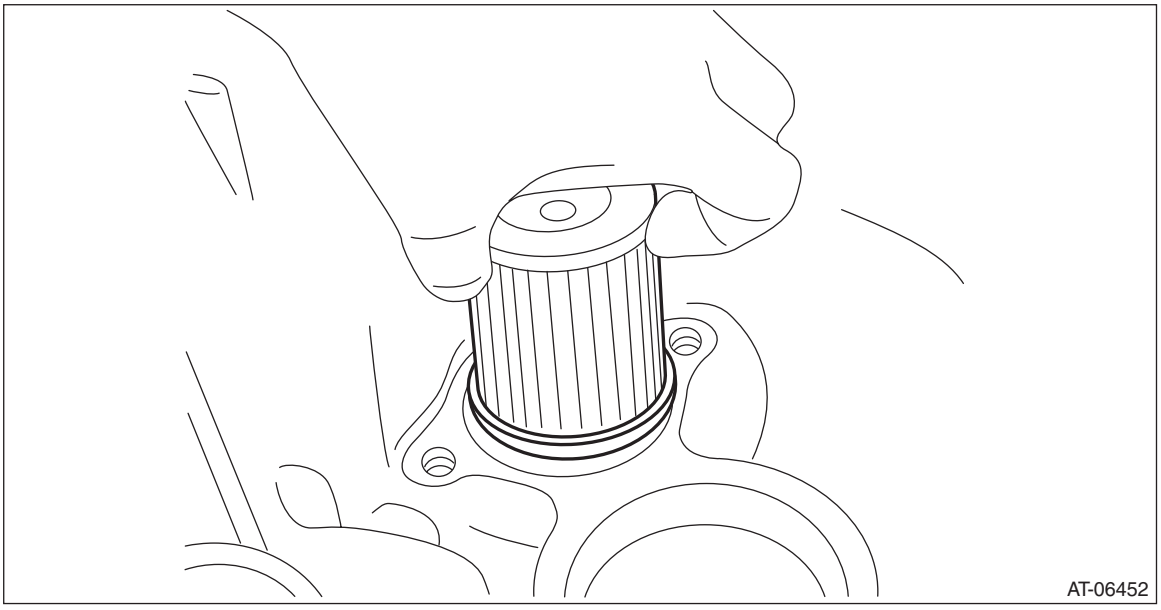

2) Install the CVTF filter cover and gasket.

NOTE:
Use a new gasket.

Tightening torque:
17 N·m (1.7 kgf-m, 12.5 ft-lb)

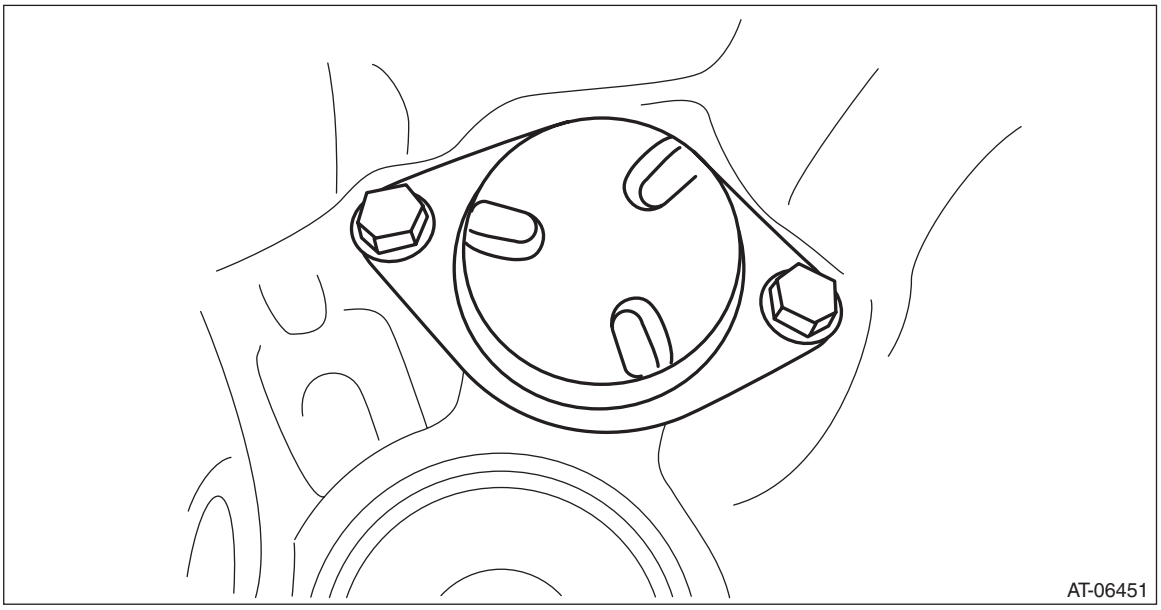

3) Using the ST, install the oil seal.

NOTE:
- Use a new oil seal.
- Apply CVTF to the oil seal lip and press-fitting surface.

ST 18657AA010 INSTALLER

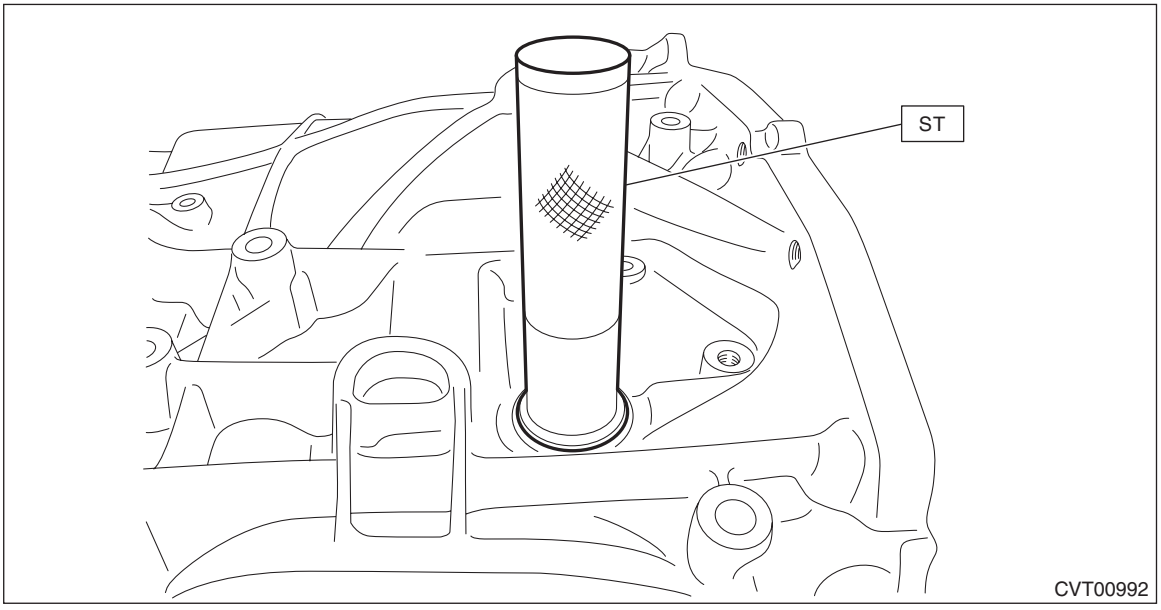

4) Using ST1 and ST2, install the ball bearing on the reduction driven gear side.

NOTE:
Use a new ball bearing.
ST1 398177700 INSTALLER
ST2 28499TC010 PRESS SNAP RING

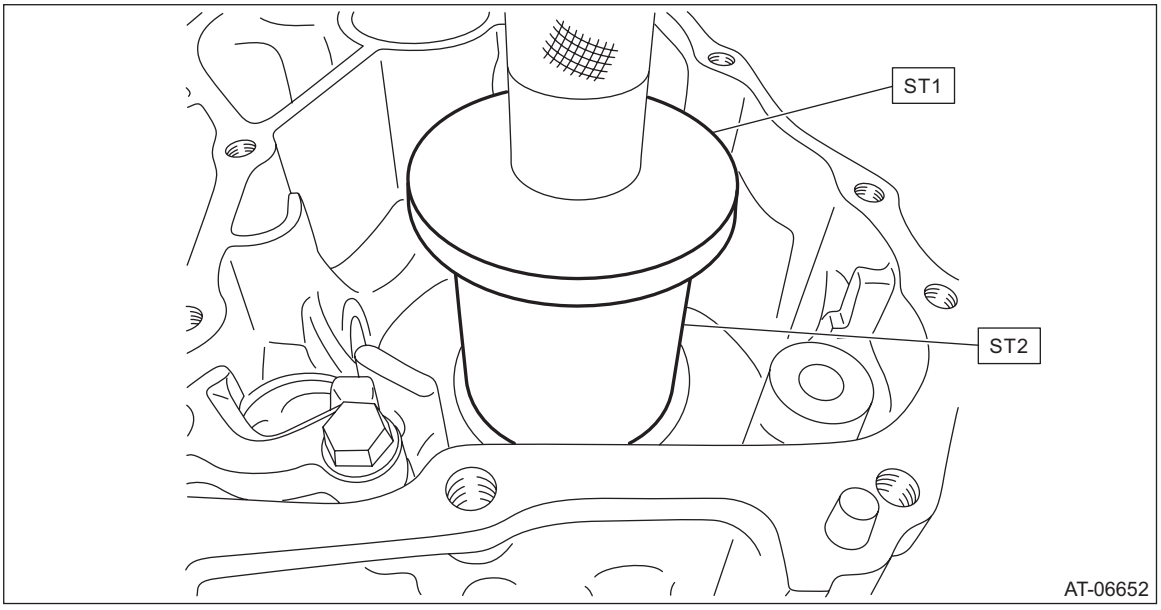

5) Install the oil guide.

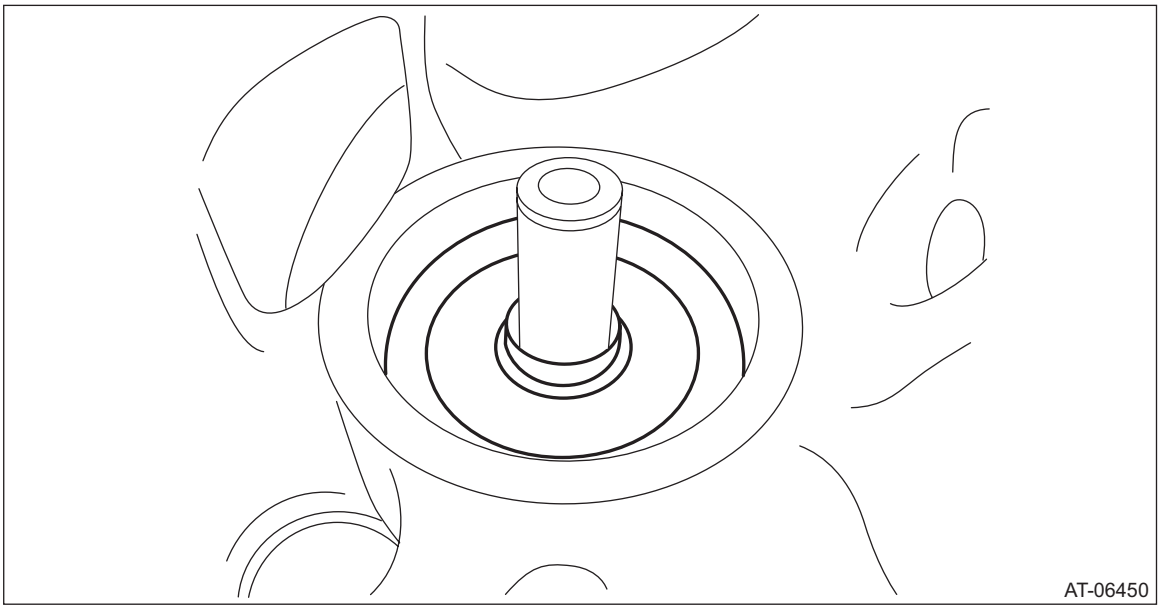

6) Press-fit the roll pin into the ball bearing on the secondary pulley side.
(1) Hold the roll pin with a knock pin punch or the like, and press-fit with a hammer.

NOTE:
- Use a new ball bearing.
- When securing the ball bearing with a vise, place a wood piece therebetween to avoid scratching the bearing race.

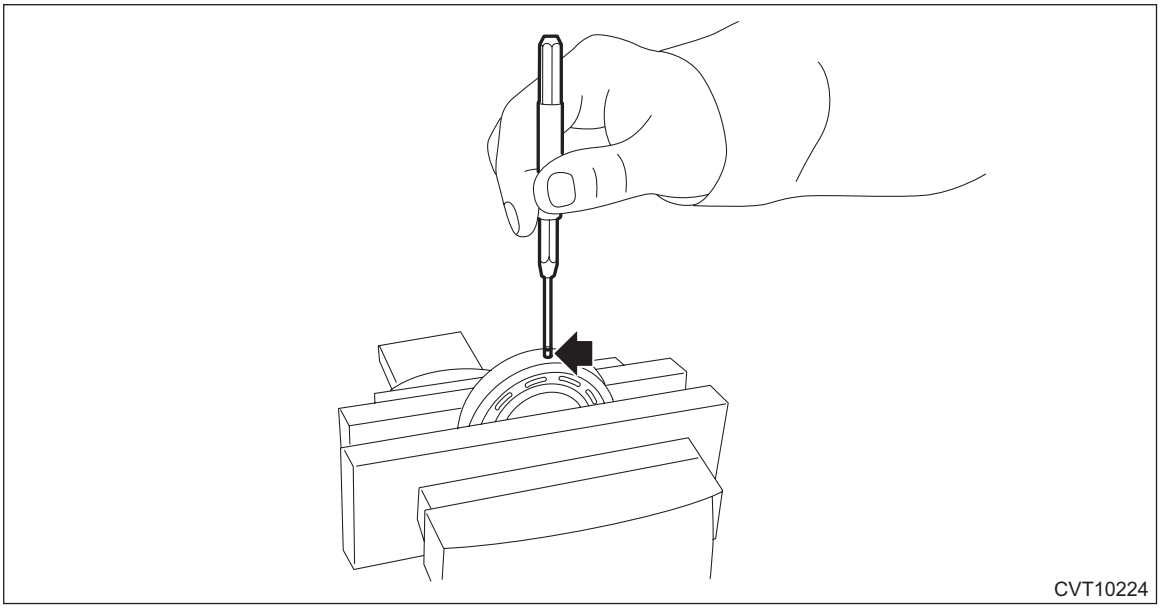
CVT10224

(2) Measure the height “A” of the roll pin.

Specification:
4.4 mm (0.173 in) or less

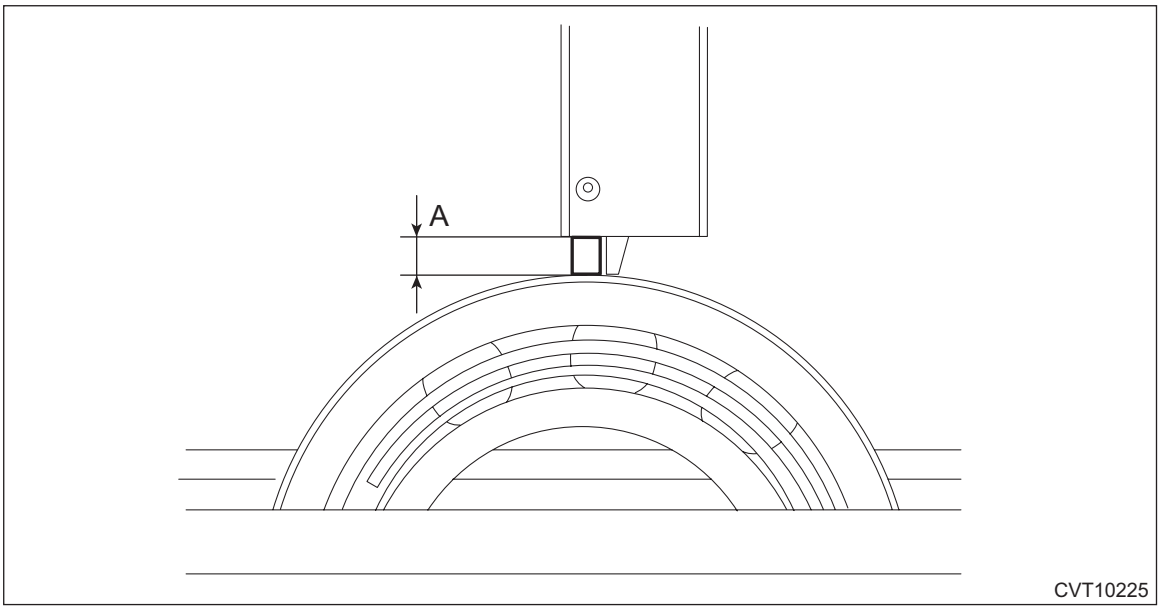

CVT10225

7) Using ST1, ST2 and ST3, install the ball bearing on the secondary pulley side.

NOTE:
- Align the roll pin to the cutout of the transmission case.
- Press-fit the pin so that it is positioned on near side (the retainer should be seen on your side).

ST1 499277100 BUSHING 1-2 INSTALLER
ST2 398177700 INSTALLER
ST3 28499TC010 PRESS SNAP RING

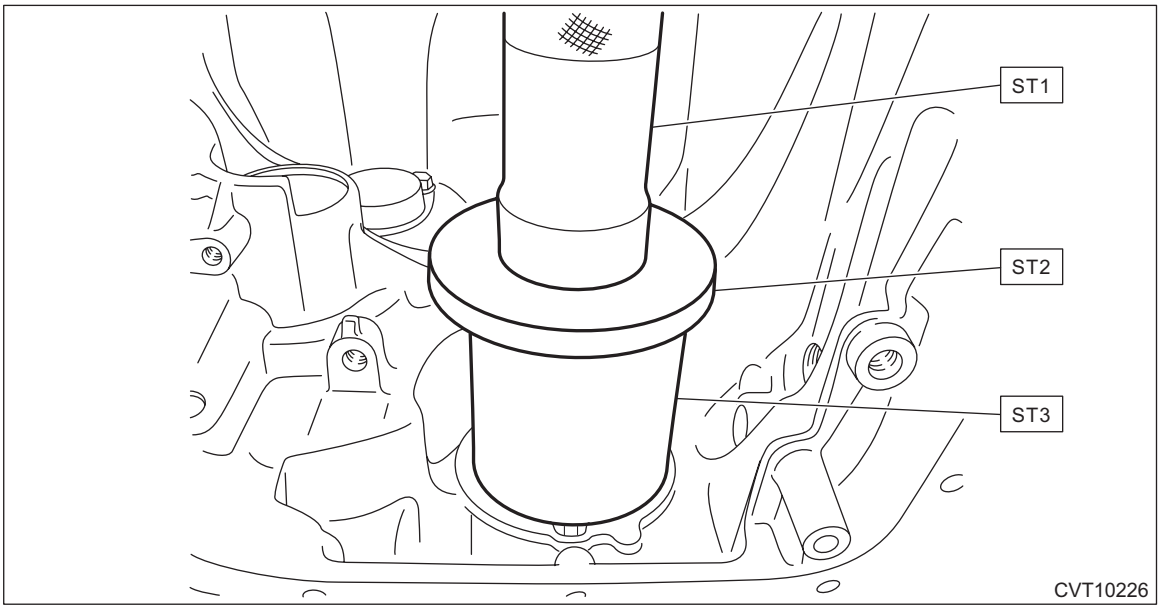

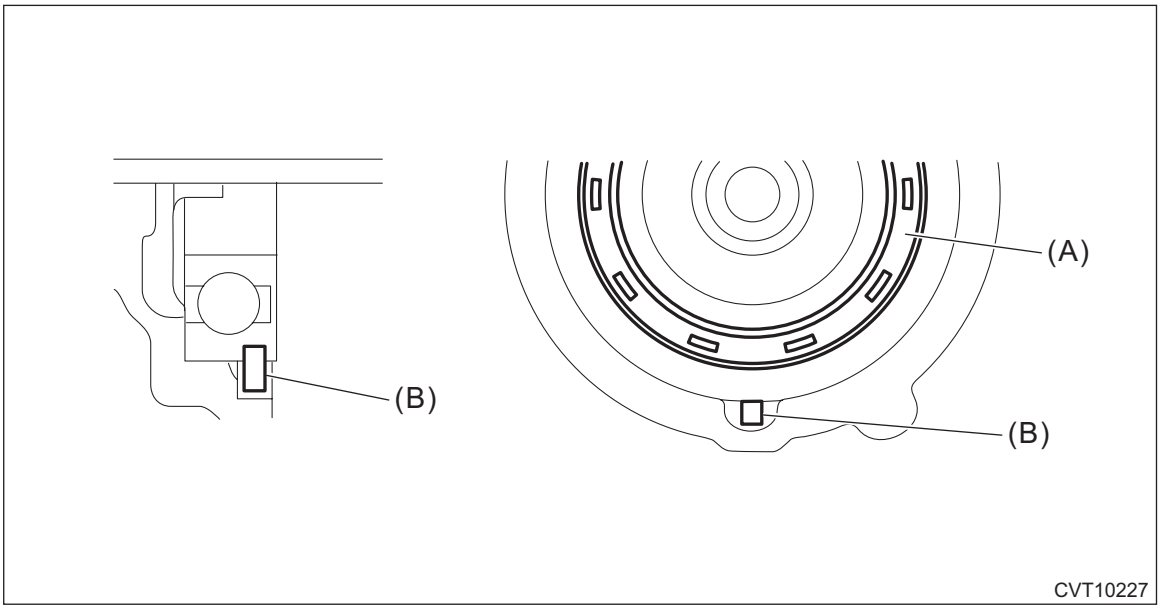

(A) Retainer
(B) Roll pin

8) Install all plugs.

NOTE:
- Use new O-rings.
- Apply CVTF to the O-rings.
- For the plug (A), fill the CVTF, and then tighten the plug using a new O-ring.

Tightening torque:
T1: 13 N·m (1.3 kgf-m, 9.6 ft-lb)
T2: 22 N·m (2.2 kgf-m, 16.2 ft-lb)
T3: 50 N·m (5.1 kgf-m, 36.9 ft-lb)

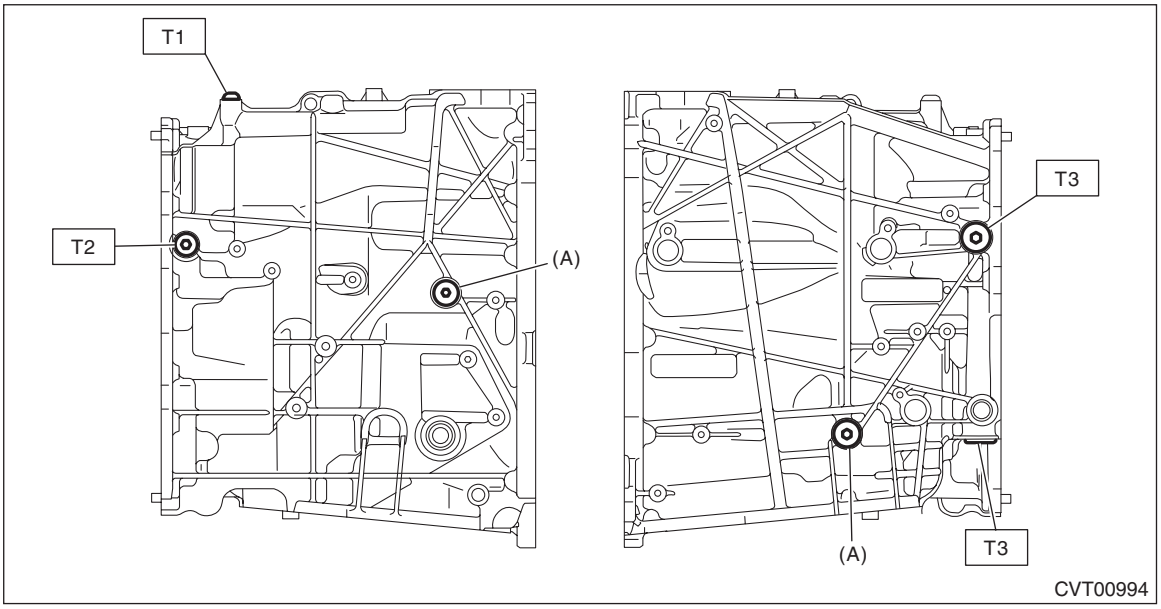

9) Install the oil stopper plate.

NOTE:
Use a new bolt.

Tightening torque:
9 N·m (0.9 kgf-m, 6.6 ft-lb)

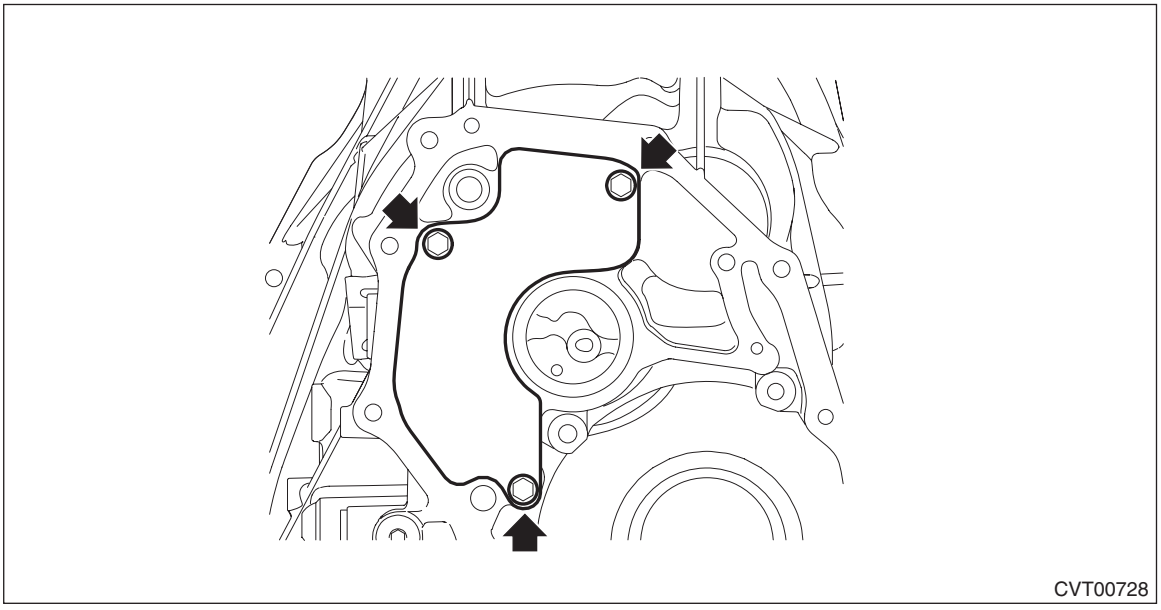

E: INSPECTION

- Check the transmission case for damage.
- Check for leakage of CVTF from the connection between converter case and transmission case.
- Check the bearing for smooth operation.
- Check the bearing for seizure or wear.

F: ADJUSTMENT

NOTE:
When replacing the transmission case with a new part, perform the following check and adjustment for the selection.

- Select the transfer driven gear shim. <Ref. to CVT(TR580)-215, ADJUSTMENT, Transfer Clutch.>
- Select the transfer drive gear shim. <Ref. to CVT(TR580)-229, ADJUSTMENT, Reduction Driven Gear.>
- Select the reduction drive gear shim. <Ref. to CVT(TR580)-259, ADJUSTMENT, Reduction Drive Gear.>

39.CVTF Filter

A: REMOVAL

NOTE:
• Although CVTF filter is a maintenance-free part, replace it if a large quantity of wear debris and metal particles are found in CVTF and CVTF filter.
• For removal of CVTF filter, refer to “Transmission Case”. <Ref. to CVT(TR580)-237, REMOVAL, Transmission Case.> <Ref. to CVT(TR580)-244, DISASSEMBLY, Transmission Case.>

B: INSTALLATION

NOTE:
For installation of CVTF filter, refer to “Transmission Case”. <Ref. to CVT(TR580)-248, ASSEMBLY, Transmission Case.> <Ref. to CVT(TR580)-240, INSTALLATION, Transmission Case.>

C: INSPECTION

- Check if a large quantity of wear debris or metal particles are in CVTF and CVTF filter.
- Check for broken part or damaged O-ring.

40.Reduction Drive Gear

A: REMOVAL

1) Remove the transmission assembly. <Ref. to CVT(TR580)-63, REMOVAL, Automatic Transmission Assembly.>
2) Remove the air breather hose. <Ref. to CVT(TR580)-190, REMOVAL, Air Breather Hose.>
3) Remove the control valve body. <Ref. to CVT(TR580)-133, REMOVAL, Control Valve Body.>
4) Remove the transmission harness. <Ref. to CVT(TR580)-147, REMOVAL, Transmission Harness.>
5) Remove the turbine speed sensor. <Ref. to CVT(TR580)-113, REMOVAL, Turbine Speed Sensor.>
6) Remove the secondary speed sensor. <Ref. to CVT(TR580)-118, REMOVAL, Secondary Speed Sensor.>
7) Remove the primary speed sensor. <Ref. to CVT(TR580)-123, REMOVAL, Primary Speed Sensor.>
8) Remove the inhibitor switch. <Ref. to CVT(TR580)-109, REMOVAL, Inhibitor Switch.>
9) Remove the extension case. <Ref. to CVT(TR580)-200, REMOVAL, Extension Case.>
10) Remove the transfer clutch assembly. <Ref. to CVT(TR580)-204, REMOVAL, Transfer Clutch.>
11) Remove the transfer driven gear assembly. <Ref. to CVT(TR580)-218, REMOVAL, Transfer Driven Gear.>
12) Remove the parking pawl. <Ref. to CVT(TR580)-221, REMOVAL, Parking Pawl.>
13) Remove the reduction driven gear assembly. <Ref. to CVT(TR580)-223, REMOVAL, Reduction Driven Gear.>
14) Remove the oil pan and oil strainer. <Ref. to CVT(TR580)-130, REMOVAL, Oil Pan and Strainer.>
15) Remove the transmission control device. <Ref. to CVT(TR580)-231, REMOVAL, Transmission Control Device.>
16) Remove the transmission case. <Ref. to CVT(TR580)-237, REMOVAL, Transmission Case.>
17) Remove the reduction drive gear shims, spring retainers, and dish plates.

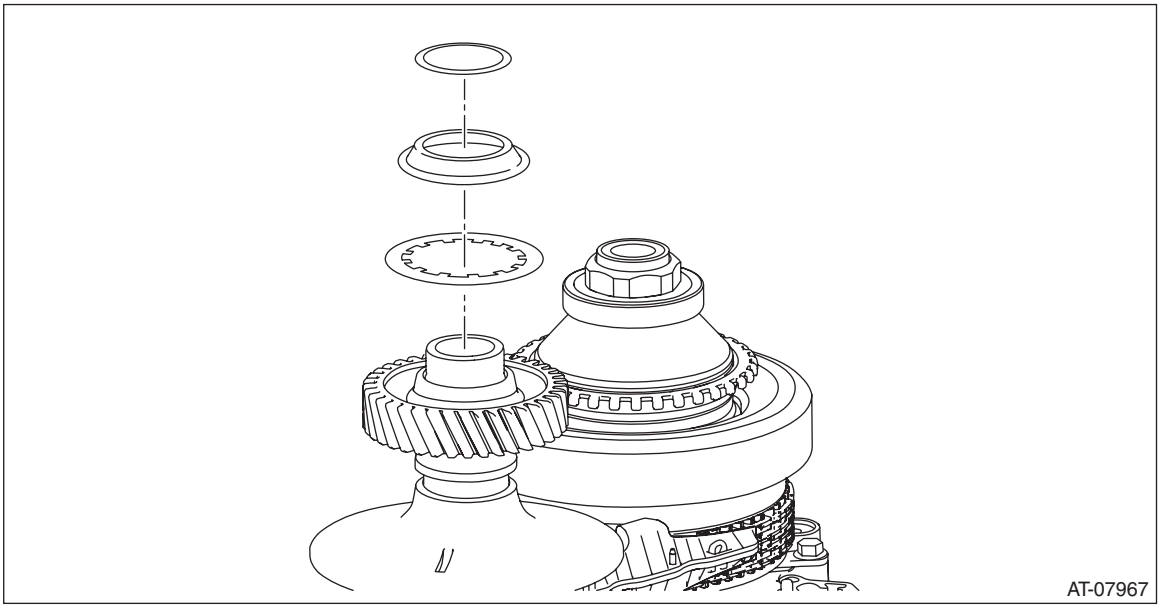

18) Remove the reduction drive gear.

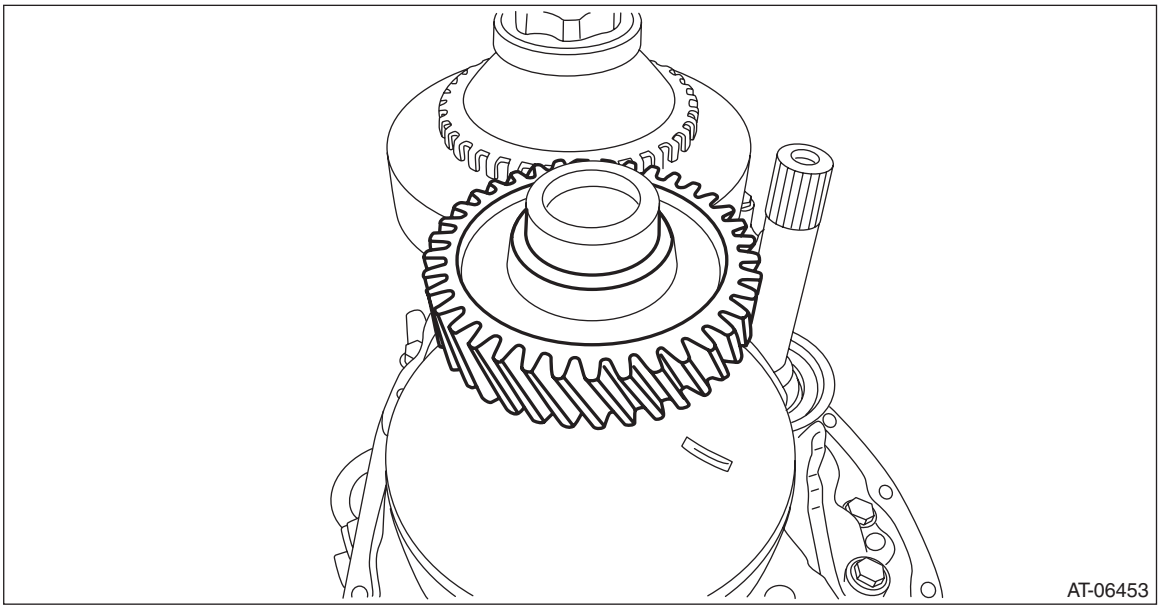

B: INSTALLATION

1) Install the reduction drive gear to secondary pulley.

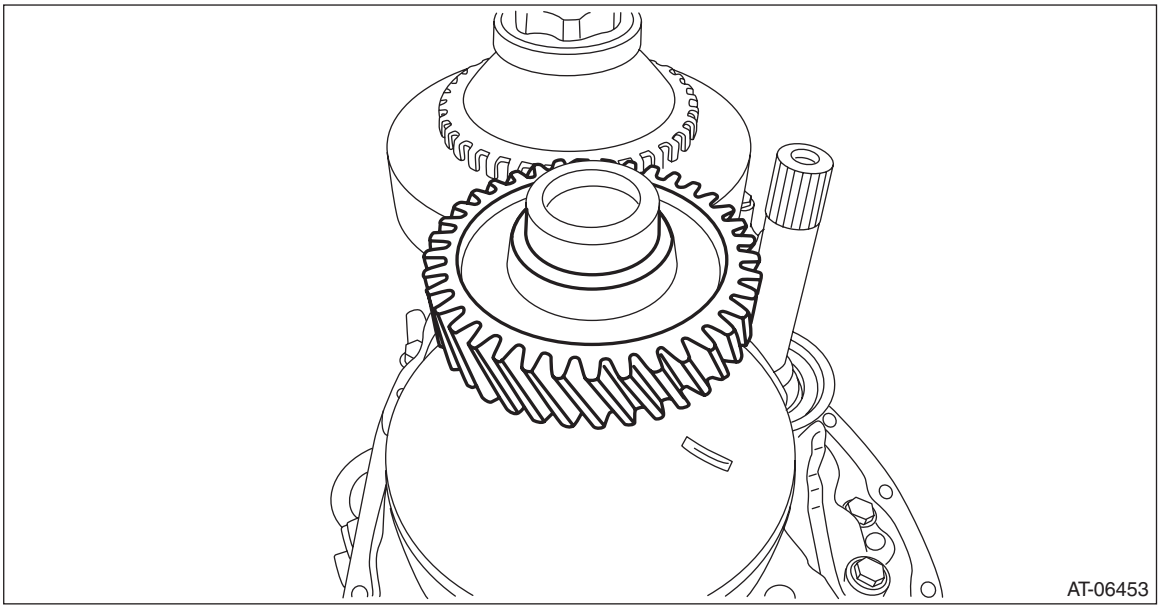

2) Select the reduction drive gear shim. <Ref. to CVT(TR580)-259, ADJUSTMENT, Reduction Drive Gear.>

3) Install the dish plates, spring retainers, and selected reduction drive gear shims.

NOTE:
Install the dish plate in the correct direction.

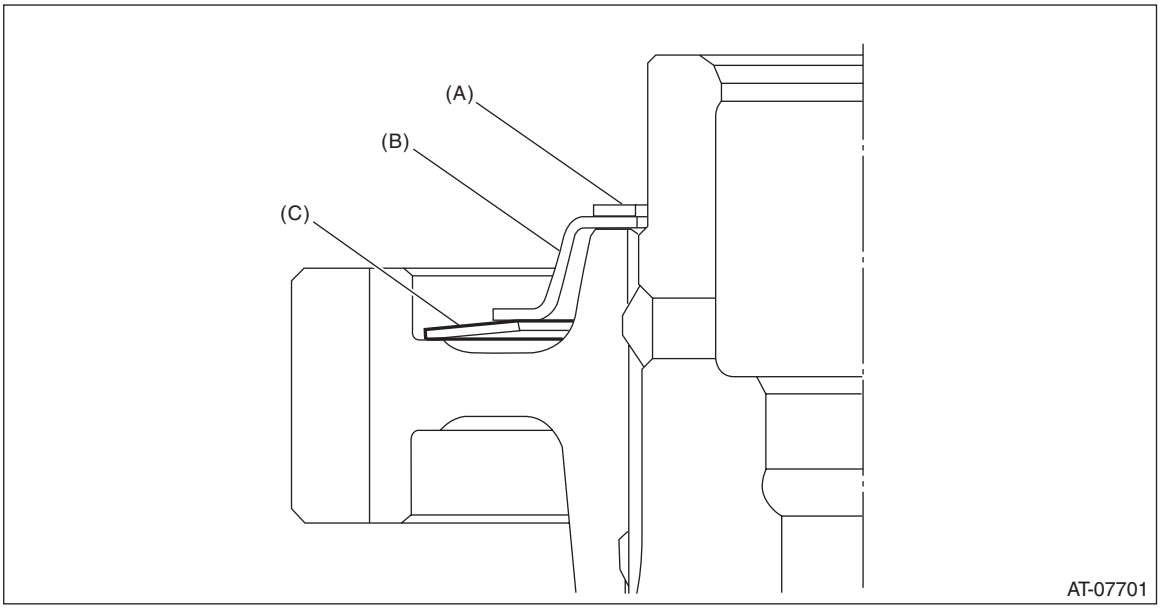

(A) Reduction drive gear shim
(B) Spring retainer
(C) Dish plate

4) Install the transmission case. <Ref. to CVT(TR580)-240, INSTALLATION, Transmission Case.>
5) Install the transmission control device. <Ref. to CVT(TR580)-234, INSTALLATION, Transmission Control Device.>
6) Install the oil strainer and oil pan. <Ref. to CVT(TR580)-131, INSTALLATION, Oil Pan and Strainer.>
7) Install the reduction driven gear assembly. <Ref. to CVT(TR580)-223, INSTALLATION, Reduction Driven Gear.>
8) Install the parking pawl. <Ref. to CVT(TR580)-222, INSTALLATION, Parking Pawl.>
9) Install the transfer driven gear assembly. <Ref. to CVT(TR580)-219, INSTALLATION, Transfer Driven Gear.>
10) Install the transfer clutch assembly. <Ref. to CVT(TR580)-206, INSTALLATION, Transfer Clutch.>
11) Install the extension case. <Ref. to CVT(TR580)-201, INSTALLATION, Extension Case.>
12) Install the inhibitor switch. <Ref. to CVT(TR580)-111, INSTALLATION, Inhibitor Switch.>
13) Install the secondary speed sensor. <Ref. to CVT(TR580)-118, INSTALLATION, Secondary Speed Sensor.>
14) Install the primary speed sensor. <Ref. to CVT(TR580)-124, INSTALLATION, Primary Speed Sensor.>
15) Install the turbine speed sensor. <Ref. to CVT(TR580)-113, INSTALLATION, Turbine Speed Sensor.>
16) Install the transmission harness. <Ref. to CVT(TR580)-150, INSTALLATION, Transmission Harness.>
17) Install the control valve body. <Ref. to CVT(TR580)-139, INSTALLATION, Control Valve Body.>
18) Install the air breather hose. <Ref. to CVT(TR580)-192, INSTALLATION, Air Breather Hose.>
19) Install the transmission assembly. <Ref. to CVT(TR580)-79, INSTALLATION, Automatic Transmission Assembly.>

C: INSPECTION

Check the reduction drive gear for breakage or damage.

D: ADJUSTMENT

1) Remove the spring retainers and reduction drive gear shims.
2) Install the transmission case, and secure it with four or five bolts.

Tightening torque:
22 N·m (2.2 kgf-m, 16.2 ft-lb)

3) Measure depth “A” from the ST upper face to the reduction drive gear end face.
ST 499575400 GAUGE

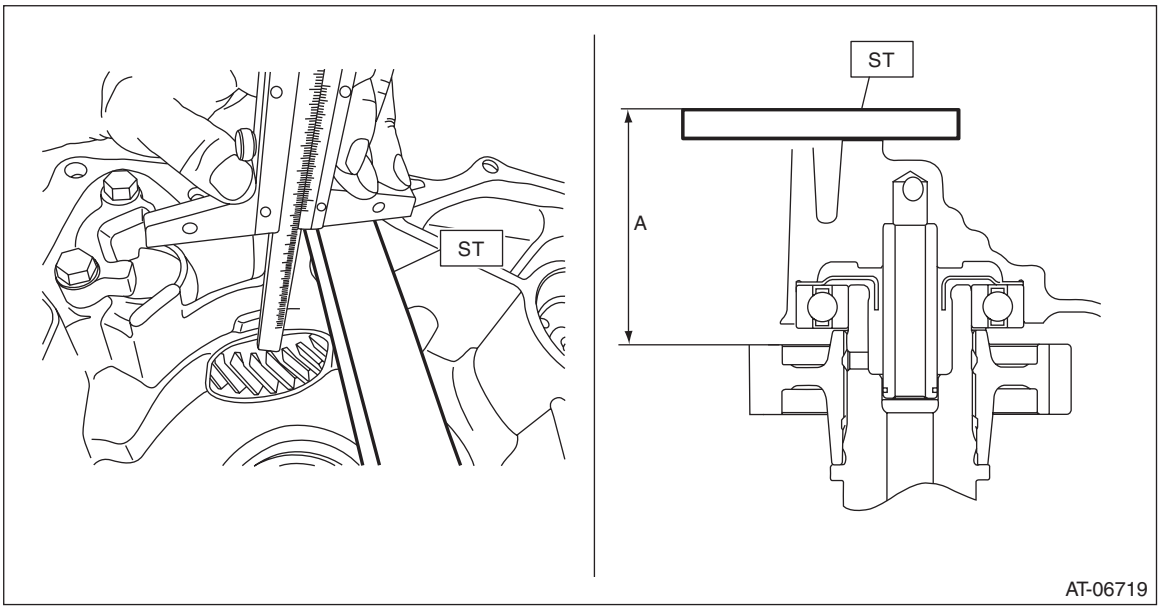

4) Raise and hold the reduction drive gear.

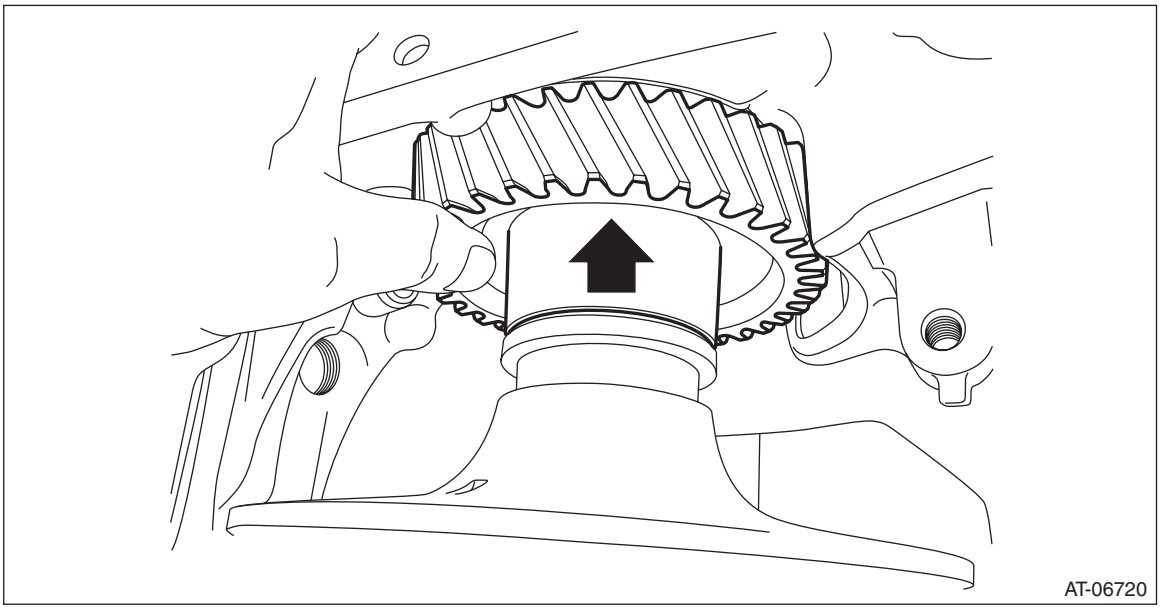

5) Measure depth “B” from the ST upper face to the reduction drive gear end face.
ST 499575400 GAUGE

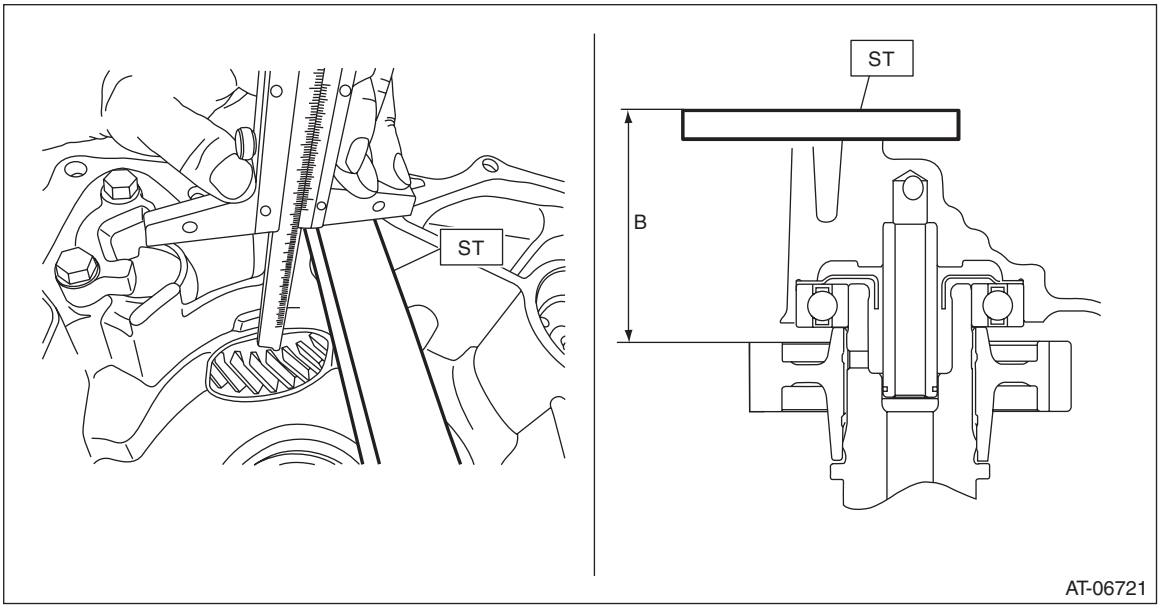

6) Calculate the following formula.
T mm = A – B – 1.0
[T in = A – B – 0.039]
T: Moving distance of reduction drive gear
A: Depth from the ST upper face to the reduction drive gear end surface
B: Depth from the ST upper face to the reduction drive gear end surface
1.0 mm (0.039 in): Thickness of spring retainer

Moving distance of transfer drive gear [T]	Total shim thickness mm (in)
0.420 — 0.519(0.0165 — 0.0204)	0.3 (0.012)
0.520 — 0.619(0.0205 — 0.0242)	0.4 (0.016)
0.620 — 0.719(0.0244 — 0.0283)	0.5 (0.020)
0.720 — 0.819(0.0283 — 0.0322)	0.6 (0.024)
0.820 — 0.919(0.0323 — 0.0362)	0.7 (0.028)
0.920 — 1.019(0.0362 — 0.0401)	0.8 (0.031)
1.020 — 1.119(0.0402 — 0.0441)	0.9 (0.035)
1.120 — 1.219(0.0441 — 0.0480)	1.0 (0.039)
1.220 — 1.319(0.0480 — 0.0519)	1.1 (0.043)
1.320 — 1.419(0.0520 — 0.0559)	1.2 (0.047)
1.420 — 1.519(0.0559 — 0.0598)	1.3 (0.051)
1.520 — 1.619(0.0598 — 0.0637)	1.4 (0.055)
1.620 — 1.719(0.0638 — 0.0677)	1.5 (0.059)
1.720 — 1.819(0.0677 — 0.0716)	1.6 (0.063)
1.820 — 1.920(0.0717 — 0.0756)	1.7 (0.067)

7) Select one to three reduction drive gear shims so that the total thickness meets the value obtained from step 5).

Part No.	Reduction drive gear shim thickness mm (in)
31288AA260	0.3 (0.012)
31288AA270	0.4 (0.016)
31288AA280	0.5 (0.020)
31288AA290	0.6 (0.024)

41.Primary Pulley and Secondary Pulley

A: REMOVAL

NOTE:
Always replace primary pulley and secondary pulley as an assembly because they are non-disassembled parts.
1) Remove the transmission assembly. <Ref. to CVT(TR580)-63, REMOVAL, Automatic Transmission Assembly.>
2) Remove the air breather hose. <Ref. to CVT(TR580)-190, REMOVAL, Air Breather Hose.>
3) Remove the control valve body. <Ref. to CVT(TR580)-133, REMOVAL, Control Valve Body.>
4) Remove the transmission harness. <Ref. to CVT(TR580)-147, REMOVAL, Transmission Harness.>
5) Remove the turbine speed sensor. <Ref. to CVT(TR580)-113, REMOVAL, Turbine Speed Sensor.>
6) Remove the secondary speed sensor. <Ref. to CVT(TR580)-118, REMOVAL, Secondary Speed Sensor.>
7) Remove the primary speed sensor. <Ref. to CVT(TR580)-123, REMOVAL, Primary Speed Sensor.>
8) Remove the inhibitor switch. <Ref. to CVT(TR580)-109, REMOVAL, Inhibitor Switch.>
9) Remove the extension case. <Ref. to CVT(TR580)-200, REMOVAL, Extension Case.>
10) Remove the transfer clutch assembly. <Ref. to CVT(TR580)-204, REMOVAL, Transfer Clutch.>
11) Remove the transfer driven gear assembly. <Ref. to CVT(TR580)-218, REMOVAL, Transfer Driven Gear.>
12) Remove the parking pawl. <Ref. to CVT(TR580)-221, REMOVAL, Parking Pawl.>
13) Remove the reduction driven gear assembly. <Ref. to CVT(TR580)-223, REMOVAL, Reduction Driven Gear.>
14) Remove the oil pan and oil strainer. <Ref. to CVT(TR580)-130, REMOVAL, Oil Pan and Strainer.>
15) Remove the transmission control device. <Ref. to CVT(TR580)-231, REMOVAL, Transmission Control Device.>
16) Remove the transmission case. <Ref. to CVT(TR580)-237, REMOVAL, Transmission Case.>
17) Remove the reduction drive gear. <Ref. to CVT(TR580)-256, REMOVAL, Reduction Drive Gear.>
18) Set the ST to secondary pulley, expand the V groove of pulley, and then completely loosen the variator chain.
ST 18769AA010 EXPANDER PULLEY

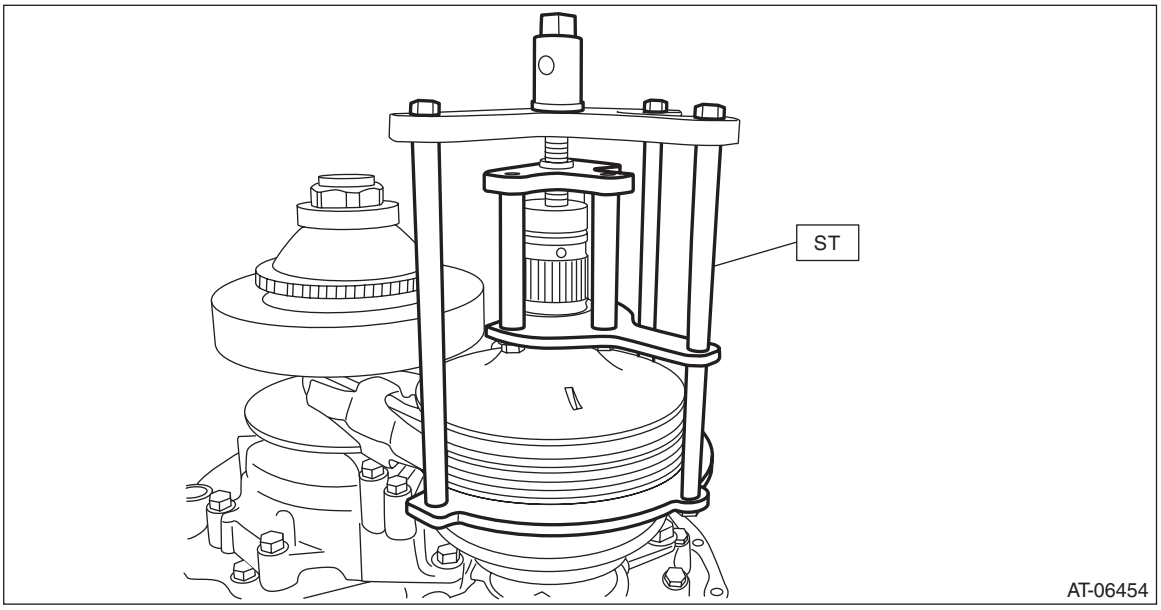

19) Remove the chain guide.
(1) Remove the chain guide from lubrication pipe.
(2) Detach the four claws to remove the chain guide.

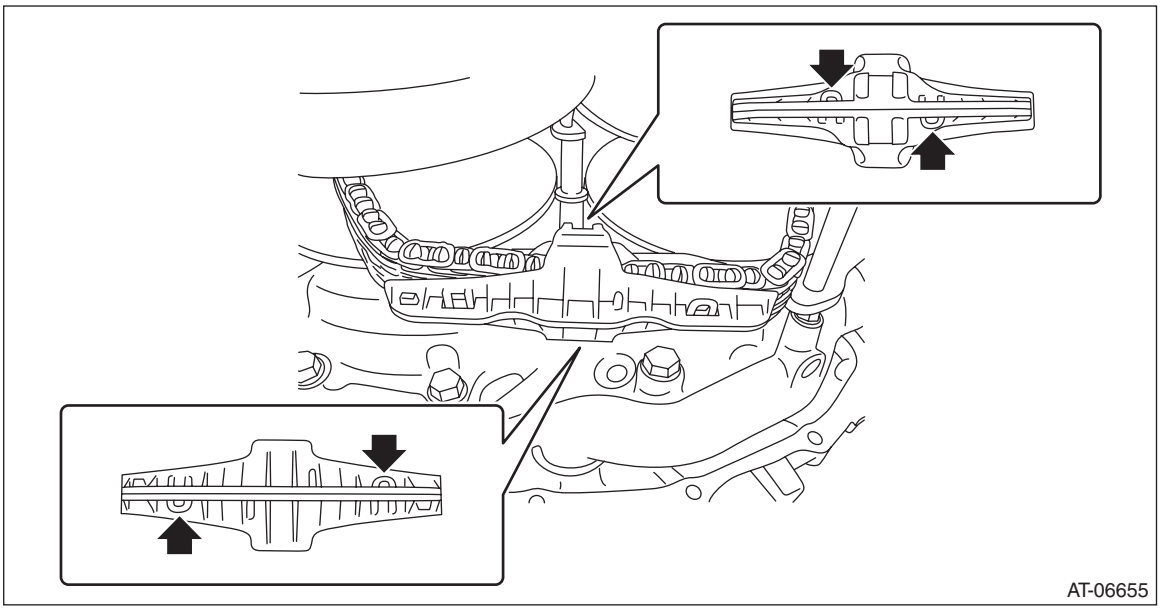

(3) Remove the lubrication pipe.

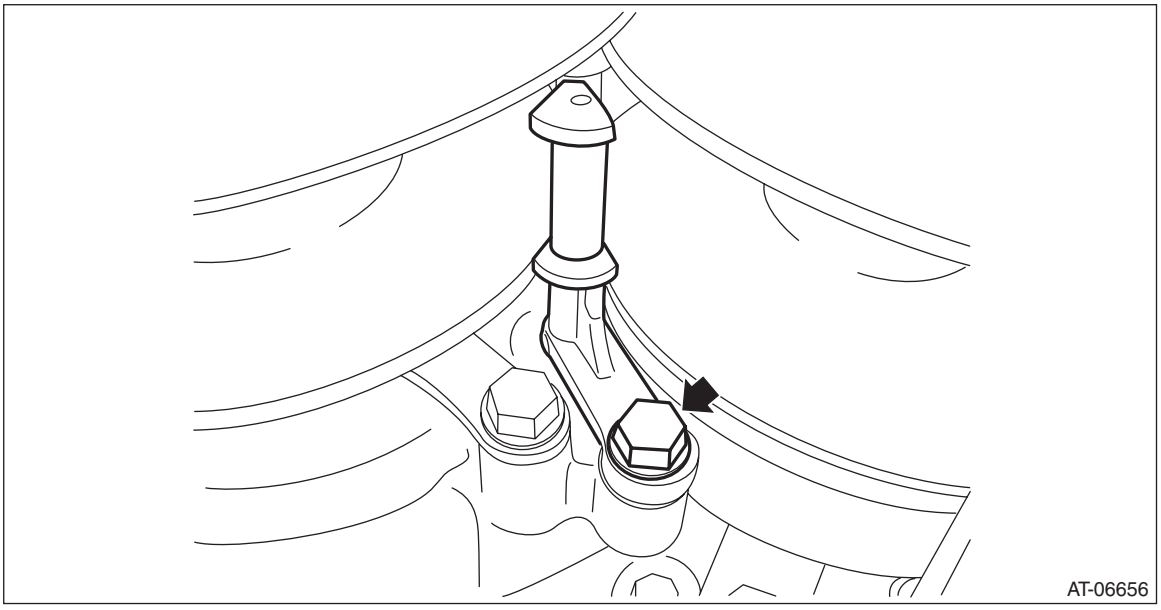

(4) Remove the support rod mounting bolts.

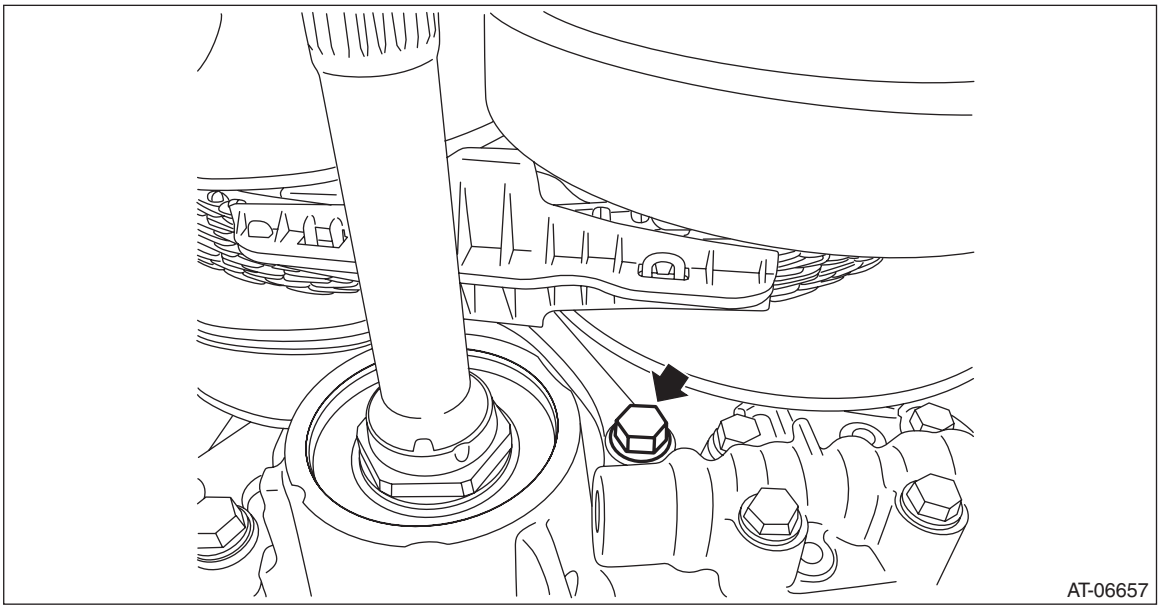

(5) Raise the support rod to remove the chain guide.

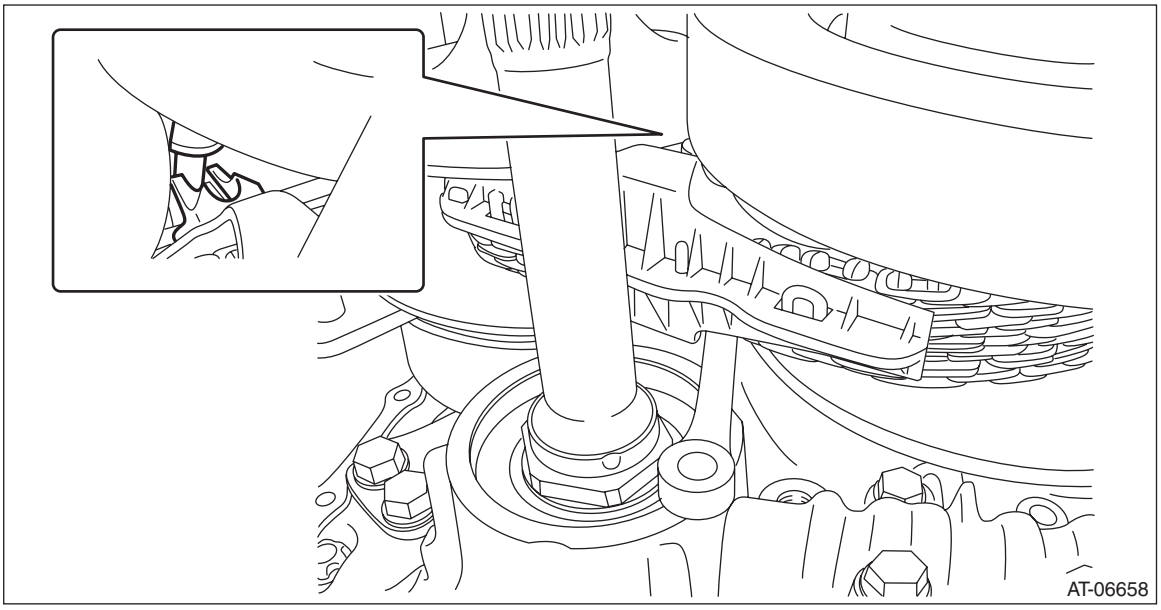

(6) Move the chain guide to the secondary pulley side.

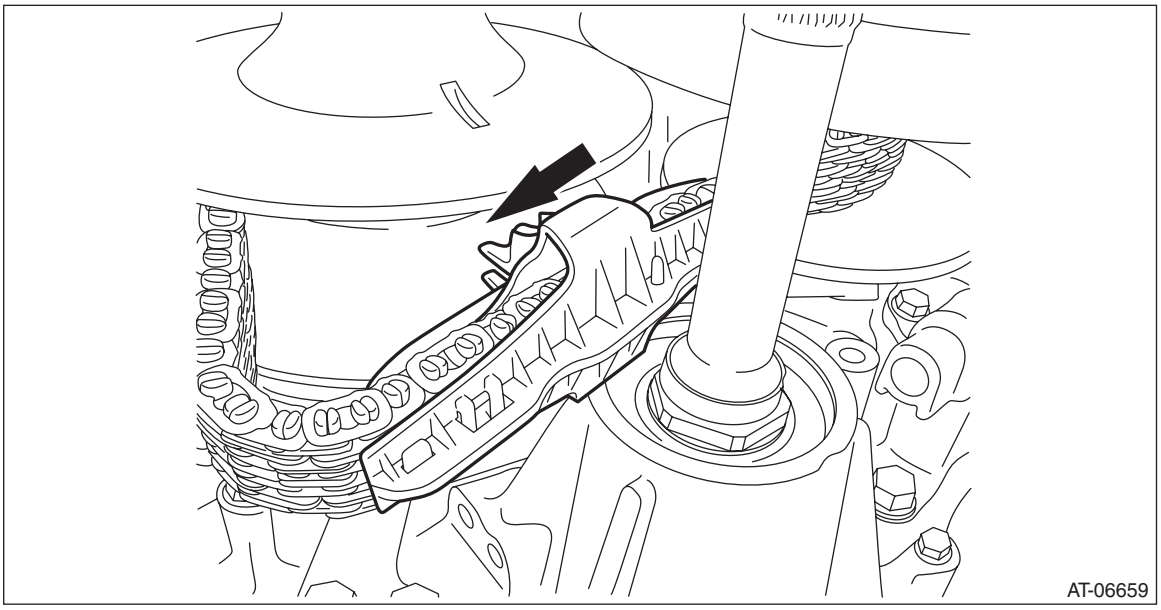

(7) Detach the four claws to remove the chain guide.

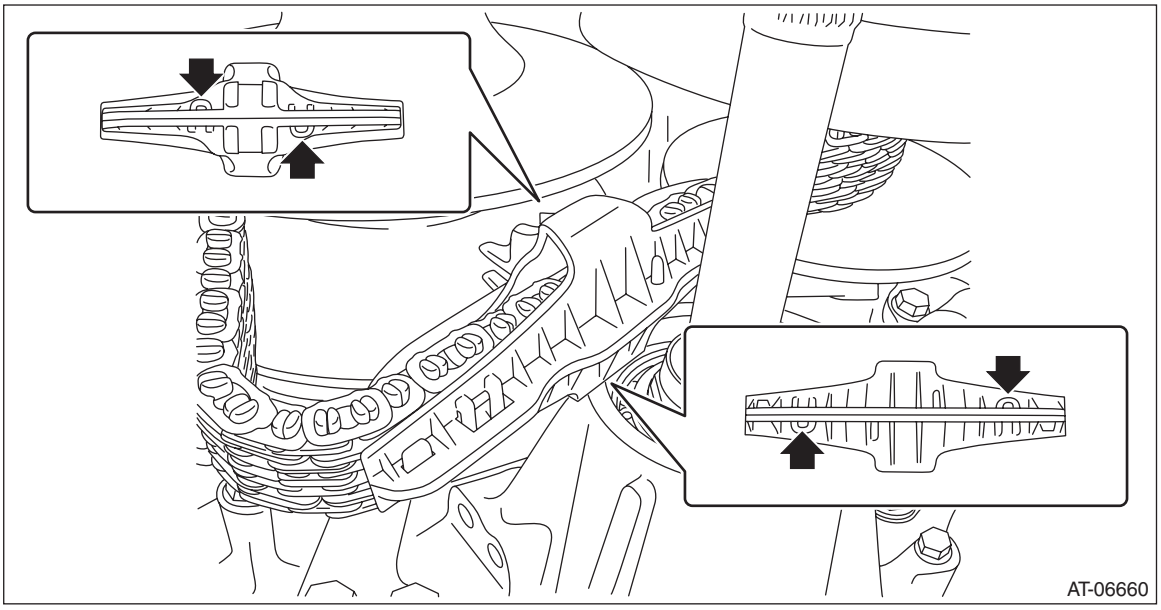

(8) Remove the support rod.

CAUTION:
Protect the both pulleys and variator chain from scratching.

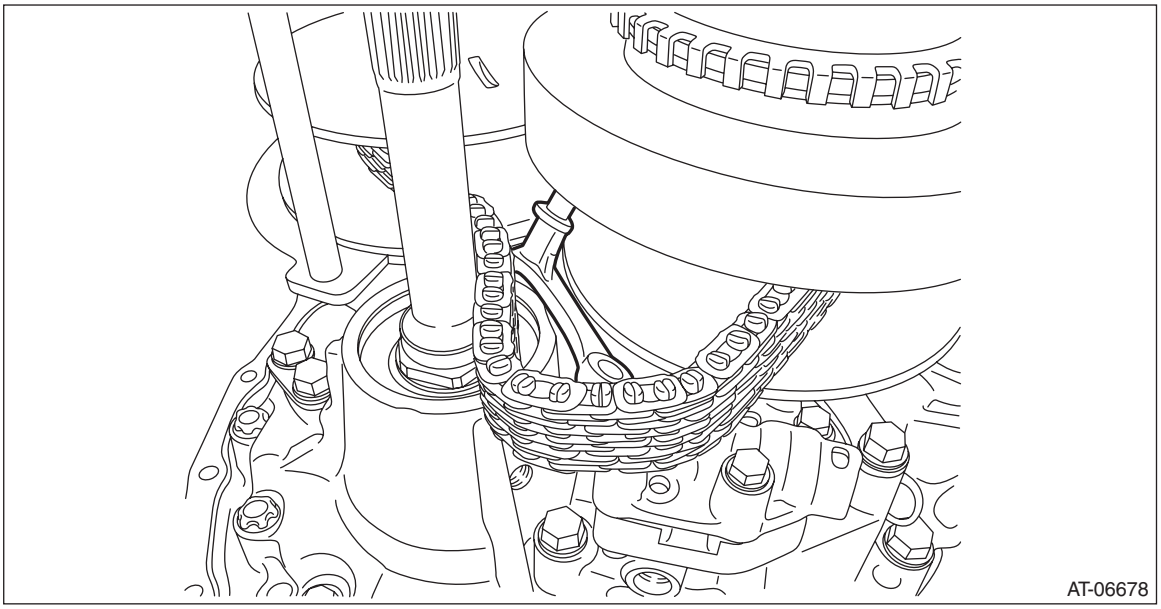

20) Remove the primary pulley mounting bolt.

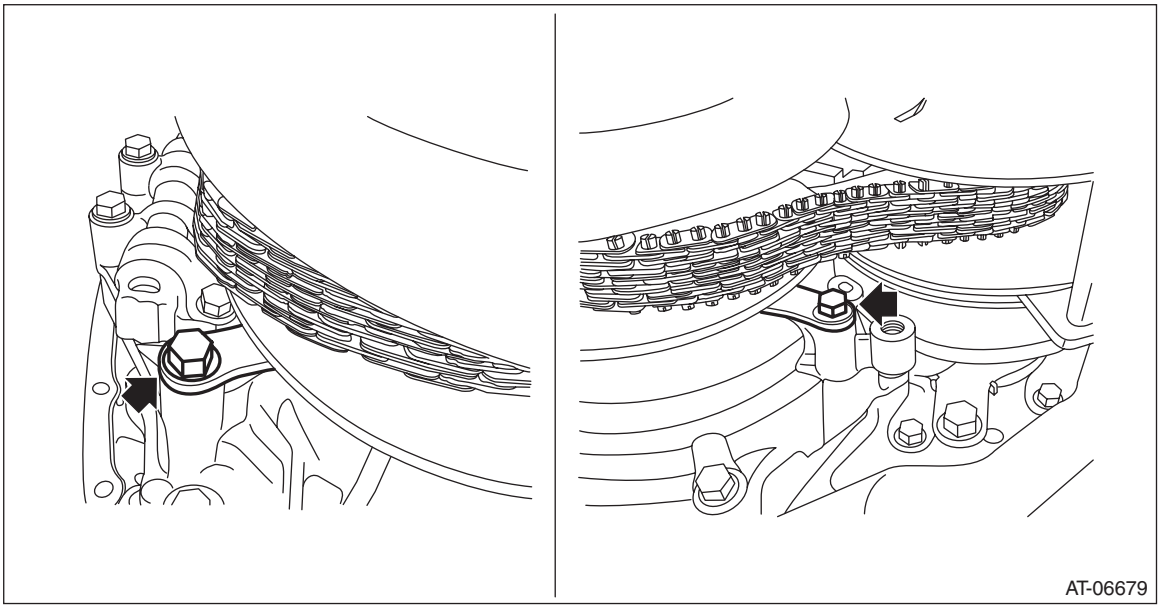

21) Remove the primary pulley from the reverse brake housing and intersect the V groove of secondary pulley and the V groove of primary pulley. Remove the variator chain from primary pulley, and remove the primary pulley.

CAUTION:
Cover the V grooves of secondary pulley and primary pulley with cloth to protect the both pulleys and variator chain from scratching.

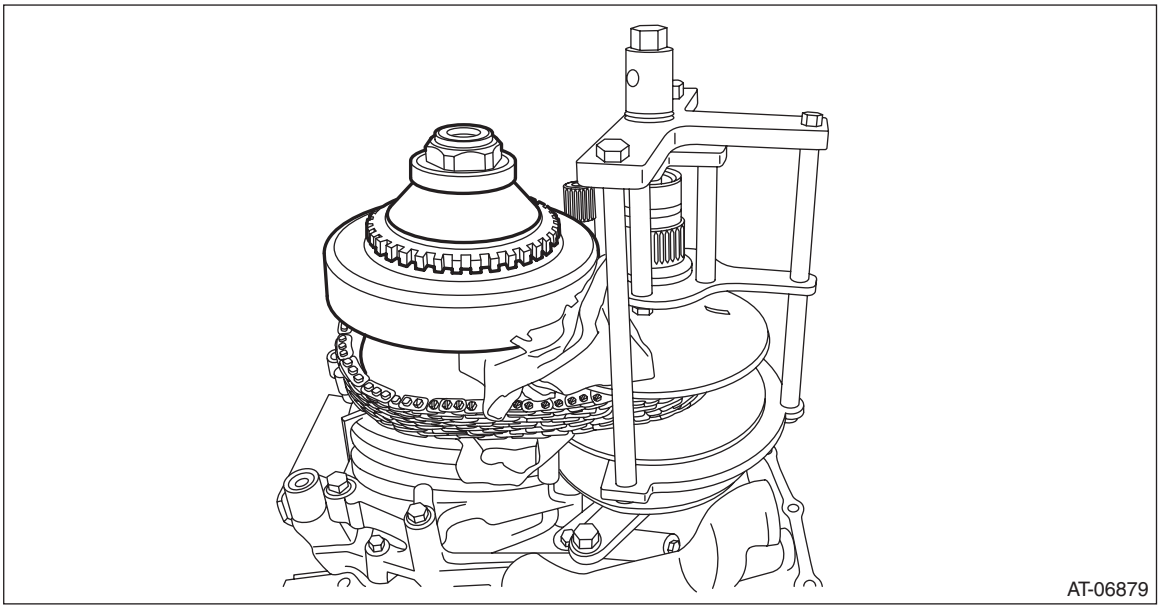

22) Remove the ST (EXPANDER PULLEY) from the secondary pulley.
23) Remove the variator chain from secondary pulley.
24) Remove the secondary pulley mounting bolts, and remove the secondary pulley.

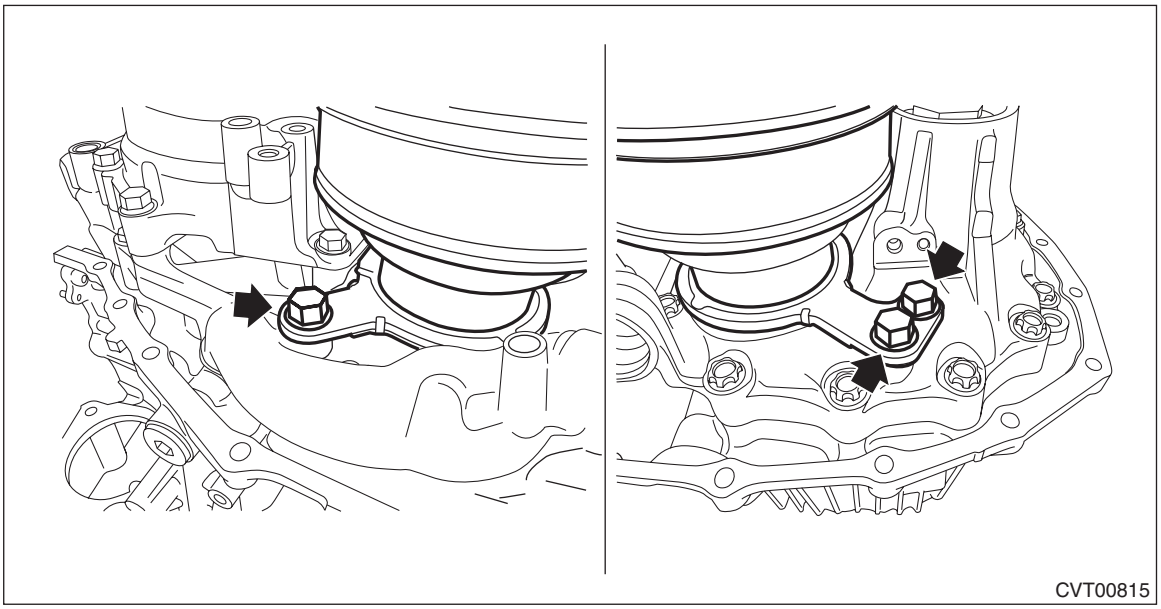

25) Remove the seal ring from drive pinion retainer.

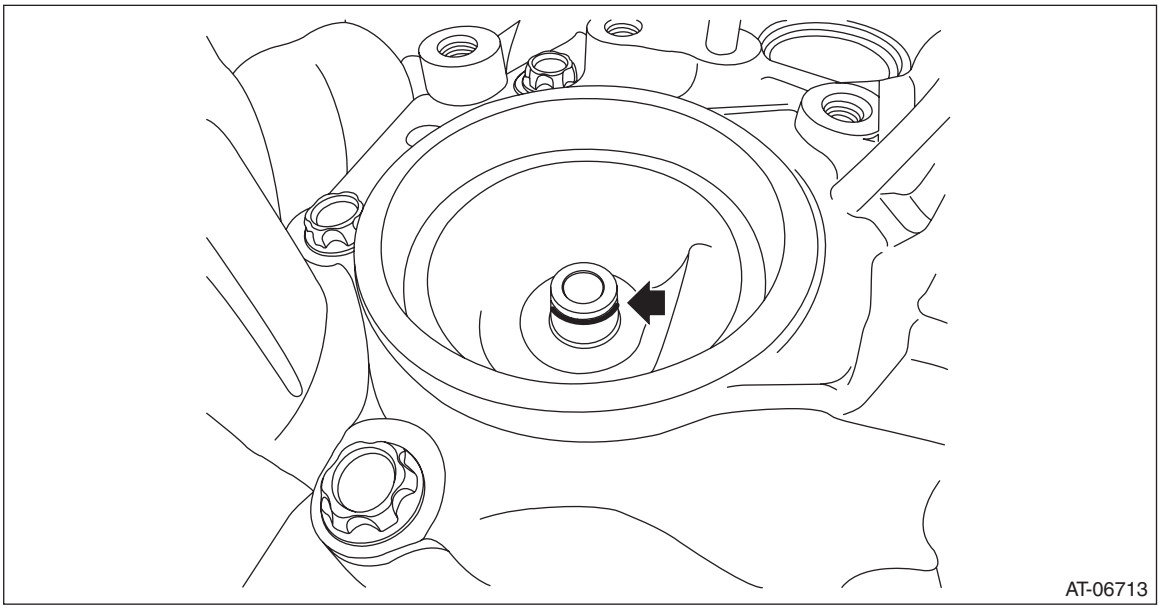

26) Remove the seal ring from the input shaft.

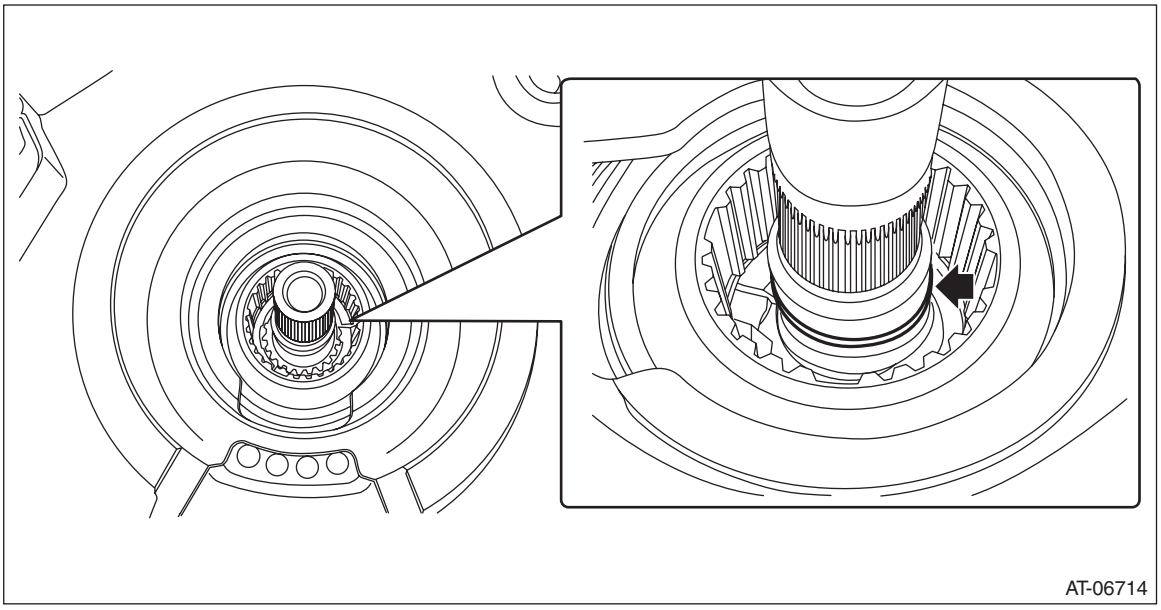

B: INSTALLATION

1) Select shims for pulley alignment. <Ref. to CVT(TR580)-275, ADJUSTMENT, Primary Pulley and Secondary Pulley.>
2) Install the seal ring to the input shaft.

NOTE:
- Use new seal rings.
- When installing the seal rings, do not expand the seal rings too much.
- Apply CVTF to the seal rings.

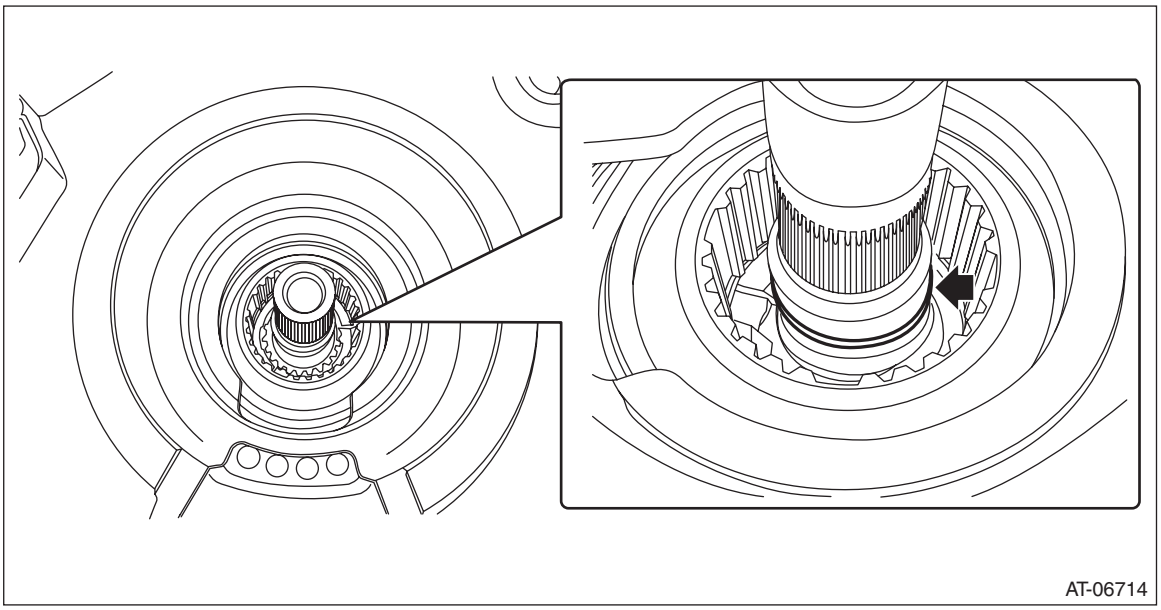

3) Install the seal ring to drive pinion retainer.

NOTE:
- Use new seal rings.
- When installing the seal rings, do not expand the seal rings too much.
- Apply CVTF to the seal rings.

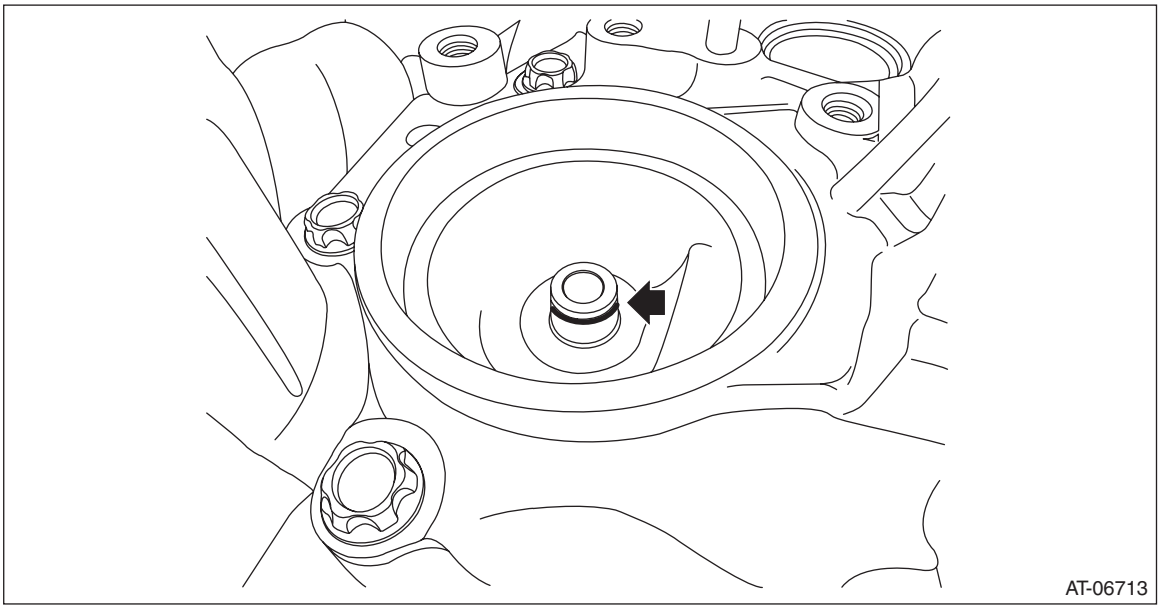

4) Install the selected shims to the primary pulley bearing catch surface.

5) Install the secondary pulley to the drive pinion retainer.

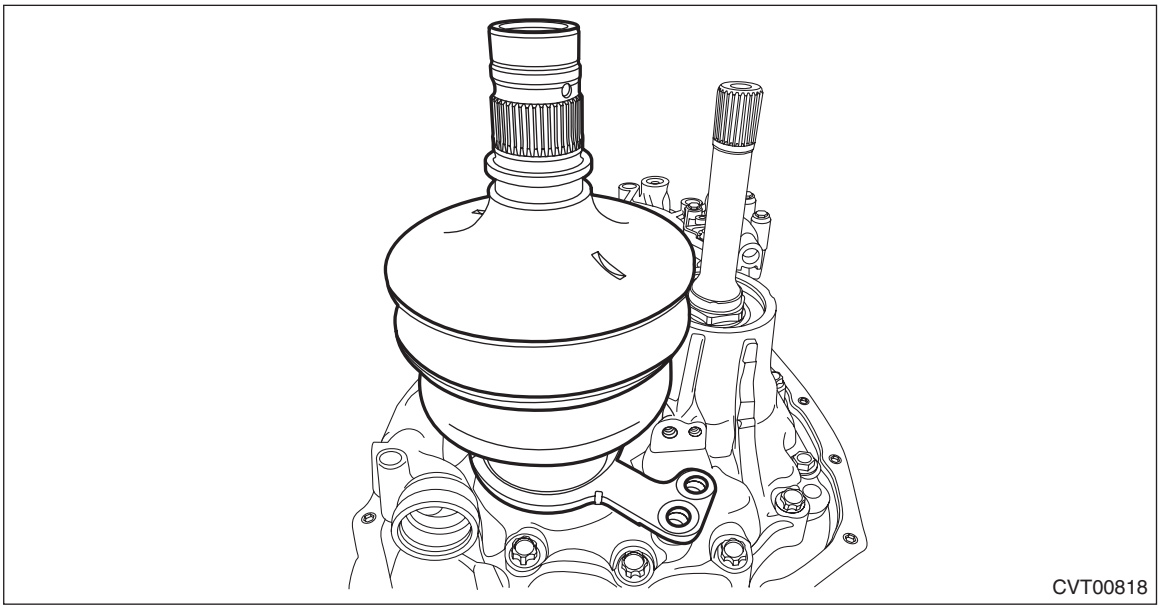

6) Install and tighten the secondary pulley securing bolts.
   (1) Tighten the three bolts until the seating surfaces contact the bearing retainer.

NOTE:
- Be careful not to tilt the bearing retainer of the secondary pulley.
- Apply CVTF to the bolt.

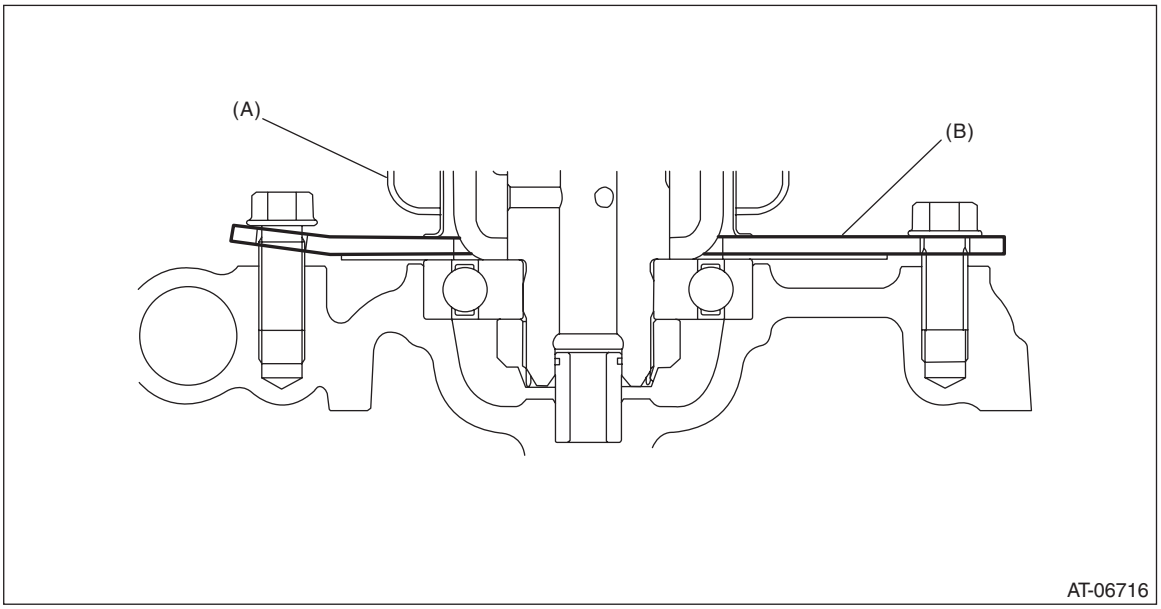

(A) Secondary pulley
(B) Bearing retainer

(2) Tighten the bolts in the order of (A) → (B) → (C) → (B).

Tightening torque:
67.5 N·m (6.9 kgf-m, 49.8 ft-lb)

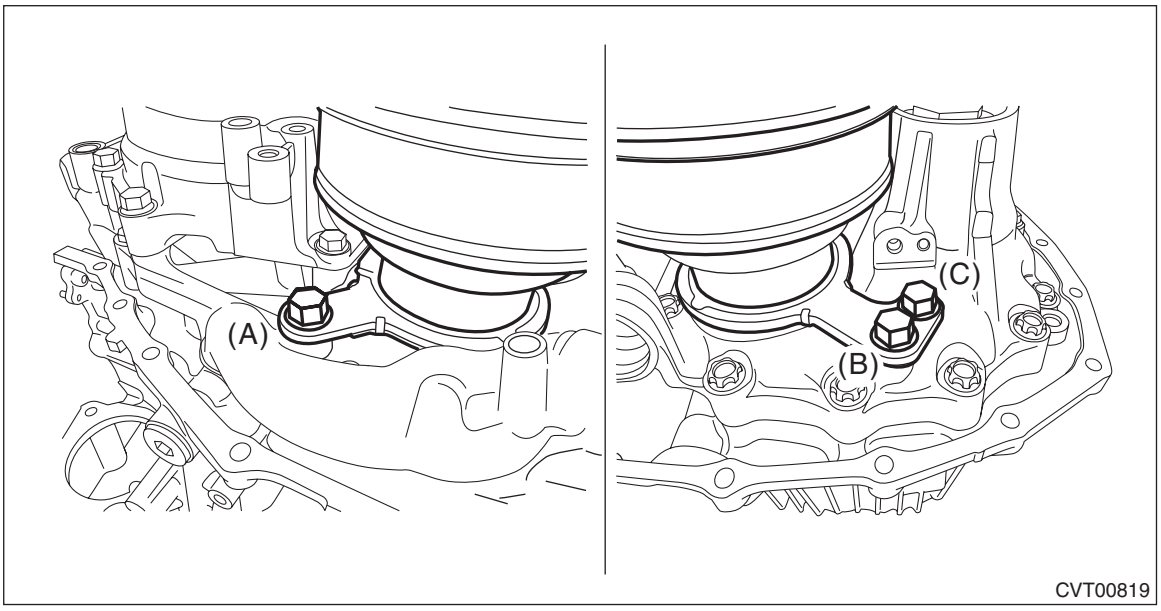

7) Place the variator chain on the V groove of the secondary pulley, and set the ST.
ST 18769AA010 EXPANDER PULLEY

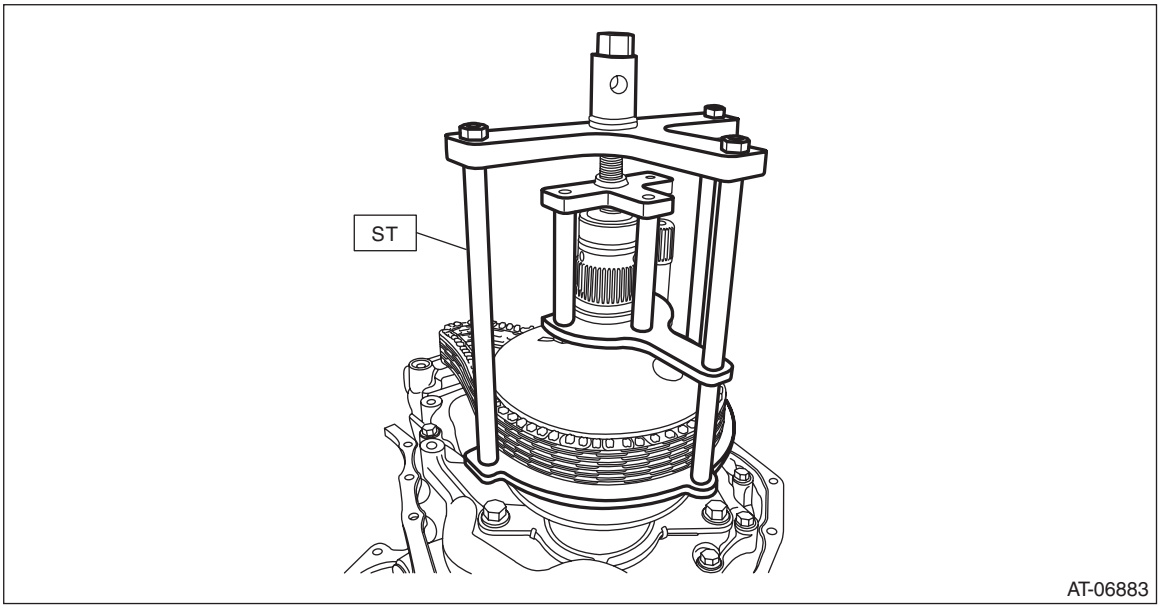

8) Expand the V groove of the secondary pulley.

9) Install the primary pulley to the reverse brake housing together with the variator chain.

CAUTION:
Cover the V grooves of primary pulley and secondary pulley with cloth to protect the both pulleys and variator chain from scratching.

(1) Intersect the V groove of primary pulley and the V groove of secondary pulley and install the secondary pulley while placing the variator chain on secondary pulley.

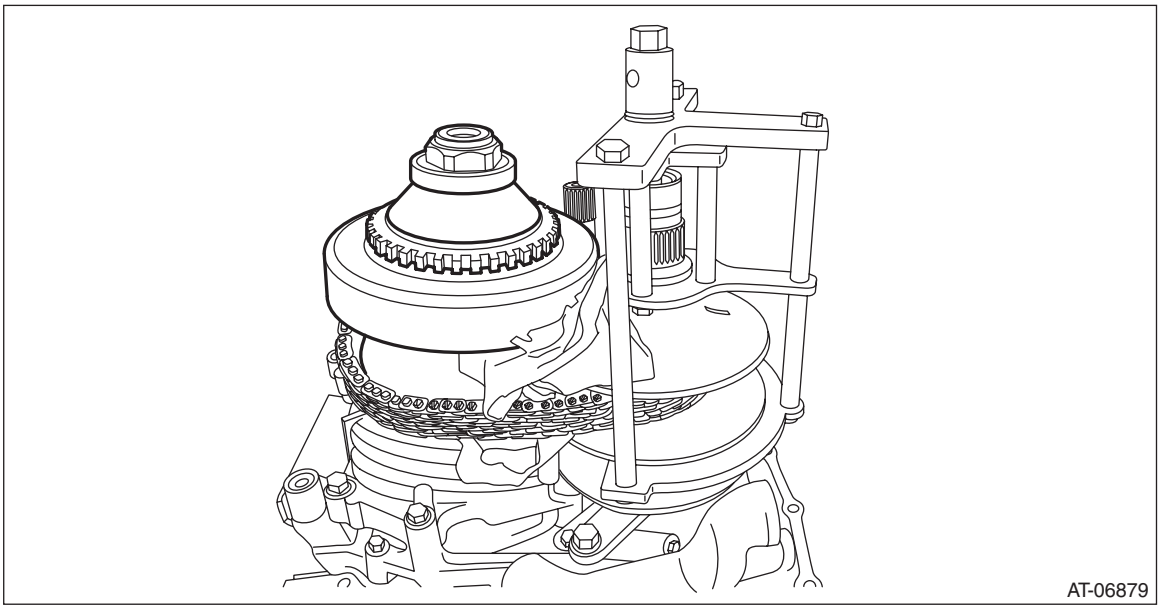

(2) Install the primary pulley to the reverse brake housing so that the bolt hole of primary bearing retainer and the bolt hole of reverse brake housing are aligned.

10) Install the primary pulley bolt.

Tightening torque:
21 N·m (2.1 kgf-m, 15.5 ft-lb)

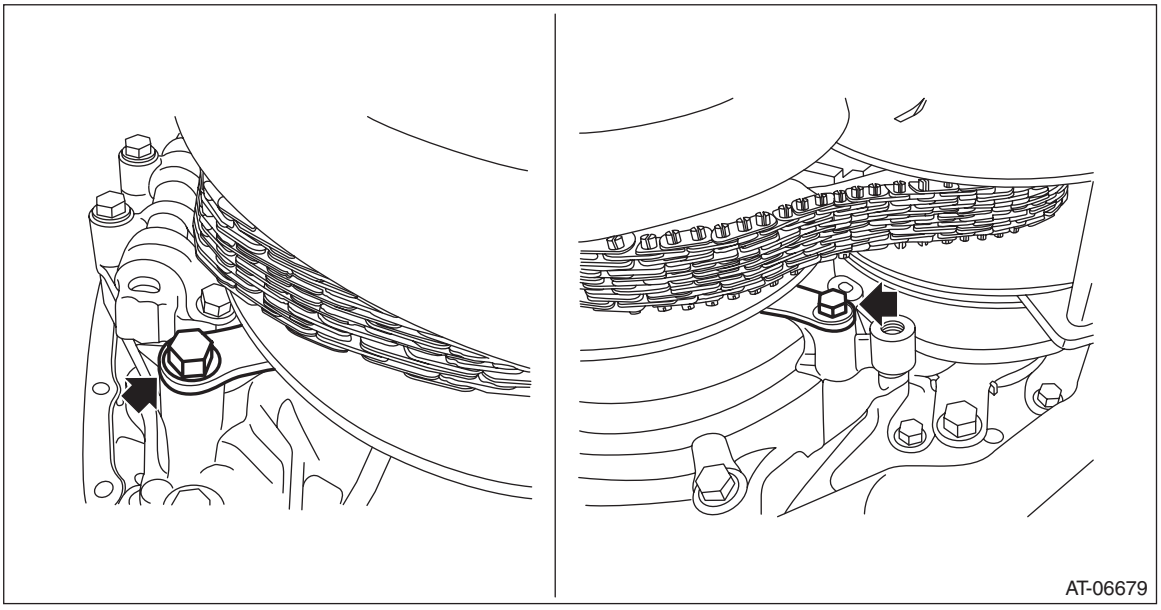

11) Install the chain guide.
(1) Place the support rod inside of the variator chain.

CAUTION:
Protect the both pulleys and variator chain from scratching.

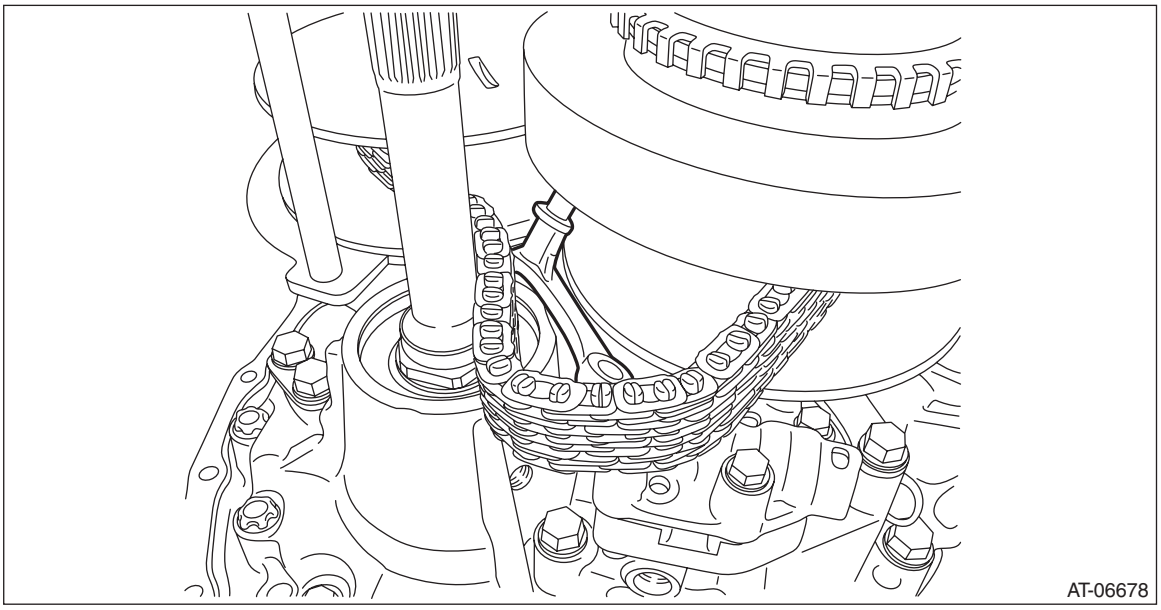
AT-06678

(2) Install the chain guide to the variator chain.

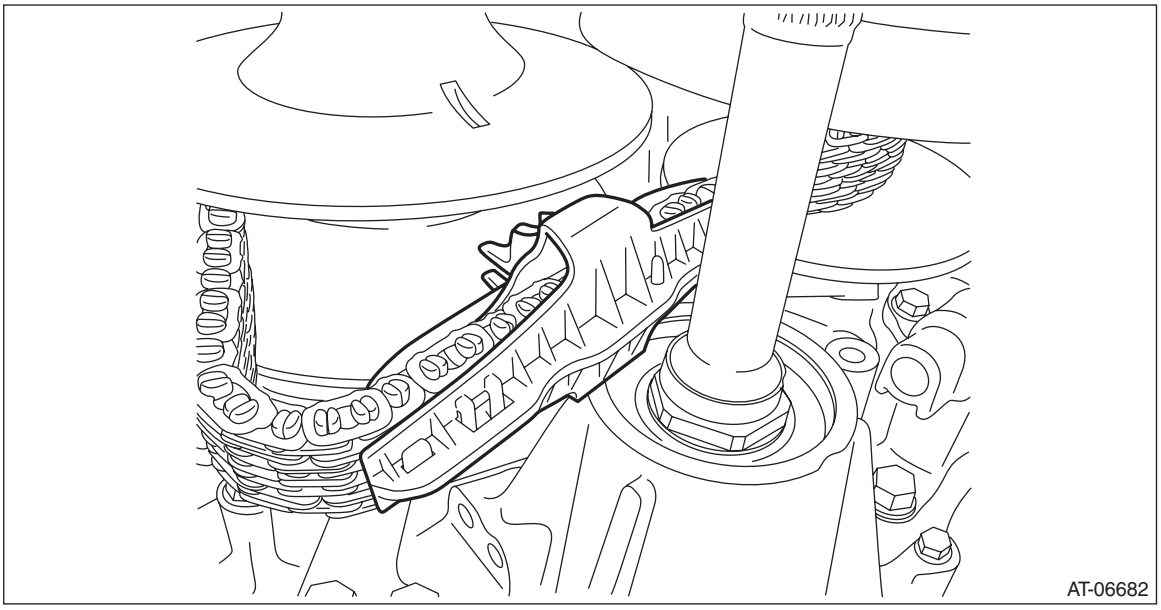
AT-06682

(3) Move the chain guide to the support rod side.

(4) While holding the support rod, press the chain guide so that the support rod runs through between the protrusions of chain guide and install the chain guide to the support rod.

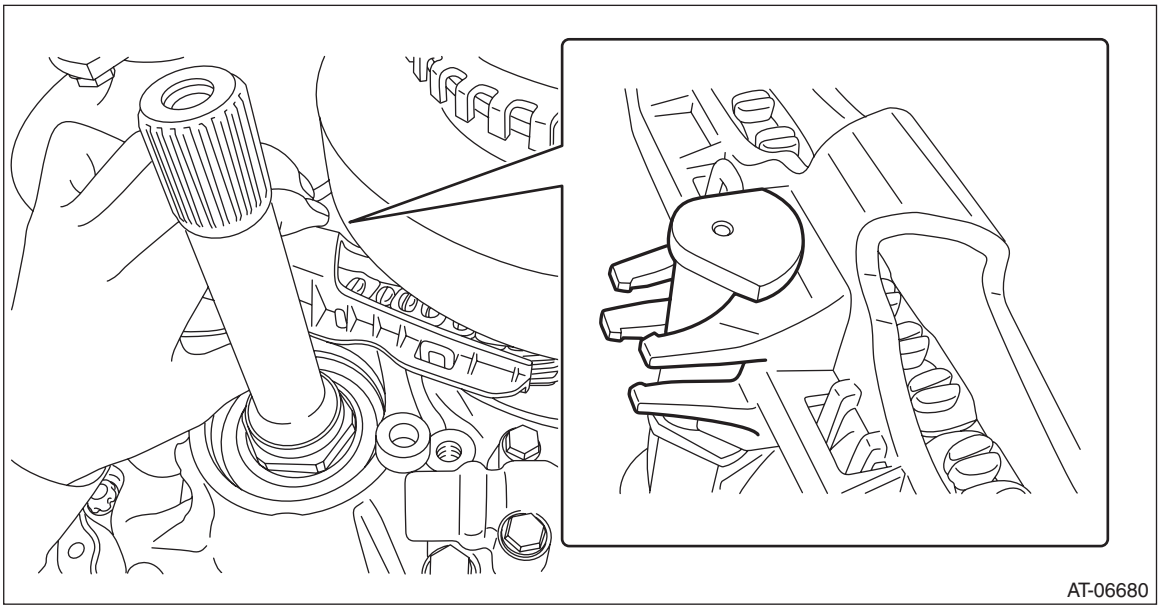

(5) Install the support rod.

Tightening torque:
21 N·m (2.1 kgf-m, 15.5 ft-lb)

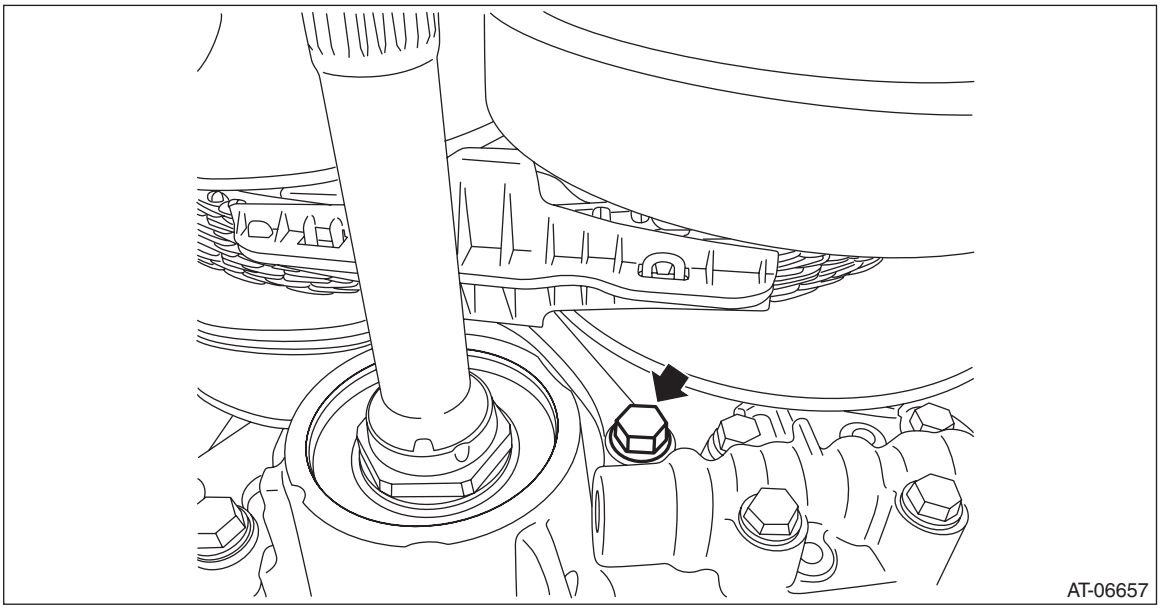

(6) Install the lubrication pipe.

Tightening torque:
21 N·m (2.1 kgf-m, 15.5 ft-lb)

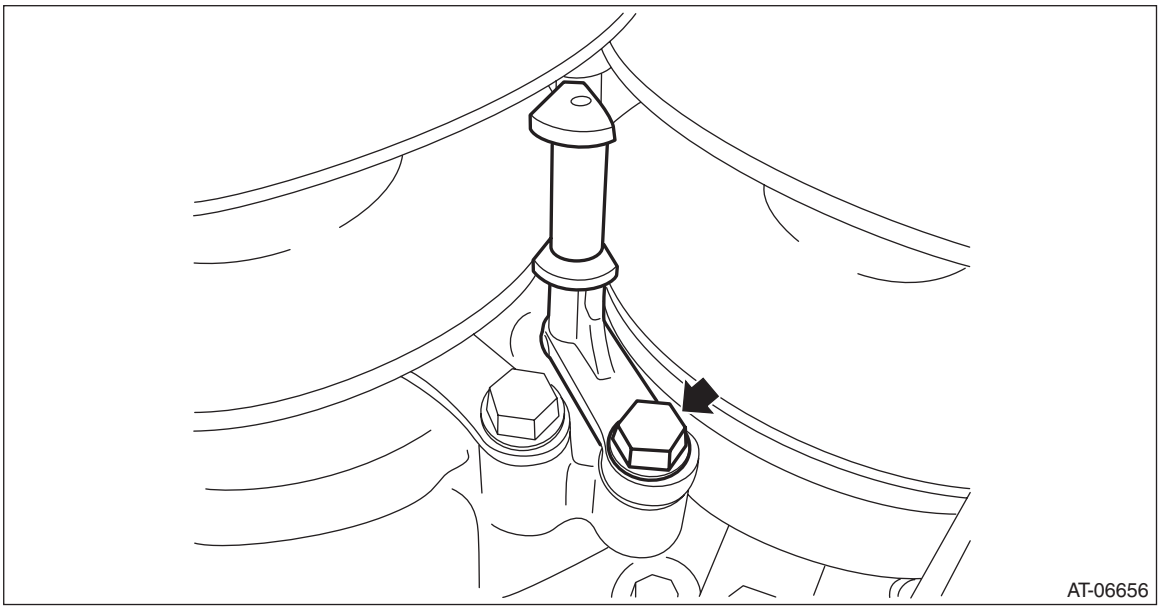

(7) Install the chain guide so that the lubrication pipe runs through between the protrusions of each chain guide. Then remove the ST (PULLEY EXPANDER).

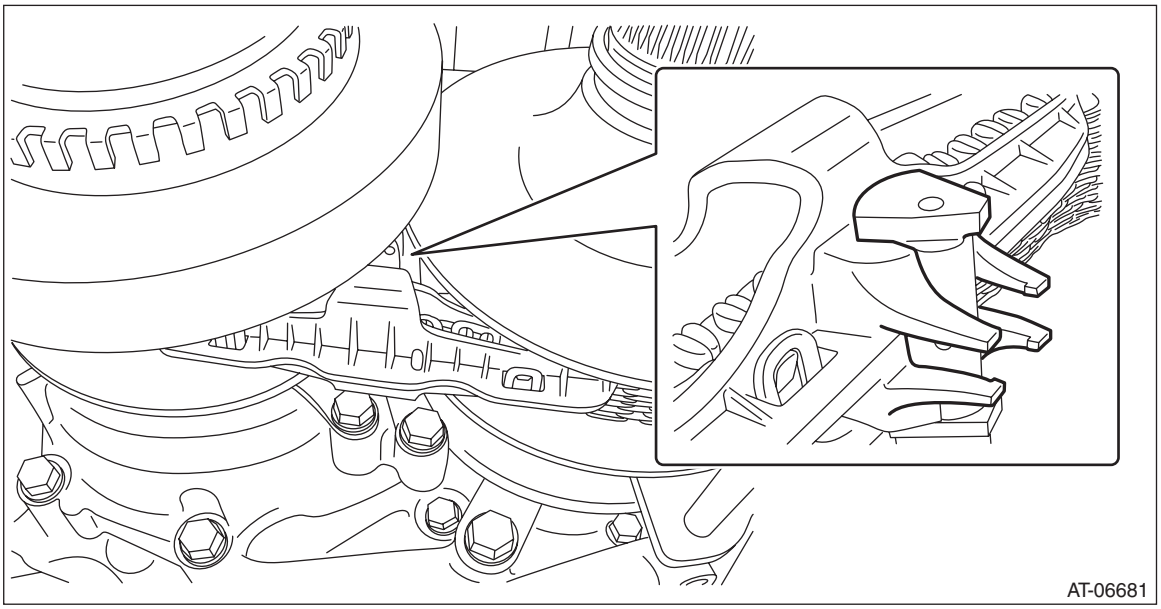

12) Install the reduction drive gear. <Ref. to CVT(TR580)-257, INSTALLATION, Reduction Drive Gear.>
13) Select the reduction drive gear shim. <Ref. to CVT(TR580)-259, ADJUSTMENT, Reduction Drive Gear.>
14) Install the transmission case. <Ref. to CVT(TR580)-240, INSTALLATION, Transmission Case.>
15) Install the transmission control device. <Ref. to CVT(TR580)-234, INSTALLATION, Transmission Control Device.>
16) Install the oil strainer and oil pan. <Ref. to CVT(TR580)-131, INSTALLATION, Oil Pan and Strainer.>
17) Install the reduction driven gear assembly. <Ref. to CVT(TR580)-223, INSTALLATION, Reduction Driven Gear.>
18) Install the transfer driven gear assembly. <Ref. to CVT(TR580)-219, INSTALLATION, Transfer Driven Gear.>
19) Install the transfer clutch assembly. <Ref. to CVT(TR580)-206, INSTALLATION, Transfer Clutch.>
20) Install the parking pawl. <Ref. to CVT(TR580)-222, INSTALLATION, Parking Pawl.>
21) Install the extension case. <Ref. to CVT(TR580)-201, INSTALLATION, Extension Case.>

22) Install the inhibitor switch. <Ref. to CVT(TR580)-111, INSTALLATION, Inhibitor Switch.>
23) Install the secondary speed sensor. <Ref. to CVT(TR580)-118, INSTALLATION, Secondary Speed Sensor.>
24) Install the primary speed sensor. <Ref. to CVT(TR580)-124, INSTALLATION, Primary Speed Sensor.>
25) Install the turbine speed sensor. <Ref. to CVT(TR580)-113, INSTALLATION, Turbine Speed Sensor.>
26) Install the transmission harness. <Ref. to CVT(TR580)-150, INSTALLATION, Transmission Harness.>
27) Install the control valve body. <Ref. to CVT(TR580)-139, INSTALLATION, Control Valve Body.>
28) Install the air breather hose. <Ref. to CVT(TR580)-192, INSTALLATION, Air Breather Hose.>
29) Install the transmission assembly. <Ref. to CVT(TR580)-79, INSTALLATION, Automatic Transmission Assembly.>

C: INSPECTION

- Check the surface of primary and secondary pulley cones for damage or wear.
- Check the primary and secondary pulley for damage.
- Check the bearing for seizure or wear.
- Apply CVTF to bearing and rotate the bearing to check for noise or dragging etc.

D: ADJUSTMENT

1. PROCEDURE IN REPLACEMENT OF PRIMARY AND SECONDARY PULLEY, OR IN REPLACEMENT OF PRIMARY PULLEY, SECONDARY PULLEY AND VARIATOR CHAIN

1) Measure depth “Lp” from the ST upper face to the primary pulley bearing catch surface at several points and calculate the average.
ST 499575400 GAUGE

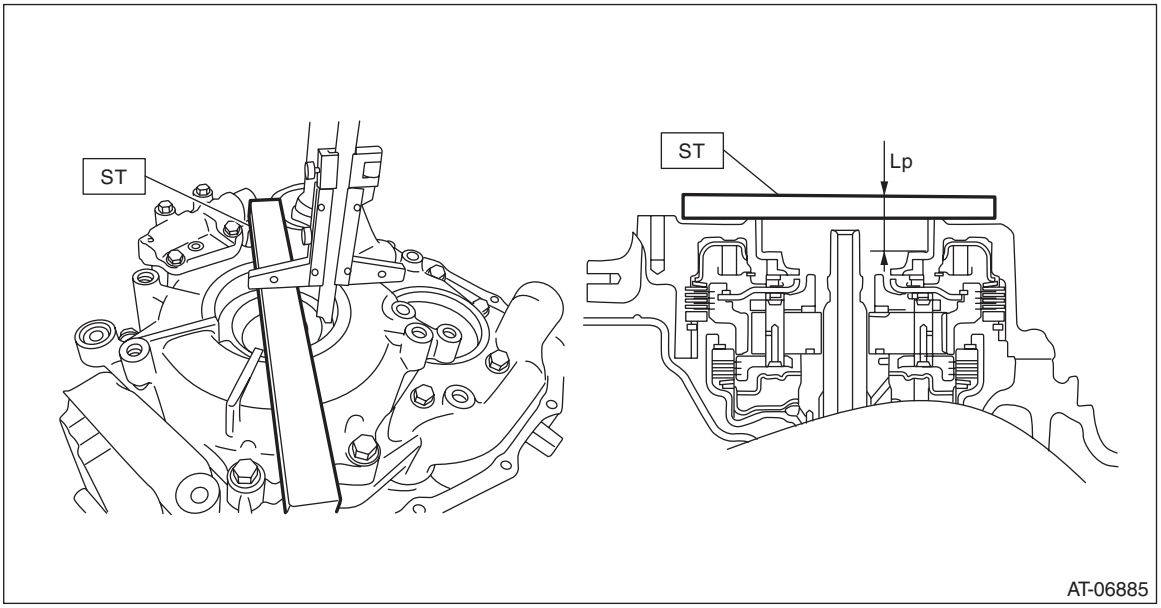

2) Measure the depth “Ls” from the ST upper face to the secondary pulley bearing catch surface at several points and calculate the average.
ST 499575400 GAUGE

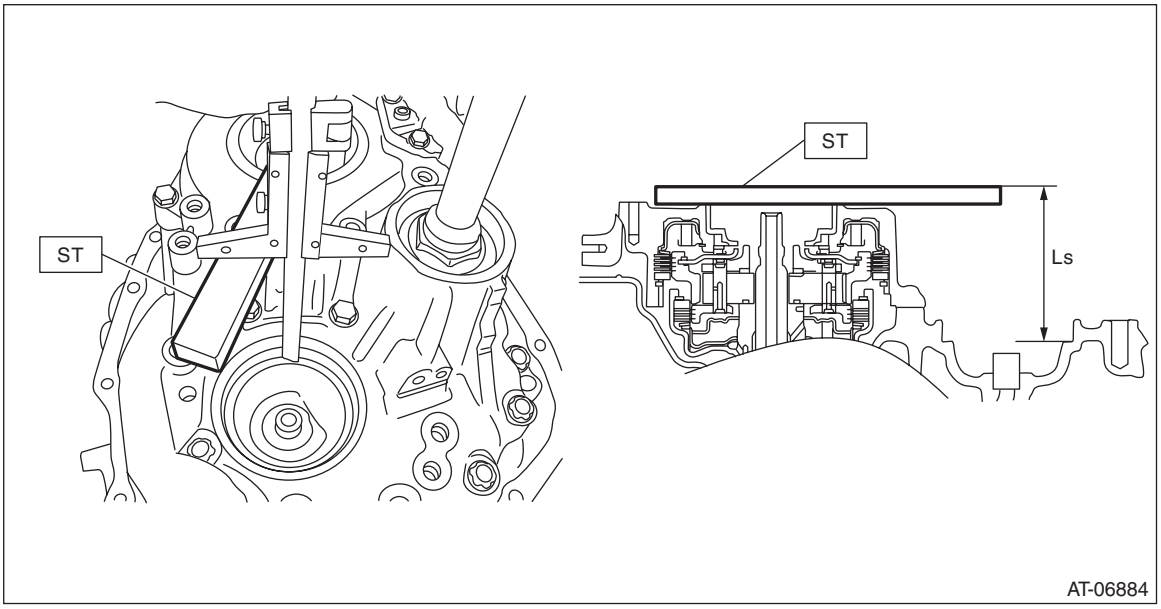

3) Calculate the following formula.
Calculation formula:
T (mm) = B – A + Lp – Ls – 28.602
[T (in) = B – A + Lp – Ls – 1.126]
T: Pulley alignment
A: Specified primary pulley dimension
B: Specified secondary pulley dimension
Lp: Depth from the ST upper face to the primary pulley bearing catch surface
Ls: Depth from the ST upper face to the secondary pulley bearing catch surface
28.602 mm (1.126 in): Constant

Pulley alignment T mm (in)	Thickness of shim mm (in)
–0.05 — 0.049 (–0.002 — 0.002)	No shims
0.050 — 0.149(0.002 — 0.006)	0.1 (0.004)
0.150 — 0.249(0.006 — 0.010)	0.2 (0.008)
0.250 — 0.349(0.010 — 0.014)	0.3 (0.012)
0.350 — 0.449(0.014 — 0.018)	0.4 (0.016)
0.450 — 0.549(0.018 — 0.022)	0.5 (0.020)
0.550 — 0.649(0.022 — 0.026)	0.6 (0.024)
0.650 — 0.749(0.026 — 0.029)	0.7 (0.028)
0.750 — 0.849(0.029 — 0.033)	0.8 (0.031)
0.850 — 0.949(0.033 — 0.037)	0.9 (0.035)
0.950 — 1.049(0.037 — 0.041)	1.0 (0.039)
1.050 — 1.149(0.041 — 0.045)	1.1 (0.043)

4) Select one to two shims so that the total thickness meets the value obtained from step 3).

Part No.	Shim thickness mm (in)
32451AA050	0.1 (0.004)
32451AA060	0.2 (0.008)
32451AA070	0.3 (0.012)
32451AA080	0.4 (0.016)
32451AA090	0.5 (0.020)
32451AA100	0.6 (0.024)

2. PROCEDURE WHEN REPLACING ONLY DRIVE PINION RETAINER OR REVERSE BRAKE HOUSING

1) Clean the mating surface of current drive pinion retainer and converter case.
2) Measure and record the shim thickness that is attached on the current reverse brake housing.
3) Using the current drive pinion retainer, measure depth “Lp1” from the ST upper face to the primary pulley bearing catch surface at several points and calculate the average.
ST 499575400 GAUGE

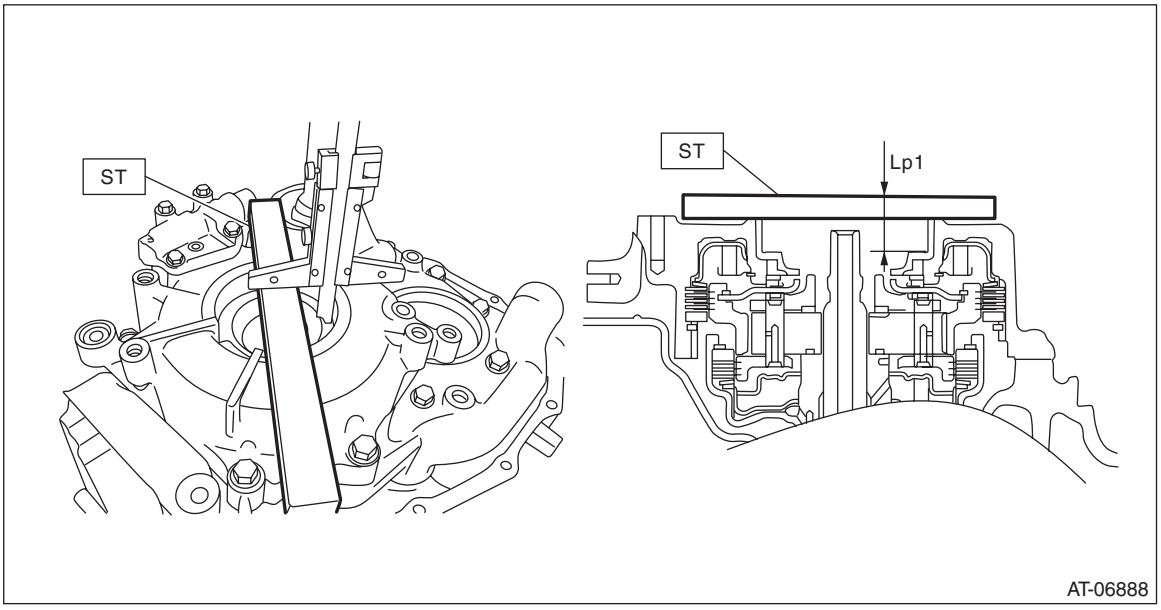

4) Using the current drive pinion retainer or current reverse brake housing, measure the depth “Ls1” from the ST upper face to the secondary pulley bearing catch surface at several points and calculate the average.
ST 499575400 GAUGE

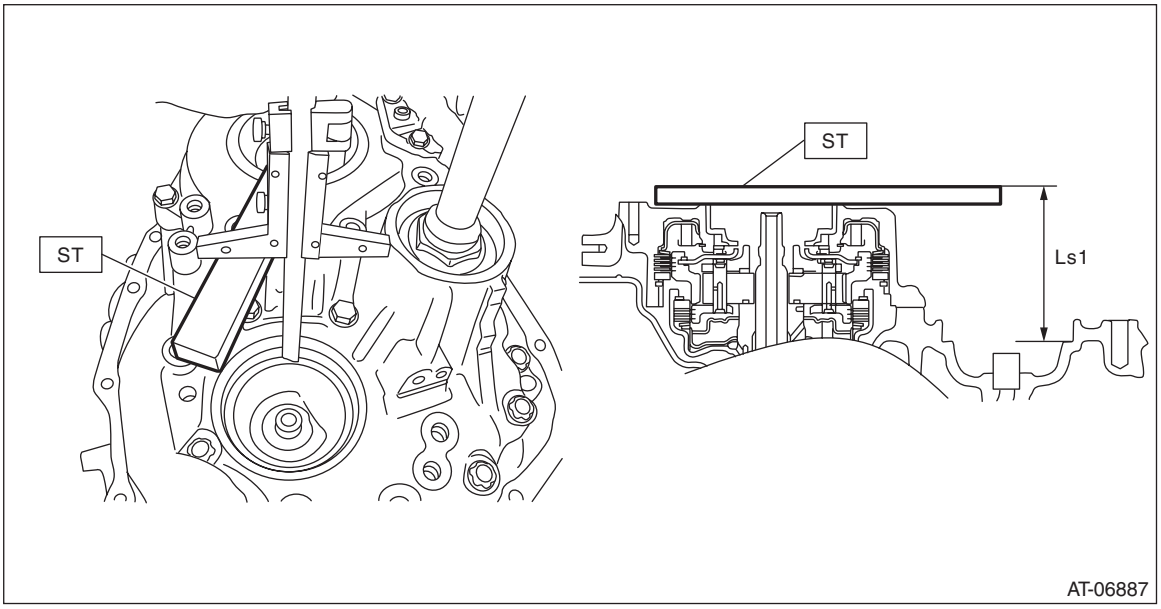

5) Calculate the “LD1” using the following formula and record it.
Calculation formula:
LD1 mm (in) = Ls1 – Lp1
LD1: Height from the primary pulley bearing catch surface to the secondary pulley bearing catch surface
Lp1: Depth from the ST upper face to the primary pulley bearing catch surface
Ls1: Depth from the ST upper face to the secondary pulley bearing catch surface
6) Using the new drive pinion retainer or new reverse brake housing, measure the depth “Lp2” from the ST upper face to the primary pulley bearing catch surface at several points and calculate the average.
ST 499575400 GAUGE

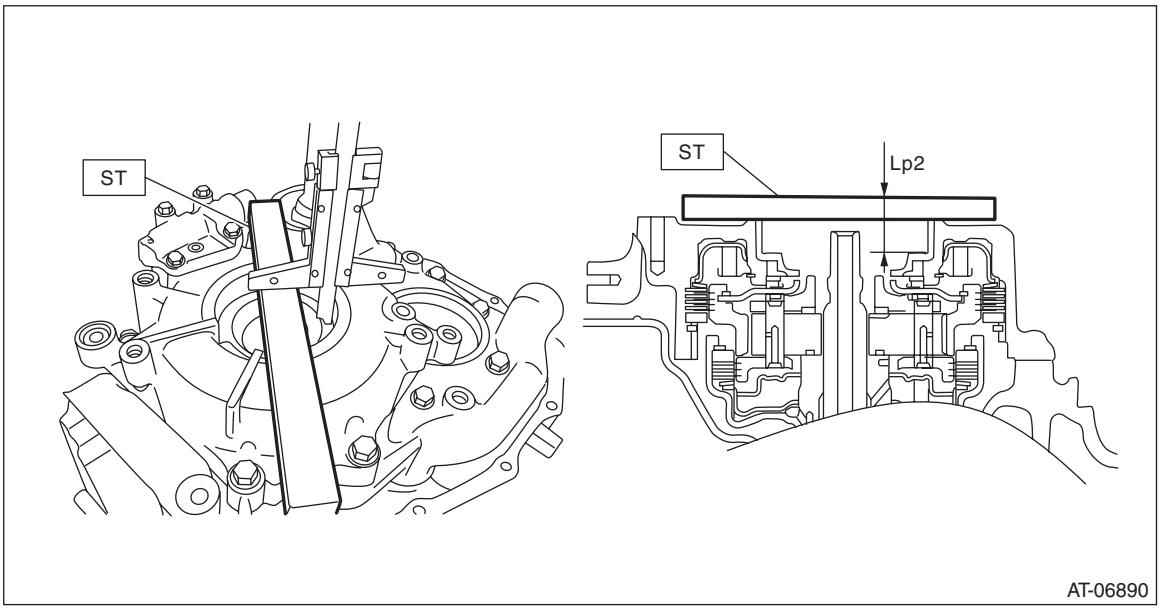

7) Using the new drive pinion retainer or new reverse brake housing, measure the depth “Ls2” from the ST upper face to the secondary pulley bearing catch surface at several points and calculate the average.
ST 499575400 GAUGE

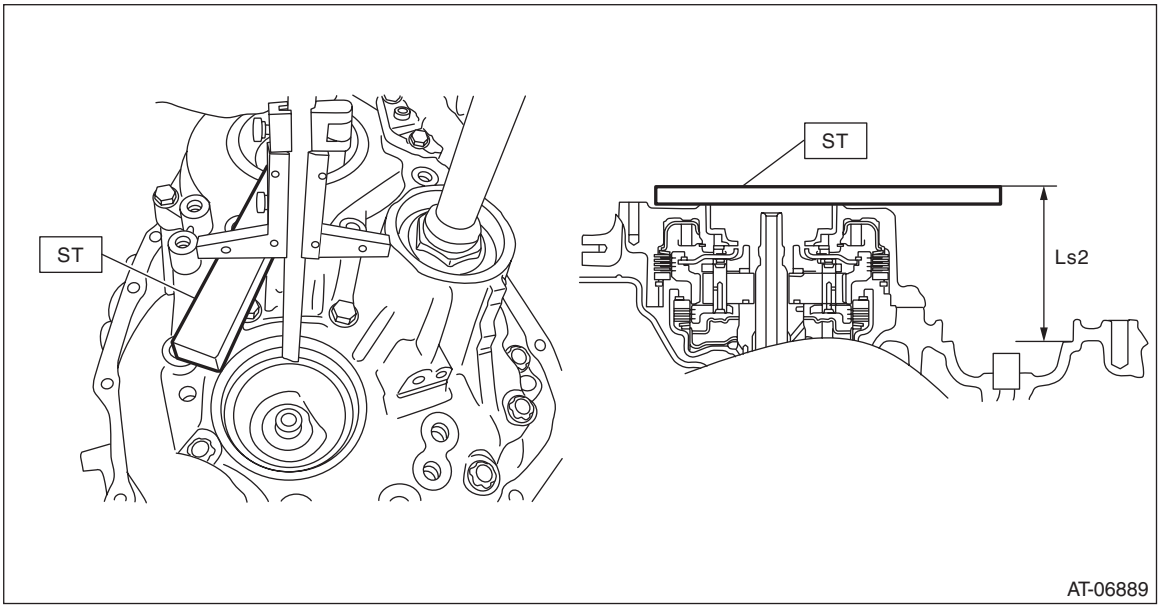

8) Calculate the “LD2” using the following formula and record it.
Calculation formula:
LD2 mm (in) = Ls2 – Lp2
LD2: Height from the primary pulley bearing catch surface to the secondary pulley bearing catch surface
Lp2: Depth from the ST upper face to the primary pulley bearing catch surface
Ls2: Depth from the ST upper face to the secondary pulley bearing catch surface

9) Calculate the recorded values of “LD1” and “LD2” to obtain the positive number to select the shims.
Calculation formula: T1 mm (in) = LD1 – LD2 or T2 mm (in) = LD2 – LD1
T1, T2: Difference between new drive pinion retainer or new reverse brake housing and current drive pinion retainer or current reverse brake housing
LD1: Calculated value of current drive pinion retainer or current reverse brake housing
LD2: Calculated value of new drive pinion retainer or new reverse brake housing

Difference of the case (T1) mm (in)	Shim selection procedure
0 — 0.050 (0 — 0.00197)	Select a new shim of the same thickness with the shim that is used on the primary pulley side of the current reverse brake housing.
0.051 — 0.150 (0.00201 — 0.00591)	Select a shim which is 0.1 mm (0.004 in) thicker than the shim that is used on the primary pulley side of the current reverse brake housing.
0.151 — 0.250 (0.00594 — 0.00984)	Select a shim which is 0.2 mm (0.008 in) thicker than the shim that is used on the primary pulley side of the current reverse brake housing.
0.251 — 0.350 (0.00988 — 0.01378)	Select a shim which is 0.3 mm (0.012 in) thicker than the shim that is used on the primary pulley side of the current reverse brake housing.
0.351 — 0.450 (0.01382 — 0.01772)	Select a shim which is 0.4 mm (0.016 in) thicker than the shim that is used on the primary pulley side of the current reverse brake housing.
0.451 — 0.550 (0.01776 — 0.02165)	Select a shim which is 0.5 mm (0.020 in) thicker than the shim that is used on the primary pulley side of the current reverse brake housing.
0.551 — 0.600 (0.02169 — 0.02362)	Select a shim which is 0.6 mm (0.024 in) thicker than the shim that is used on the primary pulley side of the current reverse brake housing.

Difference of the case (T2) mm (in)	Shim selection procedure
0 — 0.050 (0 — 0.00197)	Select a new shim of the same thickness with the shim that is used on the primary pulley side of the current reverse brake housing.
0.051 — 0.150 (0.00201 — 0.00591)	Select a shim which is 0.1 mm (0.004 in) thinner than the shim that is used on the primary pulley side of the current reverse brake housing.
0.151 — 0.250 (0.00594 — 0.00984)	Select a shim which is 0.2 mm (0.008 in) thinner than the shim that is used on the primary pulley side of the current reverse brake housing.
0.251 — 0.350 (0.00988 — 0.01378)	Select a shim which is 0.3 mm (0.012 in) thinner than the shim that is used on the primary pulley side of the current reverse brake housing.
0.351 — 0.450 (0.01382 — 0.01772)	Select a shim which is 0.4 mm (0.016 in) thinner than the shim that is used on the primary pulley side of the current reverse brake housing.
0.451 — 0.550 (0.01776 — 0.02165)	Select a shim which is 0.5 mm (0.020 in) thinner than the shim that is used on the primary pulley side of the current reverse brake housing.
0.551 — 0.600 (0.02169 — 0.02362)	Select a shim which is 0.6 mm (0.024 in) thinner than the shim that is used on the primary pulley side of the current reverse brake housing.

Part No.	Shim thickness mm (in)
32451AA050	0.1 (0.004)
32451AA060	0.2 (0.008)
32451AA070	0.3 (0.012)
32451AA080	0.4 (0.016)
32451AA090	0.5 (0.020)
32451AA100	0.6 (0.024)

42.Variator Chain

A: REMOVAL

For removal of variator chain, refer to “Primary Pulley and Secondary Pulley”. <Ref. to CVT(TR580)-261, REMOVAL, Primary Pulley and Secondary Pulley.>

B: INSTALLATION

For installation of variator chain, refer to “Primary Pulley and Secondary Pulley”. <Ref. to CVT(TR580)-268, INSTALLATION, Primary Pulley and Secondary Pulley.>

C: INSPECTION

Check the variator chain for damage and wear.

43.Reverse Brake Assembly

A: REMOVAL

1) Remove the transmission assembly. <Ref. to CVT(TR580)-63, REMOVAL, Automatic Transmission Assembly.>
2) Remove the air breather hose. <Ref. to CVT(TR580)-190, REMOVAL, Air Breather Hose.>
3) Remove the control valve body. <Ref. to CVT(TR580)-133, REMOVAL, Control Valve Body.>
4) Remove the transmission harness. <Ref. to CVT(TR580)-147, REMOVAL, Transmission Harness.>
5) Remove the turbine speed sensor. <Ref. to CVT(TR580)-113, REMOVAL, Turbine Speed Sensor.>
6) Remove the secondary speed sensor. <Ref. to CVT(TR580)-118, REMOVAL, Secondary Speed Sensor.>
7) Remove the primary speed sensor. <Ref. to CVT(TR580)-123, REMOVAL, Primary Speed Sensor.>
8) Remove the inhibitor switch. <Ref. to CVT(TR580)-109, REMOVAL, Inhibitor Switch.>
9) Remove the extension case. <Ref. to CVT(TR580)-200, REMOVAL, Extension Case.>
10) Remove the transfer clutch assembly. <Ref. to CVT(TR580)-204, REMOVAL, Transfer Clutch.>
11) Remove the transfer driven gear assembly. <Ref. to CVT(TR580)-218, REMOVAL, Transfer Driven Gear.>
12) Remove the parking pawl. <Ref. to CVT(TR580)-221, REMOVAL, Parking Pawl.>
13) Remove the reduction driven gear assembly. <Ref. to CVT(TR580)-223, REMOVAL, Reduction Driven Gear.>
14) Remove the oil pan and oil strainer. <Ref. to CVT(TR580)-130, REMOVAL, Oil Pan and Strainer.>
15) Remove the transmission control device. <Ref. to CVT(TR580)-231, REMOVAL, Transmission Control Device.>
16) Remove the transmission case. <Ref. to CVT(TR580)-237, REMOVAL, Transmission Case.>
17) Remove the reduction drive gear. <Ref. to CVT(TR580)-256, REMOVAL, Reduction Drive Gear.>
18) Remove the primary pulley, secondary pulley and variator chain. <Ref. to CVT(TR580)-261, REMOVAL, Primary Pulley and Secondary Pulley.>
19) Remove the manual valve assembly and separator plate.

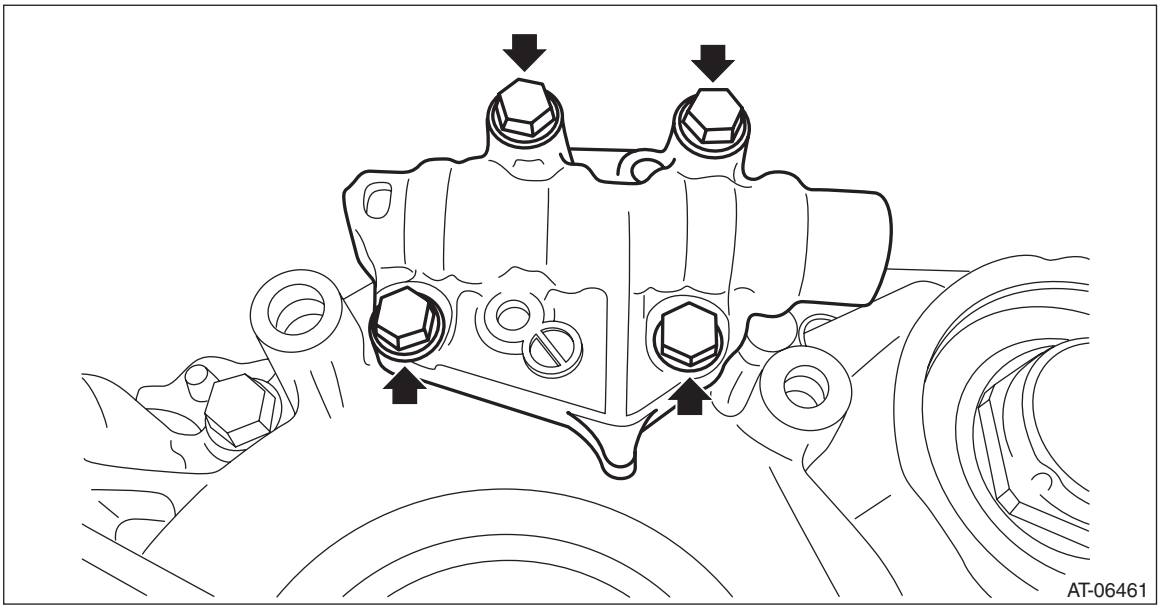

20) Remove the oil guide and lubrication pipe.

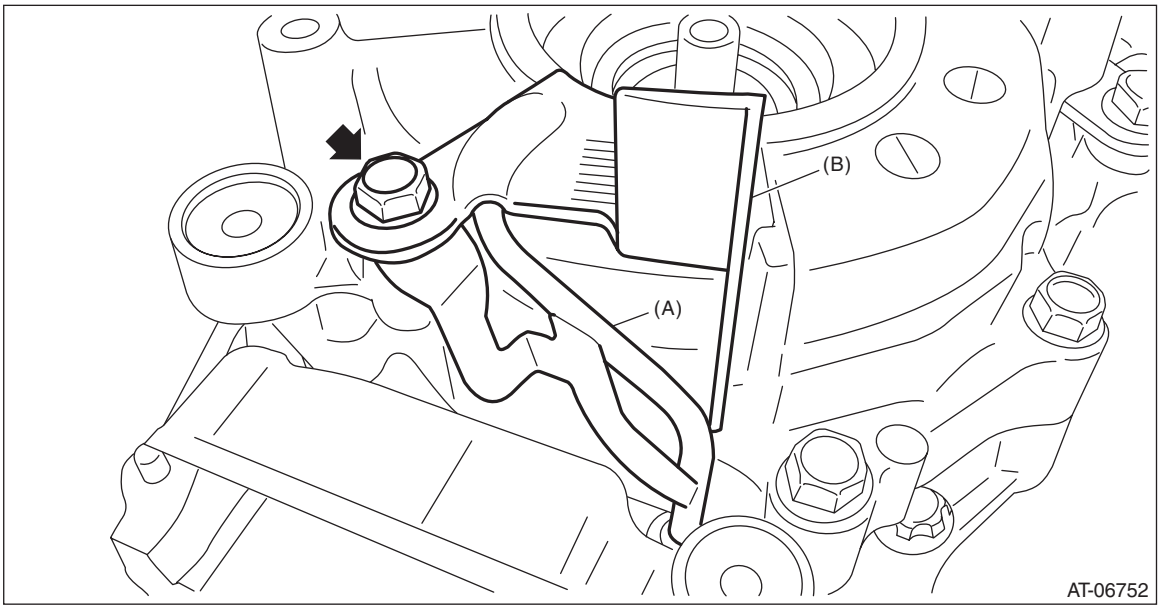

(A) Lubrication pipe
(B) Oil guide

21) Remove the O-ring from lubrication pipe.

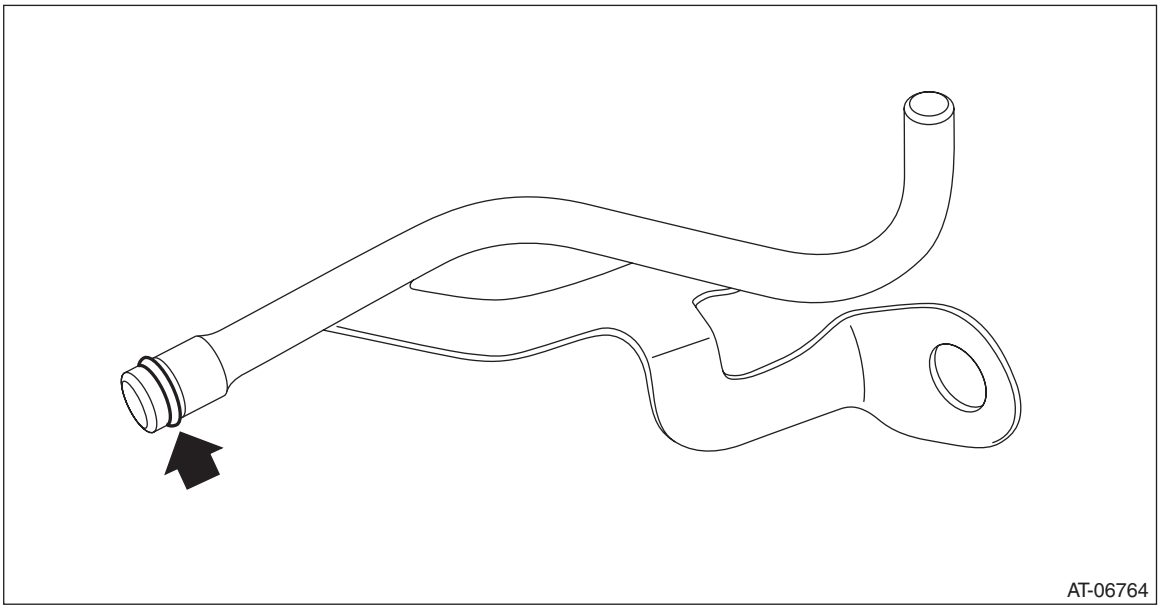

22) Remove the reverse brake assembly.

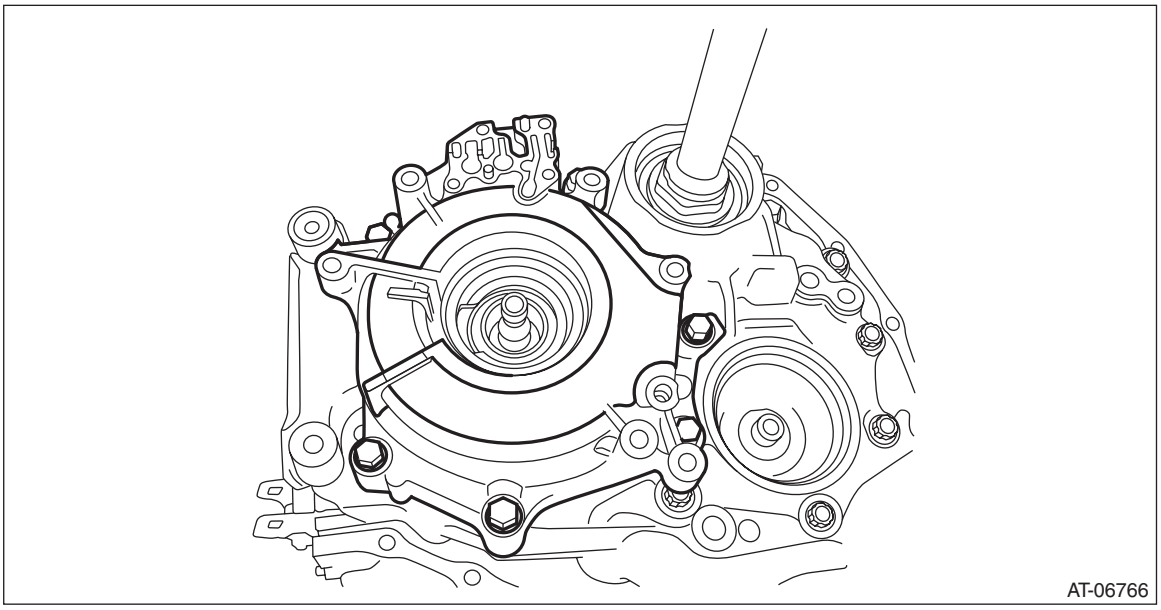

23) Remove the O-rings.

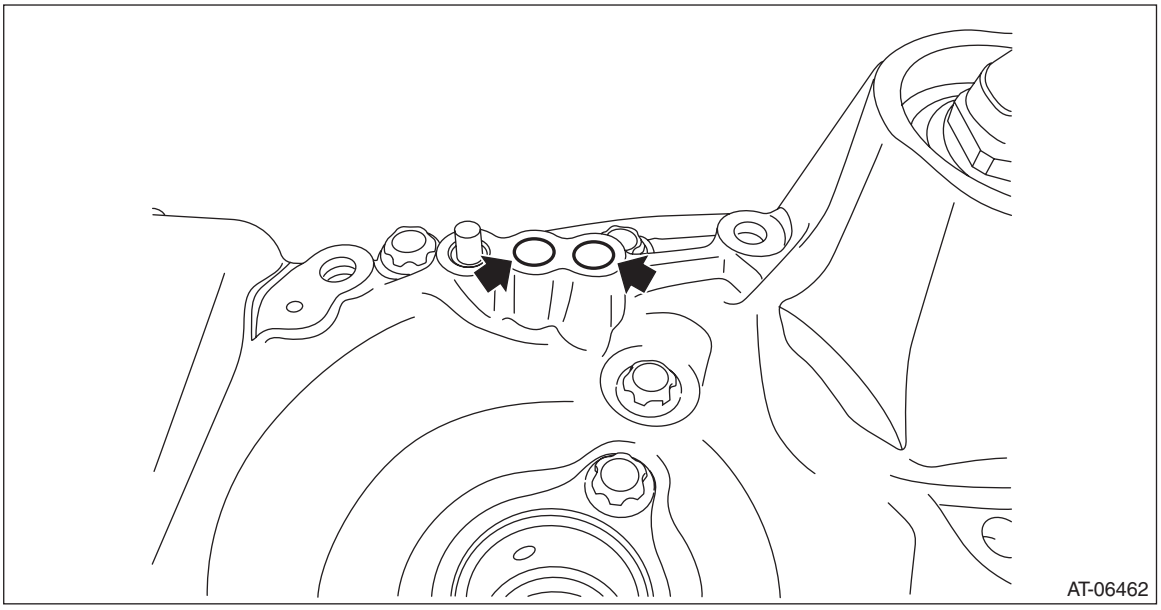

B: INSTALLATION

1) Select a washer. <Ref. to CVT(TR580)-315, ADJUSTMENT, Forward Clutch Assembly.>
2) Install the selected washer to the reverse brake housing.

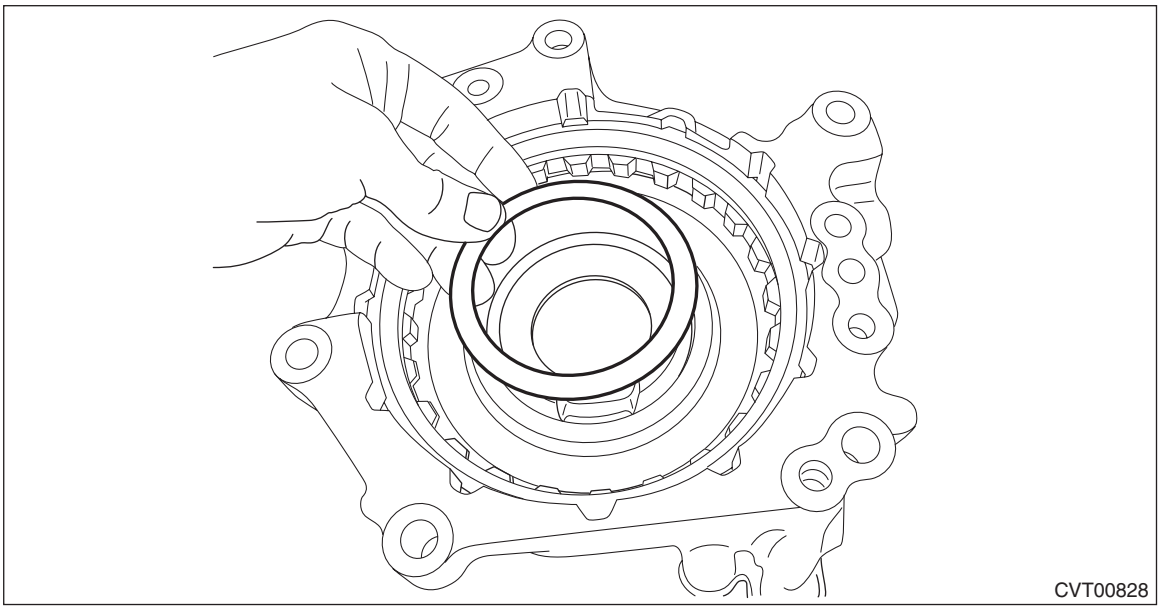

3) Install the thrust bearing to the reverse brake housing.

NOTE:
Face the temper color surface to the reverse brake side.

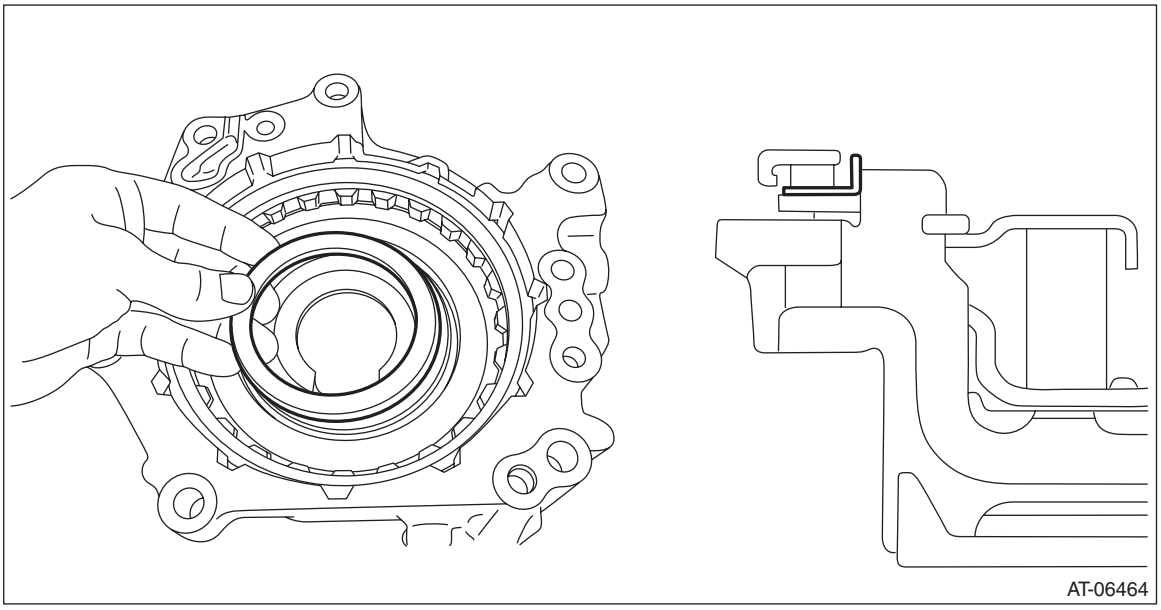

4) Remove the internal gear from the forward clutch assembly, and install it to the reverse brake housing.

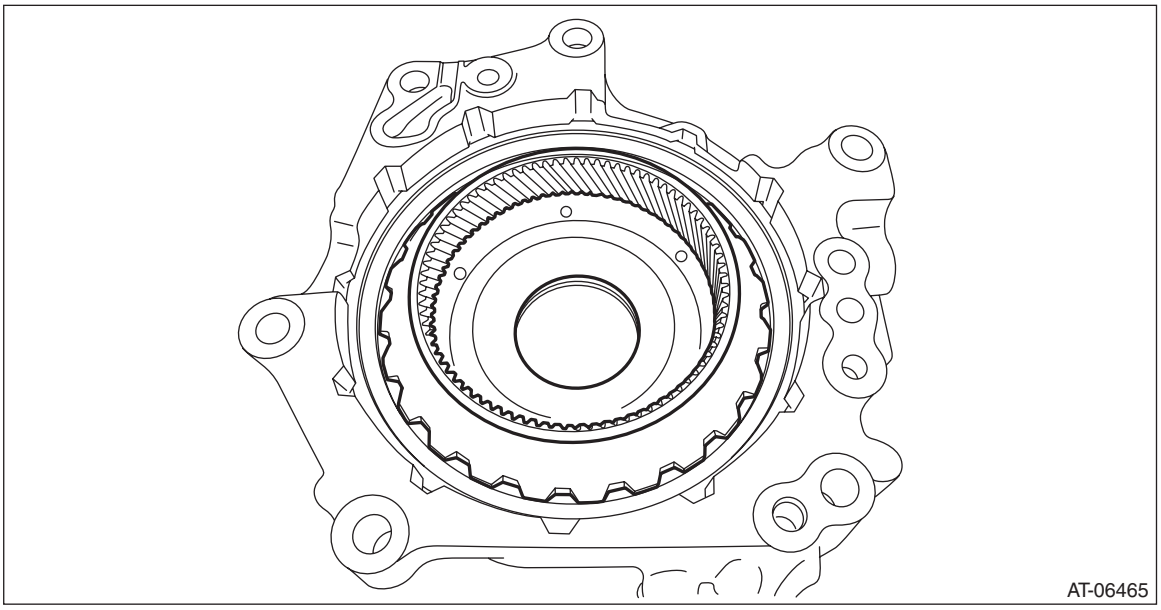

5) Install the O-rings.

NOTE:
- Install a new O-ring.
- Apply CVTF to the O-rings.

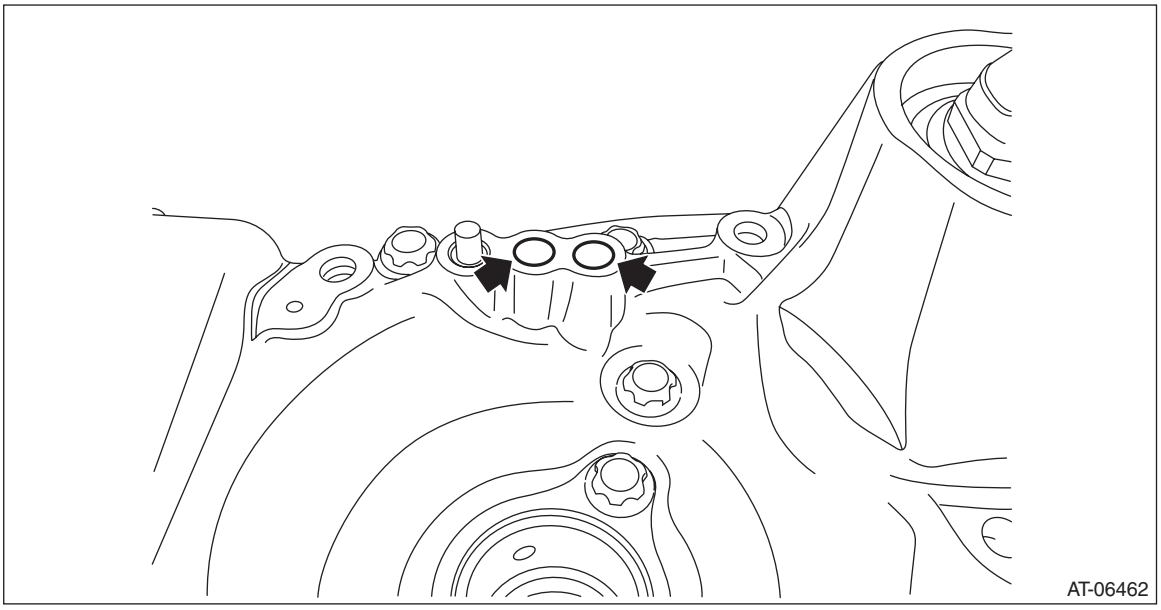

6) Install the reverse brake assembly and internal gear as a unit to the drive pinion retainer.

NOTE:
Slowly rotate the input shaft by hand to engage the internal gear and pinion gear of planetary carrier.

Tightening torque:
37 N·m (3.8 kgf-m, 27.3 ft-lb)

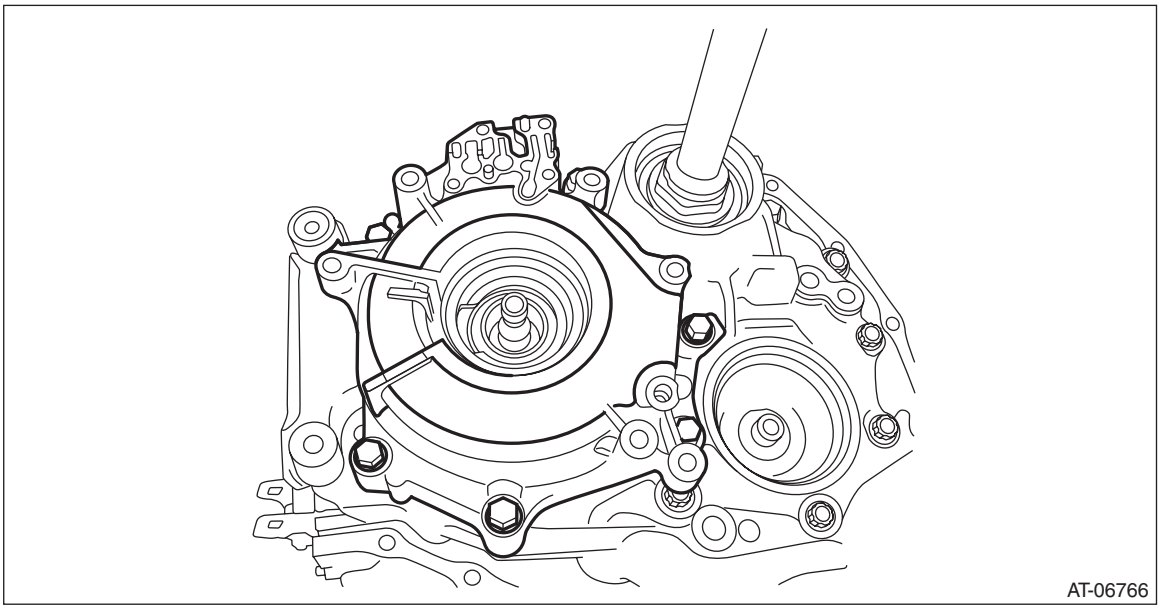

7) Install the O-ring to the lubrication pipe.

NOTE:
- Install a new O-ring.
- Apply CVTF to the O-rings.

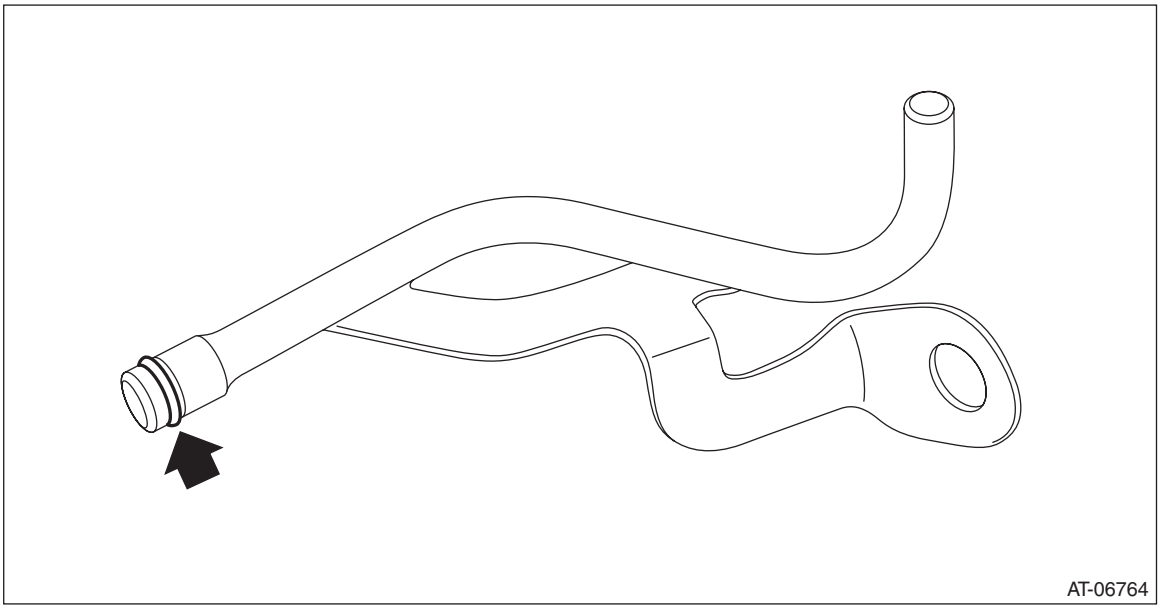

8) Install the lubrication pipe and oil guide.

Tightening torque:
16 N·m (1.6 kgf-m, 11.8 ft-lb)

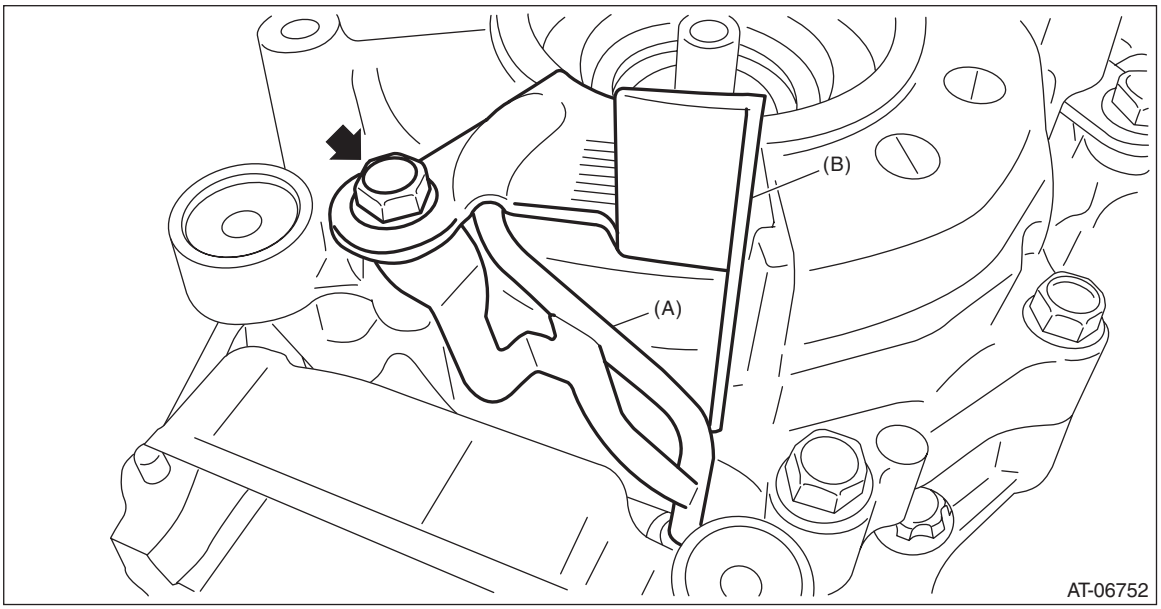

(A) Lubrication pipe
(B) Oil guide

9) Install the manual valve assembly and separator plate.

Tightening torque:
9 N·m (0.9 kgf-m, 6.6 ft-lb)

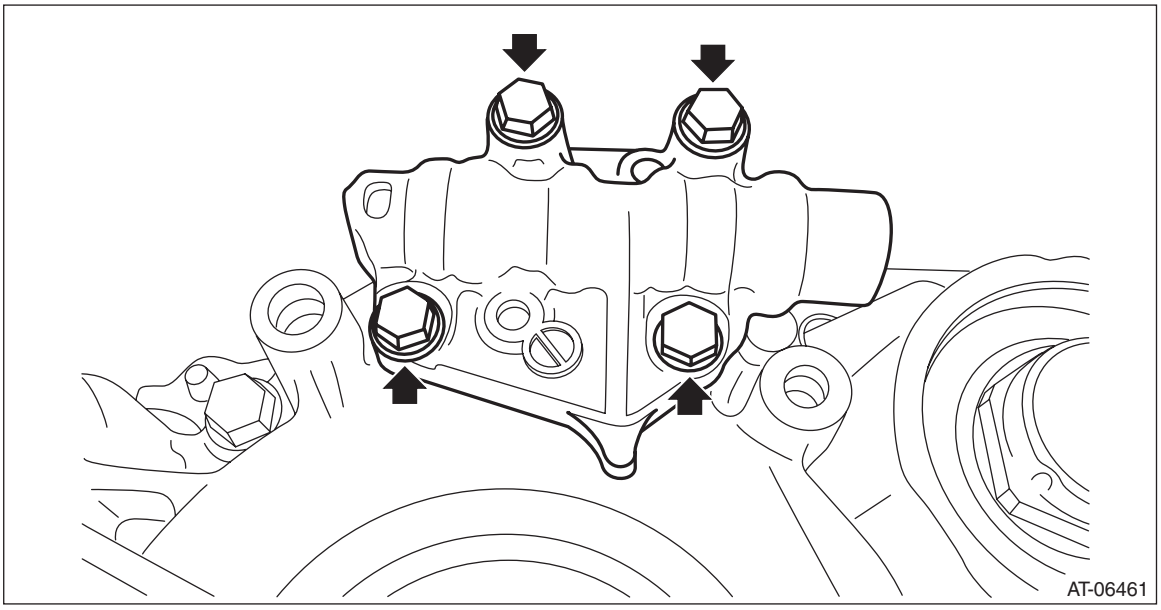

10) Install the primary pulley, secondary pulley and variator chain. <Ref. to CVT(TR580)-268, INSTALLATION, Primary Pulley and Secondary Pulley.>
11) Select shims for pulley alignment. <Ref. to CVT(TR580)-275, ADJUSTMENT, Primary Pulley and Secondary Pulley.>
12) Install the reduction drive gear. <Ref. to CVT(TR580)-257, INSTALLATION, Reduction Drive Gear.>
13) Install the transmission case. <Ref. to CVT(TR580)-240, INSTALLATION, Transmission Case.>
14) Install the transmission control device. <Ref. to CVT(TR580)-234, INSTALLATION, Transmission Control Device.>

15) Install the oil strainer and oil pan. <Ref. to CVT(TR580)-131, INSTALLATION, Oil Pan and Strainer.>
16) Install the reduction driven gear assembly. <Ref. to CVT(TR580)-223, INSTALLATION, Reduction Driven Gear.>
17) Install the transfer driven gear assembly. <Ref. to CVT(TR580)-219, INSTALLATION, Transfer Driven Gear.>
18) Install the transfer clutch assembly. <Ref. to CVT(TR580)-206, INSTALLATION, Transfer Clutch.>
19) Install the parking pawl. <Ref. to CVT(TR580)-222, INSTALLATION, Parking Pawl.>
20) Install the extension case. <Ref. to CVT(TR580)-201, INSTALLATION, Extension Case.>
21) Install the inhibitor switch. <Ref. to CVT(TR580)-111, INSTALLATION, Inhibitor Switch.>
22) Install the secondary speed sensor. <Ref. to CVT(TR580)-118, INSTALLATION, Secondary Speed Sensor.>
23) Install the primary speed sensor. <Ref. to CVT(TR580)-124, INSTALLATION, Primary Speed Sensor.>
24) Install the turbine speed sensor. <Ref. to CVT(TR580)-113, INSTALLATION, Turbine Speed Sensor.>
25) Install the transmission harness. <Ref. to CVT(TR580)-150, INSTALLATION, Transmission Harness.>
26) Install the control valve body. <Ref. to CVT(TR580)-139, INSTALLATION, Control Valve Body.>
27) Install the air breather hose. <Ref. to CVT(TR580)-192, INSTALLATION, Air Breather Hose.>
28) Install the transmission assembly. <Ref. to CVT(TR580)-79, INSTALLATION, Automatic Transmission Assembly.>

C: DISASSEMBLY

1) Remove the snap ring.
2) Remove the retaining plate, drive plate, driven plate and dish plate.

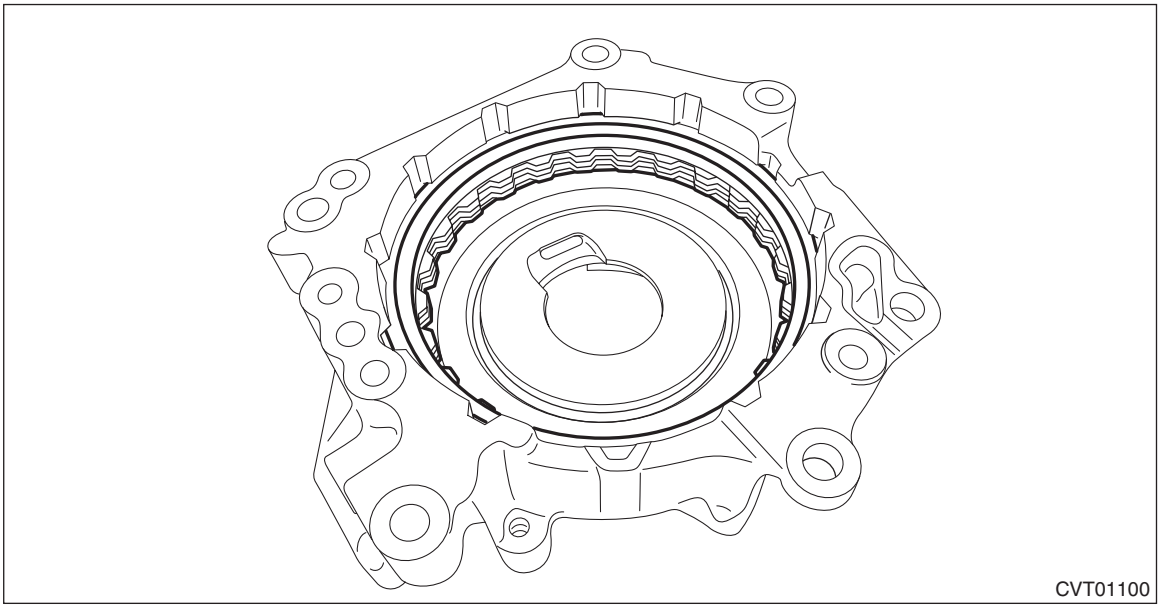

3) Compress the return spring using the ST to remove the snap ring.
ST 18762AA001 COMPRESSOR SPECIAL TOOL

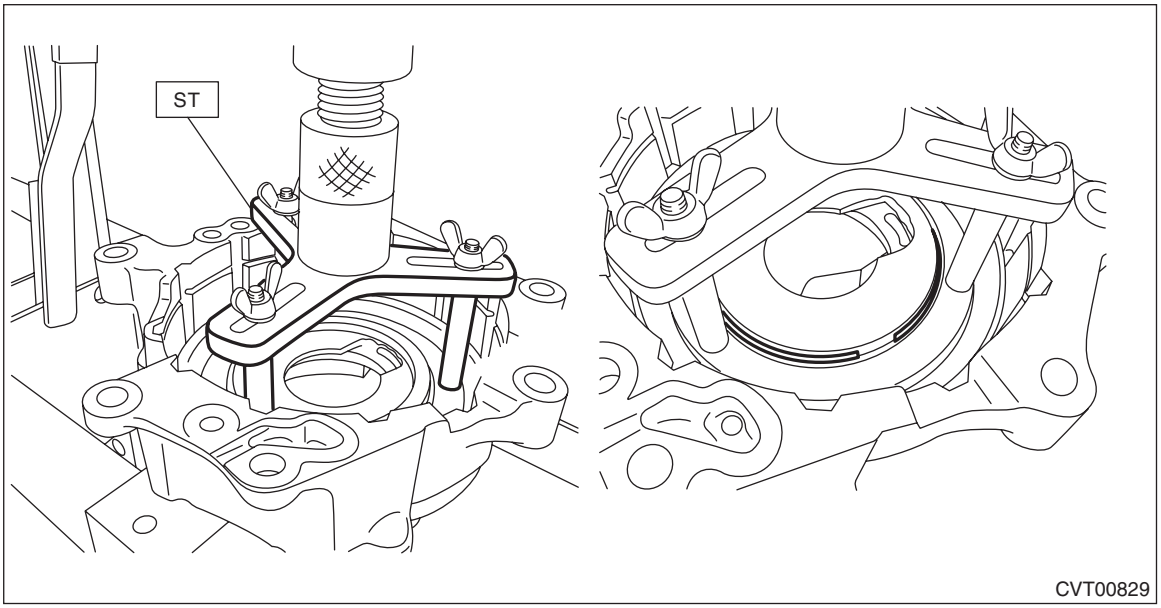

4) Using the ST, remove the snap ring and spring retainer.

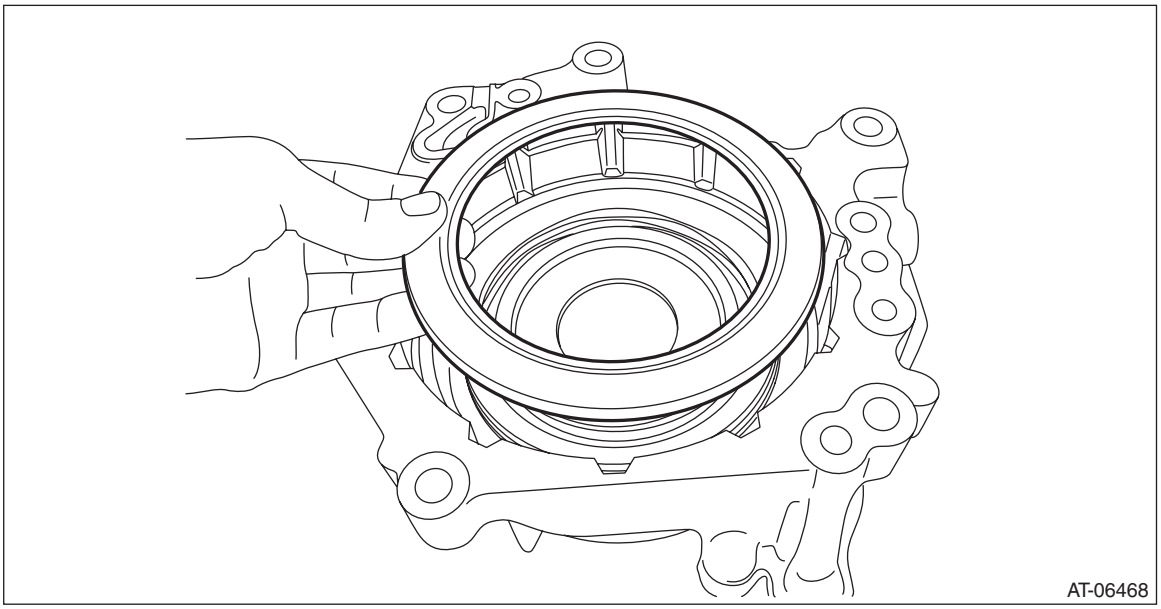

5) Remove the return spring.

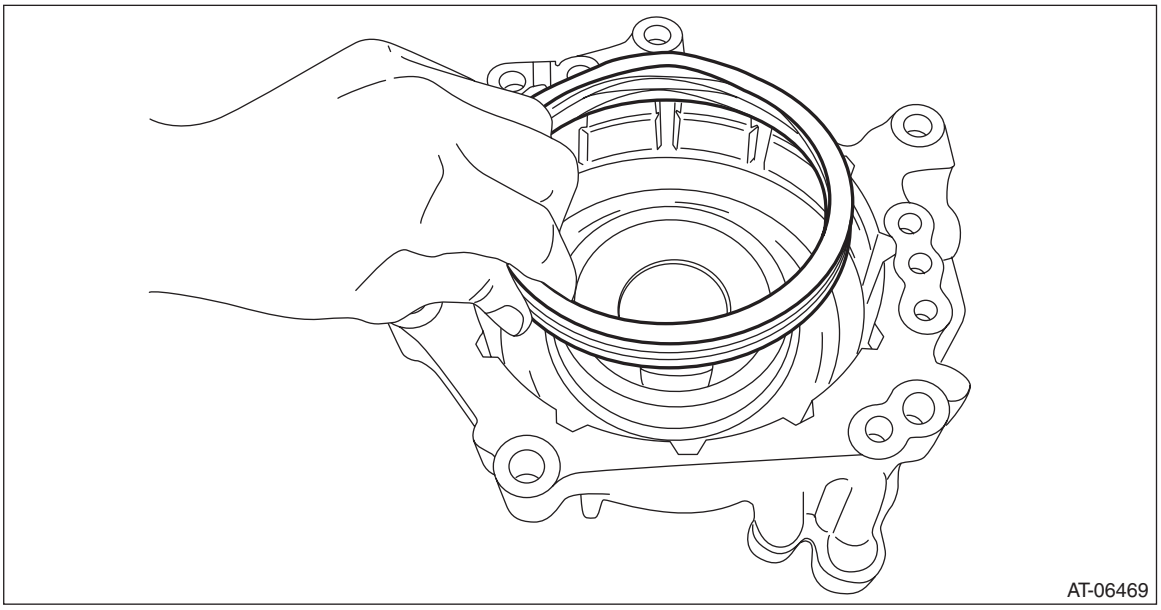

6) Remove the reverse brake piston by blowing compressed air intermittently from reverse brake housing hole.

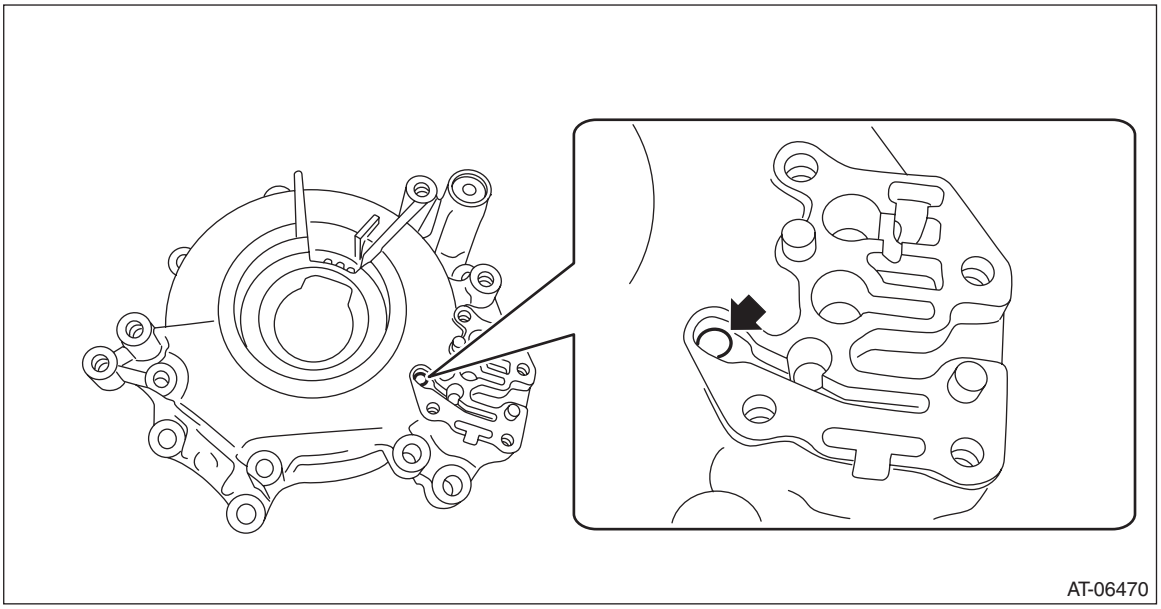

D: ASSEMBLY

1) Install the reverse brake piston.

NOTE:
Apply CVTF to the sealing area of reverse brake piston.

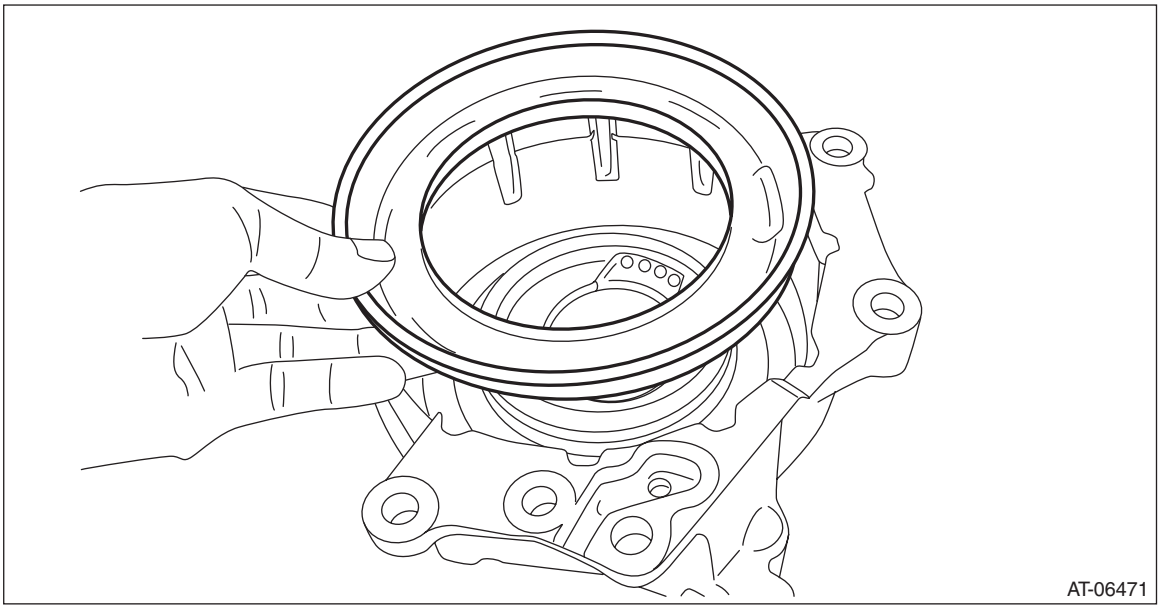

2) Install the return spring.

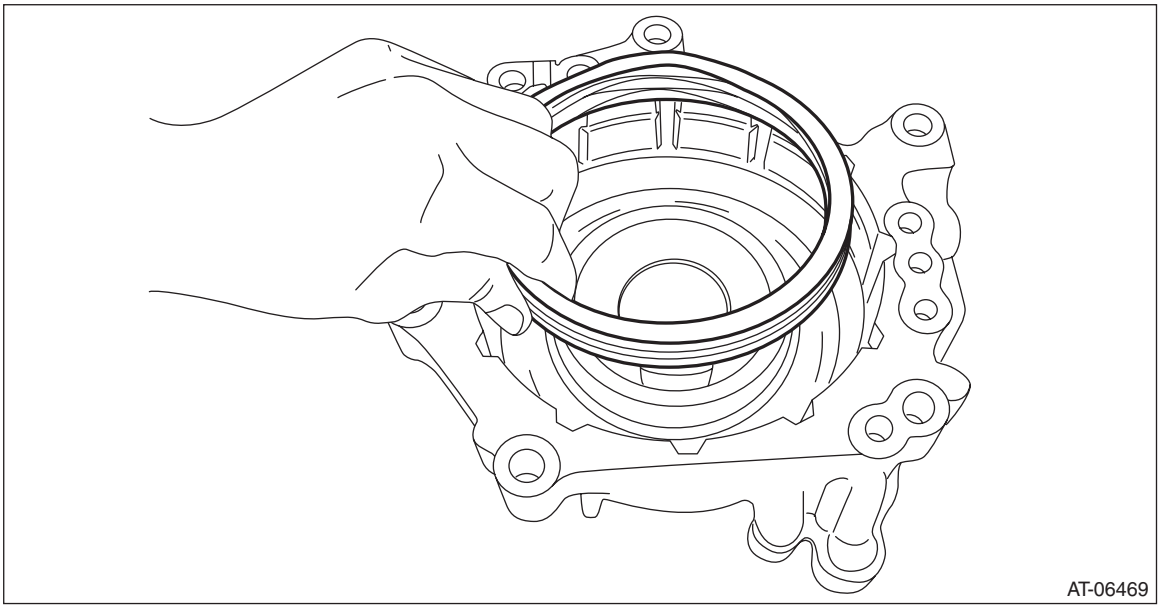

3) Install the spring retainer.

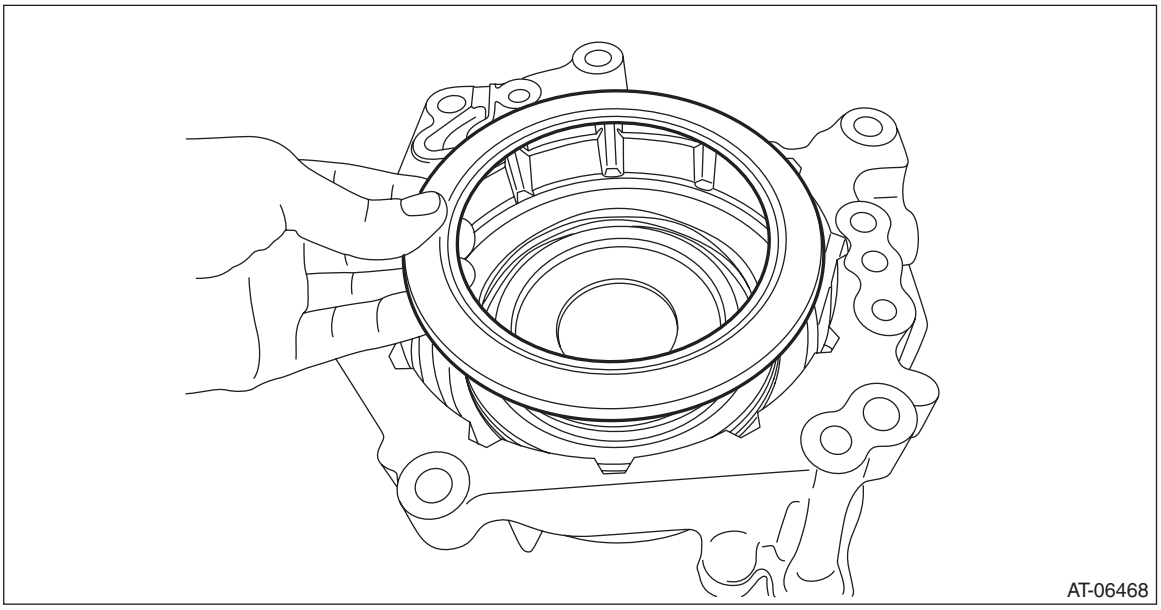

4) Compress the return spring using the ST to install the snap ring.
ST 18762AA001 COMPRESSOR SPECIAL TOOL

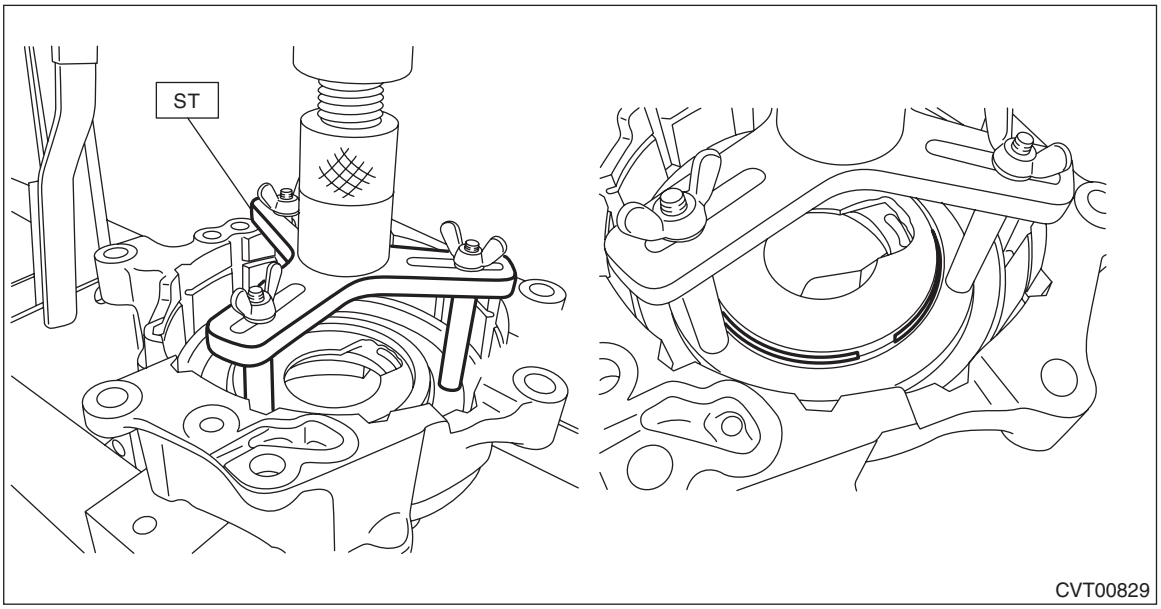

5) Check the operation of reverse brake piston by blowing compressed air intermittently from reverse brake housing hole.

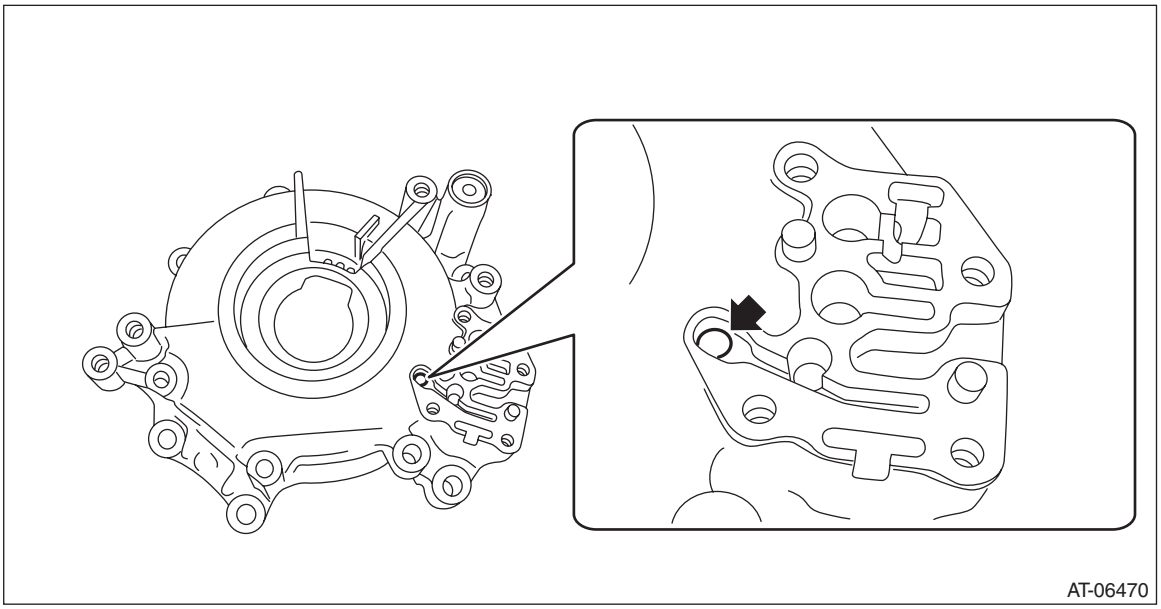

6) Place the driven plate, drive plate and retaining plate neatly in this order on surface table.
7) Set the dial gauge to retaining plate, and read its scale.

NOTE:
The value, which is read in the gauge at this time, is zero point.

8) Scale and record the weight "Z" of a flat board which will be put on retaining plate.

NOTE:
- Use a stiff board which does not bend against load as a flat board to be put on retaining plate.
- Use a flat board weighing less than 29 N (3.0 kgf, 6.5 lb).

9) Put the flat board on retaining plate.

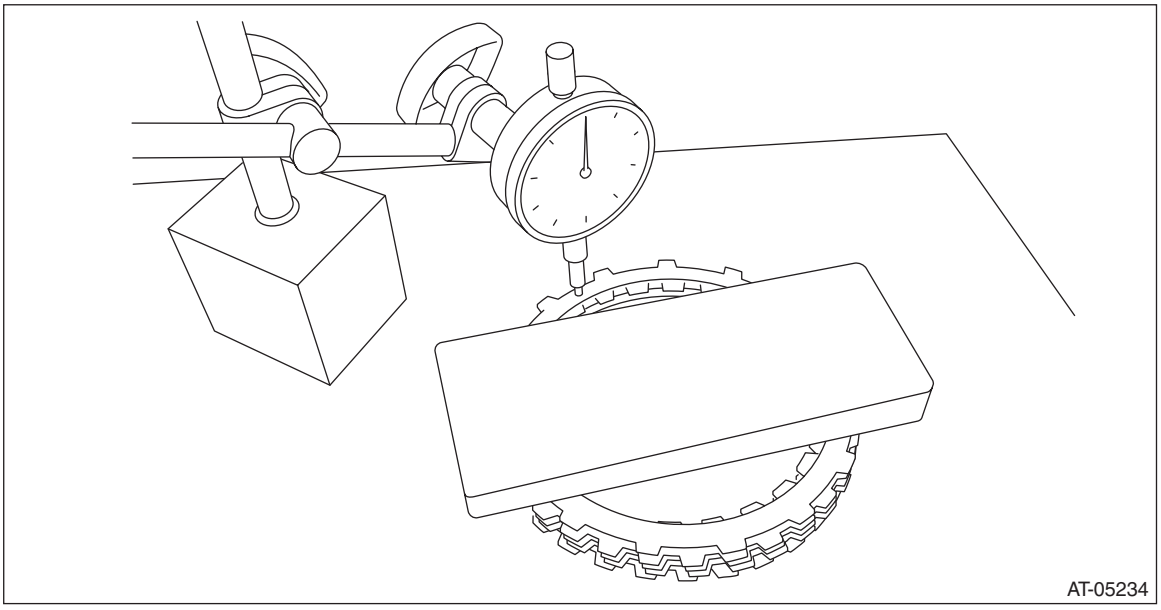

10) Using the following formula, read the push/pull gauge and calculate "N".
N = 29 N (3.0 kgf, 6.5 lb) – Z
29 N (3.0 kgf, 6.5 lb): Load applied to clutch plate
Z: Flat board weight

11) Press the center of retaining plate by applying a force of “N” using push/pull gauge, and then measure and record the compression amount “A”.

NOTE:
Measure at four points with a 90° interval and calculate the average.

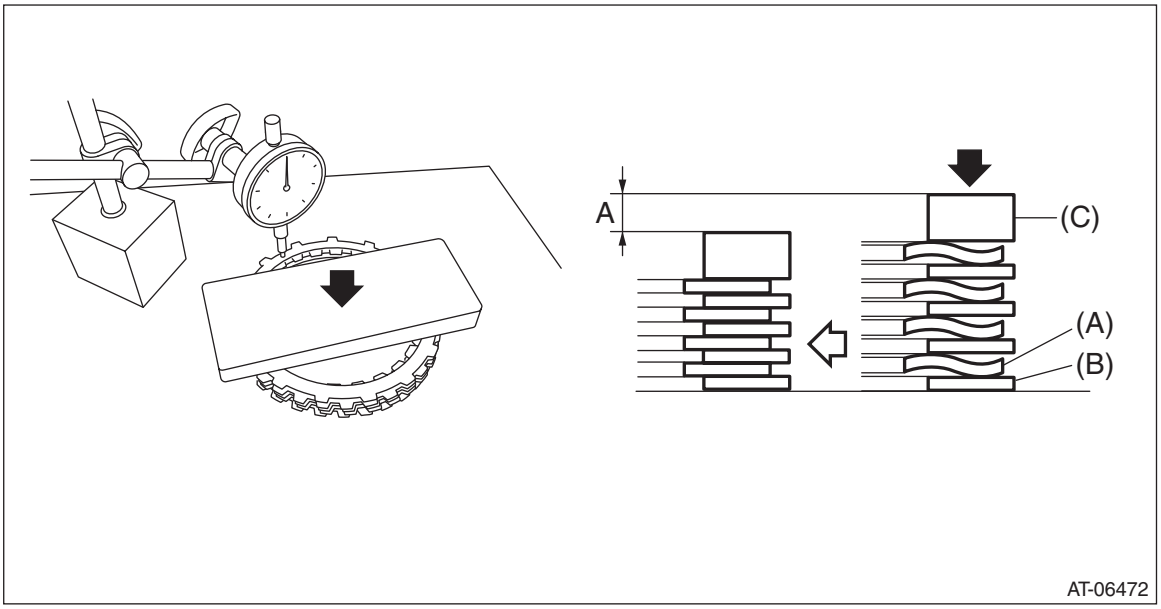

(A) Drive plate
(B) Driven plate
(C) Retaining plate

12) Install the dish plate, drive plate, driven plate, retaining plate and snap ring to the reverse brake housing.

NOTE:
Install the dish plate in the correct direction.

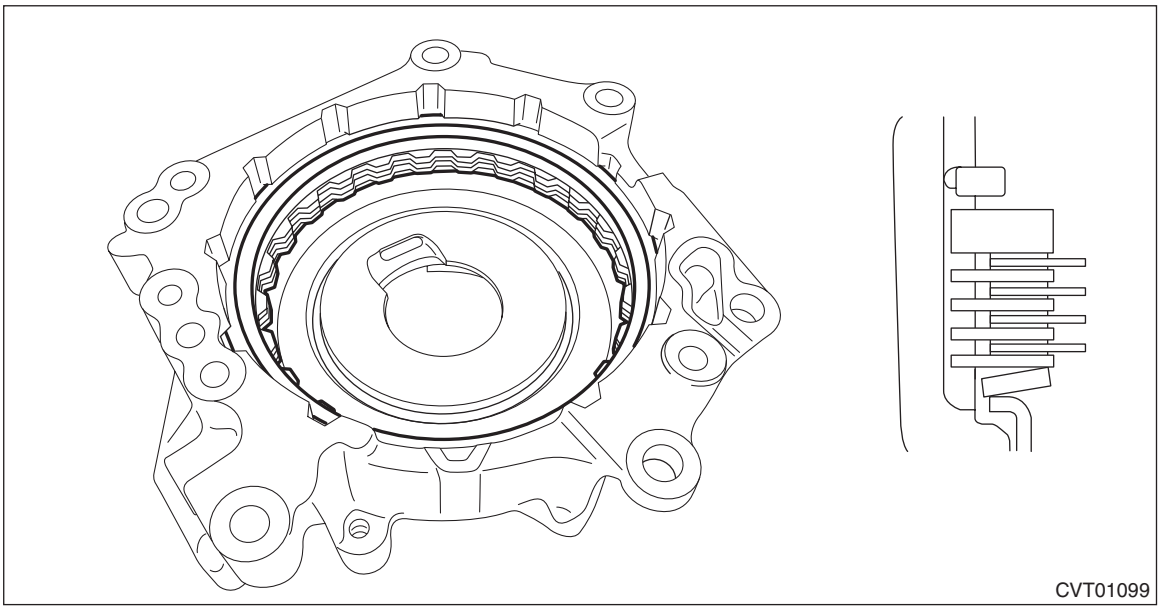

13) Measure and record the clearance “B” between the retaining plate and snap ring.

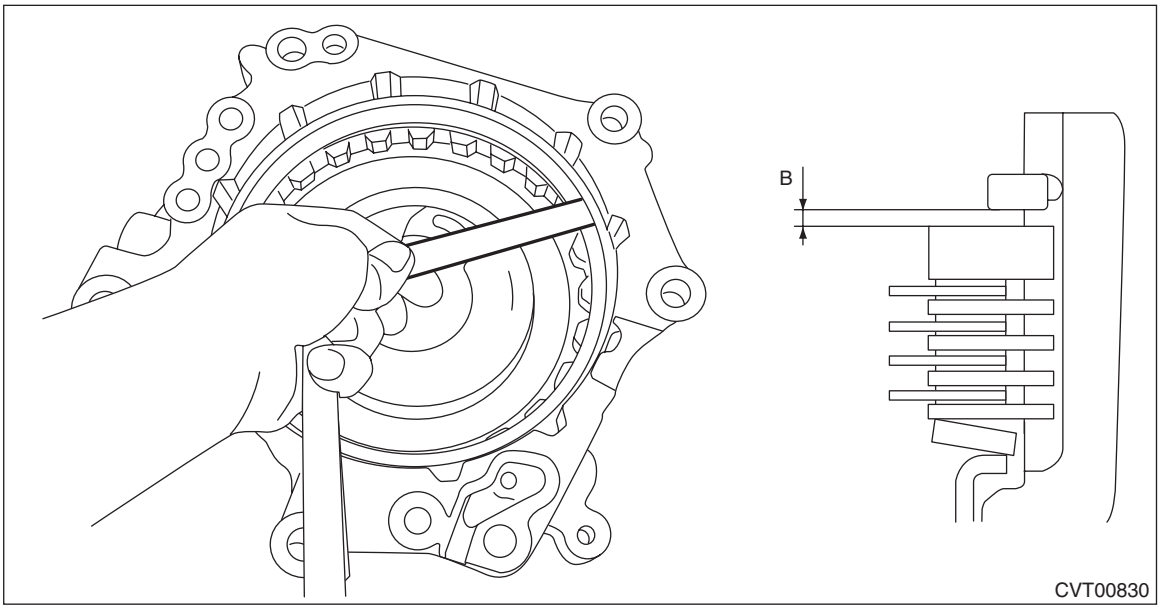

14) Piston stroke calculation
Calculate with A and B dimensions recorded before. If it exceeds the limit, replace with a new drive plate and adjust within the initial standard value.
S mm (in) = A + B
S: Piston stroke
A: Compression amount of drive plate and dish plate
B: Clearance between retaining plate and snap ring

Initial standard:
2.3 — 2.7 mm (0.091 — 0.106 in)

Limit thickness:
2.9 mm (0.114 in)

Retaining plate	
Part No.	Thickness mm (in)
31567AB750	4.2 (0.165)
31567AB800	4.4 (0.173)
31567AB810	4.6 (0.181)
31567AB820	4.8 (0.189)

E: INSPECTION

- Inspect the drive plate facing for wear and damage.
- Check the driven plate for discoloration (burnt color).
- Check for worn snap ring, fatigue or damaged return spring or deformed spring retainer.
- Make sure the clearance between retaining plate and snap ring of reverse brake is within the limit. If it exceeds the limit, replace with a new drive plate and select and adjust the retaining plate within the initial standard value. <Ref. to CVT(TR580)-292, ASSEMBLY, Reverse Brake Assembly.>

44.Forward Clutch Assembly

A: REMOVAL

1) Remove the transmission assembly. <Ref. to CVT(TR580)-63, REMOVAL, Automatic Transmission Assembly.>
2) Remove the air breather hose. <Ref. to CVT(TR580)-190, REMOVAL, Air Breather Hose.>
3) Remove the control valve body. <Ref. to CVT(TR580)-133, REMOVAL, Control Valve Body.>
4) Remove the transmission harness. <Ref. to CVT(TR580)-147, REMOVAL, Transmission Harness.>
5) Remove the turbine speed sensor. <Ref. to CVT(TR580)-113, REMOVAL, Turbine Speed Sensor.>
6) Remove the secondary speed sensor. <Ref. to CVT(TR580)-118, REMOVAL, Secondary Speed Sensor.>
7) Remove the primary speed sensor. <Ref. to CVT(TR580)-123, REMOVAL, Primary Speed Sensor.>
8) Remove the inhibitor switch. <Ref. to CVT(TR580)-109, REMOVAL, Inhibitor Switch.>
9) Remove the extension case. <Ref. to CVT(TR580)-200, REMOVAL, Extension Case.>
10) Remove the transfer clutch assembly. <Ref. to CVT(TR580)-204, REMOVAL, Transfer Clutch.>
11) Remove the transfer driven gear assembly. <Ref. to CVT(TR580)-218, REMOVAL, Transfer Driven Gear.>
12) Remove the parking pawl. <Ref. to CVT(TR580)-221, REMOVAL, Parking Pawl.>
13) Remove the reduction driven gear assembly. <Ref. to CVT(TR580)-223, REMOVAL, Reduction Driven Gear.>
14) Remove the oil pan and oil strainer. <Ref. to CVT(TR580)-130, REMOVAL, Oil Pan and Strainer.>
15) Remove the transmission control device. <Ref. to CVT(TR580)-231, REMOVAL, Transmission Control Device.>
16) Remove the transmission case. <Ref. to CVT(TR580)-237, REMOVAL, Transmission Case.>
17) Remove the reduction drive gear. <Ref. to CVT(TR580)-256, REMOVAL, Reduction Drive Gear.>
18) Remove the primary pulley, secondary pulley and variator chain. <Ref. to CVT(TR580)-261, REMOVAL, Primary Pulley and Secondary Pulley.>
19) Remove the reverse brake assembly. <Ref. to CVT(TR580)-282, REMOVAL, Reverse Brake Assembly.>
20) Remove the internal gear.

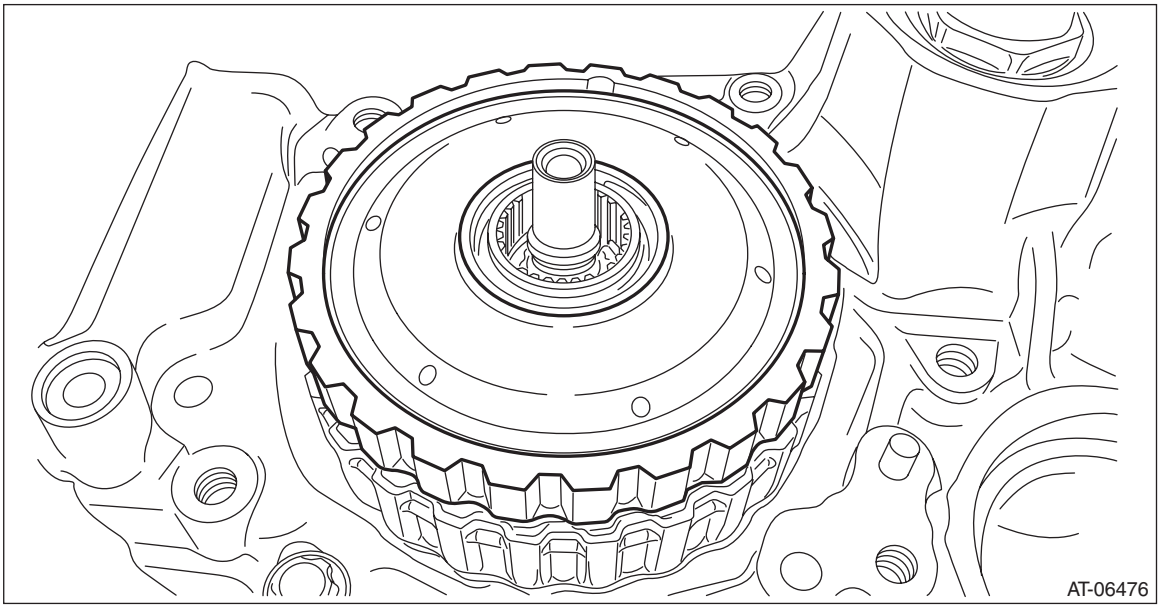

21) Remove the thrust bearing.

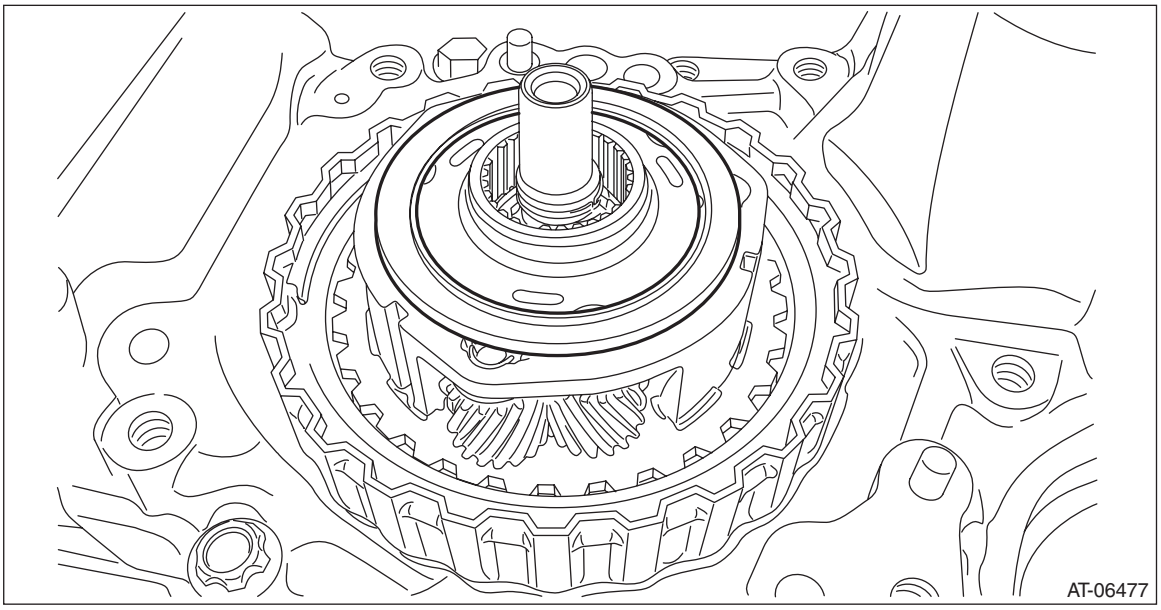

22) Remove the planetary carrier.

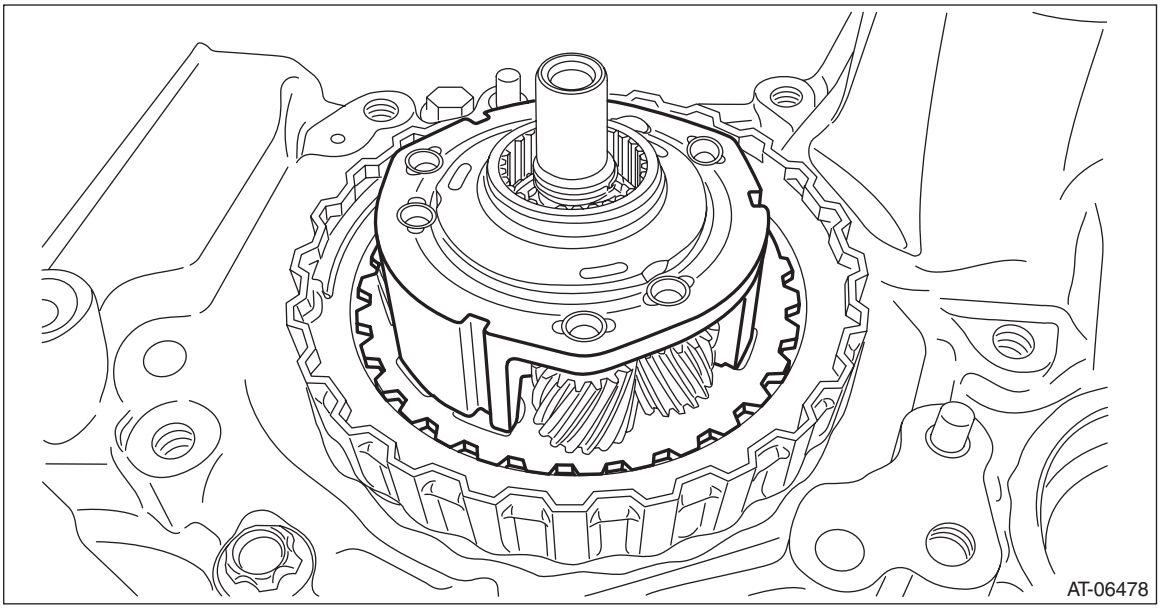

23) Remove the thrust bearing and sun gear.

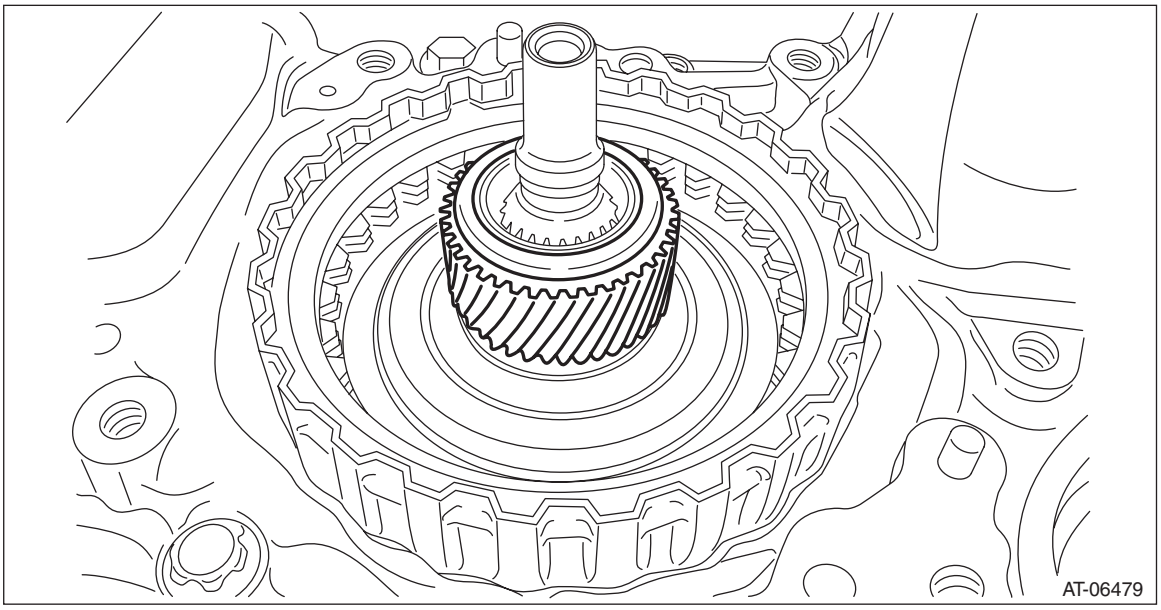

24) Remove the forward clutch assembly.

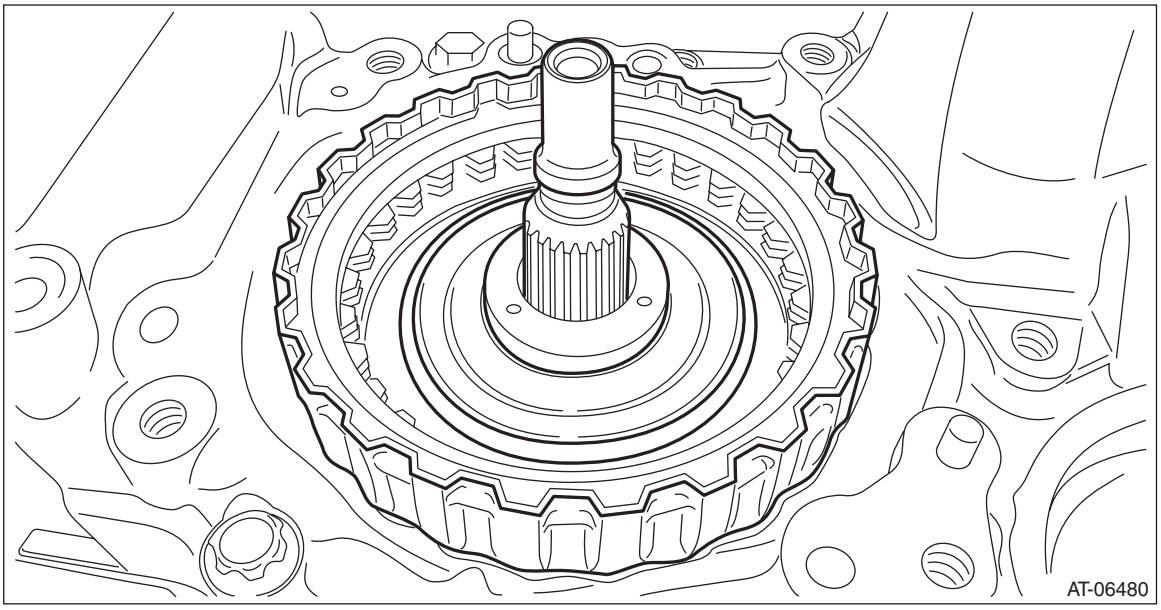

25) Remove the thrust bearing and seal ring.

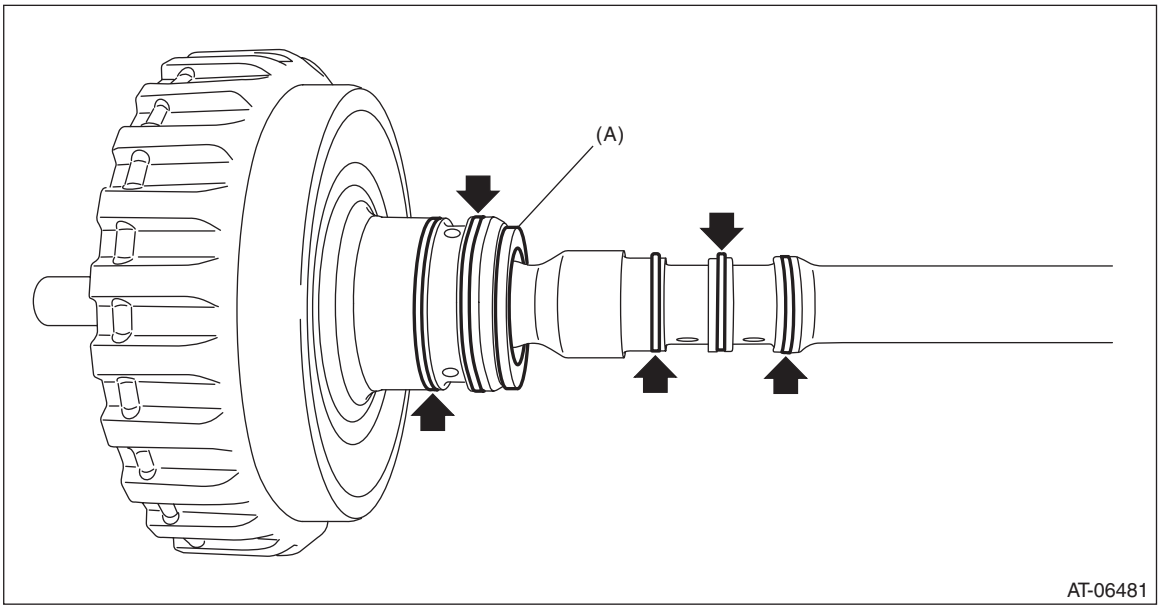

(A) Thrust bearing

B: INSTALLATION

1) Install the thrust bearing to the converter case.

NOTE:
Face the temper color surface to the converter case side.

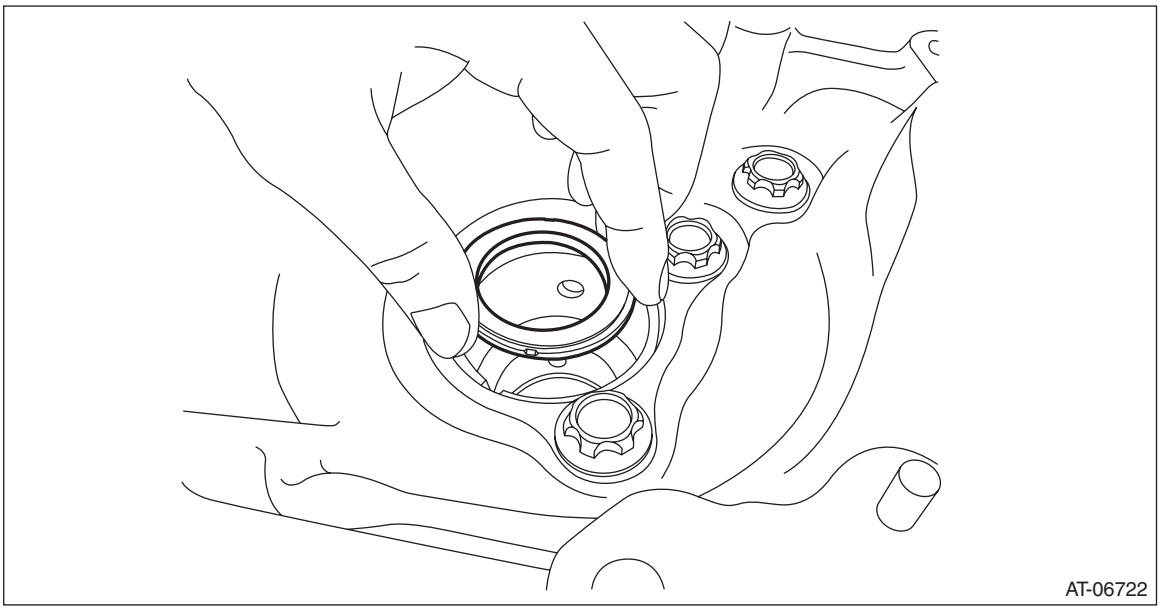

2) Install the seal ring to the input shaft.

NOTE:
- Use new seal rings.
- When installing the seal rings, do not expand the seal rings too much.
- Apply CVTF to the seal rings.

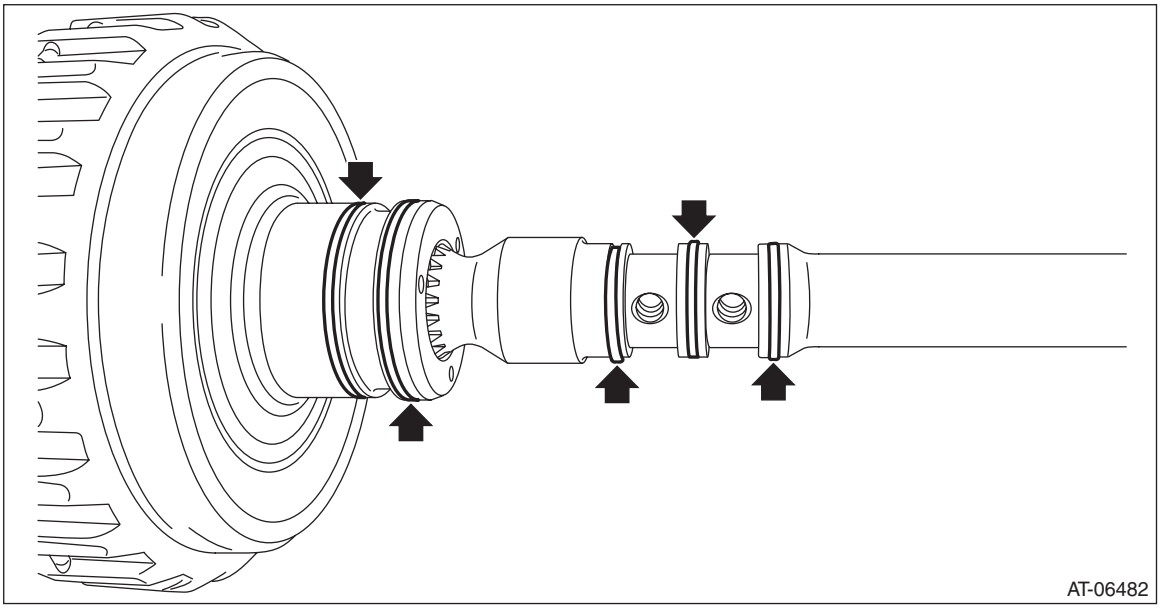

3) Install the forward clutch assembly to the converter case.

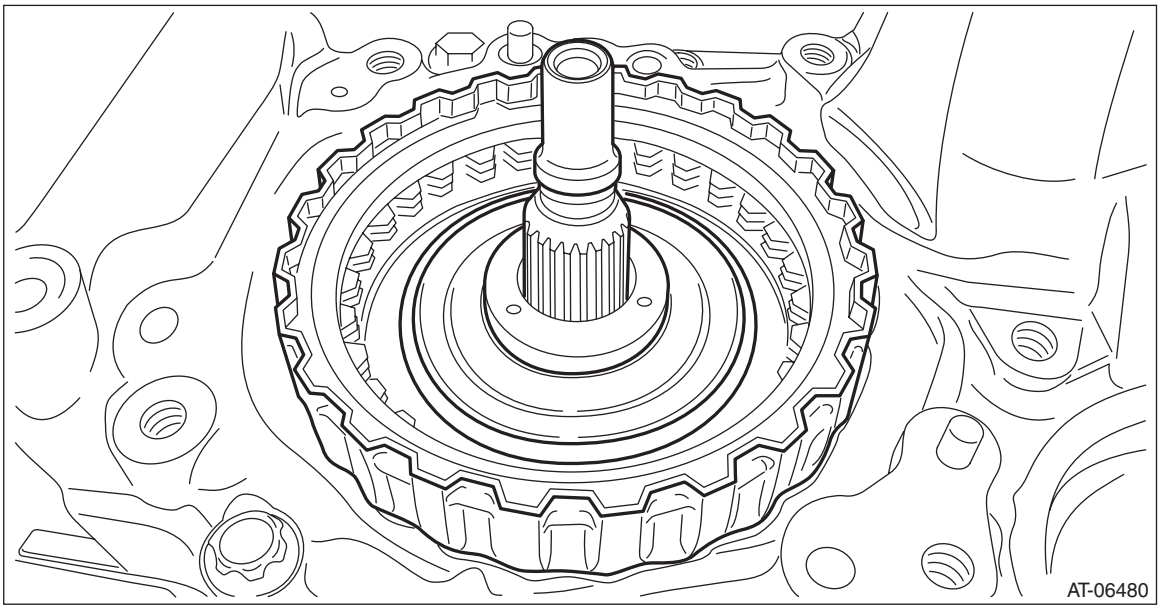

4) Install the sun gear.

NOTE:
Face the end face of the sun gear to the reverse brake side as shown in the figure.

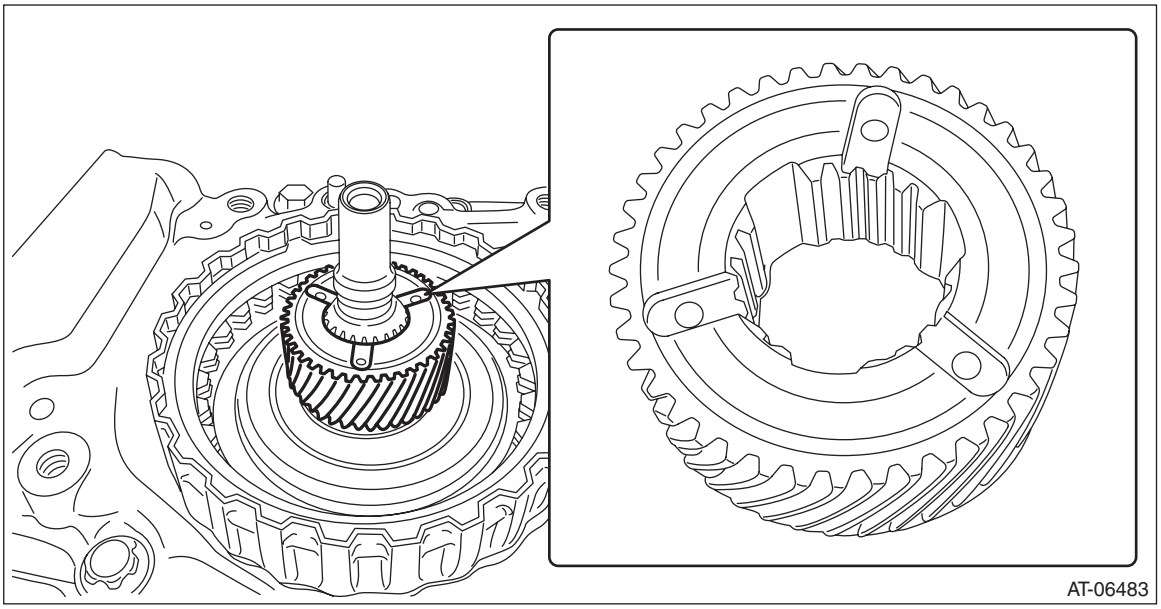

5) Install the thrust bearing to the sun gear.

NOTE:
Face the temper color surface to the reverse brake side.

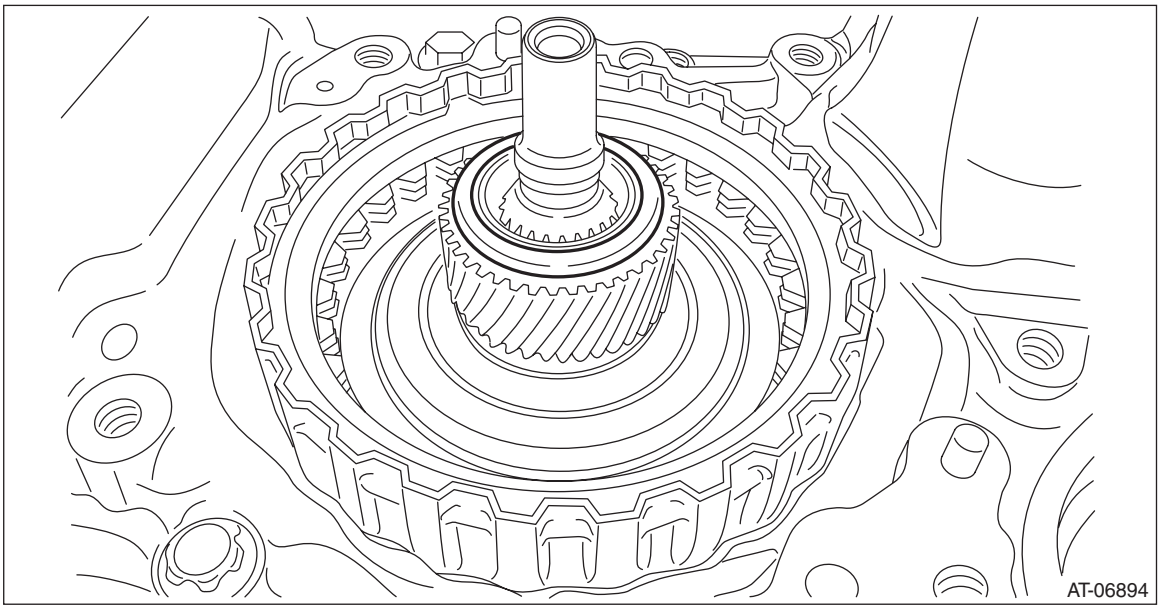

6) Install the planetary carrier.

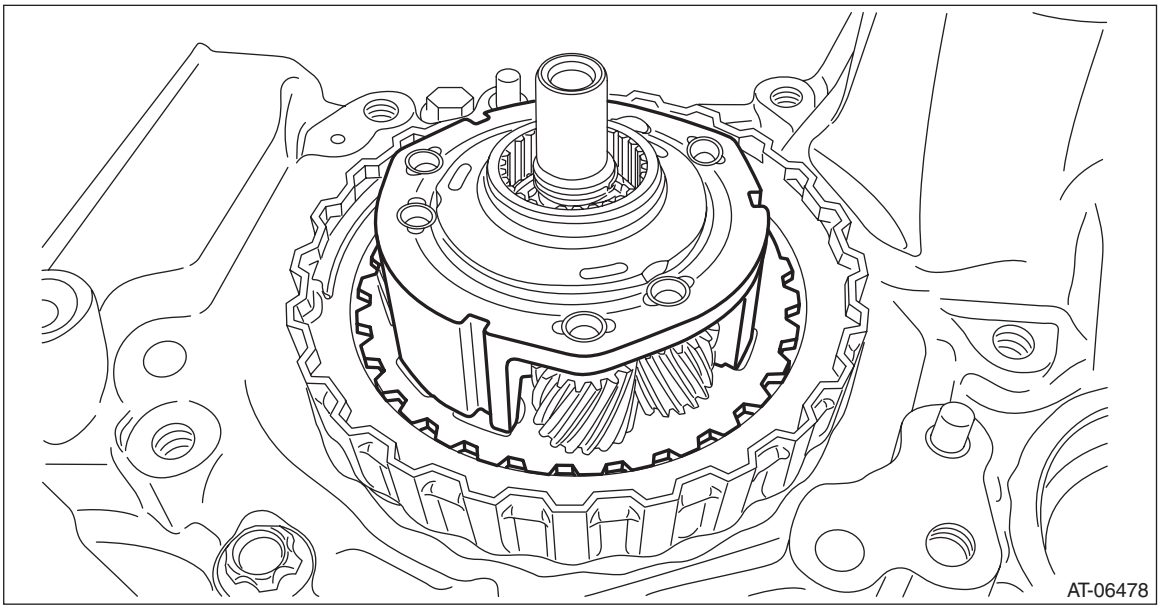

7) Install the thrust bearing.

NOTE:
Face the temper color surface to the reverse brake side.

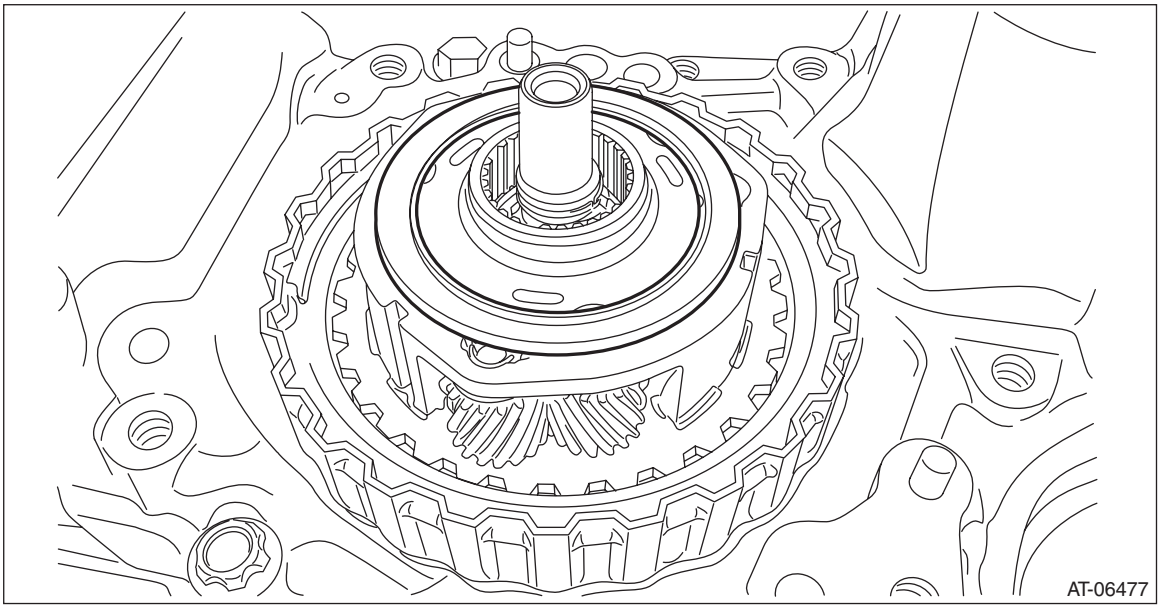

8) Install the internal gear.

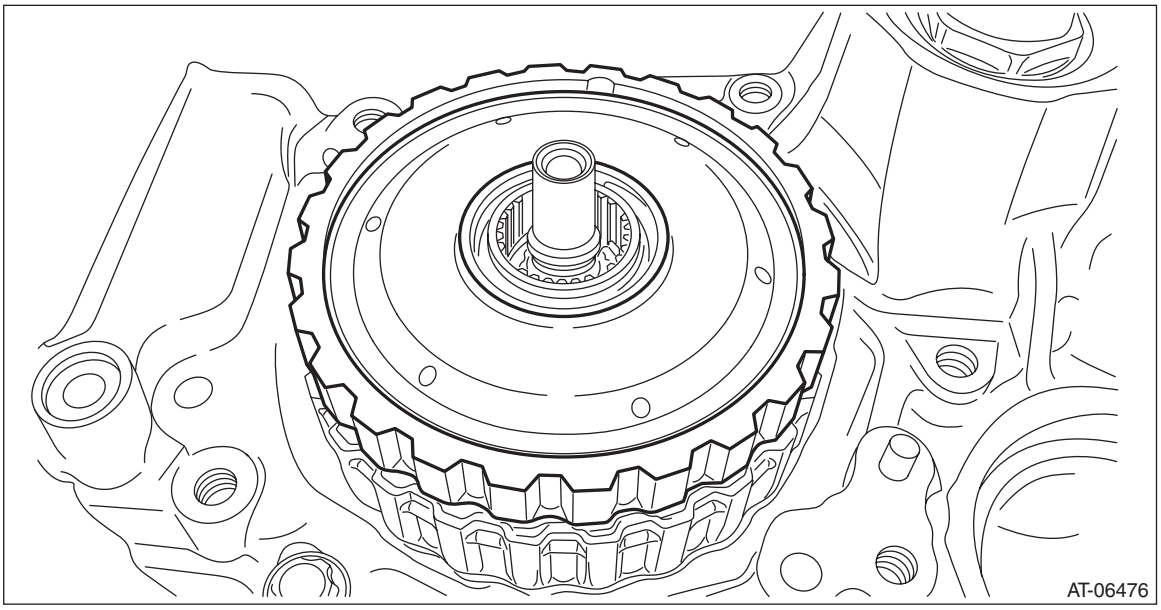

9) Install the thrust bearing to the internal gear.

NOTE:
Face the temper color surface to the reverse brake side.

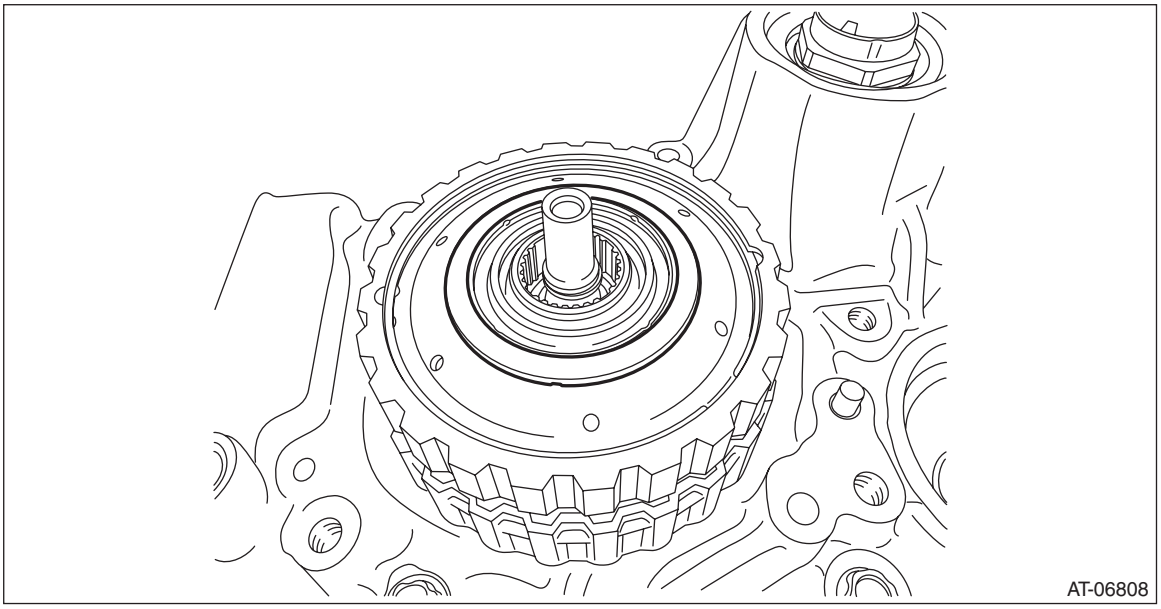

10) Select a washer. <Ref. to CVT(TR580)-315, ADJUSTMENT, Forward Clutch Assembly.>
11) Install the reverse brake assembly. <Ref. to CVT(TR580)-285, INSTALLATION, Reverse Brake Assembly.>
12) Install the primary pulley, secondary pulley and variator chain. <Ref. to CVT(TR580)-268, INSTALLATION, Primary Pulley and Secondary Pulley.>
13) Install the reduction drive gear. <Ref. to CVT(TR580)-257, INSTALLATION, Reduction Drive Gear.>
14) Install the transmission case. <Ref. to CVT(TR580)-240, INSTALLATION, Transmission Case.>
15) Install the transmission control device. <Ref. to CVT(TR580)-234, INSTALLATION, Transmission Control Device.>
16) Install the oil strainer and oil pan. <Ref. to CVT(TR580)-131, INSTALLATION, Oil Pan and Strainer.>
17) Install the reduction driven gear assembly. <Ref. to CVT(TR580)-223, INSTALLATION, Reduction Driven Gear.>
18) Install the transfer driven gear assembly. <Ref. to CVT(TR580)-219, INSTALLATION, Transfer Driven Gear.>

19) Install the transfer clutch assembly. <Ref. to CVT(TR580)-206, INSTALLATION, Transfer Clutch.>
20) Install the parking pawl. <Ref. to CVT(TR580)-222, INSTALLATION, Parking Pawl.>
21) Install the extension case. <Ref. to CVT(TR580)-201, INSTALLATION, Extension Case.>
22) Install the inhibitor switch. <Ref. to CVT(TR580)-111, INSTALLATION, Inhibitor Switch.>
23) Install the secondary speed sensor. <Ref. to CVT(TR580)-118, INSTALLATION, Secondary Speed Sensor.>
24) Install the primary speed sensor. <Ref. to CVT(TR580)-124, INSTALLATION, Primary Speed Sensor.>
25) Install the turbine speed sensor. <Ref. to CVT(TR580)-113, INSTALLATION, Turbine Speed Sensor.>
26) Install the transmission harness. <Ref. to CVT(TR580)-150, INSTALLATION, Transmission Harness.>
27) Install the control valve body. <Ref. to CVT(TR580)-139, INSTALLATION, Control Valve Body.>
28) Install the air breather hose. <Ref. to CVT(TR580)-192, INSTALLATION, Air Breather Hose.>
29) Install the transmission assembly. <Ref. to CVT(TR580)-79, INSTALLATION, Automatic Transmission Assembly.>

C: DISASSEMBLY

1. FORWARD CLUTCH ASSEMBLY

1) Remove the snap ring.
2) Remove the retaining plate, drive plate, driven plate and dish plate.

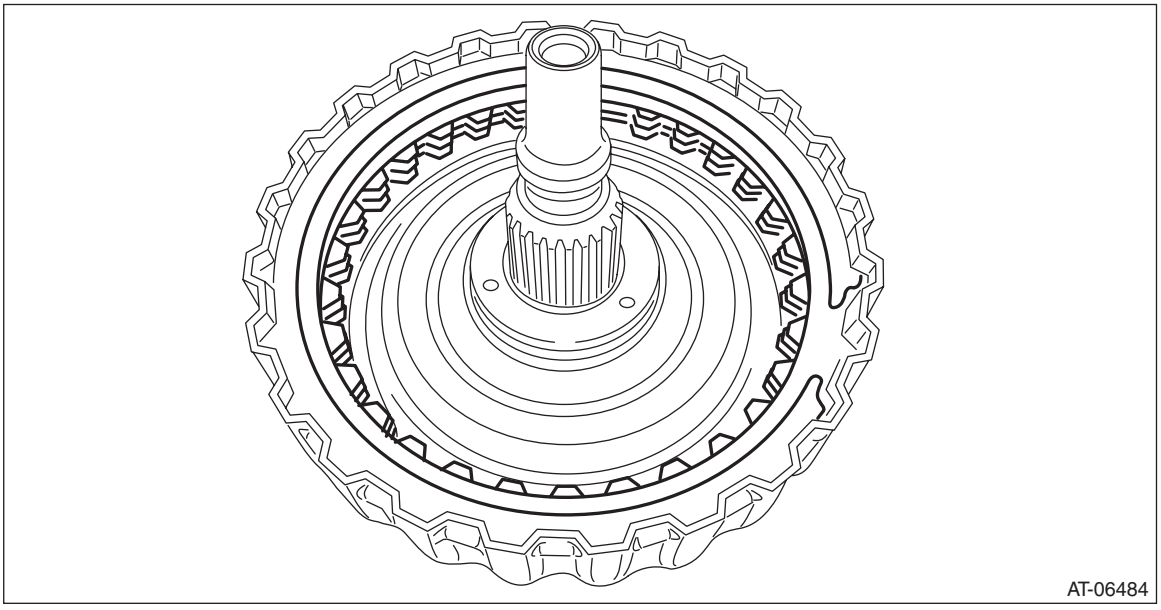

3) Compress the return spring using the ST to remove the snap ring.
ST1 18762AA010 COMPRESSOR SPECIAL TOOL
ST2 398673600 COMPRESSOR

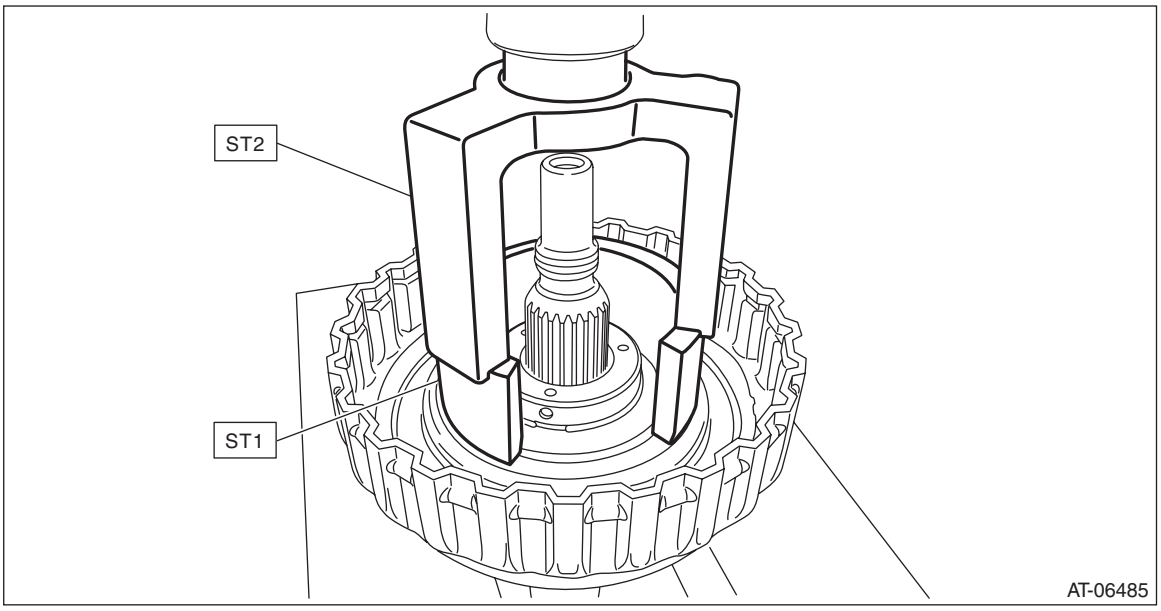

4) Remove the chamber COMPL and snap ring.

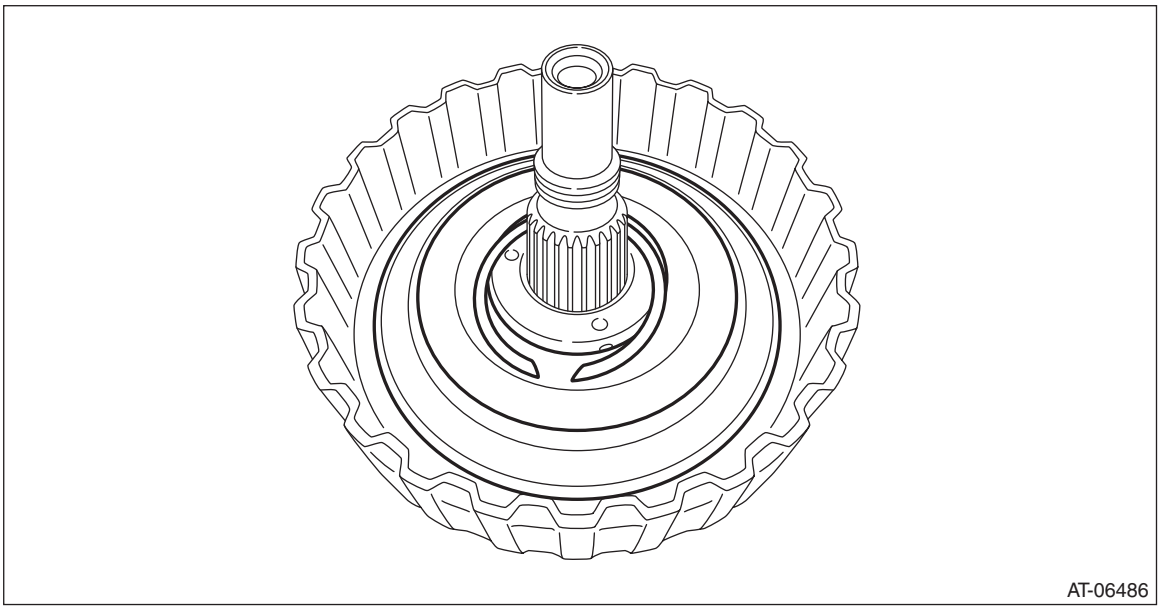

5) Remove the return spring.

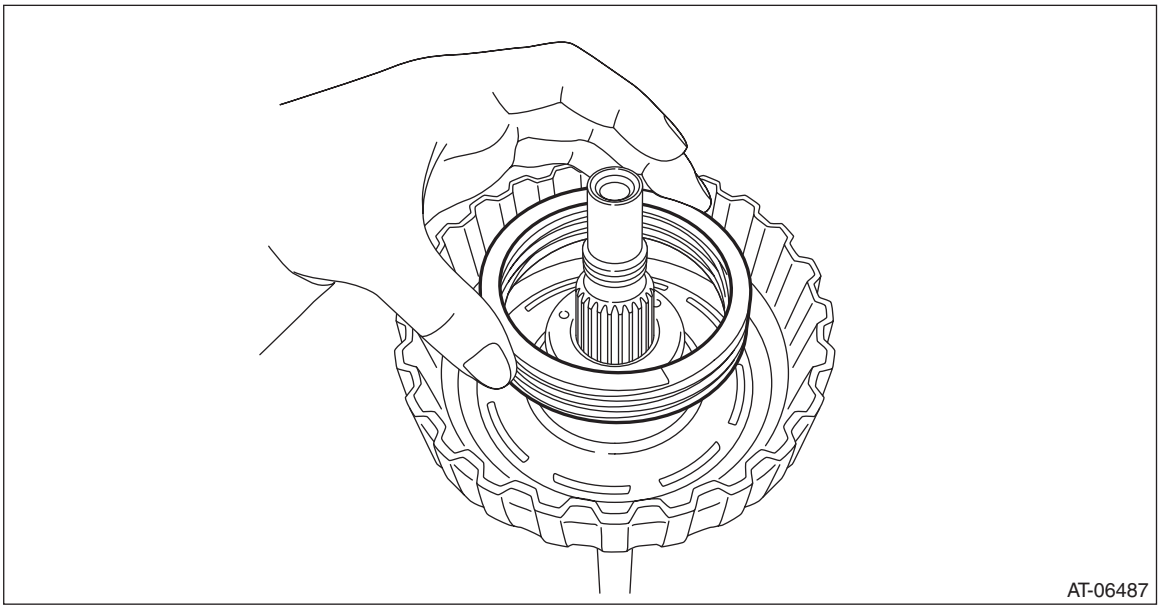

6) Remove the forward clutch piston by blowing compressed air intermittently from the forward clutch carrier hole.

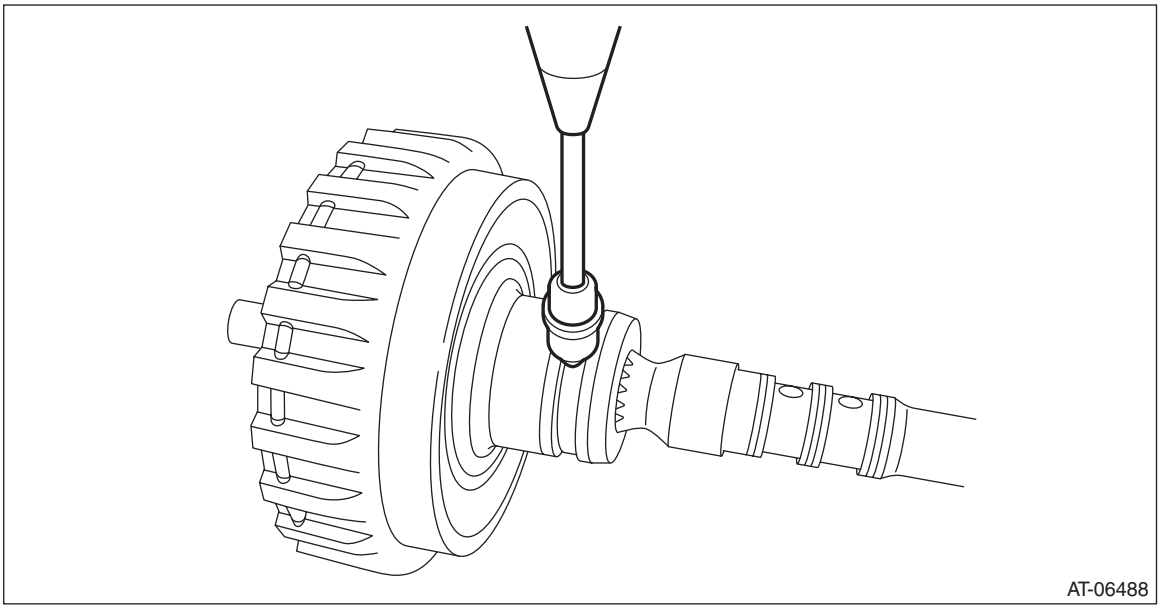

2. PLANETARY CARRIER ASSEMBLY

NOTE:
Disassemble the balance oil guide only.
1) Remove the snap ring.

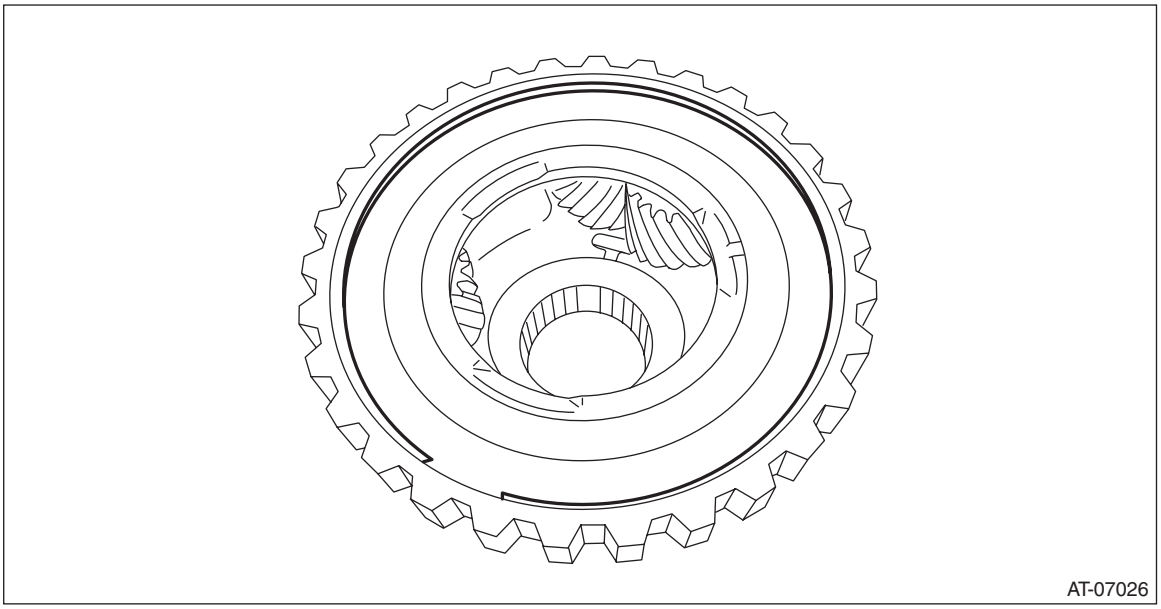

2) Remove the balance oil guide.

3. INTERNAL GEAR

1) Remove the snap ring.

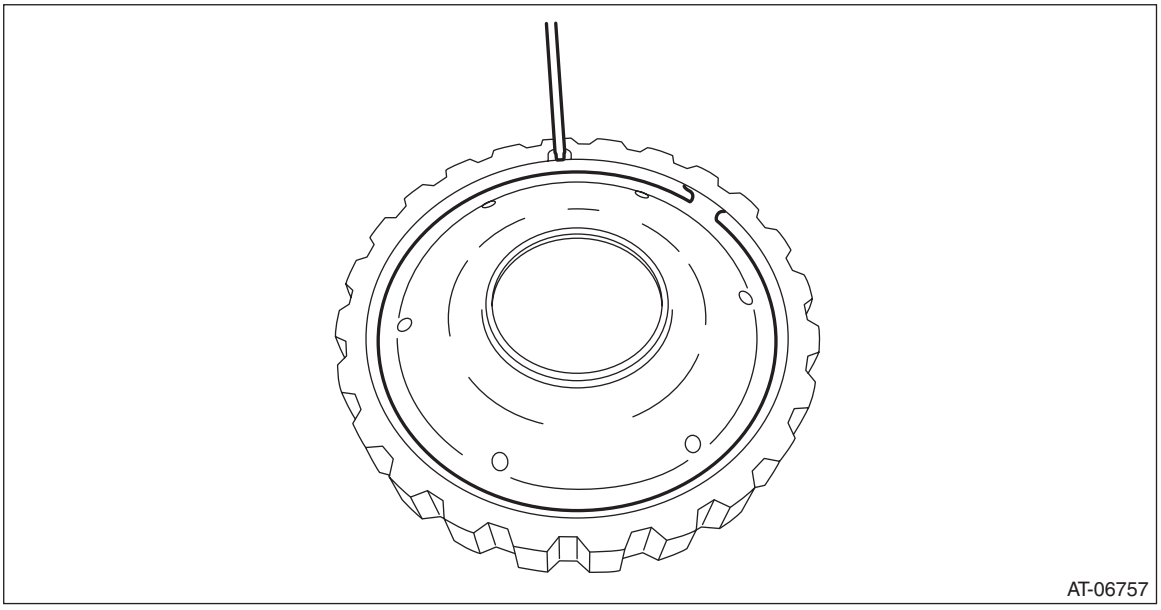

2) Remove the thrust gear plate.

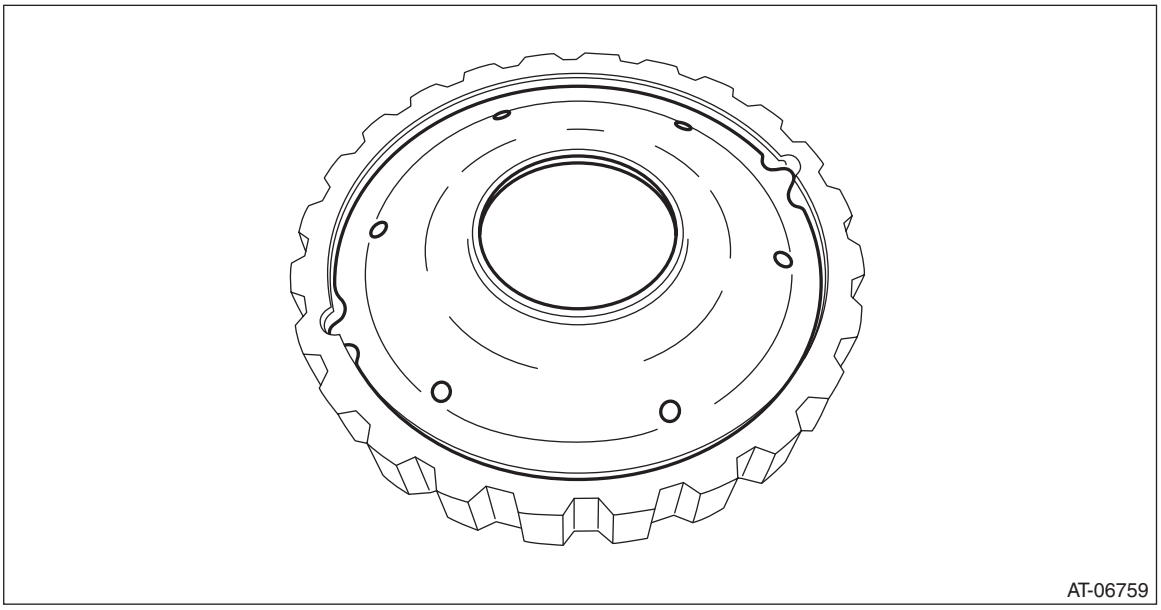
AT-06759

D: ASSEMBLY

1. FORWARD CLUTCH ASSEMBLY

1) Install the forward clutch piston to forward clutch drum.

NOTE:
- Apply CVTF to the seal of forward clutch piston.
- Insert it all the way to the end.

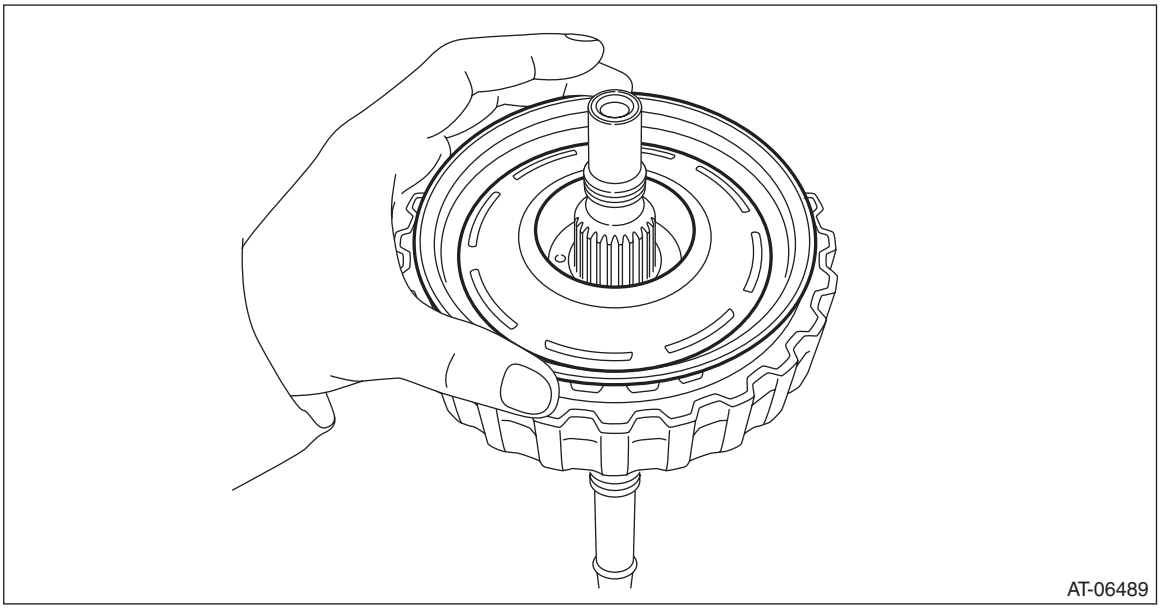
AT-06489

2) Install the return spring.

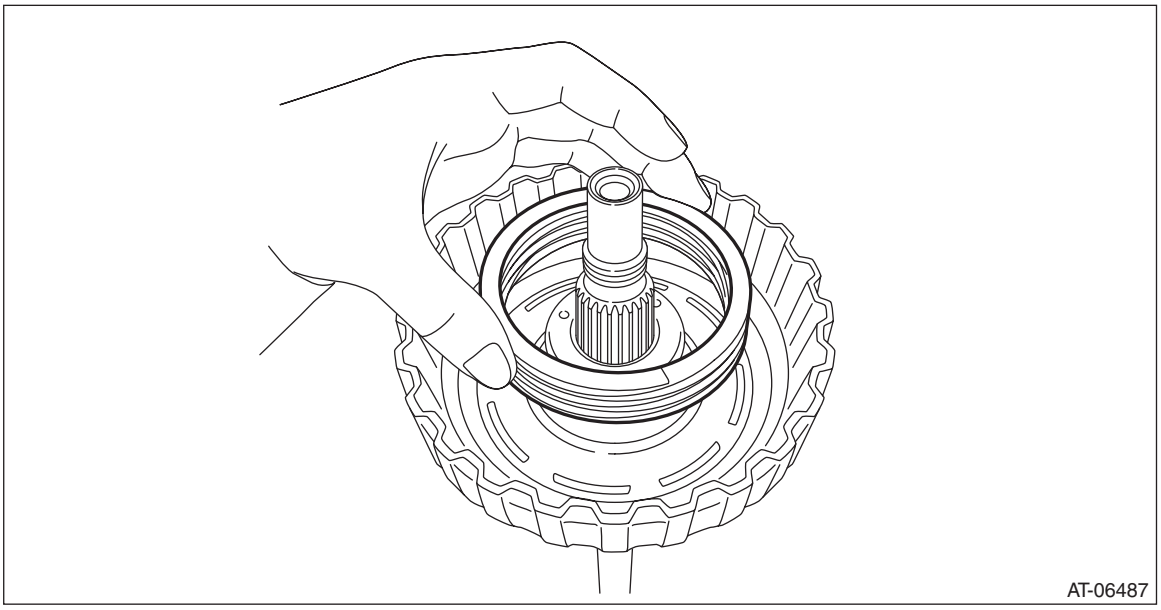

3) Install the chamber COMPL.

NOTE:
Apply CVTF to the sealing area of chamber COMPL.

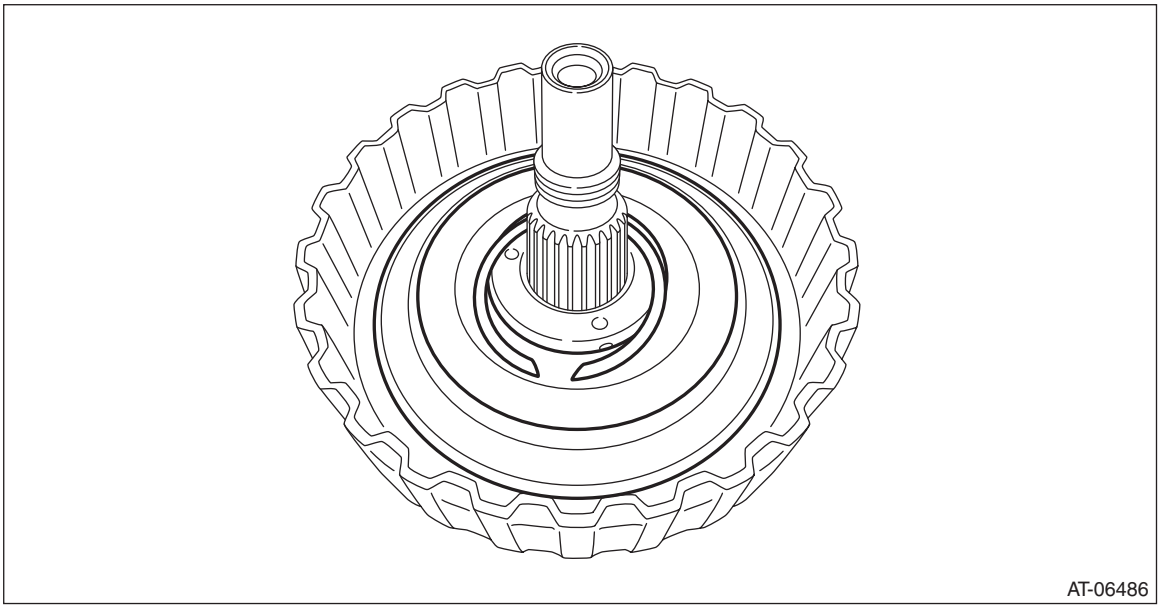

4) Compress the return spring using the ST to install the snap ring.
ST1 18762AA010 COMPRESSOR SPECIAL TOOL
ST2 398673600 COMPRESSOR

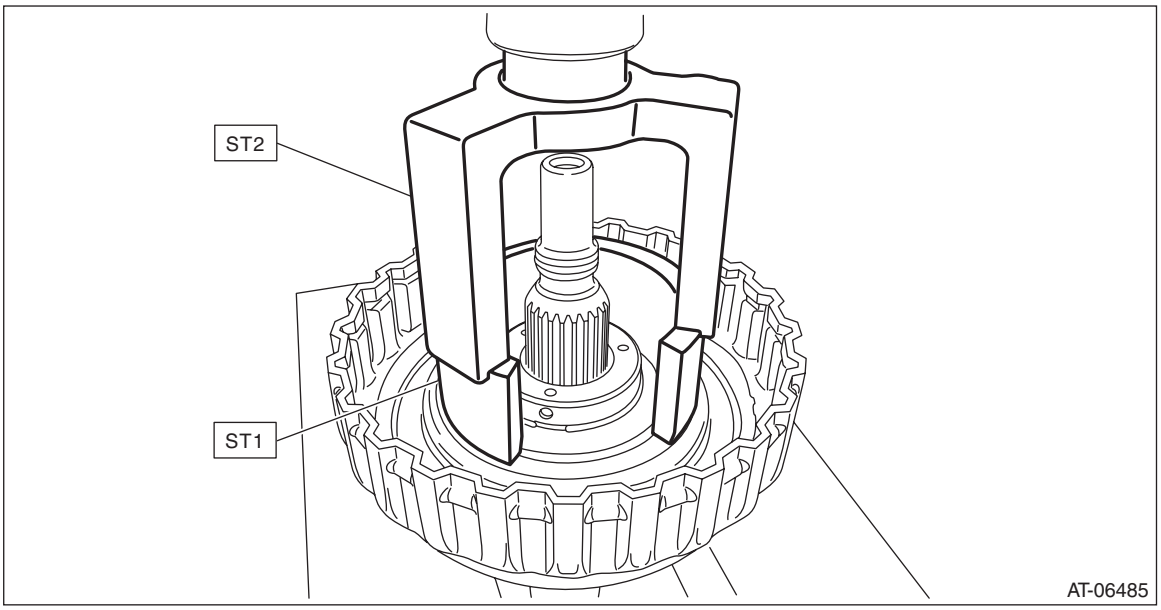

5) Check the operation of forward clutch piston by blowing compressed air intermittently from forward clutch carrier hole.

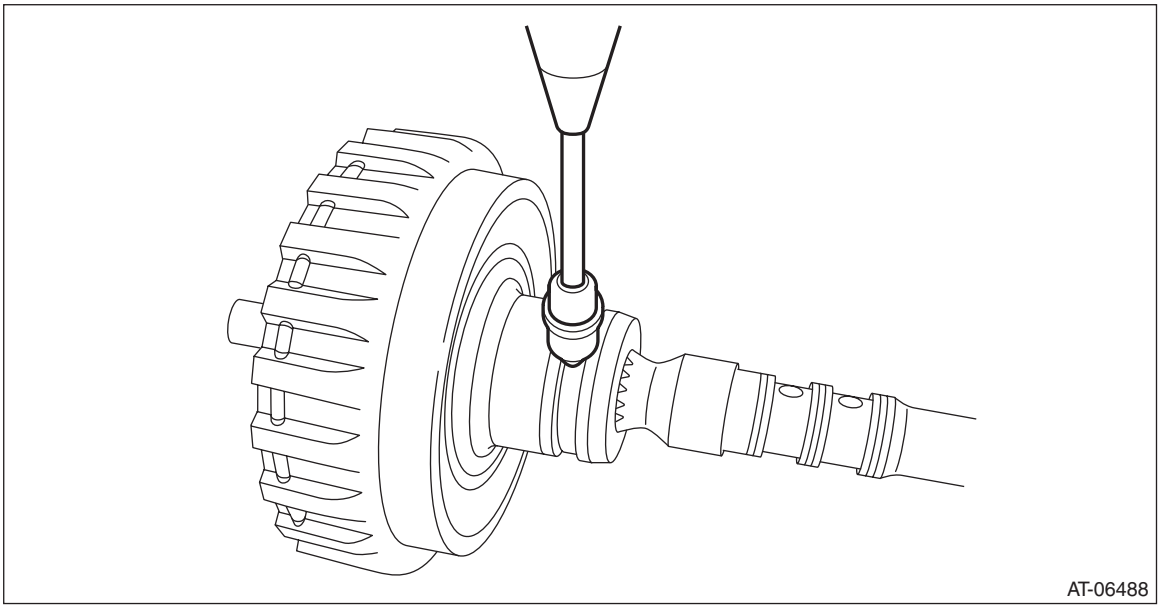

6) Place the driven plate, drive plate and retaining plate neatly in this order on surface table.
7) Set the dial gauge to retaining plate, and read its scale.

NOTE:
The value, which is read in the gauge at this time, is zero point.
8) Scale and record the weight “Z” of a flat board which will be put on retaining plate.

NOTE:
- Use a stiff board which does not bend against load as a flat board to be put on retaining plate.
- Use a flat board weighing less than 52 N (5.3 kgf, 11.7 lb).

9) Put the flat board on retaining plate.

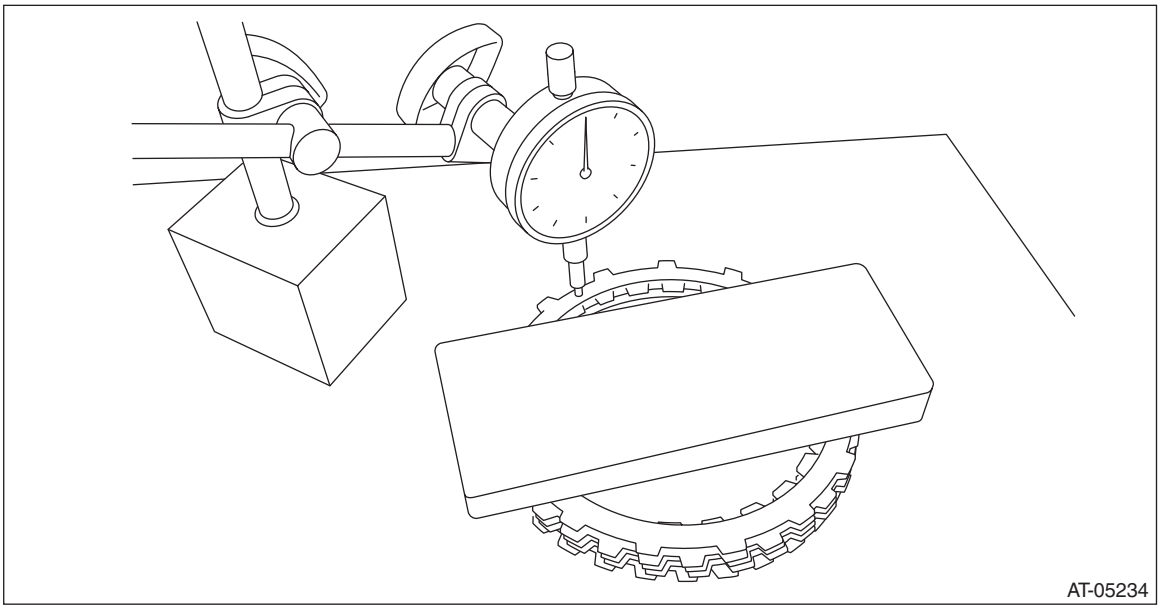

10) Using the following formula, read the push/pull gauge and calculate “N”.
N = 52 N (5.3 kgf, 11.7 lb) – Z
52 N (5.3 kgf, 11.7 lb) : Load applied to clutch plate
Z: Flat board weight
11) Press the center of retaining plate by applying a force of “N” using push/pull gauge, and then measure and record the compression amount “A”.

NOTE:
Measure at four points with a 90° interval and calculate the average.

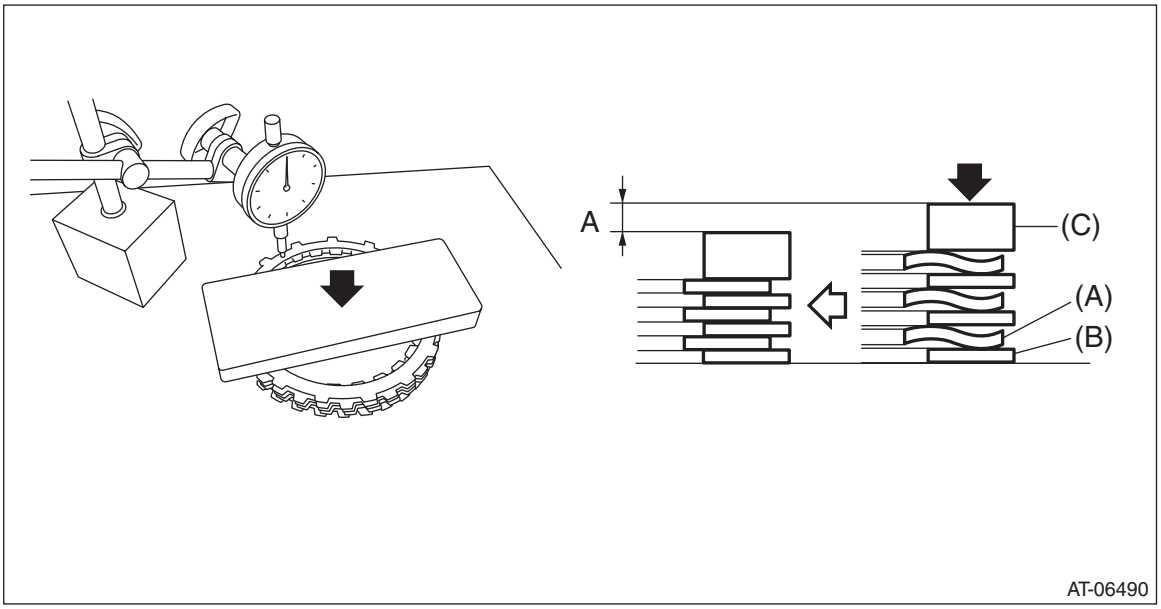

(A) Driven plate
(B) Drive plate
(C) Retaining plate

12) Install the dish plate, drive plate, driven plate, retaining plate and snap ring to the forward clutch carrier.

NOTE:
Install the dish plate in the correct direction.

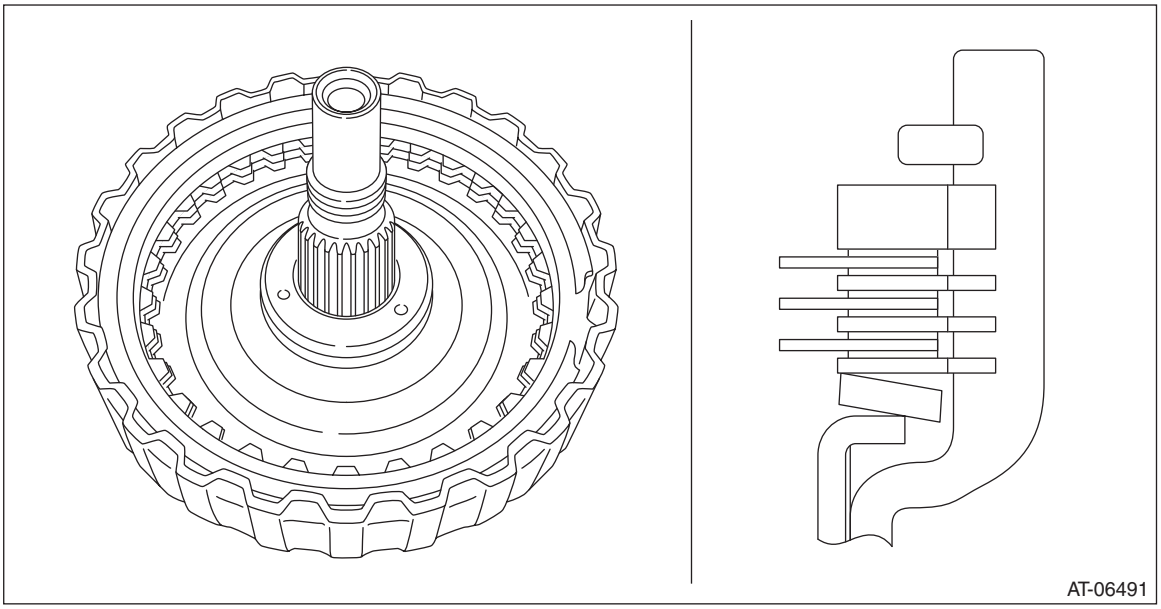

13) Measure and record the clearance “B” between the retaining plate and snap ring.

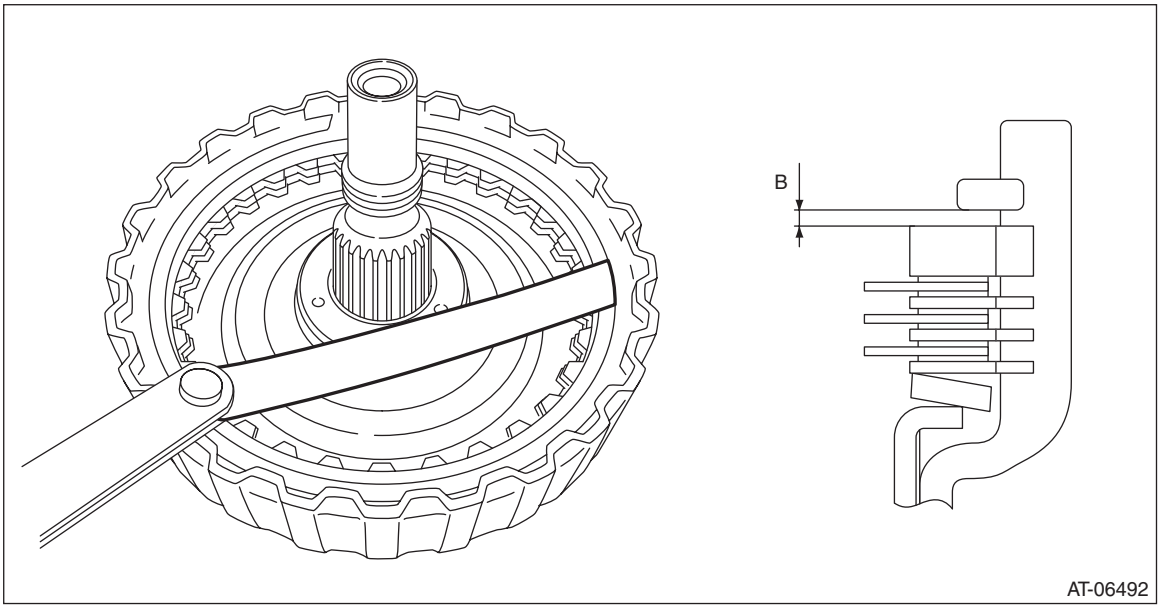

14) Piston stroke calculation
Calculate with A and B dimensions recorded before.
If it exceeds the limit, replace with a new drive plate and adjust within the initial standard value.
S mm (in) = A + B
S: Piston stroke
A: Compression amount of drive plate and dish plate
B: Clearance between retaining plate and snap ring

Initial standard:
1.0 — 1.4 mm (0.040 — 0.055 in)

Limit thickness:
1.6 mm (0.063 in)

Retaining plate	
Item number	Thickness mm (in)
31567AB760	4.2 (0.165)
31567AB770	4.4 (0.173)
31567AB780	4.6 (0.181)
31567AB790	4.8 (0.189)
31567AB830	5.0 (0.197)

2. PLANETARY CARRIER ASSEMBLY

1) Install the balance oil guide.
2) Install the snap ring.

3. INTERNAL GEAR

1) Install the thrust gear plate.
2) Install the snap ring.

E: INSPECTION

- Check the forward clutch drum, internal gear, sun gear and forward clutch piston lip for wear or damage.
- Inspect the drive plate facing for wear and damage.
- Check the driven plate for discoloration (burnt color).
- Check for worn snap ring, fatigue or damaged return spring or deformed spring retainer.
- Make sure the clearance between retaining plate and internal gear of forward clutch is within the limit. If it exceeds the standard, replace the forward clutch. <Ref. to CVT(TR580)-309, ASSEMBLY, Forward Clutch Assembly.>

F: ADJUSTMENT

1) Install the thrust bearing to the internal gear.

NOTE:
Face the temper color surface to the reverse brake side.

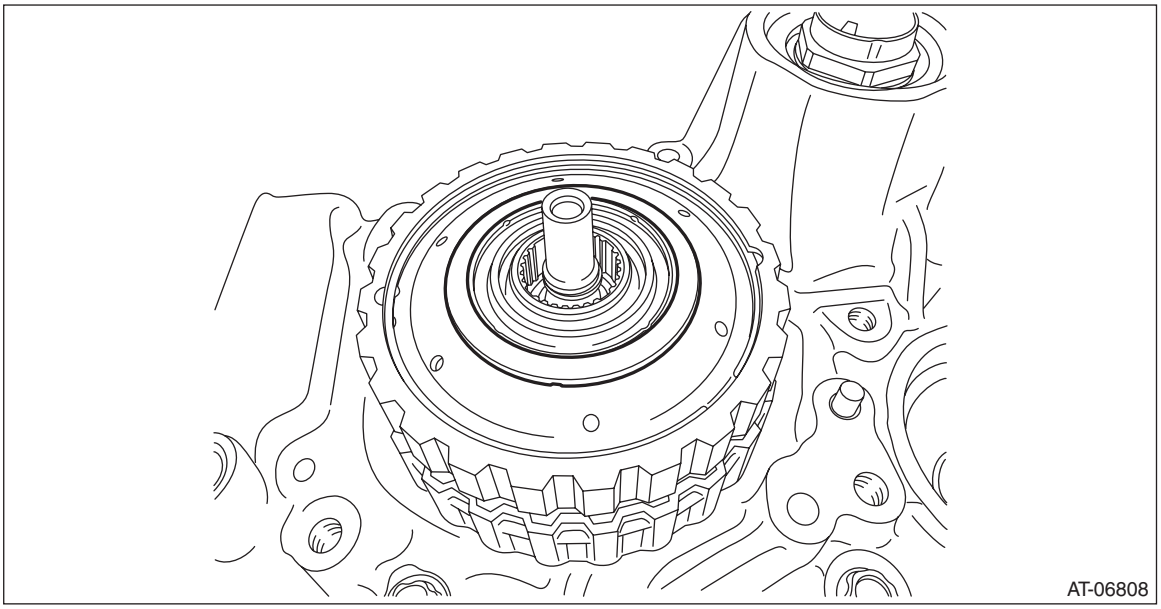

2) Measure depth “A” from the ST upper face to the washer mounting surface.
ST 499575600 GAUGE

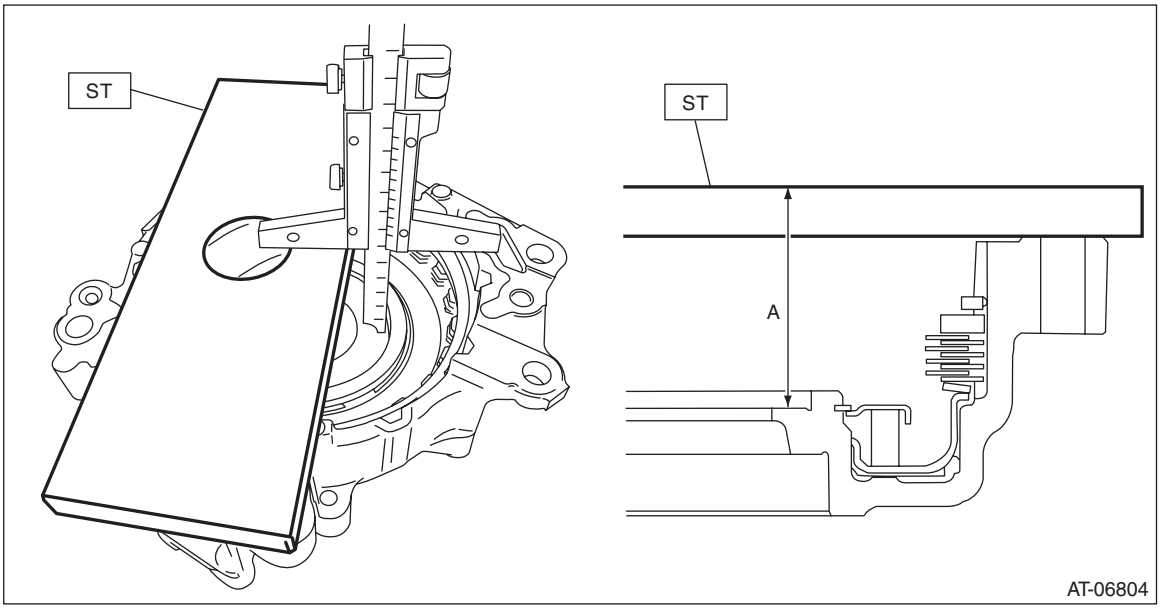

3) Measure the height “B” from the ST upper face to the mating surface of the drive pinion retainer.
ST 499575600 GAUGE

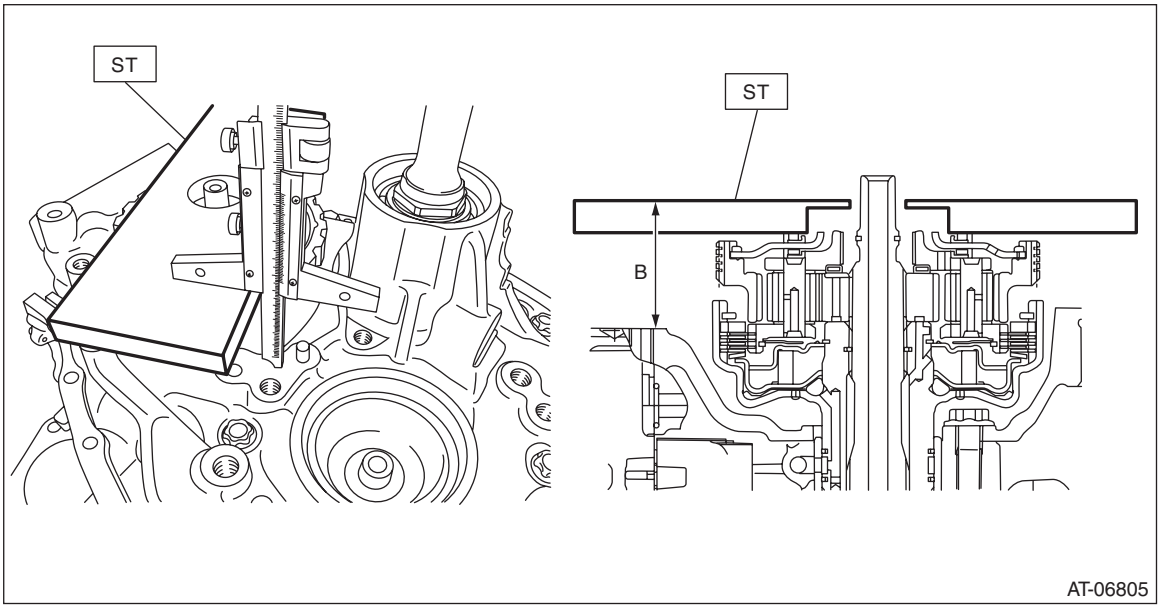

4) Obtain the thickness of washer using the following formula to select the washer.
T (mm) = A – B – (0.35 — 0.70)
[T (in) = A – B – (0.014 — 0.028)]
T: Washer thickness
A: Depth from the ST upper face to the washer mounting surface
B: Height from ST upper face to the drive pinion retainer mating surface
0.35 — 0.70 mm (0.014 — 0.028 in): Clearance

Washer	
Part No.	Thickness mm (in)
803064020	1.3 (0.051)
803064021	1.55 (0.061)
803064022	1.8 (0.071)
803064023	2.05 (0.081)
803064024	2.3 (0.091)
803064025	2.55 (0.100)

45.Drive Pinion Shaft Assembly

A: REMOVAL

1) Remove the transmission assembly. <Ref. to CVT(TR580)-63, REMOVAL, Automatic Transmission Assembly.>
2) Remove the air breather hose. <Ref. to CVT(TR580)-190, REMOVAL, Air Breather Hose.>
3) Remove the control valve body. <Ref. to CVT(TR580)-133, REMOVAL, Control Valve Body.>
4) Remove the transmission harness. <Ref. to CVT(TR580)-147, REMOVAL, Transmission Harness.>
5) Remove the turbine speed sensor. <Ref. to CVT(TR580)-113, REMOVAL, Turbine Speed Sensor.>
6) Remove the secondary speed sensor. <Ref. to CVT(TR580)-118, REMOVAL, Secondary Speed Sensor.>
7) Remove the primary speed sensor. <Ref. to CVT(TR580)-123, REMOVAL, Primary Speed Sensor.>
8) Remove the inhibitor switch. <Ref. to CVT(TR580)-109, REMOVAL, Inhibitor Switch.>
9) Remove the extension case. <Ref. to CVT(TR580)-200, REMOVAL, Extension Case.>
10) Remove the transfer clutch assembly. <Ref. to CVT(TR580)-204, REMOVAL, Transfer Clutch.>
11) Remove the transfer driven gear assembly. <Ref. to CVT(TR580)-218, REMOVAL, Transfer Driven Gear.>
12) Remove the parking pawl. <Ref. to CVT(TR580)-221, REMOVAL, Parking Pawl.>
13) Remove the reduction driven gear assembly. <Ref. to CVT(TR580)-223, REMOVAL, Reduction Driven Gear.>
14) Remove the oil pan and oil strainer. <Ref. to CVT(TR580)-130, REMOVAL, Oil Pan and Strainer.>
15) Remove the transmission control device. <Ref. to CVT(TR580)-231, REMOVAL, Transmission Control Device.>
16) Remove the transmission case. <Ref. to CVT(TR580)-237, REMOVAL, Transmission Case.>
17) Remove the reduction drive gear. <Ref. to CVT(TR580)-256, REMOVAL, Reduction Drive Gear.>
18) Remove the primary pulley, secondary pulley and variator chain. <Ref. to CVT(TR580)-261, REMOVAL, Primary Pulley and Secondary Pulley.>
19) Remove the reverse brake assembly. <Ref. to CVT(TR580)-282, REMOVAL, Reverse Brake Assembly.>
20) Remove the forward clutch assembly. <Ref. to CVT(TR580)-297, REMOVAL, Forward Clutch Assembly.>
21) Using the ST, remove the drive pinion retainer.
ST 18270KA020 SOCKET (E20)

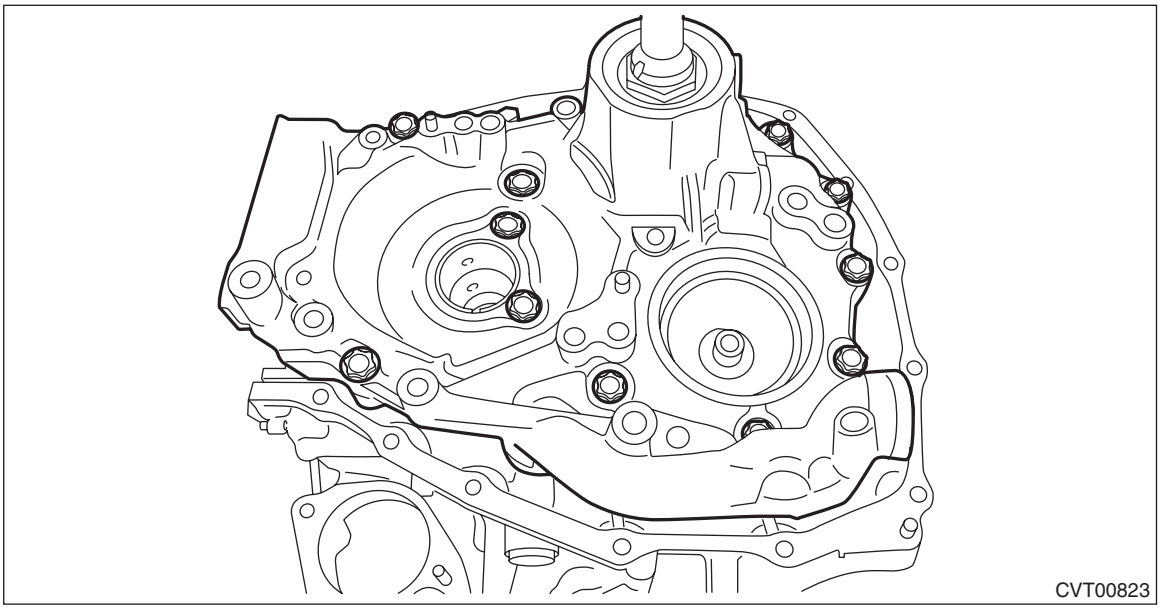
CVT00823

22) Remove the O-rings.

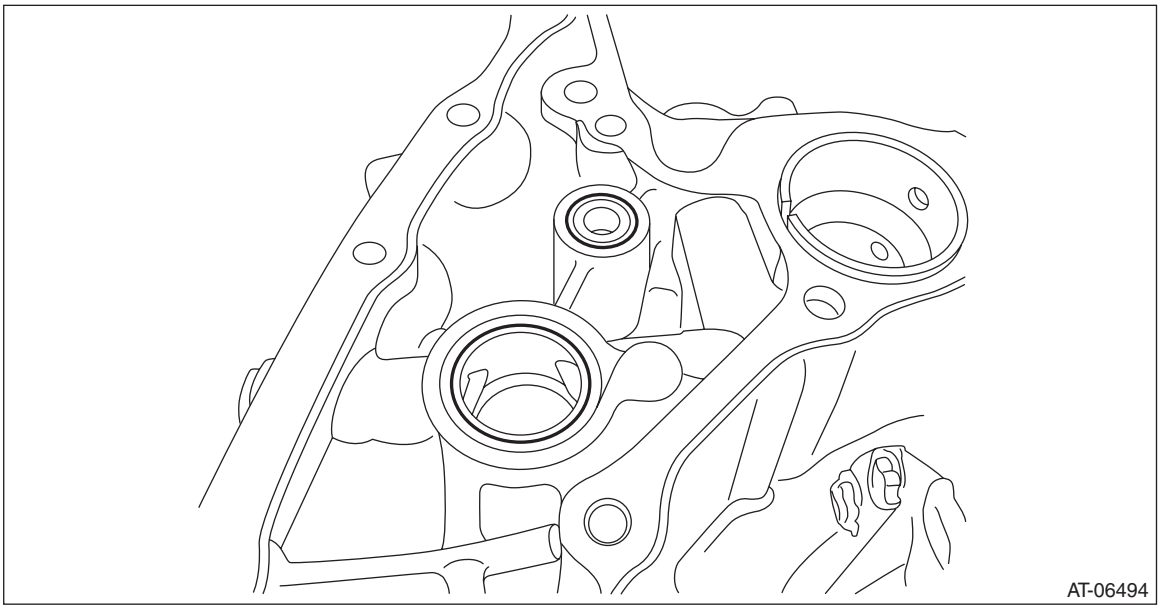

B: INSTALLATION

1) Clean the mating surface of drive pinion retainer and converter case.
2) Adjust the backlash and tooth contact between drive pinion shaft assembly and the front differential side gear. <Ref. to CVT(TR580)-339, ADJUSTMENT, Drive Pinion Shaft Assembly.>
3) Install O-rings in two locations to the converter case.

NOTE:
- Use new O-rings.
- Apply CVTF to the O-rings.

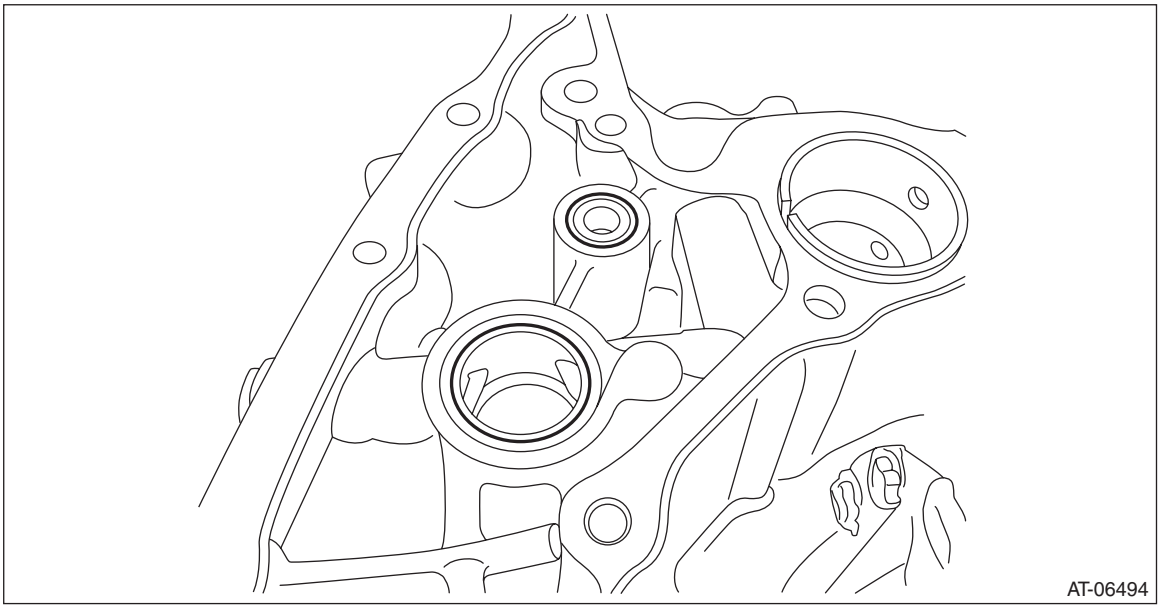

4) Apply liquid gasket seamlessly to the mating surface of drive pinion retainer.

Liquid gasket:
THREE BOND 1215B or equivalent

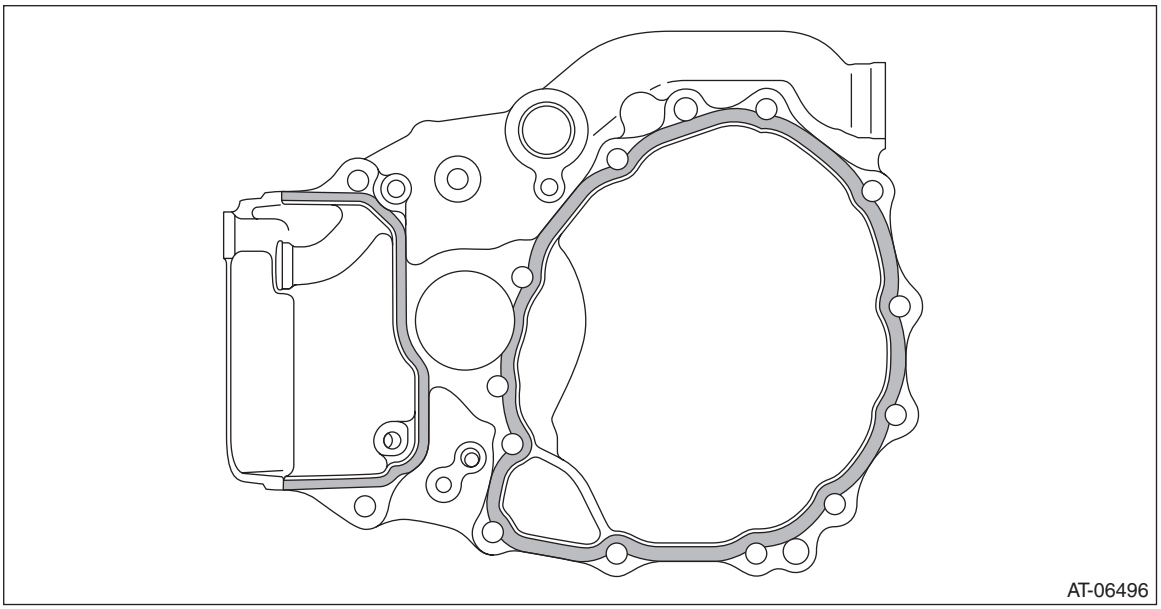

5) Install the drive pinion retainer to converter case, and tighten the bolt using the ST.
ST 18270KA020 SOCKET (E20)

NOTE:
Do not confuse the three different-length bolts when installing.

Tightening torque:
43 N·m (4.4 kgf-m, 31.7 ft-lb)

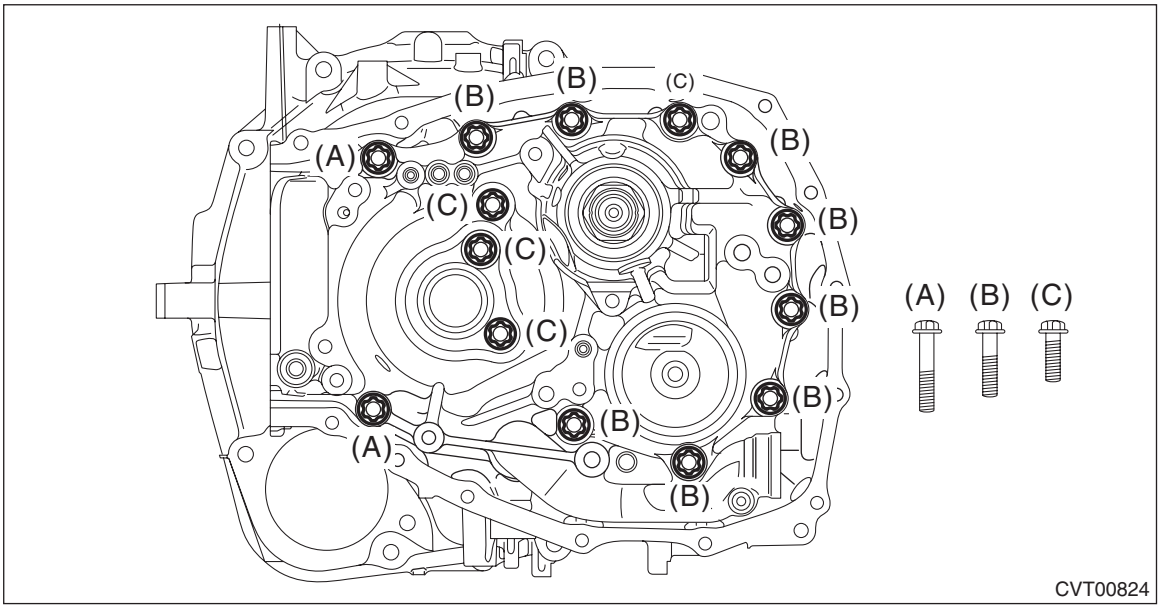

6) Install the forward clutch assembly. <Ref. to CVT(TR580)-300, INSTALLATION, Forward Clutch Assembly.>
7) Install the reverse brake assembly. <Ref. to CVT(TR580)-285, INSTALLATION, Reverse Brake Assembly.>
8) Install the primary pulley, secondary pulley and variator chain. <Ref. to CVT(TR580)-268, INSTALLATION, Primary Pulley and Secondary Pulley.>
9) Install the reduction drive gear. <Ref. to CVT(TR580)-257, INSTALLATION, Reduction Drive Gear.>
10) Install the transmission case. <Ref. to CVT(TR580)-240, INSTALLATION, Transmission Case.>

11) Install the transmission control device. <Ref. to CVT(TR580)-234, INSTALLATION, Transmission Control Device.>
12) Install the oil strainer and oil pan. <Ref. to CVT(TR580)-131, INSTALLATION, Oil Pan and Strainer.>
13) Install the reduction driven gear assembly. <Ref. to CVT(TR580)-223, INSTALLATION, Reduction Driven Gear.>
14) Install the transfer driven gear assembly. <Ref. to CVT(TR580)-219, INSTALLATION, Transfer Driven Gear.>
15) Install the transfer clutch assembly. <Ref. to CVT(TR580)-206, INSTALLATION, Transfer Clutch.>
16) Install the parking pawl. <Ref. to CVT(TR580)-222, INSTALLATION, Parking Pawl.>
17) Install the extension case. <Ref. to CVT(TR580)-201, INSTALLATION, Extension Case.>
18) Install the inhibitor switch. <Ref. to CVT(TR580)-111, INSTALLATION, Inhibitor Switch.>
19) Install the secondary speed sensor. <Ref. to CVT(TR580)-118, INSTALLATION, Secondary Speed Sensor.>
20) Install the primary speed sensor. <Ref. to CVT(TR580)-124, INSTALLATION, Primary Speed Sensor.>
21) Install the turbine speed sensor. <Ref. to CVT(TR580)-113, INSTALLATION, Turbine Speed Sensor.>
22) Install the transmission harness. <Ref. to CVT(TR580)-150, INSTALLATION, Transmission Harness.>
23) Install the control valve body. <Ref. to CVT(TR580)-139, INSTALLATION, Control Valve Body.>
24) Install the air breather hose. <Ref. to CVT(TR580)-192, INSTALLATION, Air Breather Hose.>
25) Install the transmission assembly. <Ref. to CVT(TR580)-79, INSTALLATION, Automatic Transmission Assembly.>

C: DISASSEMBLY

1) Flatten the tab of the lock nut.
2) Using ST1, ST2 and ST3, fix at the spline portion of drive pinion shaft to remove the lock nut.

ST1 499787500 ADAPTER
ST2 499787700 WRENCH
ST3 498937110 HOLDER

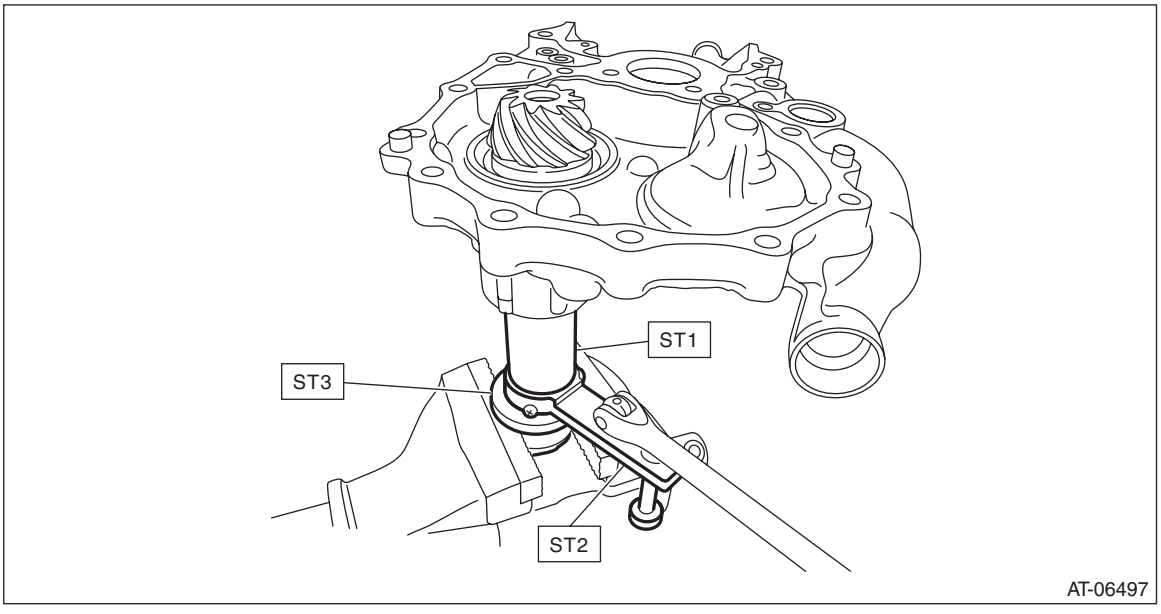

3) Remove the drive pinion shaft from the drive pinion retainer.

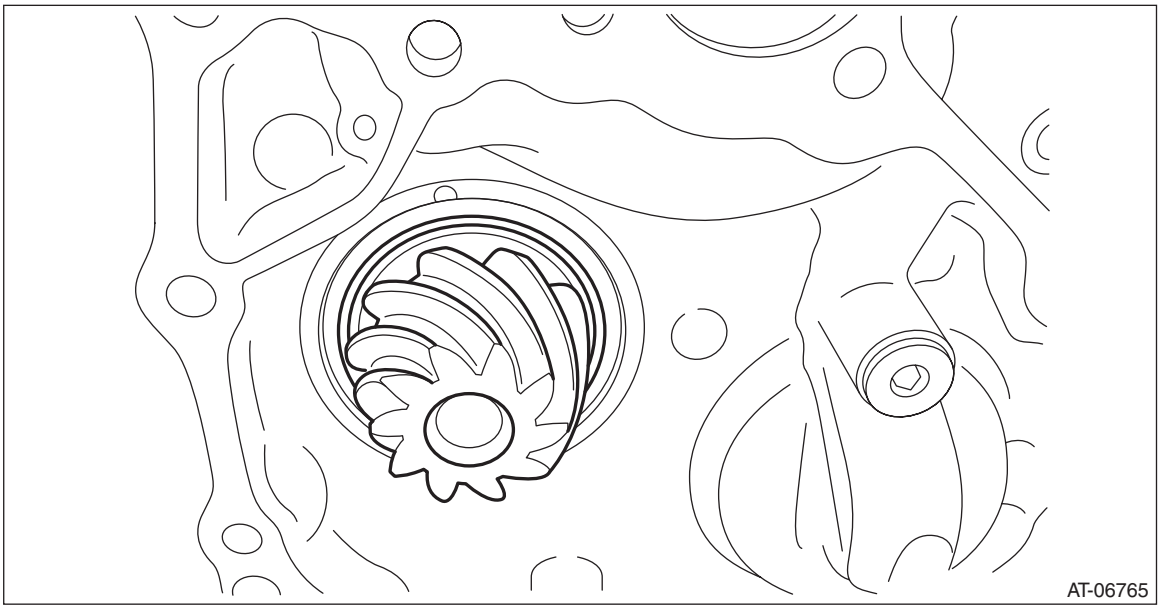

4) Using the round bar with diameter of 36 mm (1.42 in) or 37 mm (1.46 in), remove the bearing inner race and plug.

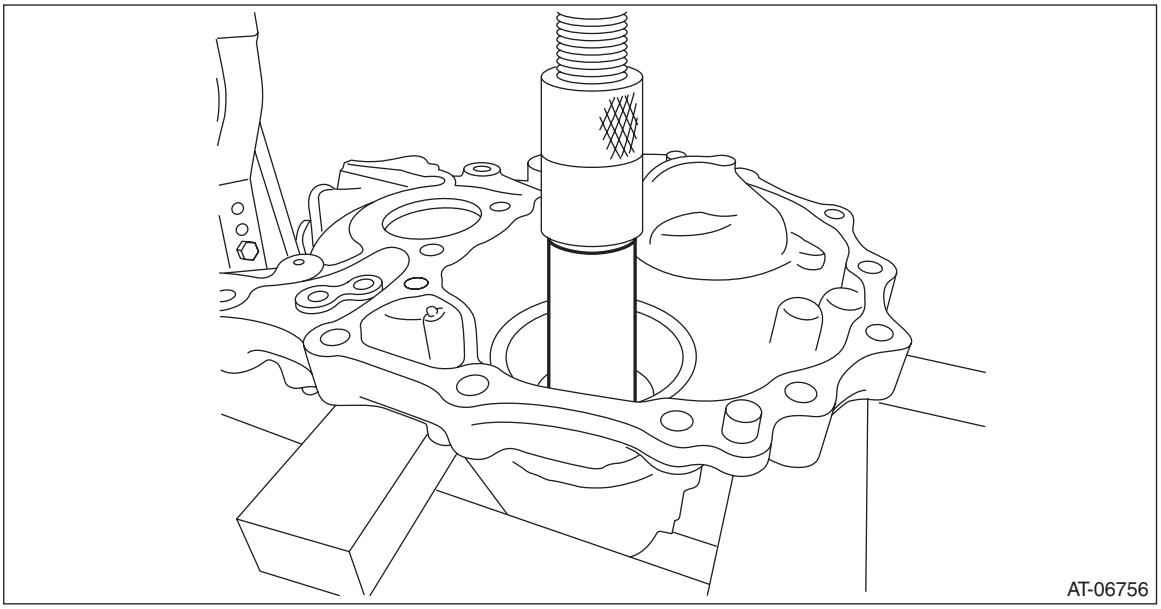

5) Remove the drive pinion washer.

6) Remove the drive pinion spacer.

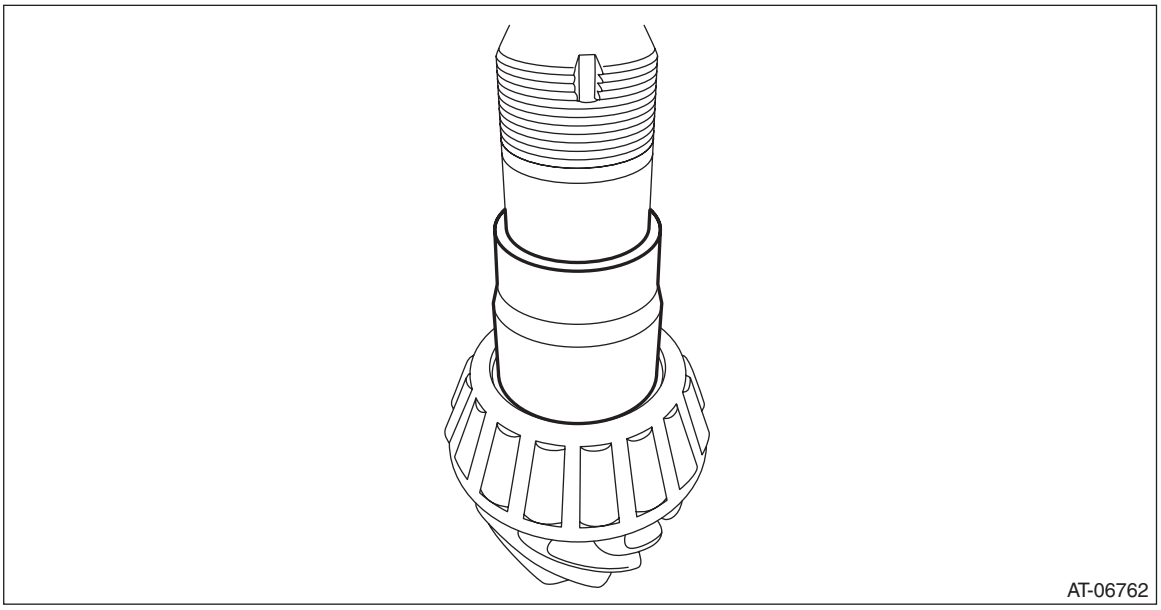

7) Remove the O-rings.

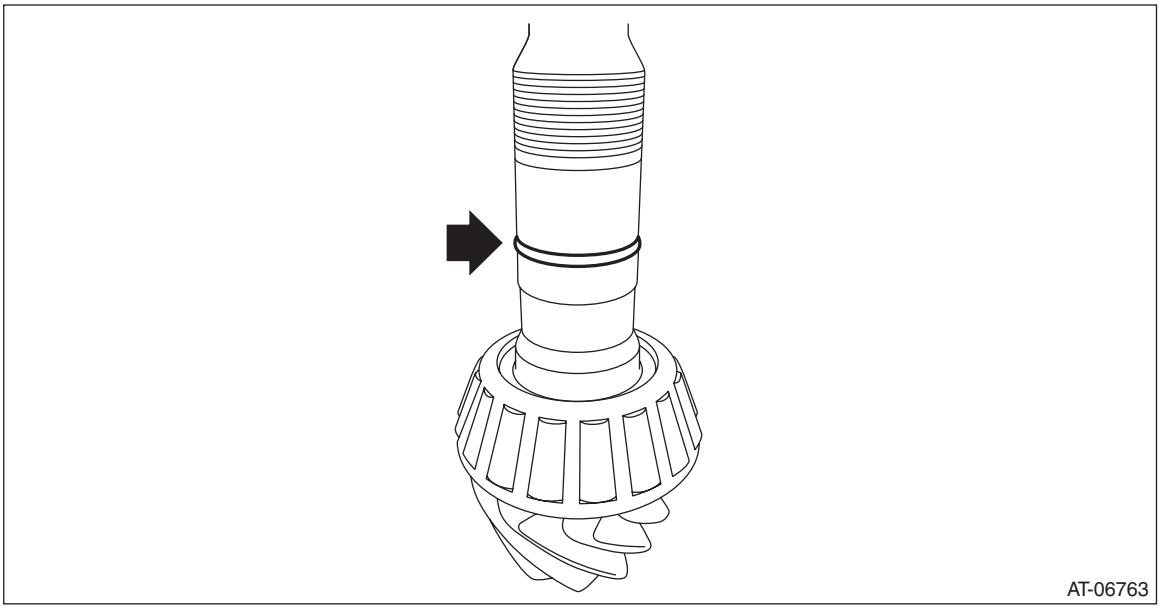

8) Remove the inner race and drive pinion shim from drive pinion shaft using ST.
ST 498515500 REMOVER

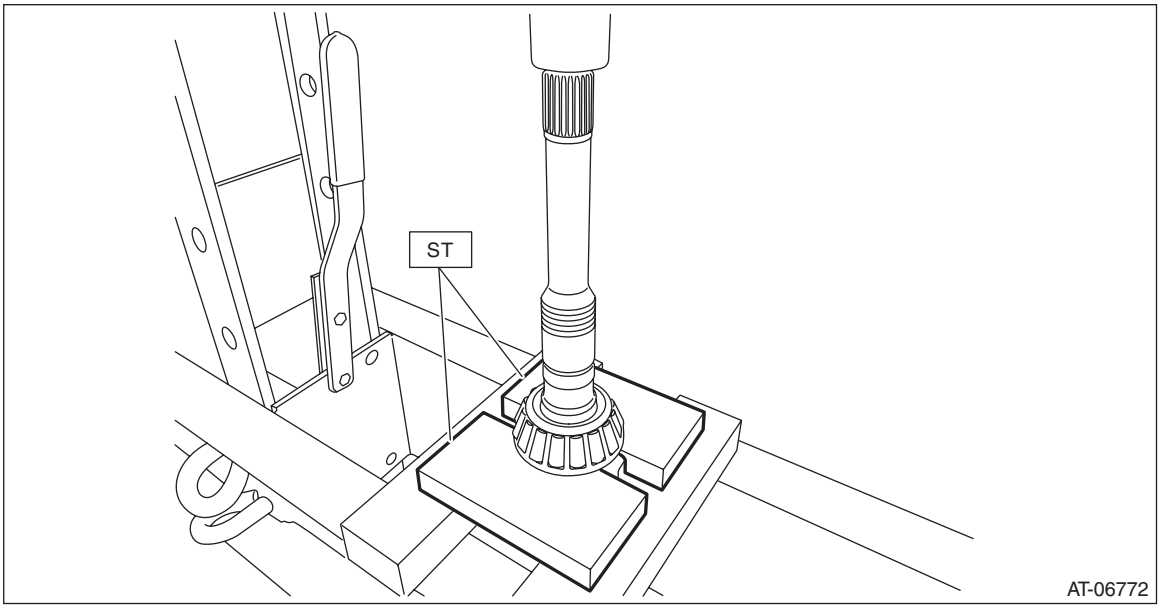

9) Using the ST, remove the outer race.
ST 398527700 PULLER ASSY

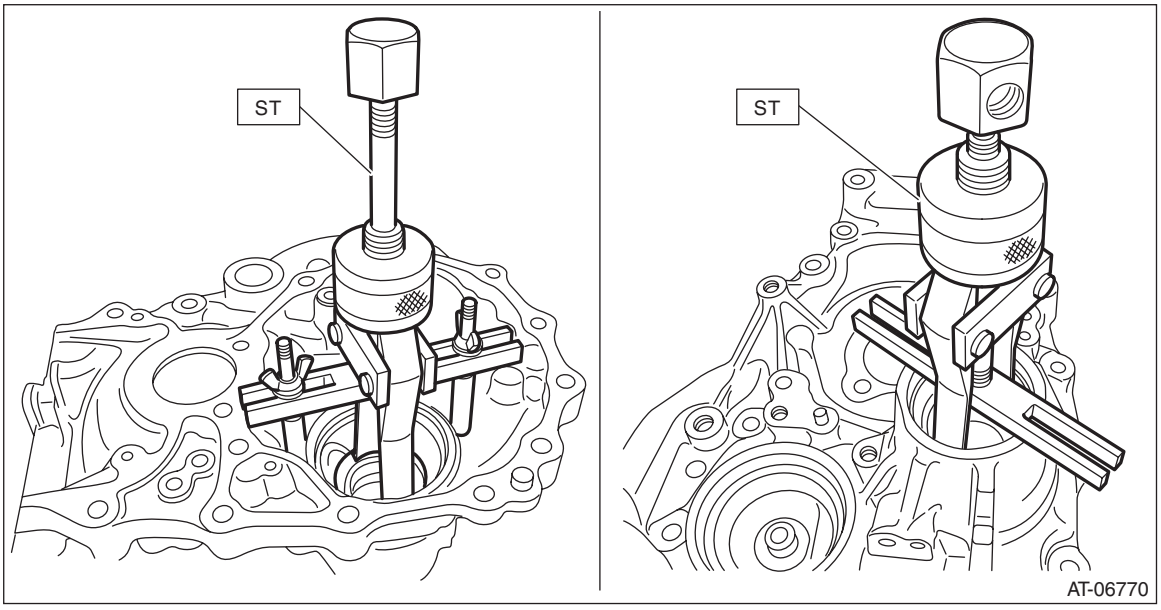

10) Remove the two oil seals using a screwdriver wrapped with cloth, etc.

CAUTION:
Do not damage the fitting surface of oil seal.

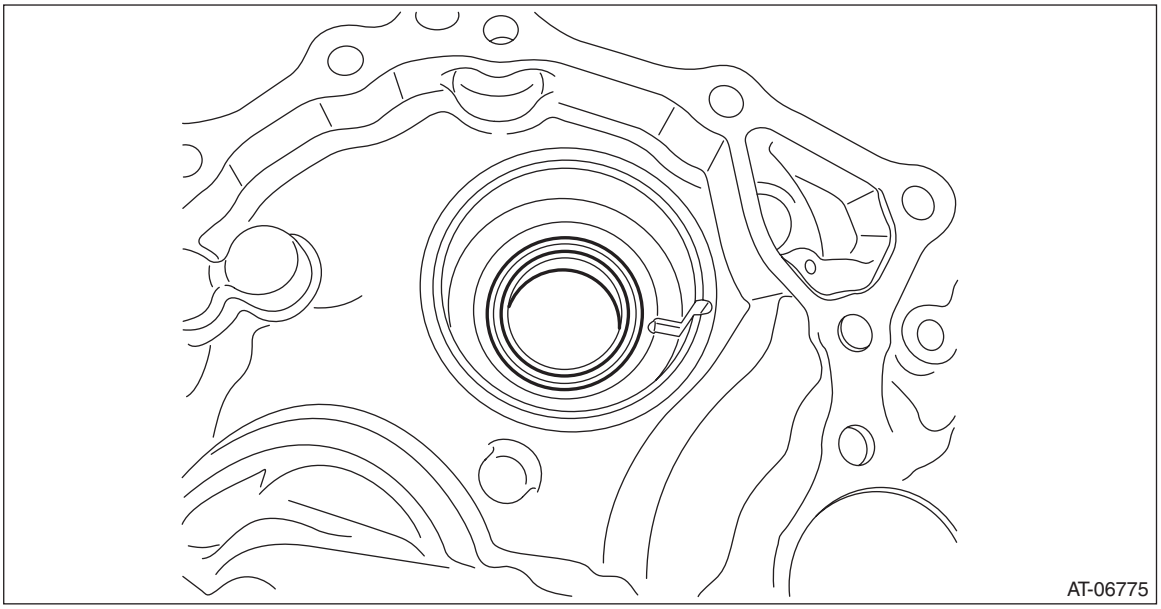

11) Remove the plug from drive pinion retainer.

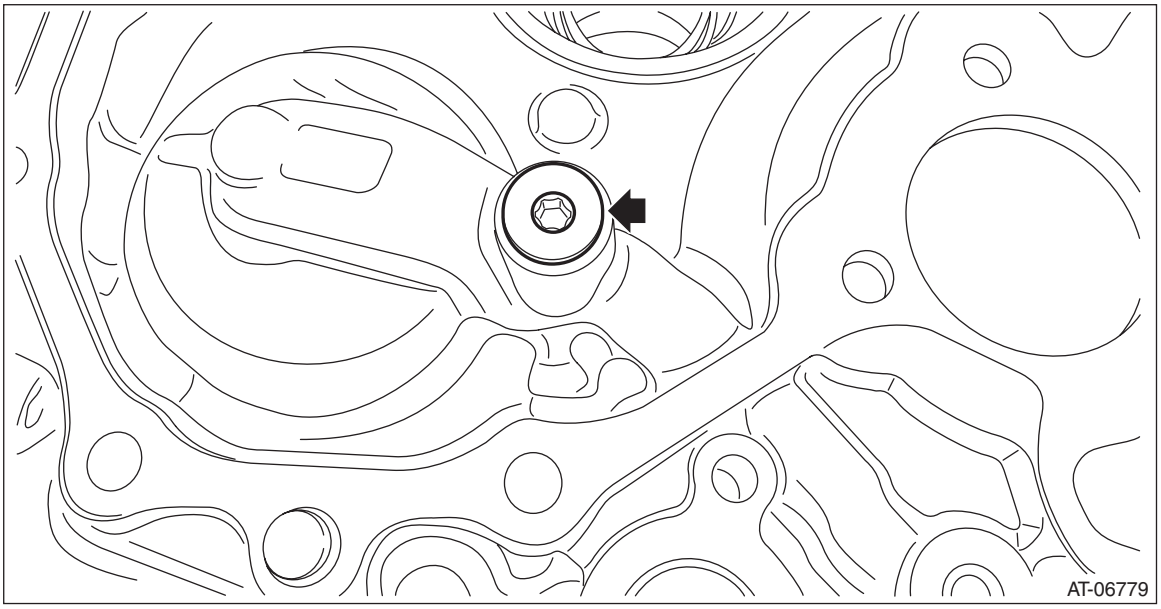

D: ASSEMBLY

1) Install the plug to drive pinion retainer.

NOTE:
- Use new O-rings.
- Apply CVTF to the O-rings.

Tightening torque:
22 N·m (2.2 kgf-m, 16.2 ft-lb)

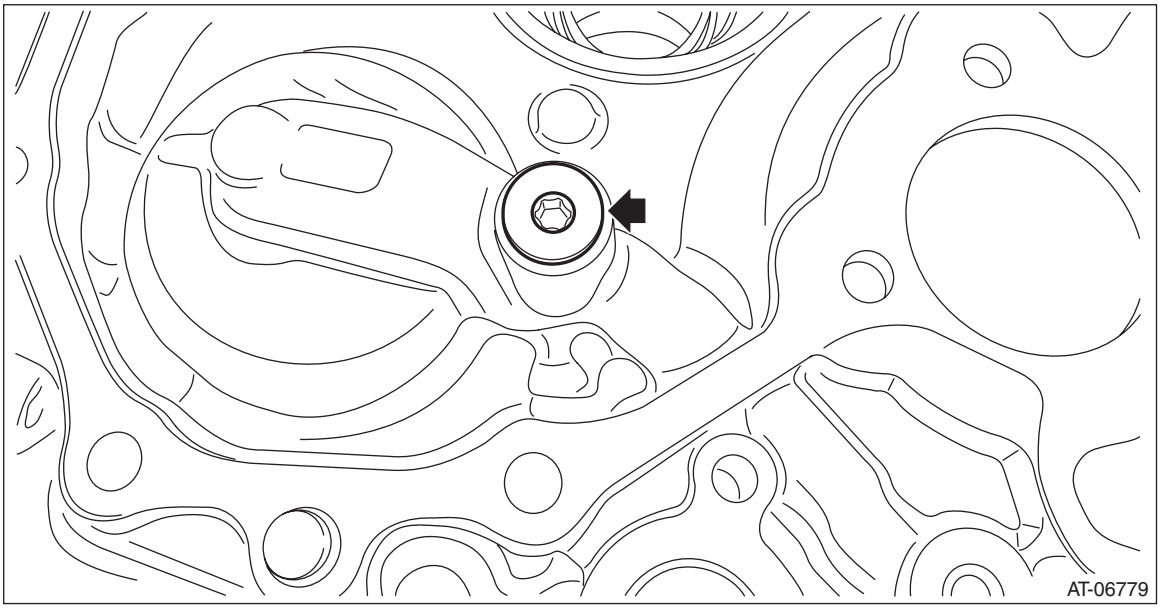

2) Using the ST, install the oil seal to drive pinion retainer.

NOTE:
- Apply CVTF to the oil seal press-fitting surface and lip.
- Install the oil seal in the correct direction.

ST 927720000 HOUSING BUSHING INSTALLER AND REMOVER

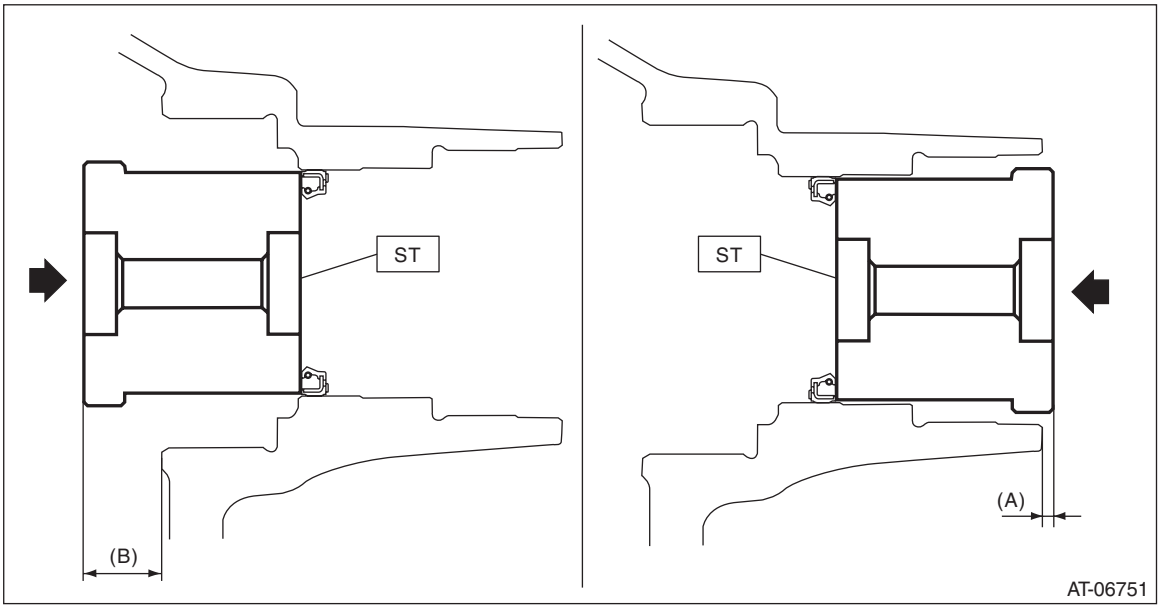

(A) 2.8 mm (0.11 in)
(B) 18.7 mm (0.74 in)

3) Select the drive pinion washer.
(1) Measure the roller bearing inner race width “A” on the front side.

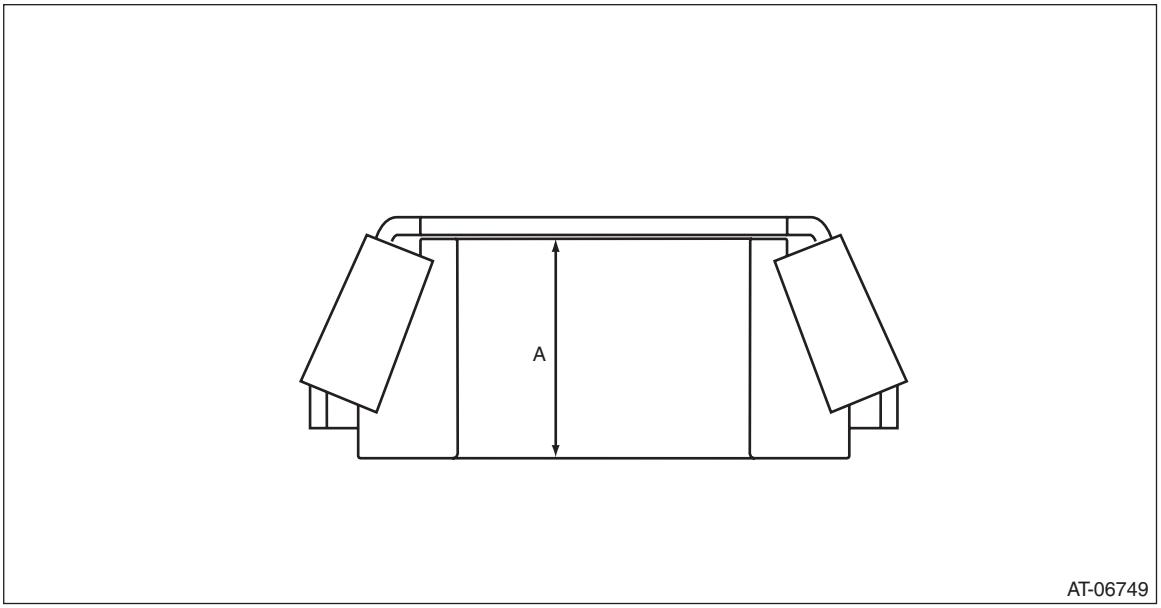

(2) Measure the roller bearing inner race width “B” on the rear side.

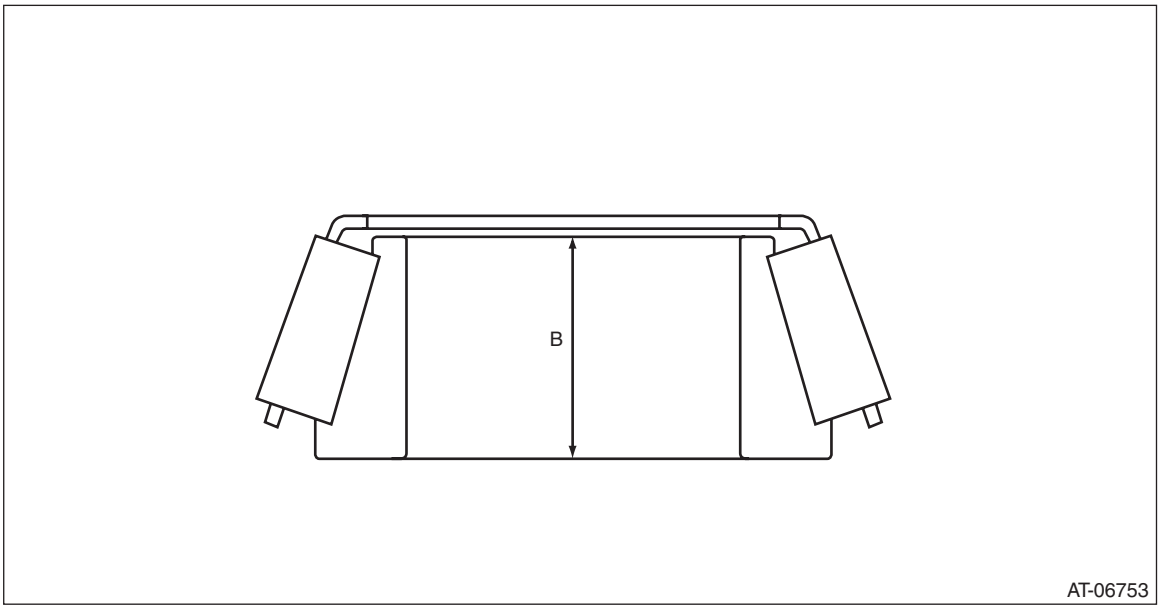

(3) Measure the spacer width “C”.

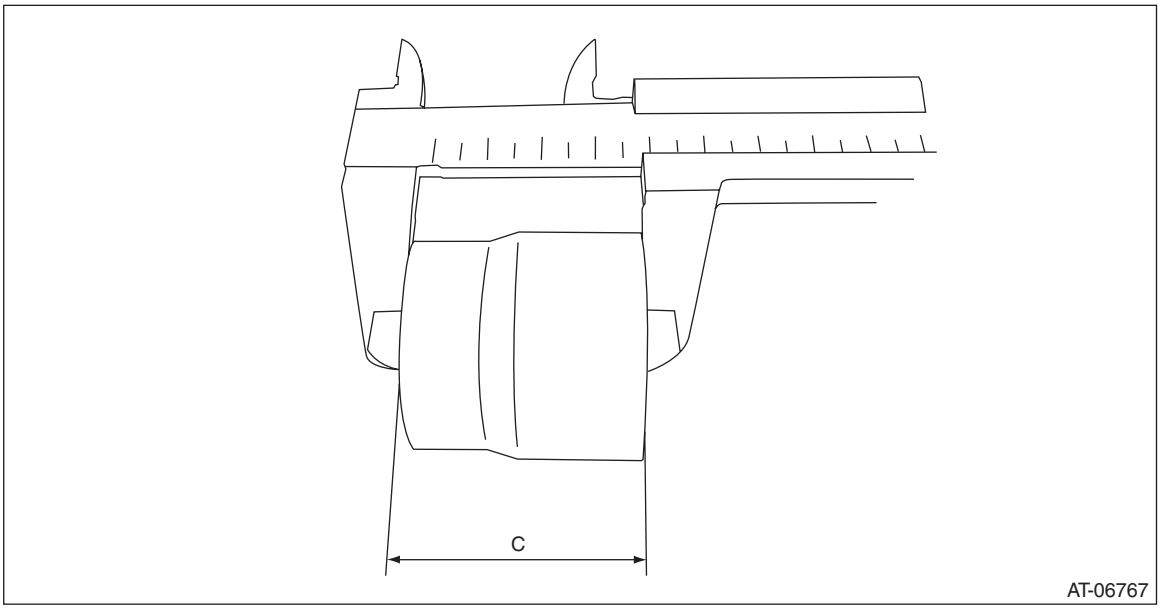

(4) Using the ST, install the front roller bearing outer race to the drive pinion retainer.

ST1 28499TC010 INSTALLER
ST2 398177700 INSTALLER

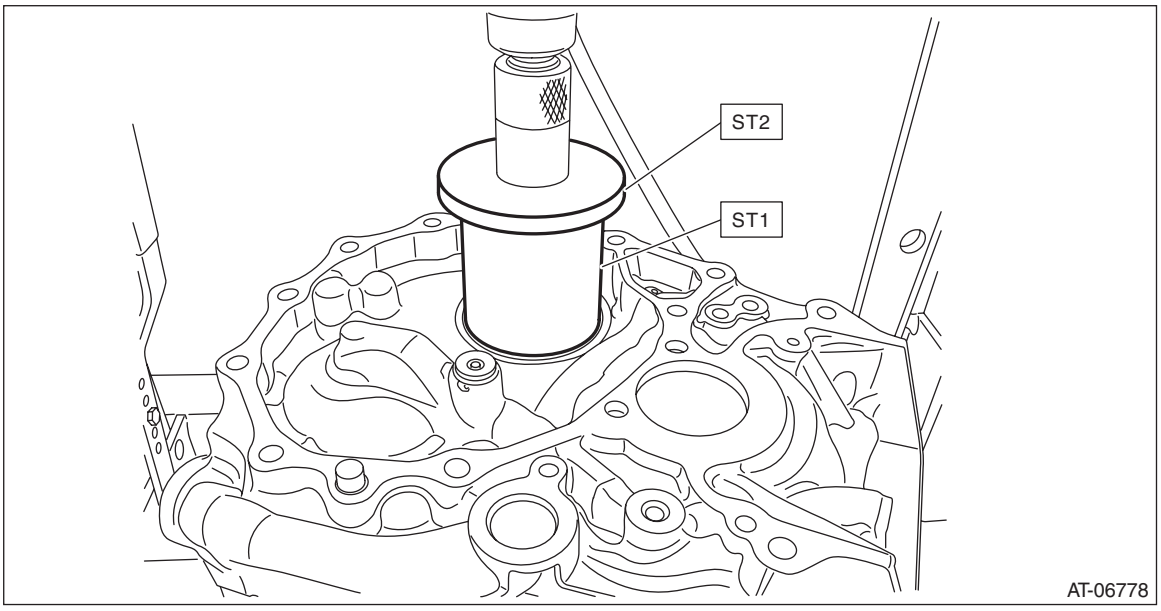

(5) Using the ST, install the rear roller bearing outer race to the drive pinion retainer.
ST 20099AE020 INSTALLER

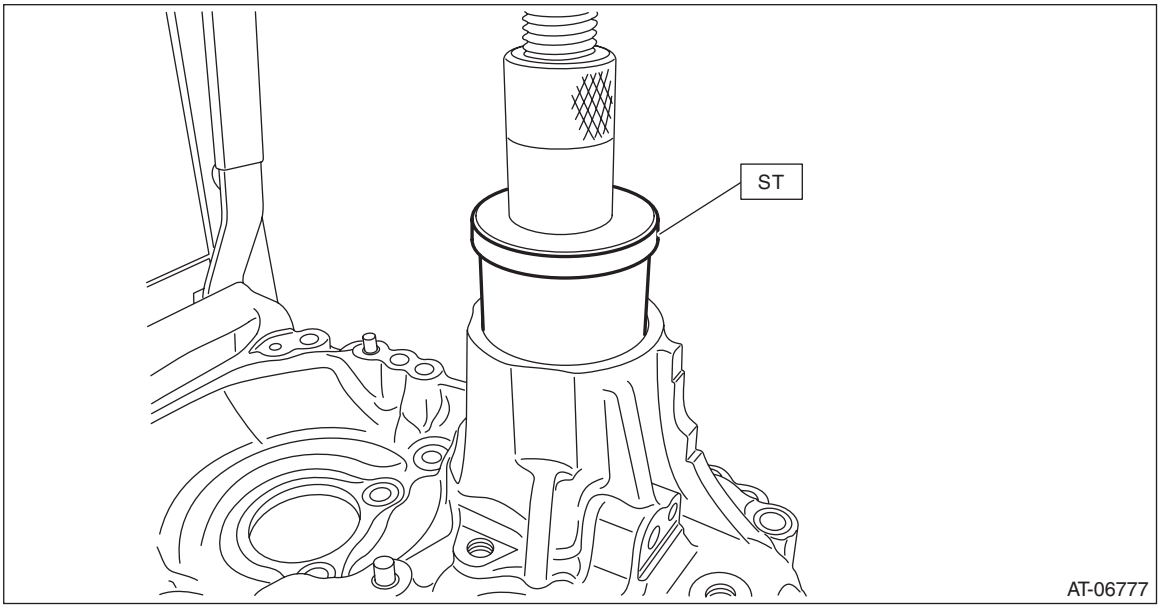

(6) Place the drive pinion retainer on the surface plate, and install the inner race to the rear roller bearing outer race.

NOTE:
Place the drive pinion retainer so that the mating surface of the drive pinion retainer (mating surface with the converter case) contacts the surface plate.

(7) Measure the height “D” from the end face of the rear roller bearing inner race to the surface plate.

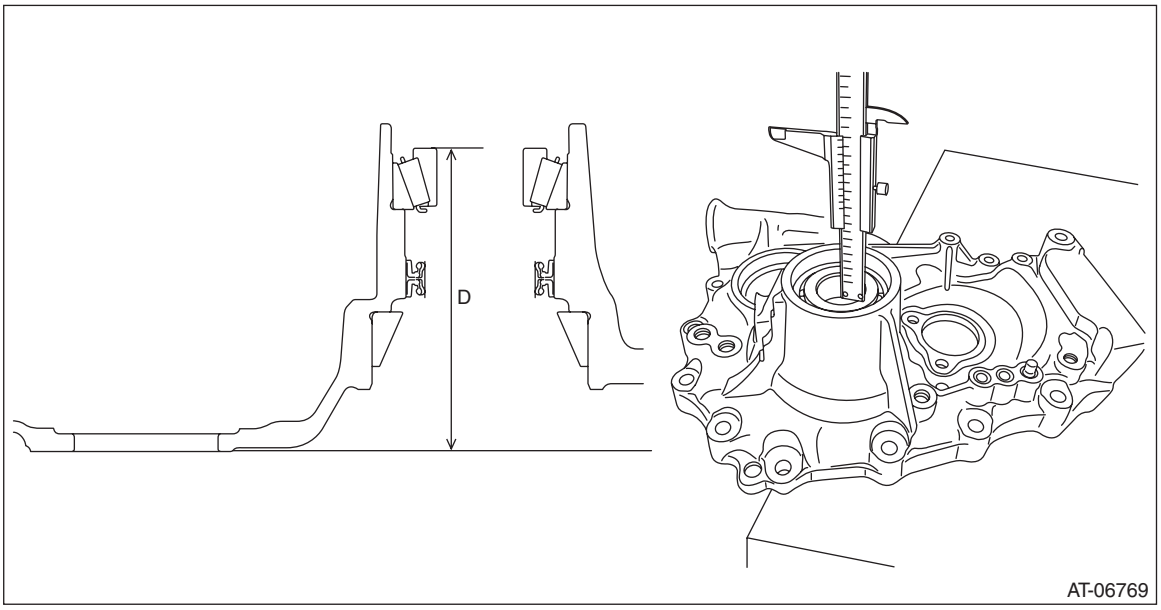

(8) Install the inner race to the front roller bearing outer race.
(9) Measure the depth “E” from the end face of the front roller bearing inner race to the end face of the ST.
ST 499575400 GAUGE

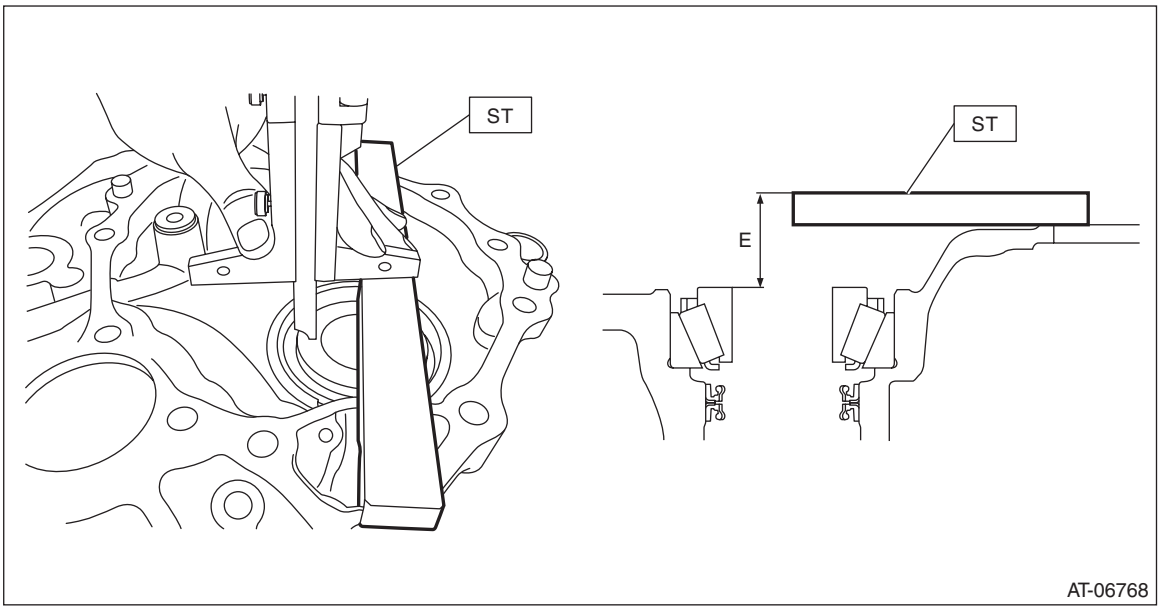

(10) Using following formula, select one to three drive pinion washers.
T (mm) = D – (A + B + C + E – 15) – (0±0.0125)
[T (in) = D – (A + B + C + E – 0.591) – (0±0.0005)]
A: Front roller bearing width
B: Rear roller bearing width
C: Spacer width
D: Height from end face of rear roller bearing inner race to surface plate
E: Depth from end face of front roller bearing inner race to end face of ST
15 mm (0.591 in): Thickness of ST
T: Drive pinion washer thickness
0±0.0125 mm (0±0.0005 in): Clearance

Drive pinion washer	
Part No.	Thickness mm (in)
38336AA750	0.150 (0.0059)
38336AA760	0.175 (0.0069)
38336AA770	0.200 (0.0079)
38336AA780	0.225 (0.0089)
38336AA790	0.250 (0.0098)
38336AA800	0.275 (0.0108)
38336AA810	0.300 (0.0118)
38336AA820	0.400 (0.0157)

4) Measure and record the drive pinion shim thickness to be reused.
5) Install the drive pinion shim that is reused for the drive pinion shaft.
6) Using the ST1 and ST2, press-fit the inner race to the drive pinion shaft.
ST1 899580100 INSTALLER
ST2 927130000 EXTENSION DRIVE SHAFT

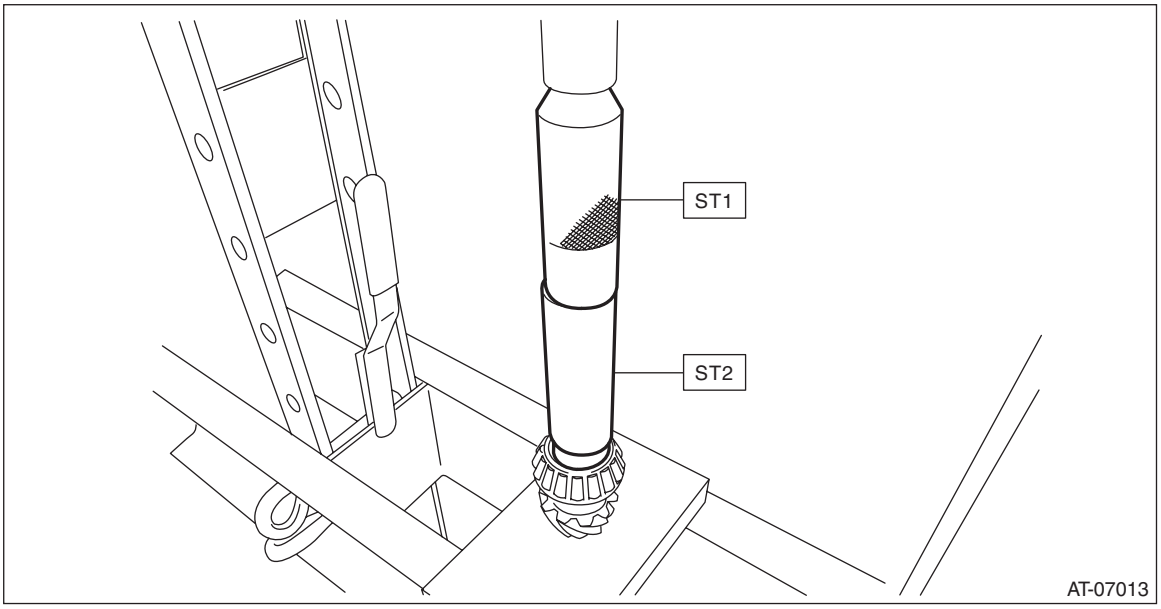

7) Install the drive pinion spacer.

NOTE:
Replace the O-ring with a new part after tooth contact inspection.

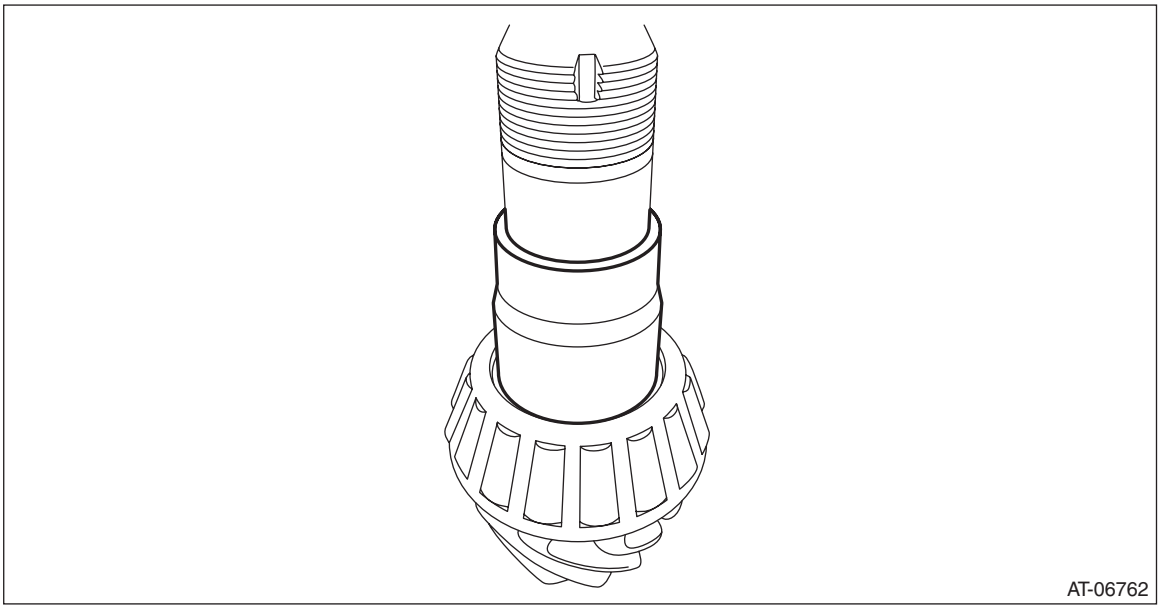

8) Install the selected drive pinion washer.

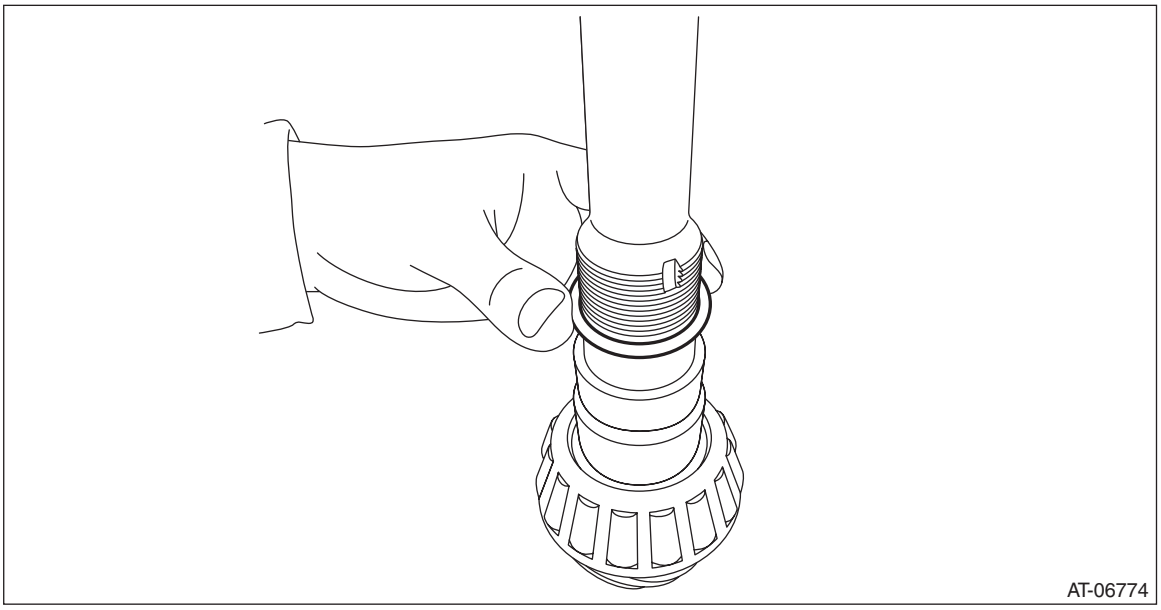

9) Insert the drive pinion shaft into the drive pinion retainer.

CAUTION:
Be careful not to damage the oil seal.

10) Install the inner bearing and lock nut.

NOTE:
Use a new lock nut.

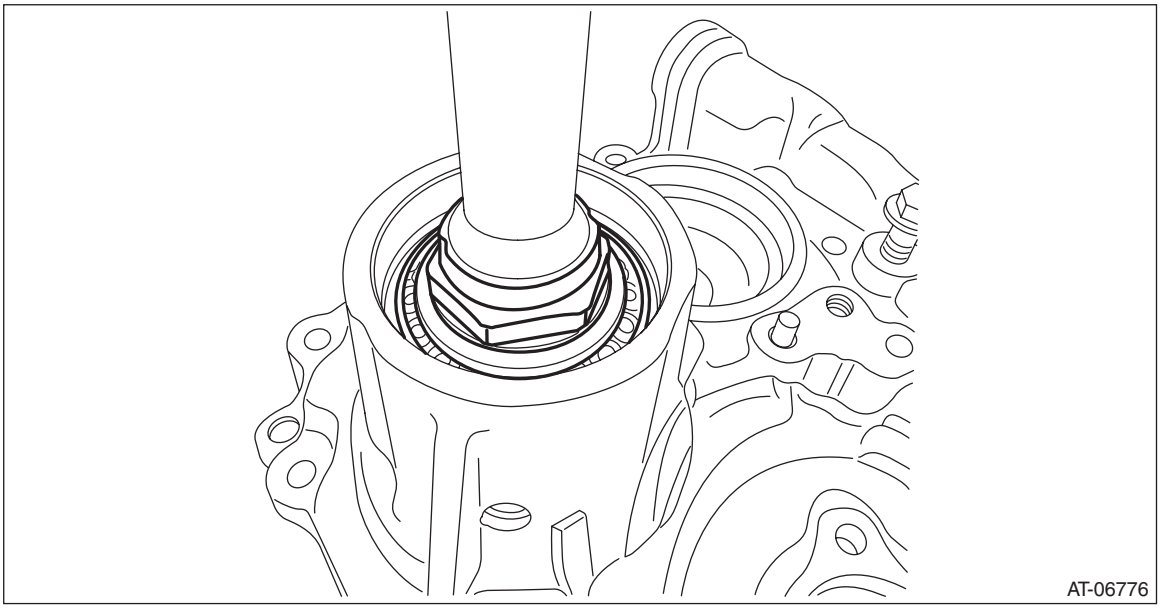

11) Using the ST, tighten the lock nut to the specified torque so that the starting torque of the drive pinion shaft is within the specified range.

CAUTION:
Before inspecting the starting torque, apply differential gear oil to roller of bearing and rotate the bearing several times.

NOTE:
- Tighten the lock nut while directly aligning ST2 and torque wrench.
- If the starting torque is not within the specified range, select the drive pinion washer, and repeat the step until the starting torque is within the specified range.
- When a thicker drive pinion washer is selected, the starting torque decreases. When a thinner drive pinion washer is selected, the starting torque increases.

Starting torque:
5.1 — 17.1 N (0.5 — 1.7 kgf, 1.1 — 3.8 lbf)

ST1 499787500 ADAPTER
ST2 499787700 WRENCH
ST3 498937110 HOLDER

Using the following formula, calculate the tightening torque for a torque wrench.
$T2 = L2/(L1 + L2) \times T1$
T1: 170 — 250 N·m (17.3 — 25.5 kgf-m, 125.4 — 184.4 ft-lb) [Specified tightening torque range]
T2: Tightening torque
L1: ST1 length 0.072 m (2.83 in)
L2: Torque wrench length
Example:

Torque wrench length m (in)	Tightening torque N·m (kgf-m, ft-lb)
0.4 (15.75)	144 — 211 (14.7 — 21.5, 106.2 — 155.6)
0.45 (17.72)	147 — 215 (15.0 — 21.9, 108.4 — 158.6)
0.5 (19.69)	149 — 218 (15.2 — 22.2, 109.9 — 160.8)
0.55 (21.65)	150 — 221 (15.3 — 22.5, 110.6 — 163.0)

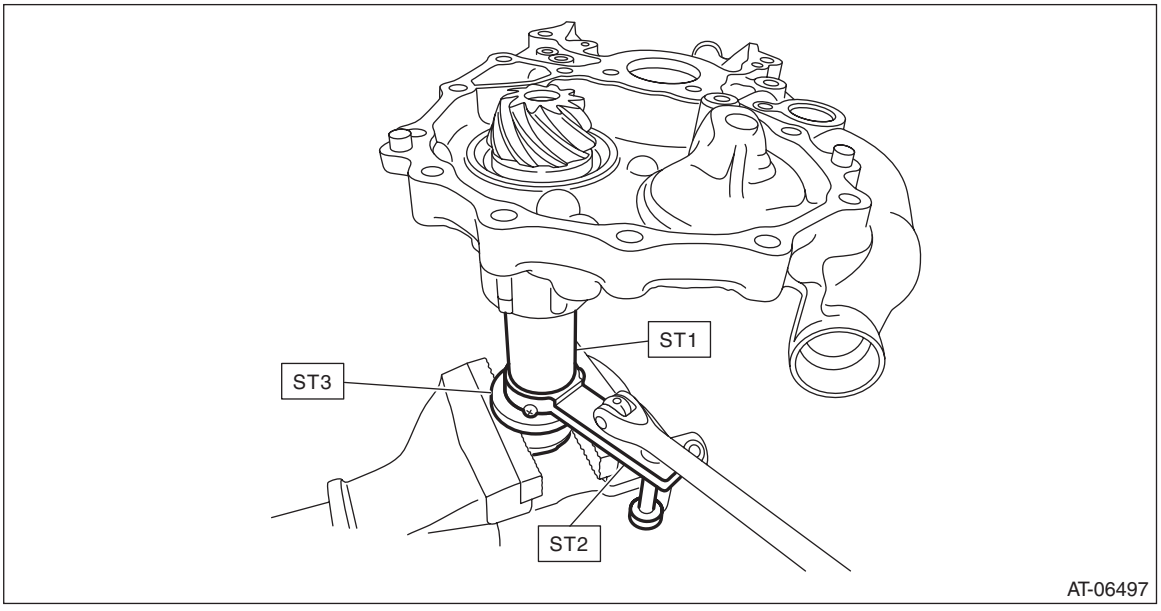

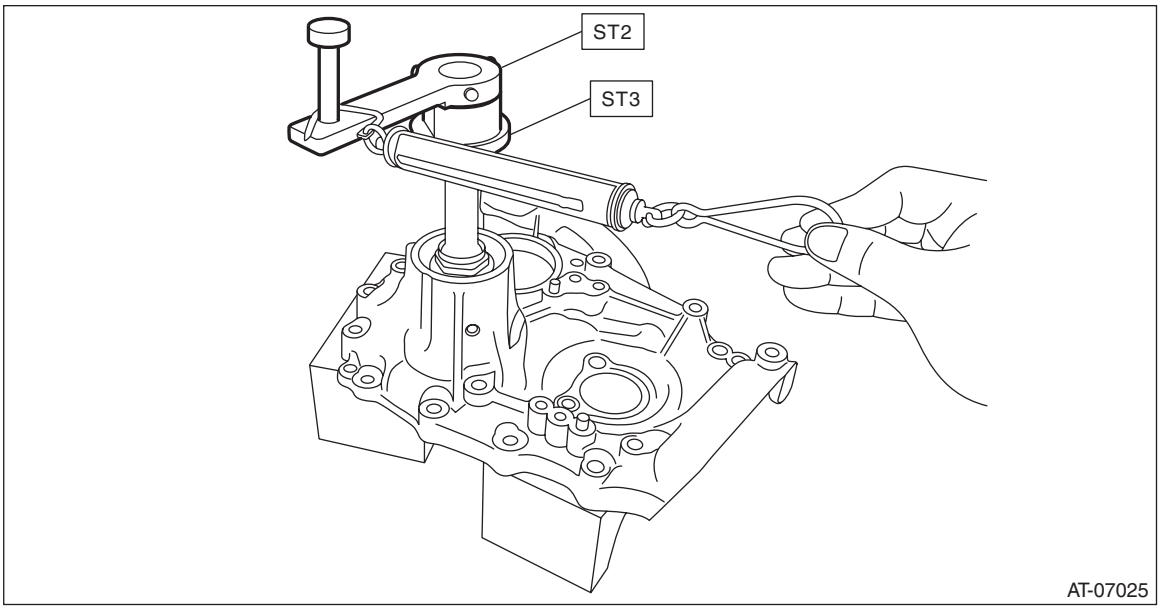

12) Install the drive pinion retainer to the converter case, and check the backlash and tooth contact. <Ref. to CVT(TR580)-339, ADJUSTMENT, Drive Pinion Shaft Assembly.> <Ref. to CVT(TR580)-362, ADJUSTMENT, Front Differential Assembly.>
13) Remove the drive pinion retainer from converter case. <Ref. to CVT(TR580)-317, REMOVAL, Drive Pinion Shaft Assembly.>
14) Remove the drive pinion spacer from the drive pinion shaft. <Ref. to CVT(TR580)-320, DISASSEMBLY, Drive Pinion Shaft Assembly.>
15) Install the O-ring to the drive pinion shaft.

NOTE:
- Use new O-rings.
- Apply CVTF to the O-rings.

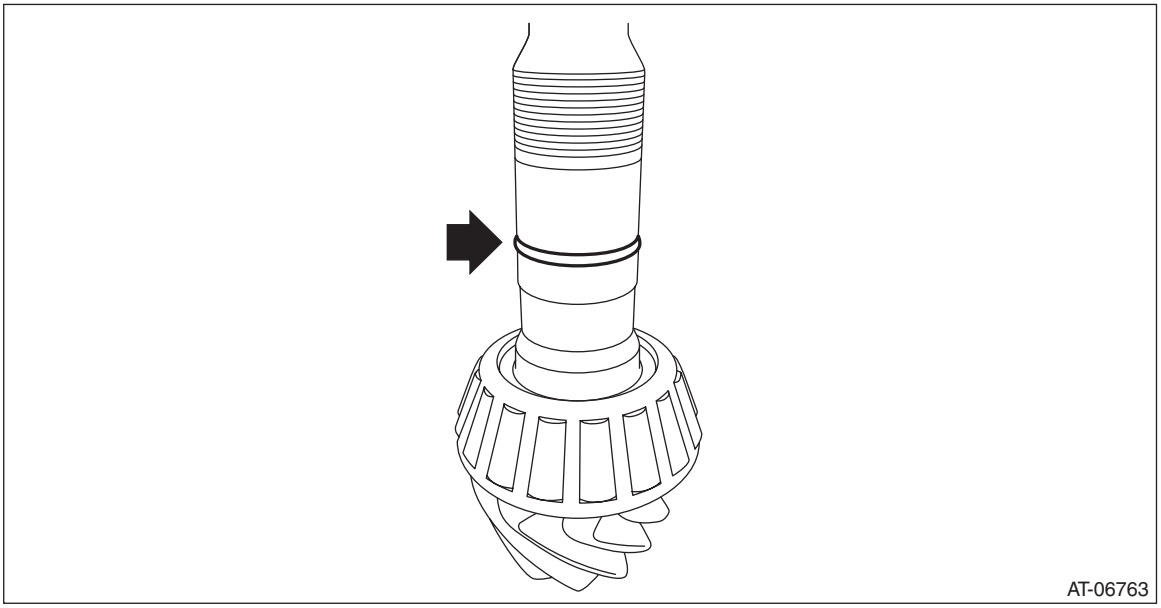

16) Install the drive pinion spacer to the drive pinion shaft.

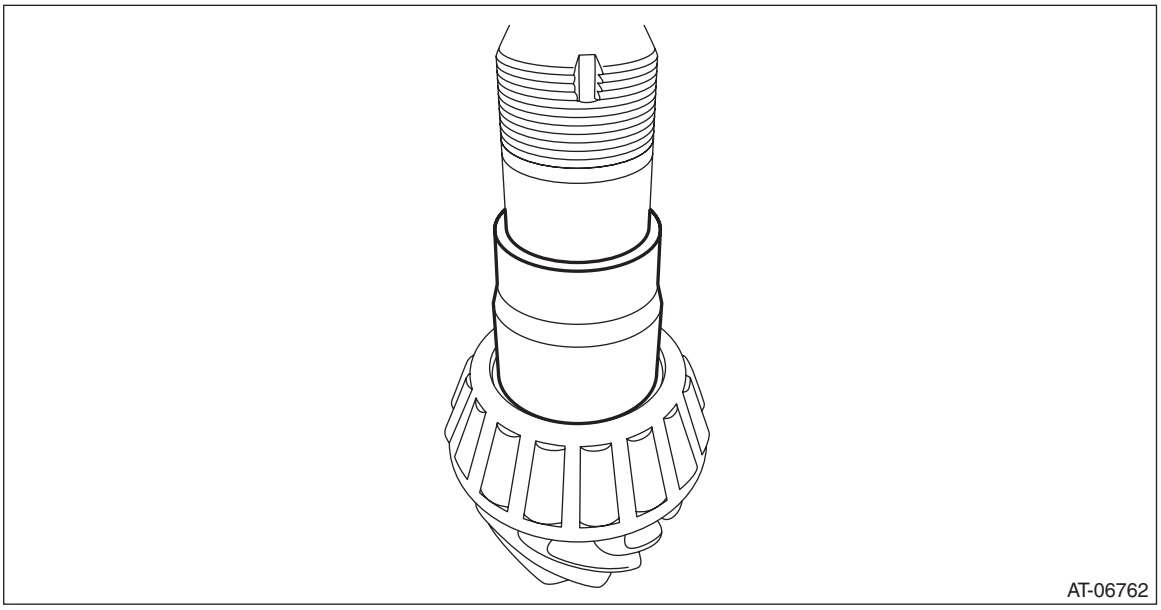

17) Install the drive pinion washer.

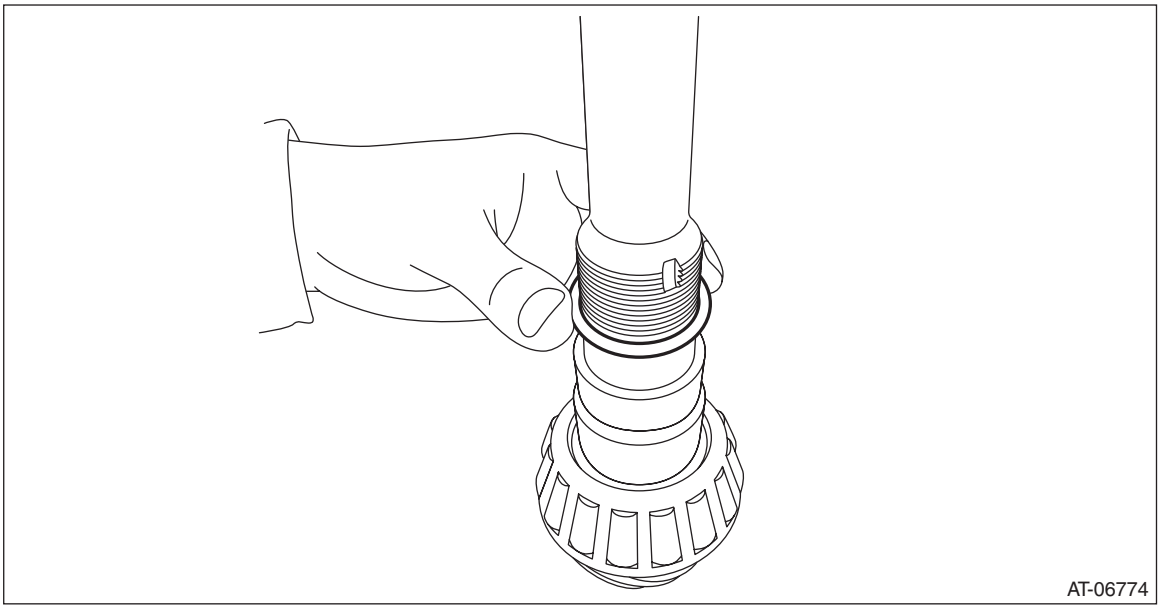

18) Insert the drive pinion shaft into the drive pinion retainer.

CAUTION:
Be careful not to damage the oil seal.

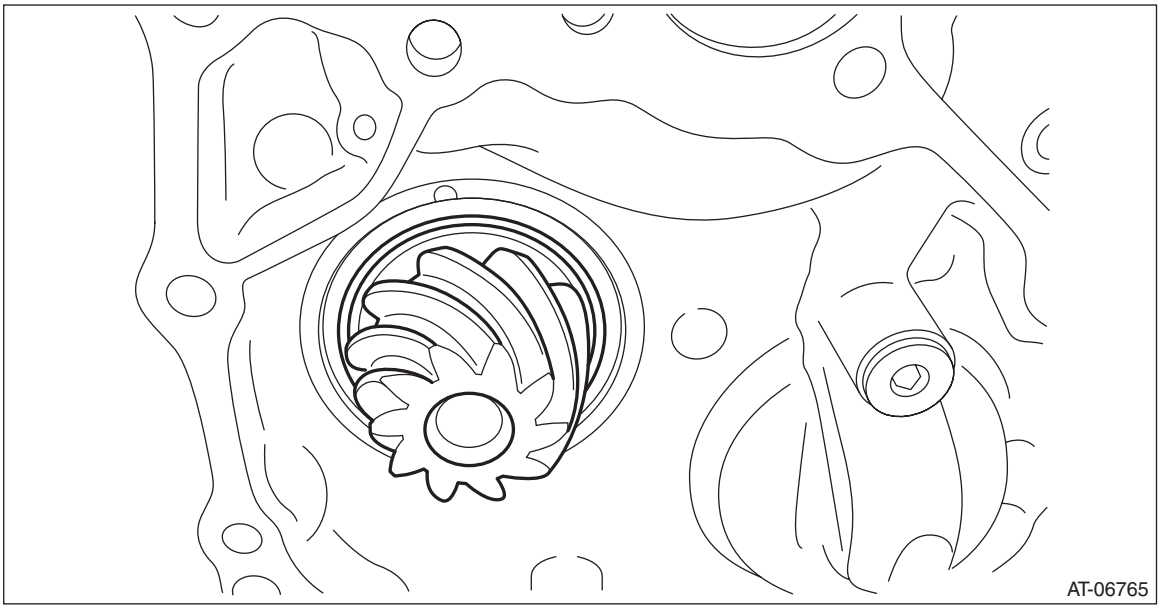

19) Install the inner bearing and lock nut.

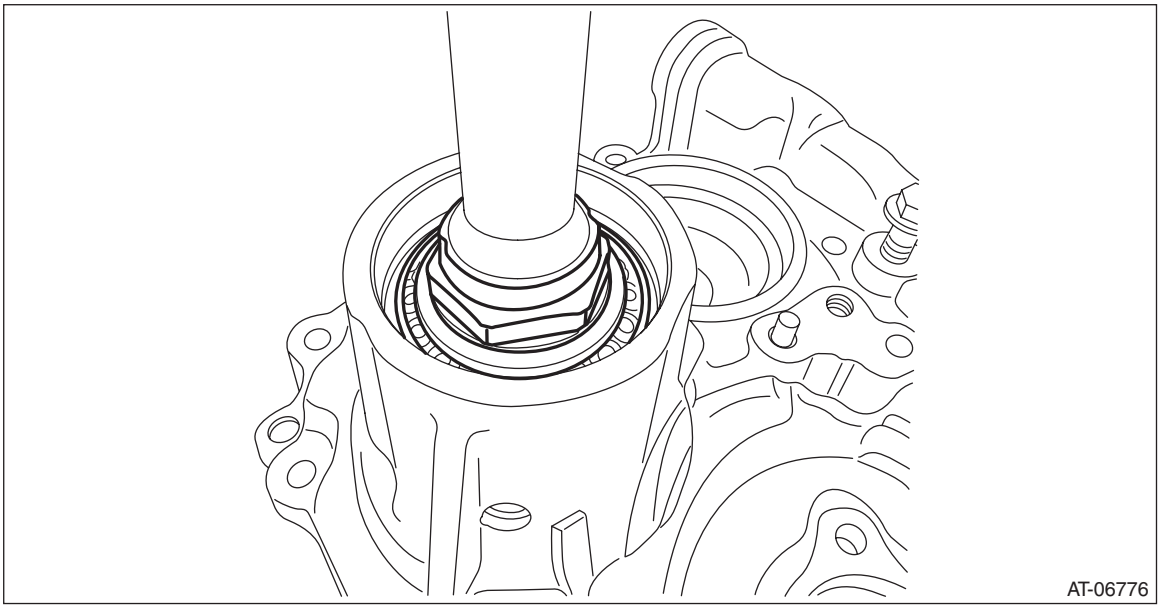

20) Using the ST, tighten the lock nut to the specified torque so that the starting torque of the drive pinion shaft is within the specified range.

CAUTION:
Before inspecting the starting torque, apply differential gear oil to roller of bearing and rotate the bearing several times.

NOTE:
- Tighten the lock nut while directly aligning ST2 and torque wrench.
- If the starting torque is not within the specified range, select the drive pinion washer, and repeat the step until the starting torque is within the specified range.
- When a thicker drive pinion washer is selected, the starting torque decreases. When a thinner drive pinion washer is selected, the starting torque increases.

Starting torque:
5.1 — 17.1 N (0.5 — 1.7 kgf, 1.1 — 3.8 lbf)

ST1 499787500 ADAPTER
ST2 499787700 WRENCH
ST3 498937110 HOLDER

Using the following formula, calculate the tightening torque for a torque wrench.
$T2 = L2/(L1 + L2) \times T1$
T1: 170 — 250 N·m (17.3 — 25.5 kgf-m, 125.4 — 184.4 ft-lb) [Specified tightening torque range]
T2: Tightening torque
L1: ST1 length 0.072 m (2.83 in)
L2: Torque wrench length
Example:

Torque wrench length m (in)	Tightening torque N·m (kgf-m, ft-lb)
0.4 (15.75)	144 — 211 (14.7 — 21.5, 106.2 — 155.6)
0.45 (17.72)	147 — 215 (15.0 — 21.9, 108.4 — 158.6)
0.5 (19.69)	149 — 218 (15.2 — 22.2, 109.9 — 160.8)
0.55 (21.65)	150 — 221 (15.3 — 22.5, 110.6 — 163.0)

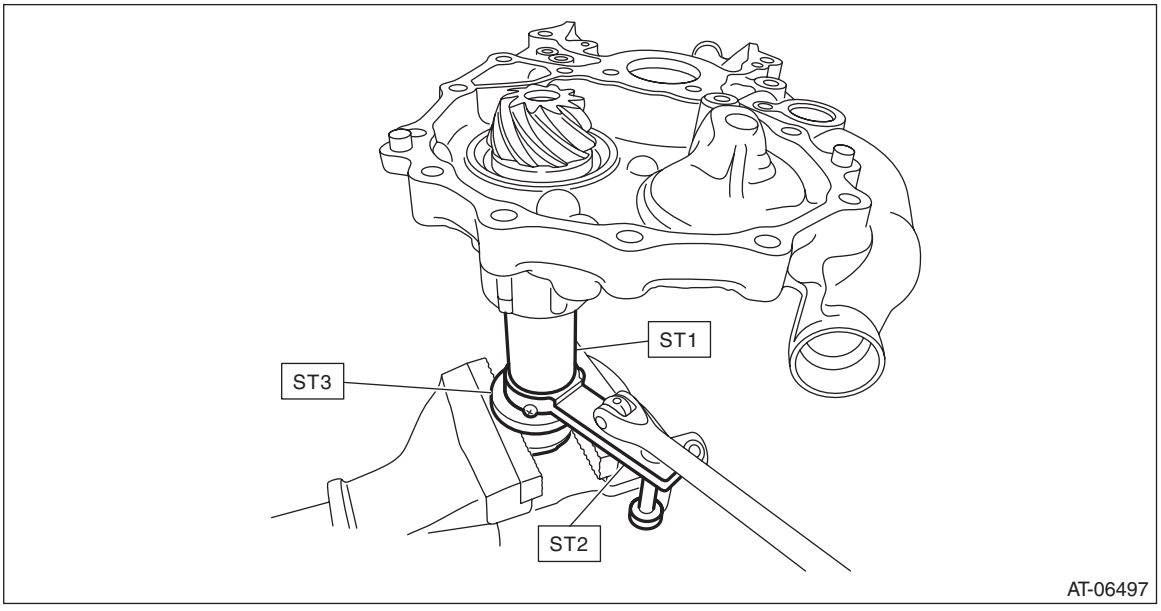

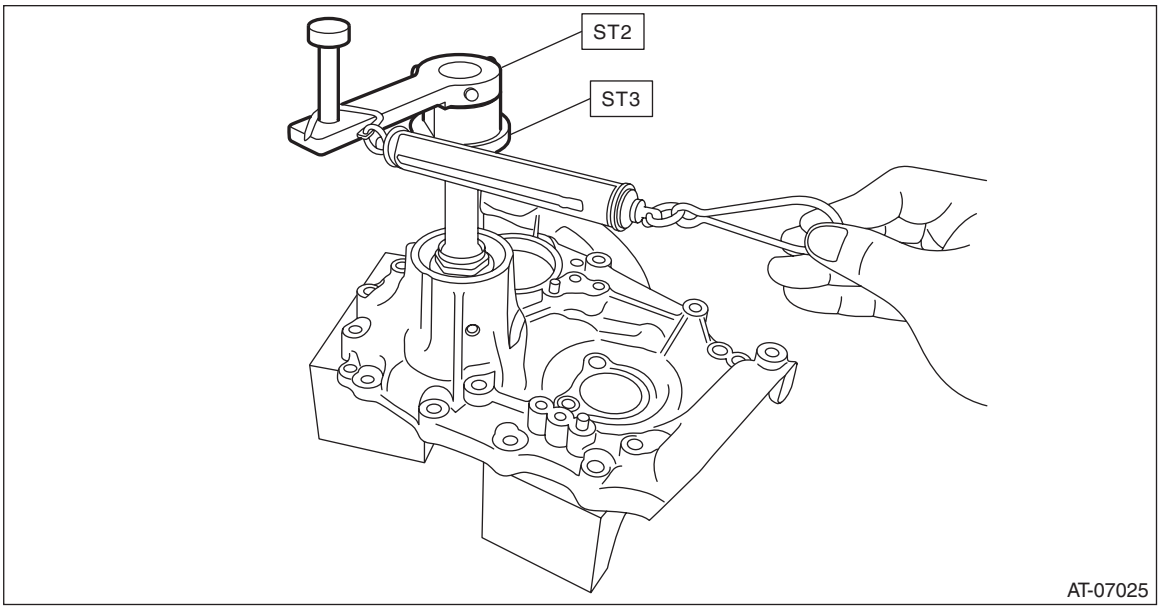

21) Crimp the lock nut in 2 locations.
22) Using the ST, install the plug.
ST1 499755602 PRESS SNAP RING
ST2 398177700 INSTALLER

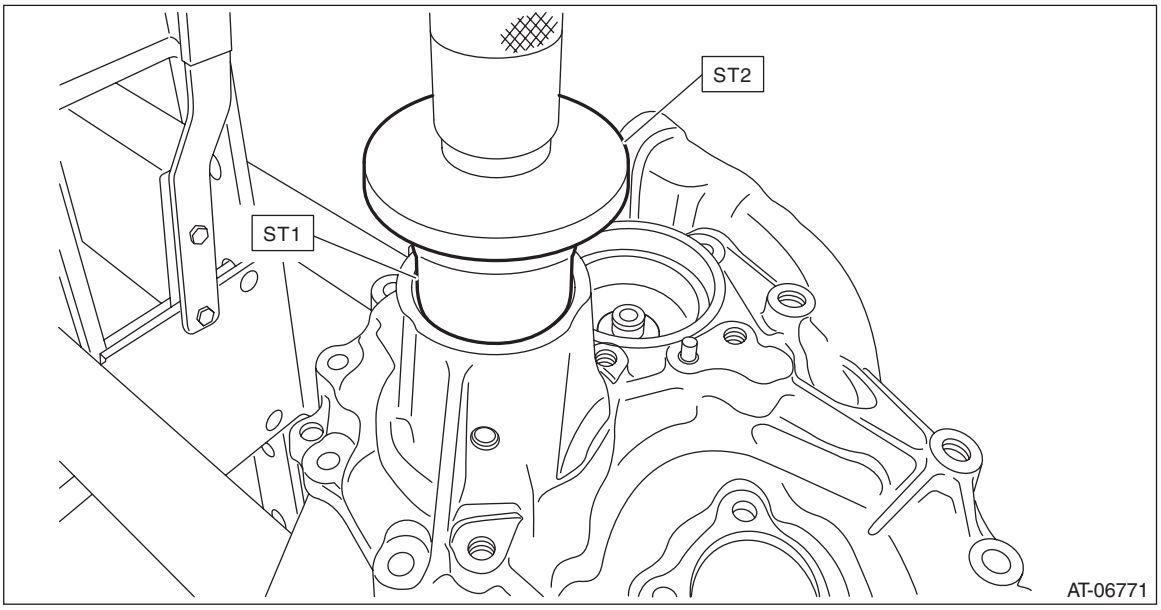

E: INSPECTION

- Make sure that all component parts are free of scratches, holes and other faults.
- Check the tooth contact. <Ref. to CVT(TR580)-339, ADJUSTMENT, Drive Pinion Shaft Assembly.>
- Apply CVTF to bearing and rotate the bearing to check for noise or dragging etc.
- Check the starting torque of drive pinion shaft.

CAUTION:
Before measuring, apply differential gear oil to roller of bearing and rotate the bearing several times.
ST1 498937110 HOLDER
ST2 499787700 WRENCH

Starting torque:
5.1 — 17.1 N (0.5 — 1.7 kgf, 1.1 — 3.8 lbf)

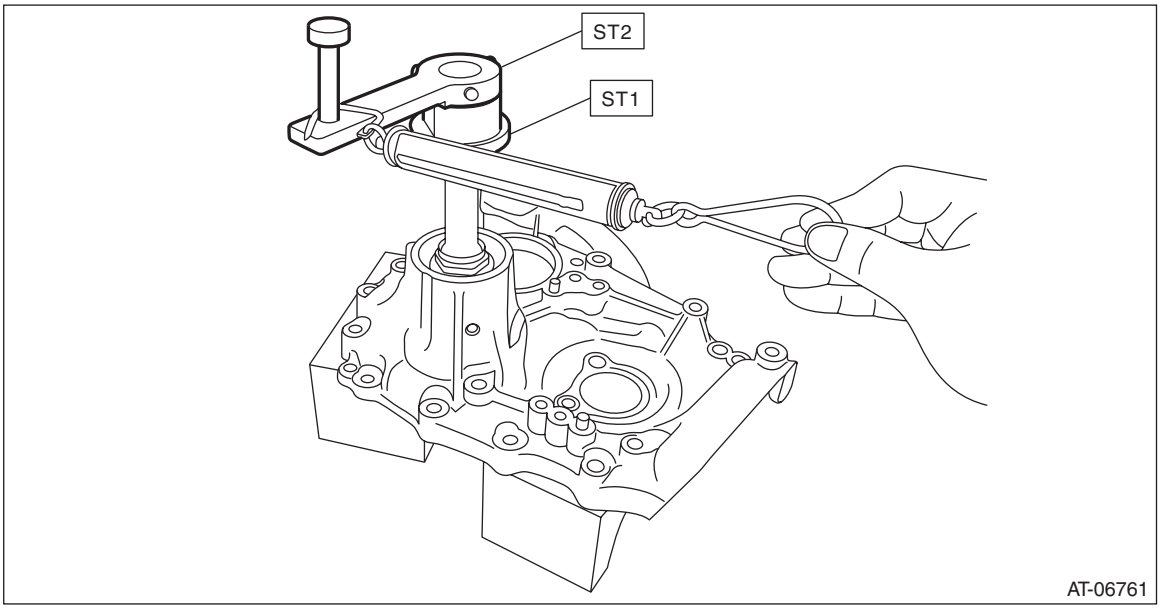

F: ADJUSTMENT

1) Remove the liquid gasket from the mating surface completely.
2) Using the ST, install the drive pinion retainer to converter case.
ST 18270KA020 SOCKET (E20)

NOTE:
Do not confuse the three different-length bolts when installing.

Tightening torque:
43 N·m (4.4 kgf-m, 31.7 ft-lb)

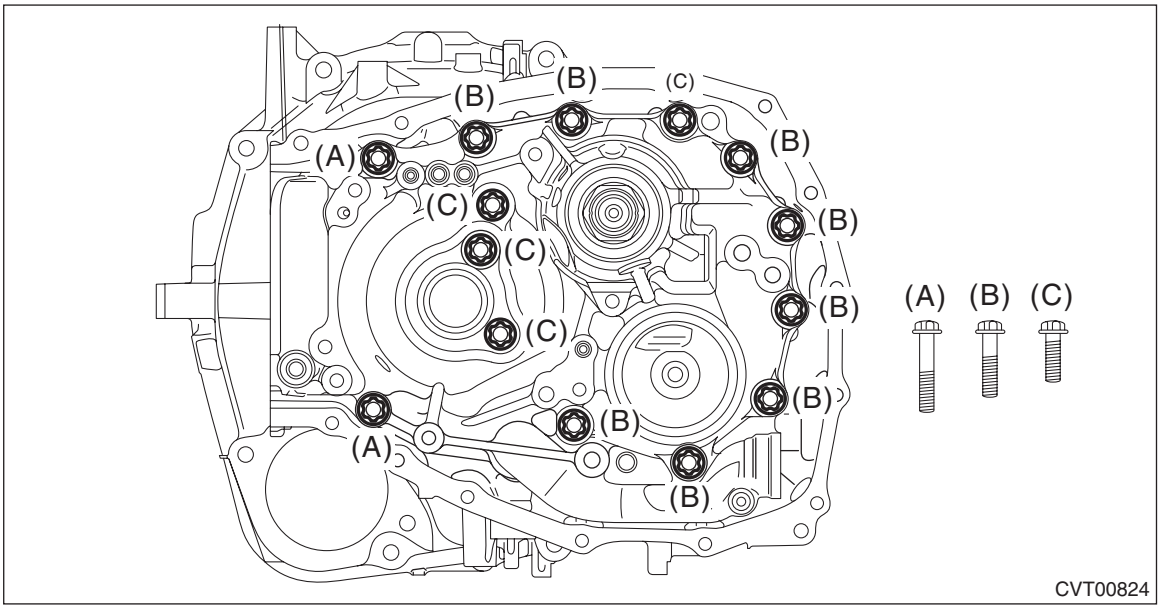

3) Rotate the drive pinion several times using ST1 and ST2.
ST1 498937110 HOLDER
ST2 499787700 WRENCH

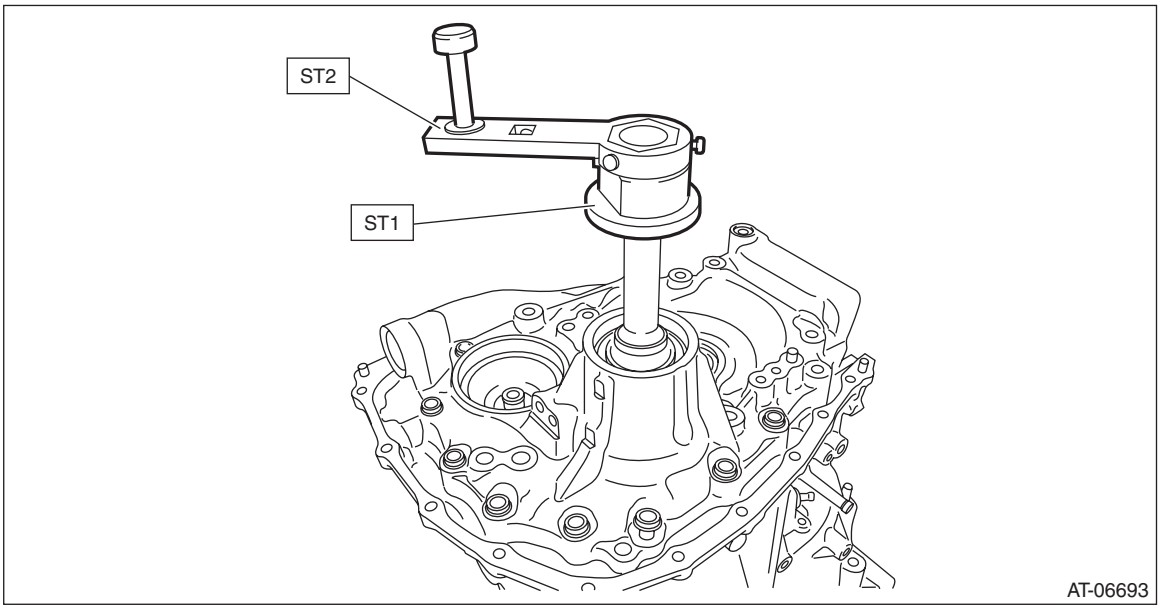

4) Adjust the drive pinion and hypoid driven gear backlash. <Ref. to CVT(TR580)-362, ADJUSTMENT, Front Differential Assembly.>
5) Using the ST, remove the drive pinion retainer from converter case.
ST 18270KA020 SOCKET (E20)
6) Apply lead-free red dye evenly on the both sides of three to four teeth of the hypoid driven gear. Then install the drive pinion retainer and rotate the drive pinion in both directions several times. Remove the drive pinion retainer and check the tooth contact pattern.
If the teeth contact is inappropriate, adjust the backlash or thickness of the shim. <Ref. to CVT(TR580)-362, ADJUSTMENT, Front Differential Assembly.>

NOTE:
After correction, wipe off the lead-free red dye.

Drive pinion shim	
Part No.	Thickness mm (in)
31451AA320	0.150 (0.0059)
31451AA330	0.175 (0.0069)
31451AA340	0.200 (0.0079)
31451AA350	0.225 (0.0089)
31451AA360	0.250 (0.0098)
31451AA370	0.275 (0.0108)

- Correct tooth contact

Check item: Tooth contact surface is slightly shifted toward the toe side under a no-load condition. (When driving, it moves towards the heel side.)

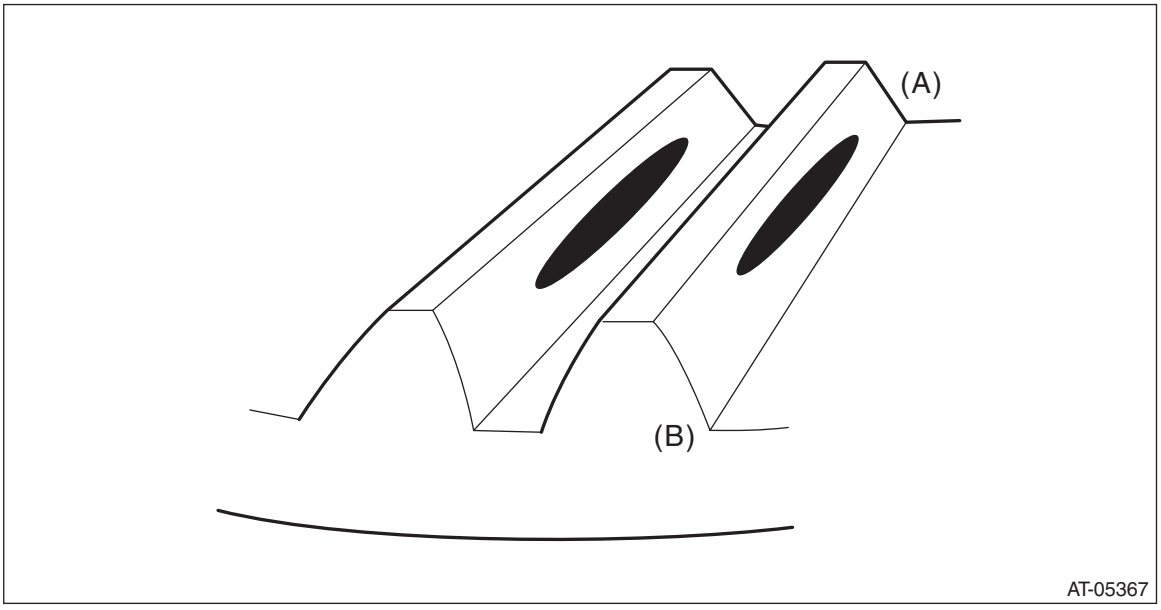

(A) Toe side
(B) Heel side

- Face contact

Check item: Backlash is too large.

Contact pattern

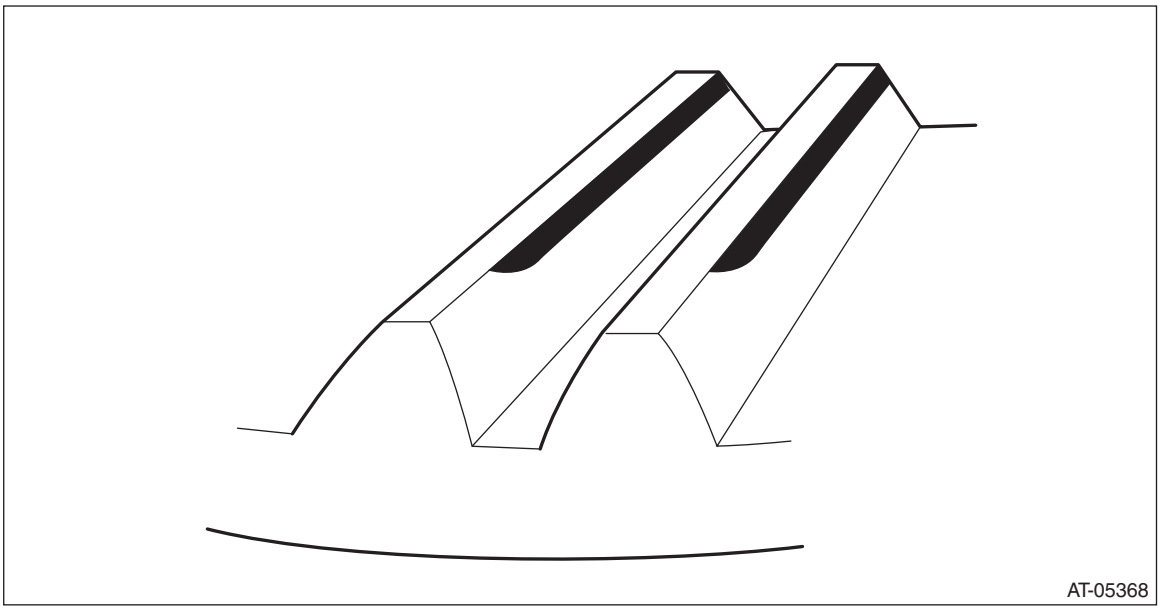

Corrective action: Increase thickness of drive pinion shim according to the procedures for moving the drive pinion close to hypoid driven gear.

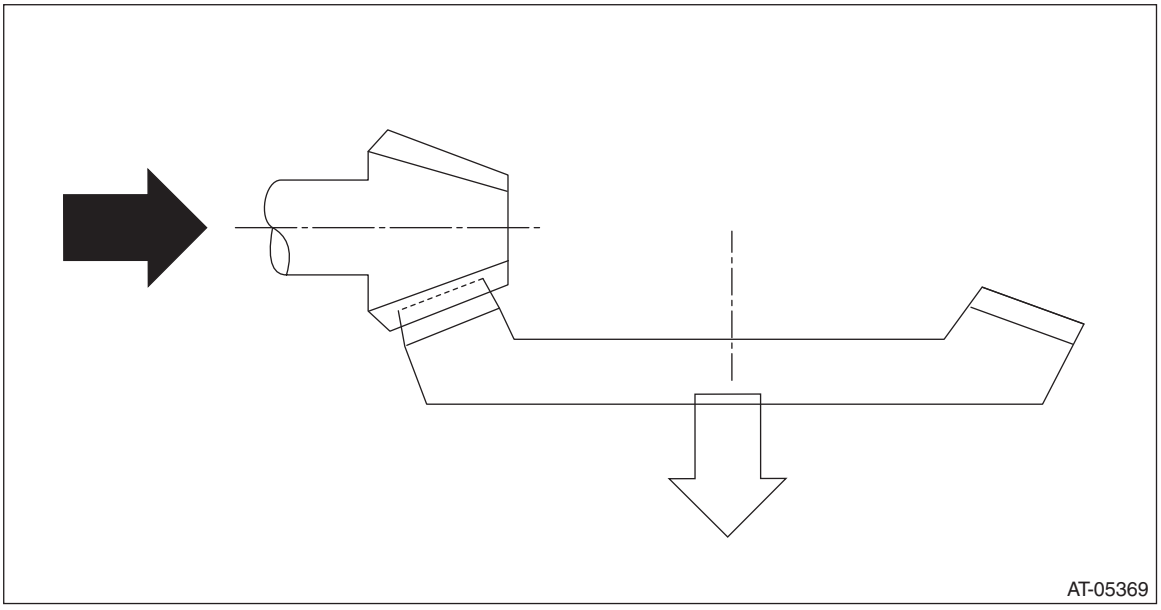

- Flank contact

Check item: Backlash is too small.

Contact pattern

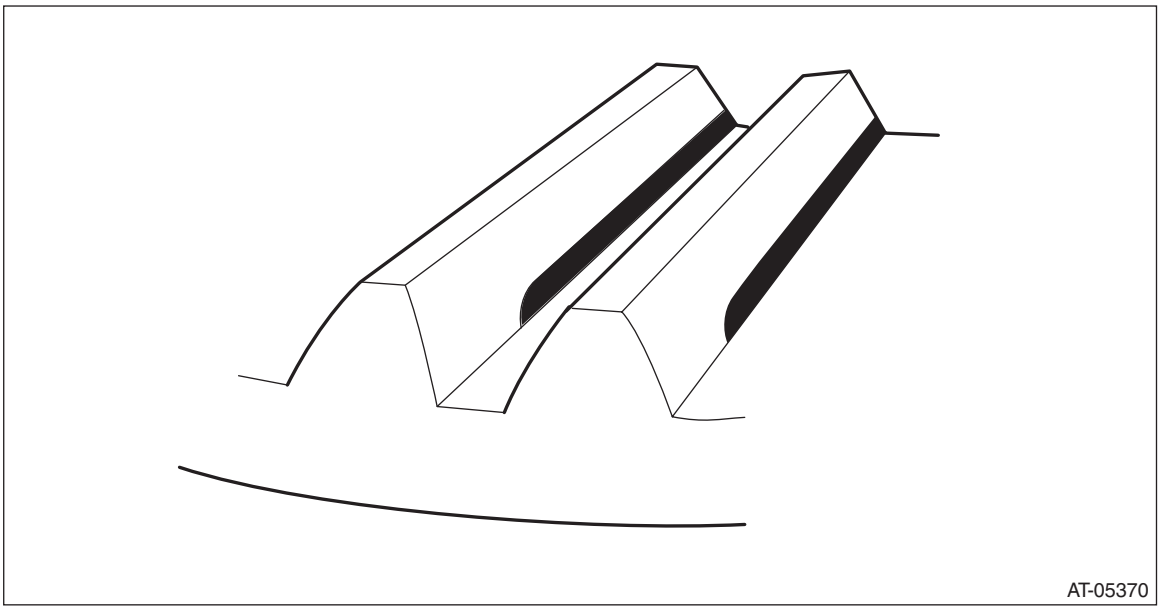

Corrective action: Reduce the thickness of the drive pinion shim according to the procedures for moving the drive pinion away from the hypoid driven gear.

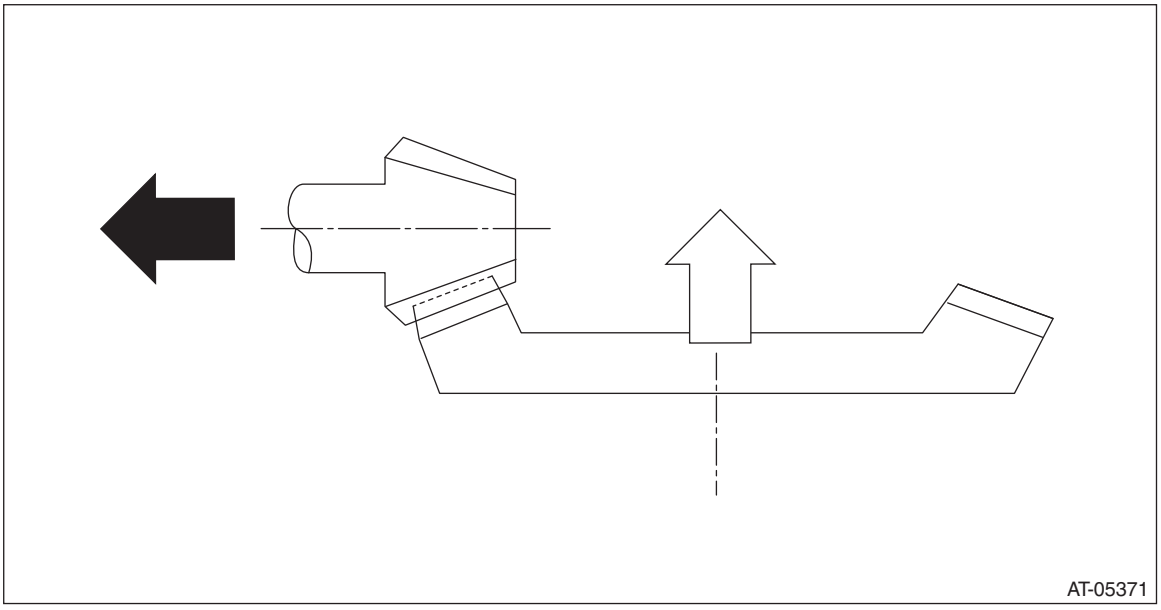

- Toe contact (inside contact)

Check item: Teeth contact area is too small.

Contact pattern

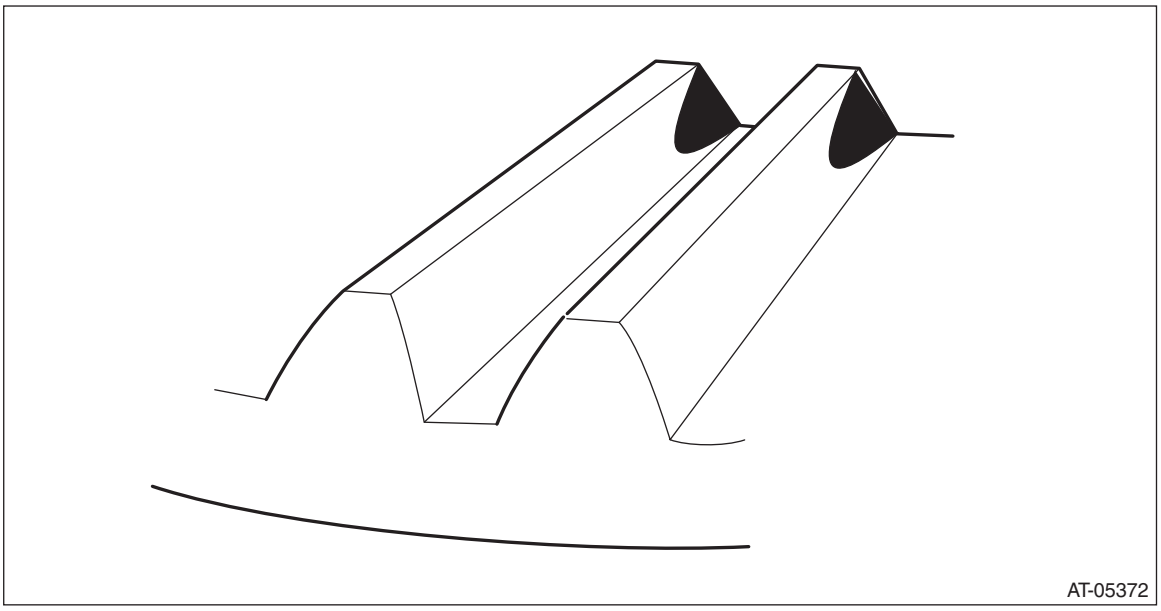

Corrective action: Reduce the thickness of the drive pinion shim according to the procedures for moving the drive pinion away from the hypoid driven gear side.

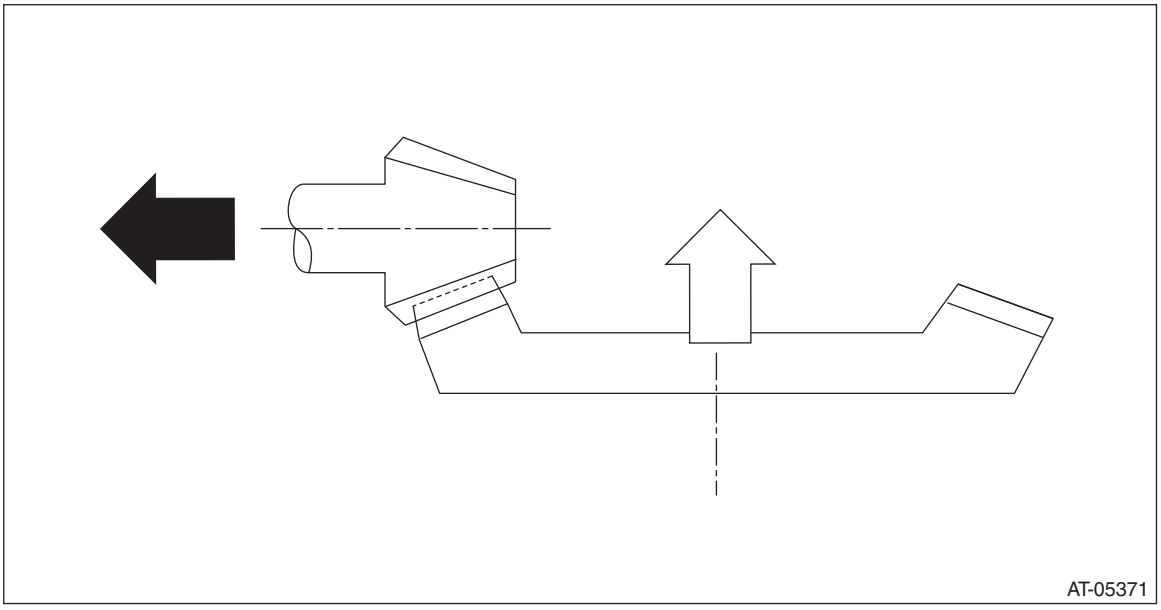

- Heel contact (outside end contact)

Check item: Teeth contact area is too small.

Contact pattern

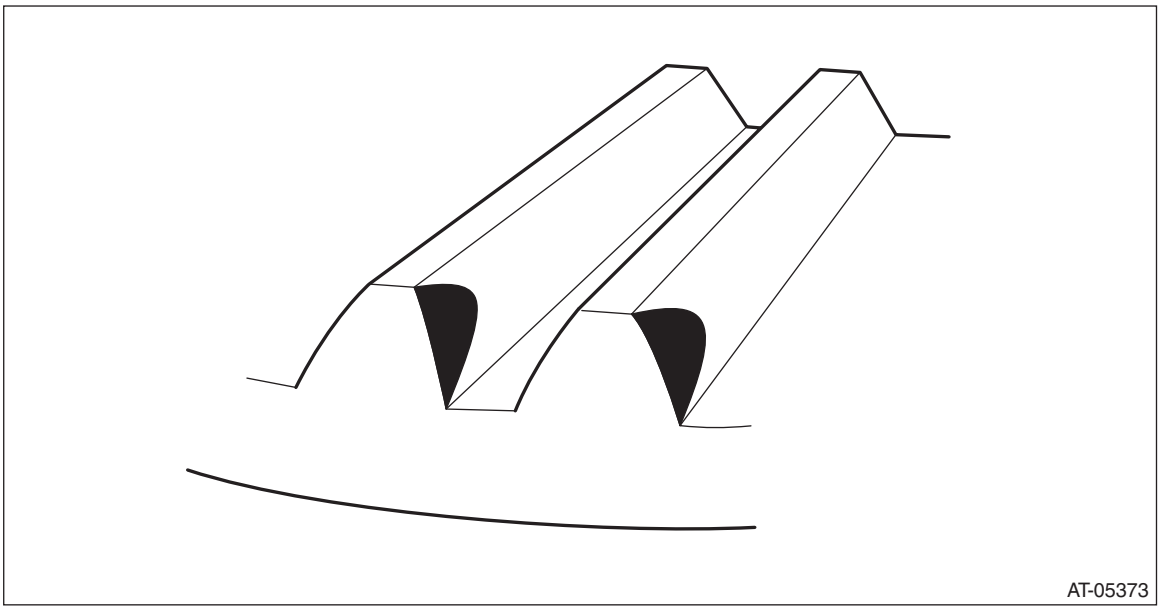

Corrective action: Increase the thickness of the drive pinion shim according to the procedures for moving the drive pinion closer to the hypoid driven gear.

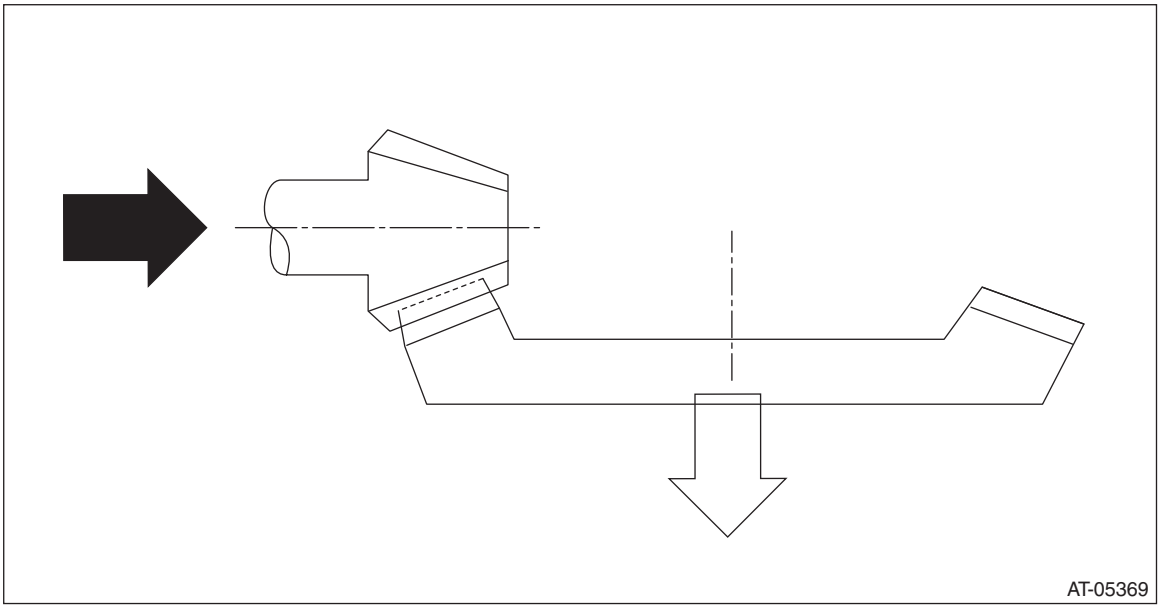

7) Using the ST, loosen the differential side retainer until the mounting groove of the O-ring appears, and then install the O-ring.

NOTE:
- When loosening the differential side retainer, record the number of the turns made.
- Perform this for both left and right differential side retainers.
- Use new O-rings.
- Apply the differential gear oil to O-ring.

ST 18658AA020 WRENCH COMPL RETAINER

8) Using the ST, tighten the retainer to the position before it is loosened.

ST 18658AA020 WRENCH COMPL RETAINER

9) Replace the differential side retainer oil seal with a new part. <Ref. to CVT(TR580)-100, Differential Side Retainer Oil Seal.>

10) Install the lock plate.

Tightening torque:
25 N·m (2.5 kgf-m, 18.4 ft-lb)

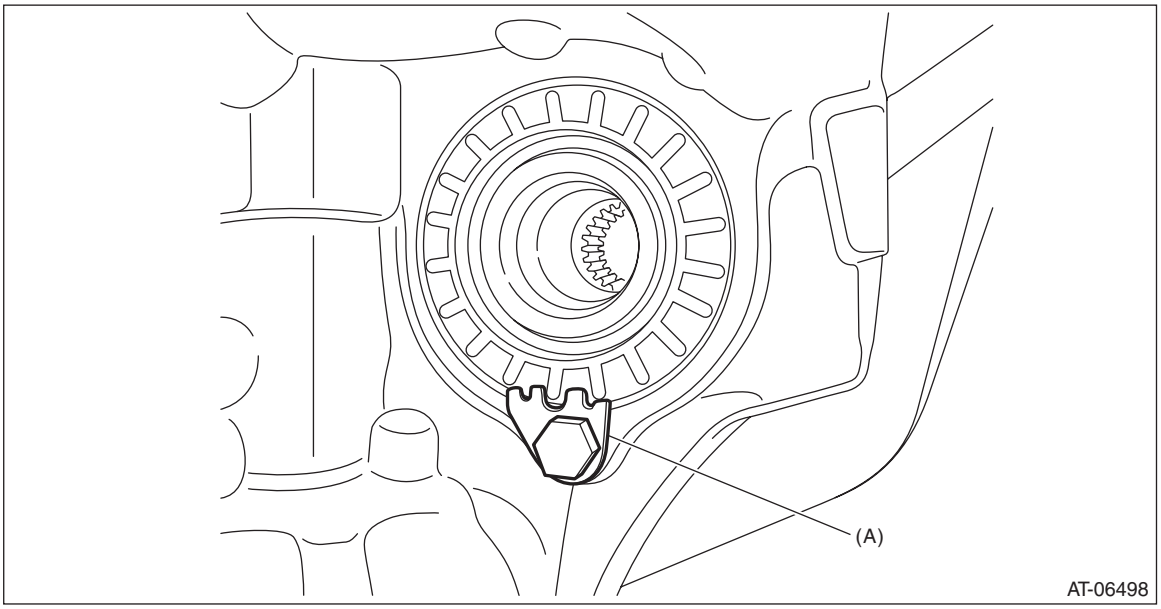

(A) Lock plate

46.Front Differential Assembly

A: REMOVAL

1) Remove the transmission assembly. <Ref. to CVT(TR580)-63, REMOVAL, Automatic Transmission Assembly.>
2) Remove the air breather hose. <Ref. to CVT(TR580)-190, REMOVAL, Air Breather Hose.>
3) Remove the control valve body. <Ref. to CVT(TR580)-133, REMOVAL, Control Valve Body.>
4) Remove the transmission harness. <Ref. to CVT(TR580)-147, REMOVAL, Transmission Harness.>
5) Remove the turbine speed sensor. <Ref. to CVT(TR580)-113, REMOVAL, Turbine Speed Sensor.>
6) Remove the secondary speed sensor. <Ref. to CVT(TR580)-118, REMOVAL, Secondary Speed Sensor.>
7) Remove the primary speed sensor. <Ref. to CVT(TR580)-123, REMOVAL, Primary Speed Sensor.>
8) Remove the inhibitor switch. <Ref. to CVT(TR580)-109, REMOVAL, Inhibitor Switch.>
9) Remove the extension case. <Ref. to CVT(TR580)-200, REMOVAL, Extension Case.>
10) Remove the transfer clutch assembly. <Ref. to CVT(TR580)-204, REMOVAL, Transfer Clutch.>
11) Remove the transfer driven gear assembly. <Ref. to CVT(TR580)-218, REMOVAL, Transfer Driven Gear.>
12) Remove the parking pawl. <Ref. to CVT(TR580)-221, REMOVAL, Parking Pawl.>
13) Remove the reduction driven gear assembly. <Ref. to CVT(TR580)-223, REMOVAL, Reduction Driven Gear.>
14) Remove the oil pan and oil strainer. <Ref. to CVT(TR580)-130, REMOVAL, Oil Pan and Strainer.>
15) Remove the transmission control device. <Ref. to CVT(TR580)-231, REMOVAL, Transmission Control Device.>
16) Remove the transmission case. <Ref. to CVT(TR580)-237, REMOVAL, Transmission Case.>
17) Remove the reduction drive gear. <Ref. to CVT(TR580)-256, REMOVAL, Reduction Drive Gear.>
18) Remove the primary pulley, secondary pulley and variator chain. <Ref. to CVT(TR580)-261, REMOVAL, Primary Pulley and Secondary Pulley.>
19) Remove the reverse brake assembly. <Ref. to CVT(TR580)-282, REMOVAL, Reverse Brake Assembly.>
20) Remove the forward clutch assembly. <Ref. to CVT(TR580)-297, REMOVAL, Forward Clutch Assembly.>
21) Remove the drive pinion shaft assembly. <Ref. to CVT(TR580)-317, REMOVAL, Drive Pinion Shaft Assembly.>
22) Remove the oil baffle.

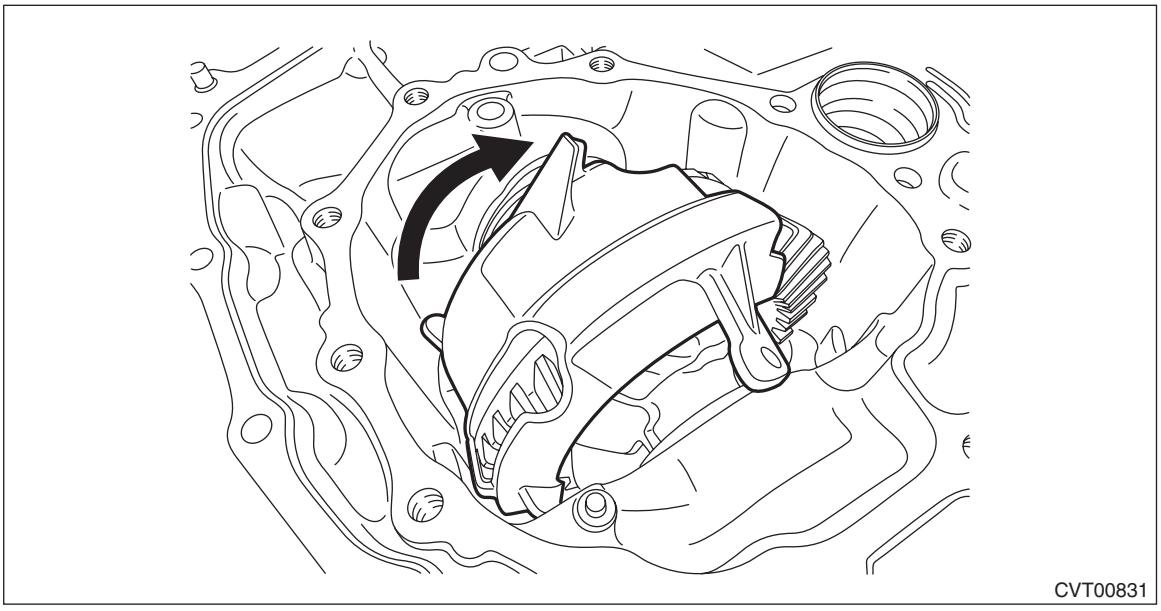
CVT00831

23) Remove the lock plates on both sides.

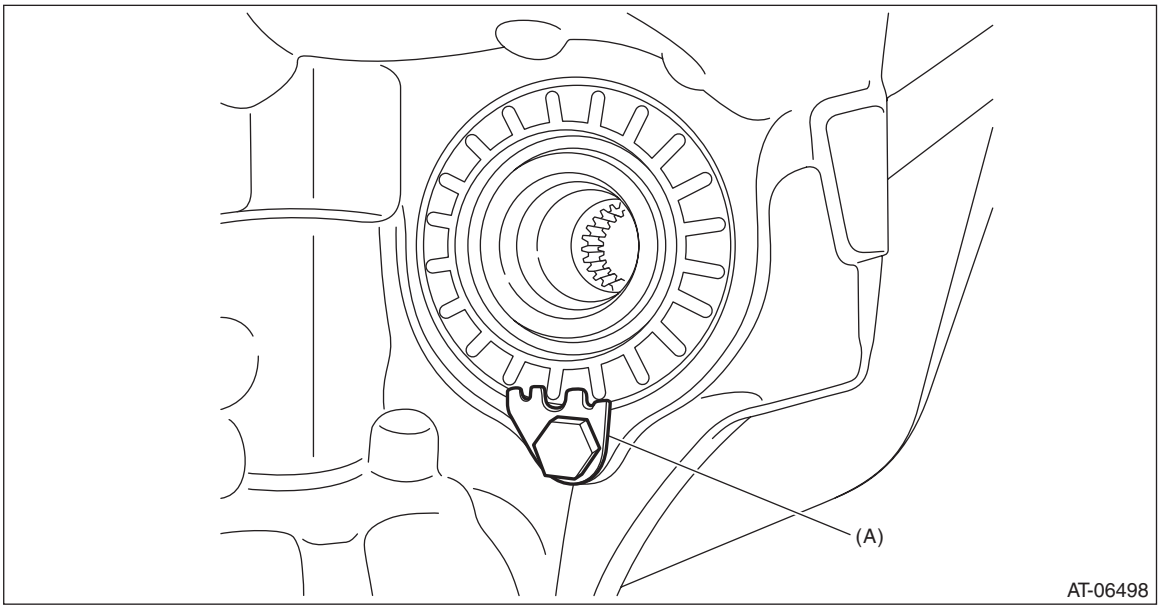

(A) Lock plate

24) Remove the differential side retainers using ST.

NOTE:
• When the wrench COMPL retainer interferes with the converter case, align the cutout portion with the interference part.
• Support the differential case assembly by hand to avoid damaging the retainer mounting hole of the converter case.
• Keep the left and right differential side retainers and left and right bearing outer races by attaching tags or in similar ways to make it possible to identify RH and LH sides.

ST 18658AA020 WRENCH COMPL RETAINER

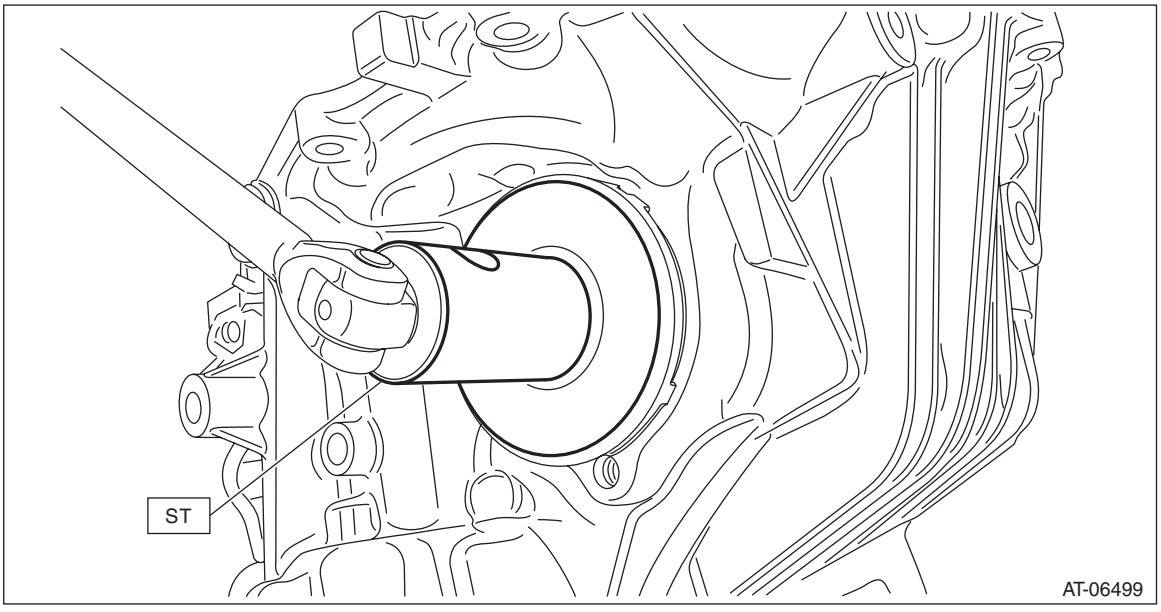

25) Remove the front differential assembly while being careful not to damage the attachment part of the retainer.

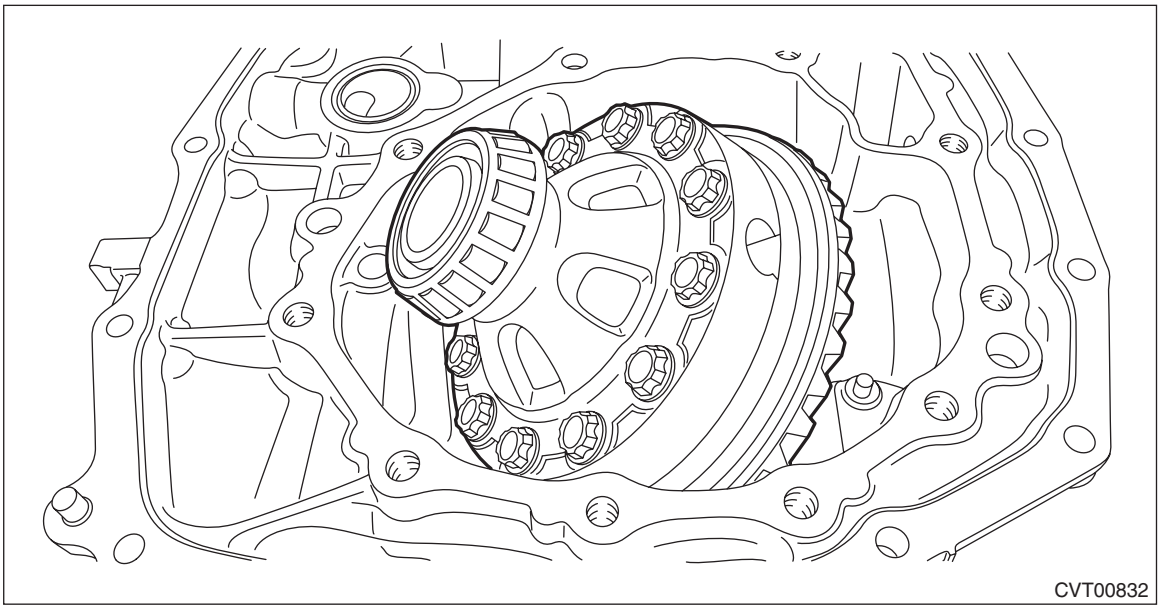

26) Remove the oil seals and O-rings from both differential side retainers. <Ref. to CVT(TR580)-354, SIDE RETAINER, DISASSEMBLY, Front Differential Assembly.>

B: INSTALLATION

1) Install the front differential assembly to the converter case.

NOTE:
Be careful not to damage the inside of the case (especially the mounting surface of the differential side retainers).

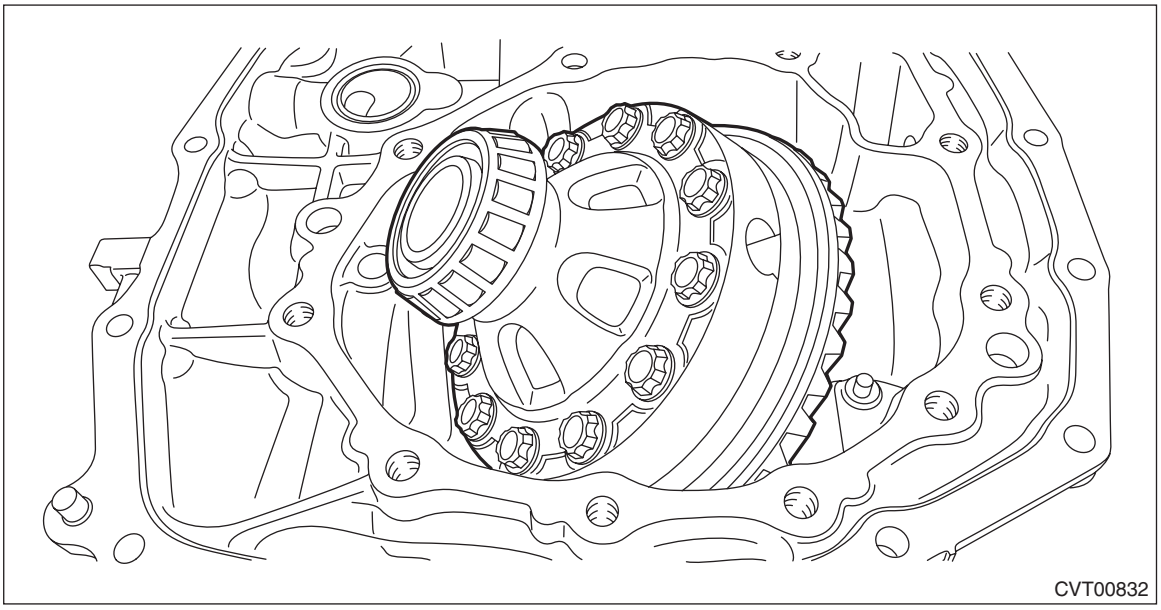

2) Install the bearing outer race.

3) Temporarily install the differential side retainers using ST.
ST 18658AA020 WRENCH COMPL RETAINER

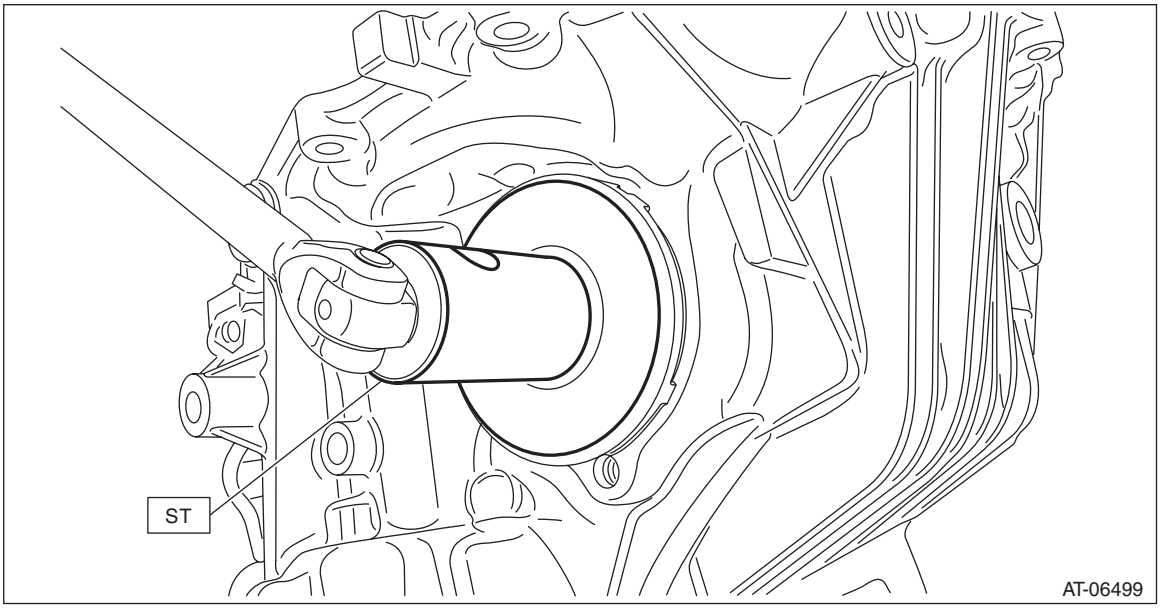

4) Adjust the backlash of the front differential. <Ref. to CVT(TR580)-362, ADJUSTMENT, Front Differential Assembly.>
5) Inspect and adjust the tooth contact. <Ref. to CVT(TR580)-339, ADJUSTMENT, Drive Pinion Shaft Assembly.>
6) Using the ST, loosen the differential side retainer until the mounting groove of the O-ring appears, and then install the O-ring.

NOTE:
- When loosening the differential side retainer, record the number of the turns made.
- Perform this for both left and right differential side retainers.
- Use new O-rings.
- Apply the differential gear oil to O-ring.

ST 18658AA020 WRENCH COMPL RETAINER
7) Using the ST, tighten the retainer to the position before it is loosened.
ST 18658AA020 WRENCH COMPL RETAINER
8) Install the oil seal to the differential side retainer. <Ref. to CVT(TR580)-100, Differential Side Retainer Oil Seal.>

9) Install the lock plate.

Tightening torque:
25 N·m (2.5 kgf-m, 18.4 ft-lb)

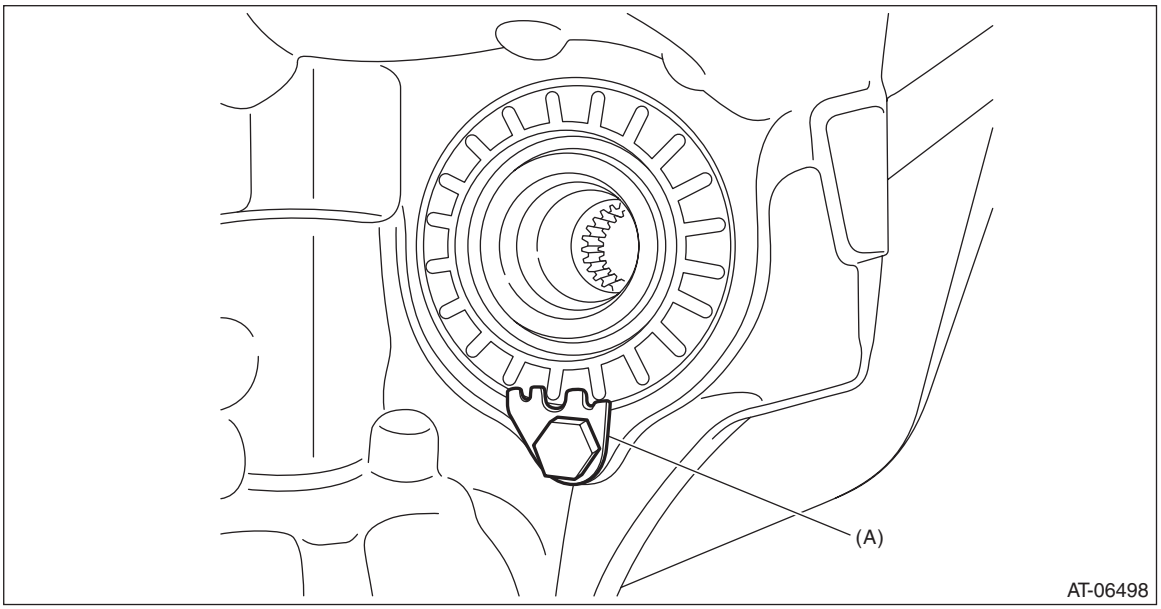

(A) Lock plate

10) Install the oil baffle.

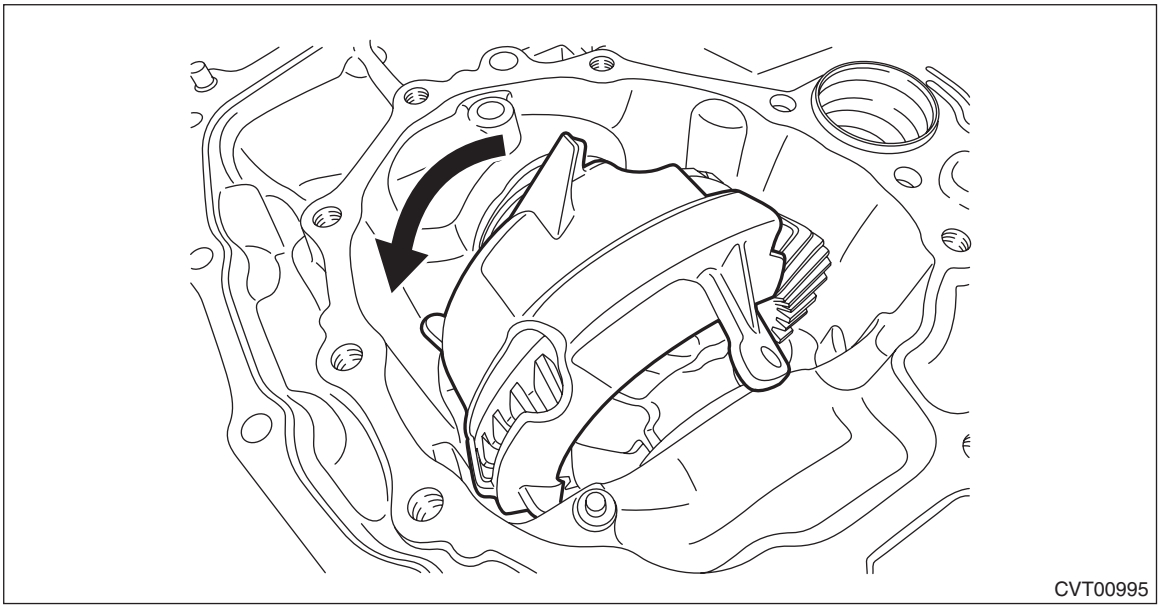

11) Install the drive pinion shaft assembly. <Ref. to CVT(TR580)-318, INSTALLATION, Drive Pinion Shaft Assembly.>
12) Install the forward clutch assembly. <Ref. to CVT(TR580)-300, INSTALLATION, Forward Clutch Assembly.>
13) Install the reverse brake assembly. <Ref. to CVT(TR580)-285, INSTALLATION, Reverse Brake Assembly.>
14) Install the primary pulley, secondary pulley and variator chain. <Ref. to CVT(TR580)-268, INSTALLATION, Primary Pulley and Secondary Pulley.>
15) Install the reduction drive gear. <Ref. to CVT(TR580)-257, INSTALLATION, Reduction Drive Gear.>
16) Install the transmission case. <Ref. to CVT(TR580)-240, INSTALLATION, Transmission Case.>
17) Install the oil strainer and oil pan. <Ref. to CVT(TR580)-131, INSTALLATION, Oil Pan and Strainer.>

18) Install the transmission control device. <Ref. to CVT(TR580)-234, INSTALLATION, Transmission Control Device.>
19) Install the reduction driven gear assembly. <Ref. to CVT(TR580)-223, INSTALLATION, Reduction Driven Gear.>
20) Install the transfer driven gear assembly. <Ref. to CVT(TR580)-219, INSTALLATION, Transfer Driven Gear.>
21) Install the transfer clutch assembly. <Ref. to CVT(TR580)-206, INSTALLATION, Transfer Clutch.>
22) Install the parking pawl. <Ref. to CVT(TR580)-222, INSTALLATION, Parking Pawl.>
23) Install the extension case. <Ref. to CVT(TR580)-201, INSTALLATION, Extension Case.>
24) Install the inhibitor switch. <Ref. to CVT(TR580)-111, INSTALLATION, Inhibitor Switch.>
25) Install the secondary speed sensor. <Ref. to CVT(TR580)-118, INSTALLATION, Secondary Speed Sensor.>
26) Install the primary speed sensor. <Ref. to CVT(TR580)-124, INSTALLATION, Primary Speed Sensor.>
27) Install the turbine speed sensor. <Ref. to CVT(TR580)-113, INSTALLATION, Turbine Speed Sensor.>
28) Install the transmission harness. <Ref. to CVT(TR580)-150, INSTALLATION, Transmission Harness.>
29) Install the control valve body. <Ref. to CVT(TR580)-139, INSTALLATION, Control Valve Body.>
30) Install the air breather hose. <Ref. to CVT(TR580)-192, INSTALLATION, Air Breather Hose.>
31) Install the transmission assembly. <Ref. to CVT(TR580)-79, INSTALLATION, Automatic Transmission Assembly.>

C: DISASSEMBLY

1. DIFFERENTIAL CASE ASSEMBLY

1) Remove the taper roller bearing using the ST.

ST1	498077000	REMOVER
ST2	899864100	REMOVER
ST3	398497701	SEAT

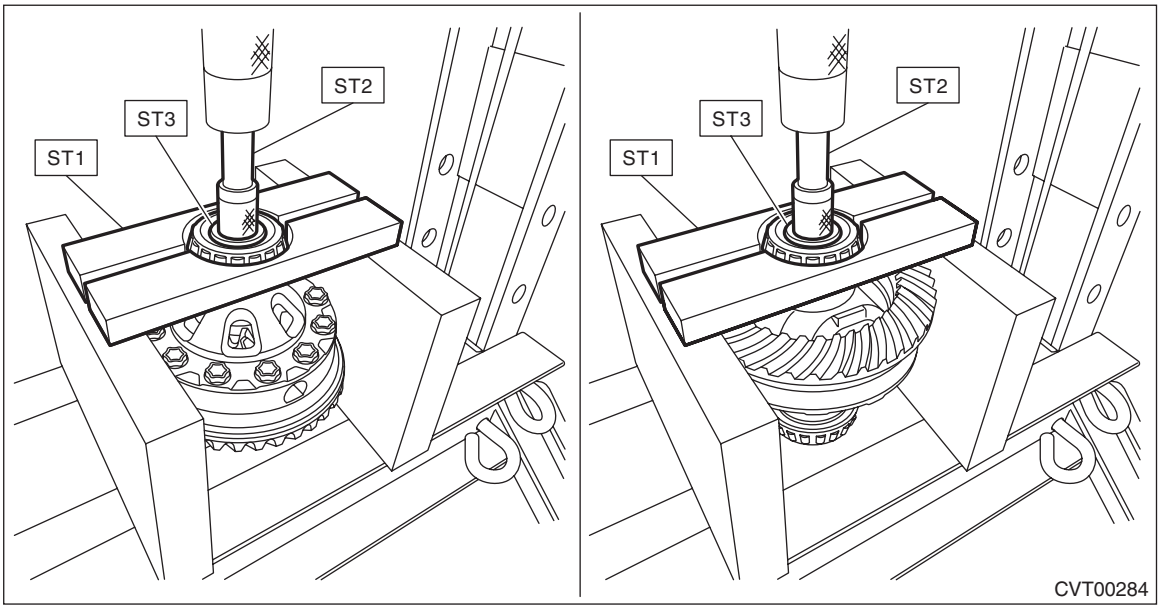

2) Remove the hypoid driven gear mounting bolt using the ST.
ST 18270KA020 SOCKET (E20)

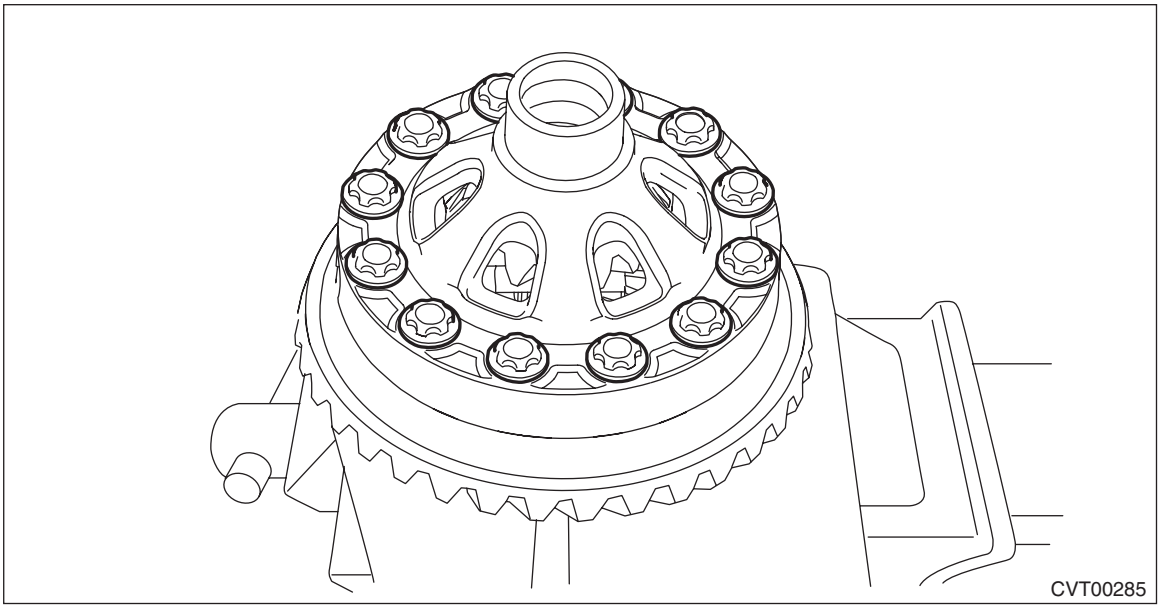

3) Remove the differential case (LH).

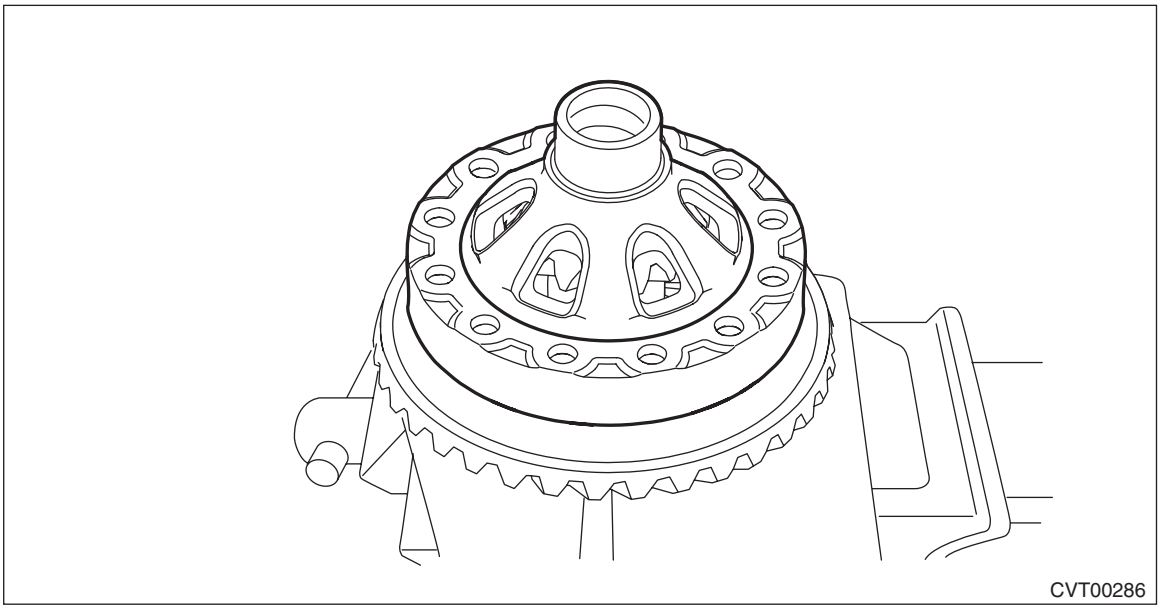

4) Remove the differential bevel gear and washer.

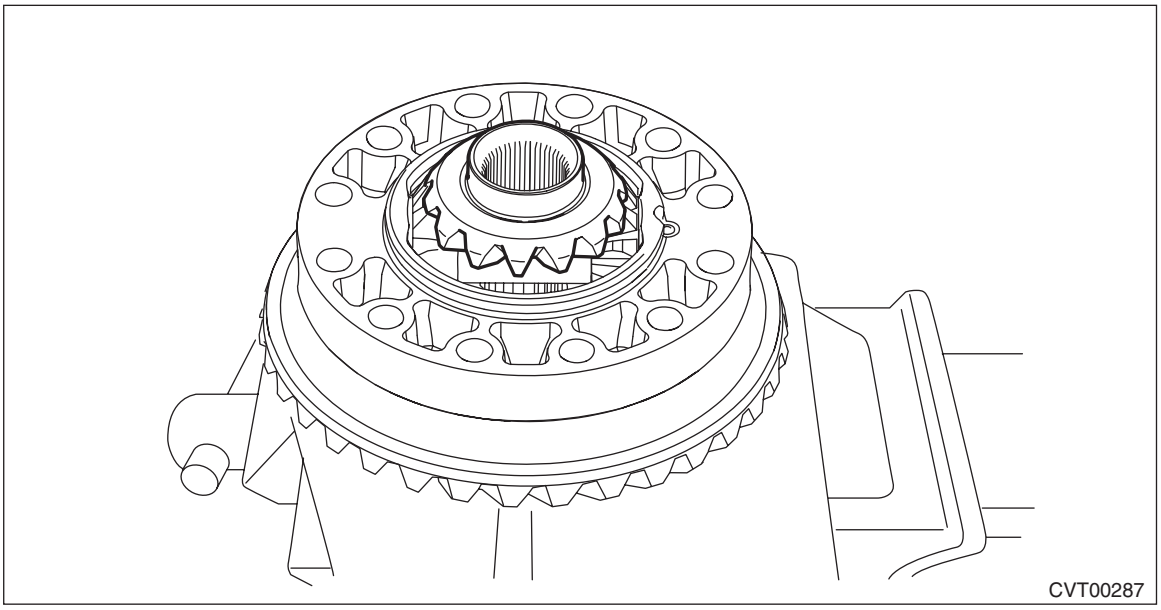

5) Remove the straight pin.

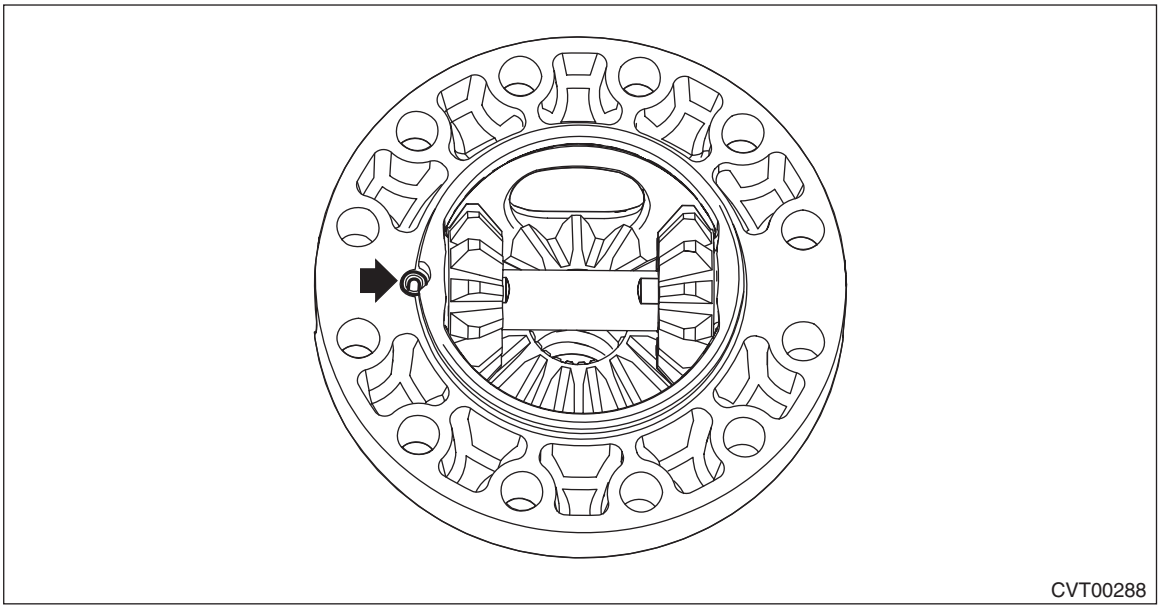

6) Remove the pinion shaft, then remove the differential bevel gear, washer and differential bevel pinion.

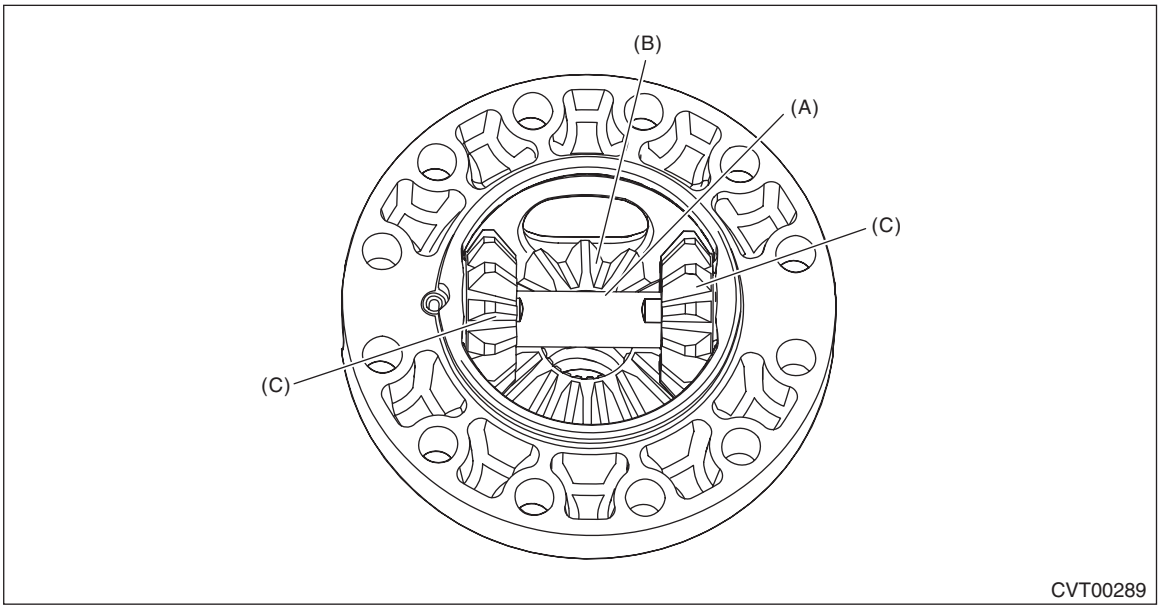

(A) Pinion shaft
(B) Differential bevel gear
(C) Differential bevel pinion

2. SIDE RETAINER

NOTE:
After adjusting the drive pinion backlash and tooth contact, replace the oil seal and O-ring with new parts.
1) Remove the O-rings.

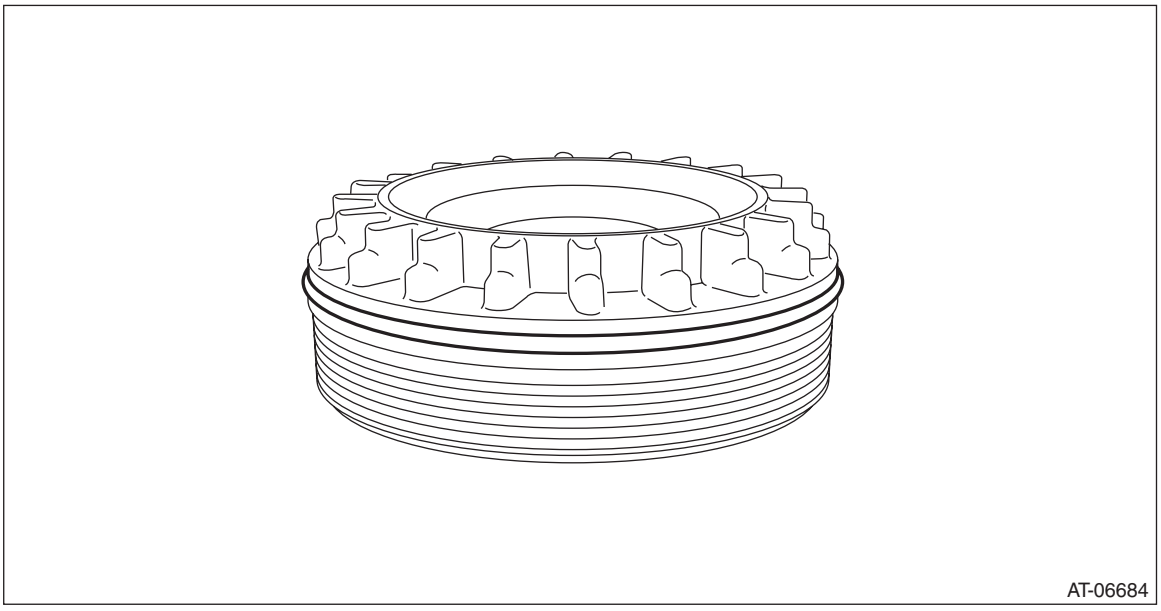

2) Remove the oil seal.

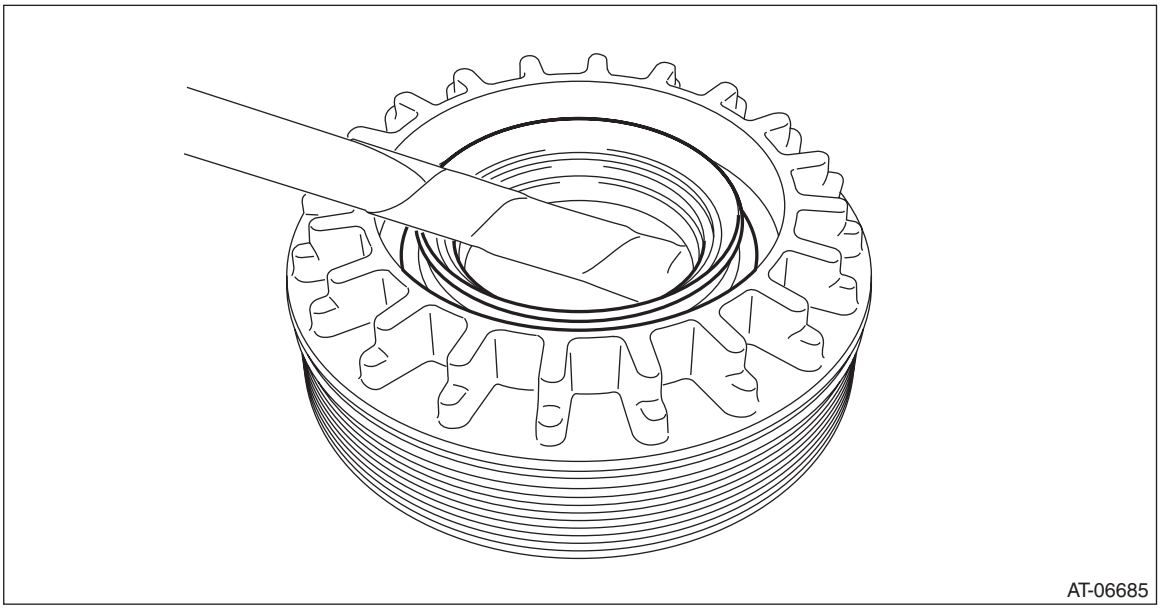

D: ASSEMBLY

1. DIFFERENTIAL CASE ASSEMBLY

1) Install the washer and differential bevel gear into the differential case (RH).

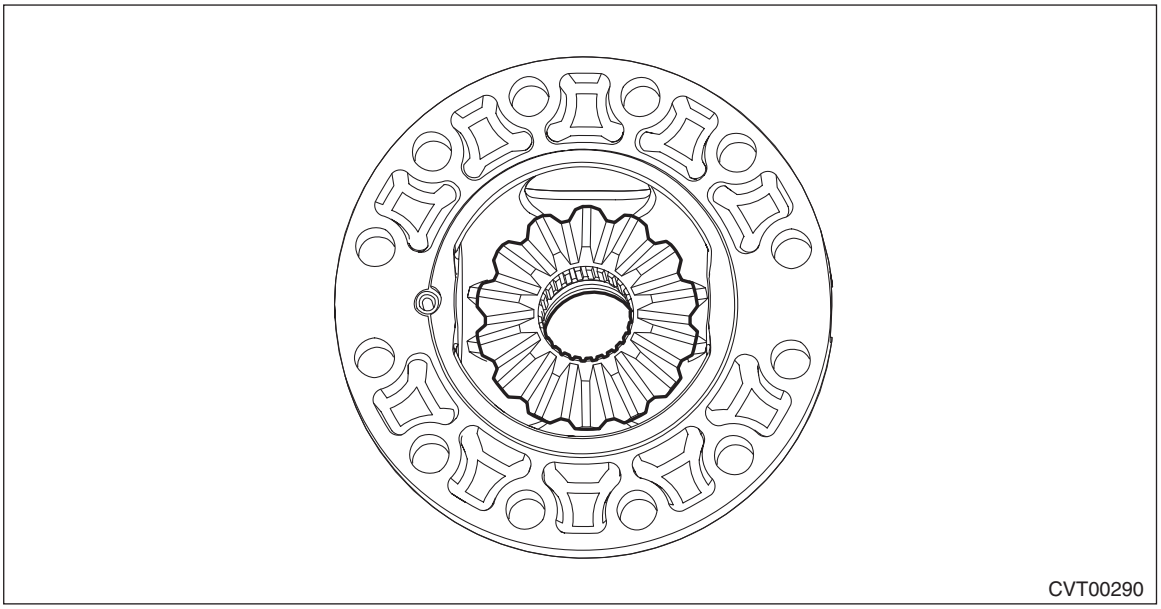

2) Install the differential bevel pinions into differential case (RH) and install the pinion shaft.

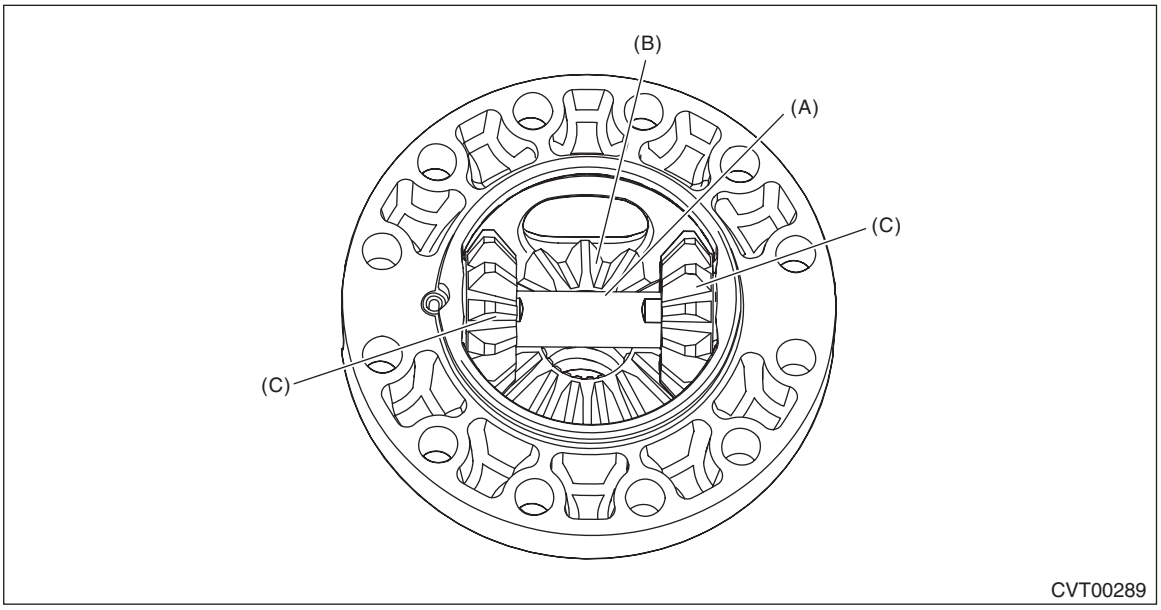

(A) Pinion shaft
(B) Differential bevel gear
(C) Differential bevel pinion

3) Install the straight pin.

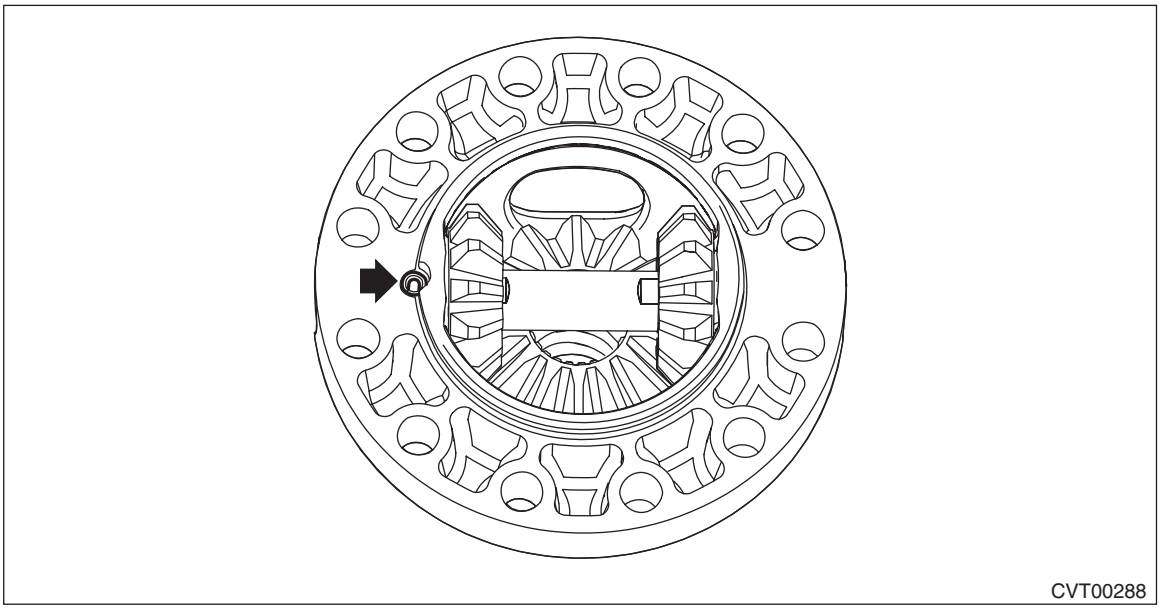

4) Install the washer and differential bevel gear to the differential case (LH).

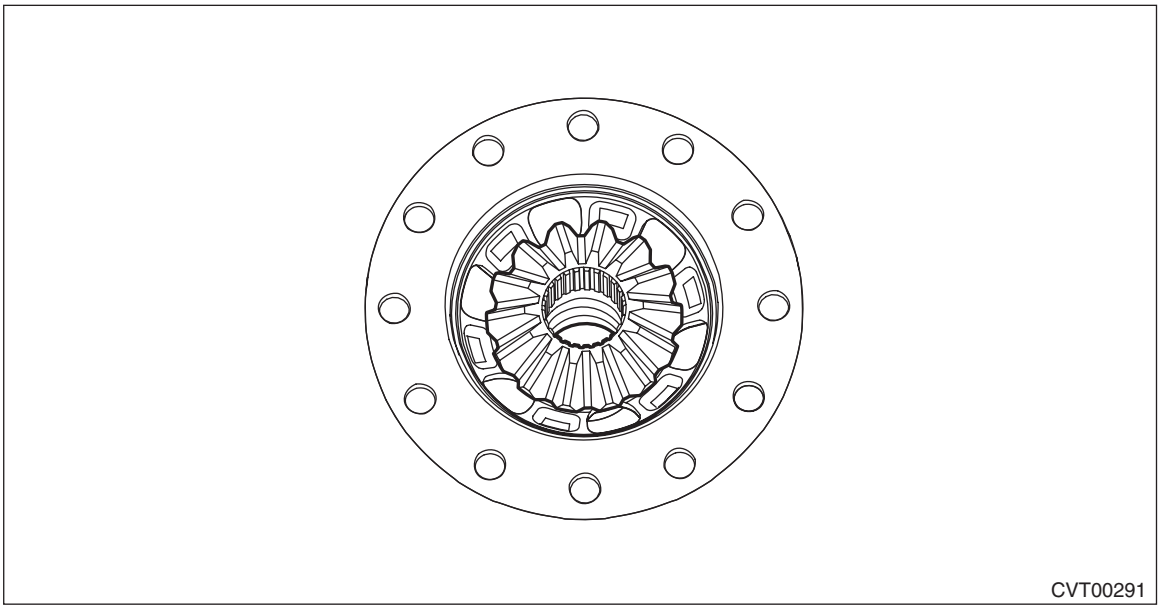

5) Install the differential case (RH) to the hypoid driven gear.

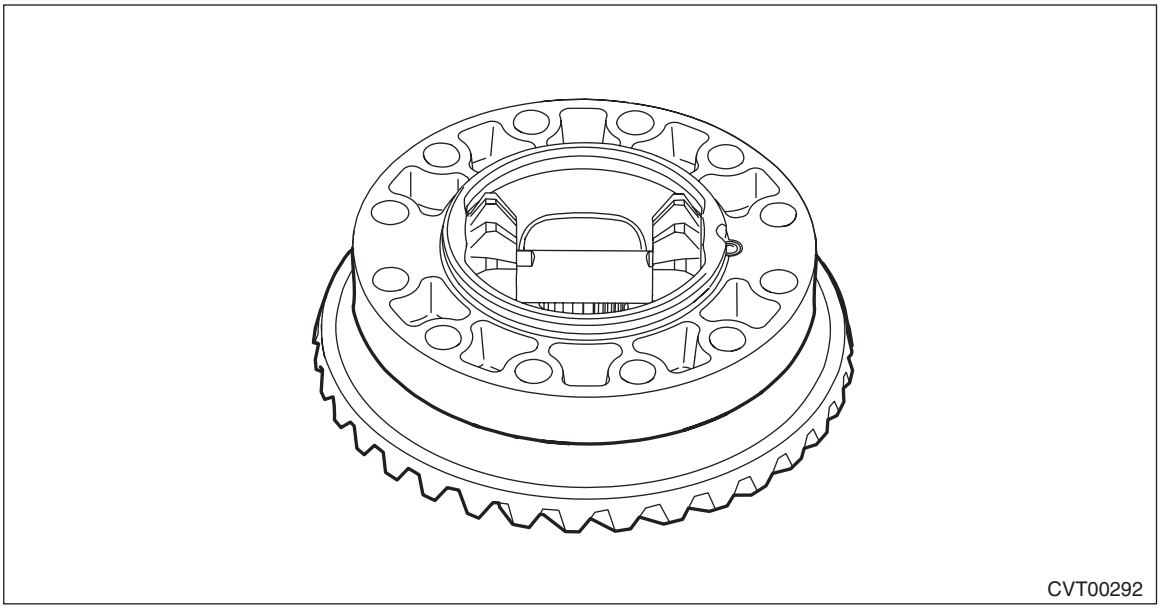

6) Install the differential case (LH) to the differential case (RH).
7) Using the ST, install the hypoid driven gear by tightening the installation bolt.
ST 18270KA020 SOCKET (E20)

Tightening torque:
64 N·m (6.5 kgf-m, 47.2 ft-lb)

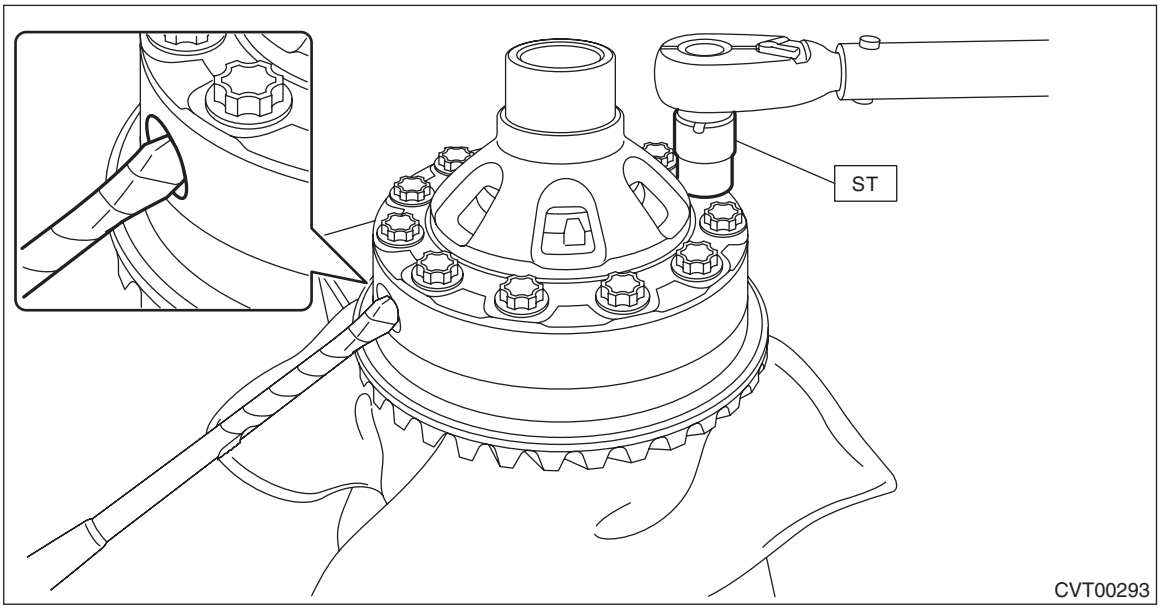

8) Measure the backlash, and select the washer.
(1) Install the SUBARU genuine axle shaft to differential case.
Part No. 38415AA070 Axle shaft
(2) Using ST1 and ST2, insert the ST2 through the window of differential case. Measure the backlash of the gear.

NOTE:
• Measure the backlash by applying a differential bevel pinion tooth between two differential bevel gear teeth.
• When measuring, fix the differential bevel pinion in place with a screwdriver covered with cloth, or a similar tool.
ST1 498247001 MAGNET BASE
ST2 498247100 DIAL GAUGE

Specification:
0.13 — 0.18 mm (0.0051 — 0.0071 in)

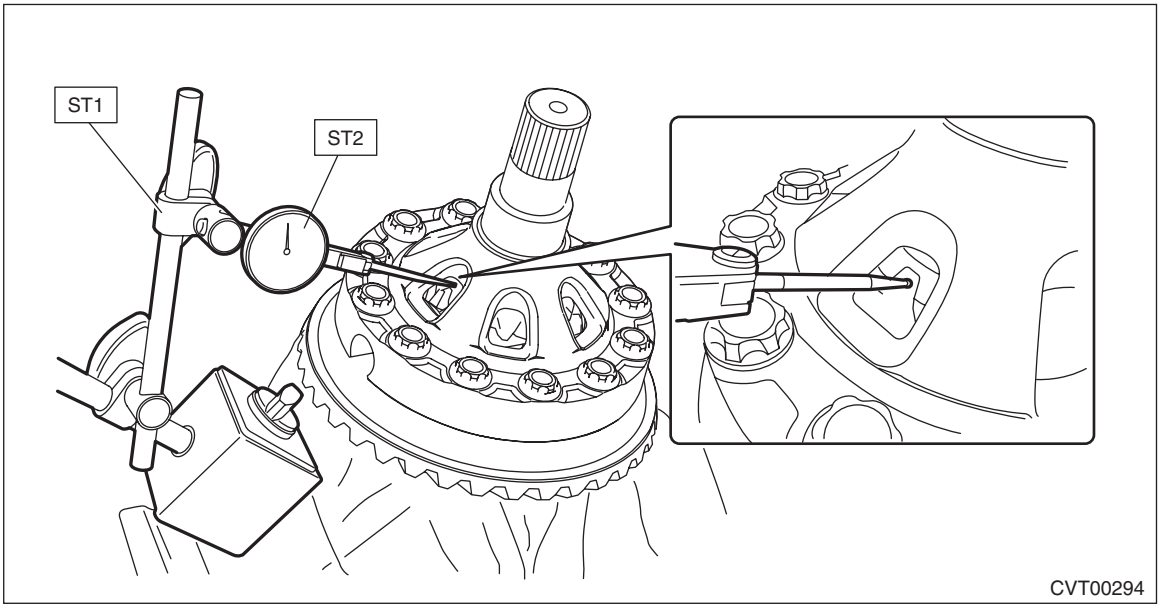

(3) If the backlash is not within specification, select a washer from the table below and replace.

Washer	
Part No.	Thickness mm (in)
803038021	0.95 (0.037)
803038022	1.00 (0.039)
803038023	1.05 (0.041)

9) Using the ST, install the left and right taper roller bearings.
ST1 499277100 BUSHING 1-2 INSTALLER
ST2 398497701 SEAT

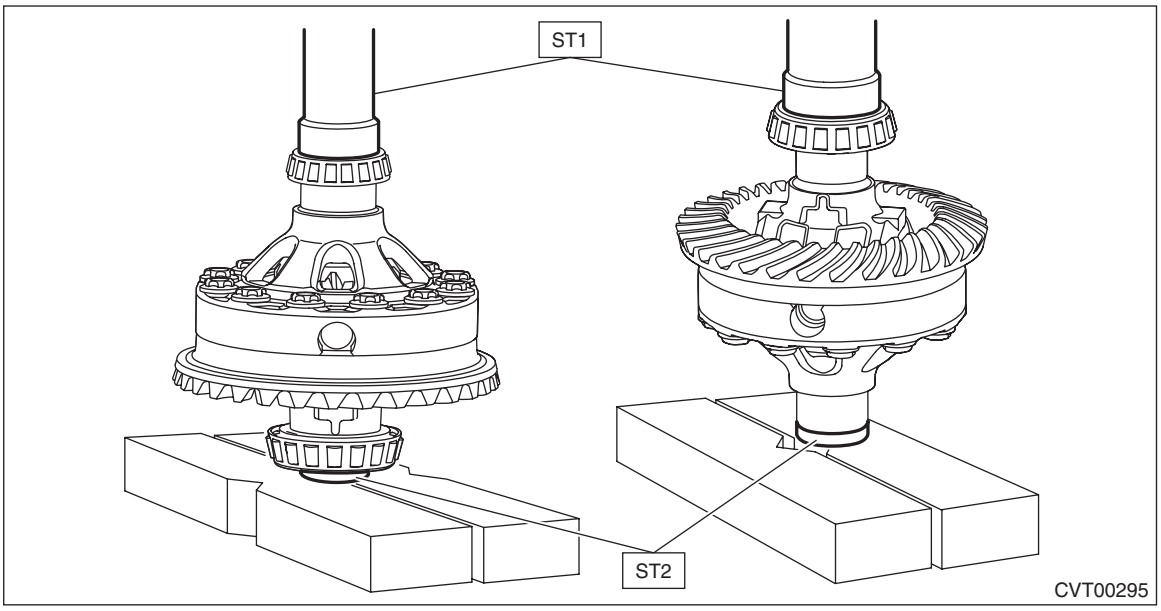

2. SIDE RETAINER

NOTE:
After adjusting the backlash and tooth contact, replace the oil seal and O-ring of side retainer with new parts.
1) Using the ST, install the oil seal.

NOTE:
- Use a new oil seal.
- Apply differential gear oil to the oil seal lip and press-fitting surface.
- Oil seal has an identification mark (R, L). When installing oil seals, do not confuse the left and right.

ST 18675AA000 DIFFERENTIAL SIDE OIL SEAL INSTALLER

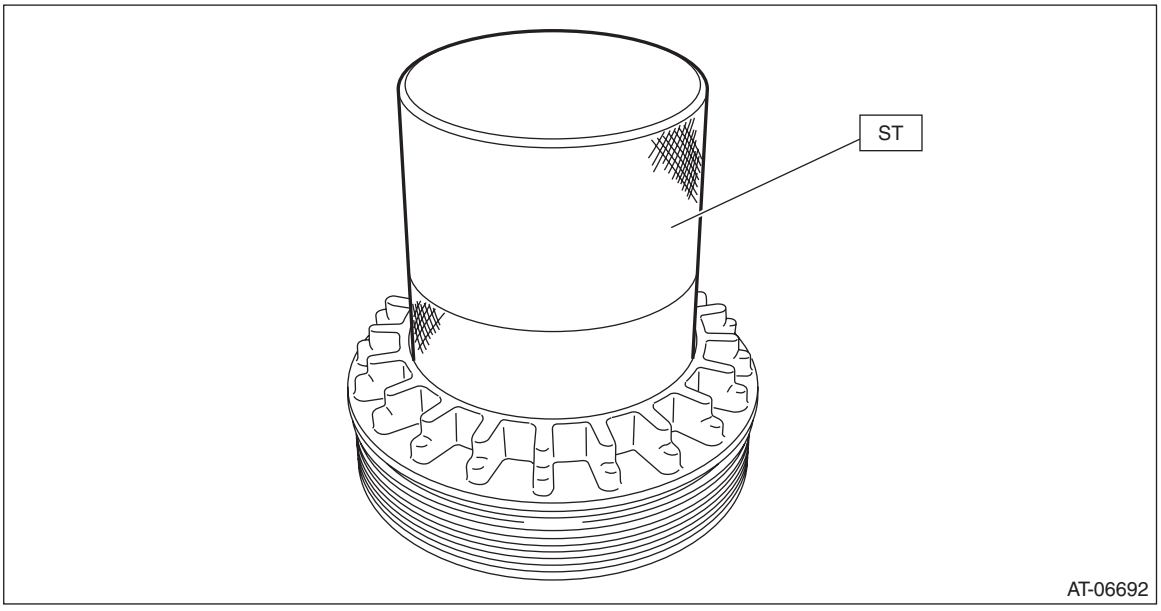

2) Install the O-rings.

NOTE:
- Use new O-rings.
- Apply the differential gear oil to O-ring.

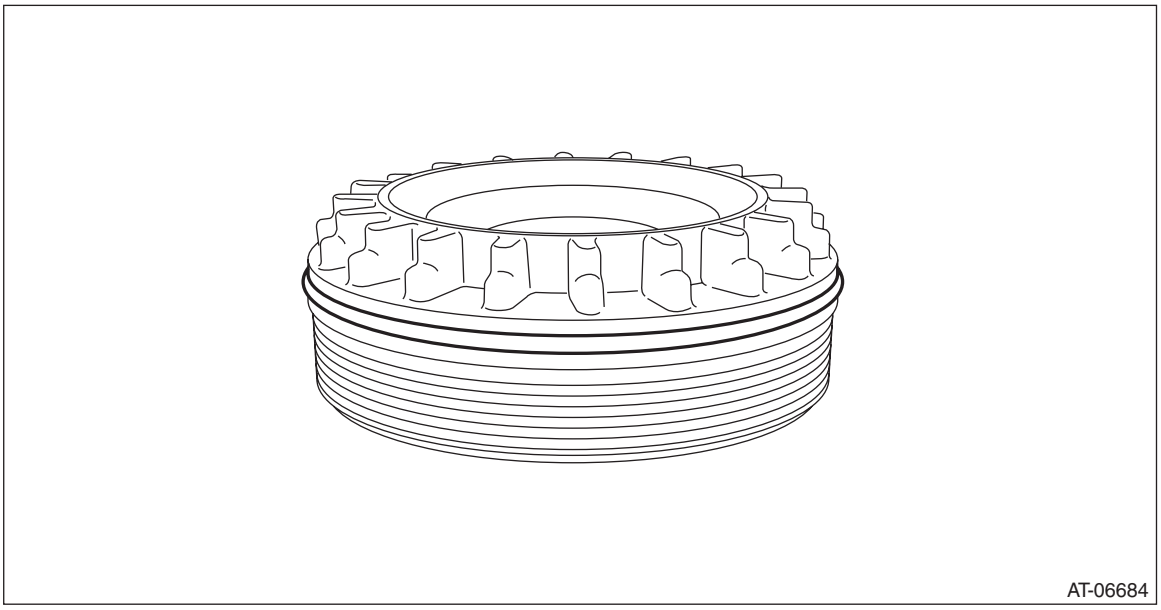

E: INSPECTION

- Check each component for scratches, damage or other faults.
- Using the ST, check the backlash of pinion gear.

ST1 498247001 MAGNET BASE
ST2 498247100 DIAL GAUGE

Specification:
0.13 — 0.18 mm (0.0051 — 0.0071 in)

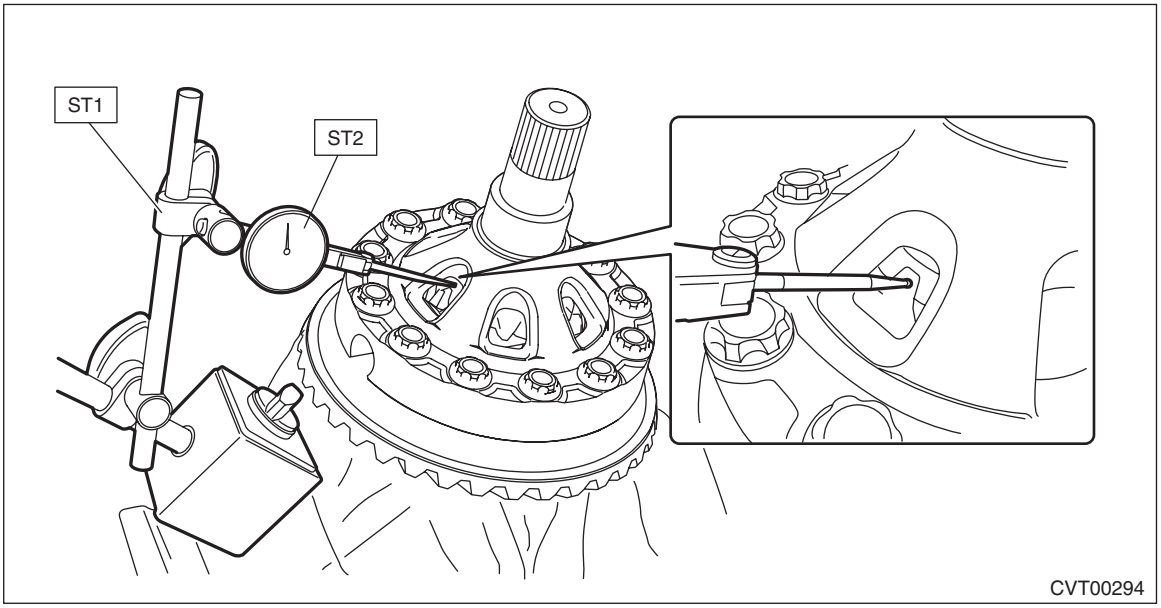

- Measure the hypoid gear backlash, and then adjust it to be within specification. <Ref. to CVT(TR580)-362, ADJUSTMENT, Front Differential Assembly.>

F: ADJUSTMENT

1) Using the ST, screw-in the retainer until resistance is felt.

NOTE:
RH side should be screwed-in more than LH side.
ST 18658AA020 WRENCH COMPL RETAINER

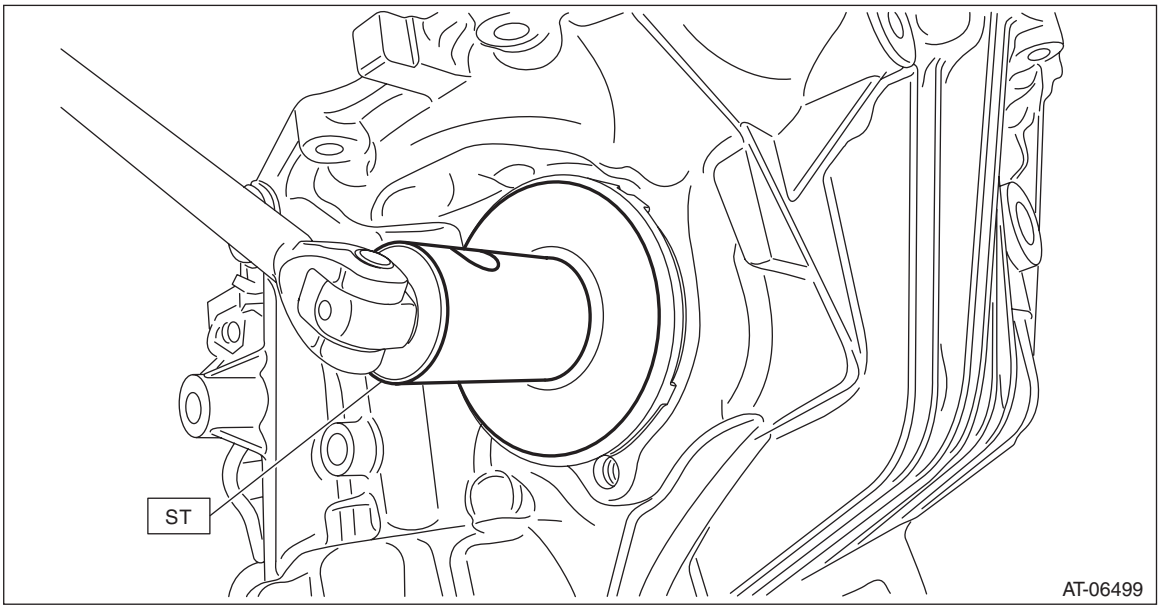

2) Remove the remaining liquid gasket from the mating surface completely.
3) Using the ST, install the drive pinion assembly to converter case.
ST 18270KA020 SOCKET (E20)

NOTE:
Do not confuse the three different-length bolts when installing.

Tightening torque:
43 N·m (4.4 kgf-m, 31.7 ft-lb)

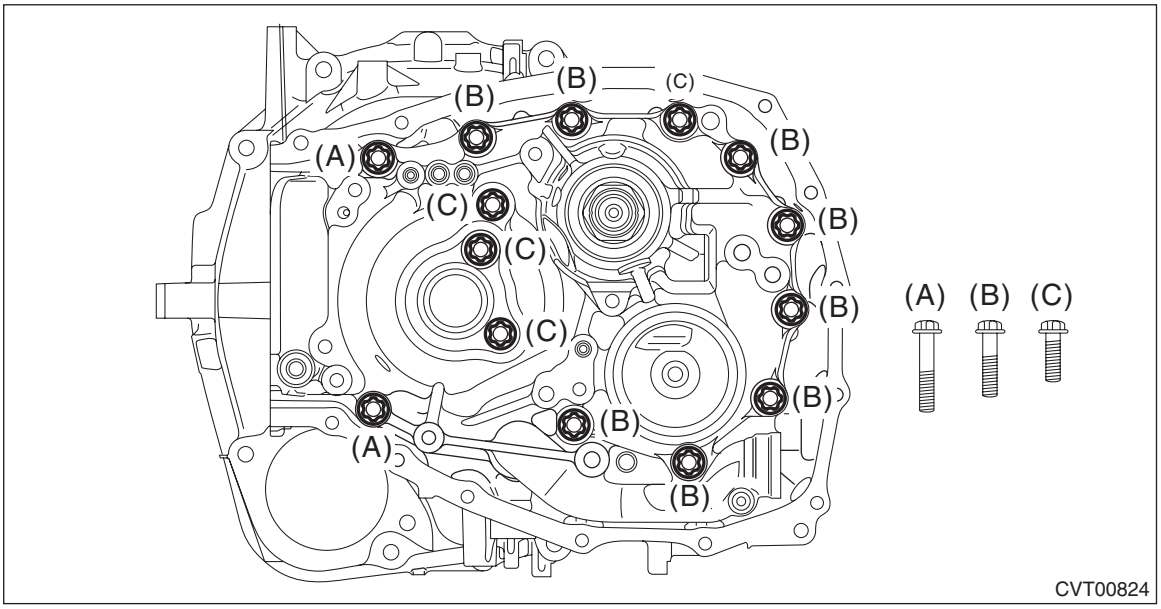

4) Rotate the drive pinion shaft ten times or more using ST1 and ST2.
ST1 498937110 HOLDER
ST2 499787700 WRENCH

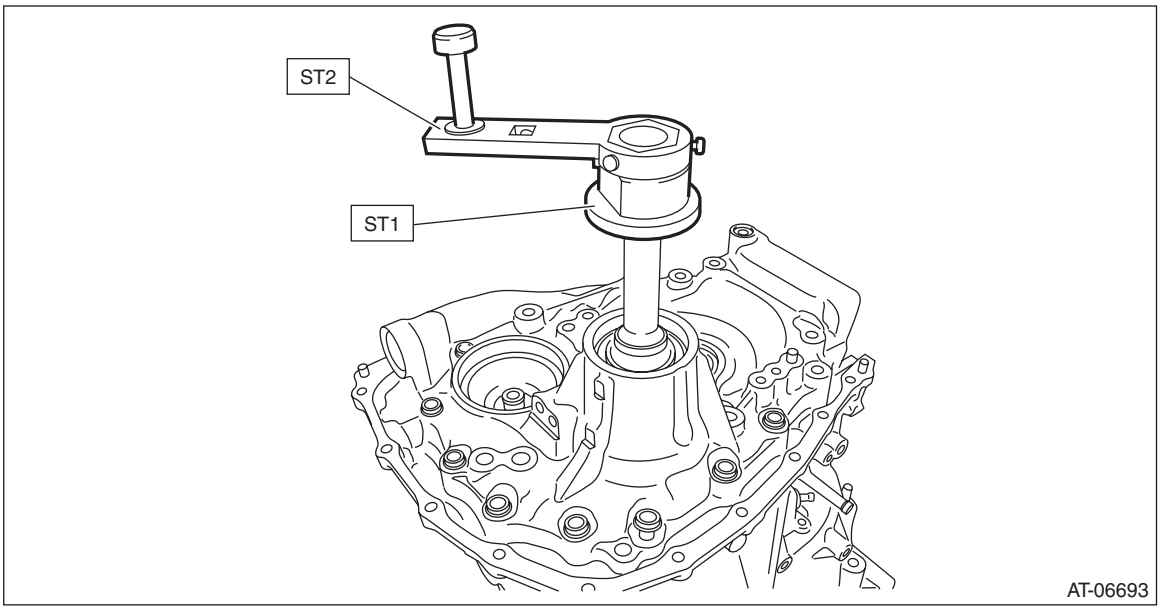

5) While rotating the pinion shaft, tighten the retainer LH and loosen the retainer RH until the shaft can't be turned anymore. The backlash is “zero” when the pinion shaft comes to the point where it doesn't rotate.
6) After the “zero” state is established, loosen the retainer LH by 3 notches and secure it with the lock plate. Retighten the retainer RH until it stops. Rotate the drive pinion 2 or 3 times. Tighten the retainer RH further 1-3/4 notches. This sets the preload. Finally, secure the retainer with its lock plate.

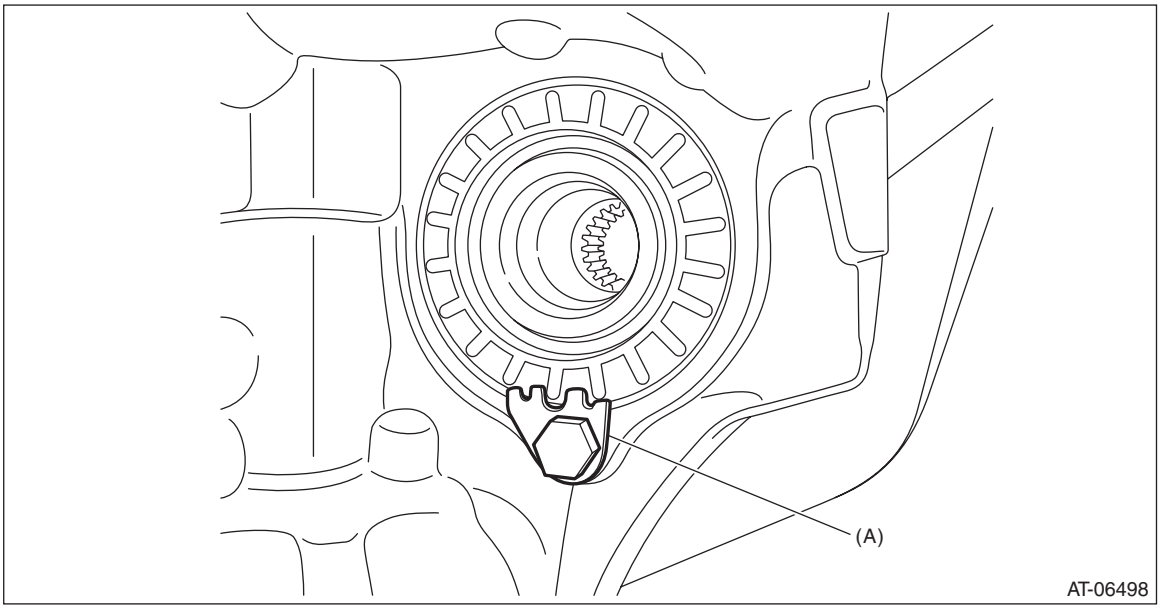

(A) Lock plate

NOTE:
Turning the retainer by every one tooth changes the backlash approx. 0.05 mm (0.0020 in).

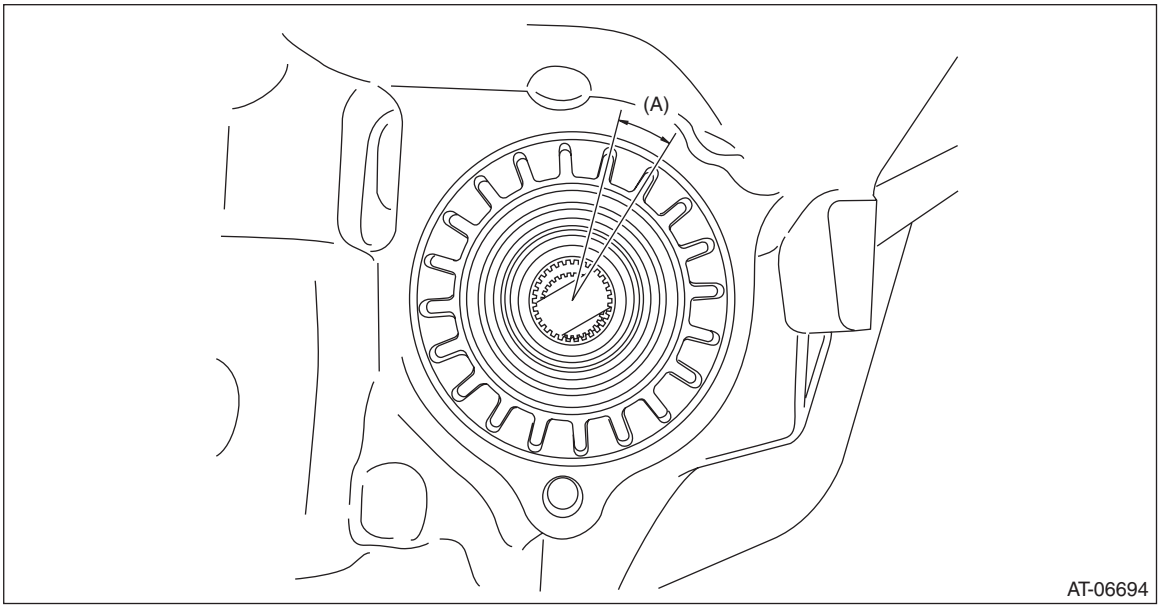

(A) 1 tooth

7) Insert the two SUBARU genuine axle shafts into differential case.
Part No. 38415AA070 Axle shaft
8) Install the ST to the drive pinion retainer, and wrap the drive pinion shaft with cloth and pinch with vise pliers. Using a tie-wrap or a wire, fix the vise pliers to the ST.
Make sure the drive pinion shaft does not move.
ST 18763AA000 COMPRESSOR SHAFT

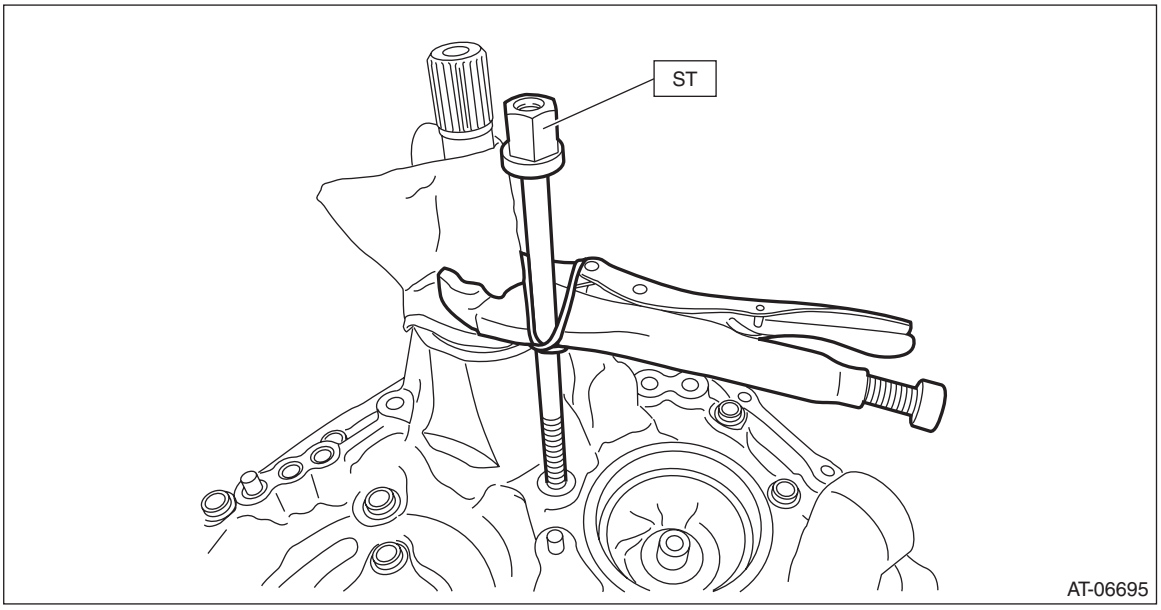

9) Check the backlash is within specification using ST1, ST2 and ST3.
ST1 498255400 PLATE
ST2 498247100 DIAL GAUGE
ST3 498247001 MAGNET BASE

Backlash:
0.13 — 0.18 mm (0.005 — 0.007 in)

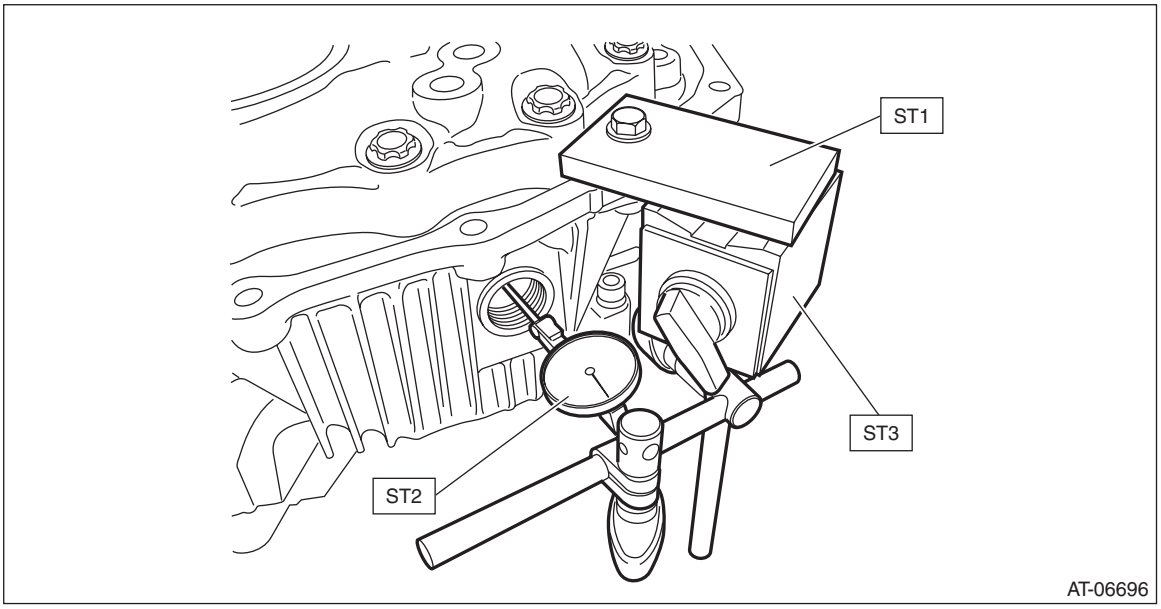

10) Adjust the teeth contact of the front differential and drive shaft. <Ref. to CVT(TR580)-339, ADJUSTMENT, Drive Pinion Shaft Assembly.>

47.Oil Pump Chain

A: REMOVAL

1) Remove the transmission assembly. <Ref. to CVT(TR580)-63, REMOVAL, Automatic Transmission Assembly.>
2) Remove the torque converter assembly. <Ref. to CVT(TR580)-196, REMOVAL, Torque Converter Assembly.>
3) Remove the oil pump chain cover.

NOTE:
Oil pump chain cover may be hard to remove because the driven sprocket is installed to the shaft side of the oil pump. Do not remove it forcibly. Remove it while holding the driven sprocket by hand.

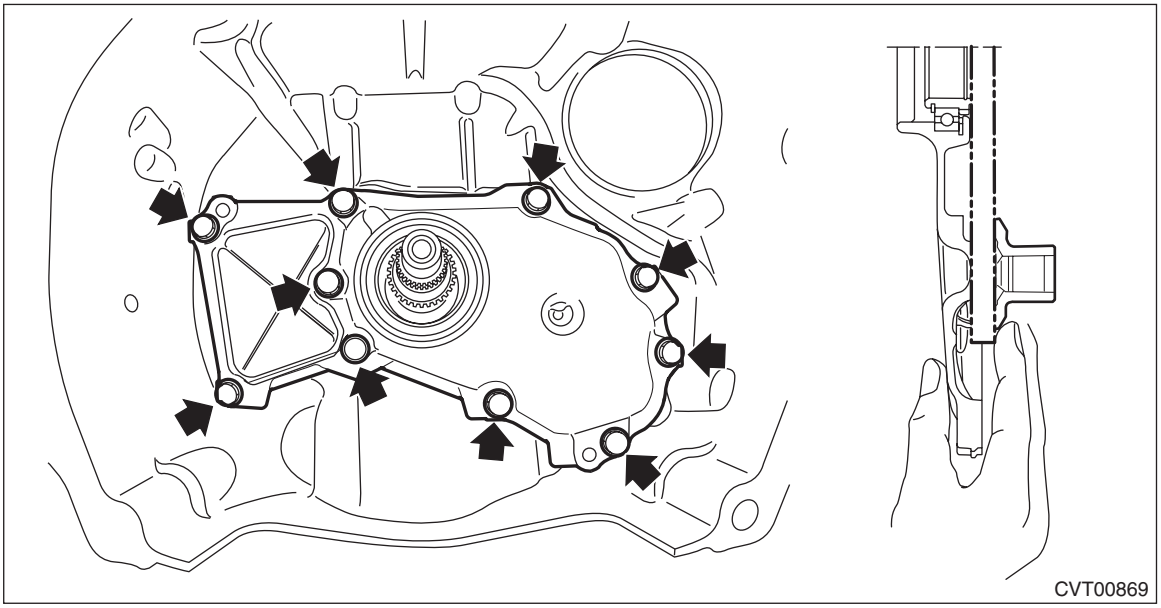

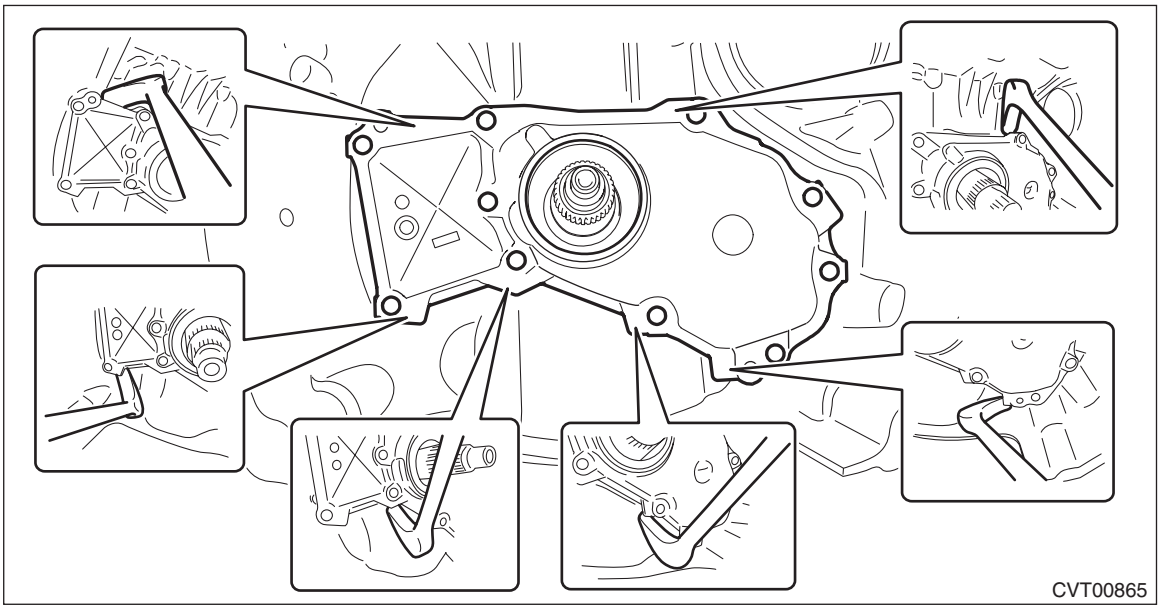

4) Remove the seal rings.

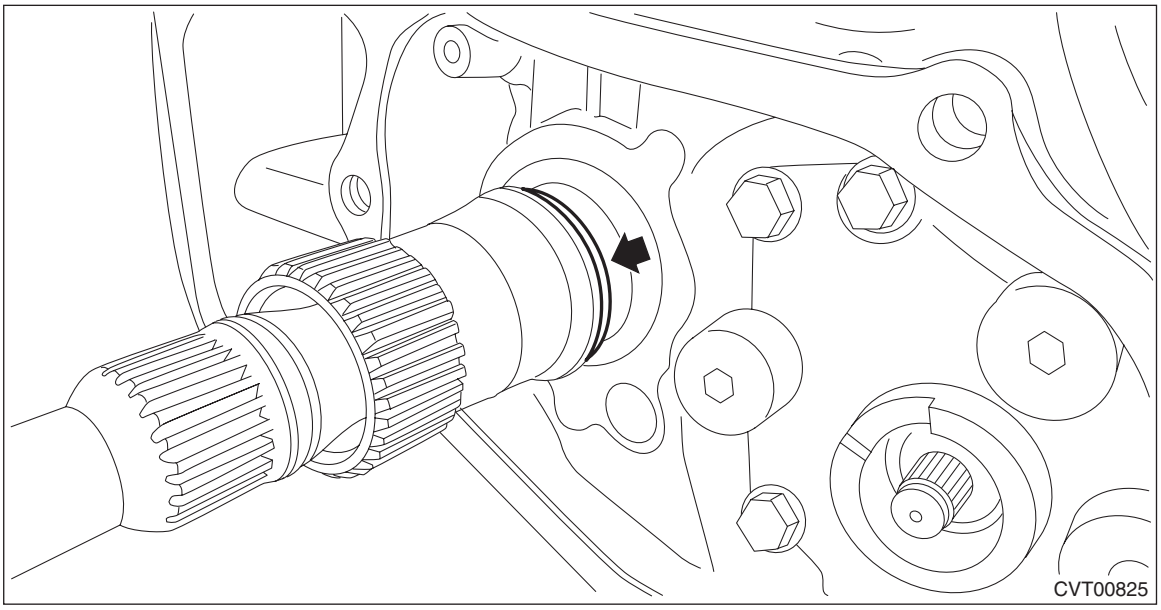

5) Remove the driven sprocket from oil pump chain cover to remove the oil pump chain.

NOTE:
- The driven sprocket is replaced as an assembly only, because it is a non-disassembly part.
- If the ball bearing is removed from the driven sprocket, replace with a new part.

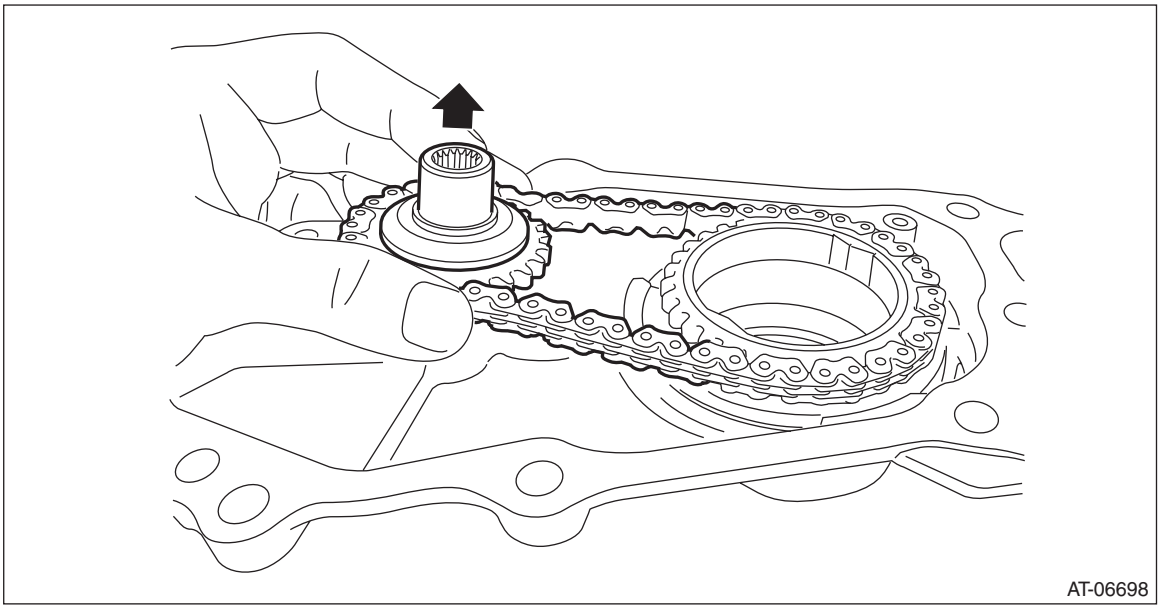

6) Remove the snap ring.

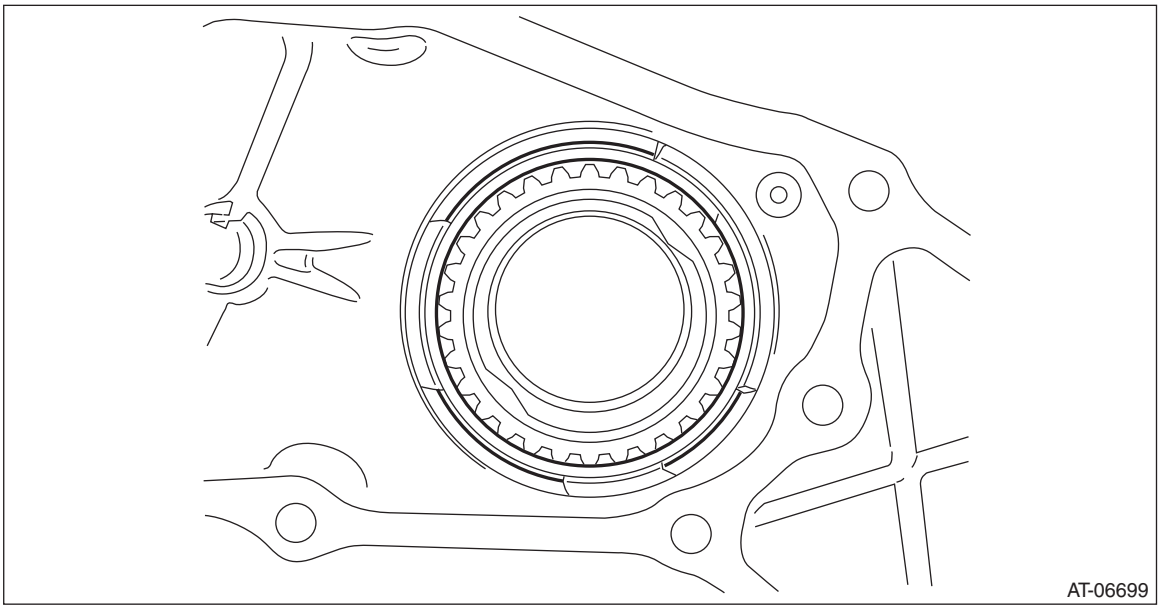

7) Remove the drive sprocket.

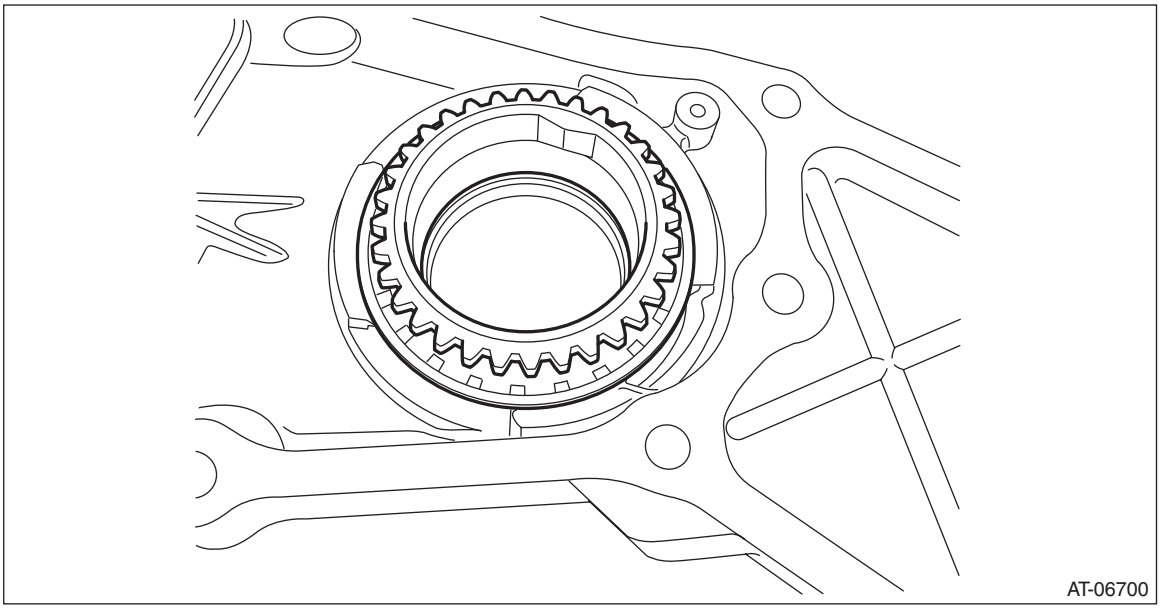

8) Remove the oil seal from the oil pump chain cover.

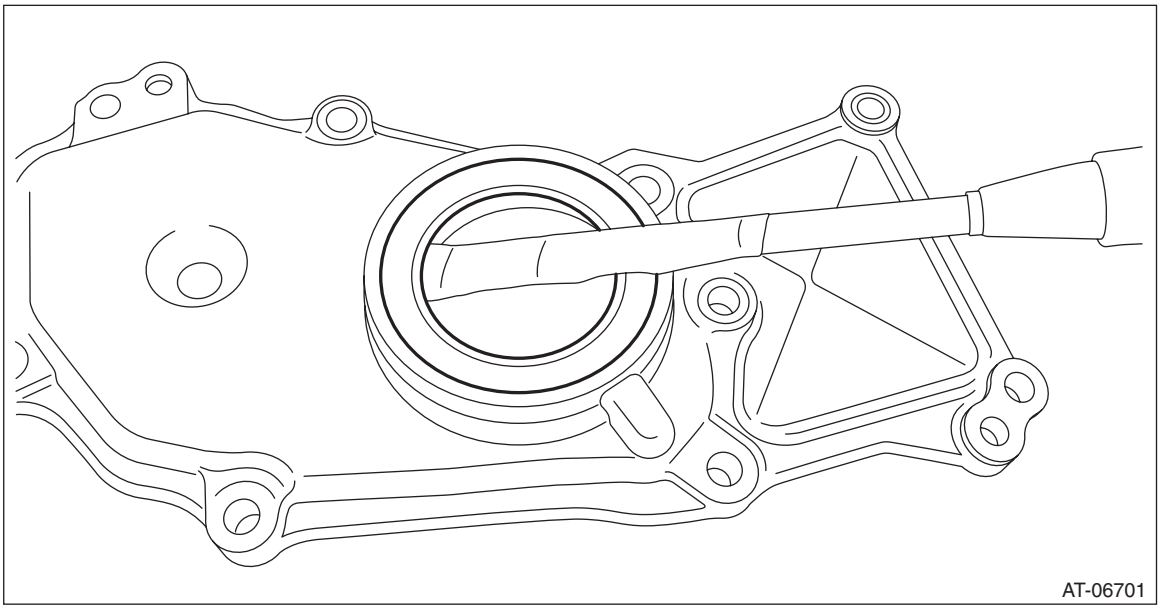

B: INSTALLATION

1) Clean the mating surface of oil pump chain cover and converter case.
2) Using the ST, install the oil seal.

NOTE:
- Use a new oil seal.
- Apply CVTF to the oil seal lip and press-fitting surface.

ST 499755602 PRESS SNAP RING

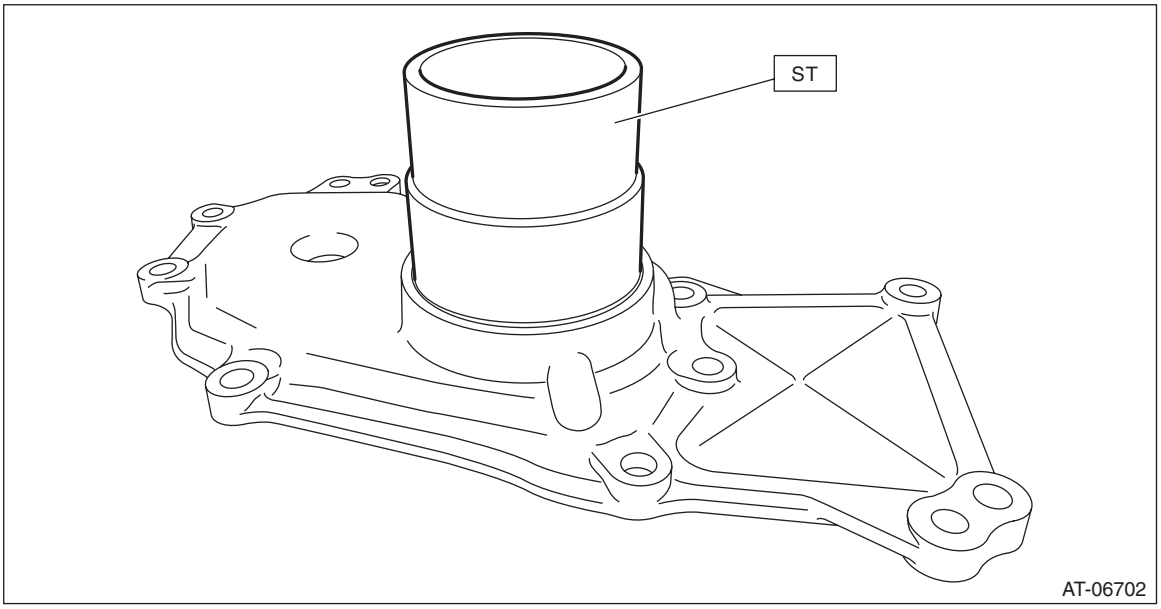

3) Install the drive sprocket.

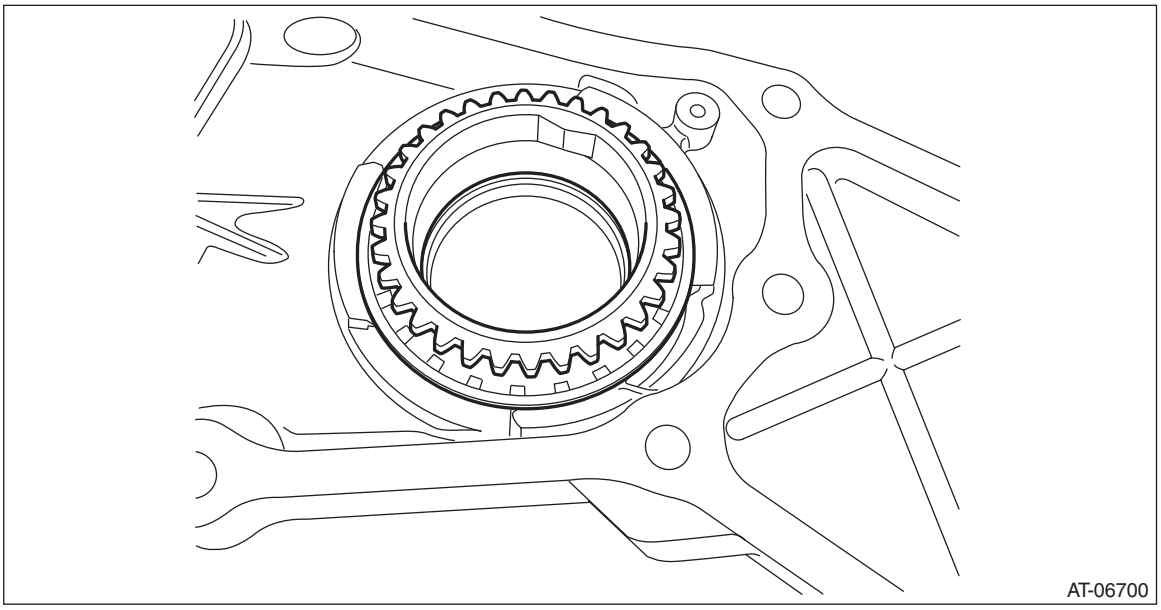

4) Install the snap ring so that its cutout portion is securely fitted into the snap ring groove of the oil pump chain cover.

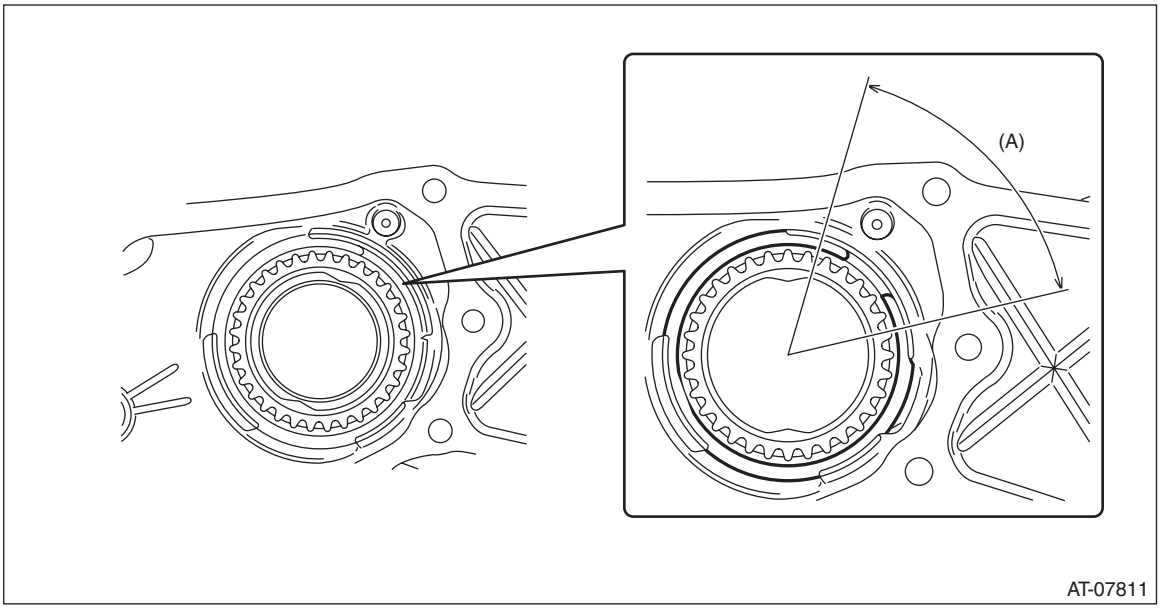

(A) Installation range of cutout portion for snap ring

5) Place the oil pump chain on drive sprocket.

6) Place the oil pump chain on driven sprocket and install the driven sprocket to oil pump chain cover.

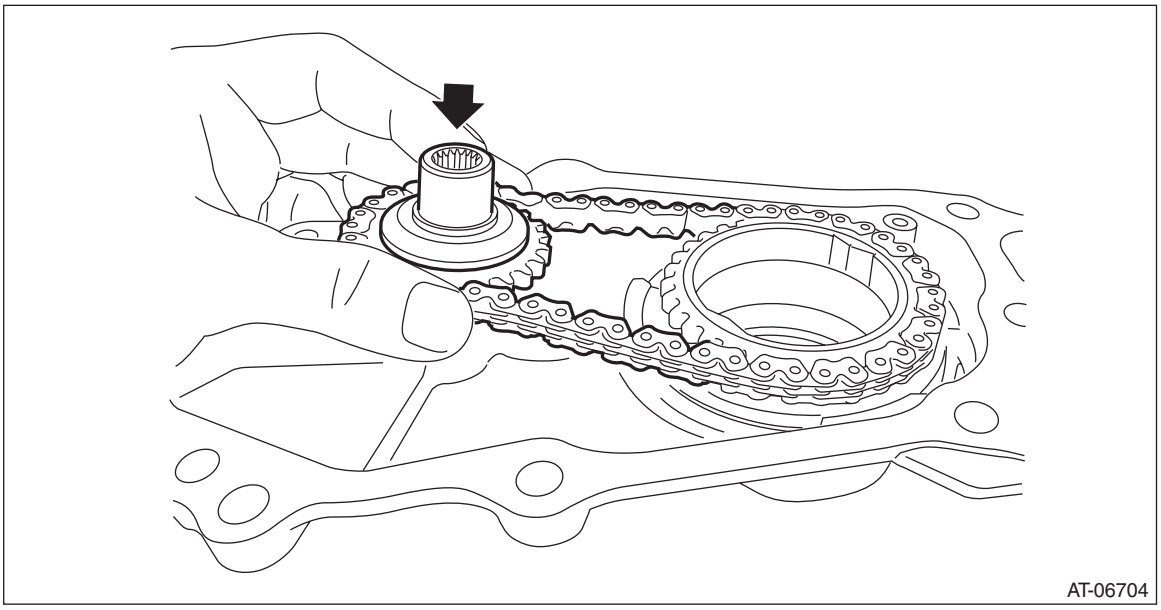

7) Install the seal rings.

NOTE:
- Use new seal rings.
- Apply CVTF to the seal rings.
- When installing the seal rings, do not expand the seal rings too much.

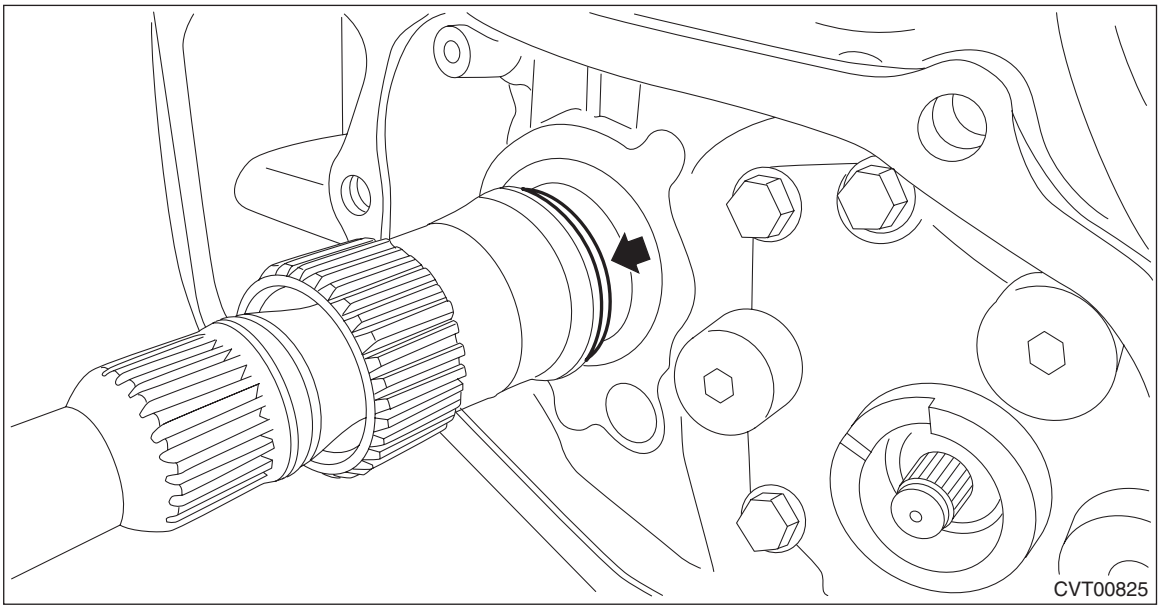

8) Apply liquid gasket seamlessly to the mating surface of oil pump chain cover.

CAUTION:
Do not apply liquid gasket at the arrowed hole.

Liquid gasket:
THREE BOND 1215B or equivalent

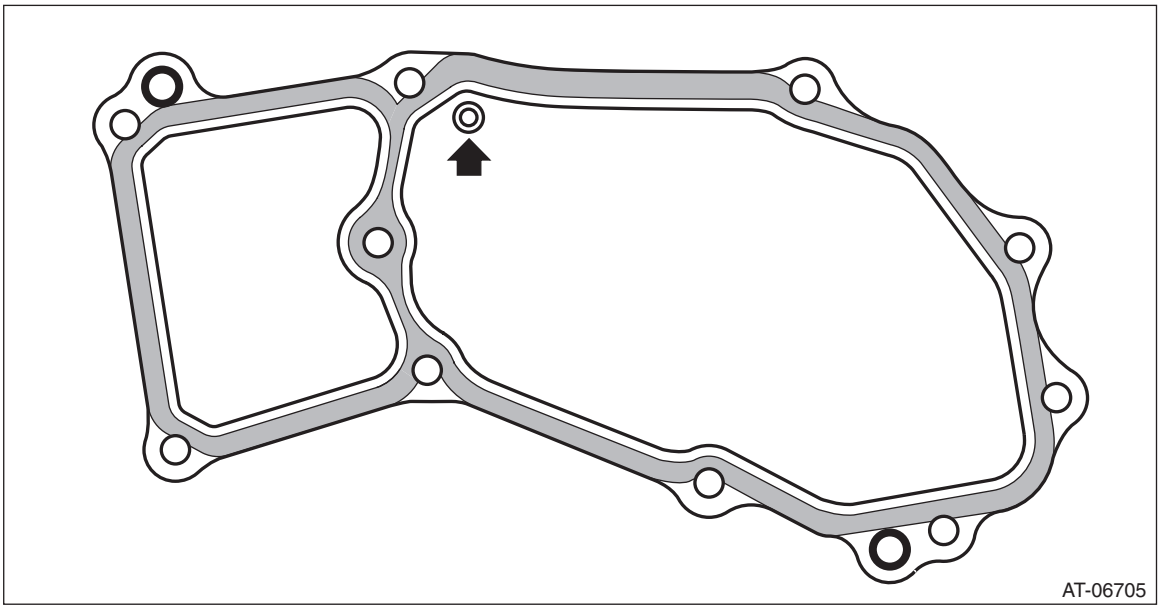

9) Install the oil pump chain cover.

Tightening torque:
21 N·m (2.1 kgf-m, 15.5 ft-lb)

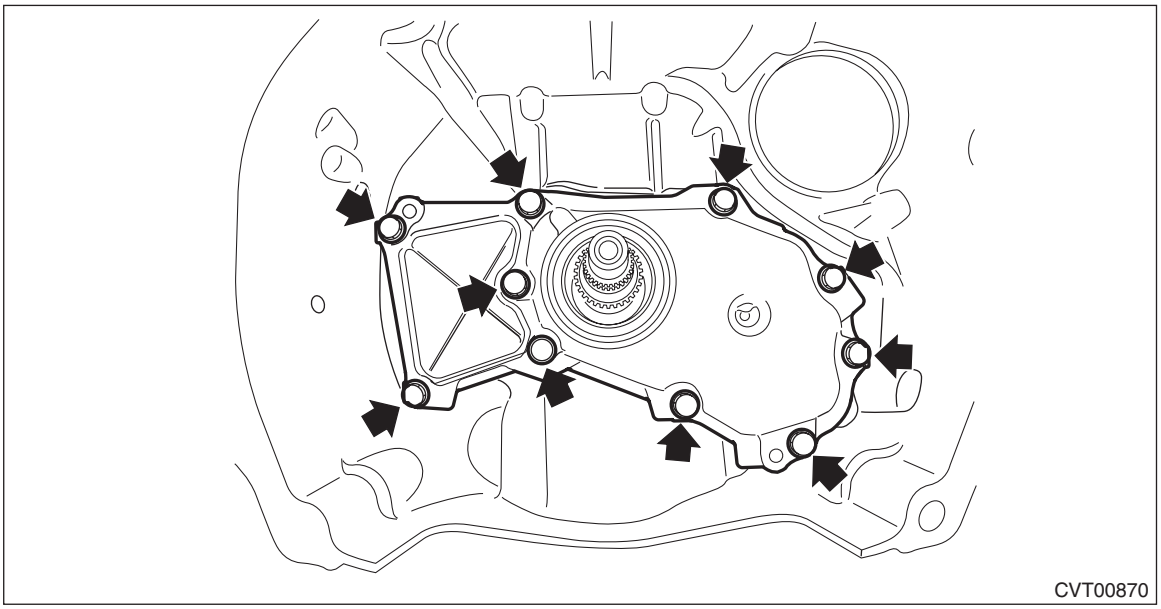

10) Install the torque converter assembly. <Ref. to CVT(TR580)-197, INSTALLATION, Torque Converter Assembly.>
11) Install the transmission assembly. <Ref. to CVT(TR580)-79, INSTALLATION, Automatic Transmission Assembly.>

C: DISASSEMBLY

1. DRIVE SPROCKET

1) Remove the snap ring.

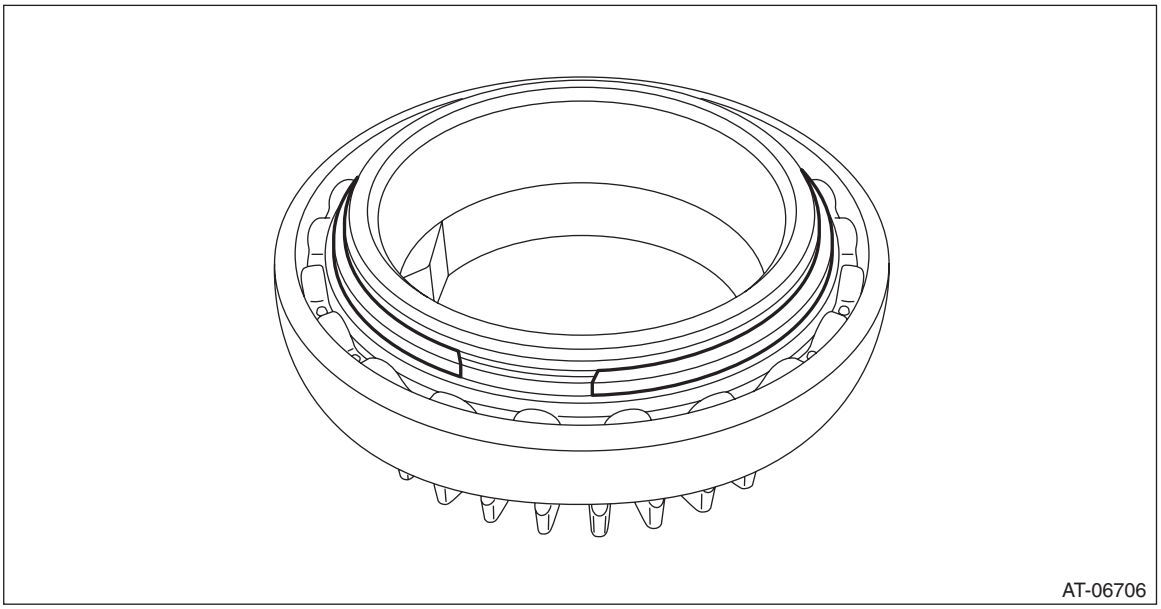

2) Remove the ball bearing using ST.
ST1 498077600 REMOVER
ST2 399513600 INSTALLER

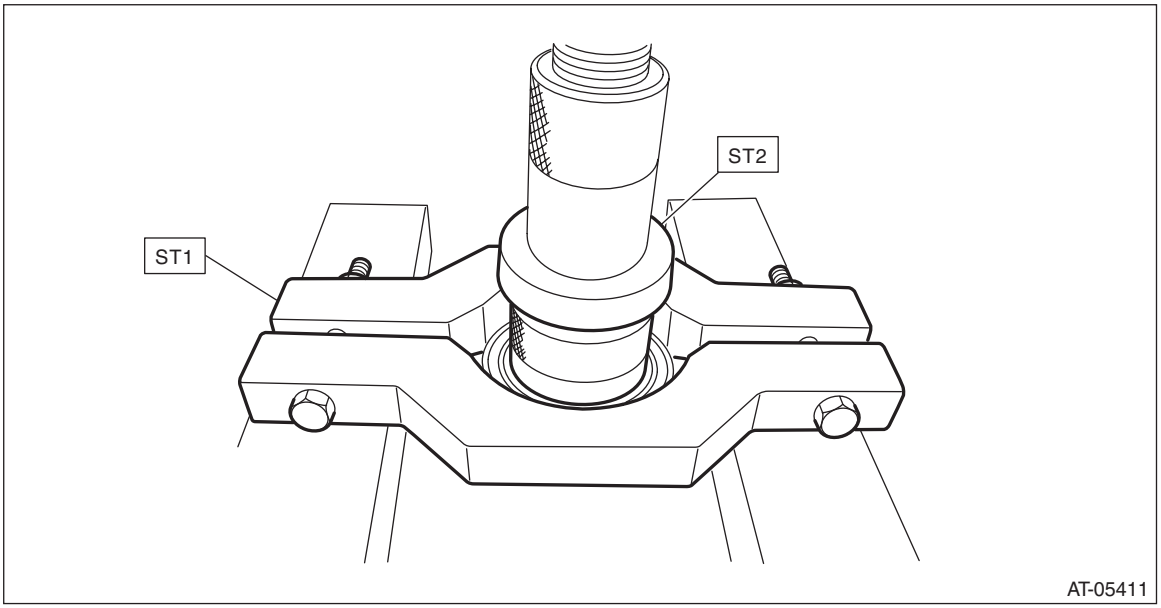

D: ASSEMBLY

1. DRIVE SPROCKET

1) Using the ST, install the ball bearing.

NOTE:
Use a new ball bearing.
ST 499755502 PRESS SNAP RING

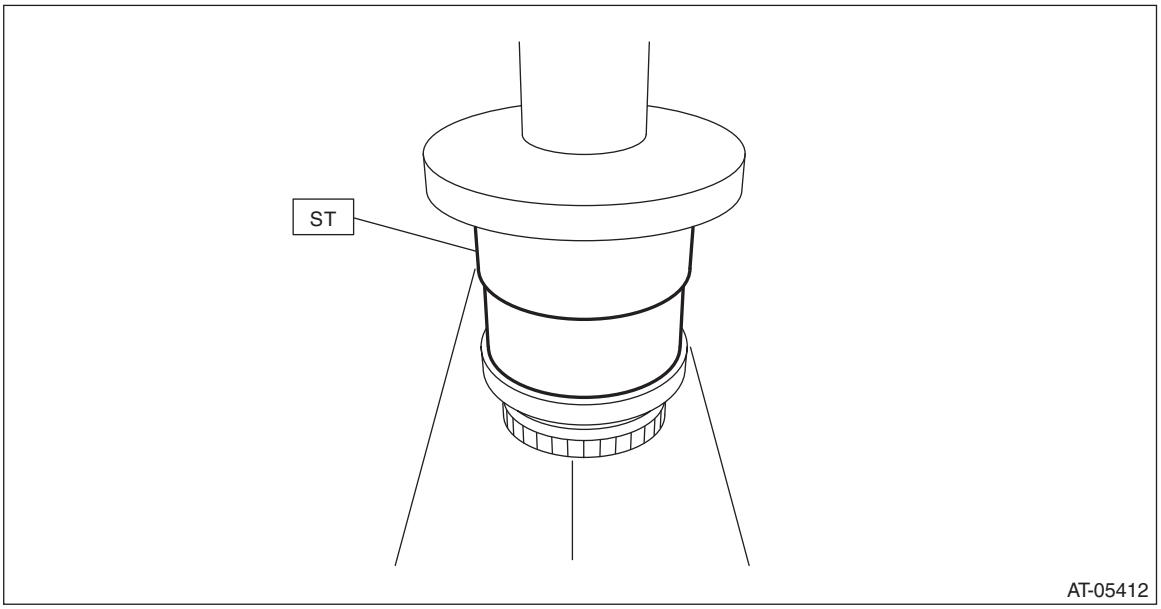

2) Install the snap ring.

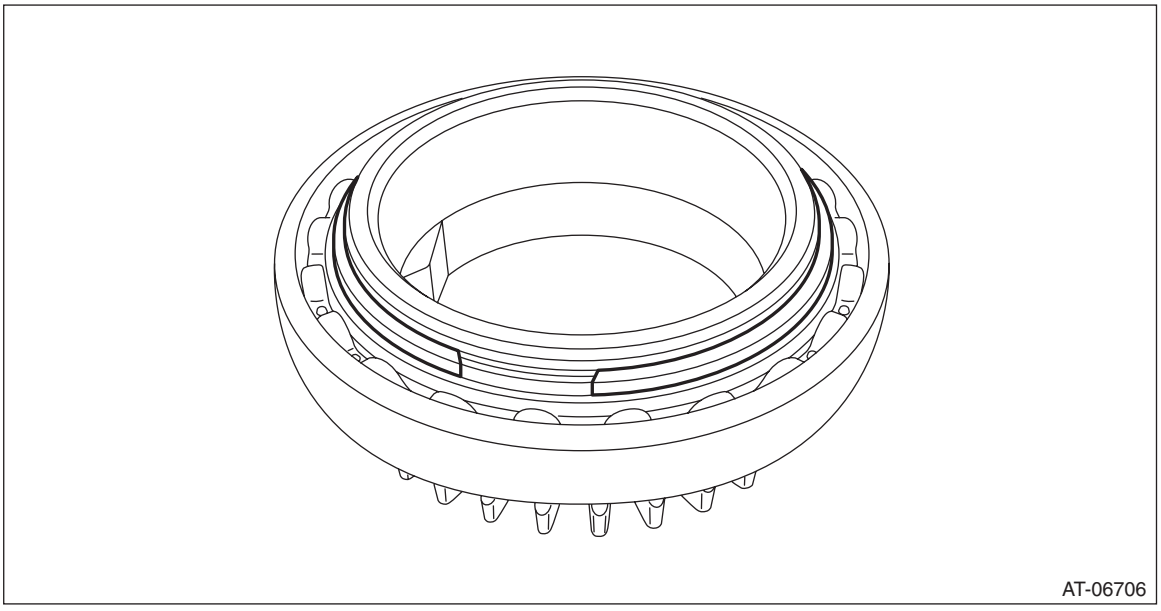

E: INSPECTION

- Check the oil pump chain for damage.
- Replace if gear teeth are broken, damaged, sharpen or excessively worn.
- Check the bearing for seizure or wear.
- Apply CVTF to bearing and rotate the bearing to check for noise or dragging etc.
- Check the oil pump chain cover for damage.
- Check for leakage of CVTF from the mating surface of oil pump chain cover.
- Check the oil seal for damage.

48.Oil Pump

A: REMOVAL

1) Remove the transmission assembly. <Ref. to CVT(TR580)-63, REMOVAL, Automatic Transmission Assembly.>
2) Remove the torque converter assembly. <Ref. to CVT(TR580)-196, REMOVAL, Torque Converter Assembly.>
3) Remove the oil pump chain cover. <Ref. to CVT(TR580)-366, REMOVAL, Oil Pump Chain.>
4) Remove the oil pump and the plate.

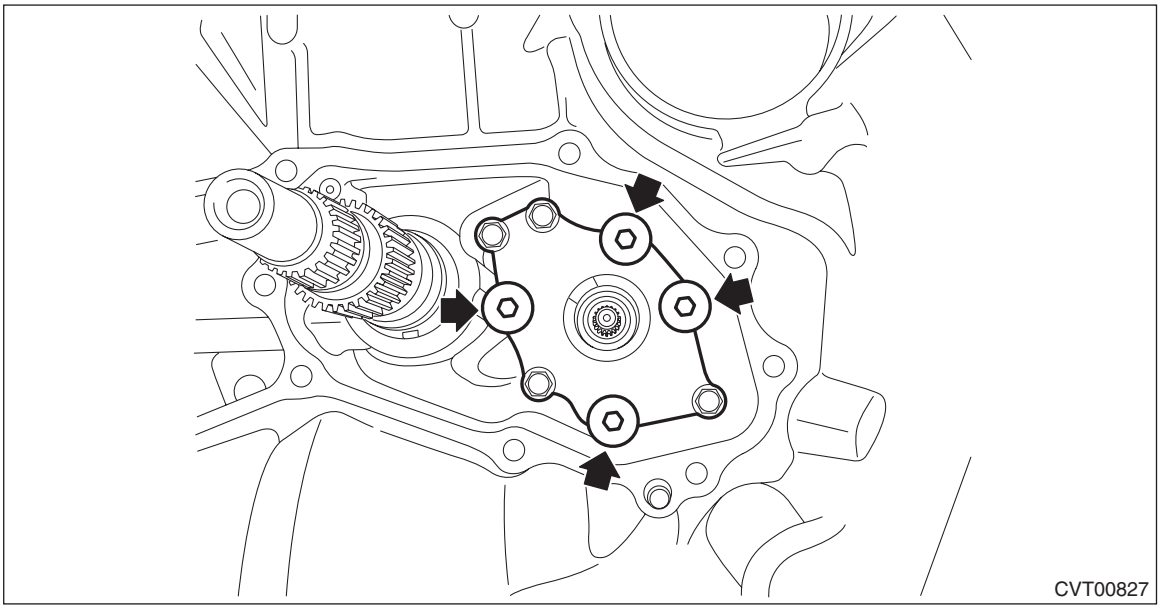

5) Remove the O-rings.

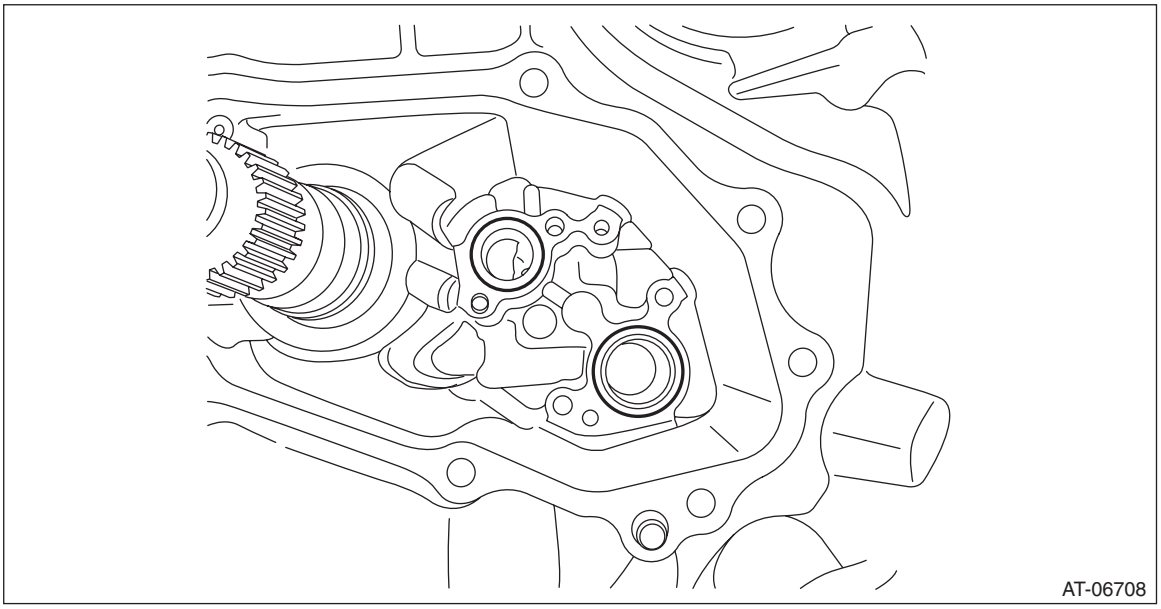

B: INSTALLATION

1) Install the O-rings.

NOTE:
- Use new O-rings.
- Apply CVTF to the O-rings.

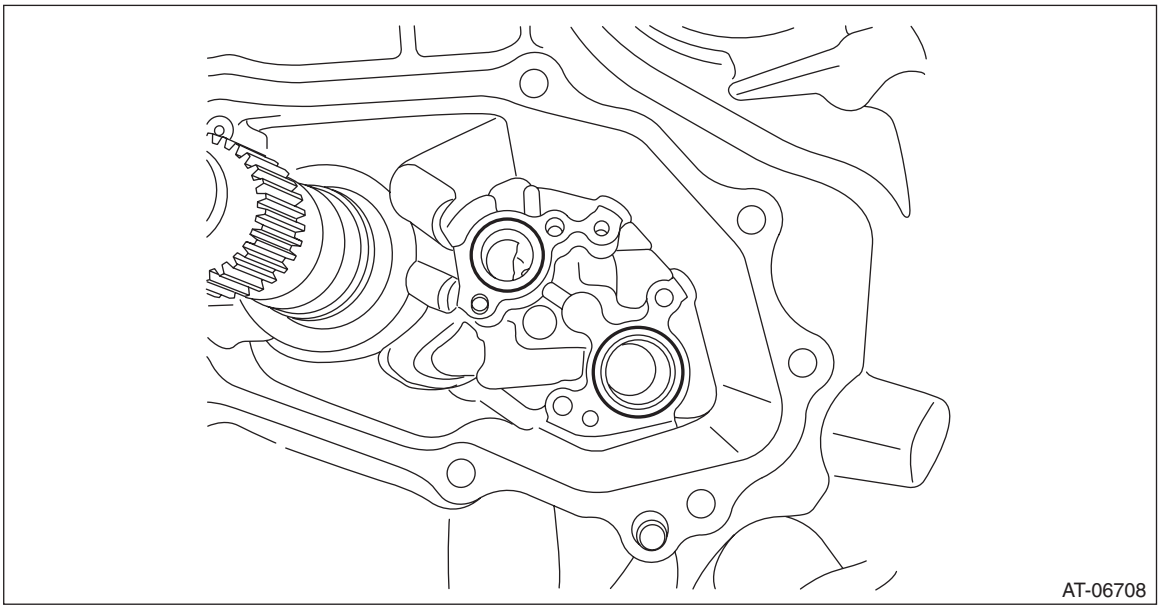

2) Install the plate and the oil pump.

NOTE:
Apply CVTF to the bolt.

Tightening torque:
8.5 N·m (0.9 kgf-m, 6.3 ft-lb)

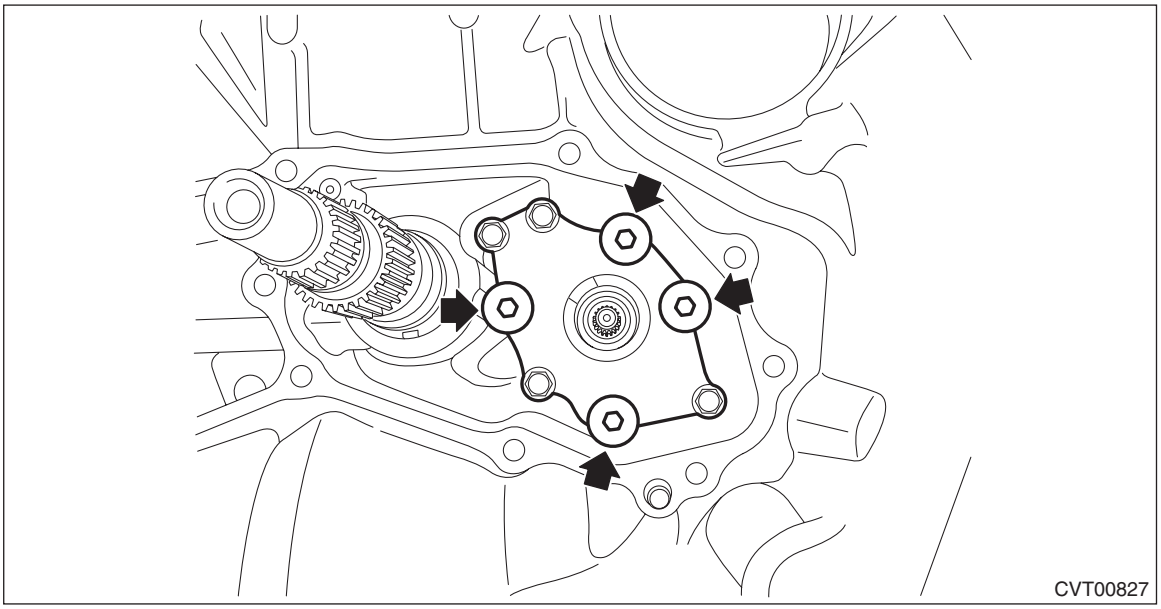

3) Install the oil pump chain cover. <Ref. to CVT(TR580)-369, INSTALLATION, Oil Pump Chain.>
4) Install the torque converter assembly. <Ref. to CVT(TR580)-197, INSTALLATION, Torque Converter Assembly.>
5) Install the transmission assembly. <Ref. to CVT(TR580)-79, INSTALLATION, Automatic Transmission Assembly.>

C: INSPECTION

Check the following items.
- Check the oil pump for damage and wear.
- Rotate the oil pump by hand, and check that it rotates smoothly.

1) Measure the secondary pressure. <Ref. to CVT(TR580)-51, INSPECTION, Secondary Pressure (Line Pressure) Test.>
2) Remove the oil pan and oil strainer. <Ref. to CVT(TR580)-130, REMOVAL, Oil Pan and Strainer.>
3) Check oil strainer for clogging.
When oil strainer has no clogging, replace the oil pump.

49.Converter Case

A: REMOVAL

1) Remove the transmission assembly. <Ref. to CVT(TR580)-63, REMOVAL, Automatic Transmission Assembly.>
2) Remove the air breather hose. <Ref. to CVT(TR580)-190, REMOVAL, Air Breather Hose.>
3) Remove the control valve body. <Ref. to CVT(TR580)-133, REMOVAL, Control Valve Body.>
4) Remove the transmission harness. <Ref. to CVT(TR580)-147, REMOVAL, Transmission Harness.>
5) Remove the turbine speed sensor. <Ref. to CVT(TR580)-113, REMOVAL, Turbine Speed Sensor.>
6) Remove the secondary speed sensor. <Ref. to CVT(TR580)-118, REMOVAL, Secondary Speed Sensor.>
7) Remove the primary speed sensor. <Ref. to CVT(TR580)-123, REMOVAL, Primary Speed Sensor.>
8) Remove the inhibitor switch. <Ref. to CVT(TR580)-109, REMOVAL, Inhibitor Switch.>
9) Remove the extension case. <Ref. to CVT(TR580)-200, REMOVAL, Extension Case.>
10) Remove the transfer clutch assembly. <Ref. to CVT(TR580)-204, REMOVAL, Transfer Clutch.>
11) Remove the transfer driven gear assembly. <Ref. to CVT(TR580)-218, REMOVAL, Transfer Driven Gear.>
12) Remove the parking pawl. <Ref. to CVT(TR580)-221, REMOVAL, Parking Pawl.>
13) Remove the reduction driven gear assembly. <Ref. to CVT(TR580)-223, REMOVAL, Reduction Driven Gear.>
14) Remove the oil pan and oil strainer. <Ref. to CVT(TR580)-130, REMOVAL, Oil Pan and Strainer.>
15) Remove the transmission control device. <Ref. to CVT(TR580)-231, REMOVAL, Transmission Control Device.>
16) Remove the transmission case. <Ref. to CVT(TR580)-237, REMOVAL, Transmission Case.>
17) Remove the reduction drive gear. <Ref. to CVT(TR580)-256, REMOVAL, Reduction Drive Gear.>
18) Remove the primary pulley, secondary pulley and variator chain. <Ref. to CVT(TR580)-261, REMOVAL, Primary Pulley and Secondary Pulley.>
19) Remove the reverse brake assembly. <Ref. to CVT(TR580)-282, REMOVAL, Reverse Brake Assembly.>
20) Remove the forward clutch assembly. <Ref. to CVT(TR580)-297, REMOVAL, Forward Clutch Assembly.>
21) Remove the drive pinion shaft assembly. <Ref. to CVT(TR580)-317, REMOVAL, Drive Pinion Shaft Assembly.>
22) Remove the front differential assembly. <Ref. to CVT(TR580)-346, REMOVAL, Front Differential Assembly.>
23) Remove the oil pump chain cover. <Ref. to CVT(TR580)-366, REMOVAL, Oil Pump Chain.>
24) Remove the oil pump. <Ref. to CVT(TR580)-375, REMOVAL, Oil Pump.>

B: INSTALLATION

1) Install the oil pump. <Ref. to CVT(TR580)-376, INSTALLATION, Oil Pump.>
2) Install the oil pump chain cover. <Ref. to CVT(TR580)-369, INSTALLATION, Oil Pump Chain.>
3) Install the front differential assembly. <Ref. to CVT(TR580)-348, INSTALLATION, Front Differential Assembly.>
4) Install the drive pinion shaft assembly. <Ref. to CVT(TR580)-318, INSTALLATION, Drive Pinion Shaft Assembly.>
5) Install the forward clutch assembly. <Ref. to CVT(TR580)-300, INSTALLATION, Forward Clutch Assembly.>
6) Install the reverse brake assembly. <Ref. to CVT(TR580)-285, INSTALLATION, Reverse Brake Assembly.>
7) Install the primary pulley, secondary pulley and variator chain. <Ref. to CVT(TR580)-268, INSTALLATION, Primary Pulley and Secondary Pulley.>
8) Install the reduction drive gear. <Ref. to CVT(TR580)-257, INSTALLATION, Reduction Drive Gear.>
9) Install the transmission case. <Ref. to CVT(TR580)-240, INSTALLATION, Transmission Case.>
10) Install the transmission control device. <Ref. to CVT(TR580)-234, INSTALLATION, Transmission Control Device.>
11) Install the oil strainer and oil pan. <Ref. to CVT(TR580)-131, INSTALLATION, Oil Pan and Strainer.>

12) Install the reduction driven gear assembly. <Ref. to CVT(TR580)-223, INSTALLATION, Reduction Driven Gear.>
13) Install the transfer driven gear assembly. <Ref. to CVT(TR580)-219, INSTALLATION, Transfer Driven Gear.>
14) Install the transfer clutch assembly. <Ref. to CVT(TR580)-206, INSTALLATION, Transfer Clutch.>
15) Install the parking pawl. <Ref. to CVT(TR580)-222, INSTALLATION, Parking Pawl.>
16) Install the extension case. <Ref. to CVT(TR580)-201, INSTALLATION, Extension Case.>
17) Install the inhibitor switch. <Ref. to CVT(TR580)-111, INSTALLATION, Inhibitor Switch.>
18) Install the secondary speed sensor. <Ref. to CVT(TR580)-118, INSTALLATION, Secondary Speed Sensor.>
19) Install the primary speed sensor. <Ref. to CVT(TR580)-124, INSTALLATION, Primary Speed Sensor.>
20) Install the turbine speed sensor. <Ref. to CVT(TR580)-113, INSTALLATION, Turbine Speed Sensor.>
21) Install the transmission harness. <Ref. to CVT(TR580)-150, INSTALLATION, Transmission Harness.>
22) Install the control valve body. <Ref. to CVT(TR580)-139, INSTALLATION, Control Valve Body.>
23) Install the air breather hose. <Ref. to CVT(TR580)-192, INSTALLATION, Air Breather Hose.>
24) Install the transmission assembly. <Ref. to CVT(TR580)-79, INSTALLATION, Automatic Transmission Assembly.>

C: DISASSEMBLY

1) Remove the transmission hanger and transmission radio ground cord, if mounted.
2) Remove the filler plug, oil drain plug and overflow drain plug. <Ref. to CVT(TR580)-44, REPLACEMENT, Differential Gear Oil.>
3) Remove all plugs.

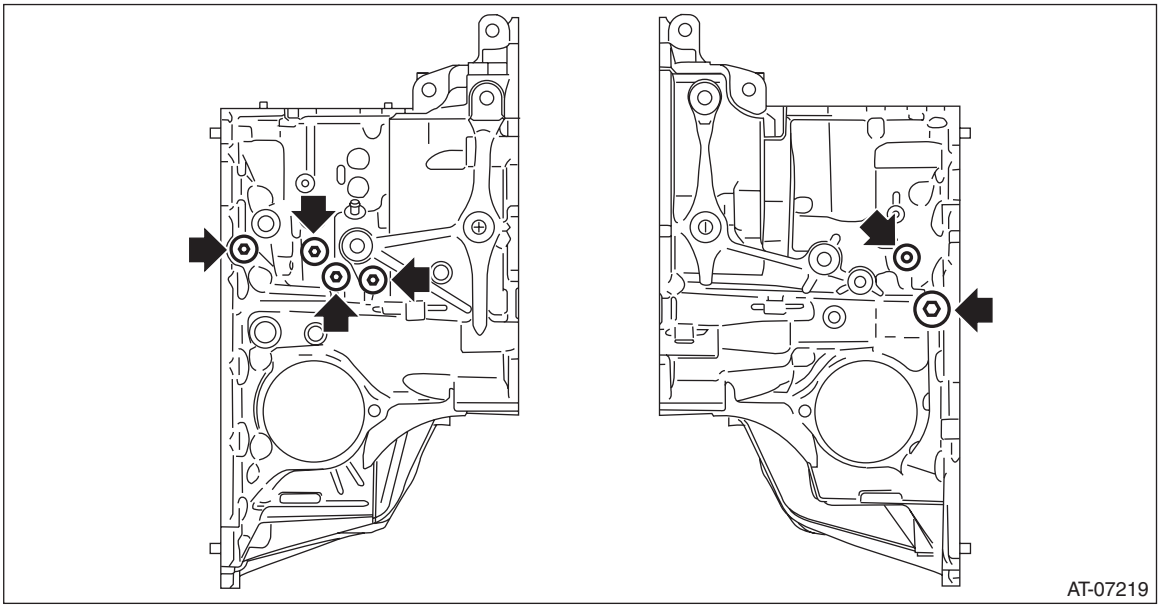

D: ASSEMBLY

1) Install the oil drain plug.

Tightening torque:
70 N·m (7.1 kgf-m, 51.6 ft-lb)

2) Install the overflow drain plug.

NOTE:
Overflow plug of differential gear oil is temporarily attached.

3) Install all plugs.

NOTE:
Use new O-rings.

Tightening torque:
T1: 22 N·m (2.2 kgf-m, 16.2 ft-lb)
T2: 22.5 N·m (2.3 kgf-m, 16.6 ft-lb)

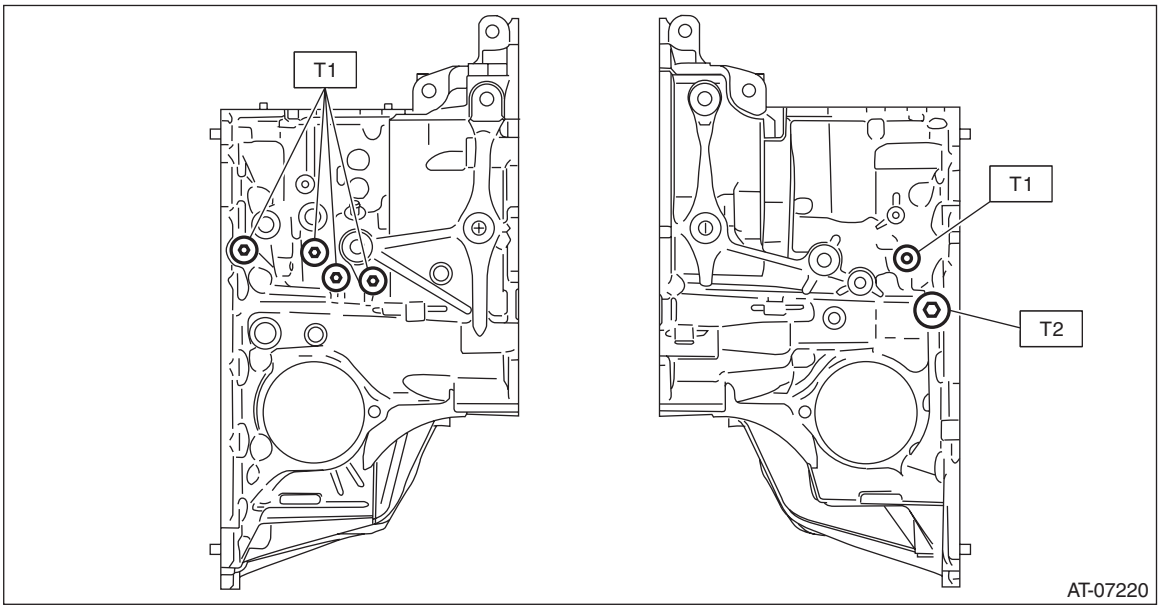

4) Install the transmission hanger and transmission radio ground cord.

Tightening torque:
41 N·m (4.2 kgf-m, 30.2 ft-lb)

E: INSPECTION

- Check for leakage of CVTF from the connection between converter case and transmission case.
- Check there is no damage or cracks on the converter case.

50.Diagnostics with Phenomenon

A: INSPECTION

Symptoms	Faulty parts
Stall speed is low after warming-up, with select lever in “D” or “R” range.	Engine control system
Vehicle does not move despite engine speed rising up, with select lever in “D” or “R” range.	• Engine control system • Select cable • CVTF • Secondary pressure circuit • Pulley, gear and variator chain • Forward/reverse changeover section • TCM • Control valve body • Inhibitor switch
Vehicle does not move by engine stall, with select lever in “D” or “R” range.	• Parking mechanism • Select cable • Bearing • Forward/reverse changeover section
Excessive shock occurs at starting, with select lever in “D” or “R” range.	• Secondary pressure circuit • Pulley, gear and variator chain
Acceleration speed from standstill is insufficient, with select lever in “D” or “R” range.	• Control valve body • Forward/reverse changeover section
Engine speed suddenly rises up during driving, with select lever in “D” or “R” range.	• Control valve body • Secondary pressure circuit • Primary pressure circuit
Vibration occurs during driving, with select lever in “D” or “R” range.	• Secondary pressure circuit • Primary pressure circuit • Forward/reverse changeover section • Pulley and variator chain • Torque converter assembly • Hydraulic pressure circuit to torque converter • Control valve body
Sudden braking occurs during driving, with select lever in “D” or “R” range.	• Secondary pressure circuit • Primary pressure circuit • Control valve body
During deceleration, lockup clutch does not disengage until just before halting, with select lever in “D” or “R” range.	• Control valve body • Torque converter assembly
Engine stalls with vehicle at a standstill, with select lever in “D” or “R” range.	• Engine control system • Control valve body
Excessive lockup shock occurs during driving, with select lever in “D” range.	Control valve body
Slipping occurs at lockup, or lockup does not occur during driving, with select lever in “D” range.	• Control valve body • Lockup hydraulic line • Torque converter assembly
Excessive shift shock occurs when shifting the select lever from “N” range to “D” range, or from “N” range to “R” range.	• Inhibitor switch • Control valve body • Forward/reverse changeover section
Vehicle does not keep at standstill with select lever in “P” range, or parking cannot be released when shifting from “P” range to another range.	• Select cable • Parking mechanism
Select lever does not shift smoothly.	• Select cable • Inhibitor switch • Detent spring • Manual plate

CONTINUOUSLY VARIABLE TRANSMISSION

CVT(TR690)

		Page
1.	General Description	3
2.	CVTF	38
3.	Differential Gear Oil	43
4.	Variator Chain Break-in	46
5.	AWD ON/OFF Switching Mode	47
6.	Road Test	48
7.	Stall Test	49
8.	Time Lag Test	50
9.	Secondary Pressure (Line Pressure) Test	51
10.	Transfer Clutch Pressure Test	54
11.	Automatic Transmission Assembly	58
12.	Transmission Mounting System	93
13.	Extension Case Oil Seal	96
14.	Differential Side Retainer Oil Seal	98
15.	Inhibitor Switch	102
16.	Secondary Speed Sensor	112
17.	Primary Speed Sensor	115
18.	Front Wheel Speed Sensor	120
19.	Secondary Pressure Sensor	122
20.	Control Valve Body	124
21.	Transmission Harness	135
22.	X MODE Switch	140
23.	Transmission Control Module (TCM)	142
24.	CVTF Cooler Pipe and Hose	144
25.	CVTF Cooler (Air Cooling)	150
26.	Air Breather Hose	152
27.	Drive Plate	155
28.	Preparation for Overhaul	157
29.	Torque Converter Assembly	158
30.	Extension Case	160
31.	Rear Drive Shaft	163
32.	Transfer Clutch	168
33.	Transfer Reduction Driven Gear	180
34.	Parking Pawl	185
35.	Intermediate Case	187
36.	CVTF Filter	192
37.	Reverse Brake Assembly	193
38.	Forward Clutch Assembly	202
39.	Reduction Driven Gear	231
40.	Transmission Control Device	238
41.	Transmission Case	242
42.	Primary Pulley and Secondary Pulley	259
43.	Variator Chain	274

44. Drive Pinion Shaft Assembly 275
45. Front Differential Assembly 296
46. Oil Pump 314
47. Oil Pump Chain 315
48. Converter Case Cover 323
49. Front Reduction Drive Gear 333
50. Front Reduction Driven Gear 341
51. Converter Case 349
52. Diagnostics with Phenomenon 352

1. General Description

A: SPECIFICATION

1. TORQUE CONVERTER

Model		3.6 L non-turbo
Type		Symmetric, 3-element, single stage, 2-phase torque converter
Stall torque ratio		1.80
Nominal	mm (in)	246 (9.69)
Stall speed (at sea level)	r/min	1,870 — 2,900 (D range) 1,750 — 2,750 (R range)
One-way clutch		Sprag type one-way clutch

2. OIL PUMP

Type		Internal gear pump
Driving method		Driven by chain
Number of teeth	Inner rotor	8
	Outer rotor	9

3. TRANSMISSION CONTROL ELEMENT

Type	Forward continuously variable speed change, 1 reverse, planetary gear
Multi-plate clutch	1 set
Multi-plate brake	1 set

4. TRANSMISSION GEAR RATIO

Forward	3.105 — 0.482
Rev	3.018

5. PLATE

Number of input clutch drive plates	5
Number of forward clutch drive plates	6
Number of reverse brake drive plates	5

6. SELECTOR POSITION

P (Park)	Transmission neutral, output shaft locked, engine start enabled
R (Reverse)	Rev
N (Neutral)	Transmission neutral, engine start enabled
D (Drive)	Forward continuously variable speed change
M (Manual mode) (paddle shift +side)	Manual gear change 1st → 2nd → 3rd → 4th → 5th → 6th
M (Manual mode) (paddle shift –side)	Manual gear change 1st ← 2nd ← 3rd ← 4th ← 5th ← 6th

7. HYDRAULIC CONTROL AND LUBRICATION

Type	Electronic hydraulic control (speed changed by signals of vehicle speed and accelerator opening angle)
Fluid	Specified fluid: Subaru High Torque CVT Fluid **CAUTION:** **Always use specified CVTF. Using other fluid will cause malfunction.**
Fluid capacity L (US qt, Imp qt)	12.45 — 12.95 (13.2 — 13.7, 11.0 — 11.4)
Lubrication system	Forced feed lubrication with oil pump

8. COOLING AND HARNESS

Model	Sedan	OUTBACK
Cooling system	Liquid-cooler incorporated in radiator	Liquid-cooler incorporated in radiator + CVTF cooler (air cool)
Inhibitor switch harness	12 poles	
Transmission harness	20 poles	

9. TRANSFER

Transfer type	Multi-plate transfer (MP-T)
Number of transfer clutch drives & driven plates	6
Control method	Electronic hydraulic type
Reduction gear ratio	1.000 (37/37)

10.REDUCTION GEAR RATIO

Front final reduction gear ratio	4.111

11.FRONT DIFFERENTIAL GEAR OIL

Fluid	Recommended fluid: SUBARU GEAR OIL EXTRA MT **CAUTION:** **If an alternative transmission oil is used, you may not have expected functionality and performance.** Alternative fluid: GL-5 (75W-90)
Fluid capacity L (US qt, Imp qt)	1.3 — 1.5 (1.4 — 1.6, 1.1 — 1.3)

B: COMPONENT

1. TORQUE CONVERTER ASSEMBLY AND CONVERTER CASE

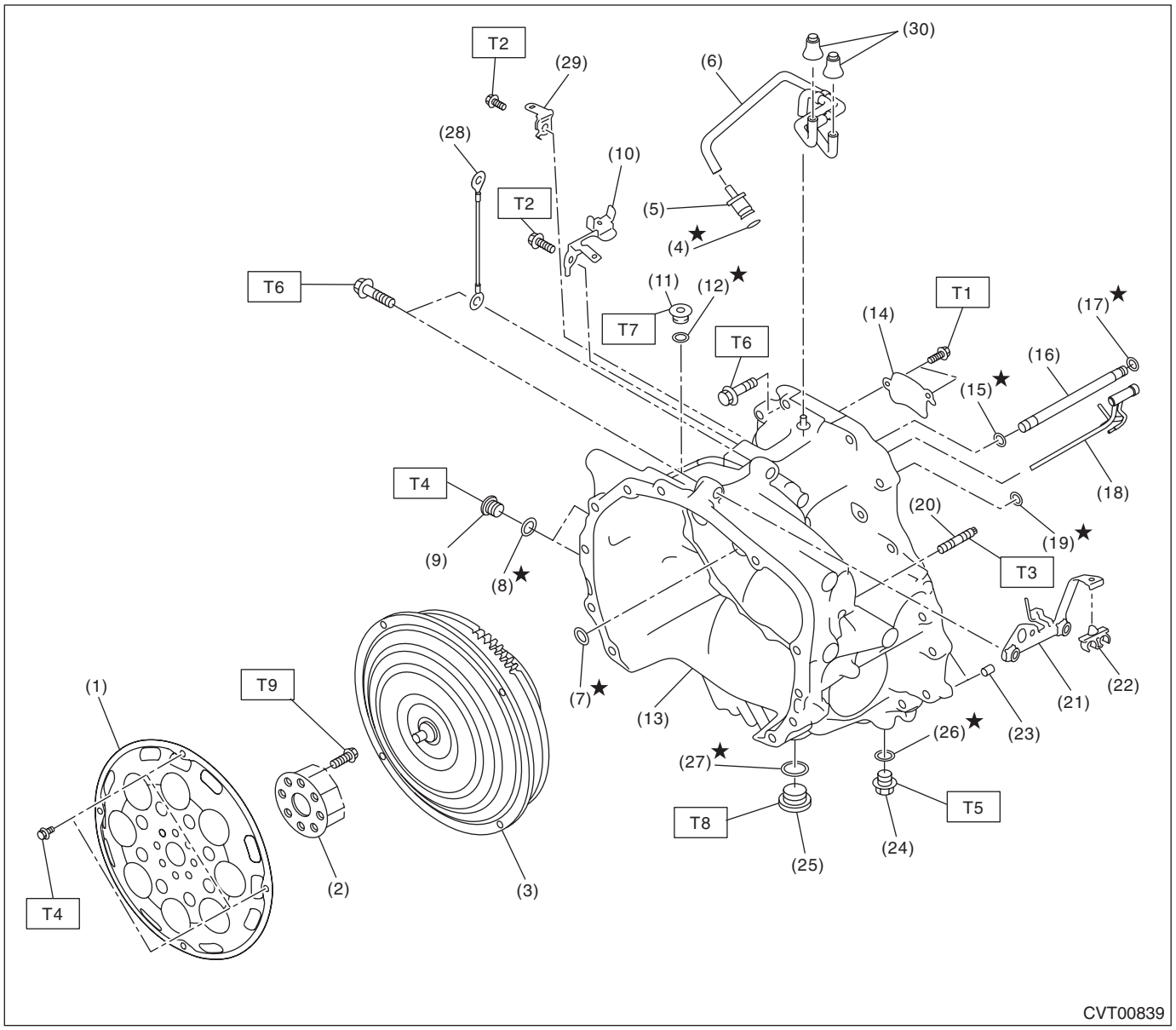

(1) Drive plate
(2) Reinforcement drive plate
(3) Torque converter ASSY
(4) O-ring
(5) Oil charge pipe cap
(6) Air breather hose
(7) O-ring
(8) O-ring
(9) Plug
(10) Transmission harness stay
(11) Plug
(12) O-ring
(13) Converter case
(14) Oil stopper plate
(15) O-ring
(16) Lubrication pipe
(17) O-ring
(18) Lubrication pipe
(19) O-ring
(20) Stud bolt
(21) Transmission hanger
(22) Clip
(23) Straight pin
(24) Overflow drain plug
(25) Front differential gear oil drain plug
(26) Gasket
(27) Gasket
(28) Transmission radio ground cord
(29) Harness stay
(30) Air breather cap

Tightening torque: N·m (kgf-m, ft-lb)
T1: 9 (0.9, 6.6)
T2: 16 (1.6, 11.8)
T3: 18 (1.8, 13.3)
T4: 25 (2.5, 18.4)
T5: 35 (3.6, 25.8)
T6: 41 (4.2, 30.2)
T7: 50 (5.1, 36.9)
T8: 70 (7.1, 51.6)
T9: <Ref. to CVT(TR690)-155, INSTALLATION, Drive Plate.>

2. OIL PUMP ASSEMBLY

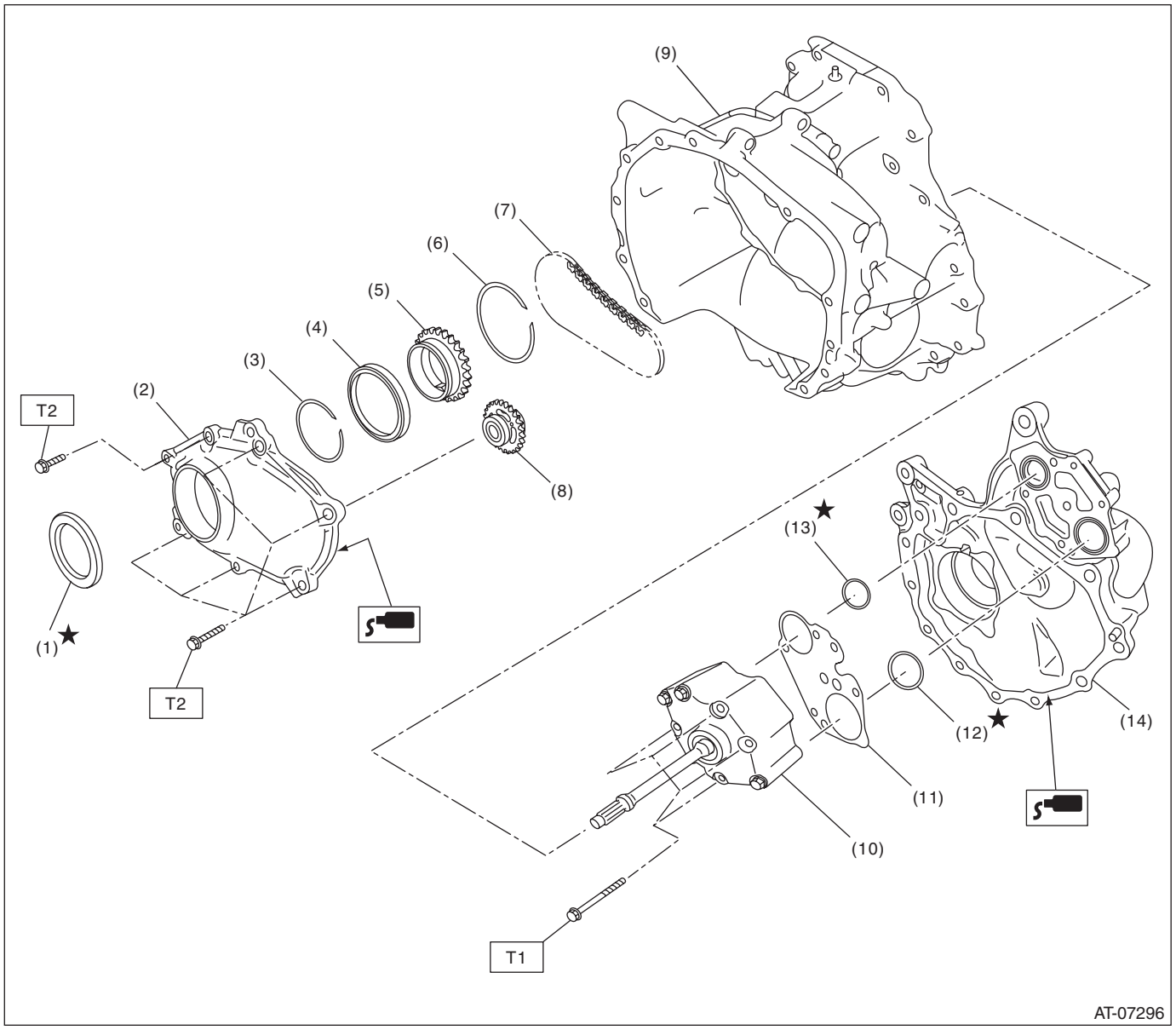

(1) Oil seal
(2) Oil pump chain cover
(3) Snap ring
(4) Ball bearing
(5) Drive sprocket
(6) Snap ring
(7) Oil pump chain
(8) Driven sprocket
(9) Converter case
(10) Oil pump ASSY
(11) Plate
(12) O-ring (large)
(13) O-ring (small)
(14) Drive pinion retainer

Tightening torque: N·m (kgf-m, ft-lb)
T1: 8.5 (0.9, 6.3)
T2: 24 (2.4, 17.7)

3. TRANSMISSION CASE

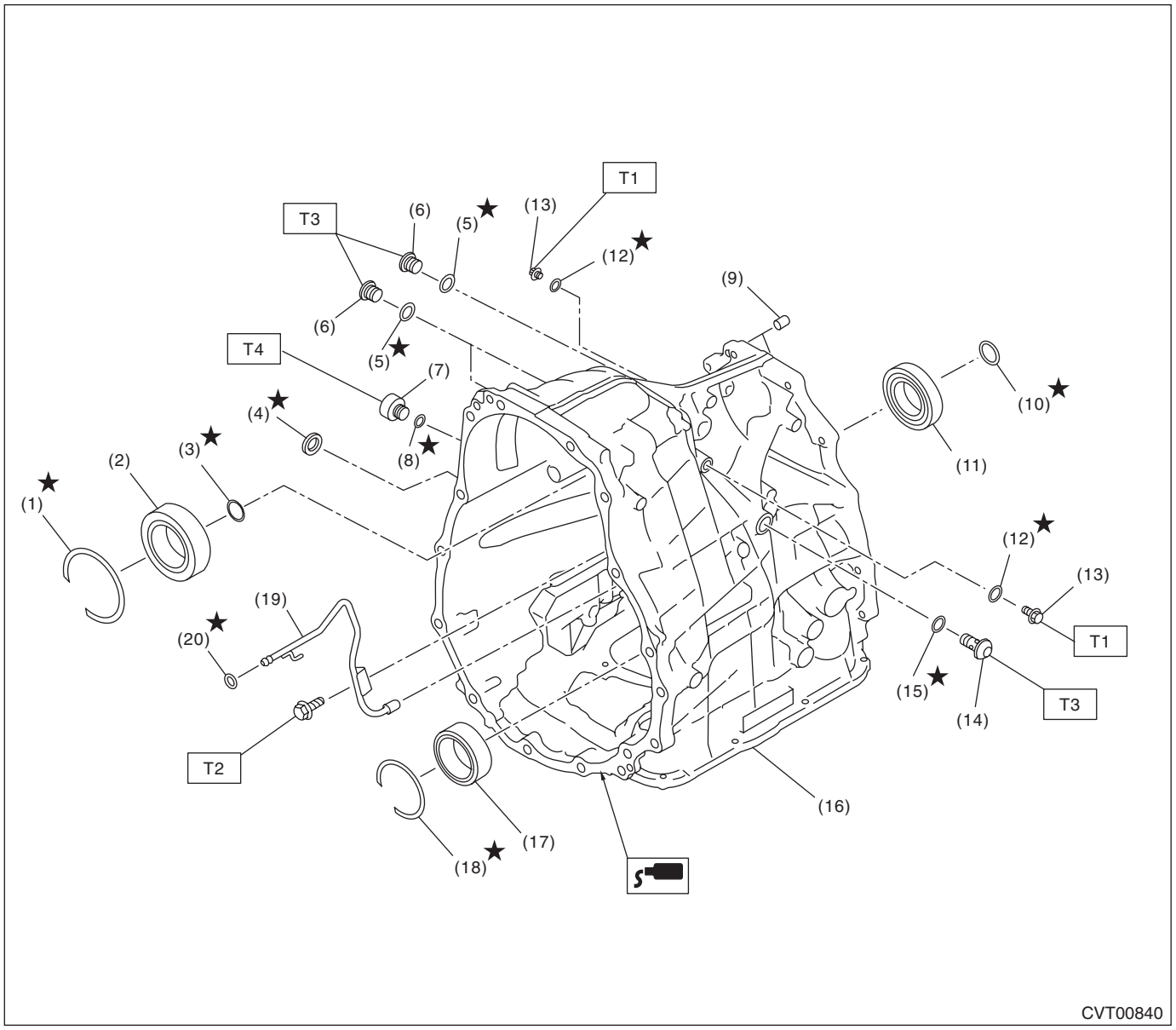

(1) Snap ring
(2) Roller bearing
(3) Seal ring
(4) Oil seal
(5) O-ring
(6) Plug
(7) Plug
(8) Gasket
(9) Straight pin
(10) Seal ring
(11) Ball bearing
(12) O-ring
(13) Plug
(14) Plug
(15) O-ring
(16) Transmission case
(17) Roller bearing
(18) Snap ring
(19) Lubrication pipe
(20) O-ring

Tightening torque: N·m (kgf-m, ft-lb)
T1: 13 (1.3, 9.6)
T2: 16 (1.6, 11.8)
T3: 25 (2.5, 18.4)
T4: 35 (3.6, 25.8)

4. CONTROL VALVE BODY

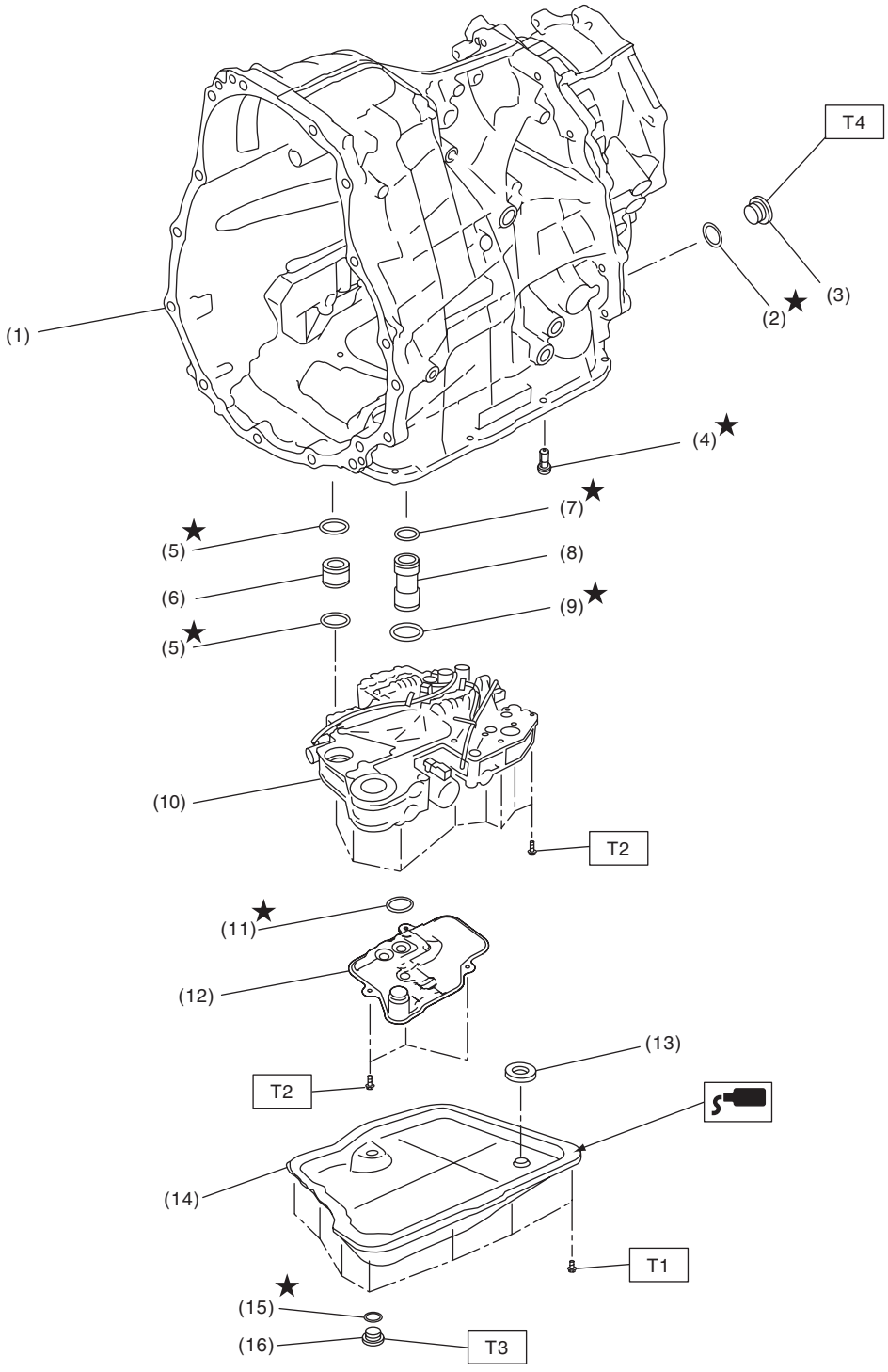

(1) Transmission case
(2) Gasket
(3) Filler plug
(4) CVTF filter
(5) O-ring
(6) Pressure pipe
(7) O-ring (small)
(8) CVTF pipe
(9) O-ring (large)
(10) Control valve body
(11) O-ring
(12) Oil strainer
(13) Magnet
(14) Oil pan
(15) Gasket
(16) CVTF drain plug

Tightening torque: N·m (kgf-m, ft-lb)
T1: 5 (0.5, 3.7)
T2: 9 (0.9, 6.6)
T3: 39.2 (4.0, 28.9)
T4: 50 (5.1, 36.9)

5. REVERSE BRAKE ASSEMBLY AND INTERMEDIATE CASE

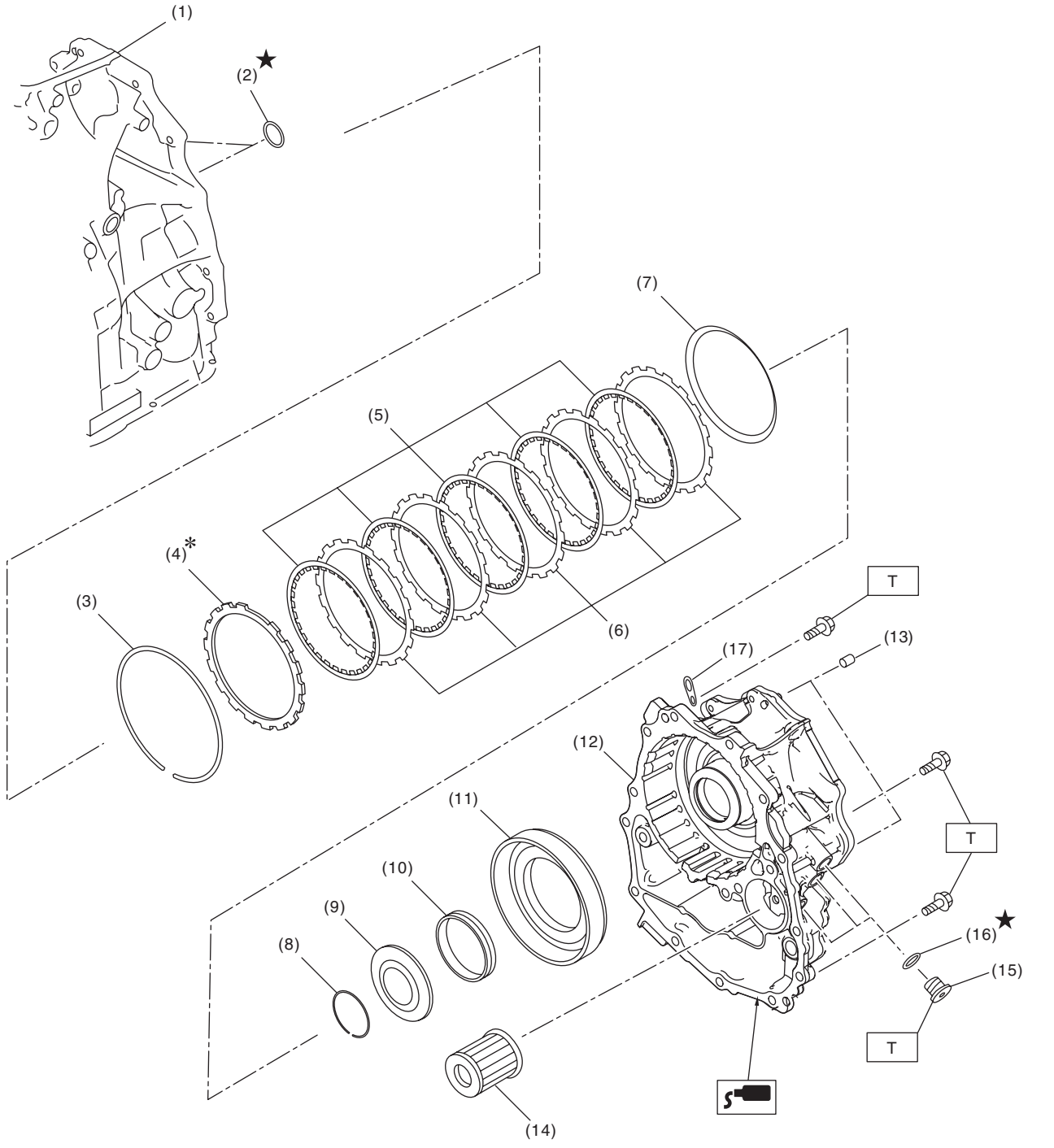

AT-07299

(1) Transmission case
(2) O-ring
(3) Snap ring
(4) Retaining plate
(5) Drive plate
(6) Driven plate
(7) Dish plate
(8) Snap ring
(9) Spring retainer
(10) Return spring
(11) Reverse brake piston
(12) Intermediate case
(13) Straight pin
(14) CVTF filter
(15) Plug
(16) O-ring
(17) Transmission hanger

Tightening torque: N·m (kgf-m, ft-lb)
T: 25 (2.5, 18.4)

6. FORWARD CLUTCH ASSEMBLY AND REDUCTION DRIVEN GEAR

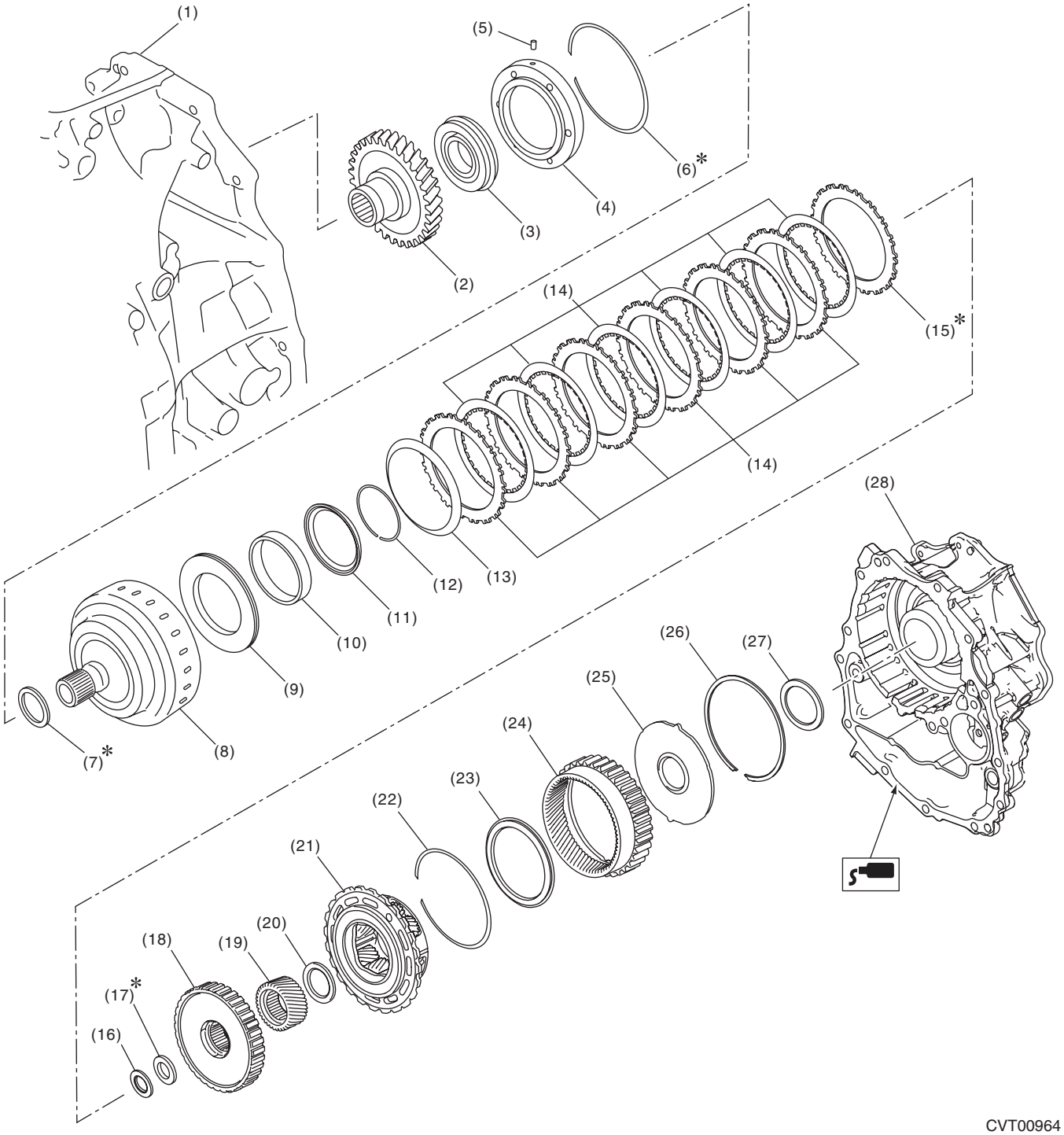

(1) Transmission case
(2) Reduction driven gear
(3) Ball bearing
(4) Reduction driven gear retainer
(5) Straight pin
(6) Snap ring
(7) Washer
(8) Forward clutch drum
(9) Forward clutch piston
(10) Return spring
(11) Forward clutch piston retainer
(12) Snap ring
(13) Dish plate
(14) Forward clutch plate
(15) Retaining plate
(16) Thrust needle bearing
(17) Washer
(18) Forward clutch hub
(19) Sun gear
(20) Thrust needle bearing
(21) Planetary carrier ASSY
(22) Snap ring
(23) Thrust needle bearing
(24) Internal gear
(25) Thrust gear plate
(26) Snap ring
(27) Thrust needle bearing
(28) Intermediate case

7. FRONT REDUCTION DRIVE GEAR AND FRONT REDUCTION DRIVEN GEAR

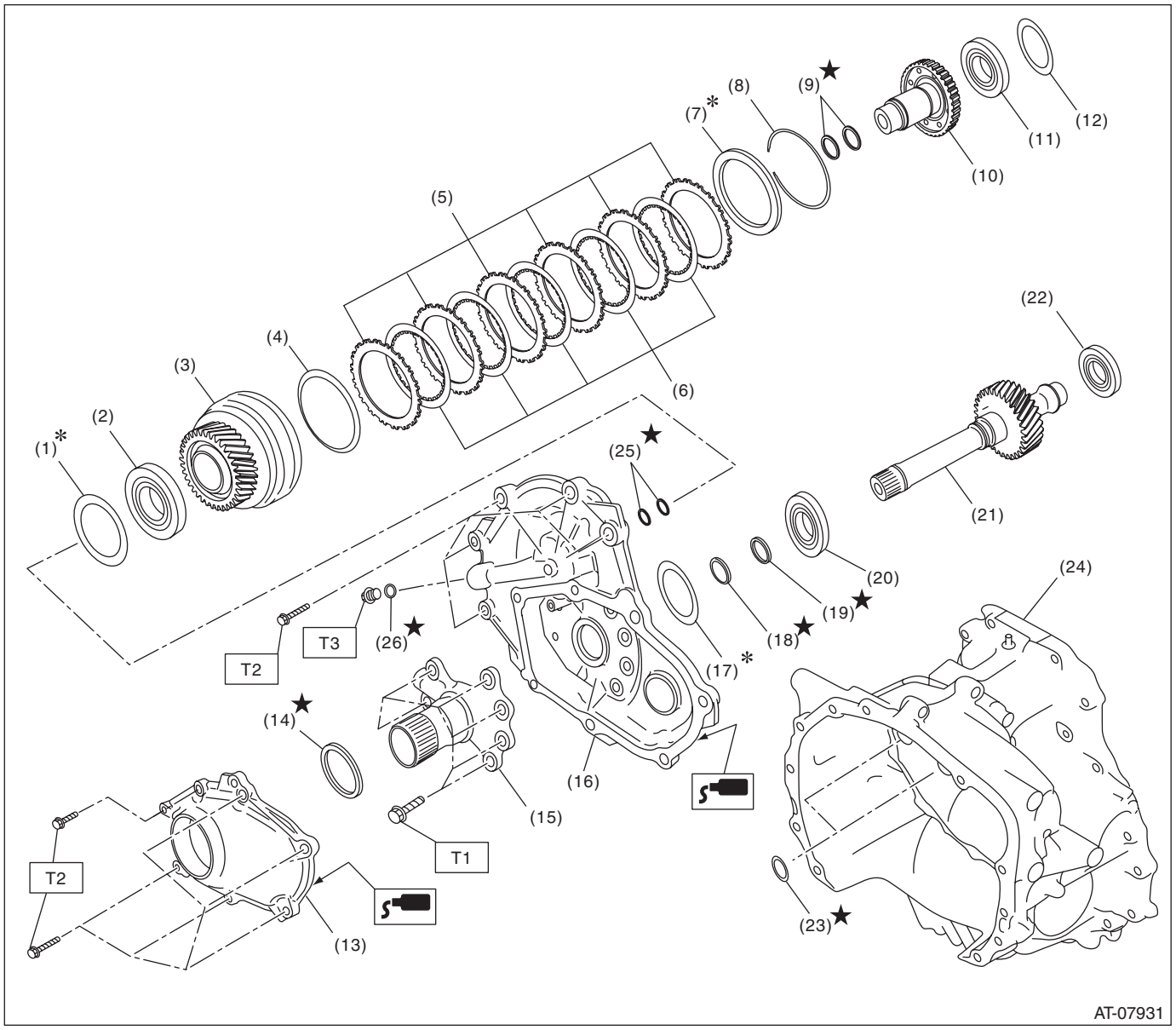

(1) Shim
(2) Ball bearing
(3) Front reduction driven gear
(4) Dish plate
(5) Driven plate
(6) Drive plate
(7) Retaining plate
(8) Snap ring
(9) Seal ring
(10) Front reduction driven shaft
(11) Ball bearing
(12) Shim
(13) Oil pump chain cover
(14) Seal ring
(15) Center support COMPL
(16) Converter case cover
(17) Shim
(18) O-ring
(19) Seal ring
(20) Ball bearing
(21) Front reduction drive gear
(22) Ball bearing
(23) O-ring
(24) Converter case
(25) Seal ring
(26) O-ring

Tightening torque: N·m (kgf-m, ft-lb)
T1: 21.5 (2.2, 15.9)
T2: 24 (2.4, 17.7)
T3: 25 (2.5, 18.4)

8. TRANSMISSION CONTROL DEVICE

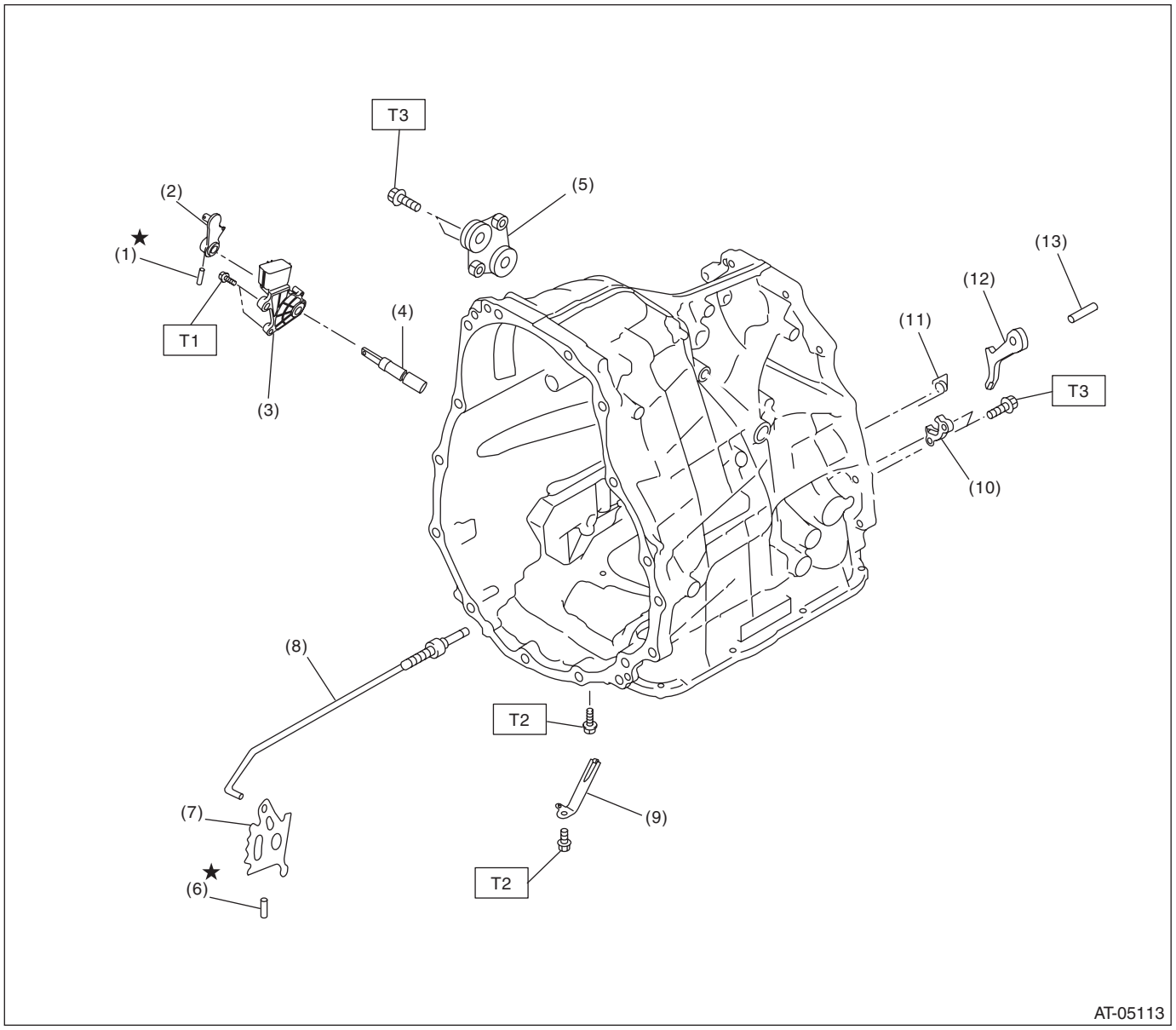

(1) Spring pin
(2) Shifter arm
(3) Inhibitor switch
(4) Shifter arm shaft
(5) Plate ASSY
(6) Spring pin
(7) Manual plate
(8) Parking rod
(9) Detent spring
(10) Parking support
(11) Return spring
(12) Parking pawl
(13) Shaft

Tightening torque: N·m (kgf-m, ft-lb)
T1: 5 (0.5, 3.7)
T2: 7 (0.7, 5.2)
T3: 25 (2.5, 18.4)

9. PRIMARY PULLEY, SECONDARY PULLEY AND VARIATOR CHAIN

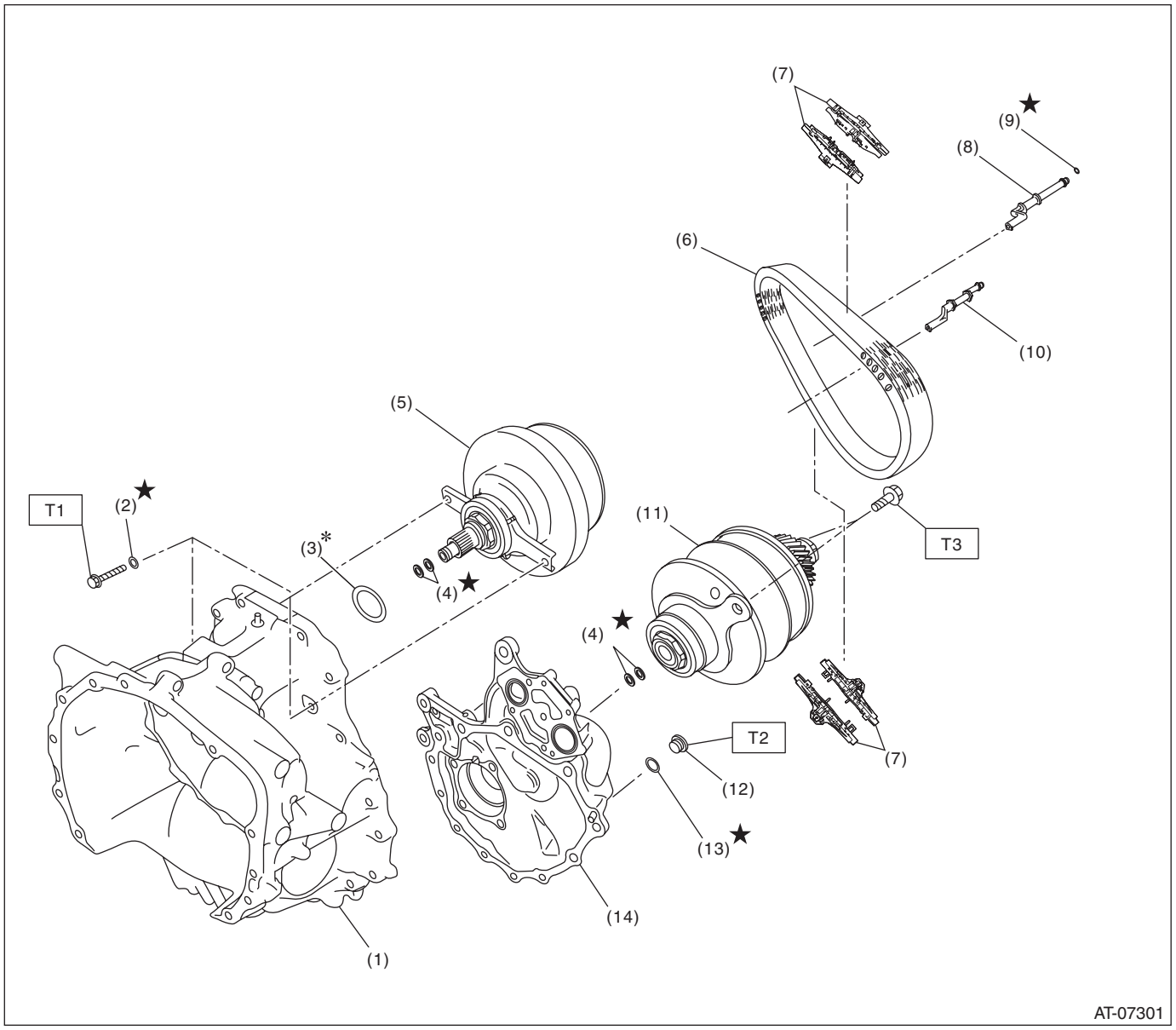

(1)	Converter case	(8)	Lubrication pipe
(2)	Seal washer	(9)	O-ring
(3)	Shim	(10)	Support rod
(4)	Seal ring	(11)	Secondary pulley ASSY
(5)	Primary pulley ASSY	(12)	Plug
(6)	Variator chain	(13)	O-ring
(7)	Chain guide	(14)	Drive pinion retainer

Tightening torque: N·m (kgf-m, ft-lb)
T1: 21 (2.1, 15.5)
T2: 25 (2.5, 18.4)
T3: 33 (3.4, 24.3)

10.FRONT DIFFERENTIAL GEAR

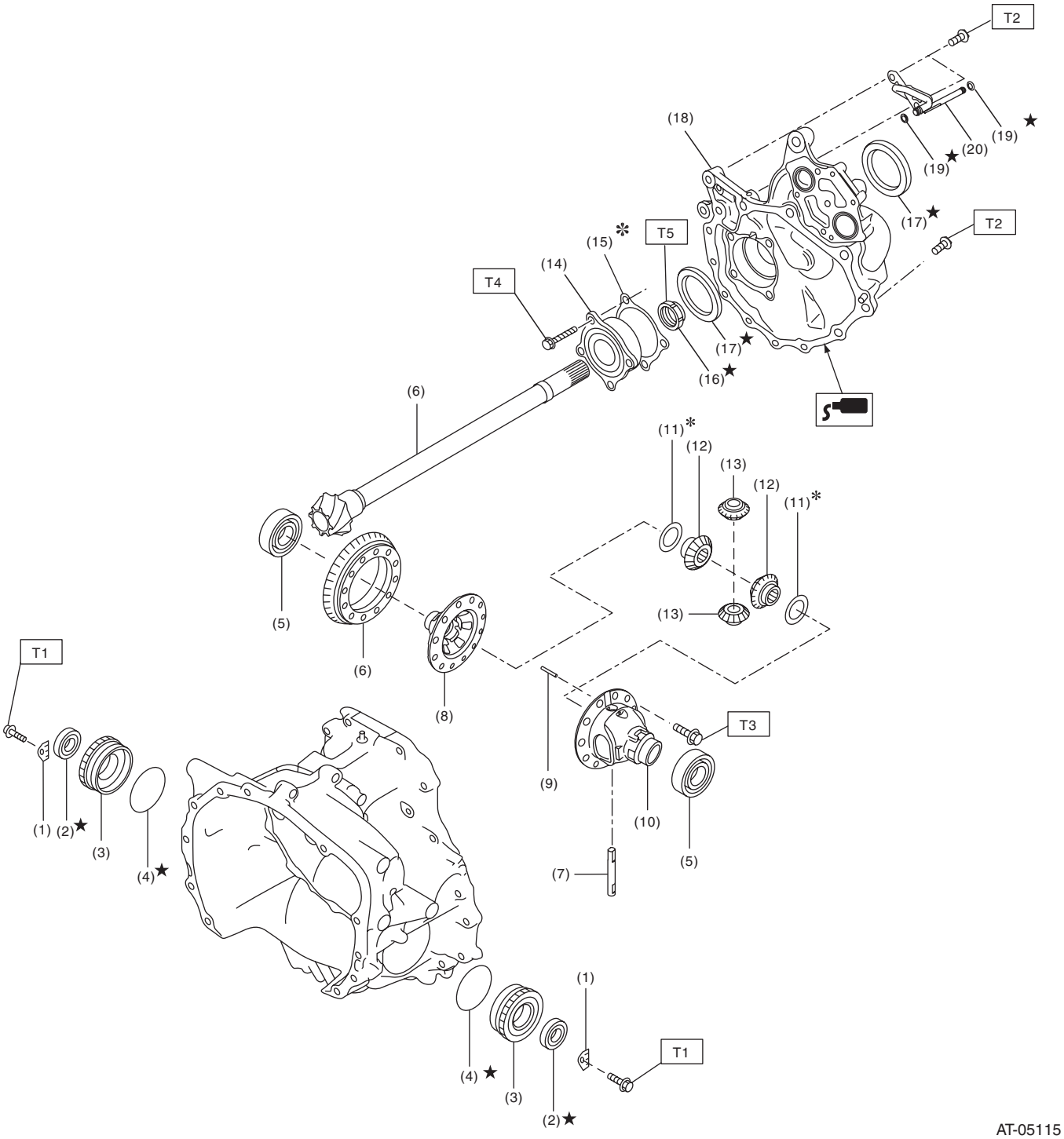

(1) Lock plate
(2) Oil seal
(3) Differential side retainer
(4) O-ring
(5) Taper roller bearing
(6) Drive pinion gear set
(7) Pinion shaft
(8) Differential case RH
(9) Straight pin
(10) Differential case LH
(11) Washer
(12) Differential bevel gear
(13) Differential bevel pinion
(14) Taper roller bearing
(15) Shim
(16) Lock nut
(17) Oil seal
(18) Drive pinion retainer
(19) O-ring
(20) Lubrication pipe

Tightening torque: N·m (kgf-m, ft-lb)

T1: 25 (2.5, 18.4)
T2: 43 (4.4, 31.7)
T3: <Ref. to CVT(TR690)-304, DIFFERENTIAL CASE ASSEMBLY, ASSEMBLY, Front Differential Assembly.>
T4: 70 (7.1, 51.6)
T5: 130 (13.3, 95.9)

11.TRANSFER AND EXTENSION CASE

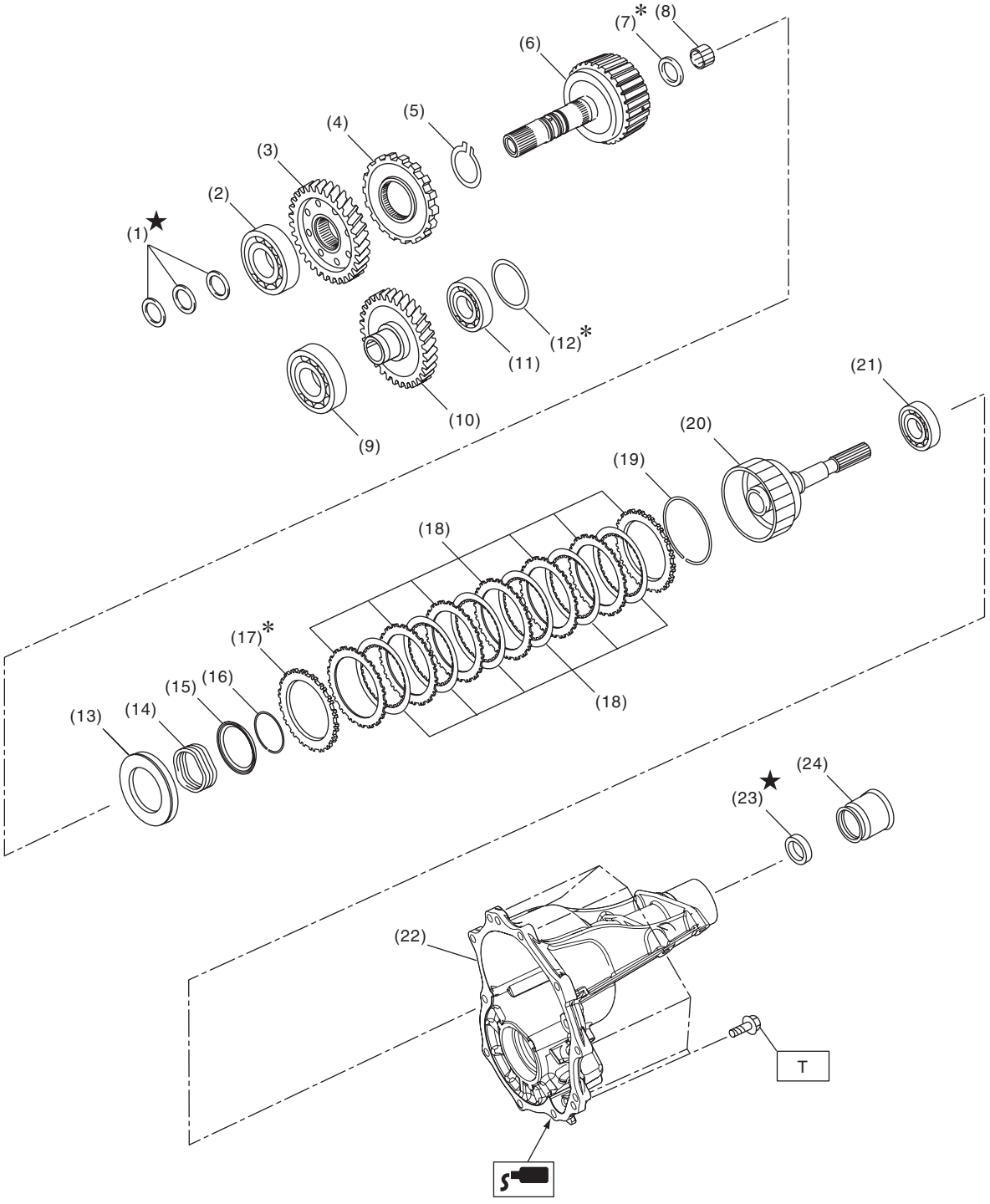

AT-07860

(1) Seal ring
(2) Ball bearing
(3) Transfer drive gear
(4) Parking gear
(5) Snap ring
(6) Reduction drive gear shaft
(7) Thrust needle bearing
(8) Needle bearing
(9) Ball bearing
(10) Transfer reduction driven gear
(11) Ball bearing
(12) Shim
(13) Transfer piston
(14) Return spring
(15) Transfer piston seal
(16) Snap ring
(17) Pressure plate
(18) Transfer clutch plate set
(19) Snap ring
(20) Rear drive shaft
(21) Ball bearing
(22) Extension case
(23) Oil seal
(24) Dust cover

Tightening torque: N·m (kgf-m, ft-lb)
T: 25 (2.5, 18.4)

12.TRANSMISSION HARNESS AND SENSOR

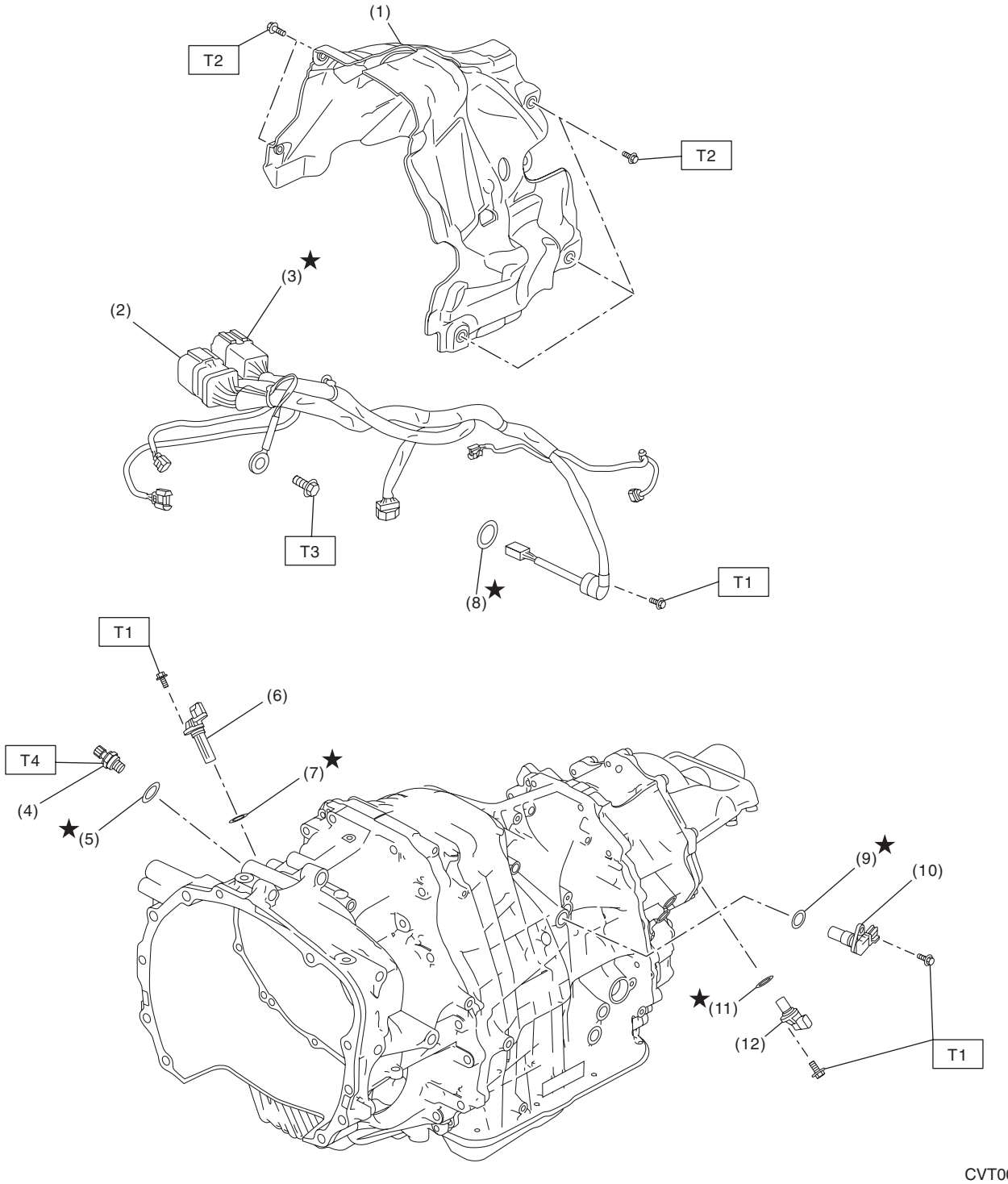

CVT00841

(1)	Transmission cover	(7)	O-ring
(2)	Transmission harness	(8)	O-ring
(3)	Inhibitor harness	(9)	O-ring
(4)	Secondary pressure sensor	(10)	Secondary speed sensor
(5)	O-ring	(11)	O-ring
(6)	Primary speed sensor	(12)	Front wheel speed sensor

Tightening torque: N·m (kgf-m, ft-lb)
T1: 5 (0.5, 3.7)
T2: 8 (0.8, 5.9)
T3: 16 (1.6, 11.8)
T4: 39 (4.0, 28.8)

13.CVTF COOLER PIPE AND HOSE

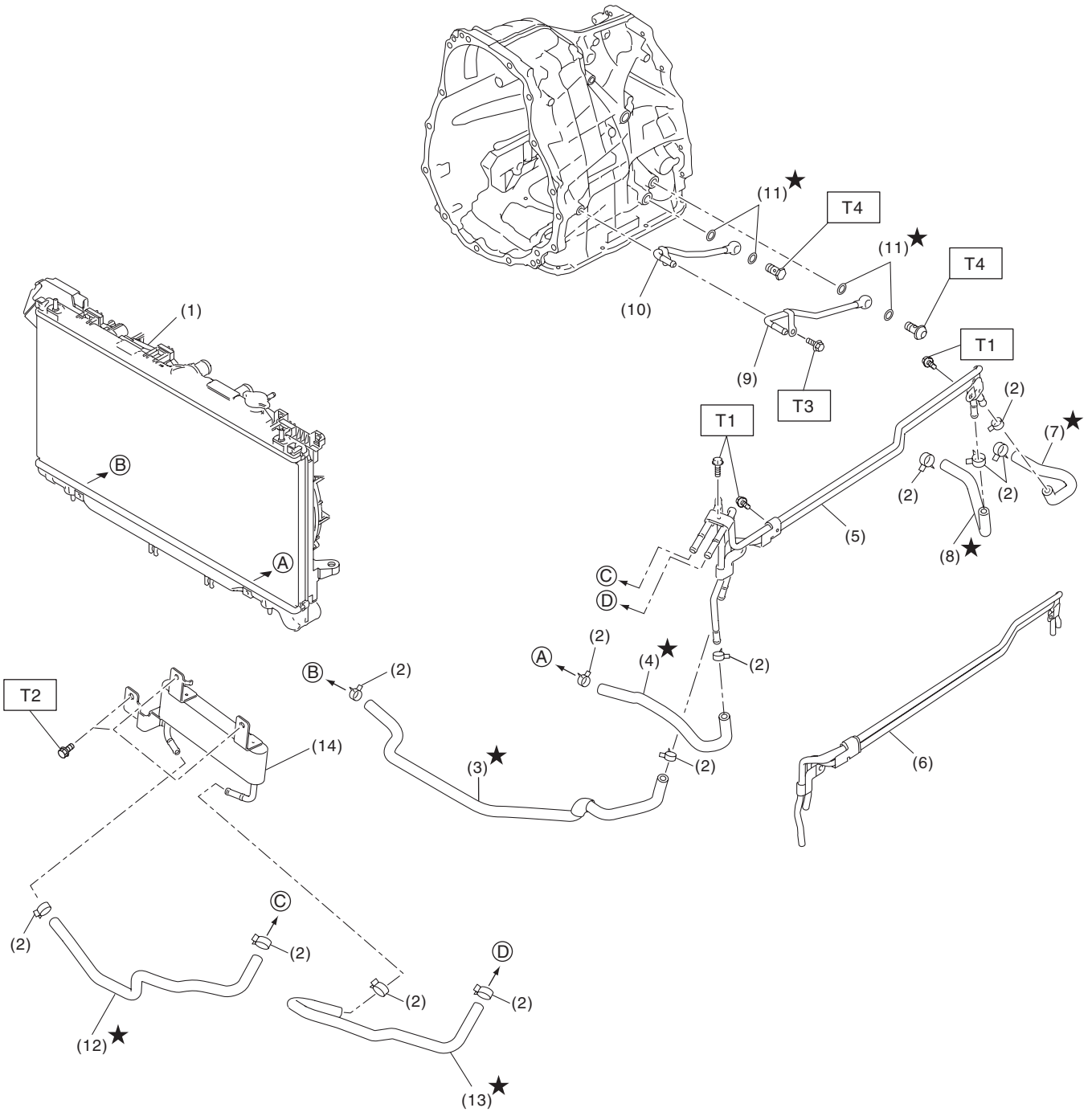

CVT00969

(1) Radiator
(2) CVTF hose clip
(3) CVTF radiator inlet hose
(4) CVTF radiator outlet hose
(5) CVTF cooler pipe ASSY (OUTBACK model)
(6) CVTF cooler pipe ASSY (sedan model)
(7) CVTF CVT inlet hose
(8) CVTF CVT outlet hose
(9) CVT outlet pipe
(10) CVT inlet pipe
(11) Gasket
(12) CVTF cooler (air cool) inlet hose (OUTBACK model)
(13) CVTF cooler (air cool) outlet hose (OUTBACK model)
(14) CVTF cooler (air cool) (OUTBACK model)

Tightening torque: N·m (kgf-m, ft-lb)
T1: 7.5 (0.8, 5.5)
T2: 12 (1.2, 8.9)
T3: 16 (1.6, 11.8)
T4: 40 (4.1, 29.5)

14.TRANSMISSION CONTROL MODULE

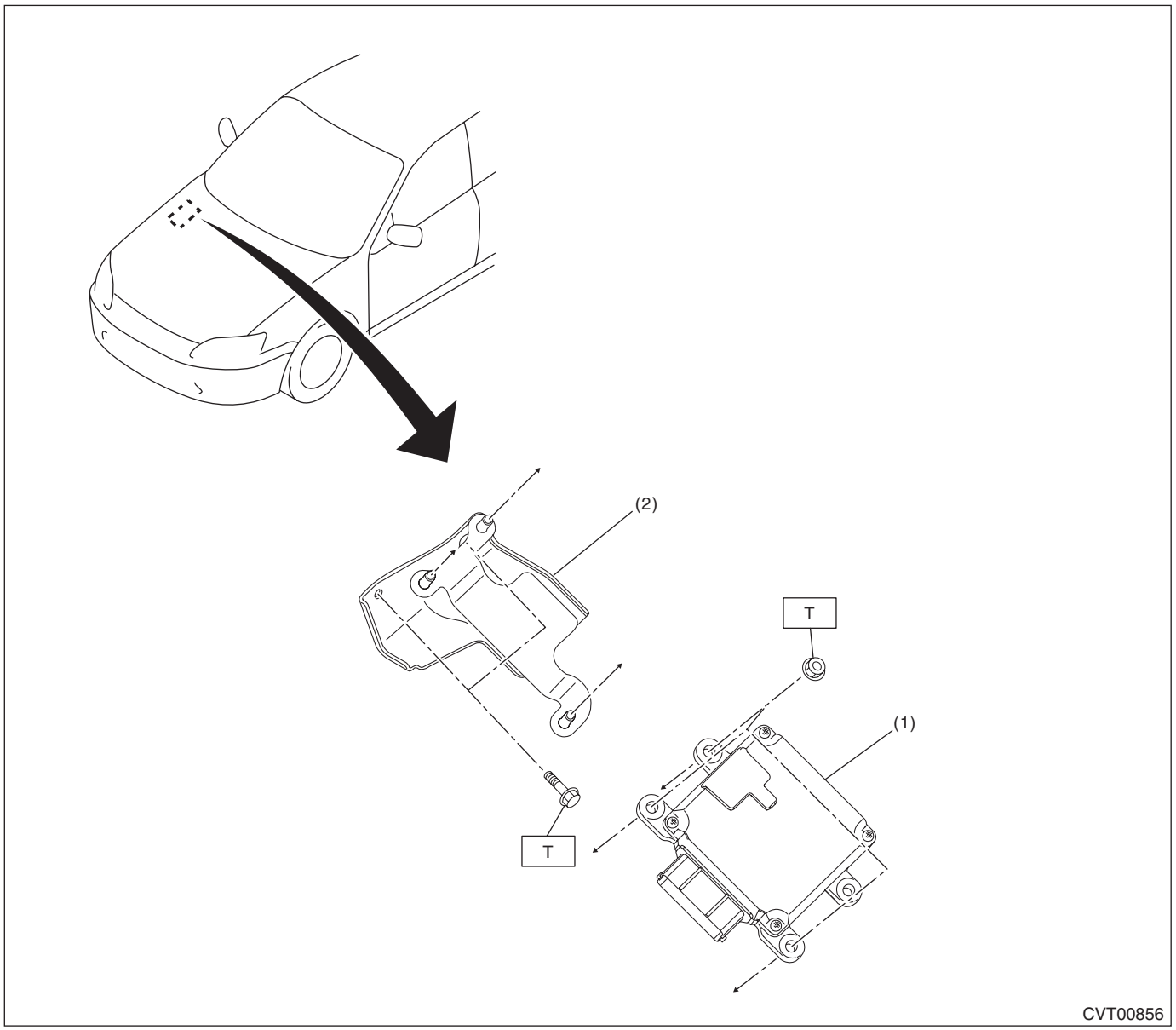

(1) Transmission control module (TCM)
(2) Bracket

Tightening torque: N·m (kgf-m, ft-lb)
T: 7.5 (0.8, 5.5)

15.TRANSMISSION MOUNTING

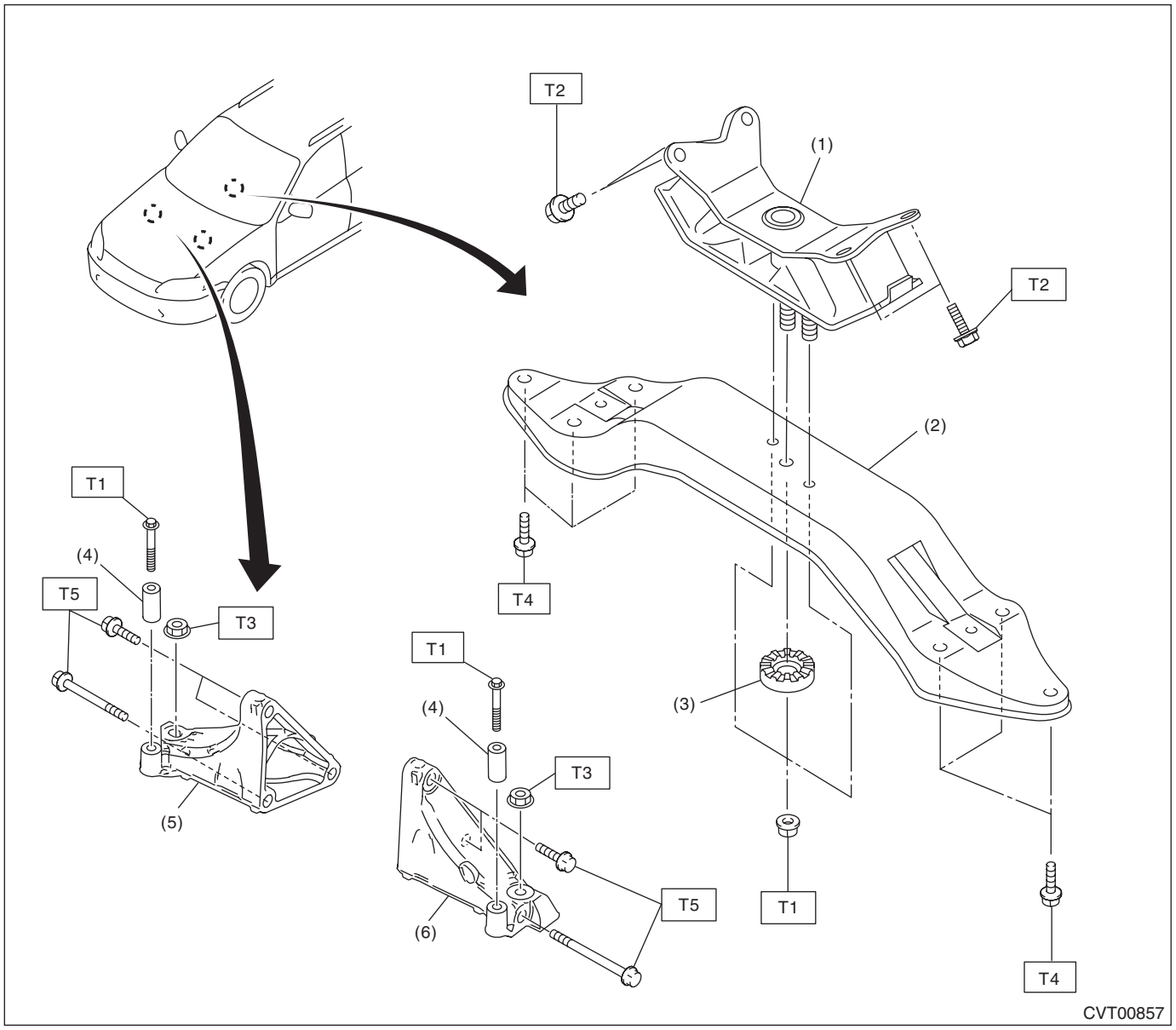

(1)	Rear cushion rubber	(4)	Collar
(2)	Transmission crossmember	(5)	Transmission main mounting bracket (RH)
(3)	Stopper	(6)	Transmission main mounting bracket (LH)

Tightening torque: N·m (kgf-m, ft-lb)

T1: 35 (3.6, 25.8)

T2: 40 (4.1, 29.5)

T3: 45 (4.6, 33.2)

T4: 75 (7.6, 55.3)

T5: 75 (7.6, 55.3)

C: CAUTION

- Wear appropriate work clothing, including a cap, protective goggles and protective shoes when performing any work.
- Remove contamination including dirt and corrosion before removal, installation or disassembly.
- Keep the disassembled parts in order and protect them from dust and dirt.
- Do not place the oil pan with its inner side facing up until it is installed, to prevent intrusion of foreign matter into the control valve body.
- Before removal, installation or disassembly, be sure to clarify the failure. Avoid unnecessary removal, installation, disassembly and replacement.
- When disassembling the case and other light alloy parts, use a plastic hammer to force it apart. Do not pry apart with screwdrivers or other tools.
- Vehicle components are extremely hot after driving. Be wary of receiving burns from heated parts.
- Use SUBARU genuine CVTF and recommended grease. Do not mix CVTF, grease etc. of different grades or manufacturers.
- Be sure to tighten bolts and nuts to the specified torque.
- Place lifts, shop jacks or rigid racks at specified locations.
- Apply CVTF onto sliding or revolving surfaces before installation.
- Apply CVTF onto the press-fitting surface of the part before press-fitting the part using a press.
- Replace deformed or damaged snap rings with new parts.
- Before installing O-rings or oil seals, apply sufficient amount of CVTF to avoid damage and deformation.
- Be careful not to incorrectly install or fail to install O-rings, snap rings and other such parts.
- Before securing a part on a vise, place cushioning material such as wood blocks, aluminum plate, or cloth between the part and the vise.
- Avoid damaging the mating surface of the case.
- Before applying liquid gasket, completely remove the old liquid gasket.
- After removing the sensors, breather hose and plugs, plug the holes to avoid foreign materials intruding as necessary.
- During disassembly or assembly, be sure to use nylon gloves or paper towels. Do not use cloth gloves or waste cloth.

D: PREPARATION TOOL

1. SPECIAL TOOL

ILLUSTRATION	TOOL NUMBER	DESCRIPTION	REMARKS
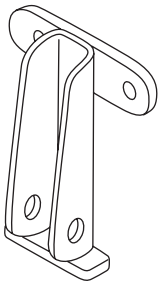 ST41099AJ010	41099AJ010	SPECIAL TOOL H6	• Used for removing and installing transmission. • For H6 engine.
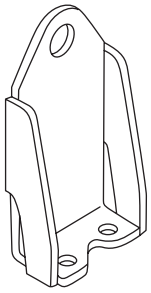 ST18360AA020	18360AA020	HANGER	• Used for removing and installing transmission. • For H6 engine.

ILLUSTRATION	TOOL NUMBER	DESCRIPTION	REMARKS
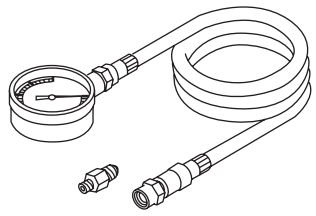 ST18801AA000	18801AA000	OIL PRESSURE GAUGE ASSY	Used for measuring the secondary pressure (line pressure).
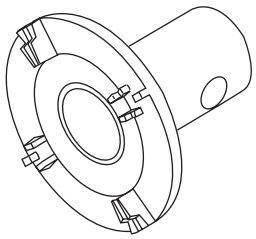 ST18658AA020	18658AA020	WRENCH COMPL RETAINER	Used for removing and installing the differential side retainer.
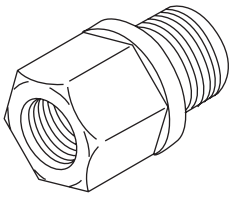 ST18681AA000	18681AA000	PRESSURE GAUGE ADAPTER	Used for measuring the secondary pressure (line pressure) and transfer clutch hydraulic pressure. NOTE: Used together with the genuine O-ring (part No. 806911080).
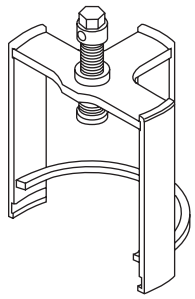 ST18769AA000	18769AA000	EXPANDER PULLEY	Used for removing and installing the secondary pulley assembly.
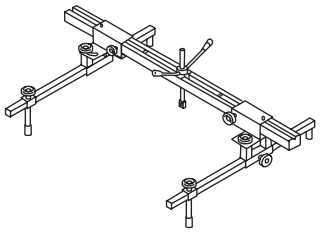 ST99099AJ000	99099AJ000	ENGINE HANGER	• Used for removing and installing the automatic transmission assembly. • Used together with CHAIN BALANCER (99099AJ010).

ILLUSTRATION	TOOL NUMBER	DESCRIPTION	REMARKS
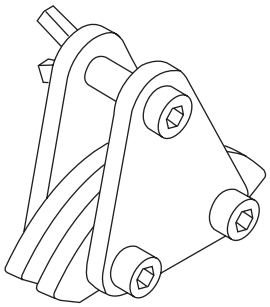 ST99099AJ010	99099AJ010	CHAIN BALANCER	• Used for removing and installing the automatic transmission assembly. • Used together with ENGINE HANGER (99099AJ000).
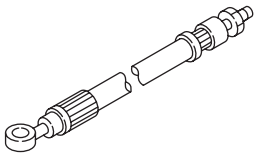 ST-498897700	498897700	OIL PRESSURE ADAPTER SET	Used for measuring the secondary pressure (line pressure) hydraulic pressure.
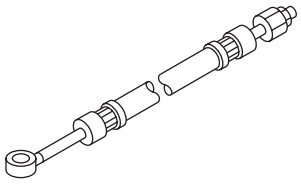 ST34099AC020	34099AC020	ADAPTER HOSE B	Used for measuring the transfer clutch hydraulic pressure. NOTE: Used with genuine union screw (Part No. 801914010) and gasket (Part No. 803914060).
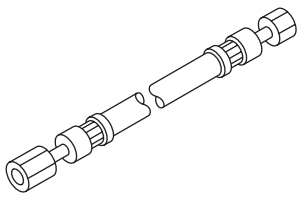 ST34099AC010	34099AC010	ADAPTER HOSE A	Used for measuring the transfer clutch hydraulic pressure.
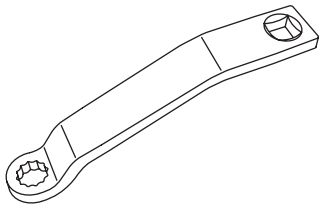 ST73099SG000	73099SG000	SPECIAL TOOL CONDENSER	Used for installing the transfer clutch pressure test plug.

ILLUSTRATION	TOOL NUMBER	DESCRIPTION	REMARKS
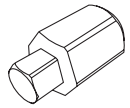 ST18270AA040	18270AA040	SOCKET	Used for installing the transfer clutch pressure test plug.
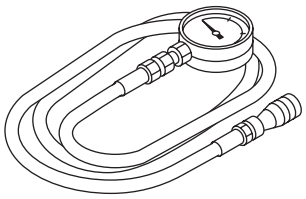 ST-498575400	498575400	OIL PRESSURE GAUGE ASSY	Used for measuring the transfer clutch hydraulic pressure.
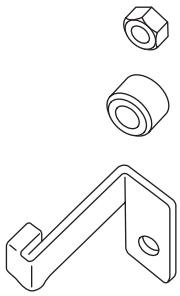 ST-498277200	498277200	STOPPER SET	• Used for removing and installing automatic transmission assembly to engine. • Used for preventing the torque converter from dropping off.
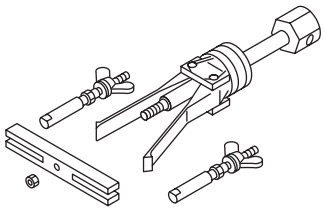 ST-398527700	398527700	PULLER ASSY	• Used for removing the extension case oil seal. • Used for removing the roller bearing of the primary pulley and secondary pulley. • Used for removing the bearing of reduction driven gear. • Used for removing the differential side retainer bearing outer race.
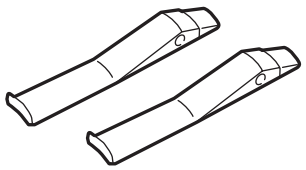 ST18760AA000	18760AA000	CLAW	• Used for removing ball bearing of front reduction driven gear. • Used together with PULLER ASSY (398527700).

ILLUSTRATION	TOOL NUMBER	DESCRIPTION	REMARKS
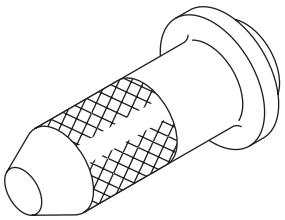 ST-498057300	498057300	INSTALLER	Used for installing the extension case oil seal.
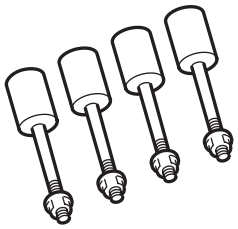 ST18632AA000	18632AA000	TRANSMISSION STAND	Used for disassembling and assembling the transmission.
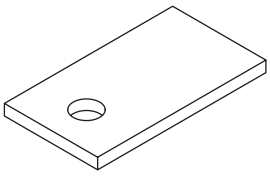 ST-498255400	498255400	PLATE	Used for measuring the backlash of hypoid gear.
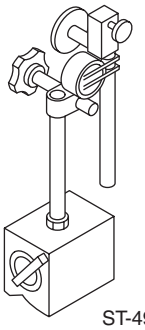 ST-498247001	498247001	MAGNET BASE	• Used for measuring the backlash of differential bevel pinion gear. • Used for measuring the backlash of hypoid gear. • Used for measuring the clearance in forward clutch. • Used together with DIAL GAUGE (498247100).
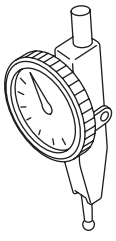 ST-498247100	498247100	DIAL GAUGE	• Used for measuring the backlash of differential bevel pinion gear. • Used for measuring the backlash of hypoid gear. • Used for measuring the clearance in forward clutch. • Used together with DIAL GAUGE (498247101).

ILLUSTRATION	TOOL NUMBER	DESCRIPTION	REMARKS
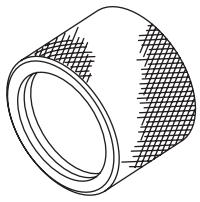 ST18675AA000	18675AA000	DIFFERENTIAL SIDE OIL SEAL INSTALLER	Used for installing the differential side retainer oil seal.
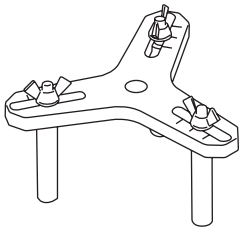 ST18762AA001	18762AA001	COMPRESSOR SPECIAL TOOL	• Used for disassembling and installing the multi-plate clutch piston for shifting. • COMPRESSOR SPECIAL TOOL (18762AA000) can also be used.
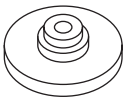 ST18765AA000	18765AA000	COMPRESSOR SUPPORT	Used for disassembling and installing the multi-plate clutch for shifting.
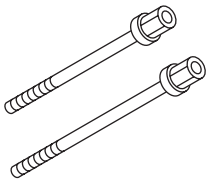 ST18763AA000	18763AA000	COMPRESSOR SHAFT	Used for disassembling and installing the multi-plate clutch for shifting.
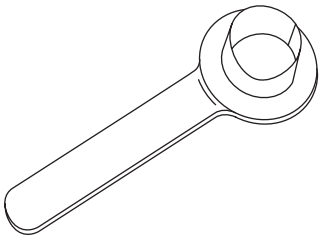 ST28399SA010	28399SA010	OIL SEAL PROTECTOR	Used for protecting oil seal when installing front drive shaft.

ILLUSTRATION	TOOL NUMBER	DESCRIPTION	REMARKS
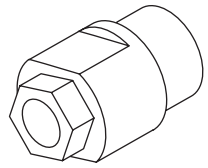 ST18667AA010	18667AA010	HOLDER	• Used for removing and installing the drive pinion lock nut. • Used as a holder to rotate gear when checking tooth contact.
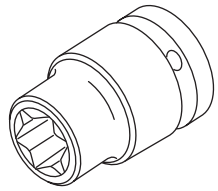 ST18270KA010	18270KA010	SOCKET (E16)	Used for removing and installing the center support COMPL.
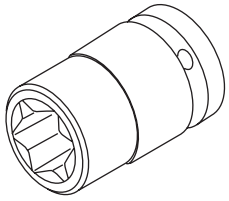 ST18270KA020	18270KA020	SOCKET (E20)	• Used for removing and installing the hypoid driven gear. • Used for removing and installing the drive pinion shaft retainer.
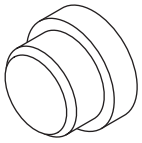 ST-398497701	398497701	SEAT	Used for removing and installing the ball bearing.
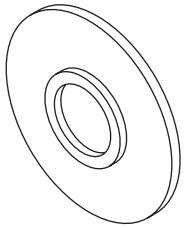 ST-398177700	398177700	INSTALLER	• Used for removing and installing the ball bearing and tapered roller bearing. • Used for installing the parking gear.

ILLUSTRATION	TOOL NUMBER	DESCRIPTION	REMARKS
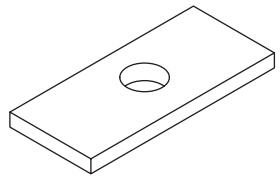 ST-398643600	398643600	GAUGE	Used for measuring the total end play, extension end play and drive pinion height.
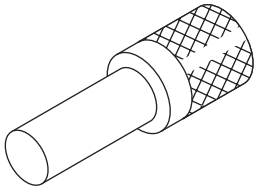 ST-899864100	899864100	REMOVER	Used for removing and installing the ball bearing.
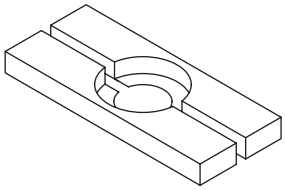 ST-498077000	498077000	REMOVER	• Used for removing ball bearing of front reduction drive gear. • Used for removing the inner bearing inner race of the drive pinion shaft. • Used for removing the differential taper roller bearing.
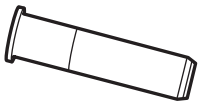 ST18657AA010	18657AA010	INSTALLER	Used for installing the oil seal of inhibitor switch.
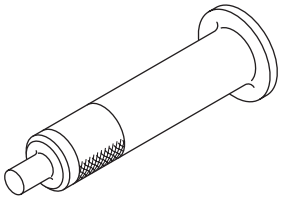 ST18657AA020	18657AA020	OIL SEAL INSTALLER	Used for installing the oil seal.

ILLUSTRATION	TOOL NUMBER	DESCRIPTION	REMARKS
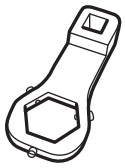 ST18621AA000	18621AA000	ADAPTER WRENCH	Used for removing and installing the drive pinion shaft lock nut.
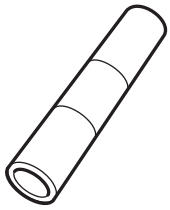 ST18651AA000	18651AA000	INSTALLER	Used for installing the bearing of front reduction drive gear.
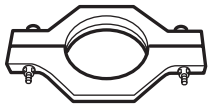 ST18720AA000	18720AA000	REMOVER	Used for removing ball bearing of reduction driven gear.
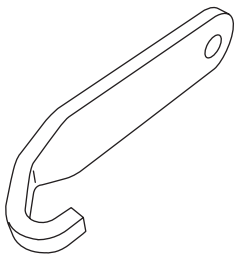 ST-498497300	498497300	CRANKSHAFT STOPPER	Used for stopping the drive plate rotation when removing and installing the drive plate.
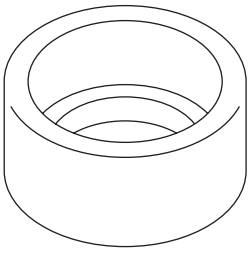 ST20299AG010	20299AG010	PRESS SNAP RING	Used for installing the bearing on primary pulley side.

ILLUSTRATION	TOOL NUMBER	DESCRIPTION	REMARKS
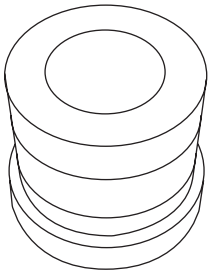 ST-399513600	399513600	INSTALLER	• Used for removing the ball bearing of the rear drive shaft. • Used for removing the bearing of the oil pump chain sprocket.
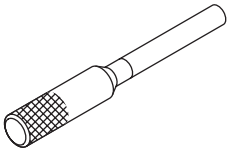 ST-499267300	499267300	STOPPER PIN	Used for adjusting the inhibitor switch.
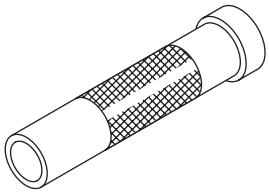 ST-499277100	499277100	BUSHING 1-2 INSTALLER	• Used for installing the front differential taper roller bearing. • Used for removing and installing the transfer reduction drive gear. • Used for installing the ball bearing of the transfer reduction drive gear. • Used for installing the oil seal. • Used for installing the ball bearing of the transfer reduction driven gear.
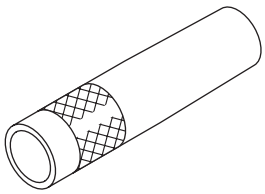 ST-499277200	499277200	INSTALLER	• Used for installing the inner bearing inner race of drive pinion shaft. • Used for installing the reduction driven gear.
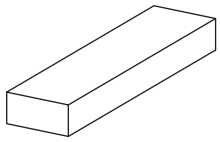 ST-499575400	499575400	GAUGE	Used for measuring height of end play.

ILLUSTRATION	TOOL NUMBER	DESCRIPTION	REMARKS
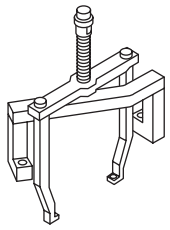 ST-499737100	499737100	PULLER SET	• Used for measuring height of forward clutch. • Used for measuring the transfer end play. • Use the rack only.
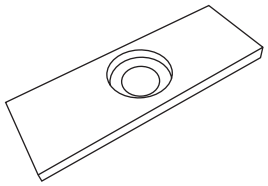 ST-499575600	499575600	GAUGE	• Used for measuring height of forward clutch. • Used for measuring height of end play.
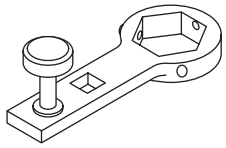 ST-499787700	499787700	WRENCH	Used for measuring the differential pinion shaft backlash.
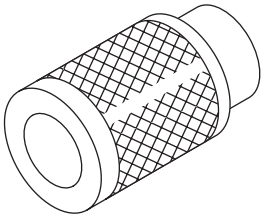 ST-499757002	499757002	INSTALLER	Used for installing the bearing of front reduction driven gear.
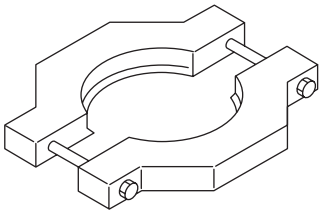 ST18767AA000	18767AA000	BEARING REMOVER	• Used for removing the transfer reduction drive gear. • Used for removing the reduction driven gear bearing retainer. • Used for removing the front reduction driven shaft.

ILLUSTRATION	TOOL NUMBER	DESCRIPTION	REMARKS
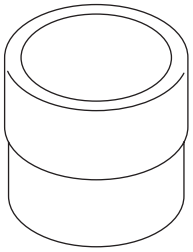 ST-499755602	499755602	PRESS SNAP RING	• Used for installing the oil seal. • Used for installing the ball bearing and roller bearing.
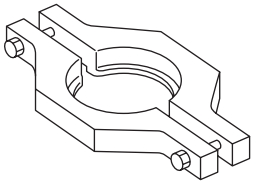 ST-498077600	498077600	REMOVER	• Used for removing the ball bearing of the rear drive shaft. • Used for removing the ball bearing of transfer reduction driven gear. • Used for removing ball bearing of reduction driven gear. • Used for removing the ball bearing of drive sprocket.
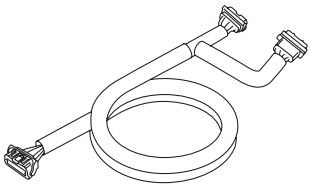 ST18460AA040	18460AA040	CHECK BOARD	Used for inspecting the TCM terminal.
 STSSM4	— (Newly adopted tool)	SUBARU SELECT MONITOR 4	Used for setting of each function and trouble-shooting for electrical system. NOTE: For detailed operation procedures of Subaru Select Monitor 4, refer to “Application help”.

2. GENERAL TOOL

TOOL NAME	REMARKS
Circuit tester	Used for measuring resistance, voltage and current.
Thickness gauge	Used for the clearance in reverse brake, transfer clutch and input clutch.
Caliper	Used for measuring the clearance at the parts.
Spring scale	Used for measuring the starting torque of the drive pinion.
TORX® bit T70	Used for removing and installing differential gear oil drain plug.
Straight pin remover	Used for removing and installing the spring pin.
Deep socket	Used for removing and installing the secondary pressure sensor. NOTE: Use Ko-ken 3/8 12-point 27 mm (manufacturer product No. 3305M-27).
Push/pull gauge	Used for measuring clutch clearance.
Angle gauge	• Used for installing the hypoid driven gear. • Used for installing the drive plate.
Chain sling	Used for removing and installing transmission. • Length: 0.8 — 1 m (2.6 — 3.3 ft) • Load capacity: 1.2 t (2646 lb) or more • Diameter: 6 mm (0.24 in) or 6.3 mm (0.25 in) • Chain external width: 23.5 mm (0.93 in) or less • Chain internal width: 8.5 mm (0.33 in) or more
Screw shackle	Used for removing and installing transmission. • Load capacity: 250 kg (551 lb) or more • Use two pieces.
DST-i	Used together with Subaru Select Monitor 4.

2. CVTF

A: INSPECTION

Check for leakage of CVTF from transmission.

B: ADJUSTMENT

CAUTION:
• CVTF level changes along with CVTF temperature. When inspecting CVTF level, observe the specified CVTF temperature.
• Always use specified CVTF. Using other fluid will cause malfunction.

1) Idle the engine to raise CVTF temperature to 35 — 45°C (95 — 113°F) on Subaru Select Monitor.
2) Operate the select lever in P → R → N → D and D → N → R → P to circulate CVTF with the engine idling.
3) With the engine running, lift up the vehicle and remove the filler plug.

CAUTION:
Pay special attention to the following operations as the engine is at idle.

NOTE:
CVTF is at the specified level when it is up to the filler plug hole lower section.

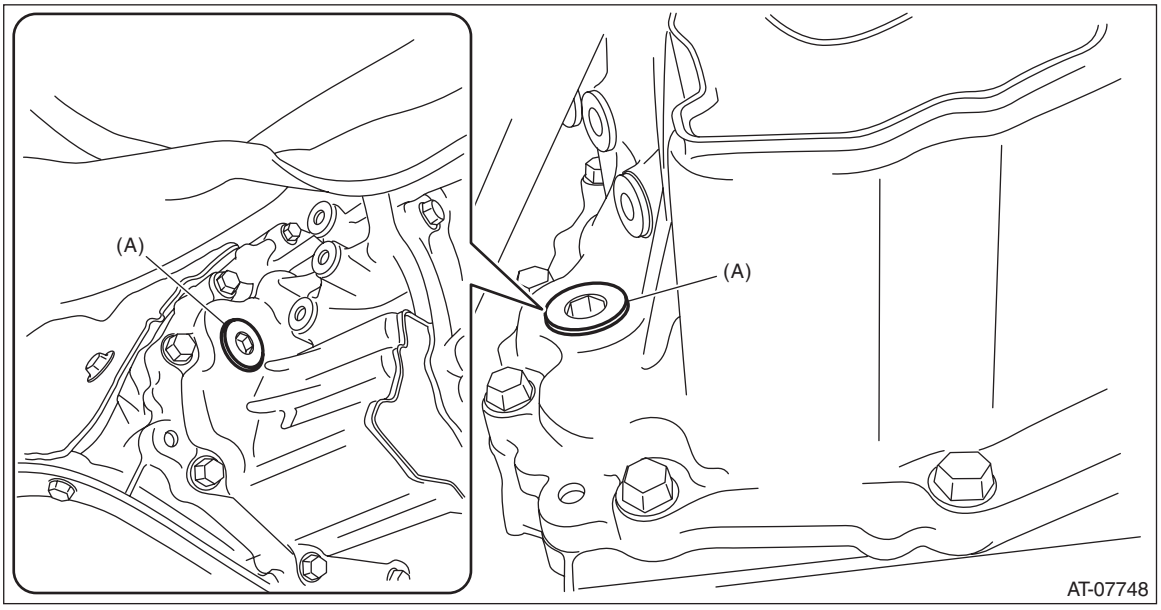

(A) Filler plug

4) When there is no CVTF leakage from the transmission, add the specified fluid up to the filler plug hole lower section.

Specified fluid:
<Ref. to CVT(TR690)-4, HYDRAULIC CONTROL AND LUBRICATION, SPECIFICATION, General Description.>

CAUTION:
Note that when CVTF is added up to the lower section of filler plug while the transmission is in cold condition, overfilling of CVTF occurs, causing the oil to spill out.

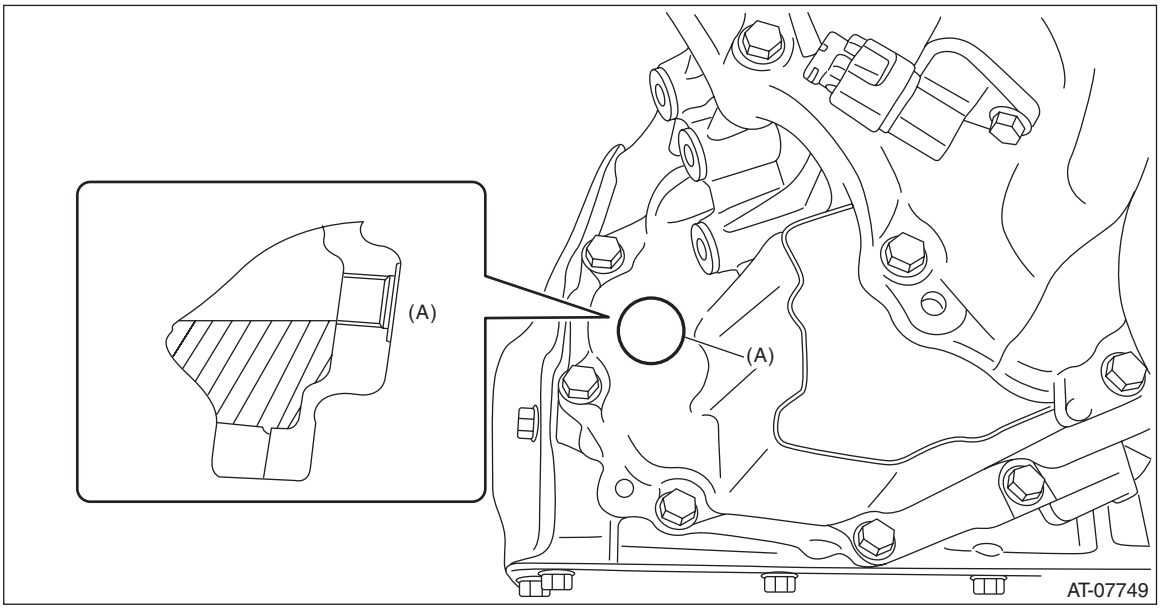

(A) Filler plug hole

5) Install the filler plug.

NOTE:
Use a new gasket.

Tightening torque:
50 N·m (5.1 kgf-m, 36.9 ft-lb)

C: REPLACEMENT

CAUTION:
• Directly after the vehicle has been running or the engine has been idling for a long time, the CVTF is hot. Be careful not to burn yourself.
• Be careful not to spill the CVTF on exhaust pipe to prevent it from emitting smoke or causing fires. If CVTF adheres, wipe it off completely.
• Always use specified CVTF. Using other fluid will cause malfunction.

1) Lift up the vehicle, and remove the CVTF drain plug.

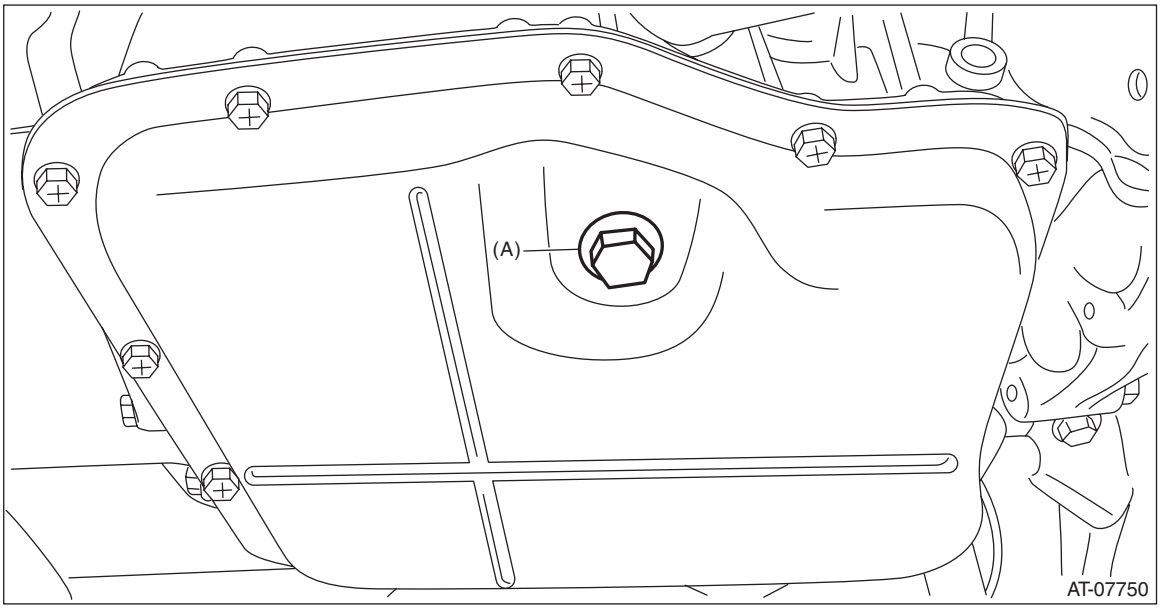

(A) CVTF drain plug

2) Check the CVTF condition. <Ref. to CVT(TR690)-42, CONDITION CHECK, CVTF.>
3) Install the CVTF drain plug and gasket.

NOTE:
Use a new gasket.

Tightening torque:
39.2 N·m (4.0 kgf-m, 28.9 ft-lb)

4) Remove the filler plug.

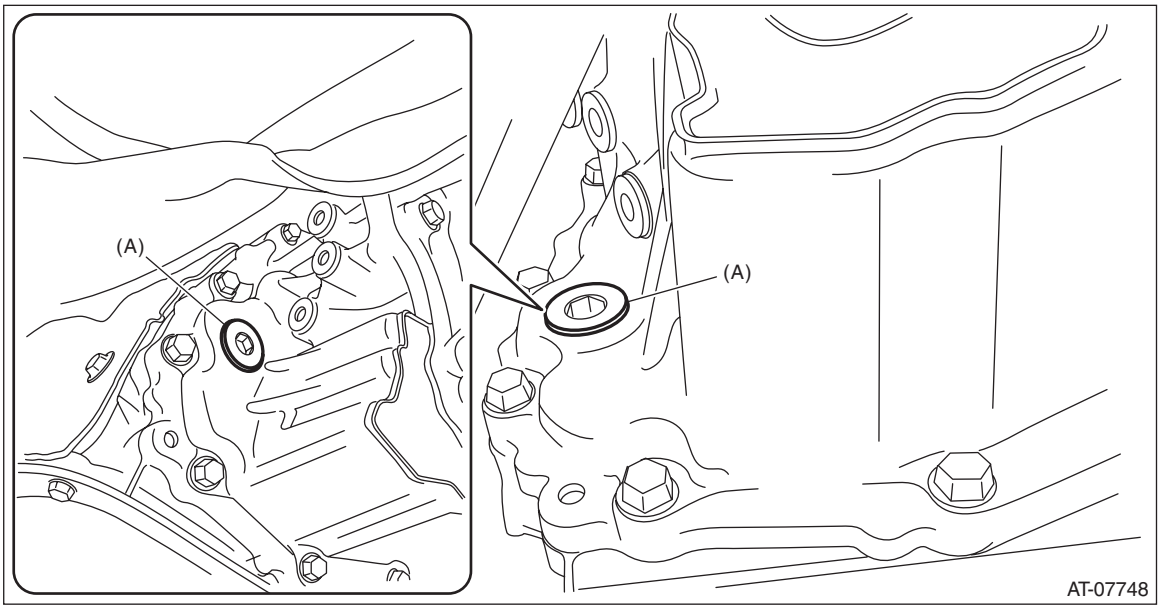

(A) Filler plug

5) Add the specified fluid up to the filler plug hole lower section.

Specified fluid:
<Ref. to CVT(TR690)-4, HYDRAULIC CONTROL AND LUBRICATION, SPECIFICATION, General Description.>

6) Temporarily tighten the filler plug.
7) Idle the engine to raise CVTF temperature to 35 — 45°C (95 — 113°F) on Subaru Select Monitor.
8) Operate the select lever in P → R → N → D and D → N → R → P to circulate CVTF with the engine idling.

CAUTION:
Pay special attention to the following operations as the engine is at idle.
9) Place the select lever in “P” range. Then lift up the vehicle with the engine at idle to adjust the CVTF level and check for leakage. <Ref. to CVT(TR690)-38, ADJUSTMENT, CVTF.>

10) Replace with a new gasket, and attach the filler plug.

Tightening torque:
50 N·m (5.1 kgf-m, 36.9 ft-lb)

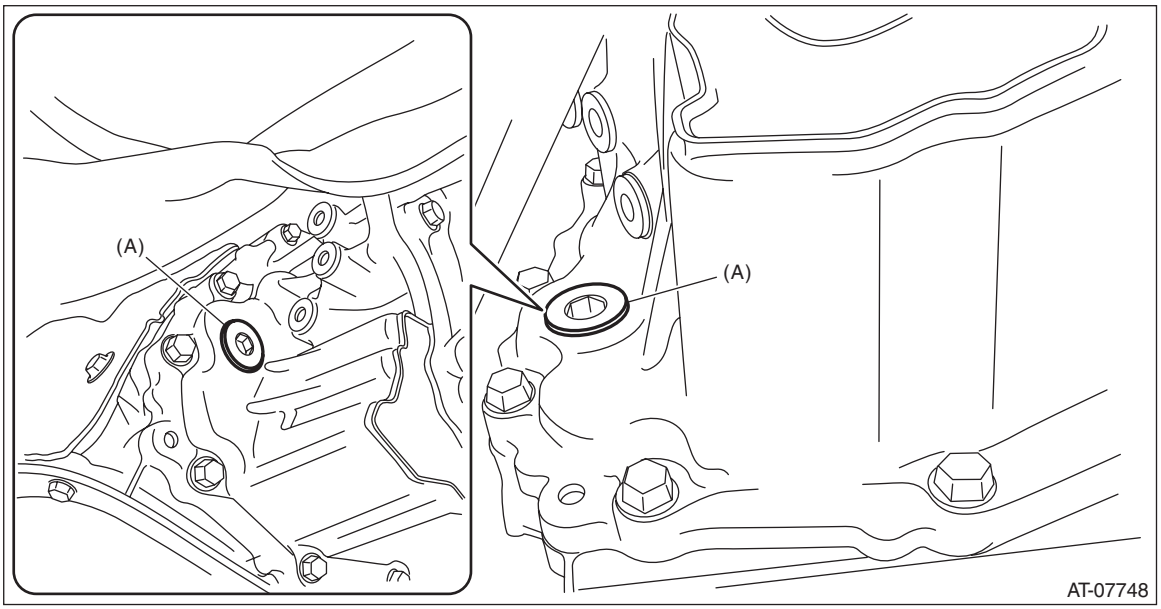

(A) Filler plug

D: CONDITION CHECK

NOTE:
When replacing CVTF, determine the condition inside the transmission body by inspecting the drained CVTF.

Fluid condition	Trouble and possible cause	Corrective action
Metal particles.	Excessive wear of the internal of the transmission body.	Replace CVTF and check if CVT operates correctly.
Thick and varnish-form fluid.	Burnt clutches	Replace CVTF and check the CVT body or vehicle for faulty.
Clouded CVTF or bubbles.	Water mixed in fluid.	Replace CVTF and check the water entering point.

3. Differential Gear Oil

A: INSPECTION

Check that there is no leakage of differential gear oil from the converter case.

B: ADJUSTMENT

NOTE:
Immediately after removing the overflow drain plug, remaining gear oil (approx. 8 cc) may come out of the overflow pipe. This is not included in the specified amount. When removing the overflow drain plug, make sure the gear oil flows out of the overflow drain plug hole by filling with gear oil.

1) Lift up the vehicle.
2) Remove the front under cover. <Ref. to EI-28, REMOVAL, Front Under Cover.>
3) Remove the oil charge pipe cap.

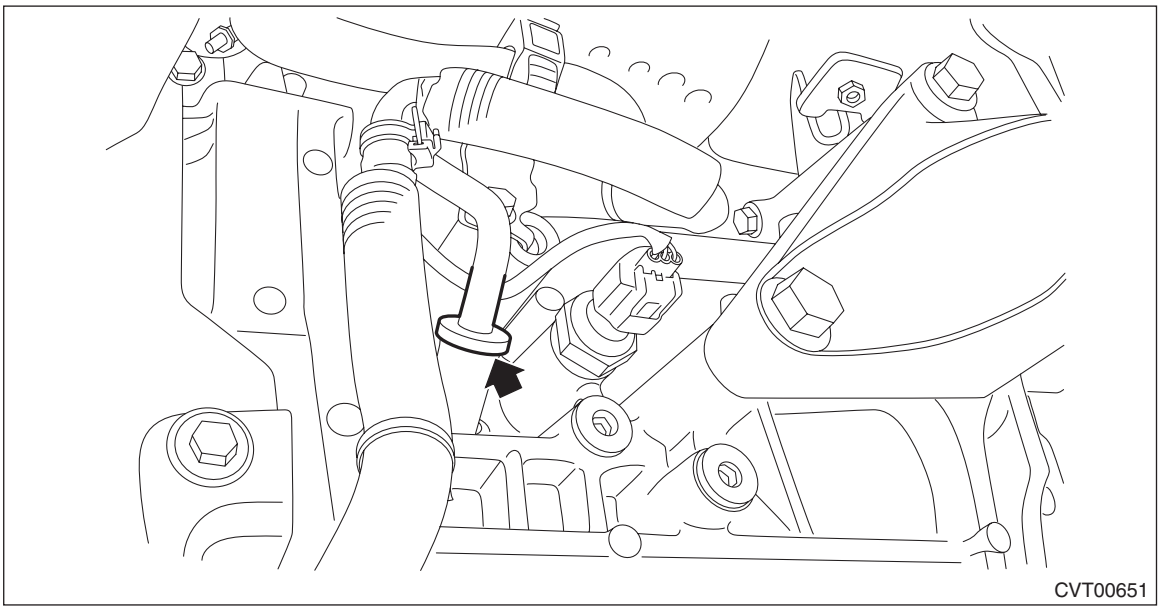
CVT00651

4) Remove the overflow drain plug.

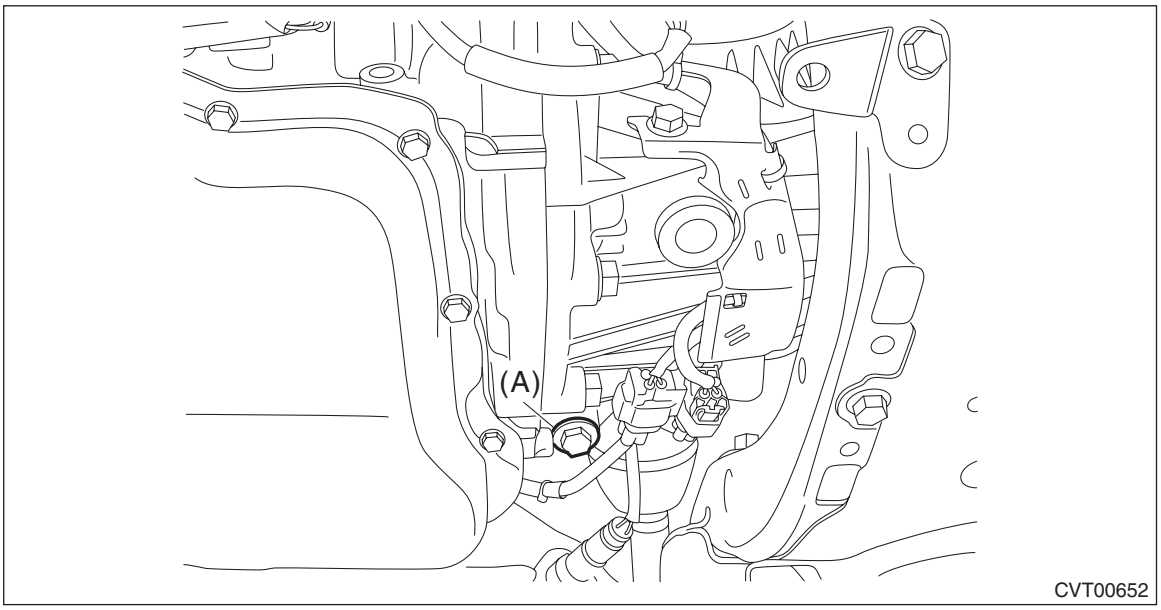

CVT00652

(A) Overflow drain plug

5) Fill in the differential gear oil through the charge pipe up to where the oil flows out of the overflow drain plug.

Recommended gear oil:
<Ref. to CVT(TR690)-4, FRONT DIFFERENTIAL GEAR OIL, SPECIFICATION, General Description.>
6) When the flow of the differential gear oil turns into a narrow stream, install the overflow drain plug.

NOTE:
Use a new gasket.

Tightening torque:
35 N·m (3.6 kgf-m, 25.8 ft-lb)

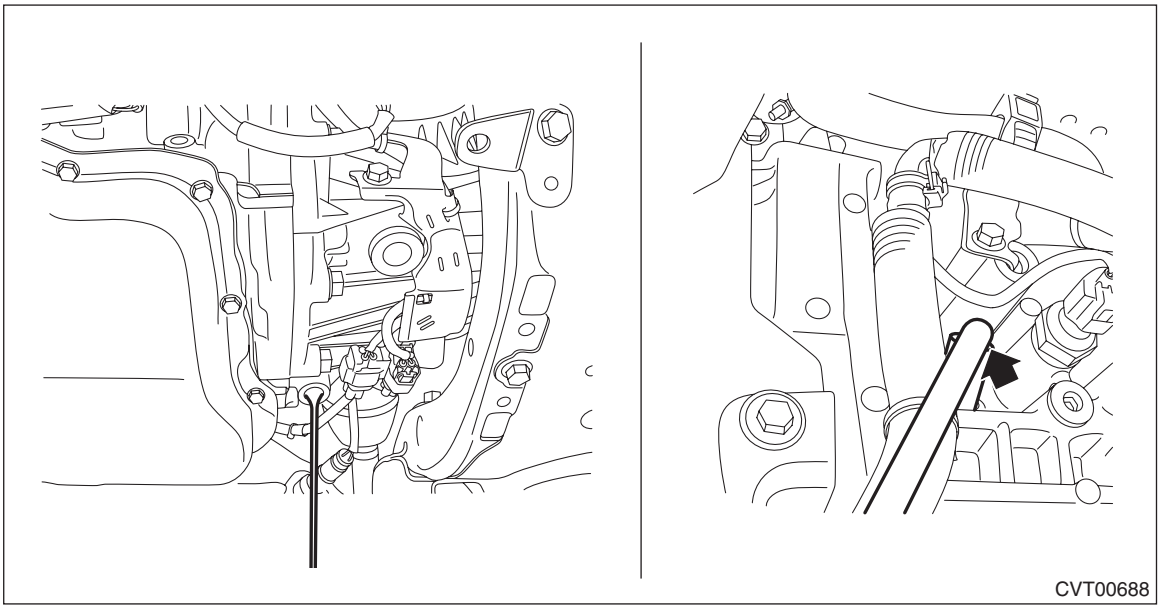

7) Install the oil charge pipe cap.

C: REPLACEMENT

CAUTION:
• Immediately after the vehicle has been running or after idling for a long time, the differential gear oil will be hot. Be careful not to burn yourself.
• Be careful not to spill differential gear oil on the exhaust pipe to prevent it from emitting smoke or causing a fire. If gear oil adheres, wipe it off completely.
1) Lift up the vehicle.
2) Remove the differential gear oil drain plug using TORX® bit T70. Drain differential gear oil.

3) Install the differential gear oil drain plug using TORX® bit T70.

NOTE:
Use a new gasket.

Tightening torque:
70 N·m (7.1 kgf-m, 51.6 ft-lb)

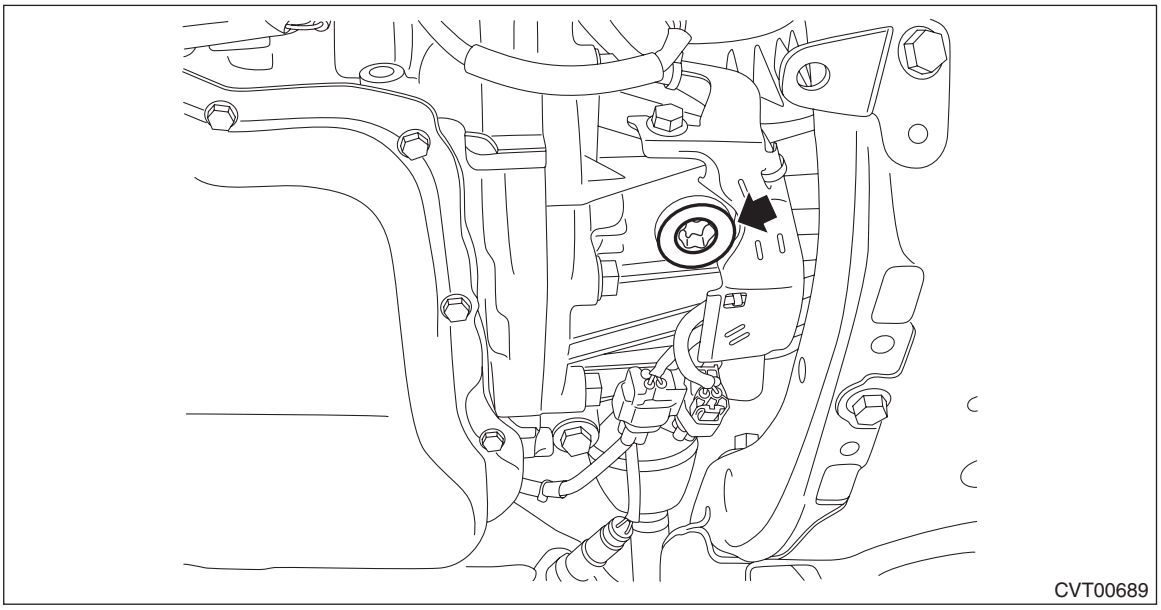

4) Pour gear oil from the charge pipe.

Recommended gear oil:
<Ref. to CVT(TR690)-4, FRONT DIFFERENTIAL GEAR OIL, SPECIFICATION, General Description.>

Gear oil capacity:
<Ref. to CVT(TR690)-4, FRONT DIFFERENTIAL GEAR OIL, SPECIFICATION, General Description.>

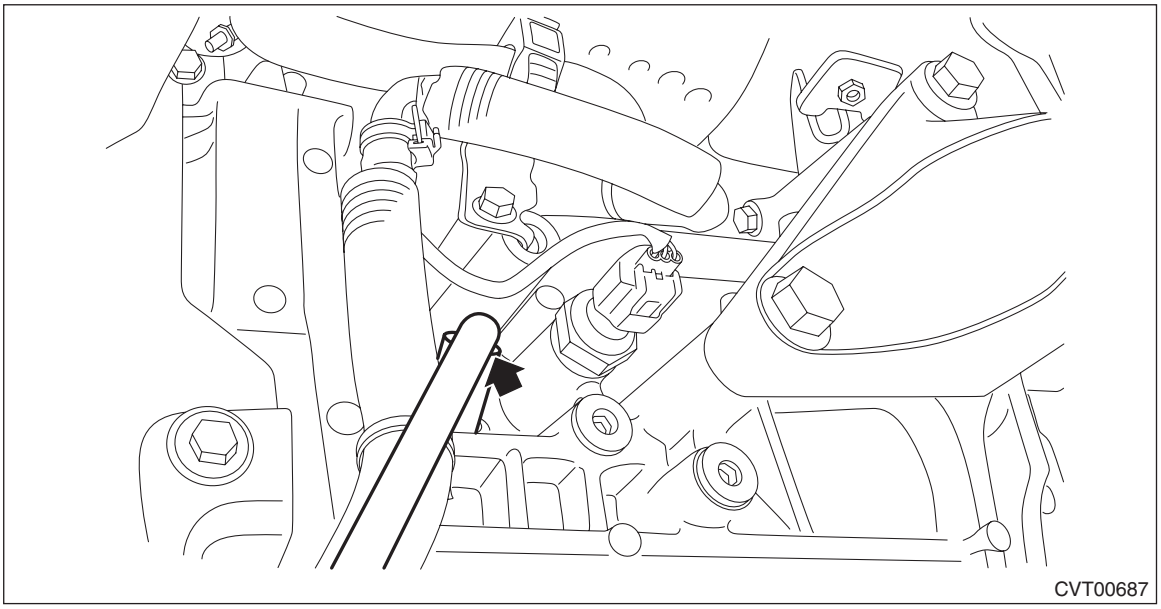

5) Adjust the level of differential gear oil. <Ref. to CVT(TR690)-43, ADJUSTMENT, Differential Gear Oil.>

4. Variator Chain Break-in

A: GENERAL DESCRIPTION

Perform Variator Chain Break-in when the following work has been performed.
- Variator chain replacement
- Primary pulley and secondary pulley replacement

B: PROCEDURE

NOTE:
- During variator chain break-in, VDC warning light illuminate because of the difference between the vehicle speed value and G sensor value. This is not a malfunction. If the warning light illuminates, clear the VDC memory after the variator chain break-in is finished. <Ref. to VDC(diag)-27, Clear Memory Mode.>
- If the above malfunction code is detected during variator chain break-in, the system enters into fail mode, and the vehicle shows symptom such as engine speed rapid increases even if the accelerator pedal is gradually depressed.

1) Lift up the vehicle.

CAUTION:
Lift up the vehicle until the tire bottom is 0.3 m (0.98 ft) or more above the ground.

2) Shift the select lever to “P” or “N” range.
3) Apply the electronic parking brake.
4) Connect the Subaru Select Monitor to data link connector.
5) Idle the engine to raise the CVTF temperature to 40 — 50°C (104 — 122°F) displayed on the Subaru Select Monitor.

NOTE:
When CVTF temperature does not rise easily or if you want to rise CVTF temperature faster, maintain the engine speed within 2,000 — 2,500 r/min at “P” or “N” range to raise the CVTF temperature.

6) With the select lever in “P” or “N” range, increase the engine speed to 3,000 — 3,500 r/min from the idling condition, and maintain the speed for approximately five seconds, then release the accelerator pedal.
7) Depress the accelerator pedal gradually again from idling condition to increase the engine speed to 3,000 — 3,500 r/min, maintain the speed for approximately five seconds, then release the accelerator pedal.
8) Release the electronic parking brake.
9) Shift the select lever into manual mode and set to 1st.
10) Depress the accelerator pedal gradually, and increase the engine speed to 5,300 r/min from engine idling condition.

NOTE:
Increase the engine speed while taking care that the engine speed does not become too high.

11) Release the accelerator pedal to fully closed position to lower the engine speed to 4,000 r/min.
12) Depress the accelerator pedal gradually again, and increase the engine speed to 5,300 r/min.
13) Repeat the steps 12) and 13) for 40 times.
14) Release the accelerator pedal to return the engine speed to idling.
15) Shift the select lever to “P” range, and then turn the engine to OFF.

5. AWD ON/OFF Switching Mode

A: GENERAL DESCRIPTION

- Follow the messages displayed on the Subaru Select Monitor when working.
- Perform as necessary in FWD mode.
- When switched to FWD, AWD light illuminates.

B: PROCEDURE

CAUTION:
• Do not turn the power of the Subaru Select Monitor OFF during work, and do not disconnect the data link connector.
• On completing the work in FWD, switch back in AWD.
1) Shift the select lever to “P” range.
2) Connect the Subaru Select Monitor to data link connector.
3) Turn the ignition switch to ON. (For model with push button start, press the push button ignition switch twice without depressing brake pedal.)
4) Turn off all switches causing an electrical load, such as headlights, A/C, seat heater and rear defogger.
5) Select «Diagnosis» in the «Start» screen of Subaru Select Monitor.
6) On «Vehicle selection» display, input the vehicle information and select «Confirmed».
7) On «Main Menu» display, select «Each System Check».
8) On «Select System» display, select «Transmission Control System».
9) On «Select Function» display, select «Work Support».
10) Select «AWD ON/OFF switching mode» in the «Work Support» screen.
11) Follow the messages displayed on the Subaru Select Monitor screen when working.
Switching completes successfully if any of the following messages is displayed.
- When switching from AWD to FWD: «Switched to FF. To return to AWD, perform basic mode again.»
- When switching from FWD to AWD: «Switched to AWD. To return to FF, perform basic mode again.»

NOTE:
- If communication error occurs during switching mode, start in the “AWD ON/OFF switching mode” again.
- If operation is interrupted before the successful end message is displayed, perform the «AWD ON/OFF switching mode» from the beginning until confirming the operation is successfully ended. If this mode fails to complete successfully, the cause is as follows.
  - Select lever is not in “P” range.
  - Engine is running.
- For detailed operation procedures, refer to “Application help”.

6. Road Test

A: INSPECTION

NOTE:
Turn OFF the X mode switch and perform inspection.

1. GENERAL PRECAUTION

Road tests should be conducted to properly diagnose the condition of CVT.

CAUTION:
Always observe the local traffic laws when performing the test.

2. D RANGE SHIFT FUNCTION

Make sure that the engine speed is 1,100 — 1,300 r/min while driving on the level road at 50 km/h (31 MPH) after accelerating from halting to 1/4 of accelerator opening angle. Then stop the vehicle. Check normal gear change has occurred while the vehicle speed changes from a constant speed to zero.

3. KICK-DOWN FUNCTION

Check if engine speed will rise by operating the accelerator opening angle to the full from a constant speed of 50 km/h (31 MPH) or more.

4. ENGINE BRAKE OPERATION

Check down shifting operation, engine braking, and indicators inside the meters.

- Drive in “6th speed of manual mode” [70 — 80 km/h (43 — 50 MPH)], and shift down from 6th to 5th. Check if the indicator of combination meter switches “6” → “5”. At the same time, check the engine brake in 5th gear.
- Drive in “5th speed of manual mode” [60 — 70 km/h (37 — 43 MPH)], and shift down from 5th to 4th. Check if the indicator of combination meter switches “5” → “4”. At the same time, check the engine brake in 4th gear.
- Drive in “4th speed of manual mode” [50 — 60 km/h (31 — 37 MPH)], and shift down from 4th to 3rd. Check if the indicator of combination meter switches “4” → “3”. At the same time, check the engine brake in 3rd gear.
- Drive in “3rd speed of manual mode” [30 — 40 km/h (19 — 25 MPH)], and shift down from 3rd to 2nd. Check if the indicator of combination meter switches “3” → “2”. At the same time, check the engine brake in 2nd gear.
- Drive in “2nd speed of manual mode” [20 — 30 km/h (12 — 19 MPH)], and shift down from 2nd to 1st. Check if the indicator of combination meter switches “2” → “1”. At the same time, check the engine brake in 1st gear.

5. LOCK-UP FUNCTION

When the accelerator is lightly depressed while driving on a flat road in “D” range, check that rpm does not change abruptly.

6. P RANGE OPERATION

Stop the vehicle on an uphill grade of 5% or more and shift to the “P” range and apply the electronic parking brake. Check that the vehicle does not move when the parking brake is released.

7. NOISE AND VIBRATION

Check for noise and vibration during driving at a constant speed, accelerating, decelerating and manual shift operation.

8. OIL LEAKAGE

After the driving test, inspect for leakage of CVTF and differential gear oil from the transmission body.

7. Stall Test

A: INSPECTION

CAUTION:
Make sure no other person is around the vehicle during stall test measurement.

NOTE:
Stall test is extremely important in diagnosing the condition of CVT and engine. The test is necessary to measure the engine stall speeds in “R” and “D” range.
Purposes of the stall test:
- Operational check of forward clutch and reverse brake
- Operational check of the torque converter assembly
- Engine performance check

1) Place wheel chocks at the front and rear of all wheels and engage the electronic parking brake.
2) Turn the A/C OFF.
3) Using the Subaru Select Monitor, check if the throttle valve operates when you depress the accelerator pedal. <Ref. to EN(H6DO)(diag)-50, OPERATION, Subaru Select Monitor.>
4) Check the engine oil level. <Ref. to LU(H6DO)-2, General Description.>
5) Check the coolant level. <Ref. to CO(H6DO)-13, Engine Coolant.>
6) Adjust the CVTF level. <Ref. to CVT(TR690)-38, ADJUSTMENT, CVTF.>
7) Increase the CVTF temperature to 60 — 80°C (140 — 176°F) by idling the engine with the select lever shifted to “N” or “P” range.
8) Hold down the pre-collision brake OFF switch to turn OFF the pre-collision brake. (With EyeSight)
9) Shift the select lever to “D” range.
10) Depress the accelerator pedal to the full while fully depressing the foot brake pedal with your left foot.
11) When the engine speed stabilizes, quickly record the engine speed and release accelerator pedal. Shift the select lever to “N” range. Let the engine idle for one minute or more to cool it down.
12) Shift to “R” range and perform the same stall test.

NOTE:
- Do not perform a stall test for over 5 seconds at a time. (From closed throttle, fully open throttle to stall speed reading.) Failure to follow this instruction will cause the engine oil and CVTF to deteriorate and the clutch and brake to be adversely affected.
- Be sure to cool down the engine for at least one minute after each stall test with the select lever set in the “P” or “N” range and with the idle speed of 1,200 r/min or less.
- If the stall speed is higher than the specified range, attempt to finish the stall test in as short a time as possible, in order to prevent the CVT from sustaining damage.

Stall speed standard:
1,870 — 2,900 r/min (D range)
1,750 — 2,750 r/min (R range)

Stall test judgment

Range	Range	Probable cause
Lower than standard value	D, R	• Throttle valve is not fully open. • Insufficient engine output • Torque converter malfunction
Higher than standard value	D	• Forward clutch slippage • Secondary pressure (line pressure) is low. • Variator chain malfunction • Input clutch slippage
	R	• Reverse brake slippage • Secondary pressure (line pressure) is low. • Variator chain malfunction • Input clutch slippage
	D, R	• Torque converter malfunction • Control valve body malfunction • TCM malfunction • Damaged harness and harness connector

8. Time Lag Test

A: INSPECTION

NOTE:
When the select lever is shifted while the engine is idling, there will be a certain time elapse or lag before shock is felt. This symptom helps to check the condition of forward clutch and reverse brake.
- Perform the test at normal operation CVTF temperature of 60 — 80°C (140 — 176°F).
- Be sure to allow one minute or more interval between tests.
- Make three measurements and take the average value.

1) Apply the electronic parking brake.
2) Start the engine. Check the idle speed. (A/C OFF)
3) Shift the select lever from “N” to “D” range. Using a stop watch, measure the time elapsed from shifting the lever until the shock is felt.

Time lag standard:
1.2 seconds or less

If “N” → “D” time lag is longer than specified:
- Secondary pressure (line pressure) is too low.
- Forward clutch worn
- Piston malfunction
- Control valve body malfunction
- Learning incomplete

4) In the same manner, measure the time lag when shifting from “N” range to “R” range.

Time lag standard:
1.5 seconds or less

If “N” → “R” time lag is longer than specified:
- Secondary pressure (line pressure) is too low.
- Reverse brake worn
- Piston malfunction
- Control valve body malfunction
- Learning incomplete

9. Secondary Pressure (Line Pressure) Test

A: INSPECTION

CAUTION:
• Directly after the vehicle has been running or the engine has been idling for a long time, the CVTF is hot. Be careful not to burn yourself.
• Make sure no other person is around the vehicle during secondary pressure (line pressure) test measurement.
• After performing the secondary pressure (line pressure) test measurement, adjust the CVTF level.

NOTE:
• If the pulley and variator chain, clutch or brake show signs of slipping or shift feel is not correct, check the secondary pressure (line pressure).
• Connect Subaru Select Monitor to vehicle so as to measure the engine speed and actual secondary pressure (secondary pressure (line pressure)).
• In many cases, slippage or inability to operate the vehicle may be due to insufficient oil pressure for the operation of clutch, brake or control valve.
1) Remove the front wheel RH. <Ref. to WT-5, REMOVAL, Tire and Wheel.>
2) Lift up the vehicle.
3) Remove the test plug for secondary pressure (line pressure).

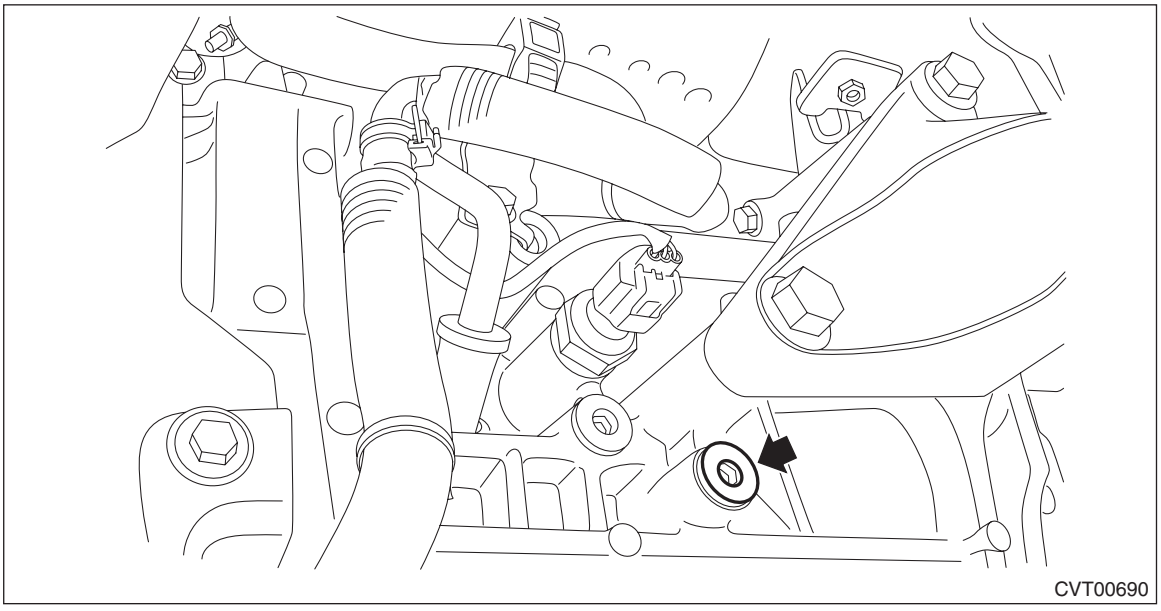

4) Attach ST1, ST2 and ST3 to transmission.
ST1 18801AA000 OIL PRESSURE GAUGE ASSY
ST2 18681AA000 PRESSURE GAUGE ADAPTER
ST3 498897700 OIL PRESSURE ADAPTER SET

NOTE:
Use ST2 PRESSURE GAUGE ADAPTER with genuine O-ring (Part No. 806911080) attached.

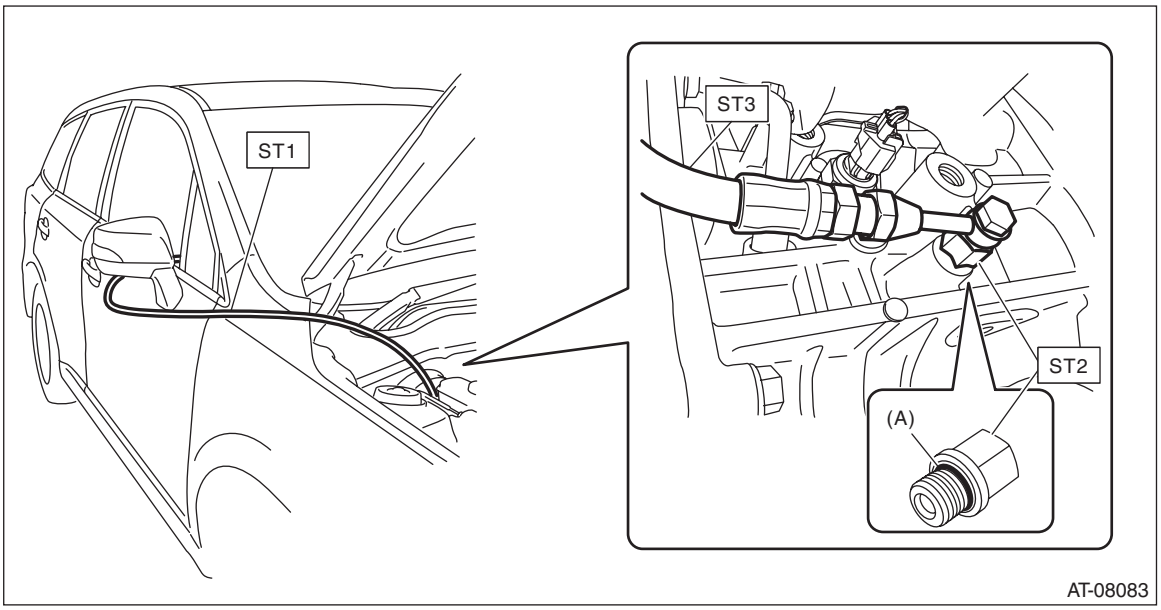

(A) O-ring (genuine part)

5) Lower the vehicle.
6) Set the gauge so that it can be seen from the driver's seat.
7) Install the front wheel RH. <Ref. to WT-5, INSTALLATION, Tire and Wheel.>
8) Using the Subaru Select Monitor, check if the throttle valve operates when you depress the accelerator pedal. <Ref. to EN(H6DO)(diag)-50, OPERATION, Subaru Select Monitor.>
9) Check the engine oil level. <Ref. to LU(H6DO)-2, General Description.>
10) Check the coolant level. <Ref. to CO(H6DO)-13, Engine Coolant.>
11) Adjust the CVTF level. <Ref. to CVT(TR690)-38, ADJUSTMENT, CVTF.>
12) Increase the CVTF temperature to 60 — 80°C (140 — 176°F) by idling the engine with the select lever shifted to "N" or "P" range.
13) Hold down the pre-collision brake OFF switch to turn OFF the pre-collision brake. (With EyeSight)
14) Shift the select lever to "D" range.
15) Depress the accelerator pedal to the full while fully depressing the foot brake pedal with your left foot.

16) Immediately after the engine speed becomes steady, record the reading of the secondary pressure (line pressure), engine speed and actual secondary pressure on Subaru Select Monitor. And then release the accelerator pedal. Shift the select lever to “N” range. Let the engine idle for one minute or more to cool it down.

NOTE:
• Do not continue the stall test for 5 seconds or more at a time (from fully closed throttle, fully open throttle to secondary pressure (line pressure) reading). Failure to follow this instruction will cause the engine oil and CVTF to deteriorate and the clutch and brake to be adversely affected.
• After performing the secondary pressure (line pressure) test, be sure to cool down the engine for at least one minute with the select lever set in “P” or “N” range and with the idle speed at 1,200 r/min or less.
• Under each condition, check that the measured pressure matches almost totally with actual secondary pressure.
• When both measured pressure and actual secondary pressure are out of specification, judge as control valve malfunction.
• The value at stall is for reference because the pressure changes under different conditions or circumstances.
• The value at idling is steady because it is not affected by any condition or circumstance.

Secondary pressure (line pressure) standard				
	Range	Throttle	Brake	Secondary pressure (line pressure) (MPa (kgf/cm^2, psi))
Stall	D, R	Full open	ON	4.5 — 6 (45.9 — 61.2, 652 — 870)
Idling	P, N	Full closed	OFF	0.5 — 1.5 (5.1 — 15.3, 72 — 218)

17) Remove the ST and install the plug after measurement.

NOTE:
• Use new O-rings.
• Apply CVTF to the O-rings.

Tightening torque:
25 N·m (2.5 kgf-m, 18.4 ft-lb)

10.Transfer Clutch Pressure Test

A: INSPECTION

1) Lift up the vehicle.
2) Remove the test plug.

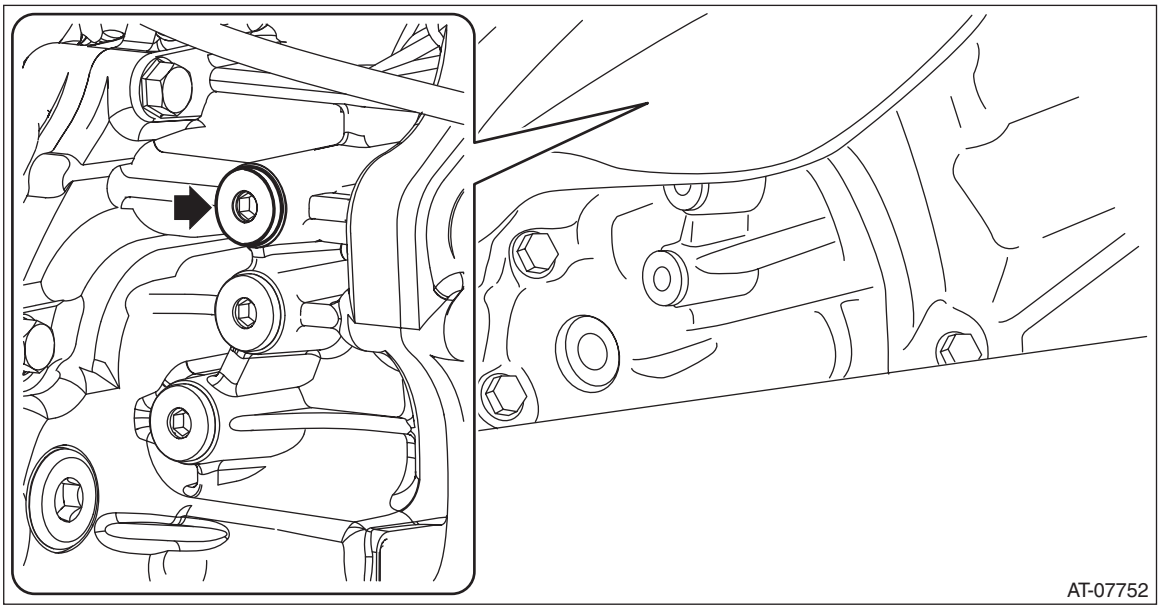

3) Set the ST1, ST2, ST3 and ST4 to the transmission.

CAUTION:
Be careful when setting tools so that the hoses do not touch the exhaust pipes.

NOTE:
• Use ST1 ADAPTER HOSE B with genuine union screw (part No. 801914010) and gasket (part No. 803914060) attached.
• Use ST3 PRESSURE GAUGE ADAPTER with genuine O-ring (part No. 806911080) attached.

ST1 34099AC020 ADAPTER HOSE B
ST2 34099AC010 ADAPTER HOSE A
ST3 18681AA000 PRESSURE GAUGE ADAPTER
ST4 498575400 OIL PRESSURE GAUGE ASSY

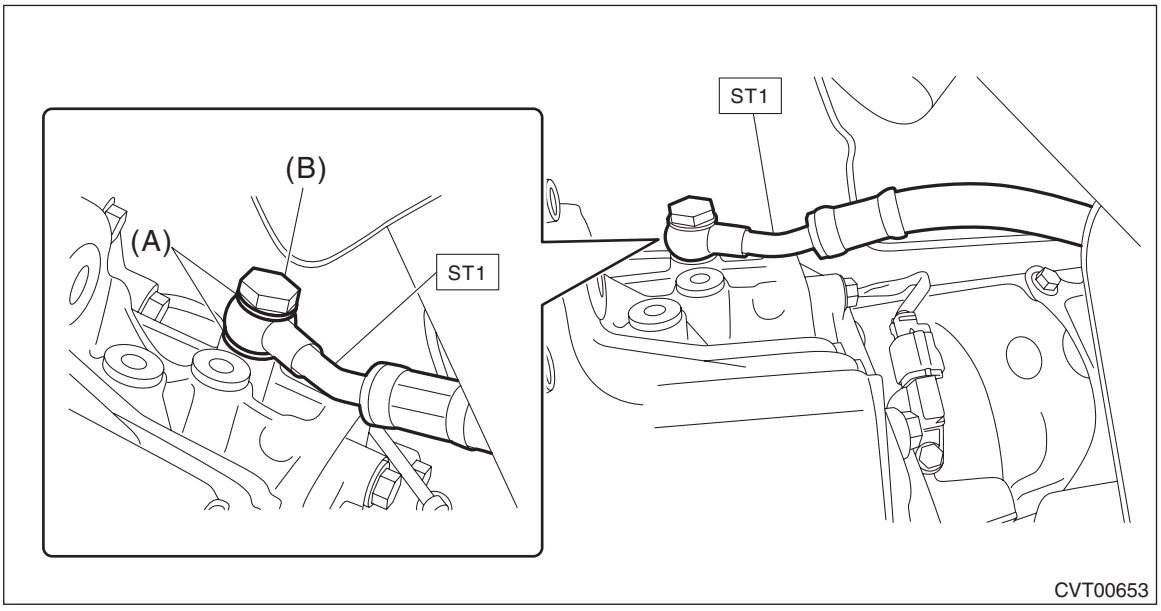

(A) Gasket (genuine part)
(B) Union screw (genuine part)

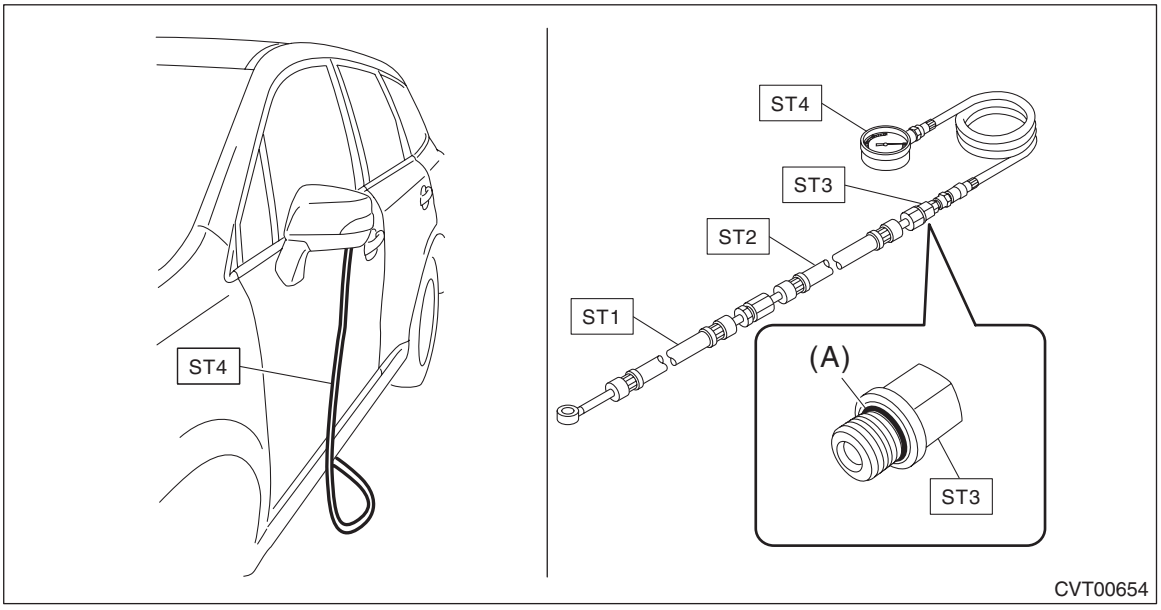

(A) O-ring (genuine part)

4) Lower the vehicle.

5) Connect the Subaru Select Monitor to the data link connector and read the current data.
6) Check the transfer clutch pressure as in secondary pressure (line pressure) test. <Ref. to CVT(TR690)-51, Secondary Pressure (Line Pressure) Test.>

NOTE:
- Turn OFF the X mode switch and perform inspection.
- If oil pressure is not produced or it does not change, the control valve body may be malfunctioning.

Range position	ON Duty ratio (%)	Accelerator pedal opening angle (%)	Standard transfer clutch pressure kPa (kgf/cm^2, psi)
D	95 — 100	Fully opened (100)	1,000 — 1,200 (10.2 — 12.2, 145 — 174)
	60	Adjust ON Duty ratio to 60%.	400 — 700 (4.1 — 7.1, 58 — 102)
	0	Fully closed (0)	—
N or P	0	Fully closed (0)	0

7) Lift up the vehicle.
8) Remove the ST.

9) Install the test plug using ST1 and ST2.

NOTE:
- Use new O-rings.
- Apply CVTF to the O-rings.
- Tighten the test plug while directly aligning ST2 and torque wrench.

ST1 18270AA040 SOCKET
ST2 73099SG000 SPECIAL TOOL CONDENSER
Using the following formula, calculate the tightening torque for a torque wrench.
T2 = L2/(L1 + L2) × T1
T1: 25 N·m (2.5 kgf-m, 18.4 ft-lb)
L1: ST2 length 0.1 m (3.94 in) (a)
L2: Torque wrench length (b) m (in)

[Required torque setting]
T2: Tightening torque: N·m (kgf-m, ft-lb)

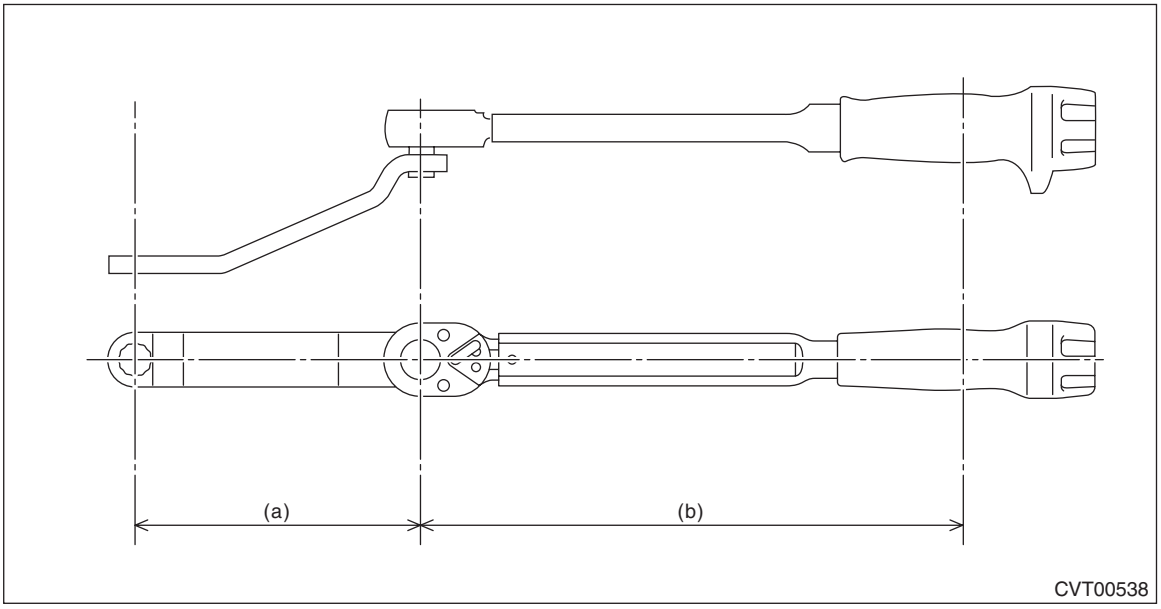

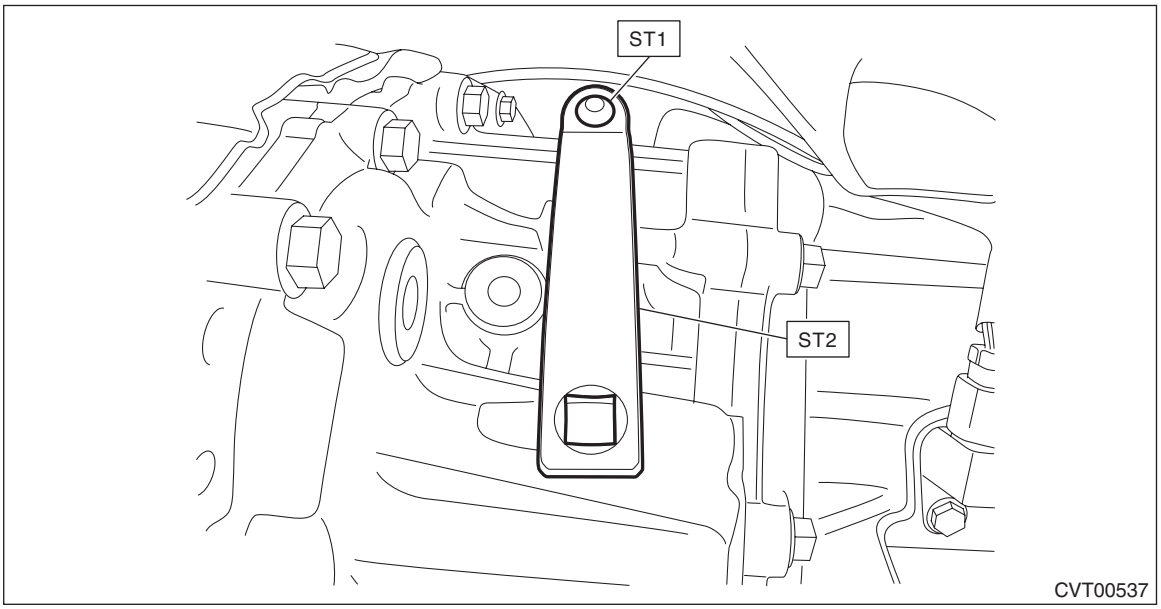

10) Lower the vehicle.

11.Automatic Transmission Assembly

A: REMOVAL

1) Remove the front tires.
2) Remove the collector cover.
   (1) Carefully pull up the rear of collector cover at two positions (A).
   (2) Carefully pull up the front of collector cover at two positions (B) while moving it forward.

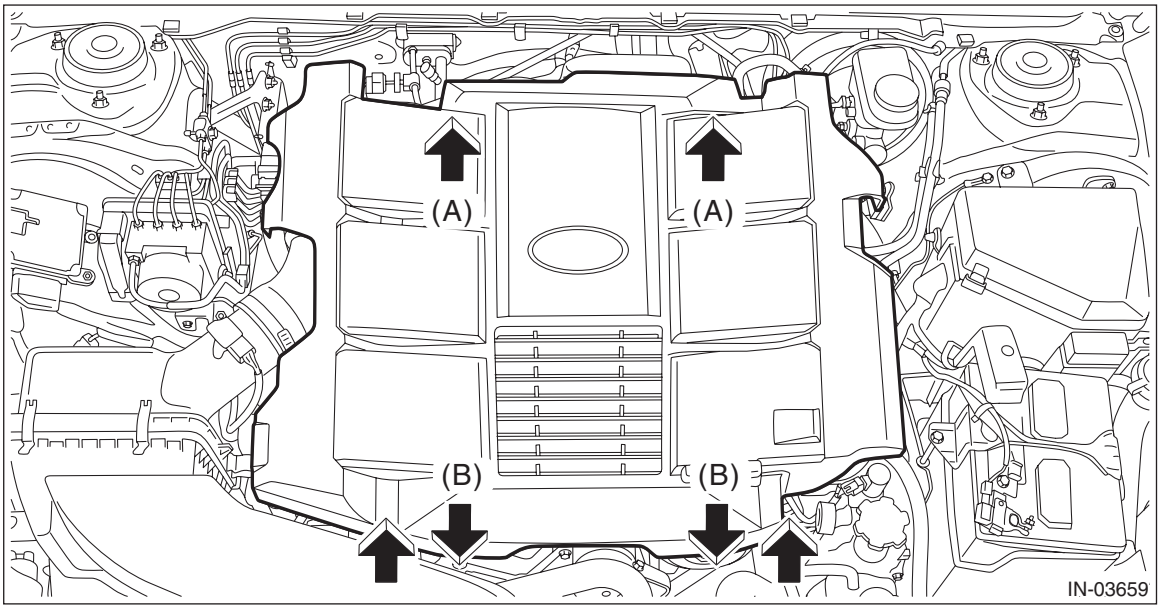

3) Disconnect the ground terminal from battery sensor. <Ref. to RC-4, BATTERY, NOTE, Repair Contents.>
4) Remove the air intake duct. <Ref. to IN(H6DO)-12, REMOVAL, Air Intake Duct.>
5) Loosen the clamp (A) which connects the air intake boot.
6) Loosen the bolt (B) securing the air intake boot to the collector cover bracket.

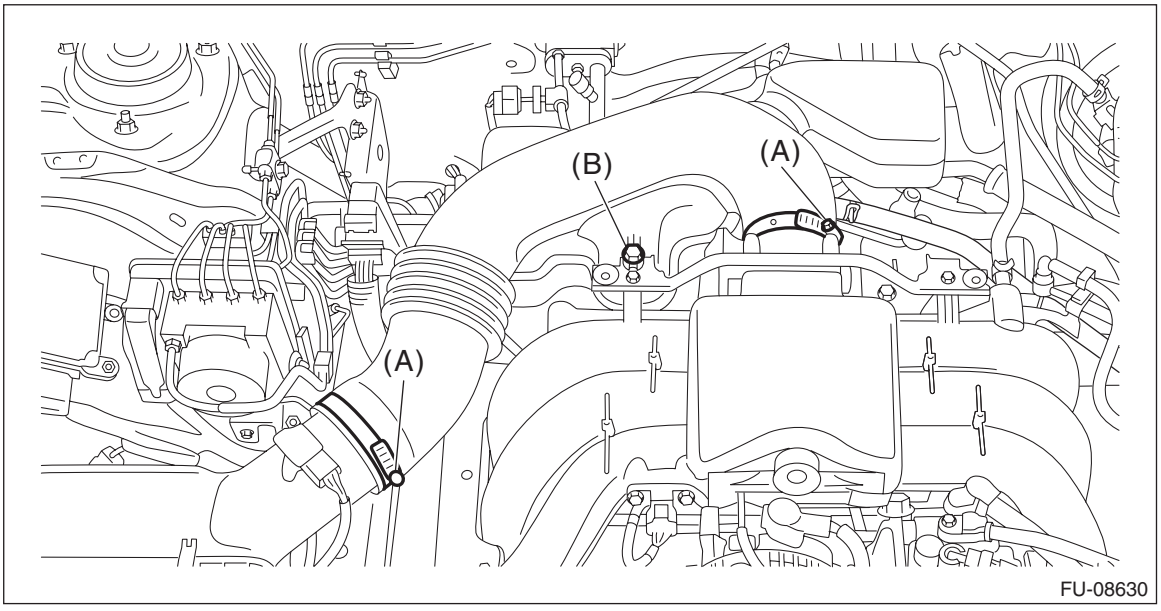

7) Remove the air intake boot from the throttle body, and move the air intake boot to the left side wheel apron.

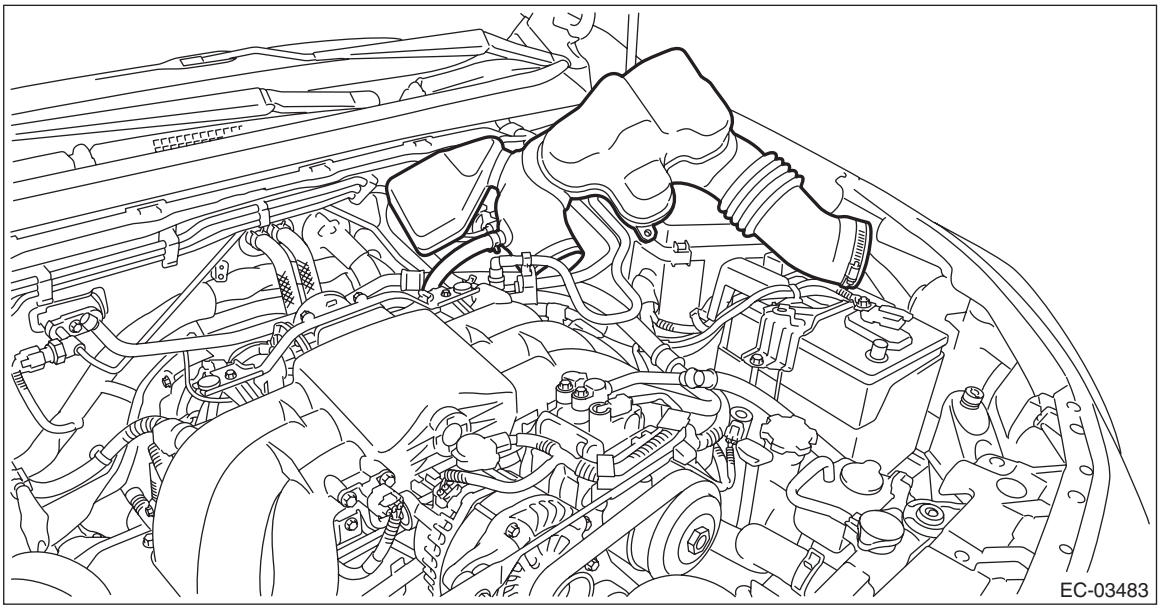

8) Disconnect the following connectors.
- Transmission harness connectors
- Transmission radio ground terminal
- Inhibitor harness connector

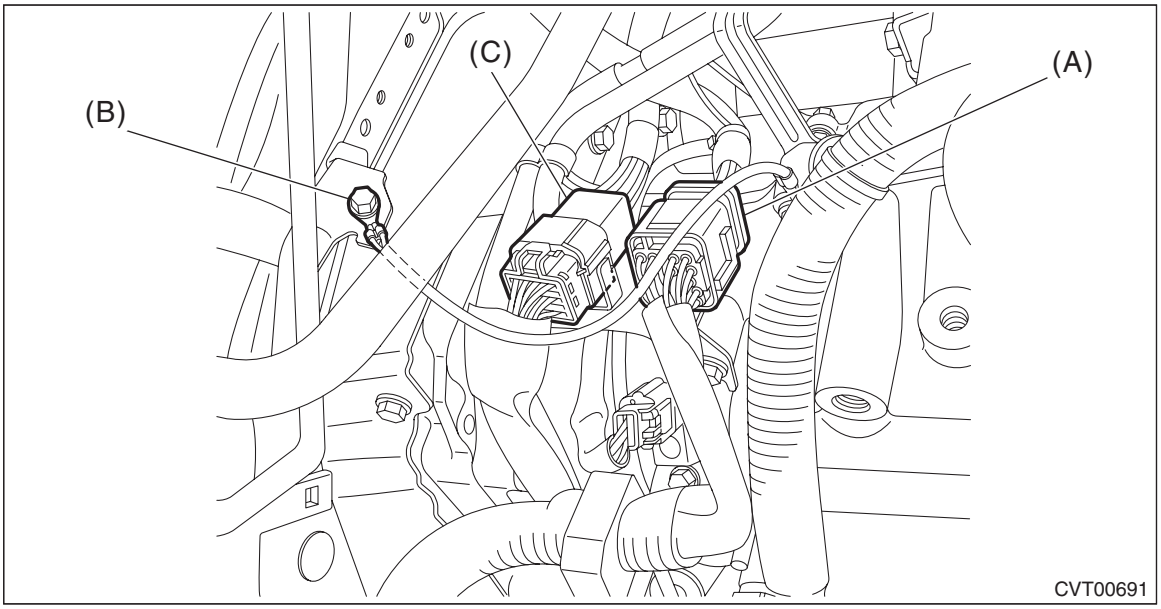

(A) Transmission harness connectors
(B) Transmission radio ground terminal
(C) Inhibitor harness connector

9) Remove the harness stay from the transmission.

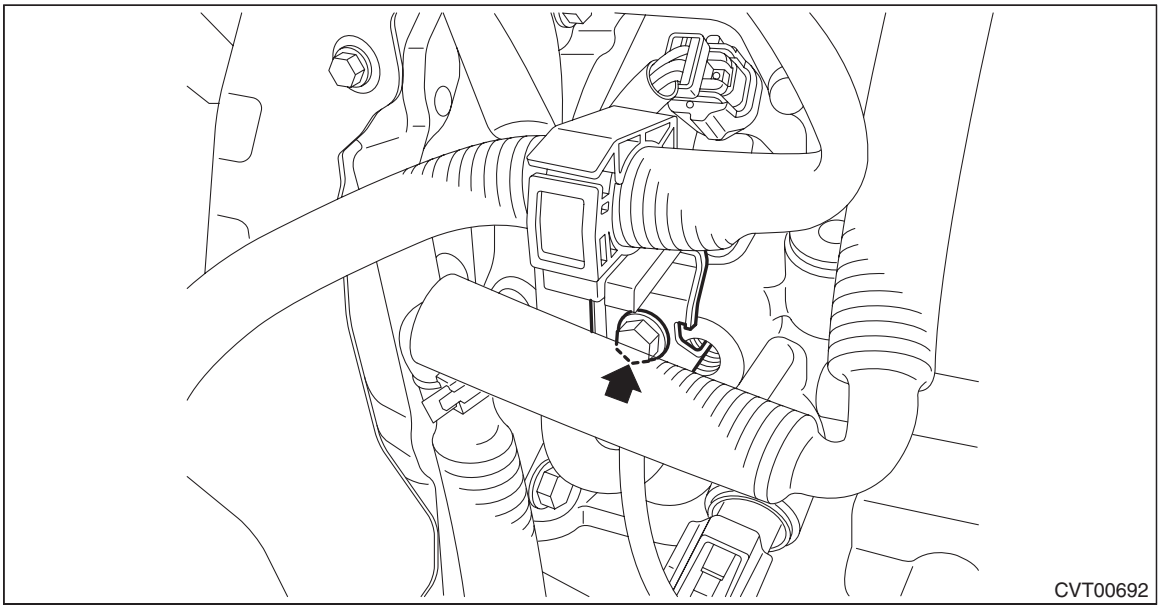

10) Separate the ground cable clip to remove the battery cable bracket.

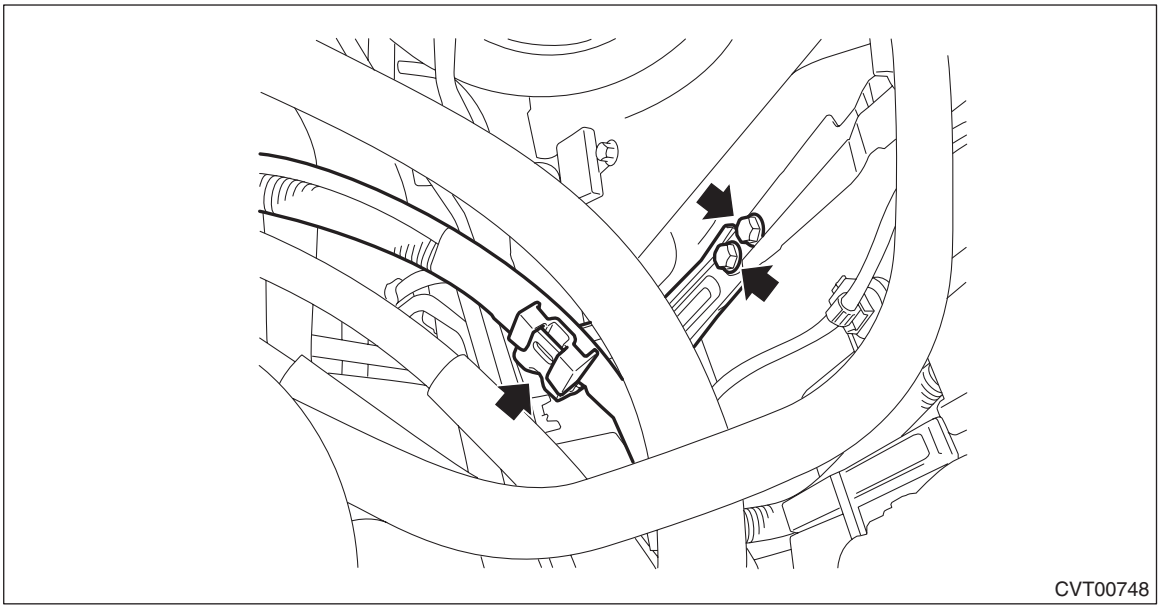

11) Disconnect the engine harness connector.

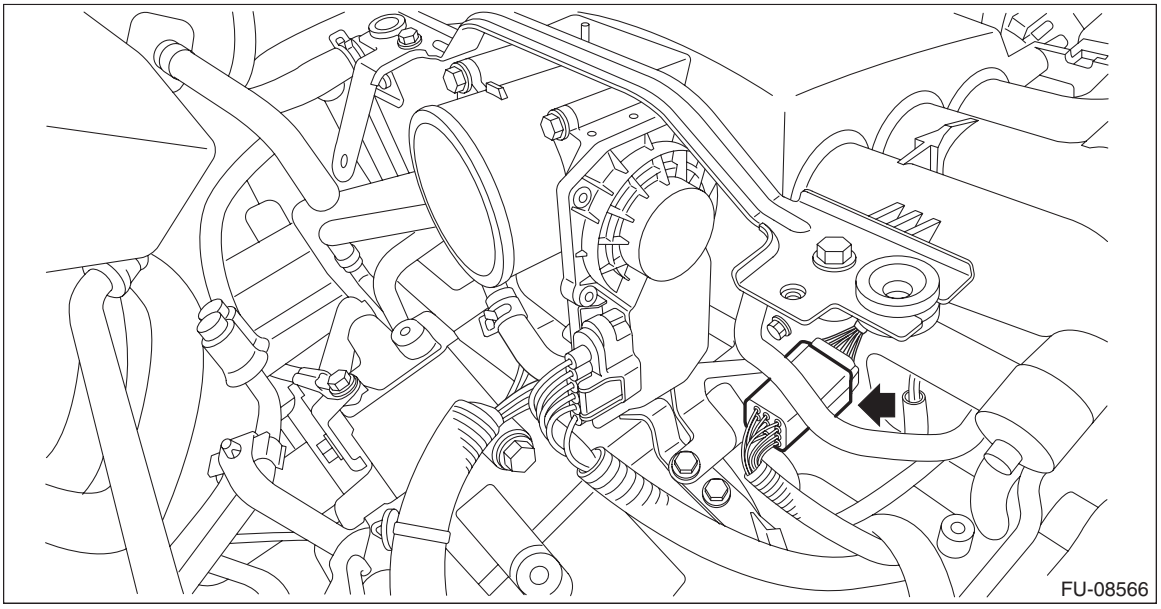

12) Remove the throttle body with the engine coolant hose connected. <Ref. to FU(H6DO)-19, REMOVAL, Throttle Body.>

13) Disconnect the oxygen sensor harness connector.

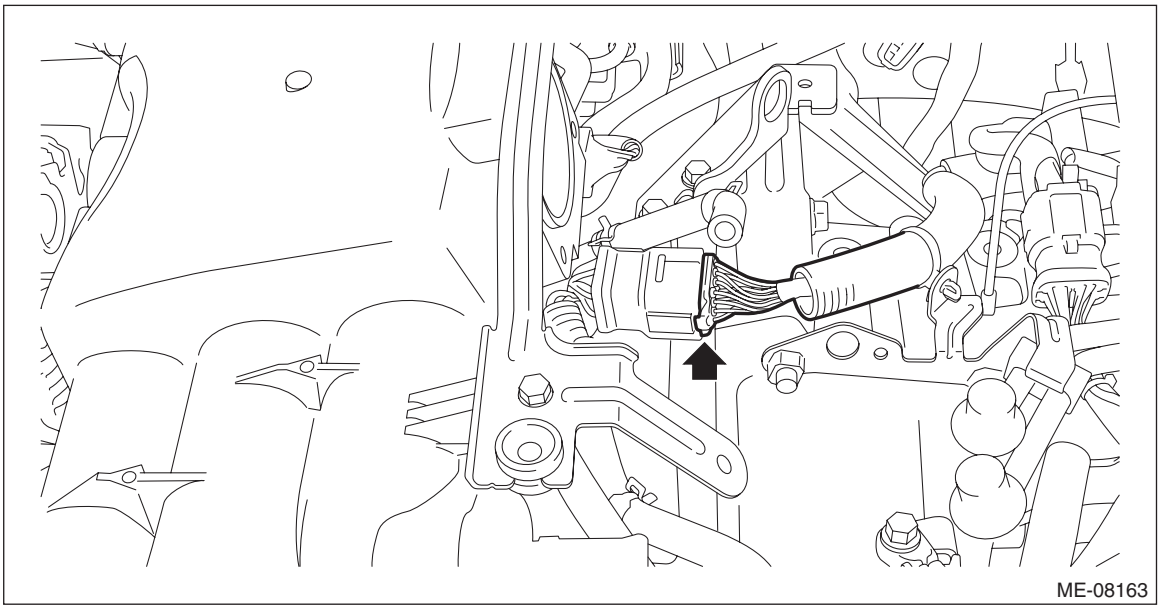

14) Disconnect the harness connector, and then remove the engine hanger rear.

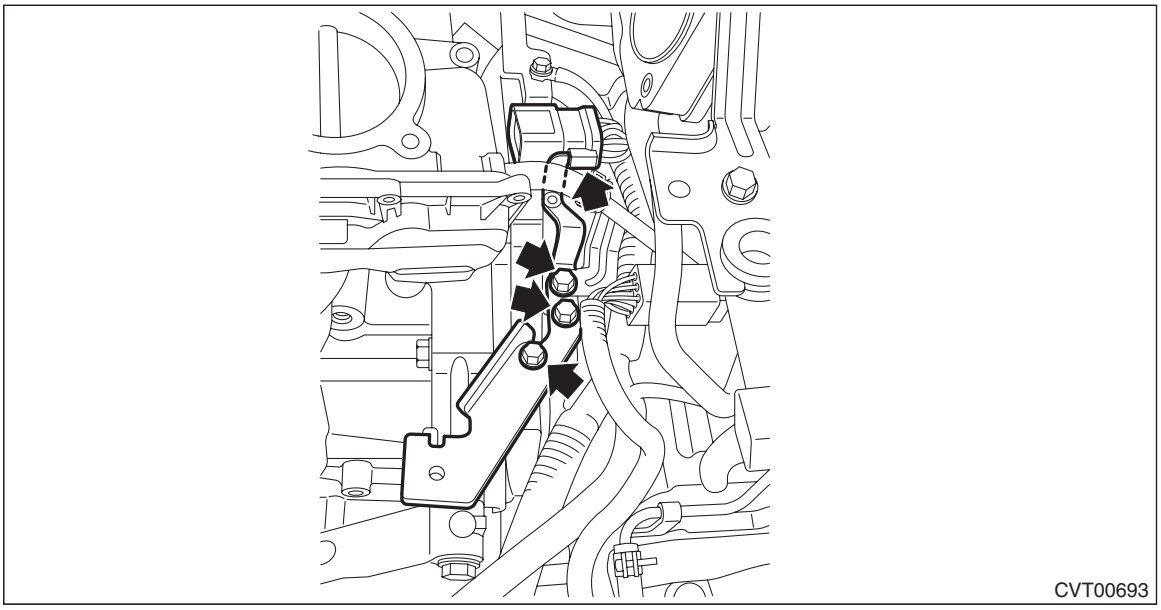

15) Remove the collector cover bracket.

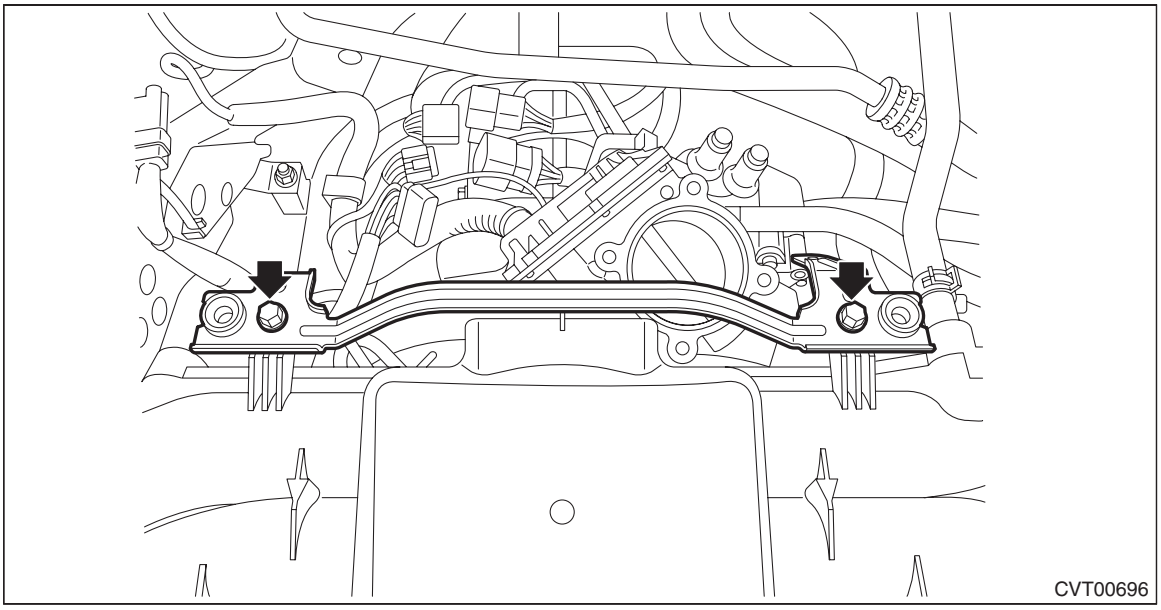

16) Attach the ST to the engine.

Tightening torque:
19 N·m (1.9 kgf-m, 14.0 ft-lb)
ST 18360AA020 HANGER

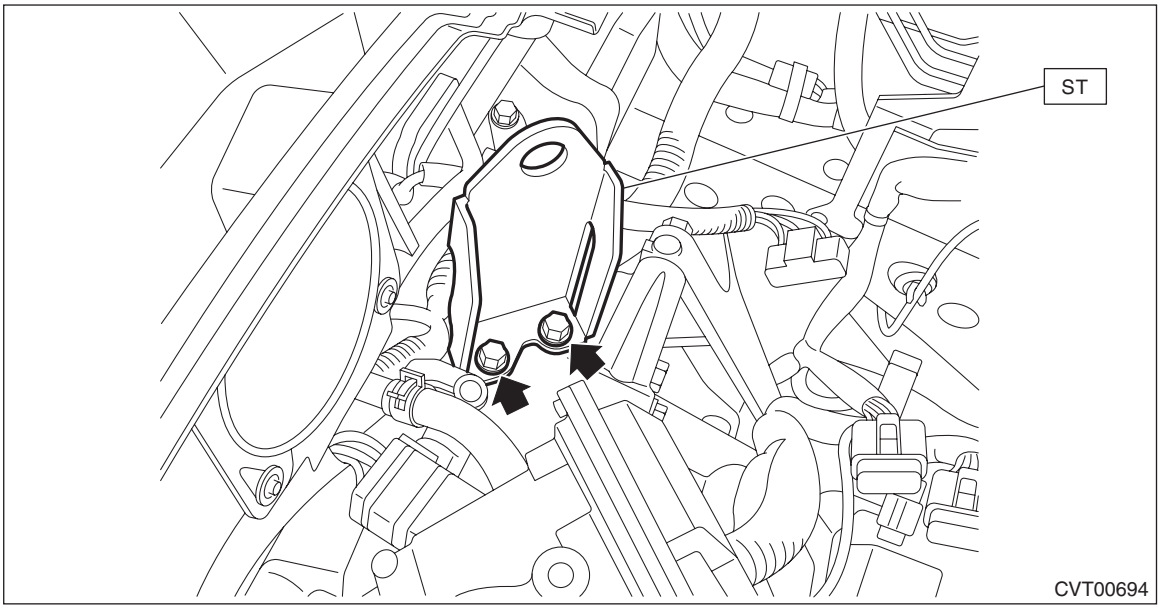

17) Remove the starter. <Ref. to SC(H6DO)-7, REMOVAL, Starter.>
18) Remove the service hole plug.

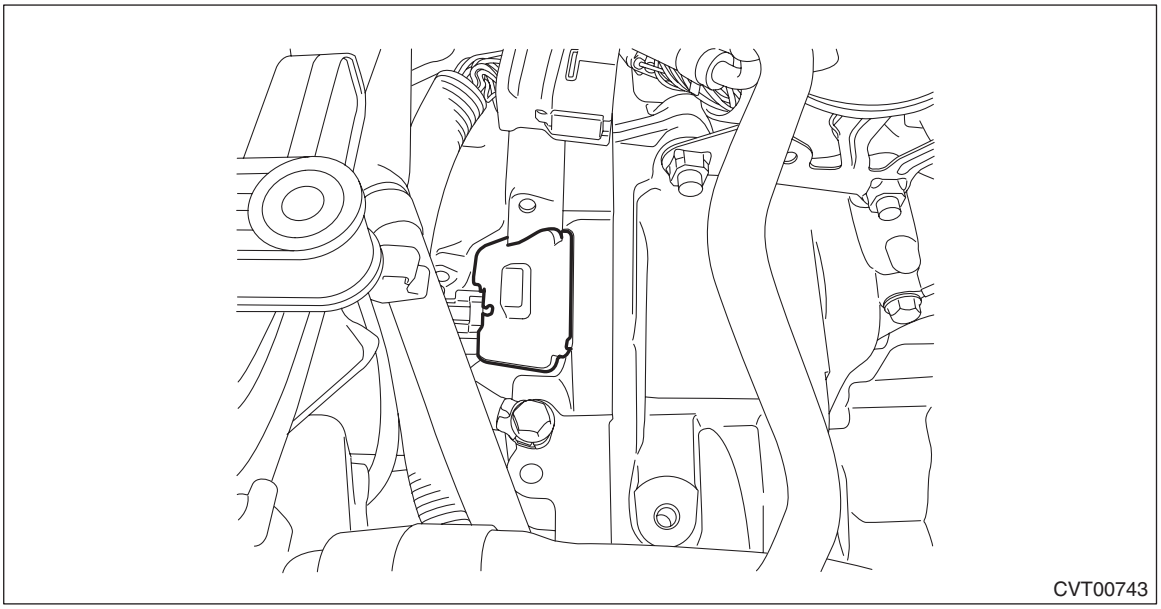

19) Remove the four bolts combining the torque converter and drive plate while rotating the crank pulley a little at a time in the same direction as engine revolution.

CAUTION:
- **Be careful not to drop bolts into converter housing.**
- **Be careful not to damage the mounting bolts.**

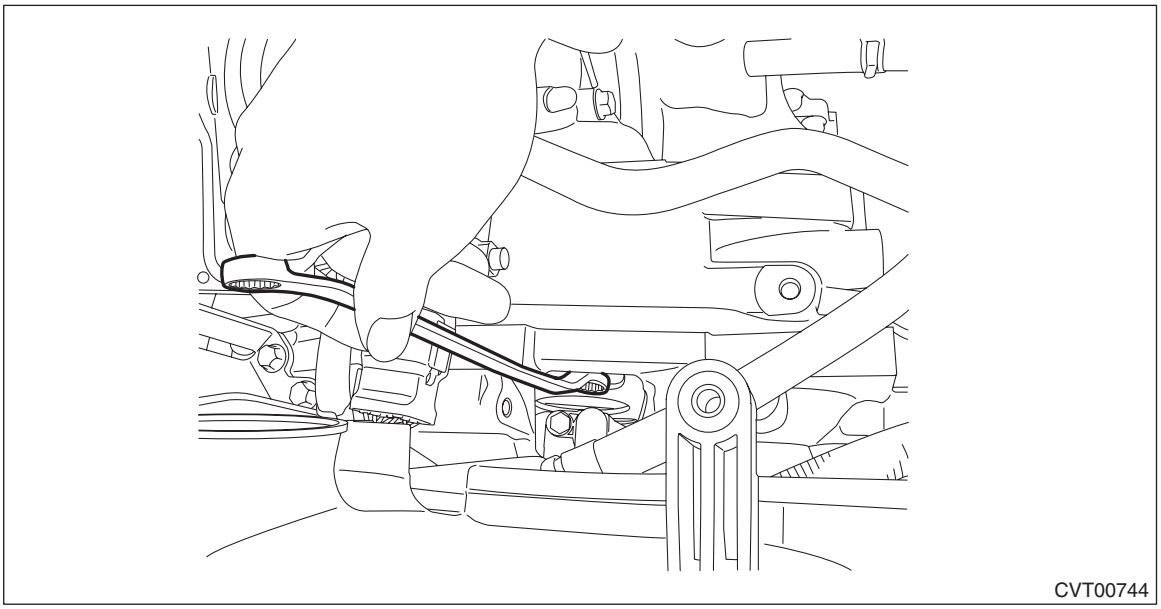

20) Make sure the torque converter moves freely by rotating with finger through the starter installation hole.
21) Attach the ST to the converter case.
ST 498277200 STOPPER SET

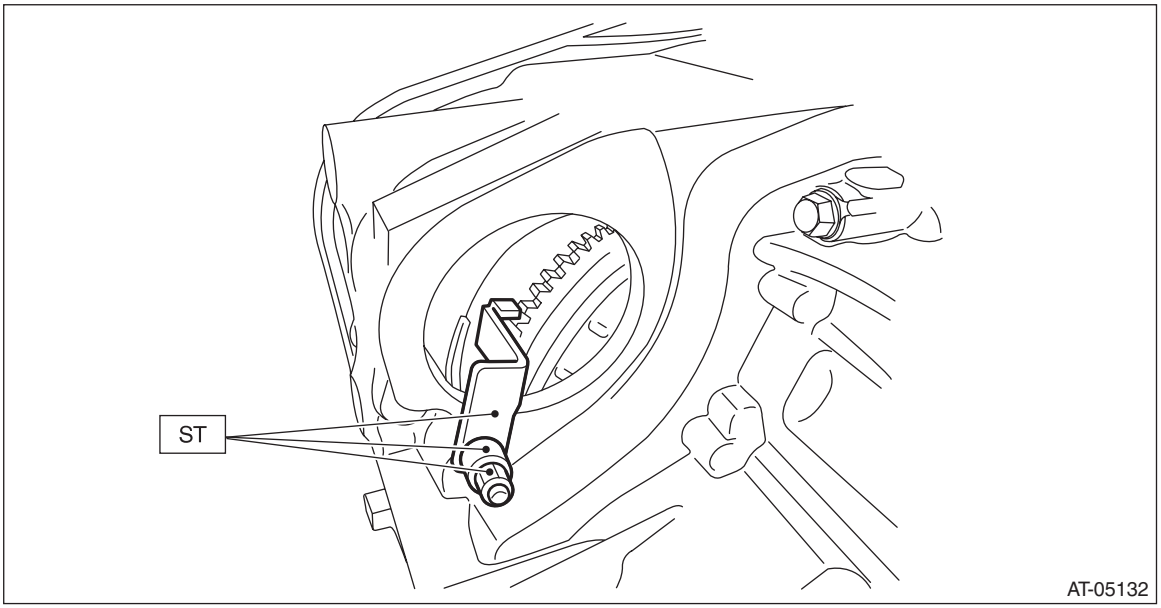

22) After pulling off the cotter pin and removing the castle nut, use a puller to remove the tie-rod end.

NOTE:
Use a tool appropriate to the structure, and be careful not to damage the boot of the joint while removing. The boot may be damaged depending on the tool used.

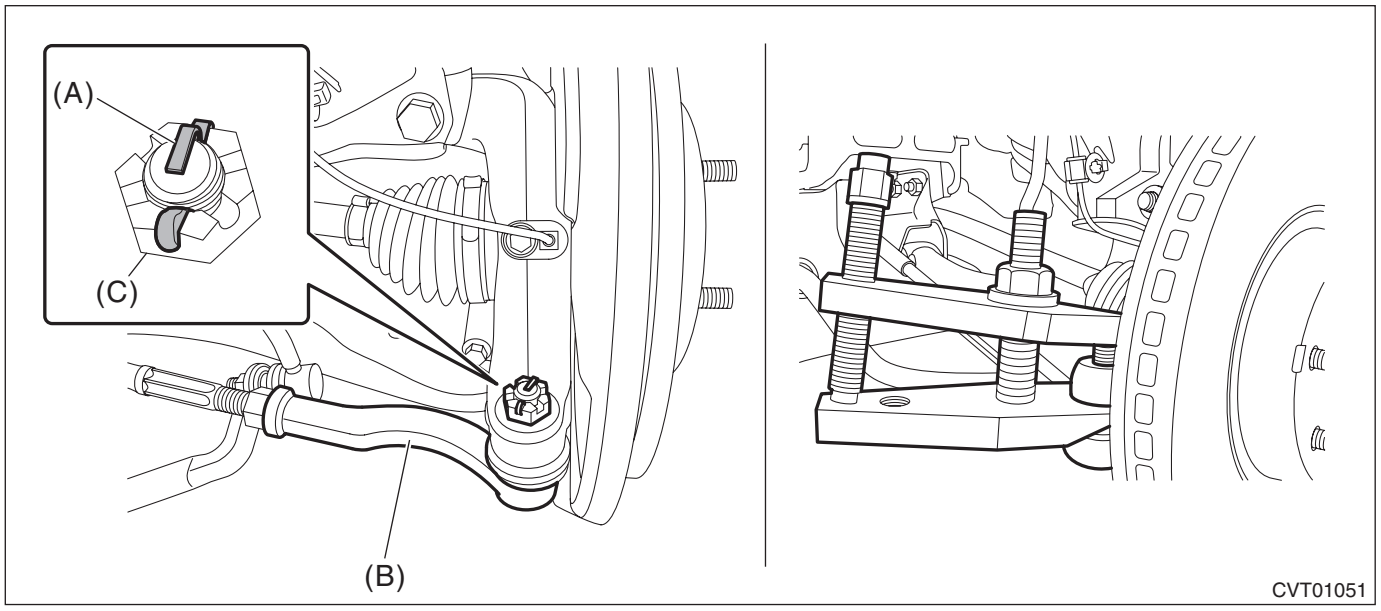

(A) Cotter pin
(B) Tie-rod end
(C) Castle nut

23) Lift up the vehicle.
24) Remove the front under cover. <Ref. to EI-28, REMOVAL, Front Under Cover.>
25) Remove the front exhaust pipe. <Ref. to EX(H6DO)-6, REMOVAL, Front Exhaust Pipe.>
26) Remove the center exhaust cover.

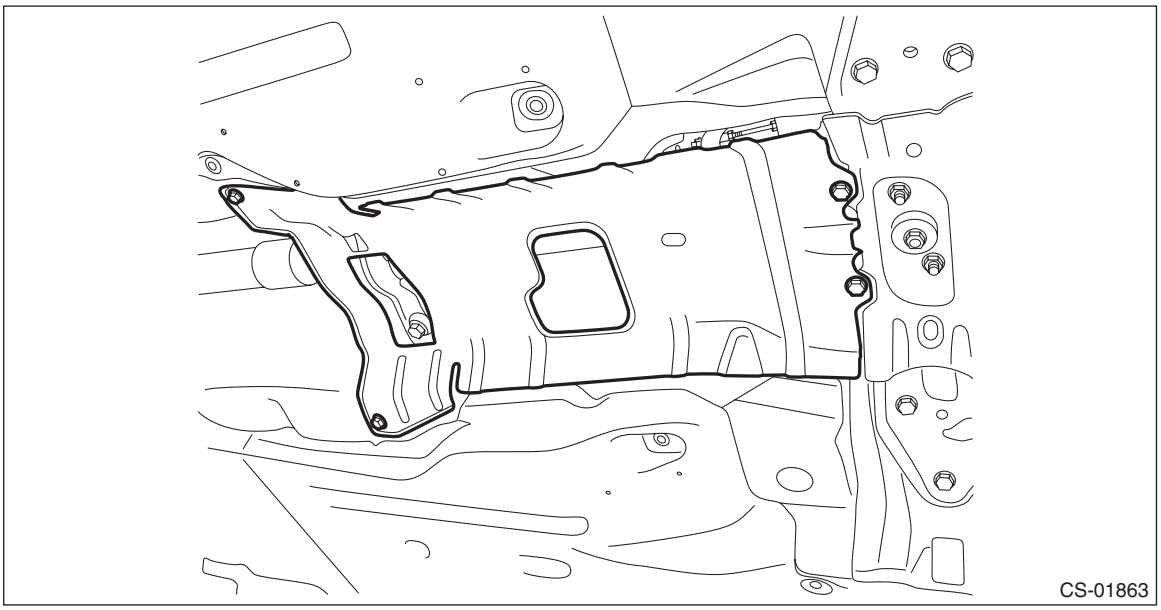

27) Remove the exhaust hanger bracket.

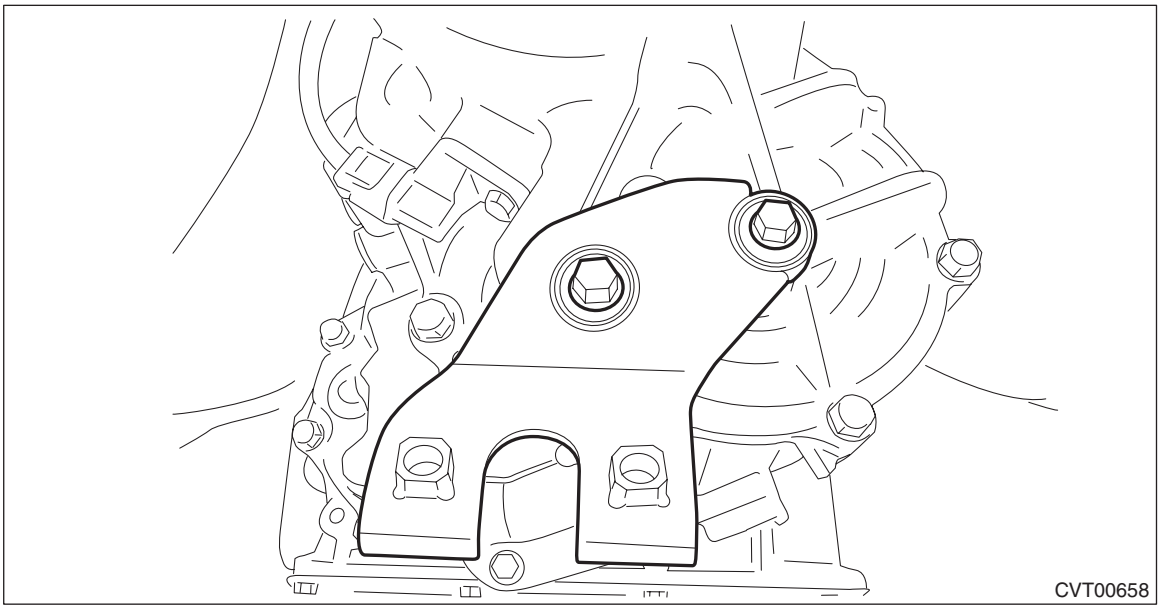

28) Remove the CVTF drain plug to drain CVTF. <Ref. to CVT(TR690)-40, REPLACEMENT, CVTF.>
29) Remove the snap pin and washer from shifter arm and remove the select cable from shifter arm.

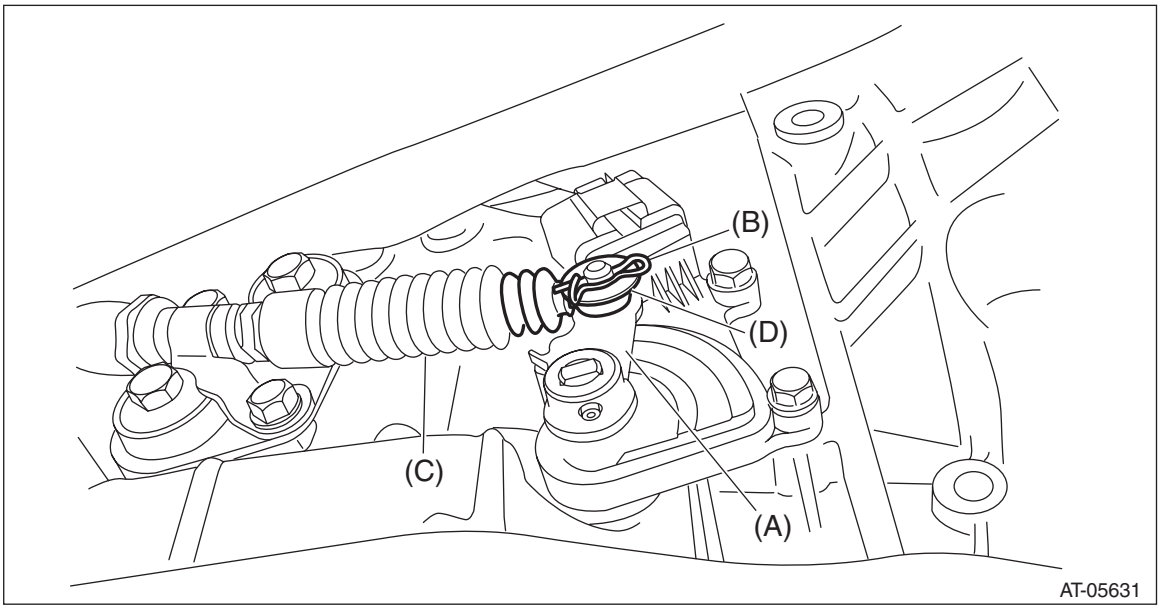

(A) Shifter arm
(B) Snap pin
(C) Select cable
(D) Washer

30) Remove the plate assembly from the transmission case.

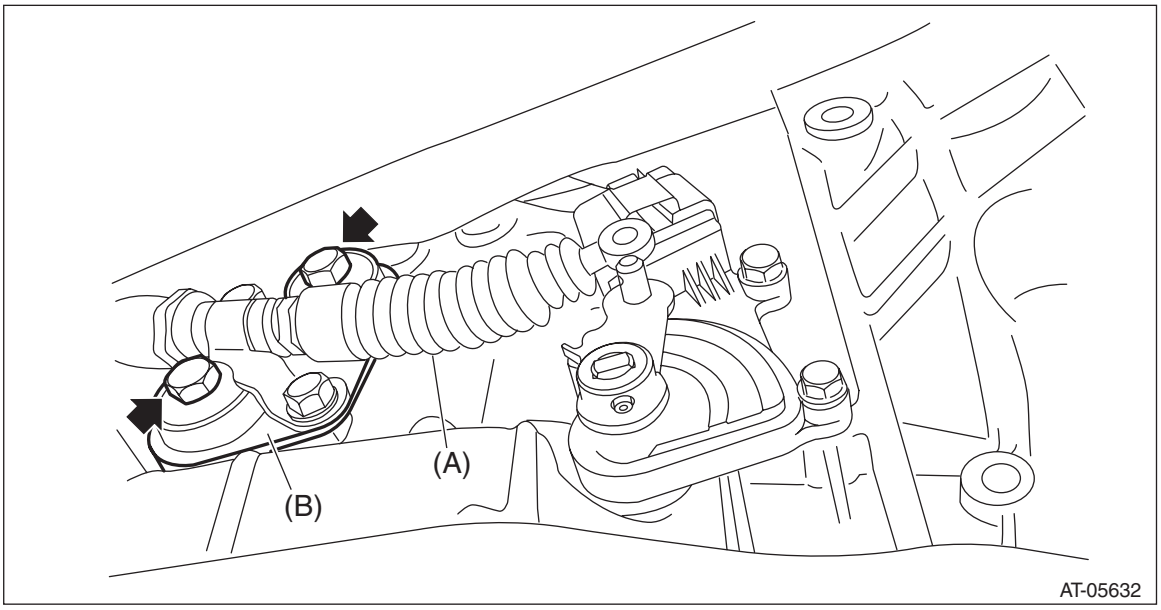

(A) Select cable
(B) Plate ASSY

31) Drain differential gear oil. <Ref. to CVT(TR690)-44, REPLACEMENT, Differential Gear Oil.>
32) Remove the CVTF CVT inlet hose and CVTF CVT outlet hose.

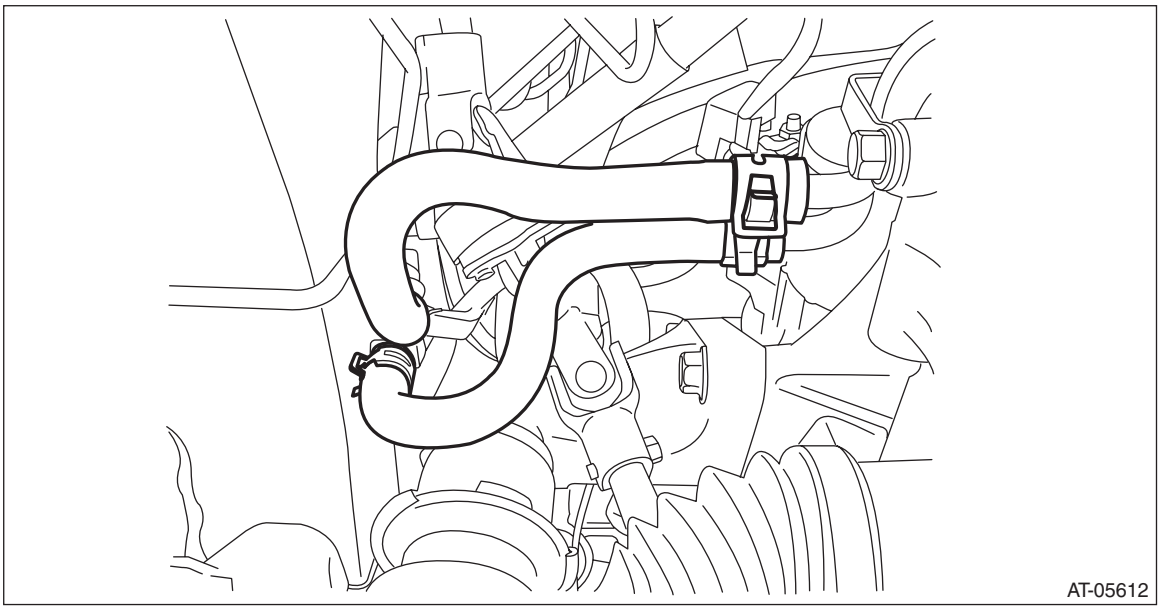

33) Remove the universal joint. <Ref. to PS-14, REMOVAL, Universal Joint.>
34) Remove the propeller shaft. <Ref. to DS-10, REMOVAL, Propeller Shaft.>
35) Remove the stabilizer link.
36) Disconnect the lower arm ball joint and housing.
37) Pull out the front drive shaft from transmission using a crowbar.
38) Holding the joint of front drive shaft from transmission side, pull out the drive shaft from transmission with care not to stretch the boot.
39) Lower the vehicle.

40) Remove the nuts from left and right transmission mounting brackets.

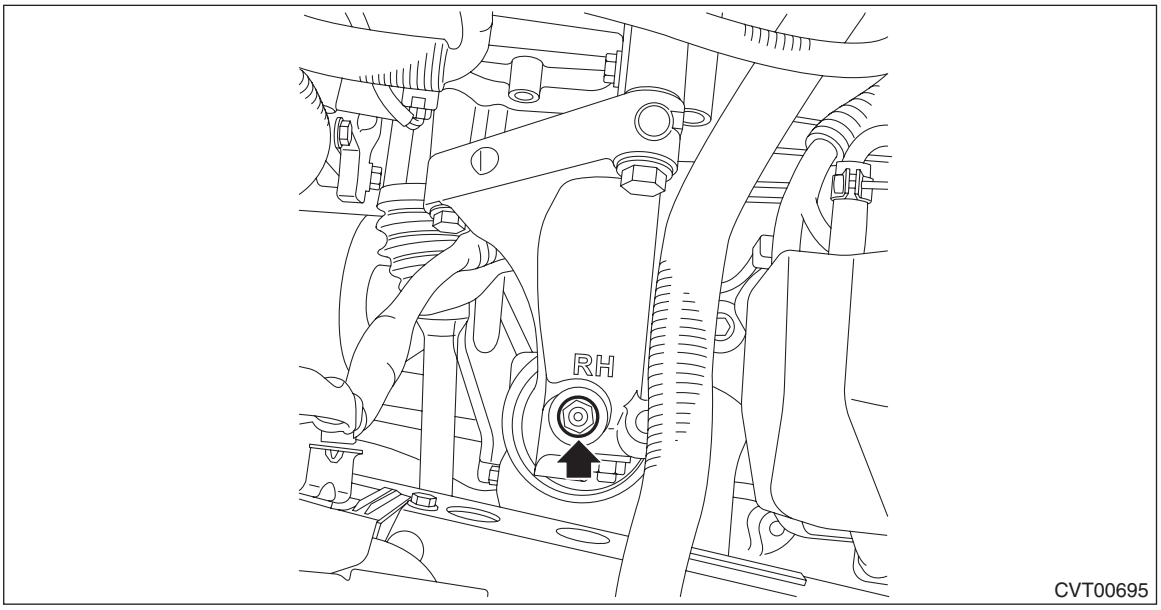

41) Set the ST1 and ST2 to vehicle.
ST1 99099AJ000 ENGINE HANGER
ST2 99099AJ010 CHAIN BALANCER

CAUTION:
- **Set so that the chain sling does not contact the engine parts.**
- **Install a bolt of ϕ8 mm (0.3 in) at the locations shown in the figure, and place the front side arms of ST (ENGINE HANGER).**
- **Set the rear arms of ST (ENGINE HANGER) at the locations shown in the figure.**

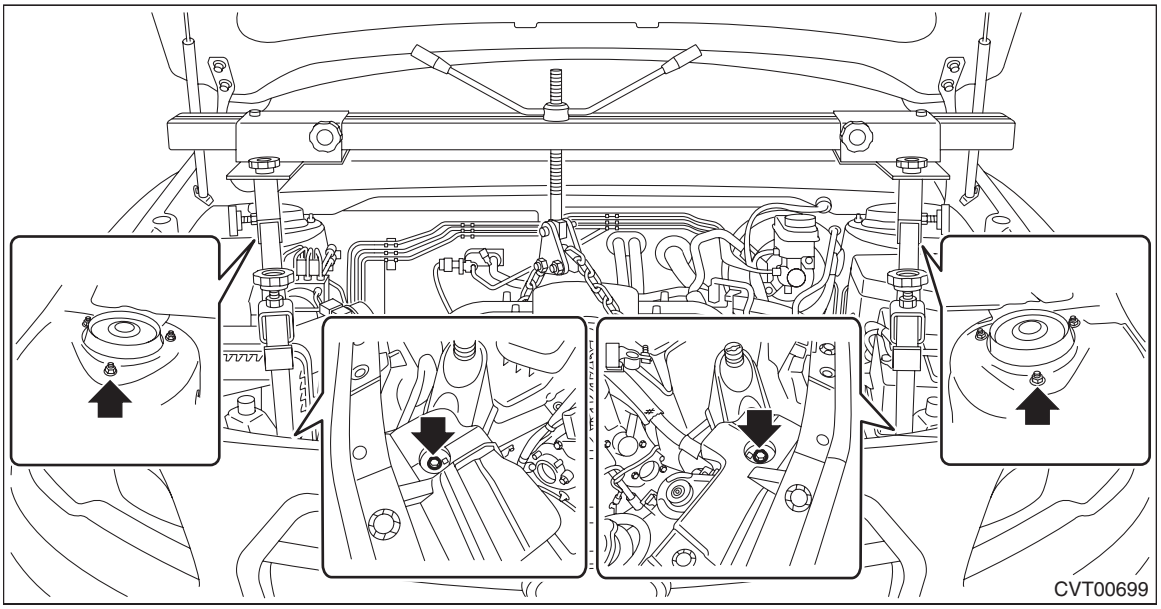

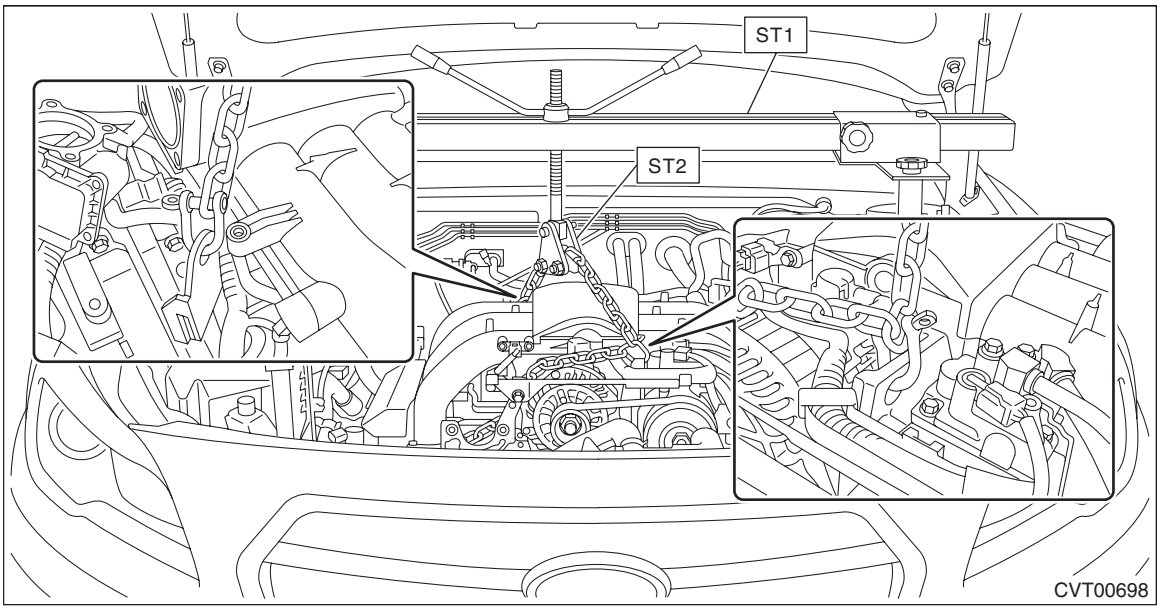

42) Lift the engine slightly and remove the bolts of front cushion rubber.

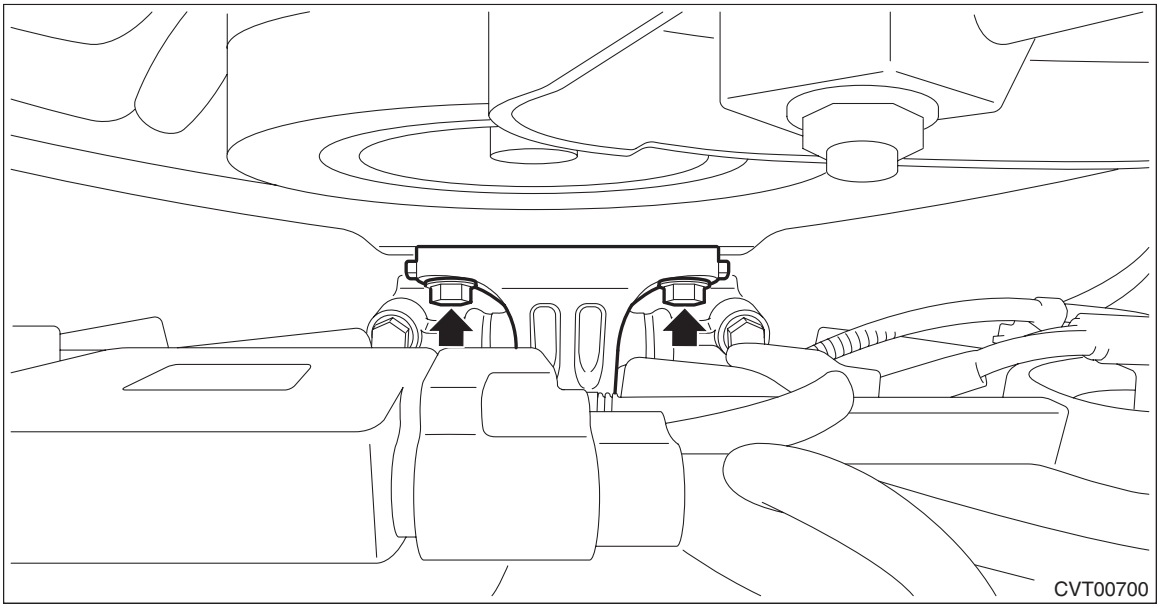

43) Remove the front cushion rubbers.

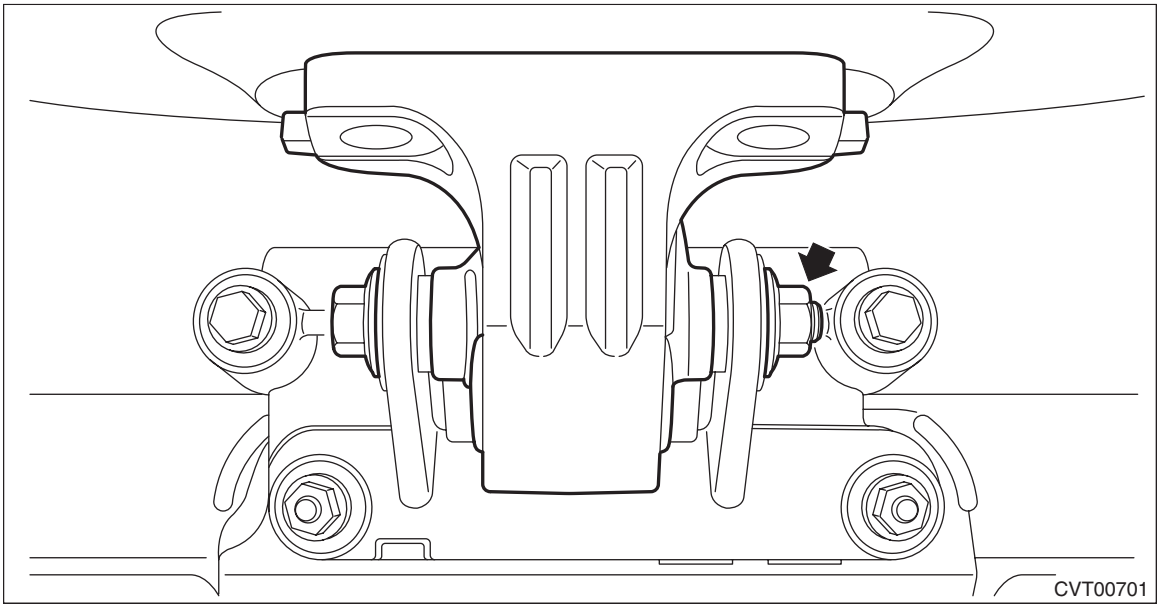

44) Temporarily attach ST by using two bolts.
ST 41099AJ010 SPECIAL TOOL H6

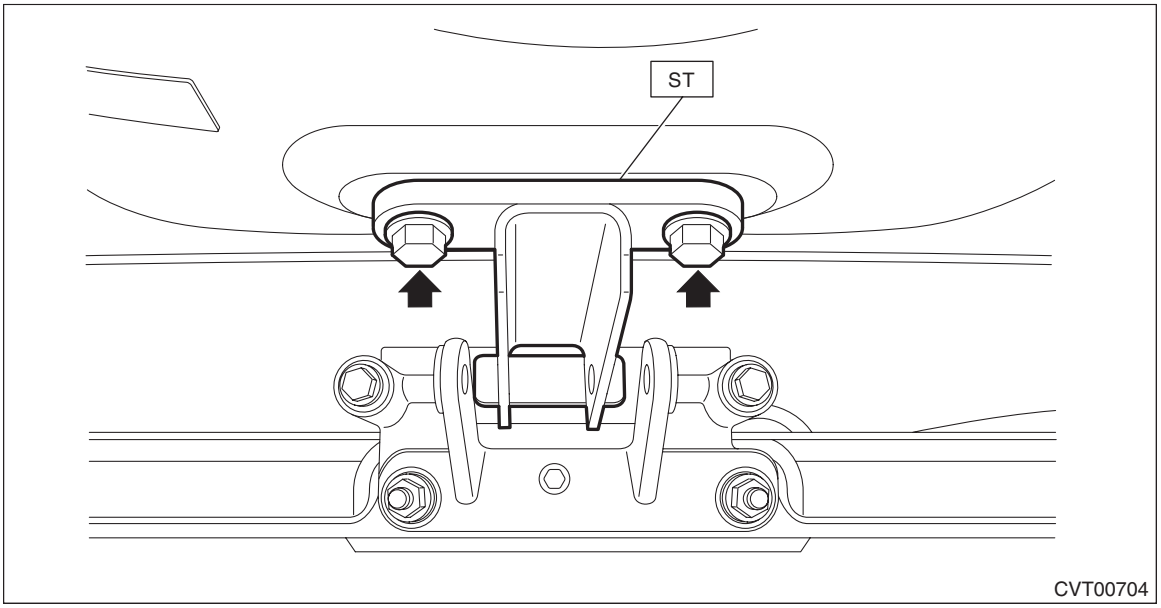

45) Lift up the engine unit high enough to install the bolt and nut to vehicle.

CAUTION:
Do not lift up higher than enough level to install the ST to avoid damage to the hoses and pipes inside the engine room.

NOTE:
If it is difficult to pull out the stud bolt from transmission mounting bracket, slightly shake the engine unit while lifting up.

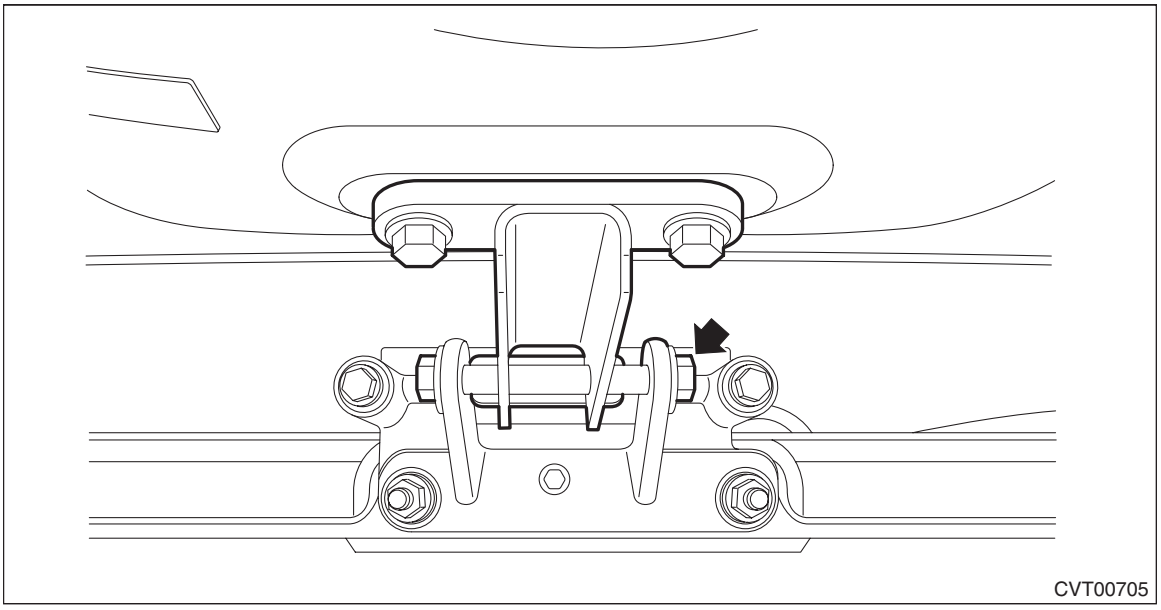

46) Tighten the mounting bolts on the engine side.

Tightening torque:
25 N·m (2.5 kgf-m, 18.4 ft-lb)

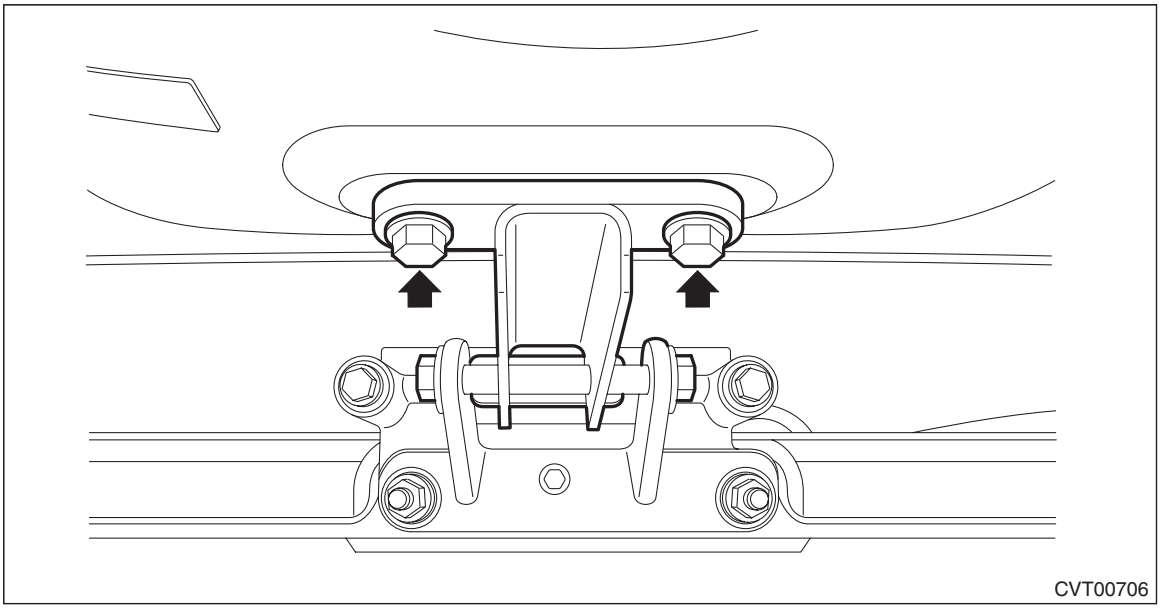

47) Remove the ST (ENGINE HANGER).
48) Remove the left and right transmission mounting brackets.

NOTE:
First, remove the transmission mounting bracket on the right side of vehicle, and then tilt the engine unit to remove the left transmission mounting bracket.

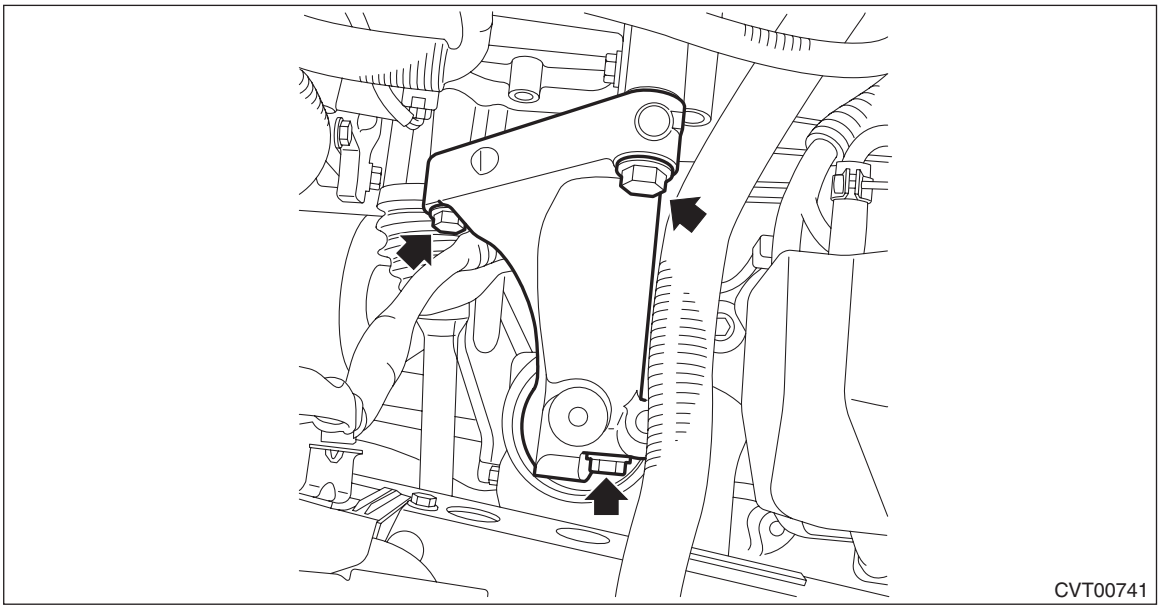

49) Remove the three transmission connecting bolts.

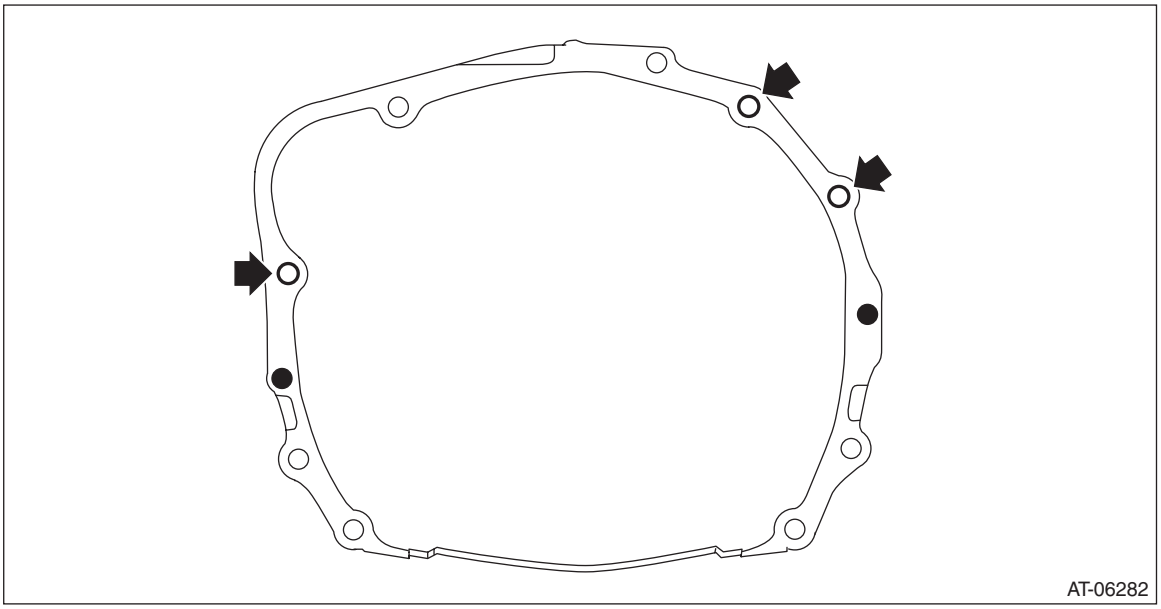

50) Set the ST (ENGINE HANGER) again to loosen the chain sling.
51) Lift up the vehicle.
52) Set the transmission jack under the transmission.
53) Remove the rear crossmember.

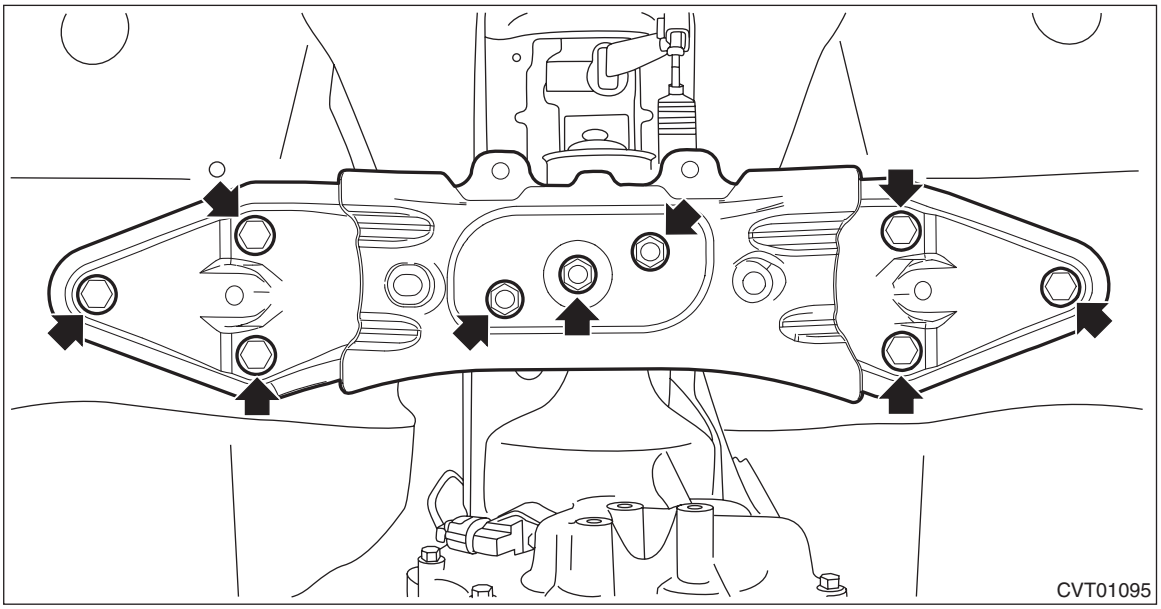

54) Lower the transmission rear end (dust cover rear end).

CAUTION:
When lowering the transmission rear end, be careful not to let the converter case and steering mechanical parts contact each other.

NOTE:
Lower the transmission rear end by approx. 80 mm (3.1 in) (reference).

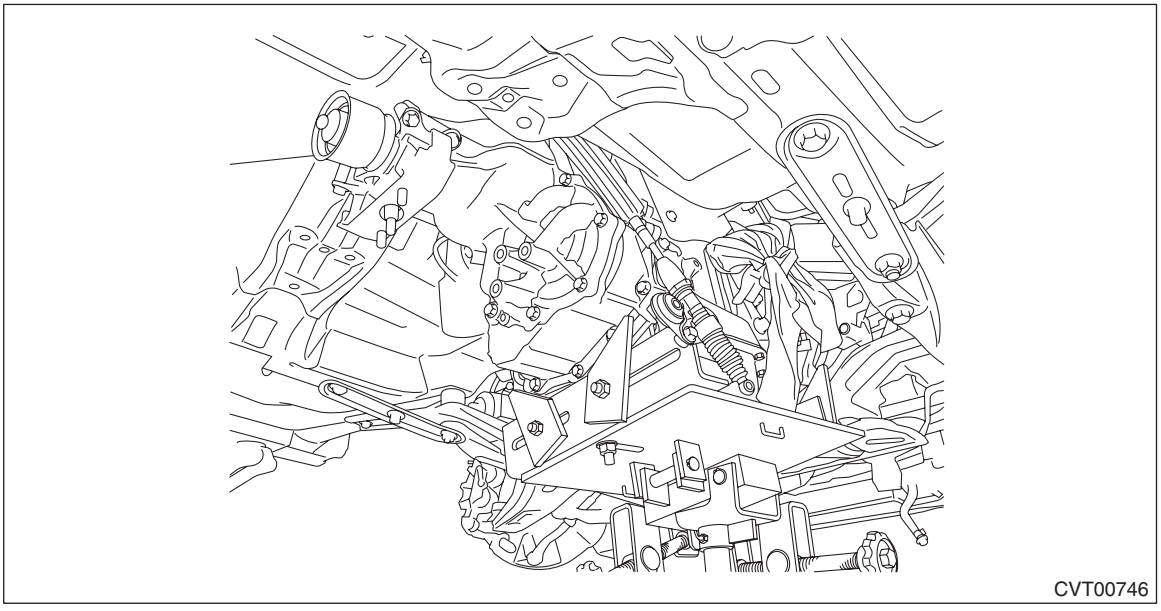

55) Rotate the handle of ST (ENGINE HANGER) to apply tension to the chain sling.
56) Remove the two transmission connecting bolts and two nuts (lower side).

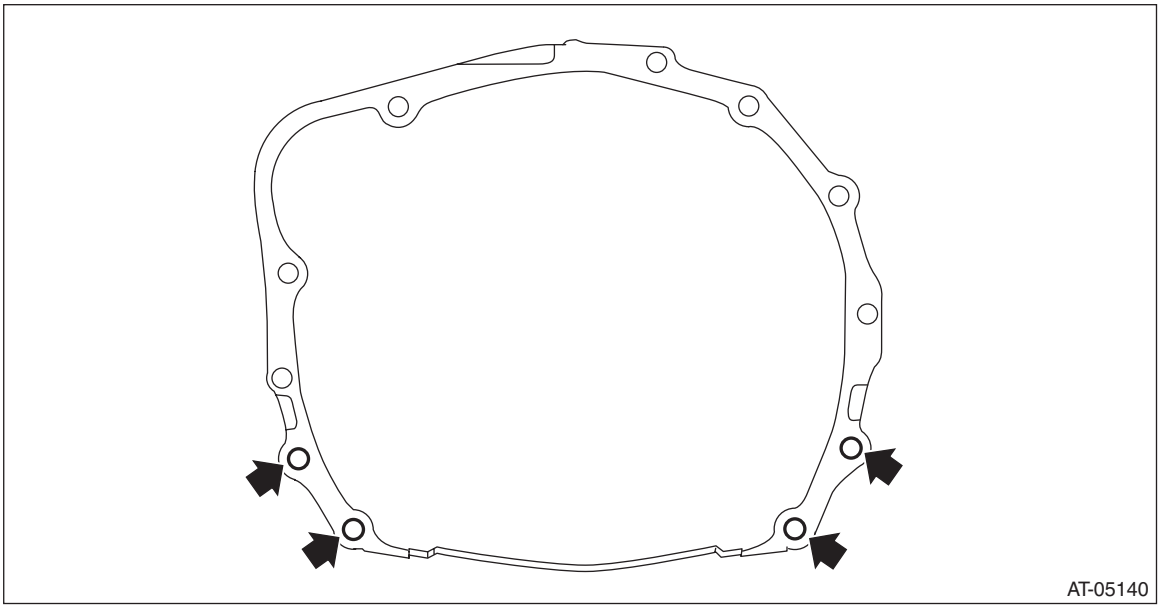

57) Remove the transmission assembly.

NOTE:
Remove it while moving the transmission jack up and down so that the engine and transmission remain directly aligned.
58) Remove the cushion rubber.

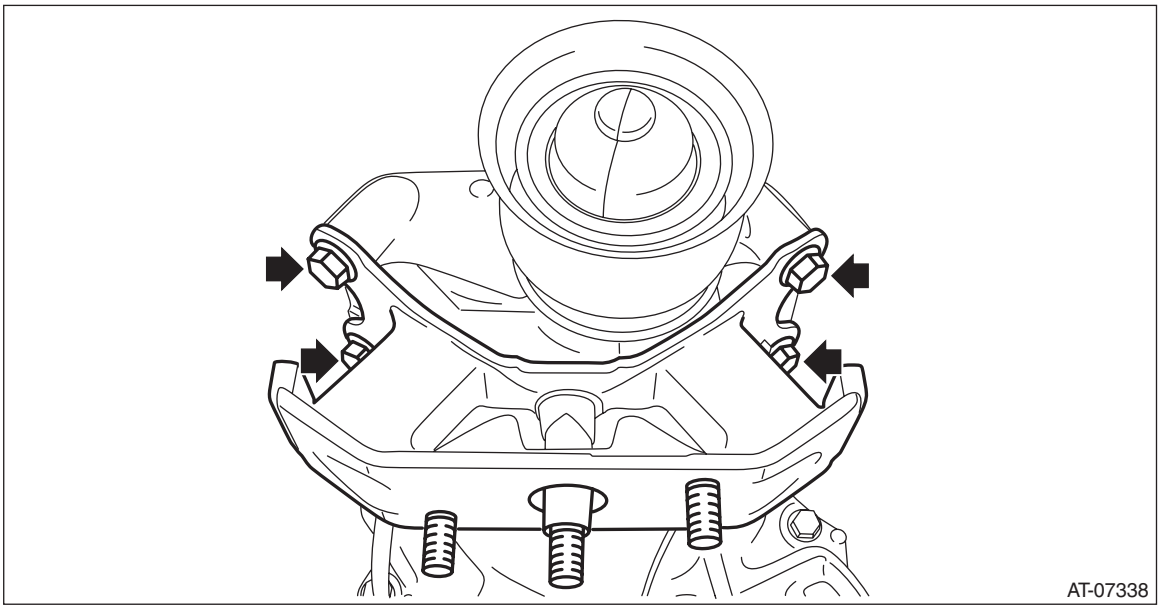

B: INSTALLATION

1) Attach the ST to converter case.
ST 498277200 STOPPER SET

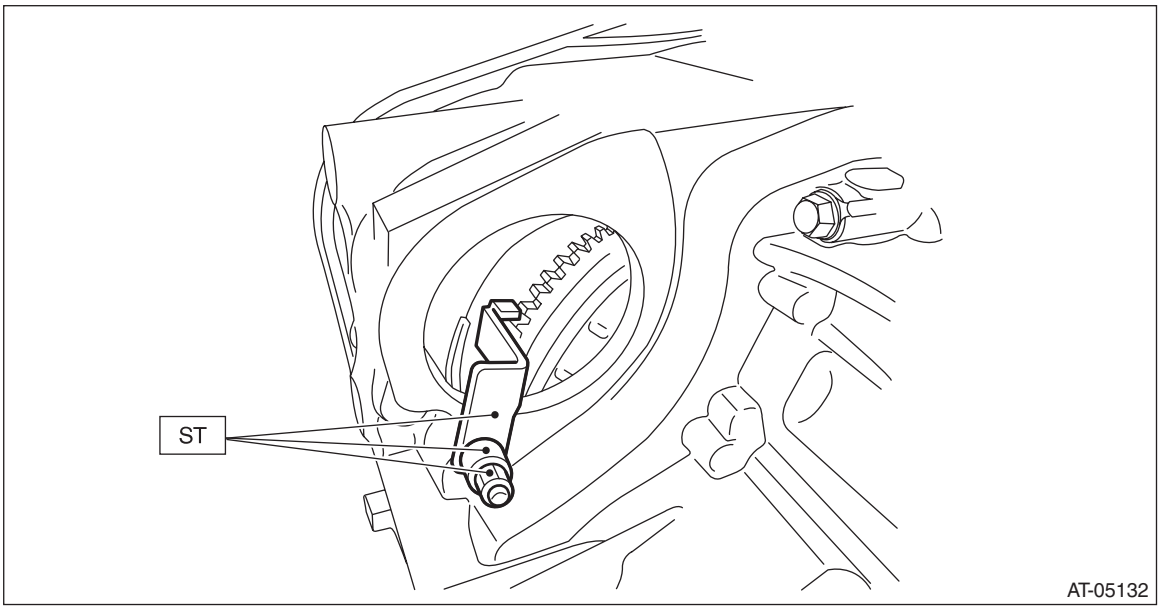

2) When completely overhauling the transmission, refill approx. 10 L (2.6 US qt, 8.8 Imp qt) of CVTF through the transmission right side plug, and install the plug.

CAUTION:
Always use specified CVTF. Using other fluid will cause malfunction. <Ref. to CVT(TR690)-4, HYDRAULIC CONTROL AND LUBRICATION, SPECIFICATION, General Description.>

NOTE:
Use a new gasket.

Tightening torque:
35 N·m (3.6 kgf-m, 25.8 ft-lb)

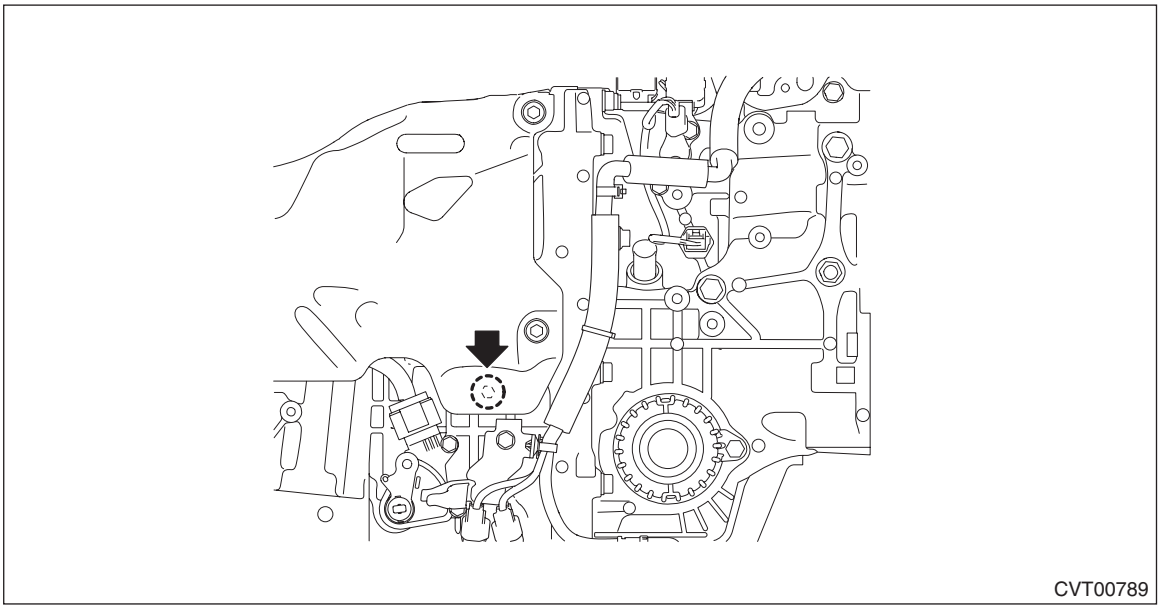

3) Replace the front differential side retainer oil seal. <Ref. to CVT(TR690)-98, REPLACEMENT, Differential Side Retainer Oil Seal.>

NOTE:
- Be sure to replace the differential side retainer oil seal with a new part whenever the front drive shaft is removed from the transmission.
- When a new differential side retainer oil seal has been installed, replacement is not required.

4) Install the cushion rubber on the transmission.

Tightening torque:
40 N·m (4.1 kgf-m, 29.5 ft-lb)

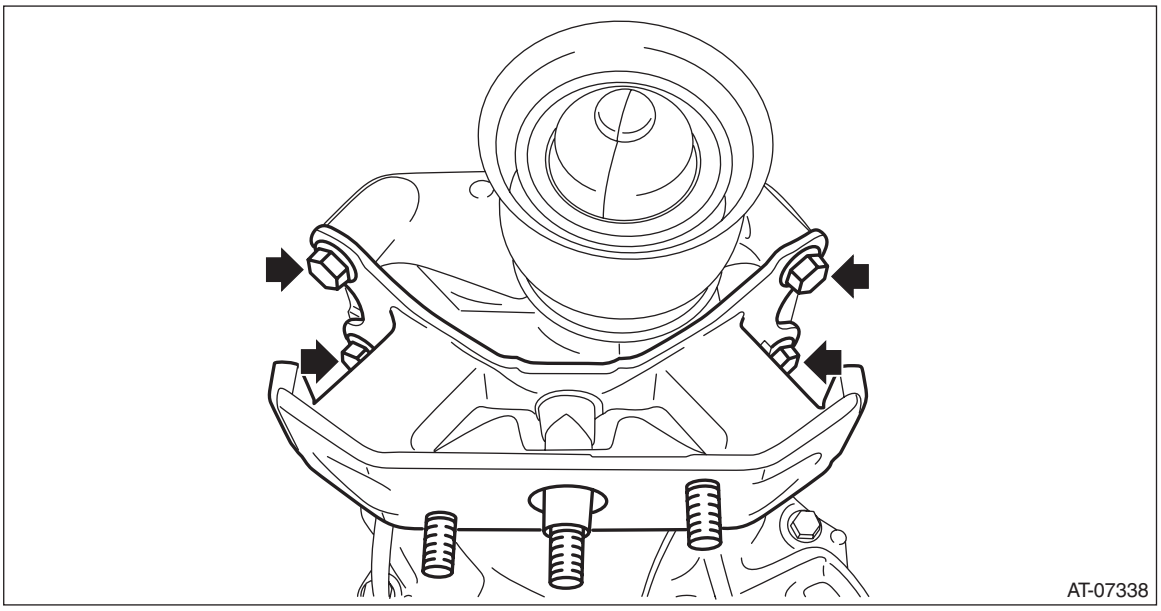

5) Mount the transmission onto the transmission jack.
6) Strike and bend the transmission hanger of transmission rear with a soft rubber hammer etc. so that it gets in contact with the transmission case.

CAUTION:
Do not apply extra overload or impact to the transmission case.

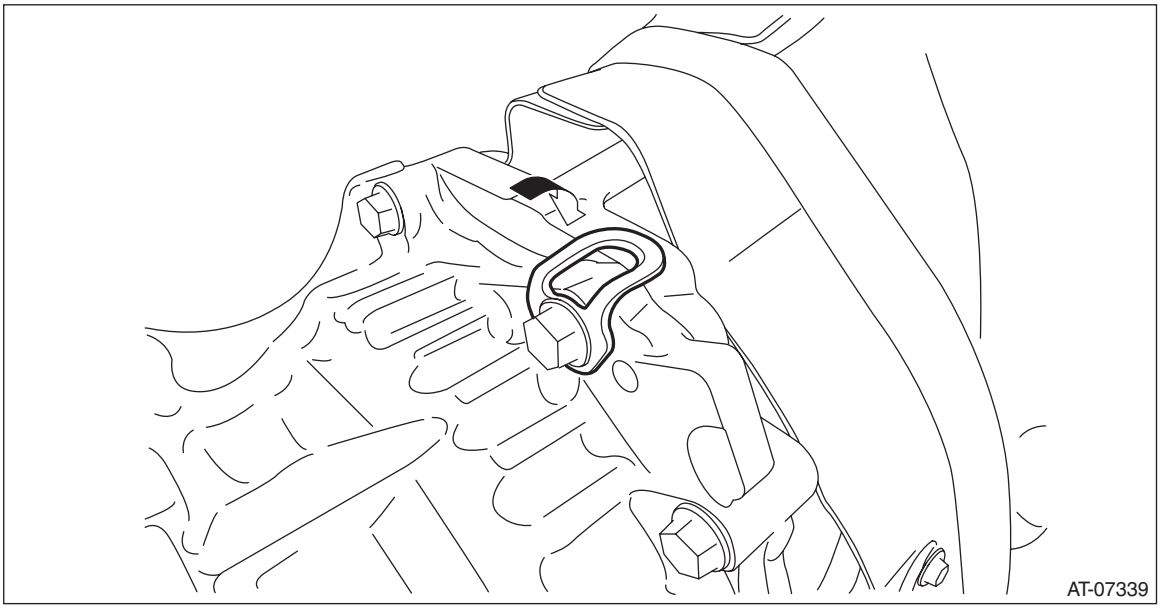

7) While lifting up the transmission gradually, install the transmission to the engine.

CAUTION:
This operation requires at least two persons.

NOTE:
Keep the engine level.
8) Install the two engine connecting bolts and two nuts (lower side).

Tightening torque:
50 N·m (5.1 kgf-m, 36.9 ft-lb)

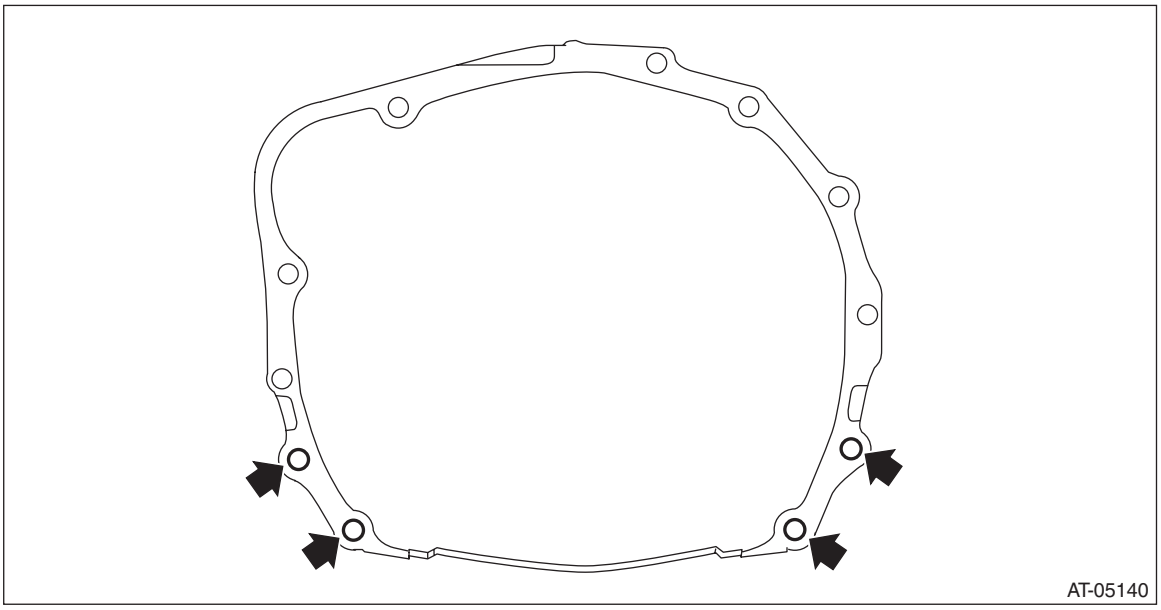

9) Secure the transmission rear crossmember to the vehicle body.

Tightening torque:
T1: 35 N·m (3.6 kgf-m, 25.8 ft-lb)
T2: 75 N·m (7.6 kgf-m, 55.3 ft-lb)

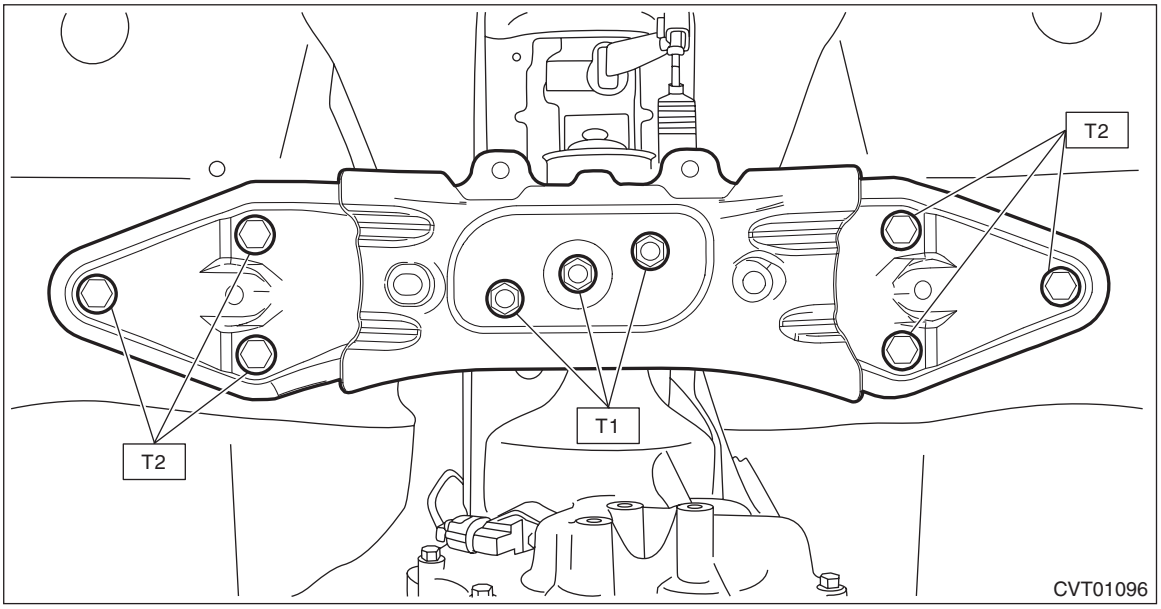

10) Remove the transmission jack.
11) Lower the vehicle.
12) Remove the ST (ENGINE HANGER).
13) Install the three engine mounting bolts (upper side).

Tightening torque:
50 N·m (5.1 kgf-m, 36.9 ft-lb)

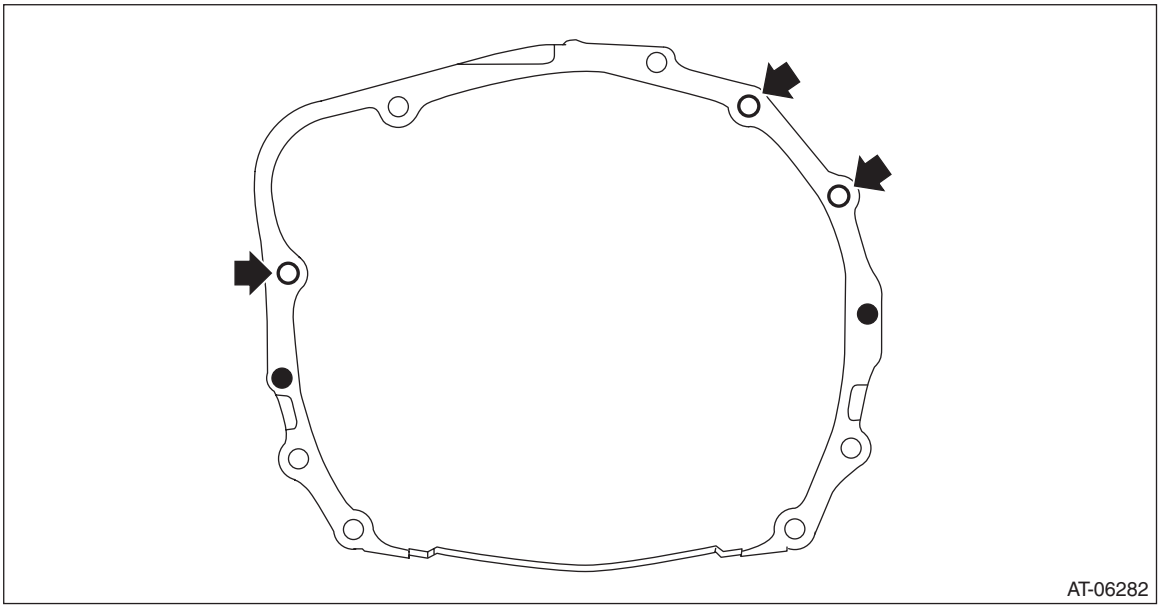

14) Install the left and right transmission mounting brackets.

NOTE:
- Install to the left side of vehicle first because the engine inclines to the left.
- Temporarily tighten the bolt arrowed in the figure.

Tightening torque:
75 N·m (7.6 kgf-m, 55.3 ft-lb)

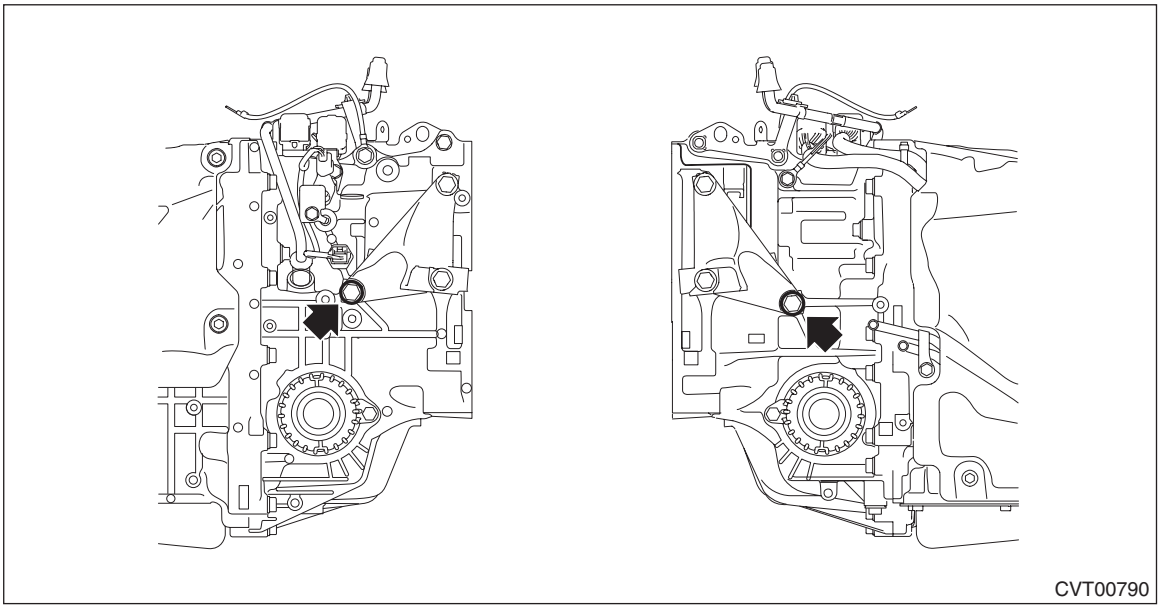

15) Set the ST1 and ST2 to the vehicle body and lift up the engine unit slightly.
ST1 99099AJ000 ENGINE HANGER
ST2 99099AJ010 CHAIN BALANCER

CAUTION:
- **Set so that the chain sling does not contact the engine parts.**
- **Install a bolt of ϕ8 mm (0.3 in) at the locations shown in the figure, and place the front side arms of ST (ENGINE HANGER).**
- **Set the rear arms of ST (ENGINE HANGER) at the locations shown in the figure.**

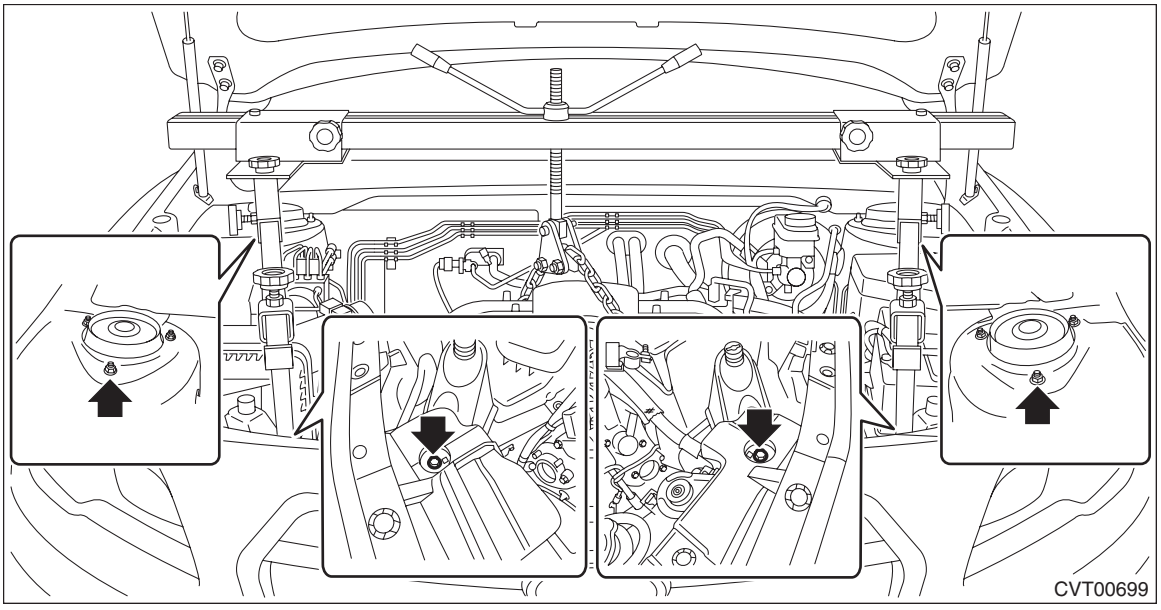

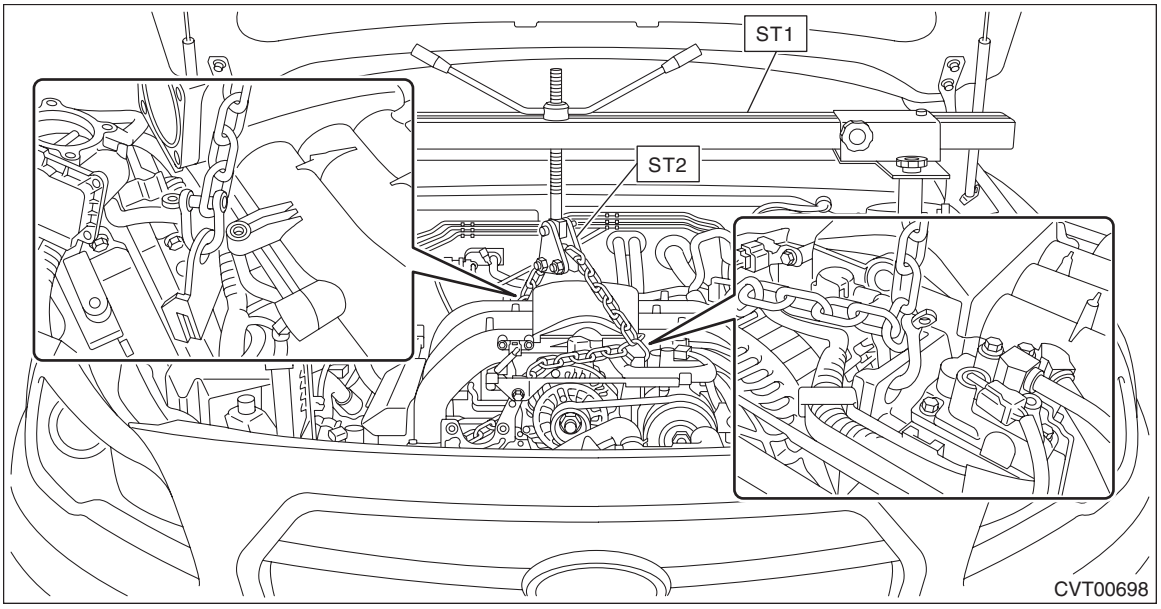

16) Remove the bolts from ST (SPECIAL TOOL H6).

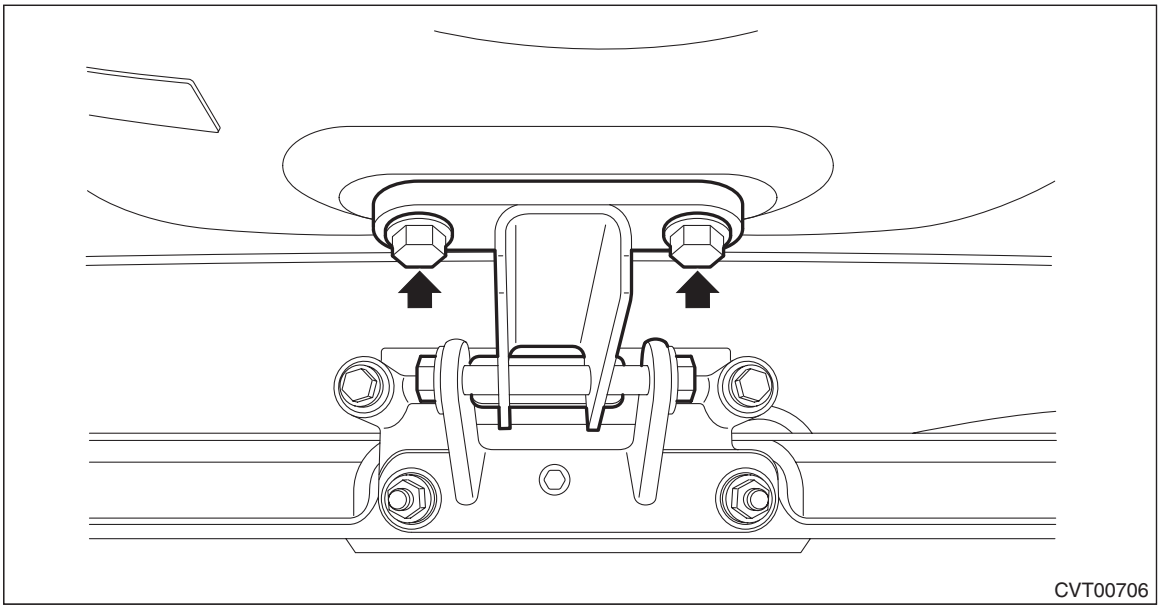

17) Remove the bolt and nut to remove ST (SPECIAL TOOL H6).

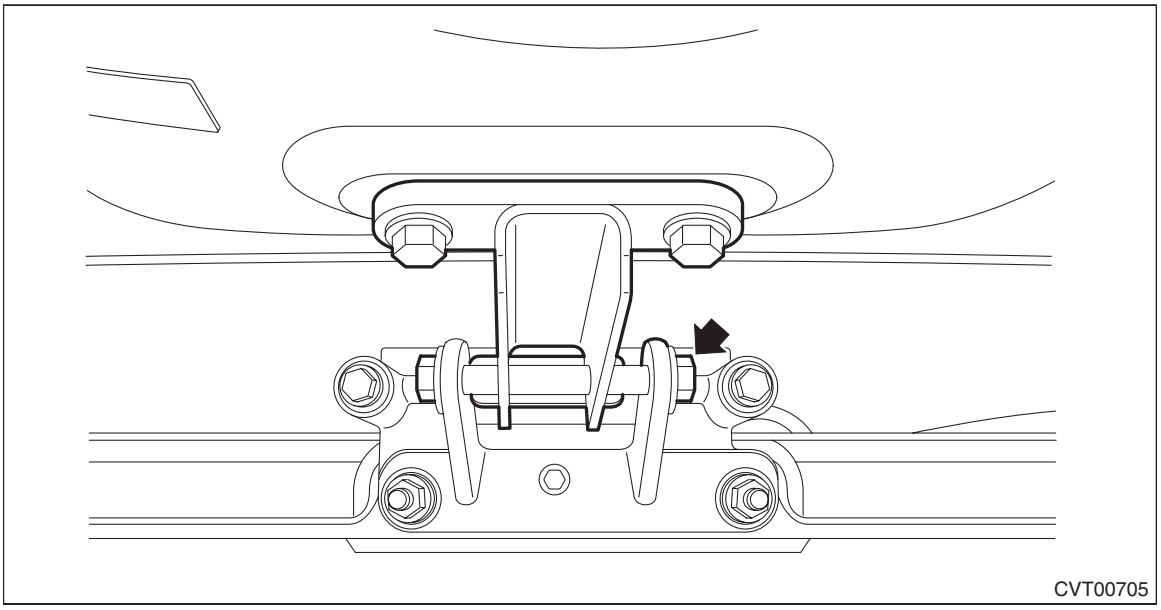

18) Temporarily attach the front cushion rubber with bolts.

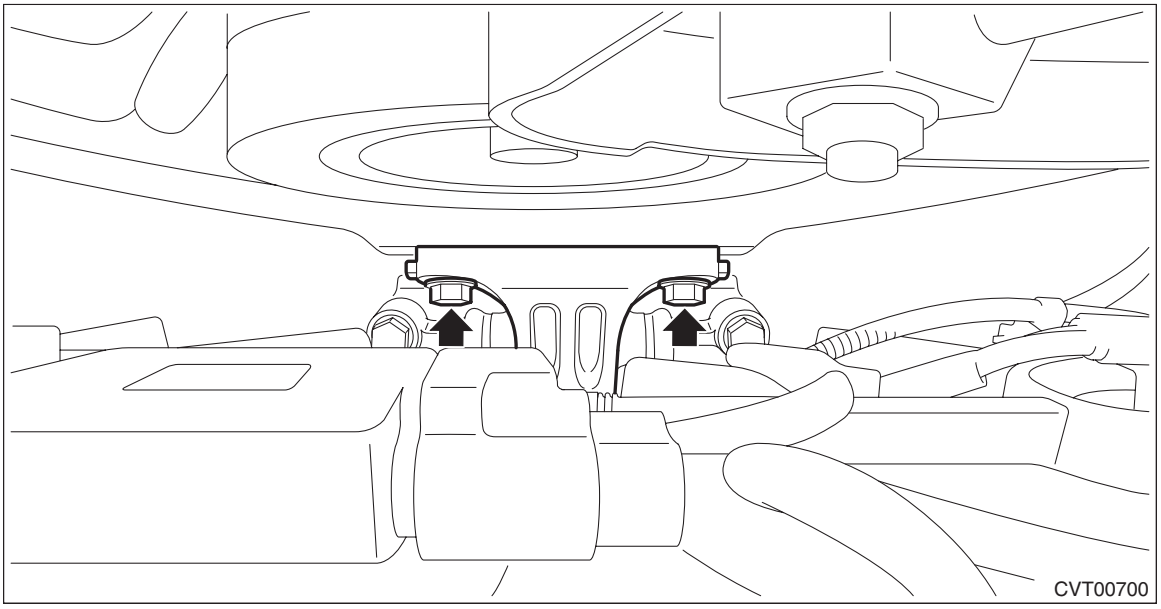

19) Lift down the engine slightly and install the bolt and nut to the front cushion rubber.

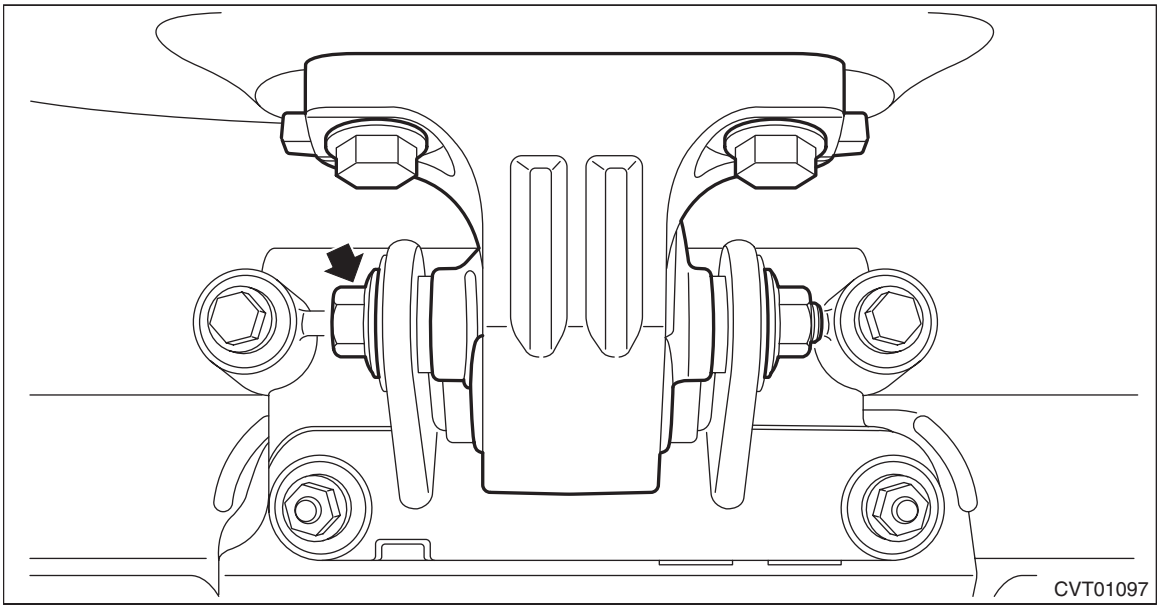

20) Tighten the bolts and nuts of front cushion rubber.

NOTE:
Always start tightening from the bolts on the engine side.

Tightening torque:
T1: 25 N·m (2.5 kgf-m, 18.4 ft-lb)
T2: 45 N·m (4.6 kgf-m, 33.2 ft-lb)

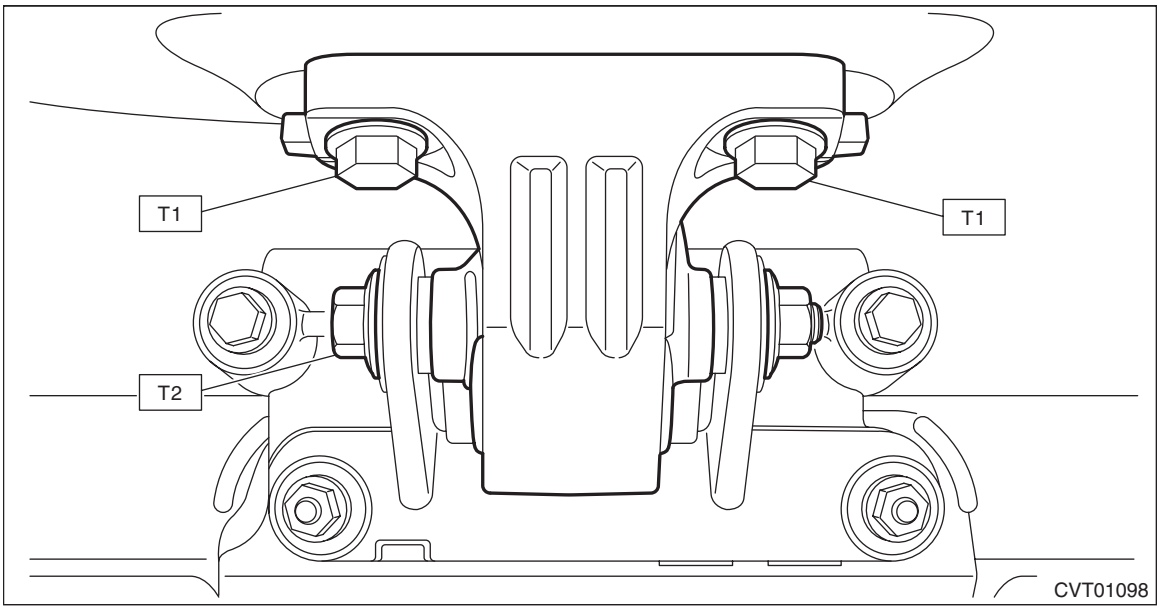

21) Remove the ST (ENGINE HANGER and CHAIN SLING).

CAUTION:
Be sure to remove the ϕ8 mm (0.3 in) bolt.
22) Install the nut to the transmission mounting bracket.

Tightening torque:
45 N·m (4.6 kgf-m, 33.2 ft-lb)

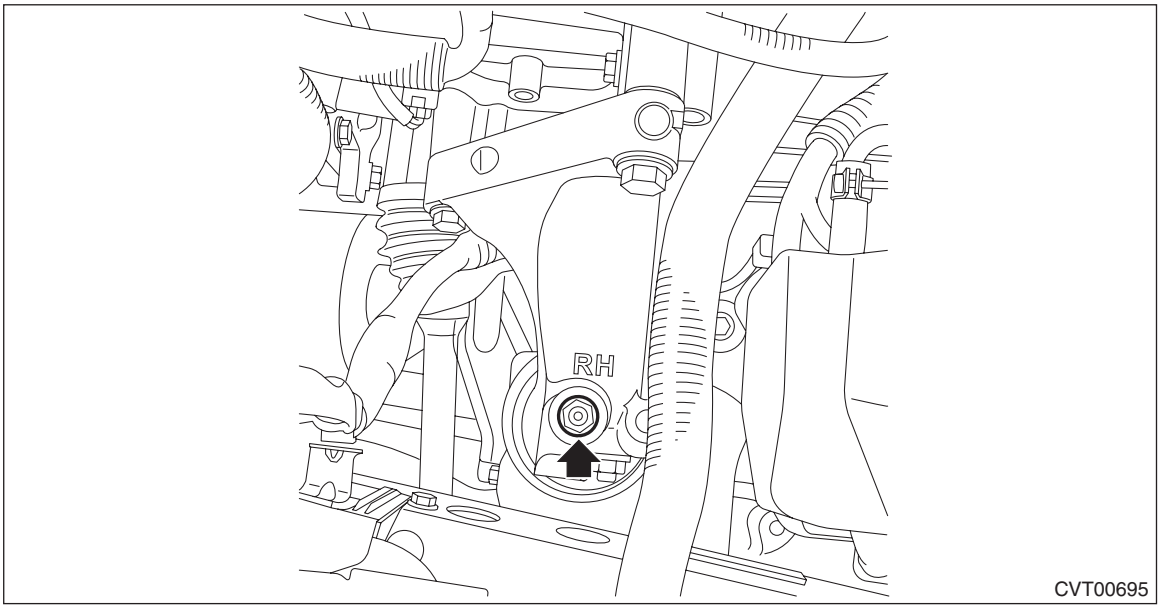

23) Remove the ST (STOPPER SET) from converter case.

24) Match the torque converter screw hole with drive plate hole to install the bolt.

CAUTION:
- **Do not drop the mounting bolt in the converter housing.**
- **Do not damage the mounting bolt.**

Tightening torque:
25 N·m (2.5 kgf-m, 18.4 ft-lb)

25) Install the remaining three bolts by rotating the crank pulley a little at a time in the same direction as engine revolution.

Tightening torque:
25 N·m (2.5 kgf-m, 18.4 ft-lb)

26) Install the service hole plug.

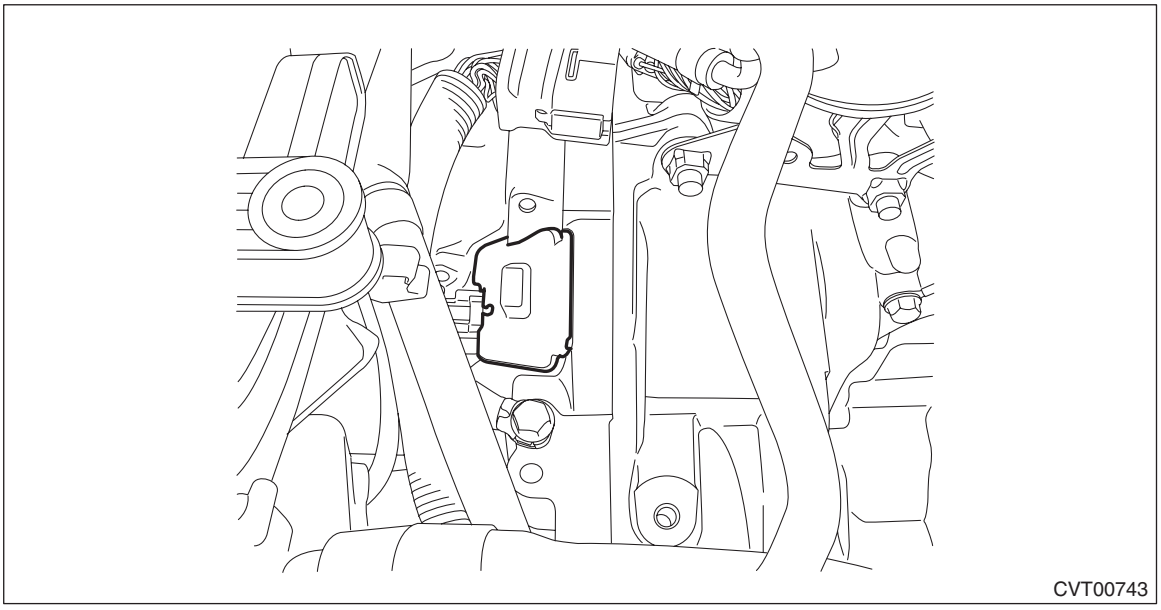
CVT00743

27) Install the starter. <Ref. to SC(H6DO)-9, INSTALLATION, Starter.>
28) Lift up the vehicle.
29) Tighten the single mounting bolt of transmission mounting bracket.

Tightening torque:
75 N·m (7.6 kgf-m, 55.3 ft-lb)

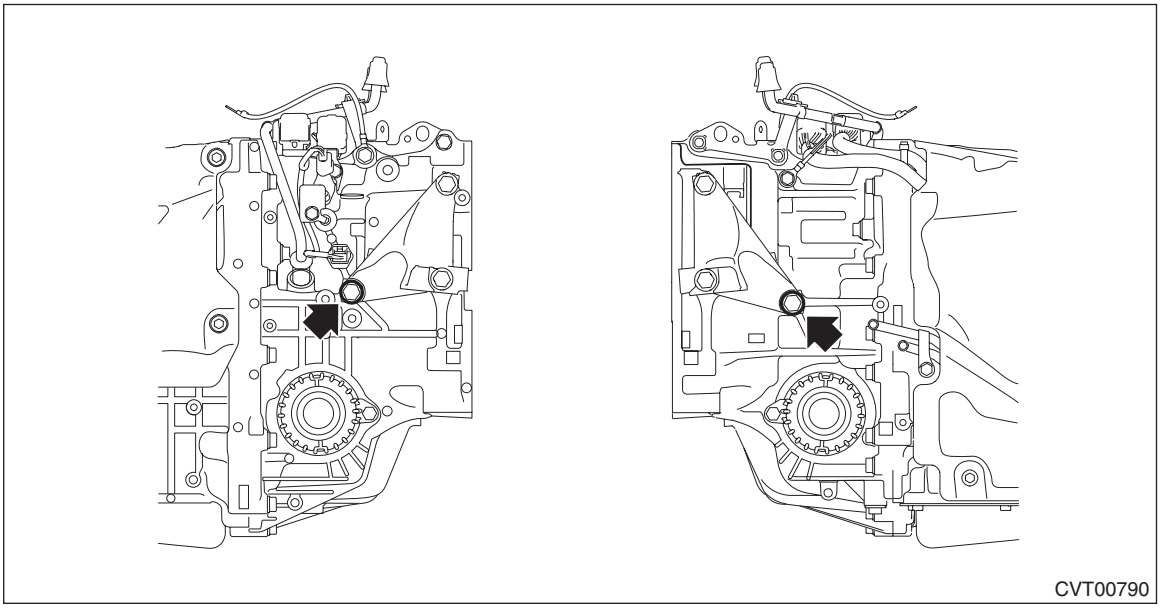
CVT00790

30) Set the ST to side retainer.
ST 28399SA010 OIL SEAL PROTECTOR

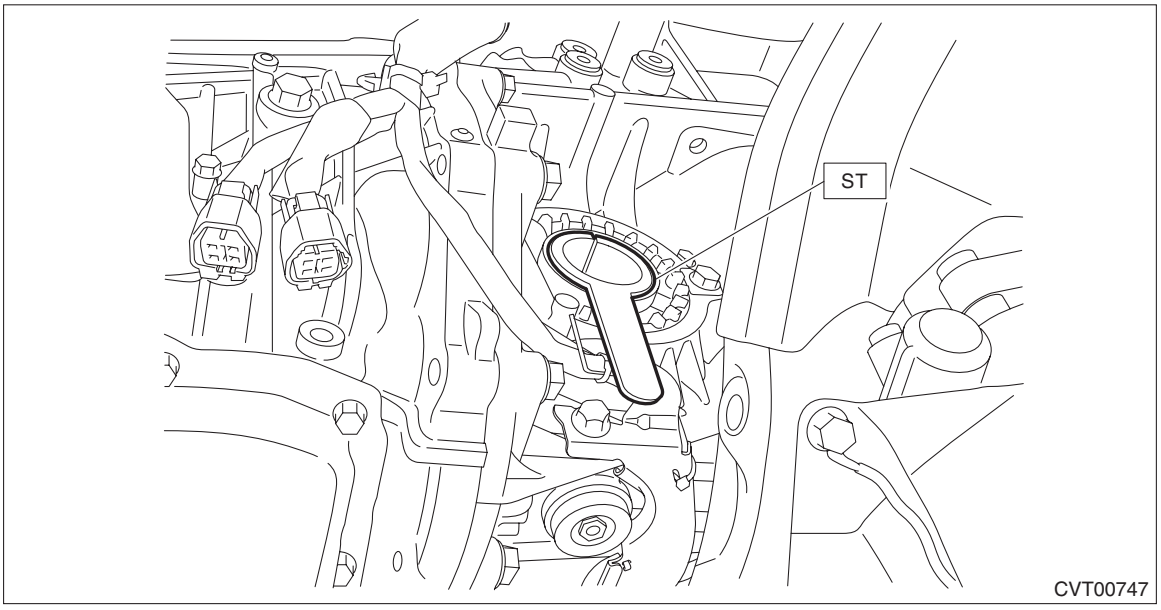

31) Replace the circlip of the drive shaft with a new part.
32) Insert the front drive shaft spline section into transmission and remove the ST (OIL SEAL PROTECTOR).
33) Insert the drive shaft into the transmission securely by pressing the housing from outside of the vehicle.
34) Install the CVTF CVT inlet hose and CVTF CVT outlet hose.

NOTE:
Use new CVTF CVT inlet hose and CVTF CVT outlet hose.

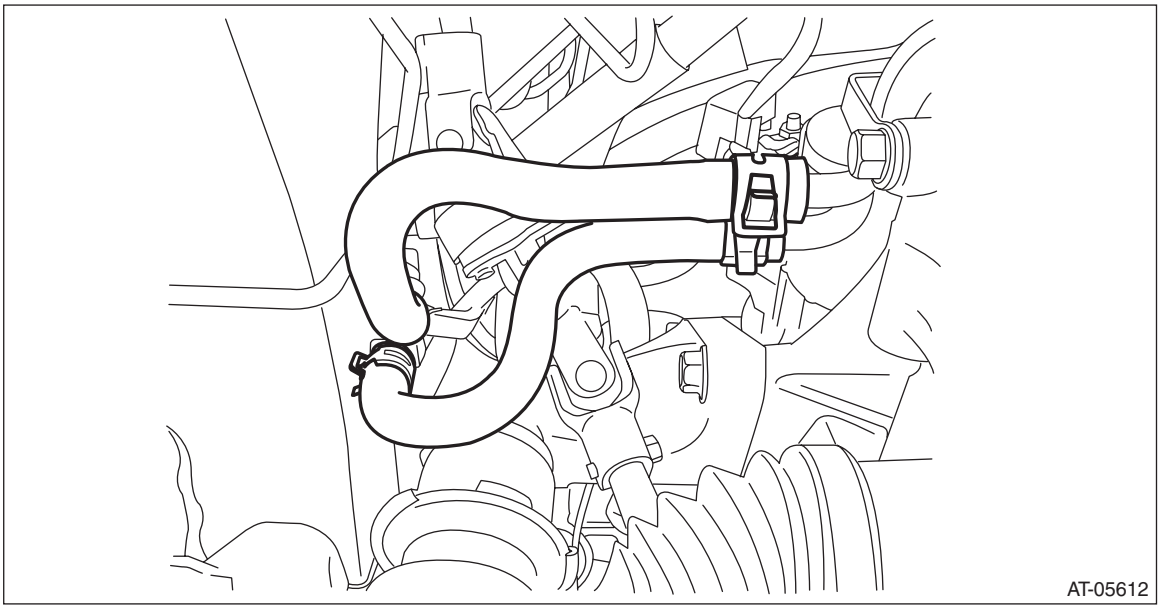

35) Insert the ball joint into housing and secure with bolt.

CAUTION:
• Before tightening, make sure the bottom surface of the housing assembly - front axle and the stepped section of ball joint are in contact.
• Be careful not to damage the boot of the joint.

Tightening torque:
50 N·m (5.1 kgf-m, 36.9 ft-lb)

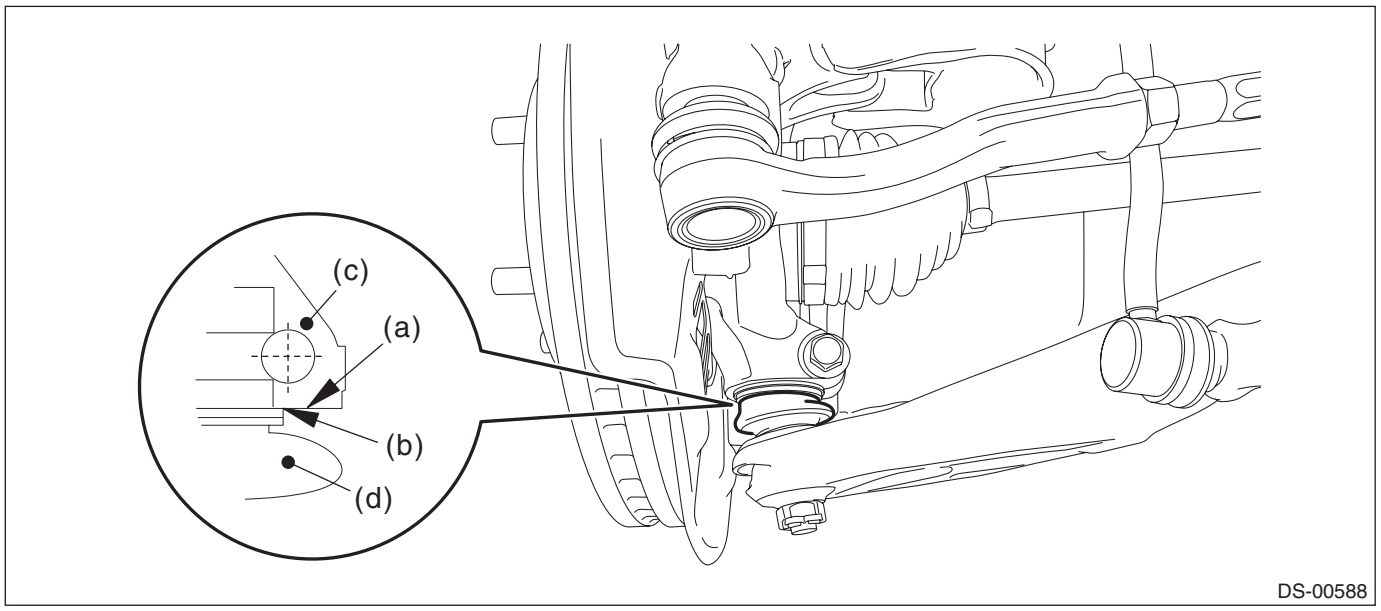

(a) Bottom surface of housing ASSY - front axle
(b) Raised section of ball joint
(c) Housing ASSY - front axle
(d) Ball joint ASSY

36) Install the stabilizer link.

Tightening torque:
60 N·m (6.1 kgf-m, 44.3 ft-lb)

37) Connect the tie-rod end and knuckle arm, and attach the castle nut.

Tightening torque:
27 N·m (2.75 kgf-m, 19.9 ft-lb)

CAUTION:
When connecting, do not hit the cap at the bottom of tie-rod end with hammer.

38) After tightening the castle nut to the specified tightening torque, tighten it further within 60° until the cotter pin hole is aligned with slot in the nut. Fit the cotter pin into the nut, and then bend the pin to lock.

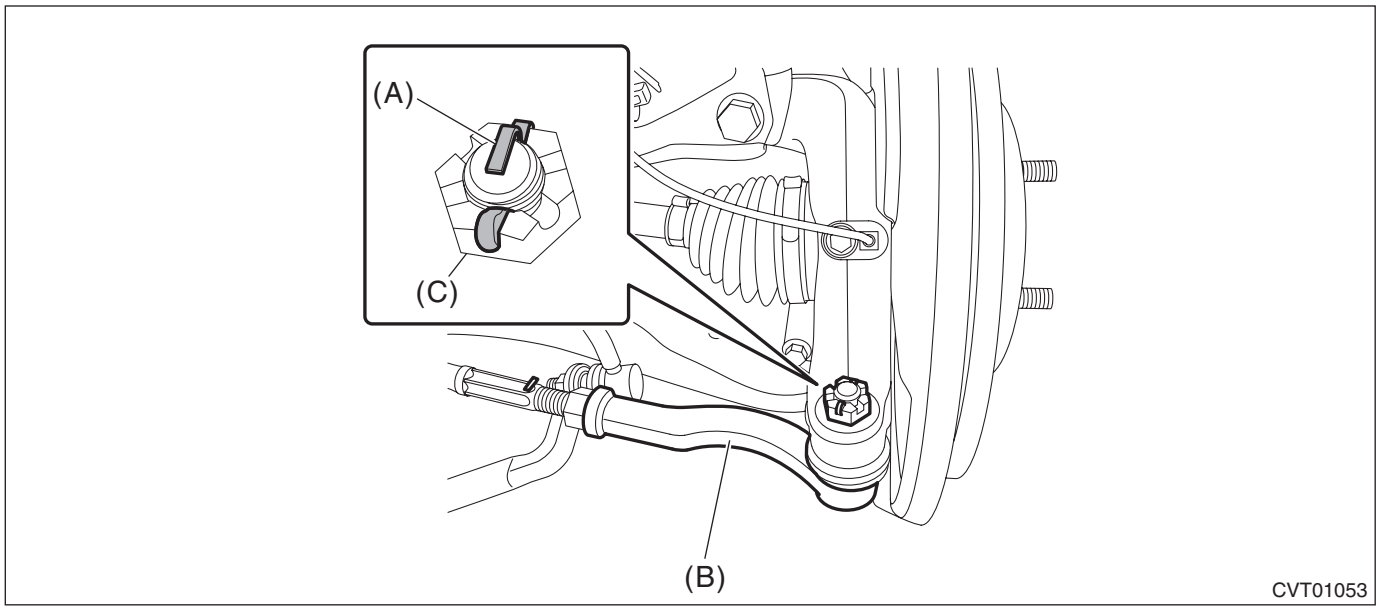

(A) Cotter pin
(B) Tie-rod end
(C) Castle nut

39) Install the propeller shaft. <Ref. to DS-12, INSTALLATION, Propeller Shaft.>
40) Install the universal joint. <Ref. to PS-15, INSTALLATION, Universal Joint.>
41) Install the plate assembly to transmission.

Tightening torque:
T: 25 N·m (2.5 kgf-m, 18.4 ft-lb)

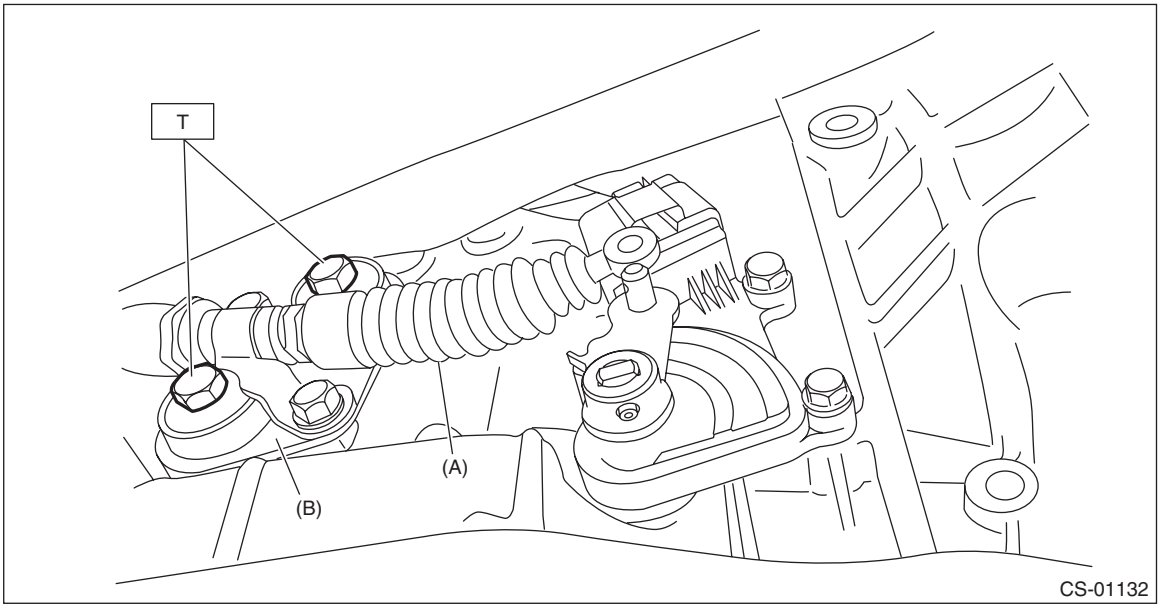

(A) Select cable
(B) Plate ASSY

42) Install the washer and snap pin to the shifter arm.

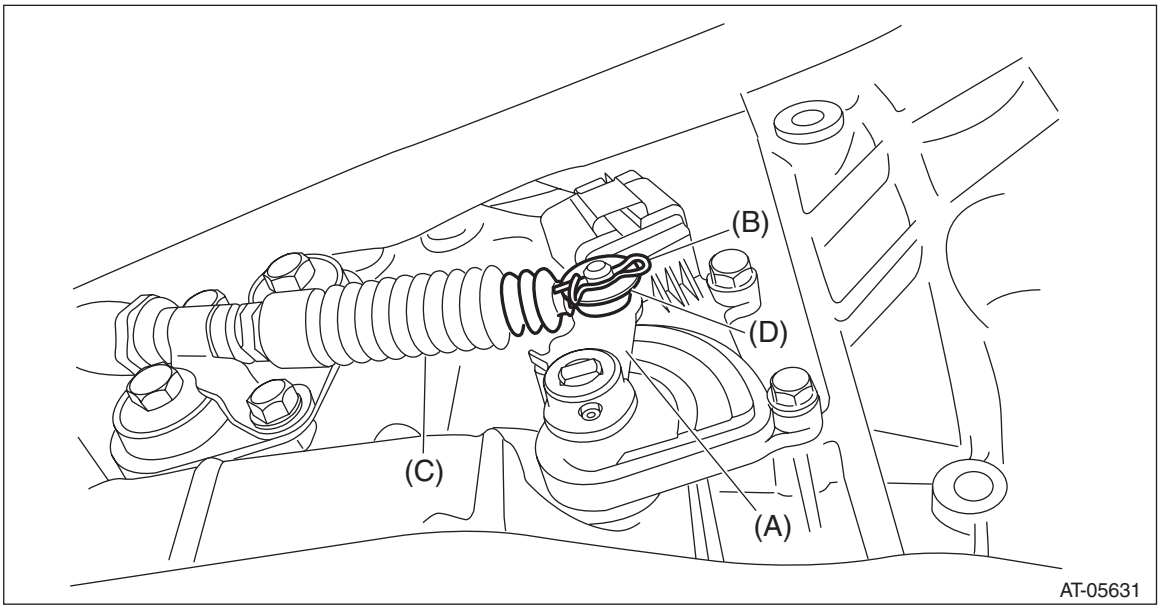

(A) Shifter arm
(B) Snap pin
(C) Select cable
(D) Washer

43) Install the exhaust hanger bracket.

Tightening torque:
30 N·m (3.1 kgf-m, 22.1 ft-lb)

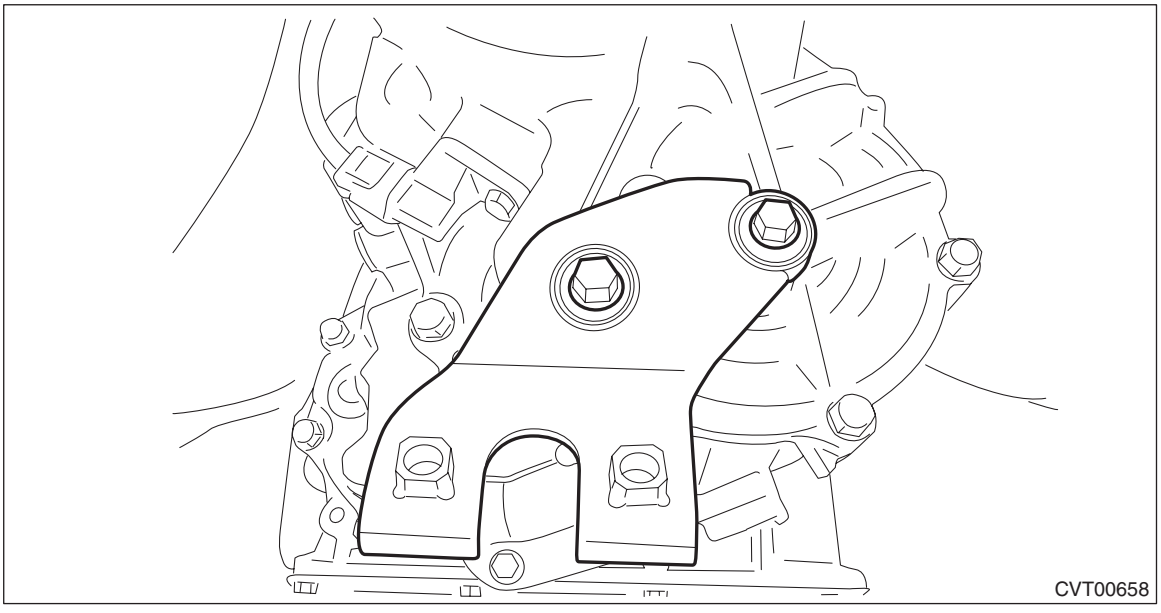

44) Install the center exhaust cover.

Tightening torque:
18 N·m (1.8 kgf-m, 13.3 ft-lb)

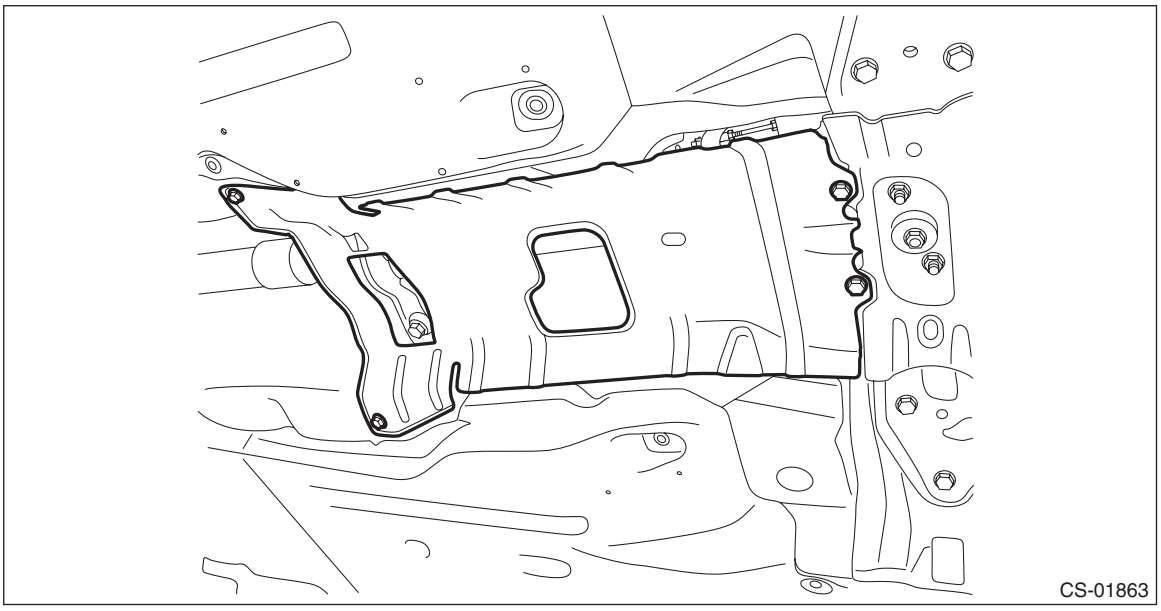

45) Install the front exhaust pipe. <Ref. to EX(H6DO)-8, INSTALLATION, Front Exhaust Pipe.>
46) Install the front under cover. <Ref. to EI-28, INSTALLATION, Front Under Cover.>
47) Lower the vehicle.
48) Remove the ST (HANGER) and install the engine rear hanger.

Tightening torque:
19 N·m (1.9 kgf-m, 14.0 ft-lb)

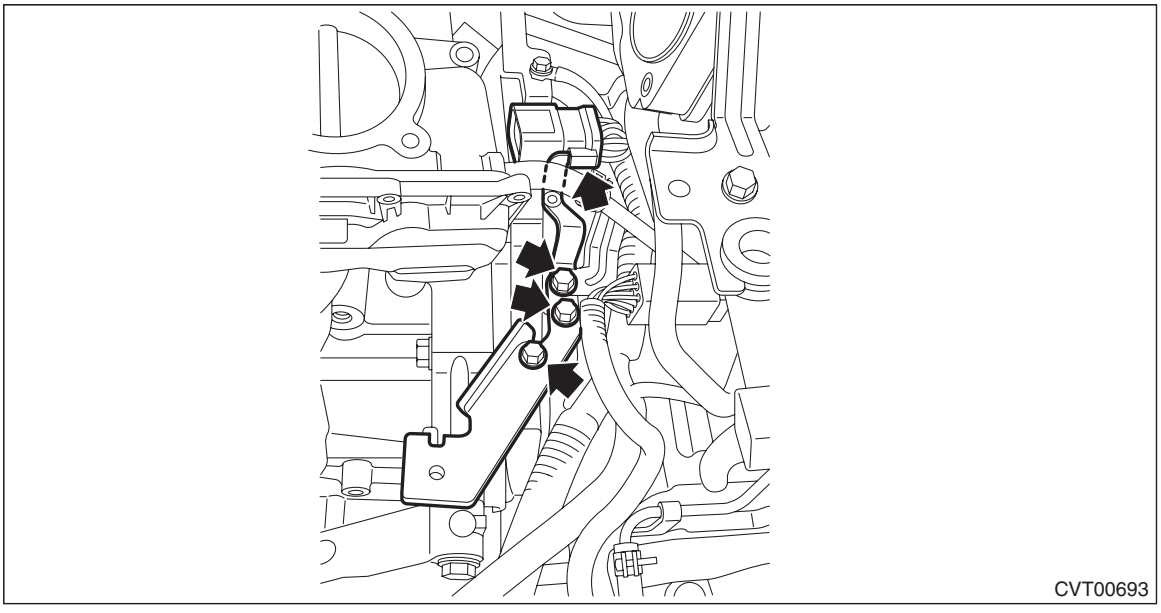

49) Install the collector cover bracket.

Tightening torque:
6.5 N·m (0.7 kgf-m, 4.8 ft-lb)

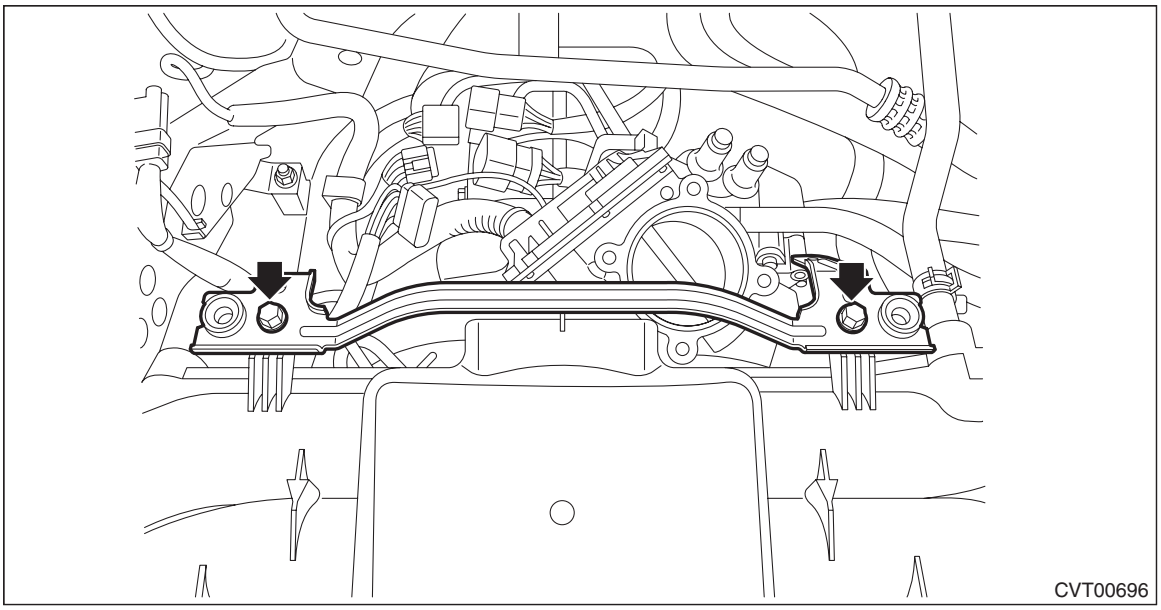

50) Connect the oxygen sensor harness connector.

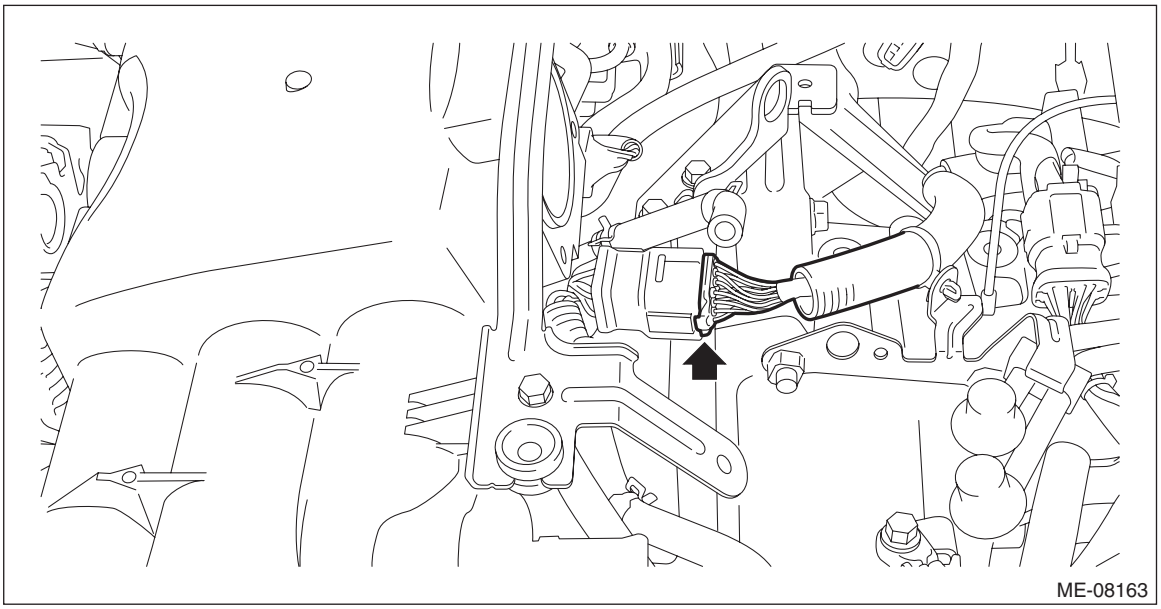

51) Install the throttle body. <Ref. to FU(H6DO)-21, INSTALLATION, Throttle Body.>

52) Connect the engine harness connector.

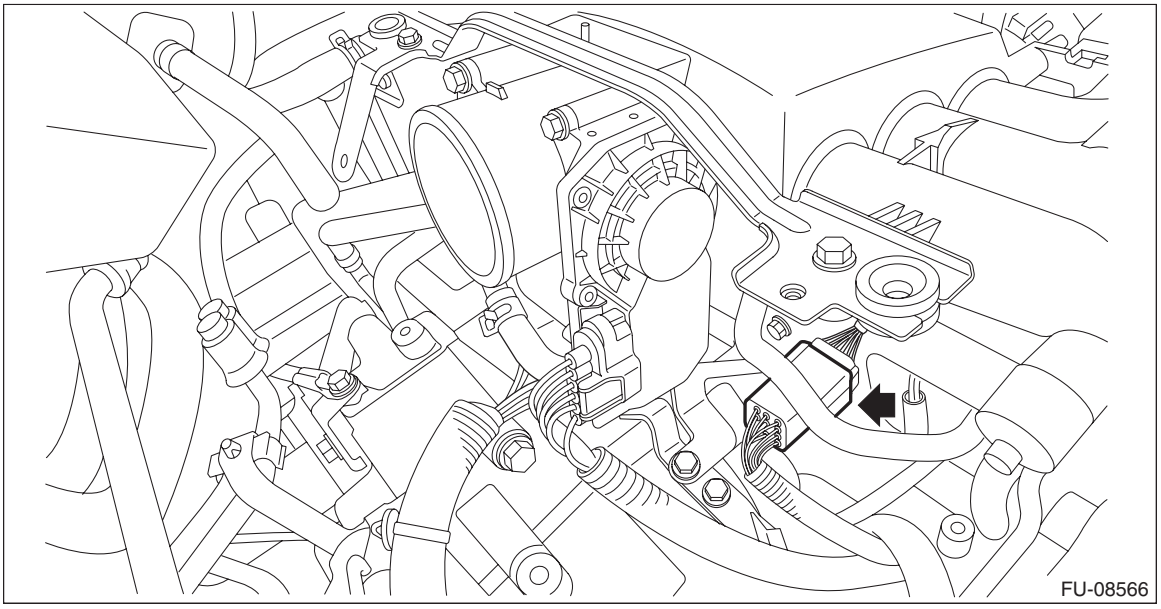

53) Install the harness stay.

Tightening torque:
16 N·m (1.6 kgf-m, 11.8 ft-lb)

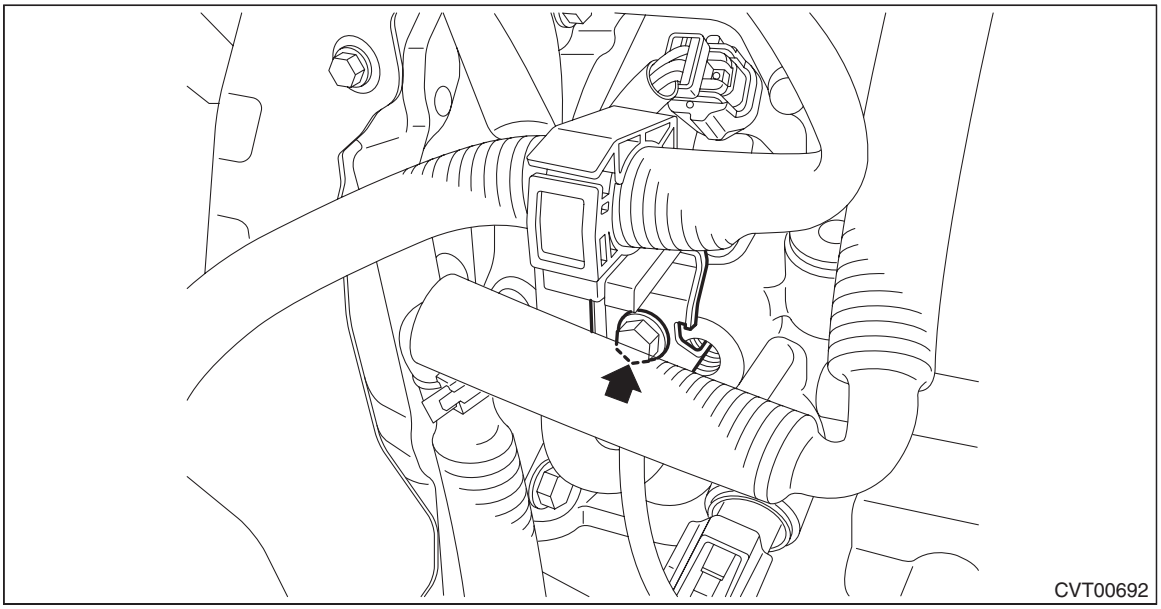

54) Connect the following harness connectors.
- Transmission harness connectors
- Transmission radio ground terminal
- Inhibitor harness connector

Tightening torque:
13 N·m (1.3 kgf-m, 9.6 ft-lb)

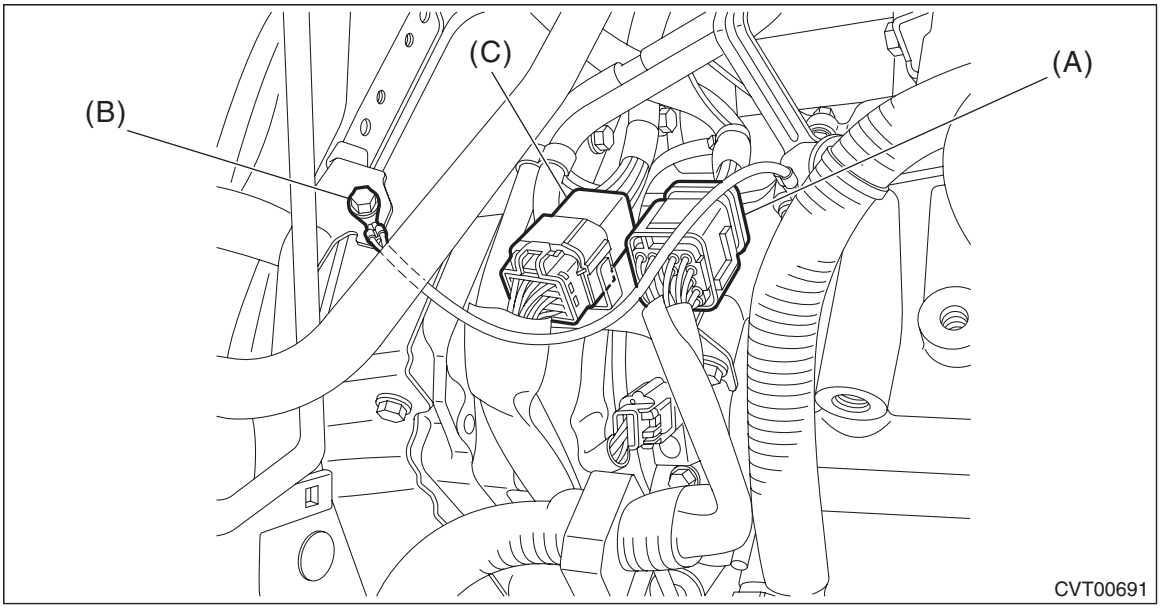

(A) Transmission harness connectors
(B) Transmission radio ground terminal
(C) Inhibitor harness connector

55) Install the battery cable bracket, and install the battery cable clip to the bracket.

Tightening torque:
7.5 N·m (0.8 kgf-m, 5.5 ft-lb)

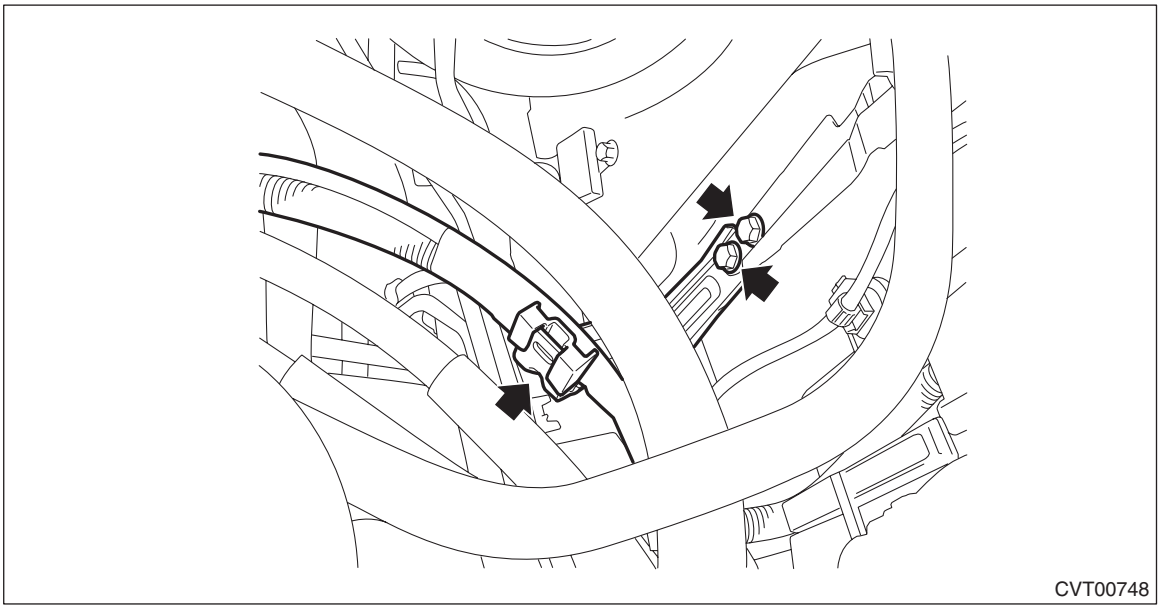

56) Install the air intake boot. <Ref. to IN(H6DO)-11, INSTALLATION, Air Intake Boot.>
57) Install the air intake duct. <Ref. to IN(H6DO)-12, INSTALLATION, Air Intake Duct.>
58) Install the front tires.
59) Connect the ground terminal to battery sensor. <Ref. to RC-4, BATTERY, NOTE, Repair Contents.>

60) Refill differential gear oil to adjust the differential gear oil amount. <Ref. to CVT(TR690)-43, Differential Gear Oil.>
61) Refill CVTF to adjust the CVTF amount. <Ref. to CVT(TR690)-38, CVTF.>
62) Perform the variator chain break-in. <Ref. to CVT(TR690)-46, Variator Chain Break-in.>

CAUTION:
Always execute the variator chain break-in after the replacement of the following.
- **Variator chain replacement**
- **Primary pulley and secondary pulley replacement**

63) Perform the clear operation for AT learning. <Ref. to CVT(diag)-26, Clear Memory Mode.>
64) Perform AT learning mode. <Ref. to CVT(diag)-33, Learning Control.>
65) Execute the rear differential inspection mode. <Ref. to DI-83, Rear Differential Inspection Mode.>

CAUTION:
Always execute the rear differential inspection mode after the replacement of the following.
- **Replacement of transmission assembly**
- **Replacement of front differential hypoid gear set**

66) Perform the road test to make sure there is no fault. <Ref. to CVT(TR690)-48, INSPECTION, Road Test.>

12.Transmission Mounting System

A: REMOVAL

1) Disconnect the ground terminal from battery sensor. <Ref. to RC-4, BATTERY, NOTE, Repair Contents.>
2) Lift up the vehicle.
3) Remove the front exhaust pipe. <Ref. to EX(H6DO)-6, REMOVAL, Front Exhaust Pipe.>
4) Remove the center exhaust cover.

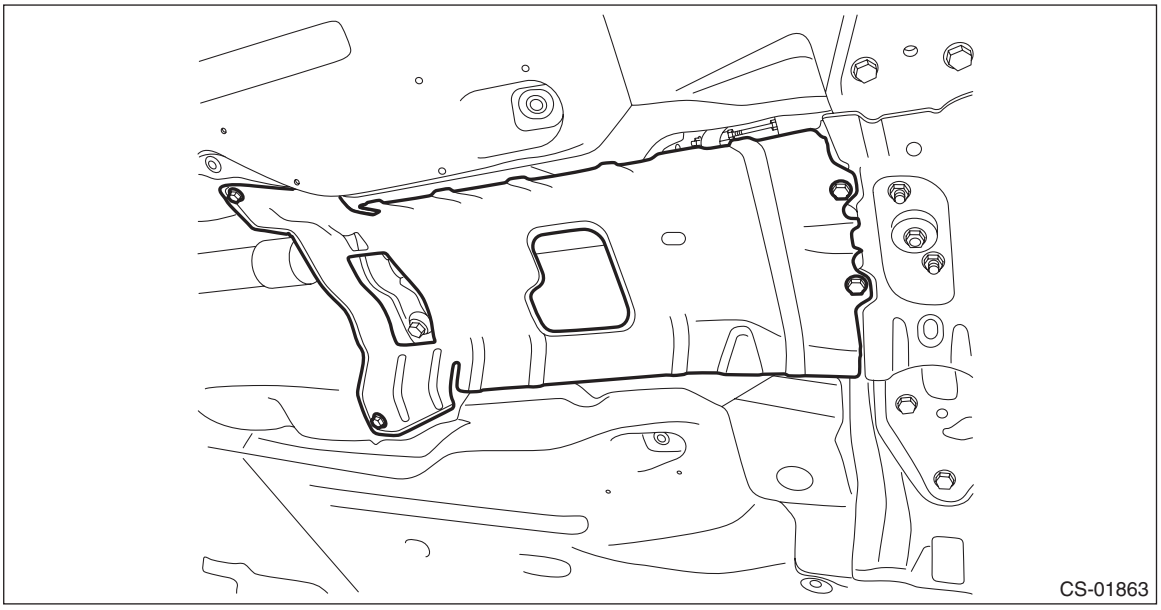

5) Set the transmission jack under the transmission. Make sure that the support plate of transmission jack does not touch the oil pan.
6) Remove the transmission rear crossmember.

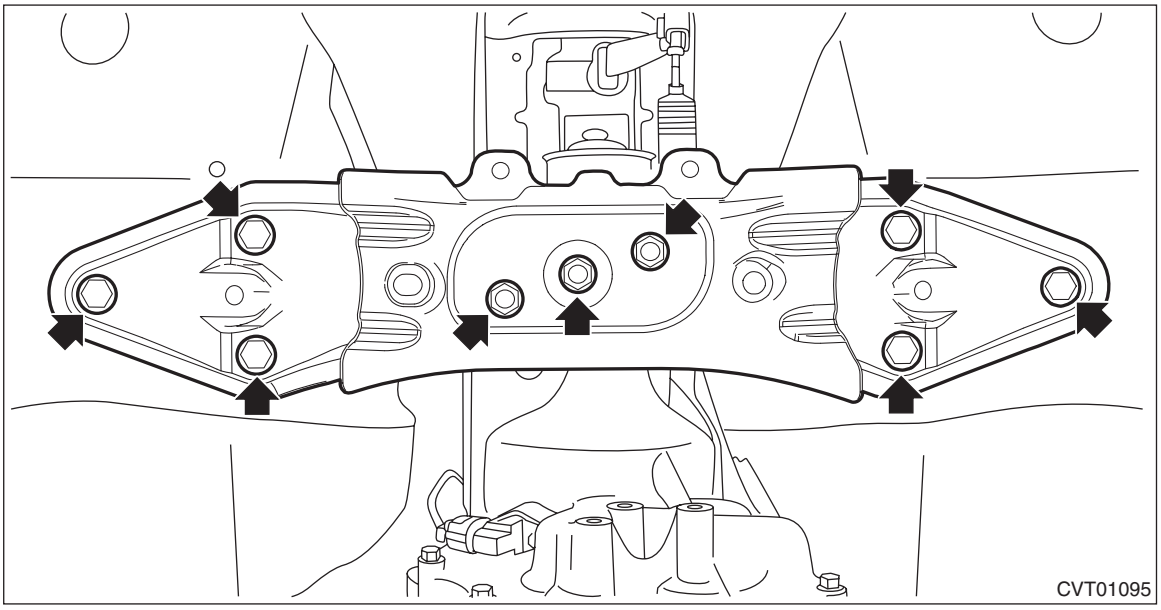

7) Remove the rear cushion rubber.

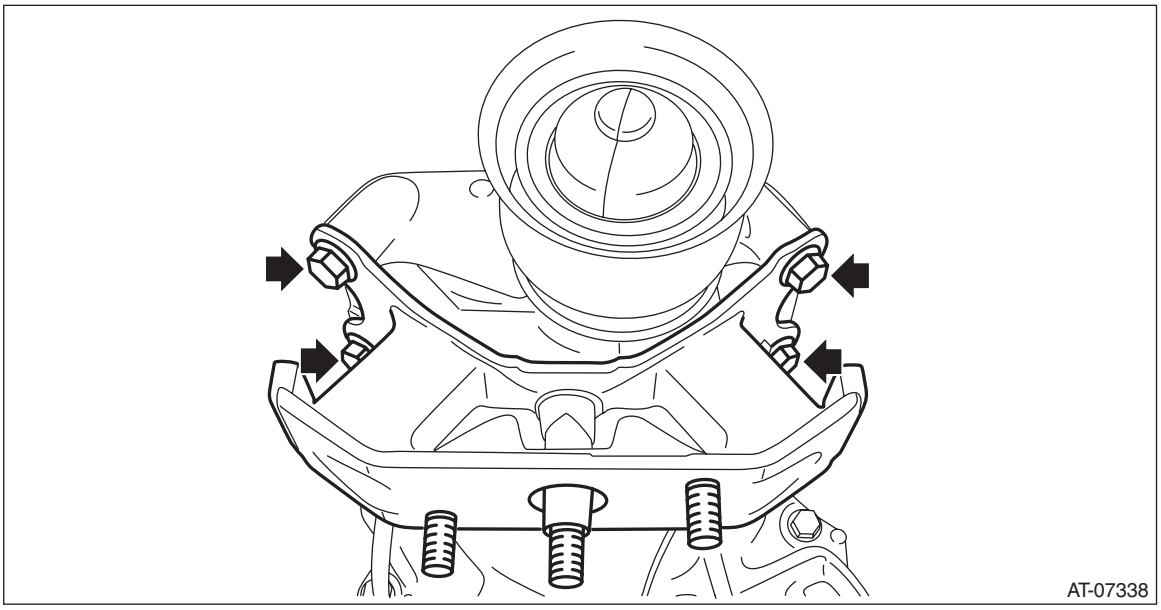

B: INSTALLATION

1) Install the rear cushion rubber on the transmission.

Tightening torque:
40 N·m (4.1 kgf-m, 29.5 ft-lb)

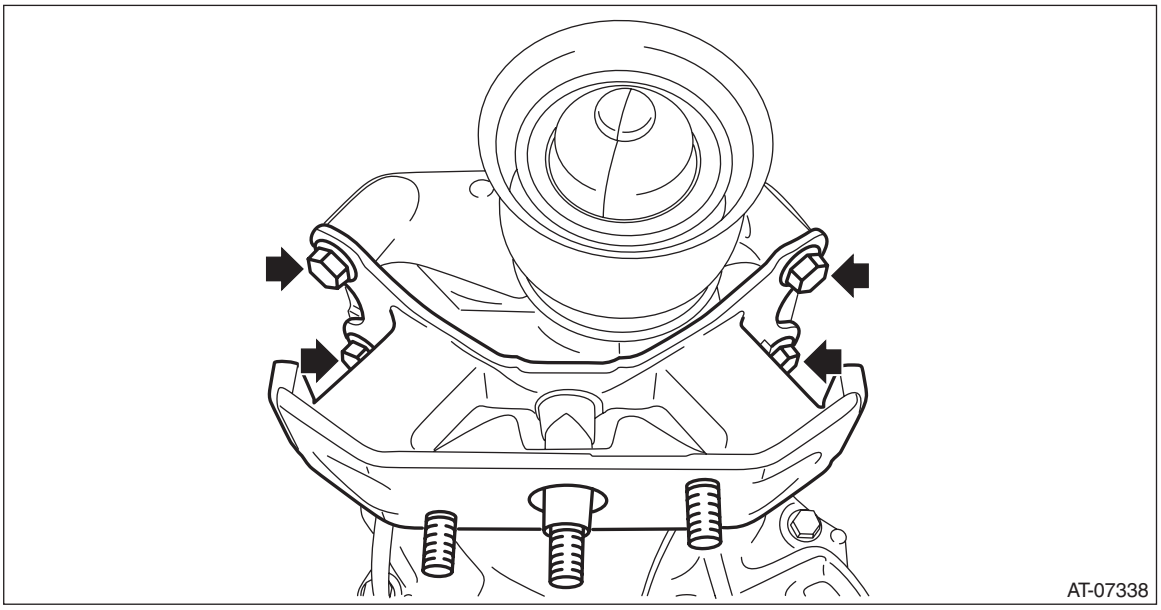

2) Install the transmission rear crossmember.

Tightening torque:
T1: 35 N·m (3.6 kgf-m, 25.8 ft-lb)
T2: 75 N·m (7.6 kgf-m, 55.3 ft-lb)

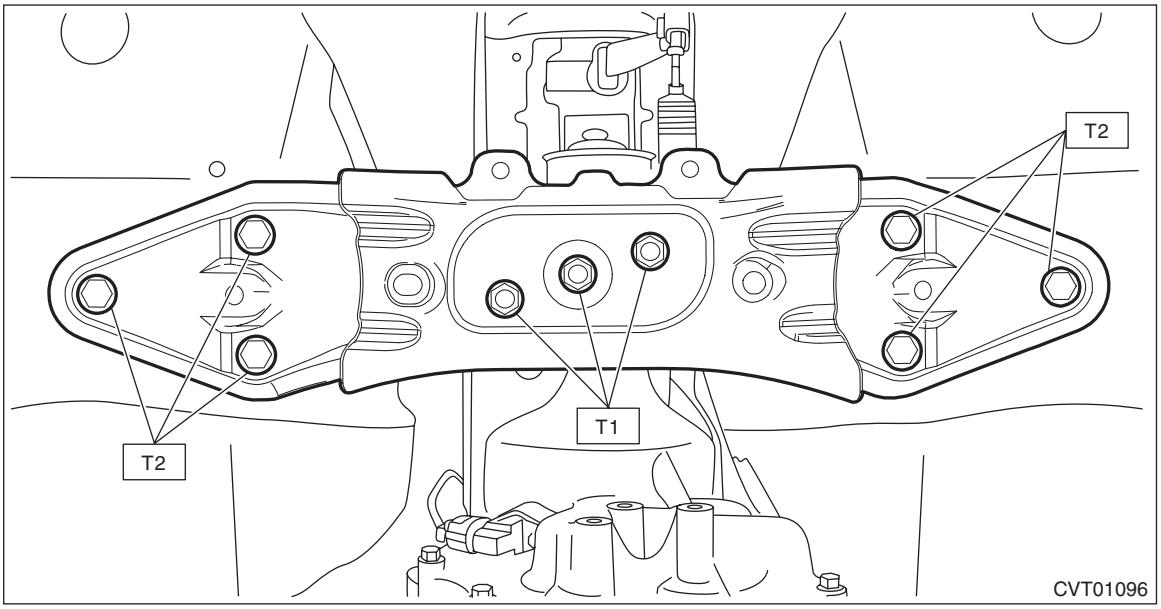

3) Remove the transmission jack.
4) Install the center exhaust cover.

Tightening torque:
18 N·m (1.8 kgf-m, 13.3 ft-lb)

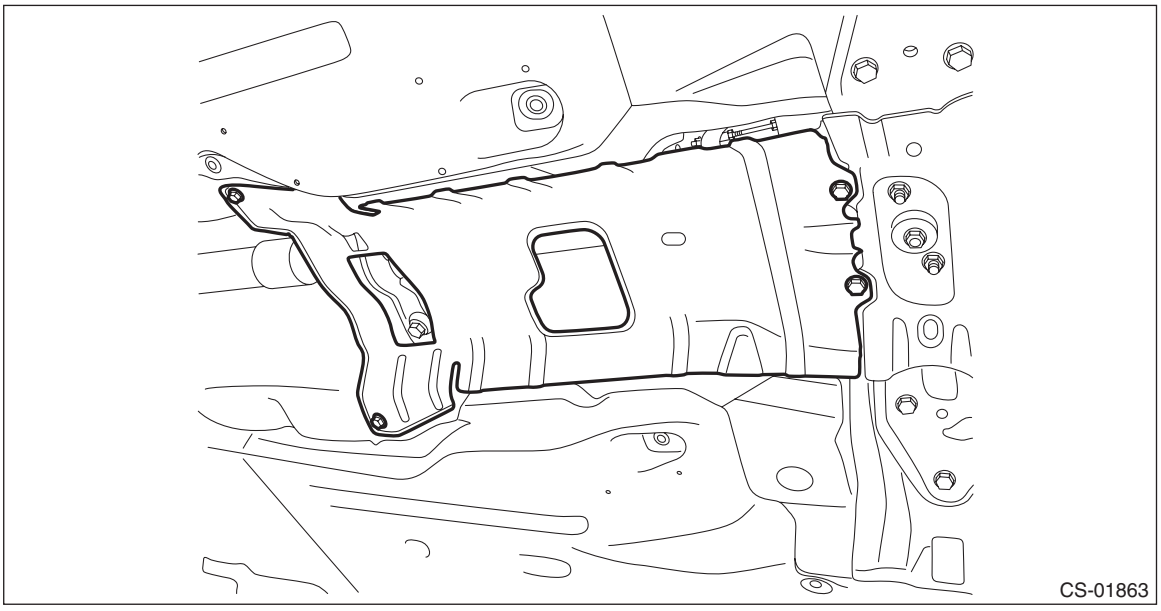

5) Install the front exhaust pipe. <Ref. to EX(H6DO)-8, INSTALLATION, Front Exhaust Pipe.>
6) Connect the ground terminal to battery sensor. <Ref. to RC-4, BATTERY, NOTE, Repair Contents.>

C: INSPECTION

- Check the crossmember for bends or damage.
- Check that the cushion rubber is not stiff, cracked or otherwise damaged.

13.Extension Case Oil Seal

A: INSPECTION

Check for leakage of CVTF from the joint section of transmission and propeller shaft. If a leak is found, inspect the propeller shaft and replace the oil seal.

B: REPLACEMENT

CAUTION:
Immediately after the vehicle has been running or after idling for a long time, the differential gear oil will be hot. Be careful not to burn yourself.

1) Lift up the vehicle.
2) Remove the front exhaust pipe. <Ref. to EX(H6DO)-6, REMOVAL, Front Exhaust Pipe.>
3) Remove the center exhaust cover.

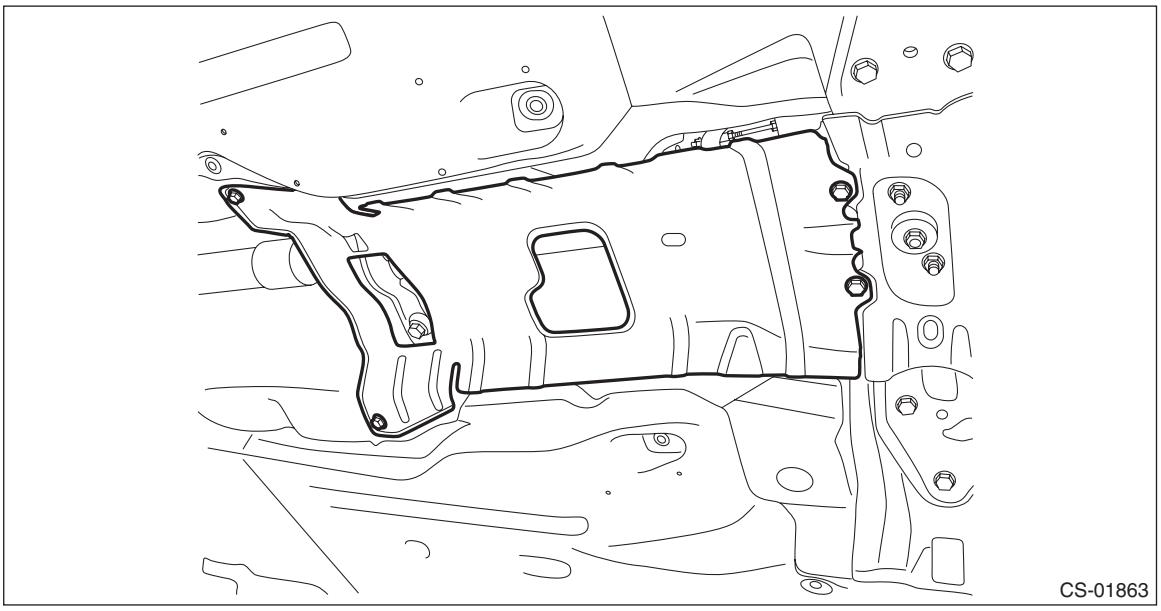

4) Clean the transmission exterior.
5) Remove the propeller shaft. <Ref. to DS-10, REMOVAL, Propeller Shaft.>
6) Using a screwdriver or ST, remove the oil seal trying not to damage the extension case.
ST 398527700 PULLER ASSY
7) Using the ST, install the oil seal.

NOTE:
- Use a new oil seal.
- Apply CVTF to the oil seal lip and press-fitting surface.

Use a new oil seal.
ST 498057300 INSTALLER
8) Install the propeller shaft. <Ref. to DS-12, INSTALLATION, Propeller Shaft.>

9) Install the center exhaust cover.

Tightening torque:
18 N·m (1.8 kgf-m, 13.3 ft-lb)

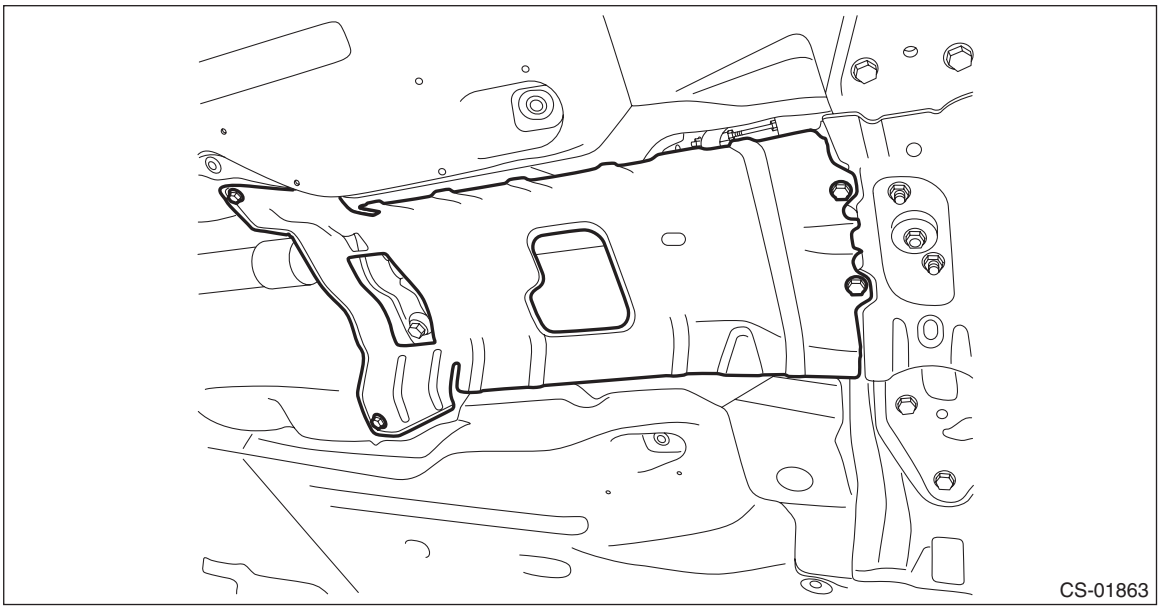

10) Install the front exhaust pipe. <Ref. to EX(H6DO)-8, INSTALLATION, Front Exhaust Pipe.>
11) Adjust the CVTF level and check there is no leakage. <Ref. to CVT(TR690)-38, ADJUSTMENT, CVTF.>

14.Differential Side Retainer Oil Seal

A: INSPECTION

Check for leakage of gear oil from differential side retainer oil seal part. If there is an oil leak, inspect the front drive shaft and replace the oil seal.

B: REPLACEMENT

CAUTION:
• Immediately after the vehicle has been running or after idling for a long time, the differential gear oil will be hot. Be careful not to burn yourself.
• Be careful not to spill the differential gear oil on exhaust pipe to prevent it from emitting smoke or fire. If differential gear oil is spilled on the exhaust pipe, wipe it off completely.
1) Lift up the vehicle, and remove the front wheels.
2) After pulling off the cotter pin and removing the castle nut, use a puller to remove the tie-rod end.

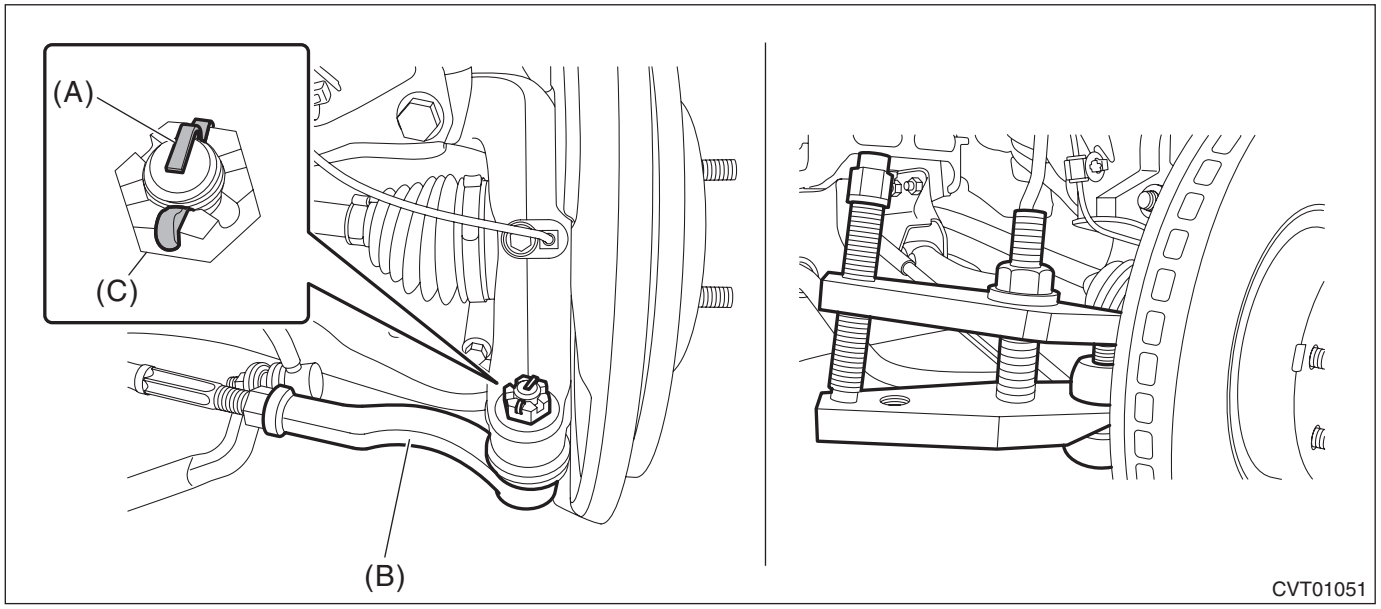

(A) Cotter pin
(B) Tie-rod end
(C) Castle nut

3) Lift up the vehicle.
4) Remove the front under cover. <Ref. to EI-28, REMOVAL, Front Under Cover.>
5) Remove the front exhaust pipe. <Ref. to EX(H6DO)-6, REMOVAL, Front Exhaust Pipe.>
6) Drain differential gear oil. <Ref. to CVT(TR690)-44, REPLACEMENT, Differential Gear Oil.>
7) Tighten the differential gear oil drain plug.

NOTE:
Use a new gasket.

Tightening torque:
70 N·m (7.1 kgf-m, 51.6 ft-lb)
8) Remove the stabilizer link. <Ref. to FS-34, REMOVAL, Front Stabilizer.>
9) Disconnect the lower arm ball joint and housing.
10) Pull out the front drive shaft from transmission using a crowbar.
11) Holding the joint of front drive shaft from transmission side, pull out the drive shaft from transmission with care not to stretch the boot.
12) Remove the differential side retainer oil seal using driver wrapped with vinyl tape etc.

13) Using the ST, install the differential side retainer oil seal by lightly tapping with a hammer.
ST 18675AA000 DIFFERENTIAL SIDE OIL SEAL INSTALLER

NOTE:
- Apply differential gear oil to the lip surface, so that the oil seal lip is not deformed.
- Apply differential gear oil to the press-fitting surface of oil seal and the differential side retainer.
- Oil seal has an identification mark (R, L). When installing oil seals, do not confuse the left and right.

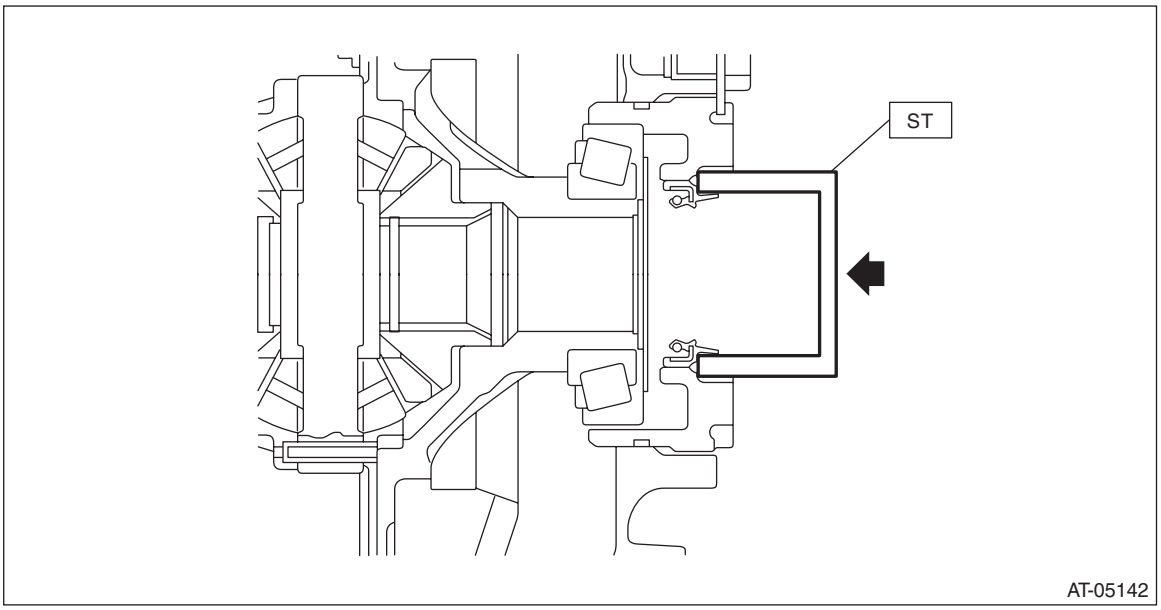

14) Apply grease to the side retainer oil seal lip.
15) Set the ST to side retainer.
ST 28399SA010 OIL SEAL PROTECTOR

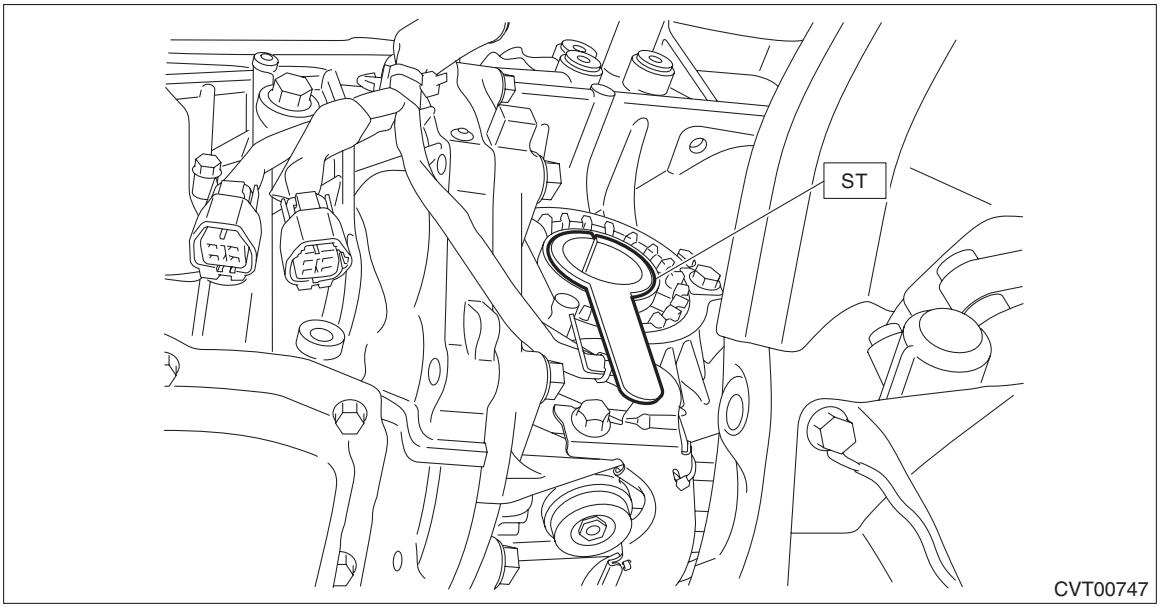

16) Replace the circlip of the drive shaft with a new part.
17) Insert the front drive shaft spline section into transmission and remove the ST (DIFFERENTIAL SIDE OIL SEAL INSTALLER).
18) Insert the drive shaft into the transmission securely by pressing the housing from outside of the vehicle.

19) Insert the ball joint into housing and secure with bolt.

CAUTION:
• Before tightening, make sure the bottom surface of the housing assembly - front axle and the stepped section of ball joint are in contact.
• Do not apply grease to the tapered portion of ball stud.

Tightening torque:
50 N·m (5.1 kgf-m, 36.9 ft-lb)

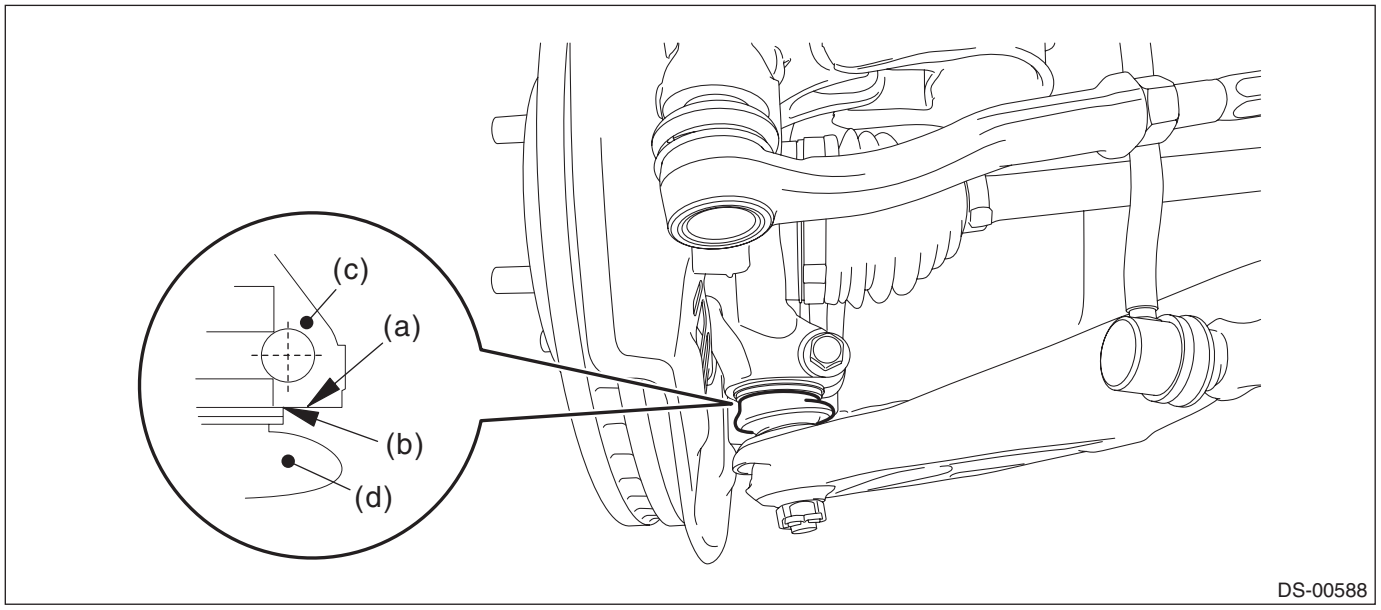

(a) Bottom surface of housing ASSY - front axle
(b) Raised section of ball joint
(c) Housing ASSY - front axle
(d) Ball joint ASSY

20) Install the stabilizer link.

Tightening torque:
60 N·m (6.1 kgf-m, 44.3 ft-lb)
21) Install the front exhaust pipe. <Ref. to EX(H6DO)-8, INSTALLATION, Front Exhaust Pipe.>
22) Install the front under cover. <Ref. to EI-28, INSTALLATION, Front Under Cover.>
23) Lower the vehicle.
24) Connect the tie-rod end and knuckle arm, and attach the castle nut.

Tightening torque:
27 N·m (2.75 kgf-m, 19.9 ft-lb)

CAUTION:
When connecting, do not hit the cap at the bottom of tie-rod end with hammer.

25) After tightening the castle nut to the specified tightening torque, tighten it further within 60° until the cotter pin hole is aligned with slot in the nut. Fit the cotter pin into the nut, and then bend the pin to lock.

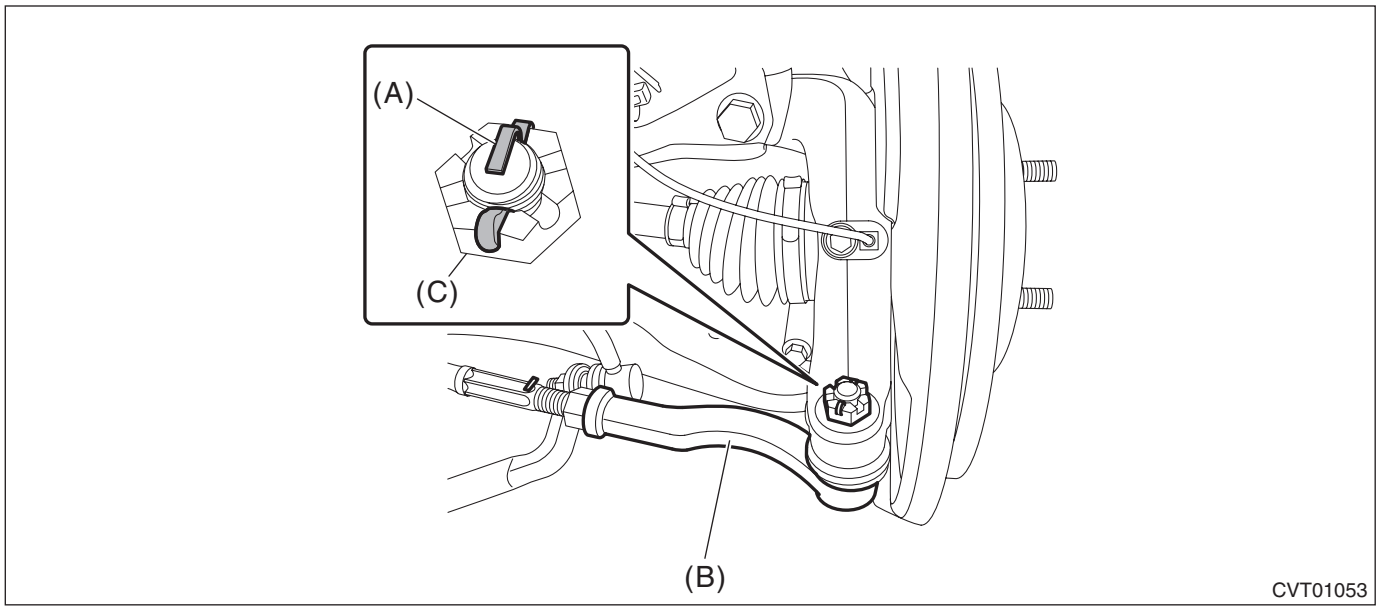

(A) Cotter pin
(B) Tie-rod end
(C) Castle nut

26) Refill differential gear oil from the charge pipe. <Ref. to CVT(TR690)-43, Differential Gear Oil.>
27) Adjust the differential gear oil level, and check for leakage. <Ref. to CVT(TR690)-43, ADJUSTMENT, Differential Gear Oil.>
28) Install the front tires.

15.Inhibitor Switch

A: INSPECTION

When the driving condition or starter motor operation is improper, first check the shift linkage for improper operation. If the shift linkage is functioning properly, check the inhibitor switch.

1) Remove the collector cover.
   (1) Carefully pull up the rear of collector cover at two positions (A).
   (2) Carefully pull up the front of collector cover at two positions (B) while moving it forward.

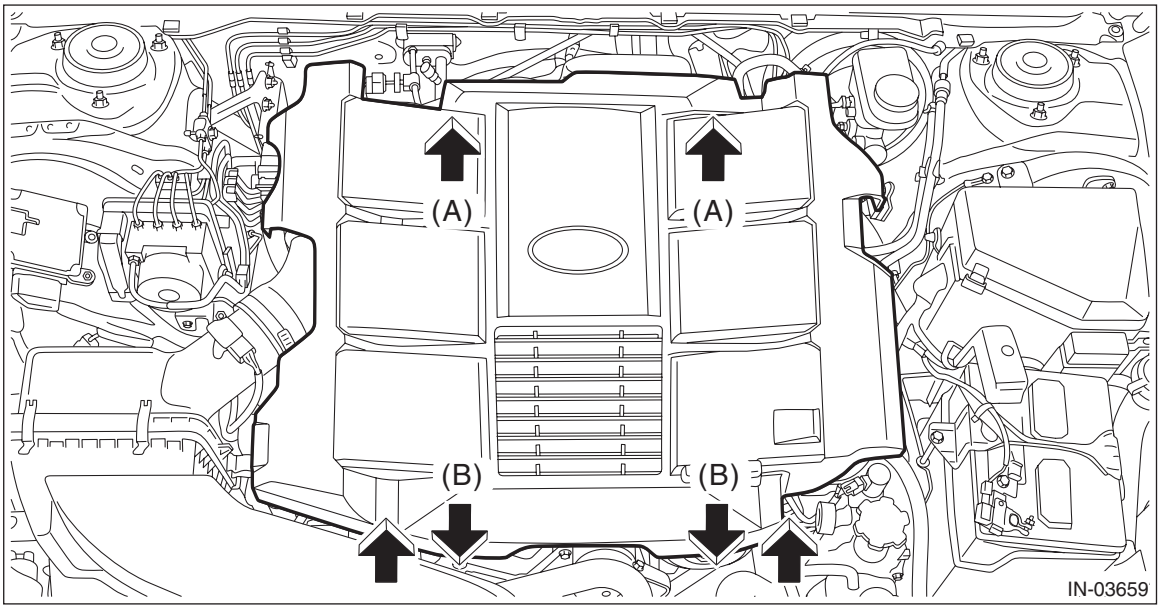

2) Disconnect the ground terminal from battery sensor. <Ref. to RC-4, BATTERY, NOTE, Repair Contents.>
3) Loosen the clamp (A) which connects the air intake boot.
4) Loosen the bolt (B) securing the air intake boot to the collector cover bracket.

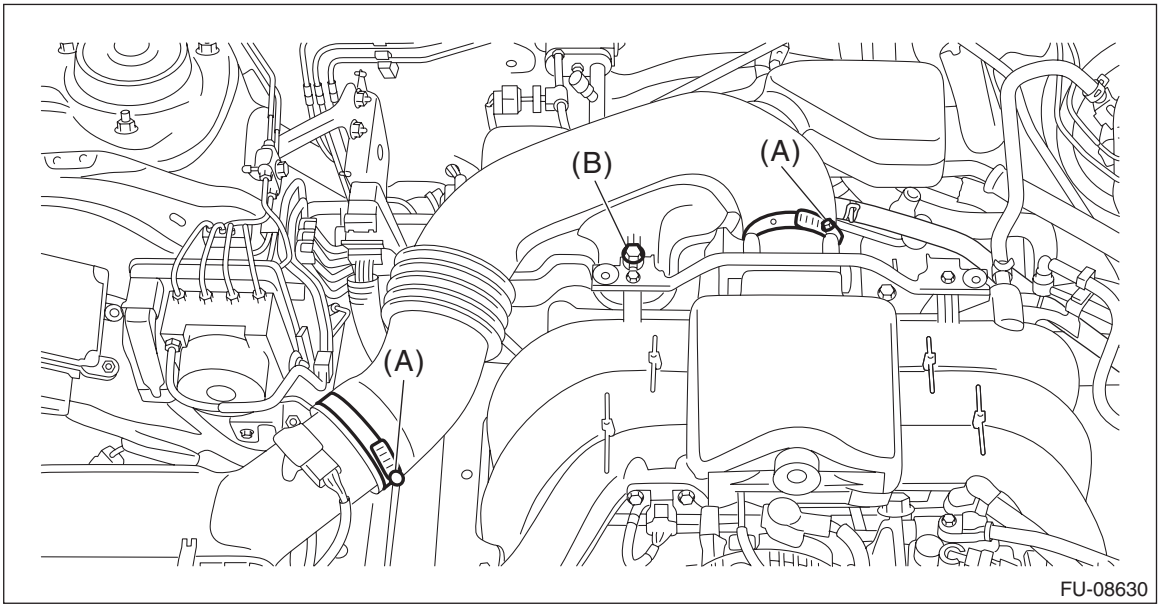

5) Remove the air intake boot from the throttle body, and move the air intake boot to the left side wheel apron.

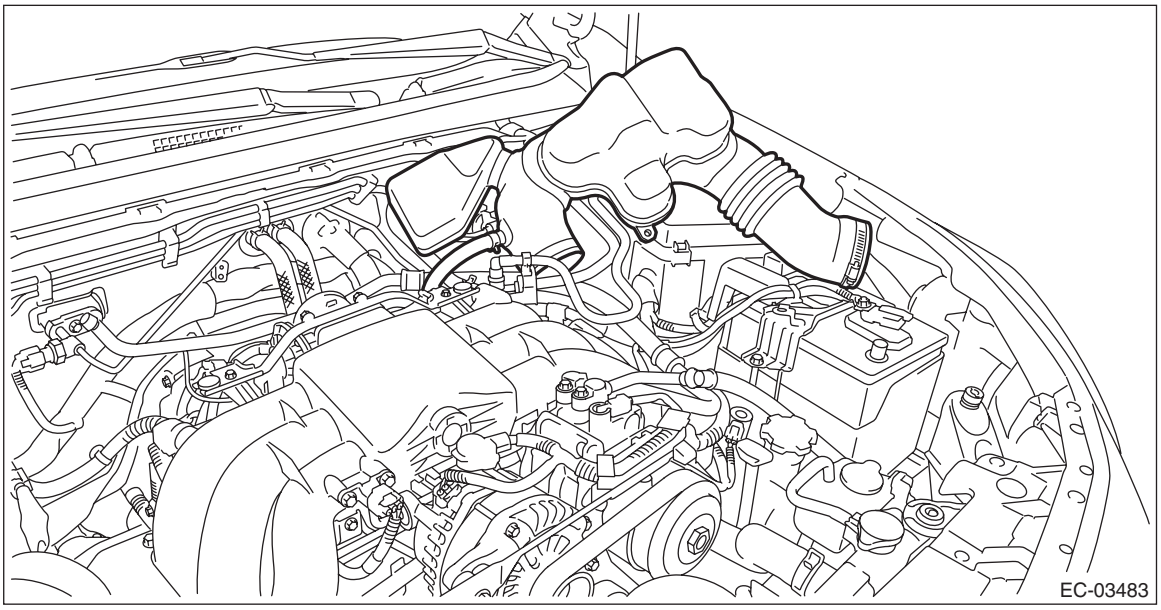

6) Disconnect the inhibitor harness connector.

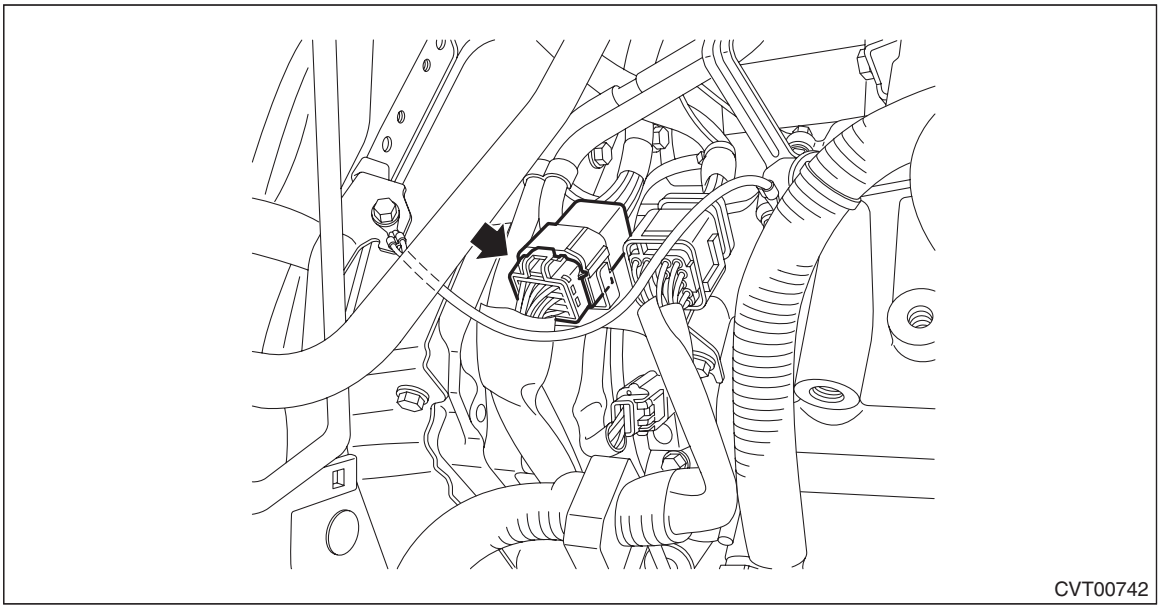

7) Check for continuity in inhibitor switch circuit by shifting the select lever in “P”, “R”, “N” and “D” respectively.

NOTE:
- Check that there is no continuity in the starter circuit when the select lever is in the “R” and “D” ranges.
- When inhibitor switch is normal, check there is no poor contact in vehicle side connector and no open circuit in harness.

	Range	Terminal No.
Signal sent to TCM	P	4 — 3
	R	4 — 2
	N	4 — 1
	D	4 — 8
Starter circuit	P/N	12 — 11
Back-up light circuit	R	10 — 9

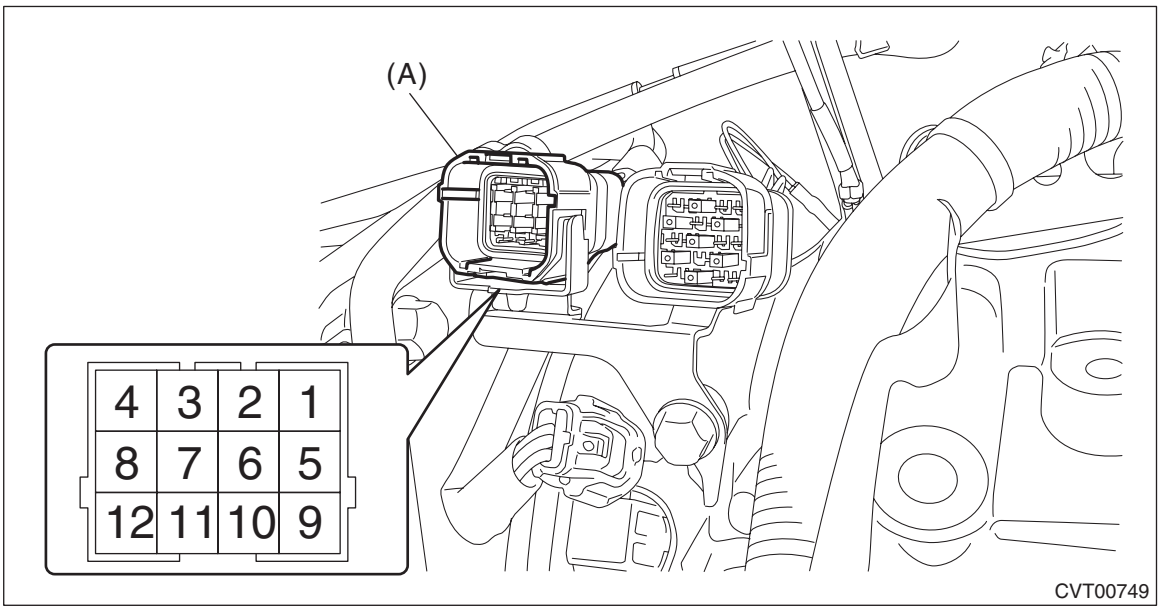

(A) Inhibitor harness connector

8) Check that there is continuity at equal points when the select lever is moved 1.5° in both directions from the “N” range.
If there is continuity in only one direction or in other points, adjust the inhibitor switch. <Ref. to CVT(TR690)-105, ADJUSTMENT, Inhibitor Switch.>

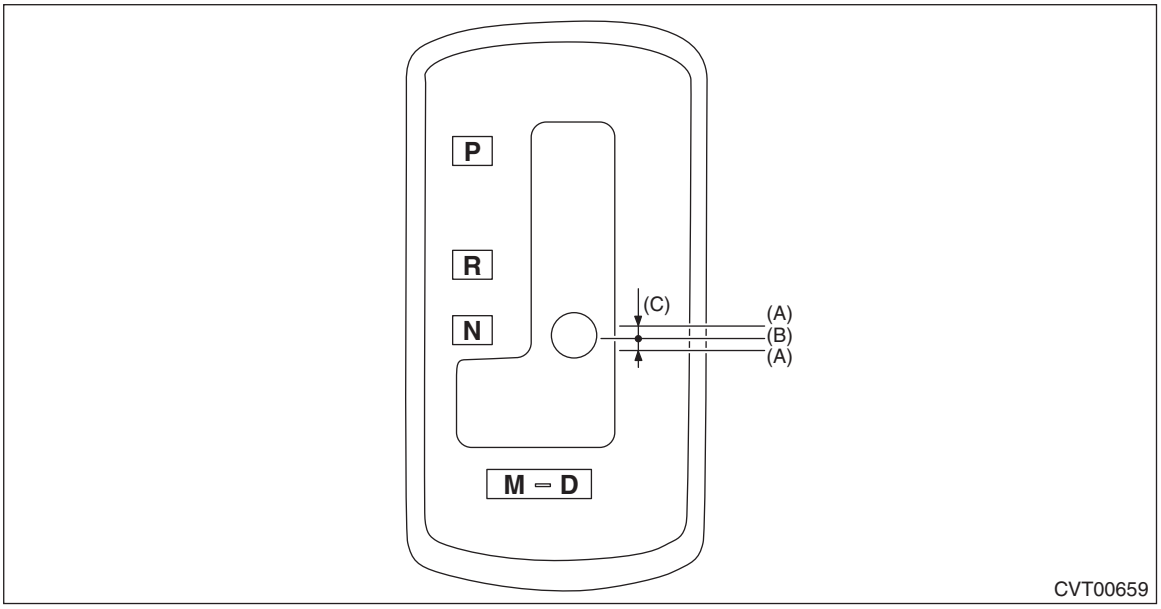

(A) Continuity does not exist.
(B) Continuity exists.
(C) 1.5°

9) Repeat the above inspection in other gear ranges. If there is fault, adjust the inhibitor switch and select cable. <Ref. to CVT(TR690)-105, ADJUSTMENT, Inhibitor Switch.> <Ref. to CS-46, ADJUSTMENT, Select Cable.>

B: ADJUSTMENT

1) Disconnect the ground terminal from battery sensor. <Ref. to RC-4, BATTERY, NOTE, Repair Contents.>
2) Release the shift lock using a screwdriver to shift the select lever to the “N” range.

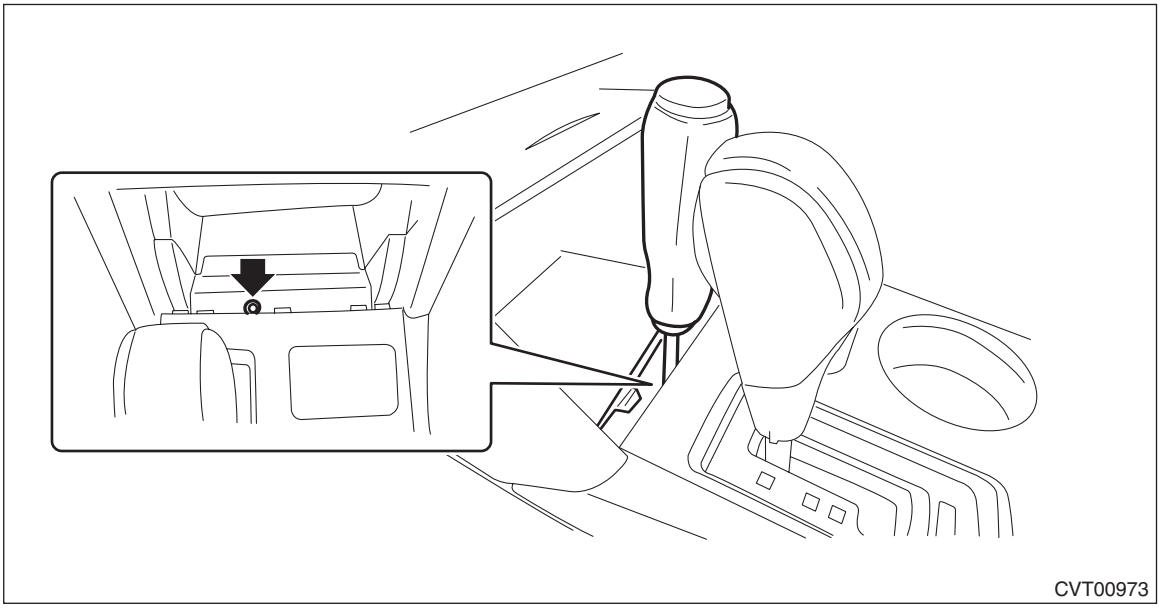

3) Remove the front exhaust pipe. <Ref. to EX(H6DO)-6, REMOVAL, Front Exhaust Pipe.>

4) Remove the harness stay from transmission.

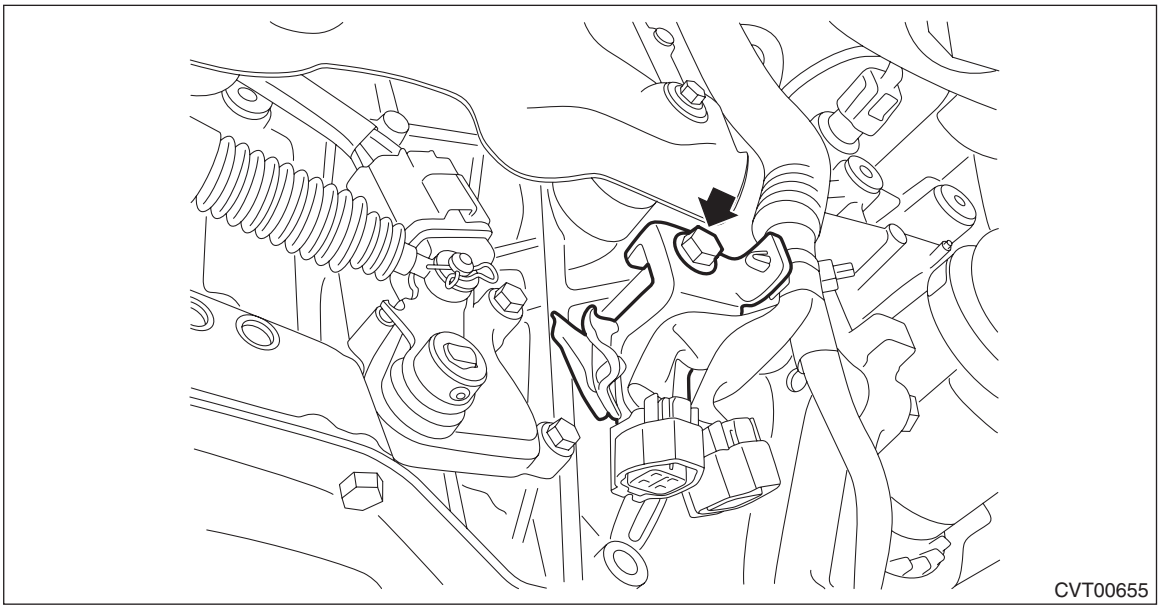

5) Loosen the two bolts holding the inhibitor switch.
6) Insert the ST vertically into the holes of the shifter arm and switch body.
ST 499267300 STOPPER PIN

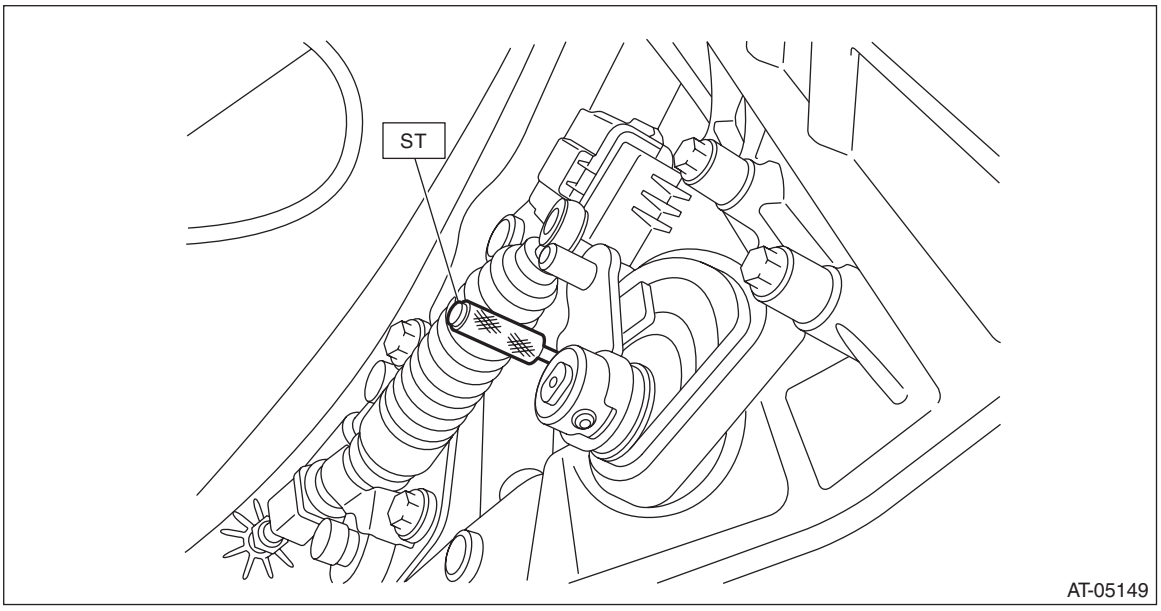

7) Tighten the two bolts holding the inhibitor switch.

Tightening torque:
5 N·m (0.5 kgf-m, 3.7 ft-lb)
8) Repeat the inspection of the inhibitor switch. If the inhibitor switch is determined to be “faulty”, replace it.

C: REMOVAL

1) Disconnect the ground terminal from battery sensor. <Ref. to RC-4, BATTERY, NOTE, Repair Contents.>
2) While pressing the shift lock release button, shift the select lever to the “N” range.
3) Lift up the vehicle.
4) Remove the front exhaust pipe. <Ref. to EX(H6DO)-6, REMOVAL, Front Exhaust Pipe.>
5) Remove the harness stay from transmission.

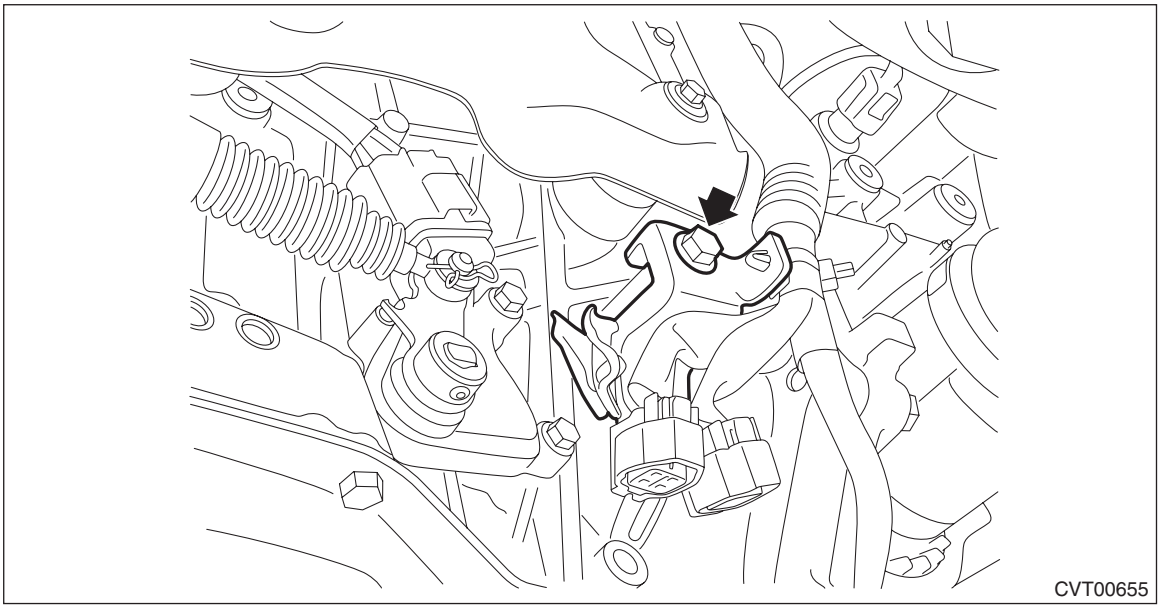

6) Remove the snap pin and washer from the shifter arm.

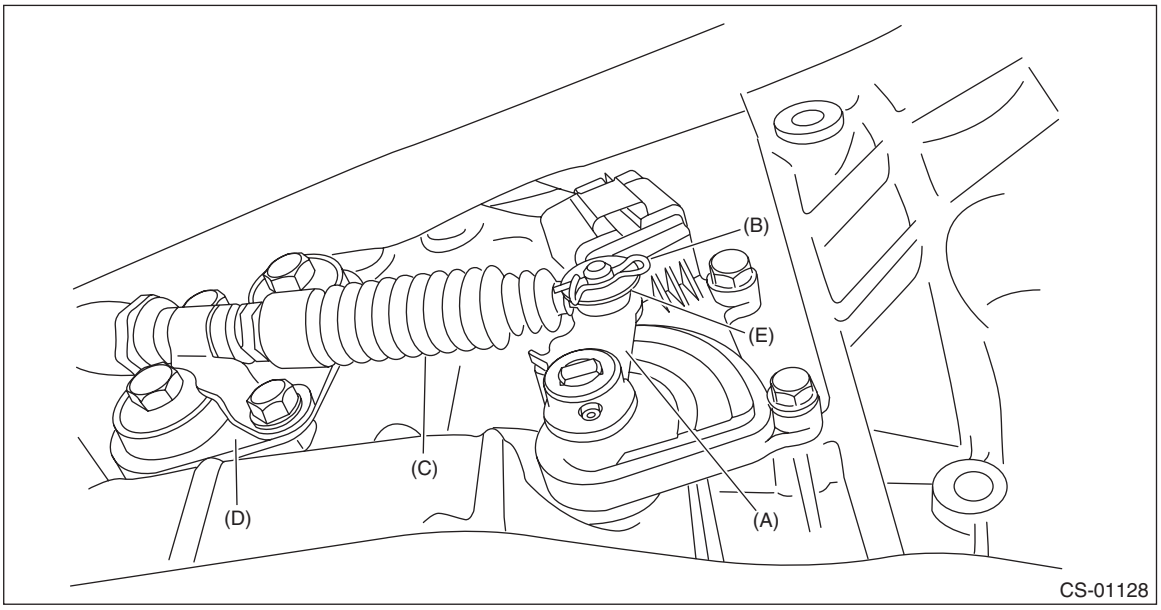

(A) Shifter arm
(B) Snap pin
(C) Select cable
(D) Plate ASSY
(E) Washer

7) Using the ST, remove the spring pin and shifter arm.

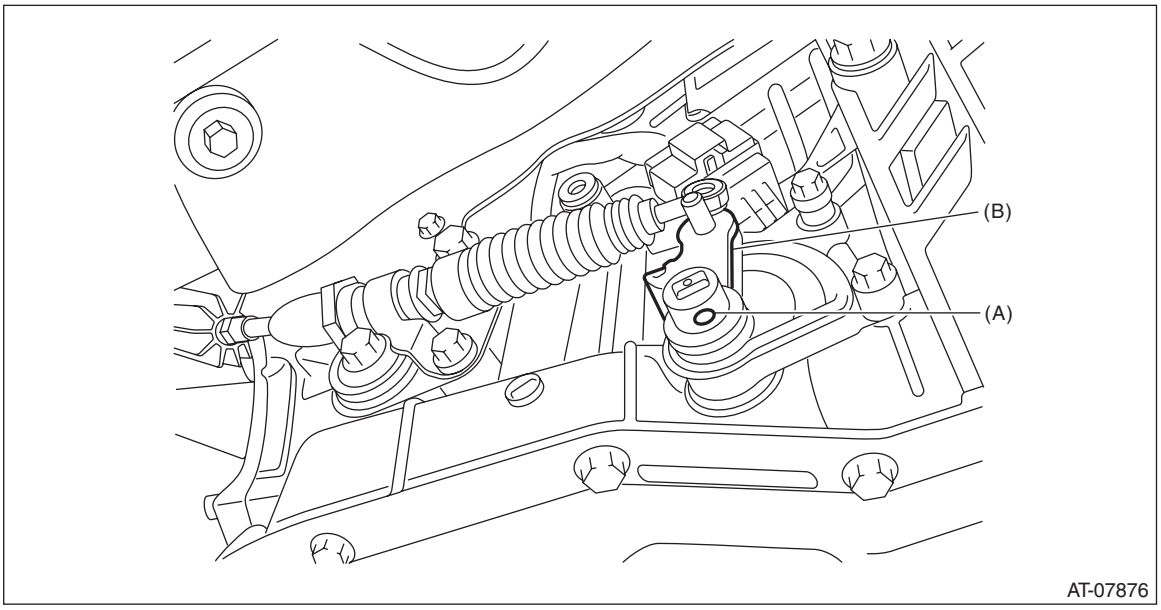

(A) Spring pin
(B) Shifter arm

8) Remove the inhibitor harness connector from inhibitor switch.
9) Remove the two inhibitor switch securing bolts.

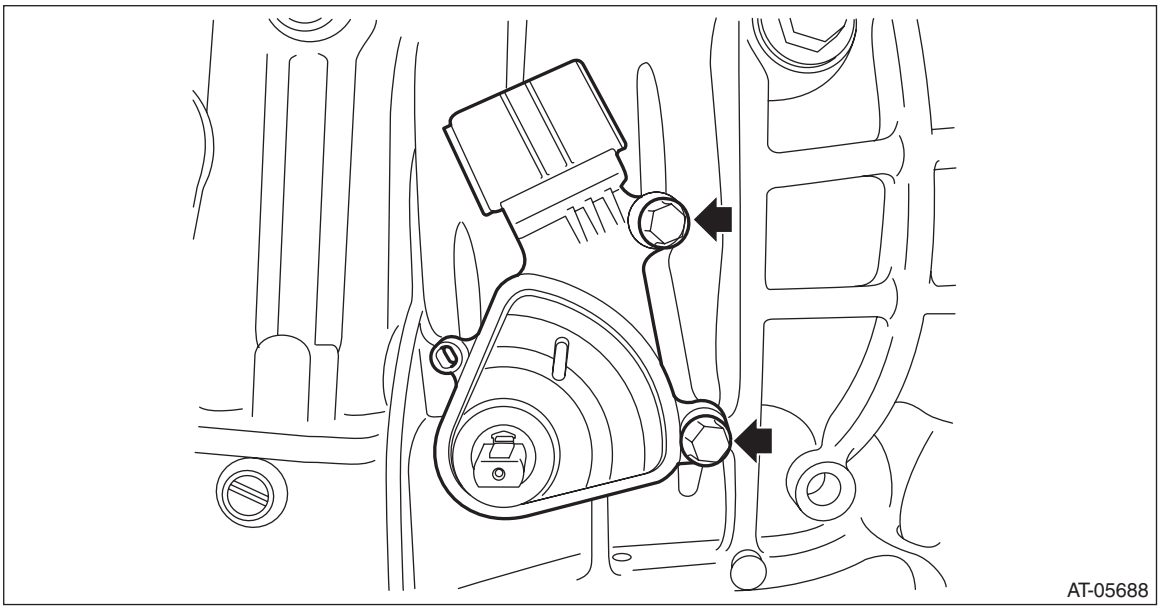

10) Remove the inhibitor switch from the transmission case.

D: INSTALLATION

1) Install the inhibitor switch to the transmission case temporarily.

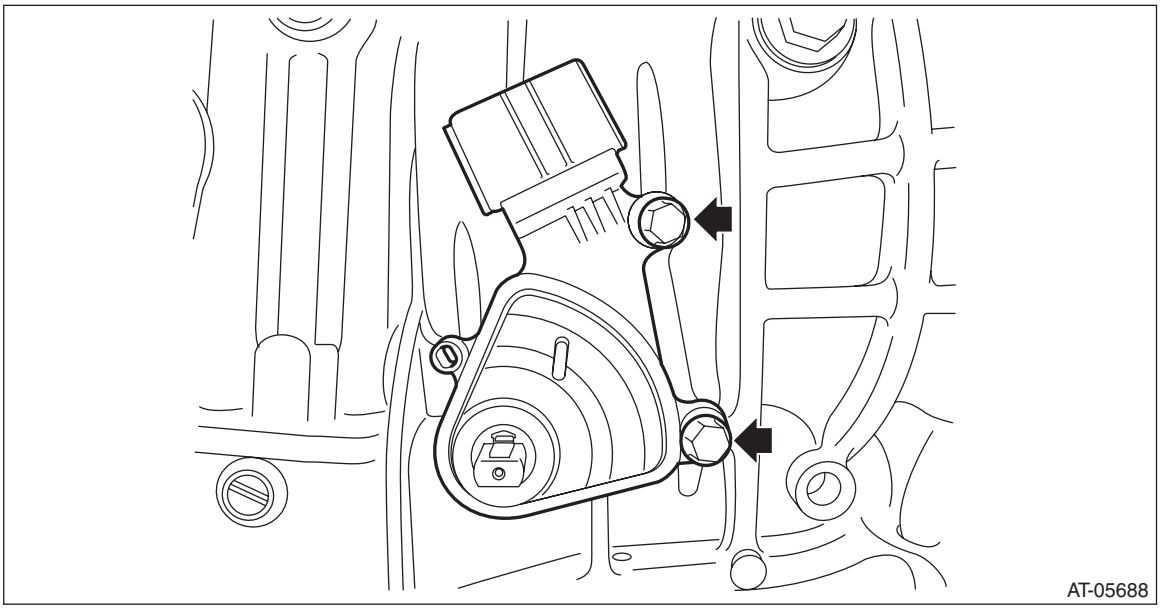

2) Connect the inhibitor harness connector to the inhibitor switch.
3) Install the shifter arm and fix with the spring pin.

NOTE:
Use new spring pin.

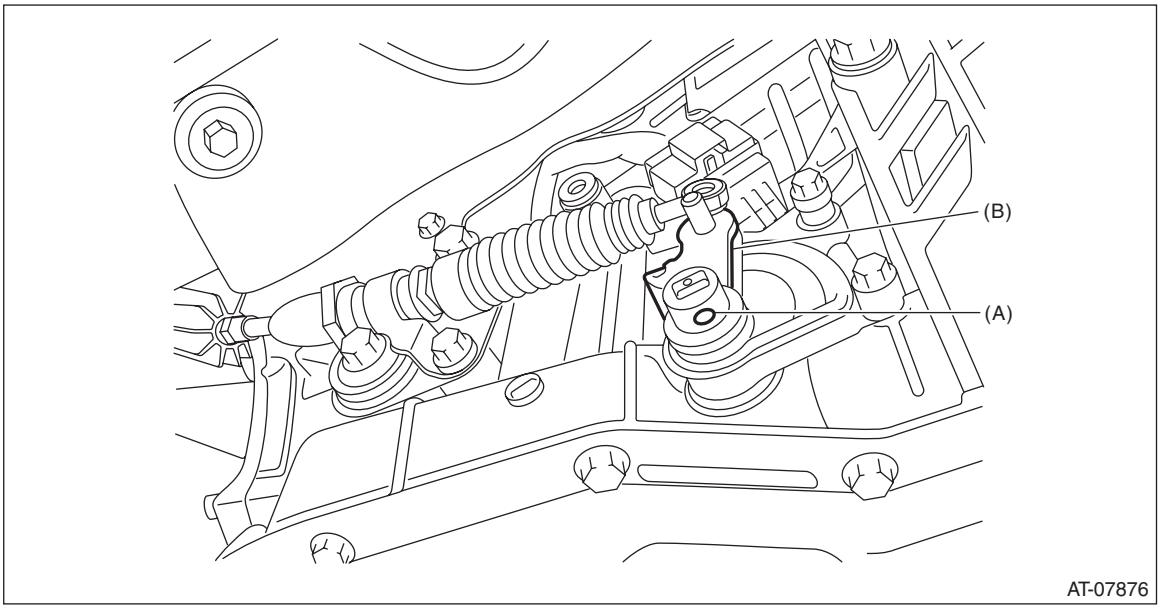

(A) Spring pin
(B) Shifter arm

4) Shift the shifter arm to “N” range.
5) Install the ST vertically in the cutout of shifter arm and the hole of switch body.
ST 499267300 STOPPER PIN

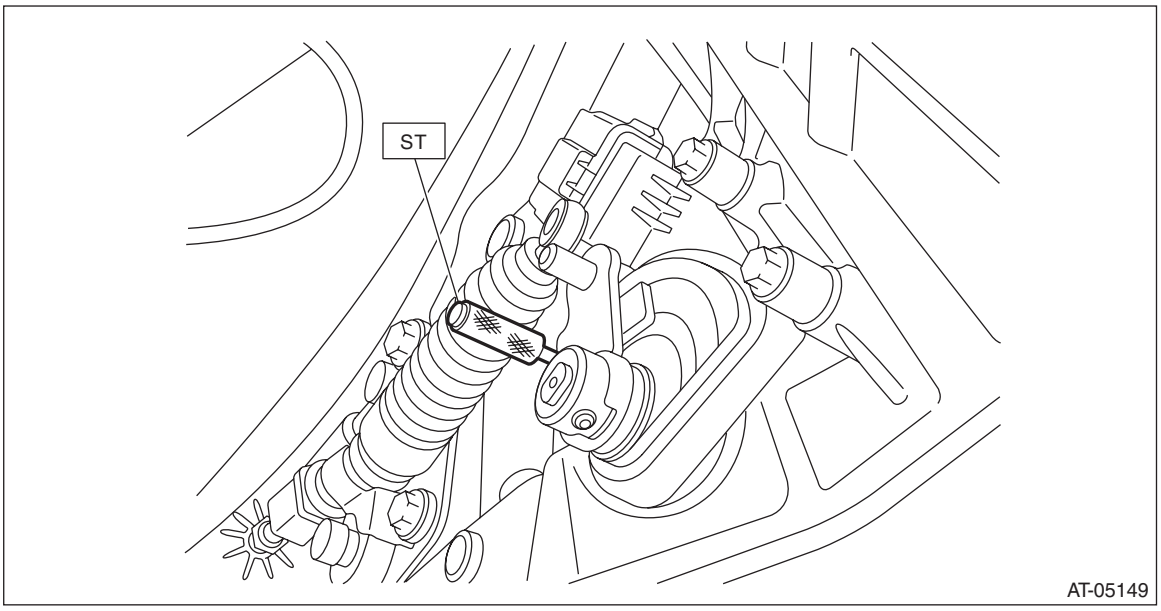

6) Tighten the two bolts holding the inhibitor switch.

Tightening torque:
5 N·m (0.5 kgf-m, 3.7 ft-lb)

7) Install the select cable to the shifter arm.
8) Install the washer and snap pin to the shifter arm.

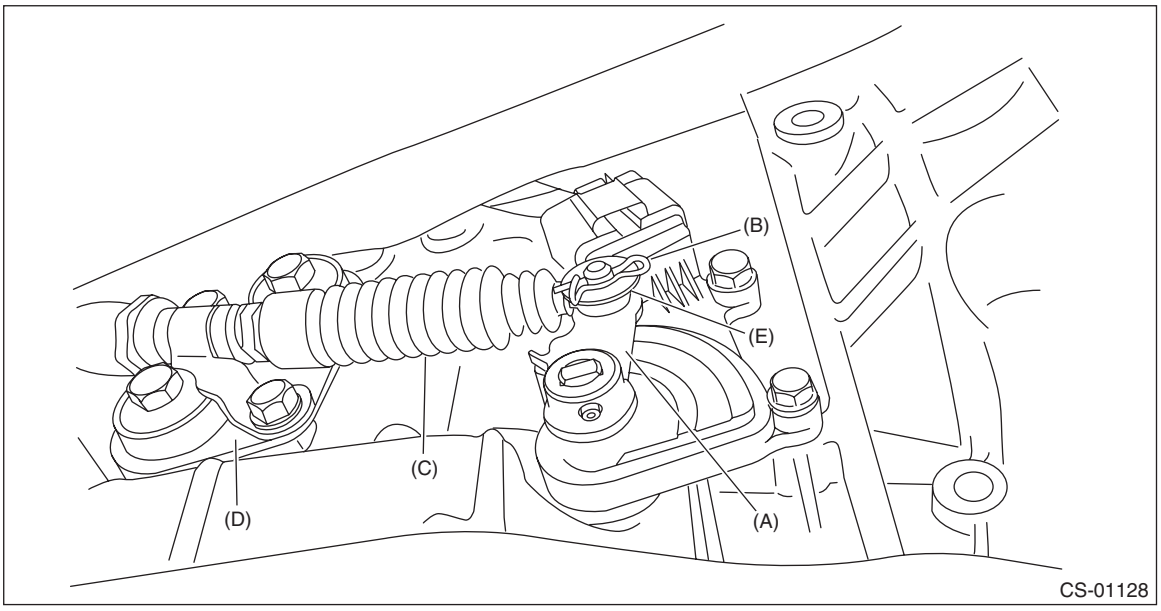

(A) Shifter arm
(B) Snap pin
(C) Select cable
(D) Plate ASSY
(E) Washer

9) Install the harness stay.

Tightening torque:
18 N·m (1.8 kgf-m, 13.3 ft-lb)

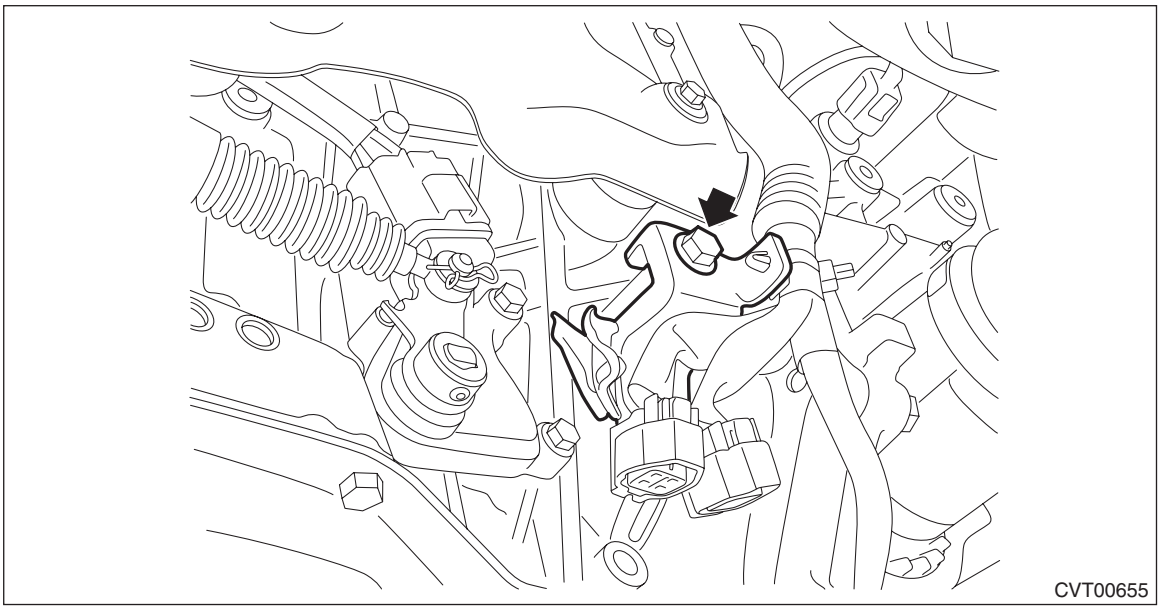

10) Install the front exhaust pipe. <Ref. to EX(H6DO)-8, INSTALLATION, Front Exhaust Pipe.>
11) Lower the vehicle.
12) Connect the ground terminal to battery sensor. <Ref. to RC-4, BATTERY, NOTE, Repair Contents.>
13) Check the inhibitor switch. <Ref. to CVT(TR690)-102, INSPECTION, Inhibitor Switch.>

16.Secondary Speed Sensor

A: REMOVAL

CAUTION:
Be sure to prevent water or oil from contacting the connector terminal of secondary speed sensor. If adhesion occurs, replace with a new part.

1) Remove the transmission from the vehicle. <Ref. to CVT(TR690)-58, REMOVAL, Automatic Transmission Assembly.>
2) Remove the transmission cover on the transmission upper side.

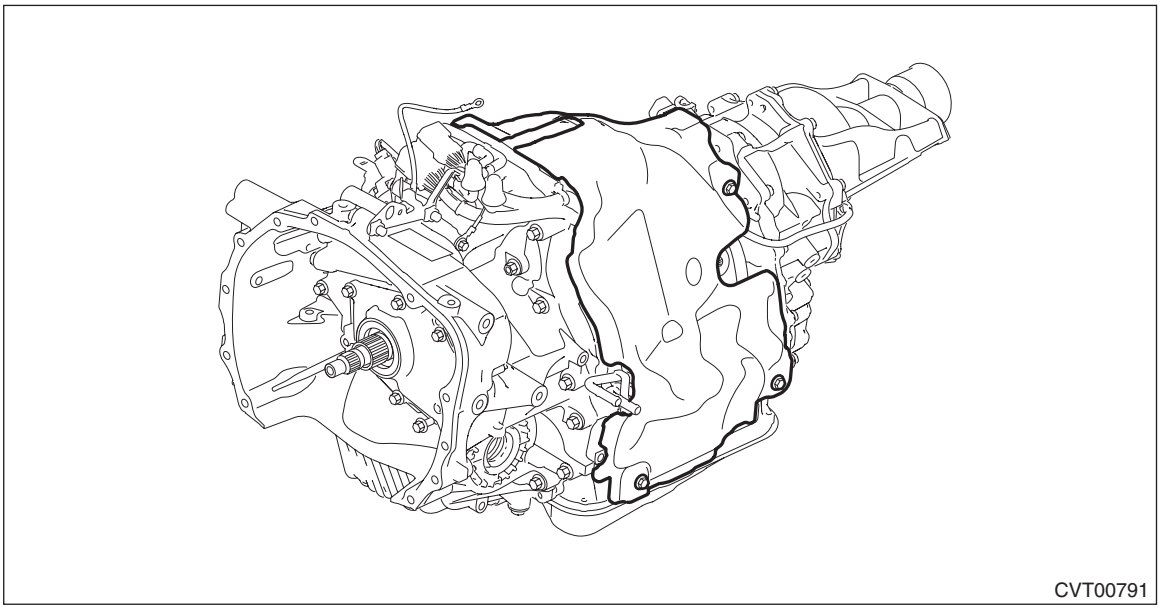

3) Remove the secondary speed sensor harness connector.
4) Remove the secondary speed sensor.

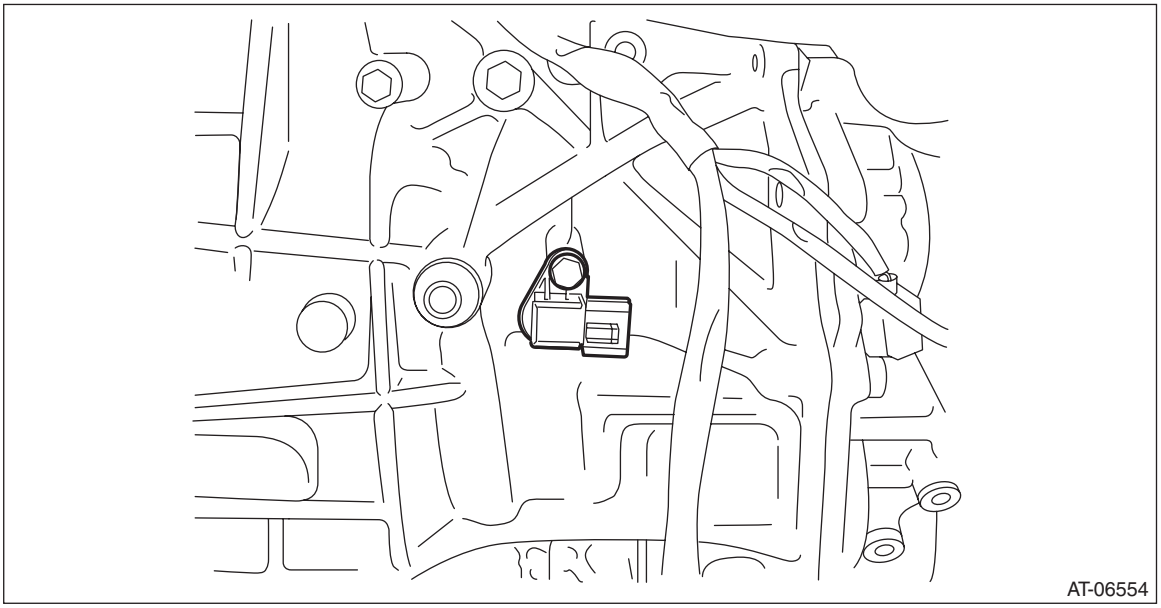

B: INSTALLATION

CAUTION:
Be sure to prevent water or oil from contacting the connector terminal of secondary speed sensor. If adhesion occurs, replace with a new part.

1) Install the secondary speed sensor.

NOTE:
- Use new O-rings.
- Apply CVTF to the O-rings.

Tightening torque:
5 N·m (0.5 kgf-m, 3.7 ft-lb)

2) Connect the harness connector.
3) Install the transmission cover.

Tightening torque:
8 N·m (0.8 kgf-m, 5.9 ft-lb)

4) Install the transmission assembly. <Ref. to CVT(TR690)-75, INSTALLATION, Automatic Transmission Assembly.>

C: INSPECTION

1) Remove the bulkhead harness connector from TCM. <Ref. to CVT(TR690)-142, REMOVAL, Transmission Control Module (TCM).>
2) Set the ST between the TCM and bulkhead harness.
ST 18460AA040 CHECK BOARD
3) Set the probe of oscilloscope to the check board connector.

Terminals:
No. 13 (+) — No. 26 (–)

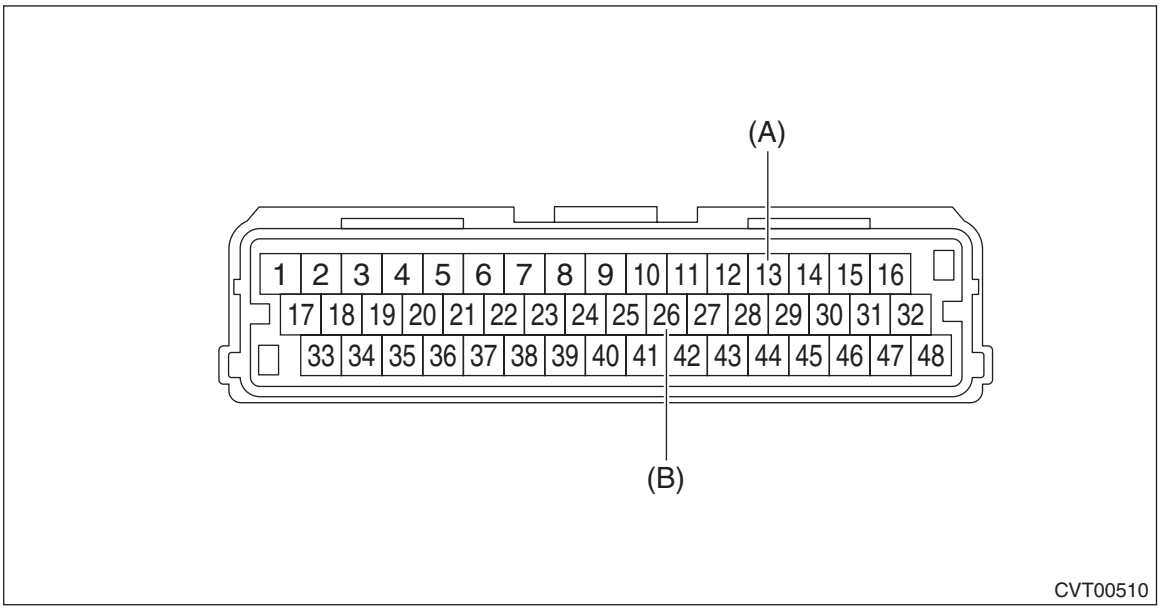

(A) + probe
(B) – probe

4) Start and warm up the engine.
5) Check the waveform of secondary speed sensor with engine idling.

NOTE:
The waveform cycle changes as the speed changes.

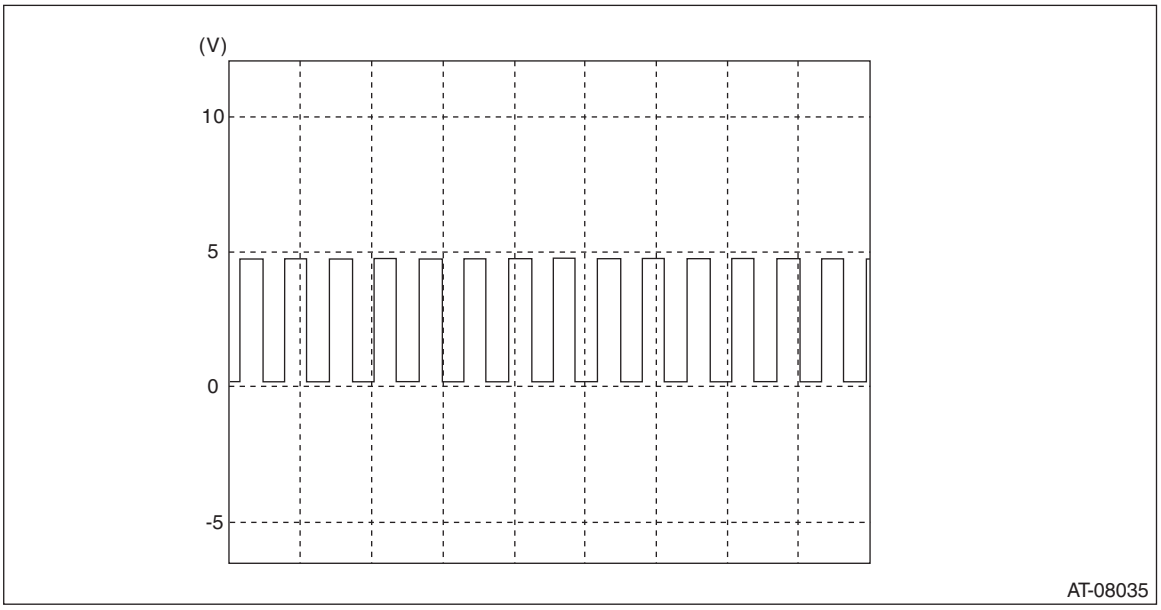

17.Primary Speed Sensor

A: REMOVAL

CAUTION:
Be sure to prevent water or oil from contacting the connector terminal of primary speed sensor. If adhesion occurs, replace with a new part.

1) Remove the collector cover.
   (1) Carefully pull up the rear of collector cover at two positions (A).
   (2) Carefully pull up the front of collector cover at two positions (B) while moving it forward.

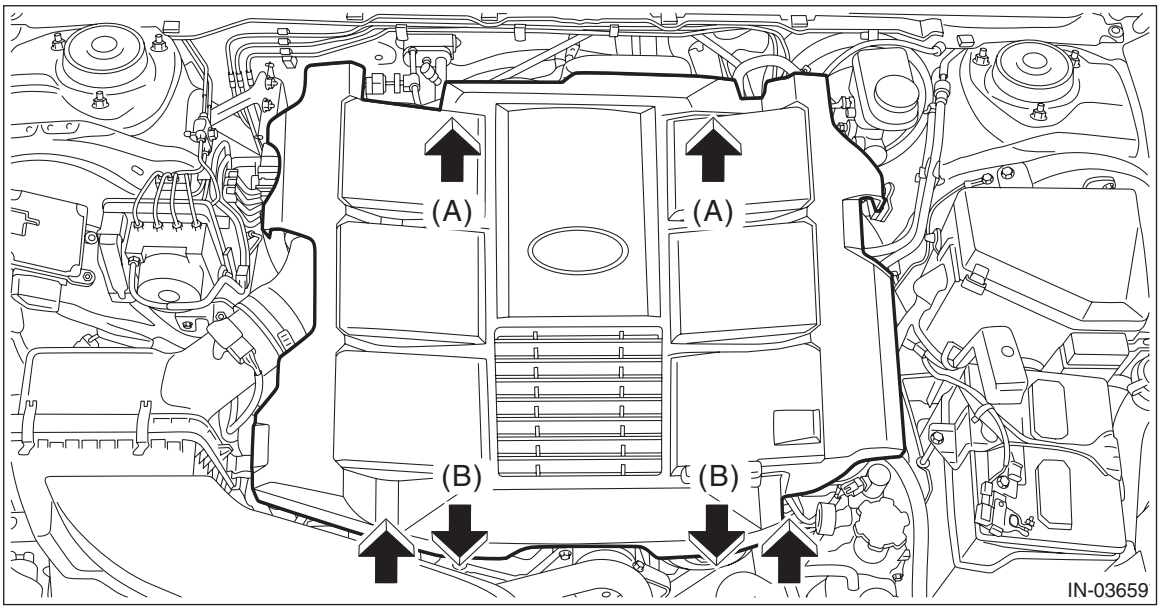

2) Disconnect the ground terminal from battery sensor. <Ref. to RC-4, BATTERY, NOTE, Repair Contents.>
3) Loosen the clamp (A) which connects the air intake boot assembly.
4) Loosen the bolt (B) which secures the air intake boot assembly to the collector cover bracket.

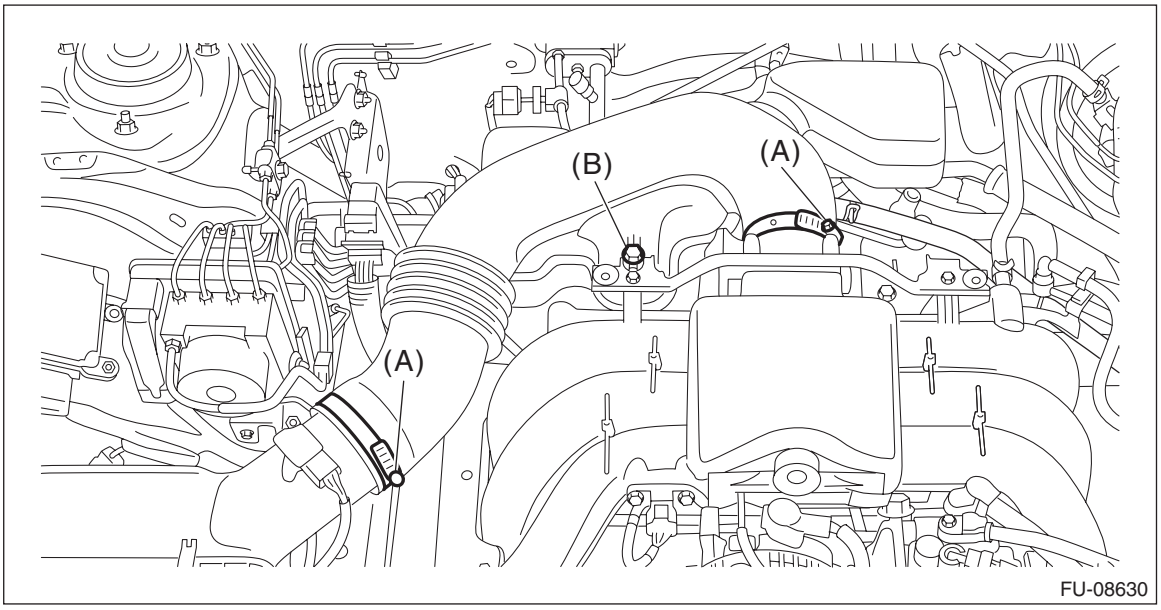

5) Remove the air intake boot from the throttle body, and move the air intake boot to the left side wheel apron.

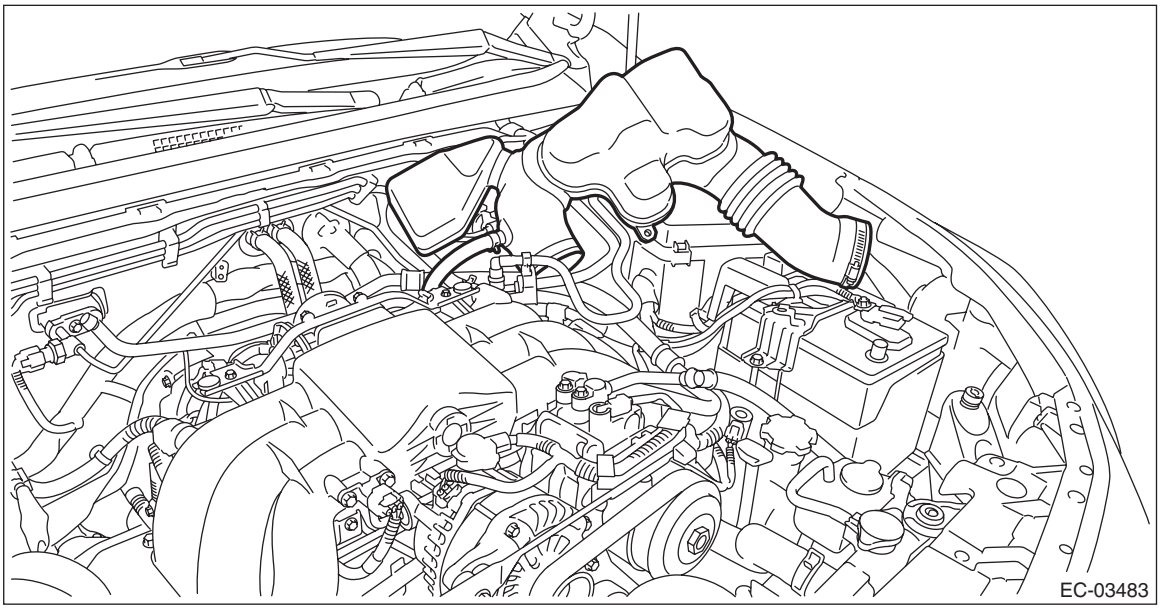

6) Clean the transmission exterior.
7) Remove the harness stay from the transmission.

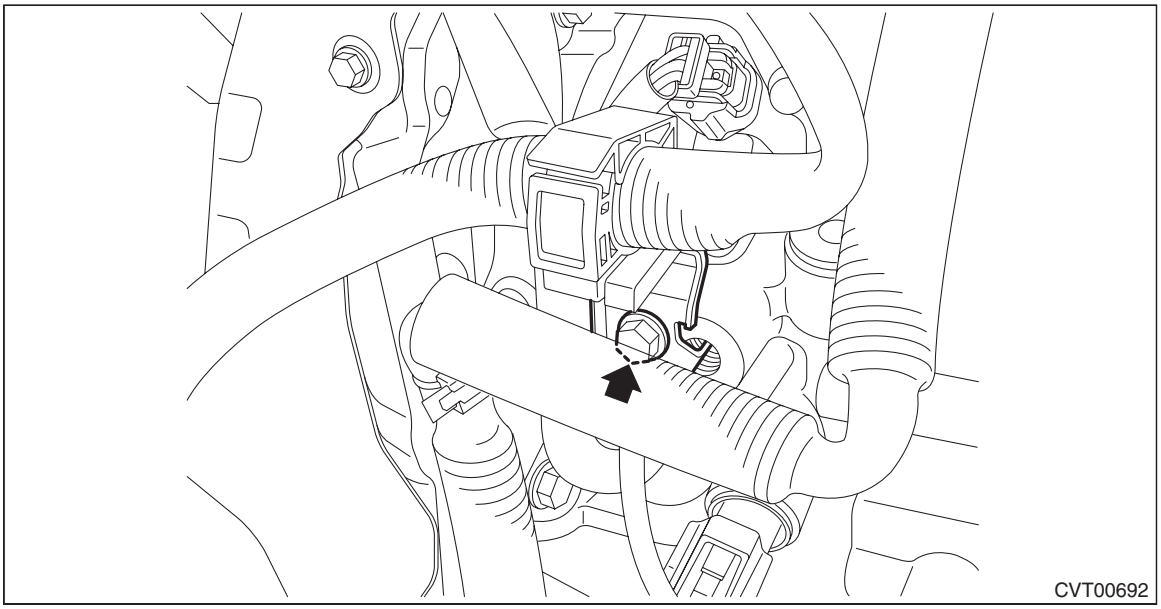

8) Remove the primary speed sensor harness connector.

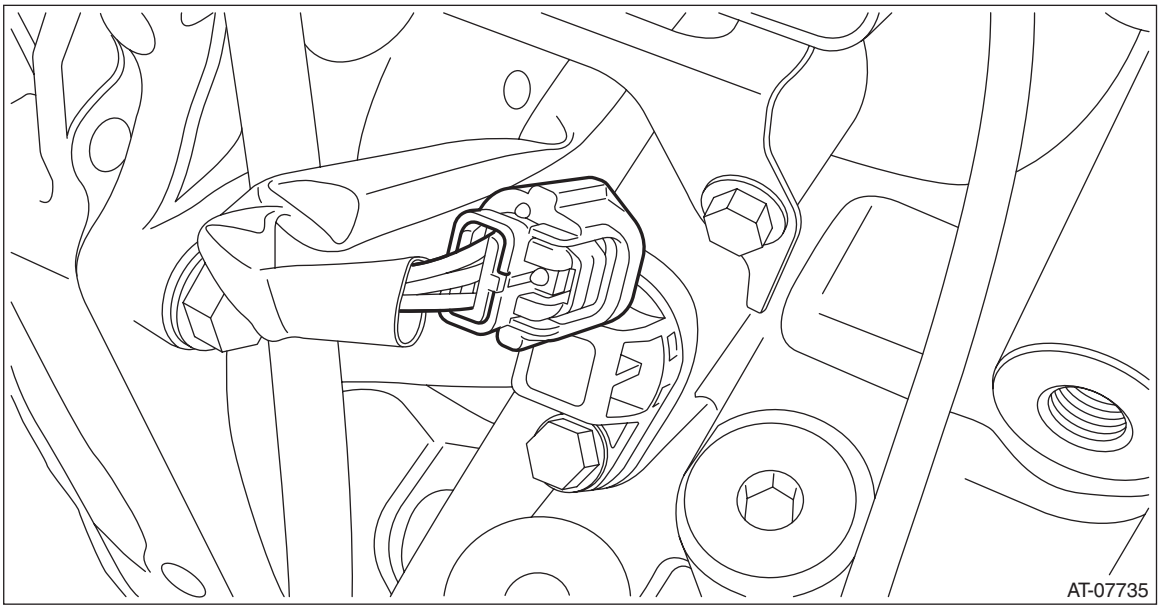

9) Remove the primary speed sensor.

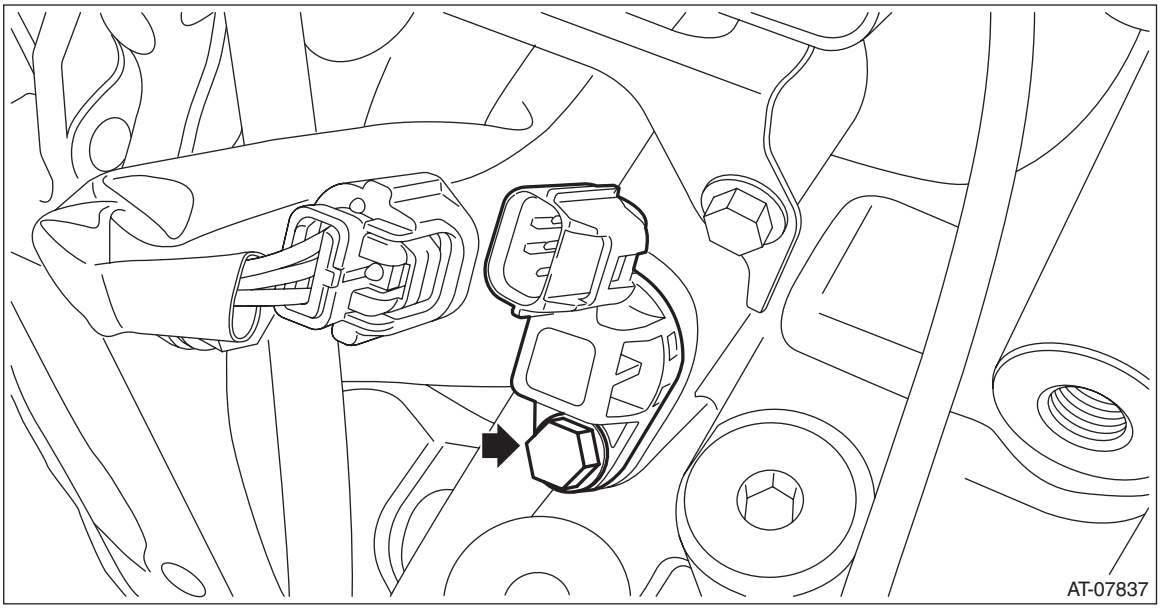

B: INSTALLATION

CAUTION:
Be sure to prevent water or oil from contacting the connector terminal of primary speed sensor. If adhesion occurs, replace with a new part.

1) Install the primary speed sensor.

NOTE:
- Use new O-rings.
- Apply CVTF to the O-rings.

Tightening torque:
5 N·m (0.5 kgf-m, 3.7 ft-lb)

2) Connect the harness connector.
3) Install the harness stay.

Tightening torque:
16 N·m (1.6 kgf-m, 11.8 ft-lb)

4) Install the air intake boot. <Ref. to IN(H6DO)-11, INSTALLATION, Air Intake Boot.>
5) Connect the ground terminal to battery sensor. <Ref. to RC-4, BATTERY, NOTE, Repair Contents.>
6) Install the collector cover.

C: INSPECTION

1) Remove the bulkhead harness connector from TCM. <Ref. to CVT(TR690)-142, REMOVAL, Transmission Control Module (TCM).>
2) Set the ST between the TCM and bulkhead harness.
ST 18460AA040 CHECK BOARD
3) Set the probe of oscilloscope to the check board connector.

Terminals:
No. 14 (+) — No. 42 (–)

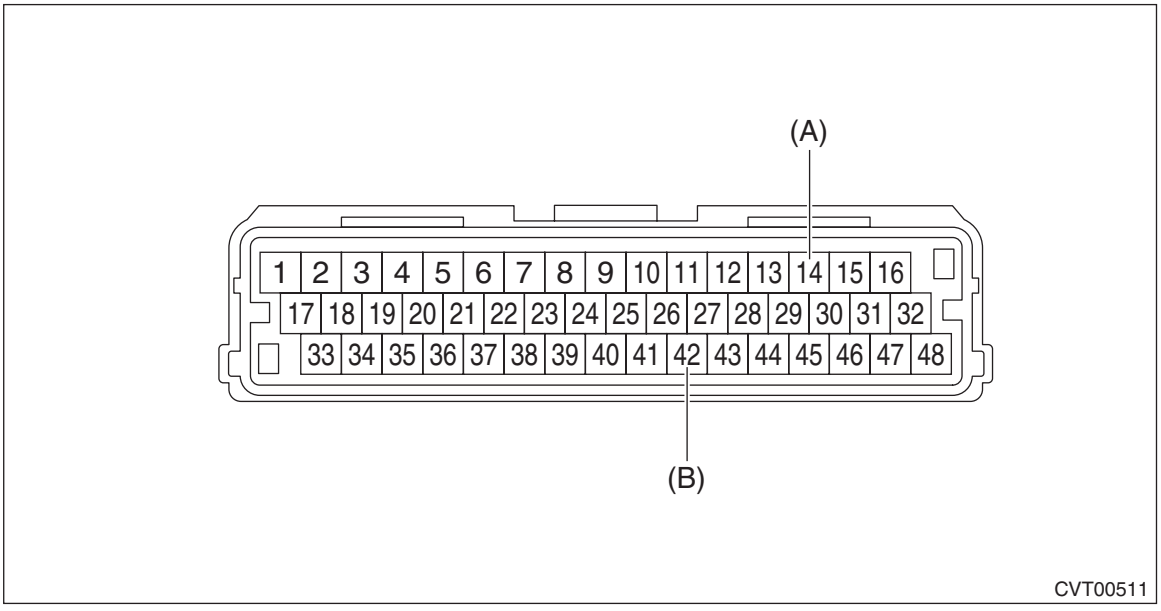

(A) + probe
(B) – probe

4) Start and warm up the engine.
5) Check the waveform of primary speed sensor with engine idling.

NOTE:
The waveform cycle changes as the speed changes.

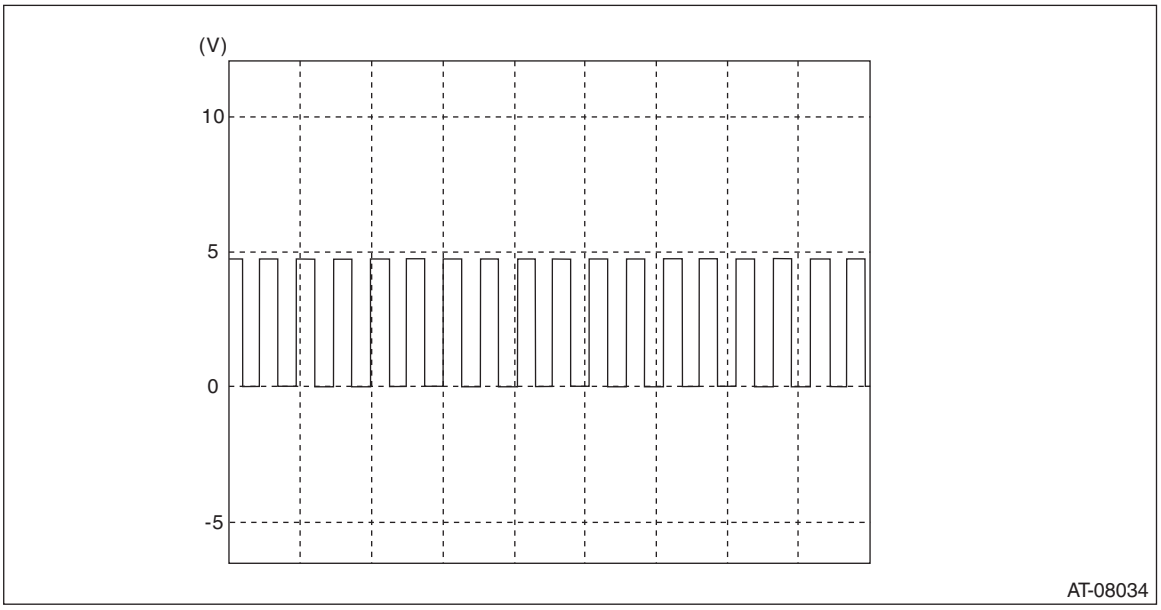

18.Front Wheel Speed Sensor

A: REMOVAL

CAUTION:
• Be sure to prevent water or oil from contacting the connector terminal of front wheel speed sensor. If adhesion occurs, replace with a new part.
• When removing front wheel speed sensor, CVTF may let out. If CVTF has leaked, adjust the CVTF level after installing the front wheel speed sensor.
1) Disconnect the ground terminal from battery sensor. <Ref. to RC-4, BATTERY, NOTE, Repair Contents.>
2) Lift up the vehicle.
3) Clean the transmission exterior.
4) Remove the front wheel speed sensor harness connector.
5) Remove the front wheel speed sensor.

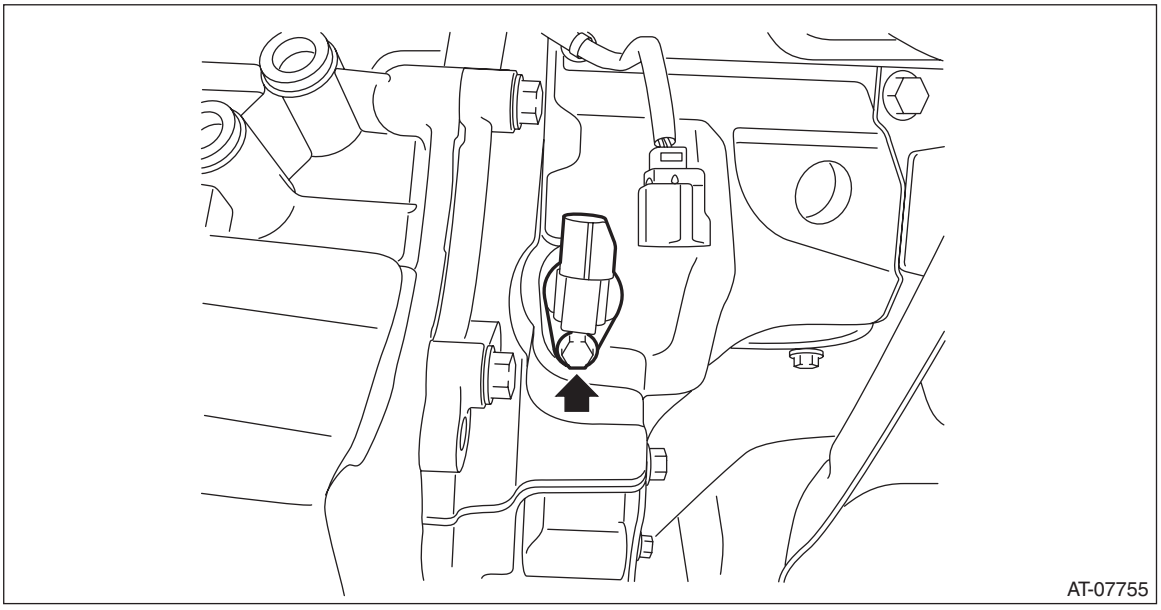

B: INSTALLATION

CAUTION:
• Be sure to prevent water or oil from contacting the connector terminal of front wheel speed sensor. If adhesion occurs, replace with a new part.
• After installing the front wheel speed sensor, adjust the CVTF level.
1) Install the front wheel speed sensor.

NOTE:
• Use new O-rings.
• Apply CVTF to the O-rings.

Tightening torque:
5 N·m (0.5 kgf-m, 3.7 ft-lb)
2) Connect the harness connector.
3) Lower the vehicle.
4) Connect the ground terminal to battery sensor. <Ref. to RC-4, BATTERY, NOTE, Repair Contents.>

C: INSPECTION

1) Remove the bulkhead harness connector from TCM. <Ref. to CVT(TR690)-142, REMOVAL, Transmission Control Module (TCM).>
2) Set the ST between the TCM and bulkhead harness.
ST 18460AA040 CHECK BOARD
3) Set the probe of oscilloscope to the check board connector.

Terminals:
No. 12 (+) — No. 26 (–)

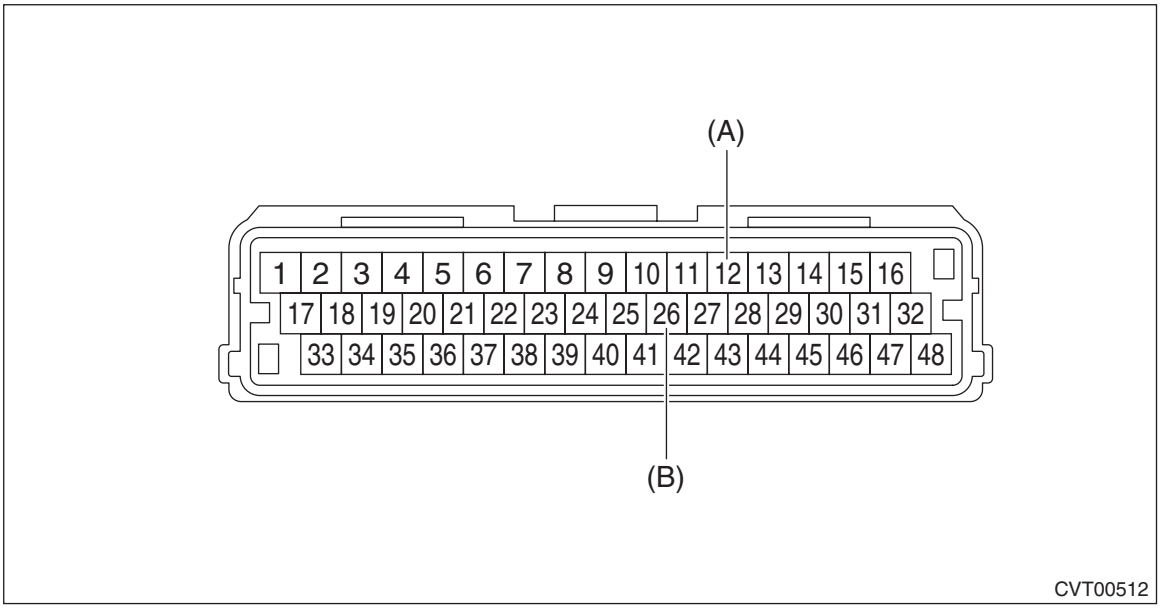

(A) + probe
(B) – probe

4) Lift up the vehicle and raise the vehicle speed up to 20 km/h (12 MPH).
5) Check the waveform of front wheel speed sensor when vehicle speed is at 20 km/h (12 MPH).

NOTE:
The waveform cycle changes as the speed changes.

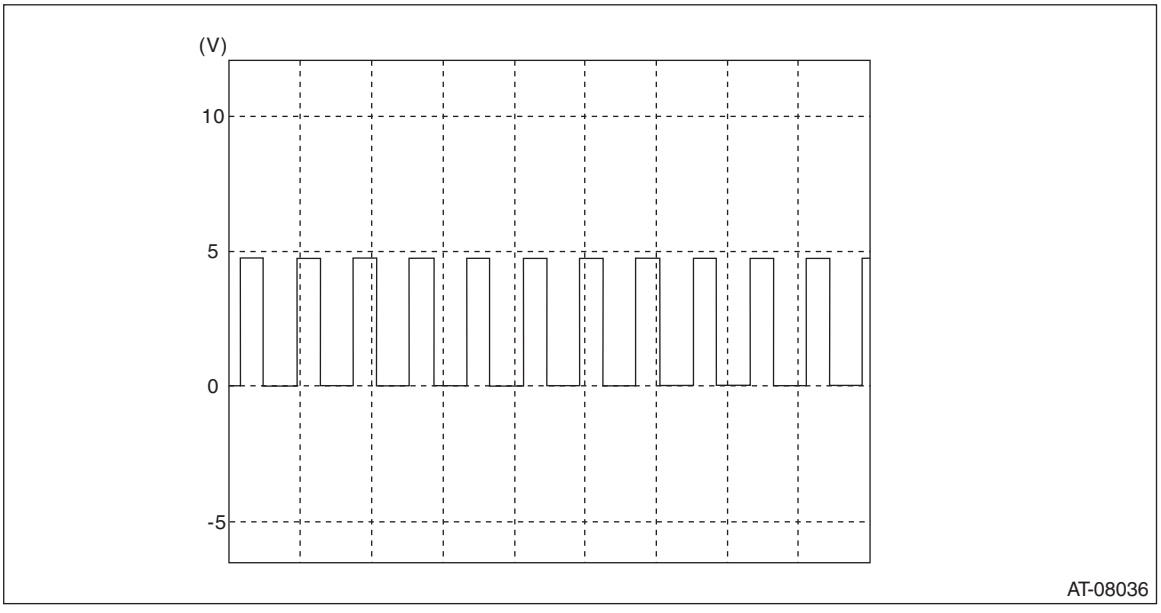

19.Secondary Pressure Sensor

A: REMOVAL

CAUTION:
• Be sure to prevent water or oil from contacting the connector terminal of secondary pressure sensor. If adhesion occurs, replace with a new part.
• When removing secondary pressure sensor, CVTF may let out. If CVTF has leaked, adjust the CVTF level after installing the secondary pressure sensor.
1) Disconnect the ground terminal from battery sensor. <Ref. to RC-4, BATTERY, NOTE, Repair Contents.>
2) Lift up the vehicle.
3) Clean the transmission exterior.
4) Remove the secondary pressure sensor harness connector.
5) Remove the secondary pressure sensor.

NOTE:
Use Ko-ken 3/8 12-point 27 mm (manufacturer product No. 3305M-27) deep socket.

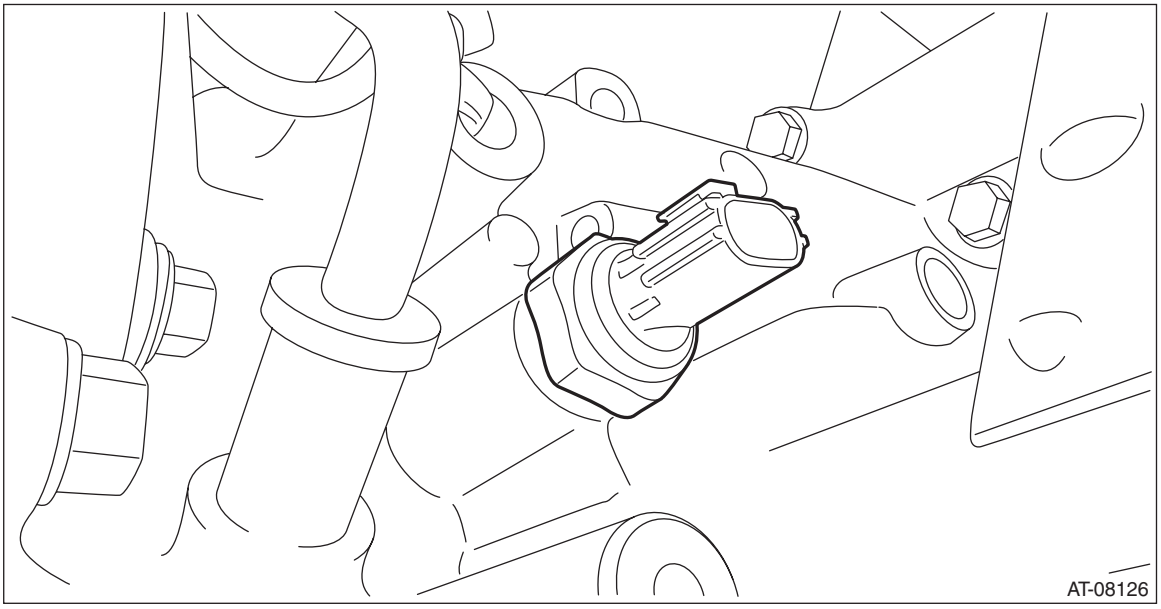

B: INSTALLATION

CAUTION:
• Be sure to prevent water or oil from contacting the connector terminal of secondary pressure sensor. If adhesion occurs, replace with a new part.
• After installing the secondary pressure sensor, adjust the CVTF level.
1) Install the secondary pressure sensor.

NOTE:
• Use new O-rings.

Tightening torque:
39 N·m (4.0 kgf-m, 28.8 ft-lb)
2) Connect the harness connector.
3) Lower the vehicle.
4) Connect the ground terminal to battery sensor. <Ref. to RC-4, BATTERY, NOTE, Repair Contents.>

Tightening torque:
39 N·m (4.0 kgf-m, 28.8 ft-lb)

C: INSPECTION

1) Start and warm up the engine.
2) Shift the select lever to “P” or “N” range.
3) Depress the brake pedal and hold it.
4) Check “secondary pressure sensor voltage” by using Subaru Select Monitor while the engine is idling. <Ref. to CVT(diag)-18, OPERATION, Subaru Select Monitor.>

Specification:
Approx. 0.8 V

5) Check “secondary pressure sensor voltage” by using Subaru Select Monitor while the engine is stopped and the ignition switch is turned on. <Ref. to CVT(diag)-18, OPERATION, Subaru Select Monitor.>

Specification:
Approx. 0.5 V

20.Control Valve Body

A: REMOVAL

CAUTION:
• Directly after the vehicle has been running or the engine has been idling for a long time, the CVTF is hot. Be careful not to burn yourself.
• Be careful not to spill CVTF on the exhaust pipe to prevent it from emitting smoke or causing a fire. If the CVTF adheres, wipe it off completely.

NOTE:
The control valve body is replaced as an assembly only, because it is a non-disassembly part.
1) Disconnect the ground terminal from battery sensor. <Ref. to RC-4, BATTERY, NOTE, Repair Contents.>
2) Lift up the vehicle.
3) Clean the transmission exterior.
4) Remove the CVTF drain plug to drain CVTF.

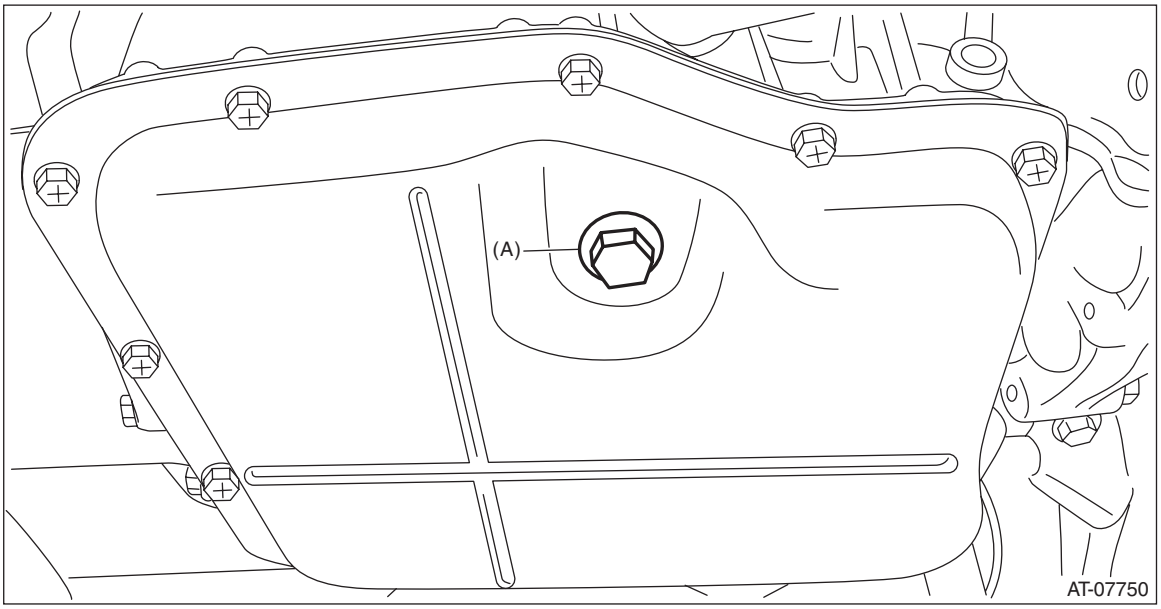

(A) CVTF drain plug

5) Install the CVTF drain plug.

NOTE:
Use a new gasket.

Tightening torque:
39.2 N·m (4.0 kgf-m, 28.9 ft-lb)

6) Remove the oil pan.

CAUTION:
Be careful not to allow foreign matter such as dust or dirt to enter the oil pan.

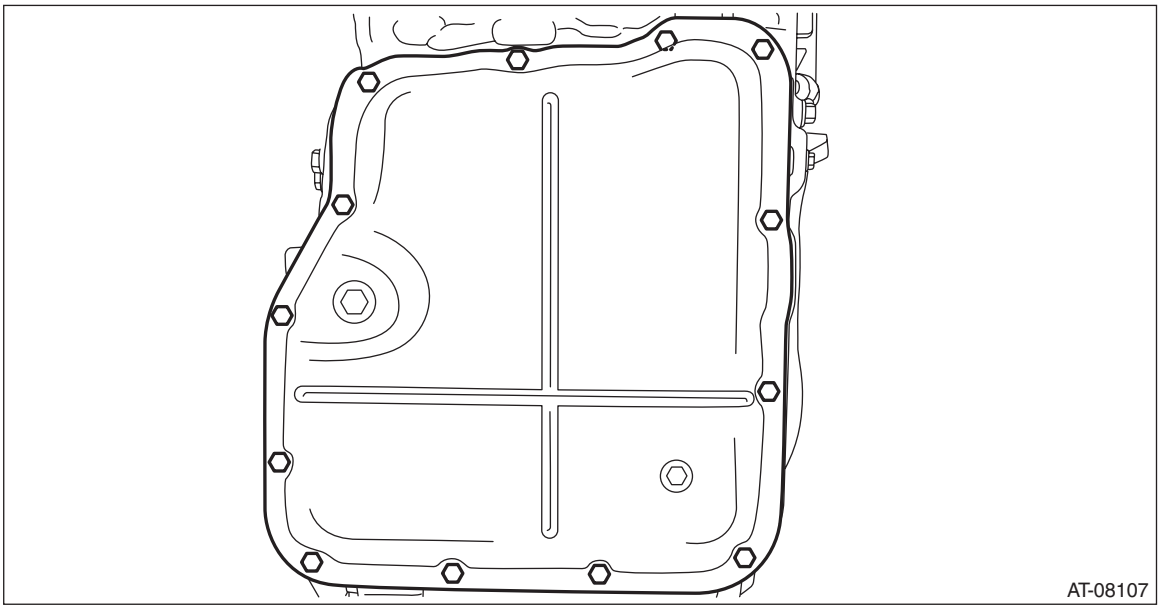

7) Remove the magnet.
8) Disconnect the control valve harness connector.

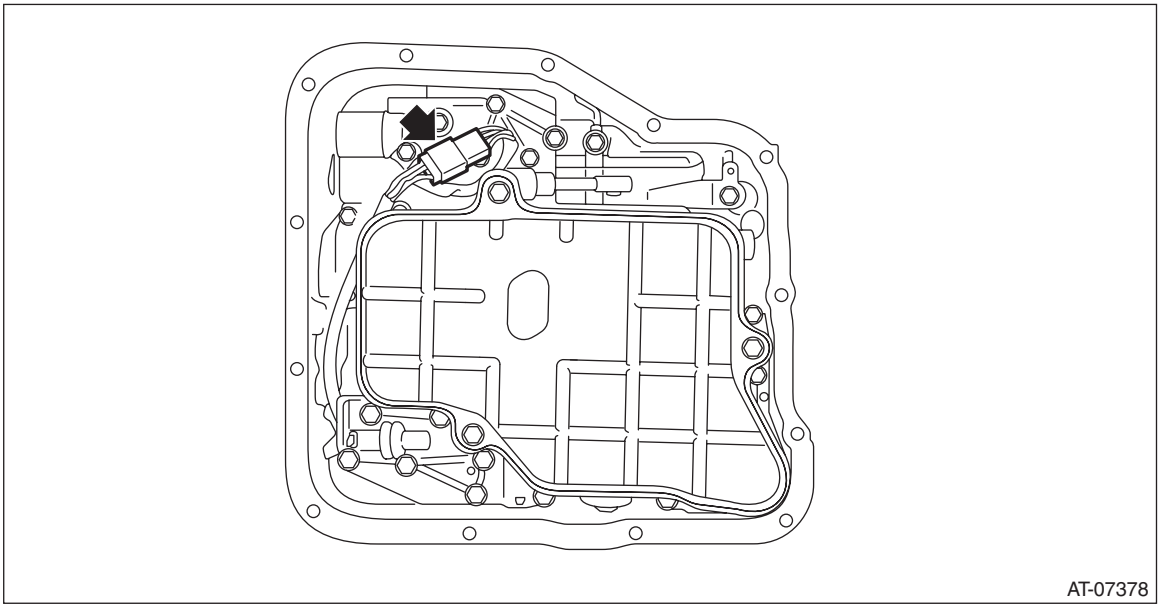

9) Remove the oil strainer.

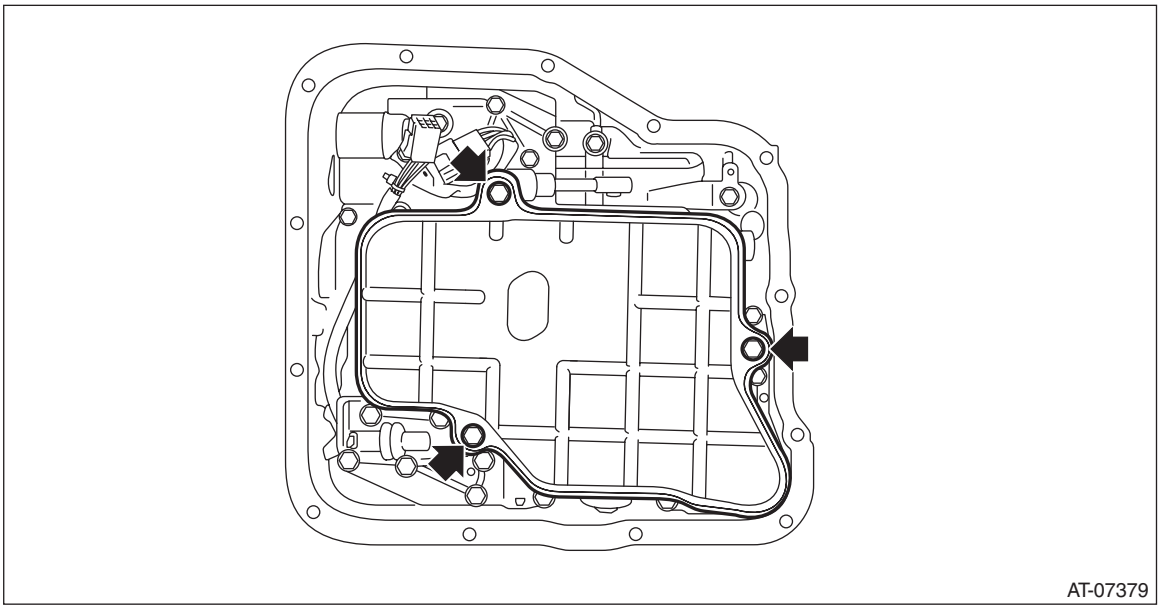

10) Remove the control valve body.

CAUTION:
Do not let the manual valve drop off.

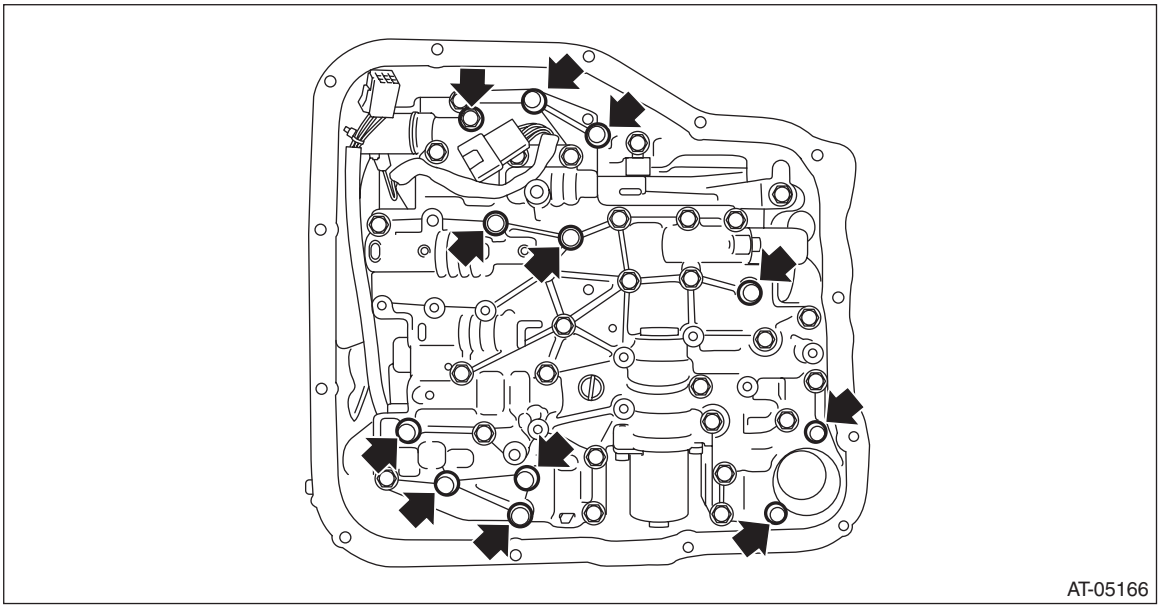

11) Remove the pressure pipe.

NOTE:
It may be located in transmission case side.

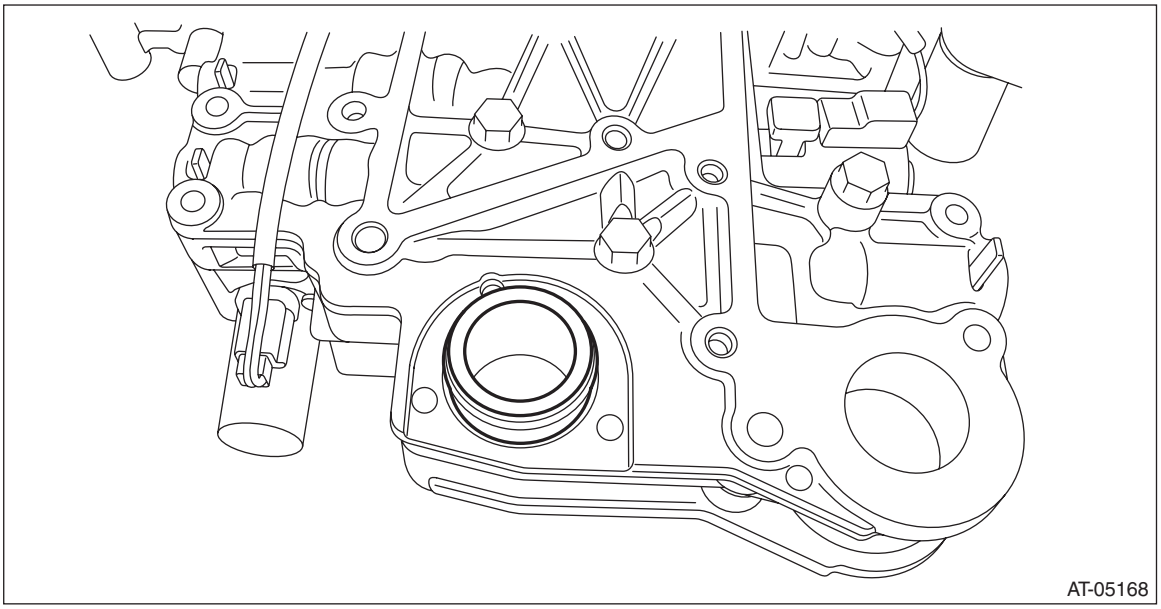

12) Remove the O-ring from oil strainer.

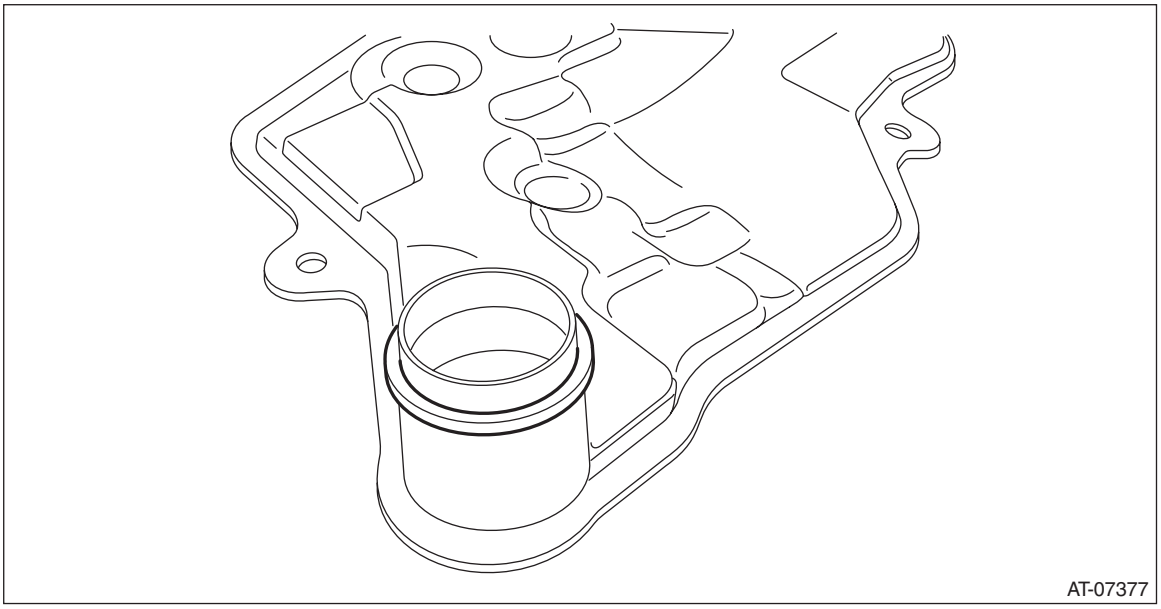

13) Remove the O-ring from pressure pipe.

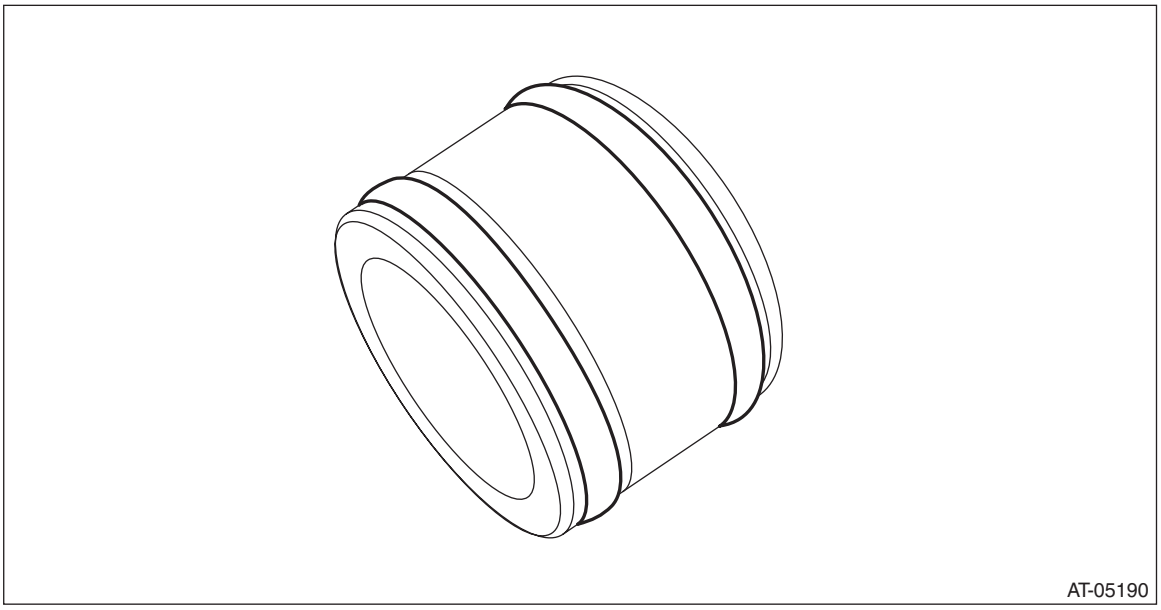

B: INSTALLATION

1) Clean the mating surface of oil pan and transmission case.
2) Make sure that the CVTF filter is installed to the transmission case.

NOTE:
Make sure that the CVTF filter does not protrude from the transmission case.

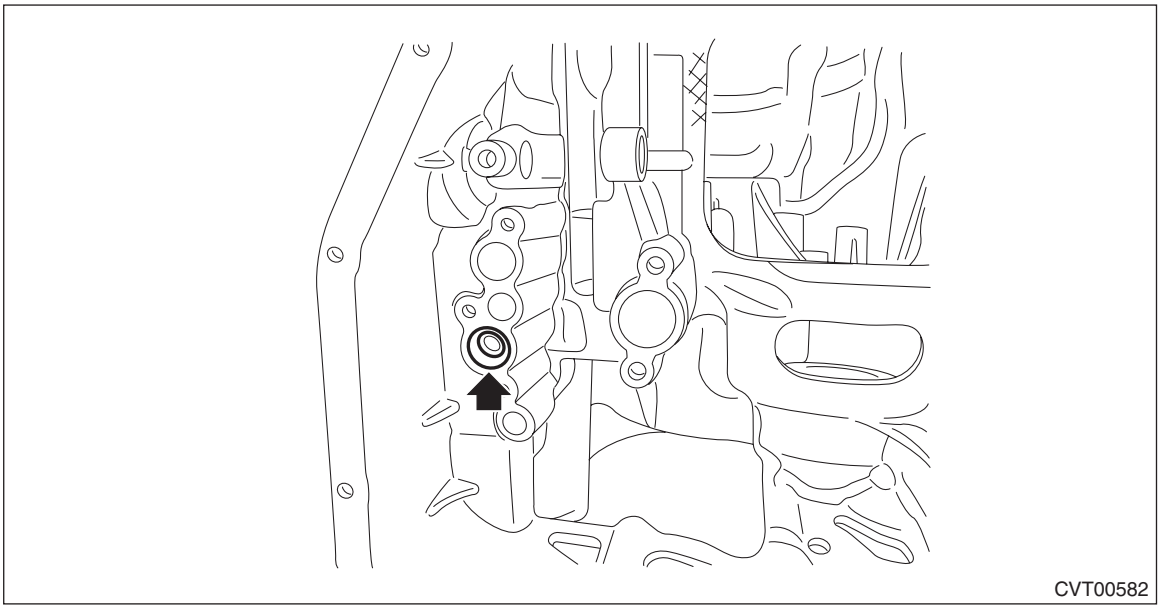

3) Check the control valve body for dust and other foreign matter.

4) Install the O-ring to the pressure pipe.

NOTE:
- Use new O-rings.
- Apply CVTF to the O-rings.

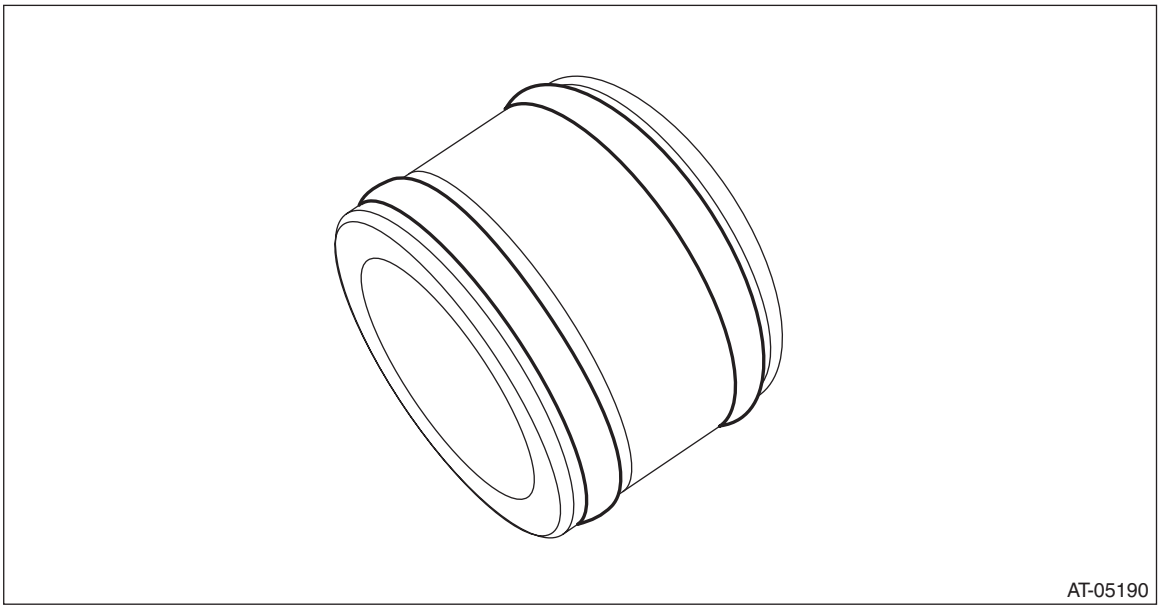

5) Install the pressure pipe.

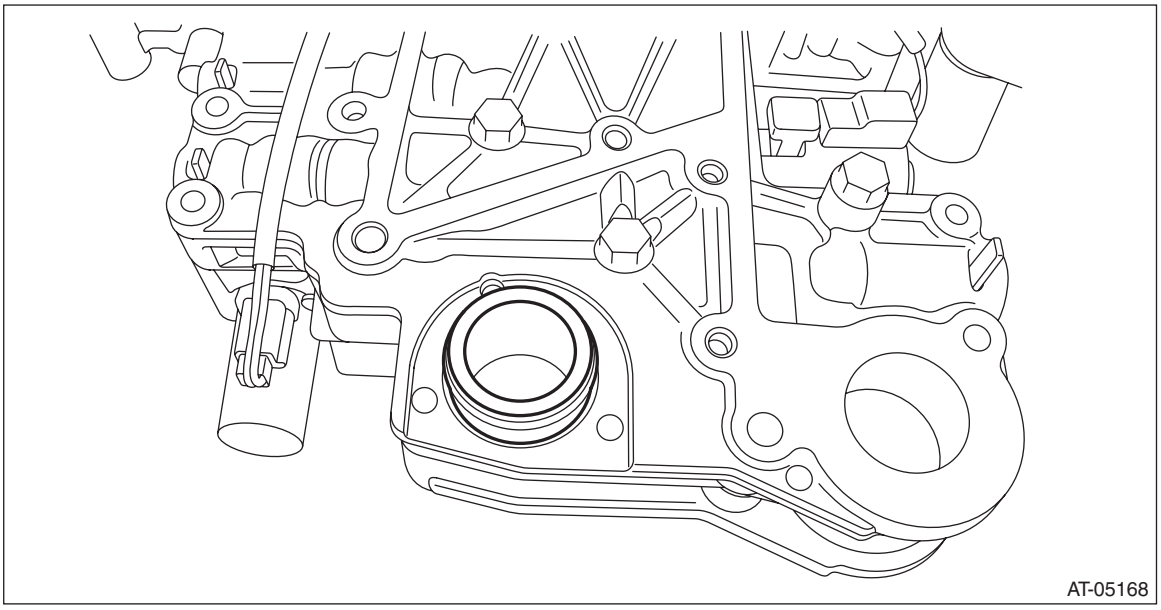

6) Install the control valve body to the transmission.

CAUTION:
- **Beware of the transmission harness getting caught in between.**
- **Do not impact or bend the transmission harness because it has the oil temperature sensor inside.**

NOTE:
- Engage the manual valve to the manual plate.
- Lead the transmission harness through from the point indicated by dashed line in the figure.

Tightening torque:
9 N·m (0.9 kgf-m, 6.6 ft-lb)

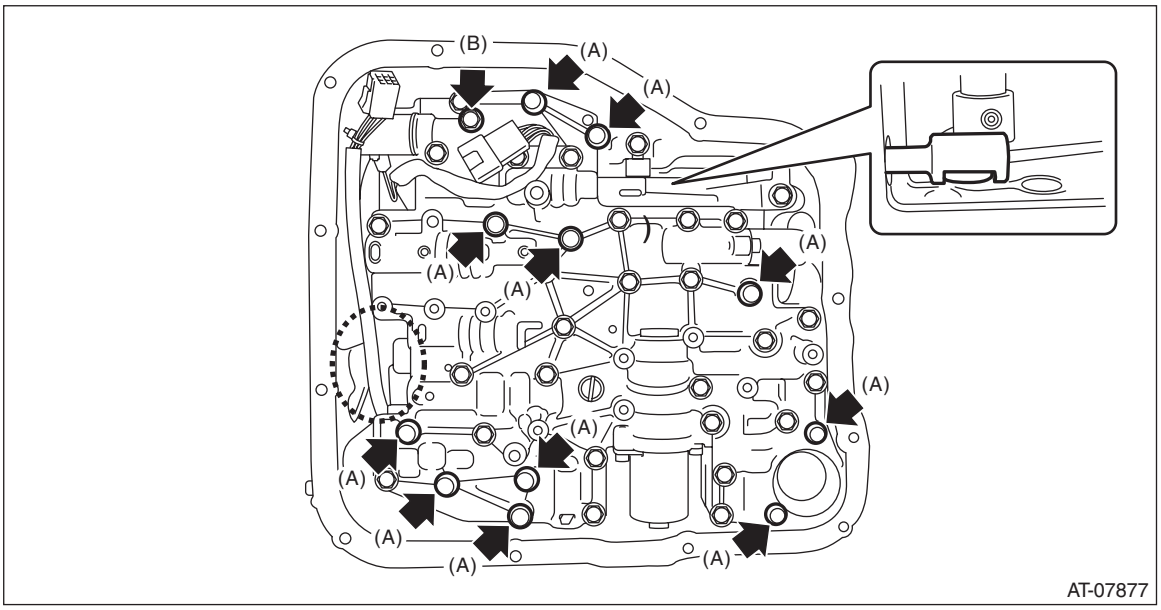

(A) Short bolt (11 pcs)
(B) Long bolt (1 pcs)

7) Install the O-ring to oil strainer and install the oil strainer.

NOTE:
- Use new O-rings.
- Apply CVTF to the O-rings.
- Let the transmission harness run between control valve body and oil strainer.

Tightening torque:
9 N·m (0.9 kgf-m, 6.6 ft-lb)

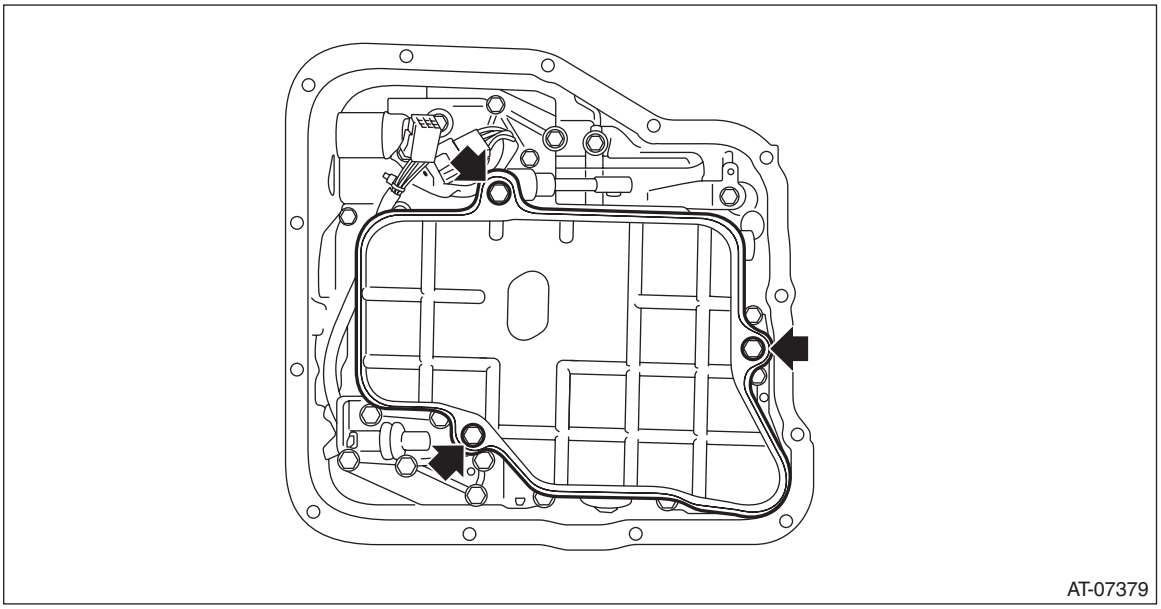

8) Connect the control valve harness connector.

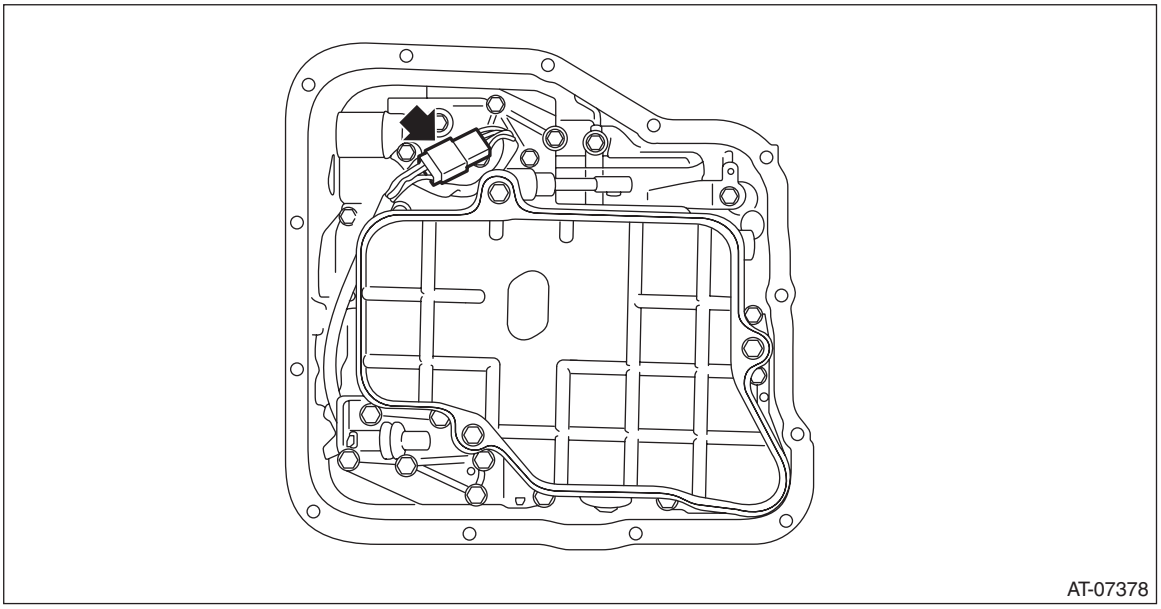

9) Clean the magnet.

10) Attach the magnet at the specified position of the oil pan.

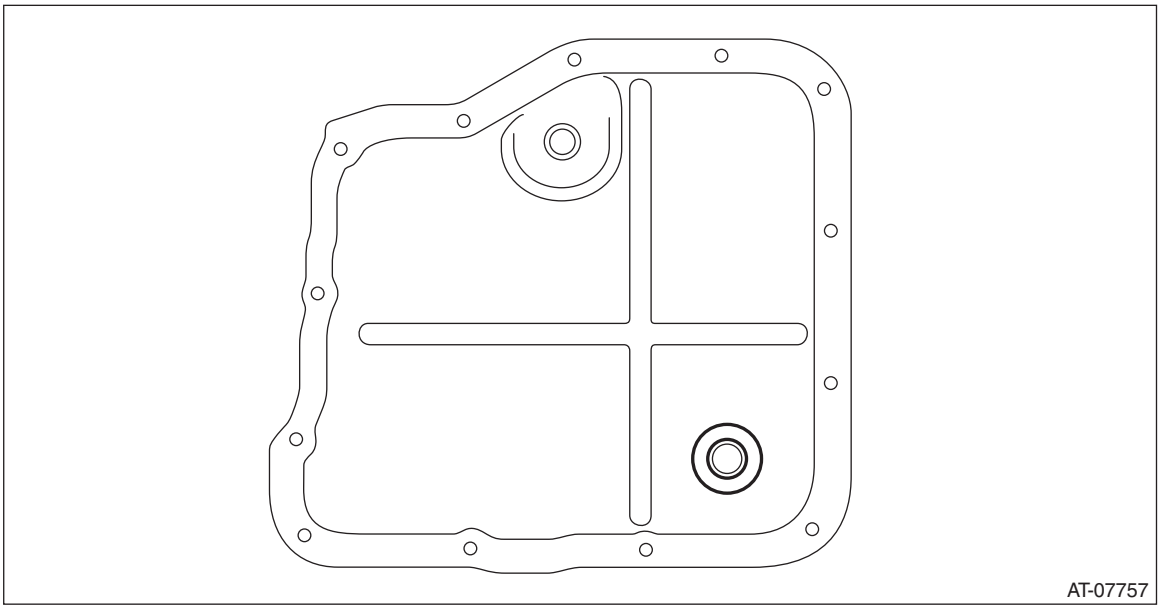

11) Apply liquid gasket all around the oil pan mating surface seamlessly.

Liquid gasket:
THREE BOND 1217B (Part No. K0877YA020) or equivalent

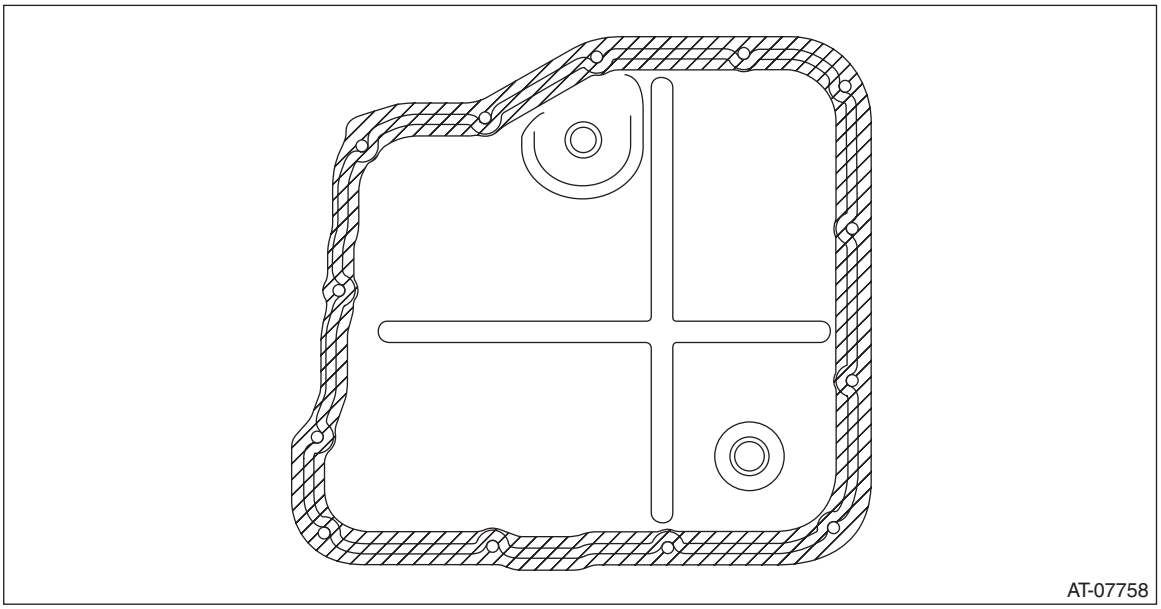

12) Install the oil pan by equally tightening the bolts.

CAUTION:
Beware of the transmission harness getting caught in between.

Tightening torque:
5 N·m (0.5 kgf-m, 3.7 ft-lb)

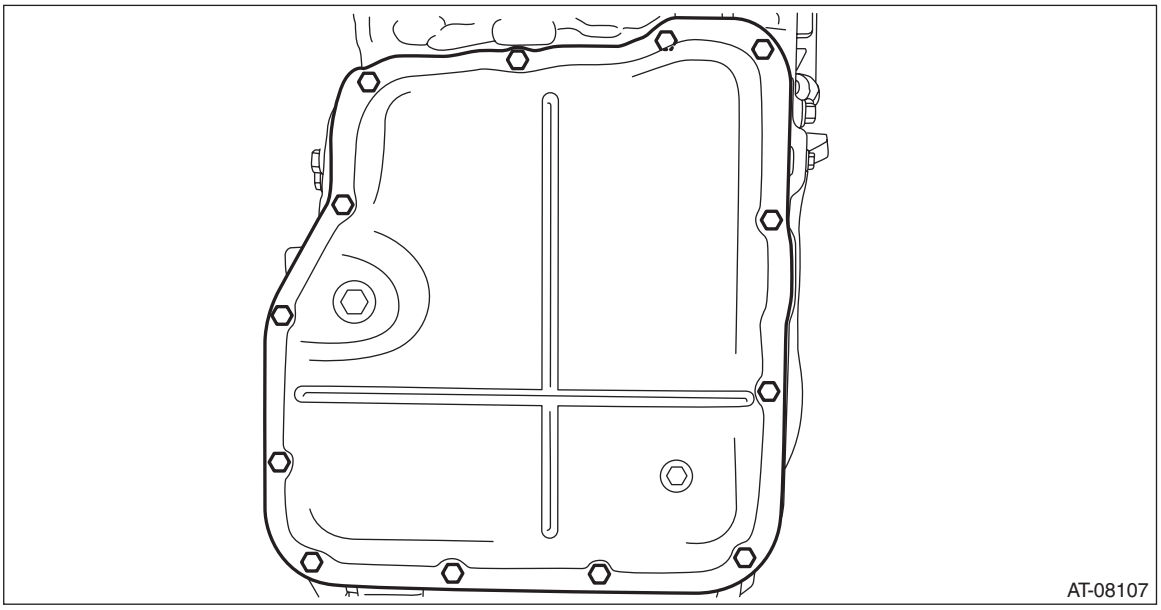

13) Connect the ground terminal to battery sensor. <Ref. to RC-4, BATTERY, NOTE, Repair Contents.>
14) Fill with CVTF. <Ref. to CVT(TR690)-40, REPLACEMENT, CVTF.>
15) Adjust the CVTF level. <Ref. to CVT(TR690)-38, ADJUSTMENT, CVTF.>
16) Perform the operation of AT learning mode. <Ref. to CVT(diag)-33, Learning Control.>

C: INSPECTION

- Check each part for damage or dust.
- Check oil strainer for clogging.
- Measure the resistance of each solenoid.

NOTE:
Measurement should be performed at a temperature of 20°C (68°F).

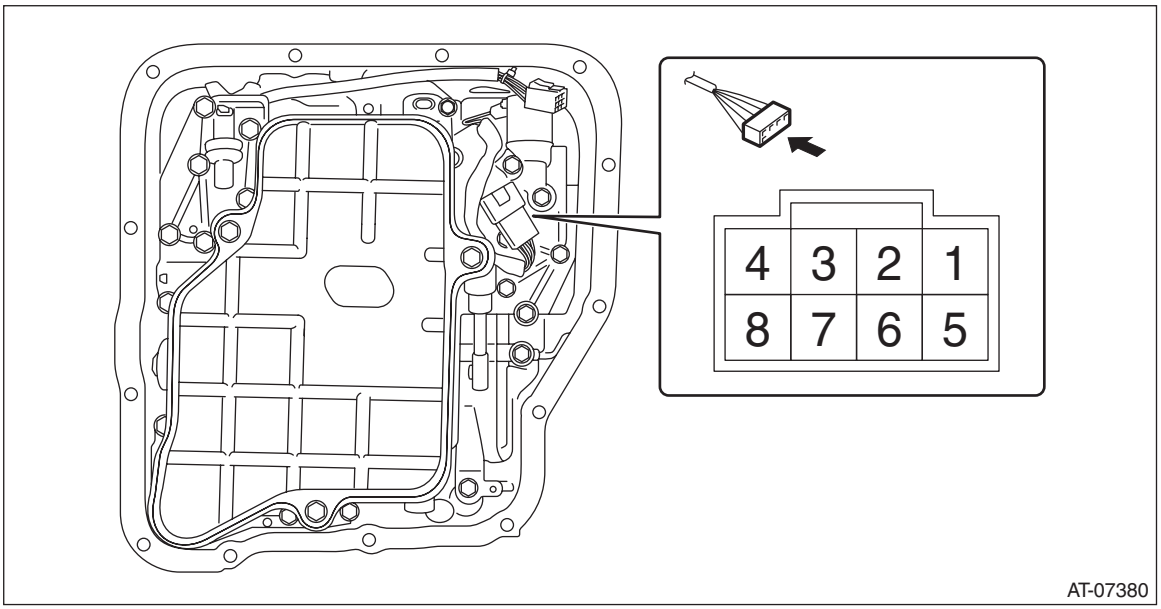

Solenoid	Terminal No.	Standard (Ω)
Secondary solenoid	No. 1 — control valve body	Approx. 6.6 Ω
Lock-up duty solenoid	No. 2 — control valve body	Approx. 12 Ω
F&R solenoid	No. 3 — control valve body	Approx. 5.3 Ω
Lock-up ON/OFF solenoid	No. 5 — control valve body	Approx. 16 Ω
Primary DOWN solenoid	No. 6 — control valve body	Approx. 12 Ω
Primary UP solenoid	No. 7 — control valve body	Approx. 12 Ω
AWD solenoid	No. 8 — control valve body	Approx. 3.2 Ω

21.Transmission Harness

A: REMOVAL

1) Remove the transmission from the vehicle. <Ref. to CVT(TR690)-58, REMOVAL, Automatic Transmission Assembly.>
2) Prepare for overhaul. <Ref. to CVT(TR690)-157, Preparation for Overhaul.>
3) Remove the transmission harness ground terminal and remove the harness connectors from front wheel speed sensor and secondary speed sensor.

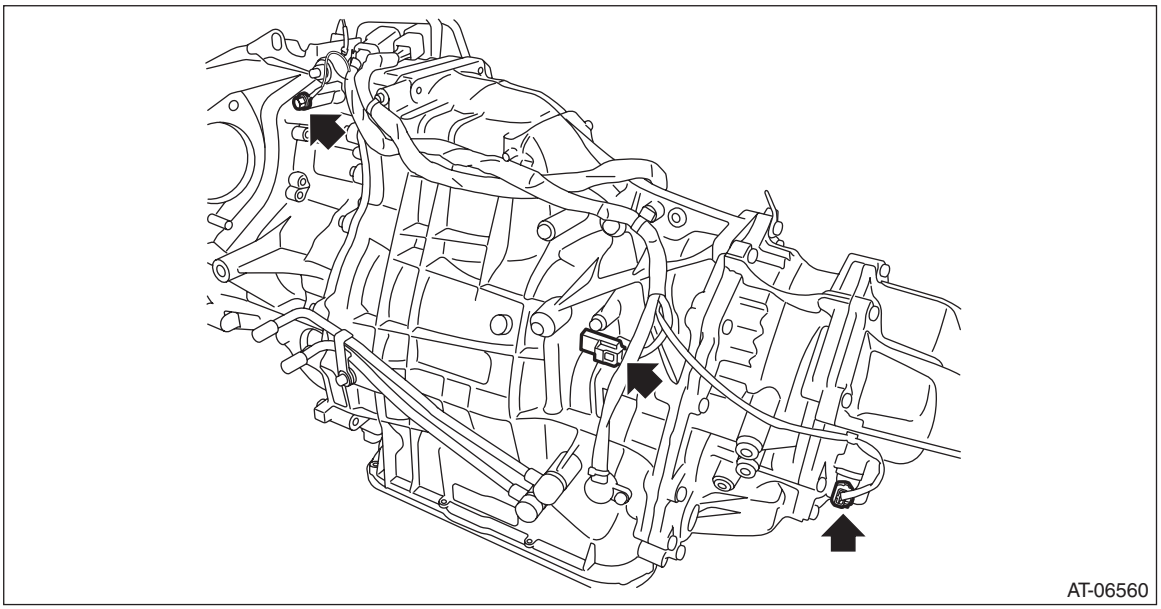

4) Remove the harness connectors from inhibitor switch, primary speed sensor and secondary pressure sensor.

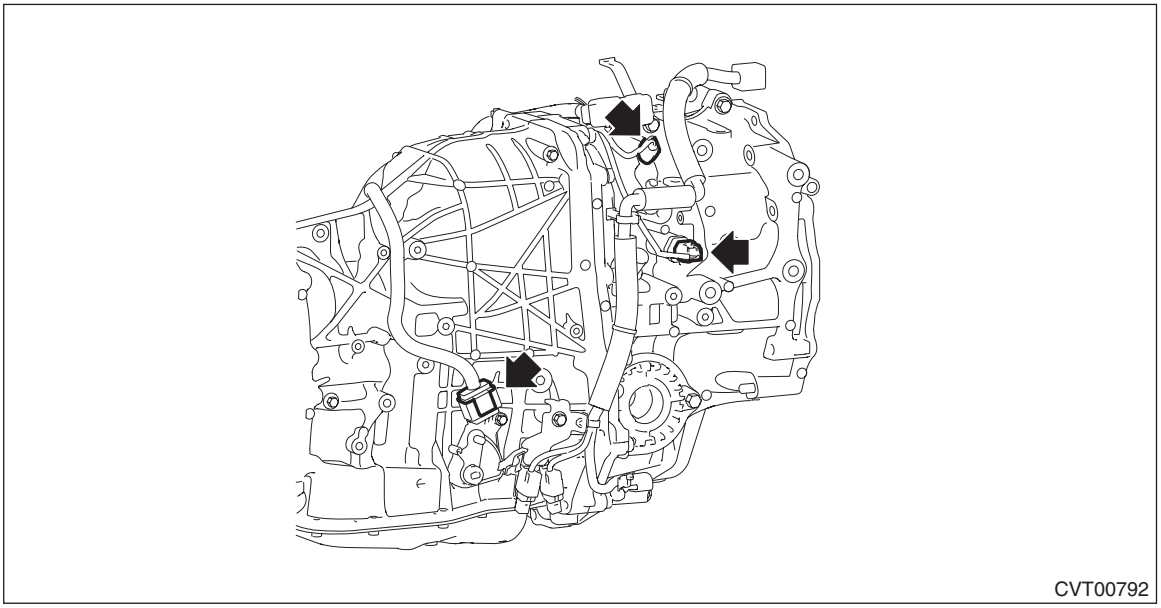

5) Remove the transmission harness stay.

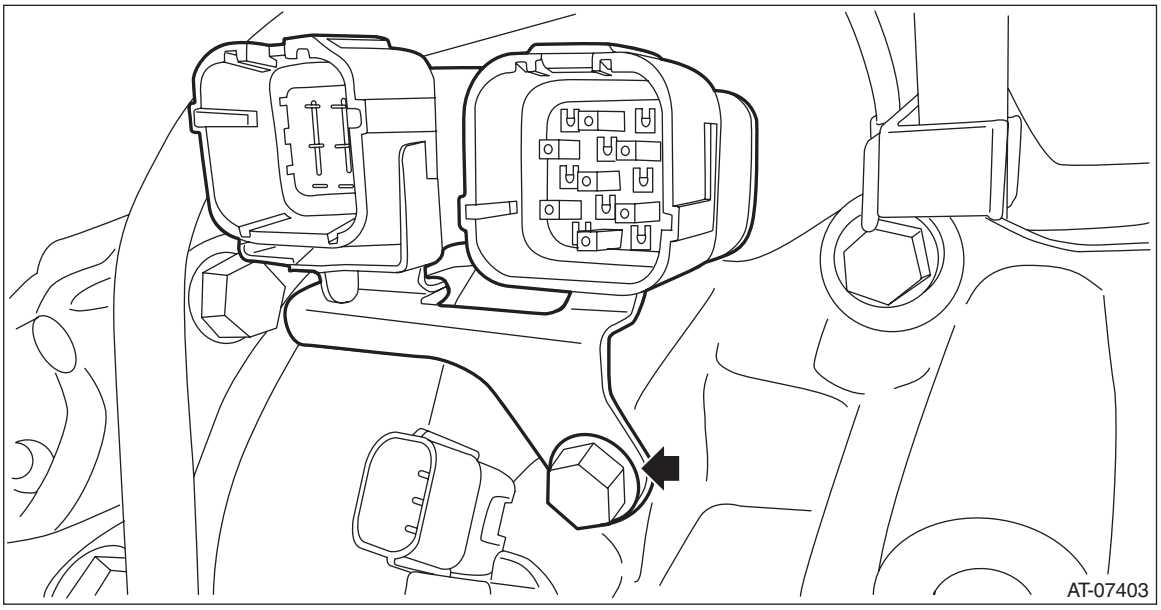

6) Remove transmission harness connector and inhibitor harness connector from harness stay.
7) Remove the control valve body. <Ref. to CVT(TR690)-124, REMOVAL, Control Valve Body.>
8) Remove the mounting bolt to pull out the bushing of transmission harness from transmission case round hole.

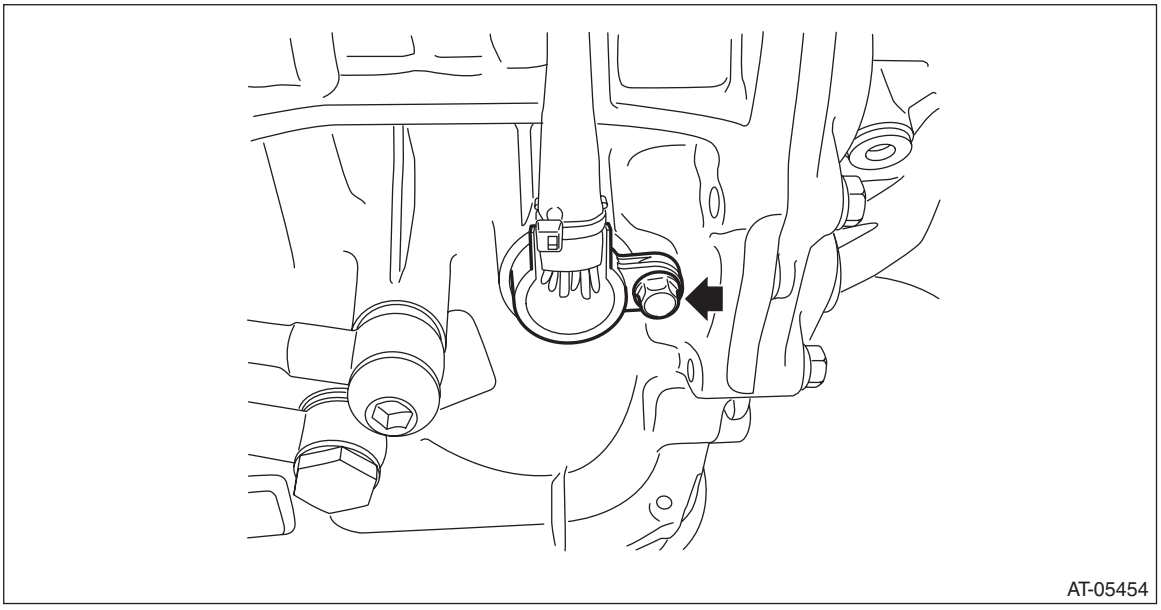

9) Remove the harness clip from transmission assembly.

B: INSTALLATION

1) Install the harness clip to the transmission assembly.
2) Insert the transmission harness bushing into the round hole on the transmission case and install the bolt.

NOTE:
- Use new O-rings.
- Do not impact or bend the transmission harness because it has the oil temperature sensor inside.

Tightening torque:
5 N·m (0.5 kgf-m, 3.7 ft-lb)

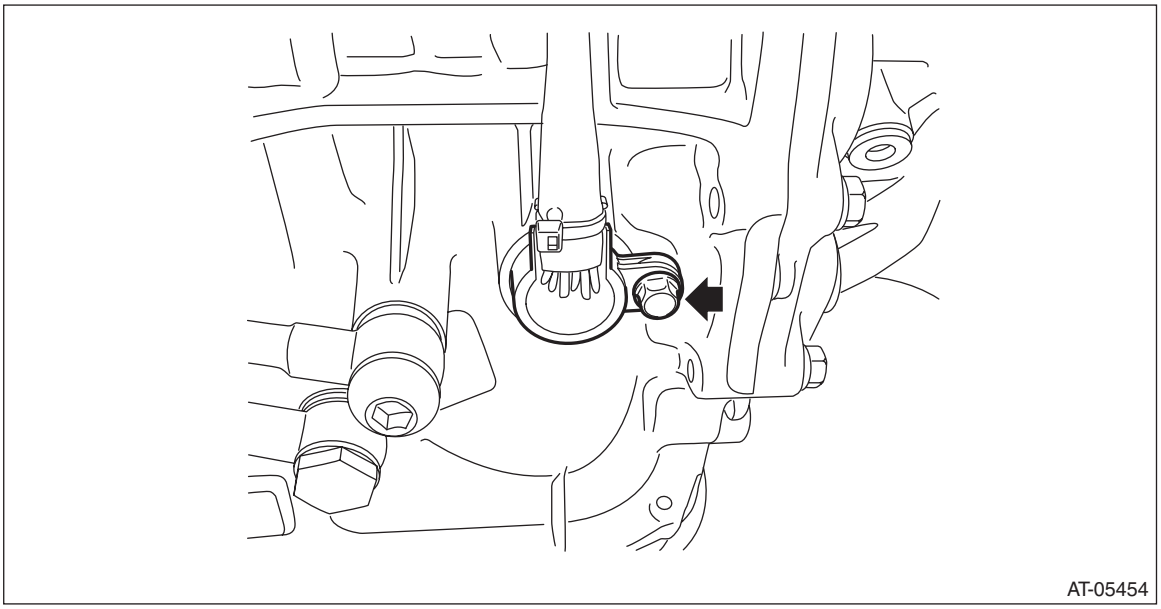

3) Install the control valve body. <Ref. to CVT(TR690)-128, INSTALLATION, Control Valve Body.>
4) Install the transmission harness connector and inhibitor harness connector to the harness stay.
5) Install the transmission harness stay.

Tightening torque:
16 N·m (1.6 kgf-m, 11.8 ft-lb)

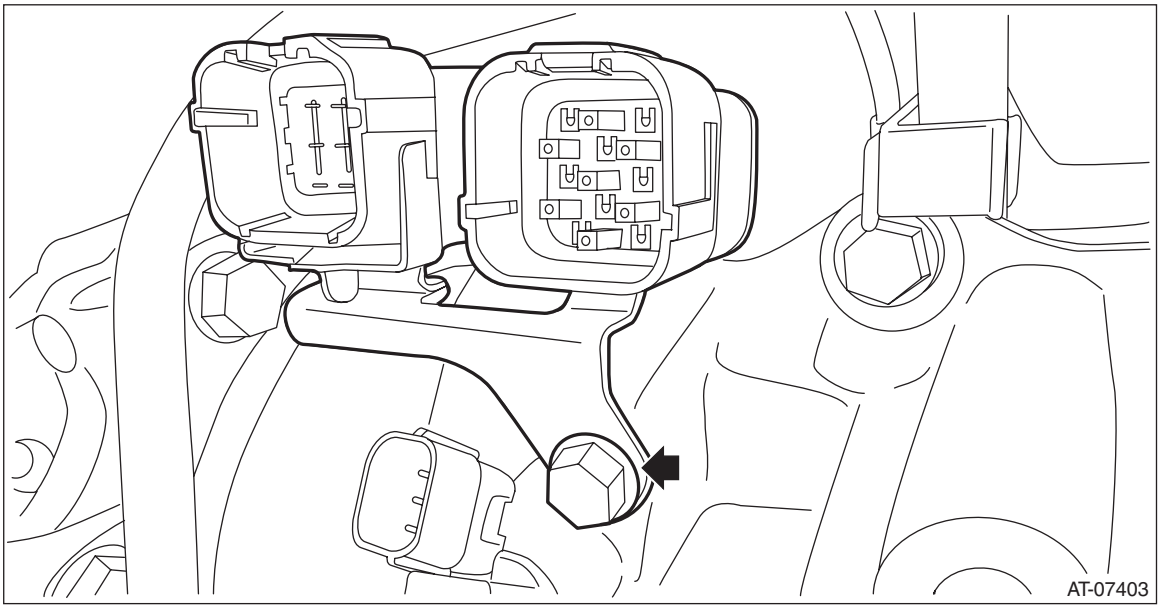

6) Connect the harness connectors to the inhibitor switch, primary speed sensor and secondary pressure sensor.

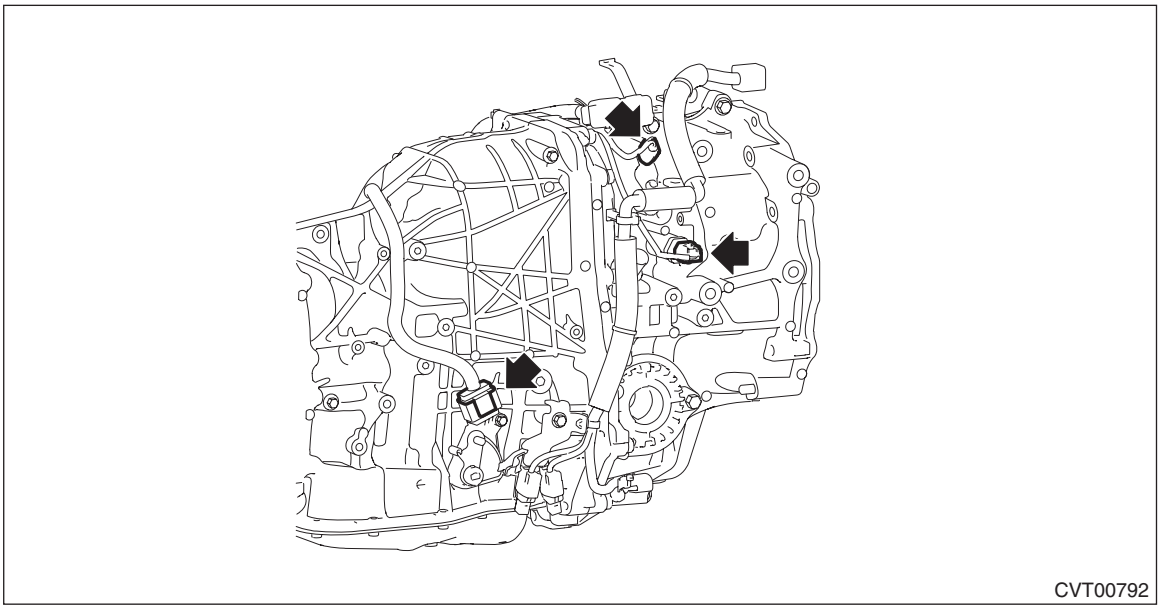

7) Connect the harness connectors to the front wheel speed sensor and secondary speed sensor.

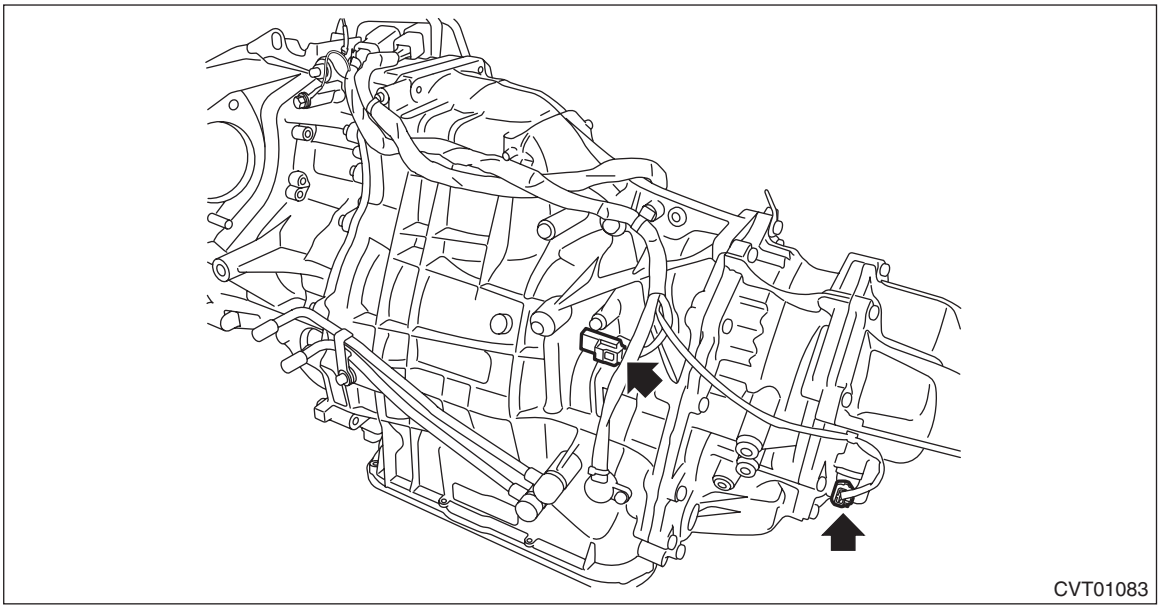

8) Install the transmission ground terminal.

NOTE:
Install the transmission ground terminal at an approximately 45° angle (A).

Tightening torque:
16 N·m (1.6 kgf-m, 11.8 ft-lb)

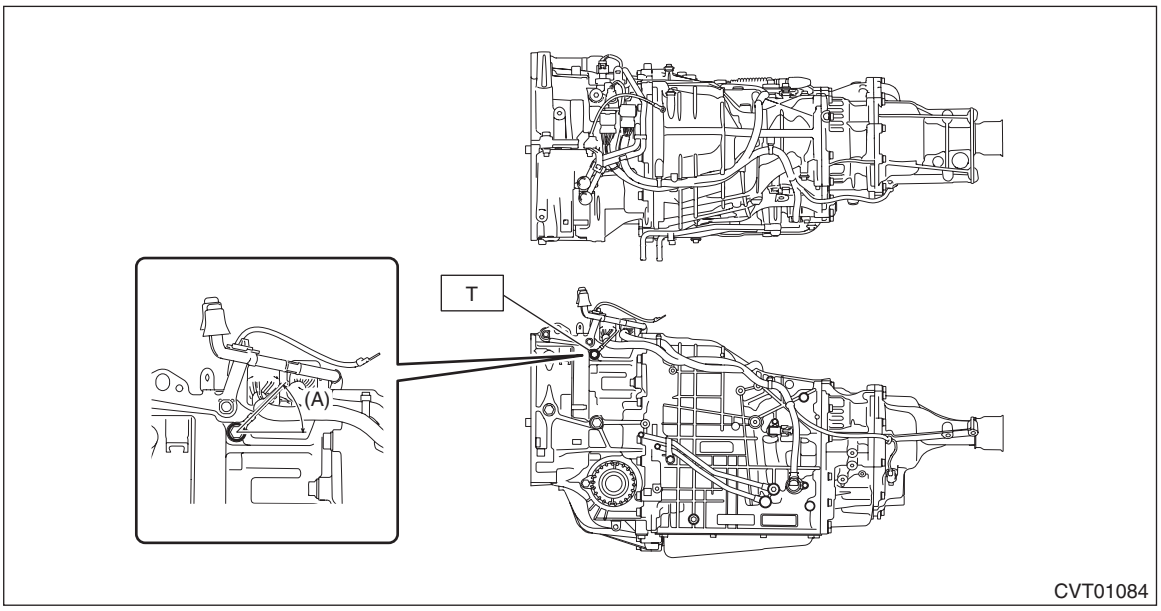

9) Install the transmission cover.

Tightening torque:
8 N·m (0.8 kgf-m, 5.9 ft-lb)

10) Install the transmission assembly. <Ref. to CVT(TR690)-75, INSTALLATION, Automatic Transmission Assembly.>

C: INSPECTION

1) Visually check the harness and connector for damage or crack.
2) Check the harness terminal for rust, disconnection or poor contact.
3) Check the continuity between harness terminals and oil temperature sensor.

NOTE:
Refer to WIRING SECTION for transmission harness terminal and oil temperature sensor terminal. <Ref. to WI-156, WIRING DIAGRAM, CVT Control System.>

Harness continuity standard:
Less than 1 Ω

Oil temperature sensor standard:
Approx. 2.6 kΩ (at 20°C)

22.X MODE Switch

A: REMOVAL

1) Disconnect the ground terminal from battery sensor. <Ref. to RC-4, BATTERY, NOTE, Repair Contents.>
2) Remove the cover - shift lever. <Ref. to EI-80, REMOVAL, Console Box.>
3) Remove the X mode switch from the cover - shift lever.

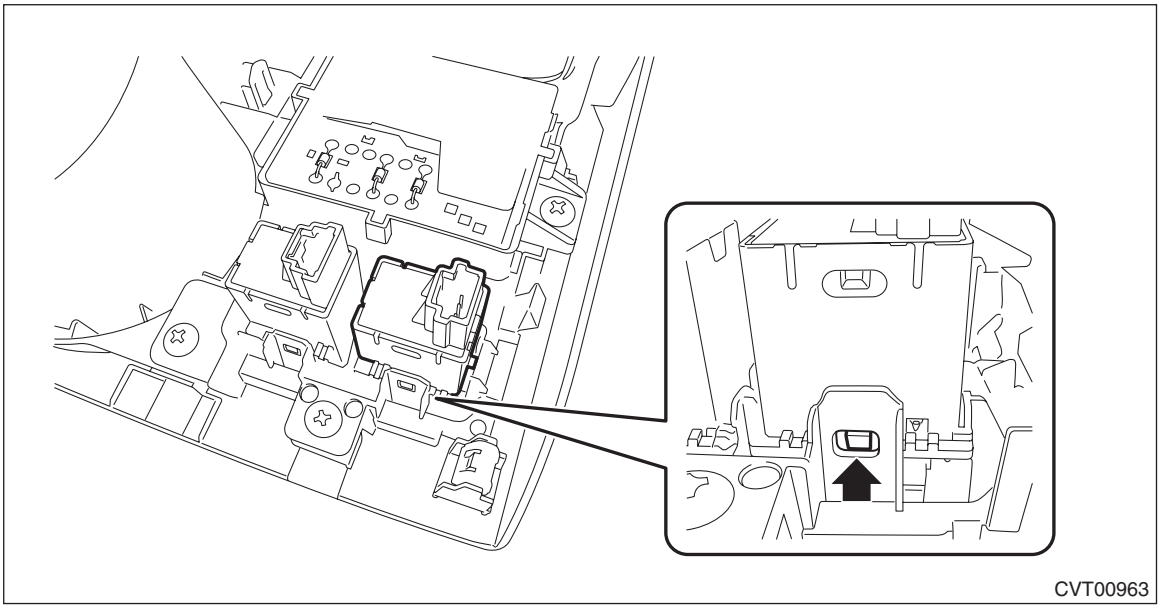

B: INSTALLATION

1) Install X mode switch to the cover - shift lever.
2) Install the cover - shift lever. <Ref. to EI-82, INSTALLATION, Console Box.>
3) Connect the ground terminal to battery sensor. <Ref. to RC-4, BATTERY, NOTE, Repair Contents.>

C: INSPECTION

1. CHECK SWITCH UNIT

Measure the resistance between connector terminals of the X mode switch.

	Terminal No.	Standard
OFF (when measured without operating the switch)	No. 1 — No. 4	1 MΩ or more
ON (when measured with the switch held down)		Less than 1 Ω

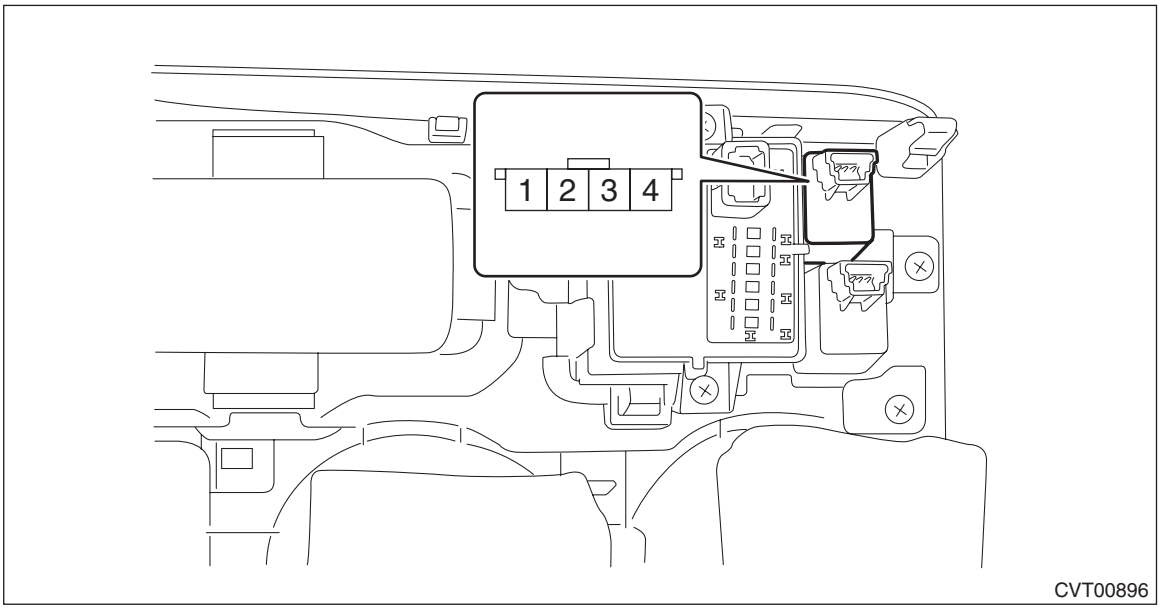

2. CHECK X MODE SYSTEM

Refer to “CVT (TR580)” section for X mode system inspection. <Ref. to CVT(TR580)-155, CHECK X MODE SYSTEM, INSPECTION, X MODE Switch.>

23.Transmission Control Module (TCM)

A: REMOVAL

1) Disconnect the ground terminal from battery sensor. <Ref. to RC-4, BATTERY, NOTE, Repair Contents.>
2) Remove the air cleaner case. <Ref. to IN(H6DO)-8, REMOVAL, Air Cleaner Case.>
3) Move the lock lever in the arrow direction while pressing the lock button, and disconnect the connector.

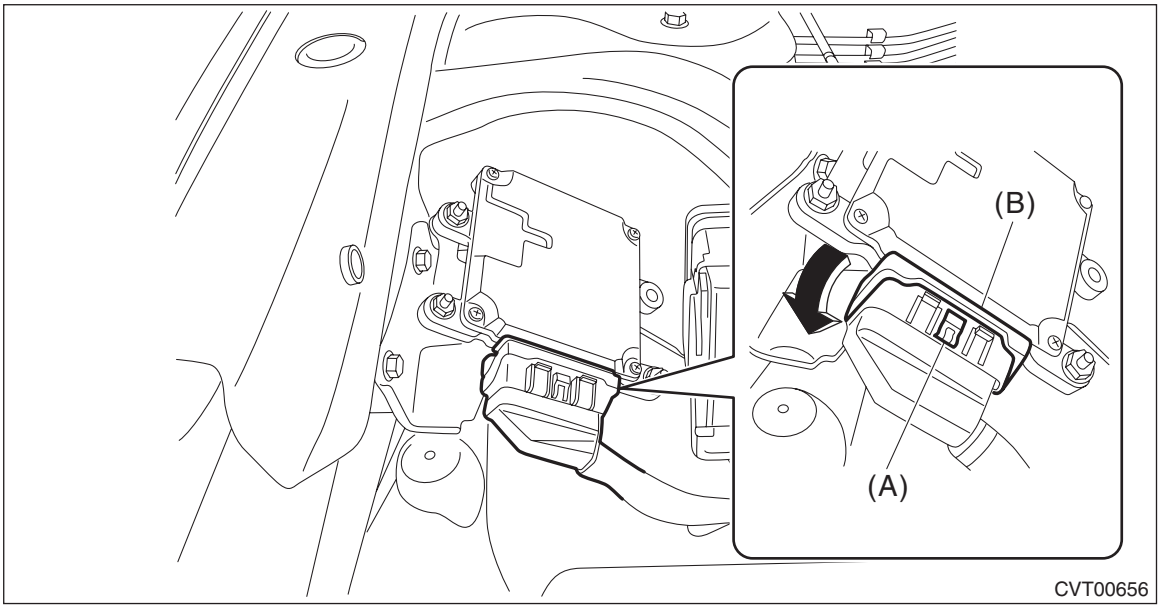

(A) Lock button
(B) Lock lever

4) Remove the TCM.

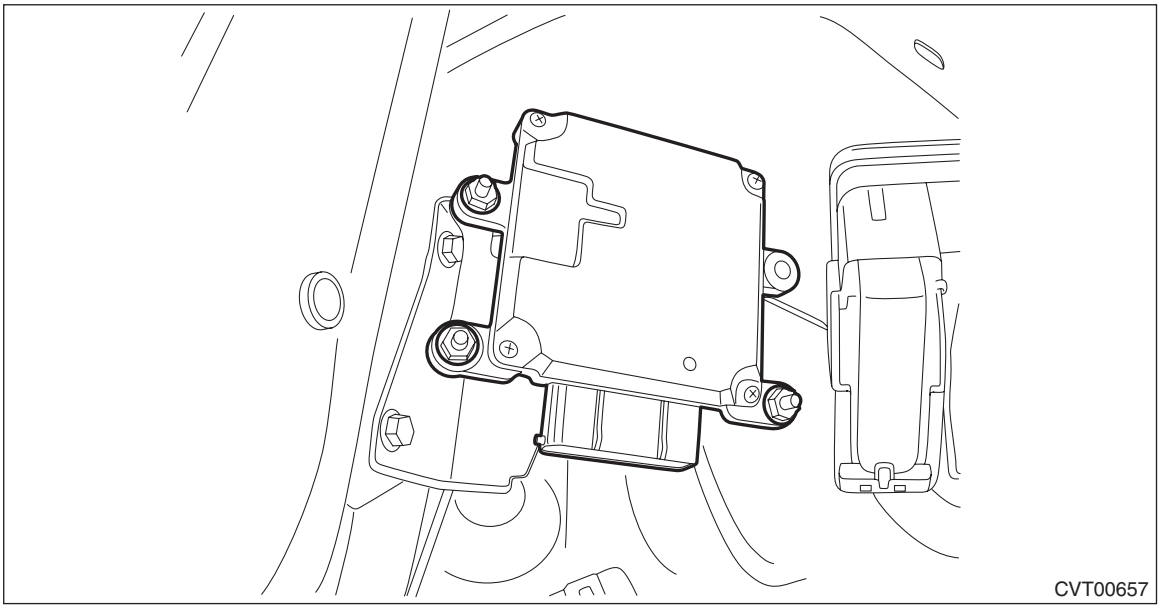

B: INSTALLATION

1) Install the TCM.

Tightening torque:
7.5 N·m (0.8 kgf-m, 5.5 ft-lb)

2) Install the harness connector to TCM.

NOTE:
- Install the connector in the reverse order of removal.
- Move the lock lever in the arrow direction, and confirm that a clicking sound is heard.

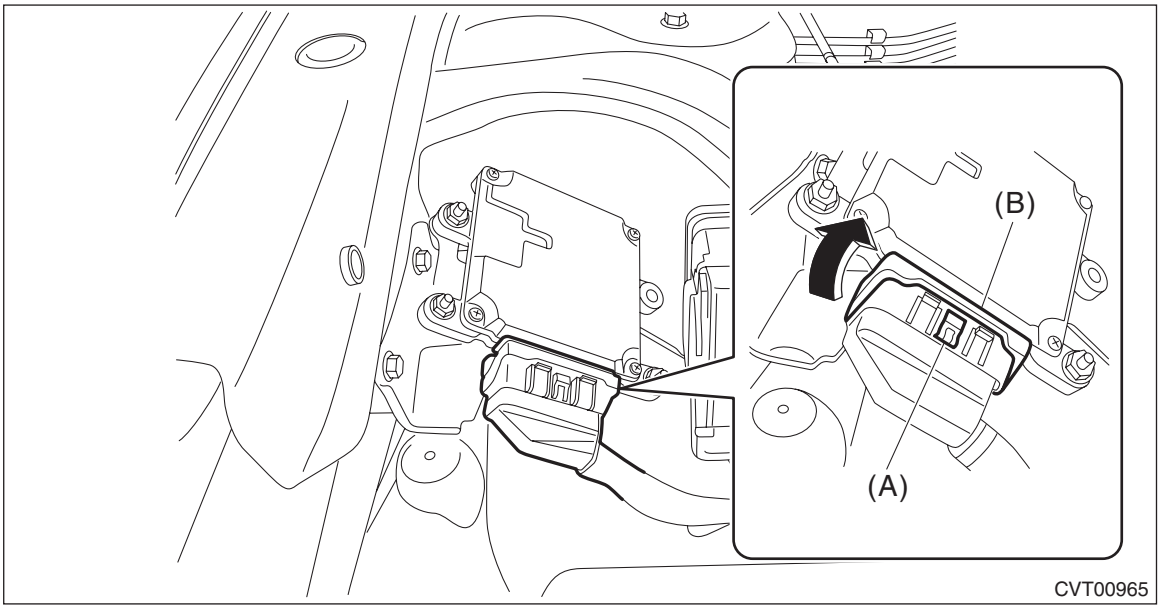

(A) Lock button
(B) Lock lever

3) Install the air cleaner case. <Ref. to IN(H6DO)-9, INSTALLATION, Air Cleaner Case.>
4) Connect the ground terminal to battery sensor. <Ref. to RC-4, BATTERY, NOTE, Repair Contents.>
5) Perform the operation of AT learning mode. <Ref. to CVT(diag)-33, Learning Control.>

24.CVTF Cooler Pipe and Hose

A: REMOVAL

CAUTION:
• Immediately after the vehicle has been running or after idling for a long time, the CVTF will be hot. Be careful not to burn yourself.
• If the CVTF is spilt over exhaust pipe, wipe it off with cloth to avoid emitting smoke or causing a fire.
• When removing the CVTF cooler pipe assembly on vehicle side, be careful not to bend the A/C pipe.

1) Lift up the vehicle.
2) Remove the front exhaust pipe. <Ref. to EX(H6DO)-6, REMOVAL, Front Exhaust Pipe.>
3) Remove the CVTF CVT inlet hose and CVTF CVT outlet hose.

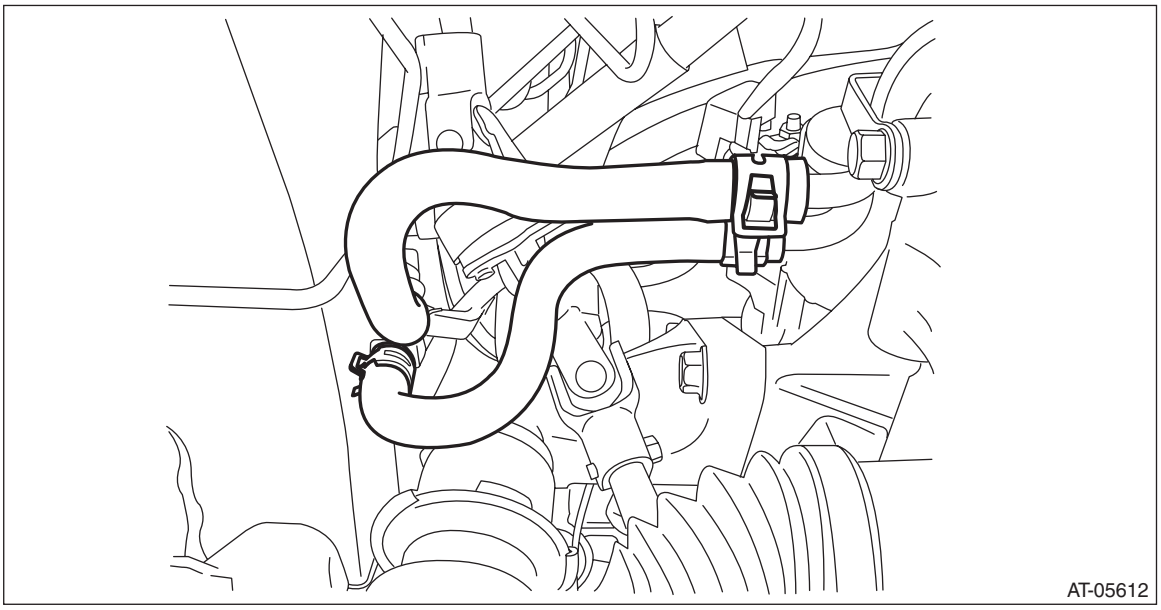

4) Remove the CVTF radiator inlet hose and CVTF radiator outlet hose on radiator side.

CAUTION:
Do not use a screwdriver or other pointed tools.

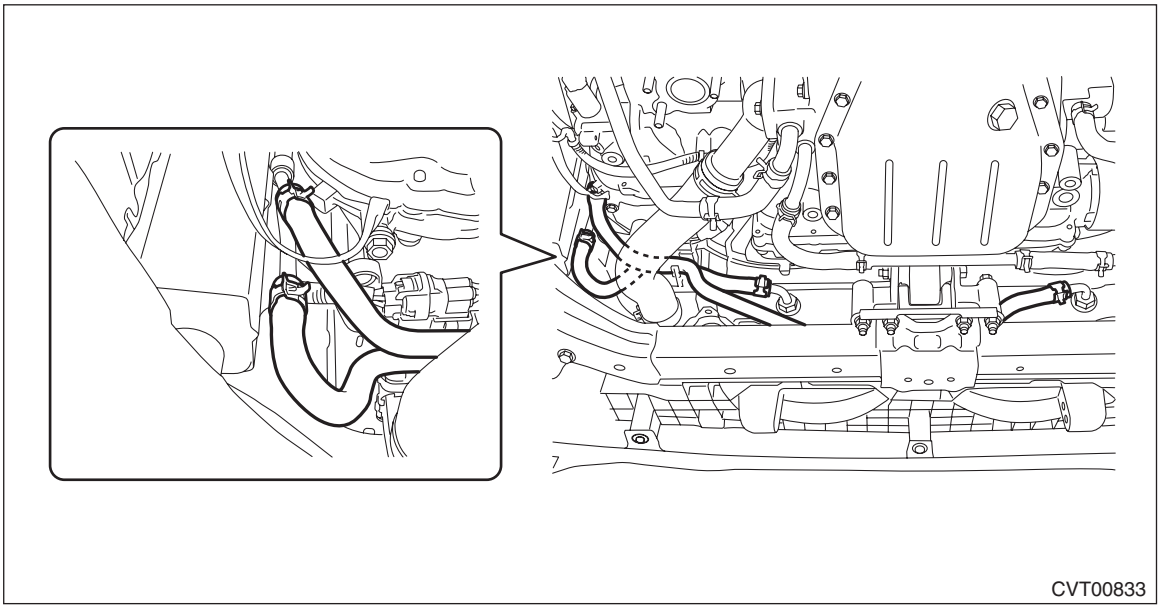

5) Lower the vehicle.

6) Remove the battery and battery box. <Ref. to SC(H6DO)-57, REMOVAL, Battery.>
7) Remove the engine coolant reservoir tank. <Ref. to CO(H6DO)-46, REMOVAL, Reservoir Tank.>
8) Remove the battery cable clip from the bracket, and remove the battery cable bracket.

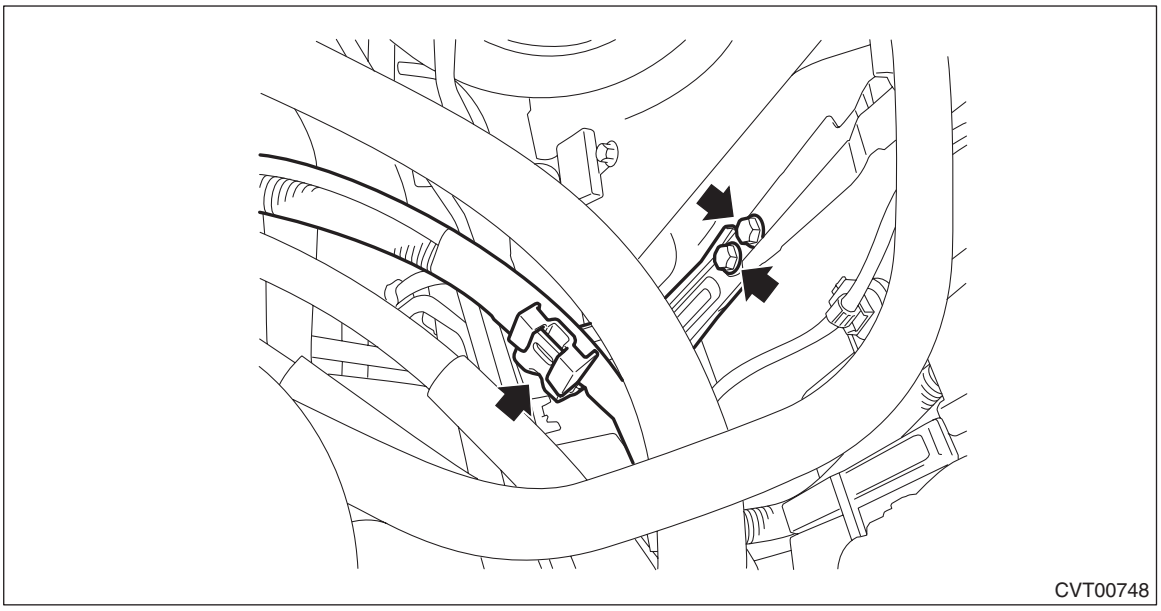
CVT00748

9) Remove the front bumper. (OUTBACK model) <Ref. to EI-34, REMOVAL, Front Bumper.>
10) Remove the headlight assembly LH. (OUTBACK model) <Ref. to LI-30, REMOVAL, Headlight Assembly.>
11) Remove the CVTF cooler (air cool) inlet hose and the CVTF cooler (air cool) outlet hose. (OUTBACK model)

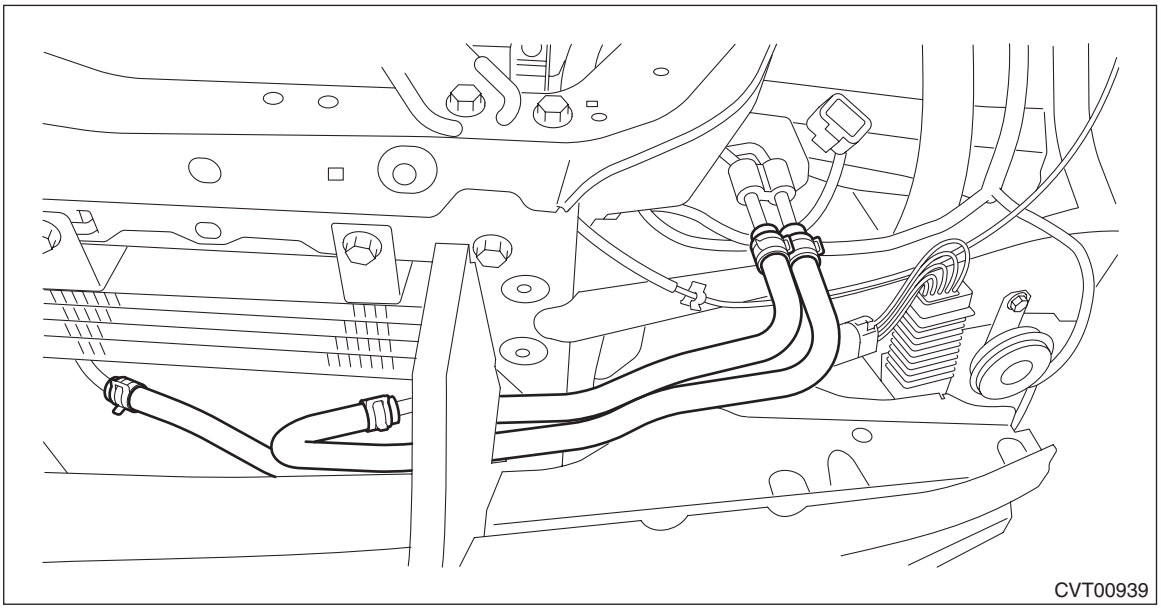
CVT00939

12) Remove the CVTF cooler pipe assembly mounting bolt.

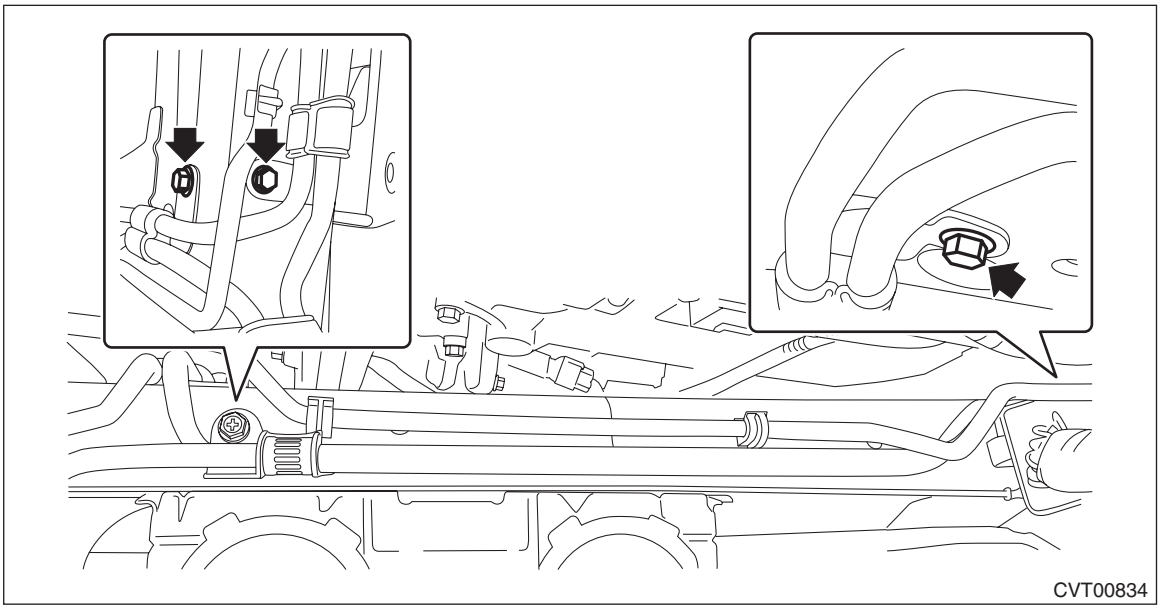

13) Detach the A/C pipe from clip.

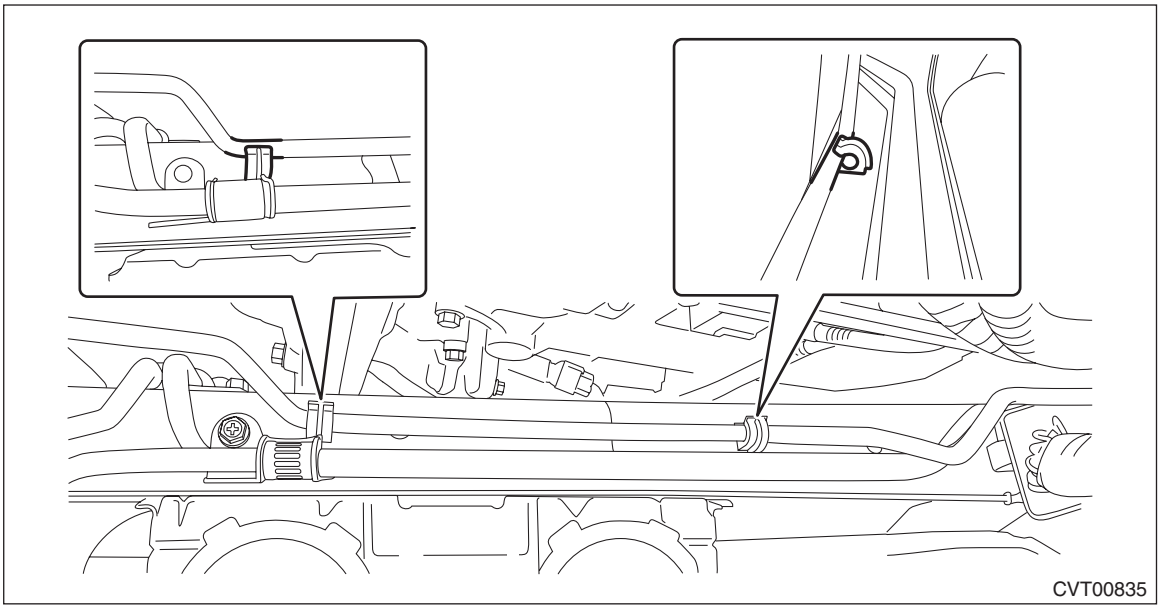

14) Remove the CVTF cooler pipe assembly.

B: INSTALLATION

CAUTION:
When installing the CVTF cooler pipe assembly on vehicle side, be careful not to bend the A/C pipe.
1) Install the CVTF cooler pipe assembly to vehicle.

Tightening torque:
7.5 N·m (0.8 kgf-m, 5.5 ft-lb)

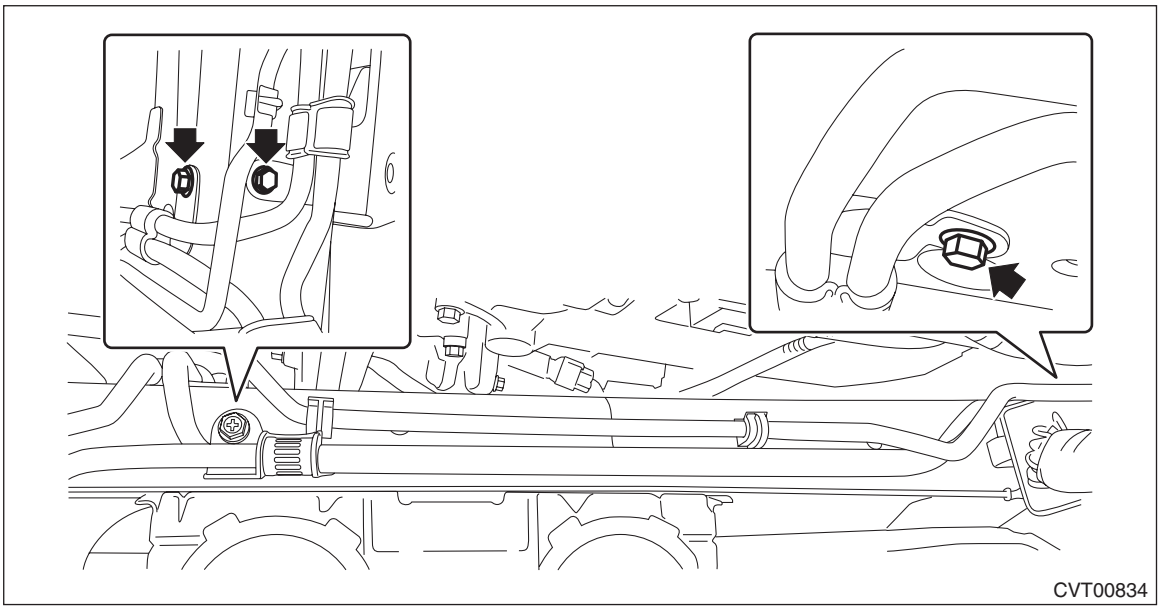

2) Install the A/C pipe to clip.
3) Install the CVTF cooler (air cool) inlet hose and the CVTF cooler (air cool) outlet hose. (OUTBACK model)

NOTE:
Use new CVTF cooler (air cool) inlet hose and the CVTF cooler (air cool) outlet hose.

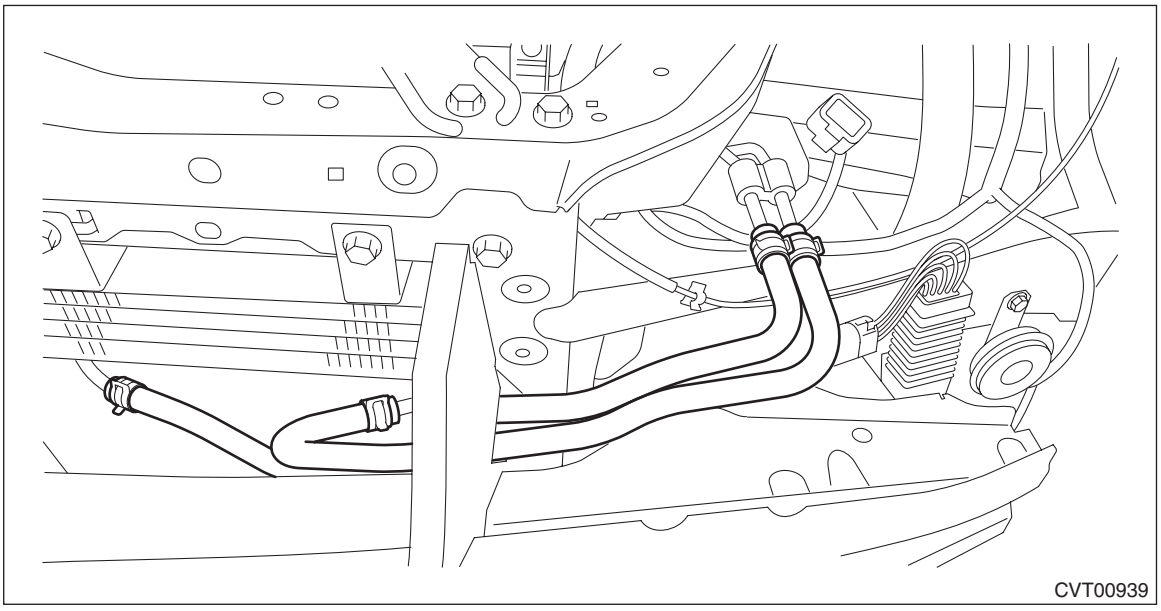

4) Install the headlight assembly LH. (OUTBACK model) <Ref. to LI-31, INSTALLATION, Headlight Assembly.>
5) Install the front bumper. (OUTBACK model) <Ref. to EI-38, INSTALLATION, Front Bumper.>
6) Install the battery cable bracket, and install the battery cable clip to the bracket.

Tightening torque:
7.5 N·m (0.8 kgf-m, 5.5 ft-lb)

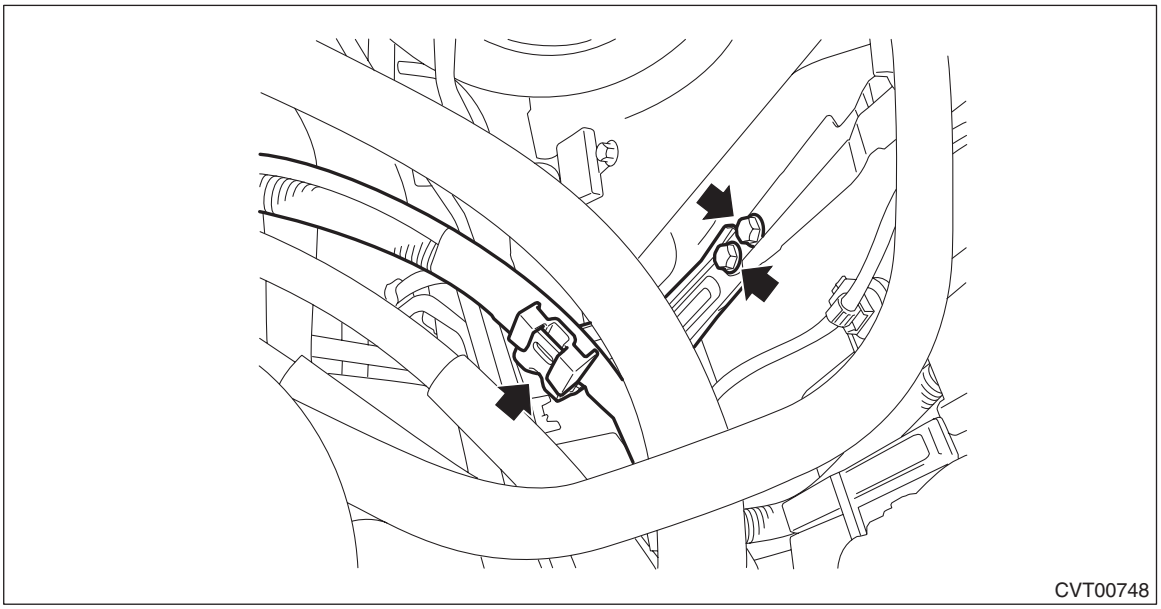
CVT00748

7) Lift up the vehicle.
8) Install the CVTF CVT inlet hose and CVTF CVT outlet hose.

NOTE:
Use new CVTF CVT inlet hose and CVTF CVT outlet hose.

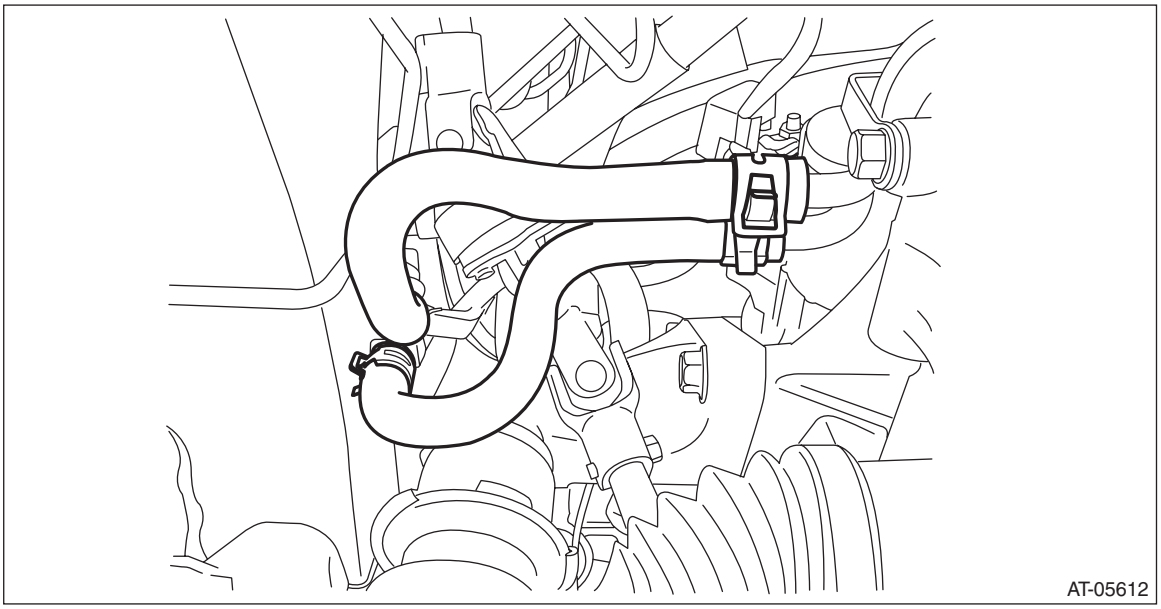
AT-05612

9) Install the CVTF radiator inlet hose and CVTF radiator outlet hose on radiator side.

NOTE:
Use new CVTF radiator inlet hose and CVTF radiator outlet hose.

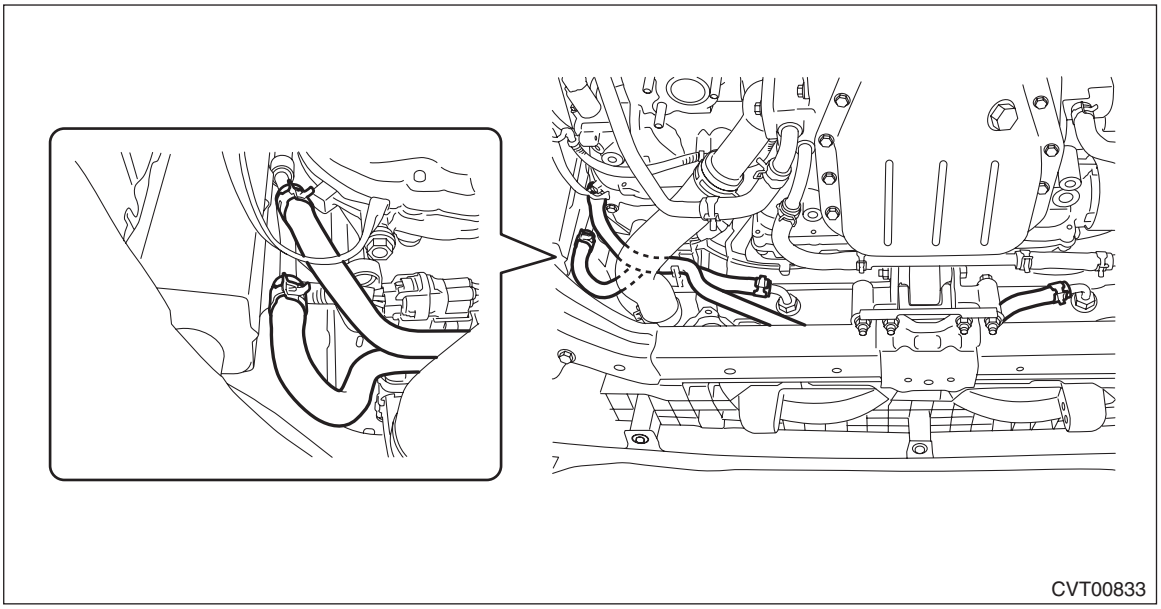

10) Install the front exhaust pipe. <Ref. to EX(H6DO)-8, INSTALLATION, Front Exhaust Pipe.>
11) Lower the vehicle.
12) Install the engine coolant reservoir tank. <Ref. to CO(H6DO)-46, INSTALLATION, Reservoir Tank.>
13) Install the battery and battery box. <Ref. to SC(H6DO)-58, INSTALLATION, Battery.>
14) Adjust the CVTF level and check there is no leakage. <Ref. to CVT(TR690)-38, ADJUSTMENT, CVTF.>

C: INSPECTION

Repair or replace any faulty hoses, pipes, and clamps found in the inspection below.
- Check for CVTF leaks in joints at the transmission, radiator, CVTF cooler (air cool), pipes, and hoses.
- Check the clamp for deformation.
- Lightly bend the hose and check for cracks in the surface or other damages.
- Pinch the hose with your fingers and check for poor elasticity. Also check for poor elasticity in the parts where the clamp was installed by pressing with your fingernail.
- Check for peeling, cracks, and deformation at the tip of the hose.

25.CVTF Cooler (Air Cooling)

A: REMOVAL

1) Disconnect the ground terminal from battery sensor. <Ref. to RC-4, BATTERY, NOTE, Repair Contents.>
2) Remove the front bumper. <Ref. to EI-34, REMOVAL, Front Bumper.>
3) Remove the headlight assembly LH. <Ref. to LI-30, REMOVAL, Headlight Assembly.>
4) Remove the CVTF cooler (air cool) inlet hose and the CVTF cooler (air cool) outlet hose.

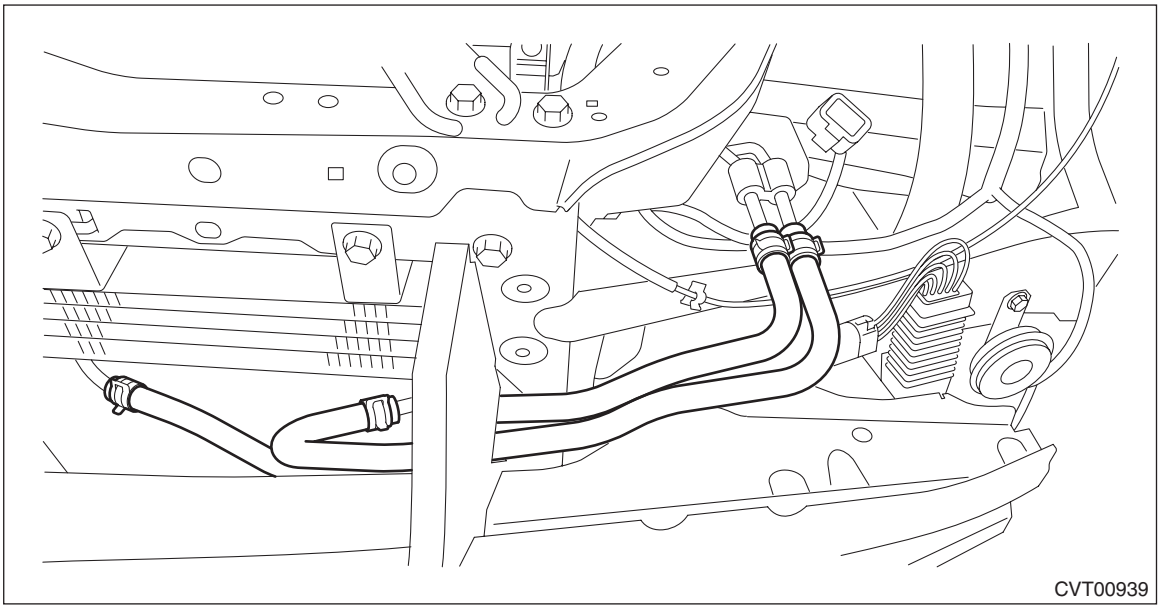
CVT00939

5) Remove the CVTF cooler (air cool).

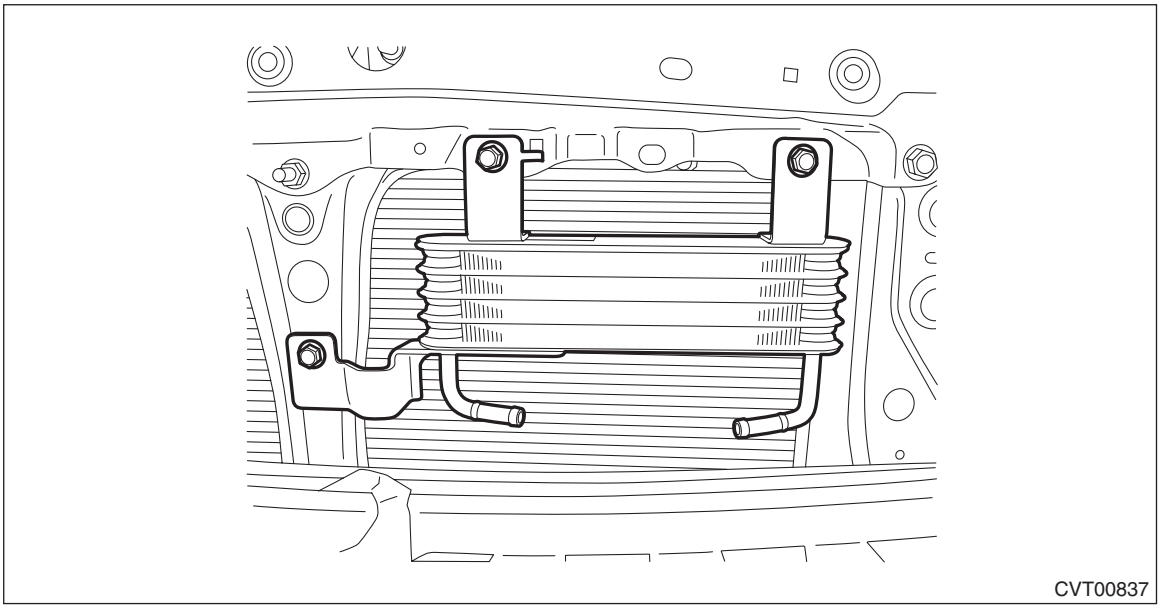
CVT00837

B: INSTALLATION

1) Install the CVTF cooler (air cool).

Tightening torque:
12 N·m (1.2 kgf-m, 8.9 ft-lb)

2) Install the CVTF cooler (air cool) inlet hose and the CVTF cooler (air cool) outlet hose.

NOTE:
Use new CVTF cooler (air cool) inlet hose and the CVTF cooler (air cool) outlet hose.

3) Install the headlight assembly LH. <Ref. to LI-31, INSTALLATION, Headlight Assembly.>
4) Install the front bumper. <Ref. to EI-38, INSTALLATION, Front Bumper.>
5) Install the battery. <Ref. to SC(H6DO)-58, INSTALLATION, Battery.>

C: INSPECTION

Check that the CVTF cooler (air cool) has no deformation, cracks or other damages.

26.Air Breather Hose

A: REMOVAL

1) Remove the collector cover.
   (1) Carefully pull up the rear of collector cover at two positions (A).
   (2) Carefully pull up the front of collector cover at two positions (B) while moving it forward.

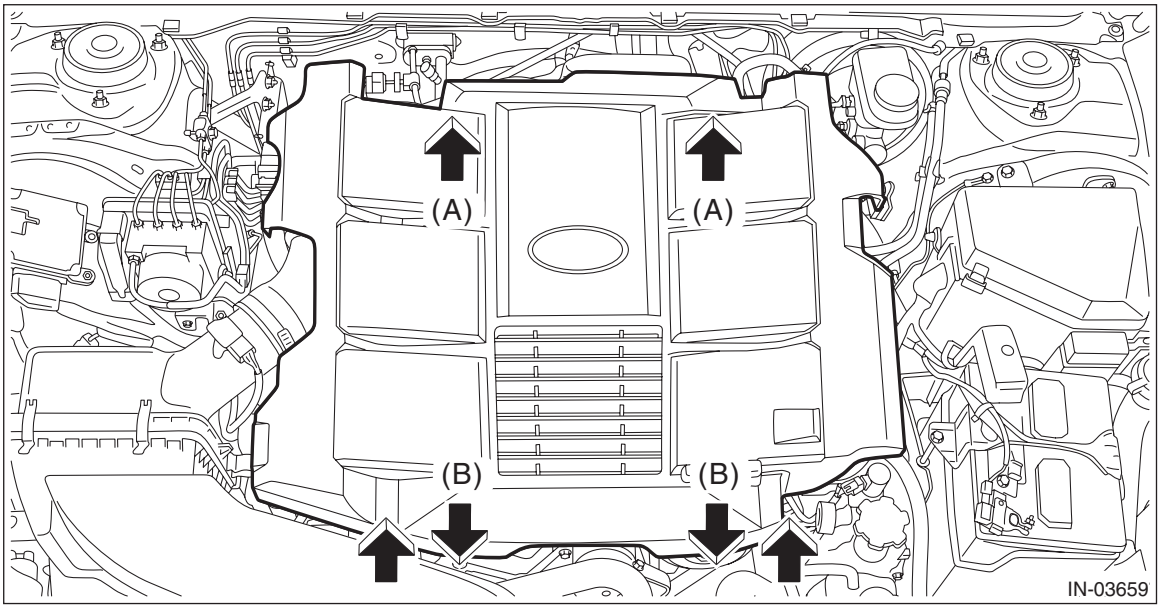

2) Disconnect the ground terminal from battery sensor. <Ref. to RC-4, BATTERY, NOTE, Repair Contents.>
3) Loosen the clamp (A) which connects the air intake boot.
4) Loosen the bolt (B) securing the air intake boot to the collector cover bracket.

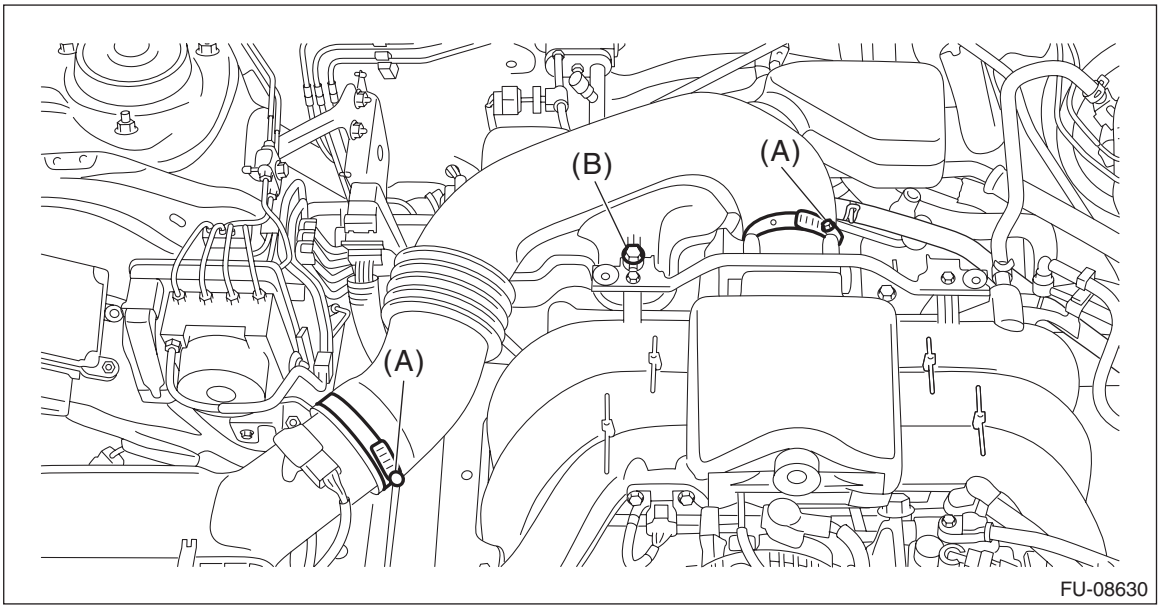

5) Remove the air intake boot from the throttle body, and move the air intake boot to the left side wheel apron.

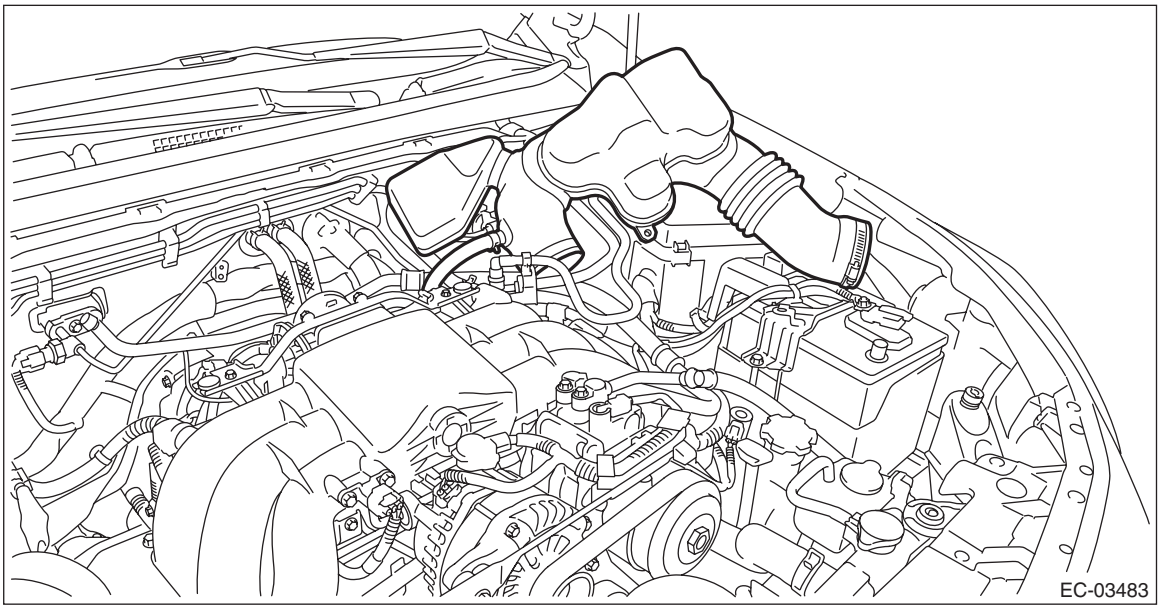

6) Remove the two air breather hoses.

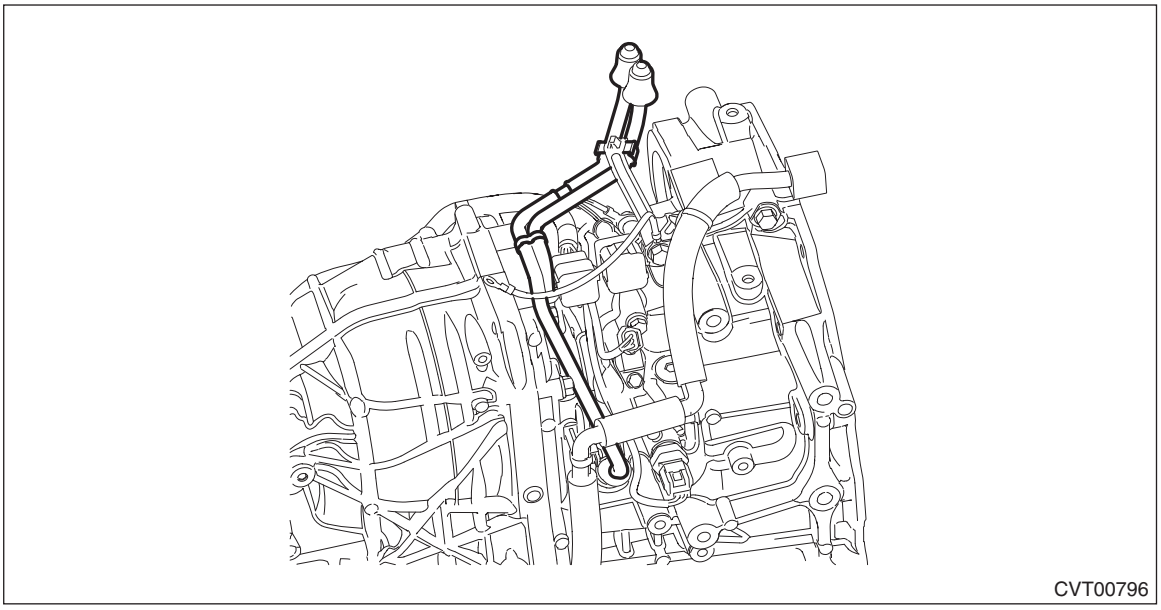

7) Remove the oil cap.

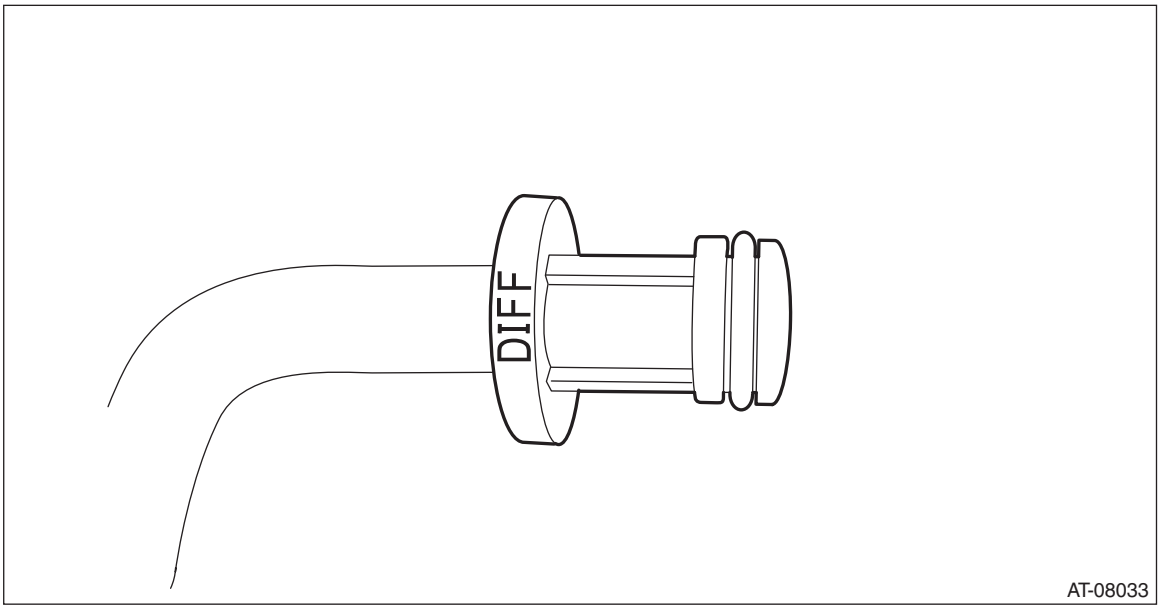

B: INSTALLATION

1) Install the oil cap.

NOTE:
Use new O-rings.

2) Install the two air breather hoses.
3) Install the air intake boot. <Ref. to IN(H6DO)-11, INSTALLATION, Air Intake Boot.>
4) Connect the ground terminal to battery sensor. <Ref. to RC-4, BATTERY, NOTE, Repair Contents.>
5) Install the collector cover.

C: INSPECTION

- Check the hose for peeling, crack or clogging.
- Check the oil cap is not cracked or clogged.
- Check O-ring of oil cap is not damaged.

27.Drive Plate

A: REMOVAL

1) Remove the transmission assembly from the vehicle. <Ref. to CVT(TR690)-58, REMOVAL, Automatic Transmission Assembly.>
2) Set the ST.

NOTE:
Set the ST to the drive plate referring to the illustration.
ST 498497300 CRANKSHAFT STOPPER

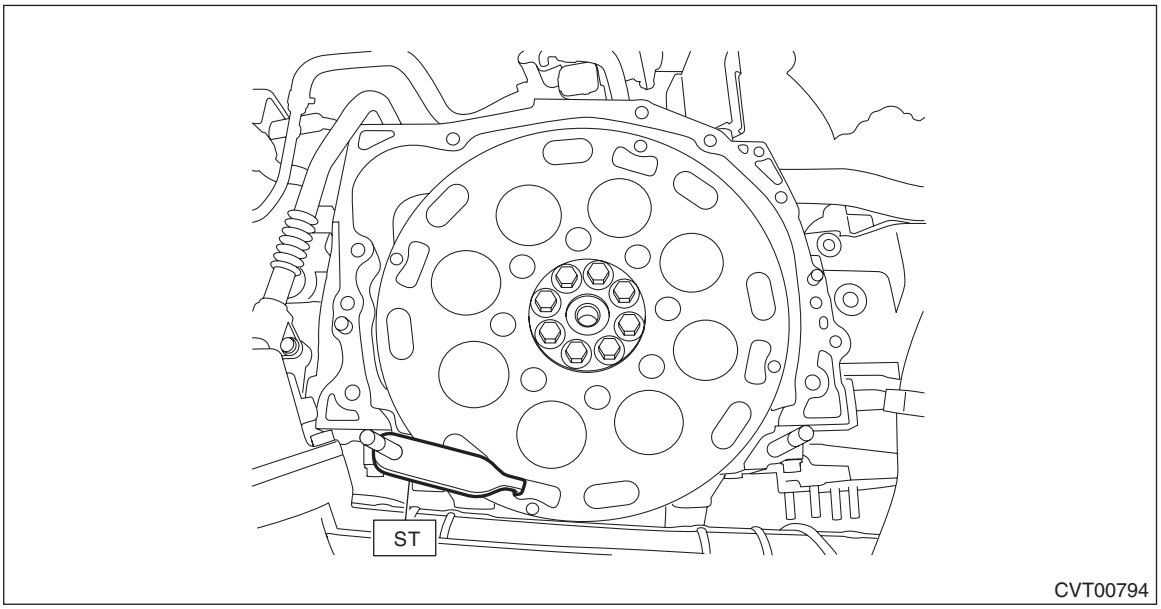

3) Remove the drive plate and reinforcement drive plate.

B: INSTALLATION

1) Temporarily install the drive plate and reinforcement drive plate.
2) Set the ST.

NOTE:
Set the ST to the drive plate referring to the illustration.
ST 498497300 CRANKSHAFT STOPPER

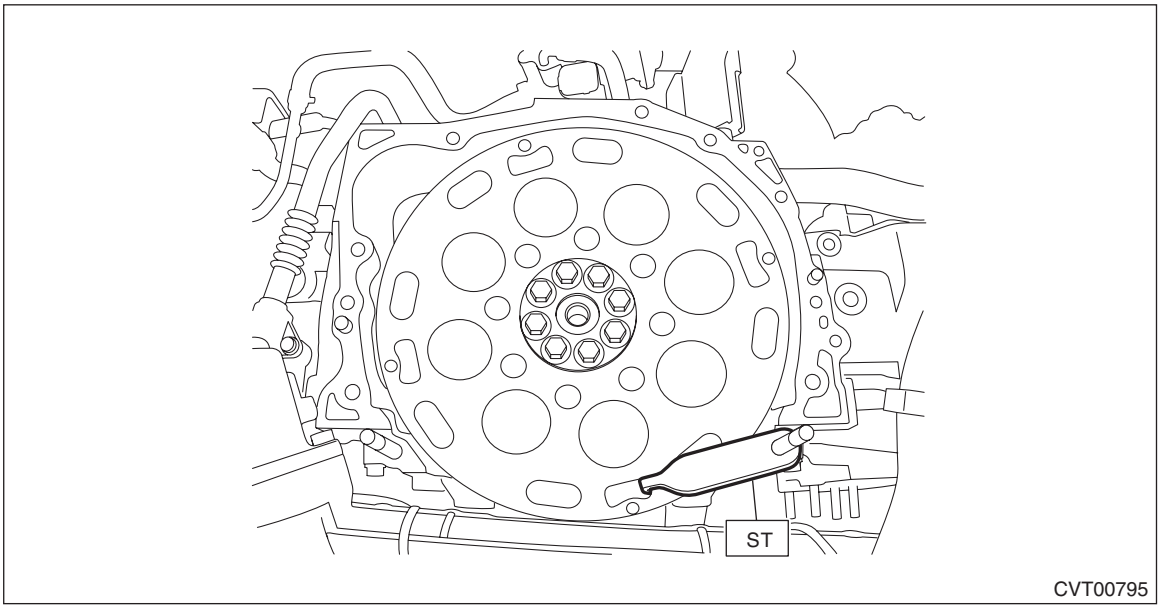

3) Tighten the drive plate mounting bolt in two stages.

NOTE:
Fix the engine unit.

(1) Tighten the drive plate mounting bolt.

Tightening torque:
10 N·m (1.0 kgf-m, 7.4 ft-lb)

(2) While checking the tightening angle with the angle gauge, tighten the drive plate mounting bolts to the specified angle.

Tightening angle:
41° — 45°

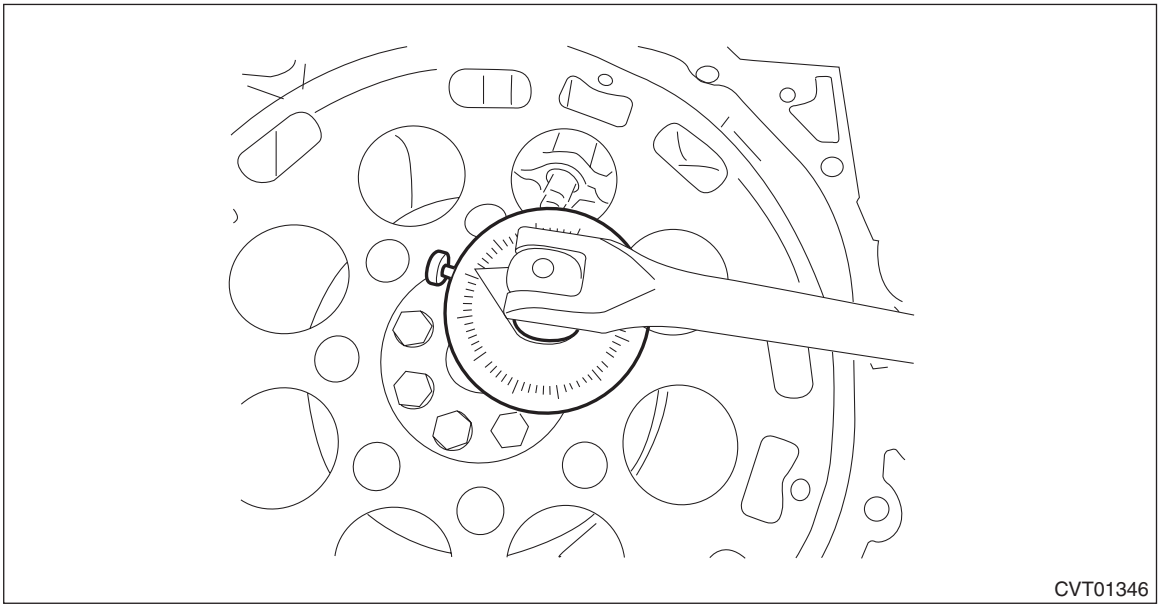

4) Install the transmission assembly to the vehicle. <Ref. to CVT(TR690)-75, INSTALLATION, Automatic Transmission Assembly.>

C: INSPECTION

Check the drive cable for damage.

28.Preparation for Overhaul

A: GENERAL DESCRIPTION

Before disassembling and assembling the transmission, follow the following procedures to prepare.

B: PROCEDURE

1) Clean the transmission exterior.
2) Remove the torque converter assembly. <Ref. to CVT(TR690)-158, REMOVAL, Torque Converter Assembly.>
3) Attach the ST on the transmission.
ST 18632AA000 STAND ASSY

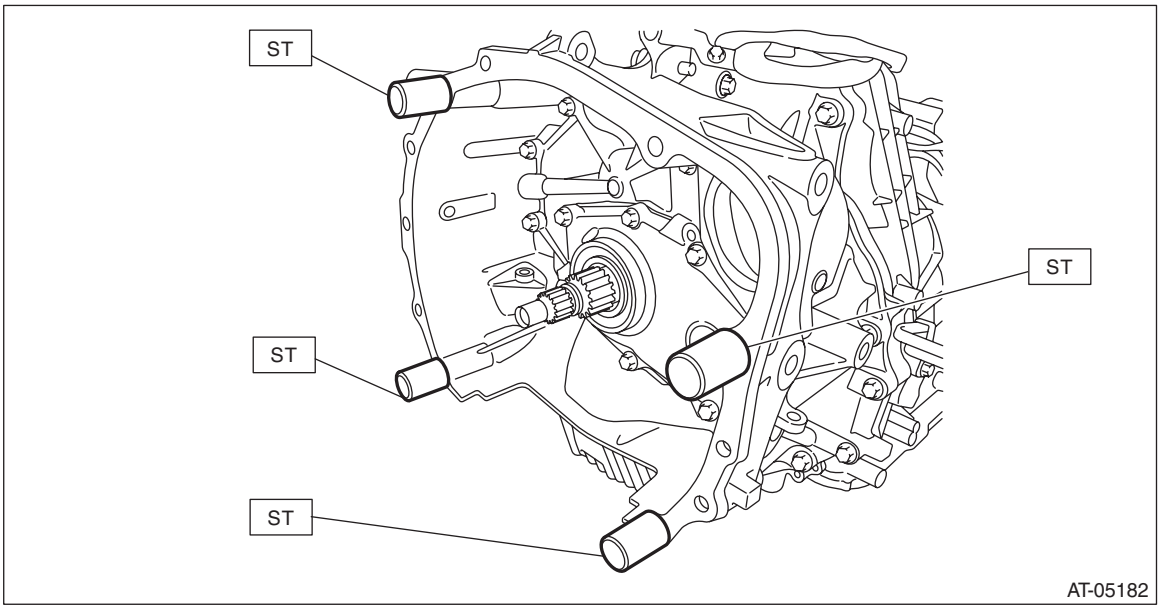

4) Remove the transmission cover on the transmission upper side.

NOTE:
Install using the following tightening torque.

Tightening torque:
8 N·m (0.8 kgf-m, 5.9 ft-lb)

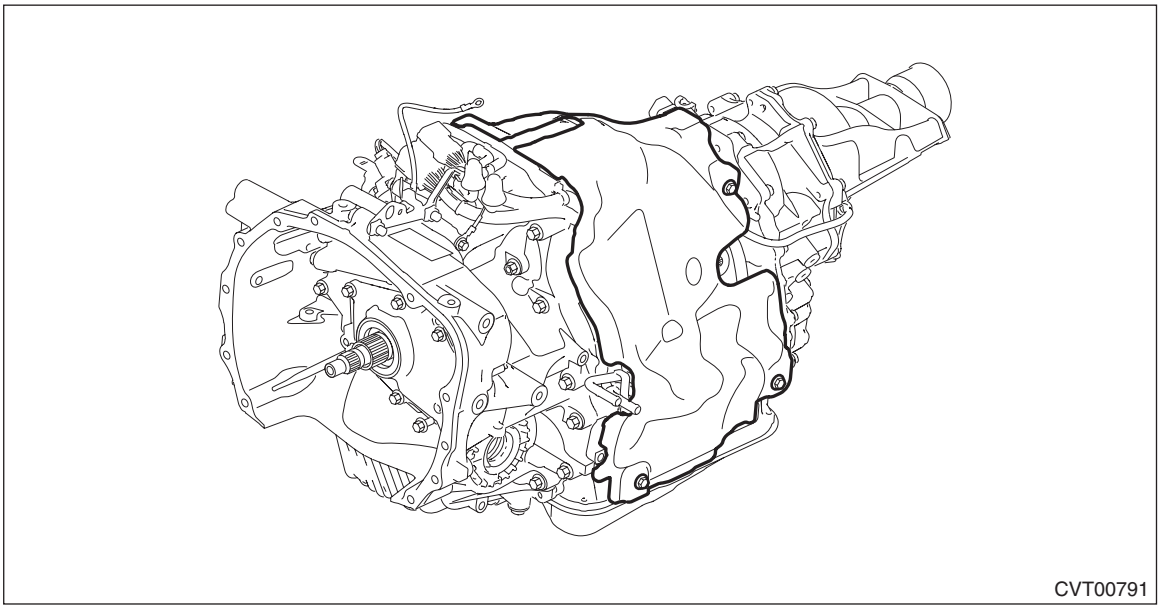

5) Place the transmission assembly on end.

29.Torque Converter Assembly

A: REMOVAL

1) Remove the transmission assembly from the vehicle. <Ref. to CVT(TR690)-58, REMOVAL, Automatic Transmission Assembly.>
2) Pull out the torque converter assembly horizontally.

CAUTION:
Do not scratch the inside of engaging parts.

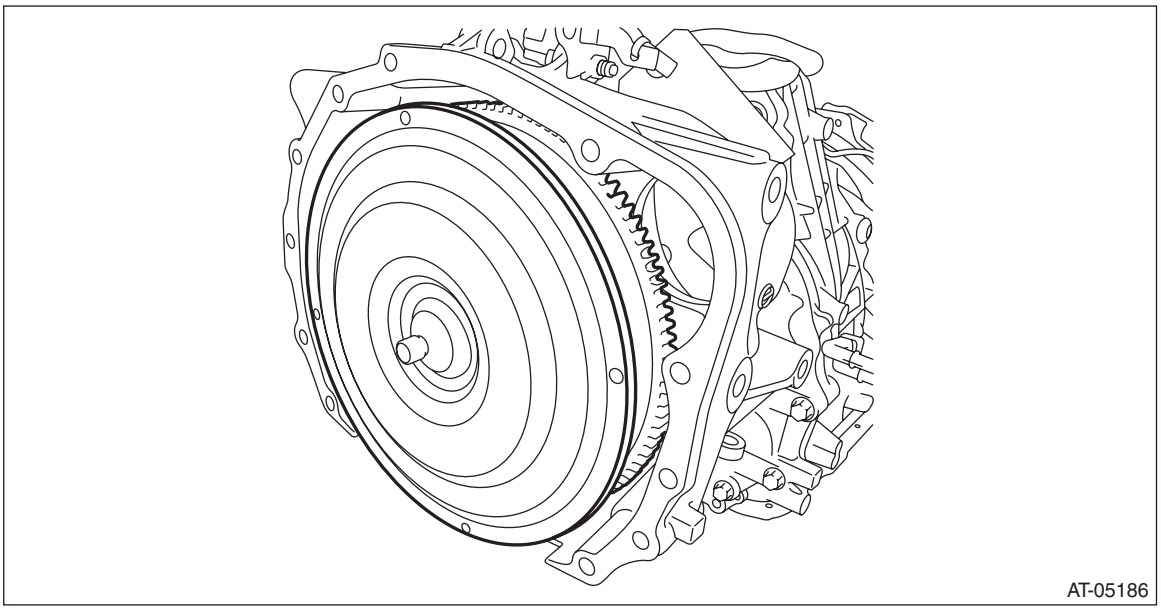

3) Remove the O-ring from the front reduction drive gear.

B: INSTALLATION

1) Install the O-ring to front reduction drive gear.

NOTE:
- Use new O-rings.
- Apply CVTF to the O-rings.

2) While holding the torque converter assembly by hand, carefully install it into the torque converter case.

NOTE:
- Apply CVTF to the oil seal lip.
- Do not damage the oil seal and O-ring.

3) Engage the splines while gently rotating the torque converter assembly by hand, and securely insert the assembly.

4) Measure depth “A”, from converter case end surface to drive plate contacting surface.

Standard (reference):
6.8 mm (0.268 in) or less

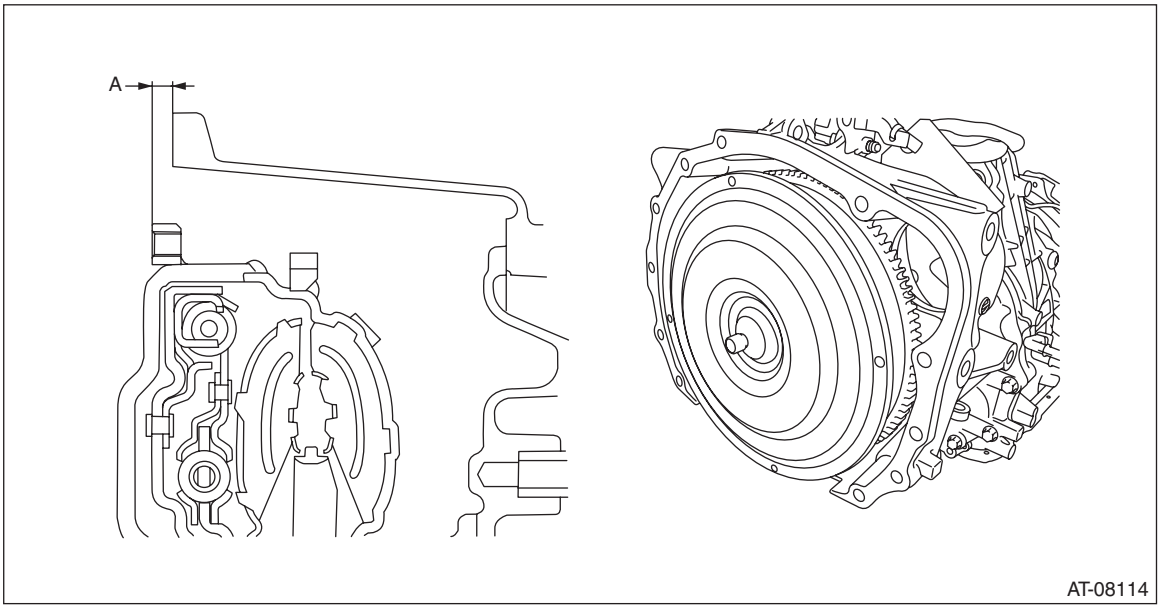

5) Install the transmission assembly to the vehicle. <Ref. to CVT(TR690)-75, INSTALLATION, Automatic Transmission Assembly.>

C: INSPECTION

- Check the protrusion of torque converter center (front boss) is not deformed or damaged.
- Check the ring gear and exterior for break or damage.

30.Extension Case

A: REMOVAL

1) Remove the transmission assembly from the vehicle. <Ref. to CVT(TR690)-58, REMOVAL, Automatic Transmission Assembly.>
2) Remove the front wheel speed sensor. <Ref. to CVT(TR690)-120, REMOVAL, Front Wheel Speed Sensor.>
3) Remove the harness clip, and remove the extension case.

NOTE:
The total number of extension case mounting bolts is 10.

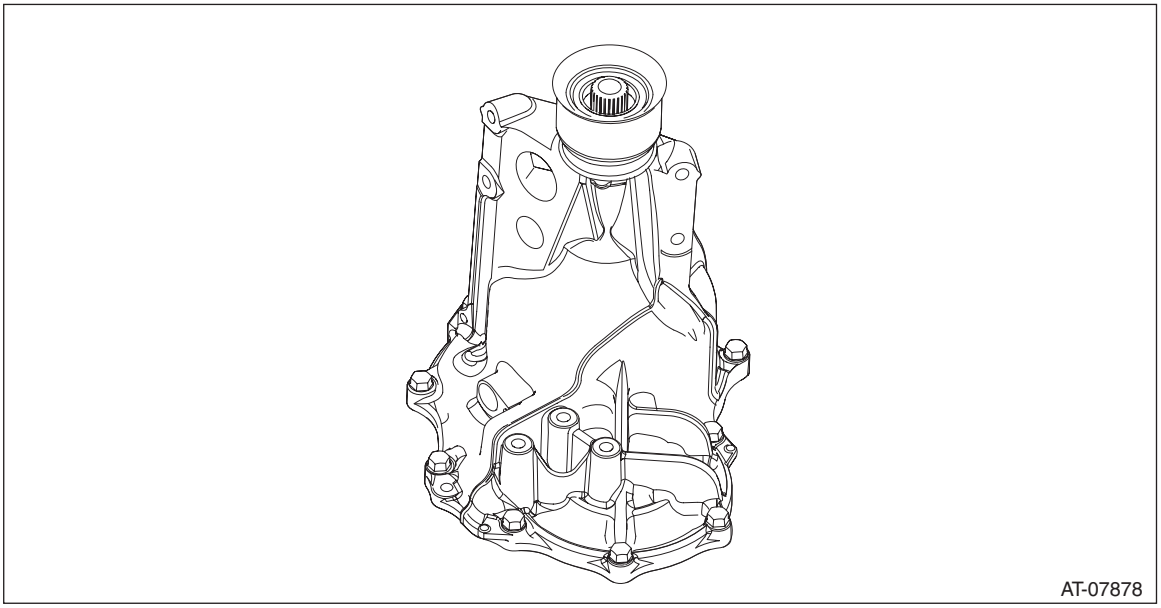

B: INSTALLATION

1) Clean the mating surface of the extension case and intermediate case.
2) Select the thrust needle bearing. <Ref. to CVT(TR690)-165, ADJUSTMENT, Rear Drive Shaft.>
3) Select the shim for transfer reduction driven gear. <Ref. to CVT(TR690)-183, ADJUSTMENT, Transfer Reduction Driven Gear.>
4) Install the selected thrust needle bearing to transfer clutch assembly.

NOTE:
Install the thrust needle bearing in the correct direction.

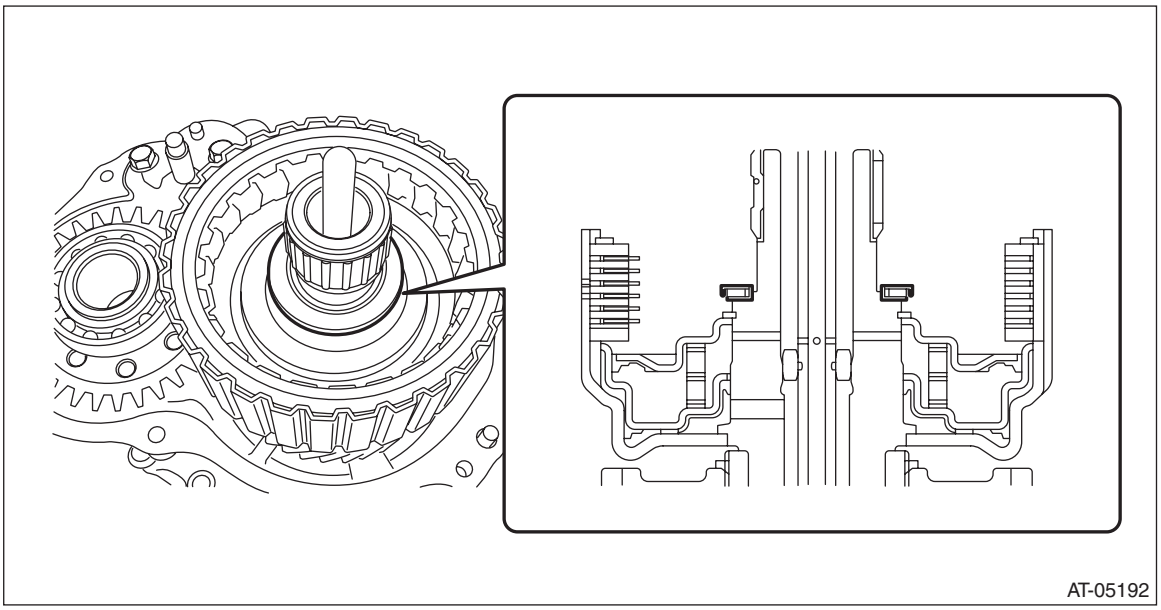
AT-05192

5) Attach the selected shim to transfer reduction driven gear assembly.
6) Apply liquid gasket to extension case seamlessly.

Liquid gasket:
THREE BOND 1215B or equivalent

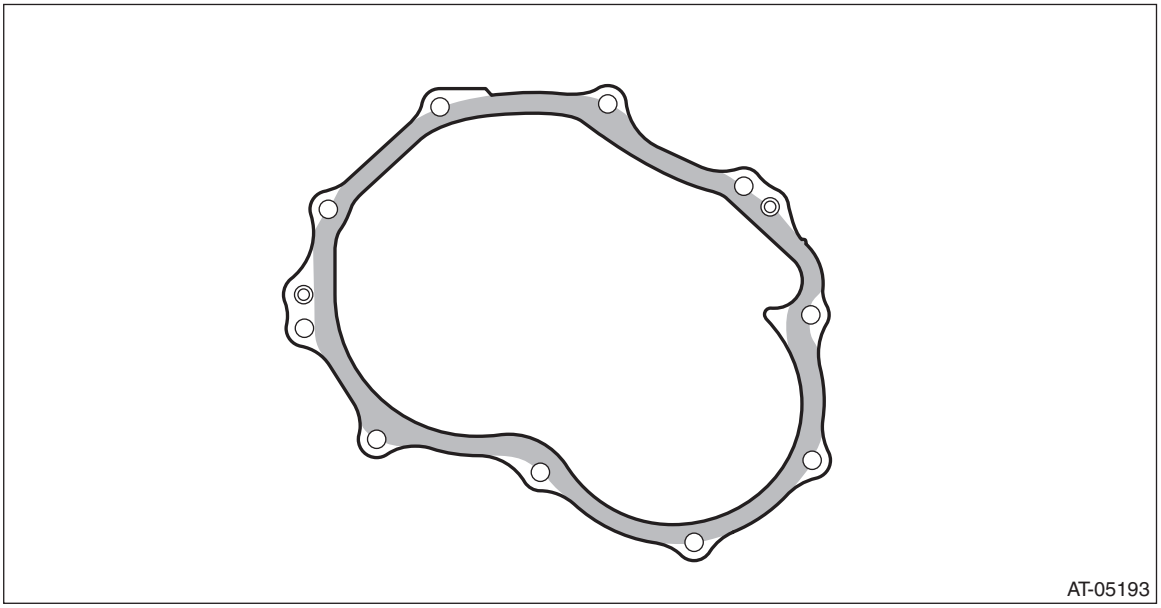
AT-05193

7) Install the extension case.

Tightening torque:
25 N·m (2.5 kgf-m, 18.4 ft-lb)

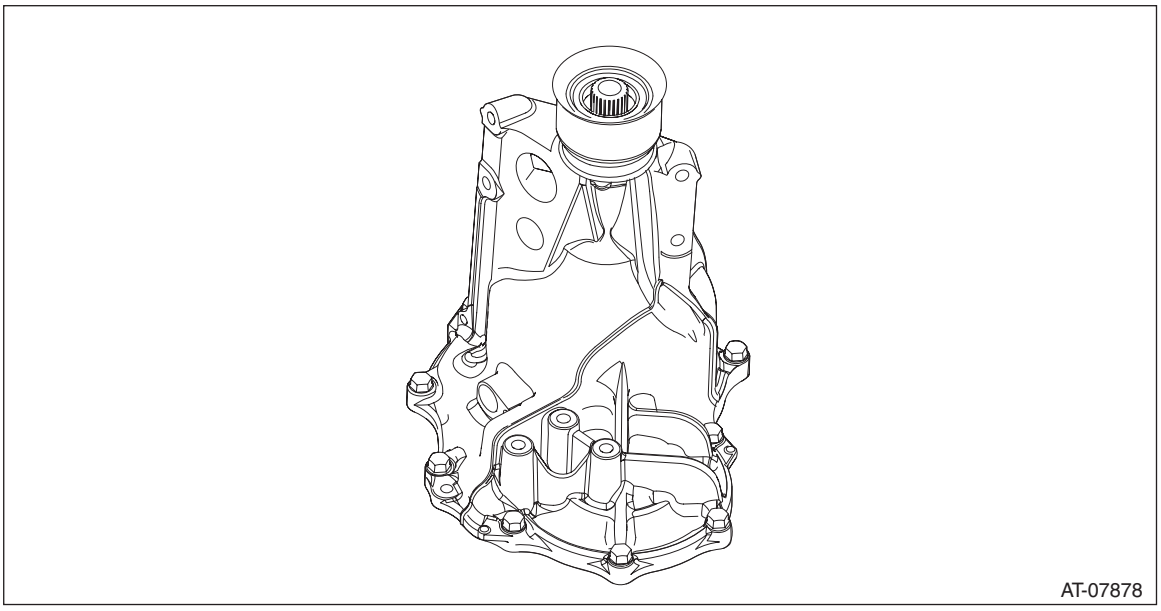

8) Install the front wheel speed sensor. <Ref. to CVT(TR690)-120, INSTALLATION, Front Wheel Speed Sensor.>
9) Install the transmission assembly. <Ref. to CVT(TR690)-75, INSTALLATION, Automatic Transmission Assembly.>

C: DISASSEMBLY

1) Remove the dust cover from extension case.
2) Remove the extension case oil seal from the extension case.

D: ASSEMBLY

1) Press-fit the dust cover into extension case.
2) Install the extension case oil seal to extension case.
ST 498057300 INSTALLER

E: INSPECTION

- Check there is no leak of CVTF from the joint between extension case and intermediate case.
- Check there is no damage or cracks on the extension case.

F: ADJUSTMENT

NOTE:
When replacing the extension case, select the shims for rear drive shaft thrust needle bearing and transfer reduction driven gear. <Ref. to CVT(TR690)-165, ADJUSTMENT, Rear Drive Shaft.> <Ref. to CVT(TR690)-183, ADJUSTMENT, Transfer Reduction Driven Gear.>

31.Rear Drive Shaft

A: REMOVAL

1) Remove the transmission assembly from the vehicle. <Ref. to CVT(TR690)-58, REMOVAL, Automatic Transmission Assembly.>
2) Remove the extension case. <Ref. to CVT(TR690)-160, REMOVAL, Extension Case.>
3) Remove the rear drive shaft.

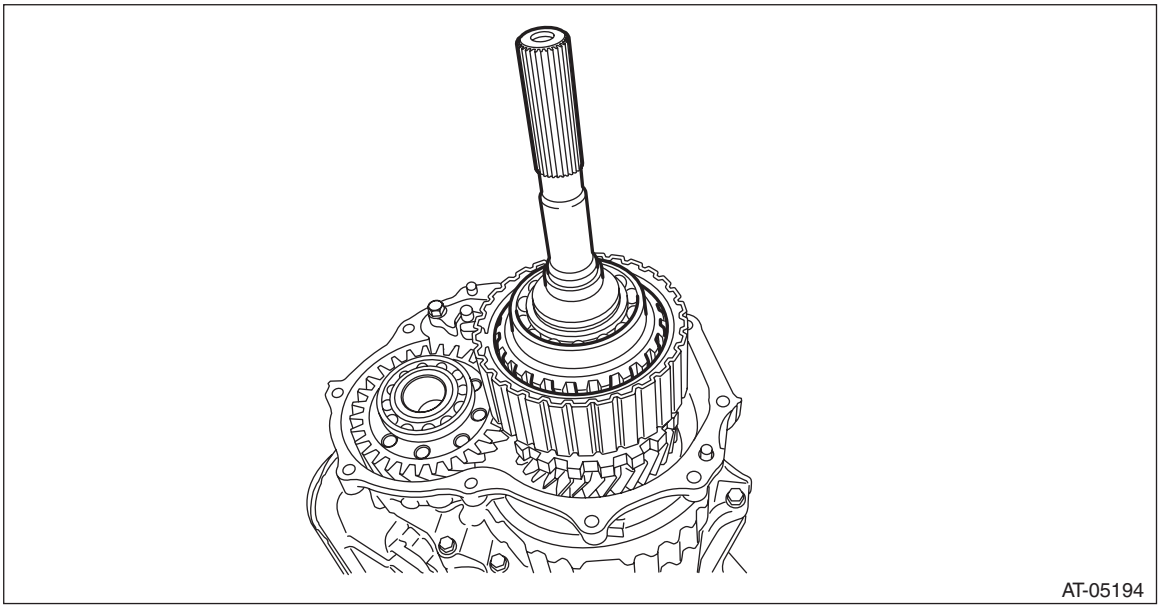

B: INSTALLATION

1) Select the thrust needle bearing. <Ref. to CVT(TR690)-165, ADJUSTMENT, Rear Drive Shaft.>
2) Install the selected thrust needle bearing to transfer clutch assembly.

NOTE:
Install the thrust needle bearing in the correct direction.

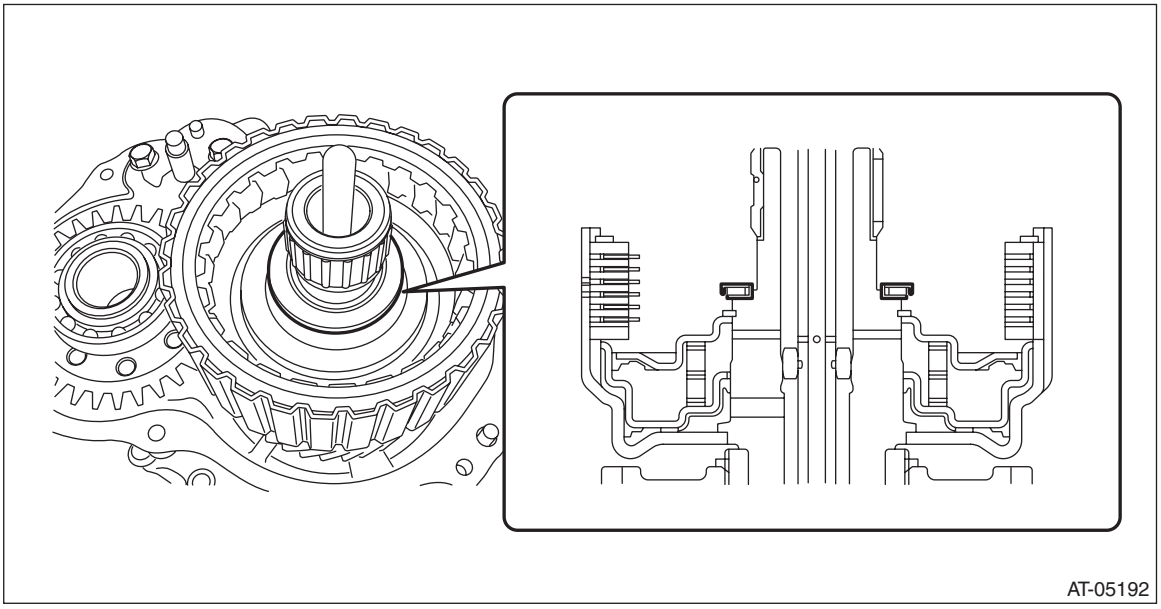

3) Install the rear drive shaft.

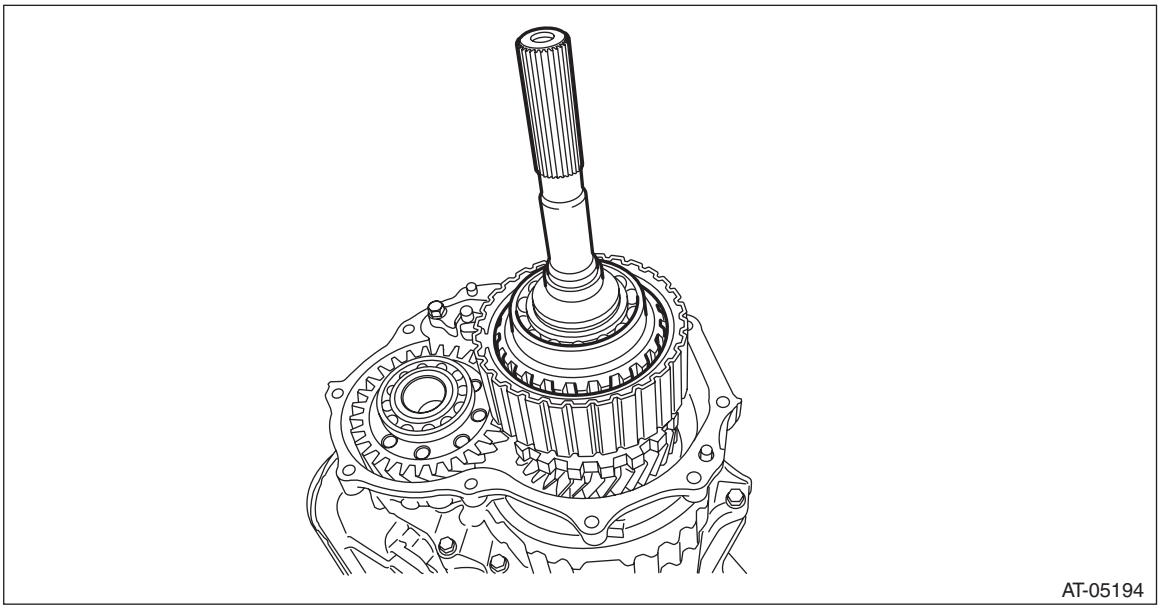

4) Install the extension case. <Ref. to CVT(TR690)-161, INSTALLATION, Extension Case.>
5) Install the transmission assembly to the vehicle. <Ref. to CVT(TR690)-75, INSTALLATION, Automatic Transmission Assembly.>

C: DISASSEMBLY

1) Remove the ball bearing using ST.
ST 498077600 REMOVER

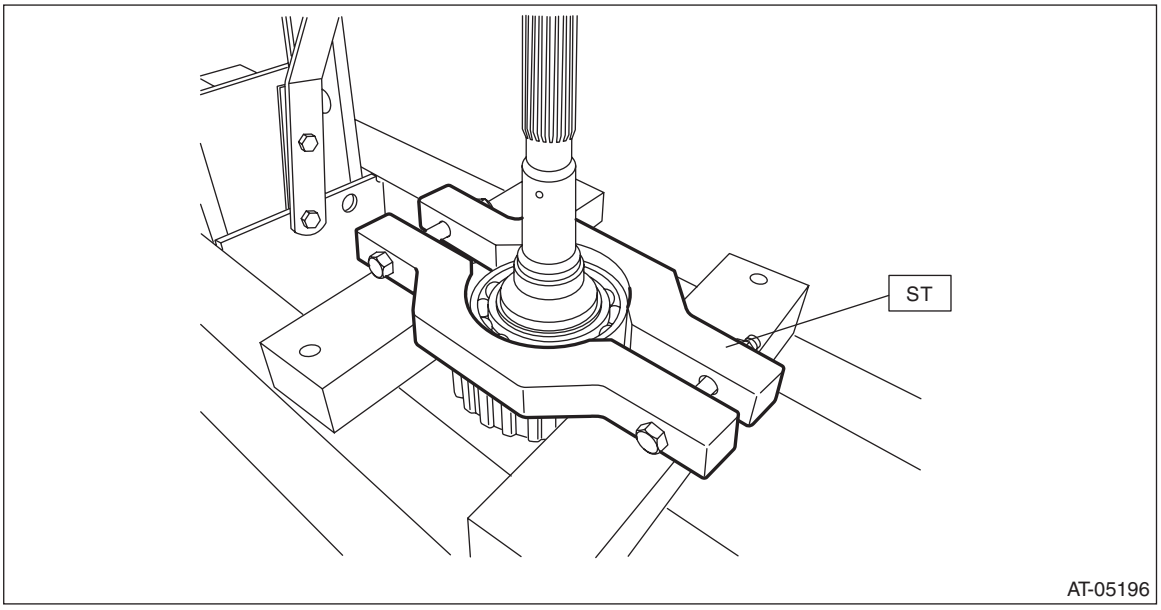

D: ASSEMBLY

1) Using the ST, install the ball bearing.

NOTE:
- Use a new ball bearing.

• Apply CVTF to press-fitting surface of ball bearing.

ST 399513600 INSTALLER

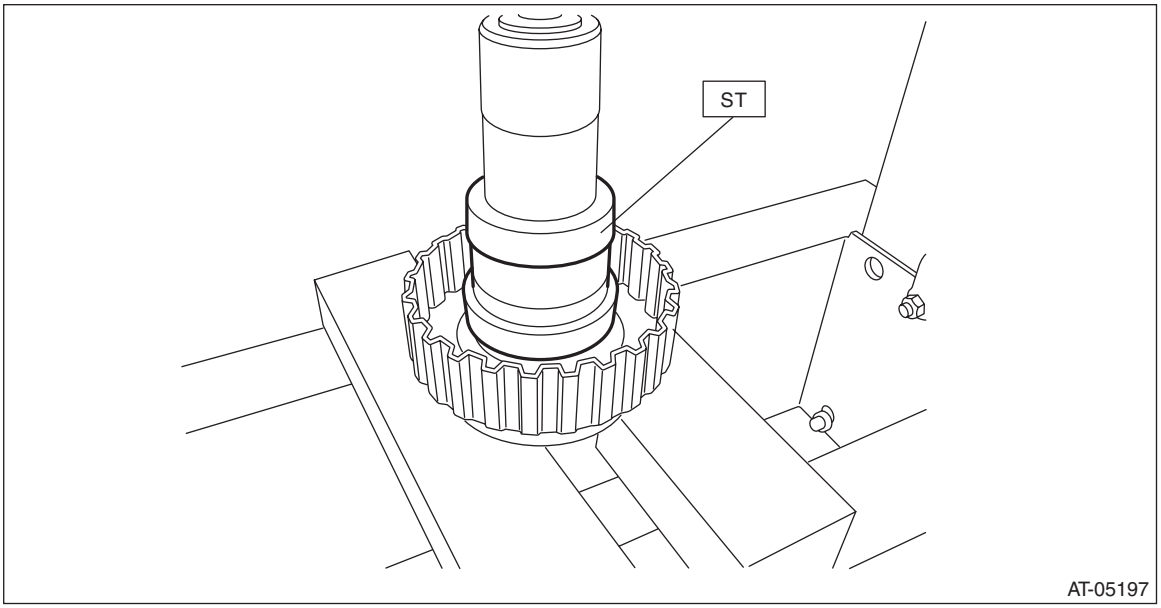

E: INSPECTION

- Check each part for crack, damage or dust.
- Check the ball bearing for smooth rotation.
- Check the ball bearing for excessive looseness.

F: ADJUSTMENT

NOTE:
When replacing the rear drive shaft or bearing, select the thrust needle bearing.

1) Using the ST, measure the distance “A” from ST end face to rear drive shaft thrust needle bearing catch surface.

ST 398643600 GAUGE

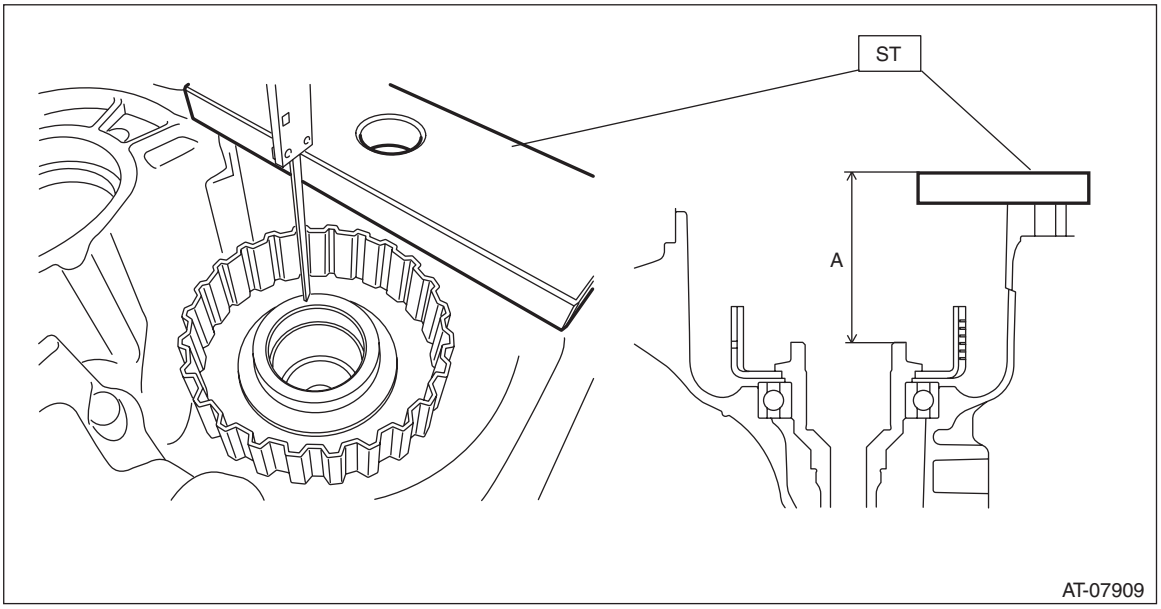

2) Using the ST, measure the height “B” from the intermediate case mating surface to the ST end face.

NOTE:
Place the measurement tool at the dent on ST upper side to measure.
ST 499737100 PULLER SET

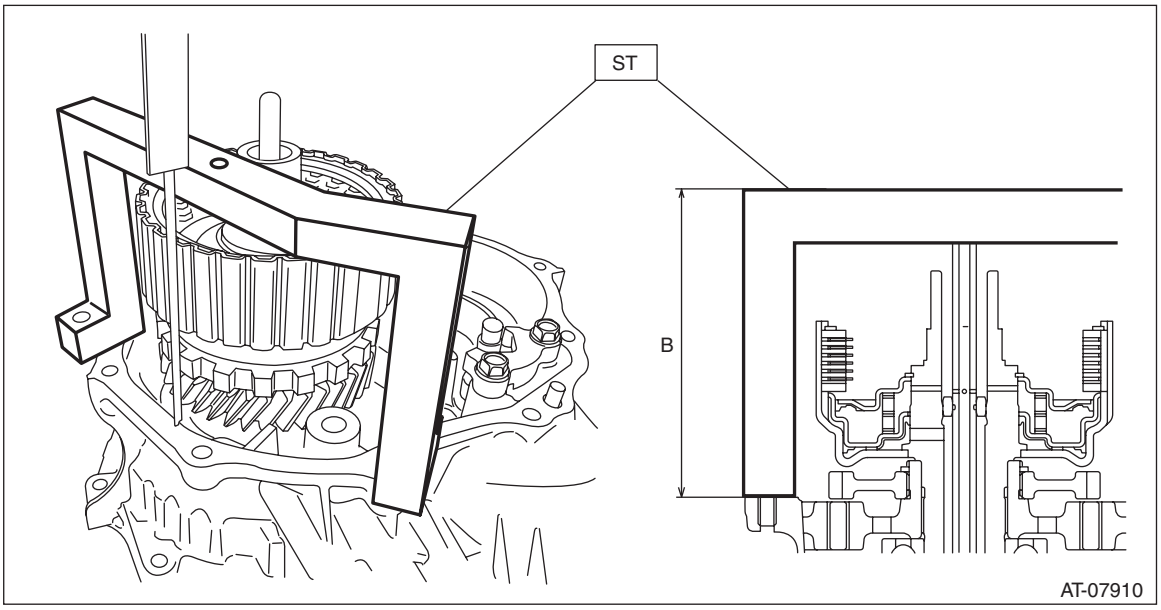

3) Using the ST, measure the height “C” from ST end face to transfer clutch assembly thrust needle bearing catch surface.

NOTE:
Place the measurement tool at the dent on ST upper side to measure.
ST 499737100 PULLER SET

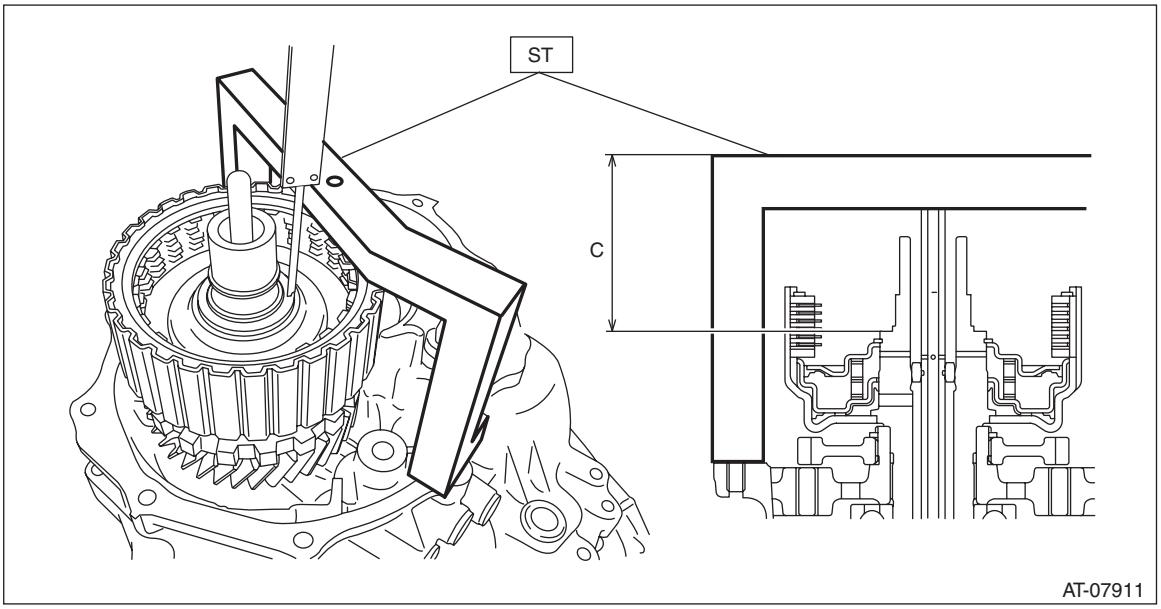

4) Obtain the thickness of thrust bearing using the following formula to select the thrust bearing.
T mm = (A – 15) – (B – C) – (0.05 — 0.25)
[T in = (A – 0.591) – (B – C) – (0.002 — 0.01)]
T: Thrust bearing thickness
A: Height from the ST end face to the rear drive shaft thrust needle bearing catch surface
B: Height from the mating surface of the intermediate case to the ST end face
C: Height from the ST end face to the transfer clutch assembly thrust needle bearing catch surface
15 mm (0.591 in): Thickness of ST
0.05 — 0.25 mm (0.002 — 0.01 in): Clearance

Thrust bearing	
Part No.	Thickness mm (in)
806536020	3.8 (0.15)
806535030	4.0 (0.157)
806535040	4.2 (0.165)
806535050	4.4 (0.173)
806535060	4.6 (0.181)
806535070	4.8 (0.189)
806535090	5.0 (0.197)

32.Transfer Clutch

A: REMOVAL

1) Remove the transmission assembly from the vehicle. <Ref. to CVT(TR690)-58, REMOVAL, Automatic Transmission Assembly.>
2) Remove the extension case. <Ref. to CVT(TR690)-160, REMOVAL, Extension Case.>
3) Remove the rear drive shaft. <Ref. to CVT(TR690)-163, REMOVAL, Rear Drive Shaft.>
4) Remove the thrust needle bearing and needle bearing.

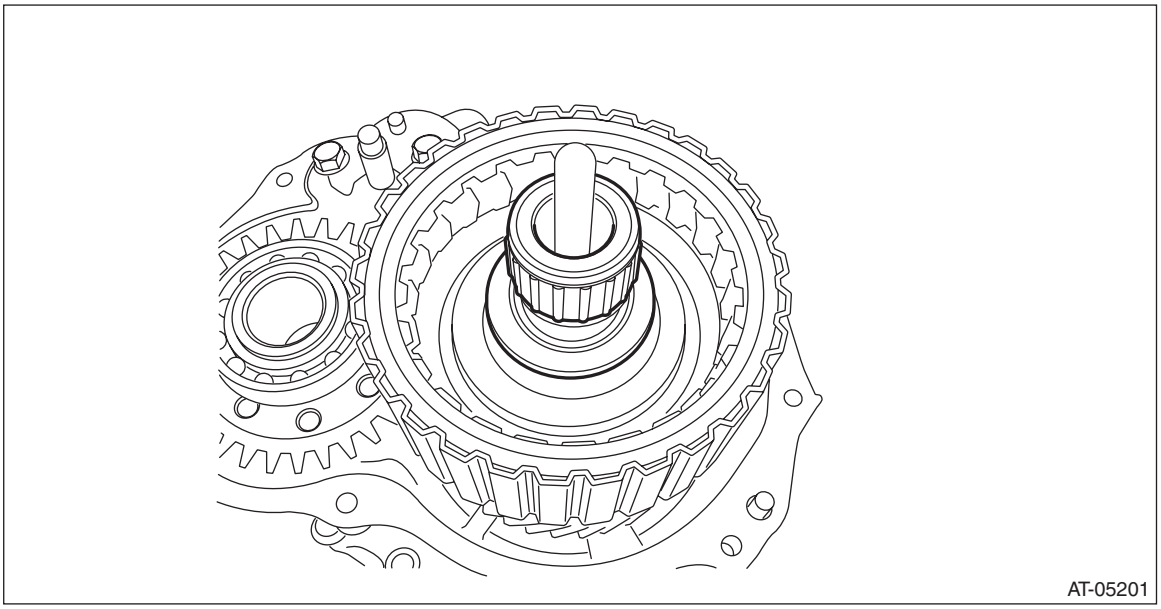
AT-05201

5) Remove the transfer clutch assembly.

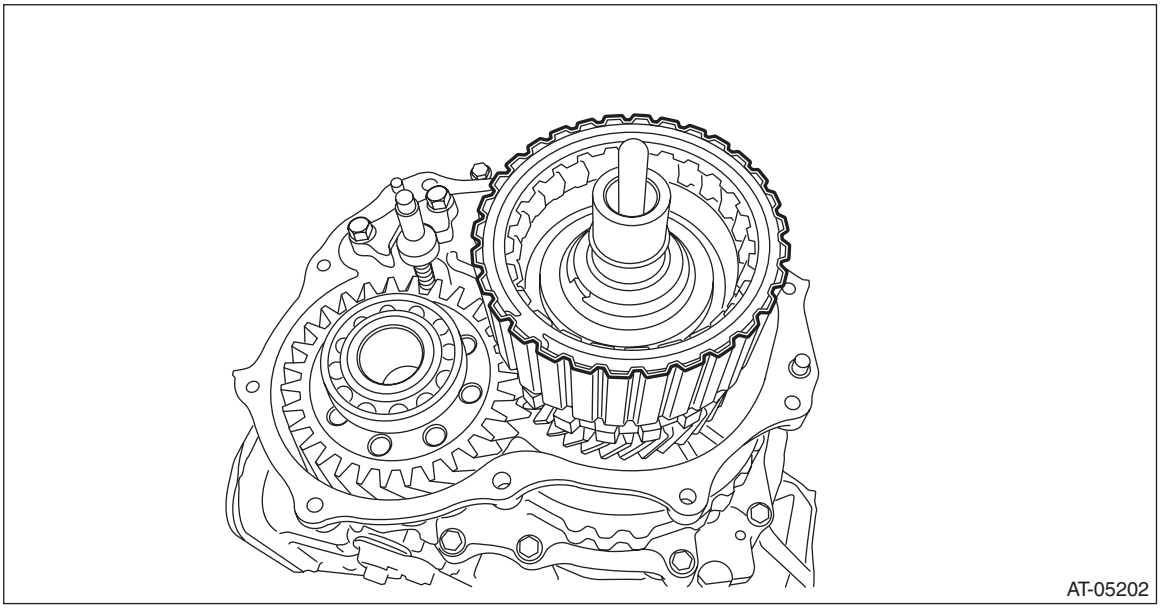
AT-05202

6) Remove the seal ring from transfer clutch assembly.

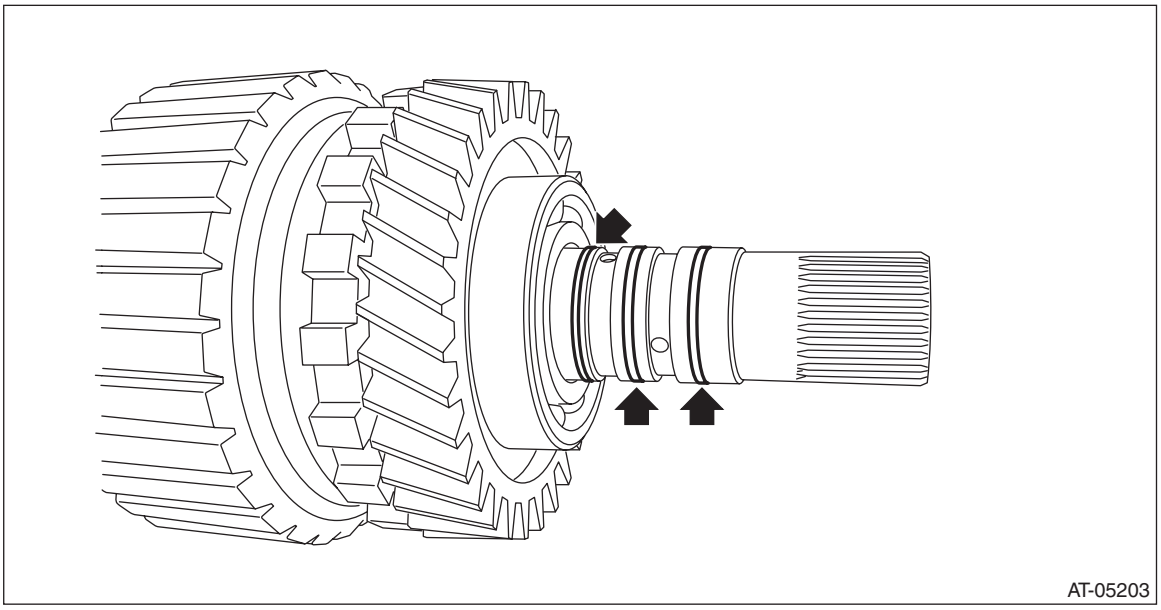

B: INSTALLATION

1) Apply CVTF to the seal ring and attach it to the seal ring groove of transfer clutch assembly.

NOTE:
- Use new seal rings.
- When installing the seal rings, do not expand the seal rings too much.

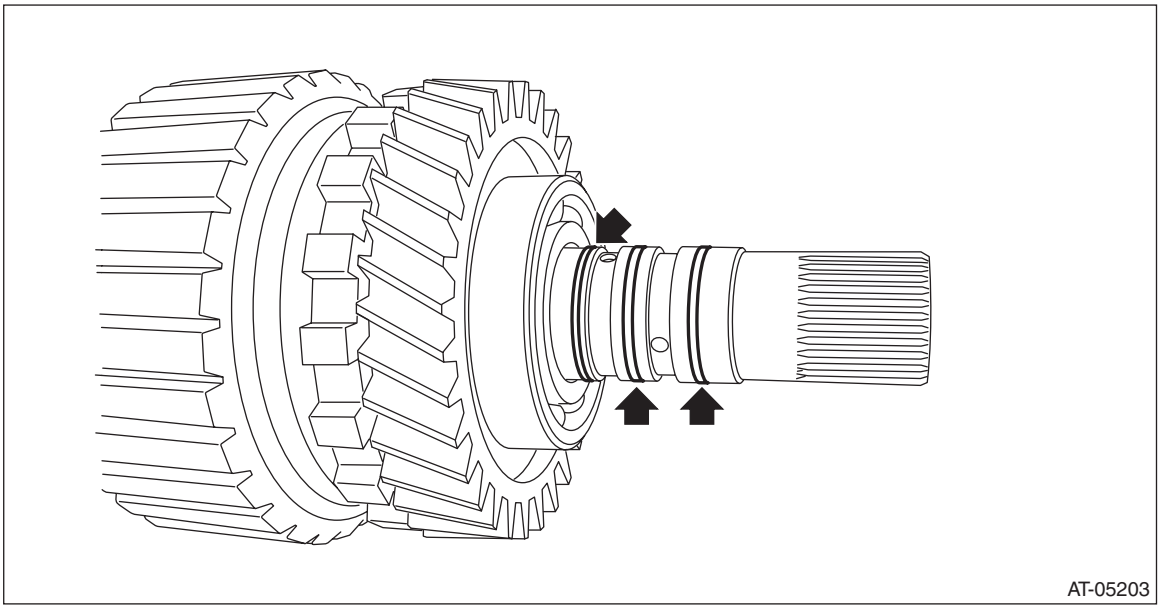

2) Install the transfer clutch assembly.

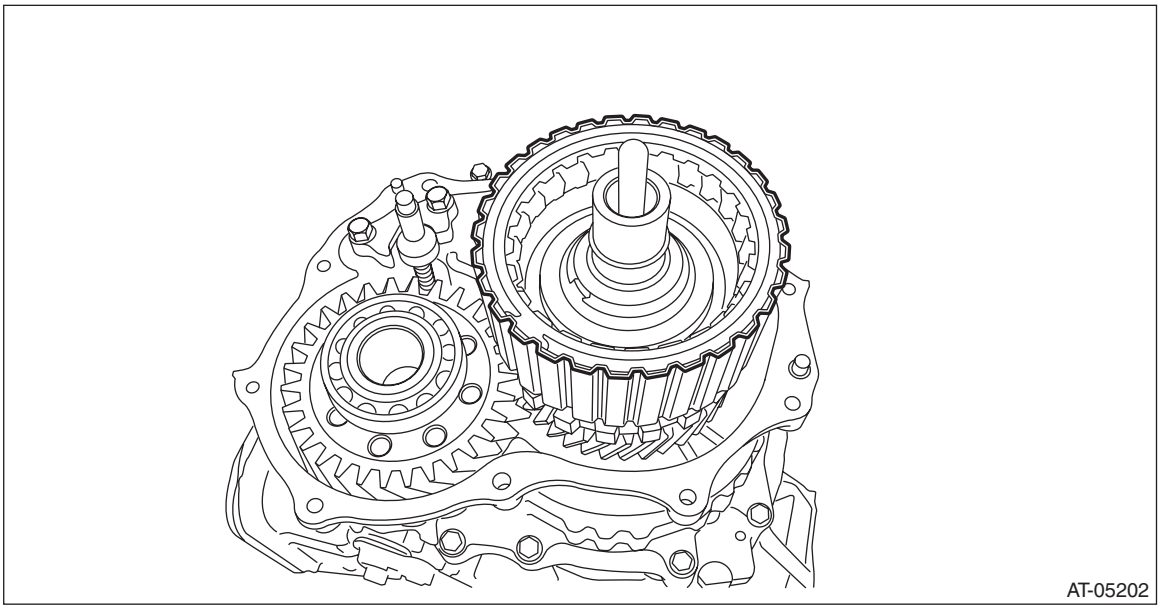

3) Select the thrust needle bearing. <Ref. to CVT(TR690)-165, ADJUSTMENT, Rear Drive Shaft.>
4) Install the selected thrust needle bearing and needle bearing to transfer clutch assembly.

NOTE:
Install the thrust needle bearing in the correct direction.

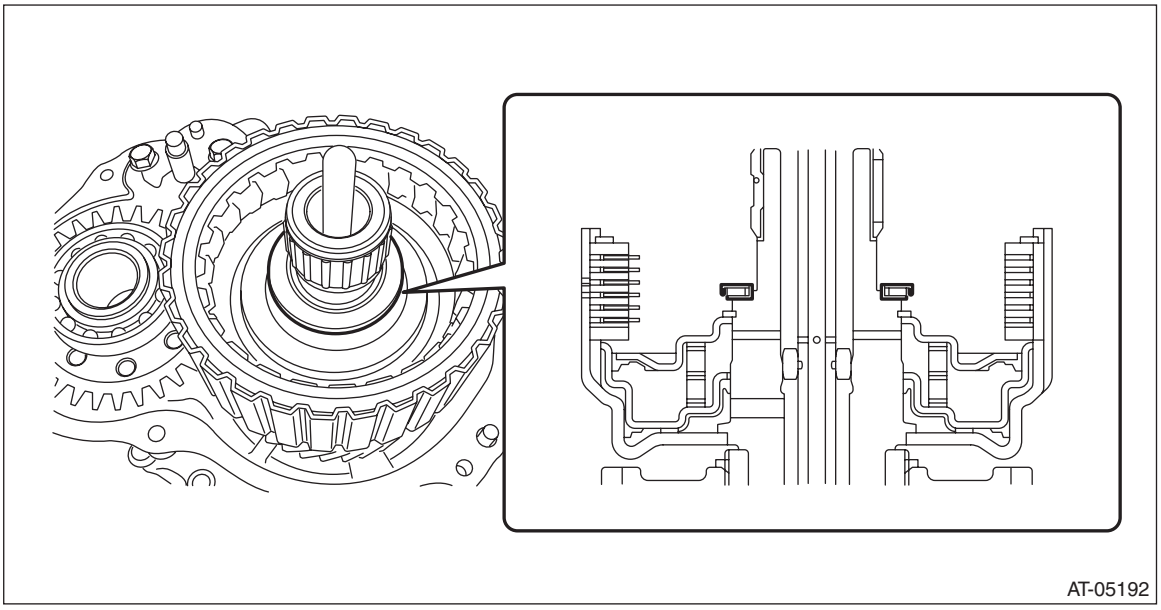

5) Install the rear drive shaft. <Ref. to CVT(TR690)-163, Rear Drive Shaft.>
6) Install the extension case. <Ref. to CVT(TR690)-161, INSTALLATION, Extension Case.>
7) Install the transmission assembly to the vehicle. <Ref. to CVT(TR690)-75, INSTALLATION, Automatic Transmission Assembly.>

C: DISASSEMBLY

1) Remove the snap ring, and then remove the retaining plate, drive plate and driven plate.

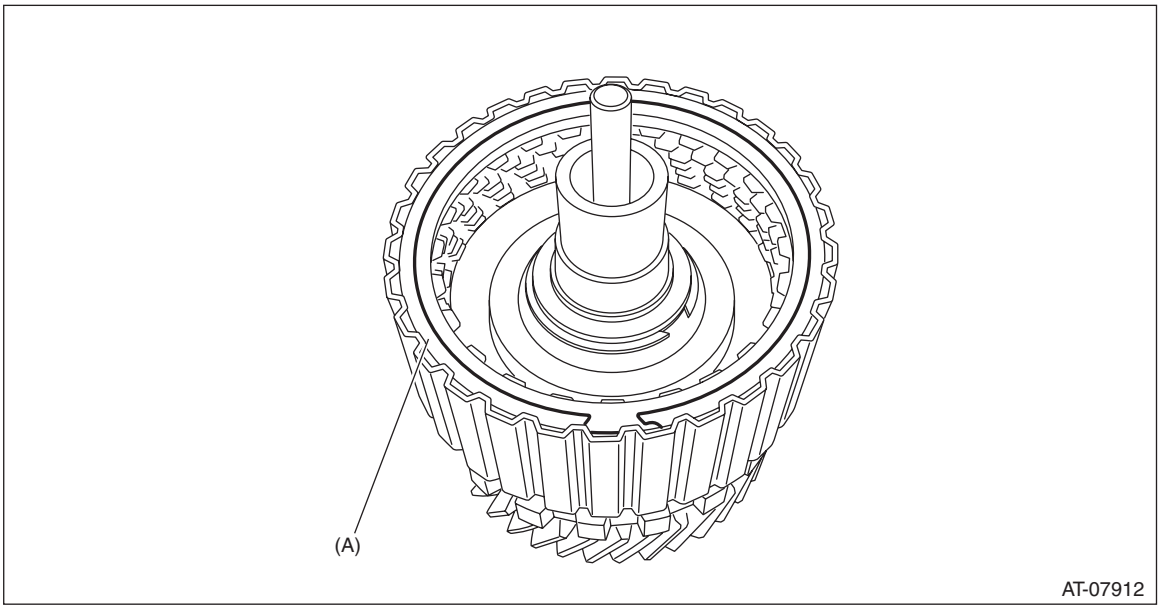

(A) Snap ring

2) Using the ST, remove the snap ring.
ST 18762AA001 COMPRESSOR SPECIAL TOOL

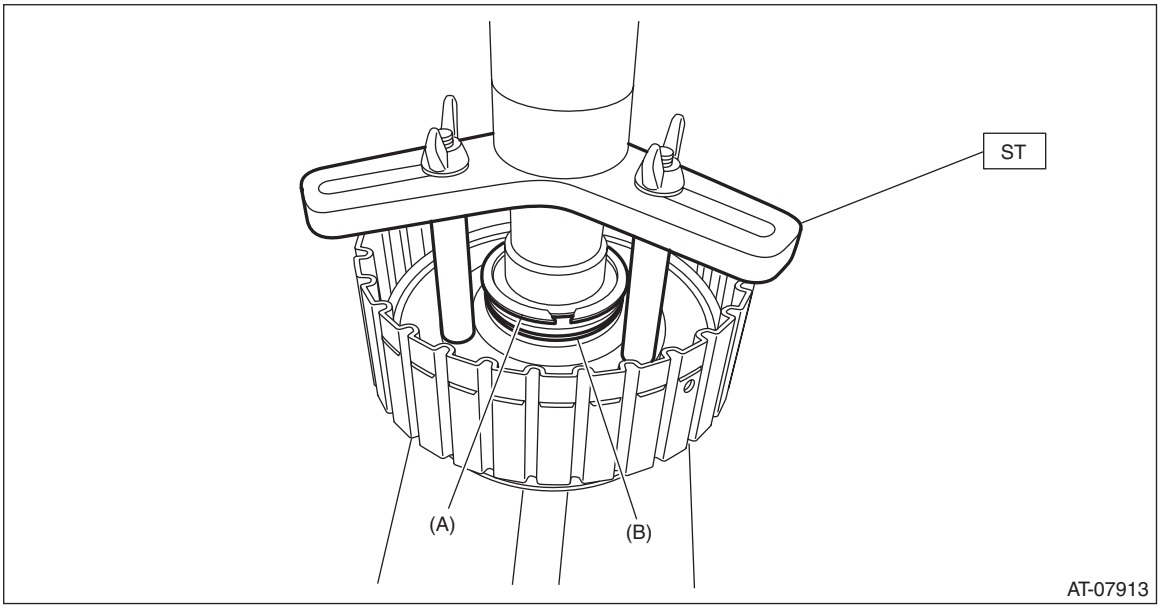

(A) Snap ring
(B) Transfer clutch piston seal

3) Remove the transfer clutch piston seal.

4) Remove the return spring.

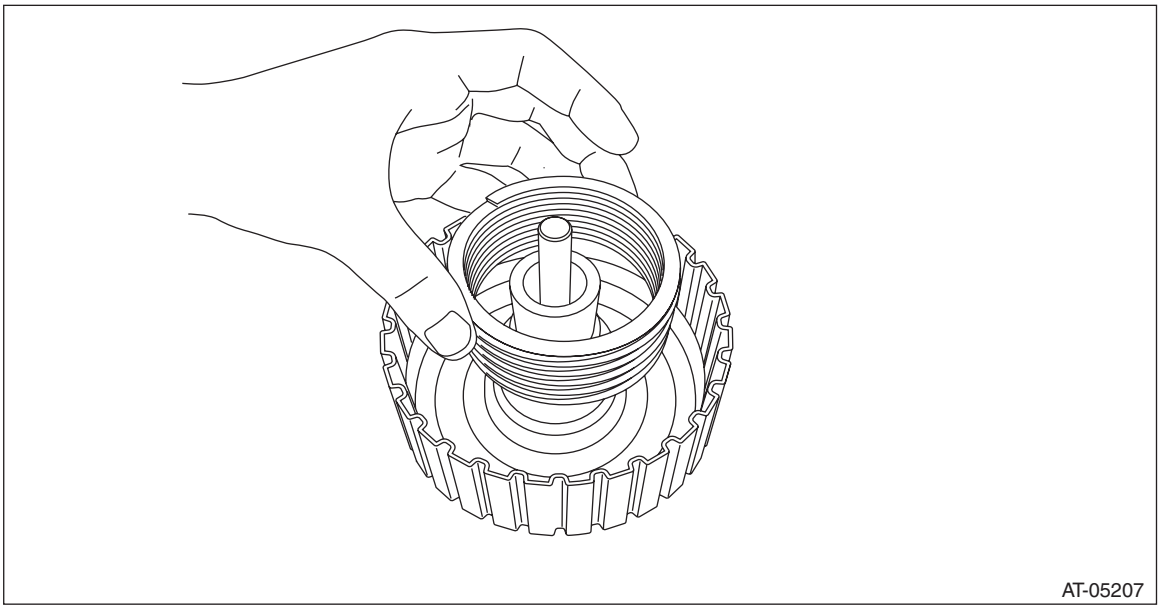

5) Remove the transfer clutch piston by blowing compressed air through transfer clutch assembly hole.

NOTE:
Block the hole opposite to the one to be blown with compressed air by your finger.

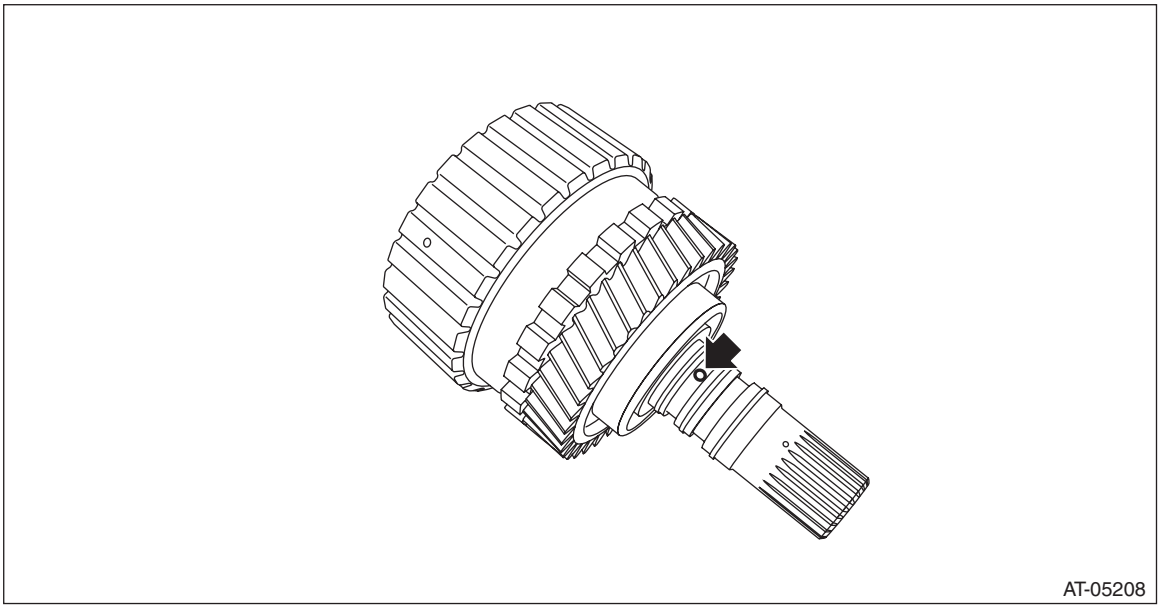

6) Using ST, remove transfer drive gear, parking gear and ball bearing.
ST 18767AA000 BEARING REMOVER

NOTE:
Let the ST sit on the parking gear.

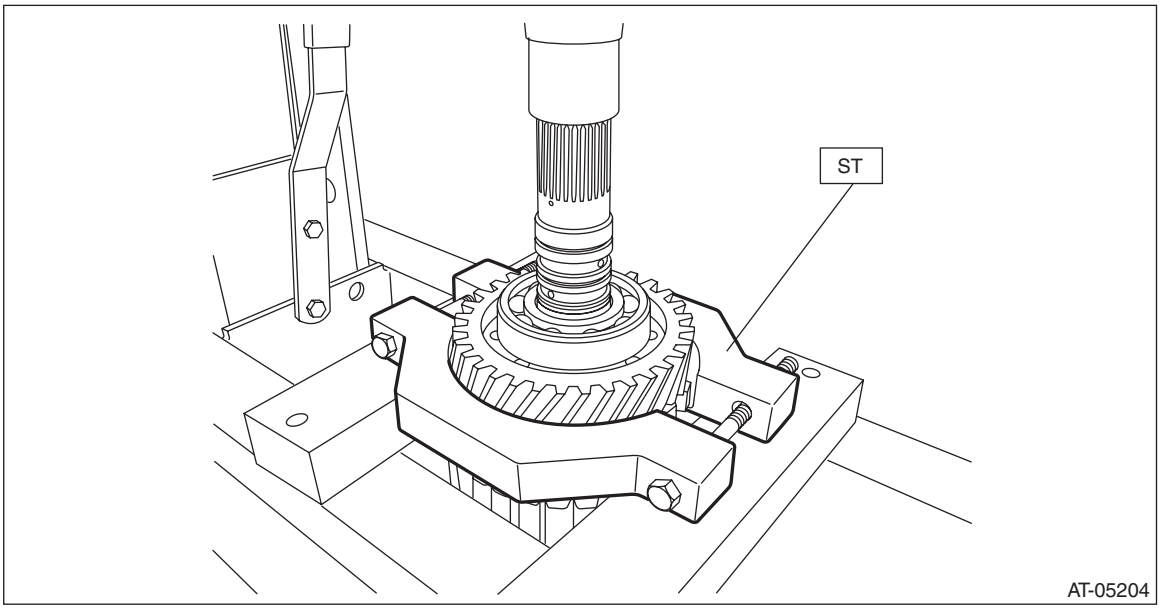

7) Remove the snap ring from transfer reduction drive gear.

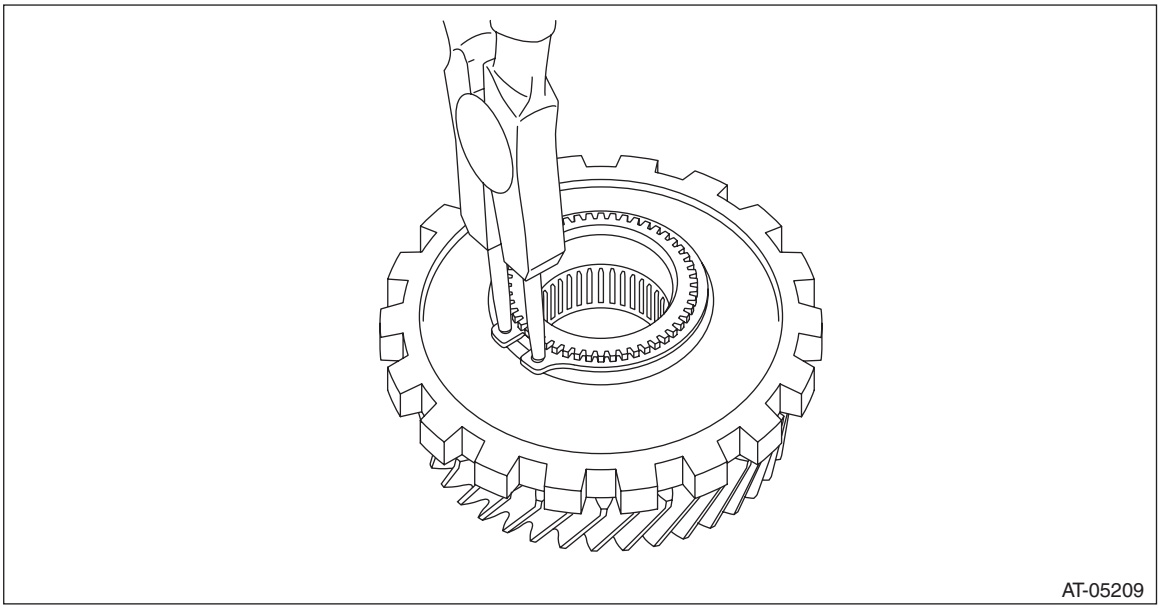

8) Using the ST, remove the parking gear from transfer reduction drive gear.
ST1 499277100 BUSHING 1-2 INSTALLER
ST2 18767AA000 BEARING REMOVER

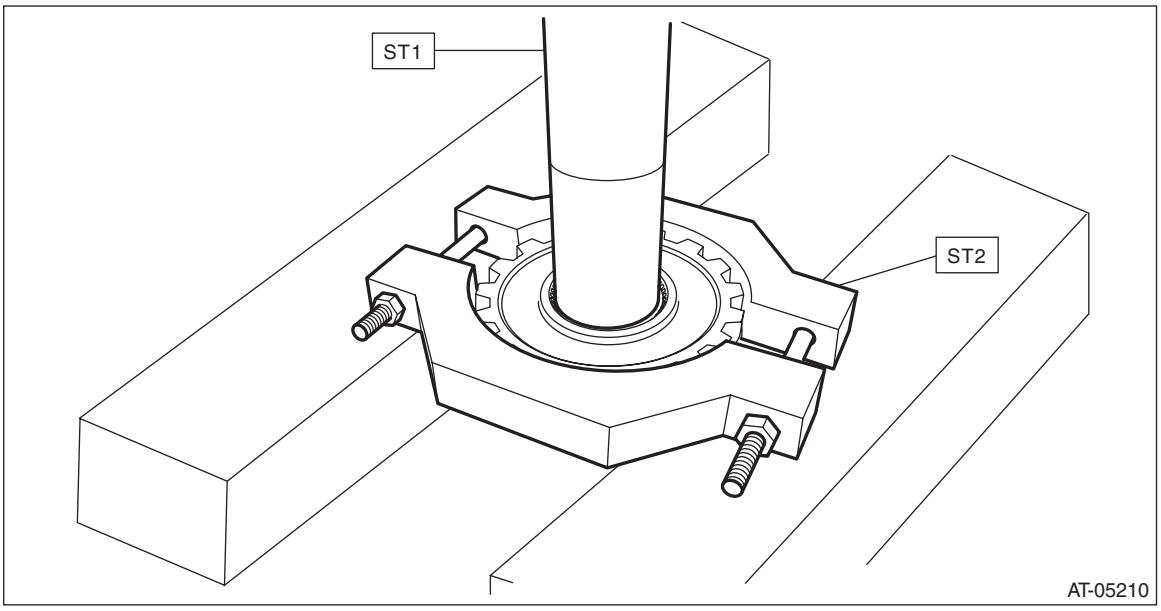

D: ASSEMBLY

1) Using the ST, install the parking gear to transfer reduction drive gear.
ST 398177700 INSTALLER

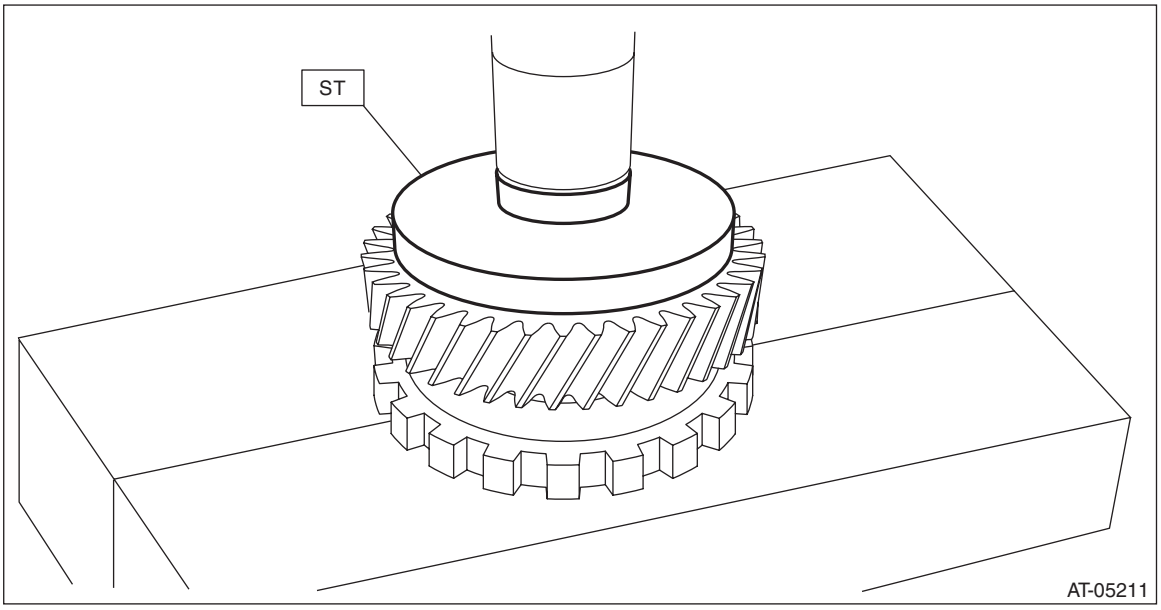

2) Install the snap ring to transfer reduction drive gear.

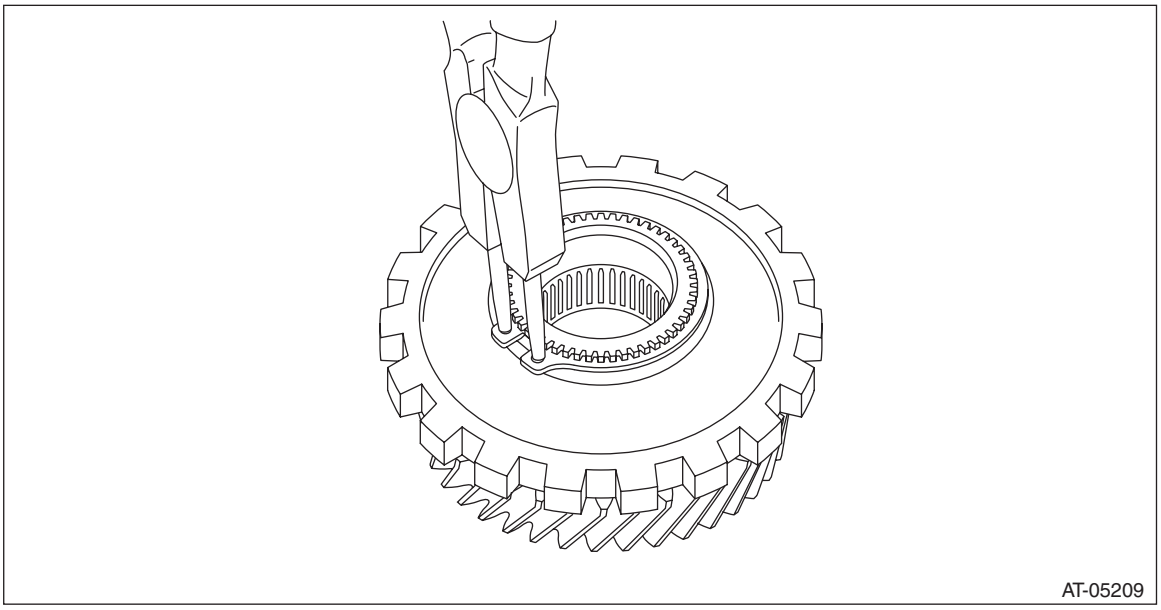

3) Using the ST, install the transfer reduction drive gear to transfer reduction drive gear shaft.
ST 499277100 BUSHING 1-2 INSTALLER

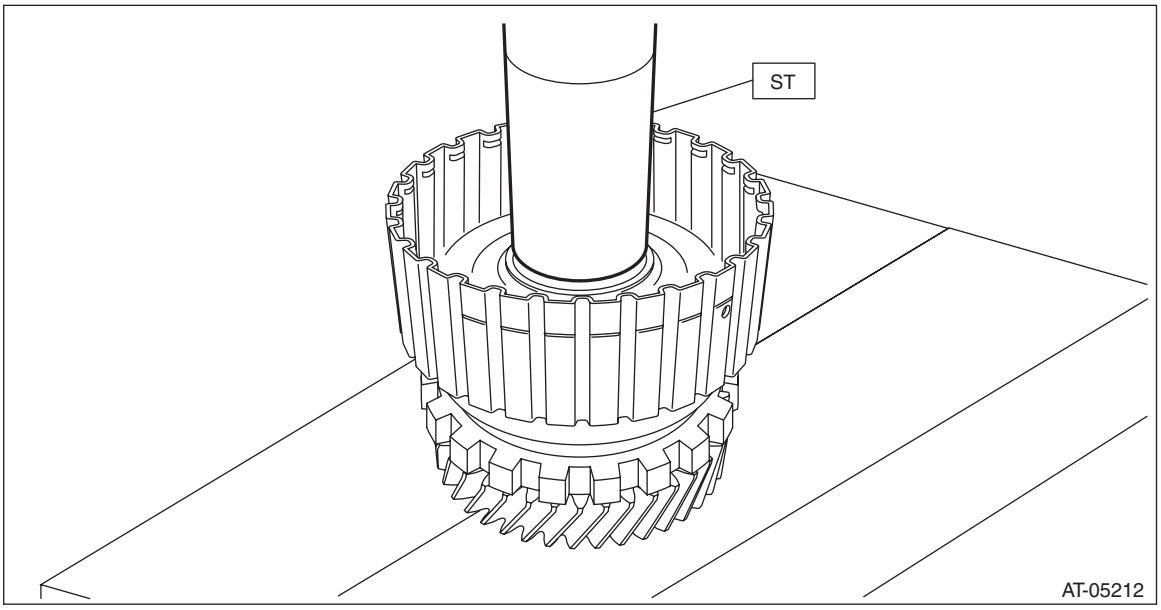

4) Using the ST, install the ball bearing.

NOTE:
Use a new ball bearing.
ST 499277100 BUSHING 1-2 INSTALLER

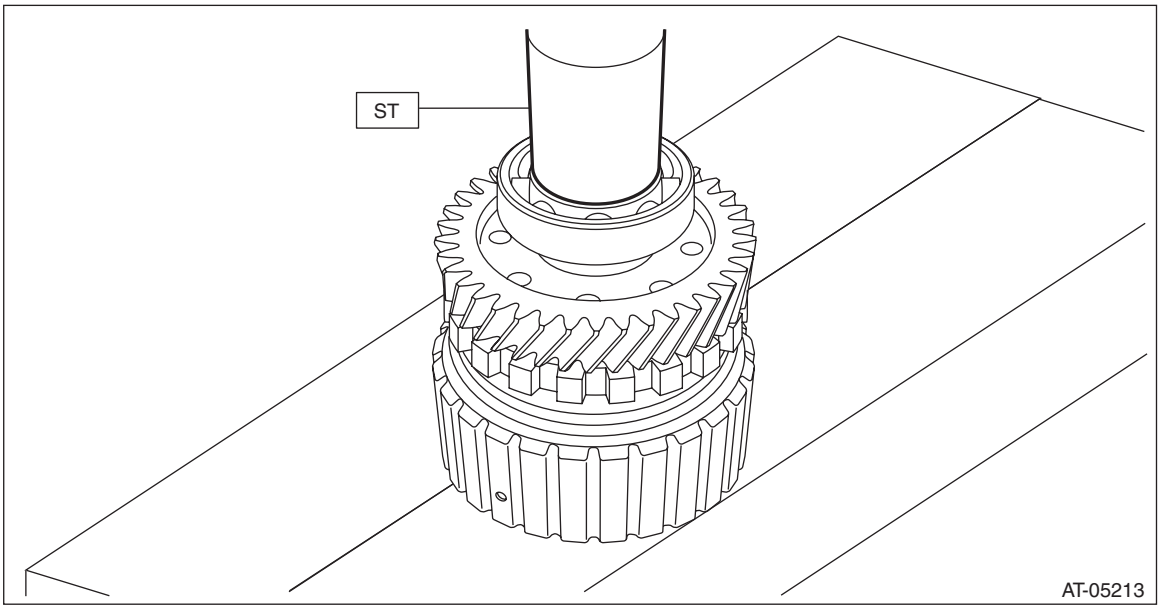

5) Attach the transfer clutch piston to the reduction drive gear shaft.

NOTE:
Apply CVTF to the transfer clutch piston lip.

6) Install the return spring.

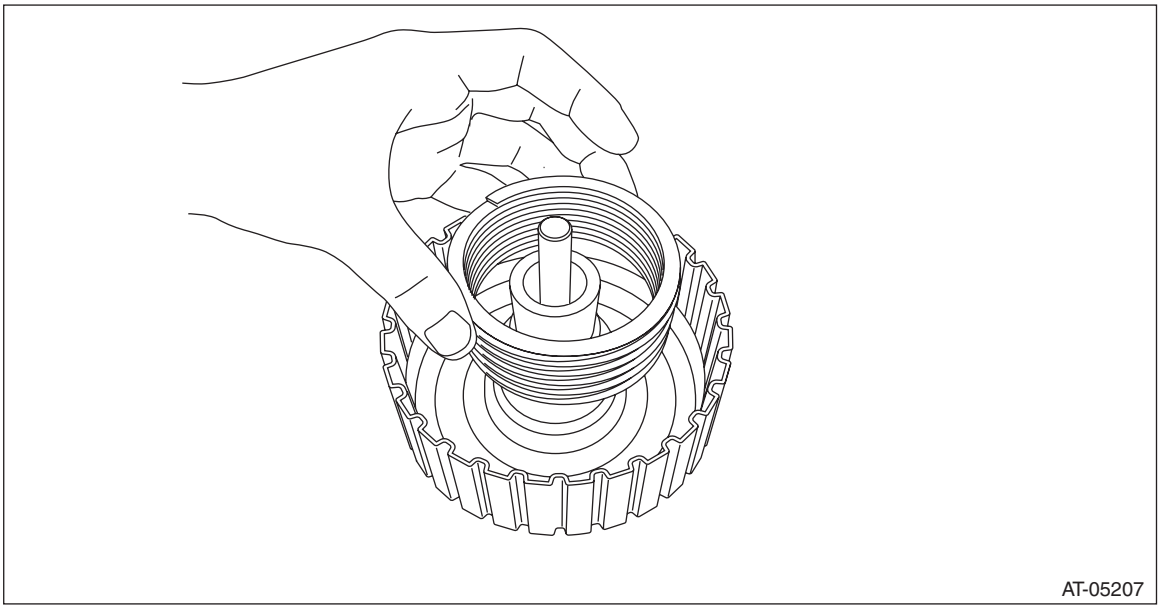

7) Install the transfer clutch piston seal.

8) Using the ST, install the snap ring.
ST 18762AA001 COMPRESSOR SPECIAL TOOL

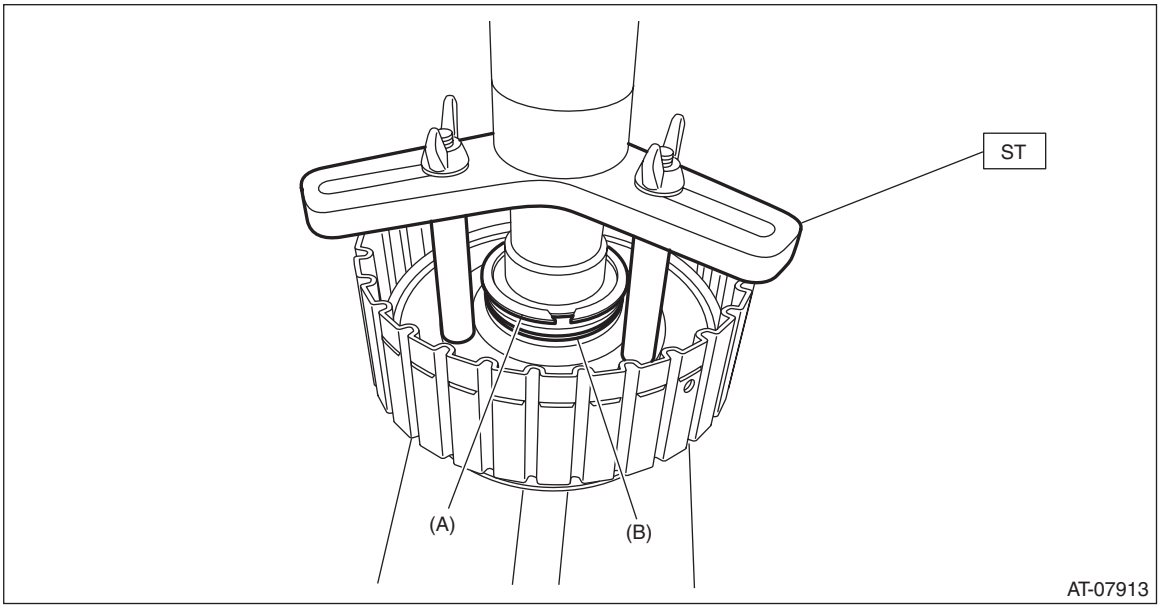

(A) Snap ring
(B) Transfer clutch piston seal

9) Install the pressure plate, driven plate, drive plate and snap ring.

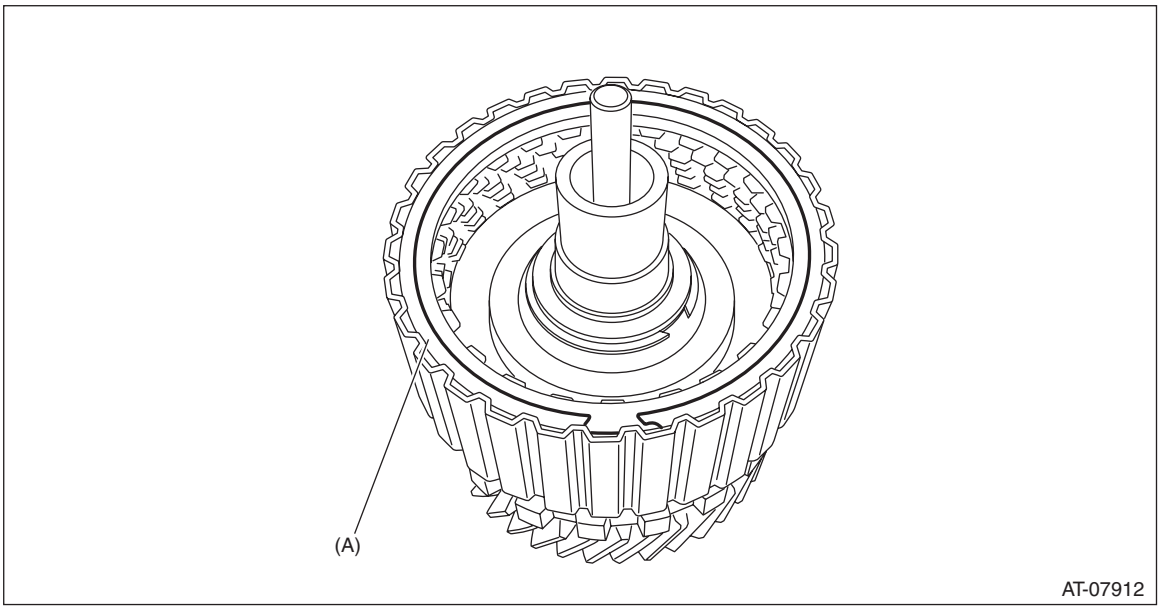

(A) Snap ring

10) Before measuring clearance “A”, place same thickness shims on both sides to prevent the retaining plate from tilting.

11) When clearance “A” exceeds the limit for use, replace the drive plate and driven plate as a set, and select and adjust the pressure plate within the initial specified value.

Initial standard:
0.7 — 1.1 mm (0.028 — 0.043 in)

Limit thickness:
1.6 mm (0.063 in)

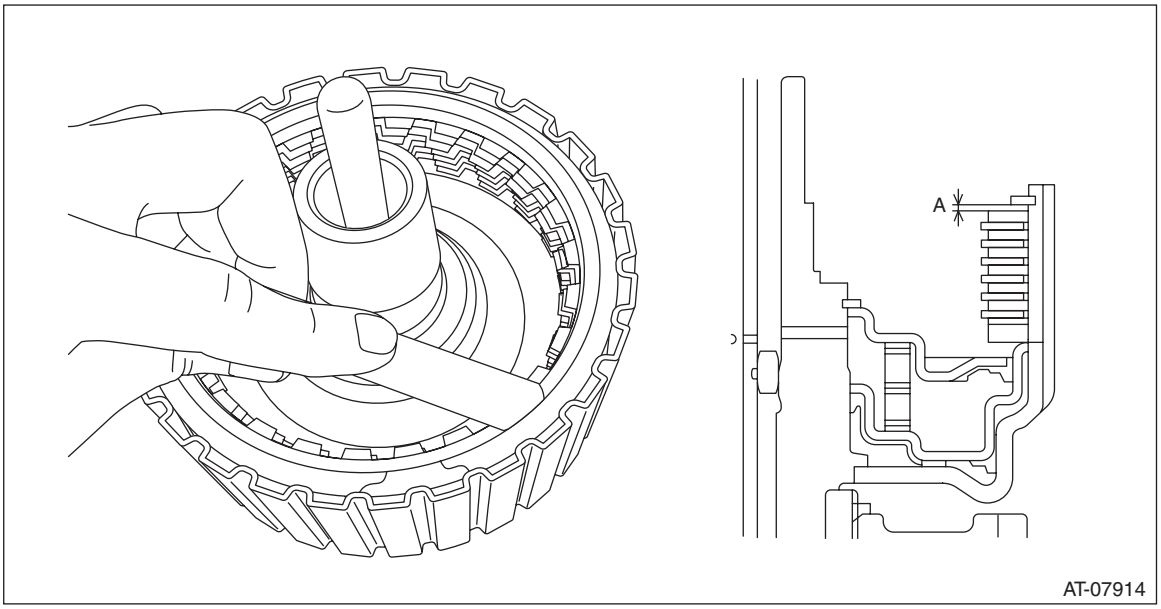

Pressure plate	
Part No.	Thickness mm (in)
31593AA151	3.3 (0.130)
31593AA161	3.7 (0.146)

12) Check the clearance between the snap ring and retaining plate. <Ref. to CVT(TR690)-178, INSPECTION, Transfer Clutch.>

E: INSPECTION

- Inspect the drive plate facing for wear and damage.
- Driven plate for discoloration (burned color)
- Make sure the snap ring is not worn and the return spring has no permanent distortion, damage, or deformation.
- Check the lip seal for damage.
- Inspect the extension end play, and adjust it to within the standard value. <Ref. to CVT(TR690)-179, ADJUSTMENT, Transfer Clutch.>

1) Before measuring clearance “A” between snap ring and retaining plate, place same thickness shims on both sides to prevent the retaining plate from tilting.

2) When clearance “A” exceeds the limit for use, replace the drive plate and driven plate as a set, and select the pressure plate within the initial specified value.

Initial standard:
0.7 — 1.1 mm (0.028 — 0.043 in)

Limit thickness:
1.6 mm (0.063 in)

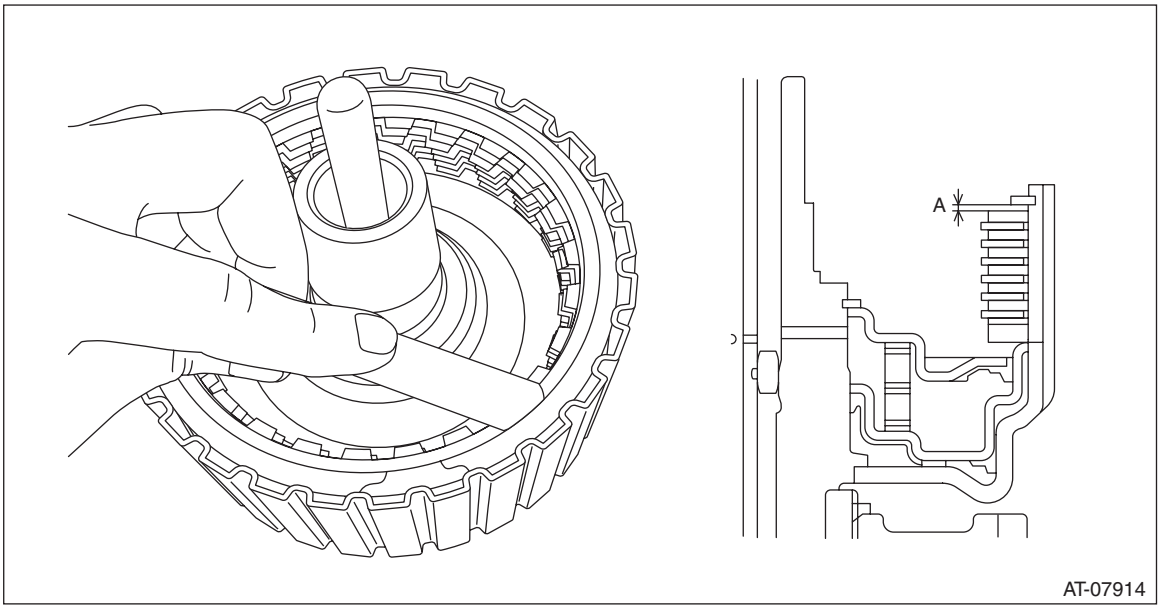

3) Check for tight corner braking phenomenon when the vehicle is moved forward with the steering fully turned. If tight corner braking occurs, perform the following procedures.

NOTE:
Turn OFF the X mode switch and perform inspection.

(1) With the steering wheel held at fully turned position, drive the vehicle in “D” range and with vehicle speed at approx. 5 km/h (3 MPH) in both clockwise and counterclockwise directions for approx. ten times each, while repeating acceleration and braking intermittently.
(2) If the tight corner braking phenomenon still persists, drive the vehicle again in a circle for several laps.

F: ADJUSTMENT

NOTE:
Refer to the Rear Drive Shaft. <Ref. to CVT(TR690)-165, ADJUSTMENT, Rear Drive Shaft.>

33.Transfer Reduction Driven Gear

A: REMOVAL

1) Remove the transmission assembly from the vehicle. <Ref. to CVT(TR690)-58, REMOVAL, Automatic Transmission Assembly.>
2) Remove the extension case. <Ref. to CVT(TR690)-160, REMOVAL, Extension Case.>
3) Remove the rear drive shaft. <Ref. to CVT(TR690)-163, REMOVAL, Rear Drive Shaft.>
4) Remove the transfer clutch assembly. <Ref. to CVT(TR690)-168, REMOVAL, Transfer Clutch.>
5) Remove the transfer reduction driven gear assembly.

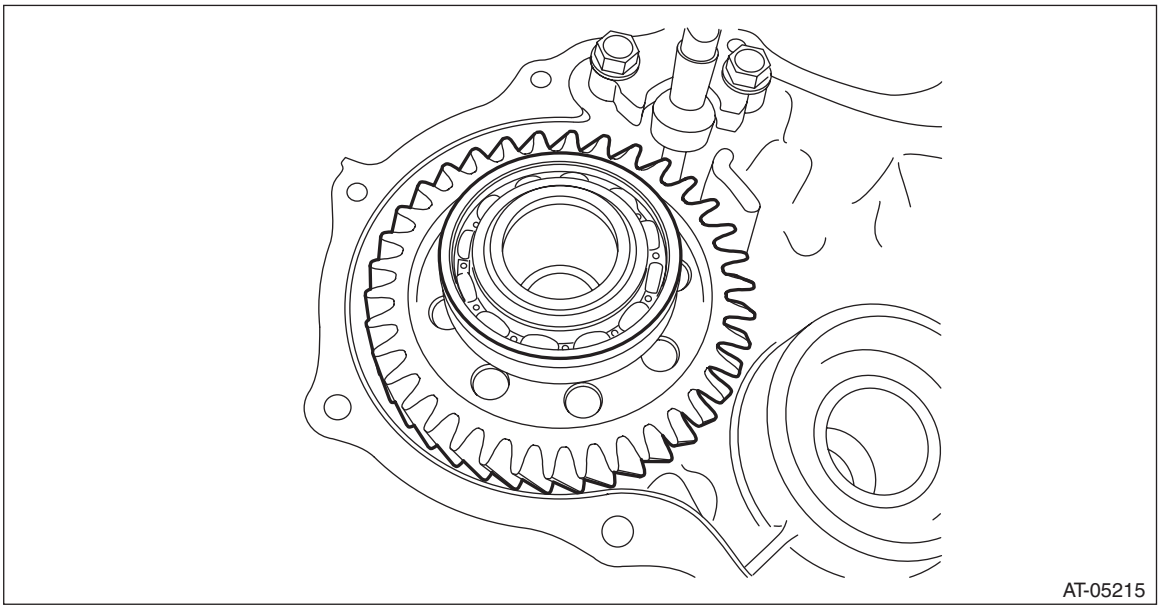

B: INSTALLATION

1) Install the reduction driven gear assembly.

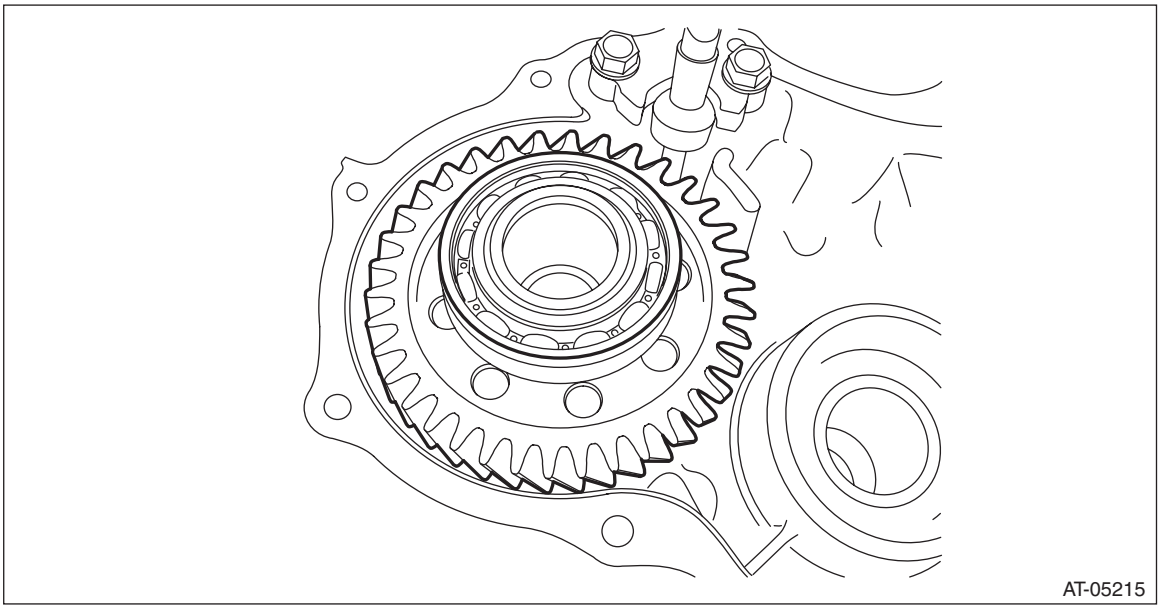

2) Select shims. <Ref. to CVT(TR690)-183, ADJUSTMENT, Transfer Reduction Driven Gear.>
3) Install the transfer clutch assembly. <Ref. to CVT(TR690)-169, INSTALLATION, Transfer Clutch.>
4) Install the rear drive shaft. <Ref. to CVT(TR690)-163, INSTALLATION, Rear Drive Shaft.>
5) Mount the selected shim onto ball bearing.
6) Install the extension case. <Ref. to CVT(TR690)-161, INSTALLATION, Extension Case.>

7) Install the transmission assembly to the vehicle. <Ref. to CVT(TR690)-75, INSTALLATION, Automatic Transmission Assembly.>

C: DISASSEMBLY

1) Using the ST, remove the ball bearing (large) from transfer reduction driven gear.
ST1 899864100 REMOVER
ST2 398497701 SEAT
ST3 498077600 REMOVER

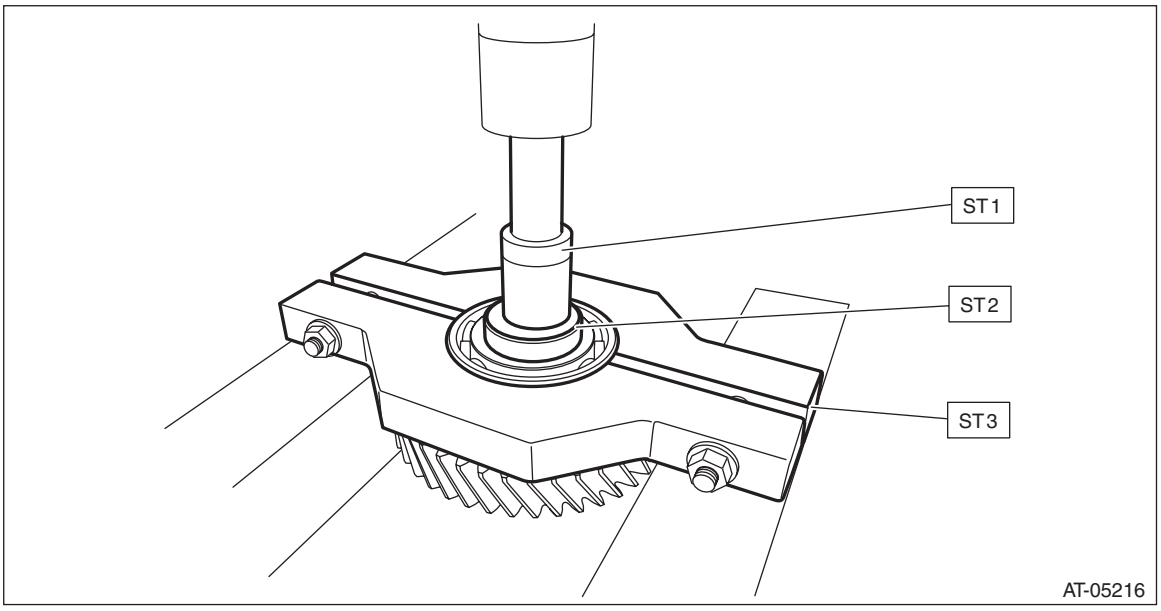

2) Using the ST, remove the ball bearing (small) from transfer reduction driven gear.
ST1 899864100 REMOVER
ST2 398497701 SEAT
ST3 18720AA000 REMOVER

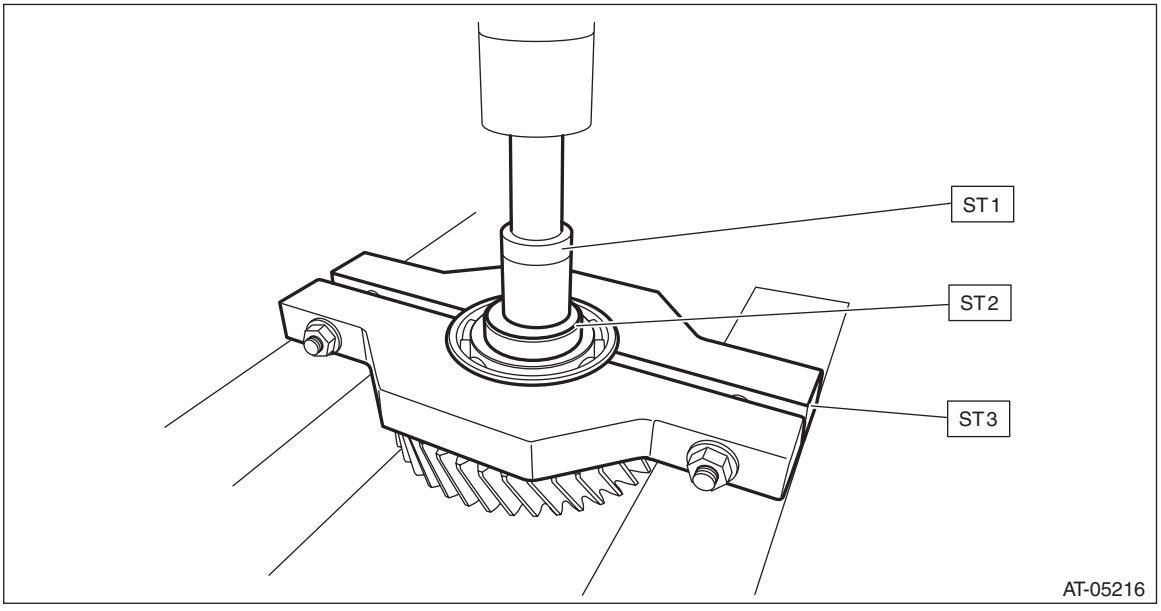

D: ASSEMBLY

1) Install the new ball bearing (large) to reduction driven gear using the ST.
ST 499277100 BUSHING 1-2 INSTALLER

NOTE:
- Use a new ball bearing.
- Install to the splines inside transfer reduction driven gear shaft.

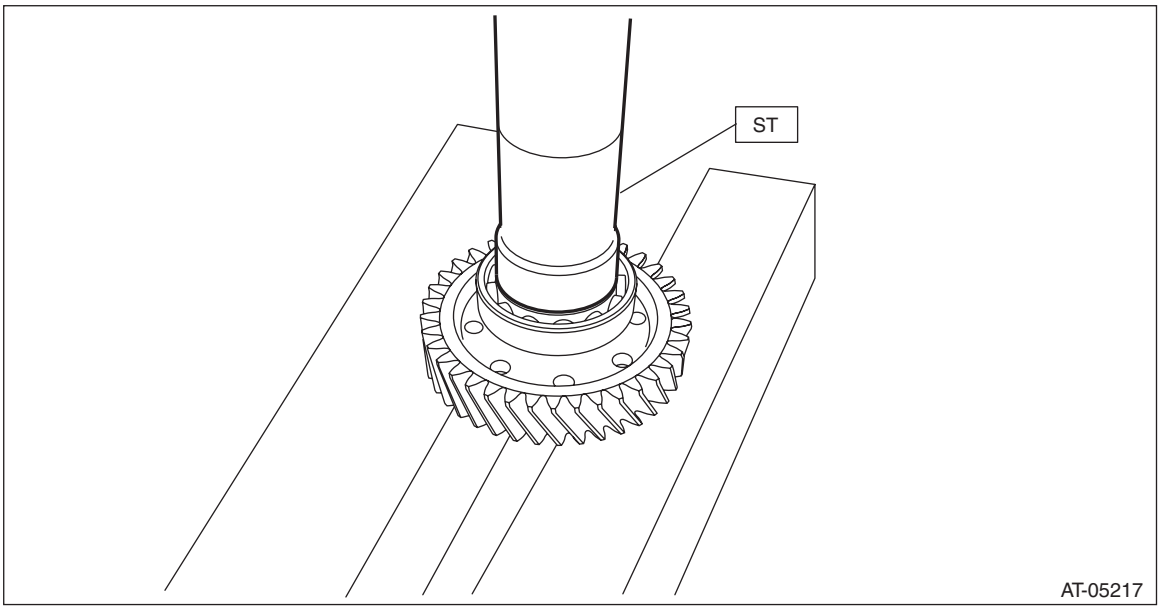

2) Install the new ball bearing (small) to reduction driven gear.

NOTE:
Use a new ball bearing.
ST 499277100 BUSHING 1-2 INSTALLER

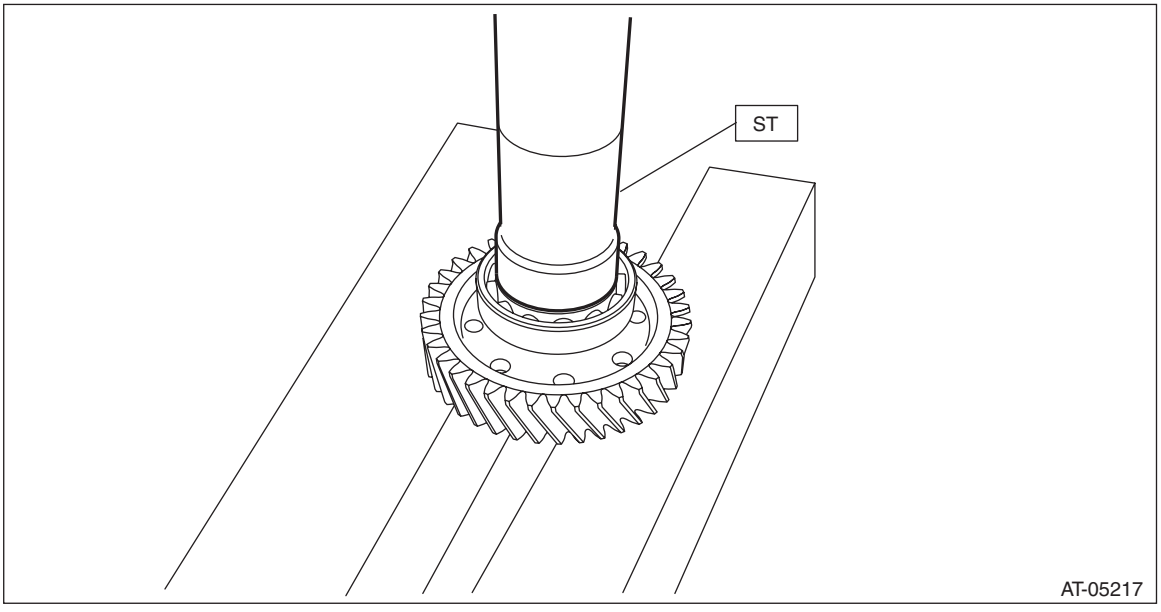

E: INSPECTION

- Check the ball bearing for smooth rotation.
- Check the ball bearing for excessive looseness.
- Make sure the gear is not broken or damaged.

F: ADJUSTMENT

1) Measure depth “A” from the ST upper face to the ball bearing catch surface.
ST 398643600 GAUGE

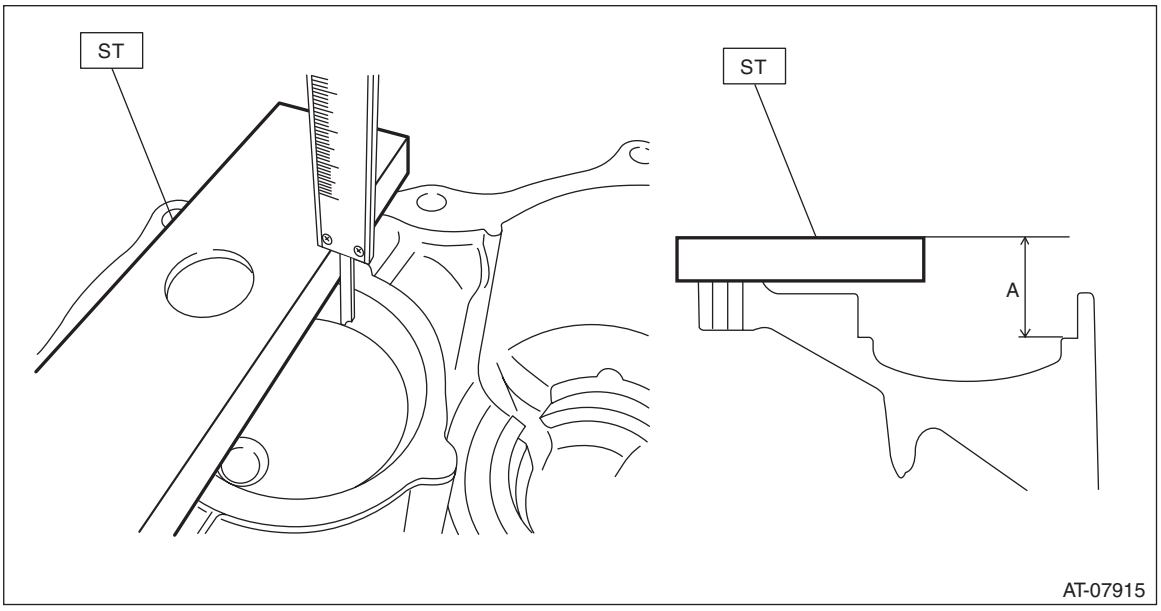

2) Measure height “B” from the ST to the end of the ball bearing outer ring.
ST 398643600 GAUGE

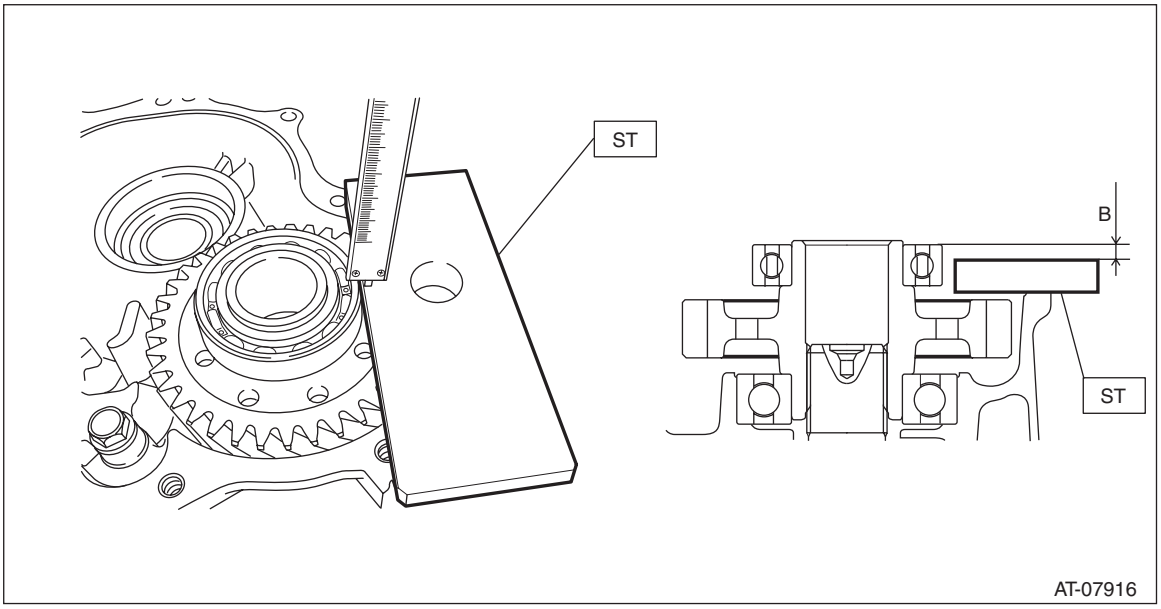

3) Obtain the thickness of shim using the following formula to select none to two shims.
T mm = (A – 15) – (B + 15) – (0.05 — 0.25)
[T in = (A – 0.591) – (B + 0.591) – (0.002 — 0.01)]
T: Shim thickness
A: Depth from the ST upper face to the ball bearing catch surface
B: Height from the ST to the end of the ball bearing outer ring
15 mm (0.591 in): Thickness of ST
0.05 — 0.25 mm (0.002 — 0.01 in): Clearance

Shim	
Part No.	Thickness mm (in)
31288AA190	0.2 (0.008)
31288AA200	0.3 (0.012)
31288AA210	0.5 (0.02)

34.Parking Pawl

A: REMOVAL

1) Remove the transmission assembly from the vehicle. <Ref. to CVT(TR690)-58, REMOVAL, Automatic Transmission Assembly.>
2) Shift the range select lever to “N” range.
3) Remove the extension case. <Ref. to CVT(TR690)-160, REMOVAL, Extension Case.>
4) Remove the parking pawl shaft, return spring and parking pawl.

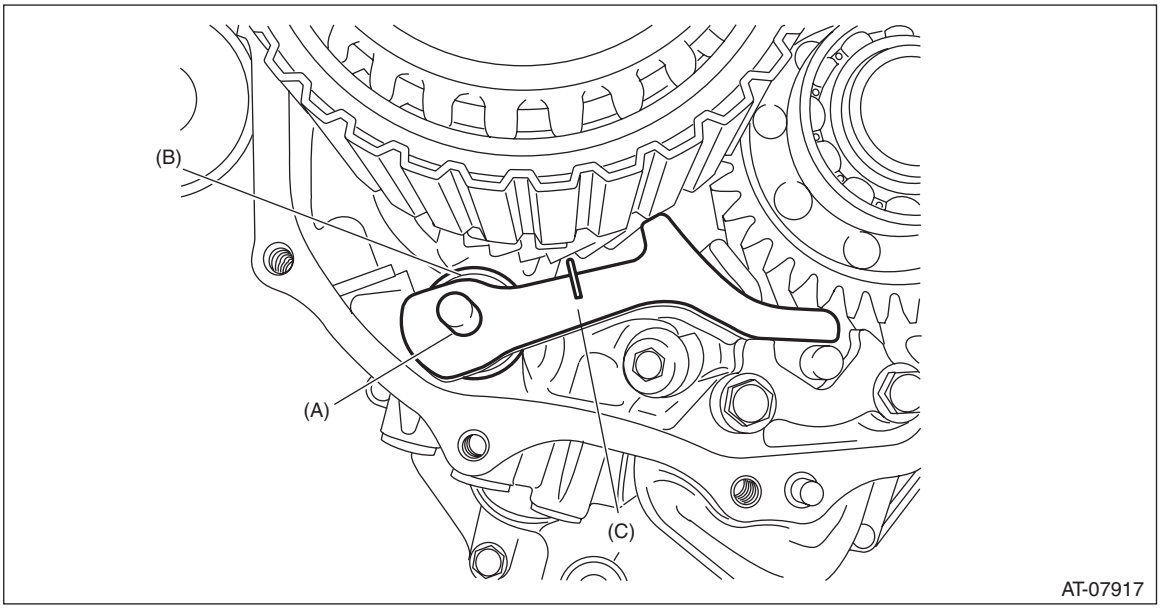

(A) Parking pawl shaft
(B) Return spring
(C) Parking pawl

B: INSTALLATION

1) Set the range select lever to the “N” range.
2) Install the parking pawl shaft, return spring and parking pawl.

NOTE:
Make sure that the end of return spring sticks out of parking pawl as shown in (a). Make sure that the other end contacts the rib of intermediate case as shown in (b).

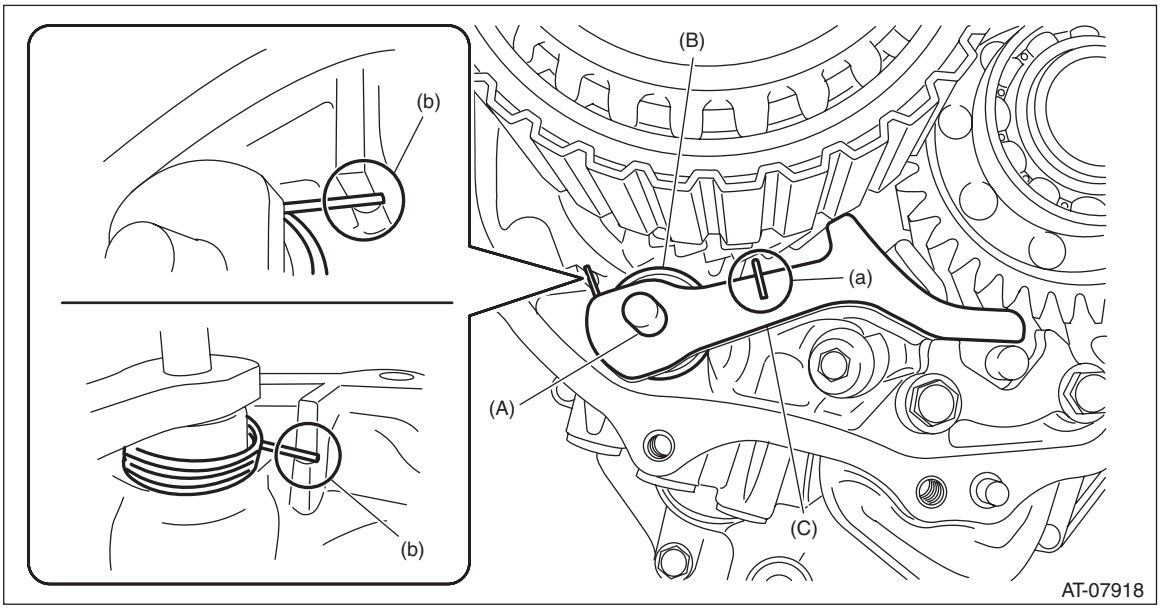

(A) Parking pawl shaft
(B) Return spring
(C) Parking pawl

3) Install the extension case. <Ref. to CVT(TR690)-161, INSTALLATION, Extension Case.>
4) Install the transmission assembly to the vehicle. <Ref. to CVT(TR690)-75, INSTALLATION, Automatic Transmission Assembly.>

C: INSPECTION

- Check the parking pawl for breakage or damage.
- Check the return spring for fatigue.

35.Intermediate Case

A: REMOVAL

1) Remove the transmission assembly from vehicle body. <Ref. to CVT(TR690)-58, REMOVAL, Automatic Transmission Assembly.>
2) Remove the extension case. <Ref. to CVT(TR690)-160, REMOVAL, Extension Case.>
3) Remove the parking pawl. <Ref. to CVT(TR690)-185, REMOVAL, Parking Pawl.>
4) Remove the rear drive shaft. <Ref. to CVT(TR690)-163, REMOVAL, Rear Drive Shaft.>
5) Remove the transfer clutch assembly. <Ref. to CVT(TR690)-168, REMOVAL, Transfer Clutch.>
6) Remove the transfer reduction driven gear assembly. <Ref. to CVT(TR690)-180, REMOVAL, Transfer Reduction Driven Gear.>
7) Remove the intermediate case.

NOTE:
- The total number of intermediate case mounting bolts is 14.
- Inside the transmission is a single bolt (arrowed).

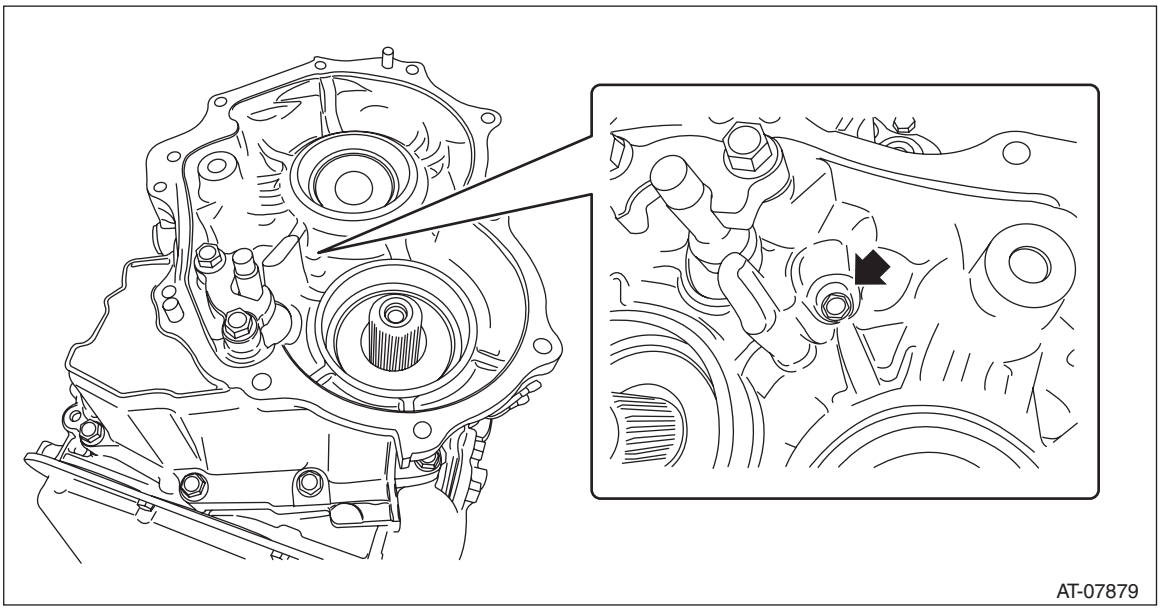
AT-07879

8) Remove the CVTF filter.

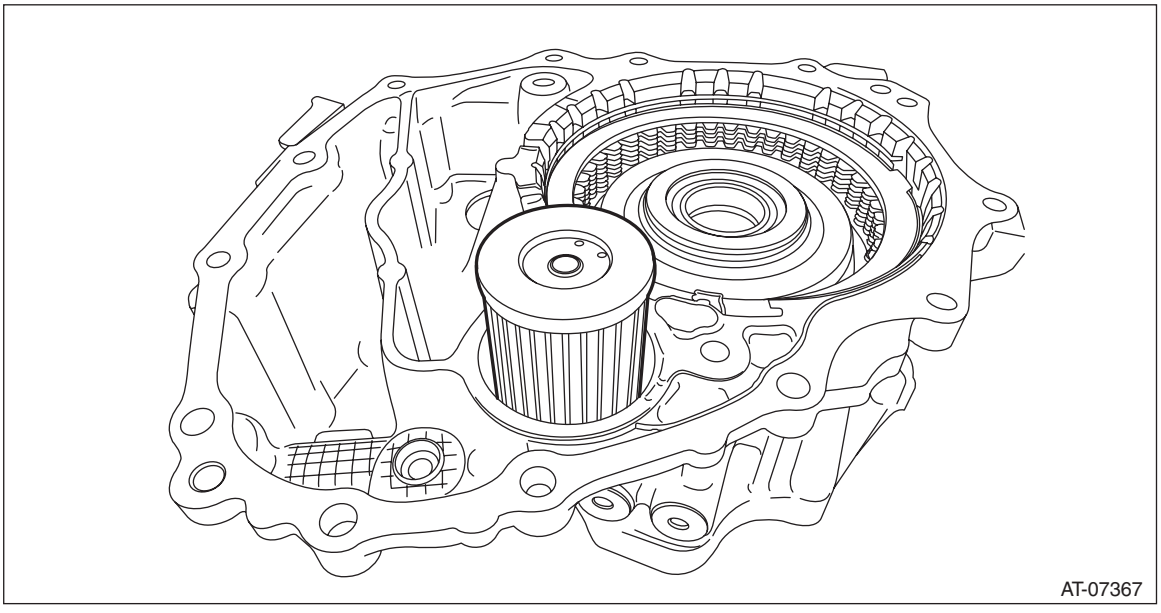
AT-07367

9) Remove the O-ring from the transmission case.

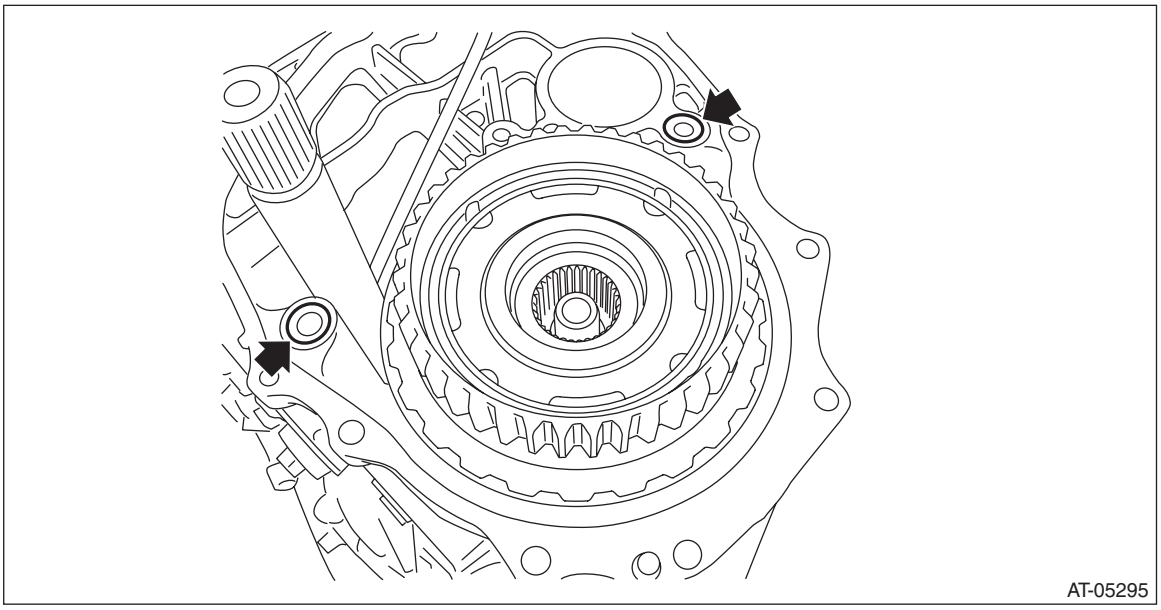

B: INSTALLATION

1) Clean the mating surface of intermediate case and transmission case.
2) Face the O-ring side of the CVTF filter to the intermediate case side, and install the CVTF filter.

NOTE:
Apply CVTF to the O-rings.

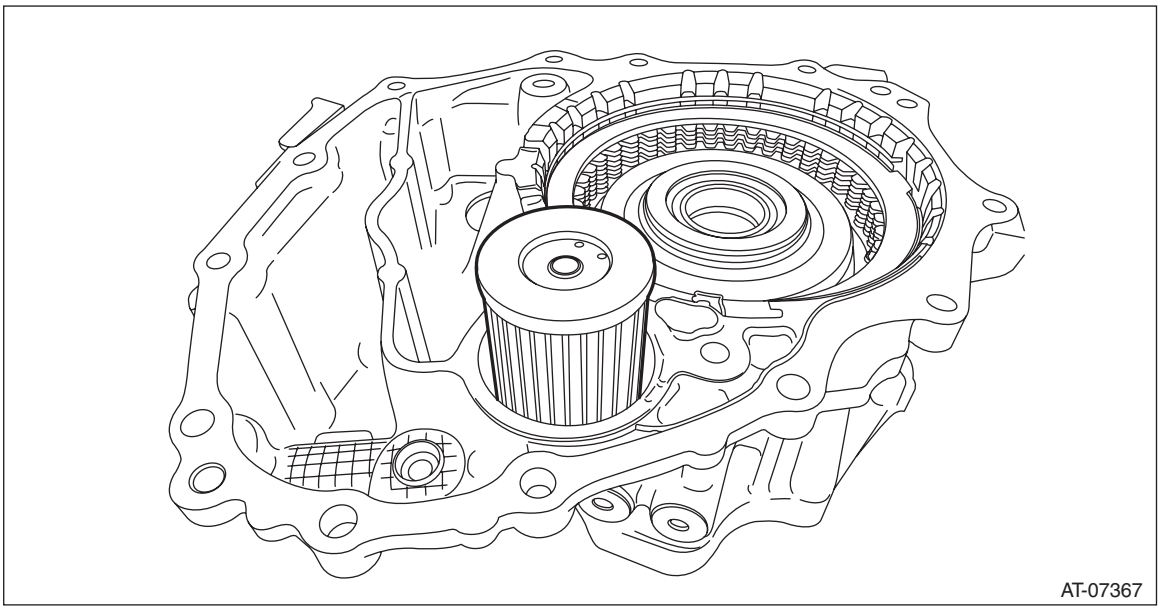

3) Install the O-ring to the transmission case.

NOTE:
- Use new O-rings.
- Apply CVTF to the O-rings.

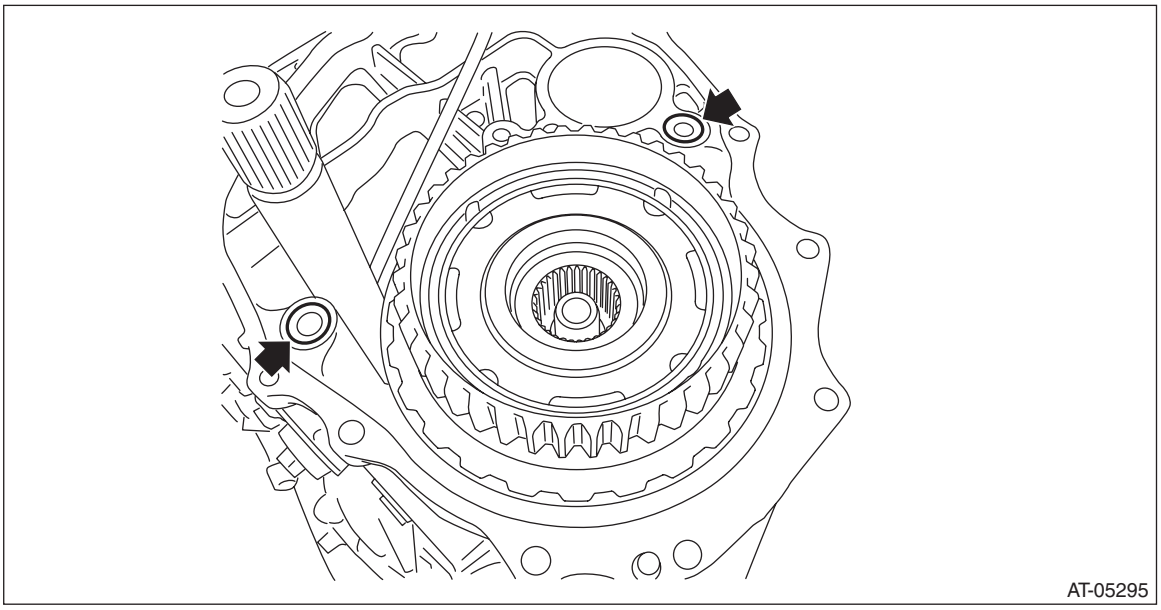

4) Apply liquid gasket to intermediate case seamlessly.

Liquid gasket:
THREE BOND 1215B or equivalent

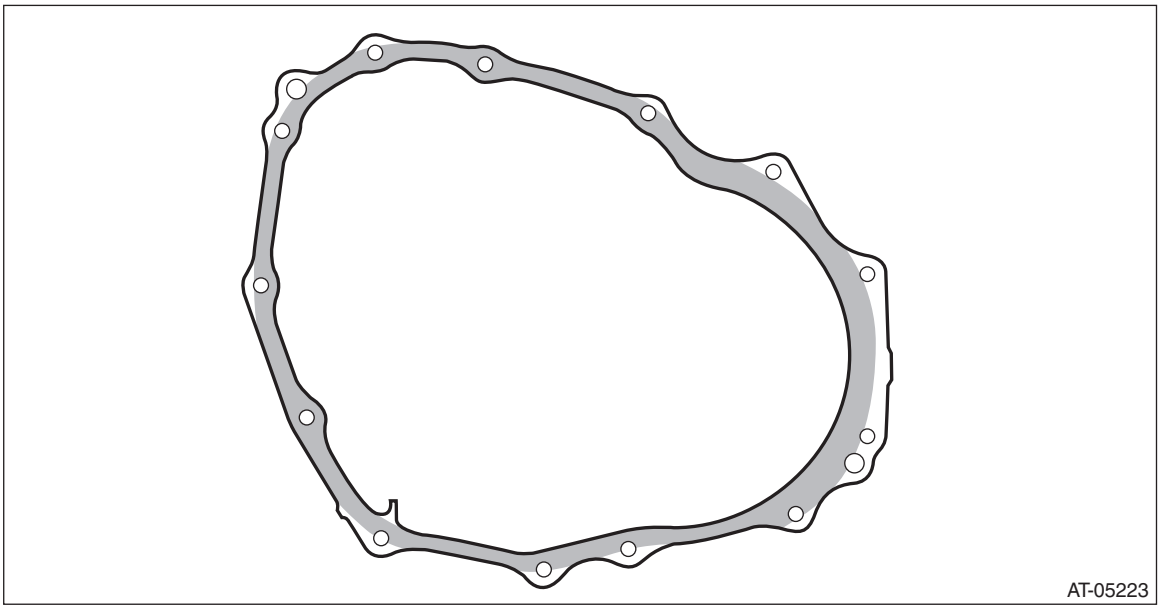

5) Install the intermediate case and the transmission hanger to the transmission case.

NOTE:
Make sure to install the arrowed bolt.

Tightening torque:
25 N·m (2.5 kgf-m, 18.4 ft-lb)

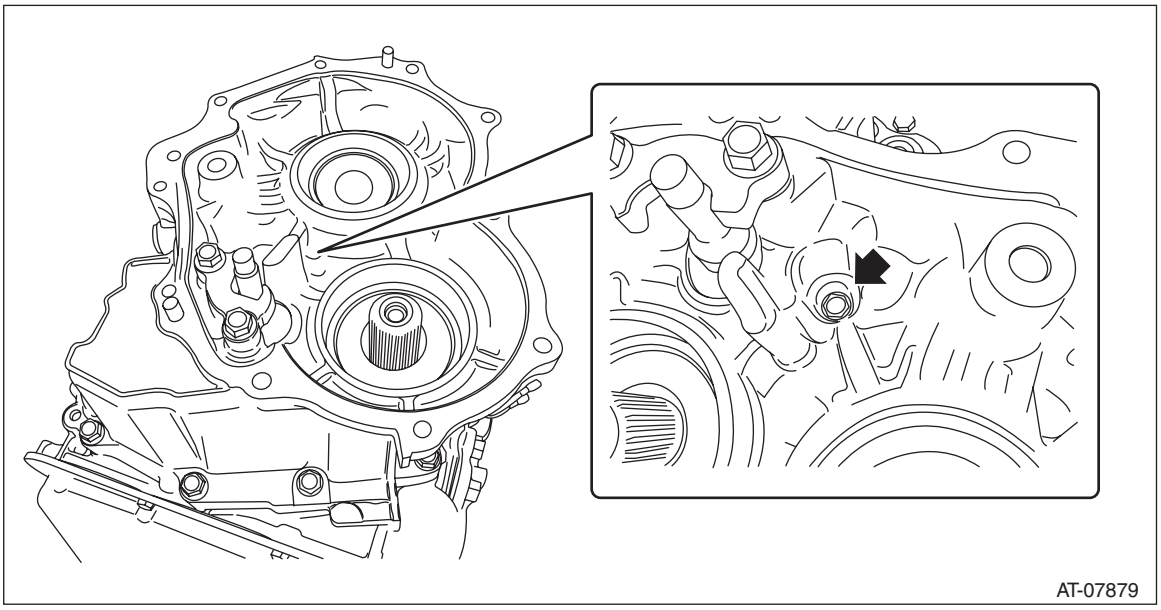

6) Install the transfer reduction driven gear assembly. <Ref. to CVT(TR690)-180, INSTALLATION, Transfer Reduction Driven Gear.>
7) Install the transfer clutch assembly. <Ref. to CVT(TR690)-169, INSTALLATION, Transfer Clutch.>
8) Install the rear drive shaft. <Ref. to CVT(TR690)-163, INSTALLATION, Rear Drive Shaft.>
9) Install the parking pawl. <Ref. to CVT(TR690)-186, INSTALLATION, Parking Pawl.>
10) Install the extension case. <Ref. to CVT(TR690)-161, INSTALLATION, Extension Case.>
11) Install the transmission to vehicle. <Ref. to CVT(TR690)-75, INSTALLATION, Automatic Transmission Assembly.>

C: DISASSEMBLY

1) Remove the parking support.
2) Remove the CVTF filler plug.
3) Remove all plugs from intermediate case.

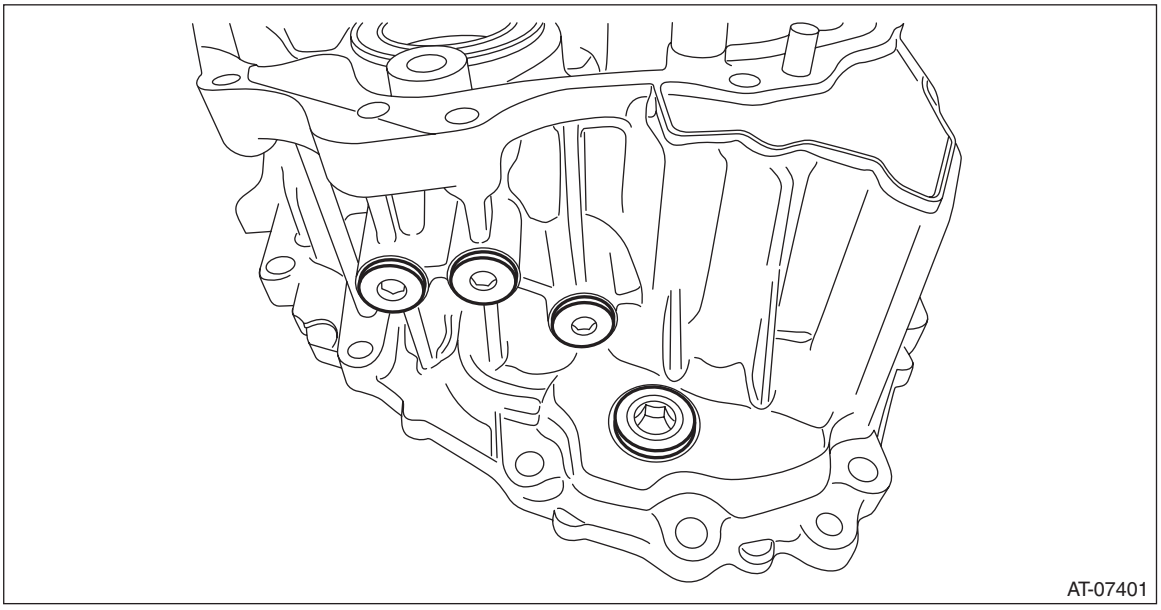

4) Remove the reverse brake assembly. <Ref. to CVT(TR690)-193, DISASSEMBLY, Reverse Brake Assembly.>

D: ASSEMBLY

1) Install the reverse brake. <Ref. to CVT(TR690)-196, ASSEMBLY, Reverse Brake Assembly.>
2) install all plugs to intermediate case.

Tightening torque:
25 N·m (2.5 kgf-m, 18.4 ft-lb)

NOTE:
Use new O-rings.

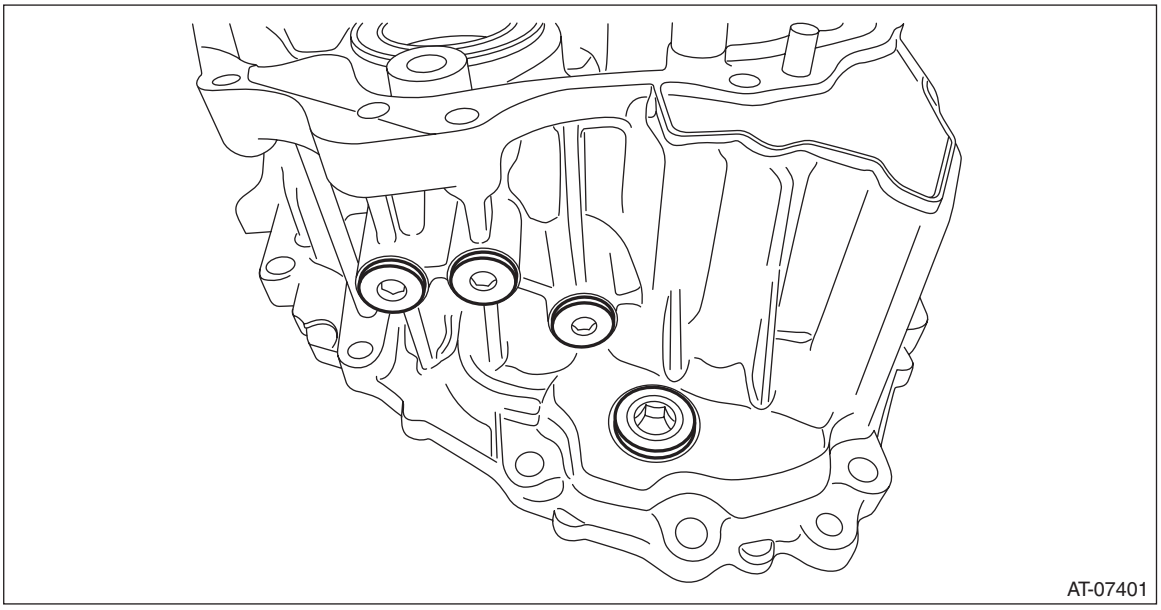

3) Install the parking support.

Tightening torque:
25 N·m (2.5 kgf-m, 18.4 ft-lb)
4) Install the CVTF filler plug.

NOTE:
Replace the gasket of CVTF filler plug with a new part after installing the transmission assembly to vehicle and adjusting CVTF fluid.

E: INSPECTION

- Check the intermediate case for fissures, cracks or damage.
- Check for leakage of CVTF from the connections between intermediate case and transmission case, and between intermediate case and extension case.

36.CVTF Filter

A: REMOVAL

NOTE:
• Although CVTF filter is a maintenance-free part, replace it if a large quantity of wear debris and metal particles are found in CVTF and CVTF filter.
• For removal of CVTF filter, refer to “Intermediate Case”. <Ref. to CVT(TR690)-187, REMOVAL, Intermediate Case.>

B: INSTALLATION

NOTE:
For installation of CVTF filter, refer to “Intermediate Case”. <Ref. to CVT(TR690)-188, INSTALLATION, Intermediate Case.>

C: INSPECTION

- Check if a large quantity of wear debris or metal particles are in CVTF and CVTF filter.
- Check for broken part or damaged O-ring.

37.Reverse Brake Assembly

A: REMOVAL

NOTE:
For removal of reverse brake assembly, refer to “Intermediate Case”. <Ref. to CVT(TR690)-187, REMOVAL, Intermediate Case.>

B: INSTALLATION

NOTE:
For installation of reverse brake assembly, refer to “Intermediate Case”. <Ref. to CVT(TR690)-188, INSTALLATION, Intermediate Case.>

C: DISASSEMBLY

1) Remove the snap ring.
2) Remove the retaining plate, drive plate, driven plate and dish plate.

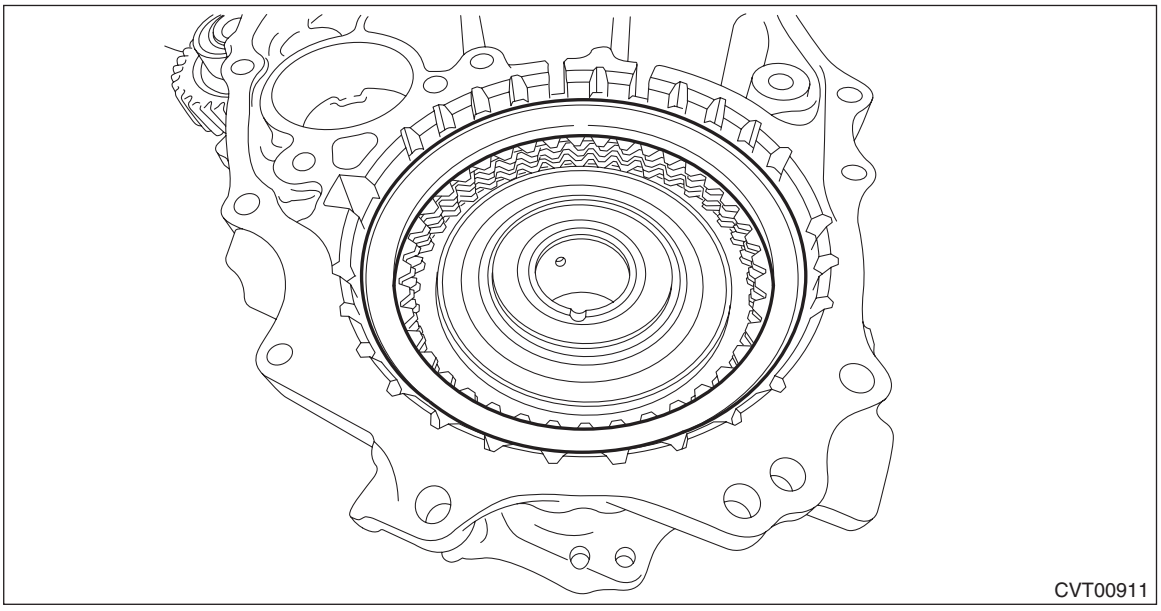

3) Set the ST1, ST2 and ST3 to intermediate case.
ST1 18762AA001 COMPRESSOR SPECIAL TOOL
ST2 18763AA000 COMPRESSOR SHAFT
ST3 18765AA000 COMPRESSOR SUPPORT

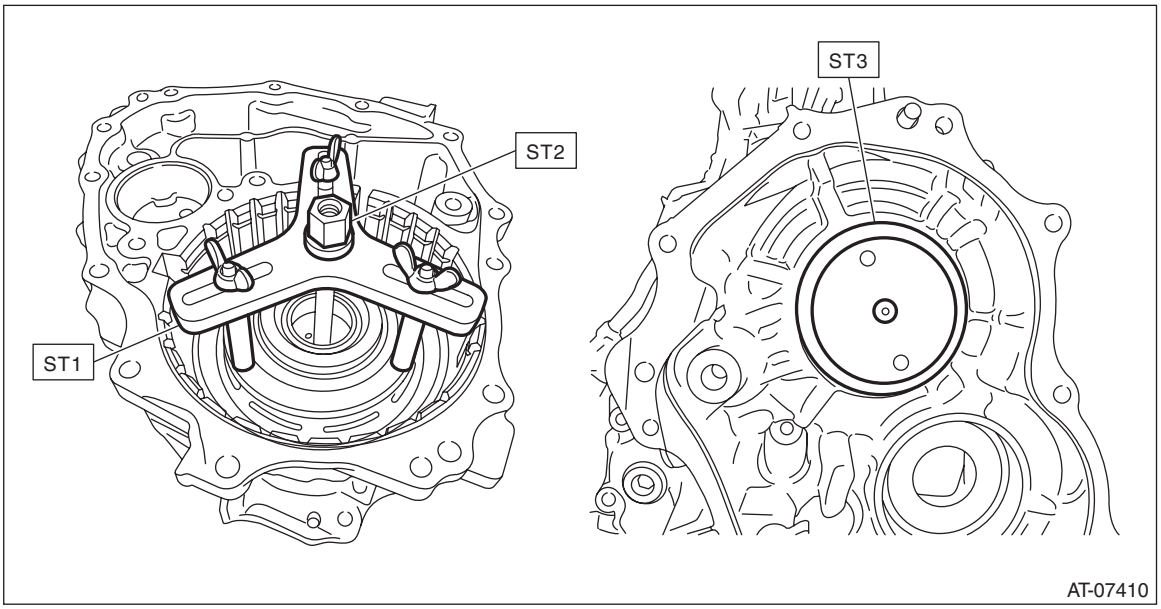

4) Compress the return spring using the set ST to remove the snap ring.

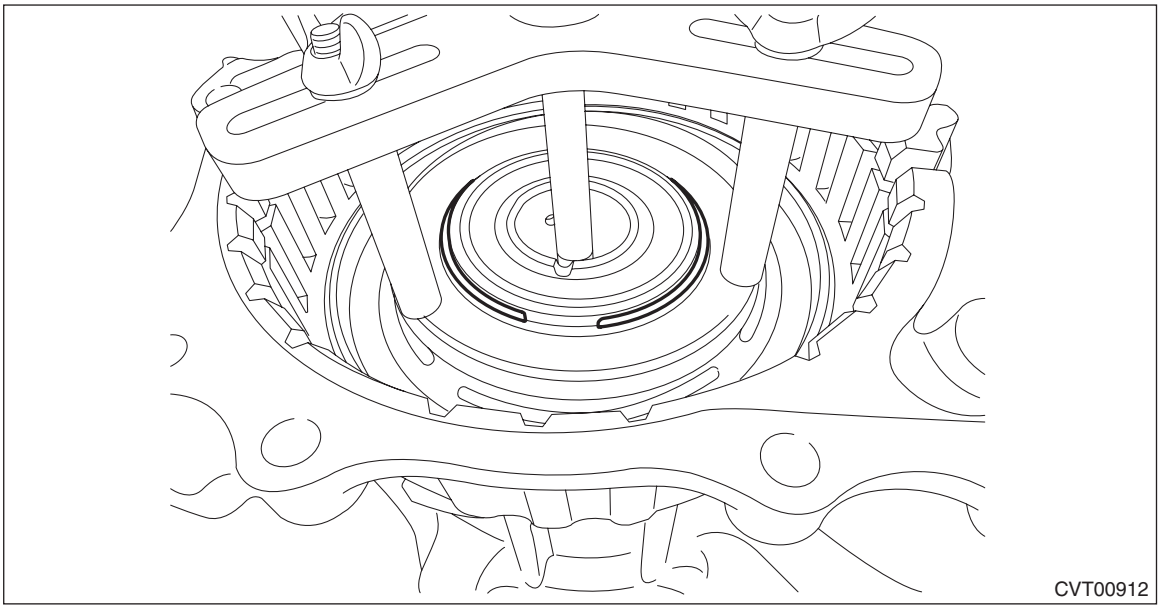

5) Using the ST, remove the snap ring and spring retainer.

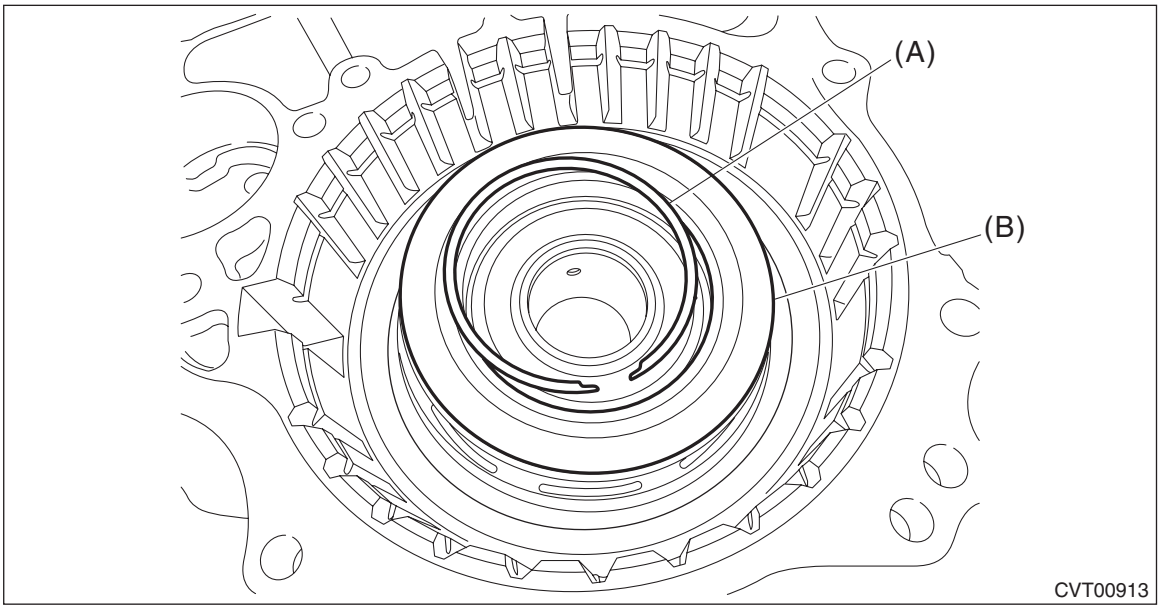

(A) Snap ring
(B) Spring retainer

6) Remove the return spring.

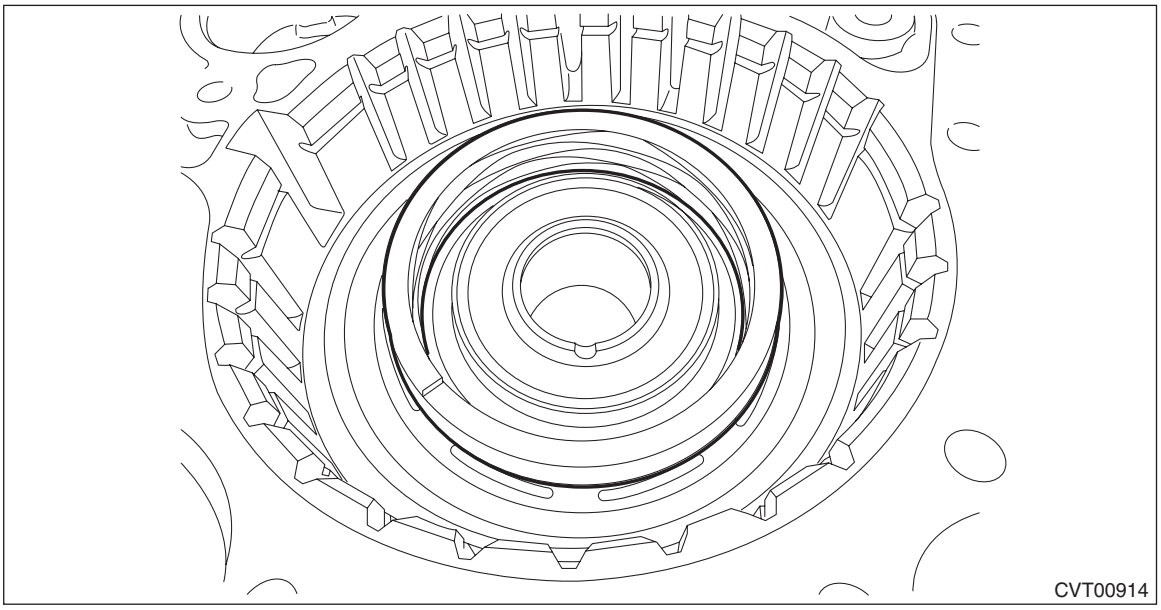

7) Remove the reverse brake piston by blowing compressed air intermittently from intermediate case hole.

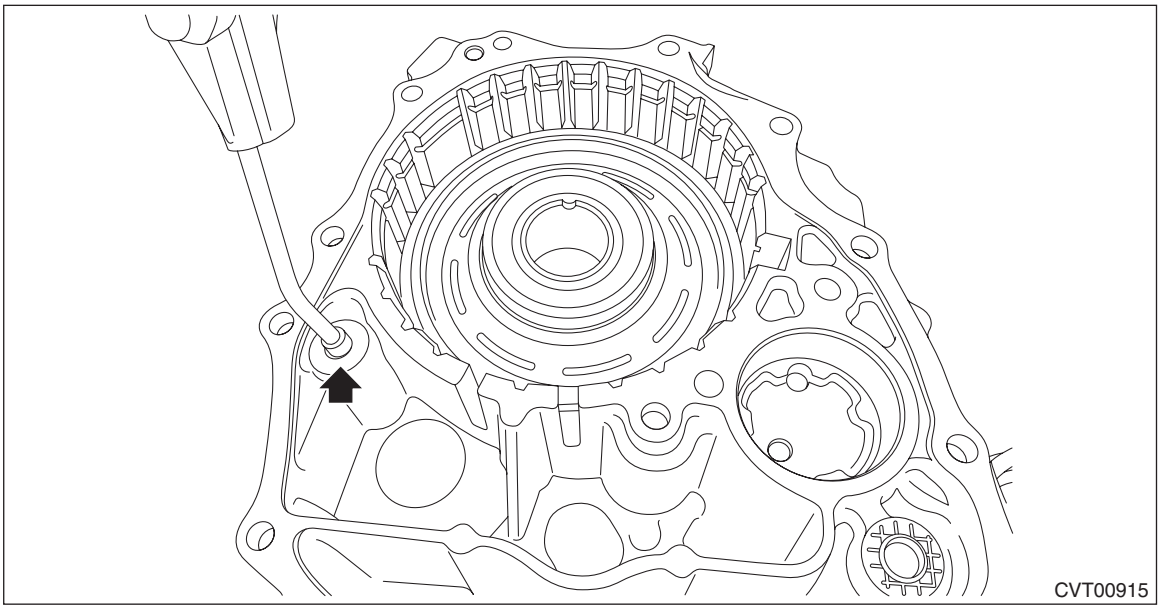

D: ASSEMBLY

1) Apply CVTF to the seal of reverse brake piston and install it to intermediate case.

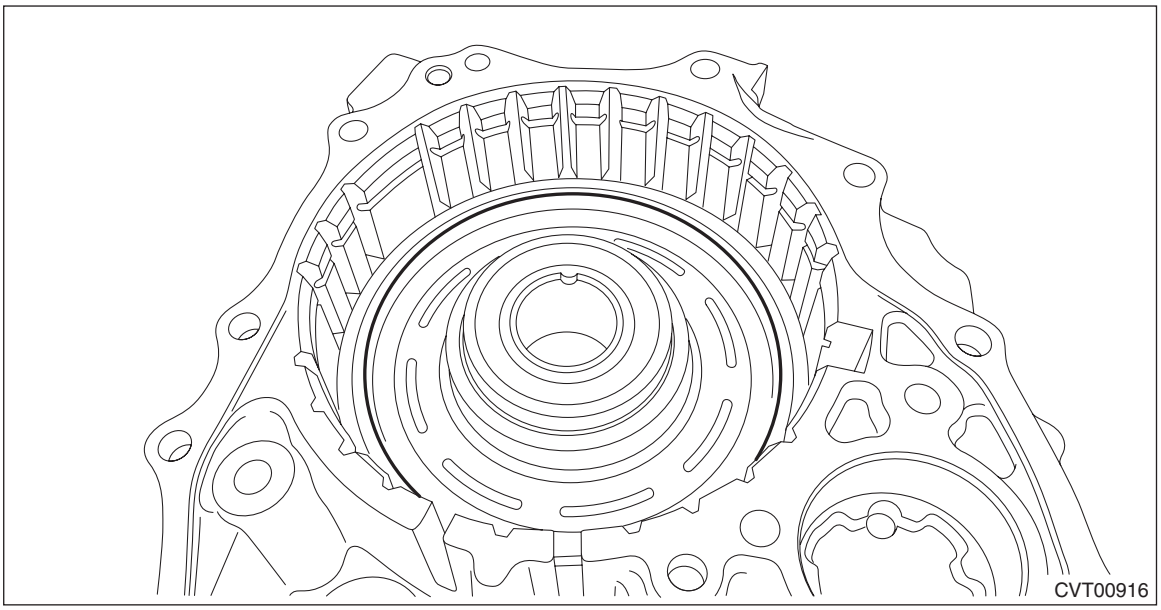

2) Install the return spring.

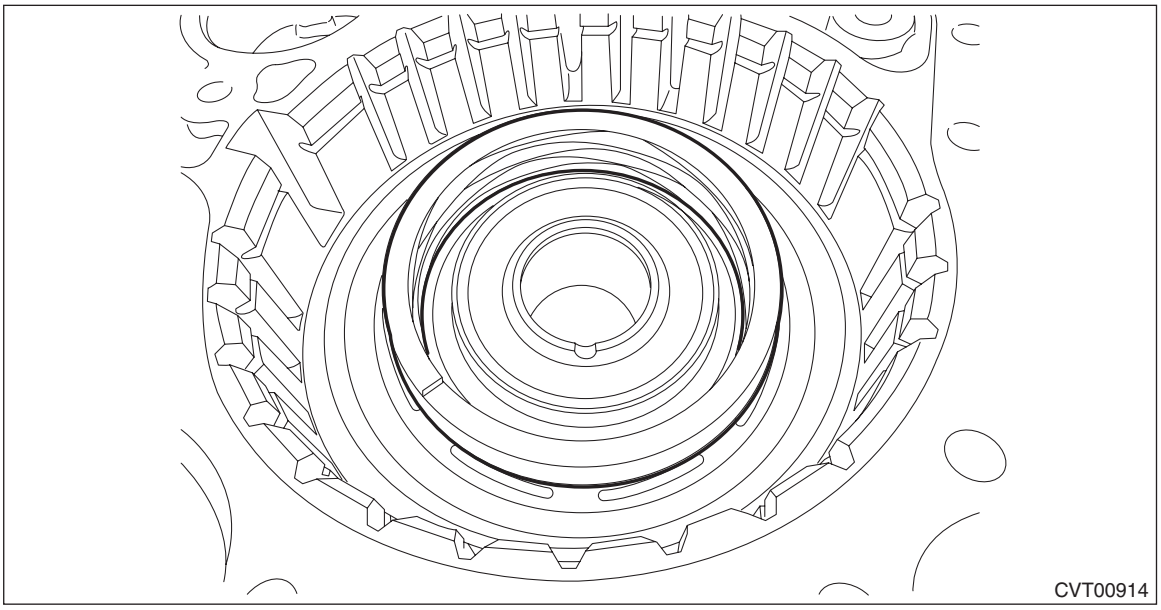

3) Set the spring retainer and snap ring.

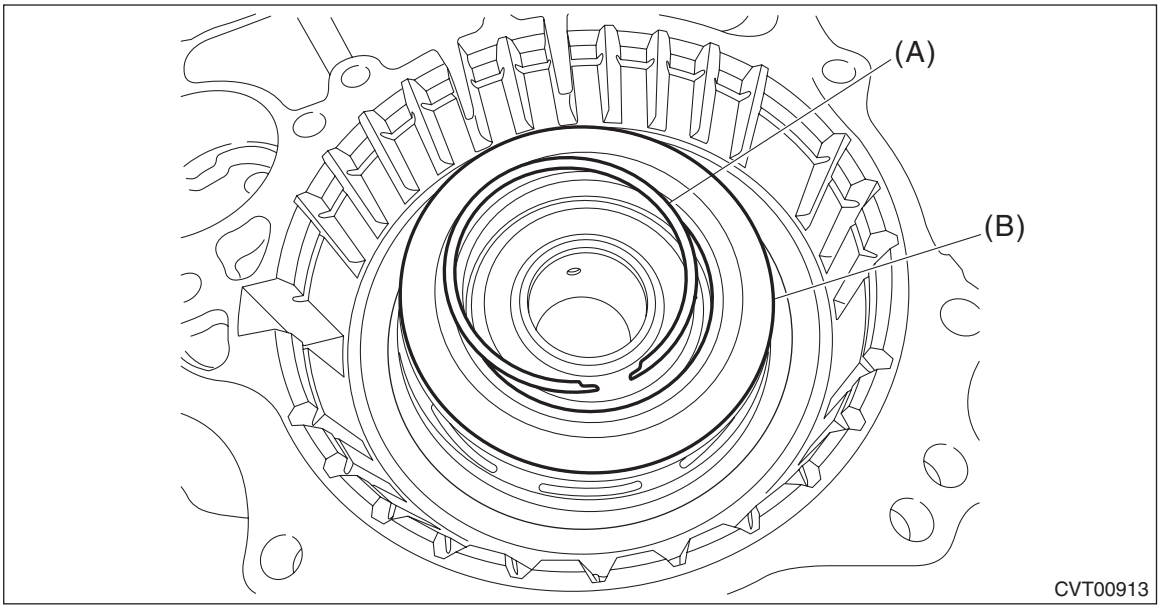

(A) Snap ring
(B) Spring retainer

4) Set the ST1, ST2 and ST3 to intermediate case.
ST1 18762AA001 COMPRESSOR SPECIAL TOOL
ST2 18763AA000 COMPRESSOR SHAFT
ST3 18765AA000 COMPRESSOR SUPPORT

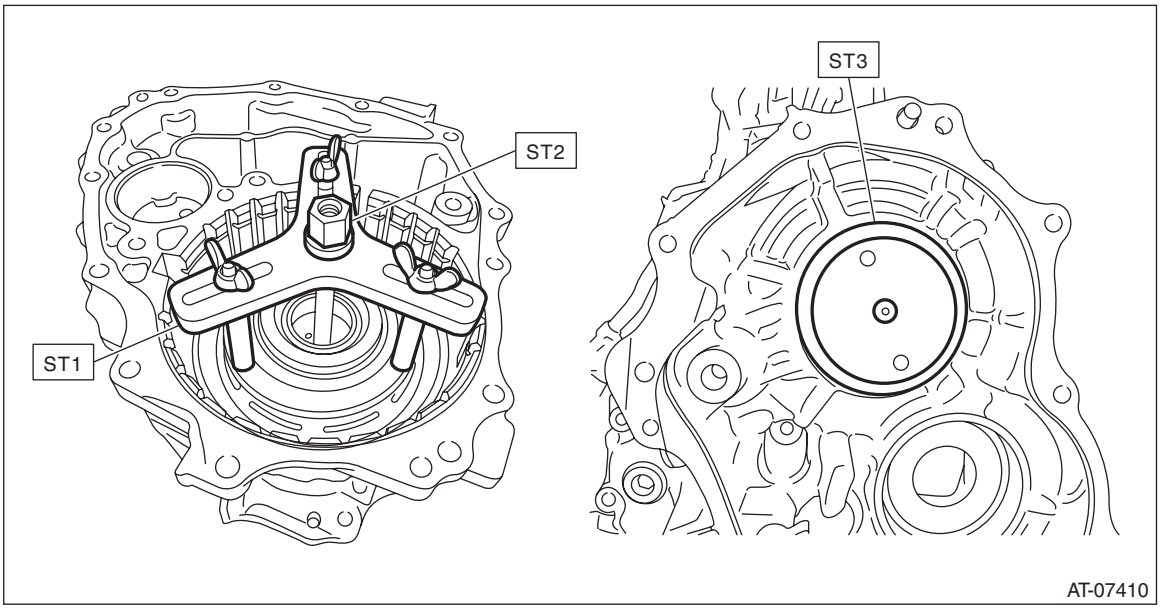

5) Compress the return spring using the ST attached, and install the snap ring.

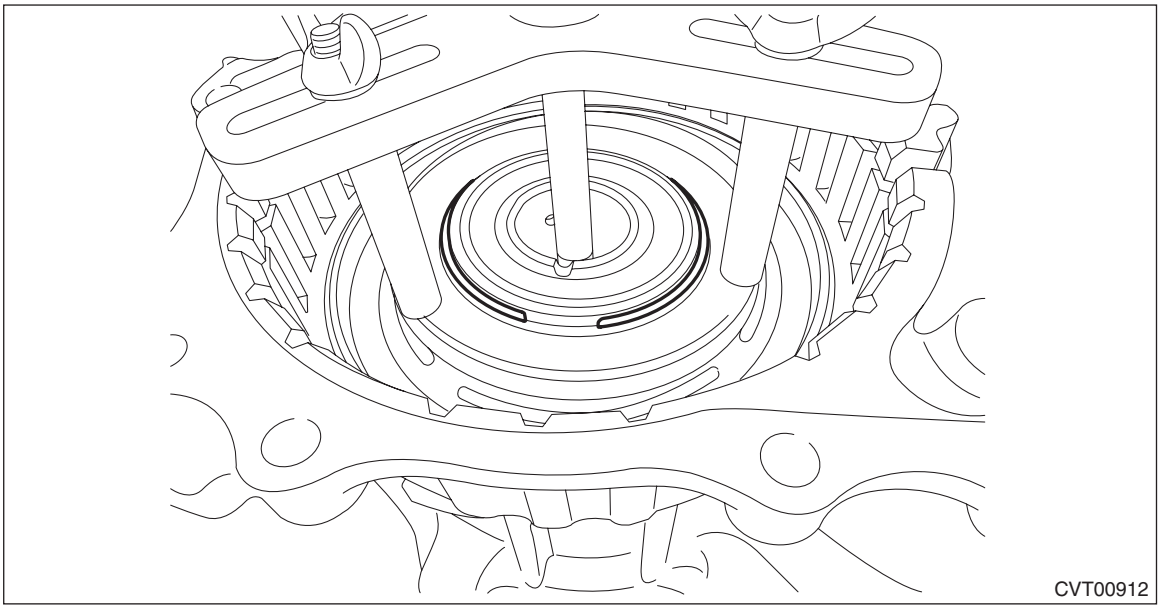

6) Check the operation of reverse brake piston by blowing compressed air intermittently from intermediate case hole.

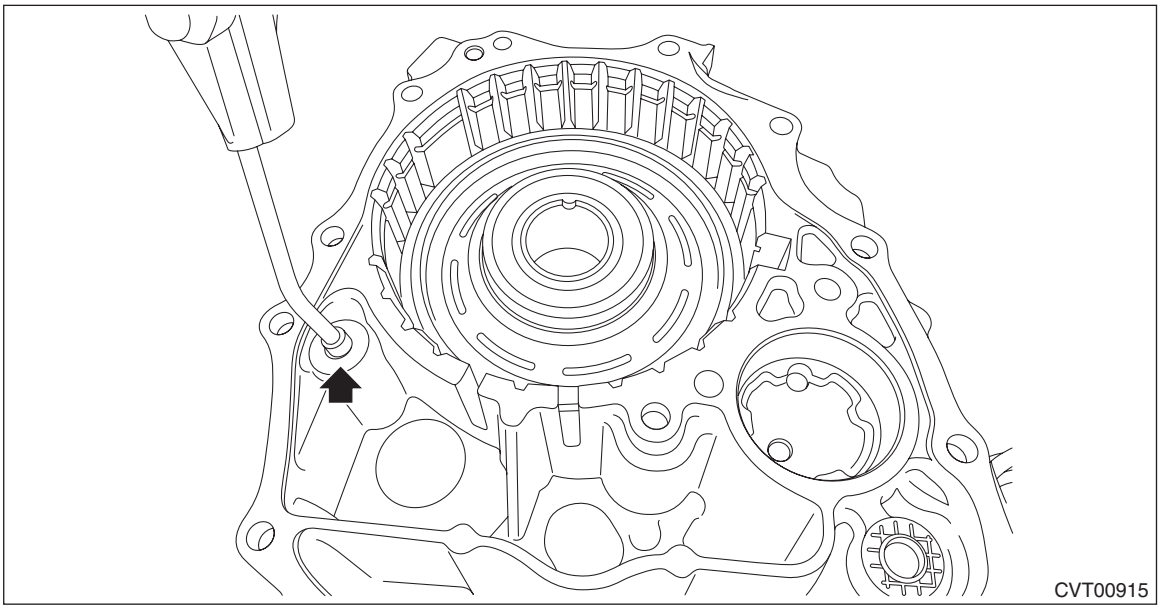

7) Place the dish plate, driven plate, drive plate and retaining plate neatly in this order on surface table.
8) Set the dial gauge to retaining plate, and read its scale.

NOTE:
The value, which is read in the gauge at this time, is zero point.

9) Scale and record the weight "Z" of a flat board which will be put on retaining plate.

NOTE:
- Use a stiff board which does not bend against load as a flat board to be put on retaining plate.
- Use a flat board weighing less than 84 N (8.6 kgf, 18.9 lb).

10) Put the flat board on retaining plate.

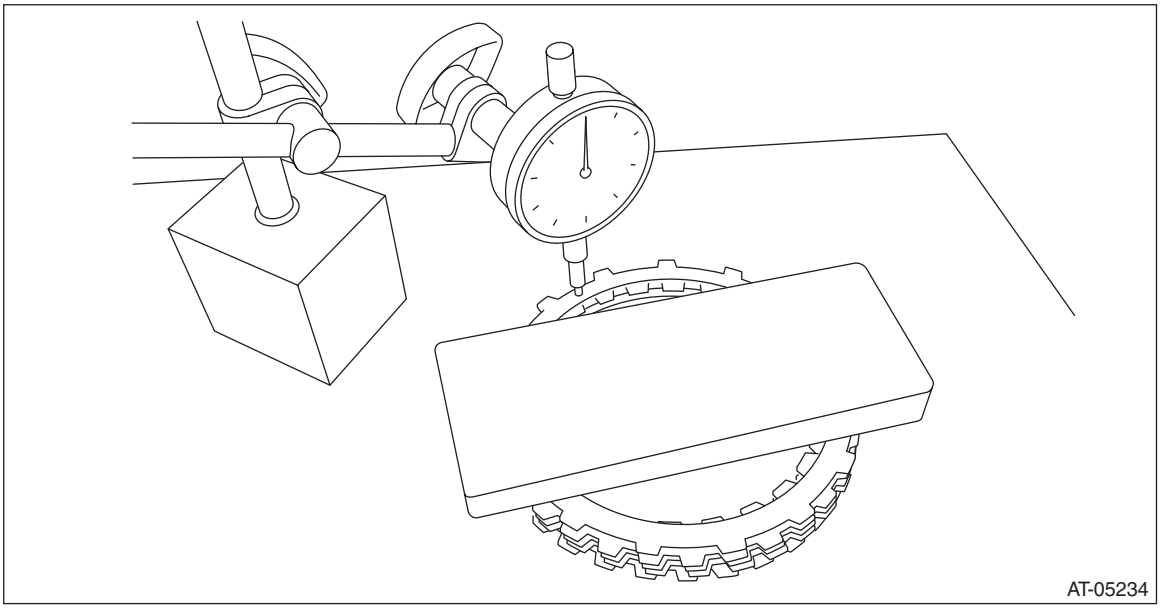

11) Using the following formula, read the push/pull gauge and calculate "N".
N = 84 N (8.6 kgf, 18.9 lb) – Z
84 N (8.6 kgf, 18.9 lb) : Load applied to clutch plate
Z: Flat board weight

12) Press the center of retaining plate by applying a force of “N” or more using push/pull gauge, and then measure and record the compression amount “A”.

NOTE:
Measure at four points with a 90° interval and calculate the average.

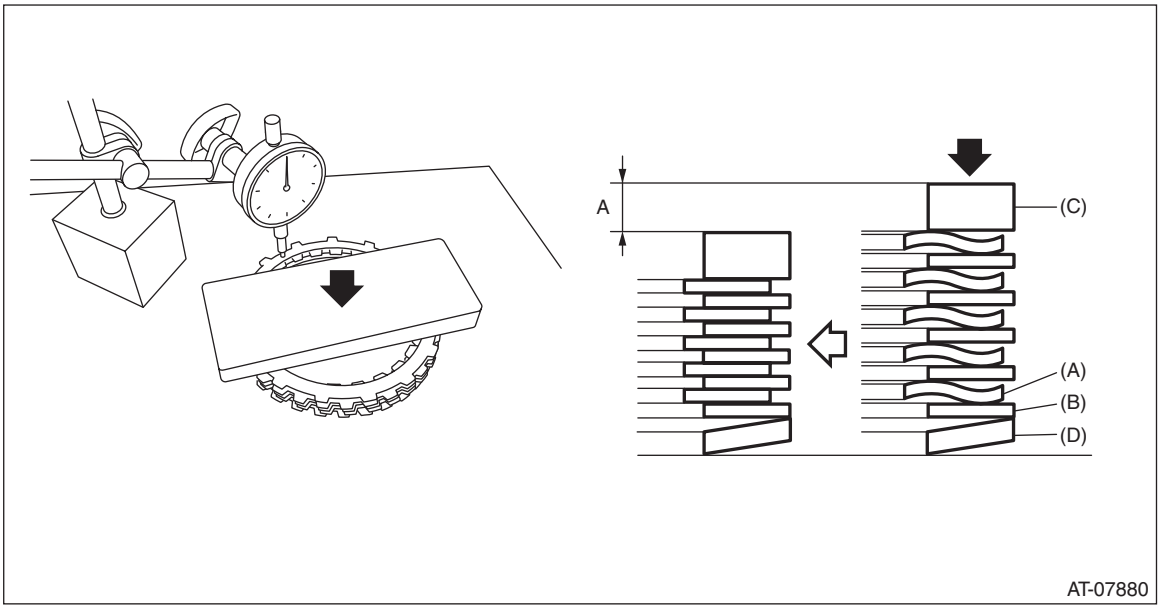

(A) Drive plate
(B) Driven plate
(C) Retaining plate
(D) Dish plate

13) Install the dish plate, drive plate, driven plate, retaining plate and snap ring to intermediate case.

NOTE:
Install the dish plate in the correct direction.

14) Measure and record the clearance “B” between the retaining plate and snap ring.

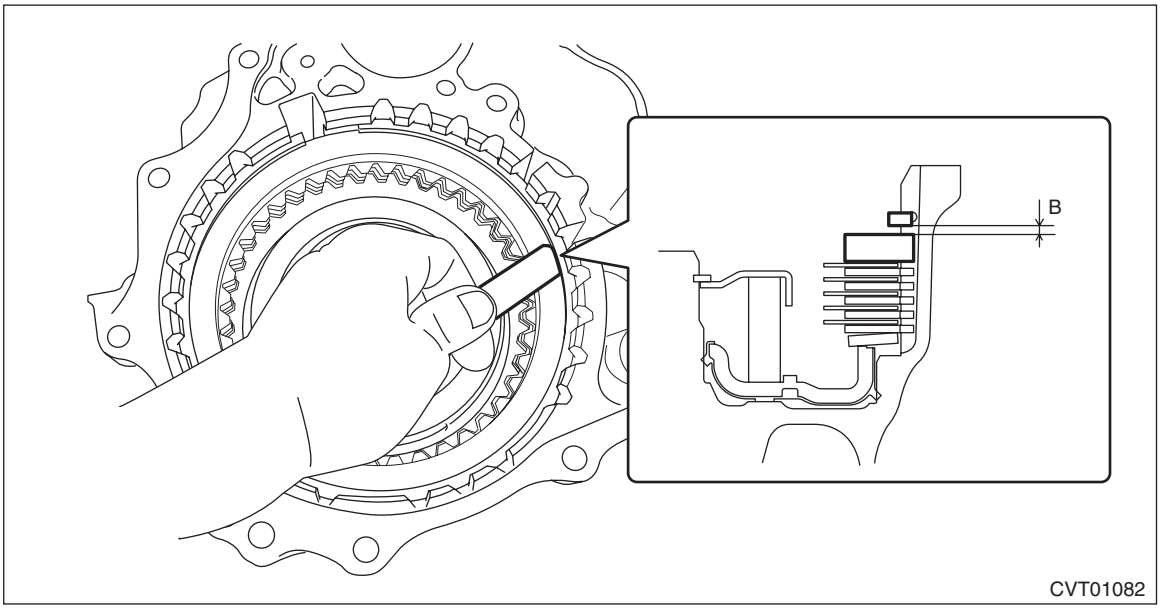

15) Piston stroke calculation
Calculate with A and B dimensions recorded before. If it exceeds the limit, replace with a new drive plate and adjust within the initial standard value.
S mm (in) = A + B
S: Piston stroke
A: Compression amount of drive plate and dish plate
B: Clearance between retaining plate and snap ring

Initial standard:
2.88 — 3.18 mm (0.113 — 0.125 in)

Limit thickness:
3.38 mm (0.133 in)

Retaining plate	
Part No.	Thickness mm (in)
31567AB920	5.6 (0.220)
31567AB930	5.8 (0.228)
31567AB940	6.0 (0.236)
31567AB950	6.2 (0.244)

E: INSPECTION

- Inspect the drive plate facing for wear and damage.
- Check the driven plate for discoloration (burnt color).
- Check for worn snap ring, fatigue or damaged return spring or deformed spring retainer.
- Make sure the clearance between retaining plate and snap ring of reverse brake is within the limit. If it exceeds the limit, replace with a new drive plate and select and adjust the retaining plate within the initial standard value. <Ref. to CVT(TR690)-196, ASSEMBLY, Reverse Brake Assembly.>

38.Forward Clutch Assembly

A: REMOVAL

1) Remove the transmission from the vehicle. <Ref. to CVT(TR690)-58, REMOVAL, Automatic Transmission Assembly.>
2) Remove the extension case. <Ref. to CVT(TR690)-160, REMOVAL, Extension Case.>
3) Remove the rear drive shaft. <Ref. to CVT(TR690)-163, REMOVAL, Rear Drive Shaft.>
4) Remove the transfer clutch assembly. <Ref. to CVT(TR690)-168, REMOVAL, Transfer Clutch.>
5) Remove the transfer reduction driven gear. <Ref. to CVT(TR690)-180, REMOVAL, Transfer Reduction Driven Gear.>
6) Remove the intermediate case. <Ref. to CVT(TR690)-187, REMOVAL, Intermediate Case.>
7) Remove the thrust needle bearing.

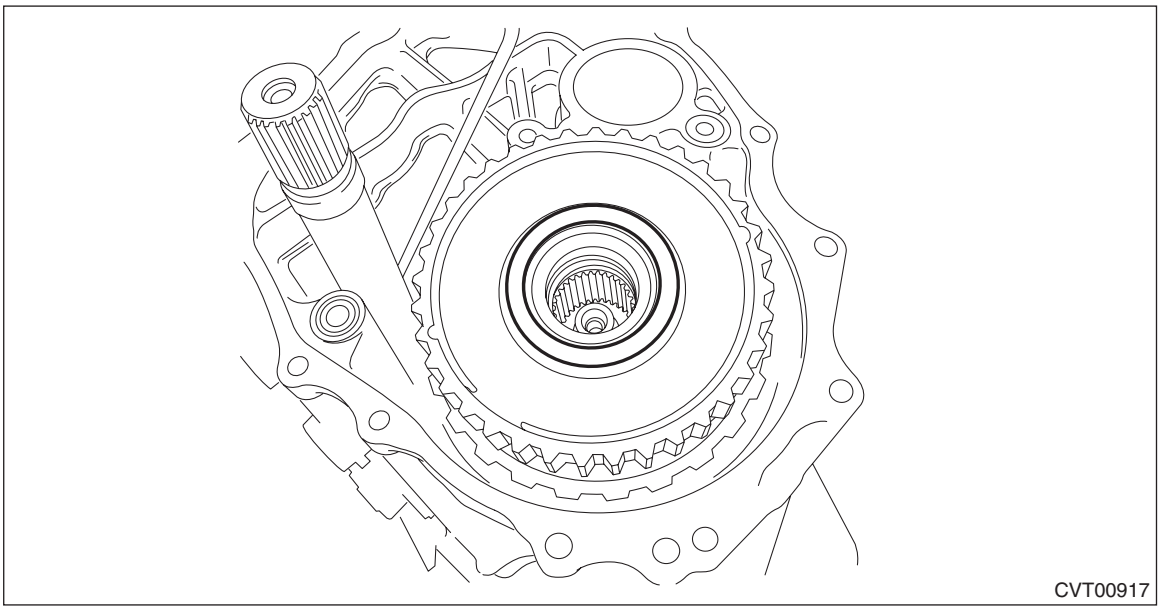
CVT00917

8) Remove the forward clutch assembly.

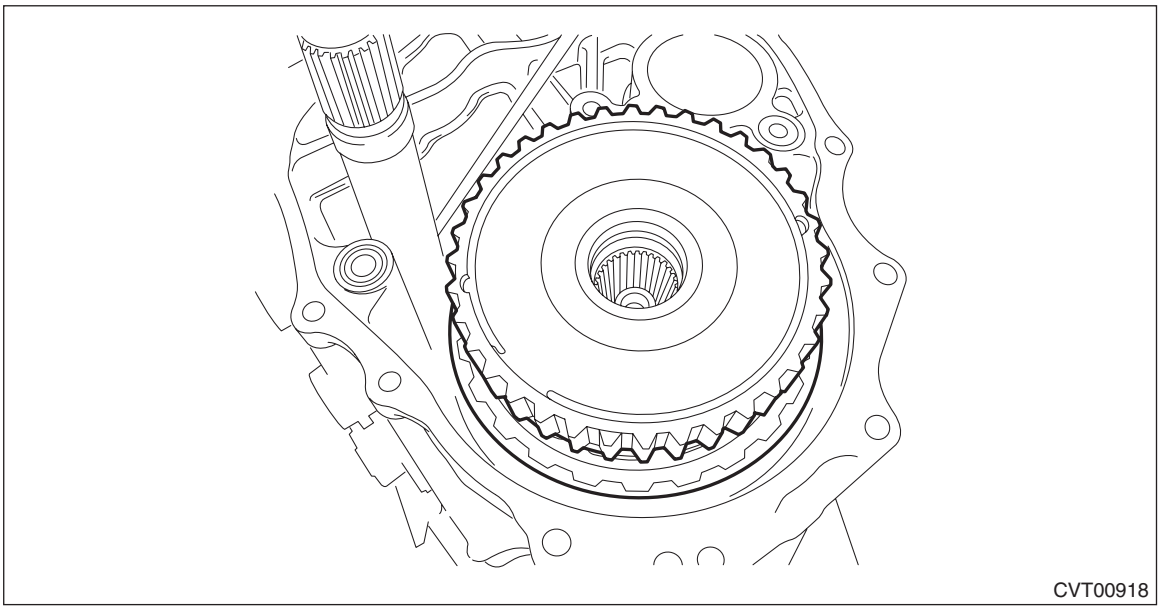
CVT00918

9) Remove the washer.

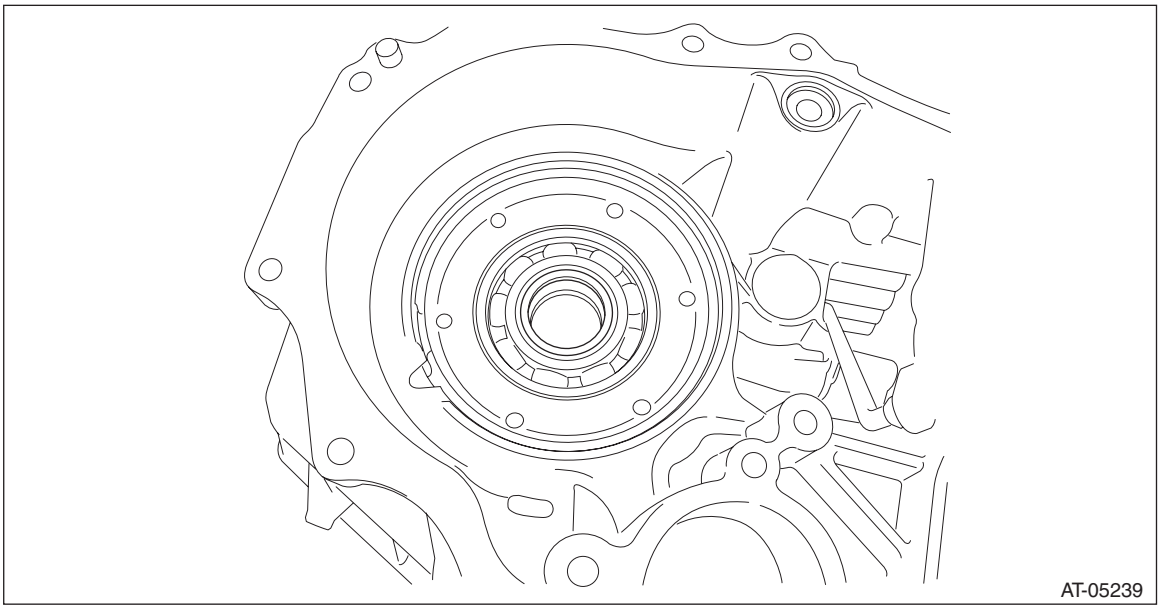

B: INSTALLATION

1) Select a washer. <Ref. to CVT(TR690)-229, ADJUSTMENT, Forward Clutch Assembly.>
2) Install the selected washer.

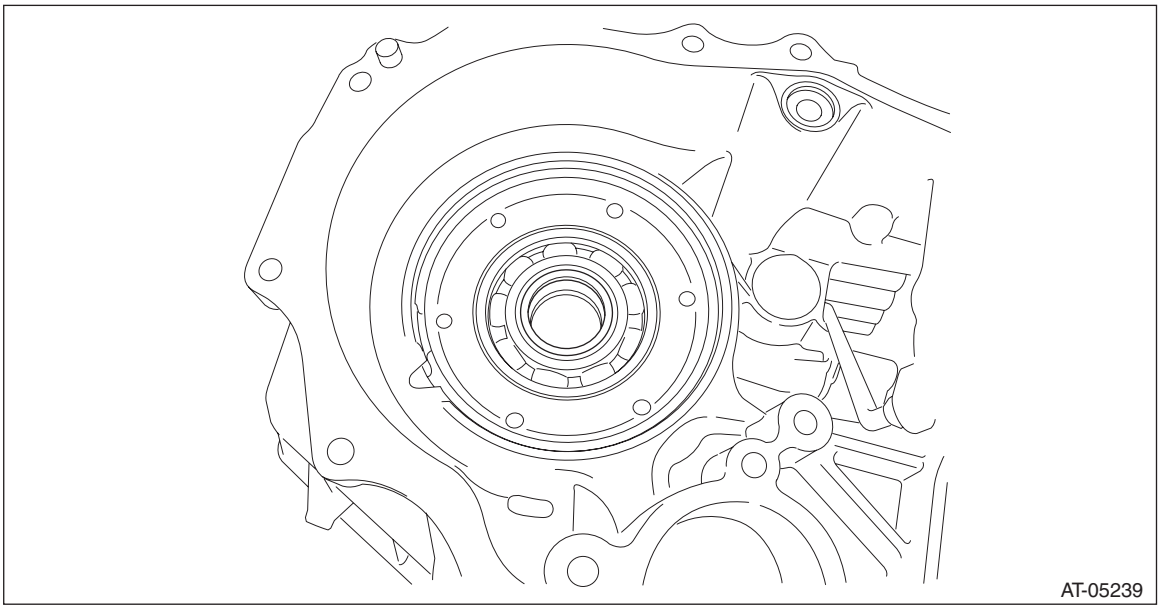

3) Install the forward clutch assembly.

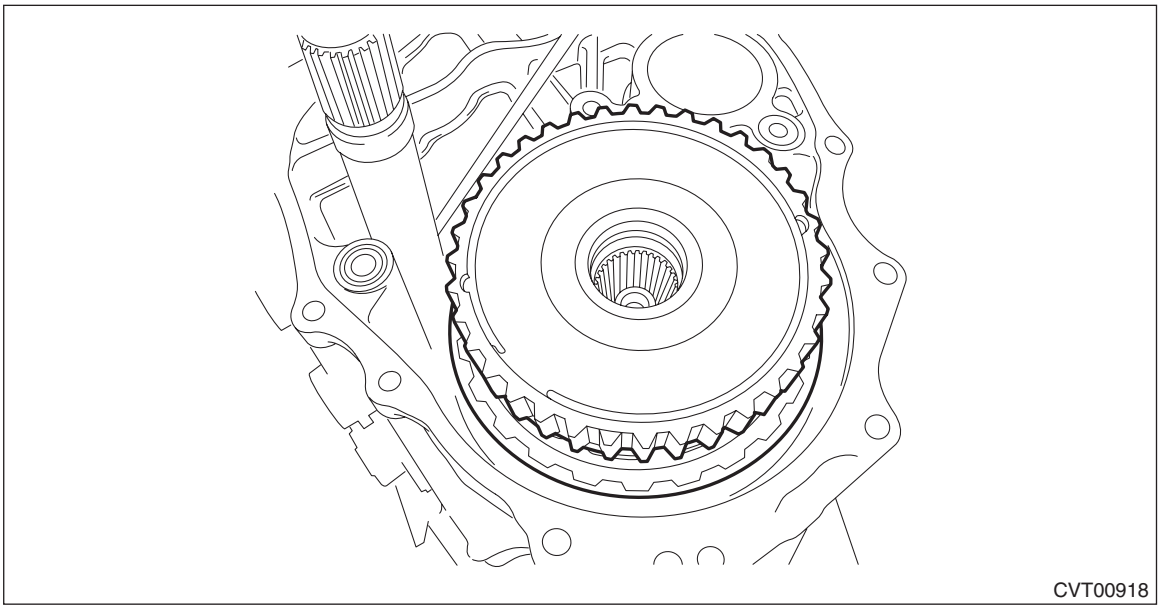
CVT00918

4) Install the thrust needle bearing.

NOTE:
Install the thrust needle bearing in the correct direction.

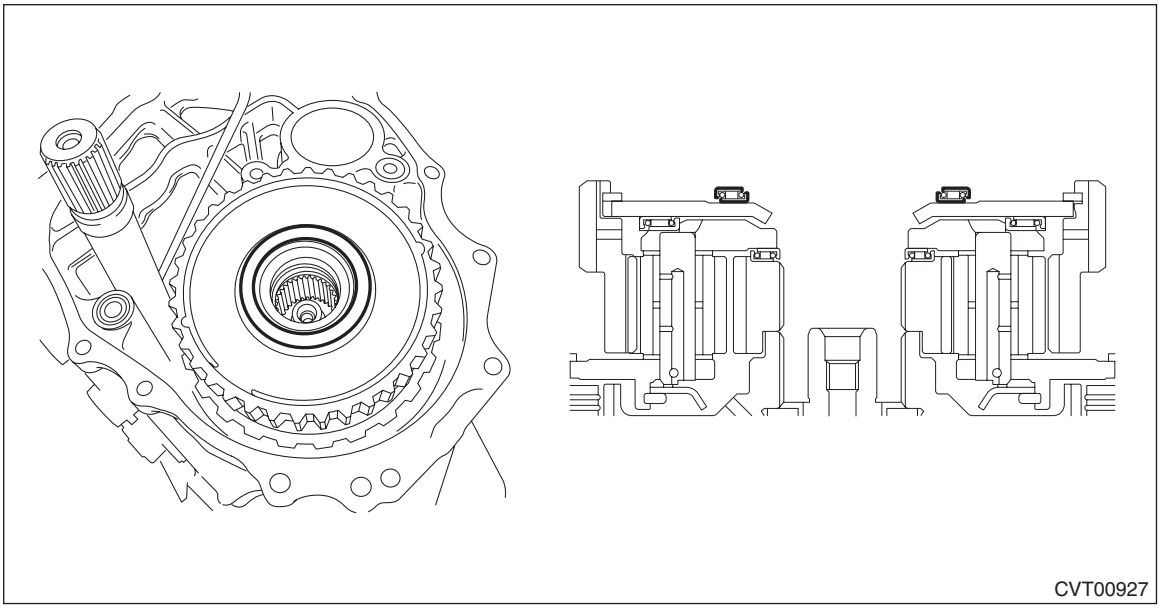
CVT00927

5) Install the intermediate case. <Ref. to CVT(TR690)-188, INSTALLATION, Intermediate Case.>
6) Install the transfer reduction driven gear assembly. <Ref. to CVT(TR690)-180, INSTALLATION, Transfer Reduction Driven Gear.>
7) Install the transfer clutch assembly. <Ref. to CVT(TR690)-169, INSTALLATION, Transfer Clutch.>
8) Install the rear drive shaft. <Ref. to CVT(TR690)-163, INSTALLATION, Rear Drive Shaft.>
9) Install the extension case. <Ref. to CVT(TR690)-161, INSTALLATION, Extension Case.>
10) Install the transmission to vehicle. <Ref. to CVT(TR690)-75, INSTALLATION, Automatic Transmission Assembly.>

C: DISASSEMBLY

1) Remove the internal gear assembly.

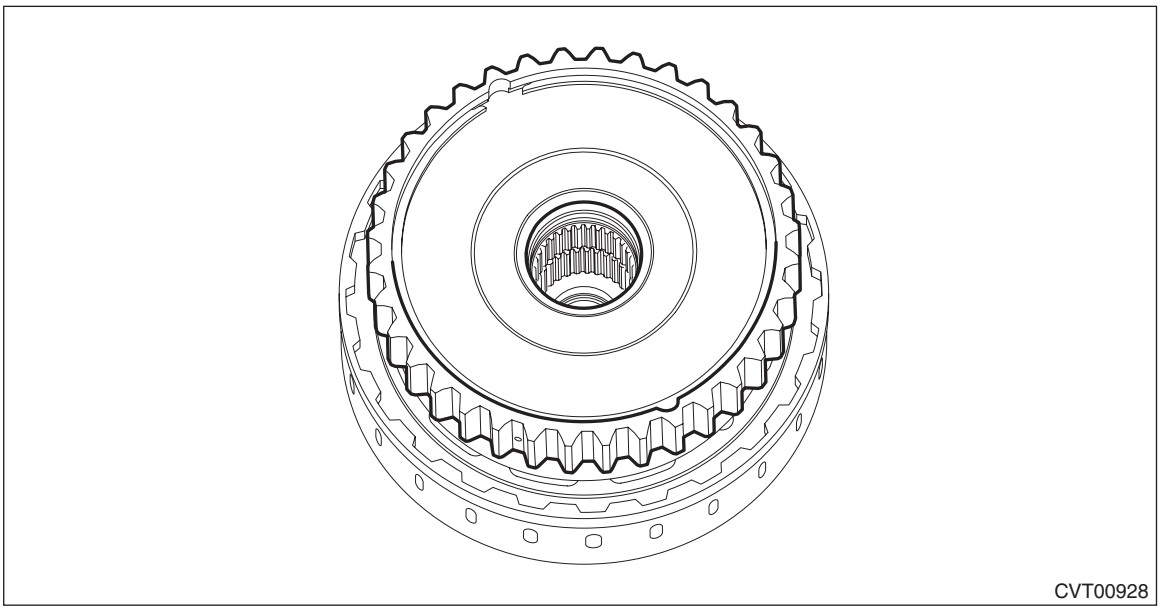
CVT00928

2) Remove the snap ring from the internal gear assembly.

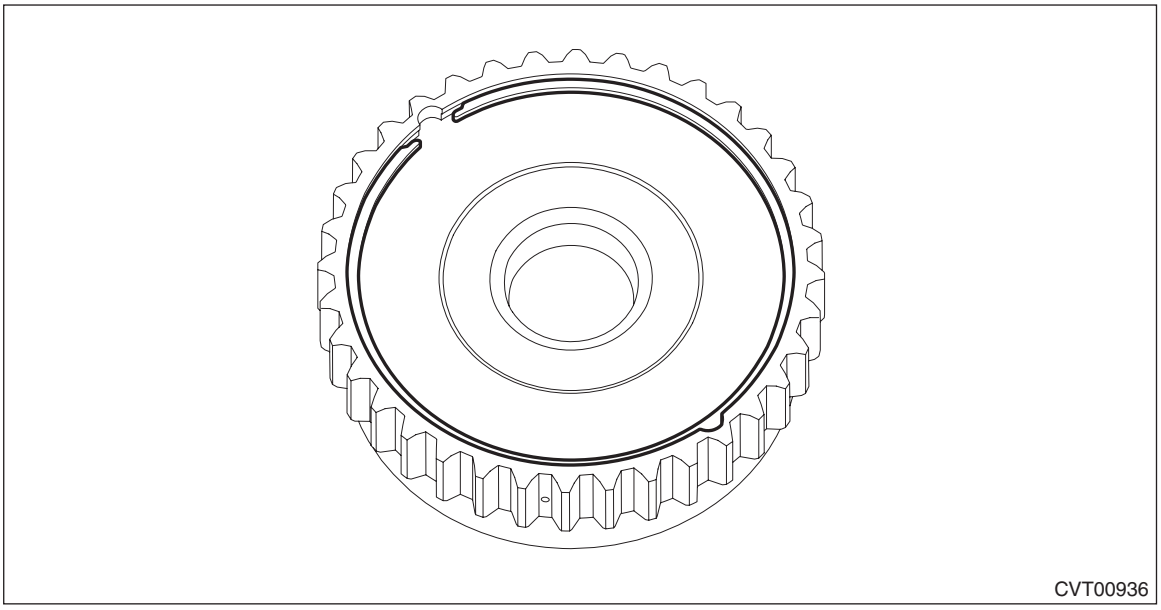
CVT00936

3) Remove the thrust gear plate.

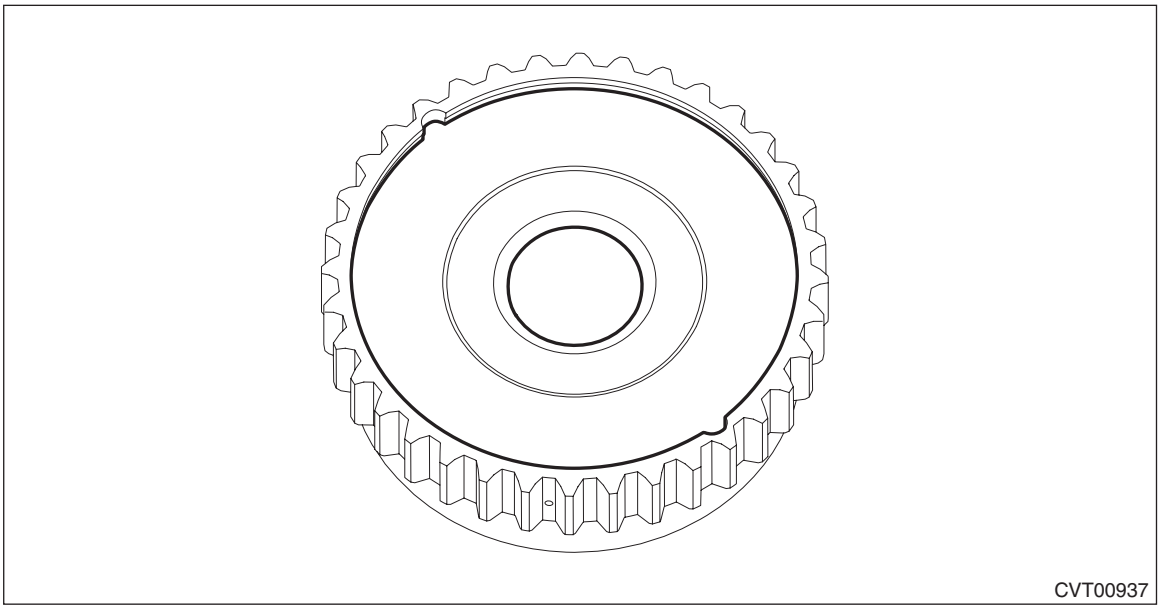

4) Remove the thrust needle bearing.

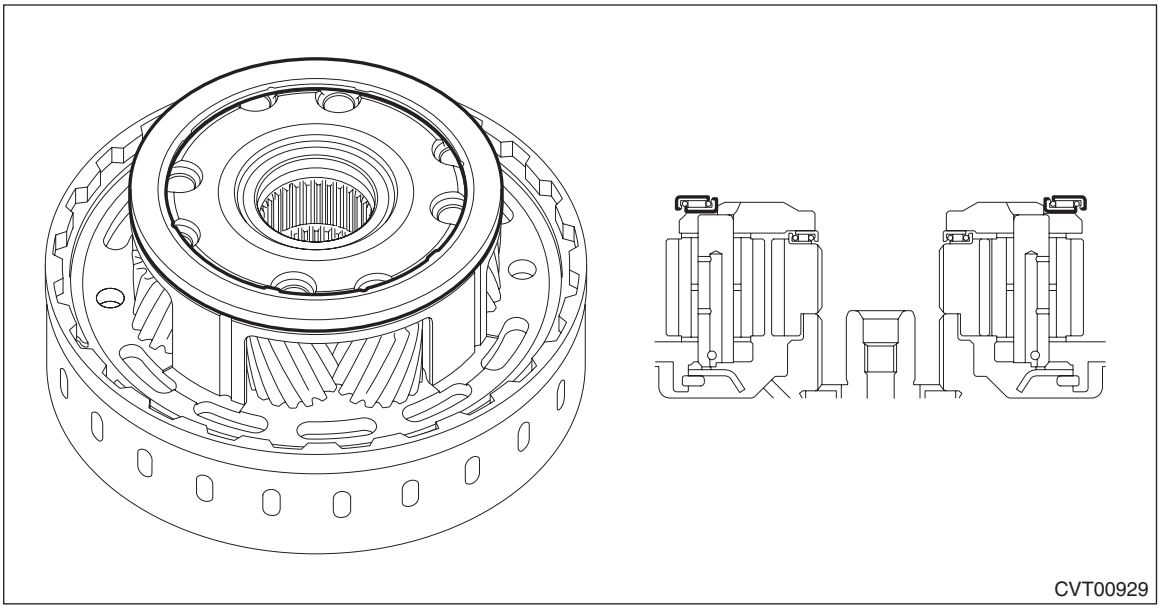

5) Remove the snap ring.

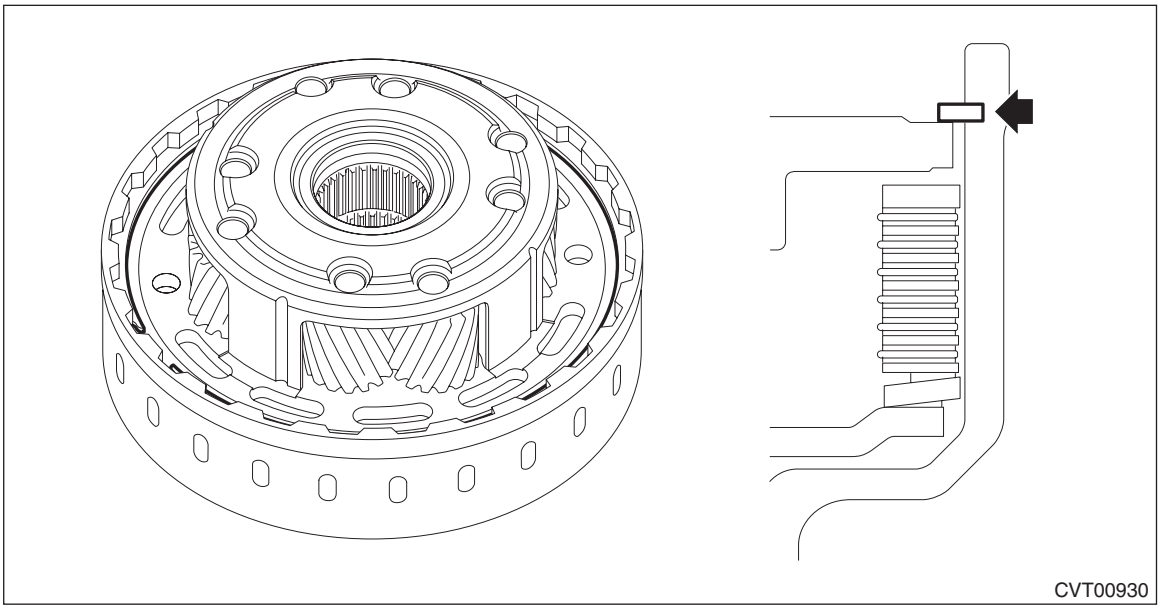

6) Remove the planetary carrier assembly.

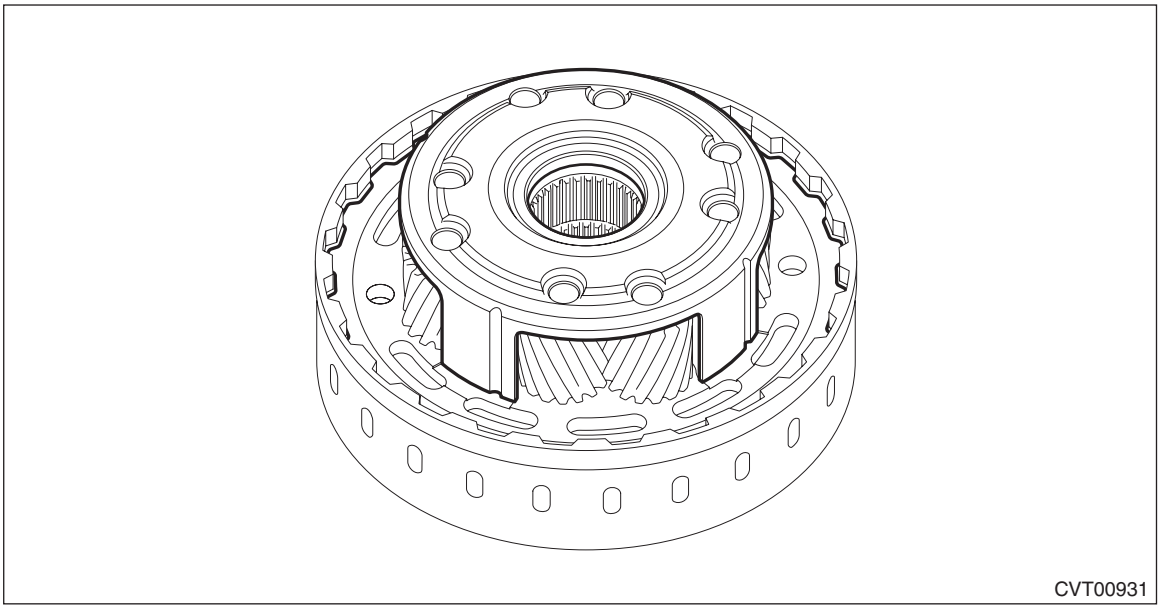

7) Remove the thrust needle bearing.

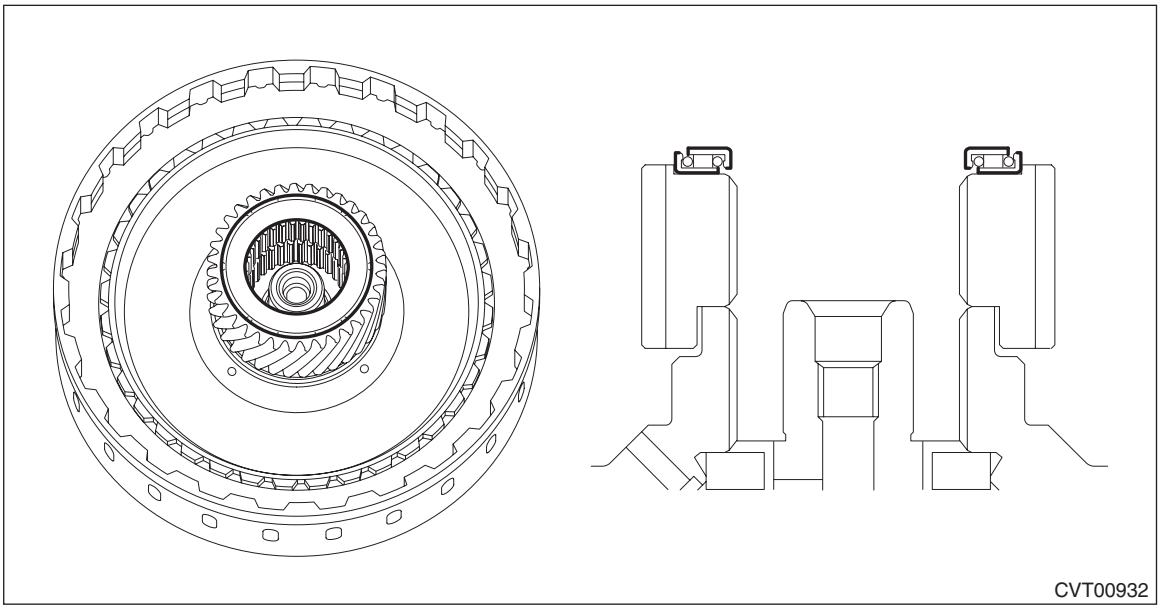

8) Remove the sun gear.

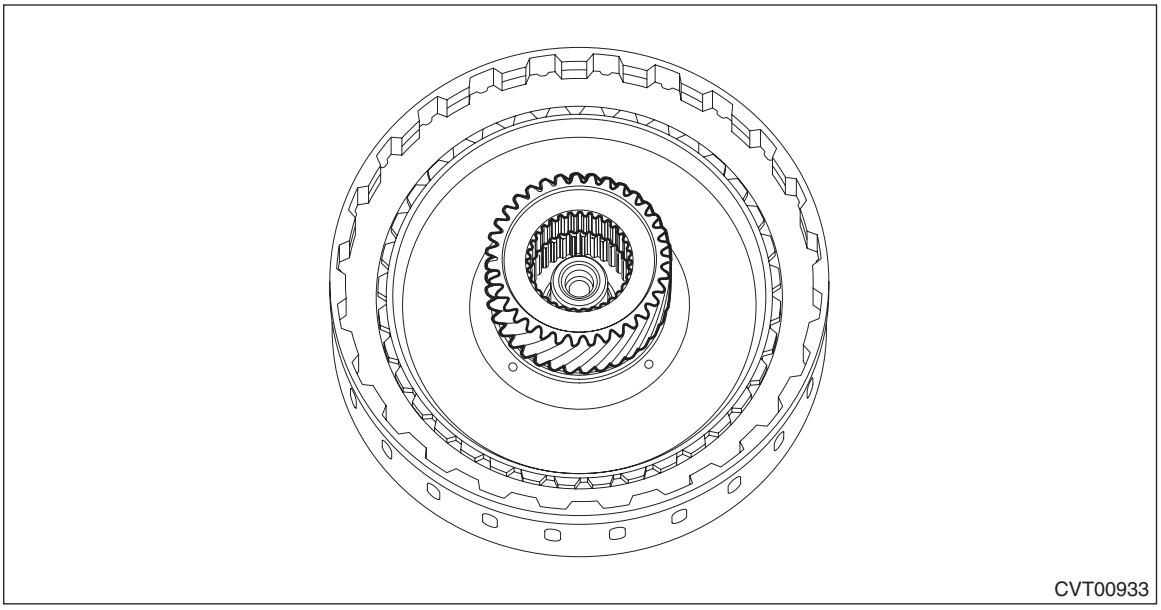

9) Remove the forward clutch hub.

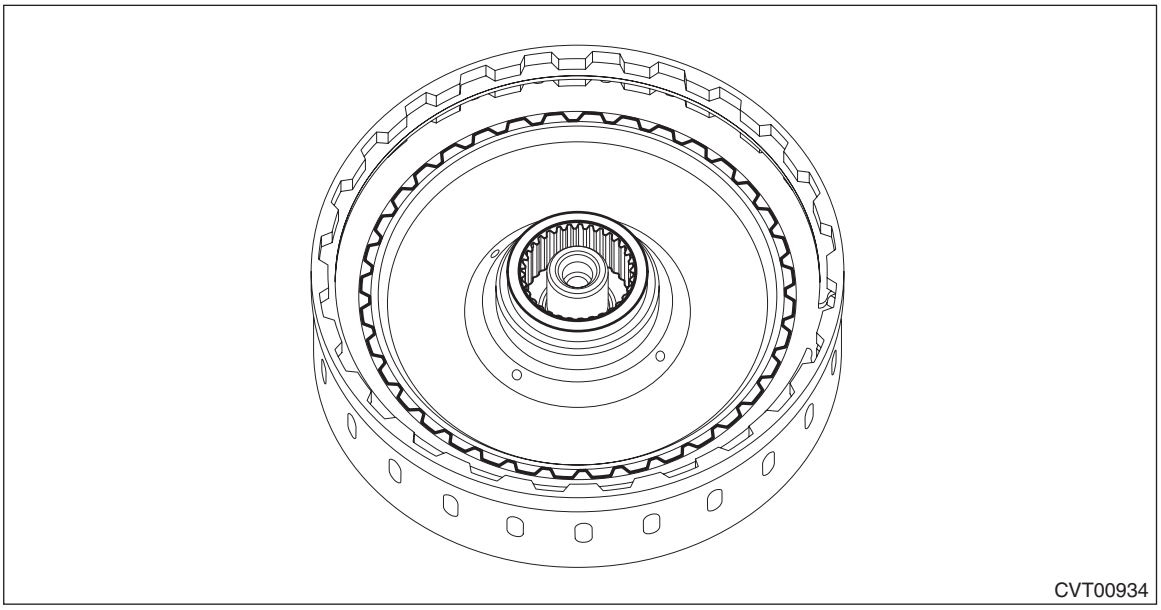

10) Remove the washer.

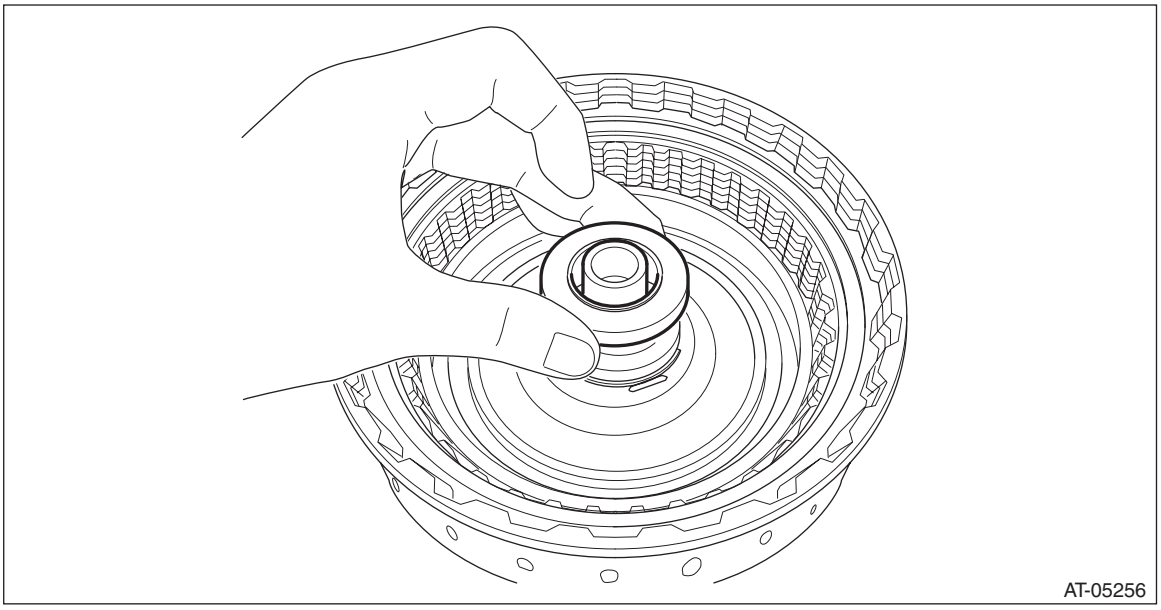

11) Remove the thrust needle bearing.

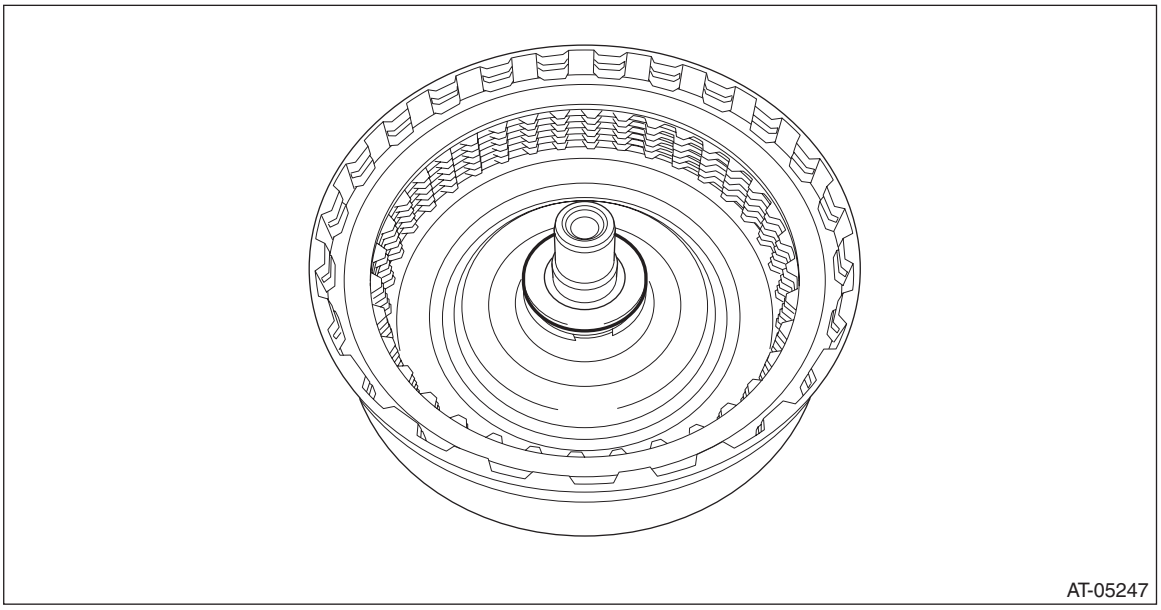

12) Remove the retaining plate, drive plate, driven plate and dish plate.

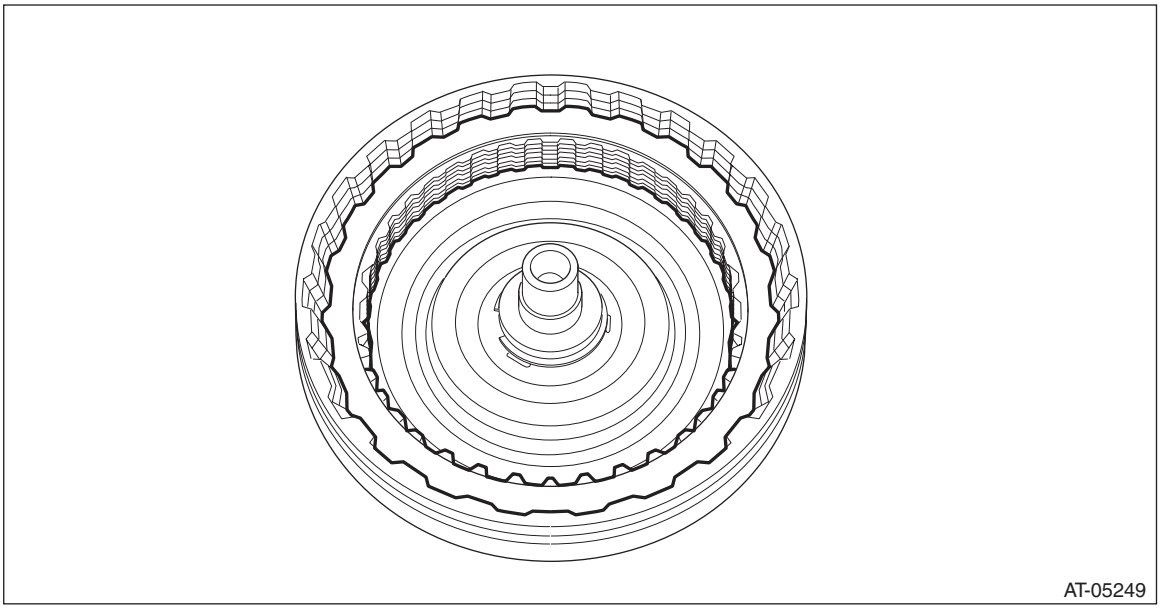

13) Using the ST, remove the snap ring.
ST 18762AA001 COMPRESSOR SPECIAL TOOL

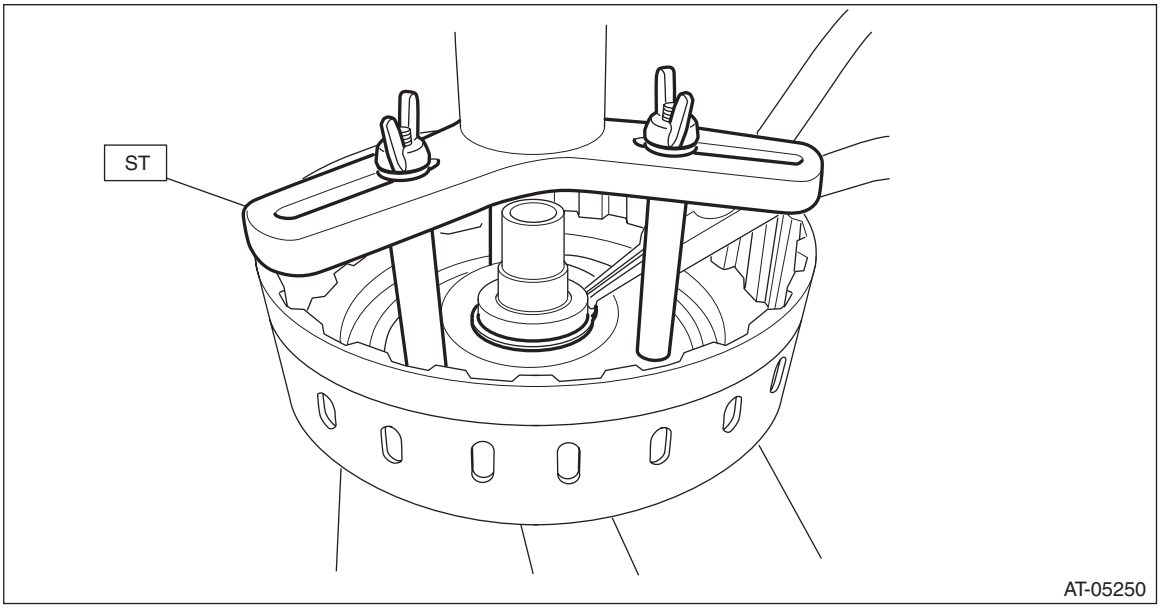

14) Remove the forward clutch piston seal.

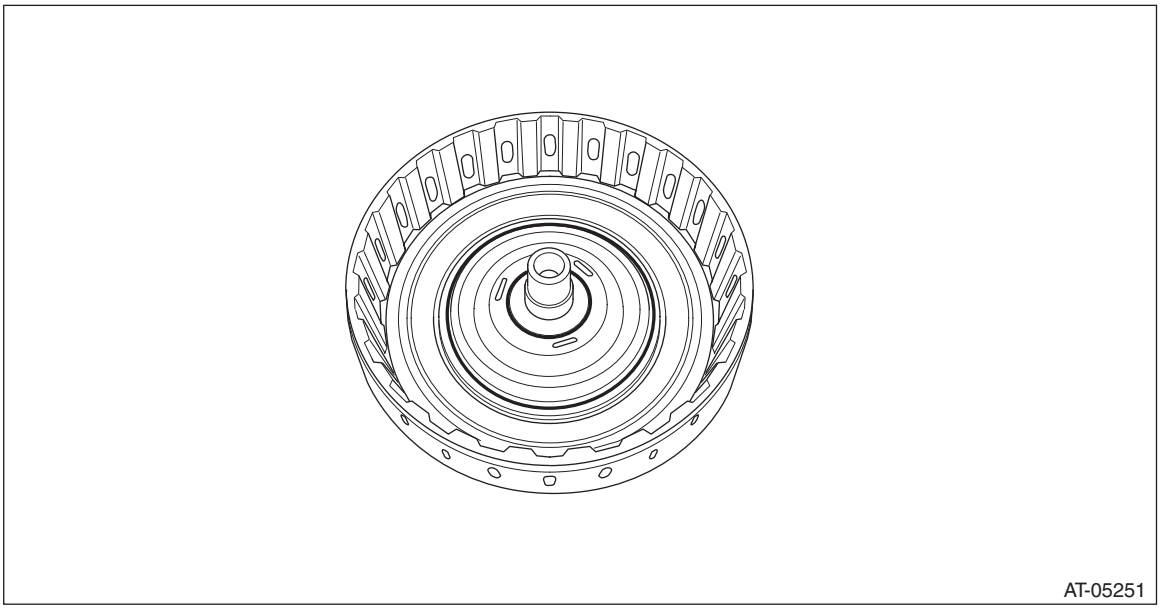

15) Remove the return spring.

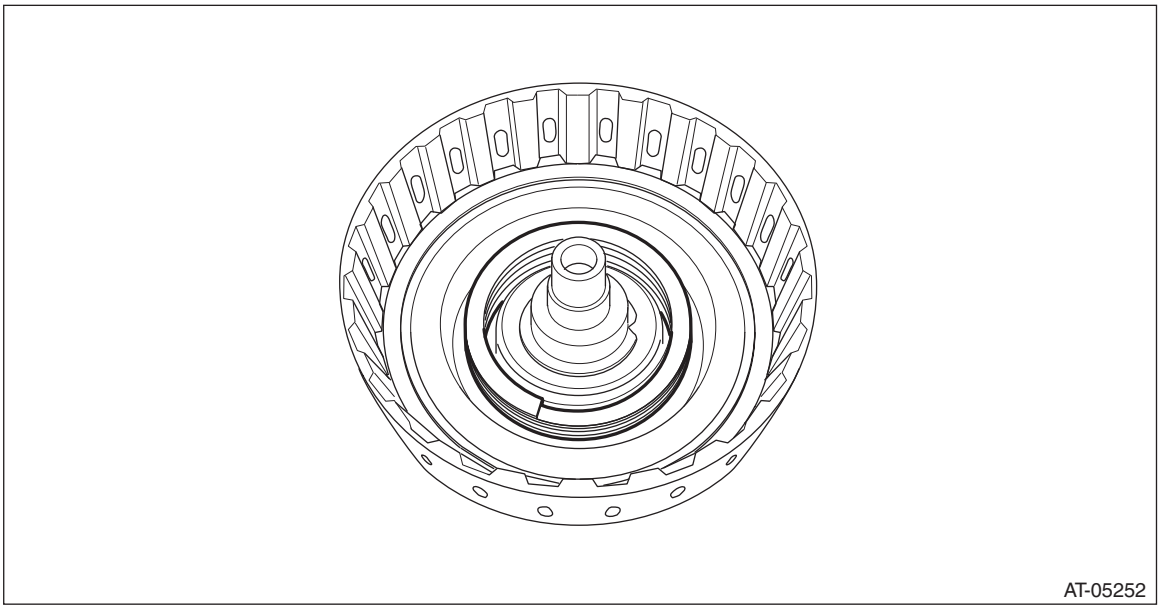

16) Remove the forward clutch piston by blowing compressed air intermittently from the end of forward clutch drum.

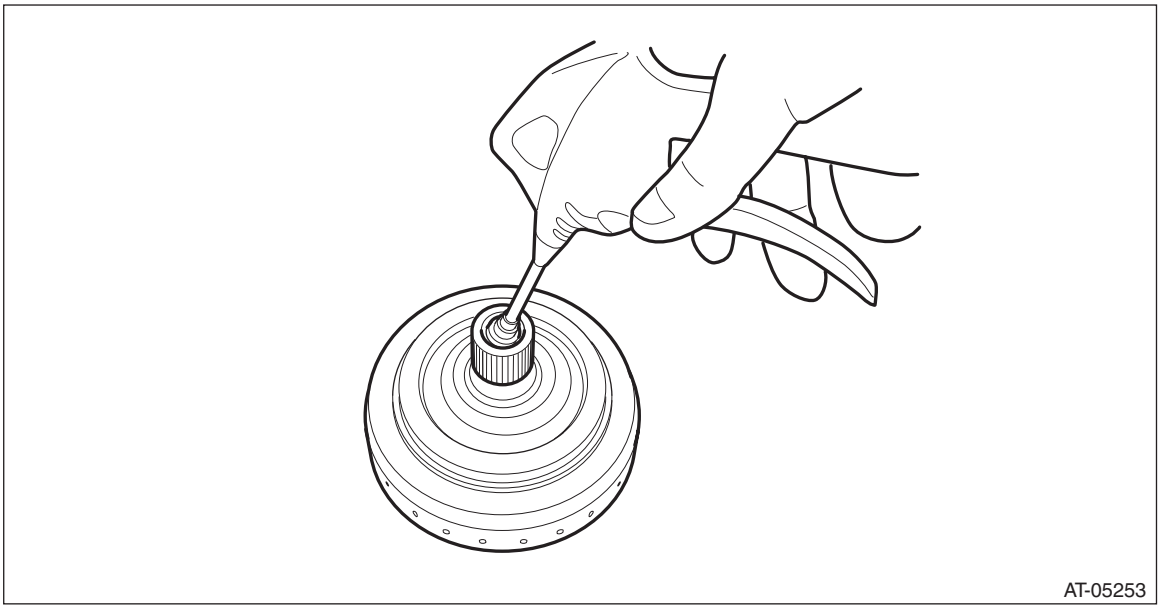

D: ASSEMBLY

1) Install the forward clutch piston to forward clutch drum.

NOTE:
- Apply CVTF to the seal of forward clutch piston.
- Insert it all the way to the end.

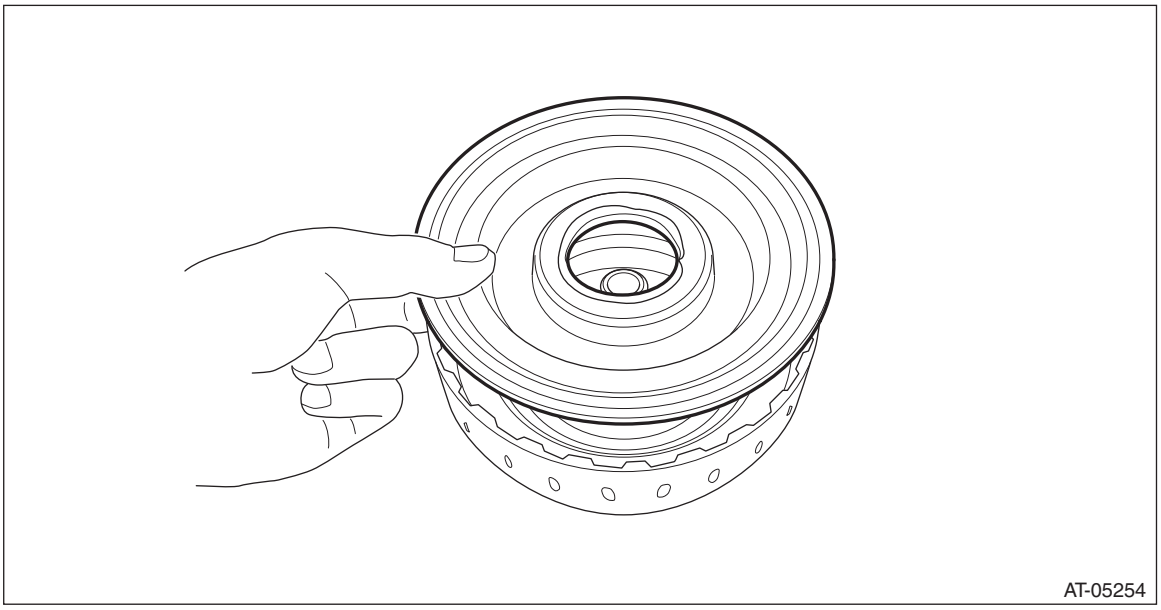

2) Install the return spring.

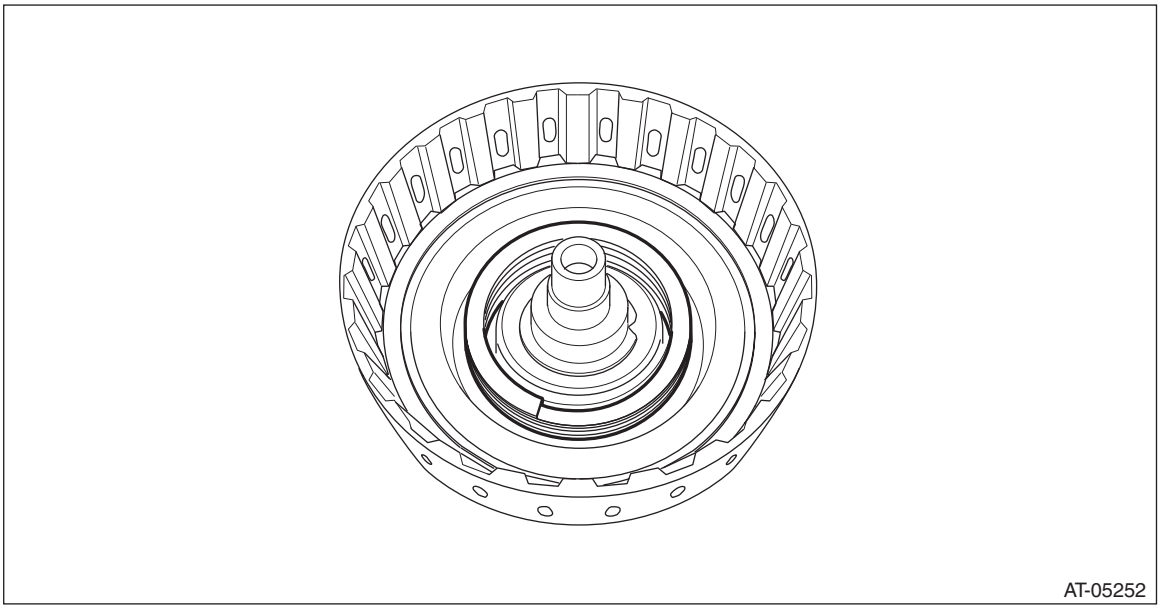

3) Install the forward clutch piston seal.

NOTE:
Apply CVTF to the sealing area of forward clutch piston seal.

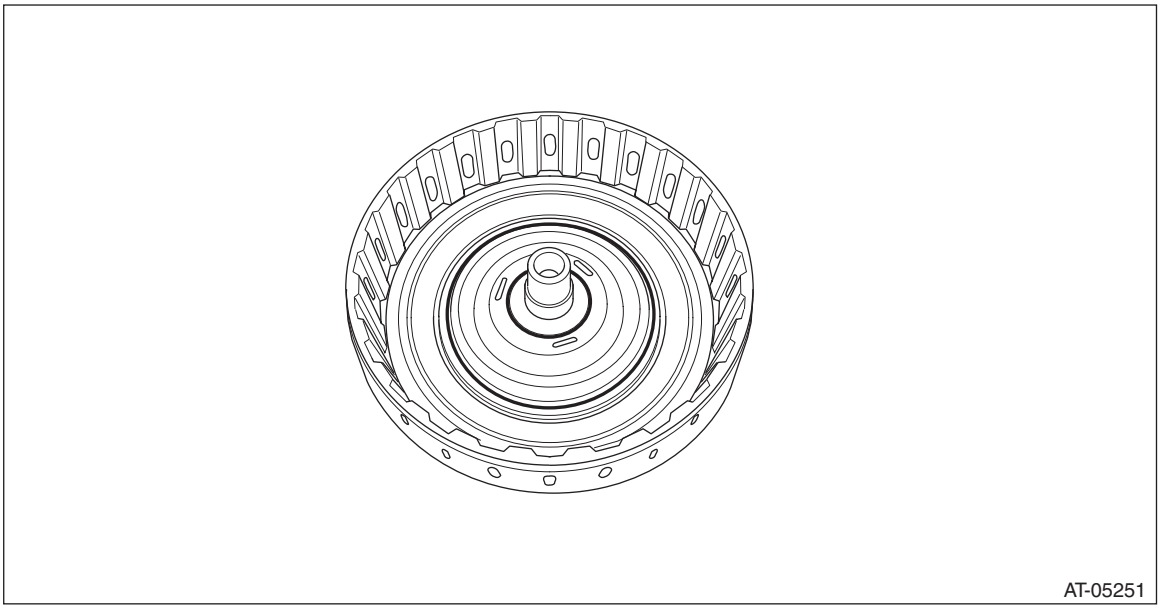

4) Compress the return spring using the ST to install the snap ring.
ST 18762AA001 COMPRESSOR SPECIAL TOOL

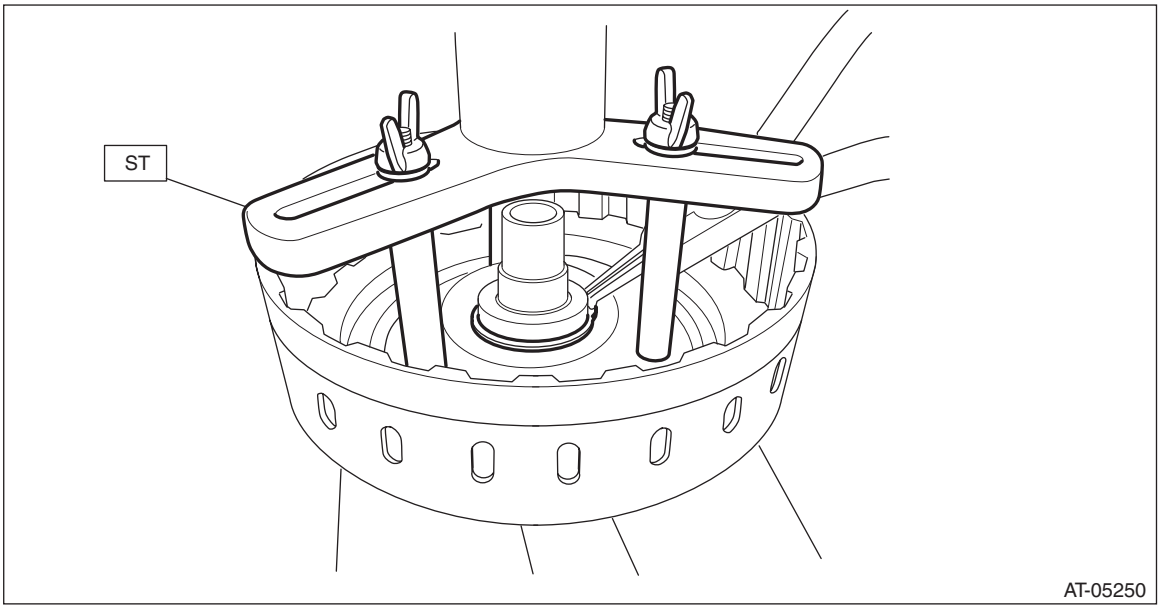

5) Install the thrust needle bearing.

NOTE:
Install the thrust needle bearing in the correct direction.

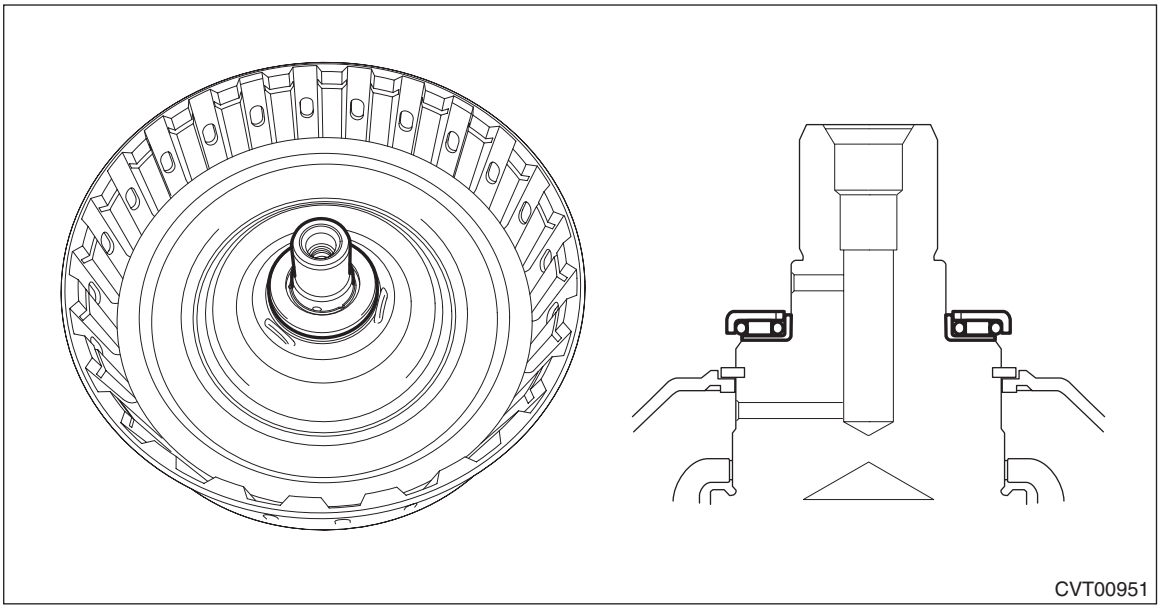
CVT00951

6) Install the snap ring.

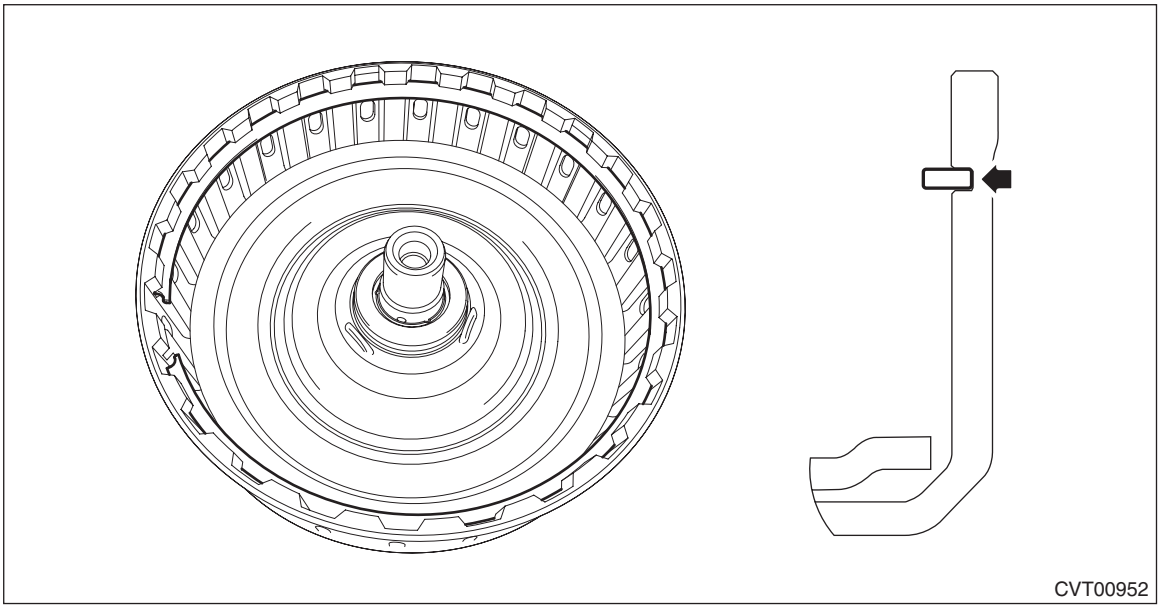
CVT00952

7) Measure the height “A” from the ST end surface to the snap ring of forward clutch drum using the ST on the surface plate.

NOTE:
- Measure while lifting the snap ring.
- Place the measurement tool at the dent on ST upper side to measure.

ST1 499737100 PULLER SET
ST2 499575600 GAUGE

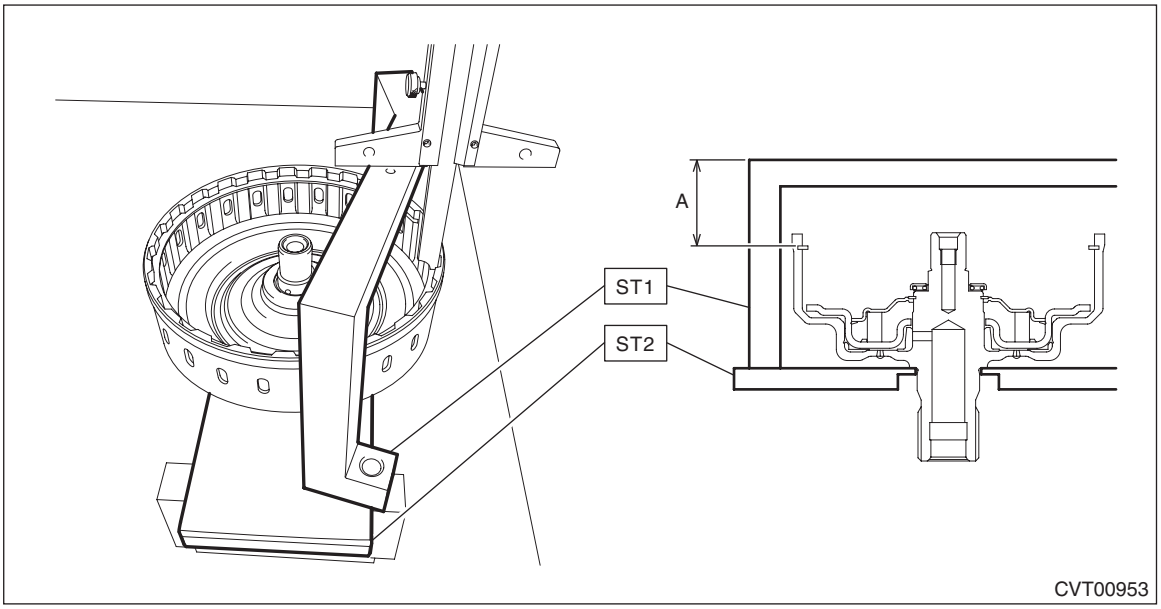

8) Measure height “B” from the ST end surface to the thrust needle bearing using the ST.

NOTE:
Place the measurement tool at the dent on ST upper side to measure.

ST1 499737100 PULLER SET
ST2 499575600 GAUGE

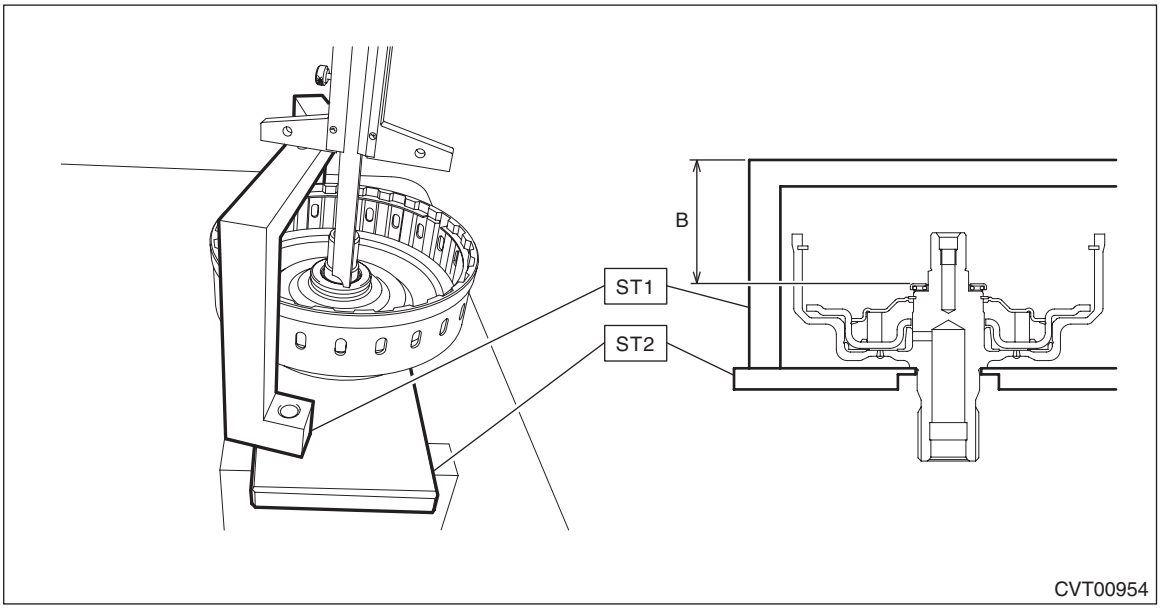

9) Remove the snap ring.

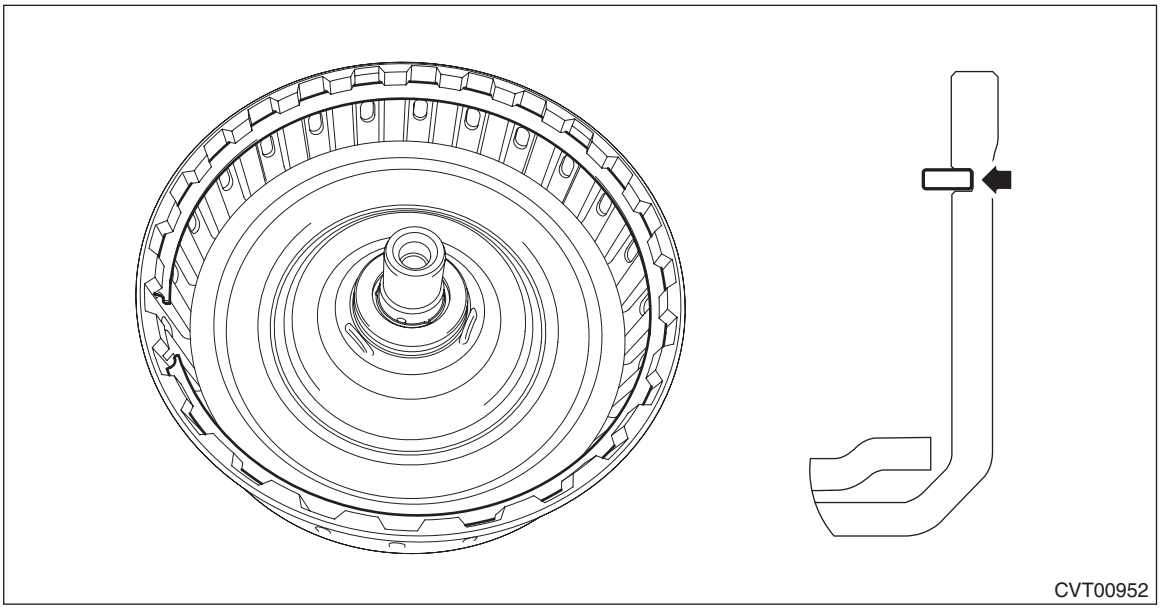

10) Place flat boards on the surface plate, and place the snap ring and then planetary carrier assembly overlapping neatly.

NOTE:
Carefully place them so that the most outer finished surface of planetary carrier assembly overlaps the snap ring.

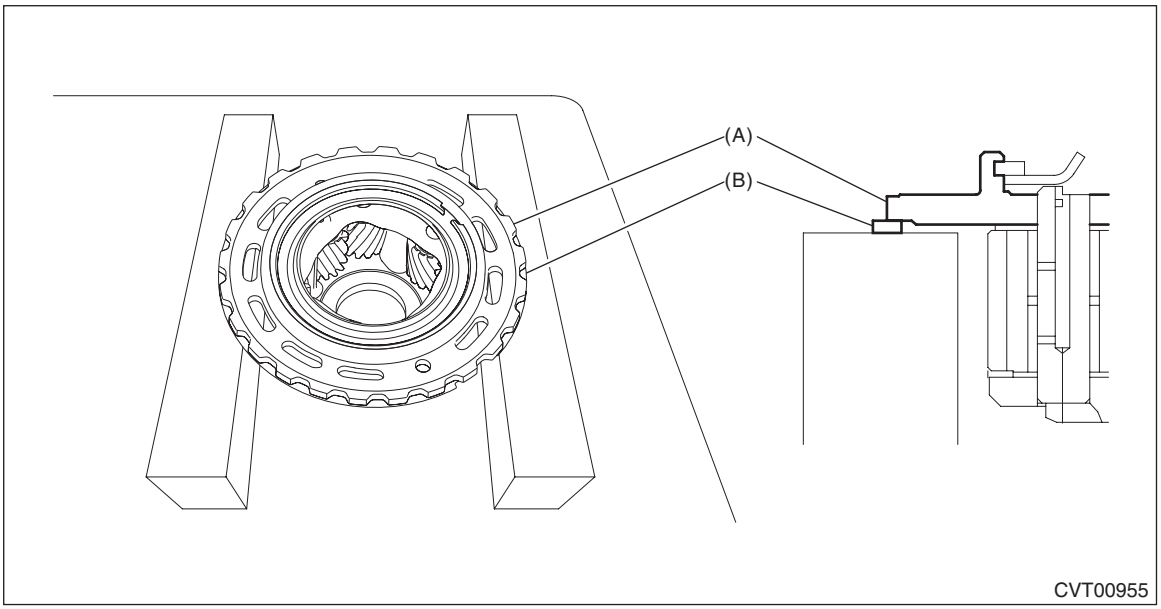

(A) Planetary carrier ASSY
(B) Snap ring

11) Install the thrust needle bearing.

NOTE:
Make sure to install in the right direction.

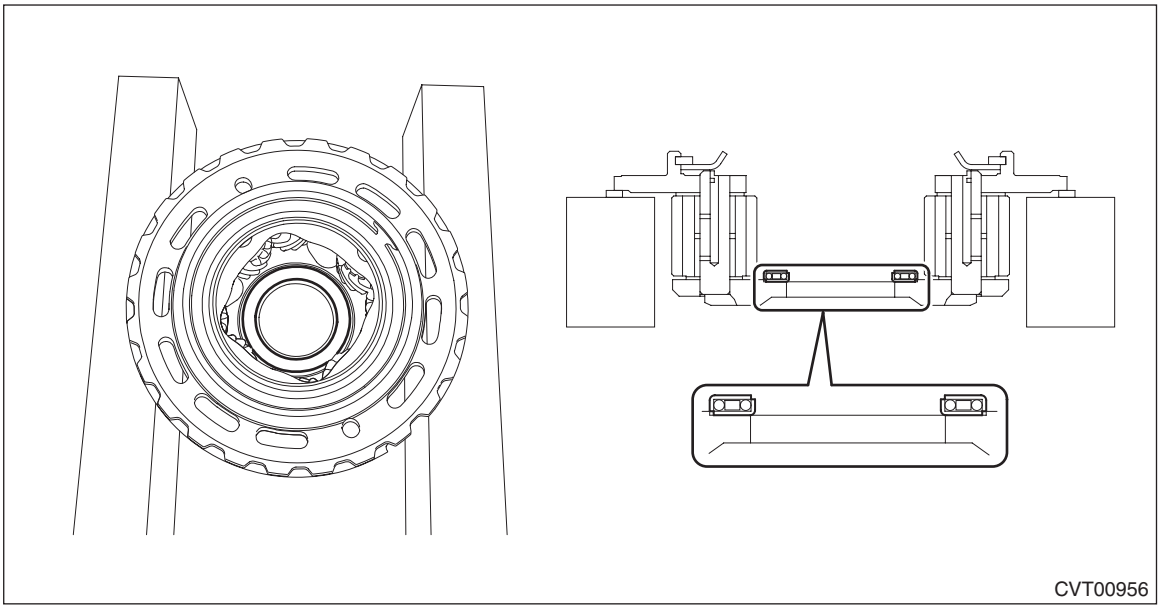
CVT00956

12) Install the sun gear.

NOTE:
Make sure to install in the right direction.

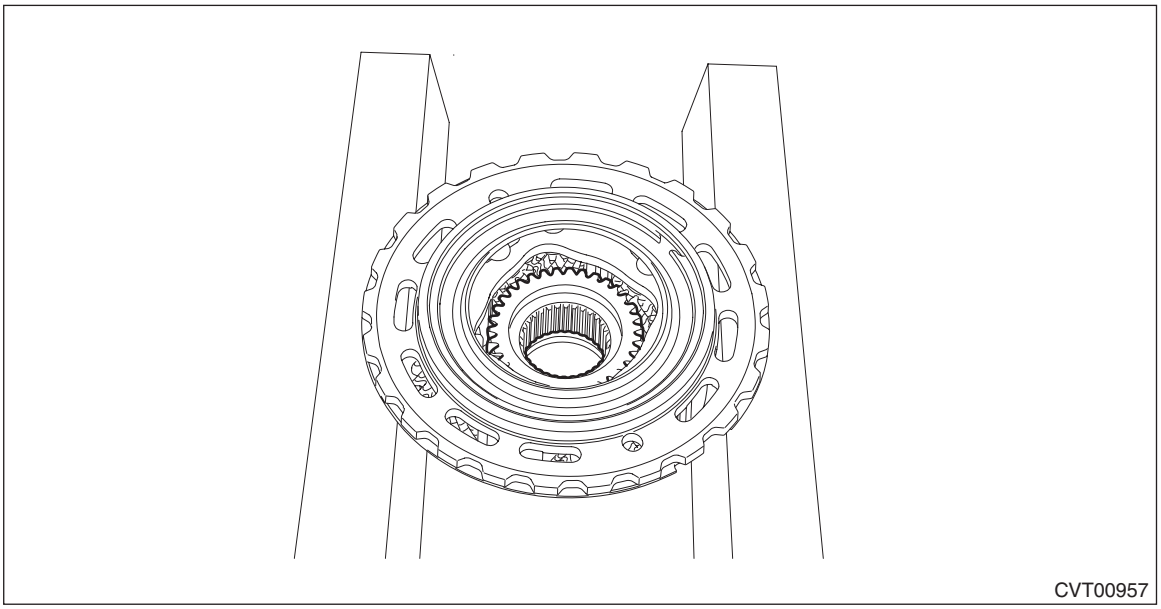
CVT00957

13) Install the forward clutch hub.

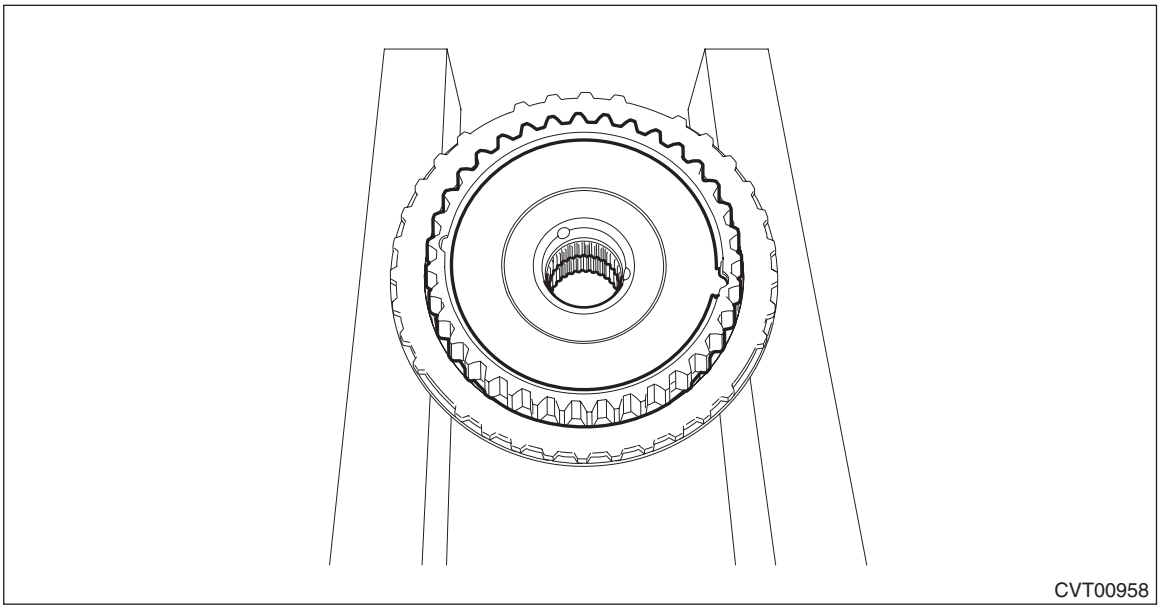

14) Using the ST, measure the height “C” from the ST end surface to the flat board with the snap ring placed on.

NOTE:
Place the measurement tool at the dent on ST upper side to measure.
ST 499737100 PULLER SET

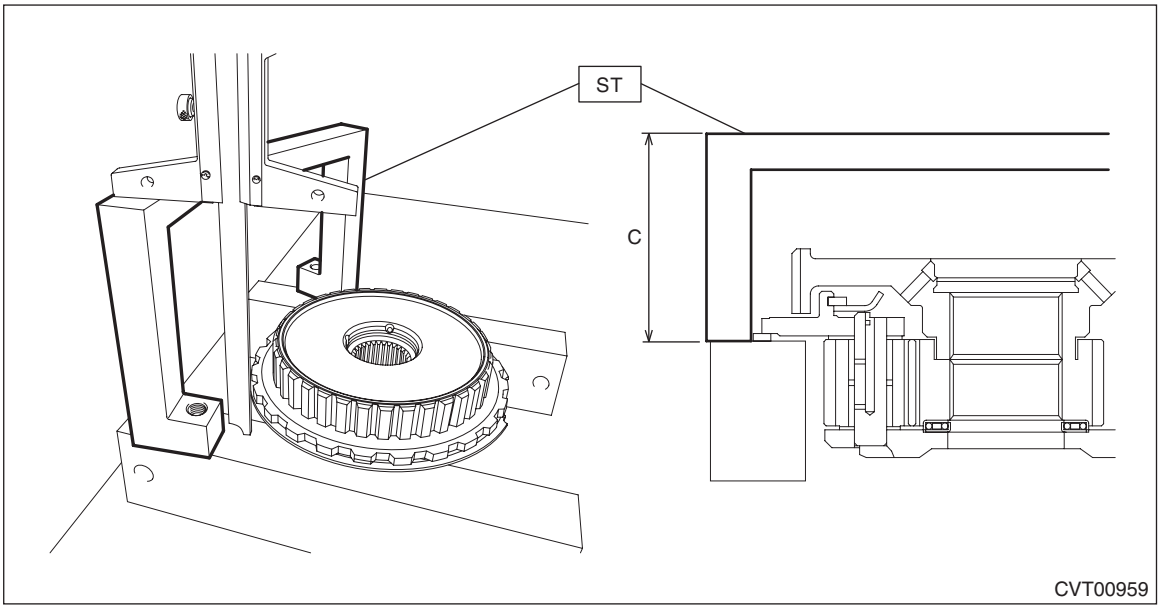

15) Using the ST, measure the height “D” from the ST end surface to the washer catch surface of the forward clutch hub.

NOTE:
Place the measurement tool at the dent on ST upper side to measure.
ST 499737100 PULLER SET

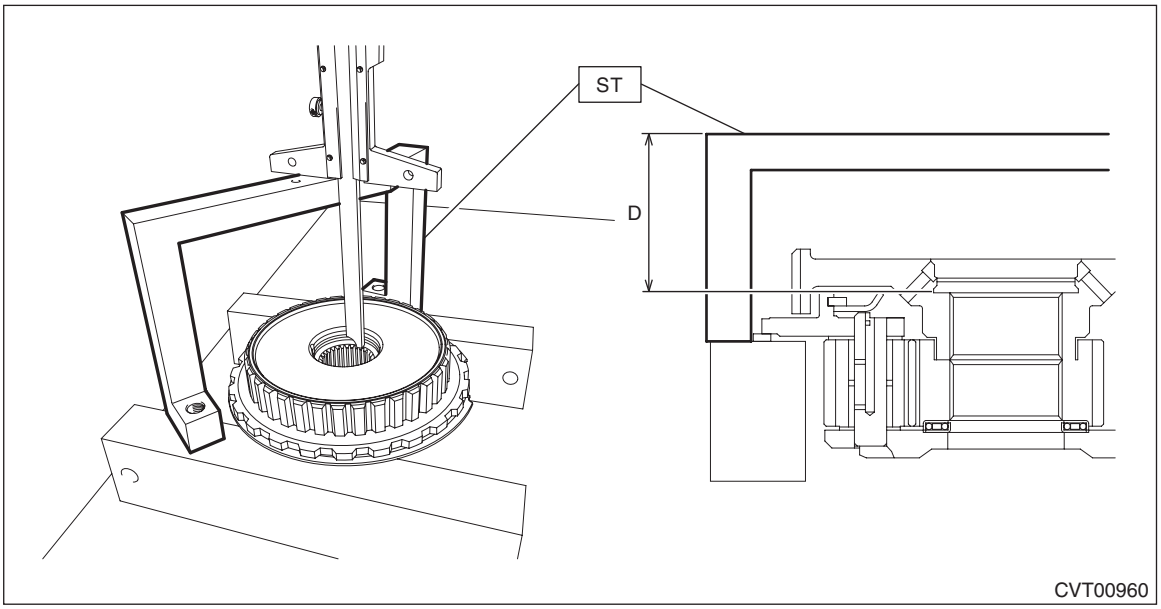

16) Obtain the thickness of washer using the values measured from step 7) to step 15).
Calculation formula:
T mm = (B – A) – (C – D) – (0.0 — 0.20)
[T in = (B – A) – (C – D) – (0.0 — 0.008)]
T: Washer thickness
A: Height from the ST end surface to the snap ring of the forward clutch drum
B: Height from the ST end surface to the thrust needle bearing
C: Height from the ST end surface to the flat board with the snap ring placed on
D: Height from the ST end surface to the washer catch surface of the forward clutch hub
0.0 — 0.20 mm (0.0 — 0.008 in): Clearance
17) Select the washer to meet the value “T” obtained from step 16).

Washer	
Part No.	Thickness mm (in)
31598AA090	4.7 (0.185)
31598AA100	4.8 (0.189)
31598AA110	4.9 (0.193)
31598AA060	5.0 (0.197)
31598AA120	5.1 (0.201)
31598AA130	5.2 (0.205)
31598AA140	5.3 (0.209)

18) Install the dish plate, drive plate, driven plate and retaining plate.

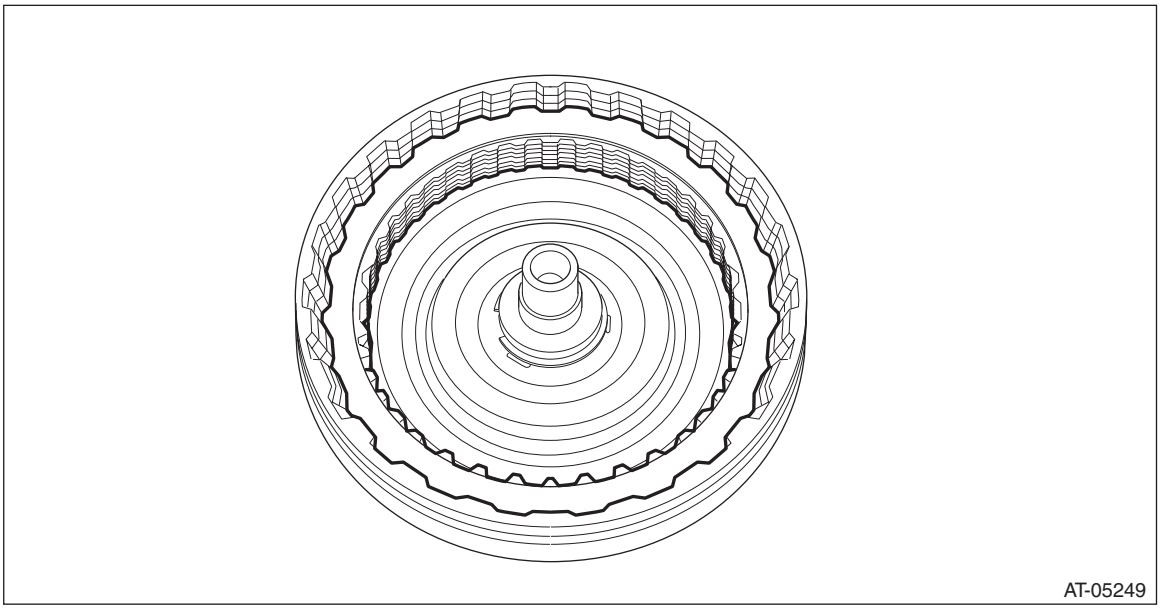

19) Install the planetary carrier assembly.

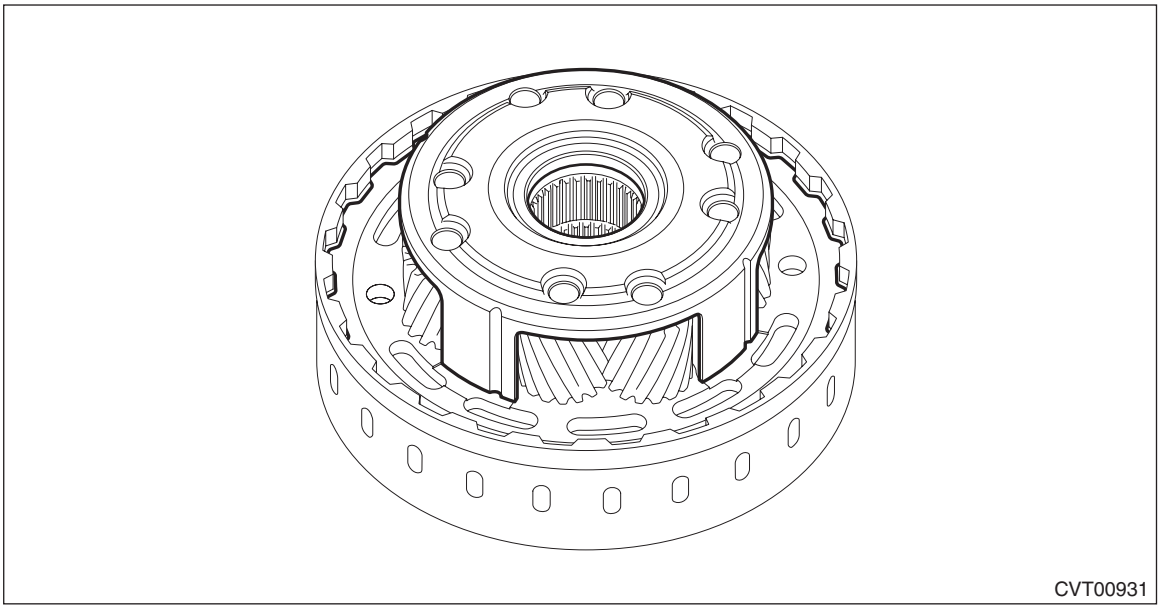

20) Install the snap ring.

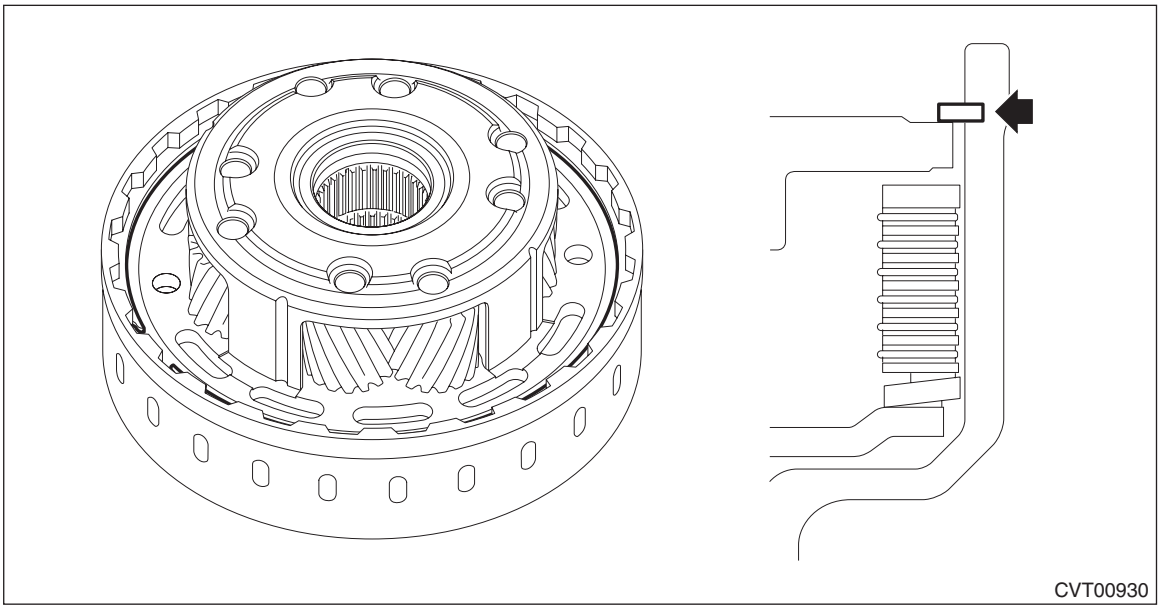

21) Hold the forward clutch drum on a vise, and set the ST.
ST1 498247001 MAGNET BASE
ST2 498247100 DIAL GAUGE

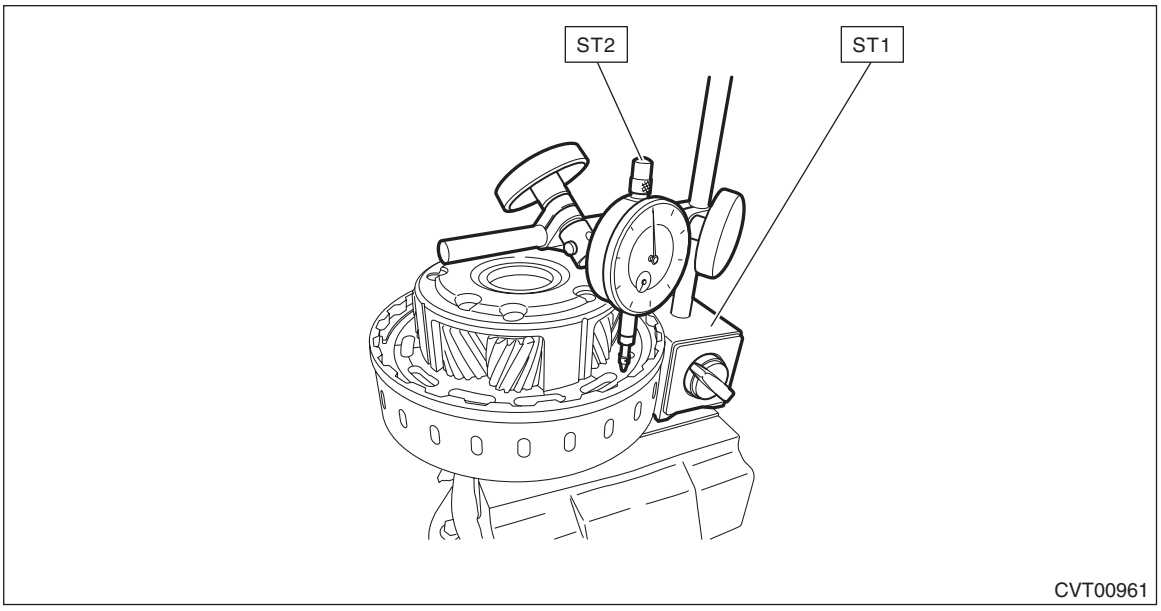

22) Lift the planetary carrier assembly, and read the value “A” indicated on the dial gauge.

NOTE:
Measure at four points with a 90° interval and calculate the average.

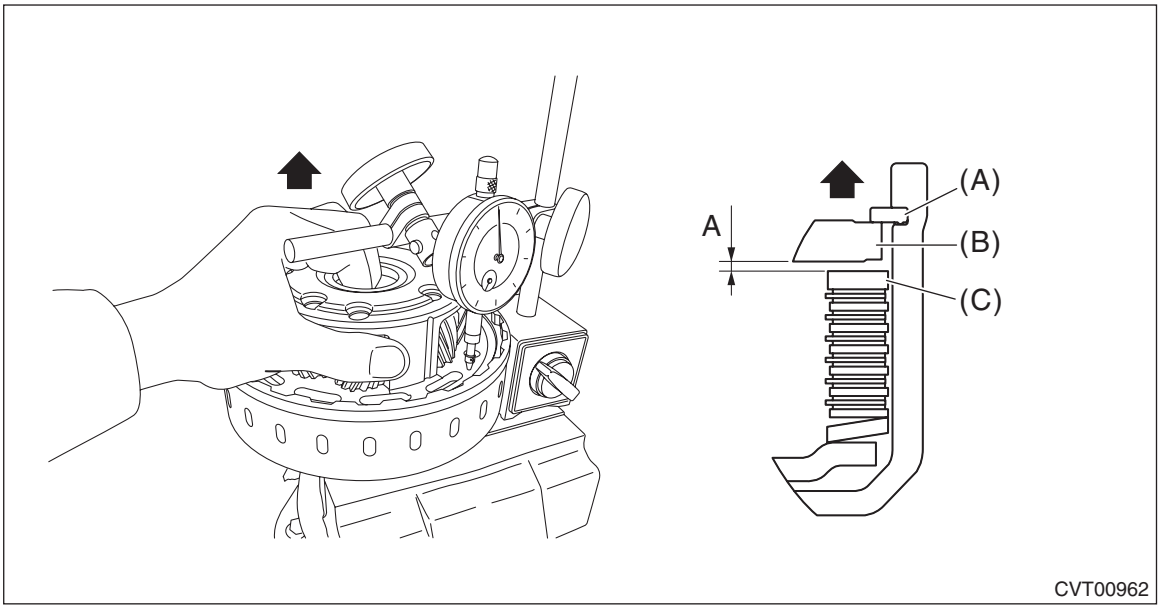

(A) Snap ring
(B) Planetary carrier ASSY
(C) Retaining plate

23) If the value “A” obtained from step 22) exceeds the limit for use, replace the drive plate and driven plate with new parts and select the retaining plate within the initial standard value.

Initial standard:
1.2 — 1.6 mm (0.047 — 0.063 in)

Limit thickness:
2.4 mm (0.09 in)

Retaining plate	
Part No.	Thickness mm (in)
31567AB890	2.0 (0.079)
31567AB900	2.2 (0.087)
31567AB910	2.4 (0.094)
31567AB640	2.6 (0.102)

24) Remove the snap ring and the planetary carrier assembly.
25) Replace with the retaining plate selected in step 23) to install.
26) Install the thrust needle bearing.

NOTE:
Install the thrust needle bearing in the correct direction.

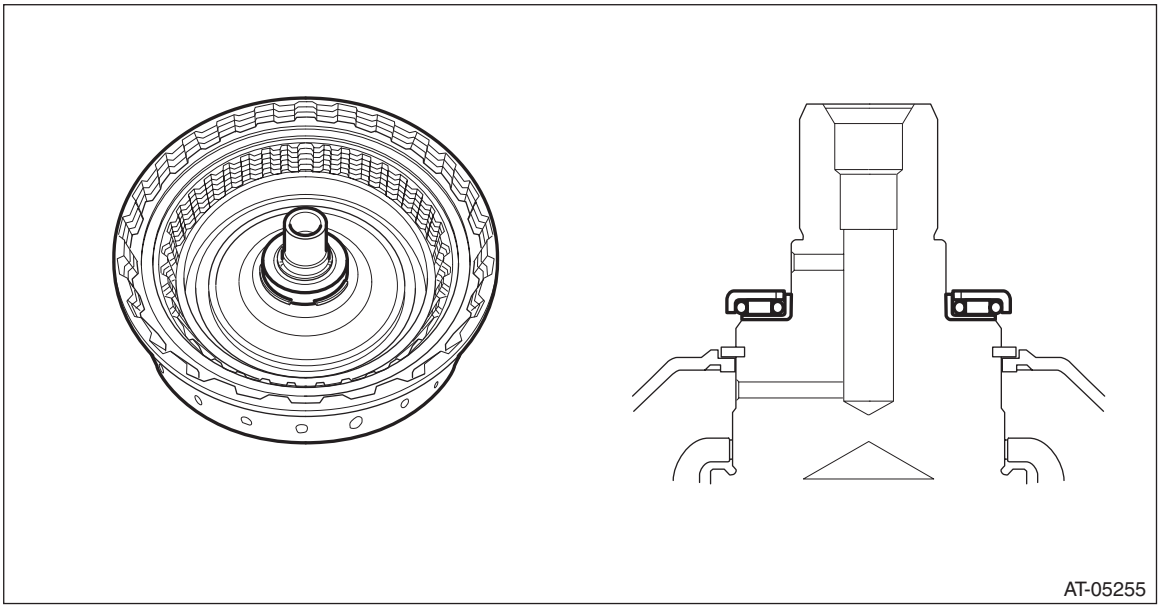

27) Install the washer selected in step 17).

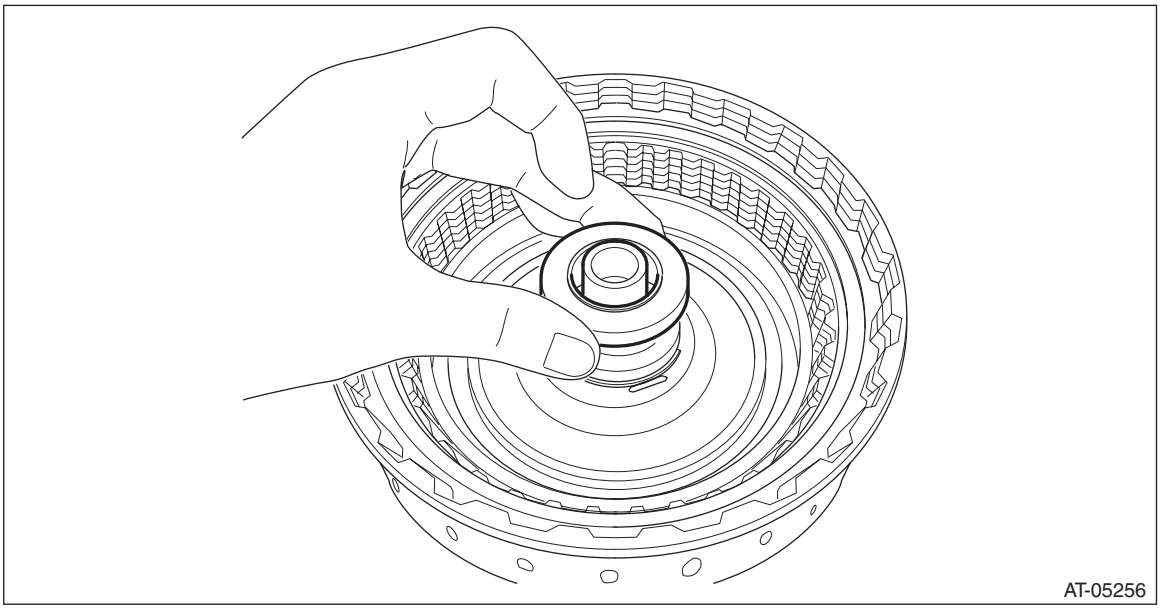

28) Install the forward clutch hub.

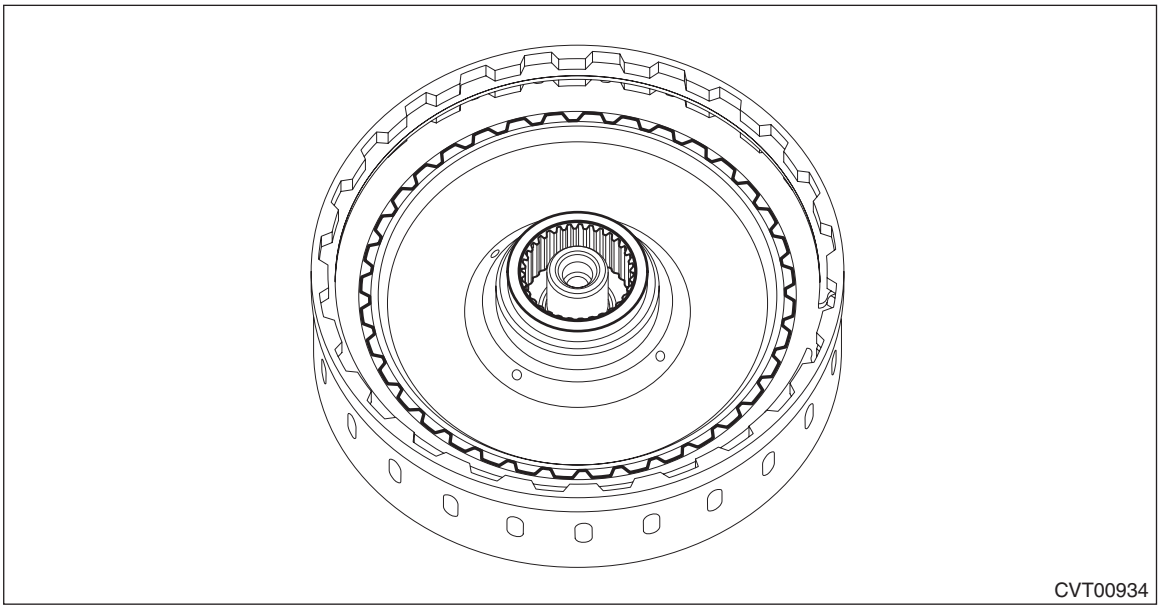
CVT00934

29) Install the sun gear.

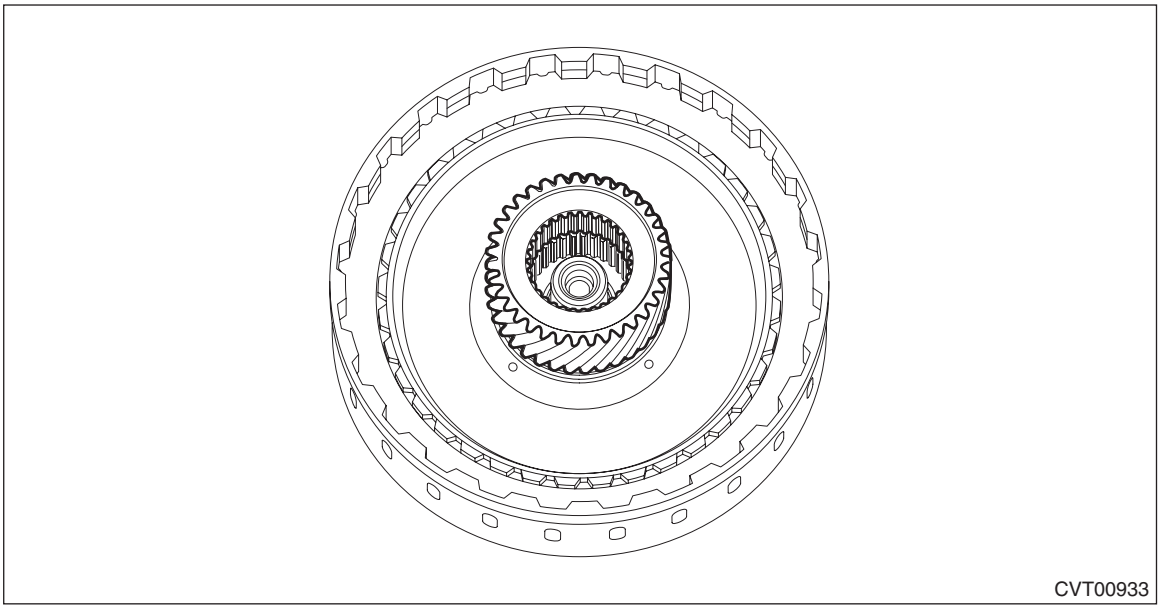
CVT00933

30) Install the thrust needle bearing.

NOTE:
Install the thrust needle bearing in the correct direction.

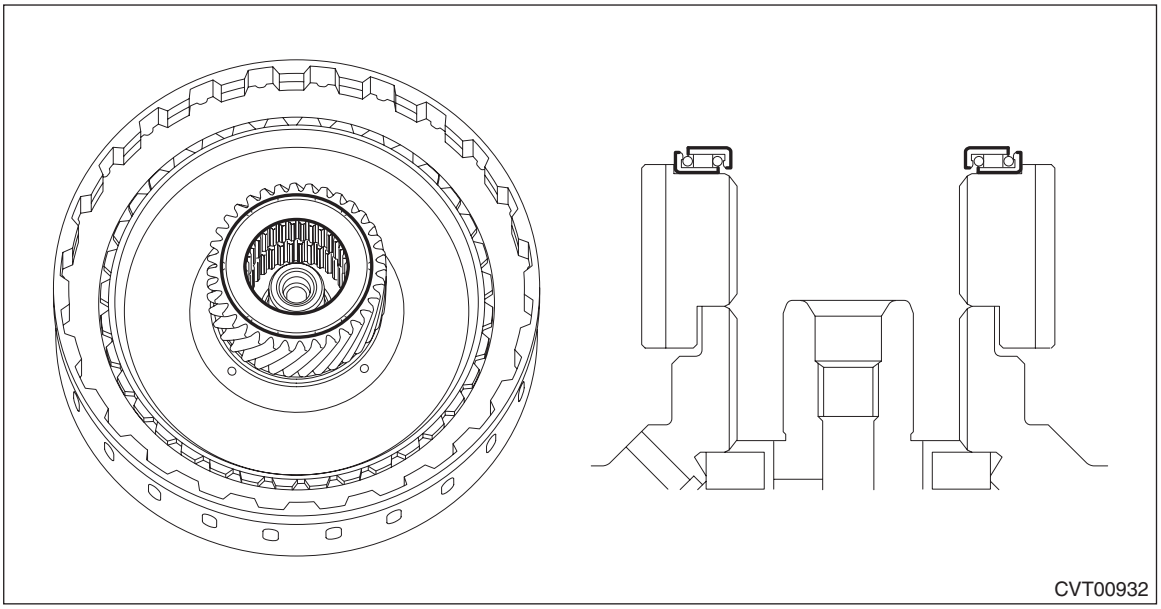
CVT00932

31) Install the planetary carrier assembly.

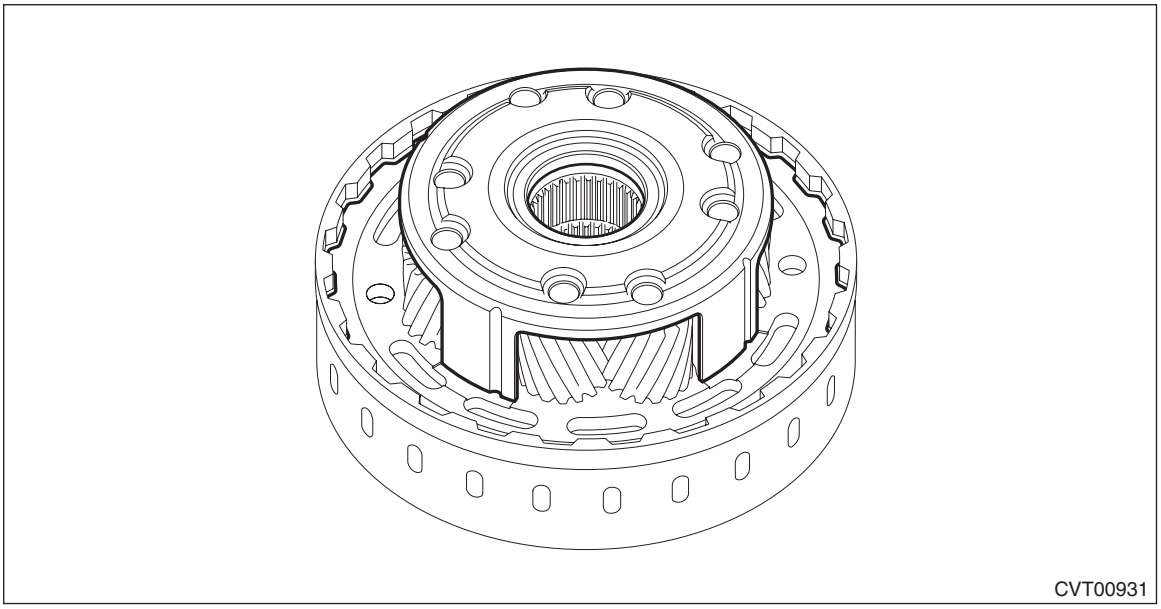
CVT00931

32) Install the snap ring.

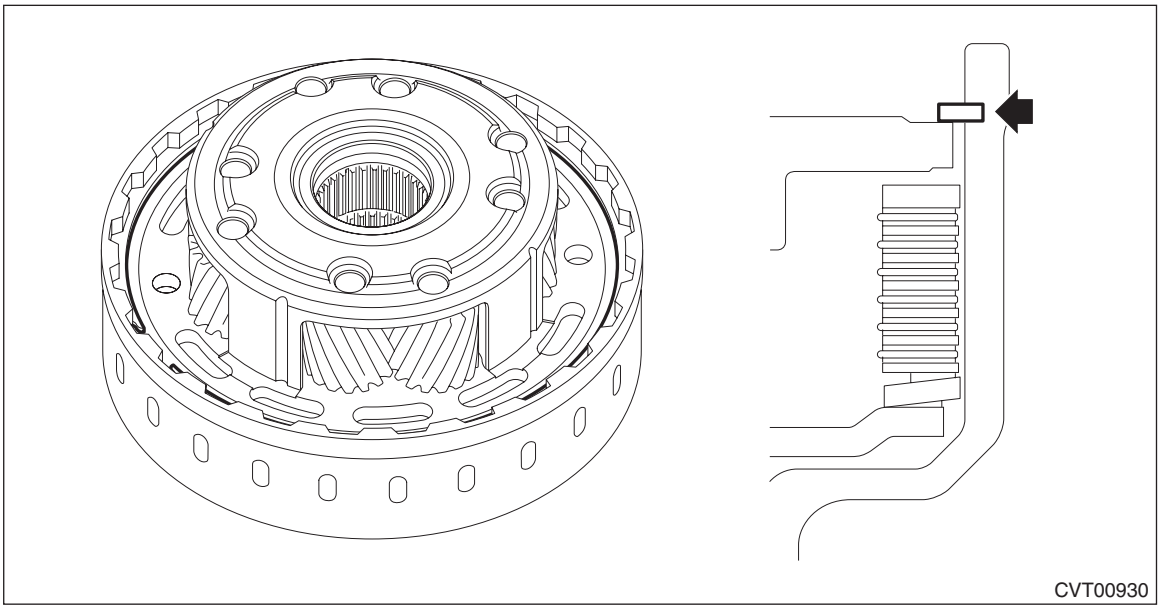

33) Install the thrust needle bearing.

NOTE:
Install the thrust needle bearing in the correct direction.

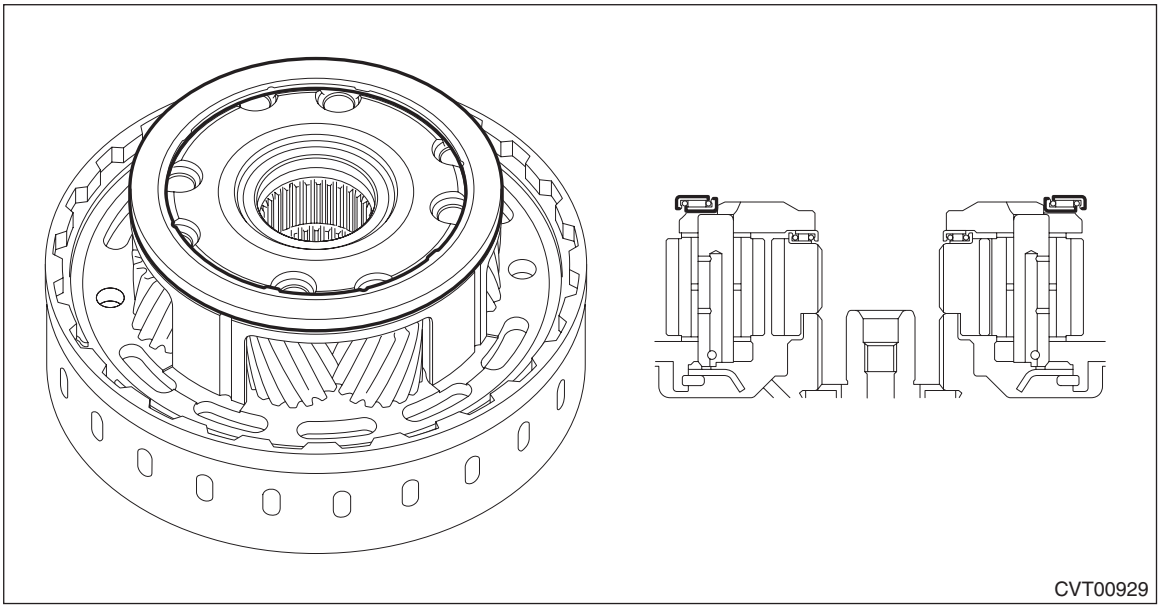

34) Install the thrust gear plate to the internal gear.

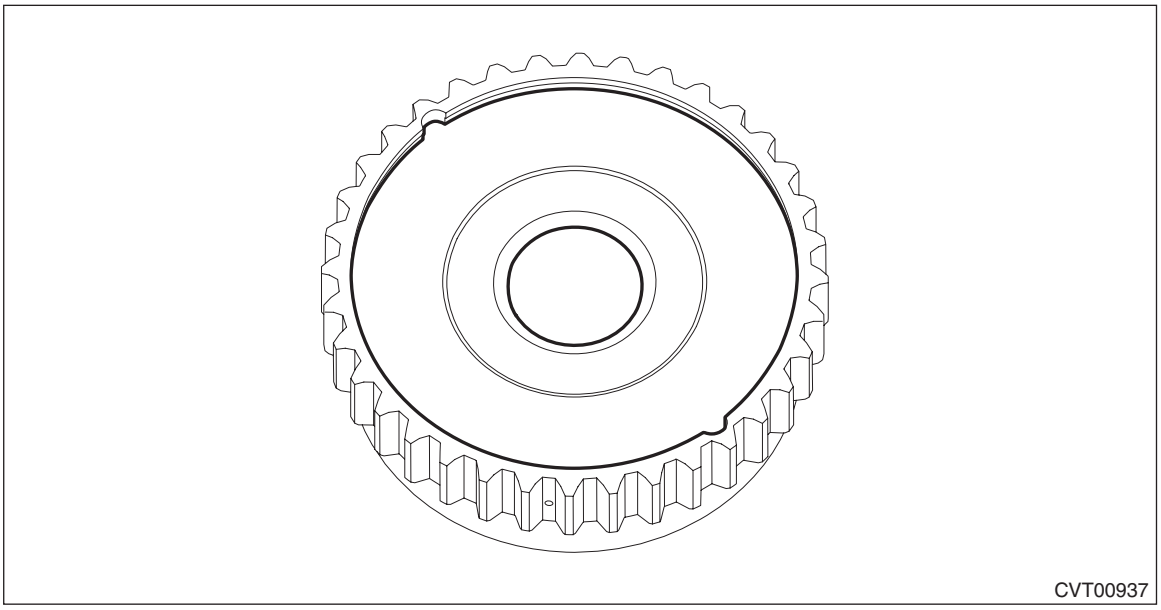
CVT00937

35) Install the snap ring.

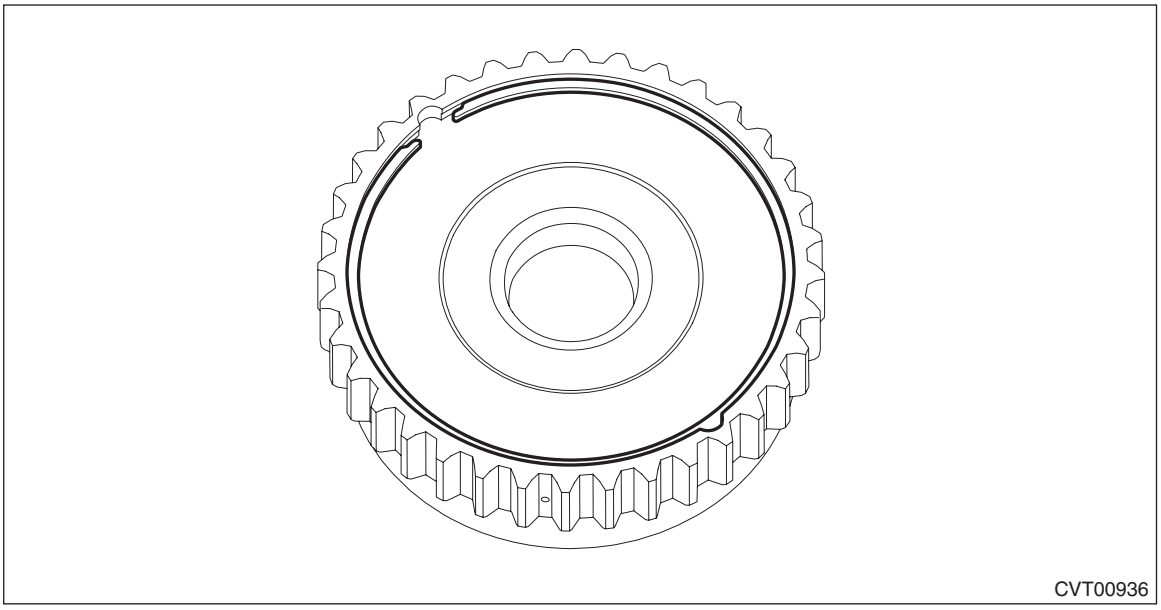
CVT00936

36) Install the internal gear assembly.

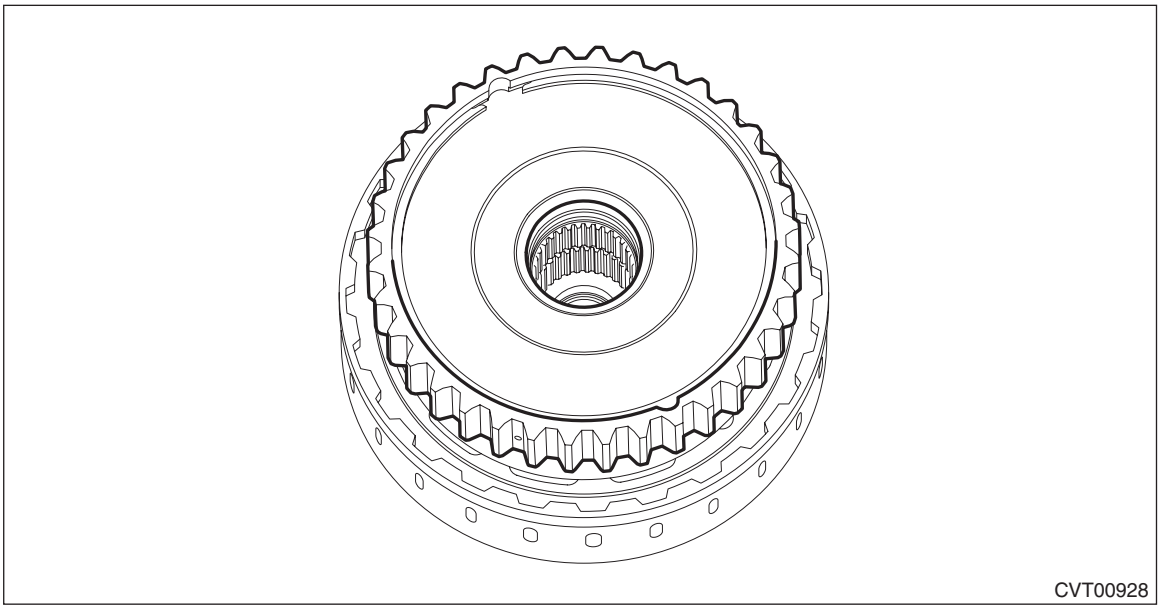

E: INSPECTION

- Check the forward clutch drum, internal gear, sun gear and forward clutch piston lip for wear or damage.
- Inspect the drive plate facing for wear and damage.
- Check the driven plate for discoloration (burnt color).
- Check for worn snap ring, fatigue or damaged return spring or deformed spring retainer.
- Make sure the clearance between the retaining plate of forward clutch and the planetary carrier assembly is within the limit. If it exceeds the standard, replace the forward clutch assembly. <Ref. to CVT(TR690)-213, ASSEMBLY, Forward Clutch Assembly.>

F: ADJUSTMENT

1) Measure depth “A” from the ST upper face to the washer catch surface.
ST 398643600 GAUGE

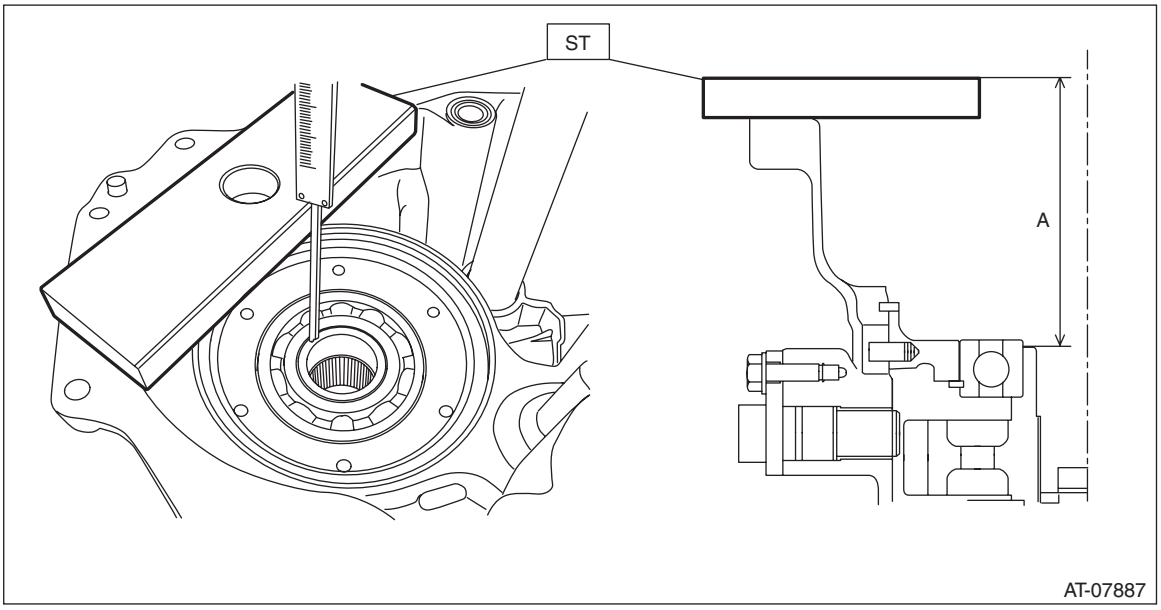

2) Install the forward clutch assembly to intermediate case.

3) Setting the ST, measure height “B” from the ST upper side to the intermediate case mating surface.
ST 499575600 GAUGE

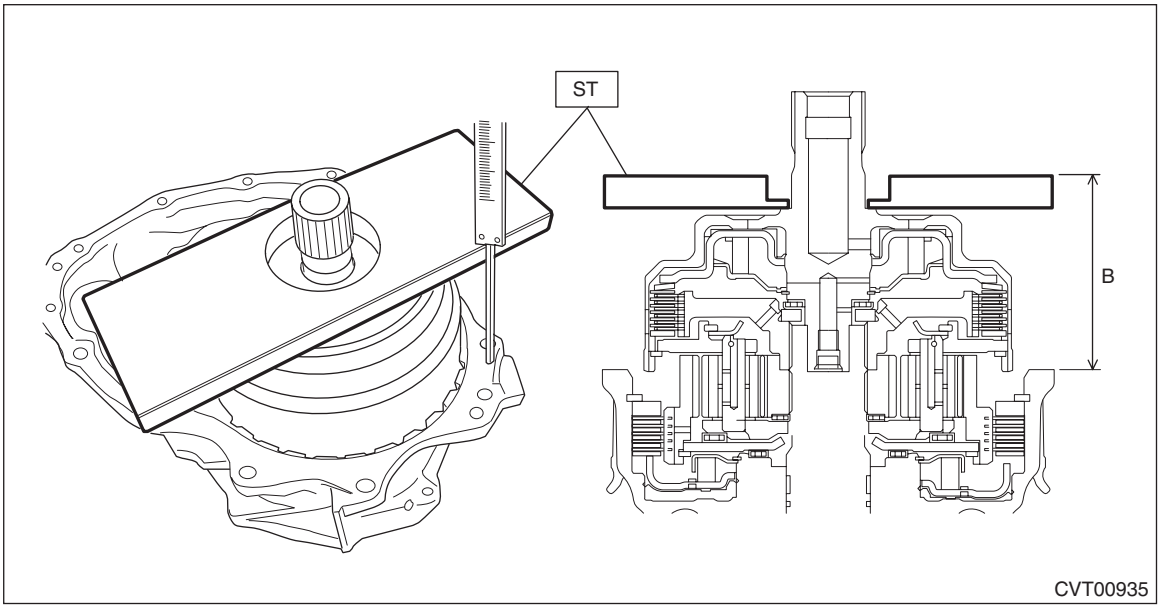

4) Obtain the thickness of washer using the following formula.
Calculation formula:
T (mm) = (A – 15) – (B – 15) – (0.75 — 0.95)
[T (in) = (A – 0.591) – (B – 0.591) – (0.030 — 0.037)]
T: Washer thickness
A: Depth from the ST upper face to the washer catch surface
B: Height from the upper surface of the ST to the mating surface of the intermediate case
15 mm (0.591 in): Thickness of ST
0.75 — 0.95 mm (0.030 — 0.037 in): Clearance
5) Select the washer to meet the value “T” obtained from step 4).

Washer	
Part No.	Washer thickness mm (in)
803034044	0.8 (0.031)
803034045	0.9 (0.035)
803034040	1.0 (0.039)
803034046	1.1 (0.043)
803034041	1.2 (0.047)
803034047	1.3 (0.051)
803034042	1.4 (0.055)
803034048	1.5 (0.059)
803034043	1.6 (0.063)

39.Reduction Driven Gear

A: REMOVAL

1) Remove the transmission from the vehicle. <Ref. to CVT(TR690)-58, REMOVAL, Automatic Transmission Assembly.>
2) Remove the extension case. <Ref. to CVT(TR690)-160, REMOVAL, Extension Case.>
3) Remove the rear drive shaft. <Ref. to CVT(TR690)-163, REMOVAL, Rear Drive Shaft.>
4) Remove the transfer clutch assembly. <Ref. to CVT(TR690)-168, REMOVAL, Transfer Clutch.>
5) Remove the transfer reduction driven gear assembly. <Ref. to CVT(TR690)-180, REMOVAL, Transfer Reduction Driven Gear.>
6) Remove the intermediate case. <Ref. to CVT(TR690)-187, REMOVAL, Intermediate Case.>
7) Remove the forward clutch assembly. <Ref. to CVT(TR690)-202, REMOVAL, Forward Clutch Assembly.>
8) Remove the snap ring.

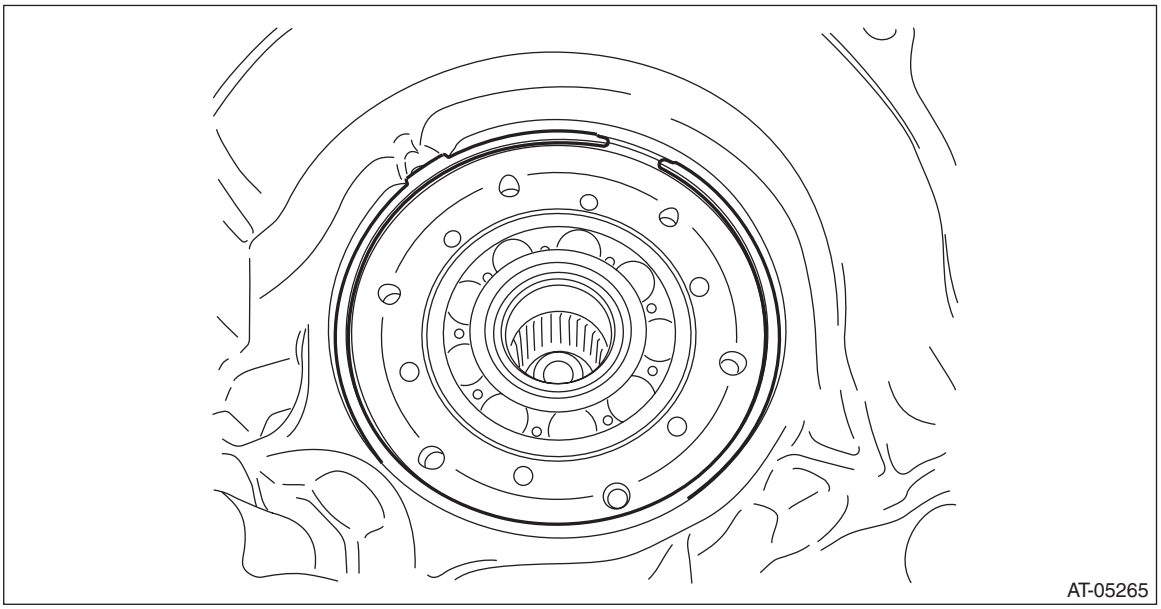
AT-05265

9) Remove the reduction driven gear assembly.

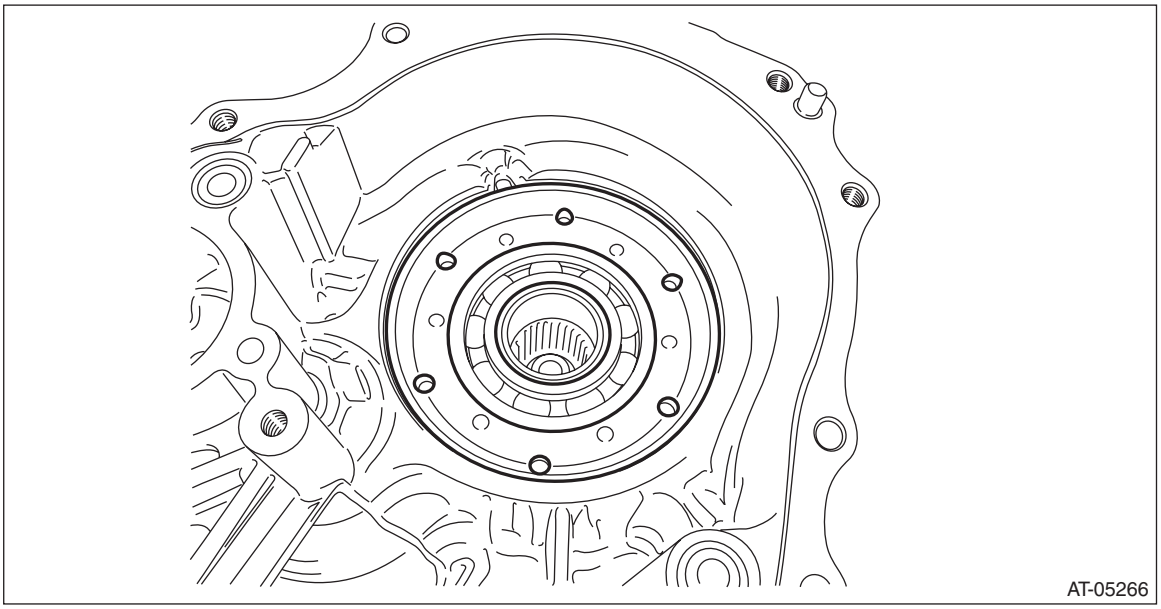
AT-05266

10) Remove the straight pin.

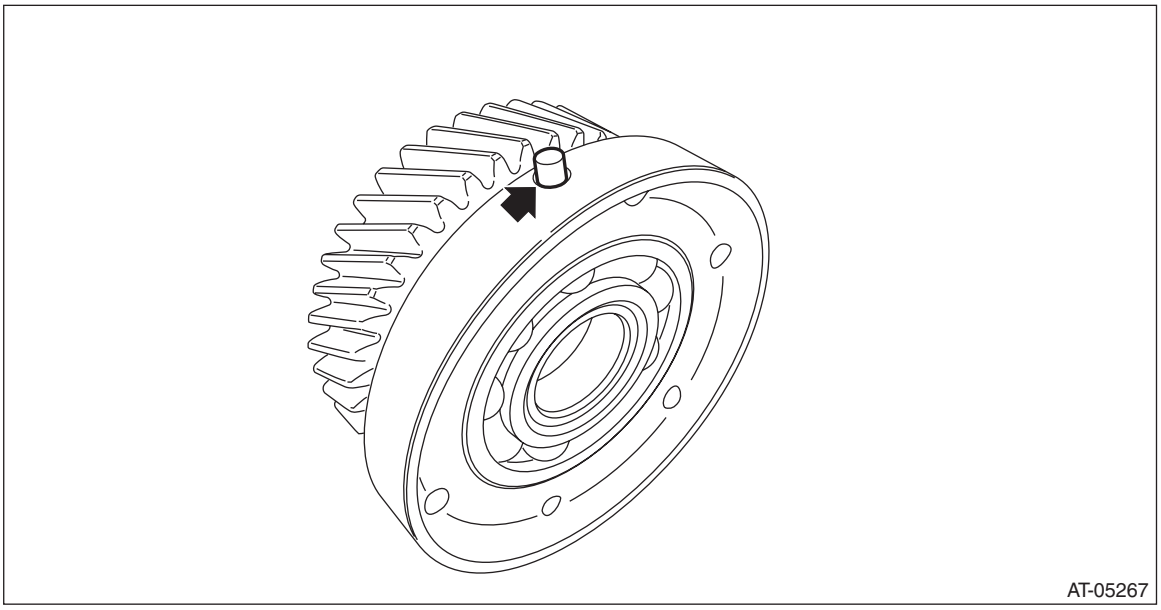

B: INSTALLATION

1) Install the straight pin to reduction driven gear assembly.

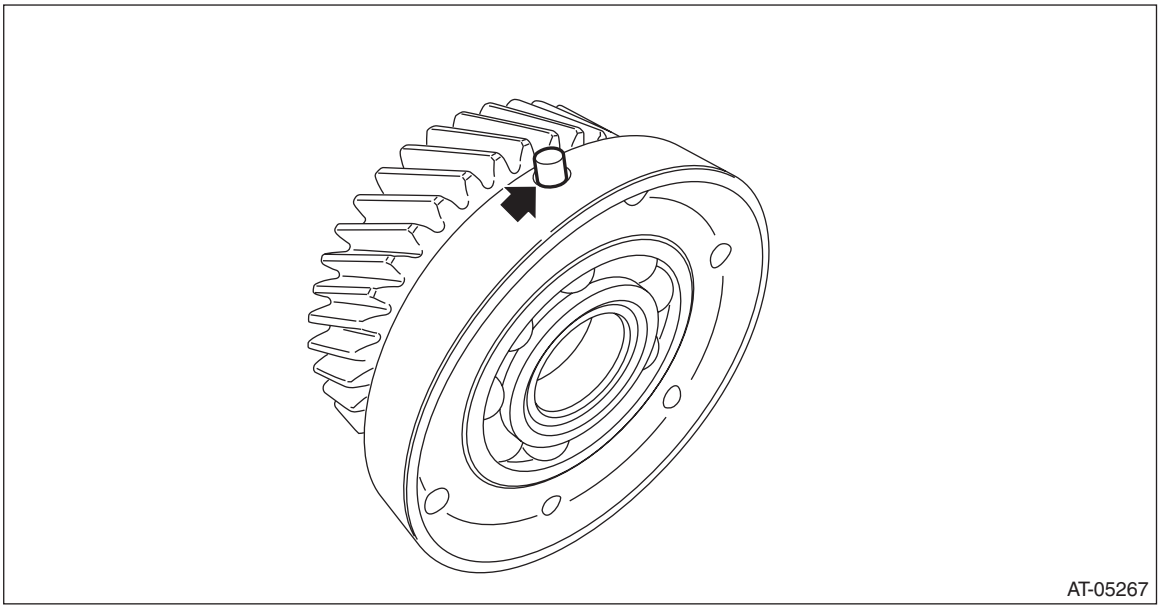

2) Fit the straight pin portion to the recess portion of transmission case and install the reduction driven gear and install the snap ring.

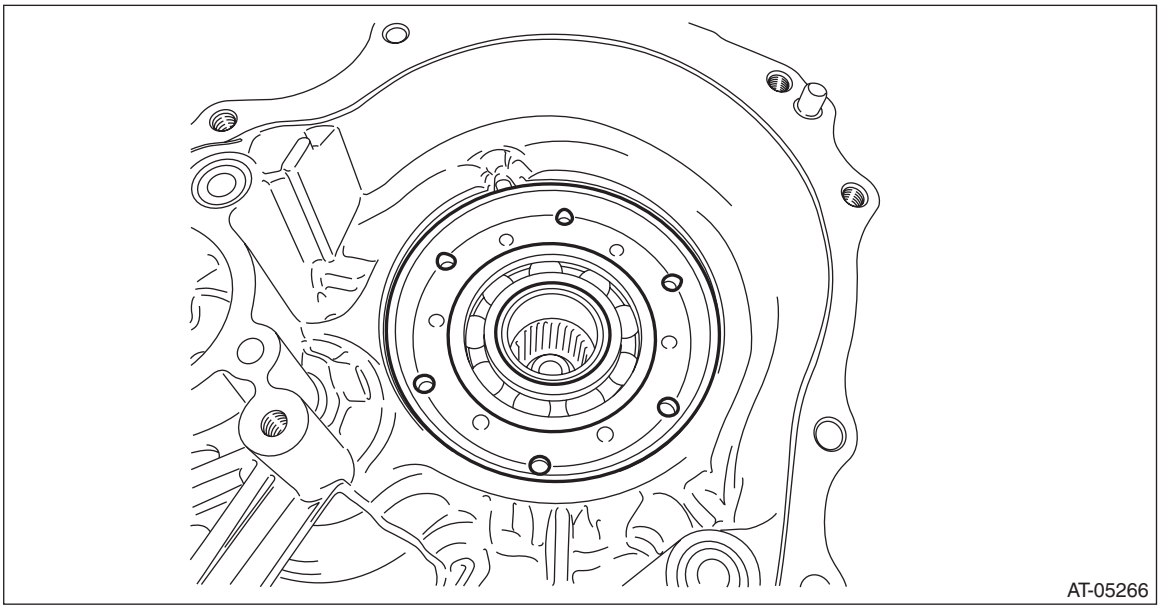

3) Select the snap ring. <Ref. to CVT(TR690)-236, ADJUSTMENT, Reduction Driven Gear.>
4) Replace with the selected snap ring.

NOTE:
If the clearance measured in step 3) is within standard, the snap ring replacement is not necessary.
5) Install the forward clutch assembly. <Ref. to CVT(TR690)-203, INSTALLATION, Forward Clutch Assembly.>
6) Install the intermediate case. <Ref. to CVT(TR690)-188, INSTALLATION, Intermediate Case.>
7) Install the transfer reduction driven gear assembly. <Ref. to CVT(TR690)-180, INSTALLATION, Transfer Reduction Driven Gear.>
8) Install the transfer clutch assembly. <Ref. to CVT(TR690)-169, INSTALLATION, Transfer Clutch.>
9) Install the rear drive shaft. <Ref. to CVT(TR690)-163, INSTALLATION, Rear Drive Shaft.>
10) Install the extension case. <Ref. to CVT(TR690)-161, INSTALLATION, Extension Case.>
11) Install the transmission to vehicle. <Ref. to CVT(TR690)-75, INSTALLATION, Automatic Transmission Assembly.>

C: DISASSEMBLY

1) Remove the bearing retainer using ST1, ST2 and ST3.
ST1 899864100 REMOVER
ST2 398497701 SEAT
ST3 18767AA000 BEARING REMOVER

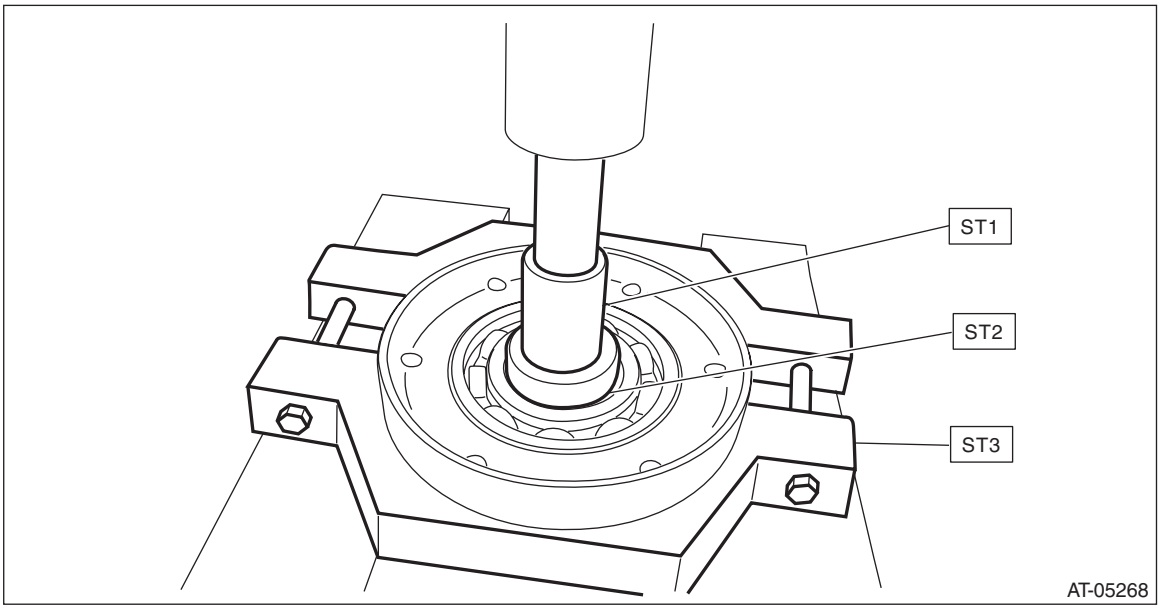

2) Remove the snap ring.

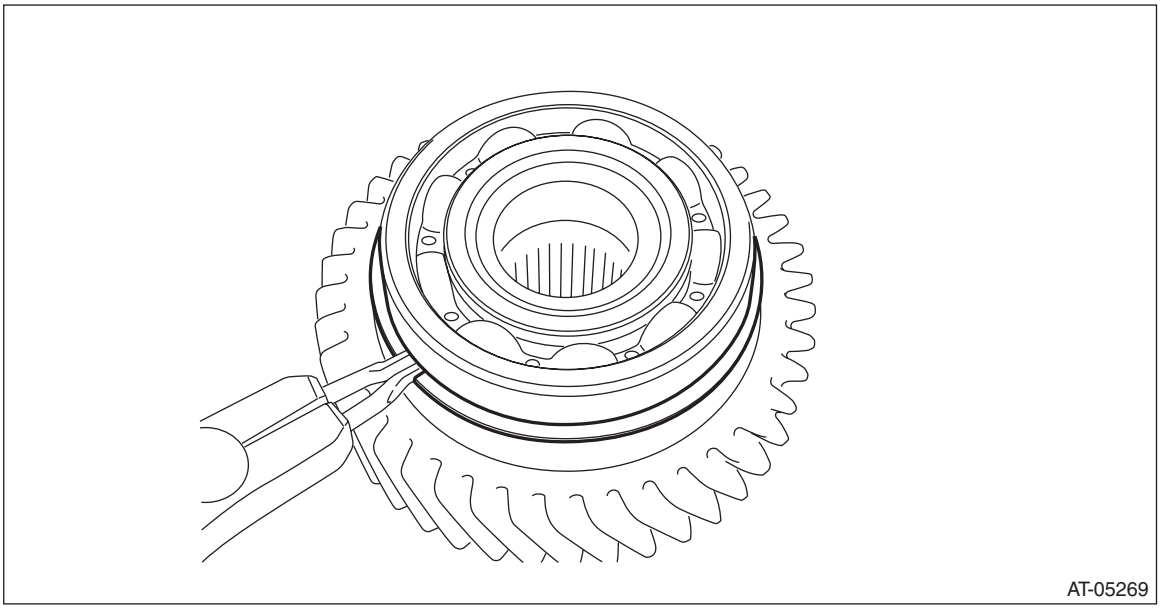

3) Remove the ball bearing using ST1, ST2 and ST3.
ST1 899864100 REMOVER
ST2 398497701 SEAT
ST3 498077600 REMOVER

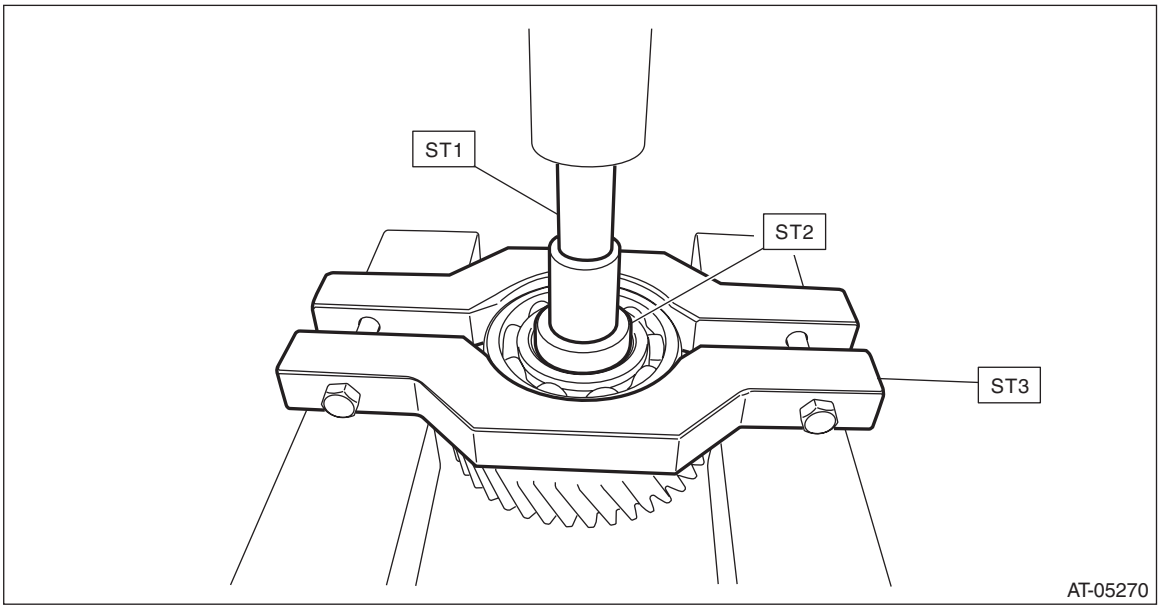

D: ASSEMBLY

1) Using the ST, install the ball bearing to bearing retainer.
ST 398177700 INSTALLER

NOTE:
- Use a new ball bearing.
- Make sure to install the ball bearing in the right direction.
- Apply CVTF to the press-fitting area.

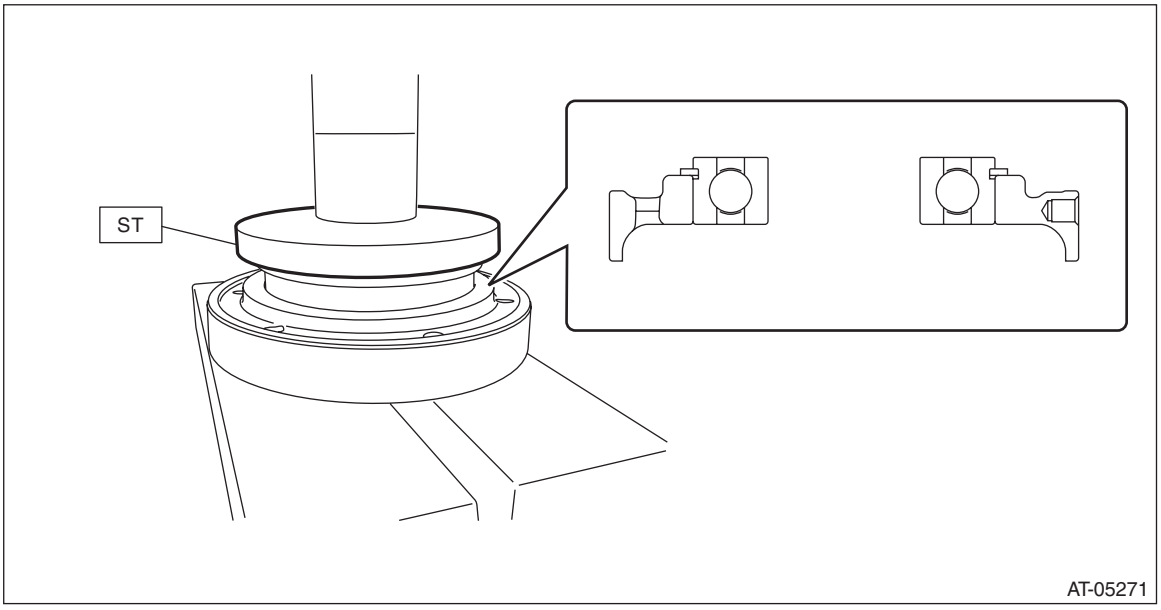

2) Using the ST, install the reduction driven gear.
ST 499277200 INSTALLER

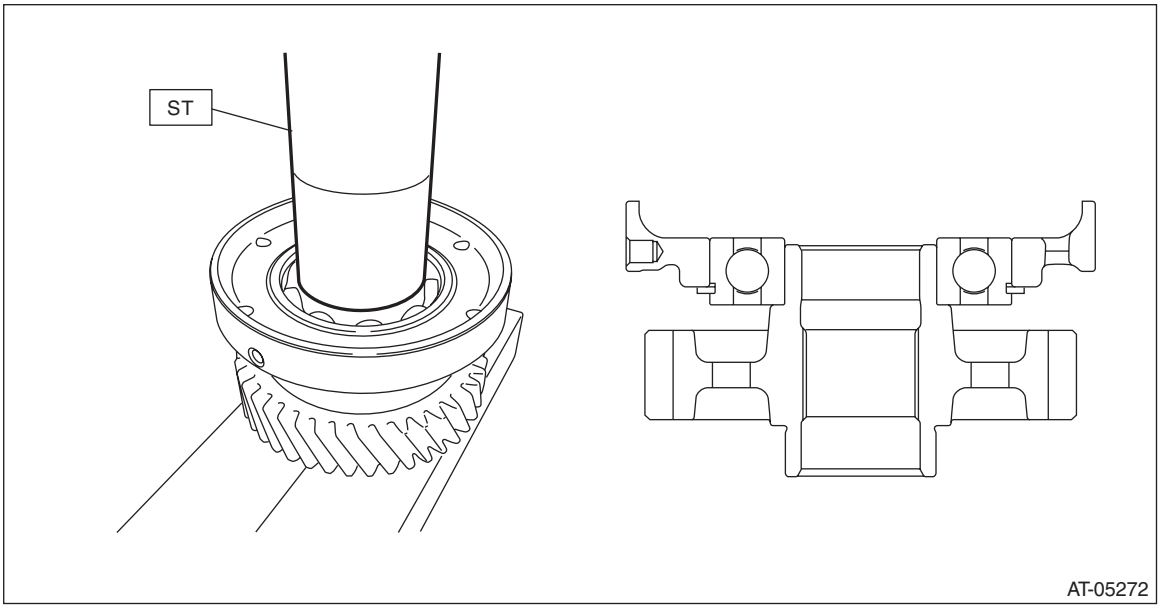

E: INSPECTION

- Check the ball bearing for smooth rotation.
- Check the ball bearing for excessive looseness.
- Check the reduction driven gear for breakage or damage.
- Check the clearance between snap ring and transmission case and replace the snap ring as necessary.

F: ADJUSTMENT

1) Measure clearance “A” between snap ring and transmission case.

Specification:
0.05 — 0.25 mm (0.002 — 0.01 in)

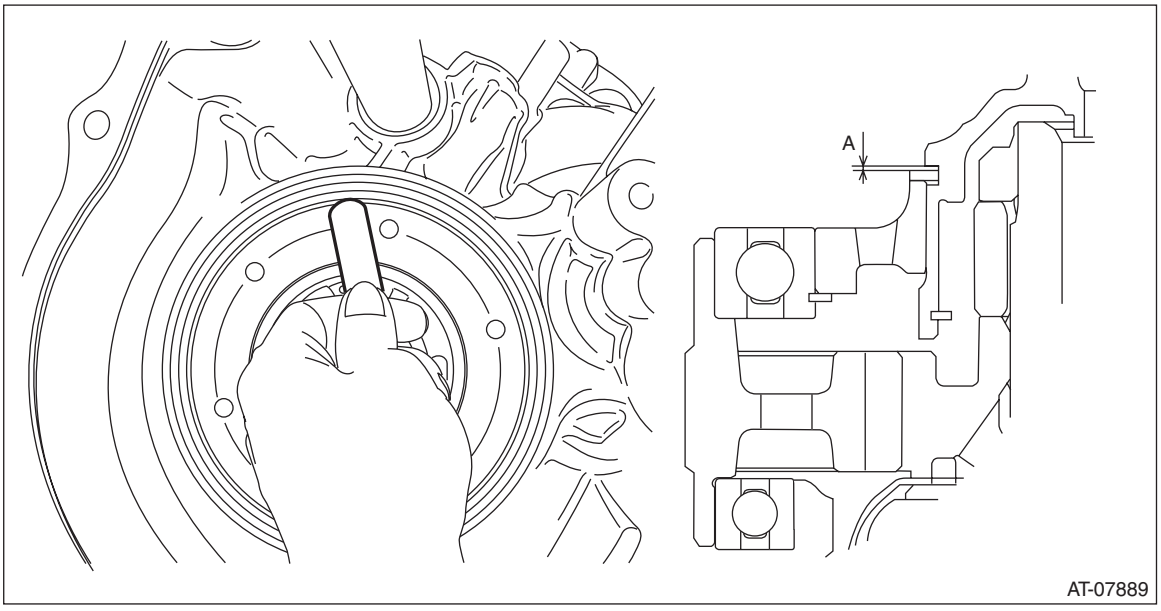

2) If clearance “A” is out of standard, select the snap ring within standard.

Snap ring	
Part No.	Thickness mm (in)
805100460	2.0 (0.079)
805100461	2.1 (0.083)
805100462	2.2 (0.087)
805100463	2.3 (0.091)
805100464	2.4 (0.094)

40.Transmission Control Device

A: REMOVAL

1) Remove the transmission assembly from the vehicle. <Ref. to CVT(TR690)-58, REMOVAL, Automatic Transmission Assembly.>
2) Remove the oil pan and control valve body. <Ref. to CVT(TR690)-124, REMOVAL, Control Valve Body.>
3) Remove the inhibitor switch. <Ref. to CVT(TR690)-107, REMOVAL, Inhibitor Switch.>
4) Remove the spring pin.

NOTE:
Prevent the spring pin from dropping in the transmission using paper towel etc.

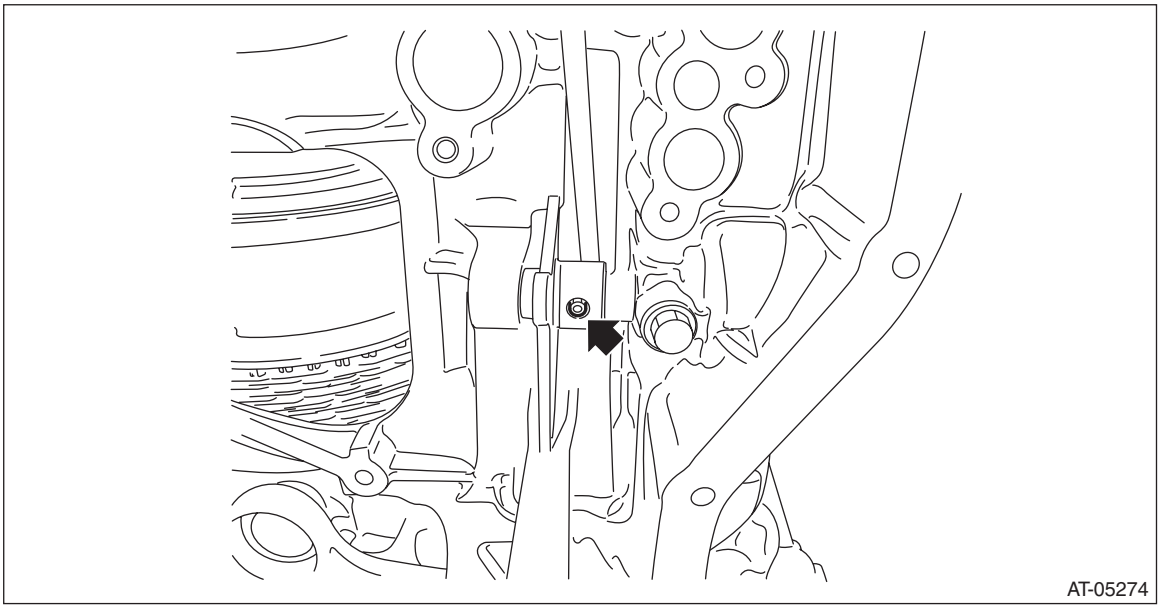

5) Remove the bolt and remove the range select lever, manual plate and parking rod.

NOTE:
Do not damage the lip of oil seal press-fitted in the case.

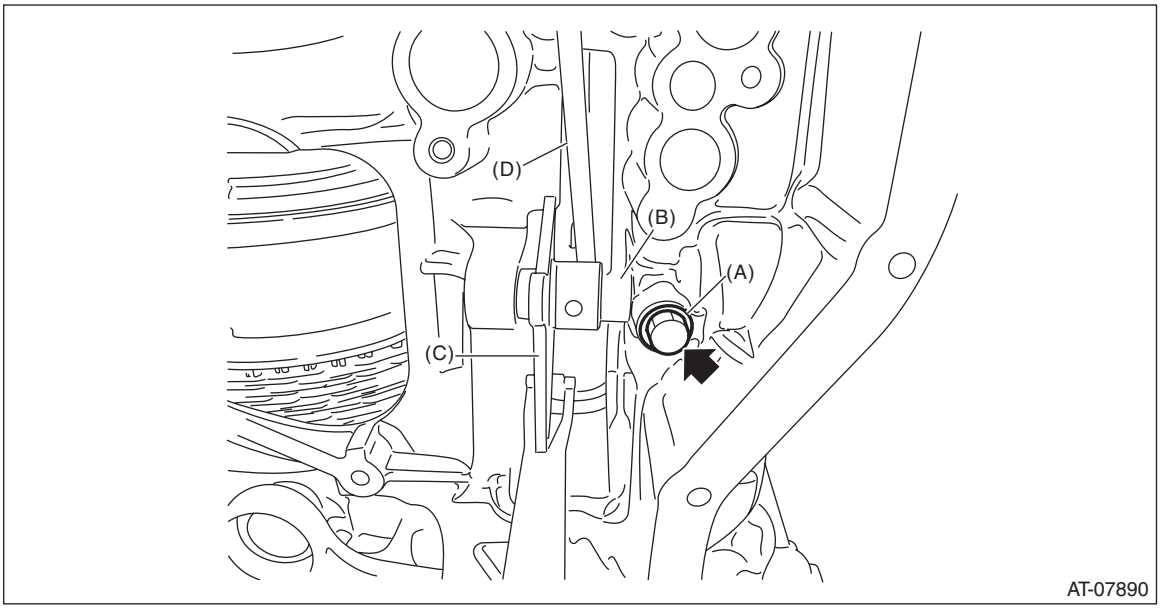

(A) Bolt
(B) Range select lever
(C) Manual plate
(D) Parking rod

6) Remove the detent spring.

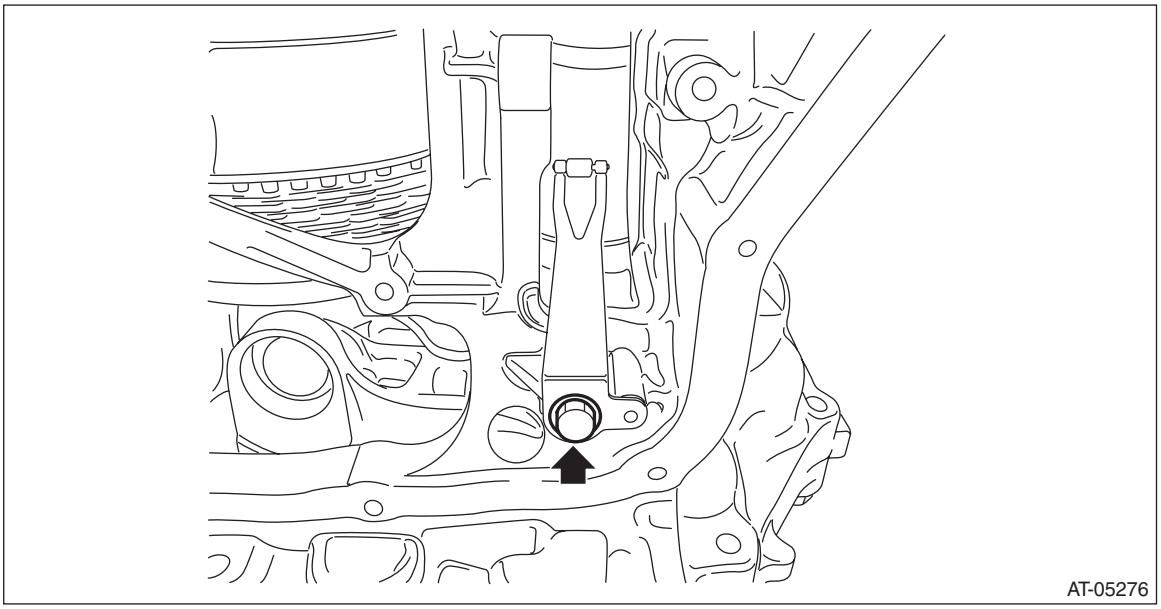

B: INSTALLATION

1) Install the detent spring to the transmission case.

Tightening torque:
7 N·m (0.7 kgf-m, 5.2 ft-lb)

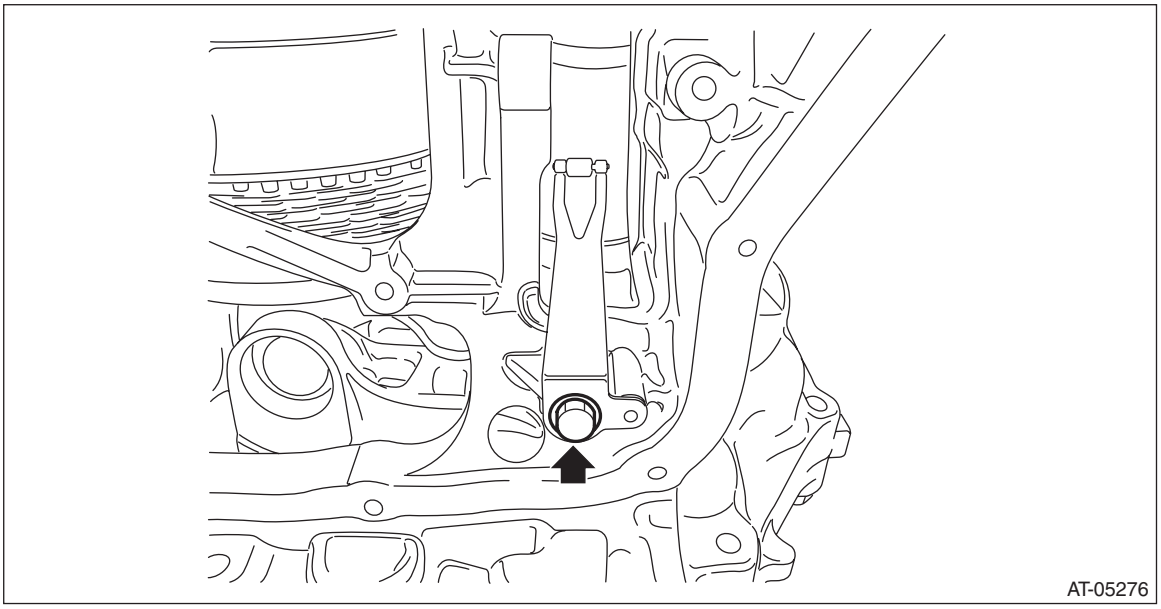

2) Install the manual plate, parking rod, range select lever and bolt.

Tightening torque:
7 N·m (0.7 kgf-m, 5.2 ft-lb)

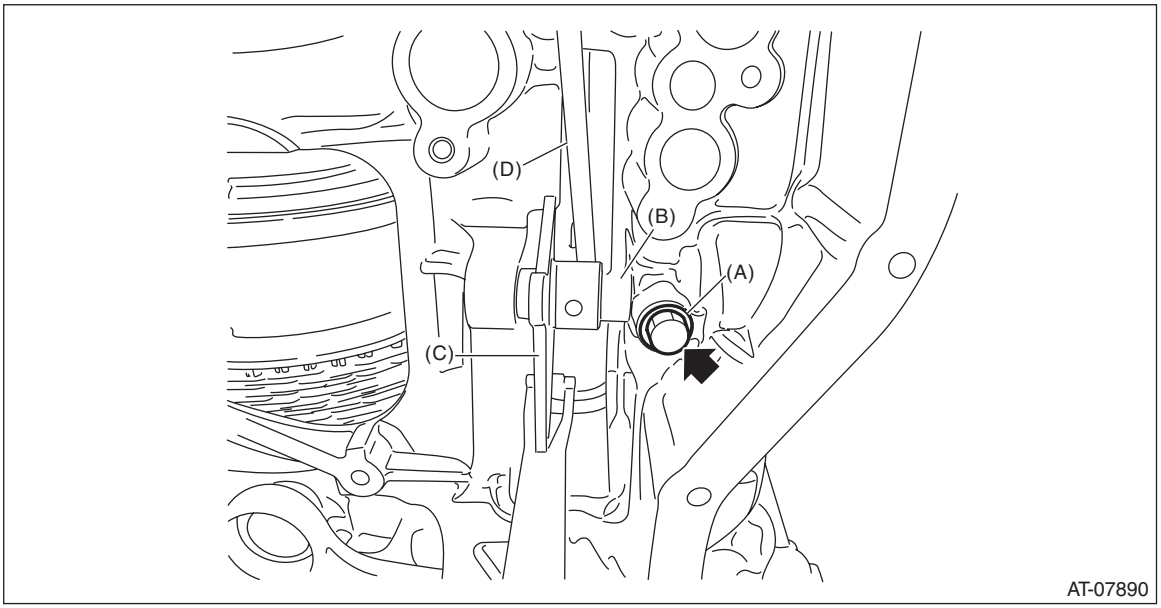

(A) Bolt
(B) Range select lever
(C) Manual plate
(D) Parking rod

3) Install the spring pin.

NOTE:
Use new spring pin.

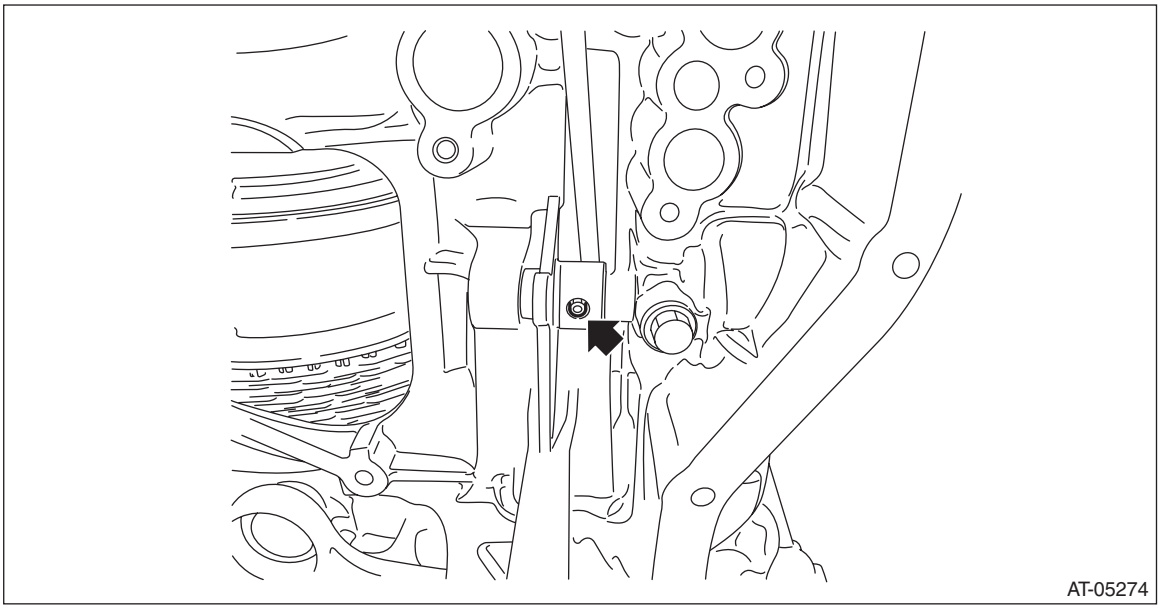

4) Install the inhibitor switch. <Ref. to CVT(TR690)-102, Inhibitor Switch.>
5) Adjust the inhibitor switch. <Ref. to CVT(TR690)-102, Inhibitor Switch.>
6) Install the control valve body and oil pan. <Ref. to CVT(TR690)-128, INSTALLATION, Control Valve Body.>
7) Install the transmission assembly to the vehicle. <Ref. to CVT(TR690)-75, INSTALLATION, Automatic Transmission Assembly.>

C: INSPECTION

Make sure that the manual lever and detent spring are not worn or otherwise damaged.

41.Transmission Case

A: REMOVAL

1) Remove the transmission assembly from the vehicle. <Ref. to CVT(TR690)-58, REMOVAL, Automatic Transmission Assembly.>
2) Remove the air breather hose. <Ref. to CVT(TR690)-152, REMOVAL, Air Breather Hose.>
3) Remove the transmission harness. <Ref. to CVT(TR690)-135, REMOVAL, Transmission Harness.>
4) Remove the secondary speed sensor. <Ref. to CVT(TR690)-112, REMOVAL, Secondary Speed Sensor.>
5) Remove the oxygen sensor harness and harness bracket.

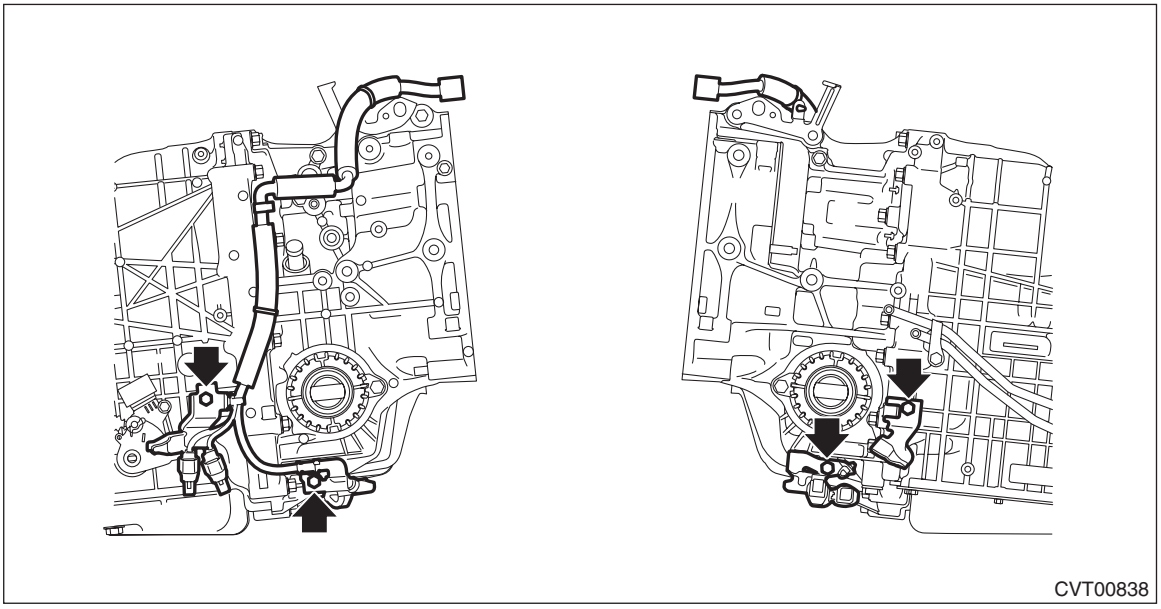

6) Remove the inhibitor switch. <Ref. to CVT(TR690)-107, REMOVAL, Inhibitor Switch.>
7) Remove the extension case. <Ref. to CVT(TR690)-160, REMOVAL, Extension Case.>
8) Remove the rear drive shaft. <Ref. to CVT(TR690)-163, REMOVAL, Rear Drive Shaft.>
9) Remove the transfer clutch assembly. <Ref. to CVT(TR690)-168, REMOVAL, Transfer Clutch.>
10) Remove the transfer reduction driven gear assembly. <Ref. to CVT(TR690)-180, REMOVAL, Transfer Reduction Driven Gear.>
11) Remove the intermediate case. <Ref. to CVT(TR690)-187, REMOVAL, Intermediate Case.>
12) Remove the forward clutch assembly. <Ref. to CVT(TR690)-202, REMOVAL, Forward Clutch Assembly.>
13) Remove the reduction driven gear. <Ref. to CVT(TR690)-231, REMOVAL, Reduction Driven Gear.>

14) Remove the oil pan and control valve body. <Ref. to CVT(TR690)-124, REMOVAL, Control Valve Body.>

NOTE:
When removing the control valve body, also remove the pressure pipe if it is attached on the case.

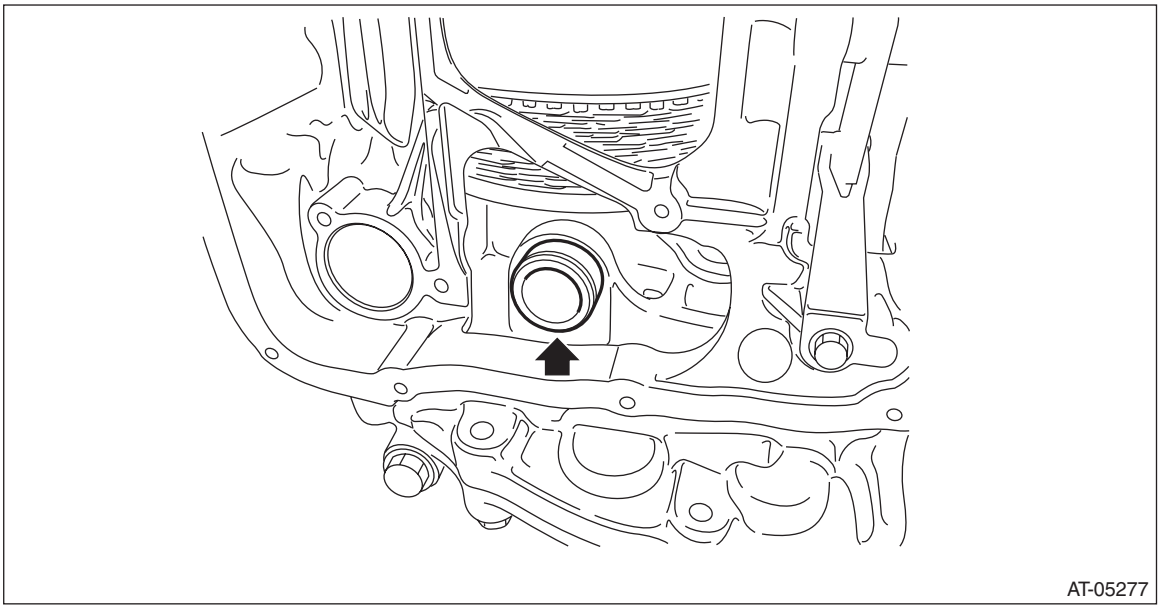

15) Remove the CVTF pipe using a tire lever etc.

NOTE:
Remove by hooking the stepped portion of CVTF pipe with a tire lever etc.

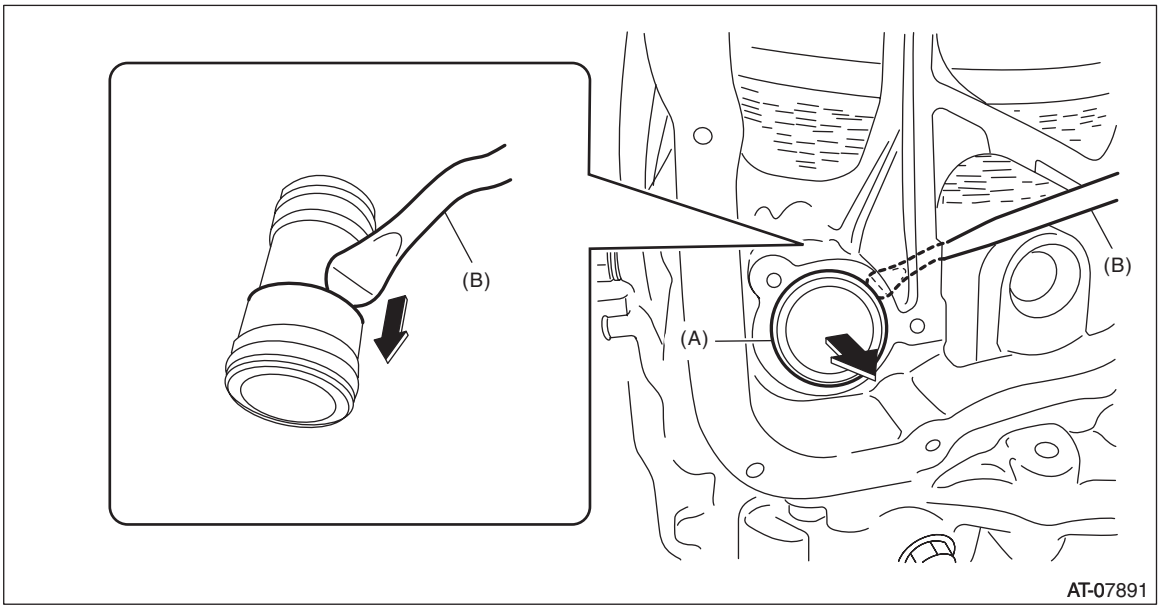

(A) CVTF pipe
(B) Tire lever

16) Remove the transmission case.

NOTE:
The total number of transmission case mounting bolts is 15.

17) Remove the O-ring of lubrication pipe.

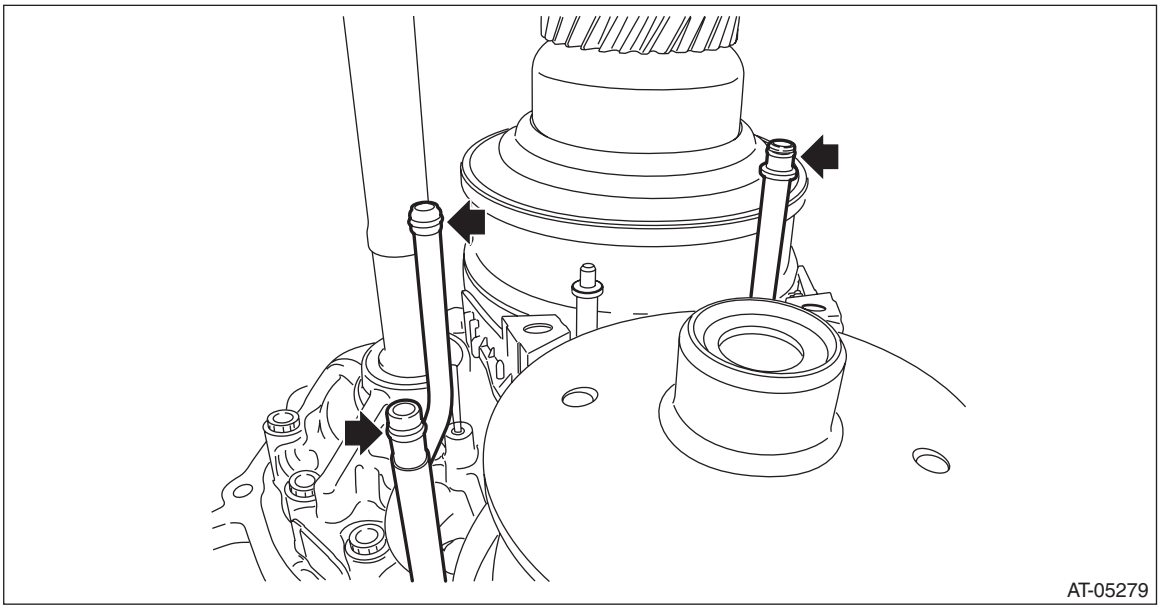

18) Remove the control device system. <Ref. to CVT(TR690)-238, REMOVAL, Transmission Control Device.>

B: INSTALLATION

1) Clean the mating surface of transmission case and converter case.
2) Install the control device system. <Ref. to CVT(TR690)-240, INSTALLATION, Transmission Control Device.>
3) Install the O-ring to the lubrication pipe.

NOTE:
- Use new O-rings.
- Apply CVTF to the O-rings.

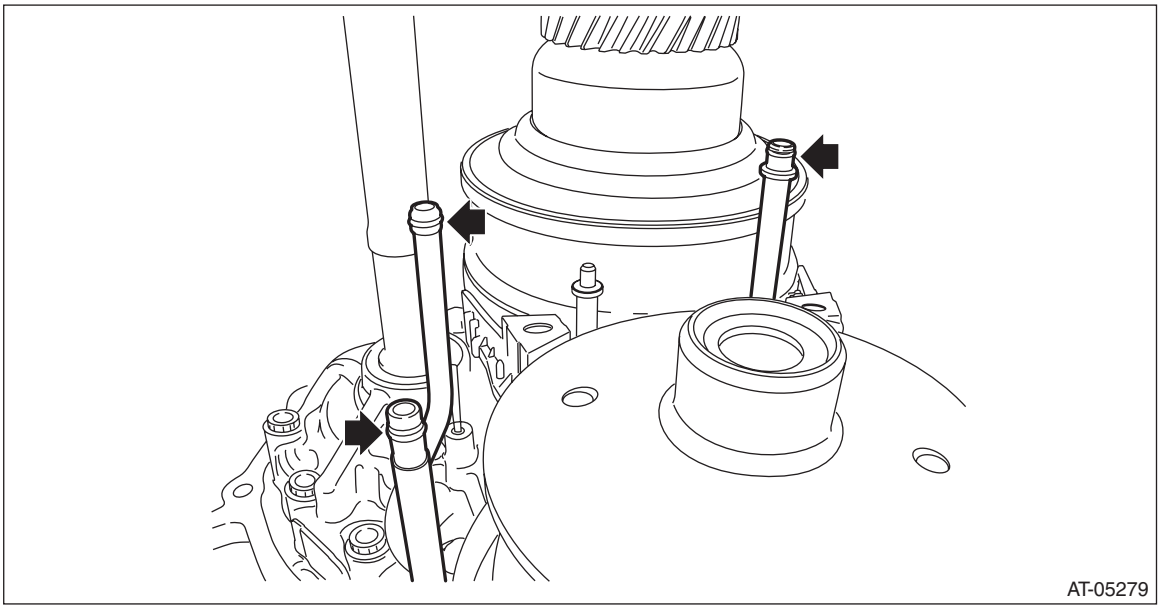

4) Make sure the lubrication pipe and support rod are in vertical position.

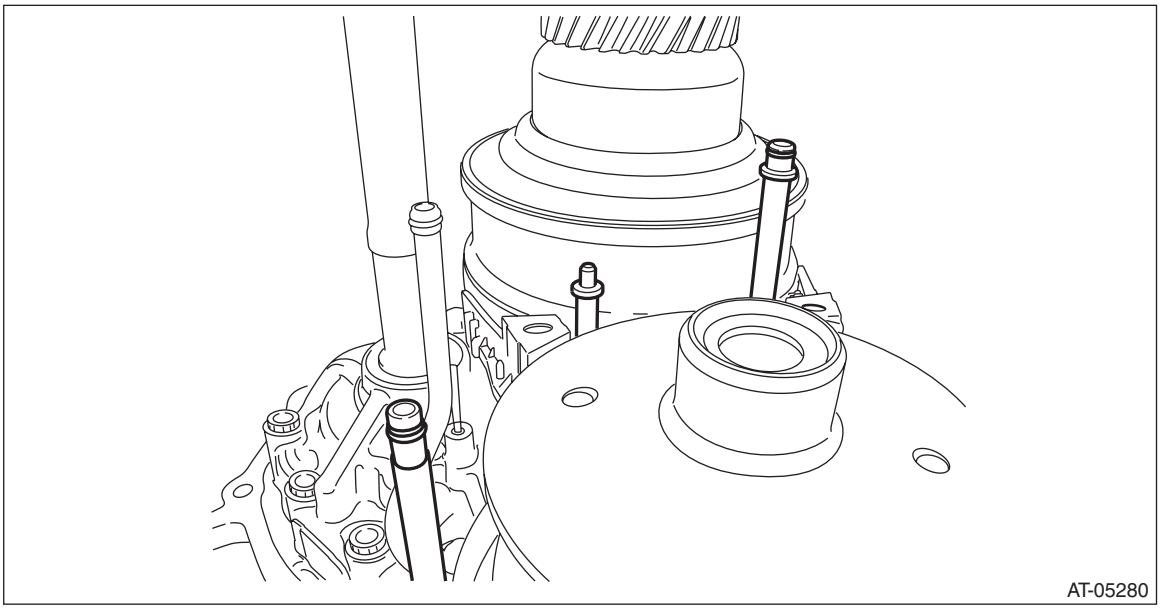

5) Apply liquid gasket seamlessly to the mating surface of transmission case.

Liquid gasket:
THREE BOND 1215B or equivalent

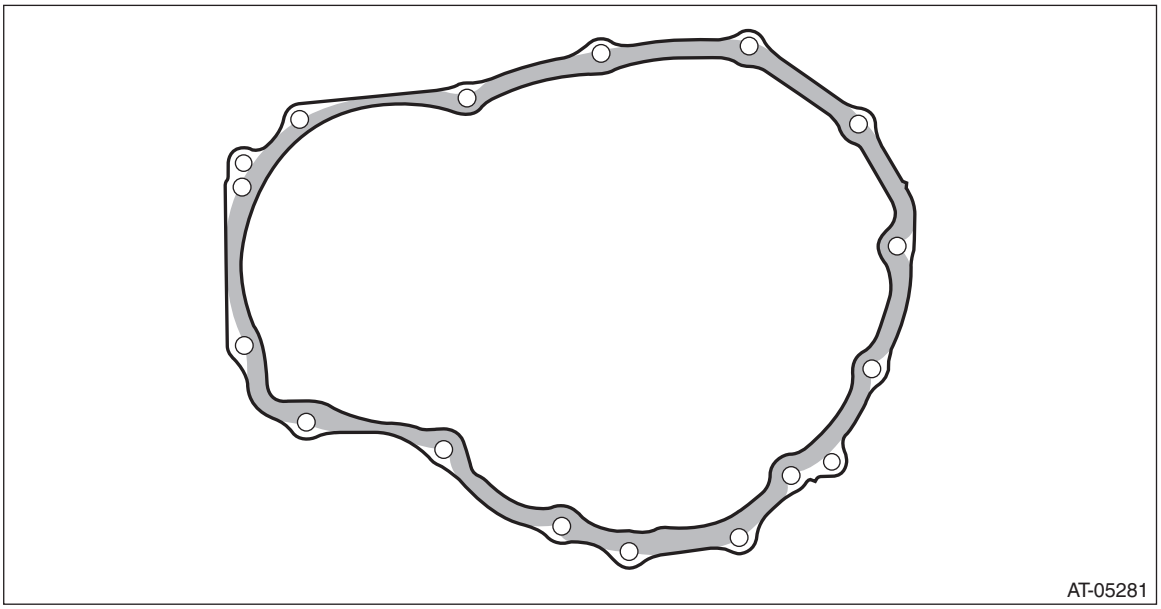

6) Install the transmission case.

CAUTION:
If the transmission case gets in contact with the lubrication pipe and support rod, do not install the transmission case forcibly.

NOTE:
• Install while checking the lubrication pipe and support rod is being inserted properly into transmission case.
• If installing the transmission is difficult, check if the lubrication pipe and support rod are bent.
• The total number of transmission case mounting bolts is 15.

Tightening torque:
41 N·m (4.2 kgf-m, 30.2 ft-lb)

7) Install the O-ring to CVTF pipe.

NOTE:
Use new O-rings.

8) The smaller opening of CVTF pipe should be inserted to transmission.

NOTE:
After installing, make sure the CVTF pipe does not stick out of transmission case.

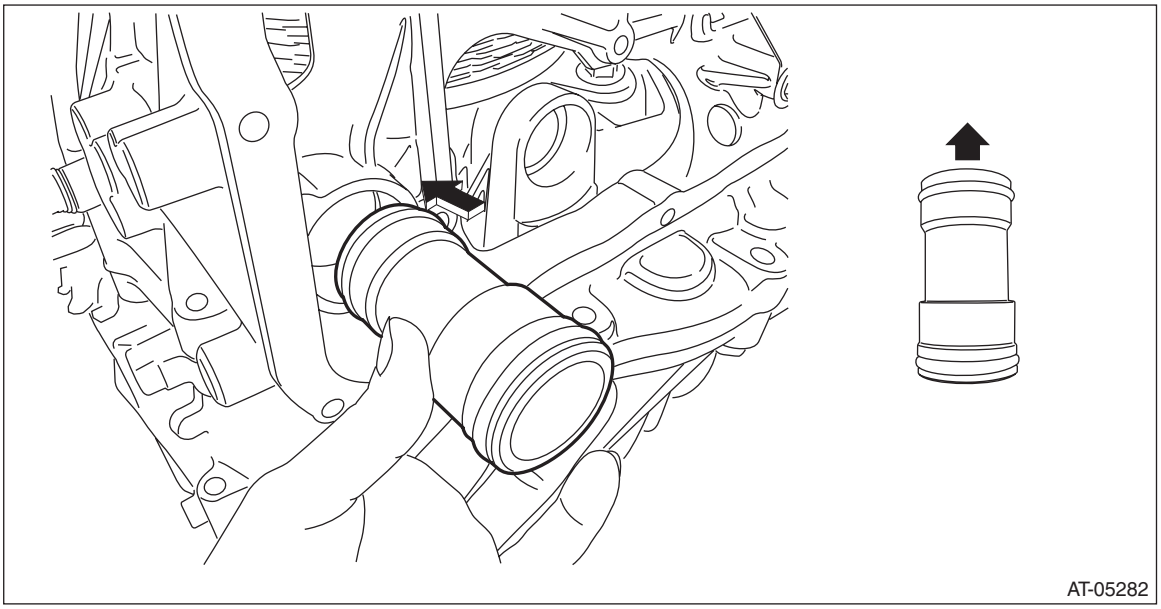

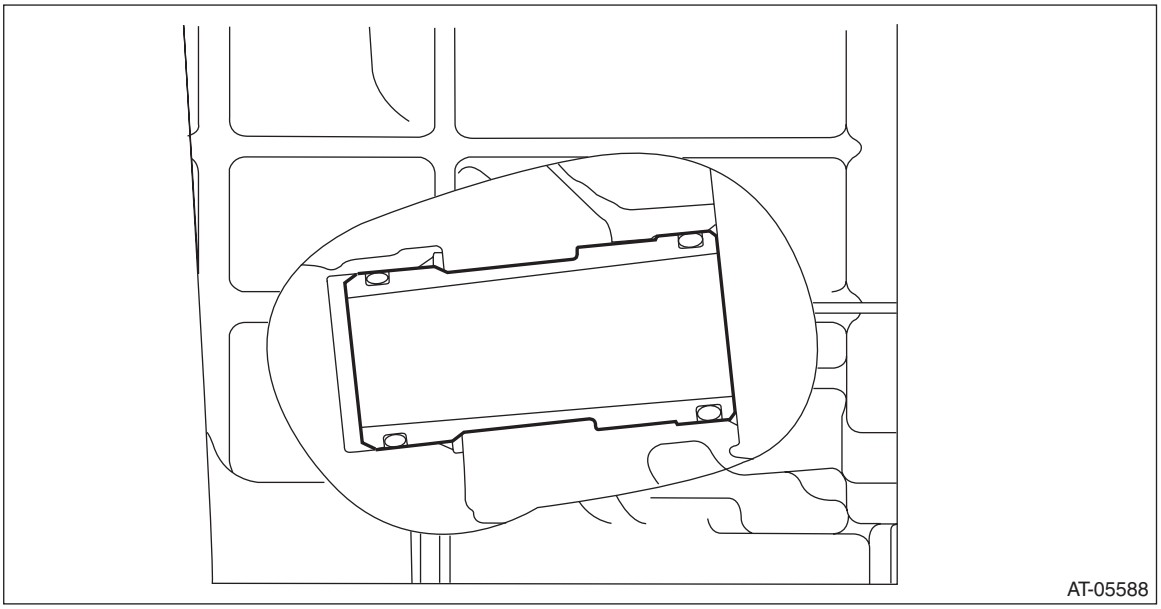

9) Install the reduction driven gear. <Ref. to CVT(TR690)-232, INSTALLATION, Reduction Driven Gear.>
10) Install the forward clutch assembly. <Ref. to CVT(TR690)-203, INSTALLATION, Forward Clutch Assembly.>
11) Install the intermediate case. <Ref. to CVT(TR690)-188, INSTALLATION, Intermediate Case.>
12) Install the transfer reduction driven gear assembly. <Ref. to CVT(TR690)-180, INSTALLATION, Transfer Reduction Driven Gear.>
13) Install the transfer clutch assembly. <Ref. to CVT(TR690)-169, INSTALLATION, Transfer Clutch.>
14) Install the rear drive shaft. <Ref. to CVT(TR690)-163, INSTALLATION, Rear Drive Shaft.>
15) Install the extension case. <Ref. to CVT(TR690)-161, INSTALLATION, Extension Case.>
16) Install the inhibitor switch. <Ref. to CVT(TR690)-109, INSTALLATION, Inhibitor Switch.>

17) Install the oxygen sensor harness and harness bracket.

Tightening torque:
18 N·m (1.8 kgf-m, 13.3 ft-lb)

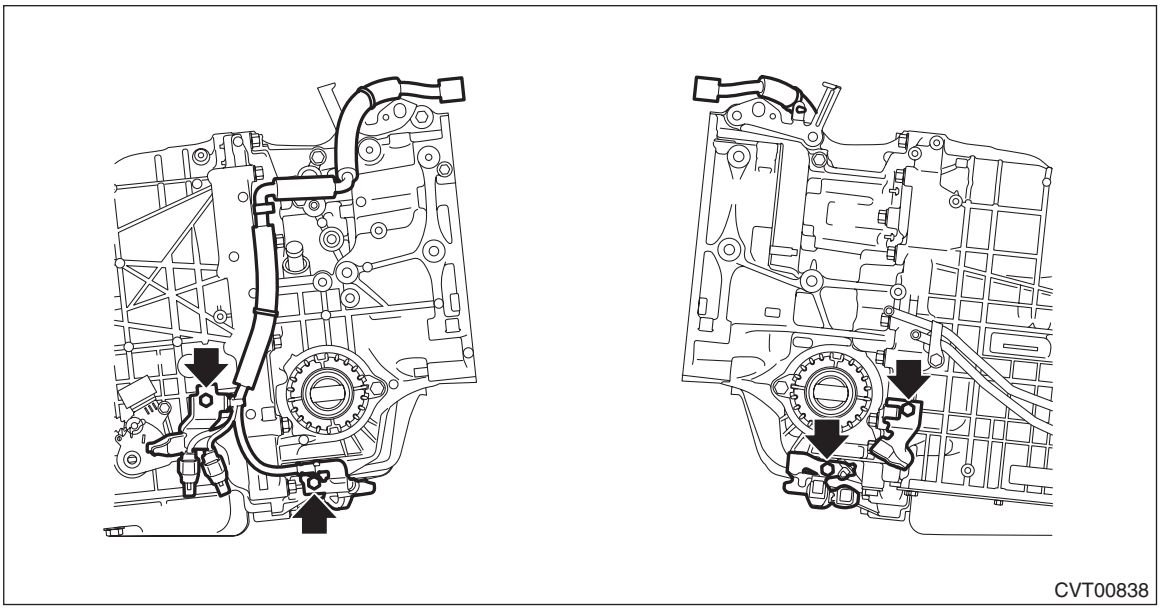

18) Install the secondary speed sensor. <Ref. to CVT(TR690)-113, INSTALLATION, Secondary Speed Sensor.>
19) Install the transmission harness. <Ref. to CVT(TR690)-137, INSTALLATION, Transmission Harness.>
20) Install the control valve body and oil pan. <Ref. to CVT(TR690)-128, INSTALLATION, Control Valve Body.>
21) Install the air breather hose. <Ref. to CVT(TR690)-154, INSTALLATION, Air Breather Hose.>
22) Install the transmission assembly to the vehicle. <Ref. to CVT(TR690)-75, INSTALLATION, Automatic Transmission Assembly.>

C: DISASSEMBLY

1) Remove the CVTF inlet pipe and CVTF outlet pipe.

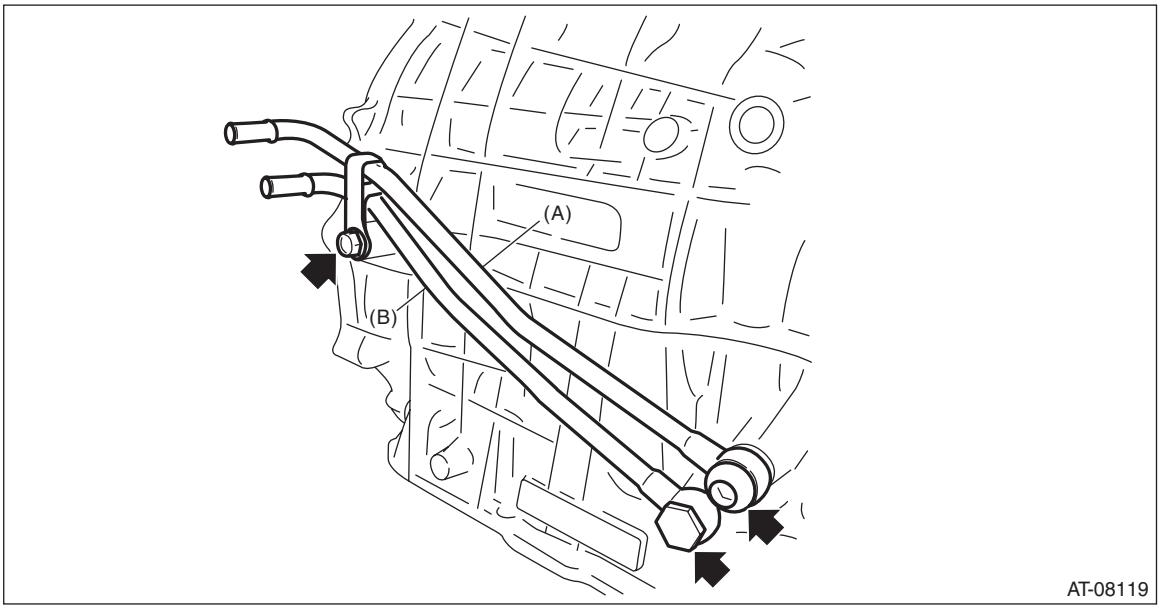

(A) CVTF outlet pipe
(B) CVTF inlet pipe

2) Remove all plugs from the transmission case.

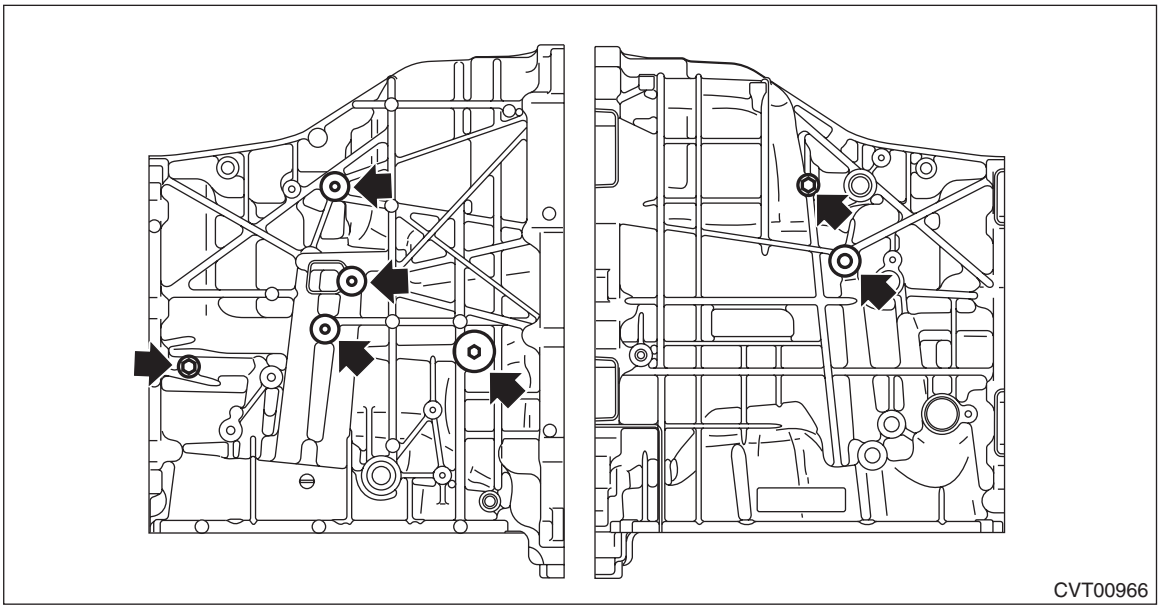

3) Remove the lubrication pipe.

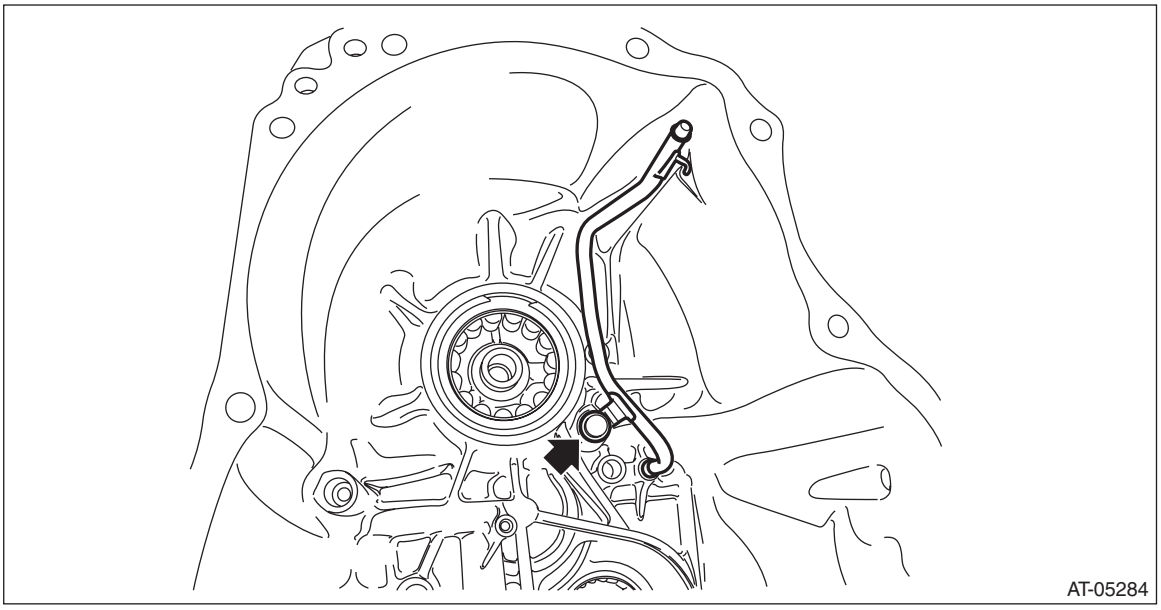

4) Remove the oil seal using a screwdriver wrapped with cloth etc.

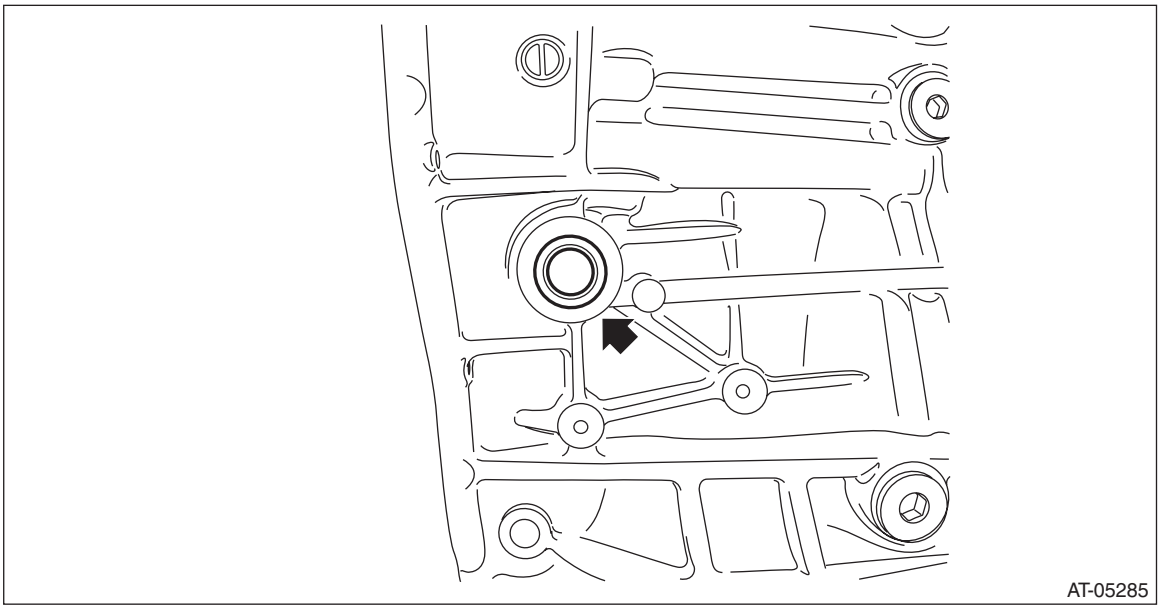

5) Remove the ball bearing from reduction driven gear using ST.
ST 398527700 PULLER ASSY

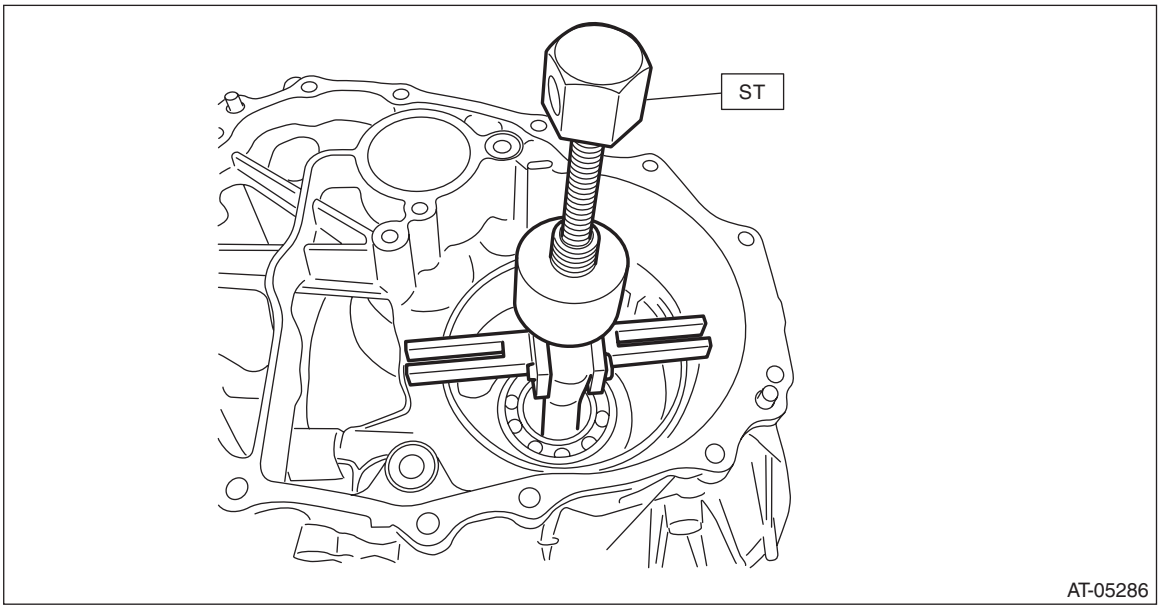

6) Remove the snap ring on primary pulley side.

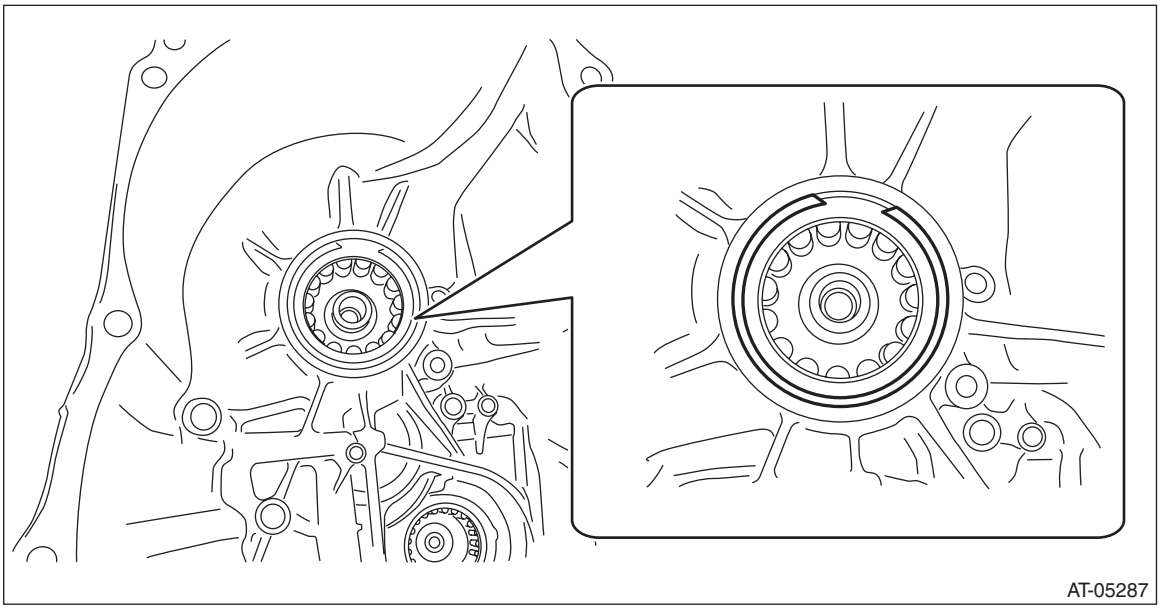

7) Using the ST, remove the roller bearing on primary pulley side.

NOTE:
Warm up the bearing area of transmission case using a drier or heat gun.
ST 398527700 PULLER ASSY

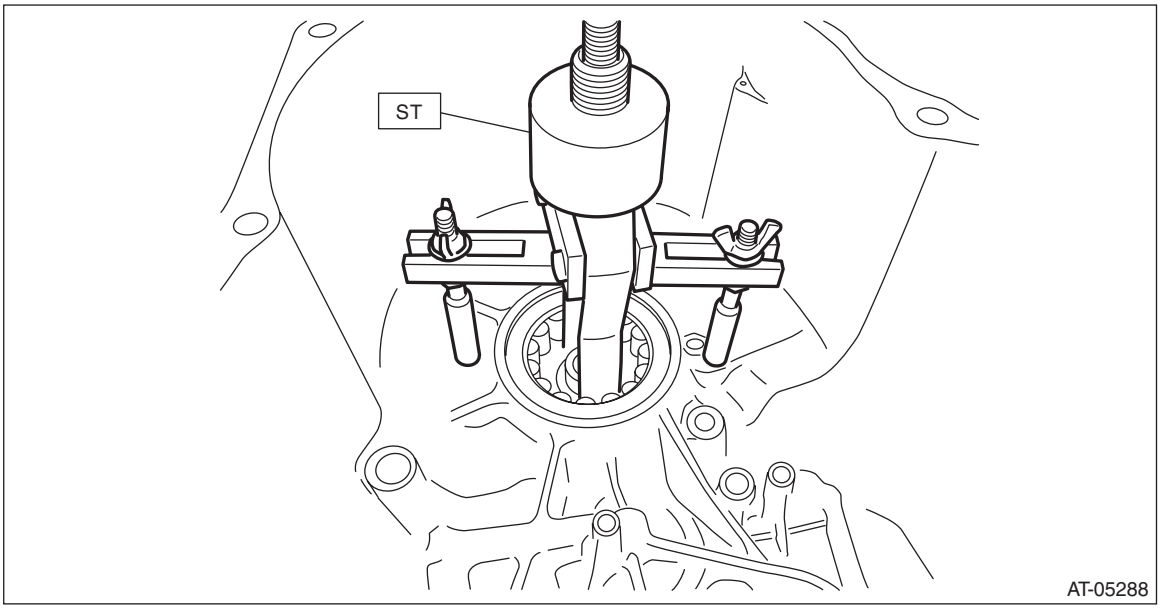

8) Remove the snap ring on secondary pulley side.

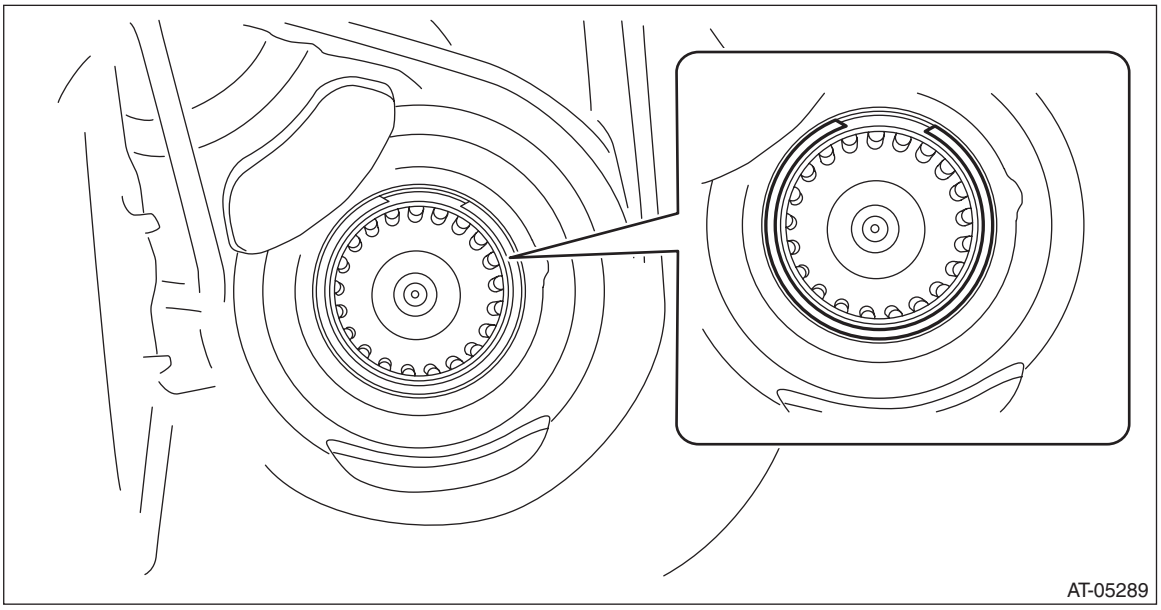

9) Using the ST, remove the roller bearing on secondary pulley side.

NOTE:
Warm up the bearing area of transmission case using a drier or heat gun.
ST 398527700 PULLER ASSY

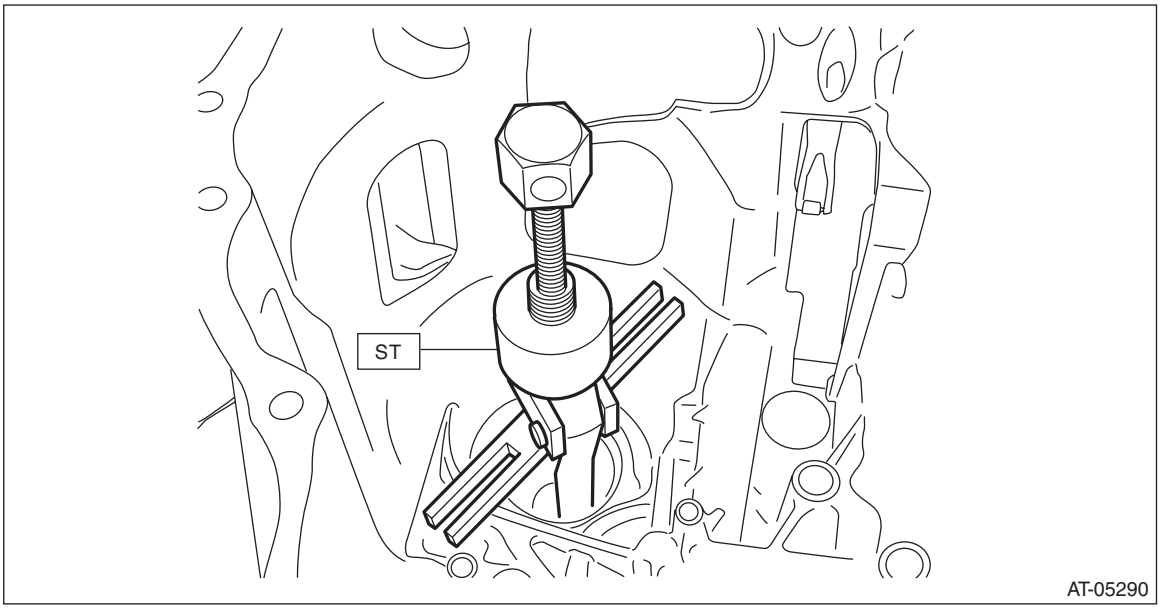

10) Remove the CVTF filter by blowing compressed air through the transmission case hole.

NOTE:
Hold the CVTF filter with a finger to prevent compressed air from leaking.

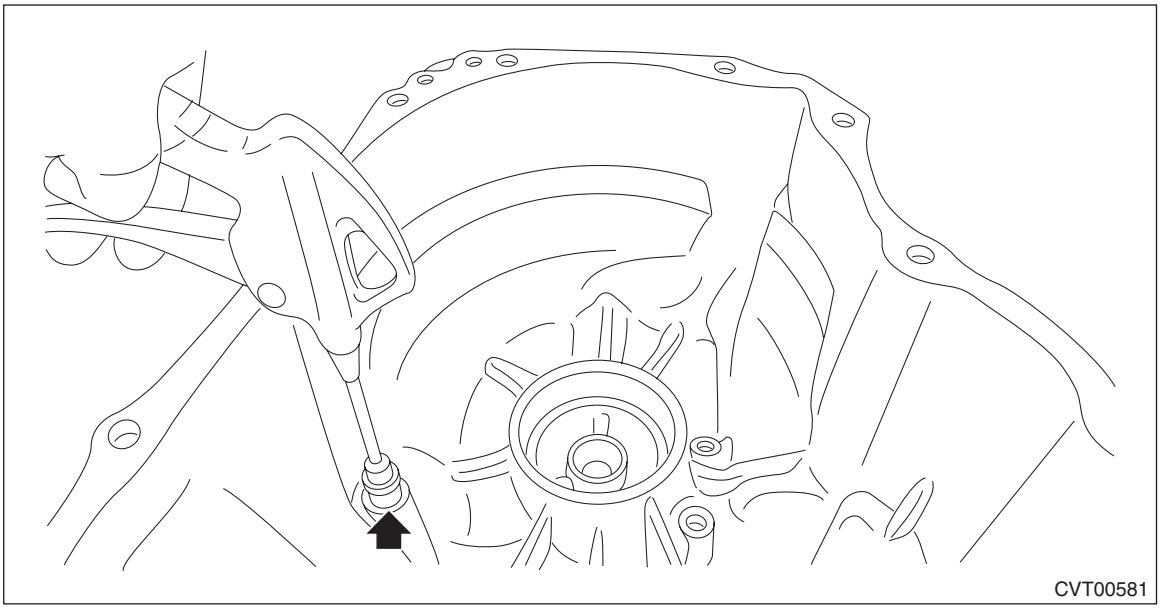
CVT00581

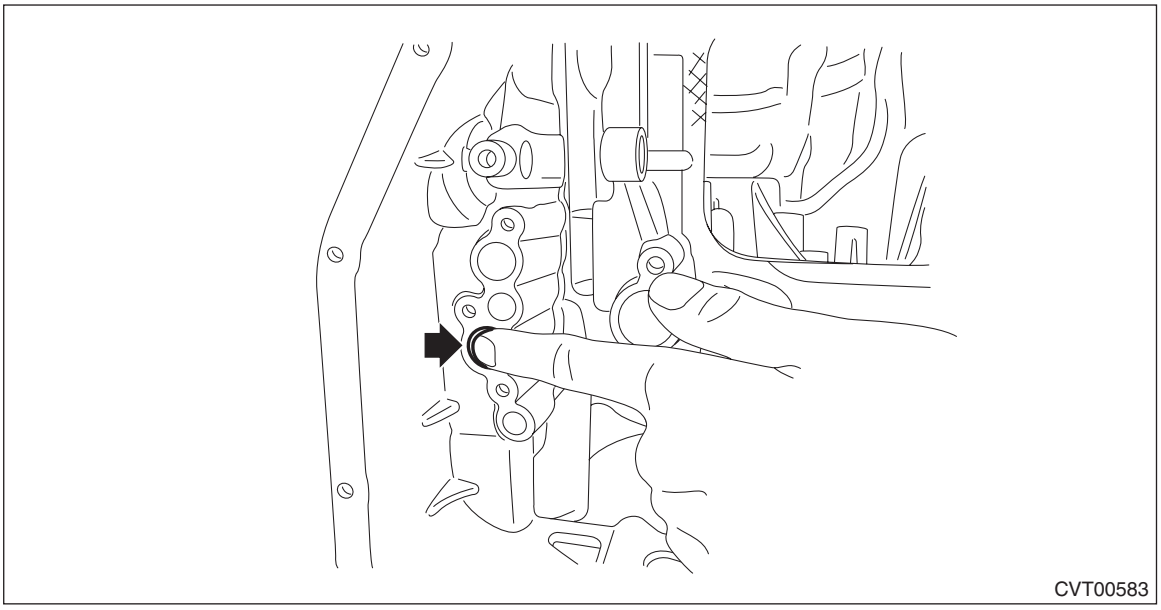
CVT00583

D: ASSEMBLY

1) Install the CVTF filter.

NOTE:
- Use a new CVTF filter.
- Apply CVTF to the CVTF filter.
- Make sure that the CVTF filter does not protrude from the transmission case.

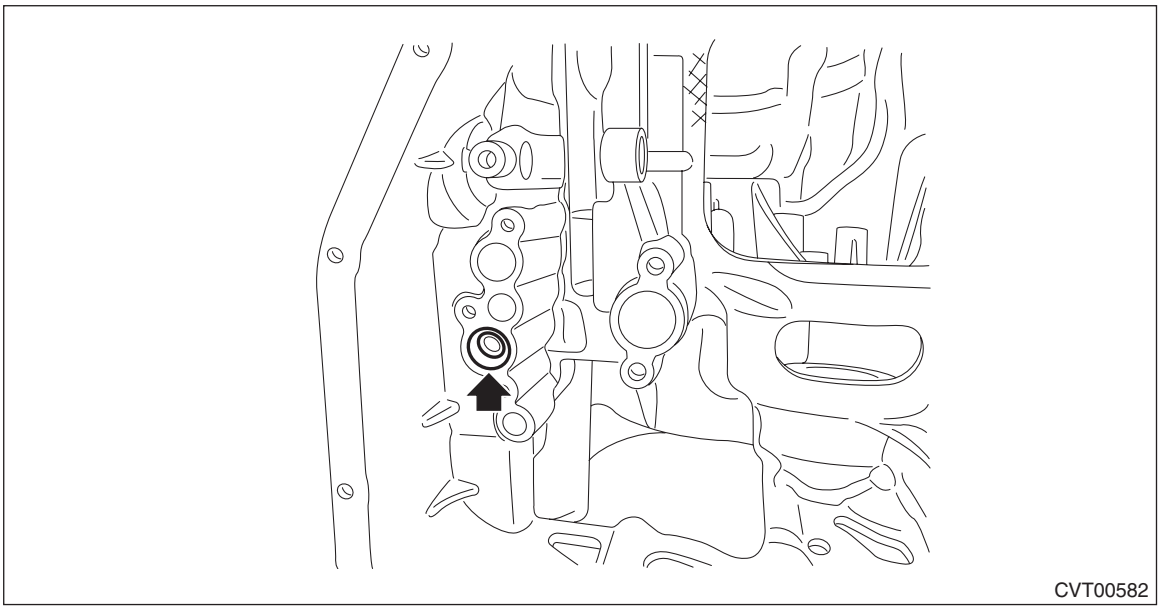

2) Using the ST, install the oil seal.
ST 18657AA000 INSTALLER

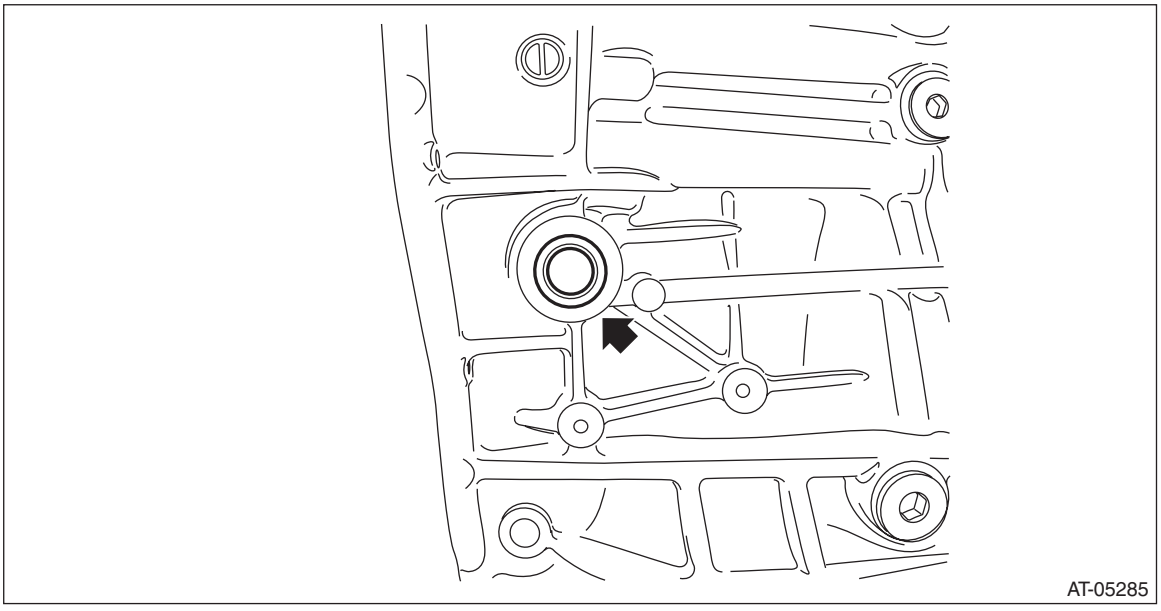

3) Using ST1 and ST2, install the ball bearing on the reduction gear side.

NOTE:
Use a new ball bearing.
ST1 398177700 INSTALLER
ST2 499755602 PRESS SNAP RING

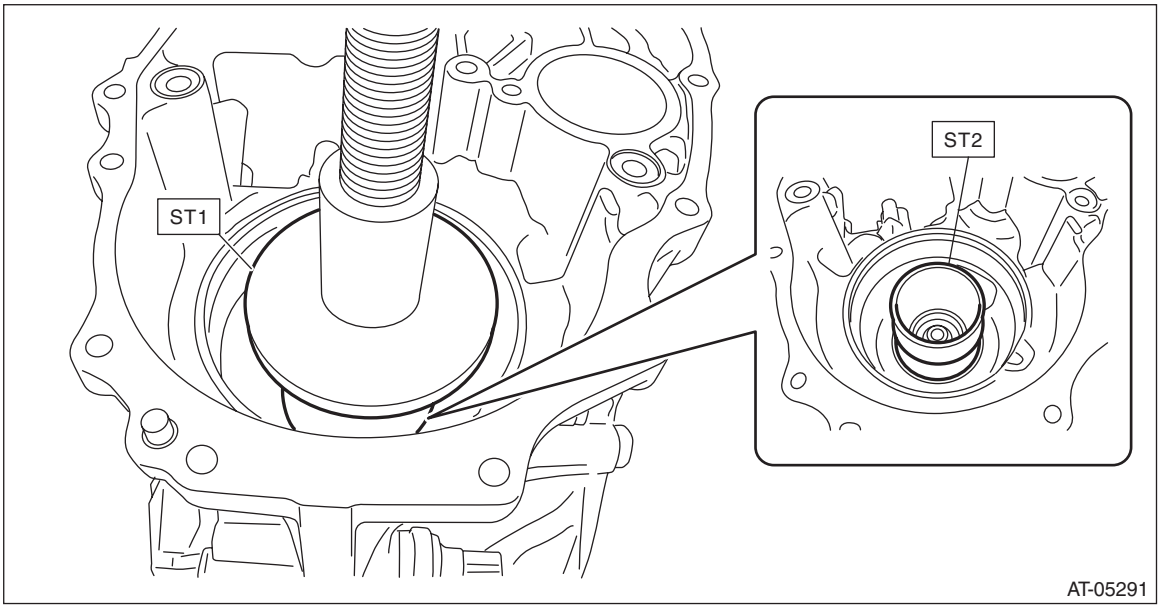

4) Using ST1 and ST2, install the roller bearing on primary pulley side.

NOTE:
- Use a new roller bearing.
- Make adjustment so that the press gets in contact with the center of ST2.

ST1 398177700 INSTALLER
ST2 20299AG010 PRESS SNAP RING

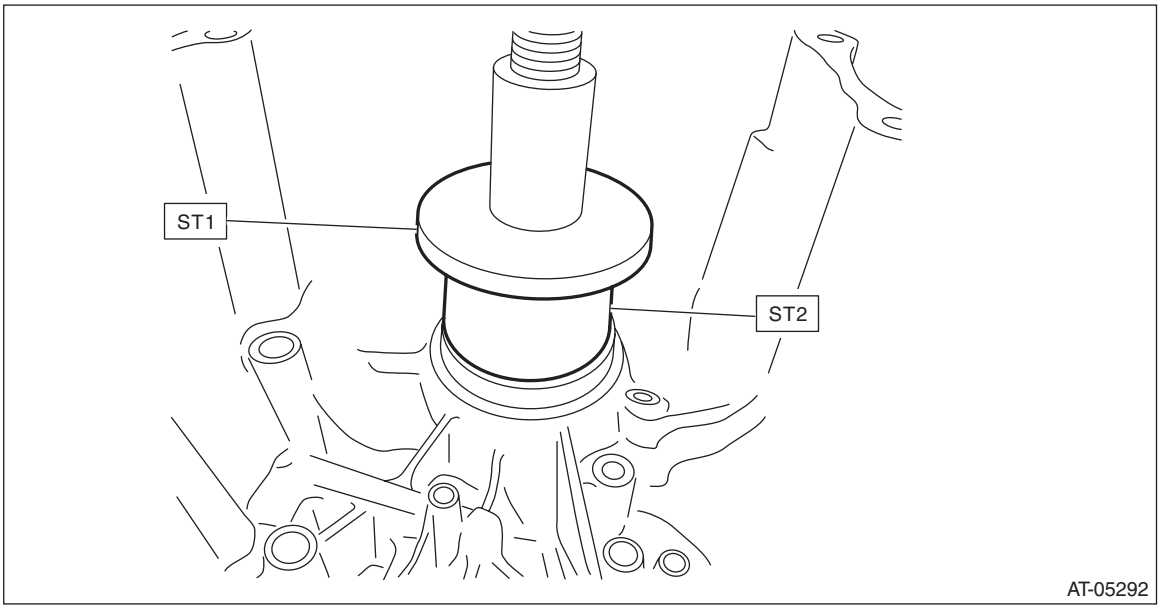

5) Install the snap ring on primary pulley side.

NOTE:
Use new snap rings.

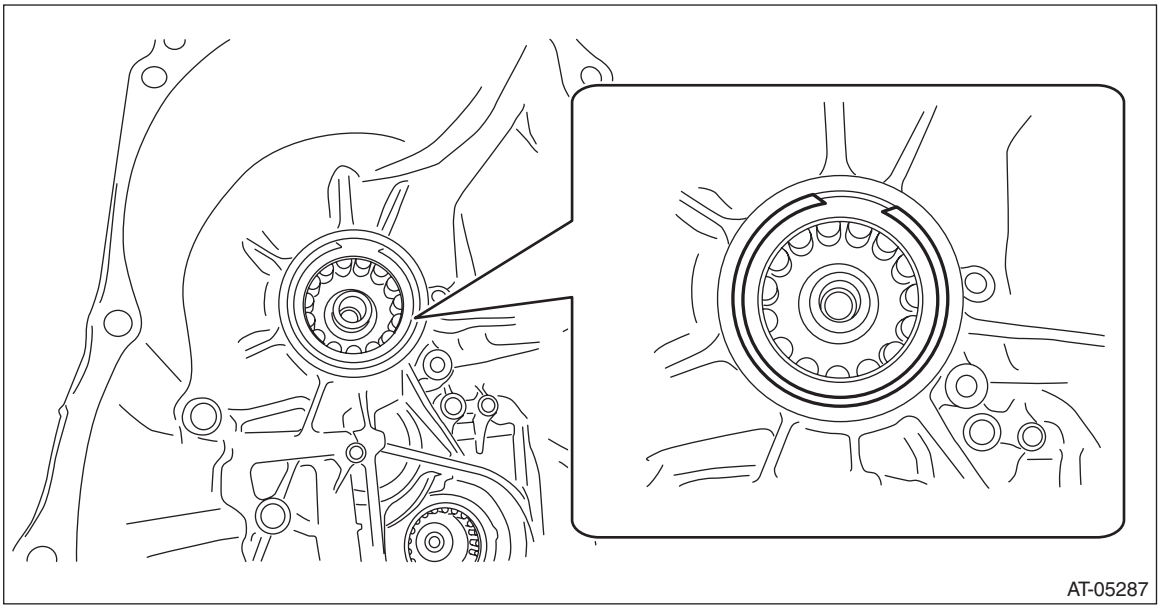

6) Using ST1 and ST2, install the roller bearing on secondary pulley side.

NOTE:
- Use a new roller bearing.
- Make adjustment so that the press gets in contact with the center of ST2.

ST1 398177700 INSTALLER
ST2 499755602 PRESS SNAP RING

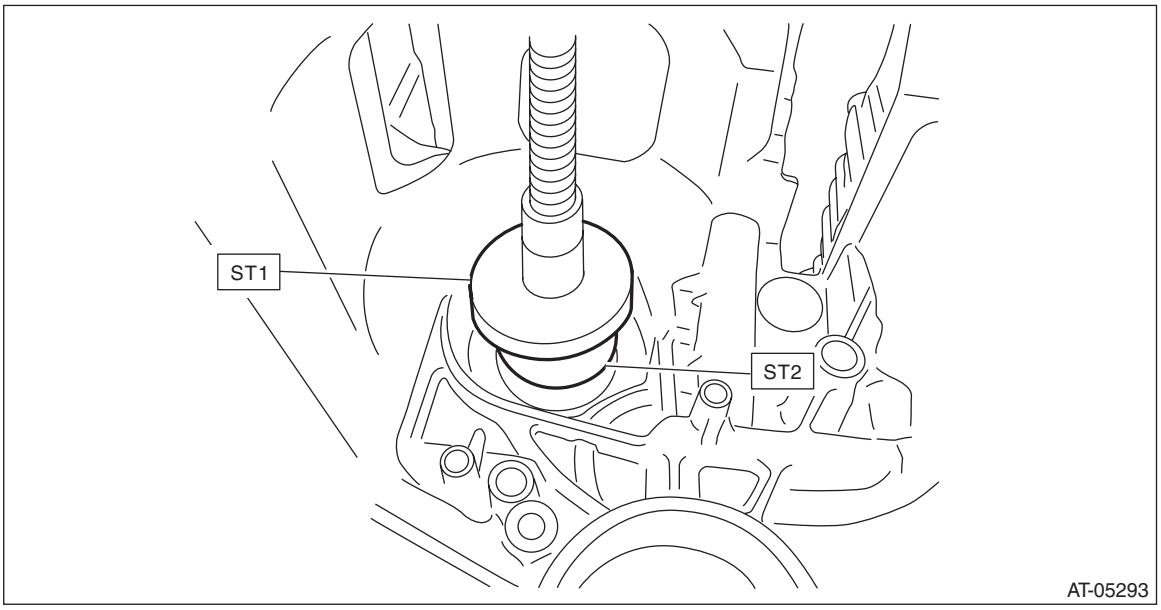

7) Install the snap ring on secondary pulley side.

NOTE:
Use new snap rings.

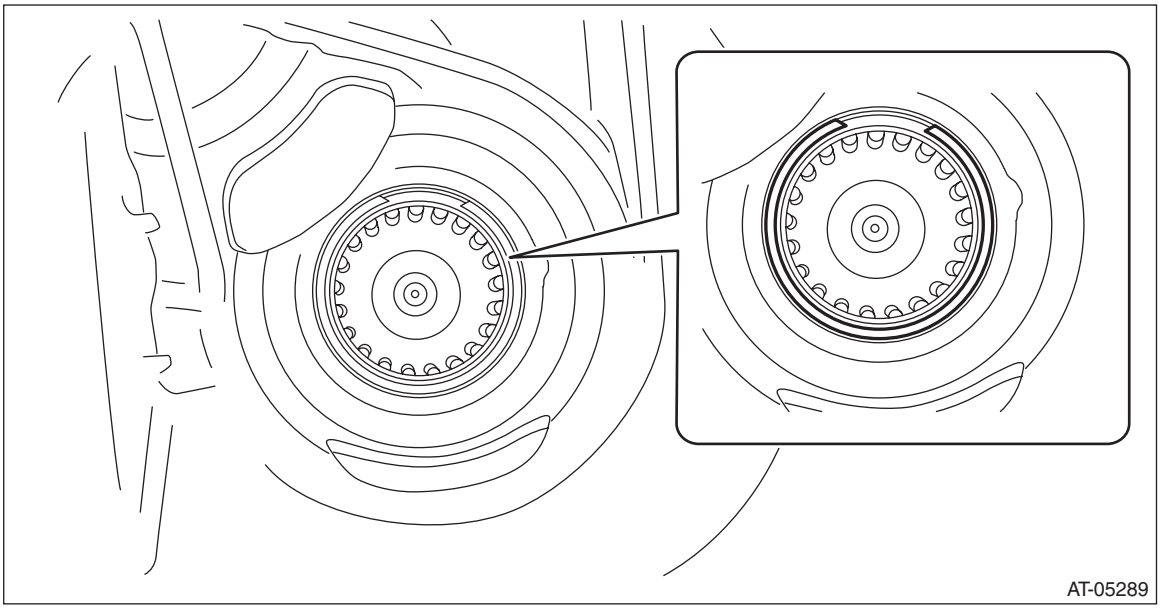

8) Install all plugs.

NOTE:
Use new gaskets and O-rings.

Tightening torque:
T1: 13 N·m (1.3 kgf-m, 9.6 ft-lb)
T2: 25 N·m (2.5 kgf-m, 18.4 ft-lb)
T3: 35 N·m (3.5 kgf-m, 25.8 ft-lb)

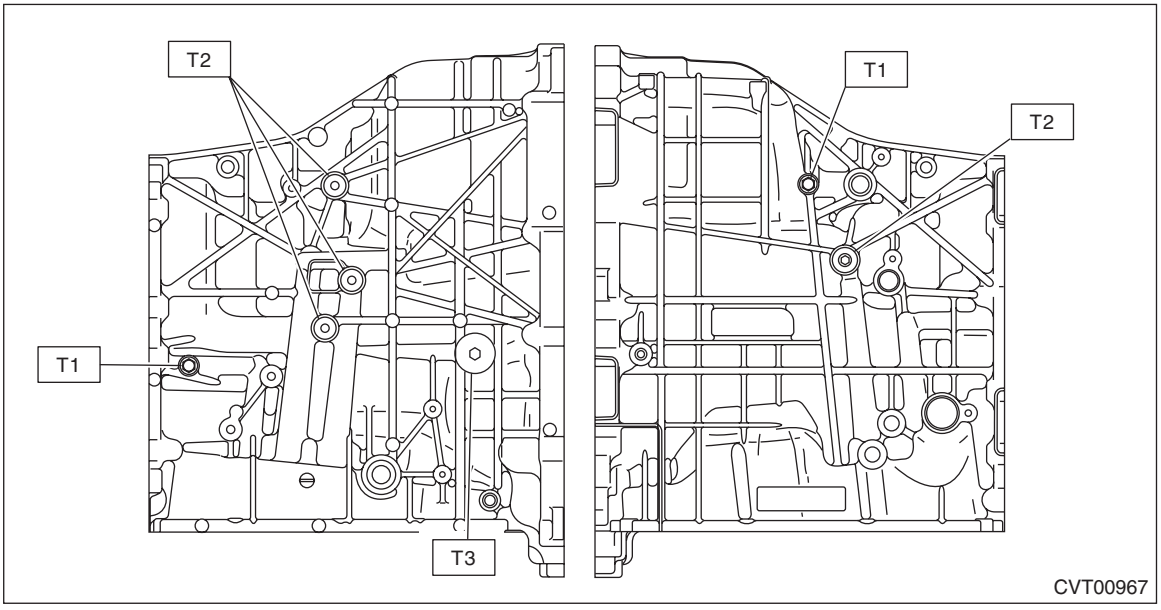

9) Install the lubrication pipe and O-ring.

NOTE:
- Use new O-rings.
- Apply CVTF to the O-rings.

Tightening torque:
16 N·m (1.6 kgf-m, 11.8 ft-lb)

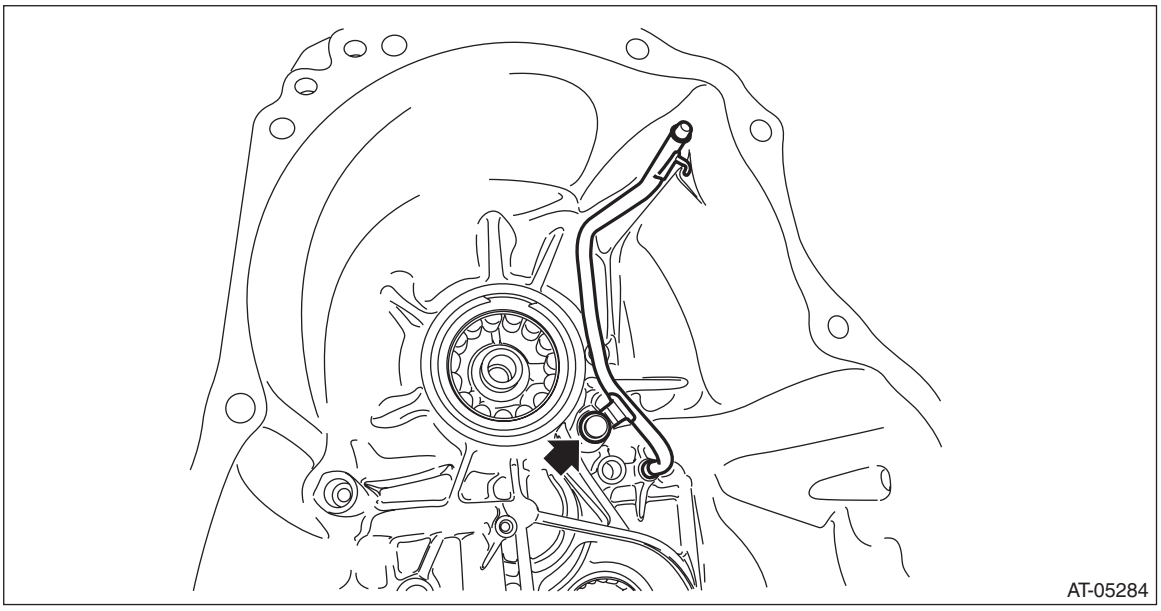

10) Install the CVTF inlet pipe and CVTF outlet pipe.

NOTE:
Use a new gasket.

Tightening torque:
T1: 16 N·m (1.6 kgf-m, 11.8 ft-lb)
T2: 40 N·m (4.1 kgf-m, 29.5 ft-lb)

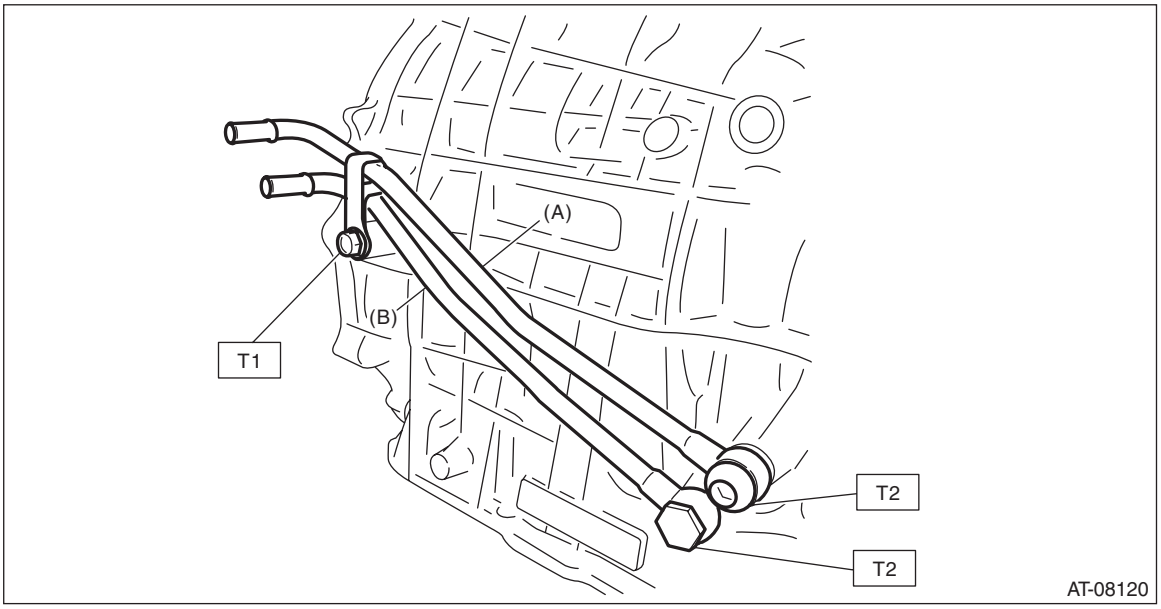

(A) CVTF outlet pipe
(B) CVTF inlet pipe

E: INSPECTION

- Check the transmission case for damage.
- Check for leakage of CVTF from the connection between converter case and transmission case.
- Check for leakage of CVTF from the connection between intermediate case and transmission case.
- Check the lubrication pipe for bend or damage.
- Check the bearing for smooth operation.
- Check the bearing for seizure or wear.

F: ADJUSTMENT

NOTE:
When replacing the transmission case with a new part, perform the following check and adjustment for the selection.

- Select the thrust bearing for the forward clutch assembly. <Ref. to CVT(TR690)-229, ADJUSTMENT, Forward Clutch Assembly.>
- Select the snap ring for the reduction gear. <Ref. to CVT(TR690)-236, ADJUSTMENT, Reduction Driven Gear.>

42.Primary Pulley and Secondary Pulley

A: REMOVAL

NOTE:
Always replace primary pulley and secondary pulley as an assembly because they are non-disassembled parts.
1) Remove the transmission assembly from the vehicle. <Ref. to CVT(TR690)-58, REMOVAL, Automatic Transmission Assembly.>
2) Remove the air breather hose. <Ref. to CVT(TR690)-152, REMOVAL, Air Breather Hose.>
3) Remove the oil pan and control valve body. <Ref. to CVT(TR690)-124, REMOVAL, Control Valve Body.>
4) Remove the transmission harness. <Ref. to CVT(TR690)-135, REMOVAL, Transmission Harness.>
5) Remove the extension case. <Ref. to CVT(TR690)-160, REMOVAL, Extension Case.>
6) Remove the rear drive shaft. <Ref. to CVT(TR690)-163, REMOVAL, Rear Drive Shaft.>
7) Remove the transfer clutch assembly. <Ref. to CVT(TR690)-168, REMOVAL, Transfer Clutch.>
8) Remove the transfer reduction driven gear assembly. <Ref. to CVT(TR690)-180, REMOVAL, Transfer Reduction Driven Gear.>
9) Remove the intermediate case. <Ref. to CVT(TR690)-187, REMOVAL, Intermediate Case.>
10) Remove the forward clutch assembly. <Ref. to CVT(TR690)-202, REMOVAL, Forward Clutch Assembly.>
11) Remove the transmission case. <Ref. to CVT(TR690)-242, REMOVAL, Transmission Case.>
12) Set the ST to the secondary pulley, and expand the V groove of pulley until the variator chain gets completely loose.
ST 18769AA000 EXPANDER PULLEY

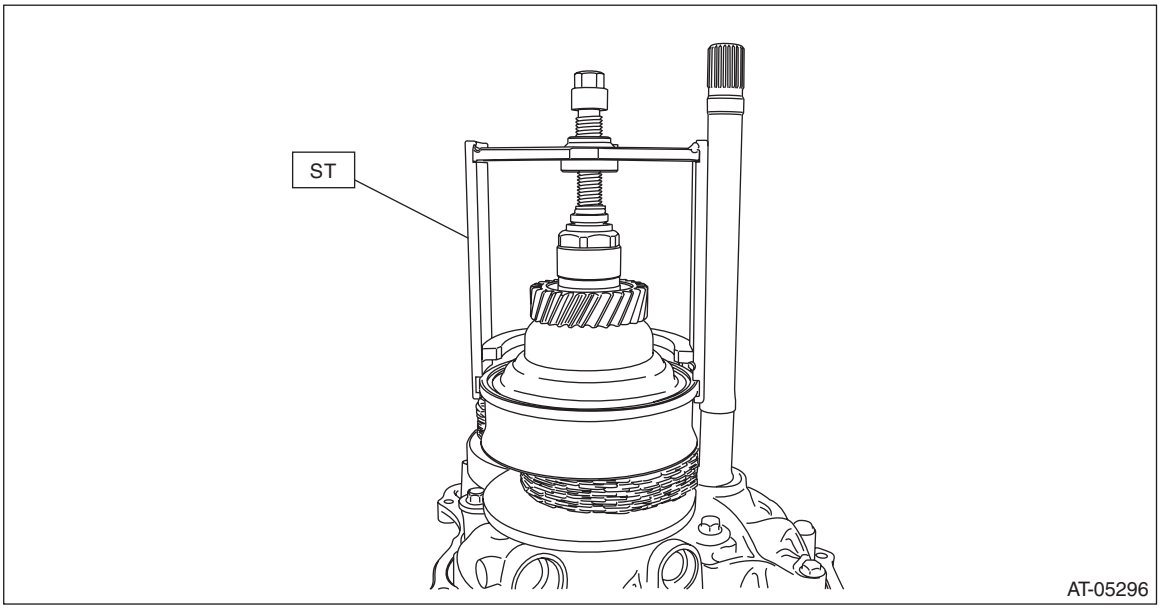

13) Remove the chain guide from lubrication pipe and support rod.

14) Remove the lubrication pipe and support rod.

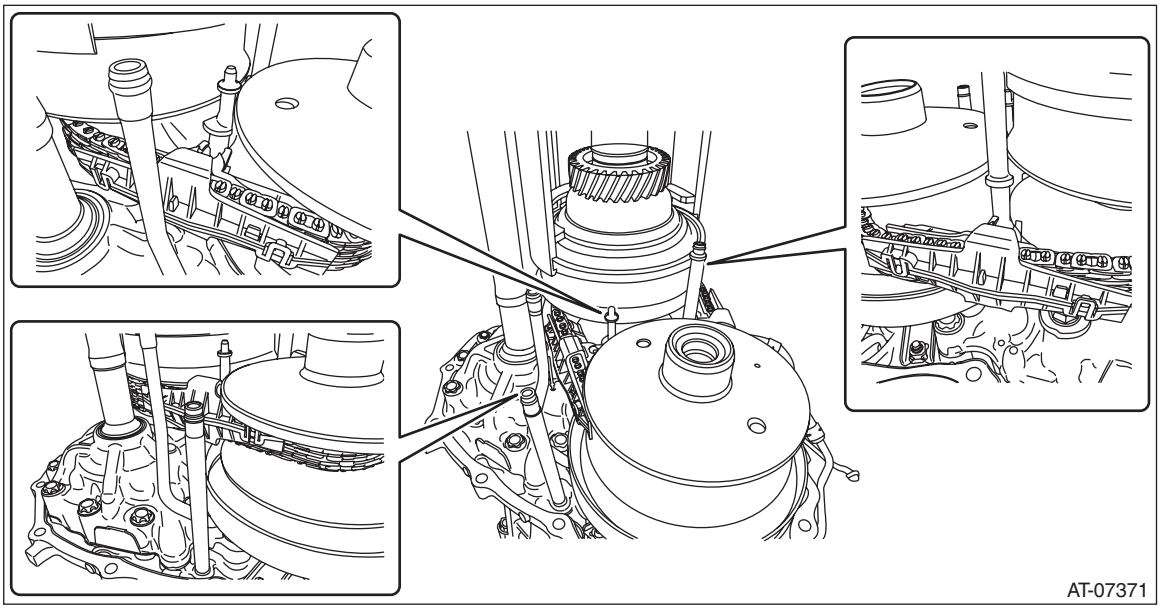

15) Detach the four claws to remove the two chain guides.

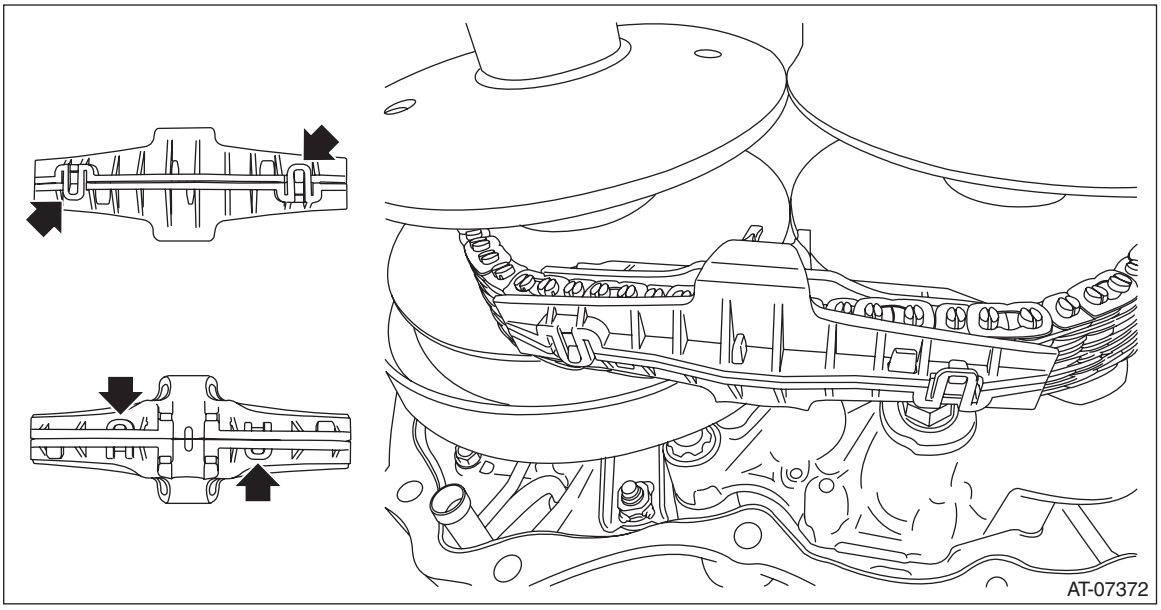

16) Remove the secondary pulley mounting bolt.

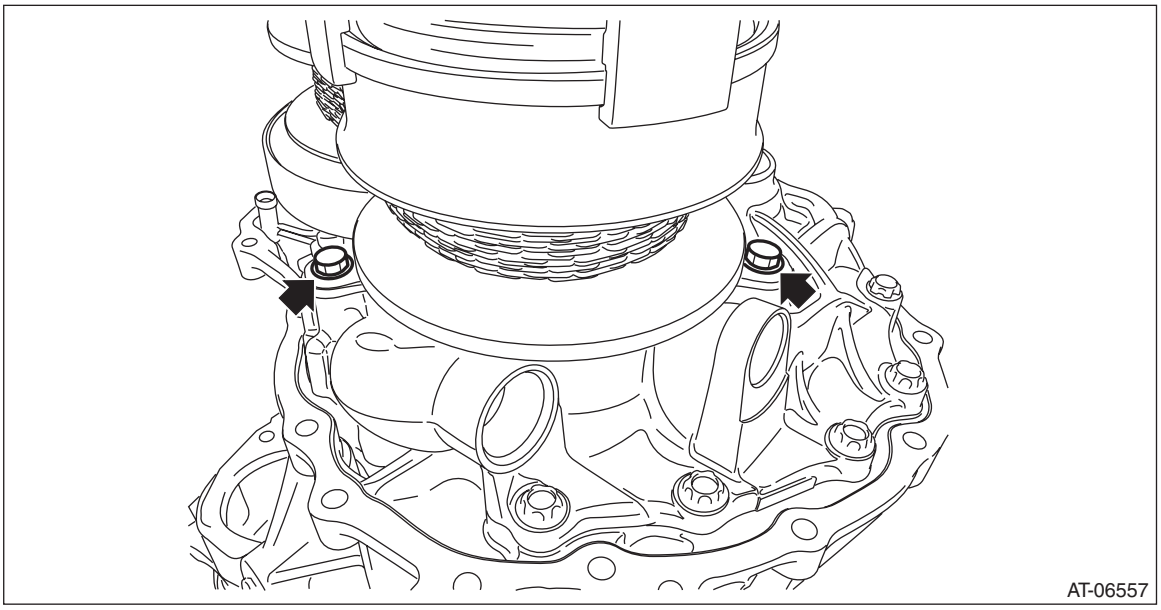

17) Remove the secondary pulley from drive pinion retainer and intersect the V groove of secondary pulley and V groove of primary pulley. Remove the variator chain from secondary pulley and remove the secondary pulley.

CAUTION:
Cover the V grooves of secondary pulley and primary pulley with cloth to protect the both pulleys and variator chain from scratching.

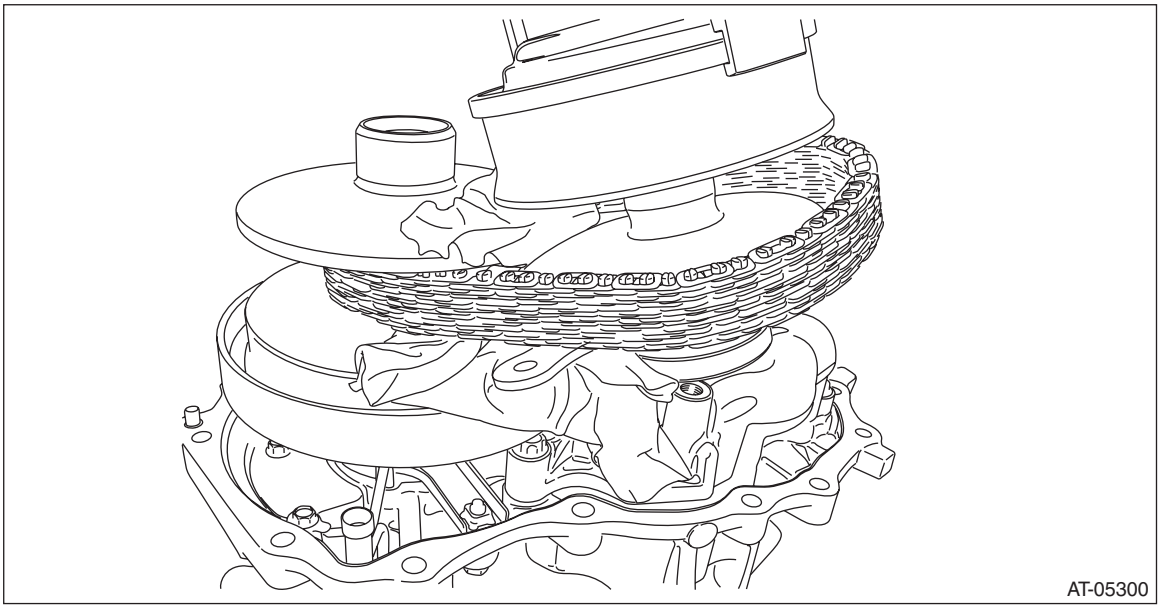

18) Remove the variator chain from primary pulley.

19) Remove the primary pulley mounting bolt.

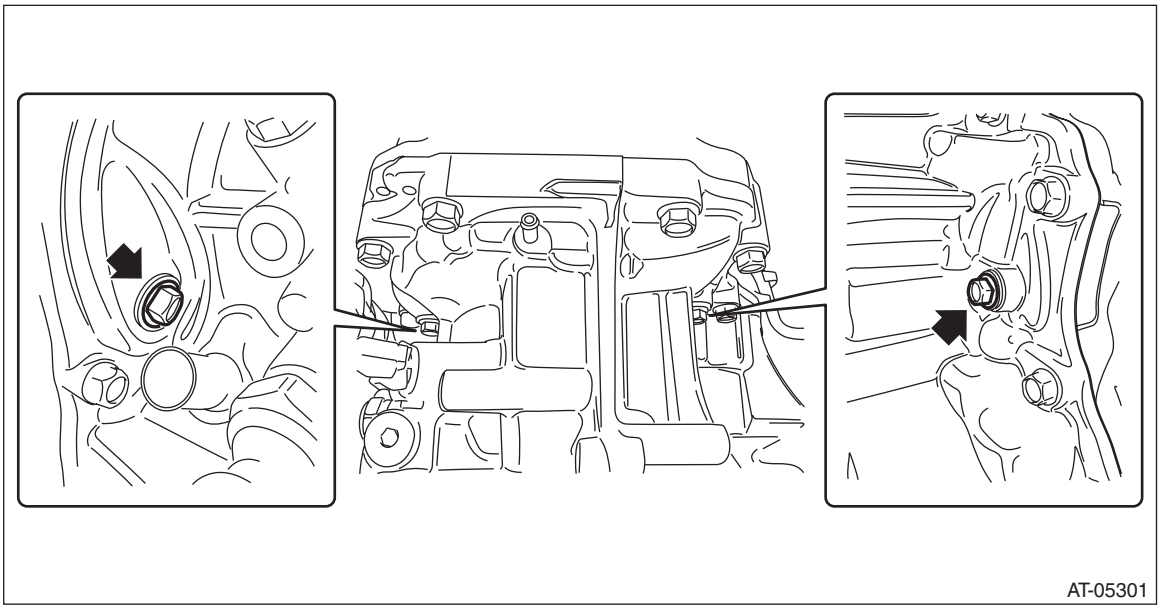

20) Remove the primary pulley.
21) Remove the two seal rings from drive pinion retainer.

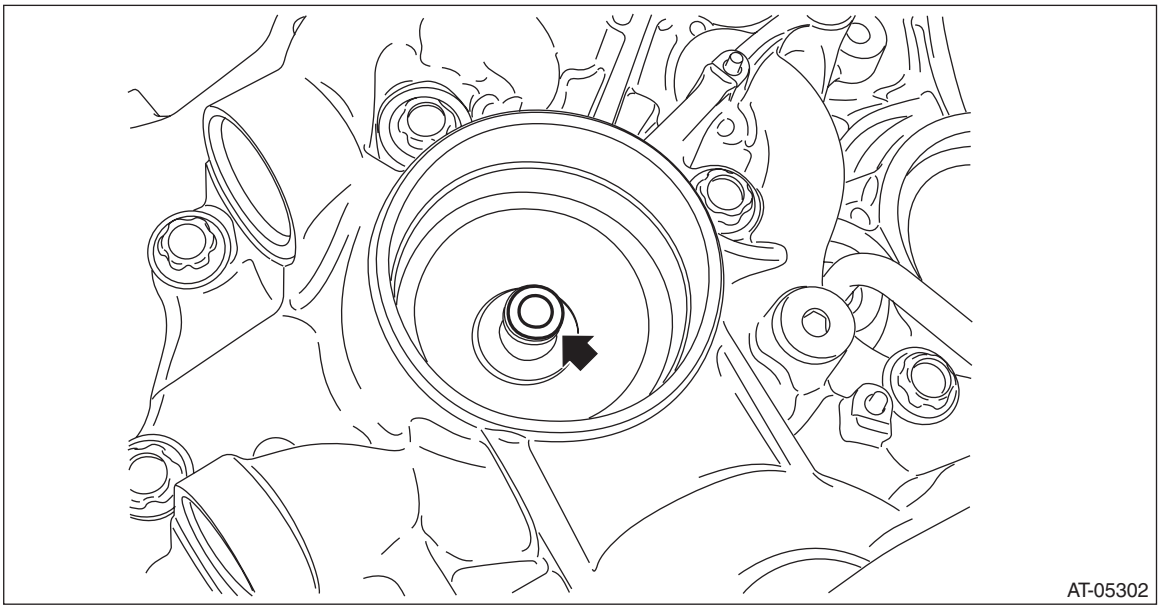

22) Remove the two seal rings from primary pulley.

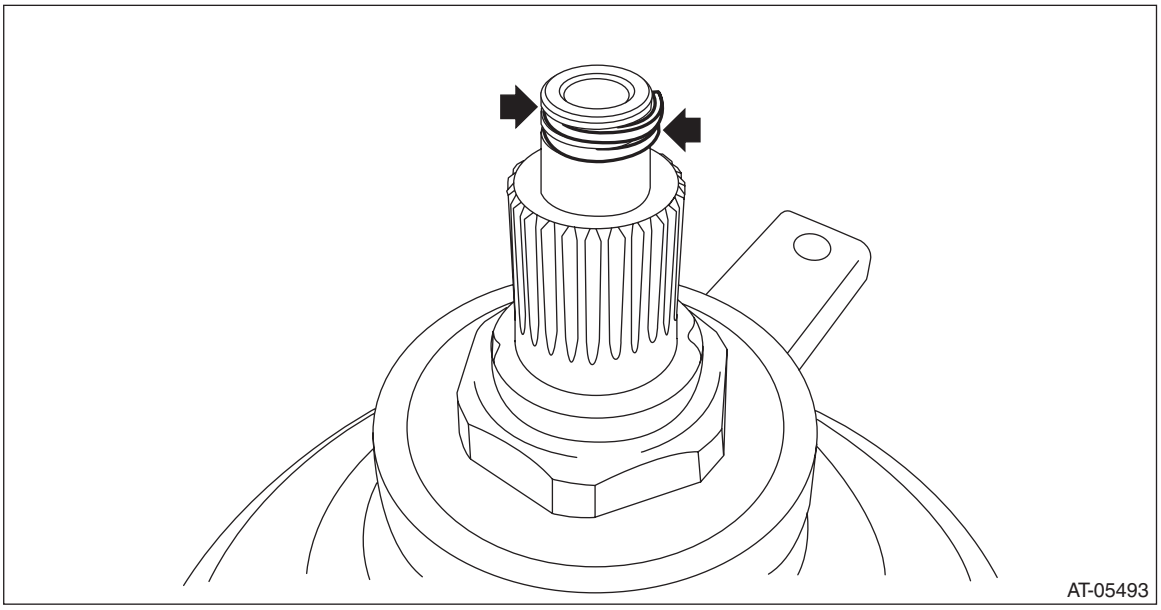

B: INSTALLATION

1) Select shims for pulley alignment. <Ref. to CVT(TR690)-269, ADJUSTMENT, Primary Pulley and Secondary Pulley.>
2) Install the two seal rings to drive pinion retainer.

NOTE:
- Use new seal rings.
- Apply CVTF to the seal rings.
- When installing the seal rings, do not expand the seal rings too much.

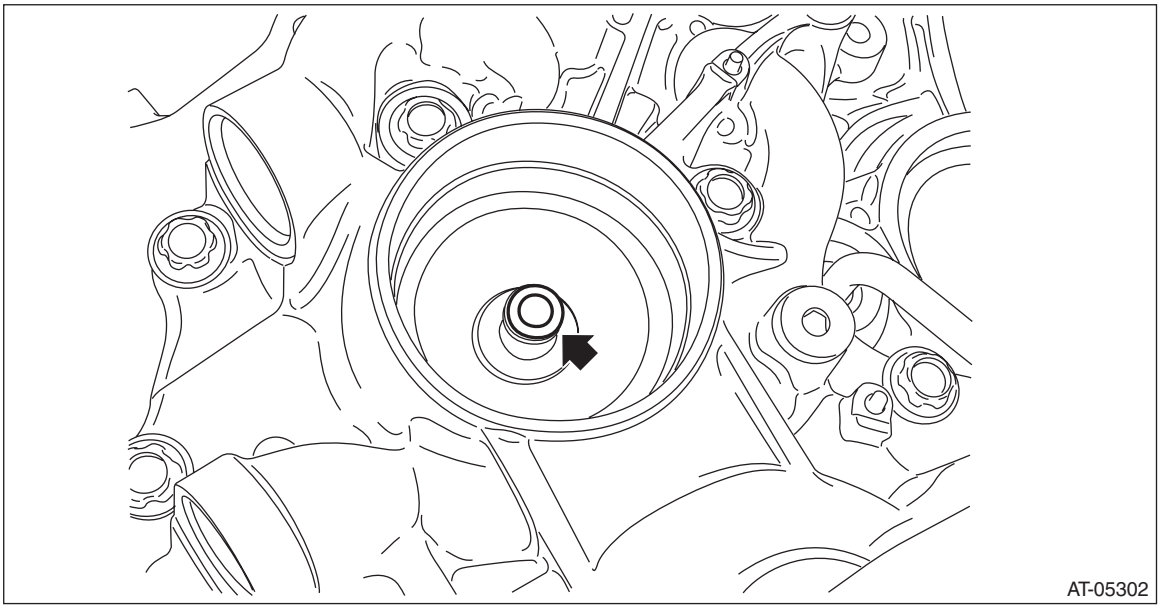

3) Install the selected shims to the primary pulley bearing catch surface.
4) Install the two seal rings to primary pulley.

NOTE:
- Use new seal rings.
- Apply CVTF to the seal rings.

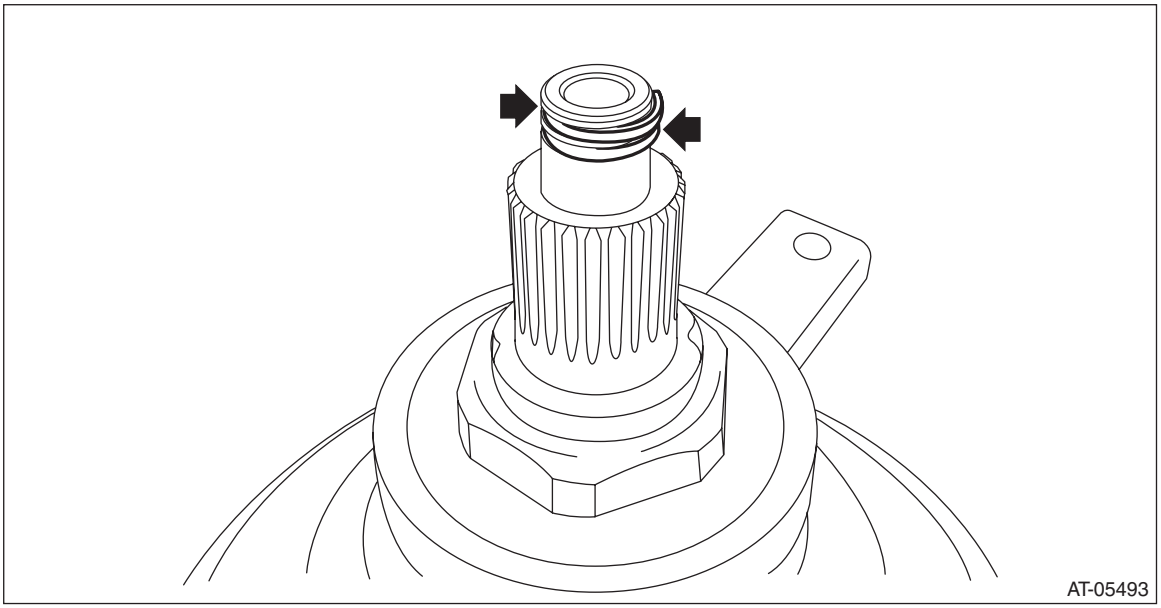

5) Install the primary pulley and adjust the position of bolt holes of primary bearing retainer and converter case to tighten the primary pulley bolt.

NOTE:
Use a new seal washer.

Tightening torque:
21 N·m (2.1 kgf-m, 15.5 ft-lb)

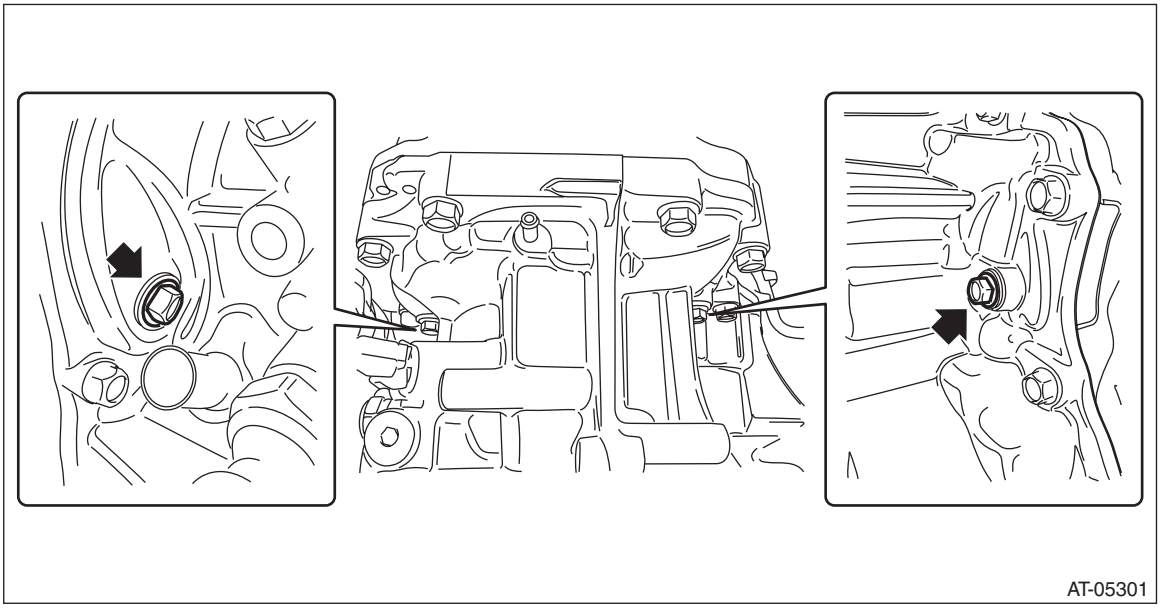

6) Set the ST to secondary pulley and expand the V groove of pulley.
ST 18769AA000 EXPANDER PULLEY

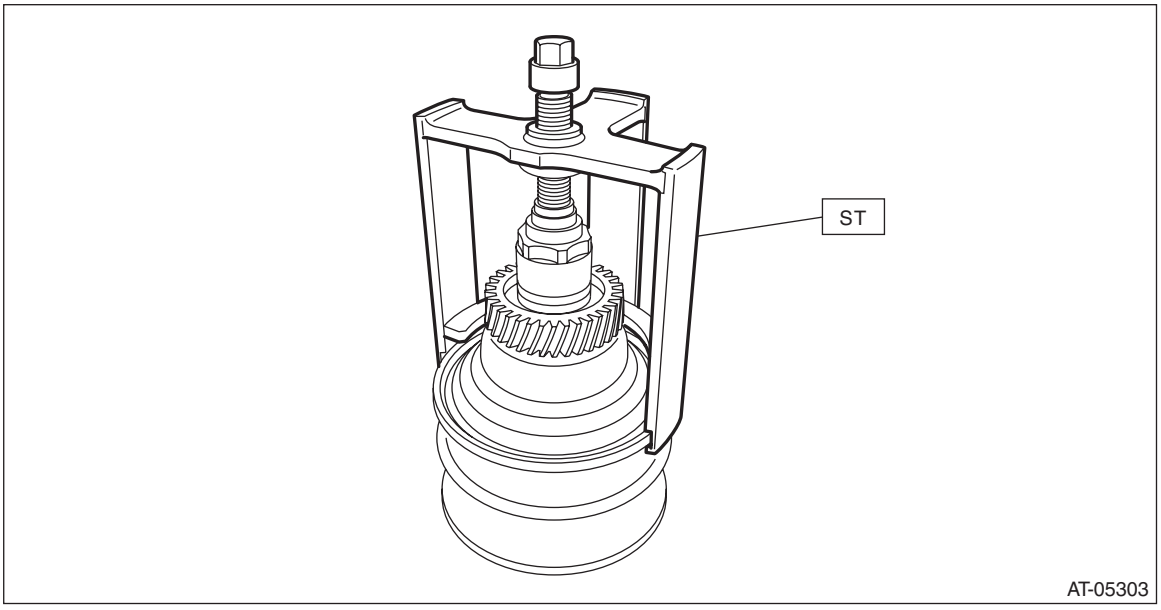

7) Place the variator chain on the primary pulley groove and attach the secondary pulley and variator chain together to the drive pinion retainer.

CAUTION:
Cover the V grooves of primary pulley and secondary pulley with cloth to protect the both pulleys and variator chain from scratching.

(1) Place the variator chain on primary pulley.
(2) Intersect the V groove of primary pulley and the V groove of secondary pulley and install the secondary pulley while placing the variator chain on secondary pulley.

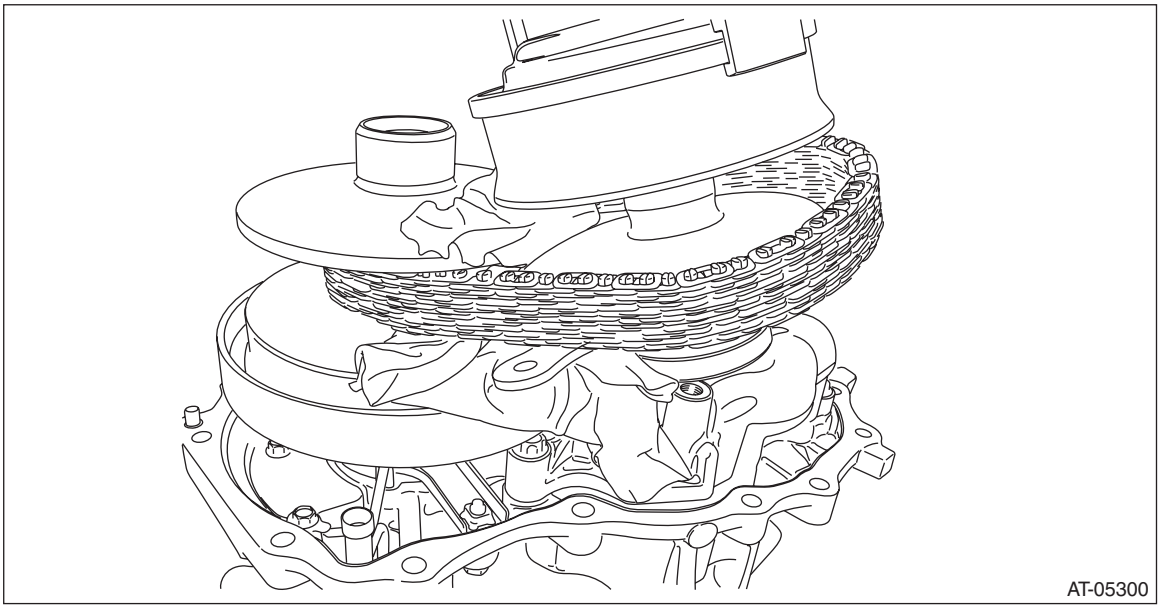

(3) While aligning the bolt hole of secondary bearing retainer and the bolt hole of driving pinion retainer, install the secondary pulley to drive pinion retainer.

8) Install the secondary pulley bolt.

NOTE:
Apply CVTF to the bolt.

Tightening torque:
33 N·m (3.4 kgf-m, 24.3 ft-lb)

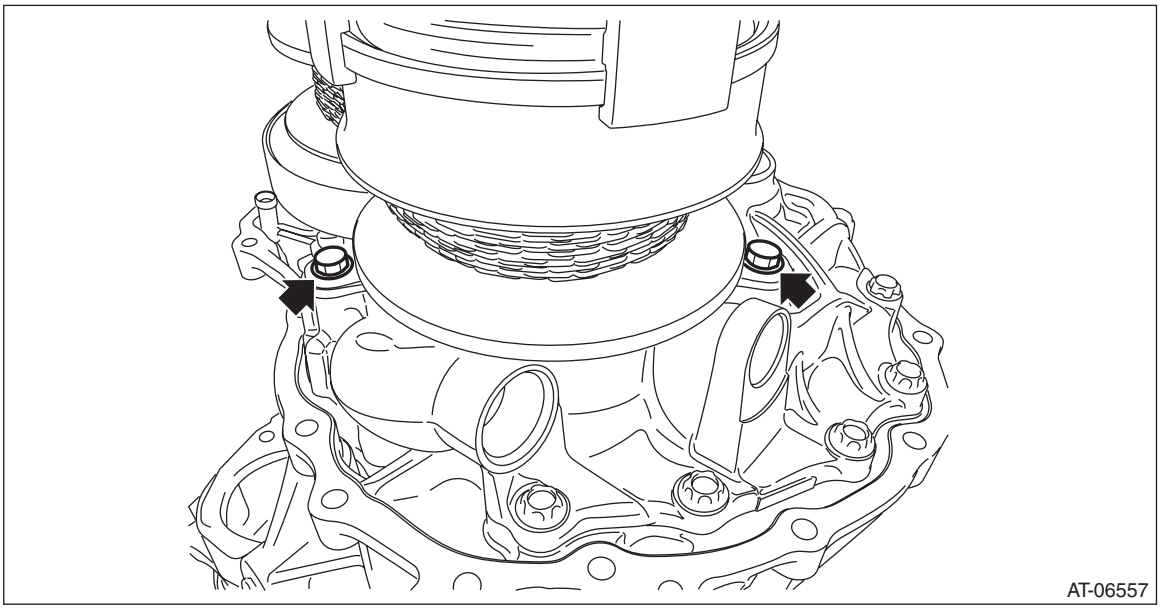

9) Install the chain guide.

NOTE:
Install it with two claws facing outward and with two claws facing inward.

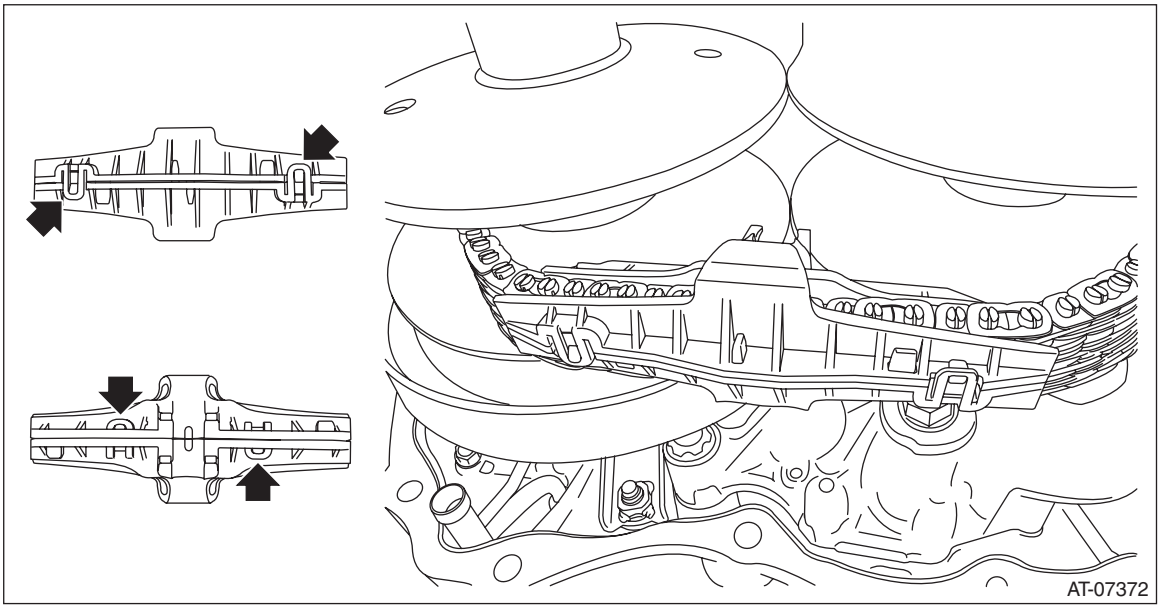

10) Engage the cutout portions of support rod and drive pinion retainer and install the support rod.

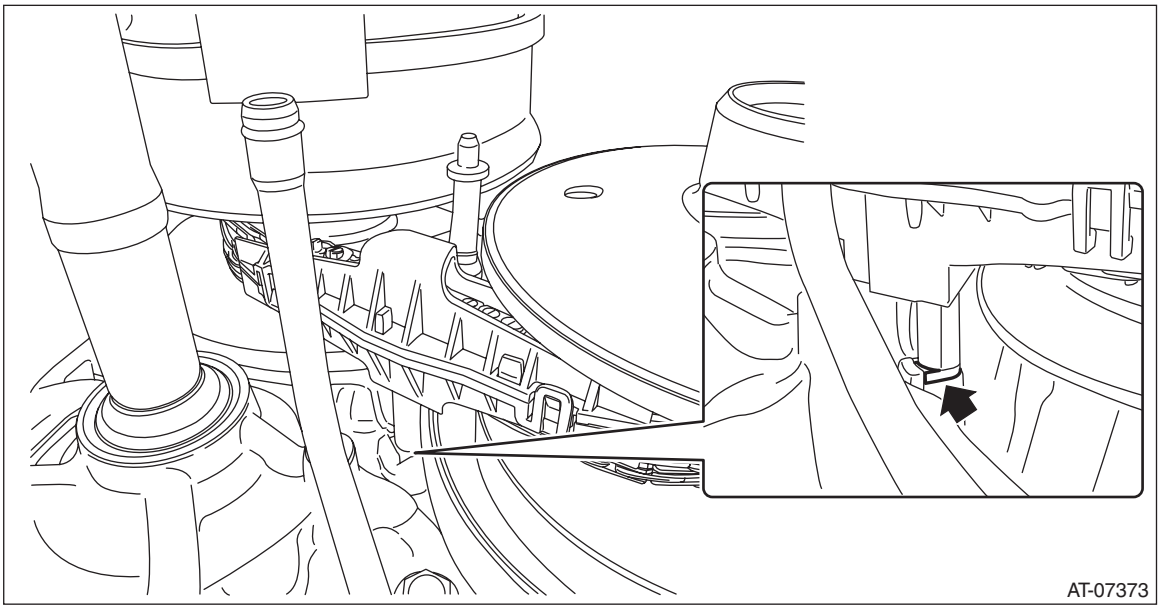

11) Engage the cutout portions of lubrication pipe and drive pinion retainer and install the lubrication pipe.

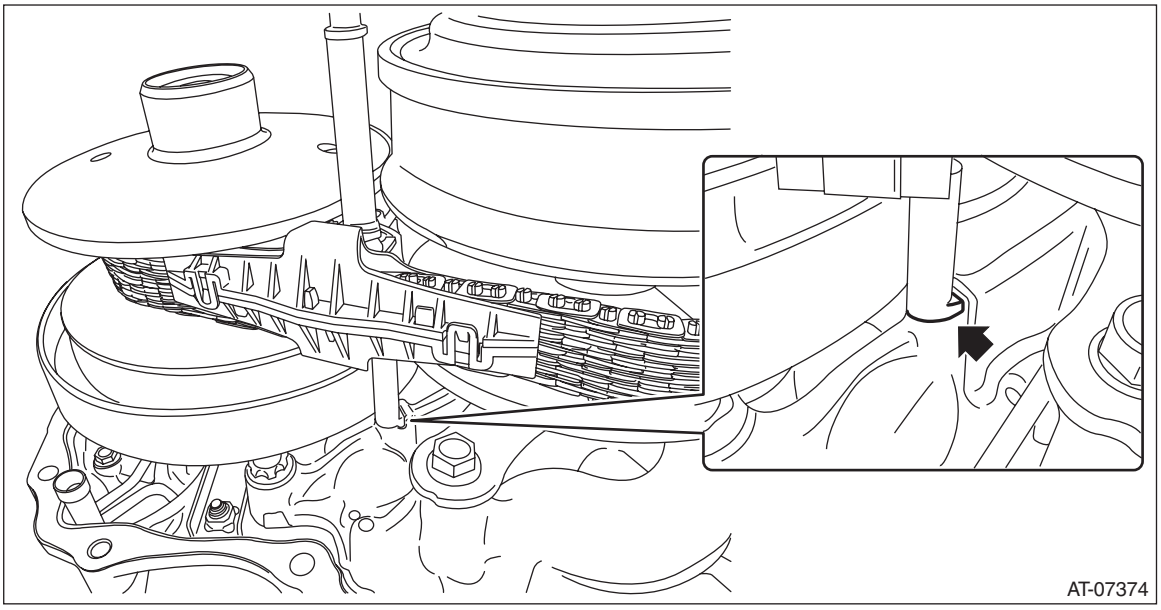

12) Install the chain guide so that the lubrication pipe and support rod run through between the protrusions of each chain guide. Then remove the ST (EXPANDER PULLEY).

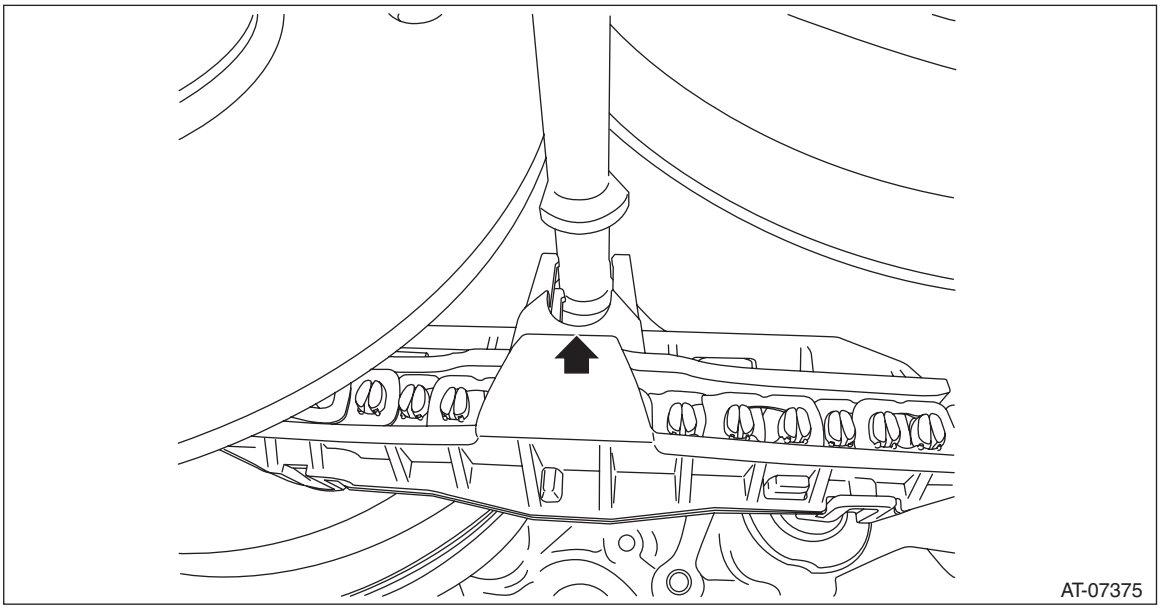

13) Install the O-ring to the lubrication pipe.

NOTE:
Use new O-rings.

14) Install the lubrication pipe.

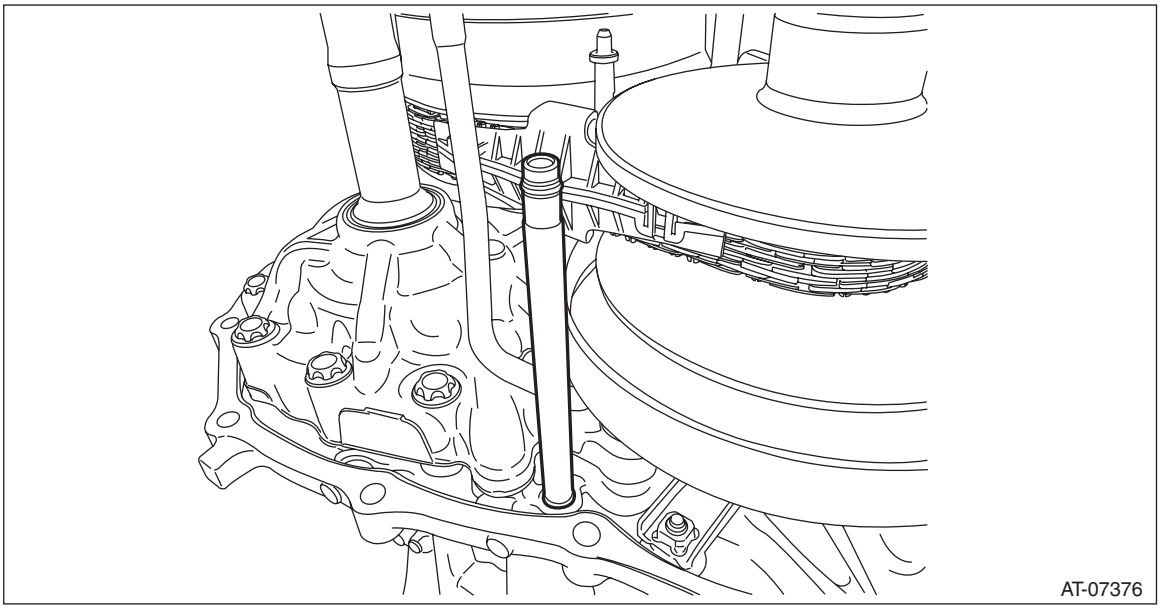

15) Install the transmission case. <Ref. to CVT(TR690)-244, INSTALLATION, Transmission Case.>
16) Install the forward clutch assembly. <Ref. to CVT(TR690)-203, INSTALLATION, Forward Clutch Assembly.>
17) Install the intermediate case. <Ref. to CVT(TR690)-188, INSTALLATION, Intermediate Case.>
18) Install the transfer reduction driven gear assembly. <Ref. to CVT(TR690)-180, INSTALLATION, Transfer Reduction Driven Gear.>
19) Install the transfer clutch assembly. <Ref. to CVT(TR690)-169, INSTALLATION, Transfer Clutch.>
20) Install the rear drive shaft. <Ref. to CVT(TR690)-163, INSTALLATION, Rear Drive Shaft.>
21) Install the extension case. <Ref. to CVT(TR690)-161, INSTALLATION, Extension Case.>
22) Install the transmission harness. <Ref. to CVT(TR690)-137, INSTALLATION, Transmission Harness.>
23) Install the control valve body and oil pan. <Ref. to CVT(TR690)-128, INSTALLATION, Control Valve Body.>

24) Install the air breather hose. <Ref. to CVT(TR690)-154, INSTALLATION, Air Breather Hose.>
25) Install the transmission assembly to the vehicle. <Ref. to CVT(TR690)-75, INSTALLATION, Automatic Transmission Assembly.>

C: INSPECTION

- Check the surface of primary and secondary pulley cones for damage or wear.
- Check the primary and secondary pulley for damage.
- Check the bearing for seizure or wear.
- Apply CVTF to bearing and rotate the bearing to check for noise or dragging etc.

D: ADJUSTMENT

1. PROCEDURE IN REPLACEMENT OF PRIMARY AND SECONDARY PULLEY, OR IN REPLACEMENT OF PRIMARY PULLEY, SECONDARY PULLEY AND VARIATOR CHAIN

1) Measure depth “Lp” from the ST upper face to the primary pulley bearing catch surface at several points and calculate the average.
ST 499575400 GAUGE

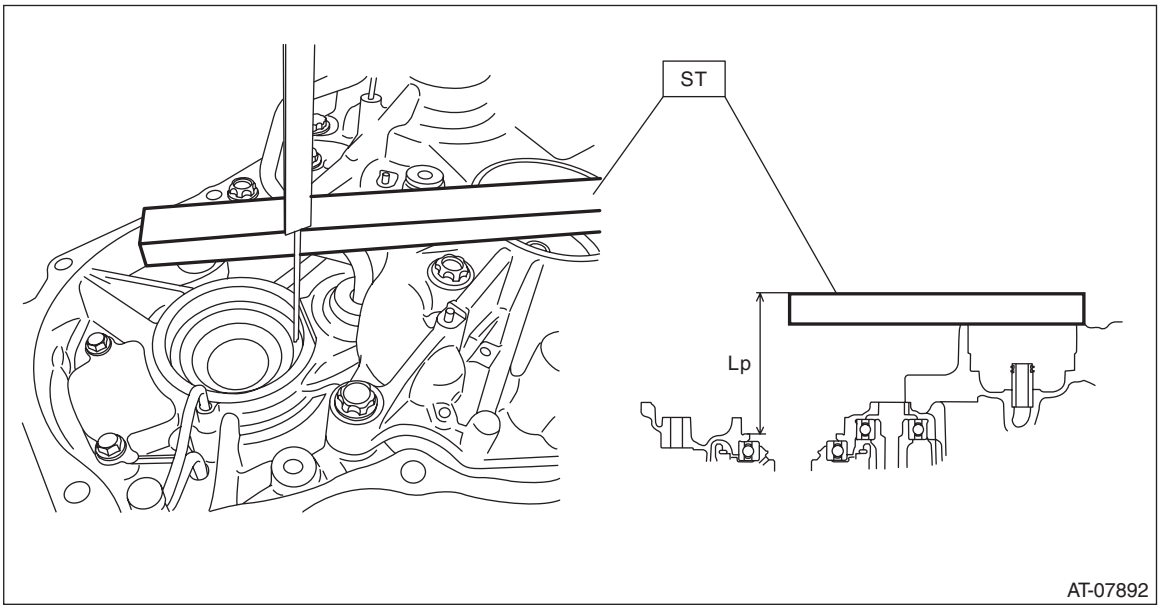

2) Measure height “Ls” from the drive pinion retainer upper face to the secondary pulley bearing catch surface at several points and calculate the average.
ST 499575400 GAUGE

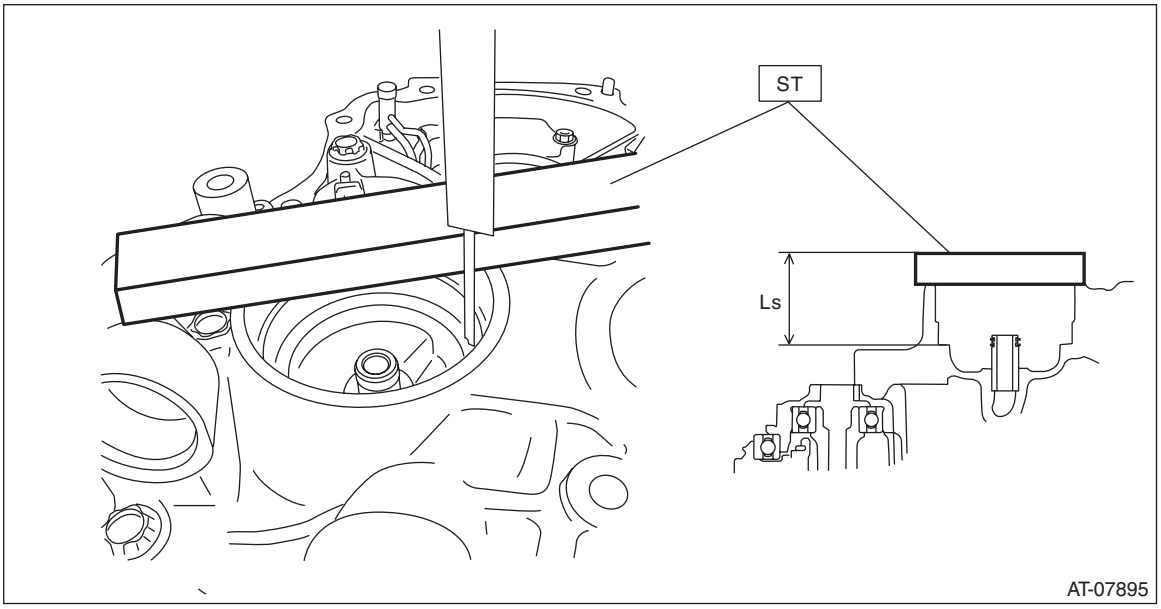

3) Calculate the following formula.
Calculation formula:
T (mm) = B + (Lp – Ls) + 31.601 – A
[T (in) = B + (Lp – Ls) + 1.224 – A]
T: Pulley alignment
A: Specified primary pulley dimension
B: Specified secondary pulley dimension
Lp: Depth from the ST upper face to the primary pulley bearing catch surface
Ls: Depth from the ST upper face to the secondary pulley bearing catch surface
31.601 mm (1.224 in): Constant

Pulley alignment T mm (in)	Shim thickness mm (in)
0.050 — 0.150 (0.002 — 0.006)	0.1 (0.004)
0.151 — 0.250 (0.006 — 0.01)	0.2 (0.008)
0.251 — 0.350 (0.01 — 0.014)	0.3 (0.012)
0.351 — 0.450 (0.014 — 0.018)	0.4 (0.016)
0.451 — 0.550 (0.018 — 0.022)	0.5 (0.020)
0.551 — 0.650 (0.022 — 0.026)	0.6 (0.024)
0.651 — 0.750 (0.026 — 0.030)	0.7 (0.028)
0.751 — 0.850 (0.030 — 0.033)	0.8 (0.031)
0.851 — 0.950 (0.033 — 0.037)	0.9 (0.035)

4) Select one to two shims so that the total thickness meets the value obtained from step 3).

Part No.	Shim thickness mm (in)
32451AA000	0.1 (0.004)
32451AA010	0.2 (0.008)
32451AA020	0.3 (0.012)
32451AA030	0.4 (0.016)
32451AA040	0.5 (0.020)

2. PROCEDURE WHEN REPLACING ONLY DRIVE PINION RETAINER OR CONVERTER CASE

1) Clean the mating surface of current drive pinion retainer and converter case.
2) Measure and record the shim thickness that is attached on the current converter case.
3) Using the current drive pinion retainer, measure depth “Lp1” from the ST upper face to the primary pulley bearing catch surface at several points and calculate the average.
ST 499575400 GAUGE

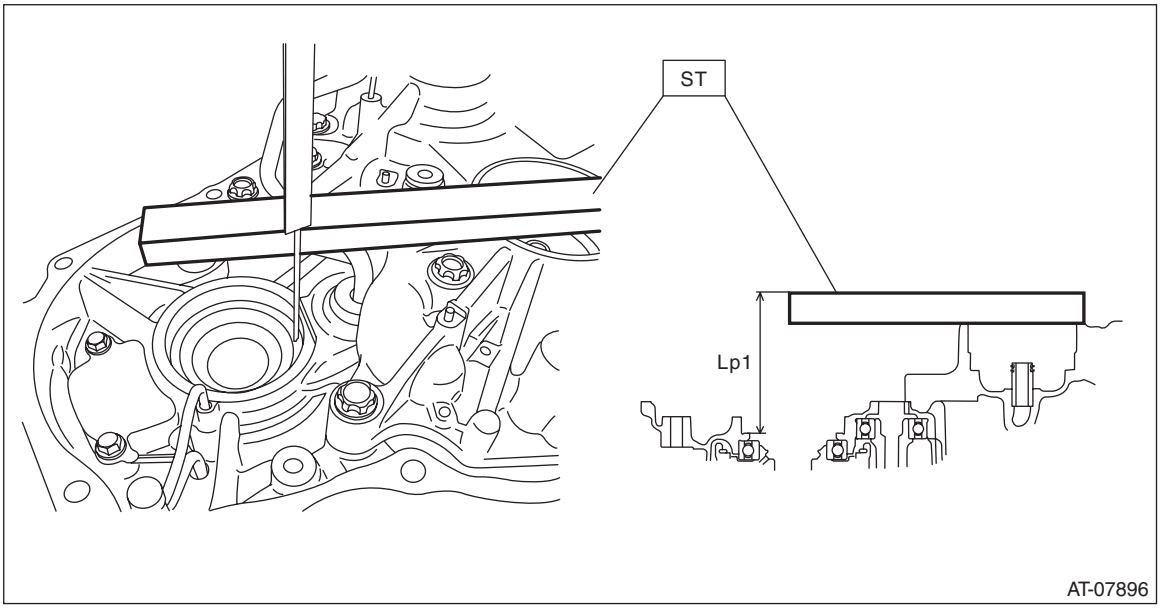

4) Using the current drive pinion retainer or current converter case, measure depth “Ls1” from the ST upper face to the secondary pulley bearing catch surface at several points and calculate the average.
ST 499575400 GAUGE

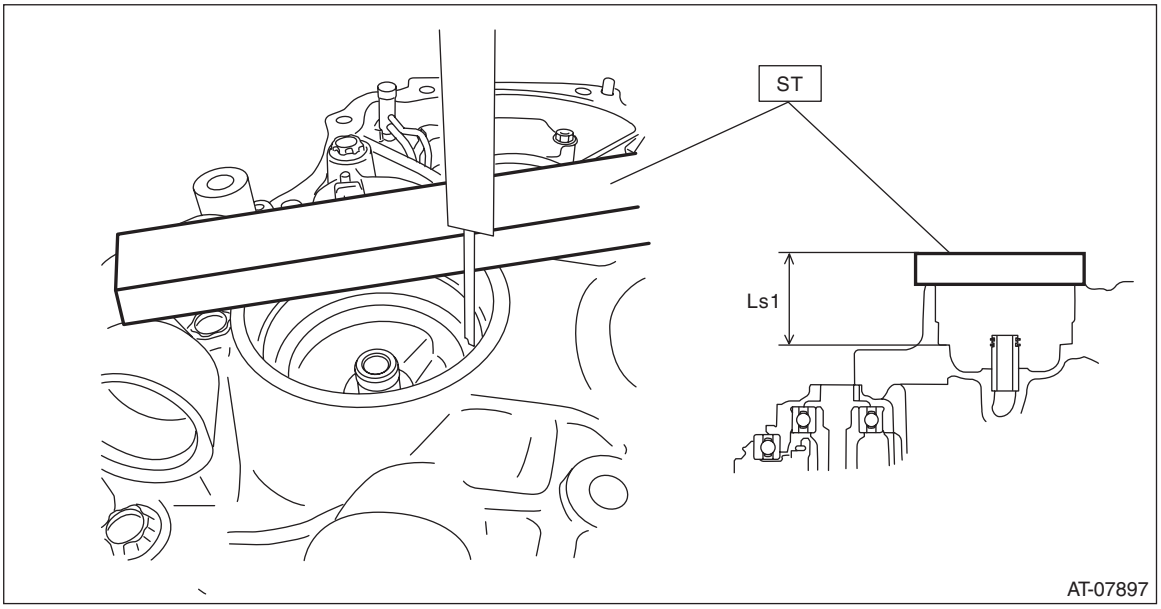

5) Calculate the “LD1” using the following formula and record it.
Calculation formula:
LD1 mm (in) = Lp1 – Ls1
LD1: Height from the primary pulley bearing catch surface to the secondary pulley bearing catch surface
Lp1: Depth from the ST upper face to the primary pulley bearing catch surface
Ls1: Depth from the ST upper face to the secondary pulley bearing catch surface

6) Using the new drive pinion retainer or new converter case, measure depth “Lp2” from the ST upper face to the primary pulley bearing catch surface at several points and calculate the average.
ST 499575400 GAUGE

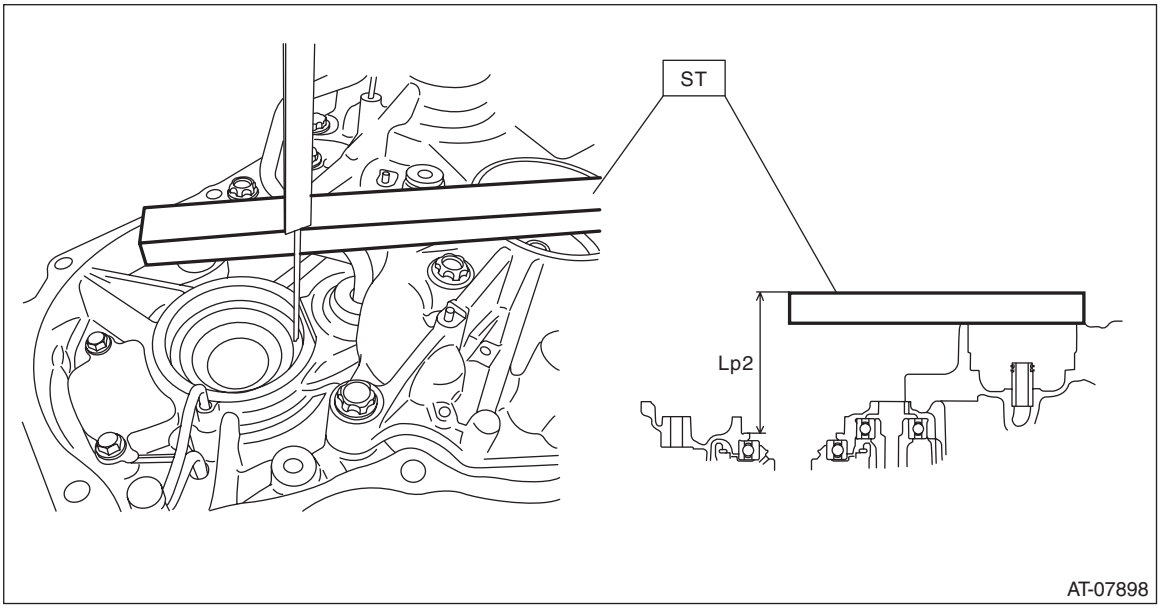

7) Using the new drive pinion retainer or new converter case, measure depth “Ls2” from the ST upper face to the secondary pulley bearing catch surface at several points and calculate the average.
ST 499575400 GAUGE

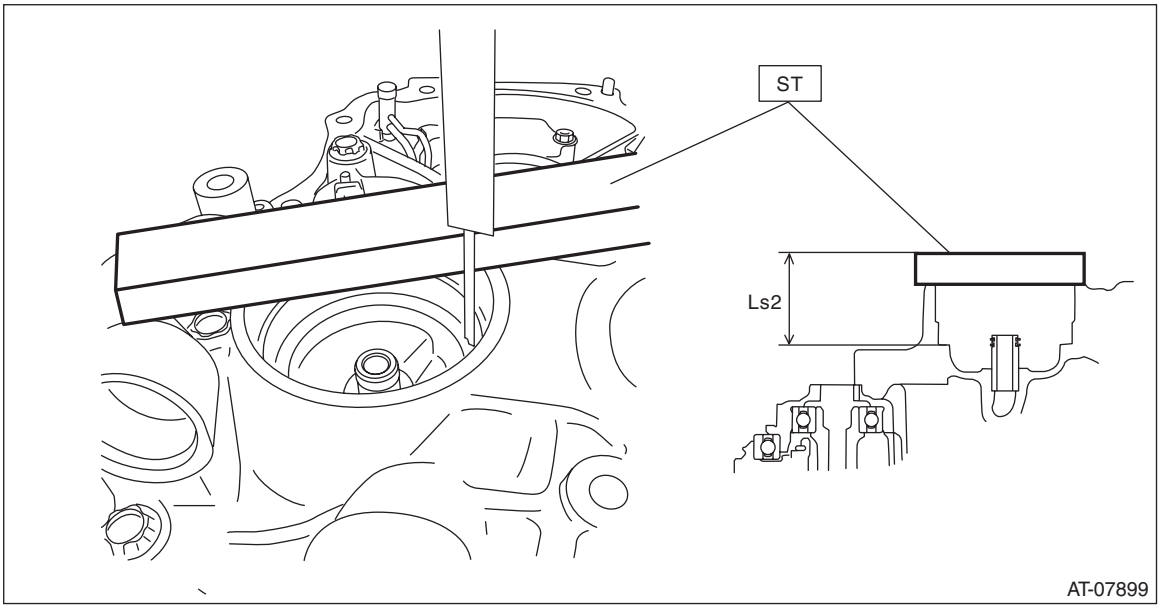

8) Calculate the “LD2” using the following formula and record it.
Calculation formula:
LD2 mm (in) = Lp2 – Ls2
LD2: Height from the primary pulley bearing catch surface to the secondary pulley bearing catch surface
Lp2: Depth from the ST upper face to the primary pulley bearing catch surface
Ls2: Depth from the ST upper face to the secondary pulley bearing catch surface

9) Calculate the recorded values of “LD1” and “LD2” to obtain the positive number to select the shims.
Calculation formula: T1 mm (in) = LD1 – LD2 or T2 mm (in) = LD2 – LD1
T1, T2: Difference between new drive pinion retainer or new converter case and current drive pinion retainer or current converter case
LD1: Calculated value of current drive pinion retainer or current converter case
LD2: Calculated value of new drive pinion retainer or new converter case

Difference of the case (T1) mm (in)	Shim selection procedure
0 — 0.020 (0 — 0.00078)	Select new shim of same thickness with the shim that is used on primary pulley side of the current converter case.
0.021 — 0.070 (0.000827 — 0.00275)	Select new shim of same thickness with the shim that is used on primary pulley side of the current converter case.
0.071 — 0.125 (0.00279 — 0.00492)	Select the shim 0.1 mm thinner than the shim that is used on primary pulley side of the current converter case.
0.126 — 0.170 (0.00496 — 0.00669)	Select the shim 0.1 mm thinner than the shim that is used on primary pulley side of the current converter case.
0.171 — 0.230 (0.00673 — 0.00905)	Select the shim 0.2 mm thinner than the shim that is used on primary pulley side of the current converter case.
0.231 — 0.250 (0.00909 — 0.00984)	Select the shim 0.3 mm thinner than the shim that is used on primary pulley side of the current converter case.
0.251 — 0.300 (0.00988 — 0.01181)	Select the shim 0.3 mm thinner than the shim that is used on primary pulley side of the current converter case.

Difference of the case (T2) mm (in)	Shim selection procedure
0 — 0.020 (0 — 0.00078)	Select new shim of same thickness with the shim that is used on primary pulley side of the current converter case.
0.021 — 0.080 (0.000827 — 0.00315)	Select new shim of same thickness with the shim that is used on primary pulley side of the current converter case.
0.081 — 0.100 (0.00318 — 0.00393)	Select the shim 0.1 mm thicker than the shim that is used on primary pulley side of the current converter case.
0.101 — 0.120 (0.00397 — 0.00472)	Select the shim 0.1 mm thicker than the shim that is used on primary pulley side of the current converter case.
0.121 — 0.180 (0.00476 — 0.00708)	Select the shim 0.1 mm thicker than the shim that is used on primary pulley side of the current converter case.
0.181 — 0.220 (0.00712 — 0.00866)	Select the shim 0.2 mm thicker than the shim that is used on primary pulley side of the current converter case.
0.221 — 0.280 (0.00870 — 0.01102)	Select the shim 0.2 mm thicker than the shim that is used on primary pulley side of the current converter case.
0.281 — 0.300 (0.01106 — 0.01181)	Select the shim 0.3 mm thicker than the shim that is used on primary pulley side of the current converter case.

Part No.	Shim thickness mm (in)
32451AA000	0.1 (0.004)
32451AA010	0.2 (0.008)
32451AA020	0.3 (0.012)
32451AA030	0.4 (0.016)
32451AA040	0.5 (0.020)

43.Variator Chain

A: REMOVAL

For removal of variator chain, refer to “Primary Pulley and Secondary Pulley”. <Ref. to CVT(TR690)-259, REMOVAL, Primary Pulley and Secondary Pulley.>

B: INSTALLATION

For installation of variator chain, refer to “Primary Pulley and Secondary Pulley”. <Ref. to CVT(TR690)-263, INSTALLATION, Primary Pulley and Secondary Pulley.>

C: INSPECTION

Check the variator chain for damage and wear.

44.Drive Pinion Shaft Assembly

A: REMOVAL

1) Remove the transmission assembly from the vehicle. <Ref. to CVT(TR690)-58, REMOVAL, Automatic Transmission Assembly.>
2) Remove the air breather hose. <Ref. to CVT(TR690)-152, REMOVAL, Air Breather Hose.>
3) Remove the oil pan and control valve body. <Ref. to CVT(TR690)-124, REMOVAL, Control Valve Body.>
4) Remove the transmission harness. <Ref. to CVT(TR690)-135, REMOVAL, Transmission Harness.>
5) Remove the extension case. <Ref. to CVT(TR690)-160, REMOVAL, Extension Case.>
6) Remove the rear drive shaft. <Ref. to CVT(TR690)-163, REMOVAL, Rear Drive Shaft.>
7) Remove the transfer clutch assembly. <Ref. to CVT(TR690)-168, REMOVAL, Transfer Clutch.>
8) Remove the transfer reduction driven gear assembly. <Ref. to CVT(TR690)-180, REMOVAL, Transfer Reduction Driven Gear.>
9) Remove the intermediate case. <Ref. to CVT(TR690)-187, REMOVAL, Intermediate Case.>
10) Remove the forward clutch assembly. <Ref. to CVT(TR690)-202, REMOVAL, Forward Clutch Assembly.>
11) Remove the transmission case. <Ref. to CVT(TR690)-242, REMOVAL, Transmission Case.>
12) Remove the primary pulley, secondary pulley and variator chain. <Ref. to CVT(TR690)-259, REMOVAL, Primary Pulley and Secondary Pulley.>
13) Using the ST, remove the drive pinion retainer and lubrication pipe.
ST 18270KA020 SOCKET (E20)

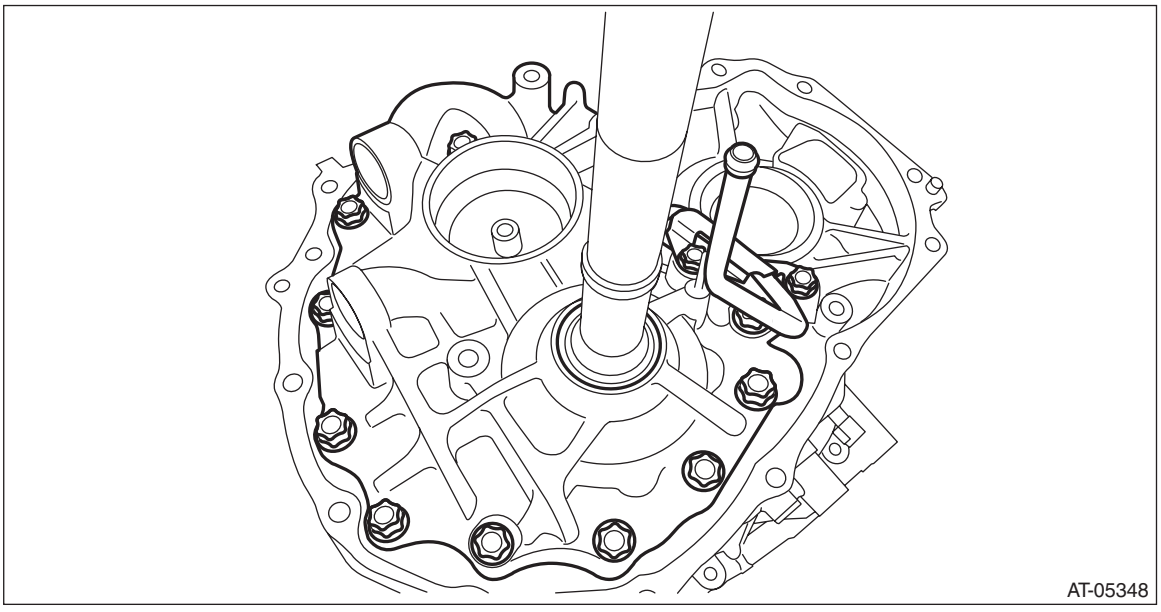

14) Remove the O-rings.

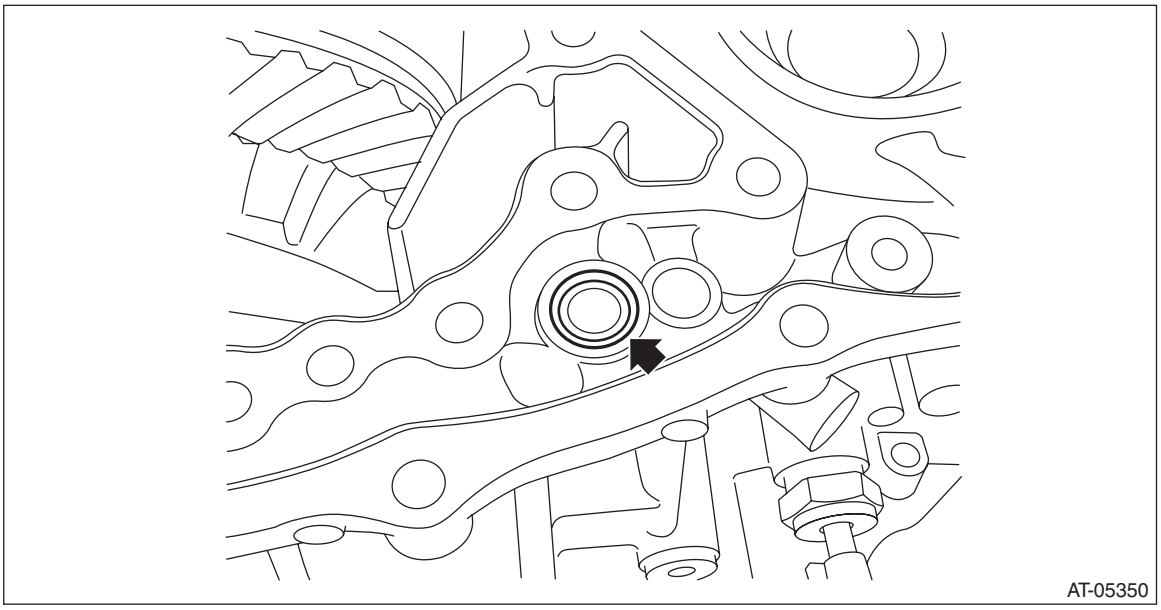

15) Remove the oil pump and the plate.

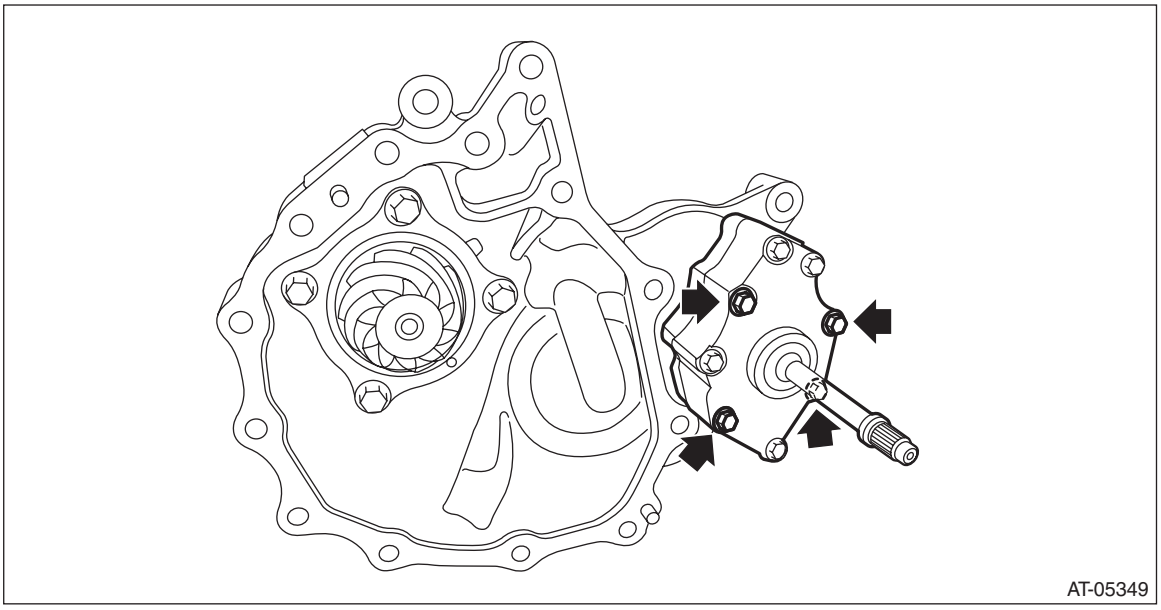

16) Remove the O-rings.

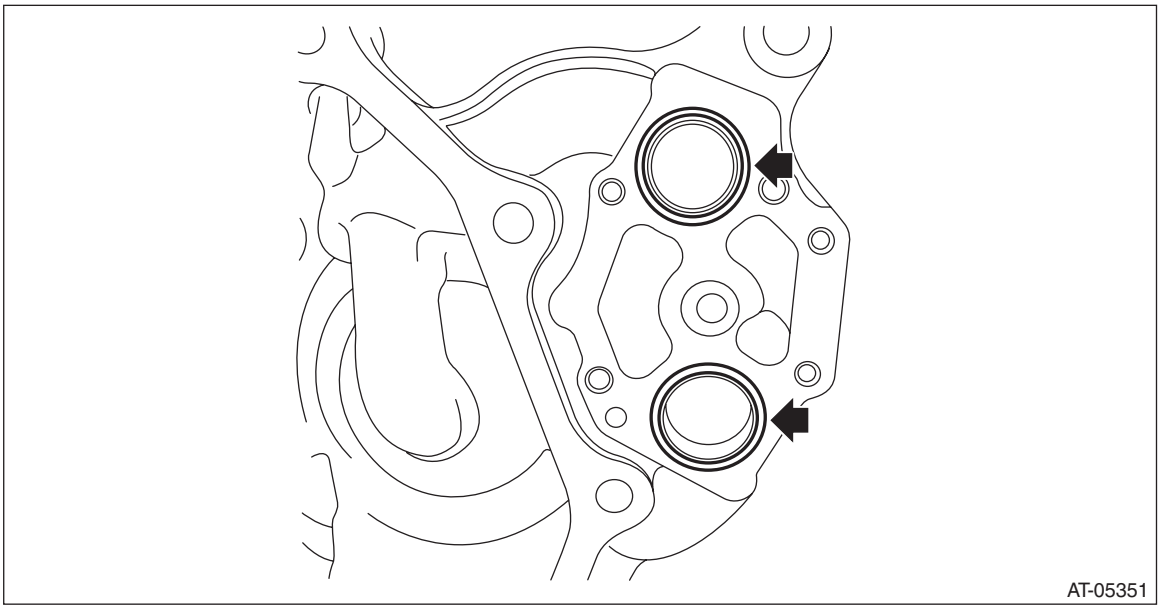

B: INSTALLATION

1) Clean the mating surface of drive pinion retainer and converter case.
2) Adjust the backlash and tooth contact between drive pinion shaft assembly and the front differential side gear. <Ref. to CVT(TR690)-289, ADJUSTMENT, Drive Pinion Shaft Assembly.>
3) Install the O-ring for oil pump to drive pinion retainer.

NOTE:
- Use new O-rings.
- Apply CVTF to the O-rings.

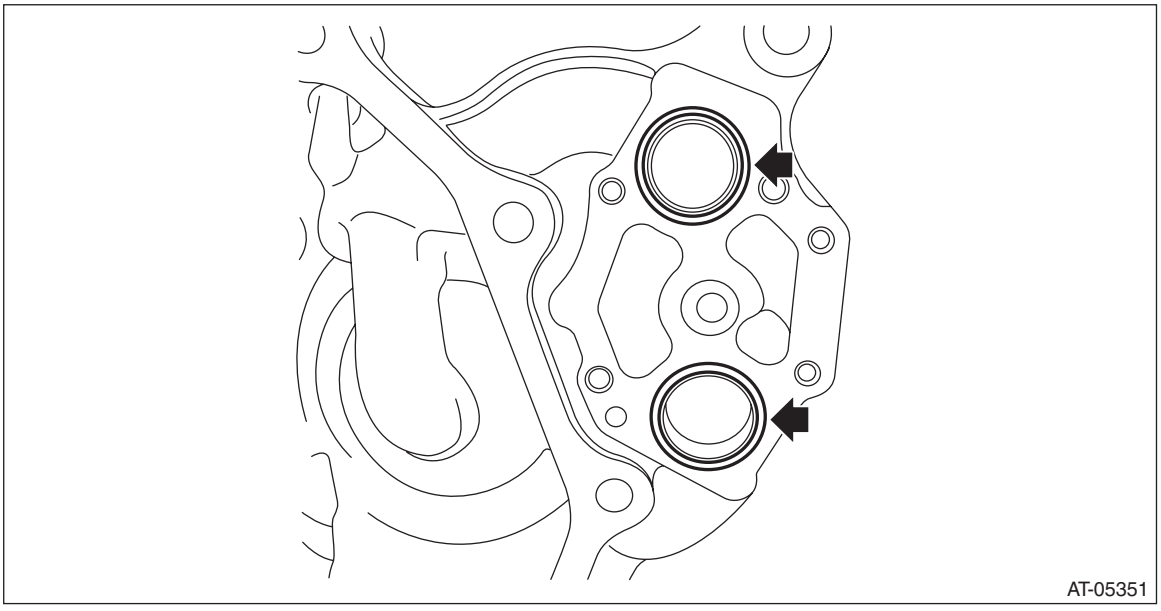

4) Install the plate and the oil pump.

NOTE:
Apply CVTF to the bolt.

Tightening torque:
8.5 N·m (0.9 kgf-m, 6.3 ft-lb)

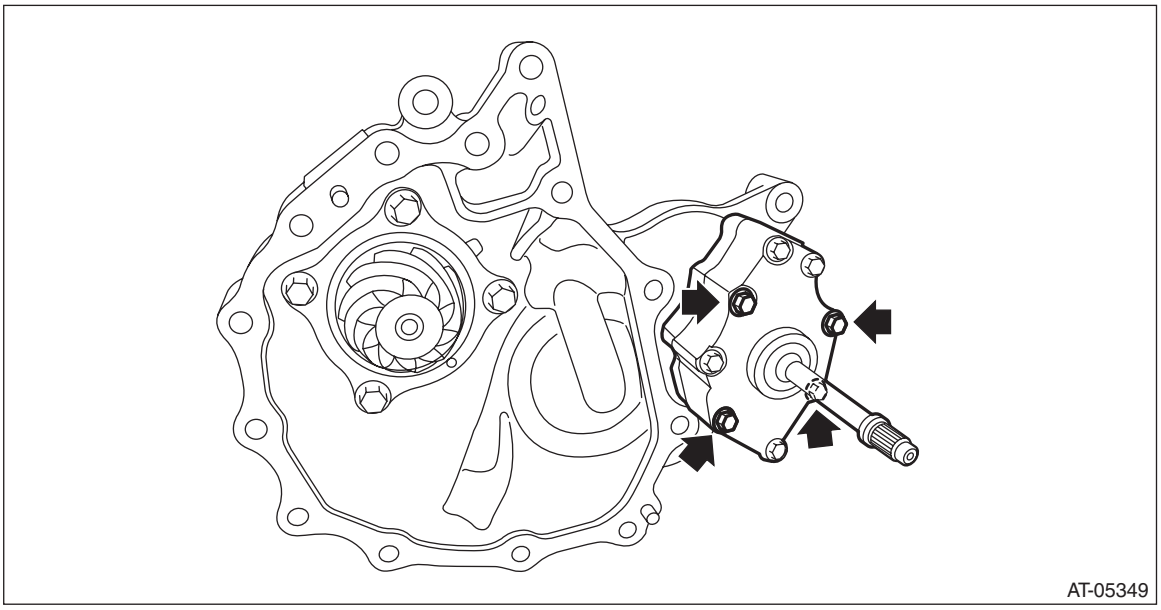

5) Apply liquid gasket seamlessly to the mating surface of drive pinion retainer.

NOTE:
Be careful not to block the arrowed hole when applying liquid gasket.

Liquid gasket:
THREE BOND 1215B or equivalent

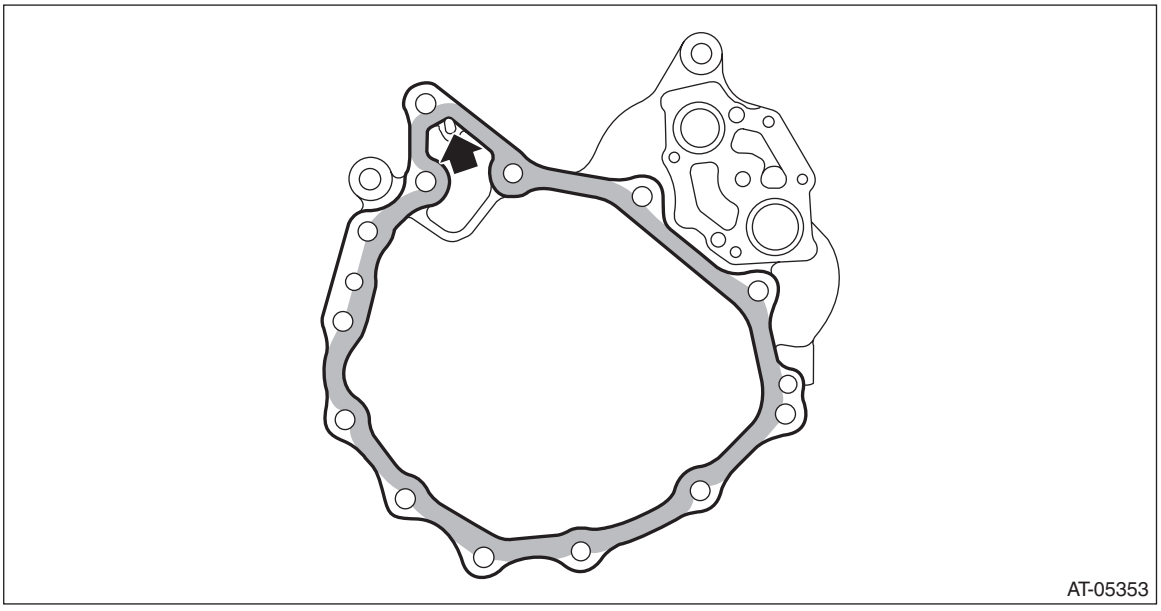

6) Install the O-ring to the lubrication pipe.

NOTE:
- Use new O-rings.
- Apply CVTF to the O-rings.

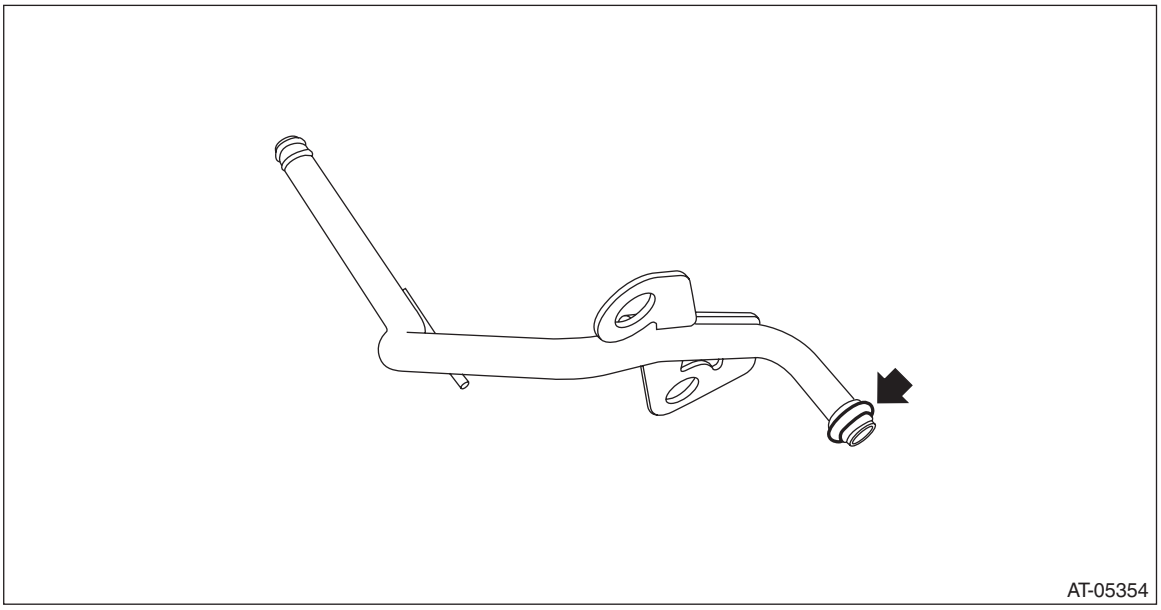

7) Install the drive pinion retainer and lubrication pipe to converter case and tighten the bolt using the ST.
ST 18270KA020 SOCKET (E20)

NOTE:
Do not confuse the three different-length bolts when installing.

Tightening torque:
43 N·m (4.4 kgf-m, 31.7 ft-lb)

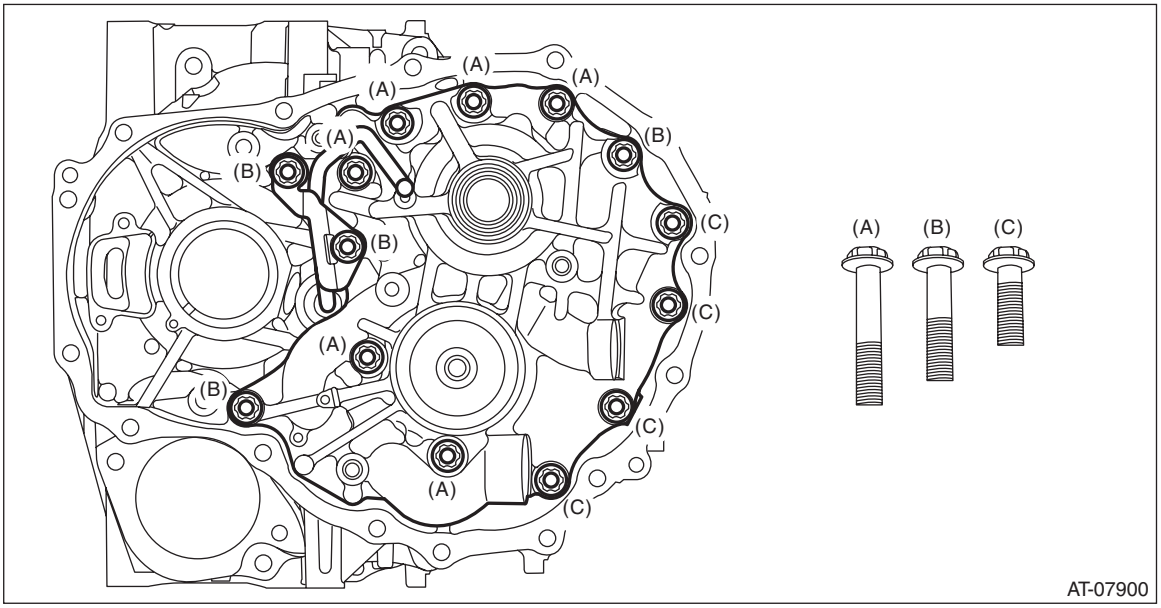

8) Install the primary pulley, secondary pulley and variator chain. <Ref. to CVT(TR690)-263, INSTALLATION, Primary Pulley and Secondary Pulley.>
9) Install the transmission case. <Ref. to CVT(TR690)-244, INSTALLATION, Transmission Case.>
10) Install the forward clutch assembly. <Ref. to CVT(TR690)-203, INSTALLATION, Forward Clutch Assembly.>
11) Install the intermediate case. <Ref. to CVT(TR690)-188, INSTALLATION, Intermediate Case.>

12) Install the transfer reduction driven gear assembly. <Ref. to CVT(TR690)-180, INSTALLATION, Transfer Reduction Driven Gear.>
13) Install the transfer clutch assembly. <Ref. to CVT(TR690)-169, INSTALLATION, Transfer Clutch.>
14) Install the rear drive shaft. <Ref. to CVT(TR690)-163, INSTALLATION, Rear Drive Shaft.>
15) Install the extension case. <Ref. to CVT(TR690)-161, INSTALLATION, Extension Case.>
16) Install the transmission harness. <Ref. to CVT(TR690)-137, INSTALLATION, Transmission Harness.>
17) Install the oil pan and control valve body. <Ref. to CVT(TR690)-128, INSTALLATION, Control Valve Body.>
18) Install the air breather hose. <Ref. to CVT(TR690)-154, INSTALLATION, Air Breather Hose.>
19) Install the transmission assembly to the vehicle. <Ref. to CVT(TR690)-75, INSTALLATION, Automatic Transmission Assembly.>

C: DISASSEMBLY

1) Remove the drive pinion assembly.

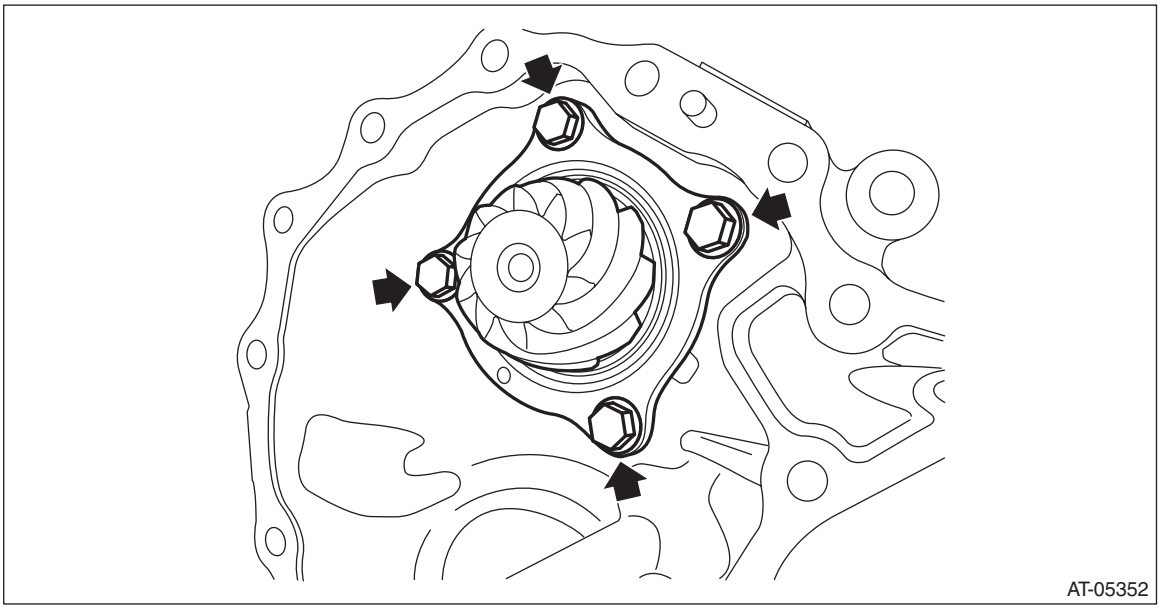

2) Flatten the tab of the lock nut.
3) Using ST1 and ST2, fix at the spline portion of drive pinion shaft to remove the lock nut.
ST1 18621AA000 WRENCH
ST2 18667AA010 HOLDER

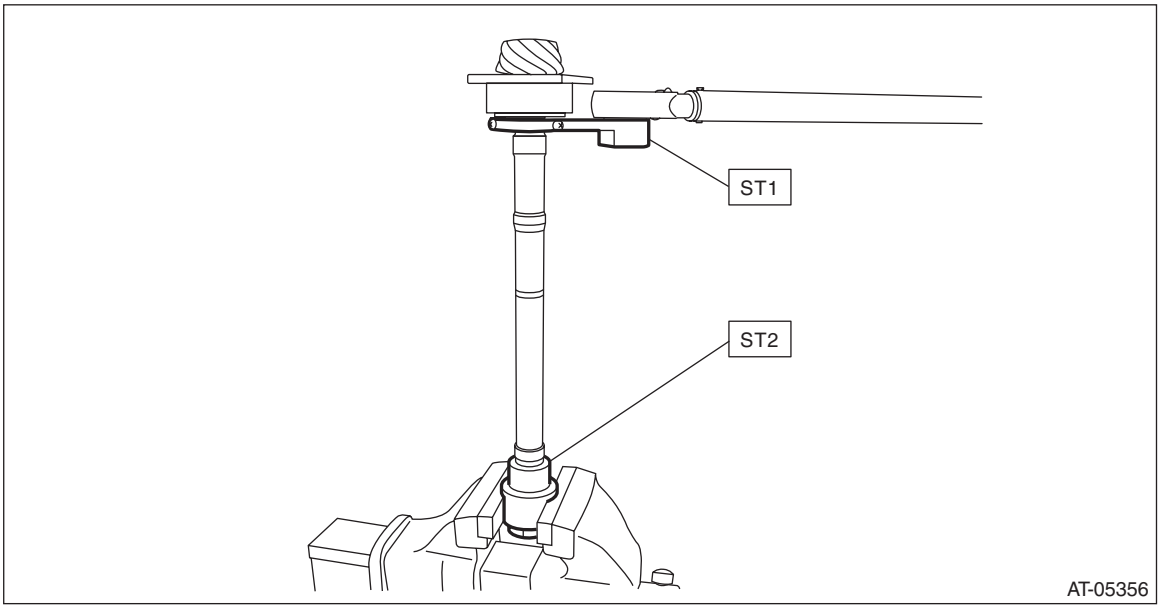

4) Remove the taper roller bearing and outer race from drive pinion shaft.

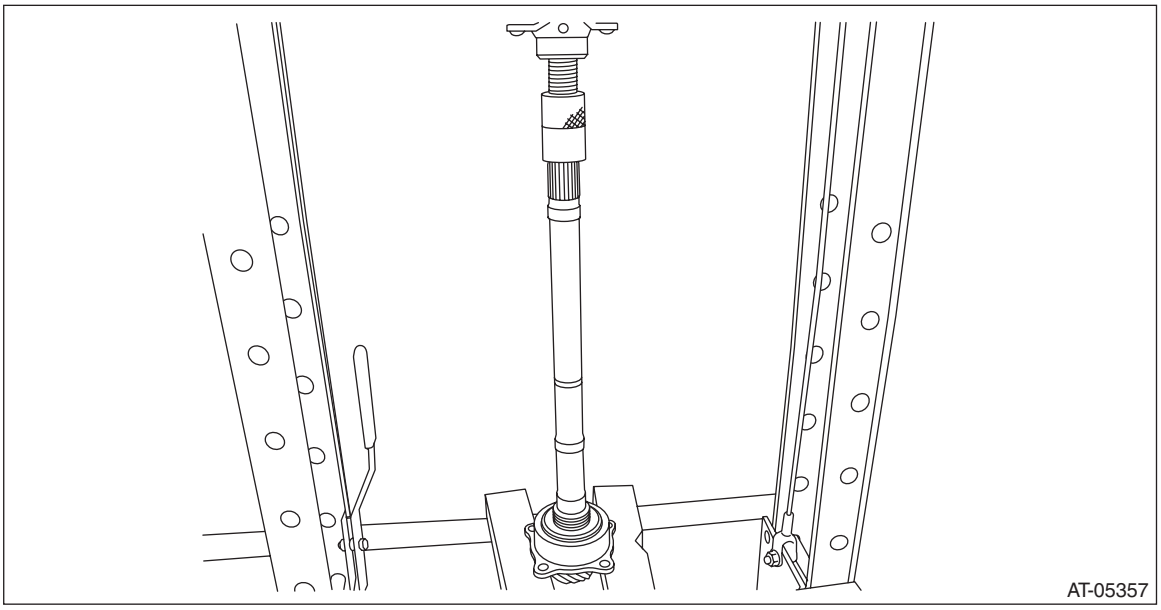

5) Remove the inner bearing inner race from the drive pinion shaft using ST.
ST 498077000 REMOVER

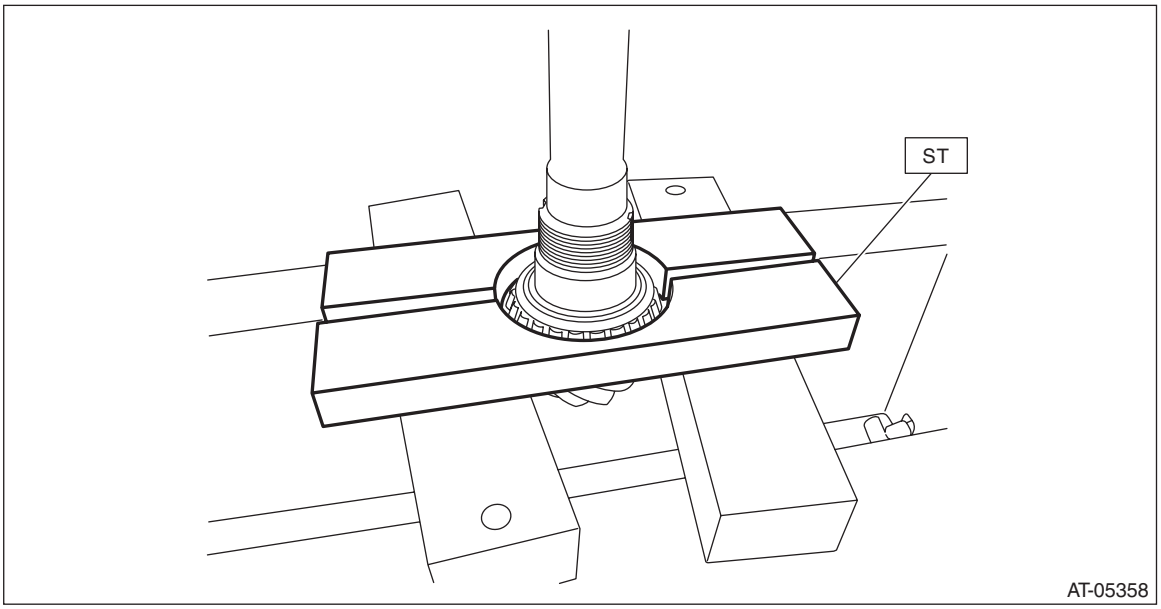

6) Remove the two oil seals using a screwdriver wrapped with cloth, etc.

CAUTION:
Do not damage the fitting surface of drive pinion bearing.

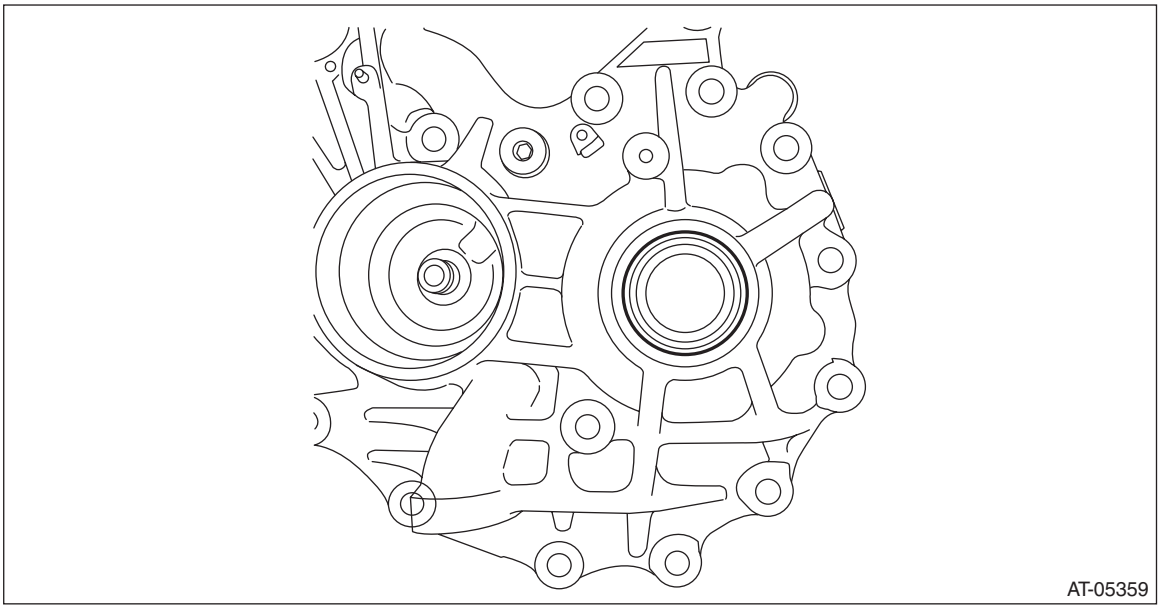

7) Remove the plug from drive pinion retainer.

D: ASSEMBLY

1) Install the O-ring to plug and install the plug to drive pinion retainer.

NOTE:
- Use new O-rings.
- Apply CVTF to the O-rings.

Tightening torque:
25 N·m (2.5 kgf-m, 18.4 ft-lb)

2) Using the ST, install the oil seal to drive pinion retainer.

NOTE:
- Apply CVTF to the oil seal press-fitting surface and lip.
- Install the oil seal in the correct direction.

Pulley side

ST 18657AA020 OIL SEAL INSTALLER

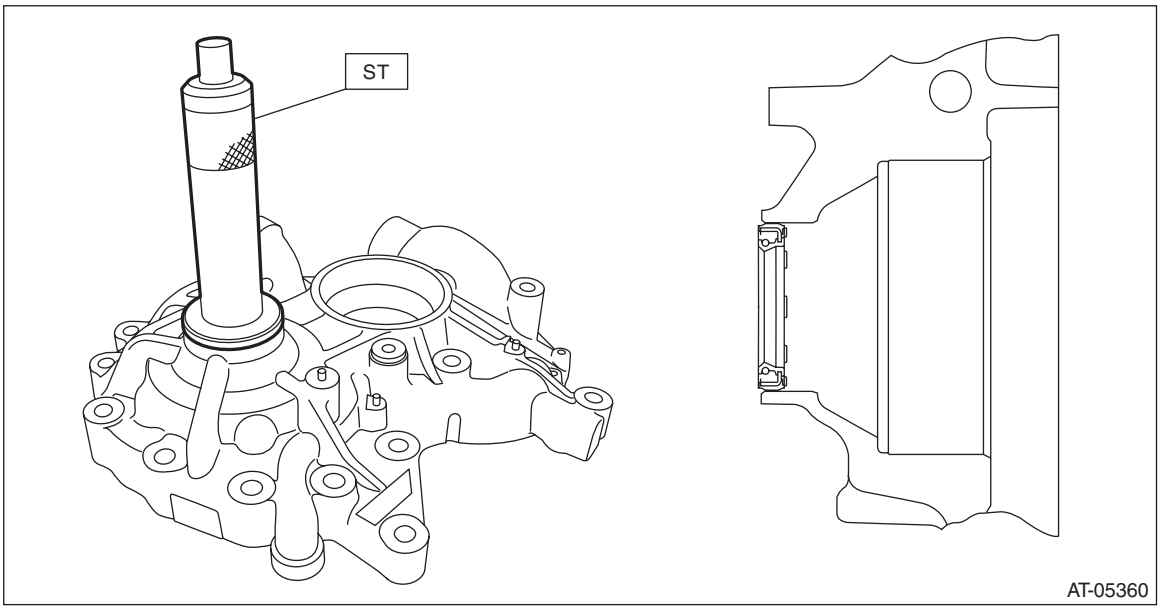

Front differential side

ST 499277100 INSTALLER

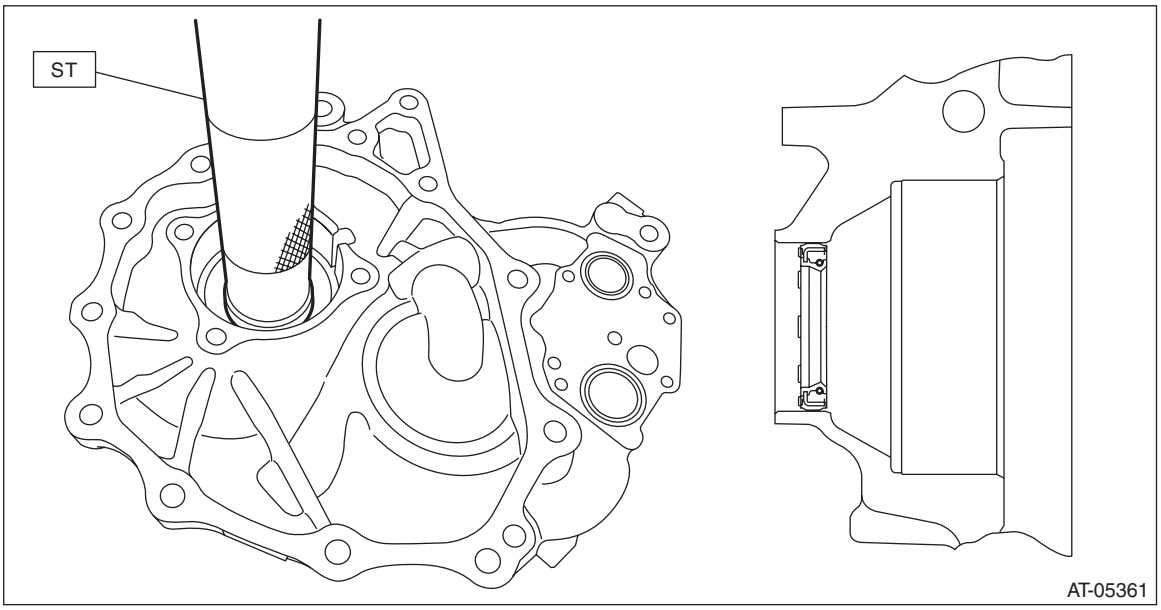

3) Measure the dimension “A” of drive pinion shaft.
ST 398643600 GAUGE

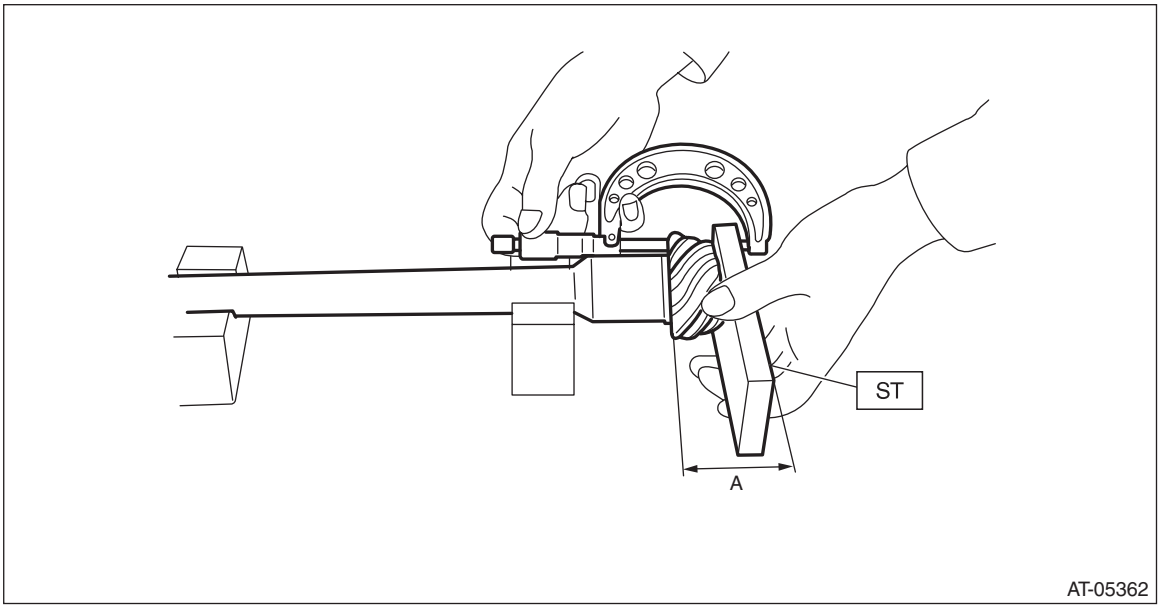

4) Press-fit the new taper roller bearing front side inner race using the ST.
ST 499277200 INSTALLER

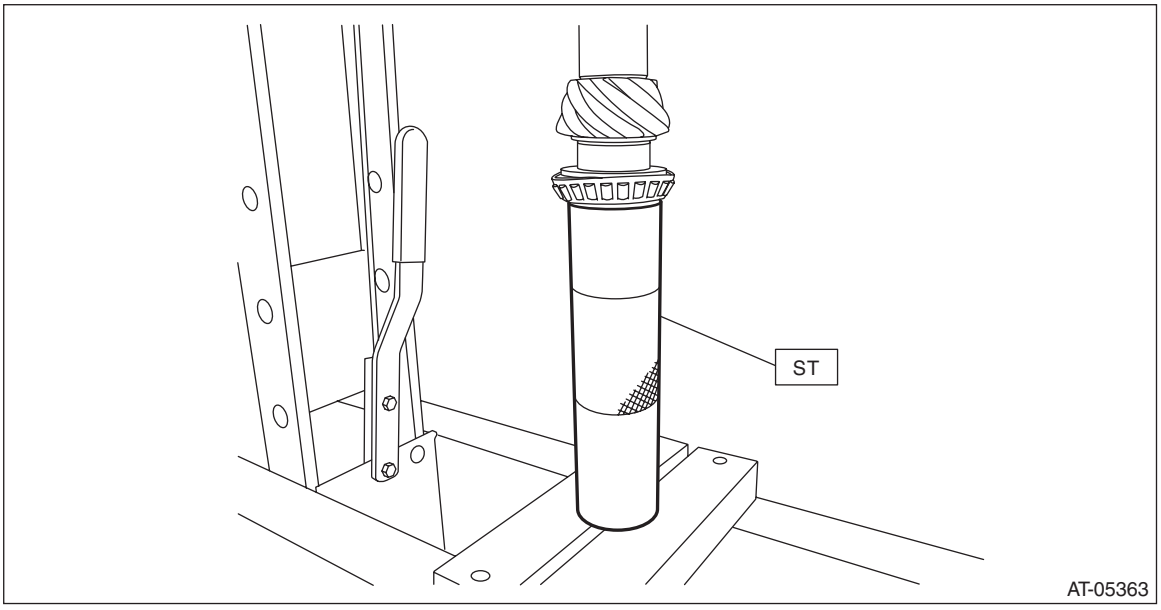

5) Press-fit the new taper roller bearing rear side inner race and outer race together.

CAUTION:
Damage may result if too much force is applied to the roller bearing.

NOTE:
Press in to a position where the bearing rotates smoothly without play.

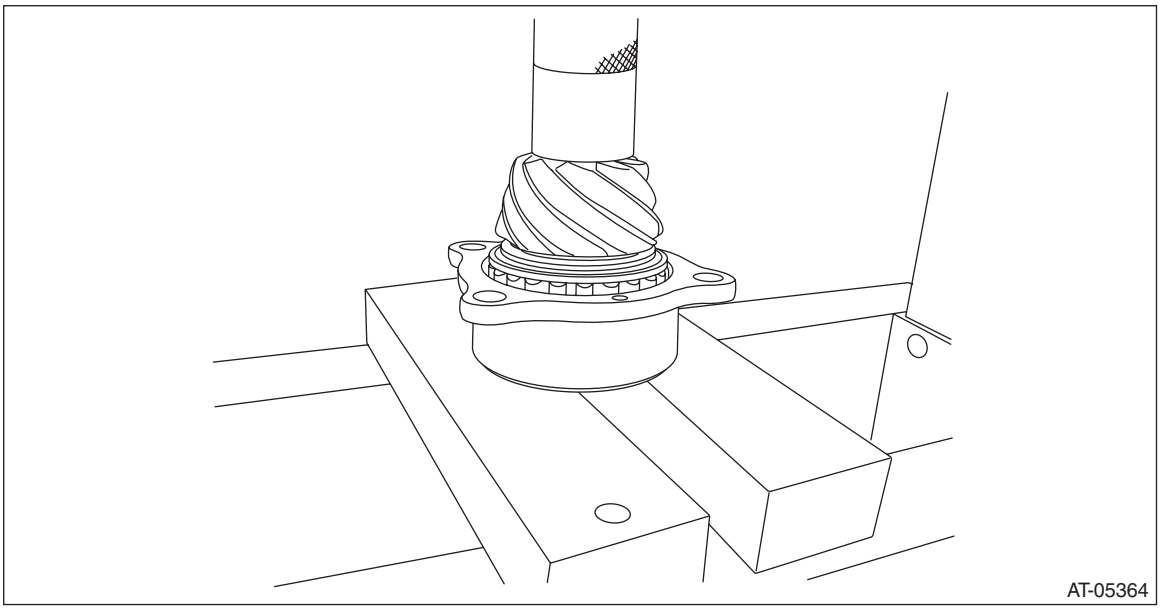

6) Tighten a new lock nut using the ST.
Using the following formula, calculate the torque for a torque wrench.
T2 = L2/(L1 + L2) × T1
T1: 130 N·m (13.3 kgf-m, 95.9 ft-lb)
L1: ST1 length 0.1 m (3.94 in)
L2: Torque wrench length m (in)

[Required torque setting]

T2: Tightening torque: N·m (kgf-m, ft-lb)
Example:

Torque wrench length m (in)	Tightening torque N·m (kgf-m, ft-lb)
0.4 (15.75)	104 (10.6, 76.7)
0.45 (17.72)	106 (10.8, 78.2)
0.5 (19.69)	108 (11.0, 79.7)
0.55 (21.65)	110 (11.2, 81.1)

ST1 18621AA000 WRENCH
ST2 18667AA010 HOLDER

NOTE:
Tighten the lock nut while directly aligning ST1 and torque wrench.

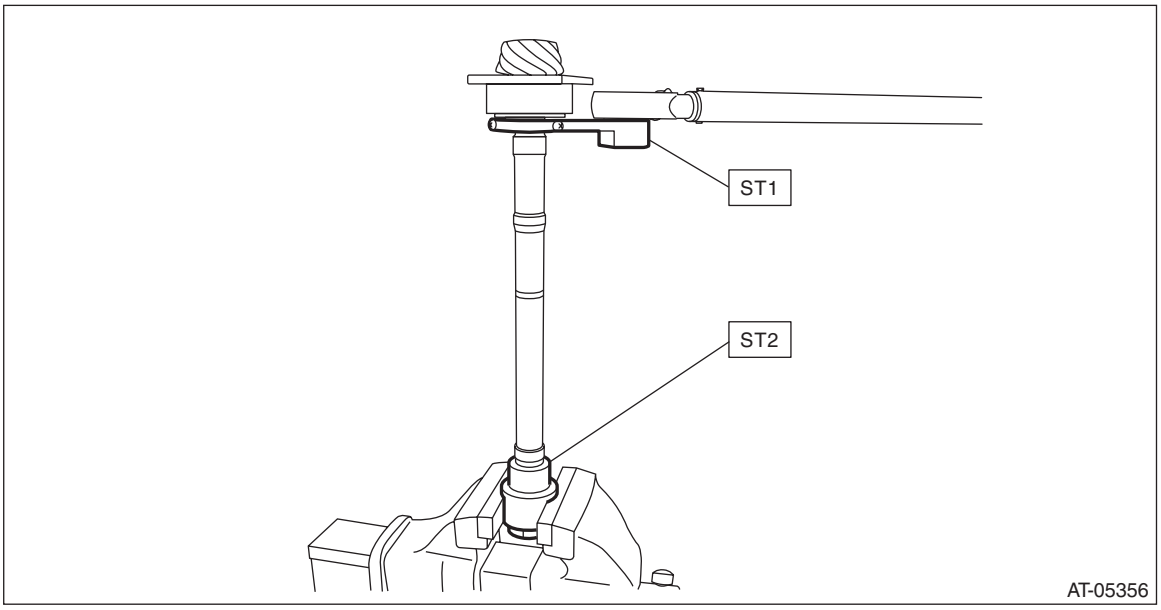

7) Apply differential gear oil to roller of bearing and rotate the bearing several times.
8) Measure the starting torque of the bearing. Make sure the starting torque is within the specified range. If the torque is not within specified range, replace the roller bearing.

Starting torque:
16.3 — 42.7 N (1.7 — 4.4 kgf, 4.4 — 9.6 lbf)

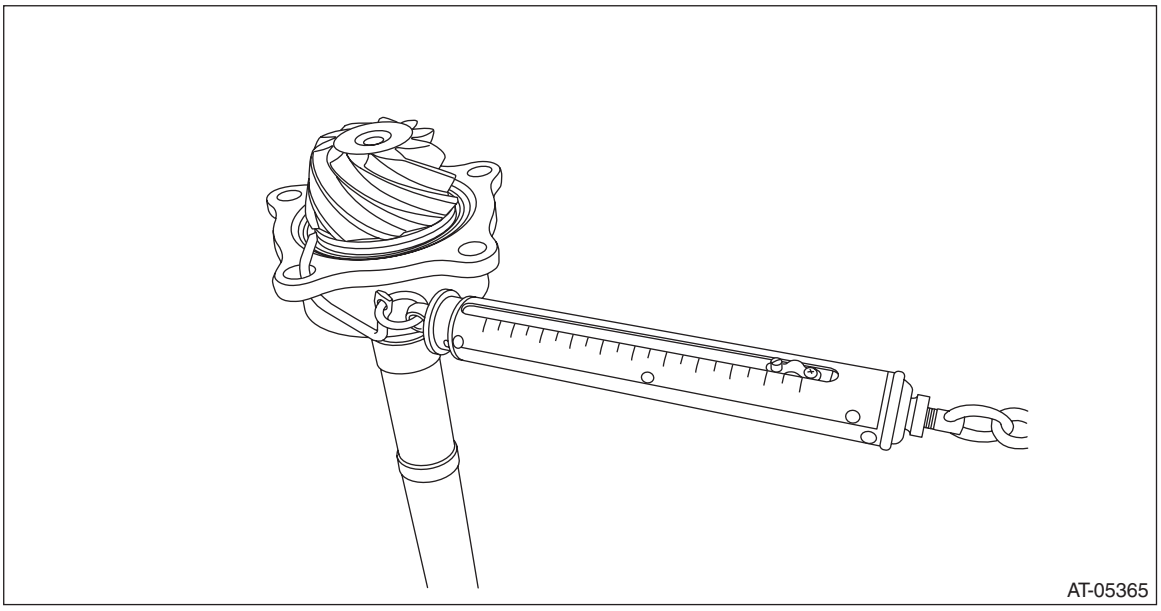

9) Crimp the lock nut in 2 locations.
10) Measure the dimension “B” of the drive pinion shaft.
ST 398643600 GAUGE

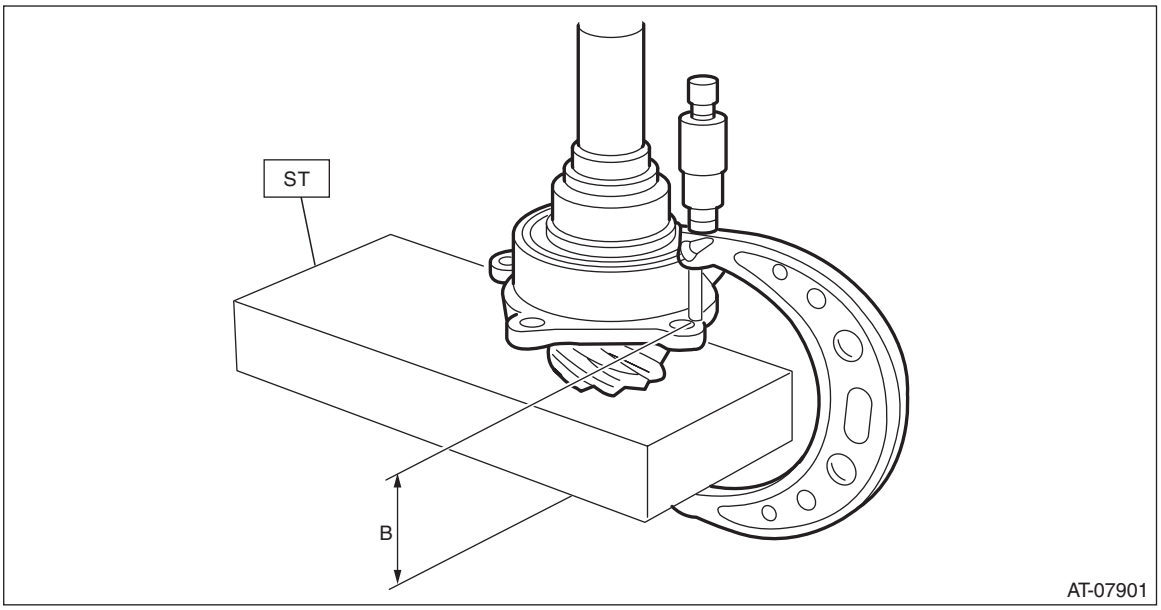

11) Obtain thickness “t” mm (in) of the drive pinion shim.
$t = 6.55 \pm 0.1225 - (B - A)$
12) Select three or less shims from following table.

Drive pinion shim	
Part No.	Thickness mm (in)
31451AA050	0.150 (0.0059)
31451AA060	0.175 (0.0069)
31451AA070	0.200 (0.0079)
31451AA080	0.225 (0.0089)
31451AA090	0.250 (0.0098)
31451AA100	0.275 (0.0108)
31451AA240	0.300 (0.0118)

13) Install the shims selected for drive pinion retainer and drive pinion shaft assembly.

NOTE:
Be careful not to bend the shim.

Tightening torque:
70 N·m (7.1 kgf-m, 51.6 ft-lb)

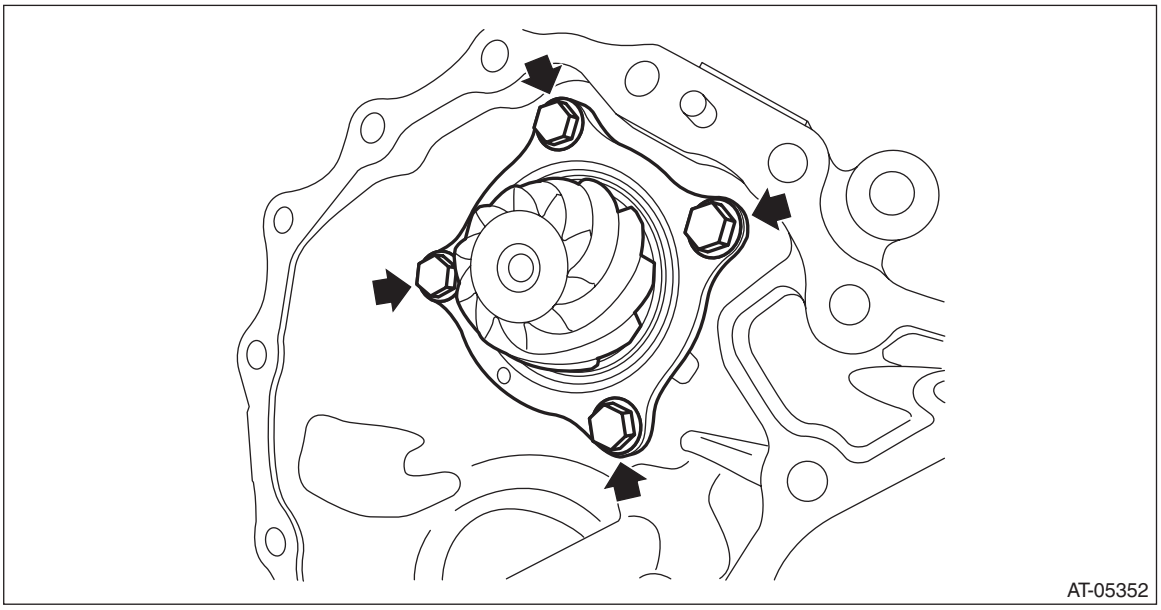

E: INSPECTION

- Make sure that all component parts are free of scratches, holes and other faults.
- Check the tooth contact. <Ref. to CVT(TR690)-289, ADJUSTMENT, Drive Pinion Shaft Assembly.>
- Apply CVTF to bearing and rotate the bearing to check for noise or dragging etc.
- Check the bearing preload of drive pinion shaft.

CAUTION:
Before measuring, apply differential gear oil to roller of bearing and rotate the bearing several times.

Starting torque:
16.3 — 42.7 N (1.7 — 4.4 kgf, 4.4 — 9.6 lbf)

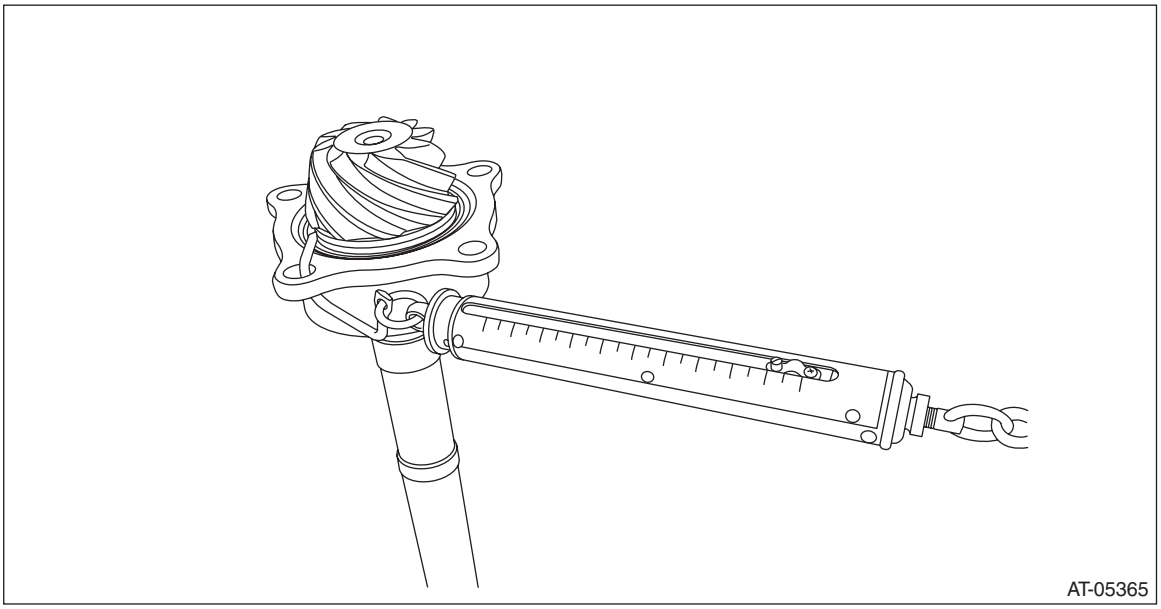

F: ADJUSTMENT

1) Remove the liquid gasket from the mating surface completely.
2) Using the ST, install the drive pinion retainer to converter case.
ST 18270KA020 SOCKET (E20)

NOTE:
Do not confuse the three different-length bolts when installing.

Tightening torque:
43 N·m (4.4 kgf-m, 31.7 ft-lb)

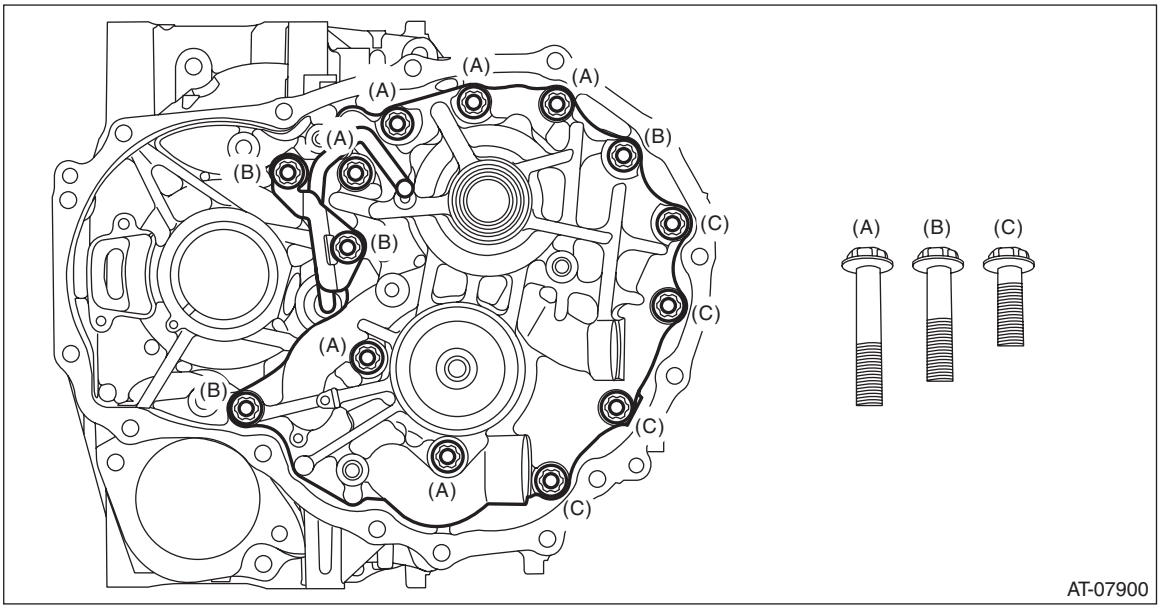

3) Rotate the drive pinion several times using ST1 and ST2.
ST1 18667AA010 HOLDER
ST2 499787700 WRENCH

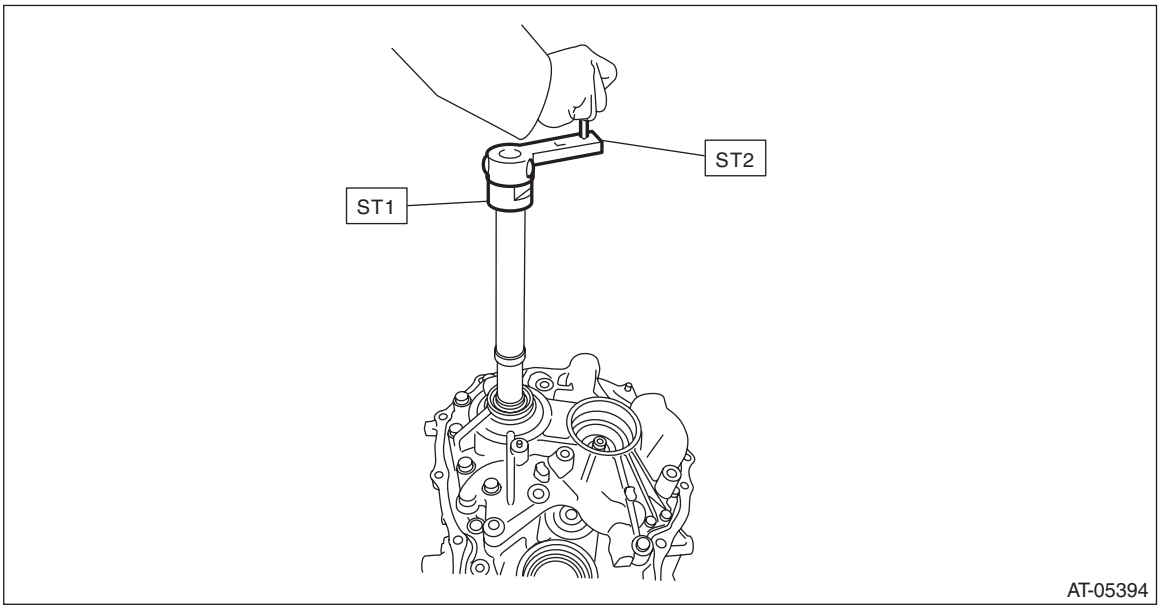

4) Adjust the drive pinion and hypoid driven gear backlash. <Ref. to CVT(TR690)-310, ADJUSTMENT, Front Differential Assembly.>
5) Using the ST, remove the drive pinion retainer from converter case.
ST 18270KA020 SOCKET (E20)
6) Apply lead-free red dye evenly on the both sides of three to four teeth of the hypoid driven gear. Then install the drive pinion retainer and rotate the drive pinion in both directions several times. Remove the drive pinion retainer and check the tooth contact pattern.
If the teeth contact is inappropriate, adjust the backlash or thickness of the shim. <Ref. to CVT(TR690)-310, ADJUSTMENT, Front Differential Assembly.>

NOTE:
After correction, wipe off the lead-free red dye.

- Correct tooth contact

Check item: Tooth contact surface is slightly shifted toward the toe side under a no-load condition. (When driving, it moves towards the heel side.)

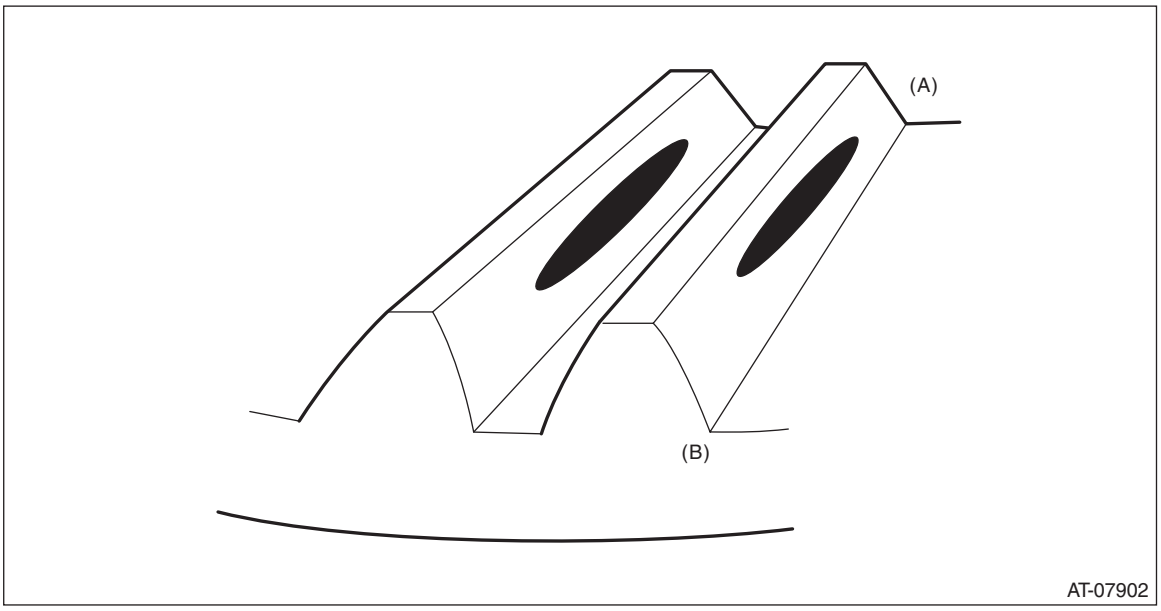

(A) Toe side
(B) Heel side

- Face contact

Check item: Backlash is too large.

Contact pattern

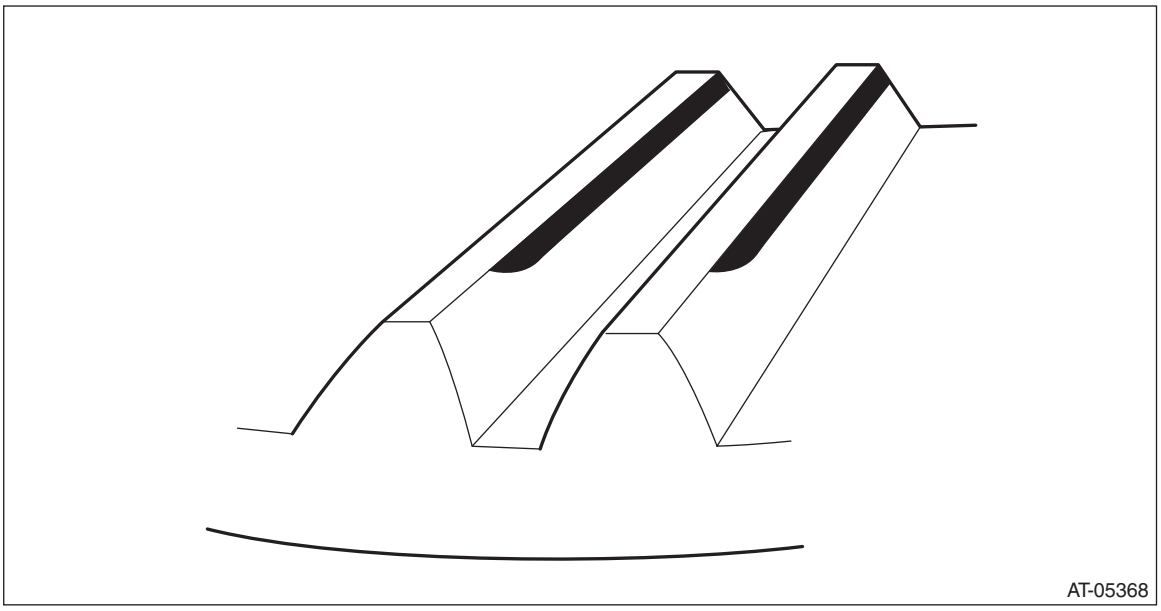

Corrective action: Increase thickness of pinion height adjusting washer according to the procedure for bringing drive pinion close to hypoid driven gear side.

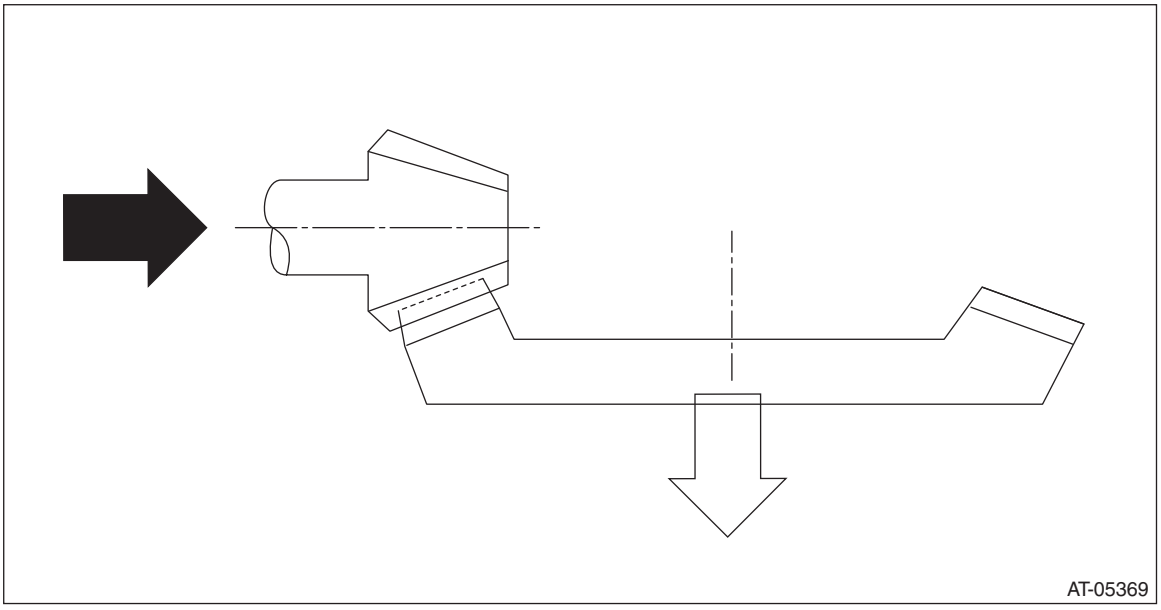

- Flank contact

Check item: Backlash is too small.

Contact pattern

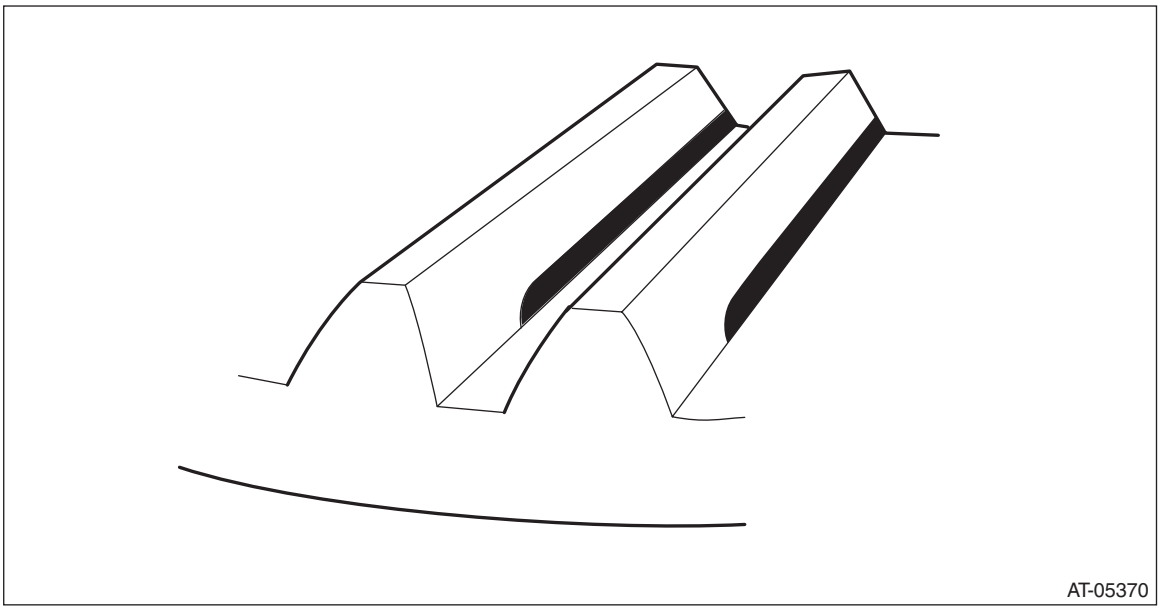

Corrective action: Reduce the thickness of pinion height adjusting washer according to the procedure for bringing drive pinion away from hypoid driven gear.

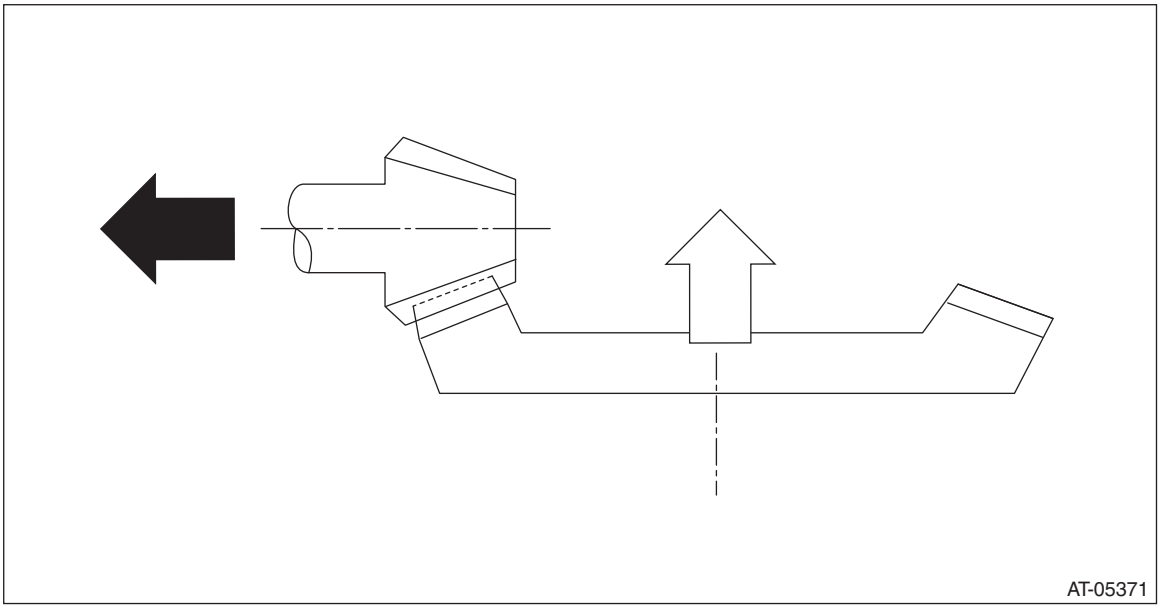

- Toe contact (inside contact)

Check item: Teeth contact area is too small.

Contact pattern

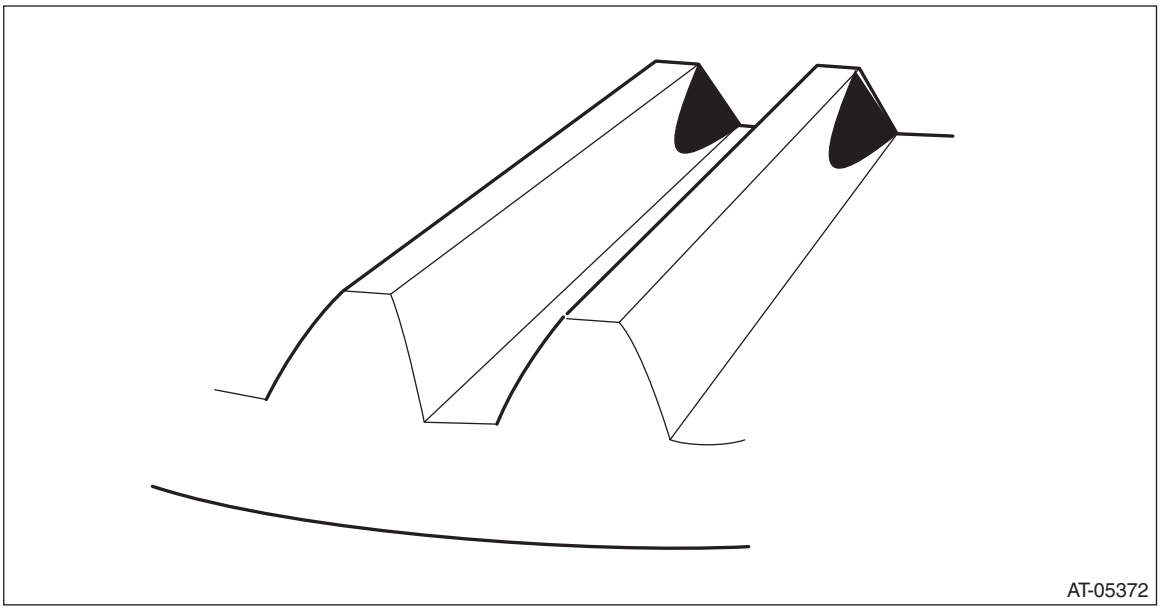

Corrective action: Reduce the thickness of pinion height adjusting washer according to the procedure for bringing drive pinion away from hypoid driven gear side.

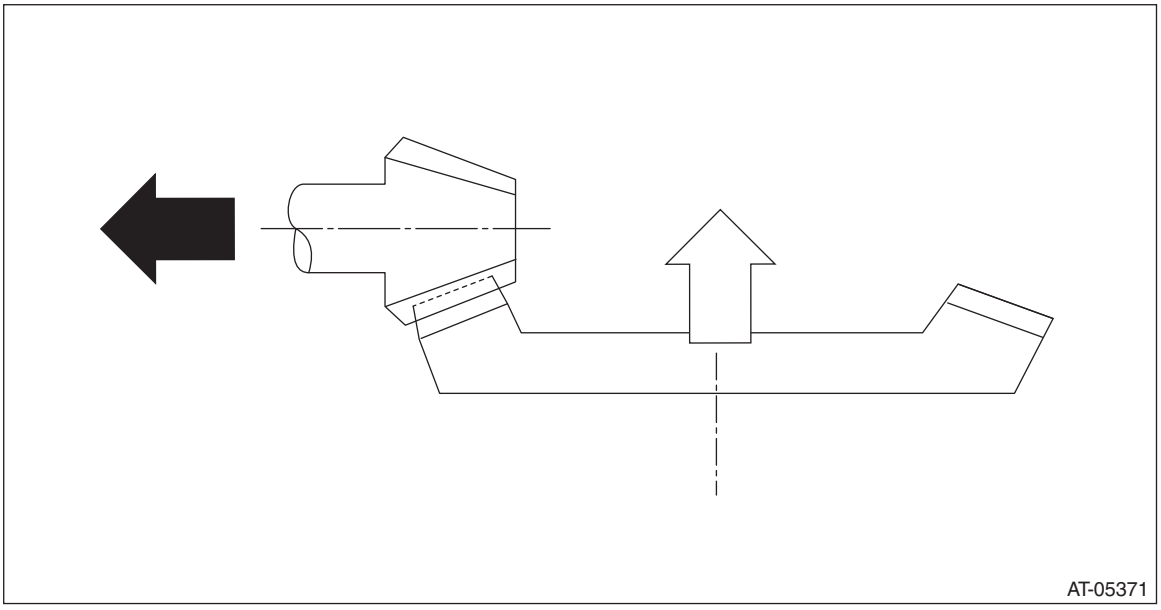

- Heel contact (outside end contact)

Check item: Teeth contact area is too small.

Contact pattern

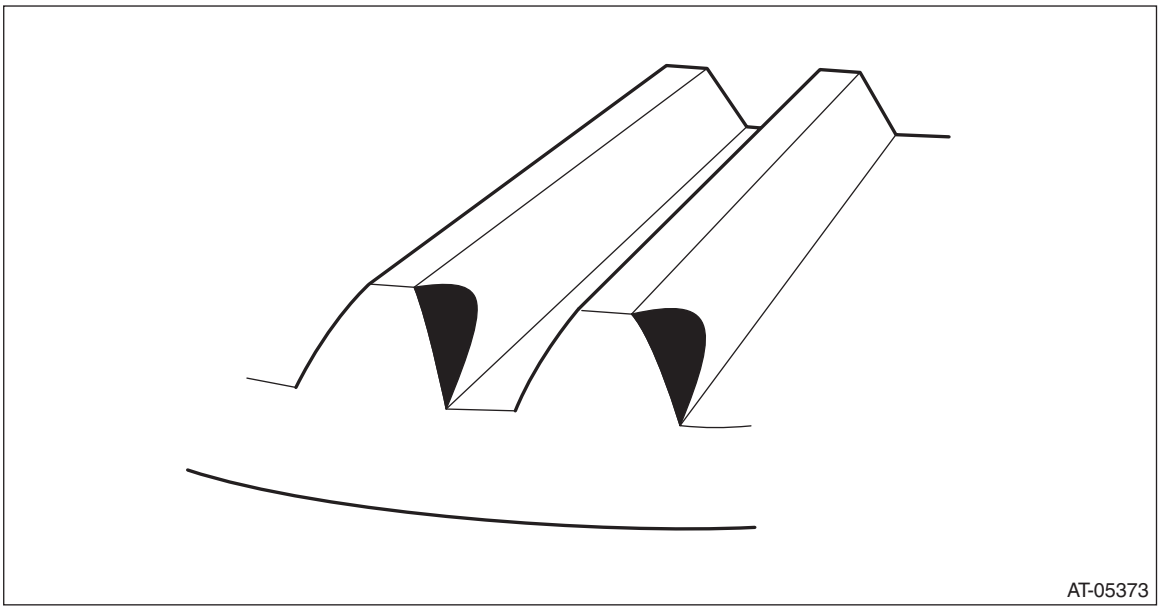

Corrective action: Increase the thickness of the pinion height adjusting washer according to the procedures for moving the drive pinion closer to the hypoid driven gear.

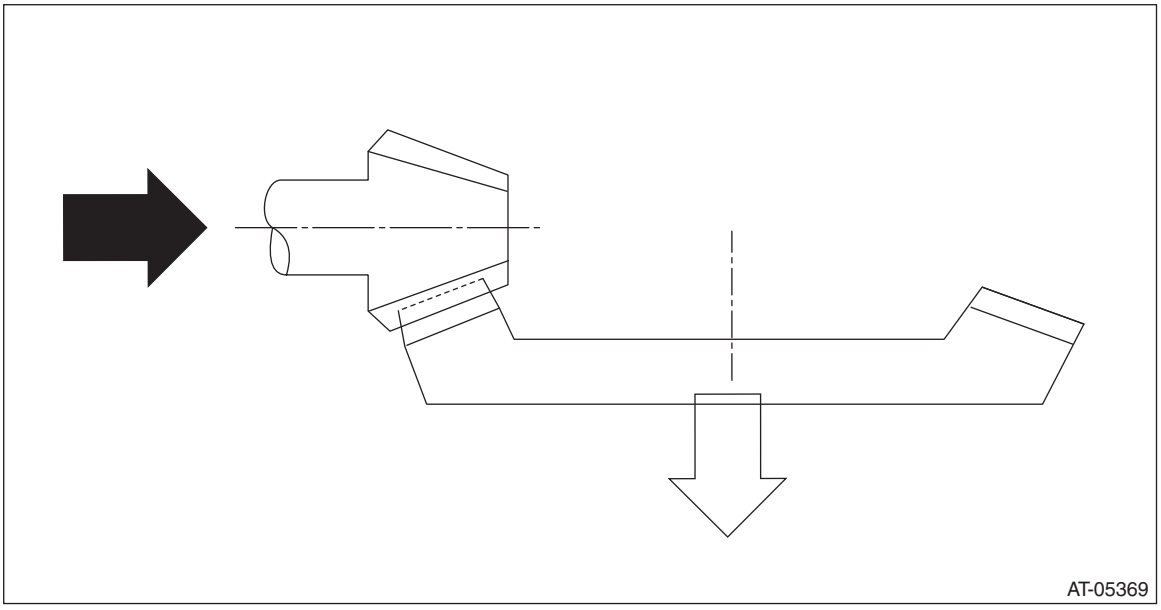

7) If tooth contact is correct, mark the differential side retainer position and loosen. After fitting a new O-ring and oil seal, screw in the differential side retainer to the marked position.
8) Tighten the lock plate with specified torque.

Tightening torque:
25 N·m (2.5 kgf-m, 18.4 ft-lb)

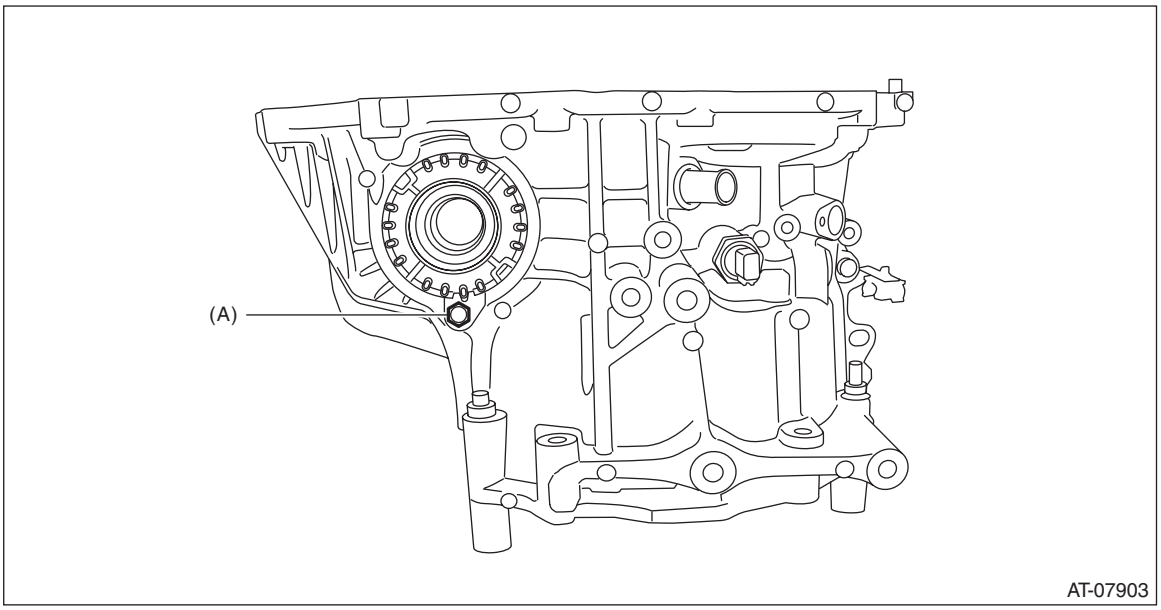

(A) Lock plate

45.Front Differential Assembly

A: REMOVAL

1) Remove the transmission assembly from the vehicle. <Ref. to CVT(TR690)-58, REMOVAL, Automatic Transmission Assembly.>
2) Remove the air breather hose. <Ref. to CVT(TR690)-152, REMOVAL, Air Breather Hose.>
3) Remove the oil pan and control valve body. <Ref. to CVT(TR690)-124, REMOVAL, Control Valve Body.>
4) Remove the transmission harness. <Ref. to CVT(TR690)-135, REMOVAL, Transmission Harness.>
5) Remove the extension case. <Ref. to CVT(TR690)-160, REMOVAL, Extension Case.>
6) Remove the rear drive shaft. <Ref. to CVT(TR690)-163, REMOVAL, Rear Drive Shaft.>
7) Remove the transfer clutch assembly. <Ref. to CVT(TR690)-168, REMOVAL, Transfer Clutch.>
8) Remove the transfer reduction driven gear assembly. <Ref. to CVT(TR690)-180, REMOVAL, Transfer Reduction Driven Gear.>
9) Remove the intermediate case. <Ref. to CVT(TR690)-187, REMOVAL, Intermediate Case.>
10) Remove the forward clutch assembly. <Ref. to CVT(TR690)-202, REMOVAL, Forward Clutch Assembly.>
11) Remove the transmission case. <Ref. to CVT(TR690)-242, REMOVAL, Transmission Case.>
12) Remove the primary pulley, secondary pulley and variator chain. <Ref. to CVT(TR690)-259, REMOVAL, Primary Pulley and Secondary Pulley.>
13) Remove the drive pinion shaft assembly. <Ref. to CVT(TR690)-275, REMOVAL, Drive Pinion Shaft Assembly.>
14) Remove the lock plates on both sides.

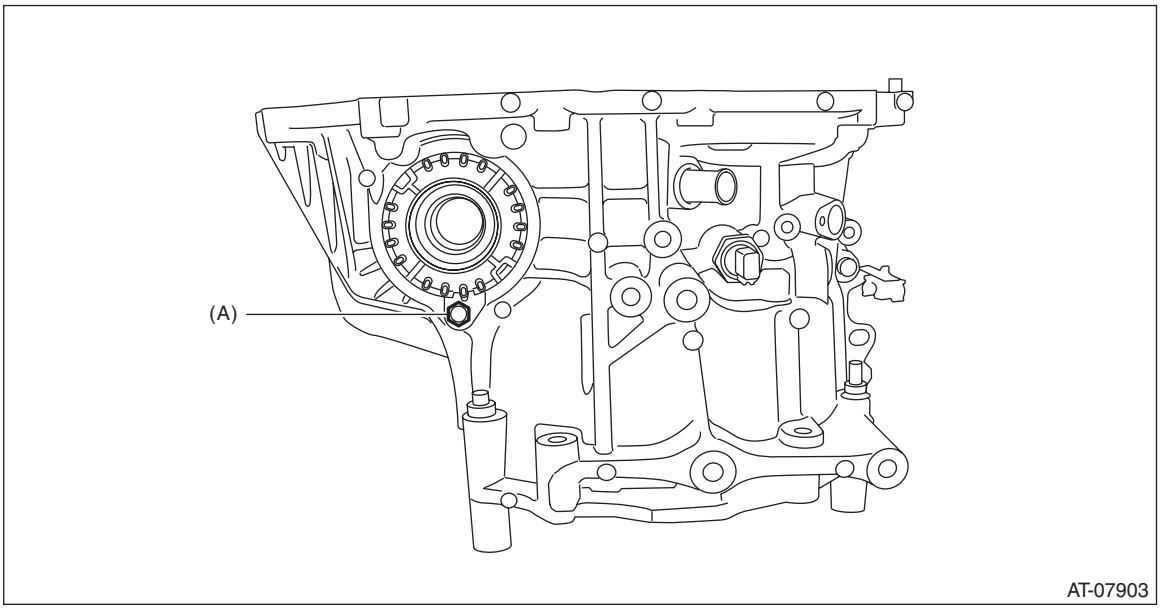

(A) Lock plate

15) Remove the differential side retainers using ST.
ST 18658AA020 WRENCH COMPL RETAINER

NOTE:
• Support the differential case assembly by hand to avoid damaging the retainer mounting hole of the converter case.
• When keeping the retainers aside, use labels etc. to avoid confusing the left and right.

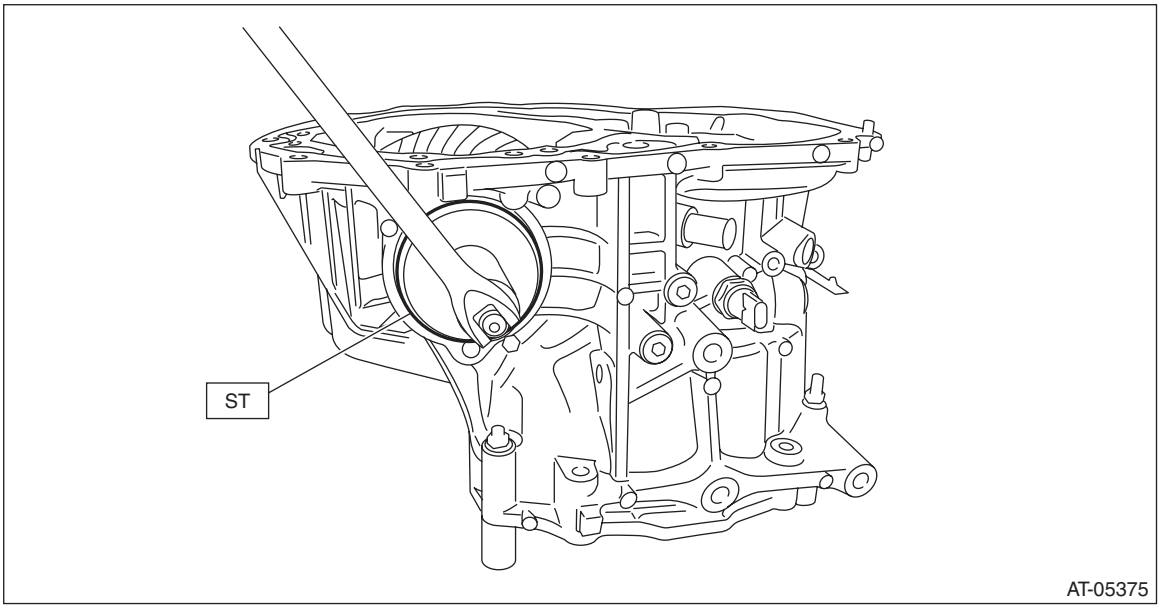

16) Remove the front differential assembly while being careful not to damage the attachment part of the retainer.
17) Remove the oil seals and O-rings from both differential side retainers. <Ref. to CVT(TR690)-302, SIDE RETAINER, DISASSEMBLY, Front Differential Assembly.>

B: INSTALLATION

1) Install the front differential assembly to the converter case.

NOTE:
Be careful not to damage the inside of the case (especially the mating surface of the differential side retainers).
2) Temporarily install the differential side retainers using ST.
ST 18658AA020 WRENCH COMPL RETAINER

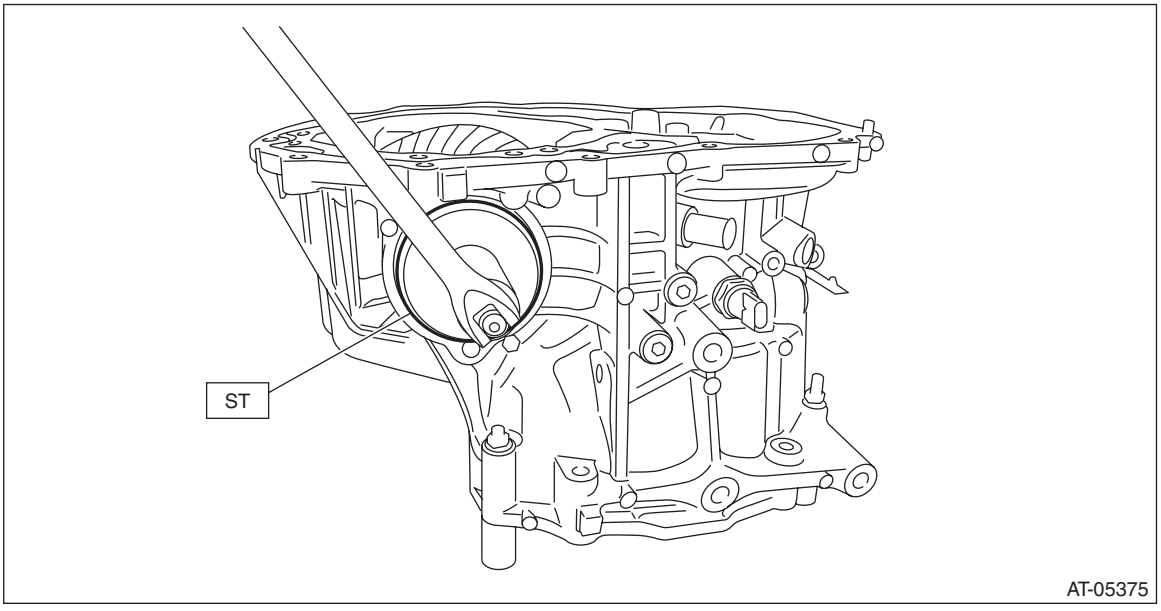

3) Adjust the backlash of the front differential. <Ref. to CVT(TR690)-310, ADJUSTMENT, Front Differential Assembly.>
4) Inspect and adjust the tooth contact. <Ref. to CVT(TR690)-289, ADJUSTMENT, Drive Pinion Shaft Assembly.>
5) Remove the differential side retainers and install the O-rings and oil seals. <Ref. to CVT(TR690)-309, SIDE RETAINER, ASSEMBLY, Front Differential Assembly.>

NOTE:
- Record how many turns were needed to remove.
- Use new O-rings and oil seals.

6) Install the differential side retainers using ST.

NOTE:
When attaching, turn the differential side retainer by the same number of turns it took to remove, and align the marks.
ST 18658AA020 WRENCH COMPL RETAINER
7) Install the lock plate.

Tightening torque:
25 N·m (2.5 kgf-m, 18.4 ft-lb)

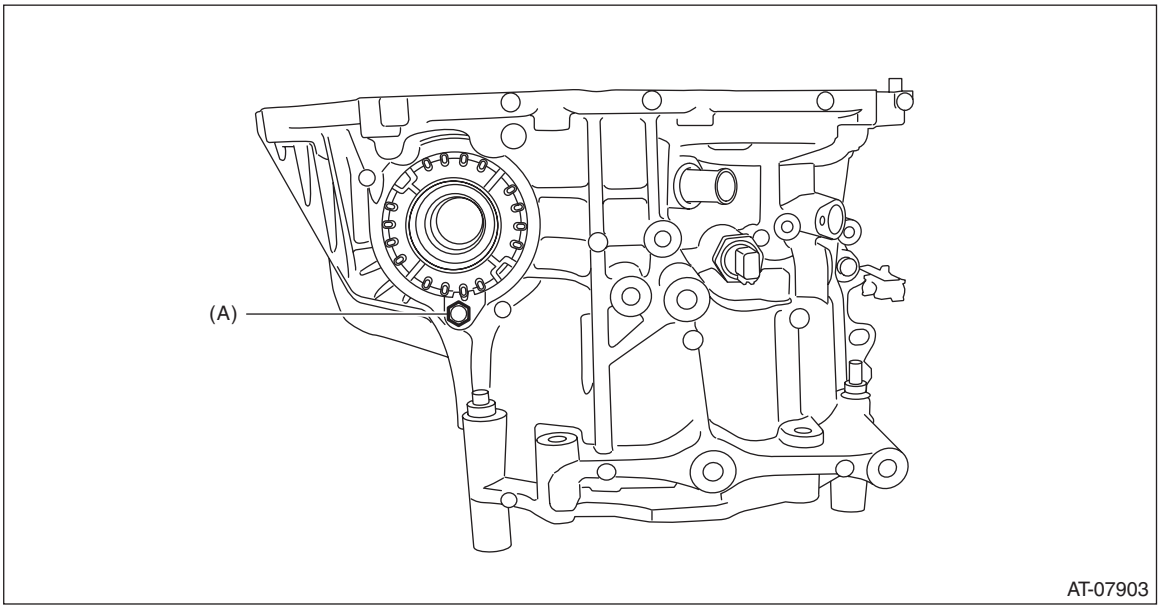

(A) Lock plate

8) Install the drive pinion shaft assembly. <Ref. to CVT(TR690)-277, INSTALLATION, Drive Pinion Shaft Assembly.>
9) Install the primary pulley, secondary pulley and variator chain. <Ref. to CVT(TR690)-263, INSTALLATION, Primary Pulley and Secondary Pulley.>
10) Install the transmission case. <Ref. to CVT(TR690)-244, INSTALLATION, Transmission Case.>
11) Install the forward clutch assembly. <Ref. to CVT(TR690)-203, INSTALLATION, Forward Clutch Assembly.>
12) Install the intermediate case. <Ref. to CVT(TR690)-188, INSTALLATION, Intermediate Case.>
13) Install the transfer reduction driven gear assembly. <Ref. to CVT(TR690)-180, INSTALLATION, Transfer Reduction Driven Gear.>
14) Install the transfer clutch assembly. <Ref. to CVT(TR690)-169, INSTALLATION, Transfer Clutch.>
15) Install the rear drive shaft. <Ref. to CVT(TR690)-163, INSTALLATION, Rear Drive Shaft.>
16) Install the extension case. <Ref. to CVT(TR690)-161, INSTALLATION, Extension Case.>
17) Install the transmission harness. <Ref. to CVT(TR690)-137, INSTALLATION, Transmission Harness.>
18) Install the control valve body and oil pan. <Ref. to CVT(TR690)-128, INSTALLATION, Control Valve Body.>

19) Install the air breather hose. <Ref. to CVT(TR690)-154, INSTALLATION, Air Breather Hose.>
20) Install the transmission assembly to the vehicle. <Ref. to CVT(TR690)-75, INSTALLATION, Automatic Transmission Assembly.>

C: DISASSEMBLY

1. DIFFERENTIAL CASE ASSEMBLY

1) Remove the taper roller bearing using the ST.
ST 498077000 REMOVER

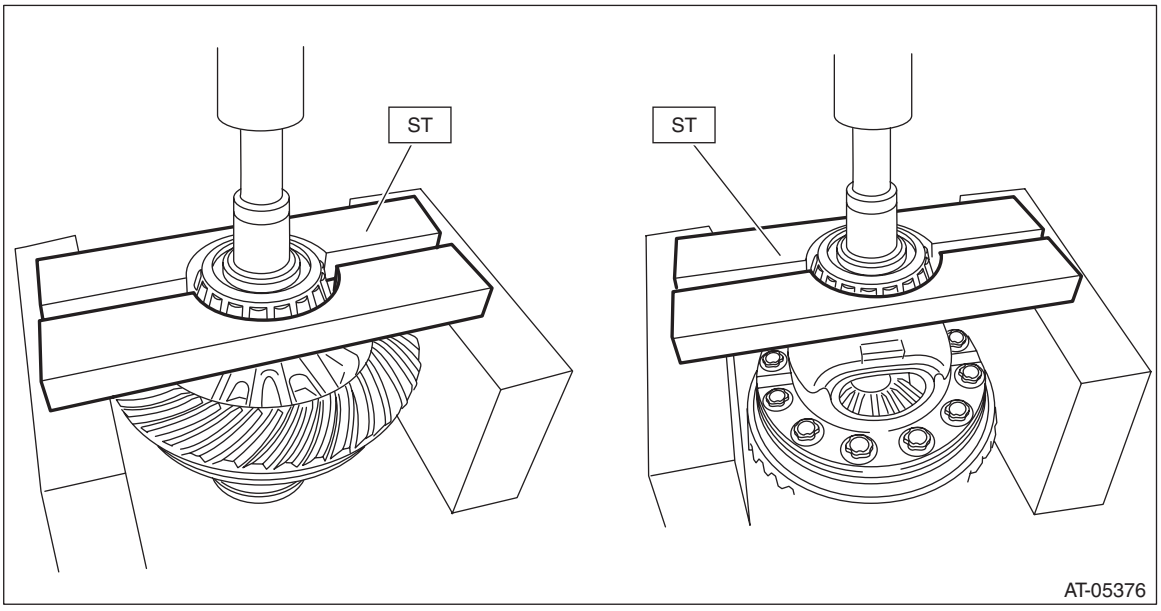

2) Remove the hypoid driven gear mounting bolt using the ST.
ST 18270KA020 SOCKET (E20)

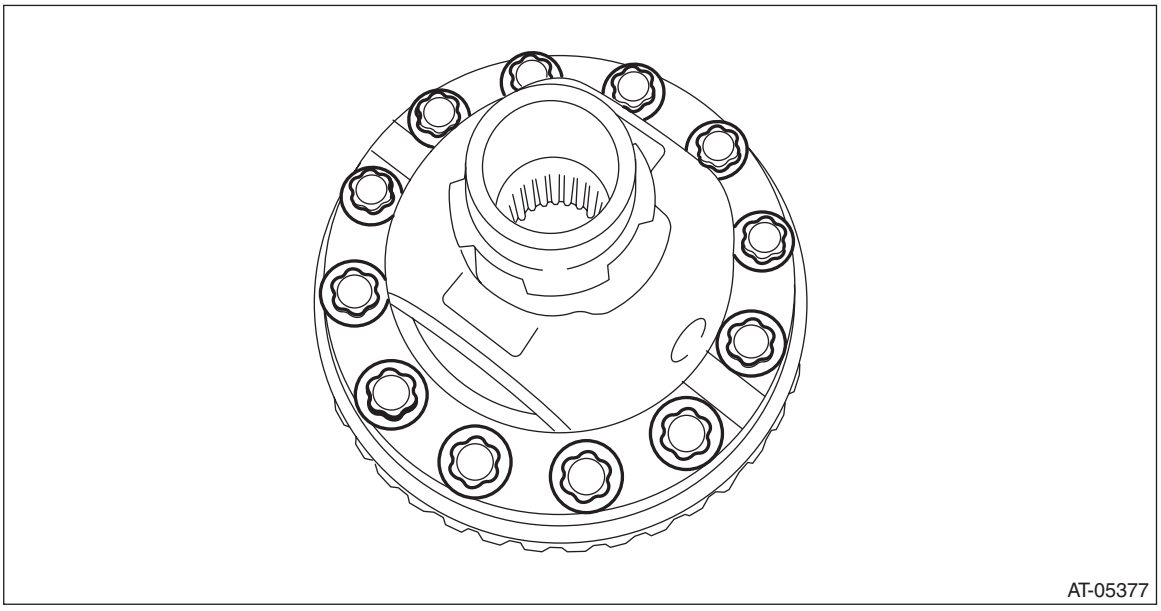

3) Remove the differential case (LH).

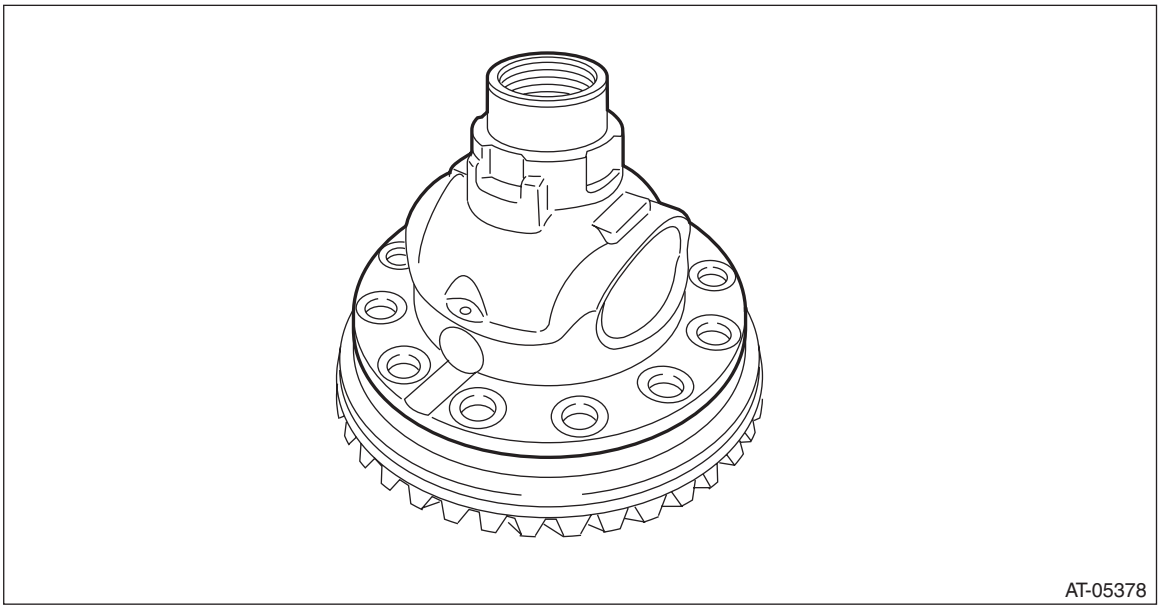

4) Remove the differential bevel gear and washer from differential case.

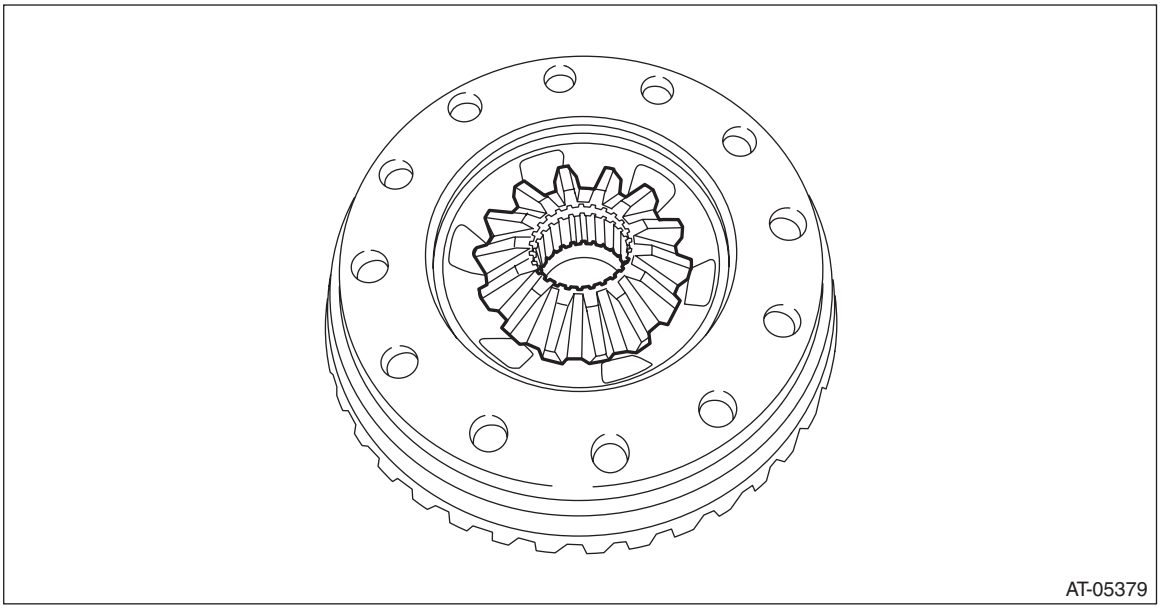

5) Remove the straight pin.

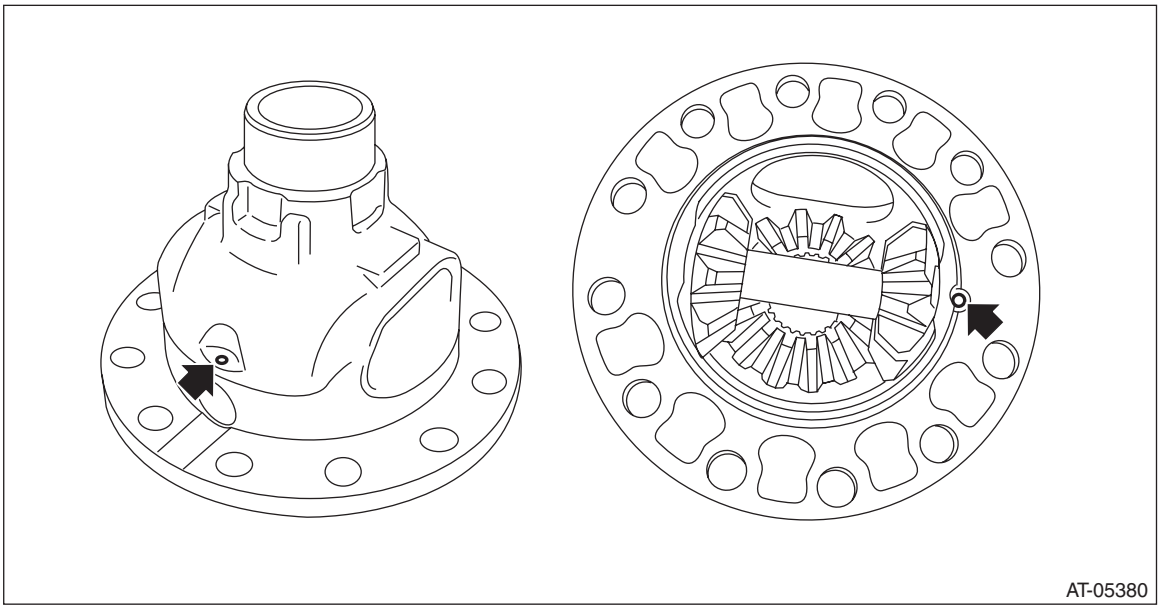

6) Remove the pinion shaft, then remove the differential bevel gear, washer and differential bevel pinion.

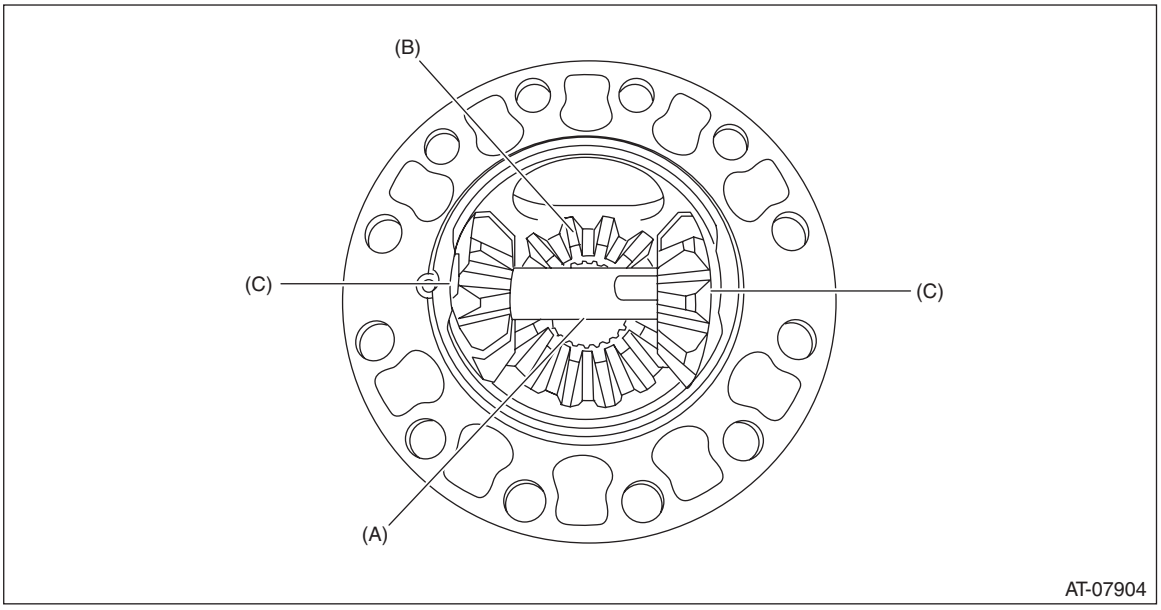

(A) Pinion shaft
(B) Differential bevel gear
(C) Differential bevel pinion

2. SIDE RETAINER

NOTE:
After adjusting the drive pinion backlash and tooth contact, replace the oil seal and O-ring with new parts.
1) Remove the O-rings.

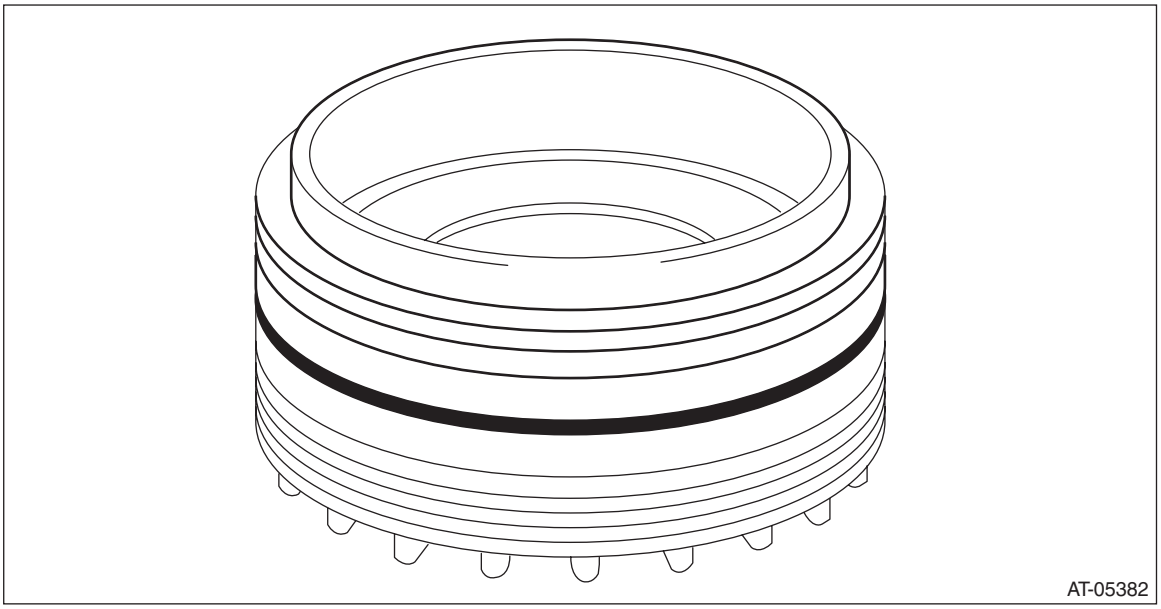

2) Remove the oil seal.

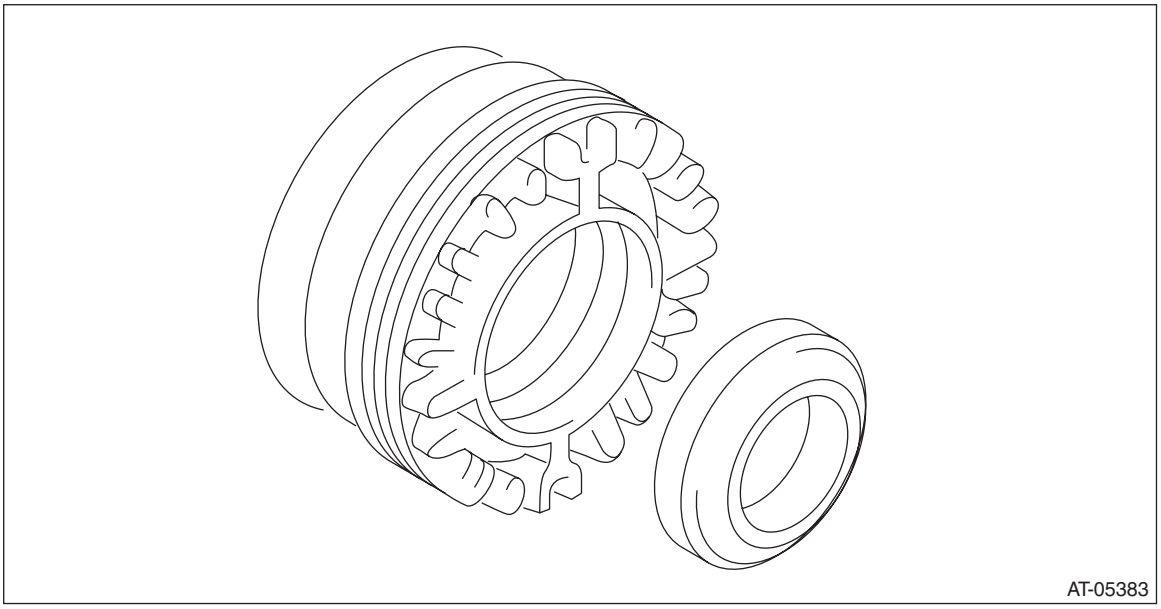

3) Remove the SPLIT PIN (ST), and then remove the claw.
ST 398527700 PULLER ASSY

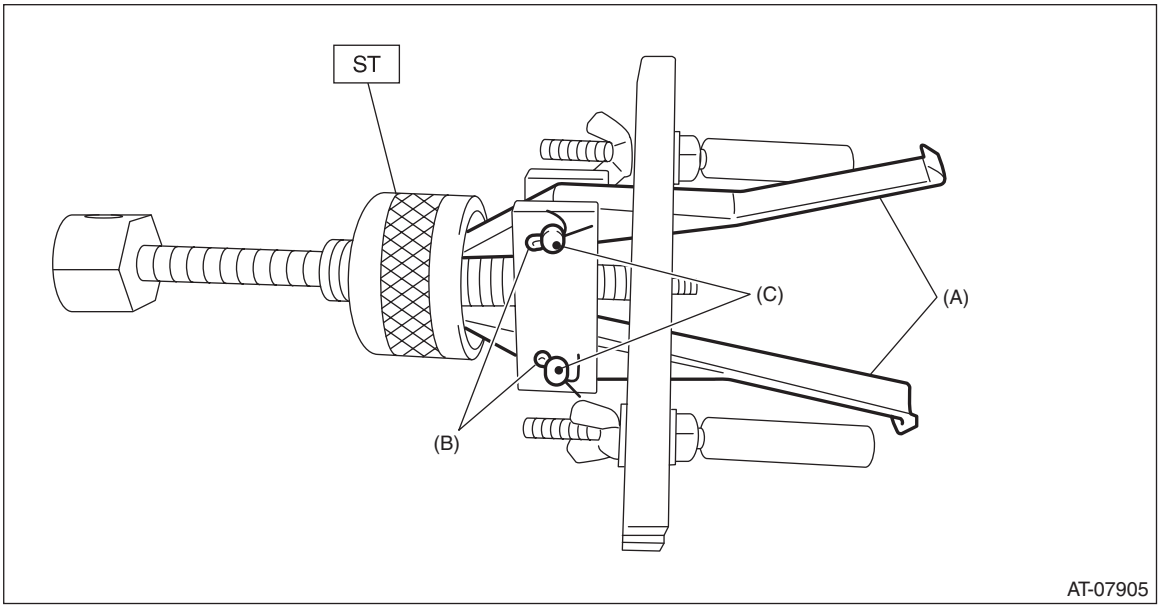

(A) Claw
(B) Split pin
(C) Pin

4) Attach two claws to the outer race, and set the ST to side retainer.
ST 398527700 PULLER ASSY

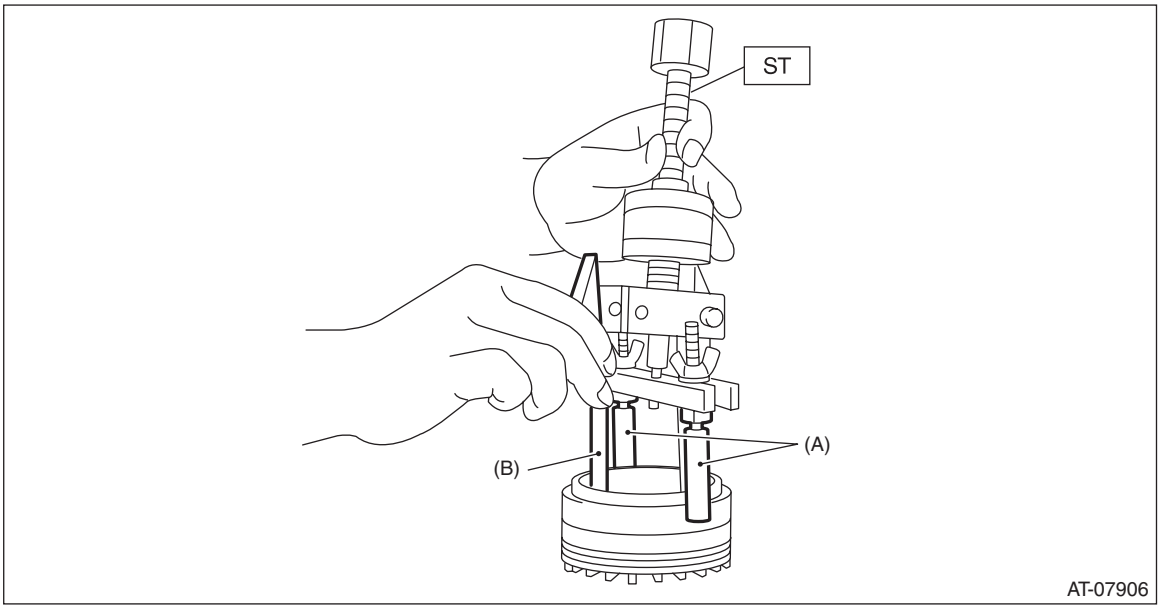

(A) Shaft
(B) Claw

5) Restore the removed claws to original position, and install the pin and split pin.
6) Hold the shaft of ST to avoid removing from side retainer, and then remove the bearing outer race.
ST 398527700 PULLER ASSY

NOTE:
Replace the bearing inner and outer races as a single unit.

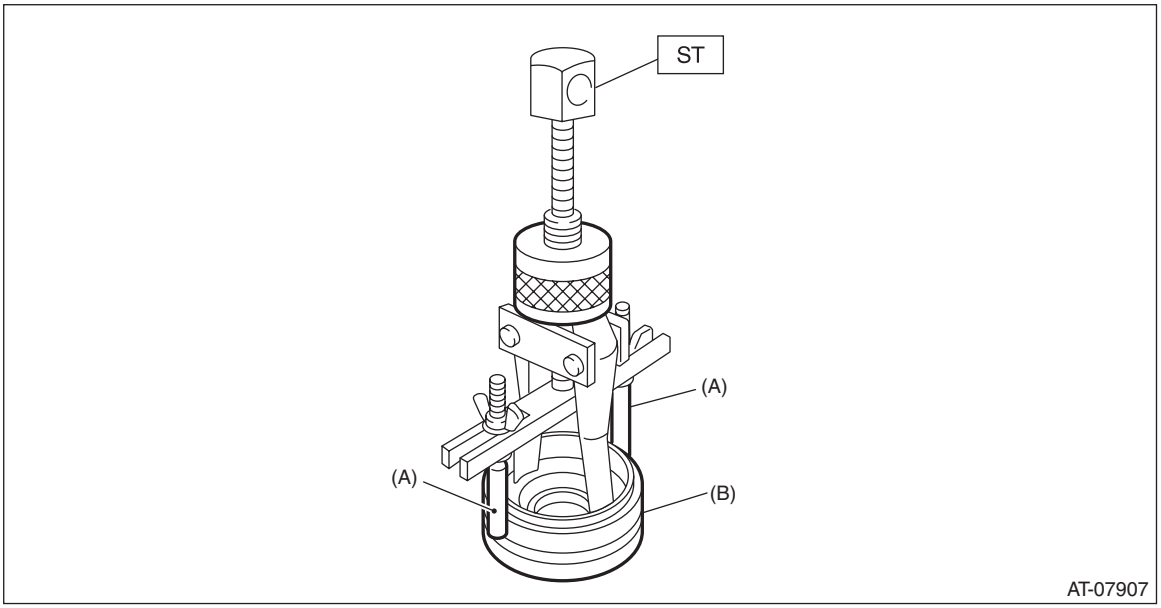

(A) Shaft
(B) Side retainer

D: ASSEMBLY

1. DIFFERENTIAL CASE ASSEMBLY

1) Install the washer and differential bevel gear into differential case (LH).

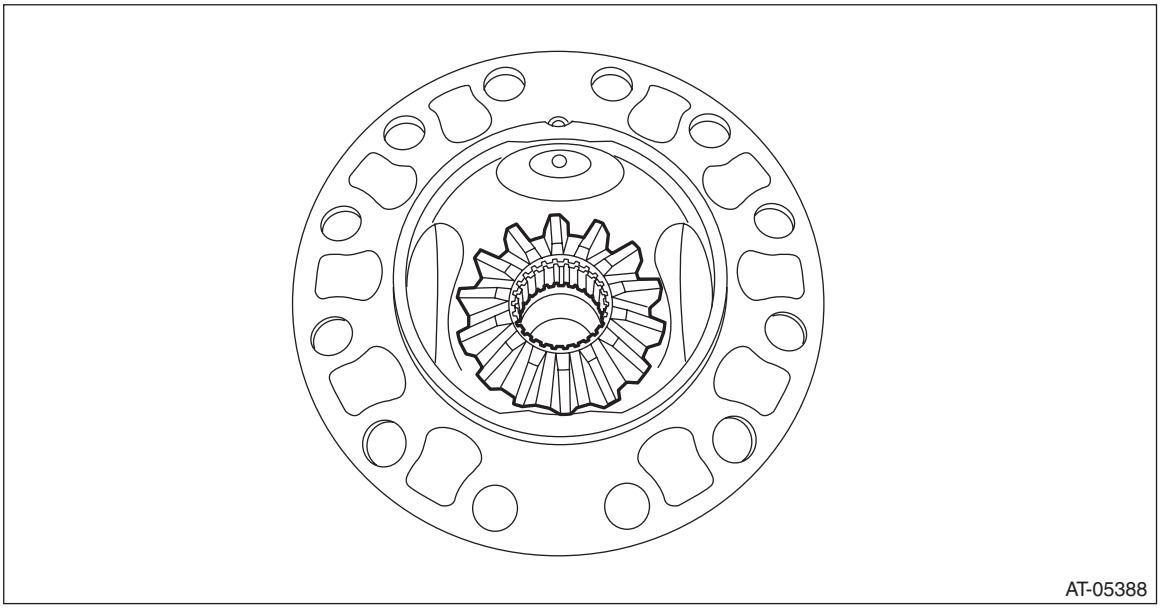

2) Install the differential bevel gear pinions into differential case (LH) and install the pinion shaft.

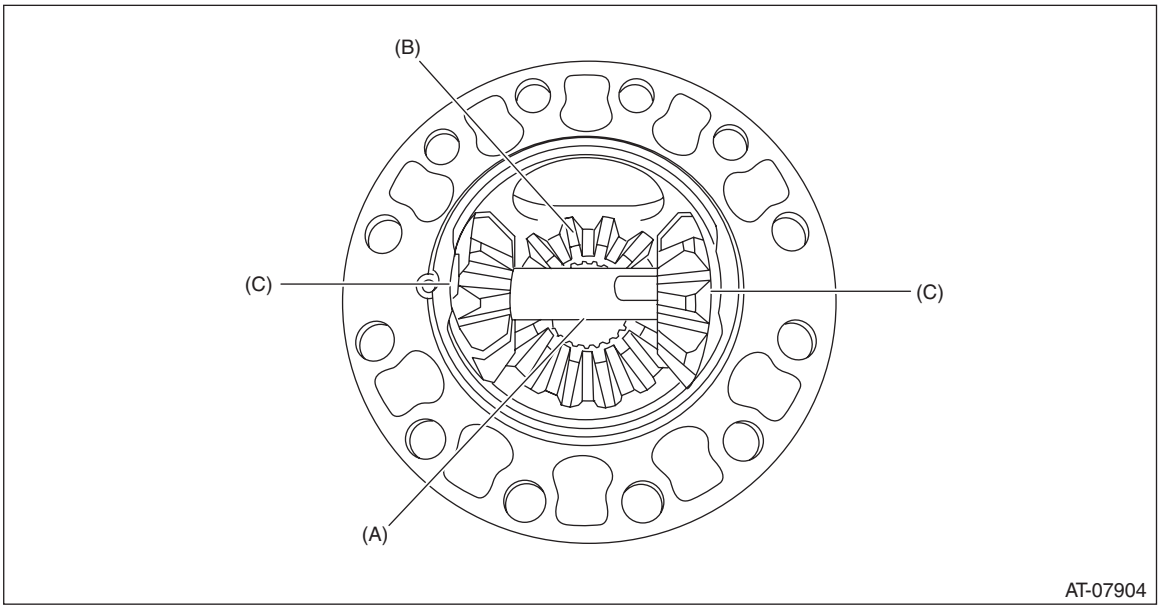

(A) Pinion shaft
(B) Differential bevel gear
(C) Differential bevel pinion

3) Install the straight pin.

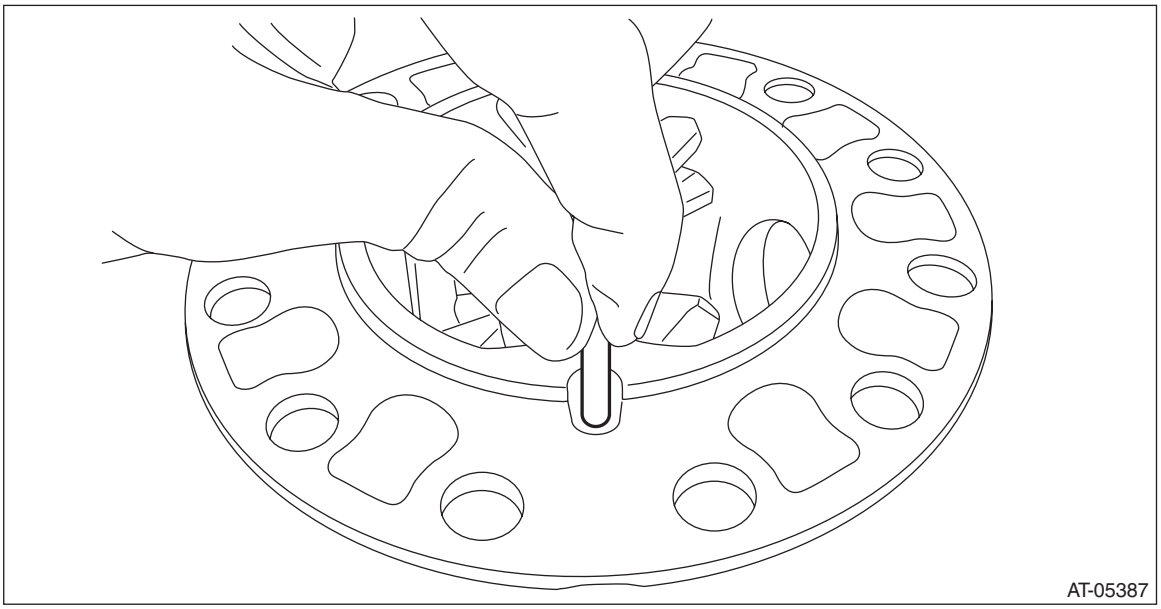

4) Install the differential case (RH) to hypoid driven gear and secure with vise.

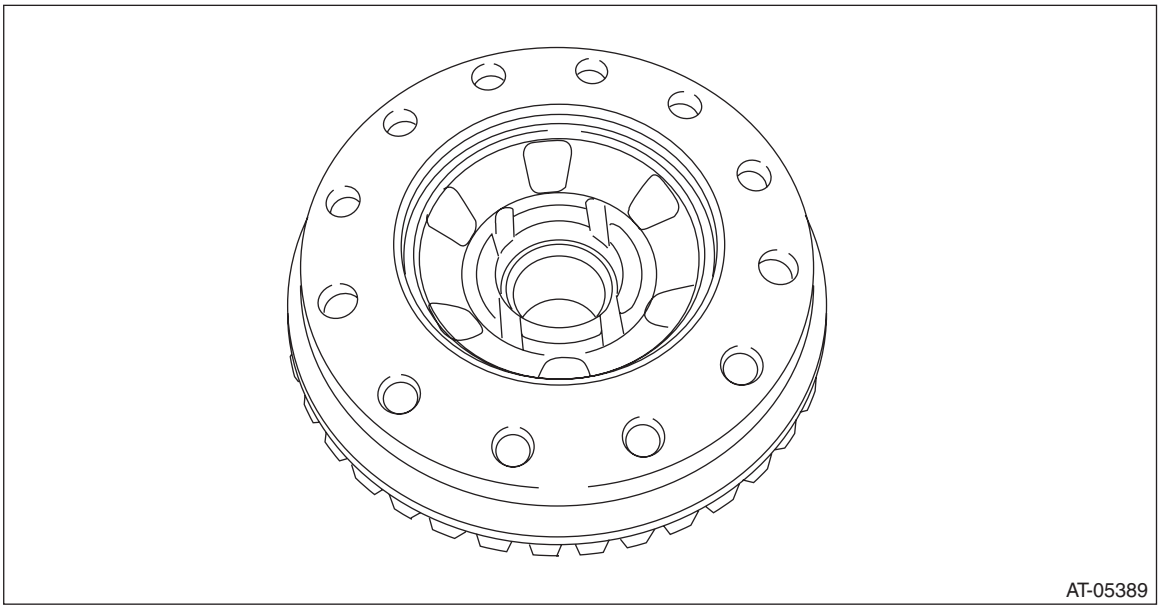

5) Install the washer and differential bevel gear to the differential case (RH).

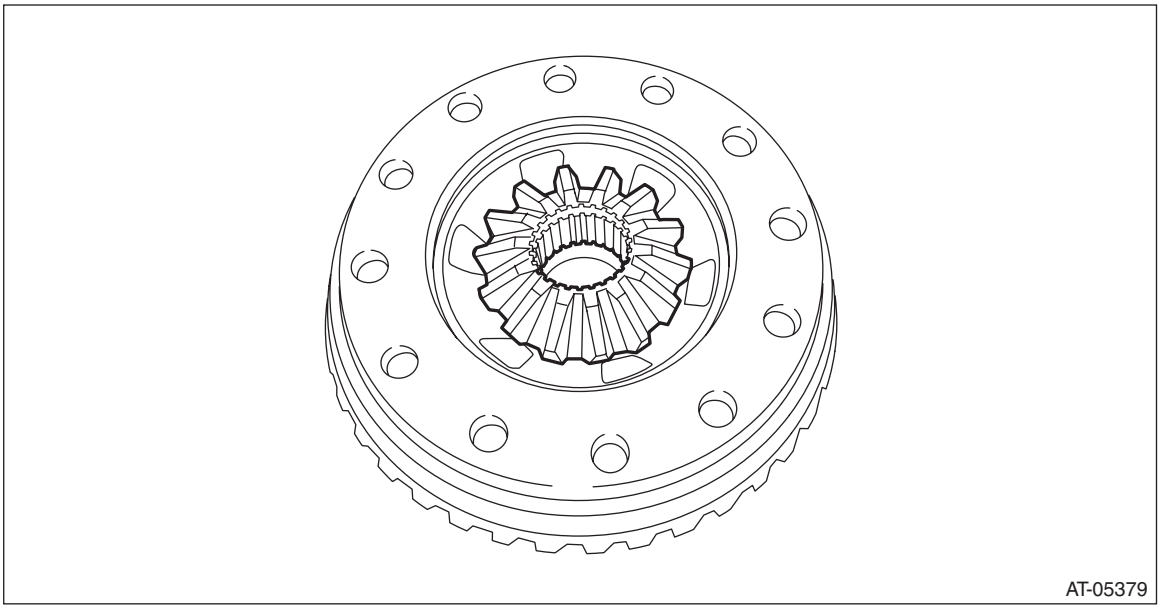

6) Using the ST, install the hypoid driven gear by tightening the installation bolt.
ST 18270KA020 SOCKET (E20)

Tightening torque:
20 N·m (2.0 kgf-m, 14.8 ft-lb)

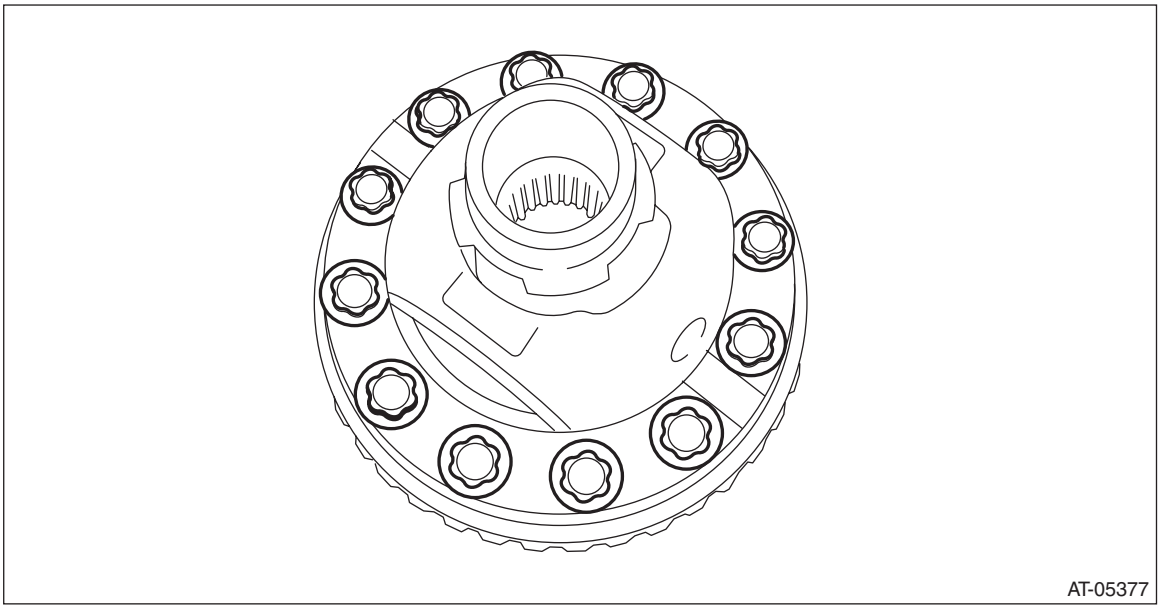

7) While checking the tightening angle with the angle gauge, further tighten the hypoid driven gear mounting bolts.

Tightening angle:
45°±2°

8) Measurement of backlash (selection of washer)
(1) Install the SUBARU genuine axle shaft to differential case.
Part No. 38415AA070 Axle shaft
(2) Measure the gear backlash using ST1 and ST2, and then insert the ST2 through the window of differential case.
ST1 498247001 MAGNET BASE
ST2 498247100 DIAL GAUGE

NOTE:
• Measure the backlash by applying a differential bevel pinion tooth between two differential bevel gear teeth.
• When measuring, fix the differential bevel pinion in place with a screwdriver covered with cloth, or a similar tool.

Specification:
0.13 — 0.18 mm (0.0051 — 0.0071 in)

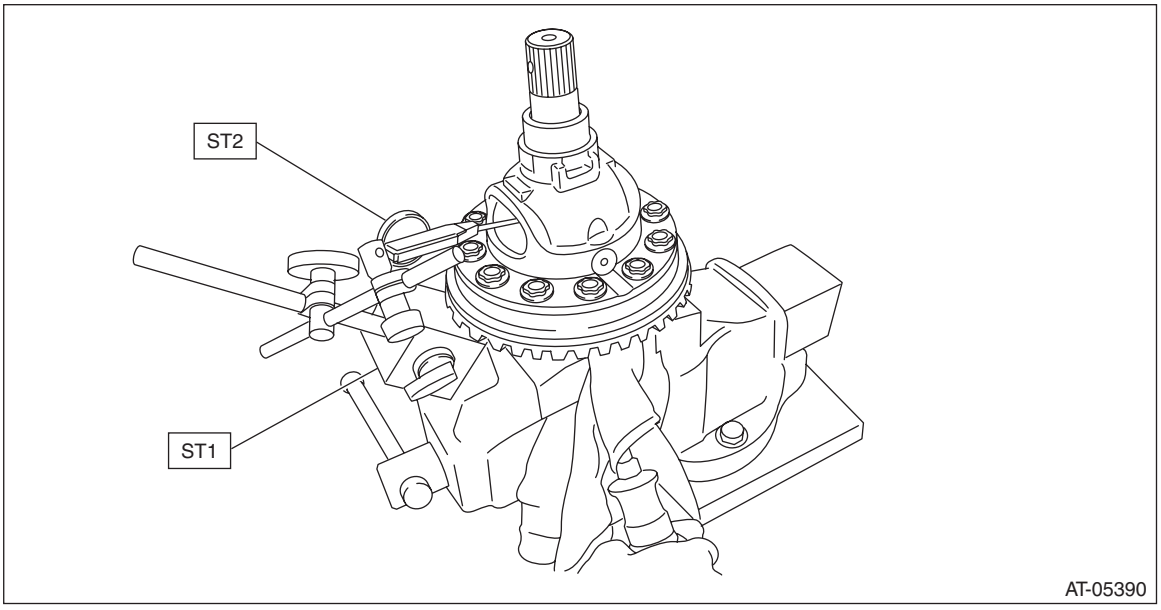

(3) If the backlash is not within specification, select a washer from the table below and replace.

Washer	
Part No.	Thickness mm (in)
803038021	0.95 (0.037)
803038022	1.00 (0.039)
803038023	1.05 (0.041)

9) Using the ST, install the left and right taper roller bearings.
ST1 499277100 BUSHING 1-2 INSTALLER
ST2 398497701 SEAT

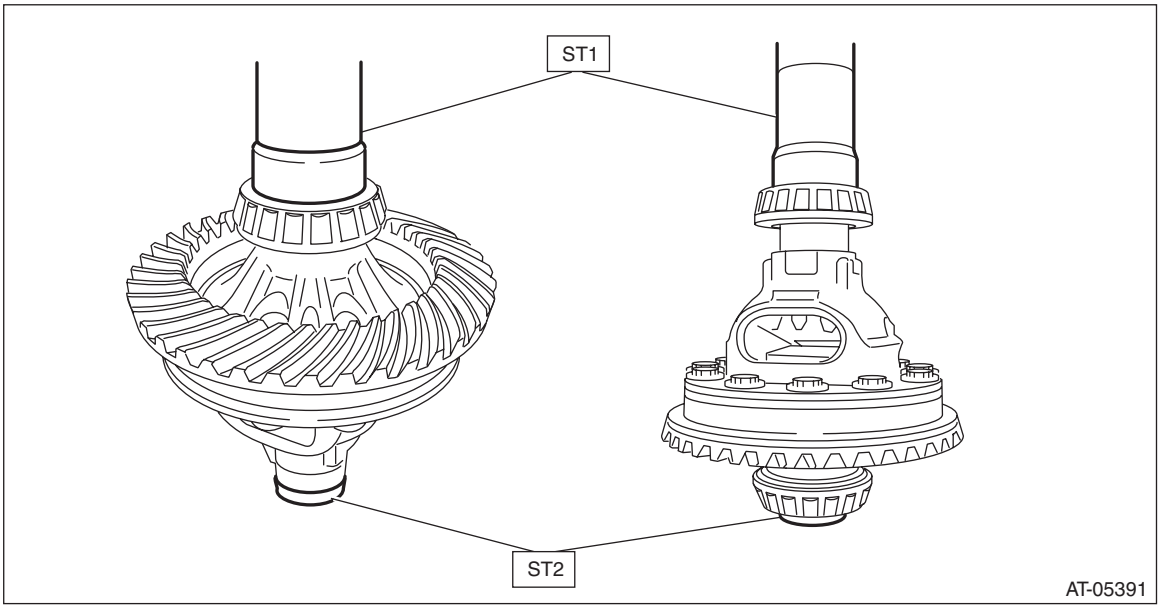

2. SIDE RETAINER

NOTE:
After adjusting the backlash and tooth contact, replace the oil seal and O-ring of side retainer with new parts.
1) Press-fit the bearing outer race to side retainer.
2) Using the ST, install the oil seal.

NOTE:
- Use a new oil seal.
- Apply differential oil to the oil seal lip.
- Oil seal has an identification mark (R, L). When installing oil seals, do not confuse the left and right.

ST 18675AA000 DIFFERENTIAL SIDE OIL SEAL INSTALLER

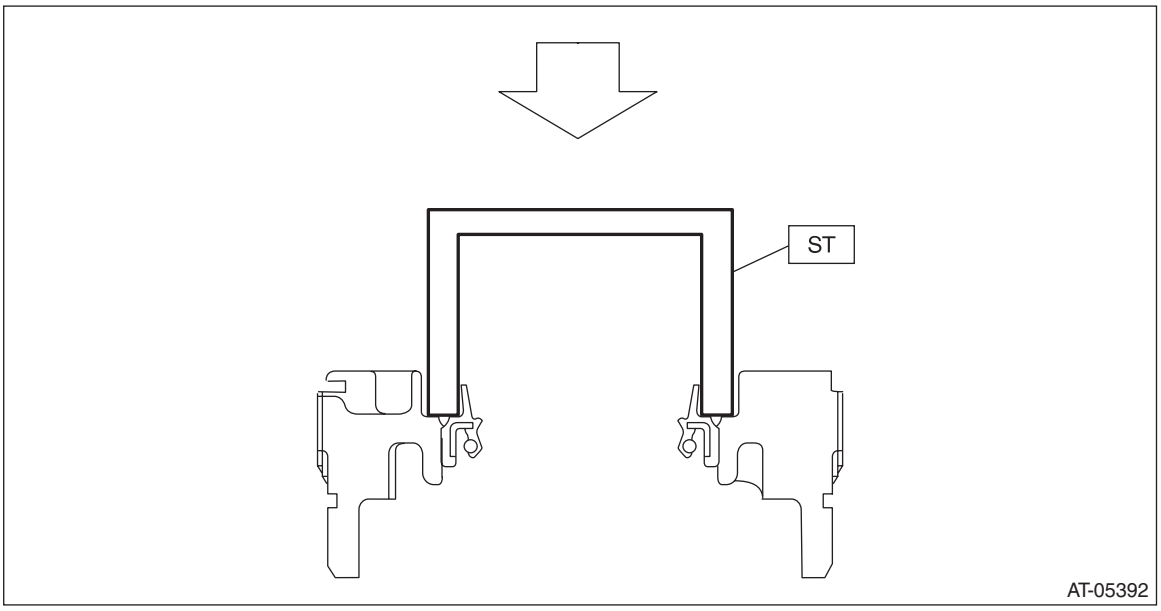

3) Install the O-rings.

NOTE:
- Use new O-rings.
- Apply gear oil to O-ring.

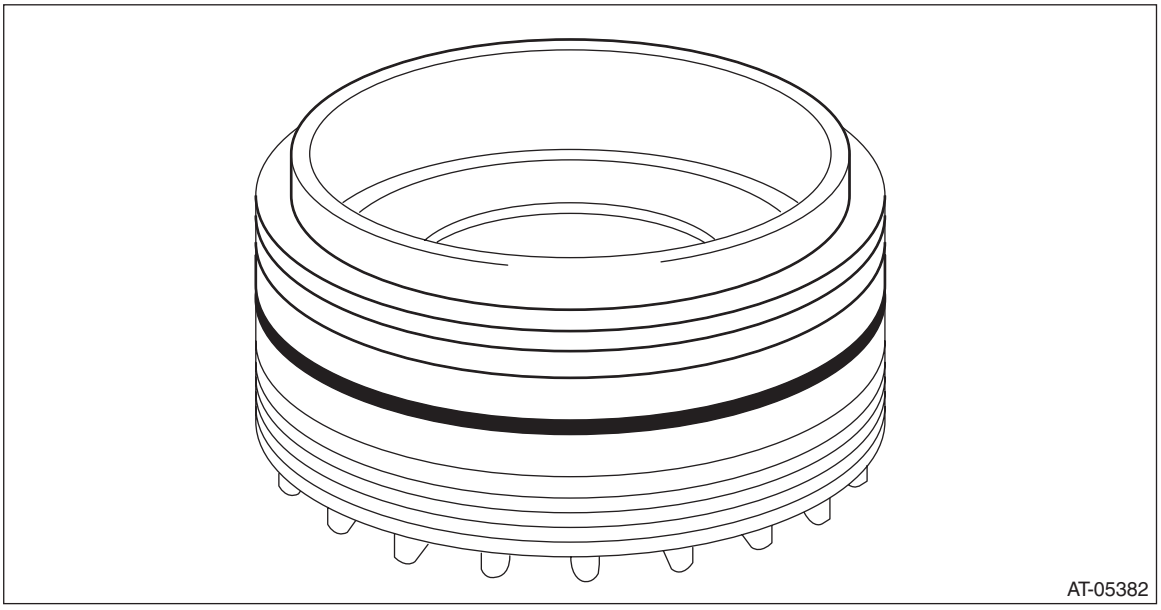

E: INSPECTION

- Check each component for scratches, damage or other faults.
- Inspect the backlash of the pinion gear.

Specification:
0.13 — 0.18 mm (0.0051 — 0.0071 in)

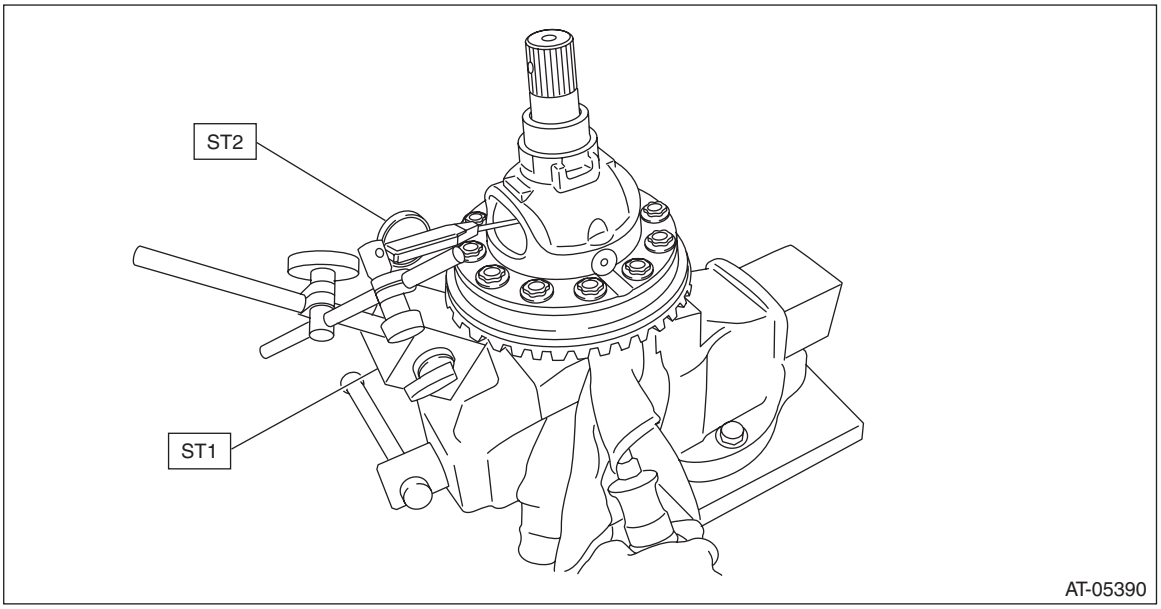

- Measure the hypoid gear backlash, and then adjust it to be within specification. <Ref. to CVT(TR690)-310, ADJUSTMENT, Front Differential Assembly.>

F: ADJUSTMENT

1) Using the ST, screw-in the retainer until resistance is felt.

NOTE:
RH side should be screwed-in more than LH side.
ST 18658AA020 WRENCH COMPL RETAINER

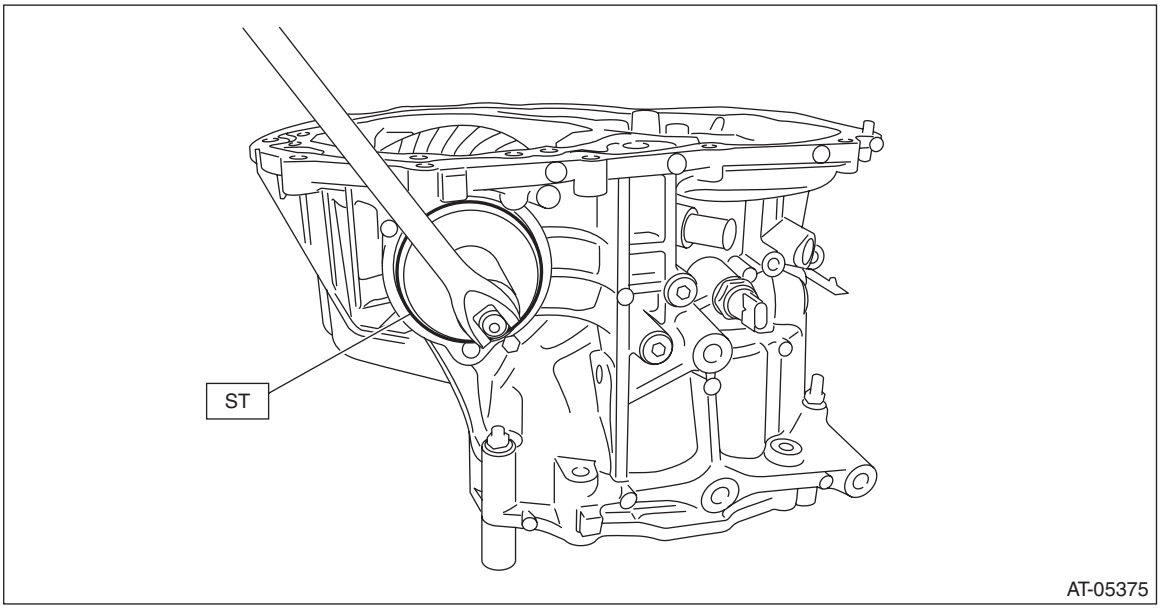

2) Remove the remaining liquid gasket from the mating surface completely.
3) Using the ST, install the drive pinion assembly to converter case.
ST 18270KA020 SOCKET (E20)

NOTE:
Do not confuse the three different-length bolts when installing.

Tightening torque:
43 N·m (4.4 kgf-m, 31.7 ft-lb)

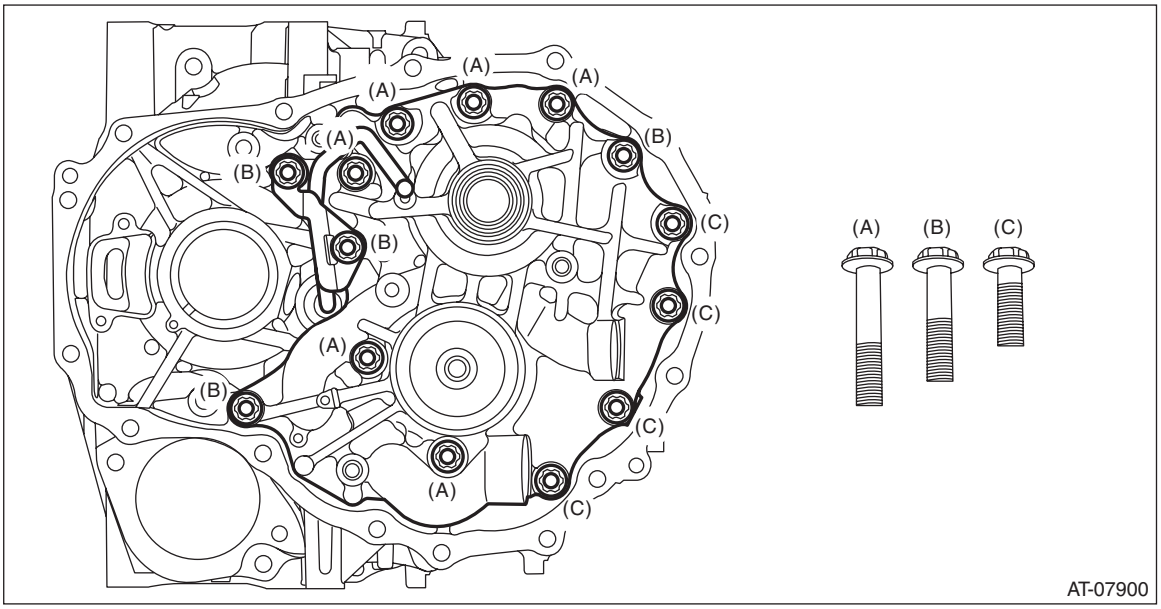

4) Rotate the drive pinion shaft ten times or more using ST1 and ST2.
ST1 18667AA010 HOLDER
ST2 499787700 WRENCH

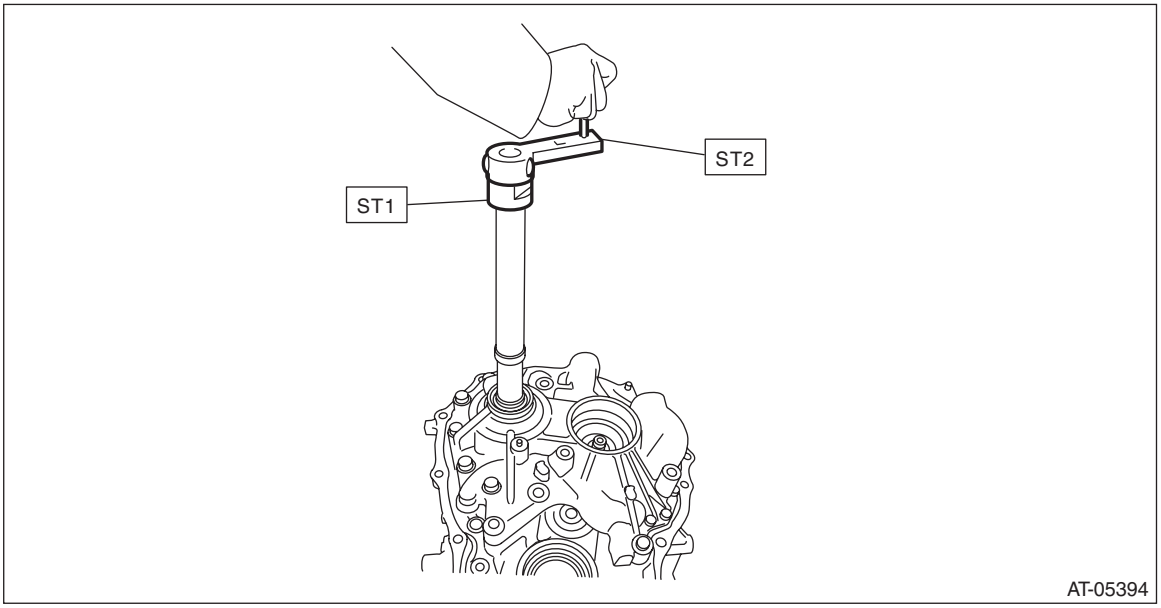

5) While rotating the pinion shaft, tighten the retainer LH and loosen the retainer RH until the shaft can't be turned anymore. The backlash is “zero” when the pinion shaft comes to the point where it doesn't rotate.

6) After the “zero” state is established, loosen the retainer LH by 3 notches and secure it with the lock plate. Loosen the retainer RH and retighten until it stops. Rotate the drive pinion 2 or 3 times. Tighten the retainer RH further 1-3/4 notches. This sets the preload. Finally, secure the retainer with its lock plate.

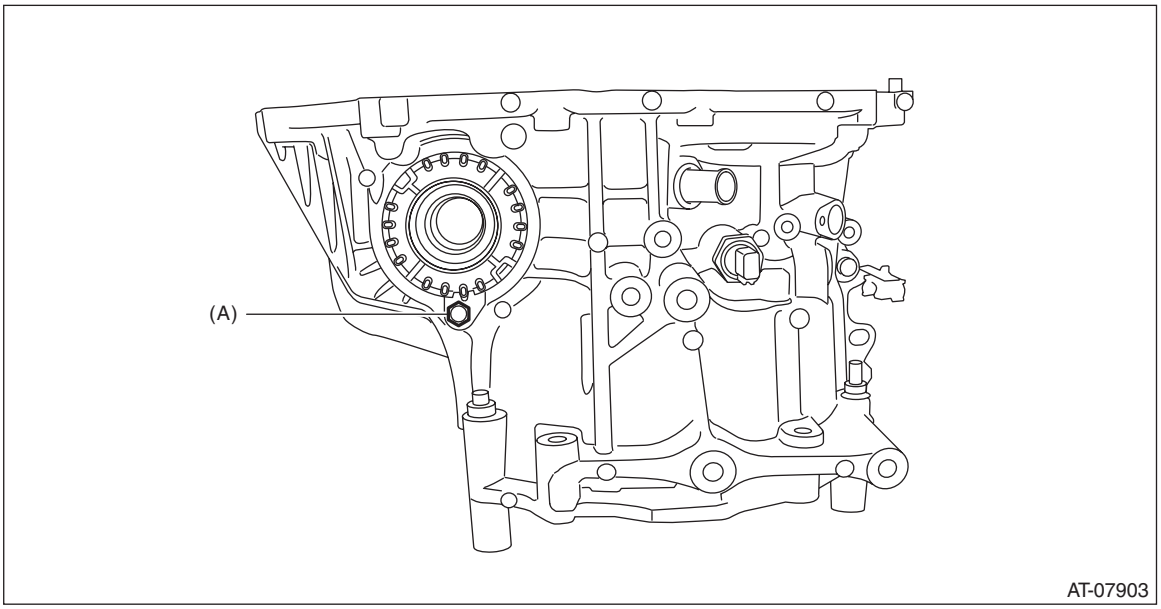

(A) Lock plate

NOTE:
Turning the retainer by every one tooth changes the backlash approx. 0.05 mm (0.0020 in).

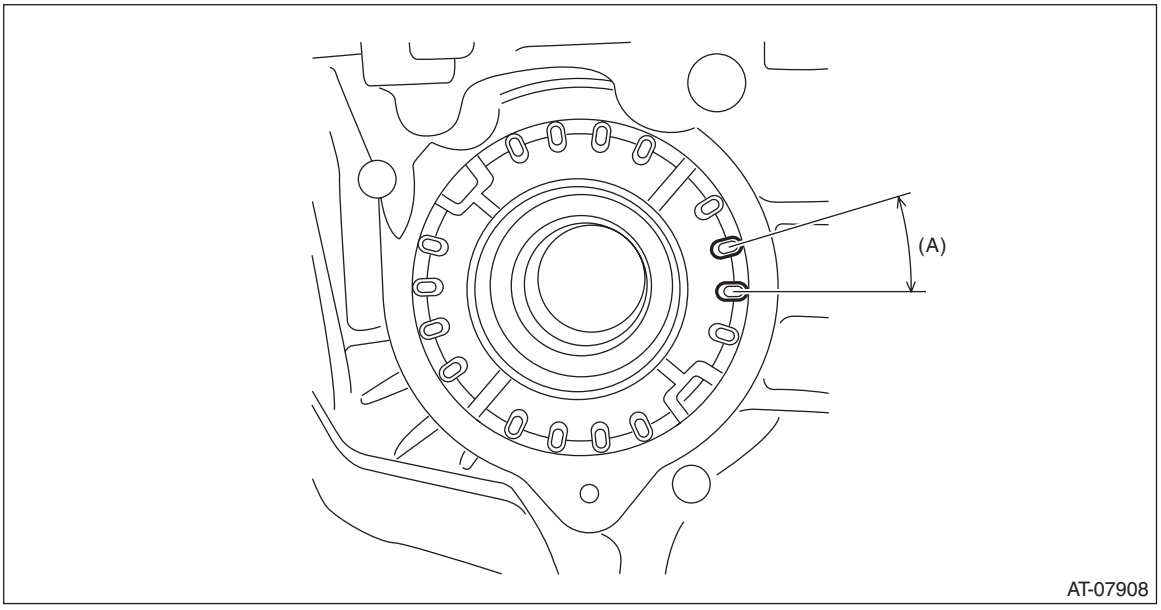

(A) 1 tooth

7) Insert the two SUBARU genuine axle shafts into differential case.
Part No. 38415AA070 Axle shaft
8) Wrap the drive shaft pinion shaft with cloth and pinch with vise pliers. Install the installation bolt into the bolt hole of secondary pulley and secure the bolt and vise pliers using a band or wire.
Make sure the drive pinion shaft does not move.

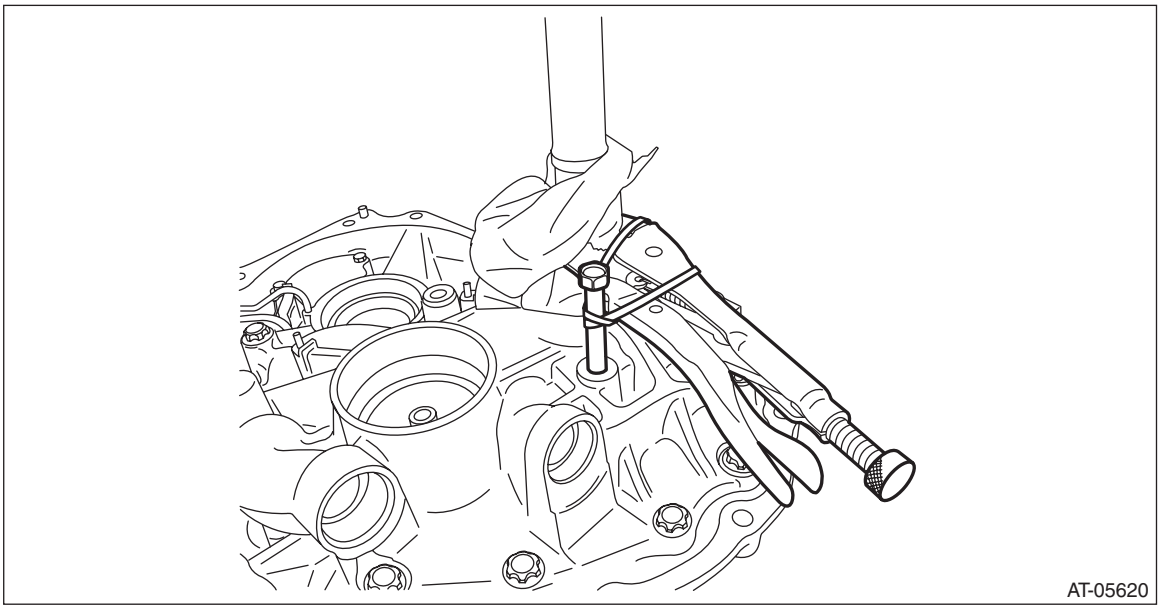

9) Check the backlash is within specification using ST1, ST2 and ST3.
ST1 498255400 PLATE
ST2 498247001 MAGNET BASE
ST3 498247100 DIAL GAUGE

Backlash:
0.13 — 0.18 mm (0.005 — 0.007 in)

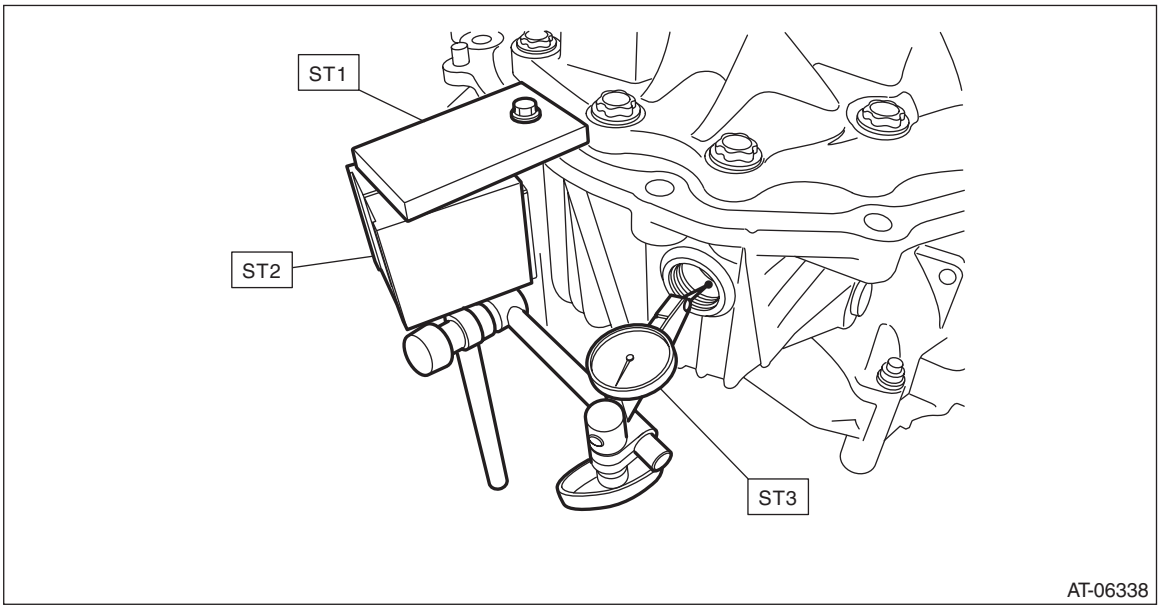

10) Adjust the teeth contact of the front differential and drive shaft. <Ref. to CVT(TR690)-289, ADJUSTMENT, Drive Pinion Shaft Assembly.>

46.Oil Pump

A: REMOVAL

NOTE:
Refer to “Drive Pinion Shaft” for removal procedures. <Ref. to CVT(TR690)-275, REMOVAL, Drive Pinion Shaft Assembly.>

B: INSTALLATION

NOTE:
Refer to “Drive Pinion Shaft” for installation procedures. <Ref. to CVT(TR690)-277, INSTALLATION, Drive Pinion Shaft Assembly.>

C: INSPECTION

Check the following items.
- Check the oil pump for damage and wear.
- Rotate the oil pump by hand, and check that it rotates smoothly.

1) Measure the secondary pressure. <Ref. to CVT(TR690)-51, INSPECTION, Secondary Pressure (Line Pressure) Test.>
2) Remove the oil pan and oil strainer. <Ref. to CVT(TR690)-124, REMOVAL, Control Valve Body.>
3) Check oil strainer for clogging.
When oil strainer has no clogging, replace the oil pump.

47.Oil Pump Chain

A: REMOVAL

1) Remove the transmission assembly from the vehicle. <Ref. to CVT(TR690)-58, REMOVAL, Automatic Transmission Assembly.>
2) Remove the torque converter assembly. <Ref. to CVT(TR690)-158, REMOVAL, Torque Converter Assembly.>
3) Remove the oil pump chain cover.

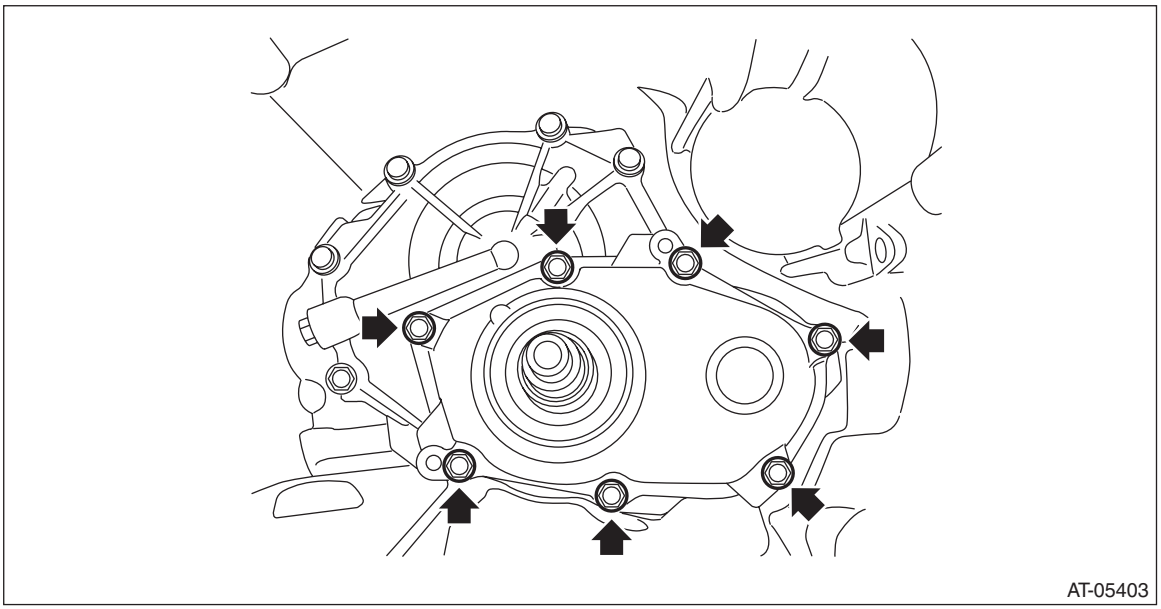

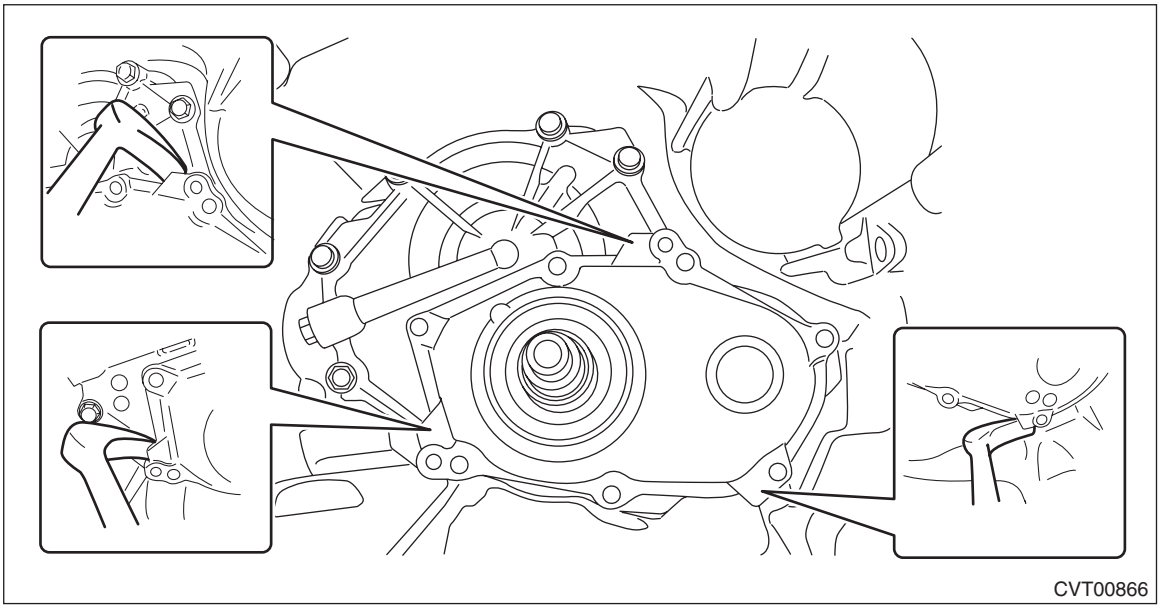

4) Remove the seal ring from center support COMPL.

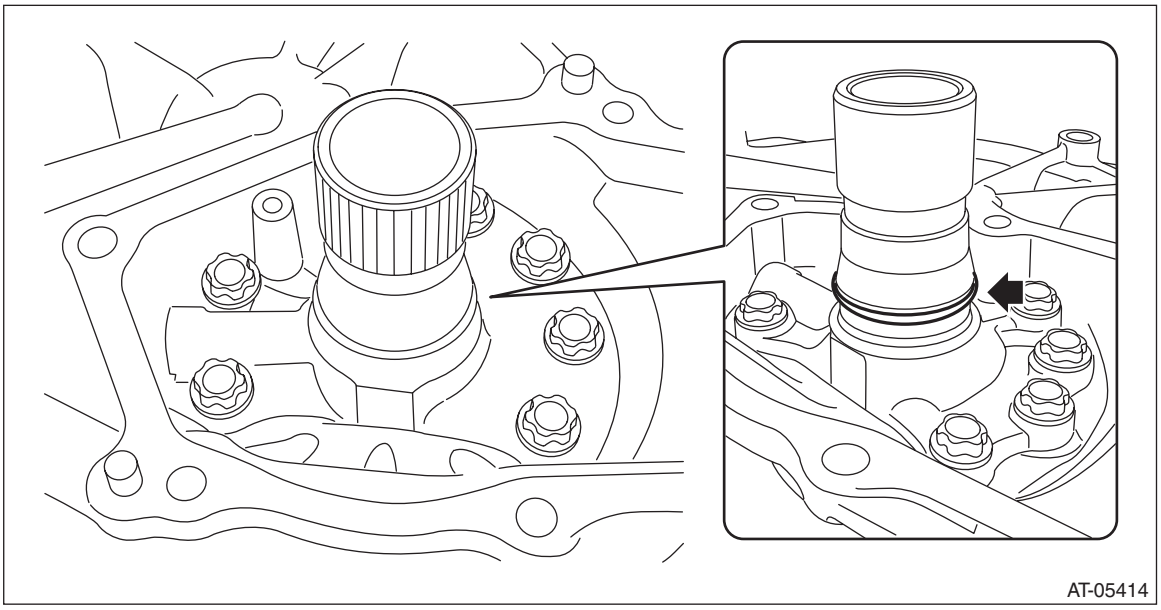

5) Remove the driven sprocket from oil pump chain cover to remove the oil pump chain.

NOTE:
The driven sprocket is replaced as an assembly only, because it is a non-disassembly part.

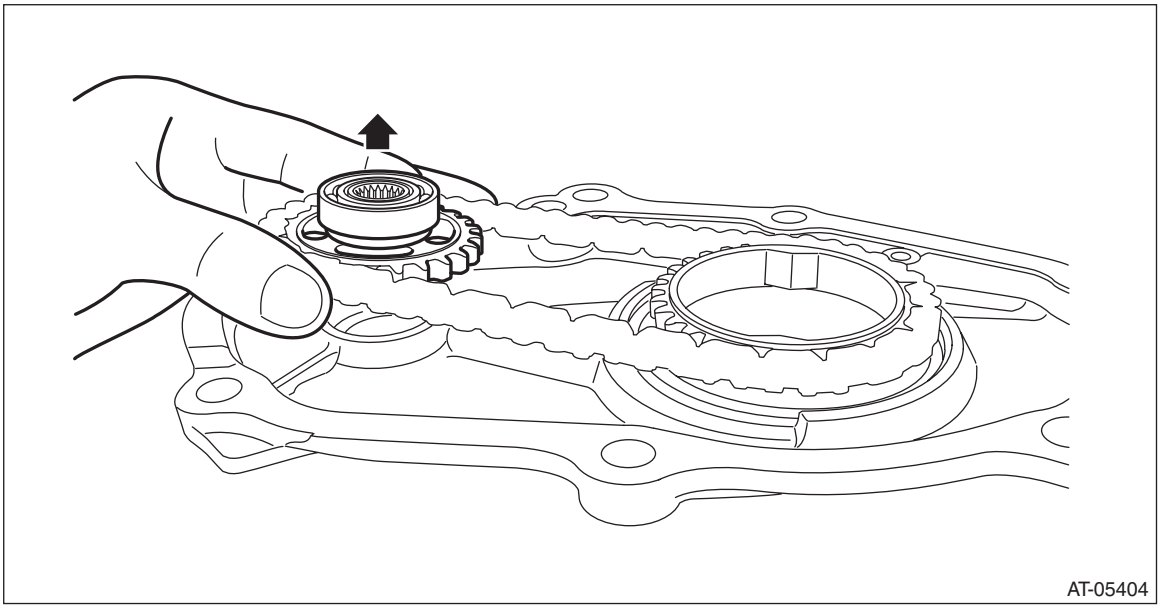

6) Remove the snap ring.

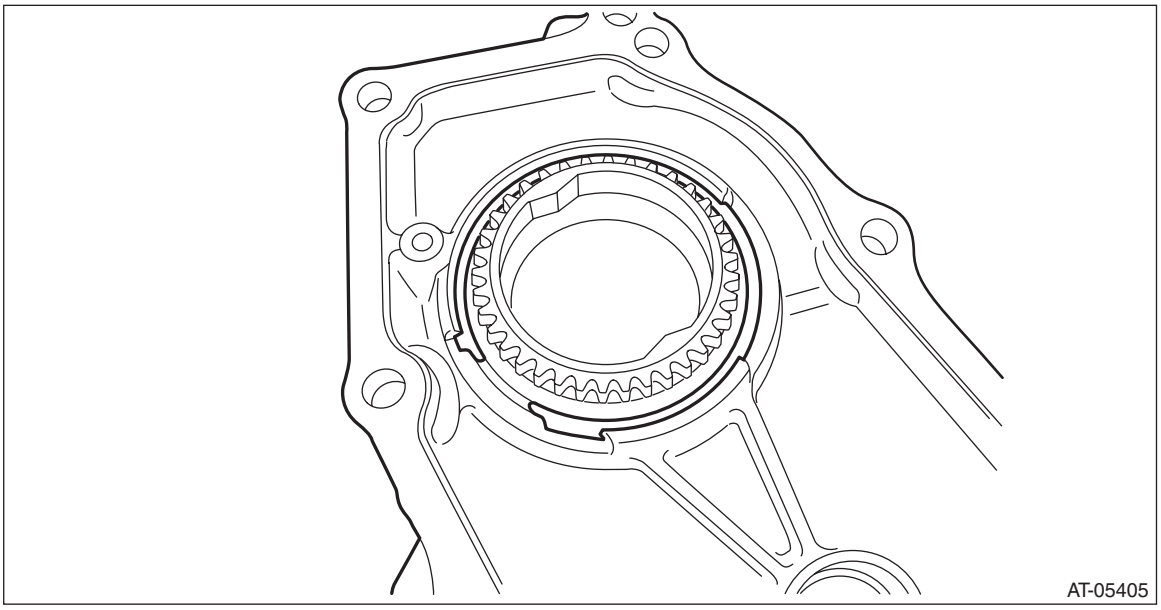

7) Remove the drive sprocket.

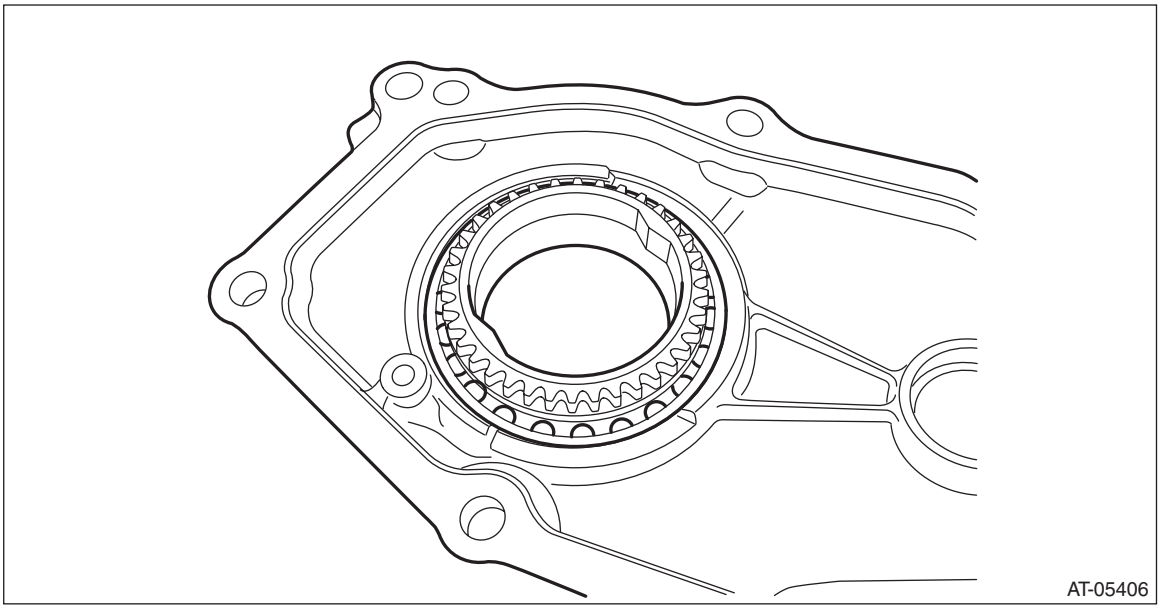

8) Remove the oil seal from the oil pump chain cover.

B: INSTALLATION

1) Clean the mating surface of oil pump chain cover and converter case cover.
2) Using the ST, install the oil seal.
ST 499755602 PRESS SNAP RING

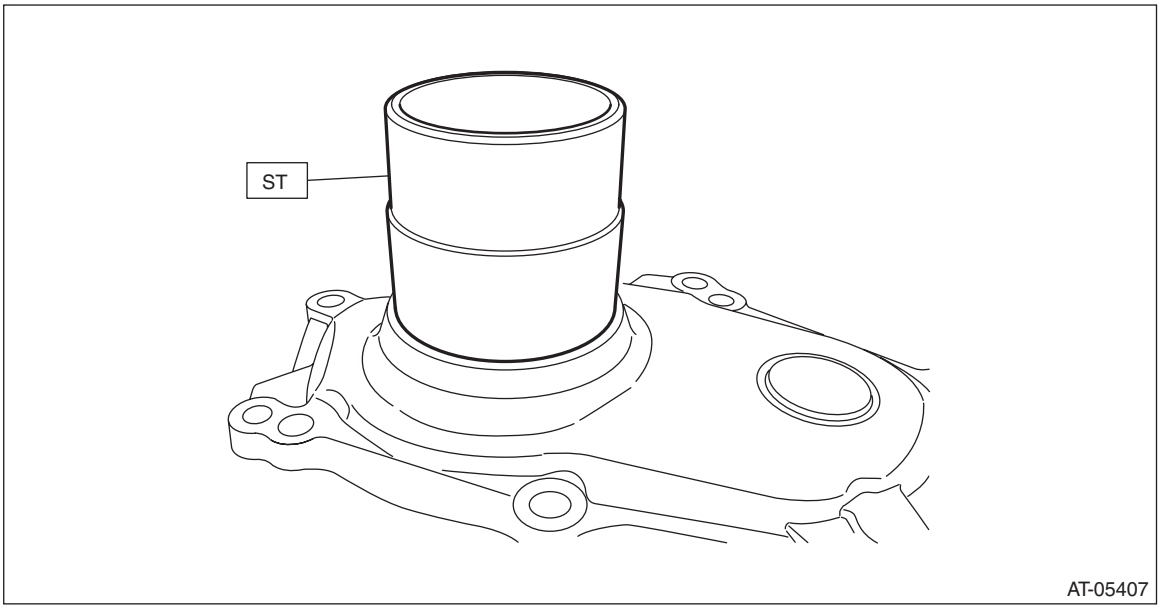

3) Install the drive sprocket and install the snap ring.

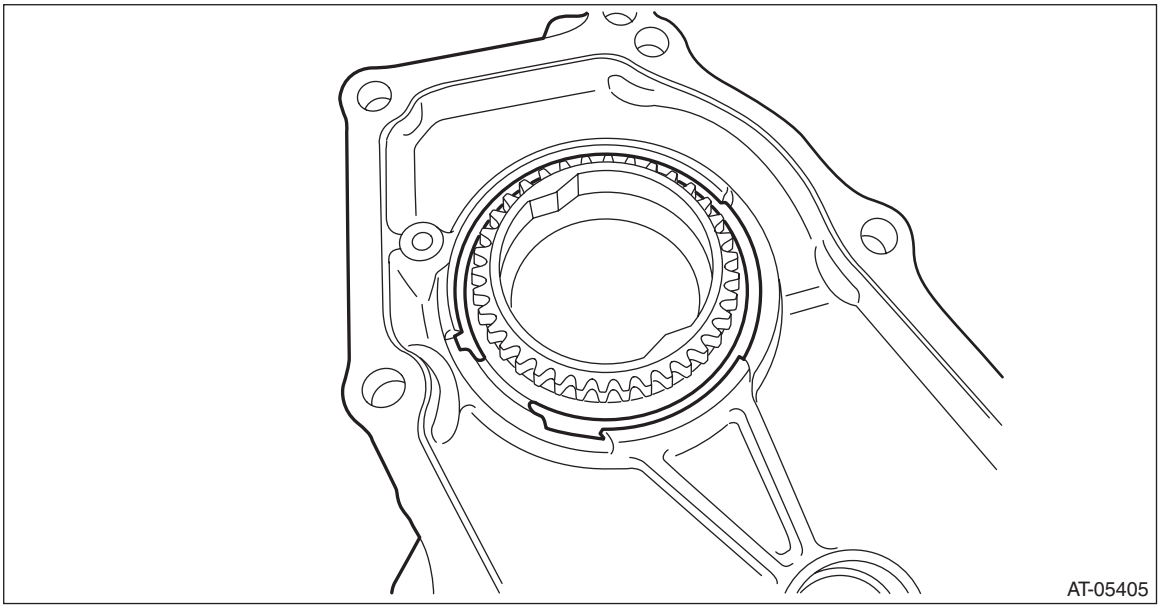

4) Place the oil pump chain on drive sprocket.

5) Place the oil pump chain on driven sprocket and install the driven sprocket to oil pump chain cover.

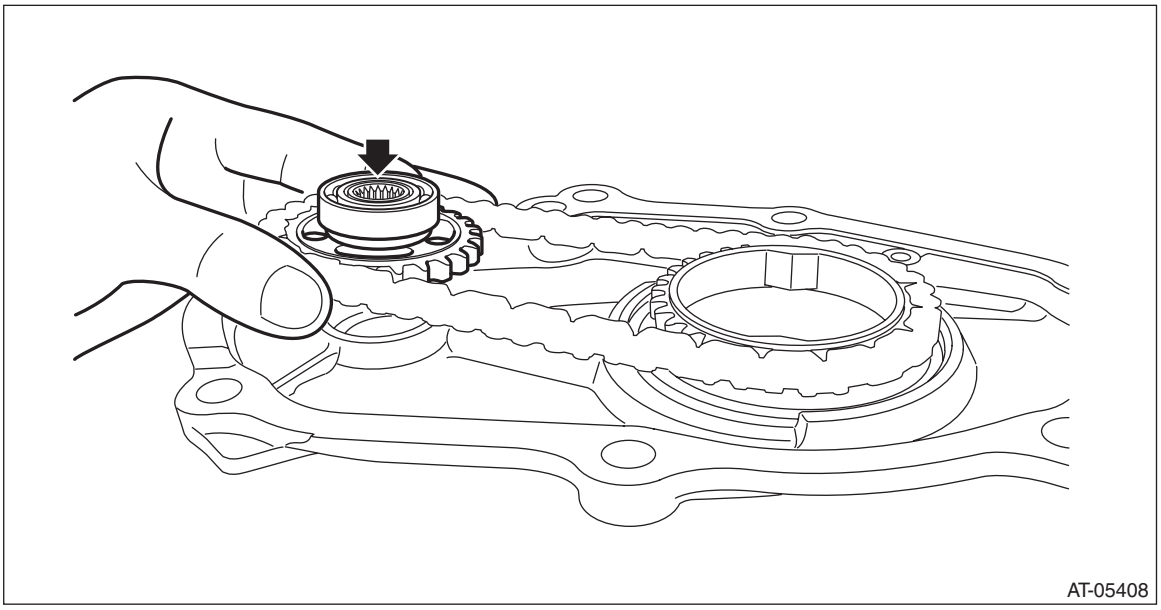

6) Install the seal ring to center support COMPL.

NOTE:
- Use new seal rings.
- Apply CVTF to the seal rings.

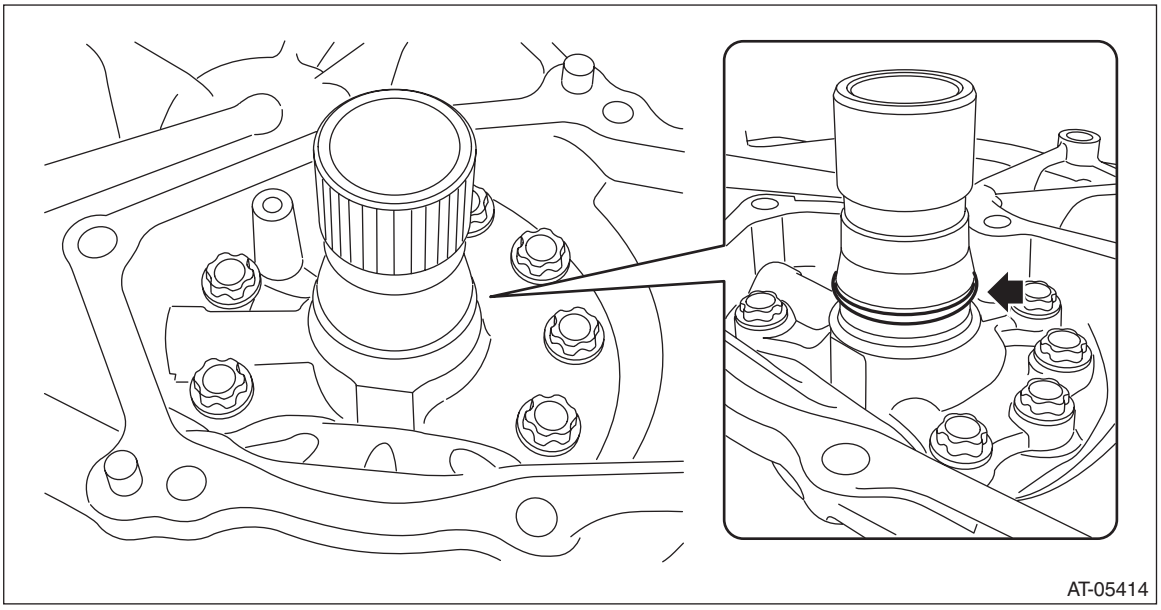

7) Apply liquid gasket seamlessly to the mating surface of oil pump chain cover.

CAUTION:
Do not apply liquid gasket at the arrowed hole.

Liquid gasket:
THREE BOND 1215B or equivalent

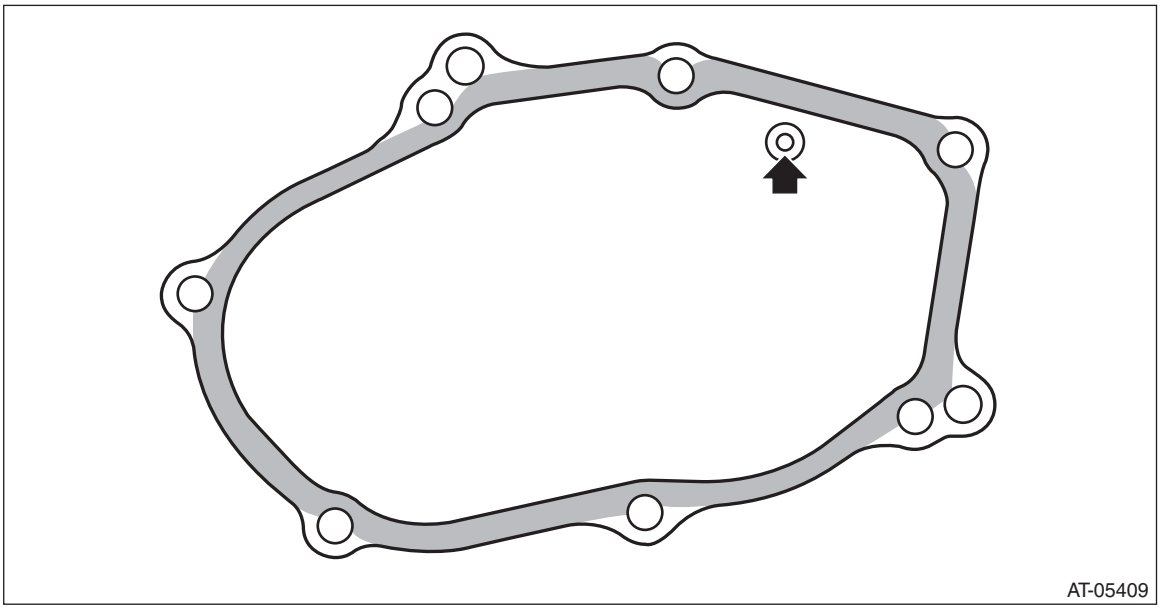

8) Install the oil pump chain cover.

NOTE:
There are two types of bolt.

Tightening torque:
24 N·m (2.4 kgf-m, 17.7 ft-lb)

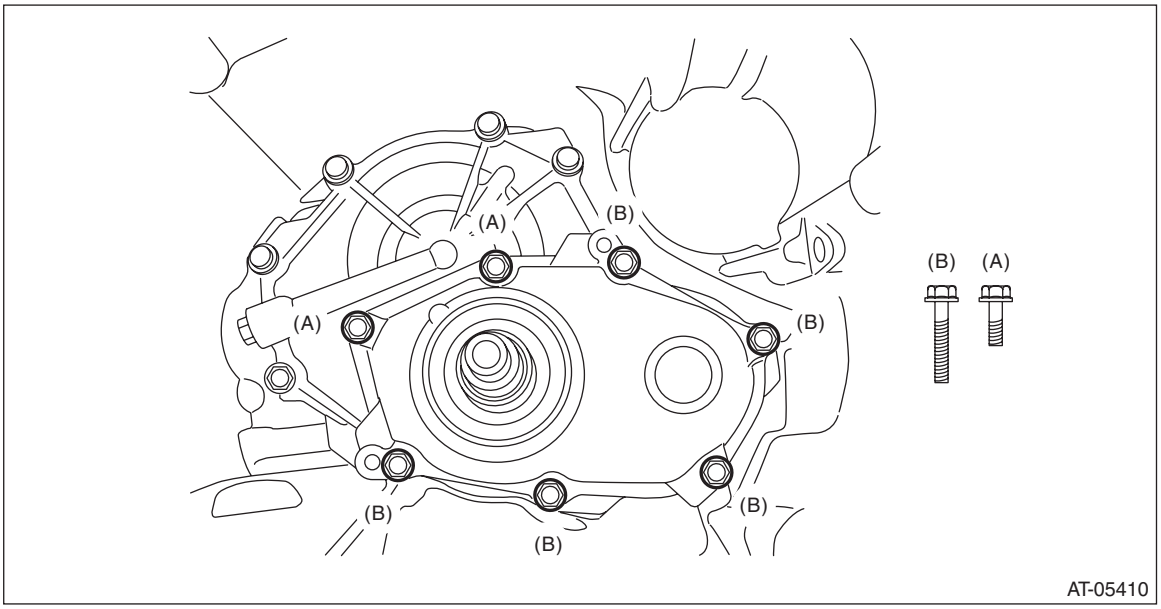

9) Install the torque converter assembly. <Ref. to CVT(TR690)-159, INSTALLATION, Torque Converter Assembly.>
10) Install the transmission assembly to the vehicle. <Ref. to CVT(TR690)-75, INSTALLATION, Automatic Transmission Assembly.>

C: DISASSEMBLY

1. DRIVE SPROCKET

1) Remove the ball bearing using ST.
ST1 498077600 REMOVER
ST2 399513600 INSTALLER

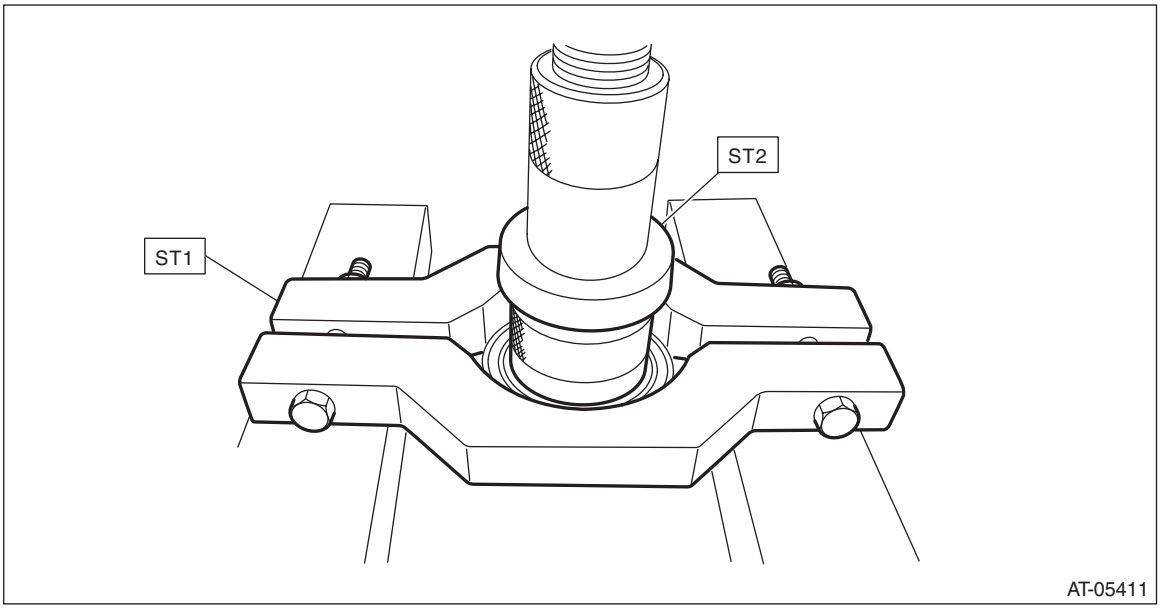

D: ASSEMBLY

1. DRIVE SPROCKET

1) Using the ST, install the ball bearing.

NOTE:
Use a new ball bearing.
ST 499755602 PRESS SNAP RING

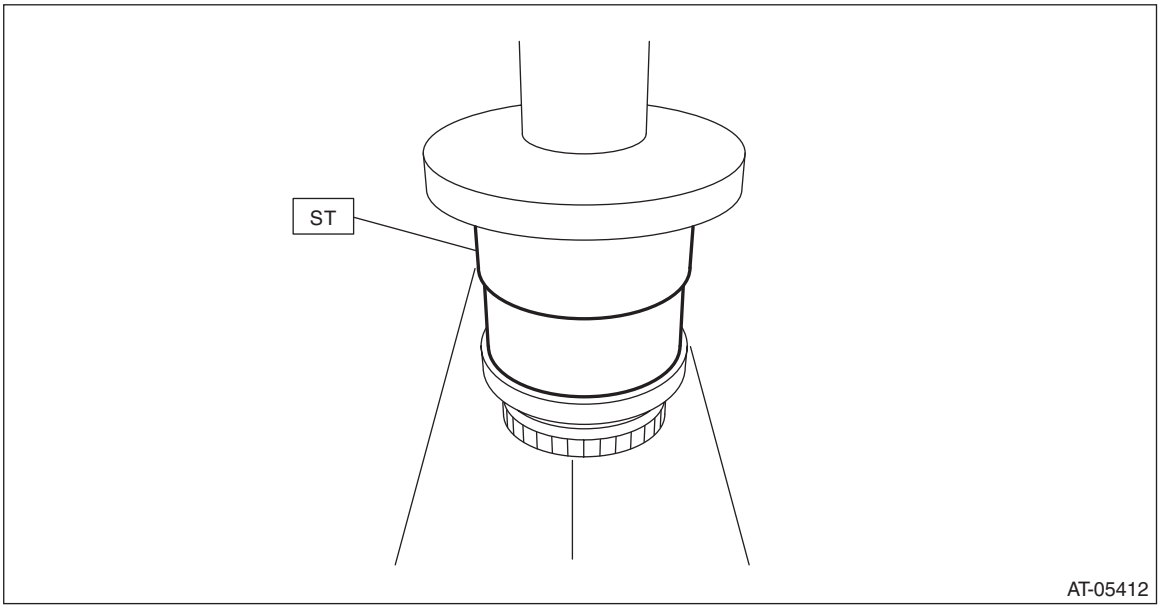

E: INSPECTION

- Check the oil pump chain for damage.
- Replace if gear teeth are broken, damaged, sharpen or excessively worn.
- Check the bearing for seizure or wear.
- Apply CVTF to bearing and rotate the bearing to check for noise or dragging etc.
- Check the oil pump chain cover for damage.
- Check for leakage of CVTF from the mating surface of oil pump chain cover.
- Check the oil seal for damage.

48.Converter Case Cover

A: REMOVAL

1) Remove the transmission assembly from the vehicle. <Ref. to CVT(TR690)-58, REMOVAL, Automatic Transmission Assembly.>
2) Remove the air breather hose. <Ref. to CVT(TR690)-152, REMOVAL, Air Breather Hose.>
3) Remove the oil pan and control valve body. <Ref. to CVT(TR690)-124, REMOVAL, Control Valve Body.>
4) Remove the transmission harness. <Ref. to CVT(TR690)-135, REMOVAL, Transmission Harness.>
5) Remove the extension case. <Ref. to CVT(TR690)-160, REMOVAL, Extension Case.>
6) Remove the rear drive shaft. <Ref. to CVT(TR690)-163, REMOVAL, Rear Drive Shaft.>
7) Remove the transfer clutch assembly. <Ref. to CVT(TR690)-168, REMOVAL, Transfer Clutch.>
8) Remove the transfer reduction driven gear assembly. <Ref. to CVT(TR690)-180, REMOVAL, Transfer Reduction Driven Gear.>
9) Remove the intermediate case. <Ref. to CVT(TR690)-187, REMOVAL, Intermediate Case.>
10) Remove the forward clutch assembly. <Ref. to CVT(TR690)-202, REMOVAL, Forward Clutch Assembly.>
11) Remove the transmission case. <Ref. to CVT(TR690)-242, REMOVAL, Transmission Case.>
12) Remove the primary pulley, secondary pulley and variator chain. <Ref. to CVT(TR690)-259, REMOVAL, Primary Pulley and Secondary Pulley.>
13) Remove the drive pinion shaft assembly. <Ref. to CVT(TR690)-275, REMOVAL, Drive Pinion Shaft Assembly.>
14) Remove the oil stopper plate and lubrication pipe.

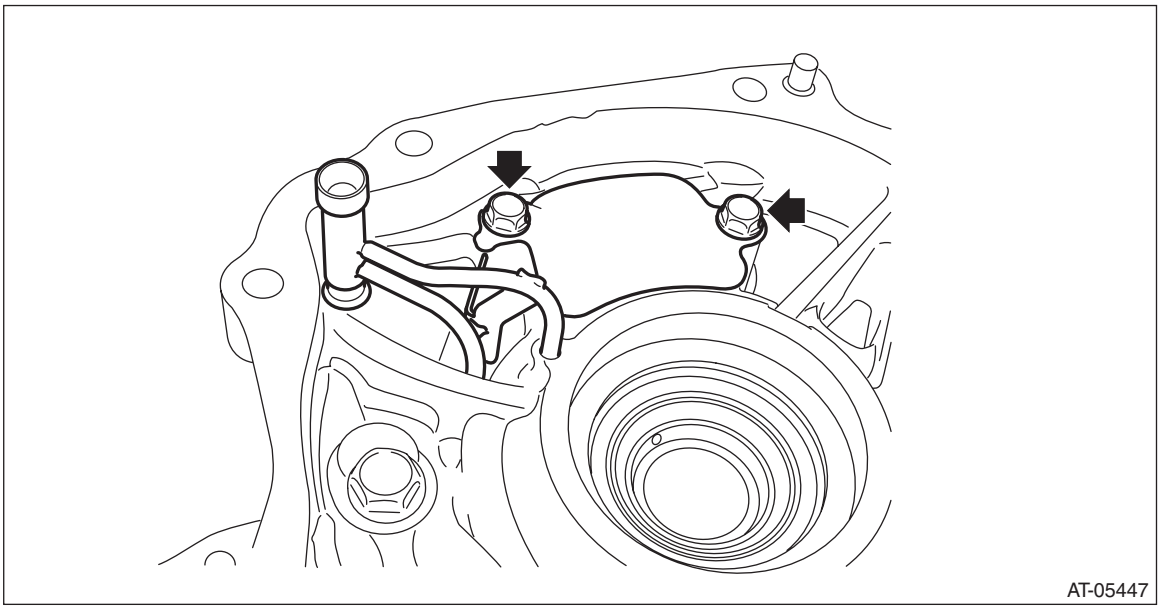

15) Flip over the converter case.
16) Remove the oil pump chain cover and the oil pump chain. <Ref. to CVT(TR690)-315, REMOVAL, Oil Pump Chain.>

17) Remove the converter case cover.

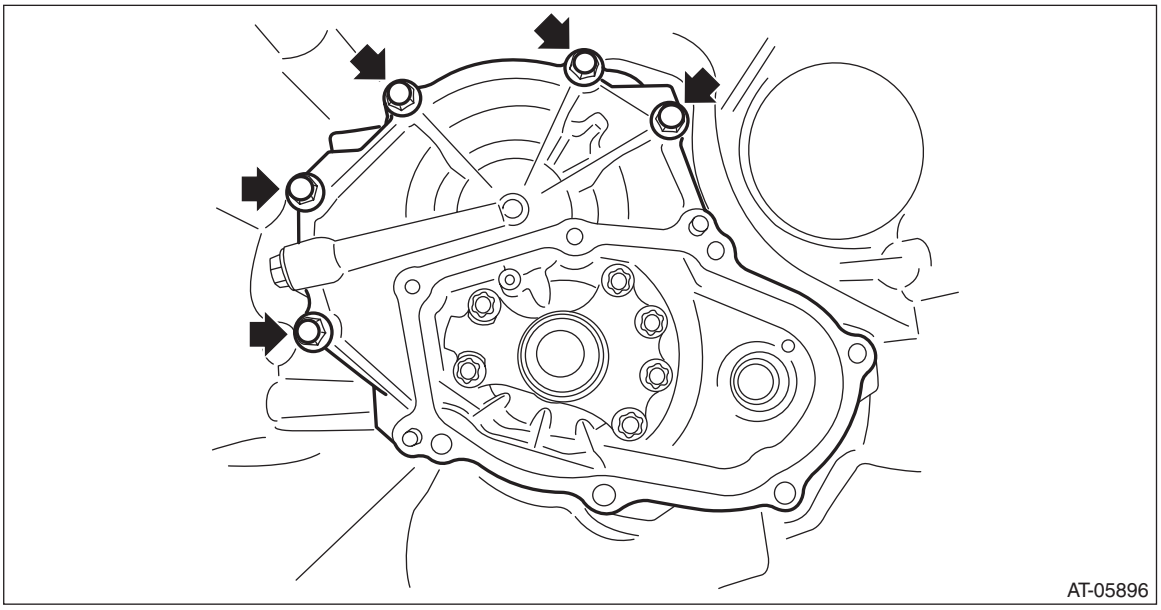

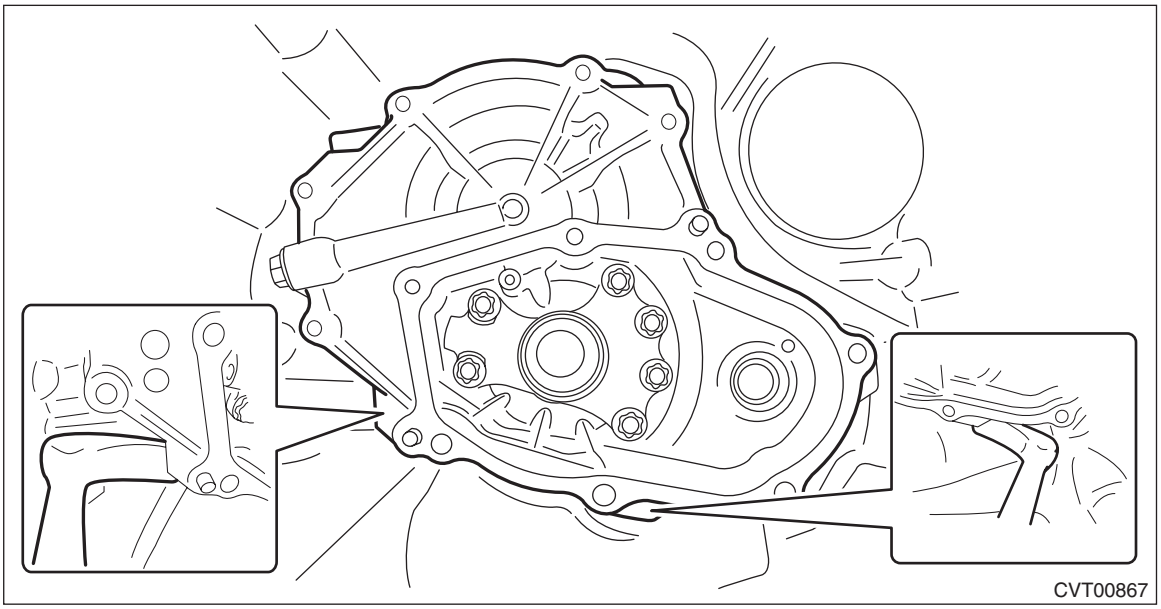

18) Remove the O-rings.

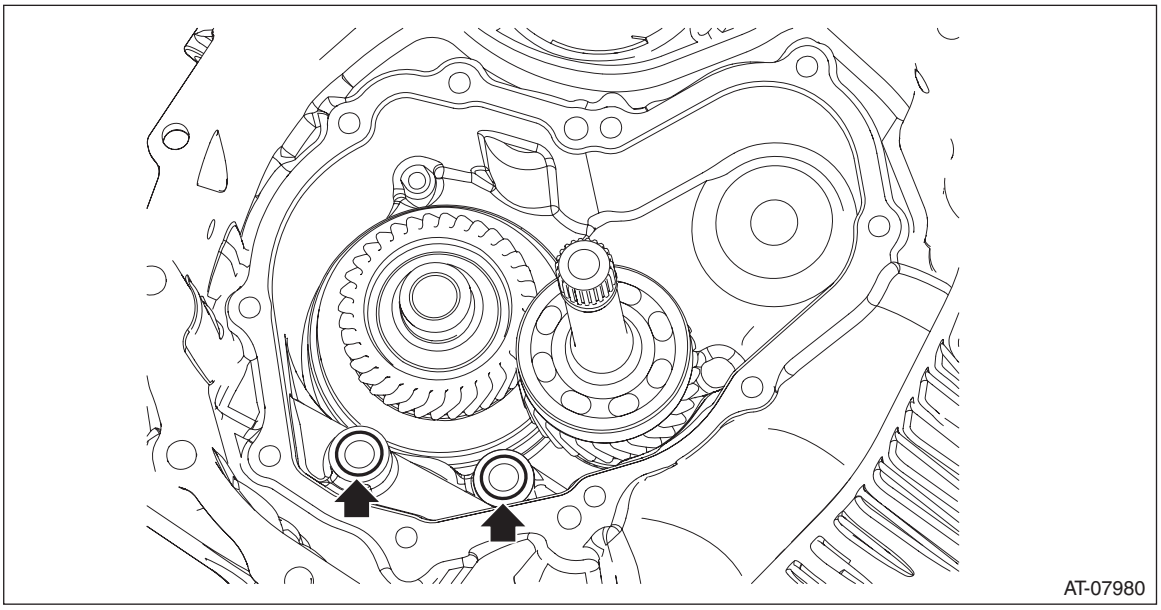

19) Remove the seal ring from converter case cover.

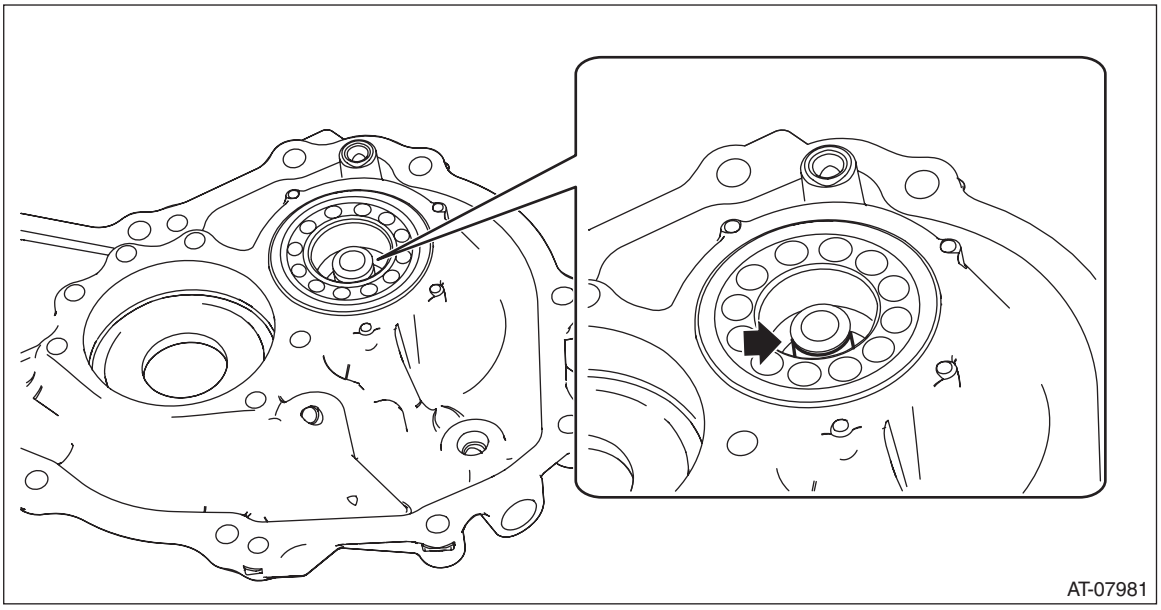

20) Using the ST, remove the ball bearing from the converter case cover.
(1) Remove the claw of ST1, and attach the claw of ST2.
ST1 398527700 PULLER ASSY
ST2 18760AA000 CLAW

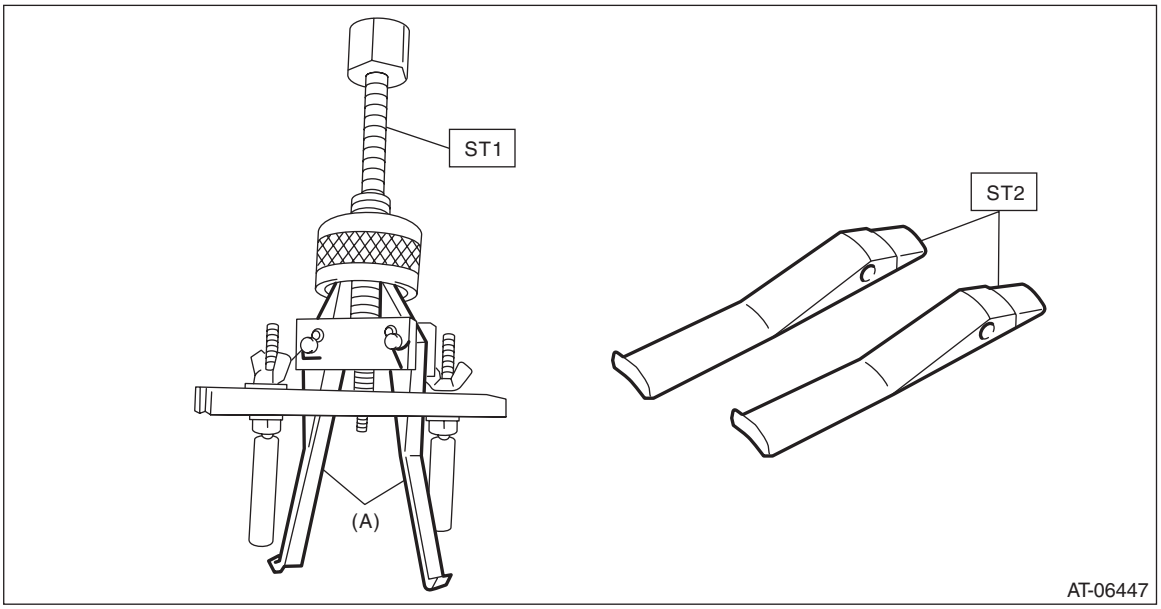

(A) Claw

(2) Using the ST, remove the ball bearing from the converter case cover.
ST1 398527700 PULLER ASSY
ST2 18760AA000 CLAW

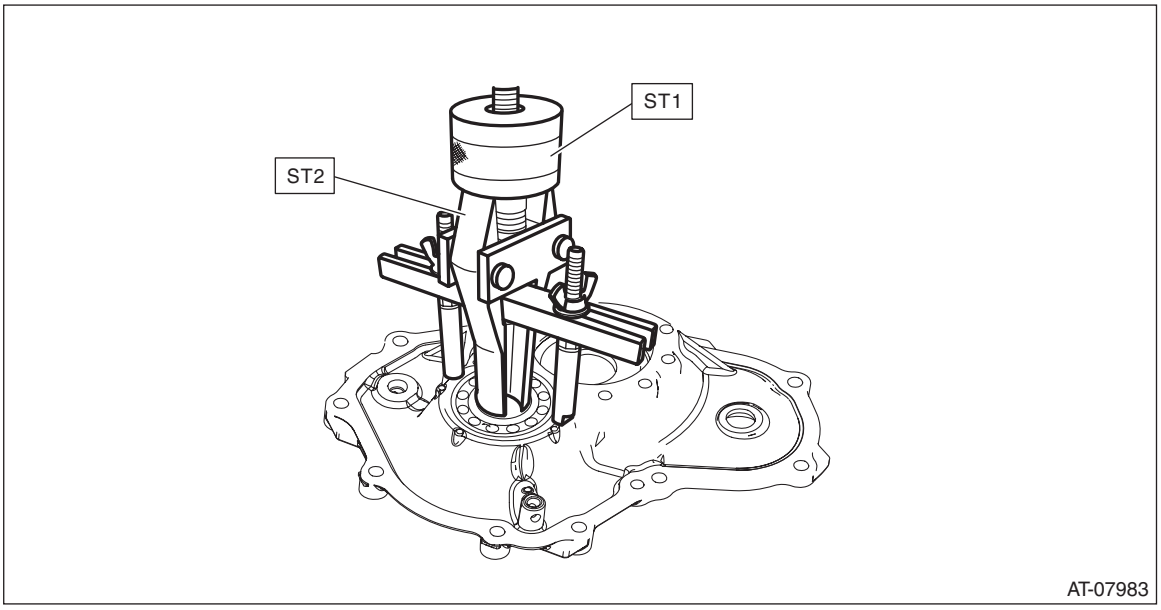

B: INSTALLATION

1) Clean the mating surface of converter case cover and converter case.
2) Adjust the shims of front reduction drive gear and front reduction driven gear. <Ref. to CVT(TR690)-339, ADJUSTMENT, Front Reduction Drive Gear.> <Ref. to CVT(TR690)-347, ADJUSTMENT, Front Reduction Driven Gear.>
3) Apply CVTF to the selected shims and install on the bearing catch surface of the front reduction driven gear.
4) Using the ST, install the ball bearing to the converter case cover.

NOTE:
Use a new ball bearing.
ST 499755602 PRESS SNAP RING

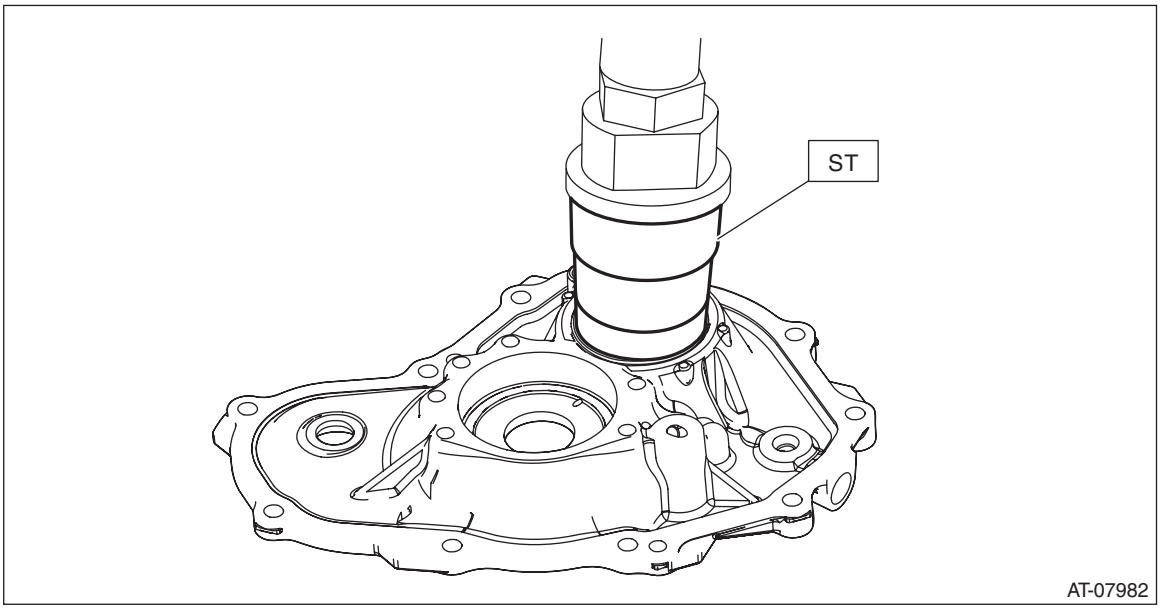

5) Install the O-rings.

NOTE:
- Use new O-rings.
- Apply CVTF to the O-rings.

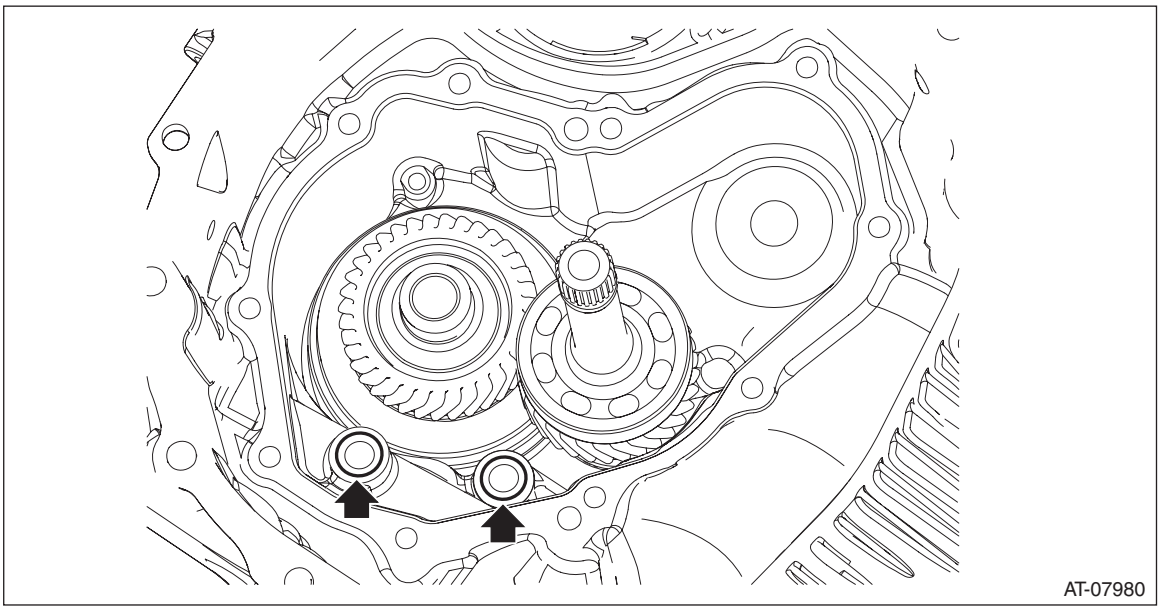

6) Apply CVTF to the selected shims and install on the bearing catch surface of the front reduction drive gear.

7) Install the seal ring to converter case cover.

NOTE:
- Use new seal rings.
- When installing the seal rings, do not expand the seal rings too much.

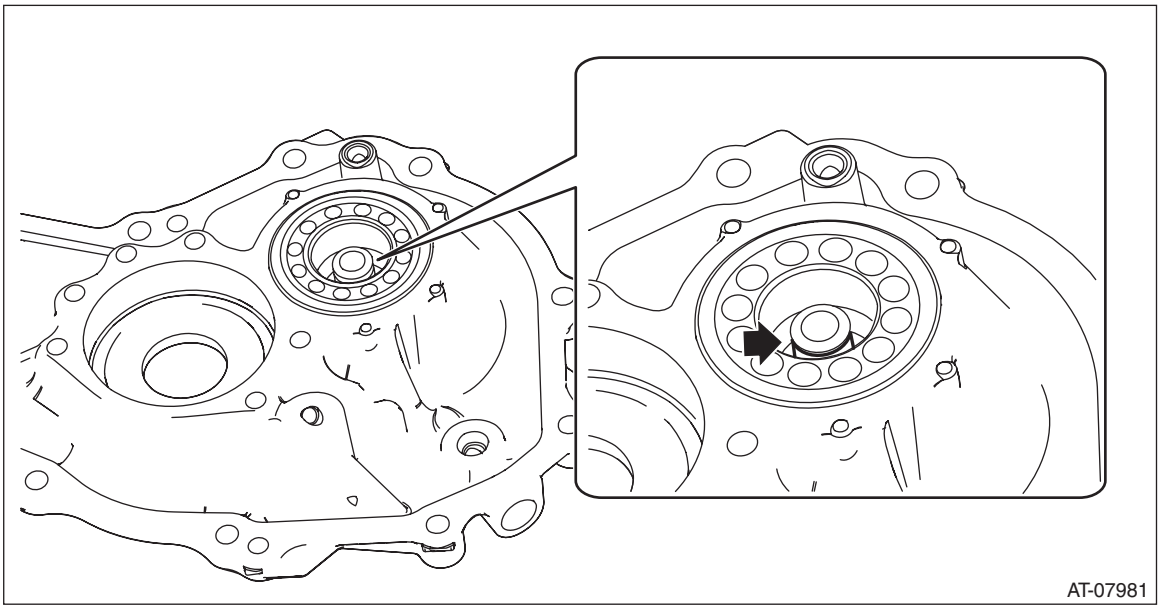

8) Apply liquid gasket seamlessly to the mating surface of converter case cover.

Liquid gasket:
THREE BOND 1215B or equivalent

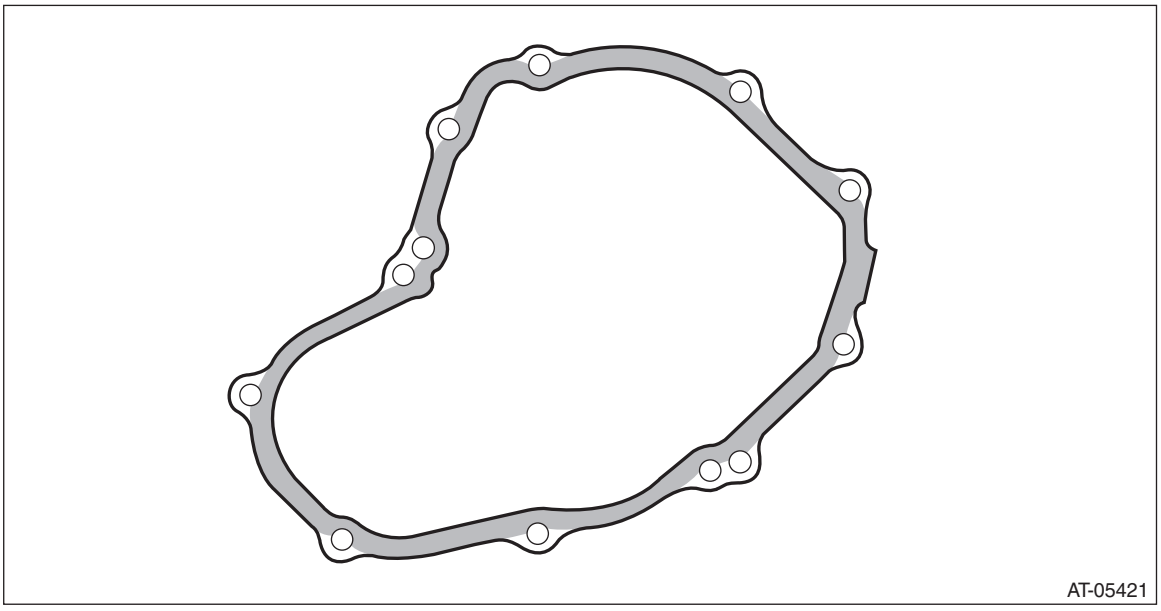

9) Install the converter case cover.

Tightening torque:
24 N·m (2.4 kgf-m, 17.7 ft-lb)

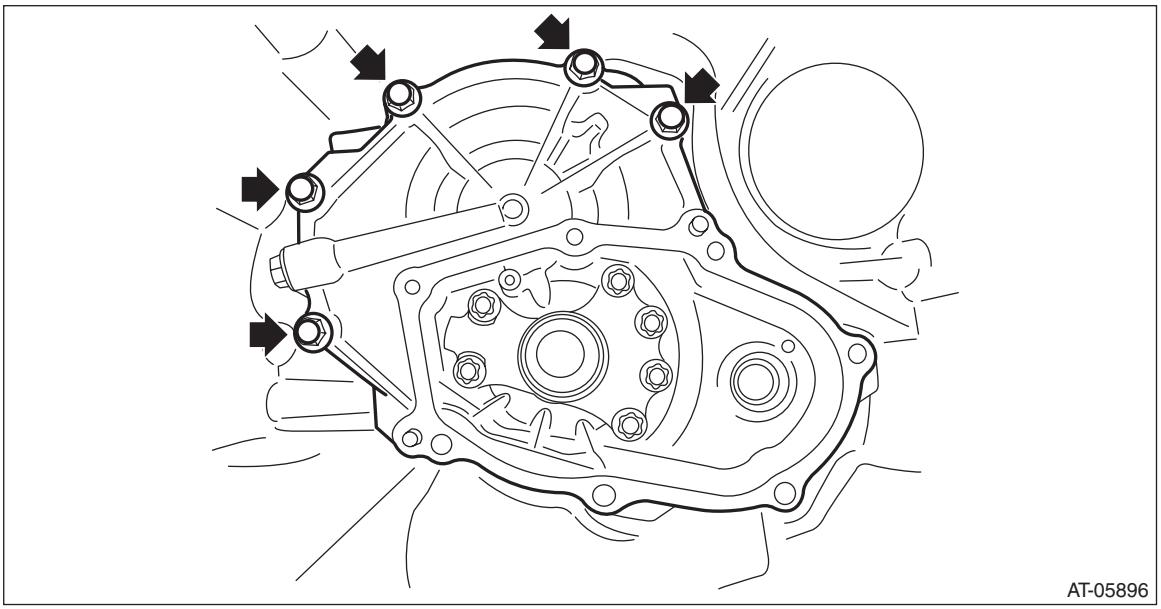

10) Install the oil pump chain cover and the oil pump chain. <Ref. to CVT(TR690)-318, INSTALLATION, Oil Pump Chain.>
11) Flip over the converter case cover.
12) Install the oil stopper plate and lubrication pipe.

Tightening torque:
9 N·m (0.9 kgf-m, 6.6 ft-lb)

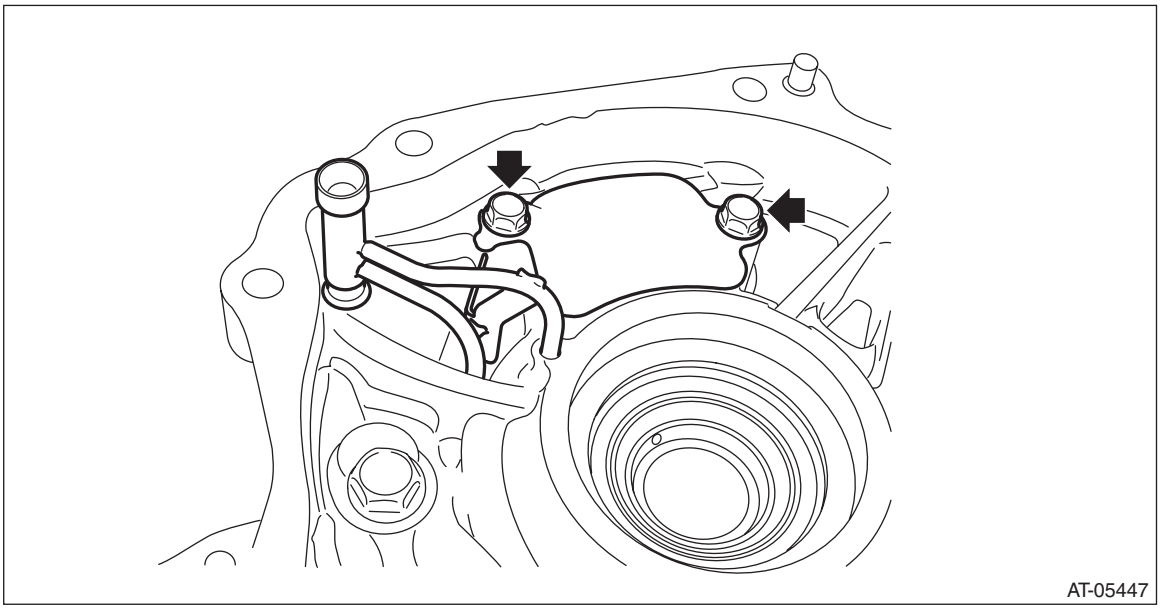

13) Install the drive pinion shaft assembly. <Ref. to CVT(TR690)-277, INSTALLATION, Drive Pinion Shaft Assembly.>
14) Install the primary pulley, secondary pulley and variator chain. <Ref. to CVT(TR690)-263, INSTALLATION, Primary Pulley and Secondary Pulley.>
15) Install the transmission case. <Ref. to CVT(TR690)-244, INSTALLATION, Transmission Case.>
16) Install the forward clutch assembly. <Ref. to CVT(TR690)-203, INSTALLATION, Forward Clutch Assembly.>
17) Install the intermediate case. <Ref. to CVT(TR690)-188, INSTALLATION, Intermediate Case.>

18) Install the transfer reduction driven gear assembly. <Ref. to CVT(TR690)-180, INSTALLATION, Transfer Reduction Driven Gear.>
19) Install the transfer clutch assembly. <Ref. to CVT(TR690)-169, INSTALLATION, Transfer Clutch.>
20) Install the rear drive shaft. <Ref. to CVT(TR690)-163, INSTALLATION, Rear Drive Shaft.>
21) Install the extension case. <Ref. to CVT(TR690)-161, INSTALLATION, Extension Case.>
22) Install the transmission harness. <Ref. to CVT(TR690)-137, INSTALLATION, Transmission Harness.>
23) Install the control valve body and oil pan. <Ref. to CVT(TR690)-128, INSTALLATION, Control Valve Body.>
24) Install the air breather hose. <Ref. to CVT(TR690)-154, INSTALLATION, Air Breather Hose.>
25) Install the transmission assembly to the vehicle. <Ref. to CVT(TR690)-75, INSTALLATION, Automatic Transmission Assembly.>

C: DISASSEMBLY

1) Using ST, remove the center support COMPL.
ST 18270KA010 SOCKET (E16)

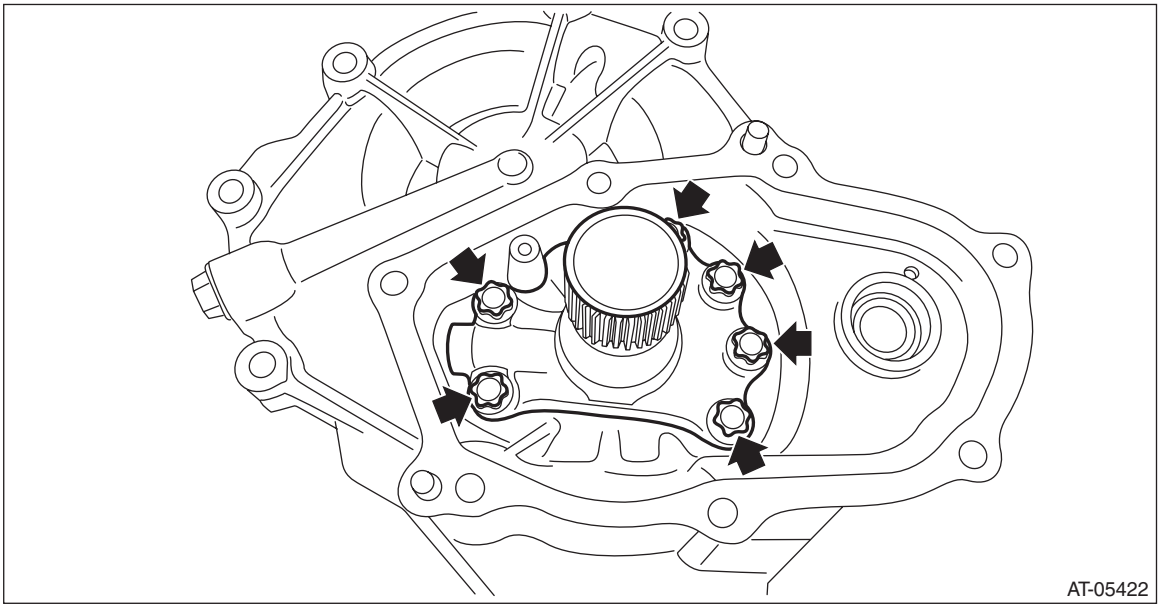

2) Remove the plug and O-ring.

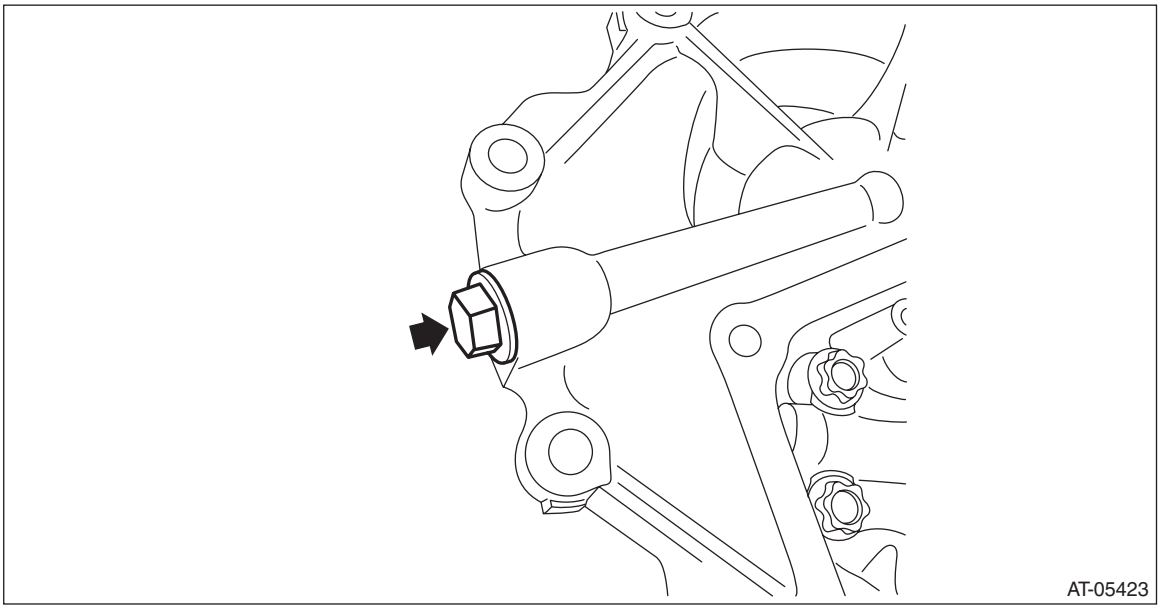

D: ASSEMBLY

1) Install the plugs.

NOTE:
- Use new O-rings.
- Apply CVTF to the O-rings.

Tightening torque:
25 N·m (2.5 kgf-m, 18.4 ft-lb)

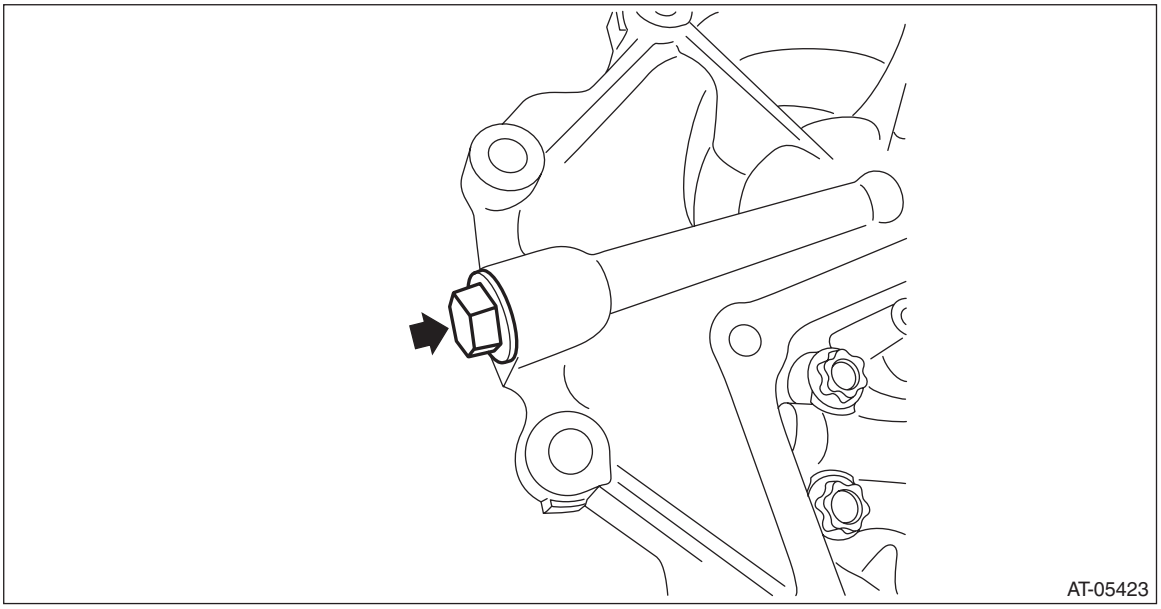

2) Using ST, install the center support COMPL.
ST 18270KA010 SOCKET (E16)

Tightening torque:
21.5 N·m (2.2 kgf-m, 15.9 ft-lb)

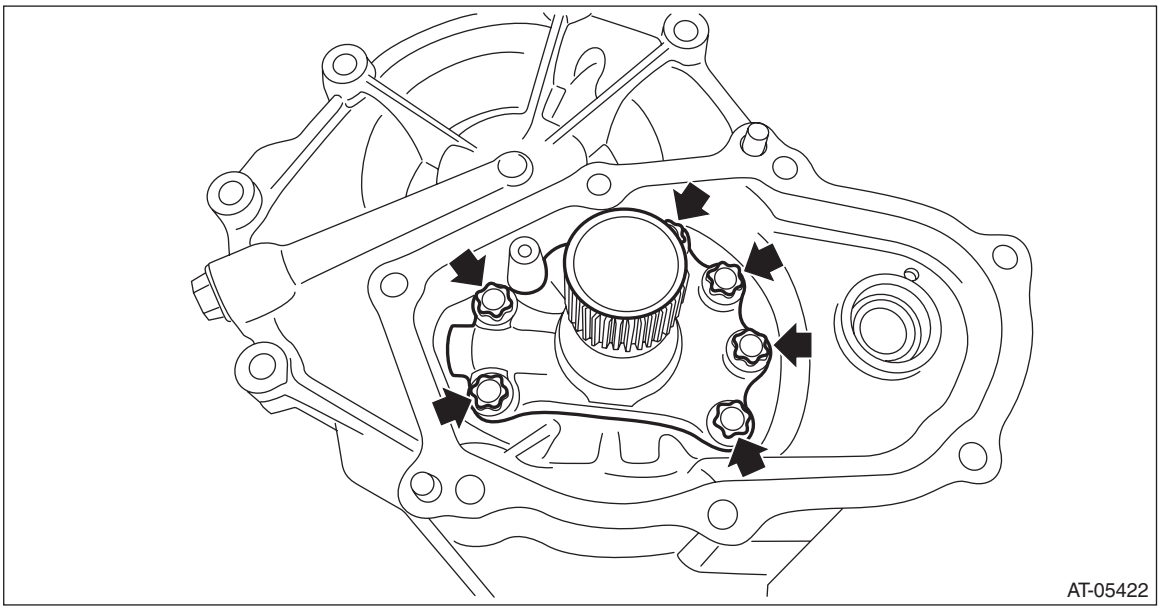

E: INSPECTION

- Check for leakage of CVTF from the connection between converter case and converter case cover.
- Check there is no damage or cracks on the converter case cover.

F: ADJUSTMENT

When replacing the converter case cover, select the following shims.

- Select the shim for front reduction drive gear. <Ref. to CVT(TR690)-339, ADJUSTMENT, Front Reduction Drive Gear.>
- Select the shim for front reduction driven gear. <Ref. to CVT(TR690)-347, ADJUSTMENT, Front Reduction Driven Gear.>

49.Front Reduction Drive Gear

A: REMOVAL

1) Remove the transmission assembly from the vehicle. <Ref. to CVT(TR690)-58, REMOVAL, Automatic Transmission Assembly.>
2) Remove the air breather hose. <Ref. to CVT(TR690)-152, REMOVAL, Air Breather Hose.>
3) Remove the oil pan and control valve body. <Ref. to CVT(TR690)-124, REMOVAL, Control Valve Body.>
4) Remove the transmission harness. <Ref. to CVT(TR690)-135, REMOVAL, Transmission Harness.>
5) Remove the primary speed sensor. <Ref. to CVT(TR690)-115, REMOVAL, Primary Speed Sensor.>
6) Remove the extension case. <Ref. to CVT(TR690)-160, REMOVAL, Extension Case.>
7) Remove the rear drive shaft. <Ref. to CVT(TR690)-163, REMOVAL, Rear Drive Shaft.>
8) Remove the transfer clutch assembly. <Ref. to CVT(TR690)-168, REMOVAL, Transfer Clutch.>
9) Remove the transfer reduction driven gear assembly. <Ref. to CVT(TR690)-180, REMOVAL, Transfer Reduction Driven Gear.>
10) Remove the intermediate case. <Ref. to CVT(TR690)-187, REMOVAL, Intermediate Case.>
11) Remove the forward clutch assembly. <Ref. to CVT(TR690)-202, REMOVAL, Forward Clutch Assembly.>
12) Remove the transmission case. <Ref. to CVT(TR690)-242, REMOVAL, Transmission Case.>
13) Remove the primary pulley, secondary pulley and variator chain. <Ref. to CVT(TR690)-259, REMOVAL, Primary Pulley and Secondary Pulley.>
14) Remove the drive pinion shaft assembly. <Ref. to CVT(TR690)-275, REMOVAL, Drive Pinion Shaft Assembly.>
15) Remove the converter case cover. <Ref. to CVT(TR690)-323, REMOVAL, Converter Case Cover.>
16) Remove the front reduction drive gear and front reduction driven gear together.

NOTE:
Remove the front reduction driven shaft while holding it.

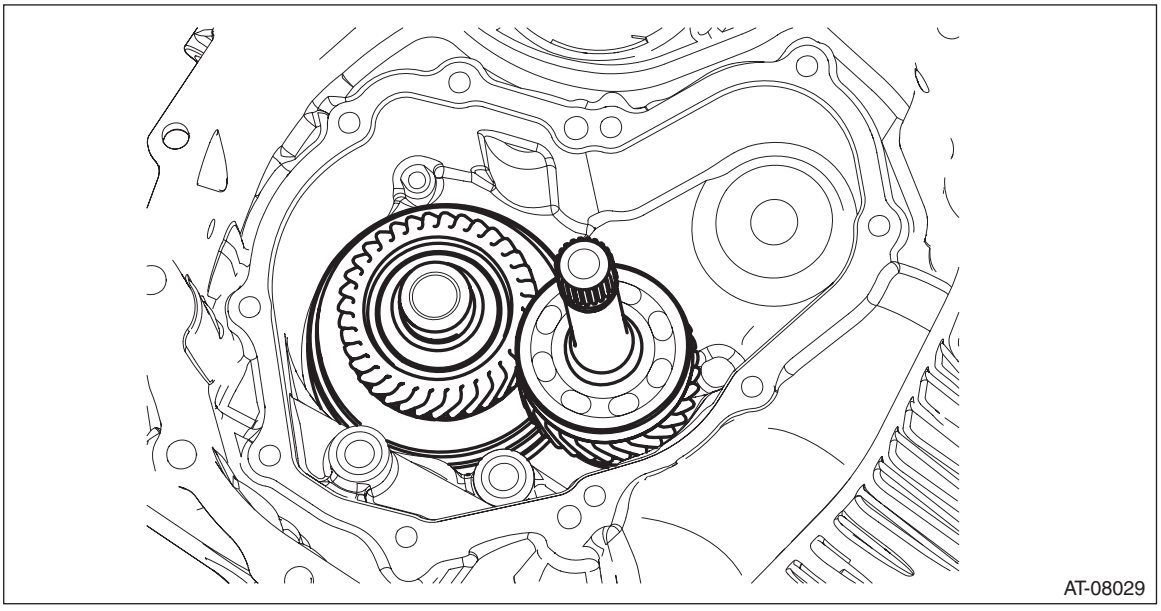

17) Remove the shims of the front reduction driven gear from the converter case.

18) Remove the seal rings.

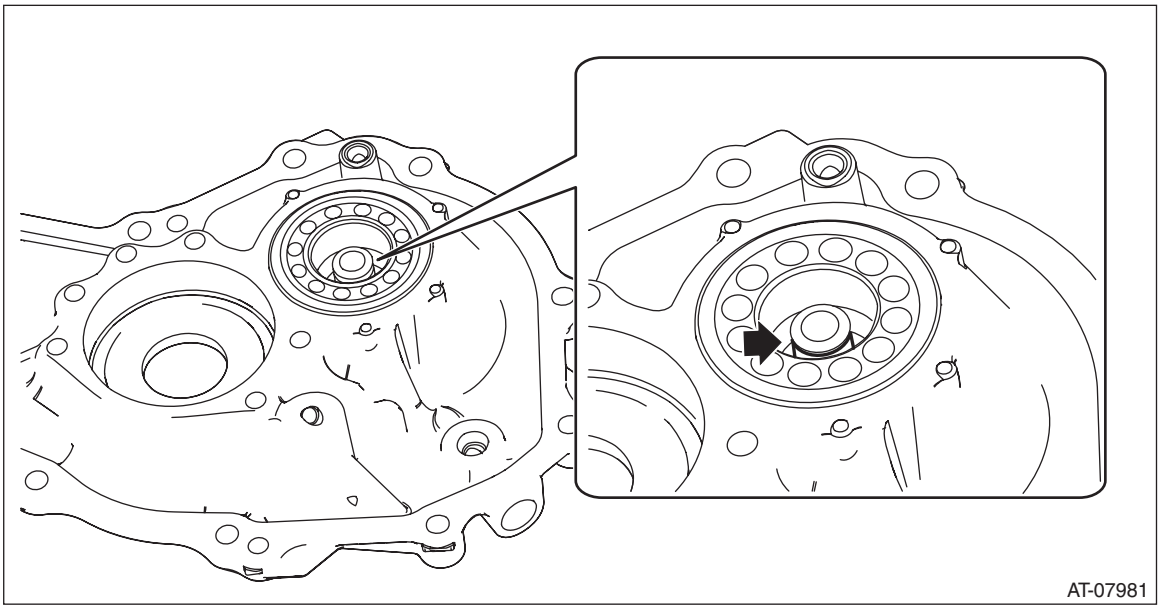

B: INSTALLATION

1) Clean the mating surface of converter case cover and converter case.
2) Select the shim for front reduction drive gear. <Ref. to CVT(TR690)-339, ADJUSTMENT, Front Reduction Drive Gear.>
3) Apply CVTF to the shims and install on the bearing catch surface of the front reduction driven gear.
4) Install the seal ring to converter case cover.

NOTE:
- Use new seal rings.
- When installing the seal rings, do not expand the seal rings too much.

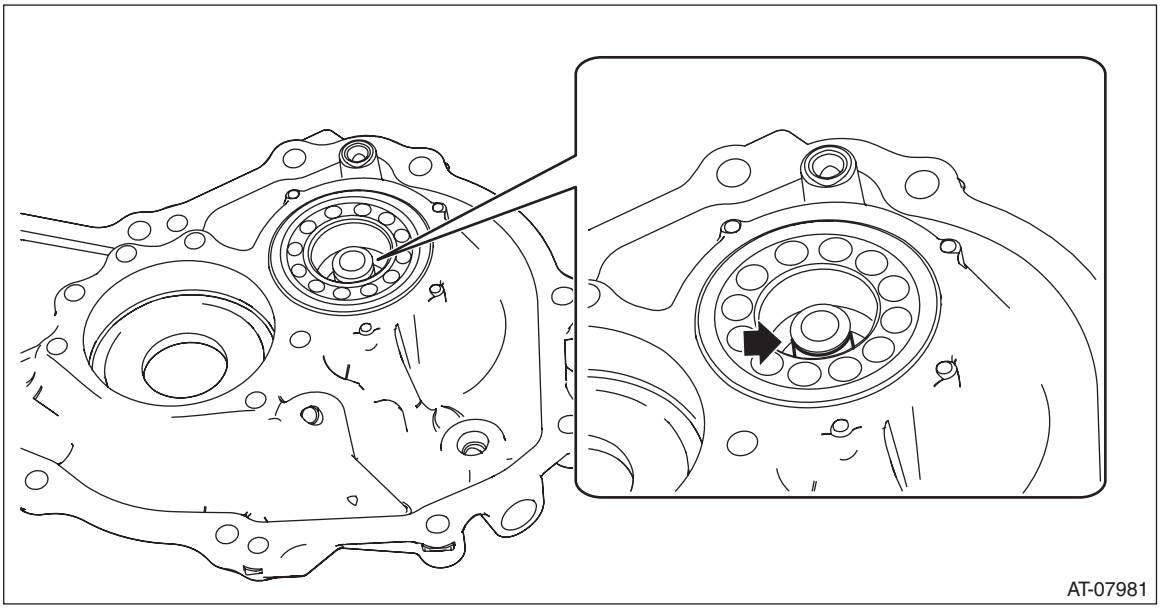

5) Install the front reduction drive gear and front reduction driven gear together.

CAUTION:
Be careful not to detach the spline of input clutch and the spline of front reduction driven shaft.

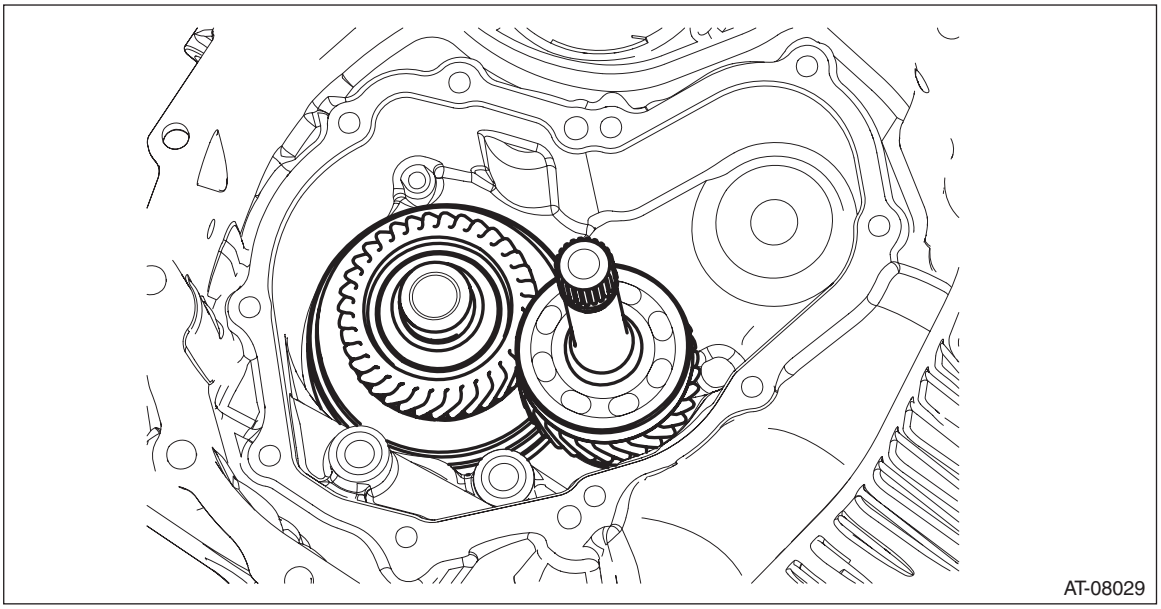

6) Install the converter case cover. <Ref. to CVT(TR690)-327, INSTALLATION, Converter Case Cover.>
7) Install the drive pinion shaft assembly. <Ref. to CVT(TR690)-277, INSTALLATION, Drive Pinion Shaft Assembly.>
8) Install the primary pulley, secondary pulley and variator chain. <Ref. to CVT(TR690)-263, INSTALLATION, Primary Pulley and Secondary Pulley.>
9) Install the transmission case. <Ref. to CVT(TR690)-244, INSTALLATION, Transmission Case.>
10) Install the forward clutch assembly. <Ref. to CVT(TR690)-203, INSTALLATION, Forward Clutch Assembly.>
11) Install the intermediate case. <Ref. to CVT(TR690)-188, INSTALLATION, Intermediate Case.>
12) Install the transfer reduction driven gear assembly. <Ref. to CVT(TR690)-180, INSTALLATION, Transfer Reduction Driven Gear.>
13) Install the transfer clutch assembly. <Ref. to CVT(TR690)-169, INSTALLATION, Transfer Clutch.>
14) Install the rear drive shaft. <Ref. to CVT(TR690)-163, INSTALLATION, Rear Drive Shaft.>
15) Install the extension case. <Ref. to CVT(TR690)-161, INSTALLATION, Extension Case.>
16) Install the primary speed sensor. <Ref. to CVT(TR690)-118, INSTALLATION, Primary Speed Sensor.>
17) Install the transmission harness. <Ref. to CVT(TR690)-137, INSTALLATION, Transmission Harness.>
18) Install the control valve body and oil pan. <Ref. to CVT(TR690)-128, INSTALLATION, Control Valve Body.>
19) Install the air breather hose. <Ref. to CVT(TR690)-154, INSTALLATION, Air Breather Hose.>
20) Install the transmission assembly to the vehicle. <Ref. to CVT(TR690)-75, INSTALLATION, Automatic Transmission Assembly.>

C: DISASSEMBLY

1) Remove the seal ring and O-ring.

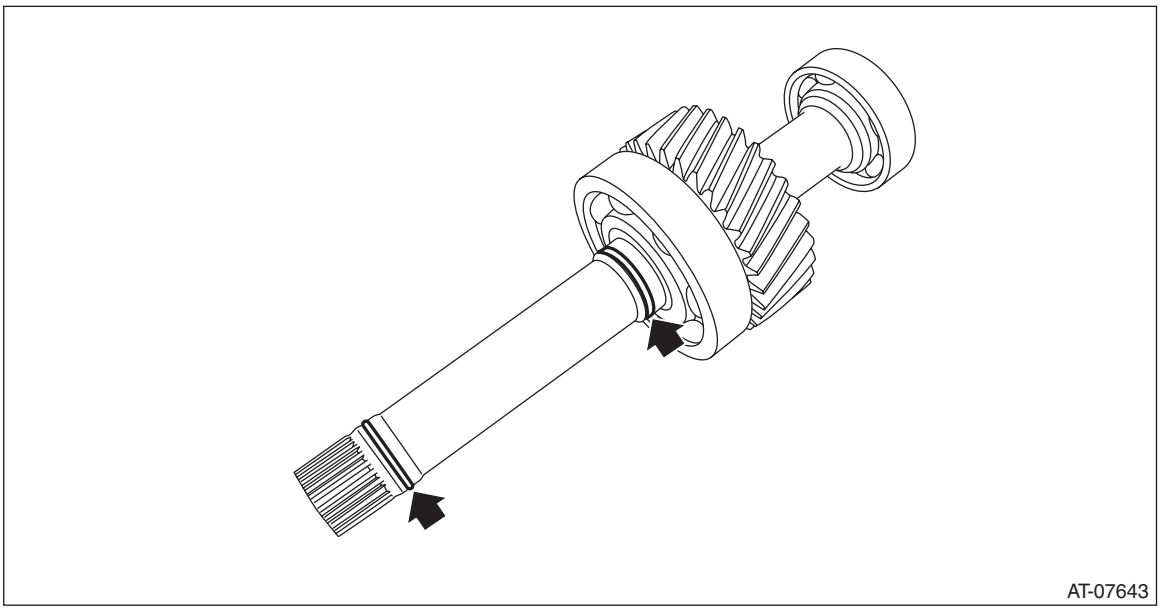

2) Using the ST, remove the ball bearing from front reduction drive gear.
ST 899864100 REMOVER

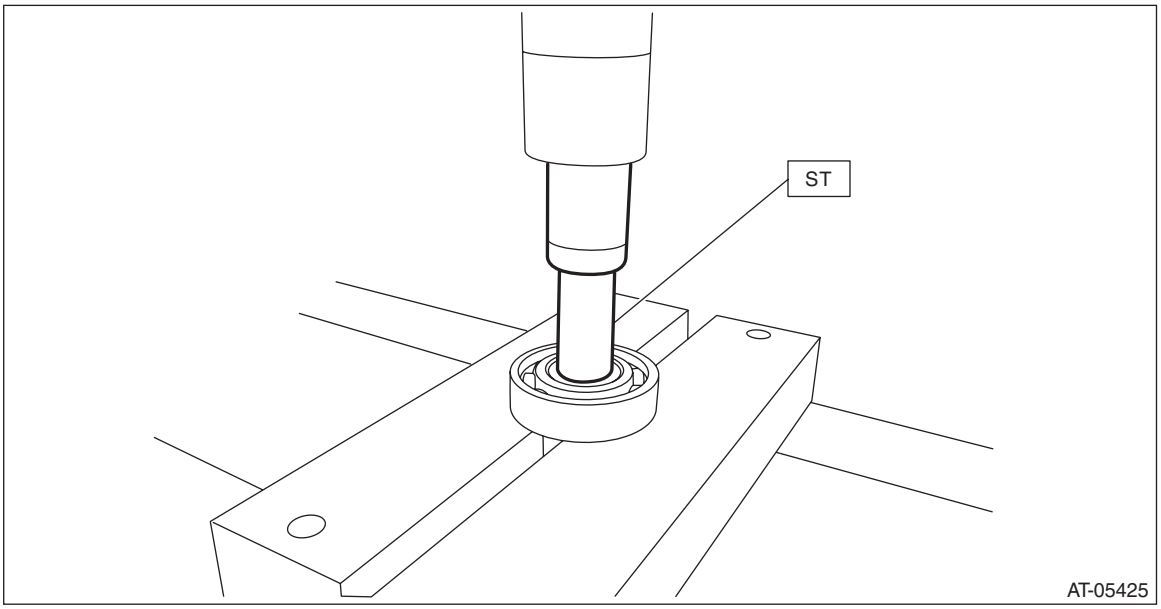

3) Using the ST, remove the ball bearing from front reduction drive gear.
ST 498077000 REMOVER

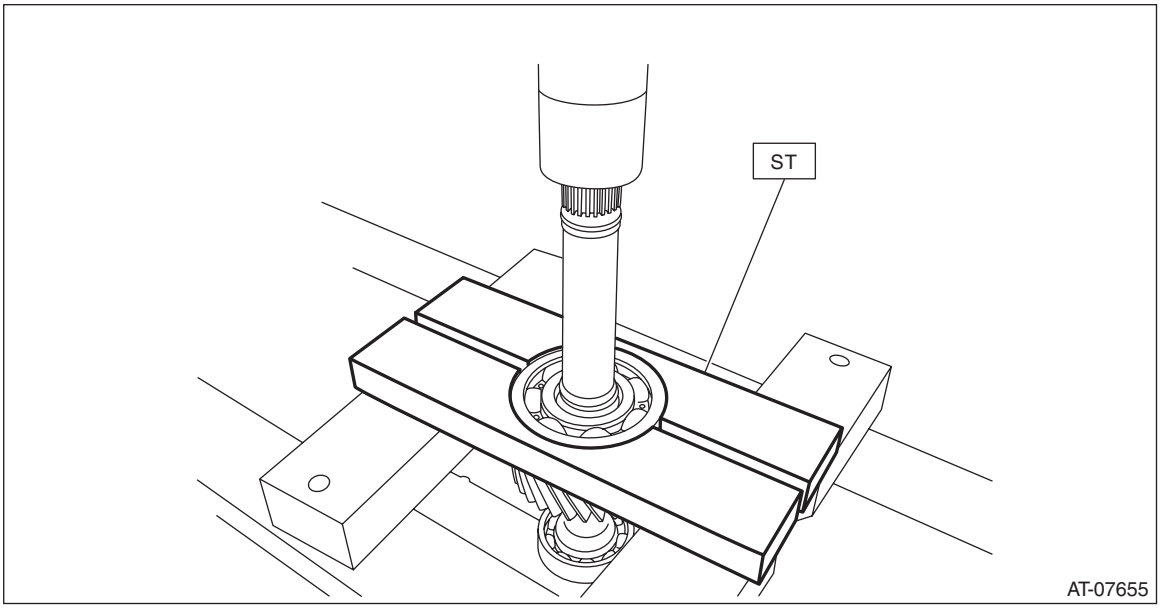

D: ASSEMBLY

1) Using the ST, install the ball bearing to front reduction drive gear.

NOTE:
Use a new ball bearing.
ST 18651AA000 INSTALLER

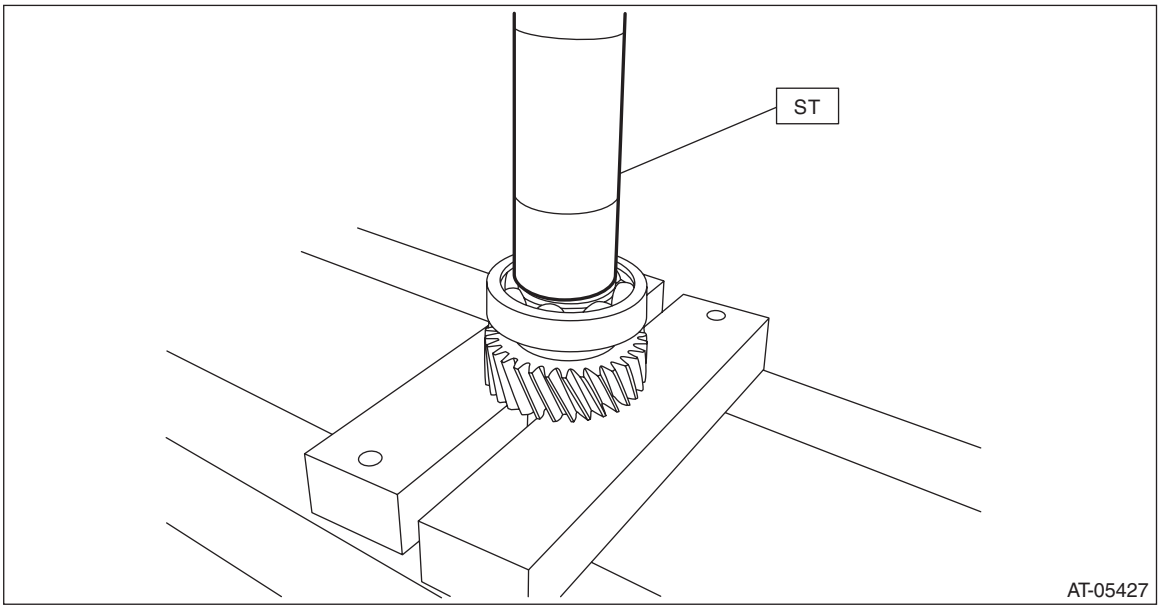

2) Using ST1 and ST2, install the ball bearing to front reduction drive gear.

NOTE:
Use a new ball bearing.
ST1 499757002 INSTALLER
ST2 398177700 INSTALLER

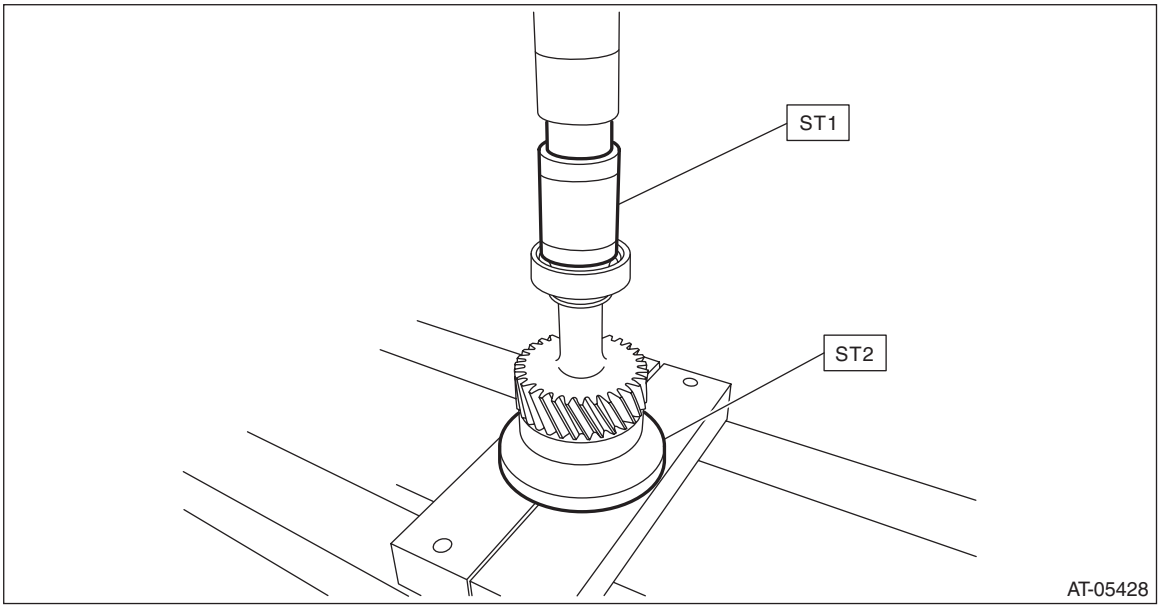

3) Install the seal rings.

NOTE:
- Use new seal rings.
- When installing the seal rings, do not expand the seal rings too much.
- Install the O-ring when installing the torque converter assembly.

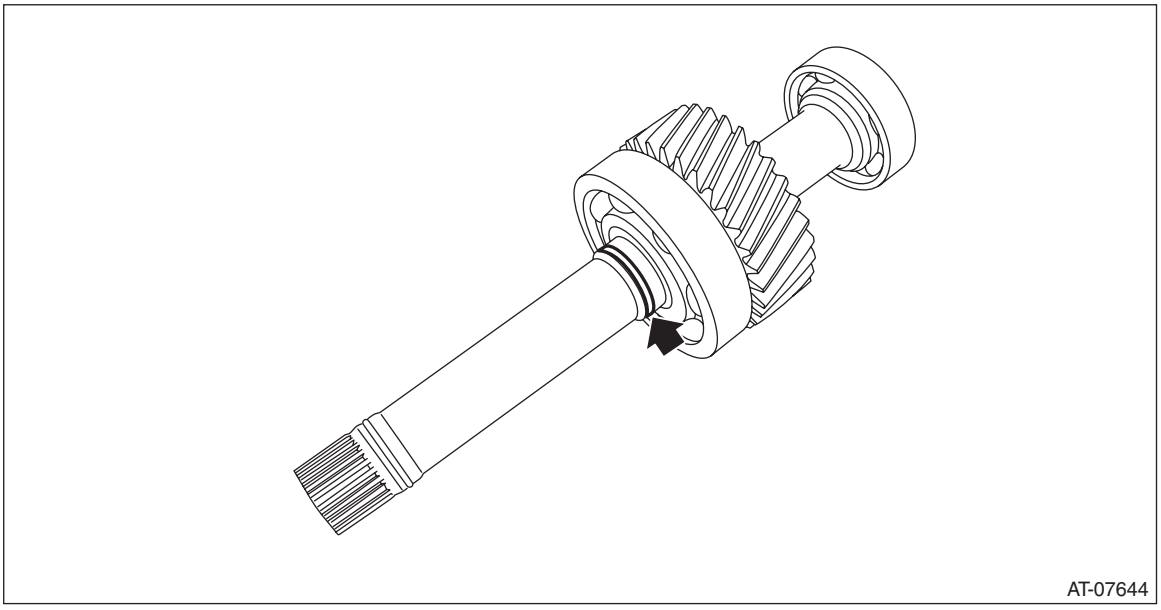

E: INSPECTION

- Replace if its tooth surfaces are broken, damaged or excessively worn.
- Check the bearing for seizure or wear.
- Apply CVTF to bearing and rotate the bearing to check for noise or dragging etc.

F: ADJUSTMENT

1) Measure height “A” from the ST upper face to the bearing end face using the ST.
ST 398643600 GAUGE

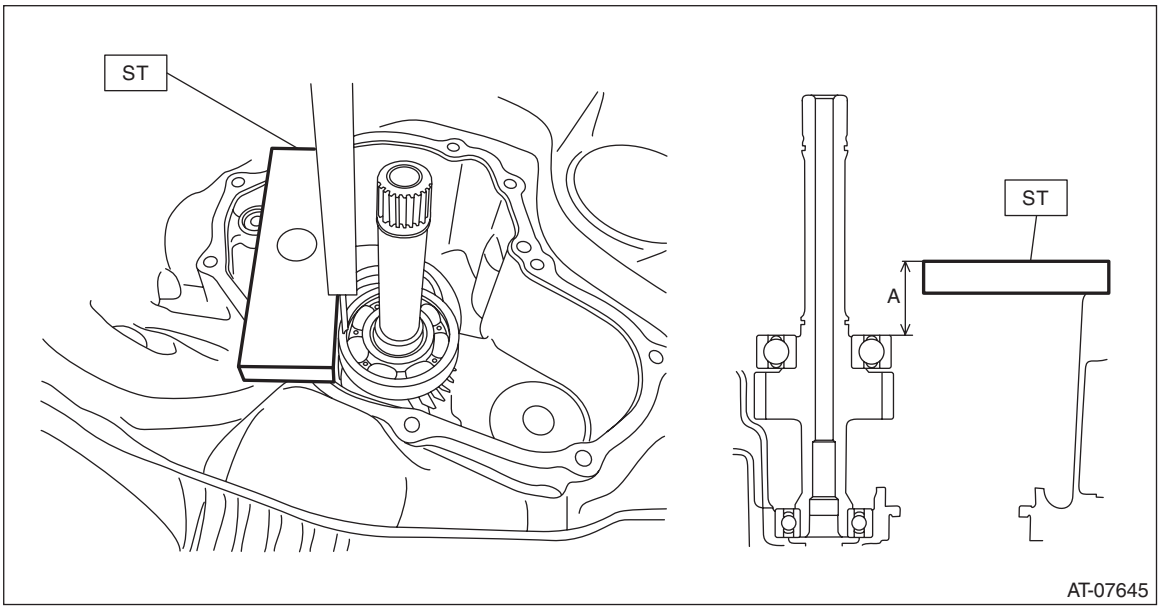

2) Measure depth “B” from the converter case cover upper face to the bearing catch surface.

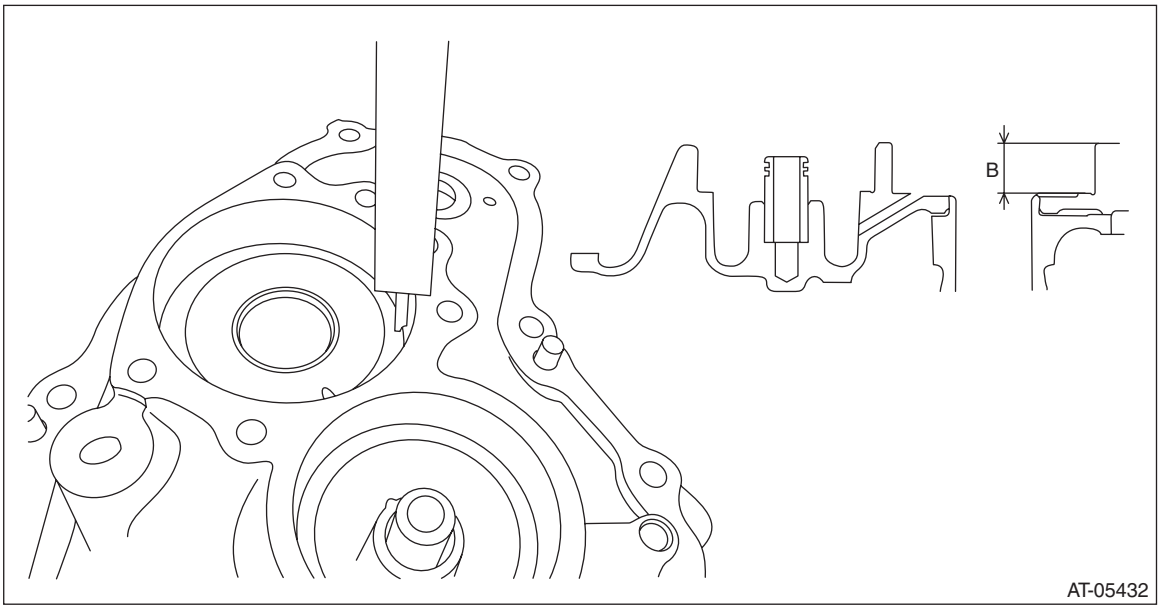

3) Using the ST, measure height “C” from the ST upper face to the converter case cover mating surface.
ST 398643600 GAUGE

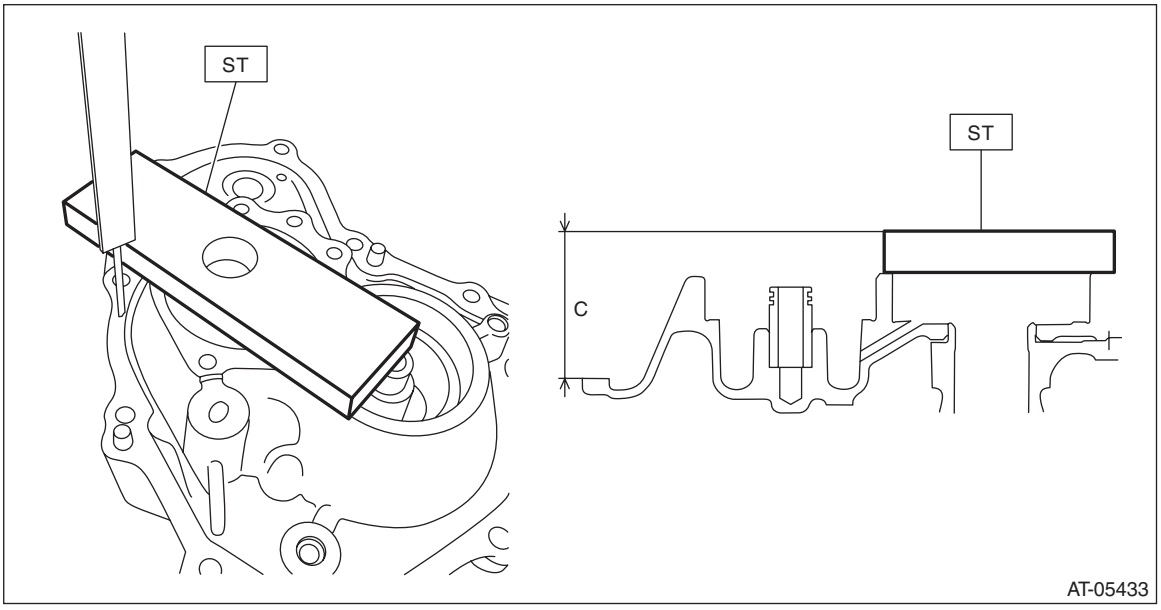

4) Using the following formula, calculate clearance “T” to select shims.
Calculation formula:
T mm = (A – 15) – ((C – 15) – B)
[T in = (A – 0.591) – ((C – 0.591) – B)]
T: Clearance
A: Depth from the ST upper face to the bearing end surface
B: Depth from the converter case cover upper face to the bearing catch surface
C: Height from the ST upper face to the converter case cover mating surface
15 mm (0.591 in): Thickness of ST

Clearance “T” mm (in)	Thickness of shim mm (in)	Part No.
1.070 — 1.174 (0.042 — 0.045)	1.0 (0.039)	31288AA160
1.175 — 1.274 (0.046 — 0.049)	1.1 (0.043)	31288AA170
1.275 — 1.374 (0.050 — 0.053)	1.2 (0.047)	31288AA180
1.375 — 1.474 (0.054 — 0.057)	1.3 (0.051)	31288AA220
1.475 — 1.580 (0.058 — 0.062)	1.4 (0.055)	31288AA230

50.Front Reduction Driven Gear

A: REMOVAL

NOTE:
For removal of front reduction driven gear, refer to the “Front Reduction Drive Gear”. <Ref. to CVT(TR690)-333, REMOVAL, Front Reduction Drive Gear.>

B: INSTALLATION

NOTE:
For installation of front reduction driven gear, refer to the “Front Reduction Drive Gear”. <Ref. to CVT(TR690)-334, INSTALLATION, Front Reduction Drive Gear.>

C: DISASSEMBLY

1) Remove the front reduction driven shaft from the front reduction driven gear.
2) Remove the snap ring.

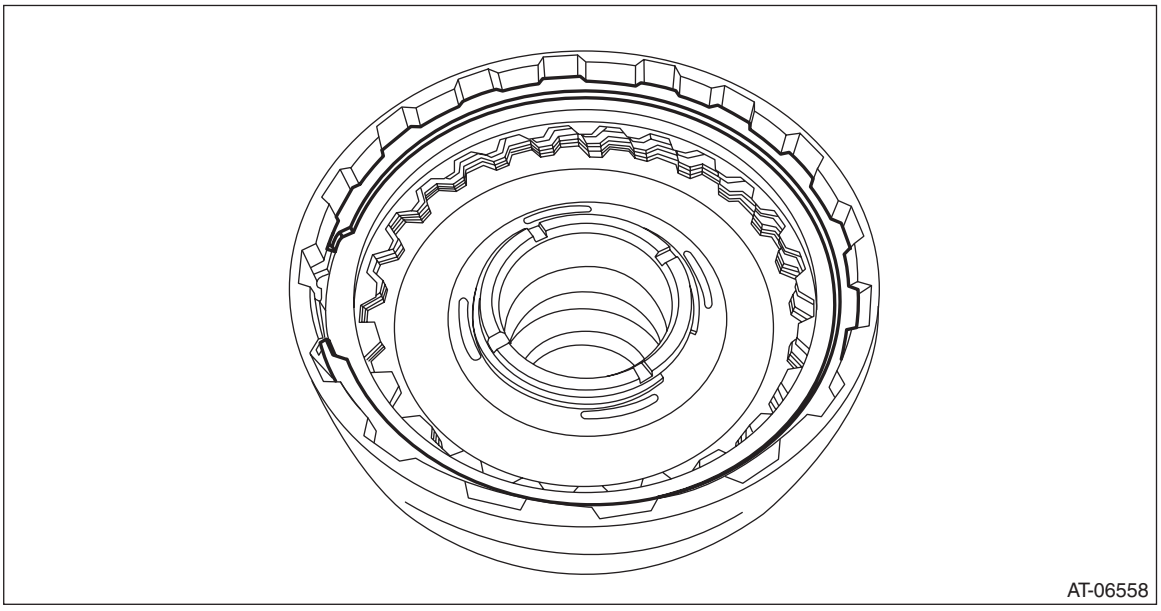

3) Remove the retaining plate, drive plate, driven plate and dish plate.

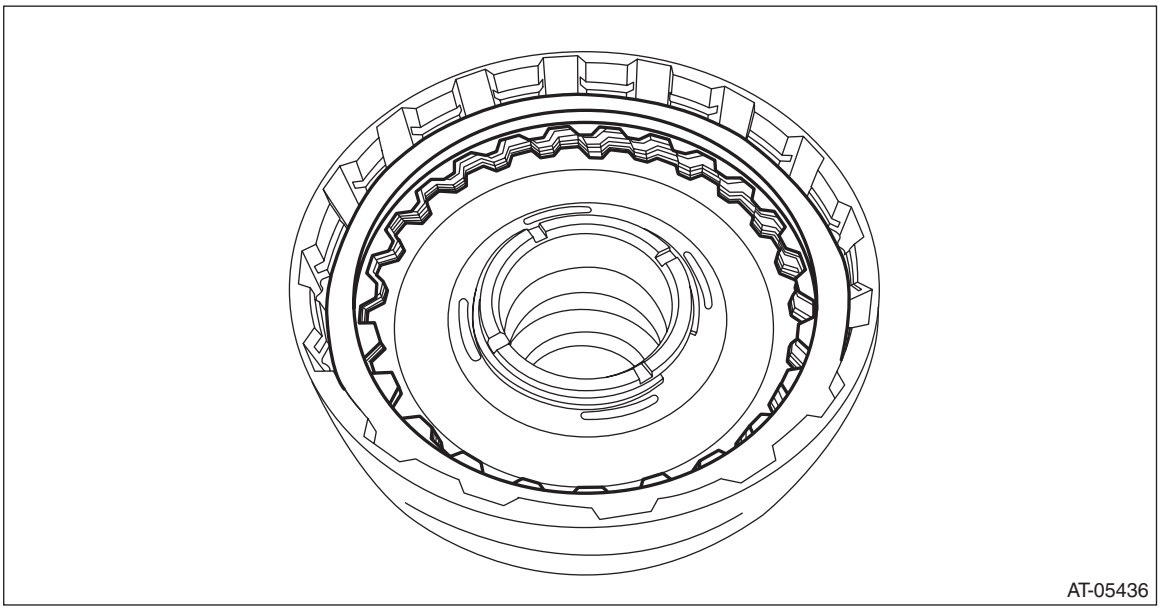

4) Remove the seal ring from front reduction driven shaft.

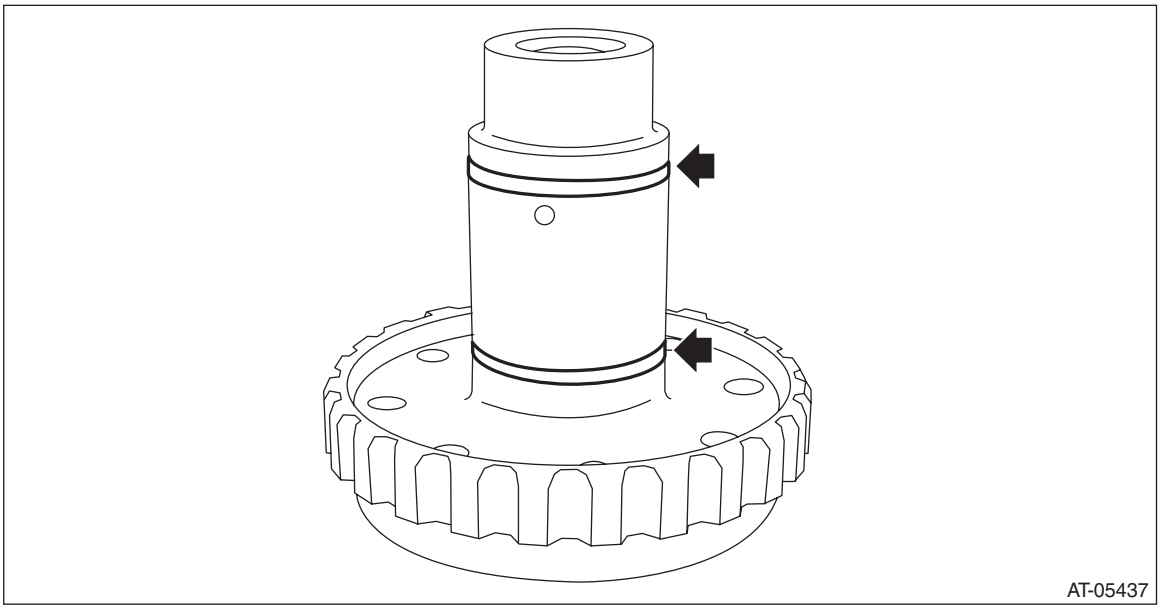

5) Remove the ball bearing, while tapping the entire circumference around the ball bearing outer race a little at a time through the front reduction driven shaft hole using the round bar with diameter of 7 mm (0.28 in).

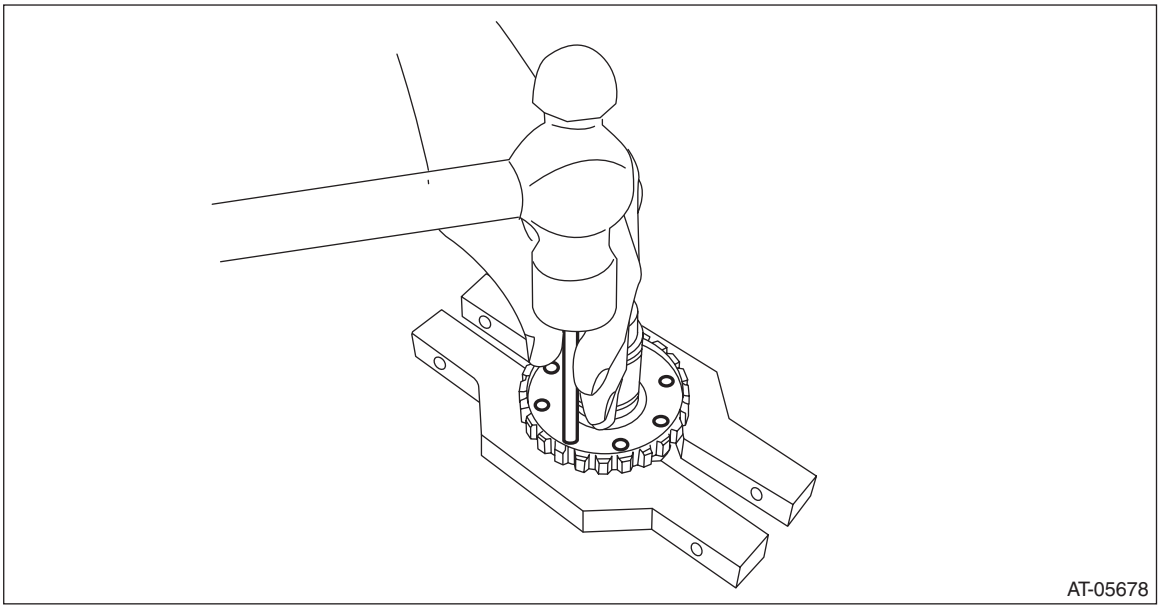

D: ASSEMBLY

1) Place the dish plate, driven plate, drive plate and retaining plate neatly in this order on surface table.

NOTE:
Make sure of the direction of dish plate.

2) Set the dial gauge to retaining plate, and read its scale.

NOTE:
The value, which is read in the gauge at this time, is zero point.

3) Scale and record the weight "Z" of a flat board which will be put on retaining plate.

NOTE:
- Use a stiff board which does not bend against load as a flat board to be put on retaining plate.
- Use a flat board weighing less than 130 N (13.3 kgf, 29.2 lb).

4) Put the flat board on retaining plate.

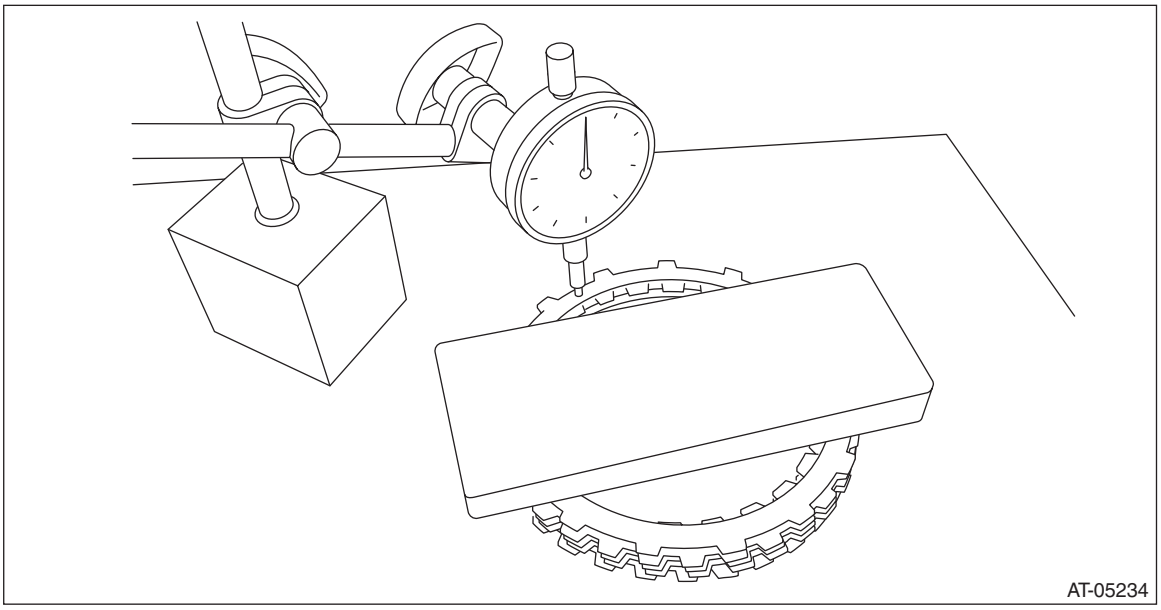

5) Using the following formula, calculate load “N”, a force of pressing with push/pull gauge.
N = 130N (13.3 kgf, 29.2 lb) – Z
130 N (13.3 kgf, 29.2 lb) : Load applied to clutch plate
Z: Flat board weight
6) Press the center of retaining plate by applying a force of “N” using push/pull gauge, and then measure and record the compression amount “A”.

NOTE:
Measure at four points with a 90° interval and calculate the average.

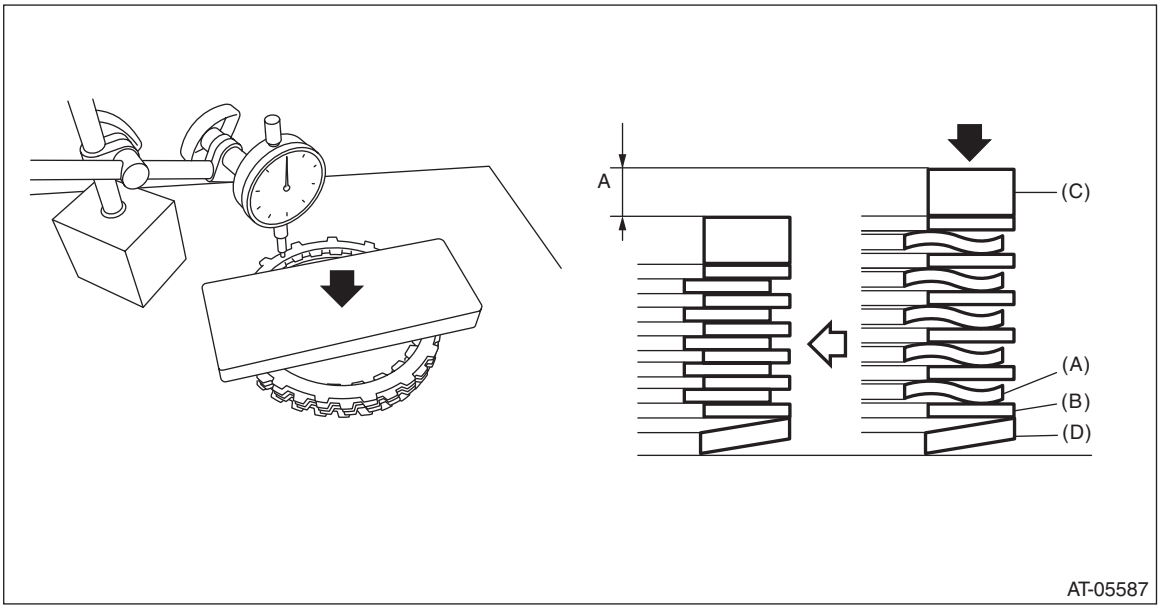

(A) Drive plate
(B) Driven plate
(C) Retaining plate
(D) Dish plate

7) Install the dish plate, driven plate, drive plate, retaining plate and snap ring.

NOTE:
Make sure of the direction of dish plate.

8) Measure and record the clearance “B” between the retaining plate and snap ring.

NOTE:
Before measuring, press down the whole circumference of retaining plate using your finger.

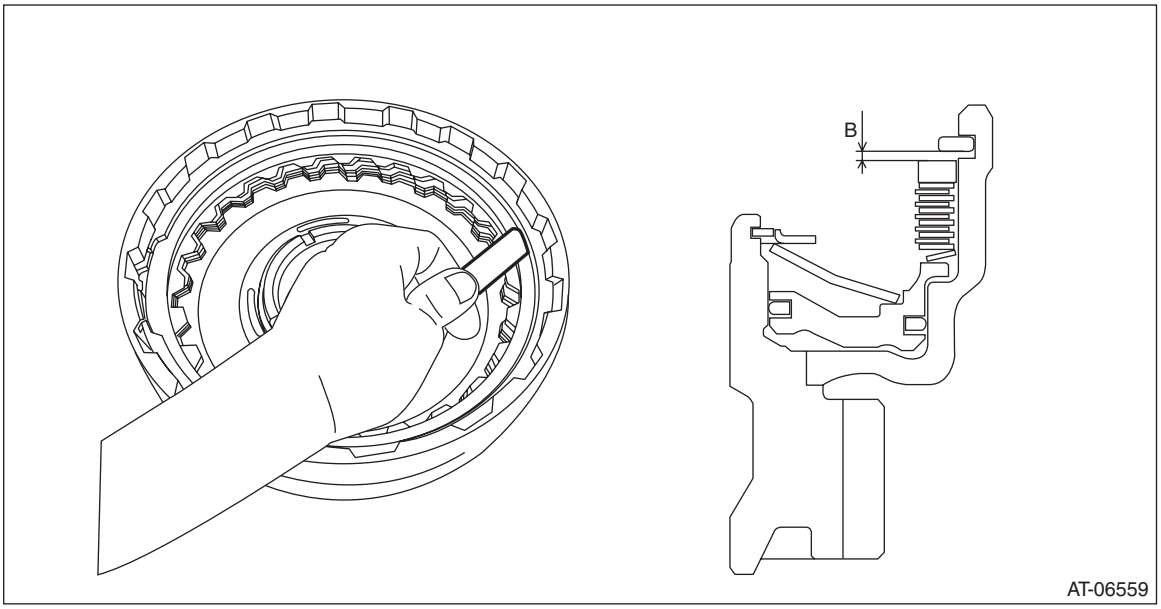

9) Piston stroke calculation
Calculate with A and B dimensions recorded before.
If out of standard, replace with a new drive plate and adjust it within standard.
S mm (in) = A + B
S: Piston stroke
A: Compression amount of drive plate and dish plate
B: Clearance between retaining plate and snap ring

Specification:
2.4 — 2.8 mm (0.094 — 0.11 in)

Retaining plate	
Part No.	Thickness mm (in)
31667AB430	3.1 (0.122)
31667AB440	3.3 (0.130)
31667AB450	3.5 (0.138)

10) Press-fit the ball bearing into front driven shaft.

NOTE:
Use a new ball bearing.

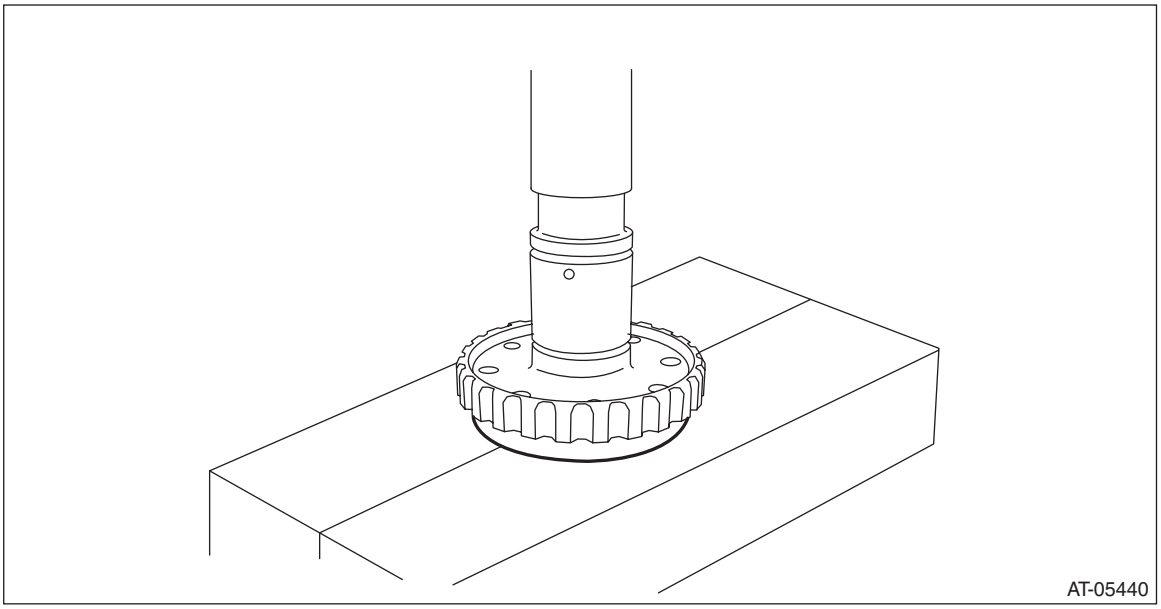

11) Install the seal ring to the front driven shaft.

NOTE:
- Install a new seal ring.
- Apply CVTF to the seal rings.

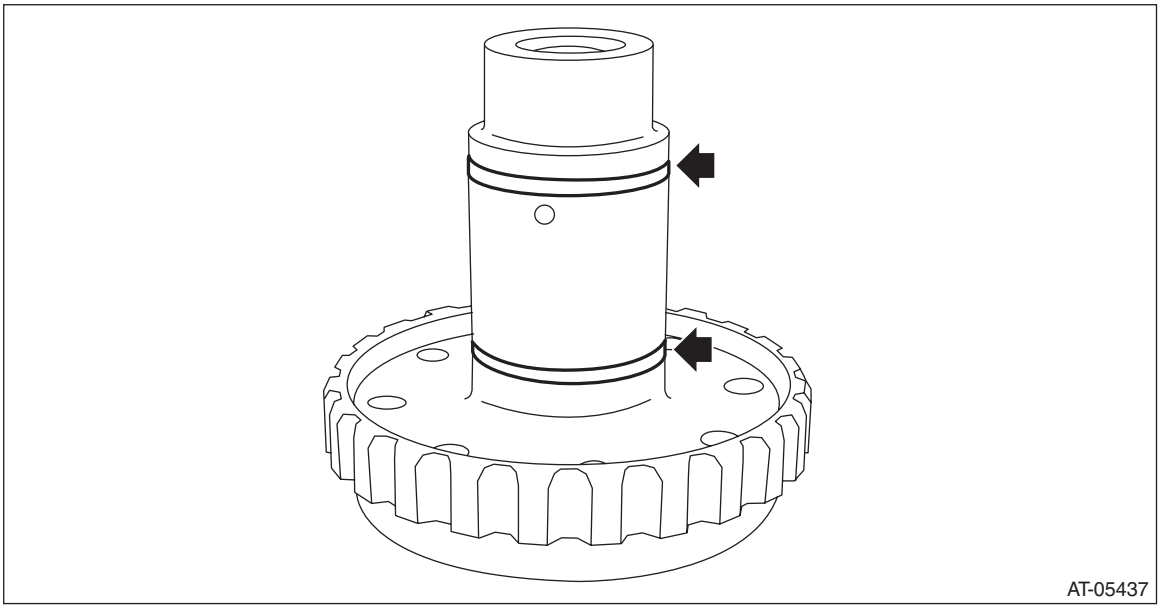

12) Install the front reduction driven shaft to the front reduction driven gear.

13) Install the front reduction driven gear assembly to converter case cover.

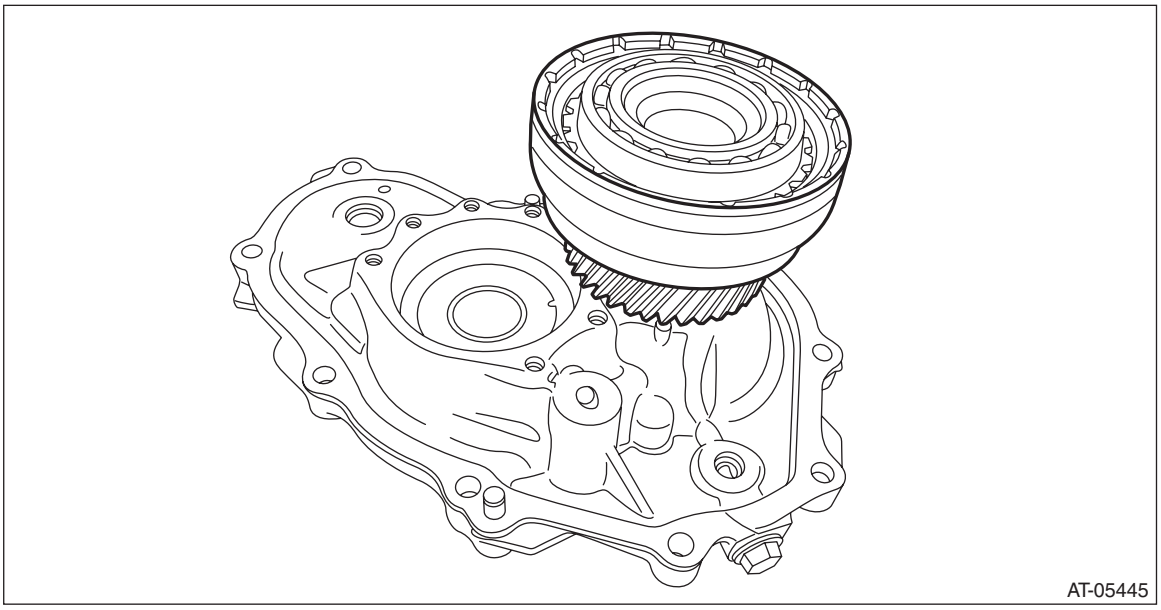

14) Apply compressed air intermittently to check the piston operation.

NOTE:
Hold the arrowed area with a finger.

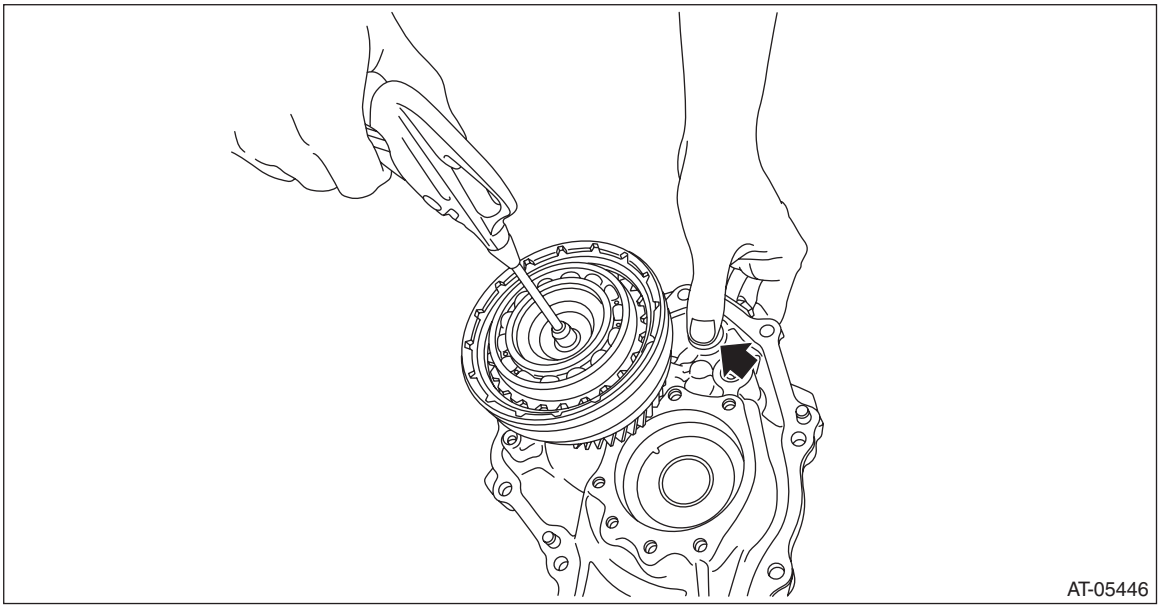

E: INSPECTION

- Check the drive plate for wear and damage.
- Check the driven plate for discoloration (burnt color).
- Check for worn snap ring, fatigue or damaged return spring or deformed piston retainer.
- Replace if its tooth surfaces are broken, damaged or excessively worn.
- Check the bearing for seizure or wear.
- Apply CVTF to bearing and rotate the bearing to check for noise or dragging etc.

F: ADJUSTMENT

1) If the ball bearing is attached, remove the bearing and shims. <Ref. to CVT(TR690)-323, REMOVAL, Converter Case Cover.>
2) Using the ST, measure height “A” from the ST upper face to the mating surface of the case.
ST 398643600 GAUGE

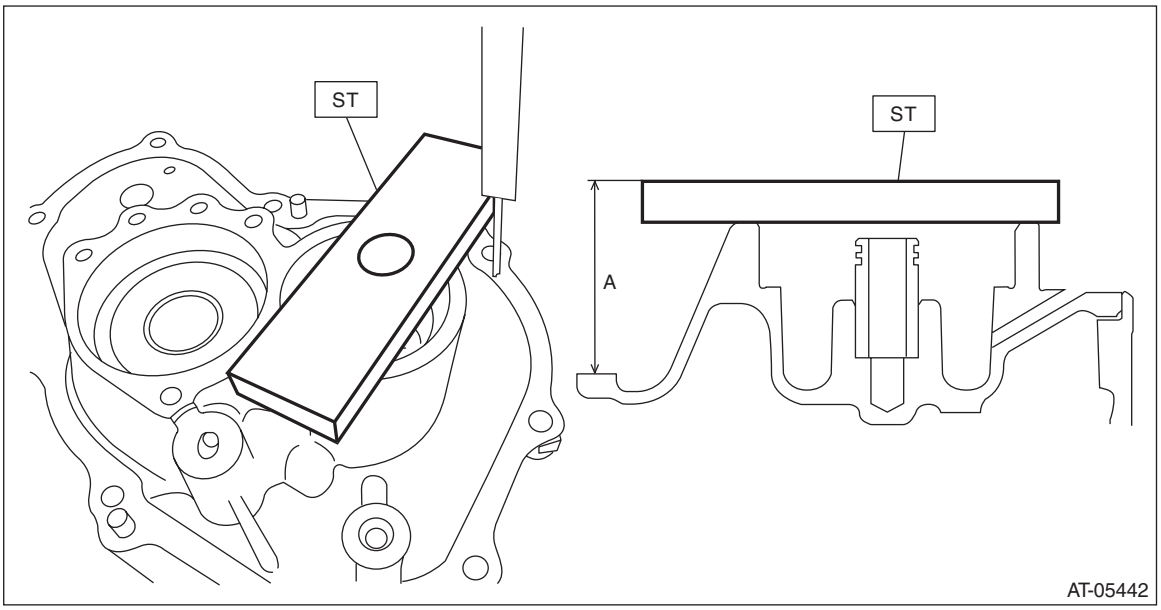

3) Measure depth “B” from the converter case cover upper face to the bearing catch surface.

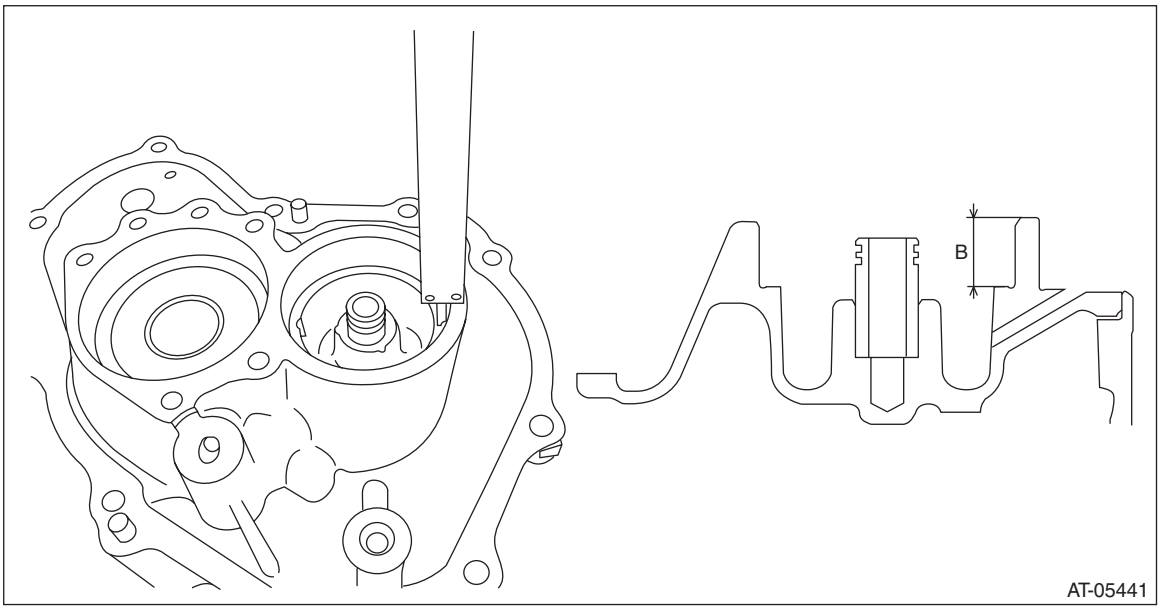

4) Install the ball bearing to the reduction driven gear.

NOTE:
Use a new ball bearing.

5) Measure depth “C” from the ST upper face to the bearing end face using the ST.
ST 398643600 GAUGE

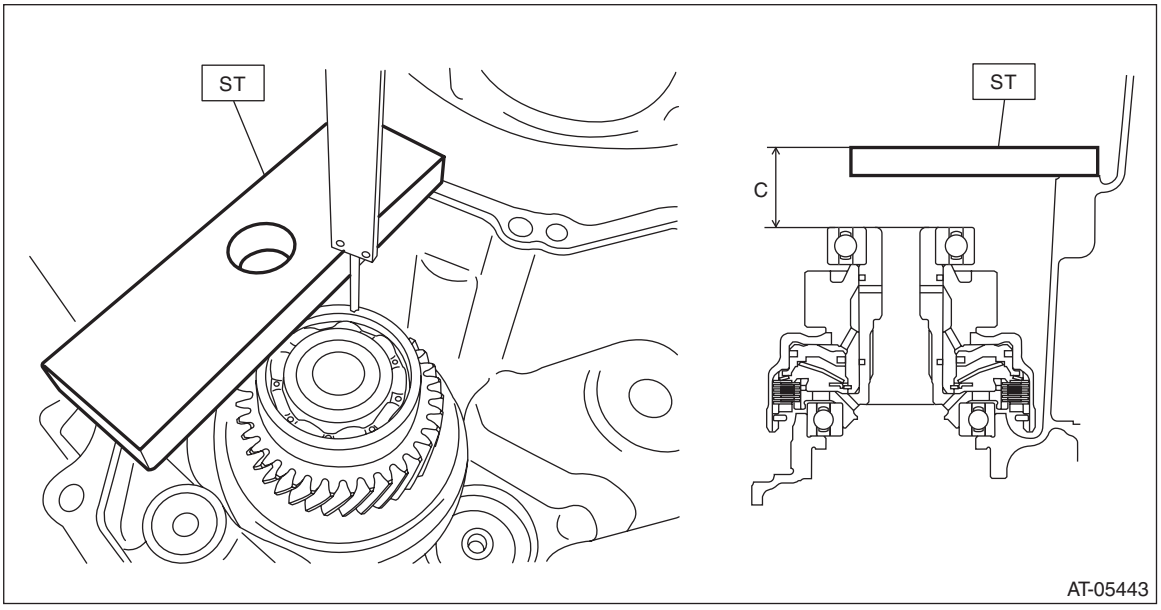

6) Calculate clearance “T” using the following formula.
Formula: T mm = (C – 15) – ((A – 15) – B)
[T in = (C – 0.591) – ((A – 0.591) – B)]
T: Clearance
A: Height from the ST upper face to the converter case mating surface
B: Depth from the converter case cover upper face to the bearing catch surface
C: Depth from the ST upper face to the bearing end face
15 mm (0.591 in): Thickness of ST

Clearance “T” mm (in)	Thickness of shim mm (in)
0.470 — 0.569 (0.019 — 0.021)	0.4 (0.016)
0.570 — 0.669 (0.022 — 0.025)	0.5 (0.020)
0.670 — 0.769 (0.026 — 0.029)	0.6 (0.024)
0.770 — 0.869 (0.030 — 0.033)	0.7 (0.028)
0.870 — 0.980 (0.034 — 0.039)	0.8 (0.031)

7) Select one to two shims so that the total thickness meets the value obtained from above.

Part No.	Thickness of shim mm (in)
31288AA130	0.2 (0.008)
31288AA140	0.3 (0.012)
31288AA150	0.5 (0.020)

51.Converter Case

A: REMOVAL

1) Remove the transmission assembly from the vehicle. <Ref. to CVT(TR690)-58, REMOVAL, Automatic Transmission Assembly.>
2) Remove the air breather hose. <Ref. to CVT(TR690)-152, REMOVAL, Air Breather Hose.>
3) Remove the oil pan and control valve body. <Ref. to CVT(TR690)-124, REMOVAL, Control Valve Body.>
4) Remove the transmission harness. <Ref. to CVT(TR690)-135, REMOVAL, Transmission Harness.>
5) Remove the secondary pressure sensor. <Ref. to CVT(TR690)-122, REMOVAL, Secondary Pressure Sensor.>
6) Remove the primary speed sensor. <Ref. to CVT(TR690)-115, REMOVAL, Primary Speed Sensor.>
7) Remove the extension case. <Ref. to CVT(TR690)-160, REMOVAL, Extension Case.>
8) Remove the rear drive shaft. <Ref. to CVT(TR690)-163, REMOVAL, Rear Drive Shaft.>
9) Remove the transfer clutch assembly. <Ref. to CVT(TR690)-168, REMOVAL, Transfer Clutch.>
10) Remove the transfer reduction driven gear assembly. <Ref. to CVT(TR690)-180, REMOVAL, Transfer Reduction Driven Gear.>
11) Remove the intermediate case. <Ref. to CVT(TR690)-187, REMOVAL, Intermediate Case.>
12) Remove the forward clutch assembly. <Ref. to CVT(TR690)-202, REMOVAL, Forward Clutch Assembly.>
13) Remove the transmission case. <Ref. to CVT(TR690)-242, REMOVAL, Transmission Case.>
14) Remove the primary pulley, secondary pulley and variator chain. <Ref. to CVT(TR690)-259, REMOVAL, Primary Pulley and Secondary Pulley.>
15) Remove the drive pinion shaft assembly. <Ref. to CVT(TR690)-275, REMOVAL, Drive Pinion Shaft Assembly.>
16) Remove the front differential assembly. <Ref. to CVT(TR690)-296, REMOVAL, Front Differential Assembly.>
17) Remove the converter case cover. <Ref. to CVT(TR690)-323, REMOVAL, Converter Case Cover.>
18) Remove the front reduction drive gear and front reduction driven gear. <Ref. to CVT(TR690)-333, REMOVAL, Front Reduction Drive Gear.>

B: INSTALLATION

1) Install the front reduction drive gear and front reduction driven gear. <Ref. to CVT(TR690)-334, INSTALLATION, Front Reduction Drive Gear.>
2) Install the converter case cover. <Ref. to CVT(TR690)-327, INSTALLATION, Converter Case Cover.>
3) Install the front differential assembly. <Ref. to CVT(TR690)-297, INSTALLATION, Front Differential Assembly.>
4) Install the drive pinion shaft assembly. <Ref. to CVT(TR690)-277, INSTALLATION, Drive Pinion Shaft Assembly.>
5) Install the primary pulley, secondary pulley and variator chain. <Ref. to CVT(TR690)-263, INSTALLATION, Primary Pulley and Secondary Pulley.>
6) Install the transmission case. <Ref. to CVT(TR690)-242, REMOVAL, Transmission Case.>
7) Install the forward clutch assembly. <Ref. to CVT(TR690)-203, INSTALLATION, Forward Clutch Assembly.>
8) Install the intermediate case. <Ref. to CVT(TR690)-188, INSTALLATION, Intermediate Case.>
9) Install the transfer reduction driven gear. <Ref. to CVT(TR690)-180, INSTALLATION, Transfer Reduction Driven Gear.>
10) Install the transfer clutch assembly. <Ref. to CVT(TR690)-169, INSTALLATION, Transfer Clutch.>
11) Install the rear drive shaft. <Ref. to CVT(TR690)-163, INSTALLATION, Rear Drive Shaft.>
12) Install the extension case. <Ref. to CVT(TR690)-161, INSTALLATION, Extension Case.>
13) Install the primary speed sensor. <Ref. to CVT(TR690)-118, INSTALLATION, Primary Speed Sensor.>
14) Install the secondary pressure sensor. <Ref. to CVT(TR690)-122, INSTALLATION, Secondary Pressure Sensor.>
15) Install the transmission harness. <Ref. to CVT(TR690)-137, INSTALLATION, Transmission Harness.>
16) Install the control valve body and oil pan. <Ref. to CVT(TR690)-128, INSTALLATION, Control Valve Body.>
17) Install the air breather hose. <Ref. to CVT(TR690)-154, INSTALLATION, Air Breather Hose.>
18) Install the transmission assembly to the vehicle. <Ref. to CVT(TR690)-75, INSTALLATION, Automatic Transmission Assembly.>

C: DISASSEMBLY

1) Remove the transmission hanger and transmission radio ground cord, if mounted.
2) Remove the oil drain plug and overflow drain plug. <Ref. to CVT(TR690)-44, REPLACEMENT, Differential Gear Oil.>
3) Remove all plugs.

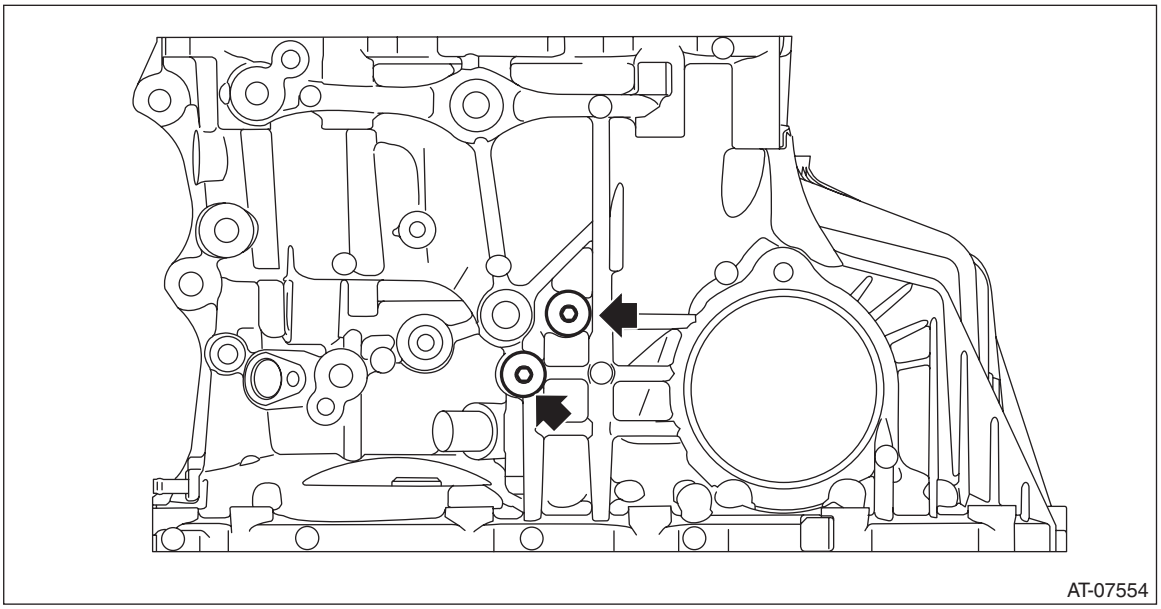

D: ASSEMBLY

1) Install the oil drain plug and overflow drain plug.

NOTE:
Overflow plug of differential gear oil is temporarily attached.
2) Install all plugs.

NOTE:
Use new O-rings.

Tightening torque:
25 N·m (2.5 kgf-m, 18.4 ft-lb)

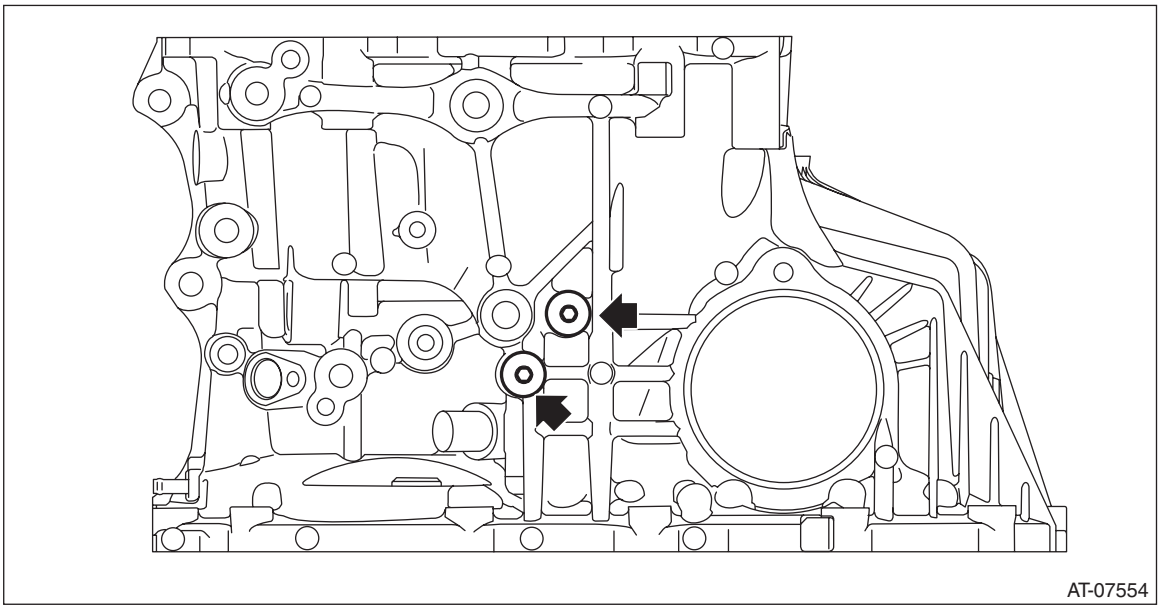

3) Install the transmission hanger and transmission radio ground cord.

Tightening torque:
41 N·m (4.2 kgf-m, 30.2 ft-lb)

E: INSPECTION

- Check for leakage of CVTF from the connection between converter case and transmission case.
- Check there is no damage or cracks on the converter case.

F: ADJUSTMENT

When replacing the converter case, select the following shims.
- Select the shim for front reduction drive gear. <Ref. to CVT(TR690)-339, ADJUSTMENT, Front Reduction Drive Gear.>
- Select the shim for front reduction driven gear. <Ref. to CVT(TR690)-347, ADJUSTMENT, Front Reduction Driven Gear.>
- Select shims for primary pulley. <Ref. to CVT(TR690)-269, ADJUSTMENT, Primary Pulley and Secondary Pulley.>

52.Diagnostics with Phenomenon

A: INSPECTION

Symptoms	Faulty parts
Stall speed is low after warming-up, with select lever in “D” or “R” range.	Engine control system
Vehicle does not move despite engine speed rising up, with select lever in “D” or “R” range.	• Engine control system • Select cable • CVTF • Secondary pressure circuit • Pulley, gear and variator chain • Forward/reverse changeover section • TCM • Control valve body • Inhibitor switch
Vehicle does not move by engine stall, with select lever in “D” or “R” range.	• Parking mechanism • Select cable • Bearing • Forward/reverse changeover section
Excessive shock occurs at starting, with select lever in “D” or “R” range.	• Secondary pressure circuit • Pulley, gear and variator chain
Acceleration speed from standstill is insufficient, with select lever in “D” or “R” range.	• Control valve body • Forward/reverse changeover section
Engine speed suddenly rises up during driving, with select lever in “D” or “R” range.	• Control valve body • Secondary pressure circuit • Primary pressure circuit
Vibration occurs during driving, with select lever in “D” or “R” range.	• Secondary pressure circuit • Primary pressure circuit • Forward/reverse changeover section • Pulley and variator chain • Torque converter assembly • Hydraulic pressure circuit to torque converter • Control valve body
Sudden braking occurs during driving, with select lever in “D” or “R” range.	• Secondary pressure circuit • Primary pressure circuit • Control valve body
During deceleration, lockup clutch does not disengage until just before halting, with select lever in “D” or “R” range.	• Control valve body • Torque converter assembly
Engine stalls with vehicle at a standstill, with select lever in “D” or “R” range.	• Engine control system • Control valve body
Excessive lockup shock occurs during driving, with select lever in “D” range.	Control valve body
Slipping occurs at lockup, or lockup does not occur during driving, with select lever in “D” range.	• Control valve body • Lockup hydraulic line • Torque converter assembly
Excessive shift shock occurs when shifting the select lever from “N” range to “D” range, or from “N” range to “R” range.	• Inhibitor switch • Control valve body • Forward/reverse changeover section
Vehicle does not keep at standstill with select lever in “P” range, or parking cannot be released when shifting from “P” range to another range.	• Select cable • Parking mechanism
Select lever does not shift smoothly.	• Select cable • Inhibitor switch • Detent spring • Manual plate

CONTINUOUSLY VARIABLE TRANSMISSION (DIAGNOSTICS)

CVT(diag)

		Page
1.	Basic Diagnostic Procedure	2
2.	Check List for Interview	4
3.	General Description	5
4.	Electrical Component Location	7
5.	Transmission Control Module (TCM) I/O Signal	12
6.	Subaru Select Monitor	18
7.	Read Diagnostic Trouble Code (DTC)	25
8.	Clear Memory Mode	26
9.	Inspection Mode	27
10.	Drive Cycle	28
11.	Active Test	32
12.	Learning Control	33
13.	AT OIL TEMP Warning Light Display	35
14.	AWD Warning Light Display	38
15.	Diagnostic Procedure for Subaru Select Monitor Communication	41
16.	List of Diagnostic Trouble Code (DTC)	44
17.	Diagnostic Procedure with Diagnostic Trouble Code (DTC)	49
18.	Diagnostic Procedure without Diagnostic Trouble Code (DTC)	234
19.	Diagnostics with Phenomenon	235

1. Basic Diagnostic Procedure

A: PROCEDURE

	Step	Check	Yes	No
1	**CHECK PRE-INSPECTION.** 1) Ask the customer when and how the trouble occurred using the interview check list. <Ref. to CVT(diag)-4, Check List for Interview.> 2) Before performing diagnostics, check the following items which might affect CVT problems. • General inspection <Ref. to CVT(diag)-5, INSPECTION, General Description.> • Disconnection of harness connector • Visual check for harness damage • Oil leakage • Stall speed test <Ref. to CVT(TR580)-49, Stall Test.> <Ref. to CVT(TR690)-49, Stall Test.> • Secondary pressure test <Ref. to CVT(TR580)-51, Secondary Pressure (Line Pressure) Test.> <Ref. to CVT(TR690)-51, Secondary Pressure (Line Pressure) Test.> • Transfer clutch pressure test <Ref. to CVT(TR580)-54, Transfer Clutch Pressure Test.> <Ref. to CVT(TR690)-54, Transfer Clutch Pressure Test.> • Time lag test <Ref. to CVT(TR580)-50, Time Lag Test.> <Ref. to CVT(TR690)-50, Time Lag Test.> • Road test <Ref. to CVT(TR580)-48, Road Test.> <Ref. to CVT(TR690)-48, Road Test.> • Inhibitor switch <Ref. to CVT(TR580)-104, Inhibitor Switch.> <Ref. to CVT(TR690)-102, Inhibitor Switch.>	Is the item that is thought to influence the CVT problem working properly?	Go to step **2**.	Repair the items which may be affecting the CVT trouble.
2	**CHECK AT OIL TEMP LIGHT.** Turn the ignition switch to ON and wait for at least 2 seconds.	Does the AT OIL TEMP light illuminate?	Go to step **3**.	Check the AT OIL TEMP light.
3	**CHECK AT OIL TEMP LIGHT.** Start the engine and wait for 2 seconds or more.	Does the AT OIL TEMP light blink?	Go to step **4**.	Go to step **5**.
4	**CHECK DTC DISPLAY.** Read the DTC. NOTE: If the communication function of Subaru Select Monitor cannot be executed normally, check the communication circuit. <Ref. to CVT(diag)-41, COMMUNICATION FOR INITIALIZING IMPOSSIBLE, Diagnostic Procedure for Subaru Select Monitor Communication.>	Is DTC displayed on Subaru Select Monitor?	Record the DTC, time stamp and freeze frame data. Go to step **6**. NOTE: • For the time stamp, refer to LAN section. <Ref. to LAN(diag)-6, TIME STAMP, CAUTION, General Description.> • Depending on DTCs, time stamp may not be stored.	Go to step **5**.

	Step	Check	Yes	No
5	**PERFORM GENERAL DIAGNOSTICS.** 1) Inspect using “Diagnostic Procedure without Diagnostic Trouble Code (DTC)”. <Ref. to CVT(diag)-234, Diagnostic Procedure without Diagnostic Trouble Code (DTC).> 2) Inspect using “Diagnostics with Phenomenon”. <Ref. to CVT(diag)-235, Diagnostics with Phenomenon.> 3) Perform the Inspection Mode. <Ref. to CVT(diag)-27, Inspection Mode.> 4) Read the DTC.	Is DTC displayed on Subaru Select Monitor?	Go to step **6**.	Finish the diagnosis.
6	**PERFORM DIAGNOSIS.** 1) Inspect by referring to “Diagnostic Procedure with Diagnostic Trouble Code (DTC)”. <Ref. to CVT(diag)-49, Diagnostic Procedure with Diagnostic Trouble Code (DTC).> NOTE: For the DTC table, refer to “List of Diagnostic Trouble Code (DTC)”. <Ref. to CVT(diag)-44, List of Diagnostic Trouble Code (DTC).> 2) Repair the trouble cause. 3) Perform the Clear Memory Mode. 4) Perform the Inspection Mode. <Ref. to CVT(diag)-27, Inspection Mode.> 5) Read the DTC.	Is DTC displayed on Subaru Select Monitor?	Inspect by referring to “Diagnostic Procedure with Diagnostic Trouble Code (DTC)”. <Ref. to CVT(diag)-49, Diagnostic Procedure with Diagnostic Trouble Code (DTC).>	Finish the diagnosis.

2. Check List for Interview

A: CHECK

Check the following items when a problem has occurred.

NOTE:
Use copies of this page for interviewing customers.

Customer's name			
Date of purchase			
Date of repair			
Transmission model	Transmission	V.I.N.	
Odometer reading	km (miles)		
Frequency	❑ Continuous ❑ Intermittent (times/day)		
Weather	❑ Fine ❑ Cloudy ❑ Rainy ❑ Snowy ❑ Other ( )		
Place	❑ Highland ❑ Suburbs ❑ Inner city ❑ Uphill ❑ Downhill ❑ Rough road ❑ Other ( )		
Ambient air temperature	❑ Hot ❑ Warm ❑ Cool ❑ Cold		
Vehicle speed	km/h (MPH)		
AT OIL TEMP light	❑ Blinks continuously	❑ Does not blink	
Select lever position	❑ P ❑ R ❑ N ❑ D ❑ Manual mode		
Driving condition	❑ Not affected ❑ At racing ❑ While decelerating	❑ At starting ❑ While accelerating ❑ While turning (❑ RH/❑ LH)	❑ While idling ❑ When cruising (Vehicle speed km/h) ❑ Immediately after starting the engine
Manual mode	❑ ON ❑ OFF		
Symptoms	❑ Vehicle does not move (❑ Any position ❑ Particular position)		
	❑ Vehicle does not move (no load racing condition as in N range)		
	❑ Vehicle does not move (engine speed does not increase, felt as stall condition)		
	❑ Noise or vibration (Describe concretely:)		
	❑ Shock felt at N → D selection (seconds after shifting, when engine cold or after warm-up)		
	❑ Shock felt at N → R selection (seconds after shifting, when engine cold or after warm-up)		
	❑ Shifting is wrong (Describe concretely:)		
	❑ Shock or judder during driving		
	❑ Fails to accelerate.		
	❑ Engine speed increases abruptly during driving		
	❑ Shock or judder during standing start		
	❑ Select lever does not move		
	❑ Other ( )		

3. General Description

A: CAUTION

1) The airbag system wiring harness is routed near the TCM.

CAUTION:
• All the airbag system wiring harnesses and connectors are colored yellow. Do not use an electric test equipment to check these circuits.
• Be careful not to damage the airbag system wiring harness when performing diagnostics or servicing the TCM.

2) When measuring the voltage or resistance of individual sensor or all electrical control modules, use a tapered pin with a diameter of 0.6 mm (0.024 in) or less and touch it to the tip of terminal. Never insert the tapered pin into the terminal because it deforms inside which may lead to malfunction.

CAUTION:
If a pin (or similar) was inserted in TCM connector, replace the TCM connector.

3) The TCM connector is waterproof. When measuring the TCM connector terminal voltage, or the resistance between the terminals, use the ST.
ST 18460AA040 CHECK BOARD

B: INSPECTION

1. BATTERY

Check the battery. <Ref. to SC(H4DO)-65, INSPECTION, Battery.> <Ref. to SC(H6DO)-59, INSPECTION, Battery.>

Standard voltage: 12 V or more

Specific gravity: 1.260 or more

2. TRANSMISSION GROUND

Make sure that the ground terminal bolt is tightened securely.

Tightening torque:
ENGINE TYPE FB
14 N·m (1.4 kgf-m, 10.3 ft-lb)

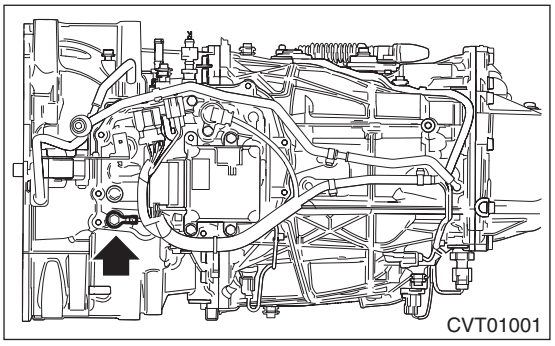

ENGINE TYPE EZ
16 N·m (1.6 kgf-m, 11.8 ft-lb)

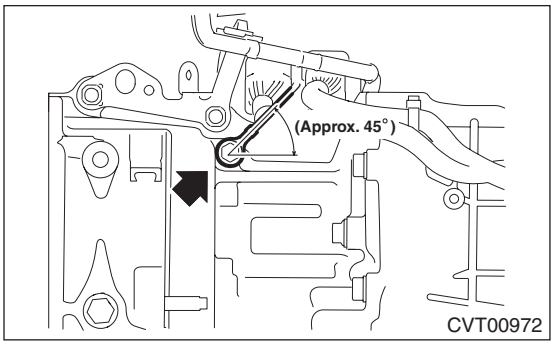

3. OPERATION OF SELECT LEVER

Make sure there is no noise, dragging or contact pattern in each select lever range.

WARNING:
Stop the engine while checking operation of the select lever.

C: PREPARATION TOOL

1. SPECIAL TOOL

ILLUSTRATION	TOOL NUMBER	Description	REMARKS
 STSSM4	— (Newly adopted tool)	SUBARU SELECT MONITOR 4	Used for setting of each function and trouble-shooting for electrical system. NOTE: For detailed operation procedures of Subaru Select Monitor 4, refer to “Application help”.
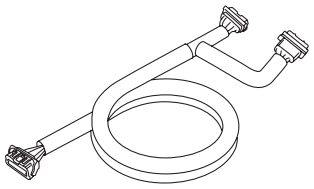 ST18460AA040	18460AA040	CHECK BOARD	Used for measuring the TCM terminal.

2. GENERAL TOOL

TOOL NAME	REMARKS
Circuit tester	Used for measuring resistance, voltage and current.
Oscilloscope	Used for measuring the sensor.
DST-i	Used together with Subaru Select Monitor 4.

4. Electrical Component Location

A: LOCATION

1. CONTROL MODULE

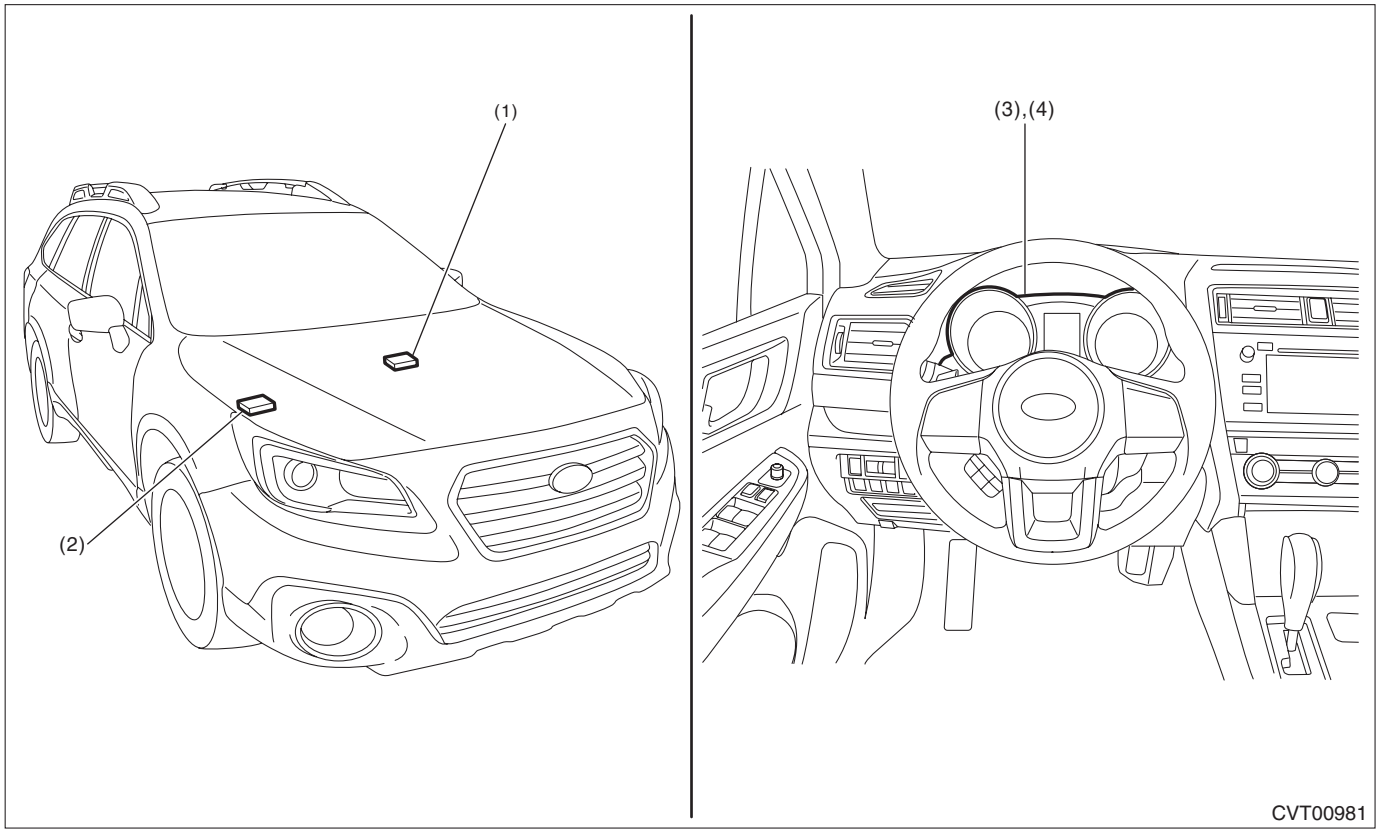

(1) TCM (engine type FB)
(2) TCM (engine type EZ)
(3) AT OIL TEMP light
(4) AWD light

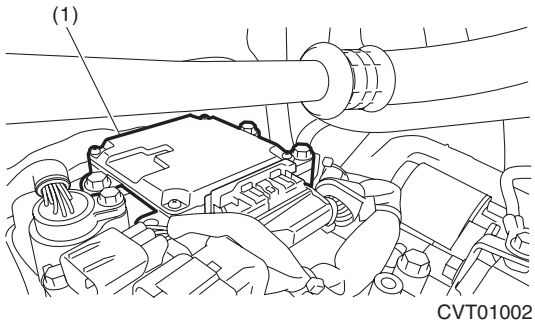

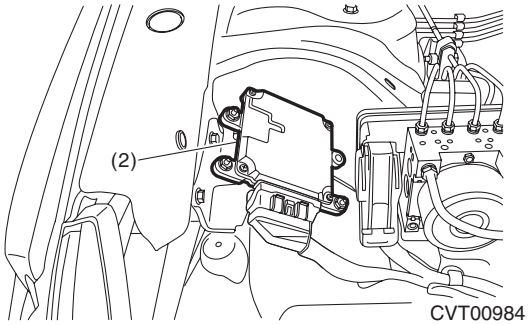

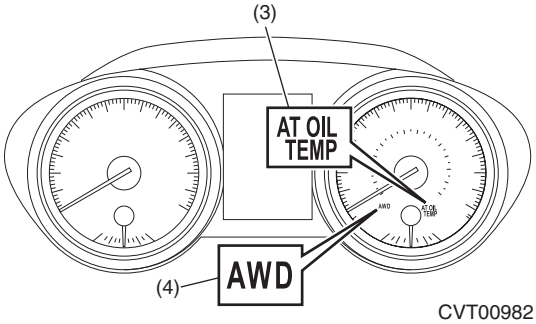

2. SENSOR

- ENGINE TYPE FB

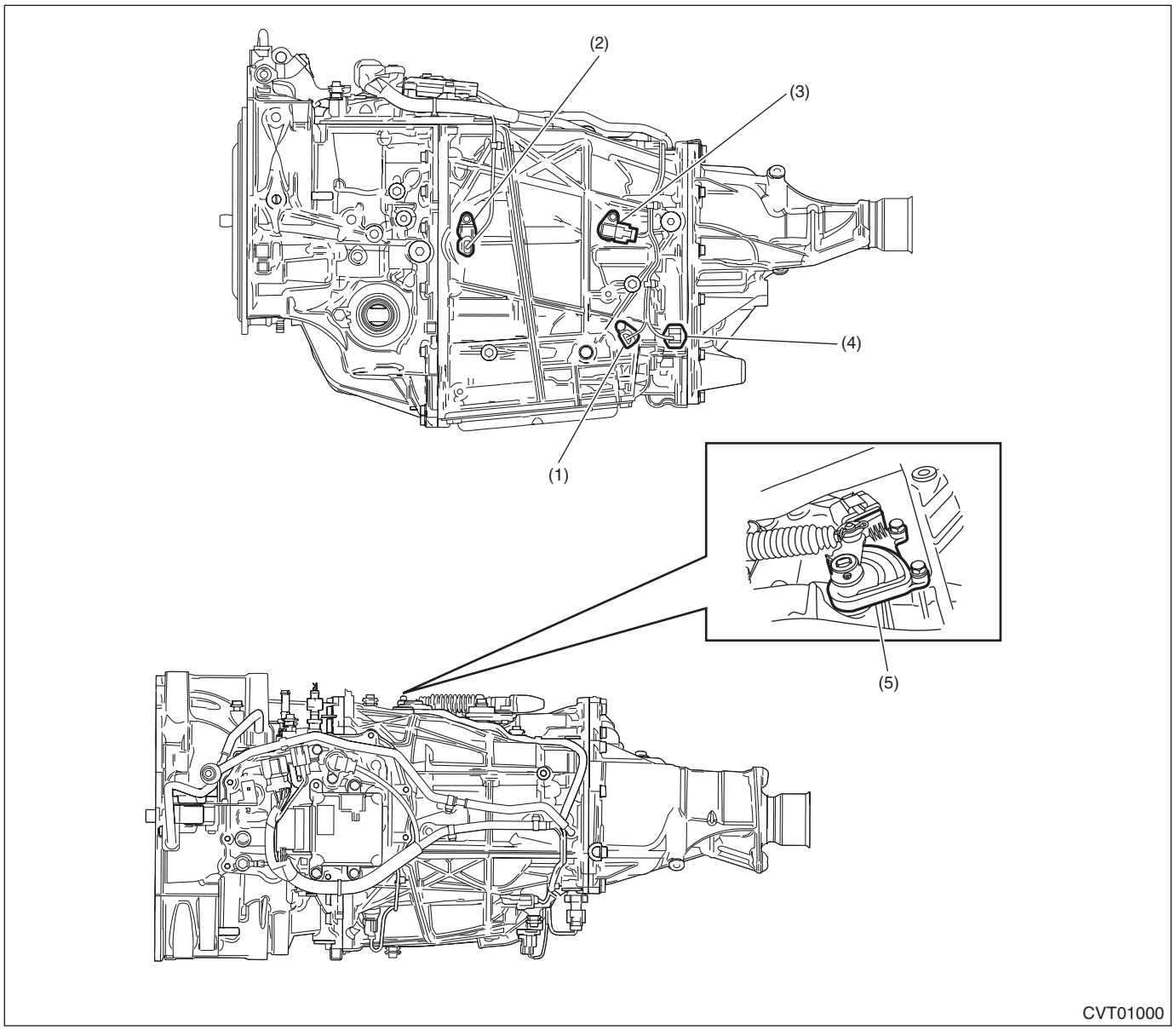

(1) Secondary speed sensor
(2) Turbine speed sensor
(3) Primary speed sensor
(4) Secondary pressure sensor
(5) Inhibitor switch

- ENGINE TYPE EZ

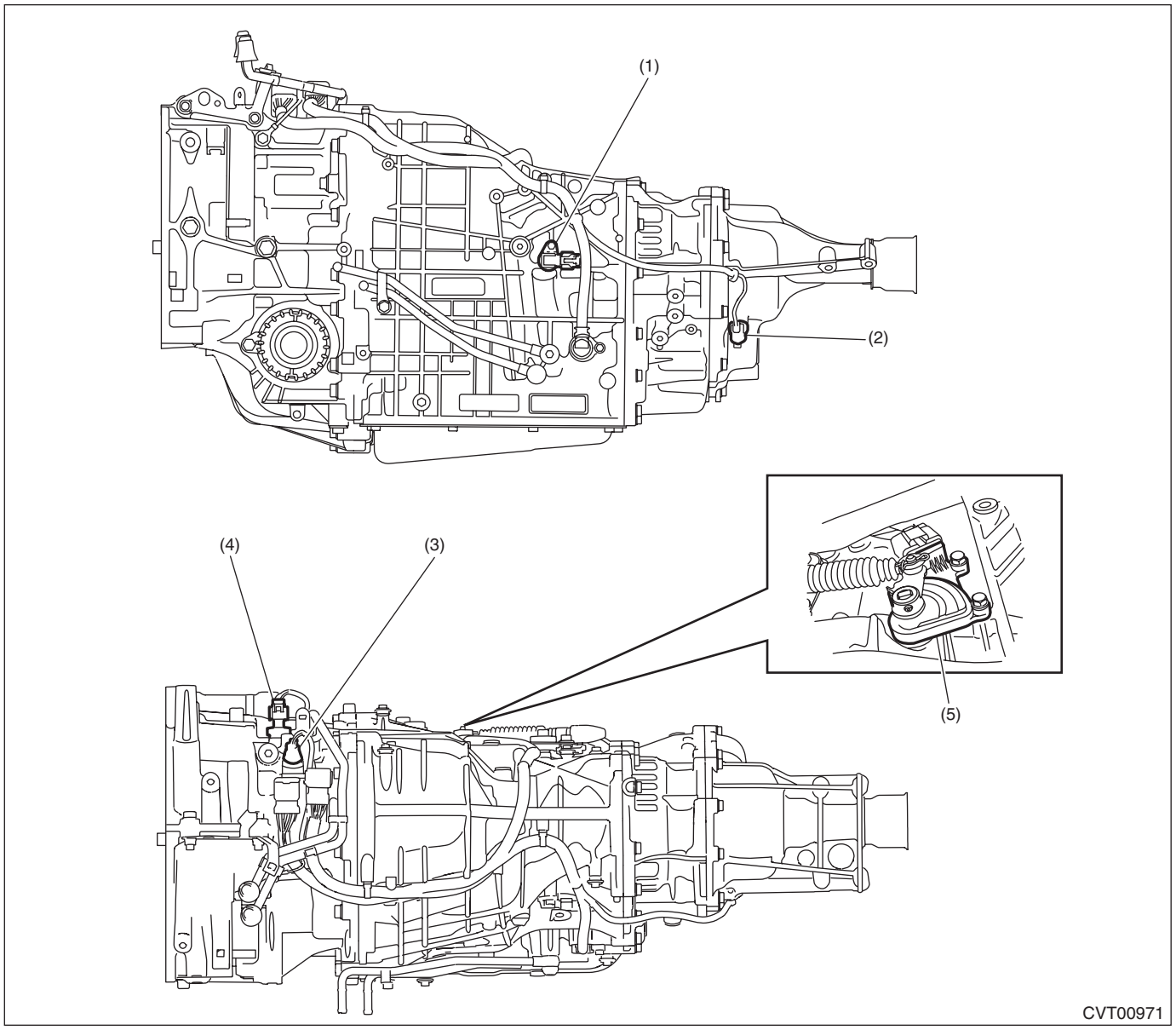

(1) Secondary speed sensor
(2) Front wheel speed sensor
(3) Primary speed sensor
(4) Secondary pressure sensor
(5) Inhibitor switch

3. SOLENOID

- ENGINE TYPE FB

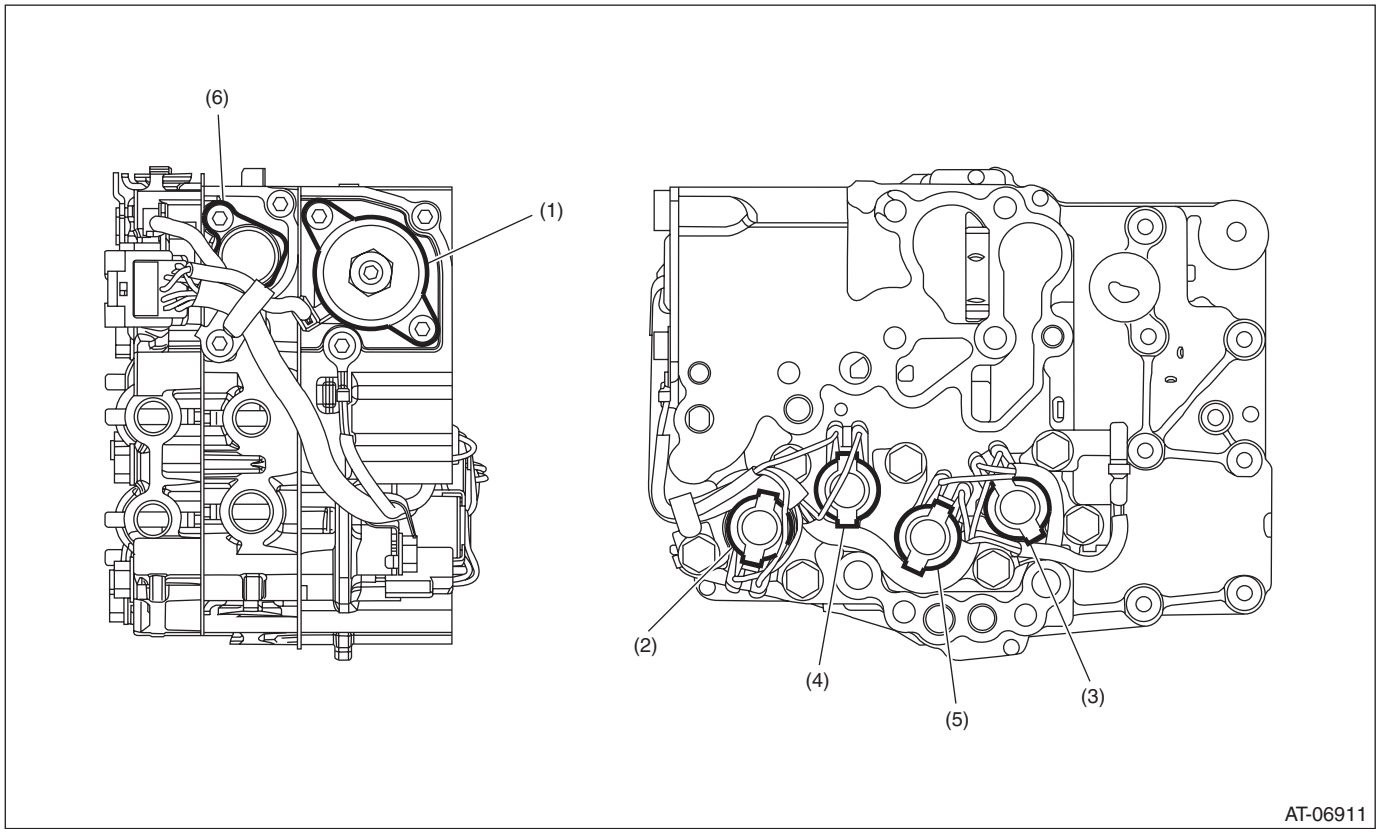

(1) Secondary solenoid
(2) AWD solenoid
(3) Lock-up duty solenoid
(4) Primary DOWN solenoid
(5) Primary UP solenoid
(6) F&R solenoid

- ENGINE TYPE EZ

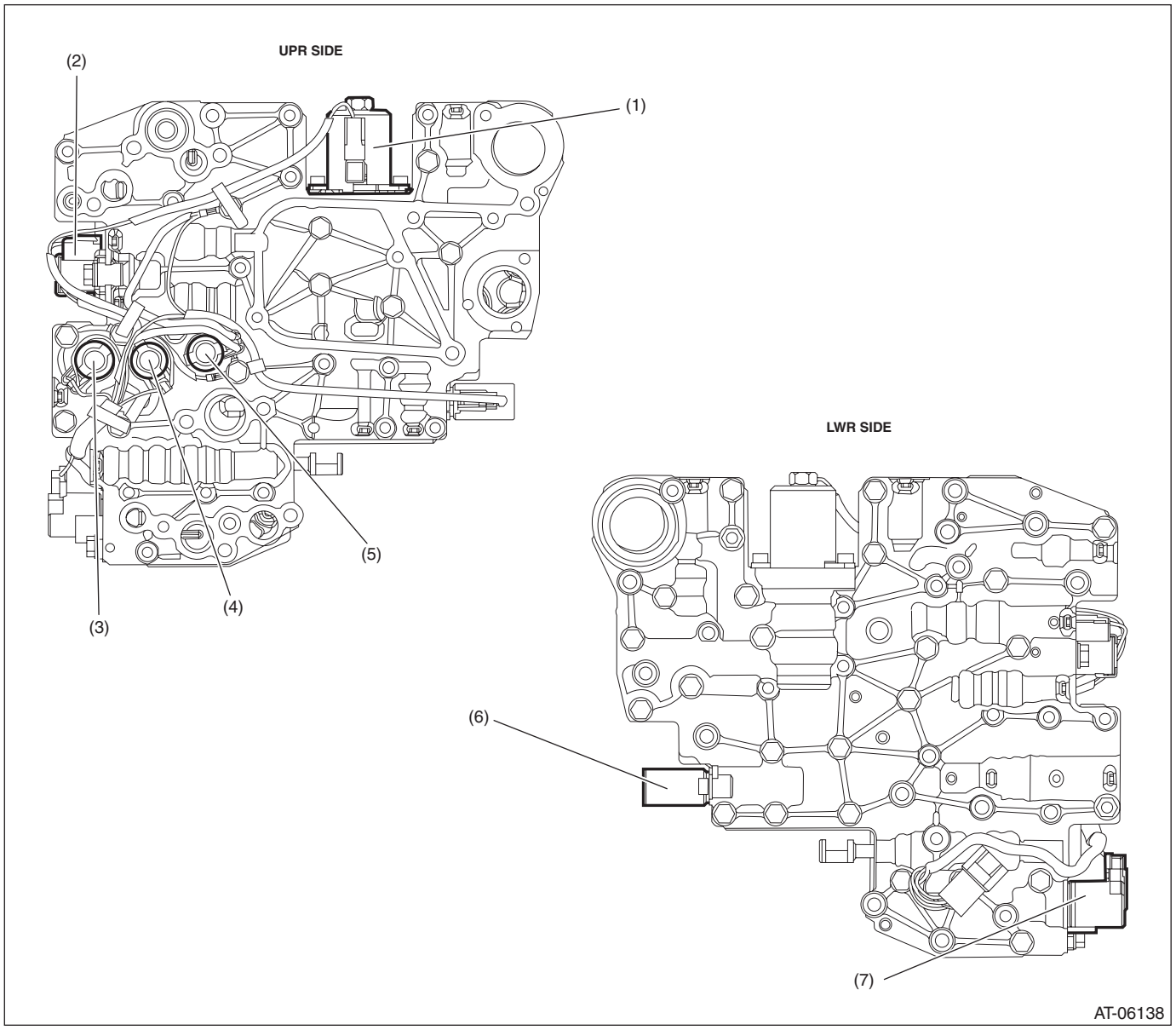

(1) Secondary solenoid
(2) AWD solenoid
(3) Lock-up duty solenoid
(4) Primary DOWN solenoid
(5) Primary UP solenoid
(6) F&R solenoid
(7) Lock-up ON/OFF solenoid

5. Transmission Control Module (TCM) I/O Signal

A: ELECTRICAL SPECIFICATION

- ENGINE TYPE FB

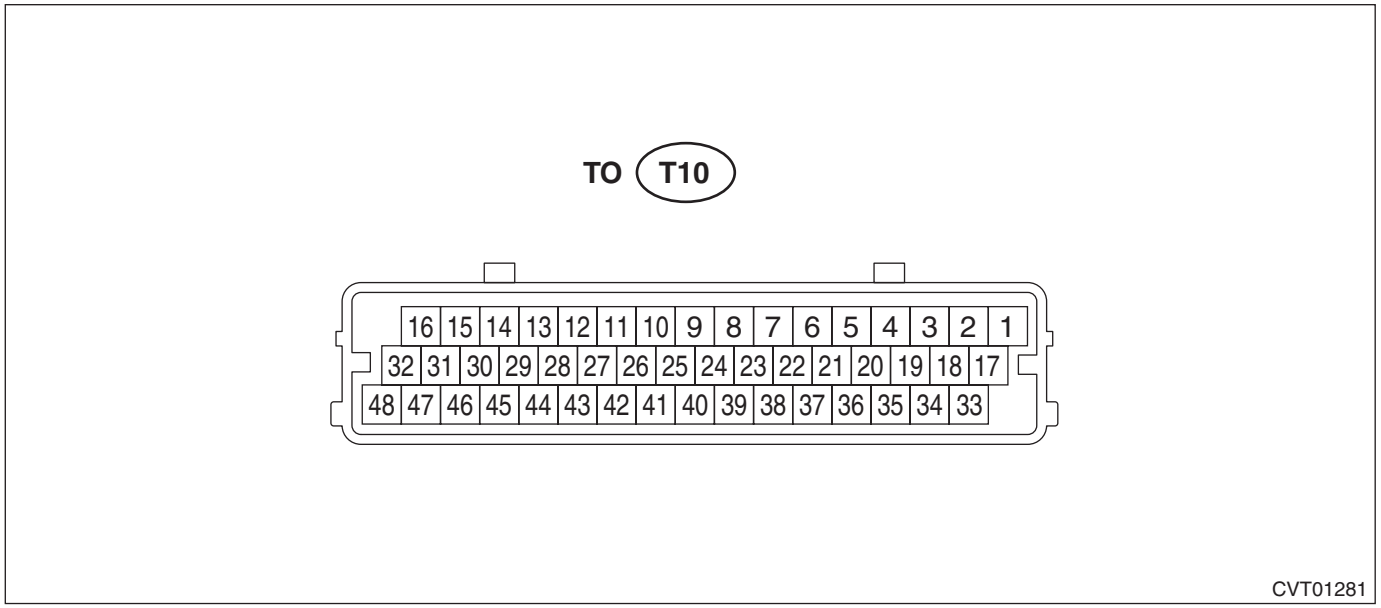

NOTE:
Measure after warming up.

Item	Terminal No.	Measuring condition	Measurement value	Resistance between terminal and chassis ground	Remarks
Backup power supply	34	—	10 — 13 V	—	
Ignition power supply	41	—	10 — 13 V	—	
Main power supply	8	—	10 — 13 V	—	
Main power supply	24	—	10 — 13 V	—	
Main power supply	40	—	10 — 13 V	—	
Manual mode switch	20	Manual mode switch ON	Less than 1 V	—	
		Manual mode switch OFF	8 V or more	—	
Manual mode UP switch	19	Manual mode UP switch ON	Less than 1 V	—	
		Manual mode UP switch OFF	8 V or more	—	
Manual mode DOWN switch	18	Manual mode DOWN switch ON	Less than 1 V	—	
		Manual mode DOWN switch OFF	8 V or more	—	
Stop light switch	29	Stop light switch ON	8 V or more	—	
		Stop light switch OFF	Less than 1 V	—	
P range switch	38	P range	Less than 1 V	—	
		Except for P range	8 V or more	—	
R range switch	37	R range	Less than 1 V	—	
		Except for R range	8 V or more	—	
N range switch	36	N range	Less than 1 V	—	
		Except for N range	8 V or more	—	
D range switch	35	D range	Less than 1 V	—	
		Except for D range	8 V or more	—	

Item	Terminal No.	Measuring condition	Measurement value	Resistance between terminal and chassis ground	Remarks
ATF temperature sensor	6	ATF temperature at 20°C (68°F)	Approx. 2.5 V	Approx. 2.5 kΩ	
		ATF temperature at 80°C (176°F)	Approx. 0.7 V	Approx. 330 Ω	
ATF temperature sensor GND	1	Always	Approx. 0 V	—	
Secondary pressure sensor power supply output	33	Ignition switch ON	5 V	—	
Secondary pressure sensor	5	Ignition switch ON, engine OFF	Approx. 0.5 V (0 MPa)	—	Value increases with increase of engine load. (0.5 — 4.5 V)
		Ignition switch ON, engine ON	Approx. 1.0 V (1.0 MPa)	—	
Secondary pressure sensor GND	2	Always	Approx. 0 V	—	
Primary speed sensor	14	While driving	0 or 5 V	—	Refer to the waveform (sensor)
Secondary speed sensor	13	While driving	0 or 5 V	—	Refer to the waveform (sensor)
Turbine speed sensor	12	Engine ON, “P” or “N” range	0 or 5 V	—	Refer to the waveform (sensor)
F&R solenoid	16	Engine ON	Refer to the waveform (solenoid (1))	Approx. 4 — 6 Ω	Resistance value at 20°C (68°F). Value is higher as the temperature increase.
Secondary solenoid	32	Engine ON	Refer to the waveform (solenoid (2))	Approx. 5 — 7 Ω	Resistance value at 20°C (68°F). Value is higher as the temperature increase.
Primary UP solenoid	47	Engine ON, while UP shifting	Refer to the waveform (solenoid (3))	Approx. 10 — 13.5 Ω	Resistance value at 20°C (68°F). Value is higher as the temperature increase.
Primary DOWN solenoid	30	Engine ON, while DOWN shifting	Refer to the waveform (solenoid (4))	Approx. 10 — 13.5 Ω	Resistance value at 20°C (68°F). Value is higher as the temperature increase.
Lock-up duty solenoid	15	Lock-up ON	Refer to the waveform (solenoid (5))	Approx. 10 — 13.5 Ω	Resistance value at 20°C (68°F). Value is higher as the temperature increase.
AWD solenoid	48	Engine ON, “P” or “N” range	Refer to the waveform (solenoid (6))	Approx. 2 — 4.5 Ω	Resistance value at 20°C (68°F). Value is higher as the temperature increase.
		Engine ON, “D” range, brake ON	Refer to the waveform (solenoid (7))		
CAN communication line (+)	43	—	—	—	
CAN communication line (–)	44	—	—	—	
GND	26	Always	Approx. 0 V	—	
GND	42	Always	Approx. 0 V	—	

- ENGINE TYPE EZ

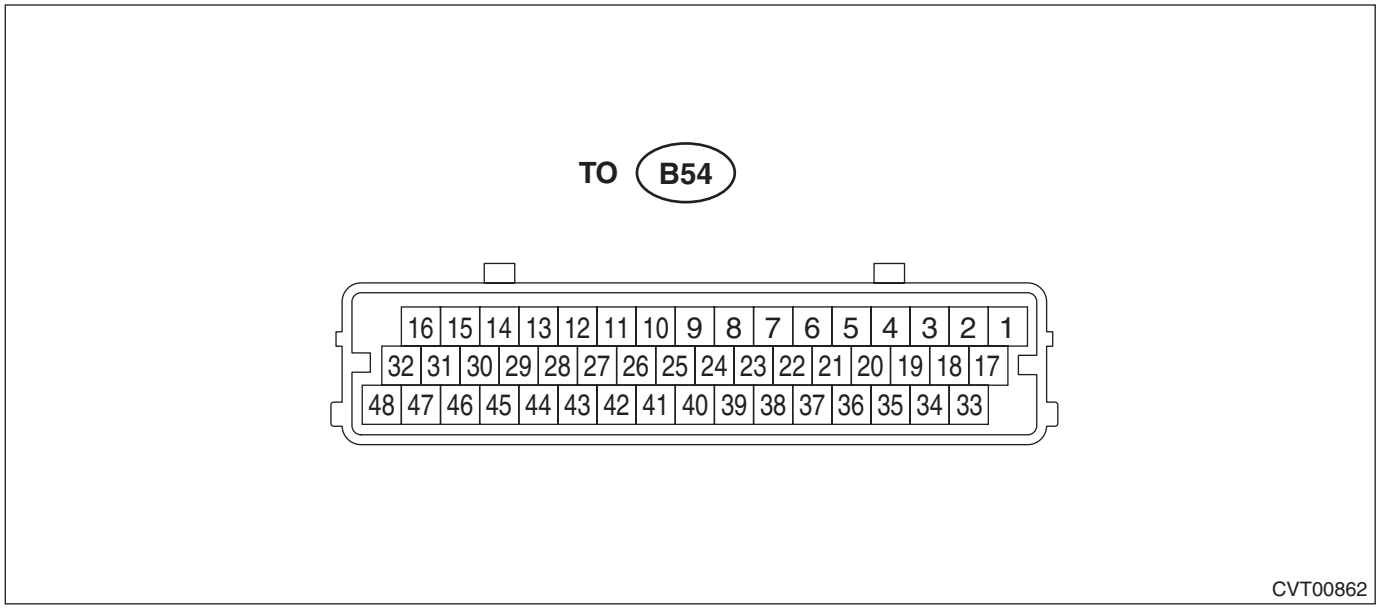

NOTE:
Measure after warming up.

Item	Terminal No.	Measuring condition	Measurement value	Resistance between terminal and chassis ground	Remarks
Backup power supply	34	—	10 — 13 V	—	
Ignition power supply	41	—	10 — 13 V	—	
Main power supply	8	—	10 — 13 V	—	
Main power supply	24	—	10 — 13 V	—	
Main power supply	40	—	10 — 13 V	—	
Manual mode switch	20	Manual mode switch ON	Less than 1 V	—	
		Manual mode switch OFF	8 V or more	—	
Manual mode UP switch	19	Manual mode UP switch ON	Less than 1 V	—	
		Manual mode UP switch OFF	8 V or more	—	
Manual mode DOWN switch	18	Manual mode DOWN switch ON	Less than 1 V	—	
		Manual mode DOWN switch OFF	8 V or more	—	
Stop light switch	29	Stop light switch ON	8 V or more	—	
		Stop light switch OFF	Less than 1 V	—	
P range switch	38	P range	Less than 1 V	—	
		Except for P range	8 V or more	—	
R range switch	37	R range	Less than 1 V	—	
		Except for R range	8 V or more	—	
N range switch	36	N range	Less than 1 V	—	
		Except for N range	8 V or more	—	
D range switch	35	D range	Less than 1 V	—	
		Except for D range	8 V or more	—	
ATF temperature sensor	6	ATF temperature at 20°C (68°F)	Approx. 2.6 V	Approx. 2.6 kΩ	
		ATF temperature at 80°C (176°F)	Approx. 0.7 V	Approx. 370 Ω	

Item	Terminal No.	Measuring condition	Measurement value	Resistance between terminal and chassis ground	Remarks
ATF temperature sensor GND	1	Always	Approx. 0 V	—	
Secondary pressure sensor power supply output	33	Ignition switch ON	5 V	—	
Secondary pressure sensor	5	Ignition switch ON, engine OFF	Approx. 0.5 V (0 MPa)	—	Value increases with increase of engine load. (0.5 — 4.5 V)
		Ignition switch ON, engine ON	Approx. 1.0 V (1.0 MPa)	—	
Secondary pressure sensor GND	2	Always	Approx. 0 V	—	
Primary speed sensor	14	While driving	0 or 5 V	—	Refer to the waveform (sensor)
Secondary speed sensor	13	While driving	0 or 5 V	—	Refer to the waveform (sensor)
Front wheel speed sensor	12	Engine ON, “P” or “N” range	0 or 5 V	—	Refer to the waveform (sensor)
F&R solenoid	16	Engine ON	Refer to the waveform (solenoid (1))	Approx. 4 — 6 Ω	Resistance value at 20°C (68°F). Value is higher as the temperature increase.
Secondary solenoid	32	Engine ON	Refer to the waveform (solenoid (2))	Approx. 5 — 7 Ω	Resistance value at 20°C (68°F). Value is higher as the temperature increase.
Primary UP solenoid	47	Engine ON, while UP shifting	Refer to the waveform (solenoid (3))	Approx. 10 — 13.5 Ω	Resistance value at 20°C (68°F). Value is higher as the temperature increase.
Primary DOWN solenoid	30	Engine ON, while DOWN shifting	Refer to the waveform (solenoid (4))	Approx. 10 — 13.5 Ω	Resistance value at 20°C (68°F). Value is higher as the temperature increase.
Lock-up duty solenoid	15	Lock-up ON	Refer to the waveform (solenoid (5))	Approx. 10 — 13.5 Ω	Resistance value at 20°C (68°F). Value is higher as the temperature increase.
AWD solenoid	48	Engine ON, “P” or “N” range	Refer to the waveform (solenoid (6))	Approx. 2 — 4.5 Ω	Resistance value at 20°C (68°F). Value is higher as the temperature increase.
		Engine ON, “D” range, brake ON	Refer to the waveform (solenoid (7))		
Lock-up ON/OFF solenoid	31	With lock-up OFF	Less than 1 V	Approx. 13 — 18.5 Ω	Resistance value at 20°C (68°F). Value is higher as the temperature increase.
		Lock-up ON	Battery voltage or higher		
CAN communication line (+)	43	—	—	—	
CAN communication line (–)	44	—	—	—	
GND	26	Always	Approx. 0 V	—	
GND	42	Always	Approx. 0 V	—	

B: WAVEFORM

1. SENSOR

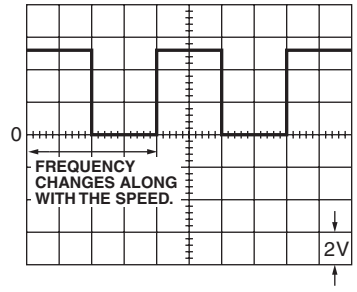

AT-04690

2. SOLENOID

- ENGINE TYPE FB

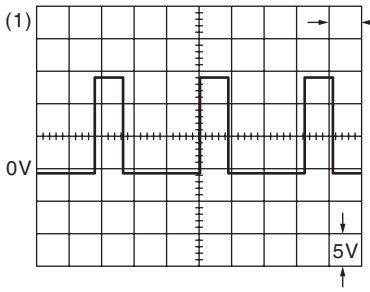

AT-06855

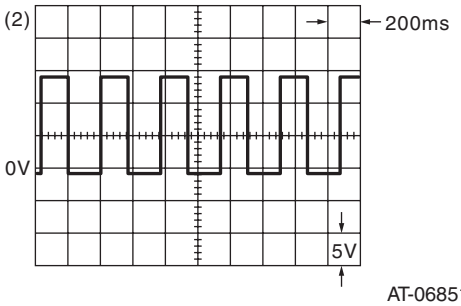

AT-06851

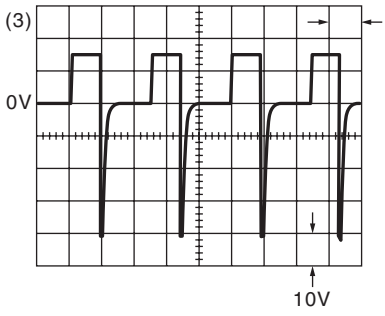

AT-06852

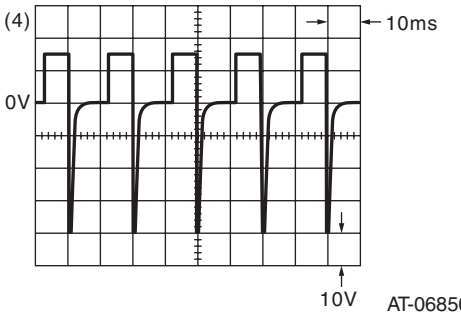

AT-06850

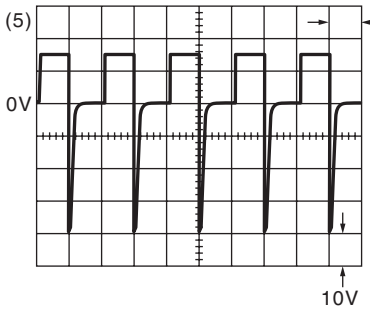

AT-06853

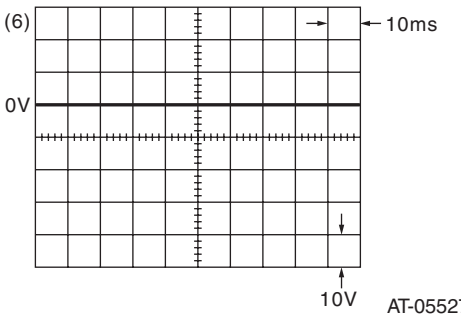

AT-05527

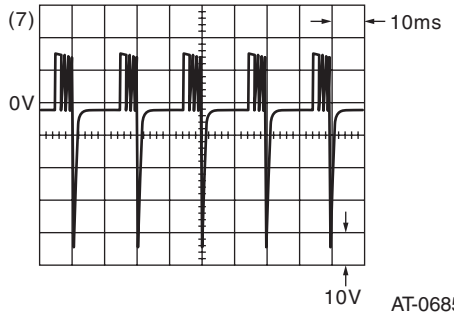

AT-06854

SUBARU.

- ENGINE TYPE EZ

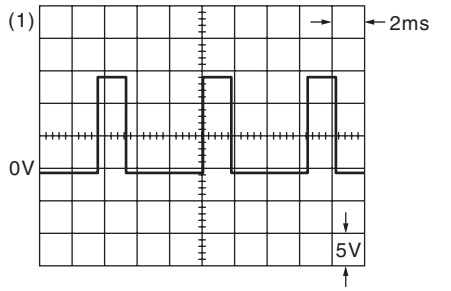

AT-05529

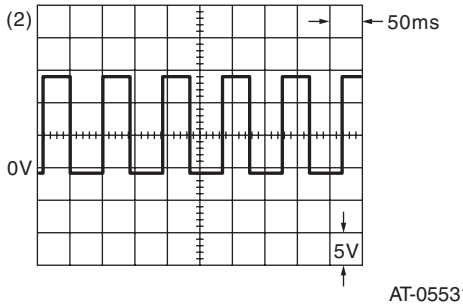

AT-05531

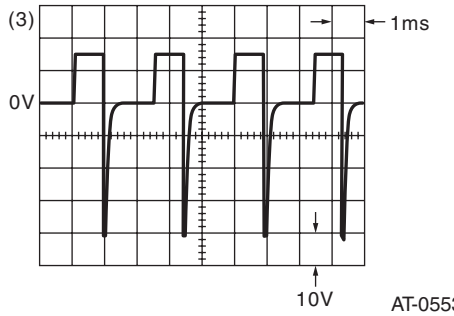

AT-05532

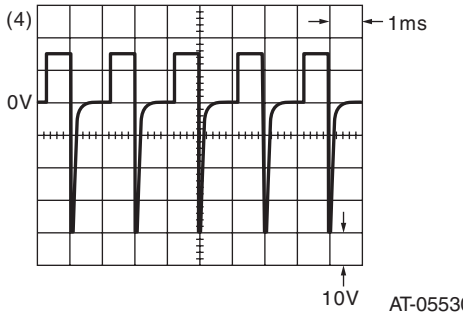

AT-05530

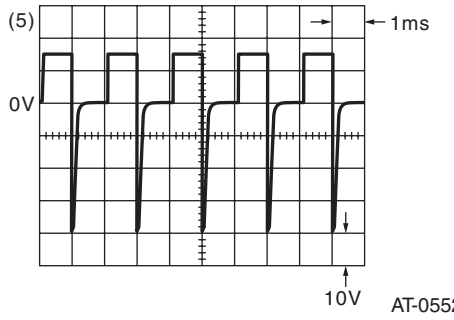

AT-05526

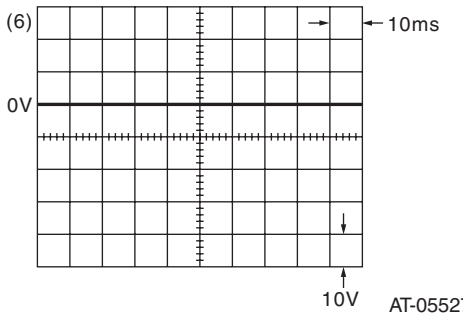

AT-05527

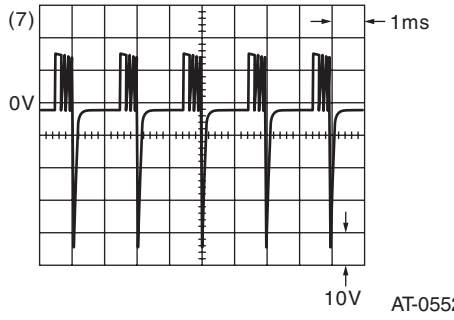

AT-05528

SUBARU.

6. Subaru Select Monitor

A: OPERATION

1. HOW TO USE SUBARU SELECT MONITOR

For detailed operation procedures, refer to “Application help”.

2. READ CURRENT DATA

1) On «Start» display, select «Diagnosis».
2) On «Vehicle selection» display, input the vehicle information and select «Confirmed».
3) On «Main Menu» display, select «Each System Check».
4) On «Select System» display, select «Transmission Control System».
5) On «Select Function» display, select «Data Monitor».

- ENGINE TYPE FB

Display	Contents	Unit of measure
Engine Speed	Engine speed signal transmitted from the ECM. Calculated from crankshaft position sensor signal. TCM input value.	rpm
Turbine Revolution Speed	Turbine rotation speed calculated by the TCM using signals from the turbine speed sensor.	rpm
Accel opening angle	Accelerator pedal opening angle transmitted from the ECM. Value calculated from the accelerator pedal position sensor output. TCM input value.	%
Front Wheel Speed	Front wheel speed calculated from the secondary axis rotation speed.	km/h or MPH
ATF Temperature	Value calculated from the ATF temperature sensor output value. ATF temperature of the control valve section.	°C or °F
Lock Up Duty Ratio	Lock-up duty solenoid control duty ratio. TCM output value.	%
Transfer Duty Ratio	Transfer duty solenoid control duty ratio. TCM output value.	%
Actual Gear Ratio	Current gear ratio (rotation ratio of the pulley) calculated from the primary pulley axis rotation speed and the secondary pulley axis rotation speed.	—
Primary Rev Speed	Primary pulley rotation speed calculated by the TCM using signals from the primary speed sensor.	rpm
Secondary Rev Speed	Secondary pulley rotation speed calculated by the TCM using signals from the secondary speed sensor.	rpm
Stop Light Switch	Stop light SW signal. Set to ON when the brake pedal is depressed. TCM input value.	ON or OFF
Secondary Set Current	Value of the indicator current for controlling the secondary solenoid calculated by the TCM.	mA
Secondary Actual Current	Actual current value of the secondary solenoid. TCM output value.	mA
Commanded Forward & Reverse Linear Solenoid Current	Value of the indicator current for controlling the F&R linear solenoid calculated by the TCM.	mA
Actual Forward & Reverse Linear Solenoid Current	Actual current value of the F&R linear solenoid. TCM output value.	mA
ECU ACC	Battery voltage. TCM input value.	V
Primary UP Duty	Primary UP solenoid control duty ratio. TCM output value.	%
Primary DOWN Duty	Primary DOWN solenoid control duty ratio. TCM output value.	%
P Range	Inhibitor SW signal. Set to ON when the select lever is in P range. TCM input value.	ON or OFF
R Range	Inhibitor SW signal. Set to ON when the select lever is in R range. TCM input value.	ON or OFF
N Range	Inhibitor SW signal. Set to ON when the select lever is in N range. TCM input value.	ON or OFF
D Range	Inhibitor SW signal. Set to ON when the select lever is in D range. TCM input value.	ON or OFF

Display	Contents	Unit of measure
X Mode	ON/OFF status of the X mode received from the engine. TCM input value.	ON or OFF
Shift Step in Manual Mode	Gear shift position in manual mode or in multi-stage shifting mode. TCM output value.	—
Tiptronic Mode Switch	Manual mode SW signal. Set to ON when the select lever is in the manual shift gate. TCM input value.	ON or OFF
Up Switch	Status of the paddle shift up SW. Set to ON when the plus (+) side of the steering wheel paddle shift is pulled. TCM input value.	ON or OFF
Down Switch	Status of the paddle shift down SW. Set to ON when the minus (–) side of the steering wheel paddle shift is pulled. TCM input value.	ON or OFF
secondary pressure sensor voltage.	Voltage value after an analog/digital conversion is done inside the TCM using the signal input from the secondary pressure sensor. TCM input value.	V
ATF Temp sensor voltage.	Sensor voltage value input from the ATF temperature sensor to the TCM. TCM input value.	V
Diagnosis Lamp	Transmission failure detection status. Set to ON when a failure is detected. AT oil temperature warning light blinks at 2 Hz. TCM output value.	ON or OFF
ATF Temperature Lamp	ATF high temperature detection status. Set to ON when high temperature is detected. AT oil temperature warning light illuminates. TCM output value.	ON or OFF
AT learning	AT initial learning completion status. AT oil temperature warning light blinks at 4 Hz when the learning is not completed. TCM output value.	Complete or Not Completed
Ignition SW ON Count	Number of times the ignition is turned ON since the vehicle was manufactured.	times
Count	Shows whether the elapsed time counter after turning ON the ignition switch is synchronized with the integrated unit (master unit) or an original counter. “Common” means the integrated unit, and “Originally” means that the original counter is used.	—
Time Count	Shows the elapsed time after turning ON the ignition.	ms
Actual secondary pressure	Pressure value applied to the secondary pulley cylinder (line pressure) detected by the secondary pressure sensor.	MPa
System Voltage	Power supply voltage supplied to the backup power supply (≈ battery voltage).	V

- ENGINE TYPE EZ

Display	Contents	Unit of measure
Engine Speed	Engine speed signal transmitted from the ECM. Calculated from crankshaft position sensor signal. TCM input value.	rpm
Turbine Revolution Speed	Turbine rotation speed which is based on the primary pulley rotation speed calculated by the TCM using signals from the primary speed sensor, and is accelerated by the reduction gear ratio.	rpm
Accel opening angle	Accelerator pedal opening angle transmitted from the ECM. Value calculated from the accelerator pedal position sensor output. TCM input value.	%
Front Wheel Speed	Front wheel speed calculated from the forward/reverse clutch output axis rotation speed.	km/h or MPH
ATF Temperature	Value calculated from the ATF temperature sensor output value. ATF temperature of the oil pan section.	°C or °F
Lock Up Duty Ratio	Lock-up duty solenoid control duty ratio. TCM output value.	%
Lock-Up ON/OFF Solenoid	Lock-up ON/OFF solenoid drive signal. Set to ON at a lockup condition. TCM output value.	ON or OFF
Transfer Duty Ratio	Transfer duty solenoid control duty ratio. TCM output value.	%

Display	Contents	Unit of measure
Actual Gear Ratio	Current gear ratio (rotation ratio of the pulley) calculated from the primary pulley axis rotation speed and the secondary pulley axis rotation speed.	—
Primary Rev Speed	Primary pulley rotation speed calculated by the TCM using signals from the primary speed sensor.	rpm
Secondary Rev Speed	Secondary pulley rotation speed calculated by the TCM using signals from the secondary speed sensor.	rpm
Front Wheel Speed	Front wheel rotation speed calculated from the forward/reverse clutch output axis rotation speed.	rpm
Stop Light Switch	Stop light SW signal. Set to ON when the brake pedal is depressed. TCM input value.	ON or OFF
Secondary Set Current	Value of the indicator current for controlling the secondary solenoid calculated by the TCM.	mA
Secondary Actual Current	Actual current value of the secondary solenoid. TCM output value.	mA
Commanded Forward & Reverse Linear Solenoid Current	Value of the indicator current for controlling the F&R linear solenoid calculated by the TCM.	mA
Actual Forward & Reverse Linear Solenoid Current	Actual current value of the F&R linear solenoid. TCM output value.	mA
ECU ACC	Battery voltage. TCM input value.	V
Primary UP Duty	Primary UP solenoid control duty ratio. TCM output value.	%
Primary DOWN Duty	Primary DOWN solenoid control duty ratio. TCM output value.	%
P Range	Inhibitor SW signal. Set to ON when the select lever is in P range. TCM input value.	ON or OFF
R Range	Inhibitor SW signal. Set to ON when the select lever is in R range. TCM input value.	ON or OFF
N Range	Inhibitor SW signal. Set to ON when the select lever is in N range. TCM input value.	ON or OFF
D Range	Inhibitor SW signal. Set to ON when the select lever is in D range. TCM input value.	ON or OFF
X Mode	ON/OFF status of the X mode received from the engine. TCM input value.	ON or OFF
Shift Step in Manual Mode	Gear shift position in manual mode or in multi-stage shifting mode. TCM output value.	—
Tiptronic Mode Switch	Manual mode SW signal. Set to ON when the select lever is in the manual shift gate. TCM input value.	ON or OFF
Up Switch	Status of the paddle shift up SW. Set to ON when the plus (+) side of the steering wheel paddle shift is pulled. TCM input value.	ON or OFF
Down Switch	Status of the paddle shift down SW. Set to ON when the minus (–) side of the steering wheel paddle shift is pulled. TCM input value.	ON or OFF
secondary pressure sensor voltage.	Voltage value after an analog/digital conversion is done inside the TCM using the signal input from the secondary pressure sensor. TCM input value.	V
ATF Temp sensor voltage.	Sensor voltage value input from the ATF temperature sensor to the TCM. TCM input value.	V
Diagnosis Lamp	Transmission failure detection status. Set to ON when a failure is detected. AT oil temperature warning light blinks at 2 Hz. TCM output value.	ON or OFF
ATF Temperature Lamp	ATF high temperature detection status. Set to ON when high temperature is detected. AT oil temperature warning light illuminates. TCM output value.	ON or OFF
AT learning	AT initial learning completion status. AT oil temperature warning light blinks at 4 Hz when the learning is not completed. TCM output value.	Complete or Not Completed

Display	Contents	Unit of measure
Ignition SW ON Count	Number of times the ignition is turned ON since the vehicle was manufactured.	times
Count	Shows whether the elapsed time counter after turning ON the ignition switch is synchronized with the integrated unit (master unit) or an original counter. “Common” means the integrated unit, and “Originally” means that the original counter is used.	—
Time Count	Shows the elapsed time after turning ON the ignition.	ms
Actual secondary pressure	Pressure value applied to the secondary pulley cylinder (line pressure) detected by the secondary pressure sensor.	MPa
System Voltage	Power supply voltage supplied to the backup power supply (≈ battery voltage).	V

NOTE:
For detailed operation procedures, refer to “Application help”.

3. READ FREEZE FRAME DATA

1) On «Start» display, select «Diagnosis».
2) On «Vehicle selection» display, input the vehicle information and select «Confirmed».
3) On «Main Menu» display, select «Each System Check».
4) On «Select System» display, select «Transmission Control System».
5) On «Select Function» display, select «DTC».
6) On «DTC» display, select «FFD».

- ENGINE TYPE FB

Display	Contents	Unit of measure
Engine Speed	Engine speed signal transmitted from the ECM. Calculated from crankshaft position sensor signal. TCM input value.	rpm
Turbine Revolution Speed	Turbine rotation speed calculated by the TCM using signals from the turbine speed sensor.	rpm
Accel opening angle	Accelerator pedal opening angle transmitted from the ECM. Value calculated from the accelerator pedal position sensor output. TCM input value.	%
Front Wheel Speed	Front wheel speed calculated from the secondary axis rotation speed.	km/h or MPH
ATF Temperature	Value calculated from the ATF temperature sensor output value. ATF temperature of the control valve section.	°C or °F
Lock Up Duty Ratio	Lock-up duty solenoid control duty ratio. TCM output value.	%
Transfer Duty Ratio	Transfer duty solenoid control duty ratio. TCM output value.	%
Actual Gear Ratio	Current gear ratio (rotation ratio of the pulley) calculated from the primary pulley axis rotation speed and the secondary pulley axis rotation speed.	—
Primary Rev Speed	Primary pulley rotation speed calculated by the TCM using signals from the primary speed sensor.	rpm
Secondary Rev Speed	Secondary pulley rotation speed calculated by the TCM using signals from the secondary speed sensor.	rpm
Stop Light Switch	Stop light SW signal. Set to ON when the brake pedal is depressed. TCM input value.	ON or OFF
Secondary Set Current	Value of the indicator current for controlling the secondary solenoid calculated by the TCM.	mA
Secondary Actual Current	Actual current value of the secondary solenoid. TCM output value.	mA
Commanded Forward & Reverse Linear Solenoid Current	Value of the indicator current for controlling the F&R linear solenoid calculated by the TCM.	mA
Actual Forward & Reverse Linear Solenoid Current	Actual current value of the F&R linear solenoid. TCM output value.	mA
ECU ACC	Battery voltage. TCM input value.	V

Display	Contents	Unit of measure
Primary UP Duty	Primary UP solenoid control duty ratio. TCM output value.	%
Primary DOWN Duty	Primary DOWN solenoid control duty ratio. TCM output value.	%
P Range	Inhibitor SW signal. Set to ON when the select lever is in P range. TCM input value.	ON or OFF
R Range	Inhibitor SW signal. Set to ON when the select lever is in R range. TCM input value.	ON or OFF
N Range	Inhibitor SW signal. Set to ON when the select lever is in N range. TCM input value.	ON or OFF
D Range	Inhibitor SW signal. Set to ON when the select lever is in D range. TCM input value.	ON or OFF
Shift Step in Manual Mode	Gear shift position in manual mode or in multi-stage shifting mode. TCM output value.	—
Tiptronic Mode Switch	Manual mode SW signal. Set to ON when the select lever is in the manual shift gate. TCM input value.	ON or OFF
Up Switch	Status of the paddle shift up SW. Set to ON when the plus (+) side of the steering wheel paddle shift is pulled. TCM input value.	ON or OFF
Down Switch	Status of the paddle shift down SW. Set to ON when the minus (–) side of the steering wheel paddle shift is pulled. TCM input value.	ON or OFF
secondary pressure sensor voltage.	Voltage value after an analog/digital conversion is done inside the TCM using the signal input from the secondary pressure sensor. TCM input value.	V
ATF Temp sensor voltage.	Sensor voltage value input from the ATF temperature sensor to the TCM. TCM input value.	V
Diagnosis Lamp	Transmission failure detection status. Set to ON when a failure is detected. AT oil temperature warning light blinks at 2 Hz. TCM output value.	ON or OFF
ATF Temperature Lamp	ATF high temperature detection status. Set to ON when high temperature is detected. AT oil temperature warning light illuminates. TCM output value.	ON or OFF
Ignition SW ON Count	Number of times the ignition is turned ON since the vehicle was manufactured.	times
Count	Shows whether the elapsed time counter after turning ON the ignition switch is synchronized with the integrated unit (master unit) or an original counter. “Common” means the integrated unit, and “Originally” means that the original counter is used.	—
Time Count	Shows the elapsed time after turning ON the ignition.	ms
Actual secondary pressure	Pressure value applied to the secondary pulley cylinder (line pressure) detected by the secondary pressure sensor.	MPa
System Voltage	Power supply voltage supplied to the backup power supply (≈ battery voltage).	V

- ENGINE TYPE EZ

Display	Contents	Unit of measure
Engine Speed	Engine speed signal transmitted from the ECM. Calculated from crankshaft position sensor signal. TCM input value.	rpm
Turbine Revolution Speed	Turbine rotation speed which is based on the primary pulley rotation speed calculated by the TCM using signals from the primary speed sensor, and is accelerated by the reduction gear ratio.	rpm
Accel opening angle	Accelerator pedal opening angle transmitted from the ECM. Value calculated from the accelerator pedal position sensor output. TCM input value.	%
Front Wheel Speed	Front wheel speed calculated from the forward/reverse clutch output axis rotation speed.	km/h or MPH
ATF Temperature	Value calculated from the ATF temperature sensor output value. ATF temperature of the oil pan section.	°C or °F

Display	Contents	Unit of measure
Lock Up Duty Ratio	Lock-up duty solenoid control duty ratio. TCM output value.	%
Lock-Up ON/OFF Solenoid	Lock-up ON/OFF solenoid drive signal. Set to ON at a lockup condition. TCM output value.	ON or OFF
Transfer Duty Ratio	Transfer duty solenoid control duty ratio. TCM output value.	%
Actual Gear Ratio	Current gear ratio (rotation ratio of the pulley) calculated from the primary pulley axis rotation speed and the secondary pulley axis rotation speed.	—
Primary Rev Speed	Primary pulley rotation speed calculated by the TCM using signals from the primary speed sensor.	rpm
Secondary Rev Speed	Secondary pulley rotation speed calculated by the TCM using signals from the secondary speed sensor.	rpm
Front Wheel Speed	Front wheel rotation speed calculated from the forward/reverse clutch output axis rotation speed.	rpm
Stop Light Switch	Stop light SW signal. Set to ON when the brake pedal is depressed. TCM input value.	ON or OFF
Secondary Set Current	Value of the indicator current for controlling the secondary solenoid calculated by the TCM.	mA
Secondary Actual Current	Actual current value of the secondary solenoid. TCM output value.	mA
Commanded Forward & Reverse Linear Solenoid Current	Value of the indicator current for controlling the F&R linear solenoid calculated by the TCM.	mA
Actual Forward & Reverse Linear Solenoid Current	Actual current value of the F&R linear solenoid. TCM output value.	mA
ECU ACC	Battery voltage. TCM input value.	V
Primary UP Duty	Primary UP solenoid control duty ratio. TCM output value.	%
Primary DOWN Duty	Primary DOWN solenoid control duty ratio. TCM output value.	%
P Range	Inhibitor SW signal. Set to ON when the select lever is in P range. TCM input value.	ON or OFF
R Range	Inhibitor SW signal. Set to ON when the select lever is in R range. TCM input value.	ON or OFF
N Range	Inhibitor SW signal. Set to ON when the select lever is in N range. TCM input value.	ON or OFF
D Range	Inhibitor SW signal. Set to ON when the select lever is in D range. TCM input value.	ON or OFF
Shift Step in Manual Mode	Gear shift position in manual mode or in multi-stage shifting mode. TCM output value.	—
Tiptronic Mode Switch	Manual mode SW signal. Set to ON when the select lever is in the manual shift gate. TCM input value.	ON or OFF
Up Switch	Status of the paddle shift up SW. Set to ON when the plus (+) side of the steering wheel paddle shift is pulled. TCM input value.	ON or OFF
Down Switch	Status of the paddle shift down SW. Set to ON when the minus (–) side of the steering wheel paddle shift is pulled. TCM input value.	ON or OFF
secondary pressure sensor voltage.	Voltage value after an analog/digital conversion is done inside the TCM using the signal input from the secondary pressure sensor. TCM input value.	V
ATF Temp sensor voltage.	Sensor voltage value input from the ATF temperature sensor to the TCM. TCM input value.	V
Diagnosis Lamp	Transmission failure detection status. Set to ON when a failure is detected. AT oil temperature warning light blinks at 2 Hz. TCM output value.	ON or OFF
ATF Temperature Lamp	ATF high temperature detection status. Set to ON when high temperature is detected. AT oil temperature warning light illuminates. TCM output value.	ON or OFF
Ignition SW ON Count	Number of times the ignition is turned ON since the vehicle was manufactured.	times

Display	Contents	Unit of measure
Count	Shows whether the elapsed time counter after turning ON the ignition switch is synchronized with the integrated unit (master unit) or an original counter. “Common” means the integrated unit, and “Originally” means that the original counter is used.	—
Time Count	Shows the elapsed time after turning ON the ignition.	ms
Actual secondary pressure	Pressure value applied to the secondary pulley cylinder (line pressure) detected by the secondary pressure sensor.	MPa
System Voltage	Power supply voltage supplied to the backup power supply (≈ battery voltage).	V

NOTE:
For detailed operation procedures, refer to “Application help”.

7. Read Diagnostic Trouble Code (DTC)

A: OPERATION

1) On «Start» display, select «Diagnosis».
2) On «Vehicle selection» display, input the vehicle information and select «Confirmed».
3) On «Main Menu» display, select «Each System Check».
4) On «Select System» display, select «Transmission Control System».
5) On «Select Function» display, select «DTC».

NOTE:
- For details concerning DTC, refer to List of Diagnostic Trouble Code (DTC). <Ref. to CVT(diag)-44, List of Diagnostic Trouble Code (DTC).>
- For detailed operation procedures, refer to “Application help”.

8. Clear Memory Mode

A: OPERATION

1) On «Start» display, select «Diagnosis».
2) On «Vehicle selection» display, input the vehicle information and select «Confirmed».
3) On «Main Menu» display, select «Each System Check».
4) On «Select System» display, select «Transmission Control System».
5) On «Select Function» display, select «DTC».
6) On «DTC» display, select «Clear Memory».

NOTE:
For detailed operation procedures, refer to “Application help”.

9. Inspection Mode

A: PROCEDURE

<Ref. to CVT(TR580)-48, Road Test.> <Ref. to CVT(TR690)-48, Road Test.>

10.Drive Cycle

A: PROCEDURE

It is possible to complete diagnosis of the DTC by performing the indicated drive cycle. After the repair for the DTC, perform a necessary drive cycle and make sure the function recovers and the DTC is recorded.

1. PREPARATION FOR DRIVE CYCLE

1) Check that the battery voltage is 12 V or more and fuel remains approx. half [20 — 40 L (5.3 — 10.6 US gal, 4.4 — 8.8 Imp gal)].
2) After performing the diagnostics and Clear Memory Mode, check that no DTC remains. <Ref. to CVT(diag)-26, Clear Memory Mode.>

NOTE:
Perform the drive cycle after warming up the engine except when the ATF temperature at engine start is specified.

2. DRIVE CYCLE A

DTC	Item	Condition
P0601	INTERNAL CONTROL MODULE MEMORY CHECKSUM ERROR	Perform the drive cycle A twice.
P0604	INTERNAL CONTROL MODULE RANDOM ACCESS MEMORY (RAM) ERROR	Perform the drive cycle A twice.
P062F	INTERNAL CONTROL MODULE EEPROM ERROR	Perform the drive cycle A twice.
P0712	TRANSMISSION FLUID TEMPERATURE SENSOR "A" CIRCUIT LOW	—
P0776	PRESSURE CONTROL SOLENOID "B" PERFORMANCE/STUCK OFF	Perform the drive cycle D, then the drive cycle A, and perform the drive cycle D again.
P0842	TRANSMISSION FLUID PRESSURE SENSOR/SWITCH "A" CIRCUIT LOW	—
P0843	TRANSMISSION FLUID PRESSURE SENSOR/SWITCH "A" CIRCUIT HIGH	—
P0890	TCM POWER RELAY SENSE CIRCUIT LOW	—
P0962	PRESSURE CONTROL SOLENOID "A" CONTROL CIRCUIT LOW	—
P0963	PRESSURE CONTROL SOLENOID "A" CONTROL CIRCUIT HIGH	—
P0966	PRESSURE CONTROL SOLENOID "B" CONTROL CIRCUIT LOW	—
P0967	PRESSURE CONTROL SOLENOID "B" CONTROL CIRCUIT HIGH	—
P160A	RANDOM ACCESS MEMORY (RAM) ERROR	Perform the drive cycle A twice.
P2530	IGNITION SWITCH RUN POSITION CIRCUIT	—
P2763	TORQUE CONVERTER CLUTCH PRESSURE CONTROL SOLENOID CONTROL CIRCUIT HIGH	Perform the drive cycle A, then perform the drive cycle C.

Diagnostic procedure:
1) Start the engine.
2) Depress the brake pedal and move the select lever to each range at an interval of five seconds.

NOTE:
Move the select lever in the following order: “P” → “R” → “N” → “D” → “N” → “R” → “P”.

3. DRIVE CYCLE B

DTC	Item	Condition
P0711	TRANSMISSION FLUID TEMPERATURE SENSOR "A" CIRCUIT RANGE/ PERFORMANCE	Perform the drive cycle B twice.

Diagnostic procedure:
1) Start the engine under condition that ATF temperature is at 20°C (68°F) or below.
2) Drive in any driving pattern for 20 minutes. (Include driving at a constant legal speed (for 20 seconds) at least once.)

NOTE:
Repeat two or more driving cycles in this driving pattern.

4. DRIVE CYCLE C

DTC	Item	Condition
P0500	VEHICLE SPEED SENSOR "A" CIRCUIT	—
P0716	INPUT/TURBINE SHAFT SPEED SENSOR "A" CIRCUIT RANGE/PERFORMANCE	—
P0717	INPUT/TURBINE SHAFT SPEED SENSOR "A" CIRCUIT NO SIGNAL	—
P0720	OUTPUT SHAFT SPEED SENSOR CIRCUIT	—
P0721	OUTPUT SHAFT SPEED SENSOR CIRCUIT RANGE/PERFORMANCE	—
P0970	PRESSURE CONTROL SOLENOID "C" CONTROL CIRCUIT LOW	—
P0971	PRESSURE CONTROL SOLENOID "C" CONTROL CIRCUIT HIGH	—
P0973	SHIFT SOLENOID "A" CONTROL CIRCUIT LOW	—
P0974	SHIFT SOLENOID "A" CONTROL CIRCUIT HIGH	—
P0976	SHIFT SOLENOID "B" CONTROL CIRCUIT LOW	—
P0977	SHIFT SOLENOID "B" CONTROL CIRCUIT HIGH	—
P2158	VEHICLE SPEED SENSOR "B" CIRCUIT	—
P2746	INTERMEDIATE SHAFT SPEED SENSOR "B" CIRCUIT RANGE/PERFORMANCE	—
P2747	INTERMEDIATE SHAFT SPEED SENSOR "B" CIRCUIT NO SIGNAL	—
P2750	INTERMEDIATE SHAFT SPEED SENSOR "C" CIRCUIT RANGE/PERFORMANCE	—
P2751	INTERMEDIATE SHAFT SPEED SENSOR "C" CIRCUIT NO SIGNAL	—
P2763	TORQUE CONVERTER CLUTCH PRESSURE CONTROL SOLENOID CONTROL CIRCUIT HIGH	Perform the drive cycle A, then perform the drive cycle C.
P2764	TORQUE CONVERTER CLUTCH PRESSURE CONTROL SOLENOID CONTROL CIRCUIT LOW	—
P2769	TORQUE CONVERTER CLUTCH CIRCUIT LOW	—
P2770	TORQUE CONVERTER CLUTCH CIRCUIT HIGH	—

Diagnostic procedure:
1) Start the engine.
2) Accelerate slowly to a legal speed, and then decelerate slowly to a stop.

5. DRIVE CYCLE D

DTC	Item	Condition
P0713	TRANSMISSION FLUID TEMPERATURE SENSOR "A" CIRCUIT HIGH	—
P0730	INCORRECT GEAR RATIO	—
P0746	PRESSURE CONTROL SOLENOID "A" PERFORMANCE/STUCK OFF	Perform the drive cycle D twice.
P0747	PRESSURE CONTROL SOLENOID "A" STUCK ON	Perform the drive cycle D twice.
P0751	SHIFT SOLENOID "A" PERFORMANCE/STUCK OFF	Perform the drive cycle D twice.
P0752	SHIFT SOLENOID "A" STUCK ON	Perform the drive cycle D twice.
P0756	SHIFT SOLENOID "B" PERFORMANCE/STUCK OFF	Perform the drive cycle D twice.
P0757	SHIFT SOLENOID "B" STUCK ON	Perform the drive cycle D twice.
P0776	PRESSURE CONTROL SOLENOID "B" PERFORMANCE/STUCK OFF	Perform the drive cycle D, then the drive cycle A, and perform the drive cycle D again.
P0841	TRANSMISSION FLUID PRESSURE SENSOR/SWITCH "A" CIRCUIT RANGE/PERFORMANCE	—
P0961	PRESSURE CONTROL SOLENOID "A" CONTROL CIRCUIT RANGE/PERFORMANCE	—
P0965	PRESSURE CONTROL SOLENOID "B" CONTROL CIRCUIT RANGE/PERFORMANCE	—
P2757	TORQUE CONVERTER CLUTCH PRESSURE CONTROL SOLENOID CONTROL CIRCUIT PERFORMANCE/STUCK OFF	Perform the drive cycle D twice.
P2758	TORQUE CONVERTER CLUTCH PRESSURE CONTROL SOLENOID CONTROL CIRCUIT STUCK ON	Perform the drive cycle D twice.

Diagnostic procedure:
1) Start the engine.
2) Drive in any driving pattern for 20 minutes. (Include driving at a constant legal speed (for 20 seconds) at least once.)

6. DRIVE CYCLE E

DTC	Item	Condition
P0801	REVERSE INHIBIT CONTROL CIRCUIT/OPEN	—
U0073	CAN FAILURE, BUS ‘OFF’ DETECTION	—
U0100	LOST COMMUNICATION WITH ECM/PCM "A"	—
U0122	LOST COMMUNICATION WITH VEHICLE DYNAMICS CONTROL MODULE	—
U0140	LOST COMMUNICATION WITH BODY CONTROL MODULE	—
U0155	LOST COMMUNICATION WITH INSTRUMENT PANEL CLUSTER (IPC) CONTROL MODULE	—
U0164	LOST COMMUNICATION WITH HVAC CONTROL MODULE	—
U0401	INVALID DATA RECEIVED FROM ECM/PCM "A"	—
U0416	INVALID DATA RECEIVED FROM VEHICLE DYNAMICS CONTROL MODULE	—
U0422	INVALID DATA RECEIVED FROM BODY CONTROL MODULE	—
U0423	INVALID DATA RECEIVED FROM INSTRUMENT PANEL CLUSTER CONTROL MODULE	—
U0424	INVALID DATA RECEIVED FROM HVAC CONTROL MODULE	—
U1235	LOST COMMUNICATION WITH EyeSight	—
U1433	INVALID DATA RECEIVED FROM EyeSight	—

Diagnostic procedure:
1) Start the engine.

7. DRIVE CYCLE F

DTC	Item	Condition
P0705	TRANSMISSION RANGE SENSOR "A" CIRCUIT (PRNDL INPUT)	—

Diagnostic procedure:
1) Start the engine.
2) Depress the brake pedal and move the select lever to each range at an interval of five seconds.

NOTE:
Move the select lever in the following order: “P” → “R” → “N” → “D”.
3) Maintain the engine speed to 2,000 rpm for five seconds or more.

8. DRIVE CYCLE G

DTC	Item	Condition
P0708	TRANSMISSION RANGE SENSOR "A" CIRCUIT HIGH	—

Diagnostic procedure:
1) Start the engine.
2) Drive for three seconds at 16 km/h (10 MPH).

NOTE:
Drive in “D” range and “R” range.

9. DRIVE CYCLE H

DTC	Item	Condition
P0719	BRAKE SWITCH "B" CIRCUIT LOW	—
P0724	BRAKE SWITCH "B" CIRCUIT HIGH	—
P0951	AUTO SHIFT MANUAL CONTROL CIRCUIT RANGE/PERFORMANCE	—

Diagnostic procedure:
1) Start the engine.
2) Operate the stop light switch or the manual mode switch.

NOTE:
Drive in “D” range and “R” range.
3) Read the data of the stop light switch or the manual mode switch using the Subaru Select Monitor. Or measure the terminal voltage.

11.Active Test

A: OPERATION

CAUTION:
- **Be sure to perform the active test while the engine is not running.**
- **After executing the active test, execute the Clear Memory Mode.**

1) On «Start» display, select «Diagnosis».
2) On «Vehicle selection» display, input the vehicle information and select «Confirmed».
3) On «Main Menu» display, select «Each System Check».
4) On «Select System» display, select «Transmission Control System».
5) On «Select Function» display, select «Active Test».

Item	SSM display	Execution condition
Activating the actuator ON/OFF	F&R Clutch Solenoid	When all of the following conditions are met: • P range • Ignition switch is ON (engine stops) • Battery voltage is 10.9 V or more
	Secondary Solenoid	
	Primary Down Solenoid	
	Primary Up Solenoid	
	AWD Solenoid	
	Lock-Up Duty Solenoid	
	Lock-Up ON/OFF Solenoid	

NOTE:
For detailed operation procedures, refer to “Application help”.

12.Learning Control

A: GENERAL DESCRIPTION

- Follow the messages displayed on the Subaru Select Monitor when working.
- When the following work is performed, perform learning work for the transmission.

Replacement of TCM/Replacement or disassembly of transmission assembly/Replacement of control valve body/Clearing AT leaning value is executed.

B: PROCEDURE

1. PREPARATION FOR LEARNING

1) Warm up or cool down until the ATF temperature displayed on the Subaru Select Monitor is 40 — 65°C (104 — 149°F).
2) After stopping the vehicle, shift the select lever to “P” range.
3) Apply the electronic parking brake.
4) Lift up the vehicle.

CAUTION:
While working, be sure to keep the lower edge of the tires 30 cm or more above the ground as vehicle will vibrate.

5) Connect the Subaru Select Monitor to data link connector.
6) Turn the ignition switch to ON.
7) Turn off all switches causing an electrical load, such as headlights, A/C, seat heater and rear defogger, etc.

2. SIMPLE LEARNING

NOTE:
Simple learning is performed with the vehicle lifted, without actually running the vehicle.

CAUTION:
Do not turn the power of the Subaru Select Monitor OFF during work, and do not disconnect the data link connector.

1) On «Start» display, select «Diagnosis».
2) On «Vehicle selection» display, input the vehicle information and select «Confirmed».
3) On «Main Menu» display, select «Each System Check».
4) On «Select System» display, select «Transmission Control System».
5) On «Select Function» display, select «Work Support».
6) On «Work Support» display, select «AT learning mode».
7) Follow the messages displayed on the screen when working.

NOTE:
During AT learning in progress, AT OIL TEMP light in the combination meter starts flashing at 2 Hz and the learning operation starts. When the AT OIL TEMP light which was flashing at 2 Hz goes off, the following message is displayed on the screen.

8) When «AT learning normally ended.» is displayed, simple AT learning is completed.

NOTE:
• If communication error occurs during learning, retry the “AT learning mode” from the beginning.
• If the message «Execute AT learning again after fixing troubles of the vehicle» appears during learning, select [OK] and display the DTC list. After repairing the locations indicated by the DTC, start the “AT learning mode” over from the beginning.
• When communication error occurs during learning, select lever does not shift occasionally. If select lever does not shift, turn the ignition switch to OFF before operating the select lever.
• If the message «AT learning ended abnormally. Try again from the beginning.» is displayed, start the “AT learning mode” over from the beginning.

Display	Main causes for abnormal termination
AT learning ended abnormally. Try again from the beginning.	• Fault is detected during AT learning. • The accelerator pedal is depressed during AT learning. • An unspecified operation was performed during AT learning • ATF temperature becomes out of specification during AT learning. • Battery voltage is low. • Malfunction indicator light illuminates. • Electric parking brake not applied strongly enough • Brake pedal is not fully depressed. • Abnormal idle speed increase, etc.

• For detailed operation procedures, refer to “Application help”.

13.AT OIL TEMP Warning Light Display

A: OPERATION

The AT OIL TEMP light illuminates or blinks, when the ATF temperature is high and malfunction occurs in CVT.

- At normal condition

After turning the ignition switch to ON, illuminates for 2 seconds then goes off.

- When ATF temperature is high

AT OIL TEMP light illuminates when the ATF temperature is abnormally high with the ignition switch ON.

- When malfunction is detected

AT OIL TEMP light blinks at 2 Hz when the TCM detects the malfunction of CVT with the ignition switch ON. In this case, inspect using “Diagnostic Procedure with Diagnostic Trouble Code (DTC)”. <Ref. to CVT(diag)-49, Diagnostic Procedure with Diagnostic Trouble Code (DTC).>

- When AT learning is not finished

AT OIL TEMP light repeats “Blinking at 4 Hz → Turning OFF” when the AT learning is not completed with the ignition switch ON. In this case, perform the “Learning”. (During AT learning, the light blinks at 2 Hz or illuminates.) <Ref. to CVT(diag)-33, Learning Control.>

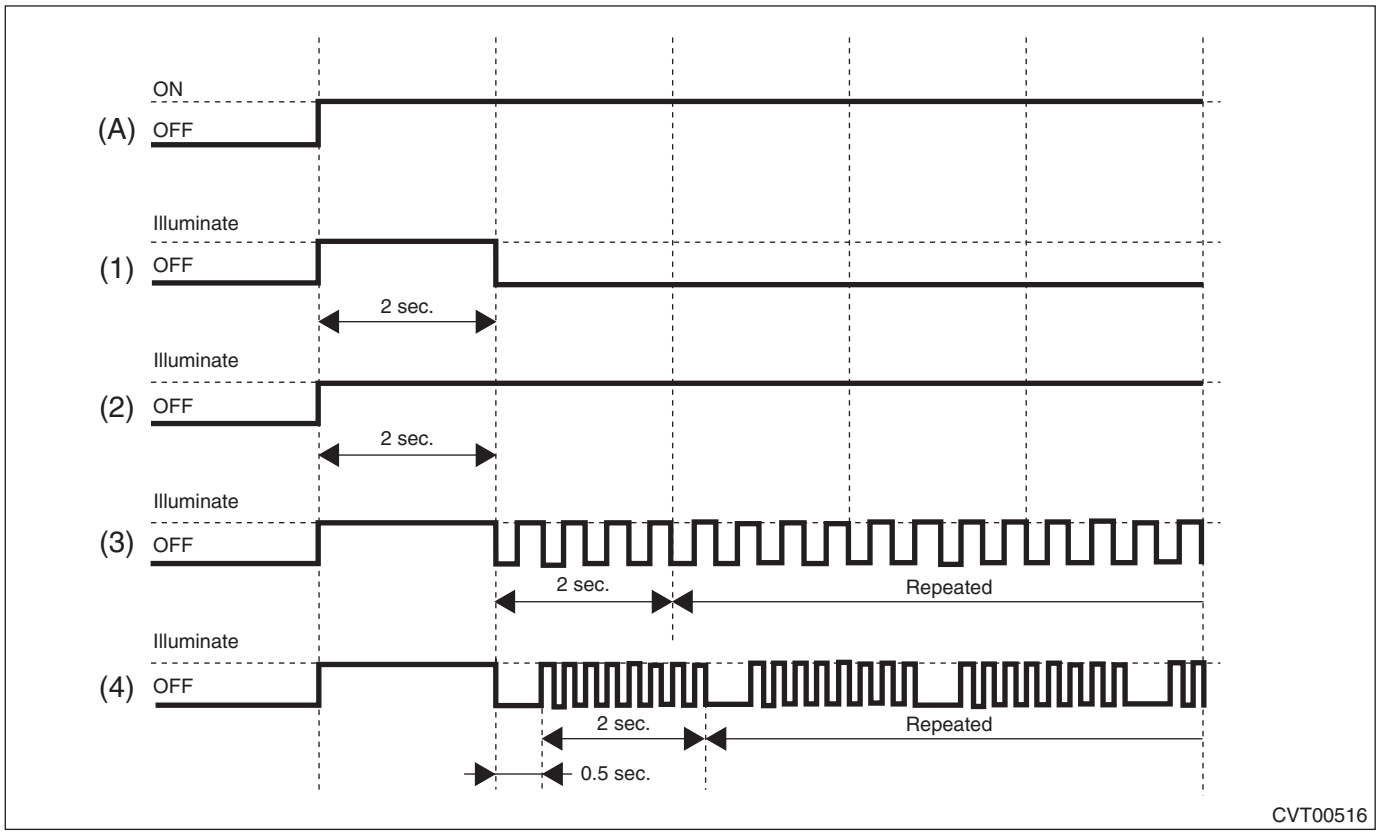

(A) Ignition switch condition

(1) At normal condition
(2) When ATF temperature is high
(3) When malfunction is detected
(4) When AT learning is not finished

If the AT OIL TEMP light does not illuminate, or illumination patterns are not as above, check the AT OIL TEMP light circuit. <Ref. to CVT(diag)-36, INSPECTION, AT OIL TEMP Warning Light Display.>

B: INSPECTION

DIAGNOSIS:

- CAN communication is lost with the combination meter.
- Combination meter malfunction
- TCM is in special control mode.
- AT learning is not finished.

TROUBLE SYMPTOM:

- When the ignition switch is turned to ON, the AT OIL TEMP light does not illuminate.
- AT OIL TEMP light remains lit after engine start.

	Step	Check	Yes	No
1	**CHECK DTC.** Read the DTC relating the TCM using the Subaru Select Monitor.	Is DTC U0155 or U0423 displayed?	Perform the self-diagnosis of combination meter.	Go to step **2**.
2	**CHECK DTC.** Read the DTC relating the TCM using the Subaru Select Monitor.	Are DTCs other than U0155 and U0423 displayed?	Perform the diagnosis according to DTC.	Go to step **3**.
3	**CHECK COMBINATION METER.** Read DTC of combination meter.	Is DTC displayed?	Perform the diagnosis according to DTC.	Go to step **4**.
4	**CHECK AT OIL TEMP LIGHT.** Turn the ignition switch to ON.	Does AT OIL TEMP light illuminate and then go off in 2 seconds?	Go to step **5**.	Perform the self-diagnosis of combination meter. <Ref. to IDI-6, SELF-DIAGNOSIS DISPLAY MODE, OPERATION, Combination Meter System.>
5	**CHECK AT OIL TEMP LIGHT.** Start the engine.	Does the AT OIL TEMP light go off?	Current condition is normal. Go back to Basic Diagnostic Procedure. <Ref. to CVT(diag)-2, Basic Diagnostic Procedure.>	Go to step **6**.
6	**CHECK DTC.** Read the DTC relating the TCM using the Subaru Select Monitor.	Is DTC displayed?	Perform the diagnosis according to DTC.	Go to step **7**.
7	**CHECK TCM.** Read the data of «ATF Temperature Lamp» using the Subaru Select Monitor.	Is “ON” displayed?	Go to step **8**.	Perform the self-diagnosis of combination meter. <Ref. to IDI-6, SELF-DIAGNOSIS DISPLAY MODE, OPERATION, Combination Meter System.>
8	**CHECK TCM.** Read the data of «ATF Temp.» using the Subaru Select Monitor.	Is the display 125°C or more?	Go to step **9**.	Replace the TCM. <Ref. to CVT(TR580)-159, Transmission Control Module (TCM).> <Ref. to CVT(TR690)-142, Transmission Control Module (TCM).>

	Step	Check	Yes	No
9	**CHECK ATF TEMPERATURE.** Check the real fluid temperature from the transmission case surface temperature.	Does it clearly differ from the «ATF Temp.» displayed on Subaru Select Monitor?	Perform the diagnosis according to DTC P0712. If there is no problem, perform the diagnosis according to DTC P0713.	When ATF temperature can be judged as actually high, perform the diagnosis again after the ATF temperature lowers.

14.AWD Warning Light Display

A: OPERATION

AWD light illuminates or blinks, when the AWD is in special control condition and AWD has malfunction.

- At normal condition

After turning the ignition switch to ON, illuminates for 2 seconds then goes off.

- When FF mode is selected

AWD light illuminates when the AWD ON/OFF switching function is set to “FF mode” with the ignition switch ON.

- When malfunction is detected

AWD light blinks at 2 Hz when any of the following malfunctions are detected with the ignition switch ON.

1. When tire with different diameter is installed, or air pressure of any of four wheels is excessively low.
2. When “Rear differential inspection mode” is judged as NG <Ref. to DI-83, Rear Differential Inspection Mode.>

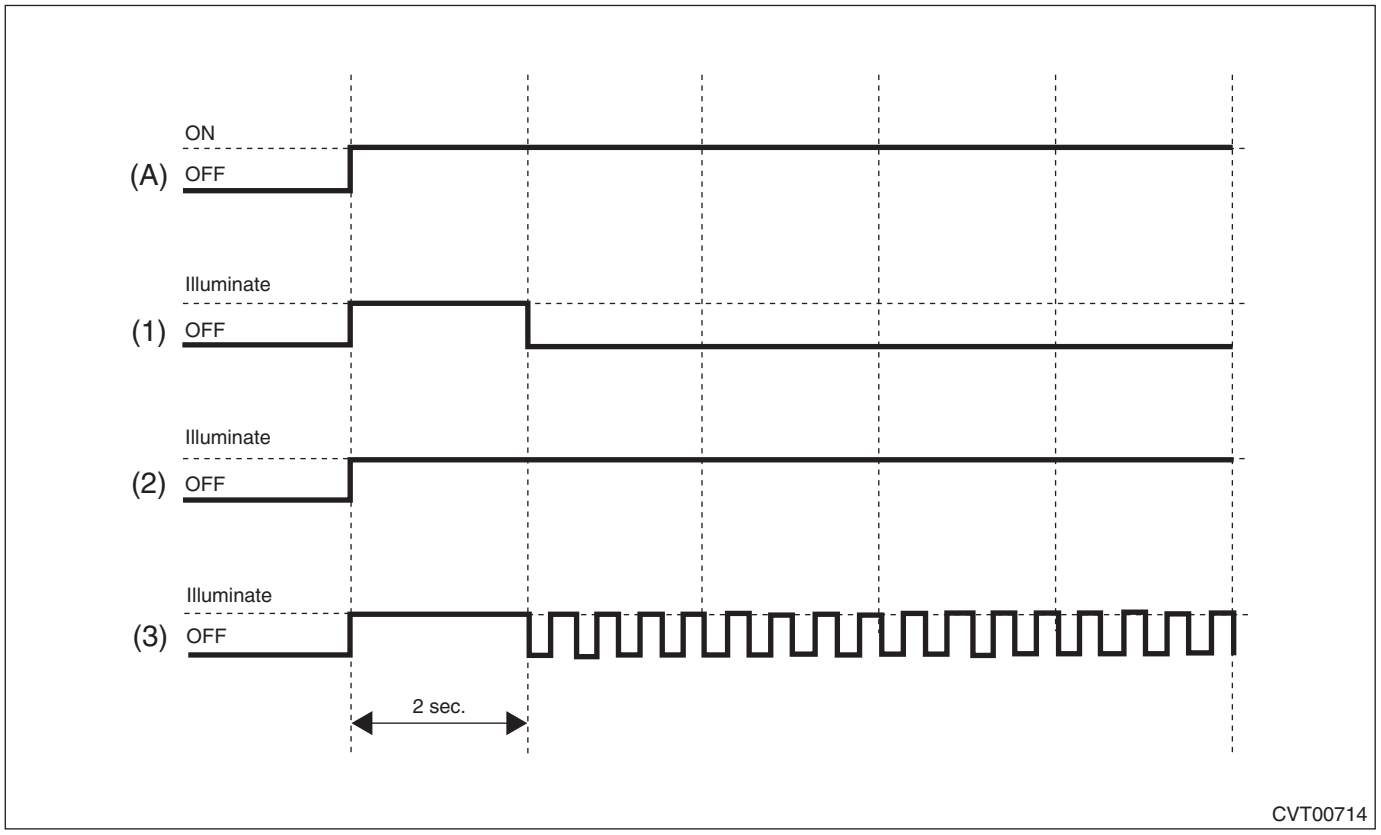

(A) Ignition switch condition

(1) At normal condition (2) When FF mode is selected (3) When malfunction is detected

If the AWD light does not illuminate, or illumination patterns are not as above, check the AWD light circuit. <Ref. to CVT(diag)-39, INSPECTION, AWD Warning Light Display.>

B: INSPECTION

DIAGNOSIS:

- CAN communication is lost with the combination meter.
- Combination meter malfunction
- TCM is in AWD special control mode.

TROUBLE SYMPTOM:

- When the ignition switch is turned to ON, the AWD light does not illuminate.
- AWD light remains lit after engine start.
- AWD light is blinking immediately after engine start.

	Step	Check	Yes	No
1	**CHECK TCM.** Check the DTC relating the TCM using the Subaru Select Monitor.	Is DTC U0155 or U0423 displayed?	Perform the self-diagnosis of combination meter.	Go to step **2**.
2	**CHECK TCM.** Check the DTC relating the TCM using the Subaru Select Monitor.	Are DTCs other than U0155 and U0423 displayed?	Perform the diagnosis according to DTC.	Go to step **3**.
3	**CHECK COMBINATION METER.** Check the DTC of combination meter.	Is DTC displayed?	Perform the diagnosis according to DTC.	Go to step **4**.
4	**CHECK AWD LIGHT.** Turn the ignition switch to ON.	Does AWD light illuminate and then go off in 2 seconds?	Go to step **5**.	Perform the self-diagnosis of combination meter. <Ref. to IDI-6, SELF-DIAGNOSIS DISPLAY MODE, OPERATION, Combination Meter System.>
5	**CHECK AWD LIGHT.** Start the engine.	Does the AWD light go off?	Current condition is normal. Go back to Basic Diagnostic Procedure. <Ref. to CVT(diag)-2, Basic Diagnostic Procedure.>	Go to step **6**.
6	**CHECK DTC.** Read the DTC relating the TCM using the Subaru Select Monitor.	Is DTC displayed?	Perform the diagnosis according to DTC.	Go to step **7**.
7	**CHECK AWD LIGHT.** Check the display of AWD light after engine start.	Is AWD light illuminating?	Go to step **9**.	Go to step **8**.
8	**CHECK AWD LIGHT.** Check the display of AWD light after engine start.	Is AWD light blinking at 2 Hz?	Go to step **10**.	Go to step **11**.
9	**CHECK AWD ON/OFF SWITCHING FUNCTION.** Using the Subaru Select Monitor, select the «AWD ON/OFF switching mode» in «Work Support» display, and check the current mode. <Ref. to CVT(TR580)-47, AWD ON/OFF Switching Mode.>	Is the message «At present, the vehicle is in AWD. Switch to FF?» displayed?	Go to step **11**.	If the message «At present, the vehicle is in FF. Switch to AWD?» is displayed, select “OK”, and switch to AWD mode.

	Step	Check	Yes	No
10	**CHECK REAR DIFFERENTIAL.** Using the Subaru Select Monitor, select and check «Rear differential inspection mode» in «Work Support» display. <Ref. to DI-83, Rear Differential Inspection Mode.>	Does AWD light go off after inspection is finished normally?	Current condition is normal. Go back to Basic Diagnostic Procedure. <Ref. to CVT(diag)-2, Basic Diagnostic Procedure.>	Go to step **11**.
11	**CHECK COMBINATION METER.** Perform the self-diagnosis of combination meter. <Ref. to IDI-6, SELF-DIAGNOSIS DISPLAY MODE, OPERATION, Combination Meter System.>	Is there any trouble with the combination meter?	Repair the combination meter.	Replace the TCM. <Ref. to CVT(TR580)-159, Transmission Control Module (TCM).> <Ref. to CVT(TR690)-142, Transmission Control Module (TCM).>

15.Diagnostic Procedure for Subaru Select Monitor Communication

A: COMMUNICATION FOR INITIALIZING IMPOSSIBLE

DIAGNOSIS:
Defective harness connector
TROUBLE SYMPTOM:
Subaru Select Monitor communication failure
WIRING DIAGRAM:
- ENGINE TYPE FB

CVT control system <Ref. to WI-156, ENGINE TYPE FB, WIRING DIAGRAM, CVT Control System.>

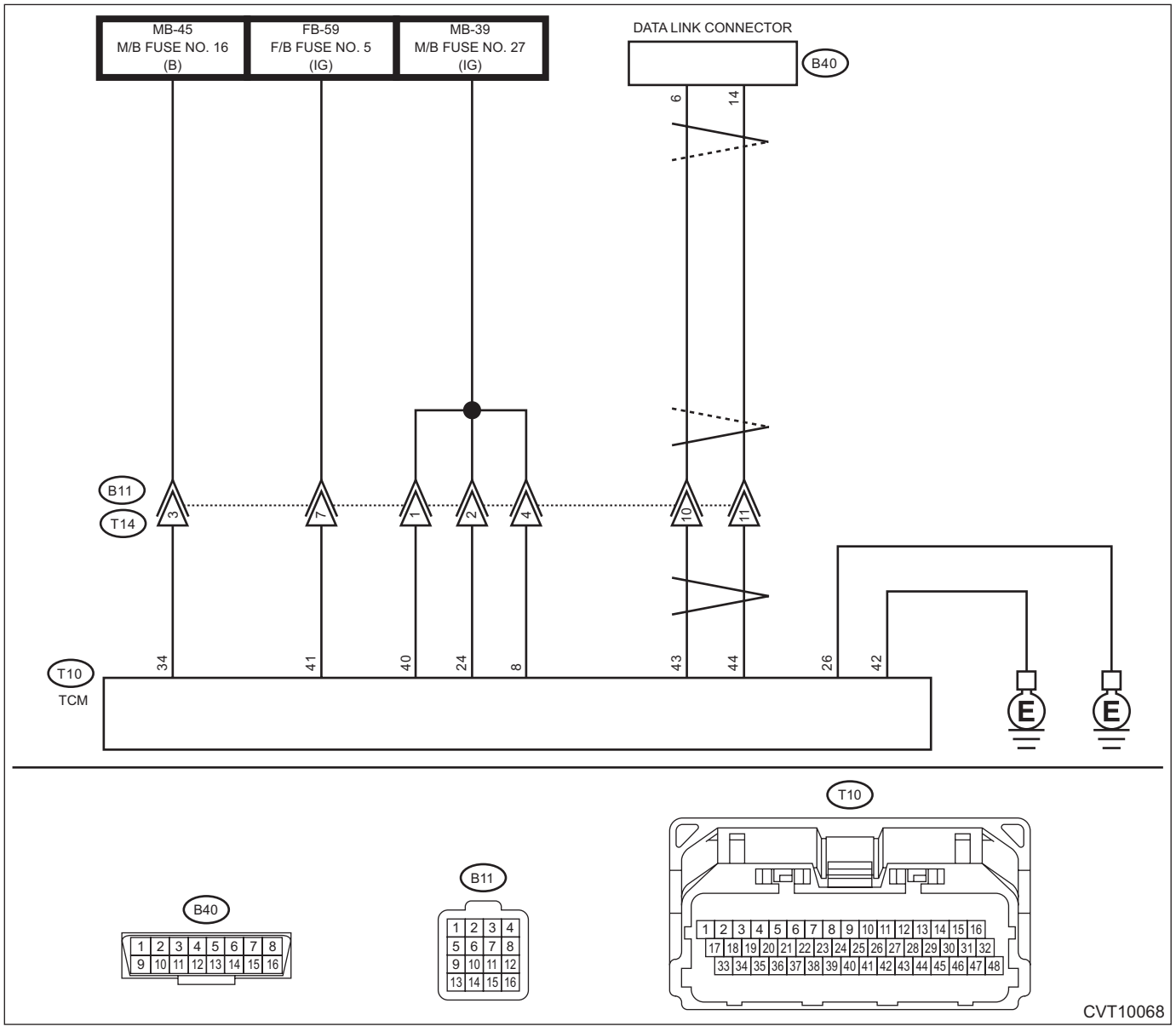

- ENGINE TYPE EZ

CVT control system <Ref. to WI-162, ENGINE TYPE EZ, WIRING DIAGRAM, CVT Control System.>

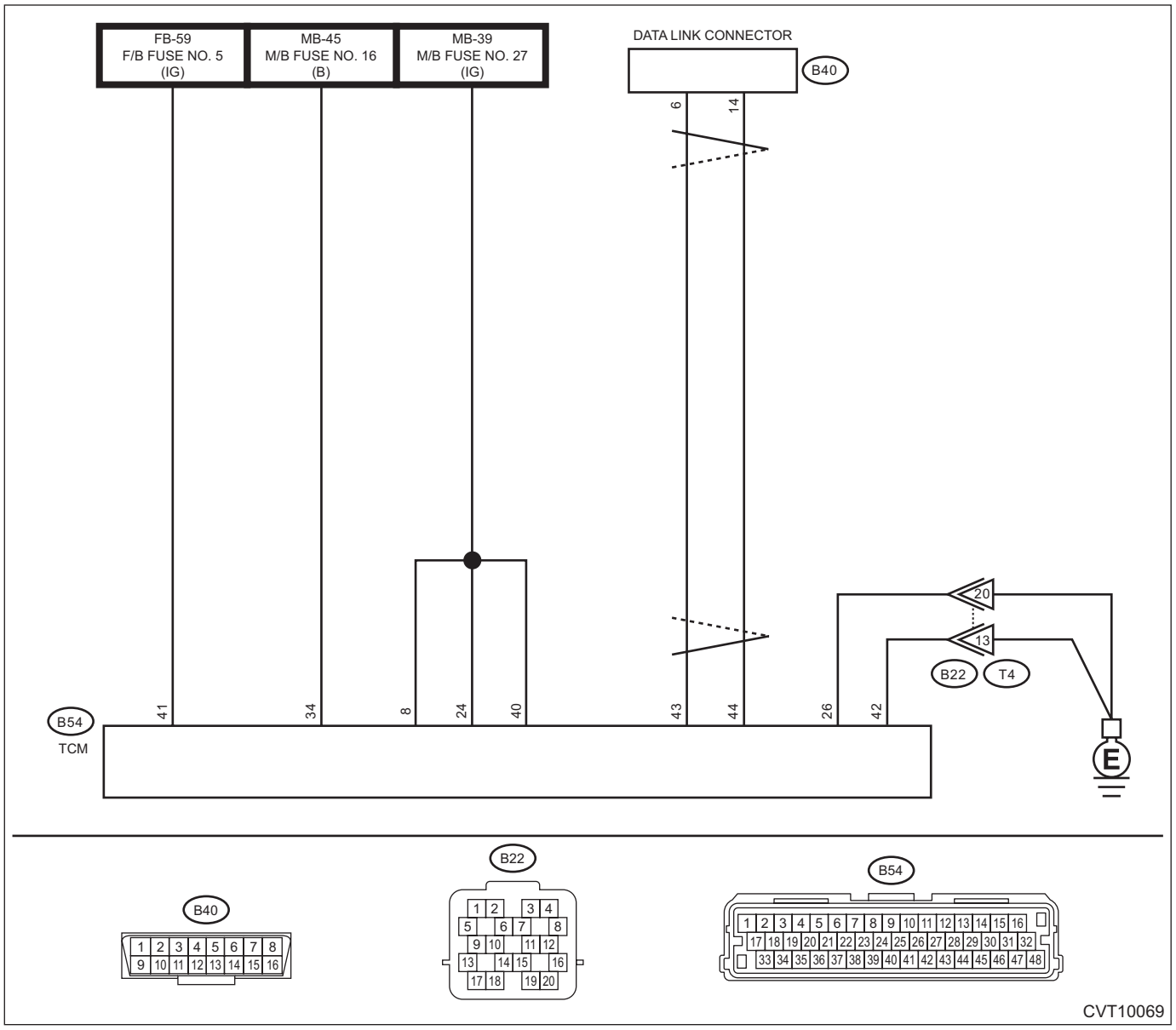

Step		Check	Yes	No
1	**CHECK IGNITION SWITCH.**	Is the ignition switch ON?	Go to step **2**.	Turn the ignition switch to ON, and select the transmission using the Subaru Select Monitor.
2	**CHECK BATTERY.** 1) Turn the ignition switch to OFF. 2) Measure the battery voltage.	Is the voltage 11 V or more?	Go to step **3**.	Charge or replace the battery.
3	**CHECK BATTERY TERMINAL.**	Is there poor contact at battery terminal?	Repair or tighten the battery terminal.	Go to step **4**.
4	**CHECK INSTALLATION OF TCM CONNECTOR.** Turn the ignition switch to OFF.	Is the TCM connector inserted into the TCM until the clamp locks?	Go to step **5**.	Insert the TCM connector to TCM.

	Step	Check	Yes	No
5	**CHECK LAN SYSTEM.** Perform the diagnosis for LAN system. <Ref. to LAN(diag)-2, Basic Diagnostic Procedure.>	Is there any fault in LAN system?	Perform the diagnosis according to DTC for LAN system. <Ref. to LAN(diag)-86, List of Diagnostic Trouble Code (DTC).>	Go to step **6**.
6	**CHECK SUBARU SELECT MONITOR COMMUNICATION.** 1) Turn the ignition switch to ON. 2) Check whether communication to transmission system can be executed normally.	Is the system name displayed on Subaru Select Monitor?	Check DTC of TCM. <Ref. to CVT(diag)-25, Read Diagnostic Trouble Code (DTC).>	Go to step **7**.
7	**CHECK POWER SUPPLY CIRCUIT.** 1) Turn the ignition switch to ON. (Engine OFF) 2) Measure the ignition power supply voltage between TCM connector and chassis ground. ***Connector & terminal*** ***ENGINE TYPE FB*** ***(T10) No. 8 (+) — Chassis ground (–):*** ***(T10) No. 24 (+) — Chassis ground (–):*** ***(T10) No. 34 (+) — Chassis ground (–):*** ***(T10) No. 40 (+) — Chassis ground (–):*** ***(T10) No. 41 (+) — Chassis ground (–):*** ***ENGINE TYPE EZ*** ***(B54) No. 8 (+) — Chassis ground (–):*** ***(B54) No. 24 (+) — Chassis ground (–):*** ***(B54) No. 34 (+) — Chassis ground (–):*** ***(B54) No. 40 (+) — Chassis ground (–):*** ***(B54) No. 41 (+) — Chassis ground (–):***	Is the voltage 10 — 13 V?	Go to step **8**.	Repair the open circuit of harness between TCM and battery.
8	**CHECK HARNESS CONNECTOR BETWEEN TCM AND CHASSIS GROUND.** 1) Turn the ignition switch to OFF. 2) Disconnect the connector from TCM. 3) Measure the resistance of harness between TCM connector and chassis ground. ***Connector & terminal*** ***ENGINE TYPE FB*** ***(T10) No. 26 — Chassis ground:*** ***(T10) No. 42 — Chassis ground:*** ***ENGINE TYPE EZ*** ***(B54) No. 26 — Chassis ground:*** ***(B54) No. 42 — Chassis ground:***	Is the resistance less than 10 Ω?	Go to step **9**.	Repair the open circuit of the TCM ground circuit and poor contact of connector.
9	**CHECK POOR CONTACT OF CONNECTOR.**	Is there poor contact of control module power supply, ground circuit and data link connector?	Repair the connector.	Replace the TCM. <Ref. to CVT(TR580)-159, Transmission Control Module (TCM).> <Ref. to CVT(TR690)-142, Transmission Control Module (TCM).>

16.List of Diagnostic Trouble Code (DTC)

A: LIST

DTC	Item	Content of diagnosis	Reference
P0500	VEHICLE SPEED SENSOR "A" CIRCUIT	Wheel speed data from VDC CM&H/U is abnormal.	<Ref. to CVT(diag)-49, DTC P0500 VEHICLE SPEED SENSOR "A" CIRCUIT, Diagnostic Procedure with Diagnostic Trouble Code (DTC).>
P0601	INTERNAL CONTROL MODULE MEMORY CHECKSUM ERROR	TCM ROM is faulty.	<Ref. to CVT(diag)-50, DTC P0601 INTERNAL CONTROL MODULE MEMORY CHECKSUM ERROR, Diagnostic Procedure with Diagnostic Trouble Code (DTC).>
P0604	INTERNAL CONTROL MODULE RANDOM ACCESS MEMORY (RAM) ERROR	TCM RAM is faulty.	<Ref. to CVT(diag)-51, DTC P0604 INTERNAL CONTROL MODULE RANDOM ACCESS MEMORY (RAM) ERROR, Diagnostic Procedure with Diagnostic Trouble Code (DTC).>
P062F	INTERNAL CONTROL MODULE EEPROM ERROR	TCM EEPROM is faulty.	<Ref. to CVT(diag)-52, DTC P062F INTERNAL CONTROL MODULE EEPROM ERROR, Diagnostic Procedure with Diagnostic Trouble Code (DTC).>
P0705	TRANSMISSION RANGE SENSOR "A" CIRCUIT (PRNDL INPUT)	Inhibitor switch malfunction or short circuit	<Ref. to CVT(diag)-53, DTC P0705 TRANSMISSION RANGE SENSOR "A" CIRCUIT (PRNDL INPUT), Diagnostic Procedure with Diagnostic Trouble Code (DTC).>
P0708	TRANSMISSION RANGE SENSOR "A" CIRCUIT HIGH	Inhibitor switch malfunction or open circuit	<Ref. to CVT(diag)-56, DTC P0708 TRANSMISSION RANGE SENSOR "A" CIRCUIT HIGH, Diagnostic Procedure with Diagnostic Trouble Code (DTC).>
P0711	TRANSMISSION FLUID TEMPERATURE SENSOR "A" CIRCUIT RANGE/PERFORMANCE	ATF temperature sensor is faulty or input signal circuit is faulty.	<Ref. to CVT(diag)-60, DTC P0711 TRANSMISSION FLUID TEMPERATURE SENSOR "A" CIRCUIT RANGE/PERFORMANCE, Diagnostic Procedure with Diagnostic Trouble Code (DTC).>
P0712	TRANSMISSION FLUID TEMPERATURE SENSOR "A" CIRCUIT LOW	ATF temperature sensor is faulty or input signal circuit is shorted.	<Ref. to CVT(diag)-62, DTC P0712 TRANSMISSION FLUID TEMPERATURE SENSOR "A" CIRCUIT LOW, Diagnostic Procedure with Diagnostic Trouble Code (DTC).>
P0713	TRANSMISSION FLUID TEMPERATURE SENSOR "A" CIRCUIT HIGH	ATF temperature sensor is faulty or input signal circuit is open or shorted.	<Ref. to CVT(diag)-65, DTC P0713 TRANSMISSION FLUID TEMPERATURE SENSOR "A" CIRCUIT HIGH, Diagnostic Procedure with Diagnostic Trouble Code (DTC).>
P0716	INPUT/TURBINE SHAFT SPEED SENSOR "A" CIRCUIT RANGE/PERFORMANCE	Turbine speed sensor is faulty or input signal circuit is open or shorted.	<Ref. to CVT(diag)-69, DTC P0716 INPUT/TURBINE SHAFT SPEED SENSOR "A" CIRCUIT RANGE/PERFORMANCE, Diagnostic Procedure with Diagnostic Trouble Code (DTC).>
P0717	INPUT/TURBINE SHAFT SPEED SENSOR "A" CIRCUIT NO SIGNAL	Turbine speed sensor signal no input	<Ref. to CVT(diag)-70, DTC P0717 INPUT/TURBINE SHAFT SPEED SENSOR "A" CIRCUIT NO SIGNAL, Diagnostic Procedure with Diagnostic Trouble Code (DTC).>
P0719	BRAKE SWITCH "B" CIRCUIT LOW	Brake switch is faulty or input signal circuit is open or shorted.	<Ref. to CVT(diag)-73, DTC P0719 BRAKE SWITCH "B" CIRCUIT LOW, Diagnostic Procedure with Diagnostic Trouble Code (DTC).>
P0720	OUTPUT SHAFT SPEED SENSOR CIRCUIT	Front wheel speed sensor is faulty or input signal circuit is open or shorted.	<Ref. to CVT(diag)-76, DTC P0720 OUTPUT SHAFT SPEED SENSOR CIRCUIT, Diagnostic Procedure with Diagnostic Trouble Code (DTC).>

DTC	Item	Content of diagnosis	Reference
P0721	OUTPUT SHAFT SPEED SENSOR CIRCUIT RANGE/PERFORMANCE	Front wheel speed sensor characteristics is abnormal.	<Ref. to CVT(diag)-79, DTC P0721 OUTPUT SHAFT SPEED SENSOR CIRCUIT RANGE/PERFORMANCE, Diagnostic Procedure with Diagnostic Trouble Code (DTC).>
P0724	BRAKE SWITCH "B" CIRCUIT HIGH	Brake switch is faulty or input signal circuit is shorted.	<Ref. to CVT(diag)-80, DTC P0724 BRAKE SWITCH "B" CIRCUIT HIGH, Diagnostic Procedure with Diagnostic Trouble Code (DTC).>
P0730	INCORRECT GEAR RATIO	Primary speed sensor, secondary speed sensor, control valve, or chain is faulty.	<Ref. to CVT(diag)-82, DTC P0730 INCORRECT GEAR RATIO, Diagnostic Procedure with Diagnostic Trouble Code (DTC).>
P0746	PRESSURE CONTROL SOLENOID "A" PERFORMANCE/STUCK OFF	Secondary solenoid is faulty, hydraulic circuit is stuck in low pressure side.	<Ref. to CVT(diag)-85, DTC P0746 PRESSURE CONTROL SOLENOID "A" PERFORMANCE/STUCK OFF, Diagnostic Procedure with Diagnostic Trouble Code (DTC).>
P0747	PRESSURE CONTROL SOLENOID "A" STUCK ON	Secondary solenoid is faulty, hydraulic circuit is stuck in high pressure side.	<Ref. to CVT(diag)-92, DTC P0747 PRESSURE CONTROL SOLENOID "A" STUCK ON, Diagnostic Procedure with Diagnostic Trouble Code (DTC).>
P0751	SHIFT SOLENOID "A" PERFORMANCE/ STUCK OFF	Primary UP solenoid is faulty, hydraulic circuit is stuck in low pressure side.	<Ref. to CVT(diag)-99, DTC P0751 SHIFT SOLENOID "A" PERFORMANCE/STUCK OFF, Diagnostic Procedure with Diagnostic Trouble Code (DTC).>
P0752	SHIFT SOLENOID "A" STUCK ON	Primary UP solenoid is faulty, hydraulic circuit is stuck in high pressure side.	<Ref. to CVT(diag)-104, DTC P0752 SHIFT SOLENOID "A" STUCK ON, Diagnostic Procedure with Diagnostic Trouble Code (DTC).>
P0756	SHIFT SOLENOID "B" PERFORMANCE/ STUCK OFF	Primary DOWN solenoid is faulty, hydraulic circuit is stuck in low pressure side.	<Ref. to CVT(diag)-109, DTC P0756 SHIFT SOLENOID "B" PERFORMANCE/STUCK OFF, Diagnostic Procedure with Diagnostic Trouble Code (DTC).>
P0757	SHIFT SOLENOID "B" STUCK ON	Primary DOWN solenoid is faulty, hydraulic circuit is stuck in high pressure side.	<Ref. to CVT(diag)-114, DTC P0757 SHIFT SOLENOID "B" STUCK ON, Diagnostic Procedure with Diagnostic Trouble Code (DTC).>
P0776	PRESSURE CONTROL SOLENOID "B" PERFORMANCE/STUCK OFF	F&R solenoid is faulty, hydraulic circuit is stuck in low pressure side.	<Ref. to CVT(diag)-119, DTC P0776 PRESSURE CONTROL SOLENOID "B" PERFORMANCE/STUCK OFF, Diagnostic Procedure with Diagnostic Trouble Code (DTC).>
P0801	REVERSE INHIBIT CONTROL CIRCUIT/ OPEN	Shift lock solenoid is faulty or output signal circuit is open or shorted.	<Ref. to CVT(diag)-125, DTC P0801 REVERSE INHIBIT CONTROL CIRCUIT/ OPEN, Diagnostic Procedure with Diagnostic Trouble Code (DTC).>
P0841	TRANSMISSION FLUID PRESSURE SENSOR/ SWITCH "A" CIRCUIT RANGE/PERFORMANCE	Secondary pressure sensor or control valve is faulty	<Ref. to CVT(diag)-126, DTC P0841 TRANSMISSION FLUID PRESSURE SENSOR/ SWITCH "A" CIRCUIT RANGE/PERFORMANCE, Diagnostic Procedure with Diagnostic Trouble Code (DTC).>
P0842	TRANSMISSION FLUID PRESSURE SENSOR/ SWITCH "A" CIRCUIT LOW	Secondary pressure sensor is faulty or input signal circuit is open or shorted.	<Ref. to CVT(diag)-134, DTC P0842 TRANSMISSION FLUID PRESSURE SENSOR/ SWITCH "A" CIRCUIT LOW, Diagnostic Procedure with Diagnostic Trouble Code (DTC).>
P0843	TRANSMISSION FLUID PRESSURE SENSOR/ SWITCH "A" CIRCUIT HIGH	Secondary pressure sensor is faulty or input signal circuit is shorted.	<Ref. to CVT(diag)-138, DTC P0843 TRANSMISSION FLUID PRESSURE SENSOR/ SWITCH "A" CIRCUIT HIGH, Diagnostic Procedure with Diagnostic Trouble Code (DTC).>
P0890	TCM POWER RELAY SENSE CIRCUIT LOW	Self-shut relay is faulty or input signal circuit is open or shorted.	<Ref. to CVT(diag)-142, DTC P0890 TCM POWER RELAY SENSE CIRCUIT LOW, Diagnostic Procedure with Diagnostic Trouble Code (DTC).>

DTC	Item	Content of diagnosis	Reference
P0951	AUTO SHIFT MANUAL CONTROL CIRCUIT RANGE/PERFORMANCE	Manual mode switch is faulty or input signal circuit is open or shorted.	<Ref. to CVT(diag)-144, DTC P0951 AUTO SHIFT MANUAL CONTROL CIRCUIT RANGE/PERFORMANCE, Diagnostic Procedure with Diagnostic Trouble Code (DTC).>
P0961	PRESSURE CONTROL SOLENOID "A" CONTROL CIRCUIT RANGE/PERFORMANCE	Characteristics of secondary solenoid is abnormal.	<Ref. to CVT(diag)-147, DTC P0961 PRESSURE CONTROL SOLENOID "A" CONTROL CIRCUIT RANGE/PERFORMANCE, Diagnostic Procedure with Diagnostic Trouble Code (DTC).>
P0962	PRESSURE CONTROL SOLENOID "A" CONTROL CIRCUIT LOW	Secondary solenoid is faulty or output signal circuit is shorted.	<Ref. to CVT(diag)-150, DTC P0962 PRESSURE CONTROL SOLENOID "A" CONTROL CIRCUIT LOW, Diagnostic Procedure with Diagnostic Trouble Code (DTC).>
P0963	PRESSURE CONTROL SOLENOID "A" CONTROL CIRCUIT HIGH	Secondary solenoid is faulty or output signal circuit is open or shorted.	<Ref. to CVT(diag)-153, DTC P0963 PRESSURE CONTROL SOLENOID "A" CONTROL CIRCUIT HIGH, Diagnostic Procedure with Diagnostic Trouble Code (DTC).>
P0965	PRESSURE CONTROL SOLENOID "B" CONTROL CIRCUIT RANGE/PERFORMANCE	F&R solenoid, forward clutch or control valve is faulty.	<Ref. to CVT(diag)-156, DTC P0965 PRESSURE CONTROL SOLENOID "B" CONTROL CIRCUIT RANGE/PERFORMANCE, Diagnostic Procedure with Diagnostic Trouble Code (DTC).>
P0966	PRESSURE CONTROL SOLENOID "B" CONTROL CIRCUIT LOW	F&R solenoid is faulty or output signal circuit is shorted.	<Ref. to CVT(diag)-159, DTC P0966 PRESSURE CONTROL SOLENOID "B" CONTROL CIRCUIT LOW, Diagnostic Procedure with Diagnostic Trouble Code (DTC).>
P0967	PRESSURE CONTROL SOLENOID "B" CONTROL CIRCUIT HIGH	F&R solenoid is faulty or output signal circuit is open or shorted.	<Ref. to CVT(diag)-162, DTC P0967 PRESSURE CONTROL SOLENOID "B" CONTROL CIRCUIT HIGH, Diagnostic Procedure with Diagnostic Trouble Code (DTC).>
P0970	PRESSURE CONTROL SOLENOID "C" CONTROL CIRCUIT LOW	AWD solenoid is faulty or output signal circuit is shorted.	<Ref. to CVT(diag)-165, DTC P0970 PRESSURE CONTROL SOLENOID "C" CONTROL CIRCUIT LOW, Diagnostic Procedure with Diagnostic Trouble Code (DTC).>
P0971	PRESSURE CONTROL SOLENOID "C" CONTROL CIRCUIT HIGH	AWD solenoid is faulty or output signal circuit is open or shorted.	<Ref. to CVT(diag)-168, DTC P0971 PRESSURE CONTROL SOLENOID "C" CONTROL CIRCUIT HIGH, Diagnostic Procedure with Diagnostic Trouble Code (DTC).>
P0973	SHIFT SOLENOID "A" CONTROL CIRCUIT LOW	Primary UP solenoid is faulty or output signal circuit is shorted.	<Ref. to CVT(diag)-171, DTC P0973 SHIFT SOLENOID "A" CONTROL CIRCUIT LOW, Diagnostic Procedure with Diagnostic Trouble Code (DTC).>
P0974	SHIFT SOLENOID "A" CONTROL CIRCUIT HIGH	Primary UP solenoid is faulty or output signal circuit is open or shorted.	<Ref. to CVT(diag)-174, DTC P0974 SHIFT SOLENOID "A" CONTROL CIRCUIT HIGH, Diagnostic Procedure with Diagnostic Trouble Code (DTC).>
P0976	SHIFT SOLENOID "B" CONTROL CIRCUIT LOW	Primary DOWN solenoid is faulty or output signal circuit is shorted.	<Ref. to CVT(diag)-177, DTC P0976 SHIFT SOLENOID "B" CONTROL CIRCUIT LOW, Diagnostic Procedure with Diagnostic Trouble Code (DTC).>
P0977	SHIFT SOLENOID "B" CONTROL CIRCUIT HIGH	Primary DOWN solenoid is faulty or output signal circuit is open or shorted.	<Ref. to CVT(diag)-180, DTC P0977 SHIFT SOLENOID "B" CONTROL CIRCUIT HIGH, Diagnostic Procedure with Diagnostic Trouble Code (DTC).>
P160A	RANDOM ACCESS MEMORY (RAM) ERROR	TCM RAM is faulty.	<Ref. to CVT(diag)-183, DTC P160A RANDOM ACCESS MEMORY (RAM) ERROR, Diagnostic Procedure with Diagnostic Trouble Code (DTC).>

DTC	Item	Content of diagnosis	Reference
P2158	VEHICLE SPEED SENSOR "B" CIRCUIT	Wheel speed data from VDC CM&H/U is abnormal.	<Ref. to CVT(diag)-184, DTC P2158 VEHICLE SPEED SENSOR "B" CIRCUIT, Diagnostic Procedure with Diagnostic Trouble Code (DTC).>
P2530	IGNITION SWITCH RUN POSITION CIRCUIT	Ignition SW circuit is faulty.	<Ref. to CVT(diag)-185, DTC P2530 IGNITION SWITCH RUN POSITION CIRCUIT, Diagnostic Procedure with Diagnostic Trouble Code (DTC).>
P2746	INTERMEDIATE SHAFT SPEED SENSOR "B" CIRCUIT RANGE/PERFORMANCE	Primary speed sensor is faulty or input signal circuit is open or shorted.	<Ref. to CVT(diag)-187, DTC P2746 INTERMEDIATE SHAFT SPEED SENSOR "B" CIRCUIT RANGE/PERFORMANCE, Diagnostic Procedure with Diagnostic Trouble Code (DTC).>
P2747	INTERMEDIATE SHAFT SPEED SENSOR "B" CIRCUIT NO SIGNAL	Primary speed sensor signal no input	<Ref. to CVT(diag)-190, DTC P2747 INTERMEDIATE SHAFT SPEED SENSOR "B" CIRCUIT NO SIGNAL, Diagnostic Procedure with Diagnostic Trouble Code (DTC).>
P2750	INTERMEDIATE SHAFT SPEED SENSOR "C" CIRCUIT RANGE/PERFORMANCE	Secondary speed sensor is faulty or input signal circuit is open or shorted.	<Ref. to CVT(diag)-195, DTC P2750 INTERMEDIATE SHAFT SPEED SENSOR "C" CIRCUIT RANGE/PERFORMANCE, Diagnostic Procedure with Diagnostic Trouble Code (DTC).>
P2751	INTERMEDIATE SHAFT SPEED SENSOR "C" CIRCUIT NO SIGNAL	Secondary speed sensor signal no input	<Ref. to CVT(diag)-197, DTC P2751 INTERMEDIATE SHAFT SPEED SENSOR "C" CIRCUIT NO SIGNAL, Diagnostic Procedure with Diagnostic Trouble Code (DTC).>
P2757	TORQUE CONVERTER CLUTCH PRESSURE CONTROL SOLENOID CONTROL CIRCUIT PERFORMANCE/ STUCK OFF	Lock-up duty solenoid is faulty, hydraulic circuit is stuck in low pressure side.	<Ref. to CVT(diag)-202, DTC P2757 TORQUE CONVERTER CLUTCH PRESSURE CONTROL SOLENOID CONTROL CIRCUIT PERFORMANCE/STUCK OFF, Diagnostic Procedure with Diagnostic Trouble Code (DTC).>
P2758	TORQUE CONVERTER CLUTCH PRESSURE CONTROL SOLENOID CONTROL CIRCUIT STUCK ON	Lock-up duty solenoid is faulty, hydraulic circuit is stuck in high pressure side.	<Ref. to CVT(diag)-208, DTC P2758 TORQUE CONVERTER CLUTCH PRESSURE CONTROL SOLENOID CONTROL CIRCUIT STUCK ON, Diagnostic Procedure with Diagnostic Trouble Code (DTC).>
P2763	TORQUE CONVERTER CLUTCH PRESSURE CONTROL SOLENOID CONTROL CIRCUIT HIGH	Lock-up duty solenoid is faulty or output signal circuit is open or shorted.	<Ref. to CVT(diag)-214, DTC P2763 TORQUE CONVERTER CLUTCH PRESSURE CONTROL SOLENOID CONTROL CIRCUIT HIGH, Diagnostic Procedure with Diagnostic Trouble Code (DTC).>
P2764	TORQUE CONVERTER CLUTCH PRESSURE CONTROL SOLENOID CONTROL CIRCUIT LOW	Lock-up duty solenoid is faulty or output signal circuit is shorted.	<Ref. to CVT(diag)-217, DTC P2764 TORQUE CONVERTER CLUTCH PRESSURE CONTROL SOLENOID CONTROL CIRCUIT LOW, Diagnostic Procedure with Diagnostic Trouble Code (DTC).>
P2769	TORQUE CONVERTER CLUTCH CIRCUIT LOW	Lock-up ON/OFF solenoid is faulty or output signal circuit is shorted.	<Ref. to CVT(diag)-220, DTC P2769 TORQUE CONVERTER CLUTCH CIRCUIT LOW, Diagnostic Procedure with Diagnostic Trouble Code (DTC).>
P2770	TORQUE CONVERTER CLUTCH CIRCUIT HIGH	Lock-up ON/OFF solenoid is faulty or output signal circuit is open or shorted.	<Ref. to CVT(diag)-222, DTC P2770 TORQUE CONVERTER CLUTCH CIRCUIT HIGH, Diagnostic Procedure with Diagnostic Trouble Code (DTC).>

DTC	Item	Content of diagnosis	Reference
U0073	CAN FAILURE, BUS 'OFF' DETECTION	CAN bus is shorted or communication error.	<Ref. to CVT(diag)-224, DTC U0073 CONTROL MODULE COMMUNICATION BUS OFF, Diagnostic Procedure with Diagnostic Trouble Code (DTC).>
U0100	LOST COMMUNICATION WITH ECM/PCM "A"	Detected that the engine data has not yet arrived.	<Ref. to CVT(diag)-225, DTC U0100 LOST COMMUNICATION WITH ECM/PCM "A", Diagnostic Procedure with Diagnostic Trouble Code (DTC).>
U0122	LOST COMMUNICATION WITH VEHICLE DYNAMICS CONTROL MODULE	Detected that the VDC data has not yet arrived.	<Ref. to CVT(diag)-226, DTC U0122 LOST COMMUNICATION WITH VEHICLE DYNAMICS CONTROL MODULE, Diagnostic Procedure with Diagnostic Trouble Code (DTC).>
U0140	LOST COMMUNICATION WITH BODY CONTROL MODULE	Detected that the body integrated unit data has not yet arrived.	<Ref. to CVT(diag)-227, DTC U0140 LOST COMMUNICATION WITH BODY CONTROL MODULE, Diagnostic Procedure with Diagnostic Trouble Code (DTC).>
U0155	LOST COMMUNICATION WITH INSTRUMENT PANEL CLUSTER (IPC) CONTROL MODULE	Detected that the meter data has not yet arrived.	<Ref. to CVT(diag)-227, DTC U0155 LOST COMMUNICATION WITH INSTRUMENT PANEL CLUSTER (IPC) CONTROL MODULE, Diagnostic Procedure with Diagnostic Trouble Code (DTC).>
U0164	LOST COMMUNICATION WITH HVAC CONTROL MODULE	Detected that the air conditioner data has not yet arrived.	<Ref. to CVT(diag)-228, DTC U0164 LOST COMMUNICATION WITH HVAC CONTROL MODULE, Diagnostic Procedure with Diagnostic Trouble Code (DTC).>
U0401	INVALID DATA RECEIVED FROM ECM/PCM "A"	Detected abnormality of the engine data.	<Ref. to CVT(diag)-229, DTC U0401 INVALID DATA RECEIVED FROM ECM/PCM "A", Diagnostic Procedure with Diagnostic Trouble Code (DTC).>
U0416	INVALID DATA RECEIVED FROM VEHICLE DYNAMICS CONTROL MODULE	Detected abnormality of the VDC data.	<Ref. to CVT(diag)-230, DTC U0416 INVALID DATA RECEIVED FROM VEHICLE DYNAMICS CONTROL MODULE, Diagnostic Procedure with Diagnostic Trouble Code (DTC).>
U0422	INVALID DATA RECEIVED FROM BODY CONTROL MODULE	Detected abnormality of the body integrated unit data.	<Ref. to CVT(diag)-231, DTC U0422 INVALID DATA RECEIVED FROM BODY CONTROL MODULE, Diagnostic Procedure with Diagnostic Trouble Code (DTC).>
U0423	INVALID DATA RECEIVED FROM INSTRUMENT PANEL CLUSTER CONTROL MODULE	Detected abnormality of the meter data.	<Ref. to CVT(diag)-231, DTC U0423 INVALID DATA RECEIVED FROM INSTRUMENT PANEL CLUSTER CONTROL MODULE, Diagnostic Procedure with Diagnostic Trouble Code (DTC).>
U0424	INVALID DATA RECEIVED FROM HVAC CONTROL MODULE	Detected abnormality of the air conditioner data.	<Ref. to CVT(diag)-232, DTC U0424 INVALID DATA RECEIVED FROM HVAC CONTROL MODULE, Diagnostic Procedure with Diagnostic Trouble Code (DTC).>
U1235	LOST COMMUNICATION WITH EyeSight	Detected that the EyeSight data has not yet arrived.	<Ref. to CVT(diag)-232, DTC U1235 LOST COMMUNICATION WITH EyeSight, Diagnostic Procedure with Diagnostic Trouble Code (DTC).>
U1433	INVALID DATA RECEIVED FROM EyeSight	Detected abnormality of the EyeSight data.	<Ref. to CVT(diag)-233, DTC U1433 INVALID DATA RECEIVED FROM EyeSight, Diagnostic Procedure with Diagnostic Trouble Code (DTC).>

17.Diagnostic Procedure with Diagnostic Trouble Code (DTC)

A: DTC P0500 VEHICLE SPEED SENSOR "A" CIRCUIT

DTC DETECTING CONDITION:
Immediately at fault recognition
TROUBLE SYMPTOM:
VDC does not operate.

Step		Check	Yes	No
1	**CHECK DTC.** Read the DTC of VDC system using the Subaru Select Monitor.	Is DTC displayed?	Perform the diagnosis according to DTC. <Ref. to VDC(diag)-40, List of Diagnostic Trouble Code (DTC).>	Repair the poor contact of connector and harness between VDCCM&H/U and wheel speed sensor.

1. OUTLINE OF DIAGNOSIS

- Judge the malfunction of VDC wheel speed sensor.
- Judge as NG when the wheel speed sensor normal status signal from VDC is cleared.

2. EXECUTION CONDITION

Secondary Parameters	Execution condition
12 V battery system voltage	≥ 10.9 V

3. DIAGNOSTIC METHOD

If the duration of time while the following conditions are met is longer than the time indicated, judge as NG.

Judgment Value

Malfunction Criteria	Threshold Value
Signal of malfunction from Vehicle Dynamics Control Module NOTE: The VDC controller detects malfunction if one of the speed sensors does not output a signal and the other vehicle speed sensor output signal is above 7.46 MPH.	ON

Time Needed for Diagnosis: 2.5 seconds
Malfunction Indicator Light Illumination: Illuminates as soon as a malfunction occurs.

B: DTC P0601 INTERNAL CONTROL MODULE MEMORY CHECKSUM ERROR

DTC DETECTING CONDITION:
Detected when two consecutive driving cycles with fault occur.
TROUBLE SYMPTOM:
TCM ROM malfunction

Step		Check	Yes	No
1	**CHECK DTC.** 1) Perform the Clear Memory Mode using the Subaru Select Monitor. <Ref. to CVT(diag)-26, Clear Memory Mode.> 2) Read the DTC.	Is DTC P0601 displayed?	Replace the TCM. <Ref. to CVT(TR580)-159, Transmission Control Module (TCM).> <Ref. to CVT(TR690)-142, Transmission Control Module (TCM).>	Current condition is normal. Check for interference from noise, etc.

1. OUTLINE OF DIAGNOSIS

- Judge the malfunction in ROM area of the TCM.
- Judge as NG when the consistency in the ROM area is lost.

2. EXECUTION CONDITION

Secondary Parameters	Execution condition
12 V battery system voltage	≥ 9 V

3. DIAGNOSTIC METHOD

If the duration of time while the following conditions are met is longer than the time indicated, judge as NG.

Judgment Value

Malfunction Criteria	Threshold Value
Checksum (ROM)	Error

Time Needed for Diagnosis: Immediately
Malfunction Indicator Light Illumination: Illuminates when malfunction occurs in 2 continuous driving cycles.

C: DTC P0604 INTERNAL CONTROL MODULE RANDOM ACCESS MEMORY (RAM) ERROR

DTC DETECTING CONDITION:
Detected when two consecutive driving cycles with fault occur.
TROUBLE SYMPTOM:
TCM RAM malfunction

Step		Check	Yes	No
1	**CHECK DTC.** 1) Perform the Clear Memory Mode using the Subaru Select Monitor. <Ref. to CVT(diag)-26, Clear Memory Mode.> 2) Read the DTC.	Is DTC P0604 displayed?	Replace the TCM. <Ref. to CVT(TR580)-159, Transmission Control Module (TCM).> <Ref. to CVT(TR690)-142, Transmission Control Module (TCM).>	Current condition is normal. Check for interference from noise, etc.

1. OUTLINE OF DIAGNOSIS

- Judge the malfunction in RAM area of the TCM.
- Judge as NG if an attempt to write to RAM area failed.

2. EXECUTION CONDITION

Secondary Parameters	Execution condition
12 V battery system voltage	≥ 10 V

3. DIAGNOSTIC METHOD

If the duration of time while the following conditions are met is longer than the time indicated, judge as NG.
Judgment Value

Malfunction Criteria	Threshold Value
Writing-check (RAM) NOTE: This check is carried out about the RAM only used for CAN communication.	Error

Time Needed for Diagnosis: Immediately
Malfunction Indicator Light Illumination: Illuminates when malfunction occurs in 2 continuous driving cycles.

D: DTC P062F INTERNAL CONTROL MODULE EEPROM ERROR

DTC DETECTING CONDITION:
Detected when two consecutive driving cycles with fault occur.
TROUBLE SYMPTOM:
TCM EEPROM malfunction

	Step	Check	Yes	No
1	**CHECK DTC.** 1) Perform the Clear Memory Mode using the Subaru Select Monitor. <Ref. to CVT(diag)-26, Clear Memory Mode.> 2) Read the DTC.	Is DTC P062F displayed?	Replace the TCM. <Ref. to CVT(TR580)-159, Transmission Control Module (TCM).> <Ref. to CVT(TR690)-142, Transmission Control Module (TCM).>	Current condition is normal. Check for interference from noise, etc.

1. OUTLINE OF DIAGNOSIS

Diagnosis 1
- Judge the malfunction in EEPROM area of the TCM.
- Judge as NG if an attempt to write to EEPROM area failed.

Diagnosis 2
- Judge the malfunction in EEPROM area of the TCM.
- Judge as malfunction when the consistency in the EEPROM area is lost.

2. EXECUTION CONDITION

Secondary Parameters	Execution condition
Diagnosis 1	
12 V battery system voltage	≥ 9 V
Diagnosis 2	
12 V battery system voltage	≥ 9 V

3. DIAGNOSTIC METHOD

If the duration of time while the following conditions are met is longer than the time indicated, judge as NG.

Judgment Value

Malfunction Criteria	Threshold Value
Diagnosis 1	
Writing-check (EEPROM)	Error
Diagnosis 2	
Checksum (EEPROM)	Error

Time Needed for Diagnosis: Immediately
Malfunction Indicator Light Illumination: Illuminates when malfunction occurs in 2 continuous driving cycles.

E: DTC P0705 TRANSMISSION RANGE SENSOR "A" CIRCUIT (PRNDL INPUT)

DTC DETECTING CONDITION:
Immediately at fault recognition
TROUBLE SYMPTOM:
- Shift characteristics are erroneous.
- The range position of the select lever and the position of shift indicator display do not match.

1. ENGINE TYPE FB

WIRING DIAGRAM:
CVT control system <Ref. to WI-156, ENGINE TYPE FB, WIRING DIAGRAM, CVT Control System.>

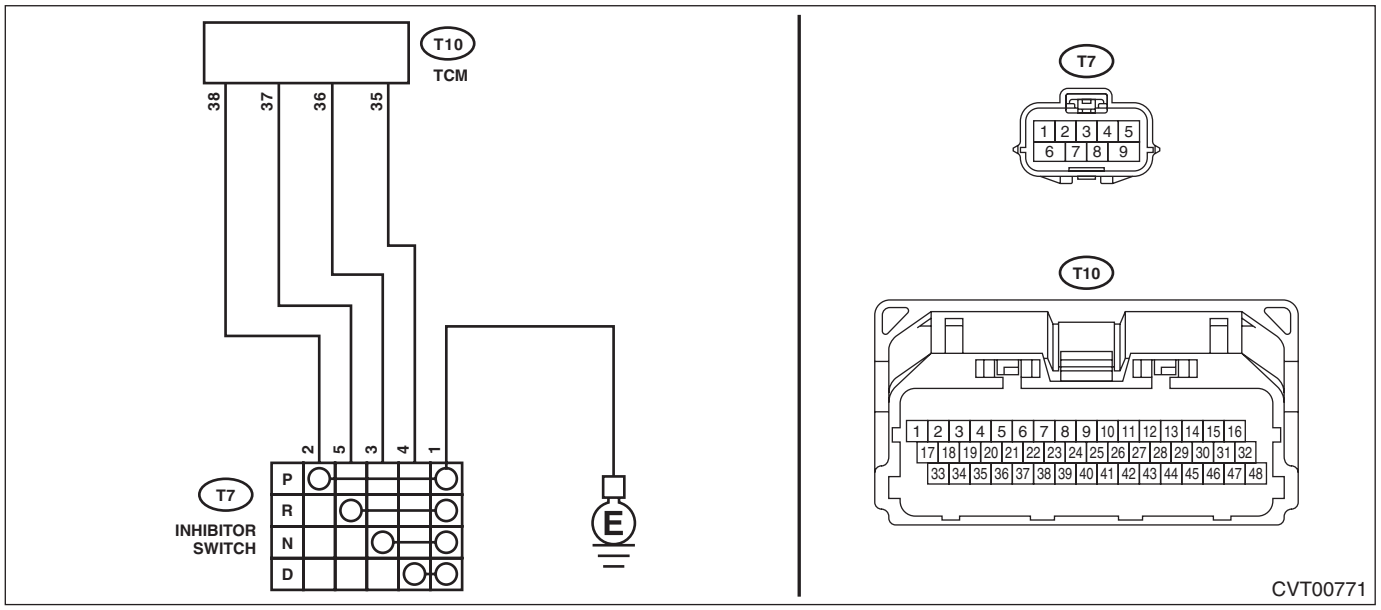

Step		Check	Yes	No
1	**CHECK INPUT SIGNAL FOR TCM.** 1) Turn the ignition switch to ON. 2) Move the select lever to each range, and read the data of «P Range», «R Range Signal», «N Range» and «D Range Signal» using the Subaru Select Monitor.	Is display “OFF” for the range other than corresponding range?	Go to step **4**.	Go to step **2**.
2	**CHECK HARNESS.** 1) Turn the ignition switch to OFF. 2) Disconnect the connector of TCM and inhibitor switch. 3) Measure the resistance between TCM connector and chassis ground. ***Connector & terminal*** ***(T10) No. 38 — Chassis ground:*** ***(T10) No. 37 — Chassis ground:*** ***(T10) No. 36 — Chassis ground:*** ***(T10) No. 35 — Chassis ground:***	Is each resistance 1 MΩ or more?	Go to step **3**.	Repair the short circuit of transmission harness.
3	**CHECK INHIBITOR SWITCH.** Move the select lever to each range, and measure the resistance between inhibitor switch terminals. ***Connector & terminal*** ***No. 2 — No. 1:*** ***No. 5 — No. 1:*** ***No. 3 — No. 1:*** ***No. 4 — No. 1:***	Is the resistance other than corresponding range 1 MΩ or more?	Go to step **4**.	Replace the inhibitor switch. <Ref. to CVT(TR580)-104, Inhibitor Switch.>

Step		Check	Yes	No
4	**CHECK FOR POOR CONTACT.**	Is there poor contact between TCM, inhibitor switch, transmission ground?	Repair the poor contact.	Replace the TCM. <Ref. to CVT(TR580)-159, Transmission Control Module (TCM).>

2. ENGINE TYPE EZ

WIRING DIAGRAM:

CVT control system <Ref. to WI-162, ENGINE TYPE EZ, WIRING DIAGRAM, CVT Control System.>

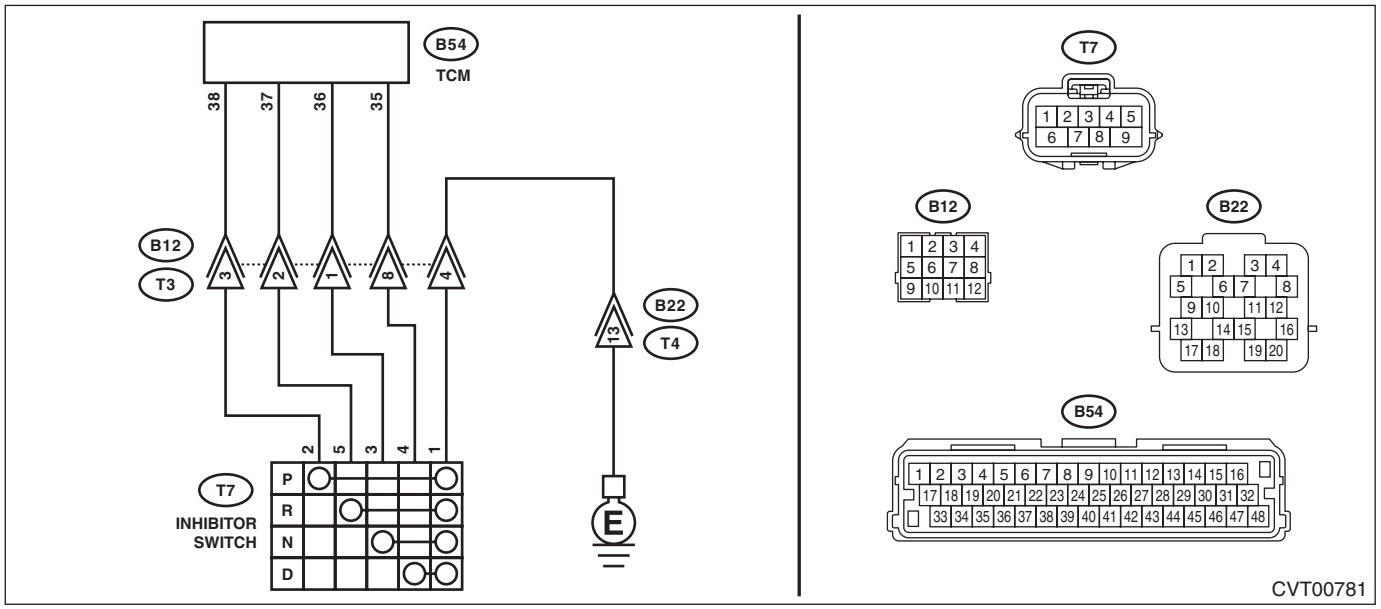

Step		Check	Yes	No
1	**CHECK INPUT SIGNAL FOR TCM.** 1) Turn the ignition switch to ON. 2) Move the select lever to each range, and read the data of «P Range», «R Range Signal», «N Range» and «D Range Signal» using the Subaru Select Monitor.	Is display “OFF” for the range other than corresponding range?	Go to step **5**.	Go to step **2**.
2	**CHECK HARNESS.** 1) Turn the ignition switch to OFF. 2) Disconnect the TCM and transmission connectors. 3) Measure the resistance between TCM connector and chassis ground. ***Connector & terminal*** ***(B54) No. 38 — Chassis ground:*** ***(B54) No. 37 — Chassis ground:*** ***(B54) No. 36 — Chassis ground:*** ***(B54) No. 35 — Chassis ground:***	Is each resistance 1 MΩ or more?	Go to step **3**.	Repair the short circuit of body harness.
3	**CHECK HARNESS.** 1) Disconnect the inhibitor switch connector. 2) Measure the resistance between transmission connector and chassis ground. ***Connector & terminal*** ***(T3) No. 3 — Chassis ground:*** ***(T3) No. 2 — Chassis ground:*** ***(T3) No. 1 — Chassis ground:*** ***(T3) No. 8 — Chassis ground:***	Is each resistance 1 MΩ or more?	Go to step **4**.	Repair the short circuit of transmission harness.

	Step	Check	Yes	No
4	**CHECK INHIBITOR SWITCH.** Move the select lever to each range, and measure the resistance between inhibitor switch terminals. ***Connector & terminal*** ***No. 2 — No. 1:*** ***No. 5 — No. 1:*** ***No. 3 — No. 1:*** ***No. 4 — No. 1:***	Is the resistance other than corresponding range 1 MΩ or more?	Go to step **5**.	Replace the inhibitor switch. <Ref. to CVT(TR690)-102, Inhibitor Switch.>
5	**CHECK FOR POOR CONTACT.**	Is there poor contact between TCM, inhibitor switch, transmission ground?	Repair the poor contact.	Replace the TCM. <Ref. to CVT(TR690)-142, Transmission Control Module (TCM).>

3. OUTLINE OF DIAGNOSIS

- Detect the malfunction of Range Switch.
- Judge as NG if more than one input of Range Switch are detected.

4. EXECUTION CONDITION

Secondary Parameters	Execution condition
12 V battery system voltage	≥ 10 V
Engine speed	≥ 500 rpm

5. DIAGNOSTIC METHOD

If the duration of time while the following conditions are met is longer than the time indicated, judge as NG.

Judgment Value

Malfunction Criteria	Threshold Value
Two or more transmission range switches ON NOTE: “Transmission range switch ON” is defined as transmission range switch input voltage < 1.7 V.	True

Time Needed for Diagnosis: 3 seconds
Malfunction Indicator Light Illumination: Illuminates as soon as a malfunction occurs.

F: DTC P0708 TRANSMISSION RANGE SENSOR "A" CIRCUIT HIGH

DTC DETECTING CONDITION:
Immediately at fault recognition
TROUBLE SYMPTOM:
- Shift characteristics are erroneous.
- The range position of the select lever and the position of shift indicator display do not match.

1. ENGINE TYPE FB

WIRING DIAGRAM:
CVT control system <Ref. to WI-156, ENGINE TYPE FB, WIRING DIAGRAM, CVT Control System.>

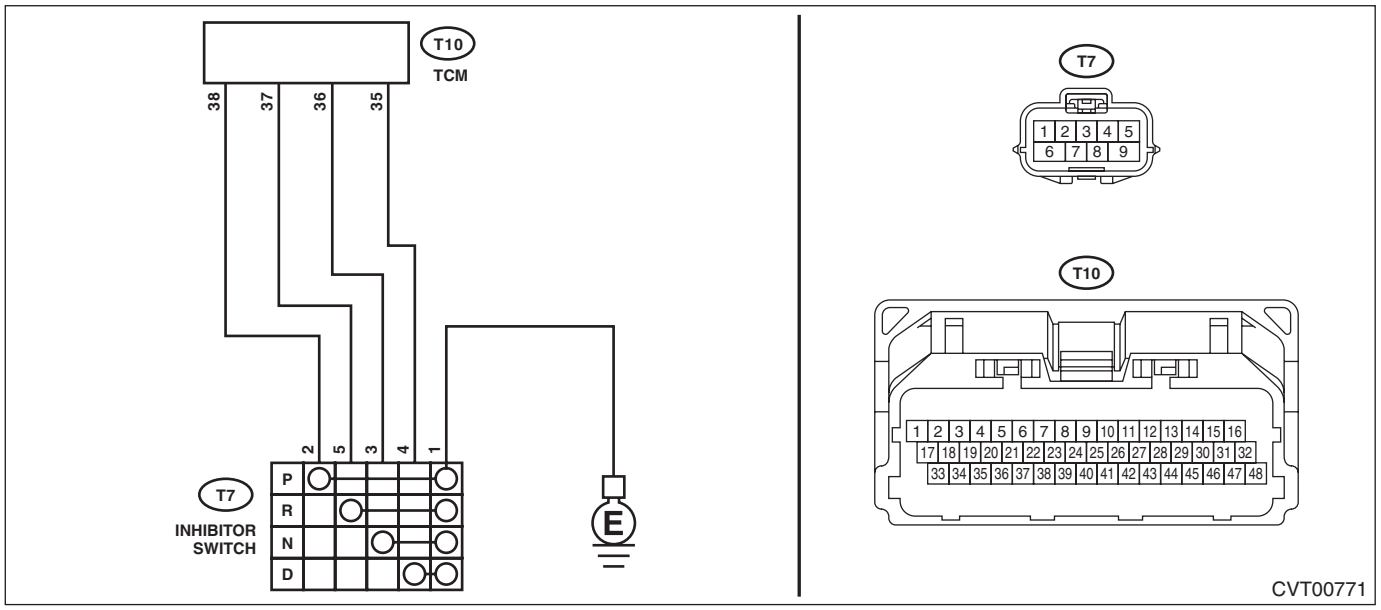

	Step	Check	Yes	No
1	**CHECK INPUT SIGNAL FOR TCM.** 1) Turn the ignition switch to ON. 2) Move the select lever to each range, and read the data of «P Range», «R Range Signal», «N Range» and «D Range Signal» using the Subaru Select Monitor.	Is the display of the corresponding range “ON”?	Go to step **6**.	Go to step **2**.
2	**CHECK HARNESS.** 1) Turn the ignition switch to OFF. 2) Disconnect the connector of TCM and inhibitor switch. 3) Measure the resistance of the harness between TCM connector and inhibitor switch connector. ***Connector & terminal*** ***(T10) No. 38 — (T7) No. 2:*** ***(T10) No. 37 — (T7) No. 5:*** ***(T10) No. 36 — (T7) No. 3:*** ***(T10) No. 35 — (T7) No. 4:***	Is each resistance less than 1 Ω?	Go to step **3**.	Repair the open circuit of transmission harness.
3	**CHECK HARNESS.** Measure the resistance of harness between inhibitor switch connector and transmission ground. ***Connector & terminal*** ***(T7) No. 1 — Transmission ground:***	Is the resistance less than 1 Ω?	Go to step **4**.	Repair the open circuit of harness.

	Step	Check	Yes	No
4	**CHECK INHIBITOR SWITCH.** Move the select lever to each range, and measure the resistance between inhibitor switch terminals. ***Connector & terminal*** ***No. 2 — No. 1:*** ***No. 5 — No. 1:*** ***No. 3 — No. 1:*** ***No. 4 — No. 1:***	Is the resistance of the corresponding range less than 1 MΩ?	Go to step **5**.	Replace the inhibitor switch. <Ref. to CVT(TR580)-104, Inhibitor Switch.>
5	**CHECK HARNESS.** 1) Turn the ignition switch to ON. 2) Measure the voltage between inhibitor switch connector and chassis ground. ***Connector & terminal*** ***(T7) No. 2 (+) — Chassis ground (–):*** ***(T7) No. 5 (+) — Chassis ground (–):*** ***(T7) No. 3 (+) — Chassis ground (–):*** ***(T7) No. 4 (+) — Chassis ground (–):***	Is each voltage less than 1 V?	Go to step **6**.	Repair the harness which outputs 1 V or more.
6	**CHECK FOR POOR CONTACT.**	Is there poor contact between TCM, inhibitor switch, transmission ground?	Repair the poor contact.	Replace the TCM. <Ref. to CVT(TR580)-159, Transmission Control Module (TCM).>

2. ENGINE TYPE EZ

WIRING DIAGRAM:

CVT control system <Ref. to WI-162, ENGINE TYPE EZ, WIRING DIAGRAM, CVT Control System.>

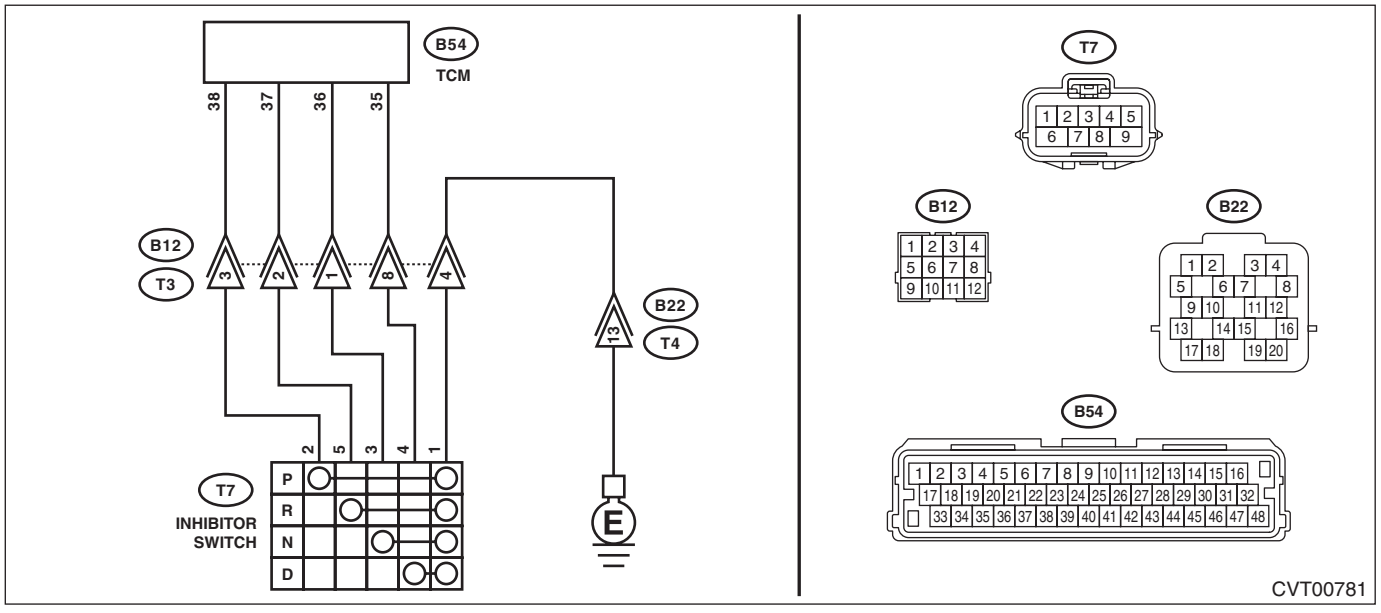

	Step	Check	Yes	No
1	**CHECK INPUT SIGNAL FOR TCM.** 1) Turn the ignition switch to ON. 2) Move the select lever to each range, and read the data of «P Range», «R Range Signal», «N Range» and «D Range Signal» using the Subaru Select Monitor.	Is the display of the corresponding range “ON”?	Go to step **7**.	Go to step **2**.

	Step	Check	Yes	No
2	**CHECK HARNESS.** 1) Turn the ignition switch to OFF. 2) Disconnect the TCM and transmission connectors. 3) Measure the resistance of harness between TCM connector and transmission connector. ***Connector & terminal*** ***(B54) No. 38 — (B12) No. 3:*** ***(B54) No. 37 — (B12) No. 2:*** ***(B54) No. 36 — (B12) No. 1:*** ***(B54) No. 35 — (B12) No. 8:***	Is each resistance less than 1 Ω?	Go to step **3**.	Repair the open circuit of body harness.
3	**CHECK HARNESS.** Measure the resistance of harness between inhibitor switch connector and transmission ground. ***Connector & terminal*** ***(T7) No. 1 — Transmission ground:***	Is the resistance less than 1 Ω?	Go to step **4**.	Repair the open circuit of harness.
4	**CHECK HARNESS.** 1) Disconnect the inhibitor switch connector. 2) Measure the resistance between transmission connector and inhibitor switch connector. ***Connector & terminal*** ***(T3) No. 3 — (T7) No. 2:*** ***(T3) No. 2 — (T7) No. 5:*** ***(T3) No. 1 — (T7) No. 3:*** ***(T3) No. 8 — (T7) No. 4:***	Is each resistance less than 1 Ω?	Go to step **5**.	Repair the open circuit of transmission harness.
5	**CHECK INHIBITOR SWITCH.** Move the select lever to each range, and measure the resistance between inhibitor switch terminals. ***Connector & terminal*** ***No. 2 — No. 1:*** ***No. 5 — No. 1:*** ***No. 3 — No. 1:*** ***No. 4 — No. 1:***	Is the resistance of the corresponding range less than 1 MΩ?	Go to step **6**.	Replace the inhibitor switch. <Ref. to CVT(TR690)-102, Inhibitor Switch.>
6	**CHECK HARNESS.** 1) Turn the ignition switch to ON. 2) Measure the voltage between each connector and chassis ground. ***Connector & terminal*** ***Transmission connector (B12 side)*** ***(B12) No. 3 (+) — Chassis ground (–):*** ***(B12) No. 2 (+) — Chassis ground (–):*** ***(B12) No. 1 (+) — Chassis ground (–):*** ***(B12) No. 8 (+) — Chassis ground (–):*** ***Transmission connector (T7 side)*** ***(T7) No. 2 (+) — Chassis ground (–):*** ***(T7) No. 5 (+) — Chassis ground (–):*** ***(T7) No. 3 (+) — Chassis ground (–):*** ***(T7) No. 4 (+) — Chassis ground (–):***	Is each voltage less than 1 V?	Go to step **7**.	Repair the harness which outputs 1 V or more.
7	**CHECK FOR POOR CONTACT.**	Is there poor contact between TCM, inhibitor switch, transmission ground?	Repair the poor contact.	Replace the TCM. <Ref. to CVT(TR690)-142, Transmission Control Module (TCM).>

3. OUTLINE OF DIAGNOSIS (ENGINE TYPE FB)

- Detect the malfunction of Range Switch.
- Judge as NG if there is no input from all Range Switches.

4. EXECUTION CONDITION (ENGINE TYPE FB)

Secondary Parameters	Execution condition
12 V battery system voltage	≥ 10 V
Vehicle speed (calculated from secondary pulley shaft speed)	≥ 6 MPH

5. DIAGNOSTIC METHOD (ENGINE TYPE FB)

If the duration of time while the following conditions are met is longer than the time indicated, judge as NG.

Judgment Value

Malfunction Criteria	Threshold Value
All transmission range switches OFF NOTE: "Transmission range switch OFF" is defined as transmission range switch input voltage ≥ 3.4 V.	True

Time Needed for Diagnosis: 3 seconds
Malfunction Indicator Light Illumination: Illuminates as soon as a malfunction occurs.

6. OUTLINE OF DIAGNOSIS (ENGINE TYPE EZ)

- Detect the malfunction of Range Switch.
- Judge as NG if there is no input from all Range Switches.

7. EXECUTION CONDITION (ENGINE TYPE EZ)

Secondary Parameters	Execution condition
12 V battery system voltage	≥ 10 V
Vehicle speed (calculated from actual output shaft speed)	≥ 6 MPH

8. DIAGNOSTIC METHOD (ENGINE TYPE EZ)

If the duration of time while the following conditions are met is longer than the time indicated, judge as NG.

Judgment Value

Malfunction Criteria	Threshold Value
All transmission range switches OFF NOTE: "Transmission range switch OFF" is defined as transmission range switch input voltage ≥ 3.4 V.	True

Time Needed for Diagnosis: 3 seconds
Malfunction Indicator Light Illumination: Illuminates as soon as a malfunction occurs.

G: DTC P0711 TRANSMISSION FLUID TEMPERATURE SENSOR "A" CIRCUIT RANGE/PERFORMANCE

DTC DETECTING CONDITION:
Detected when two consecutive driving cycles with fault occur.
TROUBLE SYMPTOM:
- Excessive shift shock
- Shift characteristics malfunction

NOTE:
For the diagnostic procedure, perform the diagnosis according to DTC P0712 and P0713. <Ref. to CVT(diag)-62, DTC P0712 TRANSMISSION FLUID TEMPERATURE SENSOR "A" CIRCUIT LOW, Diagnostic Procedure with Diagnostic Trouble Code (DTC).> <Ref. to CVT(diag)-65, DTC P0713 TRANSMISSION FLUID TEMPERATURE SENSOR "A" CIRCUIT HIGH, Diagnostic Procedure with Diagnostic Trouble Code (DTC).>

1. OUTLINE OF DIAGNOSIS (ENGINE TYPE FB)

Diagnosis 1
- Judge the malfunction of oil temperature sensor characteristics (stuck to low temperature side).
- Judge as NG if the amount of oil temperature change since ignition ON is equal to or below the predetermined value.

Diagnosis 2
- Judge the malfunction of oil temperature sensor characteristics (stuck to high temperature side).
- Judge as NG when the difference of engine coolant temperature and CVT oil temperature exceeds the predetermined value both when starting engine and when driving.

2. EXECUTION CONDITION (ENGINE TYPE FB)

Secondary Parameters	Execution condition
Diagnosis 1	
12 V battery system voltage	≥ 10 V
Transmission range	Drive
Vehicle speed (calculated from secondary pulley shaft speed)	≥ 21.9 MPH
Diagnosis 2	
12 V battery system voltage	≥ 10 V
Engine coolant temperature at the end of the previous drive cycle – Engine coolant temperature at engine start	≥ 40 degC

3. DIAGNOSTIC METHOD (ENGINE TYPE FB)

If the duration of time while the following conditions are met is longer than the time indicated, judge as NG.

Judgment Value

Malfunction Criteria	Threshold Value
Diagnosis 1	
Absolute change of measured Transmission fluid temperature sensor input voltage	< 0.049 V
Transmission fluid temperature	< 20 degC
Diagnosis 2	
Transmission fluid temperature – Engine coolant temperature at engine start	> 46 degC

Time Needed for Diagnosis:
- **Diagnosis 1:** 600 s
- **Diagnosis 2:** 300 s

Malfunction Indicator Light Illumination: Illuminates when malfunction occurs in 2 continuous driving cycles.

4. OUTLINE OF DIAGNOSIS (ENGINE TYPE EZ)

Diagnosis 1
- Judge the malfunction of oil temperature sensor characteristics (stuck to low temperature side).
- Judge as NG if the amount of oil temperature change since ignition ON is equal to or below the predetermined value.

Diagnosis 2
- Judge the malfunction of oil temperature sensor characteristics (stuck to high temperature side).
- Judge as NG when the difference of engine coolant temperature and CVT oil temperature exceeds the predetermined value both when starting engine and when driving.

5. EXECUTION CONDITION (ENGINE TYPE EZ)

Secondary Parameters	Execution condition
Diagnosis 1	
12 V battery system voltage	≥ 10 V
Transmission range	Drive
Vehicle speed (calculated from actual output shaft speed)	≥ 21.9 MPH
Diagnosis 2	
12 V battery system voltage	≥ 10 V
Engine coolant temperature at the end of the previous drive cycle – Engine coolant temperature at engine start	≥ 40 degC

6. DIAGNOSTIC METHOD (ENGINE TYPE EZ)

If the duration of time while the following conditions are met is longer than the time indicated, judge as NG.

Judgment Value

Malfunction Criteria	Threshold Value
Diagnosis 1	
Absolute change of measured Transmission fluid temperature sensor input voltage	< 0.049 V
Transmission fluid temperature	< 20 degC
Diagnosis 2	
Transmission fluid temperature – Engine coolant temperature at engine start	> 46 degC

Time Needed for Diagnosis:
- **Diagnosis 1:** 600 s
- **Diagnosis 2:** 300 s

Malfunction Indicator Light Illumination: Illuminates when malfunction occurs in 2 continuous driving cycles.

H: DTC P0712 TRANSMISSION FLUID TEMPERATURE SENSOR "A" CIRCUIT LOW

DTC DETECTING CONDITION:
Immediately at fault recognition
TROUBLE SYMPTOM:
- Excessive shift shock
- Shift characteristics malfunction

1. ENGINE TYPE FB

WIRING DIAGRAM:
CVT control system <Ref. to WI-156, ENGINE TYPE FB, WIRING DIAGRAM, CVT Control System.>

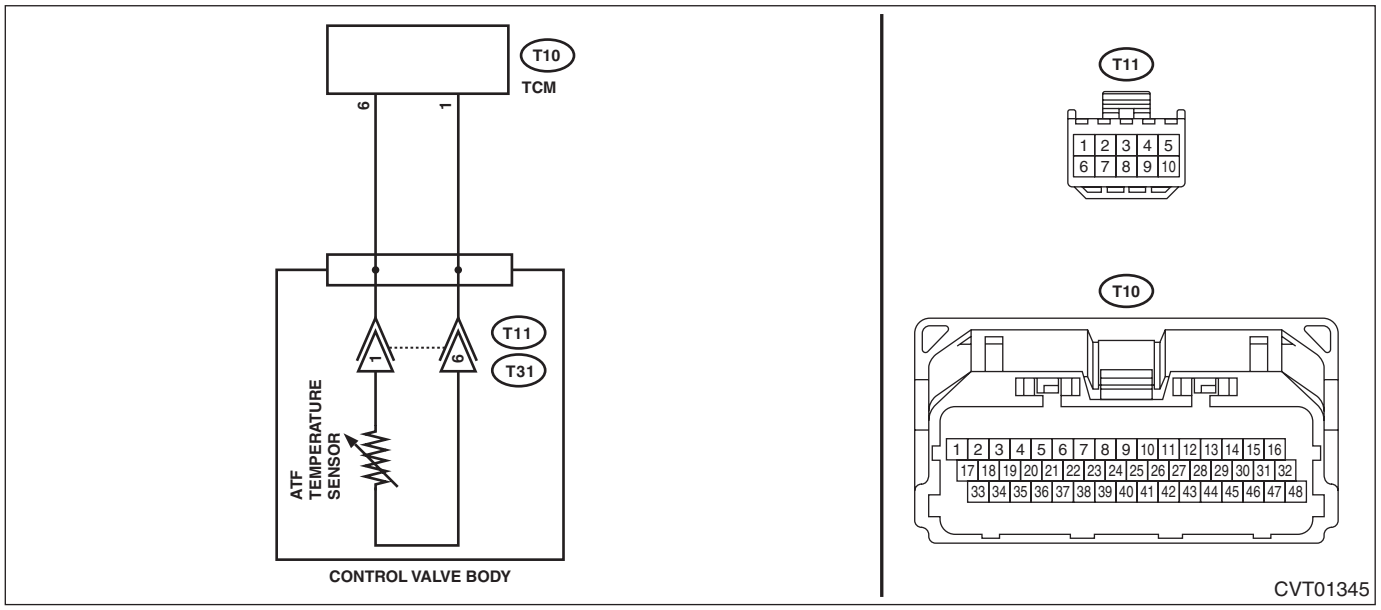

	Step	Check	Yes	No
1	**CHECK HARNESS.** 1) Turn the ignition switch to OFF. 2) Disconnect the TCM connector. 3) Measure the resistance of harness between TCM connector and chassis ground. ***Connector & terminal*** ***(T10) No. 1 — Chassis ground:*** ***(T10) No. 6 — Chassis ground:***	Is the resistance 1 MΩ or more?	Go to step **3**.	Go to step **2**.
2	**CHECK HARNESS INSIDE TRANSMISSION.** **CAUTION:** **Start work after ATF cools down.** 1) Remove the transmission valve cover. 2) Check for the harness pinch, damage.	Is there any fault in the harness?	Replace the transmission harness.	Go to step **3**.
3	**CHECK ATF TEMPERATURE SENSOR.** Measure the resistance between TCM connectors. ***Connector & terminal*** ***(T10) No. 1 — No. 6:*** NOTE: Perform the measurements using multiple oil temperatures.	Is resistance as follows? Fluid temperature 0°C → Approx. 6.0 kΩ Fluid temperature 20°C → Approx. 2.5 kΩ Fluid temperature 80°C → Approx. 330 Ω	Replace the TCM. <Ref. to CVT(TR580)-159, Transmission Control Module (TCM).>	Replace the control valve body. <Ref. to CVT(TR580)-133, Control Valve Body.>

2. ENGINE TYPE EZ

WIRING DIAGRAM:

CVT control system <Ref. to WI-162, ENGINE TYPE EZ, WIRING DIAGRAM, CVT Control System.>

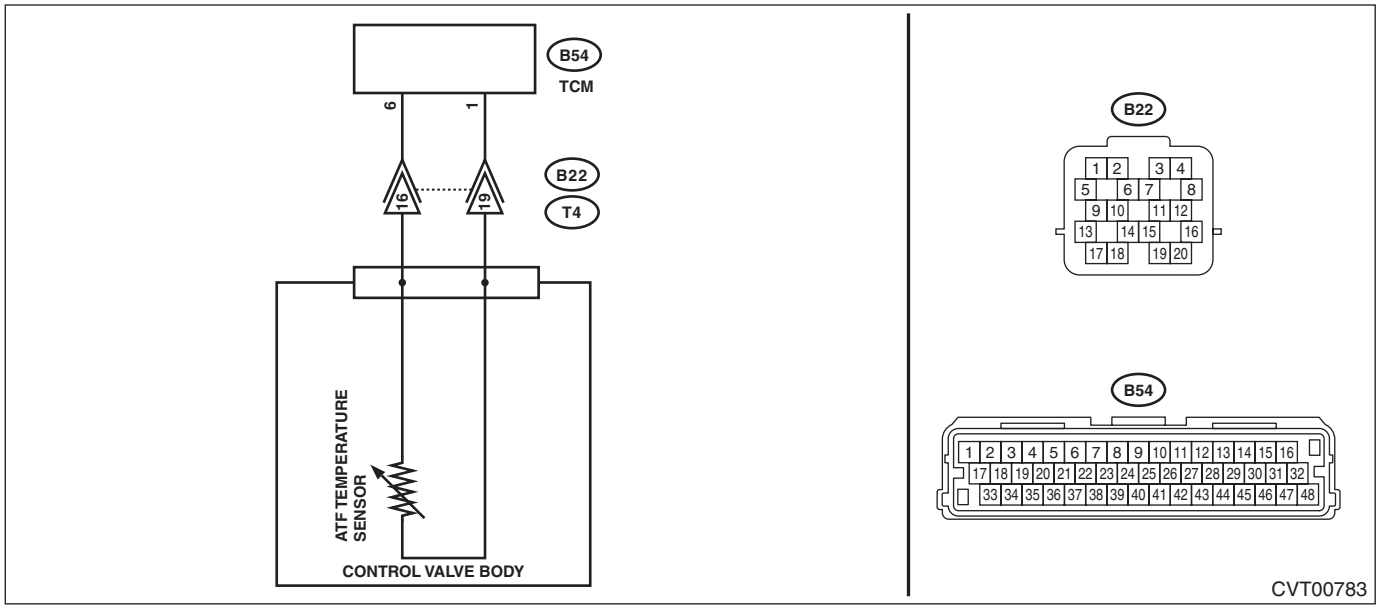

	Step	Check	Yes	No
1	**CHECK HARNESS.** 1) Turn the ignition switch to OFF. 2) Disconnect the TCM connector. 3) Measure the resistance of harness between TCM connector and chassis ground. ***Connector & terminal*** ***(B54) No. 1 — Chassis ground:*** ***(B54) No. 6 — Chassis ground:***	Is the resistance 1 MΩ or more?	Go to step **4**.	Go to step **2**.
2	**CHECK HARNESS.** 1) Disconnect the transmission connector. 2) Measure the resistance between transmission connector and transmission body. ***Connector & terminal*** ***(T4) No. 16 — Transmission body:*** ***(T4) No. 19 — Transmission body:***	Is the resistance 1 MΩ or more?	Repair the short circuit of body harness.	Go to step **3**.
3	**CHECK HARNESS INSIDE TRANSMISSION.** **CAUTION:** **Start work after ATF cools down.** 1) Remove the transmission oil pan. 2) Check for the harness pinch, damage.	Is there any fault in the harness?	Replace the transmission harness.	Go to step **4**.
4	**CHECK ATF TEMPERATURE SENSOR.** Measure the resistance between transmission connector terminals. ***Connector & terminal*** ***(T4) No. 16 — No. 19:*** NOTE: Perform the measurements using multiple oil temperatures.	Is resistance as follows? Fluid temperature 0°C → Approx. 6.2 kΩ Fluid temperature 20°C → Approx. 2.6 kΩ Fluid temperature 80°C → Approx. 370 Ω	Replace the TCM. <Ref. to CVT(TR690)-142, Transmission Control Module (TCM).>	Replace the control valve body. <Ref. to CVT(TR690)-124, Control Valve Body.>

3. OUTLINE OF DIAGNOSIS (ENGINE TYPE FB)

- Detect the ground short circuit of oil temperature sensor.
- Judge as NG if the voltage detected by the oil temperature sensor is lower than the predetermined value.

4. EXECUTION CONDITION (ENGINE TYPE FB)

Secondary Parameters	Execution condition
12 V battery system voltage	≥ 9 V

5. DIAGNOSTIC METHOD (ENGINE TYPE FB)

If the duration of time while the following conditions are met is longer than the time indicated, judge as NG.

Judgment Value

Malfunction Criteria	Threshold Value
Measured Transmission fluid temperature sensor input voltage (Transmission fluid temperature)	< 0.117 V (> 146 degC)

Time Needed for Diagnosis: 1 second
Malfunction Indicator Light Illumination: Illuminates as soon as a malfunction occurs.

6. OUTLINE OF DIAGNOSIS (ENGINE TYPE EZ)

- Detect the ground short circuit of oil temperature sensor.
- Judge as NG if the voltage detected by the oil temperature sensor is lower than the predetermined value.

7. EXECUTION CONDITION (ENGINE TYPE EZ)

Secondary Parameters	Execution condition
12 V battery system voltage	≥ 9 V

8. DIAGNOSTIC METHOD (ENGINE TYPE EZ)

If the duration of time while the following conditions are met is longer than the time indicated, judge as NG.

Judgment Value

Malfunction Criteria	Threshold Value
Measured Transmission fluid temperature sensor input voltage (Transmission fluid temperature)	< 0.132 V (> 150 degC)

Time Needed for Diagnosis: 1 second
Malfunction Indicator Light Illumination: Illuminates as soon as a malfunction occurs.

I: DTC P0713 TRANSMISSION FLUID TEMPERATURE SENSOR "A" CIRCUIT HIGH

DTC DETECTING CONDITION:
Immediately at fault recognition
TROUBLE SYMPTOM:
- Excessive shift shock
- Shift characteristics malfunction

1. ENGINE TYPE FB

WIRING DIAGRAM:
CVT control system <Ref. to WI-156, ENGINE TYPE FB, WIRING DIAGRAM, CVT Control System.>

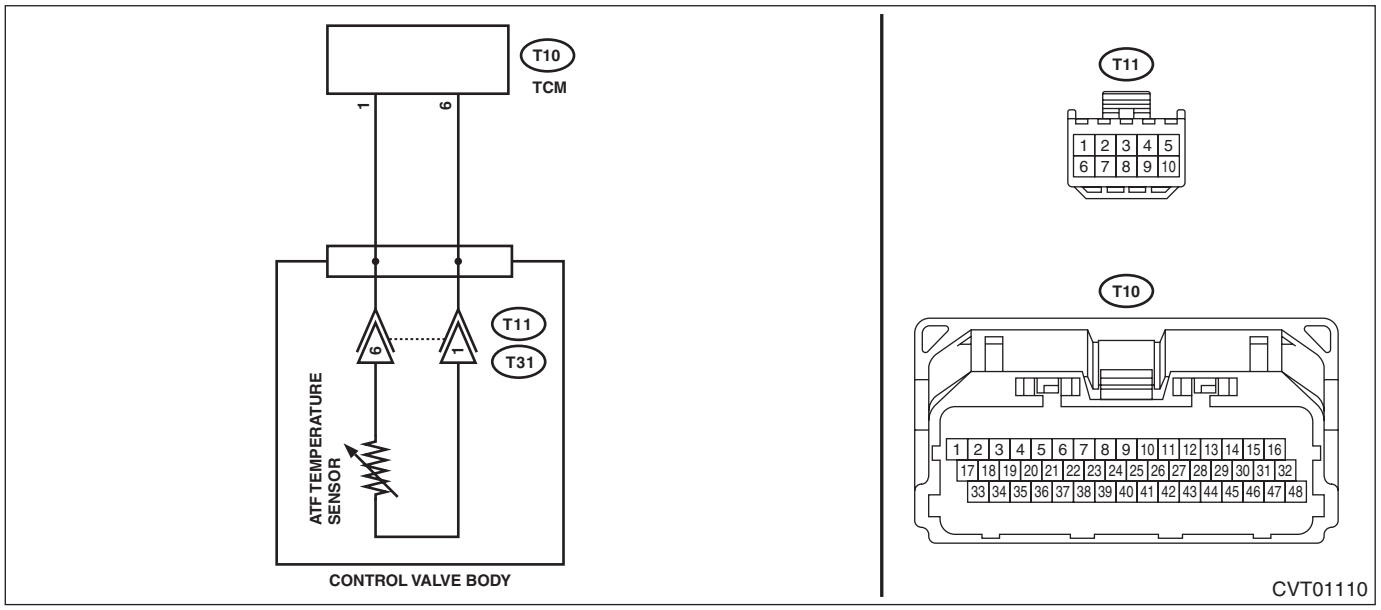

	Step	Check	Yes	No
1	**CHECK HARNESS.** 1) Turn the ignition switch to ON. 2) Measure the voltage between TCM connectors. ***Connector & terminal*** ***(T10) No. 6 (+) — (T10) No. 1 (–):***	Is the voltage 5 V or more?	Repair the short circuit of harness.	Go to step **2**.
2	**CHECK ATF TEMPERATURE SENSOR.** 1) Turn the ignition switch to OFF. 2) Disconnect the TCM connector. 3) Measure the resistance between TCM connector terminals. ***Connector & terminal*** ***(T10) No. 1 — No. 6:***	Is the resistance 1 MΩ or more?	Repair the open circuit of transmission harness.	Go to step **3**.
3	**CHECK ATF TEMPERATURE SENSOR.** 1) Connect the connector to TCM. 2) Start the engine. 3) Warm up until the ATF temperature exceeds 50°C (122°F). 4) Turn the ignition switch to OFF. 5) Disconnect the TCM connector. 6) Measure the resistance between TCM connector terminals. ***Connector & terminal*** ***(T10) No. 1 — No. 6:***	Is the resistance 650 — 990 Ω?	Go to step **4**.	Go to step **6**.

	Step	Check	Yes	No
4	**CHECK ATF TEMPERATURE SENSOR.** Measure the resistance between TCM connector terminals. ***Connector & terminal*** ***(T10) No. 1 — No. 6:***	Does the resistance value increase gradually while the ATF temperature decreases?	Go to step **5**.	Replace the control valve body. <Ref. to CVT(TR580)-133, Control Valve Body.>
5	**CHECK INPUT SIGNAL FOR TCM.** 1) Connect the connector to TCM. 2) Turn the ignition switch to ON. (Do not start engine.) 3) Read the data of «ATF Temp.» using the Subaru Select Monitor.	Does the ATF temperature gradually decrease?	Check for poor contact of the ATF temperature sensor and TCM connector harness, and repair the defective part.	Go to step **6**.
6	**CHECK FOR POOR CONTACT.**	Is there poor contact of ATF temperature sensor circuit?	Repair the poor contact.	Replace the TCM. <Ref. to CVT(TR580)-159, Transmission Control Module (TCM).>

2. ENGINE TYPE EZ

WIRING DIAGRAM:

CVT control system <Ref. to WI-162, ENGINE TYPE EZ, WIRING DIAGRAM, CVT Control System.>

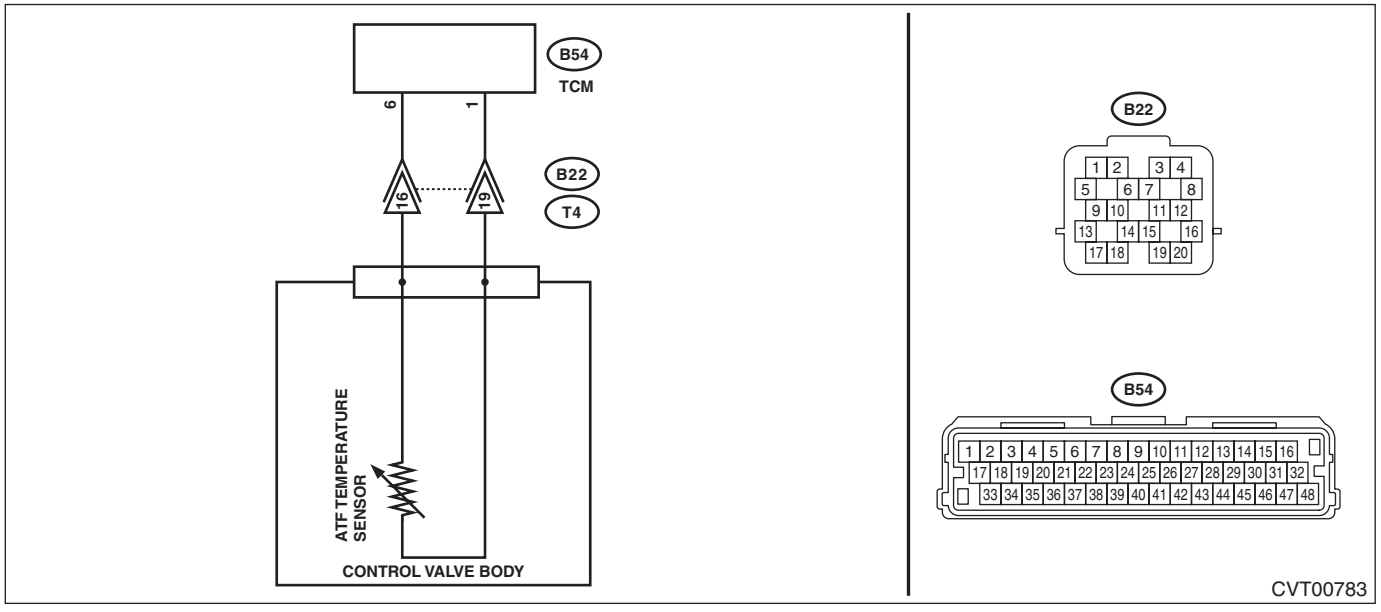

	Step	Check	Yes	No
1	**CHECK HARNESS.** 1) Turn the ignition switch to ON. 2) Measure the voltage between TCM connectors. ***Connector & terminal*** ***(B54) No. 6 (+) — (B54) No. 1 (–):***	Is the voltage 5 V or more?	Repair the short circuit of harness.	Go to step **2**.

	Step	Check	Yes	No
2	**CHECK HARNESS.** 1) Turn the ignition switch to OFF. 2) Disconnect the TCM and transmission connectors. 3) Measure the resistance between TCM connector and transmission connectors. ***Connector & terminal*** ***(B54) No. 6 — (B22) No. 16:*** ***(B54) No. 1 — (B22) No. 19:***	Is the resistance less than 1 Ω?	Go to step **3**.	Repair the open circuit of body harness.
3	**CHECK ATF TEMPERATURE SENSOR.** Measure the resistance between transmission connector terminals. ***Connector & terminal*** ***(T4) No. 16 — No. 19:***	Is the resistance 1 MΩ or more?	Repair the open circuit of transmission harness.	Go to step **4**.
4	**CHECK ATF TEMPERATURE SENSOR.** 1) Connect the connectors to TCM and transmission. 2) Start the engine. 3) Warm up until the ATF temperature exceeds 50°C (122°F). 4) Turn the ignition switch to OFF. 5) Disconnect the transmission connector. 6) Measure the resistance between transmission connector terminals. ***Connector & terminal*** ***(T4) No. 16 — No. 19:***	Is the resistance 730 — 1120 Ω?	Go to step **5**.	Go to step **7**.
5	**CHECK ATF TEMPERATURE SENSOR.** Measure the resistance between transmission connector terminals. ***Connector & terminal*** ***(T4) No. 16 — No. 19:***	Does the resistance value increase gradually while the ATF temperature decreases?	Go to step **6**.	Replace the control valve body. <Ref. to CVT(TR690)-124, Control Valve Body.>
6	**CHECK INPUT SIGNAL FOR TCM.** 1) Connect the connector to transmission. 2) Turn the ignition switch to ON. (Do not start engine.) 3) Read the data of «ATF Temp.» using the Subaru Select Monitor.	Does the ATF temperature gradually decrease?	Check for poor contact of the ATF temperature sensor and transmission connector harness, and repair the defective part.	Go to step **7**.
7	**CHECK FOR POOR CONTACT.**	Is there poor contact of ATF temperature sensor circuit?	Repair the poor contact.	Replace the TCM. <Ref. to CVT(TR690)-142, Transmission Control Module (TCM).>

3. OUTLINE OF DIAGNOSIS (ENGINE TYPE FB)

- Detect short circuit to power supply or open circuit of the oil temperature sensor 5 V system.
- Judge as NG if the voltage detected by the oil temperature sensor is higher than the predetermined value.

4. EXECUTION CONDITION (ENGINE TYPE FB)

Secondary Parameters	Execution condition
12 V battery system voltage	≥ 9 V
Vehicle speed (calculated from secondary pulley speed)	≥ 6.3 MPH
Above condition satisfied for	≥ 50 s

5. DIAGNOSTIC METHOD (ENGINE TYPE FB)

If the duration of time while the following conditions are met is longer than the time indicated, judge as NG.

Judgment Value

Malfunction Criteria	Threshold Value
Measured Transmission fluid temperature sensor input voltage	> 4.507 V
(Transmission fluid temperature)	(< – 52 degC)

Time Needed for Diagnosis: 1 second
Malfunction Indicator Light Illumination: Illuminates as soon as a malfunction occurs.

6. OUTLINE OF DIAGNOSIS (ENGINE TYPE EZ)

- Detect short circuit to power supply or open circuit of the oil temperature sensor 5 V system.
- Judge as NG if the voltage detected by the oil temperature sensor is higher than the predetermined value.

7. EXECUTION CONDITION (ENGINE TYPE EZ)

Secondary Parameters	Execution condition
12 V battery system voltage	≥ 9 V
Vehicle speed (calculated from output shaft speed)	≥ 6.3 MPH
Above condition satisfied for	≥ 50 s

8. DIAGNOSTIC METHOD (ENGINE TYPE EZ)

If the duration of time while the following conditions are met is longer than the time indicated, judge as NG.

Judgment Value

Malfunction Criteria	Threshold Value
Measured Transmission fluid temperature sensor input voltage	> 4.502 V
(Transmission fluid temperature)	(< – 53 degC)

Time Needed for Diagnosis: 1 second
Malfunction Indicator Light Illumination: Illuminates as soon as a malfunction occurs.

J: DTC P0716 INPUT/TURBINE SHAFT SPEED SENSOR "A" CIRCUIT RANGE/ PERFORMANCE

DTC DETECTING CONDITION:
Immediately at fault recognition
TROUBLE SYMPTOM:
- No lock-up occurs.
- Shock occurs when selecting shift position.
- Shift control malfunction

Step		Check	Yes	No
1	**CHECK DTC.** Read the DTC using Subaru Select Monitor.	Besides DTC P0716, is DTC U0122 or U0416 displayed?	Perform the diagnosis according to DTCs other than P0716.	Perform the diagnosis according to DTC P0717. <Ref. to CVT(diag)-70, DTC P0717 INPUT/TURBINE SHAFT SPEED SENSOR "A" CIRCUIT NO SIGNAL, Diagnostic Procedure with Diagnostic Trouble Code (DTC).>

1. OUTLINE OF DIAGNOSIS

- Detect the malfunction of turbine speed sensor signal characteristics.
- Judge as NG if the turbine speed against the engine speed is outside the possible range considering the hardware capabilities.

2. EXECUTION CONDITION

Secondary Parameters	Execution condition
12 V battery system voltage	≥ 10 V
Engine speed	≥ 500 rpm

3. DIAGNOSTIC METHOD

If the duration of time while the following conditions are met is longer than the time indicated, judge as NG.
Judgment Value

Malfunction Criteria	Threshold Value
Measured turbine shaft speed	< Table 1 rpm

Table 1

Engine speed (rpm)	3700	3727	3755	3782	3856	4019	4213	4456
Measured turbine shaft speed (rpm)	0	500	1000	1500	2000	2500	3000	3500

Engine speed (rpm)	4786	5213	5651	6101	6569	7044	7520
Measured turbine shaft speed (rpm)	4000	4500	5000	5500	6000	6500	7000

Time Needed for Diagnosis: 10 seconds
Malfunction Indicator Light Illumination: Illuminates as soon as a malfunction occurs.

K: DTC P0717 INPUT/TURBINE SHAFT SPEED SENSOR "A" CIRCUIT NO SIGNAL

DTC DETECTING CONDITION:
Immediately at fault recognition
TROUBLE SYMPTOM:
- Standing start problems
- Shock occurs when engaging the lockup clutch.
- Shock occurs when selecting shift position.

WIRING DIAGRAM:
CVT control system <Ref. to WI-156, ENGINE TYPE FB, WIRING DIAGRAM, CVT Control System.>

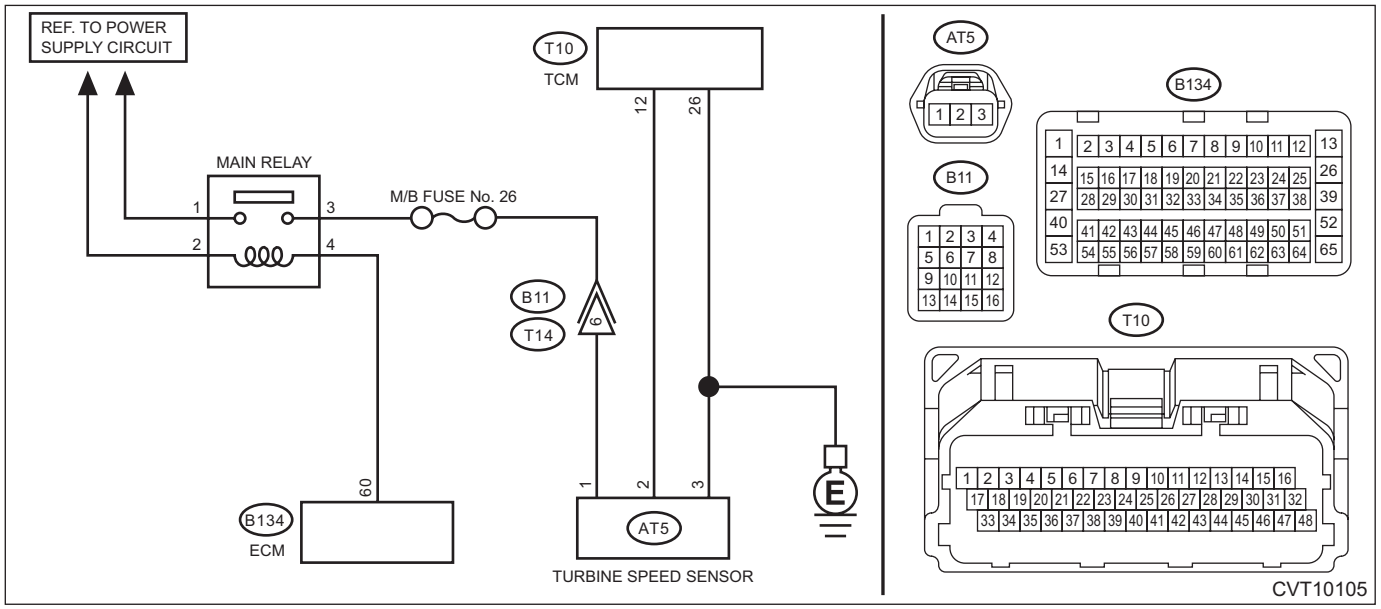

Step		Check	Yes	No
1	**CHECK FUSE.** 1) Turn the ignition switch to OFF. 2) Check the M/B fuse No. 26.	Is the fuse OK?	Go to step **2**.	Replace the fuse. If the fuse blows out easily, repair the short circuit of harness.
2	**CHECK ECM CONNECTOR.** Check the connecting condition of ECM connector.	Is the ECM connector correctly connected?	Go to step **3**.	Connect the ECM connector correctly.
3	**CHECK HARNESS BETWEEN TRANSMISSION CONNECTOR AND MAIN RELAY CONNECTOR.** 1) Turn the ignition switch to OFF. 2) Measure the voltage between transmission connector and engine ground. ***Connector & terminal*** ***(B11) No. 6 (+) — Engine ground (–):***	Is the voltage 10 V or more?	Repair the harness and connector. NOTE: In this case, repair the following item: • Short circuit to power supply of harness between transmission connector and main relay connector • Defective main relay	Go to step **4**.

	Step	Check	Yes	No
4	**CHECK HARNESS BETWEEN ECM AND MAIN RELAY CONNECTOR.** 1) Turn the ignition switch to OFF. 2) Remove the main relay. 3) Disconnect the connector from ECM. 4) Measure the resistance between the ECM connector and engine ground. ***Connector & terminal*** ***(B134) No. 60 — Engine ground:***	Is the resistance 1 MΩ or more?	Go to step **5**.	Repair the short circuit to ground in harness between ECM connector and main relay connector.
5	**CHECK HARNESS.** 1) Turn the ignition switch to OFF. 2) Disconnect the TCM and turbine speed sensor connector. 3) Measure the resistance between TCM connector and turbine speed sensor connector. ***Connector & terminal*** ***(T10) No. 12 — (AT5) No. 2:*** ***(T10) No. 26 — (AT5) No. 3:***	Is the resistance less than 1 Ω?	Go to step **6**.	Repair the open circuit of harness.
6	**CHECK HARNESS.** Measure the resistance between TCM connector and chassis ground. ***Connector & terminal*** ***(T10) No. 12 — Chassis ground:***	Is the resistance 1 MΩ or more?	Go to step **7**.	Repair the short circuit of harness.
7	**CHECK TRANSMISSION HARNESS.** 1) Install the fuse. 2) Connect the TCM connector. 3) Disconnect the transmission connector. 4) Turn the ignition switch to ON. 5) Measure the voltage between transmission connector terminals. ***Connector & terminal*** ***(B11) No. 6 (+) — Chassis ground (–):***	Is the voltage 10 — 13 V?	Go to step **8**.	Repair the open circuit of harness or poor contact of connector.
8	**CHECK INPUT SIGNAL FOR TCM.** 1) Turn the ignition switch to OFF. 2) Connect all connectors. 3) Lift up the vehicle. 4) Start the engine. 5) Read the data of «Turbine Revolution Speed» using the Subaru Select Monitor.	Does the value of «Turbine Revolution Speed» change according to the engine speed?	Current condition is normal. Repair the poor contacts of harnesses of turbine speed sensor and transmission connector.	Go to step **9**.
9	**CHECK TRANSMISSION HARNESS.** 1) Turn the ignition switch to OFF. 2) Disconnect the transmission connector. 3) Disconnect the turbine speed sensor connector. 4) Measure the resistance between transmission connector and turbine speed sensor connector. ***Connector & terminal*** ***(T14) No. 6 — (AT5) No. 1:***	Is the resistance less than 1 Ω?	Go to step **10**.	Replace the transmission harness.
10	**CHECK TURBINE SPEED SENSOR.** 1) Turn the ignition switch to OFF. 2) Replace the turbine speed sensor. <Ref. to CVT(TR580)-113, Turbine Speed Sensor.> 3) Perform the Clear Memory Mode. <Ref. to CVT(diag)-26, Clear Memory Mode.> 4) Read the DTC.	Is DTC P0717 displayed?	Go to step **11**.	The original turbine speed sensor is defective.

Step		Check	Yes	No
11	**CHECK MAIN RELAY.** 1) Turn the ignition switch to OFF. 2) Replace the main relay. 3) Perform the Clear Memory Mode. <Ref. to CVT(diag)-26, Clear Memory Mode.> 4) Read the DTC.	Is DTC P0717 displayed?	Replace the TCM. <Ref. to CVT(TR580)-159, Transmission Control Module (TCM).>	The original main relay is defective.

1. OUTLINE OF DIAGNOSIS

- Detect the no input signal from the turbine speed sensor.
- Judge as NG if there is no input signal from the turbine speed sensor, while the primary speed sensor on the same shaft has the input signal with the forward/reverse clutch engaged.

2. EXECUTION CONDITION

Secondary Parameters	Execution condition
12 V battery system voltage	≥ 10 V
Engine speed	≥ 500 rpm
Transmission range	Drive or Reverse
Measured primary pulley shaft speed	≥ 500 rpm

3. DIAGNOSTIC METHOD

If the duration of time while the following conditions are met is longer than the time indicated, judge as NG.

Judgment Value

Malfunction Criteria	Threshold Value
Measured turbine shaft speed	0 rpm

Time Needed for Diagnosis: 0.5 seconds
Malfunction Indicator Light Illumination: Illuminates as soon as a malfunction occurs.

L: DTC P0719 BRAKE SWITCH "B" CIRCUIT LOW

DTC DETECTING CONDITION:
Immediately at fault recognition
TROUBLE SYMPTOM:
Gear is not shifted down when climbing a hill or driving down a hill.
WIRING DIAGRAM:
- ENGINE TYPE FB

Stop light system <Ref. to WI-344, Stop Light System.>

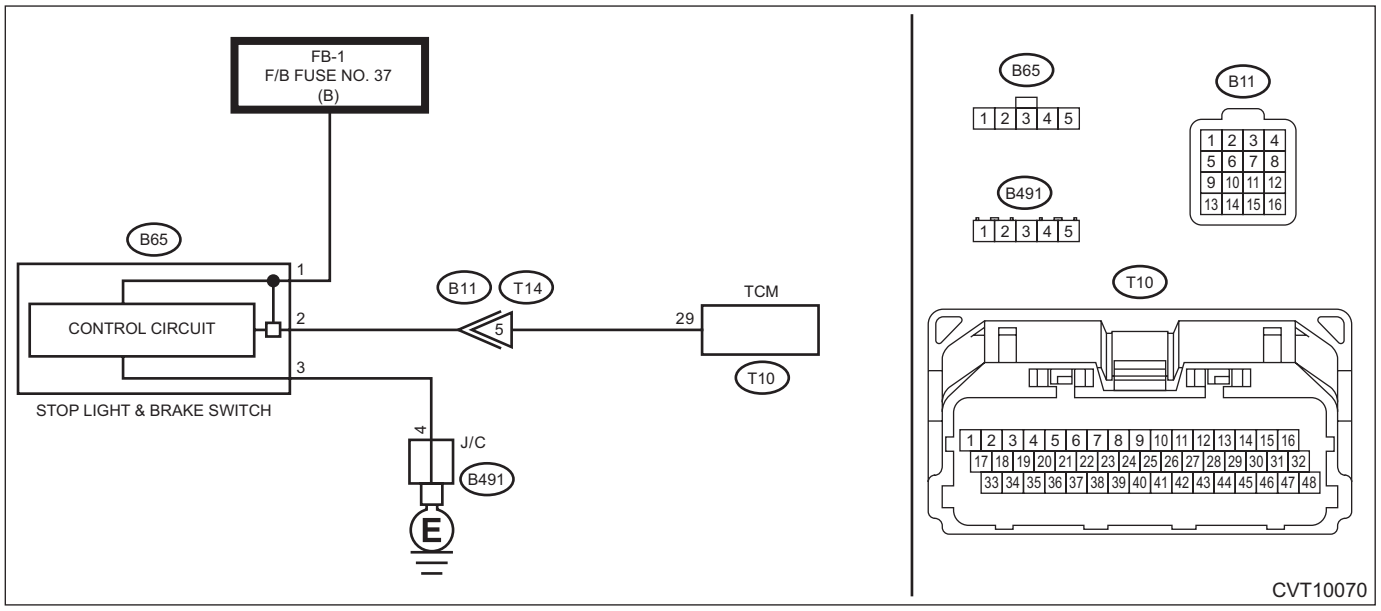

- ENGINE TYPE EZ

Stop light system <Ref. to WI-344, Stop Light System.>

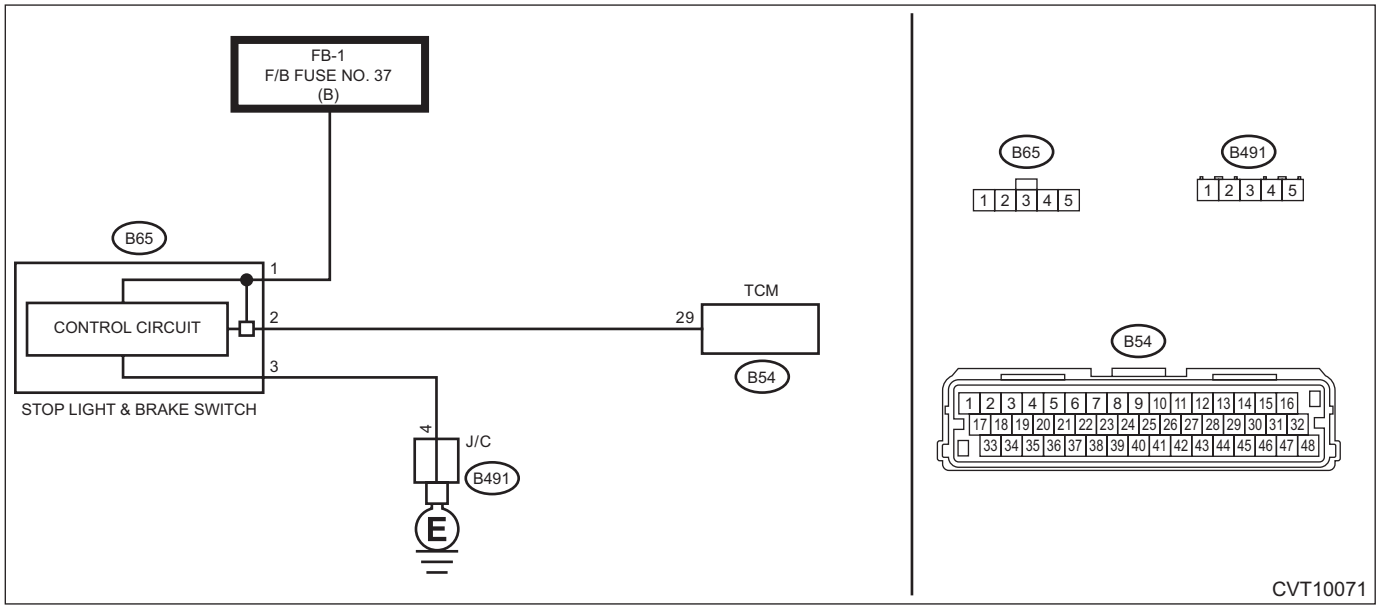

	Step	Check	Yes	No
1	**CHECK FUSE (NO. 37).** 1) Turn the ignition switch to OFF. 2) Remove the fuse (No. 37).	Is the fuse (No. 37) blown out?	Replace the fuse (No. 37). If the new fuse (No. 37) has blown out easily, repair the short circuit of harness between fuse (No. 37) and stop light switch.	Go to step **2**.
2	**CHECK HARNESS.** 1) Turn the ignition switch to OFF. 2) Disconnect the TCM and stop light switch connector. 3) Measure the resistance between TCM connector and stop light switch connector. ***Connector & terminal*** ***ENGINE TYPE FB*** ***(T10) No. 29 — (B65) No. 2:*** ***ENGINE TYPE EZ*** ***(B54) No. 29 — (B65) No. 2:***	Is the resistance less than 1 Ω?	Go to step **3**.	Repair the open circuit of harness.
3	**CHECK HARNESS.** Measure the resistance between the stop light switch connector and fuse (No. 37). ***Connector & terminal*** ***(B65) No. 1 — fuse (No. 37):***	Is the resistance less than 1 Ω?	Go to step **4**.	Repair the open circuit of harness.
4	**CHECK INPUT SIGNAL FOR TCM.** 1) Install the fuse (No. 37). 2) Connect the TCM and stop light switch connector. 3) Depress the brake pedal. 4) Measure the voltage between TCM connector and chassis ground. ***Connector & terminal*** ***ENGINE TYPE FB*** ***(T10) No. 29 (+) — Chassis ground (–):*** ***ENGINE TYPE EZ*** ***(B54) No. 29 (+) — Chassis ground (–):***	Is the voltage 10 V or more?	Go to step **5**.	Replace the stop light switch. <Ref. to BR-81, Stop Light Switch.>
5	**CHECK INPUT SIGNAL FOR TCM.** With brake pedal depressed, read the data of «Stop Light Switch» using Subaru Select Monitor.	Is “ON” displayed?	Current condition is normal. Check for poor contact in connectors or harnesses, and repair the defective part.	Go to step **6**.
6	**CHECK FOR POOR CONTACT.**	Is there poor contact of input signal of stop light switch?	Repair the poor contact.	Replace the TCM. <Ref. to CVT(TR580)-159, Transmission Control Module (TCM).> <Ref. to CVT(TR690)-142, Transmission Control Module (TCM).>

1. OUTLINE OF DIAGNOSIS

- Detect no input from the brake signal.
- Judge as NG if a predetermined number of deceleration occurs while the cruise control is set to OFF and the brake is OFF.

2. EXECUTION CONDITION

Secondary Parameters	Execution condition
Cruise control	OFF
Malfunctions listed on the right column are not detected:	P0717, P0720

3. DIAGNOSTIC METHOD

If the duration of time while the following conditions are met is longer than the time indicated, judge as NG.

Judgment Value

Malfunction Criteria	Threshold Value
Number of times that vehicle speed changes from 30 km/h to 1 km/h while the brake SW is OFF	> 10 count

M: DTC P0720 OUTPUT SHAFT SPEED SENSOR CIRCUIT

DTC DETECTING CONDITION:
Immediately at fault recognition
TROUBLE SYMPTOM:
- Shock occurs when selecting shift position.
- Shift control malfunction

WIRING DIAGRAM:
CVT control system <Ref. to WI-162, ENGINE TYPE EZ, WIRING DIAGRAM, CVT Control System.>

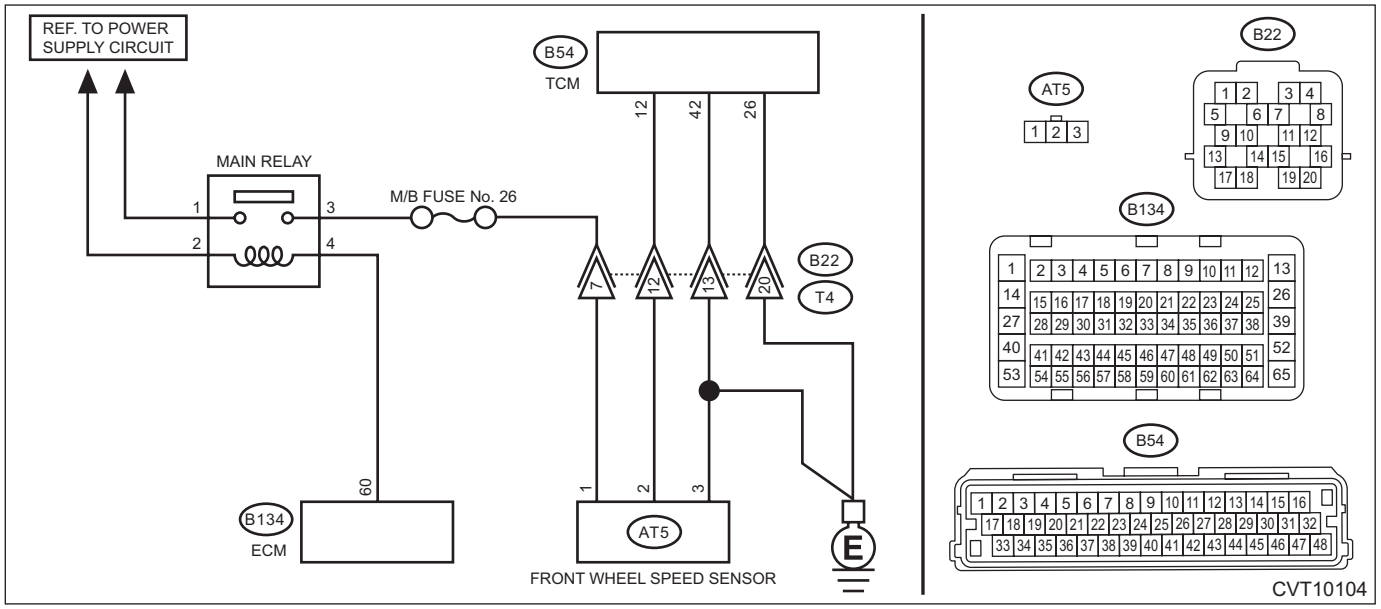

	Step	Check	Yes	No
1	**CHECK FUSE.** 1) Turn the ignition switch to OFF. 2) Check the M/B fuse No. 26.	Is the fuse OK?	Go to step **2**.	Replace the fuse. If the fuse blows out easily, repair the short circuit of harness.
2	**CHECK ECM CONNECTOR.** Check the connecting condition of ECM connector.	Is the ECM connector correctly connected?	Go to step **3**.	Connect the ECM connector correctly.
3	**CHECK HARNESS BETWEEN TRANSMISSION CONNECTOR AND MAIN RELAY CONNECTOR.** 1) Turn the ignition switch to OFF. 2) Measure the voltage between transmission connector and engine ground. ***Connector & terminal*** ***(B22) No. 7 (+) — Engine ground (–):***	Is the voltage 10 V or more?	Repair the harness and connector. NOTE: In this case, repair the following item: • Short circuit to power supply of harness between transmission connector and main relay connector • Defective main relay	Go to step **4**.

	Step	Check	Yes	No
4	**CHECK HARNESS BETWEEN ECM AND MAIN RELAY CONNECTOR.** 1) Turn the ignition switch to OFF. 2) Remove the main relay. 3) Disconnect the connector from ECM. 4) Measure the resistance between the ECM connector and engine ground. ***Connector & terminal*** ***(B134) No. 60 — Engine ground:***	Is the resistance 1 MΩ or more?	Go to step **5**.	Repair the short circuit to ground in harness between ECM connector and main relay connector.
5	**CHECK HARNESS.** 1) Turn the ignition switch to OFF. 2) Disconnect the TCM and transmission connectors. 3) Measure the resistance between TCM connector and transmission connectors. ***Connector & terminal*** ***(B54) No. 12 — (B22) No. 12:*** ***(B54) No. 26 — (B22) No. 20:*** ***(B54) No. 42 — (B22) No. 13:***	Is the resistance less than 1 Ω?	Go to step **6**.	Repair the open circuit of harness.
6	**CHECK HARNESS.** Measure the resistance between TCM connector and chassis ground. ***Connector & terminal*** ***(B54) No. 12 — Chassis ground:***	Is the resistance 1 MΩ or more?	Go to step **7**.	Repair the short circuit of harness.
7	**CHECK TRANSMISSION HARNESS.** 1) Install the fuse. 2) Connect the TCM connector. 3) Turn the ignition switch to ON. 4) Measure the voltage between transmission connector terminals. ***Connector & terminal*** ***(B22) No. 7 (+) — Chassis ground (–):***	Is the voltage approx. 10 — 13 V?	Go to step **8**.	Repair the poor contact of harness or connector.
8	**CHECK INPUT SIGNAL FOR TCM.** 1) Turn the ignition switch to OFF. 2) Connect the transmission connector. 3) Lift up the vehicle. 4) Start the engine. 5) Slowly increase the speed to 30 km/h (19 MPH). 6) Read the data of «Front Wheel Speed» using Subaru Select Monitor.	Does the value of «Front Wheel Speed» change according to the engine speed?	Current condition is normal. Repair the poor contacts of harnesses of front wheel speed sensor and transmission connector.	Go to step **9**.
9	**CHECK TRANSMISSION HARNESS.** 1) Turn the ignition switch to OFF. 2) Disconnect the transmission connector. 3) Disconnect the front wheel speed sensor connector. 4) Measure the resistance between transmission connector and front wheel speed sensor connector. ***Connector & terminal*** ***(T4) No. 7 — (AT5) No. 1:*** ***(T4) No. 12 — (AT5) No. 2:*** ***(T4) No. 13 — (AT5) No. 3:*** ***(T4) No. 20 — (AT5) No. 3:***	Is the resistance less than 1 Ω?	Go to step **10**.	Replace the transmission harness.

	Step	Check	Yes	No
10	**CHECK FRONT WHEEL SPEED SENSOR.** 1) Turn the ignition switch to OFF. 2) Replace the front wheel speed sensor. <Ref. to CVT(TR690)-120, Front Wheel Speed Sensor.> 3) Perform the Clear Memory Mode. <Ref. to CVT(diag)-26, Clear Memory Mode.> 4) Read the DTC.	Is DTC P0720 displayed?	Go to step **11**.	The original front wheel speed sensor is defective.
11	**CHECK MAIN RELAY.** 1) Turn the ignition switch to OFF. 2) Replace the main relay. 3) Perform the Clear Memory Mode. <Ref. to CVT(diag)-26, Clear Memory Mode.> 4) Read the DTC.	Is DTC P0720 displayed?	Replace the TCM. <Ref. to CVT(TR690)-142, Transmission Control Module (TCM).>	The original main relay is defective.

1. OUTLINE OF DIAGNOSIS

- Detect no input signal from the front wheel speed sensor.
- Judge as NG if there is no output from the front wheel speed sensor while the forward/reverse clutch is engaged and the wheel speed from VDC is equal to or higher than the predetermined value.

2. EXECUTION CONDITION

Secondary Parameters	Execution condition
12 V battery system voltage	≥ 10 V
Vehicle speed (from vehicle dynamics control module)	≥ 3 MPH
Transmission range	Drive or Reverse

3. DIAGNOSTIC METHOD

If the duration of time while the following conditions are met is longer than the time indicated, judge as NG.

Judgment Value

Malfunction Criteria	Threshold Value
Measured front output shaft speed	0 rpm

Time Needed for Diagnosis: 0.5 seconds
Malfunction Indicator Light Illumination: Illuminates as soon as a malfunction occurs.

N: DTC P0721 OUTPUT SHAFT SPEED SENSOR CIRCUIT RANGE/PERFORMANCE

DTC DETECTING CONDITION:
Immediately at fault recognition
TROUBLE SYMPTOM:
- Acceleration is poor during standing start.
- No lock-up occurs.
- The engine stalls when the vehicle is stopped.
- Shift control malfunction

Step		Check	Yes	No
1	**CHECK DTC.** Read the DTC using Subaru Select Monitor.	Besides DTC P0721, is DTC P0500 displayed?	Perform the diagnosis according to DTCs other than P0721.	Perform the diagnosis according to DTC P0720. <Ref. to CVT(diag)-76, DTC P0720 OUTPUT SHAFT SPEED SENSOR CIRCUIT, Diagnostic Procedure with Diagnostic Trouble Code (DTC).>

1. OUTLINE OF DIAGNOSIS

- Detect the malfunction of front wheel speed sensor characteristics.
- Judge as NG when the deviation between vehicle speed from VDC and front wheel speed sensor becomes equal to or larger than the predetermined value.

2. EXECUTION CONDITION

Secondary Parameters	Execution condition
12 V battery system voltage	≥ 10 V
Vehicle speed (from vehicle dynamics control module)	≥ 12 MPH

3. DIAGNOSTIC METHOD

If the duration of time while the following conditions are met is longer than the time indicated, judge as NG.
Judgment Value

Malfunction Criteria	Threshold Value
|Vehicle speed (calculated from front output shaft speed) – Vehicle speed (from vehicle dynamics control module)|	> 10 MPH

Time Needed for Diagnosis: 5 seconds
Malfunction Indicator Light Illumination: Illuminates as soon as a malfunction occurs.

O: DTC P0724 BRAKE SWITCH "B" CIRCUIT HIGH

DTC DETECTING CONDITION:
Immediately at fault recognition
TROUBLE SYMPTOM:
Gear is not shifted down when climbing a hill or driving down a hill.
WIRING DIAGRAM:
- ENGINE TYPE FB

Stop light system <Ref. to WI-344, Stop Light System.>

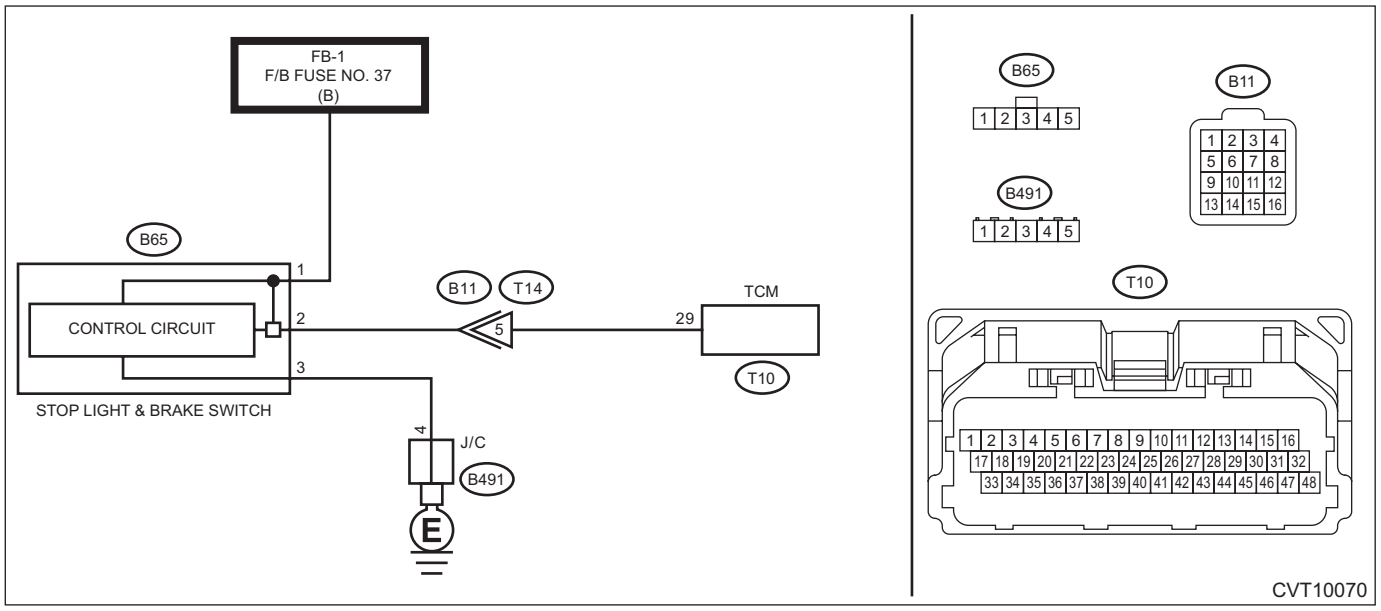

- ENGINE TYPE EZ

Stop light system <Ref. to WI-344, Stop Light System.>

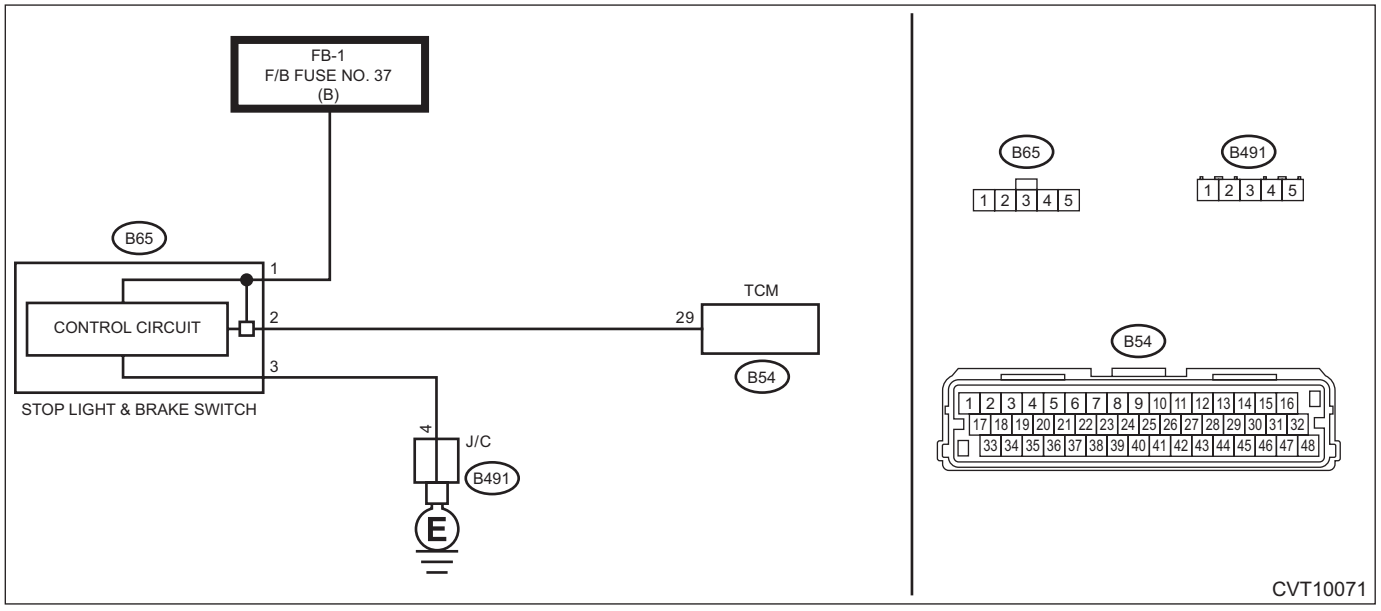

Step		Check	Yes	No
1	**CHECK STOP LIGHT SWITCH.** 1) Turn the ignition switch to OFF. 2) Disconnect the stop light switch connector. 3) Measure the resistance between stop light switch connectors. ***Connector & terminal (B65) No. 1 — No. 2:***	Is the resistance 1 MΩ or more?	Go to step **2**.	Replace the stop light switch. <Ref. to BR-81, Stop Light Switch.>

	Step	Check	Yes	No
2	**CHECK HARNESS.** 1) Disconnect the TCM connector. 2) Turn the ignition switch to ON. 3) Measure the voltage between TCM connector and chassis ground. ***Connector & terminal*** ***ENGINE TYPE FB*** ***(T10) No. 29 (+) — Chassis ground (–):*** ***ENGINE TYPE EZ*** ***(B54) No. 29 (+) — Chassis ground (–):***	Is the voltage 10 V or more?	Repair the short circuit of harness.	Go to step **3**.
3	**CHECK INPUT SIGNAL FOR TCM.** 1) Connect the TCM and stop light switch connector. 2) Turn the ignition switch to ON. 3) Read the data of «Stop Light Switch» using Subaru Select Monitor.	Is "OFF" displayed?	Current condition is normal. Check for poor contact in connectors or harnesses, and repair the defective part.	Go to step **4**.
4	**CHECK FOR POOR CONTACT.**	Is there poor contact of input signal of stop light switch?	Repair the poor contact.	Replace the TCM. <Ref. to CVT(TR580)-159, Transmission Control Module (TCM).> <Ref. to CVT(TR690)-142, Transmission Control Module (TCM).>

1. OUTLINE OF DIAGNOSIS

- Detect the brake signal stuck to ON.
- Judge as NG if a predetermined number of acceleration occurs while the cruise control is set to OFF and the brake is ON.

2. EXECUTION CONDITION

Secondary Parameters	Execution condition
Cruise control	OFF
Malfunctions listed on the right column are not detected:	P0717, P0720

3. DIAGNOSTIC METHOD

If the duration of time while the following conditions are met is longer than the time indicated, judge as NG.

Judgment Value

Malfunction Criteria	Threshold Value
Number of times that vehicle speed changes from 1 km/h to 30 km/h while the brake SW is ON	> 10 count

P: DTC P0730 INCORRECT GEAR RATIO

DTC DETECTING CONDITION:
Immediately at fault recognition
TROUBLE SYMPTOM:
- Acceleration is poor during standing start.
- Shift control malfunction
- Engine speed increases abruptly.

1. ENGINE TYPE FB

	Step	Check	Yes	No
1	**CHECK TRANSMISSION FLUID.** Check the amount of ATF. <Ref. to CVT(TR580)-39, ADJUSTMENT, CVTF.>	Is the ATF amount correct?	Go to step **2**.	Adjust the amount of ATF. <Ref. to CVT(TR580)-39, ADJUSTMENT, CVTF.>
2	**CHECK TRANSMISSION FLUID.** Check the condition of ATF. <Ref. to CVT(TR580)-42, CONDITION CHECK, CVTF.>	Is the ATF OK?	Go to step **3**.	Check according to the “Corrective action” of ATF (CVTF) “CONDITION CHECK”. <Ref. to CVT(TR580)-42, CONDITION CHECK, CVTF.>
3	**CHECK INPUT SIGNAL FOR TCM.** 1) Lift up the vehicle. 2) Start the engine. 3) Warm up until the ATF temperature reaches to 40 — 70°C (104 — 158°F). 4) Depress the brake pedal, and shift the select lever to “D” range. 5) Shift the select lever to “P” range. 6) Stabilize the engine speed at idle. 7) Read the data of «Actual secondary pressure» using Subaru Select Monitor.	Is the «Actual secondary pressure» 0.5 — 1.5 MPa?	Go to step **4**.	Perform the diagnosis according to DTC P0841. <Ref. to CVT(diag)-126, DTC P0841 TRANSMISSION FLUID PRESSURE SENSOR/SWITCH "A" CIRCUIT RANGE/PERFORMANCE, Diagnostic Procedure with Diagnostic Trouble Code (DTC).>
4	**CHECK INPUT SIGNAL FOR TCM.** 1) Set the select lever to “D” range. 2) Release the brake pedal to stabilize the engine speed and front wheel speed. 3) Read the data of «Actual Gear Ratio» using Subaru Select Monitor.	Is the «Actual Gear Ratio» 1.5 — 2.6?	Go to step **5**.	Go to step **6**.
5	**CHECK INPUT SIGNAL FOR TCM.** 1) Set the select lever to “D” range. 2) Slowly increase the speed to 40 km/h (25 MPH) and keep the constant speed. 3) Read the data of «Actual Gear Ratio» using Subaru Select Monitor.	Is the «Actual Gear Ratio» 0.5 — 0.9?	Go to step **6**.	Replace the transmission assembly. <Ref. to CVT(TR580)-63, Automatic Transmission Assembly.>
6	**DRIVING CHECK BY INSPECTION MODE.** 1) Turn the ignition switch to OFF. 2) Perform a drive check based on the “Inspection Mode”. <Ref. to CVT(diag)-27, Inspection Mode.>	Does the AT OIL TEMP light blink and is DTC P0730 displayed?	Replace the transmission assembly. <Ref. to CVT(TR580)-63, Automatic Transmission Assembly.>	Current condition is normal. It is possible that temporary poor contact occurs.

2. ENGINE TYPE EZ

	Step	Check	Yes	No
1	**CHECK TRANSMISSION FLUID.** Check the amount of ATF. <Ref. to CVT(TR690)-38, ADJUSTMENT, CVTF.>	Is the ATF amount correct?	Go to step **2**.	Adjust the amount of ATF. <Ref. to CVT(TR690)-38, ADJUSTMENT, CVTF.>
2	**CHECK TRANSMISSION FLUID.** Check the condition of ATF. <Ref. to CVT(TR690)-42, CONDITION CHECK, CVTF.>	Is the ATF OK?	Go to step **3**.	Check according to the “Corrective action” of ATF (CVTF) “CONDITION CHECK”. <Ref. to CVT(TR690)-42, CONDITION CHECK, CVTF.>
3	**CHECK INPUT SIGNAL FOR TCM.** 1) Lift up the vehicle. 2) Start the engine. 3) Warm up until the ATF temperature reaches to 40 — 70°C (104 — 158°F). 4) Depress the brake pedal, and shift the select lever to “D” range. 5) Shift the select lever to “P” range. 6) Stabilize the engine speed at idle. 7) Read the data of «Actual secondary pressure» using Subaru Select Monitor.	Is the «Actual secondary pressure» 0.5 — 1.5 MPa?	Go to step **4**.	Perform the diagnosis according to DTC P0841. <Ref. to CVT(diag)-126, DTC P0841 TRANSMISSION FLUID PRESSURE SENSOR/SWITCH "A" CIRCUIT RANGE/PERFORMANCE, Diagnostic Procedure with Diagnostic Trouble Code (DTC).>
4	**CHECK INPUT SIGNAL FOR TCM.** 1) Set the select lever to “D” range. 2) Release the brake pedal to stabilize the engine speed and front wheel speed. 3) Read the data of «Actual Gear Ratio» using Subaru Select Monitor.	Is the «Actual Gear Ratio» 2.0 — 2.4?	Go to step **5**.	Go to step **6**.
5	**CHECK INPUT SIGNAL FOR TCM.** 1) Set the select lever to “D” range. 2) Slowly increase the speed to 40 km/h (25 MPH) and keep the constant speed. 3) Read the data of «Actual Gear Ratio» using Subaru Select Monitor.	Is the «Actual Gear Ratio» 0.5 — 0.8?	Go to step **6**.	Replace the transmission assembly. <Ref. to CVT(TR690)-58, Automatic Transmission Assembly.>
6	**DRIVING CHECK BY INSPECTION MODE.** 1) Turn the ignition switch to OFF. 2) Perform a drive check based on the “Inspection Mode”. <Ref. to CVT(diag)-27, Inspection Mode.>	Does the AT OIL TEMP light blink and is DTC P0730 displayed?	Replace the transmission assembly. <Ref. to CVT(TR690)-58, Automatic Transmission Assembly.>	Current condition is normal. It is possible that temporary poor contact occurs.

3. OUTLINE OF DIAGNOSIS

- Detect the abnormality in transmission gear ratio control function.
- Judge as NG if a discrepancy between the transmission target gear ratio (as internal data) and the actual gear ratio becomes the specified value or more. (Compare the value of "Gear Ratio Target × Secondary pulley speed ≈ Target primary speed equivalent value" with the value of primary pulley speed sensor.)

4. EXECUTION CONDITION

Secondary Parameters	Execution condition
12 V battery system voltage	≥ 10 V
Engine speed	≥ 500 rpm
Transmission range	Drive

5. DIAGNOSTIC METHOD

If the duration of time while the following conditions are met is longer than the time indicated, judge as NG.

Judgment Value

Malfunction Criteria	Threshold Value
|Target primary pulley shaft speed – Measured primary pulley shaft speed|	≥ 600 rpm
(Commanded duty of shift up pressure control solenoid valve	≥ 90%
or	
Commanded duty of shift down pressure control solenoid valve)	≥ 90%

Time Needed for Diagnosis: 5 seconds
Malfunction Indicator Light Illumination: Illuminates as soon as a malfunction occurs.

Q: DTC P0746 PRESSURE CONTROL SOLENOID "A" PERFORMANCE/STUCK OFF

DTC DETECTING CONDITION:
Detected when two consecutive driving cycles with fault occur.
TROUBLE SYMPTOM:
- Shift control malfunction
- CVT chain slippage

1. ENGINE TYPE FB

WIRING DIAGRAM:
CVT control system <Ref. to WI-156, ENGINE TYPE FB, WIRING DIAGRAM, CVT Control System.>

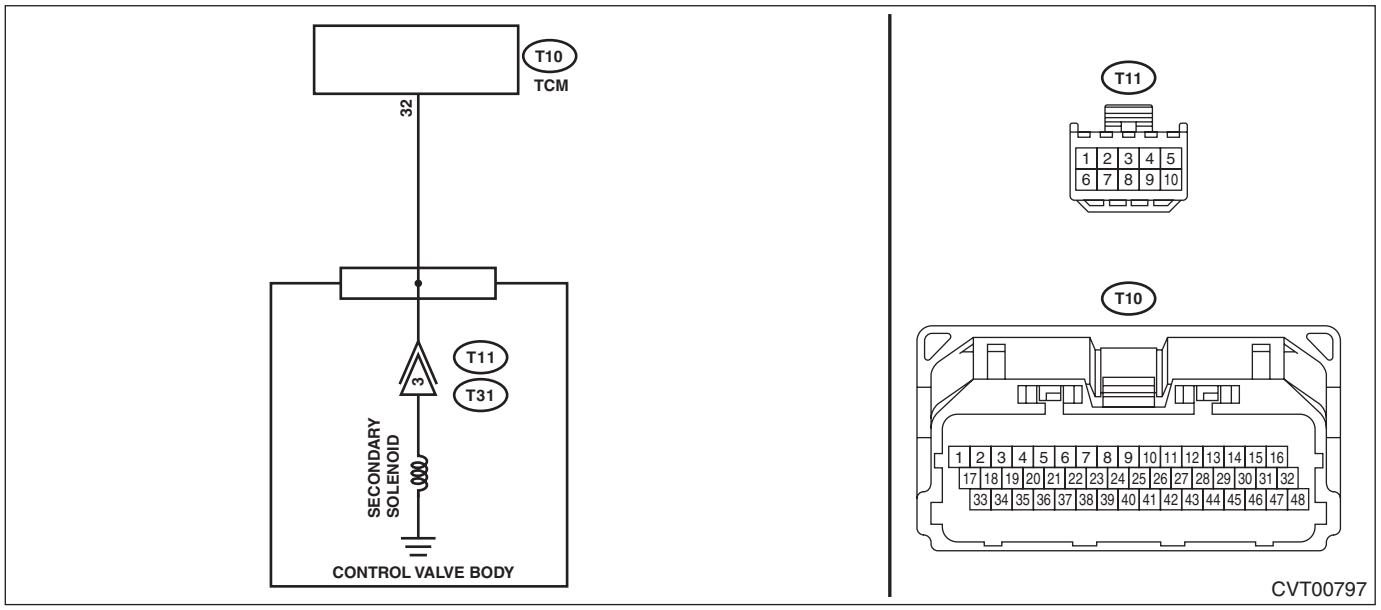

	Step	Check	Yes	No
1	**CHECK DTC.** Read the DTC using Subaru Select Monitor.	Besides DTC P0746, is any of the DTCs P0842, P0843, P0962 and P0963 displayed?	Perform the diagnosis according to DTCs other than P0746.	Go to step **2**.
2	**CHECK SECONDARY SOLENOID (ACTIVE TEST).** 1) Turn the ignition switch to ON. 2) Using the Subaru Select Monitor, perform forced operation of the secondary solenoid. <Ref. to CVT(diag)-32, Active Test.>	Does the indication of 0 → 500 mA appear repeatedly during forced operation, and does operating sound emit during indicating 500 mA?	Go to step **5**.	Go to step **3**.
3	**CHECK SECONDARY SOLENOID.** 1) Turn the ignition switch to OFF. 2) Disconnect the TCM connector. 3) Measure the resistance between TCM connector and transmission body. ***Connector & terminal*** ***(T10) No. 32 — Transmission body:***	Is the resistance approx. 5 — 7 Ω? (when cold)	Go to step **7**.	Go to step **4**.
4	**CHECK HARNESS.** Check the harness for continuity.	Is the harness normal? (Is it free from defects such as open circuit, power supply-output short or GND-output short circuit, or poor contact?)	Go to step **7**.	Repair the harness.

	Step	Check	Yes	No
5	**CHECK TRANSMISSION FLUID.** 1) Connect the TCM connector. 2) Check the amount of ATF. <Ref. to CVT(TR580)-39, ADJUSTMENT, CVTF.>	Is the ATF amount correct?	Go to step **6**.	Adjust the amount of ATF. <Ref. to CVT(TR580)-39, ADJUSTMENT, CVTF.>
6	**CHECK TRANSMISSION FLUID.** Check the condition of ATF. <Ref. to CVT(TR580)-42, CONDITION CHECK, CVTF.>	Is the ATF OK?	Go to step **7**.	Check according to the "Corrective action" of ATF (CVTF) "CONDITION CHECK". <Ref. to CVT(TR580)-42, CONDITION CHECK, CVTF.>
7	**CHECK INPUT SIGNAL FOR TCM.** 1) Lift up the vehicle. 2) Start the engine. 3) Warm up until the ATF temperature reaches to 40 — 70°C (104 — 158°F). 4) Depress the brake pedal, and shift the select lever to "D" range. 5) Shift the select lever to "P" range. 6) Stabilize the engine speed at idle. 7) Read the data of «Actual secondary pressure» using Subaru Select Monitor.	Is the «Actual secondary pressure» 0.5 — 1.5 MPa?	Go to step **8**.	Replace the control valve body. <Ref. to CVT(TR580)-133, Control Valve Body.>
8	**CHECK INPUT SIGNAL FOR TCM.** 1) Keep the engine speed at 3,000 rpm. 2) Read the data of «Actual secondary pressure» using Subaru Select Monitor.	Is the «Actual secondary pressure» higher than step 7 value? Does the value change according to the engine speed, within the range of 1.5 — 2.5 MPa?	Go to step **9**.	Replace the control valve body. <Ref. to CVT(TR580)-133, Control Valve Body.>
9	**CHECK TCM INPUT SIGNAL (STALL TEST).** 1) Apply the parking brake. 2) Set the select lever to "D" range. 3) Depress the brake pedal firmly. 4) Slowly open the accelerator fully, and stabilize the engine speed. 5) Read the data of «Actual secondary pressure» using Subaru Select Monitor. **CAUTION:** **Do not perform a stall test for over 5 seconds at a time.**	Is the «Actual secondary pressure» higher than step 8 value? Does the value change according to the engine speed, within the range of 4.5 — 6.0 MPa?	Go to step **10**.	Replace the control valve body. <Ref. to CVT(TR580)-133, Control Valve Body.>
10	**DRIVING CHECK BY INSPECTION MODE.** 1) Turn the ignition switch to OFF. 2) Perform a drive check based on the "Inspection Mode". <Ref. to CVT(diag)-27, Inspection Mode.>	Does the AT OIL TEMP light blink and is DTC P0746 displayed?	Perform the secondary pressure test. <Ref. to CVT(TR580)-51, Secondary Pressure (Line Pressure) Test.>	Current condition is normal. It is possible that temporary poor contact occurs.

2. ENGINE TYPE EZ

WIRING DIAGRAM:

CVT control system <Ref. to WI-162, ENGINE TYPE EZ, WIRING DIAGRAM, CVT Control System.>

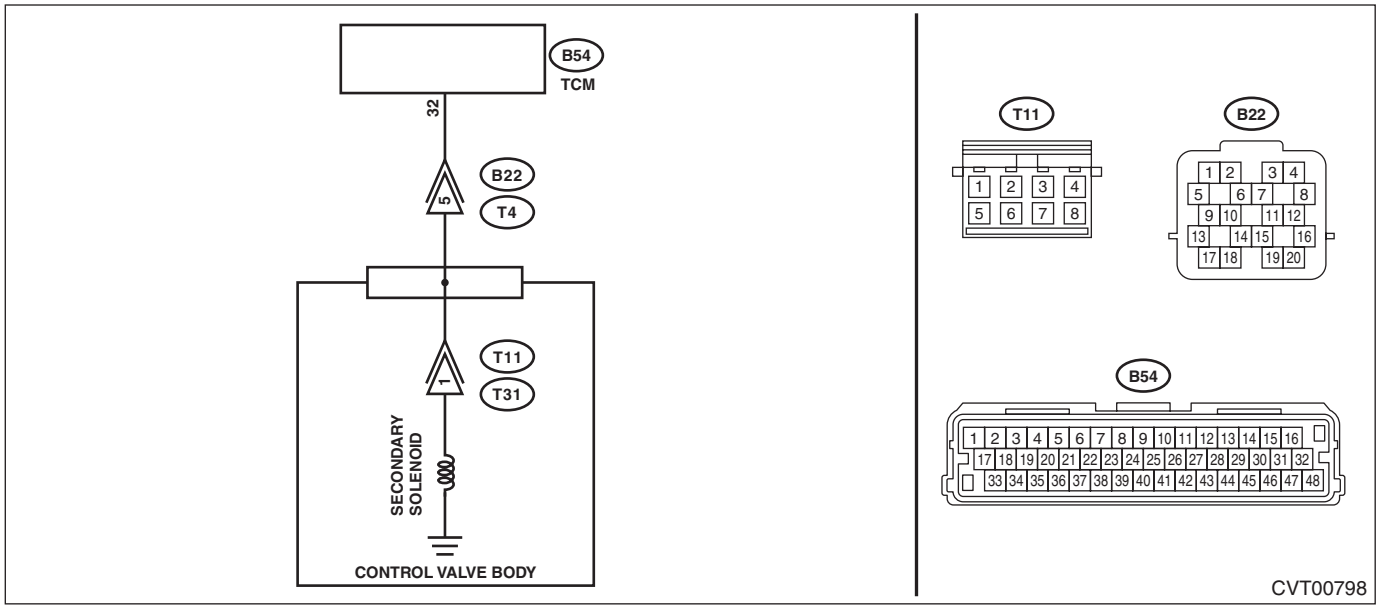

Step		Check	Yes	No
1	**CHECK DTC.** Read the DTC using Subaru Select Monitor.	Besides DTC P0746, is any of the DTCs P0842, P0843, P0962 and P0963 displayed?	Perform the diagnosis according to DTCs other than P0746.	Go to step **2**.
2	**CHECK SECONDARY SOLENOID (ACTIVE TEST).** 1) Turn the ignition switch to ON. 2) Using the Subaru Select Monitor, perform forced operation of the secondary solenoid. <Ref. to CVT(diag)-32, Active Test.>	Does the indication of 0 → 500 mA appear repeatedly during forced operation, and does operating sound emit during indicating 500 mA?	Go to step **5**.	Go to step **3**.
3	**CHECK SECONDARY SOLENOID.** 1) Turn the ignition switch to OFF. 2) Disconnect the transmission connector. 3) Measure the resistance between transmission connector and transmission body. ***Connector & terminal*** ***(T4) No. 5 — Transmission body:***	Is the resistance approx. 5 — 7 Ω? (when cold)	Go to step **7**.	Go to step **4**.
4	**CHECK HARNESS.** Check the harness for continuity.	Is the harness normal? (Is it free from defects such as open circuit, power supply-output short or GND-output short circuit, or poor contact?)	Go to step **7**.	Repair the harness.
5	**CHECK TRANSMISSION FLUID.** 1) Connect the transmission connector. 2) Check the amount of ATF. <Ref. to CVT(TR690)-38, ADJUSTMENT, CVTF.>	Is the ATF amount correct?	Go to step **6**.	Adjust the amount of ATF. <Ref. to CVT(TR690)-38, ADJUSTMENT, CVTF.>

	Step	Check	Yes	No
6	**CHECK TRANSMISSION FLUID.** Check the condition of ATF. <Ref. to CVT(TR690)-42, CONDITION CHECK, CVTF.>	Is the ATF OK?	Go to step **7**.	Check according to the "Corrective action" of ATF (CVTF) "CONDITION CHECK". <Ref. to CVT(TR690)-42, CONDITION CHECK, CVTF.>
7	**CHECK INPUT SIGNAL FOR TCM.** 1) Lift up the vehicle. 2) Start the engine. 3) Warm up until the ATF temperature reaches to 40 — 70°C (104 — 158°F). 4) Depress the brake pedal, and shift the select lever to "D" range. 5) Shift the select lever to "P" range. 6) Stabilize the engine speed at idle. 7) Read the data of «Actual secondary pressure» using Subaru Select Monitor.	Is the «Actual secondary pressure» 0.5 — 1.5 MPa?	Go to step **8**.	Replace the control valve body. <Ref. to CVT(TR690)-124, Control Valve Body.>
8	**CHECK INPUT SIGNAL FOR TCM.** 1) Keep the engine speed at 3,000 rpm. 2) Read the data of «Actual secondary pressure» using Subaru Select Monitor.	Is the «Actual secondary pressure» higher than step 7 value? Does the value change according to the engine speed, within the range of 1.5 — 2.5 MPa?	Go to step **9**.	Replace the control valve body. <Ref. to CVT(TR690)-124, Control Valve Body.>
9	**CHECK TCM INPUT SIGNAL (STALL TEST).** 1) Apply the parking brake. 2) Set the select lever to "D" range. 3) Depress the brake pedal firmly. 4) Slowly open the accelerator fully, and stabilize the engine speed. 5) Read the data of «Actual secondary pressure» using Subaru Select Monitor. **CAUTION:** **Do not perform a stall test for over 5 seconds at a time.**	Is the «Actual secondary pressure» higher than step 8 value? Does the value change according to the engine speed, within the range of 4.5 — 6.0 MPa?	Go to step **10**.	Replace the control valve body. <Ref. to CVT(TR690)-124, Control Valve Body.>
10	**DRIVING CHECK BY INSPECTION MODE.** 1) Turn the ignition switch to OFF. 2) Perform a drive check based on the "Inspection Mode". <Ref. to CVT(diag)-27, Inspection Mode.>	Does the AT OIL TEMP light blink and is DTC P0746 displayed?	Perform the secondary pressure test. <Ref. to CVT(TR690)-51, Secondary Pressure (Line Pressure) Test.>	Current condition is normal. It is possible that temporary poor contact occurs.

3. OUTLINE OF DIAGNOSIS (ENGINE TYPE FB)

• Detect the malfunction of transmission line pressure solenoid and hydraulic circuit (stuck to low pressure side).
• Judge as NG if "Target line pressure — Actual line pressure" becomes the predetermined value or more, while the actual line pressure is equal to or more than the predetermined value.

4. EXECUTION CONDITION (ENGINE TYPE FB)

Secondary Parameters	Execution condition
12 V battery system voltage	≥ 10 V
Engine speed	≥ 1000 rpm
Measured line pressure control solenoid valve current	≤ 0.78 A

5. DIAGNOSTIC METHOD (ENGINE TYPE FB)

If the duration of time while the following conditions are met is longer than the time indicated, judge as NG.

Judgment Value

Malfunction Criteria	Threshold Value
Measured line pressure	< Map1 kPa

Map 1

		Engine speed (rpm)						
		0	500	1000	1500	2000	2500	3000
Transmission fluid temperature (degC)	– 40	0	0	340	404	478	558	643
	– 20	0	0	340	404	478	558	643
	0	0	0	324	382	454	532	616
	20	0	0	366	425	490	565	649
	40	0	0	345	400	466	536	613
	60	0	0	341	389	447	512	591
	80	0	0	319	371	429	488	571
	100	0	0	298	356	412	476	551
	120	0	0	271	329	384	451	519
	140	0	0	243	302	357	425	487

		Engine speed (rpm)						
		3500	4000	4500	5000	5500	6000	6500
Transmission fluid temperature (degC)	– 40	751	883	1042	1167	1264	1292	1274
	– 20	751	883	1042	1167	1264	1342	1424
	0	722	840	991	1135	1240	1319	1395
	20	751	861	1000	1160	1258	1350	1417
	40	708	817	943	1103	1223	1312	1385
	60	677	779	906	1064	1187	1266	1339
	80	652	748	874	1000	1135	1223	1299
	100	629	719	831	947	1069	1181	1251
	120	593	678	780	880	990	1109	1171
	140	557	637	728	813	911	1037	1090

Time Needed for Diagnosis: 5 seconds
Malfunction Indicator Light Illumination: Illuminates when malfunction occurs in 2 continuous driving cycles.

6. OUTLINE OF DIAGNOSIS (ENGINE TYPE EZ)

• Detect the malfunction of transmission line pressure solenoid and hydraulic circuit (stuck to low pressure side).
• Judge as NG if “Target line pressure — Actual line pressure” becomes the predetermined value or more, while the actual line pressure is equal to or more than the predetermined value.

7. EXECUTION CONDITION (ENGINE TYPE EZ)

Secondary Parameters	Execution condition
12 V battery system voltage	≥ 10 V
Engine speed	≥ 1000 rpm
Measured line pressure control solenoid valve current	≤ 0.75 A

8. DIAGNOSTIC METHOD (ENGINE TYPE EZ)

If the duration of time while the following conditions are met is longer than the time indicated, judge as NG.

Judgment Value

Malfunction Criteria	Threshold Value
Measured line pressure	< Map 2 kPa

Map 2 is selected according to the command of the torque converter clutch circuit control solenoid output.

Map 2: Command of the torque converter clutch circuit control solenoid output = ON

		Engine speed (rpm)						
		0	500	1000	1500	2000	2500	3000
Transmission fluid temperature (degC)	– 40	0	0	490	577	681	783	884
	– 20	0	0	490	577	681	783	884
	0	0	0	415	468	533	612	701
	20	0	0	399	454	515	569	642
	40	0	0	381	432	489	552	605
	60	0	0	225	280	338	407	465
	80	0	0	218	279	338	404	472
	100	0	0	195	276	320	381	448
	120	0	0	167	246	298	365	431
	140	0	0	170	252	308	365	436

		Engine speed (rpm)						
		3500	4000	4500	5000	5500	6000	6500
Transmission fluid temperature (degC)	– 40	1010	1114	1191	1273	1359	1419	1448
	– 20	1010	1114	1191	1273	1359	1419	1448
	0	802	933	1073	1183	1282	1374	1424
	20	726	832	965	1128	1257	1370	1459
	40	683	775	890	1039	1200	1318	1411
	60	525	618	728	873	1050	1196	1288
	80	517	599	707	849	1015	1163	1255
	100	509	576	669	796	931	1072	1195
	120	491	543	664	772	874	1000	1110
	140	482	547	635	723	845	947	1074

Map 2: Command of the torque converter clutch circuit control solenoid output = OFF

		Engine speed (rpm)						
		0	500	1000	1500	2000	2500	3000
Transmission fluid temperature (degC)	– 40	0	0	493	578	690	783	887
	– 20	0	0	493	578	690	783	887
	0	0	0	376	440	517	597	699
	20	0	0	386	452	524	599	687
	40	0	0	359	422	492	566	648
	60	0	0	336	394	459	529	612
	80	0	0	327	386	451	517	601
	100	0	0	312	377	438	503	580
	120	0	0	303	367	430	493	566
	140	0	0	296	367	429	490	563

		Engine speed (rpm)						
		3500	4000	4500	5000	5500	6000	6500
Transmission fluid temperature (degC)	– 40	1020	1117	1196	1286	1378	1439	1477
	– 20	1020	1117	1196	1286	1378	1439	1477
	0	806	954	1099	1201	1301	1412	1498
	20	796	933	1095	1214	1317	1426	1532
	40	744	849	1032	1167	1285	1397	1483
	60	711	805	953	1115	1244	1345	1428
	80	676	779	906	1064	1213	1310	1391
	100	656	750	870	1014	1167	1261	1343
	120	644	728	835	970	1117	1233	1292
	140	638	717	812	928	1063	1182	1257

Time Needed for Diagnosis: 5 seconds
Malfunction Indicator Light Illumination: Illuminates when malfunction occurs in 2 continuous driving cycles.

R: DTC P0747 PRESSURE CONTROL SOLENOID "A" STUCK ON

DTC DETECTING CONDITION:
Detected when two consecutive driving cycles with fault occur.
TROUBLE SYMPTOM:
- Acceleration is poor during standing start.
- Shift control malfunction

1. ENGINE TYPE FB

WIRING DIAGRAM:
CVT control system <Ref. to WI-156, ENGINE TYPE FB, WIRING DIAGRAM, CVT Control System.>

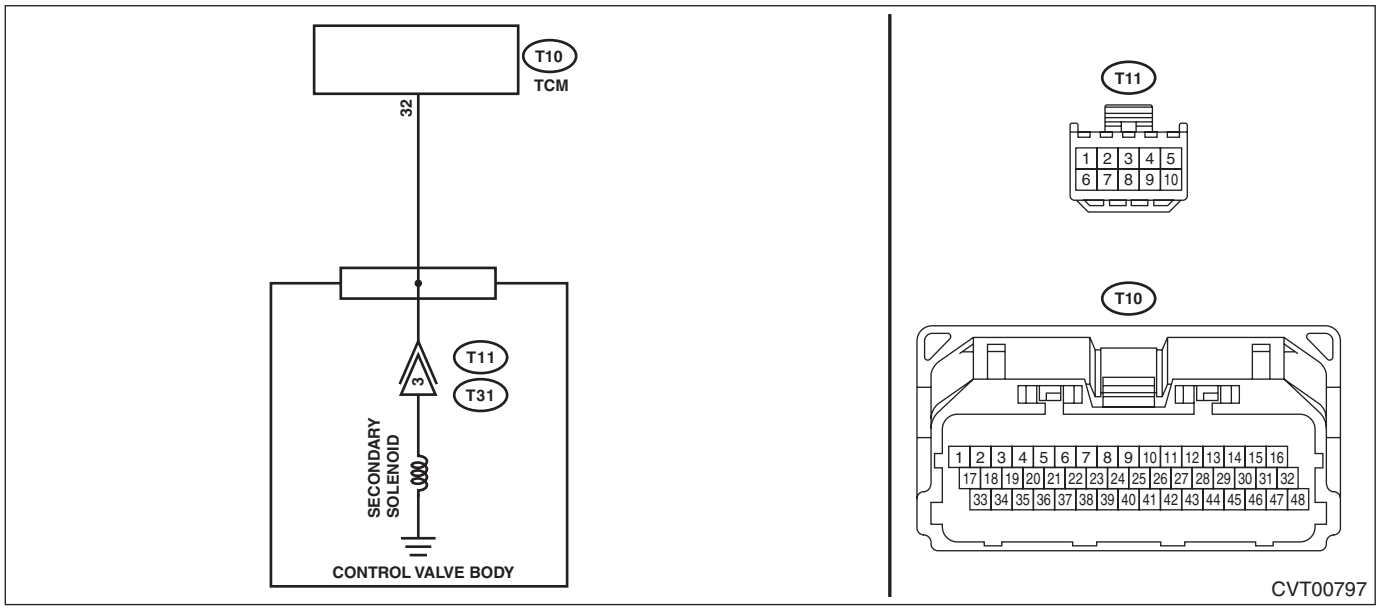

	Step	Check	Yes	No
1	**CHECK DTC.** Read the DTC using Subaru Select Monitor.	Besides DTC P0747, is any of the DTCs P0842, P0843, P0962 and P0963 displayed?	Perform the diagnosis according to DTCs other than P0747.	Go to step **2**.
2	**CHECK SECONDARY SOLENOID (ACTIVE TEST).** 1) Turn the ignition switch to ON. 2) Using the Subaru Select Monitor, perform forced operation of the secondary solenoid. <Ref. to CVT(diag)-32, Active Test.>	Does the indication of 0 → 500 mA appear repeatedly during forced operation, and does operating sound emit during indicating 500 mA?	Go to step **5**.	Go to step **3**.
3	**CHECK SECONDARY SOLENOID.** 1) Turn the ignition switch to OFF. 2) Disconnect the TCM connector. 3) Measure the resistance between TCM connector and transmission body. ***Connector & terminal*** ***(T10) No. 32 — Transmission body:***	Is the resistance approx. 5 — 7 Ω? (when cold)	Go to step **7**.	Go to step **4**.
4	**CHECK HARNESS.** Check the harness for continuity.	Is the harness normal? (Is it free from defects such as open circuit, power supply-output short or GND-output short circuit, or poor contact?)	Go to step **7**.	Repair the harness.
5	**CHECK TRANSMISSION FLUID.** 1) Connect the TCM connector. 2) Check the amount of ATF. <Ref. to CVT(TR580)-39, ADJUSTMENT, CVTF.>	Is the ATF amount correct?	Go to step **6**.	Adjust the amount of ATF. <Ref. to CVT(TR580)-39, ADJUSTMENT, CVTF.>

	Step	Check	Yes	No
6	**CHECK TRANSMISSION FLUID.** Check the condition of ATF. <Ref. to CVT(TR580)-42, CONDITION CHECK, CVTF.>	Is the ATF OK?	Go to step **7**.	Check according to the "Corrective action" of ATF (CVTF) "CONDITION CHECK". <Ref. to CVT(TR580)-42, CONDITION CHECK, CVTF.>
7	**CHECK INPUT SIGNAL FOR TCM.** 1) Lift up the vehicle. 2) Start the engine. 3) Warm up until the ATF temperature reaches to 40 — 70°C (104 — 158°F). 4) Depress the brake pedal, and shift the select lever to "D" range. 5) Shift the select lever to "P" range. 6) Stabilize the engine speed at idle. 7) Read the data of «Actual secondary pressure» using Subaru Select Monitor.	Is the «Actual secondary pressure» 0.5 — 1.5 MPa?	Go to step **8**.	Replace the control valve body. <Ref. to CVT(TR580)-133, Control Valve Body.>
8	**CHECK INPUT SIGNAL FOR TCM.** 1) Keep the engine speed at 3,000 rpm. 2) Read the data of «Actual secondary pressure» using Subaru Select Monitor.	Is the «Actual secondary pressure» higher than step 7 value? Does the value change according to the engine speed, within the range of 1.5 — 2.5 MPa?	Go to step **9**.	Replace the control valve body. <Ref. to CVT(TR580)-133, Control Valve Body.>
9	**CHECK TCM INPUT SIGNAL (STALL TEST).** 1) Apply the parking brake. 2) Set the select lever to "D" range. 3) Depress the brake pedal firmly. 4) Slowly open the accelerator fully, and stabilize the engine speed. 5) Read the data of «Actual secondary pressure» using Subaru Select Monitor. **CAUTION:** **Do not perform a stall test for over 5 seconds at a time.**	Is the «Actual secondary pressure» higher than step 8 value? Does the value change according to the engine speed, within the range of 4.5 — 6.0 MPa?	Go to step **10**.	Replace the control valve body. <Ref. to CVT(TR580)-133, Control Valve Body.>
10	**DRIVING CHECK BY INSPECTION MODE.** 1) Turn the ignition switch to OFF. 2) Perform a drive check based on the "Inspection Mode". <Ref. to CVT(diag)-27, Inspection Mode.>	Does the AT OIL TEMP light blink and is DTC P0747 displayed?	Perform the secondary pressure test. <Ref. to CVT(TR580)-51, Secondary Pressure (Line Pressure) Test.>	Current condition is normal. It is possible that temporary poor contact occurs.

2. ENGINE TYPE EZ

WIRING DIAGRAM:

CVT control system <Ref. to WI-162, ENGINE TYPE EZ, WIRING DIAGRAM, CVT Control System.>

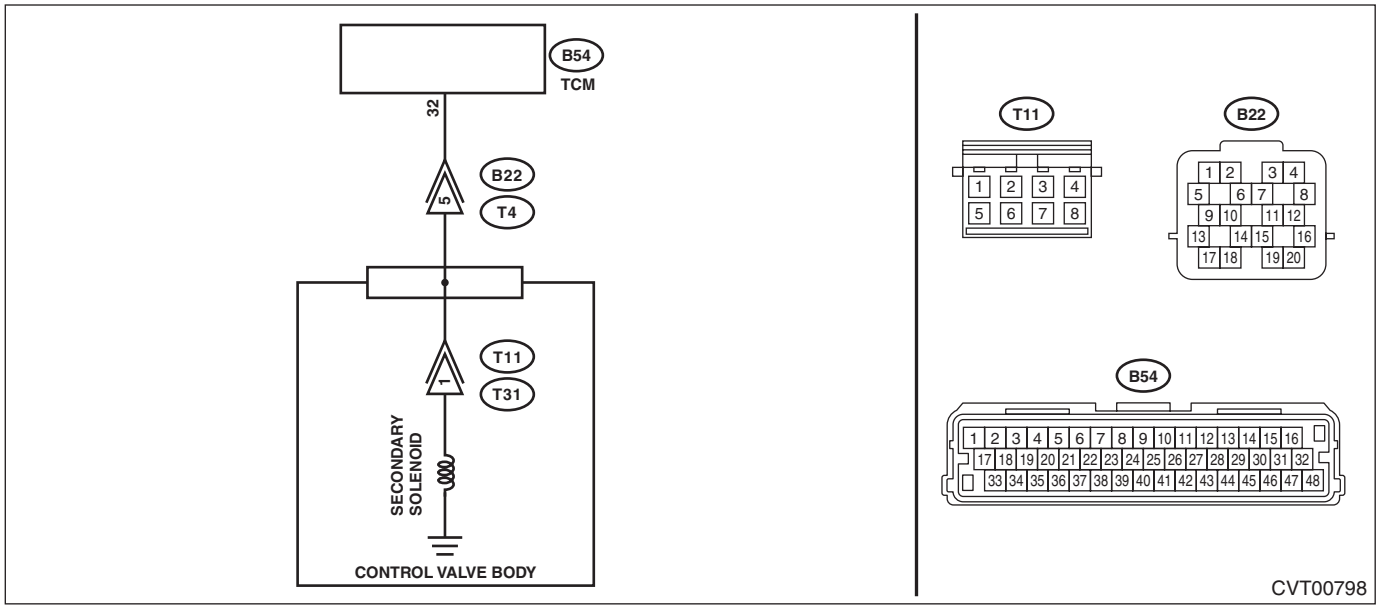

Step		Check	Yes	No
1	**CHECK DTC.** Read the DTC using Subaru Select Monitor.	Besides DTC P0747, is any of the DTCs P0842, P0843, P0962 and P0963 displayed?	Perform the diagnosis according to DTCs other than P0747.	Go to step **2**.
2	**CHECK SECONDARY SOLENOID (ACTIVE TEST).** 1) Turn the ignition switch to ON. 2) Using the Subaru Select Monitor, perform forced operation of the secondary solenoid. <Ref. to CVT(diag)-32, Active Test.>	Does the indication of 0 → 500 mA appear repeatedly during forced operation, and does operating sound emit during indicating 500 mA?	Go to step **5**.	Go to step **3**.
3	**CHECK SECONDARY SOLENOID.** 1) Turn the ignition switch to OFF. 2) Disconnect the transmission connector. 3) Measure the resistance between transmission connector and transmission body. ***Connector & terminal*** ***(T4) No. 5 — Transmission body:***	Is the resistance approx. 5 — 7 Ω? (when cold)	Go to step **7**.	Go to step **4**.
4	**CHECK HARNESS.** Check the harness for continuity.	Is the harness normal? (Is it free from defects such as open circuit, power supply-output short or GND-output short circuit, or poor contact?)	Go to step **7**.	Repair the harness.
5	**CHECK TRANSMISSION FLUID.** 1) Connect the transmission connector. 2) Check the amount of ATF. <Ref. to CVT(TR690)-38, ADJUSTMENT, CVTF.>	Is the ATF amount correct?	Go to step **6**.	Adjust the amount of ATF. <Ref. to CVT(TR690)-38, ADJUSTMENT, CVTF.>

	Step	Check	Yes	No
6	**CHECK TRANSMISSION FLUID.** Check the condition of ATF. <Ref. to CVT(TR690)-42, CONDITION CHECK, CVTF.>	Is the ATF OK?	Go to step **7**.	Check according to the "Corrective action" of ATF (CVTF) "CONDITION CHECK". <Ref. to CVT(TR690)-42, CONDITION CHECK, CVTF.>
7	**CHECK INPUT SIGNAL FOR TCM.** 1) Lift up the vehicle. 2) Start the engine. 3) Warm up until the ATF temperature reaches to 40 — 70°C (104 — 158°F). 4) Depress the brake pedal, and shift the select lever to "D" range. 5) Shift the select lever to "P" range. 6) Stabilize the engine speed at idle. 7) Read the data of «Actual secondary pressure» using Subaru Select Monitor.	Is the «Actual secondary pressure» 0.5 — 1.5 MPa?	Go to step **8**.	Replace the control valve body. <Ref. to CVT(TR690)-124, Control Valve Body.>
8	**CHECK INPUT SIGNAL FOR TCM.** 1) Keep the engine speed at 3,000 rpm. 2) Read the data of «Actual secondary pressure» using Subaru Select Monitor.	Is the «Actual secondary pressure» higher than step 7 value? Does the value change according to the engine speed, within the range of 1.5 — 2.5 MPa?	Go to step **9**.	Replace the control valve body. <Ref. to CVT(TR690)-124, Control Valve Body.>
9	**CHECK TCM INPUT SIGNAL (STALL TEST).** 1) Apply the parking brake. 2) Set the select lever to "D" range. 3) Depress the brake pedal firmly. 4) Slowly open the accelerator fully, and stabilize the engine speed. 5) Read the data of «Actual secondary pressure» using Subaru Select Monitor. **CAUTION:** **Do not perform a stall test for over 5 seconds at a time.**	Is the «Actual secondary pressure» higher than step 8 value? Does the value change according to the engine speed, within the range of 4.5 — 6.0 MPa?	Go to step **10**.	Replace the control valve body. <Ref. to CVT(TR690)-124, Control Valve Body.>
10	**DRIVING CHECK BY INSPECTION MODE.** 1) Turn the ignition switch to OFF. 2) Perform a drive check based on the "Inspection Mode". <Ref. to CVT(diag)-27, Inspection Mode.>	Does the AT OIL TEMP light blink and is DTC P0747 displayed?	Perform the secondary pressure test. <Ref. to CVT(TR690)-51, Secondary Pressure (Line Pressure) Test.>	Current condition is normal. It is possible that temporary poor contact occurs.

3. OUTLINE OF DIAGNOSIS (ENGINE TYPE FB)

• Detect the malfunction of transmission line pressure solenoid and hydraulic circuit (stuck to high pressure side).
• Judge as NG if "Target line pressure – Actual line pressure" becomes the predetermined value or less, while the actual line pressure is equal to or more than the predetermined value.

4. EXECUTION CONDITION (ENGINE TYPE FB)

Secondary Parameters	Execution condition
12 V battery system voltage	≥ 10 V
Engine speed	≥ 1000 rpm
Measured line pressure control solenoid valve current	≥ 0.5 A

5. DIAGNOSTIC METHOD (ENGINE TYPE FB)

If the duration of time while the following conditions are met is longer than the time indicated, judge as NG.

Judgment Value

Malfunction Criteria	Threshold Value
Measured line pressure	> Map1 kPa

Map 1

		Engine speed (rpm)						
		0	500	1000	1500	2000	2500	3000
Transmission fluid temperature (degC)	– 40	25600	25600	6231	6302	6341	6375	6404
	– 20	25600	25600	6231	6302	6341	6375	6404
	0	25600	25600	5977	6055	6102	6138	6120
	20	25600	25600	5624	5708	5764	5801	5836
	40	25600	25600	5547	5659	5726	5769	5804
	60	25600	25600	5420	5420	5540	5600	5643
	80	25600	25600	5351	5351	5487	5568	5609
	100	25600	25600	5422	5422	5422	5514	5553
	120	25600	25600	5266	5266	5266	5375	5444
	140	25600	25600	5236	5236	5236	5236	5335

		Engine speed (rpm)						
		3500	4000	4500	5000	5500	6000	6500
Transmission fluid temperature (degC)	– 40	6428	6462	6498	6532	6562	6588	6613
	– 20	6428	6462	6498	6532	6562	6588	6613
	0	6147	6184	6224	6260	6288	6314	6338
	20	5867	5905	5950	5988	6013	6041	6062
	40	5838	5878	5920	5956	5983	6008	6036
	60	5678	5718	5755	5785	5816	5836	5880
	80	5646	5680	5718	5745	5785	5816	5859
	100	5596	5635	5677	5711	5743	5780	5817
	120	5489	5522	5564	5600	5639	5682	5685
	140	5381	5408	5451	5489	5535	5585	5552

Time Needed for Diagnosis: 5 seconds
Malfunction Indicator Light Illumination: Illuminates when malfunction occurs in 2 continuous driving cycles.

6. OUTLINE OF DIAGNOSIS (ENGINE TYPE EZ)

• Detect the malfunction of transmission line pressure solenoid and hydraulic circuit (stuck to high pressure side).
• Judge as NG if “Target line pressure — Actual line pressure” becomes the predetermined value or less, while the actual line pressure is equal to or more than the predetermined value.

7. EXECUTION CONDITION (ENGINE TYPE EZ)

Secondary Parameters	Execution condition
12 V battery system voltage	≥ 10 V
Engine speed	≥ 1000 rpm
Measured line pressure control solenoid valve current	≥ 0.5 A

8. DIAGNOSTIC METHOD (ENGINE TYPE EZ)

If the duration of time while the following conditions are met is longer than the time indicated, judge as NG.

Judgment Value

Malfunction Criteria	Threshold Value
Measured line pressure	> Map 2 kPa

Map 2 is selected according to the command of the torque converter clutch circuit control solenoid output.

Map 2: command of the torque converter clutch circuit control solenoid output = ON

		Engine speed (rpm)						
		0	500	1000	1500	2000	2500	3000
Transmission fluid temperature (degC)	– 40	25600	25600	6213	5778	5748	5640	5608
	– 20	25600	25600	6213	5778	5748	5640	5608
	0	25600	25600	5512	5563	5603	5644	5677
	20	25600	25600	5379	5438	5510	5562	5600
	40	25600	25600	5277	5277	5381	5470	5533
	60	25600	25600	5316	5316	5336	5431	5503
	80	25600	25600	5403	5403	5403	5444	5519
	100	25600	25600	5381	5381	5381	5381	5446
	120	25600	25600	5255	5255	5255	5255	5336
	140	25600	25600	5128	5128	5128	5128	5174

		Engine speed (rpm)						
		3500	4000	4500	5000	5500	6000	6500
Transmission fluid temperature (degC)	– 40	5590	5582	5599	5635	5689	5740	5824
	– 20	5590	5582	5599	5635	5689	5740	5824
	0	5714	5758	5805	5881	5941	5998	6046
	20	5644	5691	5739	5795	5850	5899	5958
	40	5579	5629	5678	5737	5788	5844	5900
	60	5552	5595	5648	5697	5747	5800	5854
	80	5568	5617	5667	5709	5761	5833	5854
	100	5524	5587	5615	5666	5725	5784	5798
	120	5421	5473	5525	5570	5626	5636	5659
	140	5269	5326	5361	5401	5434	5440	5470

Map 2: command of the torque converter clutch circuit control solenoid output = OFF

		Engine speed (rpm)						
		0	500	1000	1500	2000	2500	3000
Transmission fluid temperature (degC)	– 40	25600	25600	5752	5752	5712	5616	5531
	– 20	25600	25600	5752	5752	5712	5616	5531
	0	25600	25600	5510	5565	5605	5649	5701
	20	25600	25600	5414	5476	5537	5579	5617
	40	25600	25600	5359	5359	5445	5514	5567
	60	25600	25600	5312	5312	5401	5490	5545
	80	25600	25600	5312	5312	5401	5490	5545
	100	25600	25600	5343	5343	5343	5427	5499
	120	25600	25600	5140	5140	5140	5281	5348
	140	25600	25600	5277	5277	5277	5277	5372

		Engine speed (rpm)						
		3500	4000	4500	5000	5500	6000	6500
Transmission fluid temperature (degC)	– 40	5549	5556	5581	5612	5671	5706	5719
	– 20	5549	5556	5581	5612	5671	5706	5719
	0	5750	5801	5851	5911	5976	6026	6078
	20	5664	5710	5769	5822	5862	5927	5983
	40	5610	5659	5718	5777	5825	5873	5929
	60	5578	5621	5668	5718	5763	5813	5863
	80	5578	5621	5668	5718	5763	5813	5863
	100	5577	5609	5650	5694	5739	5796	5810
	120	5415	5450	5482	5523	5549	5585	5604
	140	5480	5530	5560	5596	5628	5608	5661

Time Needed for Diagnosis: 5 seconds
Malfunction Indicator Light Illumination: Illuminates when malfunction occurs in 2 continuous driving cycles.

S: DTC P0751 SHIFT SOLENOID "A" PERFORMANCE/STUCK OFF

DTC DETECTING CONDITION:
Detected when two consecutive driving cycles with fault occur.

TROUBLE SYMPTOM:
- Shift control malfunction
- Engine speed increases abruptly.

1. ENGINE TYPE FB

WIRING DIAGRAM:
CVT control system <Ref. to WI-156, ENGINE TYPE FB, WIRING DIAGRAM, CVT Control System.>

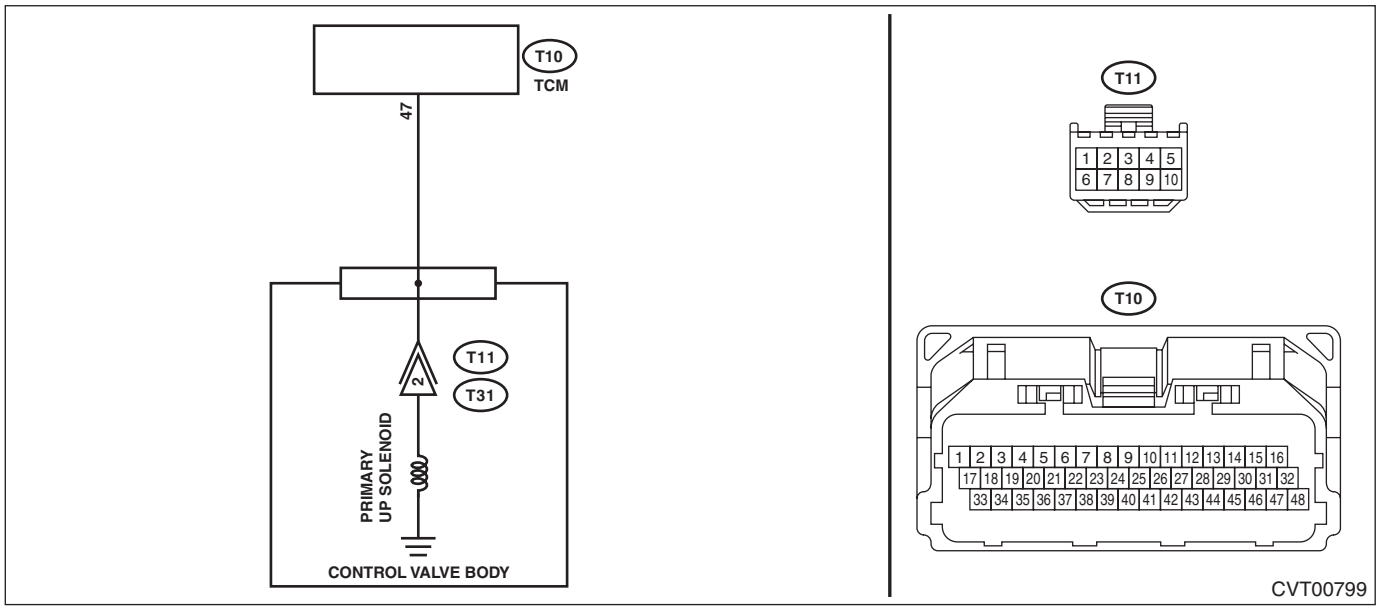

	Step	Check	Yes	No
1	**CHECK DTC.** Read the DTC using Subaru Select Monitor.	Besides DTC P0751, is any of the DTCs P0973, P0974, P0976, P0977, P2747 and P2751 displayed?	Perform the diagnosis according to DTCs other than P0751.	Go to step **2**.
2	**CHECK PRIMARY UP SOLENOID (ACTIVE TEST).** 1) Turn the ignition switch to ON. 2) Using the Subaru Select Monitor, perform forced operation of the primary UP solenoid. <Ref. to CVT(diag)-32, Active Test.>	Does the indication of 0 → 50% appear repeatedly during forced operation, and does operating sound emit during indicating 50%?	Go to step **5**.	Go to step **3**.
3	**CHECK PRIMARY UP SOLENOID.** 1) Turn the ignition switch to OFF. 2) Disconnect the TCM connector. 3) Measure the resistance between TCM connector and transmission body. ***Connector & terminal*** ***(T10) No. 47 — Transmission body:***	Is the resistance approx. 10 — 13.5 Ω? (when cold)	Go to step **7**.	Go to step **4**.
4	**CHECK HARNESS.** Check the harness for continuity.	Is the harness normal? (Is it free from defects such as open circuit, power supply-output short or GND-output short circuit, or poor contact?)	Go to step **7**.	Repair the harness.
5	**CHECK TRANSMISSION FLUID.** 1) Connect the TCM connector. 2) Check the amount of ATF. <Ref. to CVT(TR580)-39, ADJUSTMENT, CVTF.>	Is the ATF amount correct?	Go to step **6**.	Adjust the amount of ATF. <Ref. to CVT(TR580)-39, ADJUSTMENT, CVTF.>

	Step	Check	Yes	No
6	**CHECK TRANSMISSION FLUID.** Check the condition of ATF. <Ref. to CVT(TR580)-42, CONDITION CHECK, CVTF.>	Is the ATF OK?	Go to step **7**.	Check according to the "Corrective action" of ATF (CVTF) "CONDITION CHECK". <Ref. to CVT(TR580)-42, CONDITION CHECK, CVTF.>
7	**CHECK INPUT SIGNAL FOR TCM.** 1) Lift up the vehicle. 2) Start the engine. 3) Warm up until the ATF temperature reaches to 40 — 70°C (104 — 158°F). 4) Depress the brake pedal, and shift the select lever to "D" range. 5) Shift the select lever to "P" range. 6) Stabilize the engine speed at idle. 7) Read the data of «Actual secondary pressure» using Subaru Select Monitor.	Is the «Actual secondary pressure» 0.5 — 1.5 MPa?	Go to step **8**.	Replace the transmission assembly. <Ref. to CVT(TR580)-63, Automatic Transmission Assembly.>
8	**CHECK INPUT SIGNAL FOR TCM.** 1) Set the select lever to "D" range. 2) Release the brake pedal to stabilize the engine speed and front wheel speed. 3) Read the data of «Actual Gear Ratio» using Subaru Select Monitor.	Is the «Actual Gear Ratio» 1.5 — 2.6?	Go to step **9**.	Replace the transmission assembly. <Ref. to CVT(TR580)-63, Automatic Transmission Assembly.>
9	**CHECK INPUT SIGNAL FOR TCM.** 1) Set the select lever to "D" range. 2) Slowly increase the speed to 40 km/h (25 MPH) and keep to a constant speed. 3) Read the data of «Actual Gear Ratio» using Subaru Select Monitor.	Is the «Actual Gear Ratio» 0.5 — 0.9?	Go to step **10**.	Replace the transmission assembly. <Ref. to CVT(TR580)-63, Automatic Transmission Assembly.>
10	**DRIVING CHECK BY INSPECTION MODE.** 1) Turn the ignition switch to OFF. 2) Perform a drive check based on the "Inspection Mode". <Ref. to CVT(diag)-27, Inspection Mode.>	Does the AT OIL TEMP light blink and is DTC P0751 displayed?	Replace the transmission assembly. <Ref. to CVT(TR580)-63, Automatic Transmission Assembly.>	Current condition is normal. It is possible that temporary poor contact occurs.

2. ENGINE TYPE EZ

WIRING DIAGRAM:

CVT control system <Ref. to WI-162, ENGINE TYPE EZ, WIRING DIAGRAM, CVT Control System.>

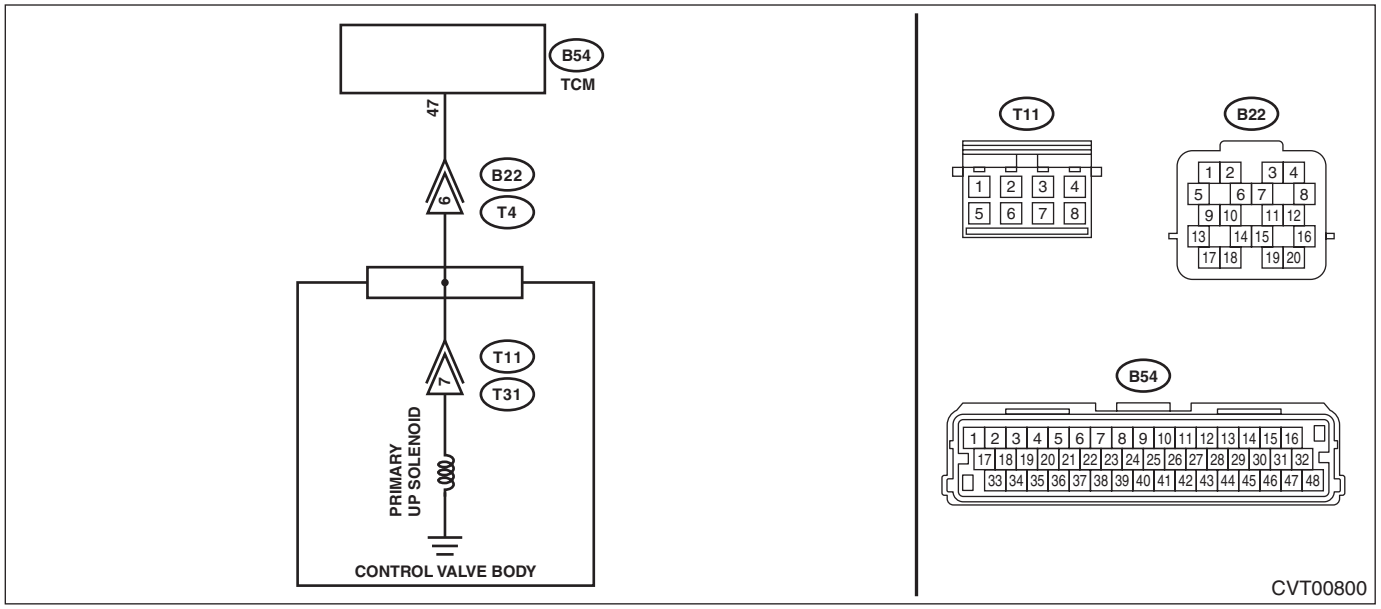

Step		Check	Yes	No
1	**CHECK DTC.** Read the DTC using Subaru Select Monitor.	Besides DTC P0751, is any of the DTCs P0973, P0974, P0976, P0977, P2747 and P2751 displayed?	Perform the diagnosis according to DTCs other than P0751.	Go to step **2**.
2	**CHECK PRIMARY UP SOLENOID (ACTIVE TEST).** 1) Turn the ignition switch to ON. 2) Using the Subaru Select Monitor, perform forced operation of the primary UP solenoid. <Ref. to CVT(diag)-32, Active Test.>	Does the indication of 0 → 50% appear repeatedly during forced operation, and does operating sound emit during indicating 50%?	Go to step **5**.	Go to step **3**.
3	**CHECK PRIMARY UP SOLENOID.** 1) Turn the ignition switch to OFF. 2) Disconnect the transmission connector. 3) Measure the resistance between transmission connector and transmission body. ***Connector & terminal*** ***(T4) No. 6 — Transmission body:***	Is the resistance approx. 10 — 13.5 Ω? (when cold)	Go to step **7**.	Go to step **4**.
4	**CHECK HARNESS.** Check the harness for continuity.	Is the harness normal? (Is it free from defects such as open circuit, power supply-output short or GND-output short circuit, or poor contact?)	Go to step **7**.	Repair the harness.
5	**CHECK TRANSMISSION FLUID.** 1) Connect the transmission connector. 2) Check the amount of ATF. <Ref. to CVT(TR690)-38, ADJUSTMENT, CVTF.>	Is the ATF amount correct?	Go to step **6**.	Adjust the amount of ATF. <Ref. to CVT(TR690)-38, ADJUSTMENT, CVTF.>

	Step	Check	Yes	No
6	**CHECK TRANSMISSION FLUID.** Check the condition of ATF. <Ref. to CVT(TR690)-42, CONDITION CHECK, CVTF.>	Is the ATF OK?	Go to step **7**.	Check according to the "Corrective action" of ATF (CVTF) "CONDITION CHECK". <Ref. to CVT(TR690)-42, CONDITION CHECK, CVTF.>
7	**CHECK INPUT SIGNAL FOR TCM.** 1) Lift up the vehicle. 2) Start the engine. 3) Warm up until the ATF temperature reaches to 40 — 70°C (104 — 158°F). 4) Depress the brake pedal, and shift the select lever to "D" range. 5) Shift the select lever to "P" range. 6) Stabilize the engine speed at idle. 7) Read the data of «Actual secondary pressure» using Subaru Select Monitor.	Is the «Actual secondary pressure» 0.5 — 1.5 MPa?	Go to step **8**.	Replace the transmission assembly. <Ref. to CVT(TR690)-58, Automatic Transmission Assembly.>
8	**CHECK INPUT SIGNAL FOR TCM.** 1) Set the select lever to "D" range. 2) Release the brake pedal to stabilize the engine speed and front wheel speed. 3) Read the data of «Actual Gear Ratio» using Subaru Select Monitor.	Is the «Actual Gear Ratio» 2.0 — 2.4?	Go to step **9**.	Replace the transmission assembly. <Ref. to CVT(TR690)-58, Automatic Transmission Assembly.>
9	**CHECK INPUT SIGNAL FOR TCM.** 1) Set the select lever to "D" range. 2) Slowly increase the speed to 40 km/h (25 MPH) and keep to a constant speed. 3) Read the data of «Actual Gear Ratio» using Subaru Select Monitor.	Is the «Actual Gear Ratio» 0.5 — 0.8?	Go to step **10**.	Replace the transmission assembly. <Ref. to CVT(TR690)-58, Automatic Transmission Assembly.>
10	**DRIVING CHECK BY INSPECTION MODE.** 1) Turn the ignition switch to OFF. 2) Perform a drive check based on the "Inspection Mode". <Ref. to CVT(diag)-27, Inspection Mode.>	Does the AT OIL TEMP light blink and is DTC P0751 displayed?	Replace the transmission assembly. <Ref. to CVT(TR690)-58, Automatic Transmission Assembly.>	Current condition is normal. It is possible that temporary poor contact occurs.

3. OUTLINE OF DIAGNOSIS (ENGINE TYPE FB)

• Detect the malfunction of shift-up fluid pressure control solenoid characteristics and hydraulic circuit characteristics (stuck to low pressure side).
• Judge as NG if the amount of gear rate change per second is equal to or larger than the predetermined value, even though the up-shift command is issued.

4. EXECUTION CONDITION (ENGINE TYPE FB)

Secondary Parameters	Execution condition
12 V battery system voltage	≥ 10 V
Engine speed	≥ 1000 rpm
Commanded duty of shift down pressure control solenoid	0%
Actual pulley ratio*	> 1.5 and < 2.549

* Actual pulley ratio: Measured primary pulley shaft speed / Measured secondary pulley shaft speed

5. DIAGNOSTIC METHOD (ENGINE TYPE FB)

If the duration of time while the following conditions are met is longer than the time indicated, judge as NG.

Judgment Value

Malfunction Criteria	Threshold Value
Actual pulley ratio change for 1 second	> – 0.08
Commanded duty of shift up pressure control solenoid	≥ 90%

Time Needed for Diagnosis: 1 second
Malfunction Indicator Light Illumination: Illuminates when malfunction occurs in 2 continuous driving cycles.

6. OUTLINE OF DIAGNOSIS (ENGINE TYPE EZ)

• Detect the malfunction of shift-up fluid pressure control solenoid characteristics and hydraulic circuit characteristics (stuck to low pressure side).
• Judge as NG if the amount of gear rate change per second is equal to or larger than the predetermined value, even though the up-shift command is issued.

7. EXECUTION CONDITION (ENGINE TYPE EZ)

Secondary Parameters	Execution condition
12 V battery system voltage	≥ 10 V
Engine speed	≥ 1000 rpm
Commanded duty of shift down pressure control solenoid	0%
Actual pulley ratio*	> 1.5 and < 2.348

* Actual pulley ratio: Measured primary pulley shaft speed / Measured secondary pulley shaft speed

8. DIAGNOSTIC METHOD (ENGINE TYPE EZ)

If the duration of time while the following conditions are met is longer than the time indicated, judge as NG.

Judgment Value

Malfunction Criteria	Threshold Value
Actual pulley ratio change for 1 second	> – 0.08
Commanded duty of shift up pressure control solenoid	≥ 90%

Time Needed for Diagnosis: 1 second
Malfunction Indicator Light Illumination: Illuminates when malfunction occurs in 2 continuous driving cycles.

T: DTC P0752 SHIFT SOLENOID "A" STUCK ON

DTC DETECTING CONDITION:
Detected when two consecutive driving cycles with fault occur.
TROUBLE SYMPTOM:
- Acceleration is poor during standing start.
- Shift control malfunction

1. ENGINE TYPE FB

WIRING DIAGRAM:
CVT control system <Ref. to WI-156, ENGINE TYPE FB, WIRING DIAGRAM, CVT Control System.>

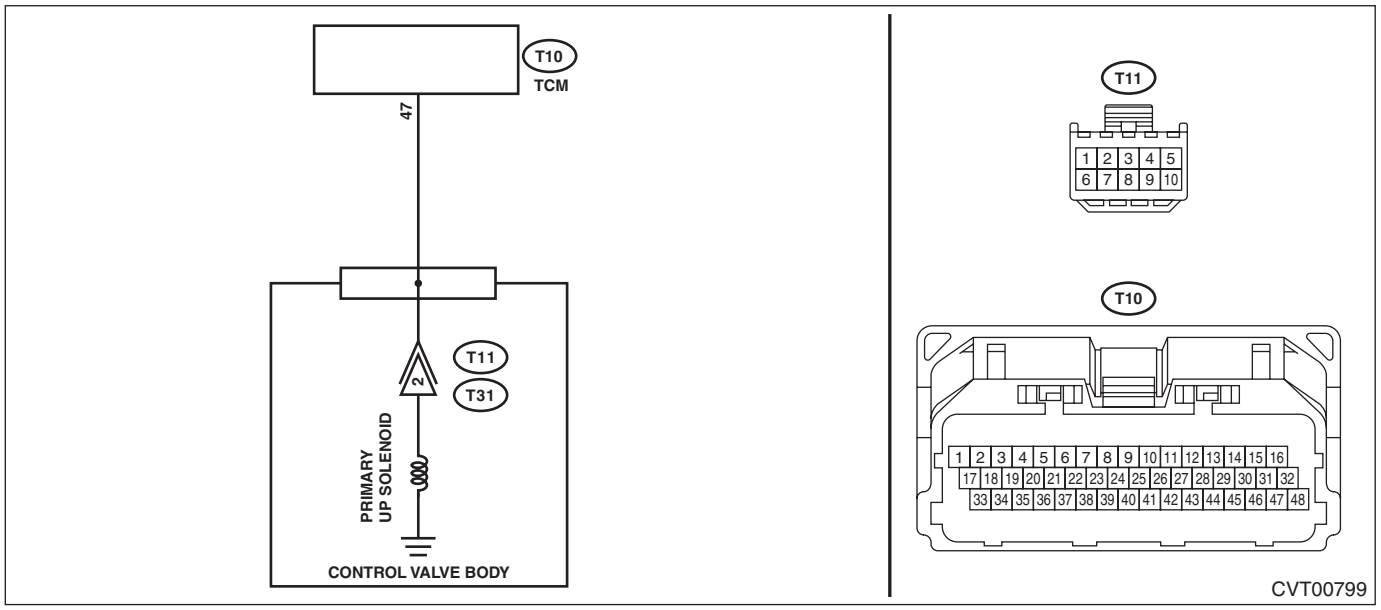

	Step	Check	Yes	No
1	**CHECK DTC.** Read the DTC using Subaru Select Monitor.	Besides DTC P0752, is any of the DTCs P0973, P0974, P0976, P0977, P2747 and P2751 displayed?	Perform the diagnosis according to DTCs other than P0752.	Go to step **2**.
2	**CHECK PRIMARY UP SOLENOID (ACTIVE TEST).** 1) Turn the ignition switch to ON. 2) Using the Subaru Select Monitor, perform forced operation of the primary UP solenoid. <Ref. to CVT(diag)-32, Active Test.>	Does the indication of 0 → 50% appear repeatedly during forced operation, and does operating sound emit during indicating 50%?	Go to step **5**.	Go to step **3**.
3	**CHECK PRIMARY UP SOLENOID.** 1) Turn the ignition switch to OFF. 2) Disconnect the TCM connector. 3) Measure the resistance between TCM connector and transmission body. ***Connector & terminal*** ***(T10) No. 47 — Transmission body:***	Is the resistance approx. 10 — 13.5 Ω? (when cold)	Go to step **7**.	Go to step **4**.
4	**CHECK HARNESS.** Check the harness for continuity.	Is the harness normal? (Is it free from defects such as open circuit, power supply-output short or GND-output short circuit, or poor contact?)	Go to step **7**.	Repair the harness.
5	**CHECK TRANSMISSION FLUID.** 1) Connect the TCM connector. 2) Check the amount of ATF. <Ref. to CVT(TR580)-39, ADJUSTMENT, CVTF.>	Is the ATF amount correct?	Go to step **6**.	Adjust the amount of ATF. <Ref. to CVT(TR580)-39, ADJUSTMENT, CVTF.>

	Step	Check	Yes	No
6	**CHECK TRANSMISSION FLUID.** Check the condition of ATF. <Ref. to CVT(TR580)-42, CONDITION CHECK, CVTF.>	Is the ATF OK?	Go to step **7**.	Check according to the "Corrective action" of ATF (CVTF) "CONDITION CHECK". <Ref. to CVT(TR580)-42, CONDITION CHECK, CVTF.>
7	**CHECK INPUT SIGNAL FOR TCM.** 1) Lift up the vehicle. 2) Start the engine. 3) Warm up until the ATF temperature reaches to 40 — 70°C (104 — 158°F). 4) Depress the brake pedal, and shift the select lever to "D" range. 5) Shift the select lever to "P" range. 6) Stabilize the engine speed at idle. 7) Read the data of «Actual secondary pressure» using Subaru Select Monitor.	Is the «Actual secondary pressure» 0.5 — 1.5 MPa?	Go to step **8**.	Replace the transmission assembly. <Ref. to CVT(TR580)-63, Automatic Transmission Assembly.>
8	**CHECK INPUT SIGNAL FOR TCM.** 1) Set the select lever to "D" range. 2) Release the brake pedal to stabilize the engine speed and front wheel speed. 3) Read the data of «Actual Gear Ratio» using Subaru Select Monitor.	Is the «Actual Gear Ratio» 1.5 — 2.6?	Go to step **9**.	Replace the transmission assembly. <Ref. to CVT(TR580)-63, Automatic Transmission Assembly.>
9	**CHECK INPUT SIGNAL FOR TCM.** 1) Set the select lever to "D" range. 2) Slowly increase the speed to 40 km/h (25 MPH) and keep to a constant speed. 3) Read the data of «Actual Gear Ratio» using Subaru Select Monitor.	Is the «Actual Gear Ratio» 0.5 — 0.9?	Go to step **10**.	Replace the transmission assembly. <Ref. to CVT(TR580)-63, Automatic Transmission Assembly.>
10	**DRIVING CHECK BY INSPECTION MODE.** 1) Turn the ignition switch to OFF. 2) Perform a drive check based on the "Inspection Mode". <Ref. to CVT(diag)-27, Inspection Mode.>	Does the AT OIL TEMP light blink and is DTC P0752 displayed?	Replace the transmission assembly. <Ref. to CVT(TR580)-63, Automatic Transmission Assembly.>	Current condition is normal. It is possible that temporary poor contact occurs.

2. ENGINE TYPE EZ

WIRING DIAGRAM:

CVT control system <Ref. to WI-162, ENGINE TYPE EZ, WIRING DIAGRAM, CVT Control System.>

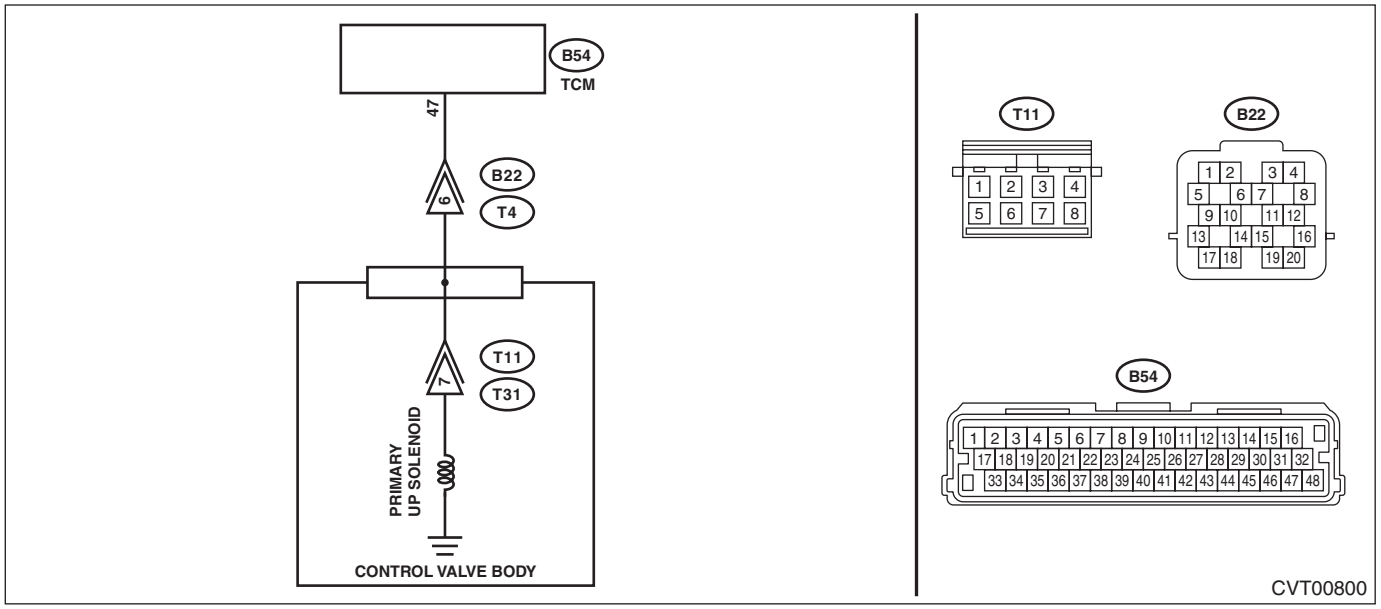

Step		Check	Yes	No
1	**CHECK DTC.** Read the DTC using Subaru Select Monitor.	Besides DTC P0752, is any of the DTCs P0973, P0974, P0976, P0977, P2747 and P2751 displayed?	Perform the diagnosis according to DTCs other than P0752.	Go to step **2**.
2	**CHECK PRIMARY UP SOLENOID (ACTIVE TEST).** 1) Turn the ignition switch to ON. 2) Using the Subaru Select Monitor, perform forced operation of the primary UP solenoid. <Ref. to CVT(diag)-32, Active Test.>	Does the indication of 0 → 50% appear repeatedly during forced operation, and does operating sound emit during indicating 50%?	Go to step **5**.	Go to step **3**.
3	**CHECK PRIMARY UP SOLENOID.** 1) Turn the ignition switch to OFF. 2) Disconnect the transmission connector. 3) Measure the resistance between transmission connector and transmission body. ***Connector & terminal*** ***(T4) No. 6 — Transmission body:***	Is the resistance approx. 10 — 13.5 Ω? (when cold)	Go to step **7**.	Go to step **4**.
4	**CHECK HARNESS.** Check the harness for continuity.	Is the harness normal? (Is it free from defects such as open circuit, power supply-output short or GND-output short circuit, or poor contact?)	Go to step **7**.	Repair the harness.
5	**CHECK TRANSMISSION FLUID.** 1) Connect the transmission connector. 2) Check the amount of ATF. <Ref. to CVT(TR690)-38, ADJUSTMENT, CVTF.>	Is the ATF amount correct?	Go to step **6**.	Adjust the amount of ATF. <Ref. to CVT(TR690)-38, ADJUSTMENT, CVTF.>

	Step	Check	Yes	No
6	**CHECK TRANSMISSION FLUID.** Check the condition of ATF. <Ref. to CVT(TR690)-42, CONDITION CHECK, CVTF.>	Is the ATF OK?	Go to step **7**.	Check according to the "Corrective action" of ATF (CVTF) "CONDITION CHECK". <Ref. to CVT(TR690)-42, CONDITION CHECK, CVTF.>
7	**CHECK INPUT SIGNAL FOR TCM.** 1) Lift up the vehicle. 2) Start the engine. 3) Warm up until the ATF temperature reaches to 40 — 70°C (104 — 158°F). 4) Depress the brake pedal, and shift the select lever to "D" range. 5) Shift the select lever to "P" range. 6) Stabilize the engine speed at idle. 7) Read the data of «Actual secondary pressure» using Subaru Select Monitor.	Is the «Actual secondary pressure» 0.5 — 1.5 MPa?	Go to step **8**.	Replace the transmission assembly. <Ref. to CVT(TR690)-58, Automatic Transmission Assembly.>
8	**CHECK INPUT SIGNAL FOR TCM.** 1) Set the select lever to "D" range. 2) Release the brake pedal to stabilize the engine speed and front wheel speed. 3) Read the data of «Actual Gear Ratio» using Subaru Select Monitor.	Is the «Actual Gear Ratio» 2.0 — 2.4?	Go to step **9**.	Replace the transmission assembly. <Ref. to CVT(TR690)-58, Automatic Transmission Assembly.>
9	**CHECK INPUT SIGNAL FOR TCM.** 1) Set the select lever to "D" range. 2) Slowly increase the speed to 40 km/h (25 MPH) and keep to a constant speed. 3) Read the data of «Actual Gear Ratio» using Subaru Select Monitor.	Is the «Actual Gear Ratio» 0.5 — 0.8?	Go to step **10**.	Replace the transmission assembly. <Ref. to CVT(TR690)-58, Automatic Transmission Assembly.>
10	**DRIVING CHECK BY INSPECTION MODE.** 1) Turn the ignition switch to OFF. 2) Perform a drive check based on the "Inspection Mode". <Ref. to CVT(diag)-27, Inspection Mode.>	Does the AT OIL TEMP light blink and is DTC P0752 displayed?	Replace the transmission assembly. <Ref. to CVT(TR690)-58, Automatic Transmission Assembly.>	Current condition is normal. It is possible that temporary poor contact occurs.

3. OUTLINE OF DIAGNOSIS

• Detect the malfunction of shift-up fluid pressure control solenoid and hydraulic circuit characteristics (stuck to high pressure side).
• Judge as NG if the amount of gear rate change per second is within the predetermined value, even though the down-shift command is issued.

4. EXECUTION CONDITION

Secondary Parameters	Execution condition
12 V battery system voltage	≥ 10 V
Engine speed	≥ 1000 rpm
Commanded duty of shift up pressure control solenoid	0%
Actual pulley ratio*	< 0.5

* Actual pulley ratio: Measured primary pulley shaft speed / Measured secondary pulley shaft speed

5. DIAGNOSTIC METHOD

If the duration of time while the following conditions are met is longer than the time indicated, judge as NG.

Judgment Value

Malfunction Criteria	Threshold Value
Actual pulley ratio change for 1 second	> – 0.08 and < 0.08
Commanded duty of shift down pressure control solenoid	> 80%

Time Needed for Diagnosis: 1 second
Malfunction Indicator Light Illumination: Illuminates when malfunction occurs in 2 continuous driving cycles.

U: DTC P0756 SHIFT SOLENOID "B" PERFORMANCE/STUCK OFF

DTC DETECTING CONDITION:
Detected when two consecutive driving cycles with fault occur.
TROUBLE SYMPTOM:
- Acceleration is poor during standing start.
- Shift control malfunction

1. ENGINE TYPE FB

WIRING DIAGRAM:
CVT control system <Ref. to WI-156, ENGINE TYPE FB, WIRING DIAGRAM, CVT Control System.>

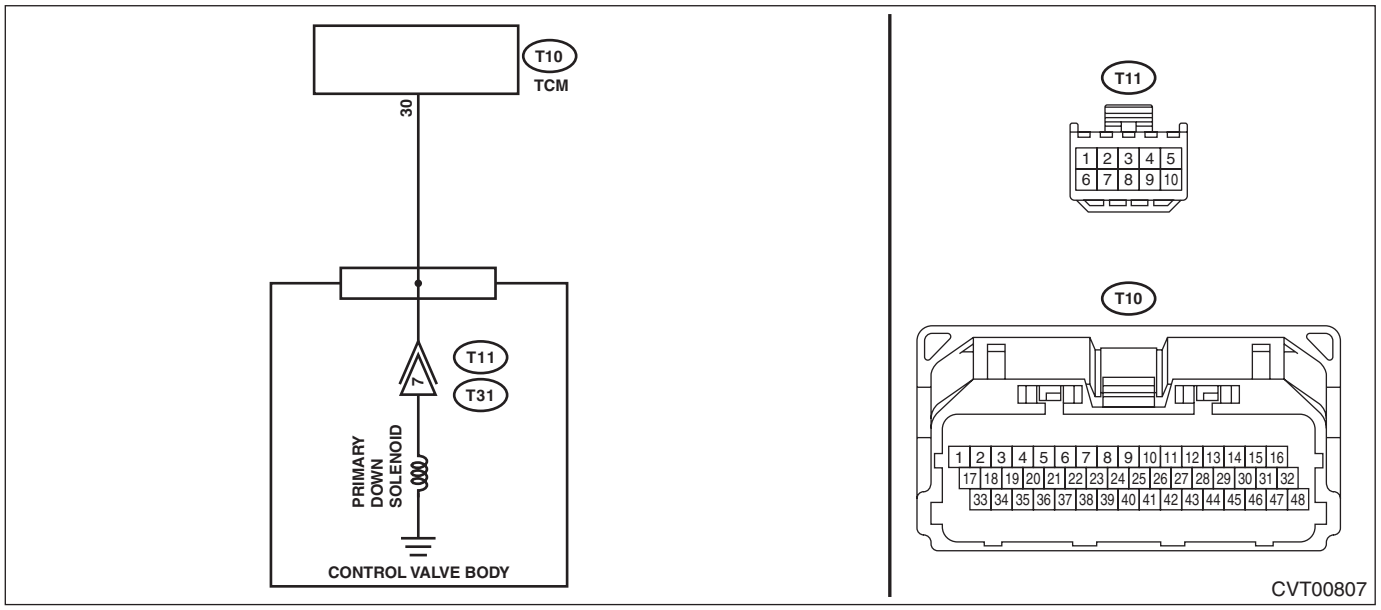

	Step	Check	Yes	No
1	**CHECK DTC.** Read the DTC using Subaru Select Monitor.	Besides DTC P0756, is any of the DTCs P0973, P0974, P0976, P0977, P2747 and P2751 displayed?	Perform the diagnosis according to DTCs other than P0756.	Go to step **2**.
2	**CHECK PRIMARY DOWN SOLENOID (ACTIVE TEST).** 1) Turn the ignition switch to ON. 2) Using the Subaru Select Monitor, perform forced operation of the primary DOWN solenoid. <Ref. to CVT(diag)-32, Active Test.>	Does the indication of 0 → 50% appear repeatedly during forced operation, and does operating sound emit during indicating 50%?	Go to step **5**.	Go to step **3**.
3	**CHECK PRIMARY DOWN SOLENOID.** 1) Turn the ignition switch to OFF. 2) Disconnect the TCM connector. 3) Measure the resistance between TCM connector and transmission body. ***Connector & terminal*** ***(T10) No. 30 — Transmission body:***	Is the resistance approx. 10 — 13.5 Ω? (when cold)	Go to step **7**.	Go to step **4**.
4	**CHECK HARNESS.** Check the harness for continuity.	Is the harness normal? (Is it free from defects such as open circuit, power supply-output short or GND-output short circuit, or poor contact?)	Go to step **7**.	Repair the harness.
5	**CHECK TRANSMISSION FLUID.** 1) Connect the TCM connector. 2) Check the amount of ATF. <Ref. to CVT(TR580)-39, ADJUSTMENT, CVTF.>	Is the ATF amount correct?	Go to step **6**.	Adjust the amount of ATF. <Ref. to CVT(TR580)-39, ADJUSTMENT, CVTF.>

	Step	Check	Yes	No
6	**CHECK TRANSMISSION FLUID.** Check the condition of ATF. <Ref. to CVT(TR580)-42, CONDITION CHECK, CVTF.>	Is the ATF OK?	Go to step **7**.	Check according to the "Corrective action" of ATF (CVTF) "CONDITION CHECK". <Ref. to CVT(TR580)-42, CONDITION CHECK, CVTF.>
7	**CHECK INPUT SIGNAL FOR TCM.** 1) Lift up the vehicle. 2) Start the engine. 3) Warm up until the ATF temperature reaches to 40 — 70°C (104 — 158°F). 4) Depress the brake pedal, and shift the select lever to "D" range. 5) Shift the select lever to "P" range. 6) Stabilize the engine speed at idle. 7) Read the data of «Actual secondary pressure» using Subaru Select Monitor.	Is the «Actual secondary pressure» 0.5 — 1.5 MPa?	Go to step **8**.	Replace the transmission assembly. <Ref. to CVT(TR580)-63, Automatic Transmission Assembly.>
8	**CHECK INPUT SIGNAL FOR TCM.** 1) Set the select lever to "D" range. 2) Release the brake pedal to stabilize the engine speed and front wheel speed. 3) Read the data of «Actual Gear Ratio» using Subaru Select Monitor.	Is the «Actual Gear Ratio» 1.5 — 2.6?	Go to step **9**.	Replace the transmission assembly. <Ref. to CVT(TR580)-63, Automatic Transmission Assembly.>
9	**CHECK INPUT SIGNAL FOR TCM.** 1) Set the select lever to "D" range. 2) Slowly increase the speed to 40 km/h (25 MPH) and keep to a constant speed. 3) Read the data of «Actual Gear Ratio» using Subaru Select Monitor.	Is the «Actual Gear Ratio» 0.5 — 0.9?	Go to step **10**.	Replace the transmission assembly. <Ref. to CVT(TR580)-63, Automatic Transmission Assembly.>
10	**DRIVING CHECK BY INSPECTION MODE.** 1) Turn the ignition switch to OFF. 2) Perform a drive check based on the "Inspection Mode". <Ref. to CVT(diag)-27, Inspection Mode.>	Does the AT OIL TEMP light blink and is DTC P0756 displayed?	Replace the transmission assembly. <Ref. to CVT(TR580)-63, Automatic Transmission Assembly.>	Current condition is normal. It is possible that temporary poor contact occurs.

2. ENGINE TYPE EZ

WIRING DIAGRAM:

CVT control system <Ref. to WI-162, ENGINE TYPE EZ, WIRING DIAGRAM, CVT Control System.>

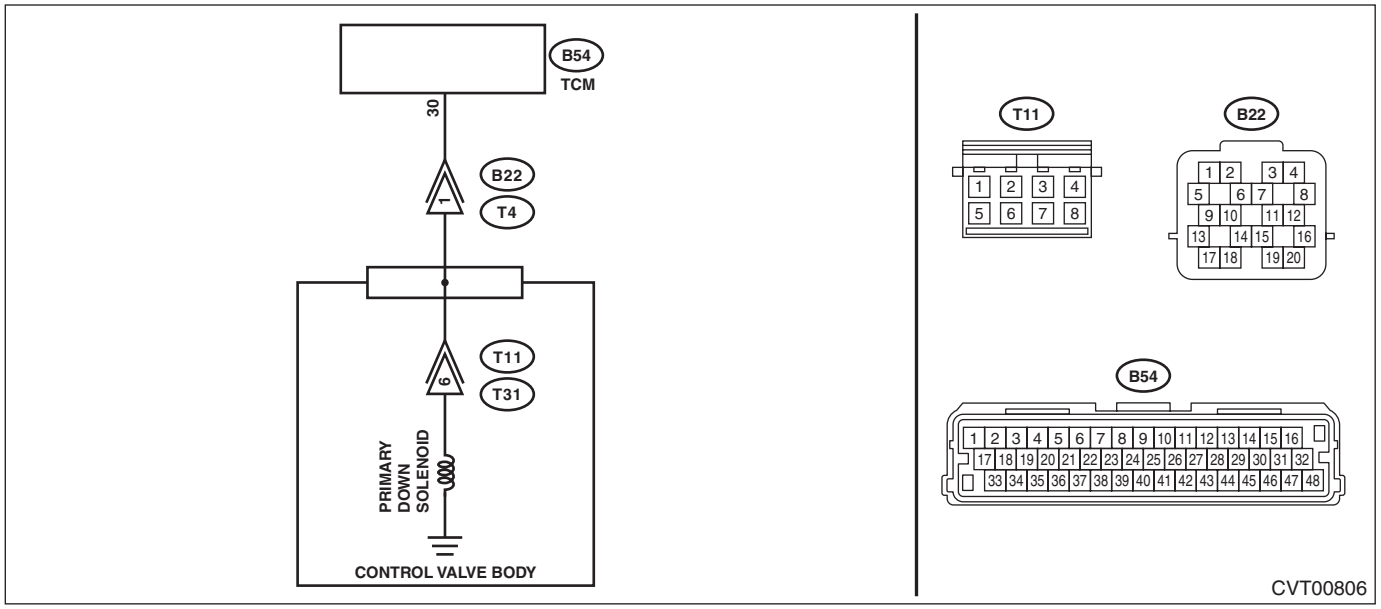

Step		Check	Yes	No
1	**CHECK DTC.** Read the DTC using Subaru Select Monitor.	Besides DTC P0756, is any of the DTCs P0973, P0974, P0976, P0977, P2747 and P2751 displayed?	Perform the diagnosis according to DTCs other than P0756.	Go to step **2**.
2	**CHECK PRIMARY DOWN SOLENOID (ACTIVE TEST).** 1) Turn the ignition switch to ON. 2) Using the Subaru Select Monitor, perform forced operation of the primary DOWN solenoid. <Ref. to CVT(diag)-32, Active Test.>	Does the indication of 0 → 50% appear repeatedly during forced operation, and does operating sound emit during indicating 50%?	Go to step **5**.	Go to step **3**.
3	**CHECK PRIMARY DOWN SOLENOID.** 1) Turn the ignition switch to OFF. 2) Disconnect the transmission connector. 3) Measure the resistance between transmission connector and transmission body. ***Connector & terminal*** ***(T4) No. 1 — Transmission body:***	Is the resistance approx. 10 — 13.5 Ω? (when cold)	Go to step **7**.	Go to step **4**.
4	**CHECK HARNESS.** Check the harness for continuity.	Is the harness normal? (Is it free from defects such as open circuit, power supply-output short or GND-output short circuit, or poor contact?)	Go to step **7**.	Repair the harness.
5	**CHECK TRANSMISSION FLUID.** 1) Connect the transmission connector. 2) Check the amount of ATF. <Ref. to CVT(TR690)-38, ADJUSTMENT, CVTF.>	Is the ATF amount correct?	Go to step **6**.	Adjust the amount of ATF. <Ref. to CVT(TR690)-38, ADJUSTMENT, CVTF.>

	Step	Check	Yes	No
6	**CHECK TRANSMISSION FLUID.** Check the condition of ATF. <Ref. to CVT(TR690)-42, CONDITION CHECK, CVTF.>	Is the ATF OK?	Go to step **7**.	Check according to the "Corrective action" of ATF (CVTF) "CONDITION CHECK". <Ref. to CVT(TR690)-42, CONDITION CHECK, CVTF.>
7	**CHECK INPUT SIGNAL FOR TCM.** 1) Lift up the vehicle. 2) Start the engine. 3) Warm up until the ATF temperature reaches to 40 — 70°C (104 — 158°F). 4) Depress the brake pedal, and shift the select lever to "D" range. 5) Shift the select lever to "P" range. 6) Stabilize the engine speed at idle. 7) Read the data of «Actual secondary pressure» using Subaru Select Monitor.	Is the «Actual secondary pressure» 0.5 — 1.5 MPa?	Go to step **8**.	Replace the transmission assembly. <Ref. to CVT(TR690)-58, Automatic Transmission Assembly.>
8	**CHECK INPUT SIGNAL FOR TCM.** 1) Set the select lever to "D" range. 2) Release the brake pedal to stabilize the engine speed and front wheel speed. 3) Read the data of «Actual Gear Ratio» using Subaru Select Monitor.	Is the «Actual Gear Ratio» 2.0 — 2.4?	Go to step **9**.	Replace the transmission assembly. <Ref. to CVT(TR690)-58, Automatic Transmission Assembly.>
9	**CHECK INPUT SIGNAL FOR TCM.** 1) Set the select lever to "D" range. 2) Slowly increase the speed to 40 km/h (25 MPH) and keep to a constant speed. 3) Read the data of «Actual Gear Ratio» using Subaru Select Monitor.	Is the «Actual Gear Ratio» 0.5 — 0.8?	Go to step **10**.	Replace the transmission assembly. <Ref. to CVT(TR690)-58, Automatic Transmission Assembly.>
10	**DRIVING CHECK BY INSPECTION MODE.** 1) Turn the ignition switch to OFF. 2) Perform a drive check based on the "Inspection Mode". <Ref. to CVT(diag)-27, Inspection Mode.>	Does the AT OIL TEMP light blink and is DTC P0756 displayed?	Replace the transmission assembly. <Ref. to CVT(TR690)-58, Automatic Transmission Assembly.>	Current condition is normal. It is possible that temporary poor contact occurs.

3. OUTLINE OF DIAGNOSIS (ENGINE TYPE FB)

• Detect the malfunction of shift-down fluid pressure control solenoid characteristics and hydraulic circuit characteristics (stuck to low pressure side).
• Judge as NG if the amount of gear rate change per second is within the predetermined value, even though the down-shift command is issued.

4. EXECUTION CONDITION (ENGINE TYPE FB)

Secondary Parameters	Execution condition
12 V battery system voltage	≥ 10 V
Engine speed	≥ 1000 rpm
Commanded duty of shift up pressure control solenoid	0%
Actual pulley ratio*	≥ 0.406 and ≤ 2.549

* Actual pulley ratio: Measured primary pulley shaft speed / Measured secondary pulley shaft speed

5. DIAGNOSTIC METHOD (ENGINE TYPE FB)

If the duration of time while the following conditions are met is longer than the time indicated, judge as NG.

Judgment Value

Malfunction Criteria	Threshold Value
Actual pulley ratio change for 1 second	> – 0.08 and < 0.08
Commanded duty of shift down pressure control solenoid	> 80%

Time Needed for Diagnosis: 1 second
Malfunction Indicator Light Illumination: Illuminates when malfunction occurs in 2 continuous driving cycles.

6. OUTLINE OF DIAGNOSIS (ENGINE TYPE EZ)

• Detect the malfunction of shift-down fluid pressure control solenoid characteristics and hydraulic circuit characteristics (stuck to low pressure side).
• Judge as NG if the amount of gear rate change per second is within the predetermined value, even though the down-shift command is issued.

7. EXECUTION CONDITION (ENGINE TYPE EZ)

Secondary Parameters	Execution condition
12 V battery system voltage	≥ 10 V
Engine speed	≥ 1000 rpm
Commanded duty of shift up pressure control solenoid	0%
Actual pulley ratio*	≥ 0.363 and ≤ 2.348

* Actual pulley ratio: Measured primary pulley shaft speed / Measured secondary pulley shaft speed

8. DIAGNOSTIC METHOD (ENGINE TYPE EZ)

If the duration of time while the following conditions are met is longer than the time indicated, judge as NG.

Judgment Value

Malfunction Criteria	Threshold Value
Actual pulley ratio change for 1 second	> – 0.08 and < 0.08
Commanded duty of shift down pressure control solenoid	> 80%

Time Needed for Diagnosis: 1 second
Malfunction Indicator Light Illumination: Illuminates when malfunction occurs in 2 continuous driving cycles.

V: DTC P0757 SHIFT SOLENOID "B" STUCK ON

DTC DETECTING CONDITION:
Detected when two consecutive driving cycles with fault occur.
TROUBLE SYMPTOM:
- Vibration occurs at shift change.
- Shift control malfunction

1. ENGINE TYPE FB

WIRING DIAGRAM:
CVT control system <Ref. to WI-156, ENGINE TYPE FB, WIRING DIAGRAM, CVT Control System.>

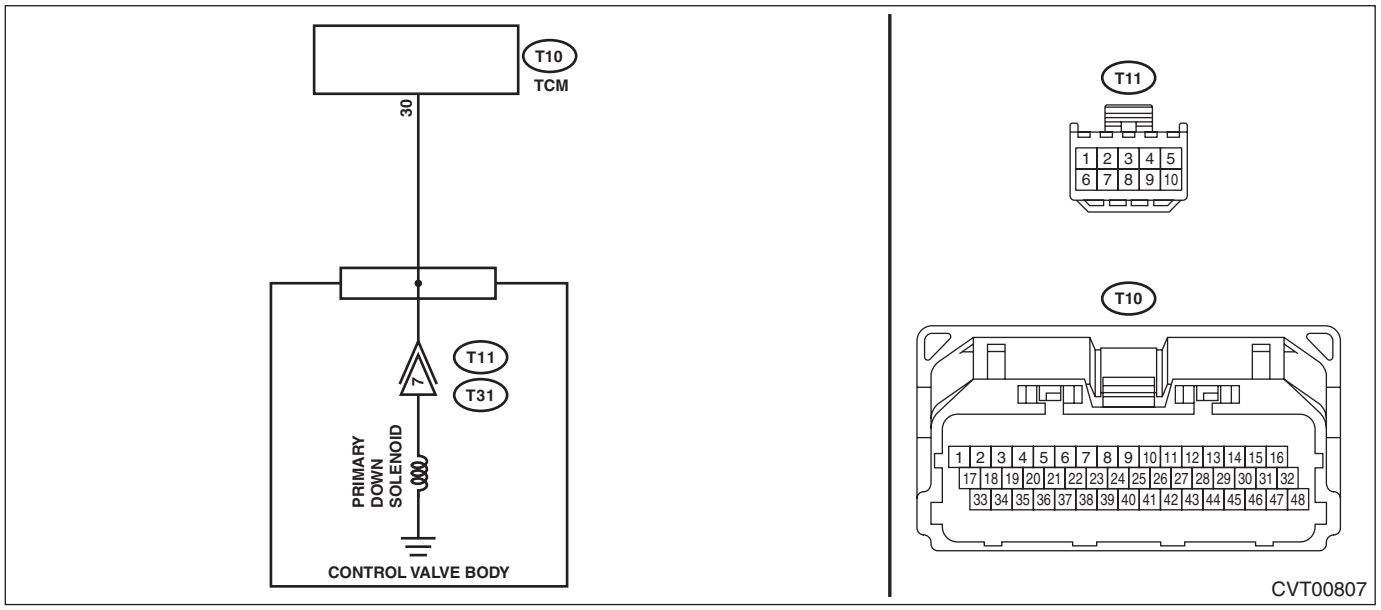

	Step	Check	Yes	No
1	**CHECK DTC.** Read the DTC using Subaru Select Monitor.	Besides DTC P0757, is any of the DTCs P0973, P0974, P0976, P0977, P2747 and P2751 displayed?	Perform the diagnosis according to DTCs other than P0757.	Go to step **2**.
2	**CHECK PRIMARY DOWN SOLENOID (ACTIVE TEST).** 1) Turn the ignition switch to ON. 2) Using the Subaru Select Monitor, perform forced operation of the primary DOWN solenoid. <Ref. to CVT(diag)-32, Active Test.>	Does the indication of 0 → 50% appear repeatedly during forced operation, and does operating sound emit during indicating 50%?	Go to step **5**.	Go to step **3**.
3	**CHECK PRIMARY DOWN SOLENOID.** 1) Turn the ignition switch to OFF. 2) Disconnect the TCM connector. 3) Measure the resistance between TCM connector and transmission body. ***Connector & terminal*** ***(T10) No. 30 — Transmission body:***	Is the resistance approx. 10 — 13.5 Ω? (when cold)	Go to step **7**.	Go to step **4**.
4	**CHECK HARNESS.** Check the harness for continuity.	Is the harness normal? (Is it free from defects such as open circuit, power supply-output short or GND-output short circuit, or poor contact?)	Go to step **7**.	Repair the harness.
5	**CHECK TRANSMISSION FLUID.** 1) Connect the TCM connector. 2) Check the amount of ATF. <Ref. to CVT(TR580)-39, ADJUSTMENT, CVTF.>	Is the ATF amount correct?	Go to step **6**.	Adjust the amount of ATF. <Ref. to CVT(TR580)-39, ADJUSTMENT, CVTF.>

	Step	Check	Yes	No
6	**CHECK TRANSMISSION FLUID.** Check the condition of ATF. <Ref. to CVT(TR580)-42, CONDITION CHECK, CVTF.>	Is the ATF OK?	Go to step **7**.	Check according to the "Corrective action" of ATF (CVTF) "CONDITION CHECK". <Ref. to CVT(TR580)-42, CONDITION CHECK, CVTF.>
7	**CHECK INPUT SIGNAL FOR TCM.** 1) Lift up the vehicle. 2) Start the engine. 3) Warm up until the ATF temperature reaches to 40 — 70°C (104 — 158°F). 4) Depress the brake pedal, and shift the select lever to "D" range. 5) Shift the select lever to "P" range. 6) Stabilize the engine speed at idle. 7) Read the data of «Actual secondary pressure» using Subaru Select Monitor.	Is the «Actual secondary pressure» 0.5 — 1.5 MPa?	Go to step **8**.	Replace the transmission assembly. <Ref. to CVT(TR580)-63, Automatic Transmission Assembly.>
8	**CHECK INPUT SIGNAL FOR TCM.** 1) Set the select lever to "D" range. 2) Release the brake pedal to stabilize the engine speed and front wheel speed. 3) Read the data of «Actual Gear Ratio» using Subaru Select Monitor.	Is the «Actual Gear Ratio» 1.5 — 2.6?	Go to step **9**.	Replace the transmission assembly. <Ref. to CVT(TR580)-63, Automatic Transmission Assembly.>
9	**CHECK INPUT SIGNAL FOR TCM.** 1) Set the select lever to "D" range. 2) Slowly increase the speed to 40 km/h (25 MPH) and keep to a constant speed. 3) Read the data of «Actual Gear Ratio» using Subaru Select Monitor.	Is the «Actual Gear Ratio» 0.5 — 0.9?	Go to step **10**.	Replace the transmission assembly. <Ref. to CVT(TR580)-63, Automatic Transmission Assembly.>
10	**DRIVING CHECK BY INSPECTION MODE.** 1) Turn the ignition switch to OFF. 2) Perform a drive check based on the "Inspection Mode". <Ref. to CVT(diag)-27, Inspection Mode.>	Does the AT OIL TEMP light blink and is DTC P0757 displayed?	Replace the transmission assembly. <Ref. to CVT(TR580)-63, Automatic Transmission Assembly.>	Current condition is normal. It is possible that temporary poor contact occurs.

2. ENGINE TYPE EZ

WIRING DIAGRAM:

CVT control system <Ref. to WI-162, ENGINE TYPE EZ, WIRING DIAGRAM, CVT Control System.>

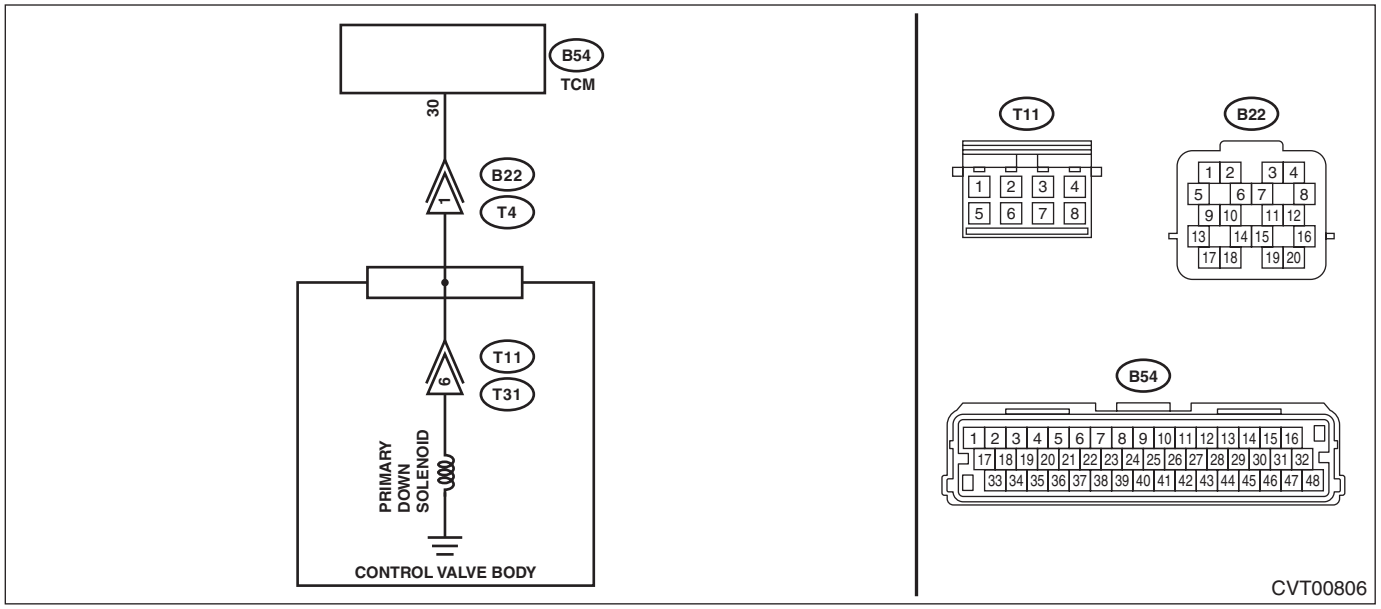

Step		Check	Yes	No
1	**CHECK DTC.** Read the DTC using Subaru Select Monitor.	Besides DTC P0757, is any of the DTCs P0973, P0974, P0976, P0977, P2747 and P2751 displayed?	Perform the diagnosis according to DTCs other than P0757.	Go to step **2**.
2	**CHECK PRIMARY DOWN SOLENOID (ACTIVE TEST).** 1) Turn the ignition switch to ON. 2) Using the Subaru Select Monitor, perform forced operation of the primary DOWN solenoid. <Ref. to CVT(diag)-32, Active Test.>	Does the indication of 0 → 50% appear repeatedly during forced operation, and does operating sound emit during indicating 50%?	Go to step **5**.	Go to step **3**.
3	**CHECK PRIMARY DOWN SOLENOID.** 1) Turn the ignition switch to OFF. 2) Disconnect the transmission connector. 3) Measure the resistance between transmission connector and transmission body. ***Connector & terminal*** ***(T4) No. 1 — Transmission body:***	Is the resistance approx. 10 — 13.5 Ω? (when cold)	Go to step **7**.	Go to step **4**.
4	**CHECK HARNESS.** Check the harness for continuity.	Is the harness normal? (Is it free from defects such as open circuit, power supply-output short or GND-output short circuit, or poor contact?)	Go to step **7**.	Repair the harness.
5	**CHECK TRANSMISSION FLUID.** 1) Connect the transmission connector. 2) Check the amount of ATF. <Ref. to CVT(TR690)-38, ADJUSTMENT, CVTF.>	Is the ATF amount correct?	Go to step **6**.	Adjust the amount of ATF. <Ref. to CVT(TR690)-38, ADJUSTMENT, CVTF.>

	Step	Check	Yes	No
6	**CHECK TRANSMISSION FLUID.** Check the condition of ATF. <Ref. to CVT(TR690)-42, CONDITION CHECK, CVTF.>	Is the ATF OK?	Go to step **7**.	Check according to the "Corrective action" of ATF (CVTF) "CONDITION CHECK". <Ref. to CVT(TR690)-42, CONDITION CHECK, CVTF.>
7	**CHECK INPUT SIGNAL FOR TCM.** 1) Lift up the vehicle. 2) Start the engine. 3) Warm up until the ATF temperature reaches to 40 — 70°C (104 — 158°F). 4) Depress the brake pedal, and shift the select lever to "D" range. 5) Shift the select lever to "P" range. 6) Stabilize the engine speed at idle. 7) Read the data of «Actual secondary pressure» using Subaru Select Monitor.	Is the «Actual secondary pressure» 0.5 — 1.5 MPa?	Go to step **8**.	Replace the transmission assembly. <Ref. to CVT(TR690)-58, Automatic Transmission Assembly.>
8	**CHECK INPUT SIGNAL FOR TCM.** 1) Set the select lever to "D" range. 2) Release the brake pedal to stabilize the engine speed and front wheel speed. 3) Read the data of «Actual Gear Ratio» using Subaru Select Monitor.	Is the «Actual Gear Ratio» 2.0 — 2.4?	Go to step **9**.	Replace the transmission assembly. <Ref. to CVT(TR690)-58, Automatic Transmission Assembly.>
9	**CHECK INPUT SIGNAL FOR TCM.** 1) Set the select lever to "D" range. 2) Slowly increase the speed to 40 km/h (25 MPH) and keep to a constant speed. 3) Read the data of «Actual Gear Ratio» using Subaru Select Monitor.	Is the «Actual Gear Ratio» 0.5 — 0.8?	Go to step **10**.	Replace the transmission assembly. <Ref. to CVT(TR690)-58, Automatic Transmission Assembly.>
10	**DRIVING CHECK BY INSPECTION MODE.** 1) Turn the ignition switch to OFF. 2) Perform a drive check based on the "Inspection Mode". <Ref. to CVT(diag)-27, Inspection Mode.>	Does the AT OIL TEMP light blink and is DTC P0757 displayed?	Replace the transmission assembly. <Ref. to CVT(TR690)-58, Automatic Transmission Assembly.>	Current condition is normal. It is possible that temporary poor contact occurs.

3. OUTLINE OF DIAGNOSIS (ENGINE TYPE FB)

• Detect the malfunction of shift-down fluid pressure control solenoid characteristics and hydraulic circuit characteristics (stuck to high pressure side).
• Judge as NG if the amount of gear rate change per second is equal to or larger than the predetermined value, even though the up-shift command is issued.

4. EXECUTION CONDITION (ENGINE TYPE FB)

Secondary Parameters	Execution condition
12 V battery system voltage	≥ 10 V
Engine speed	≥ 1000 rpm
Commanded duty of shift down pressure control solenoid	0%
Actual pulley ratio*	≥ 0.406 and ≤ 2.549

* Actual pulley ratio: Measured primary pulley shaft speed / Measured secondary pulley shaft speed

5. DIAGNOSTIC METHOD (ENGINE TYPE FB)

If the duration of time while the following conditions are met is longer than the time indicated, judge as NG.

Judgment Value

Malfunction Criteria	Threshold Value
Actual pulley ratio change for 1 second	> 0.04
Commanded duty of shift up pressure control solenoid	> 50%

Time Needed for Diagnosis: 1 s × 10 times
Malfunction Indicator Light Illumination: Illuminates when malfunction occurs in 2 continuous driving cycles.

6. OUTLINE OF DIAGNOSIS (ENGINE TYPE EZ)

• Detect the malfunction of shift-down fluid pressure control solenoid characteristics and hydraulic circuit characteristics (stuck to high pressure side).
• Judge as NG if the amount of gear rate change per second is equal to or larger than the predetermined value, even though the up-shift command is issued.

7. EXECUTION CONDITION (ENGINE TYPE EZ)

Secondary Parameters	Execution condition
12 V battery system voltage	≥ 10 V
Engine speed	≥ 1000 rpm
Commanded duty of shift down pressure control solenoid	0%
Actual pulley ratio*	≥ 0.363
	and
	≤ 2.348

* Actual pulley ratio: Measured primary pulley shaft speed / Measured secondary pulley shaft speed

8. DIAGNOSTIC METHOD (ENGINE TYPE EZ)

If the duration of time while the following conditions are met is longer than the time indicated, judge as NG.

Judgment Value

Malfunction Criteria	Threshold Value
Actual pulley ratio change for 1 second	> 0.04
Commanded duty of shift up pressure control solenoid	> 50%

Time Needed for Diagnosis: 1 s × 10 times
Malfunction Indicator Light Illumination: Illuminates when malfunction occurs in 2 continuous driving cycles.

W: DTC P0776 PRESSURE CONTROL SOLENOID "B" PERFORMANCE/STUCK OFF

DTC DETECTING CONDITION:
Detected when two consecutive driving cycles with fault occur.
TROUBLE SYMPTOM:
- Engine speed increases abruptly, and can not accelerate.
- Excessive slippage is felt.

1. ENGINE TYPE FB

WIRING DIAGRAM:
CVT control system <Ref. to WI-156, ENGINE TYPE FB, WIRING DIAGRAM, CVT Control System.>

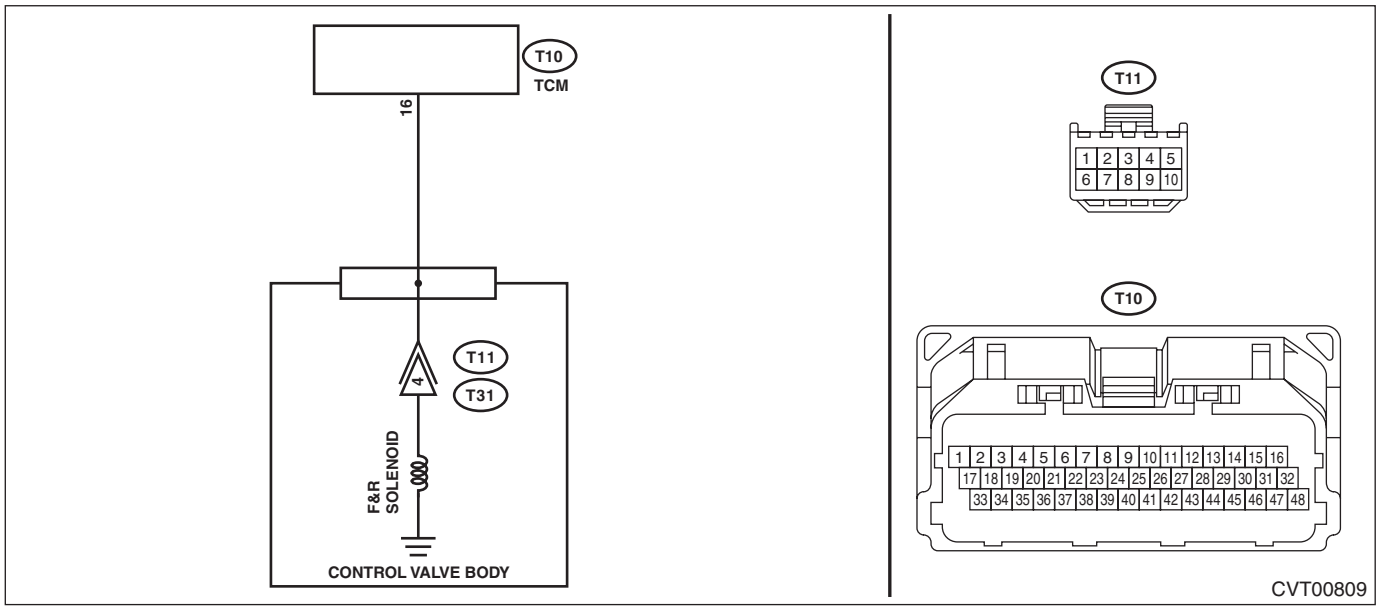

	Step	Check	Yes	No
1	**CHECK DTC.** Read the DTC using Subaru Select Monitor.	Besides DTC P0776, is any of the DTC P0717, P0966, P0967 or P2747 displayed?	Perform the diagnosis according to DTCs other than P0776.	Go to step **2**.
2	**CHECK F&R SOLENOID (ACTIVE TEST).** 1) Turn the ignition switch to ON. 2) Using the Subaru Select Monitor, perform forced operation of the F&R solenoid. <Ref. to CVT(diag)-32, Active Test.>	Does the indication of 0 → 500 mA appear repeatedly during forced operation, and does operating sound emit during indicating 500 mA?	Go to step **5**.	Go to step **3**.
3	**CHECK F&R SOLENOID.** 1) Turn the ignition switch to OFF. 2) Disconnect the TCM connector. 3) Measure the resistance between TCM connector and transmission body. ***Connector & terminal*** ***(T10) No. 16 — Transmission body:***	Is the resistance approx. 4 — 6 Ω? (when cold)	Go to step **7**.	Go to step **4**.
4	**CHECK HARNESS.** Check the harness for continuity.	Is the harness normal? (Is it free from defects such as open circuit, power supply-output short or GND-output short circuit, or poor contact?)	Go to step **7**.	Repair the harness.
5	**CHECK TRANSMISSION FLUID.** 1) Connect the TCM connector. 2) Check the amount of ATF. <Ref. to CVT(TR580)-39, ADJUSTMENT, CVTF.>	Is the ATF amount correct?	Go to step **6**.	Adjust the amount of ATF. <Ref. to CVT(TR580)-39, ADJUSTMENT, CVTF.>

	Step	Check	Yes	No
6	**CHECK TRANSMISSION FLUID.** Check the condition of ATF. <Ref. to CVT(TR580)-42, CONDITION CHECK, CVTF.>	Is the ATF OK?	Go to step **7**.	Check according to the "Corrective action" of ATF (CVTF) "CONDITION CHECK". <Ref. to CVT(TR580)-42, CONDITION CHECK, CVTF.>
7	**CHECK INPUT SIGNAL FOR TCM.** 1) Lift up the vehicle. 2) Start the engine. 3) Warm up until the ATF temperature reaches to 40 — 70°C (104 — 158°F). 4) Depress the brake pedal, and shift the select lever to "D" range. 5) Shift the select lever to "P" range. 6) Stabilize the engine speed at idle. 7) Read the data of «Actual secondary pressure» using Subaru Select Monitor.	Is the «Actual secondary pressure» 0.5 — 1.5 MPa?	Go to step **8**.	Perform the diagnosis according to DTC P0841. <Ref. to CVT(diag)-126, DTC P0841 TRANSMISSION FLUID PRESSURE SENSOR/SWITCH "A" CIRCUIT RANGE/PERFORMANCE, Diagnostic Procedure with Diagnostic Trouble Code (DTC).>
8	**STALL TEST.** Perform the stall test. <Ref. to CVT(TR580)-49, Stall Test.>	Is the stall test normal?	Go to step **9**.	Replace the transmission assembly if the stall speed is higher than the standard value of the stall test. <Ref. to CVT(TR580)-63, Automatic Transmission Assembly.>
9	**DRIVING CHECK BY INSPECTION MODE.** 1) Turn the ignition switch to OFF. 2) Perform a drive check based on the "Inspection Mode". <Ref. to CVT(diag)-27, Inspection Mode.>	Does the AT OIL TEMP light blink and is DTC P0776 displayed?	Replace the transmission assembly. <Ref. to CVT(TR580)-63, Automatic Transmission Assembly.>	Current condition is normal. It is possible that temporary poor contact occurs.

2. ENGINE TYPE EZ

WIRING DIAGRAM:

CVT control system <Ref. to WI-162, ENGINE TYPE EZ, WIRING DIAGRAM, CVT Control System.>

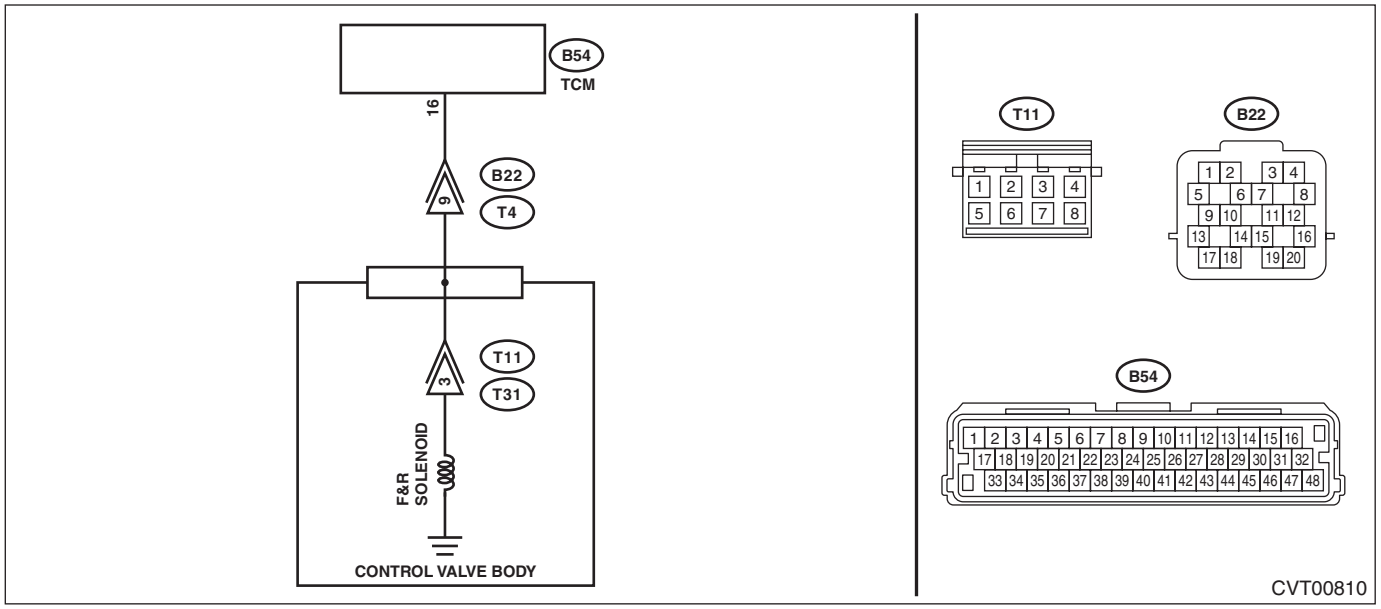

	Step	Check	Yes	No
1	**CHECK DTC.** Read the DTC using Subaru Select Monitor.	Besides DTC P0776, is any of the DTCs P0720, P0966, P0967, P1706 and P2751 displayed?	Perform the diagnosis according to DTCs other than P0776.	Go to step **2**.
2	**CHECK F&R SOLENOID (ACTIVE TEST).** 1) Turn the ignition switch to ON. 2) Using the Subaru Select Monitor, perform forced operation of the F&R solenoid. <Ref. to CVT(diag)-32, Active Test.>	Does the indication of 0 → 500 mA appear repeatedly during forced operation, and does operating sound emit during indicating 500 mA?	Go to step **5**.	Go to step **3**.
3	**CHECK F&R SOLENOID.** 1) Turn the ignition switch to OFF. 2) Disconnect the transmission connector. 3) Measure the resistance between transmission connector and transmission body. ***Connector & terminal*** ***(T4) No. 9 — Transmission body:***	Is the resistance approx. 4 — 6 Ω? (when cold)	Go to step **7**.	Go to step **4**.
4	**CHECK HARNESS.** Check the harness for continuity.	Is the harness normal? (Is it free from defects such as open circuit, power supply-output short or GND-output short circuit, or poor contact?)	Go to step **7**.	Repair the harness.
5	**CHECK TRANSMISSION FLUID.** 1) Connect the transmission connector. 2) Check the amount of ATF. <Ref. to CVT(TR690)-38, ADJUSTMENT, CVTF.>	Is the ATF amount correct?	Go to step **6**.	Adjust the amount of ATF. <Ref. to CVT(TR690)-38, ADJUSTMENT, CVTF.>
6	**CHECK TRANSMISSION FLUID.** Check the condition of ATF. <Ref. to CVT(TR690)-42, CONDITION CHECK, CVTF.>	Is the ATF OK?	Go to step **7**.	Check according to the “Corrective action” of ATF (CVTF) “CONDITION CHECK”. <Ref. to CVT(TR690)-42, CONDITION CHECK, CVTF.>

	Step	Check	Yes	No
7	**CHECK INPUT SIGNAL FOR TCM.** 1) Lift up the vehicle. 2) Start the engine. 3) Warm up until the ATF temperature reaches to 40 — 70°C (104 — 158°F). 4) Depress the brake pedal, and shift the select lever to “D” range. 5) Shift the select lever to “P” range. 6) Stabilize the engine speed at idle. 7) Read the data of «Actual secondary pressure» using Subaru Select Monitor.	Is the «Actual secondary pressure» 0.5 — 1.5 MPa?	Go to step **8**.	Perform the diagnosis according to DTC P0841. <Ref. to CVT(diag)-126, DTC P0841 TRANSMISSION FLUID PRESSURE SENSOR/SWITCH "A" CIRCUIT RANGE/PERFORMANCE, Diagnostic Procedure with Diagnostic Trouble Code (DTC).>
8	**STALL TEST.** Perform the stall test. <Ref. to CVT(TR690)-49, Stall Test.>	Is the stall test normal?	Go to step **9**.	Replace the transmission assembly if the stall speed is higher than the standard value of the stall test. <Ref. to CVT(TR690)-58, Automatic Transmission Assembly.>
9	**DRIVING CHECK BY INSPECTION MODE.** 1) Turn the ignition switch to OFF. 2) Perform a drive check based on the “Inspection Mode”. <Ref. to CVT(diag)-27, Inspection Mode.>	Does the AT OIL TEMP light blink and is DTC P0776 displayed?	Replace the transmission assembly. <Ref. to CVT(TR690)-58, Automatic Transmission Assembly.>	Current condition is normal. It is possible that temporary poor contact occurs.

3. OUTLINE OF DIAGNOSIS (ENGINE TYPE FB)

• Detect the malfunction of transmission forward/reverse clutch pressure solenoid and hydraulic circuit characteristics (stuck to low pressure side).
• Judge as NG if the value calculated by “turbine speed – primary pulley speed” becomes the predetermined value or more, even though the forward/reverse clutch is engaged.

4. EXECUTION CONDITION (ENGINE TYPE FB)

Secondary Parameters	Execution condition
Diagnosis 1	
12 V battery system voltage	≥ 10 V
Transmission range	Drive
Measured turbine shaft speed	≥ 100 rpm
Measured primary pulley shaft speed	≥ 100 rpm
Commanded forward & reverse clutch pressure control solenoid current	< 0.9 A
Engine speed	≥ 500 rpm
Diagnosis 2	
12 V battery system voltage	≥ 10 V
Transmission range	Drive
Measured primary pulley shaft speed	< 100 rpm
Commanded forward & reverse clutch pressure control solenoid current	< 0.9 A
Accelerator pedal position (from ECM)	> 6%
Engine speed	≥ 500 rpm

5. DIAGNOSTIC METHOD (ENGINE TYPE FB)

If the duration of time while the following conditions are met is longer than the time indicated, judge as NG.

Judgment Value

Malfunction Criteria	Threshold Value
Diagnosis 1	
|Measured turbine shaft speed – Measured primary pulley shaft speed|	> Table 1 rpm
Diagnosis 2	
Measured turbine shaft speed	> 2000 rpm

Table 1

Vehicle speed (MPH)	0	13	25	38	50	63	75
|Measured turbine shaft speed – Measured primary pulley shaft speed|(rpm)	150	100	100	100	100	100	100

Vehicle speed (MPH)	88	100	113	125	138	150	159
|Measured turbine shaft speed – Measured primary pulley shaft speed|(rpm)	100	100	100	100	100	100	100

Time Needed for Diagnosis: 5 seconds
Malfunction Indicator Light Illumination: Illuminates when malfunction occurs in 2 continuous driving cycles.

6. OUTLINE OF DIAGNOSIS (ENGINE TYPE EZ)

• Detect the malfunction of transmission forward/reverse clutch pressure solenoid and hydraulic circuit characteristics (stuck to low pressure side).
• Judge as NG if the value calculated by “output speed – secondary pulley speed” becomes the predetermined value or more, even though the forward/reverse clutch is engaged.

7. EXECUTION CONDITION (ENGINE TYPE EZ)

Secondary Parameters	Execution condition
Diagnosis 1	
12 V battery system voltage	≥ 10 V
Transmission range	Drive
Measured secondary pulley shaft speed	≥ 100 rpm
Measured front output shaft speed	≥ 100 rpm
Commanded forward & reverse clutch pressure control solenoid current	< 0.9 A
Engine speed	≥ 500 rpm
Diagnosis 2	
12 V battery system voltage	≥ 10 V
Transmission range	Drive
Measured front output shaft speed	< 100 rpm
Commanded forward & reverse clutch pressure control solenoid current	< 0.9 A
Accelerator pedal position (from ECM)	> 6%
Engine speed	≥ 500 rpm

8. DIAGNOSTIC METHOD (ENGINE TYPE EZ)

If the duration of time while the following conditions are met is longer than the time indicated, judge as NG.

Judgment Value

Malfunction Criteria	Threshold Value
Diagnosis 1 |Measured front output shaft speed – Measured secondary pulley shaft speed /1.322|	> Table 2 rpm
Diagnosis 2 Measured secondary pulley shaft speed	> 600 rpm

Table 2

Vehicle speed (MPH)	0	13	25	38	50	63	75
|Measured front output shaft speed – Measured secondary pulley shaft speed|(rpm)	150	100	100	100	100	100	100

Vehicle speed (MPH)	88	100	113	125	138	150	159
|Measured front output shaft speed – Measured secondary pulley shaft speed|(rpm)	100	100	100	100	100	100	100

Time Needed for Diagnosis: 5 seconds
Malfunction Indicator Light Illumination: Illuminates when malfunction occurs in 2 continuous driving cycles.

X: DTC P0801 REVERSE INHIBIT CONTROL CIRCUIT/OPEN

DTC DETECTING CONDITION:
Immediately at fault recognition

NOTE:
For diagnostic procedures, refer to “BODY CONTROL SYSTEM (DIAGNOSTICS)”. <Ref. to BC(diag)-50, DTC B1016 SHIFT LOCK CIRCUIT, Diagnostic Procedure with Diagnostic Trouble Code (DTC).>

1. OUTLINE OF DIAGNOSIS

- Detect the malfunction of shift lock solenoid or circuit.
- Judge as NG if abnormal signal from the integrated unit is received, when bus off is not detected and there is no trouble in CAN between the integrated unit.

2. EXECUTION CONDITION

Secondary Parameters	Execution condition
Malfunctions listed on the right column are not detected:	U0073 U0140, U0422

3. DIAGNOSTIC METHOD

If the duration of time while the following conditions are met is longer than the time indicated, judge as NG.

Judgment Value

Malfunction Criteria	Threshold Value
Shift lock solenoid system circuit abnormal (received from BIU)	ON

Time Needed for Diagnosis: 1 second

Y: DTC P0841 TRANSMISSION FLUID PRESSURE SENSOR/SWITCH "A" CIRCUIT RANGE/PERFORMANCE

DTC DETECTING CONDITION:
Immediately at fault recognition
TROUBLE SYMPTOM:
- Acceleration is poor during standing start.
- Shift control malfunction
- Engine speed increases abruptly.

CAUTION:
- **Before performing diagnosis, record the freeze frame data.**
- **Use the check board when measuring the TCM terminal voltage and resistance.**

1. ENGINE TYPE FB

WIRING DIAGRAM:
CVT control system <Ref. to WI-156, ENGINE TYPE FB, WIRING DIAGRAM, CVT Control System.>

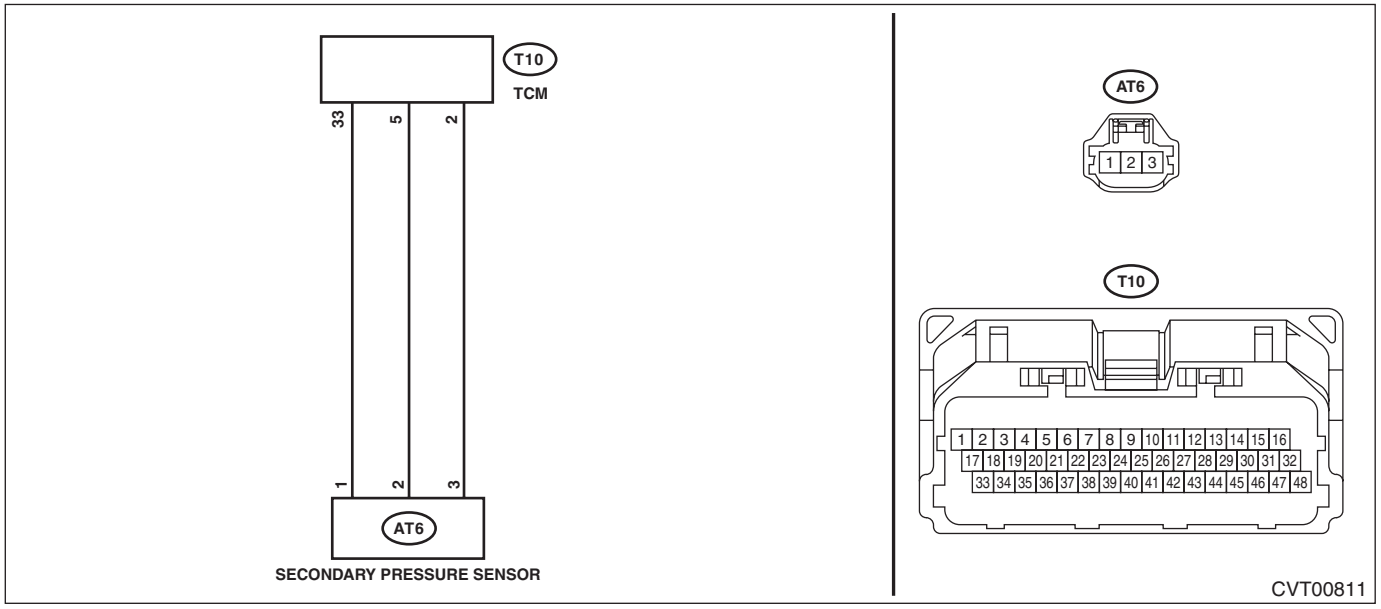

	Step	Check	Yes	No
1	**CHECK DTC.** Read the DTC using Subaru Select Monitor.	Are DTCs other than P0841 displayed?	Perform the diagnosis according to DTC. After the diagnosis, start the engine, and drive for 20 minutes in any driving pattern. (Include driving at a constant legal speed (for 20 seconds) at least once.) Read the DTC, and if P0841 alone is detected, Go to step **2**.	Go to step **2**.
2	**CHECK INPUT SIGNAL FOR TCM.** 1) Turn the ignition switch to ON. 2) Read the data of «secondary pressure sensor voltage» using Subaru Select Monitor. (While shaking the secondary pressure sensor harness)	Is the value of «secondary pressure sensor voltage» 0.39 — 0.61 V?	Go to step **10**.	Go to step **3**.

	Step	Check	Yes	No
3	**CHECK HARNESS.** 1) Turn the ignition switch to OFF. 2) Disconnect the connector of TCM and secondary pressure sensor. 3) Measure the resistance between TCM connector and secondary pressure sensor connector. ***Connector & terminal*** ***(T10) No. 2 — (AT6) No. 3:*** ***(T10) No. 5 — (AT6) No. 2:*** ***(T10) No. 33 — (AT6) No. 1:***	Is the resistance less than 1 Ω?	Go to step **4**.	Repair the open circuit of harness.
4	**CHECK HARNESS.** Measure the resistance between TCM connectors. ***Connector & terminal*** ***(T10) No. 2 — (T10) No. 33:*** ***(T10) No. 5 — (T10) No. 2:*** ***(T10) No. 33 — (T10) No. 5:***	Is the resistance 1 MΩ or more?	Go to step **5**.	Repair the short circuit of harness.
5	**CHECK HARNESS.** Measure the resistance between TCM connector and transmission body. ***Connector & terminal*** ***(T10) No. 2 — Transmission body:*** ***(T10) No. 5 — Transmission body:*** ***(T10) No. 33 — Transmission body:***	Is the resistance 1 MΩ or more?	Go to step **6**.	Repair the short circuit of harness.
6	**CHECK POWER SUPPLY FOR SECONDARY PRESSURE SENSOR.** 1) Turn the ignition switch to ON. 2) Measure the voltage between TCM connectors. ***Connector & terminal*** ***(T10) No. 33 (+) — (T10) No. 2 (–):***	Is the voltage 4.6 — 5.4 V?	Go to step **7**.	Check for poor contact of connector, and if no fault is found, replace the TCM. <Ref. to CVT(TR580)-159, Transmission Control Module (TCM).>
7	**CHECK POWER SUPPLY FOR SECONDARY PRESSURE SENSOR.** 1) Turn the ignition switch to OFF. 2) Connect the secondary pressure sensor connector. 3) Turn the ignition switch to ON. 4) Measure the voltage between TCM connectors. ***Connector & terminal*** ***(T10) No. 33 (+) — (T10) No. 2 (–):***	Is the voltage 4.6 — 5.4 V?	Go to step **8**.	Replace the secondary pressure sensor. <Ref. to CVT(TR580)-128, Secondary Pressure Sensor.>
8	**CHECK SECONDARY PRESSURE SENSOR OUTPUT.** Measure the voltage between TCM connectors. ***Connector & terminal*** ***(T10) No. 5 (+) — (T10) No. 2 (–):***	Is the voltage 0.39 — 0.61 V?	Check for poor contact of connector, and if no fault is found, replace the TCM. <Ref. to CVT(TR580)-159, Transmission Control Module (TCM).>	Go to step **9**.
9	**CHECK CONNECTOR.** 1) Turn the ignition switch to OFF. 2) Disconnect the connector of TCM and secondary pressure sensor. 3) Check the TCM connector (T10) and the secondary pressure sensor connector (AT6).	Is there any fault in the TCM connector or the secondary pressure connector?	Repair the connector, or replace harness.	Go to step **10**.

	Step	Check	Yes	No
10	**CHECK TRANSMISSION FLUID.** 1) Connect all connectors. 2) Check the amount of ATF. <Ref. to CVT(TR580)-39, ADJUSTMENT, CVTF.>	Is the ATF amount correct?	Go to step **11**.	Adjust the amount of ATF. <Ref. to CVT(TR580)-39, ADJUSTMENT, CVTF.> Go to step **11**.
11	**CHECK INPUT SIGNAL FOR TCM.** 1) Perform the Clear Memory Mode. 2) Start the engine. 3) Warm up until the ATF temperature reaches to 40 — 70°C (104 — 158°F). 4) Depress the brake pedal and move the select lever to each range at an interval of five seconds. NOTE: Move the select lever in the following order: “P” → “R” → “N” → “D” → “N” → “R” → “P”. 5) Stabilize the engine speed at idle. 6) Read the data of «Actual secondary pressure» using Subaru Select Monitor.	Is the «Actual secondary pressure» 0.5 — 1.5 MPa?	Go to step **12**.	Replace the secondary pressure sensor. <Ref. to CVT(TR580)-128, Secondary Pressure Sensor.>
12	**CHECK INPUT SIGNAL FOR TCM.** 1) Shift the select lever to “P” range. 2) Keep the engine speed at 3,000 rpm. 3) Read the data of «Actual secondary pressure» using Subaru Select Monitor.	Is the «Actual secondary pressure» 1.5 — 2.5 MPa? And is the difference of the actual oil pressure 0.2 MPa or more compared with the value measured in step 11?	Go to step **13**.	Replace the secondary pressure sensor. <Ref. to CVT(TR580)-128, Secondary Pressure Sensor.>
13	**CHECK FREEZE FRAME DATA.** 1) Turn the ignition switch to OFF. 2) Check the recorded freeze frame data.	Was the detected symptom low-voltage malfunction? <Ref. to CVT(diag)-129, CLASSIFICATION OF SYMPTOM USING FREEZE FRAME DATA, DTC P0841 TRANSMISSION FLUID PRESSURE SENSOR/SWITCH “A” CIRCUIT RANGE/PERFORMANCE, Diagnostic Procedure with Diagnostic Trouble Code (DTC).>	Replace the transmission assembly. <Ref. to CVT(TR580)-63, Automatic Transmission Assembly.>	Go to step **14**.
14	**CHECK TCM INPUT SIGNAL (STALL TEST).** 1) Lift up the vehicle. 2) Start the engine. 3) Apply the parking brake. 4) Set the select lever to “D” range. 5) Depress the brake pedal firmly. 6) Slowly open the accelerator fully, and stabilize the engine speed. 7) Read the data of «Actual secondary pressure» using Subaru Select Monitor.	Is the «Actual secondary pressure» 4.5 — 6.0 MPa?	Replace the transmission assembly. <Ref. to CVT(TR580)-63, Automatic Transmission Assembly.>	Go to step **15**.
15	**CHECK TCM INPUT SIGNAL (STALL TEST).** Check the «Actual Secondary Pressure» in step 14.	Is the «Actual secondary pressure» 4.5 MPa or less?	Replace the transmission assembly. <Ref. to CVT(TR580)-63, Automatic Transmission Assembly.>	Replace the control valve body. <Ref. to CVT(TR580)-133, Control Valve Body.>

2. CLASSIFICATION OF SYMPTOM USING FREEZE FRAME DATA

Apply the values of «Actual Secondary Pressure» and «Secondary Actual Current» recorded in the freeze frame data onto the graph shown in the following figure, and judge if either low-voltage malfunction or high-voltage malfunction occurs.

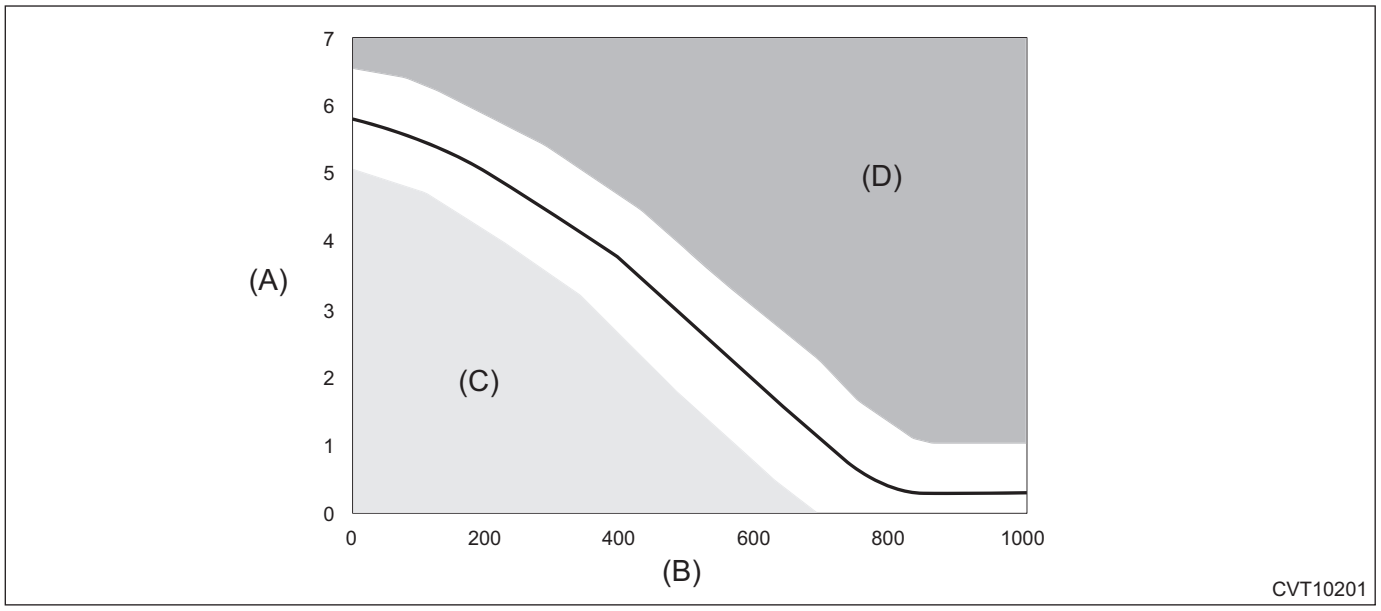

(A) Actual secondary pressure (MPa)
(B) Secondary actual current (mA)
(C) Low-voltage malfunction
(D) High-voltage malfunction

NOTE:
Symptom that the DTC P0841 illuminates can be classified into 2 patterns.
- Low-voltage malfunction: detected due to insufficient oil pressure
- High-voltage malfunction: detected due to excessive oil pressure

3. ENGINE TYPE EZ

WIRING DIAGRAM:

CVT control system <Ref. to WI-162, ENGINE TYPE EZ, WIRING DIAGRAM, CVT Control System.>

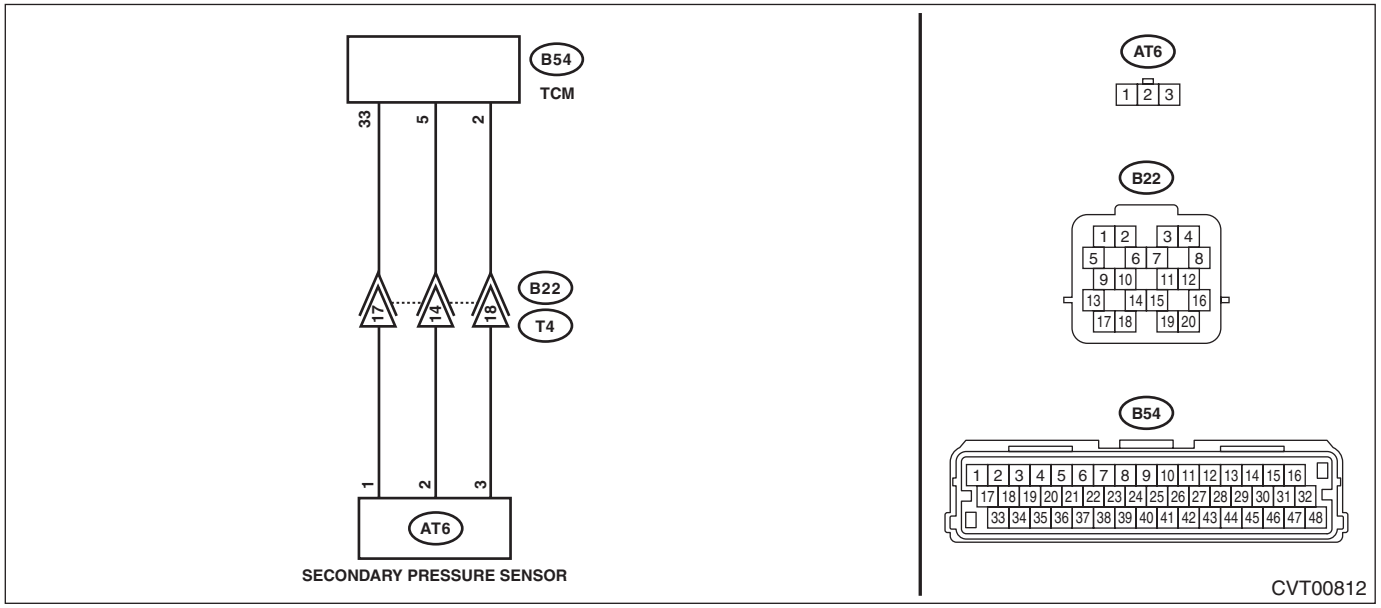

	Step	Check	Yes	No
1	**CHECK DTC.** Read the DTC using Subaru Select Monitor.	Are DTCs other than P0841 displayed?	Perform the diagnosis according to DTC. After the diagnosis, start the engine, and drive for 20 minutes in any driving pattern. (Include driving at a constant legal speed (for 20 seconds) at least once.) Read the DTC, and if P0841 alone is detected, Go to step **2**.	Go to step **2**.
2	**CHECK INPUT SIGNAL FOR TCM.** 1) Turn the ignition switch to ON. 2) Read the data of «secondary pressure sensor voltage» using Subaru Select Monitor. (While shaking the secondary pressure sensor harness)	Is the value of «secondary pressure sensor voltage» 0.39 — 0.61 V?	Go to step **10**.	Go to step **3**.
3	**CHECK HARNESS.** 1) Turn the ignition switch to OFF. 2) Disconnect the connector of TCM and secondary pressure sensor. 3) Measure the resistance between TCM connector and secondary pressure sensor connector. ***Connector & terminal*** ***(B54) No. 2 — (AT6) No. 3:*** ***(B54) No. 5 — (AT6) No. 2:*** ***(B54) No. 33 — (AT6) No. 1:***	Is the resistance less than 1 Ω?	Go to step **4**.	Repair the open circuit of harness.
4	**CHECK HARNESS.** Measure the resistance between TCM connectors. ***Connector & terminal*** ***(B54) No. 2 — (B54) No. 33:*** ***(B54) No. 5 — (B54) No. 2:*** ***(B54) No. 33 — (B54) No. 5:***	Is the resistance 1 MΩ or more?	Go to step **5**.	Repair the short circuit of harness.
5	**CHECK HARNESS.** Measure the resistance between TCM connector and transmission body. ***Connector & terminal*** ***(B54) No. 2 — Transmission body:*** ***(B54) No. 5 — Transmission body:*** ***(B54) No. 33 — Transmission body:***	Is the resistance 1 MΩ or more?	Go to step **6**.	Repair the short circuit of harness.
6	**CHECK POWER SUPPLY FOR SECONDARY PRESSURE SENSOR.** 1) Turn the ignition switch to ON. 2) Measure the voltage between TCM connectors. ***Connector & terminal*** ***(B54) No. 33 (+) — (B54) No. 2 (–):***	Is the voltage 4.6 — 5.4 V?	Go to step **7**.	Check for poor contact of connector, and if no fault is found, replace the TCM. <Ref. to CVT(TR690)-142, Transmission Control Module (TCM).>

	Step	Check	Yes	No
7	**CHECK POWER SUPPLY FOR SECONDARY PRESSURE SENSOR.** 1) Turn the ignition switch to OFF. 2) Connect the secondary pressure sensor connector. 3) Turn the ignition switch to ON. 4) Measure the voltage between TCM connectors. ***Connector & terminal*** ***(B54) No. 33 (+) — (B54) No. 2 (–):***	Is the voltage 4.6 — 5.4 V?	Go to step **8**.	Replace the secondary pressure sensor. <Ref. to CVT(TR690)-122, Secondary Pressure Sensor.>
8	**CHECK SECONDARY PRESSURE SENSOR OUTPUT.** Measure the voltage between TCM connectors. ***Connector & terminal*** ***(B54) No. 5 (+) — (B54) No. 2 (–):***	Is the voltage 0.39 — 0.61 V?	Check for poor contact of connector, and if no fault is found, replace the TCM. <Ref. to CVT(TR690)-142, Transmission Control Module (TCM).>	Go to step **9**.
9	**CHECK CONNECTOR.** 1) Turn the ignition switch to OFF. 2) Disconnect the connector of TCM and secondary pressure sensor. 3) Check the TCM connector (B54) and the secondary pressure sensor connector (AT6).	Is there any fault in the TCM connector or the secondary pressure connector?	Repair the connector, or replace harness.	Go to step **10**.
10	**CHECK TRANSMISSION FLUID.** 1) Connect all connectors. 2) Check the amount of ATF. <Ref. to CVT(TR690)-38, ADJUSTMENT, CVTF.>	Is the ATF amount correct?	Go to step **11**.	Adjust the amount of ATF. <Ref. to CVT(TR690)-38, ADJUSTMENT, CVTF.> Go to step **11**.
11	**CHECK INPUT SIGNAL FOR TCM.** 1) Perform the Clear Memory Mode. 2) Start the engine. 3) Warm up until the ATF temperature reaches to 40 — 70°C (104 — 158°F). 4) Depress the brake pedal and move the select lever to each range at an interval of five seconds. NOTE: Move the select lever in the following order: “P” → “R” → “N” → “D” → “N” → “R” → “P”. 5) Stabilize the engine speed at idle. 6) Read the data of «Actual secondary pressure» using Subaru Select Monitor.	Is the «Actual secondary pressure» 0.5 — 1.5 MPa?	Go to step **12**.	Replace the secondary pressure sensor. <Ref. to CVT(TR690)-122, Secondary Pressure Sensor.>
12	**CHECK INPUT SIGNAL FOR TCM.** 1) Shift the select lever to “P” range. 2) Keep the engine speed at 3,000 rpm. 3) Read the data of «Actual secondary pressure» using Subaru Select Monitor.	Is the «Actual secondary pressure» 1.5 — 2.5 MPa? And is the difference of the actual oil pressure 0.2 MPa or more compared with the value measured in step 11?	Go to step **13**.	Replace the secondary pressure sensor. <Ref. to CVT(TR690)-122, Secondary Pressure Sensor.>

	Step	Check	Yes	No
13	**CHECK FREEZE FRAME DATA.** 1) Turn the ignition switch to OFF. 2) Check the recorded freeze frame data.	Was the detected symptom low-voltage malfunction? <Ref. to CVT(diag)-132, CLASSIFICATION OF SYMPTOM USING FREEZE FRAME DATA, DTC P0841 TRANSMISSION FLUID PRESSURE SENSOR/SWITCH “A” CIRCUIT RANGE/PERFORMANCE, Diagnostic Procedure with Diagnostic Trouble Code (DTC).>	Replace the transmission assembly. <Ref. to CVT(TR690)-58, Automatic Transmission Assembly.>	Go to step **14**.
14	**CHECK TCM INPUT SIGNAL (STALL TEST).** 1) Lift up the vehicle. 2) Start the engine. 3) Apply the parking brake. 4) Set the select lever to “D” range. 5) Depress the brake pedal firmly. 6) Slowly open the accelerator fully, and stabilize the engine speed. 7) Read the data of «Actual secondary pressure» using Subaru Select Monitor.	Is the «Actual secondary pressure» 4.5 — 6.0 MPa?	Replace the transmission assembly. <Ref. to CVT(TR690)-58, Automatic Transmission Assembly.>	Go to step **15**.
15	**CHECK TCM INPUT SIGNAL (STALL TEST).** Check the «Actual Secondary Pressure» in step 14.	Is the «Actual secondary pressure» 4.5 MPa or less?	Replace the transmission assembly. <Ref. to CVT(TR690)-58, Automatic Transmission Assembly.>	Replace the control valve body. <Ref. to CVT(TR690)-124, Control Valve Body.>

4. CLASSIFICATION OF SYMPTOM USING FREEZE FRAME DATA

Apply the values of «Actual Secondary Pressure» and «Secondary Actual Current» recorded in the freeze frame data onto the graph shown in the following figure, and judge if either low-voltage malfunction or high-voltage malfunction occurs.

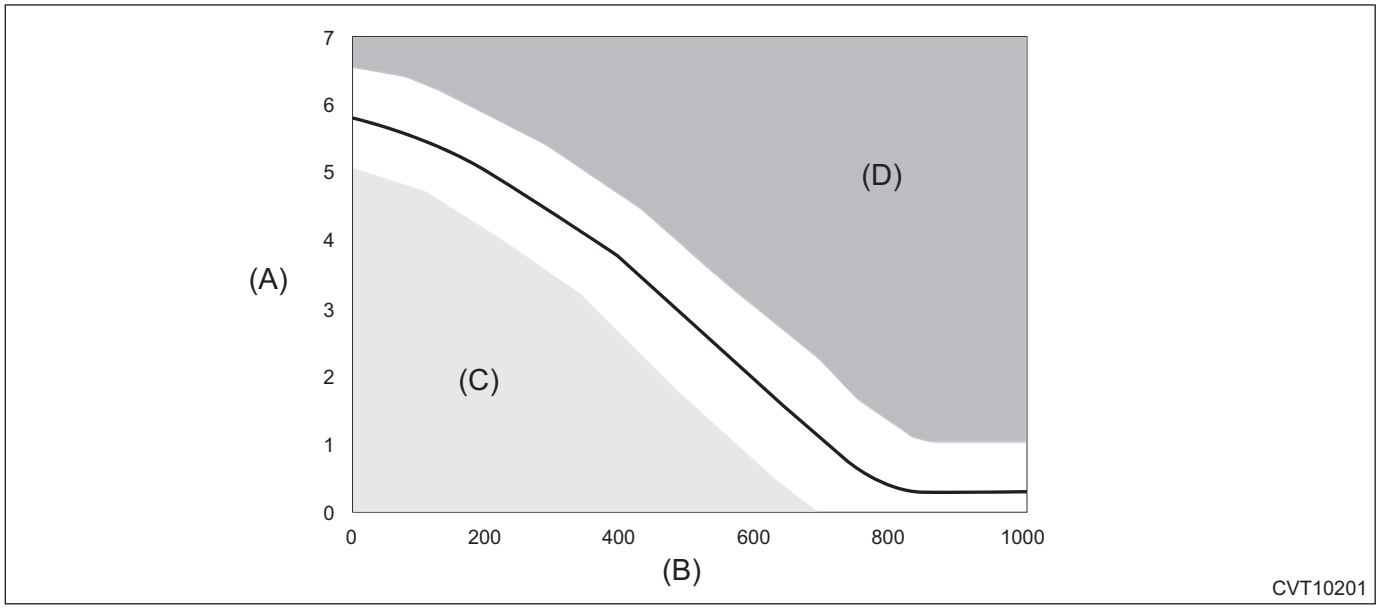

(A) Actual secondary pressure (MPa) (C) Low-voltage malfunction (D) High-voltage malfunction
(B) Secondary actual current (mA)

NOTE:
Symptom that the DTC P0841 illuminates can be classified into 2 patterns.
- Low-voltage malfunction: detected due to insufficient oil pressure
- High-voltage malfunction: detected due to excessive oil pressure

5. OUTLINE OF DIAGNOSIS

- Detect the malfunction of transmission fluid pressure control function.
- Judge as NG if a discrepancy between the target secondary oil pressure (as internal data) and the detected value of the secondary oil pressure sensor becomes the specified value or more.

6. EXECUTION CONDITION

Secondary Parameters	Execution condition
12 V battery system voltage	≥ 10 V
Engine speed	≥ Table 1 rpm

Table 1 (ENGINE TYPE FB)

Target line pressure (kPa)	0	500	1000	1500	2000	3000	4000	5000	6000
Engine speed (rpm)	300	660	900	1080	1170	1400	1680	1900	2100

Table 1 (ENGINE TYPE EZ)

Target line pressure (kPa)	0	500	1000	1500	2000	3000	4000	5000	6000
Engine speed (rpm)	400	600	965	1180	1370	1670	1930	2150	2340

7. DIAGNOSTIC METHOD

If the duration of time while the following conditions are met is longer than the time indicated, judge as NG.

Judgment Value

Malfunction Criteria	Threshold Value
|Target line pressure – Measured line pressure|	≥ 500 kPa

Time Needed for Diagnosis: 5 seconds
Malfunction Indicator Light Illumination: Illuminates as soon as a malfunction occurs.

Z: DTC P0842 TRANSMISSION FLUID PRESSURE SENSOR/SWITCH "A" CIRCUIT LOW

DTC DETECTING CONDITION:
Immediately at fault recognition
TROUBLE SYMPTOM:
Shift characteristics malfunction

1. ENGINE TYPE FB

WIRING DIAGRAM:
CVT control system <Ref. to WI-156, ENGINE TYPE FB, WIRING DIAGRAM, CVT Control System.>

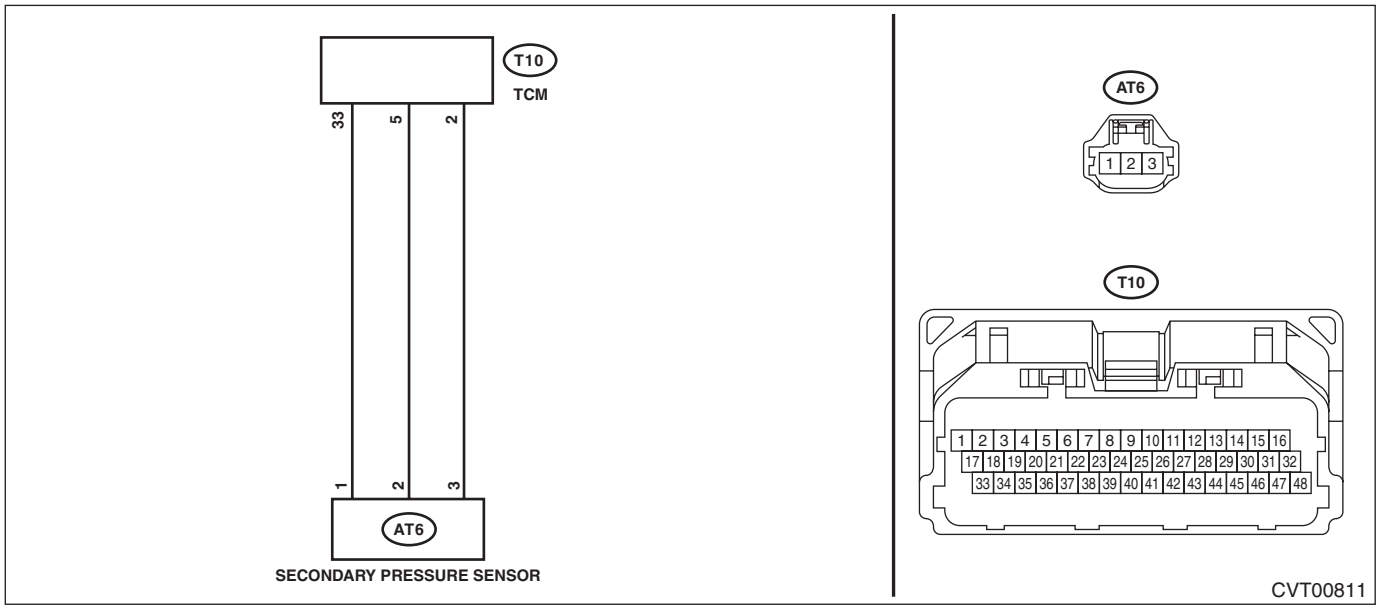

	Step	Check	Yes	No
1	**CHECK INPUT SIGNAL FOR TCM.** 1) Start the engine. 2) Warm up until the ATF temperature reaches to 40 — 70°C (104 — 158°F). 3) Depress the brake pedal, and shift the select lever to “D” range. 4) Shift the select lever to “P” range. 5) Stabilize the engine speed at idle. 6) Read the data of «Actual secondary pressure» using Subaru Select Monitor.	Is the «Actual secondary pressure» 0.5 — 1.5 MPa?	Check for poor contact of connector.	Go to step **2**.
2	**CHECK HARNESS.** 1) Turn the ignition switch to OFF. 2) Disconnect the connector of TCM and secondary pressure sensor. 3) Measure the resistance between TCM connector and secondary pressure sensor connector. ***Connector & terminal*** ***(T10) No. 2 — (AT6) No. 3:*** ***(T10) No. 5 — (AT6) No. 2:*** ***(T10) No. 33 — (AT6) No. 1:***	Is the resistance less than 1 Ω?	Go to step **3**.	Repair the open circuit of harness.
3	**CHECK HARNESS.** Measure the resistance between TCM connector and chassis ground. ***Connector & terminal*** ***(T10) No. 5 — Chassis ground:*** ***(T10) No. 33 — Chassis ground:***	Is the resistance 1 MΩ or more?	Go to step **4**.	Repair the short circuit of harness.

	Step	Check	Yes	No
4	**CHECK POWER SUPPLY FOR SECONDARY PRESSURE SENSOR.** 1) Connect the TCM connector. 2) Turn the ignition switch to ON. 3) Measure the voltage between secondary pressure sensor connector terminals. ***Connector & terminal*** ***(AT6) No. 1 (+) — (AT6) No. 3 (–):***	Is the voltage 4.5 V or more?	Replace the secondary pressure sensor. <Ref. to CVT(TR580)-128, Secondary Pressure Sensor.> If the replacement of the sensor do not eliminate the malfunction, replace the TCM. <Ref. to CVT(TR580)-159, Transmission Control Module (TCM).>	Check for poor contact of connector, and if no fault is found, replace the TCM. <Ref. to CVT(TR580)-159, Transmission Control Module (TCM).>

2. ENGINE TYPE EZ

WIRING DIAGRAM:

CVT control system <Ref. to WI-162, ENGINE TYPE EZ, WIRING DIAGRAM, CVT Control System.>

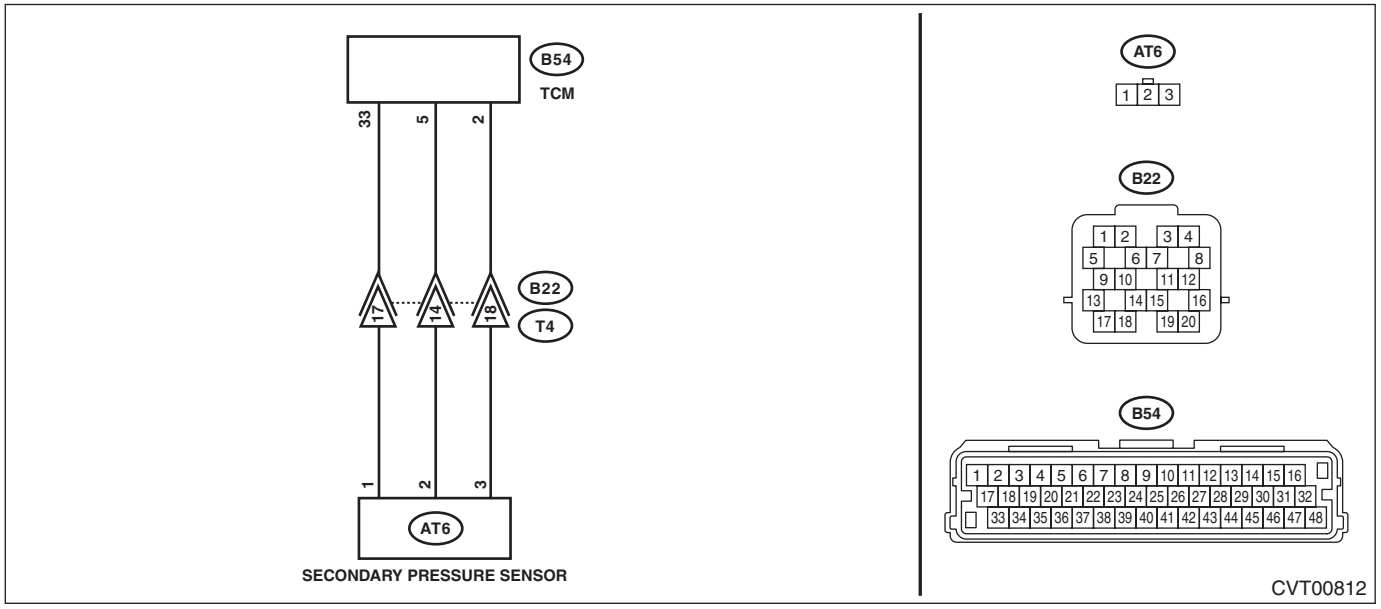

	Step	Check	Yes	No
1	**CHECK INPUT SIGNAL FOR TCM.** 1) Start the engine. 2) Warm up until the ATF temperature reaches to 40 — 70°C (104 — 158°F). 3) Depress the brake pedal, and shift the select lever to “D” range. 4) Shift the select lever to “P” range. 5) Stabilize the engine speed at idle. 6) Read the data of «Actual secondary pressure» using Subaru Select Monitor.	Is the «Actual secondary pressure» 0.5 — 1.5 MPa?	Check for poor contact of connector.	Go to step **2**.

	Step	Check	Yes	No
2	**CHECK HARNESS.** 1) Turn the ignition switch to OFF. 2) Disconnect the TCM and transmission connectors. 3) Measure the resistance between TCM connector and transmission connectors. ***Connector & terminal*** ***(B54) No. 2 — (B22) No. 18:*** ***(B54) No. 5 — (B22) No. 14:*** ***(B54) No. 33 — (B22) No. 17:***	Is the resistance less than 1 Ω?	Go to step **3**.	Repair the open circuit of harness.
3	**CHECK HARNESS.** Measure the resistance between TCM connector and chassis ground. ***Connector & terminal*** ***(B54) No. 5 — Chassis ground:*** ***(B54) No. 33 — Chassis ground:***	Is the resistance 1 MΩ or more?	Go to step **4**.	Repair the short circuit of harness.
4	**CHECK TRANSMISSION HARNESS.** 1) Disconnect the secondary pressure sensor connector. 2) Measure the resistance between transmission connector and secondary pressure sensor connector. ***Connector & terminal*** ***(T4) No. 14 — (AT6) No. 2:*** ***(T4) No. 17 — (AT6) No. 1:*** ***(T4) No. 18 — (AT6) No. 3:***	Is the resistance less than 1 Ω?	Go to step **5**.	Repair the open circuit of harness.
5	**CHECK TRANSMISSION HARNESS.** Measure the resistance between transmission connector and chassis ground. ***Connector & terminal*** ***(T4) No. 14 — Chassis ground:*** ***(T4) No. 17 — Chassis ground:***	Is the resistance 1 MΩ or more?	Go to step **6**.	Repair the short circuit of harness.
6	**CHECK POWER SUPPLY FOR SECONDARY PRESSURE SENSOR.** 1) Connect the connectors of TCM and transmission. 2) Turn the ignition switch to ON. 3) Measure the voltage between secondary pressure sensor connector terminals. ***Connector & terminal*** ***(AT6) No. 1 (+) — (AT6) No. 3 (–):***	Is the voltage 4.5 V or more?	Replace the secondary pressure sensor. <Ref. to CVT(TR690)-122, Secondary Pressure Sensor.> If the replacement of the sensor do not eliminate the malfunction, replace the TCM. <Ref. to CVT(TR690)-142, Transmission Control Module (TCM).>	Check for poor contact of connector, and if no fault is found, replace the TCM. <Ref. to CVT(TR690)-142, Transmission Control Module (TCM).>

3. OUTLINE OF DIAGNOSIS

- Detect the ground short circuit of the transmission line pressure sensor.
- Judge as NG if the voltage detected by the transmission line pressure sensor is lower than the predetermined value.

4. EXECUTION CONDITION

Secondary Parameters	Execution condition
12 V battery system voltage	≥ 9 V

5. DIAGNOSTIC METHOD

If the duration of time while the following conditions are met is longer than the time indicated, judge as NG.

Judgment Value

Malfunction Criteria	Threshold Value
Measured line pressure sensor input voltage (Line pressure)	< 0.195 V (< – 574 kPa)

Time Needed for Diagnosis: 0.5 seconds
Malfunction Indicator Light Illumination: Illuminates as soon as a malfunction occurs.

AA:DTC P0843 TRANSMISSION FLUID PRESSURE SENSOR/SWITCH "A" CIRCUIT HIGH

DTC DETECTING CONDITION:
Immediately at fault recognition
TROUBLE SYMPTOM:
Shift characteristics malfunction

1. ENGINE TYPE FB

WIRING DIAGRAM:
CVT control system <Ref. to WI-156, ENGINE TYPE FB, WIRING DIAGRAM, CVT Control System.>

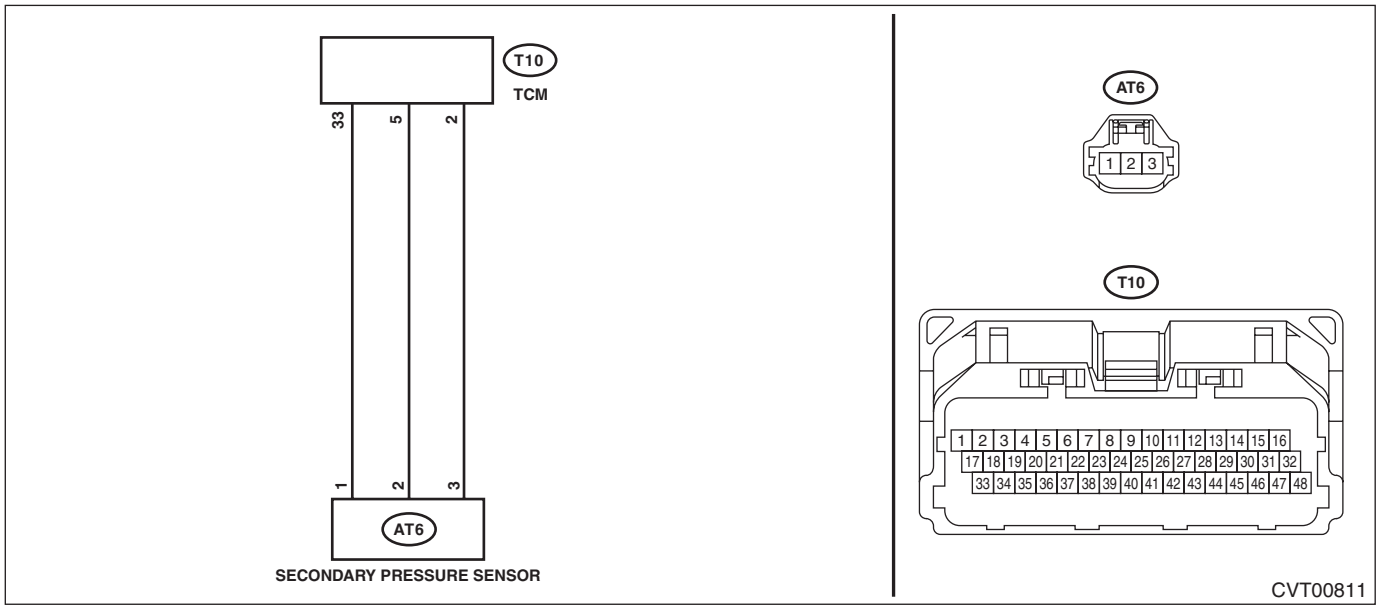

	Step	Check	Yes	No
1	**CHECK INPUT SIGNAL FOR TCM.** 1) Start the engine. 2) Warm up until the ATF temperature reaches to 40 — 70°C (104 — 158°F). 3) Depress the brake pedal, and shift the select lever to “D” range. 4) Shift the select lever to “P” range. 5) Stabilize the engine speed at idle. 6) Read the data of «Actual secondary pressure» using Subaru Select Monitor.	Is the «Actual secondary pressure» 0.5 — 1.5 MPa?	Check for poor contact of connector.	Go to step **2**.
2	**CHECK HARNESS.** 1) Turn the ignition switch to OFF. 2) Disconnect the connector of TCM and secondary pressure sensor. 3) Turn the ignition switch to ON. 4) Measure the voltage between TCM connector and chassis ground. ***Connector & terminal*** ***(T10) No. 5 (+) — Chassis ground (–):*** ***(T10) No. 33 (+) — Chassis ground (–):***	Is the voltage approx. 0 V?	Go to step **3**.	Repair the short circuit of harness.
3	**CHECK HARNESS.** 1) Turn the ignition switch to OFF. 2) Measure the resistance between TCM connector terminals. ***Connector & terminal*** ***(T10) No. 5 — (T10) No. 33:***	Is the resistance less than 1 Ω?	Repair the short circuit of harness.	Go to step **4**.

	Step	Check	Yes	No
4	**CHECK POWER SUPPLY FOR SECONDARY PRESSURE SENSOR.** 1) Connect the TCM connector. 2) Turn the ignition switch to ON. 3) Measure the voltage between secondary pressure sensor connector terminals. ***Connector & terminal*** ***(AT6) No. 1 (+) — (AT6) No. 3 (–):***	Is the voltage 4.5 V or more?	Replace the secondary pressure sensor. <Ref. to CVT(TR580)-128, Secondary Pressure Sensor.> If the replacement of the sensor do not eliminate the malfunction, replace the TCM. <Ref. to CVT(TR580)-159, Transmission Control Module (TCM).>	Check for poor contact of connector, and if no fault is found, replace the TCM. <Ref. to CVT(TR580)-159, Transmission Control Module (TCM).>

2. ENGINE TYPE EZ

WIRING DIAGRAM:

CVT control system <Ref. to WI-162, ENGINE TYPE EZ, WIRING DIAGRAM, CVT Control System.>

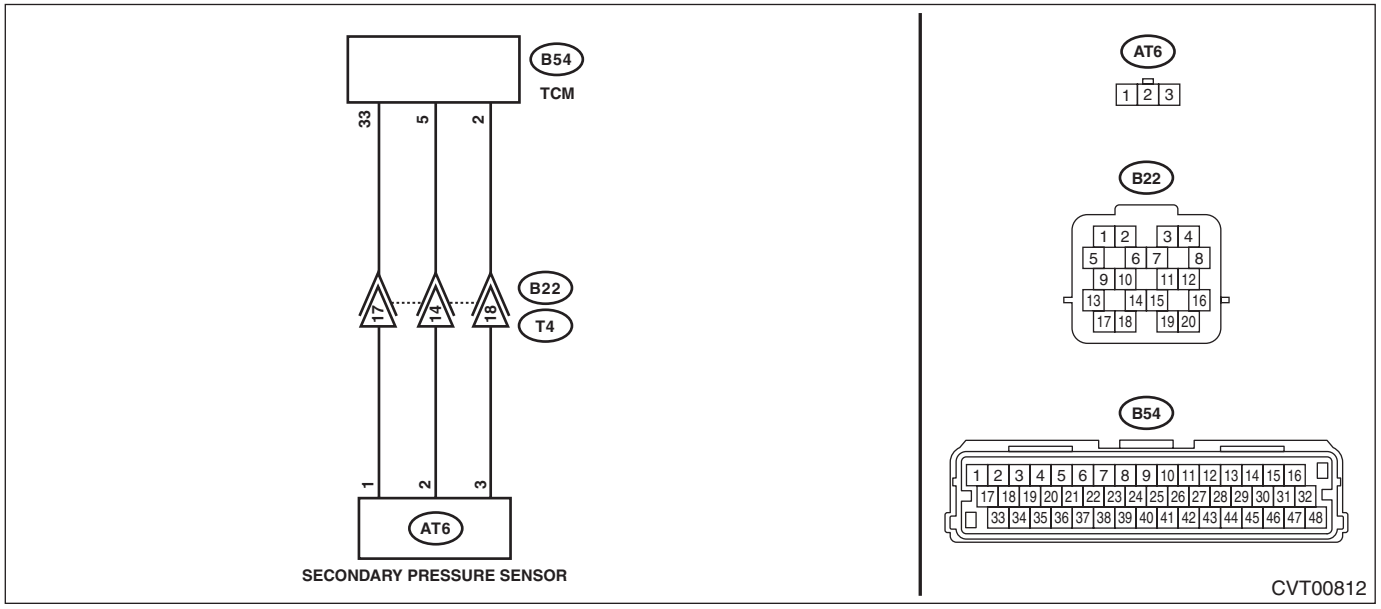

	Step	Check	Yes	No
1	**CHECK INPUT SIGNAL FOR TCM.** 1) Start the engine. 2) Warm up until the ATF temperature reaches to 40 — 70°C (104 — 158°F). 3) Depress the brake pedal, and shift the select lever to “D” range. 4) Shift the select lever to “P” range. 5) Stabilize the engine speed at idle. 6) Read the data of «Actual secondary pressure» using Subaru Select Monitor.	Is the «Actual secondary pressure» 0.5 — 1.5 MPa?	Check for poor contact of connector.	Go to step **2**.

	Step	Check	Yes	No
2	**CHECK HARNESS.** 1) Turn the ignition switch to OFF. 2) Disconnect the TCM and transmission connectors. 3) Turn the ignition switch to ON. 4) Measure the voltage between TCM connector and chassis ground. ***Connector & terminal*** ***(B54) No. 5 (+) — Chassis ground (–):*** ***(B54) No. 33 (+) — Chassis ground (–):***	Is the voltage approx. 0 V?	Go to step **3**.	Repair the short circuit of harness.
3	**CHECK HARNESS.** 1) Turn the ignition switch to OFF. 2) Measure the resistance between TCM connector terminals. ***Connector & terminal*** ***(B54) No. 5 — (B54) No. 33:***	Is the resistance less than 1 Ω?	Repair the short circuit of harness.	Go to step **4**.
4	**CHECK TRANSMISSION HARNESS.** 1) Disconnect the secondary pressure sensor connector. 2) Turn the ignition switch to ON. 3) Measure the voltage between transmission connector and chassis ground. ***Connector & terminal*** ***(T4) No. 14 (+) — Chassis ground (–):*** ***(T4) No. 17 (+) — Chassis ground (–):***	Is the voltage approx. 0 V?	Go to step **5**.	Repair the short circuit of harness.
5	**CHECK TRANSMISSION HARNESS.** 1) Turn the ignition switch to OFF. 2) Measure the resistance between transmission connector terminals. ***Connector & terminal*** ***(T4) No. 14 — (T4) No. 17:***	Is the resistance less than 1 Ω?	Repair the short circuit of harness.	Go to step **6**.
6	**CHECK POWER SUPPLY FOR SECONDARY PRESSURE SENSOR.** 1) Connect the connectors of TCM and transmission. 2) Turn the ignition switch to ON. 3) Measure the voltage between secondary pressure sensor connector terminals. ***Connector & terminal*** ***(AT6) No. 1 (+) — (AT6) No. 3 (–):***	Is the voltage 4.5 V or more?	Replace the secondary pressure sensor. <Ref. to CVT(TR690)-122, Secondary Pressure Sensor.> If the replacement of the sensor do not eliminate the malfunction, replace the TCM. <Ref. to CVT(TR690)-142, Transmission Control Module (TCM).>	Check for poor contact of connector, and if no fault is found, replace the TCM. <Ref. to CVT(TR690)-142, Transmission Control Module (TCM).>

3. OUTLINE OF DIAGNOSIS

- Detect short circuit to power supply or open circuit of the transmission line pressure sensor 5 V system.
- Judge as NG if the voltage detected by the transmission line pressure sensor is higher than the predetermined value.

4. EXECUTION CONDITION

Secondary Parameters	Execution condition
12 V battery system voltage	≥ 9 V

5. DIAGNOSTIC METHOD

If the duration of time while the following conditions are met is longer than the time indicated, judge as NG.

Judgment Value

Malfunction Criteria	Threshold Value
Measured line pressure sensor input voltage (Line pressure)	> 4.883 V (> 8200 kPa)

Time Needed for Diagnosis: 1.5 seconds
Malfunction Indicator Light Illumination: Illuminates as soon as a malfunction occurs.

AB:DTC P0890 TCM POWER RELAY SENSE CIRCUIT LOW

DTC DETECTING CONDITION:
Immediately at fault recognition
TROUBLE SYMPTOM:
Improper gear shifting
WIRING DIAGRAM:
Power supply circuit <Ref. to WI-21, WIRING DIAGRAM, Power Supply Circuit.>
Engine electrical system <Ref. to WI-170, WIRING DIAGRAM, Engine Electrical System.>

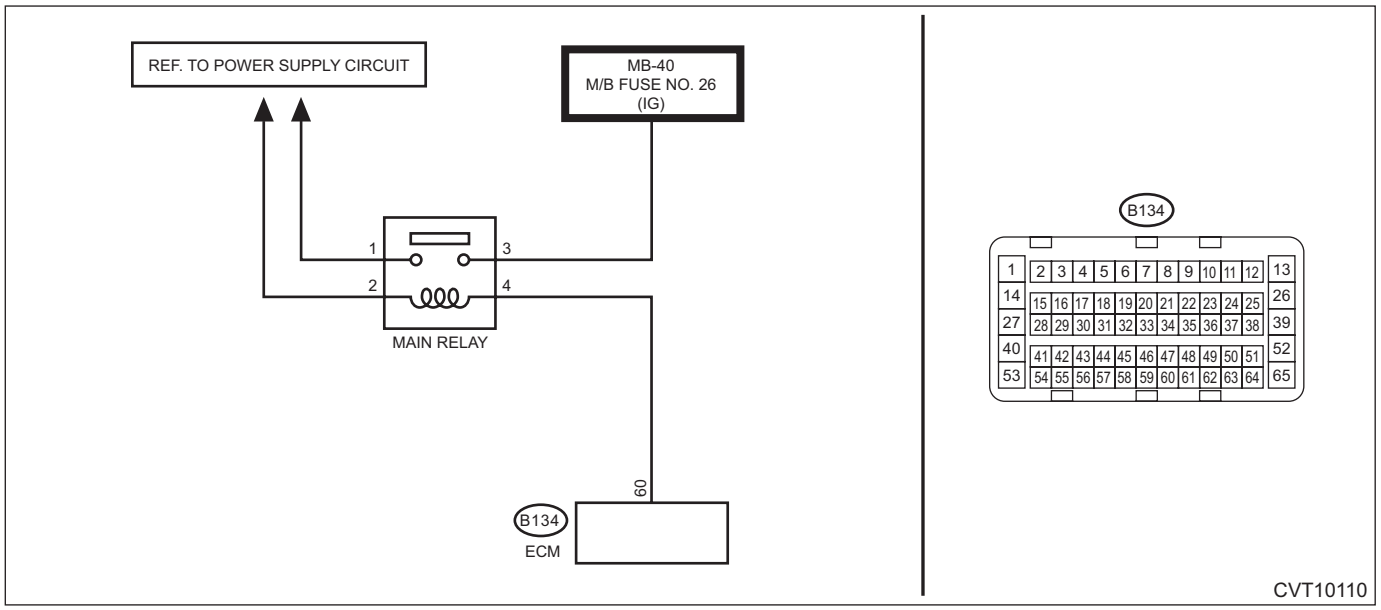

	Step	Check	Yes	No
1	**CHECK ECM CONNECTOR.** Check the connecting condition of ECM connector.	Is the ECM connector correctly connected?	Go to step **2**.	Connect the ECM connector correctly.
2	**CHECK HARNESS BETWEEN M/B FUSE AND MAIN RELAY CONNECTOR.** 1) Turn the ignition switch to OFF. 2) Measure the voltage between M/B fuse and engine ground. ***Connector & terminal*** ***(M/B fuse) No. 26 (+) — Engine ground (–):*** ***(B134) No. 14 (+) — Engine ground (–):***	Is the voltage 10 V or more?	Repair the harness and connector. NOTE: In this case, repair the following item: • Short circuit to power supply of harness between M/B fuse and main relay connector • Defective main relay	Go to step **3**.
3	**CHECK HARNESS BETWEEN ECM AND MAIN RELAY CONNECTOR.** 1) Turn the ignition switch to OFF. 2) Remove the main relay. 3) Disconnect the connector from ECM. 4) Measure the resistance between the ECM connector and engine ground. ***Connector & terminal*** ***(B134) No. 60 — Engine ground:***	Is the resistance 1 MΩ or more?	Repair the poor contact of ECM connector.	Repair the short circuit to ground in harness between ECM connector and main relay connector.

1. OUTLINE OF DIAGNOSIS

- Detect the malfunction of transmission fluid pressure solenoid drive power supply relay circuit.
- Judge as NG if the transmission fluid pressure solenoid drive power supply voltage is lower than the predetermined value.

2. EXECUTION CONDITION

Secondary Parameters	Execution condition
12 V battery system voltage	≥ 9 V
Ignition state	Run or Crank

3. DIAGNOSTIC METHOD

If the duration of time while the following conditions are met is longer than the time indicated, judge as NG.

Judgment Value

Malfunction Criteria	Threshold Value
Measured TCM input voltage which is supplied from 12 V battery system through the TCM Power Relay	< 2 V

Time Needed for Diagnosis: 0.5 seconds
Malfunction Indicator Light Illumination: Illuminates as soon as a malfunction occurs.

AC:DTC P0951 AUTO SHIFT MANUAL CONTROL CIRCUIT RANGE/PERFORMANCE

DTC DETECTING CONDITION:
Immediately at fault recognition
TROUBLE SYMPTOM:
Manual mode can not be set.
WIRING DIAGRAM:
- ENGINE TYPE FB

NOTE:
For the coupling connector, refer to “WIRING SYSTEM”.
CVT control system <Ref. to WI-156, ENGINE TYPE FB, WIRING DIAGRAM, CVT Control System.>

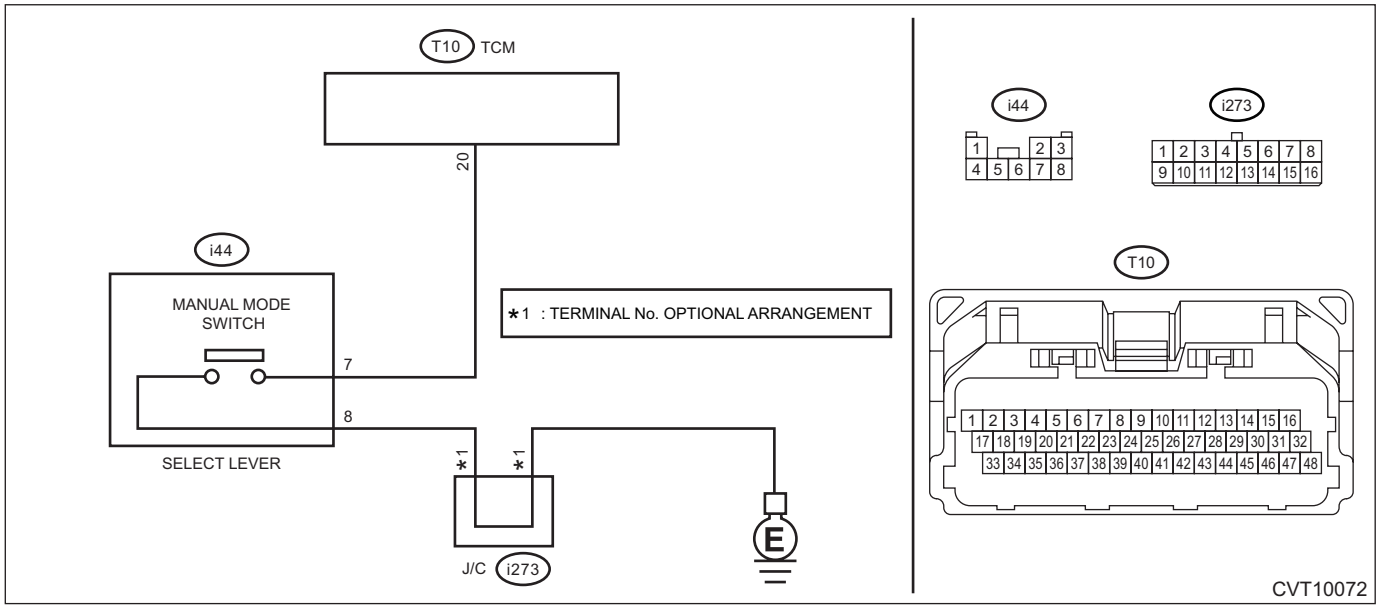

- ENGINE TYPE EZ

NOTE:
For the coupling connector, refer to “WIRING SYSTEM”.
CVT control system <Ref. to WI-162, ENGINE TYPE EZ, WIRING DIAGRAM, CVT Control System.>

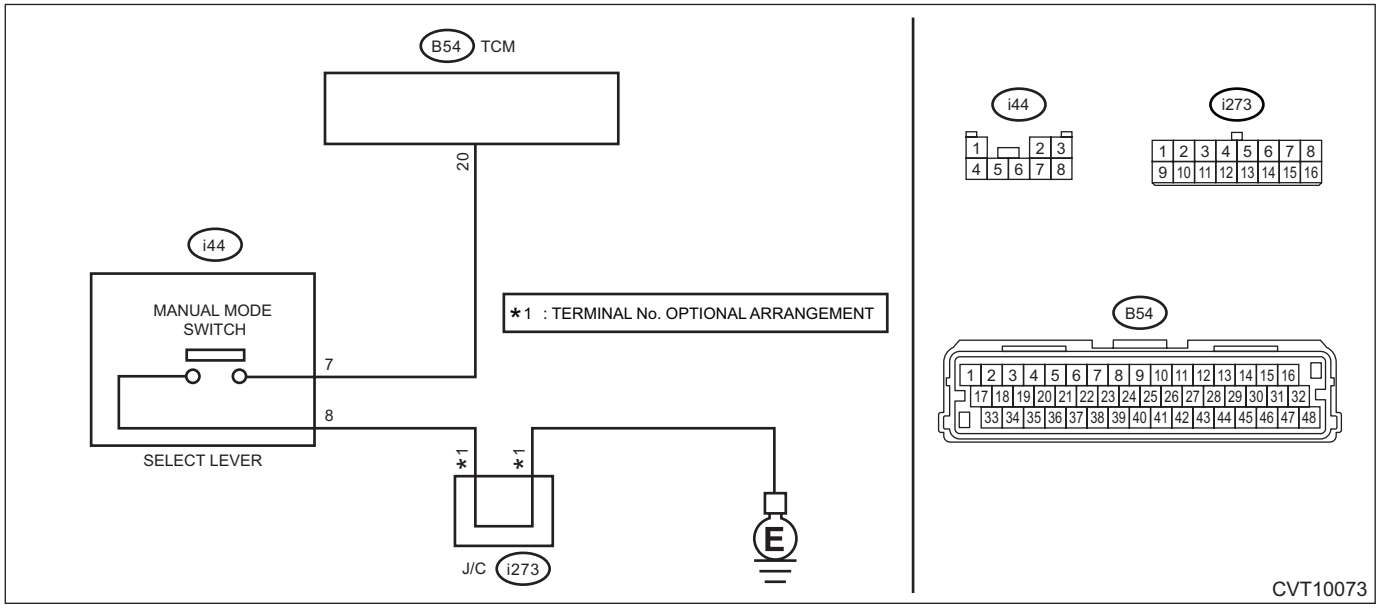

	Step	Check	Yes	No
1	**CHECK HARNESS.** 1) Turn the ignition switch to OFF. 2) Disconnect the manual mode switch connector. 3) Measure the resistance between manual mode switch connector and chassis ground. ***Connector & terminal*** ***(i44) No. 8 — Chassis ground:***	Is the resistance less than 1 Ω?	Go to step **2**.	Repair the open circuit of harness.
2	**CHECK MANUAL MODE SWITCH.** Measure the resistance between manual mode switch terminals. ***Connector & terminal*** ***No. 7 — No. 8:***	Is the resistance 1 MΩ or more?	Go to step **3**.	Replace the select lever assembly. <Ref. to CS-26, Select Lever.>
3	**CHECK MANUAL MODE SWITCH.** 1) Shift the select lever to manual mode. 2) Measure the resistance between manual mode switch terminals. ***Connector & terminal*** ***No. 7 — No. 8:***	Is the resistance less than 1 Ω?	Go to step **4**.	Replace the select lever assembly. <Ref. to CS-26, Select Lever.>
4	**CHECK HARNESS.** 1) Disconnect the TCM connector. 2) Measure the resistance between TCM connector and manual mode switch connector. ***Connector & terminal*** ***ENGINE TYPE FB*** ***(T10) No. 20 — (i44) No. 7:*** ***ENGINE TYPE EZ*** ***(B54) No. 20 — (i44) No. 7:***	Is the resistance less than 1 Ω?	Go to step **5**.	Repair the open circuit of harness or poor contact of connector.
5	**CHECK HARNESS.** Measure the resistance between manual mode switch connector and chassis ground. ***Connector & terminal*** ***(i44) No. 7 — Chassis ground:***	Is the resistance 1 MΩ or more?	Go to step **6**.	Repair the short circuit of harness.
6	**CHECK INPUT SIGNAL FOR TCM.** 1) Connect the TCM and manual mode switch connector. 2) Turn the ignition switch to ON. 3) Set the select lever to “D” range. 4) Read the data of «Tiptronic Mode Switch» using Subaru Select Monitor.	Does the value of «Tiptronic Mode Switch» change to “ON” with select lever in manual mode, and “OFF” with select lever in other than manual mode?	Current condition is normal.	Go to step **7**.
7	**CHECK FOR POOR CONTACT.**	Is there poor contact of the manual mode switch circuit?	Repair the poor contact.	Replace the TCM. <Ref. to CVT(TR580)-159, Transmission Control Module (TCM).> <Ref. to CVT(TR690)-142, Transmission Control Module (TCM).>

1. OUTLINE OF DIAGNOSIS

- Detect the GND-output short (ground-fault) in manual SW circuit.
- Judge as NG if the manual SW is ON in P, R or N range.

2. EXECUTION CONDITION

Secondary Parameters	Execution condition
Malfunctions listed on the right column are not detected:	P0705, P0708

3. DIAGNOSTIC METHOD

If the duration of time while the following conditions are met is longer than the time indicated, judge as NG.

Judgment Value

Malfunction Criteria	Threshold Value
Manual SW status in other than D range	ON

Time Needed for Diagnosis: 5 s

AD:DTC P0961 PRESSURE CONTROL SOLENOID "A" CONTROL CIRCUIT RANGE/PERFORMANCE

DTC DETECTING CONDITION:
Immediately at fault recognition
TROUBLE SYMPTOM:
- Acceleration is poor during standing start.
- Shift control malfunction
- Engine speed increases abruptly.

1. ENGINE TYPE FB

WIRING DIAGRAM:
CVT control system <Ref. to WI-156, ENGINE TYPE FB, WIRING DIAGRAM, CVT Control System.>

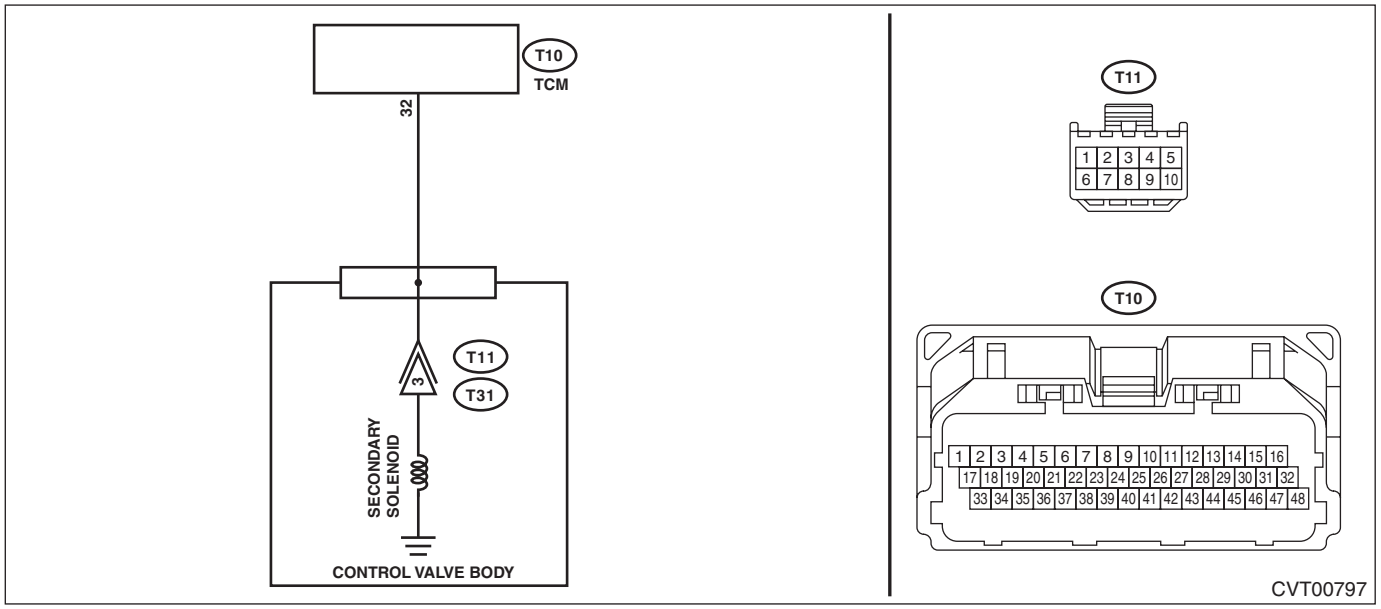

	Step	Check	Yes	No
1	**CHECK DTC.** Read the DTC using Subaru Select Monitor.	Besides DTC P0961, is DTC P0962 or P0963 displayed?	Perform the diagnosis according to DTCs other than P0961.	Go to step **2**.
2	**CHECK SECONDARY SOLENOID (ACTIVE TEST).** 1) Turn the ignition switch to ON. 2) Using the Subaru Select Monitor, perform forced operation of the secondary solenoid. <Ref. to CVT(diag)-32, Active Test.>	Does the indication change as 300 → 500 → 700 mA during forced operation, and does «Sec. Sol. Actual Current» synchronize with «Sec. Sol. Set Current»?	Go to step **3**.	Go to step **4**.
3	**CHECK FOR POOR CONTACT.** Check for poor contact of harness and connector between TCM and secondary solenoid.	Is there poor contact?	Repair the poor contact of harness and connector.	Recheck the poor contact of harness and connector. Replace the TCM if no fault is found. <Ref. to CVT(TR580)-159, Transmission Control Module (TCM).>

	Step	Check	Yes	No
4	**CHECK SECONDARY SOLENOID.** 1) Turn the ignition switch to OFF. 2) Disconnect the TCM connector. 3) Measure the resistance between TCM connector and transmission body. ***Connector & terminal*** ***(T10) No. 32 — Transmission body:***	Is the resistance approx. 5 — 7 Ω? (when cold)	Replace the control valve body. <Ref. to CVT(TR580)-133, Control Valve Body.>	Repair or replace the harness.

2. ENGINE TYPE EZ

WIRING DIAGRAM:

CVT control system <Ref. to WI-162, ENGINE TYPE EZ, WIRING DIAGRAM, CVT Control System.>

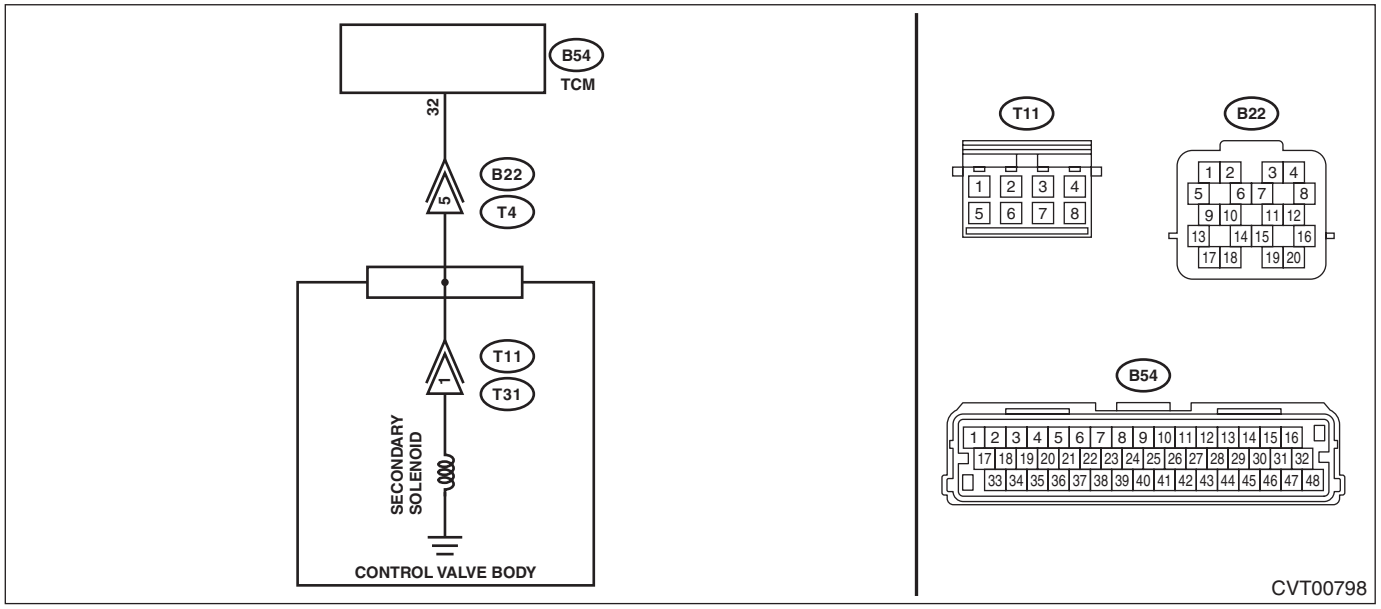

	Step	Check	Yes	No
1	**CHECK DTC.** Read the DTC using Subaru Select Monitor.	Besides DTC P0961, is DTC P0962 or P0963 displayed?	Perform the diagnosis according to DTCs other than P0961.	Go to step **2**.
2	**CHECK SECONDARY SOLENOID (ACTIVE TEST).** 1) Turn the ignition switch to ON. 2) Using the Subaru Select Monitor, perform forced operation of the secondary solenoid. <Ref. to CVT(diag)-32, Active Test.>	Does the indication change as 300 → 500 → 700 mA during forced operation, and does «Sec. Sol. Actual Current» synchronize with «Sec. Sol. Set Current»?	Go to step **3**.	Go to step **4**.
3	**CHECK FOR POOR CONTACT.** Check for poor contact of harness and connector between TCM and secondary solenoid.	Is there poor contact?	Repair the poor contact of harness and connector.	Recheck the poor contact of harness and connector. Replace the TCM if no fault is found. <Ref. to CVT(TR690)-142, Transmission Control Module (TCM).>

	Step	Check	Yes	No
4	**CHECK SECONDARY SOLENOID.** 1) Turn the ignition switch to OFF. 2) Disconnect the transmission connector. 3) Measure the resistance between transmission connector and transmission body. ***Connector & terminal*** ***(T4) No. 5 — Transmission body:***	Is the resistance approx. 5 — 7 Ω? (when cold)	Replace the control valve body. <Ref. to CVT(TR690)-124, Control Valve Body.>	Repair or replace the harness.

3. OUTLINE OF DIAGNOSIS

- Detect the malfunction of transmission line pressure solenoid drive circuit.
- Judge as NG when the deviation between target current and actual current of the transmission line pressure solenoid becomes equal to or larger than the predetermined value.

4. EXECUTION CONDITION

Secondary Parameters	Execution condition
12 V battery system voltage	≥ 9 V

5. DIAGNOSTIC METHOD

If the duration of time while the following conditions are met is longer than the time indicated, judge as NG.

Judgment Value

Malfunction Criteria	Threshold Value
| Target line pressure control solenoid valve current – Measured line pressure control solenoid valve current |	> 0.2 A

Time Needed for Diagnosis: 5 seconds
Malfunction Indicator Light Illumination: Illuminates as soon as a malfunction occurs.

AE:DTC P0962 PRESSURE CONTROL SOLENOID "A" CONTROL CIRCUIT LOW

DTC DETECTING CONDITION:
Immediately at fault recognition
TROUBLE SYMPTOM:
- Engine speed increases abruptly, and can not start.
- Engine speed increases abruptly during driving.

1. ENGINE TYPE FB

WIRING DIAGRAM:
CVT control system <Ref. to WI-156, ENGINE TYPE FB, WIRING DIAGRAM, CVT Control System.>

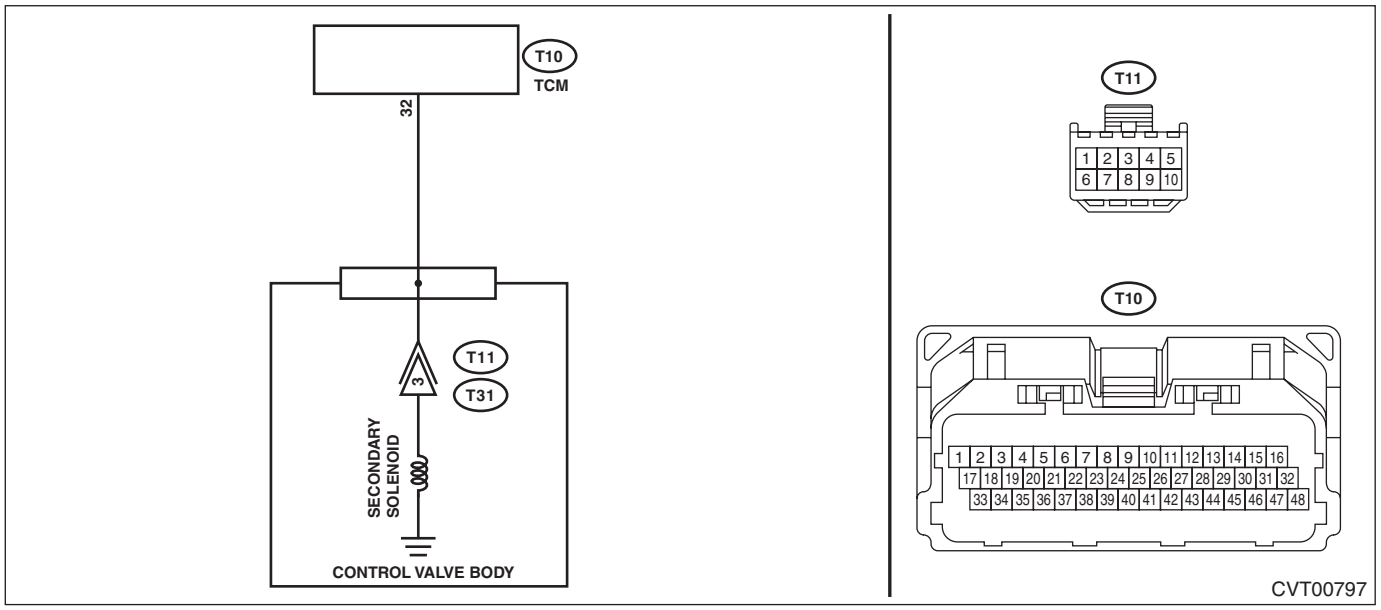

	Step	Check	Yes	No
1	**CHECK INPUT SIGNAL FOR TCM.** 1) After driving with warm up condition, park the vehicle while depressing the brake pedal at "N" range. 2) Read the data of «Sec. Sol. Set Current» and «Sec. Sol. Actual Current» using Subaru Select Monitor.	Does the value of «Sec. Sol. Set Current» and «Sec. Sol. Actual Current» almost correspond?	Check for poor contact of connector.	Go to step **2**.
2	**CHECK HARNESS.** **CAUTION:** **Start work after ATF cools down.** 1) Turn the ignition switch to OFF. 2) Disconnect the TCM connector. 3) Remove the transmission valve cover. 4) Disconnect the control valve body connector. 5) Measure the resistance between TCM connector and chassis ground. ***Connector & terminal*** ***(T10) No. 32 — Chassis ground:***	Is the resistance 1 MΩ or more?	Go to step **3**.	Repair the short circuit of harness.

	Step	Check	Yes	No
3	**CHECK SECONDARY SOLENOID.** 1) Connect the connector for control valve body. 2) Measure the resistance between TCM connector and transmission body. ***Connector & terminal*** ***(T10) No. 32 — Transmission body:***	Is the resistance approx. 5 — 7 Ω? (when cold)	Check for poor contact of connector, and if no fault is found, replace the TCM. <Ref. to CVT(TR580)-159, Transmission Control Module (TCM).>	Go to step **4**.
4	**CHECK HARNESS INSIDE TRANSMISSION.** Check for the harness pinch, damage.	Is there any fault in the harness?	Replace the transmission harness.	Replace the control valve body. <Ref. to CVT(TR580)-133, Control Valve Body.>

2. ENGINE TYPE EZ

WIRING DIAGRAM:

CVT control system <Ref. to WI-162, ENGINE TYPE EZ, WIRING DIAGRAM, CVT Control System.>

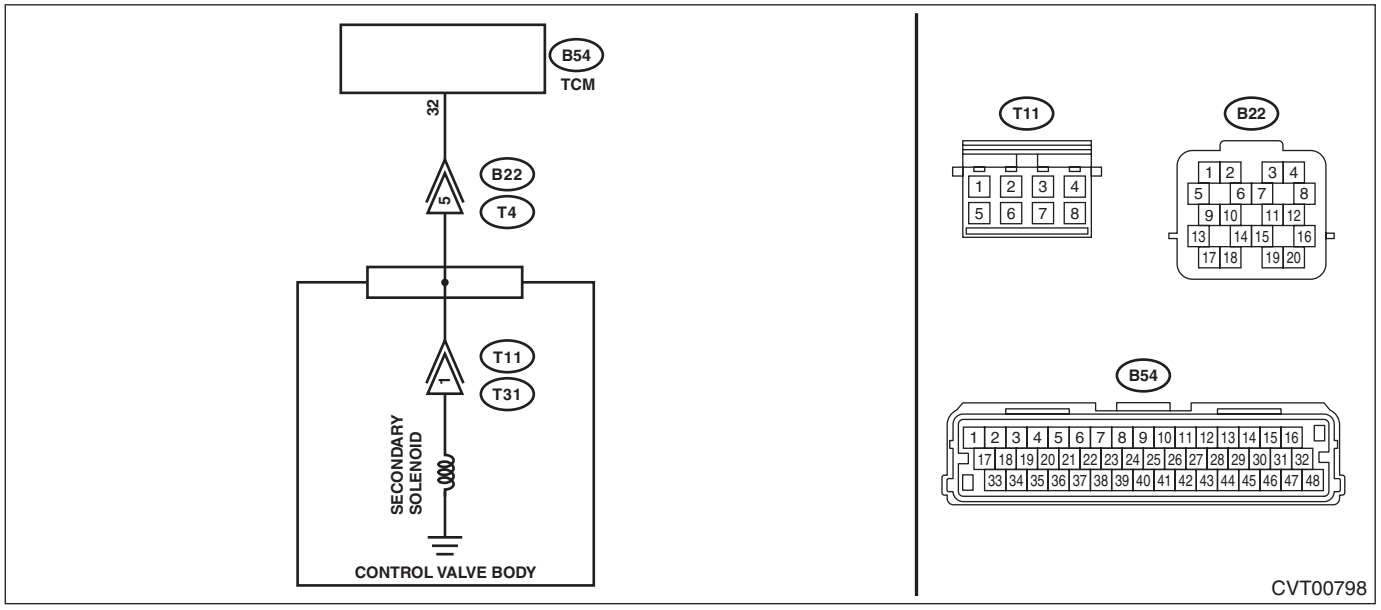

	Step	Check	Yes	No
1	**CHECK INPUT SIGNAL FOR TCM.** 1) After driving with warm up condition, park the vehicle while depressing the brake pedal at “N” range. 2) Read the data of «Sec. Sol. Set Current» and «Sec. Sol. Actual Current» using Subaru Select Monitor.	Does the value of «Sec. Sol. Set Current» and «Sec. Sol. Actual Current» almost correspond?	Check for poor contact of connector.	Go to step **2**.
2	**CHECK HARNESS.** 1) Turn the ignition switch to OFF. 2) Disconnect the TCM and transmission connectors. 3) Measure the resistance between TCM connector and chassis ground. ***Connector & terminal*** ***(B54) No. 32 — Chassis ground:***	Is the resistance 1 MΩ or more?	Go to step **3**.	Repair the short circuit of harness.

	Step	Check	Yes	No
3	**CHECK SECONDARY SOLENOID.** Measure the resistance between transmission connector and transmission body. ***Connector & terminal*** ***(T4) No. 5 — Transmission body:***	Is the resistance approx. 5 — 7 Ω? (when cold)	Check for poor contact of connector, and if no fault is found, replace the TCM. <Ref. to CVT(TR690)-142, Transmission Control Module (TCM).>	Go to step **4**.
4	**CHECK HARNESS INSIDE TRANSMISSION.** **CAUTION:** **Start work after ATF cools down.** 1) Remove the transmission oil pan. 2) Check for the harness pinch, damage.	Is there any fault in the harness?	Replace the transmission harness.	Go to step **5**.
5	**CHECK HARNESS INSIDE TRANSMISSION.** 1) Disconnect the control valve body connector. 2) Measure the resistance between transmission connector and transmission body. ***Connector & terminal*** ***(T4) No. 5 — Transmission body:***	Is the resistance 1 MΩ or more?	Replace the control valve body. <Ref. to CVT(TR690)-124, Control Valve Body.>	Replace the transmission harness.

3. OUTLINE OF DIAGNOSIS

Diagnosis 1
- Detect the ground short of the transmission line pressure solenoid drive circuit.
- Judge as NG if the transmission line pressure solenoid drive current is higher than the predetermined value.

Diagnosis 2
- Detect the ground short of the transmission line pressure solenoid drive circuit.
- Judge as NG if an overcurrent is detected more than 10 times in the transmission line pressure solenoid drive circuit.

4. EXECUTION CONDITION

Secondary Parameters	Execution condition
Diagnosis 1	
12 V battery system voltage	≥ 9 V
Commanded line pressure control solenoid valve current	≥ 0.1 A
Diagnosis 2	
12 V battery system voltage	≥ 9 V

5. DIAGNOSTIC METHOD

If the duration of time while the following conditions are met is longer than the time indicated, judge as NG.

Judgment Value

Malfunction Criteria	Threshold Value
Diagnosis 1	
Measured line pressure control solenoid valve current	≥ 1.1 A
Diagnosis 2	
Signal of malfunction from solenoid driver IC	ON
As defined by:	
Measured line pressure control solenoid valve current ≥ 1.2 A	

Time Needed for Diagnosis: 0.5 seconds
Malfunction Indicator Light Illumination: Illuminates as soon as a malfunction occurs.

AF:DTC P0963 PRESSURE CONTROL SOLENOID "A" CONTROL CIRCUIT HIGH

DTC DETECTING CONDITION:
Immediately at fault recognition
TROUBLE SYMPTOM:
- Engine speed increases abruptly, and can not start.
- Engine speed increases abruptly during driving.

1. ENGINE TYPE FB

WIRING DIAGRAM:
CVT control system <Ref. to WI-156, ENGINE TYPE FB, WIRING DIAGRAM, CVT Control System.>

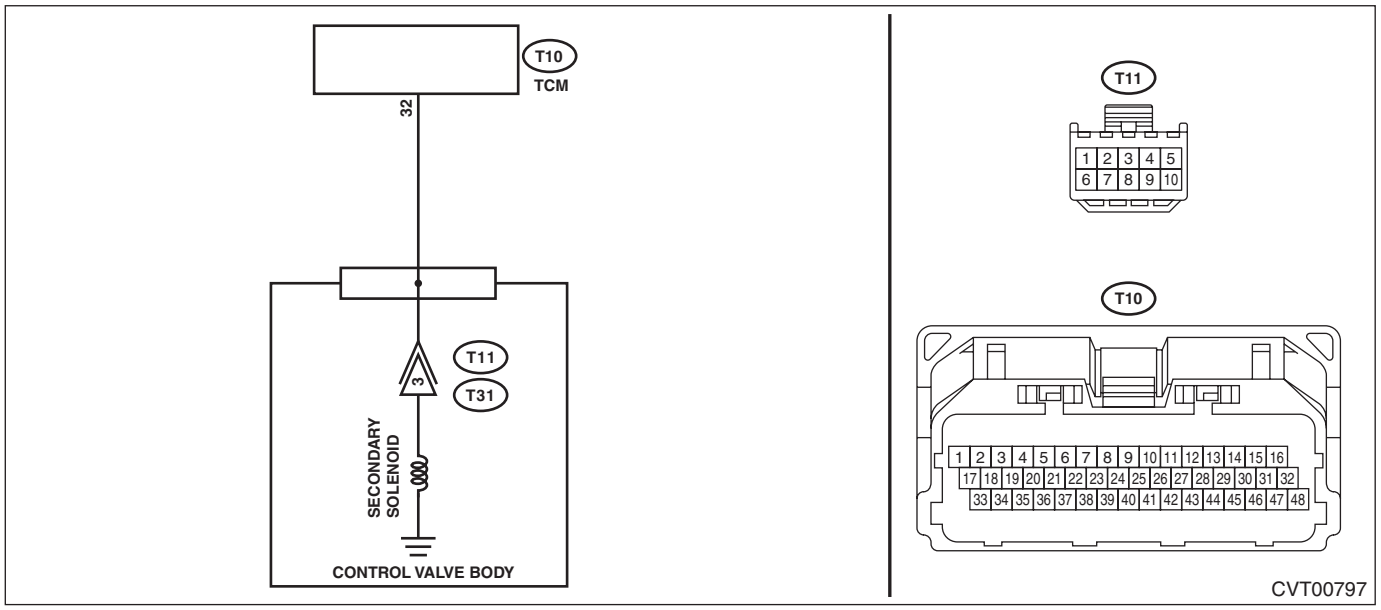

	Step	Check	Yes	No
1	**CHECK INPUT SIGNAL FOR TCM.** 1) After driving with warm up condition, park the vehicle while depressing the brake pedal at "N" range. 2) Read the data of «Sec. Sol. Set Current» and «Sec. Sol. Actual Current» using Subaru Select Monitor.	Does the value of «Sec. Sol. Set Current» and «Sec. Sol. Actual Current» almost correspond?	Check for poor contact of connector.	Go to step **2**.
2	**CHECK HARNESS.** **CAUTION:** **Start work after ATF cools down.** 1) Turn the ignition switch to OFF. 2) Disconnect the TCM connector. 3) Remove the transmission valve cover. 4) Disconnect the control valve body connector. 5) Measure the resistance between TCM connector and control valve body connector. ***Connector & terminal*** ***(T10) No. 32 — (T11) No. 3:***	Is the resistance less than 1 Ω?	Go to step **3**.	Repair the open circuit of harness.
3	**CHECK HARNESS.** 1) Turn the ignition switch to ON. 2) Measure the voltage between TCM connector and chassis ground. ***Connector & terminal*** ***(T10) No. 32 (+) — Chassis ground (–):***	Is the voltage approx. 0 V?	Go to step **4**.	Repair the short circuit of harness.

	Step	Check	Yes	No
4	**CHECK SECONDARY SOLENOID.** 1) Connect the connector for control valve body. 2) Measure the resistance between TCM connector and transmission body. ***Connector & terminal*** ***(T10) No. 32 — Transmission body:***	Is the resistance approx. 5 — 7 Ω? (when cold)	Check for poor contact of connector, and if no fault is found, replace the TCM. <Ref. to CVT(TR580)-159, Transmission Control Module (TCM).>	Go to step **5**.
5	**CHECK HARNESS INSIDE TRANSMISSION.** Check for the harness pinch, damage.	Is there any fault in the harness?	Replace the transmission harness.	Replace the control valve body. <Ref. to CVT(TR580)-133, Control Valve Body.>

2. ENGINE TYPE EZ

WIRING DIAGRAM:

CVT control system <Ref. to WI-162, ENGINE TYPE EZ, WIRING DIAGRAM, CVT Control System.>

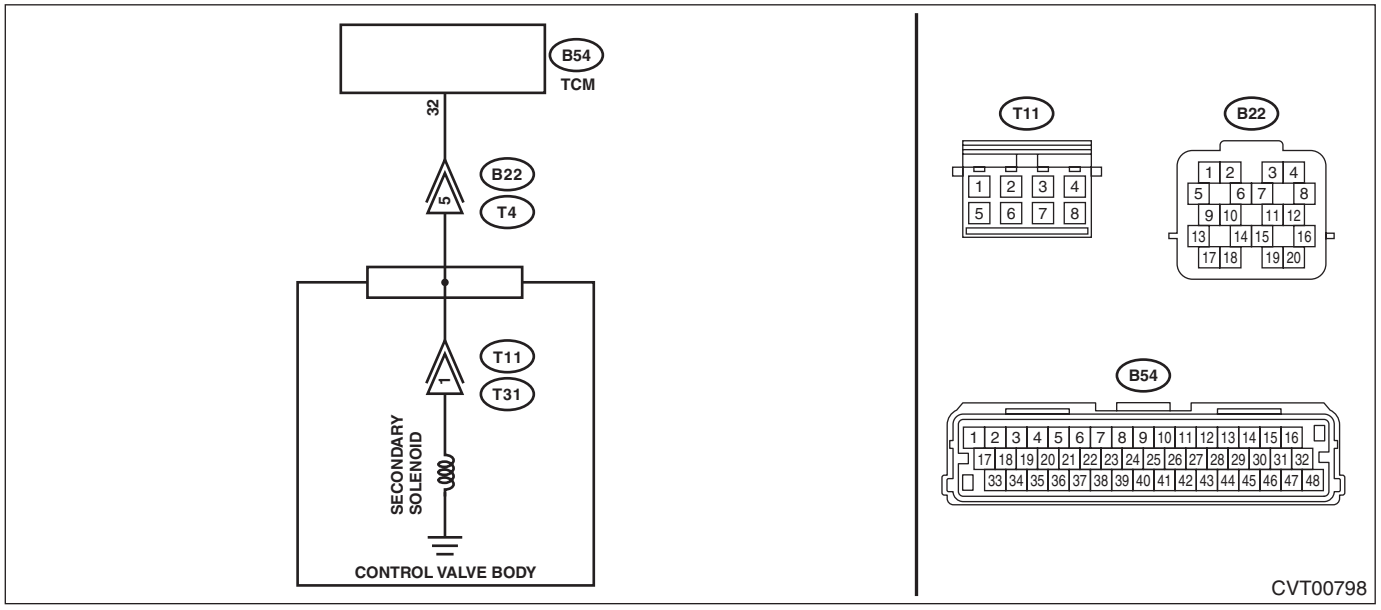

	Step	Check	Yes	No
1	**CHECK INPUT SIGNAL FOR TCM.** 1) After driving with warm up condition, park the vehicle while depressing the brake pedal at “N” range. 2) Read the data of «Sec. Sol. Set Current» and «Sec. Sol. Actual Current» using Subaru Select Monitor.	Does the value of «Sec. Sol. Set Current» and «Sec. Sol. Actual Current» almost correspond?	Check for poor contact of connector.	Go to step **2**.
2	**CHECK HARNESS.** 1) Turn the ignition switch to OFF. 2) Disconnect the TCM and transmission connectors. 3) Measure the resistance between TCM connector and transmission connectors. ***Connector & terminal*** ***(B54) No. 32 — (B22) No. 5:***	Is the resistance less than 1 Ω?	Go to step **3**.	Repair the open circuit of harness.

	Step	Check	Yes	No
3	**CHECK HARNESS.** 1) Turn the ignition switch to ON. 2) Measure the voltage between TCM connector and chassis ground. ***Connector & terminal*** ***(B54) No. 32 (+) — Chassis ground (–):***	Is the voltage approx. 0 V?	Go to step **4**.	Repair the short circuit of harness.
4	**CHECK SECONDARY SOLENOID.** Measure the resistance between transmission connector and transmission body. ***Connector & terminal*** ***(T4) No. 5 — Transmission body:***	Is the resistance approx. 5 — 7 Ω? (when cold)	Check for poor contact of connector, and if no fault is found, replace the TCM. <Ref. to CVT(TR690)-142, Transmission Control Module (TCM).>	Go to step **5**.
5	**CHECK HARNESS INSIDE TRANSMISSION.** **CAUTION:** **Start work after ATF cools down.** 1) Remove the transmission oil pan. 2) Check for the harness pinch, damage.	Is there any fault in the harness?	Replace the transmission harness.	Go to step **6**.
6	**CHECK HARNESS INSIDE TRANSMISSION.** 1) Disconnect the control valve body connector. 2) Turn the ignition switch to ON. 3) Measure the voltage between transmission connector and transmission body. ***Connector & terminal*** ***(T4) No. 5 (+) — Transmission body (–):***	Is the voltage approx. 0 V?	Replace the control valve body. <Ref. to CVT(TR690)-124, Control Valve Body.>	Replace the transmission harness.

3. OUTLINE OF DIAGNOSIS

- Detect short circuit to power supply or open circuit of the transmission line pressure solenoid drive circuit.
- Judge as NG if the transmission line pressure solenoid drive current is lower than the predetermined value.

4. EXECUTION CONDITION

Secondary Parameters	Execution condition
12 V battery system voltage	≥ 9 V
Commanded line pressure control solenoid valve current	≥ 0.2 A

5. DIAGNOSTIC METHOD

If the duration of time while the following conditions are met is longer than the time indicated, judge as NG.

Judgment Value

Malfunction Criteria	Threshold Value
Measured line pressure control solenoid valve current	< 0.1 A

Time Needed for Diagnosis: 0.5 seconds
Malfunction Indicator Light Illumination: Illuminates as soon as a malfunction occurs.

AG:DTC P0965 PRESSURE CONTROL SOLENOID "B" CONTROL CIRCUIT RANGE/PERFORMANCE

DTC DETECTING CONDITION:
Immediately at fault recognition
TROUBLE SYMPTOM:
- Engine speed increases abruptly, and can not accelerate.
- Excessive slippage is felt.

1. ENGINE TYPE FB

WIRING DIAGRAM:
CVT control system <Ref. to WI-156, ENGINE TYPE FB, WIRING DIAGRAM, CVT Control System.>

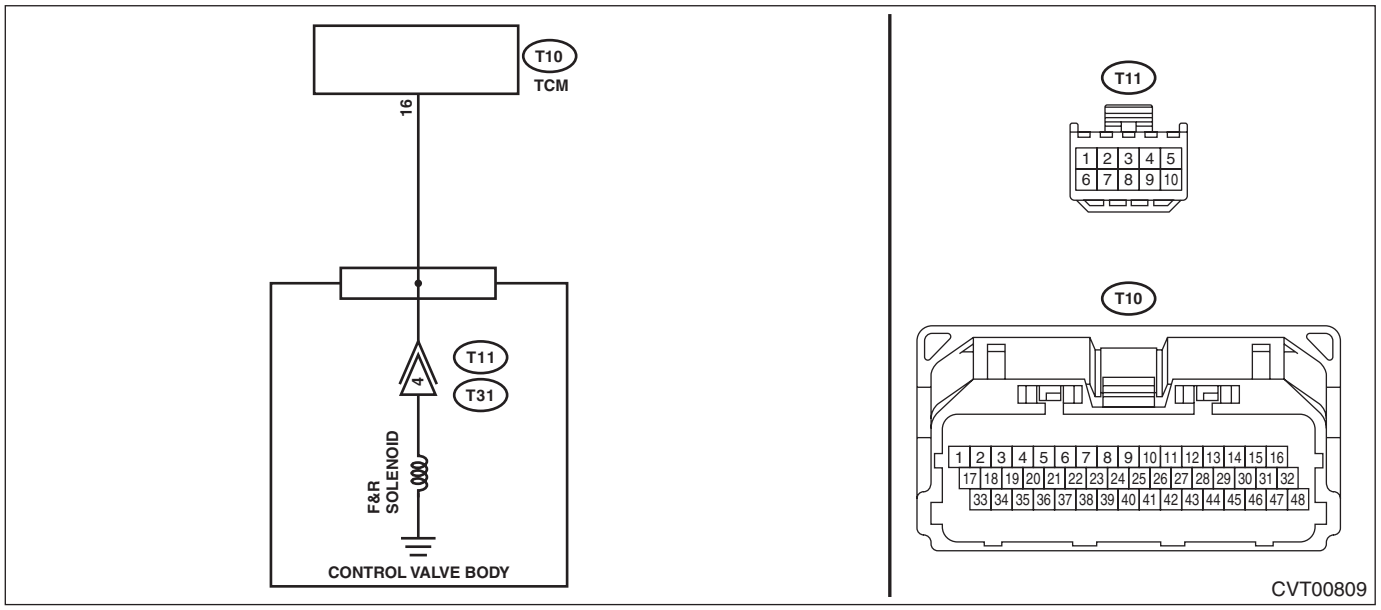

	Step	Check	Yes	No
1	**CHECK DTC.** Read the DTC using Subaru Select Monitor.	Besides DTC P0965, is any of the DTC P0717, P0966, P0967 or P2747 displayed?	Perform the diagnosis according to DTCs other than P0965.	Go to step **2**.
2	**CHECK F&R SOLENOID (ACTIVE TEST).** 1) Turn the ignition switch to ON. 2) Using the Subaru Select Monitor, perform forced operation of the F&R solenoid. <Ref. to CVT(diag)-32, Active Test.>	Does the indication change as 300 → 500 → 700 mA during forced operation, and does «F&R Linear Solenoid Actual Current» synchronize with «F&R Linear Solenoid Set Current»?	Go to step **3**.	Go to step **4**.
3	**CHECK FOR POOR CONTACT.** Check for poor contact of harness and connector between TCM and F&R solenoid.	Is there poor contact?	Repair the poor contact of harness and connector.	Recheck the poor contact of harness and connector. Replace the TCM if no fault is found. <Ref. to CVT(TR580)-159, Transmission Control Module (TCM).>

	Step	Check	Yes	No
4	**CHECK F&R SOLENOID.** 1) Turn the ignition switch to OFF. 2) Disconnect the TCM connector. 3) Measure the resistance between TCM connector and transmission body. ***Connector & terminal*** ***(T10) No. 16 — Transmission body:***	Is the resistance approx. 4 — 6 Ω? (when cold)	Replace the control valve body. <Ref. to CVT(TR580)-133, Control Valve Body.>	Repair or replace the harness.

2. ENGINE TYPE EZ

WIRING DIAGRAM:

CVT control system <Ref. to WI-162, ENGINE TYPE EZ, WIRING DIAGRAM, CVT Control System.>

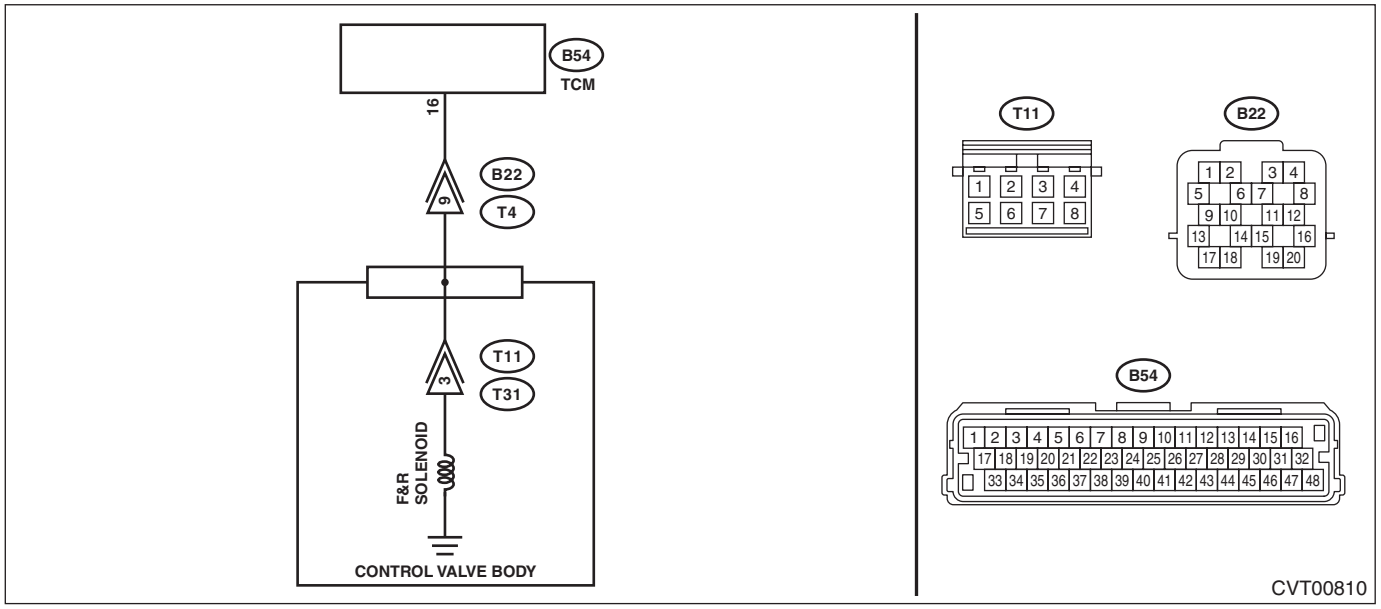

	Step	Check	Yes	No
1	**CHECK DTC.** Read the DTC using Subaru Select Monitor.	Besides DTC P0965, is any of the DTCs P0720, P0966, P0967, P1706 and P2751 displayed?	Perform the diagnosis according to DTCs other than P0965.	Go to step **2**.
2	**CHECK F&R SOLENOID (ACTIVE TEST).** 1) Turn the ignition switch to ON. 2) Using the Subaru Select Monitor, perform forced operation of the F&R solenoid. <Ref. to CVT(diag)-32, Active Test.>	Does the indication change as 300 → 500 → 700 mA during forced operation, and does «F&R Linear Solenoid Actual Current» synchronize with «F&R Linear Solenoid Set Current»?	Go to step **3**.	Go to step **4**.
3	**CHECK FOR POOR CONTACT.** Check for poor contact of harness and connector between TCM and F&R solenoid.	Is there poor contact?	Repair the poor contact of harness and connector.	Recheck the poor contact of harness and connector. Replace the TCM if no fault is found. <Ref. to CVT(TR690)-142, Transmission Control Module (TCM).>

Step		Check	Yes	No
4	**CHECK F&R SOLENOID.** 1) Turn the ignition switch to OFF. 2) Disconnect the transmission connector. 3) Measure the resistance between transmission connector and transmission body. ***Connector & terminal*** ***(T4) No. 9 — Transmission body:***	Is the resistance approx. 4 — 6 Ω? (when cold)	Replace the control valve body. <Ref. to CVT(TR690)-124, Control Valve Body.>	Repair or replace the harness.

3. OUTLINE OF DIAGNOSIS

Diagnosis 1
• Detect the malfunction of transmission forward/reverse clutch pressure solenoid drive circuit characteristics.
• Judge as NG when the deviation between set current and actual current of the transmission forward/reverse clutch pressure solenoid drive circuit becomes equal to or larger than the predetermined value.
Diagnosis 2
• Detect the malfunction of transmission forward/reverse clutch pressure solenoid drive circuit characteristics.
• Judge as NG when the transmission forward/reverse clutch pressure solenoid drive current is within the predetermined value.

4. EXECUTION CONDITION

Secondary Parameters	Execution condition
Diagnosis 1	
12 V battery system voltage	≥ 9 V
Diagnosis 2	
12 V battery system voltage	≥ 9 V

5. DIAGNOSTIC METHOD

If the duration of time while the following conditions are met is longer than the time indicated, judge as NG.

Judgment Value

Malfunction Criteria	Threshold Value
Diagnosis 1	
|Target forward & reverse clutch pressure control solenoid current – Measured forward & reverse clutch pressure control solenoid circuit|	> 0.2 A
Diagnosis 2	
Measured forward & reverse clutch pressure control solenoid current	> 1.08 A and ≤ 1.6 A

Time Needed for Diagnosis: 5 seconds
Malfunction Indicator Light Illumination: Illuminates as soon as a malfunction occurs.

AH:DTC P0966 PRESSURE CONTROL SOLENOID "B" CONTROL CIRCUIT LOW

DTC DETECTING CONDITION:
Immediately at fault recognition
TROUBLE SYMPTOM:
Excessive shift shock

1. ENGINE TYPE FB

WIRING DIAGRAM:
CVT control system <Ref. to WI-156, ENGINE TYPE FB, WIRING DIAGRAM, CVT Control System.>

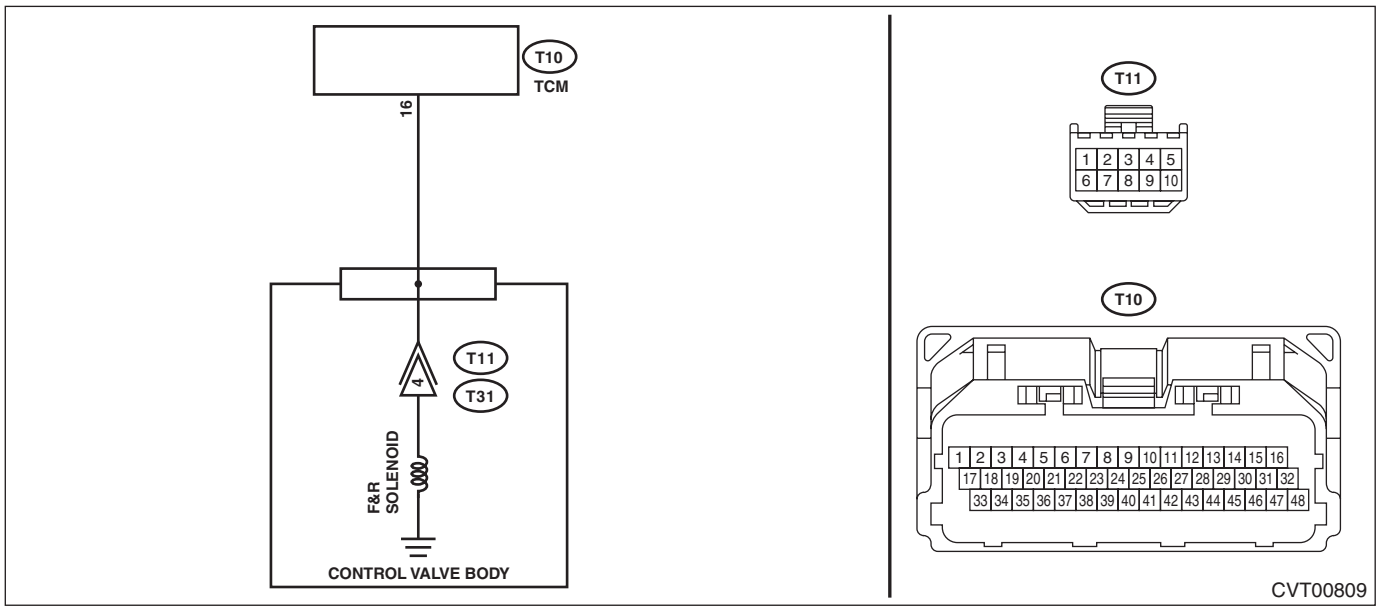

	Step	Check	Yes	No
1	**CHECK INPUT SIGNAL FOR TCM.** 1) After driving with warm up condition, park the vehicle while depressing the brake pedal at "D" range. 2) Read the data of «F&R Linear Solenoid Set Current» and «F&R Linear Solenoid Actual Current» using Subaru Select Monitor.	Does the value of «F&R Linear Solenoid Set Current» and «F&R Linear Solenoid Actual Current» almost correspond?	Check for poor contact of connector.	Go to step **2**.
2	**CHECK HARNESS.** **CAUTION:** **Start work after ATF cools down.** 1) Turn the ignition switch to OFF. 2) Disconnect the TCM connector. 3) Remove the transmission valve cover. 4) Disconnect the control valve body connector. 5) Measure the resistance between TCM connector and chassis ground. ***Connector & terminal*** ***(T10) No. 16 — Chassis ground:***	Is the resistance 1 MΩ or more?	Go to step **3**.	Repair the short circuit of harness.
3	**CHECK F&R SOLENOID.** 1) Connect the connector for control valve body. 2) Measure the resistance between TCM connector and transmission body. ***Connector & terminal*** ***(T10) No. 16 — Transmission body:***	Is the resistance approx. 4 — 6 Ω? (when cold)	Check for poor contact of connector, and if no fault is found, replace the TCM. <Ref. to CVT(TR580)-159, Transmission Control Module (TCM).>	Go to step **4**.

	Step	Check	Yes	No
4	**CHECK HARNESS INSIDE TRANSMISSION.** Check for the harness pinch, damage.	Is there any fault in the harness?	Replace the transmission harness.	Replace the control valve body. <Ref. to CVT(TR580)-133, Control Valve Body.>

2. ENGINE TYPE EZ

WIRING DIAGRAM:

CVT control system <Ref. to WI-162, ENGINE TYPE EZ, WIRING DIAGRAM, CVT Control System.>

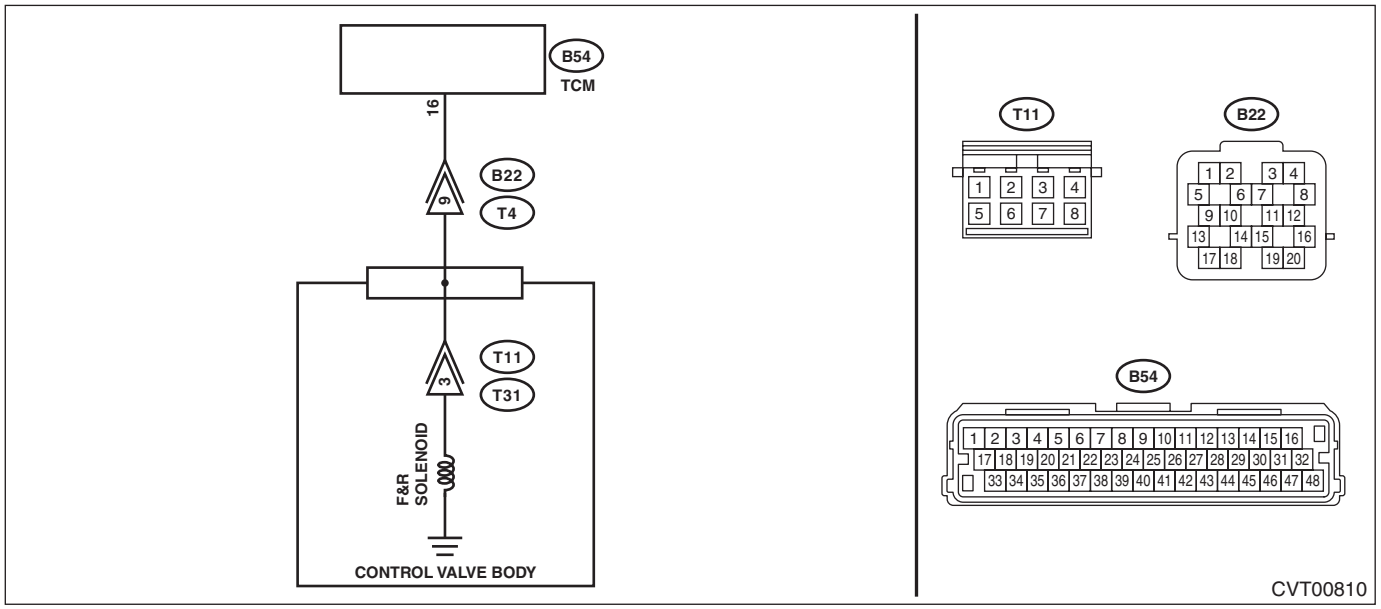

	Step	Check	Yes	No
1	**CHECK INPUT SIGNAL FOR TCM.** 1) After driving with warm up condition, park the vehicle while depressing the brake pedal at "D" range. 2) Read the data of «F&R Linear Solenoid Set Current» and «F&R Linear Solenoid Actual Current» using Subaru Select Monitor.	Does the value of «F&R Linear Solenoid Set Current» and «F&R Linear Solenoid Actual Current» almost correspond?	Check for poor contact of connector.	Go to step **2**.
2	**CHECK HARNESS.** 1) Turn the ignition switch to OFF. 2) Disconnect the TCM and transmission connectors. 3) Measure the resistance between TCM connector and chassis ground. ***Connector & terminal*** ***(B54) No. 16 — Chassis ground:***	Is the resistance 1 MΩ or more?	Go to step **3**.	Repair the short circuit of harness.
3	**CHECK F&R SOLENOID.** Measure the resistance between transmission connector and transmission body. ***Connector & terminal*** ***(T4) No. 9 — Transmission body:***	Is the resistance approx. 4 — 6 Ω? (when cold)	Check for poor contact of connector, and if no fault is found, replace the TCM. <Ref. to CVT(TR690)-142, Transmission Control Module (TCM).>	Go to step **4**.

	Step	Check	Yes	No
4	**CHECK HARNESS INSIDE TRANSMISSION.** **CAUTION:** **Start work after ATF cools down.** 1) Remove the transmission oil pan. 2) Check for the harness pinch, damage.	Is there any fault in the harness?	Replace the transmission harness.	Go to step **5**.
5	**CHECK HARNESS INSIDE TRANSMISSION.** 1) Disconnect the control valve body connector. 2) Measure the resistance between transmission connector and transmission body. ***Connector & terminal*** ***(T4) No. 9 — Transmission body:***	Is the resistance 1 MΩ or more?	Replace the control valve body. <Ref. to CVT(TR690)-124, Control Valve Body.>	Replace the transmission harness.

3. OUTLINE OF DIAGNOSIS

- Detect the GND-output short in transmission forward/reverse clutch pressure solenoid circuit.
- Judge as NG if an overcurrent is detected more than 10 times in the transmission forward/reverse clutch pressure solenoid drive circuit.

4. EXECUTION CONDITION

Secondary Parameters	Execution condition
12 V battery system voltage	≥ 9 V

5. DIAGNOSTIC METHOD

If the duration of time while the following conditions are met is longer than the time indicated, judge as NG.

Judgment Value

Malfunction Criteria	Threshold Value
Signal of malfunction from solenoid driver IC As defined by: Measured forward & reverse clutch pressure control solenoid current ≥ 1.6 A	ON

Time Needed for Diagnosis: 0.02 seconds
Malfunction Indicator Light Illumination: Illuminates as soon as a malfunction occurs.

AI: DTC P0967 PRESSURE CONTROL SOLENOID "B" CONTROL CIRCUIT HIGH

DTC DETECTING CONDITION:
Immediately at fault recognition
TROUBLE SYMPTOM:
Engine speed increases abruptly, and can not start.

1. ENGINE TYPE FB

WIRING DIAGRAM:
CVT control system <Ref. to WI-156, ENGINE TYPE FB, WIRING DIAGRAM, CVT Control System.>

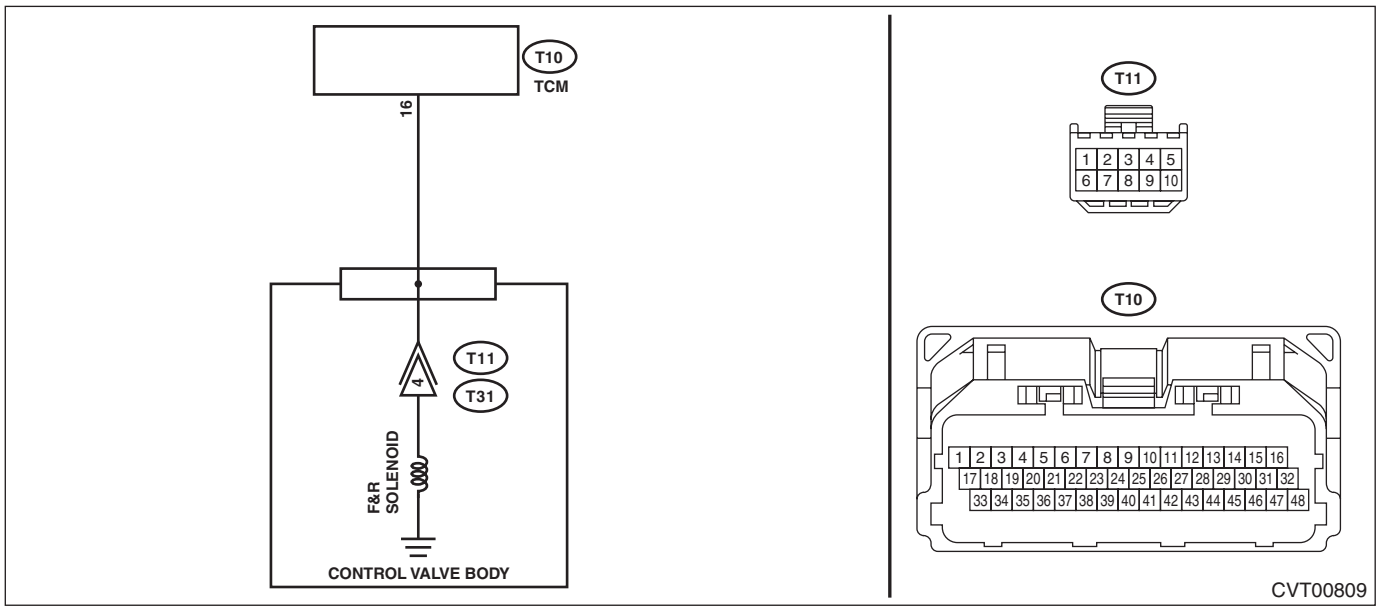

	Step	Check	Yes	No
1	**CHECK INPUT SIGNAL FOR TCM.** 1) After driving with warm up condition, park the vehicle while depressing the brake pedal at "D" range. 2) Read the data of «F&R Linear Solenoid Set Current» and «F&R Linear Solenoid Actual Current» using Subaru Select Monitor.	Does the value of «F&R Linear Solenoid Set Current» and «F&R Linear Solenoid Actual Current» almost correspond?	Check for poor contact of connector.	Go to step **2**.
2	**CHECK HARNESS.** **CAUTION:** **Start work after ATF cools down.** 1) Turn the ignition switch to OFF. 2) Disconnect the TCM connector. 3) Remove the transmission valve cover. 4) Disconnect the control valve body connector. 5) Measure the resistance between TCM connector and control valve body connector. ***Connector & terminal*** ***(T10) No. 16 — (T11) No. 4:***	Is the resistance less than 1 Ω?	Go to step **3**.	Repair the open circuit of harness.
3	**CHECK HARNESS.** 1) Turn the ignition switch to ON. 2) Measure the voltage between TCM connector and chassis ground. ***Connector & terminal*** ***(T10) No. 16 (+) — Chassis ground (–):***	Is the voltage approx. 0 V?	Go to step **4**.	Repair the short circuit of harness.

	Step	Check	Yes	No
4	**CHECK F&R SOLENOID.** 1) Connect the connector for control valve body. 2) Measure the resistance between TCM connector and transmission body. ***Connector & terminal*** ***(T10) No. 16 — Transmission body:***	Is the resistance approx. 4 — 6 Ω? (when cold)	Check for poor contact of connector, and if no fault is found, replace the TCM. <Ref. to CVT(TR580)-159, Transmission Control Module (TCM).>	Go to step **5**.
5	**CHECK HARNESS INSIDE TRANSMISSION.** Check for the harness pinch, damage.	Is there any fault in the harness?	Replace the transmission harness.	Replace the control valve body. <Ref. to CVT(TR580)-133, Control Valve Body.>

2. ENGINE TYPE EZ

WIRING DIAGRAM:

CVT control system <Ref. to WI-162, ENGINE TYPE EZ, WIRING DIAGRAM, CVT Control System.>

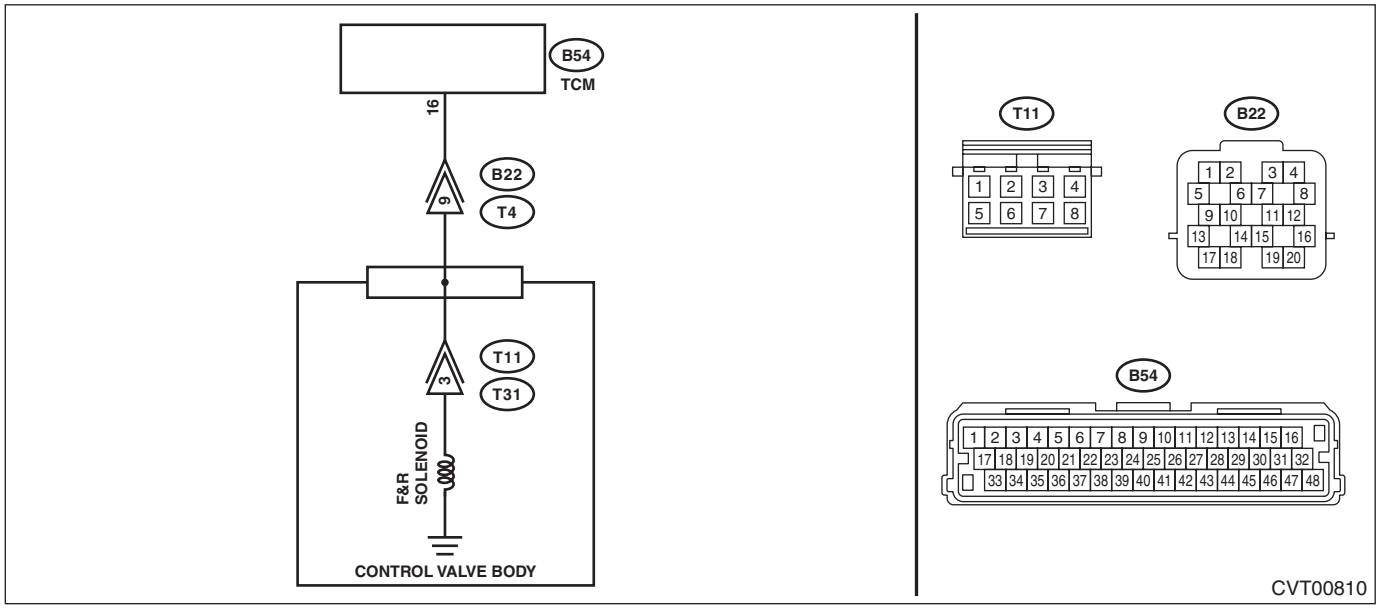

	Step	Check	Yes	No
1	**CHECK INPUT SIGNAL FOR TCM.** 1) After driving with warm up condition, park the vehicle while depressing the brake pedal at “D” range. 2) Read the data of «F&R Linear Solenoid Set Current» and «F&R Linear Solenoid Actual Current» using Subaru Select Monitor.	Does the value of «F&R Linear Solenoid Set Current» and «F&R Linear Solenoid Actual Current» almost correspond?	Check for poor contact of connector.	Go to step **2**.
2	**CHECK HARNESS.** 1) Turn the ignition switch to OFF. 2) Disconnect the TCM and transmission connectors. 3) Measure the resistance between TCM connector and transmission connectors. ***Connector & terminal*** ***(B54) No. 16 — (B22) No. 9:***	Is the resistance less than 1 Ω?	Go to step **3**.	Repair the open circuit of harness.

	Step	Check	Yes	No
3	**CHECK HARNESS.** 1) Turn the ignition switch to ON. 2) Measure the voltage between TCM connector and chassis ground. ***Connector & terminal*** ***(B54) No. 16 (+) — Chassis ground (–):***	Is the voltage approx. 0 V?	Go to step **4**.	Repair the short circuit of harness.
4	**CHECK F&R SOLENOID.** Measure the resistance between transmission connector and transmission body. ***Connector & terminal*** ***(T4) No. 9 — Transmission body:***	Is the resistance approx. 4 — 6 Ω? (when cold)	Check for poor contact of connector, and if no fault is found, replace the TCM. <Ref. to CVT(TR690)-142, Transmission Control Module (TCM).>	Go to step **5**.
5	**CHECK HARNESS INSIDE TRANSMISSION.** **CAUTION:** **Start work after ATF cools down.** 1) Remove the transmission oil pan. 2) Check for the harness pinch, damage.	Is there any fault in the harness?	Replace the transmission harness.	Go to step **6**.
6	**CHECK HARNESS INSIDE TRANSMISSION.** 1) Disconnect the control valve body connector. 2) Turn the ignition switch to ON. 3) Measure the voltage between transmission connector and transmission body. ***Connector & terminal*** ***(T4) No. 9 (+) — Transmission body (–):***	Is the voltage approx. 0 V?	Replace the control valve body. <Ref. to CVT(TR690)-124, Control Valve Body.>	Replace the transmission harness.

3. OUTLINE OF DIAGNOSIS

• Detect open circuit or power supply-output short circuit in the transmission forward/reverse clutch pressure solenoid circuit.
• Judge as NG if the transmission forward/reverse clutch pressure solenoid drive current is lower than the predetermined value.

4. EXECUTION CONDITION

Secondary Parameters	Execution condition
12 V battery system voltage	≥ 9 V
Target forward & reverse clutch pressure control solenoid current	≥ 0.1 A

5. DIAGNOSTIC METHOD

If the duration of time while the following conditions are met is longer than the time indicated, judge as NG.

Judgment Value

Malfunction Criteria	Threshold Value
Signal of malfunction from solenoid driver IC As defined by: Measured forward & reverse clutch pressure control solenoid current < 0.0059 A	ON

Time Needed for Diagnosis: 1 second
Malfunction Indicator Light Illumination: Illuminates as soon as a malfunction occurs.

AJ:DTC P0970 PRESSURE CONTROL SOLENOID "C" CONTROL CIRCUIT LOW

DTC DETECTING CONDITION:
Immediately at fault recognition
TROUBLE SYMPTOM:
Drivability getting worse.

1. ENGINE TYPE FB

WIRING DIAGRAM:
CVT control system <Ref. to WI-156, ENGINE TYPE FB, WIRING DIAGRAM, CVT Control System.>

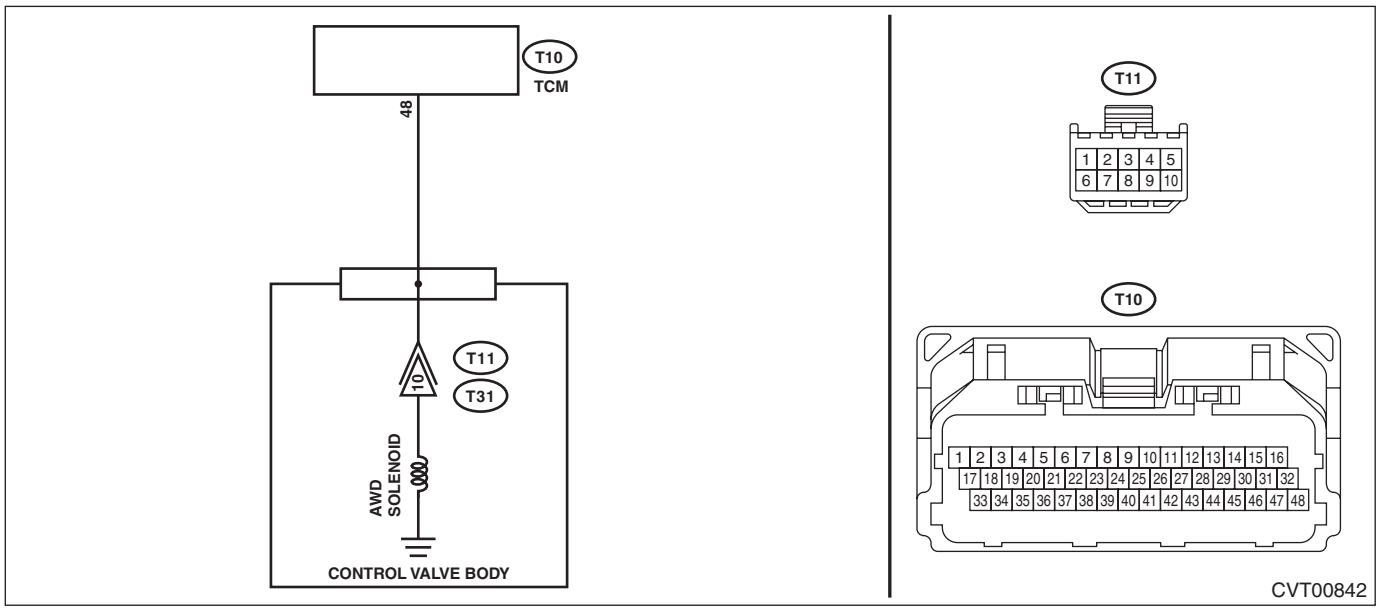

	Step	Check	Yes	No
1	**CHECK HARNESS.** **CAUTION:** **Start work after ATF cools down.** 1) Turn the ignition switch to OFF. 2) Disconnect the TCM connector. 3) Remove the transmission valve cover. 4) Disconnect the control valve body connector. 5) Measure the resistance between TCM connector and chassis ground. ***Connector & terminal*** ***(T10) No. 48 — Chassis ground:***	Is the resistance 1 MΩ or more?	Go to step **2**.	Repair the short circuit of harness.
2	**CHECK AWD SOLENOID.** 1) Connect the connector for control valve body. 2) Measure the resistance between TCM connector and transmission body. ***Connector & terminal*** ***(T10) No. 48 — Transmission body:***	Is the resistance approx. 2 — 4.5 Ω? (when cold)	Check for poor contact of connector, and if no fault is found, replace the TCM. <Ref. to CVT(TR580)-159, Transmission Control Module (TCM).>	Go to step **3**.
3	**CHECK HARNESS INSIDE TRANSMISSION.** Check for the harness pinch, damage.	Is there any fault in the harness?	Replace the transmission harness.	Replace the control valve body. <Ref. to CVT(TR580)-133, Control Valve Body.>

2. ENGINE TYPE EZ

WIRING DIAGRAM:

CVT control system <Ref. to WI-162, ENGINE TYPE EZ, WIRING DIAGRAM, CVT Control System.>

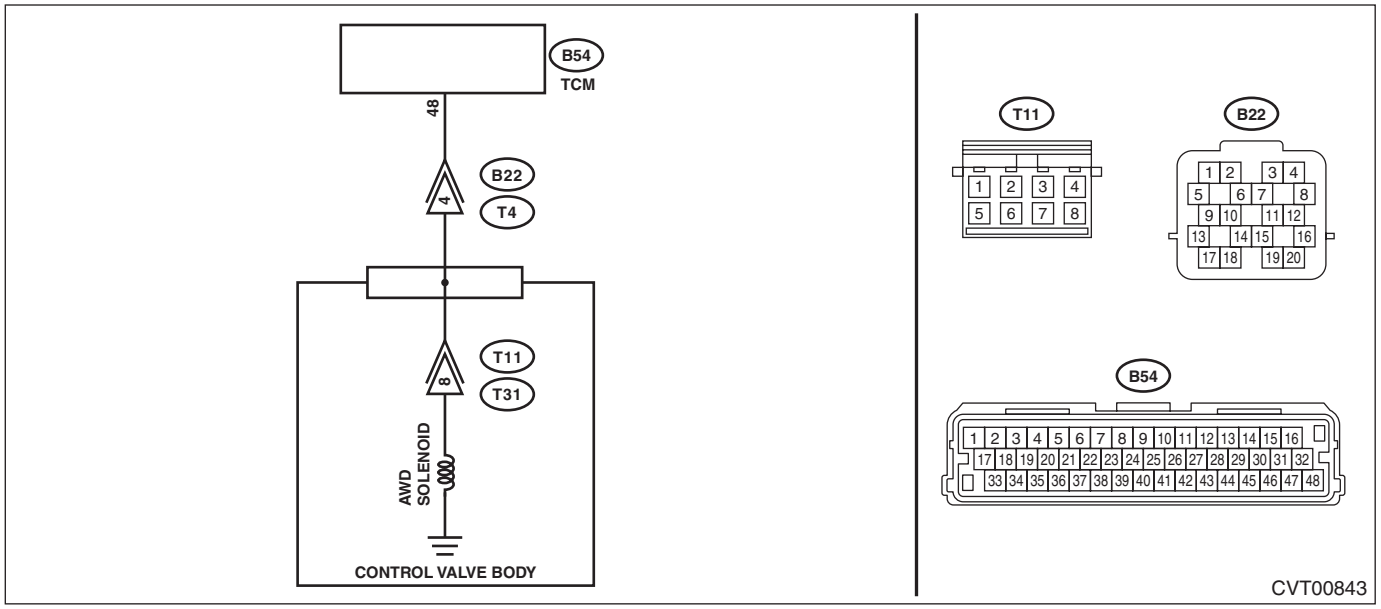

Step		Check	Yes	No
1	**CHECK HARNESS.** 1) Turn the ignition switch to OFF. 2) Disconnect the TCM and transmission connectors. 3) Measure the resistance between TCM connector and chassis ground. ***Connector & terminal*** ***(B54) No. 48 — Chassis ground:***	Is the resistance 1 MΩ or more?	Go to step **2**.	Repair the short circuit of harness.
2	**CHECK AWD SOLENOID.** Measure the resistance between transmission connector and transmission body. ***Connector & terminal*** ***(T4) No. 4 — Transmission body:***	Is the resistance approx. 2 — 4.5 Ω? (when cold)	Check for poor contact of connector, and if no fault is found, replace the TCM. <Ref. to CVT(TR690)-142, Transmission Control Module (TCM).>	Go to step **3**.
3	**CHECK HARNESS INSIDE TRANSMISSION.** **CAUTION:** **Start work after ATF cools down.** 1) Remove the transmission oil pan. 2) Check for the harness pinch, damage.	Is there any fault in the harness?	Replace the transmission harness.	Go to step **4**.
4	**CHECK HARNESS INSIDE TRANSMISSION.** 1) Disconnect the control valve body connector. 2) Measure the resistance between transmission connector and transmission body. ***Connector & terminal*** ***(T4) No. 4 — Transmission body:***	Is the resistance 1 MΩ or more?	Replace the control valve body. <Ref. to CVT(TR690)-124, Control Valve Body.>	Replace the transmission harness.

3. OUTLINE OF DIAGNOSIS

- Detect the GND-output short in transfer solenoid circuit.
- Judge as NG if a ground short circuit is detected more than 10 times via the detection circuit for the transfer solenoid drive circuit.

4. EXECUTION CONDITION

Secondary Parameters	Execution condition
Target duty cycle	0%

5. DIAGNOSTIC METHOD

If the duration of time while the following conditions are met is longer than the time indicated, judge as NG.

Judgment Value

Malfunction Criteria	Threshold Value
Malfunction signal from solenoid driver IC	≥ 10 count

Time Needed for Diagnosis: Immediately

AK:DTC P0971 PRESSURE CONTROL SOLENOID "C" CONTROL CIRCUIT HIGH

DTC DETECTING CONDITION:
Immediately at fault recognition
TROUBLE SYMPTOM:
- Tight corner braking phenomenon occurs.
- Drivability getting worse.

1. ENGINE TYPE FB

WIRING DIAGRAM:
CVT control system <Ref. to WI-156, ENGINE TYPE FB, WIRING DIAGRAM, CVT Control System.>

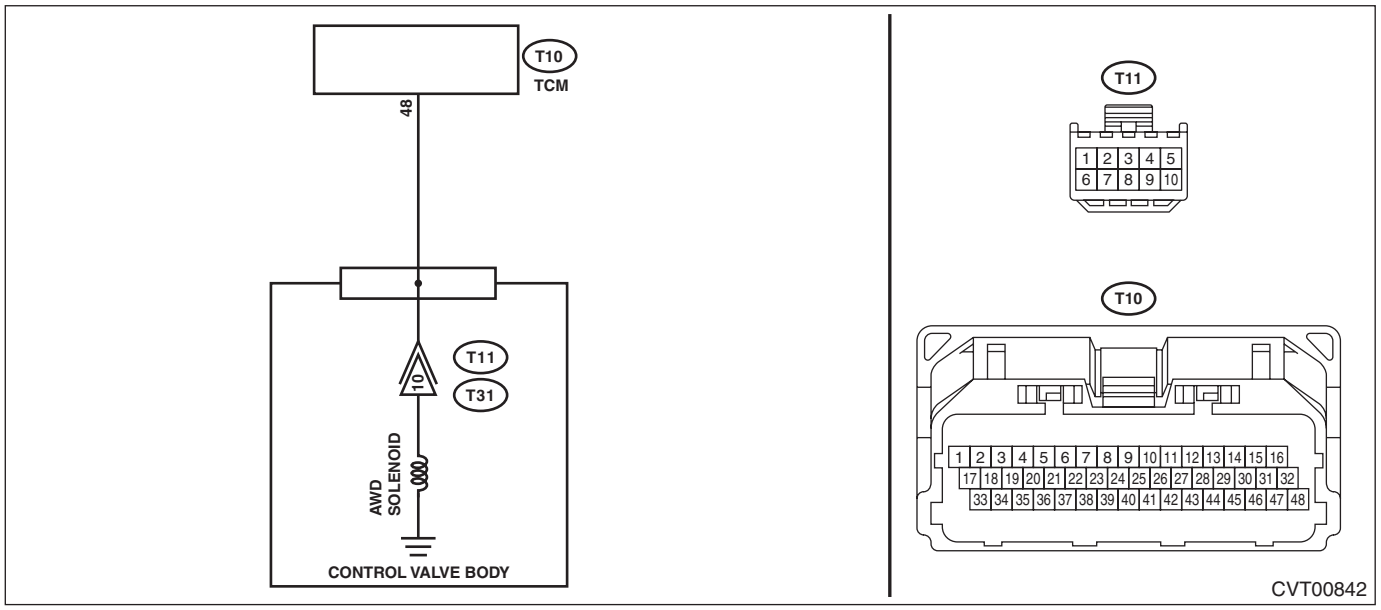

	Step	Check	Yes	No
1	**CHECK HARNESS.** **CAUTION:** **Start work after ATF cools down.** 1) Turn the ignition switch to OFF. 2) Disconnect the TCM connector. 3) Remove the transmission valve cover. 4) Disconnect the control valve body connector. 5) Measure the resistance between TCM connector and control valve body connector. ***Connector & terminal*** ***(T10) No. 48 — (T11) No. 10:***	Is the resistance less than 1 Ω?	Go to step **2**.	Repair the open circuit of harness.
2	**CHECK HARNESS.** 1) Turn the ignition switch to ON. 2) Measure the voltage between TCM connector and chassis ground. ***Connector & terminal*** ***(T10) No. 48 (+) — Chassis ground (–):***	Is the voltage approx. 0 V?	Go to step **3**.	Repair the short circuit of harness.

	Step	Check	Yes	No
3	**CHECK AWD SOLENOID.** 1) Connect the connector for control valve body. 2) Measure the resistance between TCM connector and transmission body. ***Connector & terminal*** ***(T10) No. 48 — Transmission body:***	Is the resistance approx. 2 — 4.5 Ω? (when cold)	Check for poor contact of connector, and if no fault is found, replace the TCM. <Ref. to CVT(TR580)-159, Transmission Control Module (TCM).>	Go to step **4**.
4	**CHECK HARNESS INSIDE TRANSMISSION.** Check for the harness pinch, damage.	Is there any fault in the harness?	Replace the transmission harness.	Replace the control valve body. <Ref. to CVT(TR580)-133, Control Valve Body.>

2. ENGINE TYPE EZ

WIRING DIAGRAM:

CVT control system <Ref. to WI-162, ENGINE TYPE EZ, WIRING DIAGRAM, CVT Control System.>

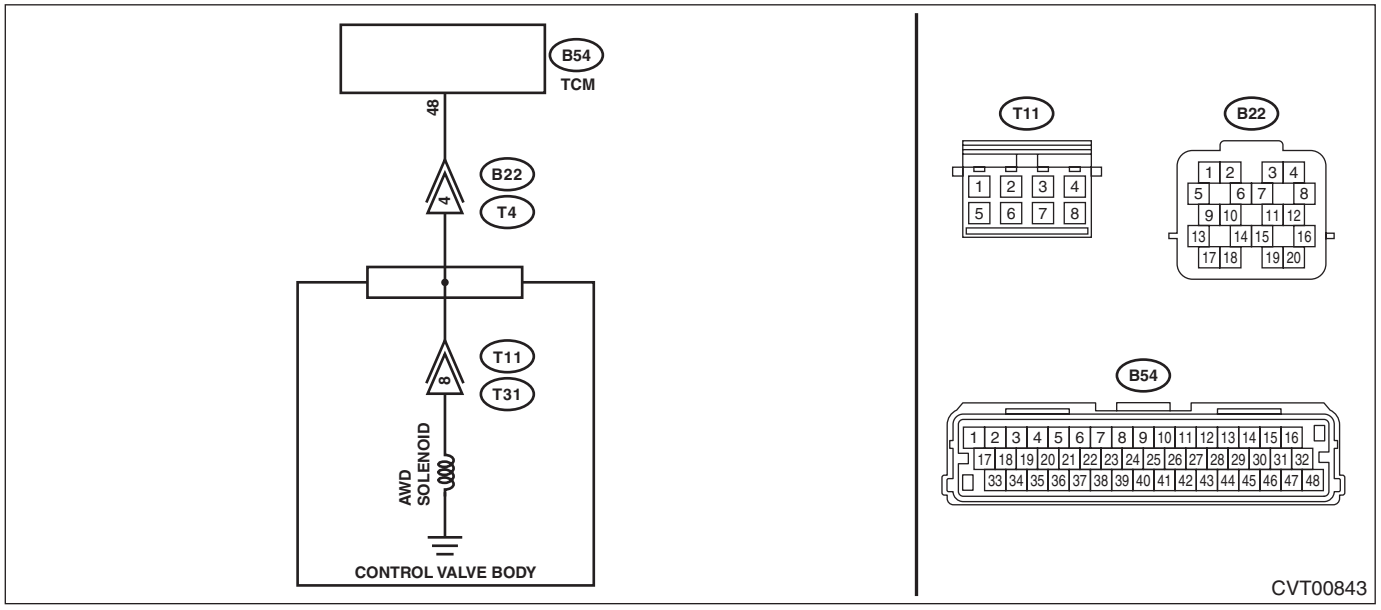

	Step	Check	Yes	No
1	**CHECK HARNESS.** 1) Turn the ignition switch to OFF. 2) Disconnect the TCM and transmission connectors. 3) Measure the resistance between TCM connector and transmission connectors. ***Connector & terminal*** ***(B54) No. 48 — (B22) No. 4:***	Is the resistance less than 1 Ω?	Go to step **2**.	Repair the open circuit of harness.
2	**CHECK HARNESS.** 1) Turn the ignition switch to ON. 2) Measure the voltage between TCM connector and chassis ground. ***Connector & terminal*** ***(B54) No. 48 (+) — Chassis ground (–):***	Is the voltage approx. 0 V?	Go to step **3**.	Repair the short circuit of harness.

	Step	Check	Yes	No
3	**CHECK AWD SOLENOID.** Measure the resistance between transmission connector and transmission body. ***Connector & terminal*** ***(T4) No. 4 — Transmission body:***	Is the resistance approx. 2 — 4.5 Ω? (when cold)	Check for poor contact of connector, and if no fault is found, replace the TCM. <Ref. to CVT(TR690)-142, Transmission Control Module (TCM).>	Go to step **4**.
4	**CHECK HARNESS INSIDE TRANSMISSION.** **CAUTION:** **Start work after ATF cools down.** 1) Remove the transmission oil pan. 2) Check for the harness pinch, damage.	Is there any fault in the harness?	Replace the transmission harness.	Go to step **5**.
5	**CHECK HARNESS INSIDE TRANSMISSION.** 1) Disconnect the control valve body connector. 2) Turn the ignition switch to ON. 3) Measure the voltage between transmission connector and transmission body. ***Connector & terminal*** ***(T4) No. 4 (+) — Transmission body (–):***	Is the voltage approx. 0 V?	Replace the control valve body. <Ref. to CVT(TR690)-124, Control Valve Body.>	Replace the transmission harness.

3. OUTLINE OF DIAGNOSIS

- Detect open circuit or power supply-output short circuit in the transfer solenoid circuit.
- Judge as NG if an open circuit or a short circuit to ground is detected more than 10 times via the detection circuit in the transfer solenoid drive circuit.

4. EXECUTION CONDITION

Secondary Parameters	Execution condition
Target duty cycle	100%

5. DIAGNOSTIC METHOD

If the duration of time while the following conditions are met is longer than the time indicated, judge as NG.

Judgment Value

Malfunction Criteria	Threshold Value
Malfunction signal from solenoid driver IC	≥ 10 count

Time Needed for Diagnosis: Immediately

AL:DTC P0973 SHIFT SOLENOID "A" CONTROL CIRCUIT LOW

DTC DETECTING CONDITION:
Immediately at fault recognition
TROUBLE SYMPTOM:
Gear is not changed. (No up-shift)

1. ENGINE TYPE FB

WIRING DIAGRAM:
CVT control system <Ref. to WI-156, ENGINE TYPE FB, WIRING DIAGRAM, CVT Control System.>

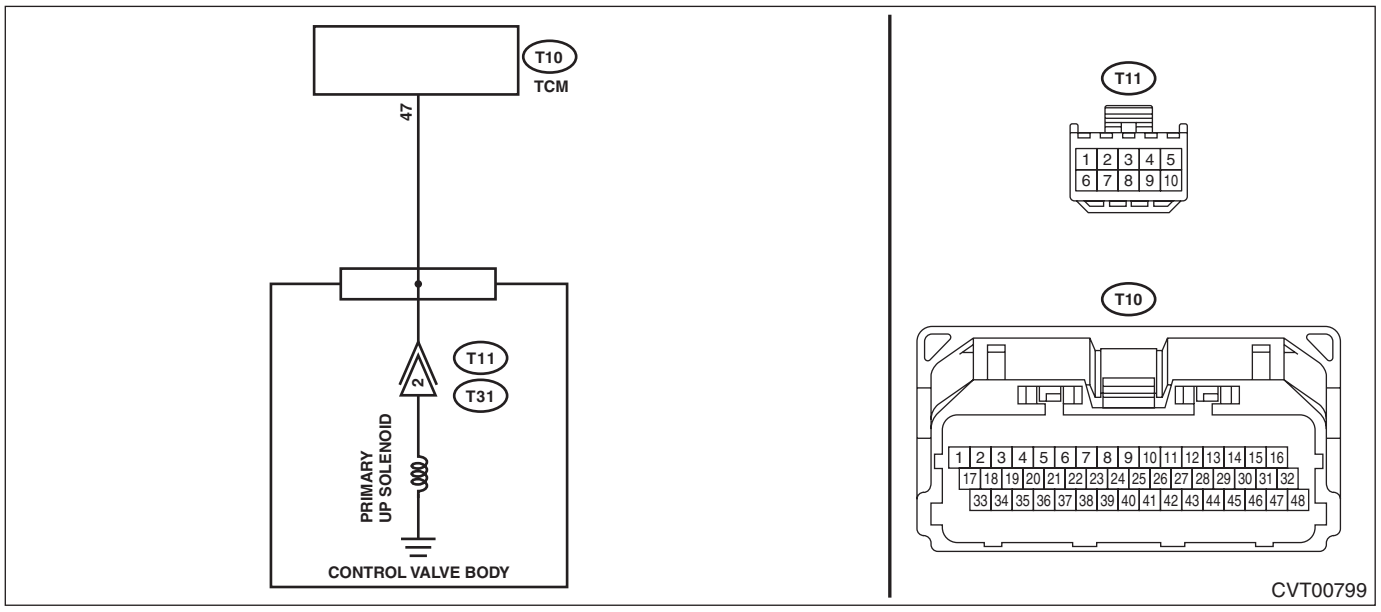

	Step	Check	Yes	No
1	**CHECK HARNESS.** **CAUTION:** **Start work after ATF cools down.** 1) Turn the ignition switch to OFF. 2) Disconnect the TCM connector. 3) Remove the transmission valve cover. 4) Disconnect the control valve body connector. 5) Measure the resistance between TCM connector and chassis ground. ***Connector & terminal*** ***(T10) No. 47 — Chassis ground:***	Is the resistance 1 MΩ or more?	Go to step **2**.	Repair the short circuit of harness.
2	**CHECK PRIMARY UP SOLENOID.** 1) Connect the connector for control valve body. 2) Measure the resistance between TCM connector and transmission body. ***Connector & terminal*** ***(T10) No. 47 — Transmission body:***	Is the resistance approx. 10 — 13.5 Ω? (when cold)	Check for poor contact of connector, and if no fault is found, replace the TCM. <Ref. to CVT(TR580)-159, Transmission Control Module (TCM).>	Go to step **3**.
3	**CHECK HARNESS INSIDE TRANSMISSION.** Check for the harness pinch, damage.	Is there any fault in the harness?	Replace the transmission harness.	Replace the control valve body. <Ref. to CVT(TR690)-124, Control Valve Body.>

2. ENGINE TYPE EZ

WIRING DIAGRAM:

CVT control system <Ref. to WI-162, ENGINE TYPE EZ, WIRING DIAGRAM, CVT Control System.>

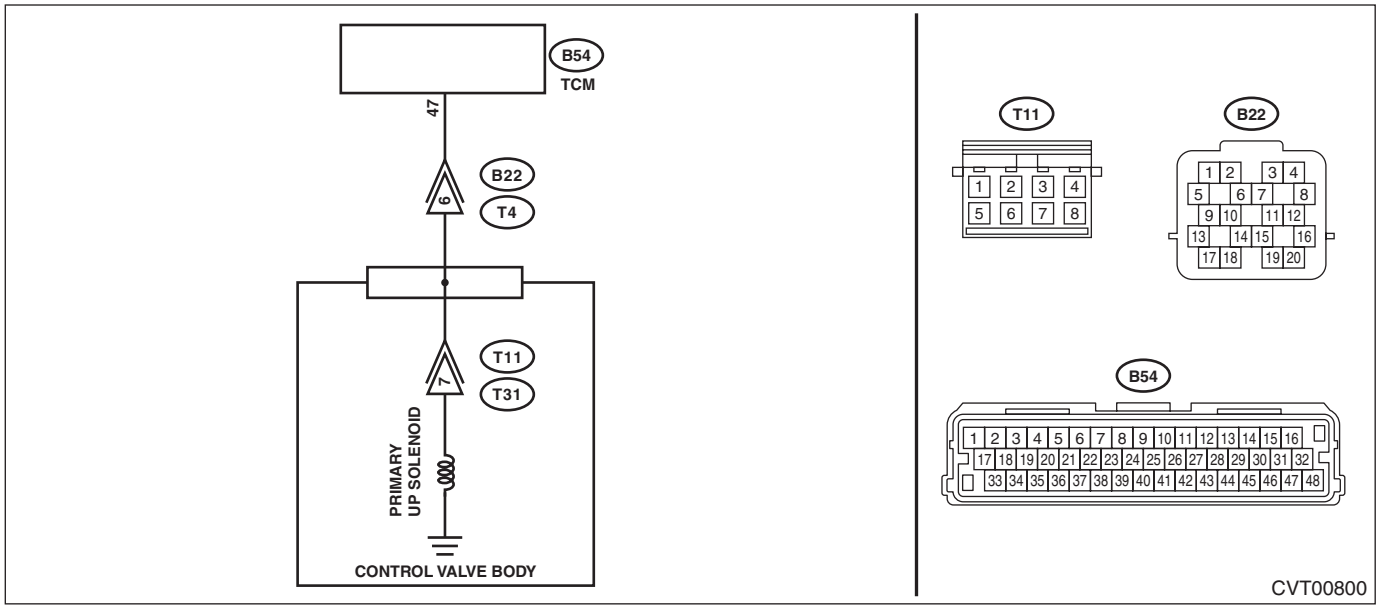

Step		Check	Yes	No
1	**CHECK HARNESS.** 1) Turn the ignition switch to OFF. 2) Disconnect the TCM and transmission connectors. 3) Measure the resistance between TCM connector and chassis ground. ***Connector & terminal*** ***(B54) No. 47 — Chassis ground:***	Is the resistance 1 MΩ or more?	Go to step **2**.	Repair the short circuit of harness.
2	**CHECK PRIMARY UP SOLENOID.** Measure the resistance between transmission connector and transmission body. ***Connector & terminal*** ***(T4) No. 6 — Transmission body:***	Is the resistance approx. 10 — 13.5 Ω? (when cold)	Check for poor contact of connector, and if no fault is found, replace the TCM. <Ref. to CVT(TR690)-142, Transmission Control Module (TCM).>	Go to step **3**.
3	**CHECK HARNESS INSIDE TRANSMISSION.** **CAUTION:** **Start work after ATF cools down.** 1) Remove the transmission oil pan. 2) Check for the harness pinch, damage.	Is there any fault in the harness?	Replace the transmission harness.	Go to step **4**.
4	**CHECK HARNESS INSIDE TRANSMISSION.** 1) Disconnect the control valve body connector. 2) Measure the resistance between transmission connector and transmission body. ***Connector & terminal*** ***(T4) No. 6 — Transmission body:***	Is the resistance 1 MΩ or more?	Replace the control valve body. <Ref. to CVT(TR690)-124, Control Valve Body.>	Replace the transmission harness.

3. OUTLINE OF DIAGNOSIS

- Detect the ground short of the shift-up fluid pressure control solenoid drive circuit.
- Judge as NG if a ground short circuit is detected more than 10 times in the shift-up fluid pressure control solenoid drive circuit.

4. EXECUTION CONDITION

Secondary Parameters	Execution condition
12 V battery system voltage	≥ 9 V
Commanded duty of shift up pressure control solenoid	100%

5. DIAGNOSTIC METHOD

If the duration of time while the following conditions are met is longer than the time indicated, judge as NG.

Judgment Value

Malfunction Criteria	Threshold Value
Signal of malfunction from solenoid driver IC	ON
As defined by:	
Measured shift up pressure control solenoid voltage ≤ 0.8 V	

Time Needed for Diagnosis: 0.2 seconds
Malfunction Indicator Light Illumination: Illuminates as soon as a malfunction occurs.

AM:DTC P0974 SHIFT SOLENOID "A" CONTROL CIRCUIT HIGH

DTC DETECTING CONDITION:
Immediately at fault recognition
TROUBLE SYMPTOM:
Gear is not changed. (No up-shift)

1. ENGINE TYPE FB

WIRING DIAGRAM:
CVT control system <Ref. to WI-156, ENGINE TYPE FB, WIRING DIAGRAM, CVT Control System.>

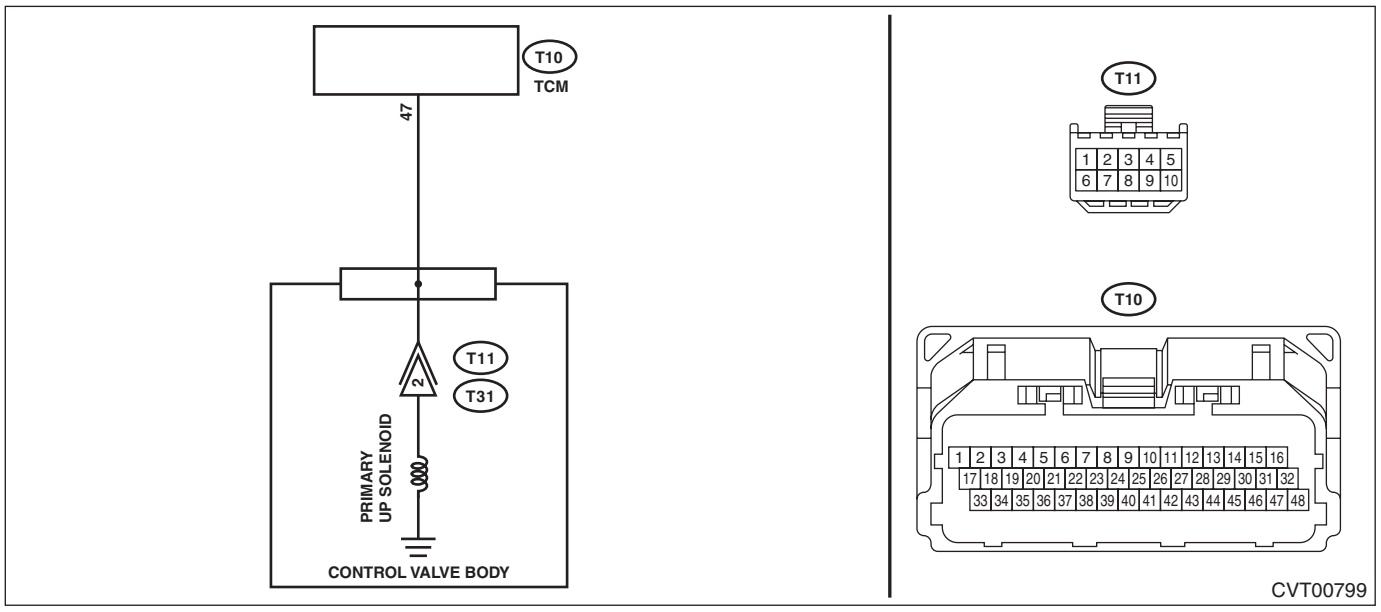

	Step	Check	Yes	No
1	**CHECK HARNESS.** **CAUTION:** **Start work after ATF cools down.** 1) Turn the ignition switch to OFF. 2) Disconnect the TCM connector. 3) Remove the transmission valve cover. 4) Disconnect the control valve body connector. 5) Measure the resistance between TCM connector and control valve body connector. ***Connector & terminal*** ***(T10) No. 47 — (T11) No. 2:***	Is the resistance less than 1 Ω?	Go to step **2**.	Repair the open circuit of harness.
2	**CHECK HARNESS.** 1) Turn the ignition switch to ON. 2) Measure the voltage between TCM connector and chassis ground. ***Connector & terminal*** ***(T10) No. 47 (+) — Chassis ground (–):***	Is the voltage approx. 0 V?	Go to step **3**.	Repair the short circuit of harness.
3	**CHECK PRIMARY UP SOLENOID.** 1) Connect the connector for control valve body. 2) Measure the resistance between TCM connector and transmission body. ***Connector & terminal*** ***(T10) No. 47 — Transmission body:***	Is the resistance approx. 10 — 13.5 Ω? (when cold)	Check for poor contact of connector, and if no fault is found, replace the TCM. <Ref. to CVT(TR580)-159, Transmission Control Module (TCM).>	Go to step **4**.

	Step	Check	Yes	No
4	**CHECK HARNESS INSIDE TRANSMISSION.** Check for the harness pinch, damage.	Is there any fault in the harness?	Replace the transmission harness.	Replace the control valve body. <Ref. to CVT(TR580)-133, Control Valve Body.>

2. ENGINE TYPE EZ

WIRING DIAGRAM:

CVT control system <Ref. to WI-162, ENGINE TYPE EZ, WIRING DIAGRAM, CVT Control System.>

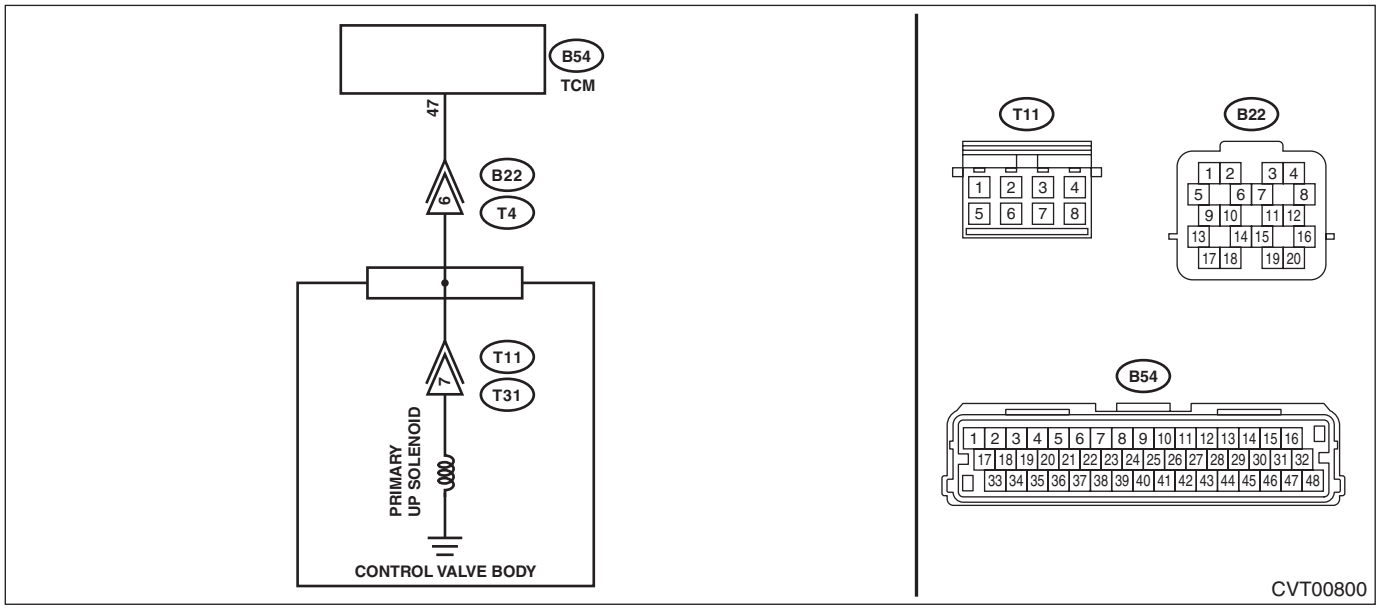

	Step	Check	Yes	No
1	**CHECK HARNESS.** 1) Turn the ignition switch to OFF. 2) Disconnect the TCM and transmission connectors. 3) Measure the resistance between TCM connector and transmission connectors. ***Connector & terminal*** ***(B54) No. 47 — (B22) No. 6:***	Is the resistance less than 1 Ω?	Go to step **2**.	Repair the open circuit of harness.
2	**CHECK HARNESS.** 1) Turn the ignition switch to ON. 2) Measure the voltage between TCM connector and chassis ground. ***Connector & terminal*** ***(B54) No. 47 (+) — Chassis ground (–):***	Is the voltage approx. 0 V?	Go to step **3**.	Repair the short circuit of harness.
3	**CHECK PRIMARY UP SOLENOID.** Measure the resistance between transmission connector and transmission body. ***Connector & terminal*** ***(T4) No. 6 — Transmission body:***	Is the resistance approx. 10 — 13.5 Ω? (when cold)	Check for poor contact of connector, and if no fault is found, replace the TCM. <Ref. to CVT(TR690)-142, Transmission Control Module (TCM).>	Go to step **4**.

	Step	Check	Yes	No
4	**CHECK HARNESS INSIDE TRANSMISSION.** **CAUTION:** **Start work after ATF cools down.** 1) Remove the transmission oil pan. 2) Check for the harness pinch, damage.	Is there any fault in the harness?	Replace the transmission harness.	Go to step **5**.
5	**CHECK HARNESS INSIDE TRANSMISSION.** 1) Disconnect the control valve body connector. 2) Turn the ignition switch to ON. 3) Measure the voltage between transmission connector and transmission body. ***Connector & terminal*** ***(T4) No. 6 (+) — Transmission body (–):***	Is the voltage approx. 0 V?	Replace the control valve body. <Ref. to CVT(TR690)-124, Control Valve Body.>	Replace the transmission harness.

3. OUTLINE OF DIAGNOSIS

• Detect short circuit to power supply or open circuit of the shift-up fluid pressure control solenoid drive circuit.
• Judge as NG if an open circuit or a power-supply short circuit is detected more than 10 times in the shift-up fluid pressure control solenoid drive circuit.

4. EXECUTION CONDITION

Secondary Parameters	Execution condition
12 V battery system voltage	≥ 9 V
Commanded duty of shift up pressure control solenoid	0%

5. DIAGNOSTIC METHOD

If the duration of time while the following conditions are met is longer than the time indicated, judge as NG.

Judgment Value

Malfunction Criteria	Threshold Value
Signal of malfunction from solenoid driver IC As defined by: Measured shift up pressure control solenoid voltage ≥ 2.5 V	ON

Time Needed for Diagnosis: 0.2 seconds
Malfunction Indicator Light Illumination: Illuminates as soon as a malfunction occurs.

AN:DTC P0976 SHIFT SOLENOID "B" CONTROL CIRCUIT LOW

DTC DETECTING CONDITION:
Immediately at fault recognition
TROUBLE SYMPTOM:
Gear is not changed. (No down-shift)

1. ENGINE TYPE FB

WIRING DIAGRAM:
CVT control system <Ref. to WI-156, ENGINE TYPE FB, WIRING DIAGRAM, CVT Control System.>

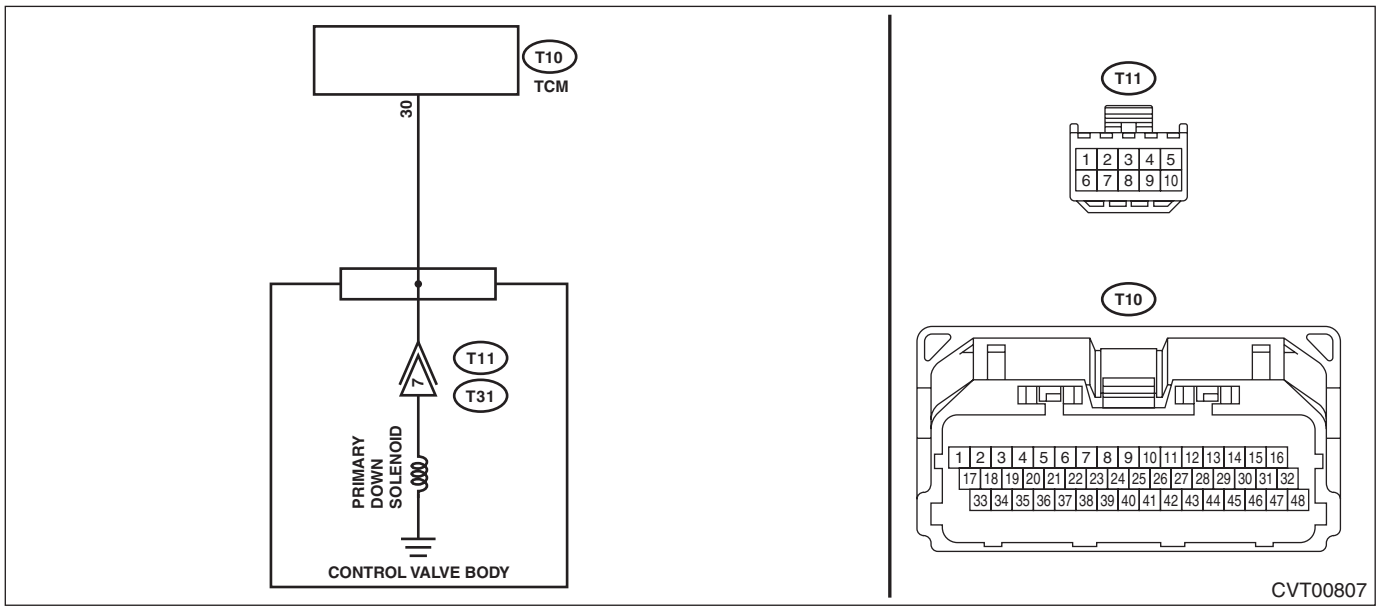

	Step	Check	Yes	No
1	**CHECK HARNESS.** **CAUTION:** **Start work after ATF cools down.** 1) Turn the ignition switch to OFF. 2) Disconnect the TCM connector. 3) Remove the transmission valve cover. 4) Disconnect the control valve body connector. 5) Measure the resistance between TCM connector and chassis ground. ***Connector & terminal*** ***(T10) No. 30 — Chassis ground:***	Is the resistance 1 MΩ or more?	Go to step **2**.	Repair the short circuit of harness.
2	**CHECK PRIMARY DOWN SOLENOID.** 1) Connect the connector for control valve body. 2) Measure the resistance between TCM connector and transmission body. ***Connector & terminal*** ***(T10) No. 30 — Transmission body:***	Is the resistance approx. 10 — 13.5 Ω? (when cold)	Check for poor contact of connector, and if no fault is found, replace the TCM. <Ref. to CVT(TR580)-159, Transmission Control Module (TCM).>	Go to step **3**.
3	**CHECK HARNESS INSIDE TRANSMISSION.** Check for the harness pinch, damage.	Is there any fault in the harness?	Replace the transmission harness.	Replace the control valve body. <Ref. to CVT(TR580)-133, Control Valve Body.>

2. ENGINE TYPE EZ

WIRING DIAGRAM:

CVT control system <Ref. to WI-162, ENGINE TYPE EZ, WIRING DIAGRAM, CVT Control System.>

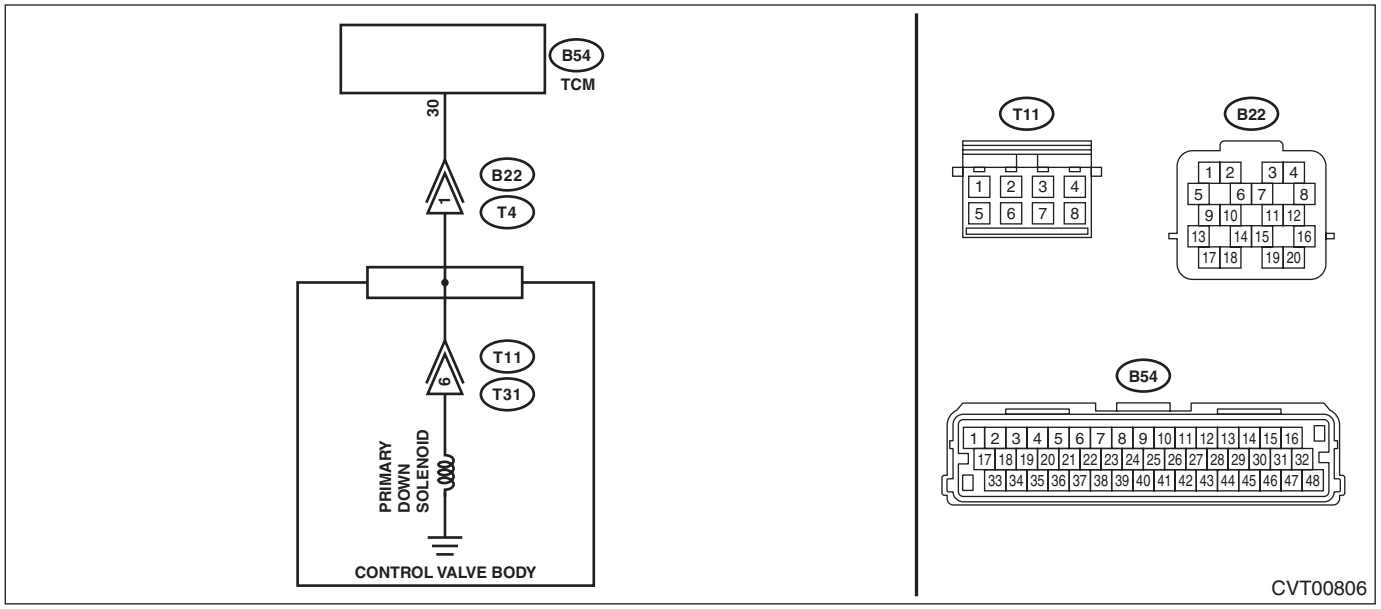

Step		Check	Yes	No
1	**CHECK HARNESS.** 1) Turn the ignition switch to OFF. 2) Disconnect the TCM and transmission connectors. 3) Measure the resistance between TCM connector and chassis ground. ***Connector & terminal*** ***(B54) No. 30 — Chassis ground:***	Is the resistance 1 MΩ or more?	Go to step **2**.	Repair the short circuit of harness.
2	**CHECK PRIMARY DOWN SOLENOID.** Measure the resistance between transmission connector and transmission body. ***Connector & terminal*** ***(T4) No. 1 — Transmission body:***	Is the resistance approx. 10 — 13.5 Ω? (when cold)	Check for poor contact of connector, and if no fault is found, replace the TCM. <Ref. to CVT(TR690)-142, Transmission Control Module (TCM).>	Go to step **3**.
3	**CHECK HARNESS INSIDE TRANSMISSION.** **CAUTION:** **Start work after ATF cools down.** 1) Remove the transmission oil pan. 2) Check for the harness pinch, damage.	Is there any fault in the harness?	Replace the transmission harness.	Go to step **4**.
4	**CHECK HARNESS INSIDE TRANSMISSION.** 1) Disconnect the control valve body connector. 2) Measure the resistance between transmission connector and transmission body. ***Connector & terminal*** ***(T4) No. 1 — Transmission body:***	Is the resistance 1 MΩ or more?	Replace the control valve body. <Ref. to CVT(TR690)-124, Control Valve Body.>	Replace the transmission harness.

3. OUTLINE OF DIAGNOSIS

- Detect the ground short of the shift-down fluid pressure control solenoid drive circuit.
- Judge as NG if a ground short circuit is detected more than 10 times in the shift-down fluid pressure control solenoid drive circuit.

4. EXECUTION CONDITION

Secondary Parameters	Execution condition
12 V battery system voltage	≥ 9 V
Commanded duty of shift down pressure control solenoid	100%

5. DIAGNOSTIC METHOD

If the duration of time while the following conditions are met is longer than the time indicated, judge as NG.

Judgment Value

Malfunction Criteria	Threshold Value
Signal of malfunction from solenoid driver IC	ON
As defined by:	
Measured shift down pressure control solenoid voltage ≤ 0.8 V	

Time Needed for Diagnosis: 0.2 seconds
Malfunction Indicator Light Illumination: Illuminates as soon as a malfunction occurs.

AO:DTC P0977 SHIFT SOLENOID "B" CONTROL CIRCUIT HIGH

DTC DETECTING CONDITION:
Immediately at fault recognition
TROUBLE SYMPTOM:
Gear is not changed. (No down-shift)

1. ENGINE TYPE FB

WIRING DIAGRAM:
CVT control system <Ref. to WI-156, ENGINE TYPE FB, WIRING DIAGRAM, CVT Control System.>

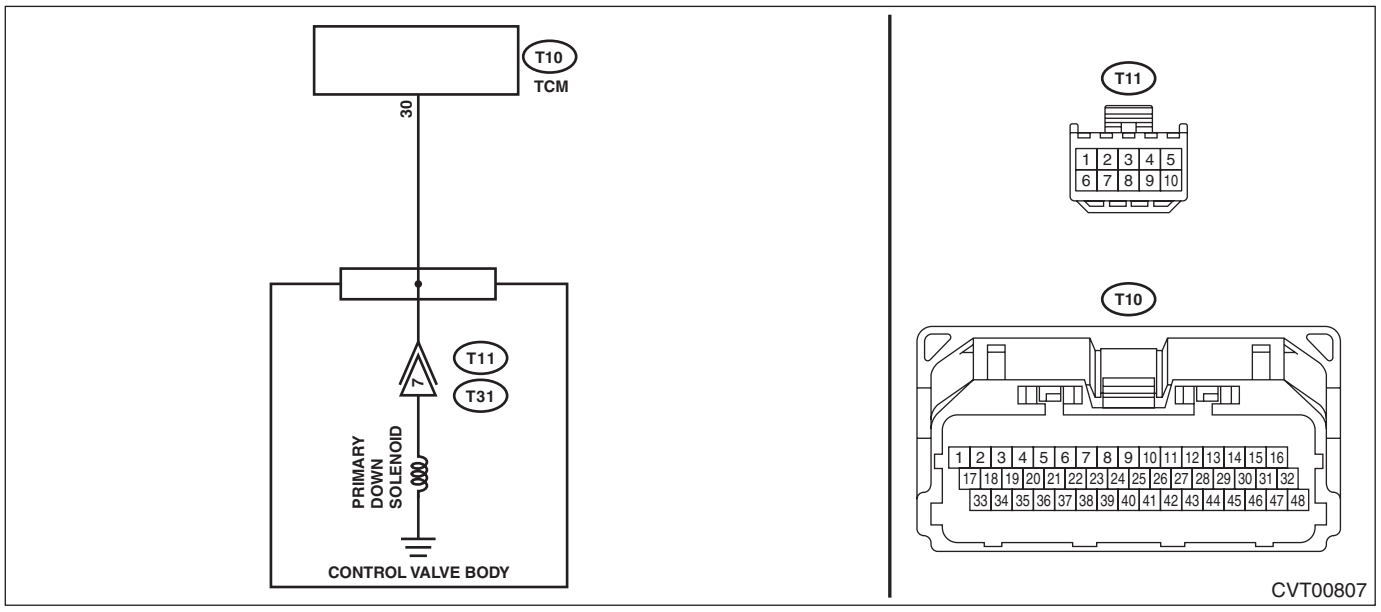

	Step	Check	Yes	No
1	**CHECK HARNESS.** **CAUTION:** **Start work after ATF cools down.** 1) Turn the ignition switch to OFF. 2) Disconnect the TCM connector. 3) Remove the transmission valve cover. 4) Disconnect the control valve body connector. 5) Measure the resistance between TCM connector and control valve body connector. ***Connector & terminal*** ***(T10) No. 30 — (T11) No. 7:***	Is the resistance less than 1 Ω?	Go to step **2**.	Repair the open circuit of harness.
2	**CHECK HARNESS.** 1) Turn the ignition switch to ON. 2) Measure the voltage between TCM connector and chassis ground. ***Connector & terminal*** ***(T10) No. 30 (+) — Chassis ground (–):***	Is the voltage approx. 0 V?	Go to step **3**.	Repair the short circuit of harness.
3	**CHECK PRIMARY DOWN SOLENOID.** 1) Connect the connector for control valve body. 2) Measure the resistance between TCM connector and transmission body. ***Connector & terminal*** ***(T10) No. 30 — Transmission body:***	Is the resistance approx. 10 — 13.5 Ω? (when cold)	Check for poor contact of connector, and if no fault is found, replace the TCM. <Ref. to CVT(TR580)-159, Transmission Control Module (TCM).>	Go to step **4**.

	Step	Check	Yes	No
4	**CHECK HARNESS INSIDE TRANSMISSION.** Check for the harness pinch, damage.	Is there any fault in the harness?	Replace the transmission harness.	Replace the control valve body. <Ref. to CVT(TR580)-133, Control Valve Body.>

2. ENGINE TYPE EZ

WIRING DIAGRAM:

CVT control system <Ref. to WI-162, ENGINE TYPE EZ, WIRING DIAGRAM, CVT Control System.>

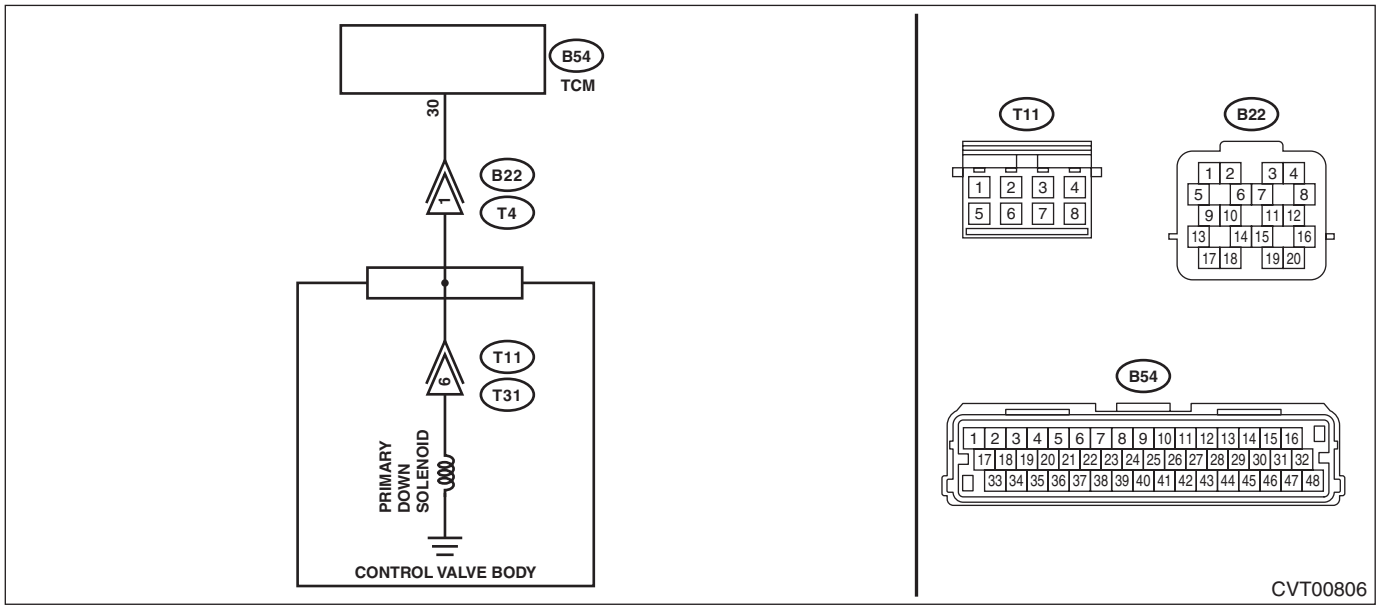

	Step	Check	Yes	No
1	**CHECK HARNESS.** 1) Turn the ignition switch to OFF. 2) Disconnect the TCM and transmission connectors. 3) Measure the resistance between TCM connector and transmission connectors. ***Connector & terminal*** ***(B54) No. 30 — (B22) No. 1:***	Is the resistance less than 1 Ω?	Go to step **2**.	Repair the open circuit of harness.
2	**CHECK HARNESS.** 1) Turn the ignition switch to ON. 2) Measure the voltage between TCM connector and chassis ground. ***Connector & terminal*** ***(B54) No. 30 (+) — Chassis ground (–):***	Is the voltage approx. 0 V?	Go to step **3**.	Repair the short circuit of harness.
3	**CHECK PRIMARY DOWN SOLENOID.** Measure the resistance between transmission connector and transmission body. ***Connector & terminal*** ***(T4) No. 1 — Transmission body:***	Is the resistance approx. 10 — 13.5 Ω? (when cold)	Check for poor contact of connector, and if no fault is found, replace the TCM. <Ref. to CVT(TR690)-142, Transmission Control Module (TCM).>	Go to step **4**.

	Step	Check	Yes	No
4	**CHECK HARNESS INSIDE TRANSMISSION.** **CAUTION:** **Start work after ATF cools down.** 1) Remove the transmission oil pan. 2) Check for the harness pinch, damage.	Is there any fault in the harness?	Replace the transmission harness.	Go to step **5**.
5	**CHECK HARNESS INSIDE TRANSMISSION.** 1) Disconnect the control valve body connector. 2) Turn the ignition switch to ON. 3) Measure the voltage between transmission connector and transmission body. ***Connector & terminal*** ***(T4) No. 1 (+) — Transmission body (–):***	Is the voltage approx. 0 V?	Replace the control valve body. <Ref. to CVT(TR690)-124, Control Valve Body.>	Replace the transmission harness.

3. OUTLINE OF DIAGNOSIS

• Detect short circuit to power supply or open circuit of the shift-down fluid pressure control solenoid drive circuit.
• Judge as NG if an open circuit or a power-supply short circuit is detected more than 10 times in the shift-down fluid pressure control solenoid drive circuit.

4. EXECUTION CONDITION

Secondary Parameters	Execution condition
12 V battery system voltage	≥ 9 V
Commanded duty of shift down pressure control solenoid	0%

5. DIAGNOSTIC METHOD

If the duration of time while the following conditions are met is longer than the time indicated, judge as NG.

Judgment Value

Malfunction Criteria	Threshold Value
Signal of malfunction from solenoid driver IC	ON
As defined by:	
Measured shift down pressure control solenoid voltage ≥ 2.5 V	

Time Needed for Diagnosis: 0.2 seconds
Malfunction Indicator Light Illumination: Illuminates as soon as a malfunction occurs.

AP:DTC P160A RANDOM ACCESS MEMORY (RAM) ERROR

DTC DETECTING CONDITION:
Detected when two consecutive driving cycles with fault occur.
TROUBLE SYMPTOM:
TCM RAM malfunction

	Step	Check	Yes	No
1	**CHECK DTC.** 1) Perform the Clear Memory Mode using the Subaru Select Monitor. <Ref. to CVT(diag)-26, Clear Memory Mode.> 2) Read the DTC.	Is DTC P160A displayed?	Replace the TCM. <Ref. to CVT(TR580)-159, Transmission Control Module (TCM).> <Ref. to CVT(TR690)-142, Transmission Control Module (TCM).>	Current condition is normal. Check for interference from noise, etc.

1. OUTLINE OF DIAGNOSIS

- Judge the malfunction in RAM area of the TCM.
- Judge as NG if an attempt to write to RAM area failed.

2. EXECUTION CONDITION

Secondary Parameters	Execution condition
12 V battery system voltage	≥ 9 V

3. DIAGNOSTIC METHOD

If the duration of time while the following conditions are met is longer than the time indicated, judge as NG.
Judgment Value

Malfunction Criteria	Threshold Value
Writing-check (RAM) NOTE: This check is carried out about the RAM used except for CAN communication.	Error

Time Needed for Diagnosis: Immediately
Malfunction Indicator Light Illumination: Illuminates when malfunction occurs in 2 continuous driving cycles.

AQ:DTC P2158 VEHICLE SPEED SENSOR "B" CIRCUIT

DTC DETECTING CONDITION:
Immediately at fault recognition
TROUBLE SYMPTOM:
VDC does not operate.

Step		Check	Yes	No
1	**CHECK DTC.** Read the DTC of VDC system using the Subaru Select Monitor.	Is DTC displayed?	Perform the diagnosis according to DTC. <Ref. to VDC(diag)-40, List of Diagnostic Trouble Code (DTC).>	Repair the poor contact of connector and harness between VDCCM&H/U and wheel speed sensor.

1. OUTLINE OF DIAGNOSIS

- Judge the malfunction of VDC wheel speed sensor.
- Judge as NG when the wheel speed sensor normal status signal from VDC is cleared.

2. EXECUTION CONDITION

Secondary Parameters	Execution condition
12 V battery system voltage	≥ 10.9 V

3. DIAGNOSTIC METHOD

If the duration of time while the following conditions are met is longer than the time indicated, judge as NG.
Judgment Value

Malfunction Criteria	Threshold Value
Signal of malfunction from Vehicle Dynamics Control Module NOTE: The VDC controller detects malfunction if one of the speed sensors does not output a signal and the other vehicle speed sensor output signal is above 7.46 MPH.	ON

Time Needed for Diagnosis: 2.5 seconds
Malfunction Indicator Light Illumination: Illuminates as soon as a malfunction occurs.

AR:DTC P2530 IGNITION SWITCH RUN POSITION CIRCUIT

DTC DETECTING CONDITION:
Immediately at fault recognition
TROUBLE SYMPTOM:
Faulty TCM operation
WIRING DIAGRAM:
• ENGINE TYPE FB
CVT control system <Ref. to WI-156, ENGINE TYPE FB, WIRING DIAGRAM, CVT Control System.>

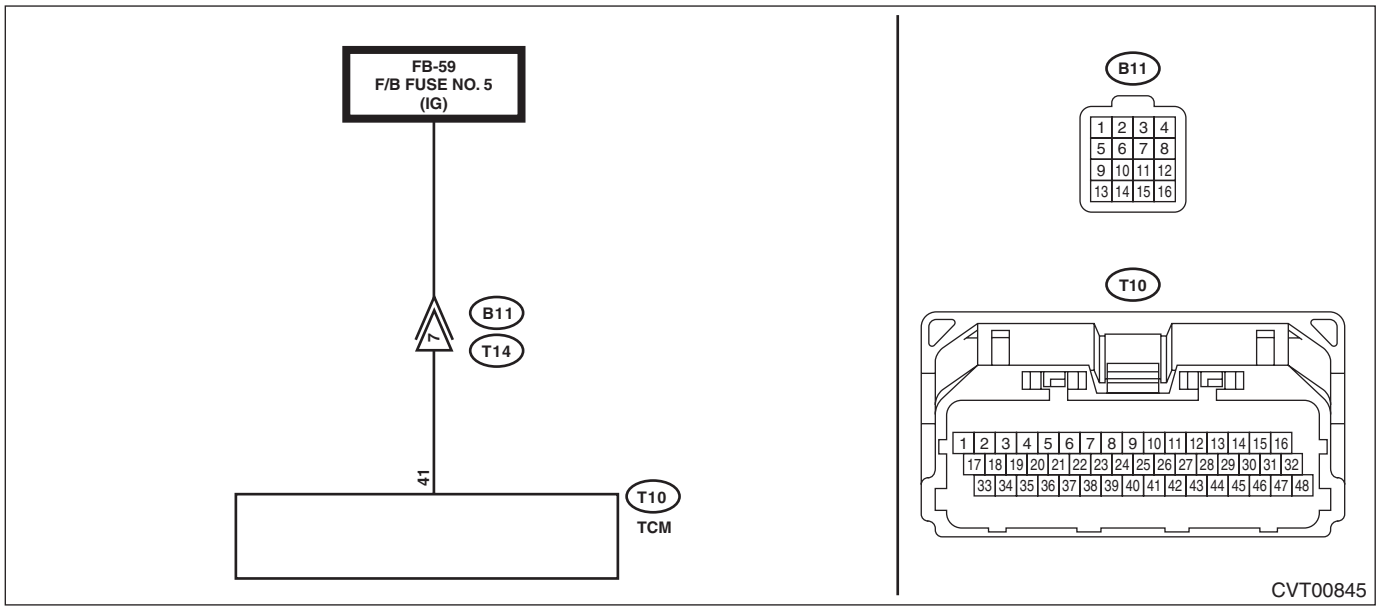

• ENGINE TYPE EZ
CVT control system <Ref. to WI-162, ENGINE TYPE EZ, WIRING DIAGRAM, CVT Control System.>

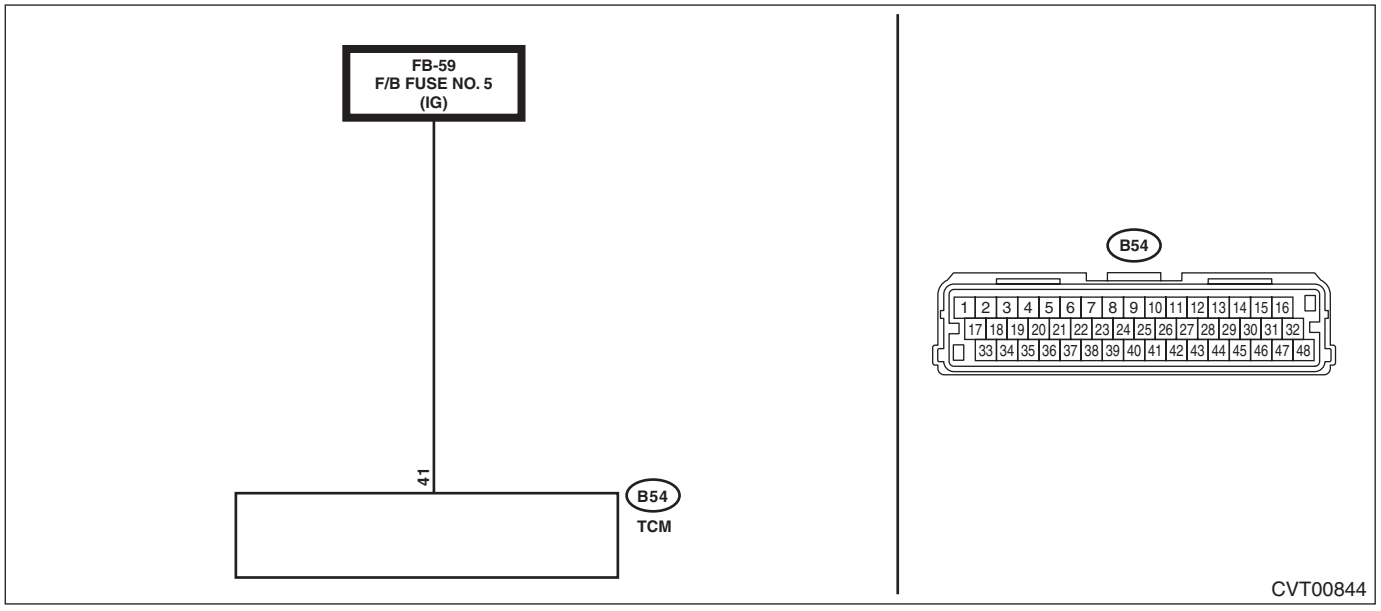

	Step	Check	Yes	No
1	**CHECK CONNECTOR.** Check the installing condition of TCM connector.	Is the TCM connector installed properly?	Go to step **2**.	Install the TCM connector.

Step		Check	Yes	No
2	**CHECK INPUT VOLTAGE OF TCM.** 1) Turn the ignition switch to ON. 2) Measure the voltage between TCM connector and chassis ground. (While wiggling the harness) ***Connector & terminal*** ***ENGINE TYPE FB*** ***(T10) No. 41 (+) — Chassis ground (–):*** ***ENGINE TYPE EZ*** ***(B54) No. 41 (+) — Chassis ground (–):***	Is the voltage 8 V or more?	Even if DTC is detected, the circuit has returned to a normal condition at this time. Reproduce the failure, and then perform the diagnosis again. NOTE: In this case, the following items may be the cause of fault. • Open circuit or short circuit to ground of harness between TCM connector and ignition switch connector (IG relay 1 connector for model with push button start) • Poor contact of ignition switch connector (IG relay 1 connector for model with push button start) • Poor contact of ignition switch (IG relay 1 for model with push button start)	Repair the harness and connector. NOTE: In this case, repair the following item: • Open circuit or short circuit to ground of harness between TCM connector and ignition switch connector (IG relay 1 connector for model with push button start) • Poor contact of ignition switch connector (IG relay 1 connector for model with push button start) • Poor contact of ignition switch (IG relay 1 for model with push button start)

1. OUTLINE OF DIAGNOSIS

- Detect the malfunction of ignition SW circuit.
- Judge as NG if the ignition SW signals are lost 5 times or more even though the engine is ON.

2. EXECUTION CONDITION

Secondary Parameters	Execution condition
12 V battery system voltage	≥ 10.9 V
Engine speed	≥ 500 rpm

3. DIAGNOSTIC METHOD

If the duration of time while the following conditions are met is longer than the time indicated, judge as NG.

Judgment Value

Malfunction Criteria	Threshold Value
Count of temporarily discontinuous input of ignition switch	≥ 5 count

Time Needed for Diagnosis: 5 seconds
Malfunction Indicator Light Illumination: Illuminates as soon as a malfunction occurs.

AS:DTC P2746 INTERMEDIATE SHAFT SPEED SENSOR "B" CIRCUIT RANGE/ PERFORMANCE

DTC DETECTING CONDITION:
Immediately at fault recognition
TROUBLE SYMPTOM:
- Standing start problems
- Shock occurs when engaging the lockup clutch.
- Shock occurs when selecting shift position.

1. ENGINE TYPE FB

Step		Check	Yes	No
1	**CHECK DTC.** Read the DTC using Subaru Select Monitor.	Besides DTC P2746, is DTC P2747 or P2751 displayed?	Perform the diagnosis according to DTCs other than P2746.	Perform the diagnosis according to DTC P2747. <Ref. to CVT(diag)-190, DTC P2747 INTERMEDIATE SHAFT SPEED SENSOR "B" CIRCUIT NO SIGNAL, Diagnostic Procedure with Diagnostic Trouble Code (DTC).>

2. ENGINE TYPE EZ

Step		Check	Yes	No
1	**CHECK DTC.** Read the DTC using Subaru Select Monitor.	Besides DTC P2746, is any of the DTCs P2747, U0100 and U0401 displayed?	Perform the diagnosis according to DTCs other than P2746.	Perform the diagnosis according to DTC P2747. <Ref. to CVT(diag)-190, DTC P2747 INTERMEDIATE SHAFT SPEED SENSOR "B" CIRCUIT NO SIGNAL, Diagnostic Procedure with Diagnostic Trouble Code (DTC).>

3. OUTLINE OF DIAGNOSIS (ENGINE TYPE FB)

Diagnosis 1
- Detect the malfunction of primary speed sensor signal characteristics.
- Judge as NG if the primary speed, compared with the speeds of other parts, is outside the possible range considering the hardware capabilities.

Diagnosis 2
- Detect the malfunction of primary speed sensor signal characteristics.
- Judge as NG if the primary speed exceeds the predetermined value.

4. EXECUTION CONDITION (ENGINE TYPE FB)

Secondary Parameters	Execution condition
Diagnosis 1	
12 V battery system voltage	≥ 9 V
Transmission range	Drive or Reverse
(Measured turbine shaft speed / Measured secondary pulley shaft speed)	≥ 0.4 and ≤ 2.55
Diagnosis 2	
12 V battery system voltage	≥ 9 V
Transmission range	Drive or Reverse
(Measured turbine shaft speed / Measured secondary pulley shaft speed)	≥ 0.4 and ≤ 2.55

5. DIAGNOSTIC METHOD (ENGINE TYPE FB)

If the duration of time while the following conditions are met is longer than the time indicated, judge as NG.

Judgment Value

Malfunction Criteria	Threshold Value
Diagnosis 1	
(Measured primary pulley shaft speed / Measured secondary pulley shaft speed)	< 0.36 or > 2.80
Diagnosis 2	
Measured primary pulley shaft speed	> 7140 rpm

Time Needed for Diagnosis: 5 seconds
Malfunction Indicator Light Illumination: Illuminates as soon as a malfunction occurs.

6. OUTLINE OF DIAGNOSIS (ENGINE TYPE EZ)

- Detect the malfunction of primary speed sensor signal characteristics.
- Judge as NG if the turbine speed, compared with the engine speed, is outside the possible range considering the hardware capabilities.

7. EXECUTION CONDITION (ENGINE TYPE EZ)

Secondary Parameters	Execution condition
12 V battery system voltage	≥ 10 V
Engine speed	≥ 500 rpm

8. DIAGNOSTIC METHOD (ENGINE TYPE EZ)

If the duration of time while the following conditions are met is longer than the time indicated, judge as NG.

Judgment Value

Malfunction Criteria	Threshold Value
Measured primary pulley shaft speed	< Table 1 rpm

Table 1

Engine speed (rpm)	3700	3727	3755	3782	3856	4019	4213	4456
Measured primary pulley shaft speed (rpm)	0	500	1000	1500	2000	2500	3000	3500

Engine speed (rpm)	4786	5213	5651	6101	6569	7044	7520
Measured primary pulley shaft speed (rpm)	4000	4500	5000	5500	6000	6500	7000

Time Needed for Diagnosis: 10 seconds
Malfunction Indicator Light Illumination: Illuminates as soon as a malfunction occurs.

AT:DTC P2747 INTERMEDIATE SHAFT SPEED SENSOR "B" CIRCUIT NO SIGNAL

DTC DETECTING CONDITION:
Immediately at fault recognition
TROUBLE SYMPTOM:
- Standing start problems
- Shock occurs when engaging the lockup clutch.
- Shock occurs when selecting shift position.

1. ENGINE TYPE FB

WIRING DIAGRAM:
CVT control system <Ref. to WI-156, ENGINE TYPE FB, WIRING DIAGRAM, CVT Control System.>

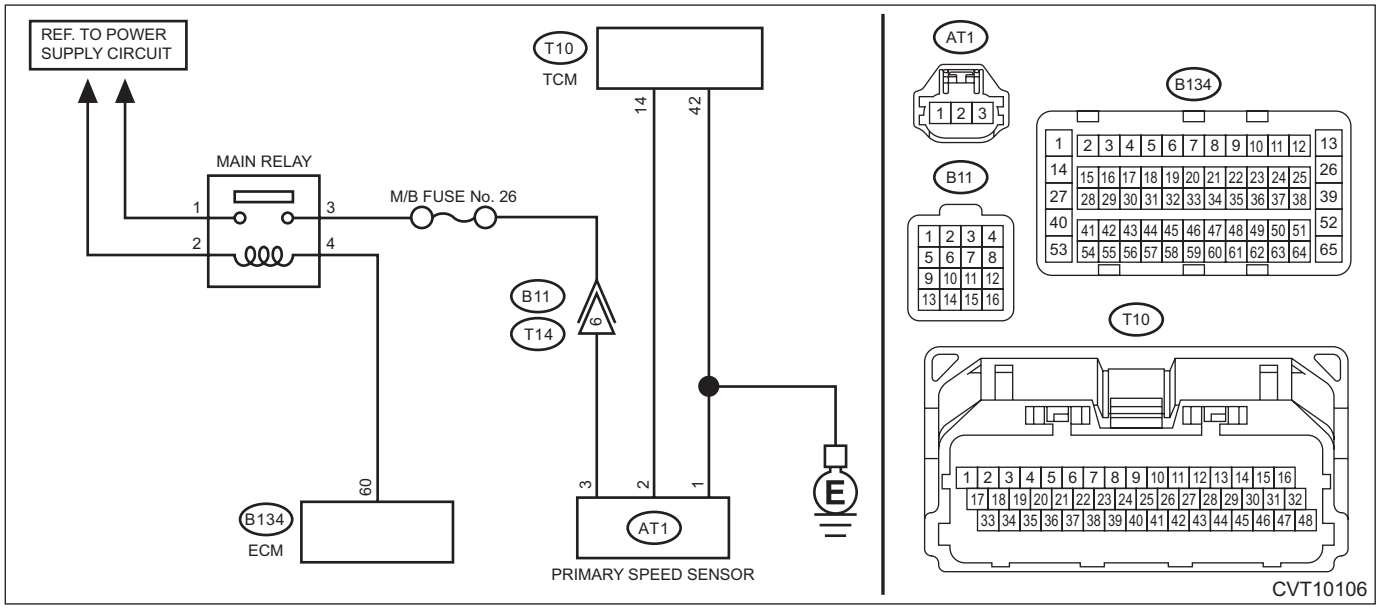

Step		Check	Yes	No
1	**CHECK FUSE.** 1) Turn the ignition switch to OFF. 2) Check the M/B fuse No. 26.	Is the fuse OK?	Go to step **2**.	Replace the fuse. If the fuse blows out easily, repair the short circuit of harness.
2	**CHECK ECM CONNECTOR.** Check the connecting condition of ECM connector.	Is the ECM connector correctly connected?	Go to step **3**.	Connect the ECM connector correctly.
3	**CHECK HARNESS BETWEEN TRANSMISSION CONNECTOR AND MAIN RELAY CONNECTOR.** 1) Turn the ignition switch to OFF. 2) Measure the voltage between transmission connector and engine ground. ***Connector & terminal*** ***(B11) No. 6 (+) — Engine ground (–):***	Is the voltage 10 V or more?	Repair the harness and connector. NOTE: In this case, repair the following item: • Short circuit to power supply of harness between transmission connector and main relay connector • Defective main relay	Go to step **4**.

	Step	Check	Yes	No
4	**CHECK HARNESS BETWEEN ECM AND MAIN RELAY CONNECTOR.** 1) Turn the ignition switch to OFF. 2) Remove the main relay. 3) Disconnect the connector from ECM. 4) Measure the resistance between the ECM connector and engine ground. ***Connector & terminal*** ***(B134) No. 60 — Engine ground:***	Is the resistance 1 MΩ or more?	Go to step **5**.	Repair the short circuit to ground in harness between ECM connector and main relay connector.
5	**CHECK HARNESS.** 1) Turn the ignition switch to OFF. 2) Disconnect the connector of TCM and the primary speed sensor. 3) Measure the resistance between TCM connector and the primary speed sensor connector. ***Connector & terminal*** ***(T10) No. 14 — (AT1) No. 2:*** ***(T10) No. 42 — (AT1) No. 1:***	Is the resistance less than 1 Ω?	Go to step **6**.	Repair the open circuit of harness.
6	**CHECK HARNESS.** Measure the resistance between TCM connector and chassis ground. ***Connector & terminal*** ***(T10) No. 14 — Chassis ground:***	Is the resistance 1 MΩ or more?	Go to step **7**.	Repair the short circuit of harness.
7	**CHECK TRANSMISSION HARNESS.** 1) Install the fuse. 2) Connect the TCM connector. 3) Disconnect the transmission connector. 4) Turn the ignition switch to ON. 5) Measure the voltage between transmission connector terminals. ***Connector & terminal*** ***(B11) No. 6 (+) — Chassis ground (–):***	Is the voltage 10 — 13 V?	Go to step **8**.	Repair the open circuit of harness or poor contact of connector.
8	**CHECK INPUT SIGNAL FOR TCM.** 1) Turn the ignition switch to OFF. 2) Connect all connectors. 3) Lift up the vehicle. 4) Start the engine. 5) Set the select lever to “D” range. 6) Read the data of «Primary Pulley Speed» using Subaru Select Monitor.	Does the value of «Primary Pulley Speed» change according to those of «Turbine Revolution Speed»?	Current condition is normal. Repair the poor contacts of harnesses of primary speed sensor and transmission connector.	Go to step **9**.
9	**CHECK TRANSMISSION HARNESS.** 1) Turn the ignition switch to OFF. 2) Disconnect the transmission connector. 3) Disconnect the primary speed sensor connector. 4) Measure the resistance between transmission connector and primary speed sensor connector. ***Connector & terminal*** ***(T14) No. 6 — (AT1) No. 3:***	Is the resistance less than 1 Ω?	Go to step **10**.	Replace the transmission harness.
10	**CHECK PRIMARY SPEED SENSOR.** 1) Turn the ignition switch to OFF. 2) Replace the primary speed sensor. <Ref. to CVT(TR580)-123, Primary Speed Sensor.> 3) Perform the Clear Memory Mode. <Ref. to CVT(diag)-26, Clear Memory Mode.> 4) Read the DTC.	Is DTC P2747 displayed?	Go to step **11**.	The original primary speed sensor is defective.

Step		Check	Yes	No
11	**CHECK MAIN RELAY.** 1) Turn the ignition switch to OFF. 2) Replace the main relay. 3) Perform the Clear Memory Mode. <Ref. to CVT(diag)-26, Clear Memory Mode.> 4) Read the DTC.	Is DTC P2747 displayed?	Replace the TCM. <Ref. to CVT(TR580)-159, Transmission Control Module (TCM).>	The original main relay is defective.

2. ENGINE TYPE EZ

WIRING DIAGRAM:

CVT control system <Ref. to WI-162, ENGINE TYPE EZ, WIRING DIAGRAM, CVT Control System.>

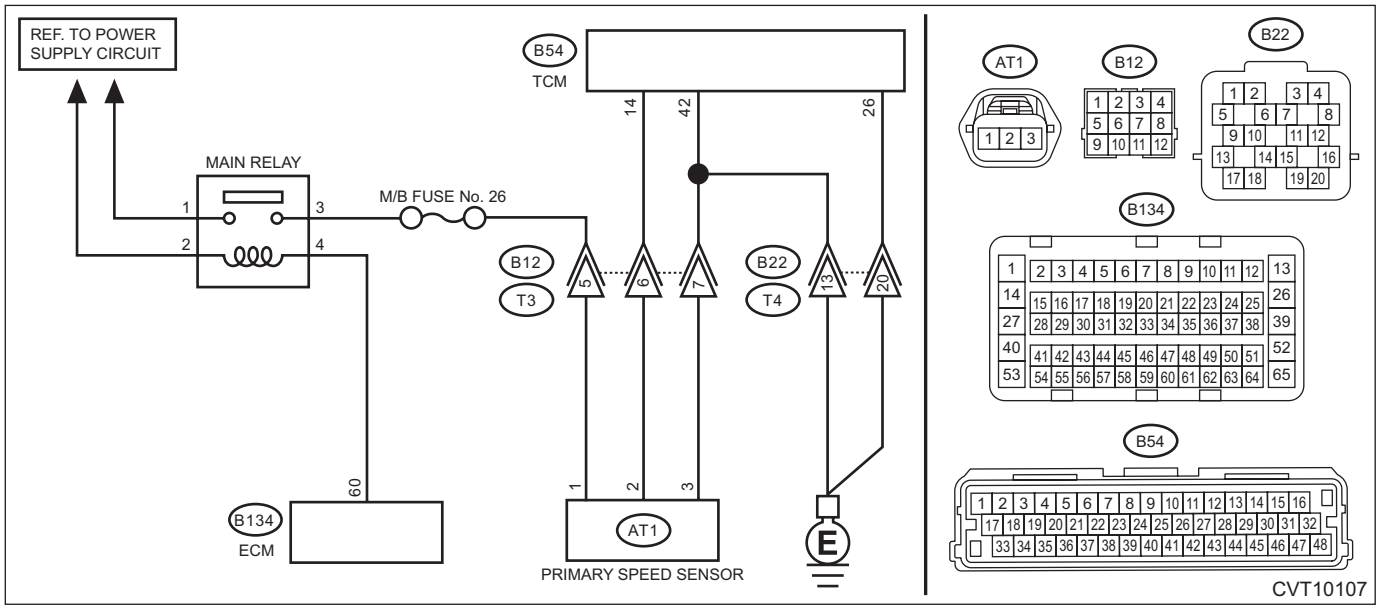

Step		Check	Yes	No
1	**CHECK FUSE.** 1) Turn the ignition switch to OFF. 2) Check the M/B fuse No. 26.	Is the fuse OK?	Go to step **2**.	Replace the fuse. If the fuse blows out easily, repair the short circuit of harness.
2	**CHECK ECM CONNECTOR.** Check the connecting condition of ECM connector.	Is the ECM connector correctly connected?	Go to step **3**.	Connect the ECM connector correctly.
3	**CHECK HARNESS BETWEEN TRANSMISSION CONNECTOR AND MAIN RELAY CONNECTOR.** 1) Turn the ignition switch to OFF. 2) Measure the voltage between transmission connector and engine ground. ***Connector & terminal*** ***(B12) No. 5 (+) — Engine ground (–):***	Is the voltage 10 V or more?	Repair the harness and connector. NOTE: In this case, repair the following item: • Short circuit to power supply of harness between transmission connector and main relay connector • Defective main relay	Go to step **4**.

	Step	Check	Yes	No
4	**CHECK HARNESS BETWEEN ECM AND MAIN RELAY CONNECTOR.** 1) Turn the ignition switch to OFF. 2) Remove the main relay. 3) Disconnect the connector from ECM. 4) Measure the resistance between the ECM connector and engine ground. ***Connector & terminal*** ***(B134) No. 60 — Engine ground:***	Is the resistance 1 MΩ or more?	Go to step **5**.	Repair the short circuit to ground in harness between ECM connector and main relay connector.
5	**CHECK HARNESS.** 1) Turn the ignition switch to OFF. 2) Disconnect the TCM and transmission connectors. 3) Measure the resistance between TCM connector and transmission connectors. ***Connector & terminal*** ***(B54) No. 26 — (B22) No. 20:*** ***(B54) No. 42 — (B22) No. 13:*** ***(B54) No. 14 — (B12) No. 6:*** ***(B54) No. 42 — (B12) No. 7:***	Is the resistance less than 1 Ω?	Go to step **6**.	Repair the open circuit of harness.
6	**CHECK HARNESS.** Measure the resistance between TCM connector and chassis ground. ***Connector & terminal*** ***(B54) No. 14 — Chassis ground:***	Is the resistance 1 MΩ or more?	Go to step **7**.	Repair the short circuit of harness.
7	**CHECK TRANSMISSION HARNESS.** 1) Install the fuse. 2) Connect the TCM connector. 3) Turn the ignition switch to ON. 4) Measure the voltage between transmission connector terminals. ***Connector & terminal*** ***(B12) No. 5 (+) — Chassis ground (–):***	Is the voltage 10 — 13 V?	Go to step **8**.	Repair the open circuit of harness or poor contact of connector.
8	**CHECK INPUT SIGNAL FOR TCM.** 1) Turn the ignition switch to OFF. 2) Connect the transmission connector. 3) Lift up the vehicle. 4) Start the engine. 5) Set the select lever to “D” range. 6) Read the data of «Primary Pulley Speed» using Subaru Select Monitor.	Does the value of «Primary Pulley Speed» change according to those of «Turbine Revolution Speed»?	Current condition is normal. Repair the poor contacts of harnesses of primary speed sensor and transmission connector.	Go to step **9**.
9	**CHECK TRANSMISSION HARNESS.** 1) Turn the ignition switch to OFF. 2) Disconnect the transmission connector. 3) Disconnect the primary speed sensor connector. 4) Measure the resistance between transmission connector and primary speed sensor connector. ***Connector & terminal*** ***(T3) No. 5 — (AT1) No. 1:*** ***(T3) No. 6 — (AT1) No. 2:*** ***(T3) No. 7 — (AT1) No. 3:***	Is the resistance less than 1 Ω?	Go to step **10**.	Replace the transmission harness.
10	**CHECK PRIMARY SPEED SENSOR.** 1) Turn the ignition switch to OFF. 2) Replace the primary speed sensor. <Ref. to CVT(TR690)-115, Primary Speed Sensor.> 3) Perform the Clear Memory Mode. <Ref. to CVT(diag)-26, Clear Memory Mode.> 4) Read the DTC.	Is DTC P2747 displayed?	Go to step **11**.	The original primary speed sensor is defective.

Step		Check	Yes	No
11	**CHECK MAIN RELAY.** 1) Turn the ignition switch to OFF. 2) Replace the main relay. 3) Perform the Clear Memory Mode. <Ref. to CVT(diag)-26, Clear Memory Mode.> 4) Read the DTC.	Is DTC P2747 displayed?	Replace the TCM. <Ref. to CVT(TR690)-142, Transmission Control Module (TCM).>	The original main relay is defective.

3. OUTLINE OF DIAGNOSIS (ENGINE TYPE FB)

- Detect no input signal from the primary speed sensor.
- Judge as NG if there is no input signal from the primary pulley speed sensor, while the secondary pulley speed sensor has the input signal although the primary and secondary pulleys are interlocked via the chain.

4. EXECUTION CONDITION (ENGINE TYPE FB)

Secondary Parameters	Execution condition
12 V battery system voltage	≥ 9 V
Measured secondary pulley shaft speed	≥ 500 rpm

5. DIAGNOSTIC METHOD (ENGINE TYPE FB)

If the duration of time while the following conditions are met is longer than the time indicated, judge as NG.

Judgment Value

Malfunction Criteria	Threshold Value
Measured primary pulley shaft speed	0 rpm

Time Needed for Diagnosis: 0.5 seconds
Malfunction Indicator Light Illumination: Illuminates as soon as a malfunction occurs.

6. OUTLINE OF DIAGNOSIS (ENGINE TYPE EZ)

- Detect no input signal from the primary speed sensor.
- Judge as NG if there is no input signal from the primary pulley speed sensor, while the secondary pulley speed sensor has the input signal although the primary and secondary pulleys are interlocked via the chain.

7. EXECUTION CONDITION (ENGINE TYPE EZ)

Secondary Parameters	Execution condition
12 V battery system voltage	≥ 10 V
Measured secondary pulley shaft speed	≥ 500 rpm

8. DIAGNOSTIC METHOD (ENGINE TYPE EZ)

If the duration of time while the following conditions are met is longer than the time indicated, judge as NG.

Judgment Value

Malfunction Criteria	Threshold Value
Measured primary pulley shaft speed	0 rpm

Time Needed for Diagnosis: 0.5 seconds
Malfunction Indicator Light Illumination: Illuminates as soon as a malfunction occurs.

AU:DTC P2750 INTERMEDIATE SHAFT SPEED SENSOR "C" CIRCUIT RANGE/ PERFORMANCE

DTC DETECTING CONDITION:
Immediately at fault recognition
TROUBLE SYMPTOM:
- Shifting shock is felt.
- Acceleration is poor during standing start.
- Shift control malfunction

1. ENGINE TYPE FB

Step		Check	Yes	No
1	**CHECK DTC.** Read the DTC using Subaru Select Monitor.	Besides DTC P2750, is any of the DTC P2751, U0122 or U0416 displayed?	Perform the diagnosis according to DTCs other than P2750.	Perform the diagnosis according to DTC P2751. <Ref. to CVT(diag)-197, DTC P2751 INTERMEDIATE SHAFT SPEED SENSOR "C" CIRCUIT NO SIGNAL, Diagnostic Procedure with Diagnostic Trouble Code (DTC).>

2. ENGINE TYPE EZ

Step		Check	Yes	No
1	**CHECK DTC.** Read the DTC using Subaru Select Monitor.	Besides DTC P2750, is DTC P2747 or P2751 displayed?	Perform the diagnosis according to DTCs other than P2750.	Perform the diagnosis according to DTC P2751. <Ref. to CVT(diag)-197, DTC P2751 INTERMEDIATE SHAFT SPEED SENSOR "C" CIRCUIT NO SIGNAL, Diagnostic Procedure with Diagnostic Trouble Code (DTC).>

3. OUTLINE OF DIAGNOSIS (ENGINE TYPE FB)

- Detect the malfunction of the secondary speed sensor characteristics.
- Judge as NG if the deviation of vehicle speed between VDC and the secondary speed sensor becomes the predetermined value or more.

4. EXECUTION CONDITION (ENGINE TYPE FB)

Secondary Parameters	Execution condition
12 V battery system voltage	≥ 10 V
Vehicle speed (from vehicle dynamics control module)	≥ 5 MPH

5. DIAGNOSTIC METHOD (ENGINE TYPE FB)

If the duration of time while the following conditions are met is longer than the time indicated, judge as NG.

Judgment Value

Malfunction Criteria	Threshold Value
|Vehicle speed (calculated from secondary pulley shaft speed) – Vehicle speed (from vehicle dynamics control module)|	> 10 MPH

Time Needed for Diagnosis: 5 seconds
Malfunction Indicator Light Illumination: Illuminates as soon as a malfunction occurs.

6. OUTLINE OF DIAGNOSIS (ENGINE TYPE EZ)

Diagnosis 1
- Detect the malfunction of secondary speed sensor signal characteristics.
- Judge as NG if the secondary speed, compared with the primary speed, is outside the possible range considering the hardware capabilities.

Diagnosis 2
- Detect the malfunction of secondary speed sensor signal characteristics.
- Judge as NG if the secondary speed exceeds the predetermined value.

7. EXECUTION CONDITION (ENGINE TYPE EZ)

Secondary Parameters	Execution condition
Diagnosis 1	
12 V battery system voltage	≥ 9 V
Transmission range	Drive or Reverse
(Measured primary pulley shaft speed /Measured front output shaft speed)	≥ 0.36 and ≤ 2.34
Diagnosis 2	
12 V battery system voltage	≥ 9 V
Transmission range	Drive or Reverse
(Measured primary pulley shaft speed /Measured front output shaft speed)	≥ 0.36 and ≤ 2.34

8. DIAGNOSTIC METHOD (ENGINE TYPE EZ)

If the duration of time while the following conditions are met is longer than the time indicated, judge as NG.

Judgment Value

Malfunction Criteria	Threshold Value
Diagnosis 1	
(Measured primary pulley shaft speed / Measured secondary pulley shaft speed)	< 0.33 or > 2.58
Diagnosis 2	
Measured secondary pulley shaft speed	> 10820 rpm

Time Needed for Diagnosis: 5 seconds
Malfunction Indicator Light Illumination: Illuminates as soon as a malfunction occurs.

AV:DTC P2751 INTERMEDIATE SHAFT SPEED SENSOR "C" CIRCUIT NO SIGNAL

DTC DETECTING CONDITION:
Immediately at fault recognition
TROUBLE SYMPTOM:
- Shifting shock is felt.
- Acceleration is poor during standing start.
- Shift control malfunction

1. ENGINE TYPE FB

WIRING DIAGRAM:
CVT control system <Ref. to WI-156, ENGINE TYPE FB, WIRING DIAGRAM, CVT Control System.>

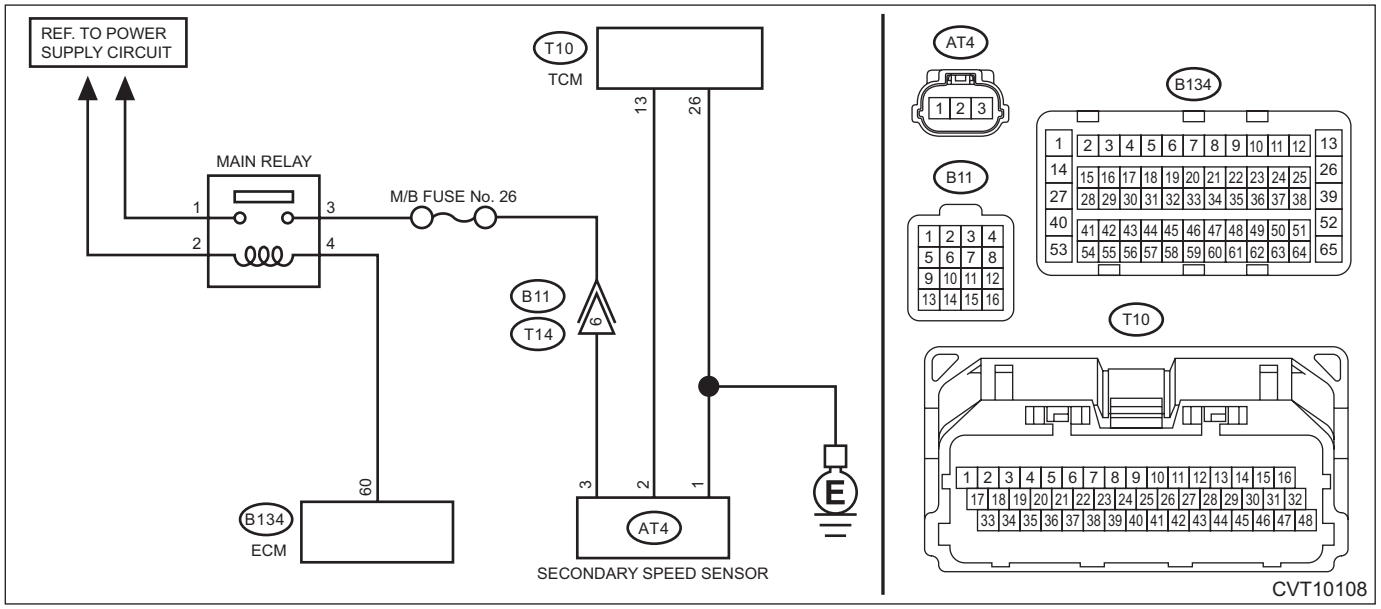

Step		Check	Yes	No
1	**CHECK FUSE.** 1) Turn the ignition switch to OFF. 2) Check the M/B fuse No. 26.	Is the fuse OK?	Go to step **2**.	Replace the fuse. If the fuse blows out easily, repair the short circuit of harness.
2	**CHECK ECM CONNECTOR.** Check the connecting condition of ECM connector.	Is the ECM connector correctly connected?	Go to step **3**.	Connect the ECM connector correctly.
3	**CHECK HARNESS BETWEEN TRANSMISSION CONNECTOR AND MAIN RELAY CONNECTOR.** 1) Turn the ignition switch to OFF. 2) Measure the voltage between transmission connector and engine ground. ***Connector & terminal*** ***(B11) No. 6 (+) — Engine ground (–):***	Is the voltage 10 V or more?	Repair the harness and connector. NOTE: In this case, repair the following item: • Short circuit to power supply of harness between transmission connector and main relay connector • Defective main relay	Go to step **4**.

	Step	Check	Yes	No
4	**CHECK HARNESS BETWEEN ECM AND MAIN RELAY CONNECTOR.** 1) Turn the ignition switch to OFF. 2) Remove the main relay. 3) Disconnect the connector from ECM. 4) Measure the resistance between the ECM connector and engine ground. ***Connector & terminal*** ***(B134) No. 60 — Engine ground:***	Is the resistance 1 MΩ or more?	Go to step **5**.	Repair the short circuit to ground in harness between ECM connector and main relay connector.
5	**CHECK HARNESS.** 1) Turn the ignition switch to OFF. 2) Disconnect the connector of TCM and the secondary speed sensor. 3) Measure the resistance between TCM connector and the secondary speed sensor connector. ***Connector & terminal*** ***(T10) No. 13 — (AT4) No. 2:*** ***(T10) No. 26 — (AT4) No. 1:***	Is the resistance less than 1 Ω?	Go to step **6**.	Repair the open circuit of harness.
6	**CHECK HARNESS.** Measure the resistance between TCM connector and chassis ground. ***Connector & terminal*** ***(T10) No. 13 — Chassis ground:***	Is the resistance 1 MΩ or more?	Go to step **7**.	Repair the short circuit of harness.
7	**CHECK TRANSMISSION HARNESS.** 1) Install the fuse. 2) Connect the TCM connector. 3) Disconnect the transmission connector. 4) Turn the ignition switch to ON. 5) Measure the voltage between transmission connector terminals. ***Connector & terminal*** ***(B11) No. 6 (+) — Chassis ground (–):***	Is the voltage 10 — 13 V?	Go to step **8**.	Repair the open circuit of harness or poor contact of connector.
8	**CHECK INPUT SIGNAL FOR TCM.** 1) Turn the ignition switch to OFF. 2) Connect all connectors. 3) Lift up the vehicle. 4) Start the engine. 5) Set the select lever to “D” range. 6) Read the data of «Secondary Pulley Speed» using Subaru Select Monitor.	Does the value of «Secondary Pulley Speed» change according to those of «Front Wheel Speed»?	Current condition is normal. Repair the poor contacts of harnesses of secondary speed sensor and transmission connector.	Go to step **9**.
9	**CHECK TRANSMISSION HARNESS.** 1) Turn the ignition switch to OFF. 2) Disconnect the transmission connector. 3) Disconnect the secondary speed sensor connector. 4) Measure the resistance between transmission connector and secondary speed sensor connector. ***Connector & terminal*** ***(T14) No. 6 — (AT4) No. 3:***	Is the resistance less than 1 Ω?	Go to step **10**.	Replace the transmission harness.
10	**CHECK SECONDARY SPEED SENSOR.** 1) Turn the ignition switch to OFF. 2) Replace the secondary speed sensor. <Ref. to CVT(TR580)-118, Secondary Speed Sensor.> 3) Perform the Clear Memory Mode. <Ref. to CVT(diag)-26, Clear Memory Mode.> 4) Read the DTC.	Is DTC P2751 displayed?	Go to step **11**.	The original secondary speed sensor is defective.

	Step	Check	Yes	No
11	**CHECK MAIN RELAY.** 1) Turn the ignition switch to OFF. 2) Replace the main relay. 3) Perform the Clear Memory Mode. <Ref. to CVT(diag)-26, Clear Memory Mode.> 4) Read the DTC.	Is DTC P2751 displayed?	Replace the TCM. <Ref. to CVT(TR580)-159, Transmission Control Module (TCM).>	The original main relay is defective.

2. ENGINE TYPE EZ

WIRING DIAGRAM:

CVT control system <Ref. to WI-162, ENGINE TYPE EZ, WIRING DIAGRAM, CVT Control System.>

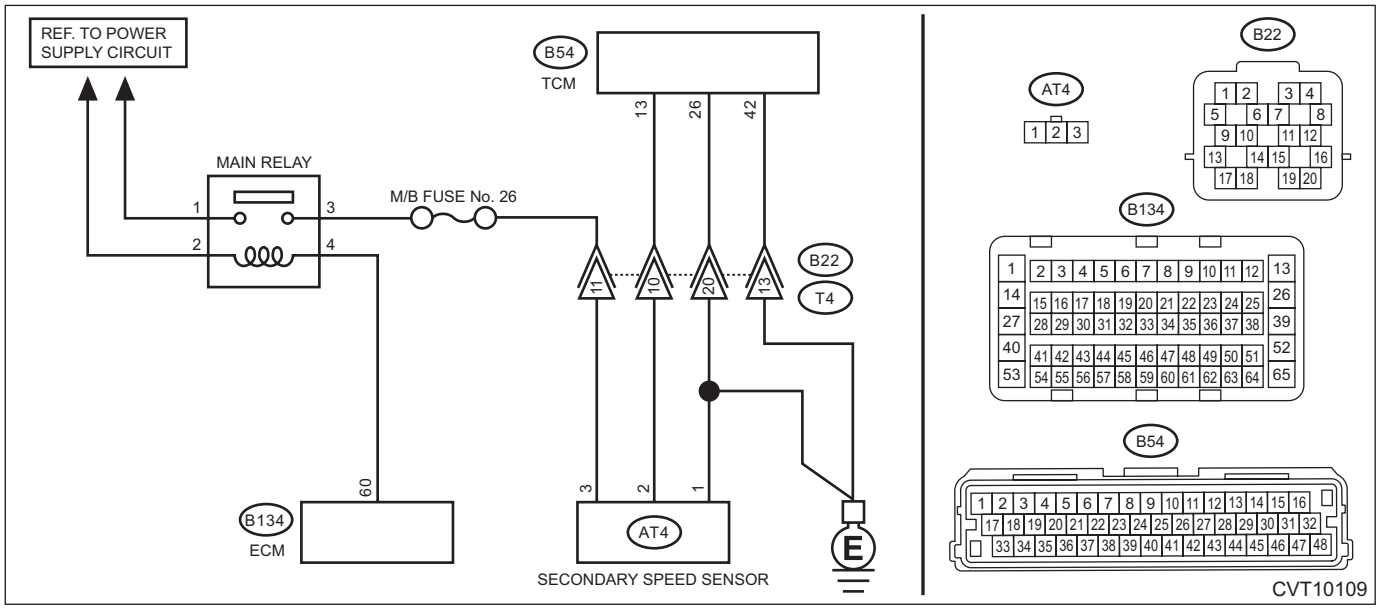

	Step	Check	Yes	No
1	**CHECK FUSE.** 1) Turn the ignition switch to OFF. 2) Check the M/B fuse No. 26.	Is the fuse OK?	Go to step **2**.	Replace the fuse. If the fuse blows out easily, repair the short circuit of harness.
2	**CHECK ECM CONNECTOR.** Check the connecting condition of ECM connector.	Is the ECM connector correctly connected?	Go to step **3**.	Connect the ECM connector correctly.
3	**CHECK HARNESS BETWEEN TRANSMISSION CONNECTOR AND MAIN RELAY CONNECTOR.** 1) Turn the ignition switch to OFF. 2) Measure the voltage between transmission connector and engine ground. ***Connector & terminal*** ***(B22) No. 11 (+) — Engine ground (–):***	Is the voltage 10 V or more?	Repair the harness and connector. NOTE: In this case, repair the following item: • Short circuit to power supply of harness between transmission connector and main relay connector • Defective main relay	Go to step **4**.

	Step	Check	Yes	No
4	**CHECK HARNESS BETWEEN ECM AND MAIN RELAY CONNECTOR.** 1) Turn the ignition switch to OFF. 2) Remove the main relay. 3) Disconnect the connector from ECM. 4) Measure the resistance between the ECM connector and engine ground. ***Connector & terminal*** ***(B134) No. 60 — Engine ground:***	Is the resistance 1 MΩ or more?	Go to step **5**.	Repair the short circuit to ground in harness between ECM connector and main relay connector.
5	**CHECK HARNESS.** 1) Turn the ignition switch to OFF. 2) Disconnect the TCM and transmission connectors. 3) Measure the resistance between TCM connector and transmission connectors. ***Connector & terminal*** ***(B54) No. 13 — (B22) No. 10:*** ***(B54) No. 26 — (B22) No. 20:*** ***(B54) No. 42 — (B22) No. 13:***	Is the resistance less than 1 Ω?	Go to step **6**.	Repair the open circuit of harness.
6	**CHECK HARNESS.** Measure the resistance between TCM connector and chassis ground. ***Connector & terminal*** ***(B54) No. 13 — Chassis ground:***	Is the resistance 1 MΩ or more?	Go to step **7**.	Repair the short circuit of harness.
7	**CHECK TRANSMISSION HARNESS.** 1) Install the fuse. 2) Connect the TCM connector. 3) Turn the ignition switch to ON. 4) Measure the voltage between transmission connector terminals. ***Connector & terminal*** ***(B22) No. 11 (+) — Chassis ground (–):***	Is the voltage 10 — 13 V?	Go to step **8**.	Repair the open circuit of harness or poor contact of connector.
8	**CHECK INPUT SIGNAL FOR TCM.** 1) Turn the ignition switch to OFF. 2) Connect the transmission connector. 3) Lift up the vehicle. 4) Start the engine. 5) Set the select lever to “D” range. 6) Read the data of «Secondary Pulley Speed» using Subaru Select Monitor.	Does the value of «Secondary Pulley Speed» change according to those of «Front Wheel Speed»?	Current condition is normal. Repair the poor contacts of harnesses of secondary speed sensor and transmission connector.	Go to step **9**.
9	**CHECK TRANSMISSION HARNESS.** 1) Turn the ignition switch to OFF. 2) Disconnect the transmission connector. 3) Disconnect the secondary speed sensor connector. 4) Measure the resistance between transmission connector and secondary speed sensor connector. ***Connector & terminal*** ***(T4) No. 10 — (AT4) No. 2:*** ***(T4) No. 11 — (AT4) No. 3:*** ***(T4) No. 13 — (AT4) No. 1:*** ***(T4) No. 20 — (AT4) No. 1:***	Is the resistance less than 1 Ω?	Go to step **10**.	Replace the transmission harness.

	Step	Check	Yes	No
10	**CHECK SECONDARY SPEED SENSOR.** 1) Turn the ignition switch to OFF. 2) Replace the secondary speed sensor. <Ref. to CVT(TR690)-112, Secondary Speed Sensor.> 3) Perform the Clear Memory Mode. <Ref. to CVT(diag)-26, Clear Memory Mode.> 4) Read the DTC.	Is DTC P2751 displayed?	Go to step **11**.	The original secondary speed sensor is defective.
11	**CHECK MAIN RELAY.** 1) Turn the ignition switch to OFF. 2) Replace the main relay. 3) Perform the Clear Memory Mode. <Ref. to CVT(diag)-26, Clear Memory Mode.> 4) Read the DTC.	Is DTC P2751 displayed?	Replace the TCM. <Ref. to CVT(TR690)-142, Transmission Control Module (TCM).>	The original main relay is defective.

3. OUTLINE OF DIAGNOSIS

- Detect the no input signal from the secondary speed sensor.
- Judge as NG if there is no input signal from the secondary pulley speed sensor, while the primary pulley speed sensor has the input signal although the primary and secondary pulleys are interlocked via the chain.

4. EXECUTION CONDITION

Secondary Parameters	Execution condition
12 V battery system voltage	≥ 9 V
Transmission range	Drive or Reverse
Measured primary pulley shaft speed	≥ 1000 rpm

5. DIAGNOSTIC METHOD

If the duration of time while the following conditions are met is longer than the time indicated, judge as NG.

Judgment Value

Malfunction Criteria	Threshold Value
Measured secondary pulley shaft speed	0 rpm

Time Needed for Diagnosis: 0.5 seconds
Malfunction Indicator Light Illumination: Illuminates as soon as a malfunction occurs.

AW:DTC P2757 TORQUE CONVERTER CLUTCH PRESSURE CONTROL SOLENOID CONTROL CIRCUIT PERFORMANCE/STUCK OFF

DTC DETECTING CONDITION:
Detected when two consecutive driving cycles with fault occur.
TROUBLE SYMPTOM:
No lock-up occurs.

1. ENGINE TYPE FB

WIRING DIAGRAM:
CVT control system <Ref. to WI-156, ENGINE TYPE FB, WIRING DIAGRAM, CVT Control System.>

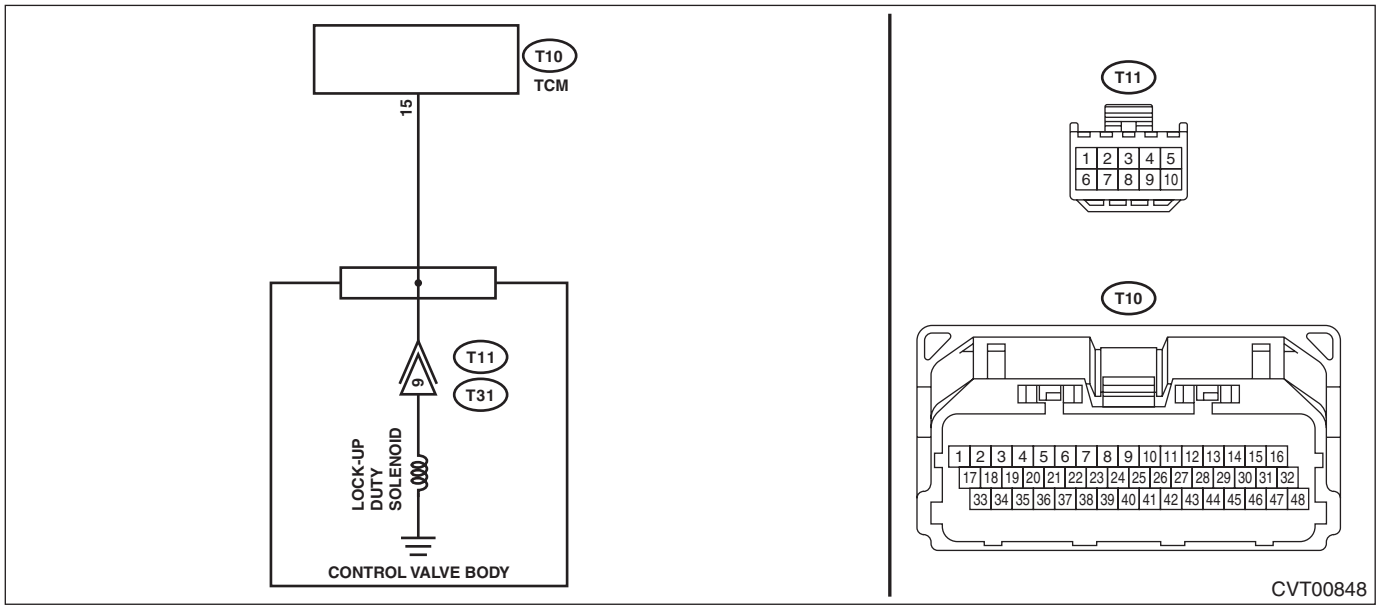

	Step	Check	Yes	No
1	**CHECK DTC.** Read the DTC using Subaru Select Monitor.	Besides DTC P2757, is any of the DTC P0717, P2763, P2764, U0100 or U0401 displayed?	Perform the diagnosis according to DTCs other than P2757.	Go to step **2**.
2	**CHECK LOCK-UP DUTY SOLENOID (ACTIVE TEST).** 1) Turn the ignition switch to ON. 2) Using the Subaru Select Monitor, perform forced operation of the lock-up duty solenoid. <Ref. to CVT(diag)-32, Active Test.>	Does the indication of 0 → 50% appear repeatedly during forced operation, and does operating sound emit during indicating 50%?	Go to step **5**.	Go to step **3**.
3	**CHECK LOCK-UP DUTY SOLENOID.** 1) Turn the ignition switch to OFF. 2) Disconnect the TCM connector. 3) Measure the resistance between TCM connector and transmission body. ***Connector & terminal*** ***(T10) No. 15 — Transmission body:***	Is the resistance approx. 10 — 13.5 Ω? (when cold)	Go to step **7**.	Go to step **4**.
4	**CHECK HARNESS.** Check the harness for continuity.	Is the harness normal? (Is it free from defects such as open circuit, power supply-output short or GND-output short circuit, or poor contact?)	Go to step **7**.	Repair the harness.
5	**CHECK TRANSMISSION FLUID.** 1) Connect the TCM connector. 2) Check the amount of ATF. <Ref. to CVT(TR580)-39, ADJUSTMENT, CVTF.>	Is the ATF amount correct?	Go to step **6**.	Adjust the amount of ATF. <Ref. to CVT(TR580)-39, ADJUSTMENT, CVTF.>

	Step	Check	Yes	No
6	**CHECK TRANSMISSION FLUID.** Check the condition of ATF. <Ref. to CVT(TR580)-42, CONDITION CHECK, CVTF.>	Is the ATF OK?	Go to step **7**.	Check according to the "Corrective action" of ATF (CVTF) "CONDITION CHECK". <Ref. to CVT(TR580)-42, CONDITION CHECK, CVTF.>
7	**CHECK INPUT SIGNAL FOR TCM.** 1) Lift up the vehicle. 2) Start the engine. 3) Warm up until the ATF temperature reaches to 40 — 70°C (104 — 158°F). 4) Depress the brake pedal, and shift the select lever to "D" range. 5) Shift the select lever to "P" range. 6) Stabilize the engine speed at idle. 7) Read the data of «Actual secondary pressure» using Subaru Select Monitor.	Is the «Actual secondary pressure» 0.5 — 1.5 MPa?	Go to step **8**.	Perform the diagnosis according to DTC P0841. <Ref. to CVT(diag)-126, DTC P0841 TRANSMISSION FLUID PRESSURE SENSOR/SWITCH "A" CIRCUIT RANGE/PERFORMANCE, Diagnostic Procedure with Diagnostic Trouble Code (DTC).>
8	**ACTUAL DRIVING CHECK FOR LOCK-UP CONDITION.** 1) Perform the Clear Memory Mode. <Ref. to CVT(diag)-26, Clear Memory Mode.> 2) Turn the ignition switch to OFF. 3) Start the engine. 4) Warm up until the ATF temperature exceeds 50°C. 5) Drive the vehicle for one minute or more while keeping such constant speed that «Lock Up Duty Ratio» is 70% or more, and «Front Wheel Speed» is 40 km/h (25 MPH) or more, which are displayed on the Subaru Select Monitor. 6) Turn the ignition switch to OFF. 7) Start the engine. 8) Perform the procedure in step 5) again. 9) Read the DTC using Subaru Select Monitor.	Does the AT OIL TEMP light blink and is DTC P2757 displayed?	Perform the secondary pressure test. <Ref. to CVT(TR580)-51, Secondary Pressure (Line Pressure) Test.> When DTC other than P2757 is displayed, perform the diagnosis corresponding to the DTC.	Current condition is normal. It is possible that temporary poor contact occurs.

2. ENGINE TYPE EZ

WIRING DIAGRAM:

CVT control system <Ref. to WI-162, ENGINE TYPE EZ, WIRING DIAGRAM, CVT Control System.>

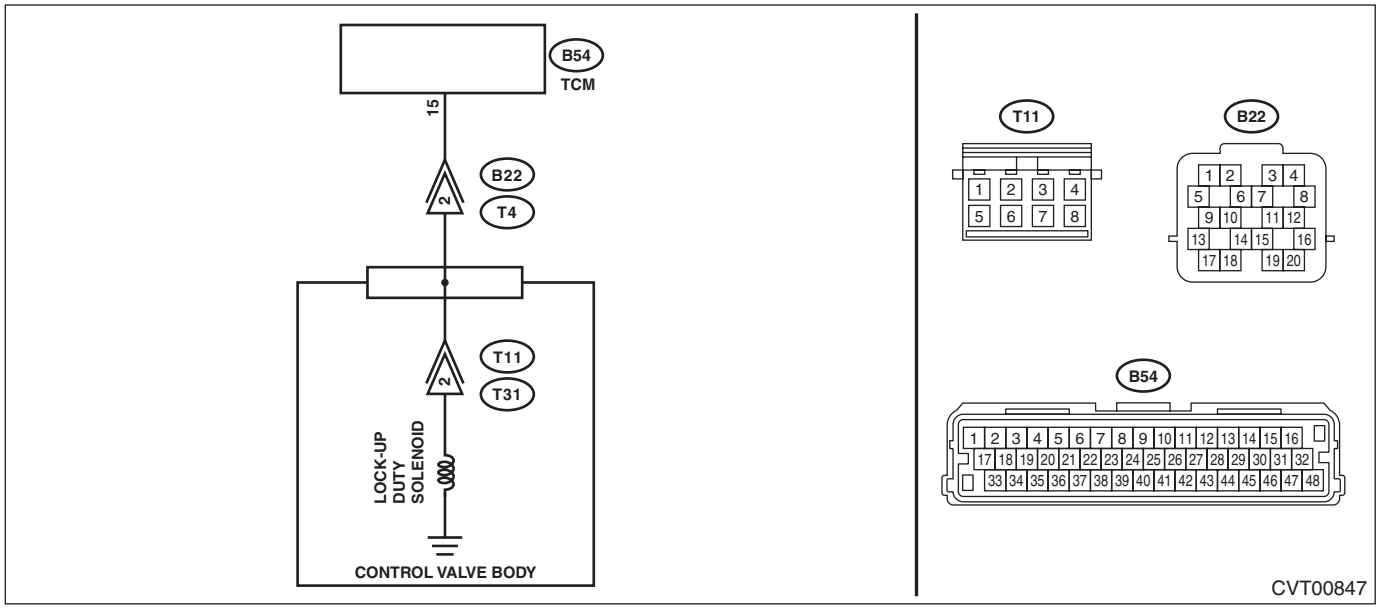

Step		Check	Yes	No
1	**CHECK DTC.** Read the DTC using Subaru Select Monitor.	Besides DTC P2757, is any of the DTCs P2747, P2763, P2764, U0100 and U0401 displayed?	Perform the diagnosis according to DTCs other than P2757.	Go to step **2**.
2	**CHECK LOCK-UP DUTY SOLENOID (ACTIVE TEST).** 1) Turn the ignition switch to ON. 2) Using the Subaru Select Monitor, perform forced operation of the lock-up duty solenoid. <Ref. to CVT(diag)-32, Active Test.>	Does the indication of 0 → 50% appear repeatedly during forced operation, and does operating sound emit during indicating 50%?	Go to step **5**.	Go to step **3**.
3	**CHECK LOCK-UP DUTY SOLENOID.** 1) Turn the ignition switch to OFF. 2) Disconnect the transmission connector. 3) Measure the resistance between transmission connector and transmission body. ***Connector & terminal*** ***(T4) No. 2 — Transmission body:***	Is the resistance approx. 10 — 13.5 Ω? (when cold)	Go to step **7**.	Go to step **4**.
4	**CHECK HARNESS.** Check the harness for continuity.	Is the harness normal? (Is it free from defects such as open circuit, power supply-output short or GND-output short circuit, or poor contact?)	Go to step **7**.	Repair the harness.
5	**CHECK TRANSMISSION FLUID.** 1) Connect the transmission connector. 2) Check the amount of ATF. <Ref. to CVT(TR690)-38, ADJUSTMENT, CVTF.>	Is the ATF amount correct?	Go to step **6**.	Adjust the amount of ATF. <Ref. to CVT(TR690)-38, ADJUSTMENT, CVTF.>

	Step	Check	Yes	No
6	**CHECK TRANSMISSION FLUID.** Check the condition of ATF. <Ref. to CVT(TR690)-42, CONDITION CHECK, CVTF.>	Is the ATF OK?	Go to step **7**.	Check according to the "Corrective action" of ATF (CVTF) "CONDITION CHECK". <Ref. to CVT(TR690)-42, CONDITION CHECK, CVTF.>
7	**CHECK INPUT SIGNAL FOR TCM.** 1) Lift up the vehicle. 2) Start the engine. 3) Warm up until the ATF temperature reaches to 40 — 70°C (104 — 158°F). 4) Depress the brake pedal, and shift the select lever to "D" range. 5) Shift the select lever to "P" range. 6) Stabilize the engine speed at idle. 7) Read the data of «Actual secondary pressure» using Subaru Select Monitor.	Is the «Actual secondary pressure» 0.5 — 1.5 MPa?	Go to step **8**.	Perform the diagnosis according to DTC P0841. <Ref. to CVT(diag)-126, DTC P0841 TRANSMISSION FLUID PRESSURE SENSOR/SWITCH "A" CIRCUIT RANGE/PERFORMANCE, Diagnostic Procedure with Diagnostic Trouble Code (DTC).>
8	**ACTUAL DRIVING CHECK FOR LOCK-UP CONDITION.** 1) Perform the Clear Memory Mode. <Ref. to CVT(diag)-26, Clear Memory Mode.> 2) Turn the ignition switch to OFF. 3) Start the engine. 4) Warm up until the ATF temperature exceeds 50°C. 5) Drive the vehicle for one minute or more while keeping such constant speed that «Lock Up Duty Ratio» is 70% or more, and «Front Wheel Speed» is 40 km/h (25 MPH) or more, which are displayed on the Subaru Select Monitor. 6) Turn the ignition switch to OFF. 7) Start the engine. 8) Perform the procedure in step 5) again. 9) Read the DTC using Subaru Select Monitor.	Does the AT OIL TEMP light blink and is DTC P2757 displayed?	Perform the secondary pressure test. <Ref. to CVT(TR690)-51, Secondary Pressure (Line Pressure) Test.> When DTC other than P2757 is displayed, perform the diagnosis corresponding to the DTC.	Current condition is normal. It is possible that temporary poor contact occurs.

3. OUTLINE OF DIAGNOSIS (ENGINE TYPE FB)

• Detect the malfunction of lock-up fluid pressure control solenoid, and hydraulic circuit, or drive circuit characteristics (stuck to low pressure side).
• Judge as NG if the deviation between engine speed and turbine speed is the predetermined value or more, even though the lock-up request has been sent.

4. EXECUTION CONDITION (ENGINE TYPE FB)

Secondary Parameters	Execution condition
12 V battery system voltage	≥ 10 V
Engine speed	≥ 1000 rpm
Transmission range	Drive
Commanded duty of torque converter clutch pressure control solenoid	≥ 95%
Measured turbine shaft speed	> Table1 rpm

Table 1

Engine speed (rpm)	3700	3727	3755	3782	3856	4019	4213	4456
Measured turbine shaft speed (rpm)	0	500	1000	1500	2000	2500	3000	3500

Engine speed (rpm)	4786	5213	5651	6101	6569	7044	7520
Measured turbine shaft speed (rpm)	4000	4500	5000	5500	6000	6500	7000

5. DIAGNOSTIC METHOD (ENGINE TYPE FB)

If the duration of time while the following conditions are met is longer than the time indicated, judge as NG.

Judgment Value

Malfunction Criteria	Threshold Value
|Engine speed – Measured turbine shaft speed|	> Table 2 rpm

Table 2

Engine speed (rpm)	0	500	1000	1500	2000	2500	3000	3500
|Engine speed – Measured turbine shaft speed|(rpm)	200	200	200	200	200	200	200	200

Engine speed (rpm)	4000	4500	5000	5500	6000	6500	7000
|Engine speed – Measured turbine shaft speed|(rpm)	200	200	200	200	200	200	200

Time Needed for Diagnosis: 10 seconds
Malfunction Indicator Light Illumination: Illuminates when malfunction occurs in 2 continuous driving cycles.

6. OUTLINE OF DIAGNOSIS (ENGINE TYPE EZ)

• Detect the malfunction of lock-up fluid pressure control solenoid, and hydraulic circuit, or drive circuit characteristics (stuck to low pressure side).
• Judge as NG if the deviation between engine speed and primary pulley speed becomes equal to or larger than the predetermined value, even though the lock-up command is issued.

7. EXECUTION CONDITION (ENGINE TYPE EZ)

Secondary Parameters	Execution condition
12 V battery system voltage	≥ 10 V
Engine speed	≥ 1000 rpm
Transmission range	Drive
Commanded duty of torque converter clutch pressure control solenoid	≥ 95%
Measured primary pulley shaft speed	> Table 3 rpm

Table 3

Engine speed (rpm)	3700	3727	3755	3782	3856	4019	4213	4456
Measured primary pulley shaft speed (rpm)	0	500	1000	1500	2000	2500	3000	3500

Engine speed (rpm)	4786	5213	5651	6101	6569	7044	7520
Measured primary pulley shaft speed (rpm)	4000	4500	5000	5500	6000	6500	7000

8. DIAGNOSTIC METHOD (ENGINE TYPE EZ)

If the duration of time while the following conditions are met is longer than the time indicated, judge as NG.

Judgment Value

Malfunction Criteria	Threshold Value
|Engine speed – Measured primary pulley shaft speed|	> Table 4 rpm

Table 4

Measured primary pulley shaft speed (rpm)	0	500	1000	1500	2000	2500	3000	3500
|Engine speed – Measured primary pulley shaft speed|(rpm)	200	200	200	200	200	200	200	200

Measured primary pulley shaft speed (rpm)	4000	4500	5000	5500	6000	6500	7000
|Engine speed – Measured primary pulley shaft speed|(rpm)	200	200	200	200	200	200	200

Time Needed for Diagnosis: 10 seconds
Malfunction Indicator Light Illumination: Illuminates when malfunction occurs in 2 continuous driving cycles.

AX:DTC P2758 TORQUE CONVERTER CLUTCH PRESSURE CONTROL SOLENOID CONTROL CIRCUIT STUCK ON

DTC DETECTING CONDITION:
Detected when two consecutive driving cycles with fault occur.
TROUBLE SYMPTOM:
The engine stalls when the vehicle is stopped.

1. ENGINE TYPE FB

WIRING DIAGRAM:
CVT control system <Ref. to WI-156, ENGINE TYPE FB, WIRING DIAGRAM, CVT Control System.>

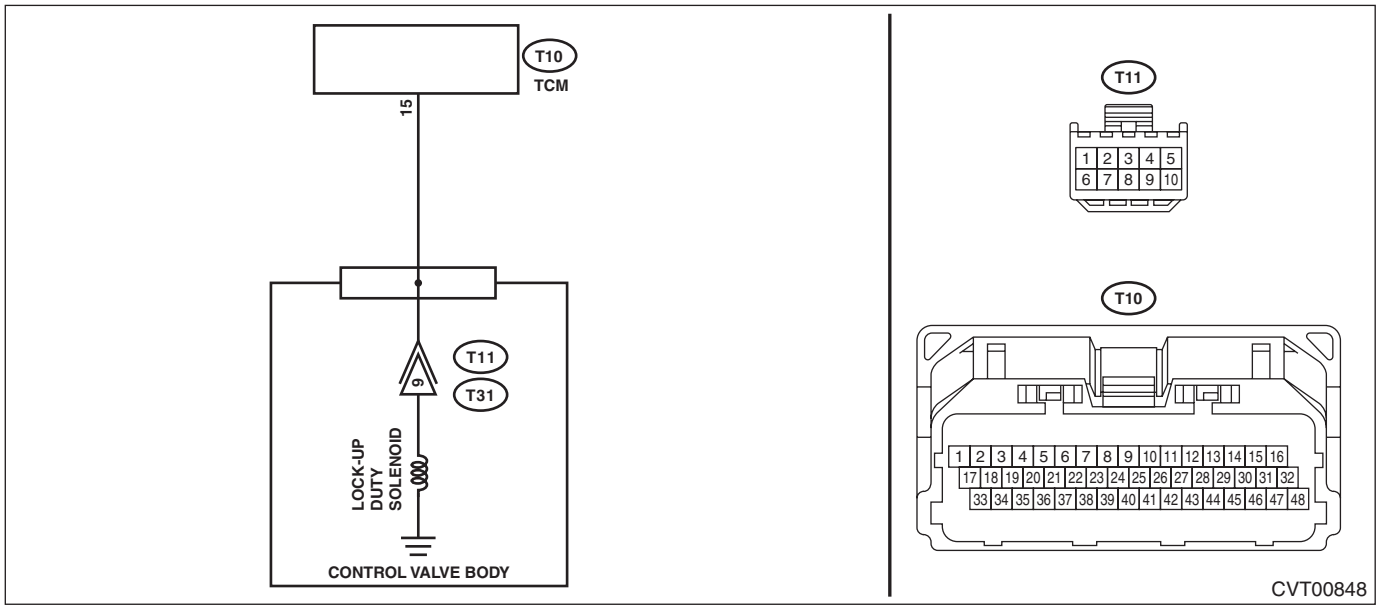

	Step	Check	Yes	No
1	**CHECK DTC.** Read the DTC using Subaru Select Monitor.	Besides DTC P2758, is any of the DTC P0717, P2763, P2764, U0100 or U0401 displayed?	Perform the diagnosis according to DTCs other than P2758.	Go to step **2**.
2	**CHECK LOCK-UP DUTY SOLENOID (ACTIVE TEST).** 1) Turn the ignition switch to ON. 2) Using the Subaru Select Monitor, perform forced operation of the lock-up duty solenoid. <Ref. to CVT(diag)-32, Active Test.>	Does the indication of 0 → 50% appear repeatedly during forced operation, and does operating sound emit during indicating 50%?	Go to step **5**.	Go to step **3**.
3	**CHECK LOCK-UP DUTY SOLENOID.** 1) Turn the ignition switch to OFF. 2) Disconnect the TCM connector. 3) Measure the resistance between TCM connector and transmission body. ***Connector & terminal*** ***(T10) No. 15 — Transmission body:***	Is the resistance approx. 10 — 13.5 Ω? (when cold)	Go to step **7**.	Go to step **4**.
4	**CHECK HARNESS.** Check the harness for continuity.	Is the harness normal? (Is it free from defects such as open circuit, power supply-output short or GND-output short circuit, or poor contact?)	Go to step **7**.	Repair the harness.
5	**CHECK TRANSMISSION FLUID.** 1) Connect the TCM connector. 2) Check the amount of ATF. <Ref. to CVT(TR580)-39, ADJUSTMENT, CVTF.>	Is the ATF amount correct?	Go to step **6**.	Adjust the amount of ATF. <Ref. to CVT(TR580)-39, ADJUSTMENT, CVTF.>

	Step	Check	Yes	No
6	**CHECK TRANSMISSION FLUID.** Check the condition of ATF. <Ref. to CVT(TR580)-42, CONDITION CHECK, CVTF.>	Is the ATF OK?	Go to step **7**.	Check according to the "Corrective action" of ATF (CVTF) "CONDITION CHECK". <Ref. to CVT(TR580)-42, CONDITION CHECK, CVTF.>
7	**CHECK INPUT SIGNAL FOR TCM.** 1) Lift up the vehicle. 2) Start the engine. 3) Warm up until the ATF temperature reaches to 40 — 70°C (104 — 158°F). 4) Depress the brake pedal, and shift the select lever to "D" range. 5) Shift the select lever to "P" range. 6) Stabilize the engine speed at idle. 7) Read the data of «Actual secondary pressure» using Subaru Select Monitor.	Is the «Actual secondary pressure» 0.5 — 1.5 MPa?	Go to step **8**.	Perform the diagnosis according to DTC P0841. <Ref. to CVT(diag)-126, DTC P0841 TRANSMISSION FLUID PRESSURE SENSOR/SWITCH "A" CIRCUIT RANGE/PERFORMANCE, Diagnostic Procedure with Diagnostic Trouble Code (DTC).>
8	**ACTUAL DRIVING CHECK FOR LOCK-UP CONDITION.** 1) Perform the Clear Memory Mode. <Ref. to CVT(diag)-26, Clear Memory Mode.> 2) Turn the ignition switch to OFF. 3) Start the engine. 4) Warm up until the ATF temperature exceeds 50°C. 5) Drive the vehicle for one minute or more while keeping such constant speed that «Lock Up Duty Ratio» is 0%, and «Front Wheel Speed» is 5 km/h (3 MPH) or less, which are displayed on the Subaru Select Monitor. 6) Turn the ignition switch to OFF. 7) Start the engine. 8) Perform the procedure in step 5) again. 9) Read the DTC using Subaru Select Monitor.	Does the AT OIL TEMP light blink and is DTC P2758 displayed? Or does the engine stall?	Perform the secondary pressure test. <Ref. to CVT(TR580)-51, Secondary Pressure (Line Pressure) Test.> When DTC other than P2758 is displayed, perform the diagnosis according to the DTC.	Current condition is normal. It is possible that temporary poor contact occurs.

2. ENGINE TYPE EZ

WIRING DIAGRAM:

CVT control system <Ref. to WI-162, ENGINE TYPE EZ, WIRING DIAGRAM, CVT Control System.>

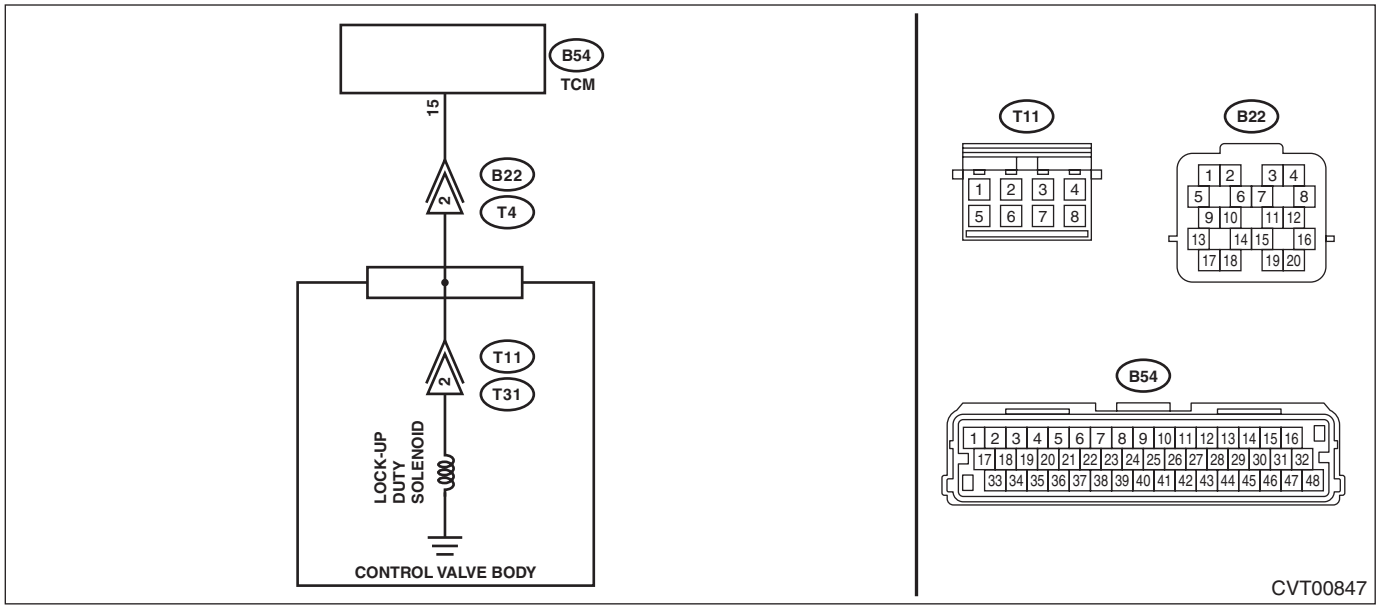

Step		Check	Yes	No
1	**CHECK DTC.** Read the DTC using Subaru Select Monitor.	Besides DTC P2758, is any of the DTCs P2747, P2763, P2764, U0100 and U0401 displayed?	Perform the diagnosis according to DTCs other than P2758.	Go to step **2**.
2	**CHECK LOCK-UP DUTY SOLENOID (ACTIVE TEST).** 1) Turn the ignition switch to ON. 2) Using the Subaru Select Monitor, perform forced operation of the lock-up duty solenoid. <Ref. to CVT(diag)-32, Active Test.>	Does the indication of 0 → 50% appear repeatedly during forced operation, and does operating sound emit during indicating 50%?	Go to step **5**.	Go to step **3**.
3	**CHECK LOCK-UP DUTY SOLENOID.** 1) Turn the ignition switch to OFF. 2) Disconnect the transmission connector. 3) Measure the resistance between transmission connector and transmission body. ***Connector & terminal*** ***(T4) No. 2 — Transmission body:***	Is the resistance approx. 10 — 13.5 Ω? (when cold)	Go to step **7**.	Go to step **4**.
4	**CHECK HARNESS.** Check the harness for continuity.	Is the harness normal? (Is it free from defects such as open circuit, power supply-output short or GND-output short circuit, or poor contact?)	Go to step **7**.	Repair the harness.
5	**CHECK TRANSMISSION FLUID.** 1) Connect the transmission connector. 2) Check the amount of ATF. <Ref. to CVT(TR690)-38, ADJUSTMENT, CVTF.>	Is the ATF amount correct?	Go to step **6**.	Adjust the amount of ATF. <Ref. to CVT(TR690)-38, ADJUSTMENT, CVTF.>

	Step	Check	Yes	No
6	**CHECK TRANSMISSION FLUID.** Check the condition of ATF. <Ref. to CVT(TR690)-42, CONDITION CHECK, CVTF.>	Is the ATF OK?	Go to step **7**.	Check according to the "Corrective action" of ATF (CVTF) "CONDITION CHECK". <Ref. to CVT(TR690)-42, CONDITION CHECK, CVTF.>
7	**CHECK INPUT SIGNAL FOR TCM.** 1) Lift up the vehicle. 2) Start the engine. 3) Warm up until the ATF temperature reaches to 40 — 70°C (104 — 158°F). 4) Depress the brake pedal, and shift the select lever to "D" range. 5) Shift the select lever to "P" range. 6) Stabilize the engine speed at idle. 7) Read the data of «Actual secondary pressure» using Subaru Select Monitor.	Is the «Actual secondary pressure» 0.5 — 1.5 MPa?	Go to step **8**.	Perform the diagnosis according to DTC P0841. <Ref. to CVT(diag)-126, DTC P0841 TRANSMISSION FLUID PRESSURE SENSOR/SWITCH "A" CIRCUIT RANGE/PERFORMANCE, Diagnostic Procedure with Diagnostic Trouble Code (DTC).>
8	**ACTUAL DRIVING CHECK FOR LOCK-UP CONDITION.** 1) Perform the Clear Memory Mode. <Ref. to CVT(diag)-26, Clear Memory Mode.> 2) Turn the ignition switch to OFF. 3) Start the engine. 4) Warm up until the ATF temperature exceeds 50°C. 5) Drive the vehicle for one minute or more while keeping such constant speed that «Lock Up Duty Ratio» is 0%, and «Front Wheel Speed» is 5 km/h (3 MPH) or less, which are displayed on the Subaru Select Monitor. 6) Turn the ignition switch to OFF. 7) Start the engine. 8) Perform the procedure in step 5) again. 9) Read the DTC using Subaru Select Monitor.	Does the AT OIL TEMP light blink and is DTC P2758 displayed? Or does the engine stall?	Perform the secondary pressure test. <Ref. to CVT(TR690)-51, Secondary Pressure (Line Pressure) Test.> When DTC other than P2758 is displayed, perform the diagnosis according to the DTC.	Current condition is normal. It is possible that temporary poor contact occurs.

3. OUTLINE OF DIAGNOSIS (ENGINE TYPE FB)

• Detect the malfunction of lock-up fluid pressure control solenoid, and hydraulic circuit, or drive circuit characteristics (stuck to high pressure side).
• Judge as NG if the deviation between engine speed and turbine speed is the predetermined value or less, even though the lock-up disengagement request has been sent.

4. EXECUTION CONDITION (ENGINE TYPE FB)

Secondary Parameters	Execution condition
12 V battery system voltage	≥ 10 V
Engine speed	≥ 1000 rpm
Transmission range	Drive
Engine torque	> Table 1 N·m
Commanded duty of torque converter clutch pressure control solenoid	≤ 0%

Table 1

Engine coolant temperature (degC)	– 40	– 20	0	20	40	60	80	100
Engine torque (N·m)	80	80	80	80	80	50	50	50

5. DIAGNOSTIC METHOD (ENGINE TYPE FB)

If the duration of time while the following conditions are met is longer than the time indicated, judge as NG.

Judgment Value

Malfunction Criteria	Threshold Value
|Engine speed – Measured turbine shaft speed|	< Table 2 rpm

Table2

Engine speed (rpm)	0	500	1000	1500	2000	2500	3000	3500
|Engine speed – Measured turbine shaft speed|(rpm)	0	0	50	50	50	50	50	50

Engine speed (rpm)	4000	4500	5000	5500	6000	6500	7000
|Engine speed – Measured turbine shaft speed|(rpm)	50	50	50	50	50	50	50

Time Needed for Diagnosis: 10 seconds
Malfunction Indicator Light Illumination: Illuminates when malfunction occurs in 2 continuous driving cycles.

6. OUTLINE OF DIAGNOSIS (ENGINE TYPE EZ)

• Detect the malfunction of lock-up fluid pressure control solenoid, and hydraulic circuit, or drive circuit characteristics (stuck to high pressure side).
• Judge as NG if the deviation between engine speed and primary speed is the predetermined value or less, even though the lock-up disengagement request has been sent.

7. EXECUTION CONDITION (ENGINE TYPE EZ)

Secondary Parameters	Execution condition
12 V battery system voltage	≥ 10 V
Engine speed	≥ 1000 rpm
Transmission range	Drive
Engine torque	> Table 3 N·m
Commanded duty of torque converter clutch pressure control solenoid	≤ 0%

Table 3

Engine coolant temperature (degC)	– 40	– 20	0	20	40	60	80	100
Engine torque (N·m)	80	80	80	80	80	50	50	50

8. DIAGNOSTIC METHOD (ENGINE TYPE EZ)

If the duration of time while the following conditions are met is longer than the time indicated, judge as NG.

Judgment Value

Malfunction Criteria	Threshold Value
|Engine speed – Measured primary pulley shaft speed|	< Table 4 rpm

Table 4

Measured primary pulley shaft speed (rpm)	0	500	1000	1500	2000	2500	3000	3500
|Engine speed – Measured primary pulley shaft speed|(rpm)	0	0	50	50	50	50	50	50

Measured primary pulley shaft speed (rpm)	4000	4500	5000	5500	6000	6500	7000
|Engine speed – Measured primary pulley shaft speed|(rpm)	50	50	50	50	50	50	50

Time Needed for Diagnosis: 10 seconds
Malfunction Indicator Light Illumination: Illuminates when malfunction occurs in 2 continuous driving cycles.

AY:DTC P2763 TORQUE CONVERTER CLUTCH PRESSURE CONTROL SOLENOID CONTROL CIRCUIT HIGH

DTC DETECTING CONDITION:
Immediately at fault recognition
TROUBLE SYMPTOM:
- No lock-up occurs.
- Engine stalls.

1. ENGINE TYPE FB

WIRING DIAGRAM:
CVT control system <Ref. to WI-156, ENGINE TYPE FB, WIRING DIAGRAM, CVT Control System.>

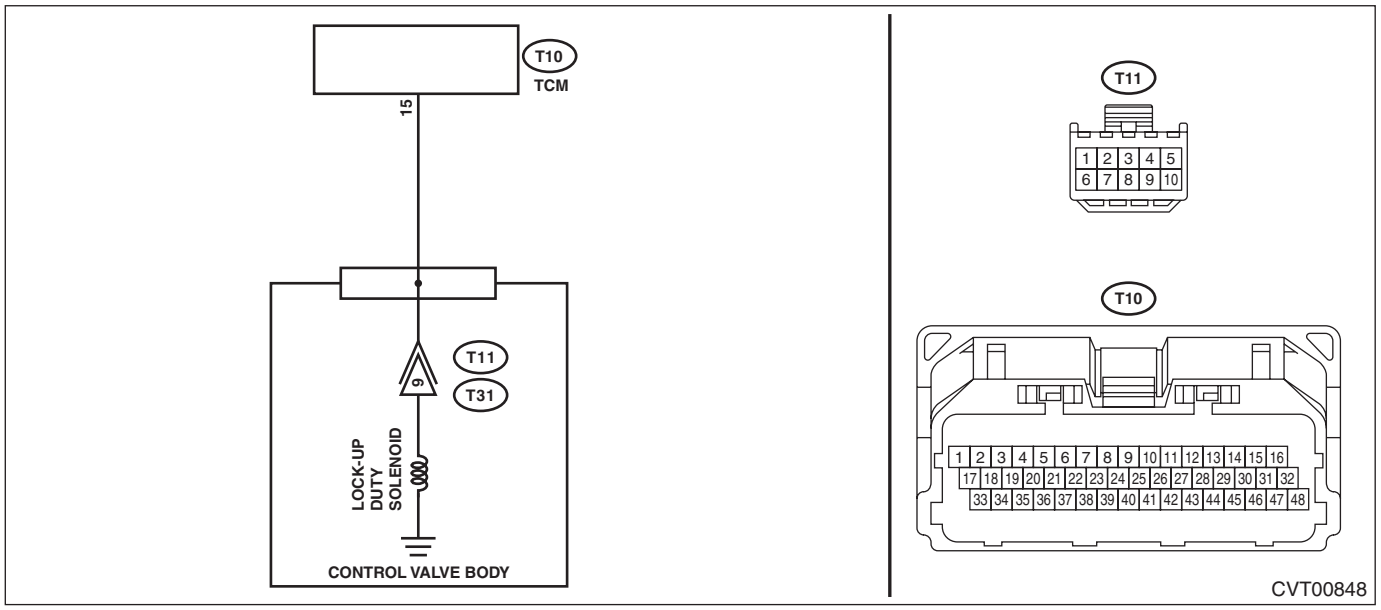

Step		Check	Yes	No
1	**CHECK HARNESS.** **CAUTION:** **Start work after ATF cools down.** 1) Turn the ignition switch to OFF. 2) Disconnect the TCM connector. 3) Remove the transmission valve cover. 4) Disconnect the control valve body connector. 5) Measure the resistance between TCM connector and control valve body connector. ***Connector & terminal*** ***(T10) No. 15 — (T11) No. 9:***	Is the resistance less than 1 Ω?	Go to step **2**.	Repair the open circuit of harness.
2	**CHECK HARNESS.** 1) Turn the ignition switch to ON. 2) Measure the voltage between TCM connector and chassis ground. ***Connector & terminal*** ***(T10) No. 15 (+) — Chassis ground (–):***	Is the voltage approx. 0 V?	Go to step **3**.	Repair the short circuit of harness.

	Step	Check	Yes	No
3	**CHECK LOCK-UP DUTY SOLENOID.** 1) Connect the connector for control valve body. 2) Measure the resistance between TCM connector and transmission body. ***Connector & terminal*** ***(T10) No. 15 — Transmission body:***	Is the resistance approx. 10 — 13.5 Ω? (when cold)	Check for poor contact of connector, and if no fault is found, replace the TCM. <Ref. to CVT(TR580)-159, Transmission Control Module (TCM).>	Go to step **4**.
4	**CHECK HARNESS INSIDE TRANSMISSION.** Check for the harness pinch, damage.	Is there any fault in the harness?	Replace the transmission harness.	Replace the control valve body. <Ref. to CVT(TR580)-133, Control Valve Body.>

2. ENGINE TYPE EZ

WIRING DIAGRAM:

CVT control system <Ref. to WI-162, ENGINE TYPE EZ, WIRING DIAGRAM, CVT Control System.>

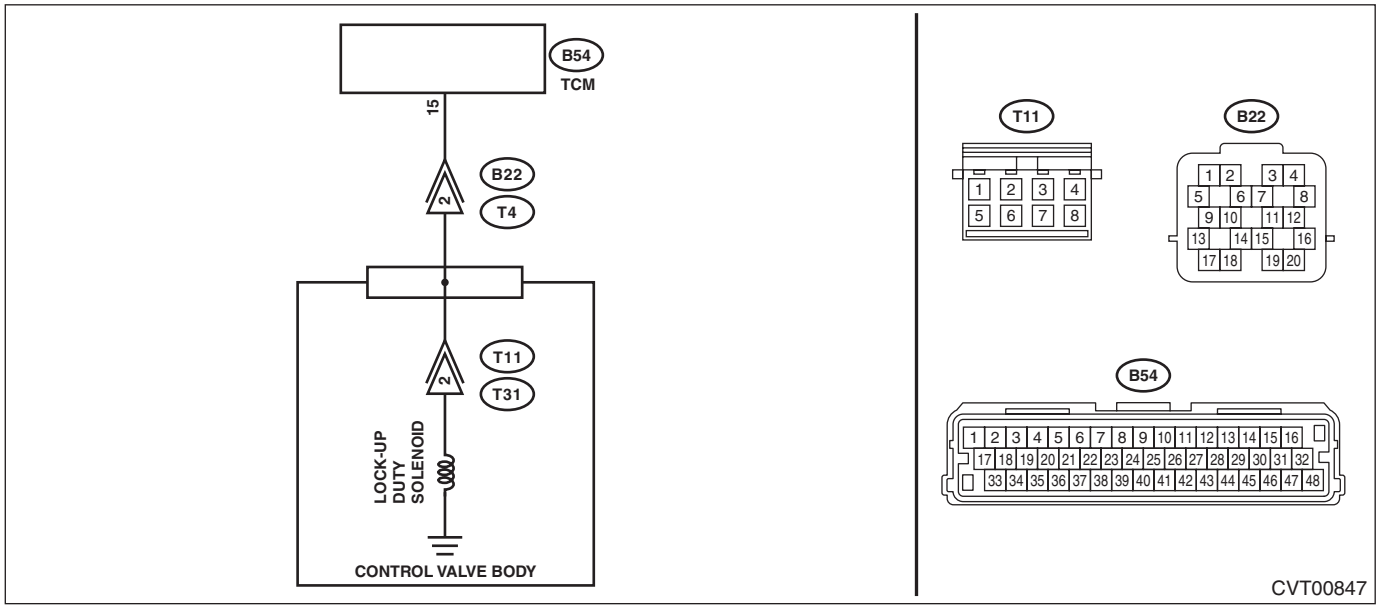

	Step	Check	Yes	No
1	**CHECK HARNESS.** 1) Turn the ignition switch to OFF. 2) Disconnect the TCM and transmission connectors. 3) Measure the resistance between TCM connector and transmission connectors. ***Connector & terminal*** ***(B54) No. 15 — (B22) No. 2:***	Is the resistance less than 1 Ω?	Go to step **2**.	Repair the open circuit of harness.
2	**CHECK HARNESS.** 1) Turn the ignition switch to ON. 2) Measure the voltage between TCM connector and chassis ground. ***Connector & terminal*** ***(B54) No. 15 (+) — Chassis ground (–):***	Is the voltage approx. 0 V?	Go to step **3**.	Repair the short circuit of harness.

	Step	Check	Yes	No
3	**CHECK LOCK-UP DUTY SOLENOID.** Measure the resistance between transmission connector and transmission body. ***Connector & terminal*** ***(T4) No. 2 — Transmission body:***	Is the resistance approx. 10 — 13.5 Ω? (when cold)	Check for poor contact of connector, and if no fault is found, replace the TCM. <Ref. to CVT(TR690)-142, Transmission Control Module (TCM).>	Go to step **4**.
4	**CHECK HARNESS INSIDE TRANSMISSION.** **CAUTION:** **Start work after ATF cools down.** 1) Remove the transmission oil pan. 2) Check for the harness pinch, damage.	Is there any fault in the harness?	Replace the transmission harness.	Go to step **5**.
5	**CHECK HARNESS INSIDE TRANSMISSION.** 1) Disconnect the control valve body connector. 2) Turn the ignition switch to ON. 3) Measure the voltage between transmission connector and transmission body. ***Connector & terminal*** ***(T4) No. 2 (+) — Transmission body (–):***	Is the voltage approx. 0 V?	Replace the control valve body. <Ref. to CVT(TR690)-124, Control Valve Body.>	Replace the transmission harness.

3. OUTLINE OF DIAGNOSIS

• Detect short circuit to power supply or open circuit of the lock-up clutch pressure control solenoid drive circuit.
• Judge as NG if an open circuit or a power-supply short circuit is detected more than 10 times in the lock-up clutch pressure control solenoid drive circuit.

4. EXECUTION CONDITION

Secondary Parameters	Execution condition
12 V battery system voltage	≥ 9 V
Commanded duty of torque converter clutch pressure control solenoid	0%

5. DIAGNOSTIC METHOD

If the duration of time while the following conditions are met is longer than the time indicated, judge as NG.

Judgment Value

Malfunction Criteria	Threshold Value
Signal of malfunction from solenoid driver IC As defined by: Measured torque converter clutch pressure control solenoid voltage ≥ 2.5 V	ON

Time Needed for Diagnosis: 0.2 seconds
Malfunction Indicator Light Illumination: Illuminates as soon as a malfunction occurs.

AZ:DTC P2764 TORQUE CONVERTER CLUTCH PRESSURE CONTROL SOLENOID CONTROL CIRCUIT LOW

DTC DETECTING CONDITION:
Immediately at fault recognition
TROUBLE SYMPTOM:
No lock-up occurs.

1. ENGINE TYPE FB

WIRING DIAGRAM:
CVT control system <Ref. to WI-156, ENGINE TYPE FB, WIRING DIAGRAM, CVT Control System.>

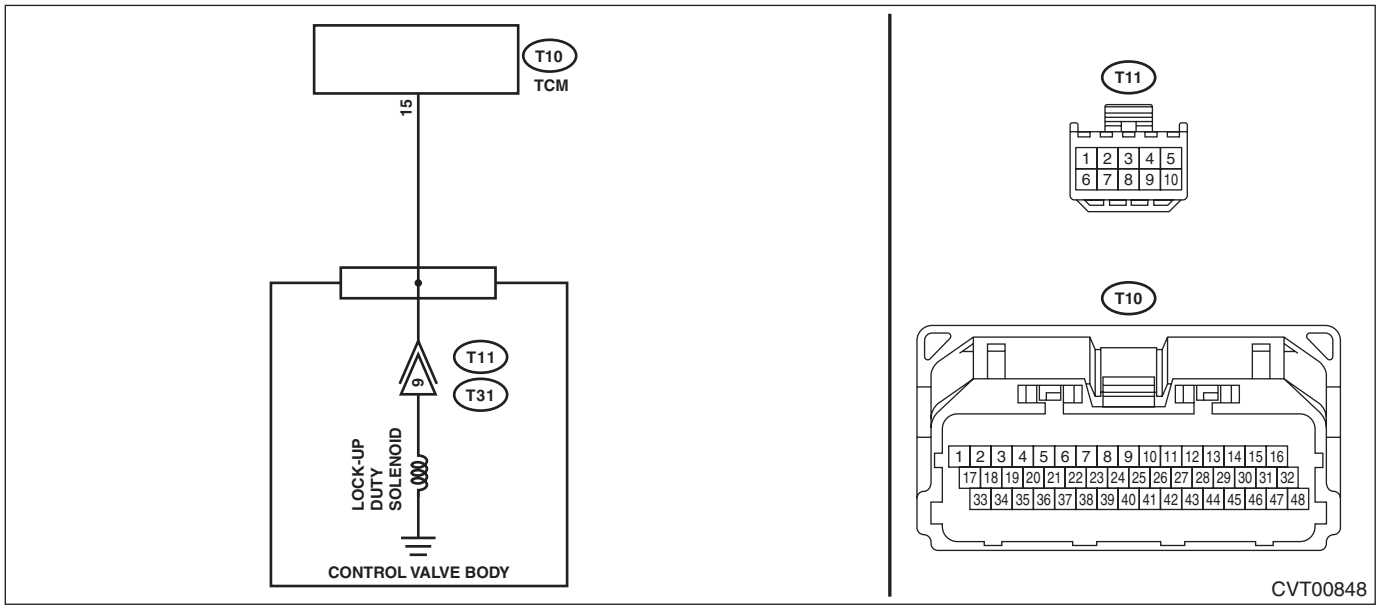

Step		Check	Yes	No
1	**CHECK HARNESS.** **CAUTION:** **Start work after ATF cools down.** 1) Turn the ignition switch to OFF. 2) Disconnect the TCM connector. 3) Remove the transmission valve cover. 4) Disconnect the control valve body connector. 5) Measure the resistance between TCM connector and chassis ground. ***Connector & terminal*** ***(T10) No. 15 — Chassis ground:***	Is the resistance 1 MΩ or more?	Go to step **2**.	Repair the short circuit of harness.
2	**CHECK LOCK-UP DUTY SOLENOID.** 1) Connect the connector for control valve body. 2) Measure the resistance between TCM connector and transmission body. ***Connector & terminal*** ***(T10) No. 15 — Transmission body:***	Is the resistance approx. 10 — 13.5 Ω? (when cold)	Check for poor contact of connector, and if no fault is found, replace the TCM. <Ref. to CVT(TR580)-159, Transmission Control Module (TCM).>	Go to step **3**.
3	**CHECK HARNESS INSIDE TRANSMISSION.** Check for the harness pinch, damage.	Is there any fault in the harness?	Replace the transmission harness.	Replace the control valve body. <Ref. to CVT(TR690)-124, Control Valve Body.>

2. ENGINE TYPE EZ

WIRING DIAGRAM:

CVT control system <Ref. to WI-162, ENGINE TYPE EZ, WIRING DIAGRAM, CVT Control System.>

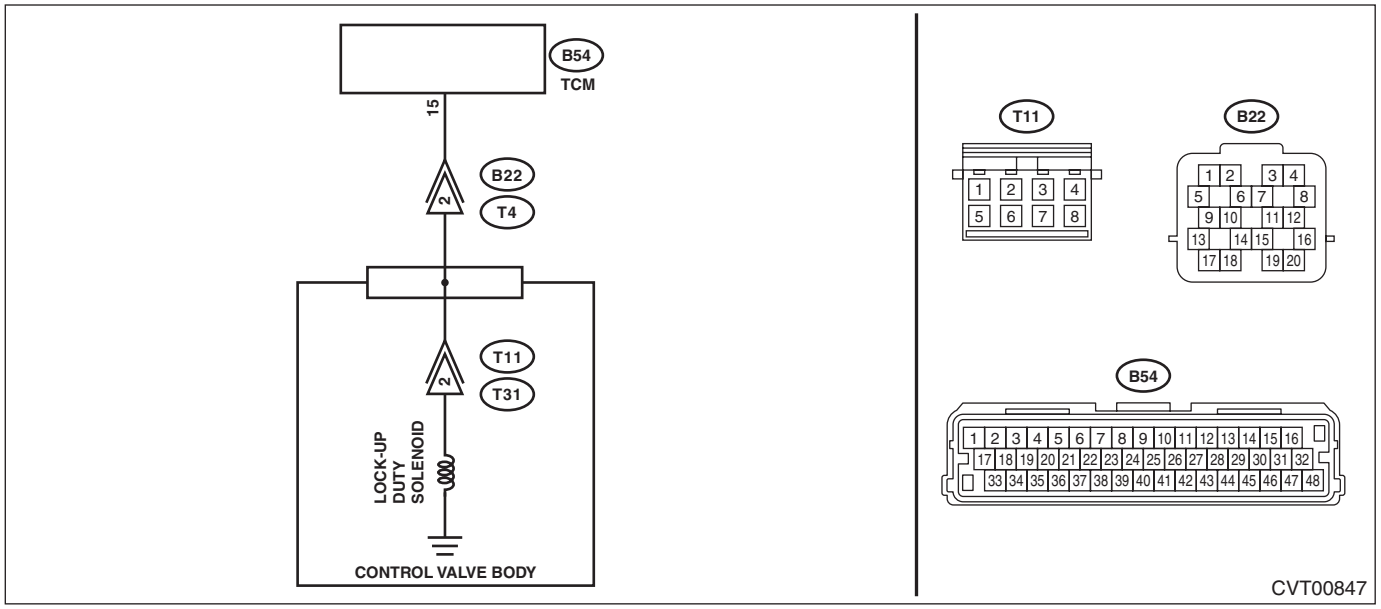

Step		Check	Yes	No
1	**CHECK HARNESS.** 1) Turn the ignition switch to OFF. 2) Disconnect the TCM and transmission connectors. 3) Measure the resistance between TCM connector and chassis ground. ***Connector & terminal*** ***(B54) No. 15 — Chassis ground:***	Is the resistance 1 MΩ or more?	Go to step **2**.	Repair the short circuit of harness.
2	**CHECK LOCK-UP DUTY SOLENOID.** Measure the resistance between transmission connector and transmission body. ***Connector & terminal*** ***(T4) No. 2 — Transmission body:***	Is the resistance approx. 10 — 13.5 Ω? (when cold)	Check for poor contact of connector, and if no fault is found, replace the TCM. <Ref. to CVT(TR690)-142, Transmission Control Module (TCM).>	Go to step **3**.
3	**CHECK HARNESS INSIDE TRANSMISSION.** **CAUTION:** **Start work after ATF cools down.** 1) Remove the transmission oil pan. 2) Check for the harness pinch, damage.	Is there any fault in the harness?	Replace the transmission harness.	Go to step **4**.
4	**CHECK HARNESS INSIDE TRANSMISSION.** 1) Disconnect the control valve body connector. 2) Measure the resistance between transmission connector and transmission body. ***Connector & terminal*** ***(T4) No. 2 — Transmission body:***	Is the resistance 1 MΩ or more?	Replace the control valve body. <Ref. to CVT(TR690)-124, Control Valve Body.>	Replace the transmission harness.

3. OUTLINE OF DIAGNOSIS

- Detect the ground short of the lock-up clutch pressure control solenoid drive circuit.
- Judge as NG if a ground short circuit is detected more than 10 times in the lock-up clutch pressure control solenoid drive circuit.

4. EXECUTION CONDITION

Secondary Parameters	Execution condition
12 V battery system voltage	≥ 9 V
Commanded duty of torque converter clutch pressure control solenoid	100%

5. DIAGNOSTIC METHOD

If the duration of time while the following conditions are met is longer than the time indicated, judge as NG.

Judgment Value

Malfunction Criteria	Threshold Value
Signal of malfunction from solenoid driver IC As defined by: Measured torque converter clutch pressure control solenoid voltage ≤ 0.8 V	ON

Time Needed for Diagnosis: 0.2 seconds
Malfunction Indicator Light Illumination: Illuminates as soon as a malfunction occurs.

BA:DTC P2769 TORQUE CONVERTER CLUTCH CIRCUIT LOW

DTC DETECTING CONDITION:
Immediately at fault recognition
TROUBLE SYMPTOM:
No lock-up occurs.
WIRING DIAGRAM:
CVT control system <Ref. to WI-162, ENGINE TYPE EZ, WIRING DIAGRAM, CVT Control System.>

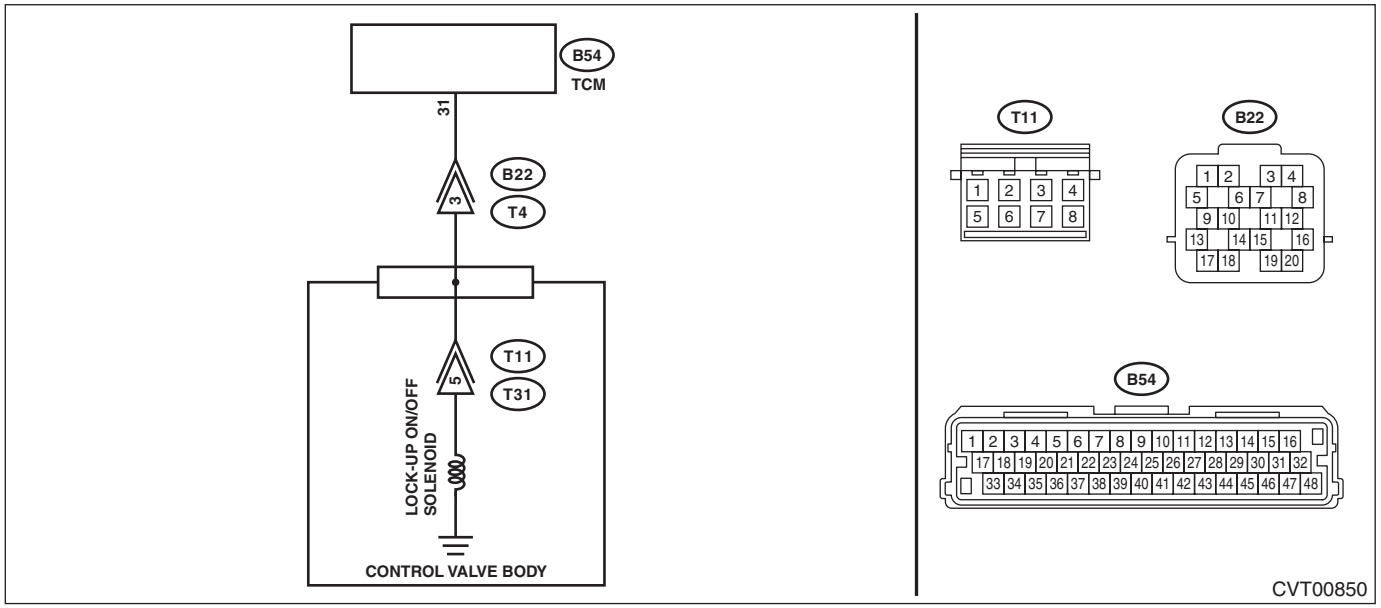

Step		Check	Yes	No
1	**CHECK HARNESS.** 1) Turn the ignition switch to OFF. 2) Disconnect the TCM and transmission connectors. 3) Measure the resistance between TCM connector and chassis ground. ***Connector & terminal*** ***(B54) No. 31 — Chassis ground:***	Is the resistance 1 MΩ or more?	Go to step **2**.	Repair the short circuit of harness.
2	**CHECK LOCK UP ON/OFF SOLENOID.** Measure the resistance between transmission connector and transmission body. ***Connector & terminal*** ***(T4) No. 3 — Transmission body:***	Is the resistance approx. 13 — 18.5 Ω? (when cold)	Check for poor contact of connector, and if no fault is found, replace the TCM. <Ref. to CVT(TR690)-142, Transmission Control Module (TCM).>	Go to step **3**.
3	**CHECK HARNESS INSIDE TRANSMISSION.** **CAUTION:** **Start work after ATF cools down.** 1) Remove the transmission oil pan. 2) Check for the harness pinch, damage.	Is there any fault in the harness?	Replace the transmission harness.	Go to step **4**.
4	**CHECK HARNESS INSIDE TRANSMISSION.** 1) Disconnect the control valve body connector. 2) Measure the resistance between transmission connector and transmission body. ***Connector & terminal*** ***(T4) No. 3 — Transmission body:***	Is the resistance 1 MΩ or more?	Replace the control valve body. <Ref. to CVT(TR690)-124, Control Valve Body.>	Replace the transmission harness.

1. OUTLINE OF DIAGNOSIS

- Detect the ground short of the lock-up clutch ON/OFF solenoid drive circuit.
- Judge as NG if a ground short circuit is detected more than 10 times in the lock-up clutch ON/OFF solenoid drive circuit.

2. EXECUTION CONDITION

Secondary Parameters	Execution condition
12 V battery system voltage	≥ 9 V
Torque converter clutch circuit control solenoid output command	ON

3. DIAGNOSTIC METHOD

If the duration of time while the following conditions are met is longer than the time indicated, judge as NG.

Judgment Value

Malfunction Criteria	Threshold Value
Signal of malfunction from solenoid driver IC As defined by: Measured torque converter clutch circuit control solenoid voltage ≤ 0.8 V	ON

Time Needed for Diagnosis: 0.2 seconds
Malfunction Indicator Light Illumination: Illuminates as soon as a malfunction occurs.

BB:DTC P2770 TORQUE CONVERTER CLUTCH CIRCUIT HIGH

DTC DETECTING CONDITION:
Immediately at fault recognition
TROUBLE SYMPTOM:
No lock-up occurs.
WIRING DIAGRAM:
CVT control system <Ref. to WI-162, ENGINE TYPE EZ, WIRING DIAGRAM, CVT Control System.>

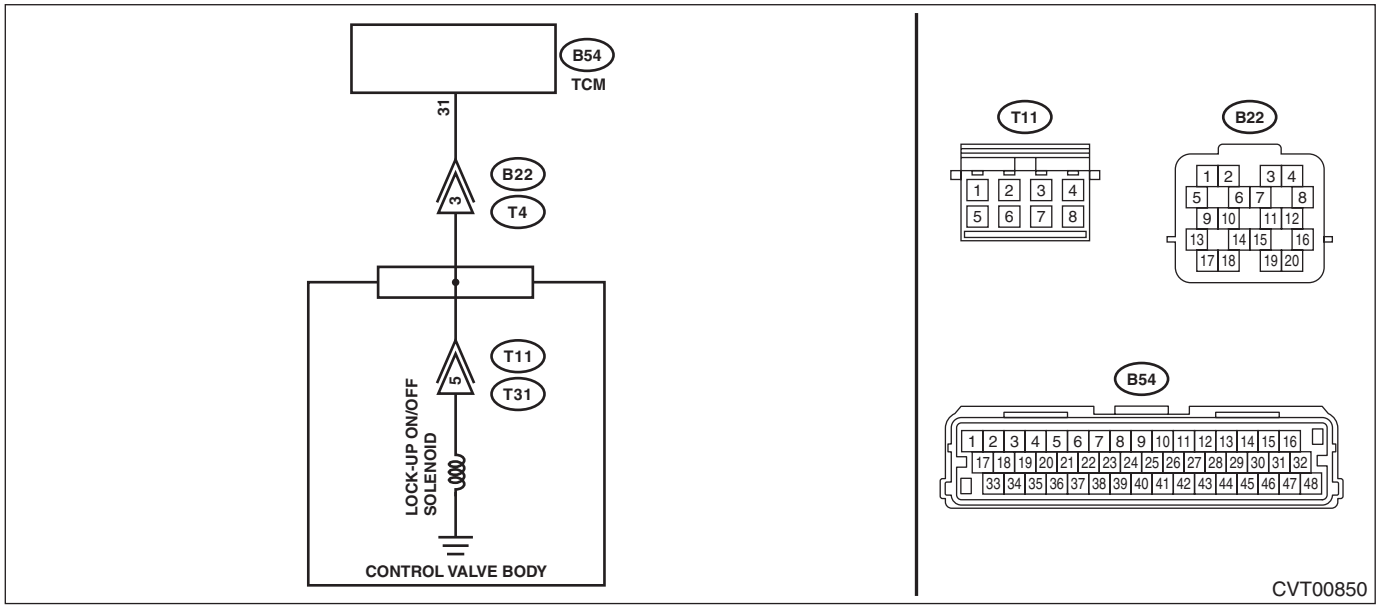

Step		Check	Yes	No
1	**CHECK HARNESS.** 1) Turn the ignition switch to OFF. 2) Disconnect the TCM and transmission connectors. 3) Measure the resistance between TCM connector and transmission connectors. ***Connector & terminal*** ***(B54) No. 31 — (B22) No. 3:***	Is the resistance less than 1 Ω?	Go to step **2**.	Repair the open circuit of harness.
2	**CHECK HARNESS.** 1) Turn the ignition switch to ON. 2) Measure the voltage between TCM connector and chassis ground. ***Connector & terminal*** ***(B54) No. 31 (+) — Chassis ground (–):***	Is the voltage approx. 0 V?	Go to step **3**.	Repair the short circuit of harness.
3	**CHECK LOCK UP ON/OFF SOLENOID.** Measure the resistance between transmission connector and transmission body. ***Connector & terminal*** ***(T4) No. 3 — Transmission body:***	Is the resistance approx. 13 — 18.5 Ω? (when cold)	Check for poor contact of connector, and if no fault is found, replace the TCM. <Ref. to CVT(TR690)-142, Transmission Control Module (TCM).>	Go to step **4**.
4	**CHECK HARNESS INSIDE TRANSMISSION.** **CAUTION:** **Start work after ATF cools down.** 1) Remove the transmission oil pan. 2) Check for the harness pinch, damage.	Is there any fault in the harness?	Replace the transmission harness.	Go to step **5**.

	Step	Check	Yes	No
5	**CHECK HARNESS INSIDE TRANSMISSION.** 1) Disconnect the control valve body connector. 2) Turn the ignition switch to ON. 3) Measure the voltage between transmission connector and transmission body. ***Connector & terminal*** ***(T4) No. 3 (+) — Transmission body (–):***	Is the voltage approx. 0 V?	Replace the control valve body. <Ref. to CVT(TR690)-124, Control Valve Body.>	Replace the transmission harness.

1. OUTLINE OF DIAGNOSIS

- Detect open circuit or short circuit to ground in the lock-up clutch ON/OFF solenoid drive circuit.
- Judge as NG if an open circuit or a short circuit to power supply is detected more than 10 times in the lock-up clutch ON/OFF solenoid drive circuit.

2. EXECUTION CONDITION

Secondary Parameters	Execution condition
12 V battery system voltage	≥ 9 V
Torque converter clutch circuit control solenoid output command	OFF

3. DIAGNOSTIC METHOD

If the duration of time while the following conditions are met is longer than the time indicated, judge as NG.

Judgment Value

Malfunction Criteria	Threshold Value
Signal of malfunction from solenoid driver IC As defined by: Measured torque converter clutch circuit control solenoid voltage ≥ 2.5 V	ON

Time Needed for Diagnosis: 0.2 seconds
Malfunction Indicator Light Illumination: Illuminates as soon as a malfunction occurs.

BC:DTC U0073 CONTROL MODULE COMMUNICATION BUS OFF

NOTE:
Refer to “LAN SYSTEM (DIAGNOSTICS)” for diagnostic procedure. <Ref. to LAN(diag)-2, Basic Diagnostic Procedure.>

1. OUTLINE OF DIAGNOSIS (ENGINE TYPE FB)

- Detect malfunction of CAN communication.
- Judge as NG when CAN communication failure has occurred.

2. EXECUTION CONDITION (ENGINE TYPE FB)

Secondary Parameters	Execution condition
12 V battery system voltage	≥ 10 V
Measured turbine shaft speed	> 0 rpm
or	
Transmission range	Drive or Reverse

3. DIAGNOSTIC METHOD (ENGINE TYPE FB)

If the duration of time while the following conditions are met is longer than the time indicated, judge as NG.

Judgment Value

Malfunction Criteria	Threshold Value
CAN bus condition	Bus off

Time Needed for Diagnosis: 2 seconds
Malfunction Indicator Light Illumination: Illuminates as soon as a malfunction occurs.

4. OUTLINE OF DIAGNOSIS (ENGINE TYPE EZ)

- Detect malfunction of CAN communication.
- Judge as NG when CAN communication failure has occurred.

5. EXECUTION CONDITION (ENGINE TYPE EZ)

Secondary Parameters	Execution condition
12 V battery system voltage	≥ 10 V
Measured primary pulley shaft speed	> 0 rpm
or	
Transmission range	Drive or Reverse

6. DIAGNOSTIC METHOD (ENGINE TYPE EZ)

If the duration of time while the following conditions are met is longer than the time indicated, judge as NG.

Judgment Value

Malfunction Criteria	Threshold Value
CAN bus condition	Bus off

Time Needed for Diagnosis: 2 seconds
Malfunction Indicator Light Illumination: Illuminates as soon as a malfunction occurs.

BD:DTC U0100 LOST COMMUNICATION WITH ECM/PCM "A"

NOTE:
Refer to “LAN SYSTEM (DIAGNOSTICS)” for diagnostic procedure. <Ref. to LAN(diag)-2, Basic Diagnostic Procedure.>

1. OUTLINE OF DIAGNOSIS (ENGINE TYPE FB)

- Detect malfunction of CAN communication.
- Judge as NG when CAN communication failure occurs with the ECM.

2. EXECUTION CONDITION (ENGINE TYPE FB)

Secondary Parameters	Execution condition
12 V battery system voltage	≥ 10 V
Measured turbine shaft speed	> 0 rpm
or	
Transmission range	Drive or Reverse

3. DIAGNOSTIC METHOD (ENGINE TYPE FB)

If the duration of time while the following conditions are met is longer than the time indicated, judge as NG.

Judgment Value

Malfunction Criteria	Threshold Value
CAN data from ECM	Lost

Time Needed for Diagnosis: 0.5 seconds
Malfunction Indicator Light Illumination: Illuminates as soon as a malfunction occurs.

4. OUTLINE OF DIAGNOSIS (ENGINE TYPE EZ)

- Detect malfunction of CAN communication.
- Judge as NG when CAN communication failure occurs with the ECM.

5. EXECUTION CONDITION (ENGINE TYPE EZ)

Secondary Parameters	Execution condition
12 V battery system voltage	≥ 10 V
Measured primary pulley shaft speed	> 0 rpm
or	
Transmission range	Drive or Reverse

6. DIAGNOSTIC METHOD (ENGINE TYPE EZ)

If the duration of time while the following conditions are met is longer than the time indicated, judge as NG.

Judgment Value

Malfunction Criteria	Threshold Value
CAN data from ECM	Lost

Time Needed for Diagnosis: 0.5 seconds
Malfunction Indicator Light Illumination: Illuminates as soon as a malfunction occurs.

BE:DTC U0122 LOST COMMUNICATION WITH VEHICLE DYNAMICS CONTROL MODULE

NOTE:
Refer to “LAN SYSTEM (DIAGNOSTICS)” for diagnostic procedure. <Ref. to LAN(diag)-2, Basic Diagnostic Procedure.>

1. OUTLINE OF DIAGNOSIS (ENGINE TYPE FB)

- Detect malfunction of CAN communication.
- Judge as NG when CAN communication failure occurs with the VDC CM.

2. EXECUTION CONDITION (ENGINE TYPE FB)

Secondary Parameters	Execution condition
12 V battery system voltage	≥ 10 V
Measured turbine shaft speed	> 0 rpm
or	
Transmission range	Drive or Reverse

3. DIAGNOSTIC METHOD (ENGINE TYPE FB)

If the duration of time while the following conditions are met is longer than the time indicated, judge as NG.

Judgment Value

Malfunction Criteria	Threshold Value
CAN data from Vehicle Dynamics Control Module	Lost

Time Needed for Diagnosis: 0.5 seconds
Malfunction Indicator Light Illumination: Illuminates as soon as a malfunction occurs.

4. OUTLINE OF DIAGNOSIS (ENGINE TYPE EZ)

- Detect malfunction of CAN communication.
- Judge as NG when CAN communication failure occurs with the VDC CM.

5. EXECUTION CONDITION (ENGINE TYPE EZ)

Secondary Parameters	Execution condition
12 V battery system voltage	≥ 10 V
Measured primary pulley shaft speed	> 0 rpm
or	
Transmission range	Drive or Reverse

6. DIAGNOSTIC METHOD (ENGINE TYPE EZ)

If the duration of time while the following conditions are met is longer than the time indicated, judge as NG.

Judgment Value

Malfunction Criteria	Threshold Value
CAN data from Vehicle Dynamics Control Module	Lost

Time Needed for Diagnosis: 0.5 seconds
Malfunction Indicator Light Illumination: Illuminates as soon as a malfunction occurs.

BF:DTC U0140 LOST COMMUNICATION WITH BODY CONTROL MODULE

NOTE:
Refer to “LAN SYSTEM (DIAGNOSTICS)” for diagnostic procedure. <Ref. to LAN(diag)-2, Basic Diagnostic Procedure.>

1. OUTLINE OF DIAGNOSIS

- Detect malfunction of CAN communication.
- Judge as NG when CAN communication failure occurs with the body integrated unit.

2. EXECUTION CONDITION

Secondary Parameters	Execution condition
Turbine shaft speed or D range switch	> 0 rpm ON

3. DIAGNOSTIC METHOD

If the duration of time while the following conditions are met is longer than the time indicated, judge as NG.

Judgment Value

Malfunction Criteria	Threshold Value
CAN data from BIU	Lost

Time Needed for Diagnosis: 2 seconds

BG:DTC U0155 LOST COMMUNICATION WITH INSTRUMENT PANEL CLUSTER (IPC) CONTROL MODULE

NOTE:
Refer to “LAN SYSTEM (DIAGNOSTICS)” for diagnostic procedure. <Ref. to LAN(diag)-2, Basic Diagnostic Procedure.>

1. OUTLINE OF DIAGNOSIS

- Detect malfunction of CAN communication.
- Judge as NG when CAN communication failure occurs with the combination meter.

2. EXECUTION CONDITION

Secondary Parameters	Execution condition
Turbine shaft speed or D range switch	> 0 rpm ON

3. DIAGNOSTIC METHOD

If the duration of time while the following conditions are met is longer than the time indicated, judge as NG.

Judgment Value

Malfunction Criteria	Threshold Value
CAN data from meter	Lost

Time Needed for Diagnosis: 2 seconds

BH:DTC U0164 LOST COMMUNICATION WITH HVAC CONTROL MODULE

NOTE:
Refer to “LAN SYSTEM (DIAGNOSTICS)” for diagnostic procedure. <Ref. to LAN(diag)-2, Basic Diagnostic Procedure.>

1. OUTLINE OF DIAGNOSIS

- Detect malfunction of CAN communication.
- Judge as NG when CAN communication failure occurs with the A/C control panel.

2. EXECUTION CONDITION

Secondary Parameters	Execution condition
Turbine shaft speed or D range switch	> 0 rpm ON

3. DIAGNOSTIC METHOD

If the duration of time while the following conditions are met is longer than the time indicated, judge as NG.

Judgment Value

Malfunction Criteria	Threshold Value
CAN data from A/C control panel	Lost

Time Needed for Diagnosis: 2 seconds

BI: DTC U0401 INVALID DATA RECEIVED FROM ECM/PCM "A"

NOTE:
Refer to “LAN SYSTEM (DIAGNOSTICS)” for diagnostic procedure. <Ref. to LAN(diag)-2, Basic Diagnostic Procedure.>

1. OUTLINE OF DIAGNOSIS (ENGINE TYPE FB)

- Detect malfunction of CAN communication.
- Judge as NG when data received from ECM is not normal.

2. EXECUTION CONDITION (ENGINE TYPE FB)

Secondary Parameters	Execution condition
12 V battery system voltage	≥ 10 V
Measured turbine shaft speed	> 0 rpm
or	
Transmission range	Drive or Reverse

3. DIAGNOSTIC METHOD (ENGINE TYPE FB)

If the duration of time while the following conditions are met is longer than the time indicated, judge as NG.

Judgment Value

Malfunction Criteria	Threshold Value
CAN data from ECM	Did not change

Time Needed for Diagnosis: 2 seconds
Malfunction Indicator Light Illumination: Illuminates as soon as a malfunction occurs.

4. OUTLINE OF DIAGNOSIS (ENGINE TYPE EZ)

- Detect malfunction of CAN communication.
- Judge as NG when data received from ECM is not normal.

5. EXECUTION CONDITION (ENGINE TYPE EZ)

Secondary Parameters	Execution condition
12 V battery system voltage	≥ 10 V
Measured primary pulley shaft speed	> 0 rpm
or	
Transmission range	Drive or Reverse

6. DIAGNOSTIC METHOD (ENGINE TYPE EZ)

If the duration of time while the following conditions are met is longer than the time indicated, judge as NG.

Judgment Value

Malfunction Criteria	Threshold Value
CAN data from ECM	Did not change

Time Needed for Diagnosis: 2 seconds
Malfunction Indicator Light Illumination: Illuminates as soon as a malfunction occurs.

BJ:DTC U0416 INVALID DATA RECEIVED FROM VEHICLE DYNAMICS CONTROL MODULE

NOTE:
Refer to “LAN SYSTEM (DIAGNOSTICS)” for diagnostic procedure. <Ref. to LAN(diag)-2, Basic Diagnostic Procedure.>

1. OUTLINE OF DIAGNOSIS (ENGINE TYPE FB)

- Detect malfunction of CAN communication.
- Judge as NG when data received from VDC CM is not normal.

2. EXECUTION CONDITION (ENGINE TYPE FB)

Secondary Parameters	Execution condition
12 V battery system voltage	≥ 10 V
Measured turbine shaft speed	> 0 rpm
or	
Transmission range	Drive or Reverse

3. DIAGNOSTIC METHOD (ENGINE TYPE FB)

If the duration of time while the following conditions are met is longer than the time indicated, judge as NG.

Judgment Value

Malfunction Criteria	Threshold Value
CAN data from Vehicle Dynamics Control Module	Did not change

Time Needed for Diagnosis: 2 seconds
Malfunction Indicator Light Illumination: Illuminates as soon as a malfunction occurs.

4. OUTLINE OF DIAGNOSIS (ENGINE TYPE EZ)

- Detect malfunction of CAN communication.
- Judge as NG when data received from VDC CM is not normal.

5. EXECUTION CONDITION (ENGINE TYPE EZ)

Secondary Parameters	Execution condition
12 V battery system voltage	≥ 10 V
Measured primary pulley shaft speed	> 0 rpm
or	
Transmission range	Drive or Reverse

6. DIAGNOSTIC METHOD (ENGINE TYPE EZ)

If the duration of time while the following conditions are met is longer than the time indicated, judge as NG.

Judgment Value

Malfunction Criteria	Threshold Value
CAN data from Vehicle Dynamics Control Module	Did not change

Time Needed for Diagnosis: 2 seconds
Malfunction Indicator Light Illumination: Illuminates as soon as a malfunction occurs.

BK:DTC U0422 INVALID DATA RECEIVED FROM BODY CONTROL MODULE

NOTE:
Refer to “LAN SYSTEM (DIAGNOSTICS)” for diagnostic procedure. <Ref. to LAN(diag)-2, Basic Diagnostic Procedure.>

1. OUTLINE OF DIAGNOSIS

- Detect malfunction of CAN communication.
- Judge as NG when data received from the body integrated unit is not normal.

2. EXECUTION CONDITION

Secondary Parameters	Execution condition
Turbine shaft speed or D range switch	> 0 rpm ON

3. DIAGNOSTIC METHOD

If the duration of time while the following conditions are met is longer than the time indicated, judge as NG.

Judgment Value

Malfunction Criteria	Threshold Value
CAN data from BIU	Freeze

Time Needed for Diagnosis: 2 seconds

BL:DTC U0423 INVALID DATA RECEIVED FROM INSTRUMENT PANEL CLUSTER CONTROL MODULE

NOTE:
Refer to “LAN SYSTEM (DIAGNOSTICS)” for diagnostic procedure. <Ref. to LAN(diag)-2, Basic Diagnostic Procedure.>

1. OUTLINE OF DIAGNOSIS

- Detect malfunction of CAN communication.
- Judge as NG when data received from the combination meter is not normal.

2. EXECUTION CONDITION

Secondary Parameters	Execution condition
Turbine shaft speed or D range switch	> 0 rpm ON

3. DIAGNOSTIC METHOD

If the duration of time while the following conditions are met is longer than the time indicated, judge as NG.

Judgment Value

Malfunction Criteria	Threshold Value
CAN data from meter	Freeze

Time Needed for Diagnosis: 2 seconds

BM:DTC U0424 INVALID DATA RECEIVED FROM HVAC CONTROL MODULE

NOTE:
Refer to “LAN SYSTEM (DIAGNOSTICS)” for diagnostic procedure. <Ref. to LAN(diag)-2, Basic Diagnostic Procedure.>

1. OUTLINE OF DIAGNOSIS

- Detect malfunction of CAN communication.
- Judge as NG when data received from the A/C control panel is not normal.

2. EXECUTION CONDITION

Secondary Parameters	Execution condition
Turbine shaft speed or D range switch	> 0 rpm ON

3. DIAGNOSTIC METHOD

If the duration of time while the following conditions are met is longer than the time indicated, judge as NG.

Judgment Value

Malfunction Criteria	Threshold Value
CAN data from A/C control panel	Freeze

Time Needed for Diagnosis: 2 seconds

BN:DTC U1235 LOST COMMUNICATION WITH EyeSight

NOTE:
Refer to “LAN SYSTEM (DIAGNOSTICS)” for diagnostic procedure. <Ref. to LAN(diag)-2, Basic Diagnostic Procedure.>

1. OUTLINE OF DIAGNOSIS

- Detect malfunction of CAN communication.
- Judge as NG when CAN communication failure occurs with the stereo camera.

2. EXECUTION CONDITION

Secondary Parameters	Execution condition
Turbine shaft speed or D range switch	> 0 rpm ON

3. DIAGNOSTIC METHOD

If the duration of time while the following conditions are met is longer than the time indicated, judge as NG.

Judgment Value

Malfunction Criteria	Threshold Value
CAN data from stereo camera	Lost

Time Needed for Diagnosis: 2 seconds

BO:DTC U1433 INVALID DATA RECEIVED FROM EyeSight

NOTE:
Refer to “LAN SYSTEM (DIAGNOSTICS)” for diagnostic procedure. <Ref. to LAN(diag)-2, Basic Diagnostic Procedure.>

1. OUTLINE OF DIAGNOSIS

- Detect malfunction of CAN communication.
- Judge as NG when data received from the stereo camera is not normal.

2. EXECUTION CONDITION

Secondary Parameters	Execution condition
Turbine shaft speed or D range switch	> 0 rpm ON

3. DIAGNOSTIC METHOD

If the duration of time while the following conditions are met is longer than the time indicated, judge as NG.

Judgment Value

Malfunction Criteria	Threshold Value
CAN data from stereo camera	Freeze

Time Needed for Diagnosis: 2 seconds

18.Diagnostic Procedure without Diagnostic Trouble Code (DTC)

A: CHECK SHIFT INDICATOR

DIAGNOSIS:

- CAN communication is abnormal with the combination meter.
- Combination meter malfunction

TROUBLE SYMPTOM:

- Shift indicator does not display or remains displayed.
- Shift indicator display does not change.

	Step	Check	Yes	No
1	**CHECK DTC.** Read the DTC relating the TCM using the Subaru Select Monitor.	Is DTC U0155 or U0423 displayed?	Perform the self-diagnosis of combination meter.	Go to step **2**.
2	**CHECK DTC.** Read the DTC relating the TCM using the Subaru Select Monitor.	Are DTCs other than U0155 and U0423 displayed?	Perform the diagnosis according to DTC.	Go to step **3**.
3	**CHECK COMBINATION METER.** Read DTC of combination meter.	Is DTC displayed?	Perform the diagnosis according to DTC.	Go to step **4**.
4	**CHECK TCM.** 1) Operate the + side of the paddle shift switch. 2) Read the data of «Up Switch» using the Subaru Select Monitor.	Does it change between ON and OFF according to the operation?	Go to step **5**.	Check for poor contact between TCM and paddle shift UP switch, and repair the defective part.
5	**CHECK TCM.** 1) Operate the – side of the paddle shift switch. 2) Read the data of «Down Switch» using the Subaru Select Monitor.	Does it change between ON and OFF according to the operation?	Go to step **6**.	Check for poor contact between TCM and paddle shift down switch, and repair the defective part.
6	**CHECK TCM.** 1) Turn the ignition switch OFF, then turn it ON again. 2) Shift the select lever to manual mode. 3) Read the data of «Shift step in Manu. mode» using the Subaru Select Monitor.	Is “1” displayed?	Go to step **7**.	Perform the diagnosis according to DTC P0951. <Ref. to CVT(diag)-144, DTC P0951 AUTO SHIFT MANUAL CONTROL CIRCUIT RANGE/ PERFORMANCE, Diagnostic Procedure with Diagnostic Trouble Code (DTC).>
7	**CHECK TCM.** 1) Shift up the select lever. 2) Read the data of «Shift step in Manu. mode» using the Subaru Select Monitor.	Is “2” displayed?	Currently, shift indicator is normal.	Replace the TCM. <Ref. to CVT(TR580)-159, Transmission Control Module (TCM).> <Ref. to CVT(TR690)-142, Transmission Control Module (TCM).>

19.Diagnostics with Phenomenon

A: INSPECTION

Symptoms	Faulty parts
Engine stalls when driving in “D” or “R” range, or selecting “N” → “D”, “N” → “R”.	• Control valve • Engine control system
While driving in “D” range, vibration occurs immediately before the stop or engine stalls.	• Control valve • Torque converter
Vehicle cannot shift while driving in “D” range.	• Control valve • TCM • Shift mechanism • Power supply system
Excessive shock when selecting “N” → “D”, and “N” → “R”.	• Control valve • TCM • F&R clutch pack • ATF deterioration or lack
Excessive shock at standing start in “D” range.	• Control valve • TCM • F&R clutch pack • ATF deterioration or lack
Engine speed increases abruptly during driving in “D” or “R” range.	• Control valve • Secondary pressure sensor • F&R clutch pack • ATF deterioration or lack
Vehicle can not start when depressing the accelerator pedal in “D” or “R” range, or acceleration is very poor. (without abrupt engine increase)	• Control valve • F&R clutch pack • Shift mechanism • Parking mechanism • Engine control system • Power supply system
Shift indicator in combination meter displays the position which differs from select lever position.	• Inhibitor switch • Select cable related • Combination meter
Manual mode enters even though the select lever and paddle shift switch is not operated.	• Manual mode switch • Paddle shift switch • Select lever • TCM
Engine speed increases abruptly in “D” or “R” range, vehicle can not start.	• F&R clutch pack • Select cable related
Manual mode can not be set	• Select lever • TCM

MANUAL TRANSMISSION AND DIFFERENTIAL

6MT

		Page
1.	General Description	2
2.	Transmission Gear Oil	25
3.	Manual Transmission Assembly	27
4.	Transmission Mounting System	46
5.	Oil Seal	49
6.	Differential Side Retainer Oil Seal	52
7.	Switches and Harness	55
8.	Air Breather Hose	58
9.	Preparation for Overhaul	60
10.	Transfer Case and Extension Case Assembly	61
11.	Transfer Drive Gear	71
12.	Transfer Driven Gear	74
13.	Center Differential	78
14.	Shift Link Assembly	80
15.	Transmission Case	93
16.	Main Shaft Assembly	100
17.	Drive Pinion Shaft Assembly	115
18.	Front Differential Assembly	134
19.	Reverse Idler Gear	146
20.	Shifter Fork and Rod	158
21.	General Diagnostic Table	166

1. General Description

A: SPECIFICATION

1. MANUAL TRANSMISSION AND DIFFERENTIAL

Model			Except for OUTBACK	OUTBACK
Type			6-forward speeds and 1-reverse (all stage with synchromesh)	
Transmission gear ratio		1st	3.545	
		2nd	1.888	
		3rd	1.296	
		4th	1.029	
		5th	0.825	
		6th	0.738	
		Rev.	3.636	
Front reduction gear	Final	Type of gear	Hypoid	
		Gear ratio	4.111	4.444
Rear reduction gear	Transfer	Type of gear	Helical	
		Gear ratio	1.000	
Front differential	Type and number of gear		Straight bevel gear (bevel pinion: 2, bevel gear: 2)	
Center differential	Type and number of gear		Straight bevel gear (bevel pinion: 2, bevel gear: 2, viscous coupling)	
Transmission gear oil capacity			3.3 L (3.5 US qt, 2.9 Imp qt)	

2. TRANSMISSION GEAR OIL

CAUTION:
If an alternative transmission gear oil is used, you may not have expected functionality and performance.

Recommended oil:
SUBARU GEAR OIL EXTRA MT

Alternative:
GL-5 (75W-90)

B: COMPONENT

1. TRANSMISSION CASE

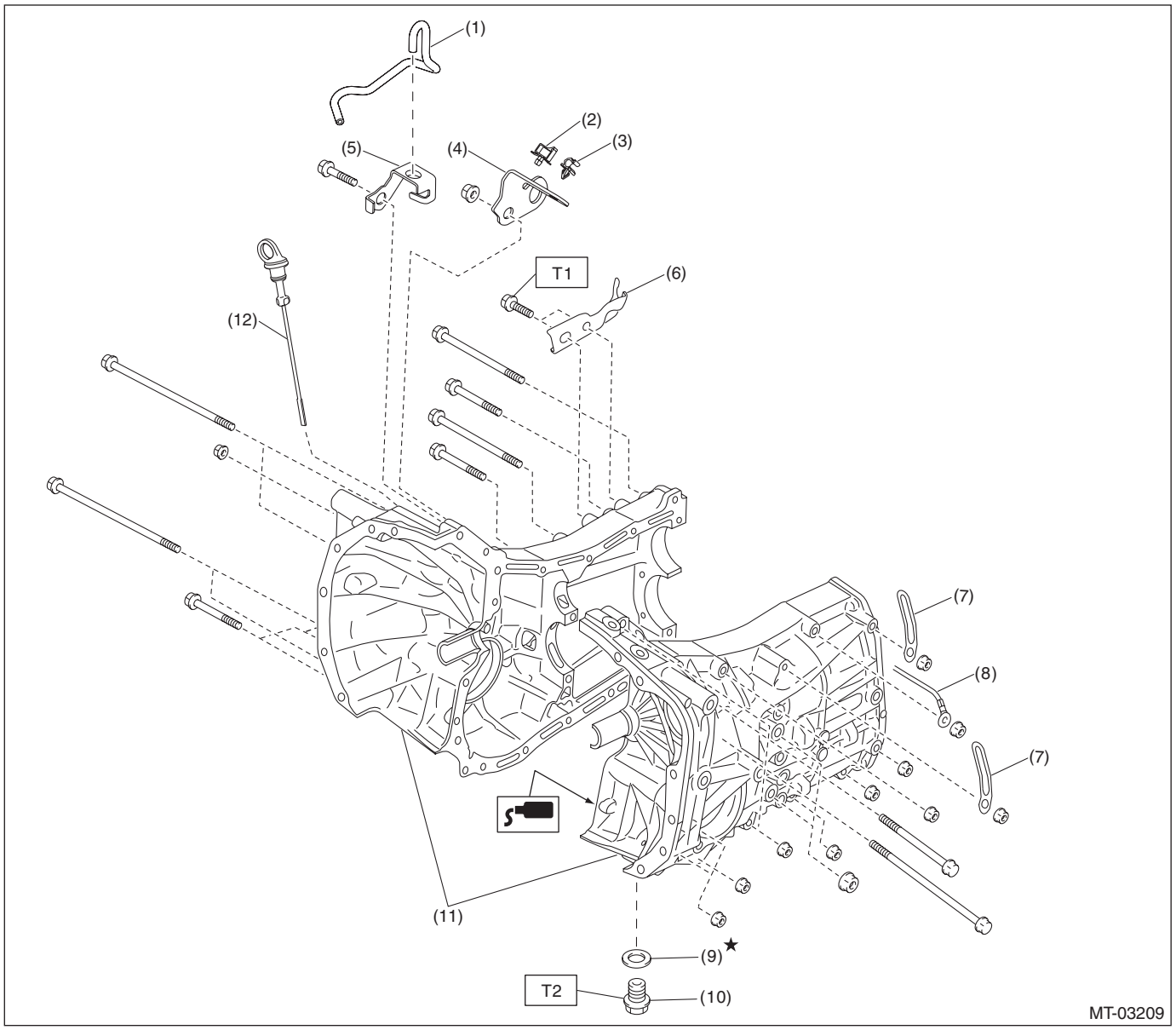

(1)	Air breather hose	(7)	Harness clip
(2)	Clamp	(8)	Transmission radio ground cord
(3)	Hose clamp	(9)	Gasket
(4)	Harness bracket	(10)	Drain plug
(5)	Air breather hose bracket	(11)	Transmission case ASSY
(6)	Select bracket	(12)	Oil level gauge

Tightening torque: N·m (kgf-m, ft-lb)

T1: 18 (1.8, 13.3)

T2: 44 (4.5, 32.5) (aluminum gasket, silver)

70 (7.1, 51.6) (copper gasket, brown)

70 (7.1, 51.6) (metal gasket, black)

Transmission case tightening torque

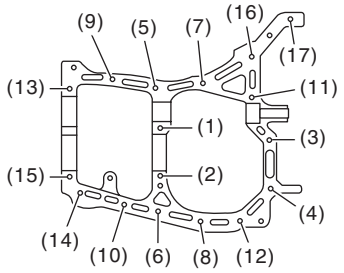

Bolt No.	Bolt size mm	Tightening torque: N·m (kgf-m, ft-lb)
(5) — (15)	8	25 (2.5, 18.4)
(1) — (4) (16), (17)	10	40 (4.1, 29.5)

2. DRIVE PINION SHAFT ASSEMBLY

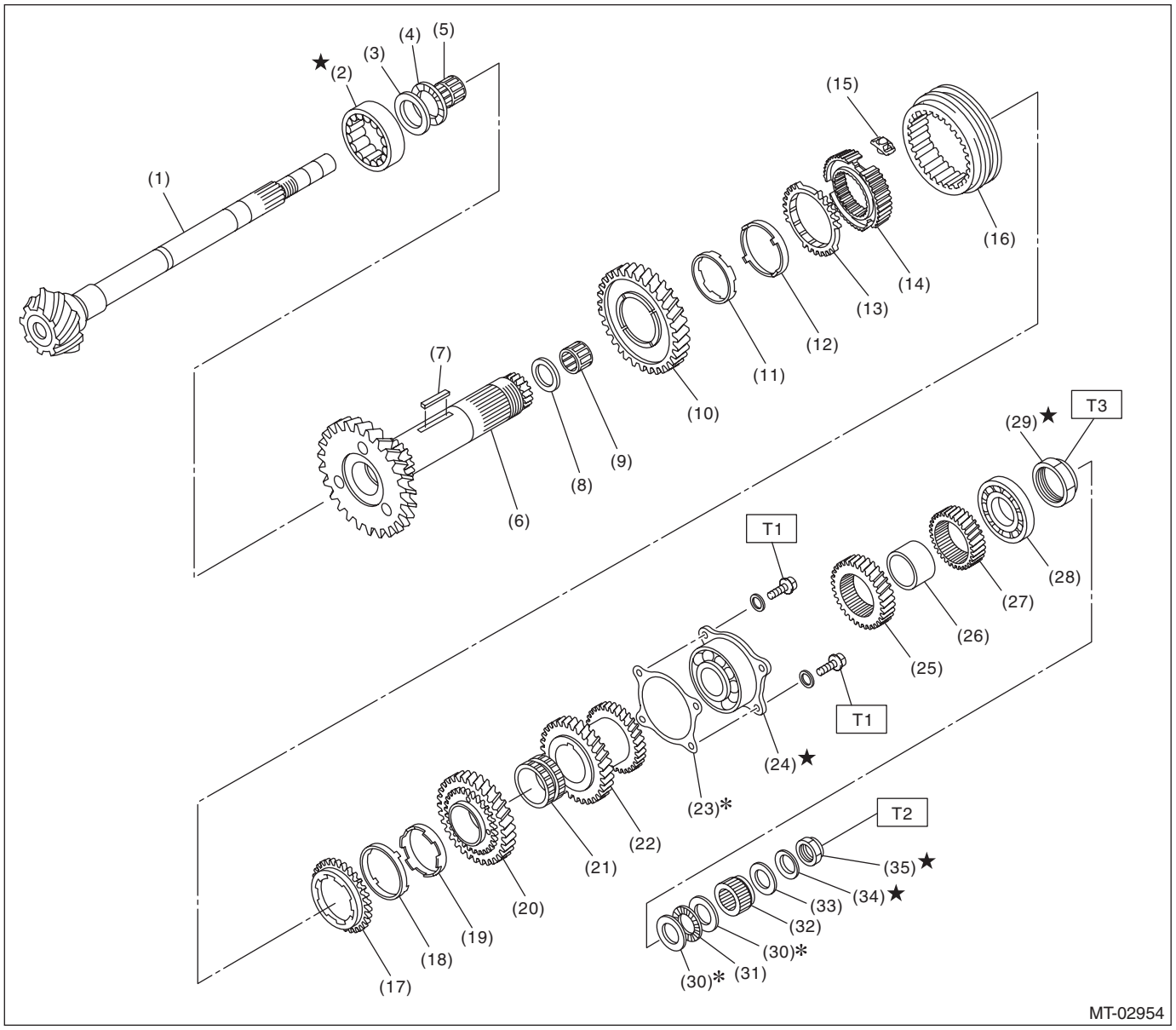

(1) Drive pinion shaft
(2) Roller bearing
(3) Washer
(4) Thrust bearing
(5) Needle bearing
(6) Driven shaft
(7) Key
(8) Drive pinion collar
(9) Needle bearing
(10) 1st driven gear
(11) 1st inner baulk ring
(12) 1st synchro cone
(13) 1st outer baulk ring
(14) 1st-2nd synchronizer hub
(15) 1st-2nd shifting insert
(16) 1st-2nd coupling sleeve
(17) 2nd outer baulk ring
(18) 2nd synchro cone
(19) 2nd inner baulk ring
(20) 2nd driven gear
(21) 2nd driven gear bushing
(22) 3rd-4th driven gear
(23) Drive pinion shim
(24) Double ball bearing
(25) 5th driven gear
(26) Drive pinion spacer
(27) 6th driven gear
(28) Ball bearing
(29) Lock nut
(30) Adjusting washer
(31) Thrust bearing
(32) Differential bevel gear sleeve
(33) Washer
(34) Lock washer
(35) Lock nut

Tightening torque: N·m (kgf-m, ft-lb)
T1: 30 (3.1, 22.1)
T2: 126 (12.8, 92.9)
T3: 440 (44.9, 324.5)

3. MAIN SHAFT ASSY

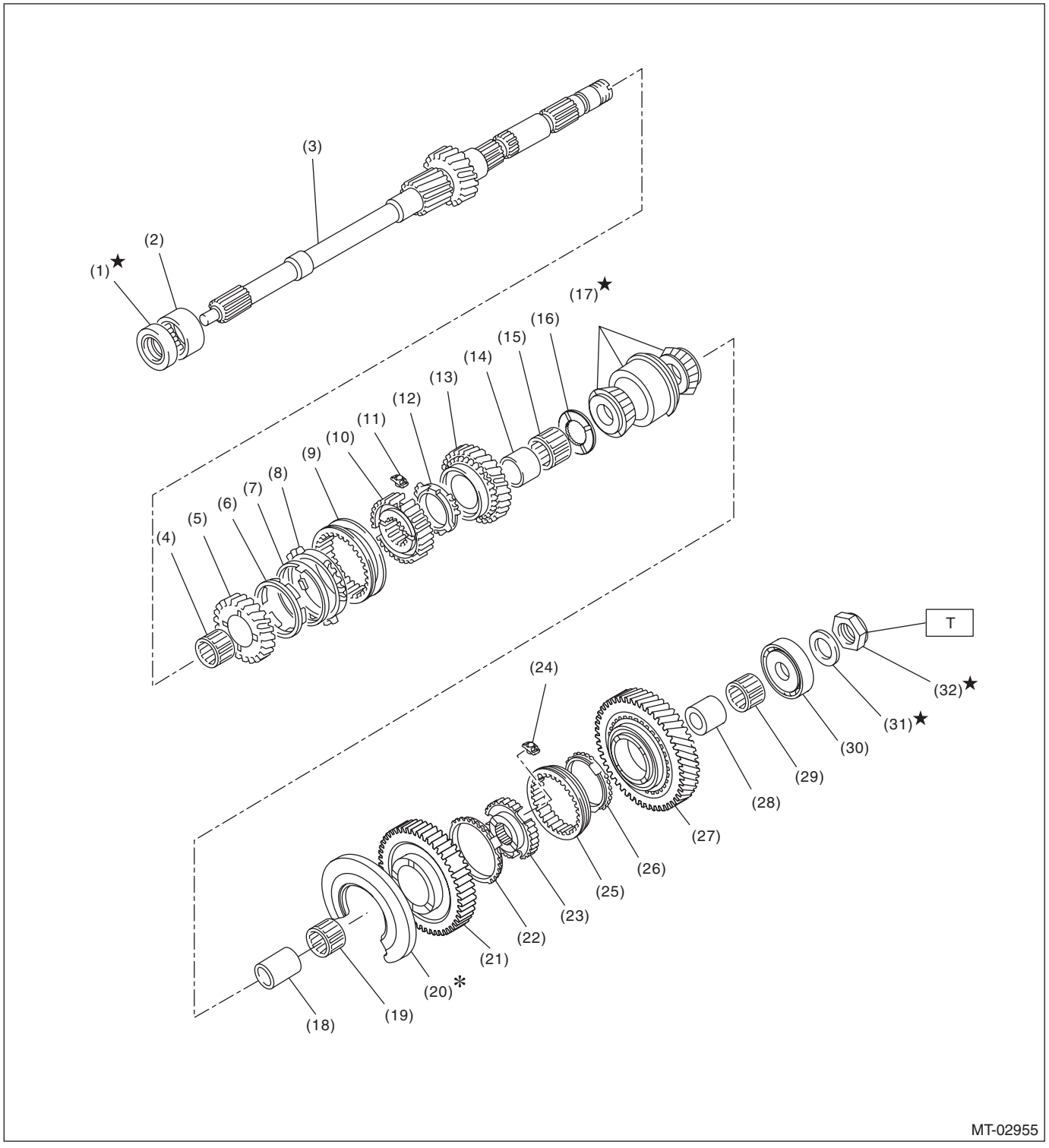

(1) Oil seal
(2) Needle bearing
(3) Main shaft
(4) 3rd needle bearing
(5) 3rd drive gear
(6) 3rd inner baulk ring
(7) 3rd synchro cone
(8) 3rd outer baulk ring
(9) 3rd-4th coupling sleeve
(10) 3rd-4th synchronizer hub
(11) 3rd-4th shifting insert
(12) 4th baulk ring
(13) 4th drive gear
(14) 4th needle bearing race
(15) 4th needle bearing
(16) 4th gear thrust washer
(17) Double taper roller bearing
(18) 5th needle bearing race
(19) 5th needle bearing
(20) Main shaft rear plate
(21) 5th drive gear
(22) 5th baulk ring
(23) 5th-6th synchronizer hub
(24) 5th-6th shifting insert
(25) 5th-6th coupling sleeve
(26) 6th baulk ring
(27) 6th drive gear
(28) 6th needle bearing race
(29) 6th needle bearing
(30) Ball bearing
(31) Lock washer
(32) Lock nut

Tightening torque: N·m (kgf-m, ft-lb)
T: 160 (16.3, 118.0)

4. REVERSE IDLER GEAR ASSY

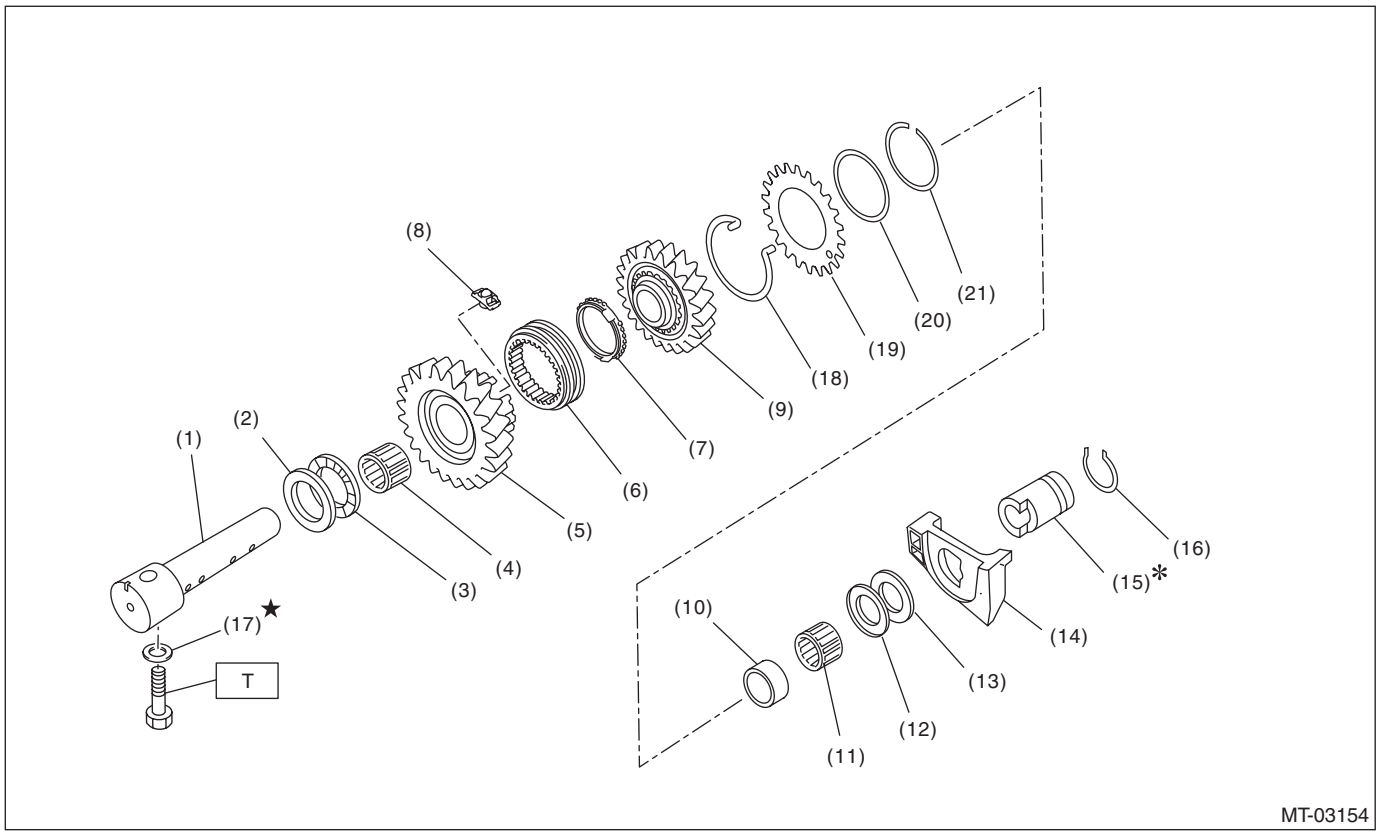

(1) Reverse idler gear shaft
(2) Reverse idler gear washer
(3) Thrust bearing
(4) Needle bearing
(5) Reverse idler gear No. 2
(6) Reverse coupling sleeve
(7) Reverse baulk ring
(8) Reverse shifting insert
(9) Reverse idler gear
(10) Reverse idler gear collar
(11) Needle bearing
(12) Thrust bearing
(13) Reverse idler gear washer
(14) Oil case guide
(15) Reverse idler gear bushing
(16) Snap ring
(17) Gasket
(18) Reverse idler spring
(19) Reverse idler sub gear
(20) Friction plate
(21) Snap ring

Tightening torque: N·m (kgf-m, ft-lb)
T: 25 (2.5, 18.4)

5. SHIFTER FORK AND SHIFTER ROD

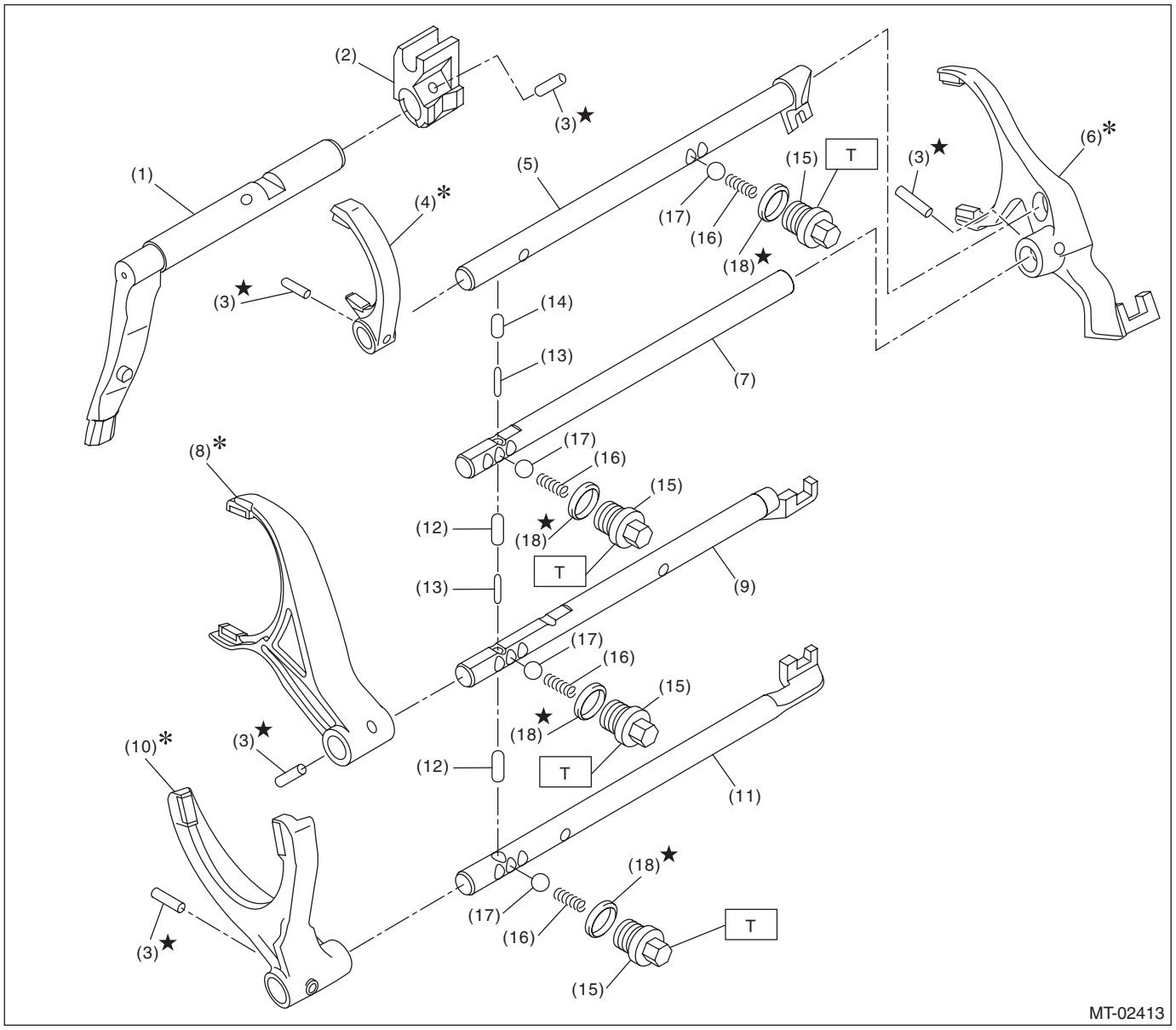

(1) Shifter arm
(2) Selector arm
(3) Straight pin
(4) Reverse shifter fork
(5) Reverse fork rod
(6) 5th-6th shifter fork
(7) 5th-6th fork rod
(8) 3rd-4th shifter fork
(9) 3rd-4th fork rod
(10) 1st-2nd shifter fork
(11) 1st-2nd fork rod
(12) Interlock plunger
(13) Interlock plunger
(14) Interlock plunger
(15) Checking ball plug
(16) Checking ball spring
(17) Check ball
(18) Gasket

Tightening torque: N·m (kgf-m, ft-lb)
T: 20 (2.0, 14.8)

6. TRANSFER CASE AND EXTENSION

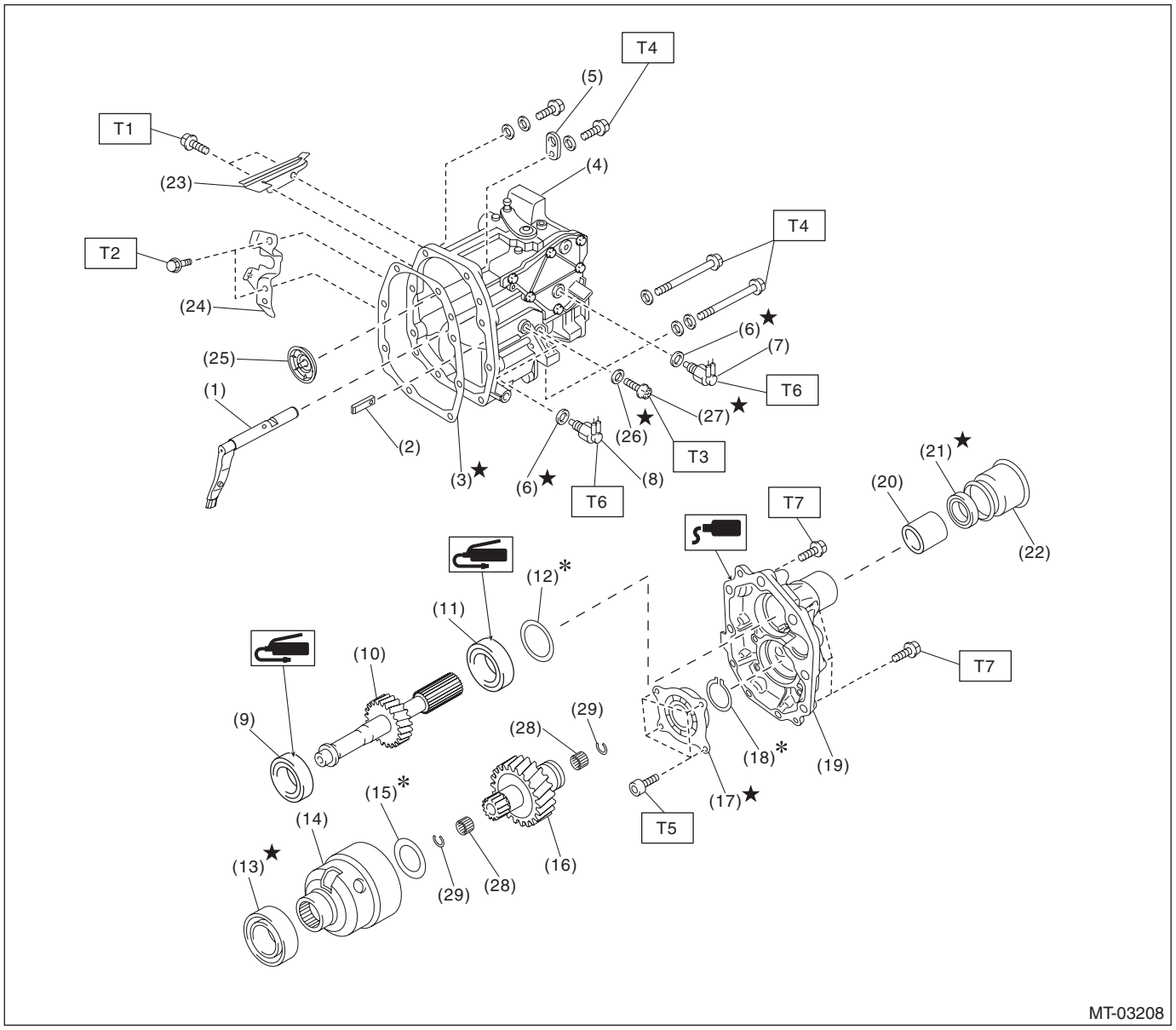

MT-03208

(1) Shifter arm
(2) Interlock plate
(3) Gasket
(4) Transfer case
(5) Transmission hanger
(6) Gasket
(7) Neutral position switch
(8) Back-up light switch
(9) Taper roller bearing (transfer case side)
(10) Transfer driven gear
(11) Taper roller bearing (extension case side)
(12) Adjusting washer
(13) Ball bearing
(14) Center differential
(15) Adjusting washer
(16) Transfer drive gear
(17) Ball bearing
(18) Snap ring
(19) Extension case
(20) Bushing
(21) Oil seal
(22) Dust cover
(23) Dust cover (OUTBACK model)
(24) Shift bracket
(25) Oil guide
(26) Gasket
(27) Precoat bolt
(28) Needle bearing
(29) Snap ring

Tightening torque: N·m (kgf-m, ft-lb)
T1: 15 (1.5, 11.1)
T2: 18 (1.8, 13.3)
T3: 20 (2.0, 14.8)
T4: 24.5 (2.5, 18.1)
T5: 26 (2.7, 19.2)
T6: 32.3 (3.3, 23.8)
T7: 40 (4.1, 29.5)

7. SHIFT LINK ASSEMBLY

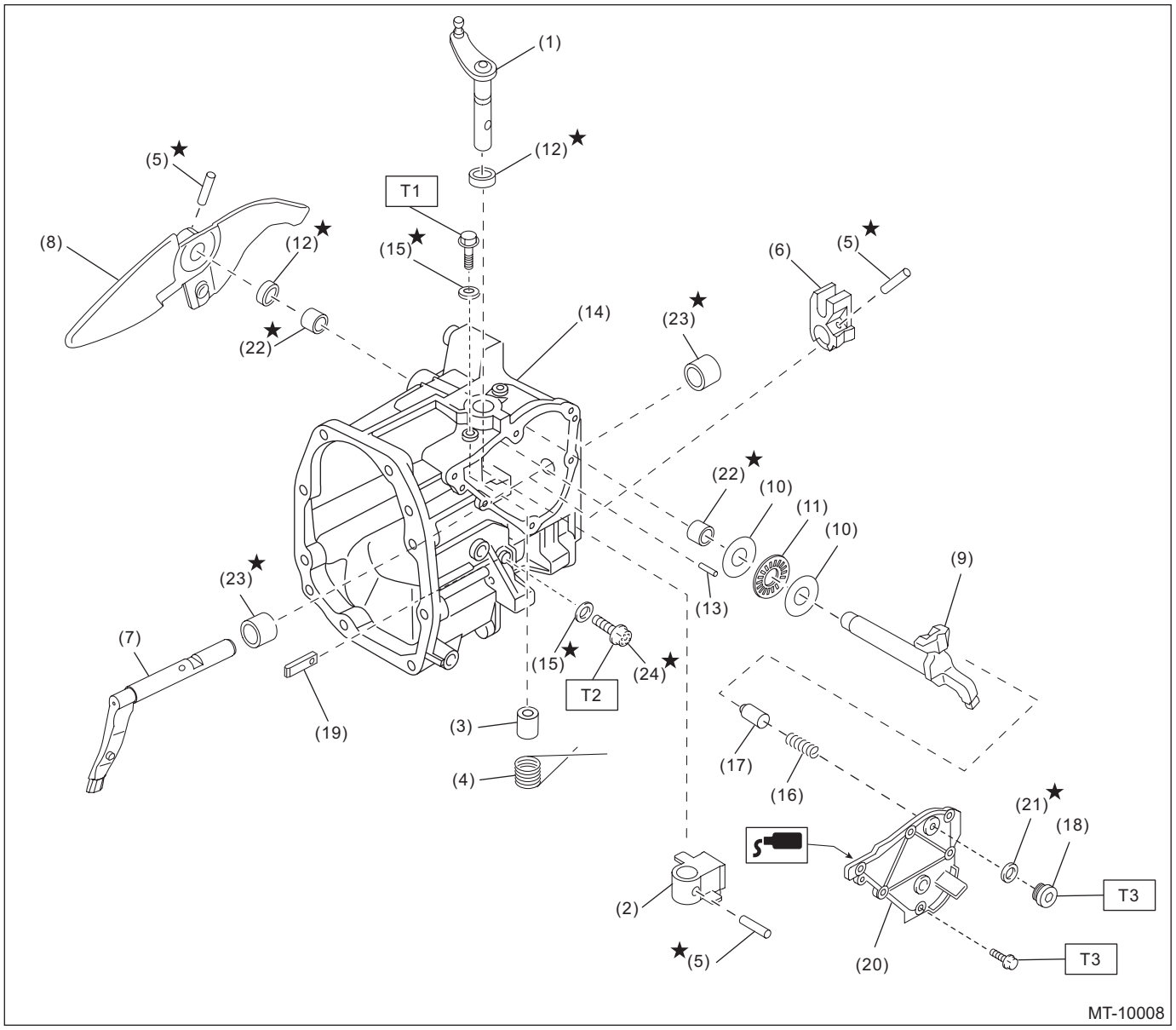

(1) Selector lever COMPL
(2) Selector arm No. 2
(3) Shifter arm collar
(4) Neutral set spring
(5) Straight pin
(6) Selector arm
(7) Shifter arm
(8) Shift lever COMPL
(9) Shifter arm No. 2
(10) Adjusting washer
(11) Thrust bearing
(12) Oil seal
(13) Straight pin
(14) Transfer case
(15) Gasket
(16) Checking ball spring
(17) Shift accent plunger
(18) Seal bolt
(19) Interlock plate
(20) Transmission cover
(21) Seal ring
(22) Needle bearing
(23) Roller bearing
(24) Precoat bolt

Tightening torque: N·m (kgf-m, ft-lb)
T1: 6.4 (0.7, 4.7)
T2: 20 (2.0, 14.8)
T3: 25 (2.5, 18.4)

8. FRONT DIFFERENTIAL

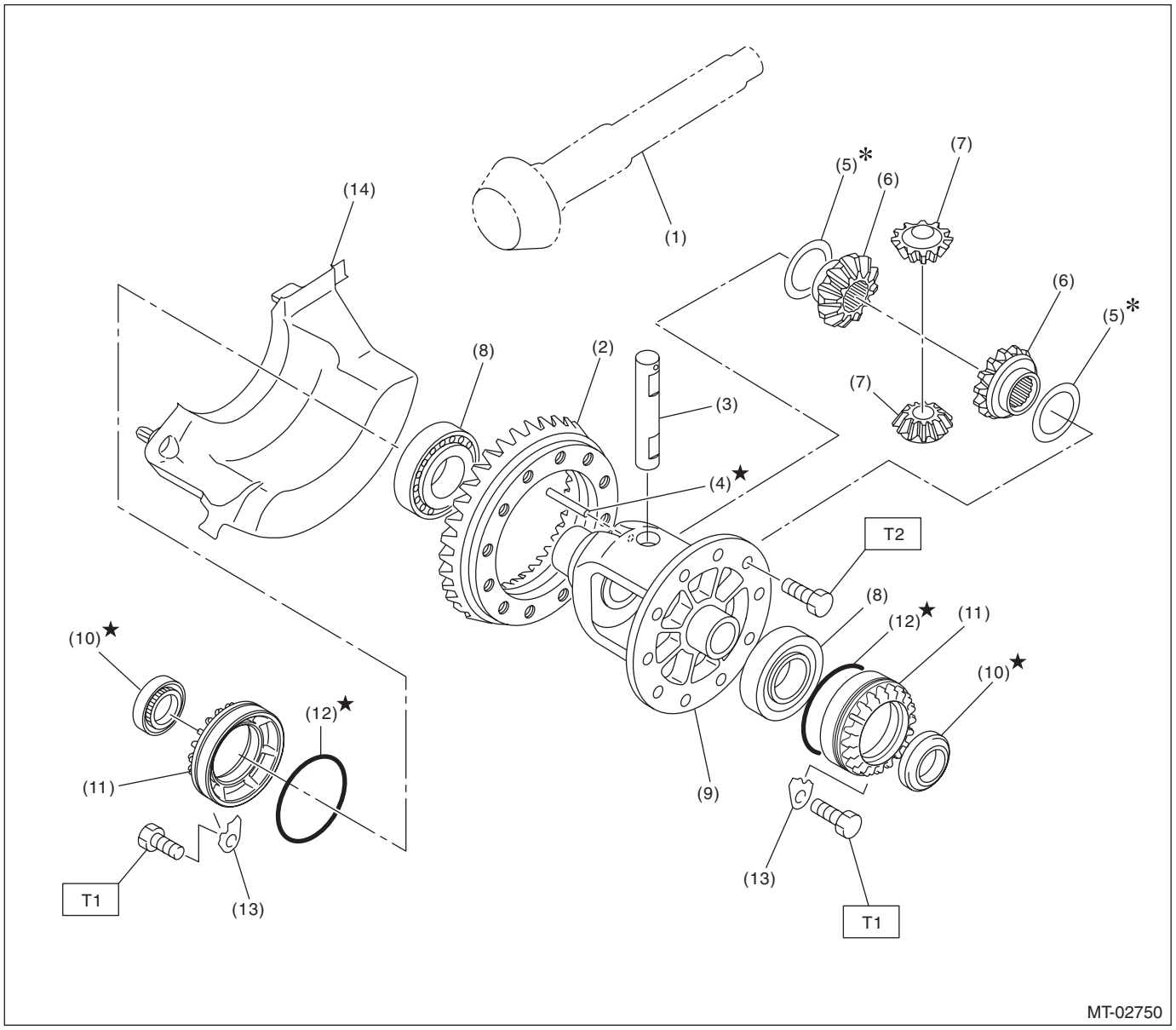

(1) Drive pinion shaft
(2) Hypoid driven gear
(3) Pinion shaft
(4) Straight pin
(5) Adjusting washer
(6) Differential bevel gear
(7) Differential bevel pinion
(8) Taper roller bearing
(9) Differential case
(10) Oil seal
(11) Differential side retainer
(12) O-ring
(13) Retainer lock plate
(14) Front oil guide

Tightening torque: N·m (kgf-m, ft-lb)
T1: 25 (2.5, 18.4)
T2: 62 (6.3, 45.7)

9. TRANSMISSION MOUNTING

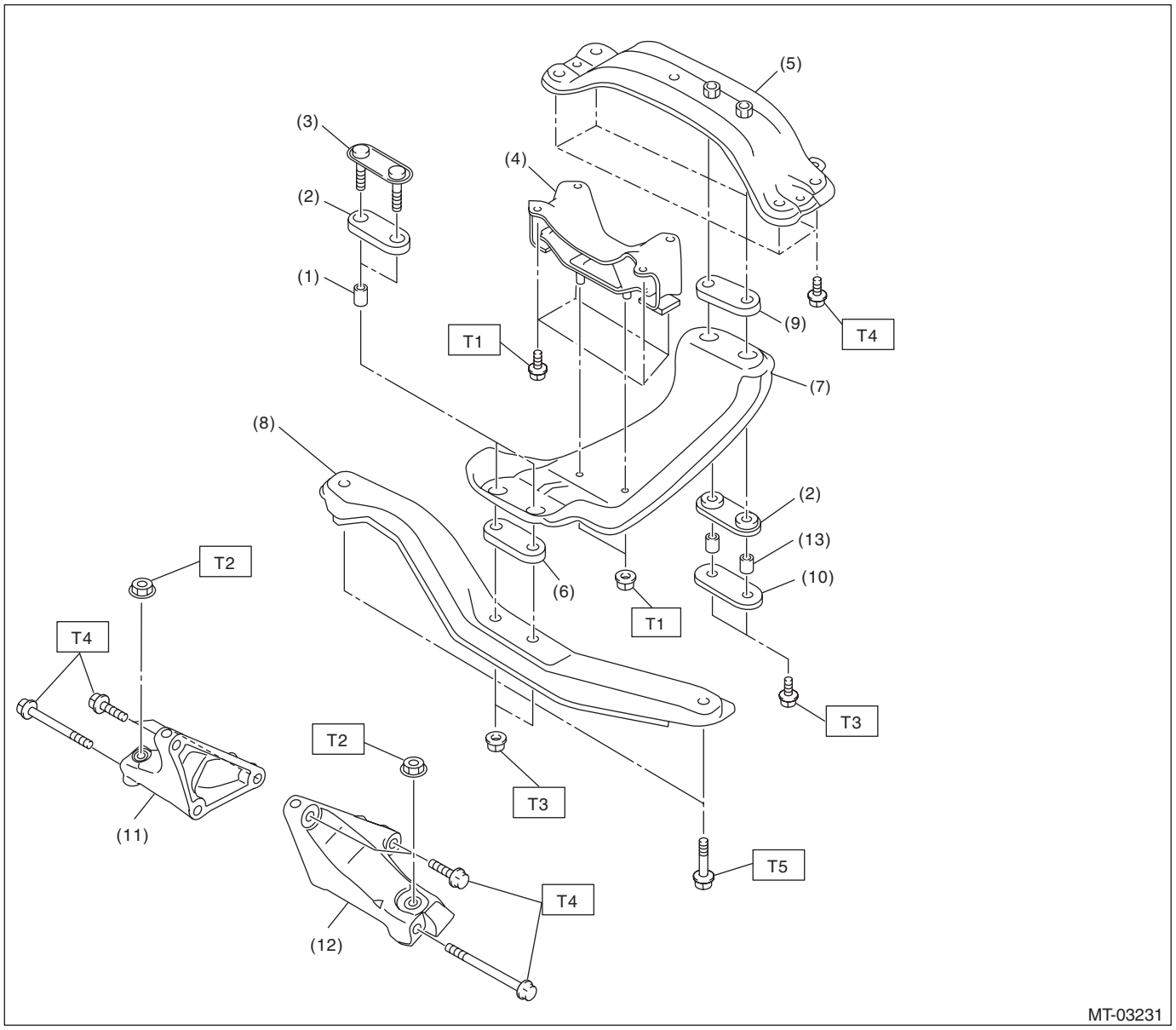

(1) Spacer
(2) Lower cushion rubber
(3) Front plate
(4) Transmission cushion rubber
(5) Rear crossmember
(6) Upper cushion rubber
(7) Center crossmember
(8) Front crossmember
(9) Rear cushion rubber
(10) Rear plate
(11) Transmission main mounting bracket (RH)
(12) Transmission main mounting bracket (LH)
(13) Spacer

Tightening torque: N·m (kgf-m, ft-lb)
T1: 35 (3.6, 25.8)
T2: 45 (4.6, 33.2)
T3: 70 (7.1, 51.6)
T4: 75 (7.6, 55.3)
T5: 140 (14.3, 103.3)

C: CAUTION

- Remove contamination including dirt and corrosion before removal, installation or disassembly.
- Keep the disassembled parts in order and protect them from dust and dirt.
- Before removal, installation or disassembly, be sure to clarify the failure. Avoid unnecessary removal, installation, disassembly and replacement.
- When disassembling the case and other light alloy parts, disassemble by using a plastic hammer. Do not pry apart with screwdrivers or other tools.
- Vehicle components are extremely hot after driving. Be wary of receiving burns from heated parts.
- Use SUBARU genuine transmission gear oil, grease or equivalent. Do not mix gear oil, grease, etc. of different grades or manufacturers.
- Be sure to tighten fasteners including bolts and nuts to the specified torque.
- Place shop jacks or rigid racks at the specified points.
- Apply transmission gear oil onto sliding or revolving surfaces before installation.
- Replace deformed or damaged snap rings with new parts.
- Before installing O-rings or oil seals, apply sufficient amount of transmission gear oil to avoid damage and deformation.
- Be careful not to incorrectly install or fail to install O-rings, snap rings and other such parts.
- Before securing a part on a vise, place cushioning material such as wood blocks, aluminum plate, or cloth between the part and the vise.
- Avoid damaging the mating surface of the case.
- Before applying liquid gasket, completely remove and clean the old liquid gasket.
- Be careful of handling the oil seal, O-ring and gasket. If the contact surface of them is damaged, oil leakage may occur.
- When pressing-in the oil seal, make sure that the oil seal lip portion and outer surface are not damaged or tilted.
- When replacing the taper roller bearing, replace the outer race and inner race as a set.
- When replacing the hypoid gear, replace the hypoid driven gear and drive pinion shaft as a set.
- Replace the bolts if the seating surface or the thread surface is excessively rusted.

D: PREPARATION TOOL

1. SPECIAL TOOL

ILLUSTRATION	TOOL NUMBER	DESCRIPTION	REMARKS
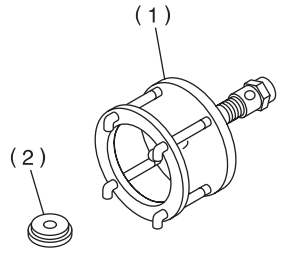 ST-899524100	899524100	PULLER SET	Used for removing the front differential taper roller bearing. (1) Puller (2) Cap
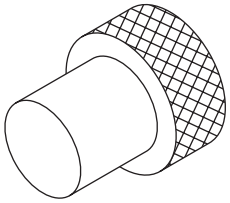 ST-399780104	399780104	WEIGHT	Used for adjusting preload on the front differential taper roller bearing.
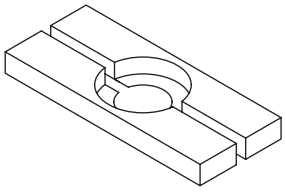 ST-498077000	498077000	REMOVER	• Used for removing the roller bearing and washer of the drive pinion shaft assembly. • Used for removing the taper roller bearing of transfer driven gear.
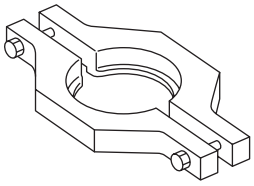 ST-498077600	498077600	CENTER DIFFERENTIAL BEARING REMOVER	Used for removing the ball bearing of the center differential.

ILLUSTRATION	TOOL NUMBER	DESCRIPTION	REMARKS
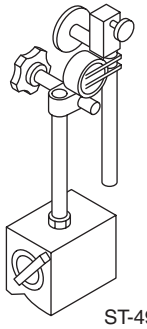 ST-498247001	498247001	MAGNET BASE	• Used for measuring the backlash of differential bevel pinion gear and hypoid driven gear. • Used together with DIAL GAUGE (498247100).
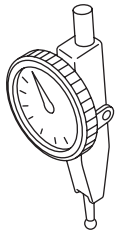 ST-498247100	498247100	DIAL GAUGE	• Used for measuring the backlash of differential bevel pinion gear and hypoid driven gear. • Used together with MAGNET BASE (498247001).
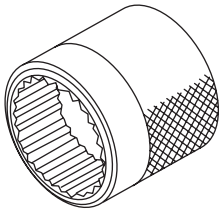 ST18667AA020	18667AA020	HOLDER	• Used for removing and installing the drive pinion shaft assembly lock nut. • Used for measuring the backlash of hypoid driven gear. • Used for adjusting preload on the front differential taper roller bearing.
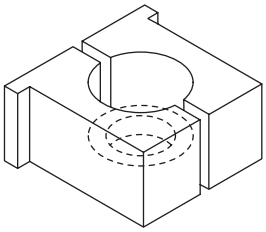 ST-498937000	498937000	TRANSMISSION HOLDER	Used for removing and installing the main shaft assembly lock nut.
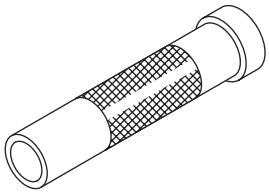 ST-499277100	499277100	BUSHING 1-2 INSTALLER	• Used for installing the drive pinion shaft assembly washer. • Used for installing the inner race of the front differential taper roller bearing.

ILLUSTRATION	TOOL NUMBER	DESCRIPTION	REMARKS
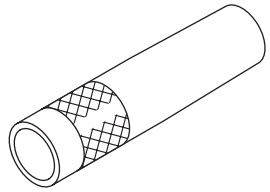 ST-499277200	499277200	INSTALLER	• Used for installing the 3rd-4th driven gear, 5th driven gear, ball bearing and 6th driven gear. • Used for installing the drive pinion shaft assembly washer.
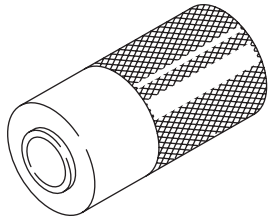 ST-927640000	927640000	INSTALLER	Used for installing the taper roller bearing (transfer case side) of transfer driven gear.
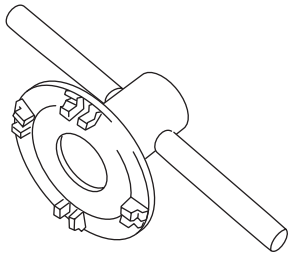 ST18630AA010	18630AA010	WRENCH COMPL RETAINER	• Used for removing and installing the differential side retainer. • Used for adjusting preload on the front differential taper roller bearing. • Used for adjusting the backlash of hypoid driven gear. • WRENCH COMPL RETAINER (18630AA020) can also be used.
 ST18722AA000	18722AA000	REMOVER	Used for removing the 5th drive gear and 6th drive gear.
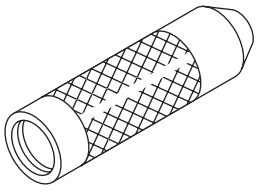 ST-499877000	499877000	RACE 4-5 INSTALLER	• Used for installing the 4th, 5th and 6th drive gear needle bearing races and the main shaft assembly double taper roller bearings. • Used together with REMOVER (899714110).

ILLUSTRATION	TOOL NUMBER	DESCRIPTION	REMARKS
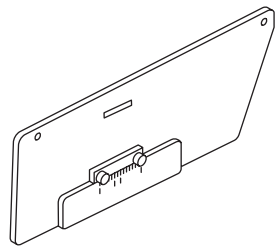 ST-499917500	499917500	DRIVE PINION GAUGE ASSY	Used for adjusting the drive pinion shaft assembly shim.
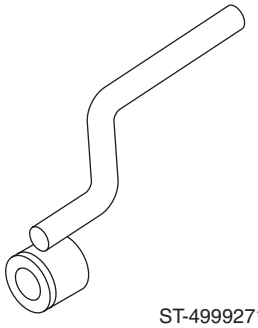 ST-499927100	499927100	HANDLE	• Used for measuring the backlash of hypoid driven gear. • Used for adjusting preload on the front differential taper roller bearing.
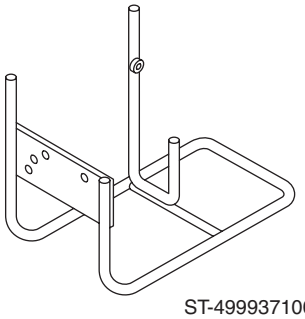 ST-499937100	499937100	TRANSMISSION STAND	Used for disassembling and assembling the transmission.
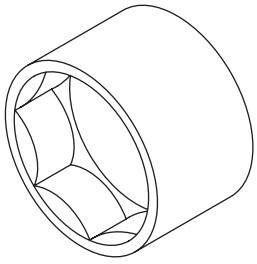 ST-499987003	499987003	SOCKET WRENCH (35)	Used for removing and installing the main shaft assembly lock nut.
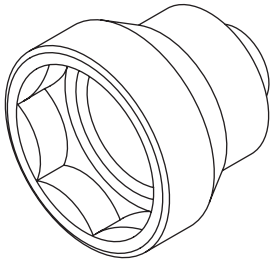 ST-499987300	499987300	SOCKET WRENCH (50)	Used for removing and installing the driven shaft lock nut.

ILLUSTRATION	TOOL NUMBER	DESCRIPTION	REMARKS
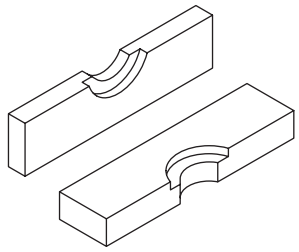 ST-899714110	899714110	REMOVER	Used for removing and installing the parts of main shaft assembly and driven shaft.
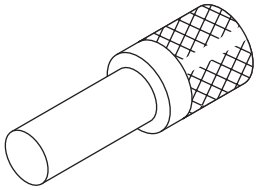 ST-899864100	899864100	REMOVER	• Used for removing the parts of the main shaft assembly. • Used for removing the transfer driven gear taper roller bearing (transfer case side) and for installing it (extension case side). • Used for removing the ball bearing of transfer drive gear. • Used for installing the taper roller bearing of the transfer case.
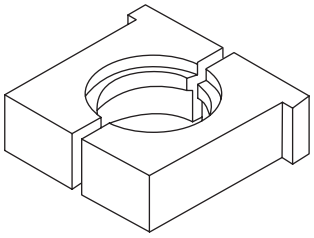 ST18680AA020	18680AA020	HOLDER	• Used for removing and installing the drive pinion shaft assembly lock nut. • Used for removing and installing the driven shaft lock nut.
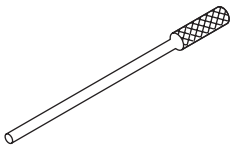 ST-899904100	899904100	STRAIGHT PIN REMOVER	Used for removing and installing the straight pin.
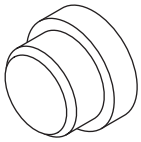 ST-398497701	398497701	SEAT	• Used for installing the front differential taper roller bearing. • Used together with BUSHING 1-2 INSTALLER (499277100).

ILLUSTRATION	TOOL NUMBER	DESCRIPTION	REMARKS
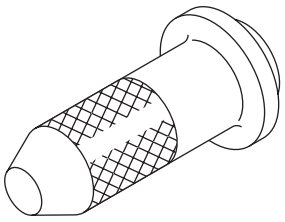 ST-498057300	498057300	INSTALLER	Used for installing the oil seal of extension case.
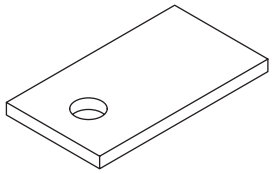 ST-498255400	498255400	PLATE	Used for measuring the backlash of hypoid driven gear.
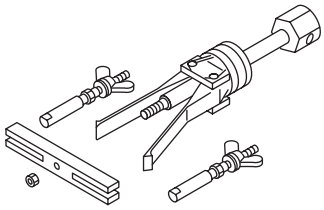 ST-398527700	398527700	PULLER ASSY	• Used for removing the oil seal of extension case. • Used for removing the outer race of the front differential taper roller bearing. • Used for removing the oil seal of differential side retainer.
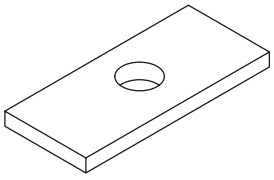 ST-398643600	398643600	GAUGE	Used for adjusting the extension end play.
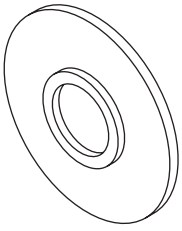 ST-398177700	398177700	INSTALLER	• Used for installing the ball bearing of the transfer drive gear. • Used for installing the 4th drive gear needle bearing race.

ILLUSTRATION	TOOL NUMBER	DESCRIPTION	REMARKS
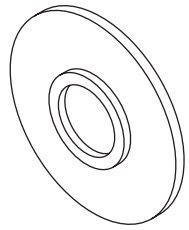 ST-498175500	498175500	INSTALLER	Used for installing the taper roller bearing of transfer driven gear (extension case side).
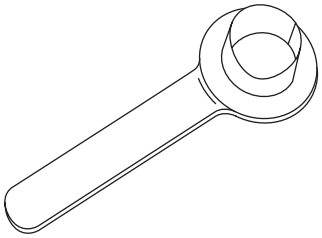 ST28399SA010	28399SA010	OIL SEAL PROTECTOR	Used for protecting the oil seal from damage when inserting the front drive shaft.
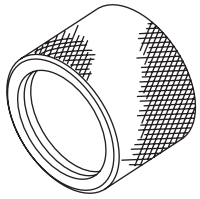 ST18675AA000	18675AA000	DIFFERENTIAL SIDE OIL SEAL INSTALLER	Used for installing the oil seal of differential side retainer.
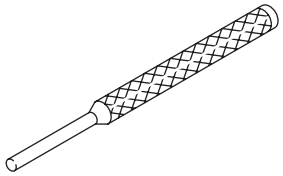 ST-398791700	398791700	REMOVER	Used for removing and installing the straight pin.
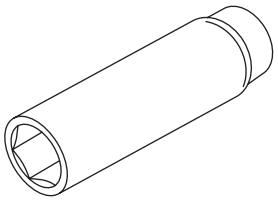 ST18662AA010	18662AA010	SOCKET (27)	• Used for removing and installing the drive pinion shaft assembly lock nut. • Used for measuring the starting torque of the drive pinion shaft assembly.

ILLUSTRATION	TOOL NUMBER	DESCRIPTION	REMARKS
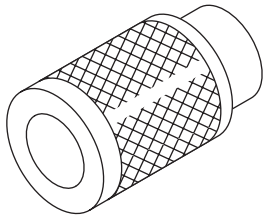 ST-899754112	899754112	PRESS	• Used for removing driven shaft parts. • Used to install the main shaft assembly ball bearing.
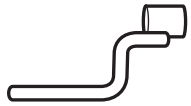 ST18631AA000	18631AA000	HANDLE	Used for installing transfer case assembly and extension case assembly.
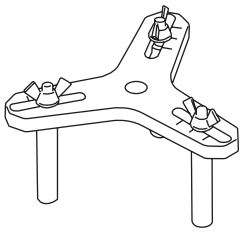 ST18762AA001	18762AA001	COMPRESSOR SPECIAL TOOL	• Used for removing the 1st driven gear. • COMPRESSOR SPECIAL TOOL (18762AA000) can also be used.
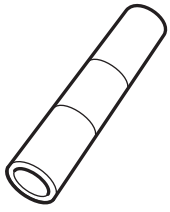 ST18654AA000	18654AA000	INSTALLER	Used for installing the 2nd driven gear bushing.
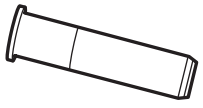 ST18657AA000	18657AA000	INSTALLER	Used for installing the transfer case oil seal.

ILLUSTRATION	TOOL NUMBER	DESCRIPTION	REMARKS
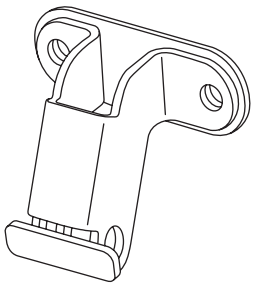 ST41099AJ130	41099AJ130	SPECIAL TOOL FB	Used for removing and installing transmission.
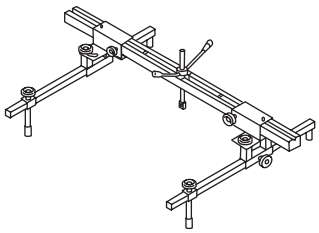 ST99099AJ000	99099AJ000	ENGINE HANGER	• Used for removing and installing transmission. • Used together with CHAIN BALANCER (99099AJ010) and sling chain (general tool).
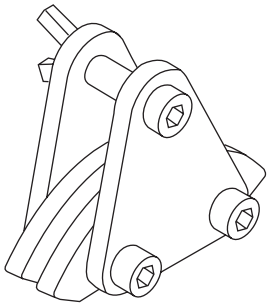 ST99099AJ010	99099AJ010	CHAIN BALANCER	• Used for removing and installing transmission. (Weight of 350 kg (772 lb) is supported) • Used together with ENGINE HANGER (99099AJ000) and sling chain (general tool). • Used to hang the engine while balancing it with the sling chain inserted in this tool.
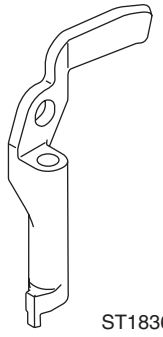 ST18360AA040	18360AA040	HANGER	Used for removing and installing transmission assembly.
 ST18363AA050	18363AA050	BOLT	Used for removing and installing transmission assembly.

ILLUSTRATION	TOOL NUMBER	DESCRIPTION	REMARKS
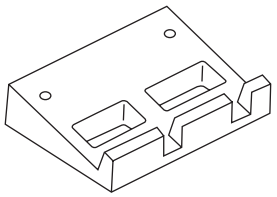 ST-498267200	498267200	CYLINDER HEAD TABLE	Used for removing and installing the roller bearing of the transfer case.
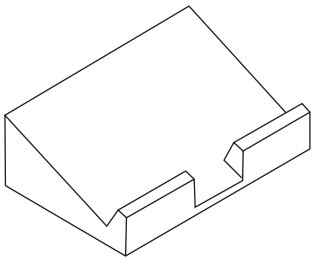 ST-498267300	498267300	CYLINDER HEAD TABLE	Used for removing and installing the roller bearing of the transfer case.
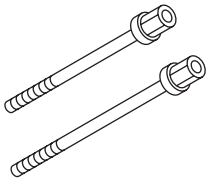 ST18763AA000	18763AA000	COMPRESSOR SHAFT	Used for removing and installing the needle bearing of the transfer case.
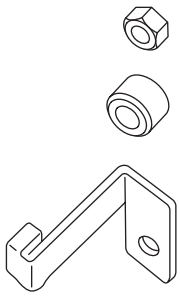 ST-498277200	498277200	STOPPER SET	• Used for installing the needle bearing of the transfer case. • Use only the spacer.

2. GENERAL TOOL

TOOL NAME	REMARKS
Circuit tester	Used for measuring resistance, voltage and current.
TORX® bit T70	Used for removing and installing the drain plug.
Spring pin remover	Used for removing and installing the straight pin. (3 — 3.3 mm)
Socket driver (TORX® 45 size, tamper resistant type)	Used for removing and installing interlock plate.
Sling chain	Used for removing and installing transmission. • Length: 0.8 — 1 m (2.6 — 3.3 ft) • Load capacity: 1.2 t (2,646 lb) or more • Diameter: 6 mm (0.24 in) or 6.3 mm (0.25 in) • Chain external width: 23.5 mm (0.93 in) or less • Chain internal width: 8.5 mm (0.33 in) or more
Screw shackle	Used for removing and installing transmission. • Load capacity: 250 kg (551 lb) or more • Use two pieces.

2. Transmission Gear Oil

A: INSPECTION

1) Park the vehicle on a level surface.
2) Turn the ignition switch to OFF, and wait until the engine cools.
3) Remove the oil level gauge and wipe it clean.
4) Reinsert the oil level gauge all the way. Be sure that the oil level gauge is correctly inserted in the proper direction.
5) Pull out the oil level gauge again, and check the oil level. If it is below the lower level, check for oil leakage and add transmission gear oil through the oil level gauge hole to bring the level up to the upper level.

CAUTION:
The length of the oil level gauge varies depending on models and destinations. Make sure to use the appropriate oil level gauge.

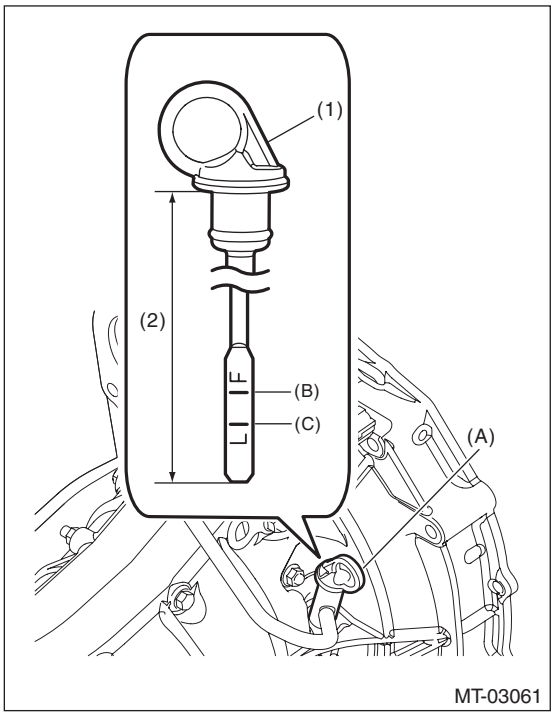

(A) Oil level gauge
(B) Upper level
(C) Lower level

(1) Gray
(2) 215.8 mm (8.5 in)

B: REPLACEMENT

1) Pull out the oil level gauge.
2) Lift up the vehicle.
3) Using the TORX® bit T70, remove the drain plug, and drain the transmission gear oil completely.

CAUTION:
• Immediately after the vehicle has been running or after idling for a long time, the gear oil will be hot. Be careful not to receive burns.
• Be careful not to spill the gear oil on the exhaust pipe, to prevent emission of smoke or causing a fire. If gear oil is spilt, wipe it off completely.
4) Attach the drain plug using TORX® bit T70.

NOTE:
- Install the drain plug after draining transmission gear oil.
- Use a new gasket.

Tightening torque:
44 N·m (4.5 kgf-m, 32.5 ft-lb) (aluminum gasket, silver)
70 N·m (7.1 kgf-m, 51.6 ft-lb) (copper gasket, brown)
70 N·m (7.1 kgf-m, 51.6 ft-lb) (metal gasket, black)

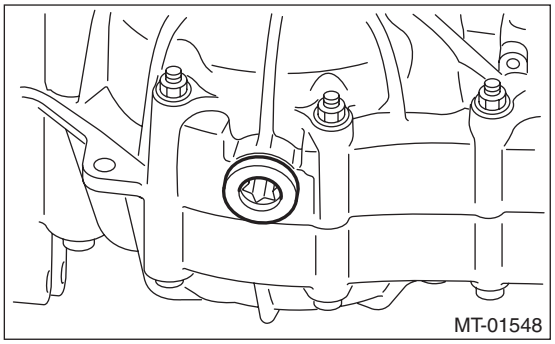

5) Lower the vehicle.
6) Fill with transmission gear oil through the oil level gauge hole.

CAUTION:
If an alternative gear oil is used, you may not have expected functionality and performance.

Recommended gear oil:
SUBARU GEAR OIL EXTRA MT

Alternative:
GL-5 (75W-90)

Gear oil capacity:
3.3 L (3.5 US qt, 2.9 Imp qt)
7) Check the transmission gear oil amount, and confirm that it is within the specification.

3. Manual Transmission Assembly

A: REMOVAL

1) Disconnect the ground terminal from battery sensor. <Ref. to RC-4, BATTERY, NOTE, Repair Contents.>
2) Remove the air intake duct. <Ref. to IN(H4DO)-12, REMOVAL, Air Intake Duct.>
3) Remove the clip (A) from the air intake boot.
4) Loosen the clamp (B) connecting the air intake boot and air cleaner case (rear).
5) Loosen the clamp (C) which connects the air intake boot and throttle body.

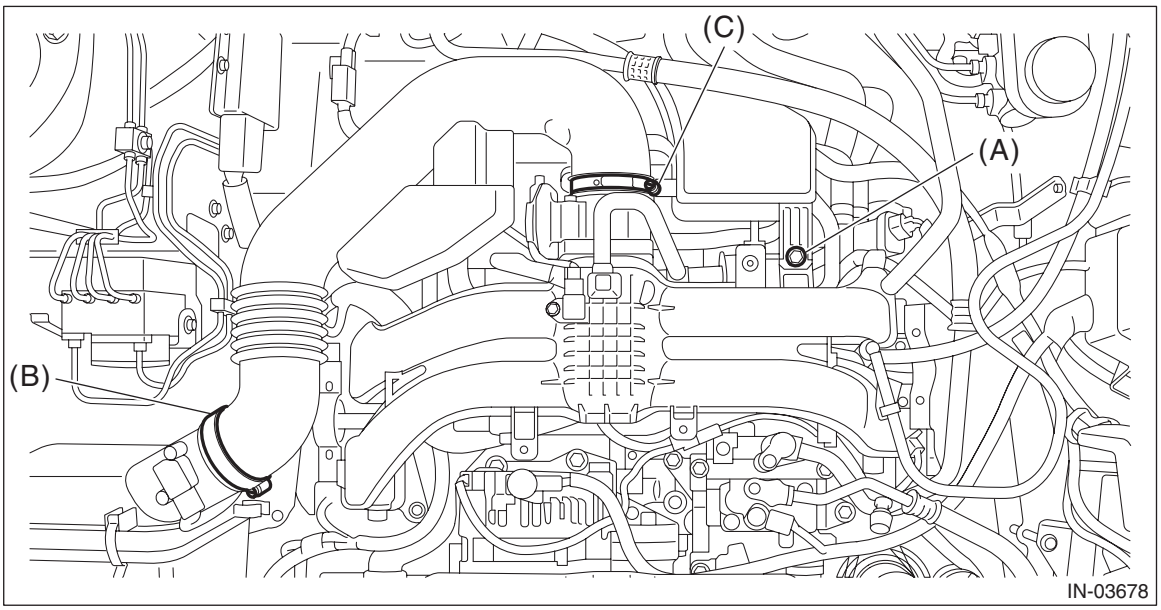

6) Remove the air intake boot from the throttle body, and move it to the left side wheel apron.

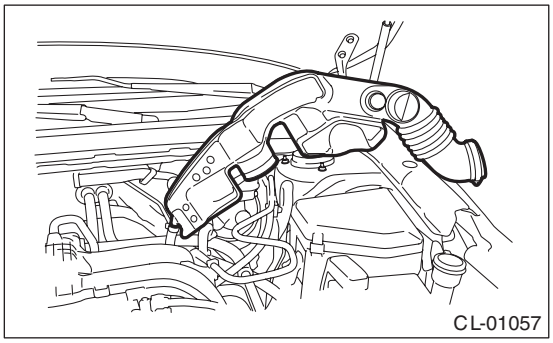

7) Disconnect the back-up light switch and the neutral position switch connectors, then remove the transmission radio ground cord terminal.

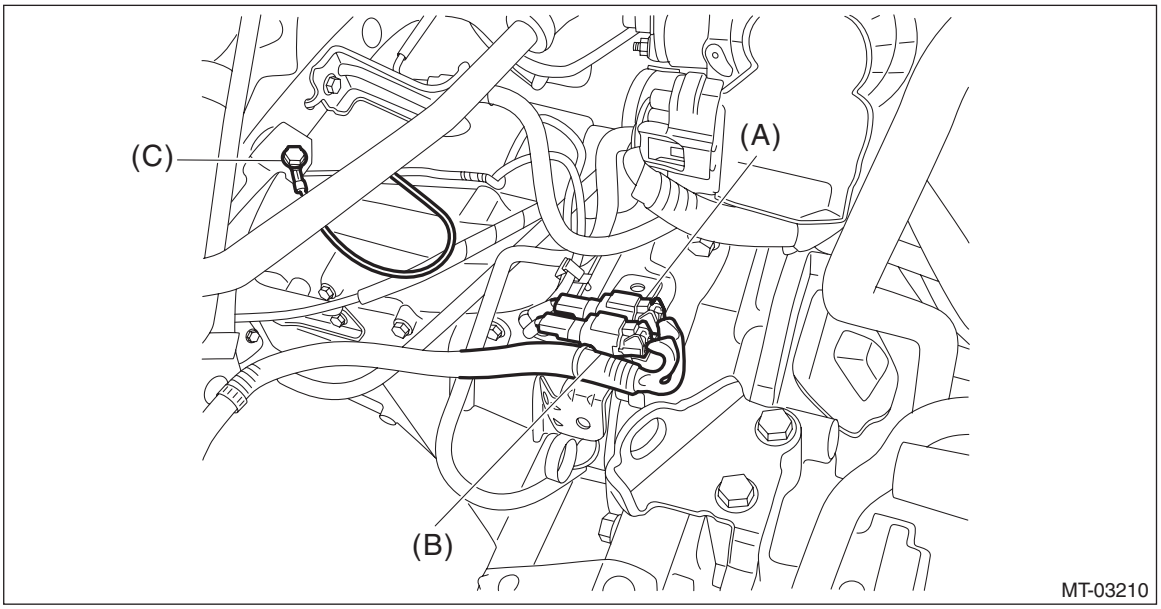

(A) Neutral position switch connector (brown)
(B) Back-up light switch connector (gray)
(C) Transmission radio ground cord terminal

8) Disconnect the throttle position sensor harness connector and manifold pressure sensor harness connector.

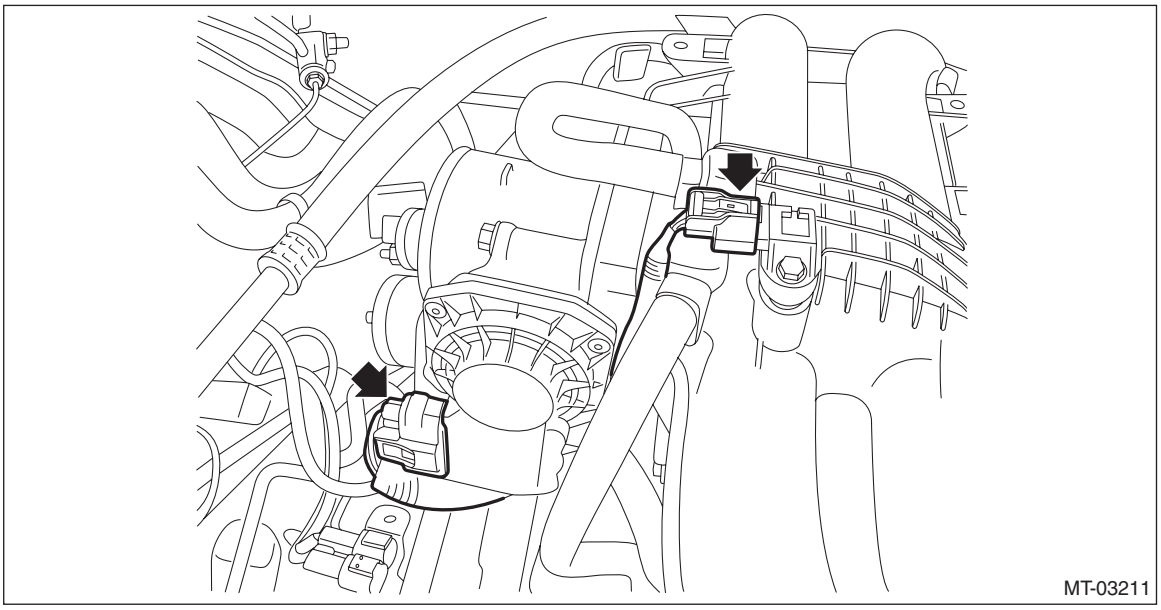

9) Remove the starter. <Ref. to SC(H4DO)-7, REMOVAL, Starter.>

10) Remove the operating cylinder and suspend on a wire.

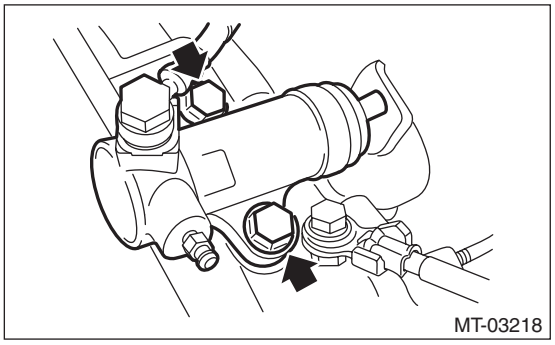

11) Remove the front wheels.
12) Lift up the vehicle.
13) Remove the front under cover. <Ref. to EI-28, REMOVAL, Front Under Cover.>
14) Remove the center exhaust pipe (rear). <Ref. to EX(H4DO)-12, REMOVAL, Center Exhaust Pipe.>
15) Drain transmission gear oil completely. <Ref. to 6MT-26, REPLACEMENT, Transmission Gear Oil.>
16) Remove the center exhaust cover.

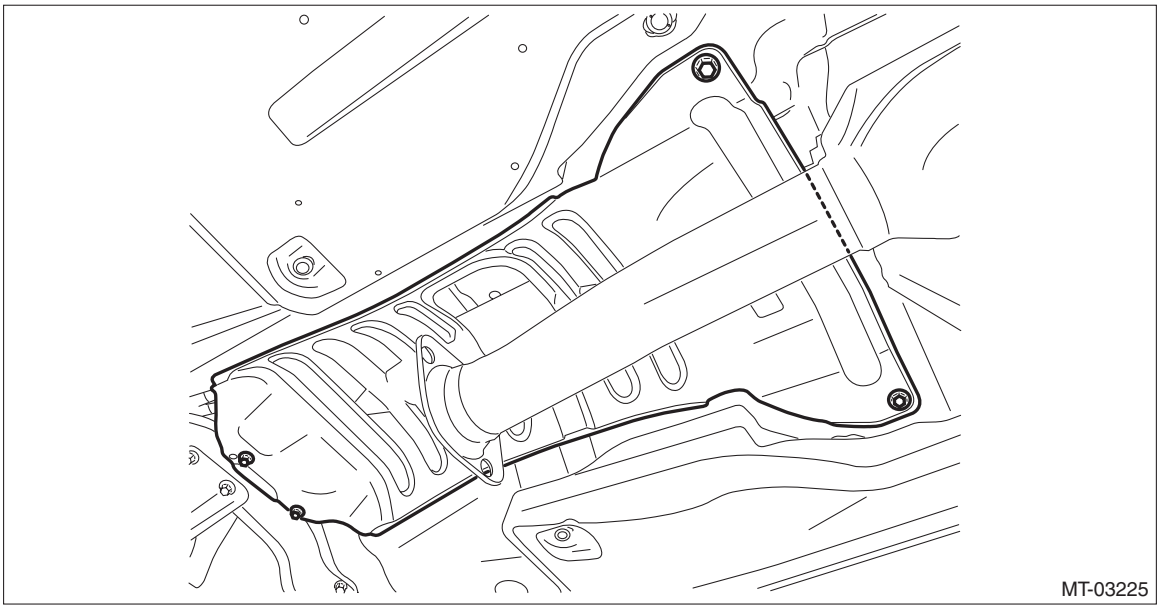

17) Remove the hanger bracket.

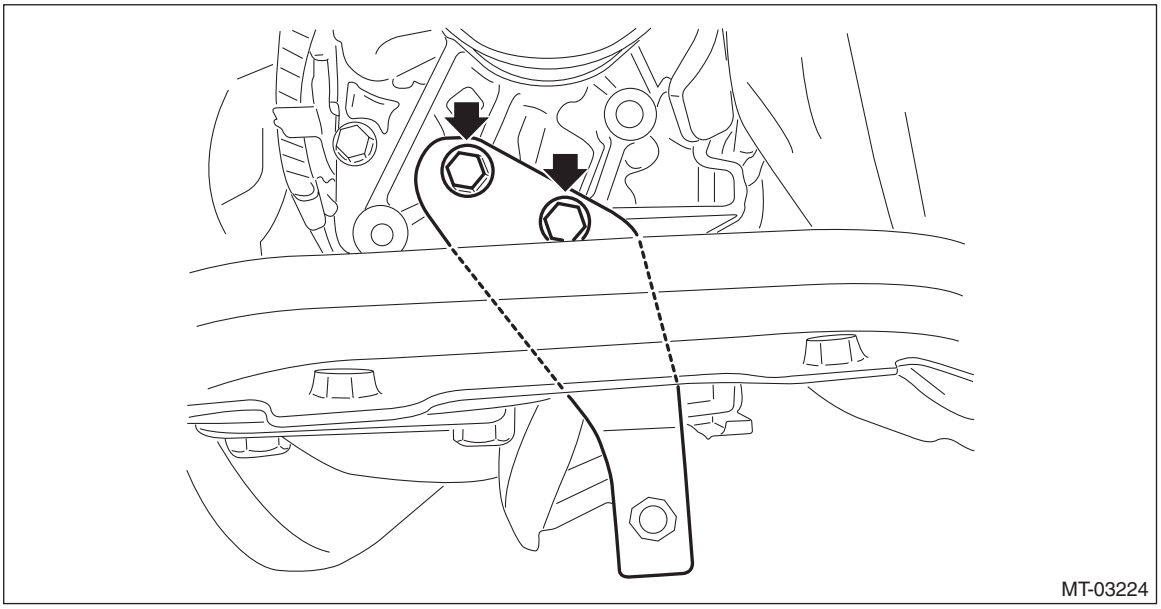

18) Remove the universal joint of the steering shaft. <Ref. to PS-14, REMOVAL, Universal Joint.>
19) Remove the propeller shaft. <Ref. to DS-10, REMOVAL, Propeller Shaft.>
20) Remove the MT gear shift cable and MT gear select cable from MT gear shift lever. <Ref. to CS-56, REMOVAL, MT Gear Shift Lever.>

CAUTION:
- **Do not bend MT gear shift cable and MT gear select cable at a sharp angle.**
- **Disconnect the MT gear shift cable and MT gear select cable at the MT gear shift lever side.**
- **Always use new MT gear select cable if the cable is removed from selector lever COMPL of transmission side.**

21) Disconnect the stabilizer link.

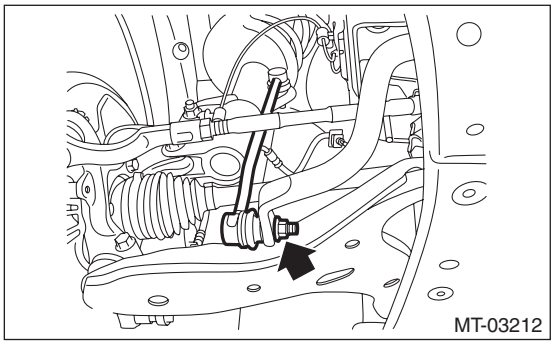

22) Remove the bolt securing the ball joint of the front arm to the housing, then separate the front arms and the housing.

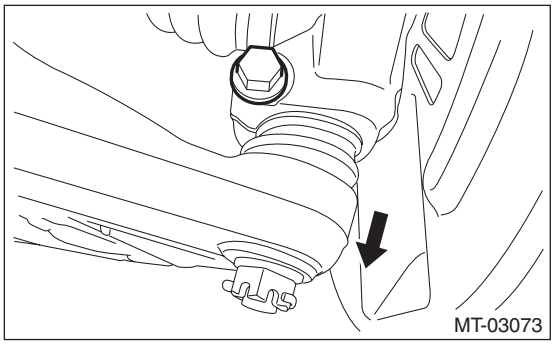

23) Using a crowbar, separate the left and right front drive shafts.

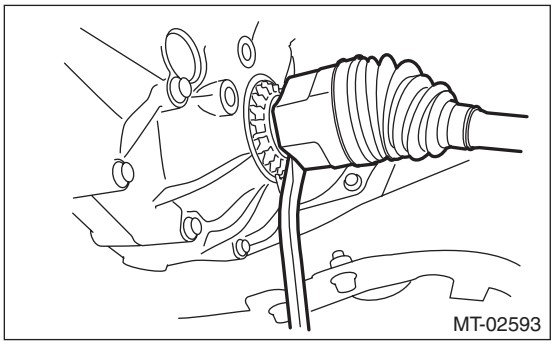

24) Lower the vehicle.

25) Remove the nuts connecting the engine mounting and the transmission main mounting bracket.

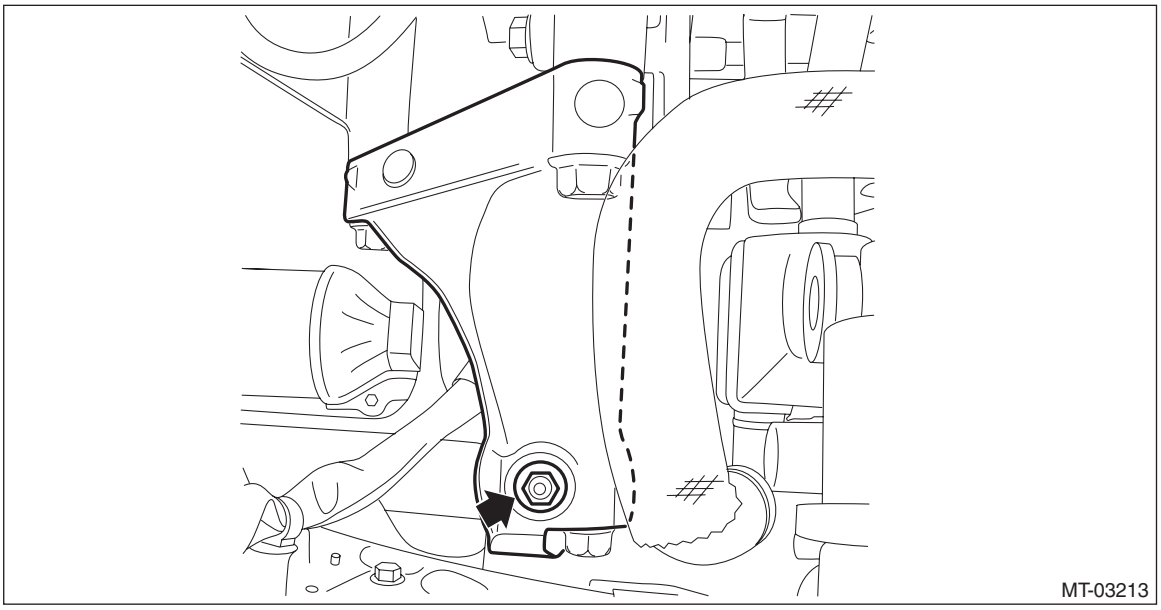

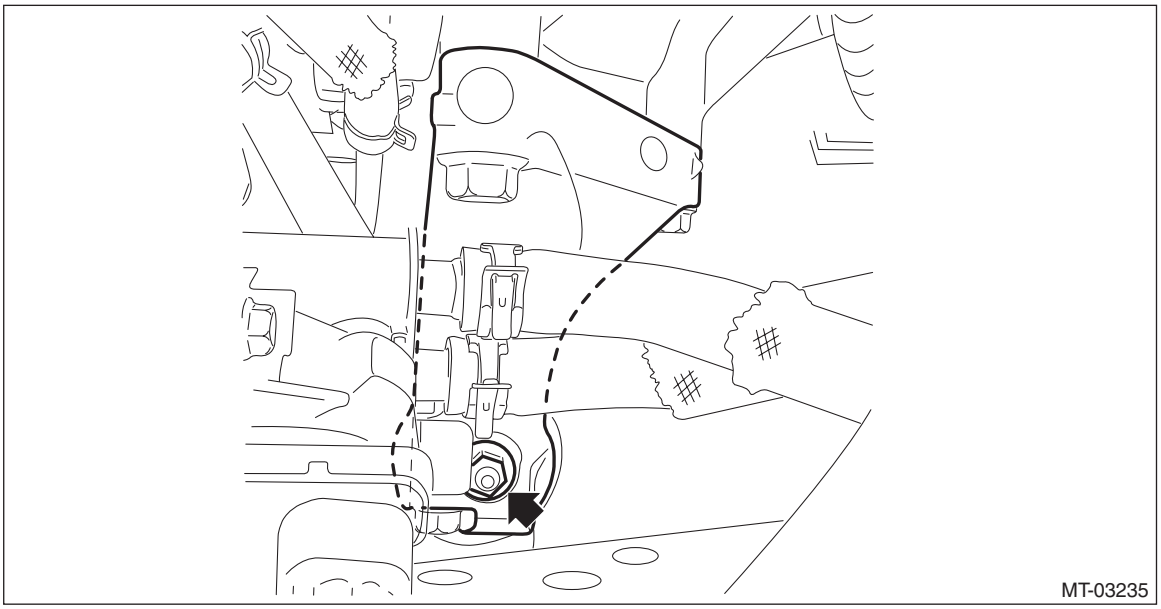

26) Remove the V-belt covers.

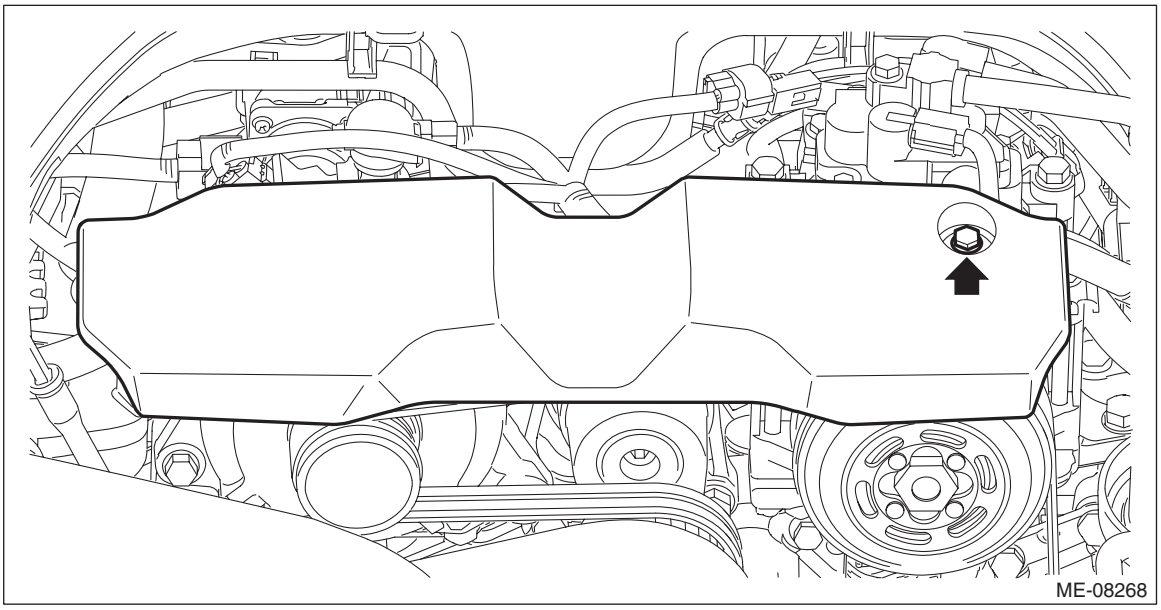

27) Using the ST1, install the ST2 to the engine unit.
ST1 18363AA050 BOLT
ST2 18360AA040 HANGER

Tightening torque:
43 N·m (4.4 kgf-m, 31.7 ft-lb)

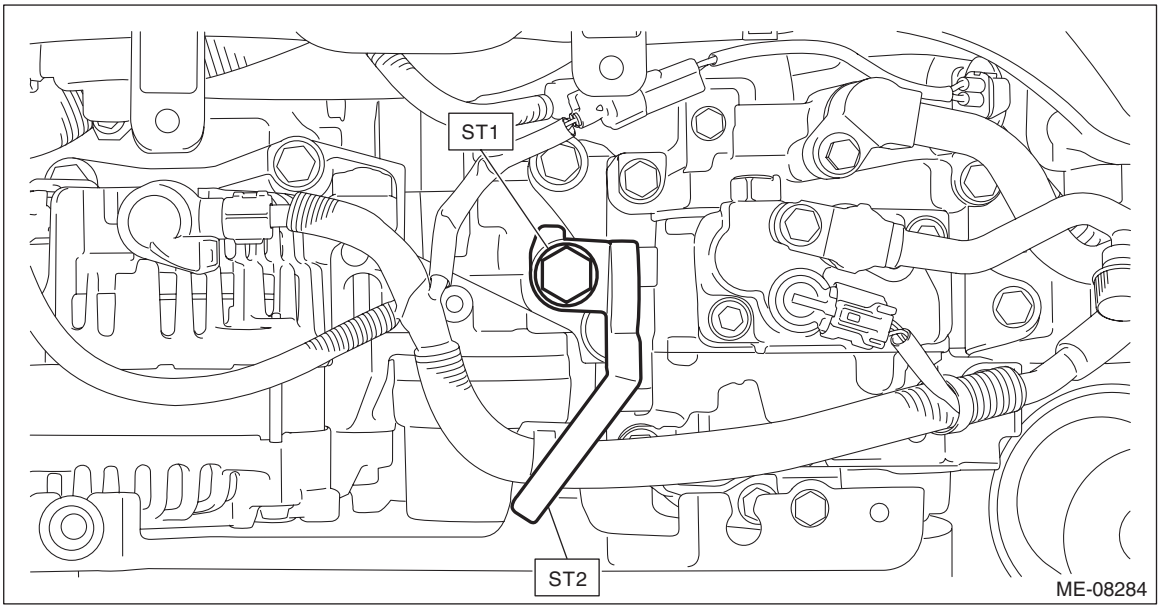

28) Set the ST1 and ST2 to vehicle.

CAUTION:
- **Set the chain sling so that it does not contact the engine parts.**
- **Install a bolt of ϕ8 mm (0.3 in) at the locations shown in the figure, and place the front side arms of ST (ENGINE HANGER).**
- **Set the rear arms of ST (ENGINE HANGER) at the locations shown in the figure.**

ST1 99099AJ000 ENGINE HANGER
ST2 99099AJ010 CHAIN BALANCER

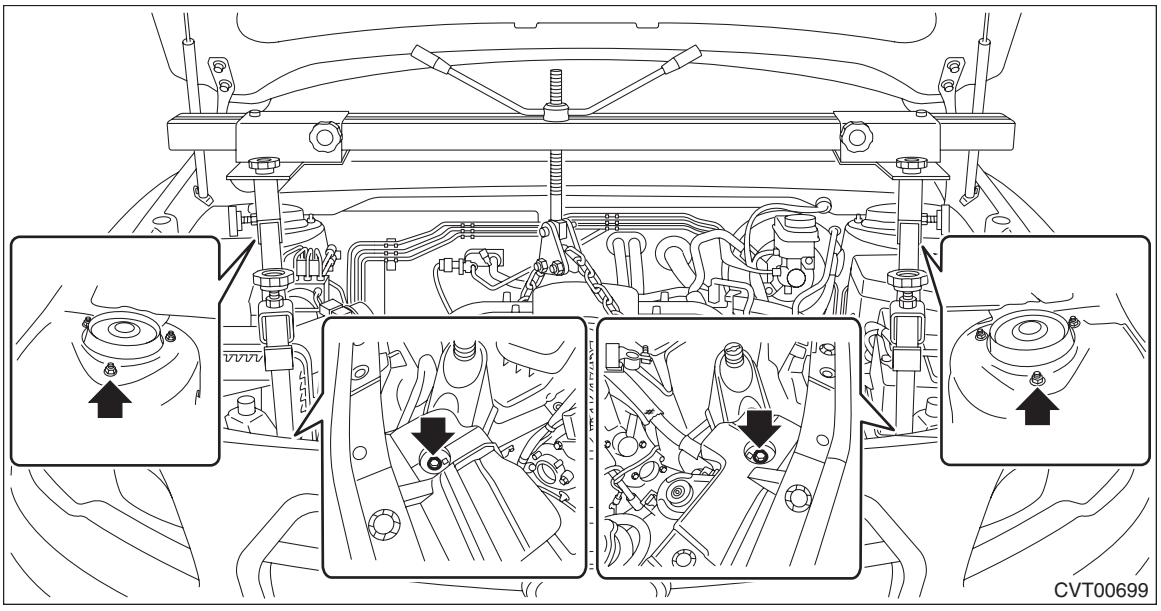

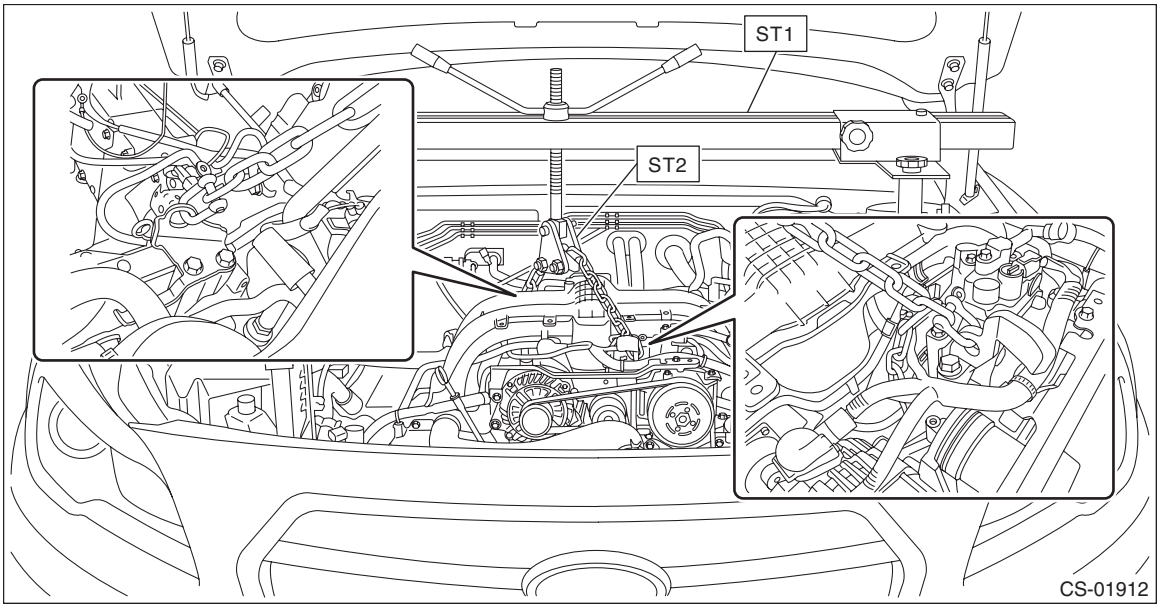

29) Lift the engine slightly and remove the bolts of front cushion rubber.
30) Remove the nut and bolt of the front cushion rubber, then remove the front cushion rubber.

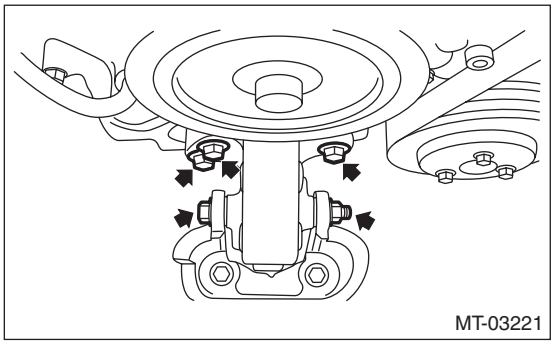

31) Temporarily attach ST by using two bolts.
ST 41099AJ130 SPECIAL TOOL FB

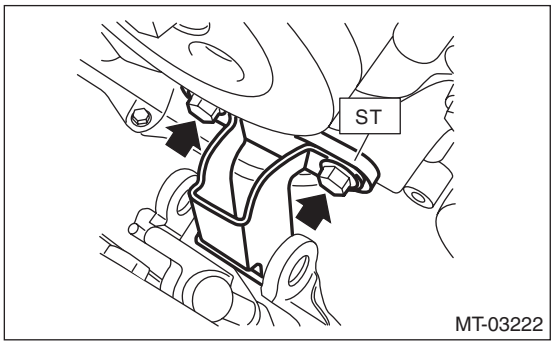

32) Lift up the engine unit high enough to install the bolt and nut to vehicle.

CAUTION:
- **Do not lift up higher than enough level to install the ST to avoid damage to the hoses and pipes inside the engine room.**
- **Do not tighten the bolts and nuts excessively, or the engine mounting bracket may be deformed.**

NOTE:
If it is difficult to pull out the stud bolt from transmission main mounting bracket, shake the engine unit slightly while lifting up.
33) Tighten the mounting bolts on the engine side.

Tightening torque:
25 N·m (2.6 kgf-m, 18.4 ft-lb)

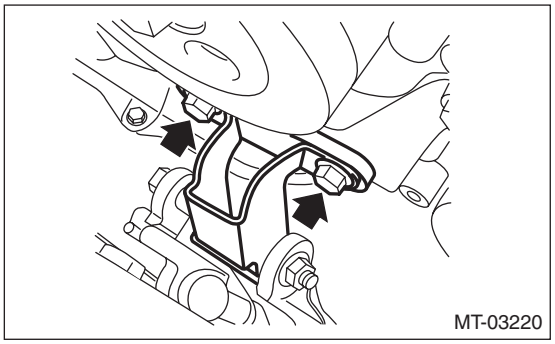

34) Remove the ST (ENGINE HANGER).

35) Separate the battery cable clip to remove the bracket.

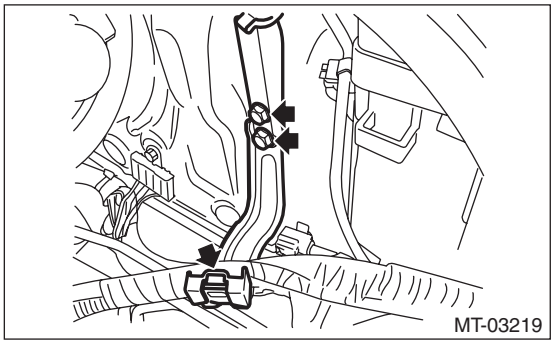

36) Remove the transmission main mounting bracket.

NOTE:
First, remove the transmission main mounting bracket on the right side of vehicle, and then tilt the engine unit to remove the left transmission main mounting bracket.

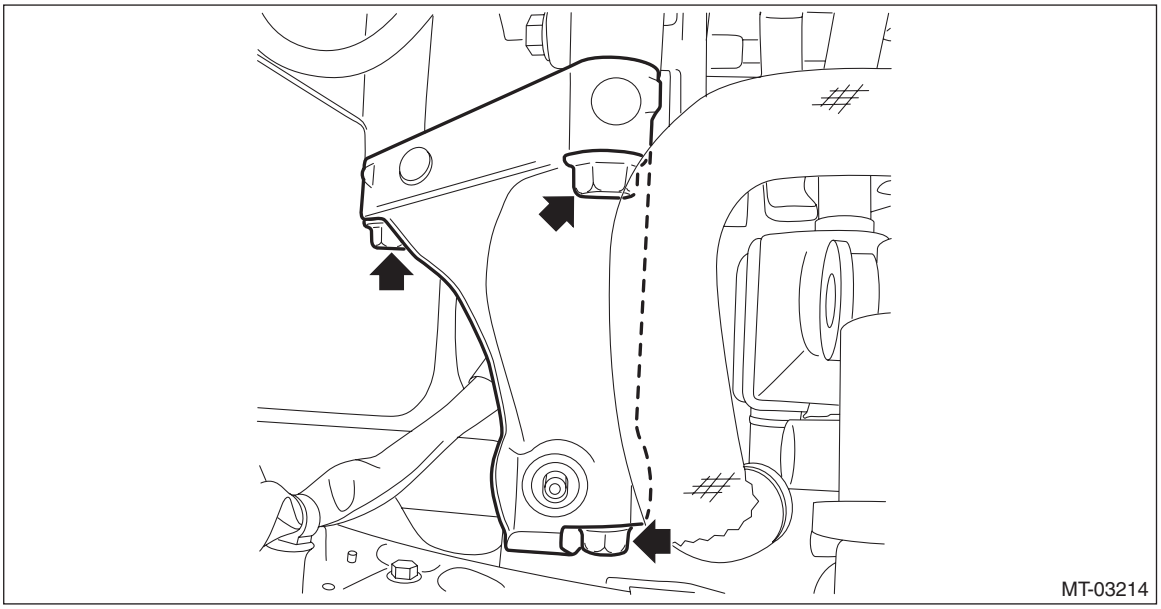

37) Remove the two mounting bolts on the upper side of the transmission.

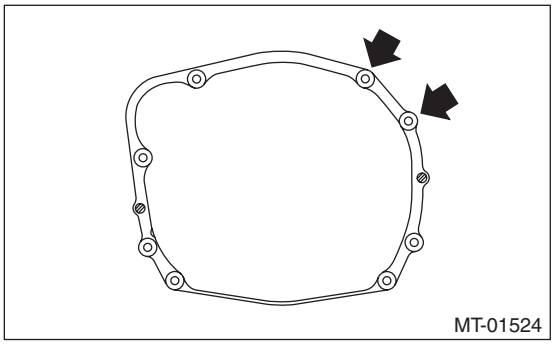

38) Set the ST (ENGINE HANGER) again to loosen the chain sling.
39) Lift up the vehicle.

40) Place the transmission jack under the transmission.

CAUTION:
Always support the transmission case with a transmission jack.

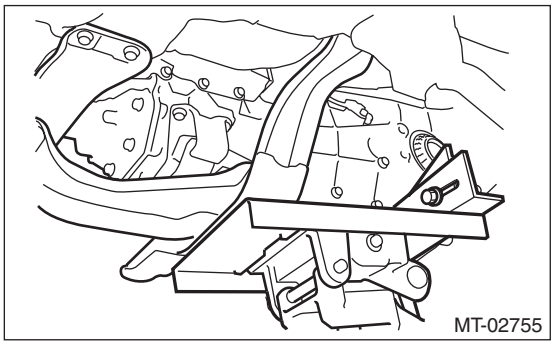

41) Remove the bolts and nuts which hold lower side of transmission to engine.

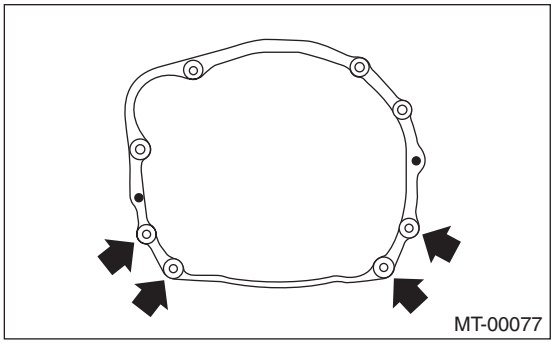

42) Remove the front crossmember and the rear crossmember.

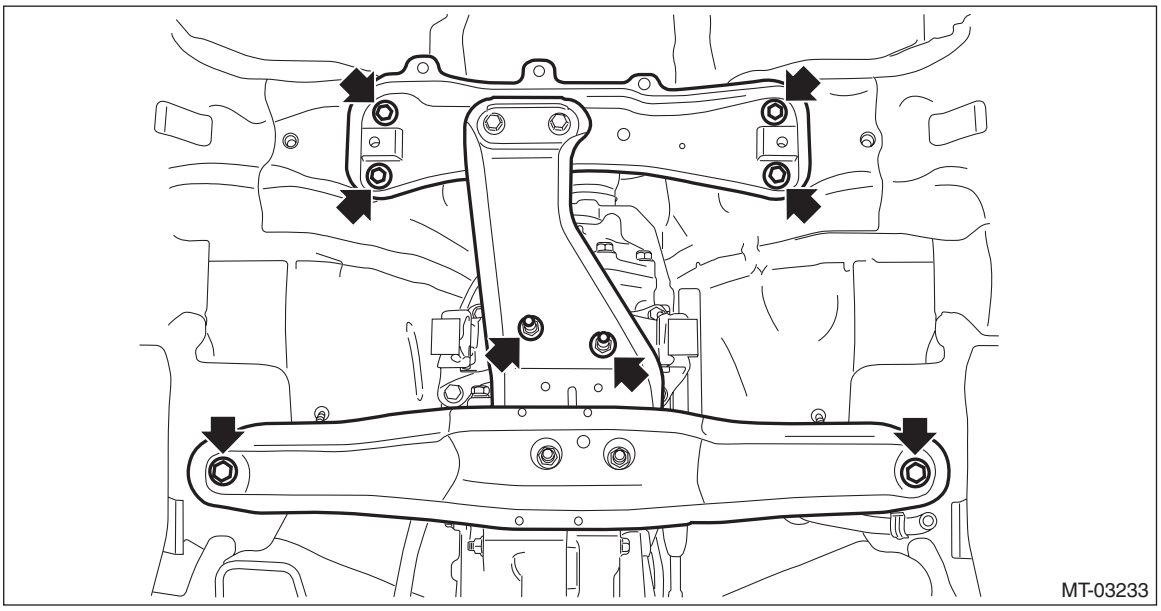

43) Lower the transmission rear end (dust cover rear end).

CAUTION:
When lowering the transmission rear end, be careful not to let the converter case and steering mechanical parts contact each other.

NOTE:
Lower the transmission rear end by approx. 80 mm (3.1 in) (reference).

44) Remove the transmission assembly.

NOTE:
- Move the transmission jack towards the rear until the main shaft is withdrawn from the clutch disc.
- Remove it while moving the transmission jack up and down so that the engine and transmission remain directly aligned.

45) Remove the transmission cushion rubber.

B: INSTALLATION

1) Replace the oil seal of the differential side retainer. <Ref. to 6MT-52, REPLACEMENT, Differential Side Retainer Oil Seal.>

NOTE:
- Be sure to replace the oil seal after removing the front drive shaft.
- When a new oil seal has been installed, replacement is not required.

ST 18675AA000 DIFFERENTIAL SIDE OIL SEAL INSTALLER

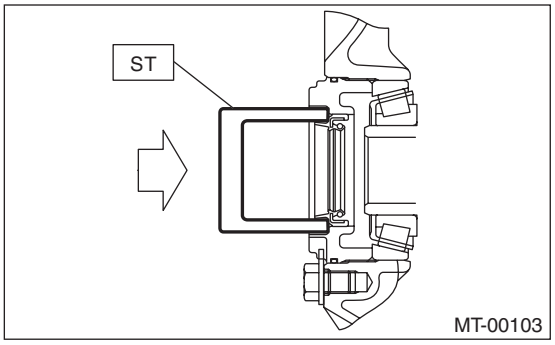

2) Strike and bend the transmission hanger of transmission rear with a rubber hammer etc. so that it gets in contact with the transmission case.

CAUTION:
Do not apply excessive load or impact to the transmission case.

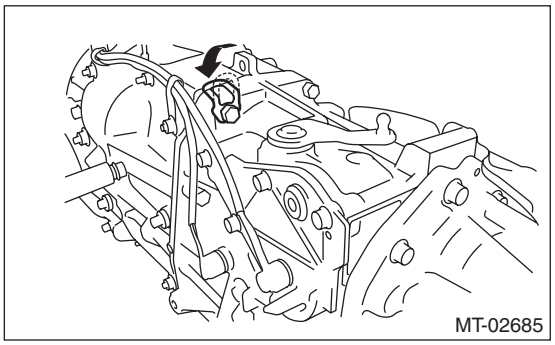

3) Install the transmission cushion rubber to the transmission, and tighten the bolt (A).
4) Install the transmission cushion rubber to the center crossmember, and temporarily tighten the nut (B).

Tightening torque:
Bolt (A)
35 N·m (3.6 kgf-m, 25.8 ft-lb)

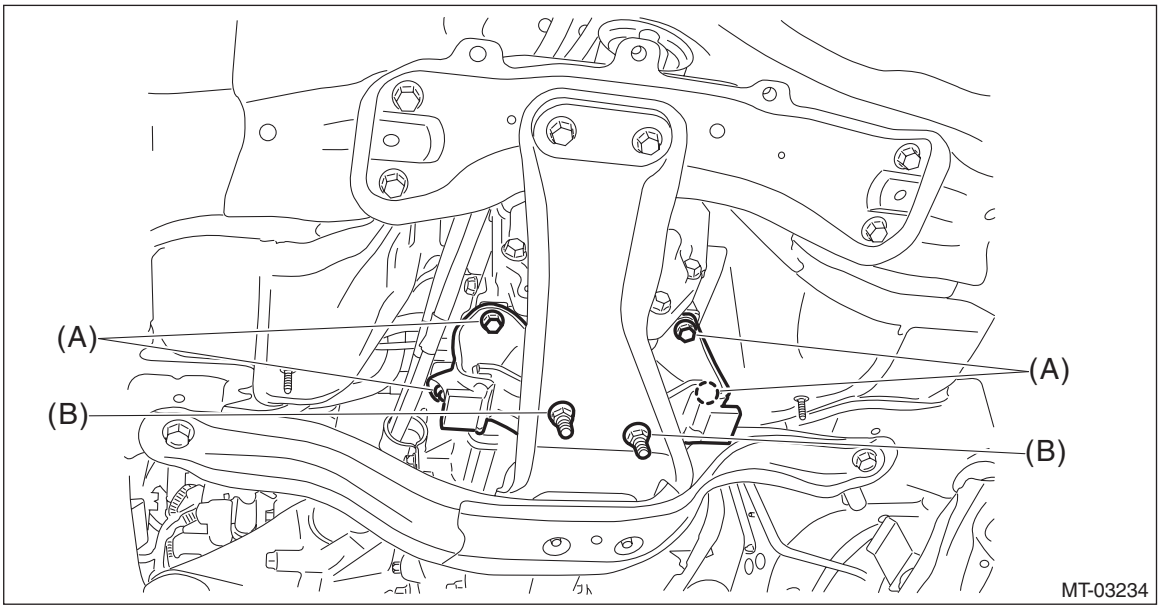

5) Install the transmission assembly onto the engine.
(1) Lift up the transmission gradually using a transmission jack.
(2) Engage at the spline section.

NOTE:
Be careful not to hit the main shaft against the clutch cover.
6) Install the front crossmember and rear crossmember.
7) Tighten the transmission cushion rubber mounting nut.

Tightening torque:
T1: 75 N·m (7.6 kgf-m, 55.3 ft-lb)
T2: 140 N·m (14.3 kgf-m, 103.3 ft-lb)
T3: 35 N·m (3.6 kgf-m, 25.8 ft-lb)

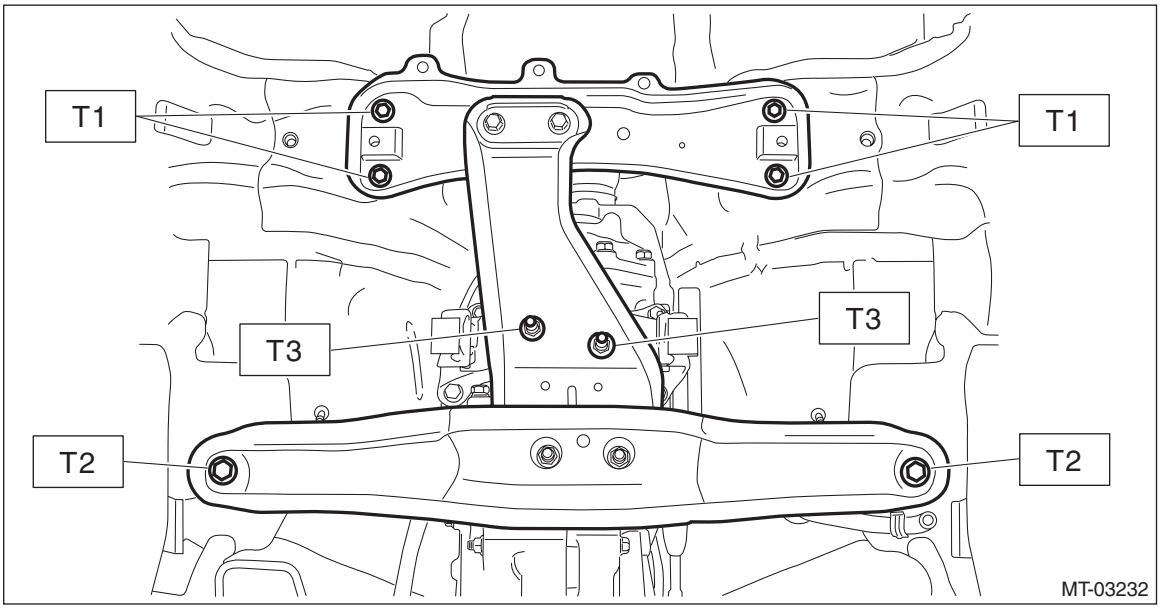

8) Take out the transmission jack.

9) Tighten the bolts and nuts which hold the lower side of transmission to the engine.

Tightening torque:
50 N·m (5.1 kgf-m, 36.9 ft-lb)

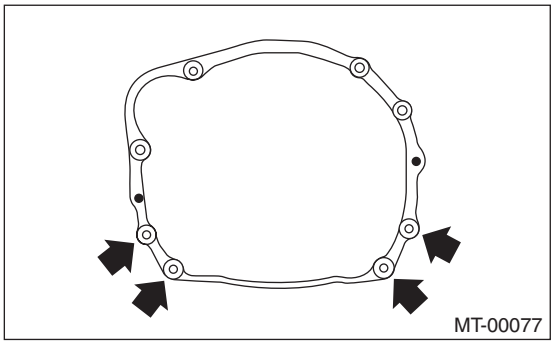

10) Lower the vehicle.
11) Remove the ST (ENGINE HANGER).
12) Install the two mounting bolts on the upper side of the transmission.

Tightening torque:
50 N·m (5.1 kgf-m, 36.9 ft-lb)

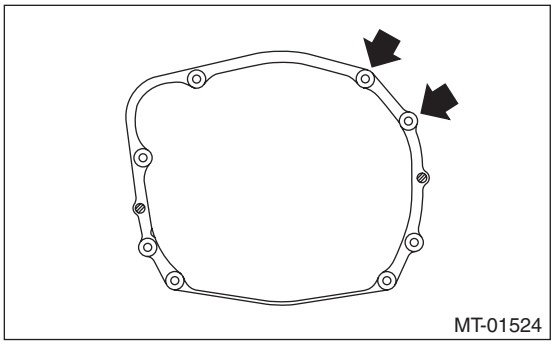

13) Install the transmission main mounting bracket.

NOTE:
Incline the engine, and install the transmission main mounting bracket for the left side of the vehicle first.

Tightening torque:
75 N·m (7.6 kgf-m, 55.3 ft-lb)

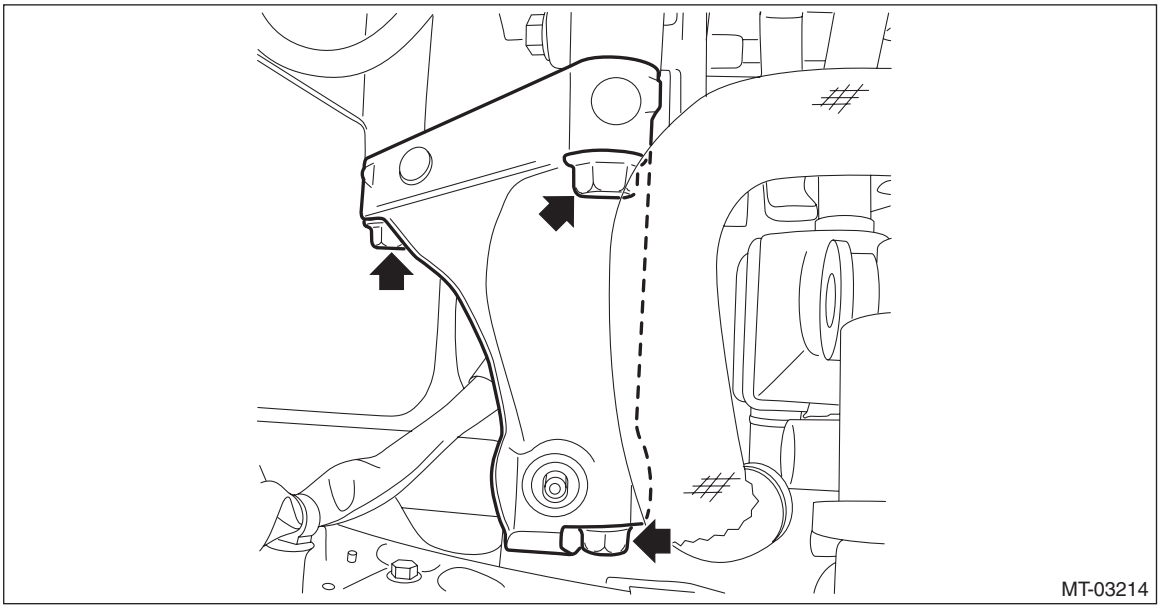

14) Install the battery cable bracket, and install the battery cable clip to the bracket.

Tightening torque:
7.5 N·m (0.76 kgf-m, 5.5 ft-lb)

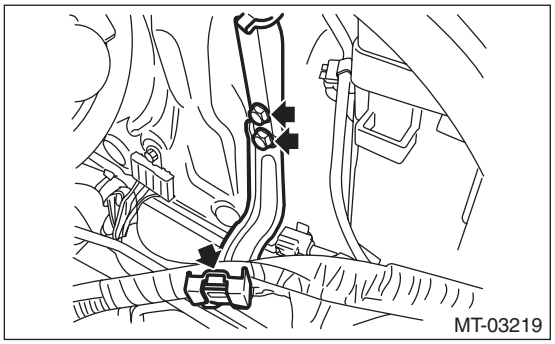

15) Attach the ST (ENGINE HANGER) again.
16) Remove the bolts from ST (SPECIAL TOOL FB).

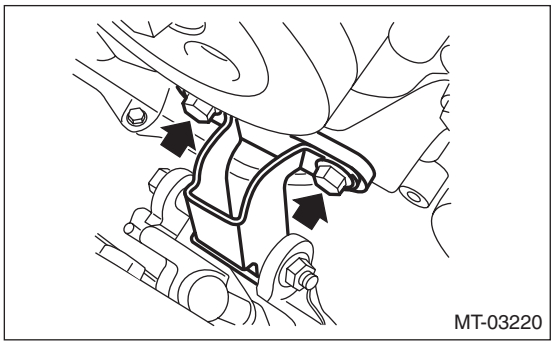

17) Remove the bolt and nut to remove ST (SPECIAL TOOL FB).
18) Temporarily attach the front cushion rubber with bolts and nuts.

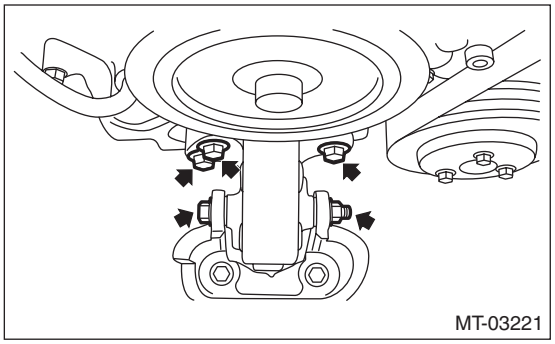

19) Tighten the bolts and nuts of front cushion rubber.

NOTE:
Always start tightening from the bolts on the engine side.

Tightening torque:
T1: 25 N·m (2.5 kgf-m, 18.4 ft-lb)
T2: 45 N·m (4.6 kgf-m, 33.2 ft-lb)

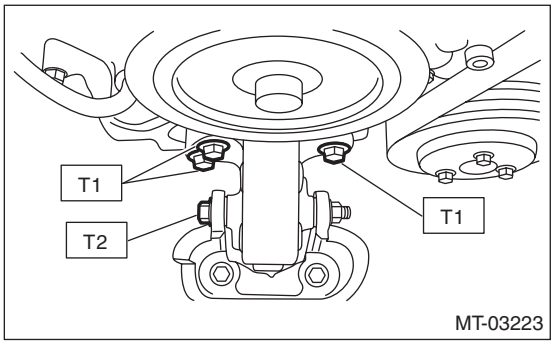

20) Remove the ST (ENGINE HANGER).

CAUTION:
Be sure to remove the M8 bolt.

21) Remove the ST1 and ST2 from the engine unit.
ST1 18363AA050 BOLT
ST2 18360AA040 HANGER

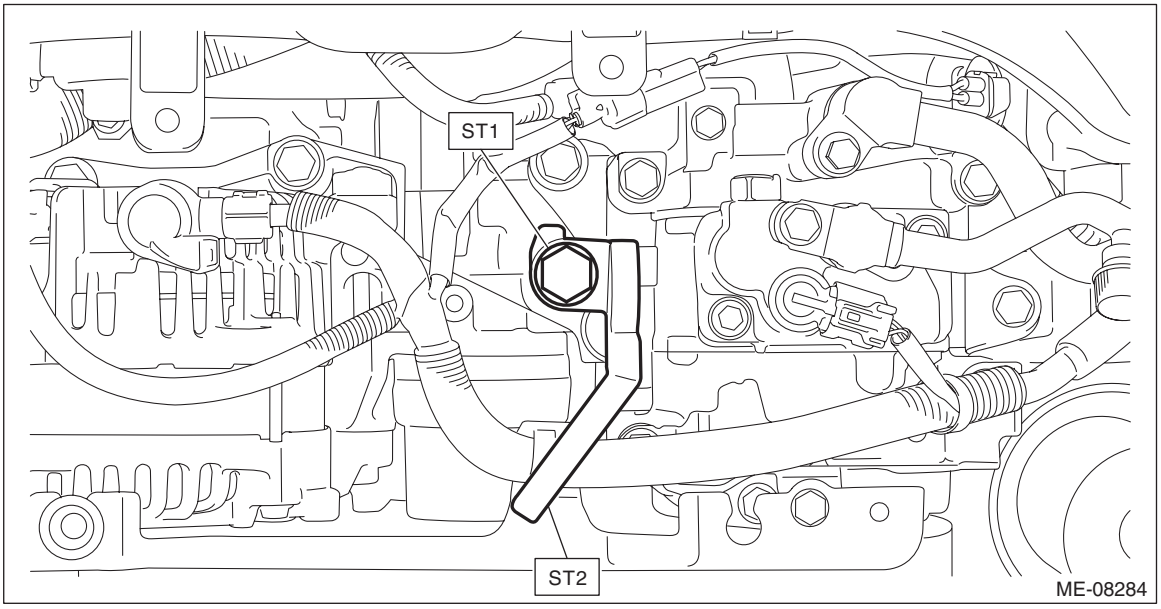

22) Tighten the nuts connecting the engine mount and the transmission main mounting bracket.

Tightening torque:
45 N·m (4.6 kgf-m, 33.2 ft-lb)

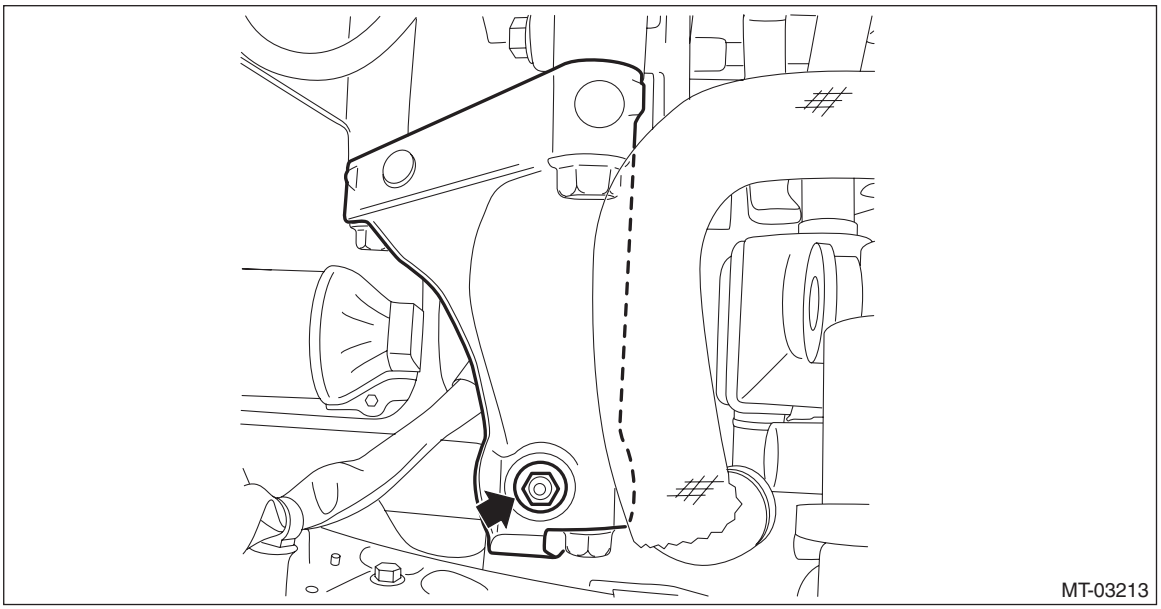
MT-03213

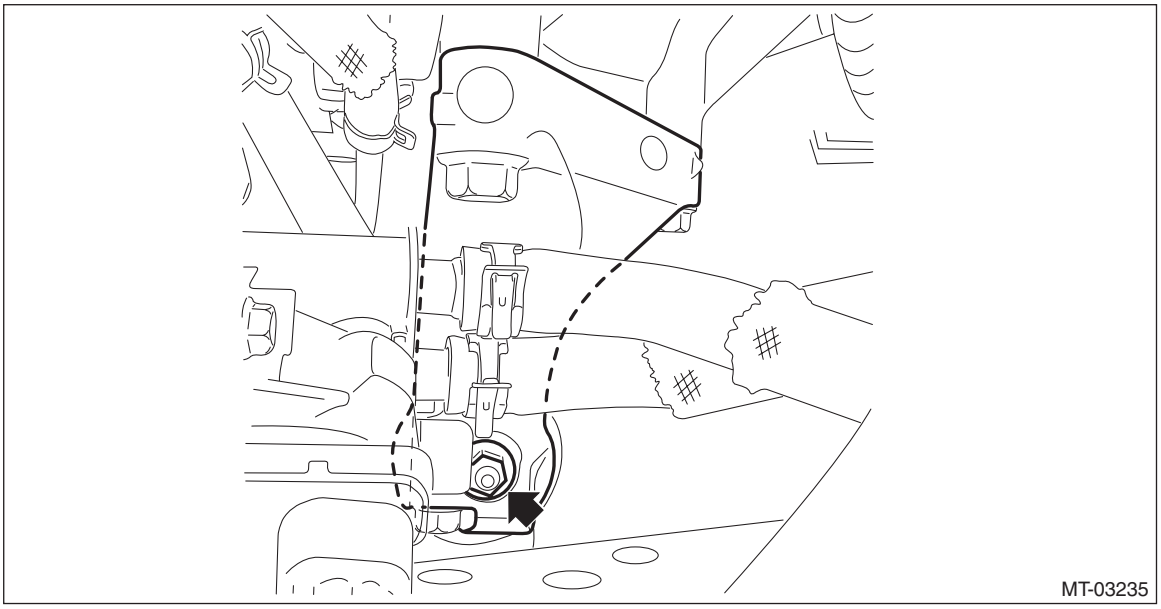
MT-03235

23) Install the starter. <Ref. to SC(H4DO)-9, INSTALLATION, Starter.>
24) Install the operating cylinder.

Tightening torque:
37 N·m (3.8 kgf-m, 27.3 ft-lb)

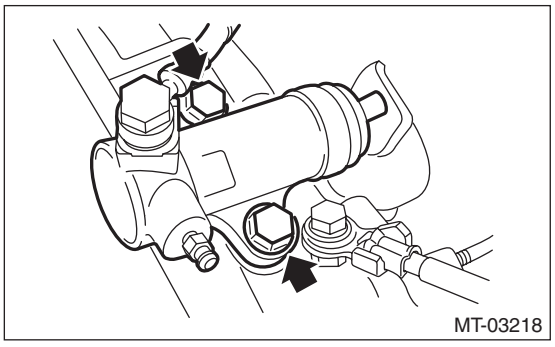
MT-03218

25) Lift up the vehicle.
26) Install the universal joint of the steering shaft. <Ref. to PS-15, INSTALLATION, Universal Joint.>
27) Install the ST to the transmission, and then install the front drive shaft.
ST 28399SA010 OIL SEAL PROTECTOR

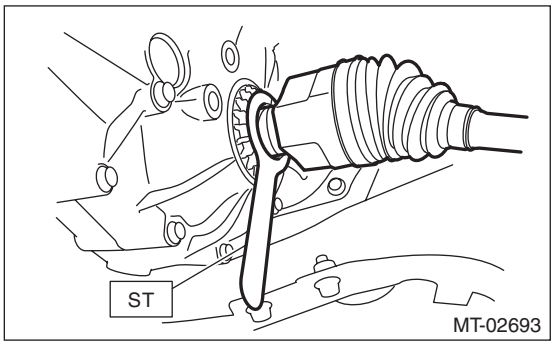

28) Insert the front arm ball joint and tighten the mounting bolt.

Tightening torque:
50 N·m (5.1 kgf-m, 36.9 ft-lb)

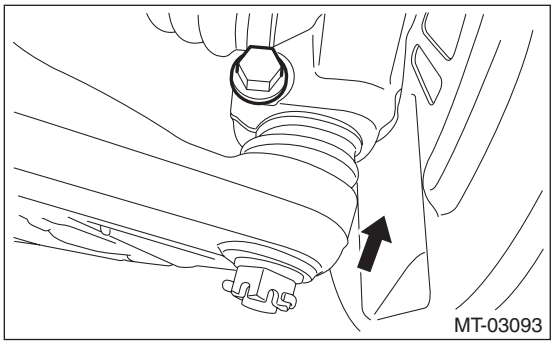

29) Install the stabilizer link.

Tightening torque:
60 N·m (6.1 kgf-m, 44.3 ft-lb)

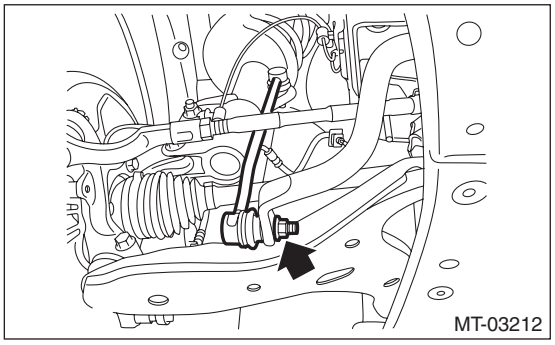

30) Install the MT gear shift cable and MT gear select cable to MT gear shift lever. <Ref. to CS-59, INSTALLATION, MT Gear Shift Lever.>

CAUTION:
- **Do not bend MT gear shift cable and MT gear select cable at a sharp angle.**
- **Always use new MT gear select cable if the cable is removed from selector lever COMPL of transmission side.**

31) Install the propeller shaft. <Ref. to DS-12, INSTALLATION, Propeller Shaft.>

32) Install the hanger bracket.

Tightening torque:
23 N·m (2.3 kgf-m, 17.0 ft-lb)

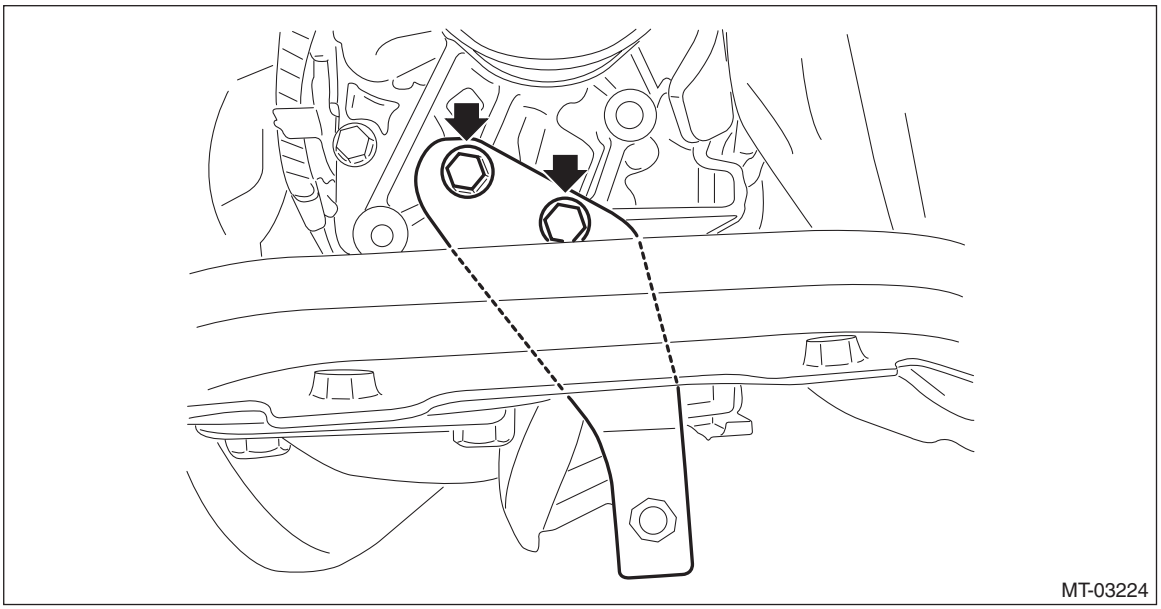

33) Install the center exhaust cover.

Tightening torque:
18 N·m (1.8 kgf-m, 13.3 ft-lb)

34) Install the center exhaust pipe (rear). <Ref. to EX(H4DO)-13, INSTALLATION, Center Exhaust Pipe.>
35) Install the front under cover. <Ref. to EI-28, INSTALLATION, Front Under Cover.>
36) Lower the vehicle.
37) Connect the throttle position sensor harness connector and manifold pressure sensor harness connector.

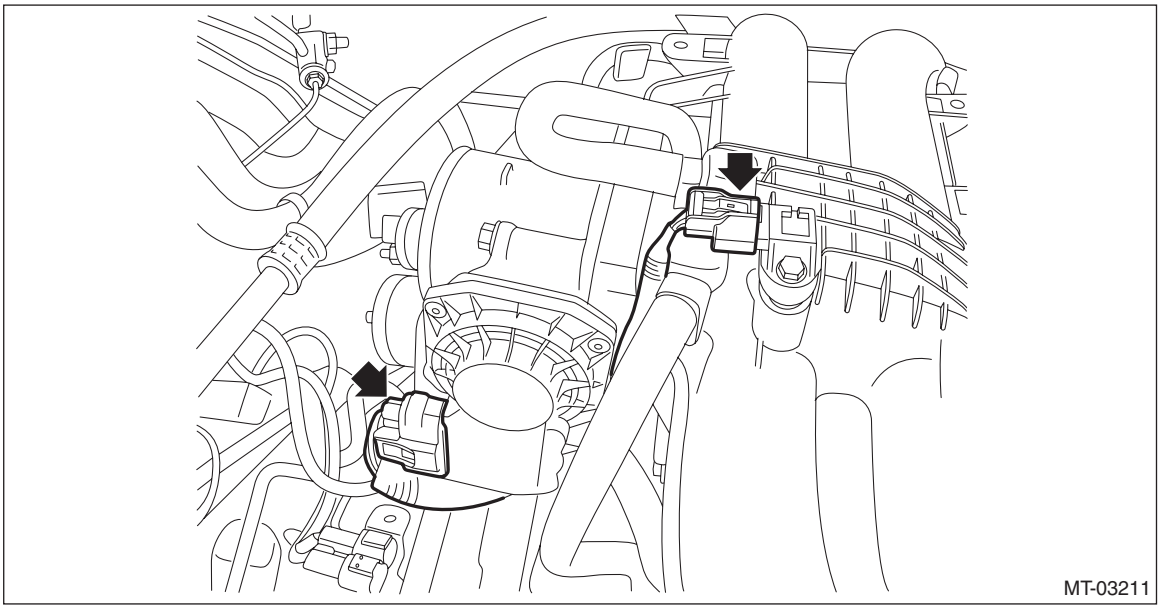

38) Connect the back-up light switch and the neutral position switch connectors, then install the transmission radio ground cord terminal.

Tightening torque:
13 N·m (1.3 kgf-m, 9.6 ft-lb)

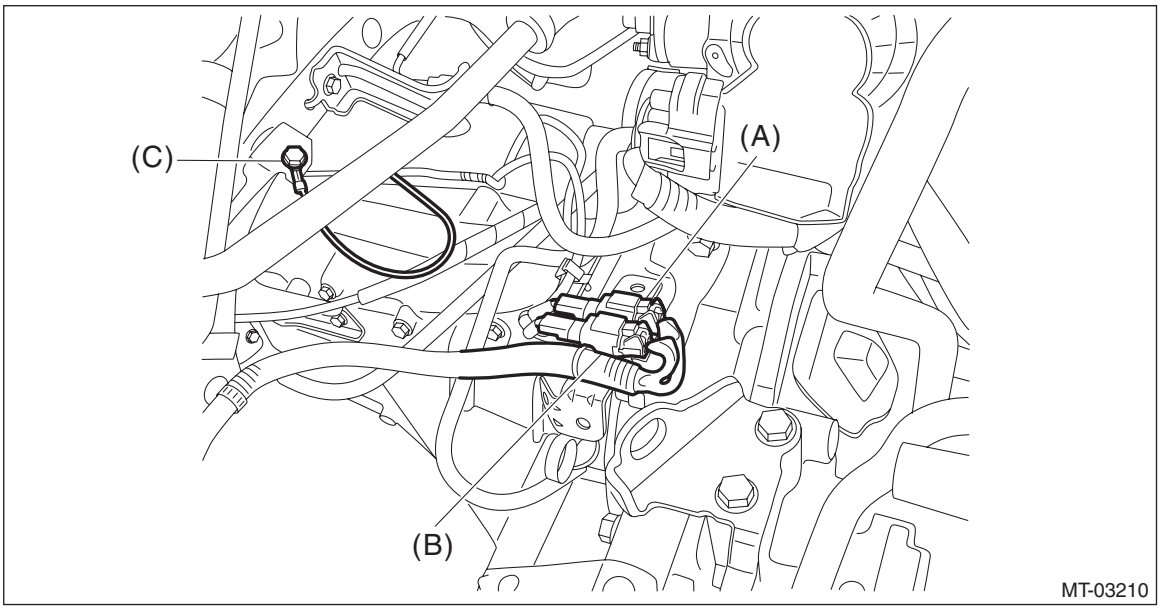

(A) Neutral position switch connector (brown)
(B) Back-up light switch connector (gray)
(C) Transmission radio ground cord terminal

39) Pour in transmission gear oil and check the oil level. <Ref. to 6MT-25, Transmission Gear Oil.>
40) Install the air intake boot. <Ref. to IN(H4DO)-10, INSTALLATION, Air Intake Boot.>
41) Install the air intake duct. <Ref. to IN(H4DO)-12, INSTALLATION, Air Intake Duct.>
42) Install the front tires.
43) Connect the ground terminal to battery sensor. <Ref. to RC-4, BATTERY, NOTE, Repair Contents.>

4. Transmission Mounting System

A: REMOVAL

1. CROSSMEMBER AND CUSHION RUBBER

1) Disconnect the ground terminal from battery sensor. <Ref. to RC-4, BATTERY, NOTE, Repair Contents.>
2) Lift up the vehicle.
3) Remove the front under cover. <Ref. to EI-28, REMOVAL, Front Under Cover.>
4) Remove the center exhaust pipe (rear). <Ref. to EX(H4DO)-12, REMOVAL, Center Exhaust Pipe.>
5) Remove the center exhaust cover.

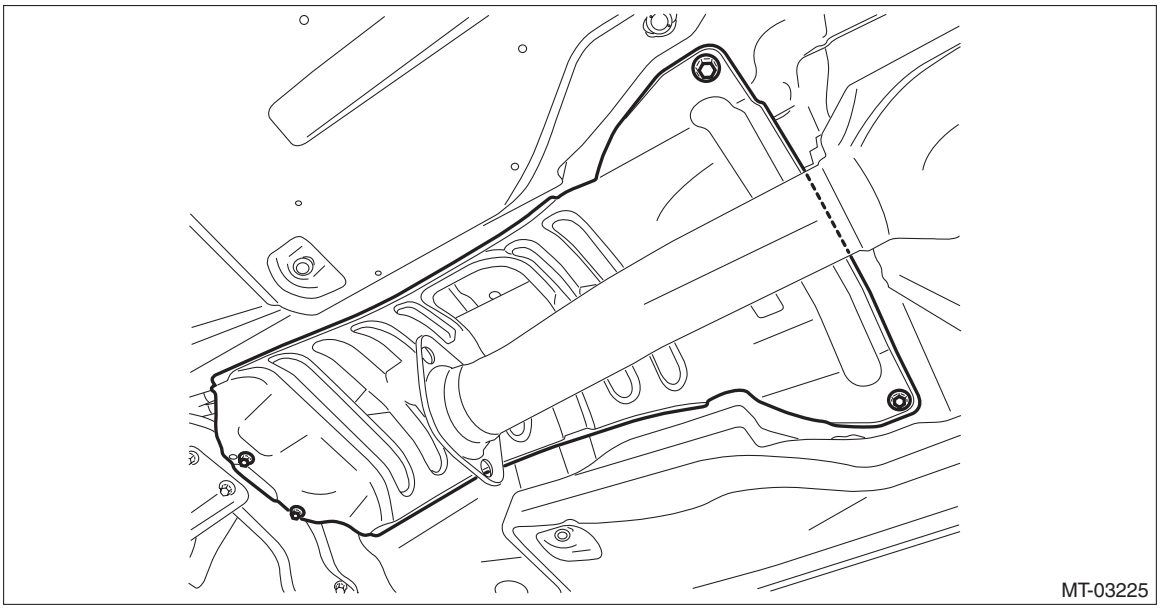
MT-03225

6) Set the transmission jack.

CAUTION:
Always support the transmission case with a transmission jack.

7) Remove the front crossmember and the rear crossmember.

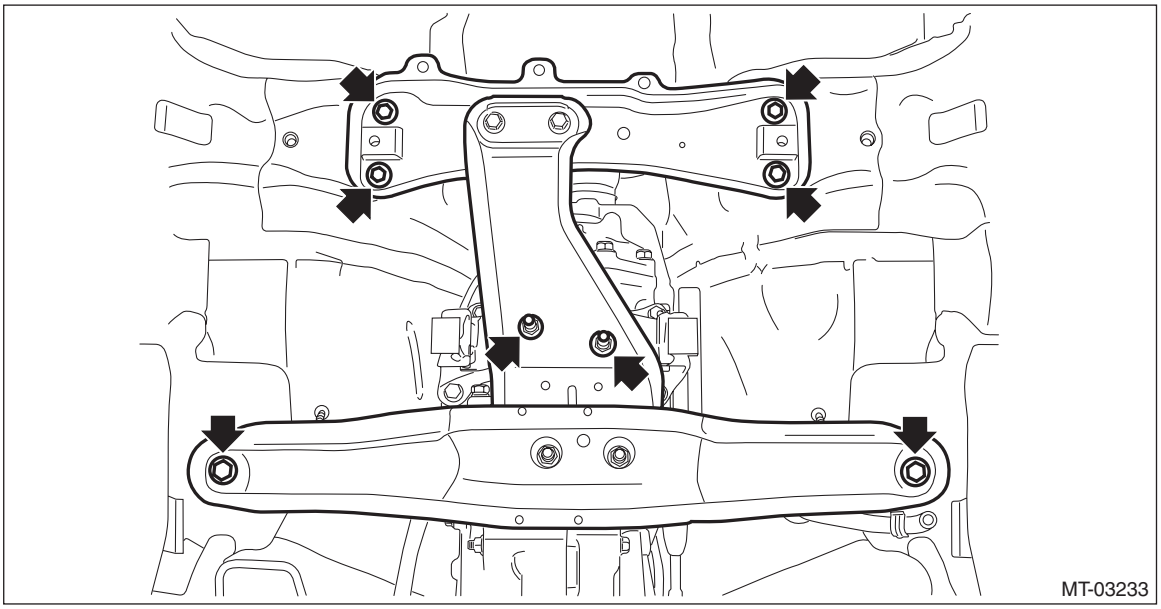
MT-03233

8) Remove the transmission cushion rubber.

B: INSTALLATION

1. CROSSMEMBER AND CUSHION RUBBER

1) Install the transmission cushion rubber to the transmission, and tighten the bolt (A).
2) Install the transmission cushion rubber to the center crossmember, and temporarily tighten the nut (B).

Tightening torque:
Bolt (A)
35 N·m (3.6 kgf-m, 25.8 ft-lb)

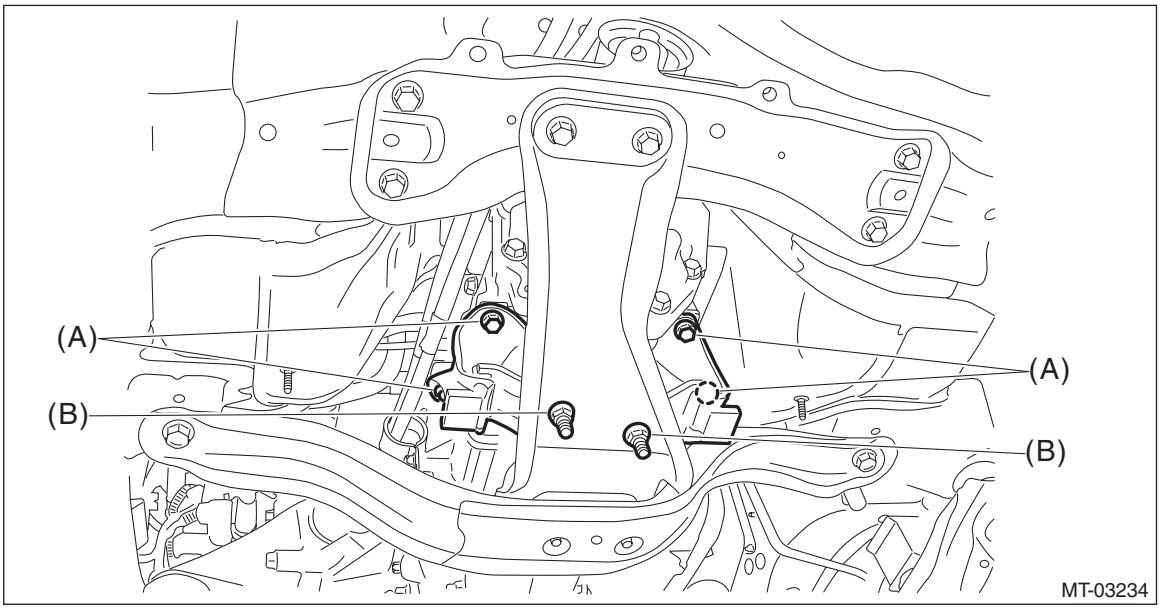

3) Install the front crossmember and rear crossmember.
4) Tighten the transmission cushion rubber mounting nut.

Tightening torque:
T1: 75 N·m (7.6 kgf-m, 55.3 ft-lb)
T2: 140 N·m (14.3 kgf-m, 103.3 ft-lb)
T3: 35 N·m (3.6 kgf-m, 25.8 ft-lb)

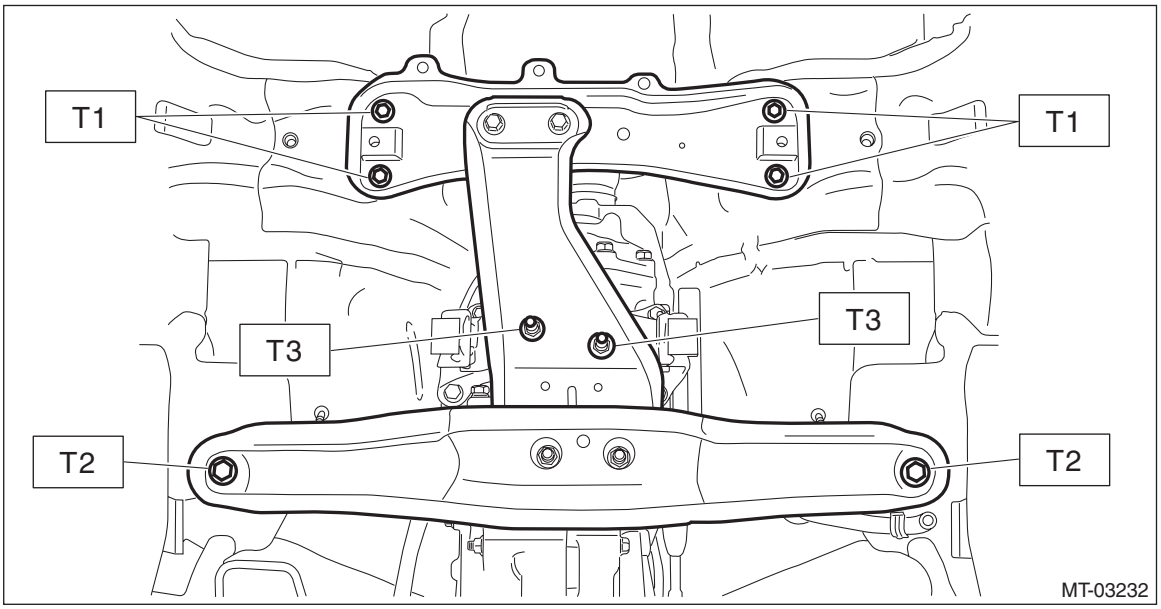

5) Remove the transmission jack.
6) Install the center exhaust cover.

Tightening torque:
18 N·m (1.8 kgf-m, 13.3 ft-lb)

7) Install the center exhaust pipe (rear). <Ref. to EX(H4DO)-13, INSTALLATION, Center Exhaust Pipe.>
8) Install the front under cover. <Ref. to EI-28, INSTALLATION, Front Under Cover.>
9) Lower the vehicle.
10) Connect the ground terminal to battery sensor. <Ref. to RC-4, BATTERY, NOTE, Repair Contents.>

C: INSPECTION

Check the following; repair or replace the faulty parts.

1. CROSSMEMBER AND CUSHION RUBBER

Check the crossmember for bending or damage. Check that the cushion rubber does not have hardening, cracks or other damages.

5. Oil Seal

A: INSPECTION

Check for leakage of transmission gear oil from the oil seal. If there is oil leakage, replace the oil seal with the new part and check the propeller shaft.

B: REPLACEMENT

1) Disconnect the ground terminal from battery sensor. <Ref. to RC-4, BATTERY, NOTE, Repair Contents.>
2) Lift up the vehicle.
3) Remove the front under cover. <Ref. to EI-28, REMOVAL, Front Under Cover.>
4) Clean the transmission exterior.
5) Using the TORX® bit T70, remove the drain plug, and drain the transmission gear oil completely.

CAUTION:
• Immediately after the vehicle has been running or after idling for a long time, the gear oil will be hot. Be careful not to receive burns.
• Be careful not to spill the gear oil on the exhaust pipe, to prevent emission of smoke or causing a fire. If gear oil is spilled, wipe it off completely.
6) Tighten the drain plug using TORX® bit T70.

NOTE:
Use a new gasket.

Tightening torque:
44 N·m (4.5 kgf-m, 32.5 ft-lb) (aluminum gasket, silver)
70 N·m (7.1 kgf-m, 51.6 ft-lb) (copper gasket, brown)
70 N·m (7.1 kgf-m, 51.6 ft-lb) (metal gasket, black)

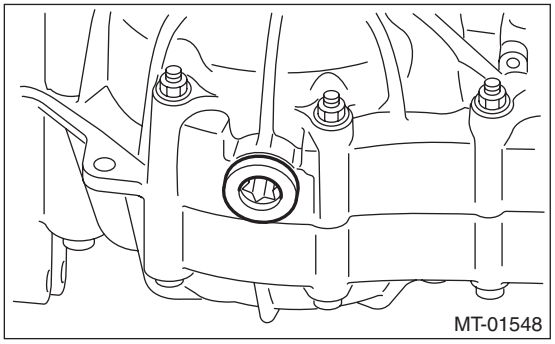

7) Remove the center exhaust pipe (rear). <Ref. to EX(H4DO)-12, REMOVAL, Center Exhaust Pipe.>

8) Remove the center exhaust cover.

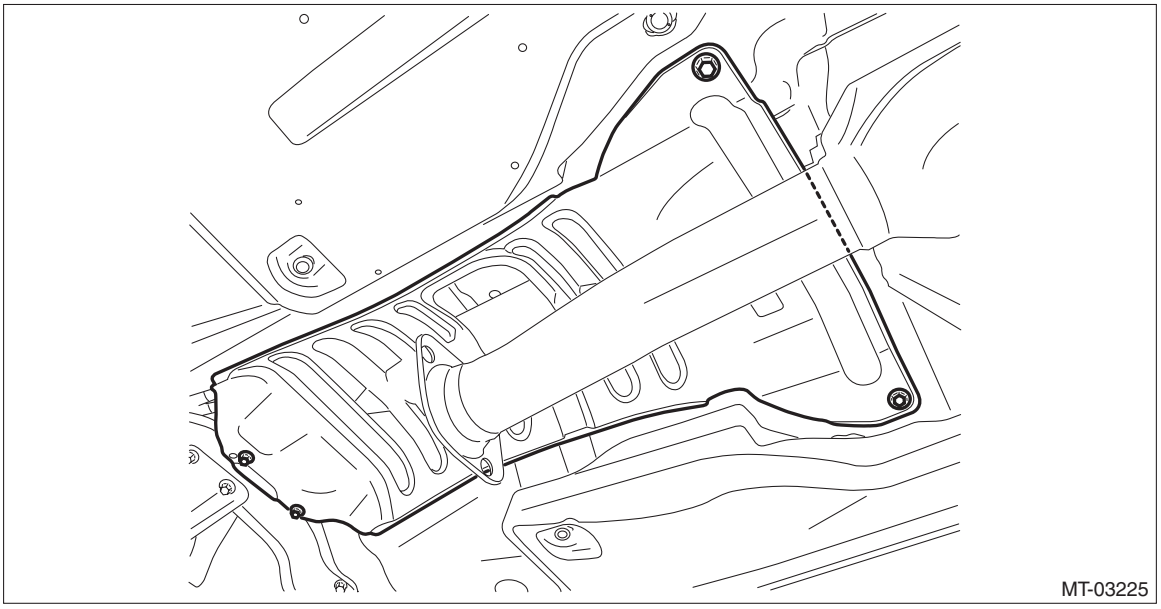

9) Remove the propeller shaft. <Ref. to DS-10, REMOVAL, Propeller Shaft.>
10) Using the ST, remove the oil seal.
ST 398527700 PULLER ASSY

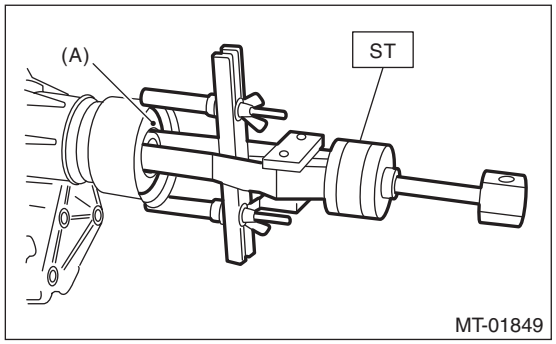

(A) Oil seal

11) Using the ST, install the oil seal.

NOTE:
- When grease is not applied to the oil seal lips, apply the transmission gear oil to the oil seal lips.
- Use a new oil seal.

ST 498057300 INSTALLER

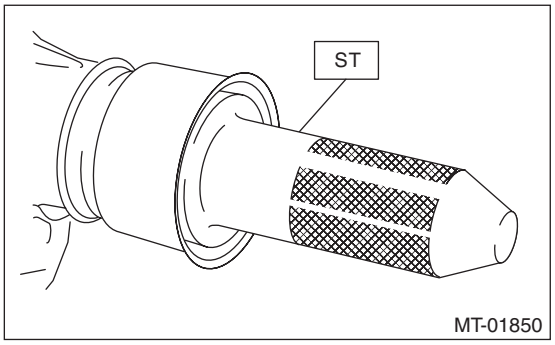

12) Install the propeller shaft. <Ref. to DS-12, INSTALLATION, Propeller Shaft.>
13) Install the center exhaust cover.

Tightening torque:
18 N·m (1.8 kgf-m, 13.3 ft-lb)

14) Install the center exhaust pipe (rear). <Ref. to EX(H4DO)-13, INSTALLATION, Center Exhaust Pipe.>
15) Install the front under cover. <Ref. to EI-28, INSTALLATION, Front Under Cover.>
16) Lower the vehicle.
17) Pour in transmission gear oil and check the oil level. <Ref. to 6MT-25, Transmission Gear Oil.>
18) Connect the ground terminal to battery sensor. <Ref. to RC-4, BATTERY, NOTE, Repair Contents.>

6. Differential Side Retainer Oil Seal

A: INSPECTION

Check the oil seal of the differential side retainer for transmission gear oil leakage. If there is oil leakage, replace the oil seal with the new part and check the drive shaft.

B: REPLACEMENT

1) Disconnect the ground terminal from battery sensor. <Ref. to RC-4, BATTERY, NOTE, Repair Contents.>
2) Remove the front tires.
3) Lift up the vehicle.
4) Remove the front under cover. <Ref. to EI-28, REMOVAL, Front Under Cover.>
5) Using the TORX® bit T70, remove the drain plug, and drain the transmission gear oil completely.

CAUTION:
• Immediately after the vehicle has been running or after idling for a long time, the gear oil will be hot. Be careful not to receive burns.
• Be careful not to spill the gear oil on the exhaust pipe, to prevent emission of smoke or causing a fire. If gear oil is spilled, wipe it off completely.
6) Tighten the drain plug using TORX® bit T70.

NOTE:
Use a new gasket.

Tightening torque:
44 N·m (4.5 kgf-m, 32.5 ft-lb) (aluminum gasket, silver)
70 N·m (7.1 kgf-m, 51.6 ft-lb) (copper gasket, brown)
70 N·m (7.1 kgf-m, 51.6 ft-lb) (metal gasket, black)

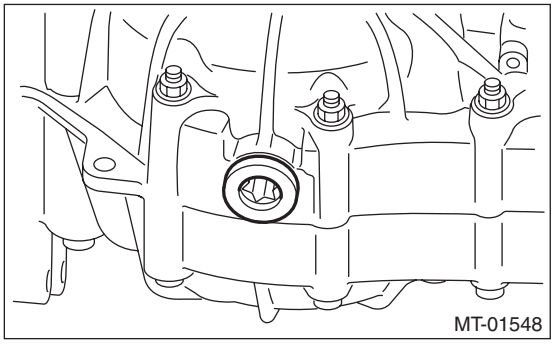

7) Remove the center exhaust pipe (rear). <Ref. to EX(H4DO)-12, REMOVAL, Center Exhaust Pipe.>
8) Disconnect the stabilizer link.

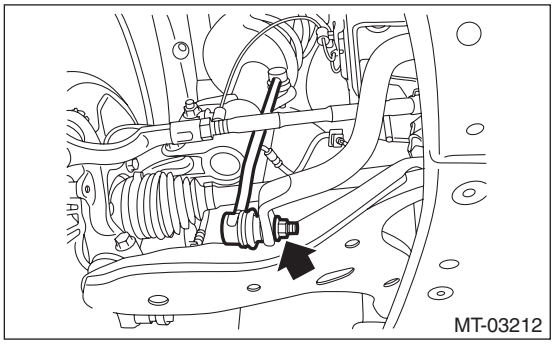

9) Remove the bolt securing the ball joint of the front arm to the housing, then separate the front arms and the housing.

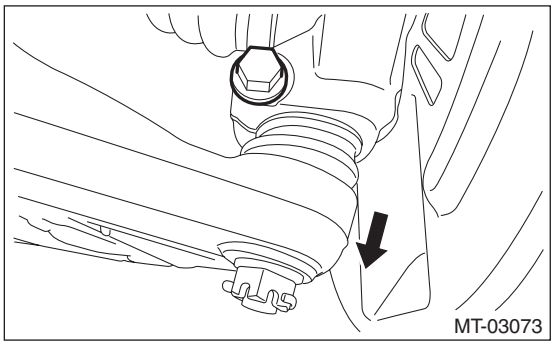

10) Using a crowbar, separate the left and right front drive shafts.

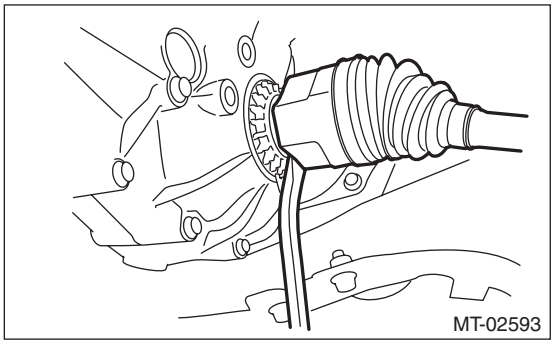

11) Remove the oil seal of the differential side retainer.

NOTE:
- Be sure to replace the oil seal after removing the front drive shaft from the transmission.
- Use the ST 398527700 PULLER ASSY to remove the oil seal. If removing the oil seal with a flat tip screwdriver, be careful not to scratch the differential side retainer.

12) Using the ST, install the oil seal of the differential side retainer by lightly tapping with a plastic hammer.

CAUTION:
- **Apply transmission gear oil to the oil seal lips, and install the oil seal while being careful not to deform the lip.**
- **Check the identification marks (L, R) during installation not to mix up the oil seals RH and LH.**

NOTE:
Use a new oil seal.
ST 18675AA000 DIFFERENTIAL SIDE OIL SEAL INSTALLER

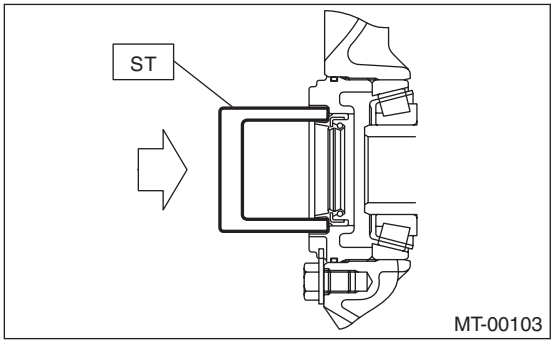

13) Install the ST to the transmission, and then install the front drive shaft.
ST 28399SA010 OIL SEAL PROTECTOR

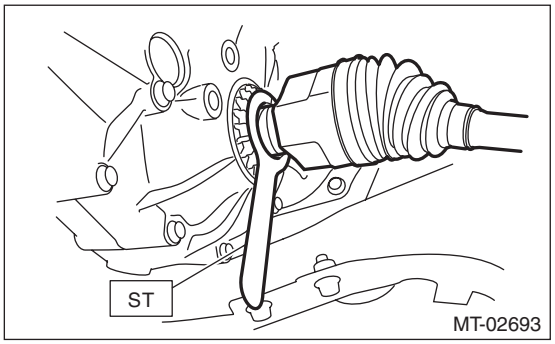

14) Insert the front arm ball joint and tighten the mounting bolt.

Tightening torque:
50 N·m (5.1 kgf-m, 36.9 ft-lb)

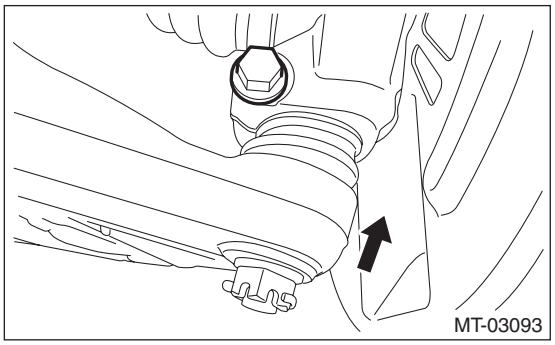

15) Install the stabilizer link.

Tightening torque:
60 N·m (6.1 kgf-m, 44.3 ft-lb)

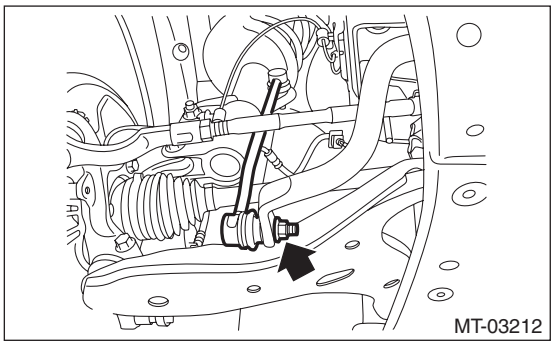

16) Install the center exhaust pipe (rear). <Ref. to EX(H4DO)-13, INSTALLATION, Center Exhaust Pipe.>
17) Install the front under cover. <Ref. to EI-28, INSTALLATION, Front Under Cover.>
18) Lower the vehicle.
19) Pour in transmission gear oil and check the oil level. <Ref. to 6MT-25, Transmission Gear Oil.>
20) Install the front tires.
21) Connect the ground terminal to battery sensor. <Ref. to RC-4, BATTERY, NOTE, Repair Contents.>

7. Switches and Harness

A: REMOVAL

1. BACK-UP LIGHT AND NEUTRAL POSITION SWITCH

1) Disconnect the ground terminal from battery sensor. <Ref. to RC-4, BATTERY, NOTE, Repair Contents.>
2) Remove the clip (A) from the air intake boot.
3) Loosen the clamp (B) connecting the air intake boot and air cleaner case (rear).
4) Loosen the clamp (C) which connects the air intake boot and throttle body.

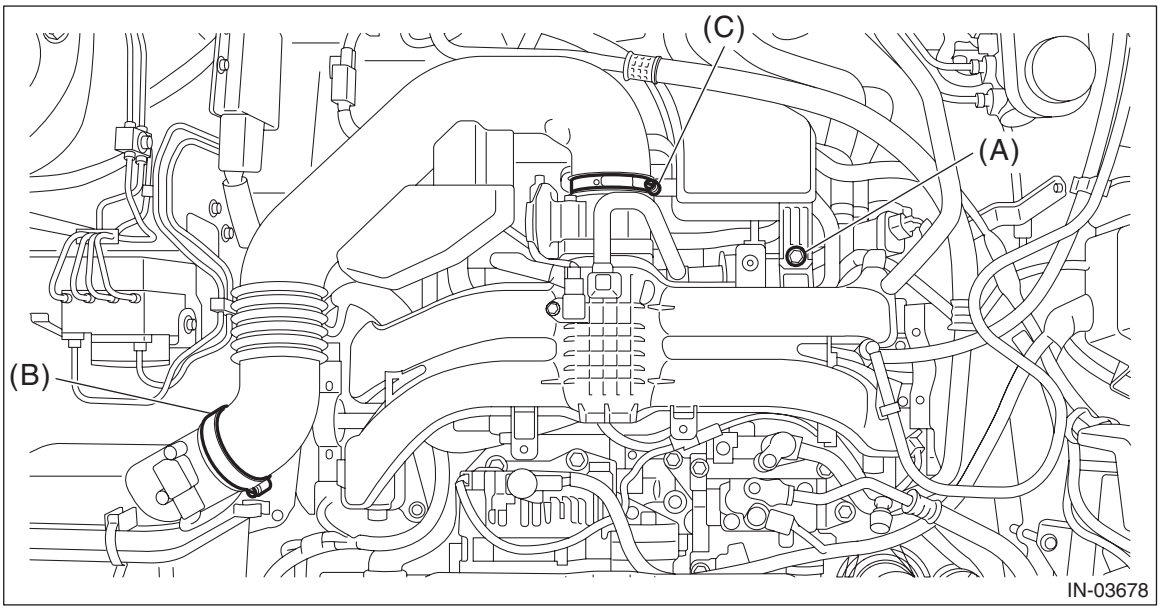

5) Remove the air intake boot from the throttle body, and move it to the left side wheel apron.

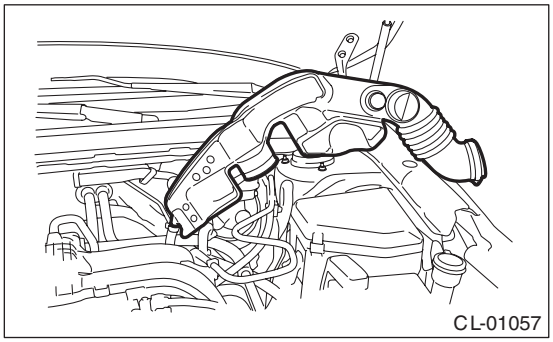

6) Disconnect the connector back-up light switch & neutral position switch.

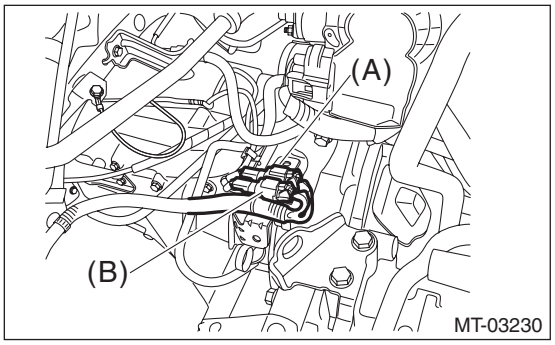

(A) Neutral position switch connector (brown)
(B) Back-up light switch connector (gray)

7) Lift up the vehicle.

8) Remove the back-up light switch & neutral position switch with the harness.

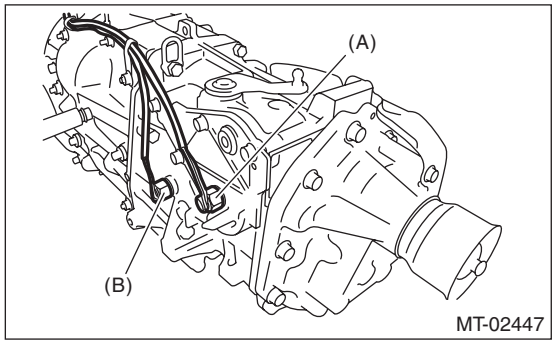

(A) Neutral position switch
(B) Back-up light switch

B: INSTALLATION

1. BACK-UP LIGHT AND NEUTRAL POSITION SWITCH

1) Install the back-up light switch & neutral position switch with the harness.

NOTE:
Use a new gasket.

Tightening torque:
32.3 N·m (3.3 kgf-m, 23.8 ft-lb)

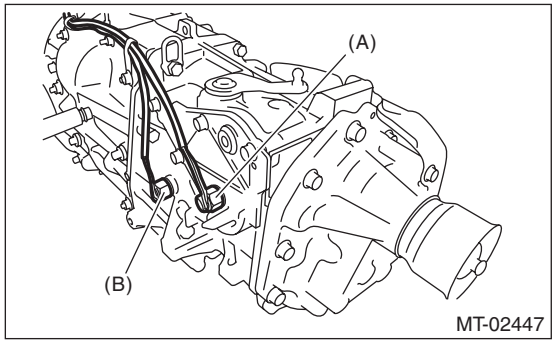

(A) Neutral position switch
(B) Back-up light switch

2) Lower the vehicle.
3) Connect the connectors of back-up light switch & neutral position switch.
4) Install the air intake boot. <Ref. to IN(H4DO)-10, INSTALLATION, Air Intake Boot.>
5) Connect the ground terminal to battery sensor. <Ref. to RC-4, BATTERY, NOTE, Repair Contents.>

C: INSPECTION

1. BACK-UP LIGHT SWITCH

1) Turn the ignition switch to OFF.
2) Disconnect the back light switch connector.
3) Measure the resistance between the back-up light switch terminals.

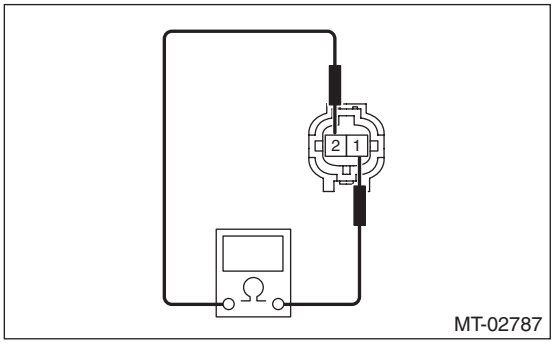

Gear shift position	Terminal No.	Specified resistance
Reverse position	1 and 2	Less than 1 Ω
Other positions		1 MΩ or more

4) Replace faulty parts.

2. NEUTRAL POSITION SWITCH

1) Turn the ignition switch to OFF.
2) Disconnect the connector of neutral position switch.
3) Measure the resistance between neutral position switch terminals.

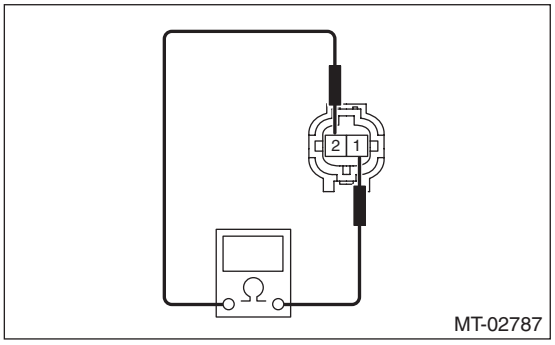

Gear shift position	Terminal No.	Specified resistance
Neutral position	1 and 2	Less than 1 Ω
Other positions		1 MΩ or more

4) Replace faulty parts.

8. Air Breather Hose

A: REMOVAL

1) Disconnect the ground terminal from battery sensor. <Ref. to RC-4, BATTERY, NOTE, Repair Contents.>
2) Remove the clip (A) from the air intake boot.
3) Loosen the clamp (B) connecting the air intake boot and air cleaner case (rear).
4) Loosen the clamp (C) which connects the air intake boot and throttle body.

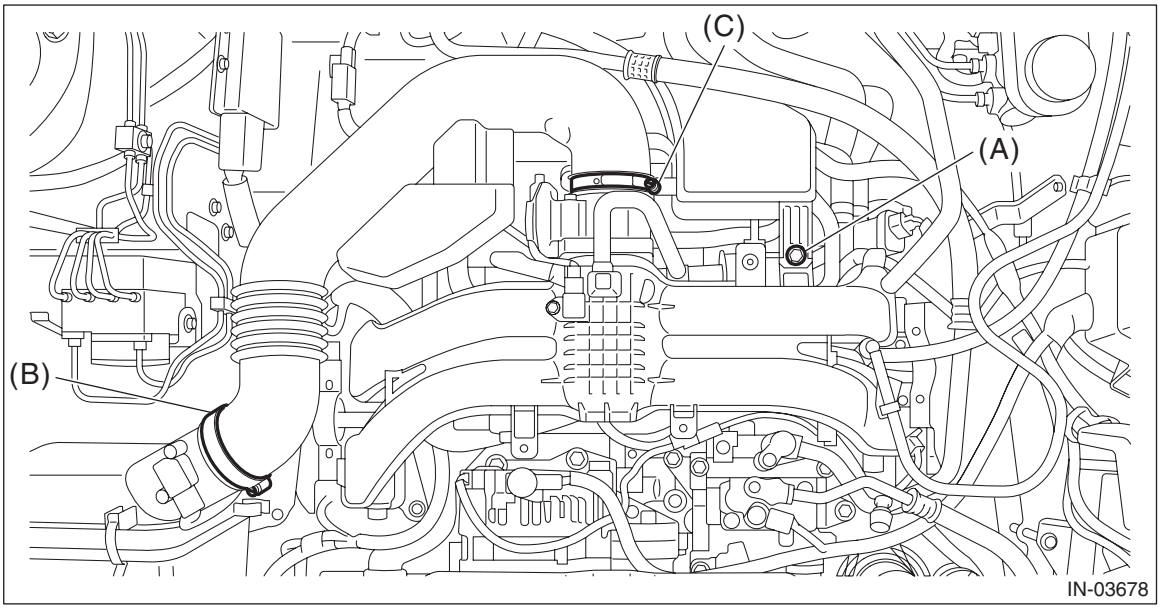

5) Remove the air intake boot from the throttle body, and move it to the left side wheel apron.

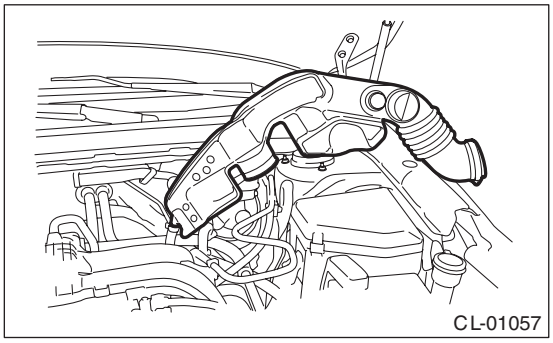

6) Remove the air breather hose.

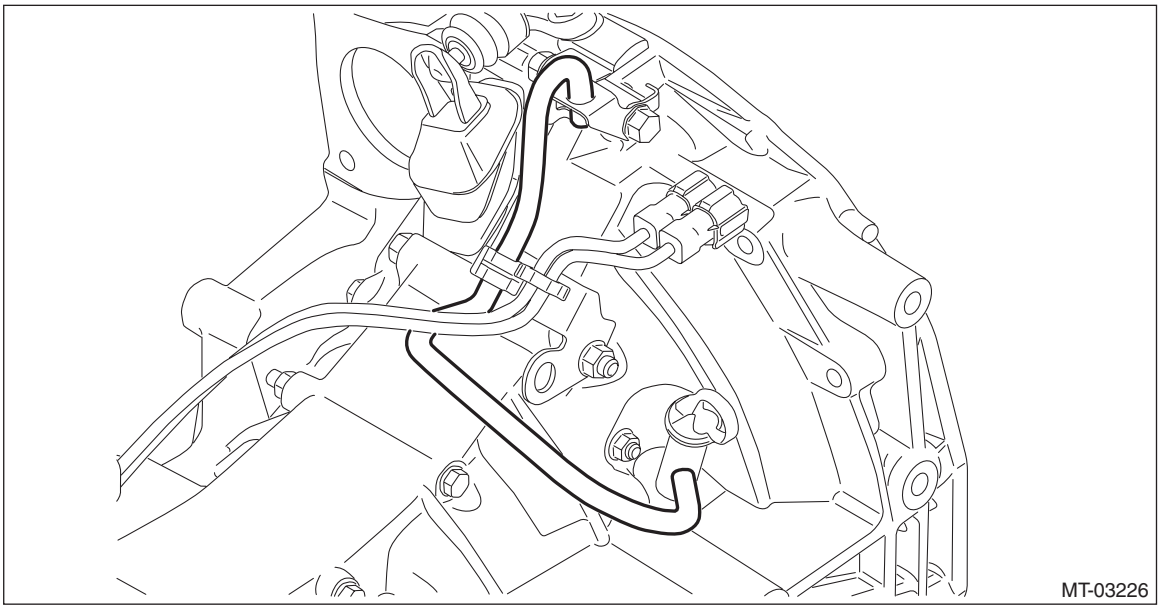

B: INSTALLATION

1) Install the air breather hose.

NOTE:
- When installing the air breather hose, pay attention to the positions of the two markings on the hose and make sure the markings come to the same position as when removed.
- Securely insert the air breather hose until the hose end contacts the catch of the pitching stopper bracket.

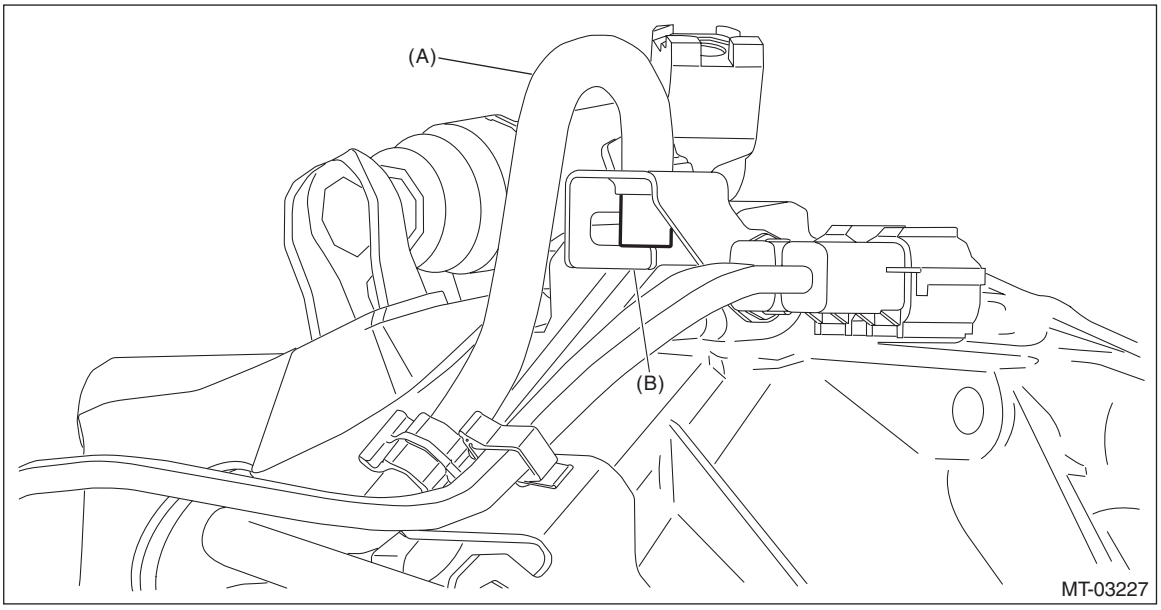

(A) Air breather hose (B) Catch

2) Install the air intake boot. <Ref. to IN(H4DO)-10, INSTALLATION, Air Intake Boot.>
3) Connect the ground terminal to battery sensor. <Ref. to RC-4, BATTERY, NOTE, Repair Contents.>

C: INSPECTION

Check the hose for peeling, crack or clogging.

9. Preparation for Overhaul

A: PROCEDURE

1) Clean oil, grease, dirt and dust from the transmission.
2) Using the TORX® bit T70, remove the drain plug, and drain the transmission gear oil completely.
3) Tighten the drain plug using TORX® bit T70.

NOTE:
Use a new gasket.

Tightening torque:
44 N·m (4.5 kgf-m, 32.5 ft-lb) (aluminum gasket, silver)
70 N·m (7.1 kgf-m, 51.6 ft-lb) (copper gasket, brown)
70 N·m (7.1 kgf-m, 51.6 ft-lb) (metal gasket, black)

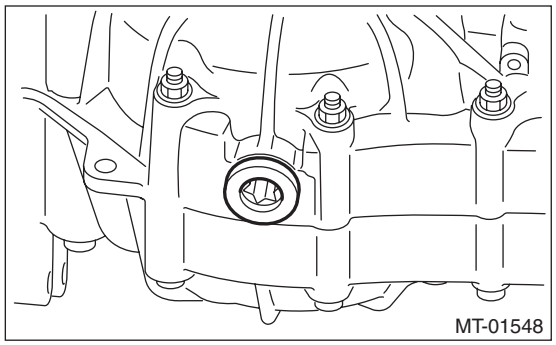

4) Attach the transmission to the ST.
ST 499937100 TRANSMISSION STAND

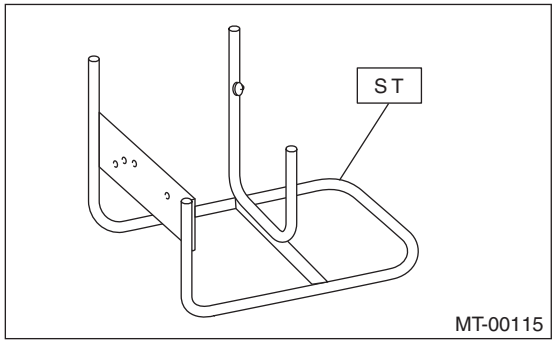

5) Apply transmission gear oil to rotating parts before assembly.
6) All disassembled parts, if to be reused, should be reinstalled in the original positions.
7) Gaskets, lock washers and lock nuts must be replaced with new ones.
8) Apply liquid gasket to the specified areas to prevent leakage.

10.Transfer Case and Extension Case Assembly

A: REMOVAL

1) Remove the manual transmission assembly from the vehicle. <Ref. to 6MT-27, REMOVAL, Manual Transmission Assembly.>
2) Remove the back-up light switch and the neutral position switch. <Ref. to 6MT-55, REMOVAL, Switches and Harness.>
3) Remove the transfer case together with the extension case assembly.
(1) Remove the transmission cover.

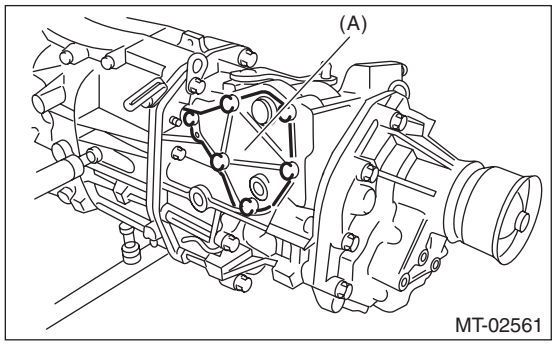

(A) Transmission cover

(2) Set and hold the selector lever COMPL to the 1st-2nd side, and remove the transfer case and extension case assembly as a unit.

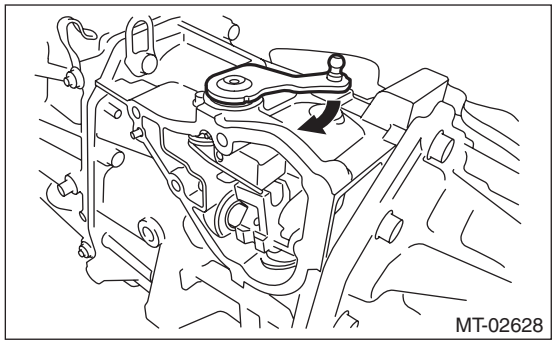

4) Use the ST to push out the spring pin, and remove the shift lever COMPL.
ST 398791700 REMOVER

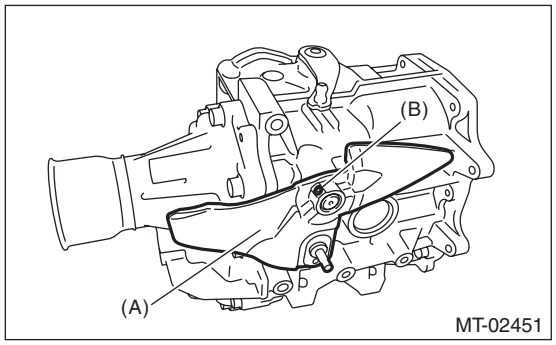

(A) Shift lever COMPL
(B) Straight pin

5) Remove the extension case assembly.

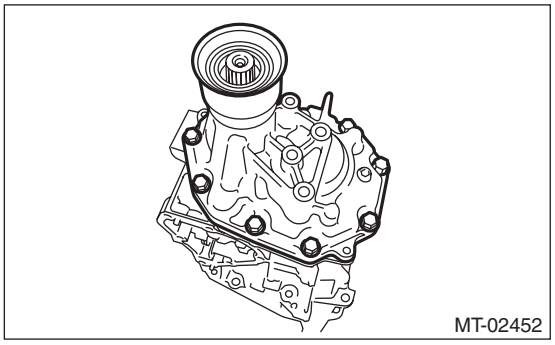

6) Remove the transfer driven gear and center differential as a unit.

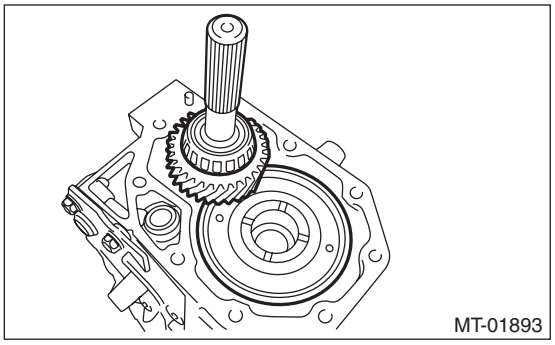

7) Remove the taper roller bearing (extension case side) outer race and the adjusting washer.

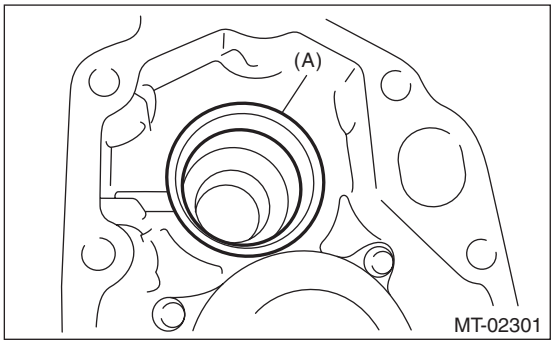

(A) Taper roller bearing (extension case side) outer race

B: INSTALLATION

1) Clean the mating surfaces of the transmission case, transfer case and extension case.
2) Apply a coat of grease to the taper roller bearing (transfer case side) of transfer driven gear and the roller rolling surface of the taper roller bearing (extension case side).

Grease:
NICHIMOLY N-130 or equivalent

3) Install the center differential and the transfer driven gear.

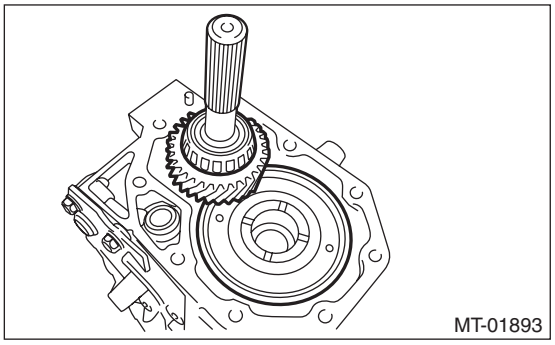

4) Install the taper roller bearing (extension case side) outer race to the transfer driven gear.
5) While pressing the taper roller bearing (extension case side) outer race horizontally, rotate the transfer driven gear for ten turns.
6) Measure the height “W” between transfer case and taper roller bearing (transfer case side) on the transfer driven gear.

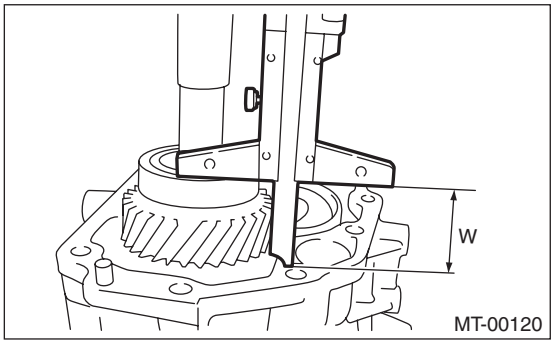

7) Measure the depth “X” of taper roller bearing insertion part of the extension case.

NOTE:
Measure while the taper roller bearing (extension case side) outer race and the adjusting washer are removed.

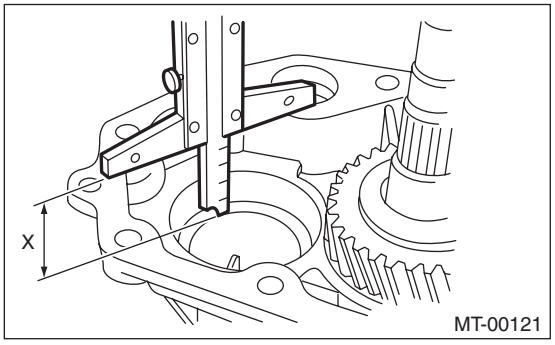

8) Calculate the adjusting washer thickness “t” using the following calculation.
t = X – W + (0.15 — 0.2 mm (0.006 — 0.008 in))
X: Depth of taper roller bearing insertion part of extension case
W: Height between transfer case and taper roller bearing (transfer case side) on transfer driven gear
0.15 — 0.20 mm (0.006 — 0.008 in): Amount of standard protrusion
9) Select the adjusting washer with the nearest value in the following table.

NOTE:
Be sure that it is always within the preload.

Preload of taper roller bearing (extension case side) (amount of standard protrusion): 0.15 — 0.20 mm (0.006 — 0.008 in)

Adjusting washer (50 × 61 × t)	
Part No.	Thickness mm (in)
803050060	0.50 (0.0197)
803050061	0.55 (0.0217)
803050062	0.60 (0.0236)
803050063	0.65 (0.0256)
803050064	0.70 (0.0276)
803050065	0.75 (0.0295)
803050066	0.80 (0.0315)
803050067	0.85 (0.0335)
803050068	0.90 (0.0354)
803050069	0.95 (0.0374)
803050070	1.00 (0.0394)
803050071	1.05 (0.0413)
803050072	1.10 (0.0433)
803050073	1.15 (0.0453)
803050074	1.20 (0.0472)
803050075	1.25 (0.0492)
803050076	1.30 (0.0512)
803050077	1.35 (0.0531)
803050078	1.40 (0.0551)
803050079	1.45 (0.0571)

10) Install the selected adjusting washer and taper roller bearing (extension case side) outer race.

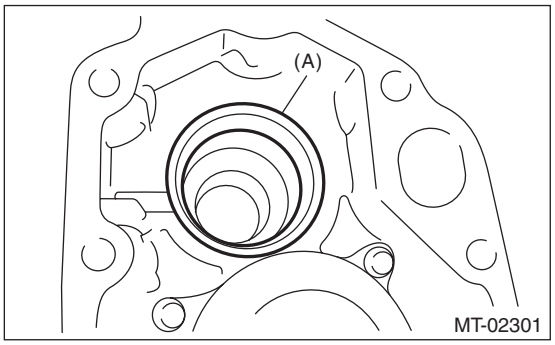

(A) Taper roller bearing (extension case side) outer race

11) Measure the depth “S” between the transfer case + ST and the center differential.
ST 398643600 GAUGE

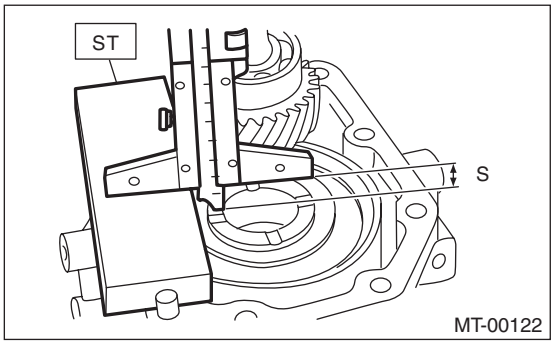

12) Measure the height “T” between the extension case + ST and the transfer drive gear.
ST 398643600 GAUGE

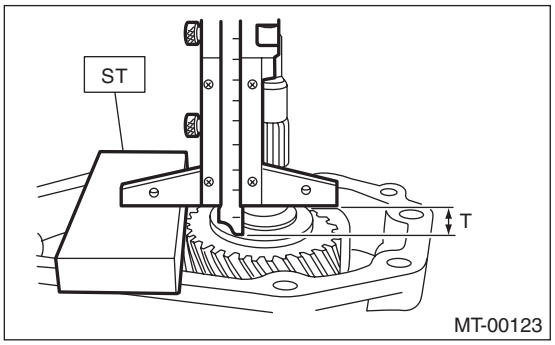

13) Calculate the adjusting washer thickness “U” using the following calculation.
U = S + T – 30 mm (1.18 in) – (0.15 — 0.35 mm (0.0059 — 0.0138 in))
S: Depth between the transfer case + ST and the center differential
T: Depth between the extension case + ST and the transfer drive gear
30 mm (1.18 in): Thickness of ST (× 2 pieces)
0.15 — 0.35 mm (0.0059 — 0.0138 in): Clearance
14) Select a suitable adjusting washer in the following table.

Clearance:
0.15 — 0.35 mm (0.0059 — 0.0138 in)

Adjusting washer	
Part No.	Thickness mm (in)
803036050	0.9 (0.035)
803036054	1.0 (0.039)
803036051	1.1 (0.043)
803036055	1.2 (0.047)
803036052	1.3 (0.051)
803036056	1.4 (0.055)
803036053	1.5 (0.059)
803036057	1.6 (0.063)
803036058	1.7 (0.067)
803036080	1.8 (0.071)
803036081	1.9 (0.075)

15) Install the adjusting washer to center differential.
16) Apply liquid gasket seamlessly.

Liquid gasket:
THREE BOND 1215B or equivalent

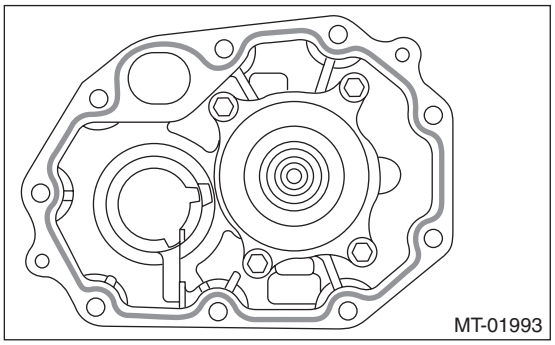
MT-01993

17) Install the extension case assembly.

Tightening torque:
40 N·m (4.1 kgf-m, 29.5 ft-lb)

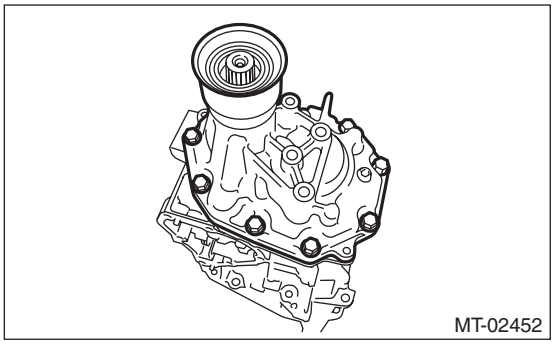
MT-02452

18) Temporarily install the gasket to the transmission case side.

NOTE:
Use a new gasket.

19) Install the transfer case together with the extension case assembly.
(1) While moving the HANDLE to align the spline position, press in the transfer case assembly until the knock pin comes slightly out of transfer case.

ST 18631AA000 HANDLE

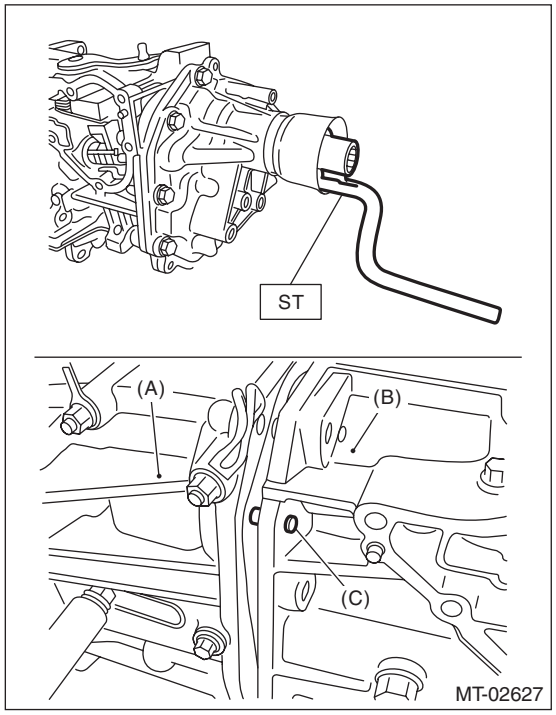

(A) Transmission case
(B) Transfer case
(C) Knock pin

(2) Set and hold the selector lever COMPL to the 1st-2nd side, and install the transfer case assembly so that the shifter arm edge and fork rod does not contact.

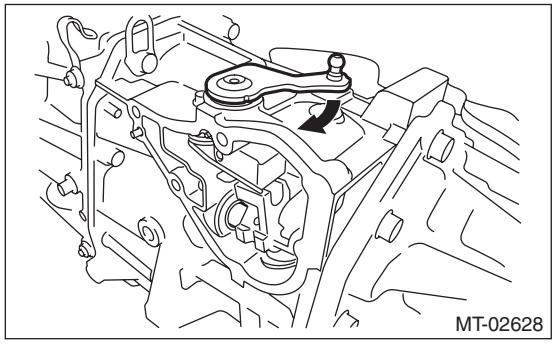

20) Temporarily install the transfer case assembly.

21) Install the shift lever COMPL, then insert the remover or similar tool instead of straight pin.

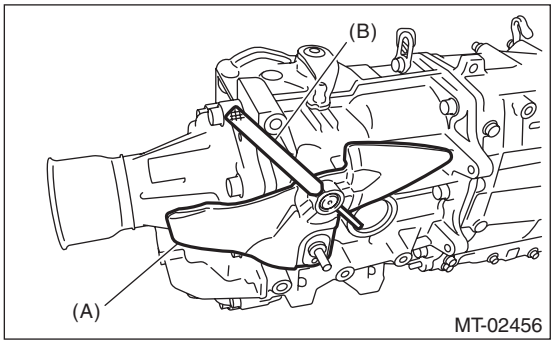

(A) Shift lever COMPL
(B) Remover

22) Operate the selector arm and remover to confirm the correct shifting into each gear is possible.
23) Install the transfer case assembly.

Tightening torque:
24.5 N·m (2.5 kgf-m, 18.1 ft-lb)

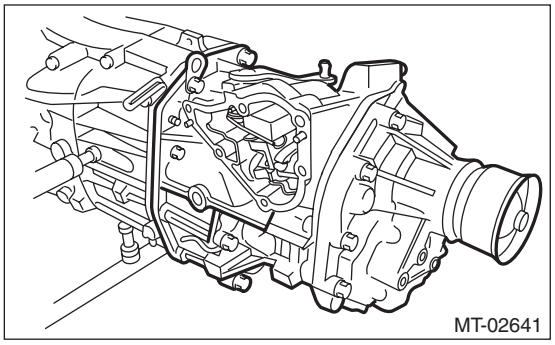

24) Install the shift lever COMPL and secure it with the straight pin.

NOTE:
Use a new straight pin.

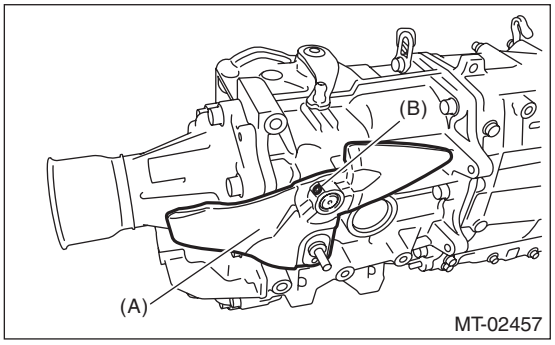

(A) Shift lever COMPL
(B) Straight pin

25) Apply liquid gasket seamlessly.

Liquid gasket:
THREE BOND 1215B or equivalent

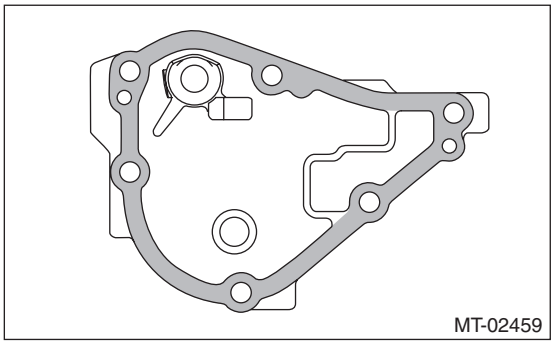

26) Install the transmission cover.

Tightening torque:
25 N·m (2.5 kgf-m, 18.4 ft-lb)

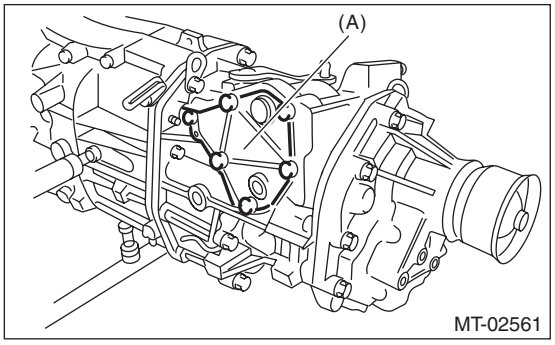

(A) Transmission cover

27) Install the back-up light switch and the neutral position switch. <Ref. to 6MT-56, INSTALLATION, Switches and Harness.>
28) Install the manual transmission assembly to the vehicle. <Ref. to 6MT-37, INSTALLATION, Manual Transmission Assembly.>

C: DISASSEMBLY

1. TRANSFER CASE

1) Remove the interlock plate.

NOTE:
Do not remove the precoat bolt (B) if the parts are assembled as a transmission assembly.

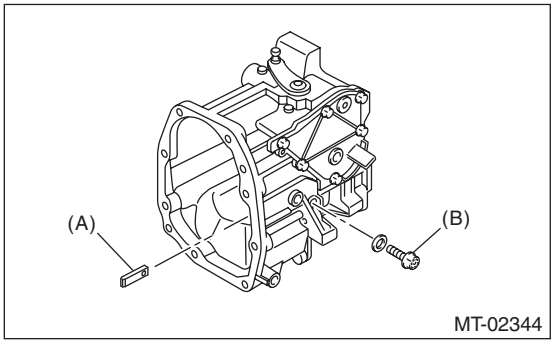

(A) Interlock plate
(B) Precoat bolt

2) Remove the shift link assembly. <Ref. to 6MT-80, REMOVAL, Shift Link Assembly.>

2. EXTENSION CASE

1) Remove the transfer drive gear assembly. <Ref. to 6MT-71, REMOVAL, Transfer Drive Gear.>
2) Remove the oil seal from the extension case. <Ref. to 6MT-49, REPLACEMENT, Oil Seal.>
3) Remove the dust cover.

D: ASSEMBLY

1. TRANSFER CASE

1) Install the shift link assembly to the transfer case. <Ref. to 6MT-86, INSTALLATION, Shift Link Assembly.>
2) Install the interlock plate.

NOTE:
- Use a new bolt and gasket.
- Clean the bolt threads before installing the interlock plate.

Tightening torque:
20 N·m (2.0 kgf-m, 14.8 ft-lb)

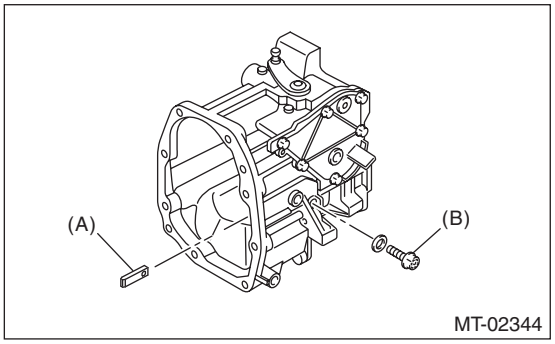

(A) Interlock plate
(B) Precoat bolt

2. EXTENSION CASE

1) Using the ST, install the oil seal to the extension case. <Ref. to 6MT-49, REPLACEMENT, Oil Seal.>

NOTE:
Use a new oil seal.
2) Install the dust cover.
3) Install the transfer drive gear to the extension case. <Ref. to 6MT-71, INSTALLATION, Transfer Drive Gear.>

11.Transfer Drive Gear

A: REMOVAL

1) Remove the manual transmission assembly from the vehicle. <Ref. to 6MT-27, REMOVAL, Manual Transmission Assembly.>
2) Remove the back-up light switch and the neutral position switch. <Ref. to 6MT-55, REMOVAL, Switches and Harness.>
3) Remove the transfer case together with the extension case assembly. <Ref. to 6MT-61, REMOVAL, Transfer Case and Extension Case Assembly.>
4) Remove the extension case assembly.
5) Remove the transfer driven gear. <Ref. to 6MT-74, REMOVAL, Transfer Driven Gear.>
6) Remove the transfer drive gear.

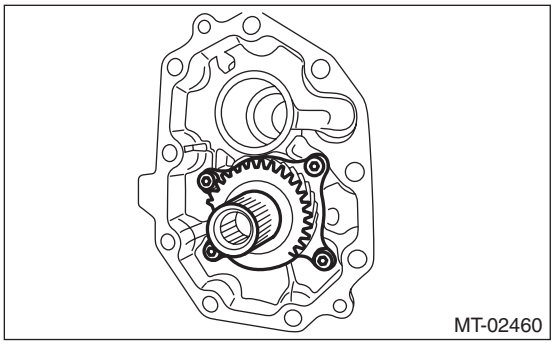

B: INSTALLATION

1) Install the transfer drive gear.

Tightening torque:
26 N·m (2.7 kgf-m, 19.2 ft-lb)

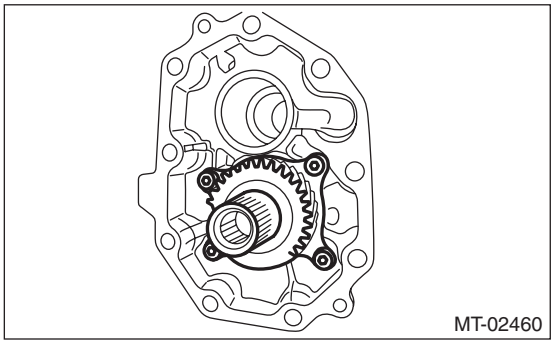

2) Install the transfer driven gear. <Ref. to 6MT-75, INSTALLATION, Transfer Driven Gear.>
3) Select the adjusting washer. <Ref. to 6MT-63, INSTALLATION, Transfer Case and Extension Case Assembly.>
4) Install the transfer case and the extension case assembly. <Ref. to 6MT-63, INSTALLATION, Transfer Case and Extension Case Assembly.>
5) Install the back-up light switch and the neutral position switch. <Ref. to 6MT-56, INSTALLATION, Switches and Harness.>
6) Install the manual transmission assembly to the vehicle. <Ref. to 6MT-37, INSTALLATION, Manual Transmission Assembly.>

C: DISASSEMBLY

1) Remove the snap ring.

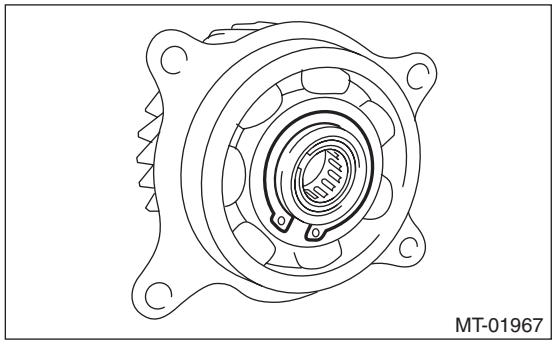

2) Remove the ball bearing.
ST 899864110 REMOVER

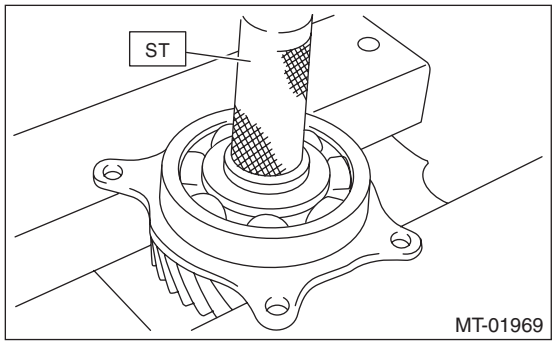

3) Remove the snap ring from transfer drive gear, and remove the needle bearing.

D: ASSEMBLY

1) Install the needle bearing and snap ring to the transfer drive gear.
2) Set the ST to the ball bearing inner race, then install the transfer drive gear.

CAUTION:
Do not apply a load in excess of 10 kN (1 ton, 1.1 US ton, 1.0 Imp ton).

NOTE:
Use a new ball bearing.
ST 398177700 INSTALLER

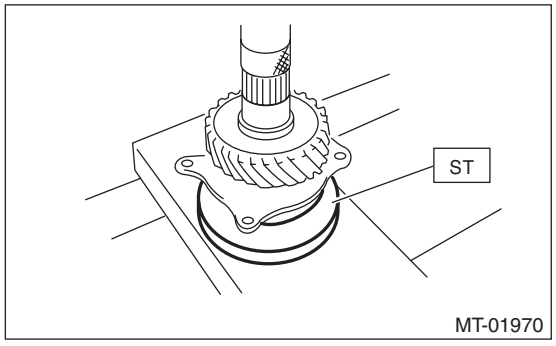

3) Install the snap ring.

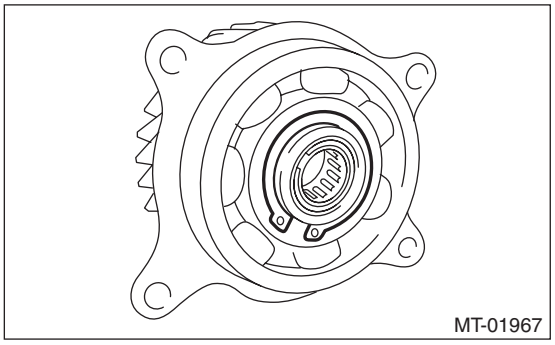

4) Inspect the clearance between the snap ring and the ball bearing. <Ref. to 6MT-73, INSPECTION, Transfer Drive Gear.>

E: INSPECTION

1) Ball bearing
Replace the ball bearing in following cases.
- In case of broken or rusty ball bearings
- In case of worn or damaged ball bearings
- When the ball bearings fail to turn smoothly or emit noise in rotation after transmission gear oil has been applied.

2) Transfer drive gear
If the tooth face of transfer drive gear and the shaft are excessively broken or damaged, replace the transfer drive gear.
3) Measure the clearance between snap ring and inner race of ball bearing with a thickness gauge.

Clearance:
0.01 — 0.15 mm (0.0004 — 0.0059 in)

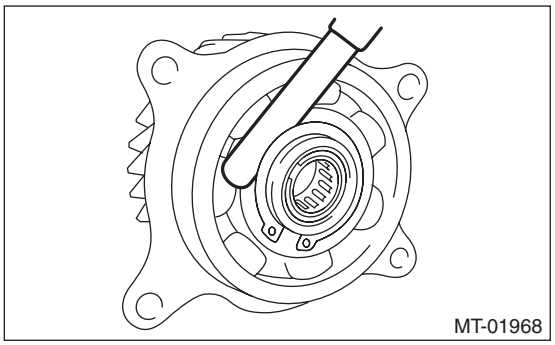

If the measurement is not within specification, select a suitable snap ring and replace it.

Snap ring (outer-30)	
Part No.	Thickness mm (in)
805030041	1.53 (0.0602)
805030042	1.65 (0.0650)
805030043	1.77 (0.0697)

12.Transfer Driven Gear

A: REMOVAL

1) Remove the manual transmission assembly from the vehicle. <Ref. to 6MT-27, REMOVAL, Manual Transmission Assembly.>
2) Remove the back-up light switch and the neutral position switch. <Ref. to 6MT-55, REMOVAL, Switches and Harness.>
3) Remove the transfer case together with the extension case assembly. <Ref. to 6MT-61, REMOVAL, Transfer Case and Extension Case Assembly.>
4) Remove the extension case assembly.
5) Remove the transfer driven gear and center differential as a unit.

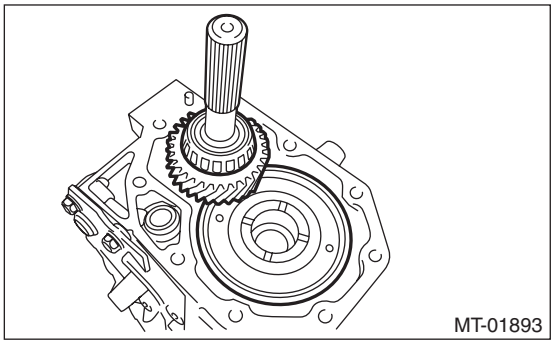

6) Remove the taper roller bearing outer race.

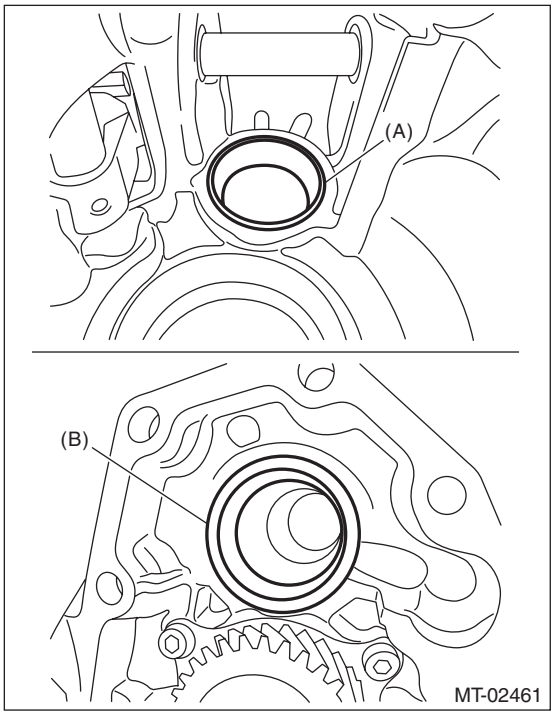

(A) Taper roller bearing (transfer case side) outer race
(B) Taper roller bearing (extension case side) outer race

B: INSTALLATION

1) Install the taper roller bearing (transfer case side) outer race.

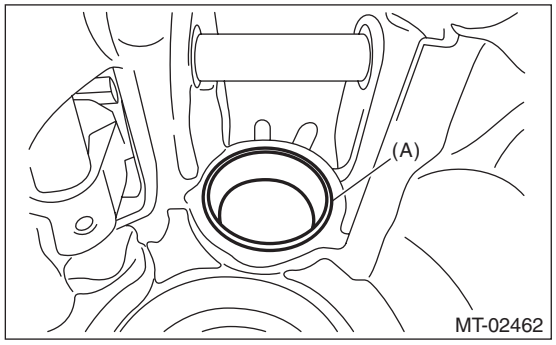

(A) Taper roller bearing (transfer case side) outer race

2) Apply a coat of grease to the taper roller bearing (transfer case side) of transfer driven gear and the roller rolling surface of the taper roller bearing (extension case side).

Grease:
NICHIMOLY N-130 or equivalent

3) Install the transfer driven gear and center differential as a unit.

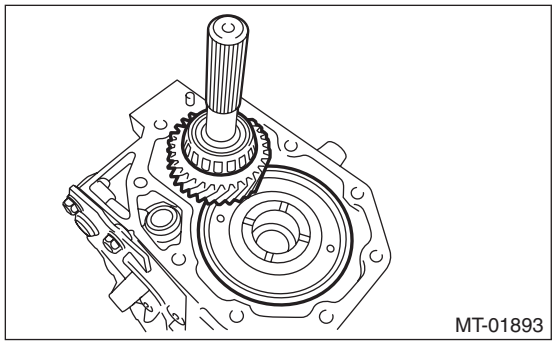

4) Select the adjusting washer. <Ref. to 6MT-63, INSTALLATION, Transfer Case and Extension Case Assembly.>
5) Install the selected adjusting washer and taper roller bearing (extension case side) outer race to the extension case.
6) Install the transfer case and the extension case assembly. <Ref. to 6MT-63, INSTALLATION, Transfer Case and Extension Case Assembly.>
7) Install the back-up light switch and the neutral position switch. <Ref. to 6MT-56, INSTALLATION, Switches and Harness.>
8) Install the manual transmission assembly to the vehicle. <Ref. to 6MT-37, INSTALLATION, Manual Transmission Assembly.>

C: DISASSEMBLY

1) Using the ST, remove the taper roller bearing (extension case side).
ST 498077000 REMOVER

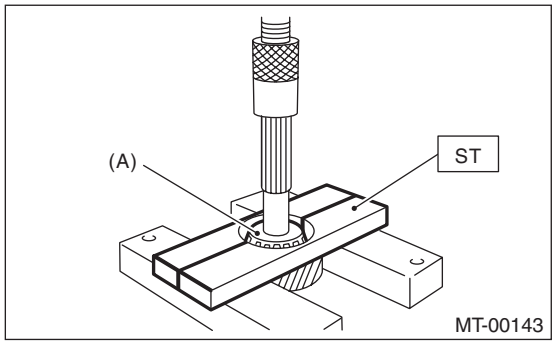

(A) Taper roller bearing (extension case side)

2) Using ST1 and ST2, remove the taper roller bearing (transfer case side).
ST1 498077000 REMOVER
ST2 899864100 REMOVER

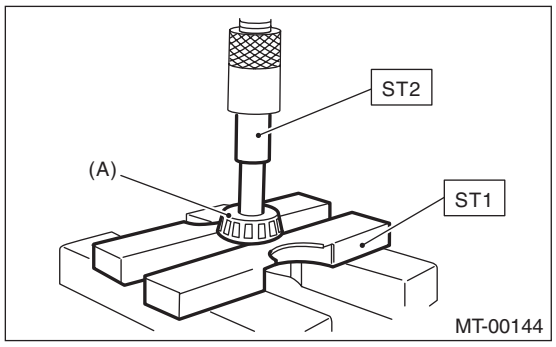

(A) Taper roller bearing (transfer case side)

D: ASSEMBLY

1) Using the ST, install the taper roller bearing (transfer case side).

CAUTION:
Do not apply a load in excess of 10 kN (1 ton, 1.1 US ton, 1.0 Imp ton).

NOTE:
Be careful when handling because the taper roller bearing and the outer race are used as a set.
ST 927640000 INSTALLER

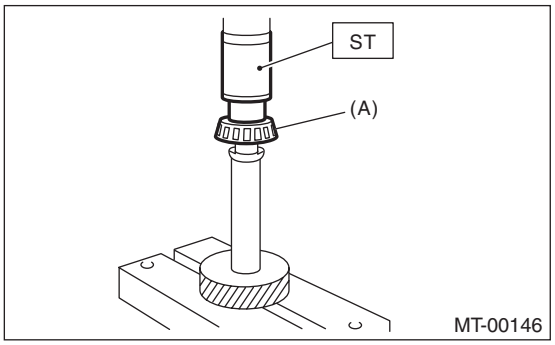

(A) Taper roller bearing (transfer case side)

2) Using the ST, install the taper roller bearing (extension case side).

CAUTION:
Do not apply a load in excess of 10 kN (1 ton, 1.1 US ton, 1.0 Imp ton).

NOTE:
Be careful when handling because the taper roller bearing and the outer race are used as a set.
ST1 498175500 INSTALLER
ST2 899864100 REMOVER

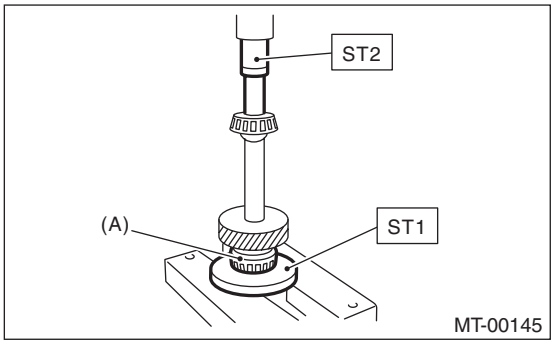

(A) Taper roller bearing (extension case side)

E: INSPECTION

1) Taper roller bearing
Replace the taper roller bearing in the following cases.
- In case of broken or rusty taper roller bearings
- In case of worn or damaged taper roller bearings
- When the taper roller bearings fail to turn smoothly or emit noise in rotation after transmission gear oil has been applied.

2) Transfer driven gear
If the tooth face of transfer driven gear and the shaft are excessively broken or damaged, replace the transfer driven gear.

13.Center Differential

A: REMOVAL

1) Remove the manual transmission assembly from the vehicle. <Ref. to 6MT-27, REMOVAL, Manual Transmission Assembly.>
2) Remove the back-up light switch and the neutral position switch. <Ref. to 6MT-55, REMOVAL, Switches and Harness.>
3) Remove the transfer case together with the extension case assembly. <Ref. to 6MT-61, REMOVAL, Transfer Case and Extension Case Assembly.>
4) Remove the extension case assembly.
5) Remove the center differential and transfer driven gear as a unit. <Ref. to 6MT-74, REMOVAL, Transfer Driven Gear.>

B: INSTALLATION

1) Install the center differential and transfer driven gear into the transfer case as a unit. <Ref. to 6MT-75, INSTALLATION, Transfer Driven Gear.>
2) Select the adjusting washer. <Ref. to 6MT-63, INSTALLATION, Transfer Case and Extension Case Assembly.>
3) Install the transfer driven gear. <Ref. to 6MT-75, INSTALLATION, Transfer Driven Gear.>
4) Install the transfer case together with the extension case assembly. <Ref. to 6MT-63, INSTALLATION, Transfer Case and Extension Case Assembly.>
5) Install the back-up light switch and the neutral position switch. <Ref. to 6MT-56, INSTALLATION, Switches and Harness.>
6) Install the manual transmission assembly to the vehicle. <Ref. to 6MT-37, INSTALLATION, Manual Transmission Assembly.>

C: DISASSEMBLY

Remove the ball bearing using ST.

NOTE:
Center differential is a non-disassembled part which should not be disassembled.
ST 498077600 CENTER DIFFERENTIAL BEARING REMOVER

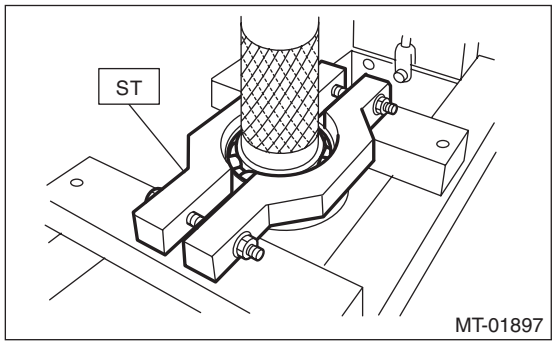

D: ASSEMBLY

Install the ball bearings.

CAUTION:
Do not apply a load in excess of 10 kN (1 ton, 1.1 US ton, 1.0 Imp ton).

NOTE:
Use a new ball bearing.

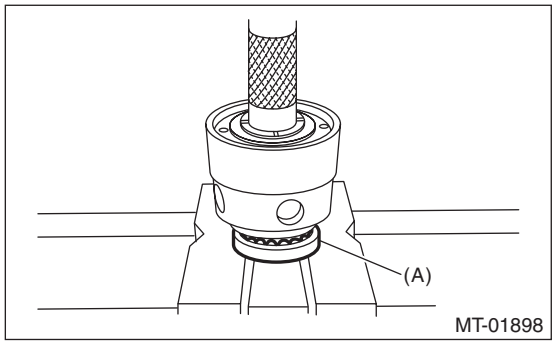

(A) Ball bearing

E: INSPECTION

1) Ball bearing
Replace the ball bearing in following cases.
- In case of broken or rusty ball bearings
- In case of worn or damaged ball bearings
- When the ball bearings fail to turn smoothly or emit noise in rotation after transmission gear oil has been applied.
- When the ball bearing has other defects.

2) Center differential
If there is wear or damage, replace the center differential assembly.

14.Shift Link Assembly

A: REMOVAL

1) Remove the manual transmission assembly from the vehicle. <Ref. to 6MT-27, REMOVAL, Manual Transmission Assembly.>
2) Remove the back-up light switch and the neutral position switch. <Ref. to 6MT-55, REMOVAL, Switches and Harness.>
3) Remove the transfer case together with the extension case assembly. <Ref. to 6MT-61, REMOVAL, Transfer Case and Extension Case Assembly.>
4) Remove the extension case assembly.
5) Remove the center differential and transfer driven gear as a unit. <Ref. to 6MT-74, REMOVAL, Transfer Driven Gear.>
6) Pull out the straight pin.

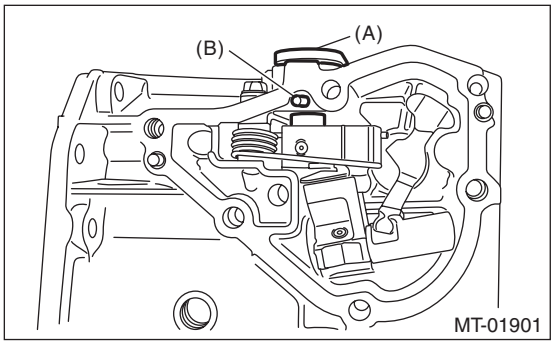

(A) Selector lever COMPL
(B) Straight pin

7) Use the ST to remove the straight pin, and remove the selector lever COMPL.
ST 398791700 REMOVER

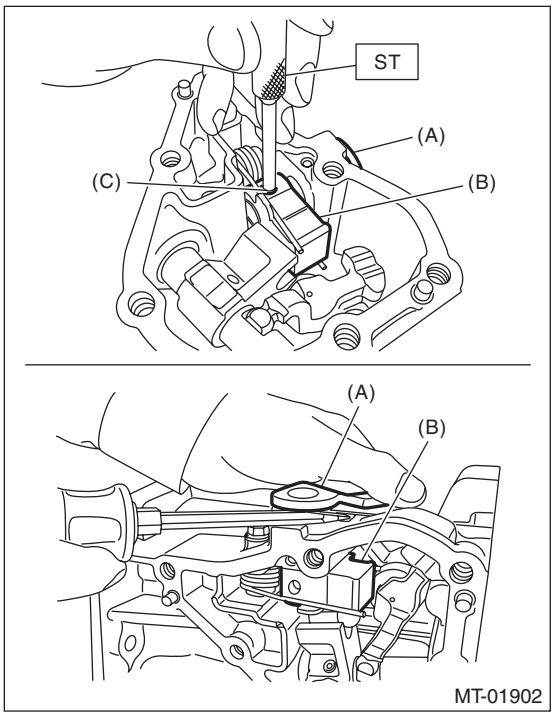

(A) Selector lever COMPL
(B) Selector arm No. 2
(C) Straight pin

8) Remove the selector arm No. 2.

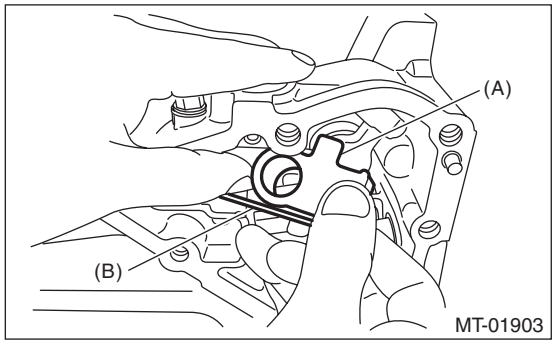

(A) Selector arm No. 2
(B) Neutral set spring

9) Remove the bolts and remove the shifter arm collar and neutral set spring.

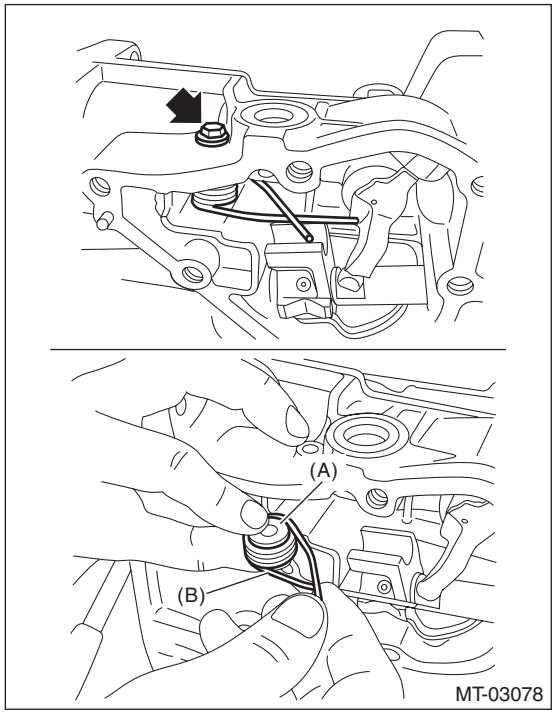

(A) Shifter arm collar
(B) Neutral set spring

10) Remove the shifter arm No. 2, adjusting washers and thrust bearing.

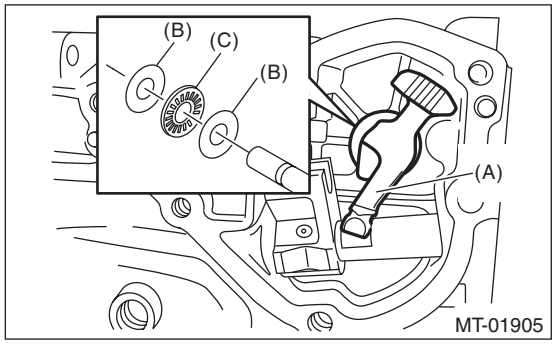

(A) Shifter arm No. 2
(B) Adjusting washer
(C) Thrust bearing

11) Use the ST to remove the straight pin, and remove the shifter arm and selector arm.
ST 398791700 REMOVER

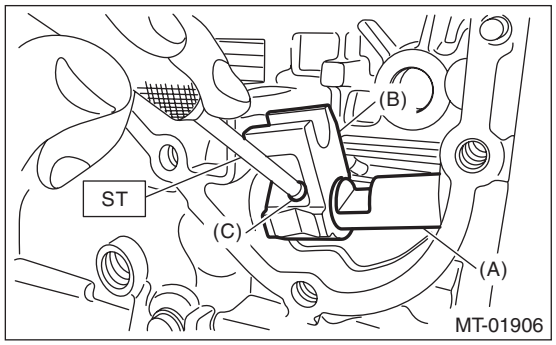

(A) Shifter arm
(B) Selector arm
(C) Straight pin

12) Remove the oil seal using a screwdriver wrapped with tape, etc.

NOTE:
The illustration shows the oil seal of selector lever COMPL. Perform the same procedures for removing the shifter arm No. 2.

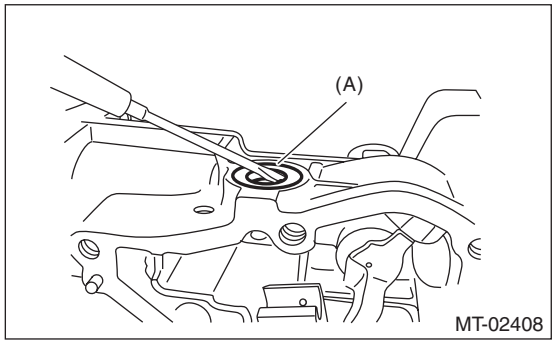

(A) Oil seal

13) Remove the needle bearing by using a tube with the diameter of 20 mm (0.79 in) or 21 mm (0.83 in) and the ST.
ST 18763AA000 COMPRESSOR SHAFT

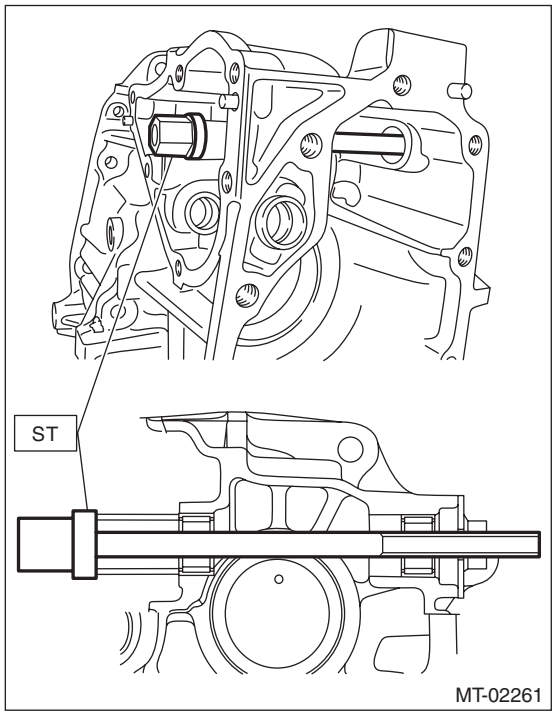

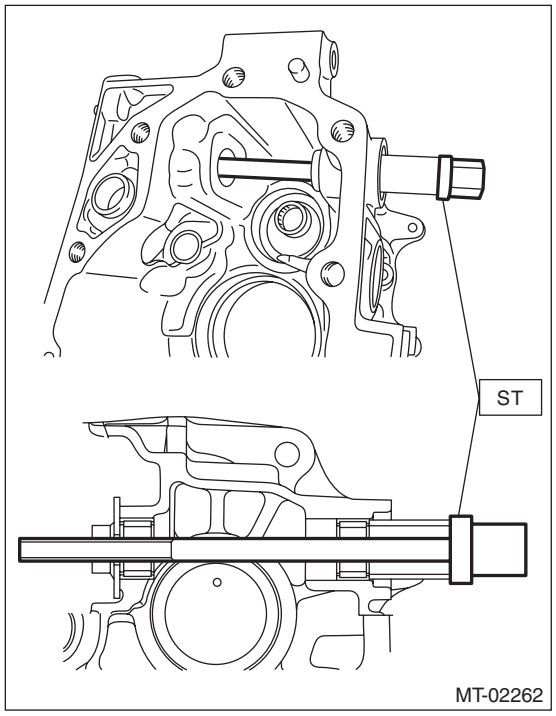

14) Set ST1, ST2 and transfer case to a press.

NOTE:
- Set the ST2 under ST1.
- Set the transfer case so that the hole for shifter arm is positioned vertically.

ST1 498267300 CYLINDER HEAD TABLE
ST2 498267200 CYLINDER HEAD TABLE

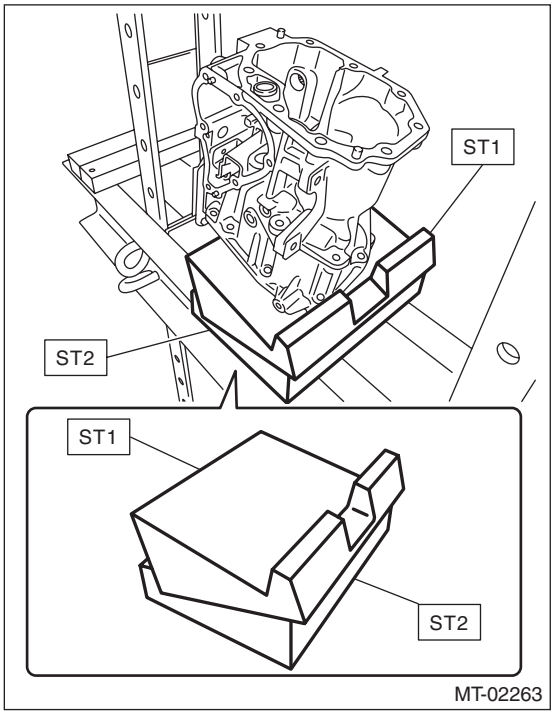

15) Remove the roller bearing by using a round bar with the diameter of 22 mm (0.87 in) or 23 mm (0.91 in).

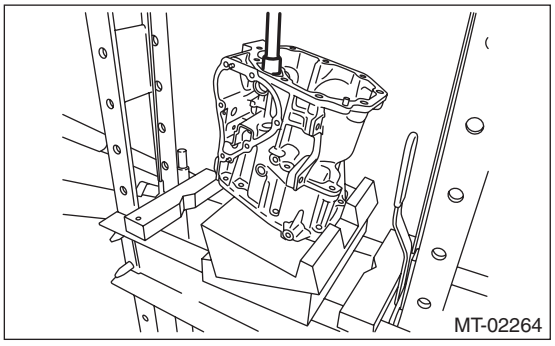

16) Flip over the transfer case, and set an iron plate between transfer case and ST.

NOTE:
- Insert the iron plate which is thicker than the exposed length of the transfer case knock pin between the ST and transfer case.
- Set the iron plate so that the transfer case knock pin does not ride on the iron plate.

17) Remove the roller bearing by using a tube with the diameter of 22 mm (0.87 in) or 23 mm (0.91 in).

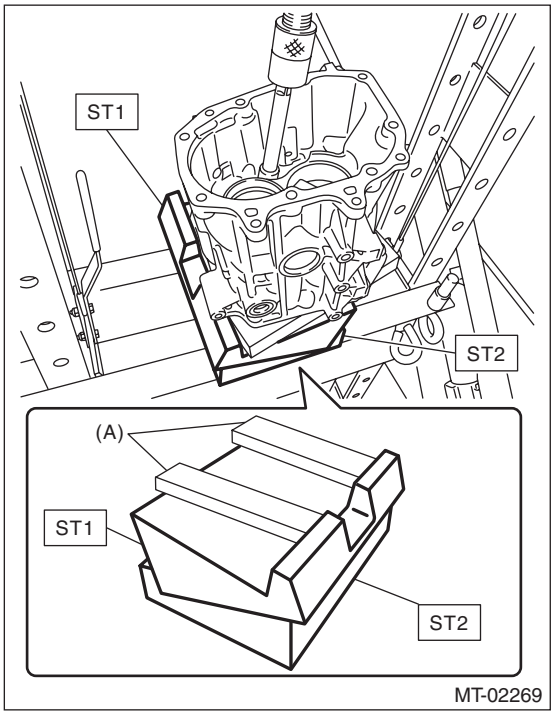

(A) Iron plate

18) Remove the shift accent plunger and the check ball spring.

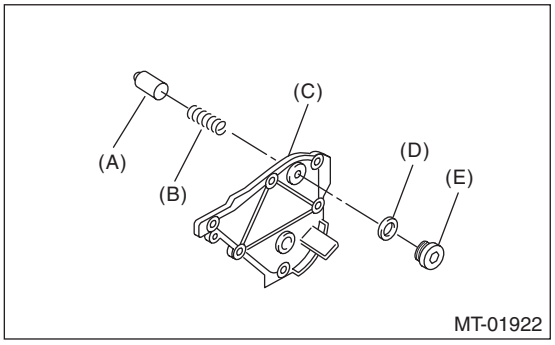

(A) Shift accent plunger
(B) Checking ball spring
(C) Transmission cover
(D) Seal ring
(E) Seal bolt

B: INSTALLATION

1) Clean the mating surface of the transmission cover and transfer case.
2) Install the shift accent plunger and the check ball spring.

NOTE:
Use new seal rings.

Tightening torque:
25 N·m (2.5 kgf-m, 18.4 ft-lb)

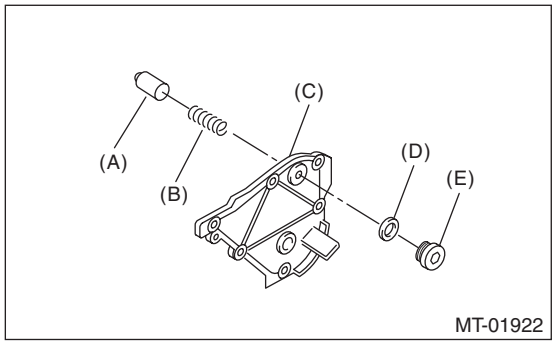

(A) Shift accent plunger
(B) Checking ball spring
(C) Transmission cover
(D) Seal ring
(E) Seal bolt

3) Using the ST, install the needle bearing.

NOTE:
- Use a new needle bearing.
- If the press-fit depth exceeds the service limit, replace with a new needle bearing.

ST1 18763AA000 COMPRESSOR SHAFT
ST2 498277200 STOPPER SET

Press-fit depth of needle bearing:
A: 8.5±0.2 mm (0.33±0.01 in) from the end of transfer case

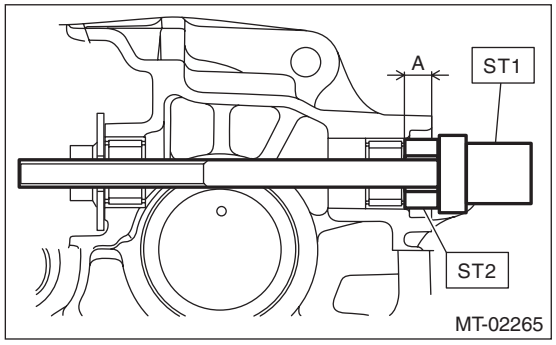

B: 0.2±0.2 mm (0.01±0.01 in) from the end of transfer case

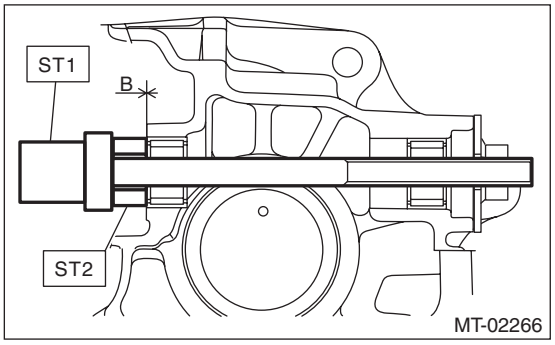

4) Set ST1, ST2 and transfer case to a press.

NOTE:
- Set the ST2 under ST1.
- Set the transfer case so that the hole for shifter arm is positioned vertically.

ST1 498267300 CYLINDER HEAD TABLE
ST2 498267200 CYLINDER HEAD TABLE

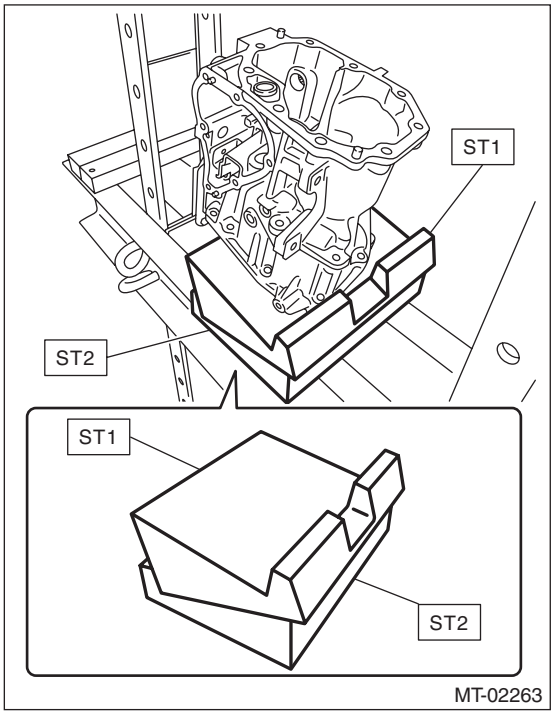

5) Using the ST, install the roller bearing.

NOTE:
- Use a new roller bearing.
- Gradually perform the press-fit operation while measuring the press-fit depth.
- If the press-fit depth exceeds the service limit, replace with a new bearing.

ST 899864100 REMOVER

Press-fit depth of roller bearing:
A: 5.1±0.2 mm (0.20±0.01 in) from the finished surface of transfer case

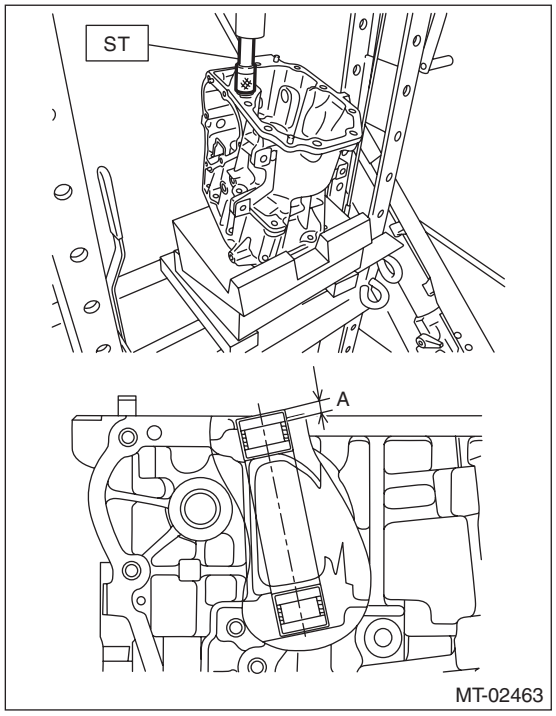

6) Flip over the transfer case, and set an iron plate between transfer case and ST.

NOTE:
- Insert the iron plate which is thicker than the exposed length of the transfer case knock pin between the ST and transfer case.
- Set the parts while taking care that the transfer case knock pin and the roller bearing do not ride over the iron plate.

7) Using the ST, install the roller bearing.

NOTE:
- Use a new roller bearing.
- Gradually perform the press-fit operation while measuring the press-fit depth.
- If the press-fit depth exceeds the service limit, replace with a new bearing.

ST 899864100 REMOVER

Press-fit depth of roller bearing:
A: 0±0.2 mm (0±0.01 in) from the end of transfer case

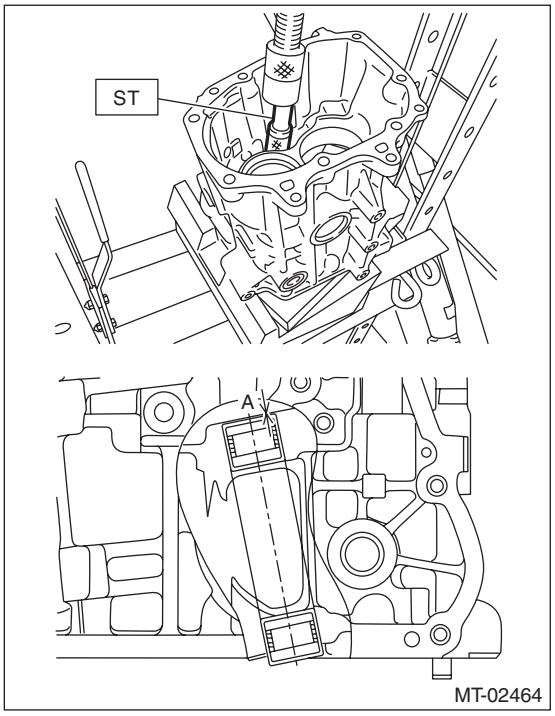

8) Using the ST, install the oil seal.

NOTE:
- Use a new oil seal.
- The illustration shows the oil seal of selector lever COMPL. Perform the same procedures for installing the oil seal of shifter arm No. 2.
- Apply transmission gear oil to the oil seal lips.

ST 18657AA000 INSTALLER

Press-fit depth of oil seal:
1±0.2 mm (0.04±0.01 in) from the end of transfer case

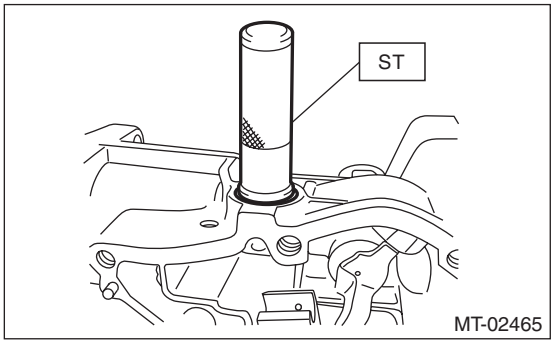

9) Insert the shifter arm and fix with a straight pin.

NOTE:
Use a new straight pin.
ST 398791700 REMOVER

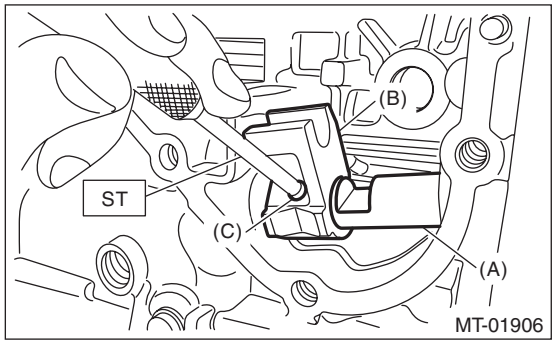

(A) Shifter arm
(B) Selector arm
(C) Straight pin

10) Install the shifter arm No. 2, adjusting washers and thrust bearing.

CAUTION:
Be careful not to damage the oil seal.

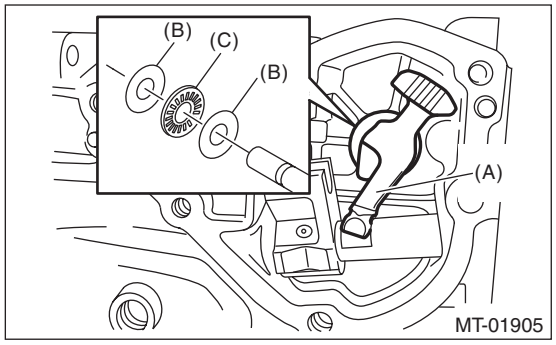

(A) Shifter arm No. 2
(B) Adjusting washer
(C) Thrust bearing

11) Install the shifter arm collar and neutral set spring.

NOTE:
Use a new gasket.

Tightening torque:
6.4 N·m (0.7 kgf-m, 4.7 ft-lb)

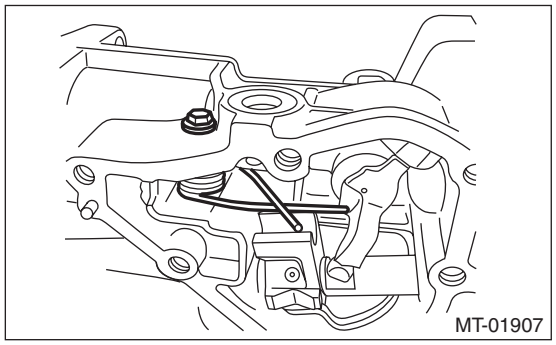

12) Install the selector arm No. 2.

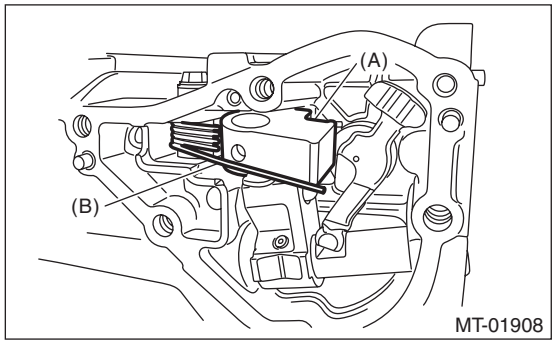

(A) Selector arm No. 2
(B) Neutral set spring

13) Insert the selector lever COMPL and fix with a straight pin.

CAUTION:
Be careful not to damage the oil seal.

NOTE:
Use a new straight pin.
ST 398791700 REMOVER

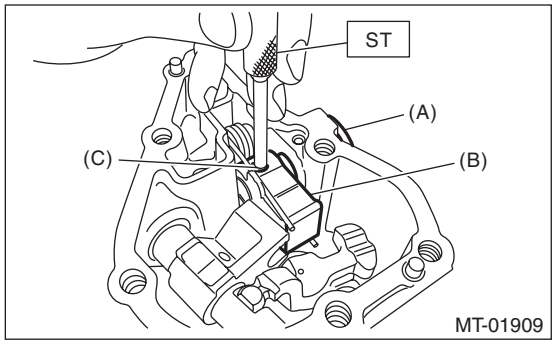

(A) Selector lever COMPL
(B) Selector arm No. 2
(C) Straight pin

14) Insert a new straight pin.

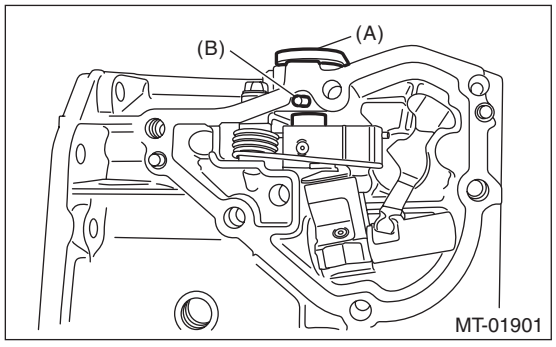

(A) Selector lever COMPL
(B) Straight pin

15) Install the center differential and transfer driven gear as a unit.
16) Install the transfer case and the extension case assembly. <Ref. to 6MT-63, INSTALLATION, Transfer Case and Extension Case Assembly.>
17) Apply liquid gasket seamlessly.

Liquid gasket:
THREE BOND 1215B or equivalent

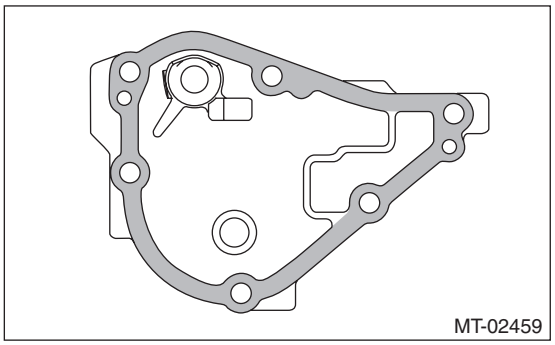

18) Install the transmission cover.

Tightening torque:
25 N·m (2.5 kgf-m, 18.4 ft-lb)

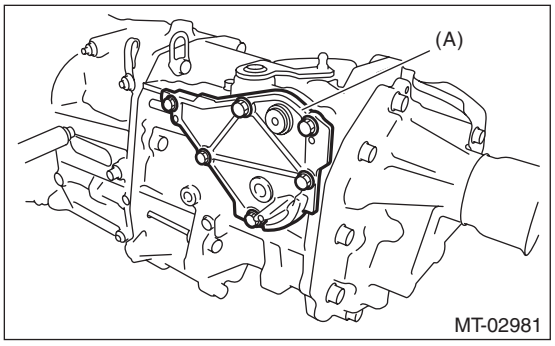

(A) Transmission cover

19) Install the back-up light switch and the neutral position switch. <Ref. to 6MT-56, INSTALLATION, Switches and Harness.>
20) Install the manual transmission assembly to the vehicle. <Ref. to 6MT-37, INSTALLATION, Manual Transmission Assembly.>

15.Transmission Case

A: REMOVAL

1) Remove the manual transmission assembly from the vehicle. <Ref. to 6MT-27, REMOVAL, Manual Transmission Assembly.>
2) Remove the clutch release lever and the release bearing. <Ref. to CL-14, REMOVAL, Release Bearing and Lever.>
3) Remove the transfer case together with the extension case assembly. <Ref. to 6MT-61, REMOVAL, Transfer Case and Extension Case Assembly.>
4) Remove the bearing mounting bolt.

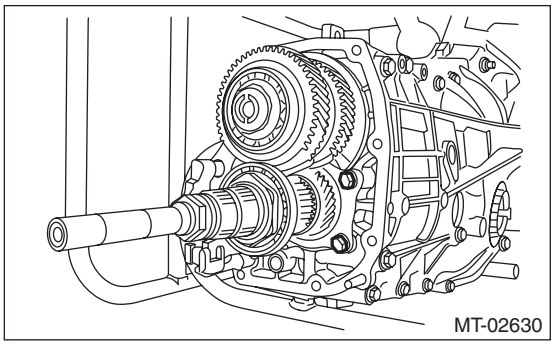
MT-02630

5) Remove the main shaft rear plate.

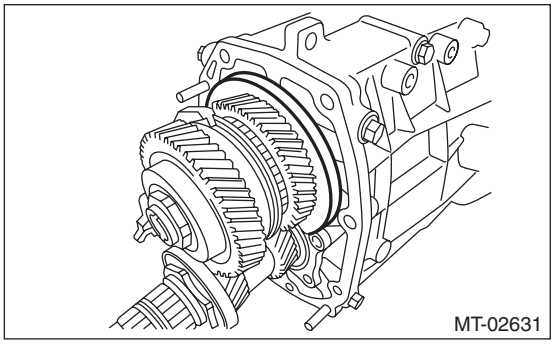
MT-02631

6) Remove the bolts and nuts, and separate the transmission case into the right and left cases.

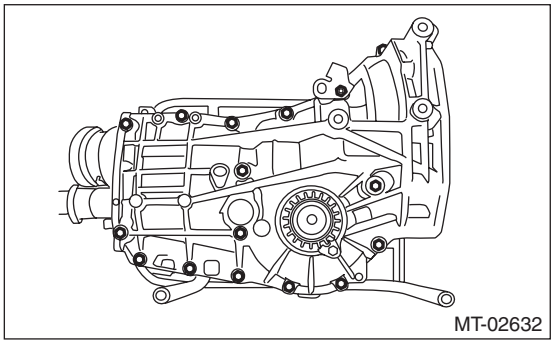
MT-02632

7) Remove the drive pinion shaft assembly.

NOTE:
Use a hammer handle, etc. to remove if too tight.

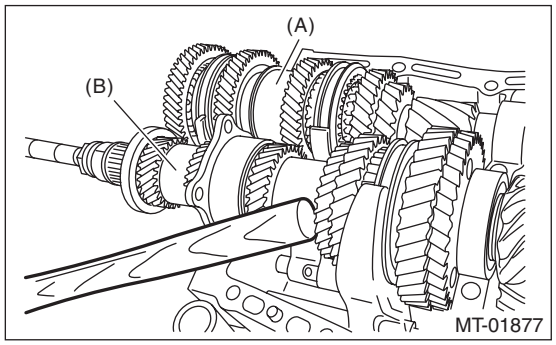

(A) Main shaft ASSY
(B) Drive pinion shaft ASSY

8) Remove the main shaft assembly.
9) Remove the front differential assembly.

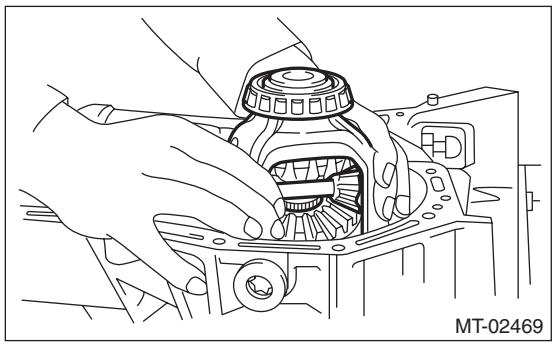

10) Remove the differential side retainers and taper roller bearing outer races on the left and right sides. <Ref. to 6MT-134, REMOVAL, Front Differential Assembly.>

NOTE:
Do not confuse the right and left taper roller bearing outer races.
11) Remove the reverse idler gear. <Ref. to 6MT-146, REMOVAL, Reverse Idler Gear.>
12) Remove the shifter fork and rod. <Ref. to 6MT-158, REMOVAL, Shifter Fork and Rod.>
13) Remove the front oil guide.

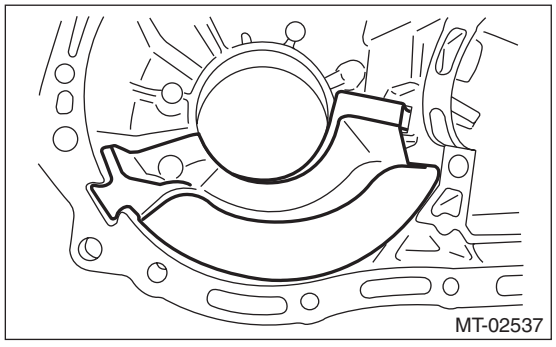

B: INSTALLATION

1) Wipe off grease, oil and dust on the mating surfaces of transmission cases with cleaning solvent.
2) Install the shifter fork and rod. <Ref. to 6MT-160, INSTALLATION, Shifter Fork and Rod.>
3) Install the reverse idler gear. <Ref. to 6MT-148, INSTALLATION, Reverse Idler Gear.>
4) Select the drive pinion shim. <Ref. to 6MT-115, INSTALLATION, Drive Pinion Shaft Assembly.>
5) Install the taper roller bearing outer race to the transmission case LH side, and install the differential side retainer with the O-ring removed.
6) Install the front differential assembly.
7) Install the main shaft assembly.

NOTE:
Align to install the needle bearing knock pin hole to the transmission case knock pin.
8) Install the selected drive pinion shims and drive pinion shaft assembly.

NOTE:
Install the transmission case knock pin into the roller bearing knock pin hole.
9) Tighten the left and right side of the transmission case with the17 mounting bolts.

NOTE:
- Insert bolts (11) and (16) from the LH side of the transmission case.
- Match the cases together so that the drive pinion shims are not caught between the cases.

Tightening torque:
8 mm bolt
25 N·m (2.5 kgf-m, 18.4 ft-lb)
★ ***10 mm bolt***
40 N·m (4.1 kgf-m, 29.5 ft-lb)

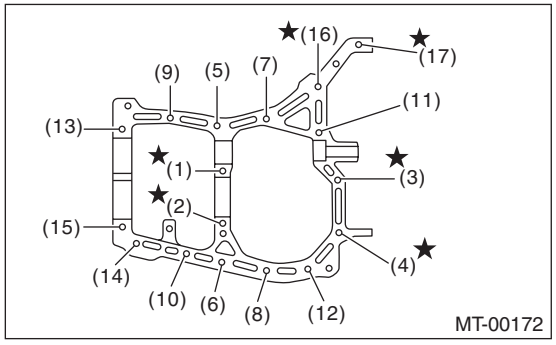

10) Install the taper roller bearing outer race to the RH side of the transmission case.
11) Tighten the bearing mounting bolts.

Tightening torque:
30 N·m (3.1 kgf-m, 22.1 ft-lb)

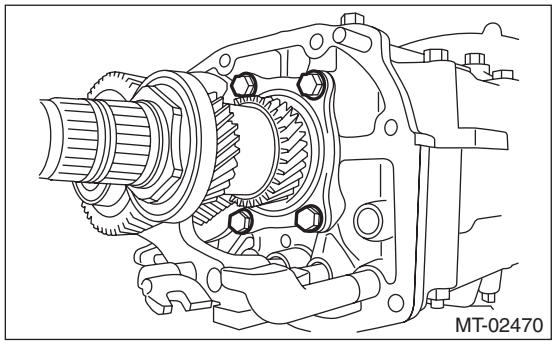

12) Perform backlash adjustment of the hypoid driven gear and preload adjustment of the taper roller bearing.

(1) Attach the ST on drive pinion shaft assembly.

ST 18667AA020 HOLDER

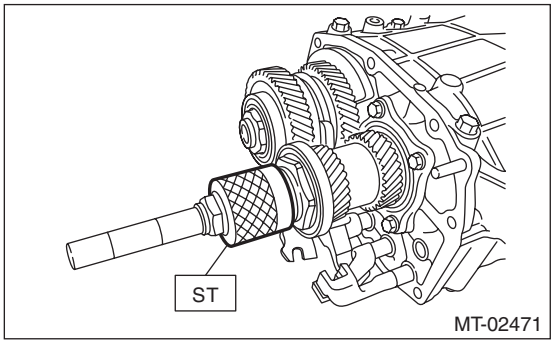

(2) Place the transmission case with the LH side facing downward, and put ST1 on the taper roller bearing outer race.

(3) Screw in the differential side retainer from the bottom into left case using ST2. Fit the ST3 on the main shaft of the transmission. Shift the gear into 4th or 5th, and turn the shaft several times. Screw in the differential side retainer while rotating the ST3 until a slight resistance is felt on ST2.

This is the contact point of the hypoid driven gear and the drive pinion shaft. Repeat the above sequence several times to ensure the contact point.

ST1 399780104 WEIGHT
ST2 18630AA010 WRENCH COMPL RETAINER
ST3 499927100 HANDLE

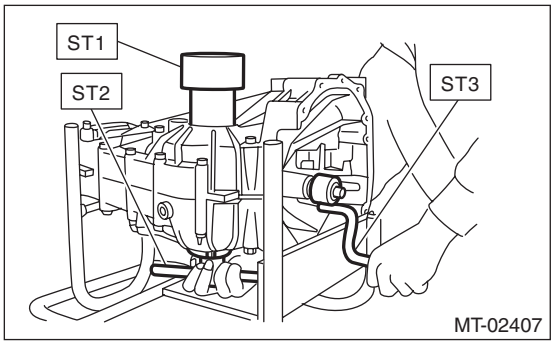

(4) Remove the WEIGHT, and screw in the differential side retainer without the O-ring into the RH side of the transmission case, and stop at the point where a slight resistance is felt.

NOTE:
In this condition, the backlash between hypoid driven gear and drive pinion shaft is zero.

ST 18630AA010 WRENCH COMPL RETAINER

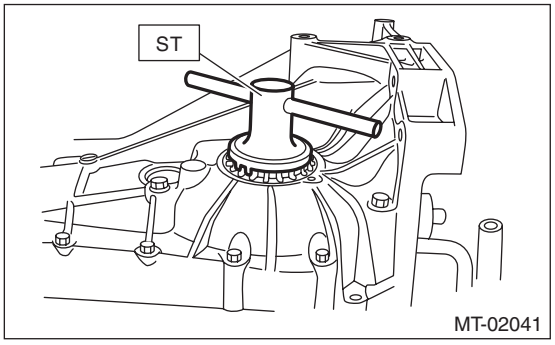

(5) Loosen the differential side retainer on the LH side of the transmission case by 3 notches, and turn the differential side retainer on the RH side of the transmission case by 3 notches in order to apply backlash.

(6) Screw in the differential side retainer of the RH side of the transmission case additionally by 1 notch in order to apply preload on taper roller bearing.

(7) Tighten temporarily both the retainer lock plates LH and RH, and put marks on both the differential side retainer and retainer lock plate for later readjustment.

NOTE:
When it is difficult to attach the retainer lock plate, turn over the retainer lock plate and attach.

(8) Turn the transmission main shaft several times while tapping around the differential side retainer lightly with a plastic hammer.

13) Inspect and adjust backlash and tooth contact of the hypoid driven gear. <Ref. to 6MT-140, INSPECTION, Front Differential Assembly.>

14) Separate the transmission case into left and right parts. <Ref. to 6MT-93, REMOVAL, Transmission Case.>

15) Check each shifter fork. <Ref. to 6MT-162, INSPECTION, Shifter Fork and Rod.>

16) Select a main shaft rear plate. <Ref. to 6MT-114, ADJUSTMENT, Main Shaft Assembly.>

17) Install the front oil guide.

NOTE:
Fit in all the way.

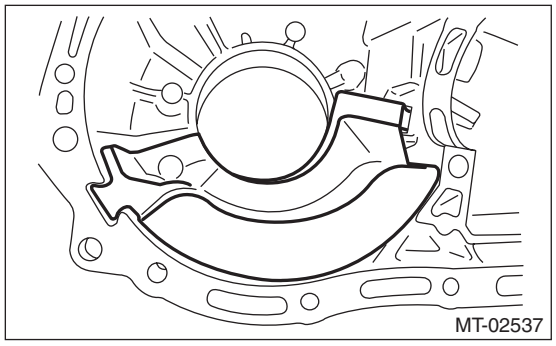
MT-02537

18) Apply liquid gasket, then join the right side and left side of the case together.

Liquid gasket:
THREE BOND 1215B or equivalent

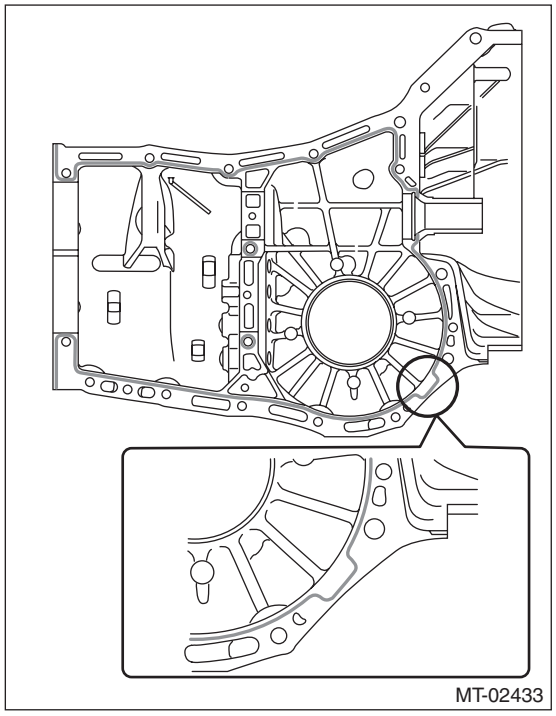
MT-02433

19) Tighten 17 bolts with brackets and clips as shown in the figure.

NOTE:
- Insert bolts (11) and (16) from the LH side of the transmission case.
- Match the cases together so that the drive pinion shims are not caught between the cases.

Tightening torque:
8 mm bolt
25 N·m (2.5 kgf-m, 18.4 ft-lb)
★ ***10 mm bolt***
40 N·m (4.1 kgf-m, 29.5 ft-lb)

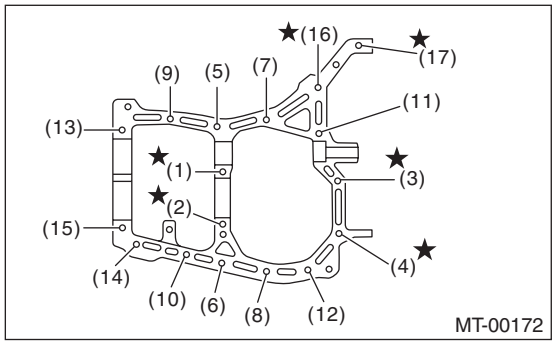

20) Tighten the bearing mounting bolts.

Tightening torque:
30 N·m (3.1 kgf-m, 22.1 ft-lb)

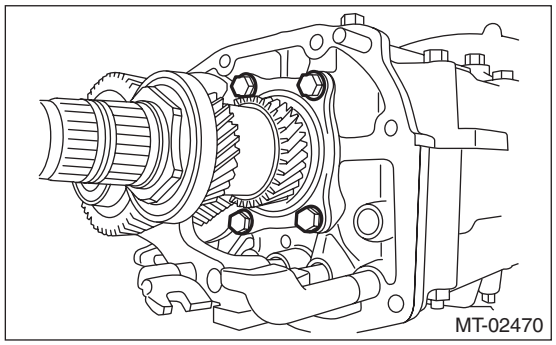

21) Remove the retainer lock plate, and loosen the differential side retainer until the groove of the O-ring appears. Fit the O-ring into the groove and tighten the differential side retainer into the position where it was not loosened.

NOTE:
- When loosening the differential side retainer, record the number of the turns made.
- Perform this for both left and right differential side retainers.
- Use new O-rings.
- Apply transmission gear oil to O-ring.

22) Install the retainer lock plate.

Tightening torque:
T: 25 N·m (2.5 kgf-m, 18.4 ft-lb)

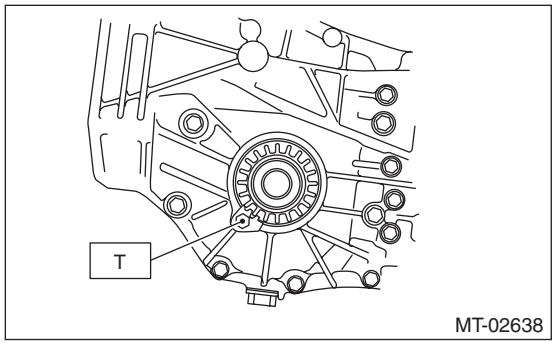

23) Install the transfer case together with the extension case assembly. <Ref. to 6MT-63, INSTALLATION, Transfer Case and Extension Case Assembly.>
24) Install the clutch release lever and release bearing. <Ref. to CL-14, INSTALLATION, Release Bearing and Lever.>
25) Install the manual transmission assembly to the vehicle. <Ref. to 6MT-37, INSTALLATION, Manual Transmission Assembly.>

C: INSPECTION

Check the transmission case for cracks, damage, or oil leaks.

16.Main Shaft Assembly

A: REMOVAL

1) Remove the manual transmission assembly from the vehicle. <Ref. to 6MT-27, REMOVAL, Manual Transmission Assembly.>
2) Remove the transfer case together with the extension case assembly. <Ref. to 6MT-61, REMOVAL, Transfer Case and Extension Case Assembly.>
3) Remove the transmission case. <Ref. to 6MT-93, REMOVAL, Transmission Case.>
4) Remove the drive pinion shaft assembly. <Ref. to 6MT-115, REMOVAL, Drive Pinion Shaft Assembly.>
5) Remove the main shaft assembly.

B: INSTALLATION

1) Attach the needle bearing and oil seal to the front of the main shaft assembly.

NOTE:
- Wrap the clutch splined section with vinyl tape to prevent damage to the oil seal.
- Apply NICHIMOLY N-130 or the equivalent to the lip of the oil seal.
- Use a new oil seal.

2) Rotate the reverse idler sub gear by two teeth from free status in the direction of the arrow to make it engage with the reverse gear of the main shaft and install the main shaft assembly.
   (1) When the reverse idler sub gear is at free status, put alignment marks on reverse idler sub gear and reverse idler gear.
   (2) Rotate the alignment mark on the reverse idler sub gear side in the arrow direction by two teeth, and secure it with a wire.

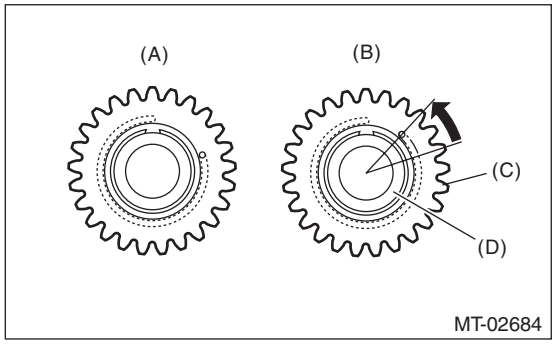

(A) Free status
(B) Set status
(C) Reverse idler sub gear
(D) Reverse idler gear

3) Fit the transmission case knock pin to the knock pin hole of the needle bearing outer race and install the main shaft assembly.

NOTE:
- Align the end face of the seal with surface (A) when installing the oil seal.

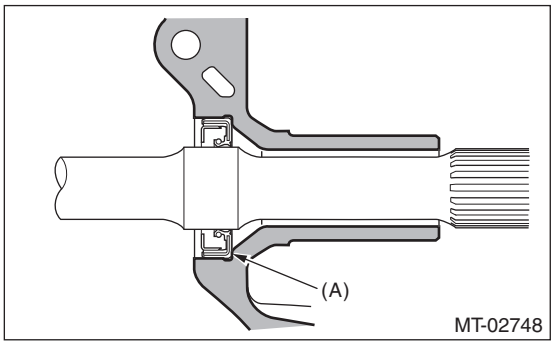

- Face the cutout portion of the snap ring for the double taper roller bearing to the drive pinion shaft assembly.

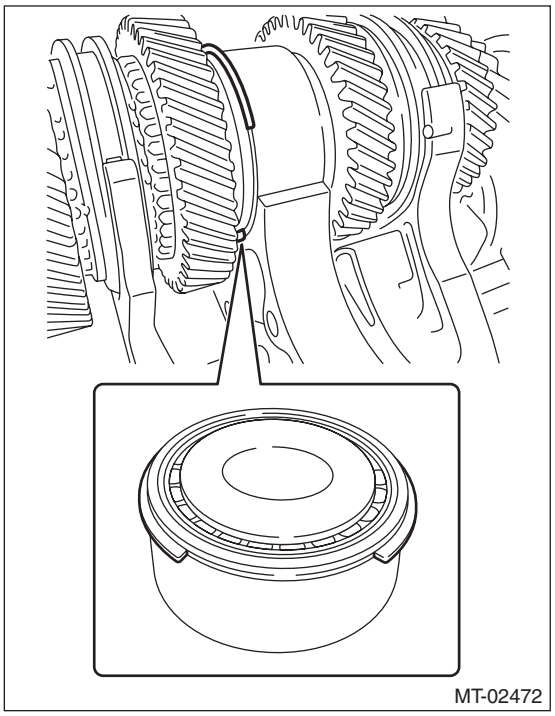

4) After installing the main shaft, check that the reverse idler gear and reverse idler sub gear are aligned two teeth away and remove the wire.
5) Install the drive pinion shaft assembly. <Ref. to 6MT-115, INSTALLATION, Drive Pinion Shaft Assembly.>
6) Check each shifter fork. <Ref. to 6MT-162, INSPECTION, Shifter Fork and Rod.>
7) Select a main shaft rear plate. <Ref. to 6MT-114, ADJUSTMENT, Main Shaft Assembly.>
8) Install the transmission case. <Ref. to 6MT-95, INSTALLATION, Transmission Case.>
9) Install the transfer case together with the extension case assembly. <Ref. to 6MT-63, INSTALLATION, Transfer Case and Extension Case Assembly.>
10) Install the manual transmission assembly to the vehicle. <Ref. to 6MT-37, INSTALLATION, Manual Transmission Assembly.>

C: DISASSEMBLY

NOTE:
When replacing the coupling sleeve and synchronizer hub, replace them as a set. Because these must engage at the specified point, avoid disassembly as much as possible. If it is necessary to disassemble, mark the engaging points on the splines beforehand.
1) Put vinyl tape around the main shaft splines and pull out the oil seal and needle bearing by hand to prevent the oil seal from being damaged.
2) Flatten the tab of the lock nut.
3) Remove the lock nut and lock washer using ST1 and ST2.
ST1 498937000 TRANSMISSION HOLDER
ST2 499987003 SOCKET WRENCH (35)

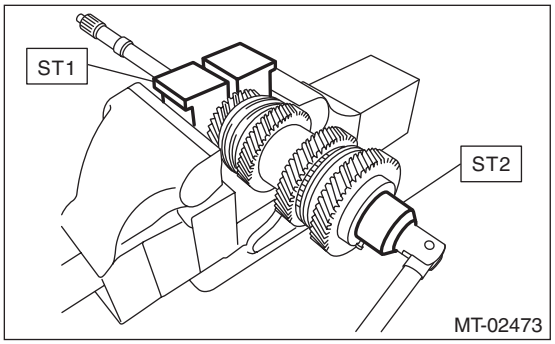

4) Remove the 6th drive gear and ball bearing using the ST1, ST2 and a press.
ST1 899864100 REMOVER
ST2 18722AA010 REMOVER

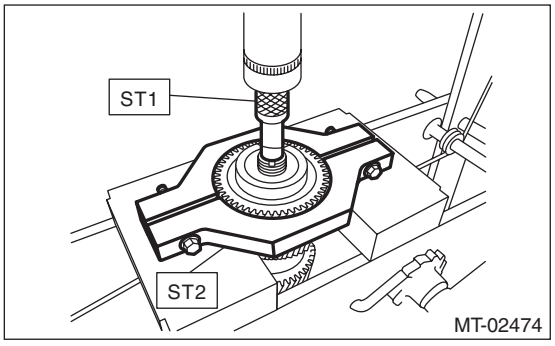

5) Remove the 6th needle bearing, 6th baulk ring, 5th-6th shifting insert and 5th-6th coupling sleeve.

CAUTION:
When removing the 5th-6th coupling sleeve, be careful not to lose the 5th-6th shifting insert.
6) Remove the 5th drive gear, 6th needle bearing race, 5th baulk ring, 5th-6th synchronizer hub and 5th needle bearing using the ST1, ST2 and a press.
ST1 899864100 REMOVER
ST2 18722AA010 REMOVER

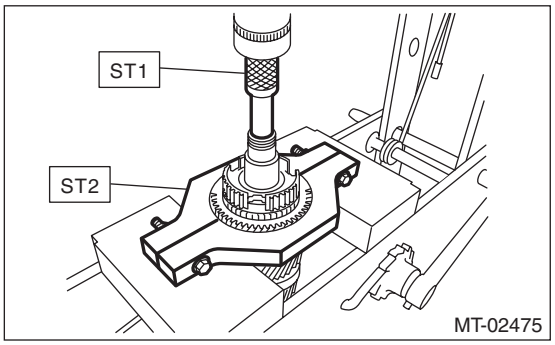

7) Shift the 3rd-4th coupling sleeve to the 3rd side.

8) Remove the 4th drive gear, 4th gear thrust washer, double taper roller bearing and 5th needle bearing race using the ST1, ST2 and a press.
ST1 899864100 REMOVER
ST2 899714110 REMOVER

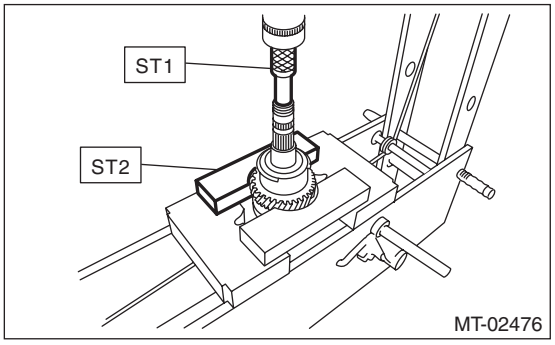

9) Remove the 4th baulk ring, 4th needle bearing, 3rd-4th shifting insert and 3rd-4th coupling sleeve.

CAUTION:
When removing the 3rd-4th coupling sleeve, be careful not to lose the 3rd-4th shifting insert.
10) Remove the 3rd drive gear, 4th needle bearing race, 3rd-4th synchronizer hub, 3rd inner baulk ring, 3rd synchro cone, 3rd outer baulk ring and 3rd needle bearing using the ST1, ST2 and a press.
ST1 899864100 REMOVER
ST2 899714110 REMOVER

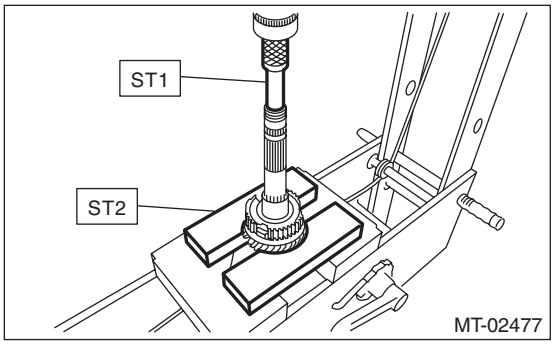

D: ASSEMBLY

NOTE:
- Match the alignment marks, and install the coupling sleeve and then install the shifting insert.
- Make sure that there is no large clearance at both sides of the shifting insert after assembly.

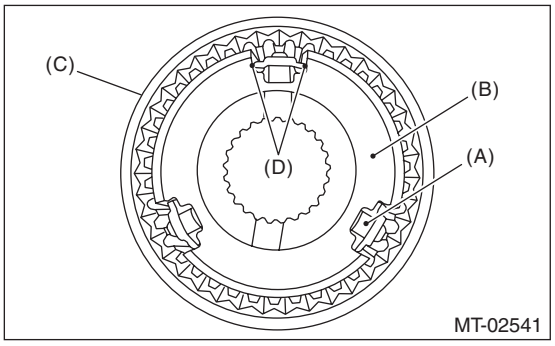

(A) Shifting insert
(B) Synchronizer hub
(C) Coupling sleeve
(D) There is no large clearance at this part.

1) Install the 3rd needle bearing, 3rd drive gear, 3rd outer baulk ring, 3rd synchro cone, 3rd inner baulk ring and 3rd-4th synchronizer hub.

NOTE:
- Install the 3rd-4th synchronizer hub in the correct direction.
- Align the protrusion of the 3rd outer baulk ring into the groove of the 3rd-4th synchronizer hub.

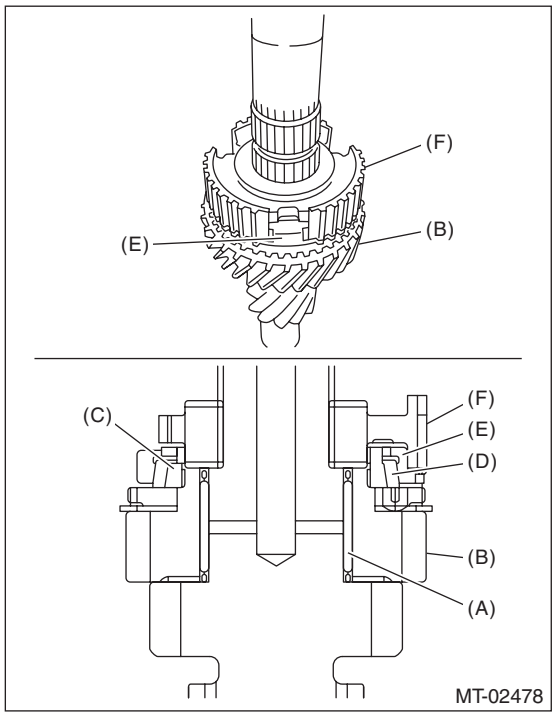

(A) 3rd needle bearing
(B) 3rd drive gear
(C) 3rd inner baulk ring
(D) 3rd synchro cone
(E) 3rd outer baulk ring
(F) 3rd-4th synchronizer hub

2) Install the 4th needle bearing race using ST1, ST2, ST3 and a press.

CAUTION:
Do not apply a load in excess of 10 kN (1 ton, 1.1 US ton, 1.0 Imp ton).

ST1 899714110 REMOVER
ST2 499877000 RACE 4-5 INSTALLER
ST3 398177700 INSTALLER

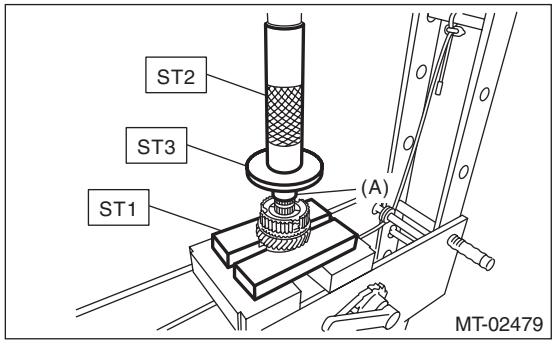

(A) 4th needle bearing race

3) Install the 3rd-4th coupling sleeve.

NOTE:
- Install the 3rd-4th coupling sleeve in the correct direction.
- Align the alignment marks of 3rd-4th coupling sleeve and the 3rd-4th synchronizer hub.

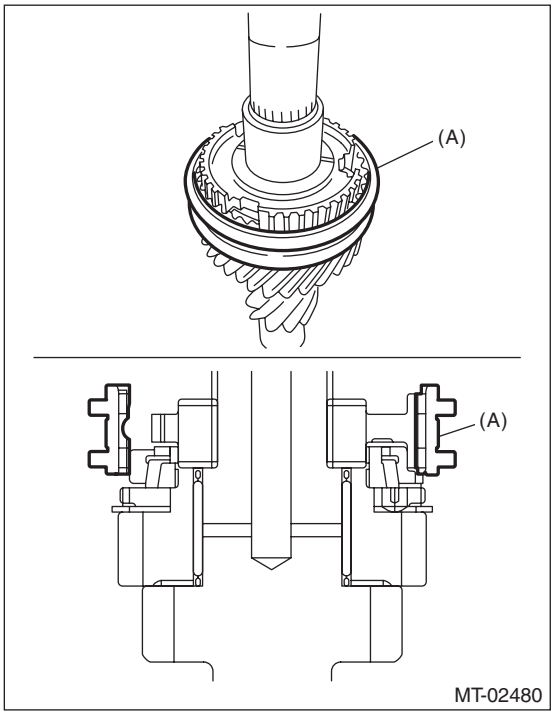

(A) 3rd-4th coupling sleeve

4) Install the 3rd-4th shifting insert.

NOTE:
Press in the ball part to install.

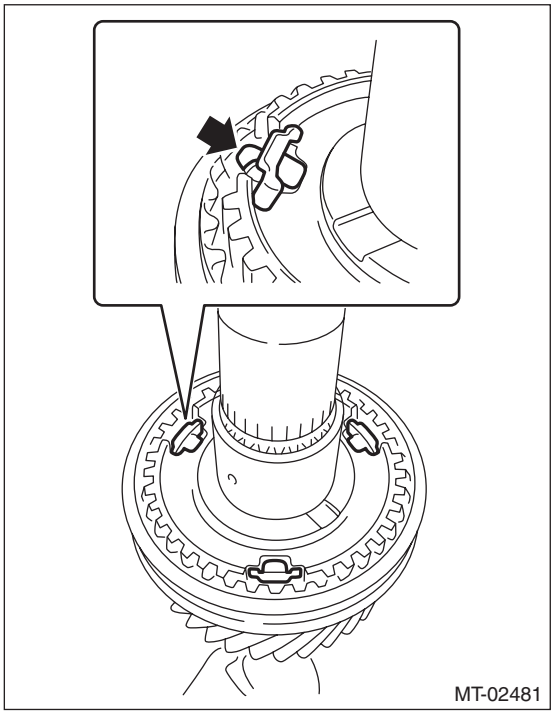

5) Install the 4th baulk ring, 4th needle bearing, 4th drive gear and 4th gear thrust washer.

NOTE:
- Align the protrusion of the 4th baulk ring into the groove of the 3rd-4th synchronizer hub.
- Install the 4th gear thrust washer with the groove side facing the 4th drive gear.

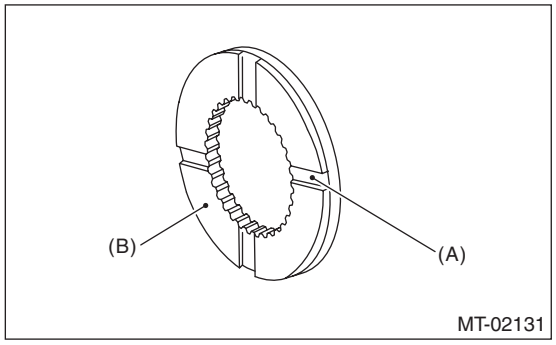

(A) Groove
(B) Face this surface to the 4th gear side.

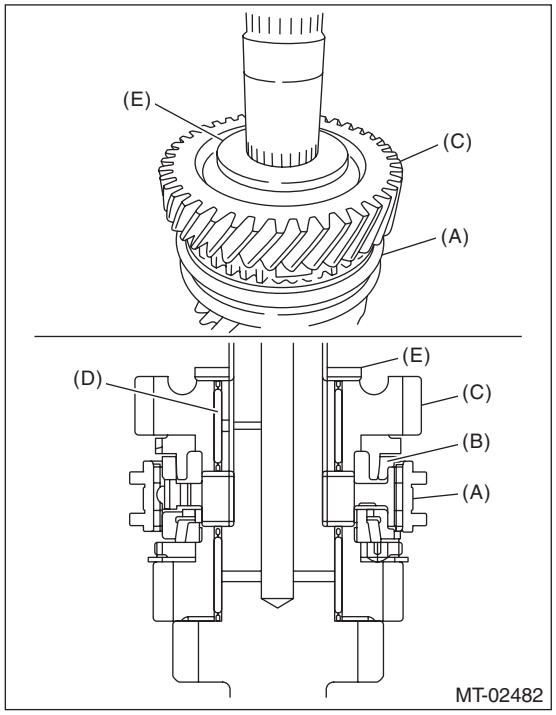

(A) 3rd-4th coupling sleeve
(B) 4th baulk ring
(C) 4th drive gear
(D) 4th needle bearing
(E) 4th gear thrust washer

6) Install the double taper roller bearing using ST1, ST2 and a press.

CAUTION:
Do not apply a load in excess of 10 kN (1 ton, 1.1 US ton, 1.0 Imp ton).

NOTE:
- Use a new double taper roller bearing.
- Install the double taper roller bearing with snap ring side facing the 5th drive gear side.

ST1 899714110 REMOVER
ST2 499877000 RACE 4-5 INSTALLER

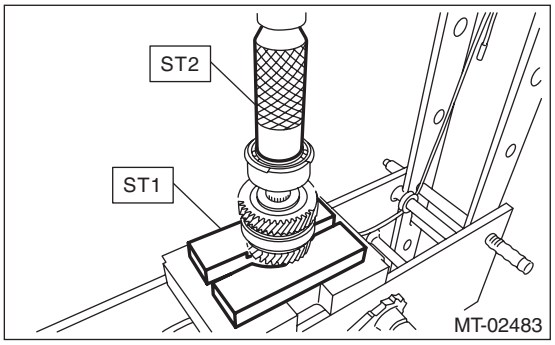

7) Make sure that the double taper roller bearing turns smoothly.
8) Install the 5th needle bearing race using ST1, ST2 and press.

CAUTION:
Do not apply a load in excess of 10 kN (1 ton, 1.1 US ton, 1.0 Imp ton).
ST1 899714110 REMOVER
ST2 499877000 RACE 4-5 INSTALLER

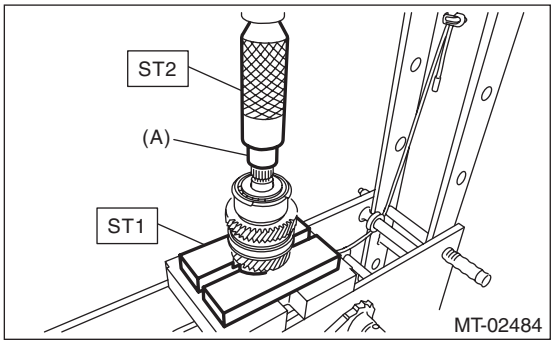

(A) 5th needle bearing race

9) Install the 5th needle bearing, 5th drive gear, 5th baulk ring, and 5th-6th synchronizer hub.

NOTE:
- Align the protrusion part of the 5th baulk ring with the groove of the 5th-6th synchronizer hub.
- Install the 5th-6th synchronizer hub in the correct direction.

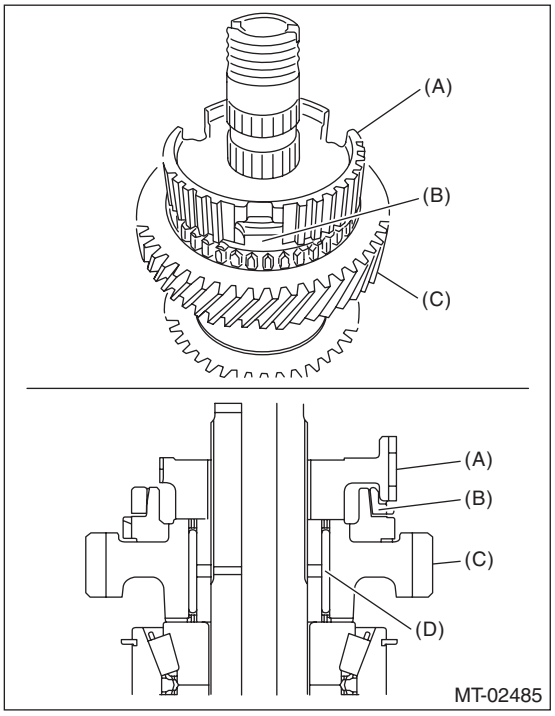

(A) 5th-6th synchronizer hub
(B) 5th baulk ring
(C) 5th drive gear
(D) 5th needle bearing (cage: black)

10) Install the 6th needle bearing race using ST1, ST2 and press.

CAUTION:
Do not apply a load in excess of 10 kN (1 ton, 1.1 US ton, 1.0 Imp ton).
ST1 899714110 REMOVER
ST2 499877000 RACE 4-5 INSTALLER

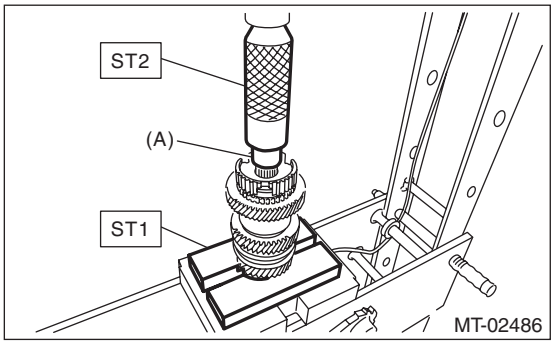

(A) 6th needle bearing race

11) Install the 5th-6th coupling sleeve.

NOTE:
- Install the 5th-6th coupling sleeve in the correct direction.
- Align the alignment marks of 5th-6th coupling sleeve and the 5th-6th synchronizer hub.

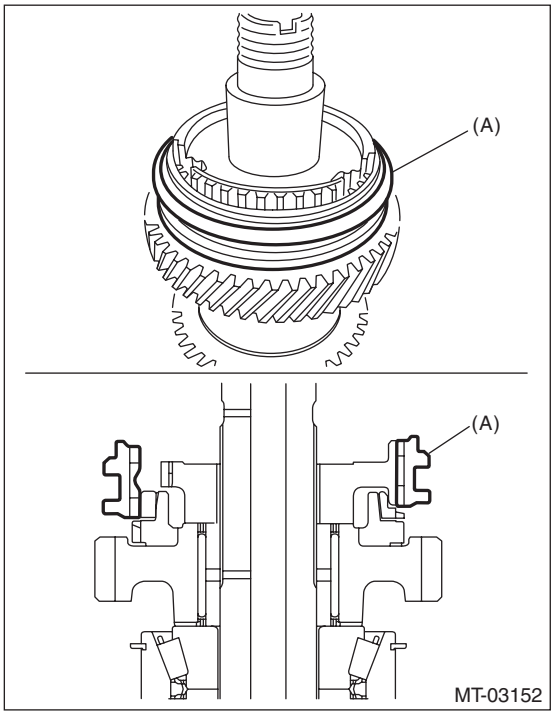

(A) 5th-6th coupling sleeve

12) Install the 5th-6th shifting insert.

NOTE:
Press in the ball part to install.

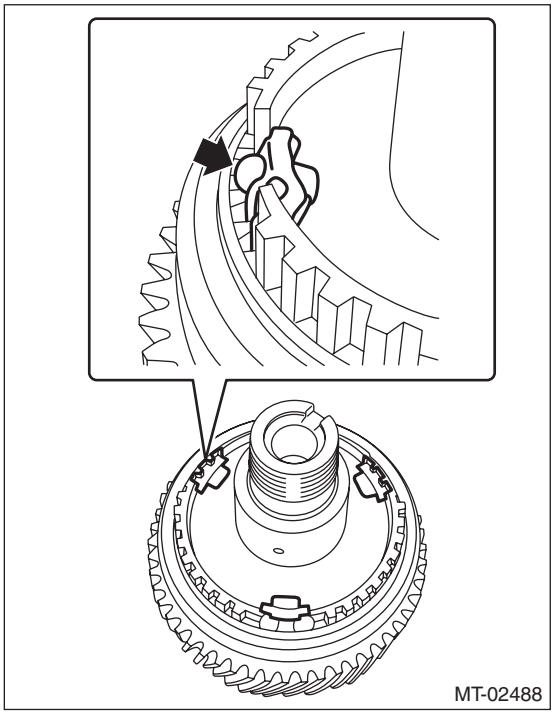

13) Install the 6th baulk ring, 6th drive gear and 6th needle bearing.

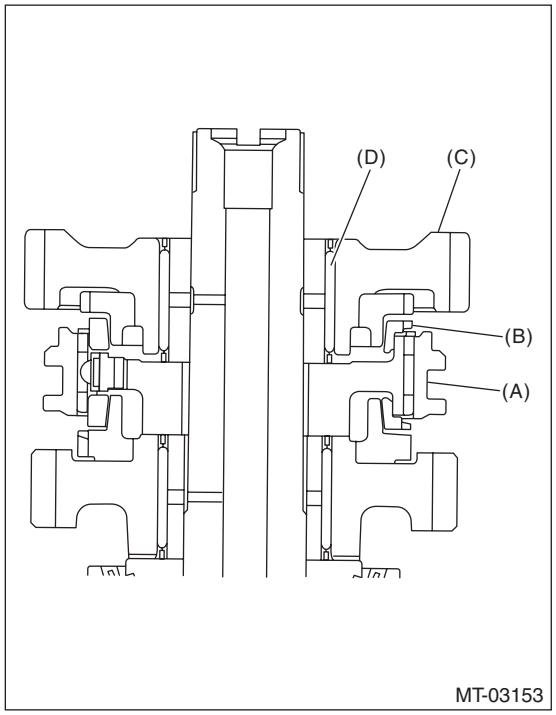

(A) 5th-6th coupling sleeve
(B) 6th baulk ring
(C) 6th drive gear
(D) 6th needle bearing (cage: silver)

14) Install the ball bearing using ST2 and a press.

CAUTION:
Do not apply a load in excess of 10 kN (1 ton, 1.1 US ton, 1.0 Imp ton).

NOTE:
Install the ball bearing with the side which does not have lock nut mounting dent facing 6th drive gear.
ST1 899714110 REMOVER
ST2 899754112 PRESS

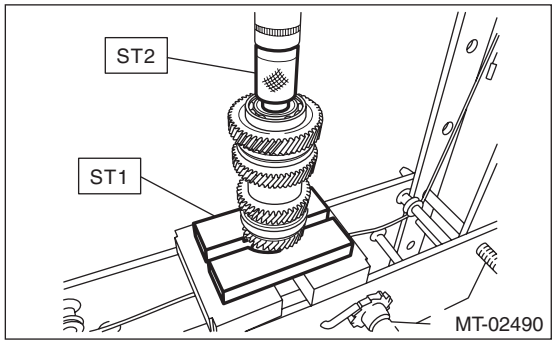

15) Install the lock washer.

NOTE:
- Use a new lock washer.
- Install the lock washer in the correct direction.

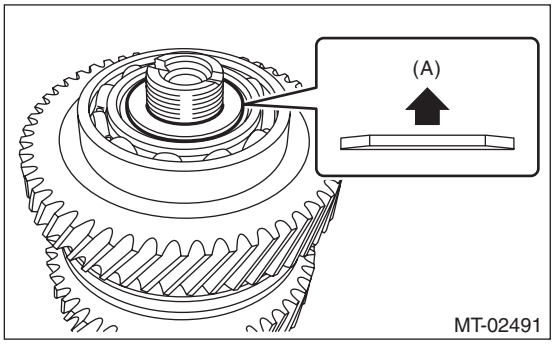

(A) Lock nut side

16) Install the lock nut using ST1 and ST2.

NOTE:
Use a new lock nut.

Tightening torque:
160 N·m (16.3 kgf-m, 118.0 ft-lb)

ST1 498937000 TRANSMISSION HOLDER
ST2 499987003 SOCKET WRENCH (35)

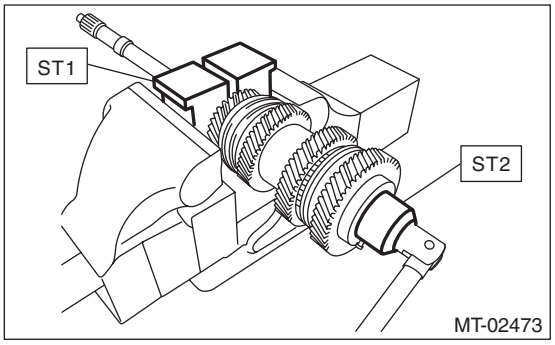

17) Crimp the lock nut at two locations so that the dimension (B) becomes 23.3 mm (0.92 in) or less.

CAUTION:
When crimping the lock nut, be careful not to crack it.

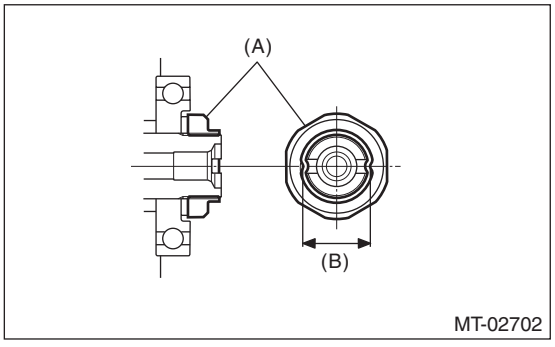

(A) Lock nut
(B) Outer dimension after crimping

E: INSPECTION

Disassembled parts should be washed with cleaning solvent first, then inspected carefully.
1) Bearing
Replace the bearings in the following cases.
- When the bearing balls, outer races and inner races are broken or rusty.
- When the bearing is worn.
- When the bearings fail to turn smoothly or emit noise in rotation after transmission gear oil has been applied.
- When bearing has other defects.

2) Bushing (each gear)
Replace the bushing in following cases.
- When the sliding surface is damaged or abnormally worn.
- When the inner wall is abnormally worn.

3) Gear
Replace gears in the following cases.
- Replace the gear with new part if its tooth surfaces are broken, damaged or excessively worn.
- Correct or replace if the cone that contacts the baulk ring is rough or damaged.
- Repair or replace if the inner surface or end face is damaged.

4) Baulk ring, synchro cone
Replace the baulk ring and synchro cone in the following cases.
- When the inner surface or end face is damaged.
- When the baulk ring inner surface is abnormally or partially worn down.
- When the contact surface of the baulk ring insert section is cracked or abnormally worn.
- If the gap between the end faces of the baulk ring and the gear splined part is excessively small, check the clearance (A) while pressing the ring against the cone.

Clearance (A):
0.5 mm (0.020 in) or more

Single cone

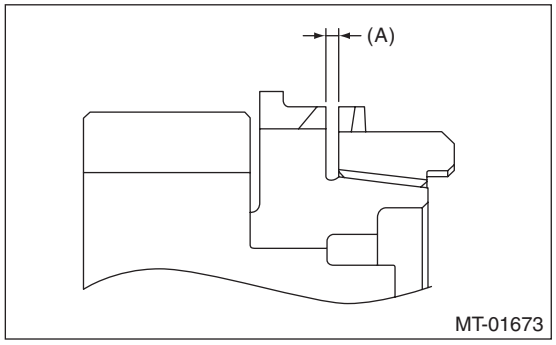

Double cone

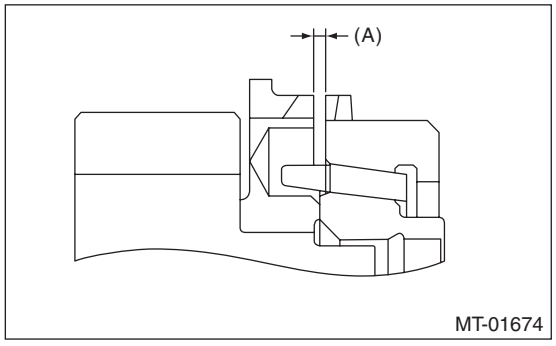

• Apply transmission gear oil to the cone of the gear and while press-fitting the baulk ring, check there is no rotation in the circumferential direction.

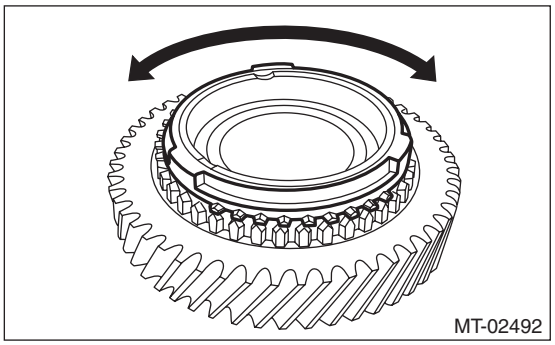

5) Coupling sleeve and synchronizer hub
• Check the slipping condition of the coupling sleeve.
• Check the splines on the coupling sleeve and synchronizer hub for wear.

6) Shifting insert
Replace the shifting insert if there is deformation, excessive wear on the ball section or any defectiveness.

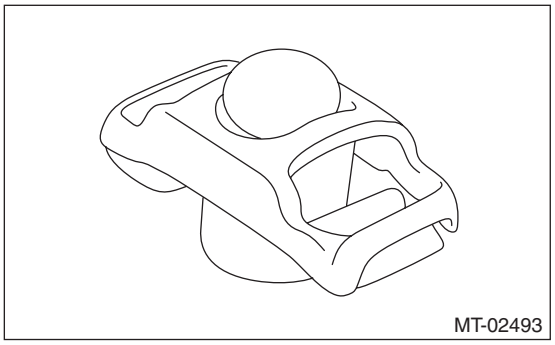

7) Oil seal
Replace the oil seal if the lip is deformed, hardened, worn or defective in any way.

8) Gearshift mechanism
Repair or replace the gearshift mechanism if excessively worn, bent or defective in any way.

F: ADJUSTMENT

Selection of main shaft rear plate:
Measure the protrusion amount (A) of bearing from transmission main case surface, and select a suitable plate in the following table.

NOTE:
Before measuring, tap the end of main shaft with a plastic hammer lightly in order to make the clearance zero between the main case surface and moving flange of bearing.

Dimension (A) mm (in)	Part No.	Mark
4.00 — 4.13 (0.1575 — 0.1626)	32294AA041	1
3.87 — 4.00 (0.1524 — 0.1575)	32294AA051	2

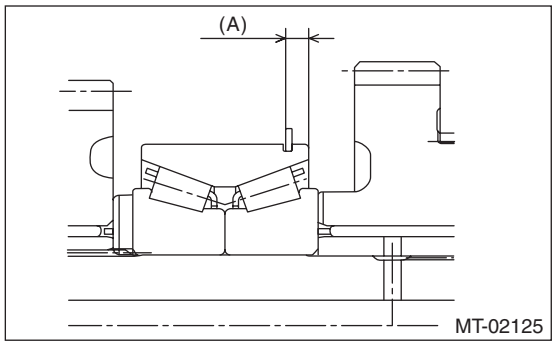

17.Drive Pinion Shaft Assembly

A: REMOVAL

1) Remove the manual transmission assembly from the vehicle. <Ref. to 6MT-27, REMOVAL, Manual Transmission Assembly.>
2) Remove the transfer case together with the extension case assembly. <Ref. to 6MT-61, REMOVAL, Transfer Case and Extension Case Assembly.>
3) Remove the transmission case. <Ref. to 6MT-93, REMOVAL, Transmission Case.>
4) Remove the drive pinion shaft assembly.

NOTE:
Use a hammer handle, etc. to remove if too tight.

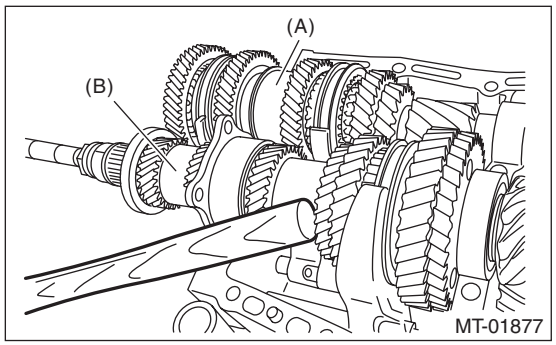

(A) Main shaft ASSY
(B) Drive pinion shaft ASSY

5) Remove the main shaft assembly.

B: INSTALLATION

1) Remove the front differential assembly.
2) Hypoid gear set match mark/No.: The number (A) on top of the drive pinion, and the number on the hypoid driven gear are set numbers for the two gears. Use a pair having the same numbers.
The figure (B) below shows a number for shim adjustment. If no number is shown, the value is zero.

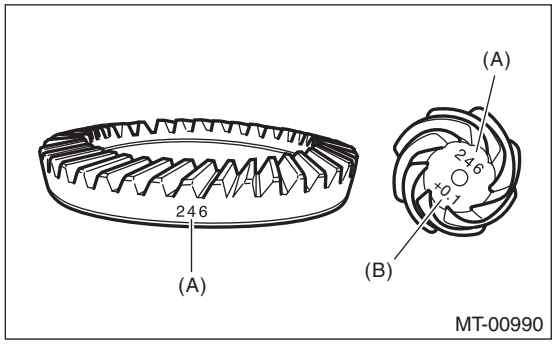

(A) Set number
(B) Number for shim adjustment

3) Place the drive pinion shaft assembly on transmission main case RH without shim and tighten the bearing mounting bolts.
4) Perform the adjustment of ST.
(1) Loosen the two bolts and adjust so that the scale indicates 0.5 correctly when the plate end and the scale end are on the same level.

ST 499917500 DRIVE PINION GAUGE ASSY

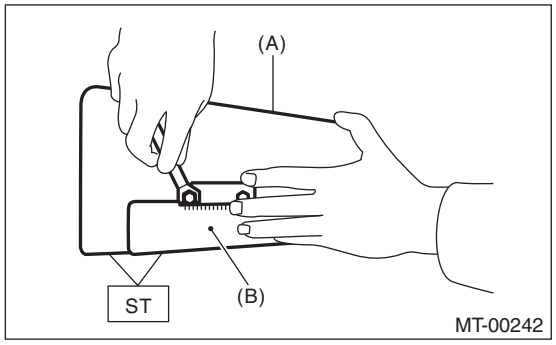

(A) Plate
(B) Scale

(2) Tighten the two bolts.
5) Position the ST by inserting the knock pin of ST into the knock hole of transmission case.

ST 499917500 DRIVE PINION GAUGE ASSY

6) Slide the drive pinion gauge scale with finger tip and read the value at the point where it matches with the end face of drive pinion.

ST 499917500 DRIVE PINION GAUGE ASSY

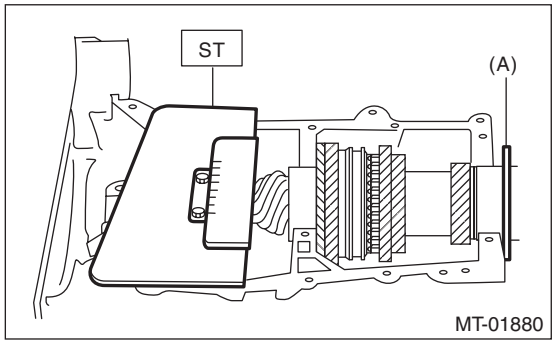

(A) Adjust the clearance to zero without drive pinion shims.

7) The thickness of drive pinion shims shall be determined by adding the value indicated on drive pinion to the value indicated on the ST. (Add if the number on drive pinion is prefixed by +, and subtract if the number is prefixed by –.)

8) Select one to three drive pinion shims in the following table for the value determined as described above, and take the drive pinion shim(s) whose thickness is closest to the said value.

NOTE:
Install the drive pinion shim(s) with its slit facing the shifter fork & rod side.

Drive pinion shim	
Part No.	Thickness mm (in)
32295AA031	0.150 (0.0059)
32295AA041	0.175 (0.0069)
32295AA051	0.200 (0.0079)
32295AA061	0.225 (0.0089)
32295AA071	0.250 (0.0098)
32295AA081	0.275 (0.0108)
32295AA091	0.300 (0.0118)
32295AA101	0.500 (0.0197)

9) Install the front differential assembly. <Ref. to 6MT-135, INSTALLATION, Front Differential Assembly.>
10) Fit the transmission case knock pin to the knock pin hole of the roller bearing and install the drive pinion shaft assembly.
11) Install the main shaft assembly. <Ref. to 6MT-100, INSTALLATION, Main Shaft Assembly.>
12) Check each shifter fork. <Ref. to 6MT-162, INSPECTION, Shifter Fork and Rod.>
13) Install the transmission case. <Ref. to 6MT-95, INSTALLATION, Transmission Case.>
14) Install the transfer case together with the extension case assembly. <Ref. to 6MT-63, INSTALLATION, Transfer Case and Extension Case Assembly.>
15) Install the manual transmission assembly to the vehicle. <Ref. to 6MT-37, INSTALLATION, Manual Transmission Assembly.>

C: DISASSEMBLY

NOTE:
• Attach a cloth to the end of driven shaft (on the frictional side of the thrust needle bearing) to prevent damage during disassembly or reassembly.
• When replacing the coupling sleeve and synchronizer hub, replace them as a set. Because these must engage at the specified point, avoid disassembly as much as possible. If it is necessary to disassemble, mark the engaging points on the splines beforehand.
1) Flatten the tab of the lock nut.
2) Remove the lock nut using ST1, ST2 and ST3.
ST1 18680AA020 HOLDER
ST2 18667AA020 HOLDER
ST3 18662AA010 SOCKET WRENCH (27)

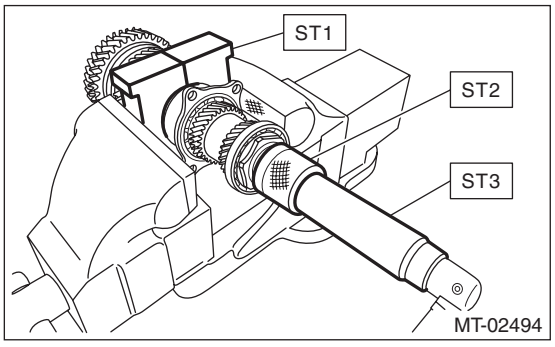

3) Remove the lock washer, washer, differential bevel gear sleeve, adjusting washer No. 1, thrust bearing and adjusting washer No. 2.

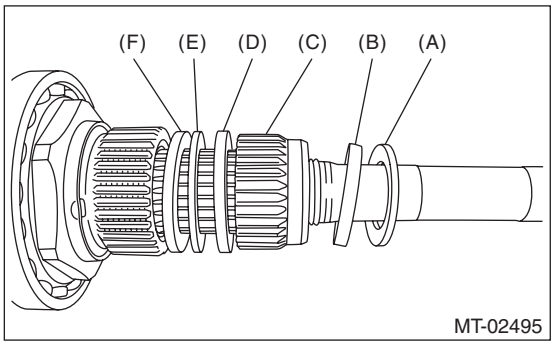

(A) Lock washer
(B) Washer
(C) Differential bevel gear sleeve
(D) Adjusting washer No. 1 (25 × 36 × t)
(E) Thrust bearing (25 × 36 × 2)
(F) Adjusting washer No. 2 (25 × 36 × t)

4) Draw out the drive pinion shaft from driven shaft.
5) Remove the needle bearing and drive pinion collar.

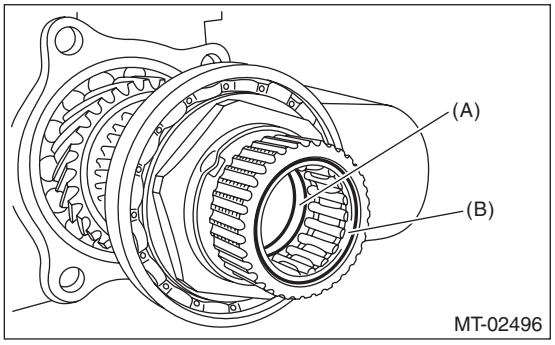

(A) Drive pinion collar
(B) Needle bearing (25 × 30 × 20)

6) Remove the needle bearing and thrust bearing.

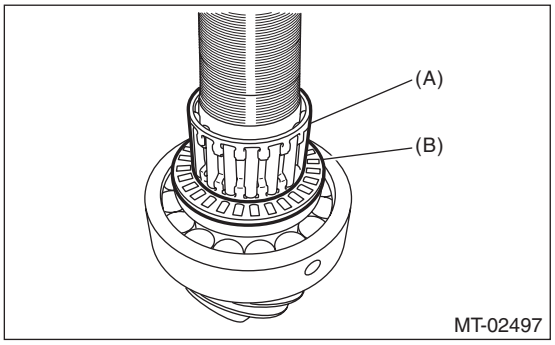

(A) Needle bearing (30 × 37 × 23)
(B) Thrust bearing (33 × 50 × 3)

7) Remove the roller bearing and washer using ST and a press.
ST 498077000 REMOVER

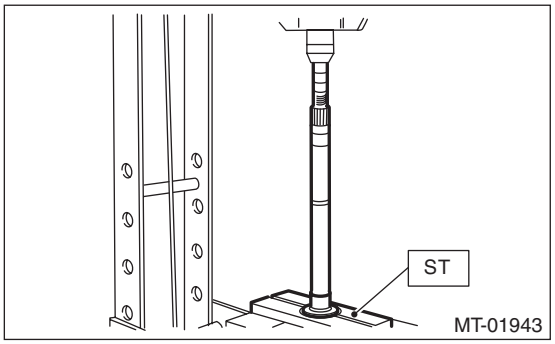

8) Flatten the tab of the lock nut.
9) Remove the lock nut using ST1 and ST2.
ST1 499987300 SOCKET WRENCH (50)
ST2 18680AA020 HOLDER

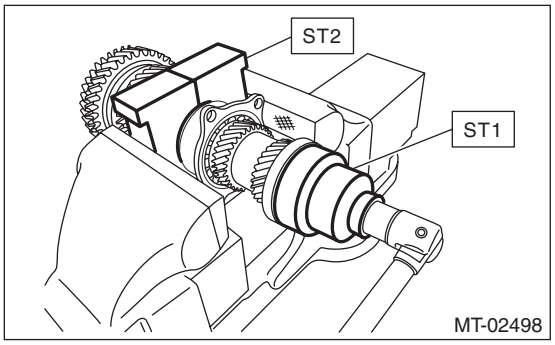

10) Remove the ball bearing, 6th driven gear and drive pinion spacer using the ST1, ST2 and a press.
ST1 899754112 PRESS
ST2 899714110 REMOVER

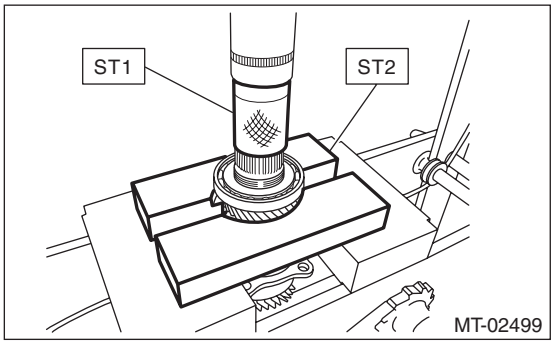

11) Remove the 5th driven gear, double ball bearing and 3rd-4th driven gear using ST1, ST2 and a press.
ST1 899754112 PRESS
ST2 899714110 REMOVER

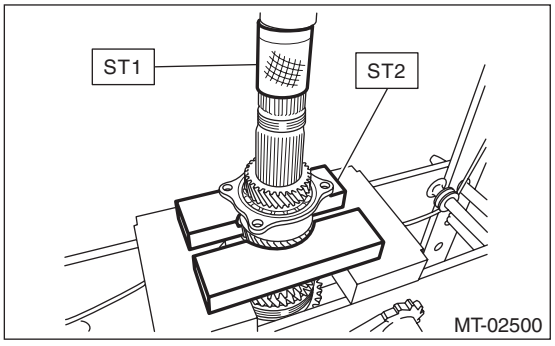

12) Remove the key.

13) Remove the 2nd driven gear, 2nd inner baulk ring, 2nd synchro cone, 2nd outer baulk ring, 1st-2nd shifting insert and 1st-2nd coupling sleeve.

CAUTION:
When removing 1st-2nd coupling sleeve, be careful not to lose the 1st-2nd shifting insert.

14) Remove the 1st driven gear, 1st inner baulk ring, 1st synchro cone, 1st outer baulk ring, 2nd driven gear bushing and 1st-2nd synchronizer hub using ST and a press.

ST 18762AA001 COMPRESSOR SPECIAL TOOL

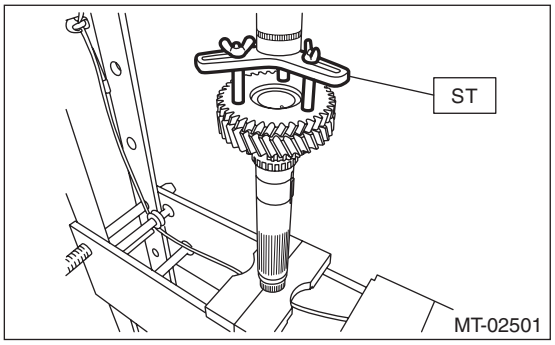

D: ASSEMBLY

NOTE:
- Match the alignment marks, and install the coupling sleeve and then install the shifting insert.
- Make sure that there is no large clearance at both sides of the shifting insert after assembly.

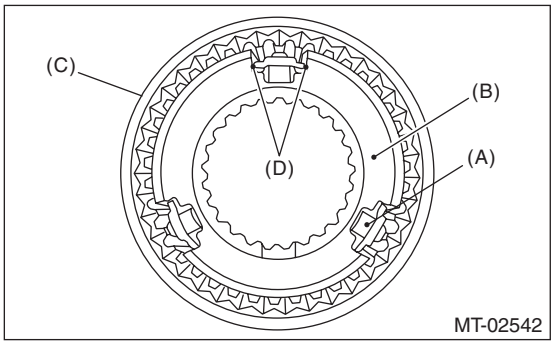

(A) Shifting insert
(B) Synchronizer hub
(C) Coupling sleeve
(D) There is no large clearance at this part.

1) Install the 1st driven gear, 1st inner baulk ring, 1st synchro cone, 1st outer baulk ring and 1st-2nd synchronizer hub.

NOTE:
- Install the 1st-2nd synchronizer hub in proper direction.
- Align the protrusion of the 1st outer baulk ring into the groove of the 1st-2nd synchronizer hub.

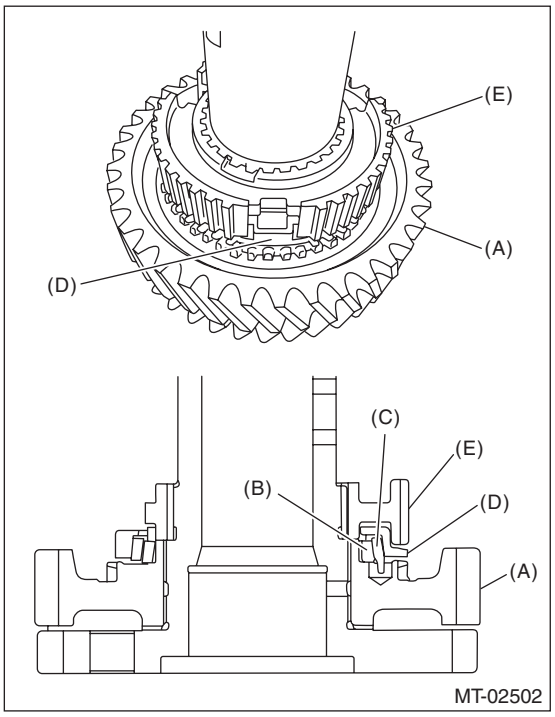

(A) 1st driven gear
(B) 1st inner baulk ring
(C) 1st synchro cone
(D) 1st outer baulk ring
(E) 1st-2nd synchronizer hub

2) Install the 2nd driven gear bushing using ST and a press.

CAUTION:
Do not apply a load in excess of 10 kN (1 ton, 1.1 US ton, 1.0 Imp ton).

NOTE:
- Attach a cloth to the end of the driven shaft to prevent damage.
- When press fitting, align the oil holes of the driven shaft and 2nd driven gear bushing.

ST 18654AA000 INSTALLER

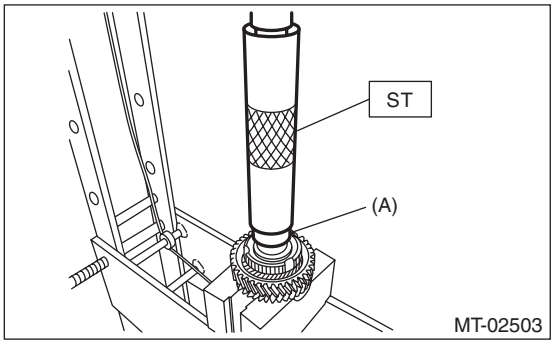

(A) 2nd driven gear bushing

3) Install the 1st-2nd coupling sleeve.

NOTE:
- Install the 1st-2nd coupling sleeve in proper direction.
- Align the alignment marks of 1st-2nd coupling sleeve and the 1st-2nd synchronizer hub.

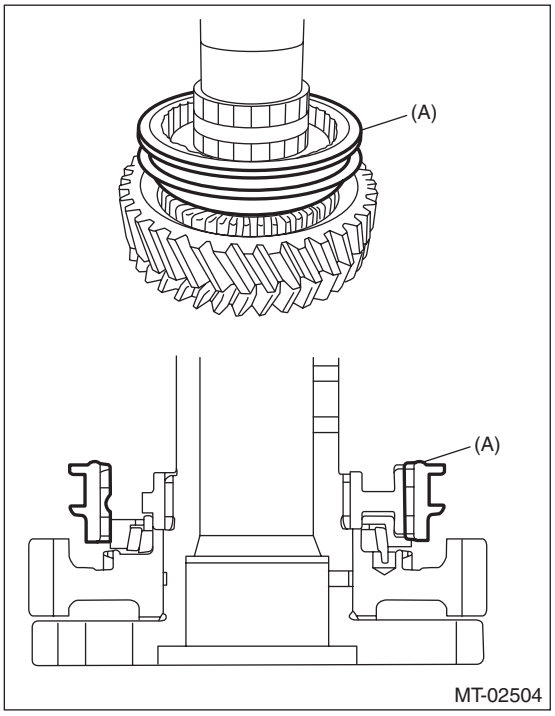

(A) 1st-2nd coupling sleeve

4) Install the 1st-2nd shifting insert.

NOTE:
Press in the ball part to install.

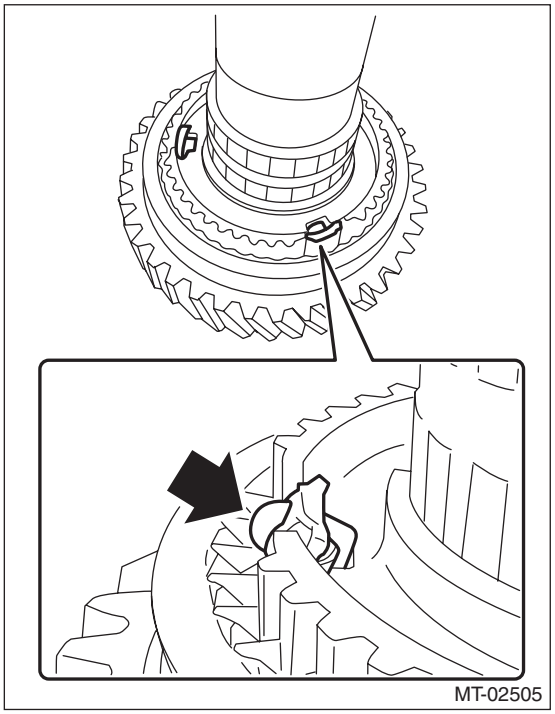

5) Install the 2nd outer baulk ring, 2nd synchro cone, 2nd inner baulk ring and 2nd driven gear.

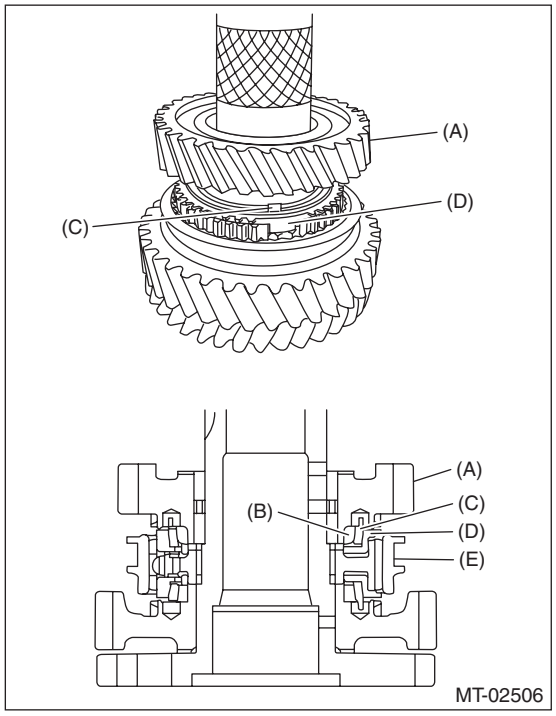

(A) 2nd driven gear
(B) 2nd inner baulk ring
(C) 2nd synchro cone
(D) 2nd outer baulk ring
(E) 1st-2nd coupling sleeve

6) Install the key to the driven shaft.
7) Using the ST and a press, install the 3rd-4th driven gear.

CAUTION:
Do not apply a load in excess of 10 kN (1 ton, 1.1 US ton, 1.0 Imp ton).

NOTE:
- Match the groove on the 3rd-4th driven gear to the key.
- Install the 3rd-4th driven gear in the proper direction.

ST 499277200 INSTALLER

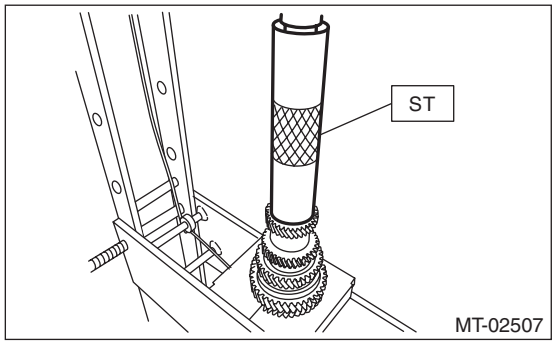

8) Using the ST and a press, install the double ball bearing.

CAUTION:
Do not apply a load in excess of 10 kN (1 ton, 1.1 US ton, 1.0 Imp ton).

NOTE:
Use a new double ball bearing.
ST 499277200 INSTALLER

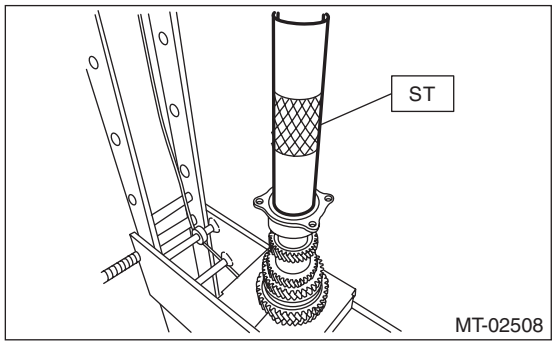

9) Install the 5th driven gear using ST and press.

CAUTION:
Do not apply a load in excess of 10 kN (1 ton, 1.1 US ton, 1.0 Imp ton).

NOTE:
Install the 5th driven gear with the groove side facing the 6th driven gear.
ST 499277200 INSTALLER

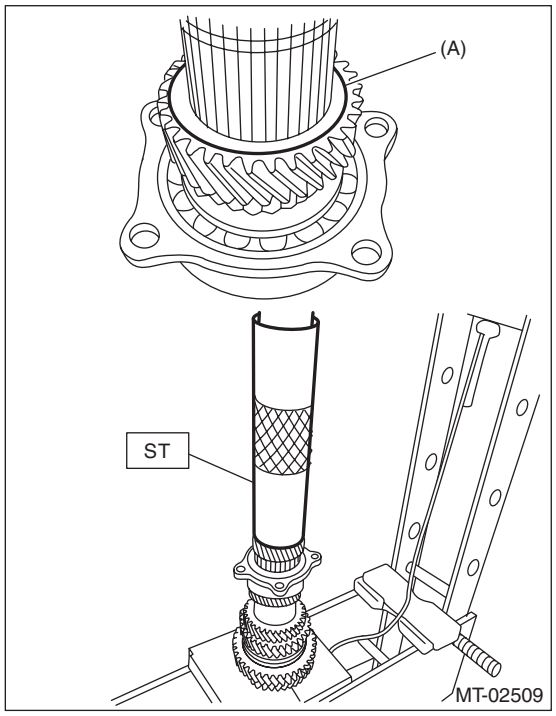

(A) Install with the groove side facing the 6th driven gear.

10) Install the drive pinion spacer to the driven shaft.

11) Install the 6th driven gear using ST and press.

CAUTION:
Do not apply a load in excess of 10 kN (1 ton, 1.1 US ton, 1.0 Imp ton).

NOTE:
Install with the stepped side on the end surface of the 6th driven gear facing the rear ball bearing side.
ST 499277200 INSTALLER

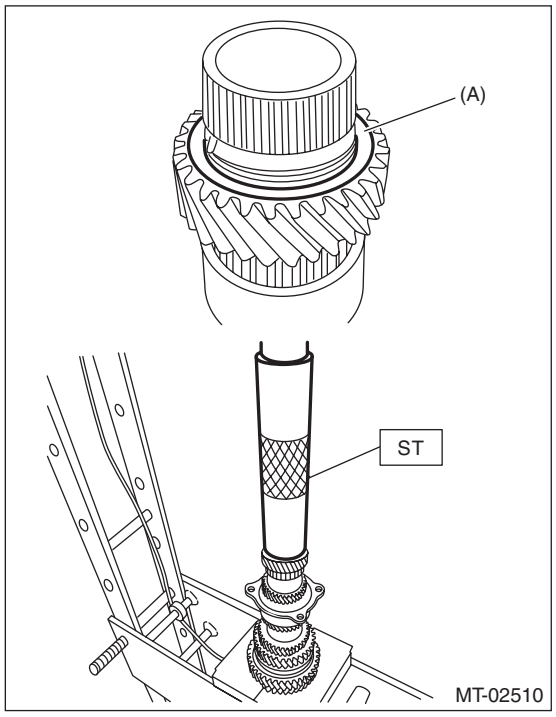

(A) Install with the stepped side facing the rear ball bearing.

12) Using the ST and a press, install the ball bearing.

CAUTION:
Do not apply a load in excess of 10 kN (1 ton, 1.1 US ton, 1.0 Imp ton).
ST 499277200 INSTALLER

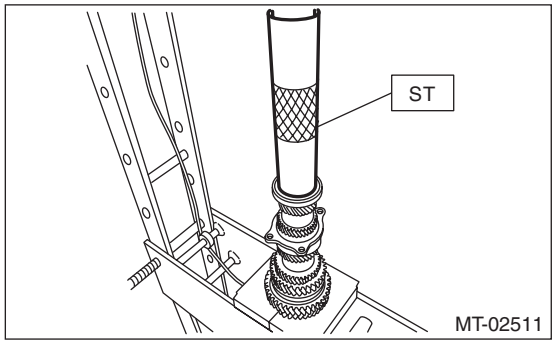

13) Install the lock nut using ST1 and ST2.

NOTE:
Use a new lock nut.

Tightening torque:
440 N·m (44.9 kgf-m, 324.5 ft-lb)
ST1 499987300 SOCKET WRENCH (50)
ST2 18680AA020 HOLDER

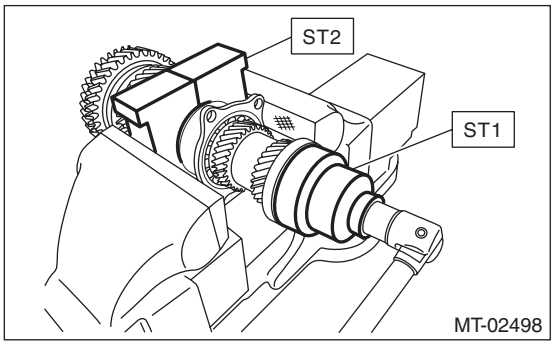

14) Using a spring scale, check that the initial load of the ball bearings is 0.1 to 1.5 N (0.01 to 0.15 kgf, 0.02 to 0.34 lbf).

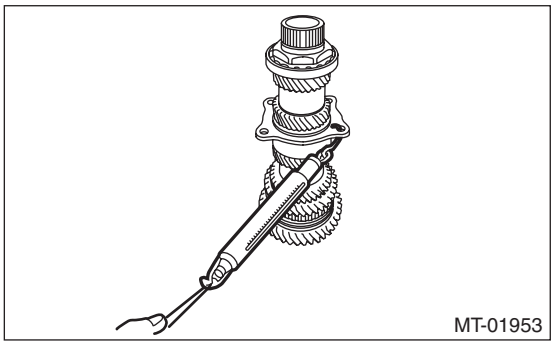

15) Crimp the lock nut at two locations so that the dimension (B) becomes 39.1 mm (1.54 in) or less.

CAUTION:
When crimping the lock nut, be careful not to crack it.

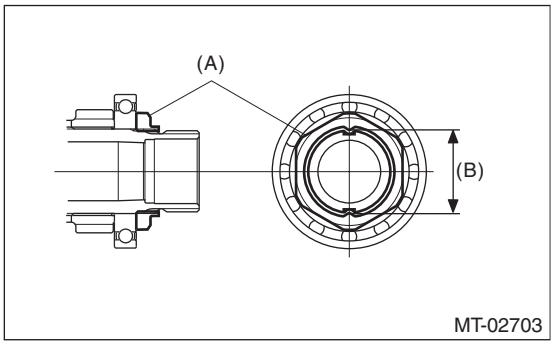

(A) Lock nut
(B) Outer dimension after crimping

16) Install the roller bearing.

NOTE:
- Use a new roller bearing.
- Install with the knock pin hole of the roller bearing outer race facing the rear side.

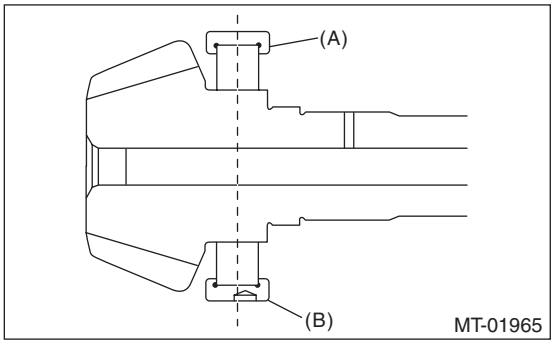

(A) Roller bearing
(B) Knock pin hole

17) Install the washer using ST1, ST2 and a press.

CAUTION:
Do not apply a load in excess of 10 kN (1 ton, 1.1 US ton, 1.0 Imp ton).
ST1 499277100 BUSHING 1-2 INSTALLER
ST2 499277200 INSTALLER

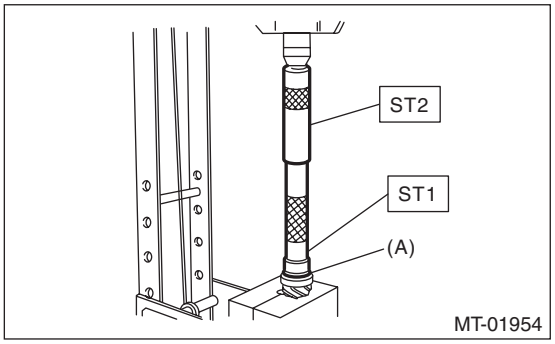

(A) Washer

18) Install the thrust bearing and needle bearing and install the driven shaft assembly.

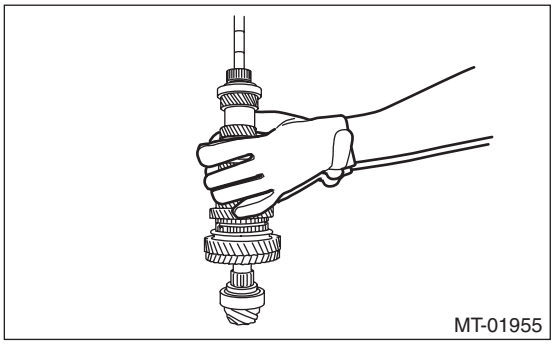

19) Install the drive pinion collar, needle bearing, adjusting washer No. 2, thrust bearing, adjusting washer No. 1 and differential bevel gear sleeve in this order.

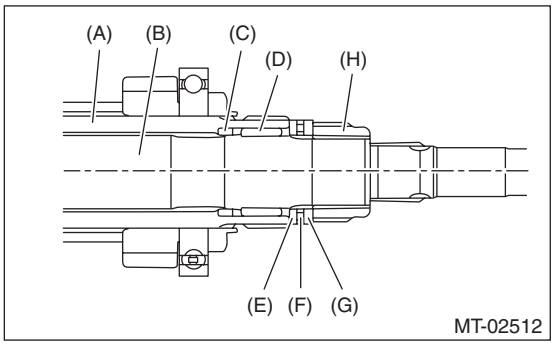

(A) Driven shaft
(B) Drive pinion shaft
(C) Drive pinion collar
(D) Needle bearing (25 × 30 × 20)
(E) Adjusting washer No. 2 (25 × 36 × t)
(F) Thrust bearing (25 × 36 × 2)
(G) Adjusting washer No. 1 (25 × 36 × t)
(H) Differential bevel gear sleeve

20) Adjust the thrust bearing preload. <Ref. to 6MT-130, THRUST BEARING PRELOAD, ADJUSTMENT, Drive Pinion Shaft Assembly.>

E: INSPECTION

Disassembled parts should be washed with cleaning solvent first, then inspected carefully.
1) Bearing
Replace the bearings in the following cases.
- When the bearing balls, outer races and inner races are broken or rusty.
- When the bearing is worn.
- When the bearings fail to turn smoothly or emit noise in rotation after transmission gear oil has been applied.
- The double ball bearing of the drive pinion shaft should be checked for smooth rotation before the drive pinion shaft assembly is disassembled. In this case, because a preload is working on the bearing, its rotation feels like it is slightly dragging unlike other bearings.

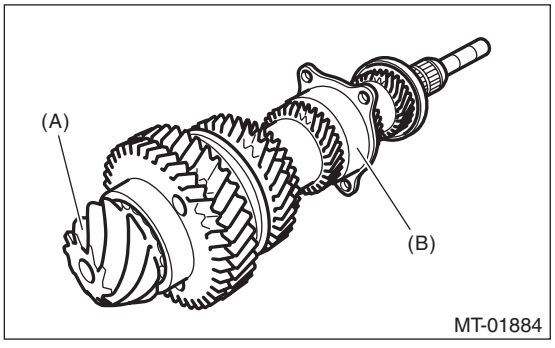

(A) Drive pinion shaft
(B) Double ball bearing

- When bearing has other defects.

2) Bushing (each gear)
Replace the bushing in following cases.
- When the sliding surface is damaged or abnormally worn.
- When the inner wall is abnormally worn.

3) Gear
Replace gears in the following cases.
- Replace the gear with new part if its tooth surfaces are broken, damaged or excessively worn.
- Correct or replace if the cone that contacts the baulk ring is rough or damaged.
- Correct or replace if the inner surface or end face is damaged.

4) Baulk ring, synchro cone
Replace the baulk ring and synchro cone in the following cases.
- When the inner surface and end face are damaged.
- When the baulk ring inner surface is abnormally or partially worn down.
- If the gap between the end faces of the baulk ring and the gear splined part is excessively small, check the clearance (A) while pressing the ring against the cone.

Clearance (A):
0.5 mm (0.020 in) or more

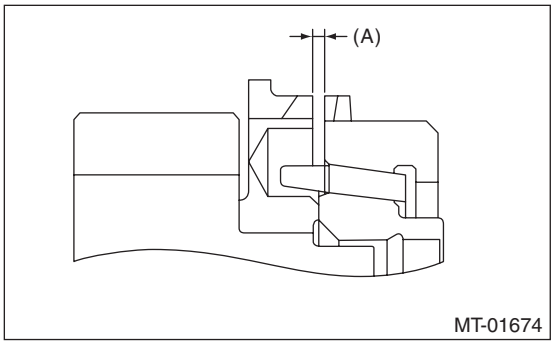

- When the contact surface of the baulk ring insert section is damaged or abnormally worn.
- Apply transmission gear oil to the cone of the gear and while press-fitting the baulk ring, check there is no rotation in the circumferential direction.

5) Coupling sleeve and synchronizer hub
- Check the slipping condition of the coupling sleeve.
- Check the splines on the coupling sleeve and synchronizer hub for wear.

6) Shifting insert
Replace the shifting insert if there is deformation, excessive wear on the ball section or any defectiveness.

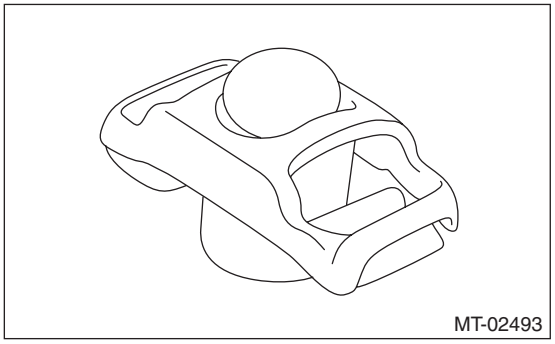

F: ADJUSTMENT

1. THRUST BEARING PRELOAD

1) Select a suitable adjusting washer No. 1 so that dimension (H) will be zero in a visual check. Position the washer (20 × 31 × 4) and lock washer (20 × 31 × 2.3) and attach the lock nut (20 × 11).

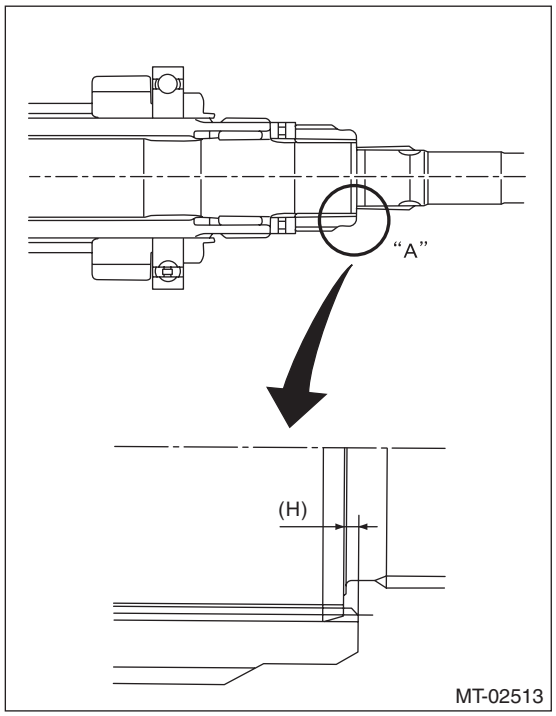

2) Install the lock nut with ST1, ST2 and ST3.

NOTE:
- Use new lock nuts and lock washers.
- Install the lock washer in the correct direction.

Tightening torque:
126 N·m (12.8 kgf-m, 92.9 ft-lb)
ST1 18680AA020 HOLDER
ST2 18667AA020 HOLDER
ST3 18662AA010 SOCKET (27)

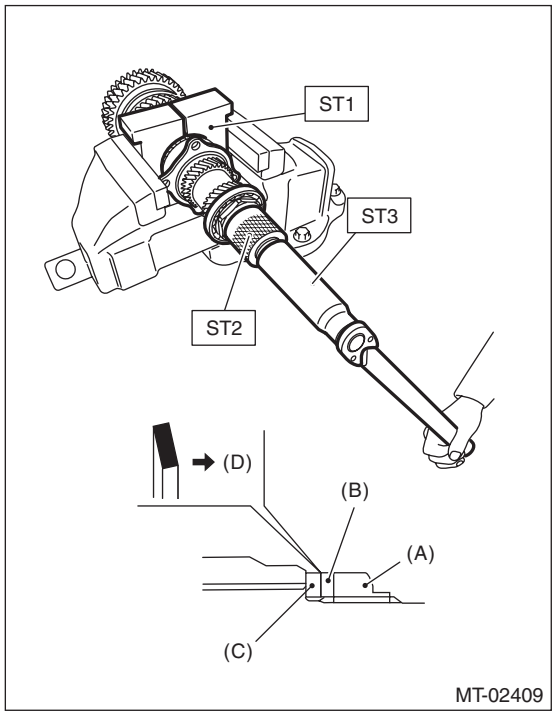

(A) Lock nut
(B) Lock washer
(C) Washer
(D) Lock nut side

3) After removing the ST2 used in step 2), measure the starting torque using torque driver.

Starting torque:
0.3 — 0.8 N·m (0.03 — 0.08 kgf-m, 0.2 — 0.6 ft-lb)
ST1 18680AA020 HOLDER
ST3 18662AA010 SOCKET (27)

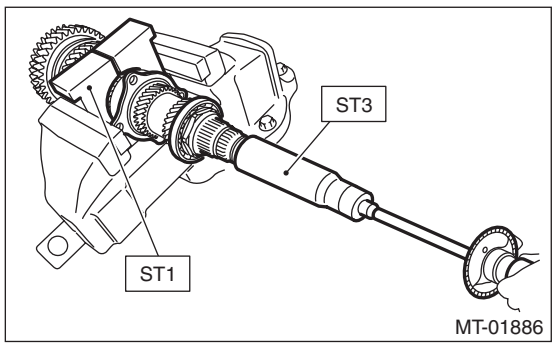

4) If the starting torque is not within the specified limit, select new adjusting washer No. 1 and recheck starting torque.

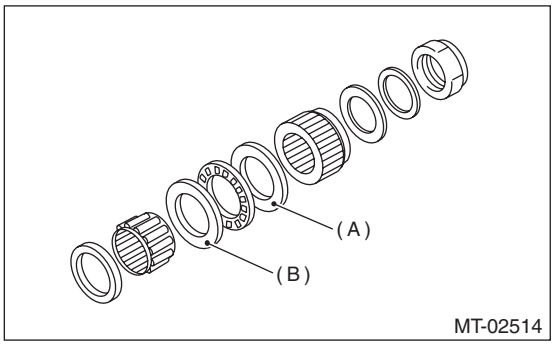

(A) Adjusting washer No. 1
(B) Adjusting washer No. 2

Adjusting washer No. 1	
Part No.	Thickness mm (in)
803025071	2.925 (0.1152)
803025072	2.950 (0.1161)
803025073	2.975 (0.1171)
803025074	3.000 (0.1181)
803025075	3.025 (0.1191)
803025076	3.050 (0.1201)
803025077	3.075 (0.1211)

5) If the specified starting torque cannot be obtained by the selection of adjusting washer No. 1, select adjusting washer No. 2 from the list below. Repeat steps 1) through 4) to adjust starting torque.

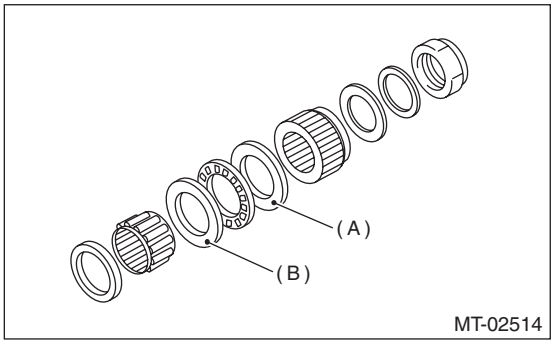

(A) Adjusting washer No. 1
(B) Adjusting washer No. 2

Starting torque	Dimension H	Adjusting washer No. 2
Low	Small	Select thicker one.
High	Large	Select thinner one.

Adjusting washer No. 2	
Part No.	Thickness mm (in)
803025070	2.850 (0.1122)
803025074	3.000 (0.1181)
803025078	3.150 (0.1240)

6) Recheck that the starting torque is within the specified range, and crimp the lock nut at two locations so that the dimension (B) becomes 20.1 mm (0.79 in) or less.

CAUTION:
When crimping the lock nut, be careful not to crack it.

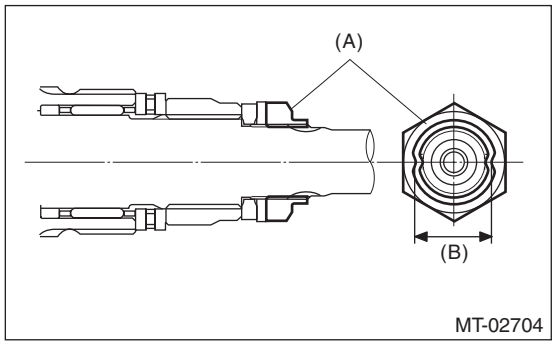

(A) Lock nut
(B) Outer dimension after crimping

18.Front Differential Assembly

A: REMOVAL

1) Remove the manual transmission assembly from the vehicle. <Ref. to 6MT-27, REMOVAL, Manual Transmission Assembly.>
2) Remove the transfer case together with the extension case assembly. <Ref. to 6MT-61, REMOVAL, Transfer Case and Extension Case Assembly.>
3) Remove the transmission case. <Ref. to 6MT-93, REMOVAL, Transmission Case.>
4) Remove the drive pinion shaft assembly. <Ref. to 6MT-115, REMOVAL, Drive Pinion Shaft Assembly.>
5) Remove the main shaft assembly. <Ref. to 6MT-100, REMOVAL, Main Shaft Assembly.>
6) Remove the front differential assembly.

NOTE:
- Do not confuse the right and left taper roller bearing outer races.
- Be careful not to damage the oil seal of differential side retainer.

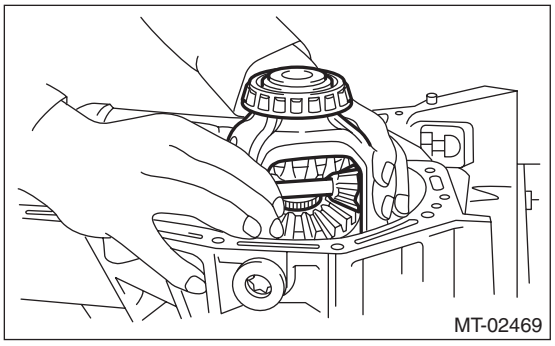
MT-02469

7) Remove the differential side retainers using ST.
ST 18630AA010 WRENCH COMPL RETAINER

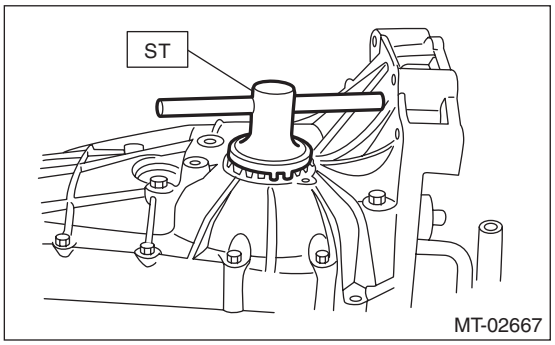

MT-02667

8) Remove the taper roller bearing outer race from the transmission case.
ST 398527700 PULLER ASSY

B: INSTALLATION

1) Install the differential side retainers using ST.
ST 18630AA010 WRENCH COMPL RETAINER
2) Install the taper roller bearing outer race to the transmission case.
3) Install the front differential assembly.

CAUTION:
Make sure the oil seal lip is not folded.

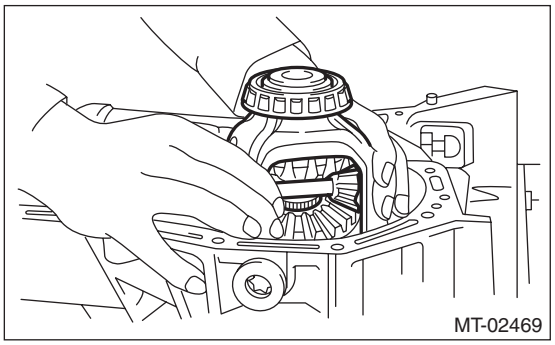

4) Install the main shaft assembly. <Ref. to 6MT-100, INSTALLATION, Main Shaft Assembly.>
5) Install the drive pinion shaft assembly. <Ref. to 6MT-115, INSTALLATION, Drive Pinion Shaft Assembly.>
6) Install the transmission case. <Ref. to 6MT-95, INSTALLATION, Transmission Case.>
7) Install the transfer case together with the extension case assembly. <Ref. to 6MT-63, INSTALLATION, Transfer Case and Extension Case Assembly.>
8) Install the manual transmission assembly to the vehicle. <Ref. to 6MT-37, INSTALLATION, Manual Transmission Assembly.>

C: DISASSEMBLY

1. DIFFERENTIAL CASE ASSEMBLY

1) Loosen the twelve bolts and remove hypoid driven gear.

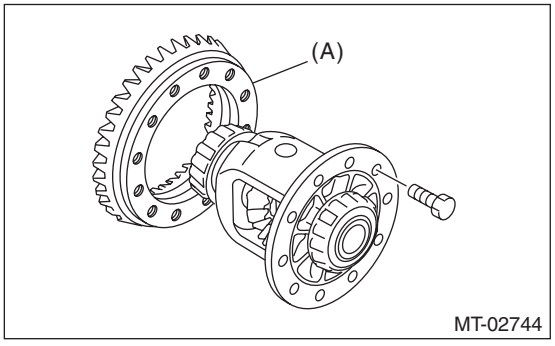

(A) Hypoid driven gear

2) Drive out the straight pin from differential assembly toward hypoid driven gear side.
ST 899904100 STRAIGHT PIN REMOVER

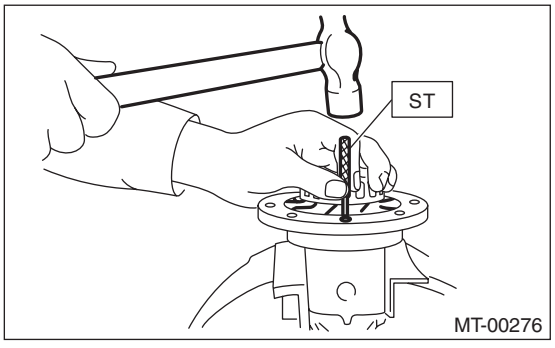

3) Pull out the pinion shaft, and remove the differential bevel pinion, differential bevel gear and adjusting washer.

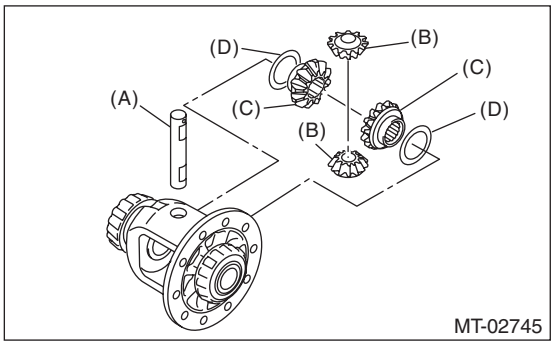

(A) Pinion shaft
(B) Differential bevel pinion
(C) Differential bevel gear
(D) Adjusting washer

4) Using the ST, remove the taper roller bearing.
ST 899524100 PULLER SET

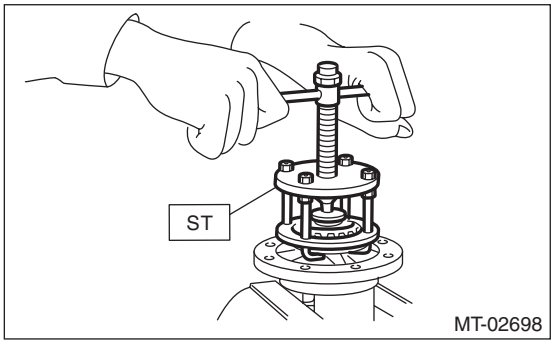

2. DIFFERENTIAL SIDE RETAINER

1) Remove the O-rings.

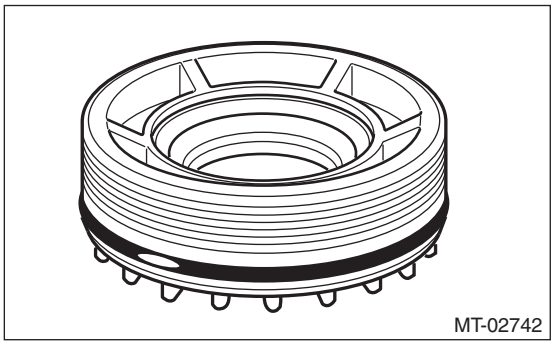

2) Remove the oil seal.

NOTE:
Remove using the flat tip screwdriver.

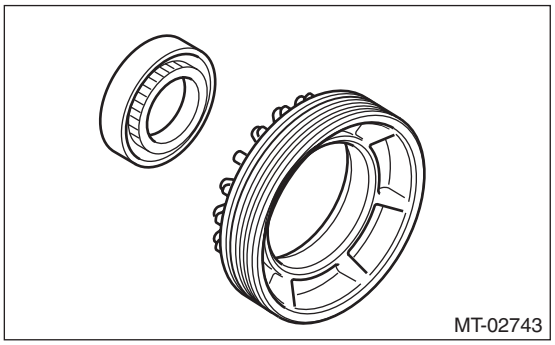

D: ASSEMBLY

1. DIFFERENTIAL CASE ASSEMBLY

1) Install the differential bevel gear and differential bevel pinion together with adjusting washer, and insert the pinion shaft.

NOTE:
Face the chamfered side of adjusting washer toward differential bevel gear.

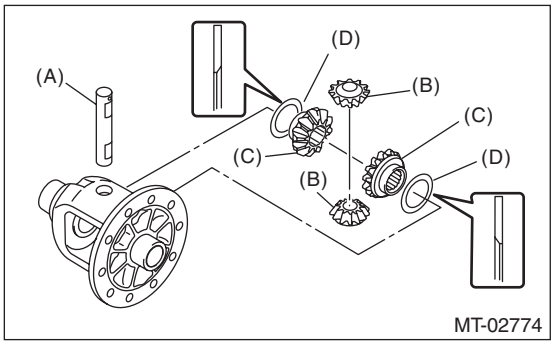

(A) Pinion shaft
(B) Differential bevel pinion
(C) Differential bevel gear
(D) Adjusting washer

2) Measure the backlash between the differential bevel gear and differential bevel pinion. Adjust the backlash if not within specified limit. <Ref. to 6MT-141, DIFFERENTIAL BEVEL PINION GEAR BACKLASH, INSPECTION, Front Differential Assembly.>

NOTE:
Be sure the differential bevel pinion gear teeth contact adjacent gear teeth during measurement.

Standard backlash
0.13 — 0.18 mm (0.0051 — 0.0071 in)
ST1 498247001 MAGNET BASE
ST2 498247100 DIAL GAUGE

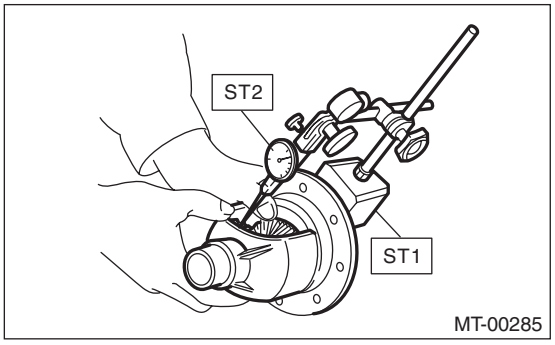

3) Align the pinion shaft pin hole with the differential case pin hole, and drive the straight pin into the holes from the hypoid driven gear side using the ST.

NOTE:
Use a new straight pin. After driving, crimp the area around the hole, and make sure that the straight pin will not come out.
ST 899904100 STRAIGHT PIN REMOVER

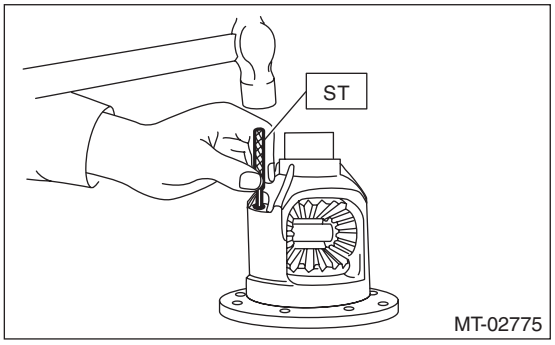

4) Install the taper roller bearing.

CAUTION:
Do not apply a load in excess of 10 kN (1 ton, 1.1 US ton, 1.0 Imp ton).

NOTE:
Be careful when handling because the taper roller bearing and the outer race are used as a set.
ST1 499277100 BUSHING 1-2 INSTALLER
ST2 398497701 SEAT

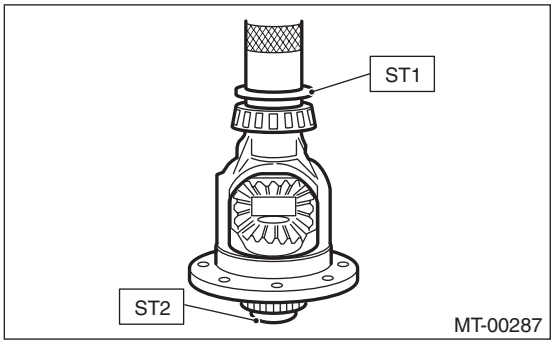

5) Install the hypoid driven gear using twelve bolts.

Tightening torque:
T: 62 N·m (6.3 kgf-m, 45.7 ft-lb)

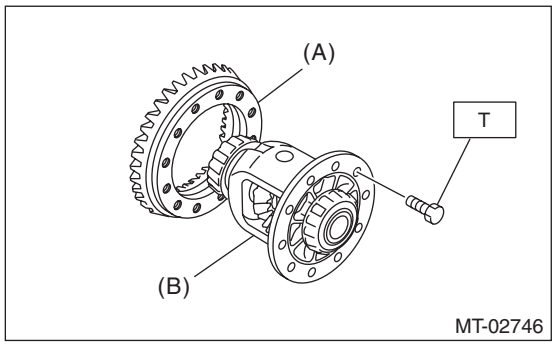

(A) Hypoid driven gear
(B) Differential case

2. DIFFERENTIAL SIDE RETAINER

1) Using the ST, install the oil seal by lightly tapping with a plastic hammer.

NOTE:
- Use a new oil seal.
- Apply transmission gear oil to the oil seal lips, and install the oil seal while being careful not to deform the lip.
- Check the identification marks (L, R), and attach the oil seals RH and LH.

ST 18675AA000 DIFFERENTIAL SIDE OIL SEAL INSTALLER

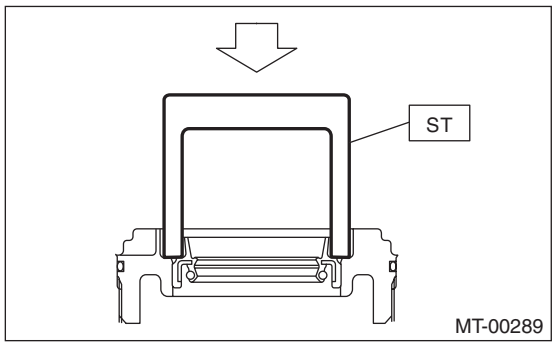

2) Install the O-rings.

NOTE:
- Use new O-rings.
- Apply transmission gear oil to O-ring.
- Do not stretch or damage the O-ring.
- Install the O-ring after hypoid driven gear backlash adjustment and completion of tooth contact inspection.

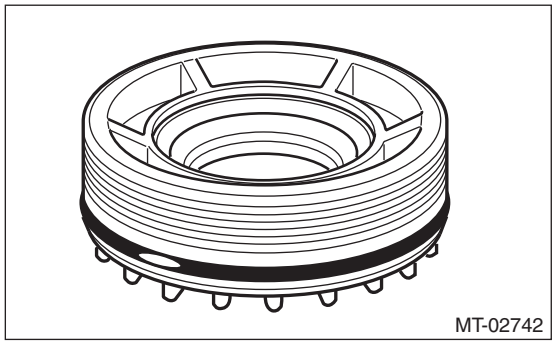

E: INSPECTION

Repair or replace the differential gear in the following cases:
- When the hypoid driven gear and drive pinion shaft tooth surfaces are damaged, excessively worn, or seized.
- When the roller bearing on the drive pinion shaft has a worn or damaged roller path.
- When there is damage, wear or seizure of the differential bevel pinion, differential bevel gear, adjusting washer, pinion shaft or straight pin.
- When the differential case sliding surfaces are worn or damaged.

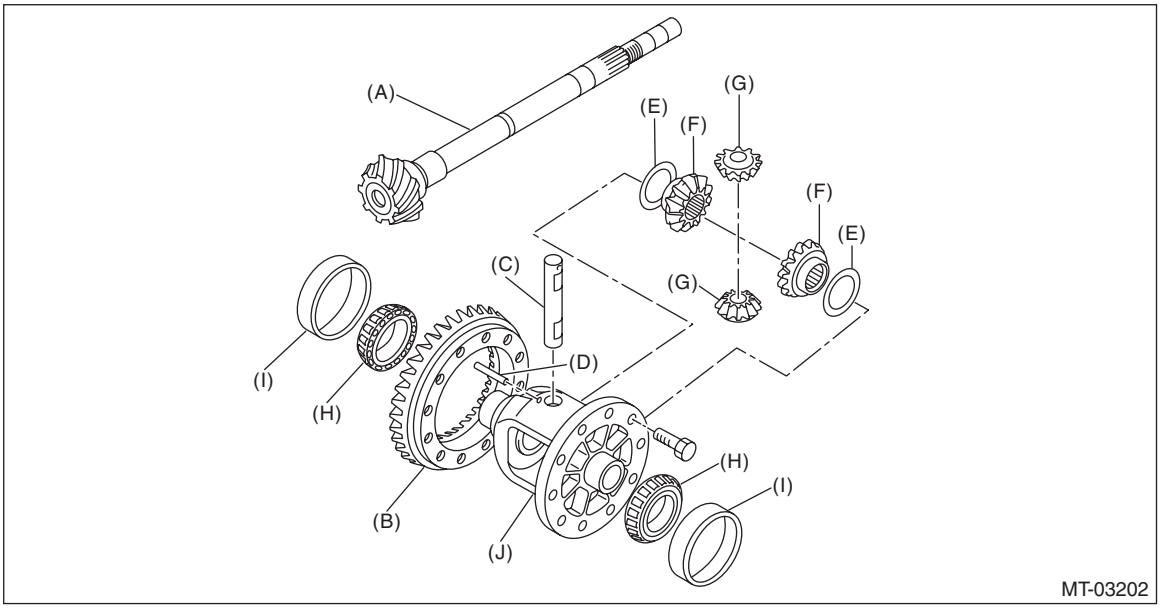

(A) Drive pinion shaft
(B) Hypoid driven gear
(C) Pinion shaft
(D) Straight pin
(E) Adjusting washer
(F) Differential bevel gear
(G) Differential bevel pinion
(H) Taper roller bearing inner race
(I) Taper roller bearing outer race
(J) Differential case

1. DIFFERENTIAL BEVEL PINION GEAR BACKLASH

Measure the backlash between the differential bevel gear and differential bevel pinion. Adjust the backlash if not within specified limit. <Ref. to 6MT-142, ADJUSTMENT, Front Differential Assembly.>

Standard backlash

0.13 — 0.18 mm (0.0051 — 0.0071 in)

ST1 498247001 MAGNET BASE
ST2 498247100 DIAL GAUGE

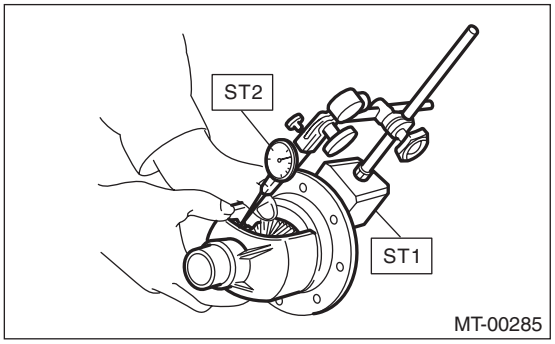

2. HYPOID DRIVEN GEAR BACKLASH

1) Set the ST1, ST2 and ST3. Insert the dial gauge probe through drain plug hole so that the probe comes in contact with the tooth surface on the right corner, and check the backlash.
ST1 498247001 MAGNET BASE
ST2 498247100 DIAL GAUGE
ST3 498255400 PLATE
2) Install SUBARU genuine axle shafts to both sides, rotate in the inversion direction so that the gauge contacts the tooth surface, and read the dial gauge.

NOTE:
If the backlash is outside the specified range, adjust it by turning the differential side retainers on the left and right side.

Backlash

0.13 — 0.18 mm (0.0051 — 0.0071 in)

Part No. 38415AA100 Axle shaft

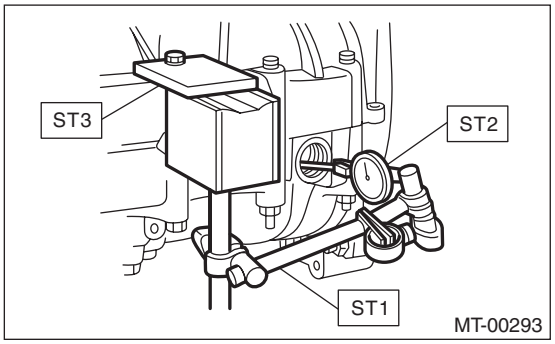

3. TOOTH CONTACT OF HYPOID DRIVEN GEAR

Check tooth contact of hypoid driven gear as follows: Apply a thin uniform coat of red lead on both teeth surfaces on 3 or 4 teeth of the hypoid gear. Move the hypoid driven gear back and forth by turning the transmission main shaft until a definite contact pattern is developed on the hypoid driven gear, and judge whether face contact is correct. When the contact pattern is not correct, adjust. <Ref. to 6MT-142, ADJUSTMENT, Front Differential Assembly.>

- Tooth contact is correct.

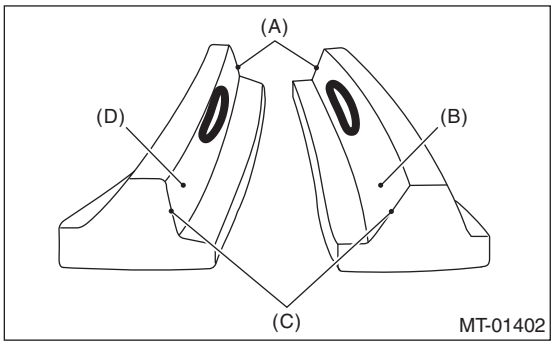

(A) Toe
(B) Coast side
(C) Heel
(D) Drive side

F: ADJUSTMENT

1. DIFFERENTIAL BEVEL PINION GEAR BACKLASH

1) Disassemble the front differential assembly. <Ref. to 6MT-135, DISASSEMBLY, Front Differential Assembly.>
2) Select the adjusting washer from the table and install.

Adjusting washer	
Part No.	Thickness mm (in)
803038021	0.925 — 0.950 (0.0364 — 0.0374)
803038022	0.975 — 1.000 (0.0384 — 0.0394)
803038023	1.025 — 1.050 (0.0404 — 0.0413)

3) Adjust until the standard value is obtained.

Backlash:
Standard
0.13 — 0.18 mm (0.0051 — 0.0071 in)

2. HYPOID DRIVEN GEAR BACKLASH

Adjust the backlash by turning the differential side retainers on the left and right side.
ST 18630AA010 WRENCH COMPL RETAINER

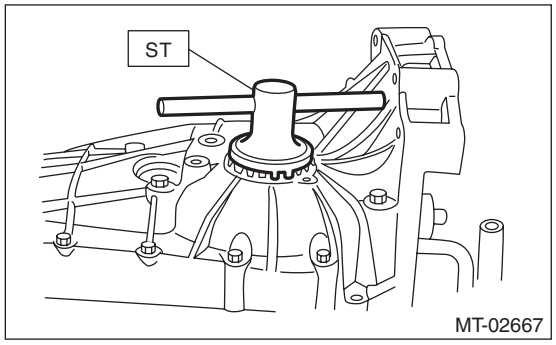

NOTE:
Each time the differential side retainer rotates by one notch (A), the backlash changes by 0.05 mm (0.0020 in).

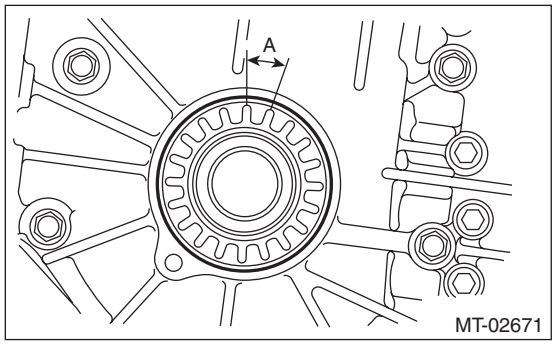

3. TOOTH CONTACT OF HYPOID DRIVEN GEAR

1) Adjust until correct teeth contact is obtained.
2) Check tooth contact, and perform the adjustment as follows.

- Correct tooth contact

Check item: Tooth contact surface is slightly shifted toward the toe side under a no-load condition. (When driving, it moves towards the heel side.)

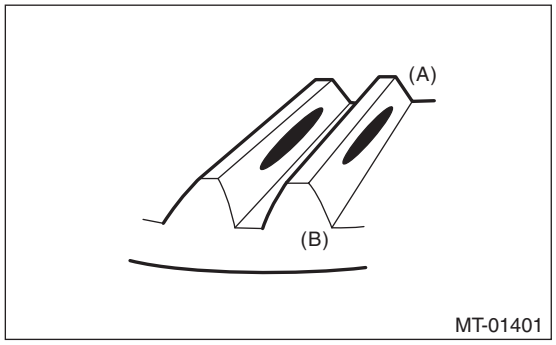

(A) Toe side
(B) Heel side

- Face contact

Check item: Backlash is too large.

Contact pattern

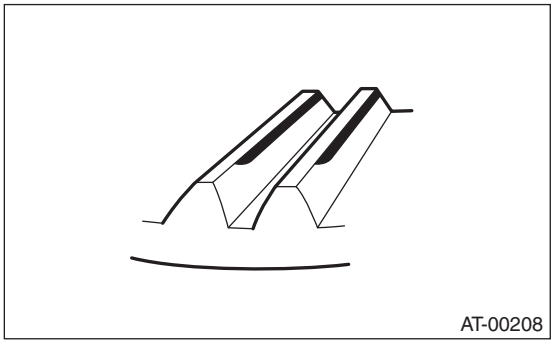

Corrective action: Tighten the differential side retainer to move the hypoid driven gear closer to the drive pinion shaft.

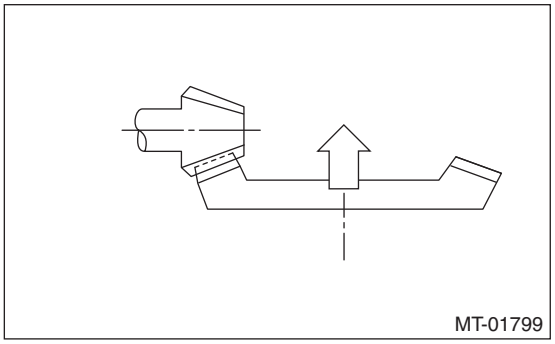

- Flank contact

Check item: Backlash is too small.

Contact pattern

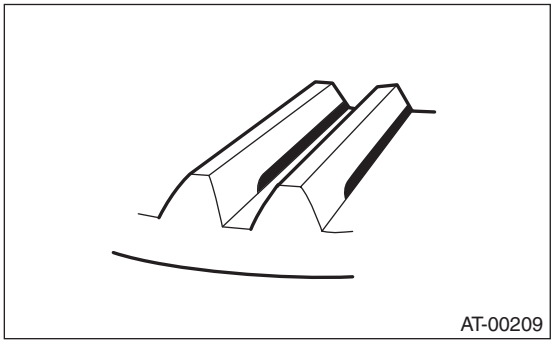

Corrective action: Loosen the differential side retainer to move the hypoid driven gear away from the drive pinion shaft.

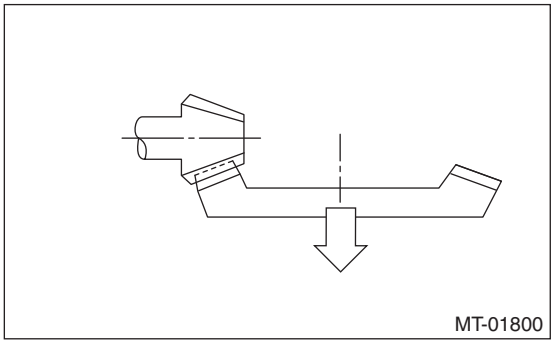

- Toe contact (inside contact)

Check item: Teeth contact area is too small.

Contact pattern

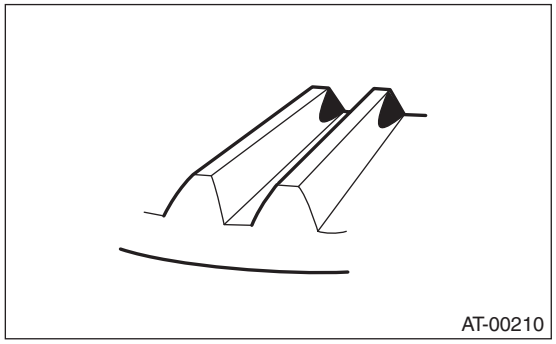

Corrective action: Increase the thickness of drive pinion shim and tighten the differential side retainer to move the hypoid driven gear closer to the drive pinion shaft according to the procedure for bringing drive pinion shaft away from hypoid driven gear.

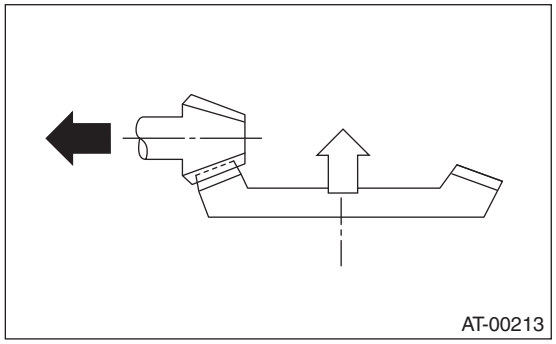

- Heel contact (outside end contact)

Check item: Teeth contact area is too small.

Contact pattern

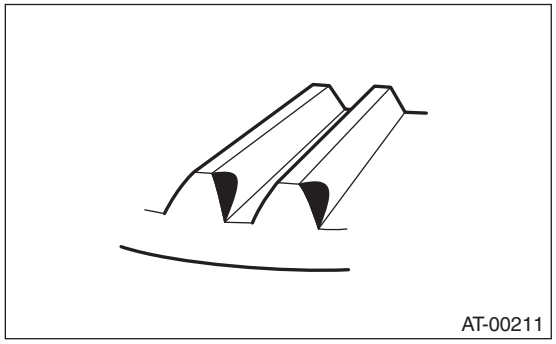

Corrective action: Reduce thickness of the drive pinion shim according to the procedures for moving the drive pinion shaft closer to driven gear. Also loosen the differential side retainer to move the hypoid driven gear away from the drive pinion shaft.

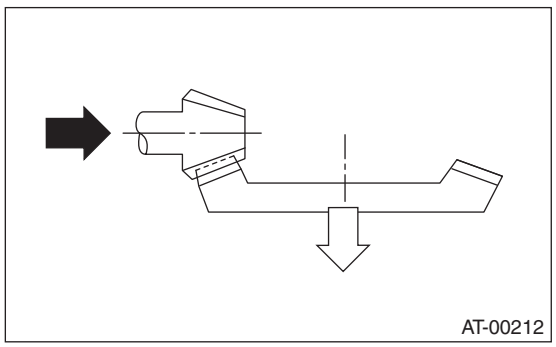

19.Reverse Idler Gear

A: REMOVAL

1) Remove the manual transmission assembly from the vehicle. <Ref. to 6MT-27, REMOVAL, Manual Transmission Assembly.>
2) Remove the back-up light switch and the neutral position switch. <Ref. to 6MT-55, REMOVAL, Switches and Harness.>
3) Remove the transfer case together with the extension case assembly. <Ref. to 6MT-61, REMOVAL, Transfer Case and Extension Case Assembly.>
4) Remove the transmission case. <Ref. to 6MT-93, REMOVAL, Transmission Case.>
5) Remove the drive pinion shaft assembly. <Ref. to 6MT-115, REMOVAL, Drive Pinion Shaft Assembly.>
6) Remove the main shaft assembly. <Ref. to 6MT-100, REMOVAL, Main Shaft Assembly.>
7) Remove the front differential assembly. <Ref. to 6MT-134, REMOVAL, Front Differential Assembly.>
8) Shift into 4th.
9) Remove the snap ring.

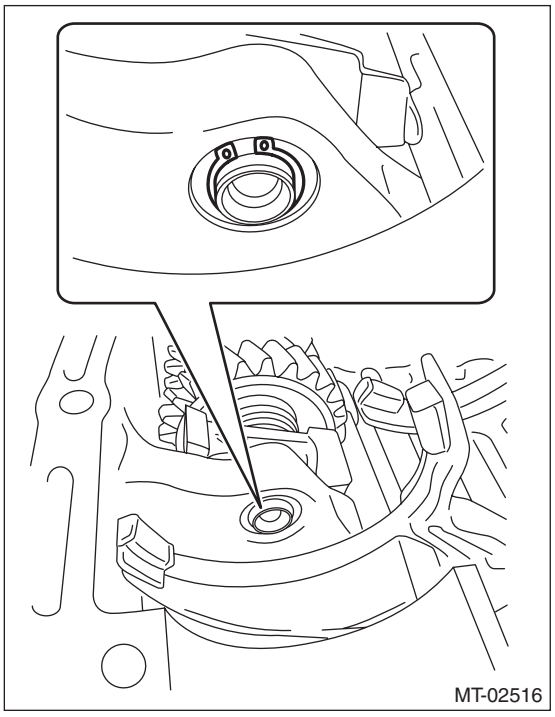

10) Remove the reverse idler gear shaft securing bolt.

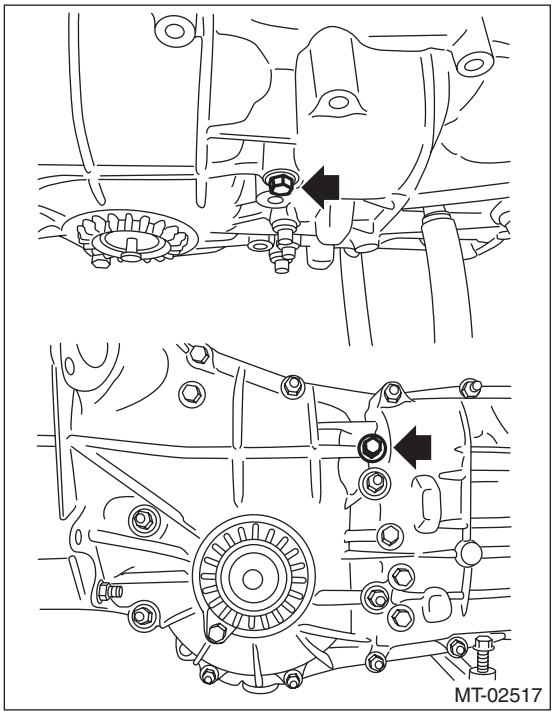

11) Remove the reverse idler gear shaft by pushing it out.

NOTE:
Support the reverse idler gear assembly with hands to avoid collapsing.

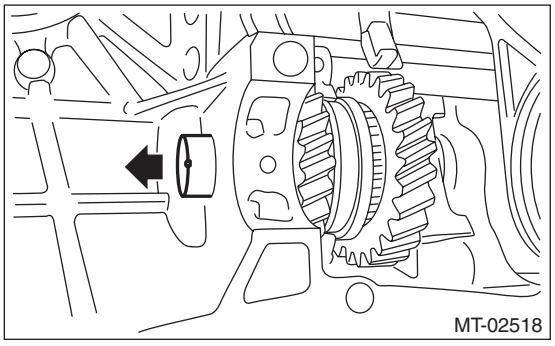

12) Remove the reverse idler gear.
13) Remove the reverse idler gear bushing.

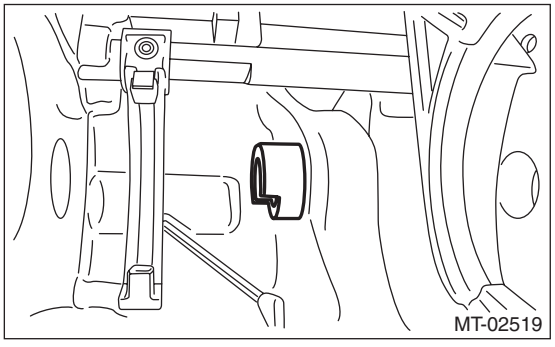

B: INSTALLATION

NOTE:
Rotate the reverse idler sub gear by two teeth from free status in the direction of the arrow to make it engage with the reverse gear of the main shaft and install the main shaft assembly.

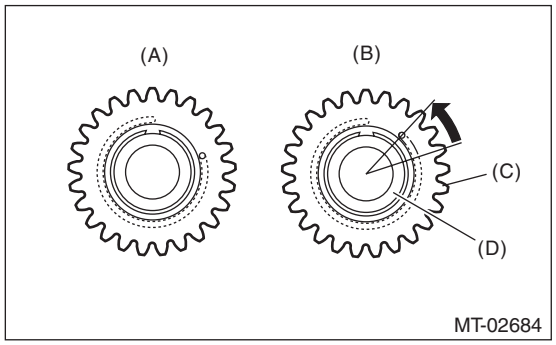

(A) Free status
(B) Set status
(C) Reverse idler sub gear
(D) Reverse idler gear

1) Install the reverse idler gear bushing with the cutout portion of the reverse idler gear bushing facing the front of the transmission.

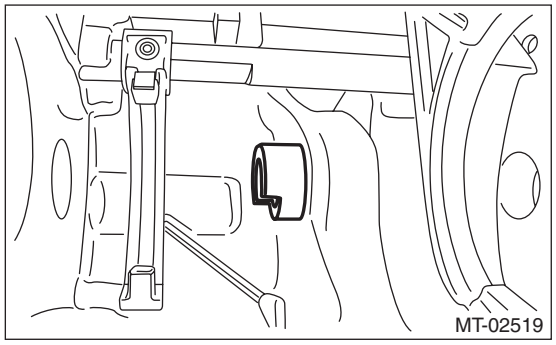

2) Assembling reverse idler gear assembly
(1) Install the reverse coupling sleeve to the reverse idler gear No. 2.

NOTE:
- Install the reverse coupling sleeve in the correct direction.
- Make sure that the oval-shaped cutout portion inside the reverse coupling sleeve matches the center of the reverse idler gear No. 2 groove.

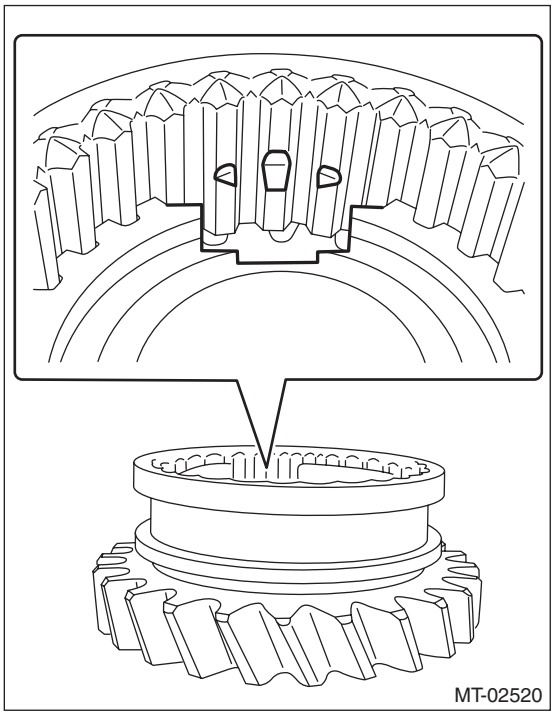

(2) Install the reverse shifting insert.

NOTE:
Press in the ball part to install.

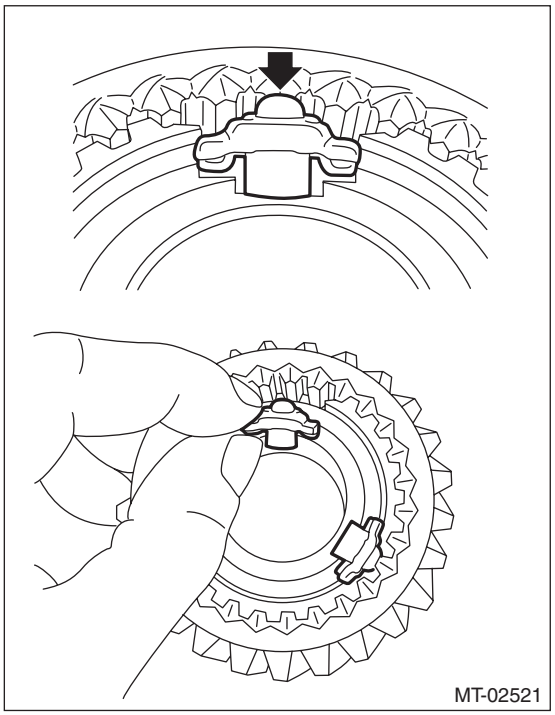

(3) Install the reverse baulk ring and reverse idler gear.

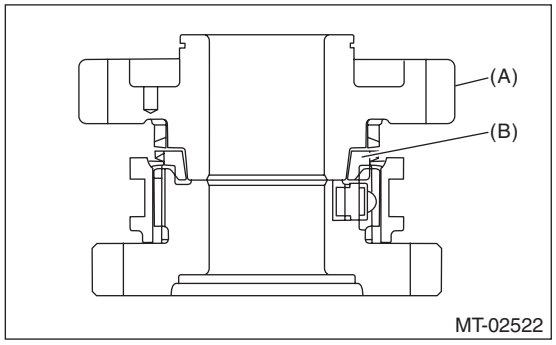

(A) Reverse idler gear
(B) Reverse baulk ring

(4) Install the needle bearing and reverse idler gear collar.

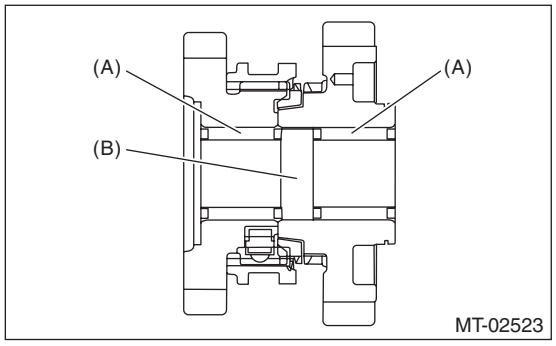

(A) Needle bearing
(B) Reverse idler gear collar

(5) Install the thrust bearing and reverse idler gear washer.

NOTE:
Install the thrust bearing in the correct direction.

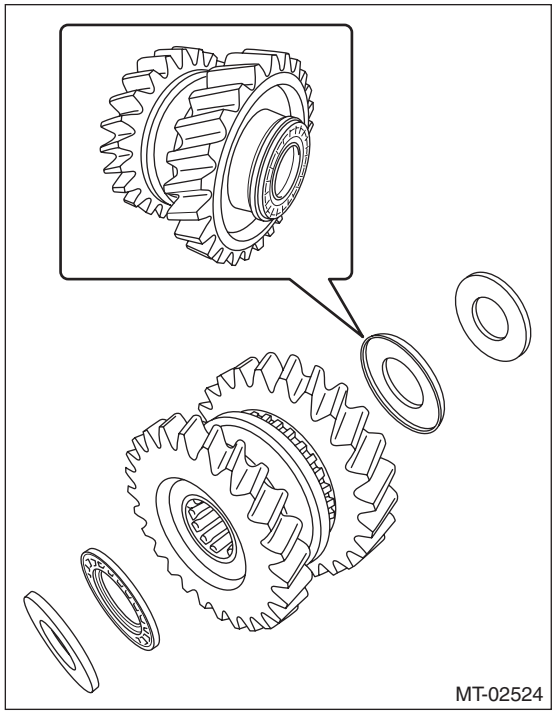

3) Install the assembled reverse idler gear assembly to the transmission case and hold it with hands.
4) Install the reverse idler gear shaft.

NOTE:
- Install with the cutout portion of the reverse idler gear shaft facing the RH side of the transmission case.
- Make sure that the groove of the reverse idler gear shaft comes out of the reverse idler gear bushing.

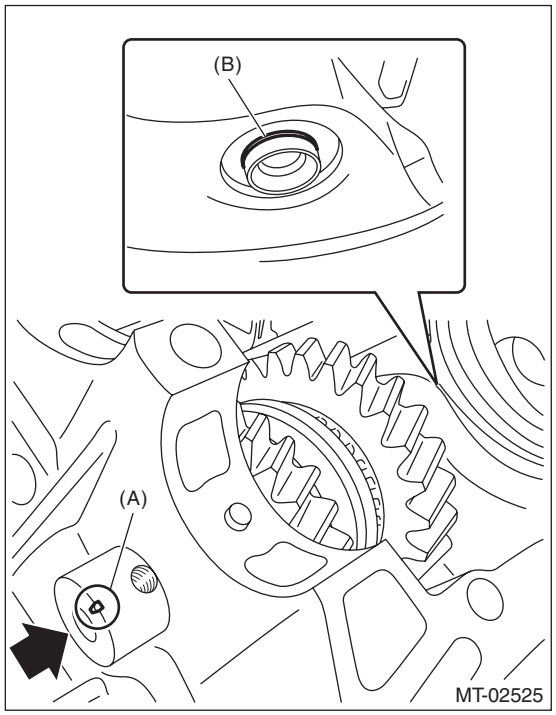

(A) Cutout portion of the reverse idler gear shaft
(B) Snap ring installation groove

5) Install the reverse idler gear shaft securing bolt.

Tightening torque:
25 N·m (2.5 kgf-m, 18.4 ft-lb)

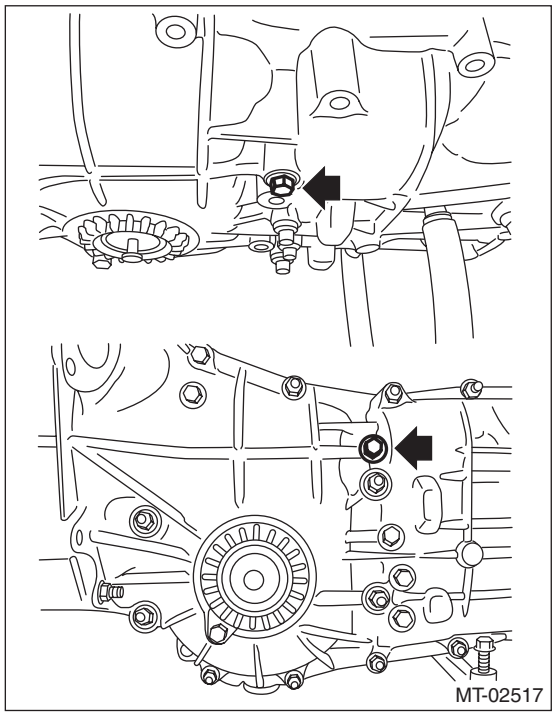

6) Install the snap ring.

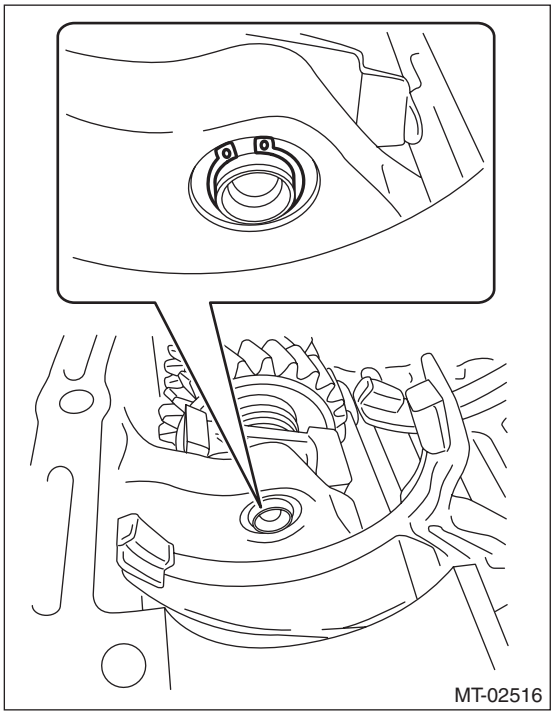

7) Select the reverse idler gear bushing. <Ref. to 6MT-157, ADJUSTMENT, Reverse Idler Gear.>
8) Remove the reverse idler gear assembly and replace with the selected bushing. <Ref. to 6MT-146, REMOVAL, Reverse Idler Gear.>
9) Install the reverse idler gear assembly, oil case guide and reverse idler gear shaft.

NOTE:
- Install with the cutout portion of the reverse idler gear shaft facing the RH side of the transmission case.
- Make sure that the groove of the reverse idler gear shaft comes out of the reverse idler gear bushing.
- Insert the cutout portion of the reverse idler gear bushing into the oil case guide.

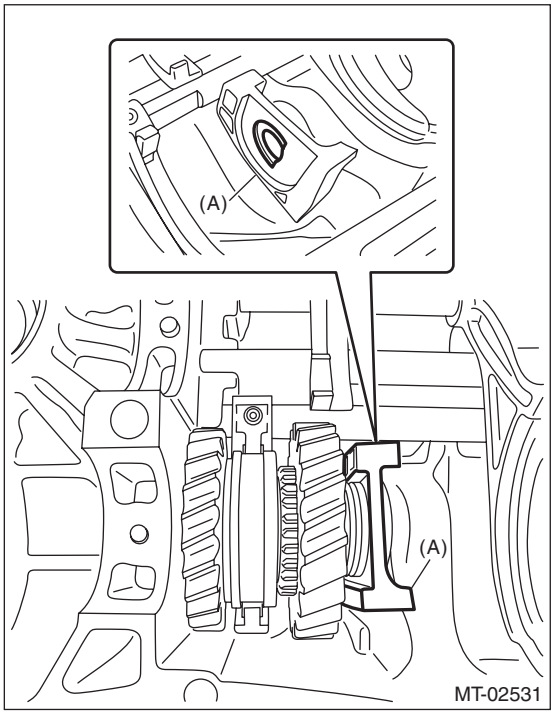

(A) Oil case guide

10) Install the reverse idler gear shaft securing bolt.

NOTE:
Use a new gasket.

Tightening torque:
25 N·m (2.5 kgf-m, 18.4 ft-lb)

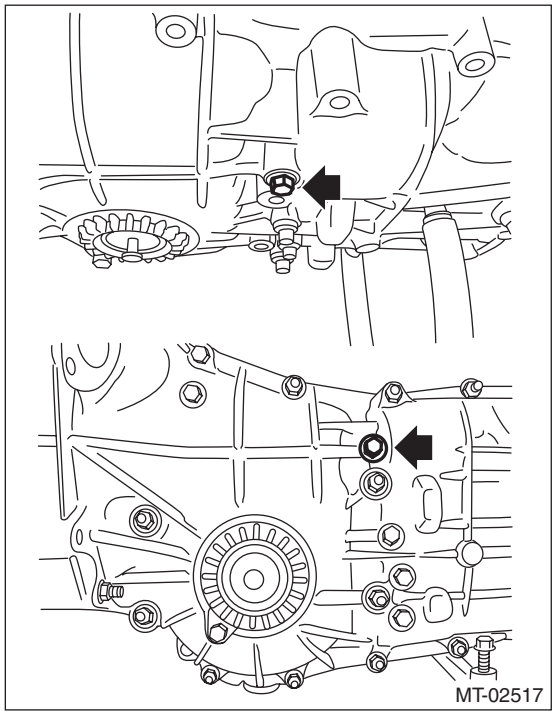

11) Install the snap ring.

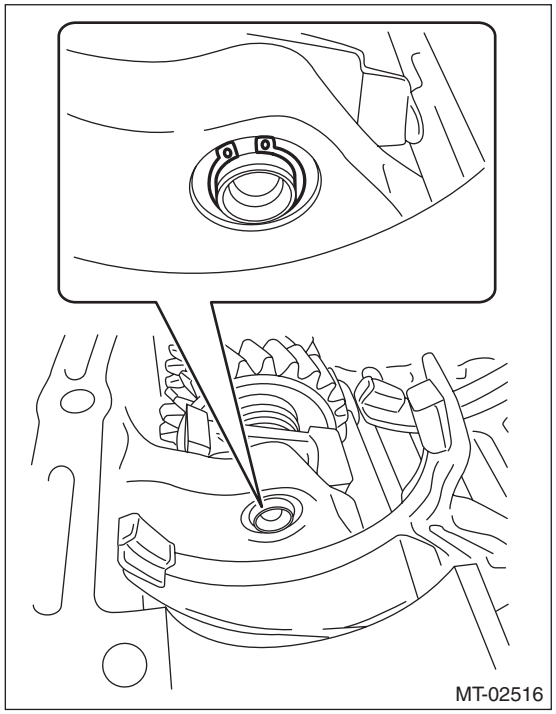

12) Check the reverse shifter fork. <Ref. to 6MT-162, INSPECTION, Shifter Fork and Rod.>
13) Install the front differential assembly. <Ref. to 6MT-135, INSTALLATION, Front Differential Assembly.>
14) Install the main shaft assembly. <Ref. to 6MT-100, INSTALLATION, Main Shaft Assembly.>
15) Install the drive pinion shaft assembly. <Ref. to 6MT-115, INSTALLATION, Drive Pinion Shaft Assembly.>

16) Install the transmission case. <Ref. to 6MT-95, INSTALLATION, Transmission Case.>
17) Install the transfer case together with the extension case assembly. <Ref. to 6MT-63, INSTALLATION, Transfer Case and Extension Case Assembly.>
18) Install the back-up light switch and the neutral position switch. <Ref. to 6MT-56, INSTALLATION, Switches and Harness.>
19) Install the manual transmission assembly to the vehicle. <Ref. to 6MT-37, INSTALLATION, Manual Transmission Assembly.>

C: DISASSEMBLY

1. REVERSE IDLER GEAR ASSY

1) Remove the snap ring and friction plate.

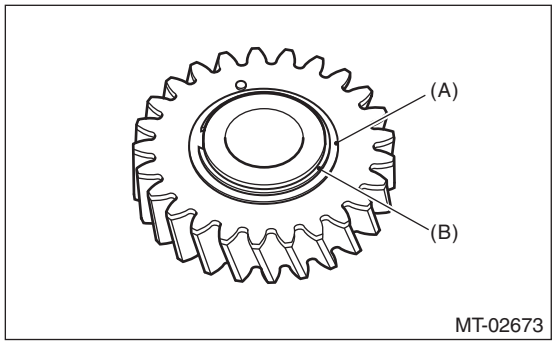

(A) Friction plate
(B) Snap ring

2) Remove the reverse idler sub gear and reverse idler spring.

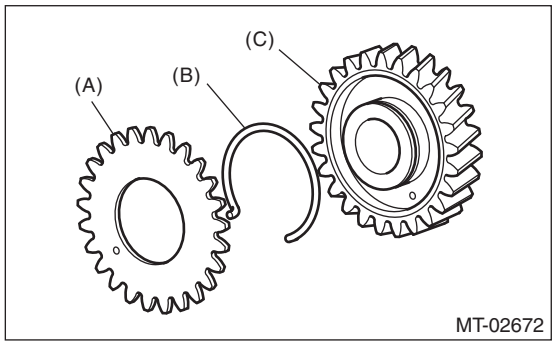

(A) Reverse idler sub gear
(B) Reverse idler spring
(C) Reverse idler gear

D: ASSEMBLY

1. REVERSE IDLER GEAR ASSY

1) Attach the reverse idler sub gear and reverse idler spring.

NOTE:
Point the stamp (marking A) towards the outside, and install the reverse idler sub gear.

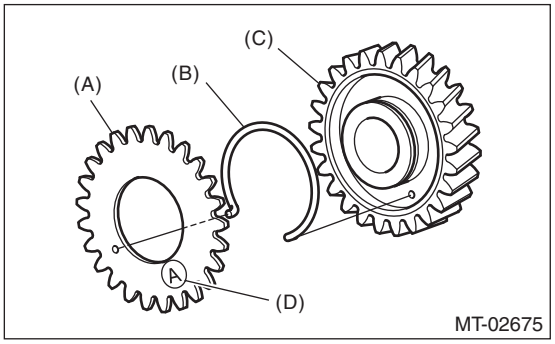

(A) Reverse idler sub gear
(B) Reverse idler spring
(C) Reverse idler gear
(D) Stamp (marking A)

2) Install the friction plate and snap ring.

NOTE:
Make sure the friction plate is installed in the proper direction.

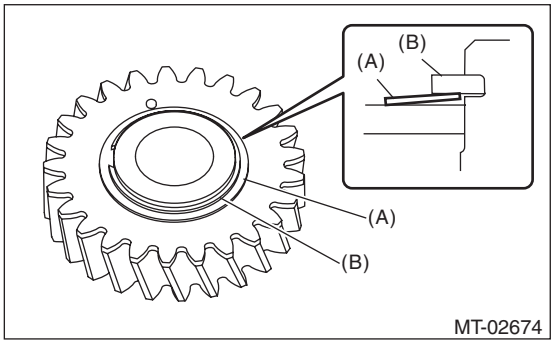

(A) Friction plate
(B) Snap ring

E: INSPECTION

1) Check the clearance between the reverse idler gear bushing and reverse idler gear washer. If the value is out of specification, select the appropriate reverse idler gear bushing and adjust.

Clearance (a):
0.1 — 0.3 mm (0.004 — 0.012 in)

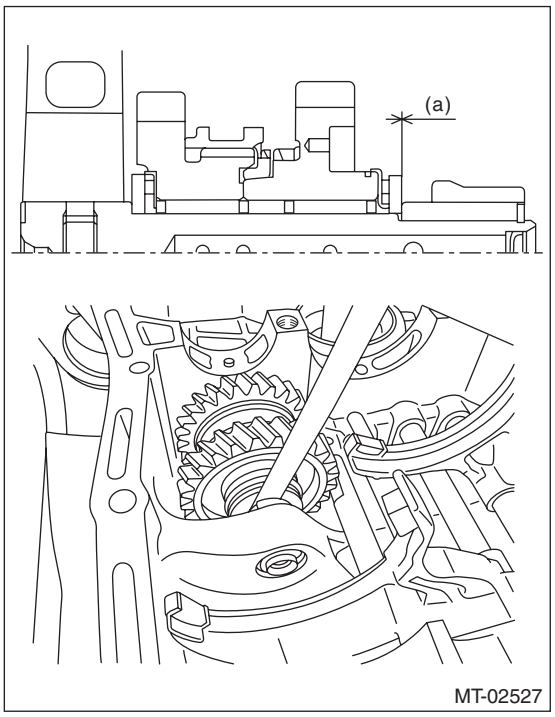

2) Check the reverse idler gear and reverse idler gear shaft for damage. Replace if it is damaged.
3) Apply transmission gear oil to the cone of the reverse idler gear and while press-fitting the reverse baulk ring, check there is no rotation in the circumferential direction.

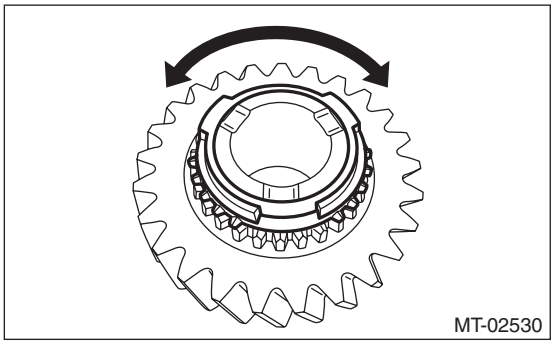

4) Reverse coupling sleeve and synchronizer hub
- Check the sliding condition of the reverse coupling sleeve.
- Check the splines on the reverse coupling sleeve and reverse idler gear for wear.

5) Reverse shifting insert
Replace the reverse shifting insert if there is deformation, excessive wear on the ball section or any defectiveness.

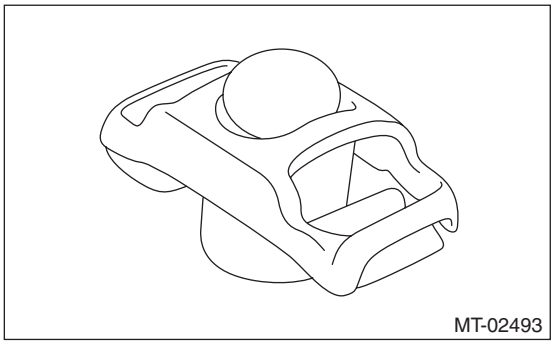
MT-02493

F: ADJUSTMENT

1) Select the appropriate reverse idler gear bushing from the table below, and adjust until the clearance between the reverse idler gear and reverse idler gear washer is within specification.

Clearance (a):
0.1 — 0.3 mm (0.004 — 0.012 in)

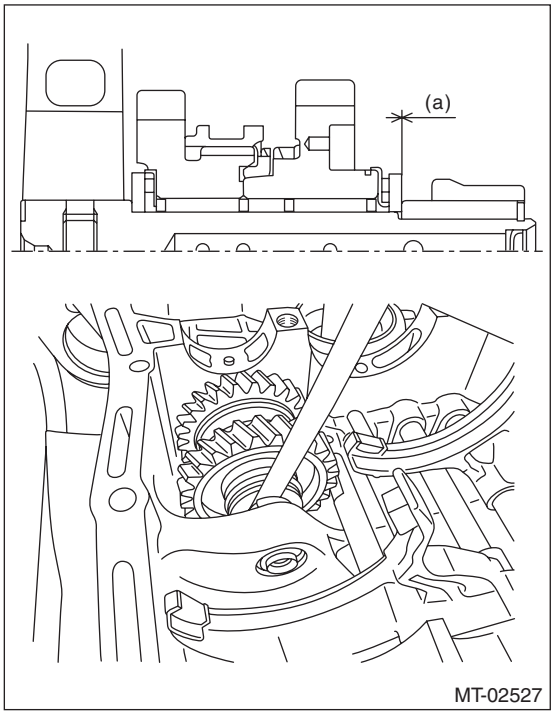

MT-02527

Reverse idler gear bushing		
Part No.	Length mm (in)	Groove for identification
32289AA080	27.75 (1.093)	None
32289AA090	27.90 (1.098)	1
32289AA100	28.05 (1.104)	2
32289AA110	28.20 (1.110)	3
32289AA120	28.35 (1.116)	4

20.Shifter Fork and Rod

A: REMOVAL

1) Remove the manual transmission assembly from the vehicle. <Ref. to 6MT-27, REMOVAL, Manual Transmission Assembly.>
2) Remove the back-up light switch and the neutral position switch. <Ref. to 6MT-55, REMOVAL, Switches and Harness.>
3) Remove the transfer case together with the extension case assembly. <Ref. to 6MT-61, REMOVAL, Transfer Case and Extension Case Assembly.>
4) Remove the transmission case. <Ref. to 6MT-93, REMOVAL, Transmission Case.>
5) Remove the drive pinion shaft assembly. <Ref. to 6MT-115, REMOVAL, Drive Pinion Shaft Assembly.>
6) Remove the main shaft assembly. <Ref. to 6MT-100, REMOVAL, Main Shaft Assembly.>
7) Remove the front differential assembly. <Ref. to 6MT-134, REMOVAL, Front Differential Assembly.>
8) Remove the reverse idler gear assembly. <Ref. to 6MT-146, REMOVAL, Reverse Idler Gear.>
9) Remove the check ball plugs, check ball springs and check balls.

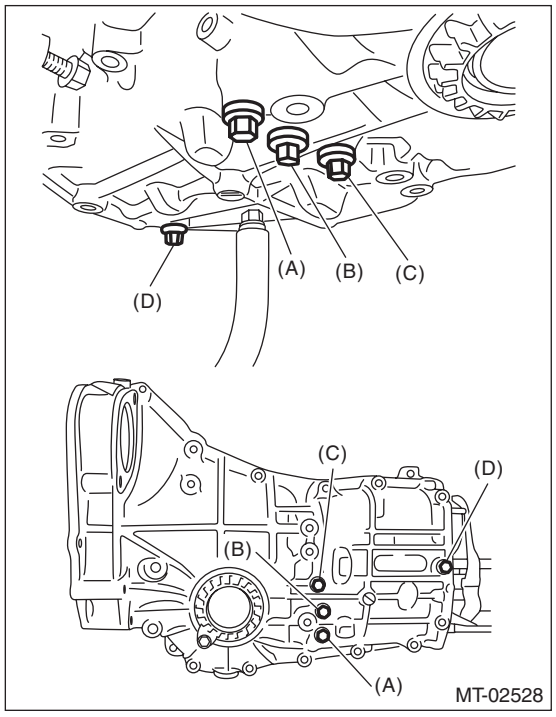

(A) 1st-2nd
(B) 3rd-4th
(C) 5th-6th
(D) Rev.

10) Use the ST to push out the straight pin of 5th-6th shifter fork and reverse shifter fork, and remove the 5th-6th shifter fork, reverse shifter fork, 5th-6th fork rod and reverse fork rod.

NOTE:
Tap out the reverse shifter fork straight pin, after setting the gear into reverse position. In the neutral position, removing is impossible because the clearance between transmission case is narrow.
ST 398791700 REMOVER

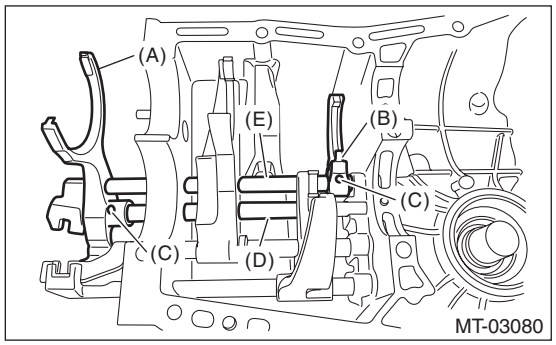

(A) 5th-6th shifter fork
(B) Reverse shifter fork
(C) Straight pin
(D) 5th-6th fork rod
(E) Reverse fork rod

11) Drive out the straight pin by tapping with the ST, and remove the 3rd-4th shifter fork and 3rd-4th fork rod.

NOTE:
When removing the 3rd-4th fork rod, keep other fork rods in neutral.
ST 398791700 REMOVER

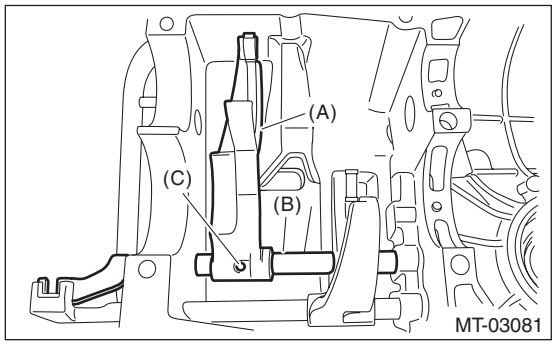

(A) 3rd-4th shifter fork
(B) 3rd-4th fork rod
(C) Straight pin

12) Drive out the straight pin by tapping with the ST, and remove the 1st-2nd shifter fork and 1st-2nd fork rod.
ST 398791700 REMOVER

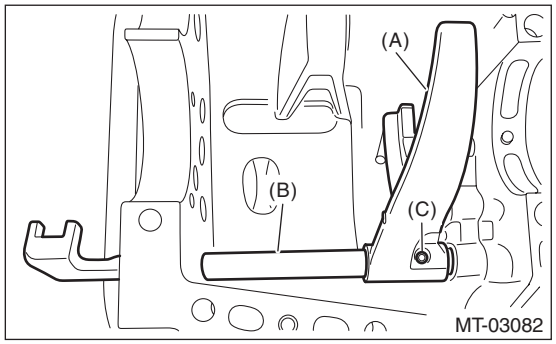

(A) 1st-2nd shifter fork
(B) 1st-2nd fork rod
(C) Straight pin

B: INSTALLATION

1) Install the 1st-2nd fork rod to the 1st-2nd shifter fork through the hole on the rear of the transmission case.
2) Align the holes on the 1st-2nd fork rod and 1st-2nd shifter fork, and drive the straight pin into these holes using the ST to fix.

NOTE:
Use a new straight pin.
ST 398791700 REMOVER

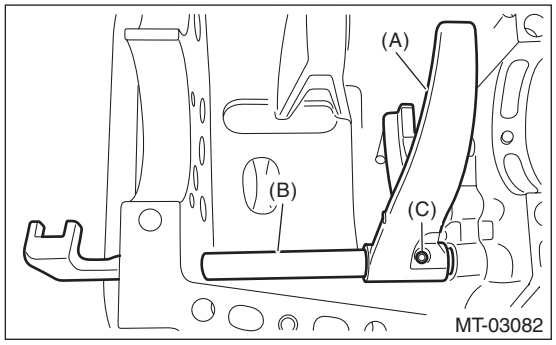

(A) 1st-2nd shifter fork
(B) 1st-2nd fork rod
(C) Straight pin

3) Install the 3rd-4th fork rod to the 3rd-4th shifter fork through the hole on the rear of the transmission case.

4) Align the holes on the 3rd-4th fork rod and 3rd-4th shifter fork, and drive the straight pin into these holes using the ST to fix.

NOTE:
- Use a new straight pin.
- Set other fork rods to neutral.
- Check that the positions of interlock plunger is correct.

ST 398791700 REMOVER

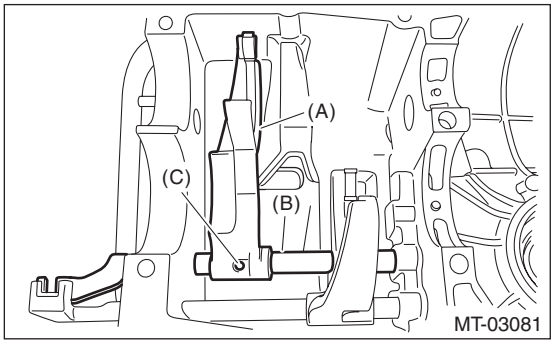

(A) 3rd-4th shifter fork
(B) 3rd-4th fork rod
(C) Straight pin

5) Install the 5th-6th fork rod into 5th-6th shifter fork, then insert through the hole on the rear of transmission case. Align the hole of the 5th-6th shifter fork with the hole on the transmission case, then insert the reverse fork rod to install the reverse shifter fork.
6) Align the holes on the 5th-6th fork rod and 5th-6th shifter fork and the holes on the reverse fork rod and reverse shifter fork, and drive the straight pin into these holes using the ST to fix.

NOTE:
- Use a new straight pin.
- Set other fork rods to neutral.
- Check that the positions of interlock plunger is correct.

ST 398791700 REMOVER

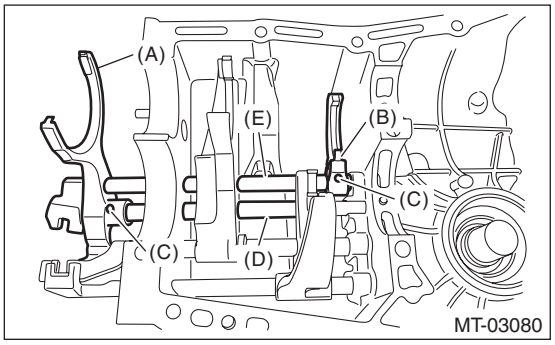

(A) 5th-6th shifter fork
(B) Reverse shifter fork
(C) Straight pin
(D) 5th-6th fork rod
(E) Reverse fork rod

7) Install the check ball plugs, check ball springs and check balls.

Tightening torque:
20 N·m (2.0 kgf-m, 14.8 ft-lb)

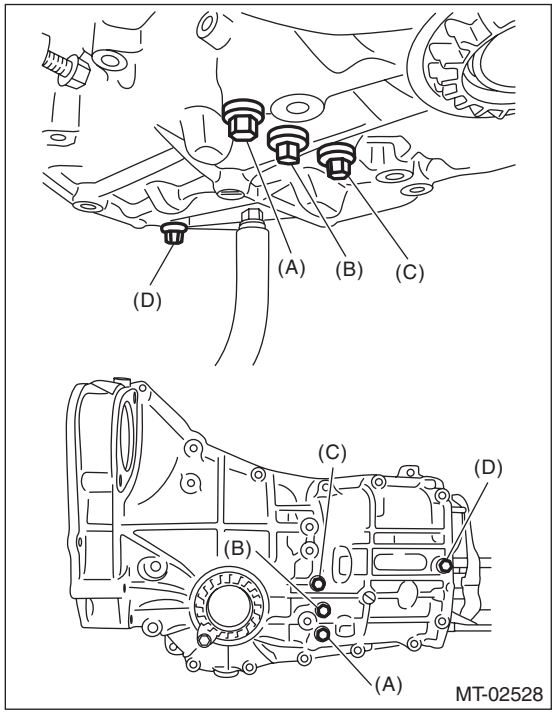

(A) 1st-2nd
(B) 3rd-4th
(C) 5th-6th
(D) Rev.

8) Install the reverse idler gear assembly. <Ref. to 6MT-148, INSTALLATION, Reverse Idler Gear.>
9) Install the front differential assembly. <Ref. to 6MT-135, INSTALLATION, Front Differential Assembly.>
10) Install the main shaft assembly. <Ref. to 6MT-100, INSTALLATION, Main Shaft Assembly.>
11) Install the drive pinion shaft assembly. <Ref. to 6MT-115, INSTALLATION, Drive Pinion Shaft Assembly.>
12) Install the transmission case. <Ref. to 6MT-95, INSTALLATION, Transmission Case.>
13) Install the transfer case together with the extension case assembly. <Ref. to 6MT-63, INSTALLATION, Transfer Case and Extension Case Assembly.>
14) Install the back-up light switch and the neutral position switch. <Ref. to 6MT-56, INSTALLATION, Switches and Harness.>
15) Install the manual transmission assembly to the vehicle. <Ref. to 6MT-37, INSTALLATION, Manual Transmission Assembly.>

C: INSPECTION

1) Check the shifter fork and fork rod for damage. Replace if it is damaged.
2) Gearshift mechanism
Repair or replace the gearshift mechanism if excessively worn, bent or defective in any way.

3) Inspect the clearance between 2nd driven gear and coupling sleeve. If any clearance is not within specifications, replace the shifter fork as required.

Clearance (a):
7.4 — 7.8 mm (0.291 — 0.307 in)

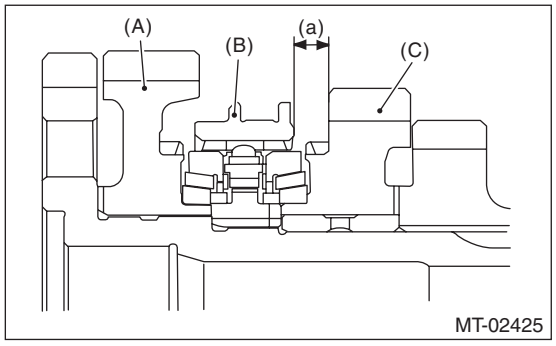

(A) 1st driven gear
(B) Coupling sleeve
(C) 2nd driven gear

1st-2nd shifter fork		
Part No.	Mark	Content
32804AA120	1	Approaches 2nd gear by 0.2 mm (0.008 in).
32804AA130	No mark	Standard
32804AA140	2	Approaches 1st gear by 0.2 mm (0.008 in).

4) Inspect the clearance between the 3rd, 4th drive gear and the coupling sleeve. If any clearance is not within specifications, replace the shifter fork as required.

Clearance (a), (b):
7.5 mm (0.295 in)

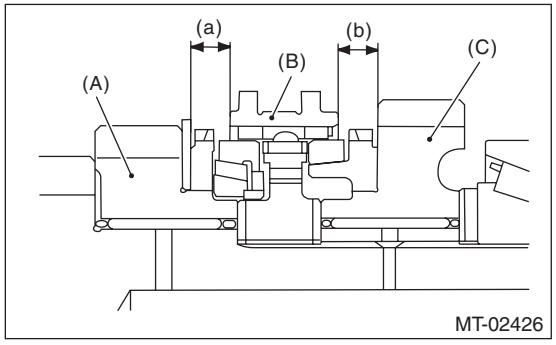

(A) 3rd drive gear
(B) Coupling sleeve
(C) 4th drive gear

3rd-4th shifter fork		
Part No.	Mark	Content
32810AA061	1	Approaches 4th gear by 0.2 mm (0.008 in).
32810AA071	No mark	Standard
32810AA101	3	Approaches 3rd gear by 0.2 mm (0.008 in).

5) Inspect the clearance between 5th, 6th drive gear and coupling sleeve. If any clearance is not within specifications, replace the shifter fork as required.

Clearance (a), (b):
7.5 mm (0.295 in)

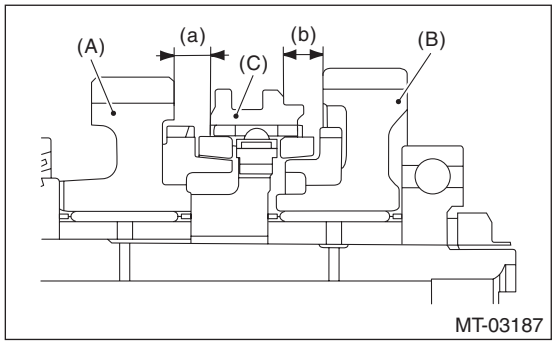

(A) 5th drive gear
(B) 6th drive gear
(C) Coupling sleeve

5th-6th shifter fork		
Part No.	Mark	Content
32940AA050	1	Approaches 5th gear by 0.2 mm (0.008 in).
32940AA060	No mark	Standard
32940AA070	2	Approaches 6th gear by 0.2 mm (0.008 in).

6) Check the clearance between the reverse idler gear and reverse coupling sleeve. If any clearance is not within specifications, replace the shifter fork as required.

Clearance (a):
0.50 mm (0.020 in) or less

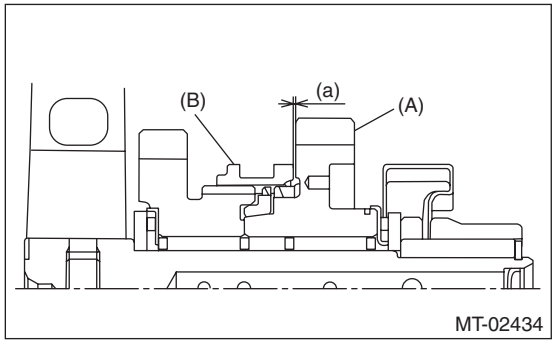

(A) Reverse idler gear
(B) Reverse coupling sleeve

Reverse shifter fork		
Part No.	Mark	Content
32941AA070	2	Approaches reverse idler gear by 0.3 mm (0.012 in).
32941AA060	No mark	Standard
32941AA050	1	Approaches reverse idler gear No. 2 by 0.3 mm (0.012 in).

7) Inspect the rod end clearances (A) and (B). If any clearance is not within specifications, replace the rod or fork as required.

Clearance (A):
1st-2nd — 3rd-4th
0.1 — 0.9 mm (0.004 — 0.035 in)

Clearance (B):
3rd-4th — 5th-6th
0.2 — 1.0 mm (0.008 — 0.039 in)

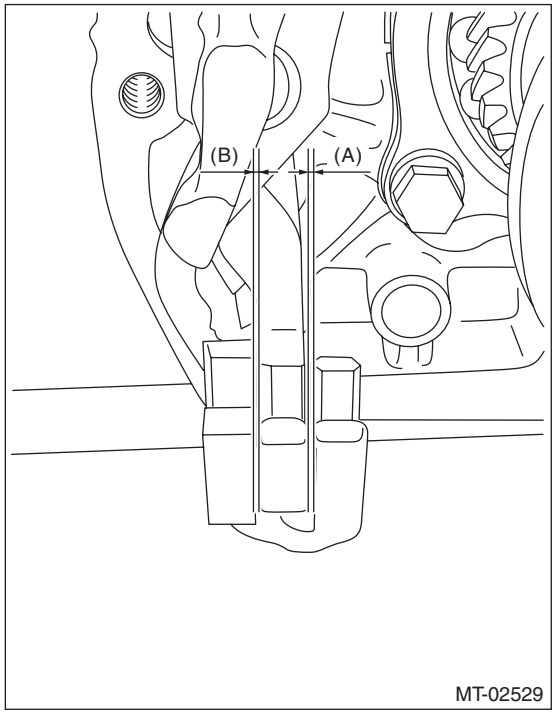

21.General Diagnostic Table

A: INSPECTION

1. MANUAL TRANSMISSION

Symptoms	Possible cause	Corrective action
1. Gears are difficult to intermesh. NOTE: The cause for difficulty in shifting gears can be classified into two types: One is a defective gear shift system and the other is defective transmission. However, if the operation is heavy and engagement of the gears is difficult, a defective clutch disengagement may also be responsible. Check whether the clutch is correctly functioning, before checking the gear shift system and transmission.	(a) Worn, damaged or burred chamfer at internal spline of the sleeve	Replace.
	(b) Gear spline wear, damage, dents	Replace.
	(c) Worn or scratched bushings	Replace.
	(d) Incorrect contact or wear between baulk ring and gear cone	Repair or replace.
2. Gear slip-out • Gear slips out when coasting on rough road. • Gear slips out during acceleration.	(a) Loose engine mounting bolts	Tighten or replace.
	(b) Worn fork shifter or broken check ball spring	Replace.
	(c) Worn or damaged ball bearing	Replace.
	(d) Excessive clearance between splines of synchronizer hub and synchronizer sleeve	Replace.
	(e) Synchronizer hub tooth step wear	Replace.
	(f) Worn 1st driven gear and driven shaft	Replace.
	(g) Worn 2nd driven gear and bushing	Replace.
	(h) Worn 3rd drive gear and needle bearing	Replace.
	(i) Worn 4th drive gear and needle bearing	Replace.
	(j) Worn 5th drive gear and needle bearing	Replace.
	(k) Worn 6th drive gear and needle bearing	Replace.
	(l) Worn reverse idler gear and needle bearing	Replace.
3. Noise emitted from transmission NOTE: If a noise is heard when the vehicle is parked with its engine idling and if a noise ceases when the clutch is disengaged, it may be considered that the noise is coming from the transmission.	(a) Insufficient or improper lubrication	Lubricate with recommended oil or replace.
	(b) Worn or damaged gears and bearings NOTE: If the trouble is only wear of the gear teeth surfaces, only a high whirring noise will occur at high speeds, but if any part is broken, rhythmical clicking sounds will be heard even at low speeds.	Replace.

2. DIFFERENTIAL

Symptoms	Possible cause	Corrective action
1. Broken differential (case, gear, bearing, etc.) NOTE: Noise will occur, and eventually the differential will not be able to operate due to broken pieces obstructing the gear revolution.	(a) Insufficient or improper oil	Disassemble the differential and replace broken components. At the same time check other components for any trouble, and replace if necessary.
	(b) Use of vehicle under severe conditions such as excessive load or improper use of the clutch	Readjust the preload and backlash of the bearing, and the contact surface of gear.
	(c) Improper adjustment of taper roller bearing	Adjust.
	(d) Improper adjustment of the drive pinion and the hypoid driven gear	Adjust.
	(e) Excessive backlash of a vehicle under severe operating conditions due to worn differential side gear, adjusting washer or differential pinion	Add recommended oil to the specified level. Do not use vehicle under severe operating conditions.
	(f) Loose hypoid driven gear clamping bolts	Tighten.
2. Differential and hypoid gear noises Troubles of the differential and hypoid gear always appear as noise problems. Therefore noise is the first indication of trouble. However, noises from the engine, muffler, tire, exhaust gas, bearing, body, etc. are easily mistaken for the differential noise. Pay special attention to the hypoid gear noise because it is easily confused with other gear noises. There are the following four kinds of noises. • Gear noise when driving: If noise increases as the vehicle speed increases, it may be due to insufficient gear oil, incorrect gear engagement, damaged gears, etc. • Gear noise when coasting: Damaged gears due to misadjusted bearings and incorrect shim adjustment • Bearing noise when driving or coasting: Cracked, broken or damaged bearings • Noise mainly when turning: Noise from differential side gear, differential pinion or differential pinion shaft, etc.	(a) Insufficient oil	Replenish or replace with the specified amount of recommended oil.
	(b) Improper adjustment of hypoid driven gear and drive pinion	Check the tooth contact.
	(c) Worn teeth of hypoid driven gear and drive pinion	Replace as a set. Readjust the bearing preload.
	(d) Loose roller bearing	Readjust the backlash of the hypoid driven gear to drive pinion, and check the tooth contact.
	(e) Distorted hypoid driven gear or differential case	Replace.
	(f) Worn adjusting washer and differential pinion shaft	Replace.

CLUTCH SYSTEM

CL

Page

1. General Description 2
2. Clutch Disc and Cover 9
3. Flywheel 12
4. Release Bearing and Lever 14
5. Operating Cylinder 16
6. Master Cylinder 19
7. Clutch Pipe and Hose 21
8. Clutch Fluid 24
9. Clutch Fluid Air Bleeding 25
10. Clutch Pedal 26
11. Clutch Switch 31
12. General Diagnostic Table 34

1. General Description

A: SPECIFICATION

Model			2.5 L non-turbo
Transmission type			6MT
Clutch cover	Type		Push type
	Diaphragm set load N (kgf, lbf)		5,688 (580, 1,279)
Clutch disc	Facing material		Woven (non-asbestos)
	O.D. × I.D. × Thickness mm (in)	Flywheel side	230 × 155 × 3.2 (9.06 × 6.10 × 0.126)
		Clutch cover side	230 × 155 × 3.5 (9.06 × 6.10 × 0.138)
	Spline outer diameter mm (in)		25.2 (0.992), (number of teeth: 24)
	Depth of rivet head mm (in)	Flywheel side	1.35 — 1.95 (0.053 — 0.077)
		Clutch cover side	1.65 — 2.25 (0.065 — 0.089)
		Limit of sinking	0.8 (0.031)
	Deflection limit mm (in)		0.7 (0.028) at R = 110 (4.33)
Clutch release lever ratio			1.6
Release bearing			Grease-packed self-aligning
Clutch pedal	Full stroke mm (in)		130 — 135 (5.12 — 5.31)
	Free play mm (in)		4 — 11 (0.16 — 0.43)
Flywheel	Type		Flexible

B: COMPONENT

1. CLUTCH ASSEMBLY

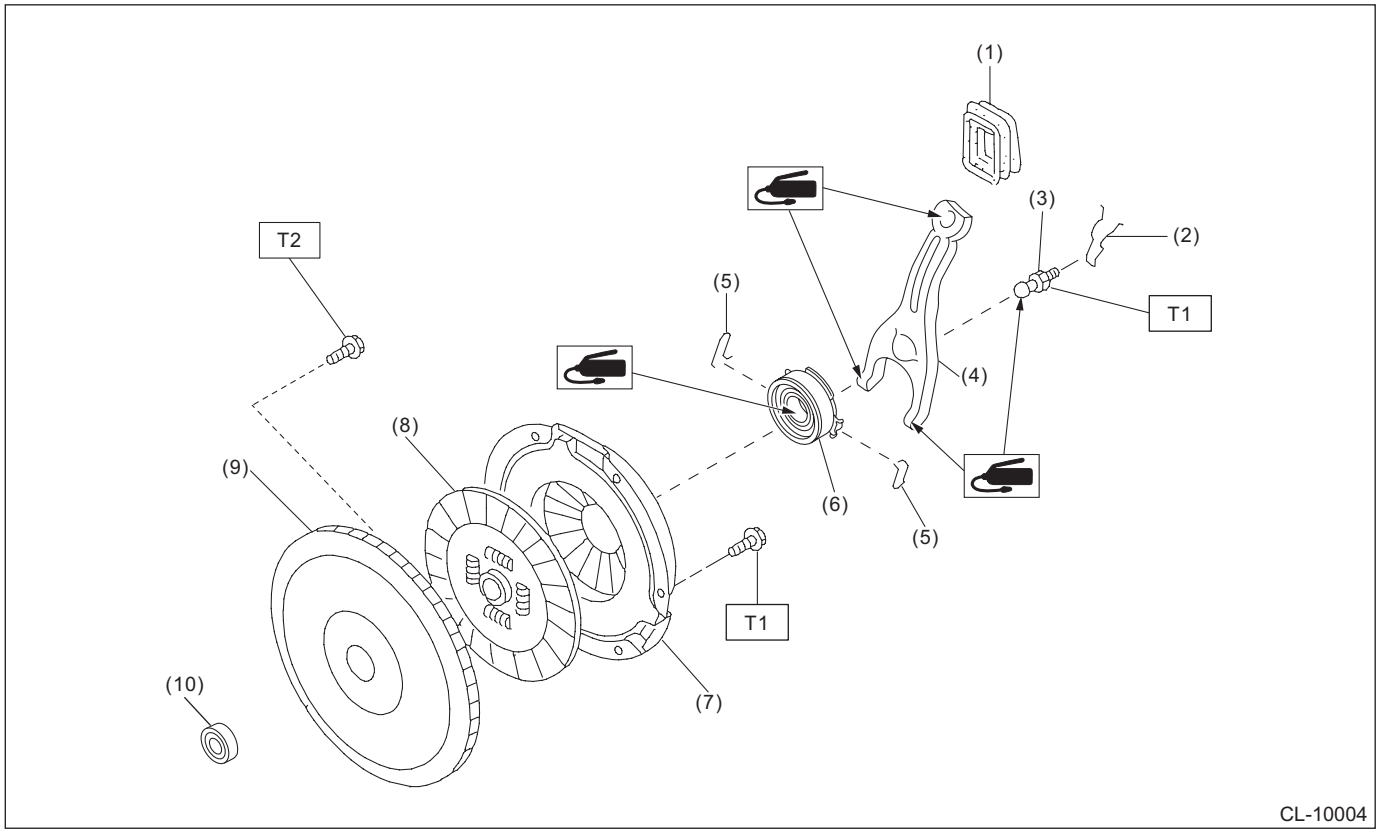

(1) Dust cover
(2) Lever spring
(3) Pivot
(4) Release lever
(5) Clip
(6) Release bearing
(7) Clutch cover
(8) Clutch disc
(9) Flexible flywheel
(10) Pilot bearing

Tightening torque: N·m (kgf-m, ft-lb)
T1: 16 (1.6, 11.8)
T2: <Ref. to CL-12, INSTALLATION, Flywheel.>

2. CLUTCH PIPE AND HOSE

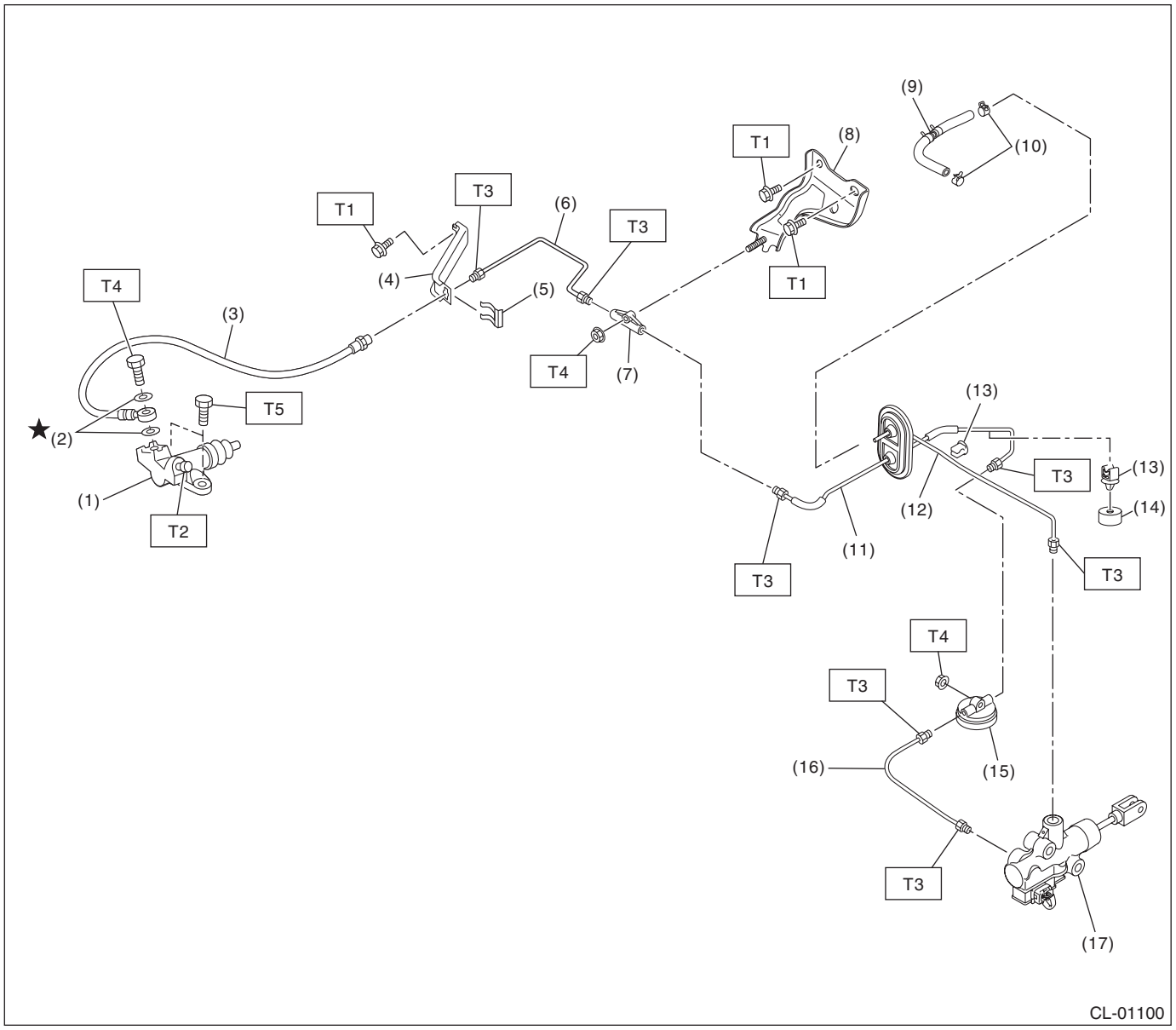

(1)	Operating cylinder	(9)	Tank hose	(17)	Master cylinder ASSY
(2)	Gasket	(10)	Clamp		
(3)	Clutch hose	(11)	Clutch pipe	***Tightening torque: N·m (kgf-m, ft-lb)***	
(4)	Clutch hose bracket	(12)	Clutch pipe	***T1:***	***7.5 (0.8, 5.5)***
(5)	Clamp	(13)	Clamp	***T2:***	***7.8 (0.8, 5.8)***
(6)	Clutch pipe	(14)	Mass damper	***T3:***	***15 (1.5, 11.1)***
(7)	Connector	(15)	Clutch damper	***T4:***	***18 (1.8, 13.3)***
(8)	Clutch bracket	(16)	Clutch pipe	***T5:***	***37 (3.8, 27.3)***

3. MASTER CYLINDER

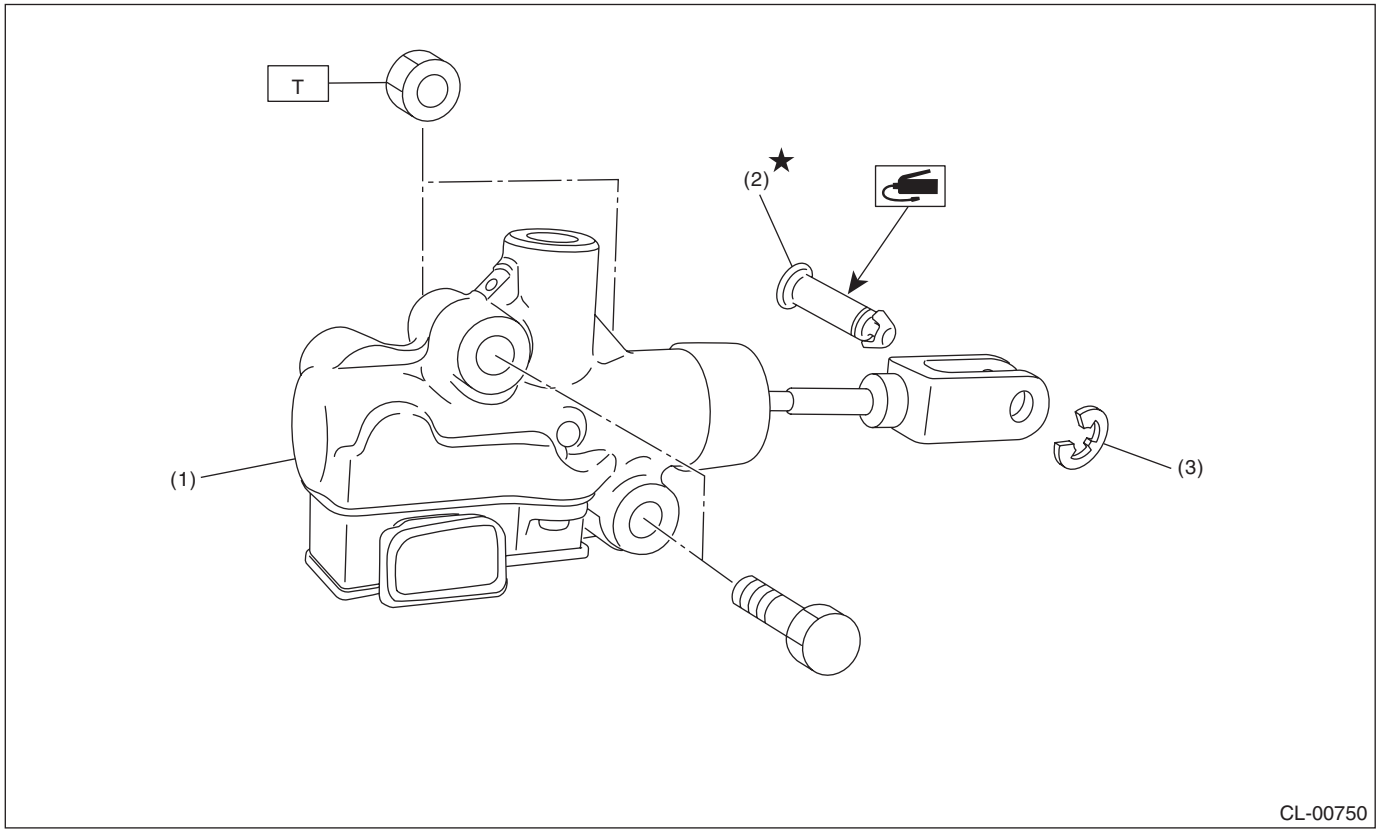

(1) Master cylinder ASSY
(2) Clevis pin
(3) Clip

Tightening torque: N·m (kgf-m, ft-lb)
T: 18 (1.8, 13.3)

4. OPERATING CYLINDER

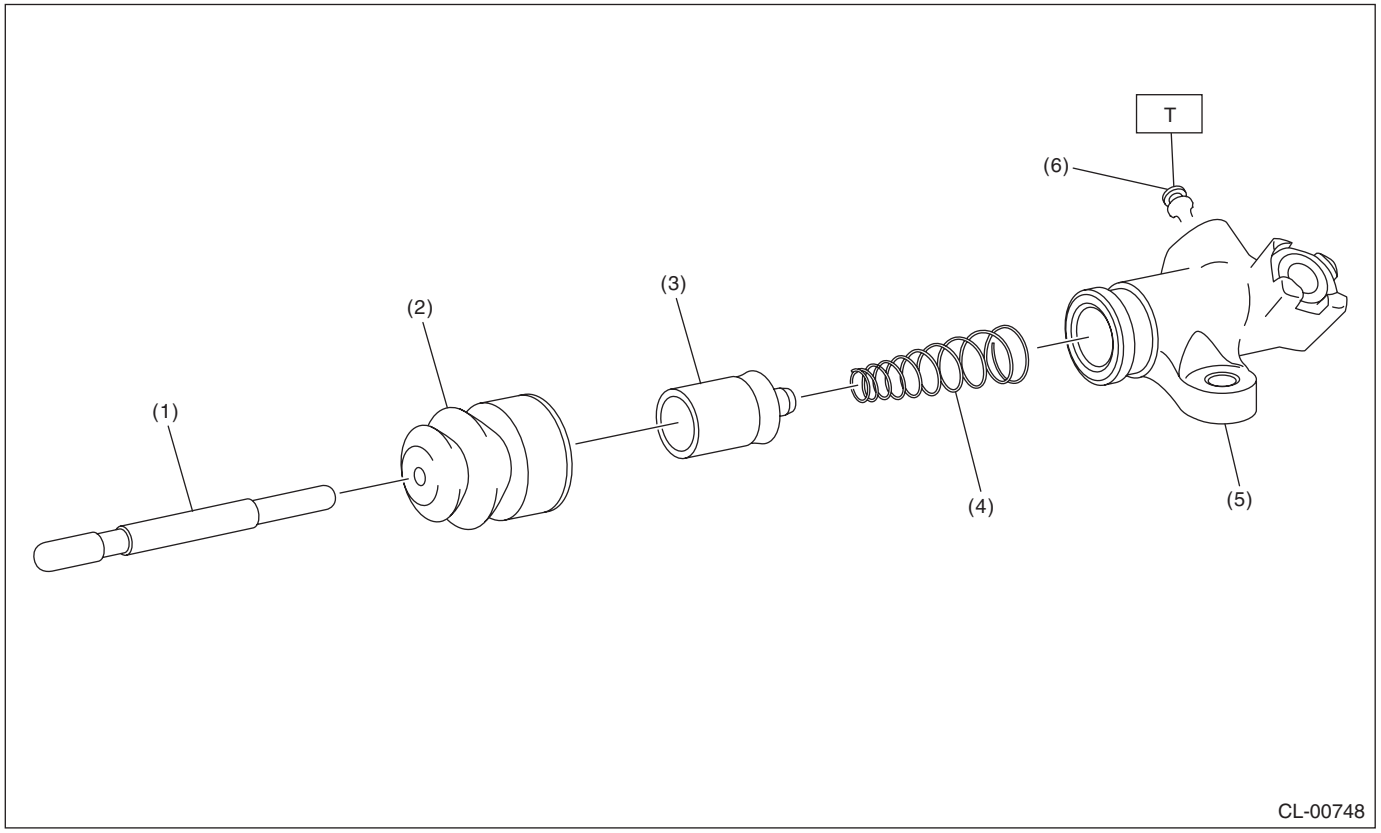

(1) Push rod
(2) Boot
(3) Piston
(4) Piston spring
(5) Operating cylinder
(6) Bleeder screw

Tightening torque: N·m (kgf-m, ft-lb)
T: 7.8 (0.8, 5.8)

5. CLUTCH PEDAL ASSEMBLY

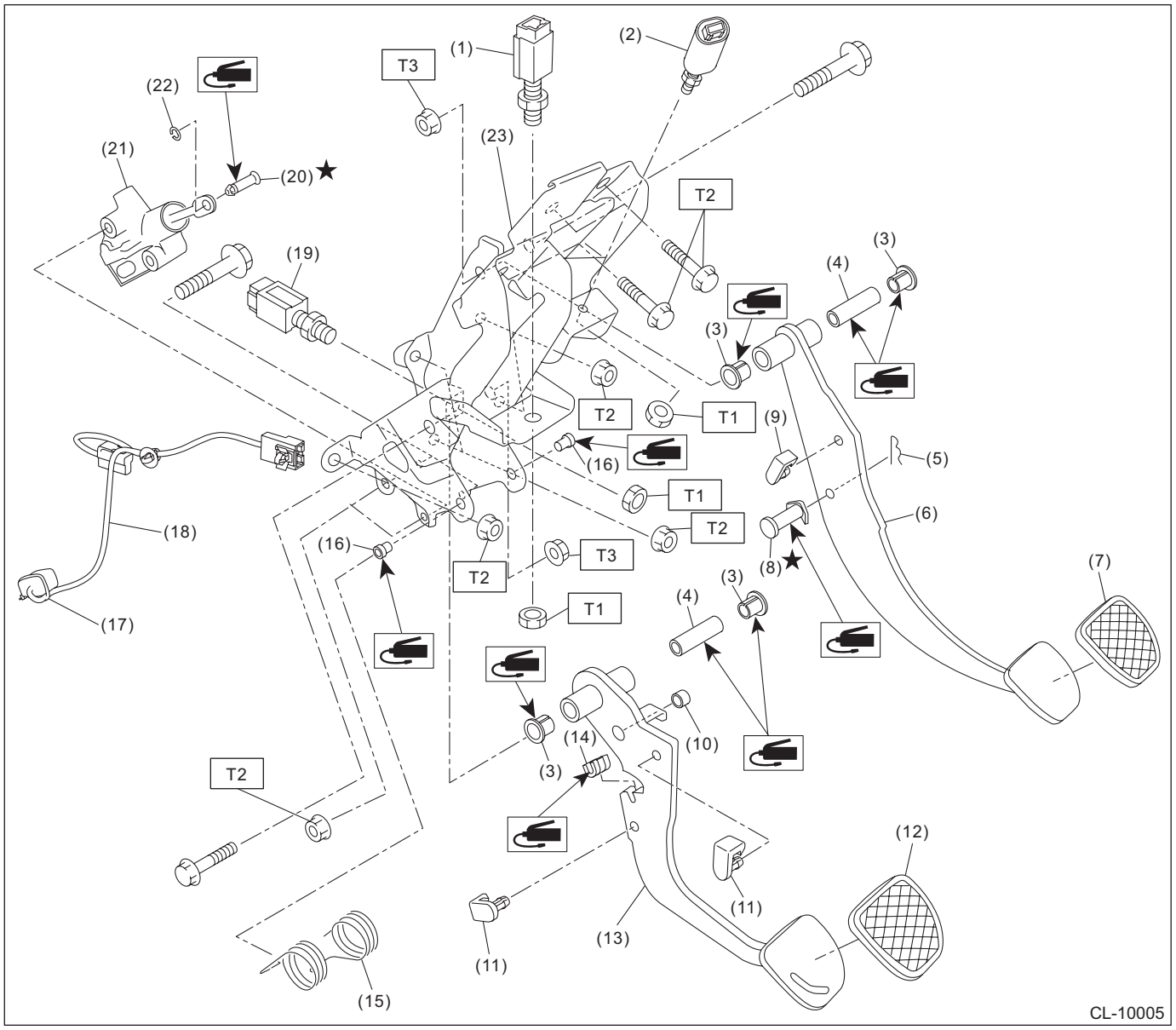

(1) Clutch switch
(2) Stop light switch
(3) Bushing
(4) Spacer
(5) Snap pin
(6) Brake pedal
(7) Brake pedal pad
(8) Clevis pin
(9) Brake pedal stopper
(10) Bushing A
(11) Clutch pedal stopper
(12) Clutch pedal pad
(13) Clutch pedal
(14) Torsion spring bushing
(15) Torsion spring
(16) Assist bushing
(17) Band
(18) Sensor harness
(19) Clutch start switch
(20) Clevis pin
(21) Master cylinder ASSY
(22) Clip
(23) Pedal bracket

Tightening torque: N·m (kgf-m, ft-lb)
T1: 8 (0.8, 5.9)
T2: 18 (1.8, 13.3)
T3: 30 (3.1, 22.1)

C: CAUTION

- Remove contamination including dirt and corrosion before removal, installation or disassembly.
- Keep the disassembled parts in order and protect them from dust and dirt.
- Before removal, installation or disassembly, be sure to clarify the failure. Avoid unnecessary removal, installation, disassembly and replacement.
- Vehicle components are extremely hot after driving. Be wary of receiving burns from heated parts.
- Use SUBARU genuine fluid, grease etc. or equivalent. Do not mix fluid, grease, etc. of different grades or manufacturers.
- Be sure to tighten fasteners including bolts and nuts to the specified torque.
- Apply grease onto sliding or revolving surfaces before installation.
- Before installing O-rings or snap rings, apply sufficient amount of fluid to avoid damage and deformation.
- Before securing a part in a vise, place cushioning material such as wood blocks, aluminum plate or cloth between the part and the vise.
- Keep fluid away from the vehicle body. If any fluid contacts the vehicle body, immediately flush the area with water.

D: PREPARATION TOOL

1. SPECIAL TOOL

ILLUSTRATION	TOOL NUMBER	DESCRIPTION	REMARKS
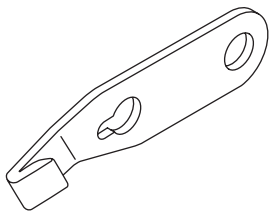 ST-498497100	498497100	CRANKSHAFT STOPPER	Used for stopping rotation of the flywheel.
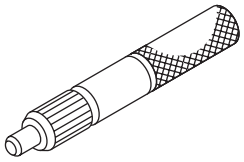 ST-499747100	499747100	CLUTCH DISC GUIDE	Used for installing the clutch disc to the flywheel.

2. GENERAL TOOL

TOOL NAME	REMARKS
Circuit tester	Used for measuring resistance, voltage and current.
Dial gauge	Used for measuring clutch disc run-out.
Depth gauge	Used for measuring clutch disc wear.
Angle gauge	Used for tightening the flywheel.

2. Clutch Disc and Cover

A: REMOVAL

1) Remove the transmission assembly from the vehicle. <Ref. to 6MT-27, REMOVAL, Manual Transmission Assembly.>
2) Attach the ST on the flywheel.
ST 499747100 CLUTCH DISC GUIDE

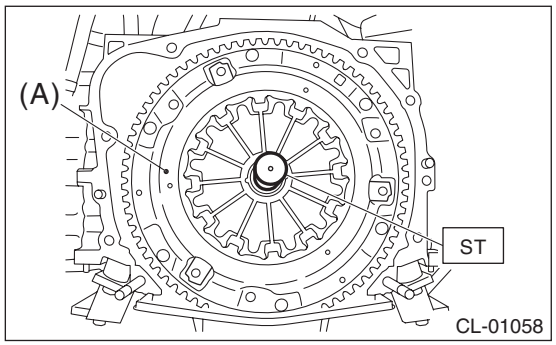

(A) Clutch cover

3) Remove the clutch cover and clutch disc.

NOTE:
• Take care not to allow oil to touch the clutch disc face.
• Do not disassemble the clutch cover or clutch disc.

B: INSTALLATION

1) Insert the ST into the clutch disc and insert the ST end into the pilot bearing.

NOTE:
When installing the clutch disc, be careful to attach in the correct direction.
ST 499747100 CLUTCH DISC GUIDE

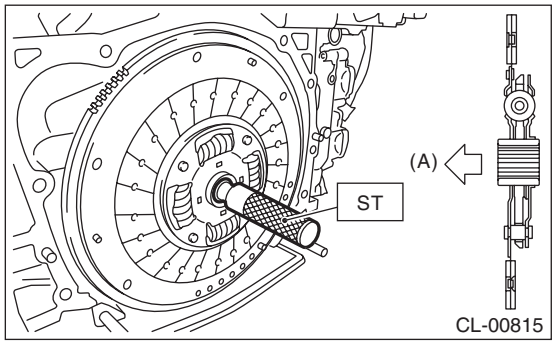

(A) Flywheel side

2) Install the clutch cover and tighten the bolts to specified torque.

NOTE:
• When installing a clutch cover, position the clutch cover so that the spacing between the unbalance marks (paint mark) on the flywheel and clutch cover is 120° or more apart. (The unbalance mark indicates the direction of residual unbalance.)
• Temporarily tighten the bolts by hand. Each bolt should be tightened to the specified torque in a crisscross order.

Tightening torque:
16 N·m (1.6 kgf-m, 11.8 ft-lb)

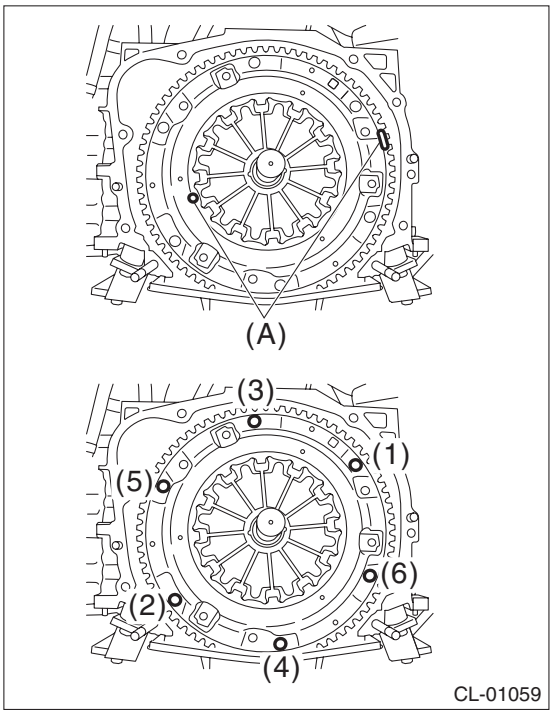

(A) Unbalance mark (paint)

3) Remove the ST.
ST 499747100 CLUTCH DISC GUIDE
4) Install the transmission assembly. <Ref. to 6MT-37, INSTALLATION, Manual Transmission Assembly.>

C: INSPECTION

1. CLUTCH DISC

1) Facing wear
Measure the depth from the facing surface to the rivet head. Replace if the face is worn locally or worn down to less than the specified value.

Depth to rivet head:
Limit of sinking
0.8 mm (0.031 in)

NOTE:
Do not wash the clutch disc with any type of cleaning fluid.

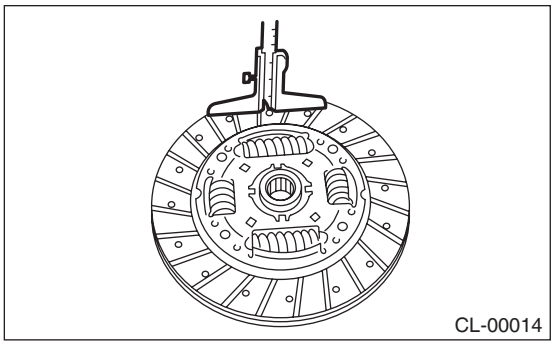

2) Hardened facing
Replace the clutch disc.
3) Oil soakage on facing
Replace the clutch disc and inspect the transmission front oil seal, transmission case mating surface, engine rear oil seal and other locations for oil leakage.

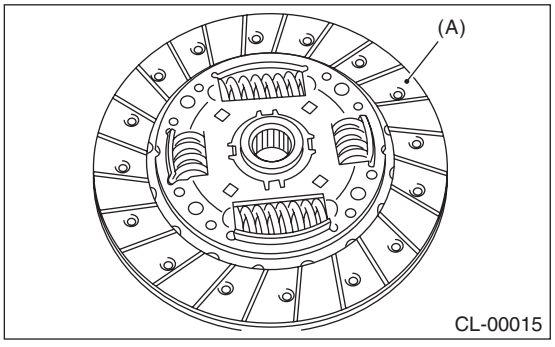

(A) Clutch facing

4) Deflection on facing
If deflection exceeds the specified value at the outer circumference of the facing, replace the clutch disc.
ST 499747100 CLUTCH DISC GUIDE

Limit for deflection:
0.7 mm (0.028 in) at R = 110 mm (4.33 in)

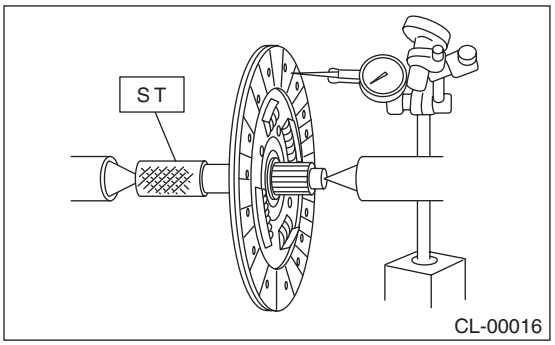

5) If there is spline wear, loose rivets, failed damper springs, etc., replace the clutch disc.

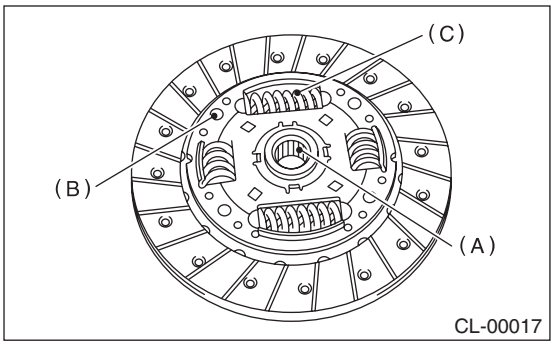

(A) Spline
(B) Rivet
(C) Damper spring

2. CLUTCH COVER

NOTE:
Visually check the following items without disassembling, and replace or repair if defective.
1) Loose thrust rivet
2) Damaged or worn bearing contact area at the center of diaphragm spring

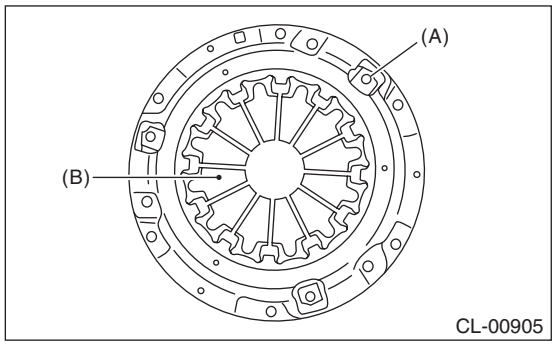

(A) Thrust rivet
(B) Diaphragm spring

3) Damaged and worn disc contact surface of the pressure plate
4) Loose strap plate installation area
5) Worn diaphragm sliding area

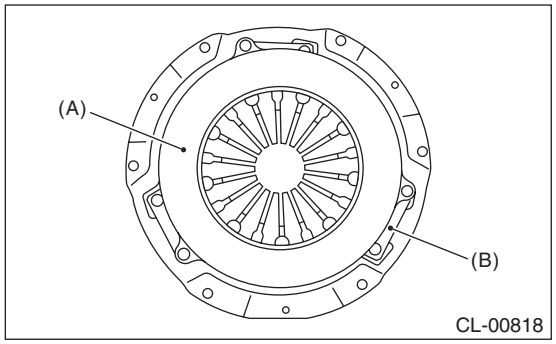

(A) Pressure plate
(B) Strap plate

3. Flywheel

A: REMOVAL

1) Remove the transmission assembly. <Ref. to 6MT-27, REMOVAL, Manual Transmission Assembly.>
2) Remove the clutch cover and clutch disc. <Ref. to CL-9, REMOVAL, Clutch Disc and Cover.>
3) Attach the ST.
ST 498497100 CRANKSHAFT STOPPER

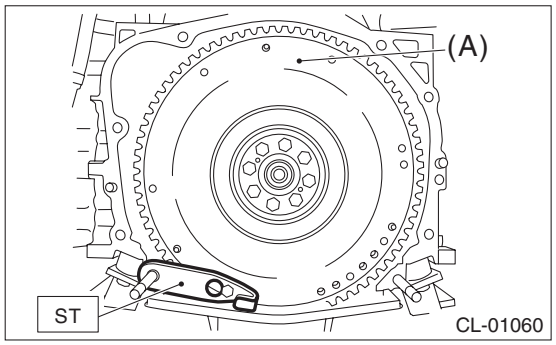

(A) Flywheel

4) Remove the flywheel and crankshaft position sensor plate.
5) Drive out the pilot bearing from the flywheel.

B: INSTALLATION

1) Press in a new pilot bearing to the position where it is flush with the flywheel surface or up to 0.4 mm (0.016 in) deeper than that.

CAUTION:
Do not press the bearing inner ring.

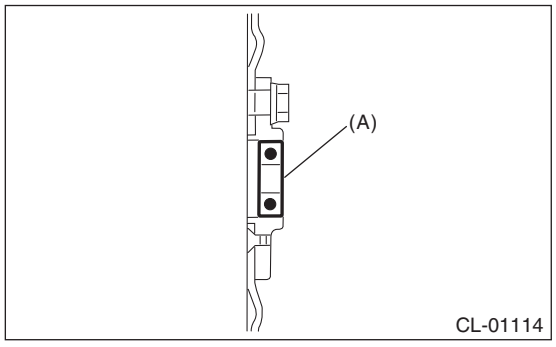

(A) Pilot bearing

2) Temporarily tighten the crankshaft position sensor plate and flywheel.

NOTE:
Align the knock pin hole of the crankshaft position sensor plate to the knock pin of the crankshaft to secure the knock pin.

3) Attach the ST.
ST 498497100 CRANKSHAFT STOPPER

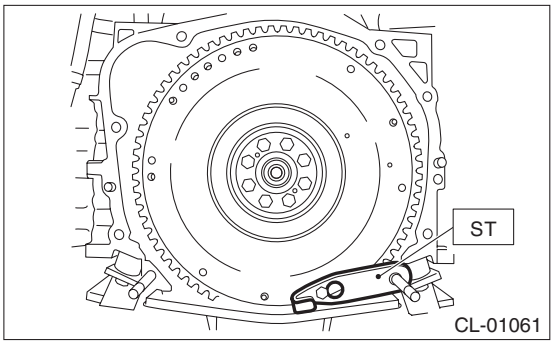

4) Tighten the flywheel mounting bolts in two stages.
(1) Tighten the flywheel attachment bolts.

Tightening torque:
30 N·m (3.1 kgf-m, 22.1 ft-lb)

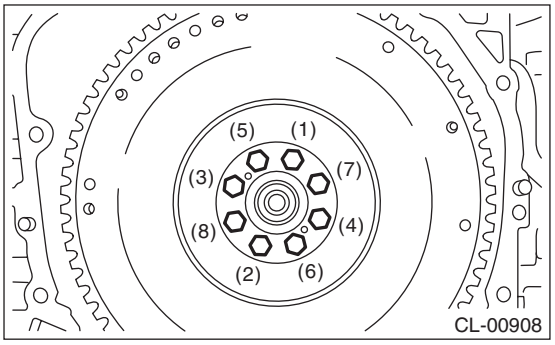

(2) While checking the tightening angle with the angle gauge, further tighten the flywheel mounting bolts.

Tightening angle:
30° — 35°

5) Install the clutch disc and clutch cover. <Ref. to CL-9, INSTALLATION, Clutch Disc and Cover.>
6) Install the transmission assembly. <Ref. to 6MT-37, INSTALLATION, Manual Transmission Assembly.>

C: INSPECTION

CAUTION:
Because the center pilot bearing is grease-sealed and is a non-lubrication type, do not wash with gasoline or solvents.

1) If there is damage or defectiveness in the facing sliding surface or ring gear, replace the flywheel.

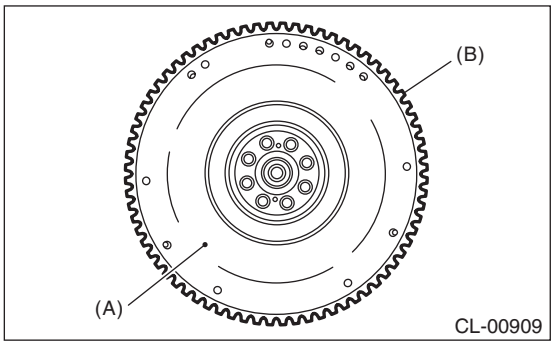

(A) Flywheel
(B) Ring gear

2) Smoothness of rotation
Rotate the ball bearing while applying pressure in the thrust direction.
3) If any noise or excessive play is noted, replace the pilot bearing.

4. Release Bearing and Lever

A: REMOVAL

1) Remove the transmission assembly from the vehicle. <Ref. to 6MT-27, REMOVAL, Manual Transmission Assembly.>
2) Remove the two clips from the release lever and remove the release bearing.

CAUTION:
Be careful not to deform the clips.
3) Remove the dust cover.

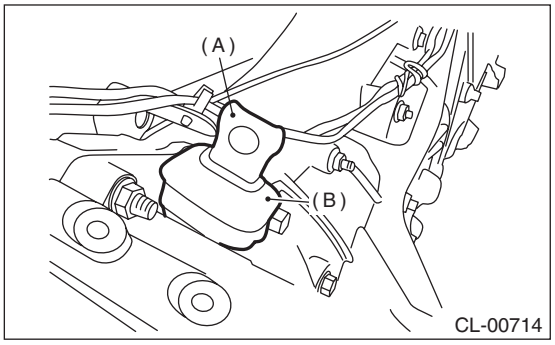

(A) Release lever
(B) Dust cover

4) Remove the attachment point of lever spring by inserting a screwdriver through the clutch housing release lever hole. Then remove the release lever.

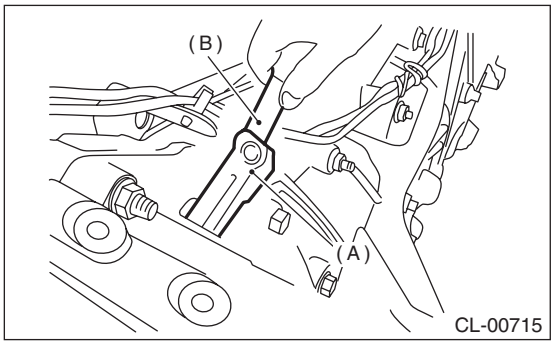

(A) Release lever
(B) Screwdriver

B: INSTALLATION

NOTE:
Apply the specified grease to lubricate to the following points before installation.
- Contact surface of lever and pivot
- Contact surface of lever and bearing
- Transmission main shaft spline
- Contact surface of release bearing and transmission case

Grease
NICHIMOLY N-130 or equivalent
1) While pushing the release lever to the pivot and twisting it to both sides, fit the lever spring onto the raised portion of the pivot.

NOTE:
Observing from the main case hole, check that the lever spring is installed securely.
2) Install the release bearing and fasten it with two clips.
3) Install the dust cover.

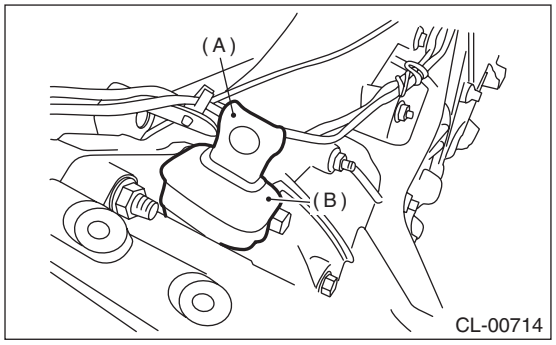

(A) Release lever
(B) Dust cover

4) Operate the release lever and check if the release bearing moves smoothly.
5) Apply grease to the contact point of the release lever and operating cylinder.

Grease
NICHIMOLY N-130 or equivalent
6) Install the transmission assembly. <Ref. to 6MT-37, INSTALLATION, Manual Transmission Assembly.>

C: INSPECTION

1. RELEASE BEARING

CAUTION:
Since this bearing is grease-sealed and is a non-lubrication type, do not wash with gasoline or any other solvent when servicing the clutch.

1) Check the bearing for smooth movement by applying force to the bearing in the radial direction.

Radial direction stroke:
1.6 mm (0.063 in)

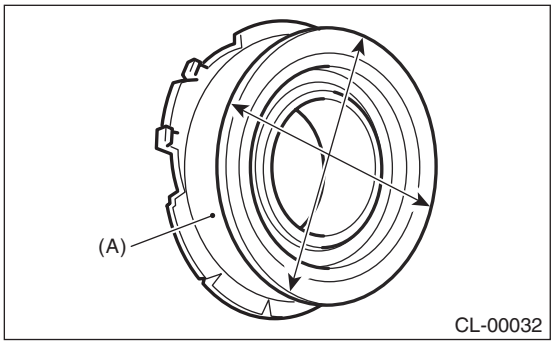

(A) Bearing case

2) While applying force to the bearing in the rotational direction, check the bearing for smooth rotation.

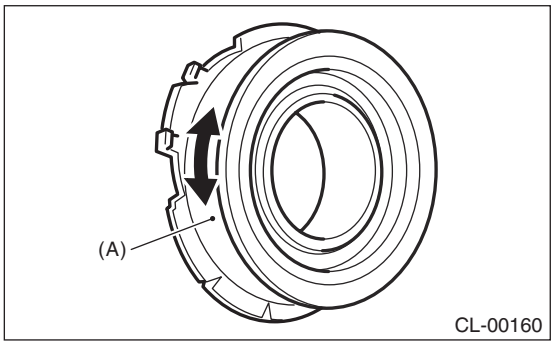

(A) Bearing case

3) Check for wear or damage at the bearing case surface in contact with the lever.

2. RELEASE LEVER

Check the pivot portion of the lever and the contact area with the release bearing case for wear.

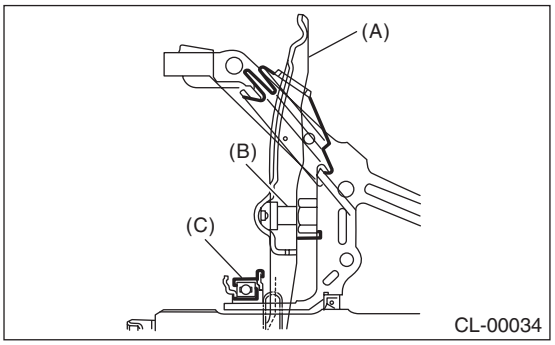

(A) Release lever
(B) Pivot
(C) Release bearing

5. Operating Cylinder

A: REMOVAL

CAUTION:
Brake fluid spilled on the vehicle body will harm the paint surface; therefore, wash it off with water and wipe clean quickly if spilled.

1) Disconnect the ground terminal from battery sensor. <Ref. to RC-4, BATTERY, NOTE, Repair Contents.>
2) Remove the clip (A) from the air intake boot.
3) Loosen the clamp (B) connecting the air intake boot and air cleaner case (rear).
4) Loosen the clamp (C) which connects the air intake boot and throttle body.

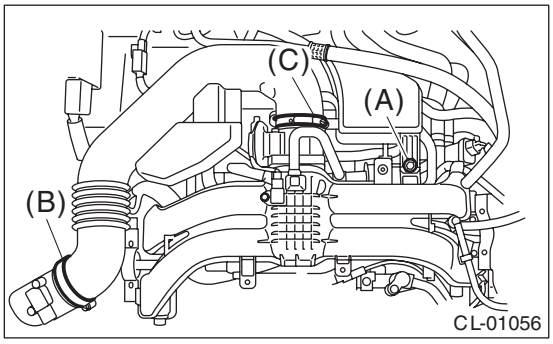

5) Remove the air intake boot from the throttle body, and move it to the left side wheel apron.

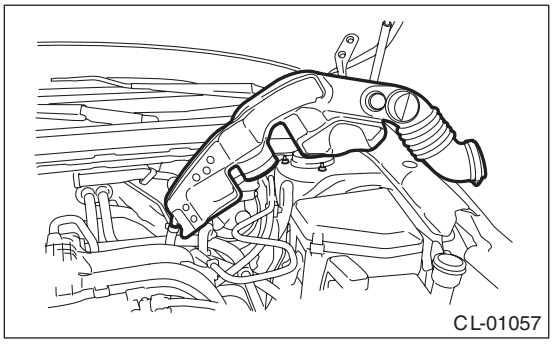

6) Disconnect the clutch hose.

CAUTION:
Cover the hose joint to prevent the brake fluid from flowing out.

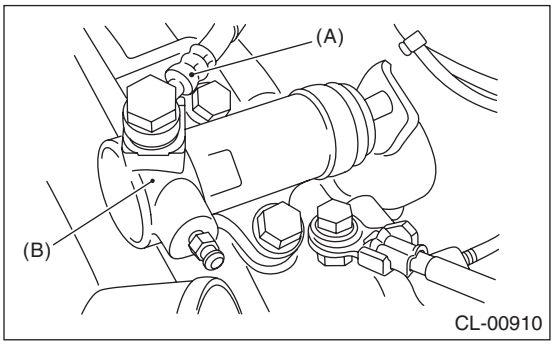

(A) Clutch hose
(B) Operating cylinder

7) Remove the operating cylinder.

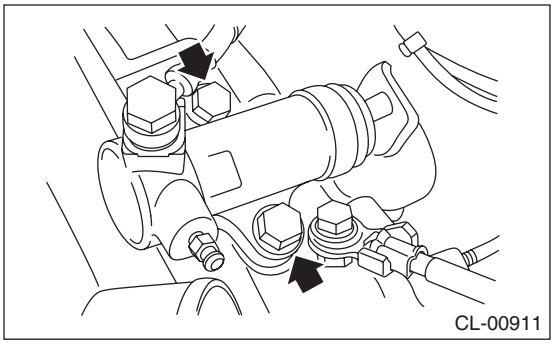

B: INSTALLATION

NOTE:
- Use a new gasket.
- Be sure to install the clutch hose with the mark side facing upward.
- Be careful not to twist the clutch hose during installation.
- Before installing the operating cylinder, apply grease to the contact point of the release lever and operating cylinder.

Grease
NICHIMOLY N-130 or equivalent

1) Install the operating cylinder to the transmission, and connect the clutch hose to the operating cylinder.

Tightening torque:
T1: 18 N·m (1.8 kgf-m, 13.3 ft-lb)
T2: 37 N·m (3.8 kgf-m, 27.3 ft-lb)

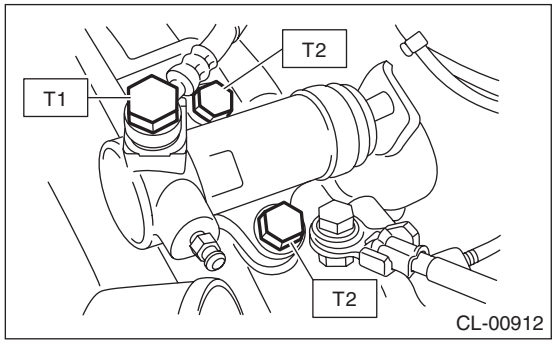

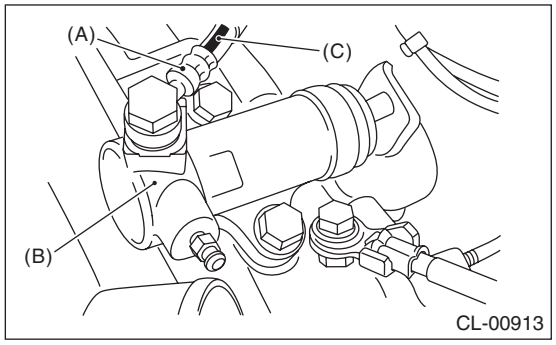

(A) Clutch hose
(B) Operating cylinder
(C) Mark

2) After bleeding air from the operating cylinder, ensure that the clutch operates properly. <Ref. to CL-25, PROCEDURE, Clutch Fluid Air Bleeding.>
3) Install the air intake boot. <Ref. to IN(H4DO)-10, INSTALLATION, Air Intake Boot.>
4) Connect the ground terminal to battery sensor. <Ref. to RC-4, BATTERY, NOTE, Repair Contents.>

C: DISASSEMBLY

1) Remove the boot and push rod.

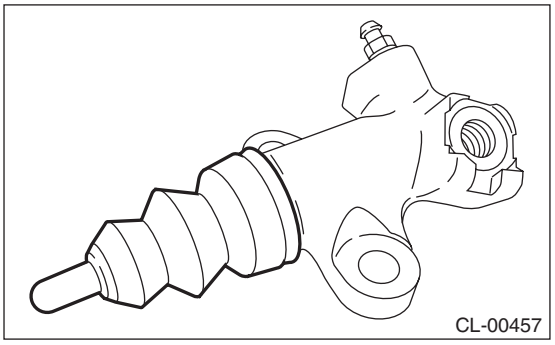

2) Apply compressed air through clutch hose attachment hole.

NOTE:
Face the piston hole down and place a piece of wood underneath to prevent the piston from popping out.

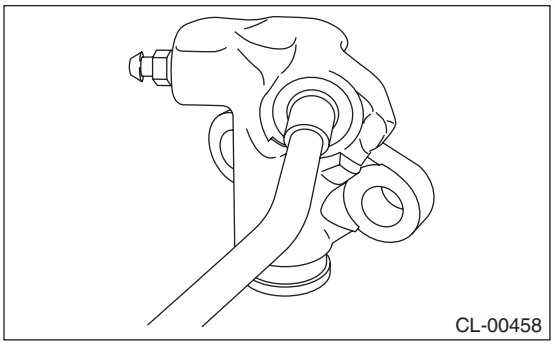

3) Separate the piston and piston spring.

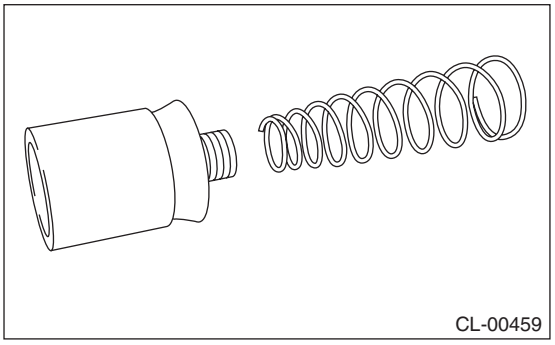

D: ASSEMBLY

NOTE:
During assembly, apply hydraulic oil to all parts.

Recommended brake fluid:
New FMVSS No. 116 DOT3 or DOT4

1) Install the piston spring.

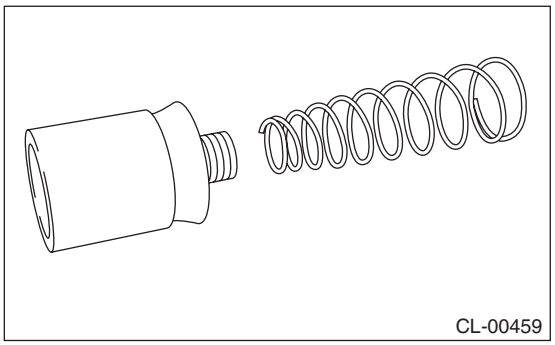

2) Insert piston into the operating cylinder.
3) Install push rod to the boot.
4) Install the boot and push rod.

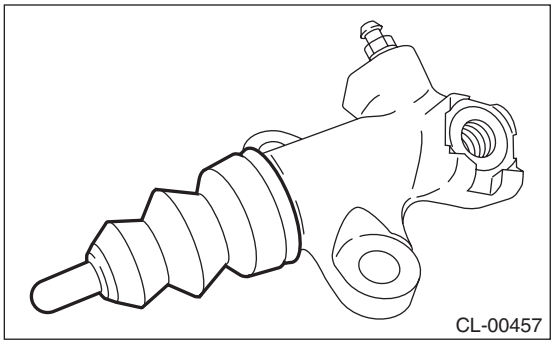

E: INSPECTION

1) Check that the operating cylinder is not damaged. Replace the operating cylinder if it is damaged.
2) Check the brake fluid leakage on the operating cylinder or the boot for damage. Replace the operating cylinder if brake fluid leaks or boot damages are noted.

6. Master Cylinder

A: REMOVAL

CAUTION:
• Be careful not to spill the brake fluid. Brake fluid spilled on the vehicle body will harm the paint surface; wash it off with water and wipe clean quickly if spilled.
• Before handling the airbag system components, refer to "CAUTION" of "General Description" in "AIRBAG SYSTEM". <Ref. to AB-10, CAUTION, General Description.>
1) Turn the ignition switch to OFF.
2) Disconnect the ground terminal from the battery sensor, and wait for at least 60 seconds before starting work. <Ref. to RC-4, BATTERY, NOTE, Repair Contents.>
3) Drain the brake fluid. <Ref. to CL-24, Clutch Fluid.>
4) Remove the instrument panel lower cover. <Ref. to EI-75, REMOVAL, Instrument Panel Lower Cover.>
5) Remove the steering column. <Ref. to PS-20, REMOVAL, Steering Column.>
6) Remove the pedal assembly. <Ref. to CL-26, REMOVAL, Clutch Pedal.>
7) Remove the clip and clevis pin, and then remove the push rod of the master cylinder.

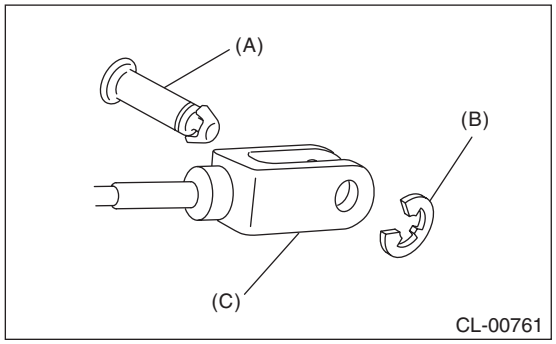

(A) Clevis pin
(B) Clip
(C) Push rod

8) Disconnect the clutch stroke sensor connector.
9) Remove the clutch pipe from the master cylinder.

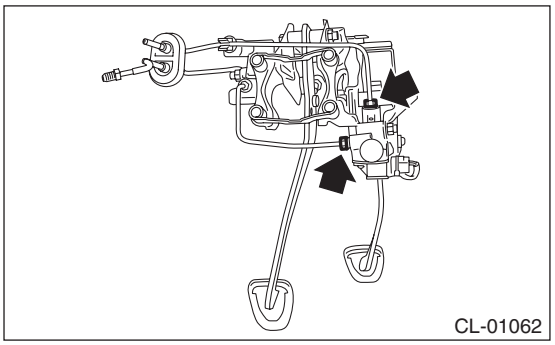

10) Remove the master cylinder from the pedal bracket.

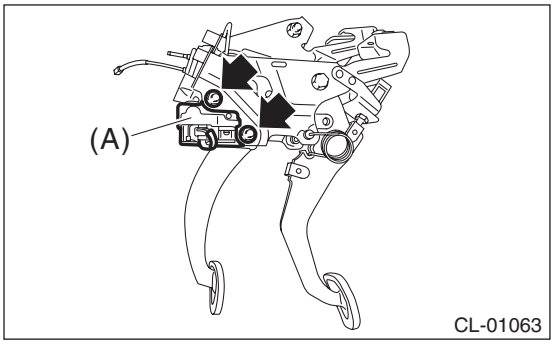

(A) Master cylinder

B: INSTALLATION

1) Install the master cylinder to the pedal assembly.

Tightening torque:
18 N·m (1.8 kgf-m, 13.3 ft-lb)

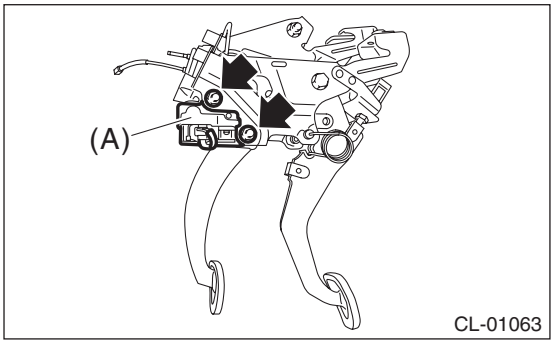

(A) Master cylinder

2) Install the clutch pipe to the master cylinder.

Tightening torque:
15 N·m (1.5 kgf-m, 11.1 ft-lb)

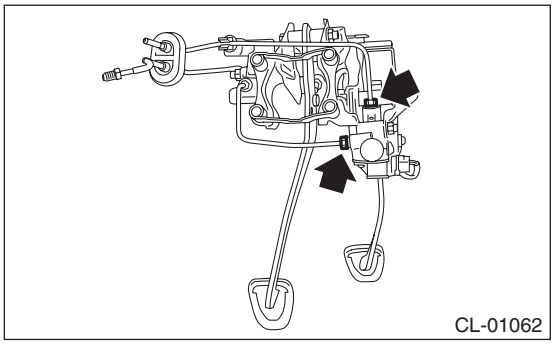

3) Connect the clutch stroke sensor connector.
4) Install the push rod of the master cylinder, and install the clevis pin and clip.

CAUTION:
Always use a new clevis pin.

NOTE:
Apply grease to the clevis pin.

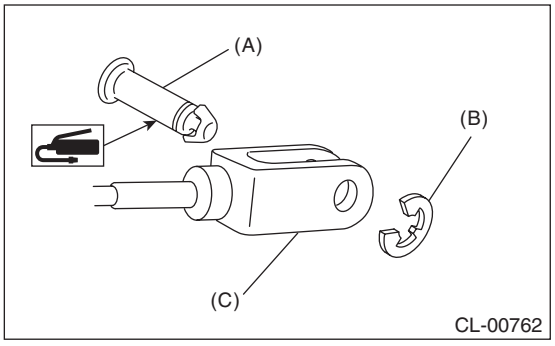

(A) Clevis pin
(B) Clip
(C) Push rod

5) Install the pedal assembly. <Ref. to CL-27, INSTALLATION, Clutch Pedal.>
6) Install the steering column. <Ref. to PS-22, INSTALLATION, Steering Column.>
7) Fill the recommended brake fluid. <Ref. to CL-24, Clutch Fluid.>
8) After bleeding air from the clutch system, ensure that no fluid leaks and the clutch operates properly. <Ref. to CL-25, Clutch Fluid Air Bleeding.>
9) Install the instrument panel lower cover. <Ref. to EI-76, INSTALLATION, Instrument Panel Lower Cover.>
10) Connect the ground terminal to battery sensor. <Ref. to RC-4, BATTERY, NOTE, Repair Contents.>

C: INSPECTION

If any damage, deformation, wear, swelling, rust or other faults are found on the master cylinder assembly, reservoir tank, clutch damper, clutch pipe and clutch hose, replace the faulty part.

7. Clutch Pipe and Hose

A: REMOVAL

CAUTION:
Before handling the airbag system components, refer to "CAUTION" of "General Description" in "AIRBAG SYSTEM". <Ref. to AB-10, CAUTION, General Description.>

1) Turn the ignition switch to OFF.
2) Disconnect the ground terminal from the battery sensor, and wait for at least 60 seconds before starting work. <Ref. to RC-4, BATTERY, NOTE, Repair Contents.>
3) Remove the clip (A) from the air intake boot.
4) Loosen the clamp (B) connecting the air intake boot and air cleaner case (rear).
5) Loosen the clamp (C) which connects the air intake boot and throttle body.

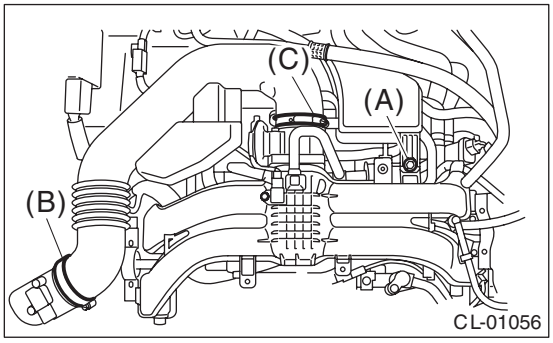

6) Remove the air intake boot from the throttle body, and move it to the left side wheel apron.

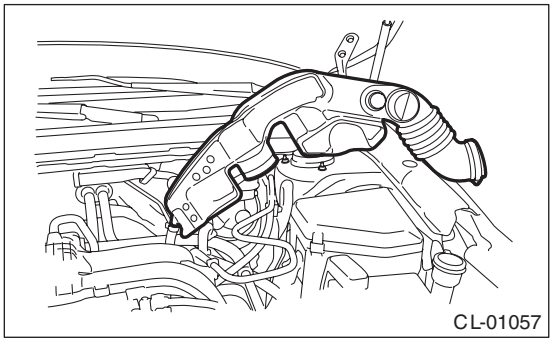

7) Drain the brake fluid. <Ref. to CL-24, Clutch Fluid.>
8) Remove the clutch pipe from the clutch hose and connector.

CAUTION:
Be careful not to spill the brake fluid. Brake fluid spilled on the vehicle body will harm the paint surface; wash it off with water and wipe clean quickly if spilled.

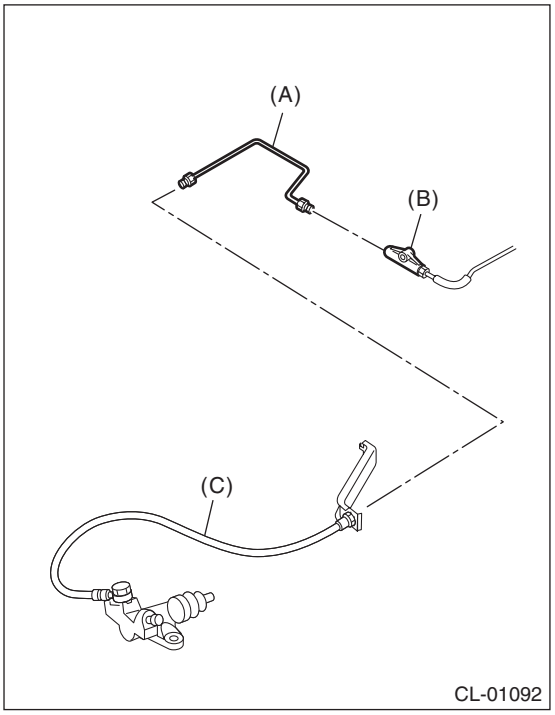

(A) Clutch pipe
(B) Connector
(C) Clutch hose

9) Remove the clamp, then remove the clutch hose from the clutch hose bracket.

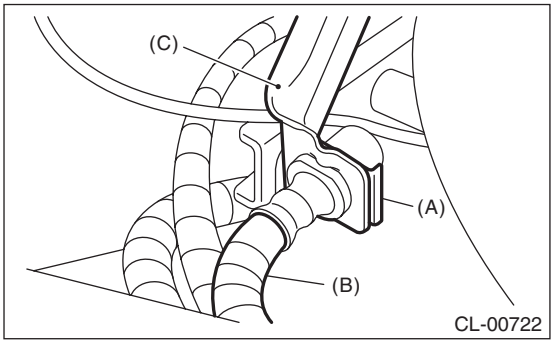

(A) Clamp
(B) Clutch hose
(C) Clutch hose bracket

10) Remove the clutch hose from operating cylinder.
11) Remove the clutch bracket.
12) Remove the tank hose from the clutch pipe.

13) Remove the instrument panel lower cover. <Ref. to EI-75, REMOVAL, Instrument Panel Lower Cover.>
14) Remove the steering column. <Ref. to PS-20, REMOVAL, Steering Column.>
15) Remove the pedal assembly. <Ref. to CL-26, REMOVAL, Clutch Pedal.>
16) Remove the clutch pipe from the mass damper, clutch damper, master cylinder and clutch pipe grommet.

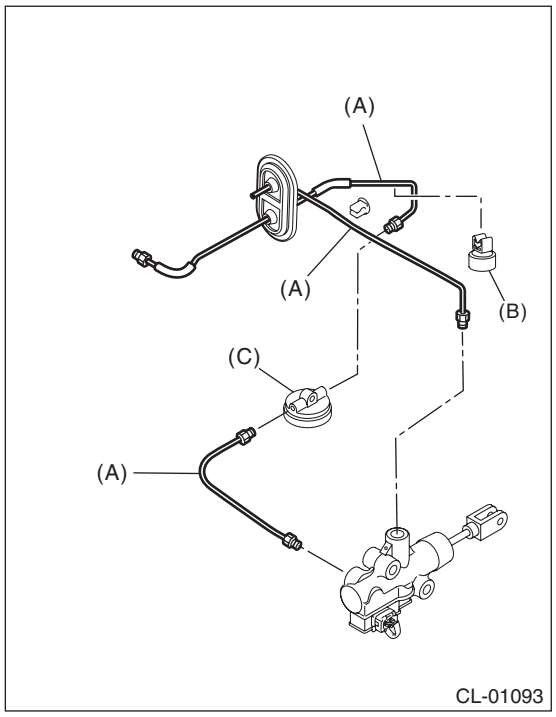

(A) Clutch pipe
(B) Mass damper
(C) Clutch damper

B: INSTALLATION

1) Install the clutch pipe to the mass damper, clutch damper, master cylinder and pipe grommet.

NOTE:
Temporarily tighten the clutch pipe (D) to the clutch damper.

Tightening torque:
T: 15 N·m (1.5 kgf-m, 11.1 ft-lb)

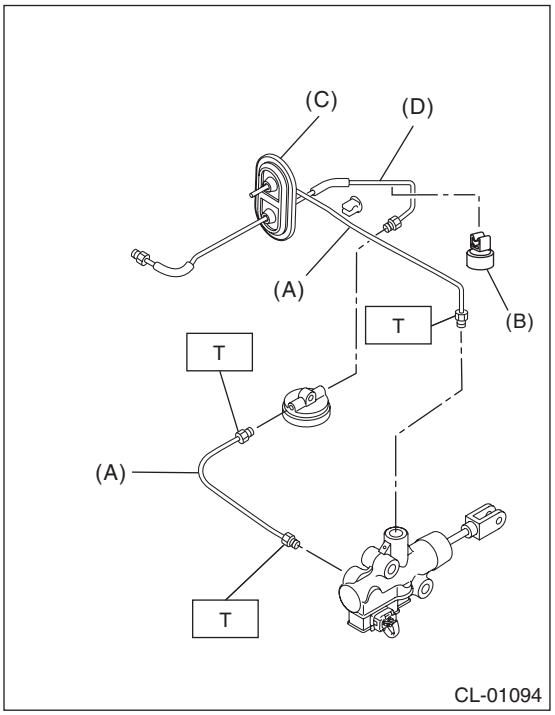

(A) Clutch pipe
(B) Mass damper
(C) Clutch pipe grommet
(D) Clutch pipe

2) Install the pedal assembly. <Ref. to CL-27, INSTALLATION, Clutch Pedal.>
3) Install the tank hose to the clutch pipe.

CAUTION:
Be sure to install the tank hose with the marking side facing upward.
4) Engage the clutch pipe with the connector attached to the clutch bracket.

Tightening torque:
T1: 7.5 N·m (0.8 kgf-m, 5.5 ft-lb)
T2: 18 N·m (1.8 kgf-m, 13.3 ft-lb)

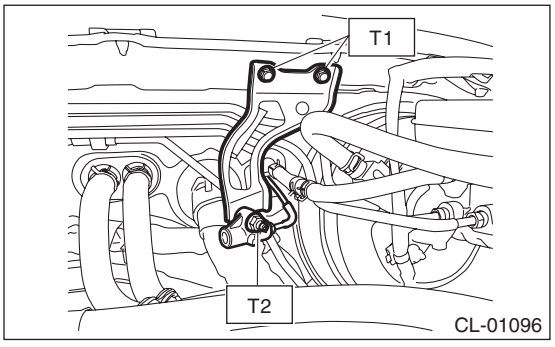

5) Tighten the clutch pipe.

Tightening torque:
15 N·m (1.5 kgf-m, 11.1 ft-lb)

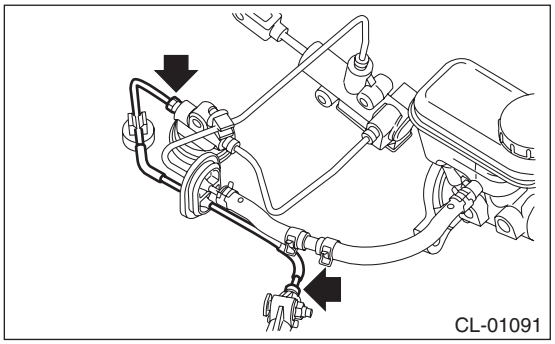

6) Install the steering column. <Ref. to PS-22, INSTALLATION, Steering Column.>
7) Install the clutch hose to the operating cylinder.

CAUTION:
Be sure to install the clutch hose with the marking side facing upward.

NOTE:
Use a new gasket.

Tightening torque:
18 N·m (1.8 kgf-m, 13.3 ft-lb)
8) Install the clutch hose to the clutch hose bracket, and install the clamp.

CAUTION:
• Be sure to install the clutch hose with the marking side facing upward.
• Install the clutch hoses while making sure that there is no twisting.

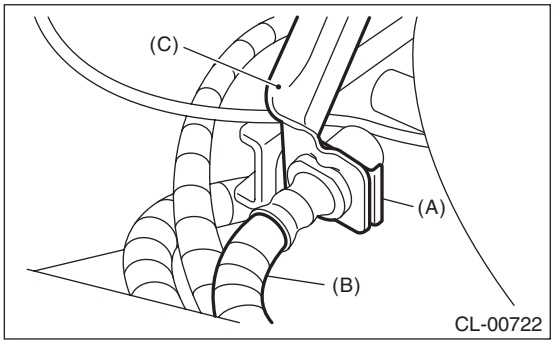

(A) Clamp
(B) Clutch hose
(C) Clutch hose bracket

9) Install the clutch pipe to the clutch hose and connector.

Tightening torque:
T: 15 N·m (1.5 kgf-m, 11.1 ft-lb)

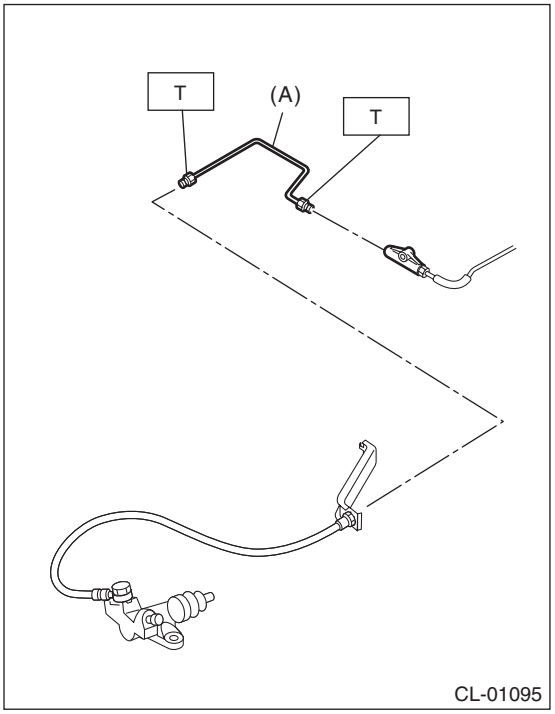

(A) Clutch pipe

10) Fill the recommended brake fluid. <Ref. to CL-24, Clutch Fluid.>
11) Bleed air from the clutch system, and ensure that no fluid leaks. <Ref. to CL-25, PROCEDURE, Clutch Fluid Air Bleeding.>
12) Install the instrument panel lower cover. <Ref. to EI-76, INSTALLATION, Instrument Panel Lower Cover.>
13) Install the air intake boot. <Ref. to IN(H4DO)-10, INSTALLATION, Air Intake Boot.>
14) Connect the ground terminal to battery sensor. <Ref. to RC-4, BATTERY, NOTE, Repair Contents.>

C: INSPECTION

Check the clutch pipe, tank hose and clutch hose for breaks and damage. Check the joint for brake fluid leakage. If crack, breakage or damage is found, repair or replace the faulty clutch pipe, tank hose or clutch hose.

8. Clutch Fluid

A: INSPECTION

CAUTION:
Be careful not to spill the brake fluid. Brake fluid spilled on the vehicle body will harm the paint surface; wash it off with water and wipe clean quickly if spilled.

1) Park the vehicle on a level surface.
2) Check the brake fluid level using the scale on the outside of the reservoir tank. If the level is below "MIN", fill the brake fluid up to "MAX" level, and make sure that there is no leakage.

CAUTION:
This reservoir tank has the brake fluid chamber and the clutch fluid chamber. When checking the fluid level, always check the fluid from the clutch fluid chamber side where the tank hose is connected.

Recommended brake fluid:
New FMVSS No. 116 DOT3 or DOT4

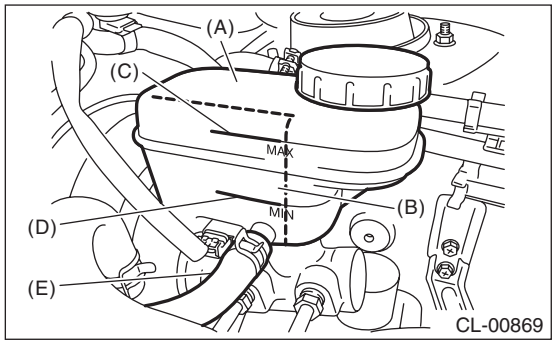

(A) Reservoir tank
(B) Clutch fluid chamber
(C) MAX. level
(D) MIN. level
(E) Tank hose

B: REPLACEMENT

CAUTION:
• Be careful not to spill the brake fluid. Brake fluid spilled on the vehicle body will harm the paint surface; wash it off with water and wipe clean quickly if spilled.
• Use new FMVSS No. 116 DOT3 or DOT4.
• Cover the air bleeder with cloth to prevent brake fluid from being splashed on surrounding parts when loosening the bleeder.
• Avoid mixing brake fluid of different brands to prevent fluid performance from degrading.
• Be careful not to allow dirt or dust to enter the reservoir tank.

NOTE:
• During the bleeding operation, keep the reservoir tank filled with brake fluid to prevent entry of air.
• Clutch pedal must be operated very slowly.
• Bleed air from the oil line with help of a co-worker.
• The required amount of brake fluid is approximately 165 mL (5.6 US fl oz, 5.8 Imp fl oz) for total clutch system.

1) Remove the clip (A) from the air intake boot.
2) Loosen the clamp (B) connecting the air intake boot and air cleaner case (rear).
3) Loosen the clamp (C) which connects the air intake boot and throttle body.

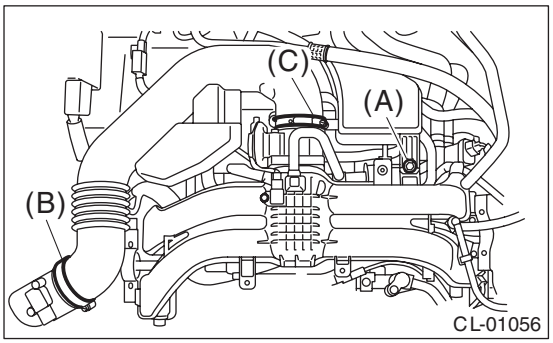

4) Remove the air intake boot from the throttle body, and move it to the left side wheel apron.

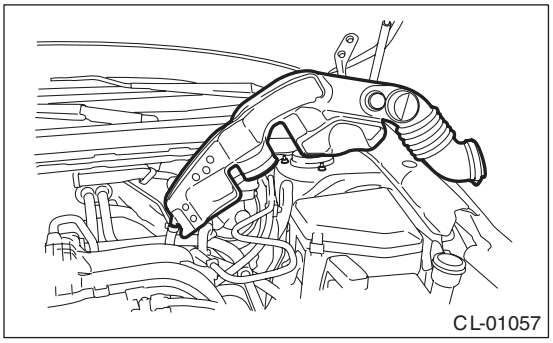

5) Drain the brake fluid from the reservoir tank.
6) Refill the reservoir tank with recommended brake fluid.

Recommended brake fluid:
New FMVSS No. 116 DOT3 or DOT4

7) Bleed air from brake fluid. <Ref. to CL-25, Clutch Fluid Air Bleeding.>
8) Install the air intake boot. <Ref. to IN(H4DO)-10, INSTALLATION, Air Intake Boot.>

9. Clutch Fluid Air Bleeding

A: PROCEDURE

CAUTION:
Be careful not to spill the brake fluid. Brake fluid spilled on the vehicle body will harm the paint surface; wash it off with water and wipe clean quickly if spilled.

NOTE:
Bleed air from the oil line with help of a co-worker.
1) Remove the clip (A) from the air intake boot.
2) Loosen the clamp (B) connecting the air intake boot and air cleaner case (rear).
3) Loosen the clamp (C) which connects the air intake boot and throttle body.

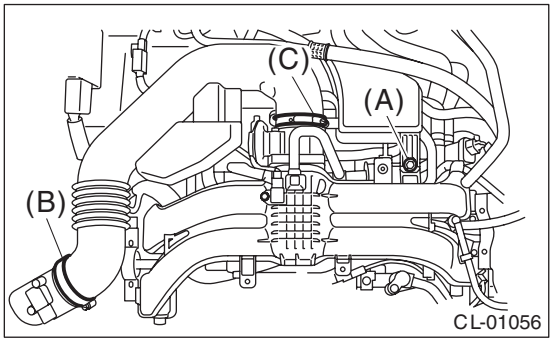

4) Remove the air intake boot from the throttle body, and move it to the left side wheel apron.

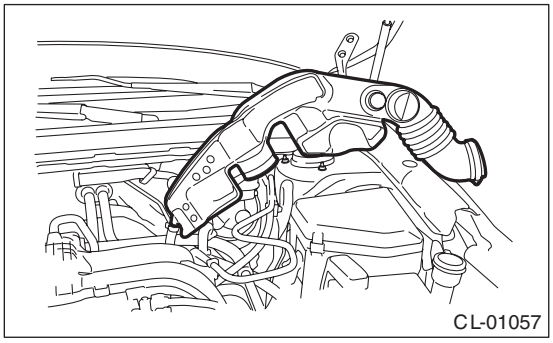

5) Fit one end of a vinyl tube into the air bleeder of the operating cylinder, and put the other end into a container.

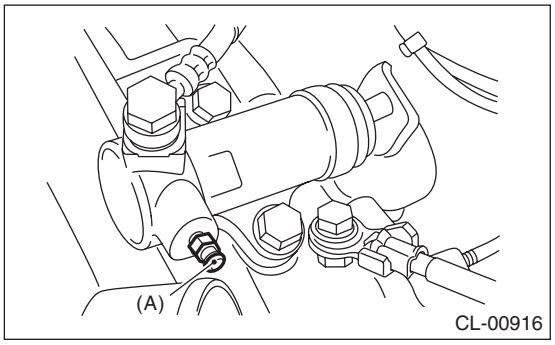

(A) Air bleeder

6) Slowly depress the clutch pedal several times and keep it depressed. Then open the air bleeder to discharge air together with the brake fluid. Release the air bleeder for 1 or 2 seconds. Next, close the air bleeder, and slowly release the clutch pedal.

CAUTION:
Cover the air bleeder with cloth to prevent brake fluid from being splashed on surrounding parts when loosening the bleeder.

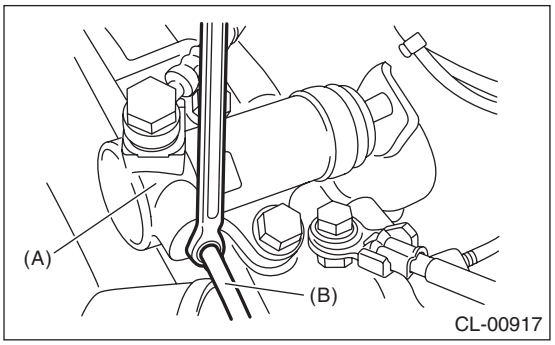

(A) Operating cylinder
(B) Vinyl tube

7) Repeat procedure 6), until there are no more air bubbles appearing from the air bleeder.
8) Tighten the air bleeder.

Tightening torque:
T: 7.8 N·m (0.8 kgf-m, 5.8 ft-lb)

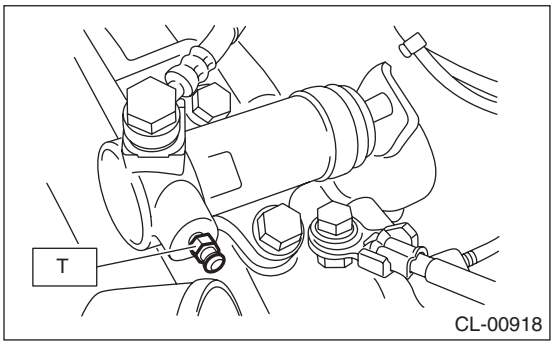

9) After stepping on the clutch pedal, make sure that there are no leaks evident in the entire clutch system.
10) After bleeding the air from clutch system, ensure that the clutch operates properly.
11) Install the air intake boot. <Ref. to IN(H4DO)-10, INSTALLATION, Air Intake Boot.>

10.Clutch Pedal

A: REMOVAL

CAUTION:
Before handling the airbag system components, refer to "CAUTION" of "General Description" in "AIRBAG SYSTEM". <Ref. to AB-10, CAUTION, General Description.>

1) Turn the ignition switch to OFF.
2) Disconnect the ground terminal from the battery sensor, and wait for at least 60 seconds before starting work. <Ref. to RC-4, BATTERY, NOTE, Repair Contents.>
3) Remove the clip (A) from the air intake boot.
4) Loosen the clamp (B) connecting the air intake boot and air cleaner case (rear).
5) Loosen the clamp (C) which connects the air intake boot and throttle body.

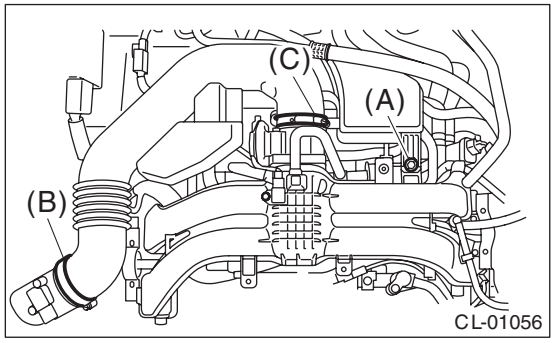

6) Remove the air intake boot from the throttle body, and move it to the left side wheel apron.

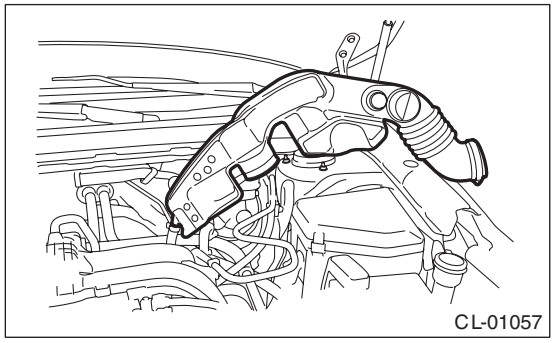

7) Drain the brake fluid. <Ref. to CL-24, Clutch Fluid.>
8) Disconnect the clutch pipe from the connector.

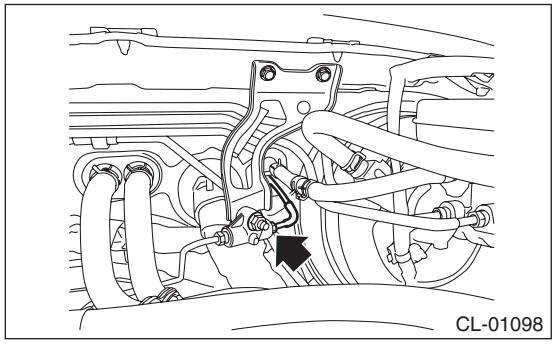

9) Remove the clutch bracket.

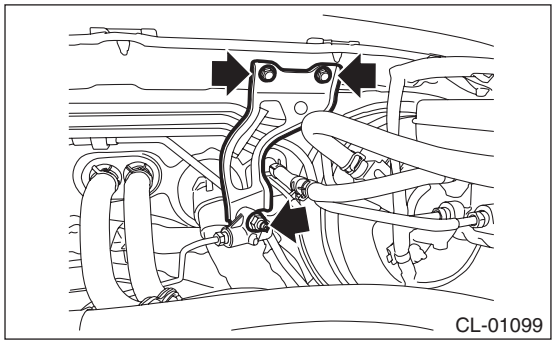

10) Disconnect the tank hose from the clutch pipe.

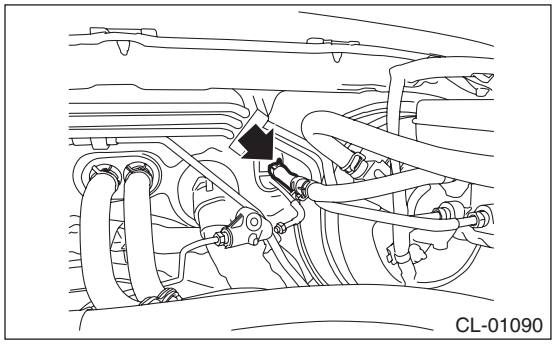

11) Remove the instrument panel lower cover. <Ref. to EI-75, REMOVAL, Instrument Panel Lower Cover.>
12) Remove the steering column. <Ref. to PS-20, REMOVAL, Steering Column.>
13) Disconnect the connector from the clutch switch and clutch start switch.
14) Disconnect the connector from the brake switch.
15) Remove the snap pin and clevis pin connecting the operating rod and brake pedal.

16) Remove the pedal assembly.

NOTE:
Place vinyl, etc. in order not to drop the brake fluid to the floor carpet.

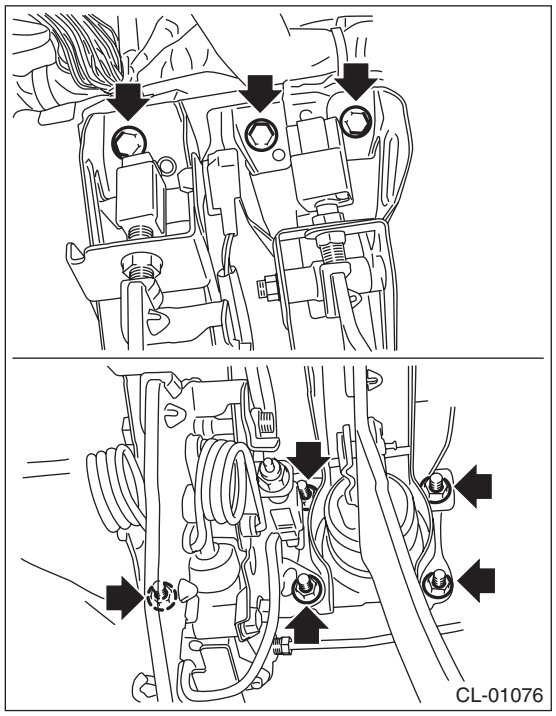

B: INSTALLATION

1) Install the pedal assembly.

Tightening torque:
T: 18 N·m (1.8 kgf-m, 13.3 ft-lb)

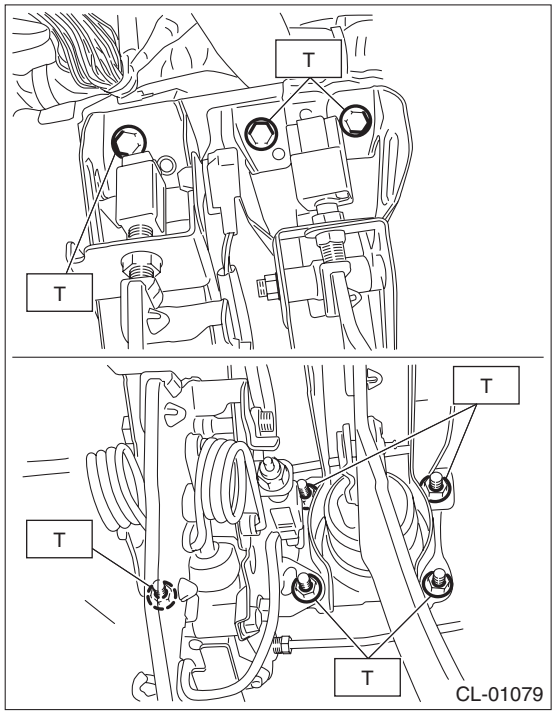

2) Install the snap pin and clevis pin connecting the operating rod and brake pedal.

CAUTION:
Always use a new clevis pin.

3) Connect the connector to the brake switch.
4) Connect the connector to the clutch switch.
5) Install the steering column. <Ref. to PS-22, INSTALLATION, Steering Column.>
6) Connect the tank hose to the clutch pipe.

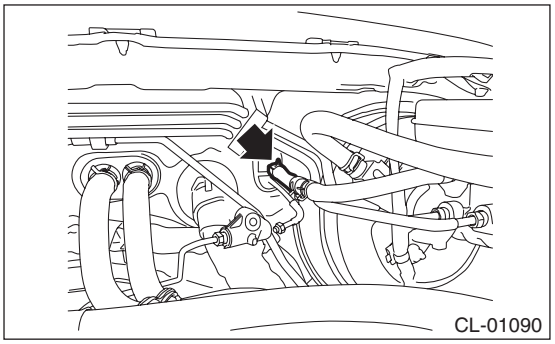

7) Install the clutch bracket.

Tightening torque:
T1: 7.5 N·m (0.8 kgf-m, 5.5 ft-lb)
T2: 18 N·m (1.8 kgf-m, 13.3 ft-lb)

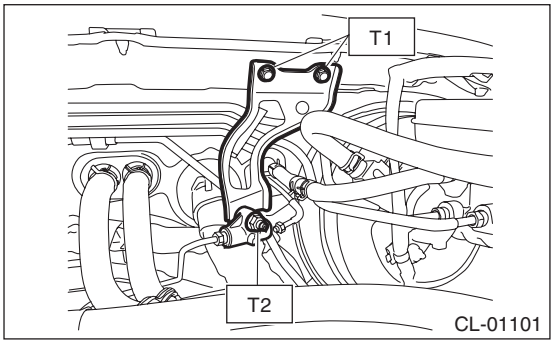

8) Install the clutch pipe to the connector.

Tightening torque:
15 N·m (1.5 kgf-m, 11.1 ft-lb)

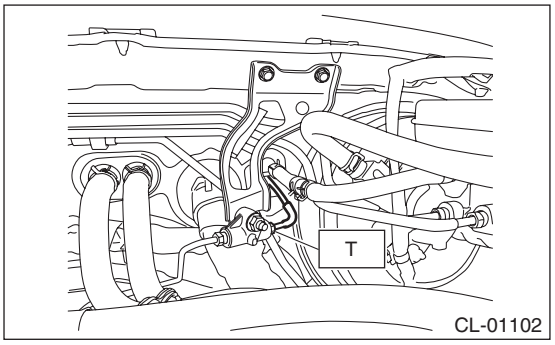

9) Fill the recommended brake fluid. <Ref. to CL-24, Clutch Fluid.>
10) After bleeding air from the clutch system, ensure that no fluid leaks and the clutch operates properly. <Ref. to CL-25, PROCEDURE, Clutch Fluid Air Bleeding.>

11) Install the instrument panel lower cover. <Ref. to EI-76, INSTALLATION, Instrument Panel Lower Cover.>
12) Install the air intake boot. <Ref. to IN(H4DO)-10, INSTALLATION, Air Intake Boot.>
13) Adjust the clutch pedal. <Ref. to CL-30, ADJUSTMENT, Clutch Pedal.>
14) Connect the ground terminal to battery sensor. <Ref. to RC-4, BATTERY, NOTE, Repair Contents.>

C: DISASSEMBLY

1) Disconnect the clutch pipe from the master cylinder.

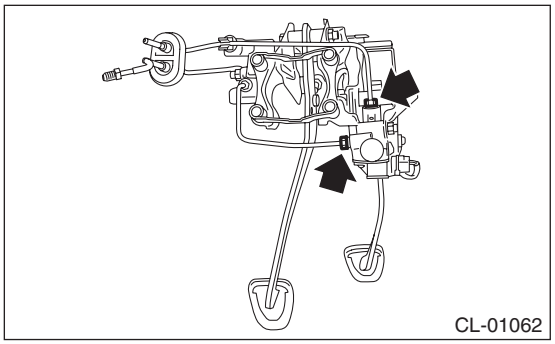

2) Remove the clutch damper mounting nut from the pedal assembly, and disconnect the clutch pipe from the clamp.

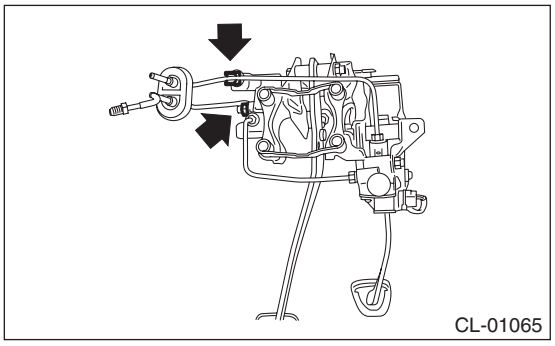

3) Remove the clutch switches.
4) Remove the clip and pull out the clevis pin.

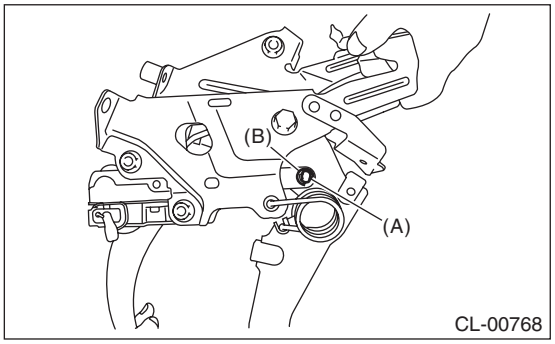

(A) Clevis pin
(B) Clip

5) Disconnect the connector from the clutch stroke sensor, and then remove the sensor harness.
6) Remove the master cylinder from the pedal assembly.

CAUTION:
The clutch stroke sensor cannot be disassembled.

NOTE:
Secure the push rod with a tape etc. to prevent it from falling off.

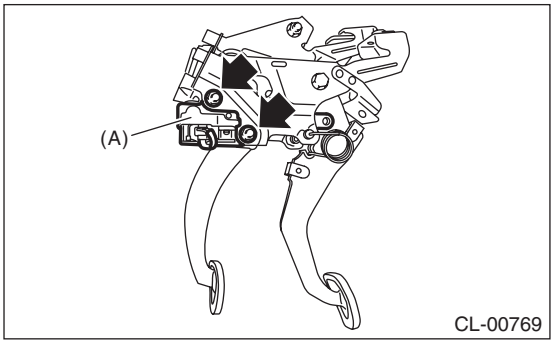

(A) Master cylinder

7) Remove the torsion spring and assist bushing from the pedal assembly.

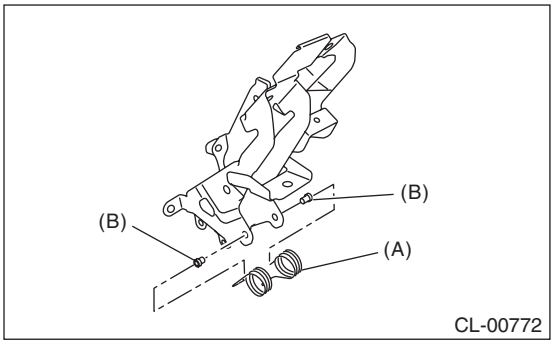

(A) Torsion spring
(B) Assist bushing

8) Remove the clutch pedal from the pedal bracket.

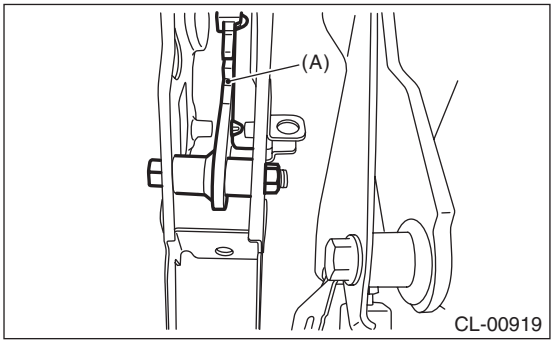

(A) Clutch pedal

9) Remove the bushing, spacer, bushing A, clutch pedal stopper, torsion spring bushing and clutch pedal pad from the clutch pedal.

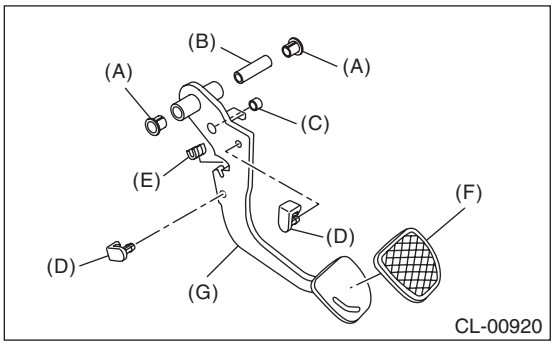

(A) Bushing
(B) Spacer
(C) Bushing A
(D) Clutch pedal stopper
(E) Torsion spring bushing
(F) Clutch pedal pad
(G) Clutch pedal

D: ASSEMBLY

1) Clean the holes in the sliding surface between the clutch pedal and bushing, and apply grease.
2) Attach the clutch pedal pad, clutch pedal stopper, bushing A, torsion spring bushing, spacer and bushing to the clutch pedal.

NOTE:
Clean the inside of the bushings and apply grease before installing the spacer.
3) Attach the clutch pedal to the pedal bracket.

Tightening torque:
T: 30 N·m (3.1 kgf-m, 22.1 ft-lb)

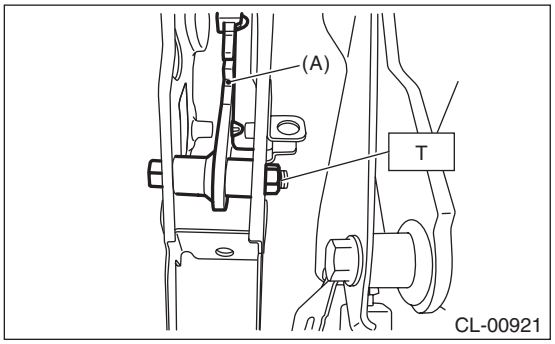

(A) Clutch pedal

4) Install the assist bushing and torsion spring to the pedal assembly.

NOTE:
Before installing the torsion spring, apply grease to the assist bushing and torsion spring bushing.

5) Install the master cylinder to the pedal assembly.

NOTE:
Secure the push rod with a tape etc. to prevent it from falling off.

Tightening torque:
T: 18 N·m (1.8 kgf-m, 13.3 ft-lb)

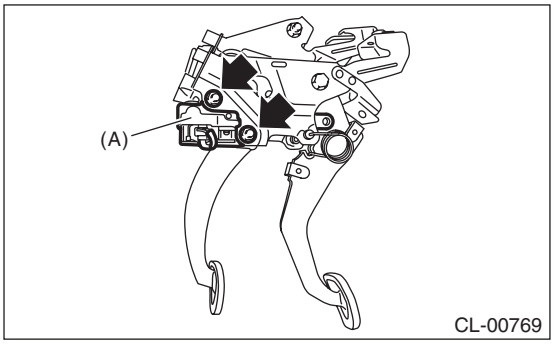

(A) Master cylinder

6) Secure the clevis pin with mounting clip.

CAUTION:
Always use a new clevis pin.

NOTE:
Before installing the clevis pin, apply grease.

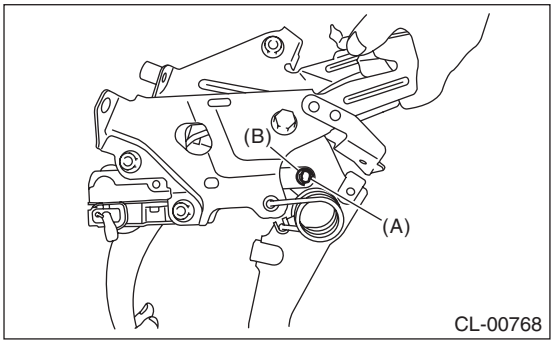

(A) Clevis pin
(B) Clip

7) Attach the sensor harness, and connect the connector to the clutch stroke sensor.
8) Install the clutch switch.

9) Install the clutch damper to the pedal assembly, and connect the clutch pipe to the master cylinder.

Tightening torque:
T1: 15 N·m (1.5 kgf-m, 11.1 ft-lb)
T2: 18 N·m (1.8 kgf-m, 13.3 ft-lb)

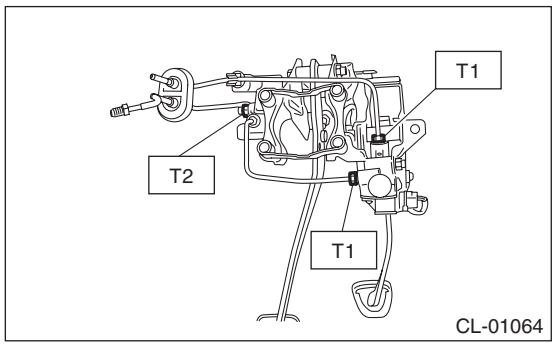

E: INSPECTION

1. CLUTCH PEDAL

Move the clutch pedal in the lateral direction with a force of approximately 10 N (1 kgf, 2 lbf) to check that the clutch pedal deflection is within the service limit.

CAUTION:
If it exceeds the service limit, replace the clutch pedal assembly with a new part.

Deflection of the clutch pedal:
Service limit
4.0 mm (0.157 in) or less

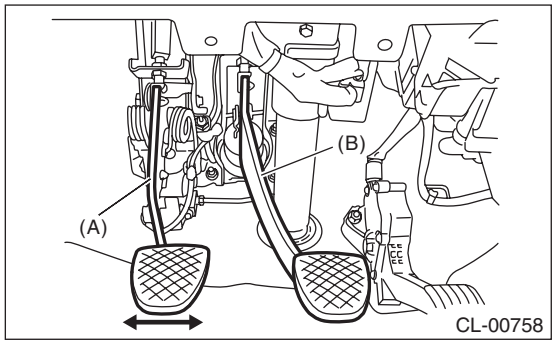

(A) Clutch pedal
(B) Brake pedal

F: ADJUSTMENT

1) If the full stroke of the clutch pedal is not within the specified value, loosen the lock nuts of the clutch switch and adjust the full stroke of the clutch pedal with the clutch switch.

CAUTION:
When adjusting the full stroke of clutch pedal, do not turn the clutch switch.

Clutch pedal full stroke A:
130 — 135 mm (5.12 — 5.31 in)

Tightening torque:
T: 8 N·m (0.8 kgf-m, 5.9 ft-lb)

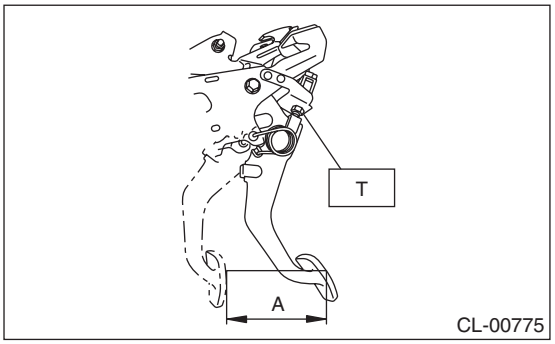

2) Depress and release the clutch pedal two or three times to ensure that the clutch pedal and release lever operate smoothly. If the clutch pedal and release lever do not operate smoothly, bleed air from the clutch hydraulic system. <Ref. to CL-25, Clutch Fluid Air Bleeding.>
3) Measure the clutch pedal full stroke length again to ensure that it is within specifications. If it is not within specifications, repeat adjustment procedures again from the beginning.

Clutch pedal full stroke:
130 — 135 mm (5.12 — 5.31 in)
4) Push the release lever until the operating cylinder push rod retracts. Check that the brake fluid level in the reservoir tank increases.

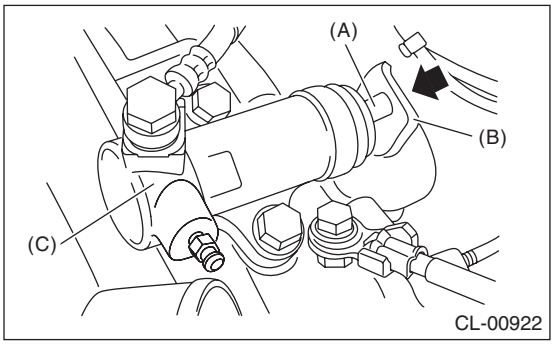

(A) Push rod
(B) Release lever
(C) Operating cylinder

5) If the brake fluid level increases, hydraulic clutch play is correct.
6) If the brake fluid level does not increase or push rod does not retract, readjust the clutch pedal.
7) Check the brake fluid level using the scale on the outside of reservoir tank. <Ref. to CL-24, INSPECTION, Clutch Fluid.>

11.Clutch Switch

A: REMOVAL

1) Disconnect the ground terminal from battery sensor. <Ref. to RC-4, BATTERY, NOTE, Repair Contents.>
2) Remove the instrument panel lower cover. <Ref. to EI-75, REMOVAL, Instrument Panel Lower Cover.>
3) Disconnect the connector from the clutch switch and clutch start switch.
4) Remove the clutch switch and clutch start switch.

B: INSTALLATION

1. CLUTCH SWITCH

1) Install the clutch switch.
2) Move the clevis pin of push rod to left and right, retain it at the position where it moves smoothly, and measure the clutch pedal stroke.

Clutch pedal full stroke A:
130 — 135 mm (5.12 — 5.31 in)

Tightening torque:
T: 8 N·m (0.8 kgf-m, 5.9 ft-lb)

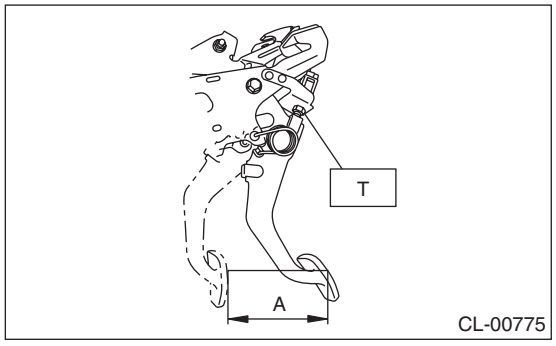

3) If the clutch pedal stroke is out of specification, adjust the stroke. <Ref. to CL-30, ADJUSTMENT, Clutch Pedal.>
4) Connect the connector to the clutch switch.
5) Thereafter, install in the reverse order of removal.

2. CLUTCH START SWITCH

1) Install the clutch start switch.
2) Fully depress the clutch pedal and hold it.
3) Install so that gap (A) of the clutch pedal plate and clutch start switch is 2.9 mm (0.11 in), and tighten the lock nut.

Tightening torque:
8 N·m (0.8 kgf-m, 5.9 ft-lb)

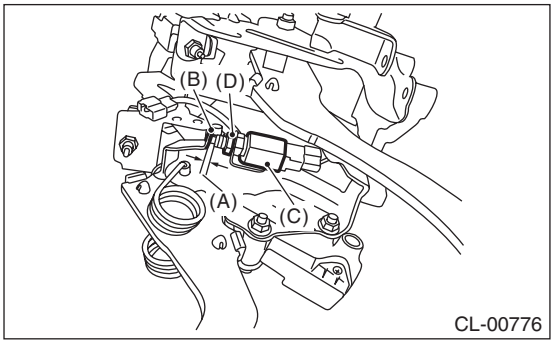

(A) 2.9 mm (0.11 in)
(B) Clutch pedal plate
(C) Clutch start switch
(D) Lock nut

4) Connect the connector to the clutch start switch.
5) Make sure that engine does not start with clutch pedal not depressed.
6) Make sure that engine starts with clutch pedal fully depressed.
7) Thereafter, install in the reverse order of removal.

C: INSPECTION

1. CLUTCH START SWITCH

1) Perform the following inspections. If the clutch start switch does not operate normally, adjust the switch, and check it again. <Ref. to CL-33, ADJUSTMENT, Clutch Switch.>

• Make sure that engine does not start with clutch pedal not depressed.

• Make sure that engine starts with clutch pedal fully depressed.

2) When the clutch start switch does not operate normally even if it is adjusted, check the clutch start switch for continuity.

(1) Remove the clutch start switch. <Ref. to CL-31, REMOVAL, Clutch Switch.>

(2) Measure the resistance between terminal 1 and 2 of the switch. If the resistance is not at the standard value, replace the switch.

Condition	Terminal No.	Specified resistance
ON	No. 1 — No. 2	Less than 1 Ω
OFF	No. 1 — No. 2	1 MΩ or more

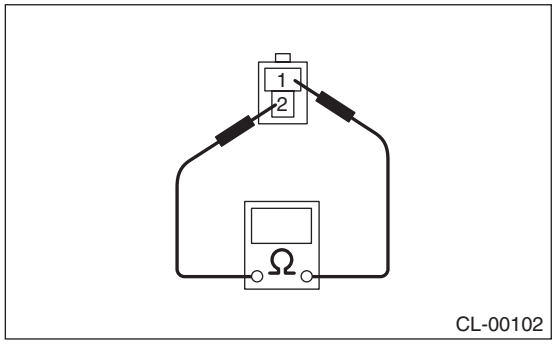

(3) Check that the switch is turned on and off in dimension L.

Dimension L:
4 — 5.5 mm (0.16 — 0.22 in)

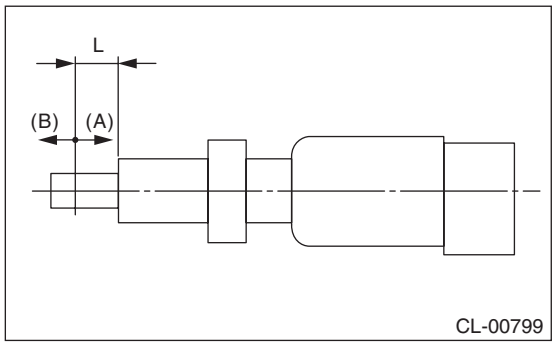

(A) ON
(B) OFF

(4) Install the clutch start switch. <Ref. to CL-31, CLUTCH START SWITCH, INSTALLATION, Clutch Switch.>

2. CLUTCH SWITCH

1) Check the clutch switch for continuity.

(1) Disconnect the connector of clutch switch.

(2) Measure the resistance between terminal 1 and 2 of the switch. If the resistance is not within the specification, check the clutch stroke and installation condition, and check the clutch switch again.

Condition	Terminal No.	Specified resistance
When clutch pedal is depressed	No. 1 — No. 2	1 MΩ or more
When the clutch pedal is not depressed	No. 1 — No. 2	Less than 1 Ω

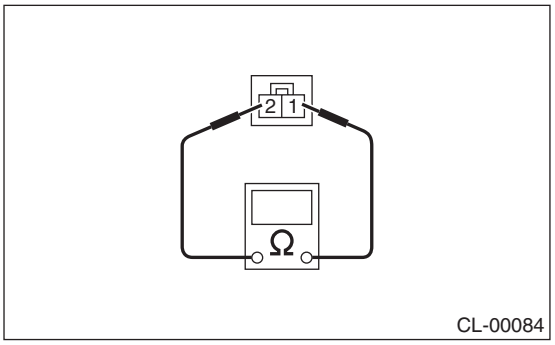

2) When the clutch switch does not operate normally even if the clutch stroke and installation condition are normal, check the clutch switch for continuity.

(1) Remove the clutch switches. <Ref. to CL-31, REMOVAL, Clutch Switch.>

(2) Measure the resistance between terminal 1 and 2 of the switch. If the resistance is not at the standard value, replace the switch.

Condition	Terminal No.	Specified resistance
ON	No. 1 — No. 2	Less than 1 Ω
OFF	No. 1 — No. 2	1 MΩ or more

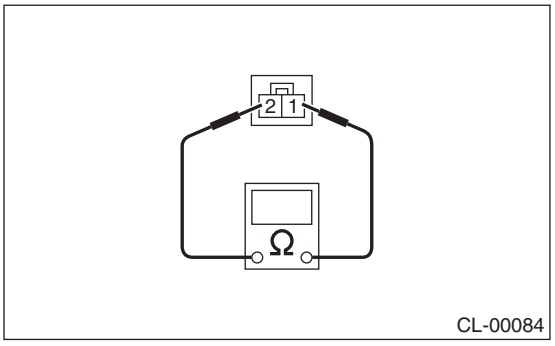

(3) Check that the switch is turned on and off in dimension L.

Dimension L:
5 — 6.5 mm (0.2 — 0.26 in)

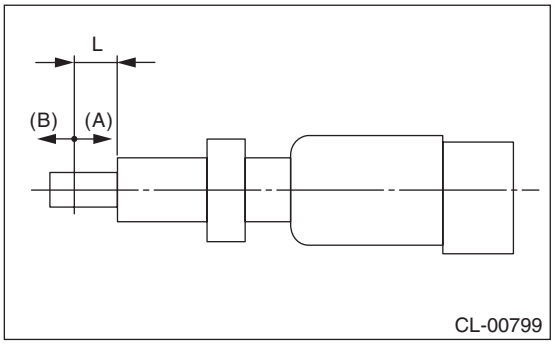

(A) ON
(B) OFF

(4) Install the clutch switch. <Ref. to CL-31, CLUTCH SWITCH, INSTALLATION, Clutch Switch.>

D: ADJUSTMENT

1) Loosen the lock nut of the clutch start switch.
2) Fully depress the clutch pedal and hold it.
3) Adjust the gap (A) of the clutch pedal plate and the clutch start switch to be 2.9 mm (0.11 in).

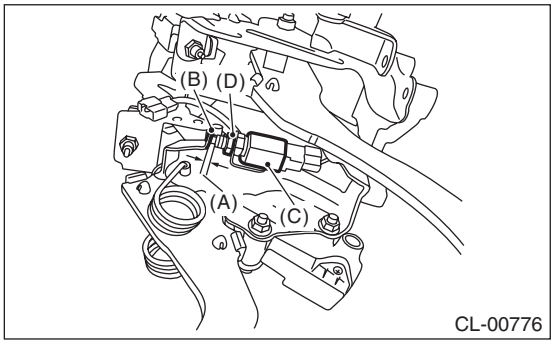

(A) 2.9 mm (0.11 in)
(B) Clutch pedal plate
(C) Clutch start switch
(D) Lock nut

4) Tighten the lock nut.

Tightening torque:
8 N·m (0.8 kgf-m, 5.9 ft-lb)

12.General Diagnostic Table

A: INSPECTION

1. CLUTCH

Symptoms	Possible cause	Corrective action
1. Clutch slippage It is hard to perceive clutch slippage in the early stage, but pay attention to the following symptoms. • Engine temporarily speeds up when the accelerator ON immediately after shifting. • High-speed driving is not possible; especially rapid acceleration is not possible and vehicle speed does not increase in proportion to the increase in engine speed. • Power drops particularly when ascending a slope, and there is a burning smell of the clutch plate. • Method of testing: Park the vehicle and fully apply the parking brake. Disengage the clutch and shift the transmission gear into the 1st. Gradually increase the engine speed while gradually allowing the clutch to engage. The clutch function is satisfactory if the engine stalls. However, the clutch is slipping if the vehicle does not move forward and the engine does not stall.	(a) Oil on the clutch face	Replace.
	(b) Worn clutch face	Replace.
	(c) Deteriorated diaphragm spring	Replace.
	(d) Warped pressure plate or flywheel	Repair or replace.
	(e) Defective release bearing holder	Repair or replace.
2. Clutch drags. As a symptom of this trouble, a harsh scratching noise occurs and control becomes difficult when shifting gears. The symptom becomes more apparent when shifting into the 1st gear. However, because most trouble of this sort is due to a defective synchronization mechanism, perform the following tests. • Method of testing: <Ref. to CL-35, DIAGNOSTIC DIAGRAM OF CLUTCH DRAG, INSPECTION, General Diagnostic Table.> The problem is caused by insufficient disengagement of the clutch if an abnormal noise occurs during this test.	(a) Worn or rusty clutch disc hub spline	Replace the clutch disc.
	(b) Excessive deflection of clutch disc face	Repair or replace.
	(c) Crankshaft pilot needle bearing sticking	Replace.
	(d) Cracked clutch disc face	Replace.
	(e) Stuck clutch disc (smeared by oil or water)	Replace.
3. Clutch chatters. Clutch chattering is an unpleasant vibration to the whole vehicle when the vehicle is just started with clutch partially engaged.	(a) Adhesion of oil on the clutch face	Replace the clutch disc.
	(b) Weak or broken damper spring	Replace the clutch disc.
	(c) Poor contact of the disc surface or excessively worn disc	Replace the faulty clutch disc.
	(d) Warped pressure plate or flywheel	Repair or replace.
	(e) Loose disc rivets	Replace the clutch disc.
	(f) Loose engine mounting	Retighten or replace mounting.
4. Noisy clutch Examine whether the noise is generated when the clutch is disengaged, engaged, or partially engaged.	(a) Broken, worn or insufficiently lubricated release bearing	Replace the release bearing.
	(b) Insufficient lubrication of the pilot bearing	Replace the pilot bearing.
	(c) Loose clutch disc hub	Replace the clutch disc.
	(d) Loose damper spring retainer	Replace the clutch disc.
	(e) Deteriorated or broken damper spring	Replace the clutch disc.

Symptoms	Possible cause	Corrective action
5. Clutch grabs suddenly. When starting the vehicle with the clutch partially engaged, the clutch engages suddenly and the vehicle jumps instead of making a smooth start.	(a) Grease or oil on facing	Replace the clutch disc.
	(b) Deteriorated cushioning spring	Replace the clutch disc.
	(c) Worn or rusted spline of clutch disc or main shaft	Take off rust, apply grease or replace clutch disc or main shaft.
	(d) Deteriorated or broken damper spring	Replace the clutch disc.
	(e) Loose engine mounting	Retighten or replace mounting.
	(f) Deteriorated diaphragm spring	Replace.

2. CLUTCH PEDAL

Symptoms	Corrective action
Insufficient clutch pedal free play	Adjust the free play of the pedal.
Excessively worn and damaged pedal shaft and/or bushing	Replace the bushing or shaft with a new part.

3. DIAGNOSTIC DIAGRAM OF CLUTCH DRAG

	Step	Check	Yes	No
1	**CHECK GEAR NOISE.** 1) Start the engine. 2) While idling the engine, step on the clutch pedal and quickly shift from neutral to reverse.	Is there any abnormal noise from the transmission gear?	Go to step **2**.	Clutch is normal.
2	**CHECK GEAR NOISE.** Depress the clutch pedal at idle and shift from neutral to reverse within 0.5 — 1.0 second.	Is there any abnormal noise from the transmission gear?	Go to step **3**.	Defective transmission or excessive clutch drag torque. Inspect pilot bearing, clutch disc, transmission and clutch disc hub spline.
3	**CHECK GEAR NOISE.** 1) Depress the clutch pedal at idle and shift from neutral to reverse within 0.5 — 1.0 second. 2) While stepping on the clutch pedal, shift from neutral to reverse, reverse to neutral several times.	Is there any abnormal noise from the transmission gear?	Inadequate clutch disengage. Inspect the clutch disc, clutch cover, clutch release, and clutch pedal free play.	Clutch and flywheel seizure. Inspect the clutch disc and the spline of the clutch disc hub.

CHASSIS SECTION

This service manual has been prepared to provide SUBARU service personnel with the necessary information and data for the correct maintenance and repair of SUBARU vehicles.
This manual includes the procedures for maintenance, disassembling, reassembling, inspection and adjustment of components and diagnostics for guidance of experienced mechanics.
Please peruse and utilize this manual fully to ensure complete repair work for satisfying our customers by keeping their vehicle in optimum condition. When replacement of parts during repair work is needed, be sure to use SUBARU genuine parts.

All information, illustration and specifications contained in this manual are based on the latest product information available at the time of publication approval.

FRONT SUSPENSION	FS
REAR SUSPENSION	RS
WHEEL AND TIRE SYSTEM	WT
TIRE PRESSURE MONITORING SYSTEM (DIAGNOSTICS)	TPM(diag)
DIFFERENTIALS	DI
TRANSFER CASE	TC
DRIVE SHAFT SYSTEM	DS
VEHICLE DYNAMICS CONTROL (VDC)	VDC
VEHICLE DYNAMICS CONTROL (VDC) (DIAGNOSTICS)	VDC(diag)
BRAKE	BR
PARKING BRAKE	PB
POWER ASSISTED SYSTEM (POWER STEERING)	PS
POWER ASSISTED SYSTEM (POWER STEERING) (DIAGNOSTICS)	PS(diag)

FUJI HEAVY INDUSTRIES LTD. G2520BE5

FRONT SUSPENSION

FS

		Page
1.	General Description	2
2.	Wheel Alignment	10
3.	Cradle	21
4.	Front Stabilizer	34
5.	Front Ball Joint	36
6.	Front Arm	39
7.	Front Strut	47
8.	General Diagnostic Table	54

1. General Description

A: SPECIFICATION

1. FRONT

• Sedan model

Tire size		P225/55R17 P225/50R18
Wheel arch height (Tolerance: $^{+12\ mm}_{-24\ mm}$ ($^{+0.47\ in}_{-0.94\ in}$)) mm (in)		397 (15.63)
Camber (tolerance: ±0°45′ Differences between RH and LH: 45′ or less)		–0°15′
Caster (referential value)		5°50′
Steering angle (tolerance: ±1.5°)	Inner wheel	37.6°
	Outer wheel	32.8°
Toe-in mm (in)		0±3 (0.00±0.12) Toe angle (sum of both wheels): 0°00′±0°15′
Kingpin angle (referential value)		13°55′

• OUTBACK model

Tire size		P225/65R17 P225/60R18
Wheel arch height (Tolerance: $^{+12\ mm}_{-24\ mm}$ ($^{+0.47\ in}_{-0.94\ in}$)) mm (in)		468 (18.43)
Camber (tolerance: ±0°45′ Differences between RH and LH: 45′ or less)		0°00′
Caster (referential value)		5°00′
Steering angle (tolerance: ±1.5°)	Inner wheel	38.6°
	Outer wheel	33.8°
Toe-in mm (in)		0±3 (0.00±0.12) Toe angle (sum of both wheels): 0°00′±0°15′
Kingpin angle (referential value)		12°15′

2. REAR

• Sedan model

Tire size	P225/55R17 P225/50R18
Wheel arch height (Tolerance: $^{+12\ mm}_{-24\ mm}$ ($^{+0.47\ in}_{-0.94\ in}$)) mm (in)	383 (15.08)
Camber (tolerance: ±0°45′ Differences between RH and LH: 45′ or less)	–1°25′
Toe-in mm (in)	3±3 (0.12±0.12) Toe angle (sum of both wheels): 0°15′±0°15′
Thrust angle (tolerance: ±0°30′)	0°

• OUTBACK model

Tire size	P225/65R17 P225/60R18
Wheel arch height (Tolerance: $^{+12\ mm}_{-24\ mm}$ ($^{+0.47\ in}_{-0.94\ in}$)) mm (in)	468 (18.43)
Camber (tolerance: ±0°45′ Differences between RH and LH: 45′ or less)	–1°00′
Toe-in mm (in)	3±3 (0.12±0.12) Toe angle (sum of both wheels): 0°14′±0°14′
Thrust angle (tolerance: ±0°30′)	0°

NOTE:
• Front toe-in, rear toe-in and front camber can be adjusted. Adjust if the value of toe-in or camber exceeds the tolerance range of the specification chart.
• Other items except for front toe-in, rear toe-in and front camber that are described in the specification chart cannot be adjusted.
• If other items exceed the tolerance range of the specification chart, check the suspension parts and connections for deformation. If defective, replace with new parts.

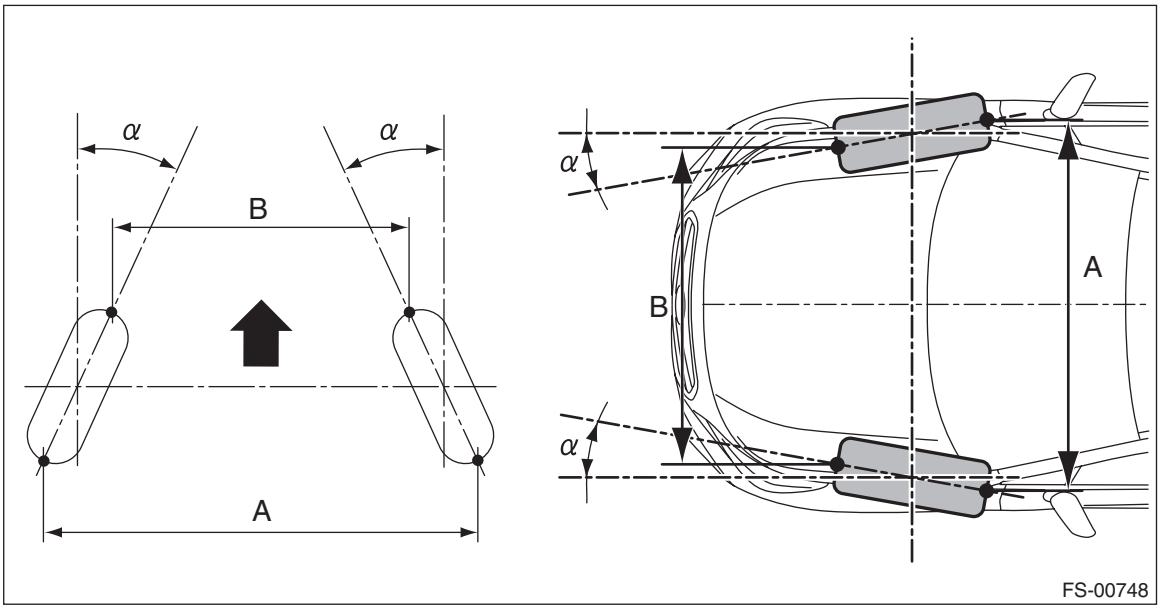

A – B = Positive: Toe-in, Negative: Toe-out

α = Individual toe angles

B: COMPONENT

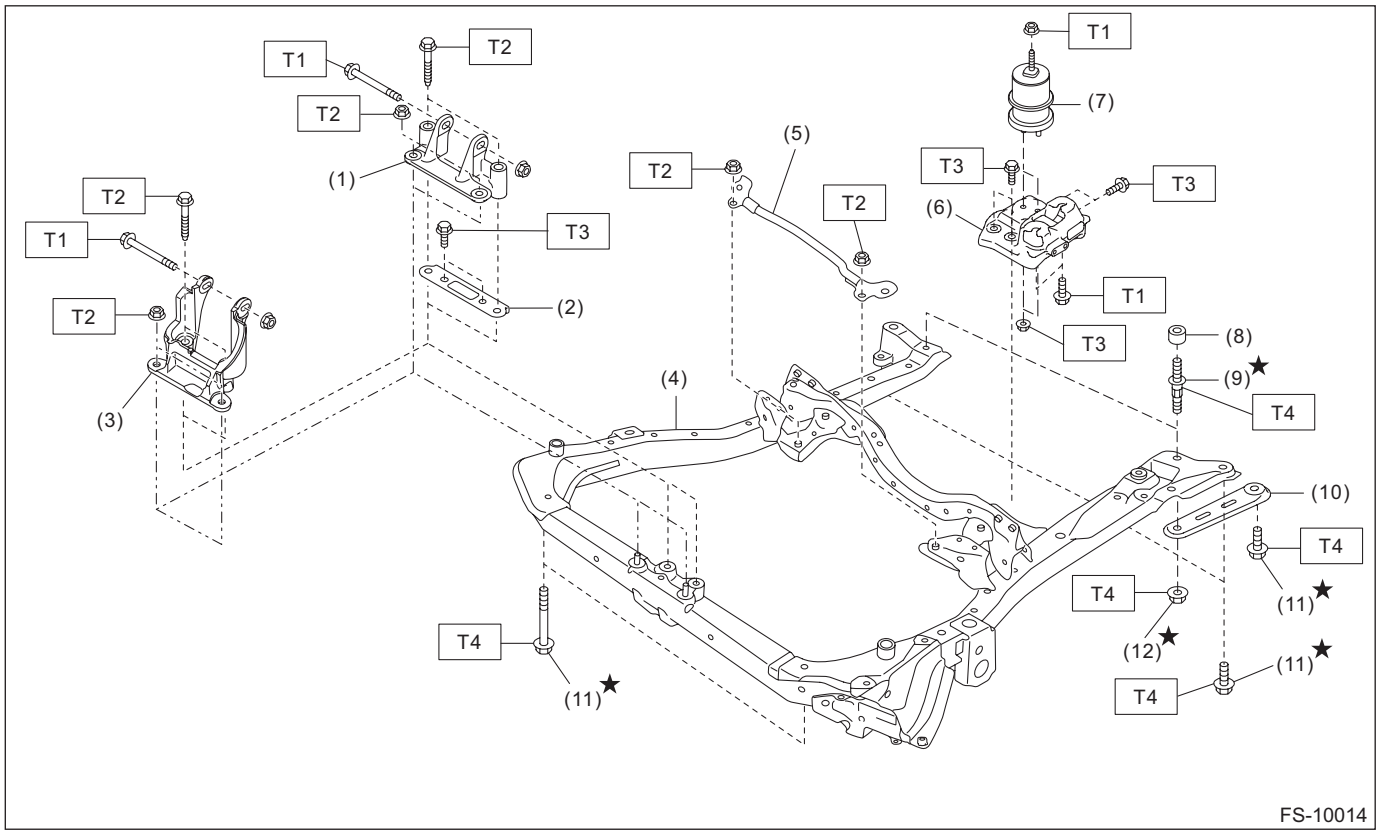

(1)	Front mounting bracket (H6 model)	(7)	Main cushion rubber	***Tightening torque: N·m (kgf-m, ft-lb)***
(2)	Bracket	(8)	Stopper (OUTBACK model only)	***T1: 45 (4.6, 33.2)***
(3)	Front mounting bracket (H4 model)	(9)	Stud bolt	***T2: 60 (6.1, 44.3)***
(4)	Cradle	(10)	Stiffener	***T3: 65 (6.6, 47.9)***
(5)	Crossmember support - front	(11)	Bolt	***T4: 90 (9.2, 66.4)***
(6)	Main mounting bracket	(12)	Self-locking nut	

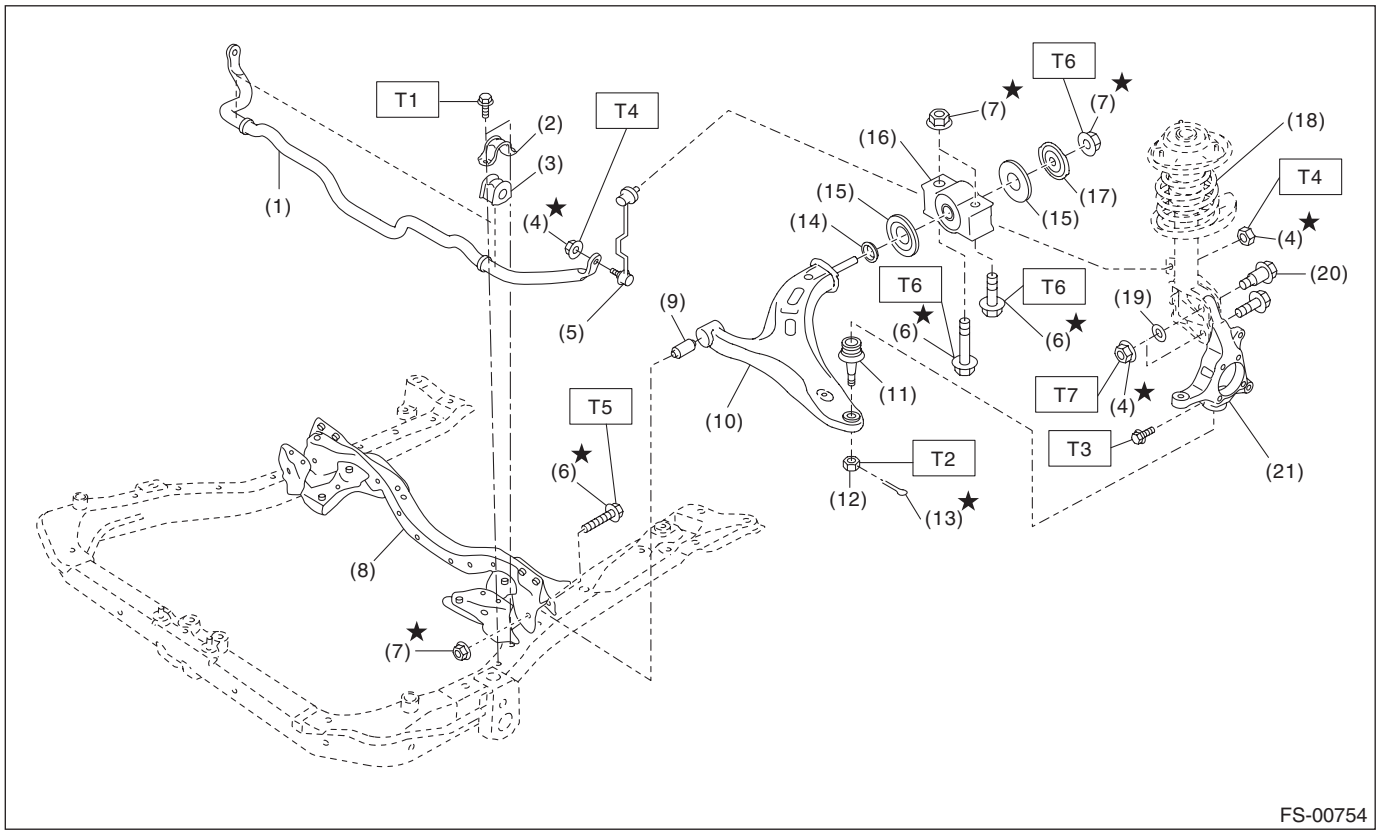

(1)	Front stabilizer	(11)	Ball joint ASSY	(21)	Housing ASSY - front axle
(2)	Clamp - stabilizer bushing	(12)	Castle nut		
(3)	Bushing - stabilizer	(13)	Cotter pin	***Tightening torque: N·m (kgf-m, ft-lb)***	
(4)	Flange nut	(14)	Spacer - arm front	***T1: 25 (2.5, 18.4)***	
(5)	Stabilizer link ASSY	(15)	Stopper - rubber front	***T2: 39 (4.0, 28.8)***	
(6)	Flange bolt	(16)	Rear bushing ASSY	***T3: 50 (5.1, 36.9)***	
(7)	Self-locking nut	(17)	Plate - arm front	***T4: 60 (6.1, 44.3)***	
(8)	Cradle	(18)	Front strut ASSY	***T5: 95 (9.7, 70.1)***	
(9)	Front bushing	(19)	Adjusting washer	***T6: 140 (14.3, 103.3)***	
(10)	Front arm ASSY	(20)	Adjusting bolt	***T7: 155 (15.8, 114.3)***	

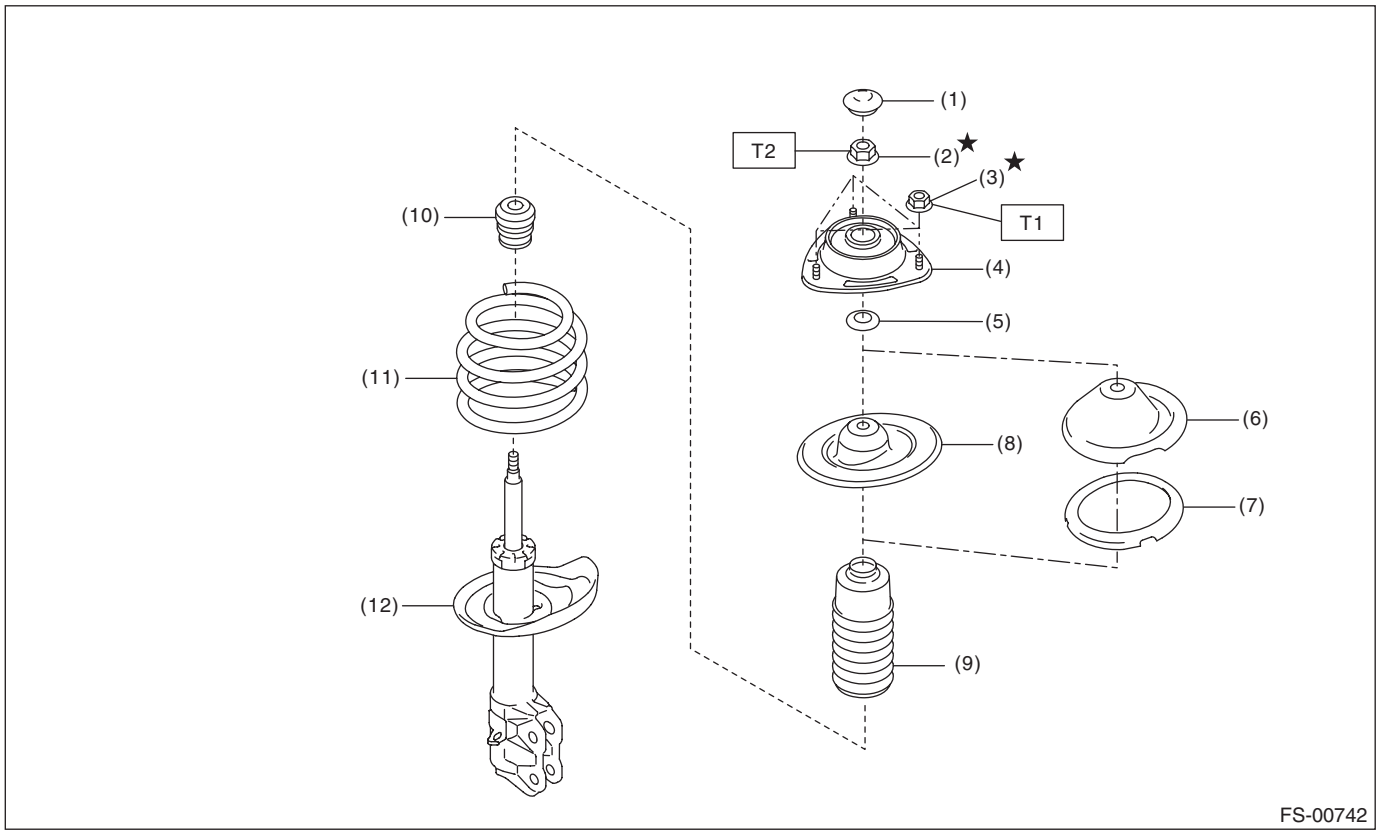

(1)	Dust seal - front strut	(7)	Rubber seat (OUTBACK model)
(2)	Self-locking nut	(8)	Spring seat - front strut UPR (sedan model)
(3)	Flange nut	(9)	Dust cover - front strut
(4)	Strut mount - front	(10)	Helper - front strut
(5)	Spacer - front strut	(11)	Coil spring - front
(6)	Spring seat - front strut UPR (OUTBACK model)	(12)	Strut COMPL - front

Tightening torque: N·m (kgf-m, ft-lb)

T1: 20 (2.0, 14.8)

T2: 55 (5.6, 40.6)

C: CAUTION

- When performing any work, always wear work clothes, a work cap and protective shoes. Additionally, wear a helmet, protective goggles, etc. if necessary.
- When disposing of strut COMPL - front, be sure to bleed the oil or gas out completely. Also, do not expose to flames or fire.
- When performing a repair, identify the cause of trouble and avoid unnecessary removal, disassembly and replacement.
- Use SUBARU genuine grease, the recommended or equivalent. Do not mix grease etc. of different grades or manufacturers.
- Do not secure a part in a vise directly. Place cushioning materials such as wood pieces, blocks, aluminum plates, or waste cloth between the part and the vise.
- Be sure to tighten fasteners including bolts and nuts to the specified torque.
- Always use the jack-up point when the shop jacks or rigid racks are used to support the vehicle.
- When the suspension-related components have been removed or replaced, perform “VDC sensor mid-point setting mode” of the VDC. <Ref. to VDC-15, VDC SENSOR MIDPOINT SETTING MODE, ADJUSTMENT, VDC Control Module and Hydraulic Control Unit (VDCCM&H/U).>
- For parts which are not reusable, always use new parts. Other parts should be replaced with new parts as required.
- When handling oil or fuel, adhere to the following to prevent unexpected accident.
  – Be careful with fire.
  – Prepare a container to catch grease or oil, etc. If any grease or oil spills, wipe it off and clean immediately to prevent from penetrating into floor or flowing outside.
  – Follow all government and local regulations concerning disposal of refuse when disposing.
- Be sure that the surface of brake disc or brake pad is free from grease or oil.
- Before disconnecting connectors of sensors or units, be sure to disconnect the ground cable from battery.
- Some vehicle components are extremely hot immediately after driving. Be wary of receiving burns from heated parts.

D: PREPARATION TOOL

1. SPECIAL TOOL

ILLUSTRATION	TOOL NUMBER	DESCRIPTION	REMARKS
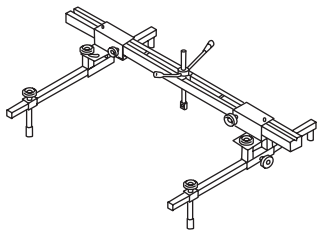 ST99099AJ000	99099AJ000	ENGINE HANGER	• Used for hanging power unit. • Used together with CHAIN BALANCER (99099AJ010).
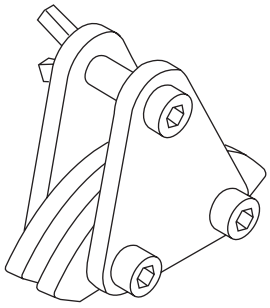 ST99099AJ010	99099AJ010	CHAIN BALANCER	• Used for hanging power unit. • Used together with ENGINE HANGER (99099AJ000).

ILLUSTRATION	TOOL NUMBER	DESCRIPTION	REMARKS
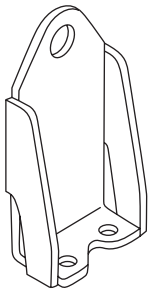 ST18360AA020	18360AA020	HANGER	• Used for hanging power unit. • For H6 model.
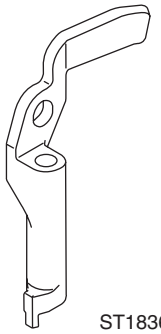 ST18360AA040	18360AA040	HANGER	• Used for removing and installing the cradle. • Used together with BOLT (18363AA050).
 ST18363AA050	18363AA050	BOLT	• Used for removing and installing the cradle. • Used together with HANGER (18360AA040).
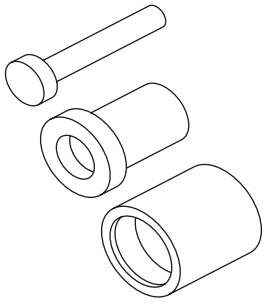 ST-927680000	927680000	INSTALLER & REMOVER SET	Used for replacing the bushing front - front arm of front arm assembly.
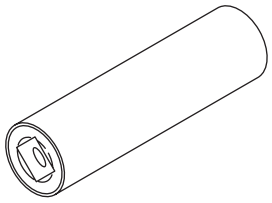 ST20299AG020	20299AG020	STUD BOLT SOCKET	Used for removing and installing the stud bolt for front arm installing portion.

ILLUSTRATION	TOOL NUMBER	DESCRIPTION	REMARKS
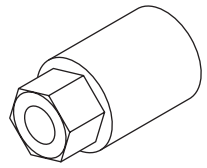 ST20399AG000	20399AG000	STRUT MOUNT SOCKET	• Used for disassembling and assembling strut assembly and shock absorber assembly. • Used for checking center nut torque of strut assembly and shock absorber assembly.

2. GENERAL TOOL

TOOL NAME	REMARKS
Alignment gauge	Used for measuring wheel alignment.
Alignment gauge adapter	Used for measuring wheel alignment.
Turning radius gauge	Used for measuring wheel alignment.
Toe-in gauge	Used for toe-in measurement.
Chain sling	• Used for hanging power unit. • Diameter: 6 mm (0.24 in) or 6.3 mm (0.25 in) • Length: 0.8 — 1 m (2.6 — 3.3 ft) • Chain inner width: 8.5 mm (0.33 in) or more • Chain external width: 23.5 mm (0.93 in) or less • Load capacity: 1.2 t (2646 lb) or more
Shackle	• Two units used for hanging power unit. • Attached to both end of chain sling and connected to engine hook. • Load capacity: 250 kg (551 lb) or more
Sling belt	• Used to remove and install the cradle. • Width: 35 — 40 mm (1.38 — 1.57 in) • Length: 2 m (6.6 ft) • Load capacity: 1 t (2205 lb) or more
Shackle	• Used to remove and install the cradle. • Load capacity: 500 kg (1103 lb) or more
Tie-rod ball joint puller	Used for disconnecting tie-rod end.
Dial gauge	Used for damper strut measurement.
Coil spring compressor	Used for disassembling and assembling strut assembly and shock absorber assembly.

2. Wheel Alignment

A: INSPECTION

Check the following items before performing the wheel alignment measurement.

- Tire inflation pressure
- Uneven wear of RH and LH tires, or difference of sizes
- Tire runout
- Excessive play and wear of ball joint
- Excessive play and wear of tie-rod end
- Excessive play of wheel bearing
- Right and left wheel base imbalance
- Deformation and excessive play of steering link
- Deformation and excessive play of suspension parts

Check, adjust and measure the wheel alignment in accordance with the following procedures.

1	Wheel arch height (front and rear wheels)	Inspection: <Ref. to FS-11, WHEEL ARCH HEIGHT, INSPECTION, Wheel Alignment.>
		↓
2	Camber (front and rear wheels)	Inspection: <Ref. to FS-12, CAMBER, INSPECTION, Wheel Alignment.> Adjustment: <Ref. to FS-14, FRONT CAMBER, ADJUSTMENT, Wheel Alignment.>
		↓
3	Caster (front wheel)	Inspection: <Ref. to FS-12, CASTER, INSPECTION, Wheel Alignment.>
		↓
4	Steering angle	Inspection: <Ref. to FS-13, FRONT WHEEL TOE-IN, INSPECTION, Wheel Alignment.> Adjustment: <Ref. to FS-16, STEERING ANGLE, ADJUSTMENT, Wheel Alignment.>
		↓
5	Front wheel toe-in	Inspection: <Ref. to FS-13, STEERING ANGLE, INSPECTION, Wheel Alignment.> Adjustment: <Ref. to FS-16, FRONT WHEEL TOE-IN, ADJUSTMENT, Wheel Alignment.>
		↓
6	Rear wheel toe-in	Inspection: <Ref. to FS-13, REAR WHEEL TOE-IN, INSPECTION, Wheel Alignment.> Adjustment: <Ref. to FS-17, REAR WHEEL TOE-IN, ADJUSTMENT, Wheel Alignment.>
		↓
7	Thrust angle	Inspection: <Ref. to FS-14, THRUST ANGLE, INSPECTION, Wheel Alignment.> Adjustment: <Ref. to FS-19, THRUST ANGLE, ADJUSTMENT, Wheel Alignment.>

1. WHEEL ARCH HEIGHT

1) Park the vehicle on a level surface.
2) Empty the vehicle so that it is at “curb weight”.

NOTE:
Empty the trunk or luggage room, load the spare tire, jack and service tools, and fill up the fuel tank.

3) Set the steering wheel in a straight-ahead position, and stabilize the suspension by moving the vehicle in a straight line for 5 m (16 ft) or more.
4) Suspend a thread from the wheel arch (point “A” in the figure below) and affix at a position directly above the center of wheel.
5) Measure the distance between the point “A” and the center of wheel.

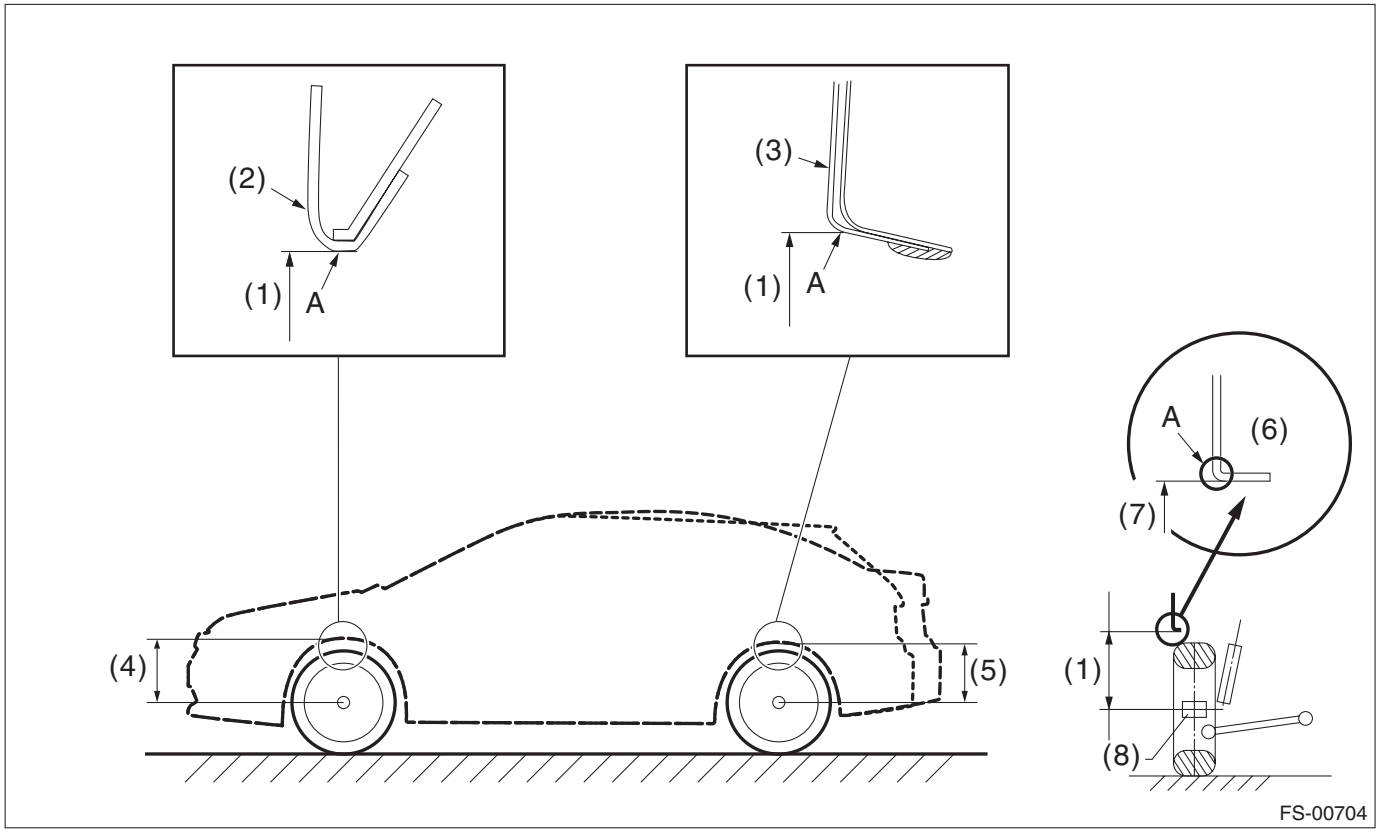

(1) Wheel arch height
(2) Front fender
(3) Rear quarter
(4) Front wheel arch height
(5) Rear wheel arch height
(6) Flange bend line
(7) Point of measurement
(8) End of spindle

Model	Tire size	Wheel arch height specification mm (in) (Tolerance: $^{+12\ mm}_{-24\ mm}$ ($^{+0.47\ in}_{-0.94\ in}$))	
		Front	Rear
Sedan model	P225/55R17 P225/50R18	397 (15.6)	383 (15.08)
OUTBACK model	P225/65R17 P225/60R18	468 (18.43)	468 (18.43)

2. CAMBER

1) Place the front wheel on the turning radius gauge.

NOTE:
Make sure the ground contact surfaces of the front and rear wheels are at the same height.

2) Set the adapter into the center of wheel, and then set the wheel alignment gauge.

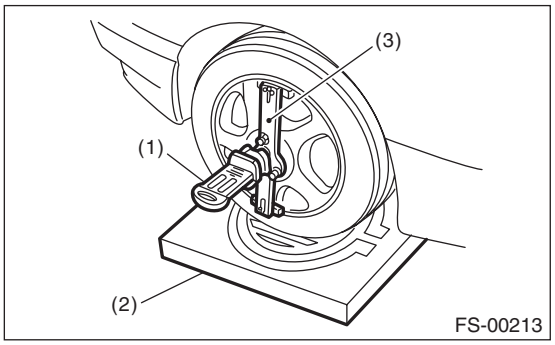

(1) Alignment gauge
(2) Turning radius gauge
(3) Adapter

3) Measure the camber angle in accordance with the operation manual for wheel alignment gauge.

Tire size		Camber (difference between RH and LH 45′ or less)	
		Front	Rear
Sedan model	P225/55R17 P225/50R18	–0°15′±0°45′	–1°25′±0°45′
OUTBACK model	P225/65R17 P225/60R18	0°00′±0°45′	–1°00′±0°45′

3. CASTER

1) Place the front wheel on the turning radius gauge. Make sure the ground contact surfaces of the front and rear wheels are at the same height.

2) Set the adapter into the center of wheel, and then set the wheel alignment gauge.

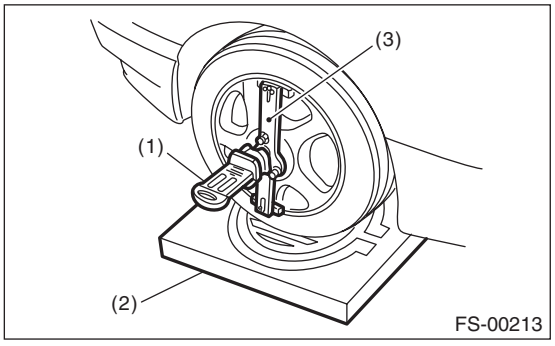

(1) Alignment gauge
(2) Turning radius gauge
(3) Adapter

3) Measure the caster angle in accordance with the operation manual for wheel alignment gauge.

Tire size		Caster
Sedan model	P225/55R17 P225/50R18	5°50′
OUTBACK model	P225/65R17 P225/60R18	5°00′

4. STEERING ANGLE

1) Place the vehicle on turning radius gauge.
2) While depressing the brake pedal, turn the steering wheel fully to the left and right.
3) With the steering wheel held at each fully turned position, measure both the inner and outer wheel steering angles.

Model	Tire size	Inner wheel	Outer wheel
Sedan model	P225/55R17 P225/50R18	37.6°±1.5°	32.8°±1.5°
OUTBACK model	P225/65R17 P225/60R18	38.6°±1.5°	33.8°±1.5°

5. FRONT WHEEL TOE-IN

Toe-in: Inspection value
0±3 mm (0.00±0.12 in)

1) Set the toe-in gauge in the position at wheel axis center height behind the right and left front tires.
2) Place a mark at the center of both left and right tires, and measure distance “A” between the marks.
3) Move the vehicle forward to rotate the tires 180°.

NOTE:
Be sure to rotate the tires in the forward direction.

4) Measure the distance “B” between the left and right marks. Find toe-in using the following calculation:

A – B = Toe-in

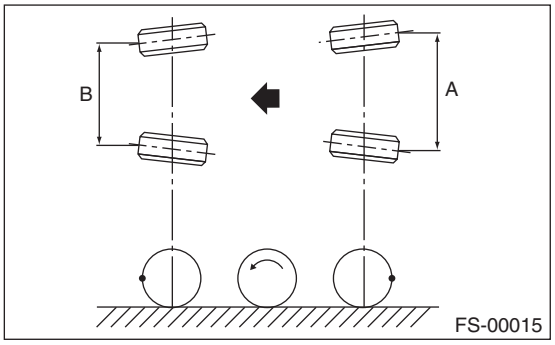

6. REAR WHEEL TOE-IN

Refer to the FRONT WHEEL TOE-IN for rear toe-in inspection procedures. <Ref. to FS-13, STEERING ANGLE, INSPECTION, Wheel Alignment.>

Toe-in: Inspection value
3±3 mm (0.12±0.12 in)

7. THRUST ANGLE

1) Park the vehicle on a level surface.
2) Move the vehicle 3 — 4 meters (10 — 13 feet) straight forward.
3) Draw the center of loci for both the front and rear axles.
4) Measure distance “L” between the center lines of the axle loci.

Thrust angle: Inspection value
0°±30′
Less than 30′ when “L” is 23 mm (0.9 in) or less

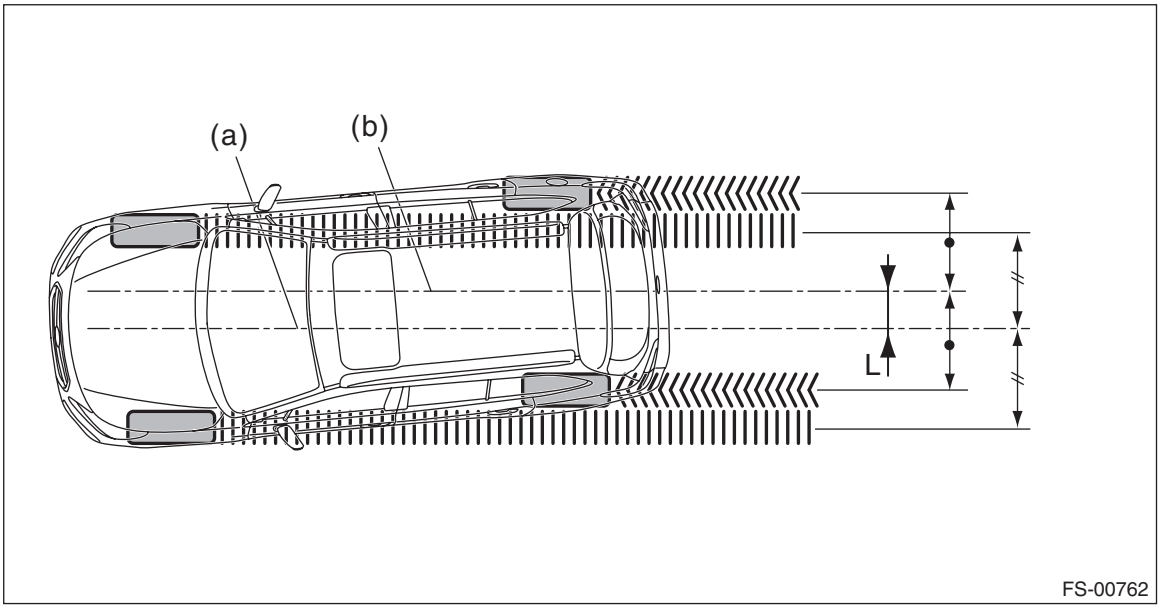

(a) Center line of loci (front axle) (b) Center line of loci (rear axle)

B: ADJUSTMENT

CAUTION:
When the wheel alignment has been adjusted, perform the following adjustment.
– Lane keep assist learning value clear (model with EyeSight): <Ref. to ES(diag)-49, OPERATION, Clear Active Lane Keep System Learning Value.>
– VDC sensor midpoint setting mode: <Ref. to VDC-15, ADJUSTMENT, VDC Control Module and Hydraulic Control Unit (VDCCM&H/U).>

1. FRONT CAMBER

1) Adjust the camber angle to the following value.

Tire size		Camber (difference between RH and LH 45′ or less)
Sedan model	P225/55R17 P225/50R18	–0°15′±0°30′
OUTBACK model	P225/65R17 P225/60R18	0°00′±0°30′

2) Loosen the two flange nuts while holding the strut bolts.
3) Turn the camber adjusting bolt so that the camber is set at specification.

NOTE:
Moving the adjusting bolt by one scale changes the camber by approximately 0°10′.

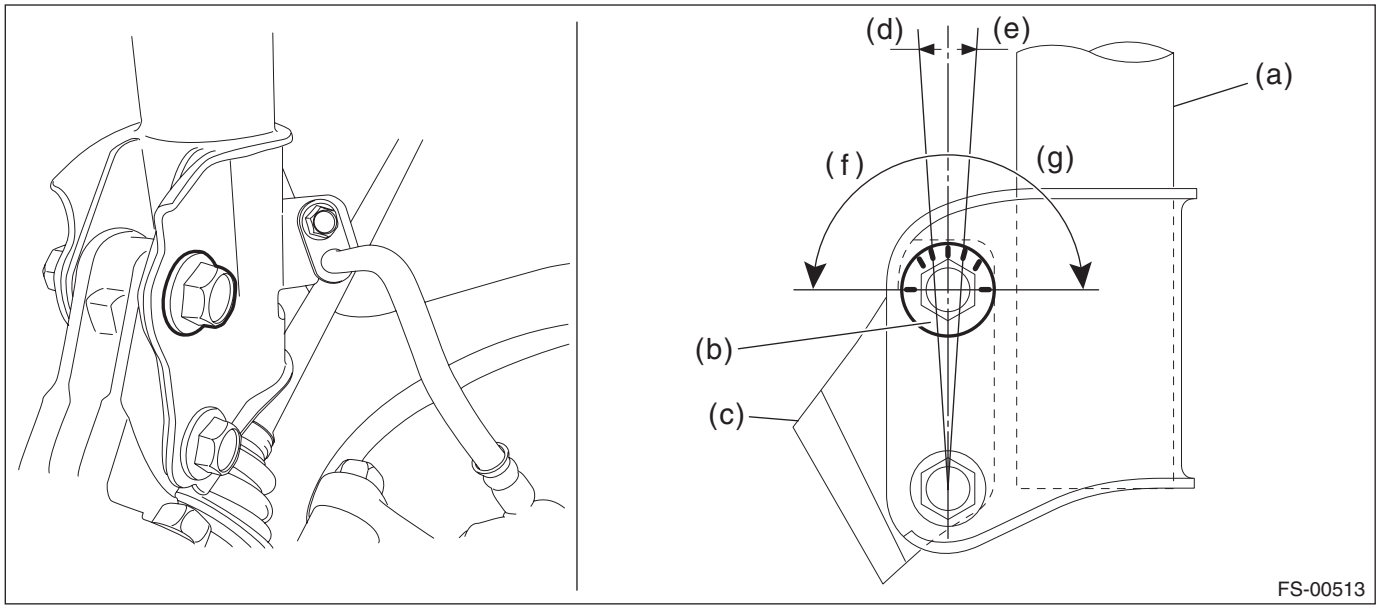

(a) Strut ASSY
(b) Adjusting bolt
(c) Housing ASSY - front axle
(d) Outer direction
(e) Inner direction
(f) Camber is increased.
(g) Camber is decreased.

To increase camber.	
Rotate the left side counterclockwise.	Rotate the right side clockwise.
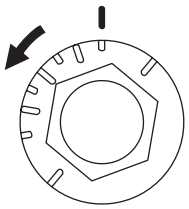 FS-00739	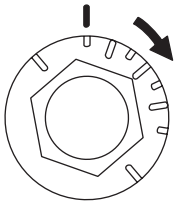 FS-00740

To decrease camber.	
Rotate the left side clockwise.	Rotate the right side counterclockwise.
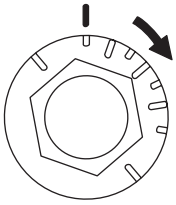 FS-00740	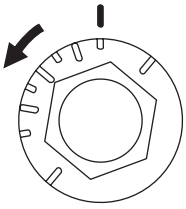 FS-00739

4) Tighten two new flange nuts.

Tightening torque:
155 N·m (15.8 kgf-m, 114.3 ft-lb)

NOTE:
While holding the adjusting bolt side, tighten the nut side.

2. STEERING ANGLE

1) Adjust the steering angle of both inner and outer wheels.
(1) Loosen the steering tie-rod lock nut (a), and rotate the tie-rod.

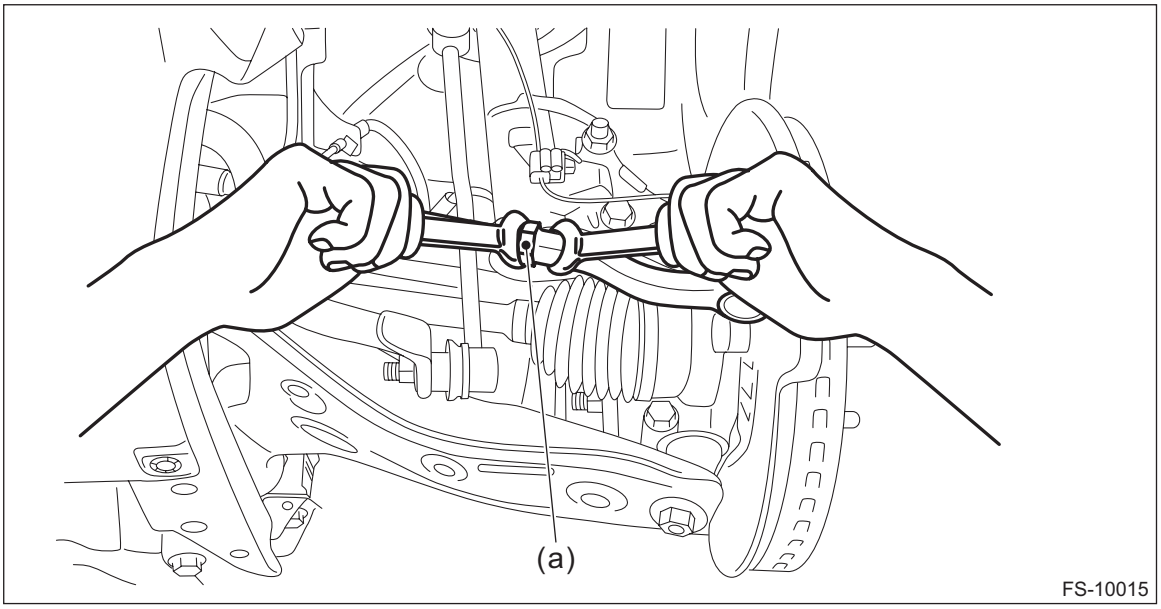

(2) Turn the tie-rod to adjust the steering angle of both inner and outer wheels.
(3) Tighten the steering tie-rod lock nut (a).

Tightening torque:
85 N·m (8.7 kgf-m, 62.7 ft-lb)

NOTE:
Check and correct the tie-rod boot if twisted.
2) Check the toe-in. <Ref. to FS-13, STEERING ANGLE, INSPECTION, Wheel Alignment.>

3. FRONT WHEEL TOE-IN

When adjusting the toe-in, adjust it to the following value. <Ref. to FS-16, STEERING ANGLE, ADJUSTMENT, Wheel Alignment.>

Toe-in: Adjustment value
0±2 mm (0.00±0.08 in)

1) Check that the left and right wheel steering angles are within specification.
2) Loosen the left and right side steering tie-rod lock nuts (a).
3) Turn the left and right tie-rods by equal amounts until the toe-in is at the specification.

NOTE:
Both the left and right tie-rods are right-hand threaded. To increase toe-in, turn both tie-rods clockwise by equal amount (viewing from the inside of vehicle).

4) Tighten the steering tie-rod lock nut (a).

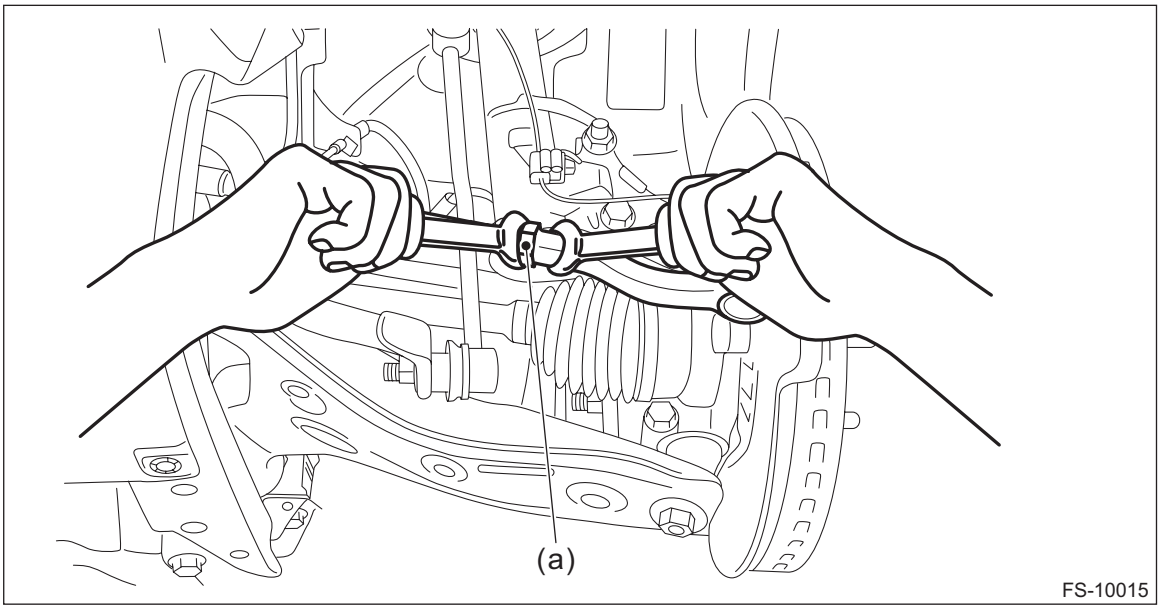

Tightening torque:
85 N·m (8.7 kgf-m, 62.7 ft-lb)

5) Check and correct the tie-rod boot if twisted.

4. REAR WHEEL TOE-IN

When adjusting, adjust it to the following value.

Toe-in: Adjustment value
3±2 mm (0.12±0.08 in)

1) Loosen the self-locking nut after holding the bolt head section of lateral link assembly - front.

NOTE:
When loosening or tightening the adjusting bolt, hold the bolt head and turn the self-locking nut.

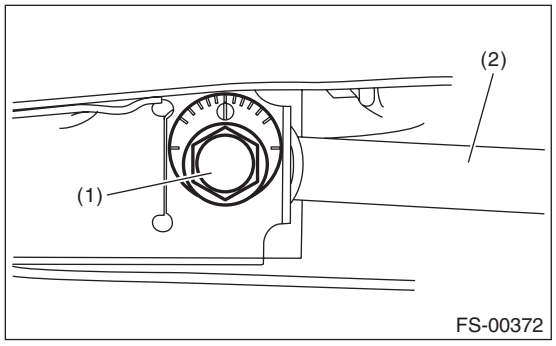

(1) Adjusting bolt
(2) Lateral link ASSY - front

2) Turn the adjusting bolt until toe-in is within the specification.

NOTE:
When the left and right wheels are adjusted for toe-in at the same time, the movement of one scale graduation changes toe-in by approx. 6.0 mm (0.24 in).

To increase toe-in.	
Rotate the left side clockwise.	Rotate the right side counterclockwise.
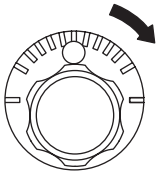 FS-00018	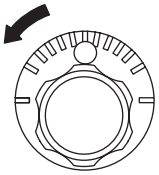 FS-00019

To decrease toe-in.	
Rotate the left side counterclockwise.	Rotate the right side clockwise.
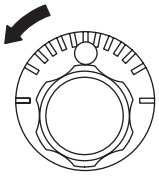 FS-00019	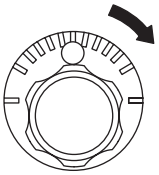 FS-00018

3) Attach and tighten a new self-locking nut.

Tightening torque:
120 N·m (12.2 kgf-m, 88.5 ft-lb)

5. THRUST ANGLE

When adjusting, adjust it to the following value.

Thrust angle: Adjustment value
0°±20′
Less than 20′ when "L" is 15 mm (0.6 in) or less

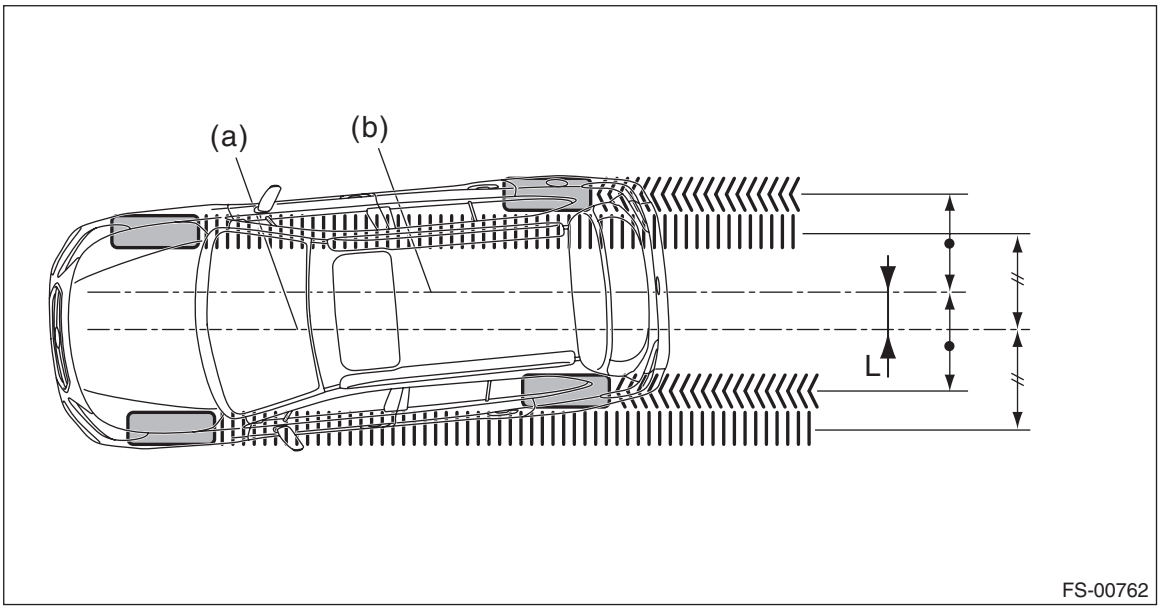

(a) Center line of loci (front axle) (b) Center line of loci (rear axle)

1) Make thrust angle adjustments by turning the toe-in adjusting bolts of the rear suspension equally in the same direction.
2) When one rear wheel is adjusted in a toe-in direction, adjust the other rear wheel equally in toe-out direction, in order to make the thrust angle adjustment.

3) When the left and right adjusting bolts are turned by one graduation, the thrust angle will change approx. 15′. (“L” is approx. 11 mm (0.43 in).)

NOTE:
Thrust angle is a mean value of left and right wheel toe angles in relation to the vehicle body center line. Vehicle is driven straight in the thrust angle direction while slanting in the oblique direction depending on the degree of the mean thrust angle.

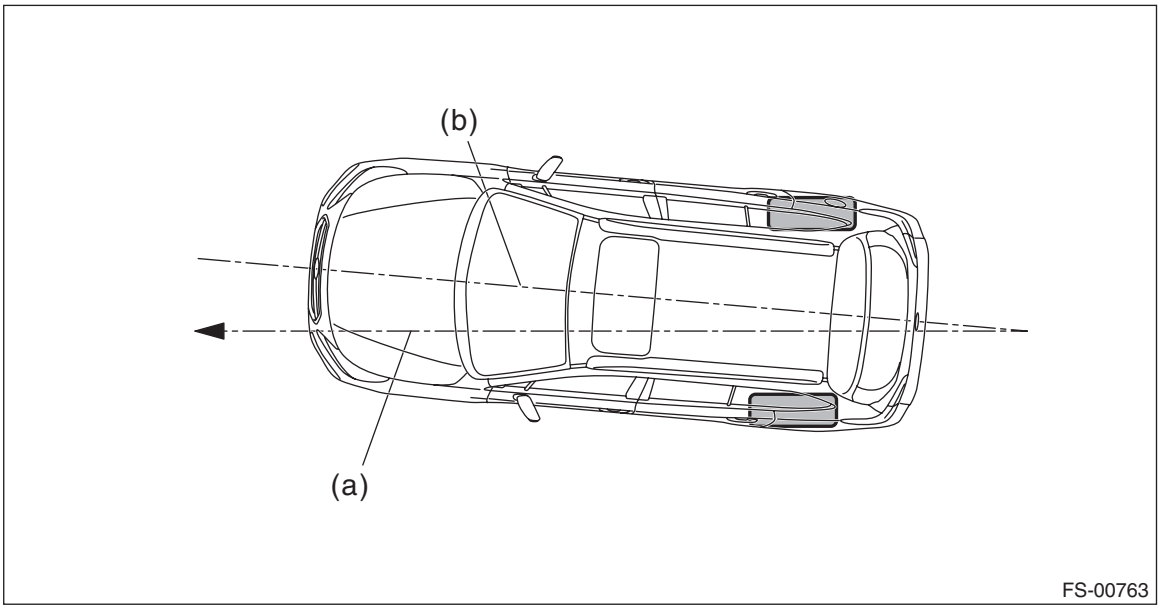

(a) Thrust angle (b) Body center line

Thrust angle:

$\gamma = (\alpha - \beta)/2$

α: Rear RH wheel toe-in angle
β: Rear LH wheel toe-in angle
Substitute only the positive toe-in values from each wheel into α and β in the calculation.

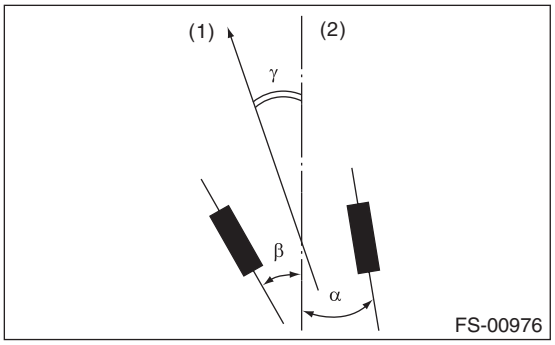

(1) Front
(2) Body center line

3. Cradle

A: REMOVAL

1) Lift up the vehicle, and then remove the front wheels.
2) Adjust the tilt position of the steering column to the neutral position and the telescopic position to the longest position.

CAUTION:
Always place the tilt lever to the lock position after the steering column is adjusted.

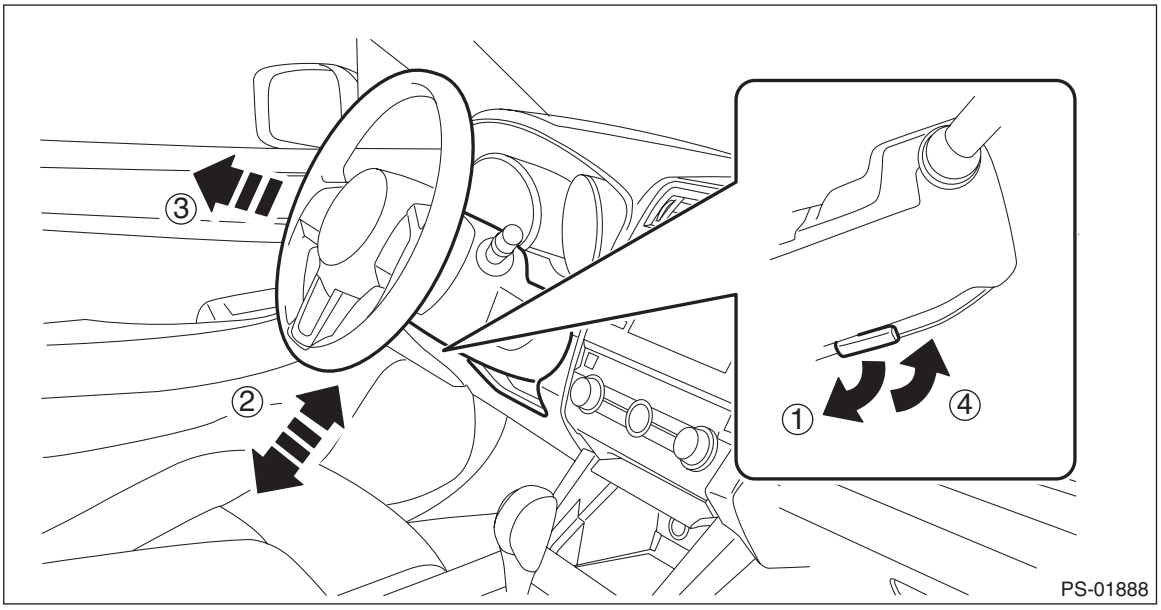

3) Remove the under cover - front. <Ref. to EI-28, REMOVAL, Front Under Cover.>
4) Disconnect the ground terminal from battery sensor. <Ref. to RC-4, BATTERY, NOTE, Repair Contents.>
5) Remove the air intake duct. <Ref. to IN(H4DO)-12, REMOVAL, Air Intake Duct.>
6) Remove the air intake boot assembly.
- H4 model: <Ref. to IN(H4DO)-10, REMOVAL, Air Intake Boot.>
- H6 model: <Ref. to IN(H6DO)-10, REMOVAL, Air Intake Boot.>

7) Fully open the front hood. <Ref. to RC-22, FRONT HOOD DAMPER STAY, NOTE, Repair Contents.>
8) Replace the engine hanger attached to the engine with ST. (H6 model)
   (1) Remove the engine harness connector.

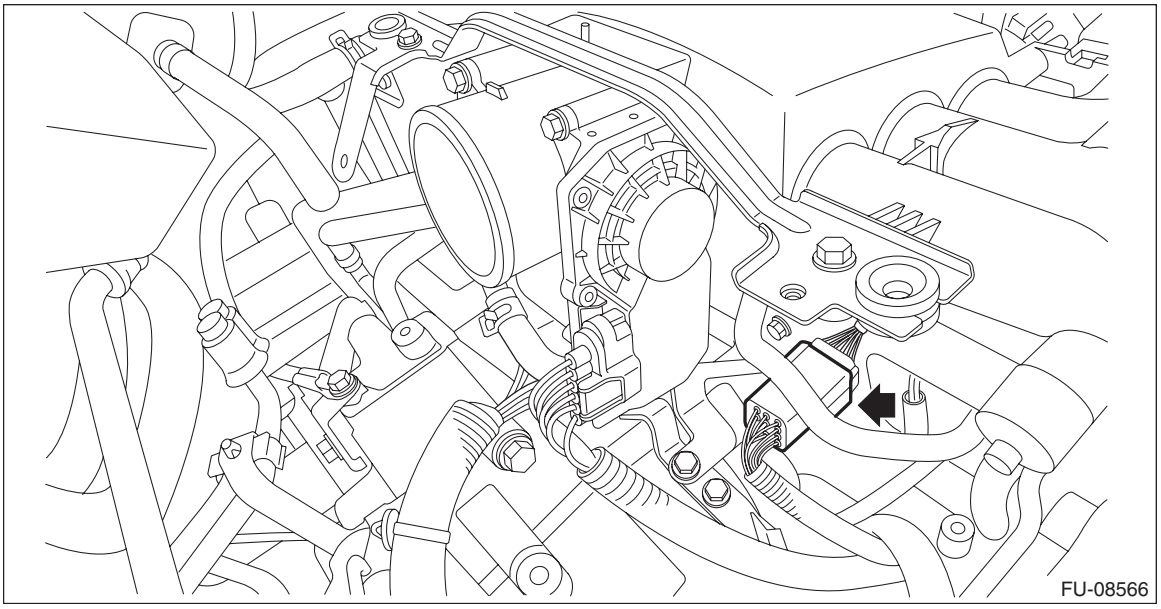

(2) Remove the throttle body from the intake manifold. <Ref. to FU(H6DO)-19, REMOVAL, Throttle Body.>

NOTE:
Do not disconnect the inlet and outlet hoses of engine coolant.

(3) Remove the engine harness connector.

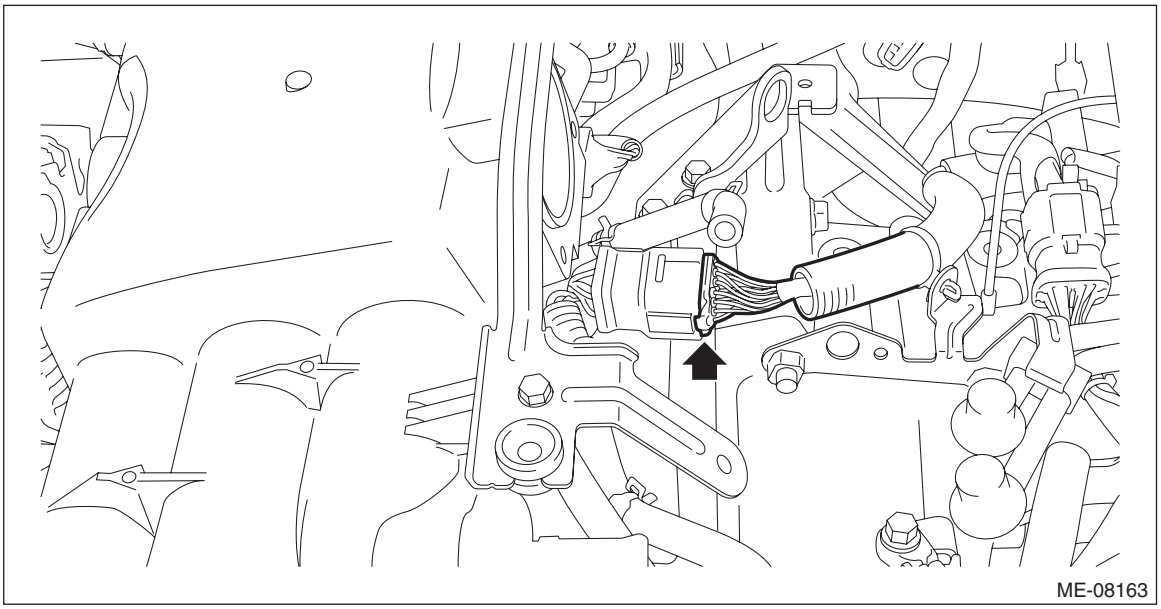

(4) Remove the engine harness connector and the engine hanger - rear from the engine hanger - rear.

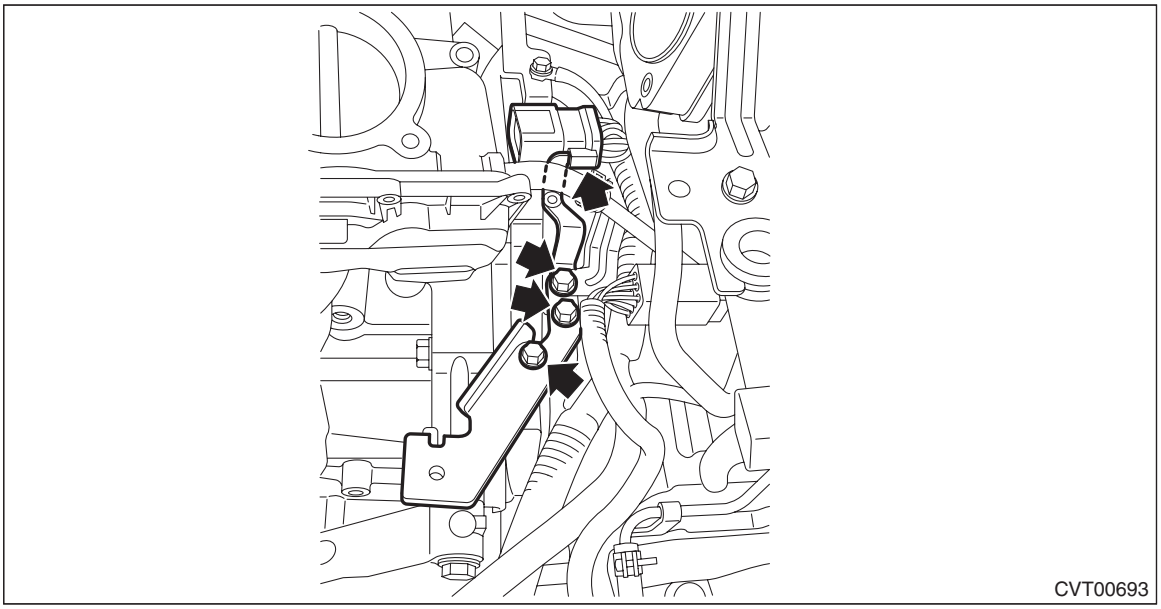

(5) Remove the collector cover bracket.

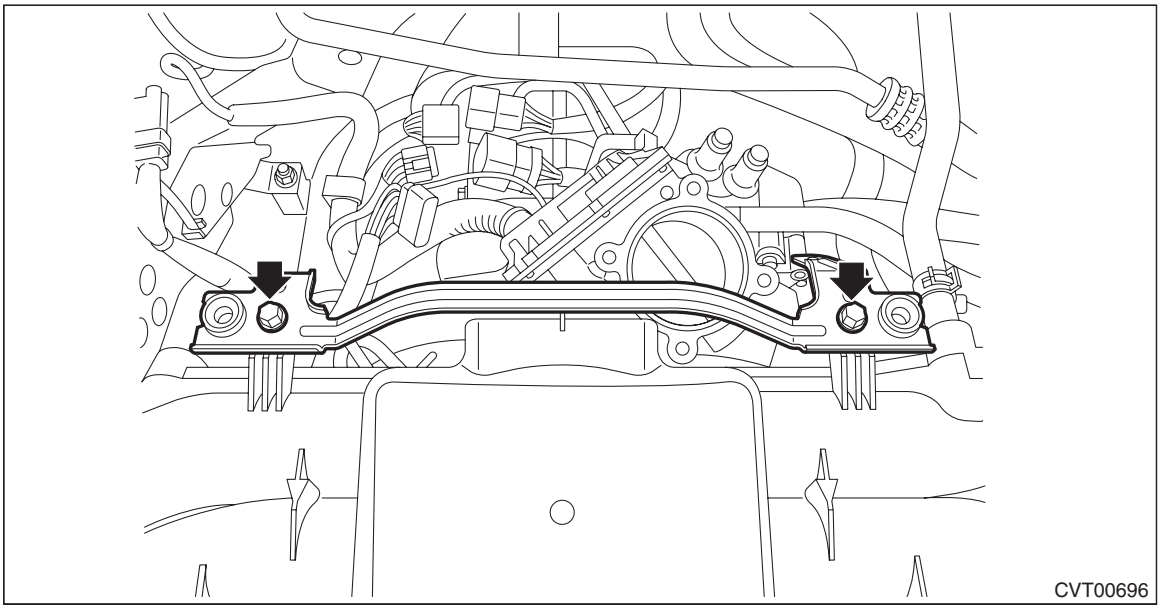

(6) Replace the engine hanger attached to the engine with ST.

Preparation tool:
H6 model (ST): HANGER (18360AA020)

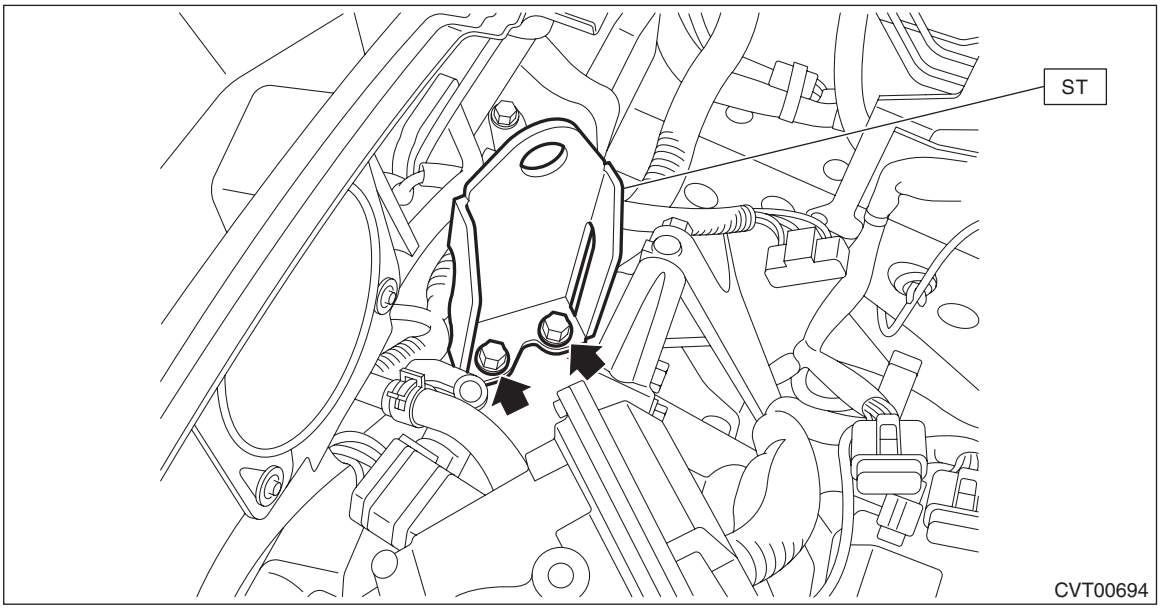

Tightening torque:
19 N·m (1.9 kgf-m, 14.0 ft-lb)

9) Install the ST for the engine hanger to the engine front side. (H4 model)
(1) Remove the belt cover.
(2) Attach the ST.

Preparation tool:
H4 model (ST1): BOLT (18363AA050)
H4 model (ST2): HANGER (18360AA040)

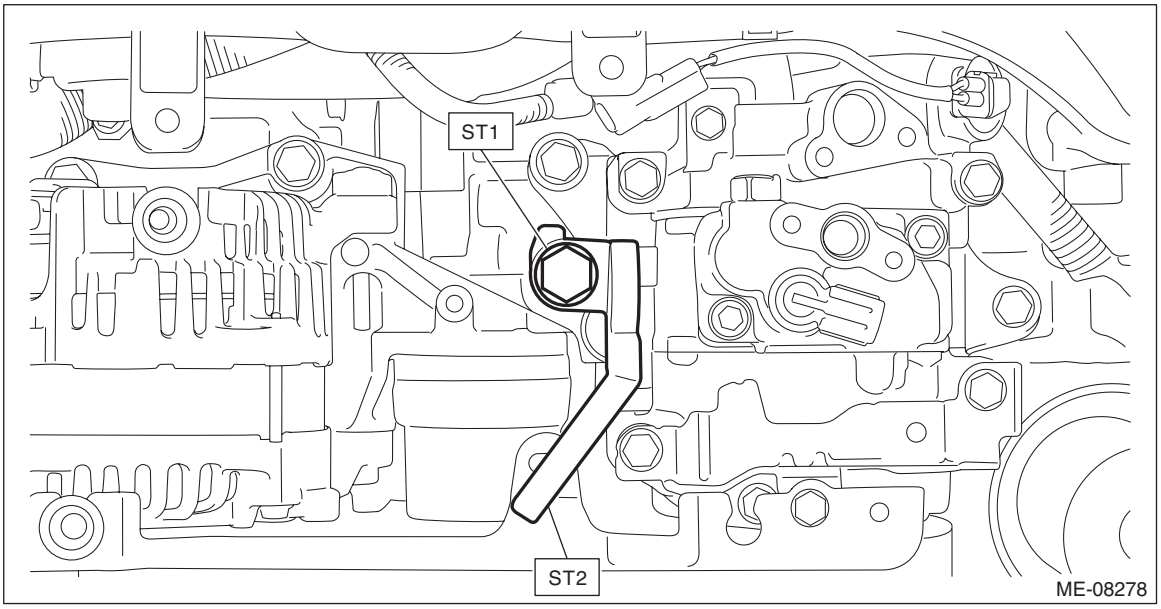

Tightening torque:
19 N·m (1.9 kgf-m, 14.0 ft-lb)

10) Suspend the engine using ST, chain sling, and shackle.
(1) Set the ST on the vehicle.

CAUTION:
• Install the M8 bolt at the locations shown in the figure, and place the front side arms of ST (ENGINE HANGER).
• Set the arms of ST (ENGINE HANGER) at the locations shown in the figure.

Preparation tool:
ST1: ENGINE HANGER (99099AJ000)
ST2: CHAIN BALANCER (99099AJ010)

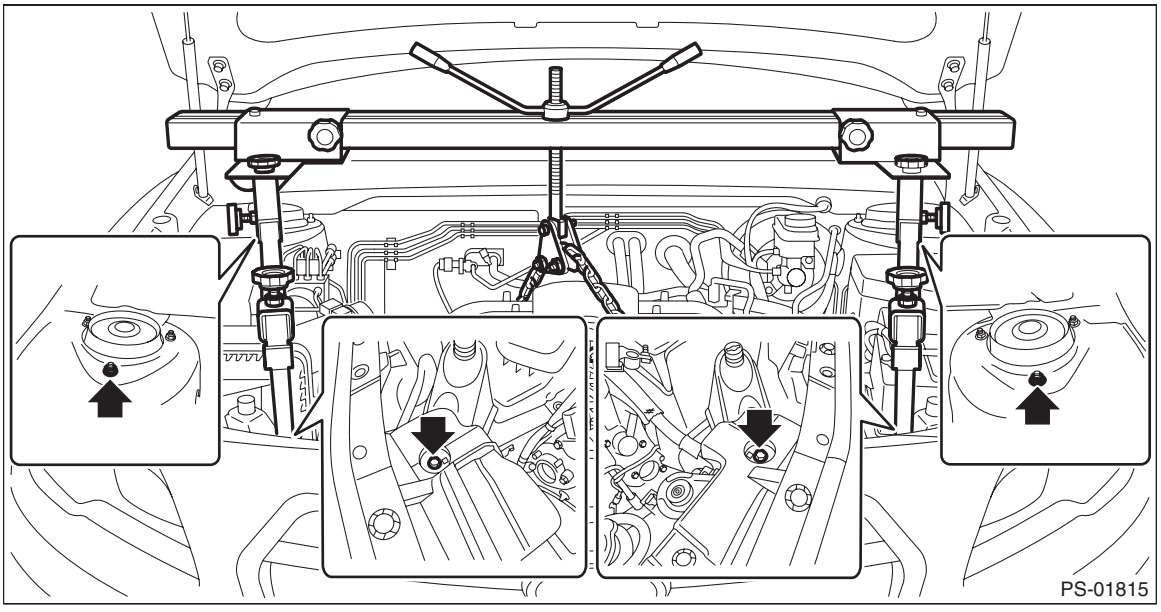

(2) Attach the shackle to the both ends of chain sling.

CAUTION:

- **Be sure to use chain slings that satisfy the following requirements:**
  - **Length: 0.8 — 1 m (2.6 — 3.3 ft)**
  - **Load capacity: 1.2 t (2646 lb) or more**
  - **Wire diameter: 6 mm (0.24 in) or 6.3 mm (0.25 in)**
  - **Internal width: 8.5 mm (0.33 in) or more**
  - **External width: 23.5 mm (0.93 in) or less**

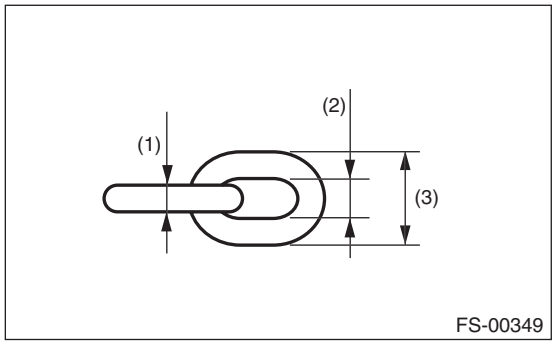

(1) Wire diameter: 6 mm (0.24 in) or 6.3 mm (0.25 in)
(2) Internal width: 8.5 mm (0.33 in) or more
(3) External width: 23.5 mm (0.93 in) or less

- **Use a shackle with the load capacity of 250 kg (551 lb) or more.**

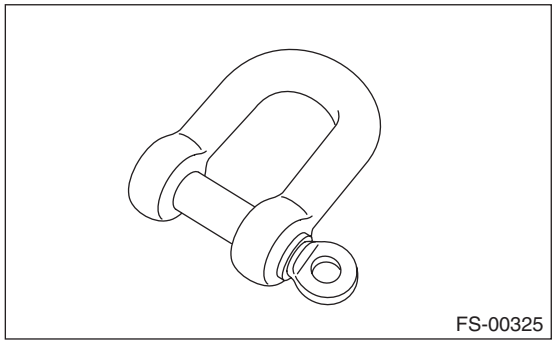

(3) Pass the chain sling through the CHAIN BALANCER and secure the both ends to the hooks on the engine.

CAUTION:
Set the chain sling so that it does not contact the engine parts.

- H4 model

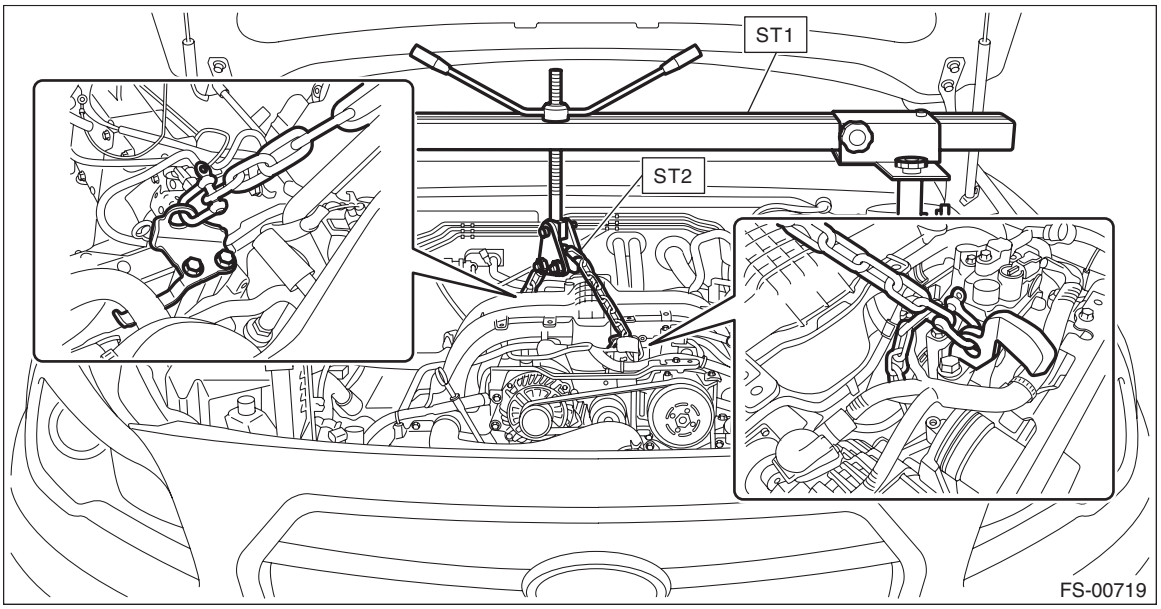

- H6 model

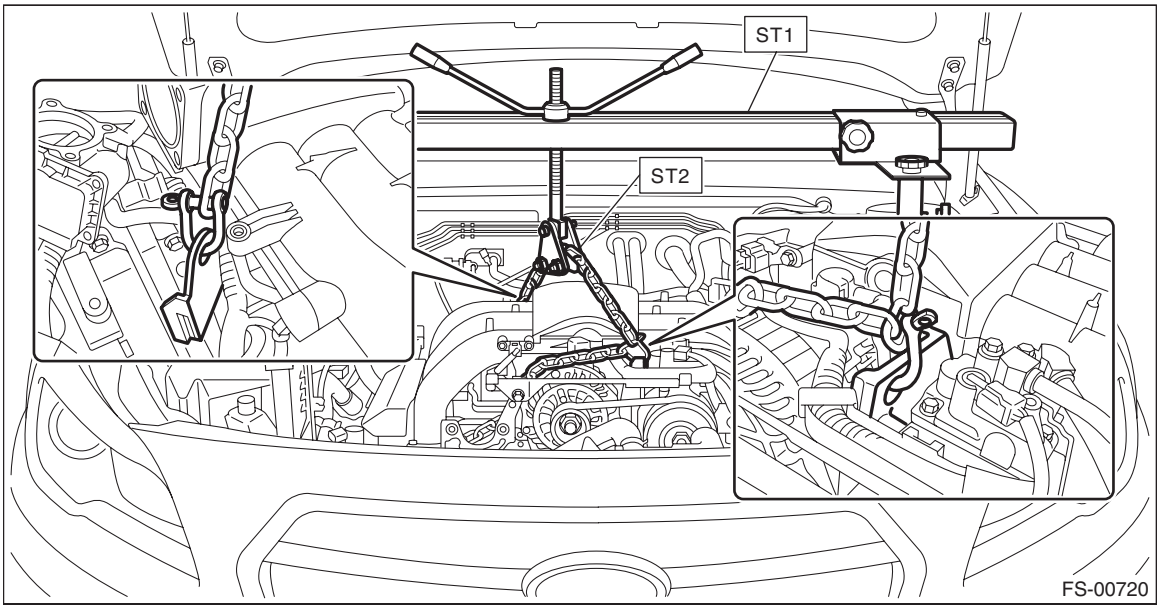

11) Remove the nuts connecting the main mount and the transmission mounting bracket.

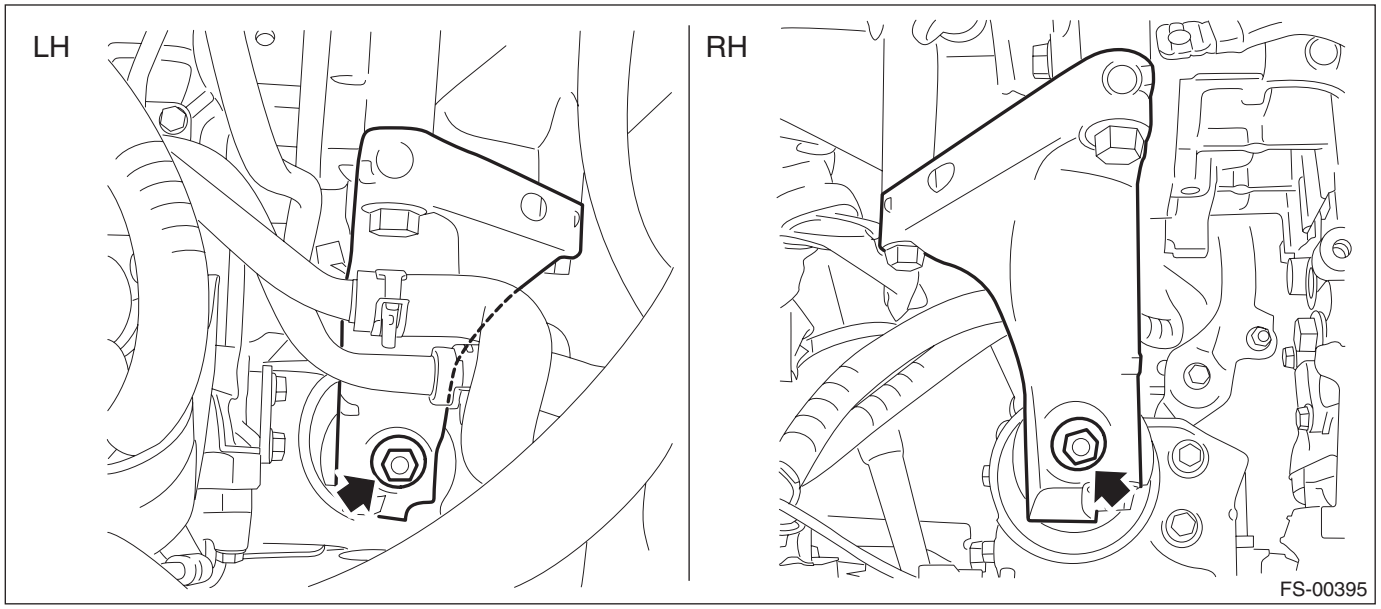

12) Remove the power steering connector.

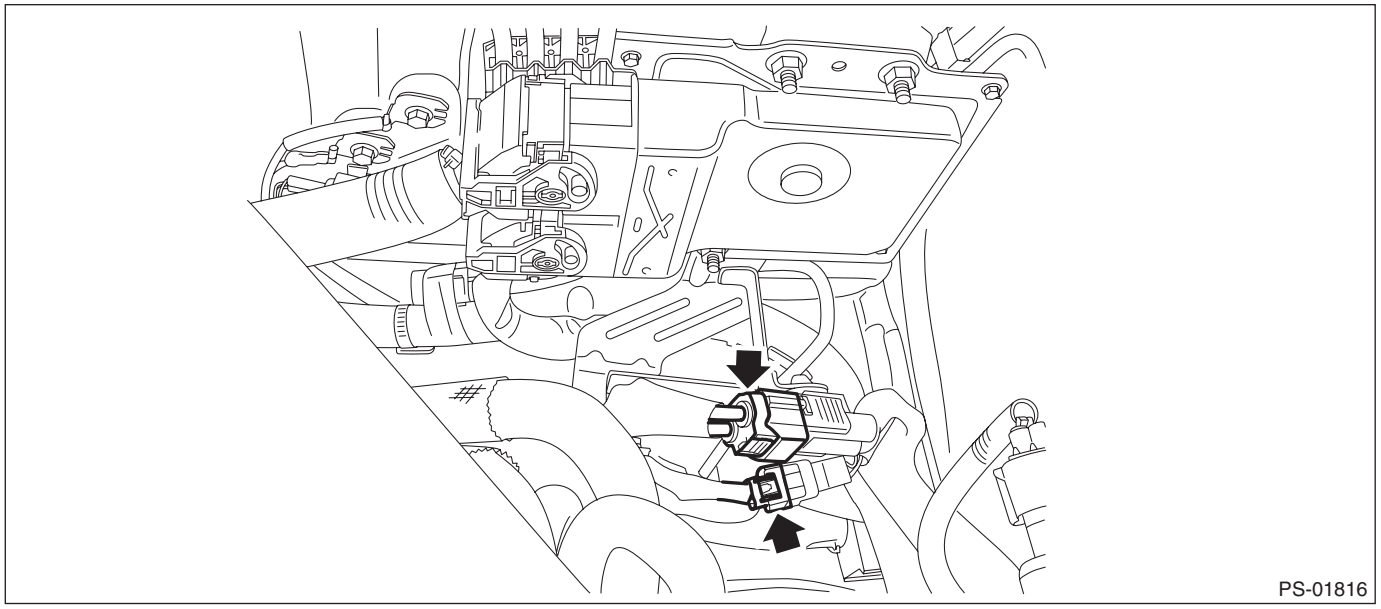

13) Remove the universal joint. <Ref. to PS-14, REMOVAL, Universal Joint.>

CAUTION:
To prevent damage to the universal joint and error of handling force, make sure to remove the universal joint.

14) Remove the front exhaust pipe.
- H4 model: <Ref. to EX(H4DO)-5, REMOVAL, Front Exhaust Pipe.>
- H6 model: <Ref. to EX(H6DO)-6, REMOVAL, Front Exhaust Pipe.>

15) Remove the stabilizer link assembly. <Ref. to FS-34, REMOVAL, Front Stabilizer.>

16) Disconnect the left and right front arms.
(1) Remove the nut, and pull out the bolt from the front lower arm.
(2) Remove the ball joint from the front lower arm.

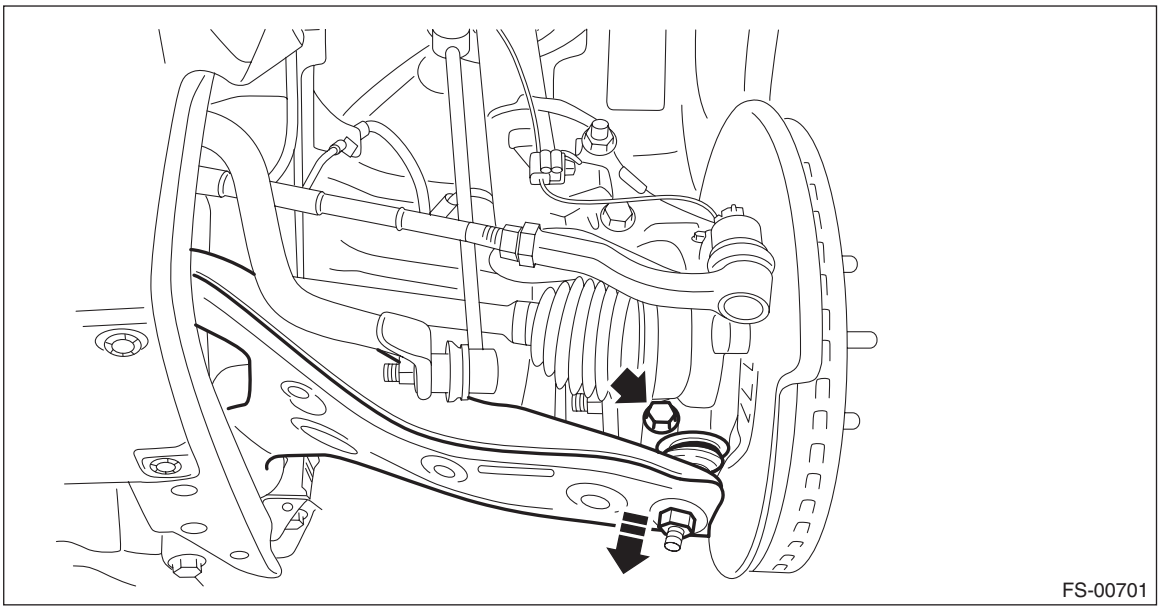
FS-00701

17) Disconnect the left and right tie-rod ends.
(1) Pull out the cotter pin (a).
(2) Remove the castle nut (b).
(3) Extract the tie-rod end (c) from the housing assembly - front axle.

CAUTION:
Use a tool appropriate to the structure, and be careful not to damage the boot of the joint while removing. The boot may be damaged depending on the tool used.

Preparation tool:
Tie-rod ball joint puller

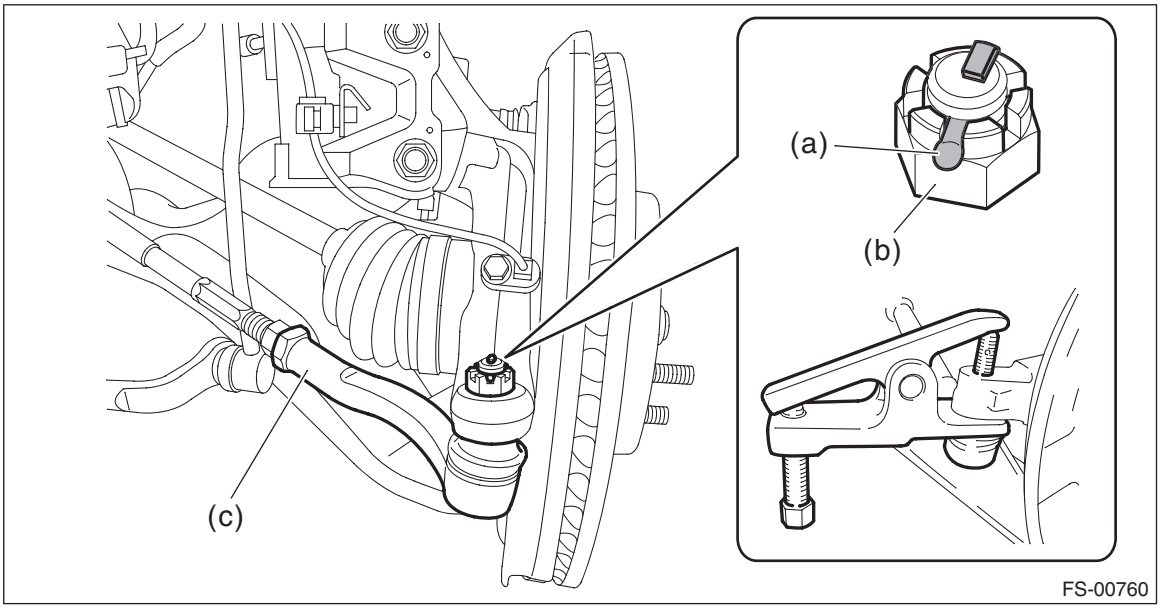

FS-00760

18) Attach the sling belt so that it wraps around the both frames using the shackle.

CAUTION:
- **Be sure to attach the sling belt to ensure safety in operation.**
- **Use a sling belt with the length of 2 m (6.6 ft), the width of 35 — 40 mm (1.38 — 1.57 in) and the load capacity of 1 t (2205 lb) or more.**

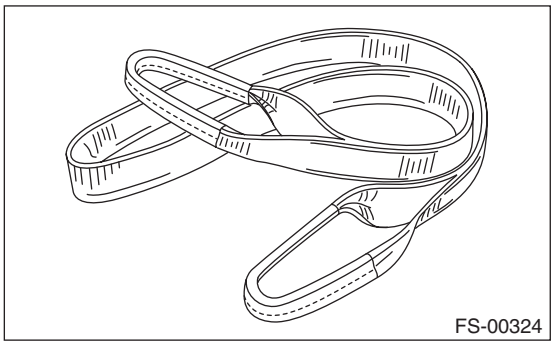
FS-00324

- **Use a shackle with the load capacity of 0.5 t (1103 lb) or more.**

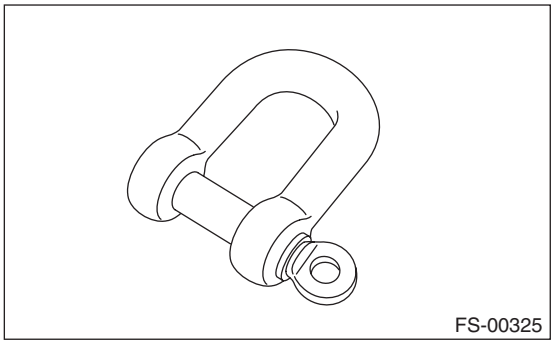
FS-00325

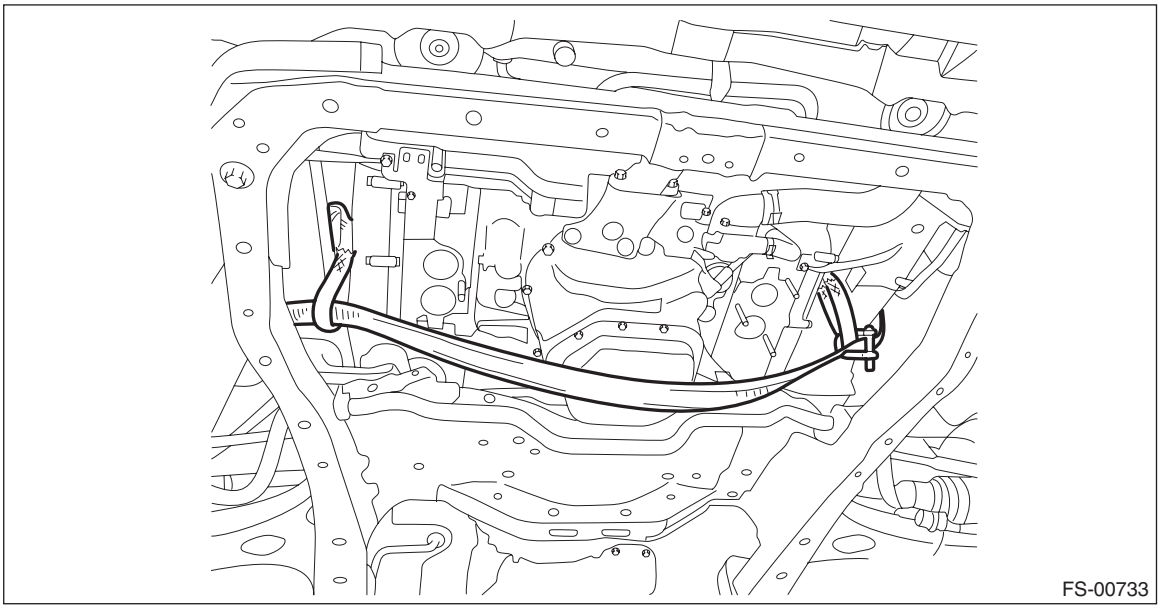
FS-00733

19) Remove the cradle from the vehicle.

CAUTION:
The cradle is heavy. Remove it carefully by paying attention to the balance.

(1) Support the cradle with the transmission jack.

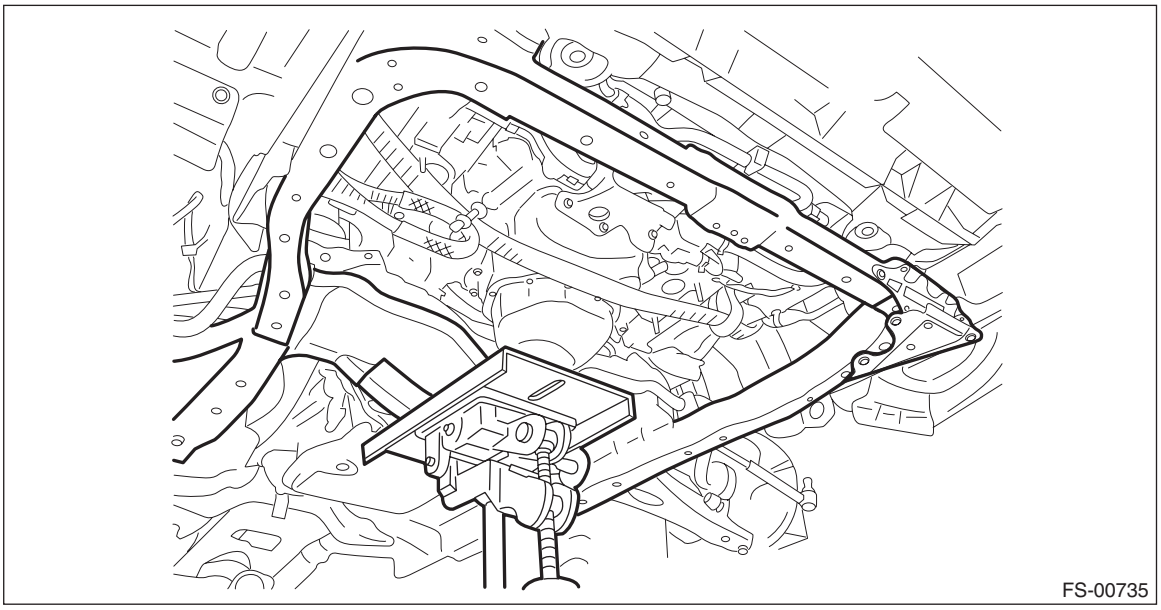

(2) Remove the bolt from the front cushion rubber, and remove the bolt securing the front of the cradle.

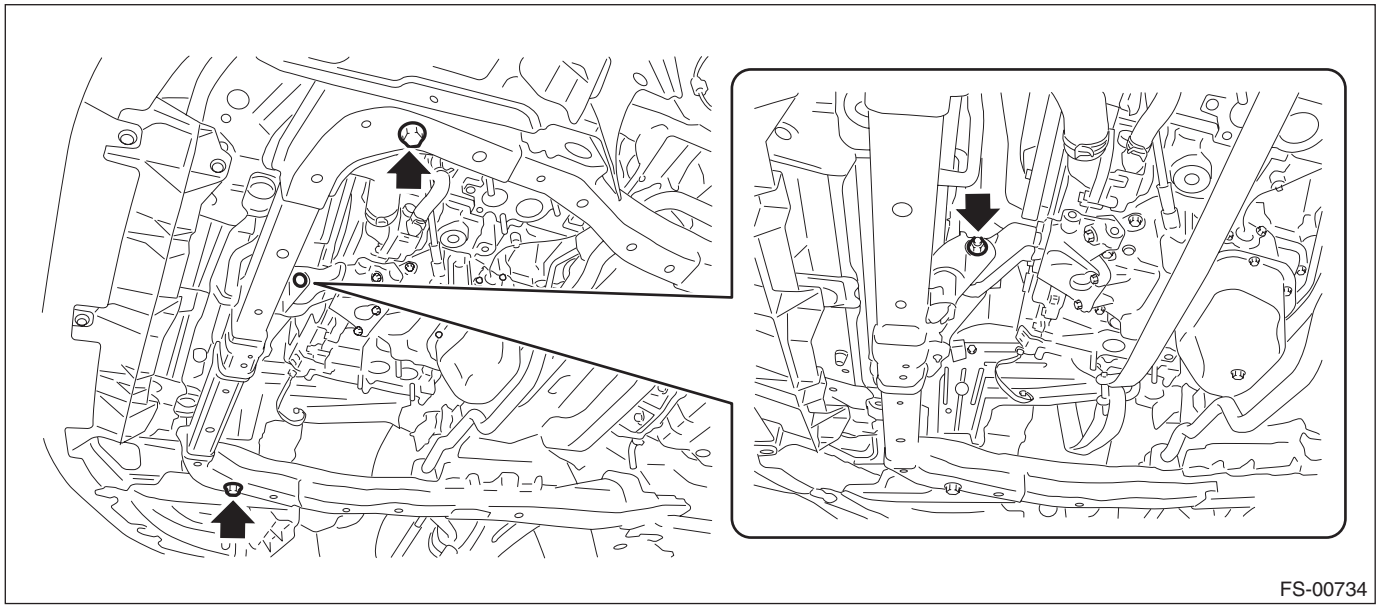

(3) Remove the left and right bolts and nuts.

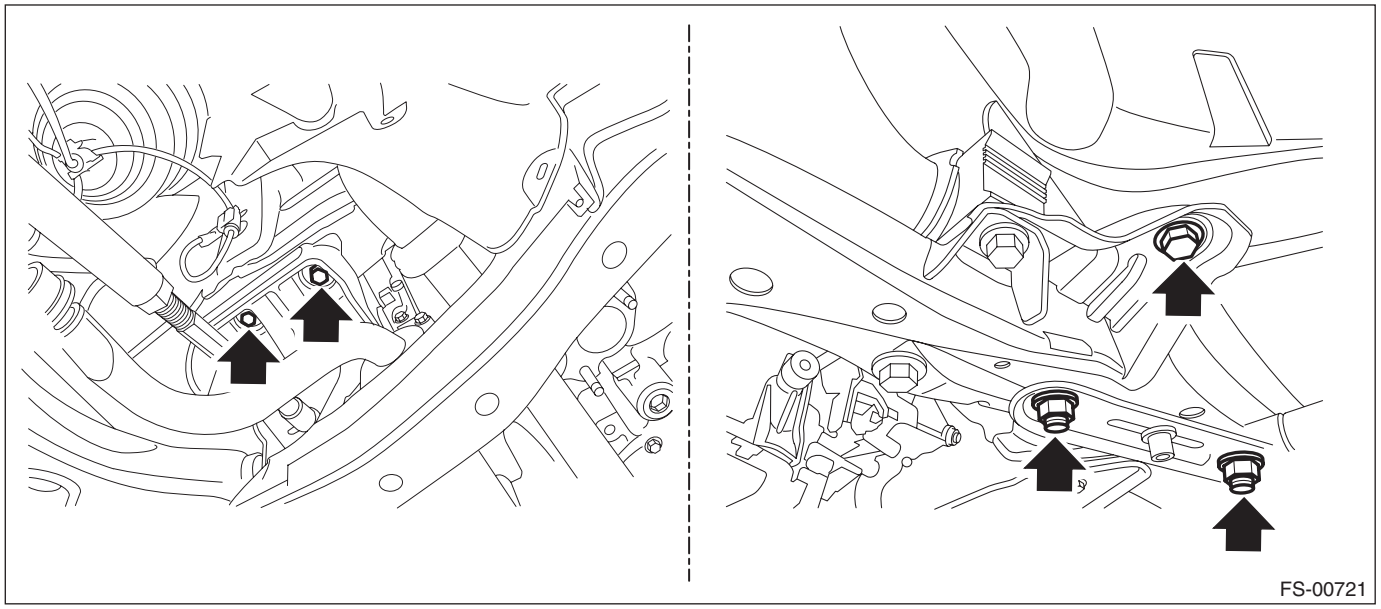

(4) Remove the cradle from the vehicle.

20) To remove the stud bolt, use the ST.

CAUTION:
Do not remove the stud bolt unless necessary. Always replace the parts with new parts when removed.

Preparation tool:
ST: STUD BOLT SOCKET (20299AG020)

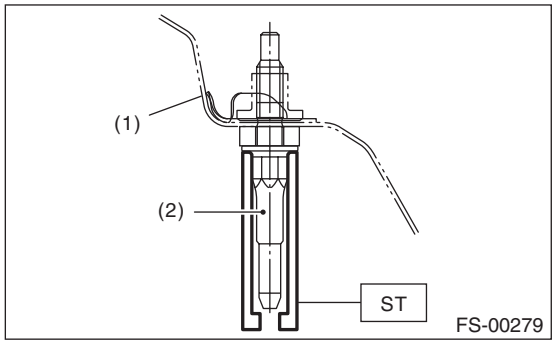

(1) Vehicle body
(2) Stud bolt

B: INSTALLATION

CAUTION:
Use a new bolt and self-locking nut. For parts which are not reusable, refer to "COMPONENT". <Ref. to FS-4, COMPONENT, General Description.>

1) Install the cradle to the vehicle body.
   (1) Raise the cradle with the transmission jack.

CAUTION:
The cradle is heavy. Raise it carefully by paying attention to the balance.
   (2) Install the bolt to the front cushion rubber and the bolt to the front of the cradle.

Tightening torque:
Front suspension-related parts: <Ref. to FS-4, COMPONENT, General Description.>

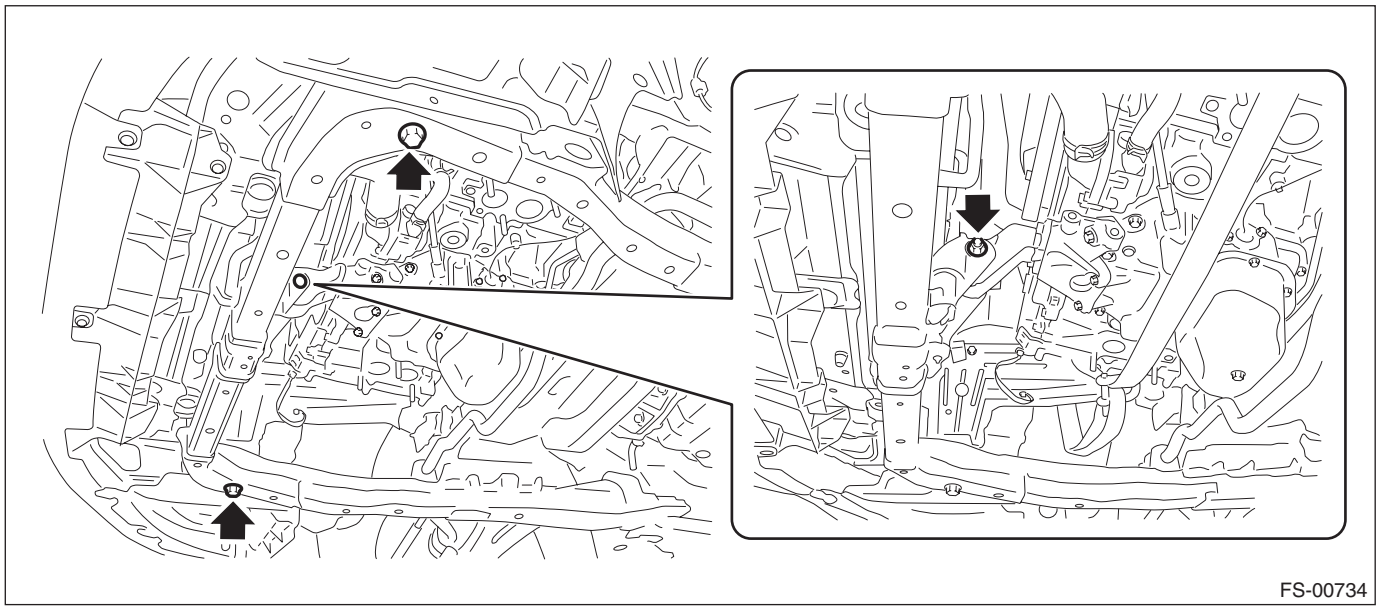
FS-00734

   (3) Install the left and right bolts and nuts.

Tightening torque:
Front suspension-related parts: <Ref. to FS-4, COMPONENT, General Description.>

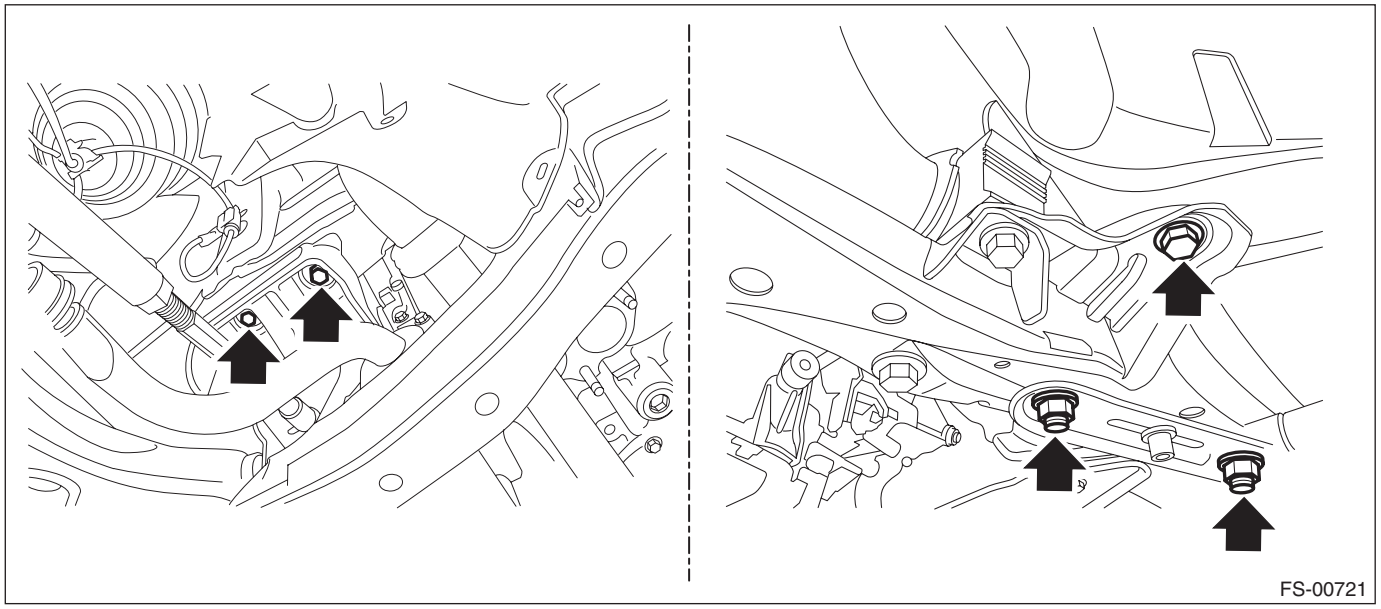
FS-00721

2) Remove the shackle and sling belt.
3) Install the tie-rod end.

Tightening torque:
Steering gearbox-related parts: <Ref. to PS-4, STEERING GEARBOX, COMPONENT, General Description.>
4) Install the front arm.

Tightening torque:
Front suspension-related parts: <Ref. to FS-4, COMPONENT, General Description.>
5) Install the stabilizer link rod. <Ref. to FS-35, INSTALLATION, Front Stabilizer.>
6) Install the front exhaust pipe.
- H4 model: <Ref. to EX(H4DO)-7, INSTALLATION, Front Exhaust Pipe.>
- H6 model: <Ref. to EX(H6DO)-8, INSTALLATION, Front Exhaust Pipe.>

7) Install the power steering connector.
8) Install the nuts connecting the main mount and the transmission mounting bracket.

Tightening torque:
Front suspension-related parts: <Ref. to FS-4, COMPONENT, General Description.>
9) Remove the ST, chain sling and shackle.
10) Remove the ST for the engine hanger from the engine front side. (H4 model)
11) Replace the ST with the engine hanger attached to the engine. (H6 model)
12) Change the hood stay location to support the front hood at ordinary position.
13) Install the air intake boot assembly.
- H4 model: <Ref. to IN(H4DO)-10, INSTALLATION, Air Intake Boot.>
- H6 model: <Ref. to IN(H6DO)-11, INSTALLATION, Air Intake Boot.>

14) Install the air intake duct. <Ref. to IN(H4DO)-12, INSTALLATION, Air Intake Duct.>
15) Connect the ground terminal to battery sensor. <Ref. to RC-4, BATTERY, NOTE, Repair Contents.>
16) Install the universal joint assembly - steering. <Ref. to PS-15, INSTALLATION, Universal Joint.>

CAUTION:
• Always tighten the cradle and engine mounting before tightening the universal joint assembly - steering.
• Always install the universal joint assembly - steering after installing the steering column to avoid damage to the universal joint assembly - steering.
• Be sure to follow the tightening order and tightening torque of the universal joint assembly - steering to avoid the steering effort from becoming heavy. After confirming that the steering column position is in the neutral position, tighten the universal joint assembly - steering.
• Always place the tilt lever to the lock position after the steering column is adjusted.
17) Install the under cover - front. <Ref. to EI-28, INSTALLATION, Front Under Cover.>
18) Install the front wheels.

Tightening torque:
120 N·m (12.2 kgf-m, 88.5 ft-lb)
19) Inspect the wheel alignment and adjust if necessary. <Ref. to FS-14, ADJUSTMENT, Wheel Alignment.>

CAUTION:
When the wheel alignment has been adjusted, perform the following adjustment.
– Lane keep assist learning value clear (model with EyeSight): <Ref. to ES(diag)-49, OPERATION, Clear Active Lane Keep System Learning Value.>
– VDC sensor midpoint setting mode: <Ref. to VDC-15, ADJUSTMENT, VDC Control Module and Hydraulic Control Unit (VDCCM&H/U).>
20) Perform reinitialization of the auto headlight beam leveler system. (Model with auto headlight beam leveler) <Ref. to LI-23, PROCEDURE, Auto Headlight Beam Leveler System.>

4. Front Stabilizer

A: REMOVAL

1) Lift up the vehicle, and then remove the left and right front wheels.
2) Remove the front under cover. <Ref. to EI-28, REMOVAL, Front Under Cover.>
3) Remove the front stabilizer.
   (1) Remove the left and right stabilizer links.

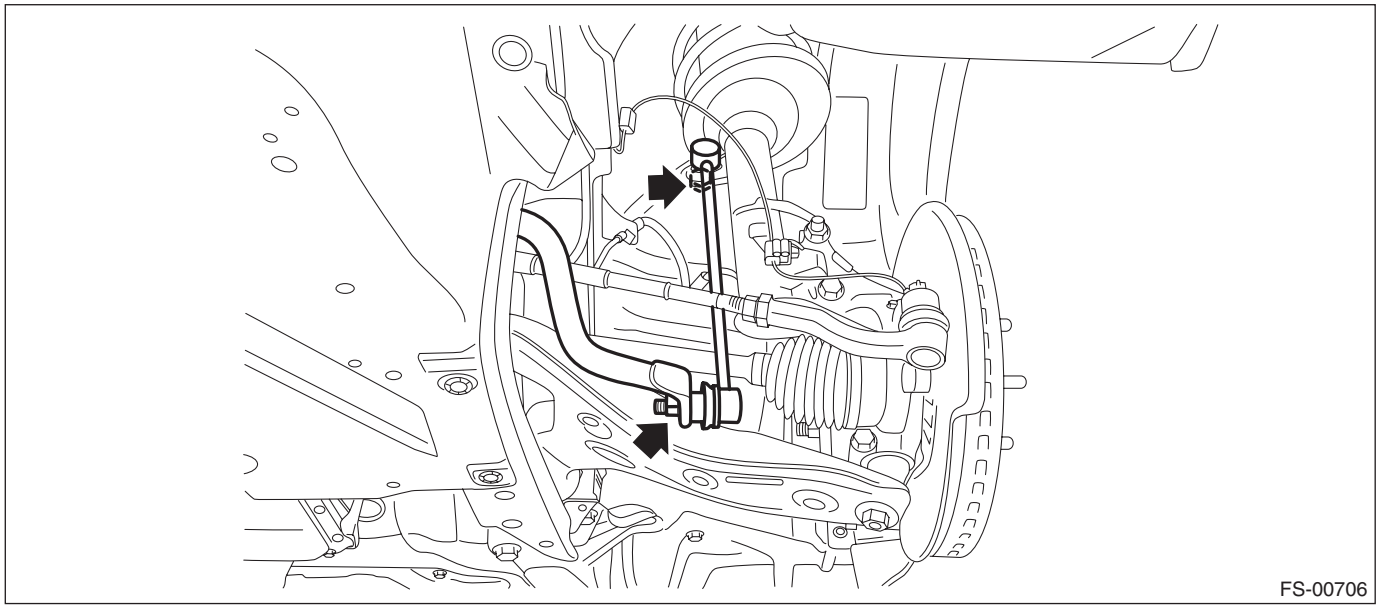

   (2) Remove the left and right stabilizer brackets.

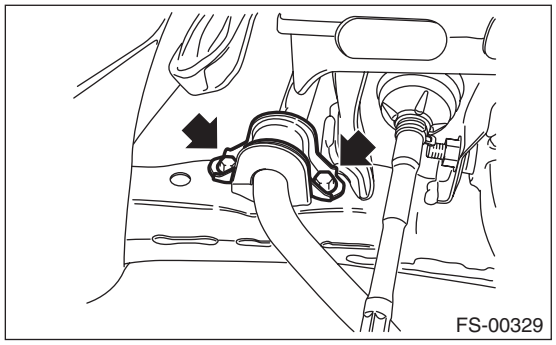

   (3) Turn the front stabilizer by approximately 180° toward the front of the vehicle and pull out the front stabilizer from the right side of the vehicle.

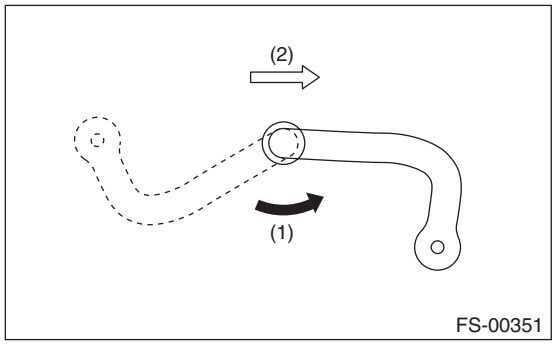

(1) Turn toward the front of the vehicle.
(2) Front side of vehicle

B: INSTALLATION

1) Before installation, inspect the following items and replace any faulty part with a new one.
- Check the bushing for abnormal cracks, fatigue or damage.
- Check the stabilizer link for damage.

2) Install the front stabilizer.

CAUTION:
• Be careful not to let the dust boot of the stabilizer link turn over or fall off when installing. If a deformed dust boot is installed, the dust boot may be damaged.
• The stabilizer bracket has a set orientation. Install it with the arrow mark facing the front side (1) of the vehicle.

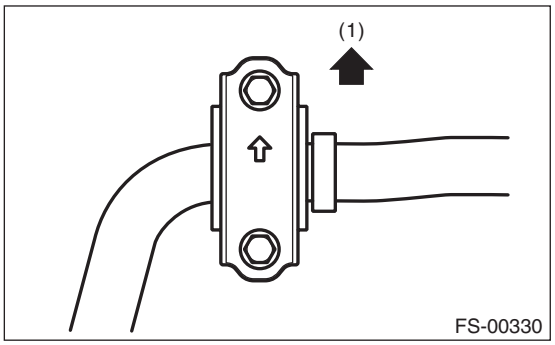

• The stabilizer link RH is different from LH. Therefore, make sure that the stabilizer link is installed correctly by checking the paint mark.

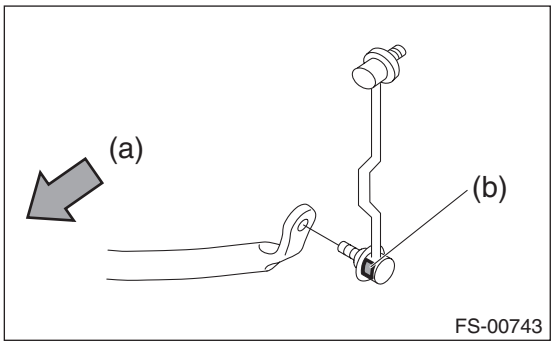

(a) Front side of vehicle
(b) Identification paint

(1) Put the front stabilizer in from the right side of vehicle.
(2) Install the right and left stabilizer brackets.

Tightening torque:
Stabilizer bracket: 25 N·m (2.5 kgf-m, 18.4 ft-lb)
(3) Install the right and left stabilizer links.

Tightening torque:
Stabilizer link: 60 N·m (6.1 kgf-m, 44.3 ft-lb)

3) Install the front under cover. <Ref. to EI-28, INSTALLATION, Front Under Cover.>
4) Install the front wheels.

Tightening torque:
120 N·m (12.2 kgf-m, 88.5 ft-lb)

5. Front Ball Joint

A: REMOVAL

1) Lift up the vehicle, and then remove the front wheels.
2) Remove the ball joint.
   (1) Extract the cotter pin (a) from the ball stud.
   (2) Remove the castle nut (b).
   (3) Extract the ball stud from the front arm (c).
   (4) Remove the bolt securing the ball joint to the housing assembly - front axle.

CAUTION:
Use a tool appropriate to the structure, and be careful not to damage the boot of the joint while removing. The boot may be damaged depending on the tool used.

Preparation tool:
Tie-rod ball joint puller

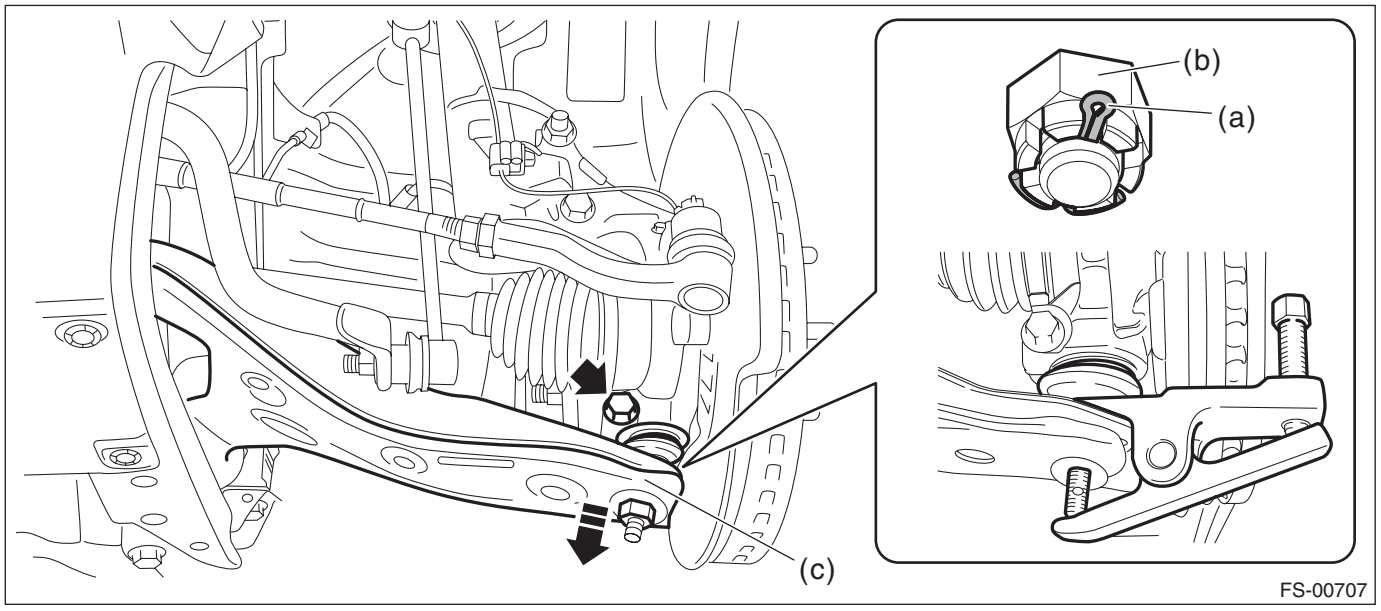

(5) Extract the ball joint from the housing assembly - front axle.

B: INSTALLATION

1) Install the ball joint into the housing assembly - front axle.

CAUTION:
- **Do not apply grease to the tapered portion of ball stud.**
- **Before tightening, make sure the bottom surface of the housing assembly - front axle and the stepped section of ball joint are in contact.**

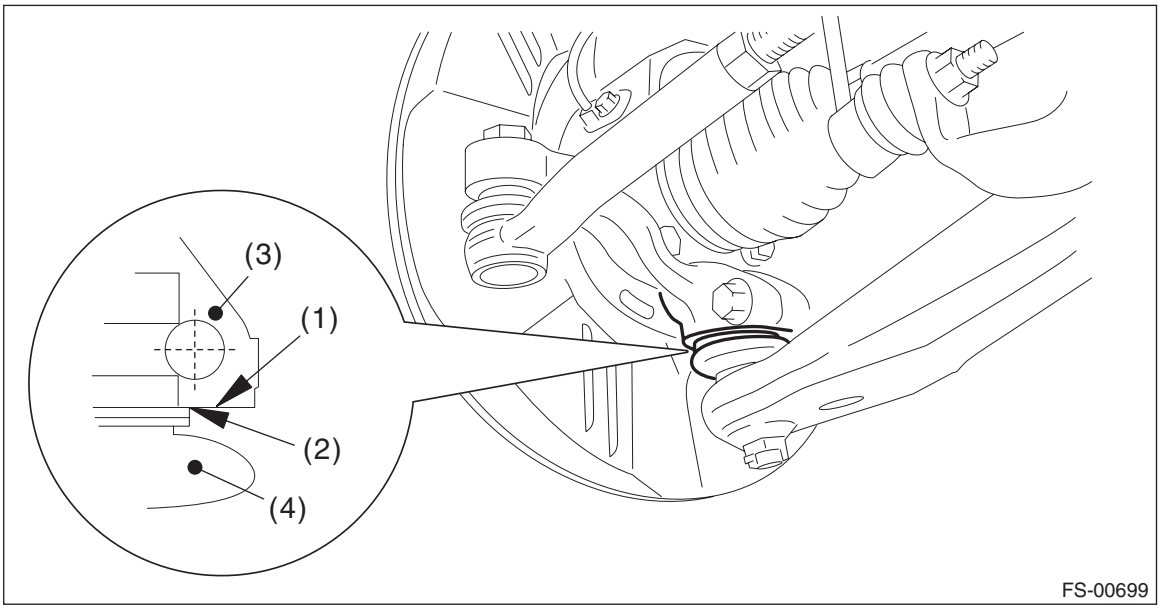

(1) Bottom surface of housing ASSY - front axle
(2) Raised section of ball joint
(3) Housing ASSY - front axle
(4) Ball joint boot

Tightening torque:
50 N·m (5.1 kgf-m, 36.9 ft-lb)

2) Install the ball joint into front arm.
   (1) Connect the ball joint to the front arm.

Tightening torque:
39 N·m (4.0 kgf-m, 28.8 ft-lb)

   (2) Tighten the castle nut further up to 60° until the hole in the ball stud is aligned with a slot in castle nut.
   (3) Insert a new cotter pin and bend it around the castle nut.

3) Install the front wheels.

Tightening torque:
120 N·m (12.2 kgf-m, 88.5 ft-lb)

C: INSPECTION

1) Check that there is no play by moving the upper and lower portions of front tire in an axial direction with the brake pedal depressed.

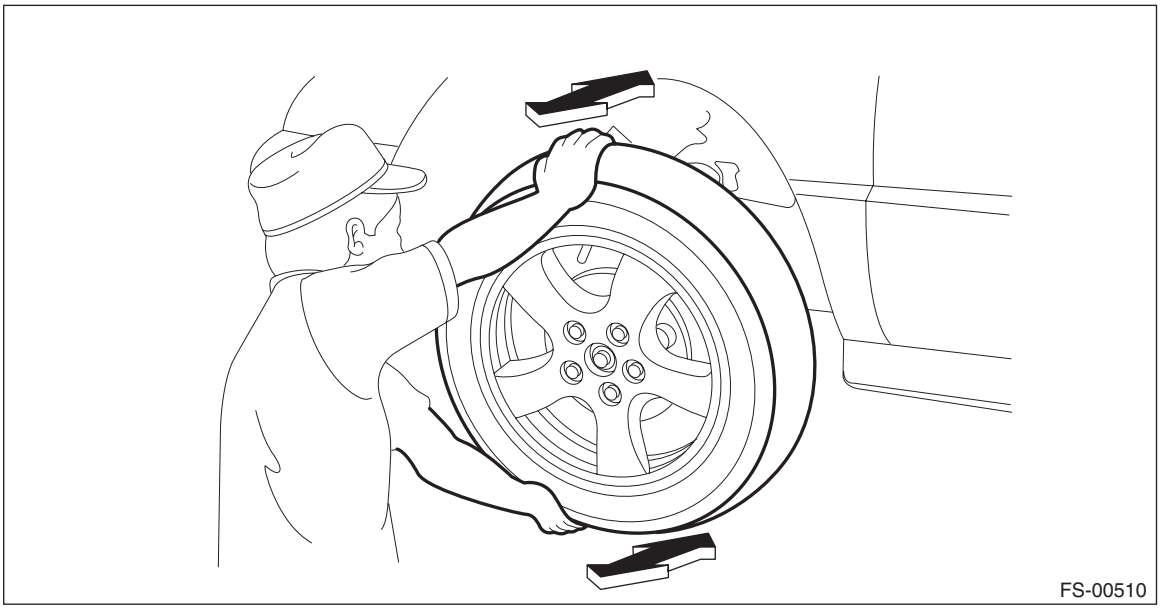

- **Play exists** → Replace the ball joint. <Ref. to FS-36, REMOVAL, Front Ball Joint.>

2) Check that there is no play by moving the upper and lower portions of front tire in an axial direction with the brake pedal released.

- **Play exists** → Check the hub unit bearing. <Ref. to DS-27, INSPECTION, Front Hub Unit Bearing.>

3) Replace the ball joint if the ball joint boot is damaged when visually inspecting the ball joint boot.

6. Front Arm

A: REMOVAL

1) Lift up the vehicle, and then remove the front wheels.
2) Remove the under cover - front. <Ref. to EI-28, REMOVAL, Front Under Cover.>
3) Remove the front arm.
   (1) Pull out the cotter pin (a).
   (2) Remove the castle nut (b) and bolt.
   (3) Extract the front arm (c) from the housing assembly - front axle.

CAUTION:
Use a tool appropriate to the structure, and be careful not to damage the boot of the joint while removing. The boot may be damaged depending on the tool used.

Preparation tool:
Tie-rod ball joint puller

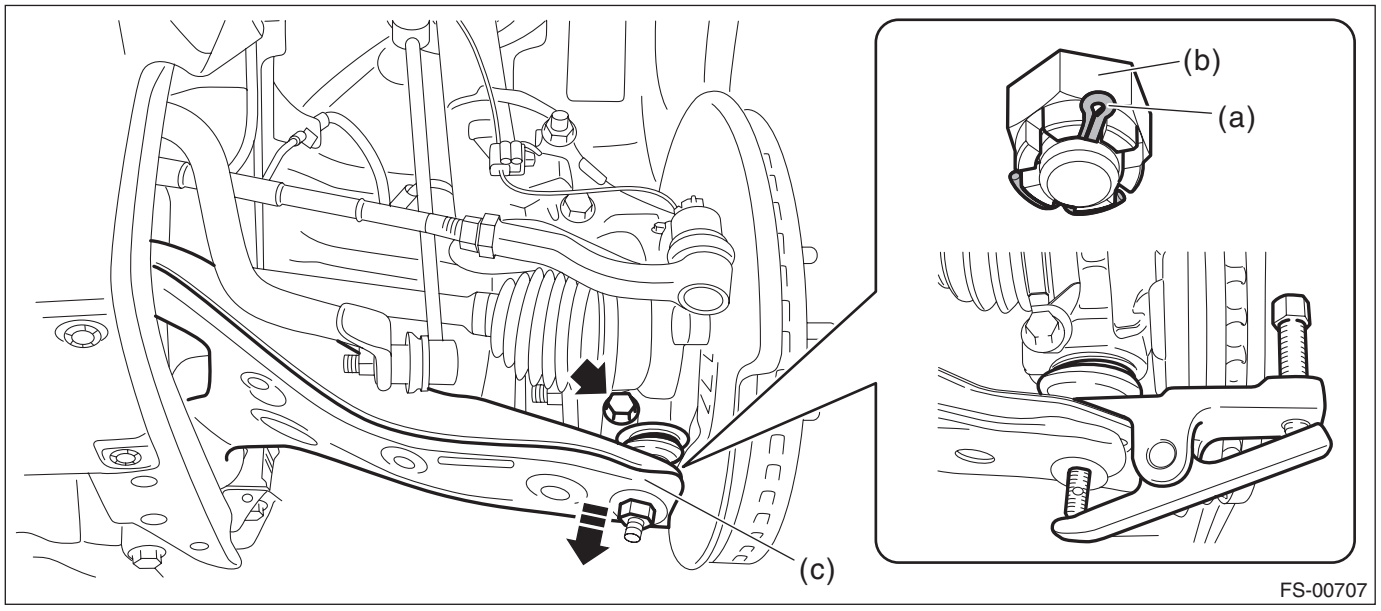

(4) Remove the bolts, then remove the front arm.

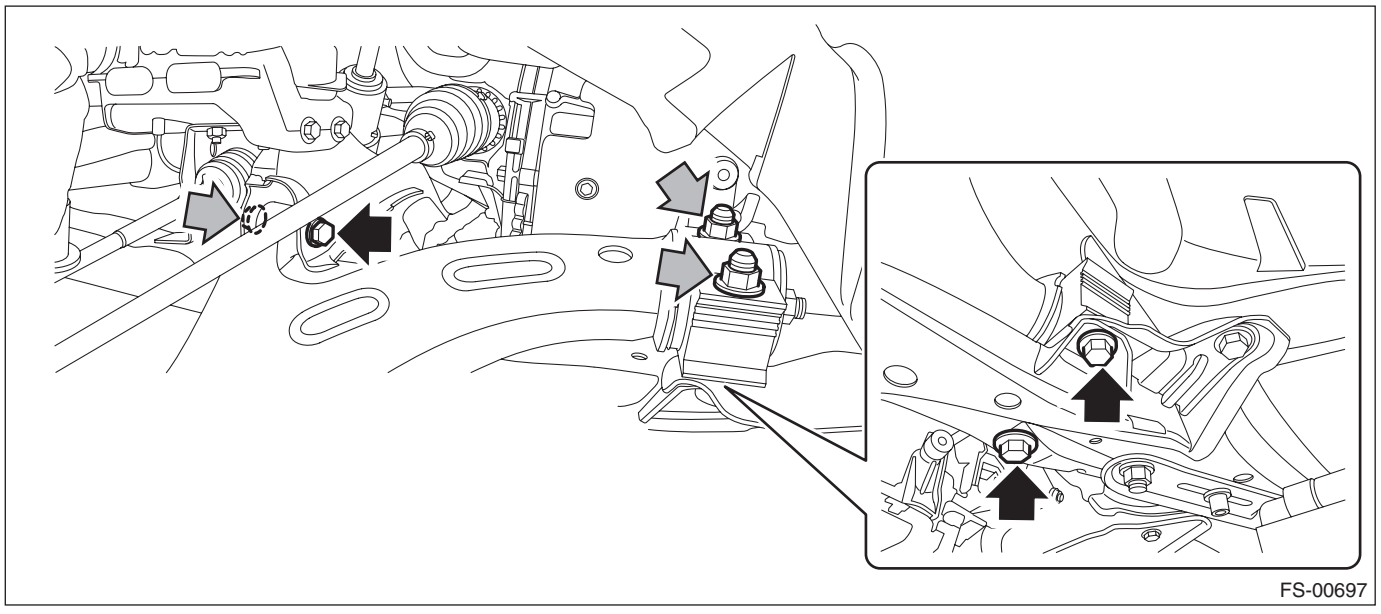

B: INSTALLATION

1) Before installation, inspect the following items and replace any faulty part with a new one.
- Check the front arm for damage or cracks, and replace if defective.
- Visually check the bushing for abnormal cracks, fatigue or damage.
- Visually check the boot on the ball joint for damage.

2) Using new self-locking nuts, temporary tighten the front arm.
3) Install the ball joint into the housing assembly - front axle.

CAUTION:
Before tightening, make sure the bottom surface of the housing assembly - front axle and the stepped section of ball joint are in contact.

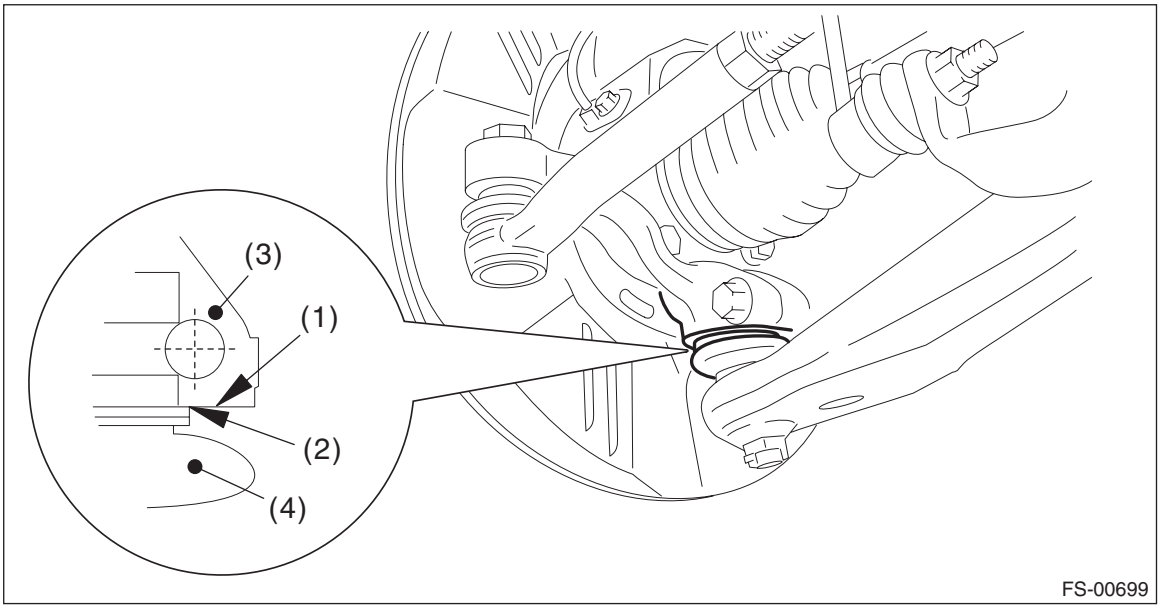

(1) Bottom surface of housing ASSY - front axle
(3) Housing ASSY - front axle
(4) Ball joint boot
(2) Raised section of ball joint

Tightening torque:
50 N·m (5.1 kgf-m, 36.9 ft-lb)

4) Install the front wheels.

Tightening torque:
120 N·m (12.2 kgf-m, 88.5 ft-lb)

5) Unload the vehicle from lift, and tighten the bolt which secures the front arm to cradle with wheels in full contact with the ground and the vehicle at curb weight.

Tightening torque:
Front bushing side: 95 N·m (9.7 kgf-m, 70.1 ft-lb)
Rear bushing side: 140 N·m (14.3 kgf-m, 103.3 ft-lb)

6) Inspect the wheel alignment and adjust if necessary. <Ref. to FS-14, ADJUSTMENT, Wheel Alignment.>

CAUTION:
When the wheel alignment has been adjusted, perform the following adjustment.
– Lane keep assist learning value clear (model with EyeSight): <Ref. to ES(diag)-49, OPERATION, Clear Active Lane Keep System Learning Value.>
– VDC sensor midpoint setting mode: <Ref. to VDC-15, ADJUSTMENT, VDC Control Module and Hydraulic Control Unit (VDCCM&H/U).>

7) Perform reinitialization of the auto headlight beam leveler system. (Model with auto headlight beam leveler) <Ref. to LI-23, PROCEDURE, Auto Headlight Beam Leveler System.>

C: DISASSEMBLY

1. BUSHING FRONT - FRONT ARM

1) Put an alignment mark on the front arm assembly based on the split portion of the bushing intermediate plate of the busing front - front arm.

CAUTION:
Always put an alignment mark for aligning the position on bushing installation.

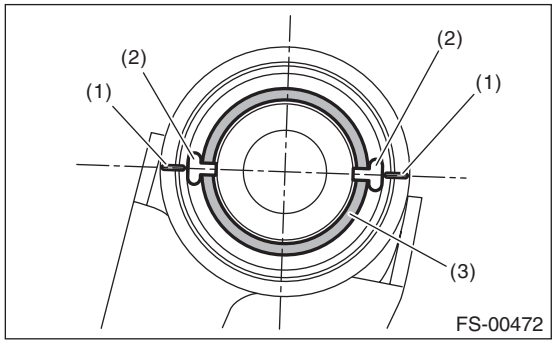

(1) Put an alignment mark.
(2) Gap of bushing intermediate plate
(3) Bushing intermediate plate

2) Using the ST and a press, remove the front bushing.

Preparation tool:
ST: INSTALLER & REMOVER SET (927680000)

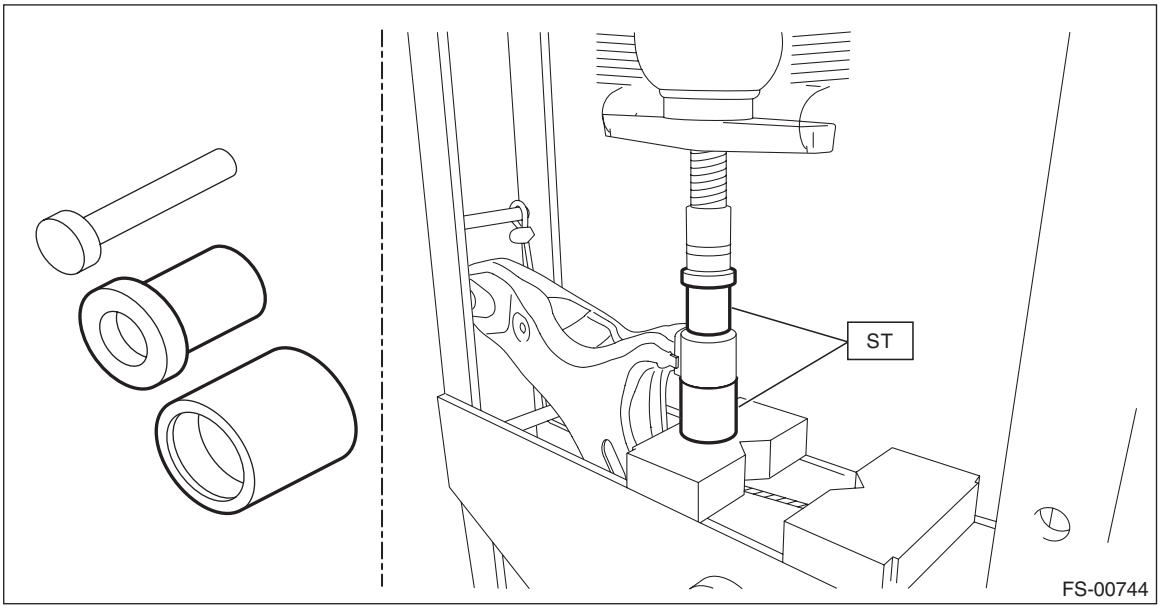

2. BUSHING REAR - FRONT ARM

1) Remove the rear bushing assembly.
(1) Put alignment marks on the front arm assembly and the bushing rear - front arm.
• Front arm assembly replacement: put an alignment mark (a) from the cutout portion of the front arm assembly to the bushing rear - front arm.

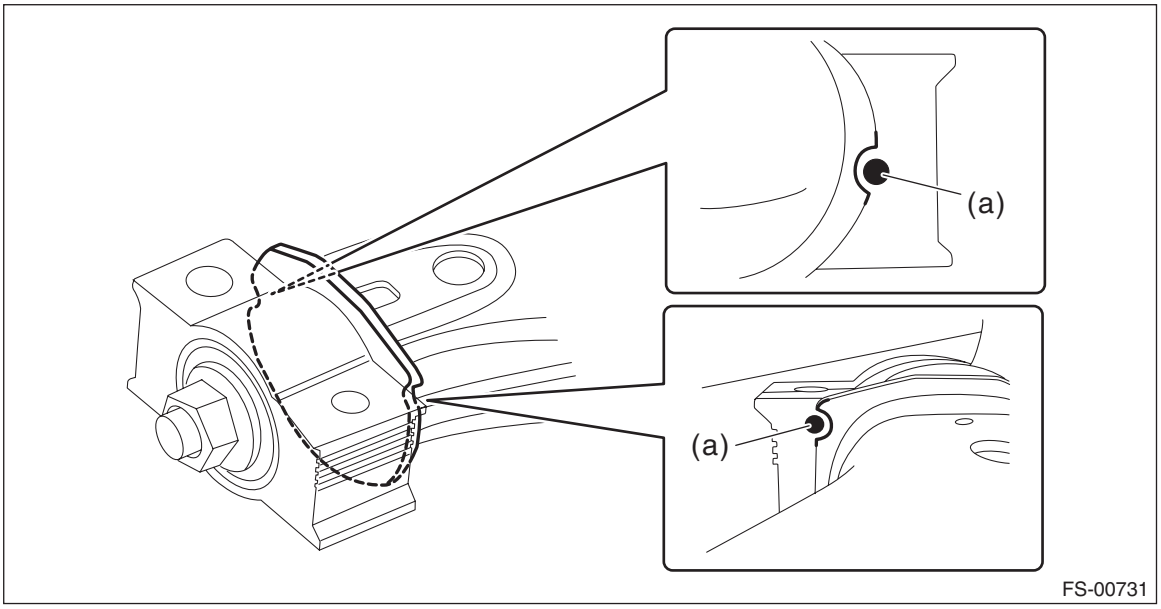

• Bushing rear - front arm replacement: put an alignment mark (b) on the front arm assembly located on an imaginary line extending from the rib portion of the bushing rear - front arm.

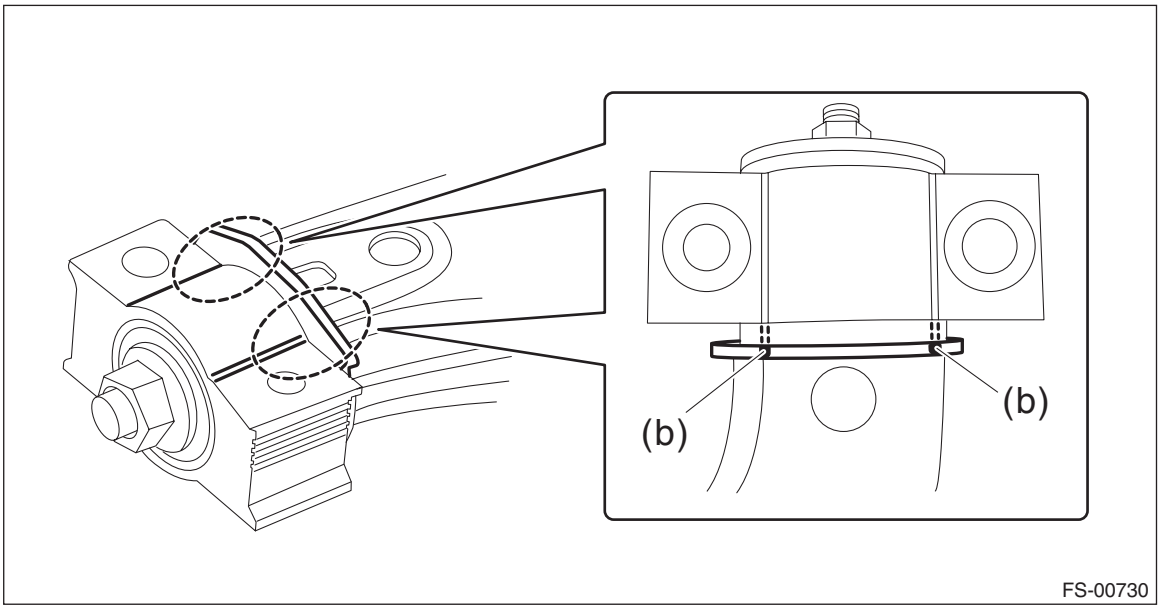

(2) Remove the self-locking nut, and then remove the rear bushing assembly.

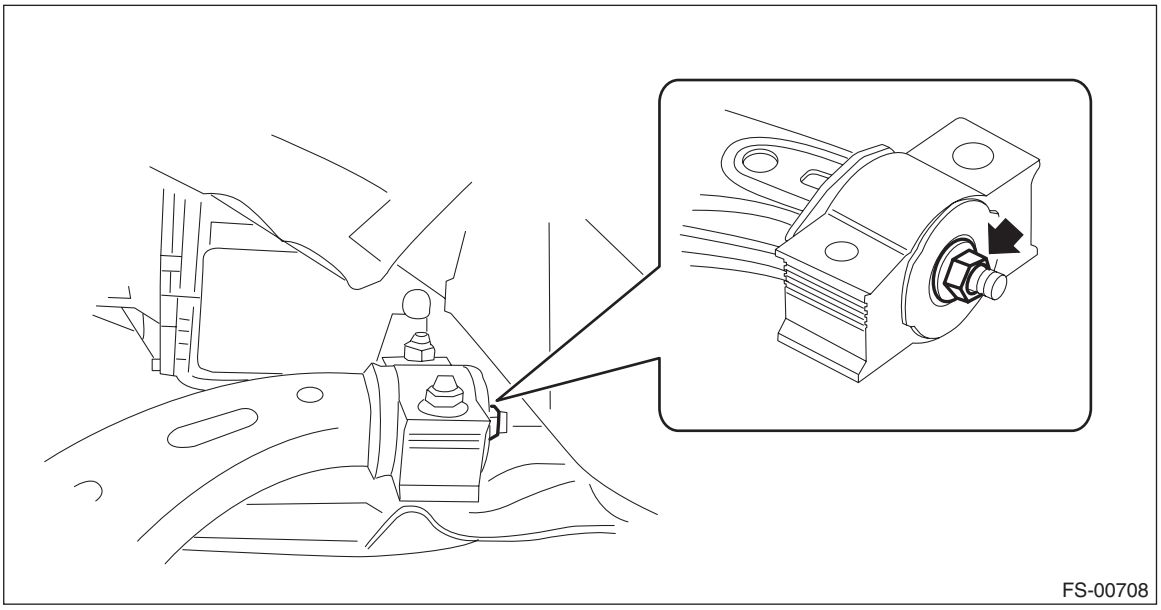

D: ASSEMBLY

1. BUSHING FRONT - FRONT ARM

1) Before assembly, inspect the following items and replace any faulty part with a new one.
- Check the front arm for damage or cracks, and replace if defective.
- Visually check the bushing for abnormal cracks, fatigue or damage.
- Visually check the boot on the ball joint for damage.

2) Align the gap of bushing intermediate plate for front bushing with the alignment mark of the front arm.
3) Using the ST and a press, install the front bushing.

Preparation tool:
ST: INSTALLER & REMOVER SET (927680000)

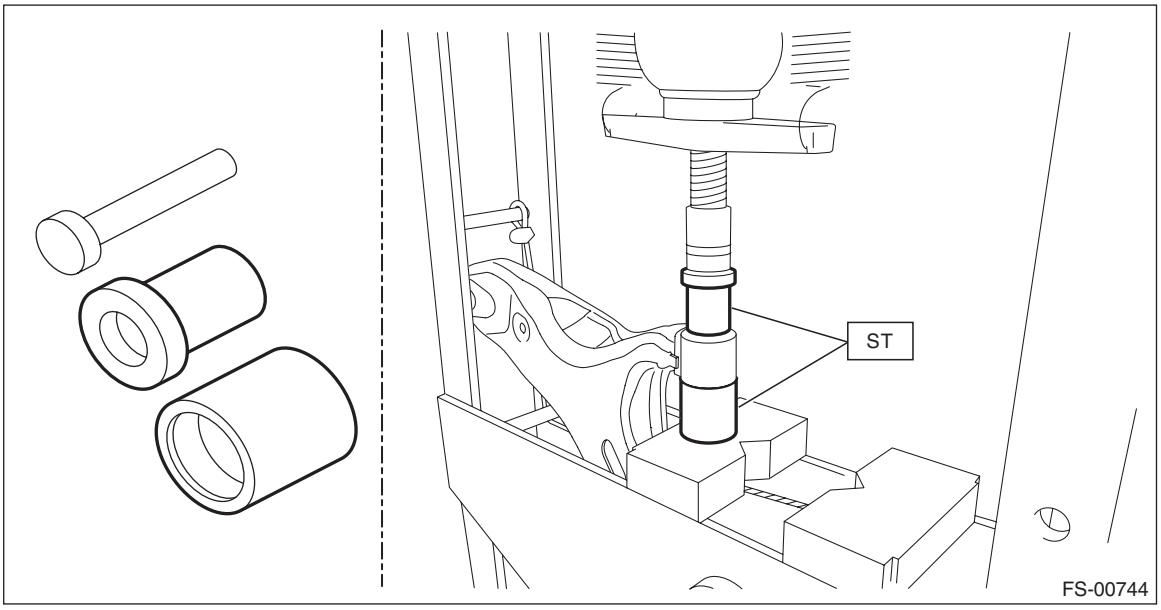

2. BUSHING REAR - FRONT ARM

1) Before installation, inspect the following items and replace any faulty part with a new one.
- Check the front arm for damage or cracks, and replace if defective.
- Visually check the bushing for abnormal cracks, fatigue or damage.
- Visually check the dust cover on the ball joint for damage.

2) Install the rear bushing assembly to the bushing rear - front arm.

CAUTION:
Confirm the installing direction and install securely.

(1) Install the spacer - arm front (a) and the stopper - rubber front (b).

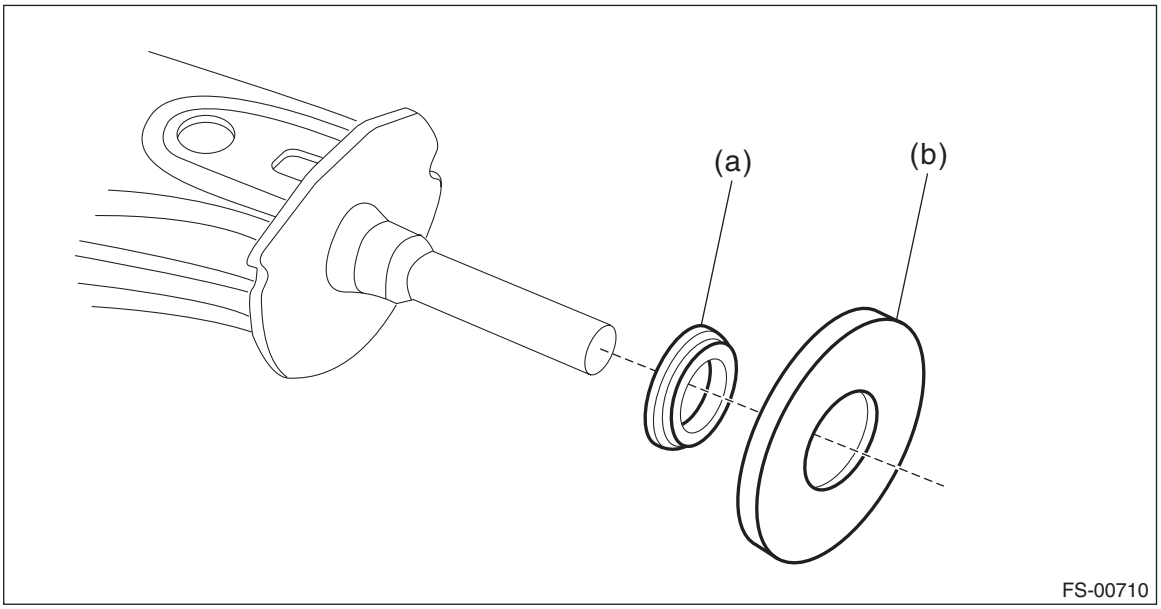

(2) Install the rear bushing assembly so that the rib (a) faces the upper side of the vehicle and the protrusion (b) faces the rear side of the vehicle.

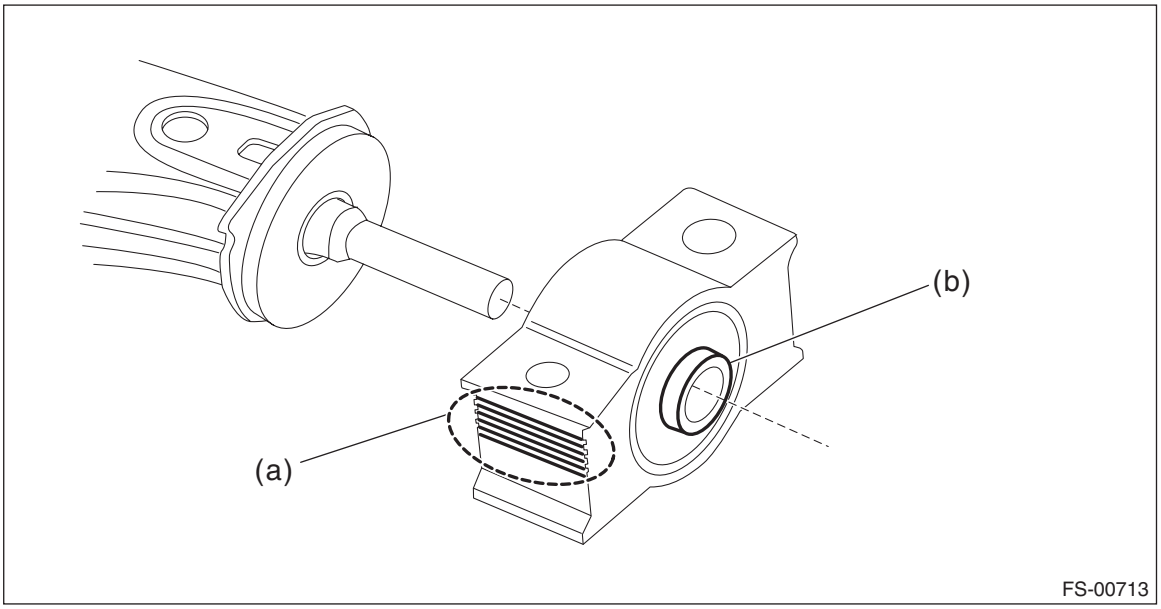

(3) Install the plate - arm front (d) and the stopper - rubber front (c).

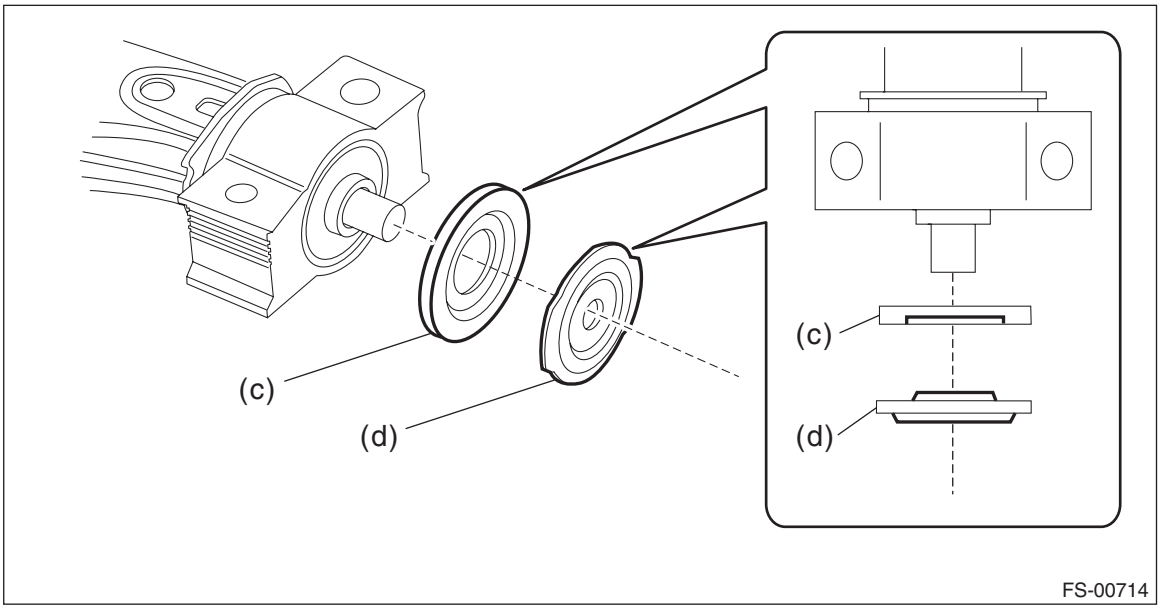

(4) Using new self-locking nuts, install the rear bushing assembly to the bushing rear - front arm by matching the alignment marks that have been marked when removing.

Tightening torque:

140 N·m (14.3 kgf-m, 103.3 ft-lb)

- Front arm assembly replacement: align the alignment mark (a) of the bushing rear - front arm with the cutout portion of the front arm assembly.

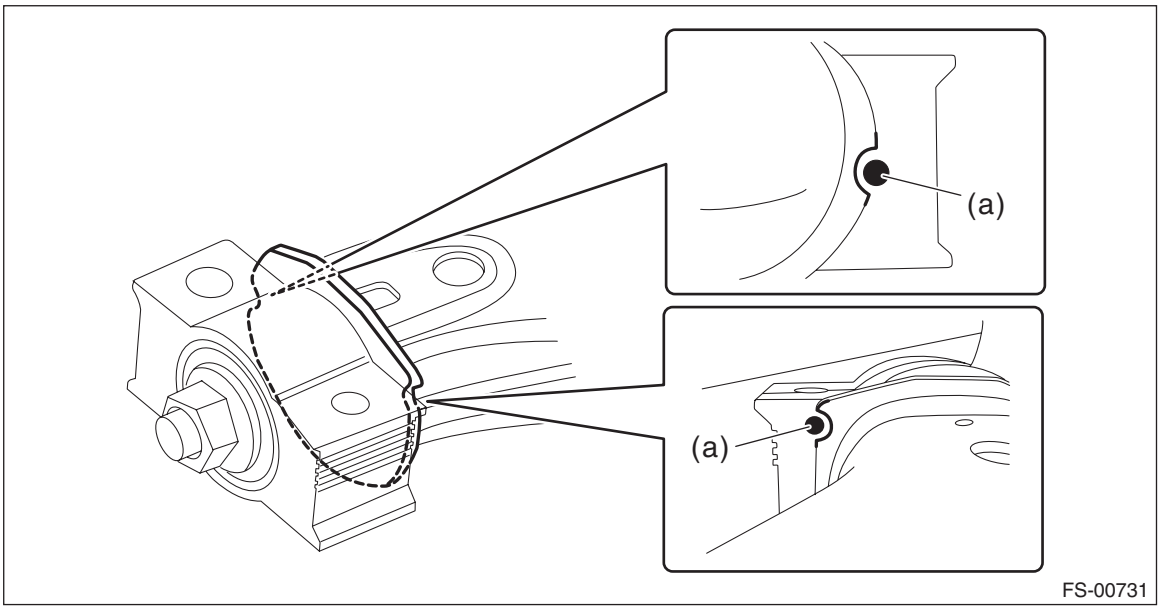

• Bushing rear - front arm replacement: align the alignment mark (b) on the front arm assembly with an imaginary line extending from the rib portion of the bushing rear - front arm.

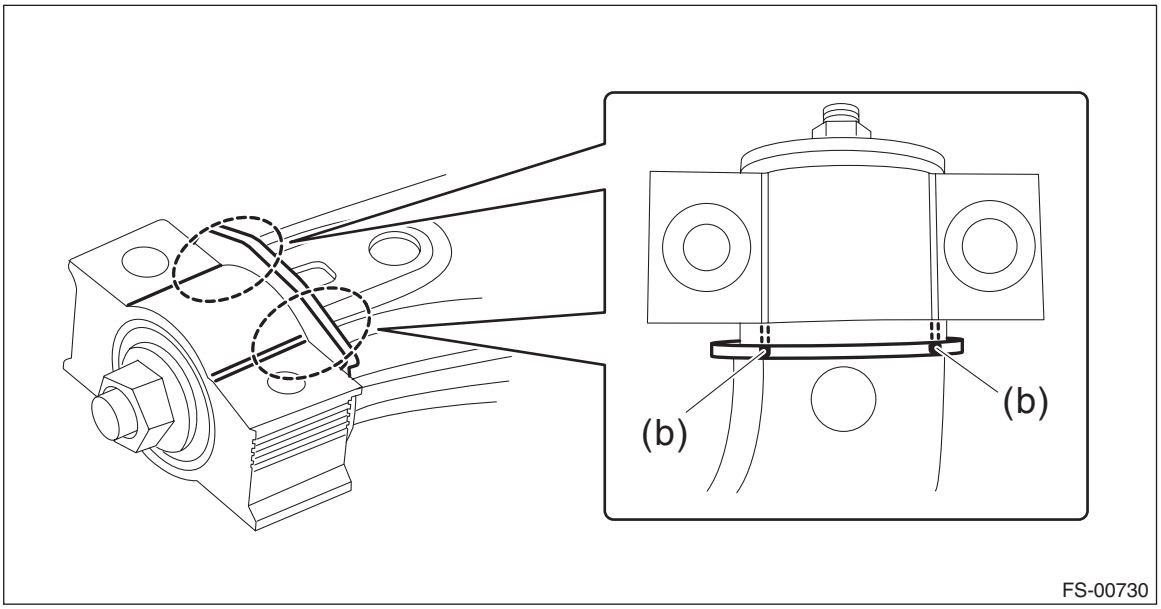

7. Front Strut

A: REMOVAL

1) Lift up the vehicle, and then remove the front wheels.
2) Remove the front strut assembly.
   (1) Place an alignment mark on the camber adjusting bolt and strut.
   (2) Remove the brake hose bracket.

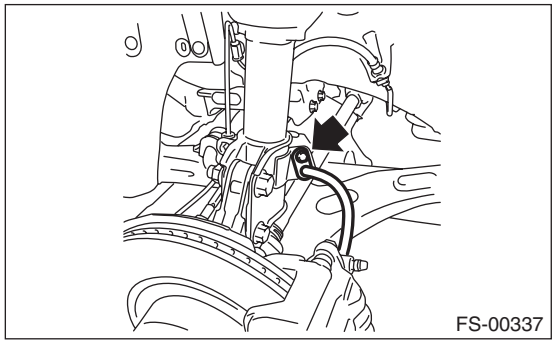

   (3) Remove the nut on the upper side of front stabilizer link and the ABS wheel speed sensor harness.

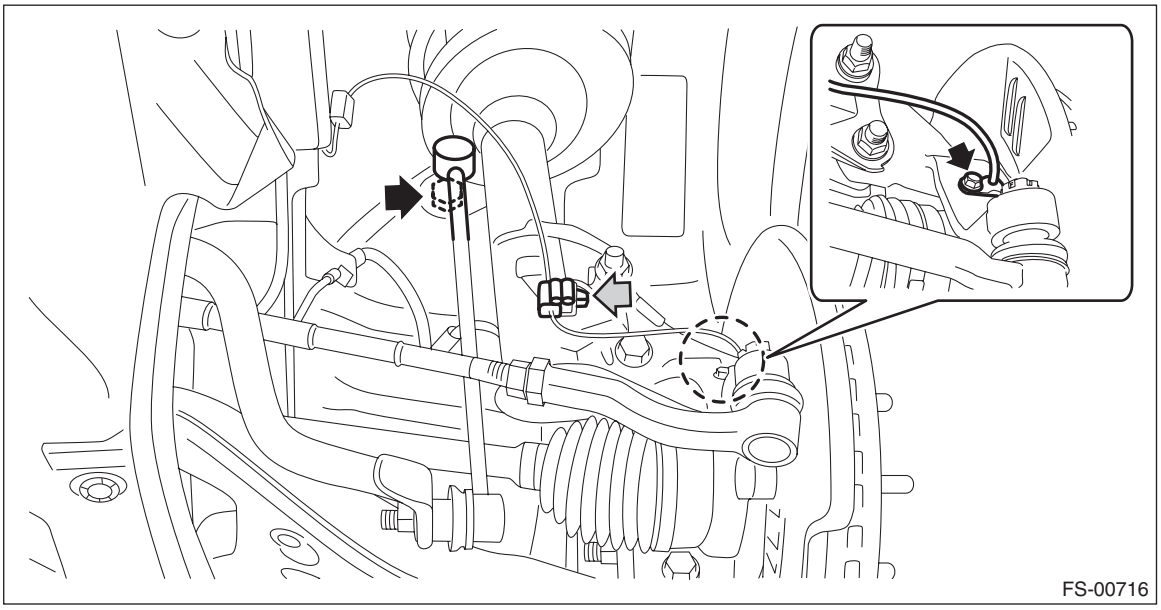

(4) Remove the two bolts securing the housing assembly - front axle to the strut.

NOTE:
While holding the head of the adjusting bolt, loosen the flange nut.

(5) Remove the three nuts securing the strut mount - front to the body.

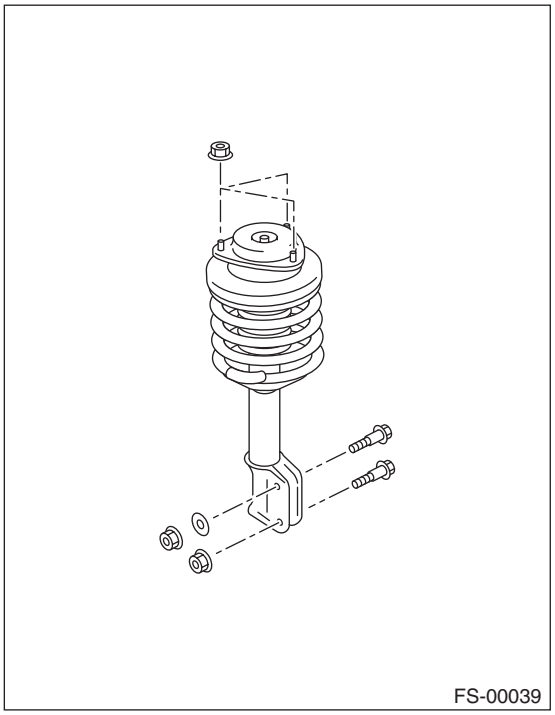

B: INSTALLATION

CAUTION:
- **For parts which are not reusable, always use new parts.**
- **Check the bushing for abnormal cracks, fatigue or damage.**

1) Install the strut mount - front at the upper side of the strut to the body, and tighten it with new flange nuts.

Tightening torque:
20 N·m (2.0 kgf-m, 14.8 ft-lb)

2) Align alignment marks on the camber adjusting bolt and strut.
Using new self-locking nuts, install the strut to the housing assembly - front axle.

NOTE:
While holding the head of adjusting bolt, tighten the self-locking nut.

Tightening torque:
155 N·m (15.8 kgf-m, 114.3 ft-lb)

3) Install the ABS wheel speed sensor harness.

CAUTION:
During the installation, make sure that the marking of ABS wheel speed sensor harness does not twist.

Tightening torque:
7.5 N·m (0.8 kgf-m, 5.5 ft-lb)

4) Install the nut to the upper side of stabilizer link.

Tightening torque:
60 N·m (6.1 kgf-m, 44.3 ft-lb)

5) Install the brake hose bracket.

Tightening torque:
33 N·m (3.4 kgf-m, 24.3 ft-lb)

6) Install the front wheels.

Tightening torque:
120 N·m (12.2 kgf-m, 88.5 ft-lb)

7) Inspect the wheel alignment and adjust if necessary.
- Inspection: <Ref. to FS-10, INSPECTION, Wheel Alignment.>
- Adjustment: <Ref. to FS-14, ADJUSTMENT, Wheel Alignment.>

CAUTION:
When the wheel alignment has been adjusted, perform the following adjustment.
– Lane keep assist learning value clear (model with EyeSight): <Ref. to ES(diag)-49, OPERATION, Clear Active Lane Keep System Learning Value.>
– VDC sensor midpoint setting mode: <Ref. to VDC-15, ADJUSTMENT, VDC Control Module and Hydraulic Control Unit (VDCCM&H/U).>

8) Perform reinitialization of the auto headlight beam leveler system. (Model with auto headlight beam leveler) <Ref. to LI-23, PROCEDURE, Auto Headlight Beam Leveler System.>

C: DISASSEMBLY

1) Using a coil spring compressor, compress the coil spring.
2) Using a hexagon wrench to prevent strut rod from turning, remove the self-locking nut with ST.

CAUTION:
When installing the coil spring compressor to the coil spring, follow the operation manual accompanied with the coil spring compressor during operation.

Preparation tool:
ST: STRUT MOUNT SOCKET (20399AG000)

NOTE:
<Example of coil spring compressor installation>
The installing position of coil spring compressor varies depending on the coil spring shape and winding number.

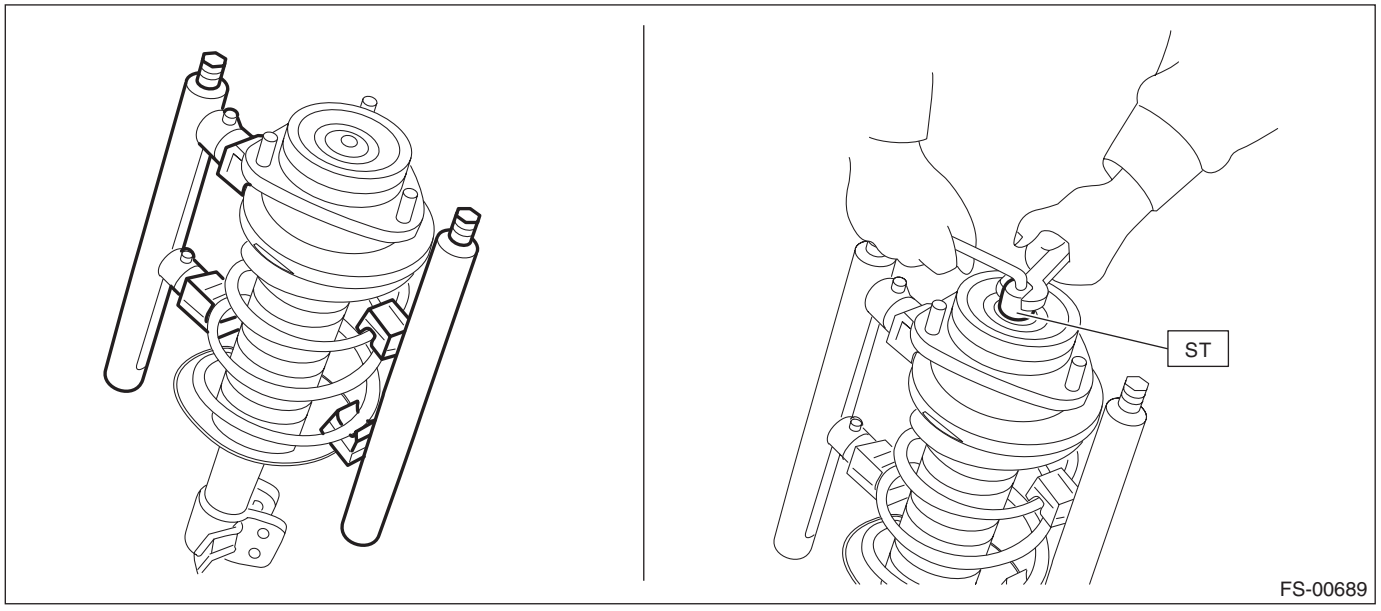

3) Remove the strut mount - front, spacer - front strut, dust cover - front strut and spring seat - front strut UPR from the strut COMPL.
4) Gradually decrease the compression force of compressor, and remove the coil spring.
5) Remove the dust cover and helper.

D: ASSEMBLY

1) Before assembly, check each part. <Ref. to FS-52, INSPECTION, Front Strut.>
2) Using a coil spring compressor, compress the coil spring.

CAUTION:
When installing the coil spring compressor to the coil spring, follow the operation manual accompanied with the coil spring compressor during operation.

NOTE:
Make sure that the vertical install direction of the coil spring is as shown in the figure.

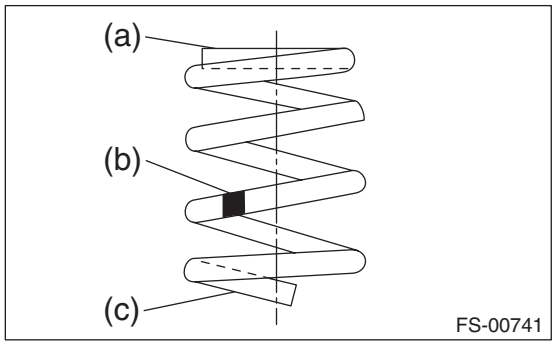

(a) Diameter is small (upper part)
(b) Identification paint
(c) Diameter is large (bottom part)

3) Set the coil spring correctly so that its end face seats well in the spring seat as shown in the figure.

CAUTION:
Install the coil spring so that the end of spring is between the marks on the spring seat.

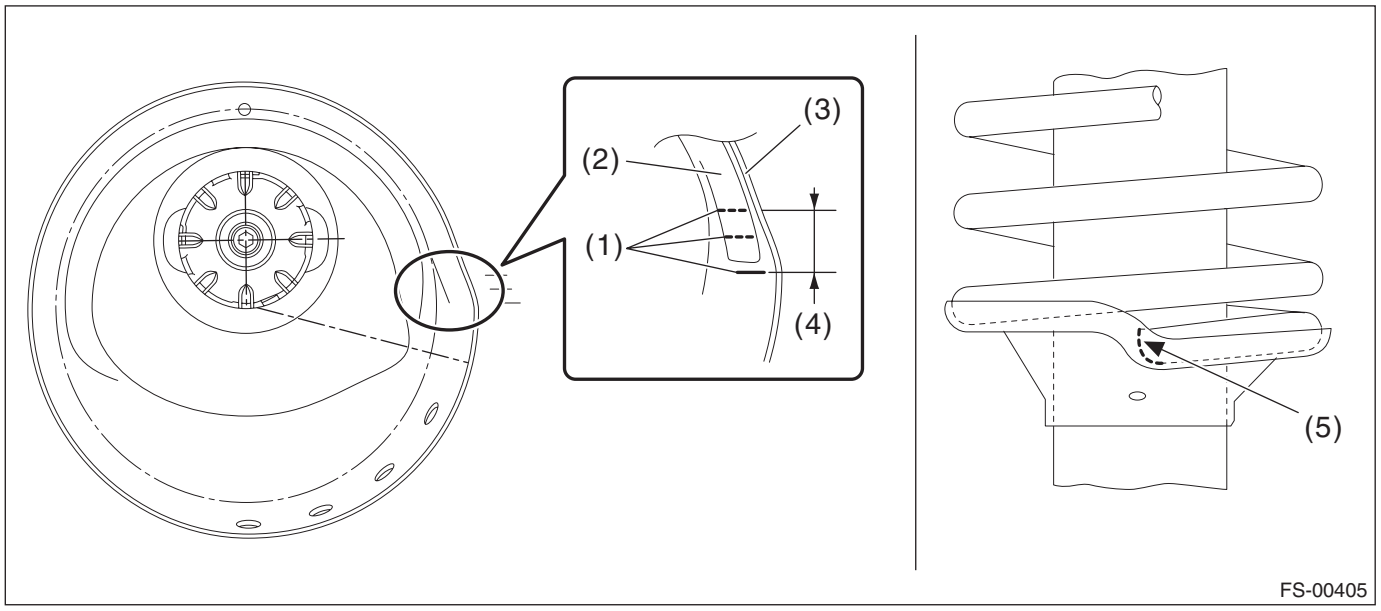

(1) Mark
(2) Spring
(3) Spring seat
(4) Install the spring within this area
(5) Coil spring end face

4) Install the dust cover and the helper - front strut to the piston rod.

5) Pull the piston rod fully upward, and install the spring seat and the dust cover - front strut.

NOTE:
Position the spring seat - front strut UPR as shown in the figure.

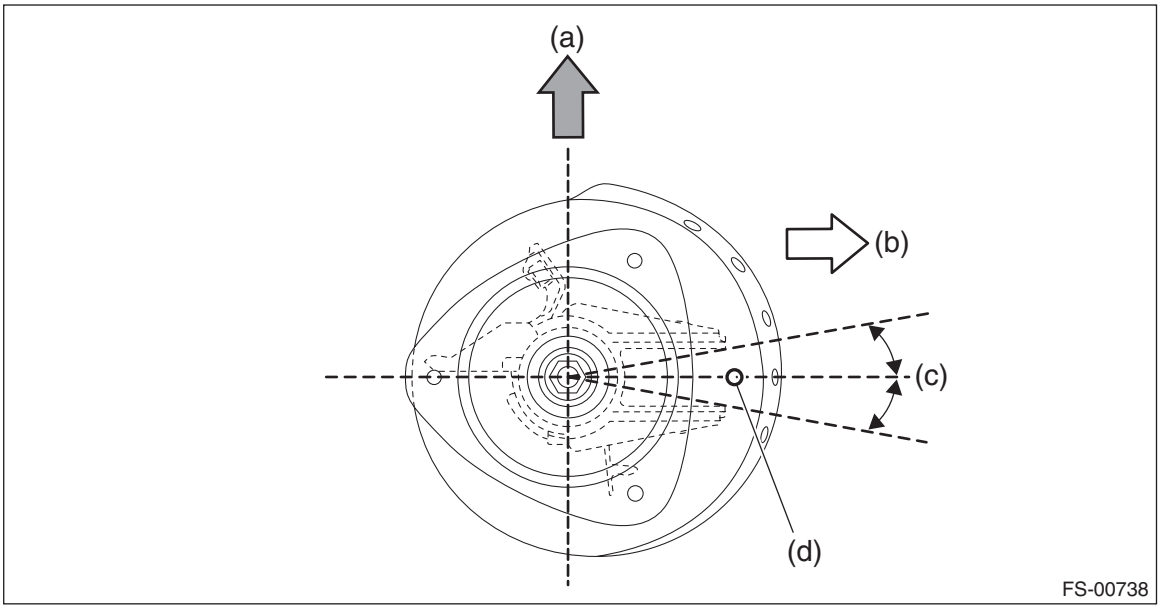

(a) Rear side of vehicle
(b) Outside of body
(c) 0°±10°
(d) Hole of spring seat - front strut UPR

6) Install the spacer - front strut and the strut mount - front to the piston rod, and temporarily tighten a new self-locking nut.

7) Using a hexagon wrench to prevent strut rod from turning, tighten the new self-locking nut with ST.

CAUTION:
Make sure that the strut mount - front turns smoothly after tightening.

Preparation tool:
ST: STRUT MOUNT SOCKET (20399AG000)

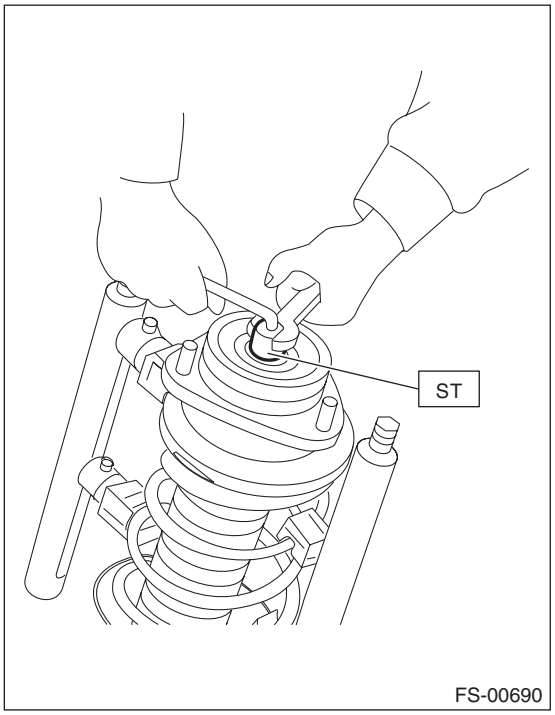

Tightening torque:
55 N·m (5.6 kgf-m, 40.6 ft-lb)

8) Loosen the coil spring compressor carefully.

E: INSPECTION

Check the removed part for wear, damage and cracks, and then repair or replace it if defective.

1. STRUT COMPL - FRONT

1) Check for oil leaks.
2) Move the piston rod up and down to check that it operates smoothly without any hitch.
3) Check the piston rod for play as follows:
1. Fix the outer shell in place and fully extend the rod.
2. Set the dial gauge on the end of the rod L [10 mm (0.39 in)].
3. While applying a force of W [20 N (2 kgf, 4 lbf)] to the threaded part, read the dial gauge indication P_1.
4. Apply a force of 20 N (2 kgf, 4 lbf) from the opposite direction of "W", and then read the dial gauge indication P_2.

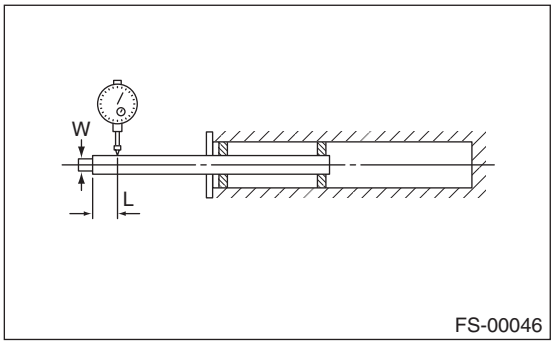

Play limit (P_1 + P_2): 0.8 mm (0.031 in)

4) Replace the strut if faulty is found in the inspection or limit value is exceeded.

2. STRUT MOUNT - FRONT

Check the rubber part for deformation, cracks or deterioration, and then replace it with a new part if defective.

3. DUST COVER - INNER

If cracks or damage are found, replace it with a new part.

4. COIL SPRING - FRONT

If a permanent strain is found, replace it with a new part.

5. HELPER - FRONT STRUT

If major cracks or damage are found, replace it with a new part.

6. DUST COVER - FRONT

If major cracks or damage are found, replace it with a new part.

F: DISPOSAL

CAUTION:
• Before handling the strut damper and shock absorber, be sure to wear goggles to protect eyes from gas, oil and cutting powder.
• Do not disassemble the strut damper and shock absorber or place them into a fire.
• When discarding gas filled strut dampers and shock absorbers, drill holes in them to purge the gas.

1) Place the strut damper and shock absorber on a level surface with the piston rod fully expanded.
2) Make a hole into the specified position 30 mm (1.18 in) deep using a drill with 2 — 3 mm (0.08 — 0.12 in) diameter.

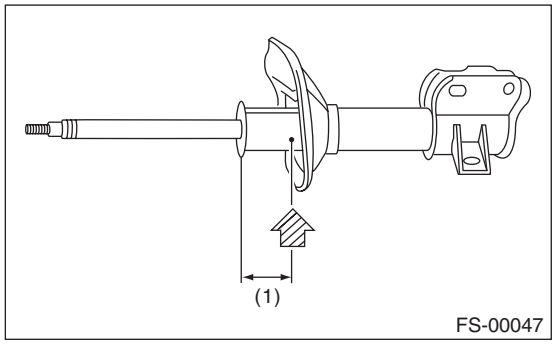

(1) 40 mm (1.57 in)

8. General Diagnostic Table

A: INSPECTION

1. IMPROPER VEHICLE POSTURE OR IMPROPER WHEEL ARCH HEIGHT

Possible cause	Corrective action
(1) Deformation or damage of suspension parts	Replace.
(2) Rough operation of strut COMPL or shock absorber COMPL	Replace.
(3) Improper installation of strut COMPL or shock absorber COMPL	Replace with appropriate parts.
(4) Installation of the wrong coil spring	Replace with appropriate parts.

2. POOR RIDE COMFORT

1) Large rebound shock.
2) Rocking of the vehicle continues too long after running over bump and hump.
3) Excessive shock in bumping.

Possible cause	Corrective action
(1) Damaged coil spring	Replace.
(2) Overinflation of tires	Adjust.
(3) Improper wheel arch height	Replace the coil springs with new parts.
(4) Defective operation of strut assembly or strut COMPL - front	Replace.
(5) Damage or deformation of strut mount - front or shock absorber mount	Replace.
(6) Unsuitable length (maximum or minimum) of strut assembly or shock absorber	Replace with appropriate parts.
(7) Abnormal deformation or loss of bushing	Replace.
(8) Deformation or damage of helper in strut assembly or strut COMPL - front	Replace.
(9) Oil leakage from the strut assembly or strut COMPL - front	Replace.

3. NOISE

Possible cause	Corrective action
(1) Wear or damage of strut assembly or strut COMPL - front component parts	Replace.
(2) Loosening of the suspension link installing bolt	Tighten to the specified torque.
(3) Abnormal deformation or loss of bushing	Replace.
(4) Unsuitable length (maximum or minimum) of strut assembly or strut COMPL - front	Replace with appropriate parts.
(5) Damaged coil spring	Replace.
(6) Wear or damage of the ball joint	Replace.
(7) Deformation of the clamp - stabilizer bushing	Replace.

REAR SUSPENSION

RS

Page

1. General Description 2
2. Wheel Alignment 9
3. Rear Sub Frame 10
4. Rear Stabilizer 15
5. Rear Trailing Link 17
6. Upper Arm 20
7. Front Lateral Link 22
8. Rear Lateral Link 25
9. Rear Shock Absorber 28
10. General Diagnostic Table 34

1. General Description

A: SPECIFICATION

1. SEDAN MODEL

Tire size		P225/55R17 P225/50R18
Wheel arch height (Tolerance: $^{+12\ mm}_{-24\ mm}$ ($^{+0.47\ in}_{-0.94\ in}$))	mm (in)	383 (15.08)
Camber (tolerance: ±0°45′ Differences between RH and LH: 45′ or less)		–1°25′
Toe-in	mm (in)	IN3±3 (IN0.12±0.12)
		Toe angle (sum of both wheels): IN0°15′±15′
Thrust angle (tolerance: 0°00′±30′)		0°00′

2. OUTBACK MODEL

Tire size		P225/65R17 P225/60R18
Wheel arch height (Tolerance: $^{+12\ mm}_{-24\ mm}$ ($^{+0.47\ in}_{-0.94\ in}$))	mm (in)	468 (18.43)
Camber (tolerance: ±0°45′ Differences between RH and LH: 45′ or less)		–1°00′
Toe-in	mm (in)	IN3±3 (IN0.12±0.12)
		Toe angle (sum of both wheels): IN0°14′±14′
Thrust angle (tolerance: 0°00′±30′)		0°00′

NOTE:
• Front toe-in, rear toe-in and front camber can be adjusted. Adjust if the value of toe-in or camber exceeds the tolerance range of the specification chart.
• Other items except for front toe-in, rear toe-in and front camber that are described in the specification chart cannot be adjusted.
• If other items exceed the tolerance range of the specification chart, check the suspension parts and connections for deformation. If defective, replace with new parts.

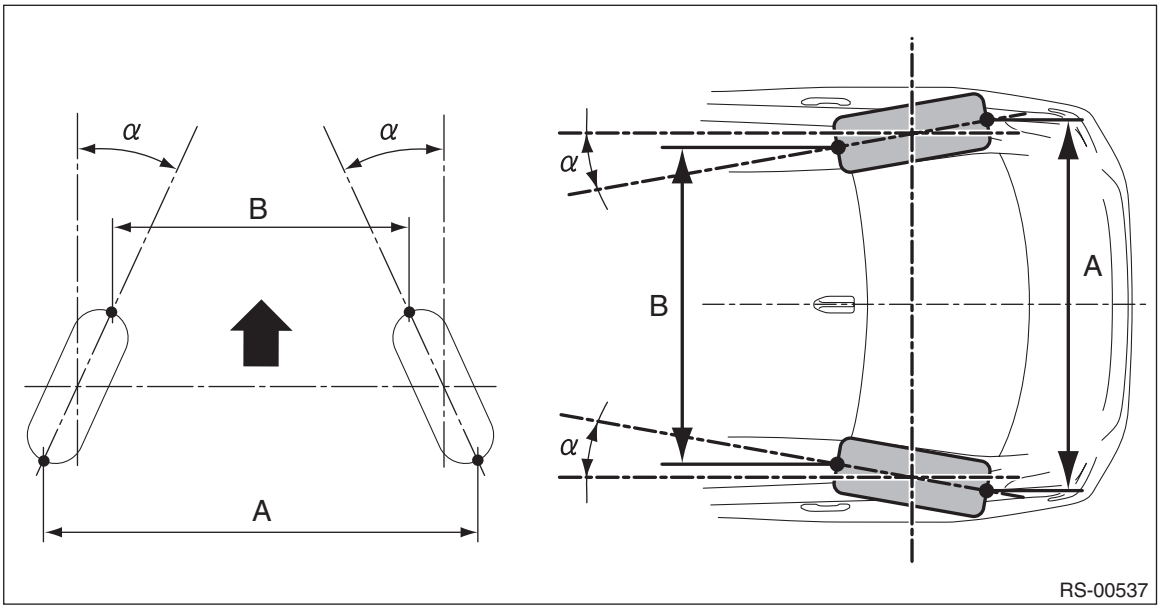

A – B = Positive: Toe-in, Negative: Toe-out

α = Individual toe angles

B: COMPONENT

1. REAR SUSPENSION

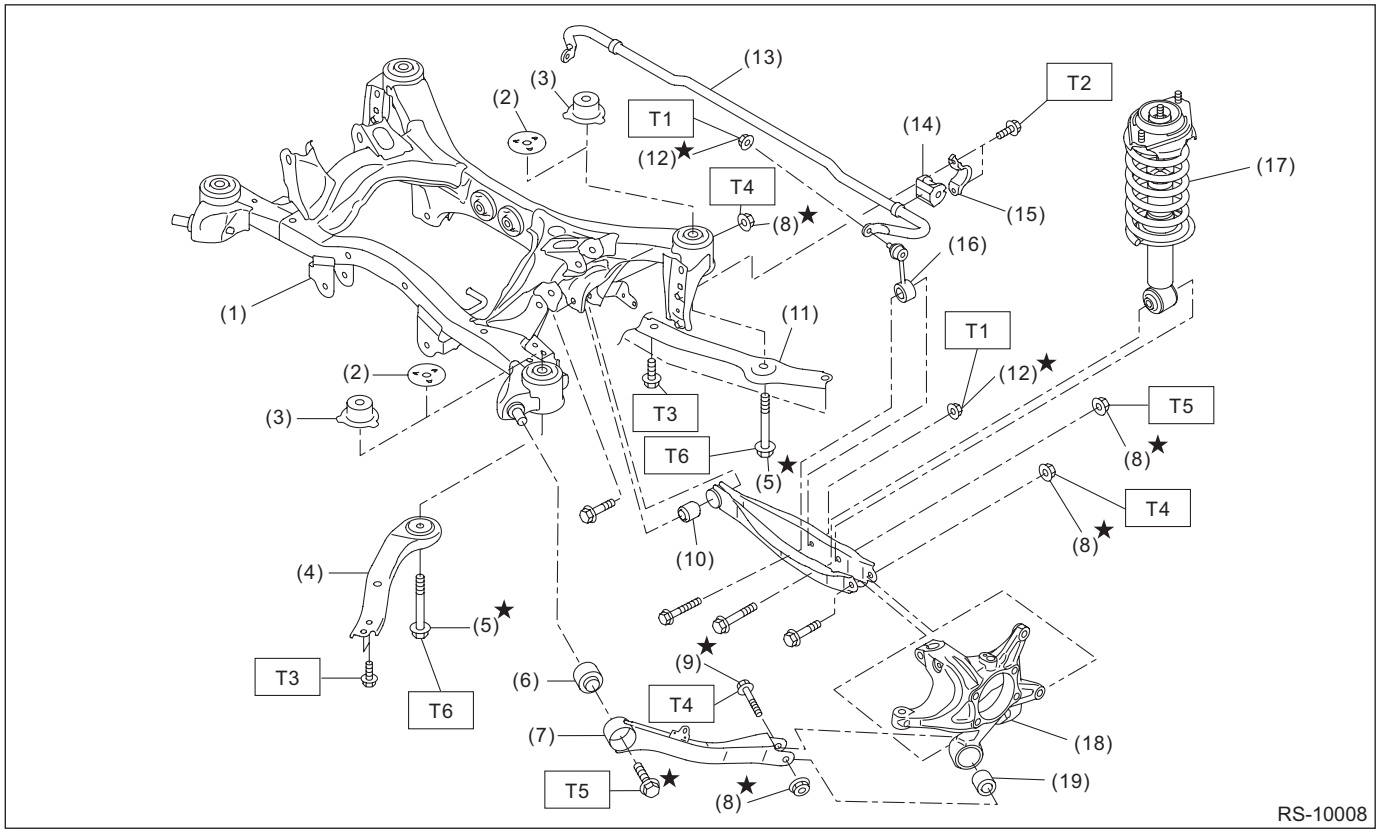

(1)	Rear sub frame ASSY	(11)	Support - sub frame	***Tightening torque: N·m (kgf-m, ft-lb)***
(2)	Rear sub frame stopper upper (sedan model)	(12)	Flange nut	***T1: 33 (3.4, 24.3)***
(3)	Rear sub frame stopper upper (OUTBACK model)	(13)	Rear stabilizer	***T2: 38 (3.9 28.0)***
(4)	Front sub frame support plate	(14)	Bushing - stabilizer	***T3: 70 (7.1, 51.6)***
(5)	Flange bolt A	(15)	Clamp - stabilizer bushing	***T4: 80 (8.2, 59.0)***
(6)	Bushing A - trailing link	(16)	Stabilizer link ASSY	***T5: 120 (12.2, 88.5)***
(7)	Trailing link	(17)	Rear shock absorber ASSY	***T6: 145 (14.8, 106.9)***
(8)	Self-locking nut	(18)	Housing ASSY - rear axle	
(9)	Flange bolt B	(19)	Bushing - trailing link	
(10)	Bushing C - lateral link rear			

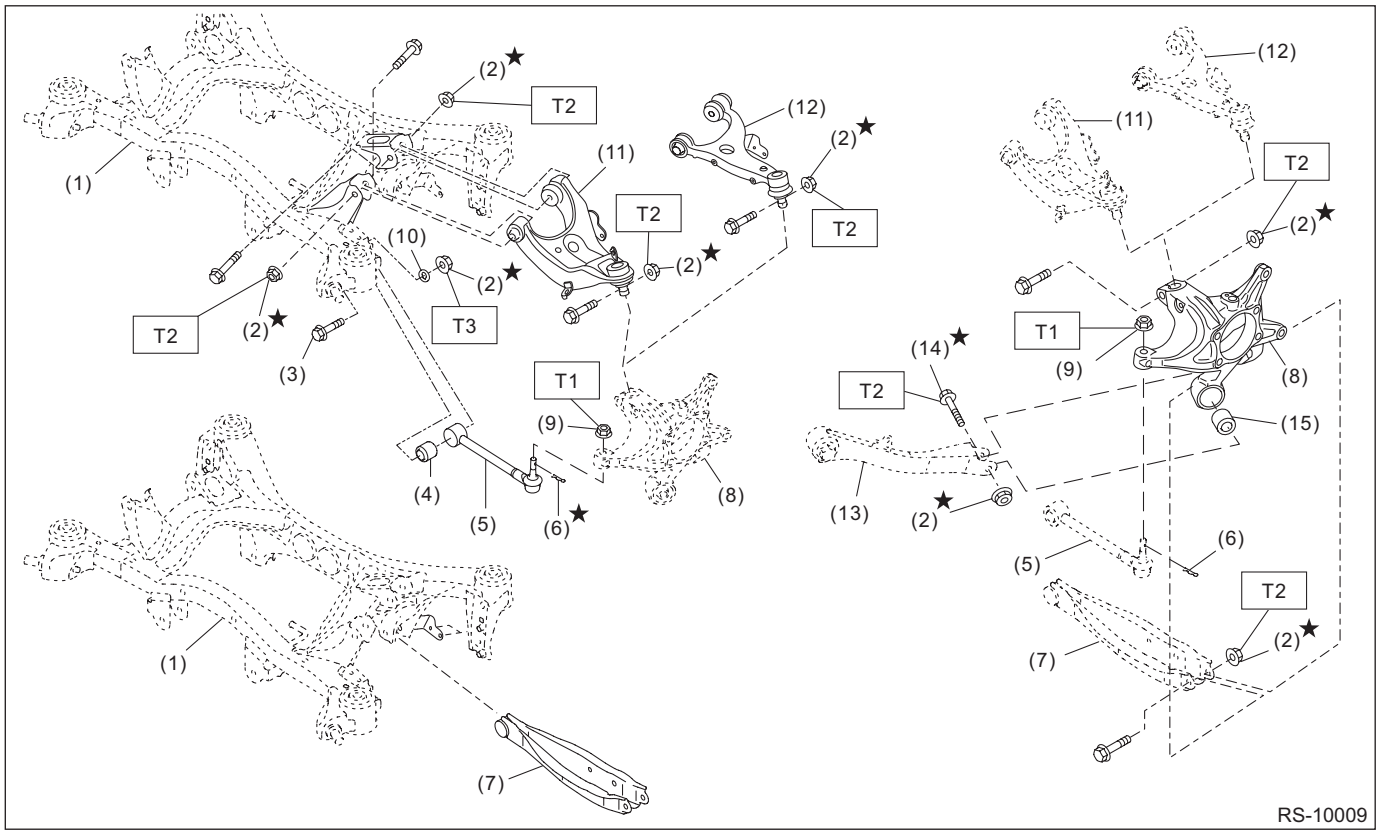

(1)	Rear sub frame ASSY	(8)	Housing ASSY - rear axle	(15)	Bushing - rear trailing link
(2)	Self-locking nut	(9)	Flange nut		
(3)	Adjusting bolt	(10)	Adjusting washer	***Tightening torque: N·m (kgf-m, ft-lb)***	
(4)	Bushing B - lateral link	(11)	Rear upper arm ASSY (sedan model)	***T1:***	***60 (6.1, 44.3)***
(5)	Lateral link ASSY - front	(12)	Rear upper arm ASSY (OUTBACK model)	***T2:***	***80 (8.2, 59.0)***
(6)	Snap pin	(13)	Trailing link	***T3:***	***120 (12.2, 88.5)***
(7)	Lateral link ASSY - rear	(14)	Flange bolt		

2. REAR SHOCK ABSORBER

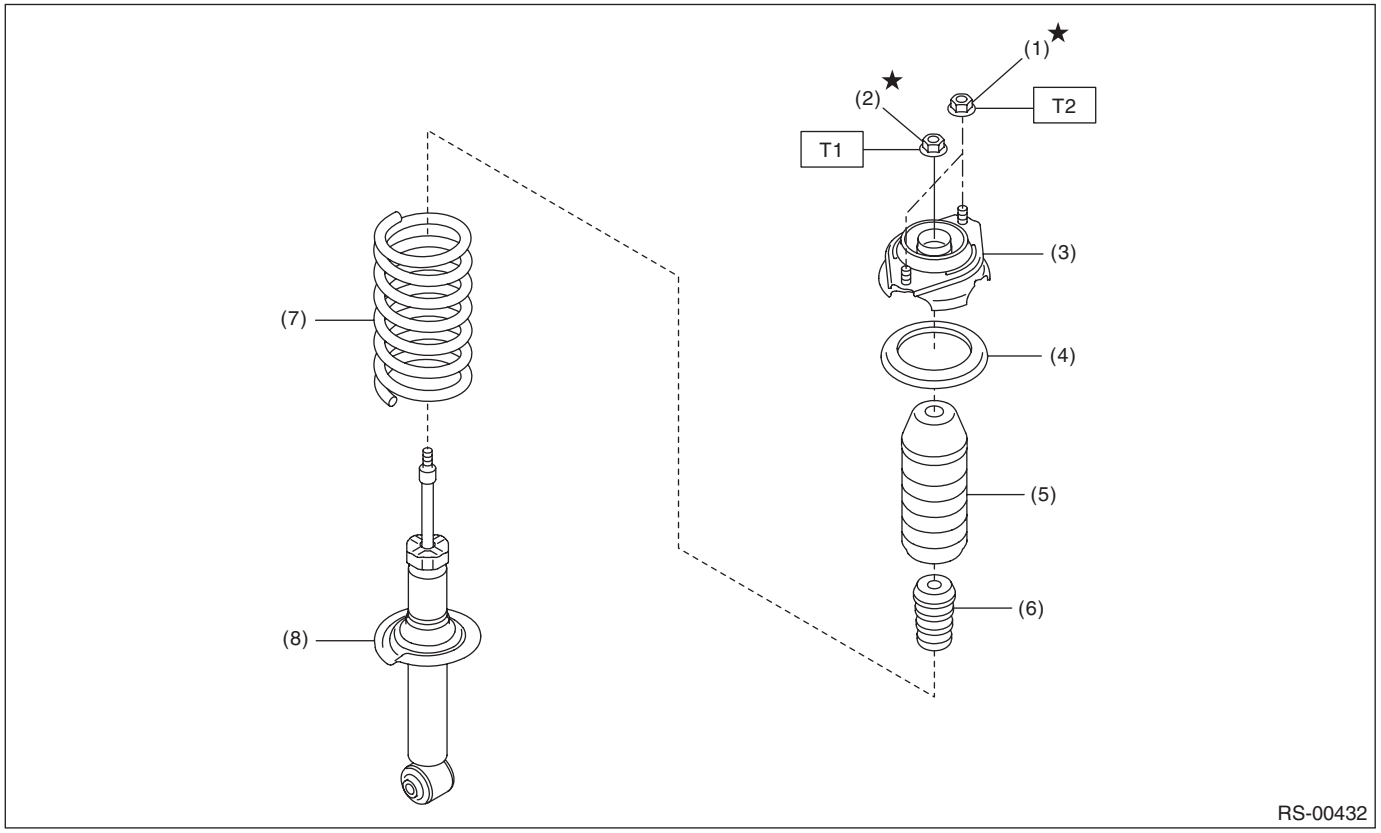

(1) Flange nut
(2) Self-locking nut
(3) Shock mount - rear
(4) Rubber seat - shock UPR
(5) Dust cover - rear shock
(6) Helper - rear
(7) Coil spring - rear
(8) Shock absorber COMPL - rear

Tightening torque: N·m (kgf-m, ft-lb)
T1: 25 (2.5, 18.4)
T2: 30 (3.1, 22.1)

C: CAUTION

- When performing any work, always wear work clothes, a work cap and protective shoes. Additionally, wear a helmet, protective goggles, etc. if necessary.
- When disposing of shock absorbers, be sure to bleed the oil or gas out completely. Also, do not expose to flames or fire.
- When performing a repair, identify the cause of trouble and avoid unnecessary removal, disassembly and replacement.
- Use SUBARU genuine grease, the recommended or equivalent. Do not mix grease etc. of different grades or manufacturers.
- Do not secure a part in a vise directly. Place cushioning materials such as wood blocks, aluminum plates, or waste cloth between the part and the vise.
- Be sure to tighten fasteners including bolts and nuts to the specified torque.
- Always use the jack-up point when the shop jacks or rigid racks are used to support the vehicle.
- When the suspension-related components have been removed or replaced, perform “VDC sensor mid-point setting mode” of the VDC. <Ref. to VDC-15, ADJUSTMENT, VDC Control Module and Hydraulic Control Unit (VDCCM&H/U).>
- For parts which are not reusable, always use new parts. Other parts should be replaced with new parts as required.
- When handling oil or fuel, adhere to the following to prevent unexpected accident.
  – Be careful with fire.
  – Prepare a container to catch grease or oil, etc. If any grease or oil spills, wipe it off and clean immediately to prevent from penetrating into floor or flowing outside.
  – Follow all government and local regulations concerning disposal of refuse when disposing.
- Be sure that the surface of brake disc or brake pad is free from grease or oil.
- Before disconnecting connectors of sensors or units, be sure to disconnect the ground cable from battery.
- Some vehicle components are extremely hot immediately after driving. Be wary of receiving burns from heated parts.

D: PREPARATION TOOL

1. SPECIAL TOOL

ILLUSTRATION	TOOL NUMBER	DESCRIPTION	REMARKS
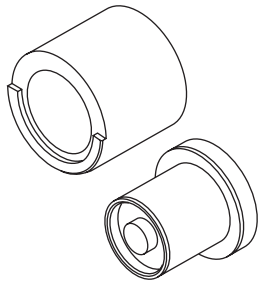 ST20099AE000	20099AE000	INSTALLER & REMOVER	Used for replacing the bushing B - lateral link.
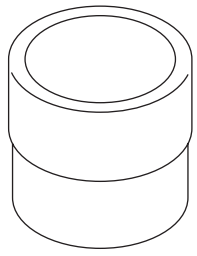 ST-499755602	499755602	PRESS	Used for replacing the bushing - rear trailing link.

ILLUSTRATION	TOOL NUMBER	DESCRIPTION	REMARKS
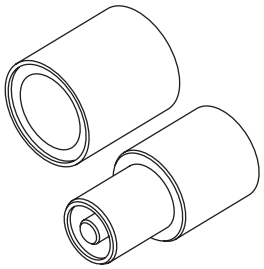 ST20099AE010	20099AE010	INSTALLER & REMOVER	Used for replacing the bushing C - lateral link rear.
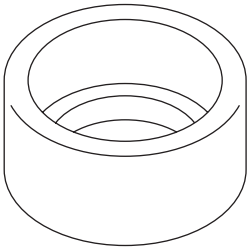 ST20299AG010	20299AG010	BASE	Used for replacing the rear trailing link bushing.
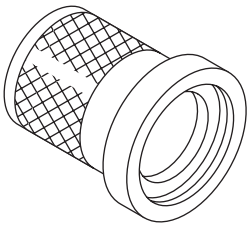 ST-899874100	899874100	INSTALLER	Used for replacing the rear trailing link bushing.
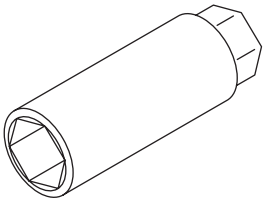 ST20399FG000	20399FG000	STRUT MOUNT SOCKET	• Used for removing and installing shock mount - rear. • Used for checking torque of shock mount center nut.
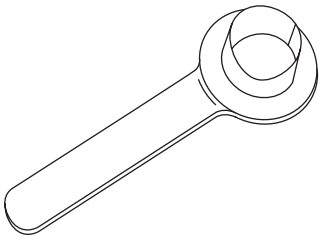 ST28099PA090	28099PA090	OIL SEAL PROTECTOR	• Used for installing the rear drive shaft to the rear differential. • Used for oil seal protection.

ILLUSTRATION	TOOL NUMBER	DESCRIPTION	REMARKS
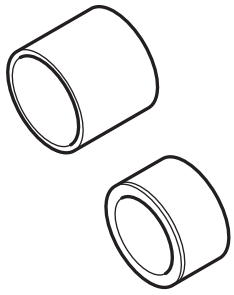 ST20099PA010	20099PA010	INSTALLER & REMOVER	• Used for replacing the bushing of the rear housing. • Used together with BUSHING REMOVER (20099FG000).
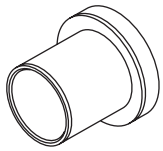 ST20099FG000	20099FG000	BUSHING REMOVER	• Used for replacing the bushing of the rear housing. • Used together with base part of INSTALLER & REMOVER (20099PA010).

2. GENERAL TOOL

TOOL NAME	REMARKS
Alignment tester	Used for measuring wheel alignment.
Toe-in gauge	Used for toe-in measurement.
Jack	Used for removing and installing suspension.
Bearing puller	Used for removing bushings.
Tie-rod ball joint puller	Used for disconnecting the lateral link assembly - front.
Coil spring compressor	Used for disassembling and assembling strut assembly and shock absorber assembly.

2. Wheel Alignment

A: INSPECTION

NOTE:
Measure and adjust the front and rear wheel alignment at a time. Refer to “Wheel Alignment” in FS section for measurement and adjustment of wheel alignment.

- Inspection: <Ref. to FS-10, INSPECTION, Wheel Alignment.>
- Adjustment: <Ref. to FS-14, ADJUSTMENT, Wheel Alignment.>

3. Rear Sub Frame

A: REMOVAL

1) Release the parking brake.
2) Using the Subaru Select Monitor, go to the brake maintenance mode according to the display screen. <Ref. to PB-6, BRAKE MAINTENANCE MODE, OPERATION, Parking Brake System.>

NOTE:
For detailed operation procedures, refer to “Application help”.
3) Disconnect the ground terminal from battery sensor. <Ref. to RC-4, BATTERY, NOTE, Repair Contents.>
4) Lift up the vehicle, and then remove the rear wheels.
5) Remove the rear exhaust pipe.
- H4 engine model: <Ref. to EX(H4DO)-16, REMOVAL, Rear Exhaust Pipe.>
- H6 engine model: <Ref. to EX(H6DO)-12, REMOVAL, Rear Exhaust Pipe.>

6) Remove the propeller shaft assembly. <Ref. to DS-10, REMOVAL, Propeller Shaft.>
7) Remove the electronic parking brake harness. <Ref. to PB-9, REMOVAL, Parking Brake Actuator.>
8) Remove the harness clamp and bolts, and remove the rear ABS wheel speed sensor from the housing assembly - rear axle.

CAUTION:
- **Be careful not to damage the sensor.**
- **Do not apply excessive force to the sensor harness.**
- **Leave the sensor harness clamp (white arrow) on the vehicle side.**
  – Sedan model

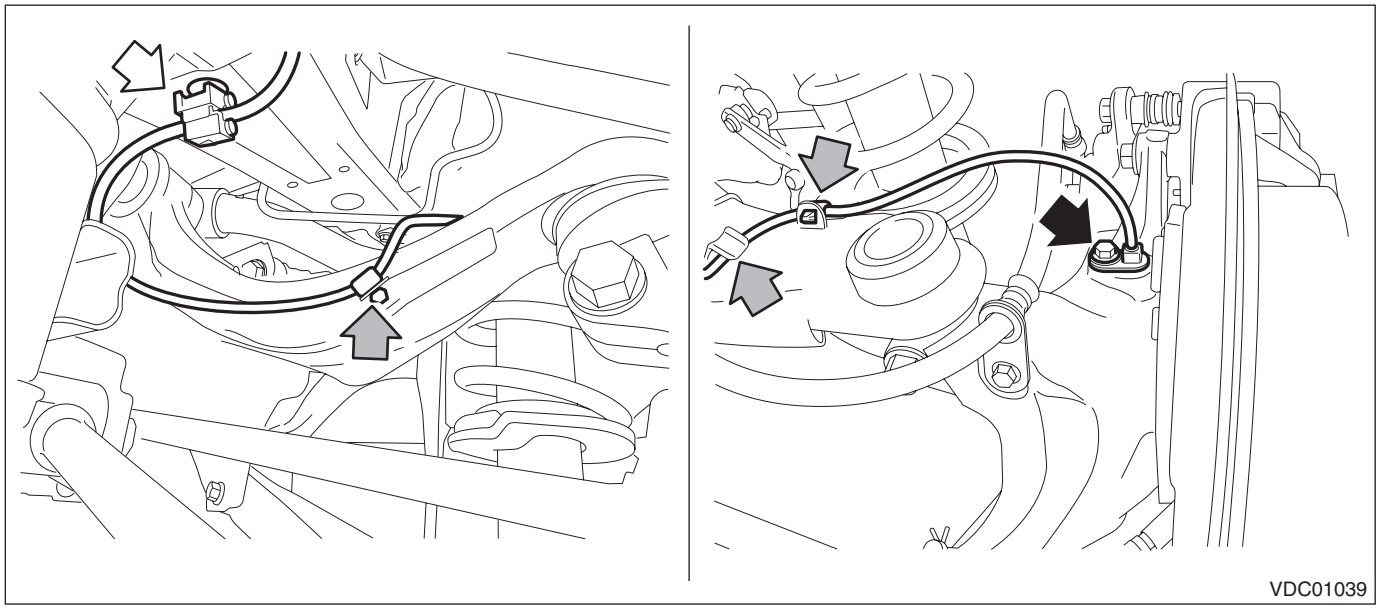

– OUTBACK model

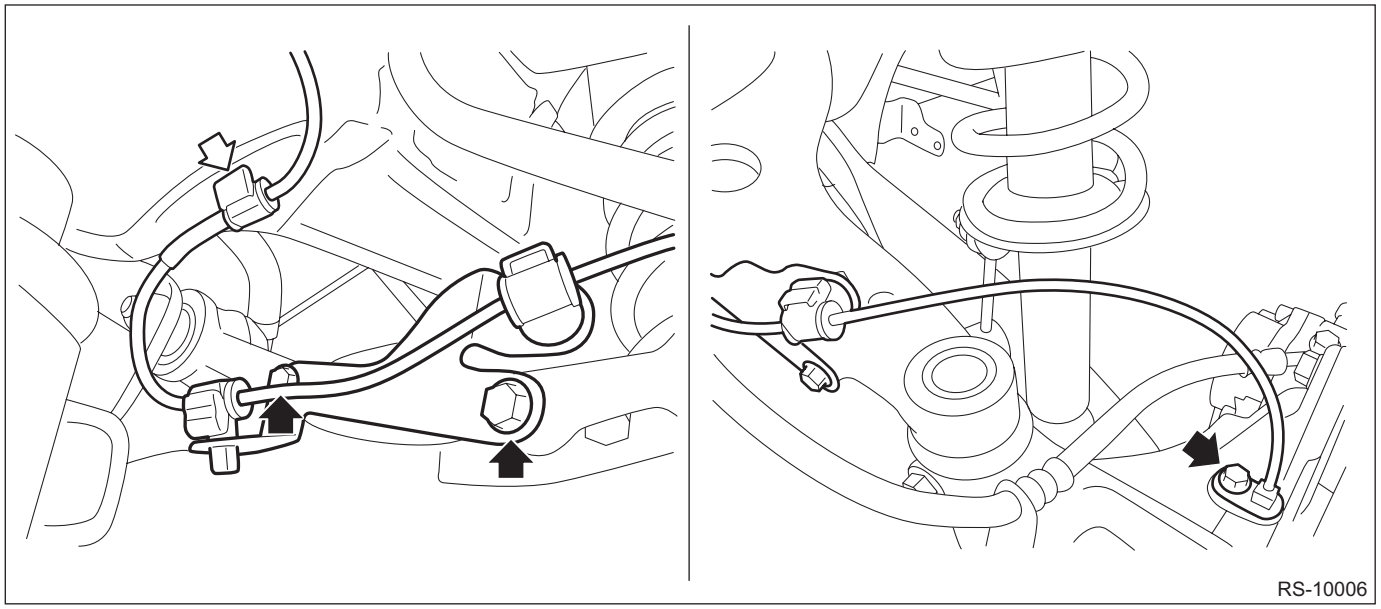

9) Remove the disc brake assembly - rear. <Ref. to BR-45, REMOVAL, Rear Disc Brake Assembly.>
10) Remove the brake hose bracket and disc brake assembly - rear.
11) Remove the sub rear harness from the clamp.
(1) Press in the clamp claw (a).
(2) Remove the clamp band, and then remove the sub rear harness.

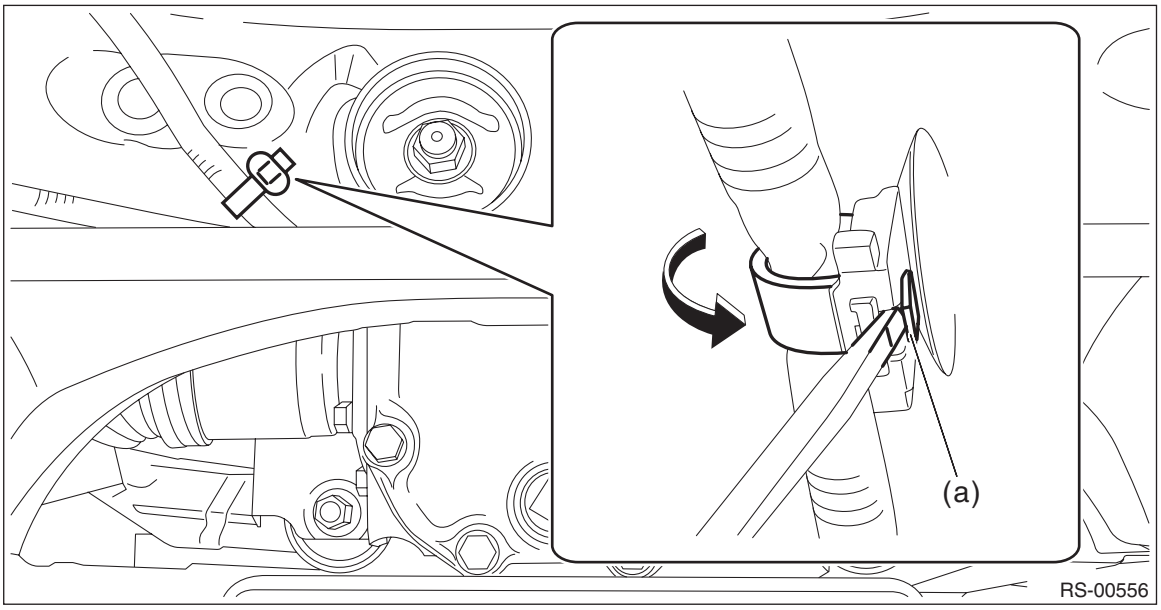

12) Remove the sensor assembly - headlight beam leveler. (Model with auto headlight beam leveler) <Ref. to LI-83, REMOVAL, Rear Height Sensor.>
13) Remove the fuel tank protector.
- H4 engine model: <Ref. to FU(H4DO)-96, REMOVAL, Fuel Tank Protector.>
- H6 engine model: <Ref. to FU(H6DO)-98, REMOVAL, Fuel Tank Protector.>

14) Remove the rear sub frame assembly.
(1) Remove the bolts and nuts from the lower side of rear shock absorber COMPL - rear.

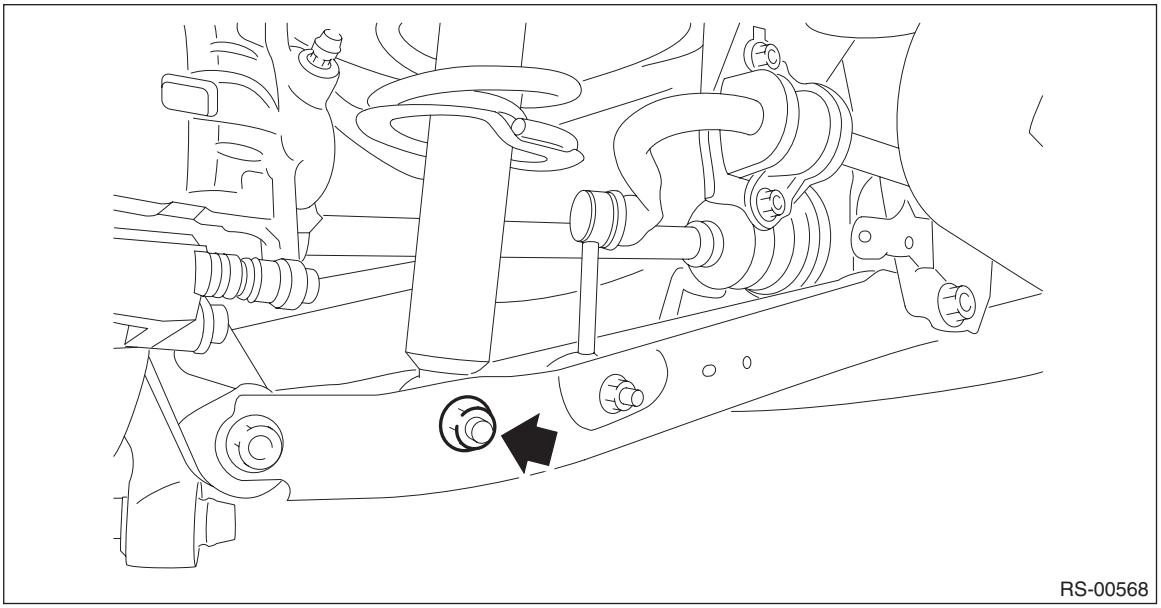
RS-00568

(2) Support the sub frame assembly using a transmission jack.

CAUTION:
The rear sub frame assembly is heavy. Make sure that it is horizontally-supported.

(3) Remove the bolt, and remove the left and right sub frame supports and the rear sub frame support.
(4) Remove the rear sub frame assembly.

CAUTION:
While checking there is no dragging of harness and wire, lower it slowly with a transmission jack.

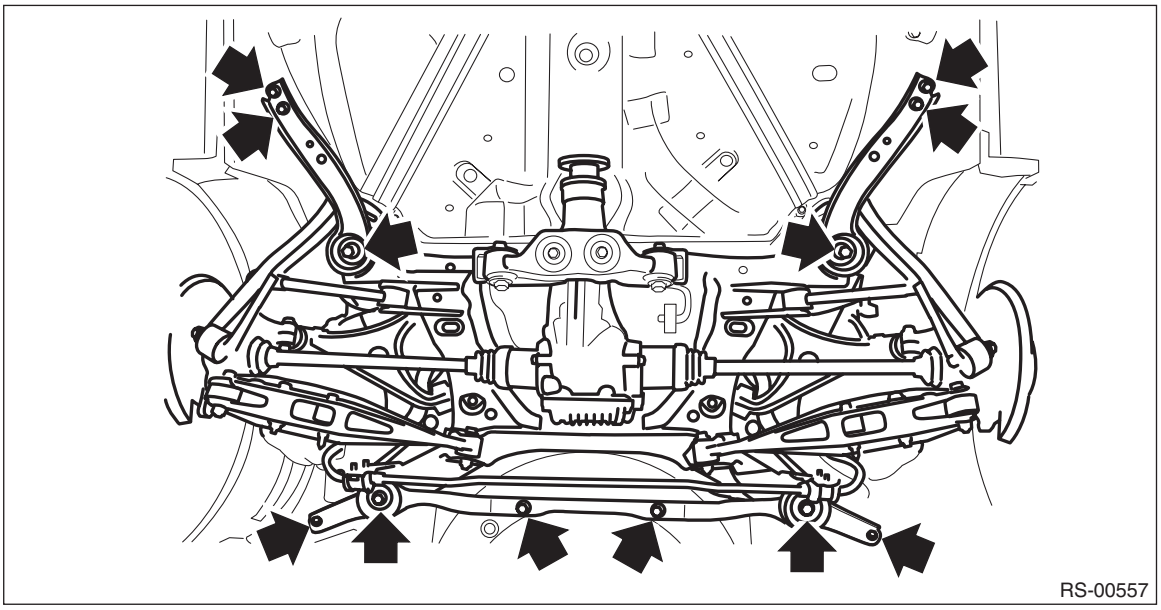
RS-00557

15) As necessary, remove each part from the rear sub frame assembly.

B: INSTALLATION

CAUTION:
- **For parts which are not reusable, always use new parts.**
- **Always tighten the bushing in the state where the vehicle is at curb weight and the wheels are in full contact with the ground.**
- **During the installation, make sure that the marking of ABS wheel speed sensor harness does not twist.**

1) Check the removed parts for wear, damage and crack, and repair or replace them if faulty.
2) Install each part to the rear sub frame assembly.

Tightening torque:
Refer to "COMPONENT" of "General Description" for the tightening torque. <Ref. to RS-3, COMPONENT, General Description.>

3) Install the rear sub frame assembly.
   (1) Lift the rear sub frame assembly using a transmission jack.
   (2) Install the right and left supports - sub frame and the rear support - sub frame, and install the rear sub frame assembly.

CAUTION:
- **The rear sub frame assembly is heavy. Make sure that it is horizontally-supported.**
- **While checking there is no dragging of harness and wire, raise it slowly with a transmission jack.**

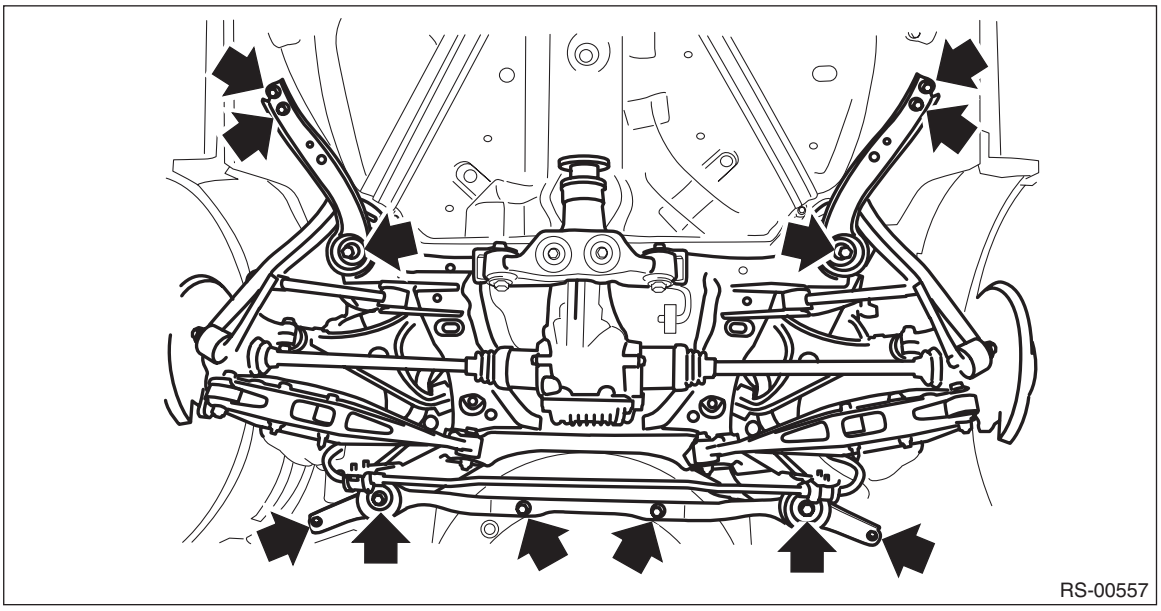

Tightening torque:
Refer to "COMPONENT" of "General Description" for the tightening torque. <Ref. to RS-3, COMPONENT, General Description.>

4) Install the bolts and nuts to the lower side of rear shock absorber COMPL - rear.

Tightening torque:
120 N·m (12.2 kgf-m, 88.5 ft-lb)

5) Install the fuel tank protector.
- H4 engine model: <Ref. to FU(H4DO)-96, INSTALLATION, Fuel Tank Protector.>
- H6 engine model: <Ref. to FU(H6DO)-98, INSTALLATION, Fuel Tank Protector.>

6) Install the sensor assembly - headlight beam leveler. (Model with auto headlight beam leveler)

Tightening torque:
7.5 N·m (0.8 kgf-m, 5.5 ft-lb)

7) Install the sub rear harness.

8) Install the brake hose bracket and the disc brake assembly - rear.

Tightening torque:
Brake hose bracket: 33 N·m (3.4 kgf-m, 24.3 ft-lb)
Disc brake assembly - rear: 66 N·m (6.7 kgf-m, 48.7 ft-lb)

9) Install the electronic parking brake harness. <Ref. to PB-12, INSTALLATION, Parking Brake Actuator.>

Tightening torque:
18 N·m (1.8 kgf-m, 13.3 ft-lb)

10) Install the rear ABS wheel speed sensor and the rear ABS wheel speed sensor bracket.

Tightening torque:
7.5 N·m (0.8 kgf-m, 5.5 ft-lb)

11) Install the propeller shaft assembly. <Ref. to DS-12, INSTALLATION, Propeller Shaft.>
12) Install the rear exhaust pipe.
- H4 engine model: <Ref. to EX(H4DO)-17, INSTALLATION, Rear Exhaust Pipe.>
- H6 engine model: <Ref. to EX(H6DO)-13, INSTALLATION, Rear Exhaust Pipe.>

13) Install the rear wheels and lower the vehicle.

Tightening torque:
120 N·m (12.2 kgf-m, 88.5 ft-lb)

14) Inspect the wheel alignment and adjust if necessary.
- Inspection: <Ref. to FS-10, INSPECTION, Wheel Alignment.>
- Adjustment: <Ref. to FS-14, ADJUSTMENT, Wheel Alignment.>

CAUTION:
When the wheel alignment has been adjusted, perform the following adjustment.
– Lane keep assist learning value clear (model with EyeSight): <Ref. to ES(diag)-49, OPERATION, Clear Active Lane Keep System Learning Value.>
– "VSC(VDC) Centering Mode": <Ref. to VDC-15, ADJUSTMENT, VDC Control Module and Hydraulic Control Unit (VDCCM&H/U).>

15) Connect the ground terminal to battery sensor. <Ref. to RC-4, BATTERY, NOTE, Repair Contents.>
16) Using the Subaru Select Monitor, exit the brake maintenance mode according to the display screen. <Ref. to PB-6, BRAKE MAINTENANCE MODE, OPERATION, Parking Brake System.>

NOTE:
For detailed operation procedures, refer to "Application help".

17) After the operation is completed, apply and release the parking brake five times and ensure that the brake operates normally.
18) Perform reinitialization of the auto headlight beam leveler system. (Model with auto headlight beam leveler) <Ref. to LI-23, PROCEDURE, Auto Headlight Beam Leveler System.>

C: INSPECTION

Check the removed parts for wear, damage and crack, and repair or replace them if faulty.

4. Rear Stabilizer

A: REMOVAL

1) Lift up the vehicle, and then remove the rear wheels.
2) Remove the rear stabilizer.
   (1) Remove the nut and disconnect the right and left stabilizer link assemblies.
   (2) Detach the right and left clamps - stabilizer bushing and remove the rear stabilizer.

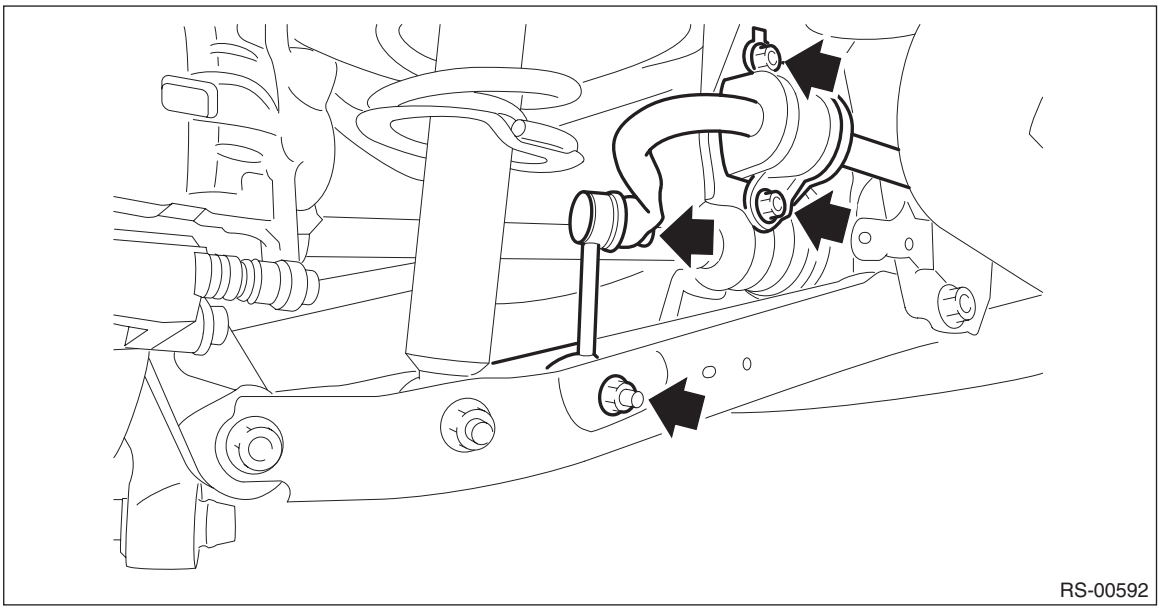

B: INSTALLATION

CAUTION:
- **For parts which are not reusable, always use new parts.**
- **Always tighten the bushing in the state where the vehicle is at curb weight and the wheels are in full contact with the ground.**
- **Install the clamp - stabilizer bushing with the "G" character facing upward.**

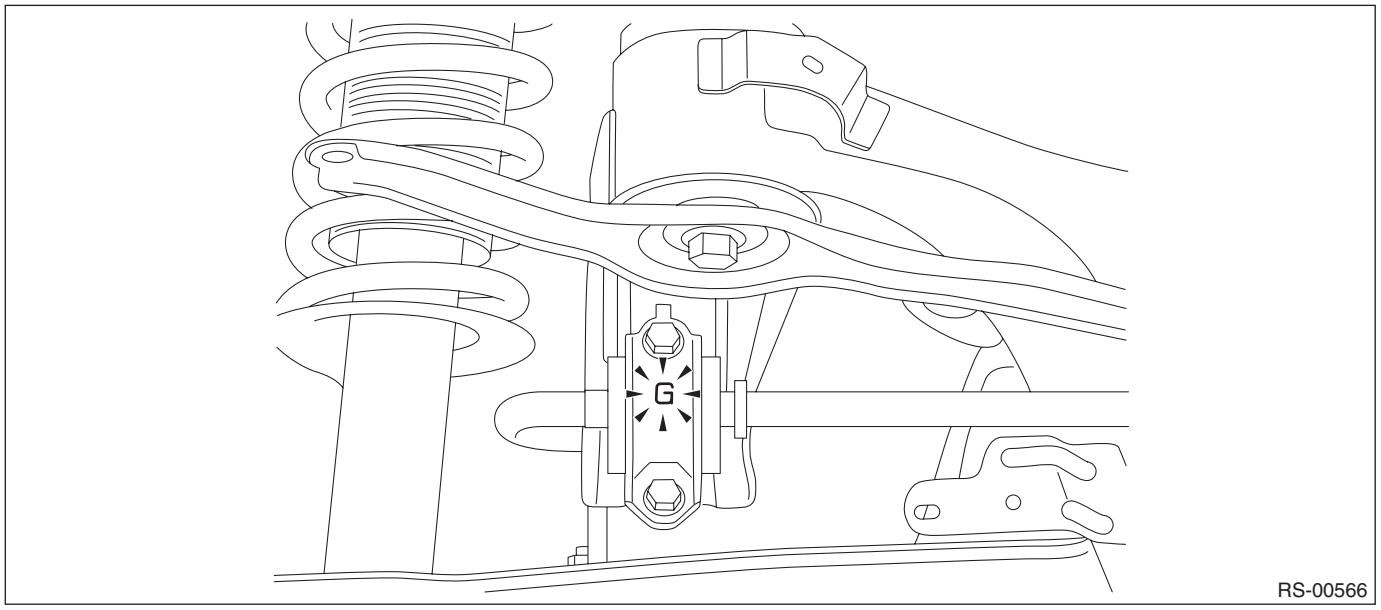

1) Before installation, inspect the following items and replace any faulty part with a new one.
- Check the bushing for abnormal cracks, fatigue or damage.
- Check the stabilizer link assembly for damage.

2) Install the rear stabilizer.
   (1) Install the stabilizer link assembly.

Tightening torque:
Stabilizer link assembly: 33 N·m (3.4 kgf-m, 24.3 ft-lb)

   (2) Install the clamp - stabilizer bushing.

Tightening torque:
Clamp - stabilizer bushing: 38 N·m (3.9 kgf-m, 28.0 ft-lb)

3) Install the rear wheels and lower the vehicle.

Tightening torque:
120 N·m (12.2 kgf-m, 88.5 ft-lb)

5. Rear Trailing Link

A: REMOVAL

1) Lift up the vehicle, and then remove the rear wheels.
2) Remove the trailing link.
   (1) Remove the bolts, and remove the bracket - parking brake cable (a) from the trailing link.
   (2) Remove the bolts and nuts, and then remove the trailing link.

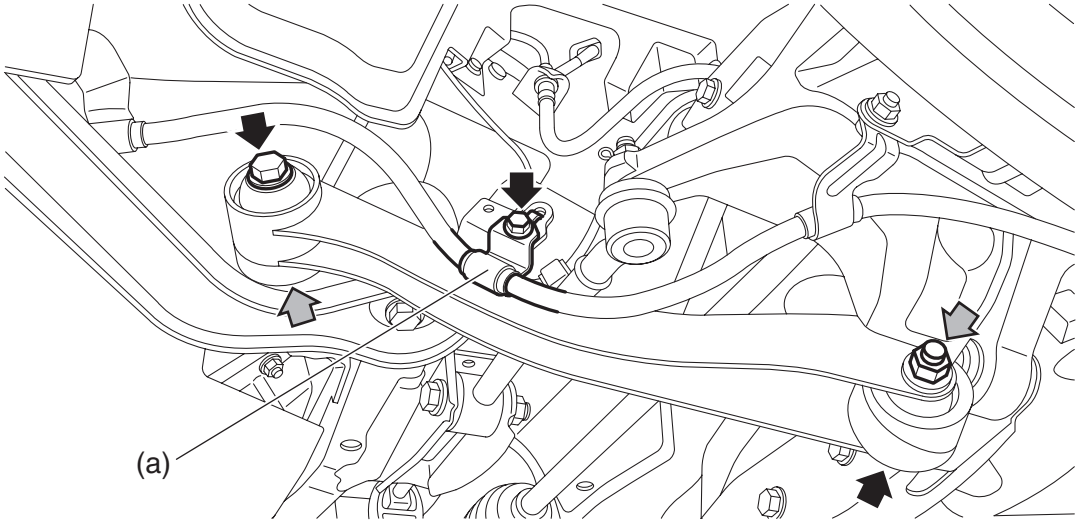

RS-00552

B: INSTALLATION

CAUTION:
- **For parts which are not reusable, always use new parts.**
- **Always tighten the bushing in the state where the vehicle is at curb weight and the wheels are in full contact with the ground.**

1) Install the trailing link.

Tightening torque:
Trailing link — rear sub frame assembly: 120 N·m (12.2 kgf-m, 88.5 ft-lb)
Trailing link — rear axle housing: 80 N·m (8.2 kgf-m, 59.0 ft-lb)

2) Install the bracket - parking brake cable.

Tightening torque:
18 N·m (1.8 kgf-m, 13.3 ft-lb)

3) Install the rear wheels and lower the vehicle.

Tightening torque:
120 N·m (12.2 kgf-m, 88.5 ft-lb)

C: DISASSEMBLY

1. BUSHING A - TRAILING LINK

Using the ST, push out the bushing A - trailing link.

Preparation tool:
ST-A: INSTALLER (899874100)
ST-B: PRESS (499755602)

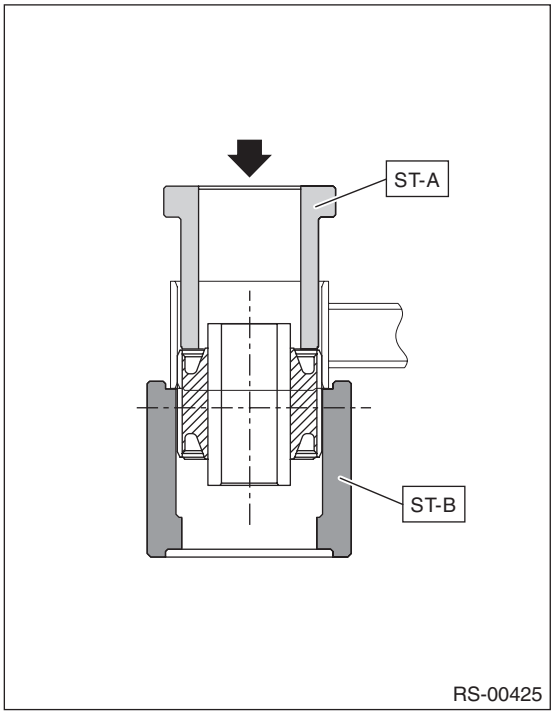

2. BUSHING - TRAILING LINK

For the removal procedure of bushing - trailing link, refer to “Rear Axle” in the “DRIVE SHAFT SYSTEM” section. <Ref. to RS-18, BUSHING - TRAILING LINK, DISASSEMBLY, Rear Trailing Link.>

D: ASSEMBLY

1. BUSHING A - TRAILING LINK

1) Before assembly, inspect the following items and replace any faulty part with a new one.
- Perform visual check for damage or bend on the trailing link.
- Visually check the bushing for abnormal cracks, fatigue or damage.

2) Using the ST-A and ST-B, press-fit the bushing.

CAUTION:
Make sure to press the bushing straight in.

Preparation tool:
ST-A: INSTALLER (899874100)
ST-B: PRESS (499755602)

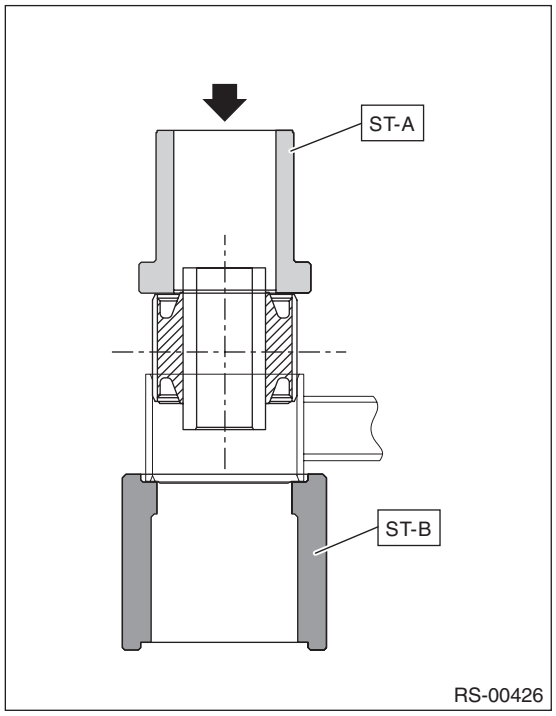

2. BUSHING - TRAILING LINK

For the installation procedure of bushing - trailing link, refer to “Rear Axle” in the “DRIVE SHAFT SYSTEM” section. <Ref. to DS-33, ASSEMBLY, Rear Axle.>

6. Upper Arm

A: REMOVAL

1) Disconnect the ground terminal from battery sensor. <Ref. to RC-4, BATTERY, NOTE, Repair Contents.>
2) Lift up the vehicle, and then remove the rear wheels.
3) Remove the rear sub frame assembly. <Ref. to RS-10, REMOVAL, Rear Sub Frame.>
4) Remove the bolts, then remove the rear upper arm assembly from the rear sub frame assembly.

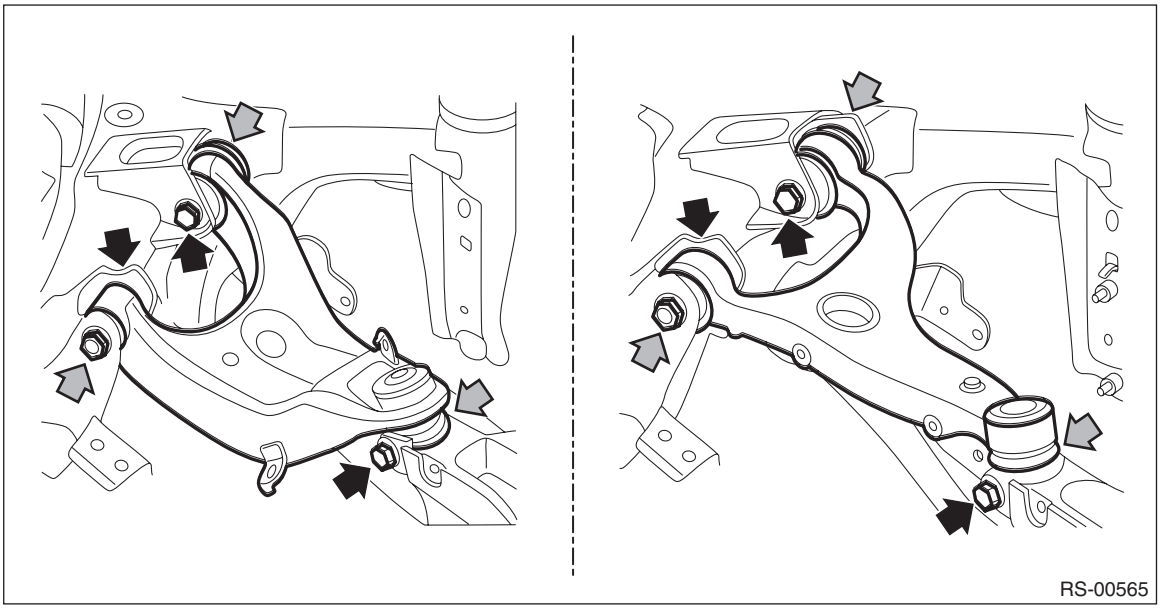

B: INSTALLATION

CAUTION:
- **For parts which are not reusable, always use new parts.**
- **Always tighten the bushing when the arm is positioned in the state where the vehicle is at curb weight and the wheels are in full contact with the ground.**

1) Before installation, inspect the following items and replace any faulty part with a new one.
- Visually check the upper arm assembly for damage and deformation.
- Visually check the bushing for abnormal cracks, fatigue or damage.
- Visually check the dust cover on the ball joint for abnormal cracks, fatigue or damage.

2) Install the upper arm assembly.
(1) Make the installation sections of the rear lateral link assembly (the bolt on the housing assembly - rear axle side and the bolt on the rear sub frame assembly side) horizontal.
(2) Install the upper arm assembly to the rear sub frame assembly.

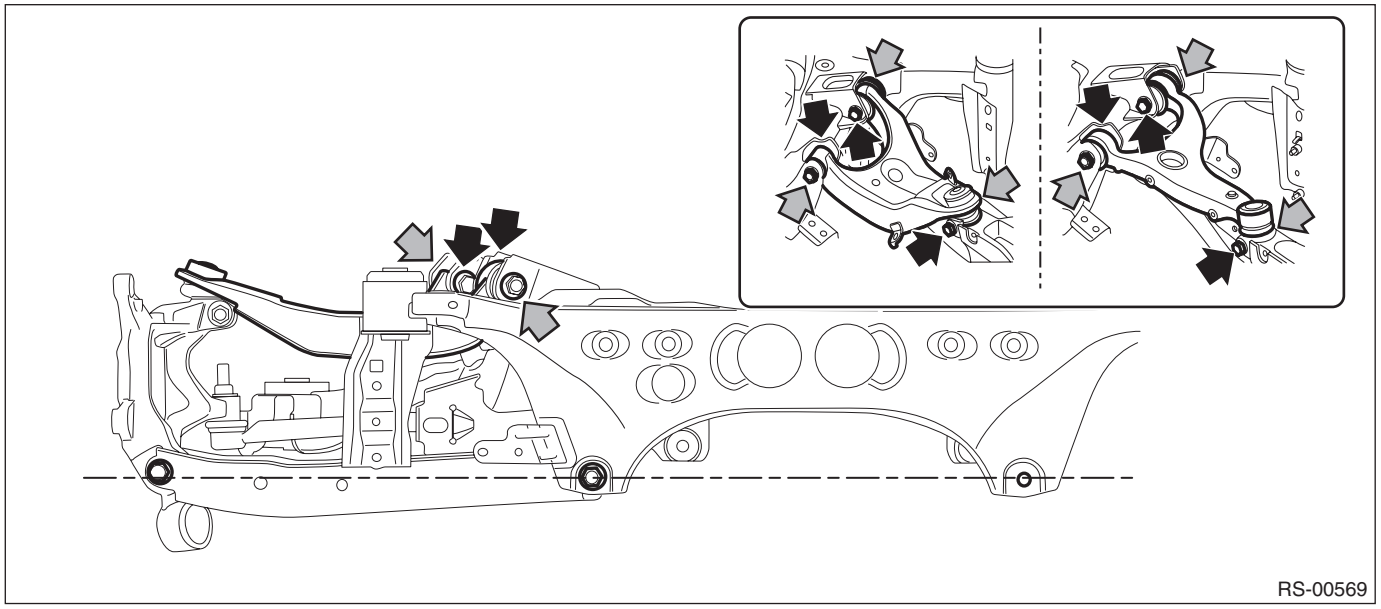

Tightening torque:
Upper arm assembly — rear sub frame assembly: 80 N·m (8.2 kgf-m, 59.0 ft-lb)
3) Connect the upper arm assembly and the housing assembly - rear axle.

Tightening torque:
Upper arm assembly — housing assembly - rear axle: 80 N·m (8.2 kgf-m, 59.0 ft-lb)
4) Install the rear sub frame assembly. <Ref. to RS-13, INSTALLATION, Rear Sub Frame.>
5) Install the rear wheels and lower the vehicle.

Tightening torque:
120 N·m (12.2 kgf-m, 88.5 ft-lb)
6) Inspect the wheel alignment and adjust if necessary.
- Inspection: <Ref. to FS-10, INSPECTION, Wheel Alignment.>
- Adjustment: <Ref. to FS-14, ADJUSTMENT, Wheel Alignment.>

CAUTION:
When the wheel alignment has been adjusted, perform the following adjustment.
– Lane keep assist learning value clear (model with EyeSight): <Ref. to ES(diag)-49, OPERATION, Clear Active Lane Keep System Learning Value.>
– "VSC(VDC) Centering Mode": <Ref. to VDC-15, ADJUSTMENT, VDC Control Module and Hydraulic Control Unit (VDCCM&H/U).>
7) Connect the ground terminal to battery sensor. <Ref. to RC-4, BATTERY, NOTE, Repair Contents.>
8) Perform reinitialization of the auto headlight beam leveler system. (Model with auto headlight beam leveler) <Ref. to LI-23, PROCEDURE, Auto Headlight Beam Leveler System.>

7. Front Lateral Link

A: REMOVAL

1) Lift up the vehicle, and then remove the rear wheels.
2) Remove the trailing link. <Ref. to RS-17, REMOVAL, Rear Trailing Link.>
3) Remove the lateral link assembly - front.
   (1) Remove the snap pin (a) and nut (b).
   (2) Remove the ball joint from the housing assembly - rear axle.

Preparation tool:
Tie-rod ball joint puller

   (3) Scribe alignment marks (c) on the adjusting bolt for lateral link assembly - front and on the rear sub frame assembly.
   (4) Remove the adjusting bolt (d), and remove the lateral link assembly - front.

CAUTION:
• When removing the adjusting bolt (d), make sure to fix the bolt head in place when loosening the nut (e).
• Use a suitable tool appropriate to the structure, and be careful not to damage the boot of the joint while removing. The boot may be damaged depending on the tool used.

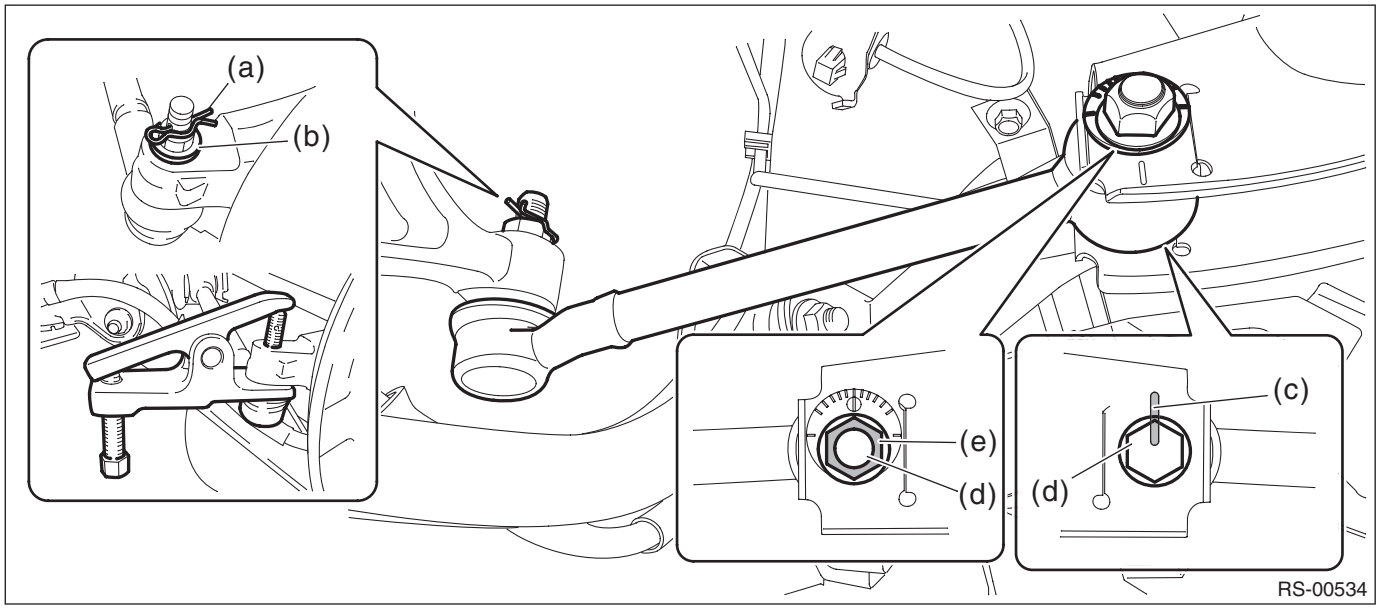

B: INSTALLATION

CAUTION:
• For parts which are not reusable, always use new parts.
• Always tighten the bushing in the state where the vehicle is at curb weight and the wheels are in full contact with the ground.

1) Before installation, inspect the following items and replace any faulty part with a new one.
- Visually check the lateral link assembly - front for damage and deformation.
- Visually check the bushing for abnormal cracks, fatigue or damage.
- Visually check the dust cover on the ball joint for abnormal cracks, fatigue or damage.

2) Install the lateral link assembly - front.

CAUTION:
• When installing the adjusting bolt (d), make sure to fix the bolt head in place and tighten the nut side (e).
• Align alignment marks (c) on the adjusting bolt for lateral link assembly - front and on the rear sub frame assembly.

Tightening torque:
Refer to "COMPONENT" of "General Description" for the tightening torque. <Ref. to RS-3, COMPONENT, General Description.>

3) Install the trailing link.

Tightening torque:
Trailing link — rear sub frame assembly: 120 N·m (12.2 kgf-m, 88.5 ft-lb)
Trailing link — rear axle housing: 80 N·m (8.2 kgf-m, 59.0 ft-lb)

4) Install the bolt and install the bracket - parking brake cable.

Tightening torque:
18 N·m (1.8 kgf-m, 13.3 ft-lb)

5) Install the rear wheels and lower the vehicle.

Tightening torque:
120 N·m (12.2 kgf-m, 88.5 ft-lb)

6) Inspect the wheel alignment and adjust if necessary.
- Inspection: <Ref. to FS-10, INSPECTION, Wheel Alignment.>
- Adjustment: <Ref. to FS-14, ADJUSTMENT, Wheel Alignment.>

CAUTION:
When the wheel alignment has been adjusted, perform the following adjustment.
– Lane keep assist learning value clear (model with EyeSight): <Ref. to ES(diag)-49, OPERATION, Clear Active Lane Keep System Learning Value.>
– "VSC(VDC) Centering Mode": <Ref. to VDC-15, ADJUSTMENT, VDC Control Module and Hydraulic Control Unit (VDCCM&H/U).>

C: DISASSEMBLY

Using the ST, push out the bushing B - lateral link.

Preparation tool:
ST-A & ST-B: INSTALLER & REMOVER (20299AE000)

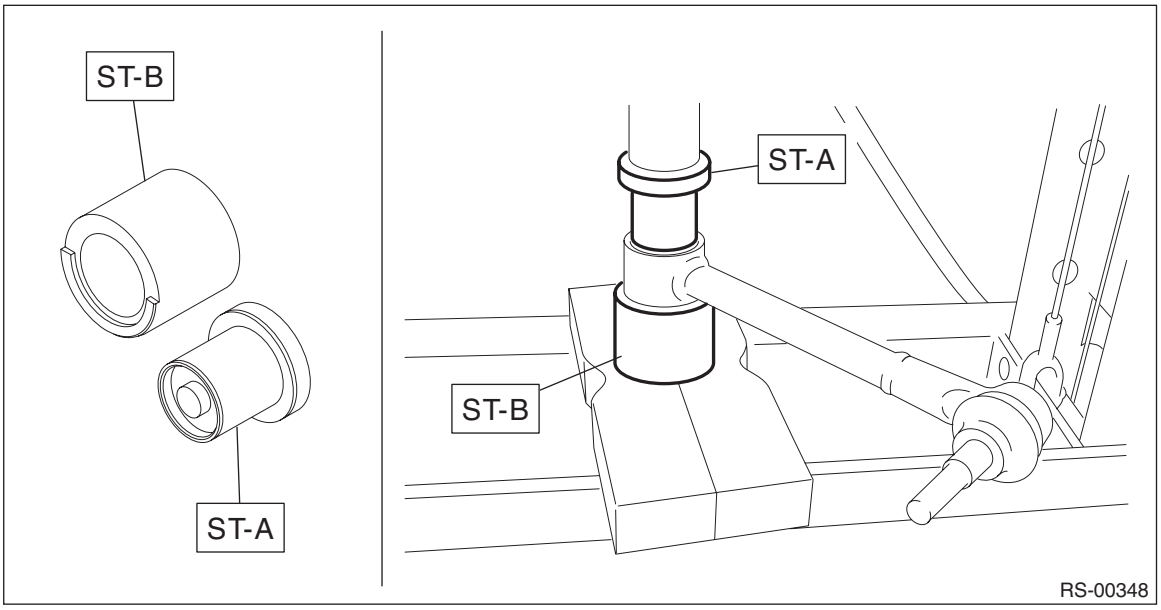

D: ASSEMBLY

1) Before assembly, inspect the following items and replace any faulty part with a new one.
- Visually check the lateral link assembly - front for damage and deformation.
- Visually check the bushing for abnormal cracks, fatigue or damage.
- Visually check the dust cover on the ball joint for damage.

2) Using the ST, press the bushing into place.

CAUTION:
Make sure to press the bushing straight in.

Preparation tool:
ST-A & ST-B: INSTALLER & REMOVER (20299AE000)

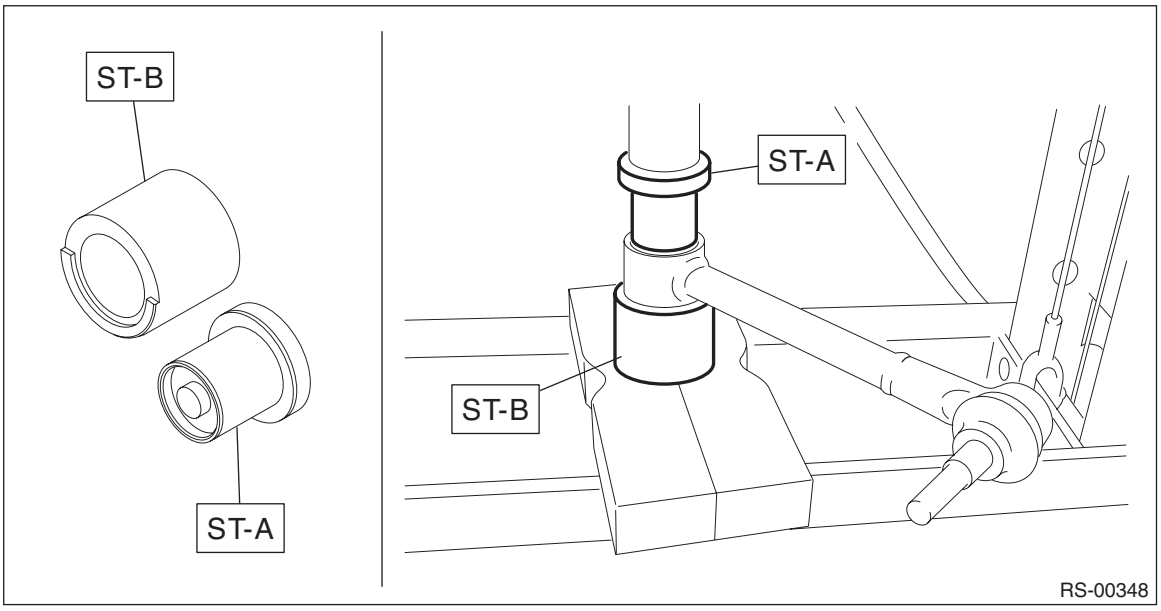

8. Rear Lateral Link

A: REMOVAL

1) Disconnect the ground terminal from battery sensor. <Ref. to RC-4, BATTERY, NOTE, Repair Contents.>
2) Lift up the vehicle, and then remove the rear wheels.
3) Remove the sensor assembly - headlight beam leveler. (Model with auto headlight beam leveler) <Ref. to LI-83, REMOVAL, Rear Height Sensor.>
4) Remove the lateral link assembly - rear.
   (1) Remove the nut and disconnect the rear stabilizer link assembly.
   (2) Remove the bolts and nuts, and remove the lower side of rear shock absorber assembly.
   (3) Remove the bolts and nuts, and remove the lateral link assembly - rear.

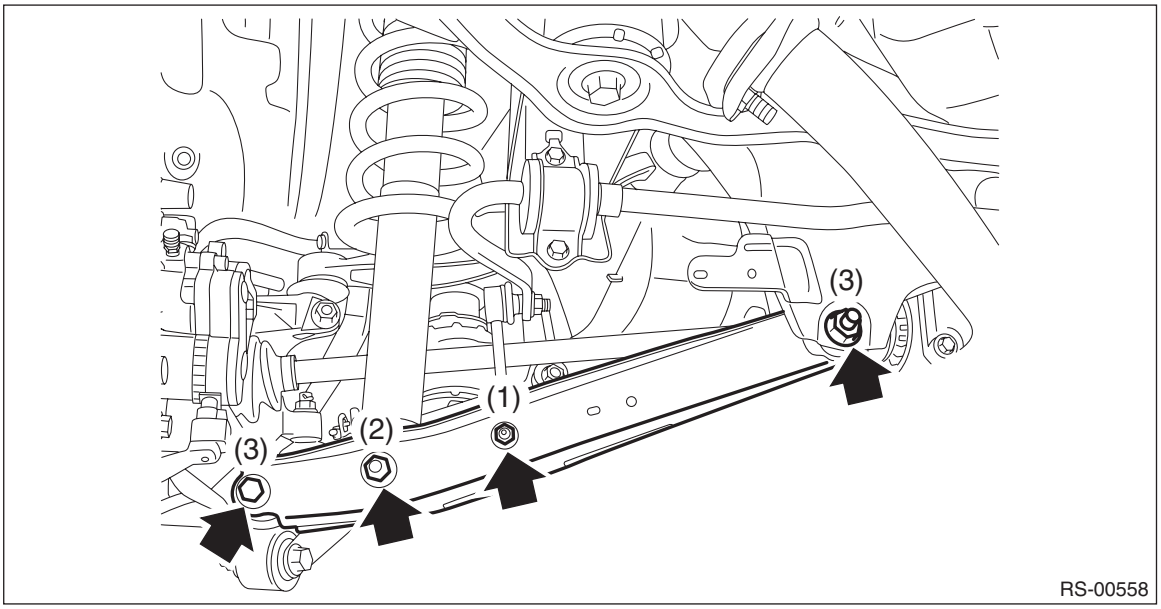

B: INSTALLATION

CAUTION:
- **For parts which are not reusable, always use new parts.**
- **Always tighten the bushing in the state where the vehicle is at curb weight and the wheels are in full contact with the ground.**

1) Before installation, inspect the following items and replace any faulty part with a new one.
- Visually check the lateral link assembly - rear for damage and deformation.
- Visually check the bushing for abnormal cracks, fatigue or damage.

2) Install the lateral link assembly - rear.

Tightening torque:
Refer to "COMPONENT" of "General Description" for the tightening torque. <Ref. to RS-3, COMPONENT, General Description.>

3) Install the sensor assembly - headlight beam leveler. (Model with auto headlight beam leveler)

Tightening torque:
7.5 N·m (0.8 kgf-m, 5.5 ft-lb)

4) Install the rear wheels and lower the vehicle.

Tightening torque:
120 N·m (12.2 kgf-m, 88.5 ft-lb)

5) Connect the ground terminal to battery sensor. <Ref. to RC-4, BATTERY, NOTE, Repair Contents.>

6) Inspect the wheel alignment and adjust if necessary. <Ref. to FS-10, INSPECTION, Wheel Alignment.>

CAUTION:
When the wheel alignment has been adjusted, perform the following adjustment.
– Lane keep assist learning value clear (model with EyeSight): <Ref. to ES(diag)-49, OPERATION, Clear Active Lane Keep System Learning Value.>
– "VSC(VDC) Centering Mode": <Ref. to VDC-15, ADJUSTMENT, VDC Control Module and Hydraulic Control Unit (VDCCM&H/U).>
7) Perform reinitialization of the auto headlight beam leveler system. (Model with auto headlight beam leveler) <Ref. to LI-24, REINITIALIZATION, PROCEDURE, Auto Headlight Beam Leveler System.>

C: DISASSEMBLY

Using the ST, push out the bushing.

Preparation tool:
ST-A & ST-B: INSTALLER & REMOVER (20299AE010)

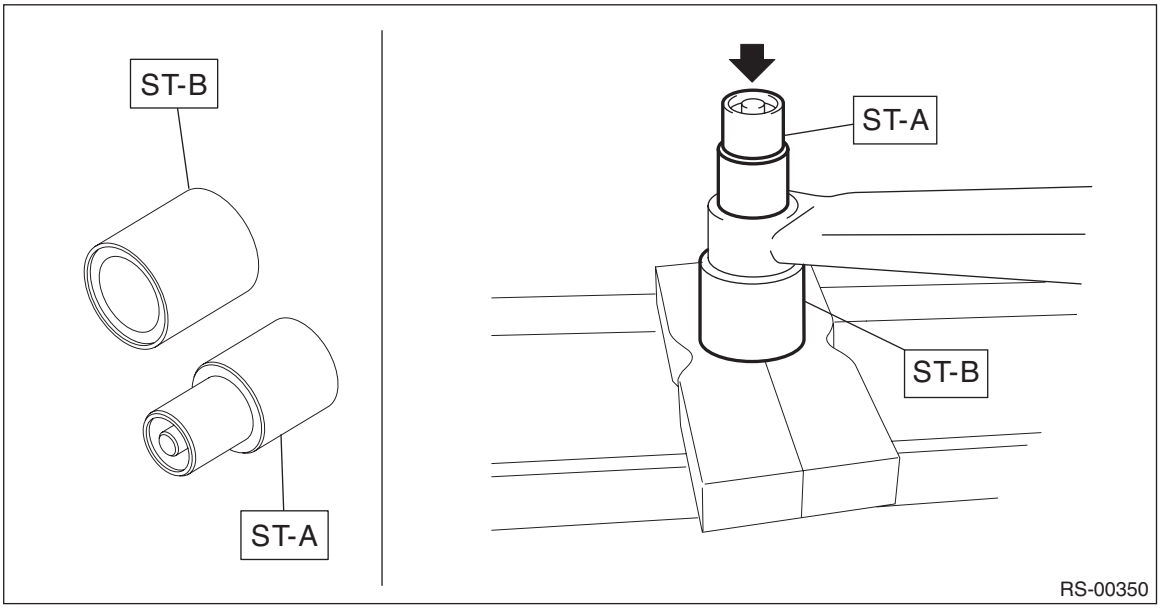

D: ASSEMBLY

1) Before assembly, inspect the following items and replace any faulty part with a new one.
- Visually check the lateral link assembly - rear for damage and deformation.
- Visually check the bushing for abnormal cracks, fatigue or damage.

2) Using the ST, press the bushing into place.

Preparation tool:
ST-A & ST-B: INSTALLER & REMOVER (20299AE010)

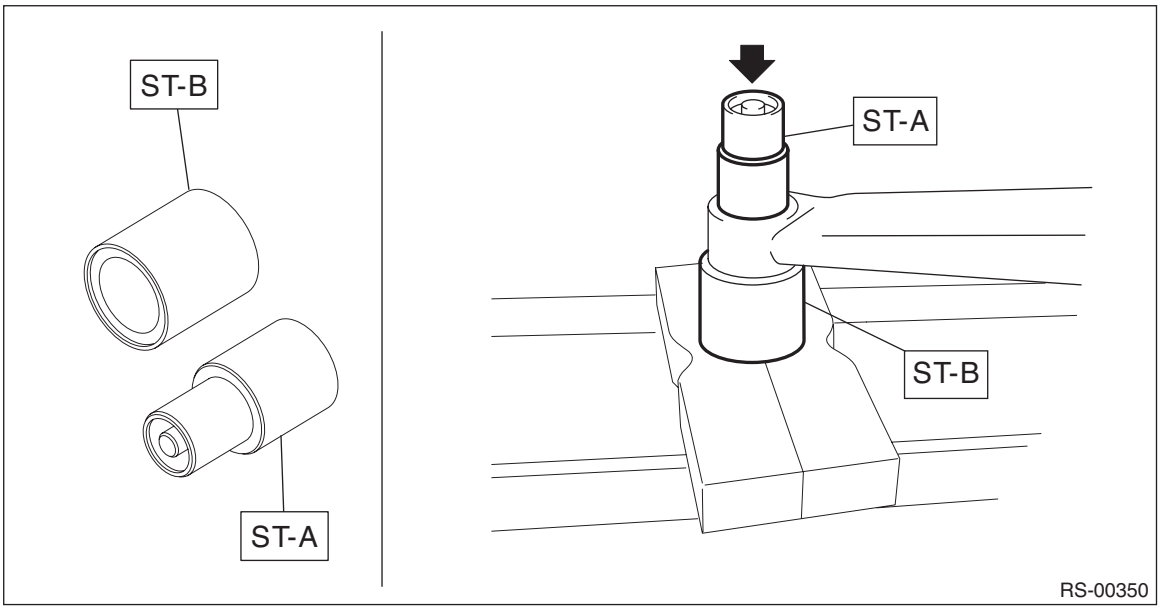

9. Rear Shock Absorber

A: REMOVAL

1) Disconnect the ground terminal from battery sensor. <Ref. to RC-4, BATTERY, NOTE, Repair Contents.>
2) Remove the trunk trim panel assembly - side (sedan model) or rear floor mat (OUTBACK model).
- Sedan model: <Ref. to EI-109, REMOVAL, Trunk Room Trim.>
- OUTBACK model: Remove the rear floor mat and the spacer - rear floor mat.

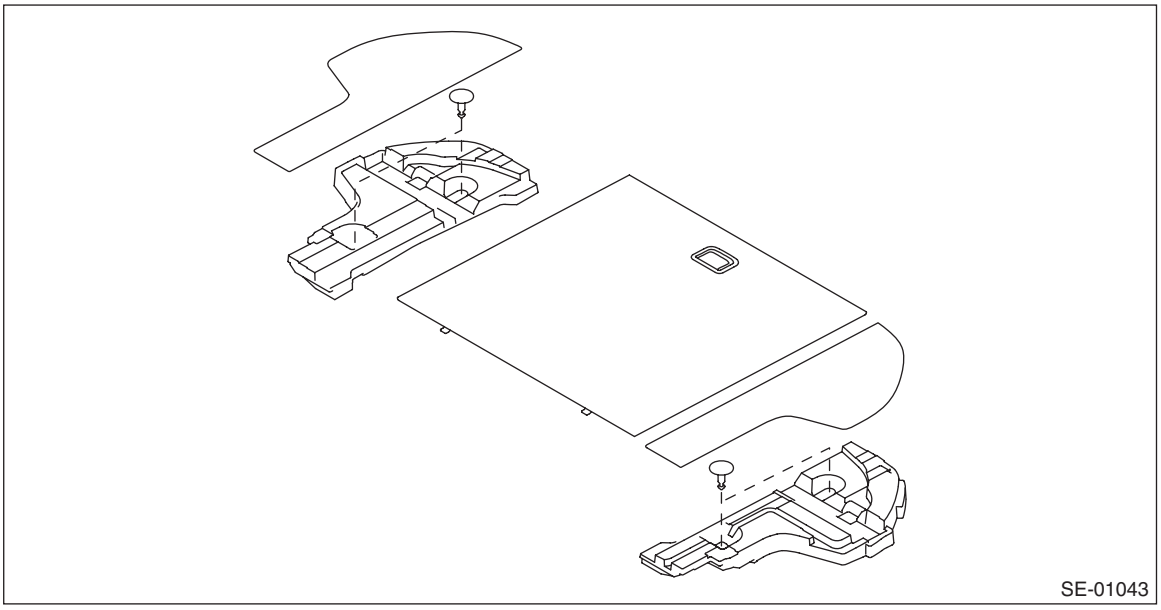
SE-01043

3) Lift up the vehicle, and then remove the rear wheels.
4) Remove the bolts and nuts, and lower the lateral link assembly - rear.
   (1) Remove the nut and disconnect the rear stabilizer link.
   (2) Remove the bolts from the lower side of rear shock absorber assembly.
   (3) Disconnect the lateral link assembly - rear.

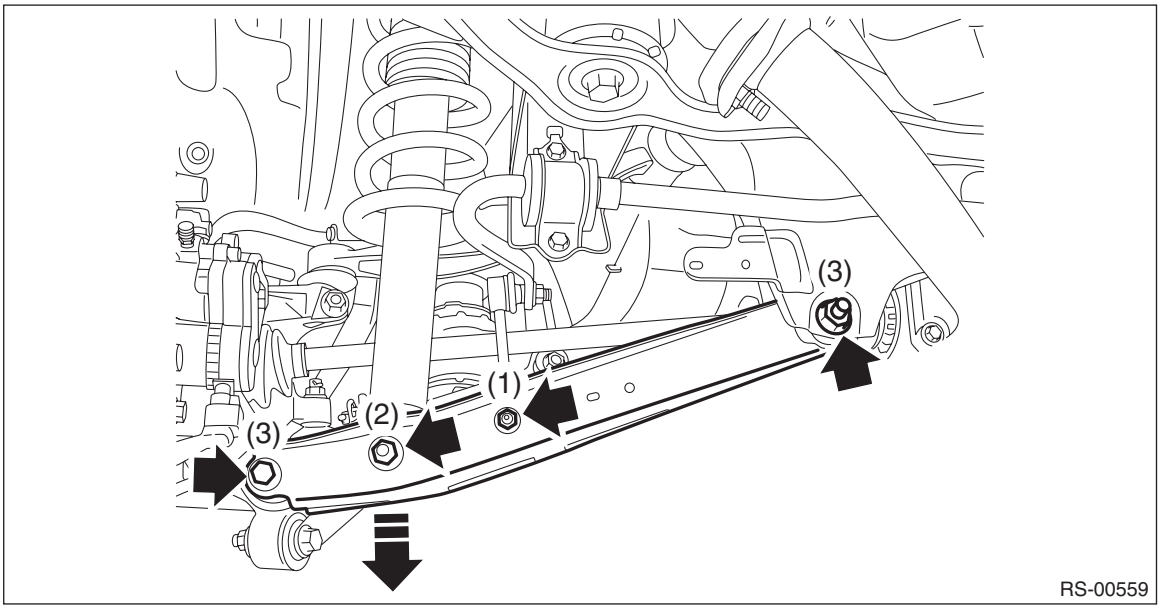

RS-00559

5) Remove the nut of shock mount - rear.

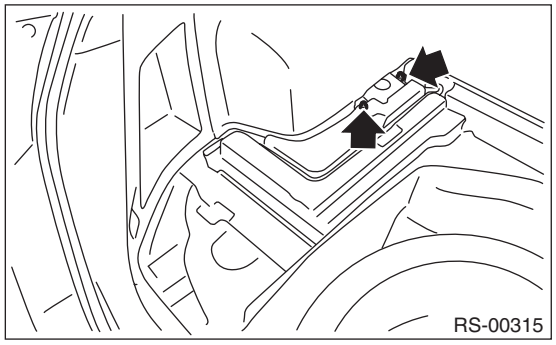

6) Remove the rear shock absorber assembly.

B: INSTALLATION

CAUTION:
- **Be sure to use a new flange nut and self-locking nut.**
- **Always tighten the bushing in the state where the vehicle is at curb weight and the wheels are in full contact with the ground.**

1) Install the nut of shock mount - rear.

Tightening torque:
30 N·m (3.1 kgf-m, 22.1 ft-lb)

2) Lift the lateral link assembly - rear, and temporarily tighten the bolts and nuts.
   (1) Temporarily tighten the lateral link assembly - rear.
   (2) Temporarily tighten the bolts on the lower side of the rear shock absorber assembly.
   (3) Temporarily tighten the rear stabilizer link.
3) Using a jack and a wooden block, apply a load so that the rear drive shaft assembly is level.

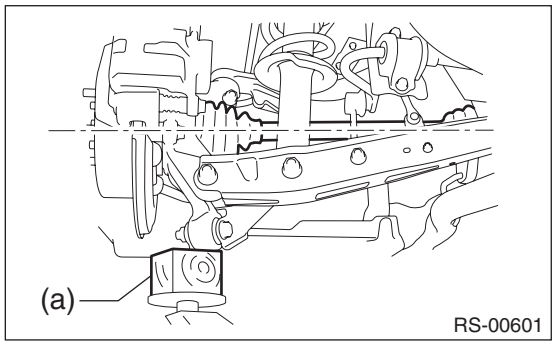

(a) Wooden block

4) Tighten the lateral link assembly - rear.

Tightening torque:
80 N·m (8.2 kgf-m, 59.0 ft-lb)

5) Tighten the bolts on the lower side of the rear shock absorber assembly.

Tightening torque:
120 N·m (12.2 kgf-m, 88.5 ft-lb)

6) Tighten the rear stabilizer link.

Tightening torque:
33 N·m (3.4 kgf-m, 24.3 ft-lb)

7) Install the trunk trim panel assembly - side (sedan model) or rear floor mat (OUTBACK model).
- Sedan model: <Ref. to EI-110, INSTALLATION, Trunk Room Trim.>
- OUTBACK model: Install the rear floor mat and the spacer - rear floor mat.

8) Connect the ground terminal to battery sensor. <Ref. to RC-4, BATTERY, NOTE, Repair Contents.>

9) Install the rear wheels.

Tightening torque:
120 N·m (12.2 kgf-m, 88.5 ft-lb)
10) Check the wheel alignment and adjust it if necessary. <Ref. to FS-10, INSPECTION, Wheel Alignment.>

CAUTION:
When the wheel alignment has been adjusted, perform the following adjustment.
– Lane keep assist learning value clear (model with EyeSight): <Ref. to ES(diag)-49, OPERATION, Clear Active Lane Keep System Learning Value.>
– "VSC(VDC) Centering Mode": <Ref. to VDC-15, ADJUSTMENT, VDC Control Module and Hydraulic Control Unit (VDCCM&H/U).>

C: DISASSEMBLY

1) Using a coil spring compressor, compress the coil spring.
2) Using a hexagon wrench to prevent the shock absorber piston rod from turning, remove the self-locking nut with ST.

CAUTION:
When installing the coil spring compressor to the coil spring, follow the operation manual accompanied with the coil spring compressor during operation.

Preparation tool:
ST: STRUT MOUNT SOCKET (20399FG000)

NOTE:
<Example of coil spring compressor installation>
The installing position of coil spring compressor varies depending on the coil spring shape and winding number.

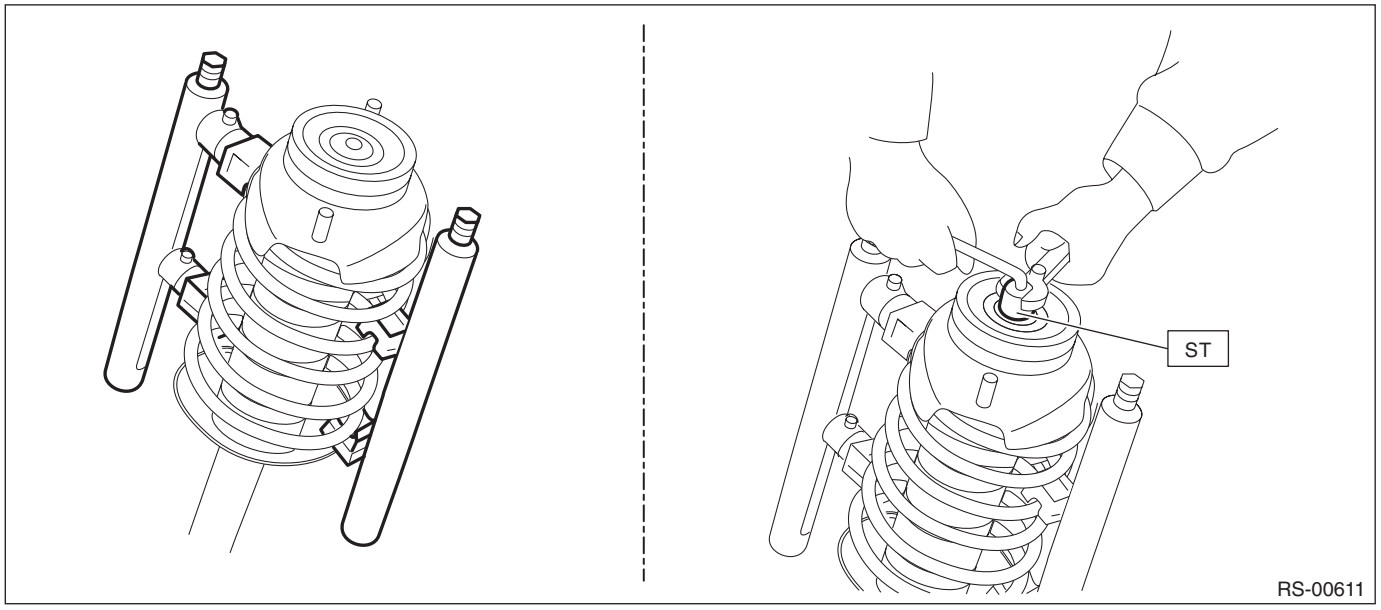

3) Remove the rubber seat - shock UPR and shock mount - rear from the shock absorber COMPL - rear.
4) Gradually decrease the compression pressure of compressor, and remove the coil spring - rear.
5) Remove the helper - rear and the dust cover - rear shock.

D: ASSEMBLY

1) Before assembly, check each part. <Ref. to RS-33, INSPECTION, Rear Shock Absorber.>
2) Using a coil spring compressor, compress the coil spring - rear.

CAUTION:
When installing the coil spring compressor to the coil spring, follow the operation manual accompanied with the coil spring compressor during operation.
3) Install by aligning with the edge surface of the coil spring - rear and the stopper portion of the lower side spring seat.

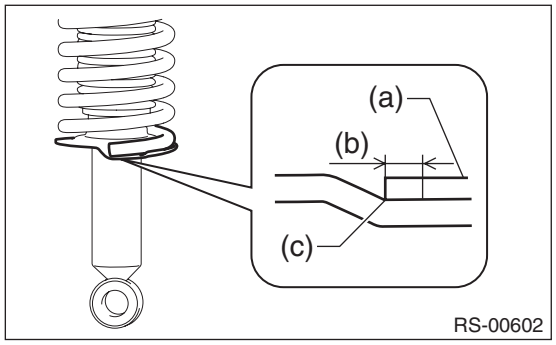

(a) Coil spring - rear
(b) 0+10 mm (0+0.4 in)
(c) Spring seat stopper portion

4) Install the helper - rear and the dust cover - rear shock to the piston rod.
5) Fully pull up the piston rod in the upward direction.

6) Temporarily tighten the rubber seat - shock UPR and the shock mount - rear with new self-locking nuts.

NOTE:
Position the shock mount - rear as shown in the figure.

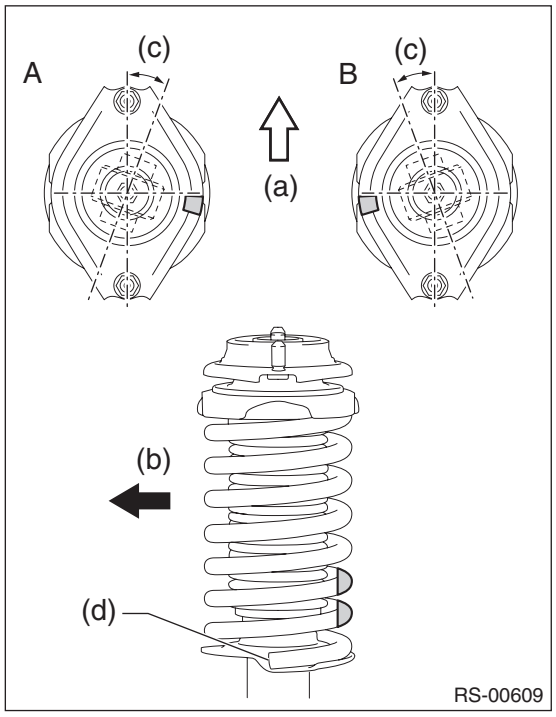

A LH side
B RH side

(a) Front side of vehicle
(b) Vehicle outside
(c) 0°±10°
(d) End portion of coil spring - rear

7) Using a hexagon wrench to prevent the shock absorber piston rod from turning, tighten the new self-locking nut with ST.

CAUTION:
Make sure that the shock mount - rear turns smoothly after tightening.

Preparation tool:
ST: STRUT MOUNT SOCKET (20399FG000)

Tightening torque:
25 N·m (2.5 kgf-m, 18.4 ft-lb)

8) Loosen the coil spring compressor carefully.

E: INSPECTION

1) Check for oil leaks.
2) Move the piston rod up and down to check that it operates smoothly without any hitch.

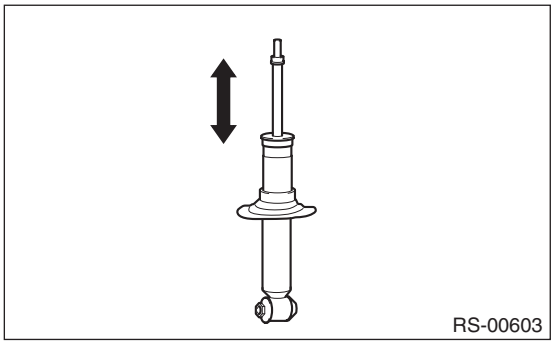

3) Check the piston rod for play as follows:
1. Fix the outer shell in place and fully extend the rod.
2. Set the dial gauge on the end of the rod L [10 mm (0.39 in)].
3. While applying a force of W [20 N (2 kgf, 4 lbf)] to the threaded part, read the dial gauge indication P_1.
4. Apply a force of 20 N (2 kgf, 4 lbf) from the opposite direction of "W", and then read the dial gauge indication P_2.

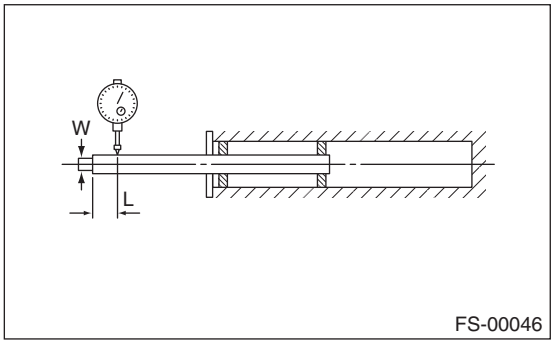

Play limit (P_1 + P_2): 0.8 mm (0.031 in)

F: DISPOSAL

CAUTION:
• Before handling the shock absorber, be sure to wear goggles to protect eyes from gas, oil and cutting powder.
• Do not disassemble the shock absorber or place it into a fire.
• Drill a hole into shock absorbers in case of discarding shock absorbers filled with gas.
1) Place the shock absorber on a level surface with the piston rod fully expanded.
2) Make a hole into the specified position 30 mm (1.18 in) deep using a drill with 2 — 3 mm (0.08 — 0.12 in) diameter.

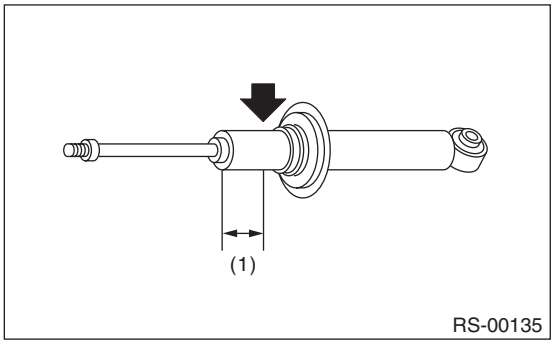

(1) 40 mm (1.57 in)

10.General Diagnostic Table

A: INSPECTION

1. IMPROPER VEHICLE POSTURE OR IMPROPER WHEEL ARCH HEIGHT

Possible cause	Corrective action
(1) Permanent distortion or damaged coil spring	Replace.
(2) Rough operation of shock absorber COMPL	Replace.
(3) Installation of the wrong shock absorber assembly	Replace with proper parts.
(4) Installation of the wrong coil spring	Replace with proper parts.

2. POOR RIDE COMFORT

1) Large rebound shock
2) Rocking of the vehicle continues too long after running over bump and hump.
3) Excessive shock in bumping

Possible cause	Corrective action
(1) Damaged coil spring	Replace.
(2) Overinflation of tires	Adjust.
(3) Improper wheel arch height	Replace the coil springs with new parts.
(4) Defective operation of shock absorber assembly	Replace.
(5) Damage or deformation of shock mount - rear	Replace.
(6) Unsuitable length (maximum or minimum) of shock absorber assembly	Replace with appropriate parts.
(7) Deformation or loss of bushing	Replace.
(8) Deformation or damage of helper - rear in shock absorber	Replace.
(9) Oil leakage from the shock absorber COMPL	Replace.

3. NOISE

Possible cause	Corrective action
(1) Wear or damage of shock absorber assembly component parts	Replace.
(2) Loosening of the suspension link or arm installing bolt	Tighten to the specified torque.
(3) Deformation or loss of bushing	Replace.
(4) Unsuitable length (maximum or minimum) of shock absorber	Replace with appropriate parts.
(5) Damaged coil spring	Replace.
(6) Wear or damage of the ball joint	Replace.
(7) Deformation of the stabilizer clamp	Replace.

WHEEL AND TIRE SYSTEM

WT

Page

1. General Description 2
2. Tire and Wheel 5
3. Temporary Tire 8
4. Tire Pressure Monitoring System 9
5. General Diagnostic Table 12

1. General Description

A: SPECIFICATION

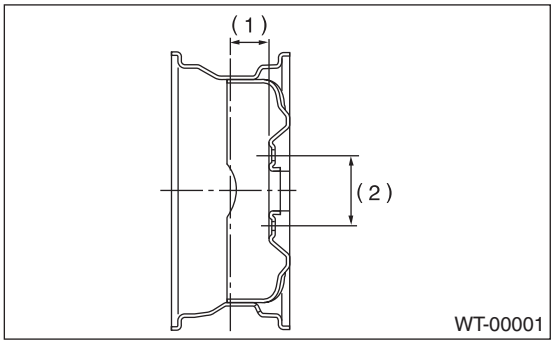

(1) Inset
(2) P.C.D.

- Sedan model

Tire size	Wheel size	Inset mm (in)	P.C.D. mm (in)	Tire inflation pressure kPa (kgf/cm^2, psi)	
				Front wheel	Rear wheel
225/50R18 95H	18 × 7$^1/_2$J	55 (2.17)	114.3 (4.50)	230 (2.3, 33)	220 (2.2, 32)
225/55R17 97V	17 × 7$^1/_2$J 17 × 7J	55 (2.17)		230 (2.3, 33)	220 (2.2, 32)
T155/70D17 110M	17 × 4T	40 (1.57)		420 (4.2, 60)	

- OUTBACK model

Tire size	Wheel size	Inset mm (in)	P.C.D. mm (in)	Tire inflation pressure kPa (kgf/cm^2, psi)	
				Front wheel	Rear wheel
225/60R18 100H	18 × 7J	55 (2.17)	114.3 (4.50)	240 (2.4, 35)	230 (2.3, 33)
225/65R17 102H	17 × 7J	55 (2.17)		240 (2.4, 35)	230 (2.3, 33)
T155/80R17 101M	17 × 4T	40 (1.57)		420 (4.2, 60)	

NOTE:
Size and inflation pressure of the standard equipment tire and temporary tire are described on the “Tire inflation pressure” label attached to the body side of the driver’s door.

1. SERVICE DATA

Part	Axial runout	Radial runout
Steel wheel	1.5 mm (0.059 in)	
Aluminum wheel	1.0 mm (0.039 in)	

Wheel balancing	Standard	Service limit
Dynamic unbalance	5 g (0.18 oz) or less	

B: COMPONENT

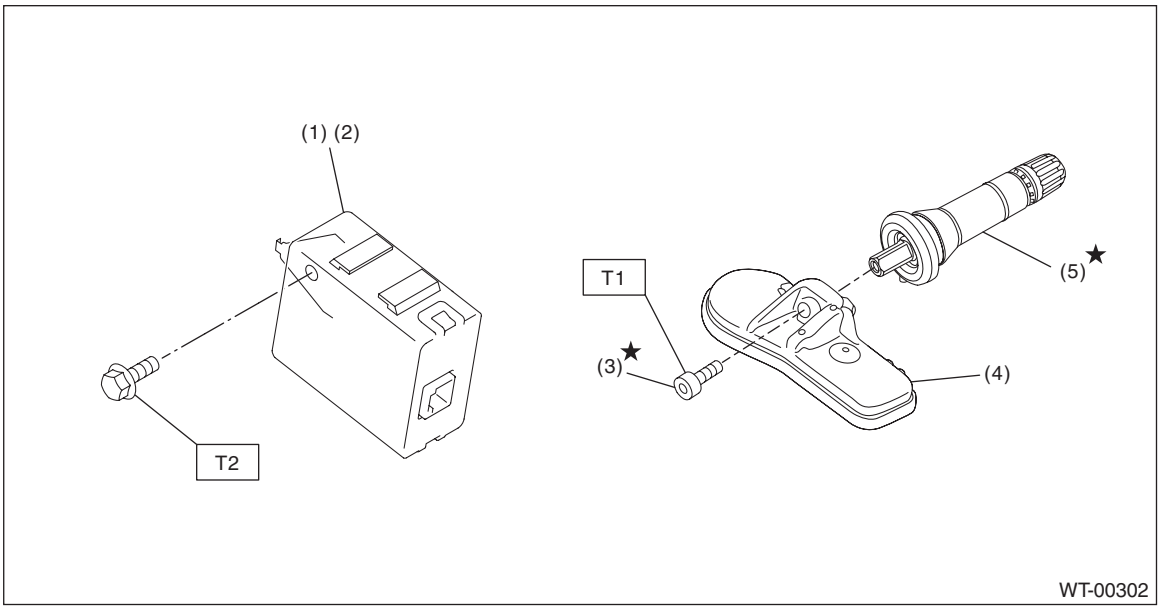

(1) TPMS & keyless entry control module (model without keyless access with push button start system)
(2) TPMS CM (model with keyless access with push button start system)
(3) Screw
(4) Transmitter (snap in type)
(5) Valve

Tightening torque: N·m (kgf-m, ft-lb)

T1: 1.4 (0.1, 1.0)

T2: 7.5 (0.8, 5.5)

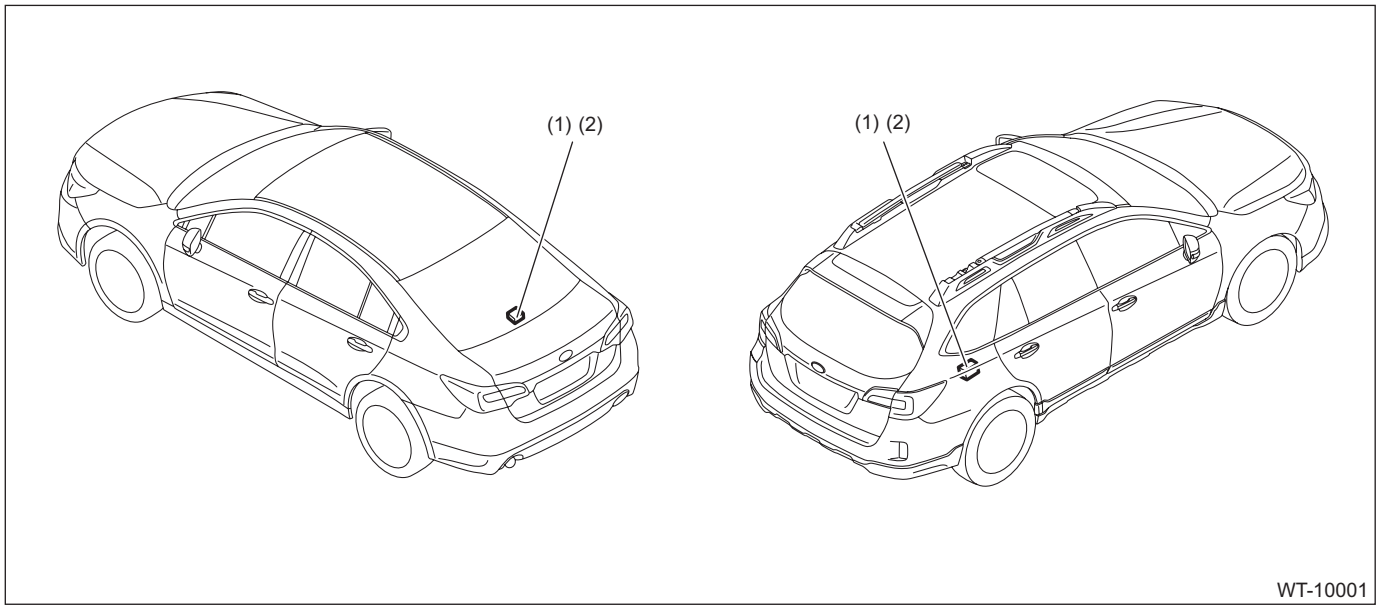

(1) TPMS & keyless entry control module (model without keyless access with push button start system)
(2) TPMS module ASSY (model with keyless access with push button start system)

C: PREPARATION TOOL

1. GENERAL TOOL

TOOL NAME	REMARKS
Air pressure gauge	Used for measuring tire air pressure.
Dial gauge	Used for measuring wheel runout.
Wheel balancer	Used for adjusting wheel balance.
Circuit tester	Used for measuring resistance, voltage and current.

2. Tire and Wheel

A: REMOVAL

1) Lift up the vehicle.
2) Remove the wheel nut.
3) Remove the wheels.

CAUTION:
When removing the wheels, be careful not to damage the bolt - hub.

B: INSTALLATION

1) Install the wheels to vehicle.
2) Tighten the wheel nuts to the specified torque.

Tightening torque:
120 N·m (12.2 kgf-m, 88.5 ft-lb)

C: INSPECTION

1. TIRE

CAUTION:
When replacing a tire, make sure to use tires of the same size, construction and load range as originally installed.

1) Tire size and tire inflation pressure check <Ref. to WT-2, SPECIFICATION, General Description.>
2) Cracks, damage and wear check
3) Tire runout check
   (1) Lift up the vehicle.
   (2) Slowly rotate the wheel to check rim “runout” using a dial gauge.

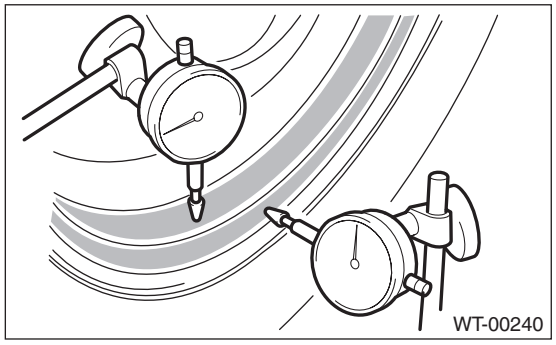

- Aluminum wheel

Service limit:
Axial and longitudinal runout: 1.0 mm (0.039 in)

- Steel wheel

Service limit:
Axial and longitudinal runout: 1.5 mm (0.059 in)

   (3) If the rim runout exceeds service limit, replace the wheel.

2. TIRE ROTATION

NOTE:
Rotate tires periodically (9,600 km/6,000 miles) in order to prolong life and to prevent uneven wear.
Rotate tires as shown in the figure depending on whether or not the direction of the tire rotation is specified.

- When the direction of tire rotation is not specified

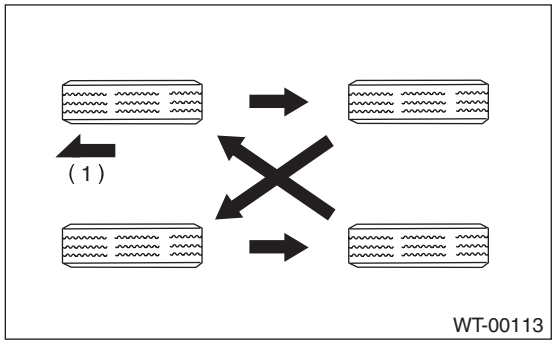

(1) Front side of vehicle

- When the direction of tire rotation is specified

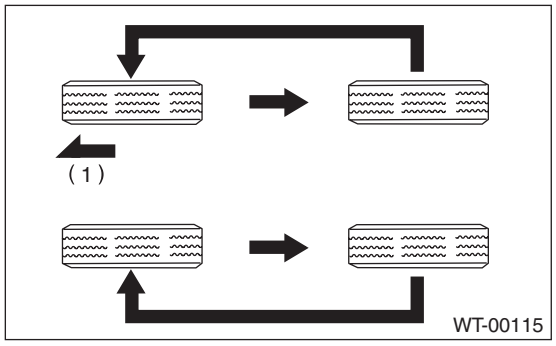

(1) Front side of vehicle

3. WHEEL BALANCING

1) Using the wheel balancer, measure wheel balance.
2) Adjust the wheel balancing.

NOTE:
- Unbalance after adjusting the wheel balancing should be 5 g (0.18 oz) or less.
- When using the adhesive type weight, degrease the surface where the adhesive type weight will be applied securely.
- After applying the adhesive type weight, apply a force to the weight and attain full adhesion.
- Using the knock-on type weight, check the size of the knock-on part.

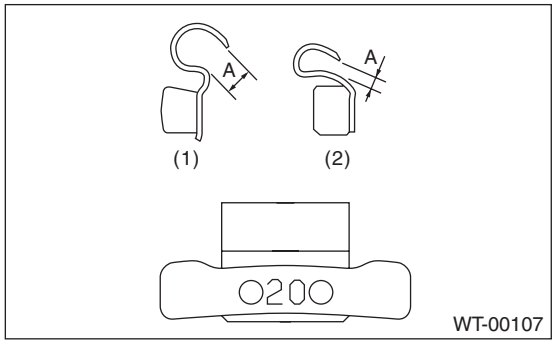

(1) Knock-on type weight for aluminum wheel
(2) Knock-on type weight for steel wheel

Service limit A:
Knock-on type weight for steel wheel: 2.0 mm (0.079 in)
Knock-on type weight for aluminum wheel: 5.0 mm (0.197 in)

3. Temporary Tire

A: NOTE

"T-type" or "Temporary" tire for temporary use is equipped as a temporary tire.

CAUTION:
• The "T-type" or "Temporary" tire is only for temporary use. Replace with a conventional tire as soon as possible.
• Do not use tire chains for "T-type" or "Temporary" tires. Because tire size is small, tire chains can not be installed and will damage the vehicle and tires.
• Do not drive at a speed greater than 80 km/h (50 MPH).
• Drive the vehicle as slowly as possible and avoid bumps on the road.

B: REPLACEMENT

Refer to "Tire and Wheel" for removal and installation of the "T-type" or "Temporary" tire. <Ref. to WT-5, Tire and Wheel.>

C: INSPECTION

Refer to "Tire and Wheel" for inspection of the "T-type" or "Temporary" tire. <Ref. to WT-5, TIRE, INSPECTION, Tire and Wheel.>

4. Tire Pressure Monitoring System

A: REMOVAL

1. TRANSMITTER (TIRE INFLATION PRESSURE SENSOR)

1) Remove the wheels from the vehicle. <Ref. to WT-5, REMOVAL, Tire and Wheel.>
2) Remove the tires from wheels.

CAUTION:
Use a tire changer when removing the tire from the wheel.
3) Loosen the screw to remove the transmitter from the valve stem.

CAUTION:
Do not reuse the valve and screw.
Replace the valve and screw with a new part even when reusing transmitter.

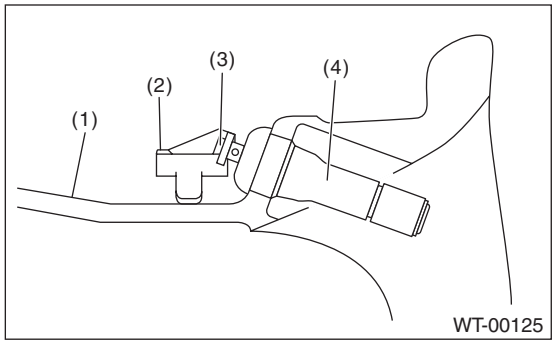

(1) Wheel
(2) Transmitter
(3) Screw
(4) Valve

4) Remove the valve from the wheel.

2. TPMS & KEYLESS CONTROL MODULE

NOTE:
• TPMS control module for model without keyless access with push button start system is integrated with the keyless entry control module.
For removal procedures, refer to “SECURITY AND LOCKS” section. <Ref. to SL-79, REMOVAL, Keyless Entry Control Module.>
• Re-register the key and the transmitter ID when TPMS & keyless entry control module has been replaced.
  • Keyless transmitter re-registration: <Ref. to SL-87, REGISTRATION OF KEYLESS TRANSMITTER WITH SUBARU SELECT MONITOR, REPLACEMENT, Keyless Transmitter.>
  • Transmitter ID re-registration: <Ref. to TPM(diag)-15, Register Transmitter (ID).>

3. TPMS CM

NOTE:
• TPMS control module for model with keyless access with push button start system is installed in the same position as the keyless entry control module for model without keyless access with push button start system.
For removal procedures, refer to “SECURITY AND LOCKS” section. <Ref. to SL-79, REMOVAL, Keyless Entry Control Module.>
• Re-register the transmitter ID when the TPMS control module has been replaced. <Ref. to TPM(diag)-15, Register Transmitter (ID).>

B: INSTALLATION

1. TRANSMITTER (TIRE INFLATION PRESSURE SENSOR)

CAUTION:
Use the new transmitter assembly or replace the new valve and screw, when installing.
1) Replace the valve and screw with a new part when reusing transmitter.

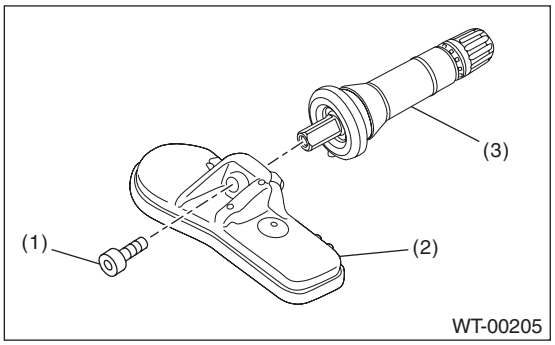

(1) Screw
(2) Transmitter
(3) Valve

Tightening torque:
1.4 N·m (0.1 kgf-m, 1.0 ft-lb)
2) Install the transmitter to the wheel by aligning it with valve hole.

NOTE:
When using the jig that pulls the valve cap by hooking its neck part, use another short-type cap.
3) Install the tires to wheels.

CAUTION:
- **Use a tire changer when installing tire to wheel.**
- **To prevent damaging the transmitter, set the tire changer boom in the position as shown in the figure.**

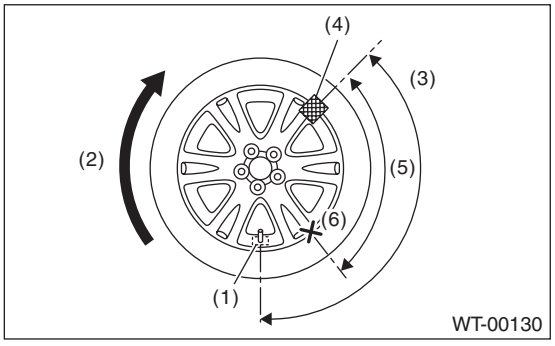

(1) Transmitter
(2) Direction of turn table rotation
(3) 135°
(4) Tire changer boom
(5) 90°
(6) Starting point for fitting the bead to the rim

4) Install the wheels to vehicle. <Ref. to WT-5, INSTALLATION, Tire and Wheel.>
5) Register the transmitter ID to the TPMS & keyless control module. <Ref. to TPM(diag)-15, Register Transmitter (ID).>

2. TPMS & KEYLESS CONTROL MODULE

NOTE:
• TPMS control module for model without keyless access with push button start system is integrated with the keyless entry control module.
For removal procedures, refer to “SECURITY AND LOCKS” section. <Ref. to SL-79, REMOVAL, Keyless Entry Control Module.>
• Re-register the key and the transmitter ID when TPMS & keyless entry control module has been replaced.
  • Keyless transmitter re-registration: <Ref. to SL-87, REGISTRATION OF KEYLESS TRANSMITTER WITH SUBARU SELECT MONITOR, REPLACEMENT, Keyless Transmitter.>
  • Transmitter ID re-registration: <Ref. to TPM(diag)-15, Register Transmitter (ID).>

3. TPMS CM

NOTE:
• TPMS control module for model with keyless access with push button start system is installed in the same position as the keyless entry control module for model without keyless access with push button start system.
For removal procedures, refer to “SECURITY AND LOCKS” section. <Ref. to SL-79, REMOVAL, Keyless Entry Control Module.>
• Re-register the transmitter ID when the TPMS control module has been replaced. <Ref. to TPM(diag)-15, Register Transmitter (ID).>

C: ADJUSTMENT

Re-register the transmitter ID when transmitter has been replaced. <Ref. to TPM(diag)-15, Register Transmitter (ID).>

5. General Diagnostic Table

A: INSPECTION

Symptoms	Possible cause	Corrective action
Wheel is out of balance.	Improperly inflated tire	Adjust the tire pressure.
	Uneven wear	Check the tire referring to “Abnormal tire wear” in this table, carry out the procedure and replace the tire.
	Front wheel alignment	Check or adjust the front wheel alignment. • Inspection: <Ref. to FS-10, INSPECTION, Wheel Alignment.> • Adjustment: <Ref. to FS-14, ADJUSTMENT, Wheel Alignment.>
	Rear wheel alignment	Check or adjust the rear wheel alignment. • Inspection: <Ref. to FS-10, INSPECTION, Wheel Alignment.> • Adjustment: <Ref. to FS-14, ADJUSTMENT, Wheel Alignment.>
	Front strut	Check the front strut. <Ref. to FS-52, INSPECTION, Front Strut.>
	Rear shock absorber	Check the rear shock absorber. <Ref. to RS-33, INSPECTION, Rear Shock Absorber.>
	Housing assembly - front axle	Check the housing assembly - front axle. <Ref. to DS-27, INSPECTION, Front Hub Unit Bearing.>
	Hub unit COMPL - front axle	Check the hub unit COMPL - front axle. <Ref. to DS-27, INSPECTION, Front Hub Unit Bearing.>
	Hub unit COMPL - rear axle	Check the hub unit COMPL - rear axle. <Ref. to DS-38, INSPECTION, Rear Hub Unit Bearing.>
Vehicle is abnormally out of balance.	Improperly inflated tire	Adjust the tire pressure.
	Uneven wear	Check the tire referring to “Abnormal tire wear” in this table, carry out the procedure and replace the tire.
	Front stabilizer	Inspect the front stabilizer.
	Front wheel alignment	Check or adjust the front wheel alignment. • Inspection: <Ref. to FS-10, INSPECTION, Wheel Alignment.> • Adjustment: <Ref. to FS-14, ADJUSTMENT, Wheel Alignment.>
	Rear wheel alignment	Check or adjust the rear wheel alignment. • Inspection: <Ref. to FS-10, INSPECTION, Wheel Alignment.> • Adjustment: <Ref. to FS-14, ADJUSTMENT, Wheel Alignment.>
Abnormal wheel vibration	Improperly inflated tire	Adjust the tire pressure.
	Uneven wear	Check the tire referring to “Abnormal tire wear” in this table, carry out the procedure and replace the tire.
	Improper wheel balancing	Check the wheel balance. <Ref. to WT-7, WHEEL BALANCING, INSPECTION, Tire and Wheel.>
	Housing assembly - front axle	Check the housing assembly - front axle. <Ref. to DS-27, INSPECTION, Front Hub Unit Bearing.>
	Hub unit COMPL - front axle	Check the hub unit COMPL - front axle. <Ref. to DS-27, INSPECTION, Front Hub Unit Bearing.>
	Hub unit COMPL - rear axle	Check the hub unit COMPL - rear axle. <Ref. to DS-38, INSPECTION, Rear Hub Unit Bearing.>
Abnormal tire wear	Improperly inflated tire	Adjust the tire pressure.
	Improper wheel balancing	Check the wheel balance. <Ref. to WT-7, WHEEL BALANCING, INSPECTION, Tire and Wheel.>
	Front wheel alignment	Check or adjust the front wheel alignment. • Inspection: <Ref. to FS-10, INSPECTION, Wheel Alignment.> • Adjustment: <Ref. to FS-14, ADJUSTMENT, Wheel Alignment.>
	Rear wheel alignment	Check or adjust the rear wheel alignment. • Inspection: <Ref. to FS-10, INSPECTION, Wheel Alignment.> • Adjustment: <Ref. to FS-14, ADJUSTMENT, Wheel Alignment.>

TIRE PRESSURE MONITORING SYSTEM (DIAGNOSTICS)

TPM(diag)

		Page
1.	Basic Diagnostic Procedure	2
2.	General Description	4
3.	Electrical Component Location	6
4.	Control Module I/O Signal	7
5.	Subaru Select Monitor	8
6.	Read Diagnostic Trouble Code (DTC)	12
7.	Clear Memory Mode	13
8.	Read Current Data	14
9.	Register Transmitter (ID)	15
10.	Inspection Mode	16
11.	Tire Pressure Warning Light / Trouble Indicator Light Illumination Pattern	17
12.	List of Diagnostic Trouble Code (DTC)	21
13.	Diagnostic Procedure with Diagnostic Trouble Code (DTC)	22
14.	General Diagnostic Table	33

1. Basic Diagnostic Procedure

A: PROCEDURE

CAUTION:
Remove foreign matter (dust, water, oil, etc.) from the TPMS & keyless entry CM connector or TPMS CM connector during removal and installation.

NOTE:
To check harness for open or short circuits, shake the suspected trouble spot or connector.

	Step	Check	Yes	No
1	**CHECK PRE-INSPECTION.** 1) Check with the user regarding when the warning light lit or started blinking. 2) Before performing diagnostics, check all components which may adversely affect the tire pressure monitor system. <Ref. to TPM(diag)-4, INSPECTION, General Description.>	Is the component that might affect the tire pressure monitor system normal?	Go to step **2**.	Repair or replace each component.
2	**CHECK DTC.** Read the DTC of tire pressure monitoring. <Ref. to TPM(diag)-12, Read Diagnostic Trouble Code (DTC).> NOTE: If the communication function of the Subaru Select Monitor cannot be executed normally, check the communication circuit. <Ref. to TPM(diag)-9, COMMUNICATION FOR INITIALIZING IMPOSSIBLE, INSPECTION, Subaru Select Monitor.>	Is DTC displayed?	Go to step **4**.	Go to step **3**.
3	**PERFORM GENERAL DIAGNOSTICS.** 1) Perform the inspection by referring to “General Diagnostic Table”. <Ref. to TPM(diag)-33, General Diagnostic Table.> 2) Perform the Clear Memory Mode. <Ref. to TPM(diag)-13, OPERATION, Clear Memory Mode.> 3) Perform the Inspection Mode. <Ref. to TPM(diag)-16, Inspection Mode.> 4) Read the DTC of tire pressure monitoring. <Ref. to TPM(diag)-12, OPERATION, Read Diagnostic Trouble Code (DTC).> Check that the DTC is not displayed.	Does the tire pressure warning light illuminates for about 2 seconds and then foes off after turning on the ignition switch, and then go out?	Finish the diagnosis.	Check the tire inflation pressure warning light. <Ref. to TPM(diag)-17, Tire Pressure Warning Light / Trouble Indicator Light Illumination Pattern.>
4	**REPRODUCTION OF FAILURE.** 1) Perform the drive test. Drive the vehicle at 40 km/h (25 MPH) or faster for at least 10 minutes. 2) Read the DTC of tire pressure monitoring. <Ref. to TPM(diag)-12, OPERATION, Read Diagnostic Trouble Code (DTC).>	Is DTC displayed as “Present fault”?	Go to step **5**.	When DTC is displayed as “Past faults”, the system has returned to a normal condition at this time. Reproduce the failure, and then perform the diagnosis again. NOTE: In this case, there may be temporary poor communication due to radio wave environment inside/outside the vehicle.

	Step	Check	Yes	No
5	**PERFORM DIAGNOSIS.** 1) Refer to “List of Diagnostic Trouble Code (DTC)”. 2) Correct the cause of trouble. 3) Perform the Clear Memory Mode. <Ref. to TPM(diag)-13, OPERATION, Clear Memory Mode.> 4) Perform the drive test. Drive the vehicle at 40 km/h (25 MPH) or faster for at least 10 minutes. 5) Read the DTC of tire pressure monitoring. <Ref. to TPM(diag)-12, OPERATION, Read Diagnostic Trouble Code (DTC).>	Is DTC displayed?	Repeat steps 1 to 4 until DTC is not shown.	Finish the diagnosis.

2. General Description

A: CAUTION

1. SRS AIRBAG SYSTEM

Airbag system wiring harness is routed near the TPM control module.

CAUTION:
- **Do not use electrical test equipment on any of the airbag system wiring harness circuits.**
- **Be careful not to damage the wiring harness of the airbag system, when servicing the TPMS & keyless entry CM or TPMS CM.**

2. TPMS & KEYLESS ENTRY CM OR TPMS CM

- If the transmitter is replaced, ID registration for the transmitter is required. <Ref. to TPM(diag)-15, OPERATION, Register Transmitter (ID).>
- When adjusting tire pressure indoors in winter, there is a big temperature difference between the indoor facilities and outside. Once the car is outside where the temperature is lower, the air pressure in the tires will drop, causing the tire pressure warning light to illuminate, even if the pressure in the tires was adjusted to standard values indoors. To avoid this, it is necessary to adjust the tire pressure to the high side in consideration of the difference in temperature between inside and outside according to the following table.
- 225/60R18, 225/65R17

Temperature °C (°F)	Indoor temperature	15.5 (60)		
	Ambient temperature	–1 (30)	–12 (10)	–23 (–10)
Air pressure kPa (psi)	Front	265 (38)	280 (40)	295 (42)
	Rear	250 (36)	265 (38)	280 (40)

- 225/50R18, 225/55R17

Temperature °C (°F)	Indoor temperature	15.5 (60)		
	Ambient temperature	–1 (30)	–12 (10)	–23 (–10)
Air pressure kPa (psi)	Front	250 (36)	265 (38)	280 (40)
	Rear	240 (35)	255 (37)	270 (39)

B: INSPECTION

Before performing diagnosis, check the following item which might affect the quality of the tire pressure monitoring system.

1. TIRE

- Inspect that the tire pressure is within the specification while the tire is cool. (Refer to Tire Caution Label.)
- Check the tires for damage or the insertion of foreign matters.

2. BATTERY

Check the battery. <Ref. to SC(H4DO)-65, INSPECTION, Battery.> <Ref. to SC(H6DO)-59, INSPECTION, Battery.>

C: PREPARATION TOOL

1. SPECIAL TOOL

ILLUSTRATION	TOOL NUMBER	DESCRIPTION	REMARKS
 STSSM4	— (Newly adopted tool)	SUBARU SELECT MONITOR 4	Used for setting of each function and trouble-shooting for electrical system. NOTE: For detailed operation procedures of Subaru Select Monitor 4, refer to “Application help”.

2. GENERAL TOOL

TOOL NAME	REMARKS
Circuit tester	Used for measuring resistance, voltage and current.
Transmitter registration tool	Used to register the transmitter ID. Manufacturer: Kent-Moore Item number: J45295
DST-i	Used together with Subaru Select Monitor 4.

3. Electrical Component Location

A: LOCATION

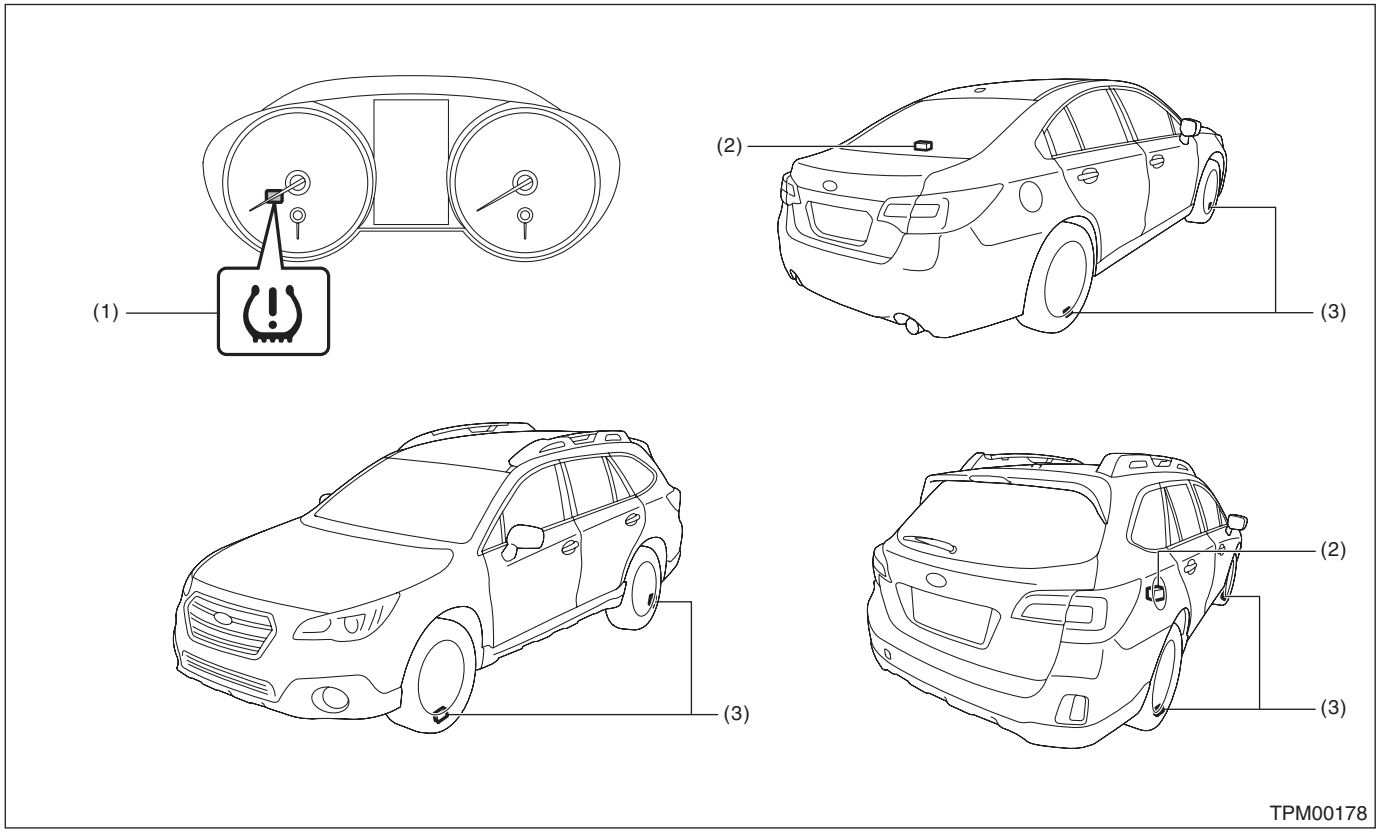

(1) Tire pressure warning light
(2) TPMS & keyless entry CM*1 or TPMS CM*2
(3) Snap-in type transmitter

*1: Without push button start
*2: With push button start

4. Control Module I/O Signal

A: ELECTRICAL SPECIFICATION

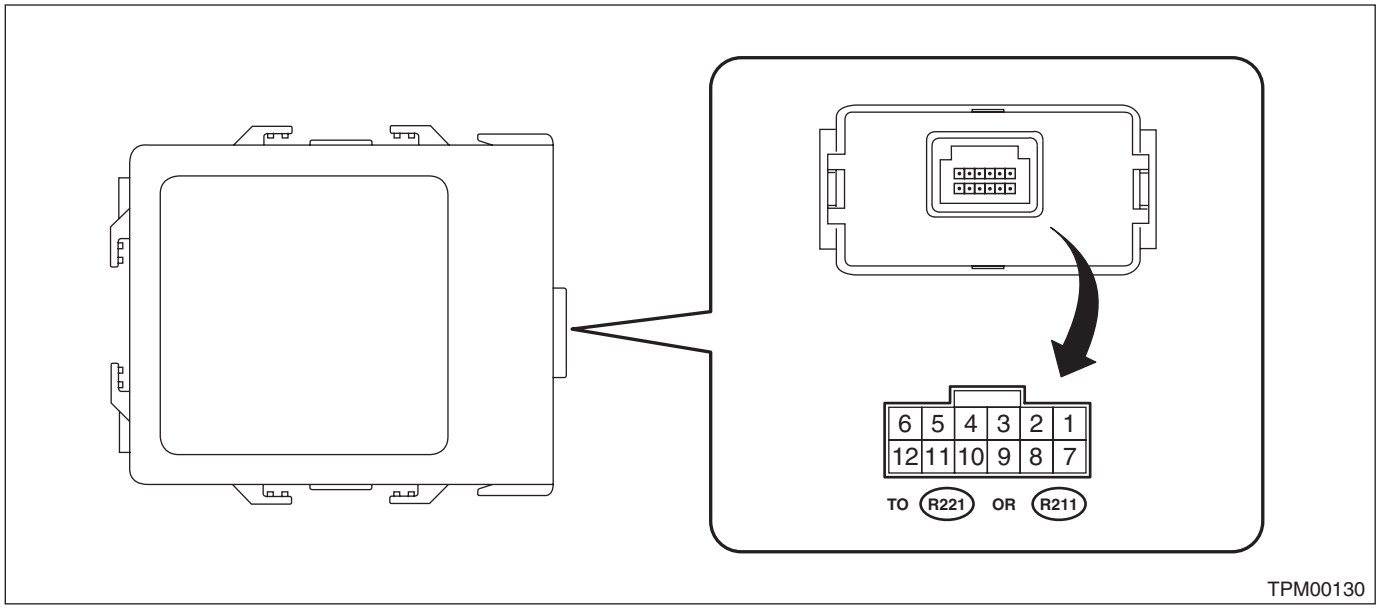

Terminal No.	Content	Measured value and measuring conditions	Remarks
1	—	—	—
2	—	—	—
3	—	—	—
4	Ignition power supply	10 — 13 V (when the ignition switch is ON)	—
5	GND	0 V (always)	—
6	Battery power supply	10 — 13 V (always)	Without push button start system
7	—	—	—
8	—	—	—
9	—	—	—
10	—	—	—
11	Body integrated unit communication line	—	—
12	—	—	—

B: WIRING DIAGRAM

Refer to “Tire Pressure Monitoring System” in the wiring diagram. <Ref. to WI-355, WIRING DIAGRAM, Tire Pressure Monitoring System.>

5. Subaru Select Monitor

A: OPERATION

For detailed operation procedures, refer to “Application help”.

NOTE:
If TPMS & keyless entry CM or TPMS CM and Subaru Select Monitor cannot communicate, check the communication circuit. <Ref. to TPM(diag)-9, INSPECTION, Subaru Select Monitor.>

B: INSPECTION

1. COMMUNICATION FOR INITIALIZING IMPOSSIBLE

DETECTING CONDITION:
Defective harness connector
TROUBLE SYMPTOM:
Communication is impossible between the TPMS & keyless entry CM or TPMS CM and the Subaru Select Monitor.
WIRING DIAGRAM:

NOTE:
For the coupling connector, refer to “WIRING SYSTEM”.
Tire Pressure Monitoring System <Ref. to WI-355, WIRING DIAGRAM, Tire Pressure Monitoring System.>

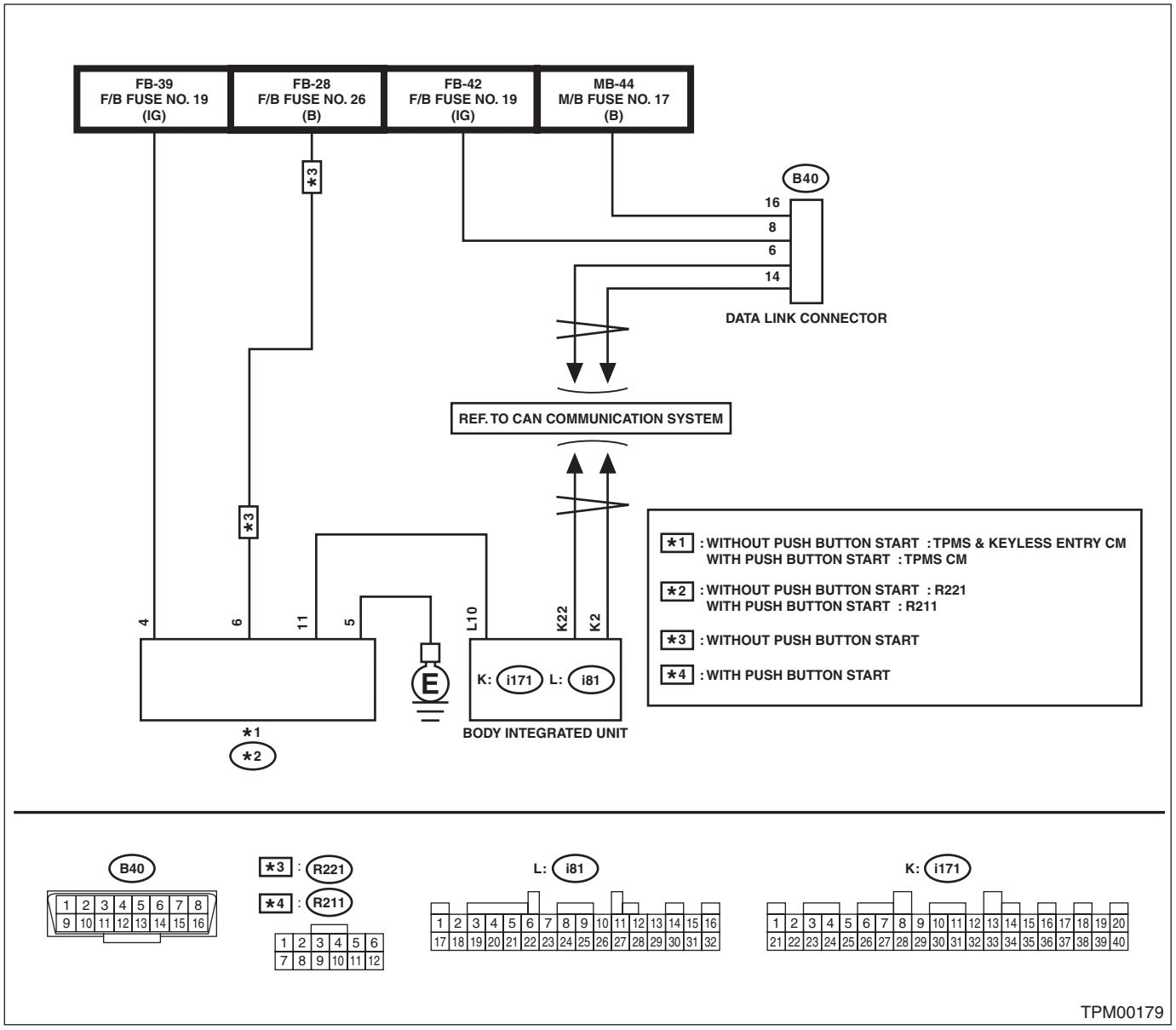

	Step	Check	Yes	No
1	**CHECK IGNITION SWITCH.**	Is the ignition switch ON?	Go to step **2**.	Turn the ignition switch to ON, and select «Tire pressure monitor» using the Subaru Select Monitor.
2	**CHECK BATTERY.** Check the battery voltage.	Is the voltage 11 V or more?	Go to step **3**.	Charge or replace the battery.
3	**CHECK BATTERY TERMINAL.** Check the battery terminal.	Is there poor contact at battery terminal?	Repair or tighten the battery terminal.	Go to step **4**.
4	**CHECK SUBARU SELECT MONITOR COMMUNICATION.** 1) Turn the ignition switch to ON. 2) Using the Subaru Select Monitor, check whether communication to other systems can be executed normally.	Is the system name displayed on Subaru Select Monitor?	Go to step **8**.	Go to step **5**.
5	**CHECK SUBARU SELECT MONITOR COMMUNICATION.** 1) Turn the ignition switch to OFF. 2) Disconnect the TPMS & keyless entry CM connector or TPMS CM connector. 3) Turn the ignition switch to ON. 4) Check whether communication to other systems can be executed normally.	Is the system name displayed on Subaru Select Monitor?	Replace the TPMS & keyless entry CM or TPMS CM. <Ref. to WT-9, Tire Pressure Monitoring System.>	Go to step **6**.
6	**CHECK HARNESS CONNECTOR BETWEEN EACH CONTROL MODULE AND BODY INTEGRATED UNIT.** 1) Turn the ignition switch to OFF. 2) Disconnect the connector of the TPMS & keyless entry CM or TPMS CM. 3) Measure the resistance between the body integrated unit and chassis ground. ***Connector & terminal*** ***(B40) No. 6 — Chassis ground:*** ***(B40) No. 14 — Chassis ground:***	Is the resistance 1 MΩ or more?	Go to step **7**.	Repair the harness and connector between each control module and body integrated unit.
7	**CHECK OUTPUT SIGNAL TO TPMS & KEYLESS ENTRY CM OR TPMS CM.** 1) Turn the ignition switch to ON. 2) Measure the voltage between TPMS & keyless entry CM or TPMS CM and chassis ground. ***Connector & terminal*** ***(B40) No. 6 (+) — Chassis ground (–):*** ***(B40) No. 14 (+) — Chassis ground (–):***	Is the voltage less than 1 V?	Go to step **8**.	Repair the harness and connector between each control module and body integrated unit.
8	**CHECK HARNESS CONNECTOR BETWEEN TPMS & KEYLESS ENTRY CM OR TPMS CM AND BODY INTEGRATED UNIT.** 1) Turn the ignition switch to OFF. 2) Measure the resistance between TPMS & keyless entry CM connector or TPMS CM connector and body integrated unit. ***Connector & terminal*** ***Without push button start*** ***(R221) No. 11 — (i81) No. 10:*** ***With push button start*** ***(R211) No. 11 — (i81) No. 10:***	Is the resistance less than 0.5 Ω?	Go to step **9**.	Repair the harness and connector between TPMS & keyless entry CM or TPMS CM and body integrated unit.

	Step	Check	Yes	No
9	**CHECK TPMS & KEYLESS ENTRY CM CONNECTOR OR TPMS CM CONNECTOR.**	Is the connector inserted into the TPMS & keyless entry CM or TPMS CM until it locks?	Go to step **10**.	Insert the connector into the TPMS & keyless entry CM or TPMS CM.
10	**CHECK POWER SUPPLY CIRCUIT.** 1) Turn the ignition switch to ON. 2) Measure the ignition power supply voltage between TPMS & keyless entry CM connector or TPMS CM connector and chassis ground. ***Connector & terminal*** ***Without push button start*** ***(R221) No. 4 (+) — Chassis ground (–):*** ***With push button start*** ***(R211) No. 4 (+) — Chassis ground (–):***	Is the voltage 10 — 15 V?	Go to step **11**.	Repair open circuit of the harness between TPMS & keyless entry CM or TPMS CM and battery.
11	**CHECK HARNESS CONNECTOR BETWEEN TPMS & KEYLESS ENTRY CM OR TPMS CM AND CHASSIS GROUND.** 1) Turn the ignition switch to OFF. 2) Disconnect the connector from the TPMS & keyless entry CM or TPMS CM. 3) Measure the resistance of harness between TPMS & keyless entry CM or TPMS CM and chassis ground. ***Connector & terminal*** ***Without push button start*** ***(R221) No. 5 — Chassis ground:*** ***With push button start*** ***(R211) No. 5 — Chassis ground:***	Is the resistance less than 0.5 Ω?	Go to step **12**.	Repair open circuit of the harness of TPMS & keyless entry CM or TPMS CM.
12	**CHECK POOR CONTACT OF CONNECTOR.**	Is there poor contact in TPMS & keyless entry CM power supply or TPMS CM power supply, ground line and body integrated unit?	Repair the connector.	Replace the TPMS & keyless entry CM or TPMS CM. <Ref. to WT-9, Tire Pressure Monitoring System.>

6. Read Diagnostic Trouble Code (DTC)

A: OPERATION

1) On «Start» display, select «Diagnosis».
2) On «Vehicle selection» display, input the target vehicle information and select «Confirmed».
3) On «Main Menu» display, select «Each System».
4) On «Select System» display, select «Tire Pressure Monitor» and then select «Enter».
5) On «Select Function» display, select «DTC».

NOTE:
- For detailed operation procedures, refer to “Application help”.
- For details concerning DTCs, refer to List of Diagnostic Trouble Code (DTC). <Ref. to TPM(diag)-21, List of Diagnostic Trouble Code (DTC).>
- All DTCs detected will be displayed.
- If a particular DTC is not properly stored in memory (due to a voltage drop of the TPMS & keyless entry CM or TPMS CM power supply, etc.) when a problem occurs, a DTC suffixed with a question mark appears on the Subaru Select Monitor display. This shows it may be an unreliable reading.
- When DTC is not displayed, check the indicator circuit and communication circuit. <Ref. to TPM(diag)-17, Tire Pressure Warning Light / Trouble Indicator Light Illumination Pattern.>

7. Clear Memory Mode

A: OPERATION

1) On «Start» display, select «Diagnosis».
2) On «Vehicle selection» display, input the target vehicle information and select «Confirmed».
3) On «Main Menu» display, select «Each System».
4) On «Select System» display, select «Tire Pressure Monitor» and then select «Enter».
5) On «Select Function» display, select «DTC».
6) On «DTC» display, select «Clear Memory».

NOTE:
For detailed operation procedures, refer to “Application help”.

8. Read Current Data

A: OPERATION

1) On «Start» display, select «Diagnosis».
2) On «Vehicle selection» display, input the target vehicle information and select «Confirmed».
3) On «Main Menu» display, select «Each System».
4) On «Select System» display, select «Tire Pressure Monitor» and then select «Enter».
5) On «Select Function» display, select «Data Monitor».

NOTE:
For detailed operation procedures, refer to “Application help”.

B: LIST

Display	Content	Reference value	Unit of measure
Tire 1 FN code	Status of transmitter	No data received after IGN ON: No data is received after IGN ON. LEARN: Transmitter ID was sent by the transmitter registration tool. LOW BAT: Battery voltage of the transmitter has been lowered. OFF: Transmitter is not functioning. (No data transmission) RE ME: When the tire pressure changed within the range of ±8.4 kPa. WAKE: When data transmission started from the stop status. NORMAL: Conditions other than the above.	km/h
Tire 2 FN code			—
Tire 3 FN code			—
Tire 4 FN code			—
Tire 1 air pressure	Value converted to tire pressure from data delivered from transmitter is displayed. (The figure may differ from the actual measured values.)	—	kPa
Tire 2 air pressure		—	kPa
Tire 3 air pressure		—	kPa
Tire 4 air pressure		—	kPa
Vehicle speed	Vehicle speed signal which is input in control module	0 — 255	km/h
Pressure warning	Threshold where tire pressure warning light illuminates	—	kPa
Return pressure	Threshold where tire pressure warning light goes out	—	kPa
Transmitter power supply		ON MODE/OFF	—
INDICATOR LAMP	Status of tire pressure warning light	ON/OFF	—
Registered ID 1		0 — 16777215	—
Registered ID 2		0 — 16777215	—
Registered ID 3		0 — 16777215	—
Registered ID 4		0 — 16777215	—
Latest reception ID		0 — 16777215	—
Reception ID one ahead		0 — 16777215	—
Before reception ID2		0 — 16777215	—
Before reception ID3		0 — 16777215	—

9. Register Transmitter (ID)

A: OPERATION

Perform the registration procedure of the transmitter in the following cases:
- Transmitter is replaced.
- TPMS & keyless entry CM or TPMS CM is replaced.

NOTE:
- If registration of the transmitter ID is not possible after two attempts, replace the TPMS & keyless entry CM or TPMS CM. <Ref. to WT-9, Tire Pressure Monitoring System.>
- During the registration, turn the ignition switch to OFF and end the Subaru Select Monitor. Or if the registration is not performed for 5 minutes or more, the registration mode is cancelled.
- When rotating tires, there is no affect on the performance or functions of the tire pressure monitoring control module even if the transmitter (ID) is not registered, however, the tire position displayed on the Subaru Select Monitor will be incorrect.

1) Adjust all tire pressures to the specifications.
2) Connect the Subaru Select Monitor, and select «Diagnosis» on the «Start» display.
3) On «Vehicle selection» display, input the target vehicle information and select «Confirmed».
4) On «Main Menu» display, select «Each System».
5) On «Select System» display, select «Tire Pressure Monitor» and then select «Enter».
6) On «Select Function» display, select «Work Support».
7) On «Work Support» display, select «Transmitter ID regist».
8) «ID registration mode When execute Registered ID is deleted Continue?» is displayed, select [OK].
9) Contact the transmitter registration tool to the side wall area near the air valve on the front left tire, and press the switch. The transmitter ID is sent to the TPMS & keyless entry CM or TPMS CM. (At this time, the tire pressure warning light blinks to confirm that the registration has started.)

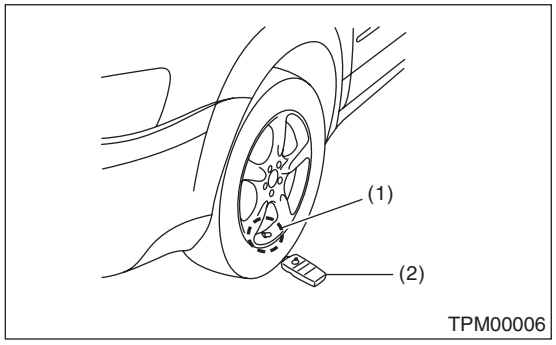

(1) Air valve (transmitter)
(2) Transmitter registration tool

NOTE:
- The registration order of transmitter ID is not specified.
- The transmitter registration tool is used by touching the side wall area near the transmitter.
- When registration of each tire is completed, «ID registration completed» is displayed on the Select Monitor screen.
- If registration procedure stop in the halfway (turning ignition switch to OFF, wrong registration order, etc), proceed from step 5).

10) When ID registration is completed, the tire pressure warning light remains lit for approximately 2 seconds, to end the registration. Switch the screen to «Current Data Display & Save» of Subaru Select Monitor. <Ref. to TPM(diag)-14, Read Current Data.>
11) Check the transmitter ID that was registered, then perform a driving test. <Ref. to TPM(diag)-16, Inspection Mode.>

10.Inspection Mode

A: PROCEDURE

Reproduce the malfunction occurrence condition as much as possible. Drive the vehicle at 40 km/h (25 MPH) or faster for at least ten minutes.

11. Tire Pressure Warning Light / Trouble Indicator Light Illumination Pattern

A: INSPECTION

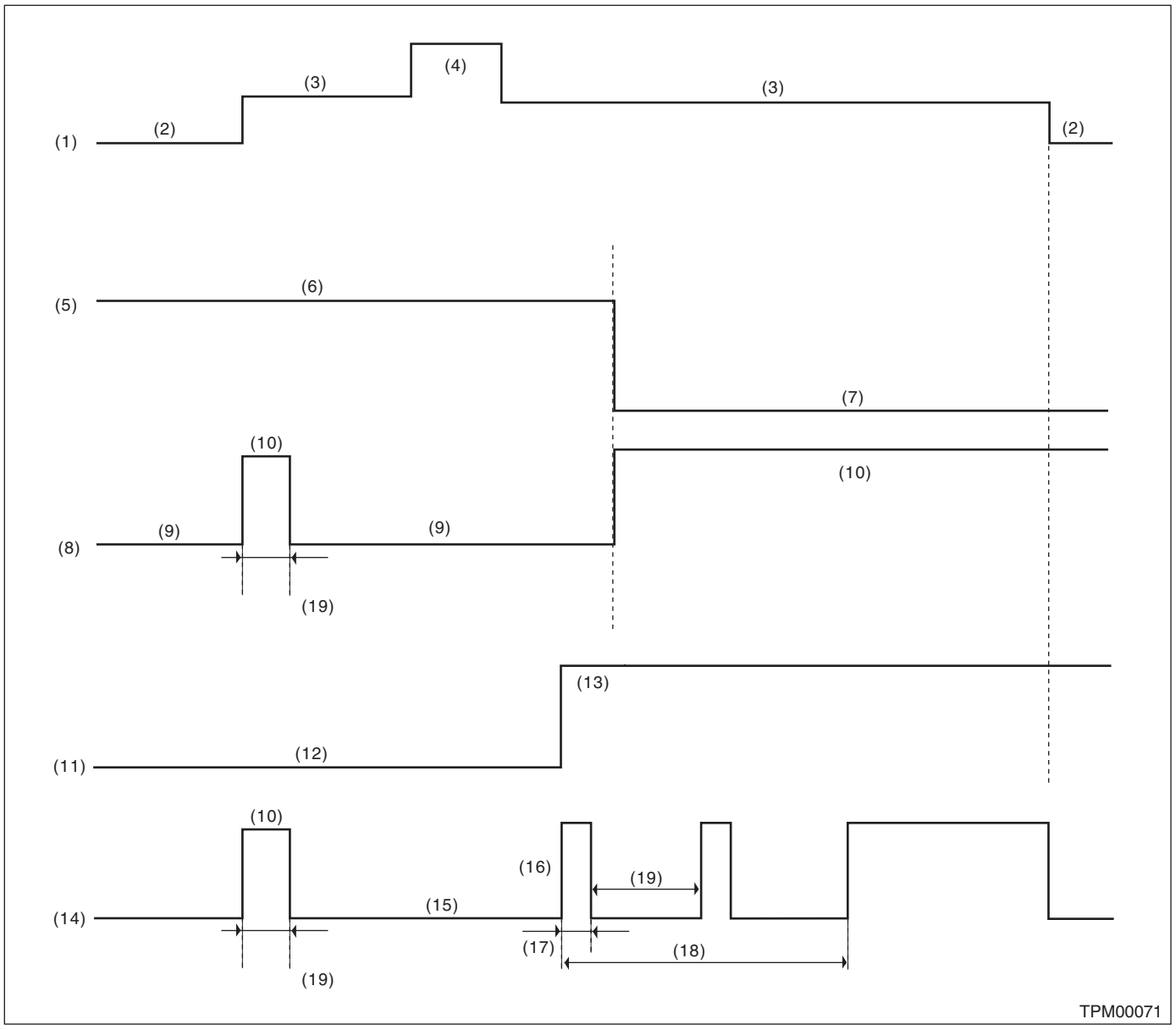

(1) Ignition switch
(2) OFF
(3) ON
(4) Start
(5) Tire inflation pressure condition
(6) Meet the specification
(7) Less than standard value (For the pressure warning level, refer to “CURRENT DATA”.) <Ref. to TPM(diag)-14, LIST, Read Current Data.>
(8) Tire inflation pressure warning light (pressure condition)
(9) Light OFF
(10) Light ON
(11) System status
(12) Normal
(13) Malfunction
(14) Tire inflation pressure warning light (system condition)
(15) Light OFF
(16) Blink
(17) 1 second
(18) Blinks 25 times
(19) 2 seconds

1) When the tire pressure warning light does not illuminate in accordance with this illumination pattern, there must be an electrical malfunction.
2) If the tire pressure warning light does not go off, check the TPMS & keyless entry CM or TPMS CM/warning light circuit and the combination meter circuit. <Ref. to TPM(diag)-18, TIRE PRESSURE WARNING LIGHT DOES NOT COME OFF, Tire Pressure Warning Light / Trouble Indicator Light Illumination Pattern.>

NOTE:
If the problem is fixed while driving at approximately 40 km/h (25 MPH) after the tire pressure warning light blinks/lights, the warning light goes out and the tire pressure monitor system operates normally. (If there is a decrease in tire pressure, or a malfunction of the system, the malfunction history is displayed.)

B: TIRE PRESSURE WARNING LIGHT DOES NOT COME ON

DETECTING CONDITION:
Defective combination meter
TROUBLE SYMPTOM:
When the ignition switch is turned to ON, the tire pressure warning light does not turn on (for approx. 2 seconds).

	Step	Check	Yes	No
1	**CHECK DTC.** Read the DTC of tire pressure monitoring. <Ref. to TPM(diag)-12, Read Diagnostic Trouble Code (DTC).>	Is DTC displayed?	Perform the diagnosis according to DTC. <Ref. to TPM(diag)-21, List of Diagnostic Trouble Code (DTC).>	Replace the combination meter. <Ref. to IDI-11, REMOVAL, Combination Meter.>

C: TIRE PRESSURE WARNING LIGHT DOES NOT COME OFF

DETECTING CONDITION:
- Defective combination meter
- Tires pressure drop
- Transmitter ID not registered

TROUBLE SYMPTOM:
Tire pressure warning light remains illuminating after engine starts.

	Step	Check	Yes	No
1	**CHECK DTC.** Read the DTC of tire pressure monitoring. <Ref. to TPM(diag)-12, Read Diagnostic Trouble Code (DTC).>	Is DTC displayed?	Perform the diagnosis according to DTC. <Ref. to TPM(diag)-21, List of Diagnostic Trouble Code (DTC).>	Go to step **2**.
2	**CHECK TRANSMITTER (ID).** Confirm the current data display of the tire pressure monitoring. <Ref. to TPM(diag)-14, Read Current Data.>	Is the transmitter ID registered?	Go to step **3**.	Register the transmitter ID. <Ref. to TPM(diag)-15, OPERATION, Register Transmitter (ID).>
3	**CHECK TRANSMITTER DATA OUTPUT.** 1) Start the engine. 2) Confirm the current data display «INDICATOR LAMP» of the tire pressure monitoring. <Ref. to TPM(diag)-14, Read Current Data.>	Is “ON” displayed?	Replace the TPMS & keyless entry CM or TPMS CM. <Ref. to WT-9, Tire Pressure Monitoring System.>	Replace the combination meter. <Ref. to IDI-11, REMOVAL, Combination Meter.>

D: TIRE PRESSURE WARNING LIGHT IS 25 TIMES BLINKING AND TURN ON

DETECTING CONDITION:

- Defective TPMS & keyless entry CM or TPMS CM
- Defective harness
- Transmitter is faulty.

TROUBLE SYMPTOM:

Every time the engine starts, tire pressure warning light blinks 25 times and then illuminates.

WIRING DIAGRAM:

NOTE:
For the coupling connector, refer to “WIRING SYSTEM”.
Tire Pressure Monitoring System <Ref. to WI-355, WIRING DIAGRAM, Tire Pressure Monitoring System.>

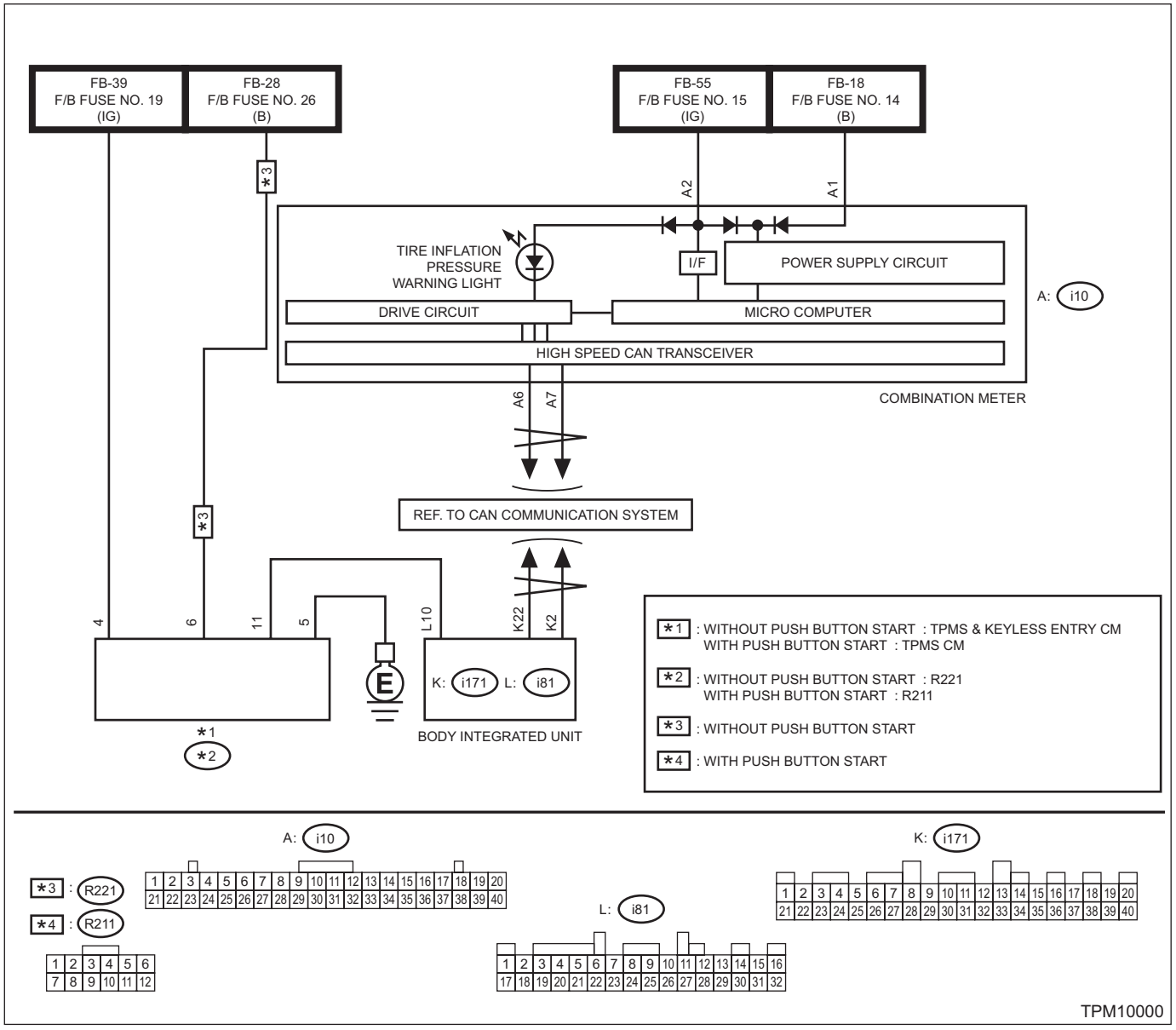

Tire Pressure Warning Light / Trouble Indicator Light Illumination Pattern

	Step	Check	Yes	No
1	**CHECK DTC.** Read the DTC of tire pressure monitoring. <Ref. to TPM(diag)-12, Read Diagnostic Trouble Code (DTC).>	Is DTC displayed?	Perform the diagnosis according to DTC. <Ref. to TPM(diag)-21, List of Diagnostic Trouble Code (DTC).>	Go to step **2**.
2	**CHECK LAN COMMUNICATION.** Inspect LAN system. <Ref. to LAN(diag)-2, PROCEDURE, Basic Diagnostic Procedure.>	Is there any fault?	Repair it according to the diagnosis for LAN system.	Go to step **3**.
3	**CHECK COMMUNICATION LINE.** Measure the resistance between TPMS & keyless entry CM connector or TPMS CM connector and body integrated unit connector. ***Connector & terminal*** ***Without push button start*** ***(R221) No. 11 — (i81) No. 10:*** ***With push button start*** ***(R211) No. 11 — (i81) No. 10:***	Is the resistance less than 10 Ω?	Go to step **4**.	Repair open circuit of the harness between TPMS & keyless entry CM connector or TPMS CM connector and body integrated unit connector.
4	**CHECK CONNECTOR.** Check each connector.	Is there poor contact or any other faults?	Repair the connector.	Replace the TPMS & keyless entry CM or TPMS CM. <Ref. to WT-9, Tire Pressure Monitoring System.>

12.List of Diagnostic Trouble Code (DTC)

A: LIST

DTC	Item	Note
C2021	TIRE 1 AIR PRESSURE LOW (NORMAL MODE)	<Ref. to TPM(diag)-22, DTC C2021 TIRE 1 AIR PRESSURE LOW (NORMAL MODE), Diagnostic Procedure with Diagnostic Trouble Code (DTC).>
C2022	TIRE 2 AIR PRESSURE LOW (NORMAL MODE)	<Ref. to TPM(diag)-22, DTC C2022 TIRE 2 AIR PRESSURE LOW (NORMAL MODE), Diagnostic Procedure with Diagnostic Trouble Code (DTC).>
C2023	TIRE 3 AIR PRESSURE LOW (NORMAL MODE)	<Ref. to TPM(diag)-22, DTC C2023 TIRE 3 AIR PRESSURE LOW (NORMAL MODE), Diagnostic Procedure with Diagnostic Trouble Code (DTC).>
C2024	TIRE 4 AIR PRESSURE LOW (NORMAL MODE)	<Ref. to TPM(diag)-22, DTC C2024 TIRE 4 AIR PRESSURE LOW (NORMAL MODE), Diagnostic Procedure with Diagnostic Trouble Code (DTC).>
C2121	TRANSMITTER 1 NO DATA	<Ref. to TPM(diag)-23, DTC C2121 TRANSMITTER 1 NO DATA, Diagnostic Procedure with Diagnostic Trouble Code (DTC).>
C2122	TRANSMITTER 2 NO DATA	<Ref. to TPM(diag)-23, DTC C2122 TRANSMITTER 2 NO DATA, Diagnostic Procedure with Diagnostic Trouble Code (DTC).>
C2123	TRANSMITTER 3 NO DATA	<Ref. to TPM(diag)-23, DTC C2123 TRANSMITTER 3 NO DATA, Diagnostic Procedure with Diagnostic Trouble Code (DTC).>
C2124	TRANSMITTER 4 NO DATA	<Ref. to TPM(diag)-24, DTC C2124 TRANSMITTER 4 NO DATA, Diagnostic Procedure with Diagnostic Trouble Code (DTC).>
C2221	TRANSMITTER 1 PRESSURE DATA ABNORMAL	<Ref. to TPM(diag)-25, DTC C2221 TRANSMITTER 1 PRESSURE DATA ABNORMAL, Diagnostic Procedure with Diagnostic Trouble Code (DTC).>
C2222	TRANSMITTER 2 PRESSURE DATA ABNORMAL	<Ref. to TPM(diag)-25, DTC C2222 TRANSMITTER 2 PRESSURE DATA ABNORMAL, Diagnostic Procedure with Diagnostic Trouble Code (DTC).>
C2223	TRANSMITTER 3 PRESSURE DATA ABNORMAL	<Ref. to TPM(diag)-25, DTC C2223 TRANSMITTER 3 PRESSURE DATA ABNORMAL, Diagnostic Procedure with Diagnostic Trouble Code (DTC).>
C2224	TRANSMITTER 4 PRESSURE DATA ABNORMAL	<Ref. to TPM(diag)-26, DTC C2224 TRANSMITTER 4 PRESSURE DATA ABNORMAL, Diagnostic Procedure with Diagnostic Trouble Code (DTC).>
C2321	TRANSMITTER 1 FUNCTION CODE ABNORMAL	<Ref. to TPM(diag)-27, DTC C2321 TRANSMITTER 1 FUNCTION CODE ABNORMAL, Diagnostic Procedure with Diagnostic Trouble Code (DTC).>
C2322	TRANSMITTER 2 FUNCTION CODE ABNORMAL	<Ref. to TPM(diag)-27, DTC C2322 TRANSMITTER 2 FUNCTION CODE ABNORMAL, Diagnostic Procedure with Diagnostic Trouble Code (DTC).>
C2323	TRANSMITTER 3 FUNCTION CODE ABNORMAL	<Ref. to TPM(diag)-27, DTC C2323 TRANSMITTER 3 FUNCTION CODE ABNORMAL, Diagnostic Procedure with Diagnostic Trouble Code (DTC).>
C2324	TRANSMITTER 4 FUNCTION CODE ABNORMAL	<Ref. to TPM(diag)-28, DTC C2324 TRANSMITTER 4 FUNCTION CODE ABNORMAL, Diagnostic Procedure with Diagnostic Trouble Code (DTC).>
C2421	TRANSMITTER 1 BATTERY VOLTAGE LOW	<Ref. to TPM(diag)-29, DTC C2421 TRANSMITTER 1 BATTERY VOLTAGE LOW, Diagnostic Procedure with Diagnostic Trouble Code (DTC).>
C2422	TRANSMITTER 2 BATTERY VOLTAGE LOW	<Ref. to TPM(diag)-29, DTC C2422 TRANSMITTER 2 BATTERY VOLTAGE LOW, Diagnostic Procedure with Diagnostic Trouble Code (DTC).>
C2423	TRANSMITTER 3 BATTERY VOLTAGE LOW	<Ref. to TPM(diag)-29, DTC C2423 TRANSMITTER 3 BATTERY VOLTAGE LOW, Diagnostic Procedure with Diagnostic Trouble Code (DTC).>
C2424	TRANSMITTER 4 BATTERY VOLTAGE LOW	<Ref. to TPM(diag)-30, DTC C2424 TRANSMITTER 4 BATTERY VOLTAGE LOW, Diagnostic Procedure with Diagnostic Trouble Code (DTC).>
C2521	SPEED ABNORMAL	<Ref. to TPM(diag)-31, DTC C2521 SPEED ABNORMAL, Diagnostic Procedure with Diagnostic Trouble Code (DTC).>

13.Diagnostic Procedure with Diagnostic Trouble Code (DTC)

A: DTC C2021 TIRE 1 AIR PRESSURE LOW (NORMAL MODE)

NOTE:
Refer to DTC C2024 for diagnostic procedure. <Ref. to TPM(diag)-22, DTC C2024 TIRE 4 AIR PRESSURE LOW (NORMAL MODE), Diagnostic Procedure with Diagnostic Trouble Code (DTC).>

B: DTC C2022 TIRE 2 AIR PRESSURE LOW (NORMAL MODE)

NOTE:
Refer to DTC C2024 for diagnostic procedure. <Ref. to TPM(diag)-22, DTC C2024 TIRE 4 AIR PRESSURE LOW (NORMAL MODE), Diagnostic Procedure with Diagnostic Trouble Code (DTC).>

C: DTC C2023 TIRE 3 AIR PRESSURE LOW (NORMAL MODE)

NOTE:
Refer to DTC C2024 for diagnostic procedure. <Ref. to TPM(diag)-22, DTC C2024 TIRE 4 AIR PRESSURE LOW (NORMAL MODE), Diagnostic Procedure with Diagnostic Trouble Code (DTC).>

D: DTC C2024 TIRE 4 AIR PRESSURE LOW (NORMAL MODE)

DTC DETECTING CONDITION:
Inflation pressure of tires dropped below the specified value.

NOTE:
For the specifications, refer to “CURRENT DATA”. <Ref. to TPM(diag)-14, LIST, Read Current Data.>
TROUBLE SYMPTOM:
Tire pressure warning light illuminates.

	Step	Check	Yes	No
1	**CHECK TIRES.** Lift up the vehicle and check for damage in the tires.	Are there cracks or damage?	Replace the tire.	Go to step **2**.
2	**CHECK TIRES.** Check the tire air pressure.	Is the tire pressure in the specifications?	Go to step **3**.	Adjust the air pressure.
3	**CHECK TRANSMITTER DATA.** 1) Drive at 40 km/h (25 MPH) or more. 2) Confirm the current data «Tire 1 air pressure»«Tire 2 air pressure»«Tire 3 air pressure»«Tire 4 air pressure» of the tire pressure monitor. <Ref. to TPM(diag)-14, Read Current Data.>	Is there a transmitter with different display?	Replace the transmitter (tire pressure sensor) with different display. <Ref. to WT-9, Tire Pressure Monitoring System.>	Go to step **4**.
4	**PERFORM DRIVING TEST.** 1) Perform the Clear Memory Mode. <Ref. to TPM(diag)-13, OPERATION, Clear Memory Mode.> 2) Perform a driving test. <Ref. to TPM(diag)-16, PROCEDURE, Inspection Mode.> 3) Read the DTC of tire pressure monitoring. <Ref. to TPM(diag)-12, Read Diagnostic Trouble Code (DTC).>	Is the same DTC displayed?	Replace the TPMS & keyless entry CM or TPMS CM. <Ref. to WT-9, Tire Pressure Monitoring System.>	Even if the DTC is displayed, the system has returned to a normal condition at this time. Reproduce the failure, and then perform the diagnosis again.

CAUTION:
When driving vehicle to perform driving test, there should be always 2 persons (driver and checker) to check.

E: DTC C2121 TRANSMITTER 1 NO DATA

NOTE:
Refer to DTC C2124 for diagnostic procedure. <Ref. to TPM(diag)-24, DTC C2124 TRANSMITTER 4 NO DATA, Diagnostic Procedure with Diagnostic Trouble Code (DTC).>

F: DTC C2122 TRANSMITTER 2 NO DATA

NOTE:
Refer to DTC C2124 for diagnostic procedure. <Ref. to TPM(diag)-24, DTC C2124 TRANSMITTER 4 NO DATA, Diagnostic Procedure with Diagnostic Trouble Code (DTC).>

G: DTC C2123 TRANSMITTER 3 NO DATA

NOTE:
Refer to DTC C2124 for diagnostic procedure. <Ref. to TPM(diag)-24, DTC C2124 TRANSMITTER 4 NO DATA, Diagnostic Procedure with Diagnostic Trouble Code (DTC).>

H: DTC C2124 TRANSMITTER 4 NO DATA

DTC DETECTING CONDITION:
Detected when no data is received from each transmitter for 8 minutes or more at a vehicle speed of 40 km/h (25 MPH) or more. (Timer is not cleared when the vehicle speed becomes lower than 40 km/h halfway.)
TROUBLE SYMPTOM:
Tire pressure warning light blinks 25 times and then illuminates.

	Step	Check	Yes	No
1	**REPRODUCTION OF FAILURE.** 1) Perform the drive test. Drive the vehicle at 40 km/h (25 MPH) or faster for at least 10 minutes. 2) Read the DTC of tire pressure monitoring. <Ref. to TPM(diag)-12, Read Diagnostic Trouble Code (DTC).>	Is DTC displayed as “Present fault”?	Go to step **2**.	When DTC is displayed as “Past faults”, the system has returned to a normal condition at this time. Reproduce the failure, and then perform the diagnosis again. NOTE: In this case, there may be temporary poor communication due to radio wave environment inside/outside the vehicle.
2	**START FRONT LEFT TRANSMITTER.** 1) Connect the Subaru Select Monitor and then turn the ignition switch to ON. 2) Select «Current Data Display & Save» of the tire pressure monitor. <Ref. to TPM(diag)-14, Read Current Data.> 3) Use the transmitter registration tool and transmit the ID from the front left transmitter to check «Latest reception ID».	Is «Latest reception ID» updated?	Go to step **3**.	Replace the front left transmitter. <Ref. to WT-9, Tire Pressure Monitoring System.>
3	**CHECK FRONT LEFT TRANSMITTER ID.** Compare the ID on the latest ID display with «Registered ID 1».	Are the two IDs same?	Go to step **4**.	Record «Latest reception ID» as the front left. Go to step **4**.
4	**START FRONT RIGHT TRANSMITTER.** Use the transmitter registration tool and transmit the ID from the front right transmitter to check «Latest reception ID».	Is «Latest reception ID» updated?	Go to step **5**.	Replace the front right transmitter. <Ref. to WT-9, Tire Pressure Monitoring System.>
5	**CHECK FRONT RIGHT TRANSMITTER ID.** Compare the ID on the latest ID display with «Registered ID 2».	Are the two IDs same?	Go to step **6**.	Record «Latest reception ID» as the front right. Go to step **6**.
6	**START REAR RIGHT TRANSMITTER.** Use the transmitter registration tool and transmit the ID from the rear right transmitter to check «Latest reception ID».	Is «Latest reception ID» updated?	Go to step **7**.	Replace the rear right transmitter. <Ref. to WT-9, Tire Pressure Monitoring System.>
7	**CHECK REAR RIGHT TRANSMITTER ID.** Compare the ID on the latest ID display with «Registered ID 3».	Are the two IDs same?	Go to step **8**.	Record «Latest reception ID» as the rear right. Go to step **8**.

	Step	Check	Yes	No
8	**START REAR LEFT TRANSMITTER.** Use the transmitter registration tool and transmit the ID from the rear left transmitter to check «Latest reception ID».	Is «Latest reception ID» updated?	Go to step **9**.	Replace the rear left transmitter. <Ref. to WT-9, Tire Pressure Monitoring System.>
9	**CHECK REAR LEFT TRANSMITTER ID.** Compare the ID on the latest ID display with «Registered ID 4».	Are the two IDs same?	Go to step **10**.	Record «Latest reception ID» as the rear left. Go to step **10**.
10	**CHECK MALFUNCTION TRANSMITTER.**	Is ID recorded by this procedure?	Go to step **11**.	Go to step **2**.
11	**CHECK MALFUNCTION TRANSMITTER.** Check the registered ID of the transmitter indicated by DTC.	Is there checked ID in the record?	Replace the transmitter of the recorded position. <Ref. to WT-9, Tire Pressure Monitoring System.>	Replace the transmitter showing the latest ID that is not included in the registered IDs. <Ref. to WT-9, Tire Pressure Monitoring System.>

CAUTION:
When driving vehicle to perform driving test, there should be always 2 persons (driver and checker) to check.

I: DTC C2221 TRANSMITTER 1 PRESSURE DATA ABNORMAL

NOTE:
Refer to DTC C2224 for diagnostic procedure. <Ref. to TPM(diag)-26, DTC C2224 TRANSMITTER 4 PRESSURE DATA ABNORMAL, Diagnostic Procedure with Diagnostic Trouble Code (DTC).>

J: DTC C2222 TRANSMITTER 2 PRESSURE DATA ABNORMAL

NOTE:
Refer to DTC C2224 for diagnostic procedure. <Ref. to TPM(diag)-26, DTC C2224 TRANSMITTER 4 PRESSURE DATA ABNORMAL, Diagnostic Procedure with Diagnostic Trouble Code (DTC).>

K: DTC C2223 TRANSMITTER 3 PRESSURE DATA ABNORMAL

NOTE:
Refer to DTC C2224 for diagnostic procedure. <Ref. to TPM(diag)-26, DTC C2224 TRANSMITTER 4 PRESSURE DATA ABNORMAL, Diagnostic Procedure with Diagnostic Trouble Code (DTC).>

L: DTC C2224 TRANSMITTER 4 PRESSURE DATA ABNORMAL

DTC DETECTING CONDITION:
Detected when error data is received from each transmitter at a vehicle speed of 40 km/h (25 MPH) or more.
- When comparing the data from each transmitter to the previous data, the change is large.
- The pressure exceeds what the transmitter can measure. (Excessive pressure)

TROUBLE SYMPTOM:
Tire pressure warning light blinks 25 times and then illuminates.

	Step	Check	Yes	No
1	**REPRODUCTION OF FAILURE.** 1) Perform the drive test. Drive the vehicle at 40 km/h (25 MPH) or faster for at least 10 minutes. 2) Read the DTC of tire pressure monitoring. <Ref. to TPM(diag)-12, OPERATION, Read Diagnostic Trouble Code (DTC).>	Is DTC displayed as “Present fault”?	Go to step **2**.	When DTC is displayed as “Past faults”, the system has returned to a normal condition at this time. Reproduce the failure, and then perform the diagnosis again. NOTE: In this case, there may be temporary poor communication due to radio wave environment inside/outside the vehicle.
2	**START FRONT LEFT TRANSMITTER.** 1) Connect the Subaru Select Monitor and then turn the ignition switch to ON. 2) Select «Current Data Display & Save» of the tire pressure monitor. <Ref. to TPM(diag)-14, Read Current Data.> 3) Use the transmitter registration tool and transmit the ID from the front left transmitter to check «Latest reception ID».	Is «Latest reception ID» updated?	Go to step **3**.	Replace the front left transmitter. <Ref. to WT-9, Tire Pressure Monitoring System.>
3	**CHECK FRONT LEFT TRANSMITTER ID.** Compare the ID on the latest ID display with «Registered ID 1».	Are the two IDs same?	Go to step **4**.	Record «Latest reception ID» as the front left. Go to step **4**.
4	**START FRONT RIGHT TRANSMITTER.** Use the transmitter registration tool and transmit the ID from the front right transmitter to check «Latest reception ID».	Is «Latest reception ID» updated?	Go to step **5**.	Replace the front right transmitter. <Ref. to WT-9, Tire Pressure Monitoring System.>
5	**CHECK FRONT RIGHT TRANSMITTER ID.** Compare the ID on the latest ID display with «Registered ID 2».	Are the two IDs same?	Go to step **6**.	Record «Latest reception ID» as the front right. Go to step **6**.
6	**START REAR RIGHT TRANSMITTER.** Use the transmitter registration tool and transmit the ID from the rear right transmitter to check «Latest reception ID».	Is «Latest reception ID» updated?	Go to step **7**.	Replace the rear right transmitter. <Ref. to WT-9, Tire Pressure Monitoring System.>
7	**CHECK REAR RIGHT TRANSMITTER ID.** Compare the ID on the latest ID display with «Registered ID 3».	Are the two IDs same?	Go to step **8**.	Record «Latest reception ID» as the rear right. Go to step **8**.

	Step	Check	Yes	No
8	**START REAR LEFT TRANSMITTER.** Use the transmitter registration tool and transmit the ID from the rear left transmitter to check «Latest reception ID».	Is «Latest reception ID» updated?	Go to step **9**.	Replace the rear left transmitter. <Ref. to WT-9, Tire Pressure Monitoring System.>
9	**CHECK REAR LEFT TRANSMITTER ID.** Compare the ID on the latest ID display with «Registered ID 4».	Are the two IDs same?	Go to step **10**.	Record «Latest reception ID» as the rear left. Go to step **10**.
10	**CHECK MALFUNCTION TRANSMITTER.**	Is ID recorded by this procedure?	Go to step **11**.	Go to step **2**.
11	**CHECK MALFUNCTION TRANSMITTER.** Check the registered ID of the transmitter indicated by DTC.	Is there checked ID in the record?	Replace the transmitter of the recorded position. <Ref. to WT-9, Tire Pressure Monitoring System.>	Replace the transmitter showing the latest ID that is not included in the registered IDs. <Ref. to WT-9, Tire Pressure Monitoring System.>

M: DTC C2321 TRANSMITTER 1 FUNCTION CODE ABNORMAL

NOTE:
Refer to DTC C2324 for diagnostic procedure. <Ref. to TPM(diag)-28, DTC C2324 TRANSMITTER 4 FUNCTION CODE ABNORMAL, Diagnostic Procedure with Diagnostic Trouble Code (DTC).>

N: DTC C2322 TRANSMITTER 2 FUNCTION CODE ABNORMAL

NOTE:
Refer to DTC C2324 for diagnostic procedure. <Ref. to TPM(diag)-28, DTC C2324 TRANSMITTER 4 FUNCTION CODE ABNORMAL, Diagnostic Procedure with Diagnostic Trouble Code (DTC).>

O: DTC C2323 TRANSMITTER 3 FUNCTION CODE ABNORMAL

NOTE:
Refer to DTC C2324 for diagnostic procedure. <Ref. to TPM(diag)-28, DTC C2324 TRANSMITTER 4 FUNCTION CODE ABNORMAL, Diagnostic Procedure with Diagnostic Trouble Code (DTC).>

P: DTC C2324 TRANSMITTER 4 FUNCTION CODE ABNORMAL

Detected when error data is received from each transmitter at a vehicle speed of 40 km/h (25 MPH) or more.
DTC DETECTING CONDITION:
Unexpected function codes received from each transmitter.
TROUBLE SYMPTOM:
Tire pressure warning light blinks 25 times and then illuminates.

Step		Check	Yes	No
1	**REPRODUCTION OF FAILURE.** 1) Perform the drive test. Drive the vehicle at 40 km/h (25 MPH) or faster for at least 10 minutes. 2) Read the DTC of tire pressure monitoring. <Ref. to TPM(diag)-12, OPERATION, Read Diagnostic Trouble Code (DTC).>	Is DTC displayed as “Present fault”?	Go to step **2**.	When DTC is displayed as “Past faults”, the system has returned to a normal condition at this time. Reproduce the failure, and then perform the diagnosis again. NOTE: In this case, there may be temporary poor communication due to radio wave environment inside/outside the vehicle.
2	**START FRONT LEFT TRANSMITTER.** 1) Connect the Subaru Select Monitor and then turn the ignition switch to ON. 2) Select «Current Data Display & Save» of the tire pressure monitor. <Ref. to TPM(diag)-14, Read Current Data.> 3) Use the transmitter registration tool and transmit the ID from the front left transmitter to check «Latest reception ID».	Is «Latest reception ID» updated?	Go to step **3**.	Replace the front left transmitter. <Ref. to WT-9, Tire Pressure Monitoring System.>
3	**CHECK FRONT LEFT TRANSMITTER ID.** Compare the ID on the latest ID display with «Registered ID 1».	Are the two IDs same?	Go to step **4**.	Record «Latest reception ID» as the front left. Go to step **4**.
4	**START FRONT RIGHT TRANSMITTER.** Use the transmitter registration tool and transmit the ID from the front right transmitter to check «Latest reception ID».	Is «Latest reception ID» updated?	Go to step **5**.	Replace the front right transmitter. <Ref. to WT-9, Tire Pressure Monitoring System.>
5	**CHECK FRONT RIGHT TRANSMITTER ID.** Compare the ID on the latest ID display with «Registered ID 2».	Are the two IDs same?	Go to step **6**.	Record «Latest reception ID» as the front right. Go to step **6**.
6	**START REAR RIGHT TRANSMITTER.** Use the transmitter registration tool and transmit the ID from the rear right transmitter to check «Latest reception ID».	Is «Latest reception ID» updated?	Go to step **7**.	Replace the rear right transmitter. <Ref. to WT-9, Tire Pressure Monitoring System.>
7	**CHECK REAR RIGHT TRANSMITTER ID.** Compare the ID on the latest ID display with «Registered ID 3».	Are the two IDs same?	Go to step **8**.	Record «Latest reception ID» as the rear right. Go to step **8**.

	Step	Check	Yes	No
8	**START REAR LEFT TRANSMITTER.** Use the transmitter registration tool and transmit the ID from the rear left transmitter to check «Latest reception ID».	Is «Latest reception ID» updated?	Go to step **9**.	Replace the rear left transmitter. <Ref. to WT-9, Tire Pressure Monitoring System.>
9	**CHECK REAR LEFT TRANSMITTER ID.** Compare the ID on the latest ID display with «Registered ID 4».	Are the two IDs same?	Go to step **10**.	Record «Latest reception ID» as the rear left. Go to step **10**.
10	**CHECK MALFUNCTION TRANSMITTER.**	Is ID recorded by this procedure?	Go to step **11**.	Replace the transmitter indicated by diagnostics trouble code (DTC). <Ref. to WT-9, Tire Pressure Monitoring System.>
11	**CHECK MALFUNCTION TRANSMITTER.** Check the registered ID of the transmitter indicated by DTC.	Is there checked ID in the record?	Replace the transmitter of the recorded position. <Ref. to WT-9, Tire Pressure Monitoring System.>	Replace the transmitter indicated by diagnostics trouble code (DTC). <Ref. to WT-9, Tire Pressure Monitoring System.>

Q: DTC C2421 TRANSMITTER 1 BATTERY VOLTAGE LOW

NOTE:
Refer to DTC C2424 for diagnostic procedure. <Ref. to TPM(diag)-30, DTC C2424 TRANSMITTER 4 BATTERY VOLTAGE LOW, Diagnostic Procedure with Diagnostic Trouble Code (DTC).>

R: DTC C2422 TRANSMITTER 2 BATTERY VOLTAGE LOW

NOTE:
Refer to DTC C2424 for diagnostic procedure. <Ref. to TPM(diag)-30, DTC C2424 TRANSMITTER 4 BATTERY VOLTAGE LOW, Diagnostic Procedure with Diagnostic Trouble Code (DTC).>

S: DTC C2423 TRANSMITTER 3 BATTERY VOLTAGE LOW

NOTE:
Refer to DTC C2424 for diagnostic procedure. <Ref. to TPM(diag)-30, DTC C2424 TRANSMITTER 4 BATTERY VOLTAGE LOW, Diagnostic Procedure with Diagnostic Trouble Code (DTC).>

T: DTC C2424 TRANSMITTER 4 BATTERY VOLTAGE LOW

DTC DETECTING CONDITION:
Detected when power supply voltage failure signal is received from each transmitter.
TROUBLE SYMPTOM:
Tire pressure warning light blinks 25 times and then illuminates.

	Step	Check	Yes	No
1	**REPRODUCTION OF FAILURE.** 1) Perform the drive test. Drive the vehicle at 40 km/h (25 MPH) or faster for at least 10 minutes. 2) Read the DTC of tire pressure monitoring. <Ref. to TPM(diag)-12, OPERATION, Read Diagnostic Trouble Code (DTC).>	Is DTC displayed as “Present fault”?	Go to step **2**.	When DTC is displayed as “Past faults”, the system has returned to a normal condition at this time. Reproduce the failure, and then perform the diagnosis again. NOTE: In this case, there may be temporary poor communication due to radio wave environment inside/outside the vehicle.
2	**CHECK TRANSMITTER.** 1) Replace all transmitters and register their IDs. <Ref. to TPM(diag)-15, OPERATION, Register Transmitter (ID).> 2) Perform the Clear Memory Mode. <Ref. to TPM(diag)-13, Clear Memory Mode.> 3) Perform the Inspection Mode. <Ref. to TPM(diag)-16, Inspection Mode.>	Is the fault eliminated?	Internal battery of the transmitter had worn out.	Replace the TPMS & keyless entry CM or TPMS CM. <Ref. to WT-9, Tire Pressure Monitoring System.>

U: DTC C2521 SPEED ABNORMAL

DTC DETECTING CONDITION:
Detected when transmitter normal signal is received at a vehicle speed of less than 6 km/h (4 MPH).
TROUBLE SYMPTOM:
Tire pressure warning light blinks 25 times and then illuminates.
WIRING DIAGRAM:

NOTE:
For the coupling connector, refer to “WIRING SYSTEM”.
Tire Pressure Monitoring System <Ref. to WI-355, WIRING DIAGRAM, Tire Pressure Monitoring System.>

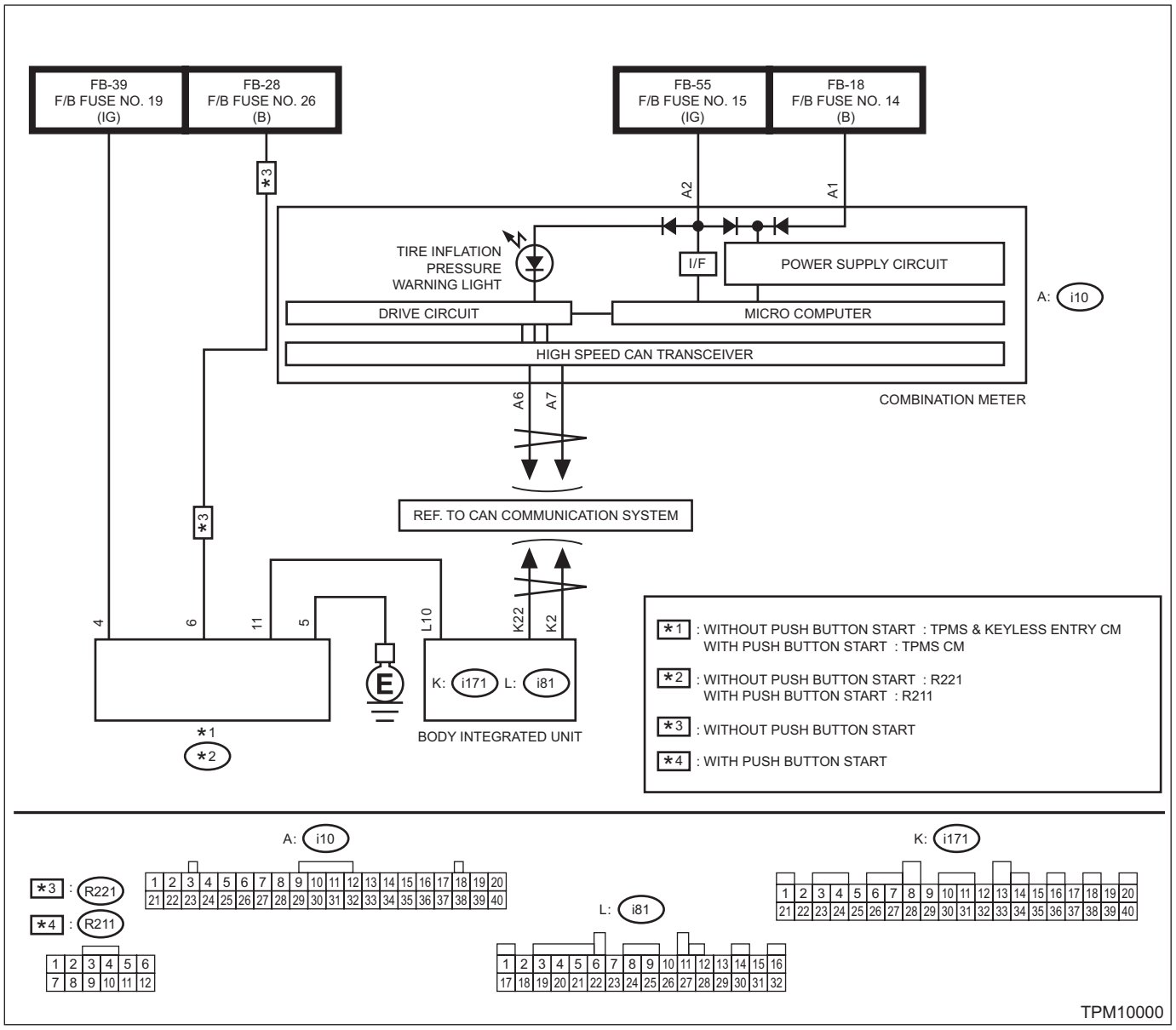

Step		Check	Yes	No
1	**CHECK LAN COMMUNICATION.** Inspect LAN system. <Ref. to LAN(diag)-2, PROCEDURE, Basic Diagnostic Procedure.>	Is there any fault?	Repair it according to the diagnosis for LAN system.	Go to step **2**.

Step		Check	Yes	No
2	**CHECK HARNESS (OPEN CIRCUIT).** Measure the resistance between TPMS & keyless entry CM or TPMS CM and body integrated unit. ***Connector & terminal*** ***Without push button start*** ***(R221) No. 11 — (i81) No. 10:*** ***(R221) No. 5 — Chassis ground:*** ***With push button start*** ***(R211) No. 11 — (i81) No. 10:*** ***(R211) No. 5 — Chassis ground:***	Is the resistance less than 10 Ω?	Go to step **3**.	Repair the harness.
3	**CHECK CONNECTOR.** Check each connector.	Is there poor contact or any other faults?	Repair the connector.	Replace the TPMS & keyless entry CM or TPMS CM. <Ref. to WT-9, Tire Pressure Monitoring System.>

14.General Diagnostic Table

A: INSPECTION

Symptoms		Faulty parts
Tire pressure warning light illuminates.	Tire pressure is reduced.	• Improper tire pressure adjustment • Punctured tire
Tire pressure warning light blinks 25 times and then illuminates.	Tire pressure monitoring system has malfunction.	• Air pressure sensor malfunction • Air pressure sensor is out of battery. • Defective TPMS & keyless entry CM or TPMS CM • Defective vehicle harness • Defective combination meter
Tire pressure is dropping but the warning light does not illuminate.	Tire pressure warning light does not illuminate.	• Air pressure sensor is faulty. • Defective TPMS & keyless entry CM or TPMS CM • Defective combination meter

DIFFERENTIALS

DI

		Page
1.	General Description	2
2.	Differential Gear Oil	22
3.	Front Differential Assembly	25
4.	Rear Differential (T-type)	26
5.	Rear Differential (VA-type)	46
6.	Rear Differential Front Oil Seal	75
7.	Rear Differential Side Oil Seal	77
8.	Rear Differential Front Member	78
9.	Rear Differential Mount Bushing	79
10.	Rear Differential Inspection Mode	83
11.	General Diagnostic Table	85

1. General Description

A: SPECIFICATION

1. REAR DIFFERENTIAL

When replacing a rear differential assembly, select the correct one according to the following table.

NOTE:
• Using a different rear differential assembly will cause the drive train and tires to drag or emit abnormal noise.
• For option code, refer to “ID” section. <Ref. to ID-2, IDENTIFICATION, Identification.>

Model	Sedan			OUTBACK		
	2.5 L		3.6 L	2.5 L		3.6 L
	CVT	6MT	CVT	CVT	6MT	CVT
Rear differential type	VA1-type	T-type	VA2-type	VA1-type	T-type	VA2-type
Identification	Y2	B1	Y4	Y3	B4	Y4
LSD type	—					
Type of gear	Hypoid gear					
Gear ratio (number of gear teeth)	3.900 (39/10)	4.111 (37/9)	4.111 (37/9)	4.111 (37/9)	4.444 (40/9)	4.111 (37/9)
Oil capacity	0.8 L (0.8 US qt, 0.7 Imp qt)					
Rear differential gear oil	GL–5 (75W–90)					

2. IDENTIFICATION

Identification positions are shown in the following figures. For details concerning identification, refer to the “ID” section.
• T-type

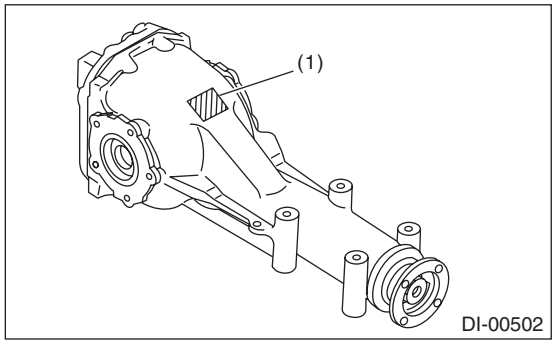

(1) Identification

• VA1-type

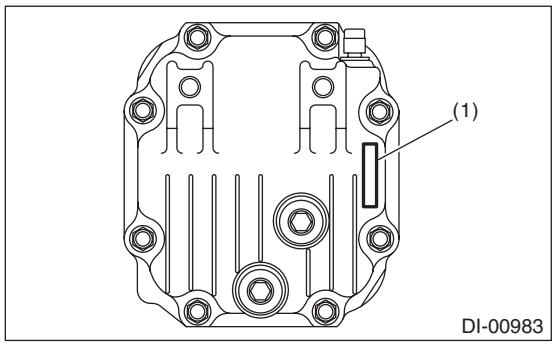

(1) Identification

- VA2-type

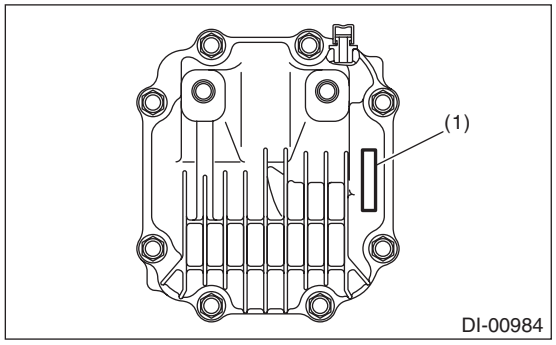

(1) Identification

3. REAR DIFFERENTIAL GEAR OIL

Recommended gear oil:
GL–5 (75W–90) or equivalent

CAUTION:
Each oil manufacturer has its base oil and additives. Thus, do not mix two or more brands.

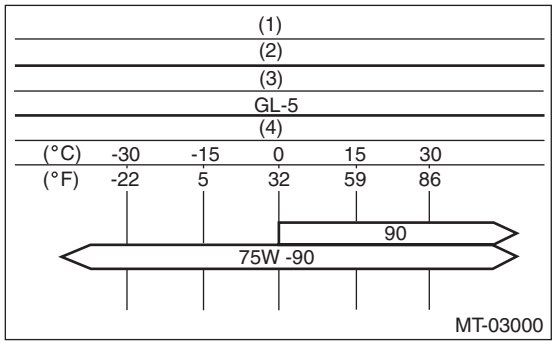

(1) Item
(2) Rear differential gear oil
(3) API classification
(4) SAE viscosity No. and applicable temperature

4. SERVICE DATA

Drive pinion bearing preload (for new bearing)	Measured with spring measurement (measured from the companion flange bolt)	N (kgf, lbf)	T-type	18.1 — 38.8 (1.8 — 4.0, 4.1 — 8.7)
			VA1, VA2-type	12.7 — 32.2 (1.3 — 3.3, 2.9 — 7.2)
	Measured with torque wrench	N·m (kgf-m, ft-lb)	T-type	0.69 — 1.47 (0.07 — 0.15, 0.51 — 1.08)
			VA1, VA2-type	0.48 — 1.22 (0.05 — 0.12, 0.35 — 0.90)
Side gear backlash		mm (in)	T-type	0.10 — 0.20 (0.004 — 0.008)
			VA1-type	0.05 — 0.15 (0.002 — 0.006)
			VA2-type	0.13 — 0.18 (0.005 — 0.007)
Hypoid driven gear backlash		mm (in)	T-type	0.10 — 0.20 (0.004 — 0.008)
			VA1, VA2-type	0.10 — 0.15 (0.004 — 0.006)
Hypoid driven gear runout on its back surface		mm (in)	T-type	0.05 (0.002)
Total preload (measured from the companion flange bolt hole)		N (kgf, lbf)	T-type	20.7 — 54.4 (2.1 — 5.5, 4.7 — 12.2)
Companion flange mating surface runout		mm (in)		0.08 (0.003)
Companion flange runout on its inner side		mm (in)		0.08 (0.003)

B: COMPONENT

1. REAR DIFFERENTIAL (T-TYPE)

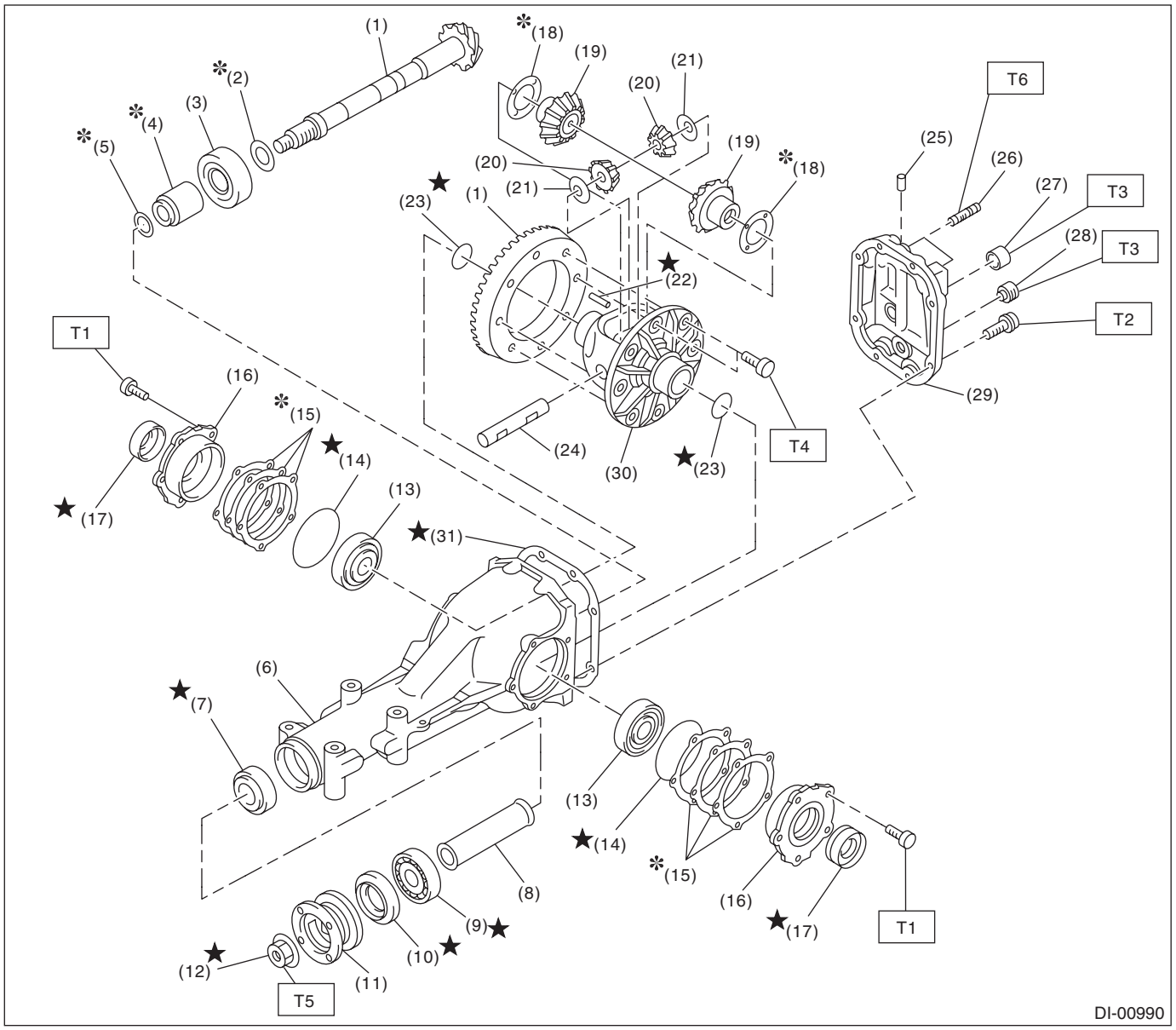

(1)	Hypoid driven gear and drive pinion set	(14)	O-ring	(27)	Filler plug
(2)	Pinion height adjusting washer	(15)	Side retainer shim	(28)	Drain plug
(3)	Rear bearing	(16)	Side retainer	(29)	Rear cover
(4)	Preload adjusting spacer	(17)	Side oil seal	(30)	Differential case
(5)	Preload adjusting washer	(18)	Side gear thrust washer	(31)	Gasket
(6)	Differential carrier	(19)	Side gear		
(7)	Front bearing	(20)	Pinion mate gear		
(8)	Spacer	(21)	Pinion mate gear washer		
(9)	Pilot bearing	(22)	Pinion shaft lock pin		
(10)	Front oil seal	(23)	Snap ring		
(11)	Companion flange	(24)	Pinion mate shaft		
(12)	Self-locking nut	(25)	Air breather cap		
(13)	Side bearing	(26)	Stud bolt		

Tightening torque: N·m (kgf-m, ft-lb)

T1: 10.5 (1.1, 7.7)
T2: 29.5 (3.0, 21.8)
T3: 49 (5.0, 36.1)
T4: 103 (10.5, 76.0)
T5: 181.5 (18.5, 133.9)
T6: 44 (4.5, 32.5)

2. REAR DIFFERENTIAL (VA1-TYPE)

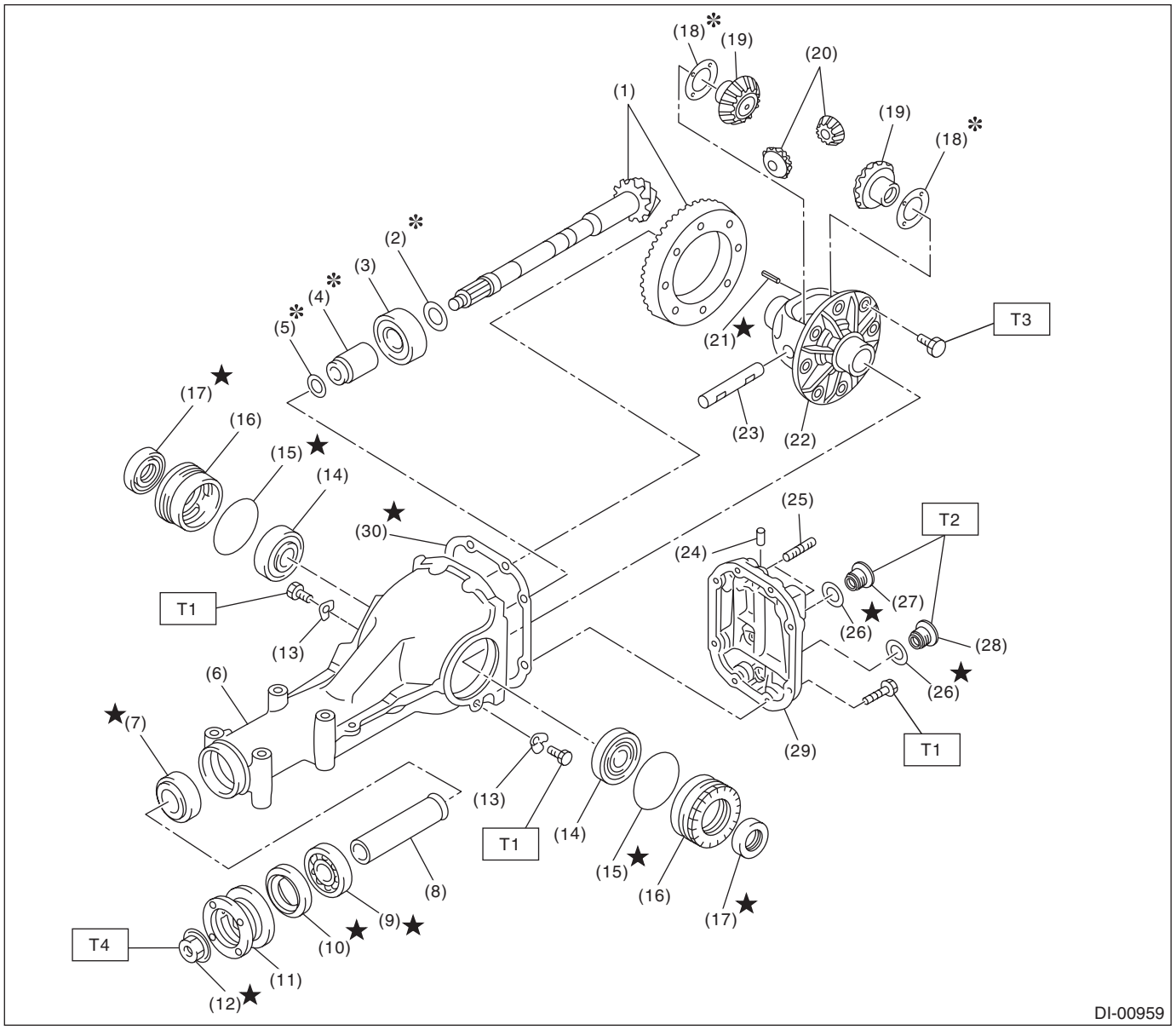

(1)	Hypoid driven gear and drive pinion set	(13)	Lock plate	(25)	Stud bolt
(2)	Pinion height adjusting washer	(14)	Side bearing	(26)	Gasket
(3)	Rear bearing	(15)	O-ring	(27)	Filler plug
(4)	Preload adjusting spacer	(16)	Side retainer	(28)	Drain plug
(5)	Preload adjusting washer	(17)	Side oil seal	(29)	Rear cover
(6)	Differential carrier	(18)	Side gear thrust washer	(30)	Gasket
(7)	Front bearing	(19)	Side gear		
(8)	Spacer	(20)	Pinion mate gear	***Tightening torque: N·m (kgf-m, ft-lb)***	
(9)	Pilot bearing	(21)	Spring pin	***T1:***	***25 (2.5, 18.4)***
(10)	Front oil seal	(22)	Differential case	***T2:***	***50 (5.1, 36.9)***
(11)	Companion flange	(23)	Pinion mate shaft	***T3:***	***<Ref. to DI-52, ASSEMBLY, Rear Differential (VA-type).>***
(12)	Self-locking nut	(24)	Air breather cap	***T4:***	***191 (19.5, 140.9)***

3. REAR DIFFERENTIAL (VA2-TYPE)

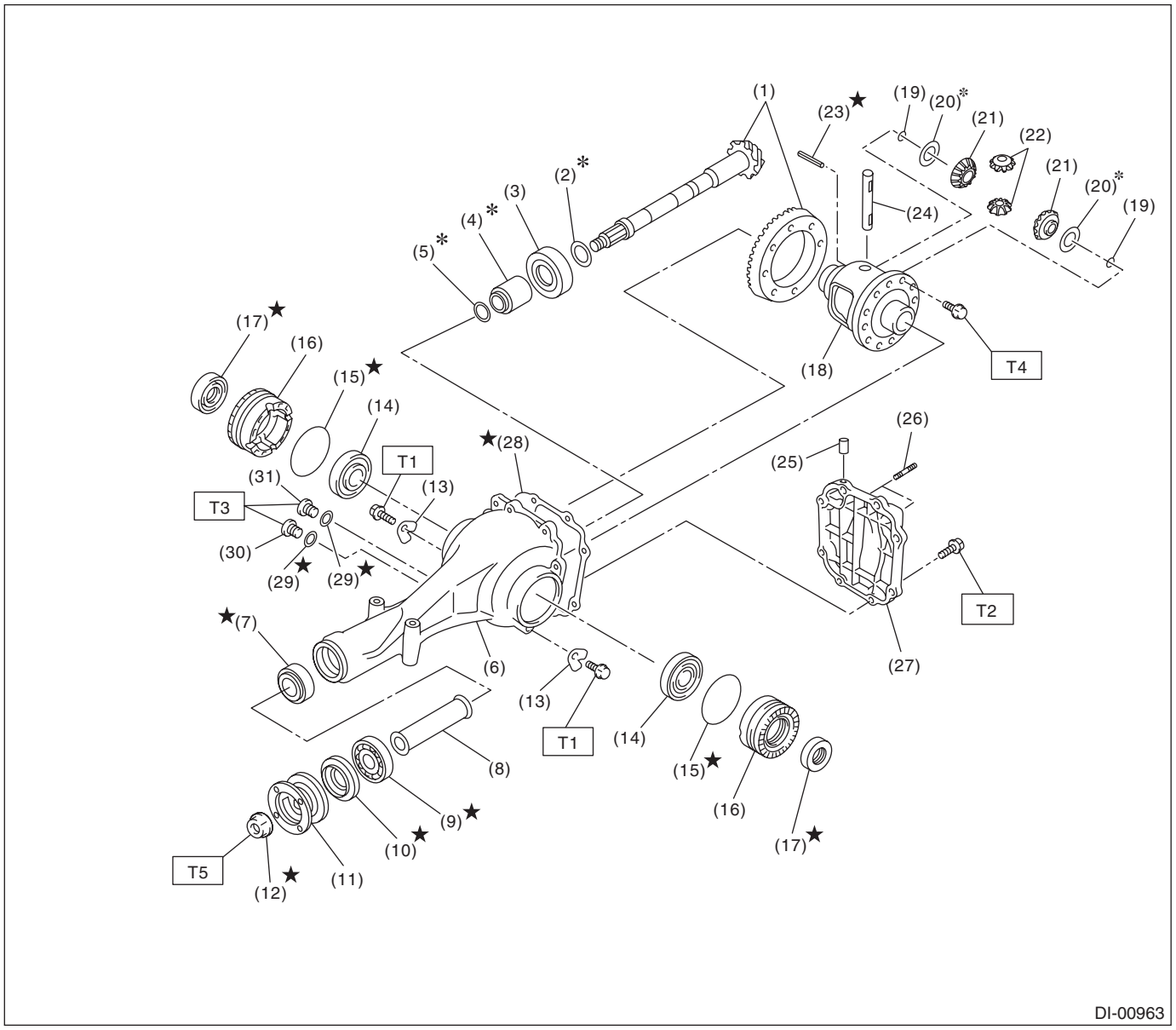

DI-00963

(1)	Hypoid driven gear and drive pinion set	(14)	Side bearing	(27)	Rear cover
(2)	Pinion height adjusting washer	(15)	O-ring	(28)	Gasket
(3)	Rear bearing	(16)	Side retainer	(29)	Gasket
(4)	Preload adjusting spacer	(17)	Side oil seal	(30)	Filler plug
(5)	Preload adjusting washer	(18)	Differential case	(31)	Drain plug
(6)	Differential carrier	(19)	Circlip		
(7)	Front bearing	(20)	Side gear thrust washer		
(8)	Spacer	(21)	Side gear		
(9)	Pilot bearing	(22)	Pinion mate gear		
(10)	Front oil seal	(23)	Spring pin		
(11)	Companion flange	(24)	Pinion mate shaft		
(12)	Self-locking nut	(25)	Air breather cap		
(13)	Lock plate	(26)	Stud bolt		

Tightening torque: N·m (kgf-m, ft-lb)

T1: 25 (2.5, 18.4)
T2: 34 (3.5, 25.1)
T3: 50 (5.1, 36.9)
T4: <Ref. to DI-52, ASSEMBLY, Rear Differential (VA-type).>
T5: 191 (19.5, 140.9)

4. REAR DIFFERENTIAL MOUNTING SYSTEM

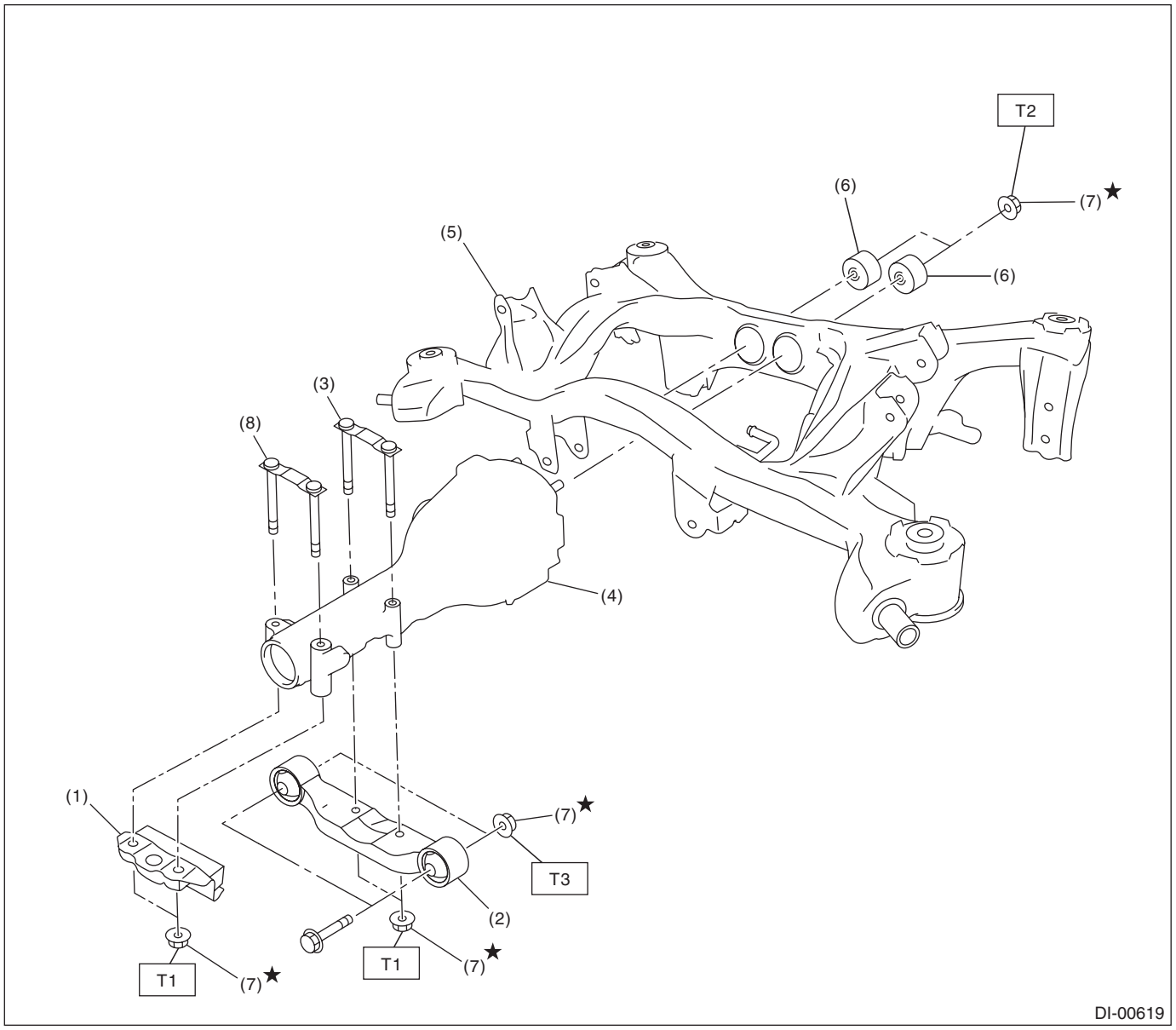

(1)	Mass damper (2.5 L OUTBACK model)	(5)	Sub frame	***Tightening torque: N·m (kgf-m, ft-lb)***
(2)	Rear differential front member	(6)	Rear differential mount bushing	***T1: 50 (5.1, 36.9)***
(3)	Rear differential member plate	(7)	Self-locking nut	***T2: 70 (7.1, 51.6)***
(4)	Rear differential ASSY	(8)	Rear differential member plate (2.5 L OUTBACK model)	***T3: 110 (11.2, 81.1)***

C: CAUTION

- When performing any work, always wear work clothes, a work cap and protective shoes. Additionally, wear a helmet, protective goggles, etc. if necessary.
- Remove contamination including dirt and corrosion before removal, installation, disassembly or assembly.
- Keep the disassembled parts in order and protect them from dust and dirt.
- When performing a repair, identify the cause of trouble and avoid unnecessary removal, disassembly and replacement.
- Use SUBARU genuine grease, the recommended or equivalent. Do not mix grease etc. of different grades or manufacturers.
- Do not secure a part in a vise directly. Place cushioning materials such as wood pieces, blocks, aluminum plates, or waste cloth between the part and the vise.
- Be sure to tighten fasteners including bolts and nuts to the specified torque.
- Always use the jack-up point when the shop jacks or rigid racks are used to support the vehicle.
- Apply grease onto sliding or revolving surfaces before installation.
- Before installing the O-ring or snap ring, apply a sufficient amount of gear oil to avoid damage and deformation.
- Avoid damaging the mating surface of the case.
- For parts which are not reusable, always use new parts. Other parts should be replaced with new parts as required.
- When handling oil or fuel, adhere to the following to prevent unexpected accident.
  - Be careful with fire.
  - Prepare a container to catch grease or oil, etc. If any grease or oil spills, wipe it off and clean immediately to prevent from penetrating into floor or flowing outside.
  - Follow all government and local regulations concerning disposal of refuse when disposing.
- Before disconnecting connectors of sensors or units, be sure to disconnect the ground cable from battery.
- Some vehicle components are extremely hot immediately after driving. Be wary of receiving burns from heated parts.

D: PREPARATION TOOL

1. SPECIAL TOOL

ILLUSTRATION	TOOL NUMBER	DESCRIPTION	REMARKS
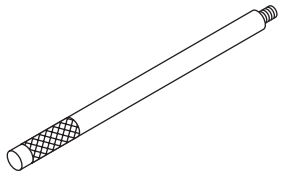 ST-398477701	398477701	HANDLE	• Used for installing the rear bearing race. • Used for installing the front bearing race. (T-type and VA1-type)
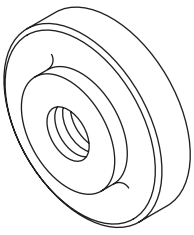 ST-398477702	398477702	DRIFT	• Used for installing the front bearing race. (T-type) • Used for installing the rear bearing race. (VA1-type) • Used for installing side bearing race. (VA1-type)

ILLUSTRATION	TOOL NUMBER	DESCRIPTION	REMARKS
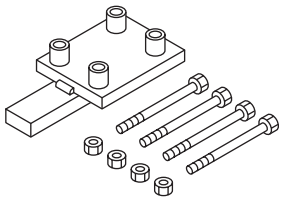 ST-398217700	398217700	ATTACHMENT SET	Stand for rear differential carrier disassembly and assembly.
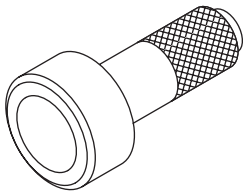 ST-498447120	498447120	INSTALLER	Used for installing the front oil seal.
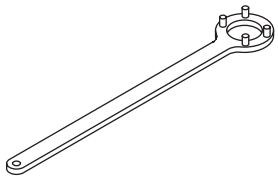 ST-498427200	498427200	FLANGE WRENCH	Used for stopping rotation of companion flange when removing and tightening self-lock nut.
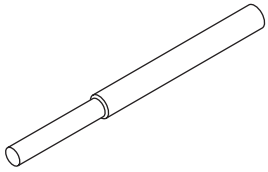 ST-398467700	398467700	DRIFT	Used for removing drive pinion shaft, pilot bearing and front bearing cone. (T-type and VA1-type)
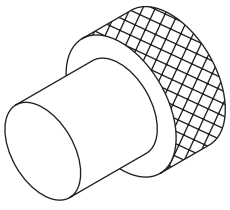 ST-399780104	399780104	WEIGHT	• Used for installing the front bearing cone and the companion flange. • Used for installing the pilot bearing. (T-type and VA1-type)

ILLUSTRATION	TOOL NUMBER	DESCRIPTION	REMARKS
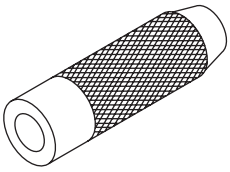 ST-899580100	899580100	INSTALLER	Used for installing the front bearing cone and the pilot bearing. (T-type and VA1-type)
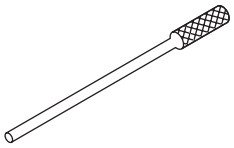 ST-899904100	899904100	STRAIGHT PIN REMOVER	• Used for removing and installing the pinion mate shaft lock pin. (T-type) • Used for removing and installing the pinion mate shaft spring pin. (VA-type)
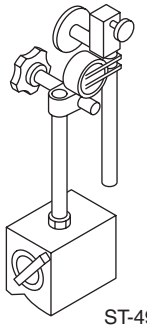 ST-498247001	498247001	MAGNET BASE	• Used for measuring backlash between side gear and pinion, and hypoid gear. • Used together with DIAL GAUGE (498247100).
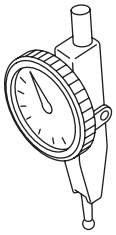 ST-498247100	498247100	DIAL GAUGE	• Used for measuring backlash between side gear and pinion, and hypoid gear. • Used together with MAGNET BASE (498247001).
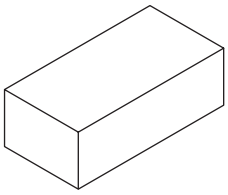 ST-398507704	398507704	BLOCK	Used for adjusting pinion height and preload. (T-type and VA1-type)

ILLUSTRATION	TOOL NUMBER	DESCRIPTION	REMARKS
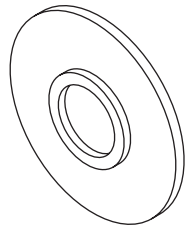 ST-398177700	398177700	INSTALLER	Used for installing the rear bearing cone. (T-type and VA2-type)
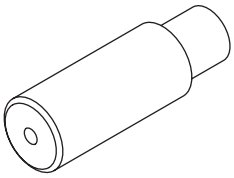 ST-398457700	398457700	ATTACHMENT	Used for removing the side retainer. (T-type)
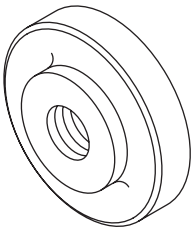 ST-398477703	398477703	DRIFT 2	Used for installing the rear bearing race. (T-type and VA2-type)
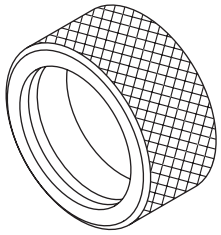 ST-398437700	398437700	DRIFT	Used for installing the side oil seal. (T-type and VA2-type)
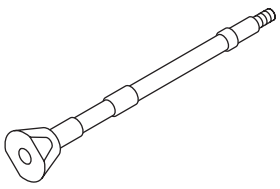 ST-398507702	398507702	DUMMY SHAFT	Used for adjusting pinion height and preload. (T-type)

ILLUSTRATION	TOOL NUMBER	DESCRIPTION	REMARKS
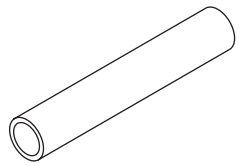 ST-398507703	398507703	DUMMY COLLAR	Used for adjusting pinion height and preload. (T-type)
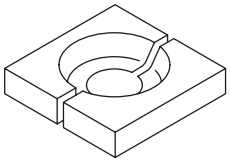 ST-398517700	398517700	REPLACER	Used for removing rear bearing cone. (T-type and VA2-type)
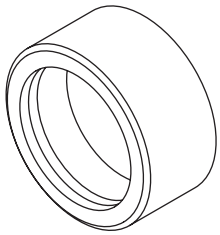 ST-398487700	398487700	DRIFT	Used for installing side bearing cone. (T-type and VA2-type)
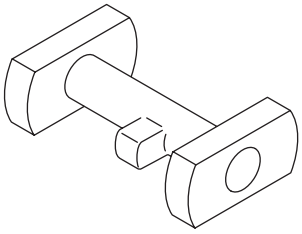 ST-398507701	398507701	DIFFERENTIAL CARRIER GAUGE	Used for adjusting pinion height. (T-type)
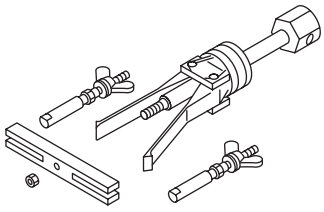 ST-398527700	398527700	PULLER ASSY	• Used for removing front oil seal. • Used for removing the side bearing race. (T-type)

ILLUSTRATION	TOOL NUMBER	DESCRIPTION	REMARKS
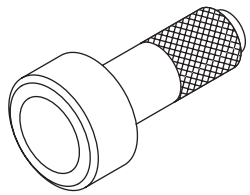 ST-398417700	398417700	DRIFT	Used for installing side bearing race. (T-type and VA2-type)
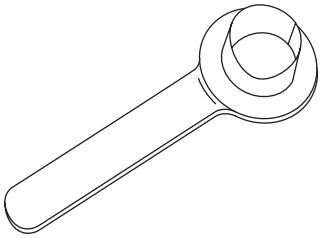 ST28099PA090	28099PA090	OIL SEAL PROTECTOR	Used for installing the rear drive shaft to the rear differential. (For oil seal protection)
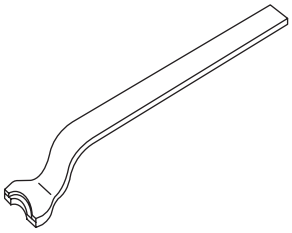 ST28099PA100	28099PA100	DRIVE SHAFT REMOVER	Used for removing the rear drive shaft from rear differential. (T-type)
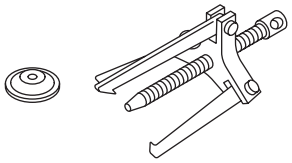 ST-399703600	399703600	PULLER ASSY	Used for removing companion flange.
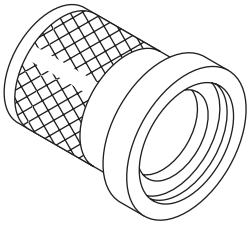 ST-899874100	899874100	INSTALLER	Used for installing the companion flange.

ILLUSTRATION	TOOL NUMBER	DESCRIPTION	REMARKS
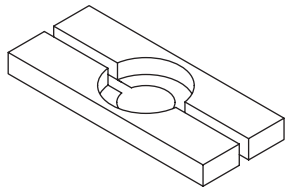 ST-498077000	498077000	REMOVER	Used for removing the side bearing cone. (VA2-type)
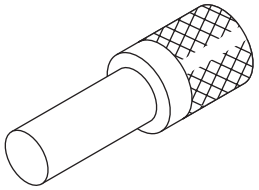 ST-899864100	899864100	REMOVER	Used for removing the side bearing cone. (VA2-type)
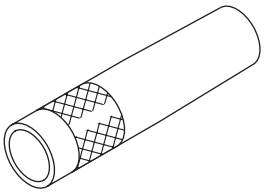 ST-499277200	499277200	INSTALLER	Used for installing the front bearing race and front oil seal. (VA2-type)
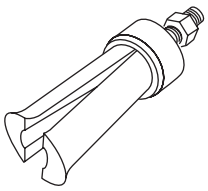 ST18758AA000	18758AA000	PULLER	Used for removing the side bearing race. (VA2-type)
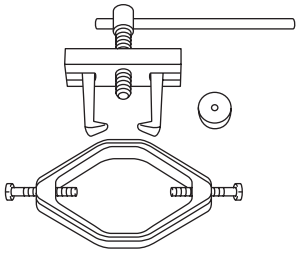 ST18759AA000	18759AA000	PULLER ASSY	Used for removing the side bearing cone. (T-type)

ILLUSTRATION	TOOL NUMBER	DESCRIPTION	REMARKS
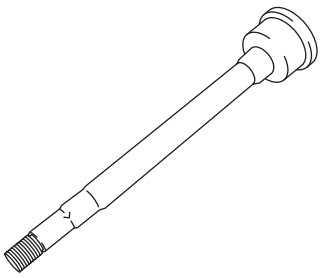 ST18678AA000	18678AA000	DUMMY SHAFT	Used for adjusting pinion height and preload. (VA2-type)
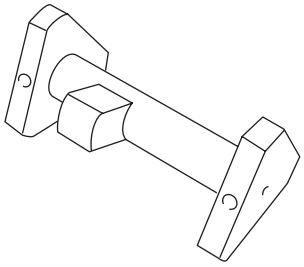 ST18831AA010	18831AA010	DIFFERENTIAL CARRIER GAUGE	Used for adjusting pinion height. (VA2-type)
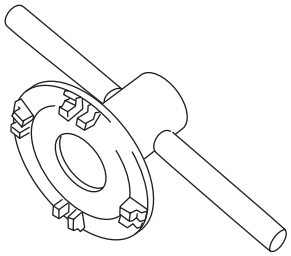 ST18630AA010	18630AA010	WRENCH COMPL RETAINER	• Used for removing and installing the side retainer. (VA1-type and VA2-type) • WRENCH ASSY (499787000) can also be used.
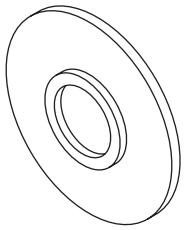 ST-498175500	498175500	INSTALLER	Used for installing the rear bearing cone. (VA1-type)
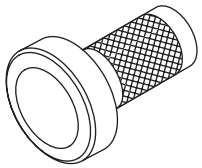 ST498447100	498447100	INSTALLER	Used for installing the side oil seal. (VA1-type)

ILLUSTRATION	TOOL NUMBER	DESCRIPTION	REMARKS
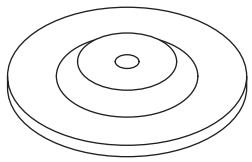 ST-399520105	399520105	SEAT	• Used for removing the side bearing cone. (VA1-type and VA2-type) • Used together with PULLER SET (899524100). (VA1-type) • Used together with REMOVER (899864100). (VA2-type)
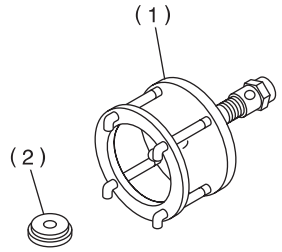 ST-899524100	899524100	PULLER SET	• Used for removing the side bearing cone. (VA1-type) • Used together with SEAT (399520105). (1) Puller (2) Cap
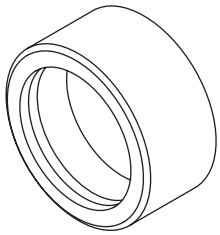 ST-498485400	498485400	DRIFT	Used for installing side bearing cone. (VA1-type)
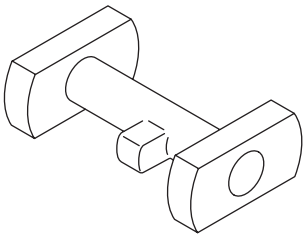 ST-498505501	498505501	DIFFERENTIAL CARRIER GAUGE	Used for adjusting pinion height. (VA1-type)
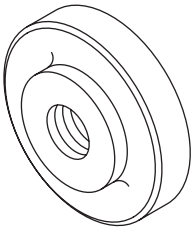 ST-498447110	498447110	DRIFT	Used for installing the front bearing race. (VA1-type)

ILLUSTRATION	TOOL NUMBER	DESCRIPTION	REMARKS
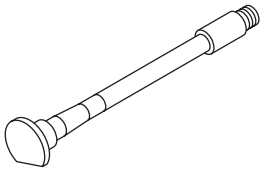 ST-498447150	498447150	DUMMY SHAFT	Used for adjusting pinion height and preload. (VA1-type)
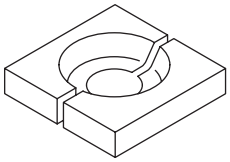 ST-498515500	498515500	REPLACER	Used for removing rear bearing cone. (VA1-type)
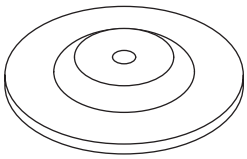 ST-499705404	499705404	SEAT	• Used for removing the side bearing race. (VA1-type) • Used together with PULLER ASSY (499705401).
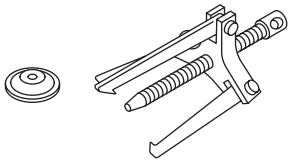 ST-499705401	499705401	PULLER ASSY	• Used for removing the side bearing race. (VA1-type) • Used together with SEAT (499705404).
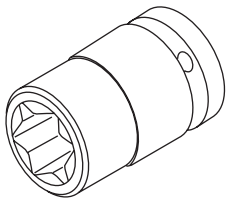 ST18270KA020	18270KA020	SOCKET (E20)	Used for removing and installing the hypoid driven gear. (VA1-type and VA2-type)

ILLUSTRATION	TOOL NUMBER	DESCRIPTION	REMARKS
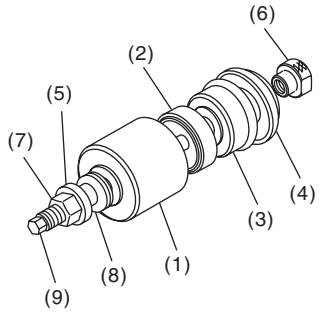 ST41399FG001	41399FG001	SPECIAL TOOL ASSY	• Used for removing and installing the rear differential mount bushing. • Use (1), (2), (5), (6), (7), (8) and (9) for removal. • Use (3), (4), (5), (6), (7), (8) and (9) for installation. (1) SPECIAL TOOL A (41399FG010) (2) SPECIAL TOOL C (41399FG031) (3) SPECIAL TOOL B (41399FG020) (4) SPECIAL TOOL D (41399FG041) (5) SPECIAL TOOL SLEEVE (41399FG050) (6) SPECIAL TOOL RING (41399FG061) (7) SPECIAL TOOL NUT (41399FG070) (8) SPECIAL TOOL BEARING (41399FG080) (9) SPECIAL TOOL SHAFT (41399FG091)
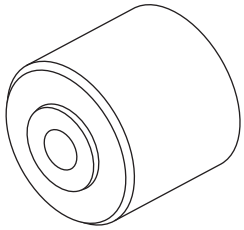 ST41399FG010	41399FG010	SPECIAL TOOL A	• Used for removing the rear differential mount bushing. • For combination of tools for removal, refer to “SPECIAL TOOL ASSY (41399FG001)”.
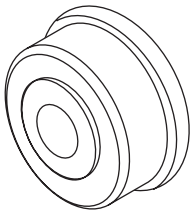 ST41399FG020	41399FG020	SPECIAL TOOL B	• Used for installing the rear differential mount bushing. • For combination of tools for installation, refer to “SPECIAL TOOL ASSY (41399FG001)”.
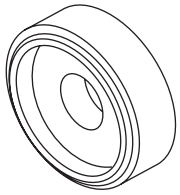 ST41399FG031	41399FG031	SPECIAL TOOL C	• Used for removing the rear differential mount bushing. • For combination of tools for removal, refer to “SPECIAL TOOL ASSY (41399FG001)”.

ILLUSTRATION	TOOL NUMBER	DESCRIPTION	REMARKS
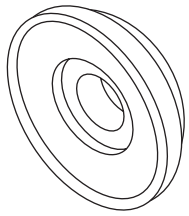 ST41399FG041	41399FG041	SPECIAL TOOL D	• Used for installing the rear differential mount bushing. • For combination of tools for installation, refer to “SPECIAL TOOL ASSY (41399FG001)”.
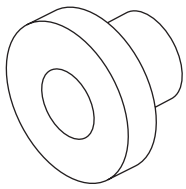 ST41399FG050	41399FG050	SPECIAL TOOL SLEEVE	• Used for removing and installing the rear differential mount bushing. • For combination of tools for removal and installation, refer to “SPECIAL TOOL ASSY (41399FG001)”.
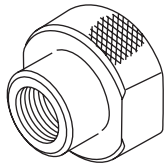 ST41399FG061	41399FG061	SPECIAL TOOL RING	• Used for removing and installing the rear differential mount bushing. • For combination of tools for removal and installation, refer to “SPECIAL TOOL ASSY (41399FG001)”.
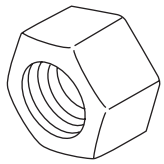 ST41399FG070	41399FG070	SPECIAL TOOL NUT	• Used for removing and installing the rear differential mount bushing. • For combination of tools for removal and installation, refer to “SPECIAL TOOL ASSY (41399FG001)”.
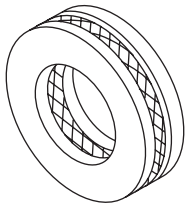 ST41399FG080	41399FG080	SPECIAL TOOL BEARING	• Used for removing and installing the rear differential mount bushing. • For combination of tools for removal and installation, refer to “SPECIAL TOOL ASSY (41399FG001)”.

ILLUSTRATION	TOOL NUMBER	DESCRIPTION	REMARKS
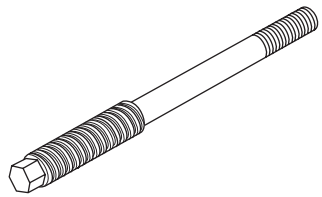 ST41399FG091	41399FG091	SPECIAL TOOL SHAFT	• Used for removing and installing the rear differential mount bushing. • For combination of tools for removal and installation, refer to “SPECIAL TOOL ASSY (41399FG001)”.
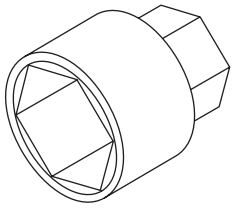 ST41399YC000	41399YC000	SOCKET WRENCH (17)	Used for tightening the self-locking nut. (Except for OUTBACK)
 STSSM4	— (Newly adopted tool)	SUBARU SELECT MONITOR 4	Used for setting of each function and troubleshooting for electrical system. NOTE: For detailed operation procedures of Subaru Select Monitor 4, refer to “Application help”.

2. GENERAL TOOL

TOOL NAME	REMARKS
Transmission jack	Used for removing and installing the rear differential.
Puller	Used for removing the side bearing retainer.
Thickness gauge	Used for measuring clearance.
Hexagon wrench	Used for installing and removing the oil filler plug and oil drain plug.
Tire lever	Used for removing the rear drive shaft. (VA-type)
Angle gauge	Used for installing the hypoid driven gear. (VA-type)
DST-i	Used together with Subaru Select Monitor 4.

2. Differential Gear Oil

A: INSPECTION

1) Lift up the vehicle.
2) Remove the filler plug, and then check the gear oil. Replace the gear oil if it is contaminated, deteriorated or cloudy. <Ref. to DI-22, REPLACEMENT, Differential Gear Oil.>
3) Check that the gear oil level is within –5 mm (–0.2 in) from the bottom of the filler plug hole. If the level is low, make sure that there is no oil leakage and refill up to the bottom of filler plug hole.

NOTE:
On VA1-types at factory settings, the oil level may be within –14 mm (–0.6 in) from the bottom of the filler plug. This is at normal level, requiring no oil refill.

- T-type

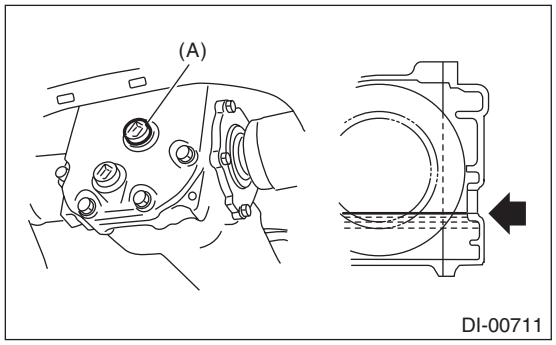

(A) Filler plug

- VA1-type

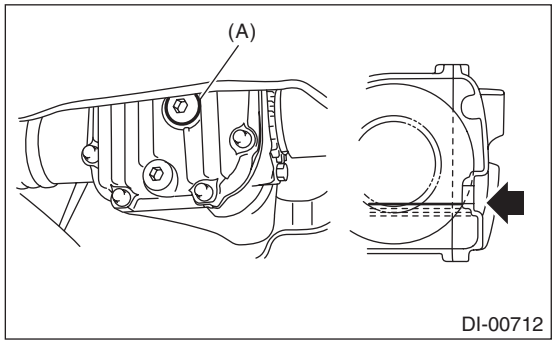

(A) Filler plug

- VA2-type

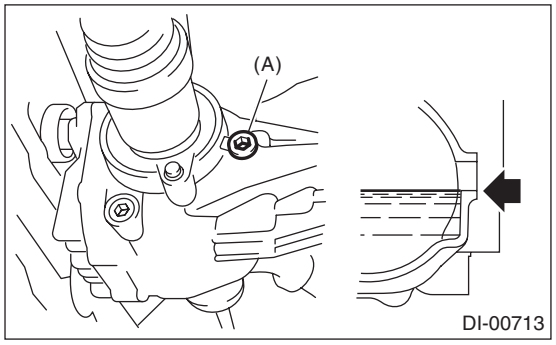

(A) Filler plug

4) Install the filler plug.

NOTE:
- For the T-type, degrease the thread portion sufficiently and apply liquid gasket to the filler plug.

Liquid gasket:
THREE BOND 1105 (Part No. 004403010) or equivalent
- For VA type, use a new gasket.

Tightening torque:
T-type:
49 N·m (5.0 kgf-m, 36.1 ft-lb)
VA-type:
50 N·m (5.1 kgf-m, 36.9 ft-lb)

B: REPLACEMENT

CAUTION:
• Gear oil is extremely hot just after driving. Be wary of receiving burns.
• Be careful not to spill the differential gear oil on exhaust pipe. If gear oil is spilled, wipe it off completely.
1) Lift up the vehicle.
2) Remove the drain plug and filler plug, and drain the gear oil.
- T-type

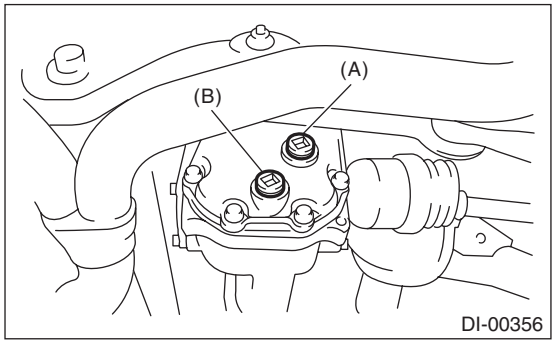

(A) Filler plug
(B) Drain plug

- VA1-type

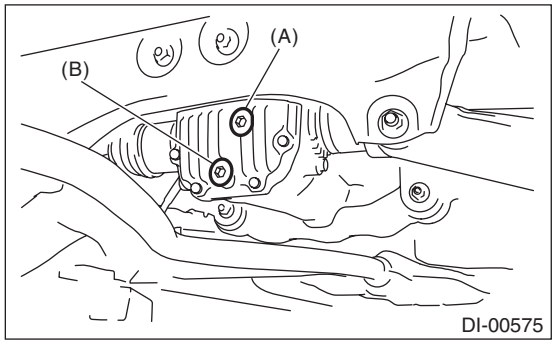

(A) Filler plug
(B) Drain plug

- VA2-type

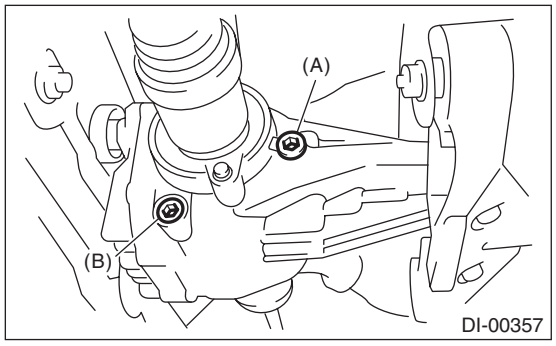

(A) Filler plug
(B) Drain plug

3) Tighten the drain plug.

NOTE:
• For the T-type, degrease the thread portion sufficiently and apply liquid gasket to the drain plug.

Liquid gasket:
THREE BOND 1105 (Part No. 004403010) or equivalent
• For VA type, use a new gasket.

Tightening torque:
T-type
49 N·m (5.0 kgf-m, 36.1 ft-lb)
VA-type:
50 N·m (5.1 kgf-m, 36.9 ft-lb)

4) Fill the differential carrier with gear oil to the bottom of filler plug.

NOTE:
Carefully refill gear oil while watching the level. Excessive or insufficient oil must be avoided.

Recommended gear oil:
<Ref. to DI-2, SPECIFICATION, General Description.>

Oil capacity:
0.8 L (0.8 US qt, 0.7 Imp qt)
- T-type

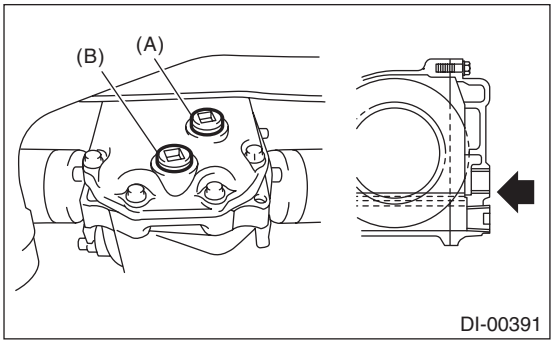

(A) Filler plug
(B) Drain plug

- VA1-type

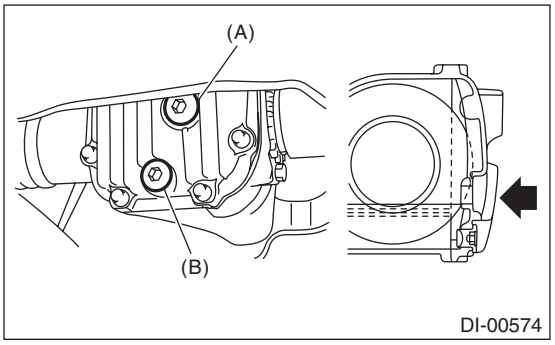

(A) Filler plug
(B) Drain plug

- VA2-type

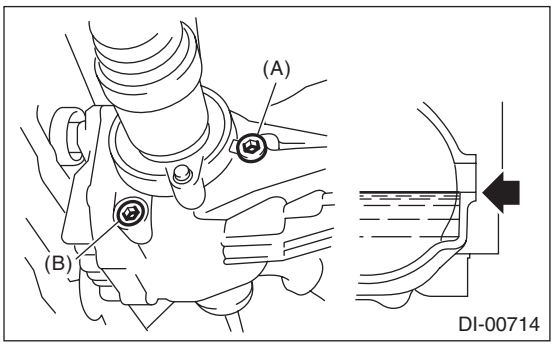

(A) Filler plug
(B) Drain plug

5) Install the filler plug.

NOTE:
• For the T-type, degrease the thread portion sufficiently and apply liquid gasket to the filler plug.

Liquid gasket:
THREE BOND 1105 (Part No. 004403010) or equivalent
• For VA type, use a new gasket.

Tightening torque:
T-type:
49 N·m (5.0 kgf-m, 36.1 ft-lb)
VA-type:
50 N·m (5.1 kgf-m, 36.9 ft-lb)

3. Front Differential Assembly

A: NOTE

1. CVT (TR580) MODEL

For front differential for the CVT (TR580) model, refer to the “CVT (TR580)” section. <Ref. to CVT(TR580)-346, Front Differential Assembly.>

2. CVT (TR690) MODEL

For front differential for the CVT (TR690) model, refer to the “CVT (TR690)” section. <Ref. to CVT(TR690)-296, Front Differential Assembly.>

3. 6MT MODEL

For front differential for the 6MT model, refer to the “6MT” section. <Ref. to 6MT-134, Front Differential Assembly.>

4. Rear Differential (T-type)

A: REMOVAL

1) Shift the select lever or gear shift lever to neutral.
2) Release the parking brake.
3) Disconnect the ground cable from battery.
4) Lift up the vehicle.
5) Remove the rear wheels.
6) Drain differential gear oil. <Ref. to DI-22, REPLACEMENT, Differential Gear Oil.>
7) Remove the rear exhaust pipe.
• 2.5 L model
<Ref. to EX(H4DO)-16, REMOVAL, Rear Exhaust Pipe.>
• 3.6 L model
<Ref. to EX(H6DO)-12, REMOVAL, Rear Exhaust Pipe.>
8) Remove the heat shield cover.

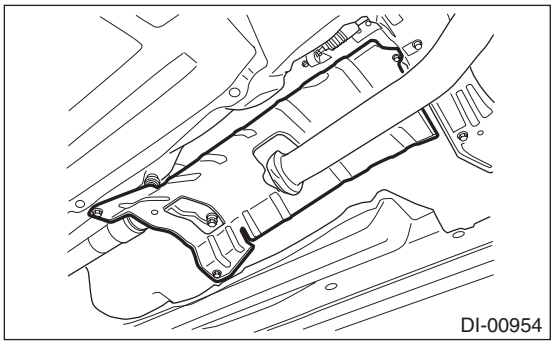
DI-00954

9) Remove the propeller shaft. <Ref. to DS-10, REMOVAL, Propeller Shaft.>
10) Loosen the self-lock nuts which hold the rear differential to rear crossmember.

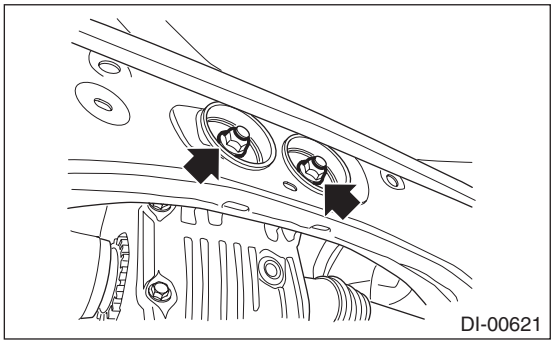
DI-00621

11) Remove the DOJ of rear drive shaft from rear differential using ST or tire lever.

NOTE:
• For the T-type, use the ST.
• For the VA-type, use the tire lever.
• When removing the DOJ from the rear differential, fit the tire lever or ST to the bolts as shown in the figure so as not to damage the side retainer.

T-type

ST 28099PA100 DRIVE SHAFT REMOVER

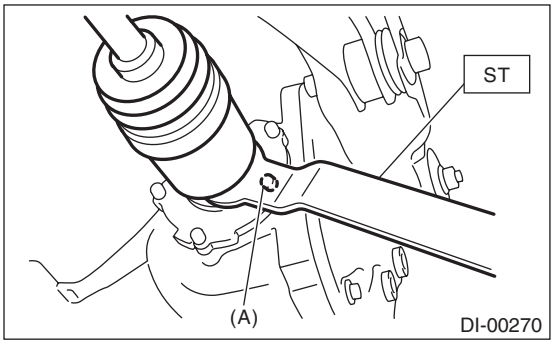

DI-00270

(A) Bolt

VA-type

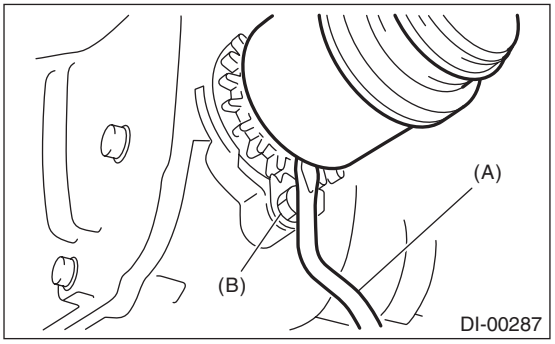

DI-00287

(A) Tire lever
(B) Bolt

12) Set the rear differential to transmission jack.

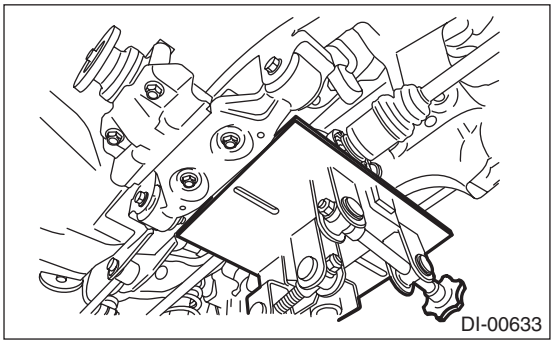
DI-00633

13) Remove the mass damper. (2.5 L OUTBACK model)

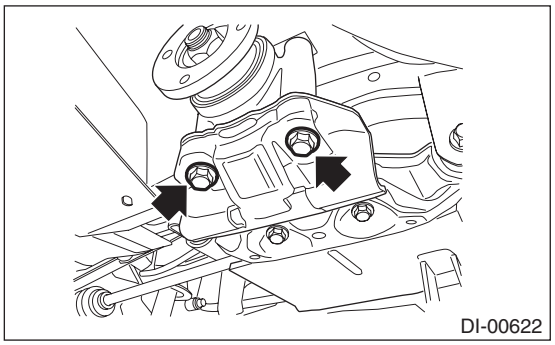

14) Remove the rear differential front member.

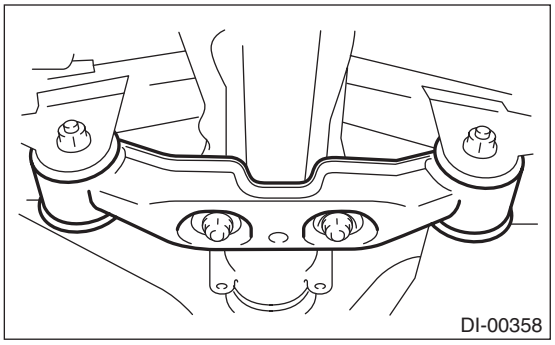

15) Remove the self-locking nuts which hold the rear differential to the crossmember.

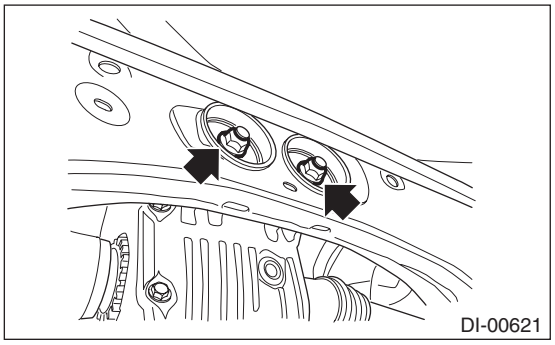

16) Pull out the rear differential stud bolt from rear crossmember bushing.

NOTE:
When removing the stud bolt from the rear crossmember bushing, carefully adjust the angle and location of transmission jack and jack stand, if necessary.

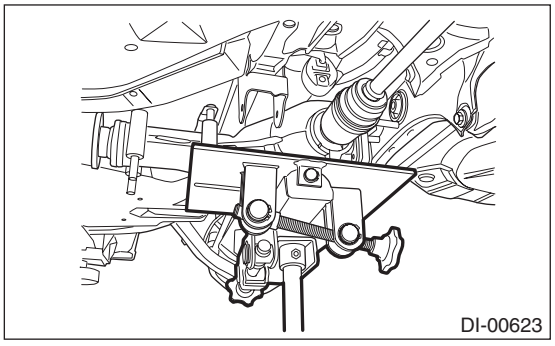

17) Lower the transmission jack.

18) Pull out the rear drive shaft from the rear differential.

NOTE:
• If it is difficult to pull out the rear drive shaft from rear differential, use the ST for T-type and the tire lever for VA-type.
ST 28099PA100 DRIVE SHAFT REMOVER
• If a circlip is attached to the removed rear drive shaft for VA2-type, remove the differential case assembly and replace it with a new part.

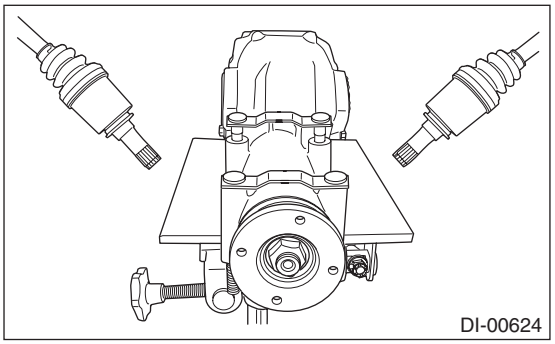

19) Lower the transmission jack.
20) Secure the rear drive shaft to rear lateral link using wire.

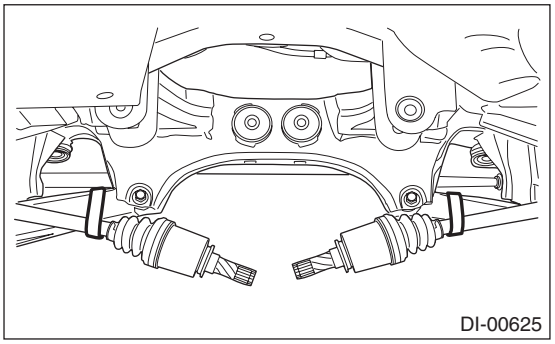

21) Remove the rear differential member plate from rear differential.

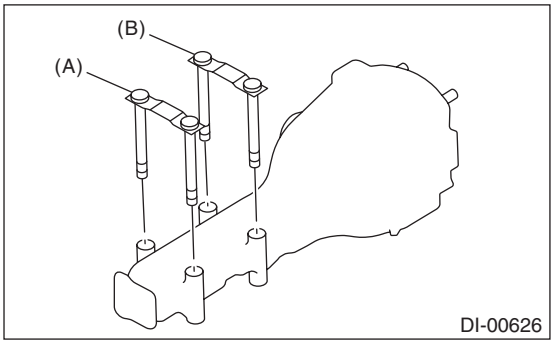

(A) Rear differential member plate (2.5 L OUTBACK model)
(B) Rear differential member plate

B: INSTALLATION

1) Attach the rear differential member plate to the rear differential.

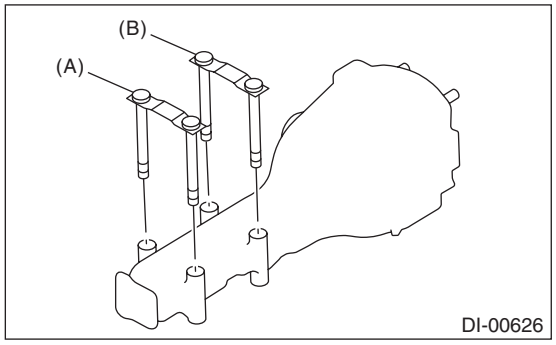

(A) Rear differential member plate (2.5 L OUTBACK model)
(B) Rear differential member plate

2) Set the rear differential to transmission jack.
3) Set the ST to the rear differential.
ST 28099PA090 OIL SEAL PROTECTOR

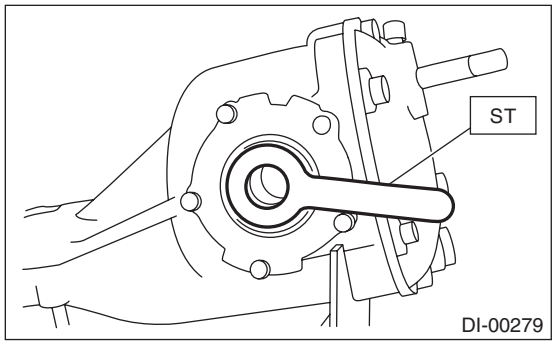

4) Insert the rear drive shaft until the spline portion of the rear drive shaft exceeds the side oil seal.

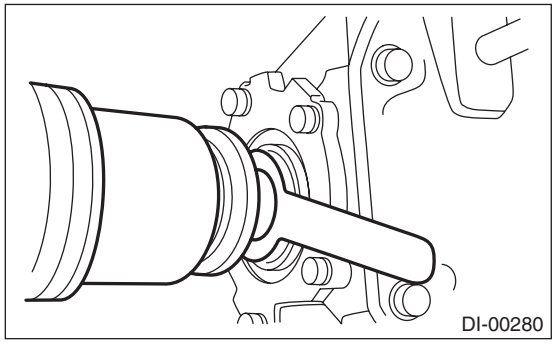

5) Remove ST from rear differential.

6) Push the rear differential from side to side to insert the DOJ into rear differential completely.

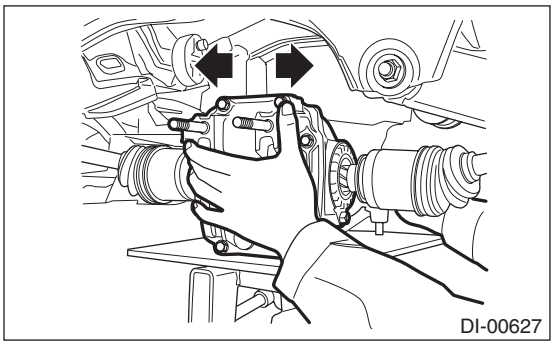

7) Adjust the transmission jack, if necessary, and insert the rear differential stud bolt into rear crossmember bushing properly.

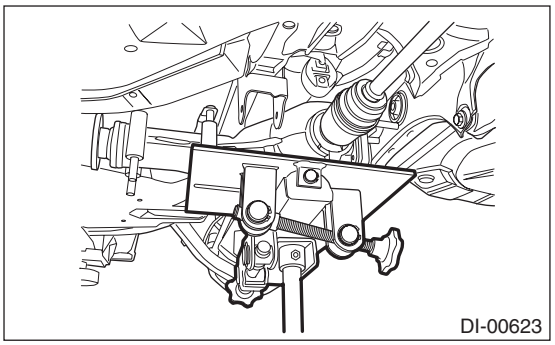

8) After inserting the rear differential stud bolt into the rear crossmember bushing, lift up the transmission jack and align the rear differential to its attachment position.

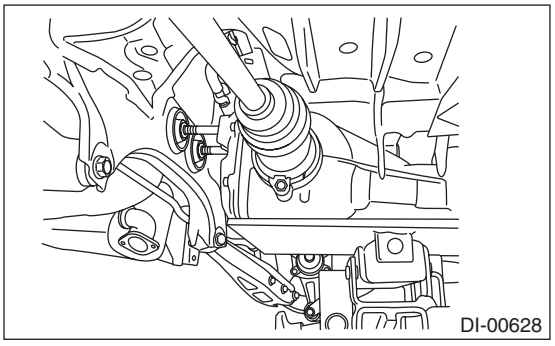

9) Tighten a new self-locking nut temporarily to rear crossmember.

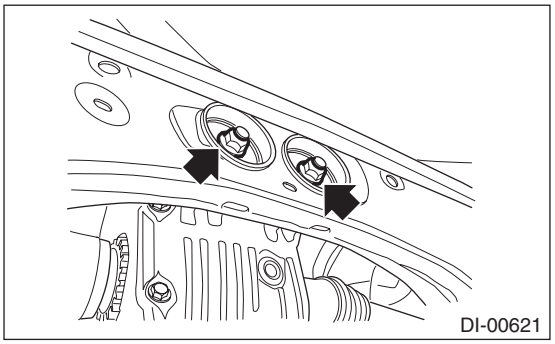

10) Install the rear differential front member with a new self-locking nut.

Tightening torque:
T1: 50 N·m (5.1 kgf-m, 36.9 ft-lb)
T2: 110 N·m (11.2 kgf-m, 81.1 ft-lb)

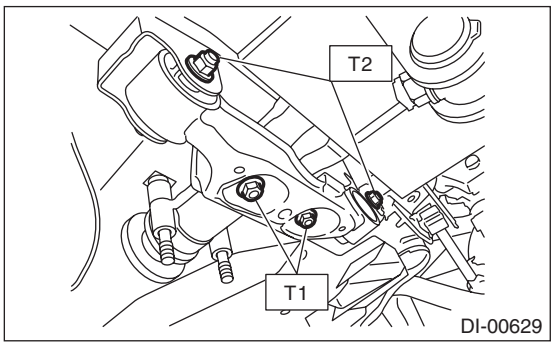

11) Install the mass damper with a new self-locking nut. (2.5 L OUTBACK model)

Tightening torque:
50 N·m (5.1 kgf-m, 36.9 ft-lb)

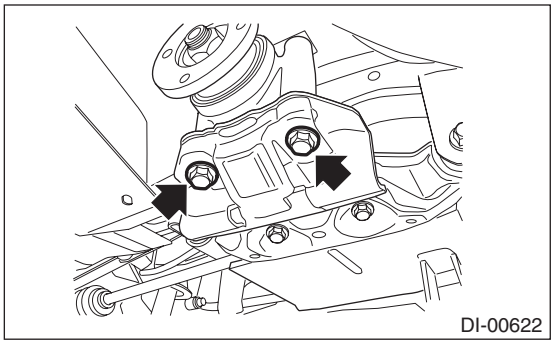

12) Tighten the self-locking nut.

NOTE:
For models other than OUTBACK model, tighten the self-locking nut using the ST.
ST 41399YC000 SOCKET WRENCH (17)

Tightening torque:
70 N·m (7.1 kgf-m, 51.6 ft-lb)

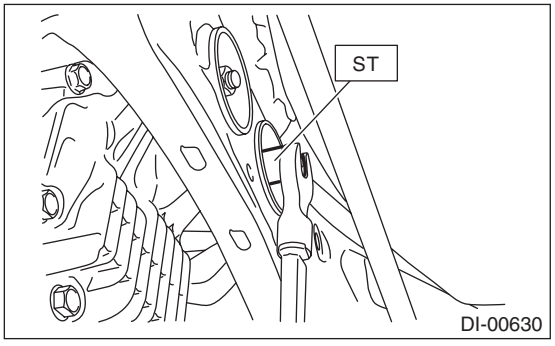

13) Remove the transmission jack.
14) Install the propeller shaft. <Ref. to DS-12, INSTALLATION, Propeller Shaft.>
15) Install the heat shield cover.

Tightening torque:
18 N·m (1.8 kgf-m, 13.3 ft-lb)

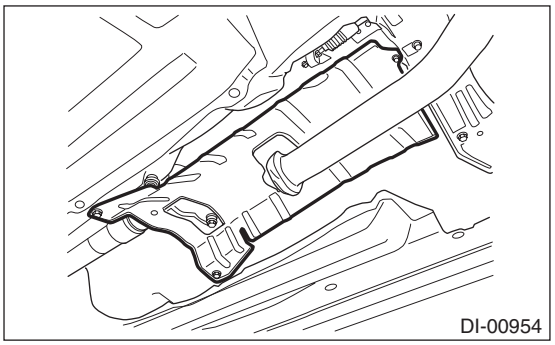

16) Install the rear exhaust pipe.
- 2.5 L model

<Ref. to EX(H4DO)-17, INSTALLATION, Rear Exhaust Pipe.>
- 3.6 L model

<Ref. to EX(H6DO)-13, INSTALLATION, Rear Exhaust Pipe.>
17) Fill differential gear oil. <Ref. to DI-22, REPLACEMENT, Differential Gear Oil.>
18) Installing procedure hereafter is in the reverse order of removal.
19) Perform “Rear differential inspection mode” using the Subaru Select Monitor. (CVT model) <Ref. to DI-83, Rear Differential Inspection Mode.>

CAUTION:
Be sure to perform rear differential inspection mode when the following work has been performed.
- **Replacement of rear differential**
- **Replacement of rear differential hypoid gear set**
- **Replacement of transmission assembly**
- **Replacement of front differential hypoid gear set**

C: DISASSEMBLY

To detect the real cause of trouble, inspect the following items before disassembling.
• Tooth contact and backlash between hypoid driven gear and drive pinion
• Hypoid driven gear runout on its back surface
• Total preload of drive pinion
1) Set the ST on vise and install the differential assembly to ST.
ST 398217700 ATTACHMENT SET

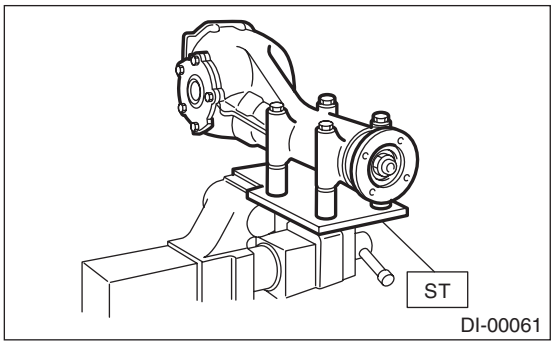

2) Remove the drain plug and filler plug.
3) Remove the air breather cap.

NOTE:
• Do not attempt to remove the air breather cap unless necessary.
• Whenever the air breather cap is removed, replace it with a new part.

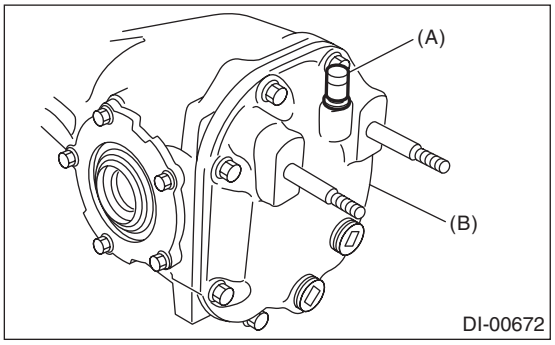

(A) Air breather cap
(B) Rear cover

4) Remove the bolts, and then remove the rear cover.
5) Remove the stud bolts from rear cover if necessary.
6) Remove the side retainer attachment bolts, set the ST to differential case, and extract the side retainers RH and LH with a puller.

NOTE:
• Side retainer shim of each side should be kept together with its mating retainer.
• Keep the side retainers separate by attaching tags or in similar ways to make it possible to identify RH and LH sides during reassembly.
ST 398457700 ATTACHMENT

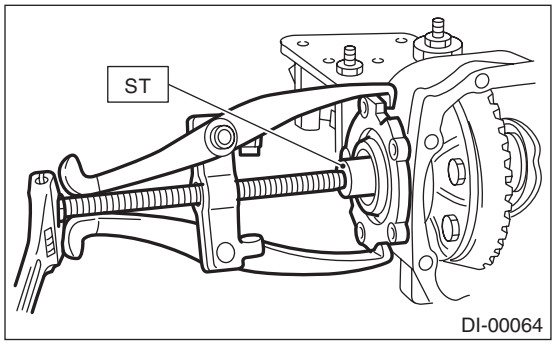

7) Pull out the differential case assembly from the differential carrier.

NOTE:
Be careful not to hit the teeth of hypoid driven gear against the differential carrier.

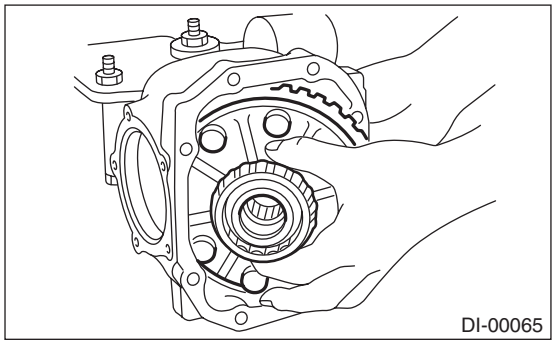

8) Remove the oil seal and O-ring from the side retainer.
9) When replacing the side bearing, remove the bearing race from the side retainer using ST.
ST 398527700 PULLER ASSY

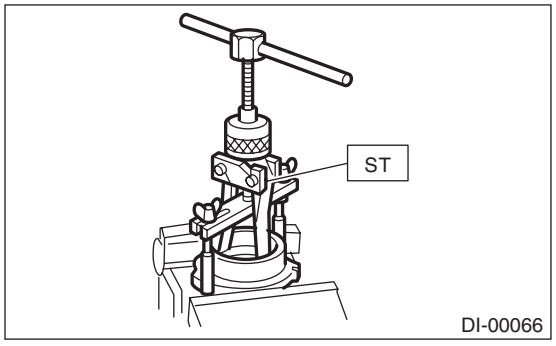

10) Using the ST, remove the bearing cone.

NOTE:
• Do not attempt to disassemble the parts unless necessary.
• Set the ST so that its claws catch the edge of the bearing cone.
• Never mix up the RH and LH bearing races and cones.

ST 18759AA000 PULLER ASSY

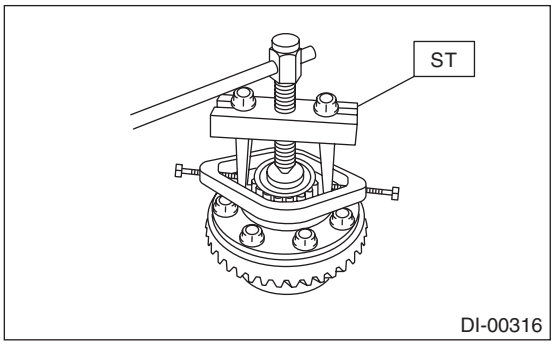

11) Remove the hypoid driven gear by loosening hypoid driven gear bolts.

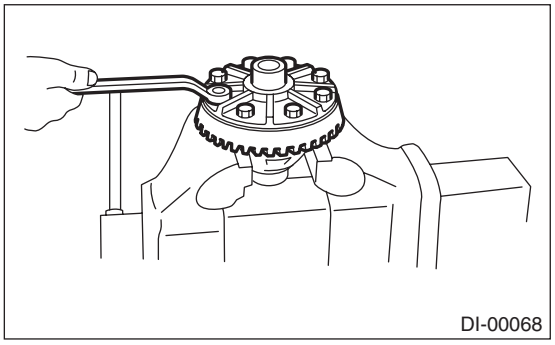

12) Remove the pinion shaft lock pin from hypoid driven gear side using ST.

ST 899904100 STRAIGHT PIN REMOVER

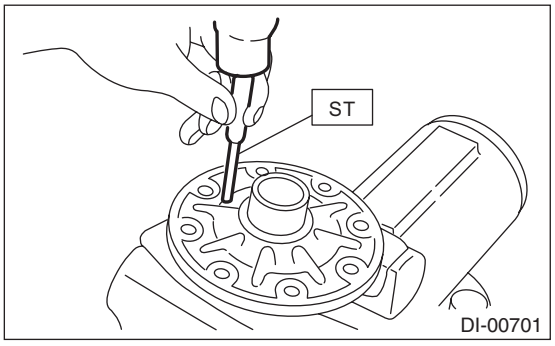

13) Draw out the pinion mate shaft, and remove pinion mate gears, pinion mate gear washers, side gears, and side gear thrust washers.

NOTE:
The gears and washers should be marked with RH or LH, front or rear, or kept separately.

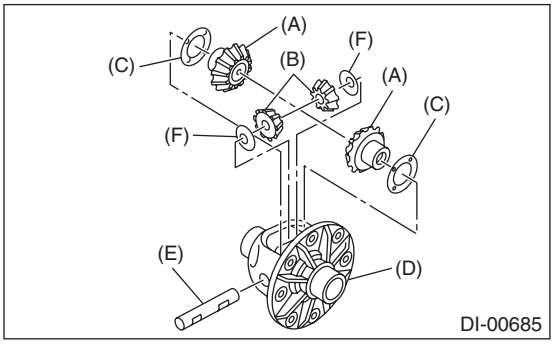

(A) Side gear
(B) Pinion mate gear
(C) Side gear thrust washer
(D) Differential case
(E) Pinion mate shaft
(F) Pinion mate gear washer

14) Remove the self-locking nut while securing the companion flange with ST.

ST 498427200 FLANGE WRENCH

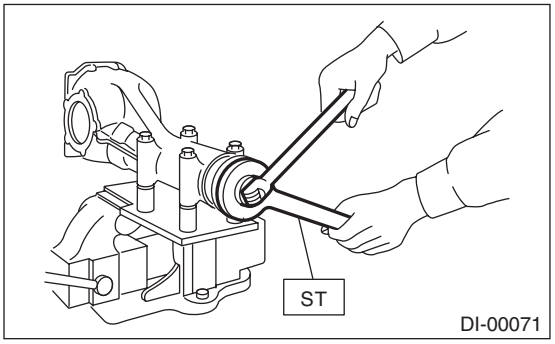

15) Extract the companion flange with a puller.

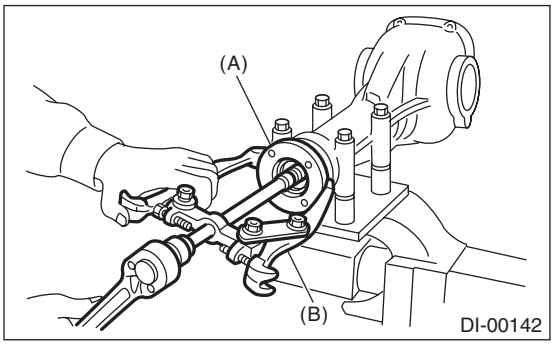

(A) Companion flange
(B) Puller

16) Press the end of drive pinion shaft using ST and remove the rear bearing cone, preload adjusting spacer and washer.

NOTE:
Hold the drive pinion so as not to drop it.
ST 398467700 DRIFT

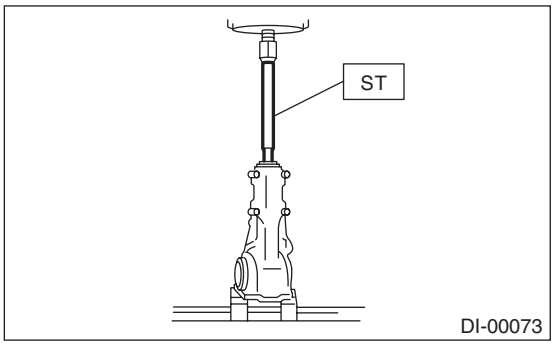

17) Remove the rear bearing cone from drive pinion by supporting the cone with ST.

NOTE:
Place the replacer so that its center-recessed side faces the bearing cone.
ST 398517700 REPLACER

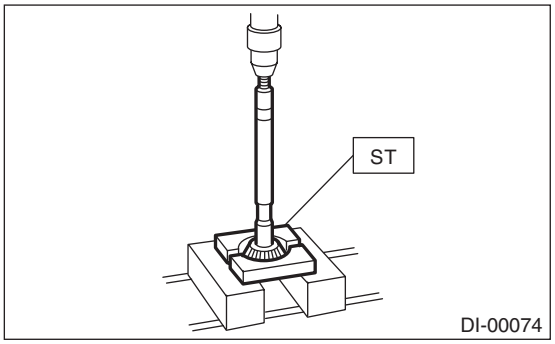

18) Remove the front oil seal from differential carrier using ST.
ST 398527700 PULLER ASSY

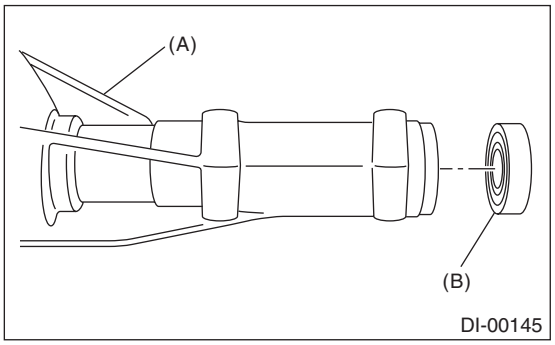

(A) Differential carrier
(B) Front oil seal

19) Remove the pilot bearing together with the front bearing cone and spacer using the ST.
ST 398467700 DRIFT

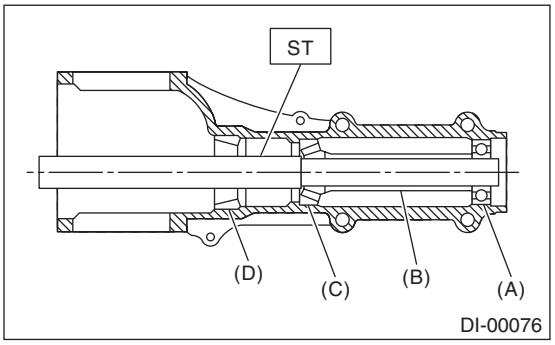

(A) Pilot bearing
(B) Spacer
(C) Front bearing
(D) Rear bearing race

20) When replacing the bearings, use a brass bar to tap out the front bearing race and rear bearing race in this order to remove them.

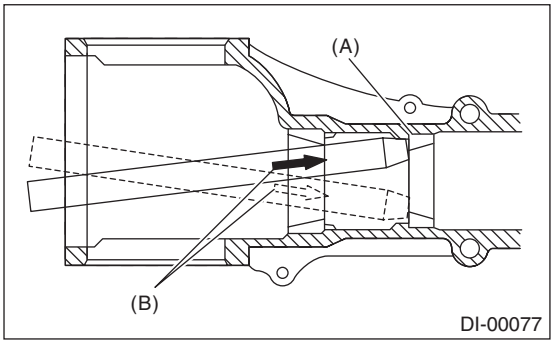

(A) 2 cutout portions along diagonal lines
(B) Tap alternately with brass bar.

D: ASSEMBLY

NOTE:
- Assemble in the reverse order of disassembly.
- Check and adjust each part during assembly.
- Keep the shims and washers in order, so that they are not improperly installed.
- Thoroughly clean the surfaces on which the shims, washers and bearings are to be installed.
- Apply differential gear oil when installing the bearings and thrust washers.
- Be careful not to mix up the RH and LH bearing races.
- Replace the gasket, oil seal and O-ring with a new part.
- Be careful not to mix up the oil seal RH and LH.
- Apply differential gear oil to the lips when installing the oil seal.

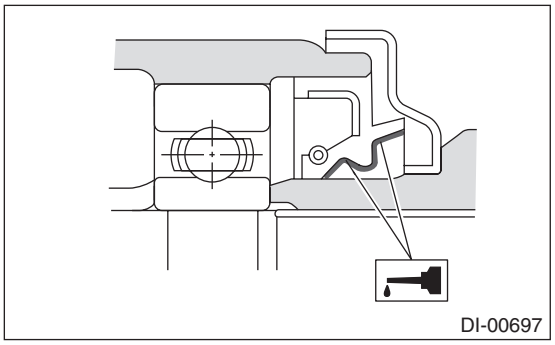

1) Adjusting preload for front and rear bearings

NOTE:
Adjust the bearing preload between front and rear bearings with preload adjusting spacer and washer. Pinion height adjusting washer is not affected by this adjustment. The adjustment must not be carried out with oil seal inserted.

(1) Install the rear bearing race into the differential carrier using ST1 and ST2.

ST1 398477701 HANDLE
ST2 398477703 DRIFT 2

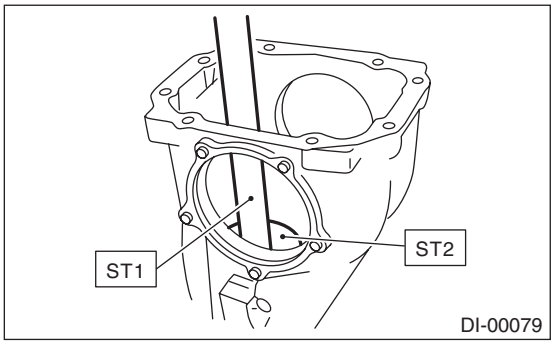

(2) Install the front bearing race to the differential carrier using ST1 and ST2.

NOTE:
Use a new front bearing race.
ST1 398477701 HANDLE
ST2 398477702 DRIFT

(3) Insert ST1 into the differential carrier with the pinion height adjusting washer and rear bearing cone fitted onto it.

NOTE:
- At this time, install a provisionally selected or previously used pinion height adjusting washer. Measure and record the thickness.
- If tooth contact (drive pinion, hypoid driven gear) is normal in the inspection before disassembling, verify that the washer is not deformed, and then reuse the used washer.

(4) Install the preload adjusting spacer and washer, front bearing cone, ST2, companion flange and self-locking nut.

NOTE:
Use new front bearing cone.
ST1 398507702 DUMMY SHAFT
ST2 398507703 DUMMY COLLAR

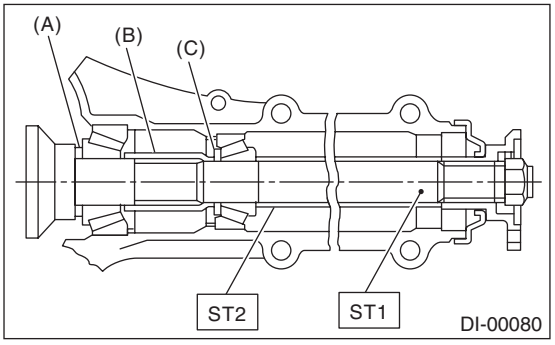

(A) Pinion height adjusting washer
(B) Preload adjusting spacer
(C) Preload adjusting washer

(5) Turn the ST1 by hand to smooth the bearing, and tighten the self-locking nut while measuring the initial load or initial torque with a spring scale or torque wrench. Select the preload adjusting washer and spacer so that the specified preload is obtained when nut is tightened to the specified torque.

NOTE:
• Measure the preload in direction of tangent to the flange.
• Be careful not to give excessive preload.
• When tightening the self-locking nut, lock ST1 with ST2 as shown in the figure.
ST1 398507702 DUMMY SHAFT
ST2 398507704 BLOCK

Tightening torque:
181.5 N·m (18.5 kgf-m, 133.9 ft-lb)

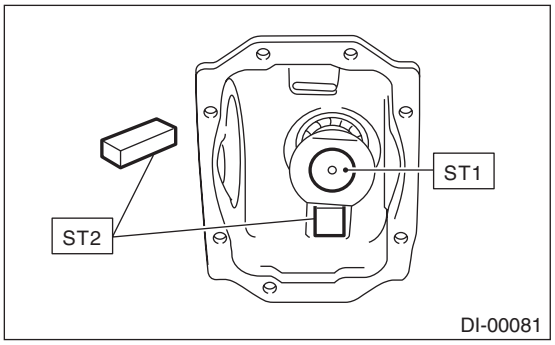

Initial load:
18.1 — 38.8 N (1.8 — 4.0 kgf, 4.1 — 8.7 lbf)

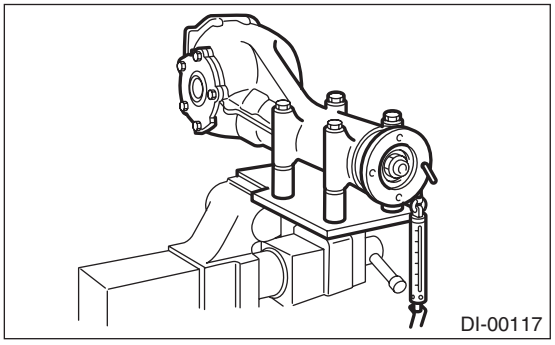

Initial torque:
0.69 — 1.47 N·m (0.07 — 0.15 kgf-m, 0.51 — 1.08 ft-lb)

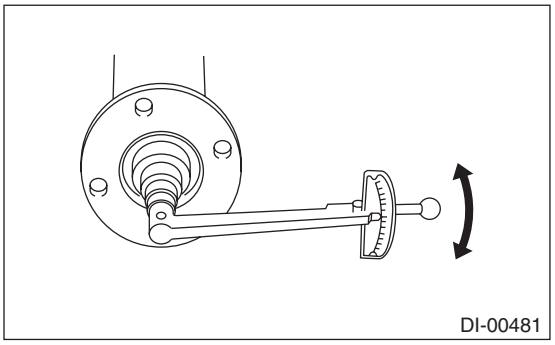

Preload adjusting washer	
Part No.	Thickness mm (in)
383705200	2.59 (0.1020)
383715200	2.57 (0.1012)
383725200	2.55 (0.1004)
383735200	2.53 (0.0996)
383745200	2.51 (0.0988)
383755200	2.49 (0.0980)
383765200	2.47 (0.0972)
383775200	2.45 (0.0965)
383785200	2.43 (0.0957)
383795200	2.41 (0.0949)
383805200	2.39 (0.0941)
383815200	2.37 (0.0933)
383825200	2.35 (0.0925)
383835200	2.33 (0.0917)
383845200	2.31 (0.0909)

Preload adjusting spacer	
Part No.	Length mm (in)
383695201	56.2 (2.213)
383695202	56.4 (2.220)
383695203	56.6 (2.228)
383695204	56.8 (2.236)
383695205	57.0 (2.244)
383695206	57.2 (2.252)

2) Adjusting drive pinion height:
Adjust the drive pinion height with pinion height adjusting washer installed between the rear bearing cone and the back of pinion gear.

(1) Attach the ST2.

ST1 398507702 DUMMY SHAFT
ST2 398507701 DIFFERENTIAL CARRIER GAUGE
ST3 398507703 DUMMY COLLAR

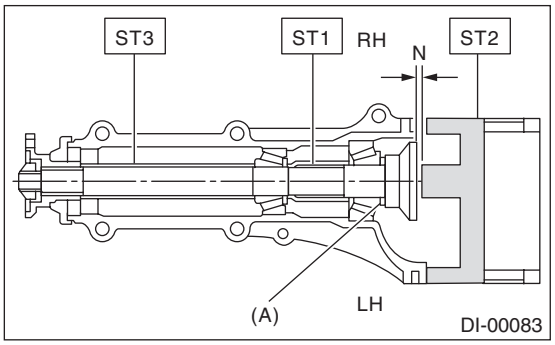

(A) Pinion height adjusting washer

(2) Measure the clearance “N” between the end of ST2 and the end surface of ST1 by using a thickness gauge.

NOTE:
Make sure there is no clearance between the differential carrier and ST2.

ST1 398507702 DUMMY SHAFT
ST2 398507701 DIFFERENTIAL CARRIER GAUGE

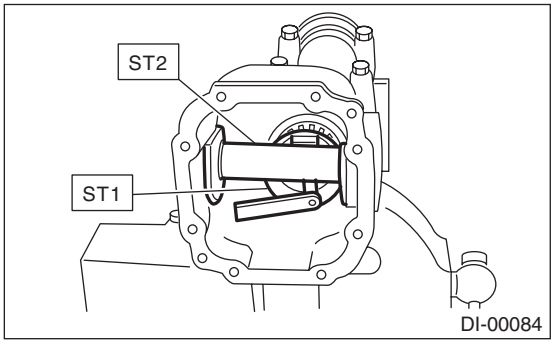

(3) Obtain the thickness of pinion height adjusting washer to be inserted from the following formula, and replace the temporarily installed washer with this one.

$T = To + N - (H \times 0.01) - 0.20$ mm (0.0079 in)

T	Thickness of pinion height adjusting washer mm (in)	
To	Thickness of washer temporarily inserted mm (in)	
N	Clearance of thickness gauge mm (in)	
H	Figure marked on drive pinion head	
Memo:		

(Example of calculation)
To = 3.39 mm (0.1335 in)
N = 0.24 mm (0.0094 in)
H = + 1
T = 3.39 mm (0.1335 in) + 0.24 mm (0.0094 in) – 0.01 mm (0.0004 in) – 0.20 mm (0.0079 in) = 3.42 mm (0.1346 in)
Result: Thickness = 3.42 mm (0.1346 in)
Therefore use washer 383605200.

Pinion height adjusting washer	
Part No.	Thickness mm (in)
383495200	3.09 (0.1217)
383505200	3.12 (0.1228)
383515200	3.15 (0.1240)
383525200	3.18 (0.1252)
383535200	3.21 (0.1264)
383545200	3.24 (0.1276)
383555200	3.27 (0.1287)
383565200	3.30 (0.1299)
383575200	3.33 (0.1311)
383585200	3.36 (0.1323)
383595200	3.39 (0.1335)
383605200	3.42 (0.1346)
383615200	3.45 (0.1358)
383625200	3.48 (0.1370)
383635200	3.51 (0.1382)
383645200	3.54 (0.1394)
383655200	3.57 (0.1406)
383665200	3.60 (0.1417)
383675200	3.63 (0.1429)
383685200	3.66 (0.1441)

3) Install the selected pinion height adjusting washer on drive pinion, and press the rear bearing cone into position with ST.
ST 398177700 INSTALLER

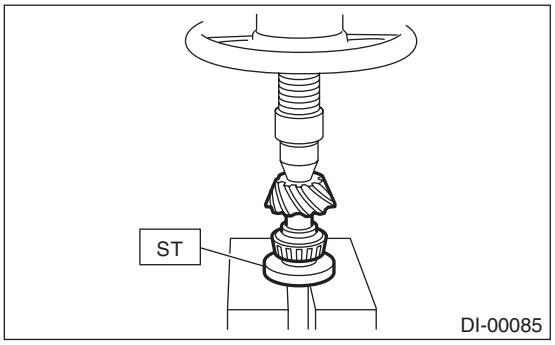

4) Insert the drive pinion into the differential carrier, and install the preselected preload adjusting spacer and washer.

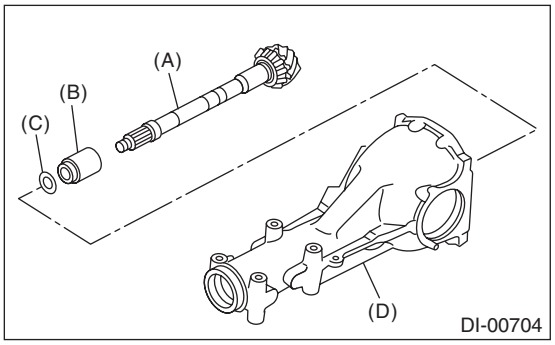

(A) Drive pinion
(B) Preload adjusting spacer
(C) Preload adjusting washer
(D) Differential carrier

5) Press-fit the front bearing cone with ST1, ST2 and ST3.
ST1 398507703 DUMMY COLLAR
ST2 399780104 WEIGHT
ST3 899580100 INSTALLER

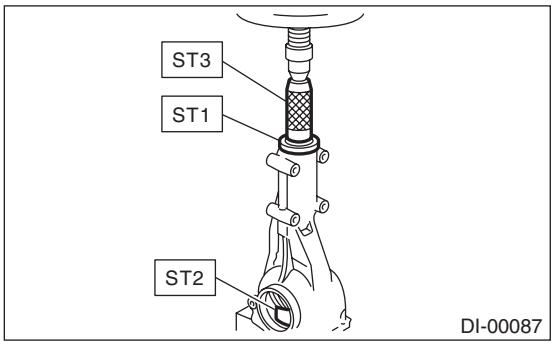

6) Insert the spacer, then press-fit the pilot bearing with ST1 and ST2.

NOTE:
Use a new pilot bearing.
ST1 399780104 WEIGHT
ST2 899580100 INSTALLER

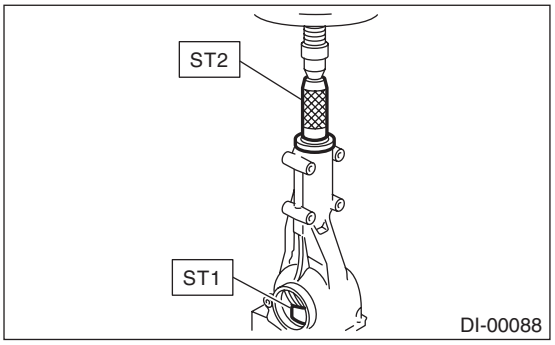

7) Using the ST, install the oil seal.

NOTE:
- Use a new oil seal.
- Press-fit until the oil seal end comes 1 mm (0.04 in) inward from end of carrier.
- Apply differential gear oil to the oil seal lips.

ST 498447120 INSTALLER

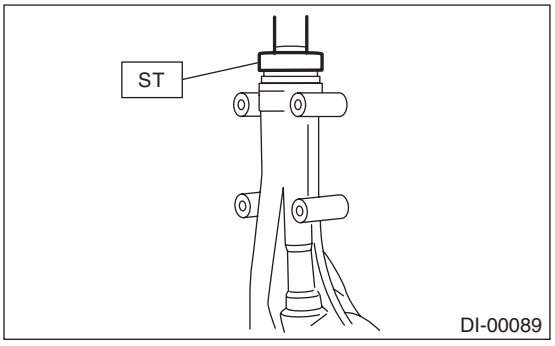

8) Press-fit the companion flange with ST1 and ST2.

NOTE:
Be careful not to damage the bearing.
ST1 899874100 INSTALLER
ST2 399780104 WEIGHT

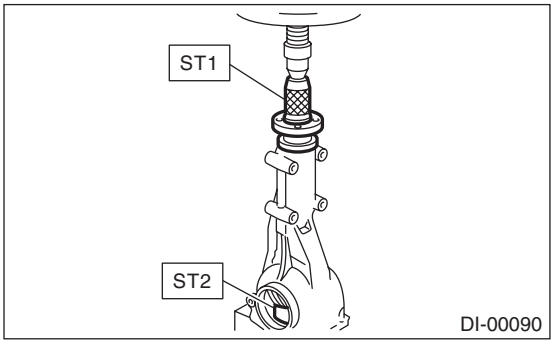

9) Apply seal material on the drive pinion shaft thread and new self-locking nut seat.

Seal material:
THREE BOND 1324 (Part No. 004403042) or equivalent

10) Attach the new self-locking nut and use the ST to fix the companion flange in place, then tighten the self-locking nut.

Tightening torque:
181.5 N·m (18.5 kgf-m, 133.9 ft-lb)

ST 498427200 FLANGE WRENCH

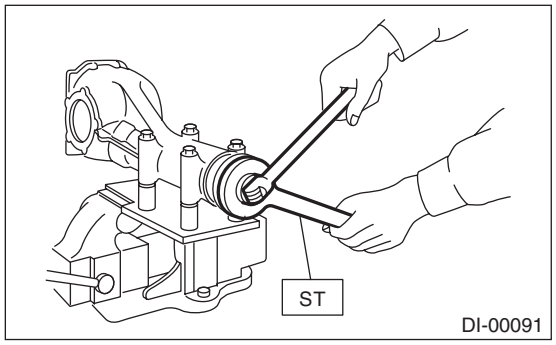

11) Check the initial torque or initial load.

Initial load:
18.1 — 38.8 N (1.8 — 4.0 kgf, 4.1 — 8.7 lbf)

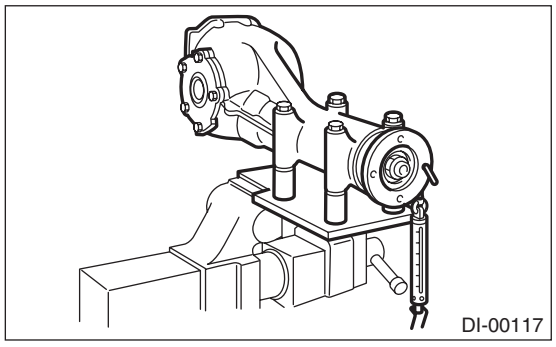

Initial torque:
0.69 — 1.47 N·m (0.07 — 0.15 kgf-m, 0.51 — 1.08 ft-lb)

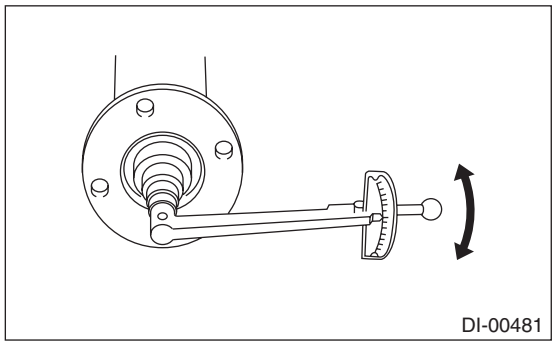

12) Assembling differential case
(1) Install the side gears and pinion mate gears, with their side gear thrust washers, pinion mate gear washer, and pinion mate shaft, into the differential case.

NOTE:
• Apply gear oil on both sides of the washer and on the pinion mate shaft before installing.
• Insert the pinion mate shaft into the differential case by aligning the pin holes.

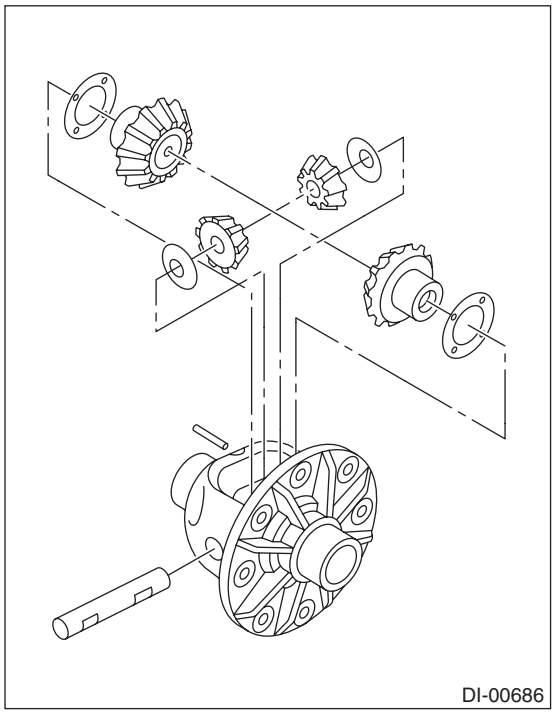

(2) Measure the side gear backlash.

Side gear backlash:
0.10 — 0.20 mm (0.004 — 0.008 in)

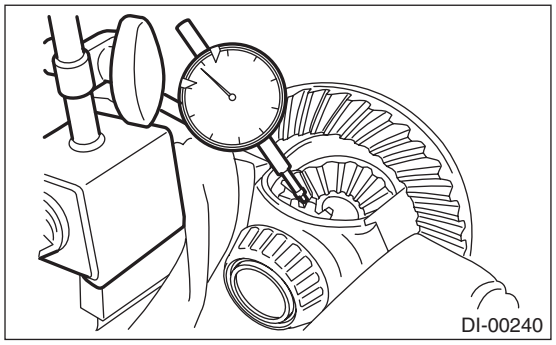

(3) Adjust the backlash as specified by selecting side gear thrust washer.

Side gear thrust washer	
Part No.	Thickness mm (in)
383445201	0.75 — 0.80 (0.0295 — 0.0315)
383445202	0.80 — 0.85 (0.0315 — 0.0335)
383445203	0.85 — 0.90 (0.0335 — 0.0354)

(4) Check the condition of rotation after applying oil to the gear tooth surfaces and washer surfaces.
(5) Drive the pinion shaft lock pin into the differential case.

NOTE:
Use a new pinion shaft lock pin.
ST 899904100 STRAIGHT PIN REMOVER
13) Install the driven gear to the differential case.

NOTE:
• Before installing bolts, apply seal material to bolt threads.

Seal material:
THREE BOND 1324 (Part No. 004403042) or equivalent
• Make sure there is no clearance between the differential case and driven gear.
• Tighten opposing bolts in order.

Tightening torque:
103 N·m (10.5 kgf-m, 76.0 ft-lb)

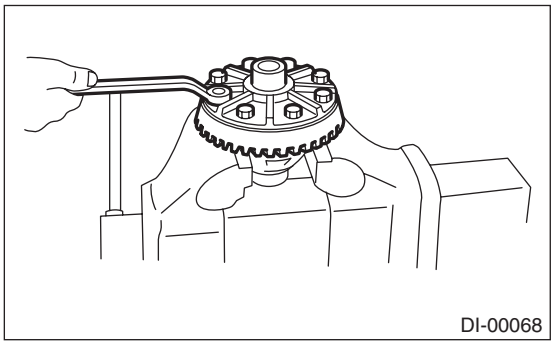
DI-00068

14) Using the ST, press-fit the side bearing to the differential case.
ST 398487700 DRIFT

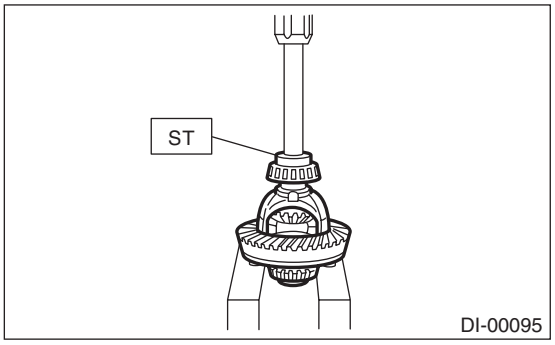

DI-00095

15) Using the ST, press-fit the side bearing outer race to the side retainer.

CAUTION:
Make sure that the bearing outer races and cones are properly assembled.
ST 398417700 DRIFT

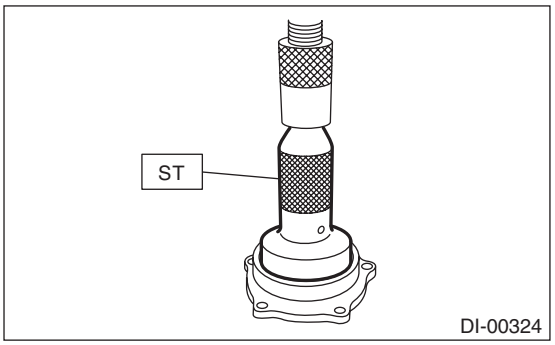

DI-00324

16) Side retainer shim adjustment
(1) The hypoid driven gear backlash and side bearing preload can be adjusted by the side retainer shim thickness.
(2) Install the differential case assembly into differential carrier in the reverse order of disassembly.

NOTE:
Be careful not to hit the teeth of hypoid driven gear against the differential carrier.

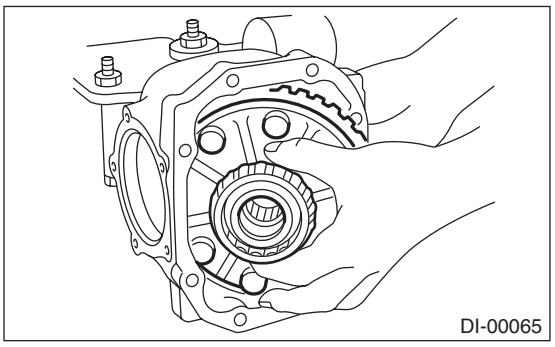
DI-00065

(3) Install the side retainer shim.

NOTE:
• Be careful not to mix up the side retainer shim RH and LH.
• Replace broken or corroded side retainer shims with a new part of the same thickness.

Side retainer shim	
Part No.	Thickness mm (in)
383475201	0.20 (0.0079)
383475202	0.25 (0.0098)
383475203	0.30 (0.0118)
383475204	0.40 (0.0157)
383475205	0.50 (0.0197)

(4) Align the arrow mark on the differential carrier with the arrow mark on the side retainer when installing the side retainer.

NOTE:
Be careful that the side bearing outer race is not damaged by the bearing roller.

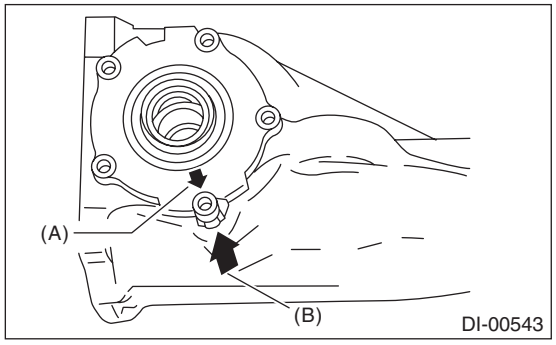

(A) Arrow mark (on the side retainer)
(B) Arrow mark (on the differential carrier)

(5) Tighten the side retainer bolts.

Tightening torque:
10.5 N·m (1.1 kgf-m, 7.7 ft-lb)

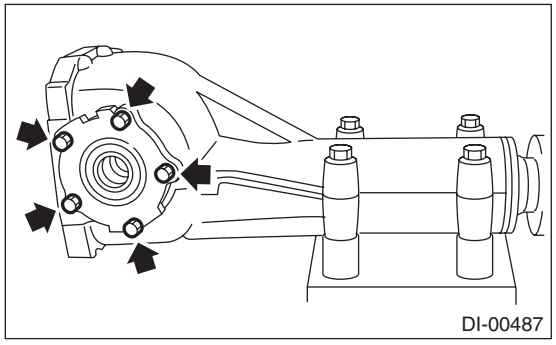

(6) Measure the hypoid driven gear to drive pinion backlash. Set the magnet base on differential carrier. Align the contact point of dial gauge with tooth face of hypoid driven gear, and move hypoid driven gear while holding drive pinion still. Read the value indicated on dial gauge. If the backlash is outside the standard range, adjust the side retainer shim by the following method.

• When backlash is less than 0.1 mm (0.004 in):
Reduce the thickness of shim on the back side of the hypoid driven gear and increase the thickness of shims on the teeth side of the hypoid driven gear.

• When backlash exceeds 0.2 mm (0.008 in):
Increase the thickness of shim on the back side of the hypoid driven gear and reduce the thickness of shims on the teeth side of the hypoid driven gear.

Backlash:
0.10 — 0.20 mm (0.004 — 0.008 in)

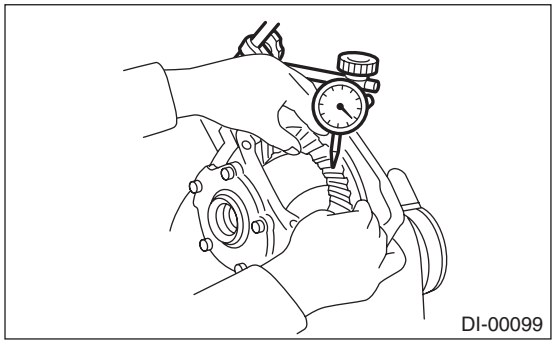

(7) Measure the total preload of the drive pinion. If the total preload is outside the specification range, adjust the thickness of side retainer shims, increasing/reducing both shims by an even amount at a time.

Total preload:
20.7 — 54.4 N (2.1 — 5.5 kgf, 4.7 — 12.2 lbf)

17) Recheck the hypoid driven gear to drive pinion backlash.

Backlash:
0.10 — 0.20 mm (0.004 — 0.008 in)

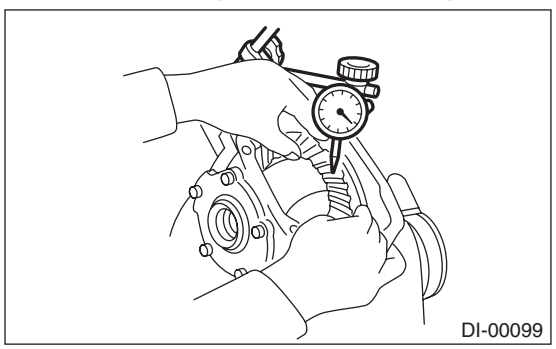

18) Check pinion and hypoid driven gears rotate smoothly and make sure of the hypoid driven gear runout on its back surface. If the hypoid driven gear runout on its back surface exceeds the specification, check for any foreign objects between the hypoid driven gear and differential case, and for any deformation of the differential case or hypoid driven gear.

Hypoid driven gear back surface runout: 0.05 mm (0.002 in)

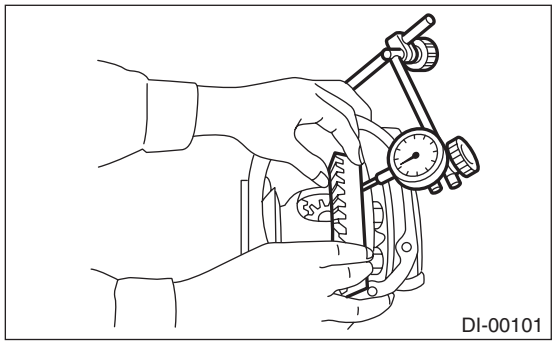

19) Check and adjustment of the tooth contact of hypoid driven gear and drive pinion

(1) Apply lead-free red dye evenly on the both sides of three to four teeth of the hypoid driven gear. Check the contact pattern after rotating the hypoid driven gear several revolutions back and forth until a definite contact pattern appears on the hypoid driven gear.

(2) When the contact pattern is not correct, readjust.

NOTE:
Be sure to wipe off the lead-free red dye completely after the adjustment is completed.

- Correct tooth contact

Check item: Tooth contact pattern is slightly shifted toward toe side under no-load rotation. (When driving, it moves towards the heel side.)

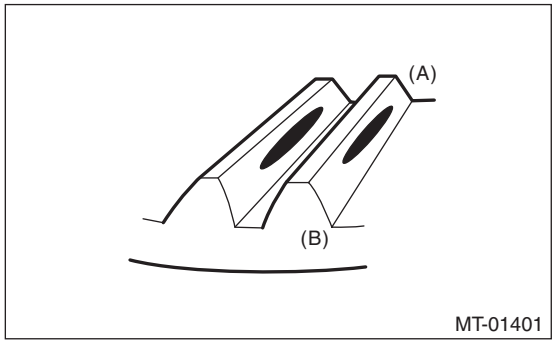

(A) Toe side
(B) Heel side

- Face contact

Check item: Backlash is too large.
Contact pattern

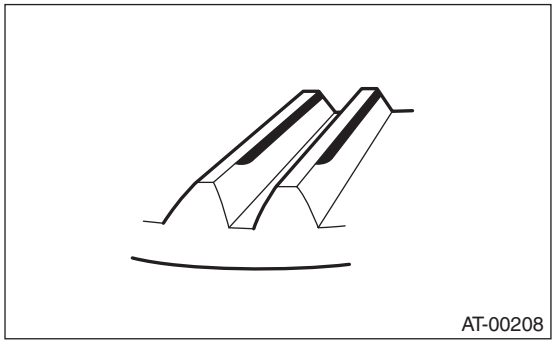

Corrective action: Increase thickness of pinion height adjusting washer according to the procedure for bringing drive pinion close to hypoid driven gear side.

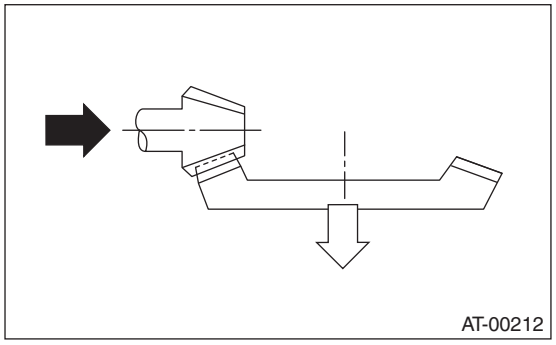

- Flank contact

Check item: Backlash is too small.
Contact pattern

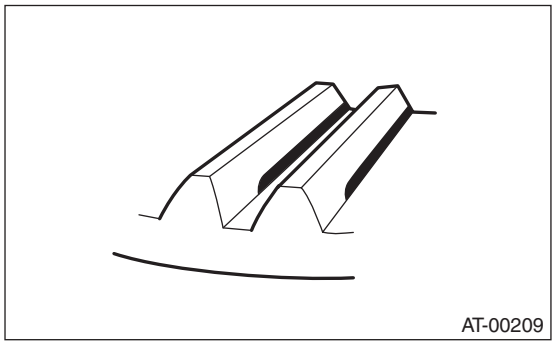

Corrective action: Reduce the thickness of pinion height adjusting washer according to the procedure for bringing drive pinion away from hypoid driven gear.

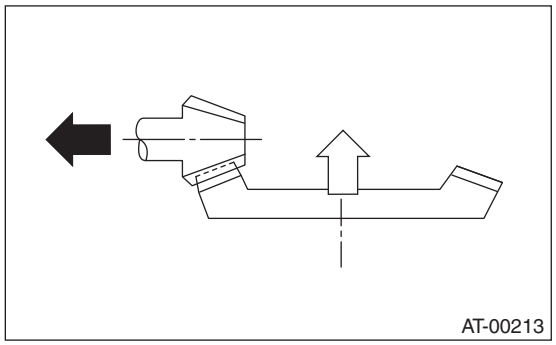

- Toe contact (inside contact)

Check item: Teeth contact area is too small.
Contact pattern

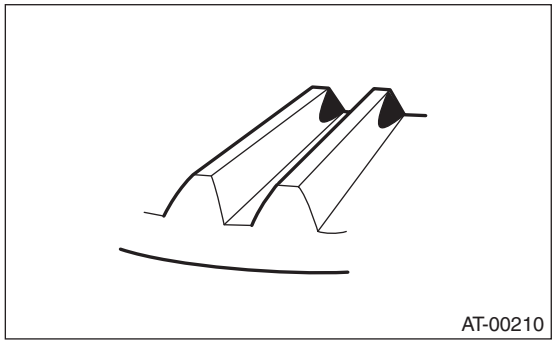

Corrective action: Reduce the thickness of pinion height adjusting washer according to the procedure for bringing drive pinion away from hypoid driven gear.

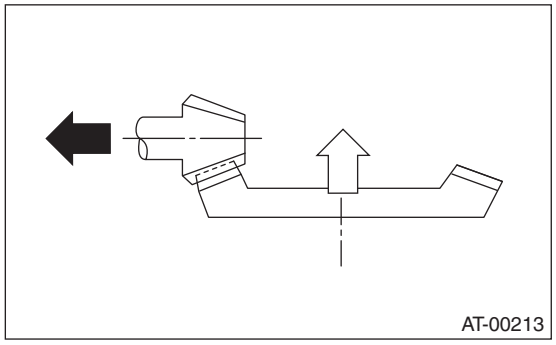

- Heel contact (outside end contact)

Check item: Teeth contact area is too small.
Contact pattern

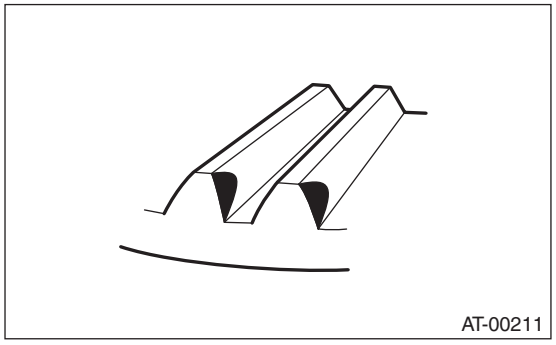

Corrective action: Increase thickness of pinion height adjusting washer according to the procedure for bringing drive pinion close to hypoid driven gear side.

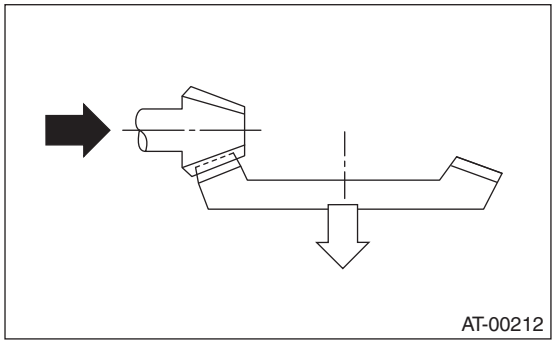

20) If proper tooth contact is not obtained, readjust the drive pinion height by changing the RH and LH side retainer shims and the hypoid gear backlash.
(1) Drive pinion height

ST1 398507702 DUMMY SHAFT
ST2 398507701 DIFFERENTIAL CARRIER GAUGE

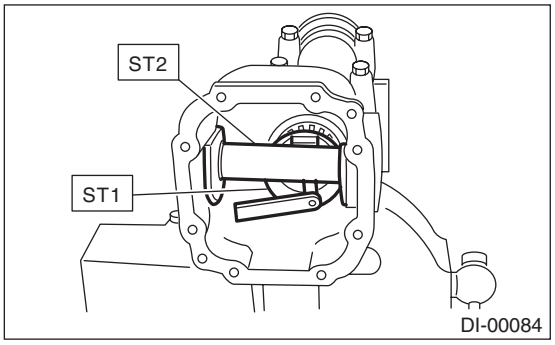

T = To + N – (H × 0.01) – 0.20 mm (0.0079 in)

T	Thickness of pinion height adjusting washer mm (in)	
To	Thickness of washer temporarily inserted mm (in)	
N	Clearance of thickness gauge mm (in)	
H	Figure marked on drive pinion head	
Memo:		

(2) Hypoid gear backlash

Backlash:
0.10 — 0.20 mm (0.004 — 0.008 in)

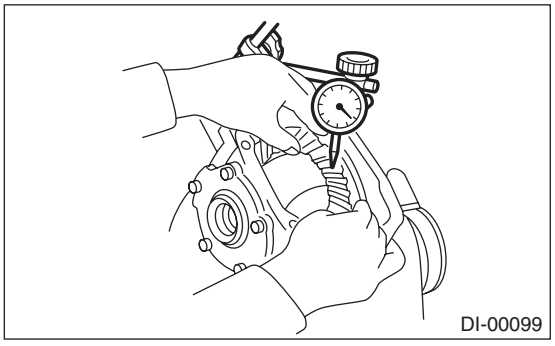

21) Remove the RH and LH side retainers.
22) Install the O-ring to left and right side retainers.

NOTE:
Use new O-rings.

23) Install the oil seal to the side retainers on both sides. <Ref. to DI-77, REPLACEMENT, Rear Differential Side Oil Seal.>

24) Align the arrow mark on the differential carrier with the arrow mark on the side retainer when installing the side retainer.

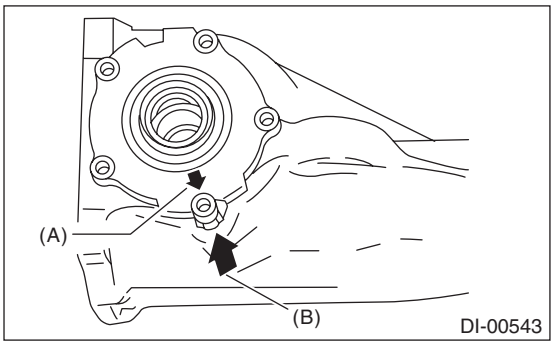

(A) Arrow mark (on the side retainer)
(B) Arrow mark (on the differential carrier)

25) Apply liquid gasket to the bolts indicated by arrows, and tighten the bolts.

Liquid gasket:
THREE BOND 1110F or equivalent

Tightening torque:
10.5 N·m (1.1 kgf-m, 7.7 ft-lb)

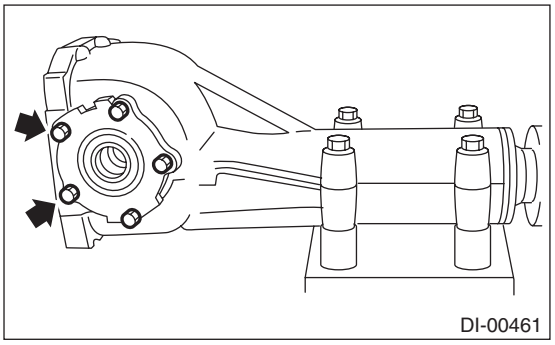

26) Install the gasket and rear cover, and tighten the bolts to specified torque.

NOTE:
Use a new gasket.

Tightening torque:
29.5 N·m (3.0 kgf-m, 21.8 ft-lb)

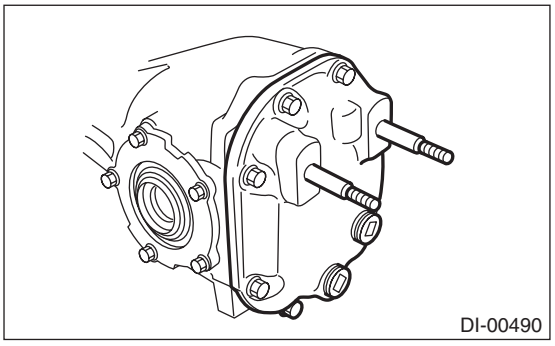

27) When the stud bolts are removed from the rear cover, install the stud bolts.

28) Measure the exposed length “L” of the stud bolt as shown in the figure, and check that the value is within the specified range.

Exposed length L of stud bolt:
59.0 — 61.0 mm (2.32 — 2.40 in)

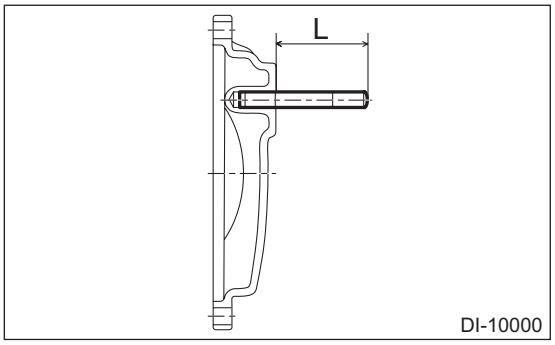

29) Install the air breather cap.

NOTE:
When installing the air breather cap, do not tap section (A). Be sure to tap section (B) to install.

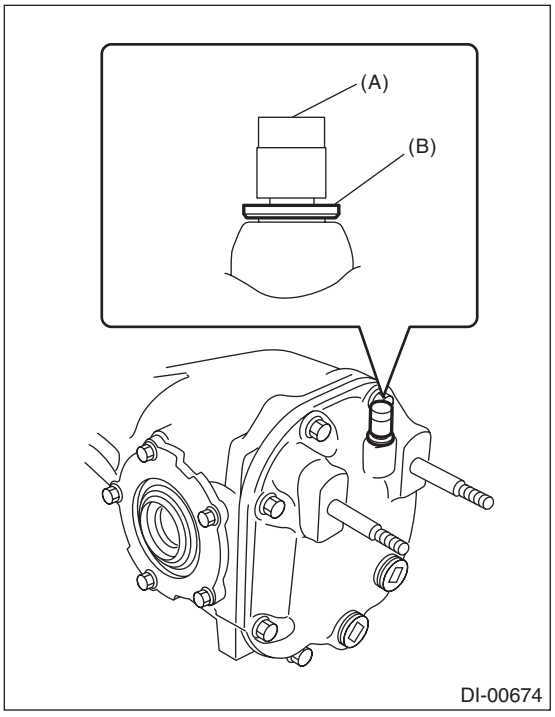

30) Install the drain plug.

NOTE:
Apply liquid gasket to the drain plug.

Liquid gasket:
THREE BOND 1105 (Part No. 004403010) or equivalent

Tightening torque:
49 N·m (5.0 kgf-m, 36.1 ft-lb)

31) Install the filler plug.

NOTE:
After installing the rear differential assembly to the vehicle, fill the gear oil, then apply liquid gasket, and tighten to the specified torque. <Ref. to DI-22, REPLACEMENT, Differential Gear Oil.>

E: INSPECTION

Wash all the disassembled parts clean, and examine them for wear, damage and other defects. Repair or replace the defective parts as necessary.
1) Hypoid driven gear and drive pinion
• If there is evidently an abnormal tooth contact, find out the cause and adjust until the teeth contact correctly. Replace the gear if there is an excessive worn or an incapable adjustment.
• If crack, cutout or seizure is found, replace the parts as a set. Slight damage of some teeth can be corrected by oil stone or the like.
2) Side gear and pinion mate gear
• Replace if cracks, scoring or other defects are evident on the tooth surface.
• Replace if thrust washer contact surface is worn or scored. Slight damages of the surface can be corrected by oil stones or equivalent.
3) Bearing
Replace if seizure, peeling, wear, rust, dragging during rotation, noise or other defect is evident.
4) Thrust washer of the side gear and pinion mate gear
Replace if seized, flawed, abnormally worn or having other defects.
5) Oil seal
Replace if deformed or damaged, and at every disassembling.
6) Differential carrier
Replace if the bearing bores are worn or damaged.
7) Differential case
Replace if sliding surfaces are abnormally worn, burned, or cracked.
8) Companion flange
Replace if the oil seal lip contact surface shows cracking.

1. SIDE GEAR BACKLASH

Using a dial gauge, check the backlash of side gear.

Side gear backlash:
0.10 — 0.20 mm (0.004 — 0.008 in)

If the side gear backlash is not within the specification, select the side gear thrust washer and adjust the side gear backlash as specified.

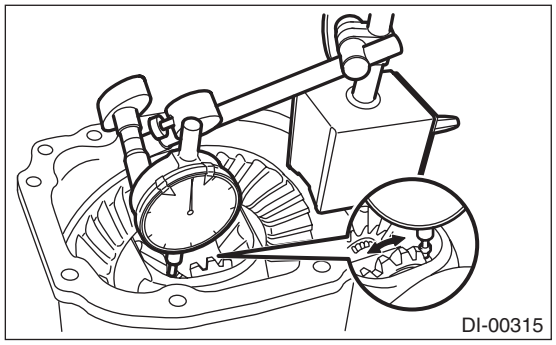

2. HYPOID DRIVEN GEAR BACKLASH

Using a dial gauge, check the backlash of hypoid driven gear.

Hypoid driven gear backlash:
0.10 — 0.20 mm (0.004 — 0.008 in)

If the hypoid driven gear backlash is outside the specification range, adjust the side bearing preload and repair if necessary.

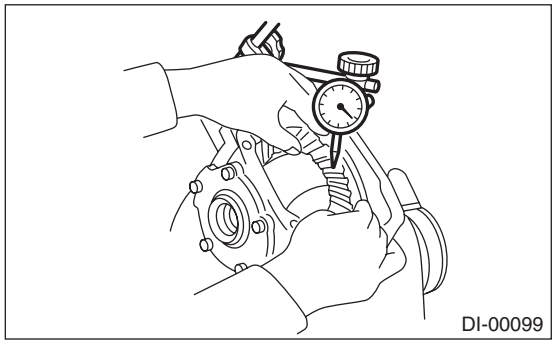

3. HYPOID DRIVEN GEAR RUNOUT ON ITS BACK SURFACE

Using a dial gauge, check the hypoid driven gear back surface runout.

Hypoid driven gear back surface runout:
0.05 mm (0.002 in)

If the hypoid driven gear runout on its back surface exceeds the limit, replace the hypoid driven gear.

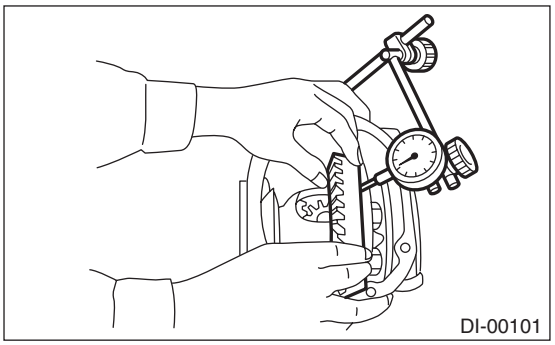

4. TOOTH CONTACT BETWEEN HYPOID DRIVEN GEAR AND DRIVE PINION

Inspect the tooth contact between the hypoid driven gear and drive pinion. <Ref. to DI-33, ASSEMBLY, Rear Differential (T-type).>

5. TOTAL PRELOAD

Using a spring scale, check the total preload.

Total preload:
20.7 — 54.4 N (2.1 — 5.5 kgf, 4.7 — 12.2 lb)

If the total preload is not within the specification, adjust the side retainer shim.

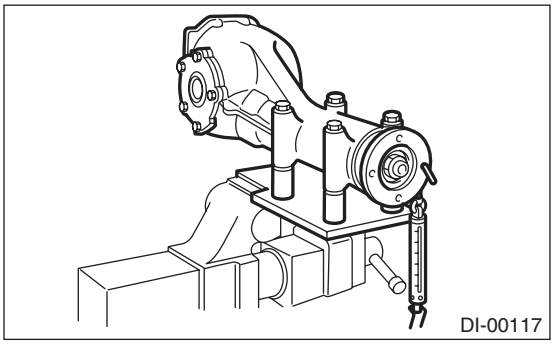

6. COMPANION FLANGE

1) If rust or dirt is attached to the companion flange, remove them.
2) Set a dial gauge at a companion flange surface (mating surface of propeller shaft and companion flange), and then measure the companion flange runout.

Limit of runout:
0.08 mm (0.003 in)

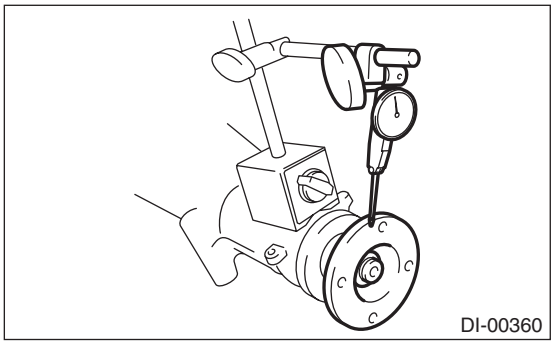

3) Set the gauge inside of the companion flange, and measure the runout.

Limit of runout:
0.08 mm (0.003 in)

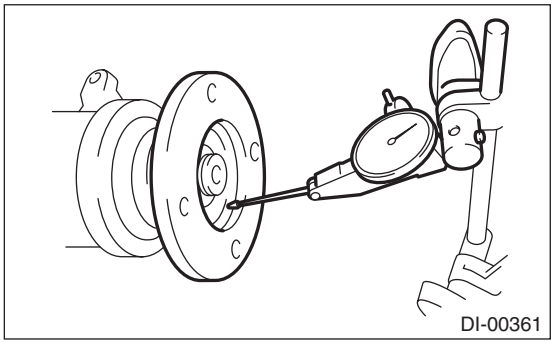

4) If either runout exceeds the limit, move the phase of companion flange and drive pinion 90° each, and find the point where the runout is within the limit.
5) If the runout exceeds the limit after changing the phase, replace the companion flange and recheck the runout.
6) If the runout exceeds the limit after replacing the companion flange, the drive pinion may be assembled incorrectly or bearing is faulty.

F: ADJUSTMENT

1. SIDE GEAR BACKLASH

Adjust the side gear backlash. <Ref. to DI-33, ASSEMBLY, Rear Differential (T-type).>

2. HYPOID DRIVEN GEAR BACKLASH

Adjust hypoid driven gear backlash. <Ref. to DI-33, ASSEMBLY, Rear Differential (T-type).>

3. TOOTH CONTACT BETWEEN HYPOID DRIVEN GEAR AND DRIVE PINION

Adjust the tooth contact between hypoid driven gear and drive pinion gear. <Ref. to DI-33, ASSEMBLY, Rear Differential (T-type).>

4. TOTAL PRELOAD

Adjust the side retainer shim. <Ref. to DI-33, ASSEMBLY, Rear Differential (T-type).>

5. Rear Differential (VA-type)

A: REMOVAL

The removal procedure for VA-type is included in “REMOVAL” for T-type. <Ref. to DI-26, REMOVAL, Rear Differential (T-type).>

B: INSTALLATION

The installation procedure for VA-type is included in “INSTALLATION” for T-type. <Ref. to DI-28, INSTALLATION, Rear Differential (T-type).>

C: DISASSEMBLY

1. VA1-TYPE

To detect the real cause of trouble, inspect the following items before disassembling.

• Tooth contact and backlash between hypoid driven gear and drive pinion

1) Set the ST on vise and install the differential assembly to ST.

ST 398217700 ATTACHMENT SET

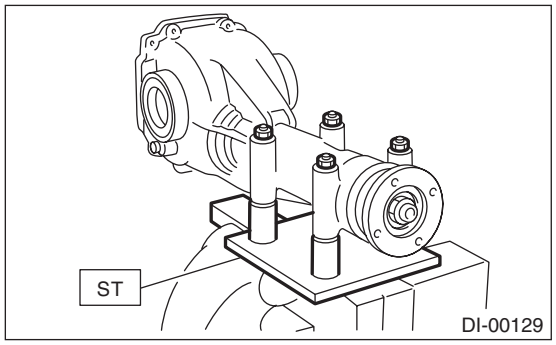

2) Remove the drain plug and filler plug.

3) Remove the rear cover by removing retaining bolts.

NOTE:
Remove it by tapping with a plastic hammer.

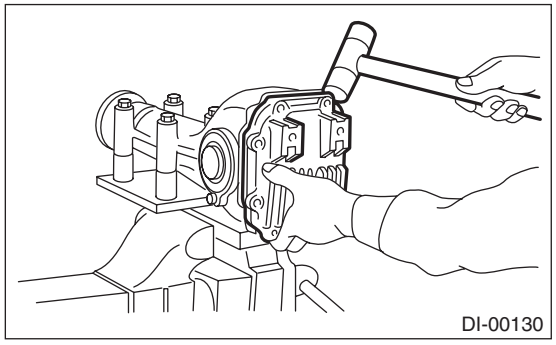

4) Remove the stud bolts from rear cover if necessary.

5) Remove the air breather cap.

NOTE:

• Do not attempt to remove the air breather cap unless necessary.

• Whenever the air breather cap is removed, replace it with a new part.

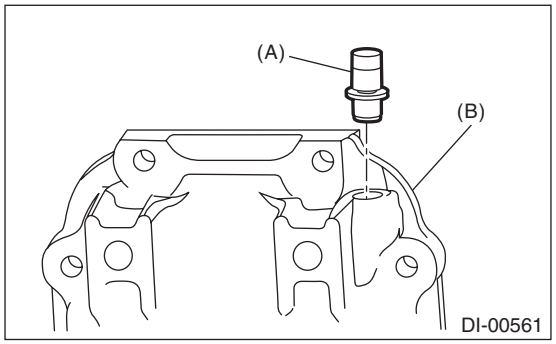

(A) Air breather cap
(B) Rear cover

6) Remove the lock plate RH and LH.

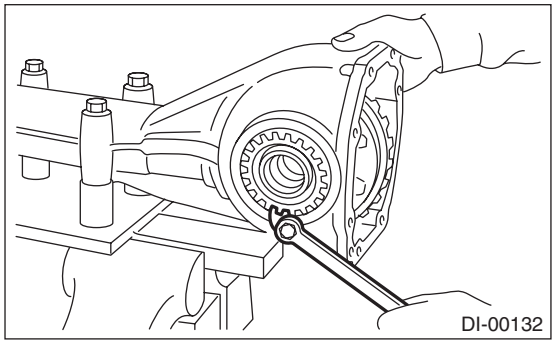

7) Remove the side retainer RH and LH with ST.

NOTE:
When keeping the retainers aside, use labels etc. to avoid confusing the left and right.

ST 18630AA010 WRENCH COMPL RETAINER

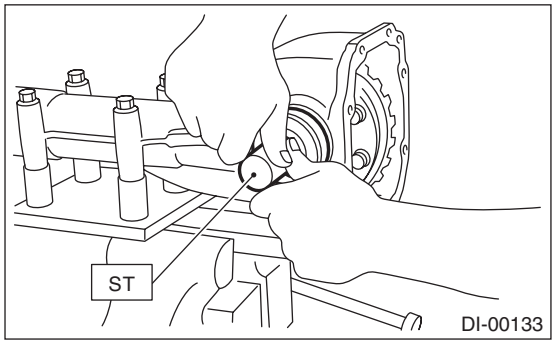

8) Pull out the differential case assembly from differential carrier.

NOTE:
Be careful not to hit the teeth of hypoid driven gear against the differential carrier.

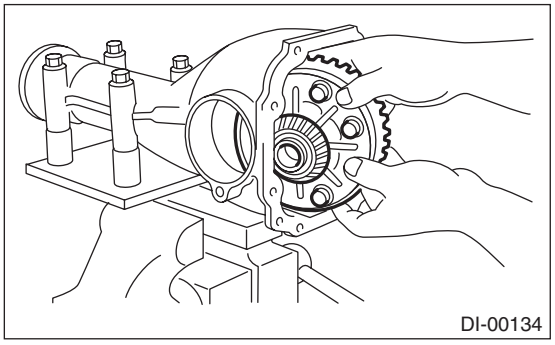

9) Remove the bearing race from side retainer RH and LH with ST1 and ST2.
ST1 499705401 PULLER ASSY
ST2 499705404 SEAT

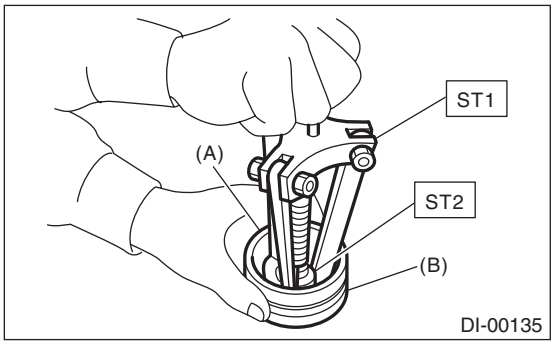

(A) Bearing race
(B) Side retainer

10) Remove the oil seal from RH and LH side retainers.

NOTE:
Perform this operation only when changing oil seal.

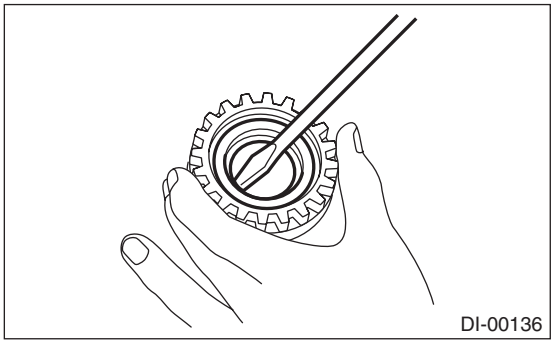

11) Remove the O-rings.

12) Extract the bearing cone with ST1 and ST2.

NOTE:
• Do not attempt to disassemble the parts unless necessary.
• Set the puller so that its claws catch the edge of the bearing cone.
• Store so that the right and left side bearing races and cones are not mixed together.
ST1 899524100 PULLER SET
ST2 399520105 SEAT

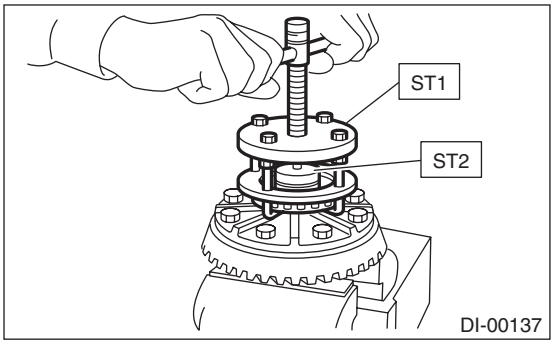

13) Using the ST, loosen the hypoid driven gear bolt and remove the hypoid driven gear.
ST 18270KA020 SOCKET (E20)

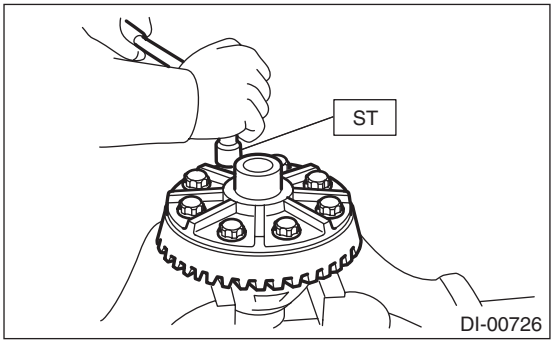

14) Remove the spring pin from hypoid driven gear side using ST.
ST 899904100 STRAIGHT PIN REMOVER

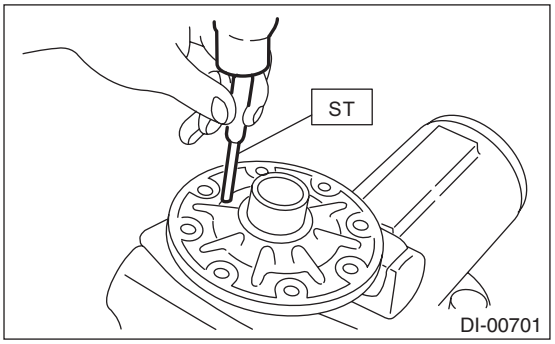

15) Draw out the pinion mate shaft and remove pinion mate gears, side gears and side gear thrust washers.

NOTE:
The gears and washers should be marked with RH or LH, front or rear, or kept separately.

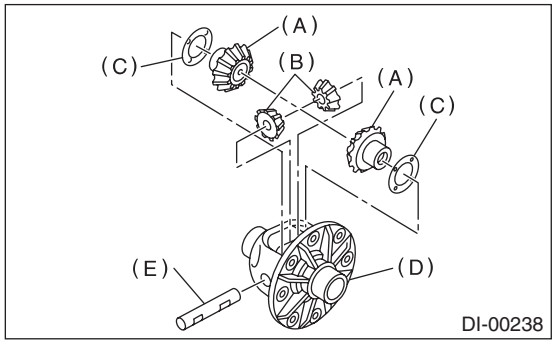

(A) Side gear
(B) Pinion mate gear
(C) Side gear thrust washer
(D) Differential case
(E) Pinion mate shaft

16) Remove the self-locking nut while securing the companion flange with ST.
ST 498427200 FLANGE WRENCH

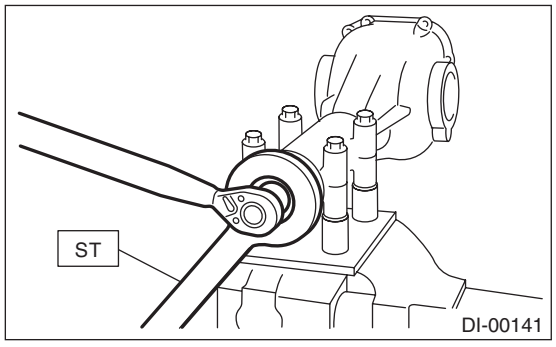

17) Extract the companion flange with a puller.

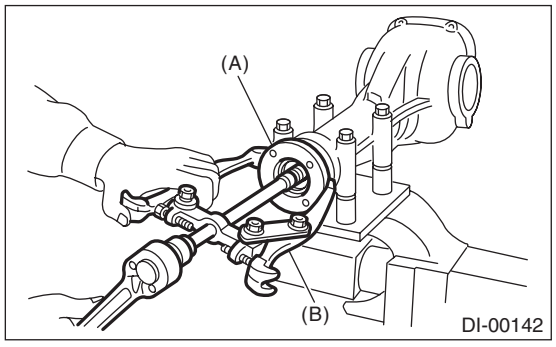

(A) Companion flange
(B) Puller

18) Press the end of drive pinion shaft using ST and remove the rear bearing cone, pinion height adjusting washer, preload adjusting spacer and washer.

NOTE:
Hold the drive pinion so as not to drop it.
ST 398467700 DRIFT

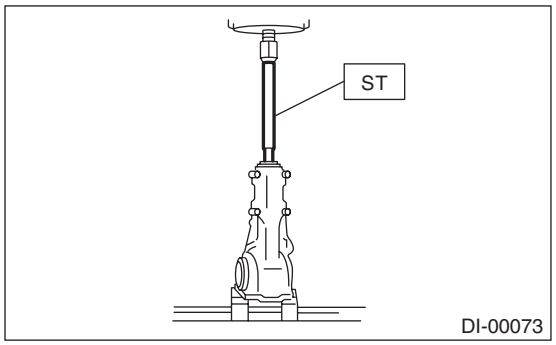

19) Remove the rear bearing cone from drive pinion by supporting the cone with ST.

NOTE:
Place the replacer so that its center-recessed side faces the bearing cone.
ST 498515500 REPLACER

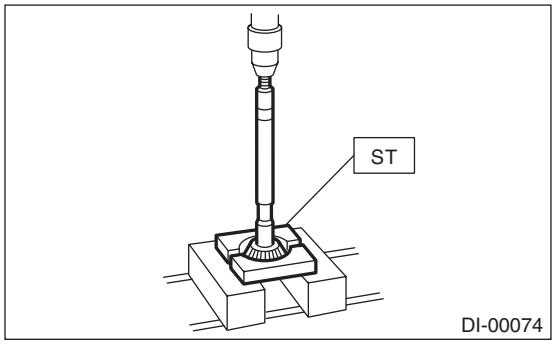

20) Remove the front oil seal from differential carrier using ST.
ST 398527700 PULLER ASSY

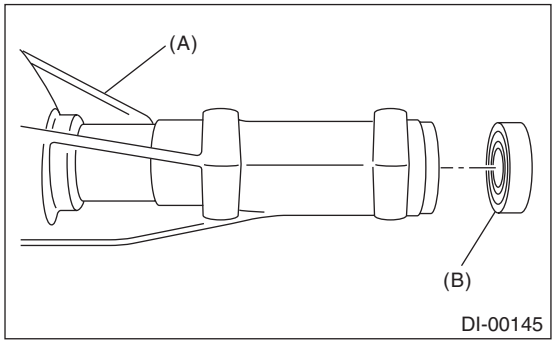

(A) Differential carrier
(B) Front oil seal

21) Remove the pilot bearing together with the front bearing cone and spacer using the ST.
ST 398467700 DRIFT

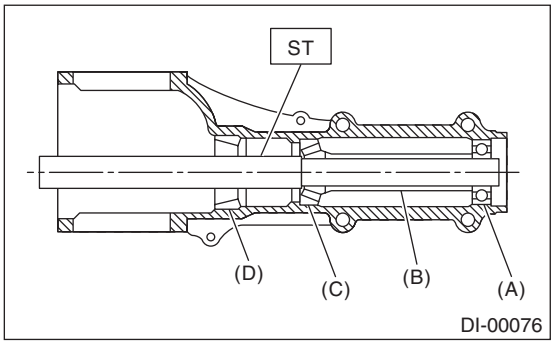

(A) Pilot bearing
(B) Spacer
(C) Front bearing
(D) Rear bearing race

22) When replacing the bearings, tap out the front bearing race and rear bearing race in this order using a brass bar to remove them.

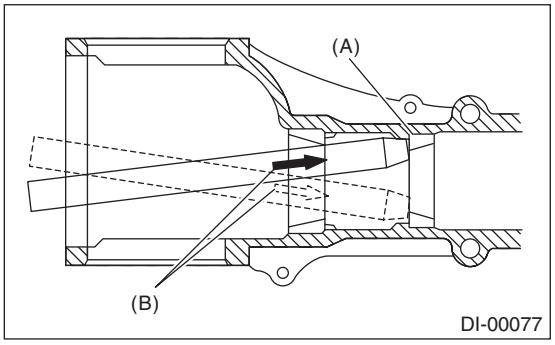

(A) 2 cutout portions along diagonal lines
(B) Tap alternately with brass bar.

2. VA2-TYPE

To detect the real cause of trouble, inspect the following items before disassembling.
• Tooth contact and backlash between hypoid driven gear and drive pinion
1) Set the ST on vise and install the differential assembly to ST.
ST 398217700 ATTACHMENT SET

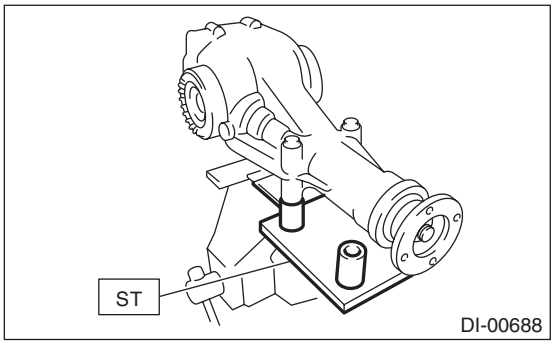

2) Remove the drain plug and filler plug.
3) Remove the rear cover by removing retaining bolts.

NOTE:
Remove it by tapping with a plastic hammer.

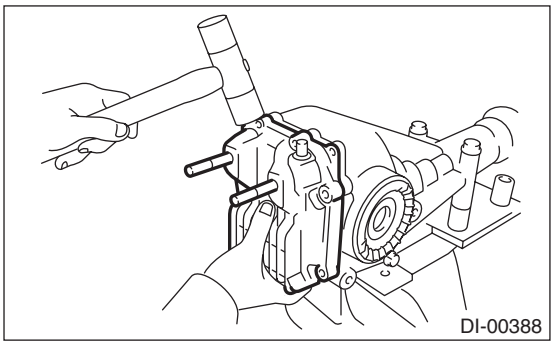

4) Remove the stud bolts from rear cover if necessary.
5) Remove the air breather cap.

NOTE:
• Do not attempt to remove the air breather cap unless necessary.
• Whenever the air breather cap is removed, replace it with a new part.

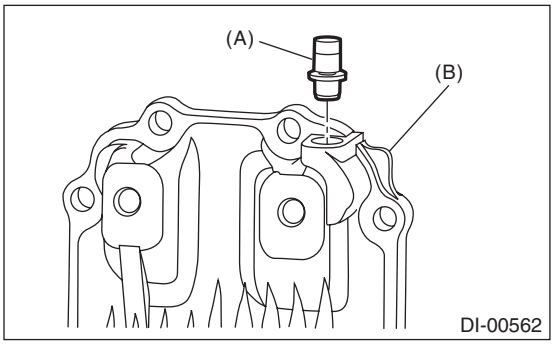

(A) Air breather cap
(B) Rear cover

6) Remove the lock plate RH and LH.

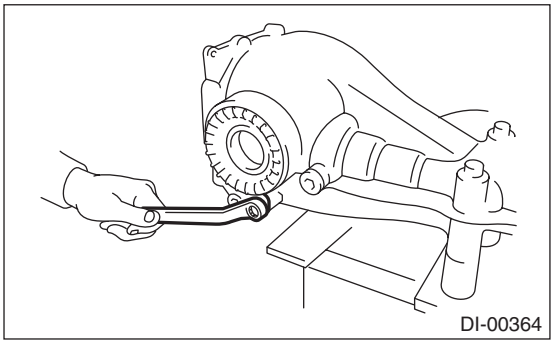

7) Remove the side retainer RH and LH with ST.

NOTE:
When keeping the retainers aside, use labels etc. to avoid confusing the left and right.

ST 18630AA010 WRENCH COMPL RETAINER

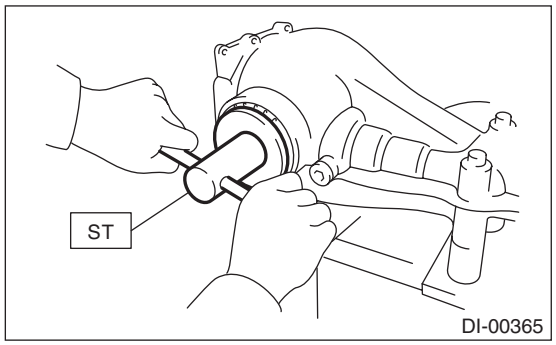

8) Pull out the differential case assembly from differential carrier.

NOTE:
Be careful not to hit the teeth of hypoid driven gear against the differential carrier.

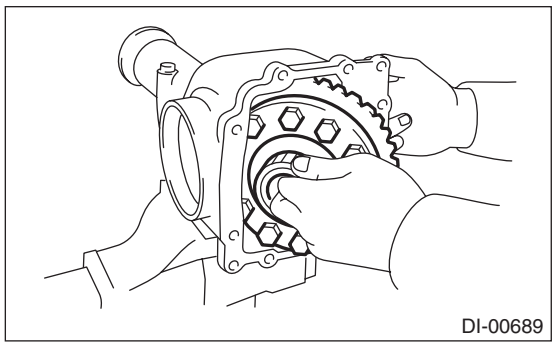

9) Remove the bearing race from side retainer RH and LH with ST and the press.

NOTE:
- Be sure to turn the bolt of the ST by hand.
- Set the puller so that its claws catch the groove of side retainer.

ST 18758AA000 PULLER

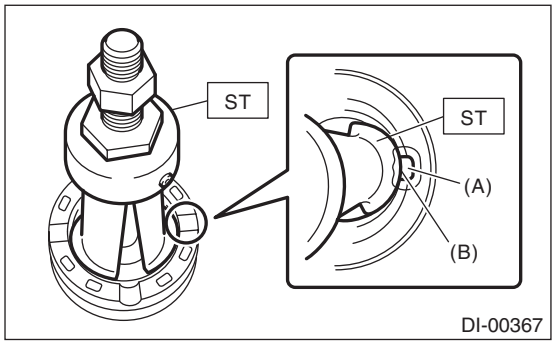

(A) Groove
(B) Claw

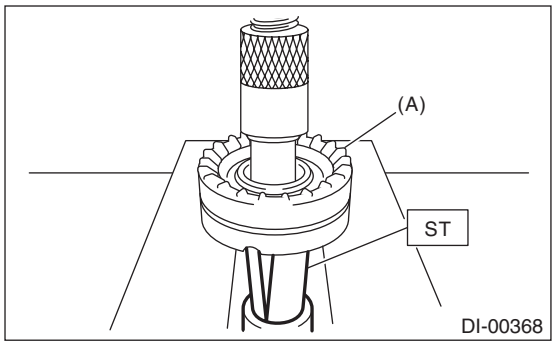

(A) Side retainer

10) Remove the oil seal from RH and LH side retainers.

NOTE:
Perform this operation only when changing oil seal.

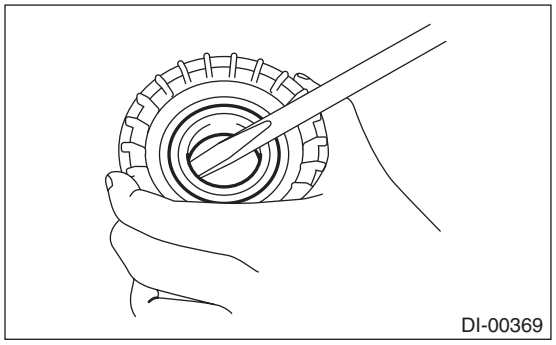

11) Remove the O-rings.

12) Extract the bearing cone with ST1, ST2 and ST3.

NOTE:
• Do not attempt to disassemble the parts unless necessary.
• Never mix up the RH and LH bearing races and cones.

ST1 498077000 REMOVER
ST2 399520105 SEAT
ST3 899864100 REMOVER

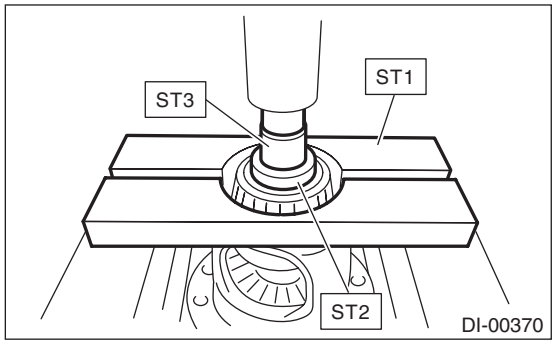

13) Using the ST, loosen the hypoid driven gear bolt and remove the hypoid driven gear.

ST 18270KA020 SOCKET (E20)

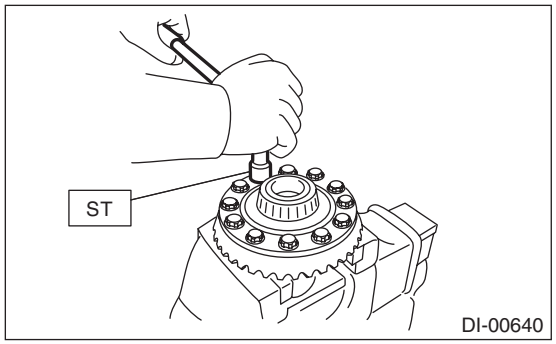

14) Remove the spring pin from hypoid driven gear side using ST.

ST 899904100 STRAIGHT PIN REMOVER

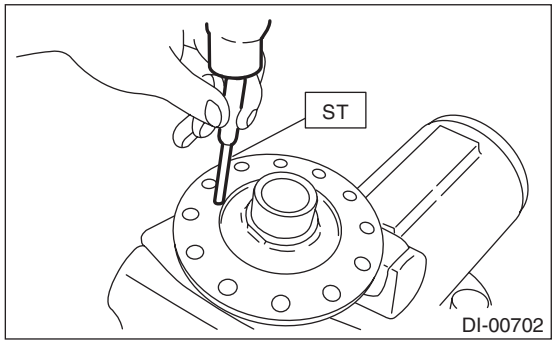

15) Draw out the pinion mate shaft and remove pinion mate gears, side gears and side gear thrust washers.

NOTE:
The gears and washers should be marked with RH or LH, front or rear, or kept separately.

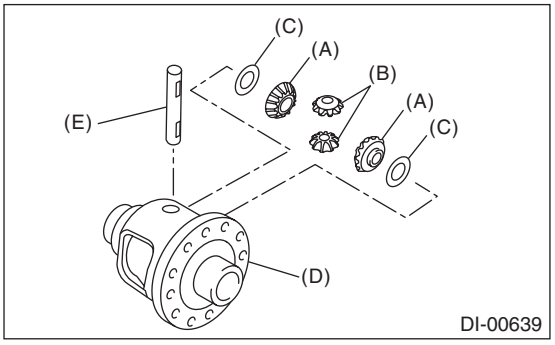

(A) Side gear
(B) Pinion mate gear
(C) Side gear thrust washer
(D) Differential case
(E) Pinion mate shaft

16) Remove the circlip from the side gear.

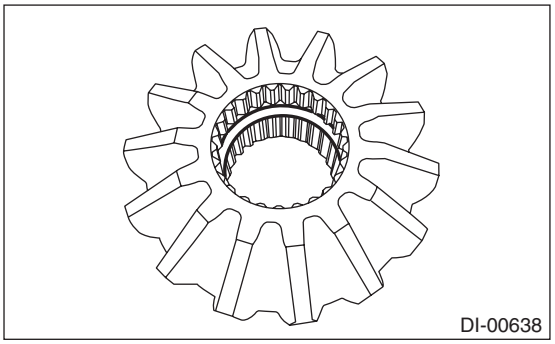

17) Remove the self-locking nut while securing the companion flange with ST.

ST 498427200 FLANGE WRENCH

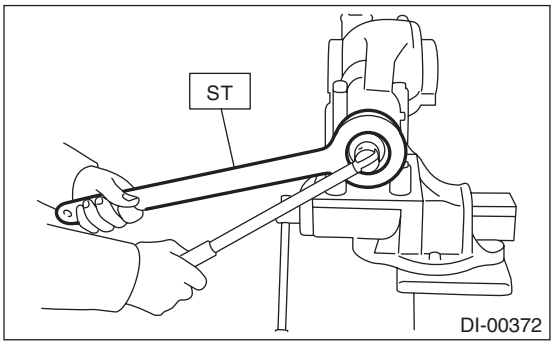

18) Extract the companion flange using a puller.

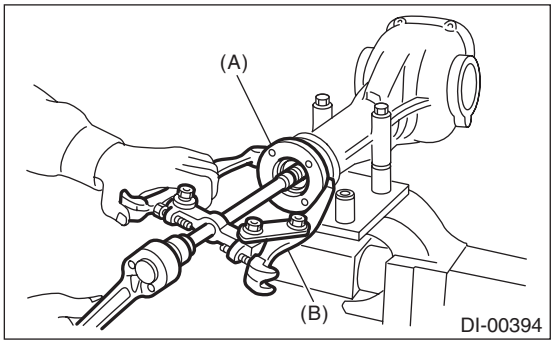

(A) Companion flange
(B) Puller

19) Remove the drive pinion shaft.
20) Remove the rear bearing cone from drive pinion by supporting the cone with ST.

NOTE:
Place the replacer so that its center-recessed side faces the bearing cone.
ST 398517700 REPLACER

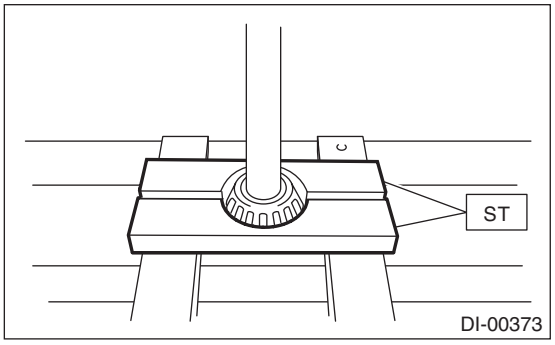

21) Remove the front oil seal from differential carrier using screwdriver.
22) Remove the pilot bearing, front bearing cone and spacer.

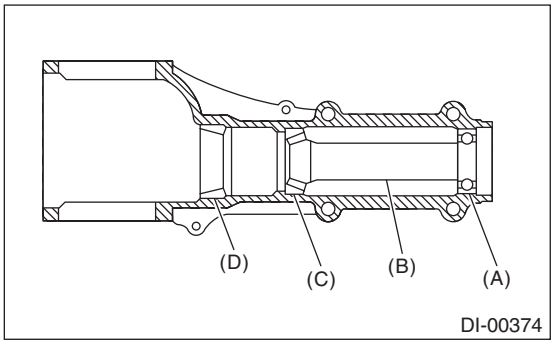

(A) Pilot bearing
(B) Spacer
(C) Front bearing
(D) Rear bearing race

23) When replacing the bearings, tap out the front bearing race and rear bearing race in this order using a brass bar to remove them.

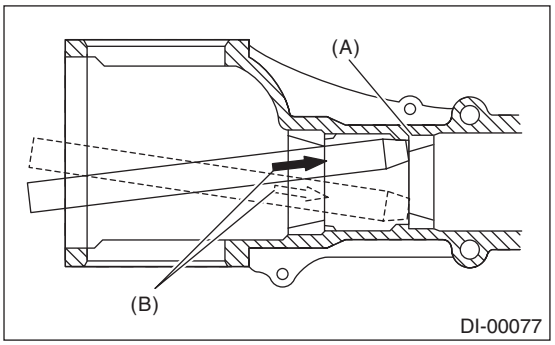

(A) 2 cutout portions along diagonal lines
(B) Tap alternately with brass bar.

D: ASSEMBLY

1. VA1-TYPE

NOTE:
- Assemble in the reverse order of disassembly.
- Check and adjust each part during assembly.
- Keep the shims and washers in order, so that they are not improperly installed.
- Thoroughly clean the surfaces on which the shims, washers and bearings are to be installed.
- Apply differential gear oil when installing the bearings and thrust washers.
- Be careful not to mix up the RH and LH bearing races.
- Replace the gasket, oil seal and O-ring with a new part.
- Be careful not to mix up the side oil seal RH and LH.
- Apply differential gear oil to the lips when installing the oil seal.

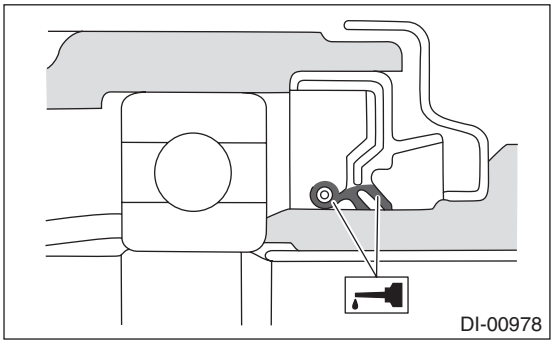

1) Adjusting preload for front and rear bearings

NOTE:
Adjust the bearing preload between front and rear bearings with preload adjusting spacer and washer. Pinion height adjusting washer is not affected by this adjustment. The adjustment must be carried out with oil seal removed.

(1) Install the rear bearing race into the differential carrier using ST1 and ST2.

NOTE:
Use a new front bearing race.
ST1 398477701 HANDLE
ST2 398477702 DRIFT

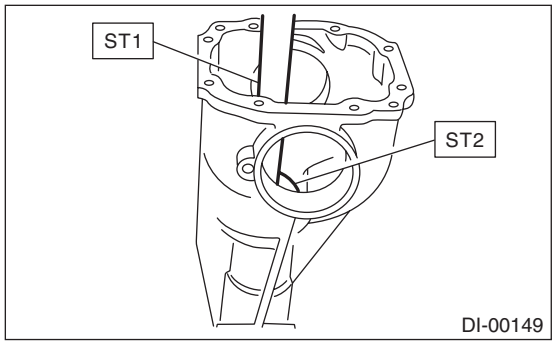

(2) Install the front bearing race to the differential carrier using ST1 and ST2.
ST1 398477701 HANDLE
ST2 498447110 DRIFT

(3) Insert the front bearing cone.

NOTE:
Use new front bearing cone.

(4) Measure and record the thickness of pinion height adjusting washer.

NOTE:
• At this time, install a provisionally selected or previously used pinion height adjusting washer. Measure and record the thickness.
• If tooth contact (drive pinion and hypoid driven gear) is normal in the inspection before disassembling, verify that the washer is not deformed, and then reuse the used washer.

(5) Insert the ST (DUMMY SHAFT) into case with the pinion height adjusting washer and rear bearing cone fitted onto it.

(6) Install the preload adjusting spacer, washer, front bearing cone, spacer, pilot bearing, companion flange, and self-locking nut.

NOTE:
Use a new pilot bearing.
ST 498447150 DUMMY SHAFT
Part No. 32285AA000 Spacer

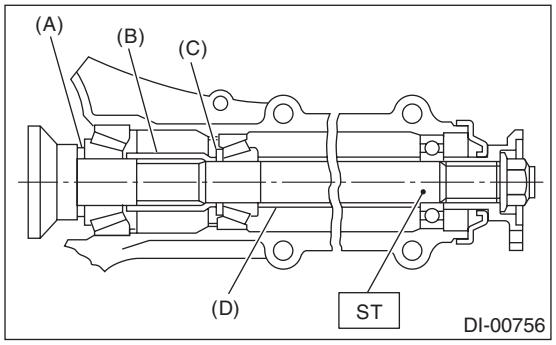

(A) Pinion height adjusting washer
(B) Preload adjusting spacer
(C) Preload adjusting washer
(D) Spacer (SUBARU genuine parts)

(7) Turn the ST by hand to slowly seat the bearing, and tighten the self-locking nut while measuring the initial load or initial torque with a spring scale or torque wrench. Select the preload adjusting washer and spacer so that the specified preload is obtained when nut is tightened to the specified torque.

NOTE:
• Measure the preload in direction of tangent to the flange.
• Be careful not to give excessive preload.
• When tightening the self-locking nut, lock ST1 with ST2 as shown in the figure.
ST1 498447150 DUMMY SHAFT
ST2 398507704 BLOCK

Tightening torque:
191 N·m (19.5 kgf-m, 140.9 ft-lb)

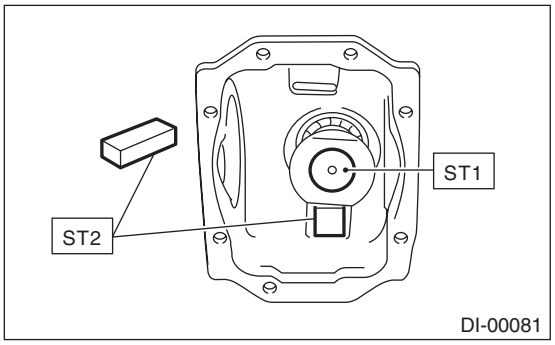

Initial load:
12.7 — 32.2 N (1.3 — 3.3 kgf, 2.9 — 7.2 lbf)

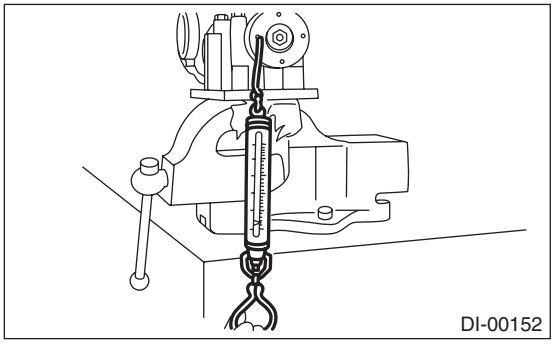

Initial torque:
0.48 — 1.22 N·m (0.05 — 0.12 kgf-m, 0.35 — 0.90 ft-lb)

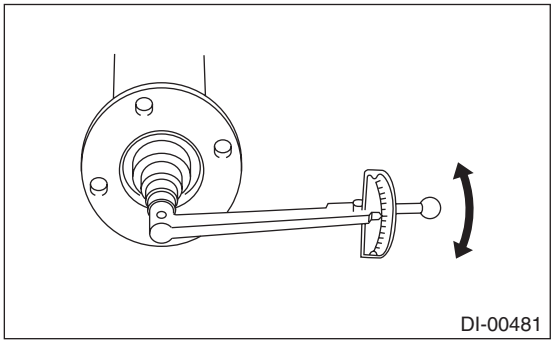

Preload adjusting washer	
Part No.	Thickness mm (in)
38336AA000	1.500 (0.0591)
38336AA120	1.513 (0.0596)
38336AA010	1.525 (0.0600)
38336AA130	1.538 (0.0606)
38336AA020	1.550 (0.0610)
38336AA140	1.563 (0.0615)
38336AA030	1.575 (0.0620)
38336AA150	1.588 (0.0625)
38336AA040	1.600 (0.0630)
38336AA160	1.613 (0.0635)
38336AA050	1.625 (0.0640)
38336AA170	1.638 (0.0645)
38336AA060	1.650 (0.0650)
38336AA180	1.663 (0.0655)
38336AA070	1.675 (0.0659)
38336AA190	1.688 (0.0665)
38336AA080	1.700 (0.0669)
38336AA200	1.713 (0.0674)
38336AA090	1.725 (0.0679)
38336AA210	1.738 (0.0684)
38336AA100	1.750 (0.0689)
38336AA220	1.763 (0.0694)
38336AA110	1.775 (0.0699)

Preload adjusting spacer	
Part No.	Length mm (in)
32288AA040	52.3 (2.059)
32288AA050	52.5 (2.067)
31454AA100	52.6 (2.071)
32288AA060	52.7 (2.075)
31454AA110	52.8 (2.079)
32288AA070	52.9 (2.083)
31454AA120	53.0 (2.087)
32288AA080	53.1 (2.091)
32288AA090	53.3 (2.098)

2) Adjusting drive pinion height:
Adjust the drive pinion height with pinion height adjusting washer installed between the rear bearing cone and the back of pinion gear.

(1) Attach the ST2.

ST1 498447150 DUMMY SHAFT
ST2 498505501 DIFFERENTIAL CARRIER GAUGE
Part No. 32285AA000 Spacer

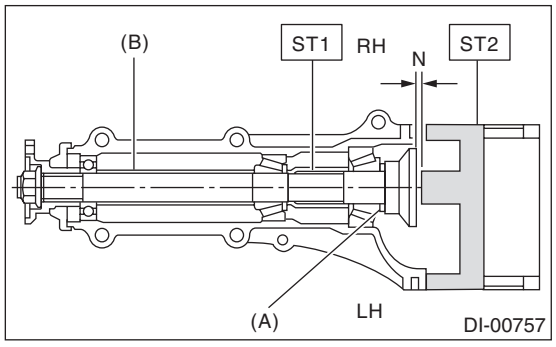

(A) Pinion height adjusting washer
(B) Spacer (SUBARU genuine parts)

(2) Measure the clearance "N" between the end of ST2 and the end surface of ST1 by using a thickness gauge.

NOTE:
Make sure there is no clearance between the differential carrier and ST2.

ST1 498447150 DUMMY SHAFT
ST2 498505501 DIFFERENTIAL CARRIER GAUGE

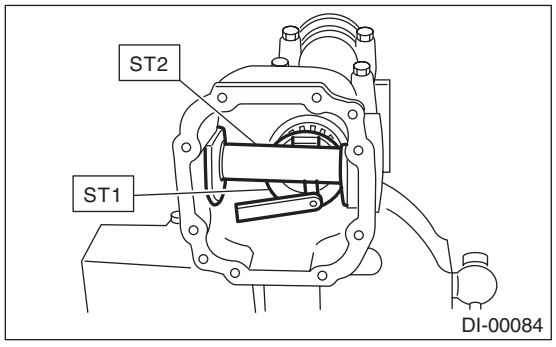

(3) Obtain the thickness of pinion height adjusting washer to be inserted from the following formula, and replace the temporarily installed washer with this one.

NOTE:
Adjust it using the 1 — 3 washers.

T = To + N – 0.05 mm (0.0020 in)

T	Thickness of pinion height adjusting washer mm (in)	
To	Thickness of washer temporarily inserted mm (in)	
N	Clearance of thickness gauge mm (in)	
Memo:		

(Example of calculation)
To = 0.15 mm (0.0059 in)
N = 0.1 mm (0.0039 in)
T = 0.15 + 0.1 – 0.05 = 0.2 mm (0.0079 in)
Result: Thickness = 0.2 mm (0.0079 in)
Therefore use part number 32295AA220.

Pinion height adjusting washer	
Part No.	Thickness mm (in)
32295AA200	0.150 (0.0059)
32295AA210	0.175 (0.0069)
32295AA220	0.200 (0.0079)
32295AA230	0.225 (0.0089)
32295AA240	0.250 (0.0098)
32295AA250	0.275 (0.0108)

3) Install the selected pinion height adjusting washer on drive pinion, and press the rear bearing cone into position with ST.

ST 498175500 INSTALLER

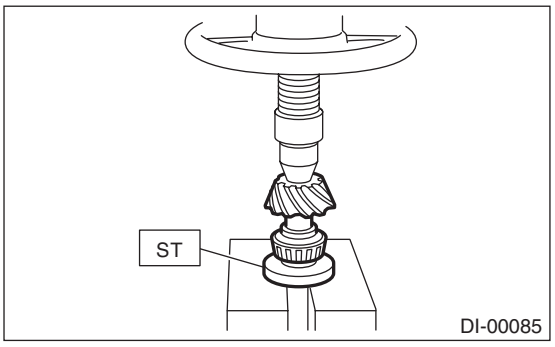

4) Insert the drive pinion into the differential carrier, and install the preselected preload adjusting spacer and washer.

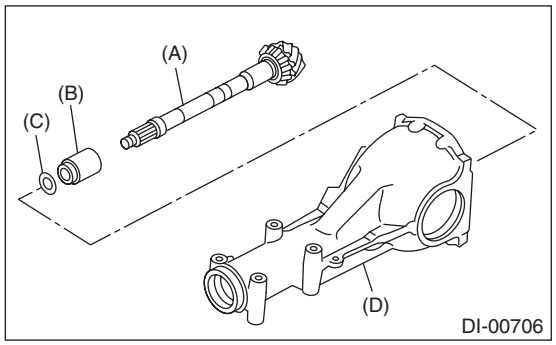

(A) Drive pinion
(B) Preload adjusting spacer
(C) Preload adjusting washer
(D) Differential carrier

5) Press-fit the front bearing cone into the carrier with ST1, ST2 and the spacer.
ST1 399780104 WEIGHT
ST2 899580100 INSTALLER
Part No. 32285AA000 Spacer

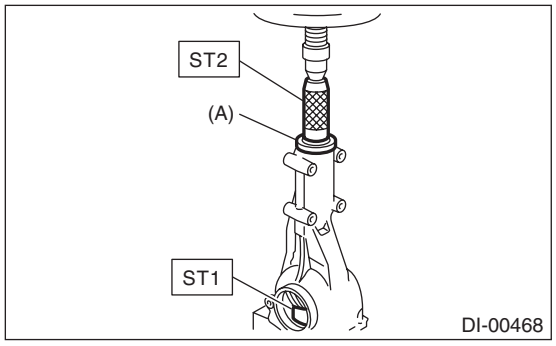

(A) Spacer (SUBARU genuine parts)

6) Insert the spacer, then press-fit the pilot bearing with ST1 and ST2.
ST1 399780104 WEIGHT
ST2 899580100 INSTALLER

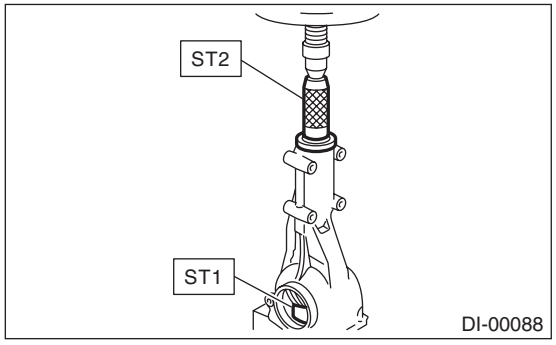

7) Using the ST, install the oil seal.

NOTE:
- Use a new oil seal.
- Press-fit until the oil seal end comes 1 mm (0.04 in) inward from end of carrier.
- Apply differential gear oil to the oil seal lips.

ST 498447120 INSTALLER

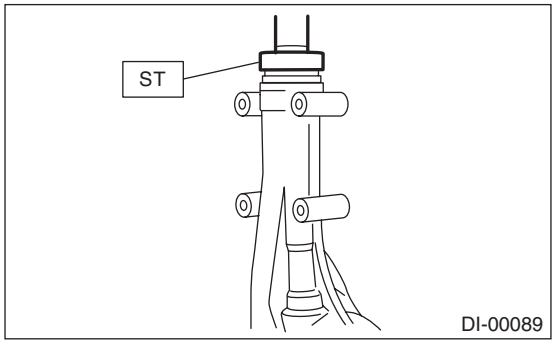

8) Press-fit the companion flange with ST1 and ST2.

NOTE:
Be careful not to damage the pilot bearing.
ST1 899874100 INSTALLER
ST2 399780104 WEIGHT

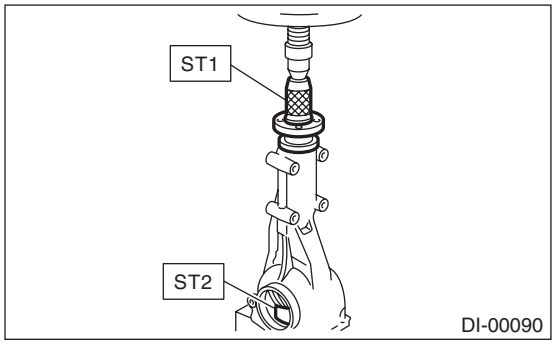

9) Attach the self-locking nut and use the ST to fix the companion flange in place, then tighten the self-locking nut.

NOTE:
- Use a new self-locking nut.
- Before installing the self-locking nut, apply the seal material to the threads of the drive pinion shaft and to the seating surface of the self-locking nut.

Seal material:
THREE BOND 1324 (Part No. 004403042) or equivalent

Tightening torque:
191 N·m (19.5 kgf-m, 140.9 ft-lb)
ST 498427200 FLANGE WRENCH

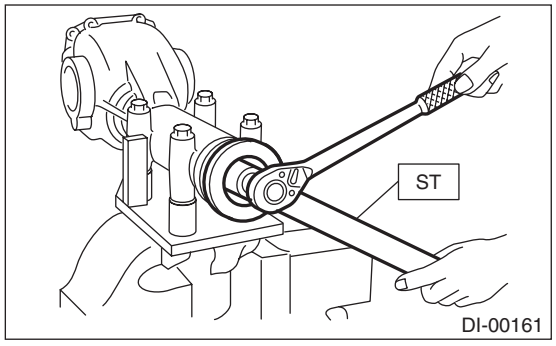

10) Check the initial torque or initial load.

Initial load:
12.7 — 32.2 N (1.3 — 3.3 kgf, 2.9 — 7.2 lbf)

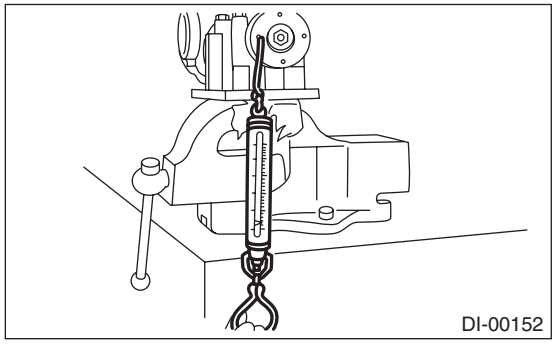

Initial torque:
0.48 — 1.22 N·m (0.05 — 0.12 kgf-m, 0.35 — 0.90 ft-lb)

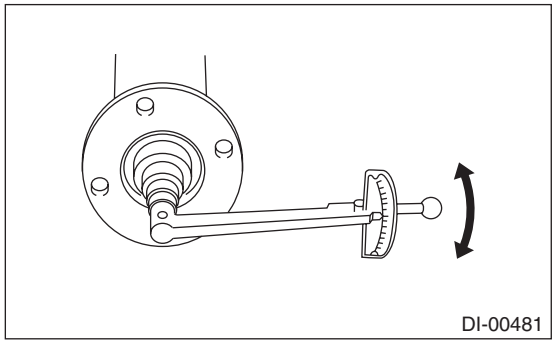

11) Assembling differential case
(1) Install the side gears and pinion mate gears, with their side gear thrust washers and pinion mate shaft, into the differential case.

NOTE:
- Apply gear oil on both sides of the washer and on the side gear shaft before installing.
- Insert the pinion mate shaft into the differential case by aligning the pin holes.
- The side gear thrust washer inner surface has a chamfered side. Install the washer with the chamfered side facing toward the side gear.

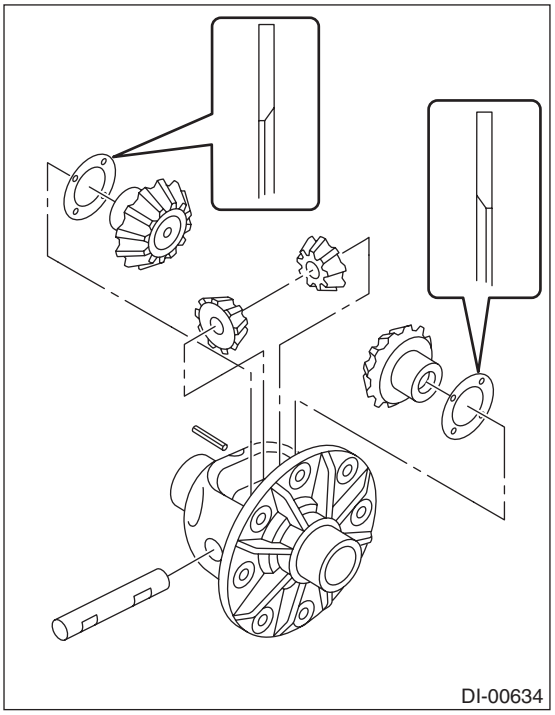

(2) Measure the side gear backlash.

Side gear backlash:
0.05 — 0.15 mm (0.002 — 0.006 in)

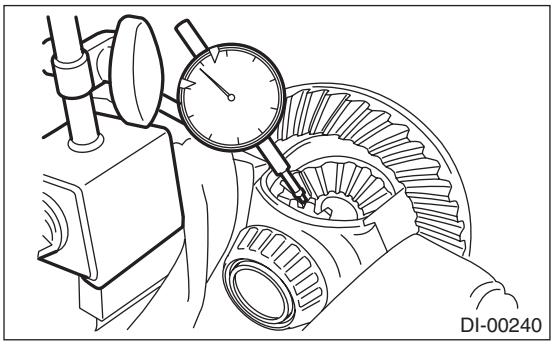

(3) Adjust the side gear backlash by selecting side gear thrust washer.

Side gear thrust washer	
Part No.	Thickness mm (in)
803135011	0.925 — 0.950 (0.0364 — 0.0374)
803135012	0.950 — 0.975 (0.0374 — 0.0384)
803135013	0.975 — 1.000 (0.0384 — 0.0394)
803135014	1.000 — 1.025 (0.0394 — 0.0404)
803135015	1.025 — 1.050 (0.0404 — 0.0413)

(4) Check the condition of rotation after applying oil to the gear tooth surfaces and washer surfaces.
(5) Drive the spring pin into the differential case.

NOTE:
Use new spring pin.

12) Install the hypoid driven gear to differential case.

NOTE:
• Before installing bolts, apply seal material to bolt threads.

Seal material:
THREE BOND 1324 (Part No. 004403042) or equivalent

• Tighten opposing bolts in order.
(1) Tighten the hypoid driven gear mounting bolts to the specified torque using the ST.

ST 18270KA020 SOCKET (E20)

Tightening torque:
20 N·m (2.0 kgf-m, 14.8 ft-lb)

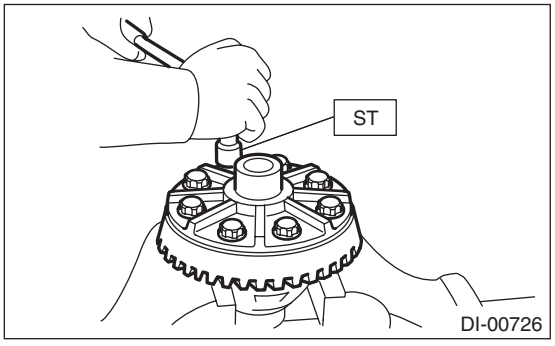

(2) While checking the tightening angle with the angle gauge, further tighten the hypoid driven gear mounting bolts.

Tightening angle:
35°±2°

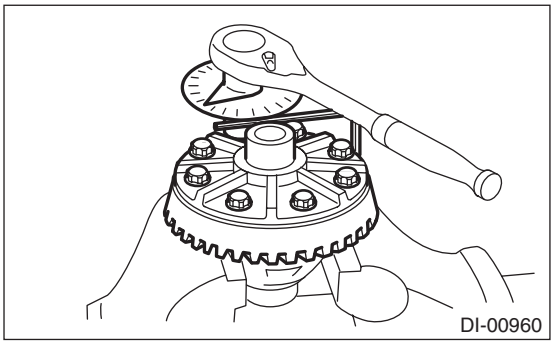

13) Using the ST, press-fit the side bearing to the differential case.

ST 498485400 DRIFT

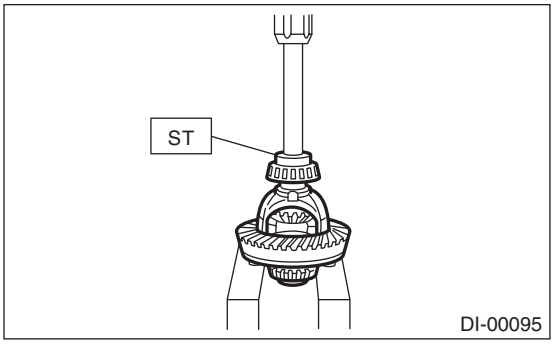

14) Assemble the side retainer.
(1) Install the oil seal into side retainer RH and LH.

CAUTION:
Pay attention to the left and right of the oil seal.

NOTE:
• Use a new oil seal.
• Apply differential gear oil to the oil seal lip.

ST 498447100 INSTALLER

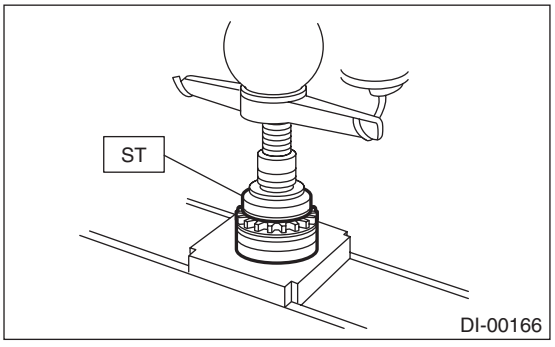

(2) Install the bearing race into side retainer RH and LH.

CAUTION:
Make sure that the bearing outer races and cones are properly assembled.

ST 398477702 DRIFT

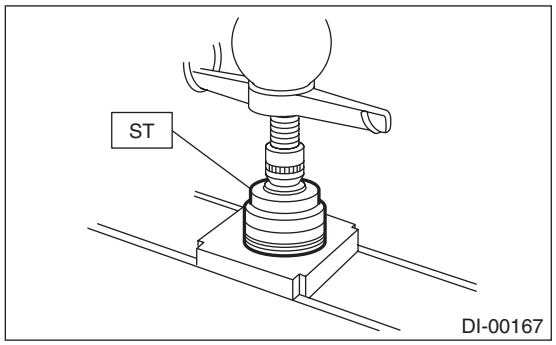

(3) Install the differential case assembly into differential carrier in the reverse order of disassembly.

NOTE:
Be careful not to hit the teeth of hypoid driven gear against the differential carrier.

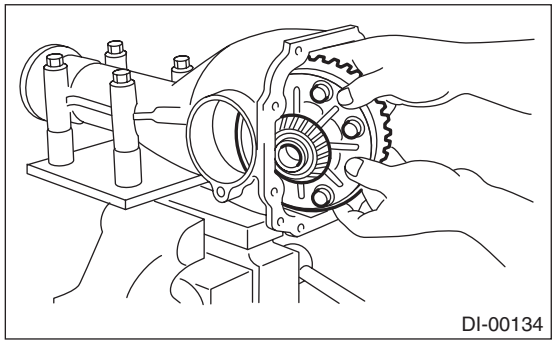

(4) Temporally tighten the side retainers RH and LH in differential carrier to install.

15) Perform the backlash adjustment between the hypoid driven gear and drive pinion, and preload adjustment of differential side bearing.

(1) Turn the drive pinion with ST for better fitting of differential side bearing.

ST 498427200 FLANGE WRENCH

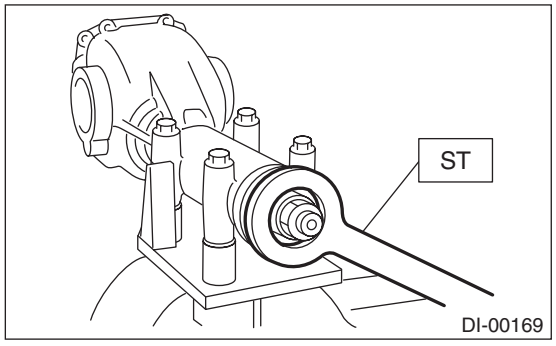

(2) Using the ST, tighten side retainer RH, and then tighten side retainer LH until there is no backlash.

ST 18630AA010 WRENCH COMPL RETAINER

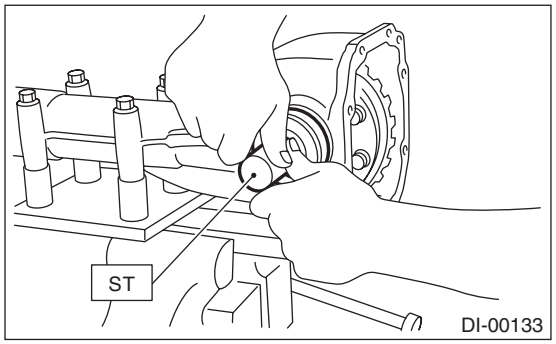

(3) Loosen the side retainer LH by approx. 1 and 1/2 teeth, and tighten the side retainer RH by approx. 2 teeth [amount that the side retainer LH is turned back (approx. 1 and 1/2 teeth) + approx. 1/2 teeth]. Difference between [amount that the side retainer LH is turned back (approx. 1 and 1/2 teeth)] and [amount that the side retainer RH is tightened (approx. 2 teeth)] gives preload.

(4) Temporarily tighten the lock plate.

NOTE:
Turn over the lock plate to shift the holder by 1/2 teeth.

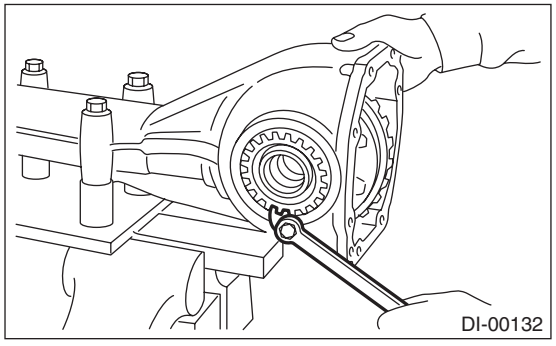

(5) Measure the hypoid driven gear-to-drive pinion backlash. Set the magnet base on differential carrier. Align the contact point of dial gauge with tooth face of hypoid driven gear, and move hypoid driven gear while holding drive pinion still. Read the value indicated on dial gauge.

NOTE:
If measured value of backlash is not within the specified range, repeat the procedures for pinion driven gear set backlash adjustment and the differential side bearing preload adjustment.

Backlash:
0.10 — 0.15 mm (0.004 — 0.006 in)

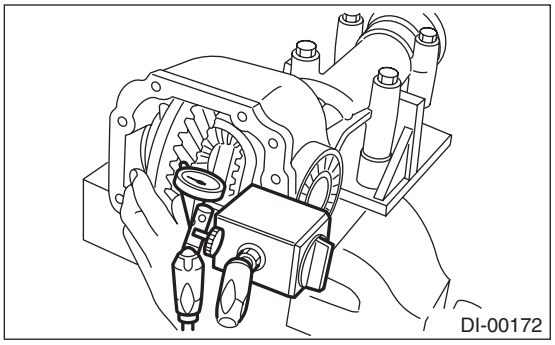

16) Put alignment marks on both the differential carrier and side retainer. Remove the side retainers one side at a time. After installing an O-ring and applying oil to the threaded portion, restore them to the original position.

NOTE:
Use new O-rings.

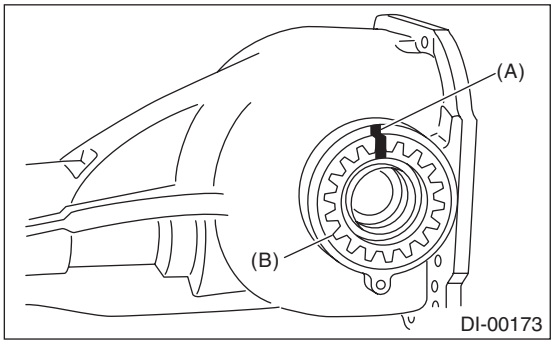

(A) Alignment mark
(B) Side retainer

17) Install the lock plate, and tighten the bolts to the specified torque.

Tightening torque:
25 N·m (2.5 kgf-m, 18.4 ft-lb)

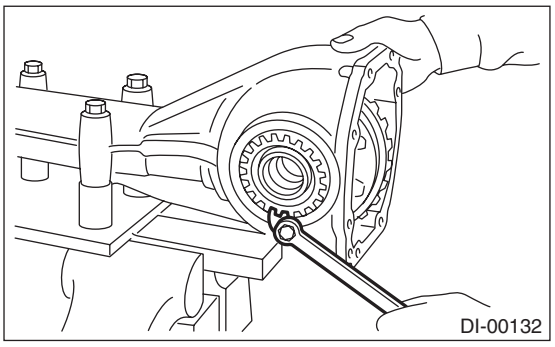

18) Recheck the backlash between hypoid driven gear and drive pinion.

Backlash:
0.10 — 0.15 mm (0.004 — 0.006 in)

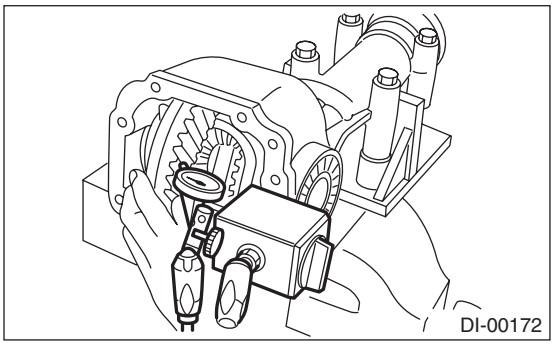

19) Checking and adjusting the tooth contact of hypoid driven gear

(1) Apply lead-free red dye evenly on the both sides of three to four teeth of the hypoid driven gear. Check the contact pattern after rotating the hypoid driven gear several revolutions back and forth until a definite contact pattern appears on the hypoid driven gear.

(2) When the contact pattern is not correct, readjust.

NOTE:
Be sure to wipe off the lead-free red dye completely after the adjustment is completed.

- Correct tooth contact

Check item: Tooth contact pattern is slightly shifted toward toe side under no-load rotation. (When driving, it moves towards the heel side.)

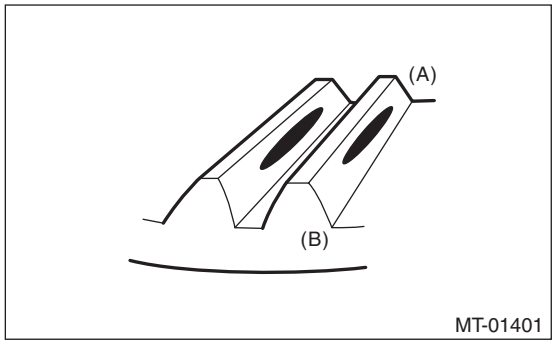

(A) Toe side
(B) Heel side

- Face contact

Check item: Backlash is too large.
Contact pattern

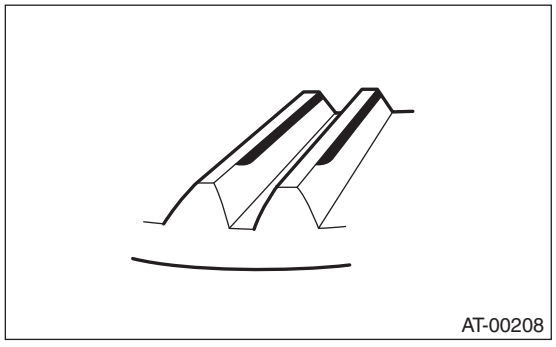

Corrective action: Increase thickness of pinion height adjusting washer according to the procedure for bringing drive pinion close to hypoid driven gear side.

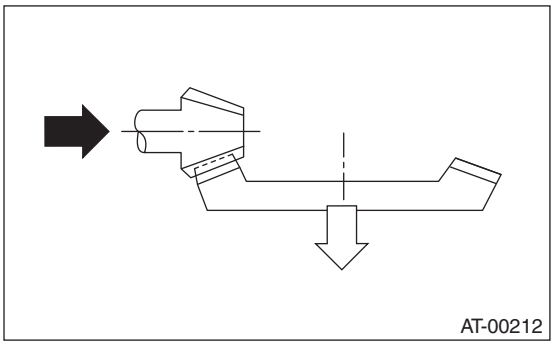

- Flank contact

Check item: Backlash is too small.
Contact pattern

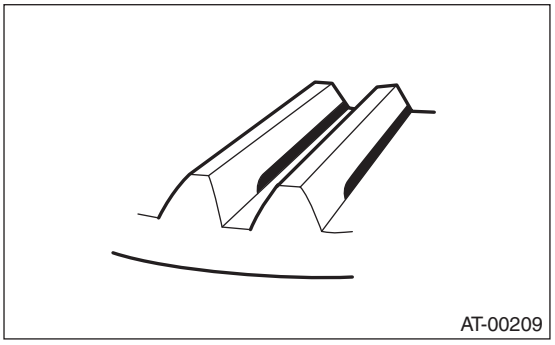

Corrective action: Reduce the thickness of pinion height adjusting washer according to the procedure for bringing drive pinion away from hypoid driven gear.

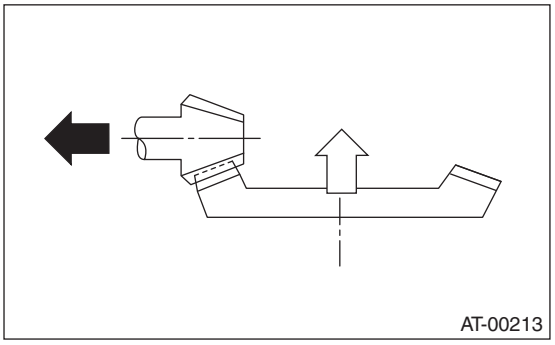

• Toe contact (inside contact)

Check item: Teeth contact area is too small.

Contact pattern

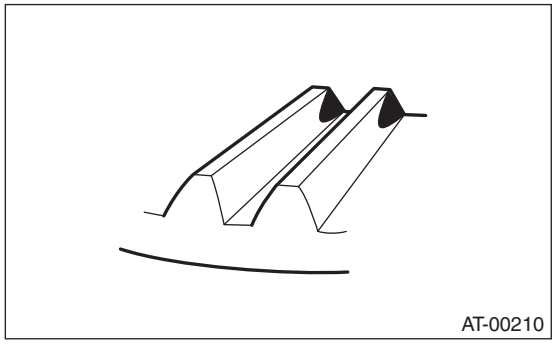

Corrective action: Reduce the thickness of pinion height adjusting washer according to the procedure for bringing drive pinion away from hypoid driven gear side.

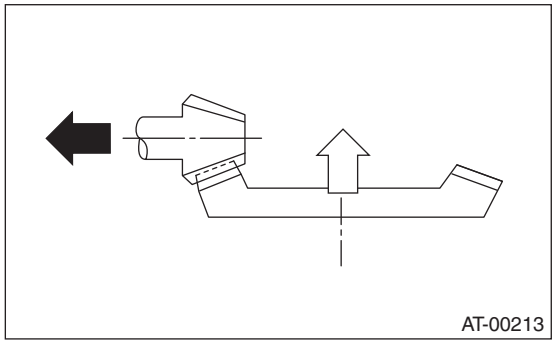

• Heel contact (outside end contact)

Check item: Teeth contact area is too small.

Contact pattern

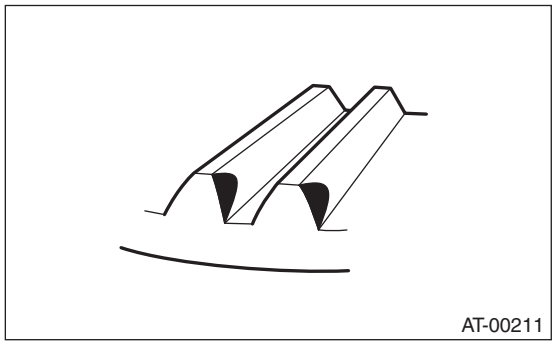

Corrective action: Increase thickness of pinion height adjusting washer according to the procedure for bringing drive pinion close to hypoid driven gear side.

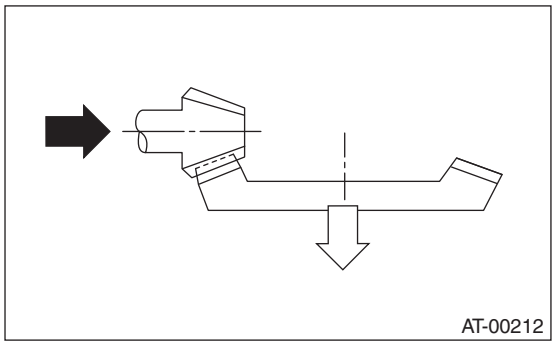

20) If correct tooth contact is not obtained, readjust the drive pinion height and the differential side bearing preload (already mentioned) and the hypoid gear backlash.

21) Install the gasket and rear cover to the differential carrier, and tighten the bolts to specified torque.

NOTE:
Use a new gasket.

Tightening torque:
25 N·m (2.5 kgf-m, 18.4 ft-lb)

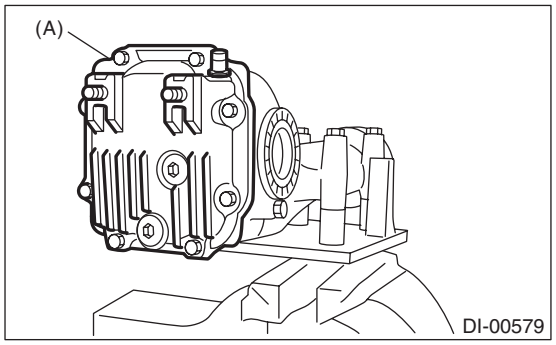

(A) Rear cover

22) When the stud bolts are removed from the rear cover, install the stud bolts.

23) Measure the exposed length “L” of the stud bolt as shown in the figure, and check that the value is within the specified range.

Exposed length L of stud bolt:
59.0 — 61.0 mm (2.32 — 2.40 in)

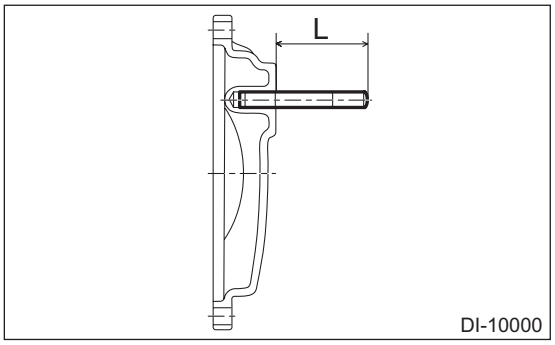

24) Install the air breather cap.

NOTE:
When installing the air breather cap, do not tap section (A). Be sure to tap section (B) to install.

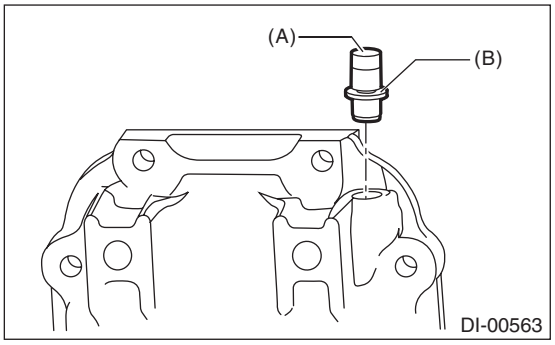

25) Install the drain plug.

NOTE:
Use a new gasket.

Tightening torque:
50 N·m (5.1 kg-m, 36.9 ft-lb)

26) Install the filler plug.

NOTE:
After installing the rear differential assembly to the vehicle, fill the gear oil, then use a new gasket, and tighten to the specified torque. <Ref. to DI-22, REPLACEMENT, Differential Gear Oil.>

2. VA2-TYPE

NOTE:
- Assemble in the reverse order of disassembly.
- Check and adjust each part during assembly.
- Keep the shims and washers in order, so that they are not improperly installed.
- Thoroughly clean the surfaces on which the shims, washers and bearings are to be installed.
- Apply differential gear oil when installing the bearings and thrust washers.
- Attach tags not to mix up the RH and LH bearing races.
- Replace the gasket, oil seal and O-ring with a new part.
- Apply differential gear oil to the lips when installing the oil seal.

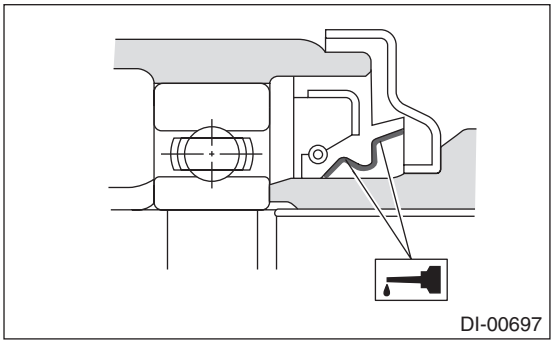

1) Adjusting preload for front and rear bearings

NOTE:
Adjust the bearing preload between front and rear bearings with preload adjusting spacer and washer. Pinion height adjusting washer is not affected by this adjustment. The adjustment must not be carried out with oil seal inserted.

(1) Install the rear bearing race into the differential carrier using ST1 and ST2.

ST1 398477701 HANDLE
ST2 398477703 DRIFT 2

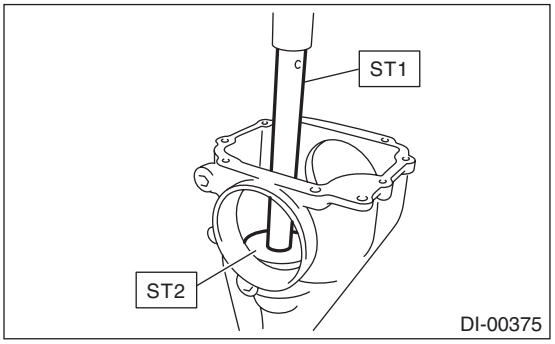

(2) Using the ST, press-fit the front bearing race to the differential carrier.

NOTE:
Use a new front bearing race.
ST 499277200 INSTALLER

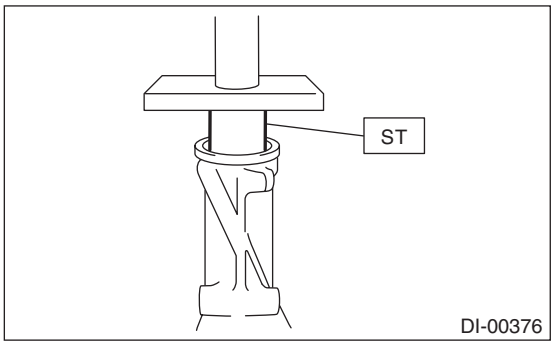

(3) Insert the front bearing cone.

NOTE:
Use new front bearing cone.

(4) Measure and record the thickness of the pinion height adjusting washer.

NOTE:
• At this time, install a provisionally selected or previously used pinion height adjusting washer.
• If tooth contact (drive pinion and hypoid driven gear) is normal in the inspection before disassembling, verify that the washer is not deformed, and then reuse the used washer.

(5) Insert the ST1 into carrier with the pinion height adjusting washer and rear bearing cone fitted onto it.

(6) Install the preload adjusting spacer, washer, front bearing cone, spacer, pilot bearing, companion flange, and self-locking nut.

NOTE:
Use a new pilot bearing.
ST1 18678AA000 DUMMY SHAFT

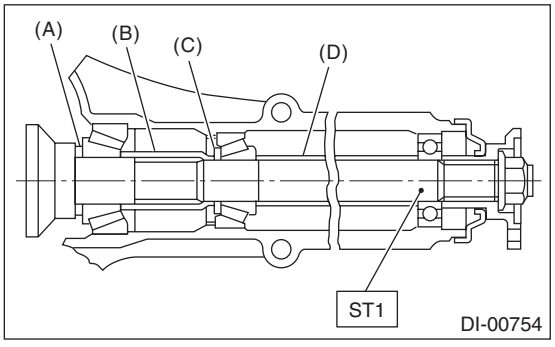

(A) Pinion height adjusting washer
(B) Preload adjusting spacer
(C) Preload adjusting washer
(D) Spacer

(7) Turn the ST1 by hand to smooth the bearing, and tighten the self-locking nut while measuring the initial load or initial torque with a spring scale or torque wrench. Select the preload adjusting washer and spacer so that the specified preload is obtained when nut is tightened to the specified torque.

NOTE:
• Measure the preload in direction of tangent to the flange.
• Be careful not to give excessive preload.
• When tightening the self-locking nut, lock companion flange with ST2 as shown in the figure.
ST1 18678AA000 DUMMY SHAFT
ST2 498427200 FLANGE WRENCH

Tightening torque:
191 N·m (19.5 kgf-m, 140.9 ft-lb)

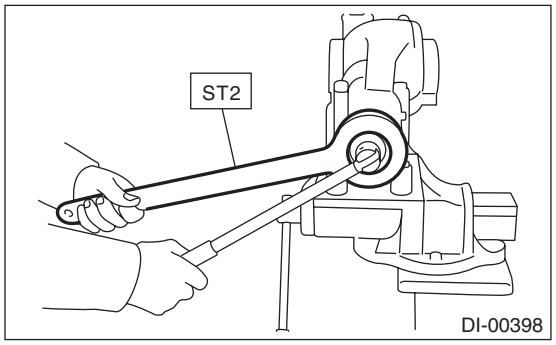

Initial load:
12.7 — 32.2 N (1.3 — 3.3 kgf, 2.9 — 7.2 lbf)

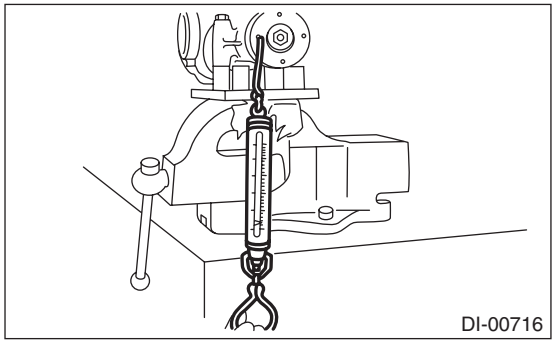

Initial torque:
0.48 — 1.22 N·m (0.05 — 0.12 kgf-m, 0.35 — 0.90 ft-lb)

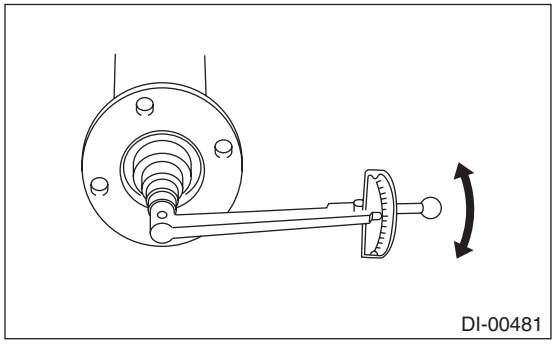

Preload adjusting washer	
Part No.	Thickness mm (in)
38336AA430	1.500 (0.0591)
38336AA440	1.513 (0.0596)
38336AA450	1.525 (0.0600)
38336AA460	1.538 (0.0606)
38336AA470	1.550 (0.0610)
38336AA480	1.563 (0.0615)
38336AA490	1.575 (0.0620)
38336AA500	1.588 (0.0625)
38336AA510	1.600 (0.0630)
38336AA520	1.613 (0.0635)
38336AA530	1.625 (0.0640)
38336AA540	1.638 (0.0645)
38336AA550	1.650 (0.0650)
38336AA560	1.663 (0.0655)
38336AA570	1.675 (0.0659)
38336AA580	1.688 (0.0665)
38336AA590	1.700 (0.0669)
38336AA600	1.713 (0.0674)
38336AA610	1.725 (0.0679)
38336AA620	1.738 (0.0684)
38336AA630	1.750 (0.0689)
38336AA640	1.763 (0.0694)
38336AA650	1.775 (0.0699)

Preload adjusting spacer	
Part No.	Length mm (in)
31454AA250	51.05 (2.010)
31454AA260	51.25 (2.018)
31454AA270	51.35 (2.022)
31454AA280	51.45 (2.026)
31454AA290	51.55 (2.030)
31454AA300	51.65 (2.033)
31454AA310	51.75 (2.037)
31454AA320	51.85 (2.041)
31454AA330	52.05 (2.049)

2) Adjusting drive pinion height:
Adjust the drive pinion height with pinion height adjusting washer installed between the rear bearing cone and the back of pinion gear.

(1) Attach the ST2.

ST1 18678AA000 DUMMY SHAFT
ST2 18831AA010 DIFFERENTIAL CARRIER GAUGE

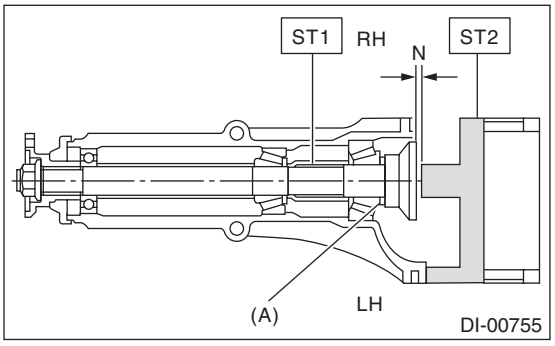

(A) Pinion height adjusting washer

(2) Install the side retainer LH to the left side of the differential carrier in reverse direction.

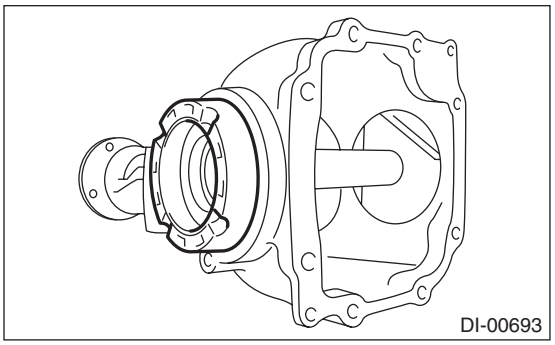

(3) Measure the clearance “N” between the end of ST2 and the end surface of ST1 by using a thickness gauge.

NOTE:
Make sure there is no clearance between the differential carrier and ST2.

ST1 18678AA000 DUMMY SHAFT
ST2 18831AA010 DIFFERENTIAL CARRIER GAUGE

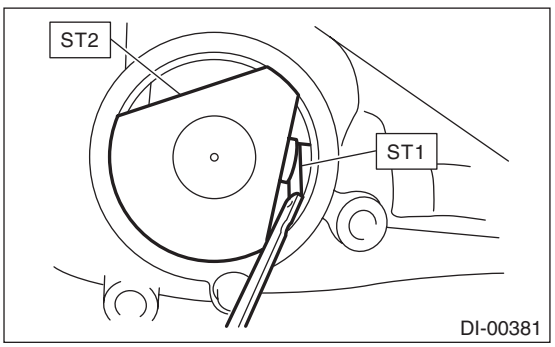

(4) Obtain the thickness of pinion height adjusting washer to be inserted from the following formula, and replace the temporarily installed washer with this one.

NOTE:
Adjust it using the 1 — 3 washers.
T = To + N – 0.05 mm (0.0020 in)

T	Thickness of pinion height adjusting washer mm (in)	
To	Thickness of washer temporarily inserted mm (in)	
N	Clearance of thickness gauge mm (in)	
Memo:		

(Example of calculation)
To = 0.15 mm (0.0059 in)
N = 0.1 mm (0.0039 in)
T = 0.15 mm (0.0059 in) + 0.1 mm (0.0039 in) – 0.05 mm (0.0020 in) = 0.2 mm (0.0079 in)
Result: Thickness = 0.2 mm (0.0079 in)
Therefore use part number 32295AA370.

Pinion height adjusting washer	
Part No.	Thickness mm (in)
32295AA350	0.150 (0.0059)
32295AA360	0.175 (0.0069)
32295AA370	0.200 (0.0079)
32295AA380	0.225 (0.0089)
32295AA390	0.250 (0.0098)
32295AA400	0.275 (0.0108)

3) Install the selected pinion height adjusting washer on drive pinion, and press the rear bearing cone into position with ST.
ST 398177700 INSTALLER

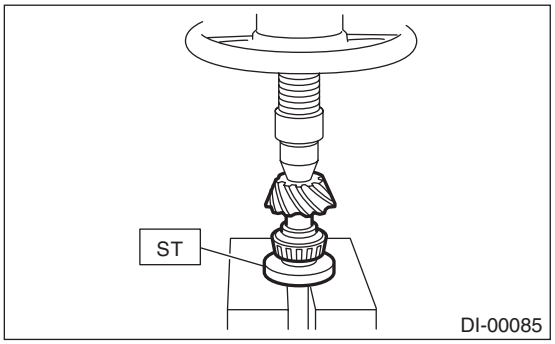

4) Insert the drive pinion into the differential carrier, and install the preselected preload adjusting spacer and washer.

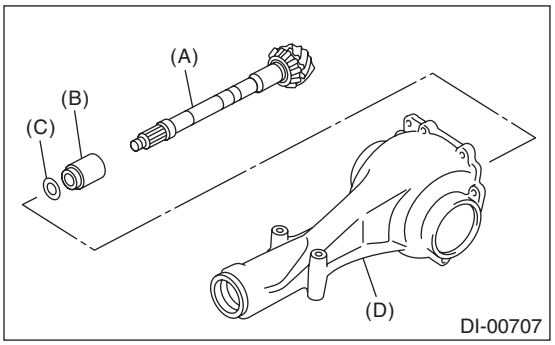

(A) Drive pinion
(B) Preload adjusting spacer
(C) Preload adjusting washer
(D) Differential carrier

5) Set ST and differential carrier to the press and install the front bearing cone.
ST 399780104 WEIGHT

NOTE:
Set the carrier to the press until the companion flange is installed.

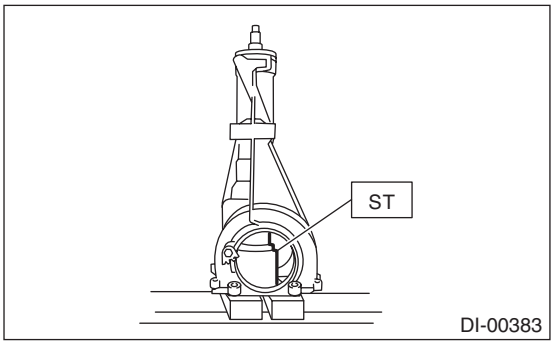

6) Insert the spacer, then install the pilot bearing.

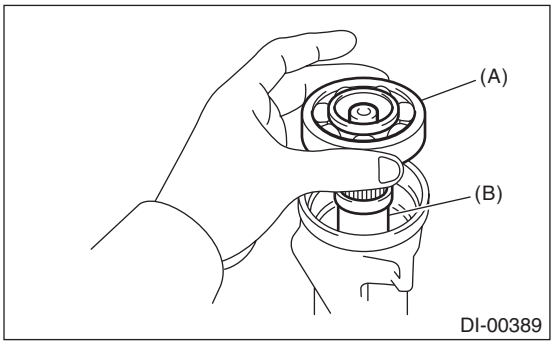

(A) Pilot bearing
(B) Spacer

7) Using the ST, install the oil seal.

NOTE:
- Use a new oil seal.
- Press-fit until the oil seal end comes 1 mm (0.04 in) inward from end of carrier.
- Apply differential gear oil to the oil seal lips.

ST 499277200 INSTALLER

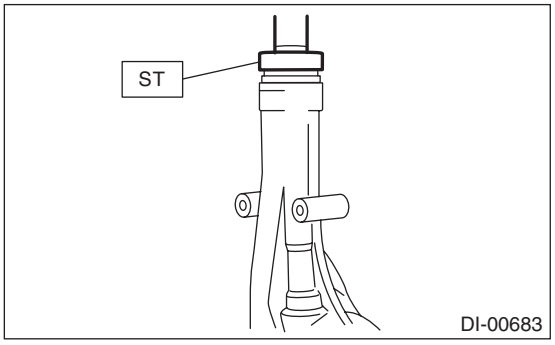

8) Press-fit the companion flange with ST.

NOTE:
Be careful not to damage the bearing.

ST 899874100 INSTALLER

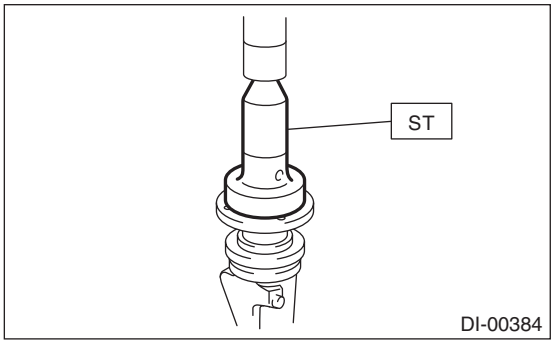

9) Apply seal material on the drive pinion shaft thread and new self-locking nut seat.

Seal material:
THREE BOND 1324 (Part No. 004403042) or equivalent

10) Install the self-locking nut while holding the companion flange with ST.

Tightening torque:
191 N·m (19.5 kgf-m, 140.9 ft-lb)

ST 498427200 FLANGE WRENCH

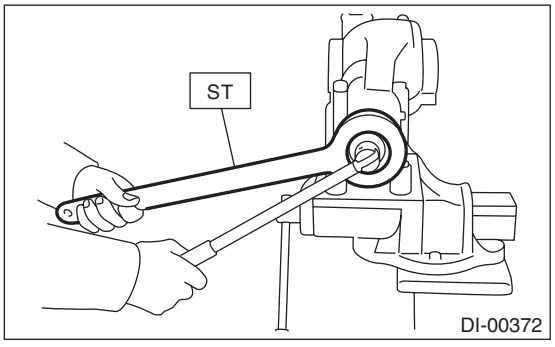

11) Check the initial torque or initial load.

Initial load:
12.7 — 32.2 N (1.3 — 3.3 kgf, 2.9 — 7.2 lbf)

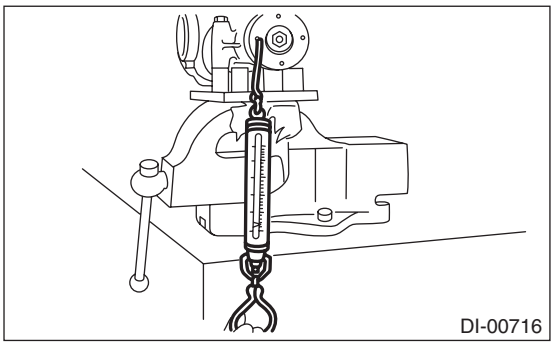

Initial torque:
0.48 — 1.22 N·m (0.05 — 0.12 kgf-m, 0.35 — 0.90 ft-lb)

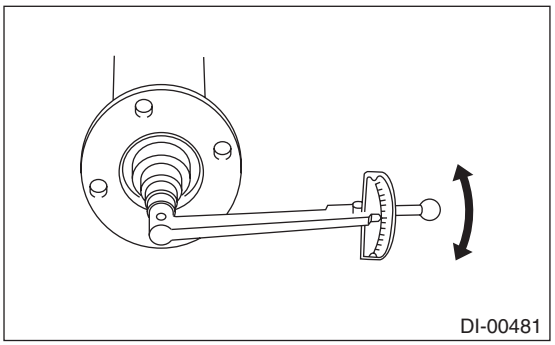

12) Assembling differential case
(1) Attach the circlip to the side gear.

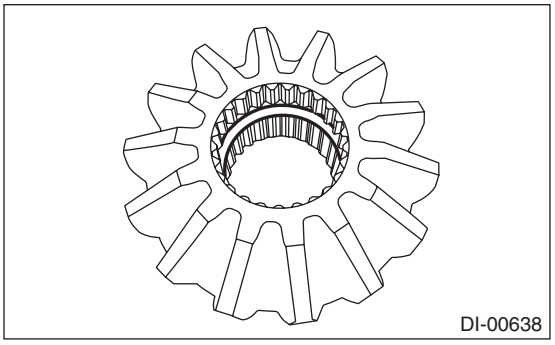

(2) Install the side gears and pinion mate gears, with their side gear thrust washers and pinion mate shaft, into the differential case.

NOTE:
• Apply gear oil on both sides of the washer and on the side gear shaft before installing.
• Insert the pinion mate shaft into the differential case by aligning the pin holes.

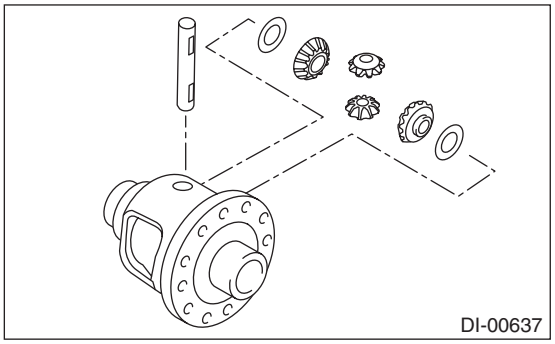
DI-00637

(3) Measure the side gear backlash.

Side gear backlash:
0.13 — 0.18 mm (0.005 — 0.007 in)

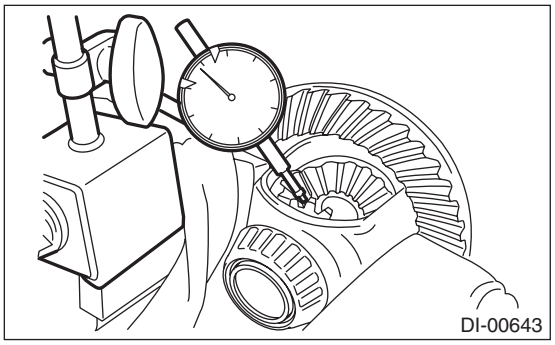
DI-00643

(4) Adjust the side gear backlash as specified by selecting side gear thrust washer.

Side gear thrust washer	
Part No.	Thickness mm (in)
803038021	0.950 (0.0374)
803038022	1.000 (0.0394)
803038023	1.050 (0.0413)

(5) Check the condition of rotation after applying oil to the gear tooth surfaces and washer surfaces.
(6) Attach the spring pin to the differential case.

NOTE:
Use new spring pin.

13) Install the hypoid driven gear to differential case.

NOTE:
• Set a cushioning such as wooden block, aluminum plate or shop cloth between vise and differential case if the side gear comes into contact with vise.
• Before installing bolts, apply seal material to bolt threads.

Seal material:
THREE BOND 1324 (Part No. 004403042) or equivalent
• Tighten opposing bolts in order.
(1) Tighten the hypoid driven gear mounting bolts to the specified torque using the ST.
ST 18270KA020 SOCKET (E20)

Tightening torque:
20 N·m (2.0 kgf-m, 14.8 ft-lb)

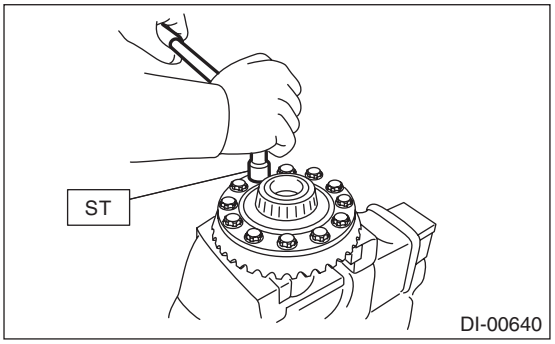

DI-00640

(2) While checking the tightening angle with the angle gauge, further tighten the hypoid driven gear mounting bolts.

Tightening angle:
33°±2°

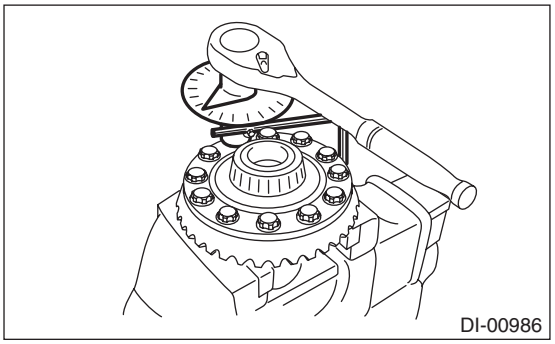
DI-00986

14) Using the ST, press-fit the side bearing to the differential case.
ST 398487700 DRIFT

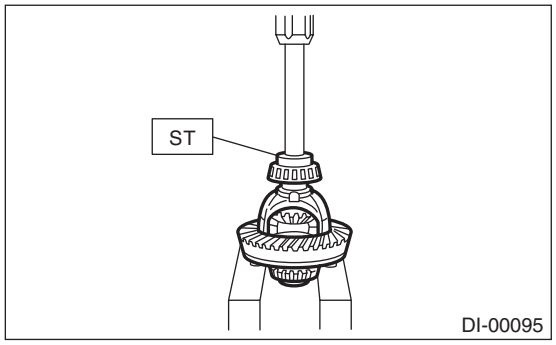

15) Assemble the side retainer.
(1) Install the oil seal into side retainer RH and LH.

NOTE:
- Use a new oil seal.
- Apply differential gear oil to the oil seal lip.

ST 398437700 DRIFT

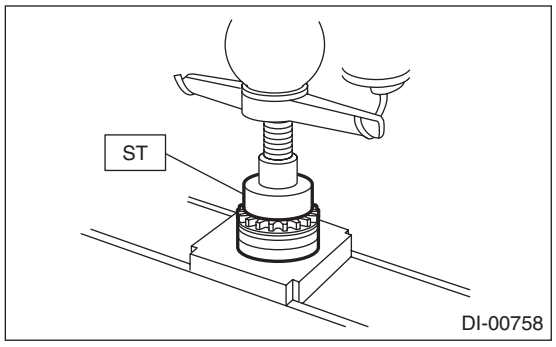

(2) Install the bearing race into side retainer RH and LH.

CAUTION:
Make sure that the bearing outer races and cones are properly assembled.

ST 398417700 DRIFT

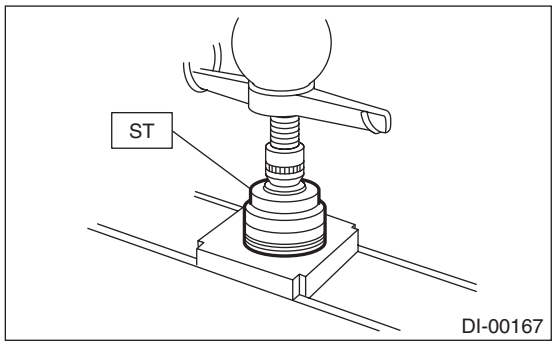

(3) Install the differential case assembly into differential carrier in the reverse order of disassembly.

NOTE:
Be careful not to hit the teeth of hypoid driven gear against the differential carrier.

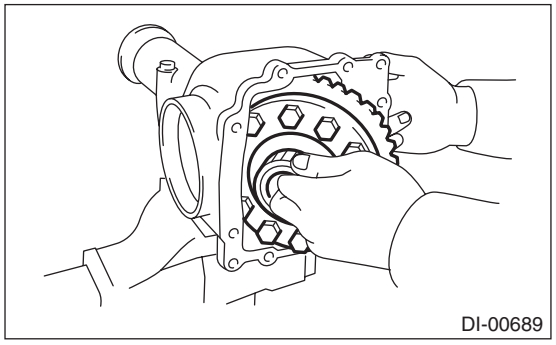

(4) Temporally tighten the side retainers RH and LH in differential carrier to install.

16) Perform the backlash adjustment between the hypoid driven gear and drive pinion, and side bearing preload adjustment.
(1) Turn the drive pinion with ST for better fitting of differential side bearing.

ST 498427200 FLANGE WRENCH

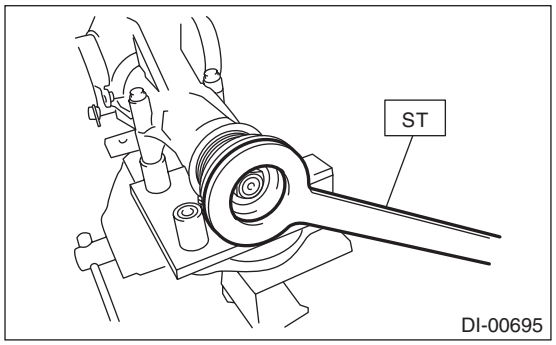

(2) Using the ST, tighten side retainer RH, and then tighten side retainer LH until there is no backlash.

ST 18630AA010 WRENCH COMPL RETAINER

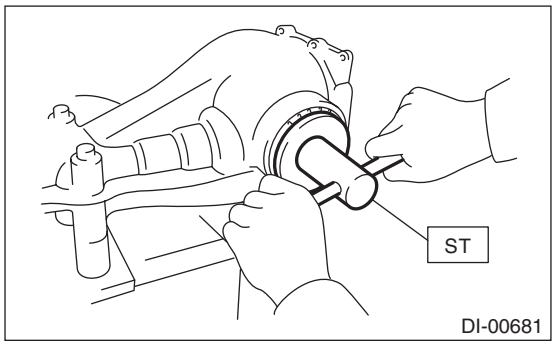

(3) Back off the side retainer LH by approx. 1 and 1/2 teeth, and tighten the side retainer RH by approx. 2 teeth [amount that the side retainer LH is turned back (approx. 1 and 1/2 teeth) + approx. 1/2 teeth].

NOTE:
Difference between [amount that the side retainer LH is turned back (approx. 1 and 1/2 teeth)] and [amount that the side retainer RH is tightened (approx. 2 teeth)] gives preload.

(4) Temporarily attach the lock plate.

NOTE:
Turn over the lock plate to shift the holder by 1/2 teeth.

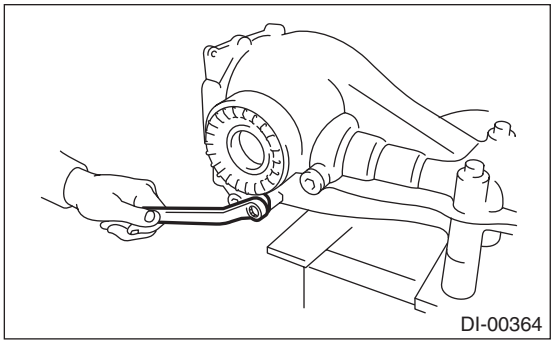
DI-00364

(5) Measure the hypoid driven gear-to-drive pinion backlash. Set the magnet base on differential carrier. Align the contact point of dial gauge with tooth face of hypoid driven gear, and move hypoid driven gear while holding drive pinion still. Read the value indicated on dial gauge.

NOTE:
If measured value of backlash is not within the specified range, repeat the procedures for the backlash adjustment between hypoid driven gear and drive pinion, and the differential side bearing preload adjustment.

Backlash:
0.10 — 0.15 mm (0.004 — 0.006 in)

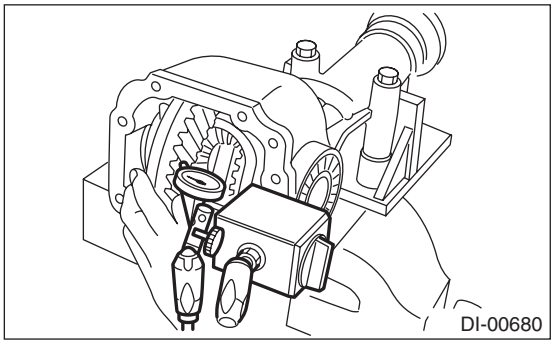
DI-00680

17) Put alignment marks on both the differential carrier and side retainer. Remove the side retainers one side at a time. After installing an O-ring and applying differential gear oil to the threaded portion, restore them to the original position.

NOTE:
Use new O-rings.

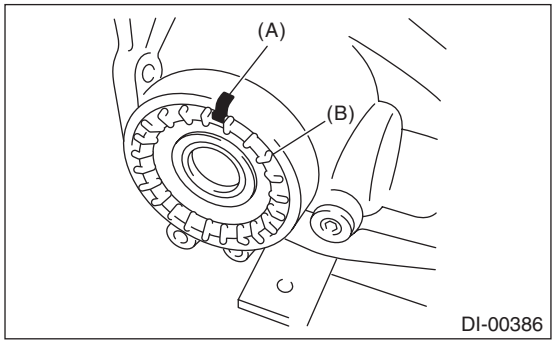

DI-00386

(A) Alignment mark
(B) Side retainer

18) Tighten the bolt of lock plate to specified torque.

Tightening torque:
25 N·m (2.5 kgf-m, 18.4 ft-lb)

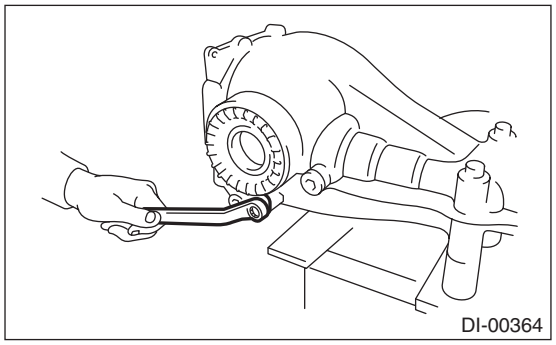
DI-00364

19) Recheck the hypoid driven gear to pinion backlash.

Backlash:
0.10 — 0.15 mm (0.004 — 0.006 in)

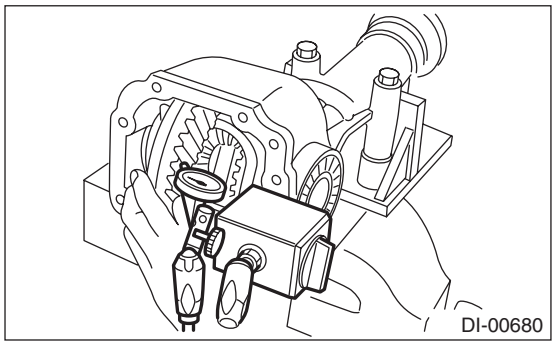
DI-00680

20) Checking and adjusting the tooth contact of hypoid driven gear

(1) Apply lead-free red dye evenly on the both sides of three to four teeth of the hypoid driven gear. Check the contact pattern after rotating the hypoid driven gear several revolutions back and forth until a definite contact pattern appears on the hypoid driven gear.

(2) When the contact pattern is not correct, readjust.

NOTE:
Be sure to wipe off the lead-free red dye completely after the adjustment is completed.

- Correct tooth contact

Check item: Tooth contact pattern is slightly shifted toward toe side under no-load rotation. (When driving, it moves towards the heel side.)

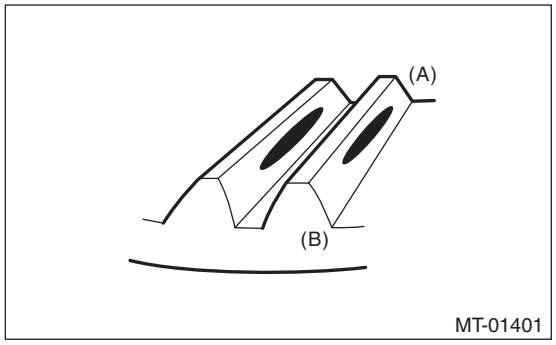

(A) Toe side
(B) Heel side

- Face contact

Check item: Backlash is too large.
Contact pattern

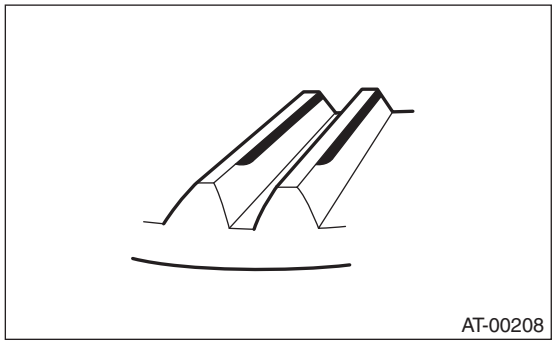

Corrective action: Increase thickness of pinion height adjusting washer according to the procedure for bringing drive pinion close to hypoid driven gear side.

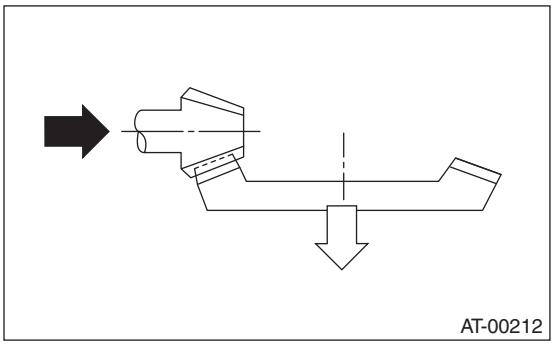

- Flank contact

Check item: Backlash is too small.
Contact pattern

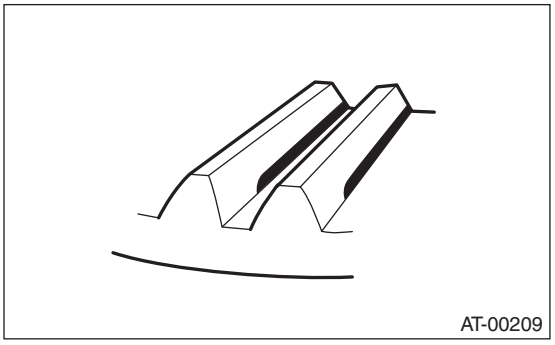

Corrective action: Reduce the thickness of pinion height adjusting washer according to the procedure for bringing drive pinion away from hypoid driven gear.

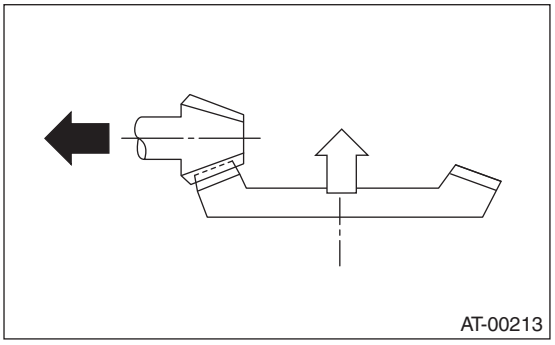

• Toe contact (inside contact)
Check item: Teeth contact area is too small.
Contact pattern

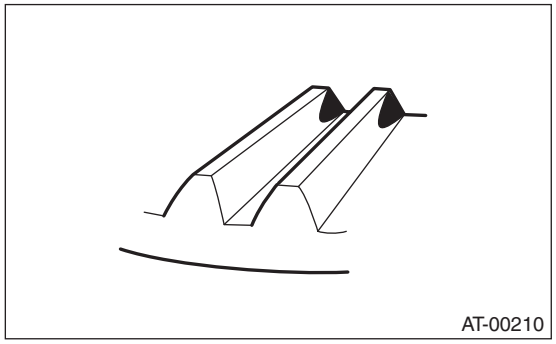

Corrective action: Reduce the thickness of pinion height adjusting washer according to the procedure for bringing drive pinion away from hypoid driven gear.

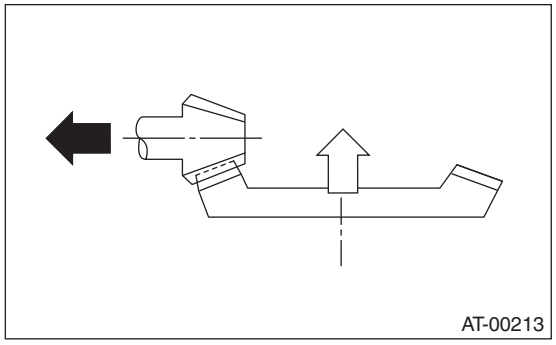

• Heel contact (outside end contact)
Check item: Teeth contact area is too small.
Contact pattern

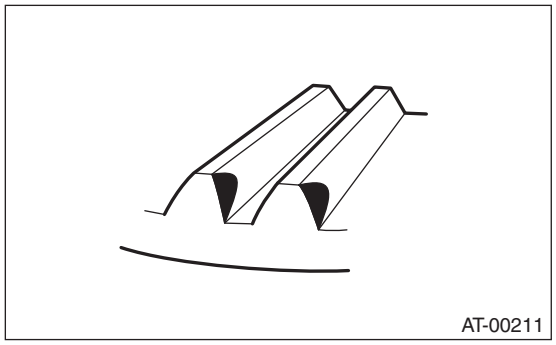

Corrective action: Increase thickness of pinion height adjusting washer according to the procedure for bringing drive pinion close to hypoid driven gear side.

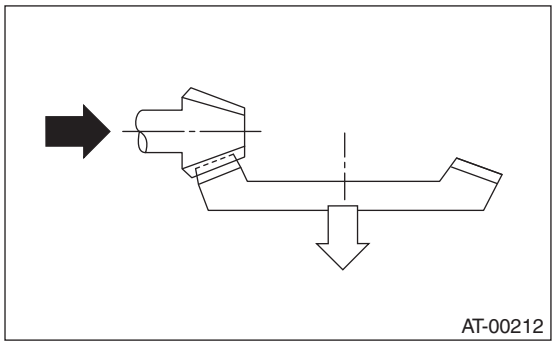

21) If correct tooth contact is not obtained, readjust the drive pinion height and the differential side bearing preload (already mentioned) and the hypoid gear backlash.
22) Install the gasket and rear cover to the differential carrier, and tighten the bolts to specified torque.

NOTE:
Use a new gasket.

Tightening torque:
34 N·m (3.5 kgf-m, 25.1 ft-lb)

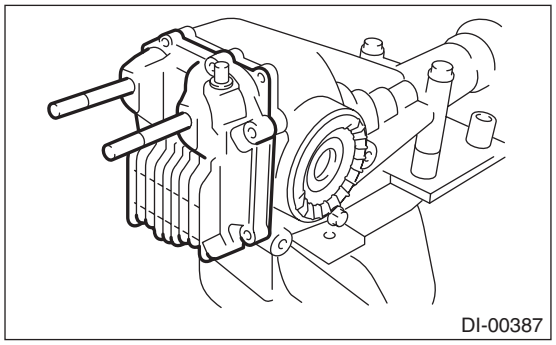

23) When the stud bolts are removed from the rear cover, install the stud bolts.
24) Measure the exposed length “L” of the stud bolt as shown in the figure, and check that the value is within the specified range.

Exposed length L of stud bolt:
59.0 — 61.0 mm (2.32 — 2.40 in)

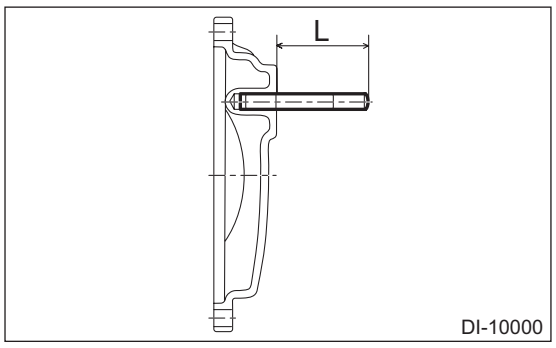

25) Install the air breather cap.

NOTE:
When installing the air breather cap, do not tap section (A). Be sure to tap section (B) to install.

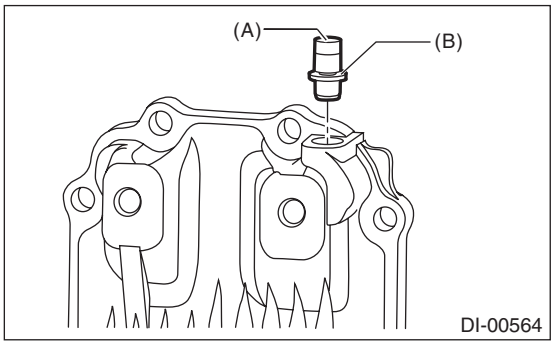

26) Install the drain plug.

NOTE:
Use a new gasket.

Tightening torque:
50 N·m (5.1 kgf-m, 36.9 ft-lb)

27) Install the filler plug.

NOTE:
After installing the rear differential assembly to the vehicle, fill the gear oil, then use a new gasket, and tighten to the specified torque. <Ref. to DI-22, REPLACEMENT, Differential Gear Oil.>

E: INSPECTION

Wash all the disassembled parts clean, and examine them for wear, damage or other defects. Repair or replace the defective parts as necessary.
1) Hypoid driven gear and drive pinion
• If there is evidently an abnormal tooth contact, find out the cause and adjust until the teeth contact correctly. Replace the gear if there is an excessive worn or an incapable adjustment.
• If crack, cutout or seizure is found, replace the parts as a set. Slight damage of some teeth can be corrected by oil stone or the like.
2) Side gear and pinion mate gear
• Replace if cracks, scoring or other defects are evident on the tooth surface.
• Replace if thrust washer contact surface is worn or seized. Slight damages of the surface can be corrected by oil stones or equivalent.
3) Bearing
Replace if seizure, peeling, wear, rust, dragging during rotation, noise or other defect is evident.
4) Thrust washer of the side gear and pinion mate gear
Replace if seized, flawed, abnormally worn or having other defects.
5) Oil seal
Replace if deformed or damaged, and at every disassembling.
6) Differential carrier
Replace if the bearing bores are worn or damaged.
7) Differential case
Replace if its sliding surfaces are abnormally worn, burned, or cracked.
8) Companion flange
Replace if the oil seal lip contact surface shows cracking.

1. SIDE GEAR BACKLASH

Using a dial gauge, check the backlash of side gear.

Side gear backlash:
VA1-type:
0.05 — 0.15 mm (0.002 — 0.006 in)
VA2-type:
0.13 — 0.18 mm (0.005 — 0.007 in)

If the side gear backlash is outside the specification range, select the side gear thrust washer and adjust the side gear backlash as specified.

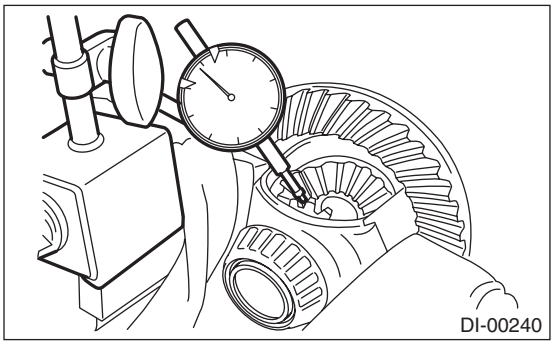

2. HYPOID DRIVEN GEAR BACKLASH

Using a dial gauge, check the backlash of hypoid driven gear.

Hypoid driven gear backlash:
0.10 — 0.15 mm (0.004 — 0.006 in)

If the hypoid driven gear backlash is outside the specification range, adjust the side bearing preload and repair if necessary.

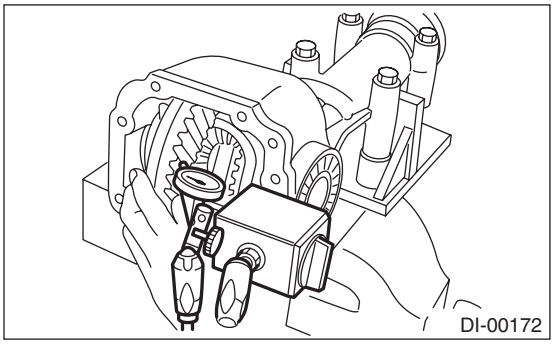

3. COMPANION FLANGE

1) If rust or dirt is attached to the companion flange, remove them.
2) Set a dial gauge at a companion flange surface (mating surface of propeller shaft and companion flange), and then measure the companion flange runout.

Limit of runout:
0.08 mm (0.003 in)

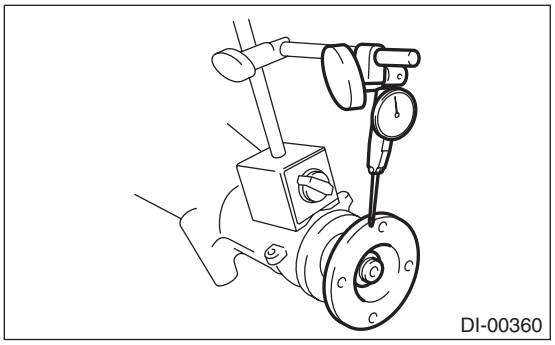

3) Set the gauge inside of the companion flange, and measure the runout.

Limit of runout:
0.08 mm (0.003 in)

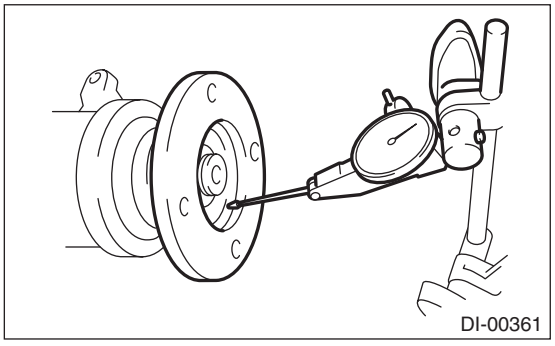

4) If either runout exceeds the limit, move the phase of companion flange and drive pinion 90° each, and find the point where the runout is within the limit.
5) If the runout exceeds the limit after changing the phase, replace the companion flange and recheck the runout.
6) If the runout exceeds the limit after replacing the companion flange, the drive pinion may be assembled incorrectly or bearing is faulty.

4. TOOTH CONTACT BETWEEN HYPOID DRIVEN GEAR AND DRIVE PINION

Inspect the tooth contact between the hypoid driven gear and drive pinion. <Ref. to DI-52, ASSEMBLY, Rear Differential (VA-type).>

F: ADJUSTMENT

1. SIDE GEAR BACKLASH

Adjust the side gear backlash. <Ref. to DI-52, ASSEMBLY, Rear Differential (VA-type).>

2. HYPOID DRIVEN GEAR BACKLASH

Adjust hypoid driven gear backlash. <Ref. to DI-52, ASSEMBLY, Rear Differential (VA-type).>

3. TOOTH CONTACT BETWEEN HYPOID DRIVEN GEAR AND DRIVE PINION

Adjust the tooth contact between hypoid driven gear and drive pinion gear. <Ref. to DI-52, ASSEMBLY, Rear Differential (VA-type).>

6. Rear Differential Front Oil Seal

A: INSPECTION

Check that there is no leakage from front oil seal portion. If there is any leakage replace the oil seal and inspect the propeller shaft.

B: REPLACEMENT

1) Shift the select lever or gear shift lever to neutral.
2) Release the parking brake.
3) Lift up the vehicle.
4) Drain differential gear oil. <Ref. to DI-22, REPLACEMENT, Differential Gear Oil.>
5) Remove the rear exhaust pipe.
• 2.5 L model
<Ref. to EX(H4DO)-16, REMOVAL, Rear Exhaust Pipe.>
• 3.6 L model
<Ref. to EX(H6DO)-12, REMOVAL, Rear Exhaust Pipe.>
6) Remove the heat shield cover.

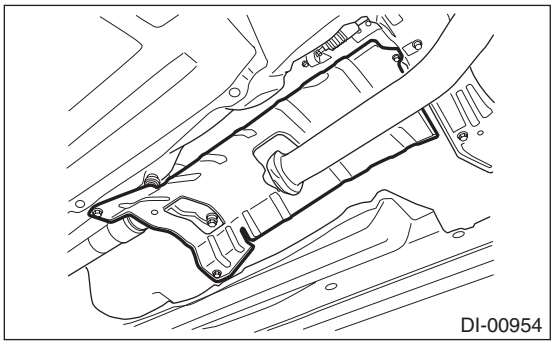
DI-00954

7) Remove the propeller shaft. <Ref. to DS-10, REMOVAL, Propeller Shaft.>
8) Check the initial torque and write it down.
9) Remove the self-locking nut while holding the companion flange with ST.
ST 498427200 FLANGE WRENCH

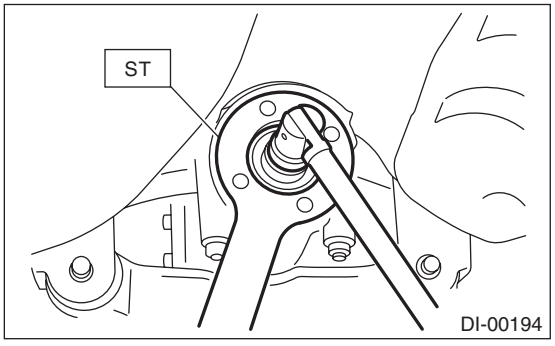

DI-00194

10) Extract the companion flange using the ST.
ST 399703600 PULLER ASSY

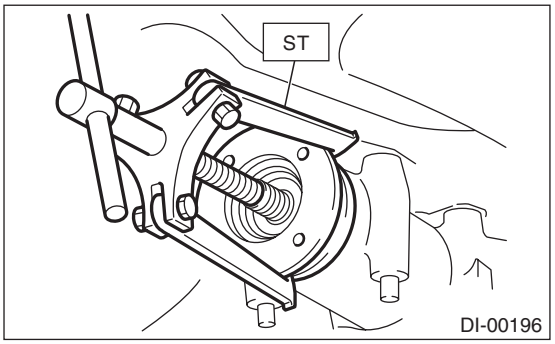

DI-00196

11) Remove the oil seal using ST or screwdriver.
ST 398527700 PULLER ASSY

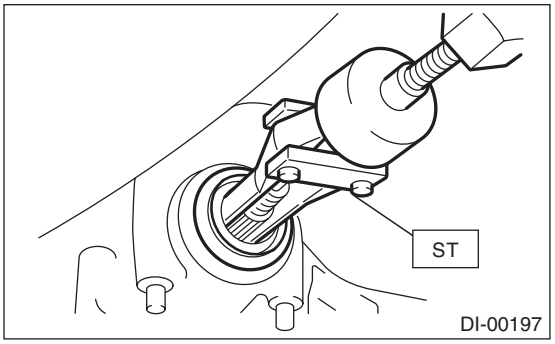

DI-00197

12) Using the ST, install the oil seal.

NOTE:
• Use a new oil seal.
• Apply differential gear oil to the oil seal lips.
ST 498447120 INSTALLER

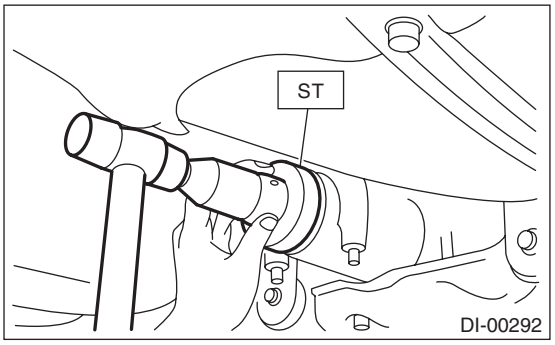

DI-00292

13) Install the companion flange.

NOTE:
Use a plastic hammer to install companion flange.

14) Tighten the self-locking nut to the specified torque so that the initial torque of companion flange becomes the same as that of before oil seal replacement.

NOTE:
- Use a new self-locking nut.
- Before installing the self-locking nut, apply the seal material to the threads of the drive pinion shaft and to the seating surface of the self-locking nut.

Seal material:
THREE BOND 1324 (Part No. 004403042) or equivalent

Tightening torque:
T-type
167 — 196 N·m (17.0 — 20.0 kgf-m, 123.2 — 144.6 ft-lb)
VA-type
162 — 220 N·m (16.5 — 22.5 kgf-m, 119.5 — 162.3 ft-lb)

ST 498427200 FLANGE WRENCH

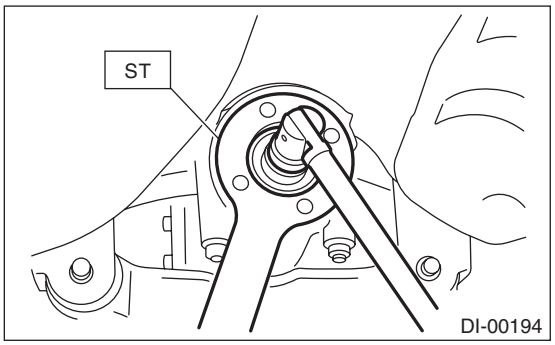

15) Hereafter, perform assembly in the reverse order of disassembly.

16) Fill differential gear oil. <Ref. to DI-22, REPLACEMENT, Differential Gear Oil.>

7. Rear Differential Side Oil Seal

A: INSPECTION

Check that there is no oil leakage from the side oil seal. If there is any leakage, replace the oil seal.

B: REPLACEMENT

1) Remove the rear differential. <Ref. to DI-26, REMOVAL, Rear Differential (T-type).> <Ref. to DI-46, REMOVAL, Rear Differential (VA-type).>
2) Remove the rear differential side oil seal using a ST or screwdriver wrapped with vinyl tape to prevent the side retainer from scratching.
ST 398527700 PULLER ASSY
3) Using the ST, install the oil seal to the side retainer.

NOTE:
- Use a new oil seal.
- Apply differential gear oil to the oil seal lips.
- T-type and VA2-type

ST 398437700 DRIFT

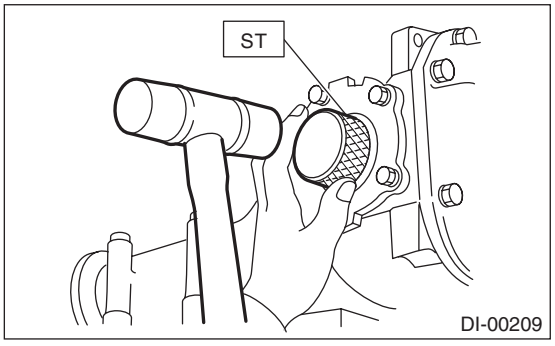

- VA1-type

ST 498447100 INSTALLER

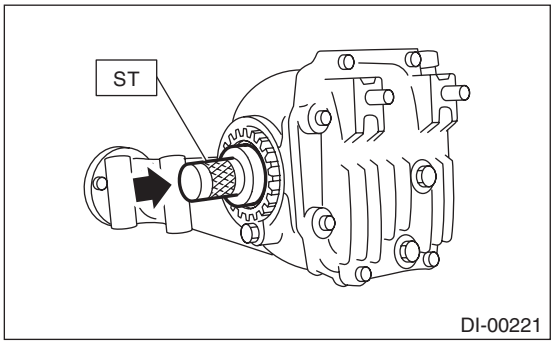

4) Install the rear differential. <Ref. to DI-28, INSTALLATION, Rear Differential (T-type).> <Ref. to DI-46, INSTALLATION, Rear Differential (VA-type).>

8. Rear Differential Front Member

A: REMOVAL

1) Disconnect the ground cable from battery.
2) Lift up the vehicle.
3) Support the rear differential using transmission jack, and then remove the rear differential front member.

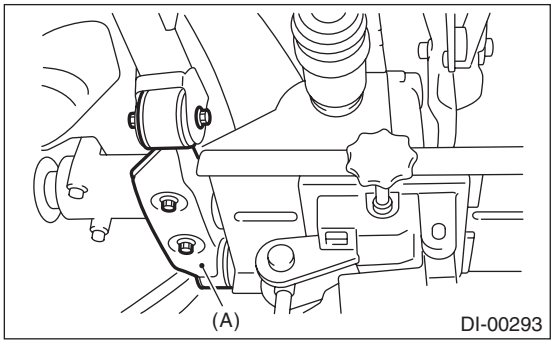

(A) Rear differential front member

B: INSTALLATION

Install the rear differential front member with a new self-locking nut.

Tightening torque:
T1: 50 N·m (5.1 kgf-m, 36.9 ft-lb)
T2: 110 N·m (11.2 kgf-m, 81.1 ft-lb)

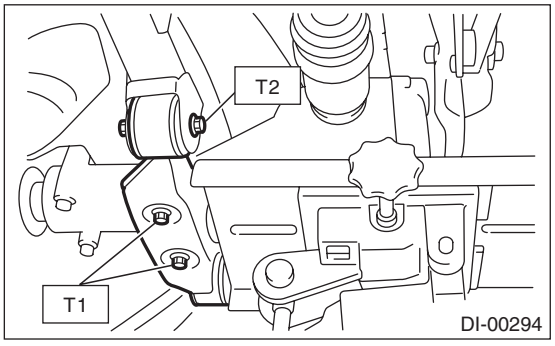

C: INSPECTION

1) Check the rear differential front member for damage, bend and corrosion.
If damage, bend or corrosion is excessive, replace the rear differential front member.
2) Check the bushings of rear differential front member for cracking, hardening and damage. If cracking, hardening or damage is excessive, replace rear differential front member.

9. Rear Differential Mount Bushing

A: INSPECTION

Check the rear differential mount bushing for cracks, hardening or damage. If cracking, hardening or damage is excessive, replace rear differential mount bushing.

B: REPLACEMENT

CAUTION:
• If there was so much rust in the rear differential mount bushing, remove the rust before starting work.
• Apply the molybdenum grease on the square thread of the ST (shaft and nut) before use.
1) Remove the rear differential. <Ref. to DI-26, REMOVAL, Rear Differential (T-type).> <Ref. to DI-46, REMOVAL, Rear Differential (VA-type).>
2) Fit the ST to the periphery of the sub frame cylinder, and make sure that the ST does not contact with welded spots or spatters.
ST 41399FG010 SPECIAL TOOL A

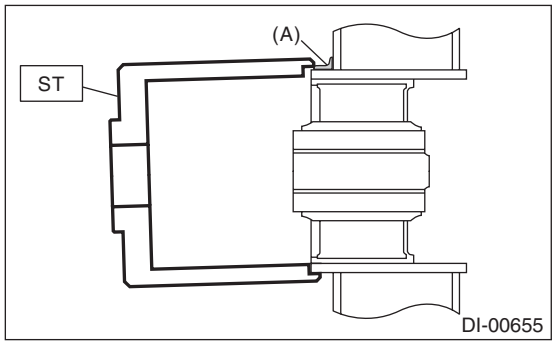

(A) Welded spot

3) If the ST contacts with welded spots or spatters, remove the excessive welds or spatters with sander or the equivalent so that the ST contacts the cylinder peripheral part.

CAUTION:
Performing the operation with the ST contacting with welded spots or spatters may break the ST. Be sure to remove excessive welds or spatters before the operation.

4) Set ST1, ST2, ST3, ST4 and ST5 as shown in the figure.
ST1 41399FG091 SPECIAL TOOL SHAFT
ST2 41399FG070 SPECIAL TOOL NUT
ST3 41399FG050 SPECIAL TOOL SLEEVE
ST4 41399FG080 SPECIAL TOOL BEARING
ST5 41399FG010 SPECIAL TOOL A

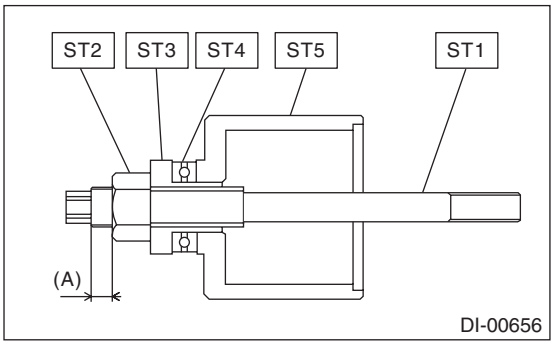

(A) 5 mm (0.2 in) or less

5) Fit and hold the ST1 and ST2 to the rear differential mount bushing from the rear side of vehicle.
ST1 41399FG031 SPECIAL TOOL C
ST2 41399FG061 SPECIAL TOOL RING

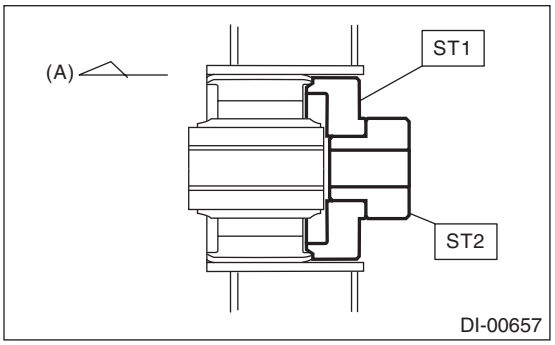

(A) Front side of vehicle

6) Insert the ST set in the step 4) through the rear differential mount bushing hole from the front side of vehicle, and screw in the ST1 by hand till the front end of ST1 comes out slightly from the rear end of ST2.
ST1 41399FG091 SPECIAL TOOL SHAFT
ST2 41399FG061 SPECIAL TOOL RING

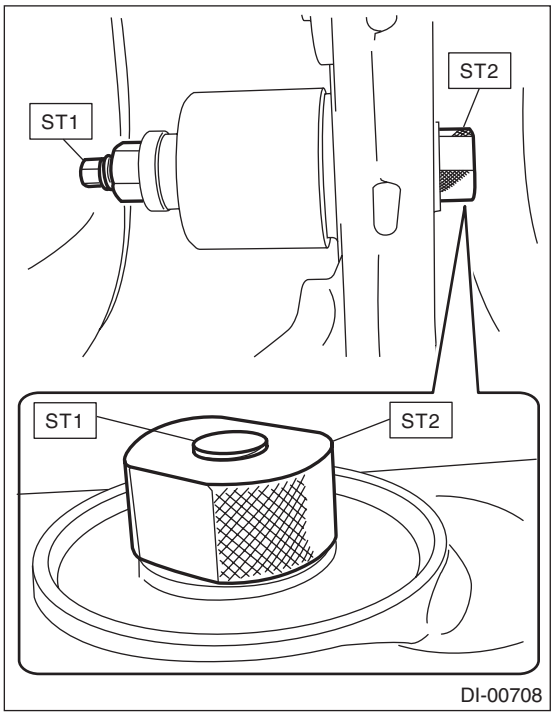

7) Hold the ST1 to prevent it from rotating, and screw in the ST3 by hand till there is no loose fit on the ST2.

CAUTION:
When setting the ST to the vehicle, always make sure that the ST2 fits the periphery of the sub frame cylinder and is not tilted.
ST1 41399FG091 SPECIAL TOOL SHAFT
ST2 41399FG010 SPECIAL TOOL A
ST3 41399FG070 SPECIAL TOOL NUT

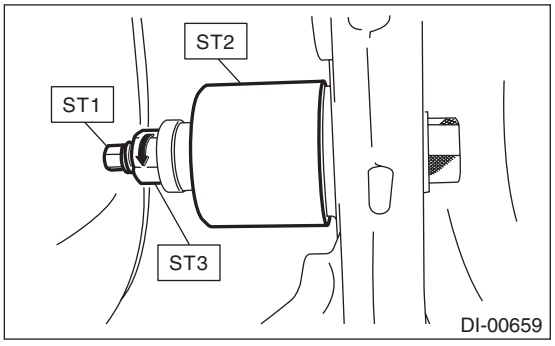

8) Hold the ST1 with a tool to prevent it from rotating, and screw in the ST2 to remove the rear differential mount bushing.

CAUTION:
• Rotation of ST1 will damage the screw at the rear end of rear differential mount bushing. Never rotate the ST1.
• If the ST starts to tilt while removing the rear differential mount bushing, stop the work and set the ST again.
ST1 41399FG091 SPECIAL TOOL SHAFT
ST2 41399FG070 SPECIAL TOOL NUT

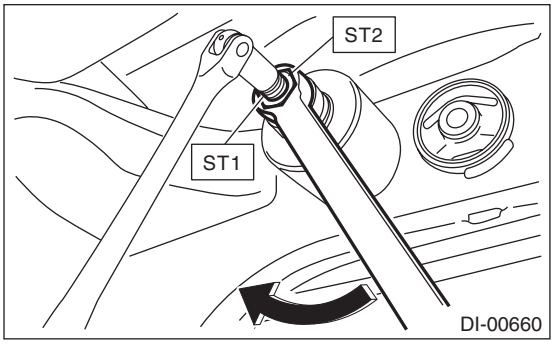

9) Set ST1, ST2, ST3, ST4, ST5 and rear differential mount bushing as shown in the figure.

NOTE:
• Set the ST2 nut near to the end of ST1 screw.
• Hold the rear differential mount bushing with the marked side facing toward the rear of the vehicle, and set the rear differential mount bushing to the ST so that the arrow mark faces upward.

• Mark the bottom end of rear differential mount bushing to identify the installing direction.
ST1 41399FG091 SPECIAL TOOL SHAFT
ST2 41399FG070 SPECIAL TOOL NUT
ST3 41399FG050 SPECIAL TOOL SLEEVE
ST4 41399FG080 SPECIAL TOOL BEARING
ST5 41399FG020 SPECIAL TOOL B

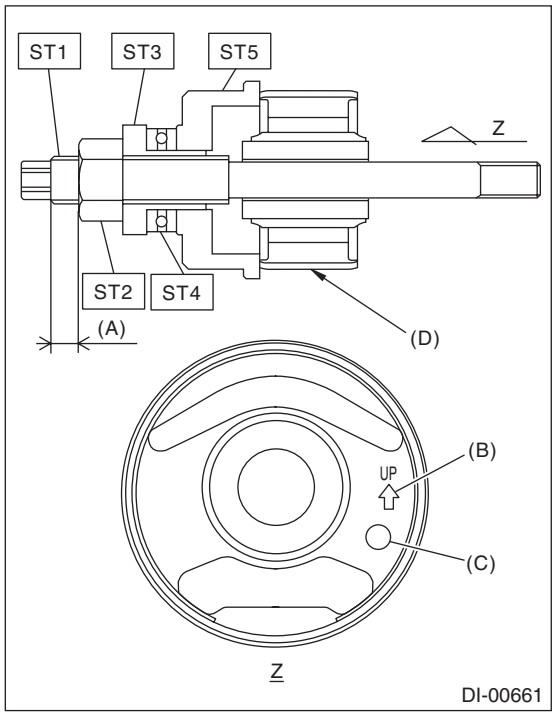

(A) 8 mm (0.31 in) or more
(B) Arrow mark
(C) Mark
(D) Marked position

10) Attach ST1 to the ST2, and fit and hold the STs as a unit to the sub frame from the rear side of vehicle.
ST1 41399FG061 SPECIAL TOOL RING
ST2 41399FG041 SPECIAL TOOL D

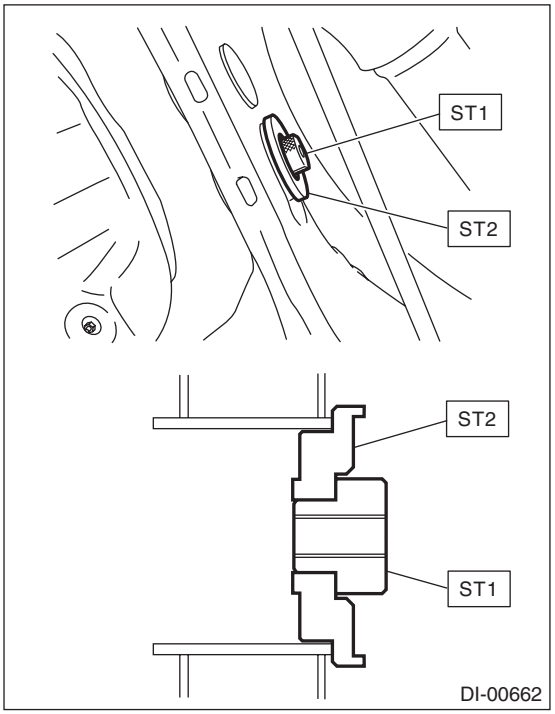

11) Insert the ST and rear differential mount bushing set in the step 9) through the sub frame from the front side of vehicle, and screw in the ST1 by hand till the front end of ST1 comes out slightly from the rear end of ST2.

CAUTION:
Set the rear differential mount bushing with its mark facing the bottom end direction.
ST1 41399FG091 SPECIAL TOOL SHAFT
ST2 41399FG061 SPECIAL TOOL RING

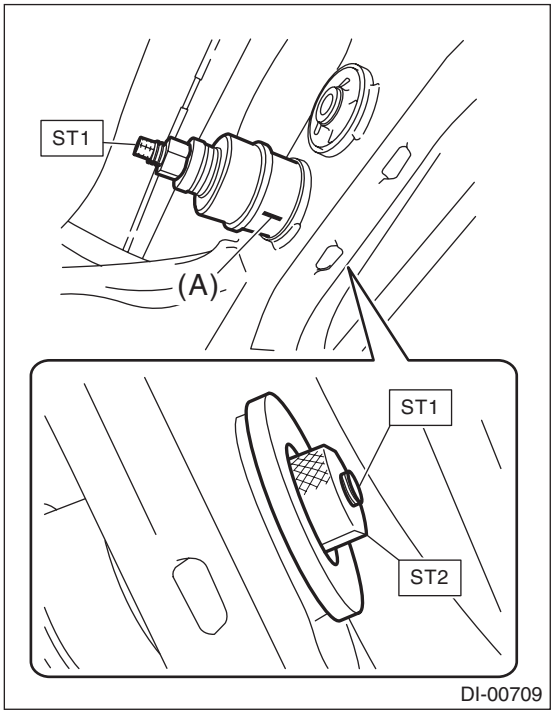

(A) Mark

12) Hold the ST1 to prevent it from rotating, and screw in the ST2 by hand till there is no loose fit on the ST and the rear differential mount bushing.

CAUTION:
Make sure that the ST and rear differential mount bushing are not tilted.
ST1 41399FG091 SPECIAL TOOL SHAFT
ST2 41399FG070 SPECIAL TOOL NUT

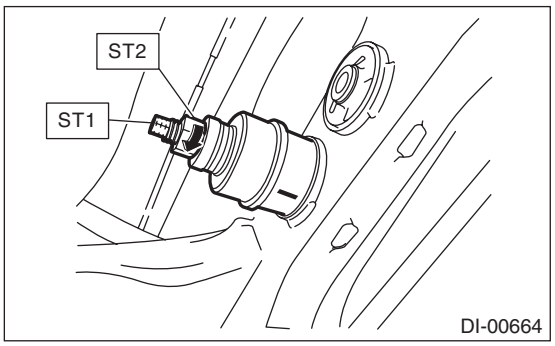

13) Screw in the ST2 while holding the ST1 with a tool to prevent it from rotating, and press-fit the rear differential mount bushing to the front end of sub frame cylinder.
ST1 41399FG091 SPECIAL TOOL SHAFT
ST2 41399FG070 SPECIAL TOOL NUT

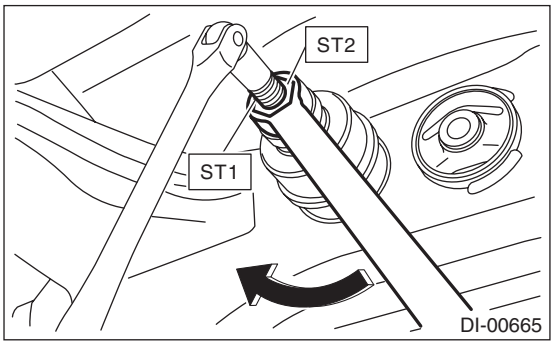

14) Make sure that the rear differential mount bushing is inserted to the front end of sub frame cylinder.

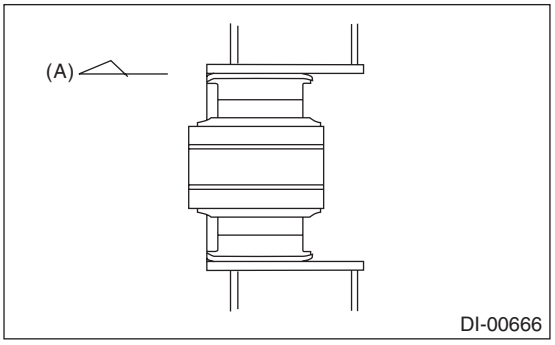

(A) Front side of vehicle

15) Install the rear differential. <Ref. to DI-28, INSTALLATION, Rear Differential (T-type).> <Ref. to DI-46, INSTALLATION, Rear Differential (VA-type).>

10.Rear Differential Inspection Mode

A: GENERAL DESCRIPTION

CAUTION:
Be sure to perform rear differential inspection mode.
- Follow the messages displayed on the Subaru Select Monitor when working.
- “Rear differential inspection mode” using the Subaru Select Monitor is available only for the CVT model.
- Perform rear differential inspection mode when the following work has been performed.

Transmission assembly replacement/Replacement of rear differential/Replacement of front differential hypoid gear set/Replacement of rear differential hypoid gear set

B: PROCEDURE

CAUTION:
Do not turn the power of the Subaru Select Monitor OFF during work, and do not disconnect the data link connector.
1) Shift the select lever to “P” range.
2) Apply the electronic parking brake.
3) Lift up the vehicle.

WARNING:
Lift up the vehicle until the tire bottom is 30 cm or more above the ground.
4) Connect the Subaru Select Monitor to data link connector.
5) Turn the ignition switch to ON. (For model with push button start, press the push button ignition switch twice without depressing brake pedal.)
6) Select «Diagnosis» in the «Start» screen of Subaru Select Monitor.
7) On «Vehicle selection» display, input the vehicle information and select «Confirmed».
8) On «Main Menu» display, select «Each System Check».
9) On «Select System» display, select «Transmission Control System».
10) On «Select Function» display, select «Work Support».
11) On «Work Support» display, select «Rear differential inspection mode».
12) Follow the messages displayed on the Subaru Select Monitor screen when working.
13) The results of the rear differential inspection mode are displayed on the Subaru Select Monitor screen.
- When ended normally: “The rear differential has been replaced normally.”
- When ended abnormally: “A rear differential abnormality has been detected. Reinspect the items at the time of rear differential installation.”
- When interrupted: “Inspection is stopped. Restart this inspection mode from the beginning.”

14) After the message “Inspection has been completed. Set the ignition switch to OFF.” appears, the rear differential inspection mode completes.

NOTE:
• When the rear differential inspection mode is completed properly, the following warning lights may illuminate. But this is not a malfunction. If warning light illuminates, clear the memory.
VDC/ABS, engine, power steering, EyeSight
• For detailed operation procedures, refer to “PC application help for Subaru Select Monitor”.
• If the rear differential inspection mode does not end normally, repeat the mode until it ends normally.
• When the inspection mode does not end normally, the AWD warning light will start blinking at 2 Hz.
• When the rear differential inspection mode ends abnormally, the front differential and rear differential may be different from the specifications for the vehicle.
• When the rear differential inspection mode is interrupted, the following reasons are possible.

Message	Main reasons for abnormal termination
• “Inspection is stopped.” • “Inspection is stopped. Restart this inspection mode from the beginning.”	• TCM has detected a failure. • VDC has a failure. • Brake is applied after start during automatic running. • Too delayed operation to the instructions displayed on the Subaru Select Monitor.
“TCM incompatible. Rear differential inspection mode is stopped.”	The model does not support the rear differential inspection mode.
The TCM has detected a fault. Inspect following the manual.	TCM has detected a failure.

15) Perform “Function Check Sequence” for VDC. <Ref. to VDC(diag)-21, MAINTENANCE MODE, OPERATION, Subaru Select Monitor.> <Ref. to VDC-15, ADJUSTMENT, VDC Control Module and Hydraulic Control Unit (VDCCM&H/U).>

11.General Diagnostic Table

A: INSPECTION

Symptom or trouble	Possible cause	Remedy
1. Oil leakage	(1) Worn, scratched, or incorrectly seated front or side oil seal. Scored, battered or excessively worn sliding surface of companion flange.	Repair or replace.
	(2) Clogged or damaged air breather cap.	Clean, repair or replace.
	(3) Loose bolts on the side retainer, or incorrectly fitted O-ring.	Tighten the bolts to specified torque. Replace the O-ring.
	(4) Loose rear cover attachment bolts or damaged gasket.	Replace the gasket, and tighten the bolts to specified torque.
	(5) Loose filler plug or drain plug.	• Apply liquid gasket, and tighten to the specified torque. (T-type) • Replace the gasket, and tighten to the specified torque. (VA-type)
	(6) Wear, damage or incorrect fitting of drive shaft, side retainer or oil seal.	Repair or replace.
2. Seizure NOTE: Seized or damaged parts should be replaced, and also other parts should be thoroughly checked for any defect and should be repaired or replaced as required.	(1) Insufficient backlash for hypoid gear.	Readjust or replace.
	(2) Excessive preload for side, rear or front bearing.	Readjust or replace.
	(3) Insufficient or improper oil used.	Add recommended oil to the specified level.
3. Damage NOTE: Damaged parts should be replaced, and also other parts should be thoroughly checked for any defect and should be repaired or replaced as required.	(1) Improper backlash for hypoid gear.	Readjust or replace.
	(2) Insufficient or excessive preload for side, rear or front bearing.	Readjust or replace.
	(3) Excessive backlash for differential gear.	Replace gear or thrust washer.
	(4) Loose bolts and nuts such as hypoid driven gear bolt.	Retighten.
	(5) Damage due to overloading.	Replace.
4. Noises when starting or shifting gears NOTE: Noises may be caused by differential assembly, universal joint, wheel bearing, etc. Find out what is actually making noise before disassembling.	(1) Improper tooth contact of hypoid driven gear and drive pinion.	Readjust. (Drive pinion adjustment and backlash adjustment)
	(2) Excessive backlash for hypoid driven gear.	Replace the gear or the pinion height adjusting washer.
	(3) Excessive backlash for side gear.	Replace gear or thrust washer.
	(4) Insufficient preload for front or rear bearing.	Readjust.
	(5) Loose drive pinion nut.	Tighten to the specified torque.
	(6) Loose bolts and nuts such as side retainer attachment bolt.	Tighten to the specified torque.
5. Noises when cornering	(1) Damaged differential gear.	Replace.
	(2) Excessive wear or damage of thrust washer.	Replace.
	(3) Broken pinion mate shaft.	Replace.
	(4) Seized or damaged side bearing.	Replace.

Symptom or trouble	Possible cause	Remedy
6. Gear Noise NOTE: Since noises from engine, muffler, transmission, propeller shaft, wheel bearings, tires, and body are sometimes mistaken for noises from differential assembly, be careful in checking them. Inspection methods to locate noises include coasting, accelerating, cruising, and lifting-up all four wheels. Perform these inspections according to the condition of trouble. When listening to noises, shift the gear into four-wheel drive and fourth speed position, trying to pick up only differential noise.	(1) Improper tooth contact of hypoid driven gear and drive pinion.	Readjust or replace the hypoid gear set.
	(2) Improper backlash of the hypoid driven gear.	Readjust.
	(3) Scored or chipped teeth of hypoid gear.	Replace hypoid gear set.
	(4) Scuffed hypoid gear.	Replace hypoid gear set.
	(5) Improper preload for front or rear bearings.	Readjust.
	(6) Stuck, scored or chipped teeth of front or rear bearing.	Replace.
	(7) Stuck, scored or chipped teeth of side bearing.	Replace.
	(8) Vibrating differential gear.	Replace the differential gear.

TRANSFER CASE

TC

Page

1. General Description 2
2. Transfer Case and Extension Case Assembly 3
3. Transfer Clutch 4
4. Extension Case 5
5. Oil Seal 6
6. Transfer Drive Gear 7
7. Transfer Driven Gear 8
8. Reduction Drive Gear 9
9. Reduction Driven Gear 10
10. Center Differential 11
11. Transfer Clutch Pressure Test 12

1. General Description

A: NOTE

For general description, refer to “CVT (TR580)”, “CVT (TR690)” or “6MT” section.
CVT (TR580) model:
<Ref. to CVT(TR580)-3, General Description.>
CVT (TR690) model:
<Ref. to CVT(TR690)-3, General Description.>
6MT model:
<Ref. to 6MT-2, General Description.>

2. Transfer Case and Extension Case Assembly

A: NOTE

For removal, installation and inspection, refer to “6MT” section. <Ref. to 6MT-61, Transfer Case and Extension Case Assembly.>

3. Transfer Clutch

A: NOTE

For removal, installation and inspection, refer to “CVT (TR580)” or “CVT (TR690)” section.
CVT (TR580) model:
<Ref. to CVT(TR580)-204, Transfer Clutch.>
CVT (TR690) model:
<Ref. to CVT(TR690)-168, Transfer Clutch.>

4. Extension Case

A: NOTE

For removal, installation and inspection, refer to “CVT (TR580)” or “CVT (TR690)” section.
CVT (TR580) model:
<Ref. to CVT(TR580)-200, Extension Case.>
CVT (TR690) model:
<Ref. to CVT(TR690)-160, Extension Case.>

5. Oil Seal

A: NOTE

For replacement and inspection, refer to “CVT (TR580)”, “CVT (TR690)” or “6MT” section.
CVT (TR580) model:
<Ref. to CVT(TR580)-99, Extension Case Oil Seal.>
CVT (TR690) model:
<Ref. to CVT(TR690)-96, Extension Case Oil Seal.>
6MT model:
<Ref. to 6MT-49, Oil Seal.>

6. Transfer Drive Gear

A: NOTE

For removal, installation and inspection, refer to “6MT” section. <Ref. to 6MT-71, Transfer Drive Gear.>

7. Transfer Driven Gear

A: NOTE

For removal, installation and inspection, refer to “CVT (TR580)” or “6MT” section.
CVT (TR580) model:
<Ref. to CVT(TR580)-218, Transfer Driven Gear.>
6MT model:
<Ref. to 6MT-74, Transfer Driven Gear.>

8. Reduction Drive Gear

A: NOTE

For removal, installation and inspection, refer to “CVT (TR580)” section. <Ref. to CVT(TR580)-256, Reduction Drive Gear.>

9. Reduction Driven Gear

A: NOTE

For removal, installation and inspection, refer to “CVT (TR580)” or “CVT (TR690)” section.
CVT (TR580) model:
<Ref. to CVT(TR580)-223, Reduction Driven Gear.>
CVT (TR690) model:
<Ref. to CVT(TR690)-231, Reduction Driven Gear.>

10.Center Differential

A: NOTE

For removal, installation and inspection, refer to “6MT” section. <Ref. to 6MT-78, Center Differential.>

11.Transfer Clutch Pressure Test

A: NOTE

For inspection, refer to “CVT (TR580)” or “CVT (TR690)” section.
CVT (TR580) model:
<Ref. to CVT(TR580)-54, Transfer Clutch Pressure Test.>
CVT (TR690) model:
<Ref. to CVT(TR690)-54, Transfer Clutch Pressure Test.>

DRIVE SHAFT SYSTEM

DS

		Page
1.	General Description	2
2.	Propeller Shaft	10
3.	Front Axle	16
4.	Front Hub Unit Bearing	22
5.	Rear Axle	28
6.	Rear Hub Unit Bearing	34
7.	Front Drive Shaft	40
8.	Rear Drive Shaft	51
9.	General Diagnostic Table	62

1. General Description

A: SPECIFICATION

1. PROPELLER SHAFT

Model			All models
Propeller shaft type			EDJ
Front propeller shaft joint-to-joint length: L_1	mm (in)	CVT (TR580)	675.5 (26.59)
		CVT (TR690)	578 (22.76)
		6MT	735.5 (28.96)
Rear propeller shaft joint-to-joint length: L_2		mm (in)	828 (32.6)
Outer diameter of tube:	mm (in)	D_1	63.5 (2.500)
		D_2	57.5 (2.264)

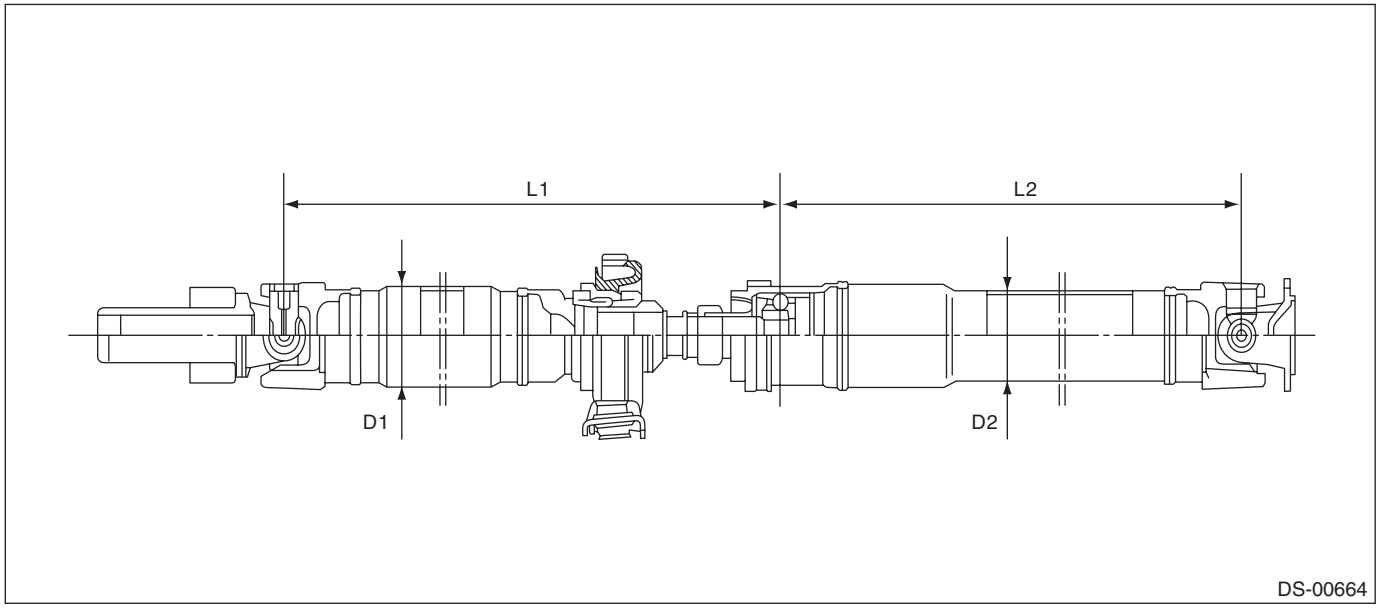

2. FRONT DRIVE SHAFT ASSEMBLY

Model	Type of drive shaft	Axle diameter ϕ mm (in)	Axle length mm (in)
2.5 L sedan and OUTBACK 6MT model	EBJ + PTJ	22 (0.87)	381.2 (15.01)
Other than above	EBJ + PTJ	22 (0.87)	366.8 (14.44)

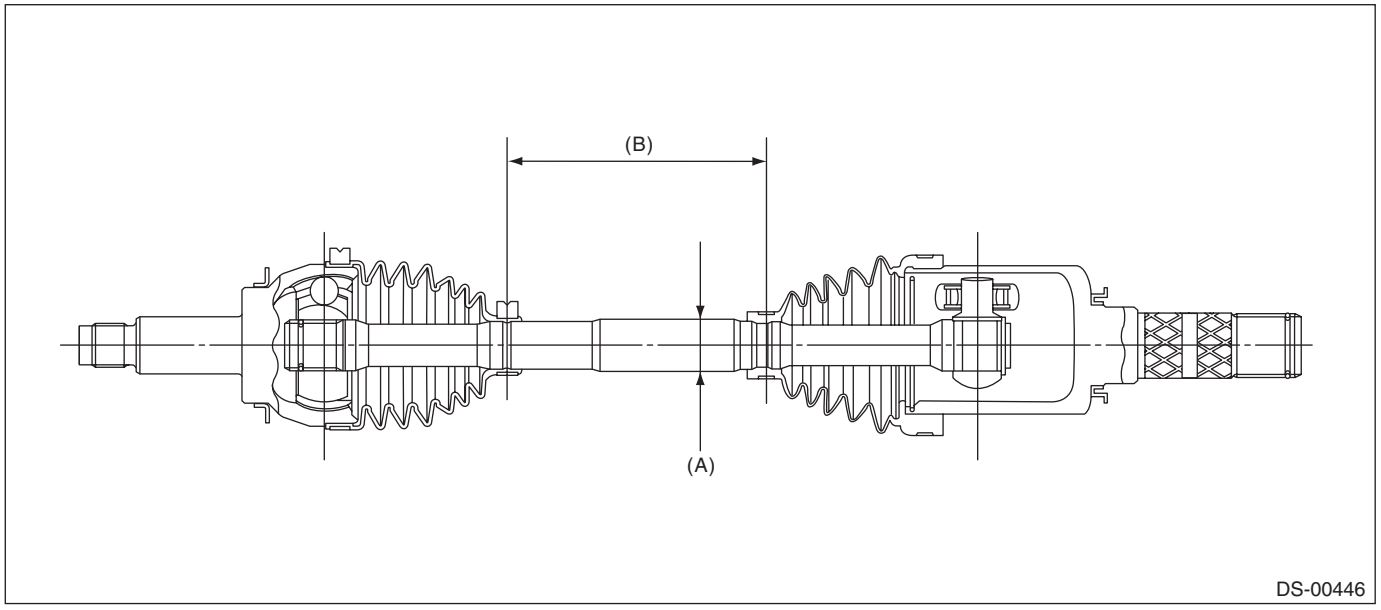

(A) Axle diameter (B) Axle length

3. REAR DRIVE SHAFT ASSEMBLY

Model	Type of drive shaft	Axle diameter ϕ mm (in)	Axle length mm (in)
2.5 L CVT model	BJ + DOJ	22 (0.87)	420.8 (16.57)
Other than above	EBJ + DOJ	22 (0.87)	409.7 (16.13)

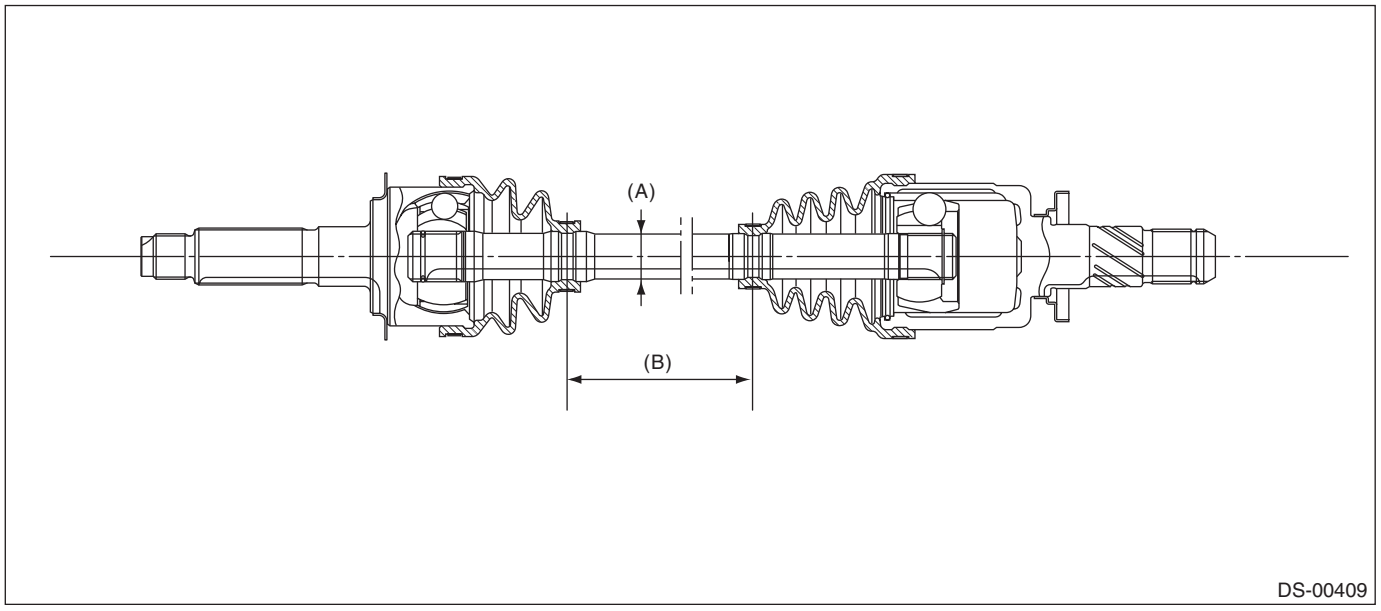

(A) Axle diameter (B) Axle length

B: COMPONENT

1. PROPELLER SHAFT

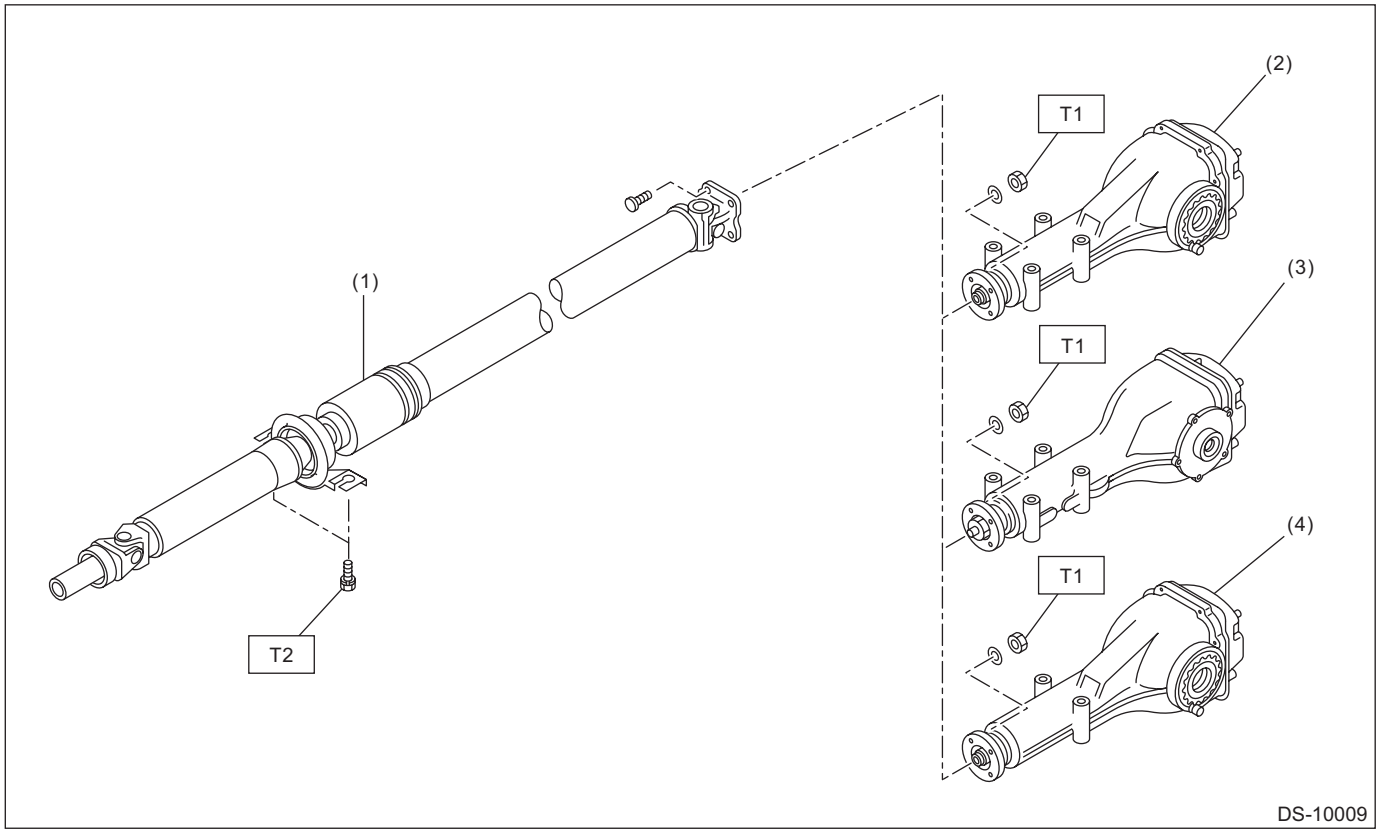

(1) Propeller shaft
(2) Rear differential (VA1-type)
(3) Rear differential (T-type)
(4) Rear differential (VA2-type)

Tightening torque: N·m (kgf-m, ft-lb)
T1: 31 (3.2, 22.9)
T2: 52 (5.3, 38.4)

2. FRONT AXLE

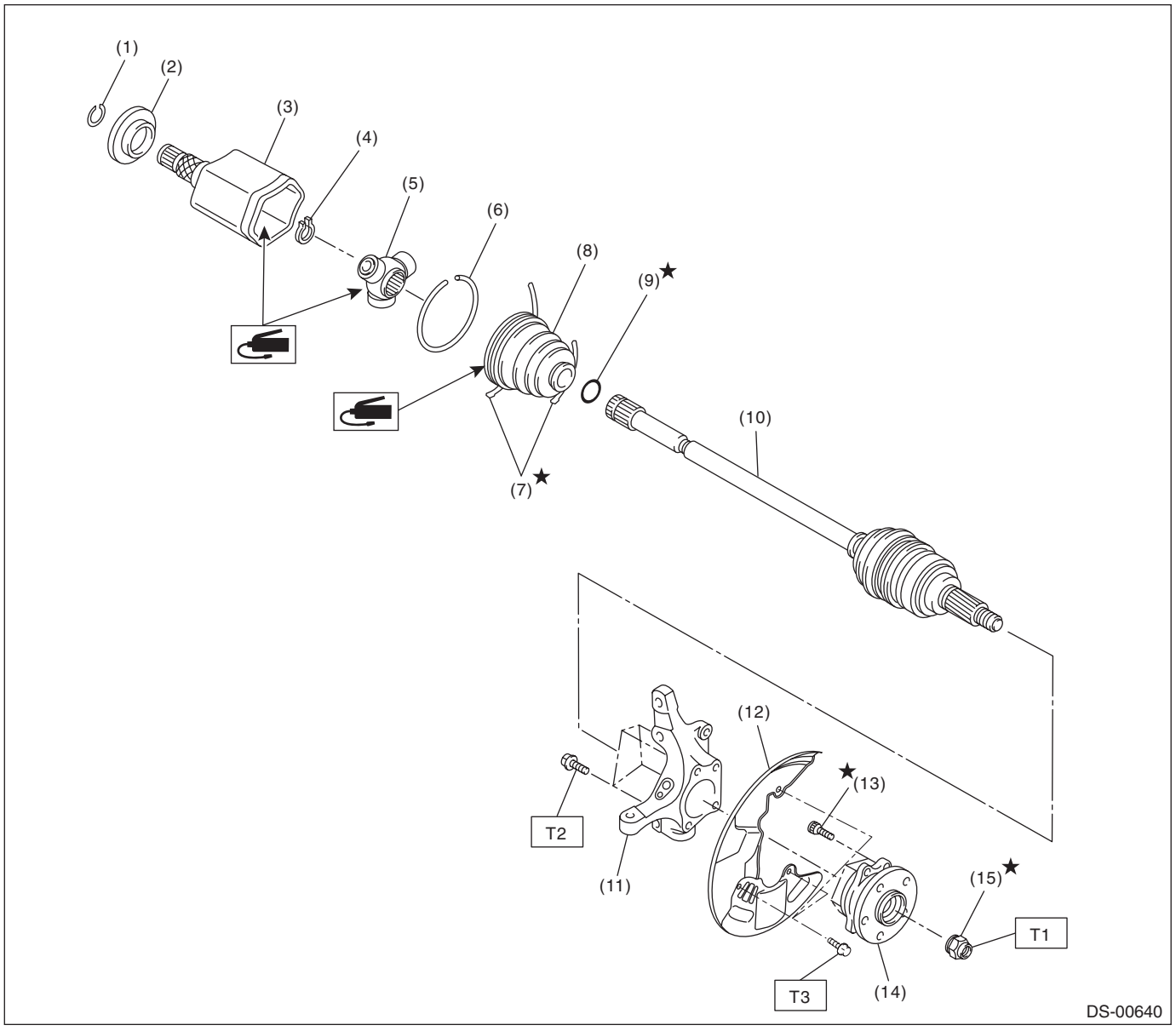

(1) Circlip
(2) Baffle plate
(3) Outer race (PTJ)
(4) Snap ring
(5) Trunnion
(6) Snap ring
(7) Boot band
(8) Boot (PTJ)
(9) O-ring
(10) EBJ shaft ASSY
(11) Front axle housing
(12) Front brake back plate
(13) Hub bolt
(14) Front hub unit bearing
(15) Axle nut

Tightening torque: N·m (kgf-m, ft-lb)
T1: 220 (22.4, 162.3)
T2: 65 (6.6, 47.9)
T3: 18 (1.8, 13.3)

3. REAR AXLE

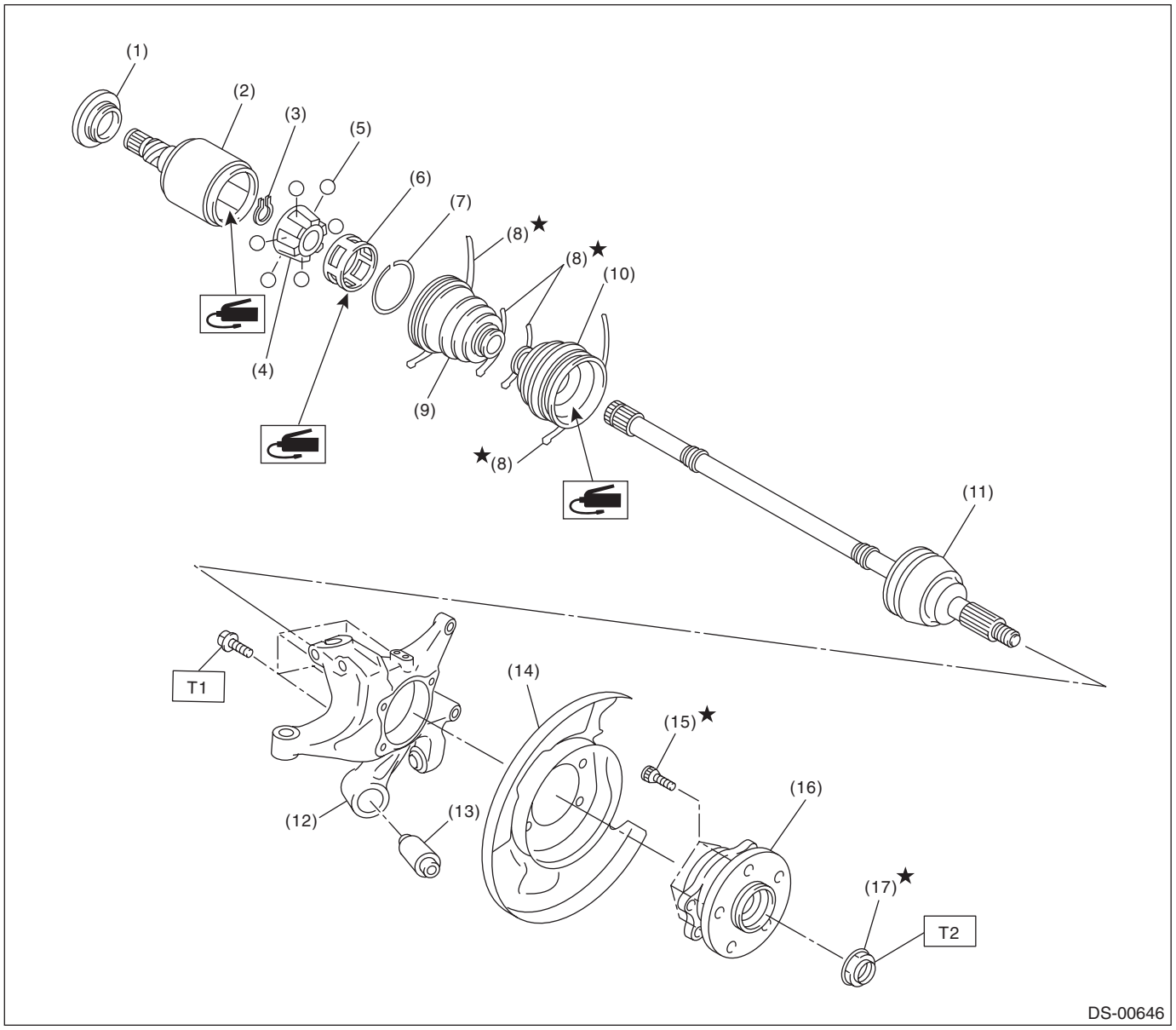

(1)	Baffle plate	(8)	Boot band	(15)	Hub bolt
(2)	Outer race (DOJ)	(9)	Boot (DOJ)	(16)	Rear hub unit bearing
(3)	Snap ring	(10)	Boot (BJ) Boot (EBJ)	(17)	Axle nut
(4)	Inner race	(11)	BJ shaft ASSY EBJ shaft ASSY		
(5)	Ball	(12)	Axle housing		
(6)	Cage	(13)	Rear bushing		
(7)	Snap ring	(14)	Rear brake back plate		

Tightening torque: N·m (kgf-m, ft-lb)
T1: 65 (6.6, 47.9)
T2: 240 (24.5, 177.0)

C: CAUTION

• When performing any work, always wear work clothes, a work cap and protective shoes. Additionally, wear a helmet, protective goggles, etc. if necessary.
• Remove contamination including dirt and corrosion before removal, installation, disassembly or assembly.
• When performing a repair, identify the cause of trouble and avoid unnecessary removal, disassembly and replacement.
• Some vehicle components are extremely hot immediately after driving. Be wary of receiving burns from heated parts.
• Use SUBARU genuine grease, the recommended or equivalent. Do not mix grease etc. of different grades or manufacturers.
• Be sure to tighten fasteners including bolts and nuts to the specified torque.
• Always use the jack-up point when the shop jacks or rigid racks are used to support the vehicle.
• Apply grease onto sliding or revolving surfaces before installation.
• Be sure that the surface of brake disc, brake pad or brake shoe is free from grease or oil.
• Do not secure a part in a vise directly. Place cushioning materials such as wood blocks, aluminum plates, or waste cloth between the part and the vise.
• When the suspension-related components have been removed or replaced, perform “VDC sensor mid-point setting mode” of the VDC. <Ref. to VDC-15, ADJUSTMENT, VDC Control Module and Hydraulic Control Unit (VDCCM&H/U).>

D: PREPARATION TOOL

1. SPECIAL TOOL

ILLUSTRATION	Part No.	DESCRIPTION	REMARKS
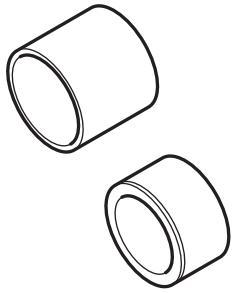 ST20099PA010	20099PA010	INSTALLER & REMOVER	• Used for replacing the bushing - trailing link of the housing assembly - rear axle. • Used together with BUSHING REMOVER (20099FG000).
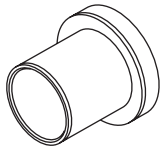 ST20099FG000	20099FG000	BUSHING REMOVER	• Used for replacing the bushing - trailing link of the housing assembly - rear axle. • Used together with base part of INSTALLER & REMOVER (20099PA010).

ILLUSTRATION	Part No.	DESCRIPTION	REMARKS
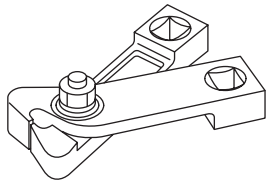 ST28099AC000	28099AC000	BOOT BAND PLIERS	Used for tightening the band - boot. (For front drive shaft)
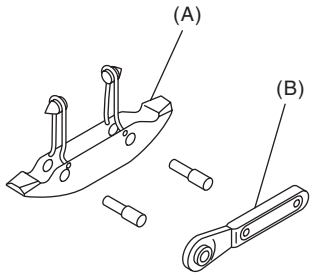 ST-925091000	925091000	BAND TIGHTENING TOOL	Used for tightening the band - boot. (A) Jig for the band (B) Ratchet wrench
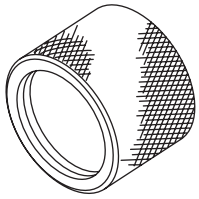 ST18675AA000	18675AA000	DIFFERENTIAL SIDE OIL SEAL INSTALLER	Used for installing the differential side retainer oil seal.
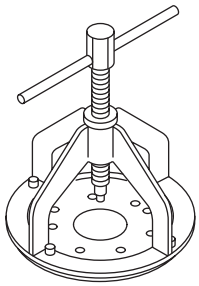 ST-926470000	926470000	AXLE SHAFT PULLER	• Used for removing the drive shaft. • Used together with AXLE SHAFT PULLER PLATE (28099PA110).
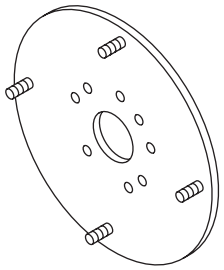 ST28099PA110	28099PA110	AXLE SHAFT PULLER PLATE	• Used for removing the drive shaft. • Exchange with the plate of the AXLE SHAFT PULLER (926470000) to use.

ILLUSTRATION	Part No.	DESCRIPTION	REMARKS
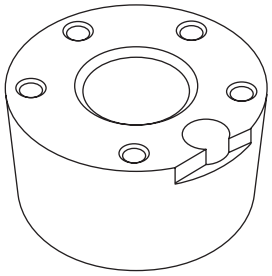 ST28099PA080	28099PA080	HUB STAND	Used for assembling the bolt - hub of the hub.
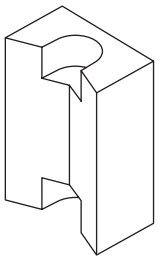 ST28399AG000	28399AG000	HUB STAND	Used for extracting the bolt - hub.
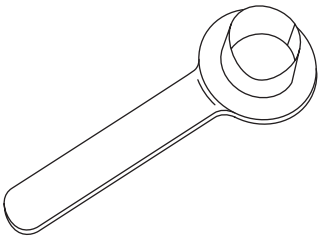 ST28399SA010	28399SA010	OIL SEAL PROTECTOR	• Used for installing front drive shaft into front differential. • For protecting the oil seal.
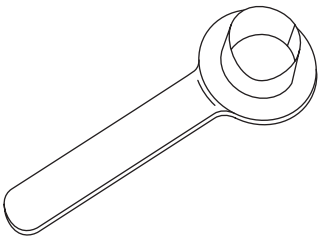 ST28099PA090	28099PA090	OIL SEAL PROTECTOR	• Used for installing the rear drive shaft to the rear differential. • For protecting the oil seal.

2. GENERAL TOOL

TOOL NAME	REMARKS
Tie-rod ball joint puller	Used for disconnecting joints.
Dial gauge	Used for inspecting the propeller shaft run-out.
Extension cap	Used for preventing leakage of gear oil or CVTF.
Crowbar	Used for extracting drive shaft.
Needle nose pliers	Used for tightening the band - boot of the rear drive shaft. • Snap-on 96BCP Or equivalent.

2. Propeller Shaft

A: REMOVAL

CAUTION:
- **Before removing propeller shaft, wrap metal parts with a cloth or rubber material.**
- **Do not disassemble the center EDJ of the propeller shaft.**
- **Before removing the propeller shaft, wrap the center joint part with a cloth, etc. If the joint is bent during removal, the rubber boot may be damaged due to interference with metal parts.**

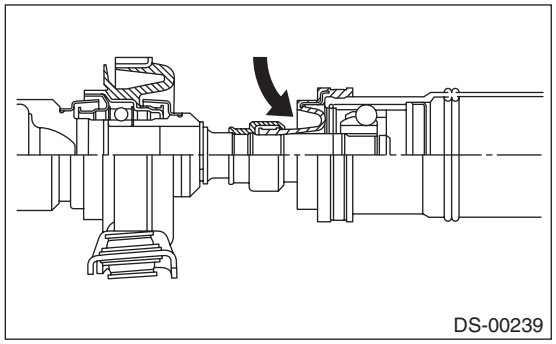
DS-00239

1) Shift the select lever or gear shift lever to neutral.
2) Release the parking brake.
3) Lift up the vehicle.
4) Remove the front exhaust pipe.
- 2.5 L model: <Ref. to EX(H4DO)-5, REMOVAL, Front Exhaust Pipe.>
- 3.6 L model: <Ref. to EX(H6DO)-6, REMOVAL, Front Exhaust Pipe.>

5) Remove the rear exhaust pipe.
- 2.5 L model: <Ref. to EX(H4DO)-16, REMOVAL, Rear Exhaust Pipe.>
- 3.6 L model: <Ref. to EX(H6DO)-12, REMOVAL, Rear Exhaust Pipe.>

6) Remove the bolts to remove the front heat shield cover.

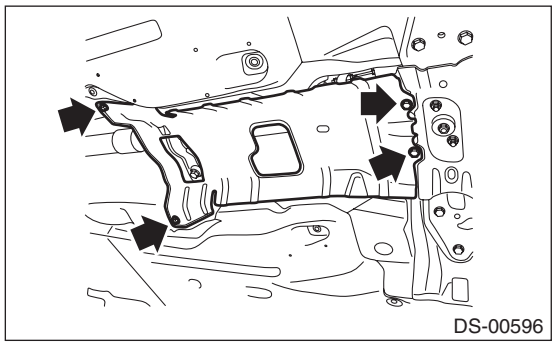
DS-00596

7) Remove the propeller shaft assembly.

CAUTION:
- **Do not disassemble the propeller shaft.**
- **Use a container to catch CVTF or oil flowing from propeller shaft.**
- **To prevent CVTF from leaking, install extension cap etc. to the transmission.**
- **Be careful not to damage oil seals and contact surface of the sleeve yoke.**

(1) Place alignment marks (A) on the flange yoke and rear differential.

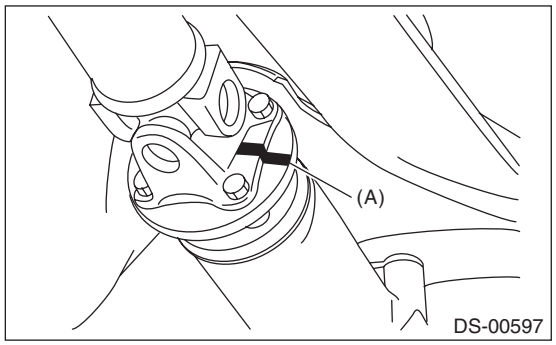

(2) Remove the bolts and remove the propeller shaft from the rear differential.

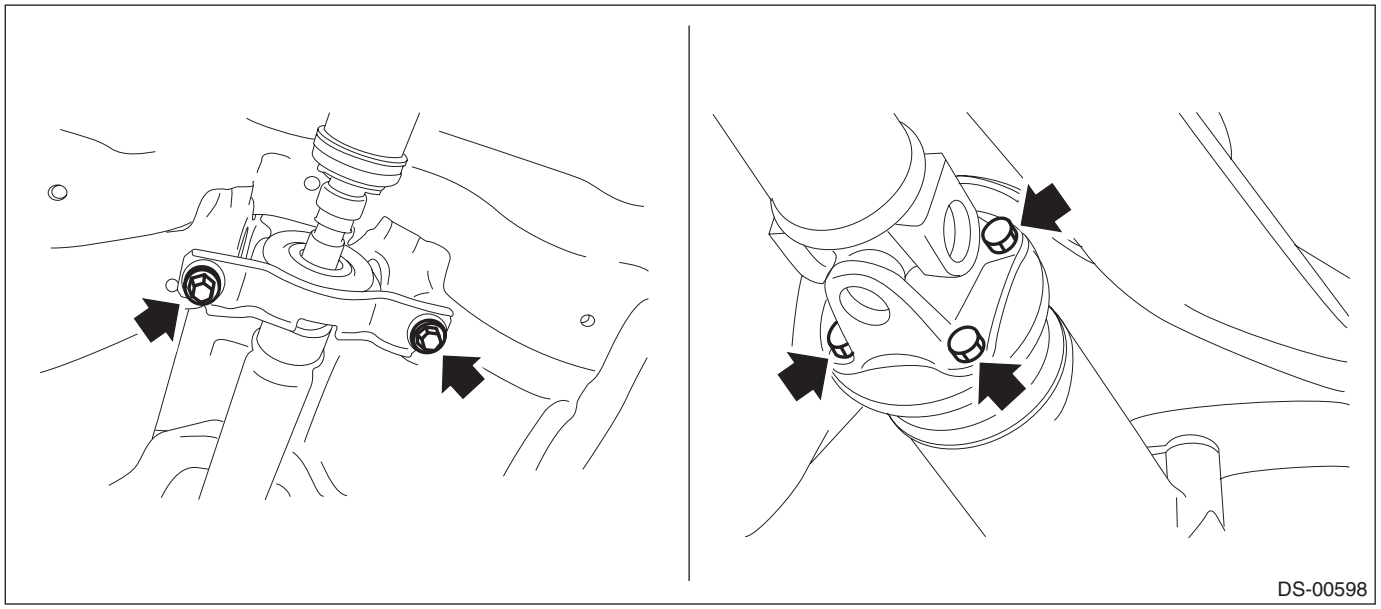

(3) Remove the end of propeller shaft from the transmission.

NOTE:
Use a container to catch oil flowing from propeller shaft.

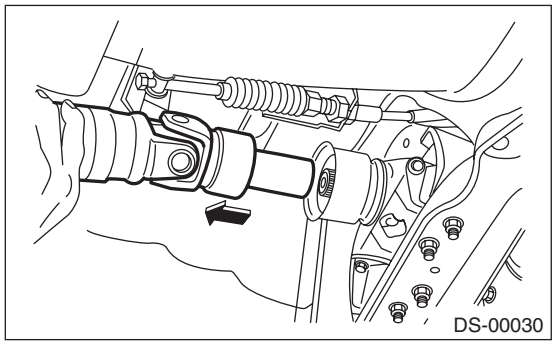

(4) Install extension cap (A) to the transmission.

NOTE:
If extension cap (A) is not available, place vinyl bag over opening and fasten with string to prevent gear oil from leaking.

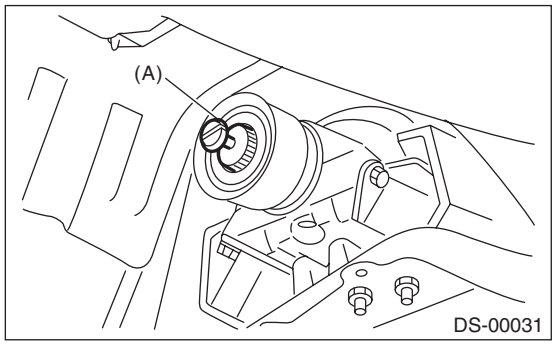

B: INSTALLATION

1) Before installation, check the following items, and replace the propeller shaft assembly as necessary.
- Dents or cracks on the tube surface
- Splines for deformation or abnormal wear
- Unsmooth joint operation or abnormal noise
- Center bearing for free play, noise or non-smooth operation.
- Oil seals for abnormal wear or damage
- Damaged center bearing

2) Apply fluid or gear oil to the oil seal lip and the propeller shaft.

Recommended fluid/gear oil:
<Ref. to RM-4, FLUID, RECOMMENDED MATERIALS, Recommended Materials.>

3) Insert the sleeve yoke into the transmission and attach center bearing to body.

Tightening torque:
52 N·m (5.3 kgf-m, 38.4 ft-lb)

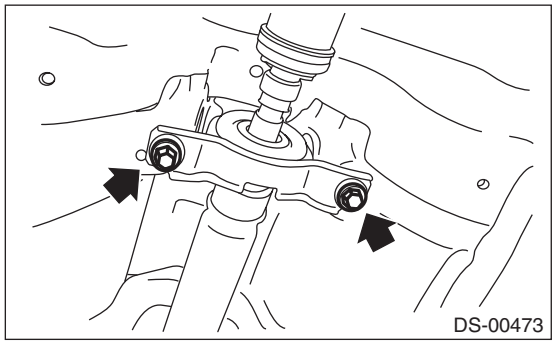

4) Align the alignment marks (A), and connect the yoke flange and rear differential.

Tightening torque:
31 N·m (3.2 kgf-m, 22.9 ft-lb)

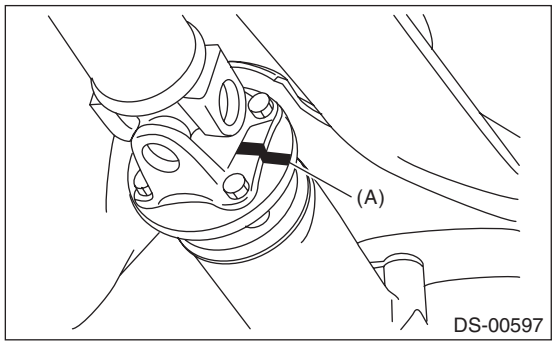

5) Check the propeller shaft with the propeller shaft installed to the vehicle. <Ref. to DS-13, INSPECTION, Propeller Shaft.>
6) Install the heat shield cover.

Tightening torque:
18 N·m (1.8 kgf-m, 13.3 ft-lb)

7) Install the rear exhaust pipe.
- 2.5 L model: <Ref. to EX(H4DO)-17, INSTALLATION, Rear Exhaust Pipe.>
- 3.6 L model: <Ref. to EX(H6DO)-13, INSTALLATION, Rear Exhaust Pipe.>

8) Install the front exhaust pipe.
- 2.5 L model: <Ref. to EX(H4DO)-7, INSTALLATION, Front Exhaust Pipe.>
- 3.6 L model: <Ref. to EX(H6DO)-8, INSTALLATION, Front Exhaust Pipe.>

9) Install the under cover - front. <Ref. to EI-28, INSTALLATION, Front Under Cover.>
10) Lower the vehicle.

C: INSPECTION

Check the propeller shaft with the propeller shaft installed to the vehicle.
1) Shift the select lever or gear shift lever to neutral.
2) Release the parking brake.
3) Lift up the vehicle.
4) Remove the front exhaust pipe.
- 2.5 L model: <Ref. to EX(H4DO)-5, REMOVAL, Front Exhaust Pipe.>
- 3.6 L model: <Ref. to EX(H6DO)-6, REMOVAL, Front Exhaust Pipe.>

5) Remove the rear exhaust pipe.
- 2.5 L model: <Ref. to EX(H4DO)-16, REMOVAL, Rear Exhaust Pipe.>
- 3.6 L model: <Ref. to EX(H6DO)-12, REMOVAL, Rear Exhaust Pipe.>

6) Remove the bolts to remove the front heat shield cover.

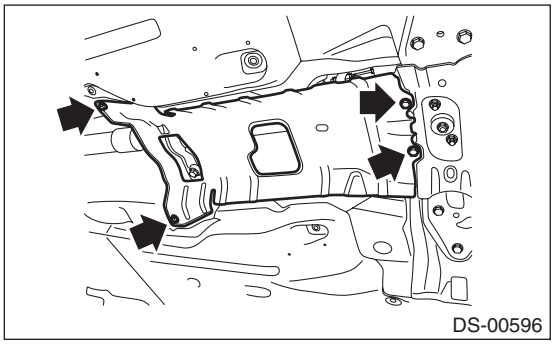
DS-00596

7) Check the propeller shaft mounting bolt for looseness.
   (1) Yoke flange mounting bolts which connect to the rear differential
   (2) Center bearing bracket mounting bolts

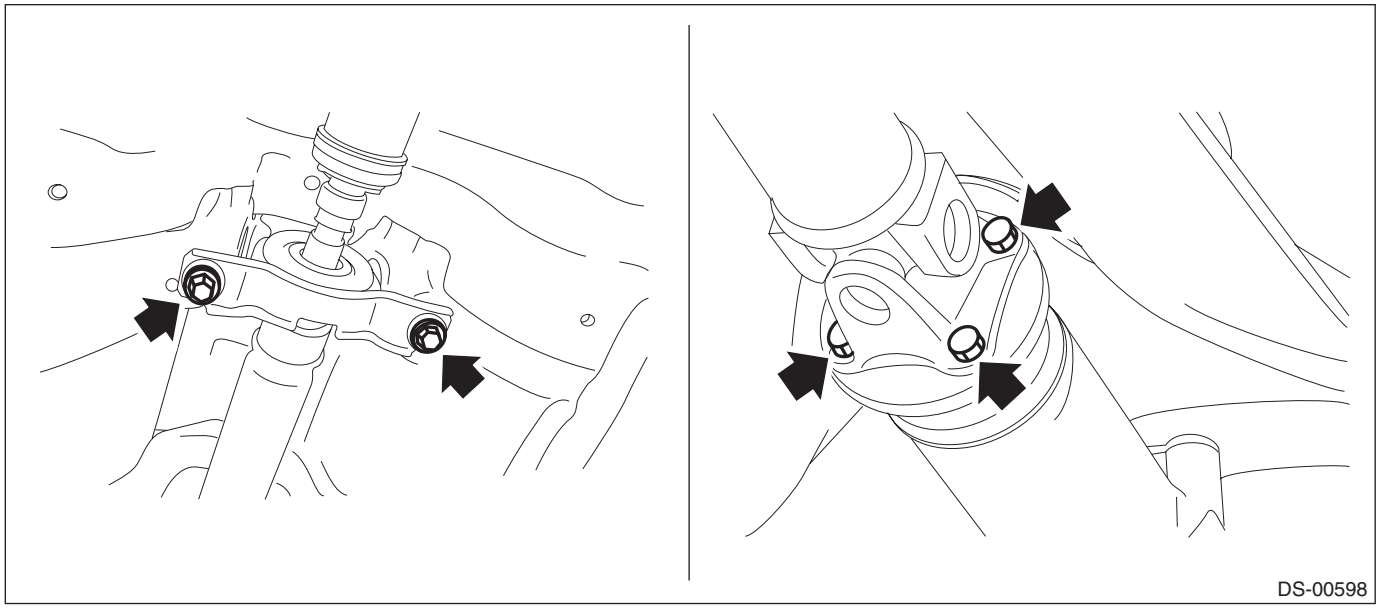

8) Check the spline and bearing for the propeller shaft.
   (1) Turn the propeller shaft by hand to check if abnormal free play exists at splines.
   (2) Also move yokes to check if abnormal free play exists at spiders and bearings.

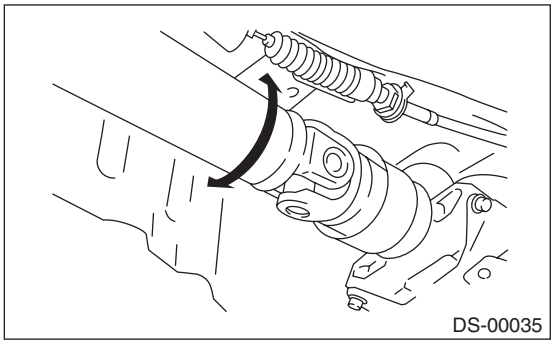

9) Measure the deflection of the propeller shaft.
(1) Set the dial gauge (B) with its indicator stem at the center of the propeller shaft (A).
(2) Turn the propeller shaft (A) slowly by hands to check for runout of the propeller shaft.

Runout:
Limit: 0.6 mm (0.024 in)

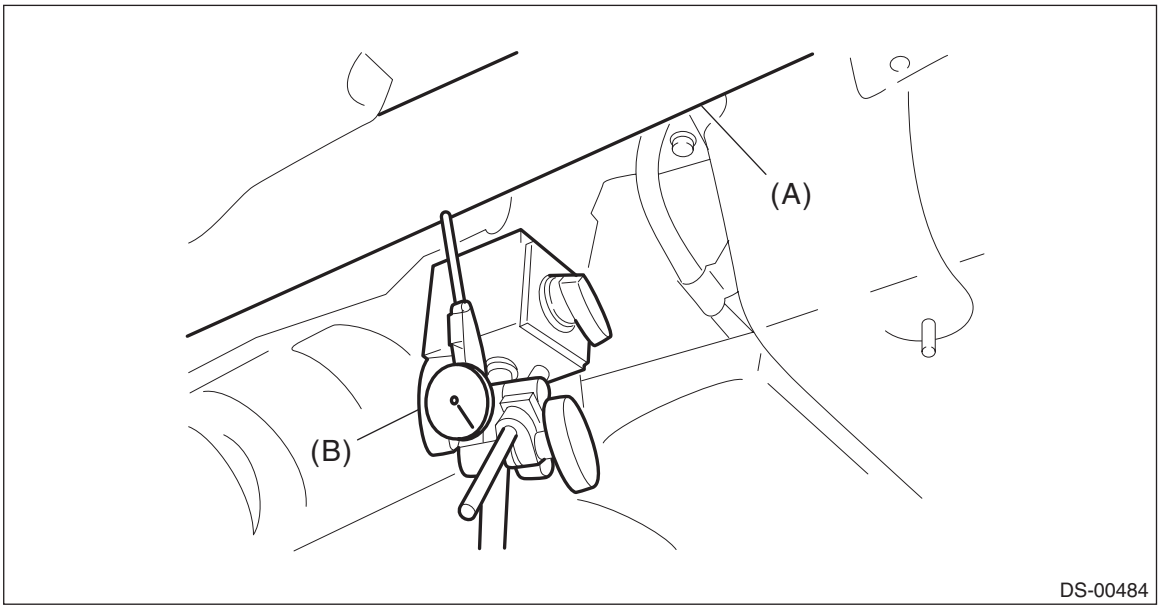

10) Check the center bearing for free play.
Move the propeller shaft near the center bearing up, down, left, right by hand, to check for any abnormal free play of the bearings.

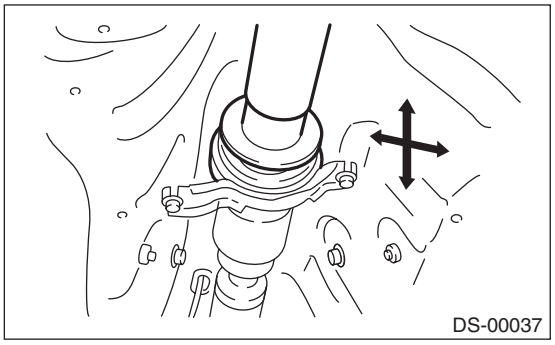

11) Replace the propeller shaft assembly if faulty is found in the inspection.

3. Front Axle

A: REMOVAL

1) Lift up the vehicle, and then remove the front wheels.
2) Remove the nut - axle.

CAUTION:
Do not loosen the nut - axle while the front axle is loaded. Doing so may damage the hub unit COMPL.

(1) Lift the crimped section of the nut - axle.
(2) Remove the nut - axle using a socket wrench while depressing the brake pedal.

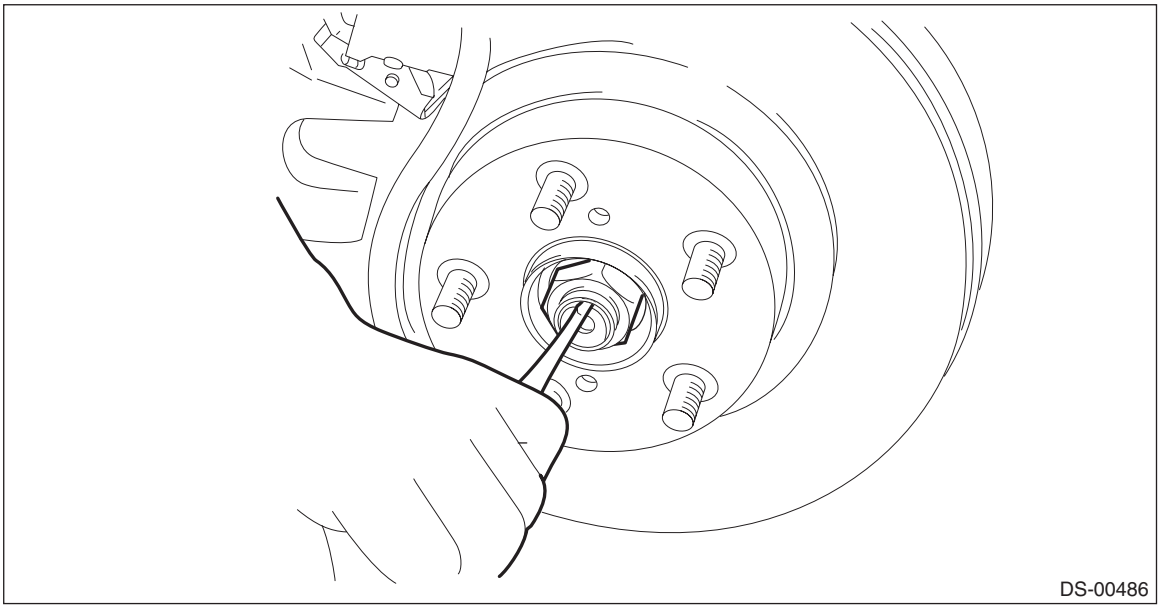

3) Remove the disc brake assembly. <Ref. to BR-26, REMOVAL, Front Disc Brake Assembly.>
4) Remove the disc rotor. <Ref. to BR-23, REMOVAL, Front Disc Rotor.>
5) Remove the bolts, and remove the front ABS wheel speed sensor.

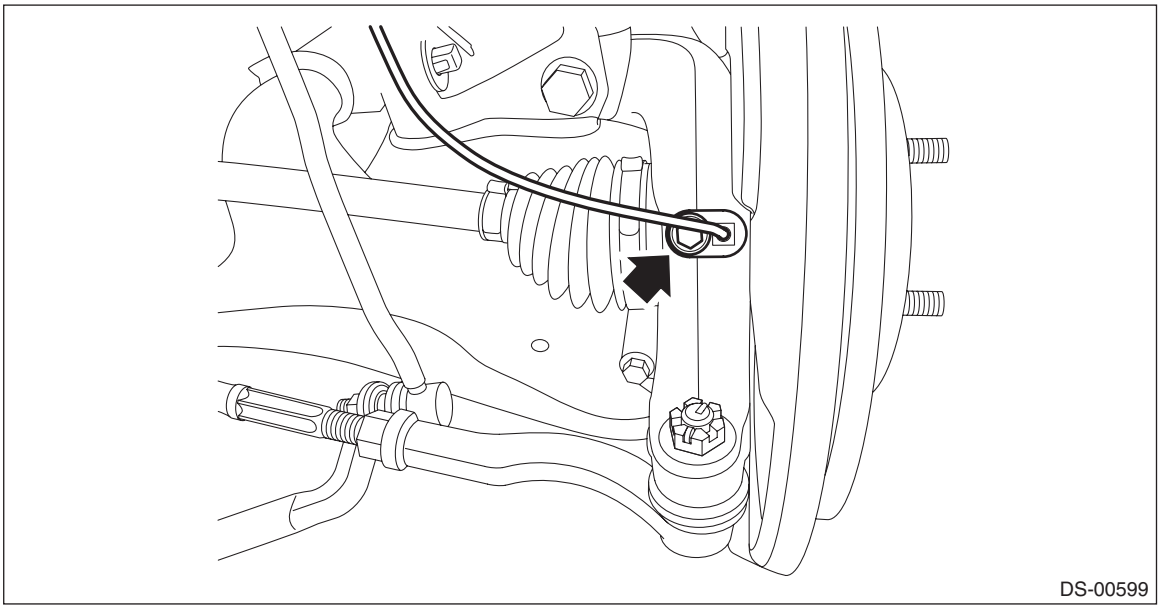

6) Disconnect the tie-rod end.
   (1) Pull out the cotter pin (a).
   (2) Remove the castle nut (b).
   (3) Using a tie-rod ball joint puller, remove the tie-rod end (c).

CAUTION:
Use a tool appropriate to the structure, and be careful not to damage the boot of the joint while removing. The boot may be damaged depending on the tool used.

Preparation tool:
Tie-rod ball joint puller

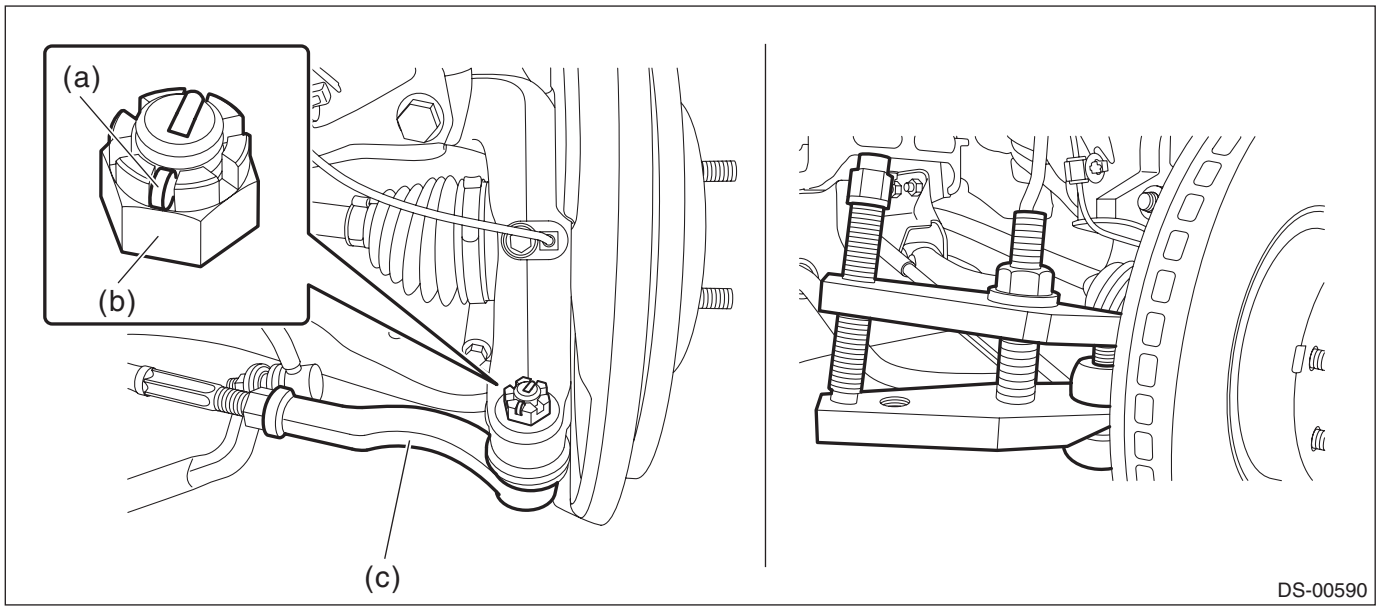

7) Remove the stabilizer link and ball joint.

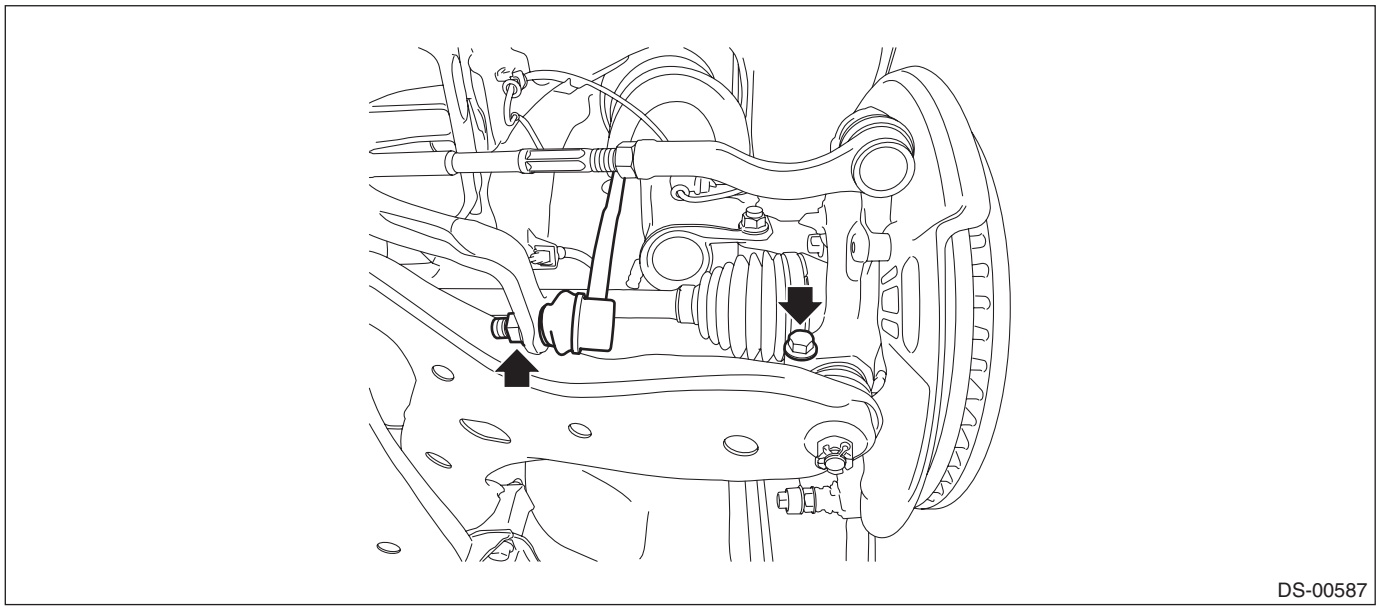

8) Remove the front drive shaft. <Ref. to DS-40, REMOVAL, Front Drive Shaft.>

9) Remove the housing assembly - front axle.

CAUTION:
- **Be careful of the weight of the housing assembly - front axle.**
- **Be careful not to damage the spline portion of the drive shaft.**

(1) Place an alignment mark (a) on the adjusting bolt and the strut assembly.
(2) Remove the adjusting bolts and flange bolts for the strut assembly, and then remove the housing assembly - front axle.

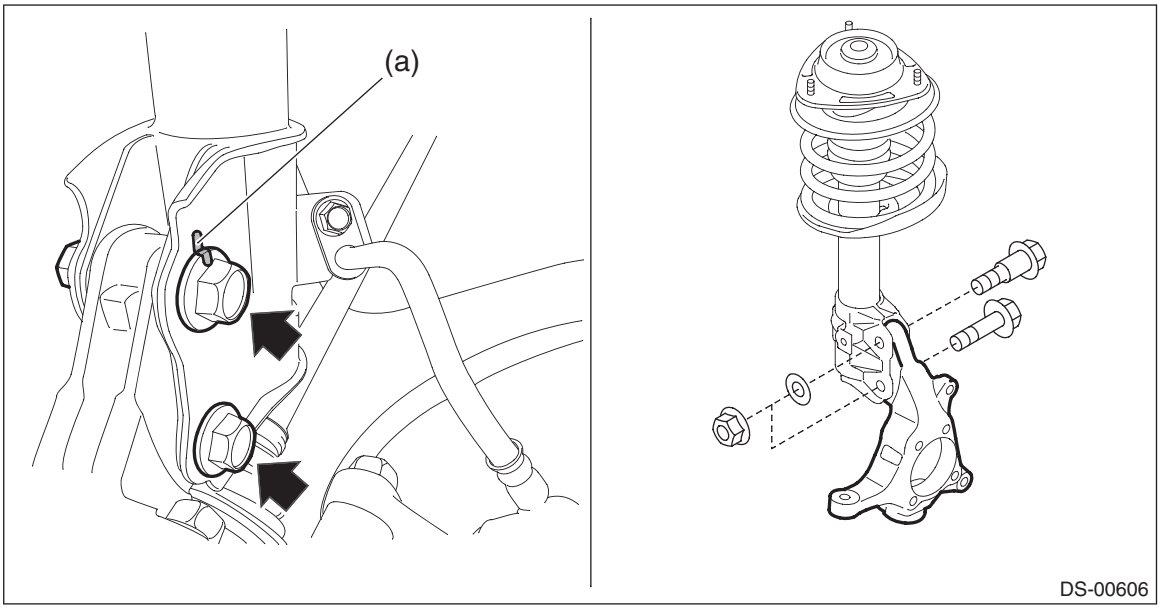

NOTE:
While holding the adjusting bolt side, tighten the nut side.
10) For removal of the hub unit COMPL - front axle, refer to “Front Hub Unit Bearing”. <Ref. to DS-22, REMOVAL, Front Hub Unit Bearing.>

B: INSTALLATION

1) Install the housing assembly - front axle to the strut assembly.
   (1) Align alignment marks on the camber adjusting bolt and strut.
   (2) While holding the bolt head of adjusting bolt, tighten the nut.

Tightening torque:
155 N·m (15.8 kgf-m, 114.3 ft-lb)

2) Install the front drive shaft assembly. <Ref. to DS-41, INSTALLATION, Front Drive Shaft.>
3) Install the ball joint assembly.

CAUTION:
• Before tightening, make sure the bottom surface of the housing assembly - front axle and the stepped section of ball joint are in contact.
• Be careful not to damage the boot of the joint.

Tightening torque:
50 N·m (5.1 kgf-m, 36.9 ft-lb)

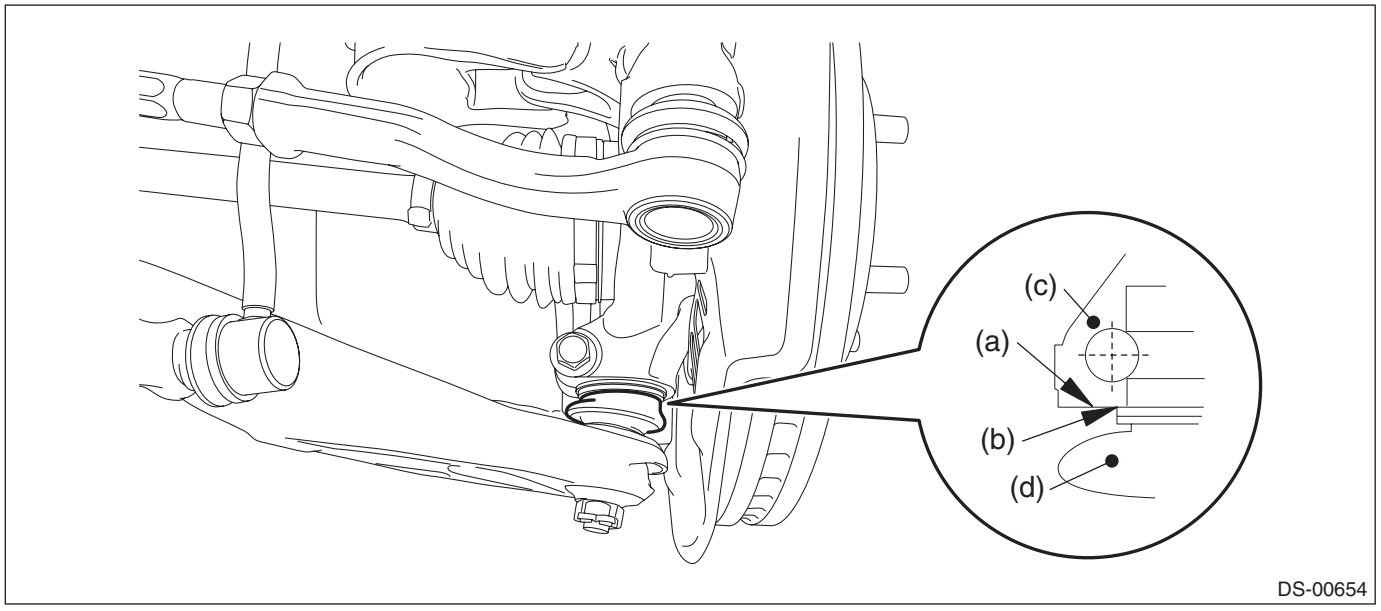

(a) Bottom surface of housing ASSY - front axle
(b) Raised section of ball joint
(c) Housing ASSY - front axle
(d) Ball joint ASSY

4) Install the front ABS wheel speed sensor.

Tightening torque:
7.5 N·m (0.8 kgf-m, 5.5 ft-lb)

5) Install the disc rotor.
6) Install the disc brake assembly.

Tightening torque:
120 N·m (12.2 kgf-m, 88.5 ft-lb)

7) Install the brake hose bracket.

Tightening torque:
33 N·m (3.4 kgf-m, 24.3 ft-lb)

8) Install the stabilizer link assembly.

Tightening torque:
60 N·m (6.1 kgf-m, 44.3 ft-lb)

9) Connect the tie-rod ends.
(1) Connect the tie-rod ends (a) to the housing assembly - front axle.
(2) Tighten the castle nuts (b) to the specified torque.

CAUTION:
When connecting the tie-rod, do not hit the cap at bottom of tie-rod end with a hammer.

Tightening torque:
27 N·m (2.8 kgf-m, 19.9 ft-lb)
(3) Tighten the castle nut within the range of 60° so that the cotter pin hole and cutout portion of the castle nut are aligned.
(4) Insert the cotter pin (c), and bend the tip of the pin to fix it.

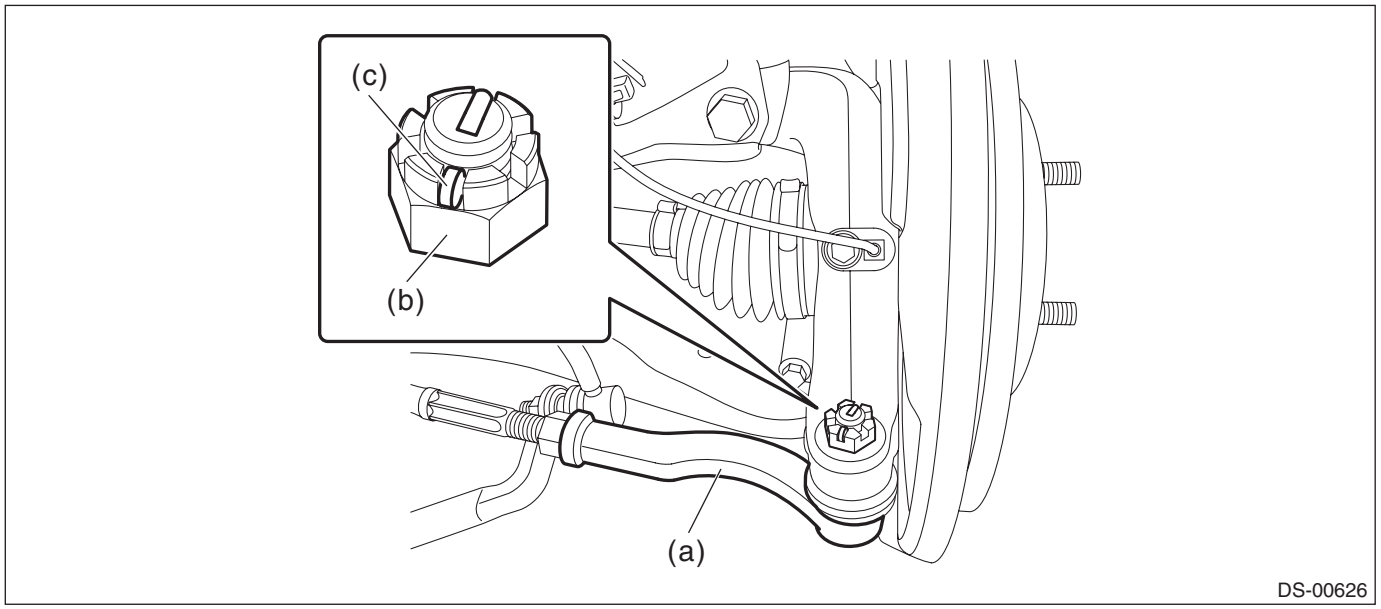

(a) Tie-rod end (b) Castle nut (c) Cotter pin

10) While depressing the brake pedal, tighten the nut - axle to the specified torque.

CAUTION:
Do not load the front axle before tightening the nut - axle. Doing so may damage the hub unit COMPL.

Tightening torque:
220 N·m (22.4 kgf-m, 162.3 ft-lb)
11) After tightening the nut - axle, lock it securely.

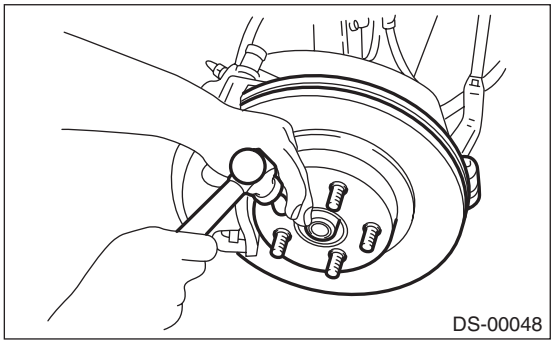

12) Install the front wheels, and perform the following inspections.

Tightening torque:
120 N·m (12.2 kgf-m, 88.5 ft-lb)

1. Check the wheels for smooth rotation.
2. Check that there is no play by moving the upper and lower portions of front tire in an axial direction with the brake pedal released.
   - **Play exists** → Check the hub unit COMPL - front axle. <Ref. to DS-27, INSPECTION, Front Hub Unit Bearing.>

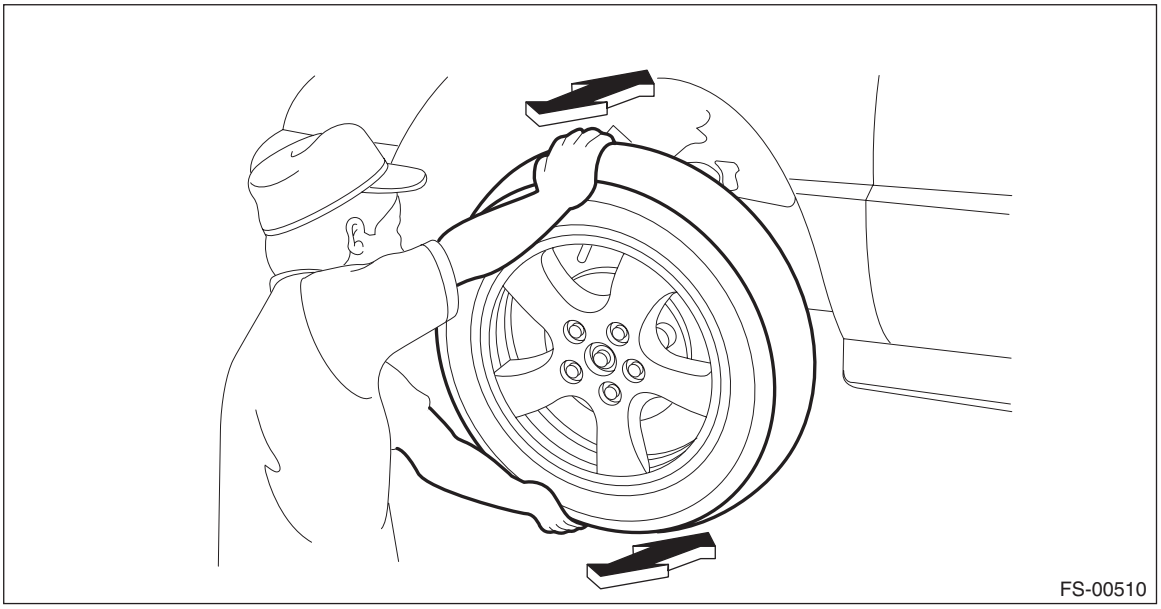

3. Check that there is no play by moving the upper and lower portions of front tire in an axial direction with the brake pedal depressed.
   - **Play exists** → Replace the ball joint assembly. <Ref. to FS-36, REMOVAL, Front Ball Joint.>

13) Inspect the wheel alignment and adjust if necessary.
- Inspection: <Ref. to FS-10, INSPECTION, Wheel Alignment.>
- Adjustment: <Ref. to FS-14, ADJUSTMENT, Wheel Alignment.>

CAUTION:
When the wheel alignment has been adjusted, perform the following adjustment.
– Lane keep assist learning value clear (model with EyeSight): <Ref. to ES(diag)-49, OPERATION, Clear Active Lane Keep System Learning Value.>
– "VSC(VDC) Centering Mode": <Ref. to VDC-15, ADJUSTMENT, VDC Control Module and Hydraulic Control Unit (VDCCM&H/U).>

14) Perform reinitialization of the auto headlight beam leveler system. (Model with auto headlight beam leveler) <Ref. to LI-23, PROCEDURE, Auto Headlight Beam Leveler System.>

4. Front Hub Unit Bearing

A: REMOVAL

1) Lift up the vehicle, and then remove the front wheels.
2) Remove the nut - axle.

CAUTION:
Do not loosen the nut - axle while the front axle is loaded. Doing so may damage the hub unit COMPL.

(1) Lift the crimped section of the nut - axle.
(2) Remove the nut - axle using a socket wrench while depressing the brake pedal.

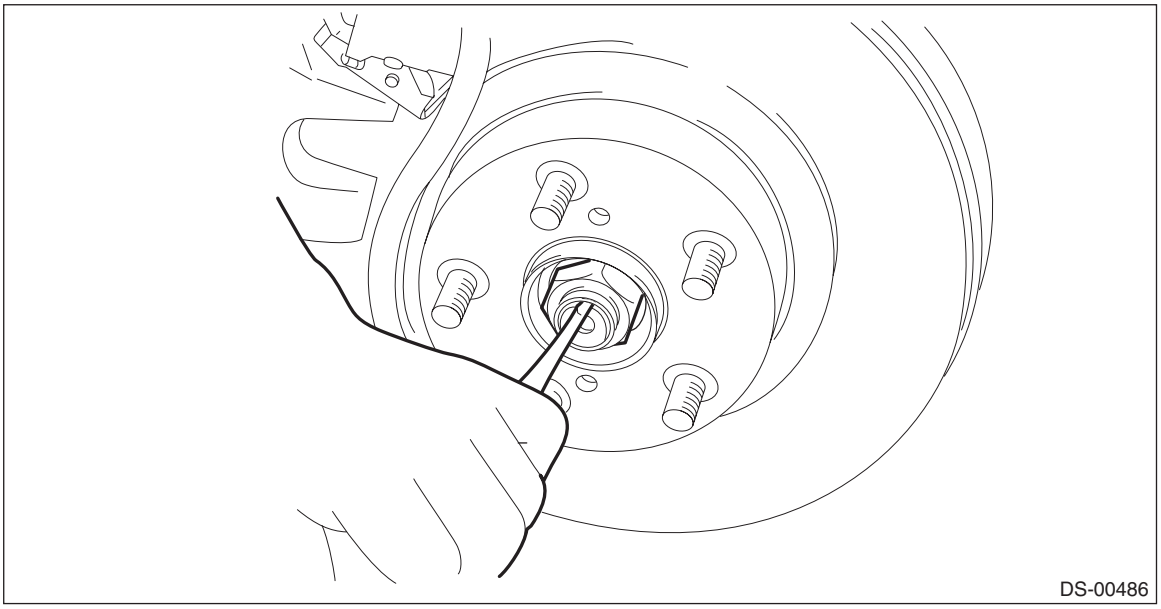

3) Remove the disc brake assembly. <Ref. to BR-26, REMOVAL, Front Disc Brake Assembly.>
4) Remove the disc rotor. <Ref. to BR-23, REMOVAL, Front Disc Rotor.>
5) Remove the bolts, and remove the front ABS wheel speed sensor.

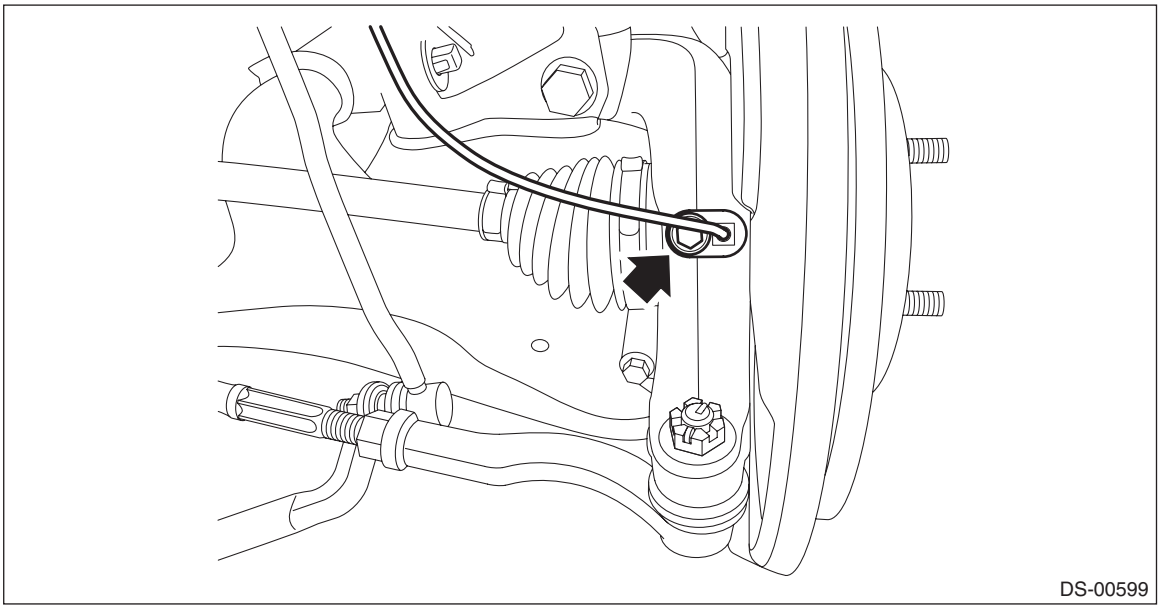

6) Remove the hub unit COMPL - front axle.

CAUTION:
- **Do not get closer the tool which charged magnetism to magnetic encoder.**
- **Be careful not to damage the magnetic encoder.**

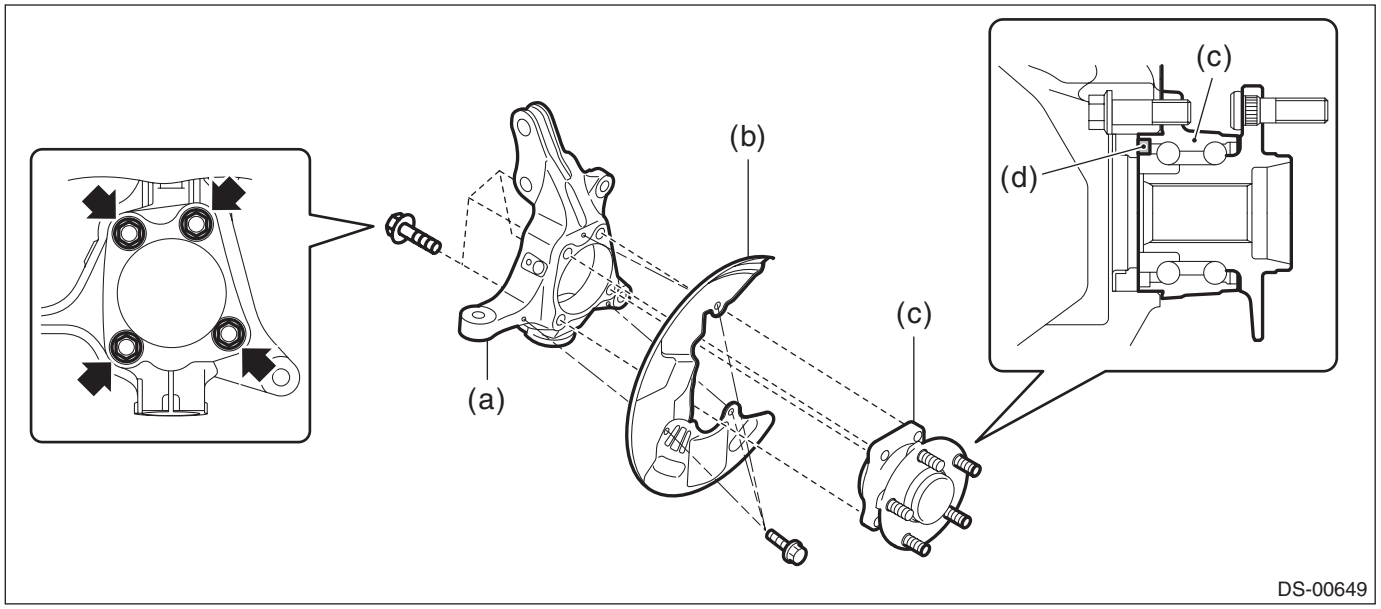

(a) Housing ASSY - front axle
(b) Back plate - front brake
(c) Hub unit COMPL - front axle
(d) Magnetic encoder

NOTE:
If it is hard to remove, use the ST.

Preparation tool:
ST1: AXLE SHAFT PULLER (926470000)
ST2: AXLE SHAFT PULLER PLATE (28099PA110)

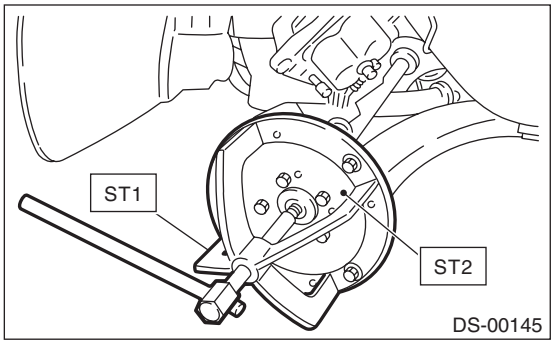

B: INSTALLATION

1) Tighten the back plate - front brake and the hub unit COMPL - front axle to the housing assembly - front axle with bolts.

CAUTION:
- **Do not get closer the tool which charged magnetism to magnetic encoder.**
- **Be careful not to damage the magnetic encoder.**

Tightening torque:
Back plate - front brake: 18 N·m (1.8 kgf-m, 13.3 ft-lb)
Hub unit COMPL - front axle: 65 N·m (6.6 kgf-m, 47.9 ft-lb)

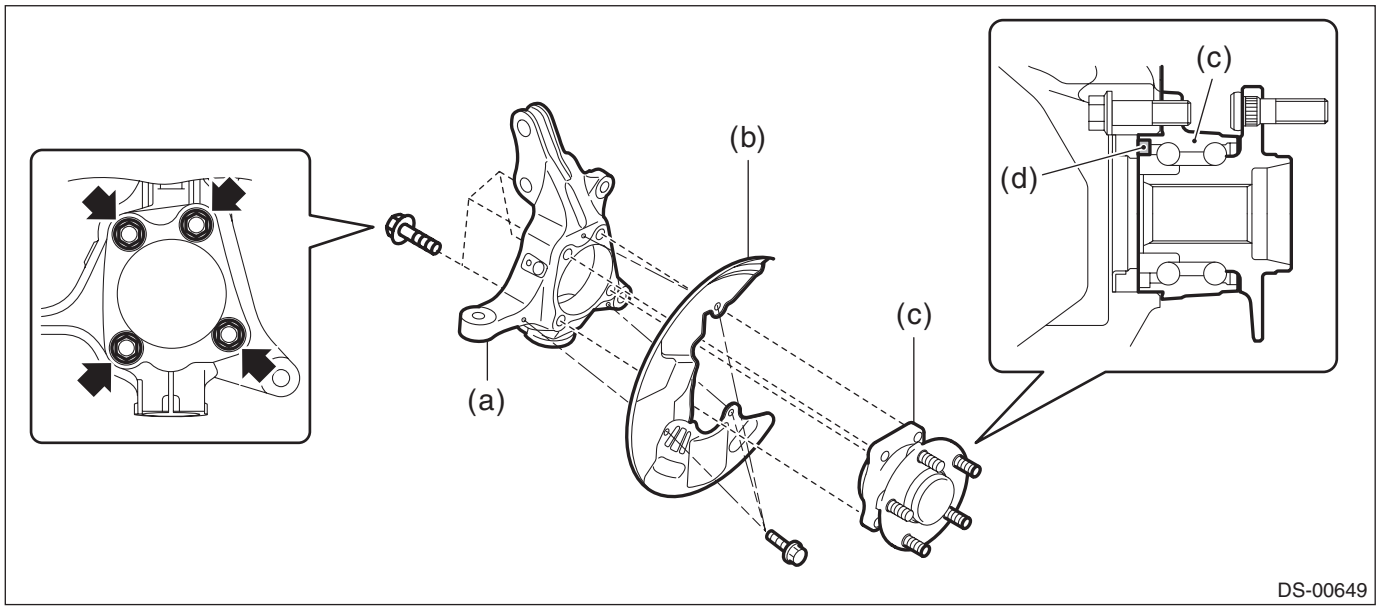

(a) Housing ASSY - front axle
(b) Back plate - front brake
(c) Hub unit COMPL - front axle
(d) Magnetic encoder

2) Install the front drive shaft assembly.

CAUTION:
- **Do not hammer the drive shaft assembly when installing.**
- **Use new nut - axle.**
  (1) Insert the drive shaft assembly into the hub spline, and pull it into the specified position.
  (2) Tighten the new nut - axle temporarily.

3) Install the disc rotor to the hub unit COMPL - front axle.
4) Install the disc brake assembly to the housing assembly - front axle.

Tightening torque:
120 N·m (12.2 kgf-m, 88.5 ft-lb)

5) Install the brake hose bracket.

Tightening torque:
33 N·m (3.4 kgf-m, 24.3 ft-lb)

6) Install the front ABS wheel speed sensor.

Tightening torque:
7.5 N·m (0.8 kgf-m, 5.5 ft-lb)

7) While depressing the brake pedal, tighten new nuts - axle to the specified torque.

CAUTION:
Do not load the front axle before tightening the nut - axle. Doing so may damage the hub unit COMPL.

Tightening torque:
220 N·m (22.4 kgf-m, 162.3 ft-lb)

8) After tightening the nut - axle, lock it securely.

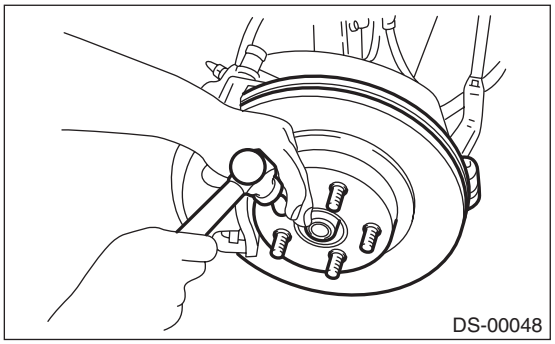

9) Install the front wheels, and perform the following inspections.

Tightening torque:
120 N·m (12.2 kgf-m, 88.5 ft-lb)

1. Check the wheels for smooth rotation.
2. Check that there is no play by moving the upper and lower portions of front tire in an axial direction with the brake pedal released.
   - **Play exists** → Check the hub unit COMPL - front axle. <Ref. to DS-27, INSPECTION, Front Hub Unit Bearing.>

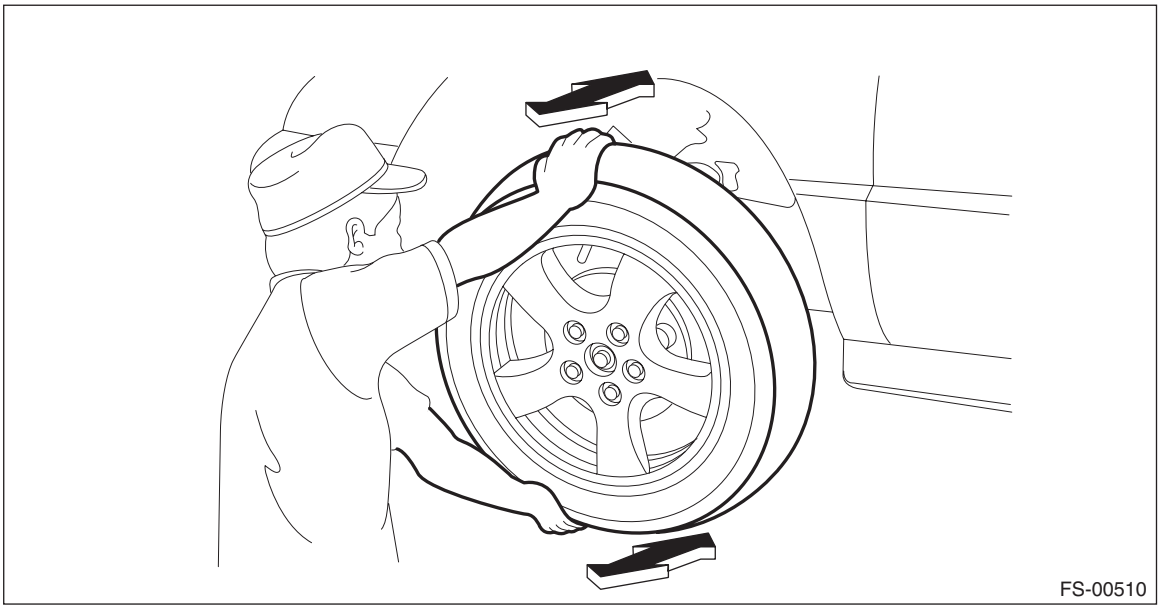

3. Check that there is no play by moving the upper and lower portions of front tire in an axial direction with the brake pedal depressed.
   - **Play exists** → Replace the ball joint assembly. <Ref. to FS-36, REMOVAL, Front Ball Joint.>

C: DISASSEMBLY

Using the ST or a hydraulic press, push out the bolt - hub (b) from the hub unit COMPL - front axle (a).

CAUTION:
- **Be careful not to hammer the bolts - hub. This may deform the hub unit COMPL.**
- **Do not reuse the bolt - hub.**

NOTE:
Since the hub unit COMPL can not be disassembled, only bolts - hub can be removed.

Preparation tool:
ST: HUB STAND (28399AG000)

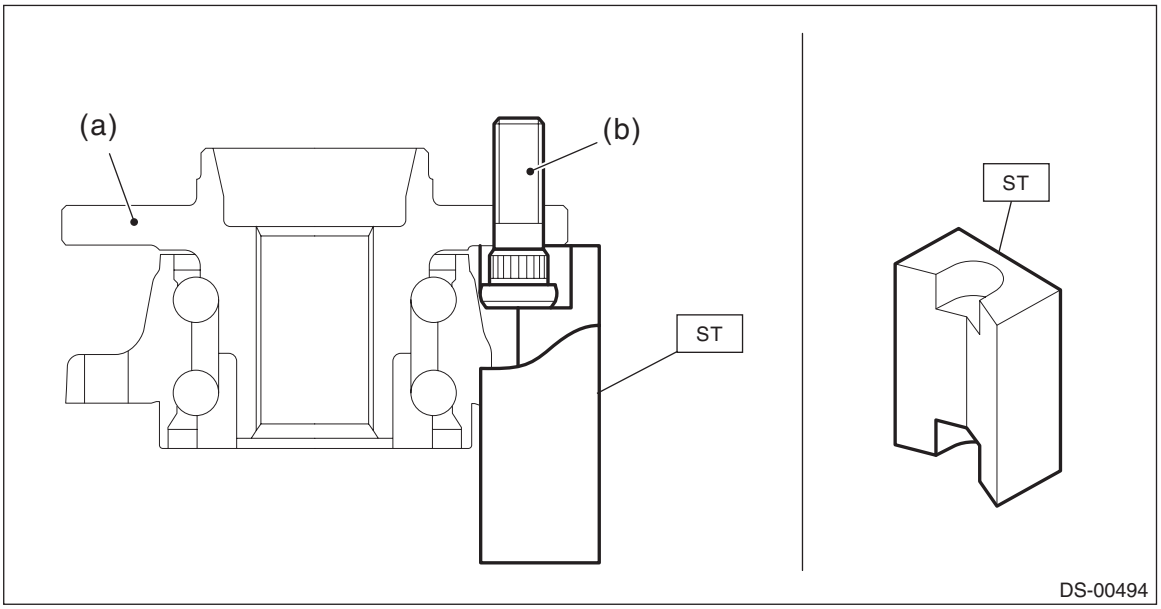

D: ASSEMBLY

1) Install the hub unit COMPL to the ST securely.

Preparation tool:
ST: HUB STAND (28099PA080)

2) Using a press, press new bolts - hub until their seating surfaces contact the hub unit COMPL.

NOTE:
Use the 12 mm (0.47 in) dia. holes in the HUB STAND to prevent bolts from tilting.

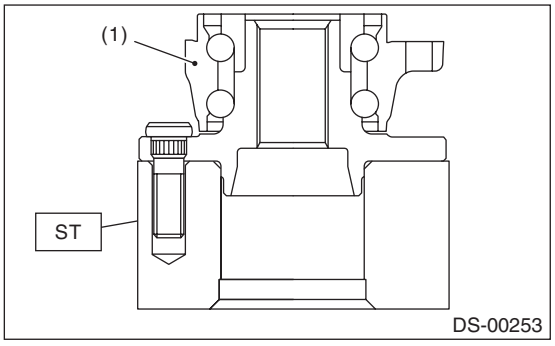

(1) Hub unit COMPL - front axle

E: INSPECTION

1) Moving the front tire up and down by hand, check there is no play in bearing, and check the wheel rotates smoothly.

CAUTION:
If there is any fault in the bearing, replace the hub unit COMPL.

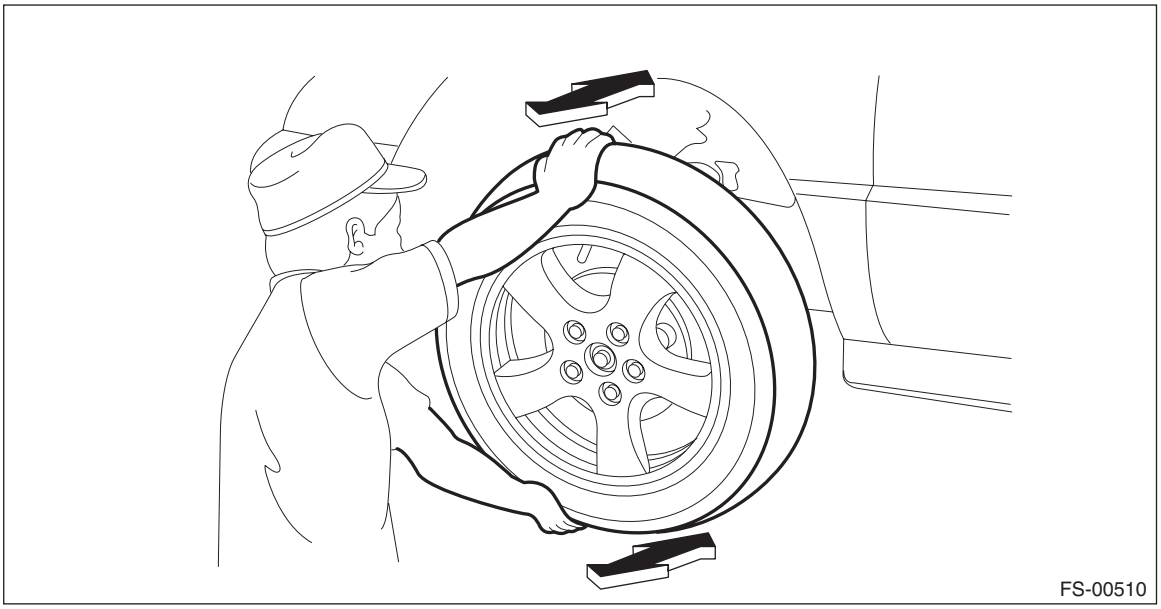

2) Inspect axial play of the hub unit bearing.
1. Remove the tire and disc rotor.
2. Inspect the lean of axis direction using a dial gauge. Replace the hub unit COMPL if the play exceeds the limit.

Service limit:
Maximum: 0.05 mm (0.0020 in)

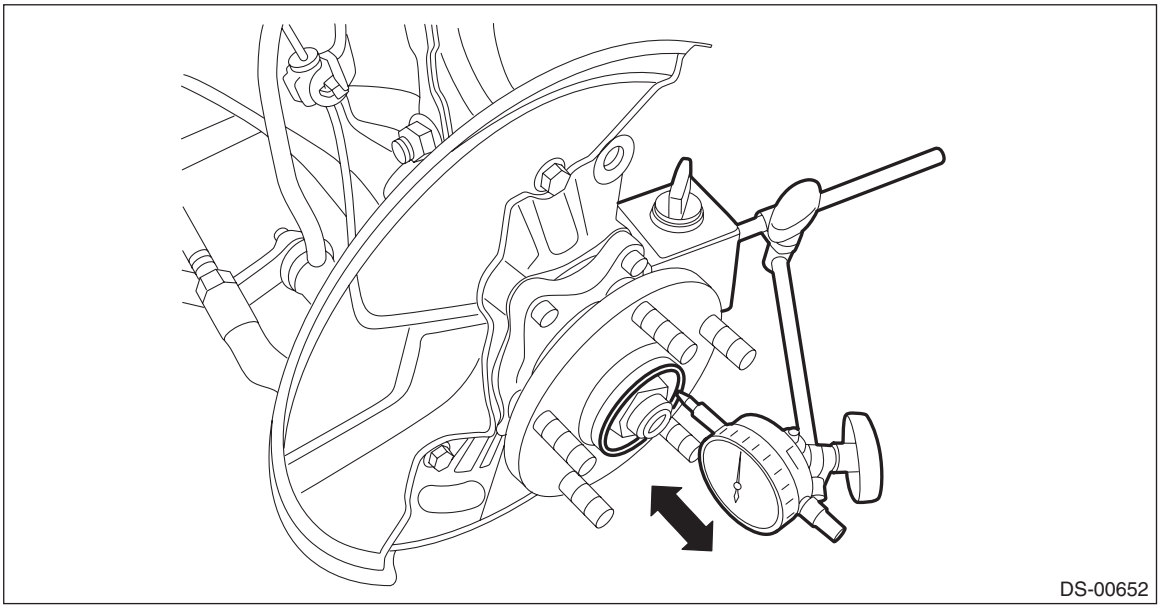

5. Rear Axle

A: REMOVAL

1) Disconnect the ground terminal from battery sensor. <Ref. to RC-4, BATTERY, NOTE, Repair Contents.>
2) Lift up the vehicle, and then remove the rear wheels.
3) Remove the nut - axle.

CAUTION:
Do not loosen the nut - axle while the rear axle is loaded. Doing so may damage the hub unit COMPL.
(1) Lift the crimped section of the nut - axle.
(2) Remove the nut - axle using a socket wrench while depressing the brake pedal.

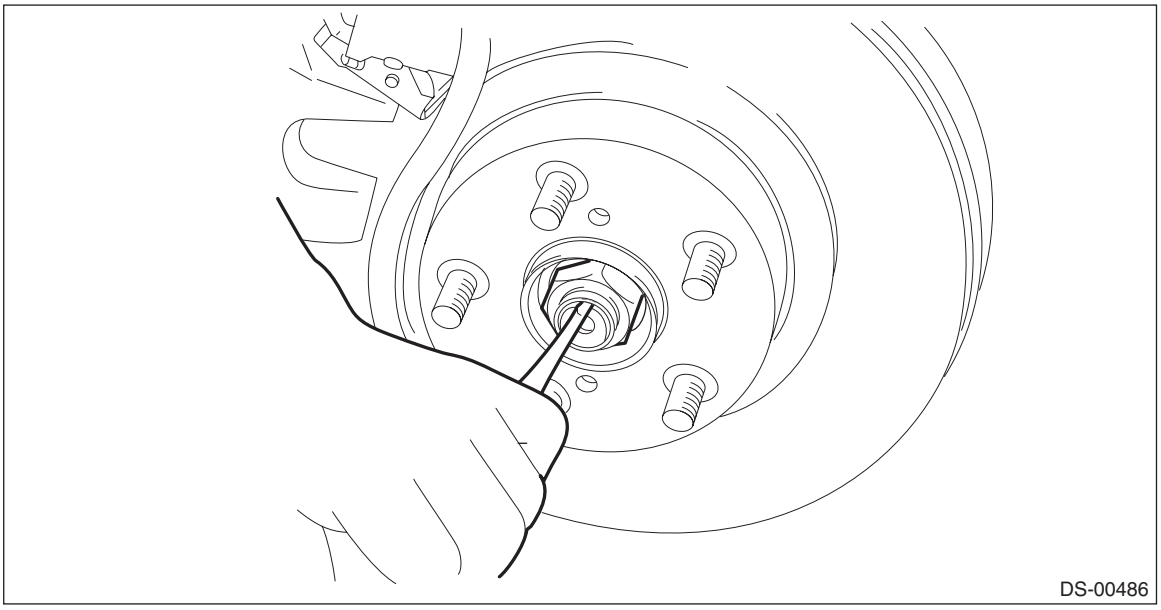

4) Remove the sensor assembly - headlight beam leveler. (Model with auto headlight beam leveler) <Ref. to LI-83, REMOVAL, Rear Height Sensor.>
5) Remove the lateral link assembly - rear. <Ref. to RS-25, REMOVAL, Rear Lateral Link.>
6) Remove the rear disc rotor. <Ref. to BR-41, REMOVAL, Rear Disc Rotor.>
7) Remove the rear drive shaft assembly. <Ref. to DS-51, REMOVAL, Rear Drive Shaft.>

8) Remove the lateral link assembly - front.
(1) Remove the snap pin (a) and nut (b).
(2) Remove the ball joint from the housing assembly - rear axle.

CAUTION:
Use a tool appropriate to the structure, and be careful not to damage the boot of the joint while removing. The boot may be damaged depending on the tool used.

Preparation tool:
Tie-rod ball joint puller

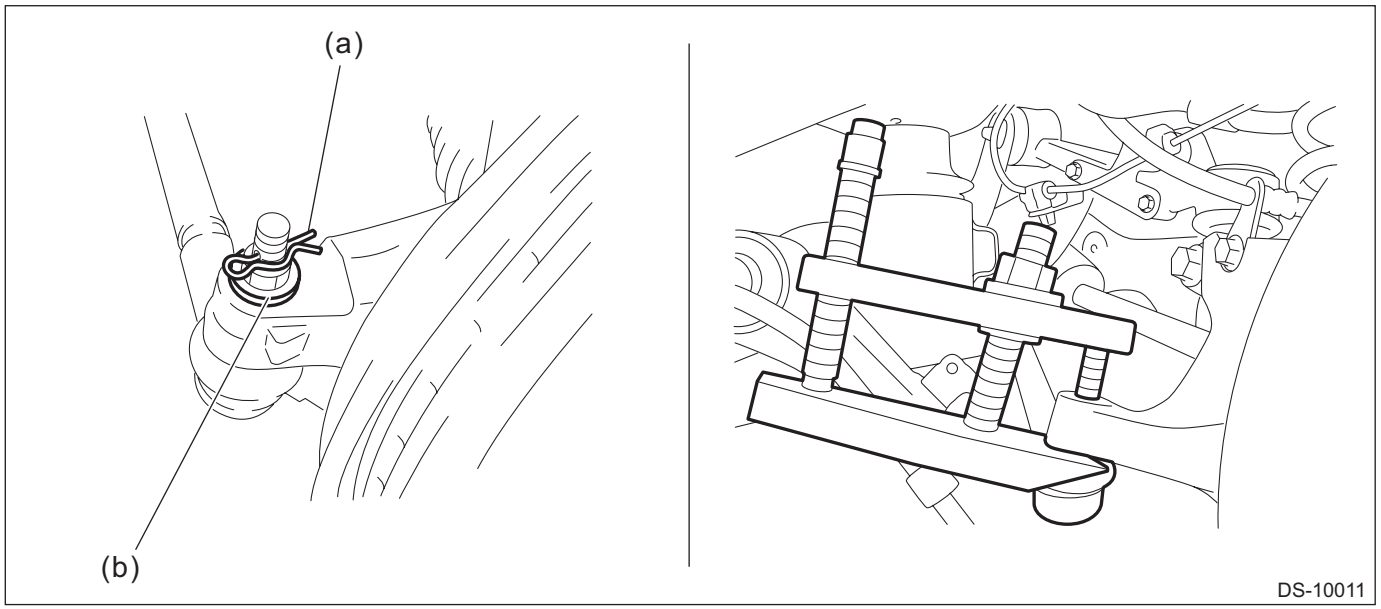

9) Remove the housing assembly - rear axle.

CAUTION:
- **Be careful of the weight of the housing assembly - rear axle.**
- **Be careful not to damage the spline portion of the drive shaft.**

(1) Remove the bolts, and disconnect the upper arm and trailing link.

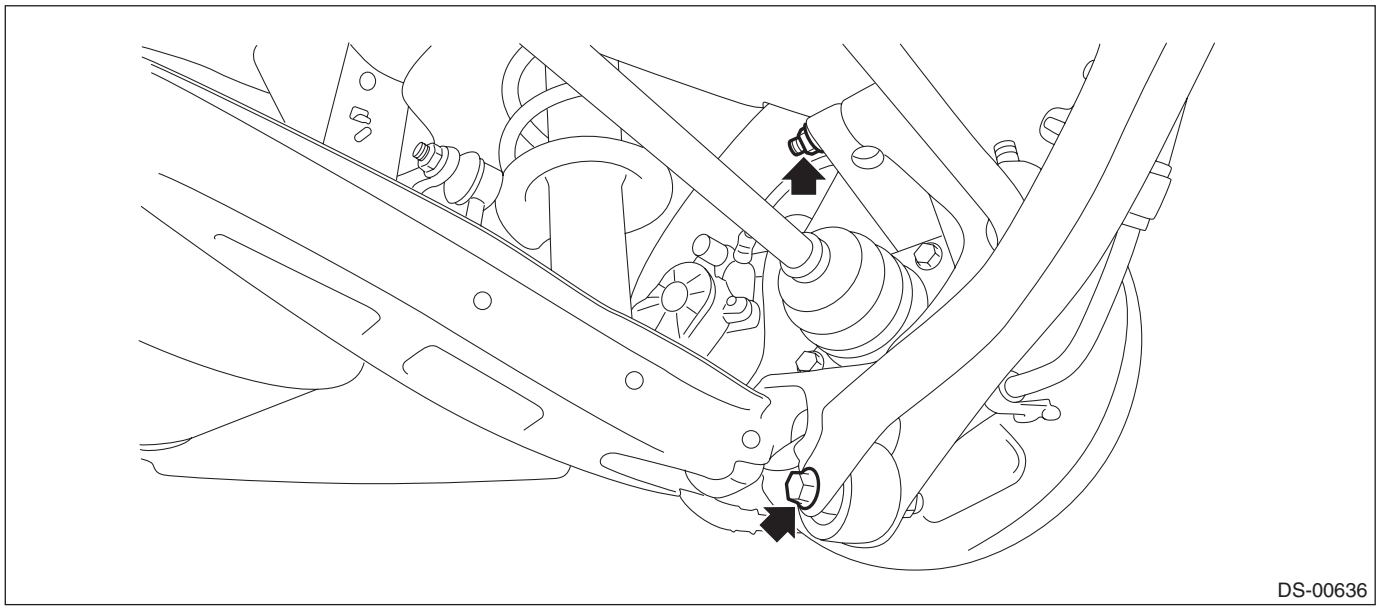

(2) Remove the housing assembly - rear axle.
10) Refer to “Rear Hub Unit Bearing” for removal of the hub unit COMPL - rear axle. <Ref. to DS-34, REMOVAL, Rear Hub Unit Bearing.>

B: INSTALLATION

1) Temporarily tighten the housing assembly - rear axle to the upper arm assembly.
2) Install the rear drive shaft assembly. <Ref. to DS-55, INSTALLATION, Rear Drive Shaft.>

CAUTION:
Do not hammer the drive shaft assembly when installing.

(1) Insert the drive shaft assembly into the hub spline, and pull it into the specified position.
(2) Tighten the new nut - axle temporarily.

3) Tighten the rear shock absorber assembly, rear stabilizer link assembly and other links to the specified torque.

Tightening torque:
Rear suspension: <Ref. to RS-3, REAR SUSPENSION, COMPONENT, General Description.>
Rear shock absorber: <Ref. to RS-5, REAR SHOCK ABSORBER, COMPONENT, General Description.>

4) Install the rear disc rotor.
5) Install the disc brake assembly.

Tightening torque:
66 N·m (6.7 kgf-m, 48.7 ft-lb)

6) Install the brake hose bracket and rear ABS wheel speed sensor.

Tightening torque:
Brake hose bracket: 33 N·m (3.4 kgf-m, 24.3 ft-lb)
Rear ABS wheel speed sensor: 7.5 N·m (0.8 kgf-m, 5.5 ft-lb)

7) Install the sensor assembly - headlight beam leveler. (Model with auto headlight beam leveler)

Tightening torque:
7.5 N·m (0.8 kgf-m, 5.5 ft-lb)

8) While depressing the brake pedal, tighten new nuts - axle to the specified torque.

CAUTION:
Do not load the rear axle before tightening the nut - axle. Doing so may damage the hub unit COMPL.

Tightening torque:
240 N·m (24.5 kgf-m, 177 ft-lb)

9) After tightening the nut - axle, lock it securely.

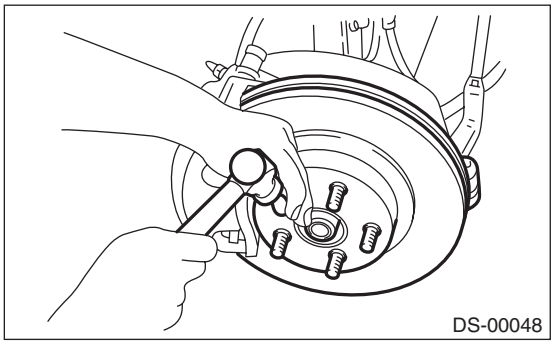

10) Install the rear wheels, and perform the following inspections.

Tightening torque:
120 N·m (12.2 kgf-m, 88.5 ft-lb)

1. Check the wheels for smooth rotation.
2. Check that there is no play by moving the upper and lower portions of rear tire in an axial direction with the brake pedal released.
   - **Play exists** → Check the hub unit COMPL - rear axle. <Ref. to DS-38, INSPECTION, Rear Hub Unit Bearing.>

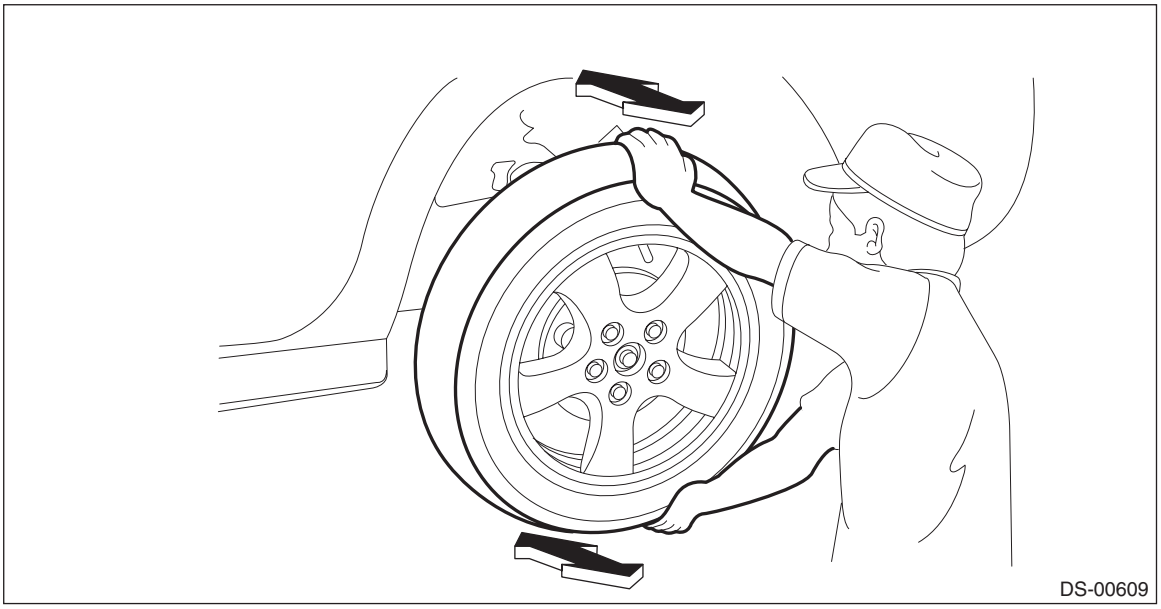

11) Inspect the wheel alignment and adjust if necessary.
- Inspection: <Ref. to FS-10, INSPECTION, Wheel Alignment.>
- Adjustment: <Ref. to FS-14, ADJUSTMENT, Wheel Alignment.>

CAUTION:
When the wheel alignment has been adjusted, perform the following adjustment.
– Lane keep assist learning value clear (model with EyeSight): <Ref. to ES(diag)-49, OPERATION, Clear Active Lane Keep System Learning Value.>
– "VSC(VDC) Centering Mode": <Ref. to VDC-15, ADJUSTMENT, VDC Control Module and Hydraulic Control Unit (VDCCM&H/U).>

12) Perform reinitialization of the auto headlight beam leveler system. (Model with auto headlight beam leveler) <Ref. to LI-23, PROCEDURE, Auto Headlight Beam Leveler System.>

C: DISASSEMBLY

1. BUSHING - REAR AXLE HOUSING

Do not remove the housing assembly - rear axle because the bushing - rear axle housing cannot be replaced. If it is removed, replace the housing assembly - rear axle.

2. BUSHING - TRAILING LINK

1) Remove the housing assembly - rear axle. <Ref. to DS-28, REMOVAL, Rear Axle.>
2) Using the ST and a hydraulic press, push out the bushing.

Preparation tool:
ST1: BUSHING REMOVER (20099FG000)
ST2: INSTALLER & REMOVER (BASE) (20099PA010)

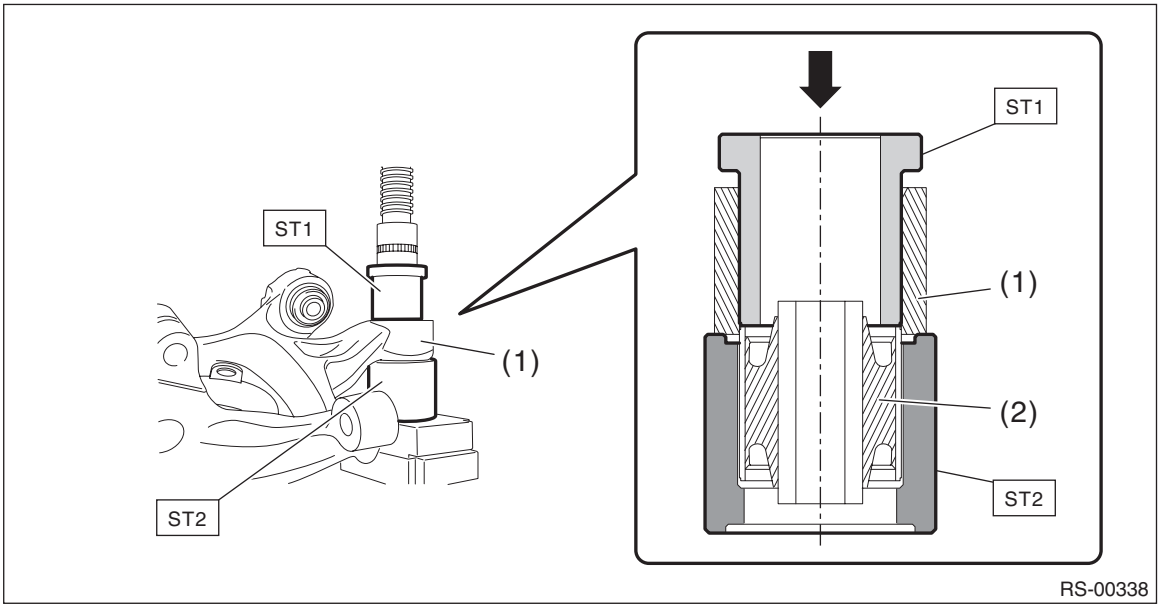

(1) Housing ASSY - rear axle
(2) Bushing - trailing link

D: ASSEMBLY

1. BUSHING - REAR AXLE HOUSING

Do not remove the housing assembly - rear axle because the bushing - rear axle housing cannot be replaced. If it is removed, replace the housing assembly - rear axle.

2. BUSHING - TRAILING LINK

1) Before assembly, inspect the following items and replace any faulty part with a new one.
- Perform visual check for damage or bend on the trailing link.
- Visually check the bushing for abnormal cracks, fatigue or damage.

2) Press-fit the bushing using ST and the hydraulic press.

CAUTION:
Make sure to press the bushing straight in.

Preparation tool:
ST1: BUSHING REMOVER (20099FG000)
ST2: INSTALLER & REMOVER (BASE) (20099PA010)

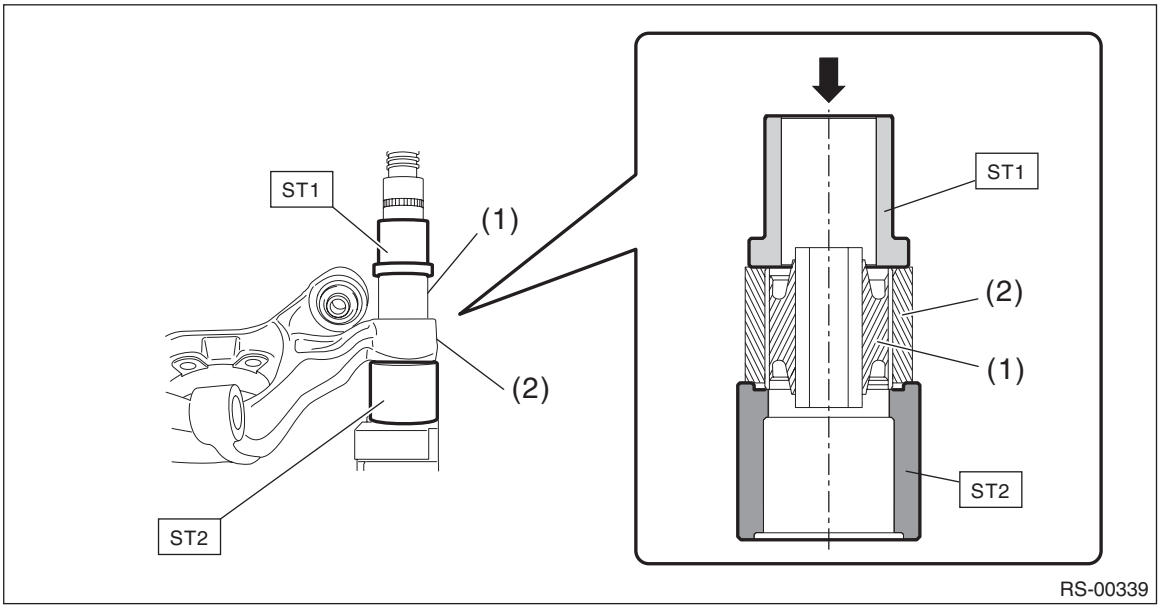

(1) Bushing
(2) Housing ASSY - rear axle

6. Rear Hub Unit Bearing

A: REMOVAL

1) Lift up the vehicle, and then remove the rear wheels.
2) Remove the nut - axle.

CAUTION:
Do not loosen the nut - axle while the rear axle is loaded. Doing so may damage the hub unit COMPL.

(1) Lift the crimped section of the nut - axle.
(2) Remove the nut - axle using a socket wrench while depressing the brake pedal.

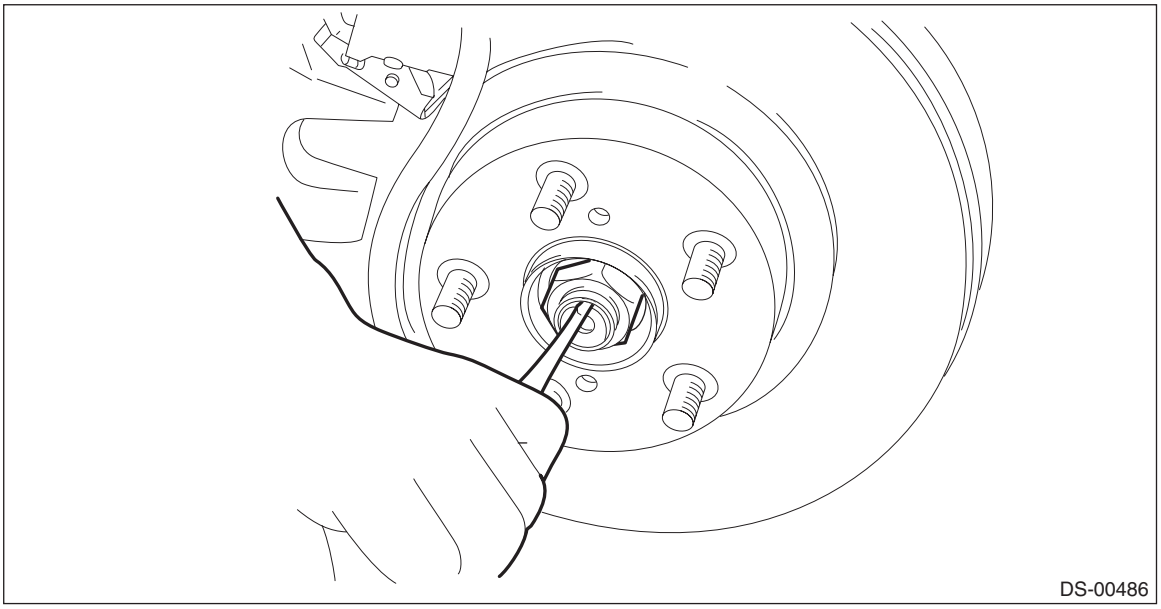

3) Remove the rear disc rotor. <Ref. to BR-41, REMOVAL, Rear Disc Rotor.>
4) Remove the hub unit COMPL - rear axle.

CAUTION:
- **Be careful not to damage the magnetic encoder.**
- **Do not get closer the tool which charged magnetism to magnetic encoder.**

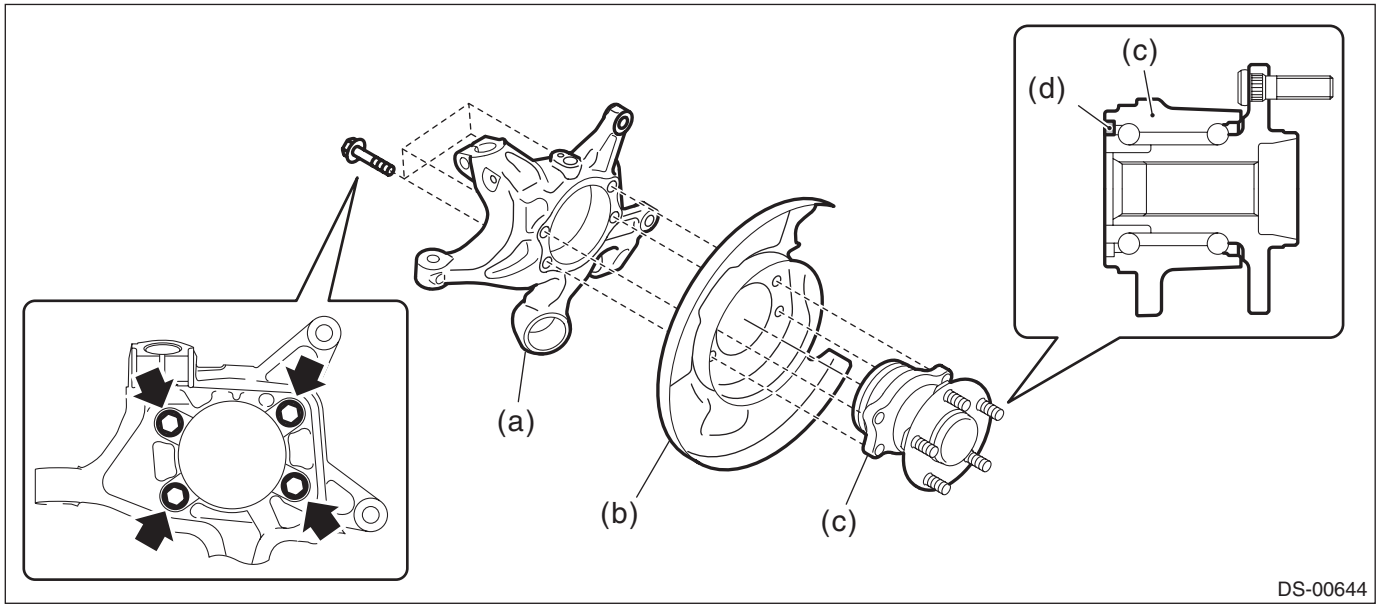

(a) Housing ASSY - rear axle
(b) Back plate - rear brake
(c) Hub unit COMPL - rear axle
(d) Magnetic encoder

NOTE:
If it is hard to remove, use the ST.

Preparation tool:
ST1: AXLE SHAFT PULLER (926470000)
ST2: AXLE SHAFT PULLER PLATE (28099PA110)

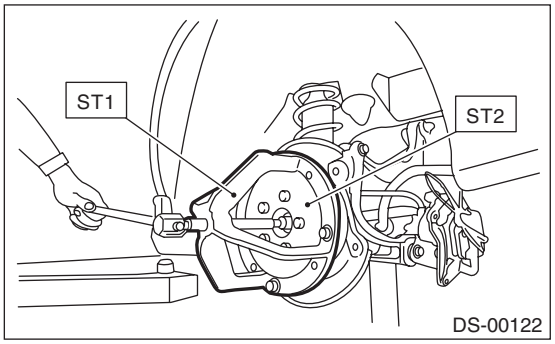

B: INSTALLATION

1) Place the back plate - rear brake between the housing assembly - rear axle and the hub unit COMPL - rear axle, and tighten the bolt.

CAUTION:
- **Do not get closer the tool which charged magnetism to magnetic encoder.**
- **Be careful not to damage the magnetic encoder.**

Tightening torque:
65 N·m (6.6 kgf-m, 47.9 ft-lb)

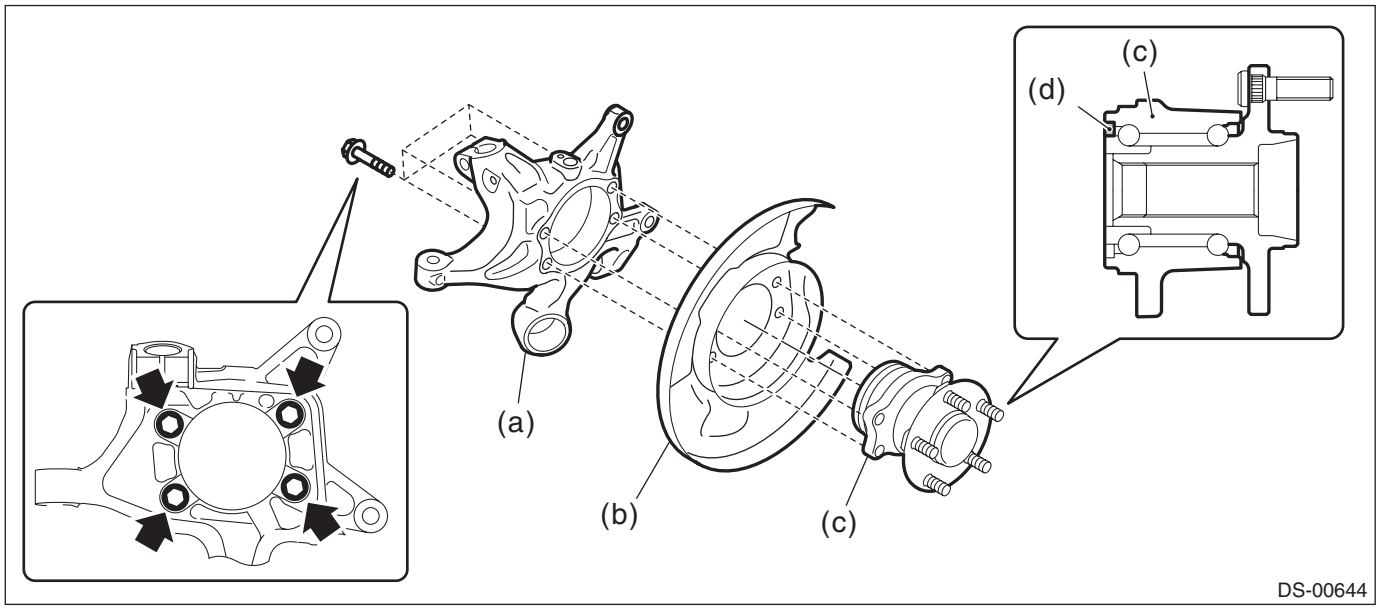

(a) Housing ASSY - rear axle
(b) Back plate - rear brake
(c) Hub unit COMPL - rear axle
(d) Magnetic encoder

2) Install the rear drive shaft assembly.

CAUTION:
Do not hammer the drive shaft assembly when installing.
(1) Insert the drive shaft assembly into the hub spline, and pull it into the specified position.
(2) Tighten the new nut - axle temporarily.
3) Install the disc rotor to the hub unit COMPL - rear axle.

4) Install the caliper body assembly to the housing assembly - rear axle.

Tightening torque:
66 N·m (6.7 kgf-m, 48.7 ft-lb)
5) Install the brake hose bracket.

Tightening torque:
33 N·m (3.4 kgf-m, 24.3 ft-lb)
6) Install the rear ABS wheel speed sensor.

Tightening torque:
7.5 N·m (0.8 kgf-m, 5.5 ft-lb)
7) While depressing the brake pedal, tighten new nuts - axle to the specified torque.

CAUTION:
Do not load the rear axle before tightening the nut - axle. Doing so may damage the hub unit COMPL.

Tightening torque:
240 N·m (24.5 kgf-m, 177 ft-lb)
8) After tightening the nut - axle, lock it securely.

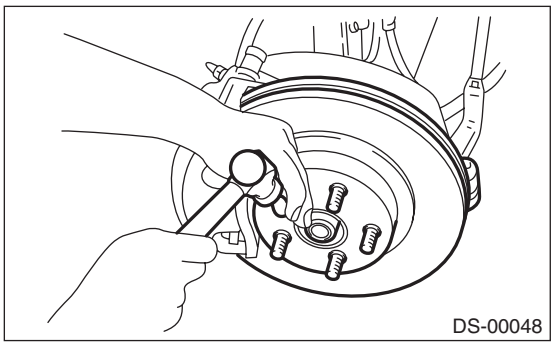
DS-00048

9) Install the rear wheels, and perform the following inspections.

Tightening torque:
120 N·m (12.2 kgf-m, 88.5 ft-lb)
1. Check the wheels for smooth rotation.
2. Check that there is no play by moving the upper and lower portions of rear tire in an axial direction with the brake pedal released.
   - **Play exists** → Check the hub unit COMPL - rear axle. <Ref. to DS-38, INSPECTION, Rear Hub Unit Bearing.>

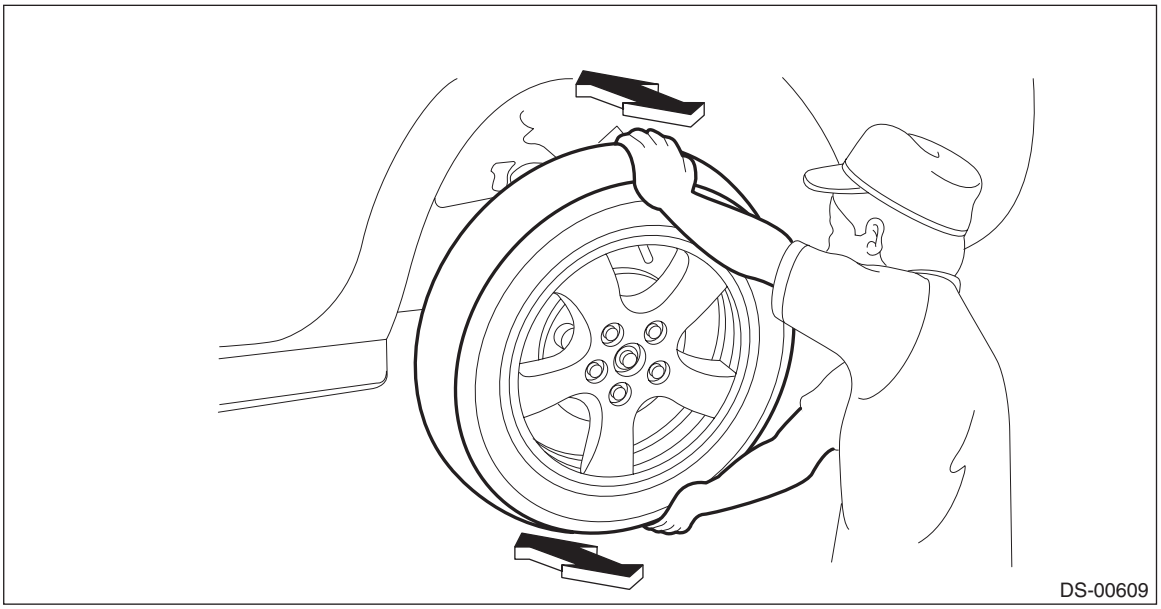
DS-00609

C: DISASSEMBLY

Using the ST or a hydraulic press, push out the bolt - hub (b) from the hub unit COMPL - rear axle (a).

CAUTION:
- **Be careful not to hammer the bolts - hub. This may deform the hub unit COMPL.**
- **Do not reuse the bolt - hub.**

NOTE:
Since the hub unit COMPL - rear axle cannot be disassembled, only bolts - hub can be removed.

Preparation tool:
ST: HUB STAND (28399AG000)

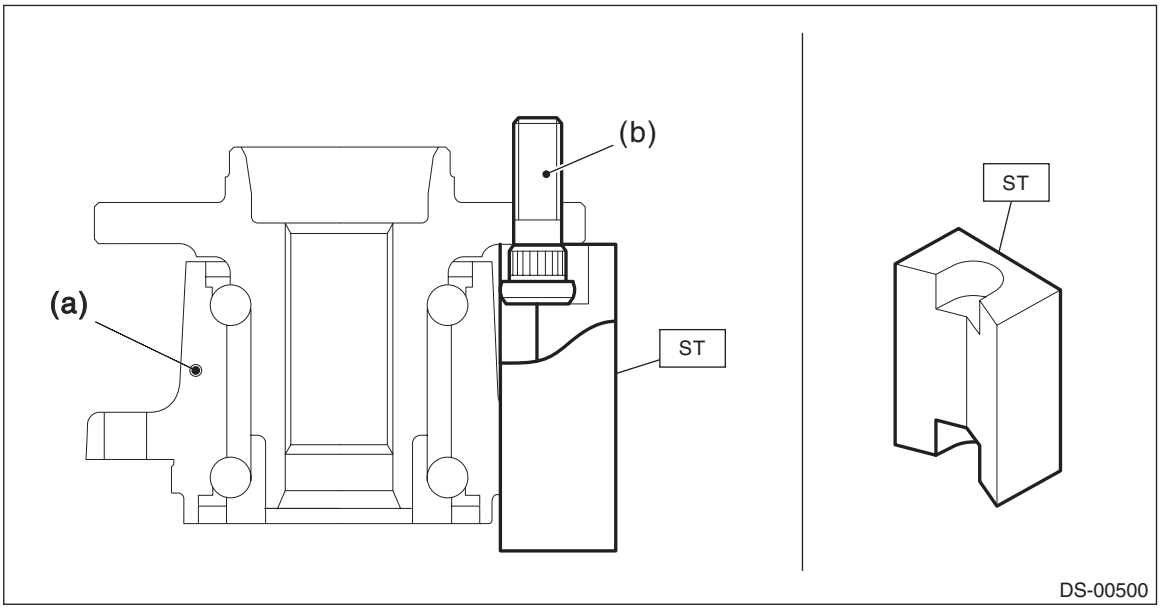

D: ASSEMBLY

1) Install the hub unit COMPL - rear axle to the ST securely.

Preparation tool:
ST: HUB STAND (28099PA080)

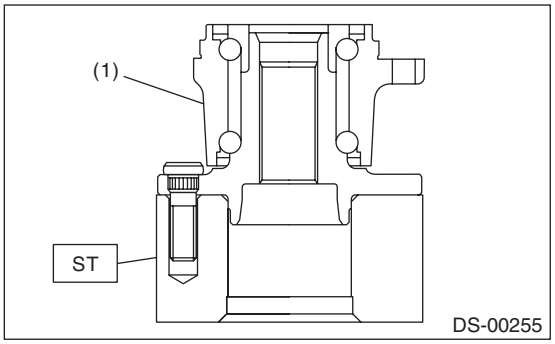

(1) Hub unit COMPL - rear axle

2) Using a press, press new bolts - hub (b) until their seating surfaces contact the hub unit COMPL - rear axle (a).

NOTE:
Use the 12 mm (0.47 in) dia. holes in the HUB STAND to prevent bolts from tilting.

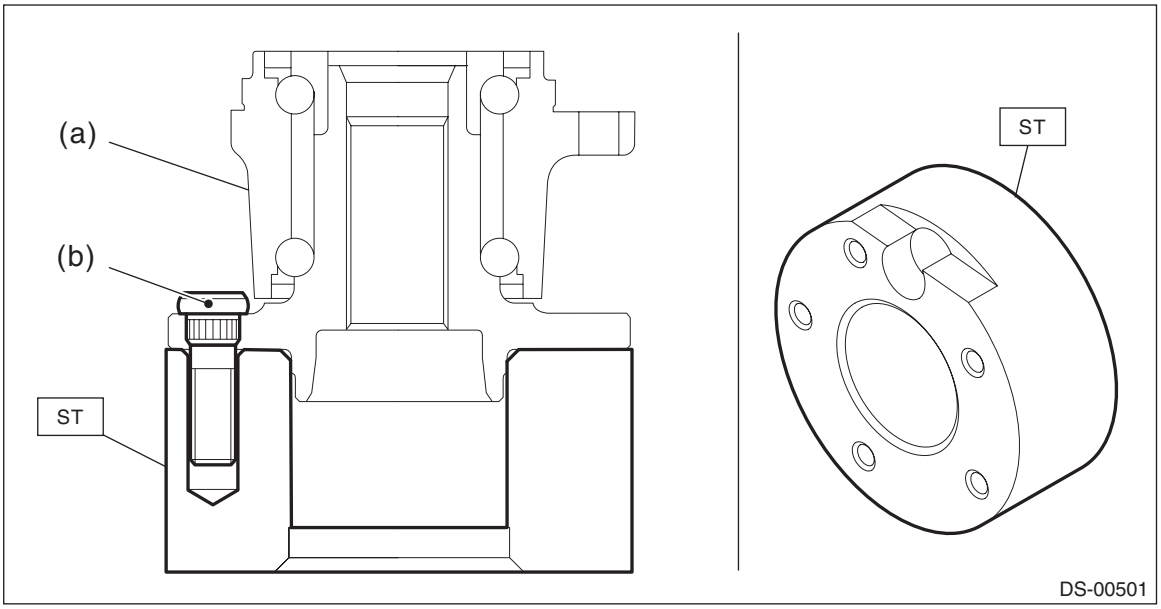

E: INSPECTION

1) Moving the rear tire up and down by hand, check there is no backlash in bearing, and check the wheel rotates smoothly.

CAUTION:
If there is any fault in the bearing, replace the hub unit COMPL - rear axle.

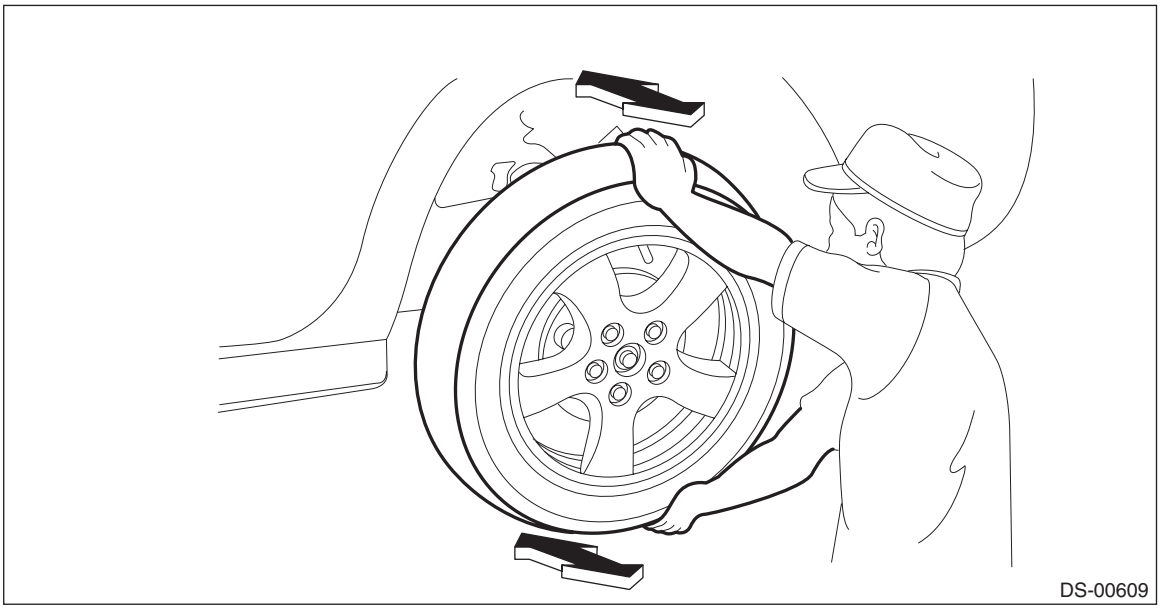

2) Inspect axial play of the hub unit bearing.
1. Remove the tire and disc rotor.
2. Inspect the lean of axis direction using a dial gauge. Replace the hub unit COMPL if the play exceeds the limit.

Service limit:
Maximum: 0.05 mm (0.0020 in)

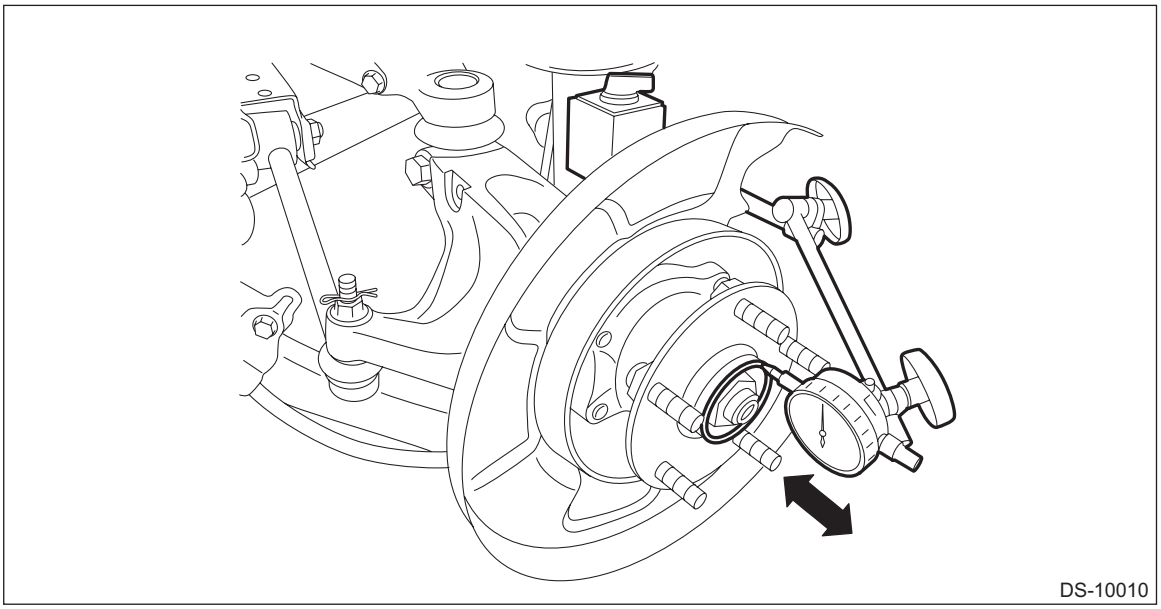

7. Front Drive Shaft

A: REMOVAL

1) Lift up the vehicle, and then remove the front wheels.
2) Remove the nut - axle.

CAUTION:
Do not loosen the nut - axle while the front axle is loaded. Doing so may damage the hub unit COMPL.

(1) Lift the crimped section of the nut - axle.
(2) Remove the nut - axle using a socket wrench while depressing the brake pedal.

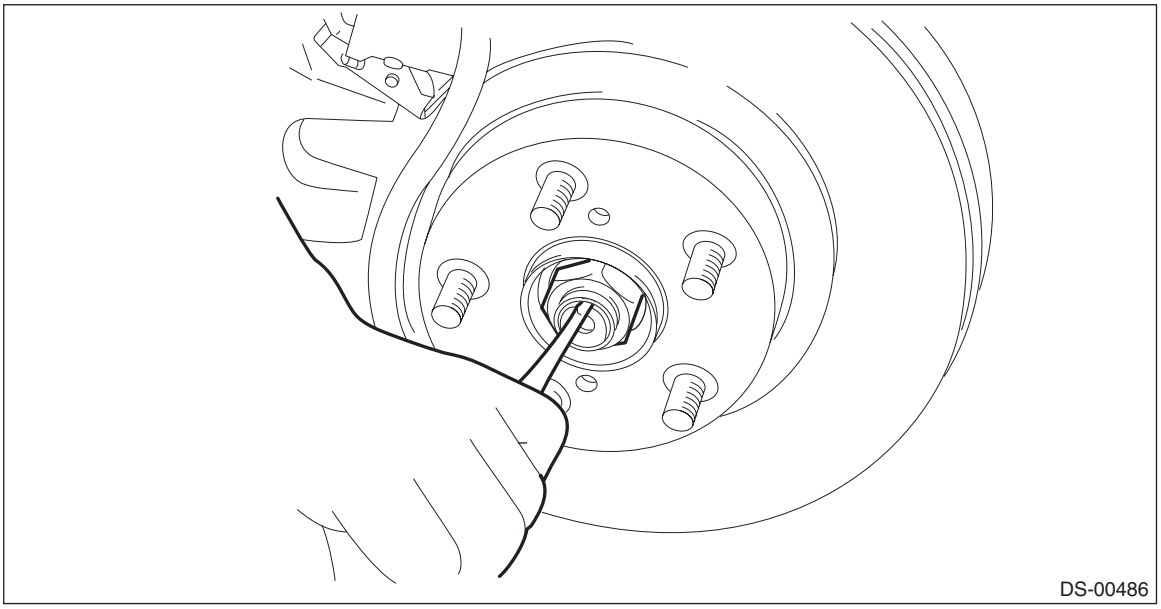
DS-00486

3) Drain the transmission gear oil. (MT model)
4) Drain differential gear oil. (CVT model)
5) Disconnect the ball joint assembly.

(1) Remove the nut and disconnect the front stabilizer link.
(2) Remove the bolts, disconnect the front arm ball joint, and lower the front arm assembly.

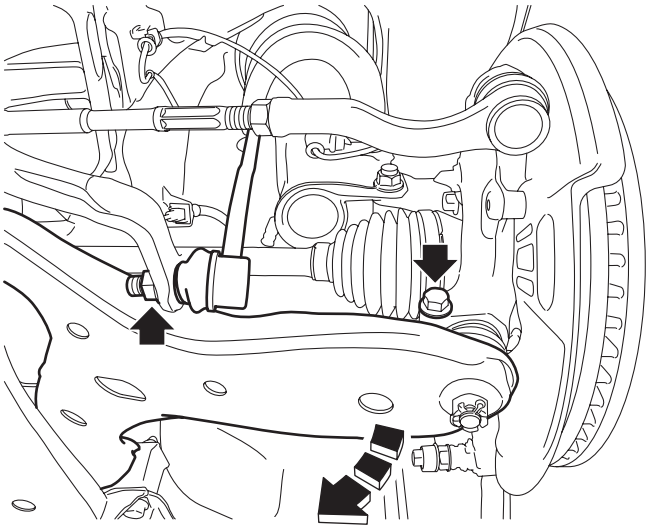
DS-00630

6) Remove the front drive shaft.
(1) Disconnect the housing assembly - front axle from the front drive shaft.

NOTE:
If it is hard to remove, use the ST.

Preparation tool:
ST1: AXLE SHAFT PULLER (926470000)
ST2: AXLE SHAFT PULLER PLATE (28099PA110)

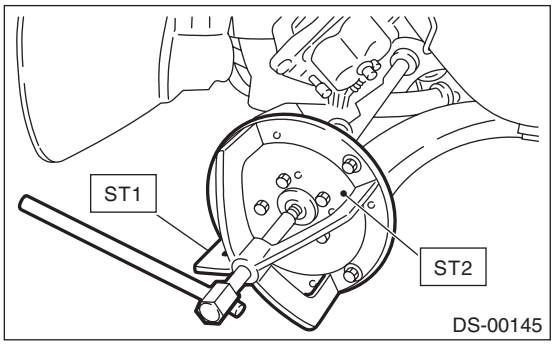

(2) Using a tire lever, remove the front drive shaft from transmission.

CAUTION:
Be careful not to allow the tire lever to damage holder area.

Preparation tool:
Tire lever

B: INSTALLATION

1) Before installation, check the drive shaft assembly. <Ref. to DS-50, INSPECTION, Front Drive Shaft.>
2) Replace the differential side retainer oil seal with a new part.
- MT model: <Ref. to 6MT-52, REPLACEMENT, Differential Side Retainer Oil Seal.>
- CVT model: <Ref. to CVT(TR690)-98, REPLACEMENT, Differential Side Retainer Oil Seal.> <Ref. to CVT(TR580)-100, REPLACEMENT, Differential Side Retainer Oil Seal.>

CAUTION:
After pulling out the drive shaft assembly, be sure to replace with a new oil seal.
3) Insert the drive shaft assembly into the hub spline, and pull it into the specified position.

CAUTION:
Do not hammer the drive shaft assembly when installing.
4) Tighten the new nut - axle temporarily.

5) Using the ST, install the front drive shaft assembly to the transmission.

Preparation tool:
ST: OIL SEAL PROTECTOR (28399SA010)

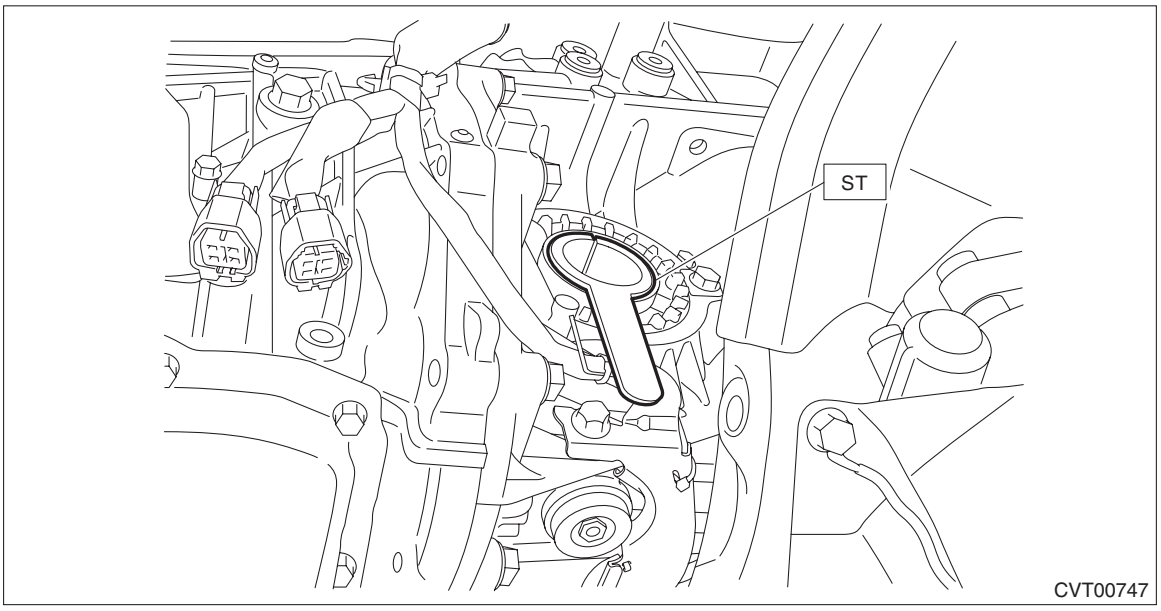

6) Install the ball joint assembly to the housing assembly - front axle.

CAUTION:
Before tightening, make sure the bottom surface of the housing assembly - front axle and the stepped section of ball joint are in contact.

Tightening torque:
50 N·m (5.1 kgf-m, 36.9 ft-lb)

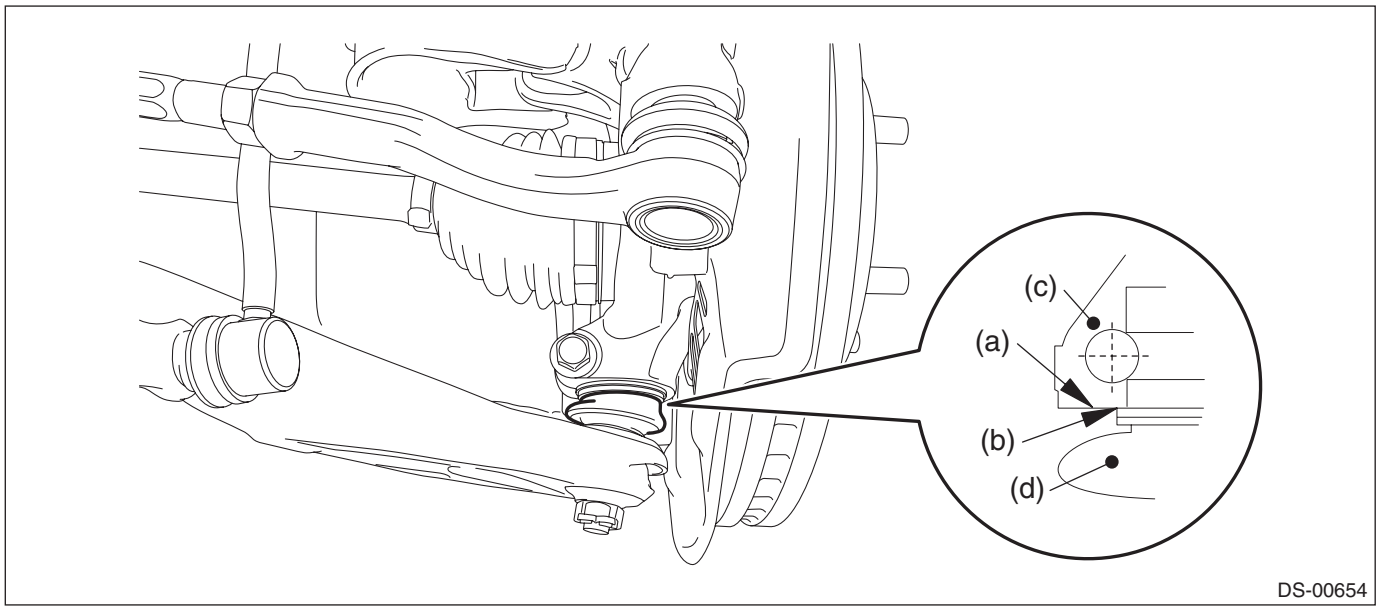

(a) Bottom surface of housing ASSY - front axle
(b) Raised section of ball joint
(c) Housing ASSY - front axle
(d) Ball joint

7) Install the stabilizer link.

Tightening torque:
60 N·m (6.1 kgf-m, 44.3 ft-lb)

8) While depressing the brake pedal, tighten new nuts - axle to the specified torque.

CAUTION:
Do not load the front axle before tightening the nut - axle. Doing so may damage the hub unit COMPL.

Tightening torque:
220 N·m (22.4 kgf-m, 162.3 ft-lb)

9) After tightening the nut - axle, lock it securely.
10) Fill transmission gear oil. (MT model)
11) Fill differential gear oil. (CVT model)
12) Install the front wheels.

Tightening torque:
120 N·m (12.2 kgf-m, 88.5 ft-lb)

13) Inspect the wheel alignment and adjust if necessary.
- Inspection: <Ref. to FS-10, INSPECTION, Wheel Alignment.>
- Adjustment: <Ref. to FS-14, ADJUSTMENT, Wheel Alignment.>

CAUTION:
When the wheel alignment has been adjusted, perform the following adjustment.
– Lane keep assist learning value clear (model with EyeSight): <Ref. to ES(diag)-49, OPERATION, Clear Active Lane Keep System Learning Value.>
– "VSC(VDC) Centering Mode": <Ref. to VDC-15, ADJUSTMENT, VDC Control Module and Hydraulic Control Unit (VDCCM&H/U).>

14) Perform reinitialization of the auto headlight beam leveler system. (Model with auto headlight beam leveler) <Ref. to LI-23, PROCEDURE, Auto Headlight Beam Leveler System.>

C: DISASSEMBLY

1) Place alignment marks on the shaft and outer race.

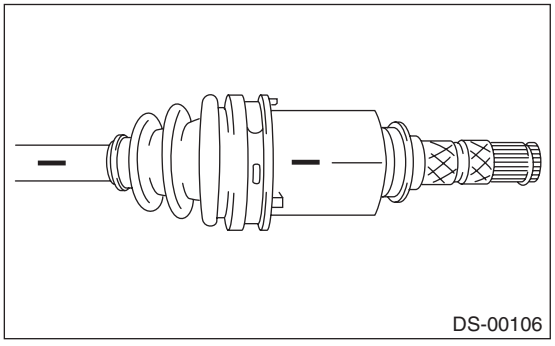
DS-00106

2) Remove the PTJ boot band and boot.

CAUTION:
Be careful not to damage the boot.

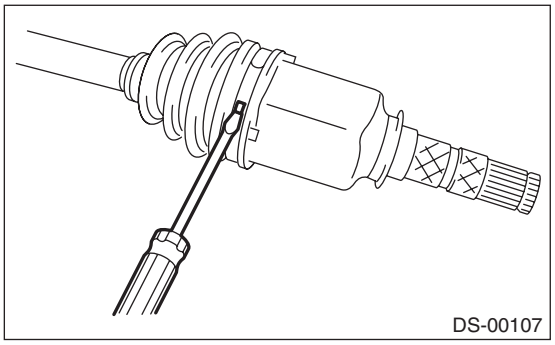
DS-00107

3) Remove the snap ring from PTJ outer race.

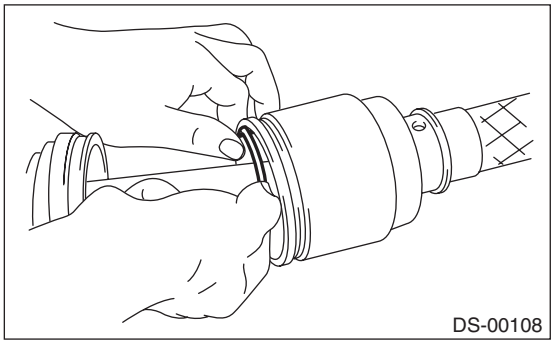
DS-00108

4) Remove the PTJ outer race from shaft assembly.
5) Wipe off grease.

CAUTION:
The grease is a special type of grease. Do not mix with other grease.
6) Place alignment marks on the roller kit and trunnion.

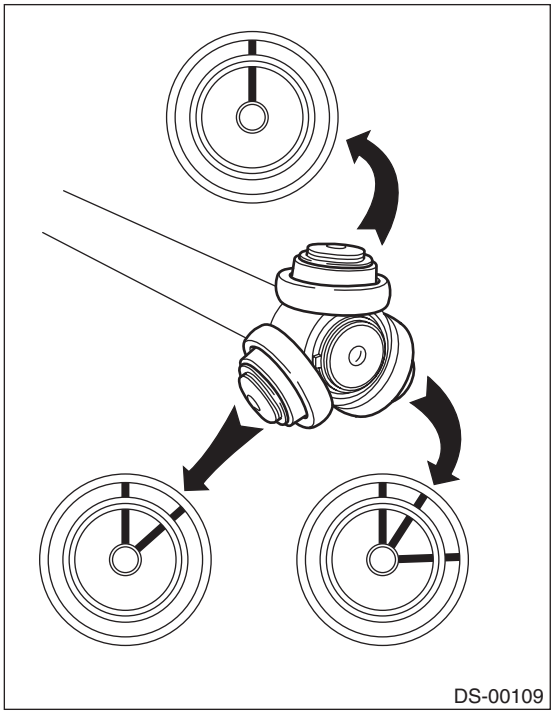
DS-00109

7) Remove the roller kit from trunnion.

CAUTION:
Be careful with the roller kit position.
8) Place alignment marks on the trunnion and shaft.

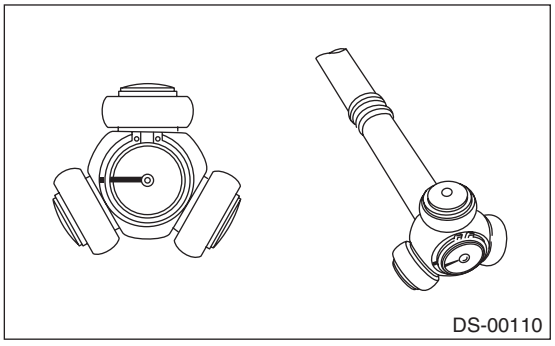
DS-00110

9) Remove the snap ring and trunnion.

CAUTION:
Be sure to wrap shaft splines with vinyl tape to protect the boot from scratches.

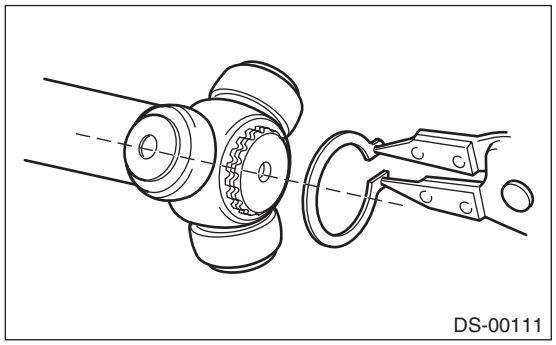

10) Remove the PTJ boot.
11) Remove the O-ring from the groove of the shaft.

NOTE:
The EBJ is a non-disassembly part, so the axle disassembly stops here.

D: ASSEMBLY

1) Roll up a thick piece of paper to a size where the shaft can pass through, and affix with tape to form a cylinder.
2) Attach a new O-ring on this cylinder.

CAUTION:
- **Always use a new O-ring.**
- **Be careful that the O-ring does not become scratched and that there are no foreign objects attached to it.**
- **Make sure to install the O-ring so that it does not twist as much as possible.**
- **Do not stretch the O-ring to 30 mm (1.18 in) inner diameter or more.**

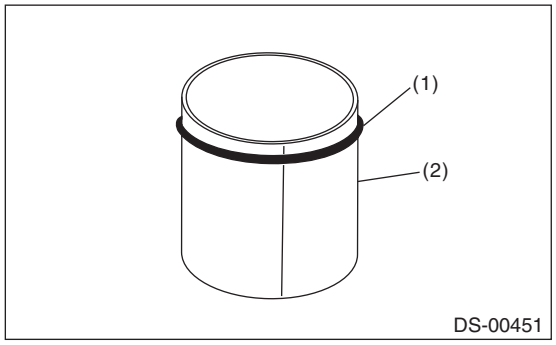

(1) O-ring
(2) Cylinder made with thick paper, etc.

3) Pass the cylinder material onto the shaft, and slide in the direction of the shaft axis.

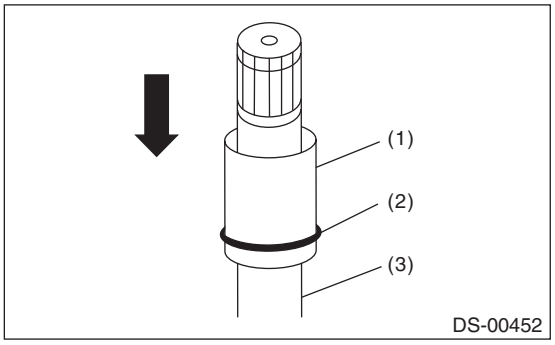

(1) Cylinder material
(2) O-ring
(3) Shaft

4) Clean the shaft boot groove, and wipe off the grease.
5) Slide the cylinder material near the shaft boot groove, and move the O-ring from the cylinder material onto the shaft boot groove.

CAUTION:
- **Attach the O-ring to the shaft boot groove center.**
- **Be careful that the O-ring does not become scratched and that there are no foreign objects attached to it.**
- **Make sure to install the O-ring so that it does not twist as much as possible.**
- **With the O-ring attached, do not wash with kerosene, gasoline, etc.**

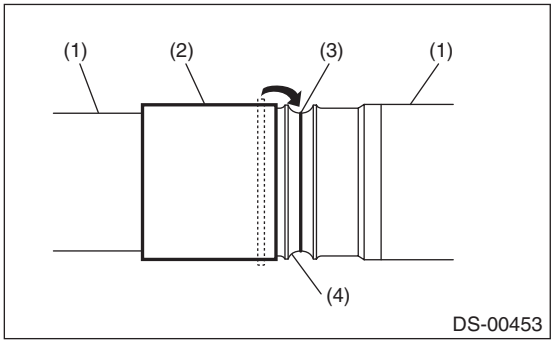

(1) Shaft
(2) Cylinder material
(3) O-ring
(4) Boot groove

6) Pass the PTJ small diameter boot band through the shaft.
7) Wrap vinyl tape around the splines of the shaft.

CAUTION:
To prevent damage to the boots, make sure to always wrap with vinyl tape for protection.

8) Install a new PTJ boot.

CAUTION:
Make sure to fit securely on the boot groove of the shaft.

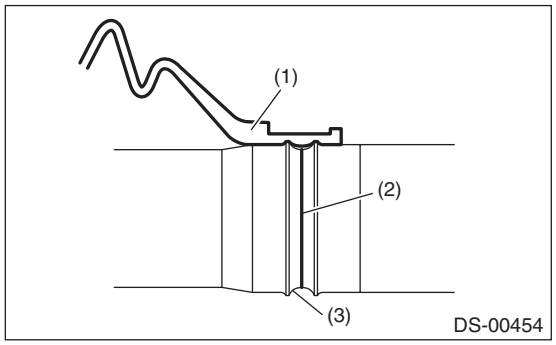

(1) PTJ boot
(2) O-ring
(3) Boot groove

9) Match the alignment marks, and attach the trunnion onto the shaft.

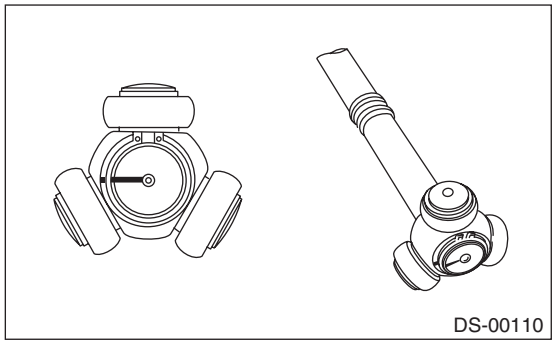

10) Attach the snap ring to the shaft.

CAUTION:
Confirm that the snap ring is completely fitted in the shaft groove.

11) Fill 100 to 110 g (3.53 to 3.88 oz) of specified grease into the interior of the PTJ outer race.

Grease:
NKG302

12) Apply a thin coat of specified grease to the roller kit and trunnion.

13) Match the alignment marks of the roller kit and trunnion, and attach the roller kit.

CAUTION:
Be careful with the roller kit position.

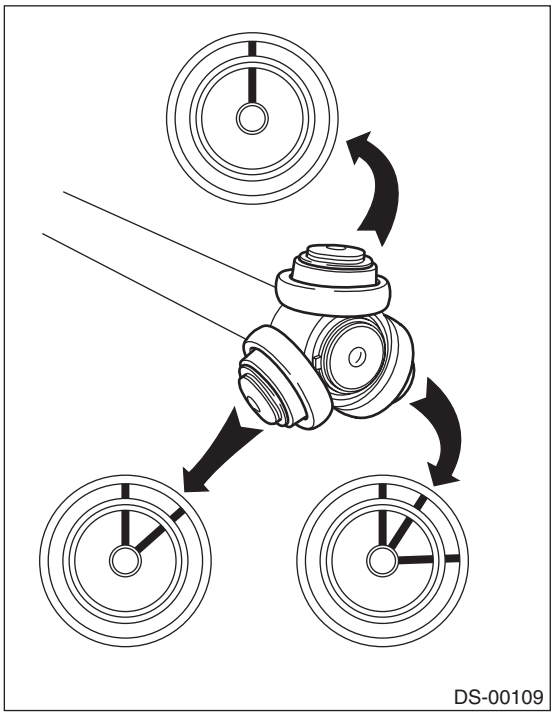

14) Match the alignment marks of the shaft and outer race, and attach the outer race.

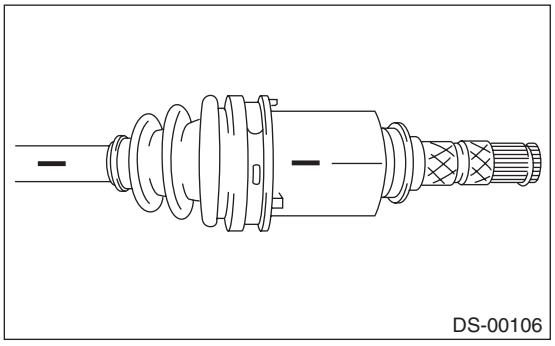

15) Install the snap ring in the groove of the PTJ outer race.

CAUTION:
Pull the shaft lightly and make sure that the snap ring is completely fitted in the groove.

16) Apply an even coat of the specified grease 30 to 40 g (1.06 to 1.41 oz) to the entire inner surface of boot.
17) Attach the PTJ boot taking care not to twist it.

CAUTION:
- **Clean the large end of PTJ boot and the boot groove well, and remove the grease and other substances.**
- **When installing the PTJ boot, position the outer race of the PTJ at center of the stroke.**

18) Set the new boot band at the specified position.

19) Tighten the boot bands using ST, torque wrench and socket flex handle.

CAUTION:
The large boot band is to be tightened so that the omega shaped part is at the position indicated in the figure below.

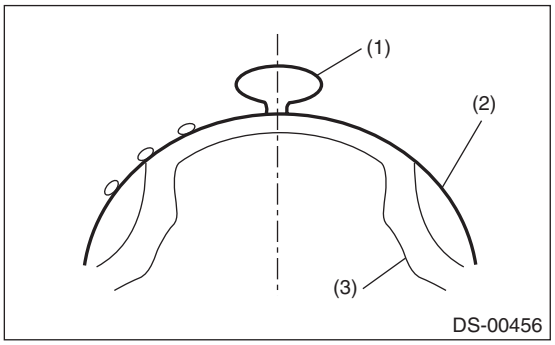

(1) Omega shaped part
(2) Boot band
(3) Outer race

Tightening torque:
Large boot band: 178 N·m (18.1 kgf-m, 131.3 ft-lb)
Small boot band: 145 N·m (14.8 kgf-m, 106.9 ft-lb)

Preparation tool:
ST: BOOT BAND PLIERS (28099AC000)

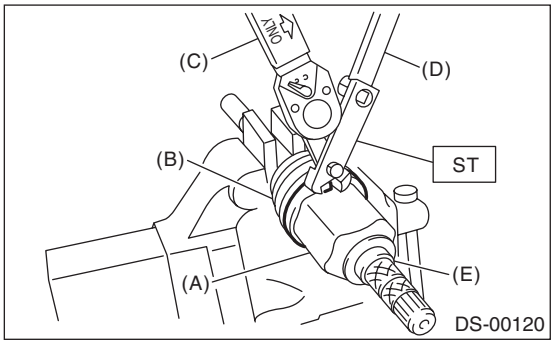

(A) Large boot band
(B) Boot
(C) Torque wrench
(D) Socket flex handle
(E) Outer race

20) Extend and retract the PTJ repeatedly so that grease is spread evenly.

E: INSPECTION

Check the removed parts for damage, wear, corrosion etc. If faulty, repair or replace.

- **PTJ (pillow tripod joint)**

Check for seizure, corrosion, damage, wear and excessive play.

- **EBJ (high-efficiency compact ball fixed joint)**

Check for seizure, corrosion, damage and excessive play.

- **Shaft:**

Check for excessive bending, twisting, damage and wear.

- **Boot:**

Check for wear, warping, breakage and scratches.

- **Grease:**

Check for discoloration and fluidity.

8. Rear Drive Shaft

A: REMOVAL

1) Disconnect the ground terminal from battery sensor. <Ref. to RC-4, BATTERY, NOTE, Repair Contents.>
2) Lift up the vehicle, and then remove the rear wheels.
3) Remove the nut - axle.

CAUTION:
Do not loosen the nut - axle while the rear axle is loaded. Doing so may damage the hub unit COMPL.
(1) Lift the crimped section of the nut - axle.
(2) Remove the nut - axle using a socket wrench while depressing the brake pedal.

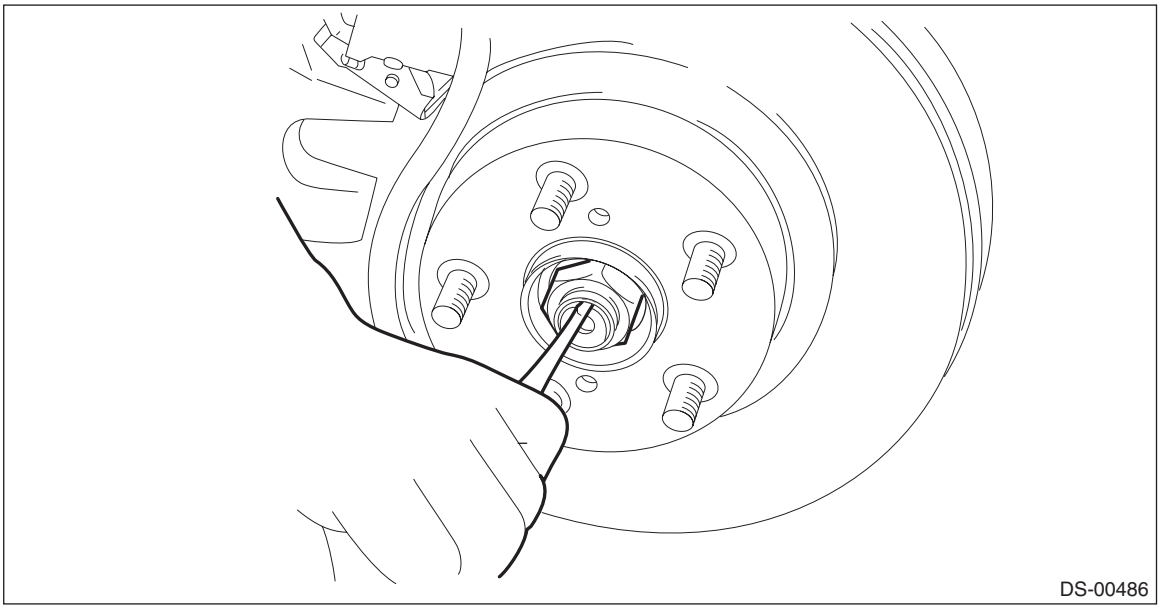

4) Remove the sensor assembly - headlight beam leveler. (Model with auto headlight beam leveler) <Ref. to LI-83, REMOVAL, Rear Height Sensor.>
5) Drain differential gear oil.
6) Remove the propeller shaft. <Ref. to DS-10, REMOVAL, Propeller Shaft.>

7) Loosen the joint of rear differential assembly and rear drive shaft assembly.
- T type: Pull out the rear drive shaft assembly by fitting the ST to the bolt (a) as shown in the figure.

CAUTION:
Fit the ST to the bolts as shown in the figure to prevent damage of the side bearing retainer.

Preparation tool:
ST: DRIVE SHAFT REMOVER (28099PA100)

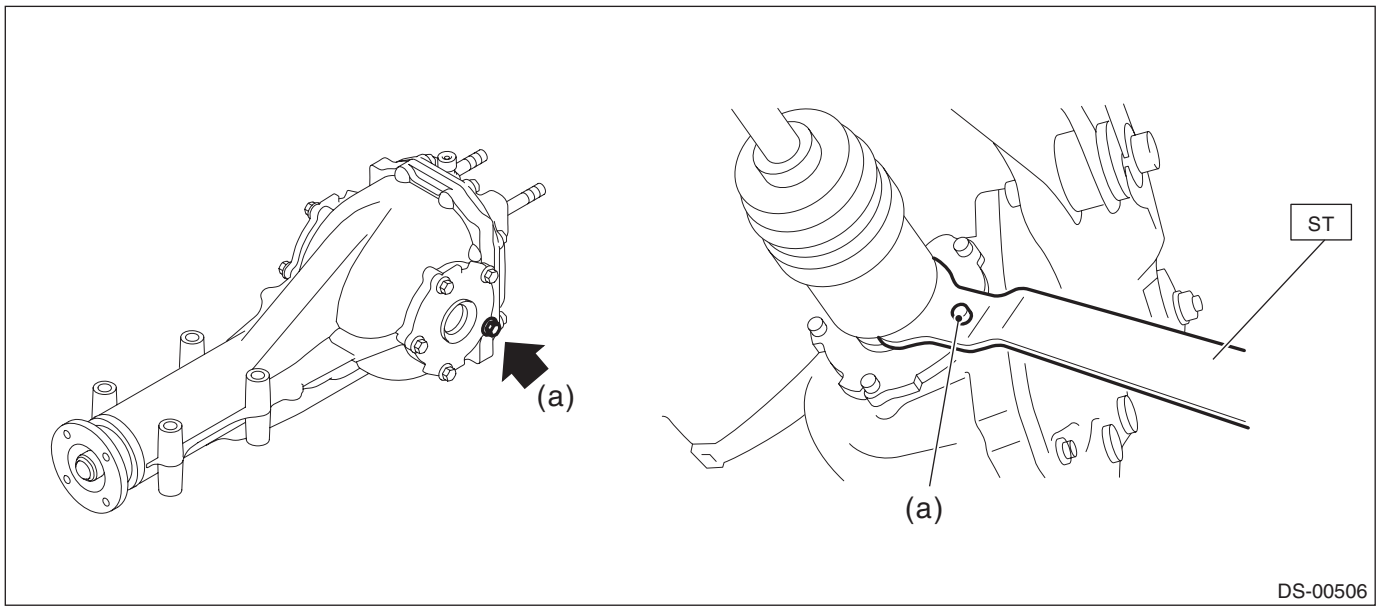

- VA type: Pull out the rear drive shaft assembly by fitting the tire lever (b) to the bolt (a) as shown in the figure.

CAUTION:
To prevent damage to the side bearing retainer, use by placing the tire lever against the bolt as shown in the figure.

Preparation tool:
Tire lever

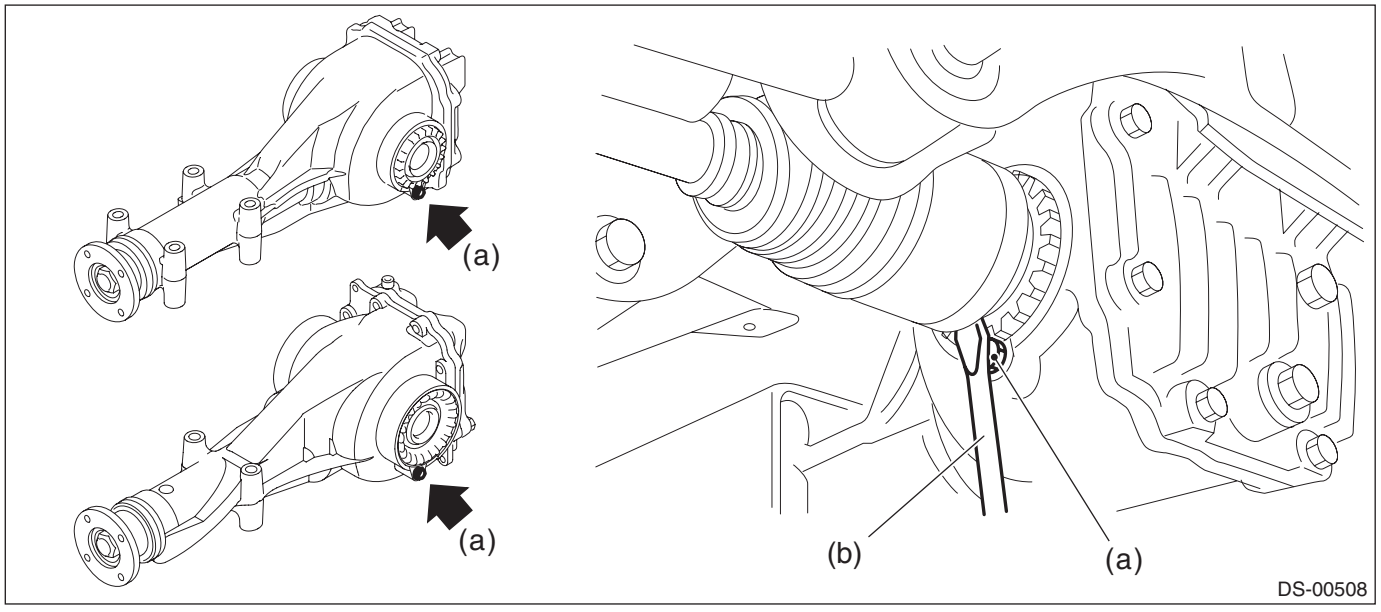

8) Remove the installation section of rear differential assembly.
(1) Support the rear differential assembly with a transmission jack.
(2) Remove the bolts which hold the rear differential front crossmember from the rear sub frame assembly.

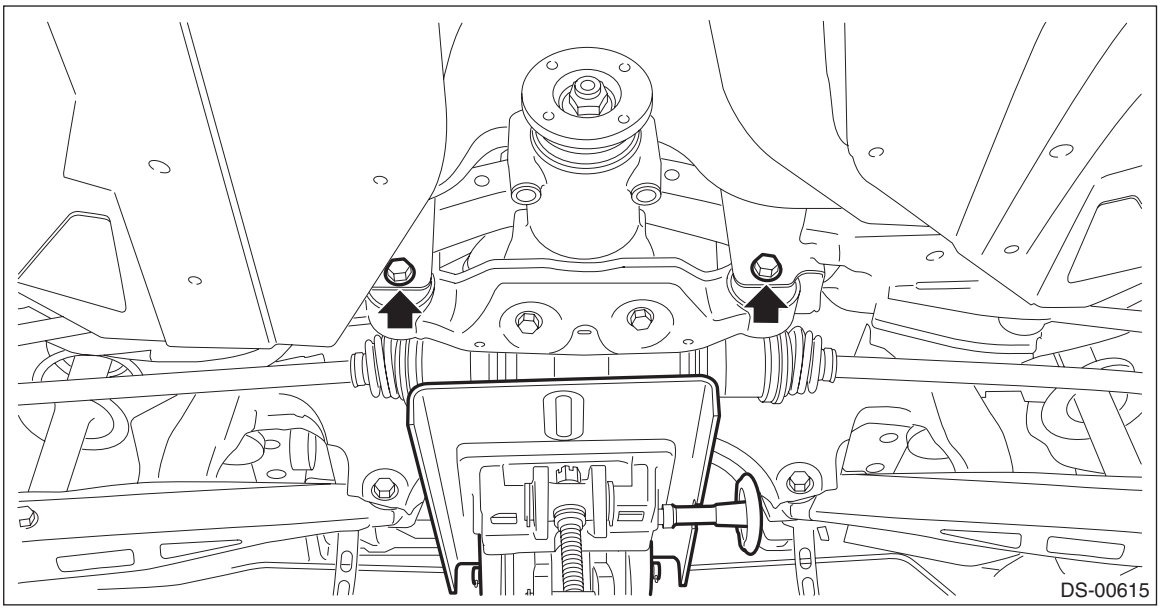

(3) Remove the self-locking nuts which hold the rear differential to the rear sub frame assembly.

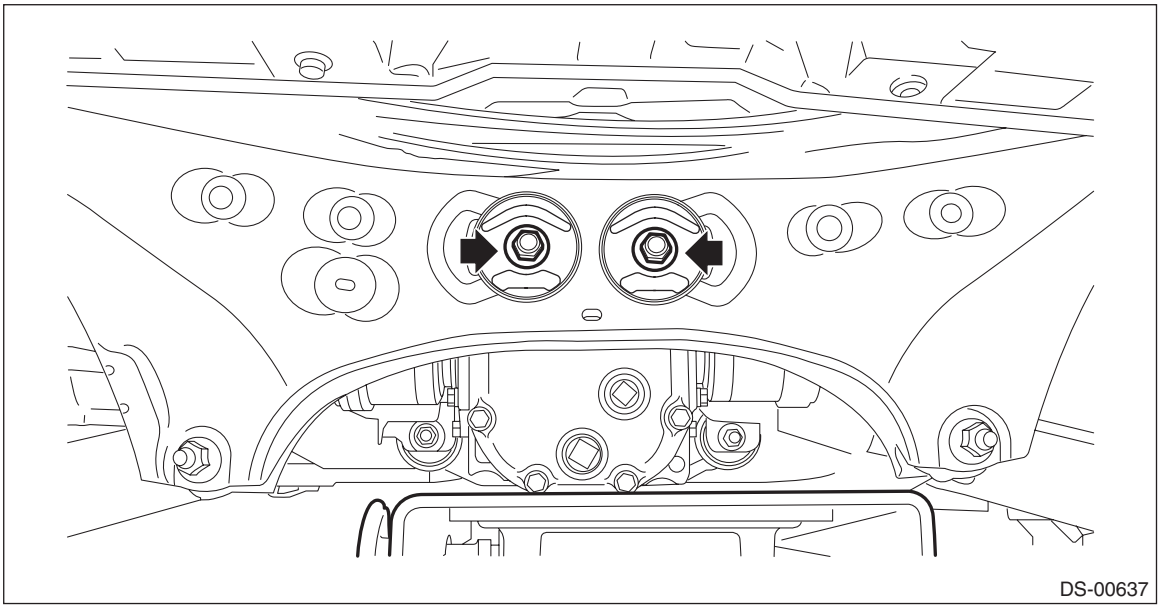

9) Completely pull out the rear drive shaft assembly while lowering the rear differential.

CAUTION:
Pay attention to avoid damaging the boot of drive shaft.

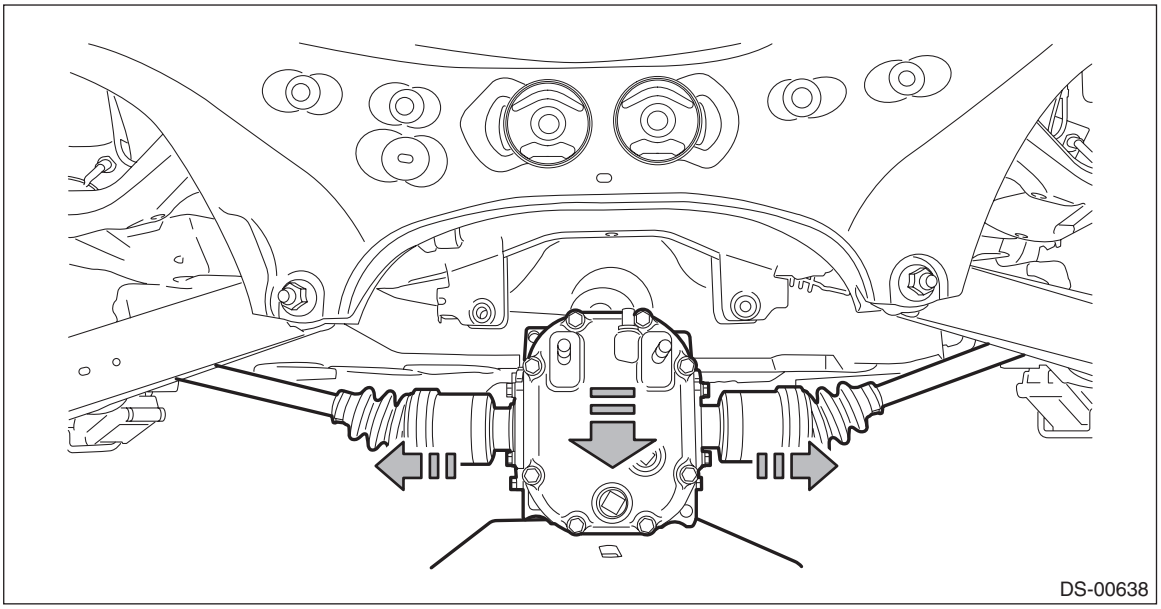

10) Remove the rear drive shaft assembly from the housing assembly - rear axle.

NOTE:
If it is hard to remove, use the ST.

Preparation tool:
ST1: AXLE SHAFT PULLER (926470000)
ST2: AXLE SHAFT PULLER PLATE (28099PA110)

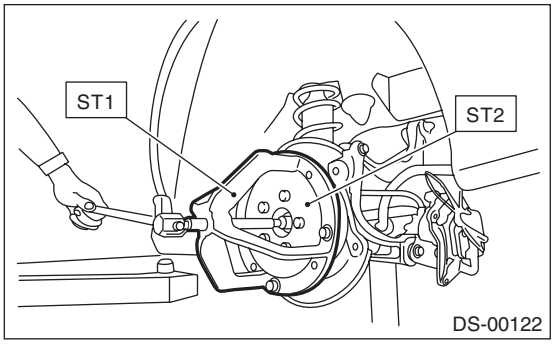

B: INSTALLATION

1) Replace the rear differential side oil seal. <Ref. to DI-77, REPLACEMENT, Rear Differential Side Oil Seal.>

NOTE:
After pulling out the drive shaft assembly, be sure to replace with a new oil seal.
2) Insert the drive shaft assembly into the rear hub spline, and pull it into the specified position.

CAUTION:
- **Be careful not to damage the magnetic encoder.**
- **Do not get closer the tool which charged magnetism to magnetic encoder.**
- **Do not hammer the drive shaft assembly when installing.**

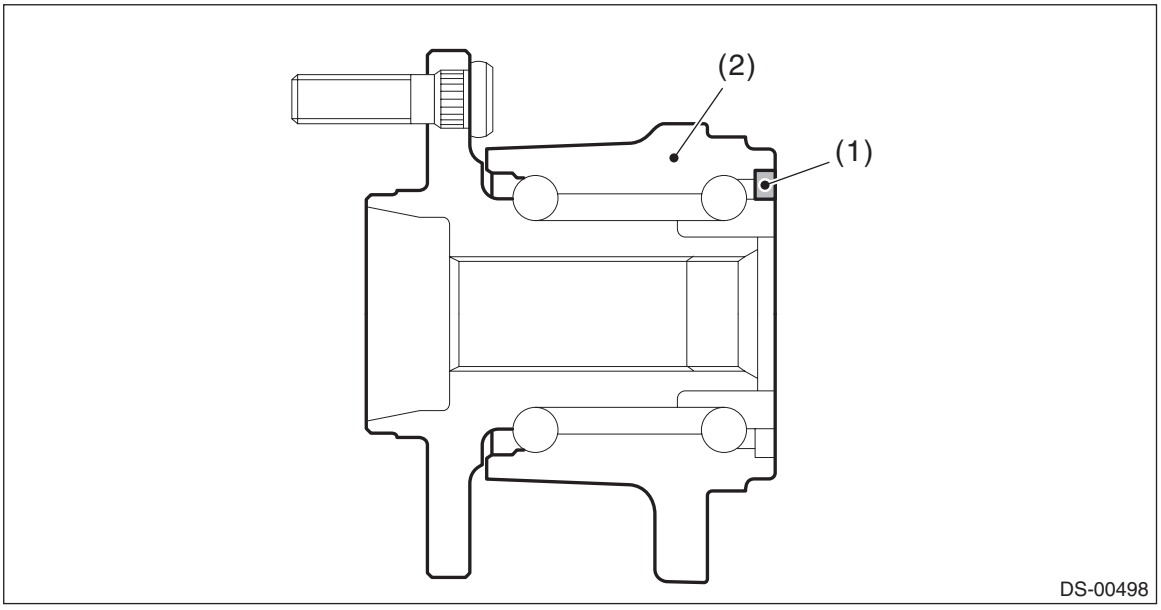

(1) Magnetic encoder (2) Hub unit COMPL - rear axle

3) Temporarily tighten the nut - axle.
4) Using the ST, install the rear drive shaft assembly to the rear differential.

Preparation tool:
ST: OIL SEAL PROTECTOR (28099PA090)

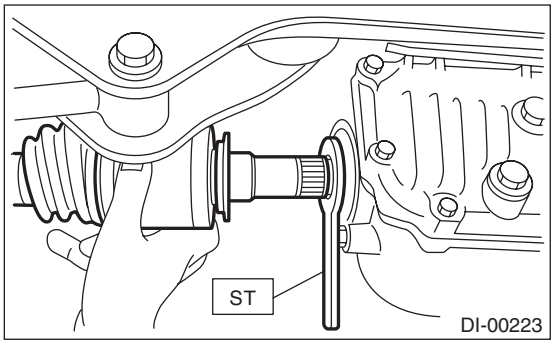

5) Install the rear differential assembly to the rear sub frame assembly.

CAUTION:
Be sure to use a new self-locking nut.

Tightening torque:
Differential assembly — bushing - differential: 70 N·m (7.1 kgf-m, 51.6 ft-lb)
Differential assembly — rear sub frame assembly: 110 N·m (11.2 kgf-m, 81.1 ft-lb)

6) Install the sensor assembly - headlight beam leveler. (Model with auto headlight beam leveler)

Tightening torque:
7.5 N·m (0.8 kgf-m, 5.5 ft-lb)

7) While pressing the brake pedal, tighten the new axle nuts to the specified torque.

CAUTION:
Do not load the rear axle before tightening the nut - axle. Doing so may damage the hub unit COMPL.

Tightening torque:
240 N·m (24.5 kgf-m, 177 ft-lb)

8) Lock the nut - axle securely.

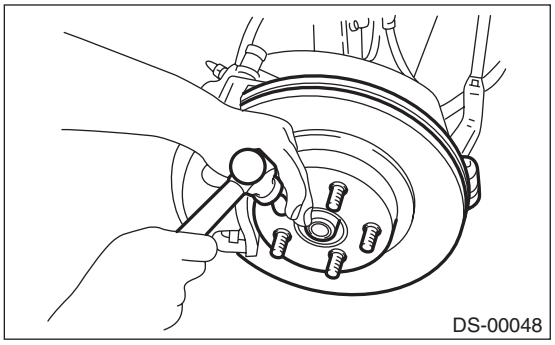

9) Fill differential gear oil.
10) Install the rear wheels.

Tightening torque:
240 N·m (24.5 kgf-m, 177 ft-lb)

11) Perform reinitialization of the auto headlight beam leveler system. (Model with auto headlight beam leveler) <Ref. to LI-23, PROCEDURE, Auto Headlight Beam Leveler System.>

C: DISASSEMBLY

1) Using a flat tip screwdriver or pliers, loosen the boot band on the large end of DOJ boot.

CAUTION:
Be careful not to damage the boot.

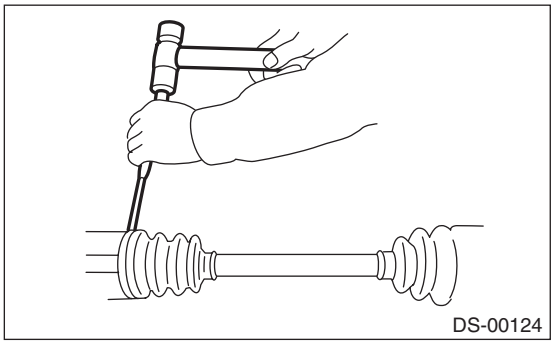

2) Remove the boot band on the small end of DOJ boot in the same manner.
3) Remove the large end of DOJ boot from DOJ outer race.

4) Remove the round snap ring at the neck of DOJ outer race with a flat tip screwdriver.

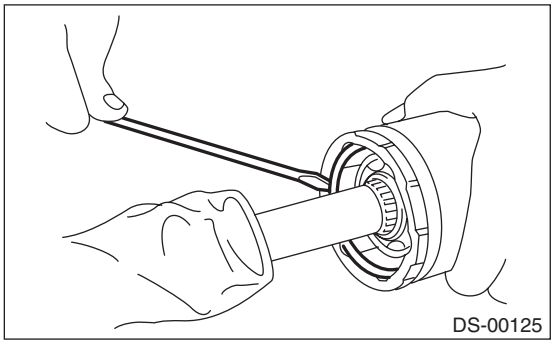

5) Take out the DOJ outer race from the shaft assembly.
6) Wipe off the grease and take out the ball bearings.

CAUTION:
The grease is a special grease (grease for constant velocity joints). Do not mix with other greases.

NOTE:
Disassemble the parts taking care not to lose balls.

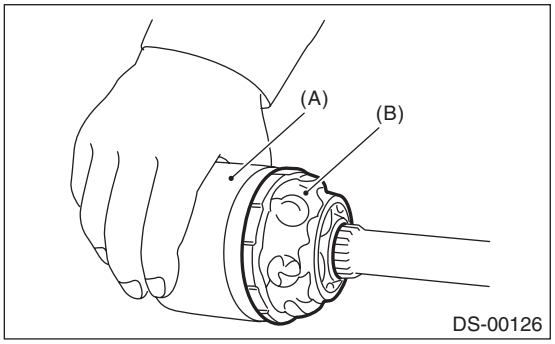

(A) Outer race
(B) Grease

7) To remove the cage from inner race, turn the cage by a half pitch to the track groove of inner race and shift the cage.
8) Using pliers, remove the snap ring fixing the inner race to the shaft.
9) Take out the DOJ inner race.
10) Take off the DOJ cage from shaft and remove the DOJ boot.

CAUTION:
Wrap shaft splines with vinyl tape to protect the boot from scratches.
11) Remove the BJ boot or EBJ boot in the same procedure as the DOJ boot.

NOTE:
Further disassembly of the drive shaft is impossible because the BJ and EBJ cannot be disassembled.

D: ASSEMBLY

CAUTION:
Wrap shaft splines with vinyl tape to protect the boot from scratches.

NOTE:
Use specified grease.

BJ, EBJ side:
NKG814

DOJ side:
NKG814

1) Install the BJ or EBJ boot in specified position, and fill it with 50 to 60 g (1.76 to 2.12 oz) of specified grease.
2) Place the DOJ boot at the center of shaft.
3) Insert the DOJ cage onto shaft.

NOTE:
Insert the cage with the cutout portion facing the shaft end, since the cage has an orientation.

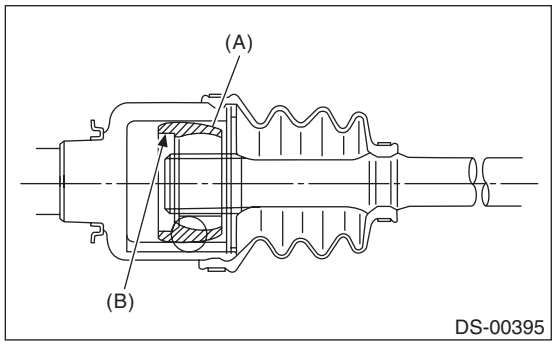

(A) Cage
(B) Cutout portion

4) Install the DOJ inner race on shaft and fix the snap ring in place with pliers.

NOTE:
Confirm that the snap ring is completely fitted in the shaft groove.

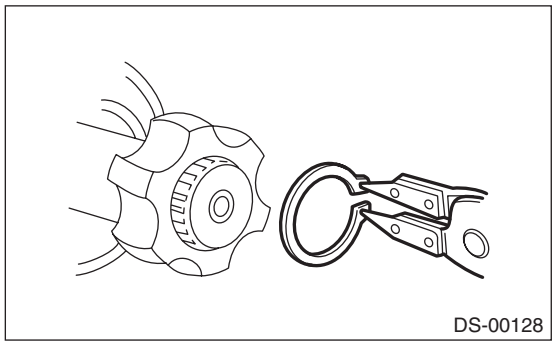

5) Install the cage to inner race fixed upon shaft.

NOTE:
Fit the cage with the protruding section aligned with the track on the inner race, and turn by a half pitch.

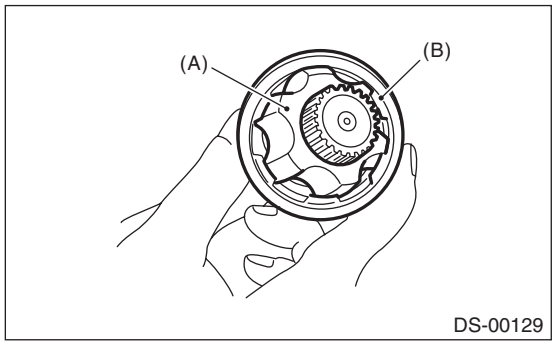

(A) Inner race
(B) Cage

6) Fill 80 to 90 g (2.82 to 3.17 oz) of specified grease into the inner side of the DOJ outer race.
7) Apply a thin coat of specified grease to the cage pocket and ball.
8) Insert the ball bearings into the cage pocket.
9) Align the outer race track and ball positions, and place the shaft, inner race, cage and ball bearings in the original positions, and then fix outer race in place.

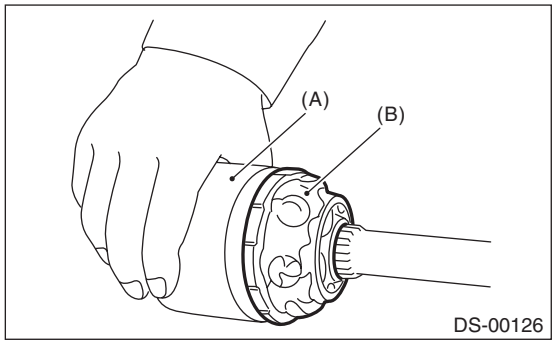

(A) Outer race
(B) Grease

10) Install the snap ring in the groove on the DOJ outer race.

NOTE:
- Assure that the balls, cage and inner race are completely fitted in the outer race of DOJ.
- Use care not to place the matched position of snap ring in the ball groove of outer race.
- Pull the shaft lightly and assure that the circlip is completely fitted in the groove.

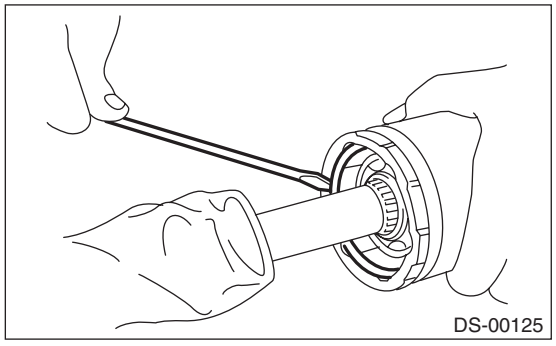

11) Apply an even coat of the specified grease [20 to 30 g (0.71 to 1.06 oz)] to the entire inner surface of boot. Also apply grease to the shaft.
12) Install the DOJ boot taking care not to twist it.

NOTE:
• The inside of the large end of DOJ boot and the boot groove shall be cleaned so as to be free from grease and other substances.
• When installing the DOJ boot, position the outer race of DOJ at center of the stroke.
13) Put a new band through the clip and wind twice in the band groove of the boot.
14) Pinch the end of band with pliers. Hold the clip and tighten securely.

NOTE:
When tightening boot, use care so that the air within the boot is appropriate.
15) Tighten the band using the ST.

NOTE:
Tighten the band until it cannot be moved by hand.

Preparation tool:
ST: BAND TIGHTENING TOOL (925091000)

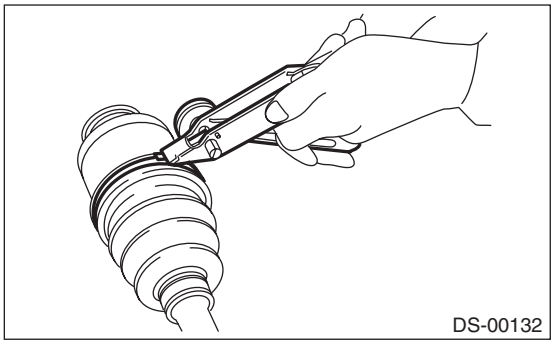

16) Tap the clip with the punch provided at the end of the ST.

NOTE:
Tap to an extent that the boot underneath is not damaged.

Preparation tool:
ST: BAND TIGHTENING TOOL (925091000)

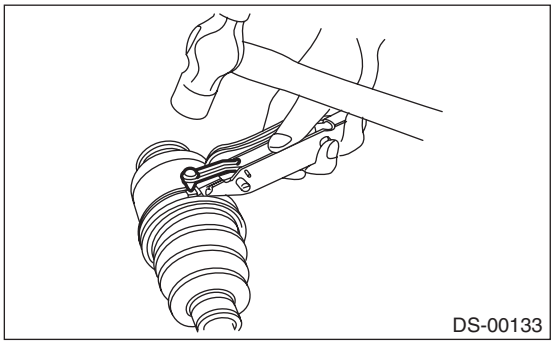

17) Cut off the band with an allowance of about 10 mm (0.39 in) left from the clip and bend this allowance over the clip.

NOTE:
Be careful so that the end of the band is in close contact with clip.
18) Install the BJ boot or EBJ boot band in the same procedure as a DOJ boot.
19) Extend and retract the DOJ repeatedly to provide an equal coating of grease.

E: INSPECTION

Check the removed parts for damage, wear, corrosion etc. Repair or replace if defective.

- **DOJ (Double Offset Joint):**

Check for seizure, corrosion, damage, wear and excessive play.

- **EBJ (High-Efficiency Compact Ball Fixed Joint):**

Check for seizure, corrosion, damage, wear and excessive play.

- **BJ (Ball Fixed Joint):**

Check for seizure, corrosion, damage and excessive play.

- **Shaft:**

Check for excessive bending, twisting, damage and wear.

- **Boot:**

Check for wear, warping, breakage and scratches.

- **Grease:**

Check for discoloration and fluidity.

9. General Diagnostic Table

A: INSPECTION

NOTE:
Vibration while cruising may be caused by an unbalanced tire, improper tire inflation pressure, improper wheel alignment, etc.

Symptoms	Possible cause	Corrective action
Noise or vibration from propeller shaft	• Center bearing • Runout of propeller shaft • Loose or gap at connections	Inspect the propeller shaft. <Ref. to DS-13, INSPECTION, Propeller Shaft.>
Abnormal wheel vibration	Wheel is out of balance.	Check the wheel balance. <Ref. to WT-7, WHEEL BALANCING, INSPECTION, Tire and Wheel.>
	Front wheel alignment	Check the front wheel alignment. <Ref. to FS-10, INSPECTION, Wheel Alignment.>
	Rear wheel alignment	Check the rear wheel alignment. <Ref. to RS-9, INSPECTION, Wheel Alignment.>
	Front strut	Check the front strut. <Ref. to FS-52, INSPECTION, Front Strut.>
	Rear shock absorber	Check the rear shock absorber. <Ref. to RS-33, INSPECTION, Rear Shock Absorber.>
	Front drive shaft	Check the front drive shaft. <Ref. to DS-50, INSPECTION, Front Drive Shaft.>
	Rear drive shaft	Check the rear drive shaft. <Ref. to DS-61, INSPECTION, Rear Drive Shaft.>
	Hub unit COMPL - front axle	Check the hub unit COMPL - front axle. <Ref. to DS-27, INSPECTION, Front Hub Unit Bearing.>
	Hub unit COMPL - rear axle	Check the hub unit COMPL - rear axle. <Ref. to DS-38, INSPECTION, Rear Hub Unit Bearing.>
Noise from the underbody	Wheel is out of balance.	Check the wheel balance. <Ref. to WT-7, WHEEL BALANCING, INSPECTION, Tire and Wheel.>
	Front wheel alignment	Check the front wheel alignment. <Ref. to FS-10, INSPECTION, Wheel Alignment.>
	Rear wheel alignment	Check the rear wheel alignment. <Ref. to RS-9, INSPECTION, Wheel Alignment.>
	Front strut	Check the front strut. <Ref. to FS-52, INSPECTION, Front Strut.>
	Rear shock absorber	Check the rear shock absorber. <Ref. to RS-33, INSPECTION, Rear Shock Absorber.>

VEHICLE DYNAMICS CONTROL (VDC)

VDC

		Page
1.	General Description	2
2.	Relay and Fuse	6
3.	Vehicle Dynamics Control System	7
4.	VDC Control Module and Hydraulic Control Unit (VDCCM&H/U)	8
5.	ABS Sequence Control	18
6.	VDC Sequence Control	21
7.	Brake Lamp Relay	24
8.	Yaw Rate and G Sensor	25
9.	Steering Angle Sensor	26
10.	Front ABS Wheel Speed Sensor	29
11.	Rear ABS Wheel Speed Sensor	32
12.	Front Magnetic Encoder	35
13.	Rear Magnetic Encoder	36
14.	VDC OFF Switch	37
15.	Hill Hold Switch	39

1. General Description

A: SPECIFICATION

Item					Specification or identification
ABS wheel speed sensor	Gap between ABS wheel speed sensor and magnetic encoder (for reference)	Front			0.77 — 1.43 mm (0.030 — 0.056 in)
		Rear			0.44 — 1.76 mm (0.017 — 0.069 in)
	Identifications of harness (symbol)	Front			H1
		Rear	Sedan model	RH	H3
				LH	H4
			OUTBACK model	RH	H7
				LH	H8
VDCCM&H/U identification		Models without EyeSight			G3
		Models with EyeSight			G4

B: COMPONENT

1. ABS WHEEL SPEED SENSOR

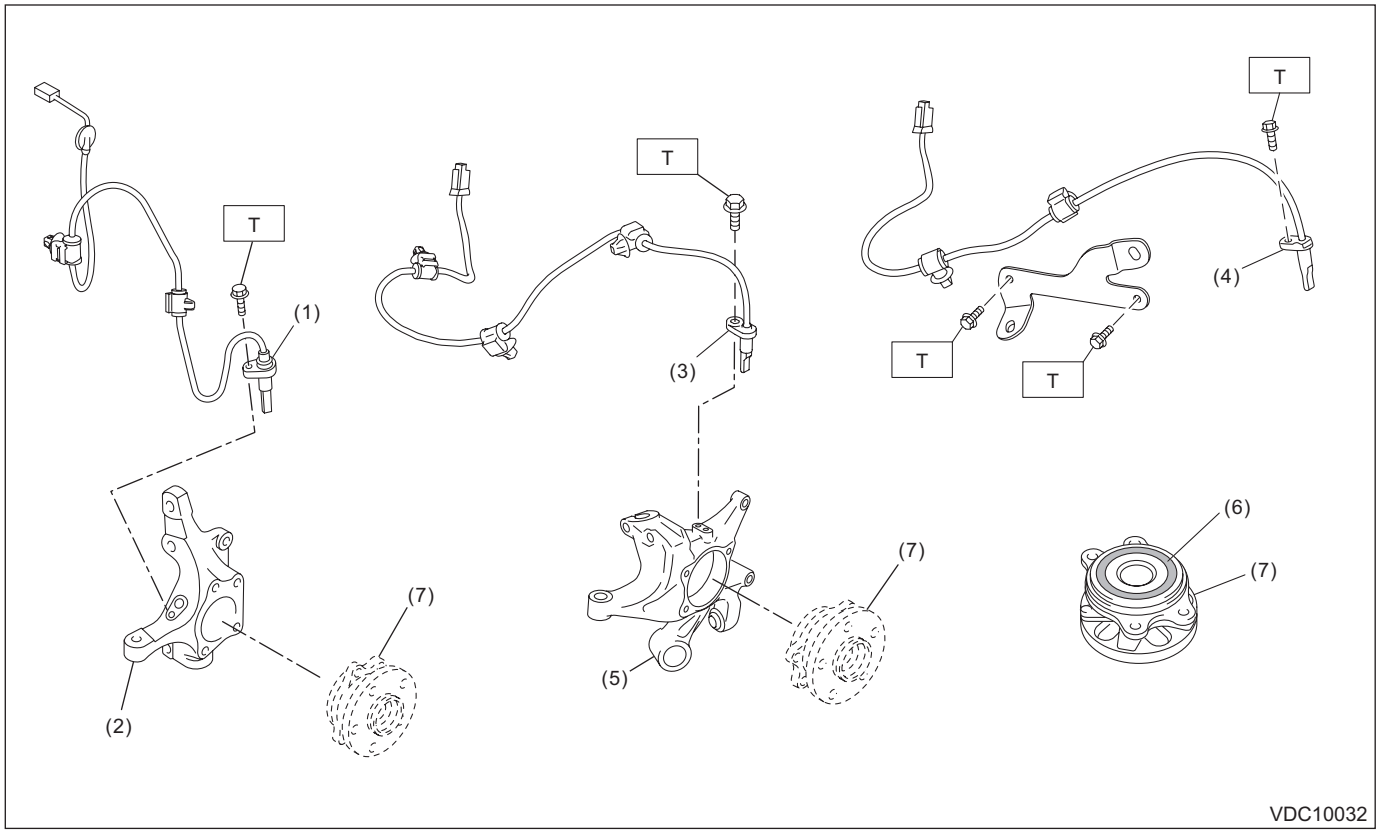

(1) Front ABS wheel speed sensor
(2) Housing ASSY - front axle
(3) Rear ABS wheel speed sensor (sedan model)
(4) Rear ABS wheel speed sensor (OUTBACK model)
(5) Housing ASSY - rear axle
(6) Magnetic encoder
(7) Hub unit COMPL

Tightening torque: N·m (kgf-m, ft-lb)
T: 7.5 (0.8, 5.5)

2. STEERING ANGLE SENSOR

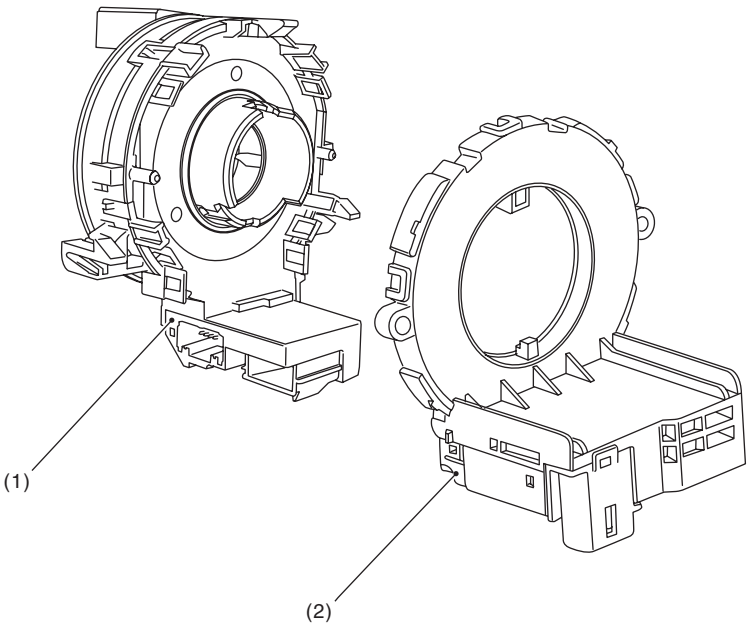

VDC01324

(1) Steering roll connector
(2) Steering angle sensor

3. VDC CONTROL MODULE AND HYDRAULIC CONTROL UNIT (VDCCM&H/U)

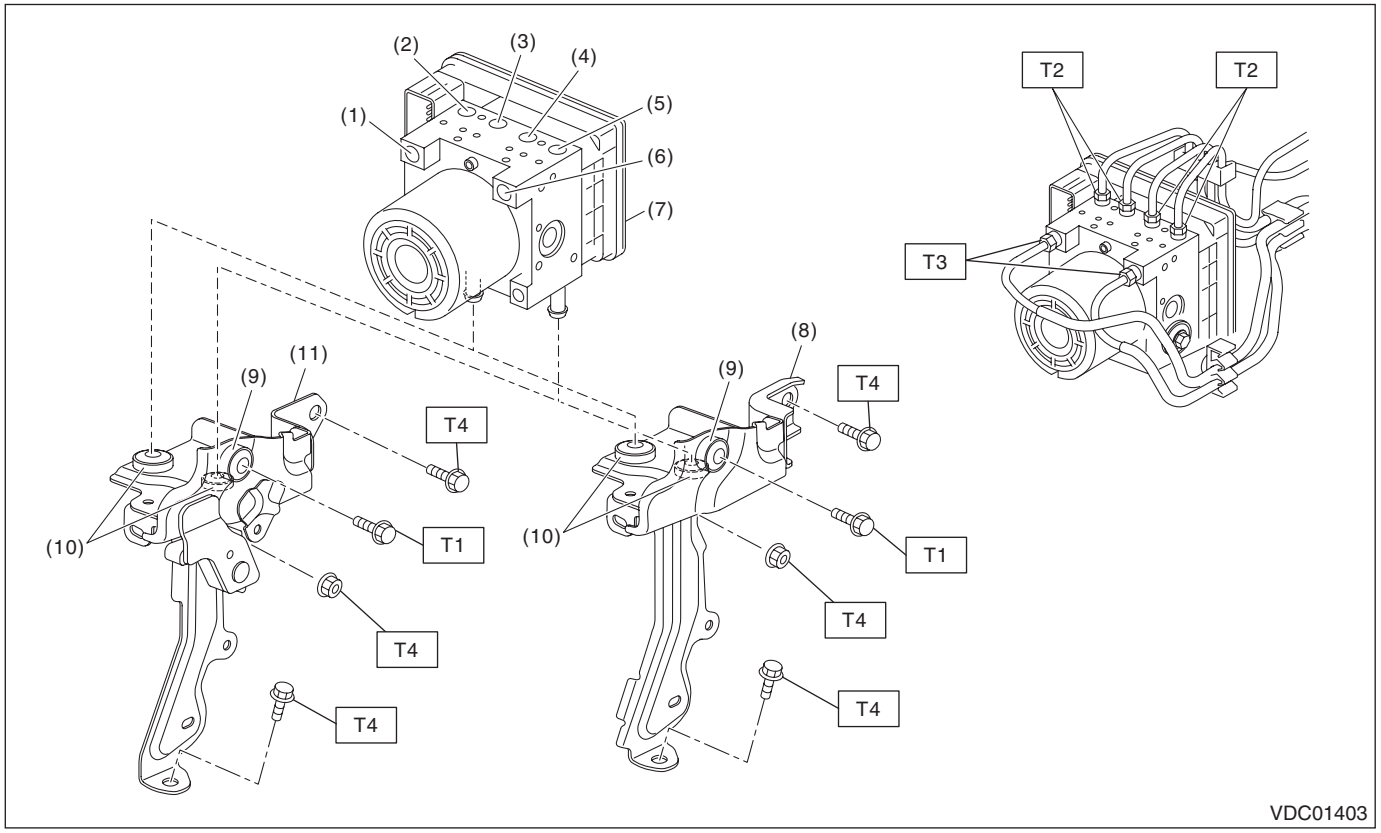

(1)	Secondary inlet	(7)	VDC control module and hydraulic control unit (VDCCM&H/U)	***Tightening torque: N·m (kgf-m, ft-lb)***
(2)	Rear RH outlet	(8)	Bracket - hydraulic unit (model without EyeSight)	***T1: 7.5 (0.8, 5.5)***
(3)	Front LH outlet	(9)	Spacer	***T2: 15 (1.5, 11.1)***
(4)	Front RH outlet	(10)	Damper - hydraulic unit	***T3: 19 (1.9, 14.0)***
(5)	Rear LH outlet	(11)	Bracket - hydraulic unit (model with EyeSight)	***T4: 33 (3.4, 24.3)***
(6)	Primary inlet			

C: CAUTION

- When performing any work, always wear work clothes, a work cap and protective shoes. Additionally, wear a helmet, protective goggles, etc. if necessary.
- Remove contamination including dirt and corrosion before removal, installation, disassembly or assembly.
- Keep the disassembled parts in order and protect them from dust and dirt.
- When performing a repair, identify the cause of trouble and avoid unnecessary removal, disassembly and replacement.
- Some vehicle components are extremely hot immediately after driving. Be wary of receiving burns from heated parts.
- Be sure to tighten fasteners including bolts and nuts to the specified torque.
- Always use the jack-up point when the shop jacks or rigid racks are used to support the vehicle.
- When removing, installing or replacing the VDCCM&H/U, VDCCM&H/U bracket, steering wheel or steering angle sensor (steering roll connector), perform “VDC sensor midpoint setting mode” of the VDC. <Ref. to VDC-15, VDC SENSOR MIDPOINT SETTING MODE, ADJUSTMENT, VDC Control Module and Hydraulic Control Unit (VDCCM&H/U).>

D: PREPARATION TOOL

1. SPECIAL TOOL

ILLUSTRATION	TOOL NUMBER	DESCRIPTION	REMARKS
 STSSM4	— (Newly adopted tool)	SUBARU SELECT MONITOR 4	Used for setting of each function and trouble-shooting for electrical system. NOTE: For detailed operation procedures of Subaru Select Monitor 4, refer to “Application help”.

2. GENERAL TOOL

TOOL NAME	REMARKS
Circuit tester	Used for measuring resistance, voltage and current.
DST-i	Used together with Subaru Select Monitor 4.
Pressure gauge	Used for measuring oil pressure.
Oscilloscope	Used for measuring the sensor.
Steering wheel puller	Used for removing the steering wheel.

2. Relay and Fuse

A: LOCATION

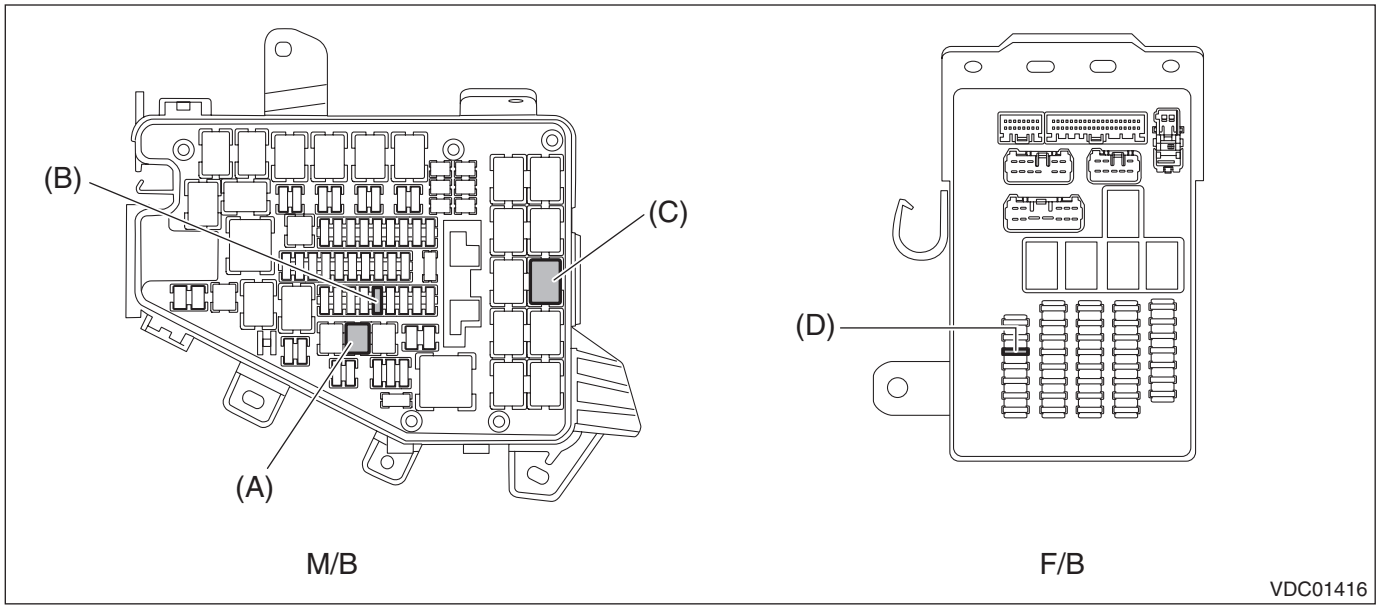

Main fuse box (M/B)	Fuse 40 A	(A)
	Fuse 30 A	(B)
	Brake light relay	(C)
Fuse & relay box (F/B)	Fuse 7.5 A	(D)

NOTE:
For details concerning other fuses and relays, refer to the wiring diagram. <Ref. to WI-21, Power Supply Circuit.>

B: INSPECTION

1. CHECK FUSE

1) Remove the fuse and inspect visually.
2) If the fuse is blown out, replace the fuse.

2. CHECK RELAY

1) Measure the resistance between relay terminals.

Terminal No.	Inspection conditions	Standard	Circuit
1 — 2	Always	1 MΩ or more	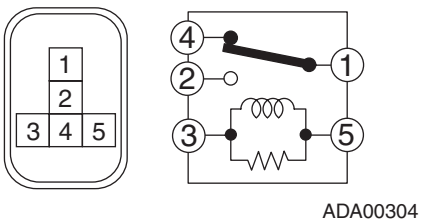
1 — 4	Always	Less than 1 Ω	
1 — 2	Apply battery voltage between terminals 3 and 5.	Less than 1 Ω	

2) Replace the relay if the inspection result is not within the standard value.

3. Vehicle Dynamics Control System

A: WIRING DIAGRAM

Refer to “Vehicle Dynamics Control System” in the wiring diagram. <Ref. to WI-360, WIRING DIAGRAM, Vehicle Dynamics Control System.>

B: ELECTRICAL SPECIFICATION

Refer to the Control Module I/O Signal of the “Vehicle Dynamics Control System (VDC) (DIAGNOSTICS)”. <Ref. to VDC(diag)-17, ELECTRICAL SPECIFICATION, Control Module I/O Signal.>

C: INSPECTION

Refer to the “Vehicle Dynamics Control System (VDC) (DIAGNOSTICS)”. <Ref. to VDC(diag)-111, INSPECTION, General Diagnostic Table.>

D: NOTE

For operation procedures of each component of the vehicle dynamics control system, refer to the respective section.

- VDC control module & hydraulic control unit (VDCCM&H/U): <Ref. to VDC-8, VDC Control Module and Hydraulic Control Unit (VDCCM&H/U).>
- Yaw rate & G sensor: <Ref. to VDC-25, Yaw Rate and G Sensor.>
- Steering angle sensor: <Ref. to VDC-26, Steering Angle Sensor.>
- Front ABS wheel speed sensor: <Ref. to VDC-29, Front ABS Wheel Speed Sensor.>
- Rear ABS wheel speed sensor: <Ref. to VDC-32, Rear ABS Wheel Speed Sensor.>
- Front magnetic encoder: <Ref. to VDC-35, Front Magnetic Encoder.>
- Rear magnetic encoder: <Ref. to VDC-36, Rear Magnetic Encoder.>
- VDC OFF switch: <Ref. to VDC-37, VDC OFF Switch.>
- Hill hold switch: <Ref. to VDC-39, Hill Hold Switch.>

4. VDC Control Module and Hydraulic Control Unit (VDCCM&H/U)

A: REMOVAL

CAUTION:
- **Avoid unnecessary removal of parts in order to prevent fluid leakage.**
- **When the VDCCM&H/U components are removed, be sure to perform the installation according to the installation procedures. <Ref. to VDC-10, INSTALLATION, VDC Control Module and Hydraulic Control Unit (VDCCM&H/U).>**

1) Disconnect the ground terminal from battery sensor. <Ref. to RC-4, BATTERY, NOTE, Repair Contents.>
2) Remove the air intake boot. <Ref. to RC-4, BATTERY, NOTE, Repair Contents.>
3) Remove the VDC control module & hydraulic control unit (VDCCM&H/U).

CAUTION:
- **Do not pull on the harness when disconnecting the connector.**
- **Wrap the brake pipe with a vinyl bag so as not to spill the brake fluid on the painted surface of the vehicle body.**
- **If brake fluid is spilled on the painted surface of the vehicle body, wash it off immediately with water and wipe clean.**

(1) Remove any dirt from around the VDCCM&H/U.
(2) Pull up the lock lever (b) while pressing the lock button (a) and disconnect the VDCCM&H/U connector.

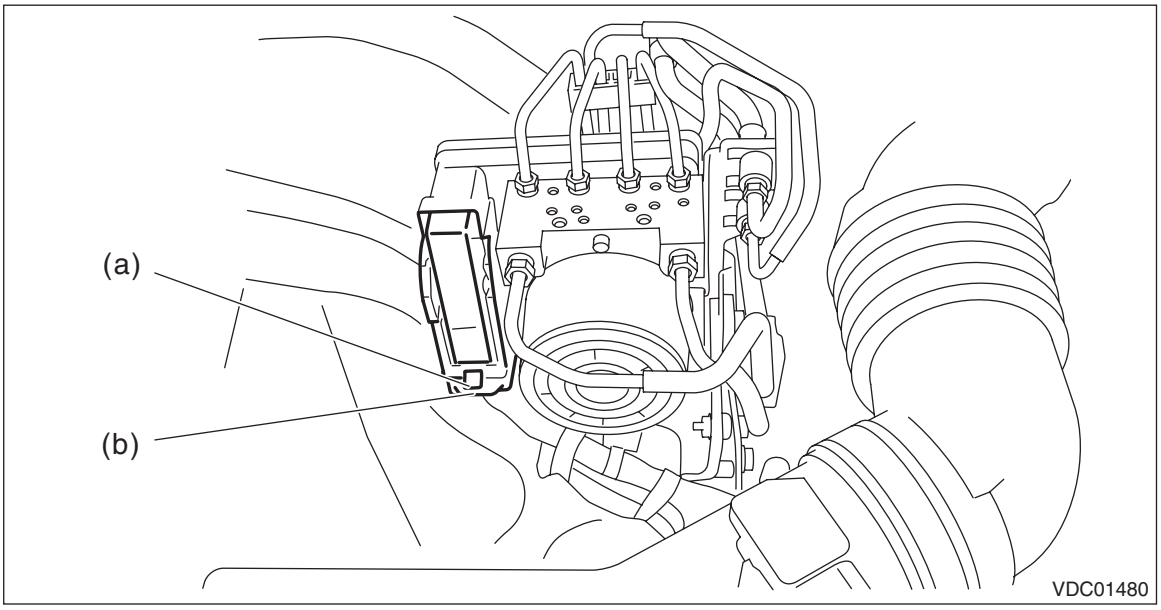

(3) Separate each brake pipe using a flare nut wrench.

- Models with EyeSight

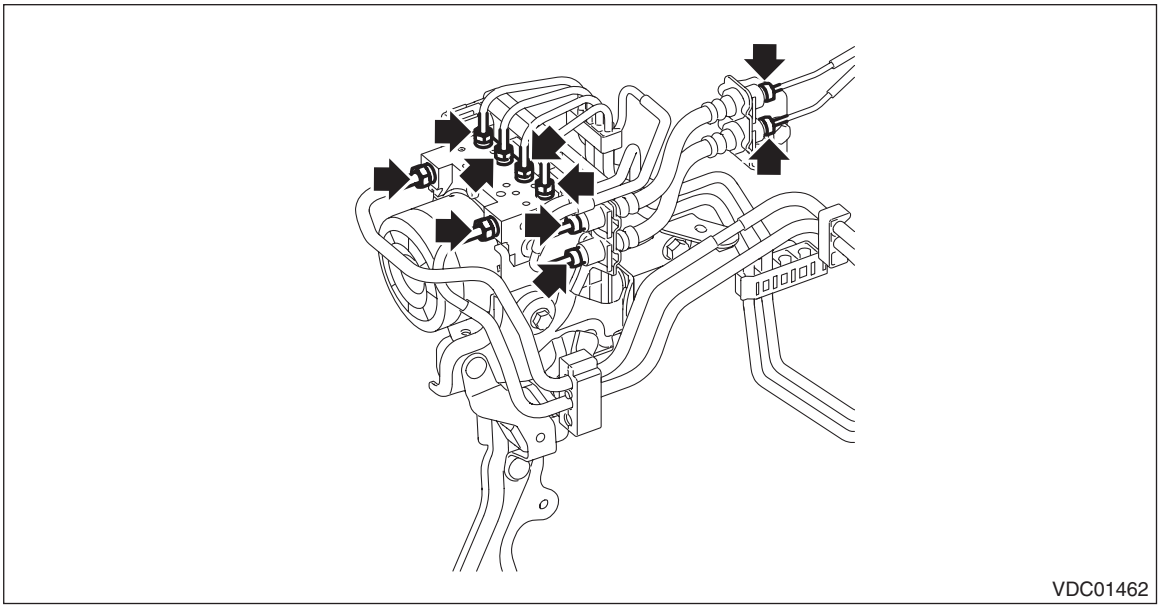

- Models without EyeSight

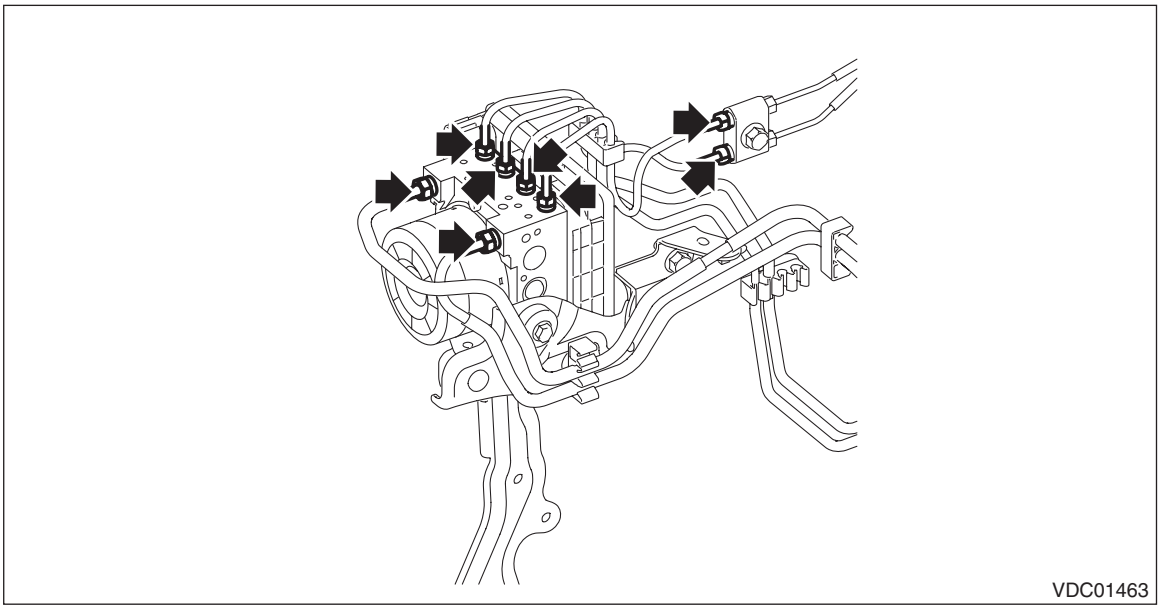

(4) Remove the bolts and nuts, and remove the bracket - hydraulic unit and the VDCCM&H/U.

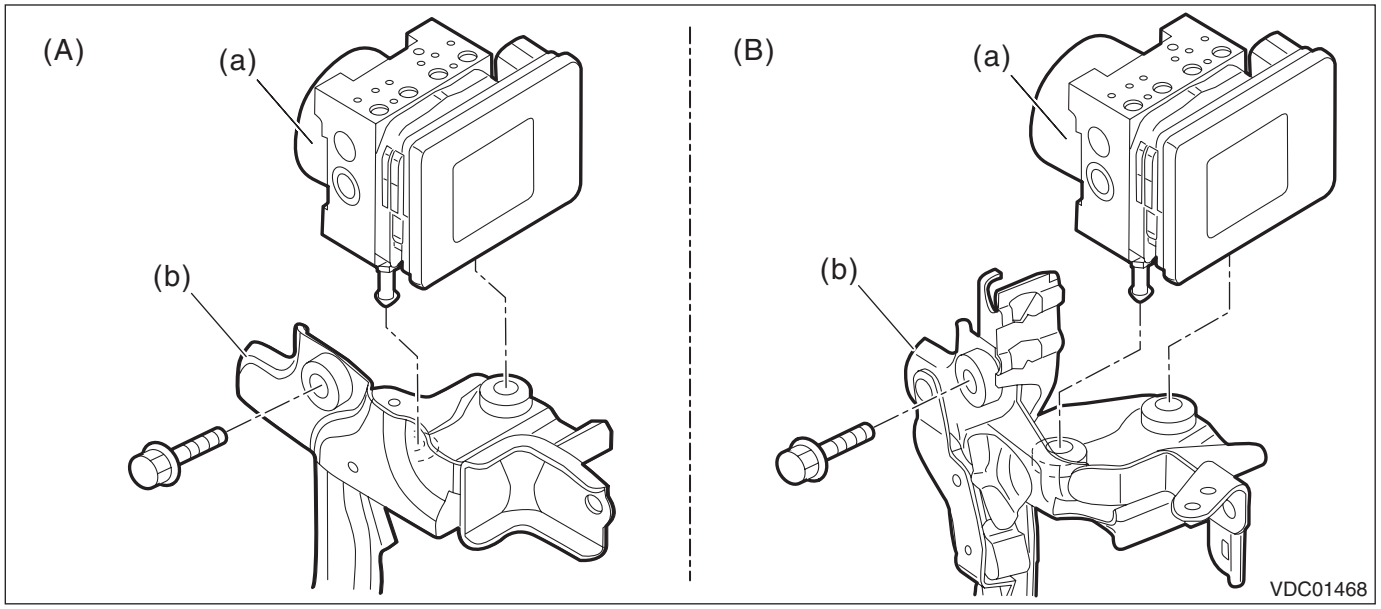

(A) Models without EyeSight (B) Models with EyeSight

B: INSTALLATION

CAUTION:
• When installing the VDCCM&H/U to the bracket - hydraulic unit, make sure that there is no oil adhered to the bolts and the threads of VDCCM&H/U. If the oil is adhered, degrease it carefully before tightening.
• Connect the VDCCM&H/U connector securely.

1) Install the bracket - hydraulic unit and the VDCCM&H/U.
(1) Install the VDCCM&H/U to the bracket - hydraulic unit.

Tightening torque:
7.5 N·m (0.8 kgf-m, 5.5 ft-lb)
(2) Attach the bracket - hydraulic unit.

Tightening torque:
33 N·m (3.4 kgf-m, 23.8 ft-lb)
(3) Connect the VDCCM&H/U connector.
(4) Install each brake pipe using a flare nut wrench.

Tightening torque:
Refer to "COMPONENT" of "General Description". <Ref. to VDC-4, VDC CONTROL MODULE AND HYDRAULIC CONTROL UNIT (VDCCM&H/U), COMPONENT, General Description.>

2) Connect the ground terminal to battery sensor. <Ref. to RC-4, BATTERY, NOTE, Repair Contents.>
3) Bleed air from the brake system. <Ref. to BR-68, Air Bleeding.>

4) Perform parameter confirmation, selection, and registration.

NOTE:
• When the VDCCM&H/U is replaced with a new part, be sure to perform the selection · registration operation.
• When the registration has not been performed, the DTC code “Parameter selection error” is detected together with the ABS/EBD/VDC warning light illumination.
• When the VDCCM&H/U is replaced with a new part, the EPB warning light illuminates and the EPB operation light blinks. After performing parameter selection and registration, be sure to operate the electronic parking brake five times and check that the EPB operation light illuminates or blinks and the EPB warning light goes off.

(1) Check that the applied model and grade of the relevant vehicle are included. <Ref. to VDC-17, VDCCM PARAMETER CHECK, MAINTENANCE MODE, VDC Control Module and Hydraulic Control Unit (VDCCM&H/U).>

(2) If the applied model and grade of the target vehicle are not included, perform parameter selection and registration. <Ref. to VDC-17, VDCCM PARAMETER SELECTION, MAINTENANCE MODE, VDC Control Module and Hydraulic Control Unit (VDCCM&H/U).>

5) Perform “VDC sensor midpoint setting mode”. <Ref. to VDC-15, VDC SENSOR MIDPOINT SETTING MODE, ADJUSTMENT, VDC Control Module and Hydraulic Control Unit (VDCCM&H/U).>

C: INSPECTION

1) Check the identification (a) of the VDC control module & hydraulic control unit (VDCCM&H/U).

NOTE:
For the identification, refer to “SPECIFICATION” in “General Description”. <Ref. to VDC-2, SPECIFICATION, General Description.>

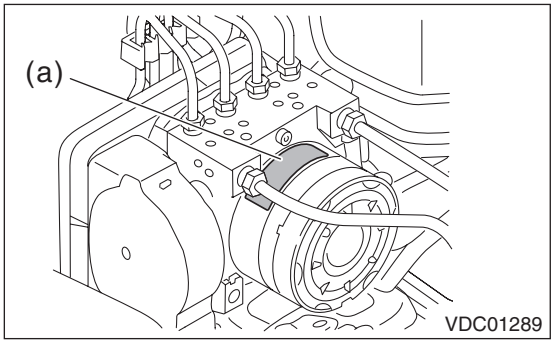

2) Check the condition of connection and settlement of connector, and correct or replace if defective.

1. CHECKING THE HYDRAULIC UNIT ABS OPERATION BY PRESSURE GAUGE

1) Lift up the vehicle, and then remove the wheel.
2) Remove the bleeder - screws from the front LH and front RH caliper bodies.
3) Connect two pressure gauges to front LH and front RH caliper bodies.

CAUTION:
- **Use a pressure gauge used exclusively for brake fluid measurement.**
- **Do not use the pressure gauge used for the measurement of transmission oil. Doing so will cause the piston seal to expand and deform.**

NOTE:
Wrap sealing tape around the pressure gauge.

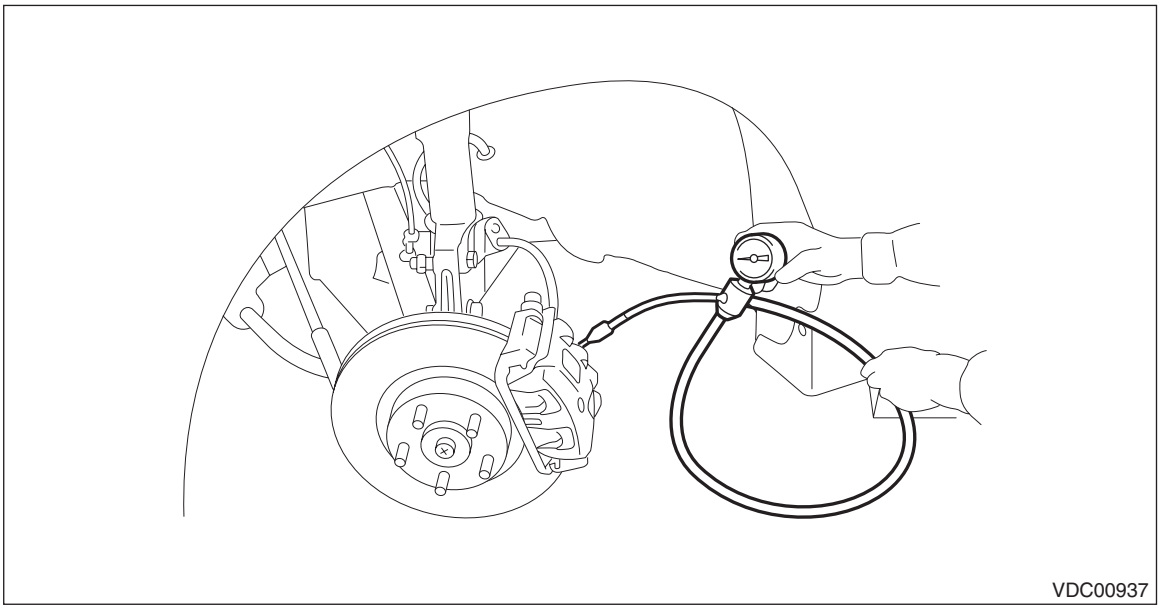

4) Bleed air from the pressure gauges and the front LH and front RH caliper bodies.
5) Perform ABS sequence control. <Ref. to VDC-18, ABS Sequence Control.>

NOTE:
When the hydraulic unit begins to work, first the front LH side performs decompression, hold and compression, and then the front RH side performs decompression, hold and compression.
6) Read values indicated on the pressure gauge and check if the fluctuation of the values between decompression and compression meets the standard values. Depress the brake pedal and check that the kick-back is normal, and tightness is normal.

Inspection conditions	Front wheel	Rear wheel
Initial value	3,500 kPa (36 kgf/cm^2, 511 psi)	3,500 kPa (36 kgf/cm^2, 511 psi)
When depressurized	500 kPa (5 kgf/cm^2, 73 psi) or less	500 kPa (5 kgf/cm^2, 73 psi) or less
When pressurized	3,500 kPa (36 kgf/cm^2, 511 psi) or more	3,500 kPa (36 kgf/cm^2, 511 psi) or more

7) Remove the pressure gauge from the front LH and front RH caliper bodies.
8) Install the bleeder - screws of the front LH and front RH caliper bodies.
9) Remove the bleeder - screws from the rear LH and rear RH caliper bodies.
10) Connect two pressure gauges to rear LH and rear RH caliper bodies.
11) Bleed air from the pressure gauges and the rear LH and rear RH caliper bodies.
12) Perform ABS sequence control. <Ref. to VDC-18, ABS Sequence Control.>

NOTE:
When the hydraulic unit begins to work, first the rear LH side performs decompression, hold and compression, and then the rear RH side performs decompression, hold and compression.
13) Read values indicated on the pressure gauge and check if the fluctuation of the values between decompression and compression meets specification. Depress the brake pedal and check that the kick-back is normal, and tightness is normal.
14) Remove the pressure gauge from the rear LH and rear RH caliper bodies.
15) Install the bleeder - screws of the rear LH and rear RH caliper bodies.
16) Bleed air from the brake system. <Ref. to BR-68, Air Bleeding.>

2. CHECKING THE HYDRAULIC UNIT ABS OPERATION WITH THE BRAKE TESTER

1) Set wheels other than the one to measure on free rollers.
2) Prepare for the ABS sequence control operation. <Ref. to VDC-18, ABS Sequence Control.>
3) Set the front wheels or rear wheels on the brake tester and set the gear to neutral.
4) Operate the brake tester.

NOTE:
When any wheel speed reaches 10 km/h (6.2 MPH), the ABS sequence control stops and ABS operation is returned to the normal control mode.
5) Perform ABS sequence control. <Ref. to VDC-18, ABS Sequence Control.>
6) When the hydraulic unit begins to work, check the following work sequence.
   (1) The front LH wheel performs decompression, hold and compression in sequence, and subsequently the front RH wheel repeats the same cycle.
   (2) The rear RH wheel performs decompression, hold and compression in sequence, and subsequently the rear LH wheel repeats the same cycle.
7) Read values indicated on the brake tester and check if the fluctuation of the values between decompression and compression meets specification.

Inspection conditions	Front wheel	Rear wheel
Initial value	1,000 N (102 kgf, 225 lb)	1,000 N (102 kgf, 225 lb)
When depressurized	500 N (51 kgf, 112 lb) or less	500 N (51 kgf, 112 lb) or less
When pressurized	1,000 N (102 kgf, 225 lb) or more	1,000 N (102 kgf, 225 lb) or more

8) After the inspection, depress the brake pedal and check that it is not abnormally hard, and tightness is normal.

3. CHECKING THE HYDRAULIC UNIT VDC OPERATION USING A PRESSURE GAUGE

1) Lift up the vehicle, and then remove the wheel.
2) Remove the bleeder - screws from the front LH and front RH caliper bodies.
3) Connect two pressure gauges to front LH and front RH caliper bodies.

CAUTION:
- **Use a pressure gauge used exclusively for brake fluid measurement.**
- **Do not use a pressure gauge used for the measuring transmission oil pressure, as the piston seal may expand and deform.**

NOTE:
Wrap sealing tape around the pressure gauge.

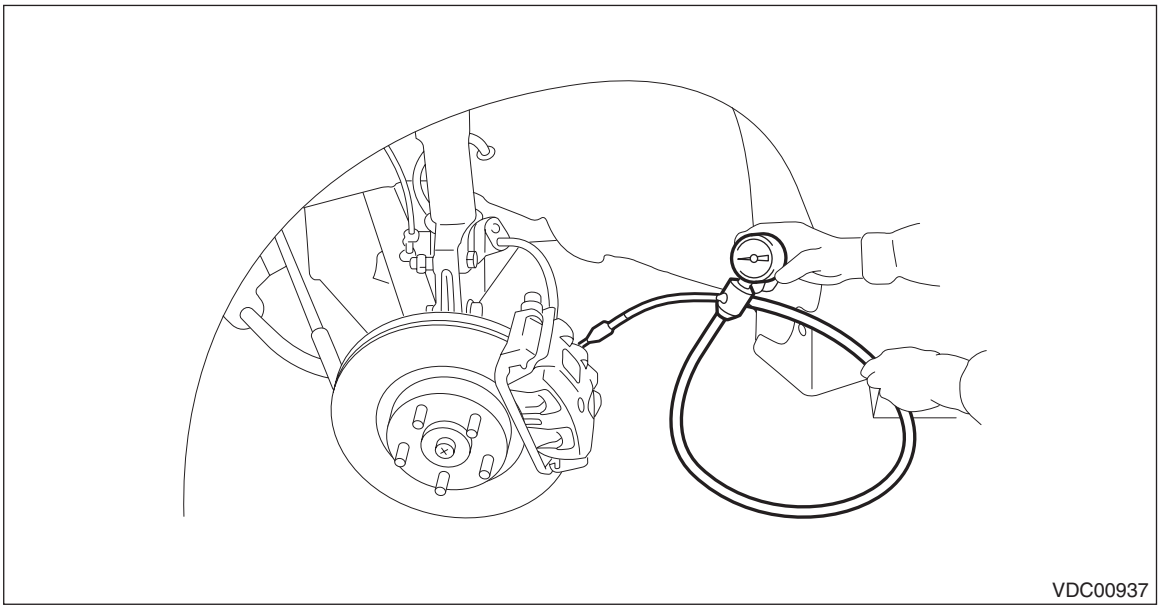

4) Bleed air from the pressure gauge.
5) Perform VDC sequence control. <Ref. to VDC-21, VDC Sequence Control.>

NOTE:
When the hydraulic unit begins to work, first the front LH side performs compression, hold and decompression, and then the front RH side performs compression, hold and decompression.
6) Read values indicated on the pressure gauge and check if the fluctuation of the values between decompression and compression meets specification. Depress the brake pedal and check that it is not abnormally hard, and tightness is normal.

Inspection conditions	Front wheel	Rear wheel
When pressurized	3,000 kPa (31 kgf/cm^2, 441 psi) or more	3,000 kPa (31 kgf/cm^2, 441 psi) or more
When depressurized	500 kPa (5 kgf/cm^2, 73 psi) or less	500 kPa (5 kgf/cm^2, 73 psi) or less

7) Remove the pressure gauge from the front LH and front RH caliper bodies.
8) Install the bleeder - screws of the front LH and front RH caliper bodies.
9) Remove the bleeder - screws from the rear LH and rear RH caliper bodies.
10) Connect two pressure gauges to rear LH and rear RH caliper bodies.
11) Bleed air from the pressure gauges and the rear LH and rear RH caliper bodies.
12) Perform VDC sequence control. <Ref. to VDC-21, VDC Sequence Control.>

NOTE:
When the hydraulic unit begins to work, first the rear RH side performs compression, hold and decompression, and then the rear LH side performs compression, hold and decompression.

13) Read the values indicated on the pressure gauges and check if it is within specification. Depress the brake pedal and check that it is not abnormally hard, and tightness is normal.
14) Remove the pressure gauge from the rear LH and rear RH caliper bodies.
15) Install the bleeder - screws of the rear LH and rear RH caliper bodies.
16) Bleed air from the brake system. <Ref. to BR-68, Air Bleeding.>

4. CHECK HYDRAULIC UNIT VDC OPERATION WITH BRAKE TESTER

1) Set wheels other than the one to measure on free rollers.
2) Prepare to operate the VDC sequence control. <Ref. to VDC-21, VDC Sequence Control.>
3) Set the front wheels or rear wheels on the brake tester and set the gear to neutral.
4) Operate the brake tester.

NOTE:
When any wheel speed reaches 10 km/h (6.2 MPH), the VDC sequence control stops and VDC operation is returned to the normal control mode.
5) Perform VDC sequence control. <Ref. to VDC-21, VDC Sequence Control.>
6) When the hydraulic unit begins to work, check the following work sequence.
   (1) The front LH wheel performs compression, hold and decompression in sequence, and subsequently the front RH wheel repeats the same cycle.
   (2) The rear RH wheel performs compression, hold and decompression in sequence, and subsequently the rear LH wheel repeats the same cycle.
7) Read values indicated on the brake tester and check if the fluctuation of the values between decompression and compression meets specification.

Inspection conditions	Front wheel	Rear wheel
When pressurized	2,000 N (204 kgf, 450 lbf) or more	2,000 N (204 kgf, 450 lbf) or more
When depressurized	500 N (51 kgf, 112 lbf) or less	500 N (51 kgf, 112 lbf) or less

8) After the inspection, depress the brake pedal and check that it is not abnormally hard, and tightness is normal.

D: ADJUSTMENT

1. VDC SENSOR MIDPOINT SETTING MODE

After installing, replacing or adjusting the following parts, perform the VDC sensor midpoint setting mode.
- Steering angle sensor
- Steering wheel
- Suspension parts
- Wheel alignment
- VDCCM&H/U
- VDCCM&H/U bracket

1) Park the vehicle on a level surface, and set the steering wheel to the neutral position.
2) Perform the VDC sensor midpoint setting mode.
   (1) Connect the Subaru Select Monitor to data link connector.

NOTE:
For detailed operation procedures, refer to “Application help”.
   (2) Turn the ignition switch to ON.
   (3) On «Start» display, select «Diagnosis».
   (4) On «Vehicle selection» display, input the target vehicle information and select «Confirmed».
   (5) On «Main Menu» display, select «Each System».
   (6) On «Select System» display, select «Brake Control System» and select «Enter».
   (7) On «Select Function» display, select «Data Monitor».
   (8) On «Data monitor» display, select «Steering Angle Sensor», «Longitudinal G Sensor» and «Lateral G sensor Output».

3) Check that the steering angle sensor output value is within the range of following values.
- Model without EyeSight: –10 — 10 deg
- Model with EyeSight: –2 — 2 deg

4) Check that output values for the longitudinal G sensor and lateral G sensor are -2 — 2 m/s^2.
5) From «Work Support», select «VSC(VDC) Centering Mode», and perform the setting according to the procedure displayed on the Subaru Select Monitor screen.
6) Drive the vehicle for 10 minutes, and check that there is no system malfunction or the warning light illumination while driving.
7) Make sure that the DTC is not stored.

E: MAINTENANCE MODE

1. BRAKE MAINTENANCE MODE

NOTE:
For brake maintenance mode, refer to “PARKING BRAKE” section. <Ref. to PB-6, BRAKE MAINTENANCE MODE, OPERATION, Parking Brake System.>

2. VDCCM PARAMETER READING

1) Perform reading of parameter.
   (1) Connect the Subaru Select Monitor to data link connector.

NOTE:
For detailed operation procedures, refer to “Application help”.
   (2) Turn the ignition switch to ON.
   (3) On «Start» display, select «Diagnosis».
   (4) On «Vehicle selection» display, input the target vehicle information and select «Confirmed».
   (5) On «Main Menu» display, select «Each System».
   (6) On «Select System» display, select «Brake Control System» and select «Enter».
   (7) On «Select Function» display, select «Work Support».
   (8) On «Work Support» display, select «Reading of parameter: ECM to SSM».

2) Save and close the file.

3. VDCCM PARAMETER WRITING

1) Perform writing of parameter.
   (1) Connect the Subaru Select Monitor to data link connector.

NOTE:
For detailed operation procedures, refer to “Application help”.
   (2) Turn the ignition switch to ON.
   (3) On «Start» display, select «Diagnosis».
   (4) On «Vehicle selection» display, input the target vehicle information and select «Confirmed».
   (5) On «Main Menu» display, select «Each System».
   (6) On «Select System» display, select «Brake Control System» and select «Enter».
   (7) On «Select Function» display, select «Work Support».
   (8) On «Work Support» display, select «Writing of parameter: SSM to ECM».

2) Open the file saved in the «Reading of parameter: ECM to SSM» procedure.
3) When the confirmation screen indicating the vehicle information appears, check that the correct applied model and grade are displayed and click the «OK» button.

4. VDCCM PARAMETER SELECTION

NOTE:
• When the VDCCM&H/U is replaced with a replacement part, be sure to perform the parameter selection/ registration to the VDCCM&H/U using this function.
• To check the applied model, refer to the “Model number plate” attached to the vehicle. <Ref. to ID-2, IDENTIFICATION, Identification.>
• If you entered a wrong applied model, you can re-write it.
• When the registration has not been performed, the DTC code “Parameter” is detected together with the ABS/EBD/VDC warning light illumination.
• This function can be used for the replacement part of VDCCM&H/U.

1) Perform selection of parameter.
   (1) Connect the Subaru Select Monitor to data link connector.

NOTE:
For detailed operation procedures, refer to “Application help”.

   (2) Turn the ignition switch to ON.
   (3) On «Start» display, select «Diagnosis».
   (4) On «Vehicle selection» display, input the target vehicle information and select «Confirmed».
   (5) On «Main Menu» display, select «Each System».
   (6) On «Select System» display, select «Brake Control System» and select «Enter».
   (7) On «Select Function» display, select «Work Support».
   (8) On «Work Support» display, select «Selection of Parameter».

2) Check the applied model and option code indicated on the “Model number plate”. <Ref. to ID-2, IDENTIFICATION, Identification.>
3) Enter the applied model of 7-digit alphanumeric characters and press the [Enter] key.
4) When the option code input screen appears after entering the applied model, enter the option code consisting of 4-digit alphanumeric characters, and press the «Enter» key. When the option code is 3 digits, add “0” (zero) in front and enter the code as 4 digits.
5) When the confirmation screen indicating the vehicle information appears, check that the correct applied model and grade are displayed and click the «OK» button.

NOTE:
When the displayed applied model and grade are different from those of the vehicle, perform registration operations again after clicking the [OK] button.

6) Execute the Clear Memory Mode after parameter selection and registration operations because the DTC for “Parameter selection error” is memorized. <Ref. to VDC(diag)-27, Clear Memory Mode.>

5. VDCCM PARAMETER CHECK

NOTE:
The parameter data registered in the VDCCM is shown on the display.

1) Perform confirming on parameter.
   (1) Connect the Subaru Select Monitor to data link connector.

NOTE:
For detailed operation procedures, refer to “Application help”.

   (2) Turn the ignition switch to ON.
   (3) On «Start» display, select «Diagnosis».
   (4) On «Vehicle selection» display, input the target vehicle information and select «Confirmed».
   (5) On «Main Menu» display, select «Each System».
   (6) On «Select System» display, select «Brake Control System» and select «Enter».
   (7) On «Select Function» display, select «Work Support».
   (8) On «Work Support» display, select «Confirm on parameter».

2) Check that the applied model and grade of the relevant vehicle are included, and click the «OK» button.
3) If the applied model and grade of the target vehicle are not included, perform “parameter selection and registration”. <Ref. to VDC-17, VDCCM PARAMETER SELECTION, MAINTENANCE MODE, VDC Control Module and Hydraulic Control Unit (VDCCM&H/U).>

5. ABS Sequence Control

A: OPERATION

1) While the ABS sequence control is being performed, the operation of the hydraulic unit can be checked using the brake tester or pressure gauge after the hydraulic unit solenoid valve operation.
2) ABS sequence control can be started by the Subaru Select Monitor.

1. ABS SEQUENCE CONTROL WITH SUBARU SELECT MONITOR

NOTE:
In the event of any trouble, the ABS sequence control will not operate.
1) Connect the Subaru Select Monitor to data link connector.

NOTE:
For detailed operation procedures, refer to “Application help”.
(1) Turn the ignition switch to ON.
(2) On «Start» display, select «Diagnosis».
(3) On «Vehicle selection» display, input the target vehicle information and select «Confirmed».
(4) On «Main Menu» display, select «Each System».
(5) On «Select System» display, select «Brake Control System» and select «Enter».
(6) On «Select Function» display, select «Work Support».
(7) On «Work Support» display, select «ABS Sequence Control Mode».
2) Follow the procedures displayed in the Subaru Select Monitor to execute the following.
(1) When using a brake tester, depress the brake pedal with a force of 100 N (10.2 kgf, 22.5 lbf).
(2) When using a pressure gauge, press the brake pedal so that the pressure gauge indicates 3,500 kPa (36 kgf/cm^2, 511 psi).
3) The brake system being operated is displayed on the Subaru Select Monitor.

2. CONDITIONS FOR ABS SEQUENCE CONTROL

NOTE:
The control operation starts at point A.

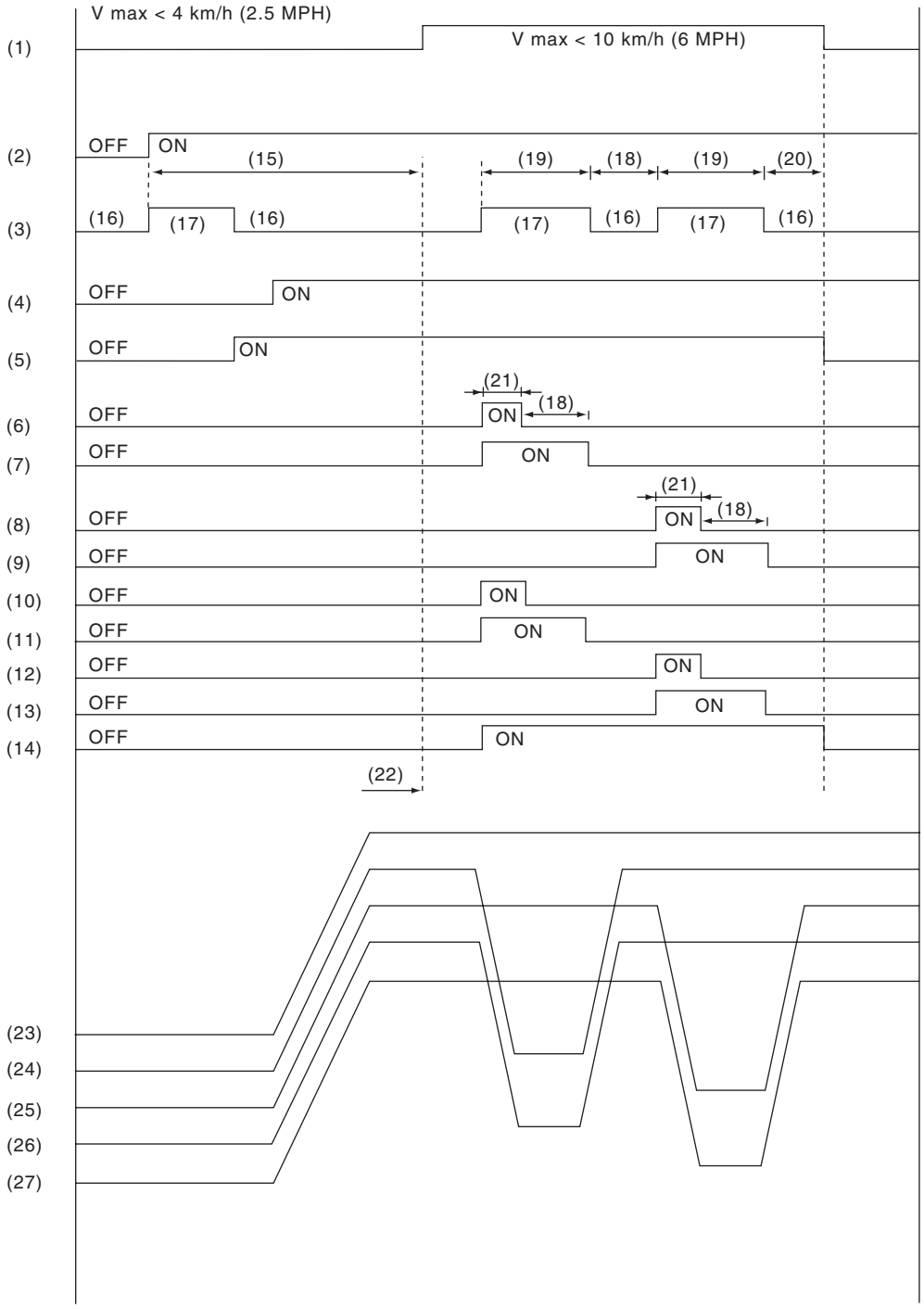

VDC01433

(1) All wheel speed
(2) Ignition key
(3) ABS warning light
(4) Switch - stop light
(5) Valve relay
(6) Front LH decompression valve
(7) Front LH compression valve
(8) Front RH decompression valve
(9) Front RH compression valve
(10) Rear RH decompression valve
(11) Rear RH compression valve
(12) Rear LH decompression valve
(13) Rear LH compression valve
(14) Pump motor
(15) A few seconds
(16) Light OFF
(17) Light ON
(18) 1.0 seconds
(19) 1.4 seconds
(20) 0.6 seconds
(21) 0.4 seconds
(22) Point A
(23) Master cylinder pressure
(24) Front LH wheel cylinder pressure
(25) Front RH wheel cylinder pressure
(26) Rear RH wheel cylinder pressure
(27) Rear LH wheel cylinder pressure

B: SPECIFICATION

1. CONDITIONS FOR COMPLETION OF ABS SEQUENCE CONTROL

When the following conditions develop, the ABS sequence control stops and ABS operation is returned to the normal control mode.

- When the speed of at least one wheel reaches 10 km/h (6.2 MPH).
- When the brake pedal is released during ABS sequence control and the switch - stop light becomes OFF.
- After completion of ABS sequence control.
- When a malfunction is detected.

6. VDC Sequence Control

A: OPERATION

1) While the VDC sequence control is performed, the operation of the hydraulic unit can be checked using the brake tester or pressure gauge after the hydraulic unit solenoid valve is operated.
2) VDC sequence control can be started by Subaru Select Monitor.

1. VDC SEQUENCE CONTROL WITH SUBARU SELECT MONITOR

NOTE:
In the event of any trouble, sequence control will not operate.
1) Connect the Subaru Select Monitor to data link connector.

NOTE:
For detailed operation procedures, refer to “Application help”.
(1) Turn the ignition switch to ON.
(2) On «Start» display, select «Diagnosis».
(3) On «Vehicle selection» display, input the target vehicle information and select «Confirmed».
(4) On «Main Menu» display, select «Each System».
(5) On «Select System» display, select «Brake Control System» and select «Enter».
(6) On «Select Function» display, select «Work Support».
(7) On «Work Support» display, select «VDC Function Check Mode».
2) Operate according to the procedures displayed in the Subaru Select Monitor.
3) The brake system being operated is displayed on the Subaru Select Monitor.

2. CONDITIONS FOR VDC SEQUENCE CONTROL

NOTE:
The control operation starts at point A.

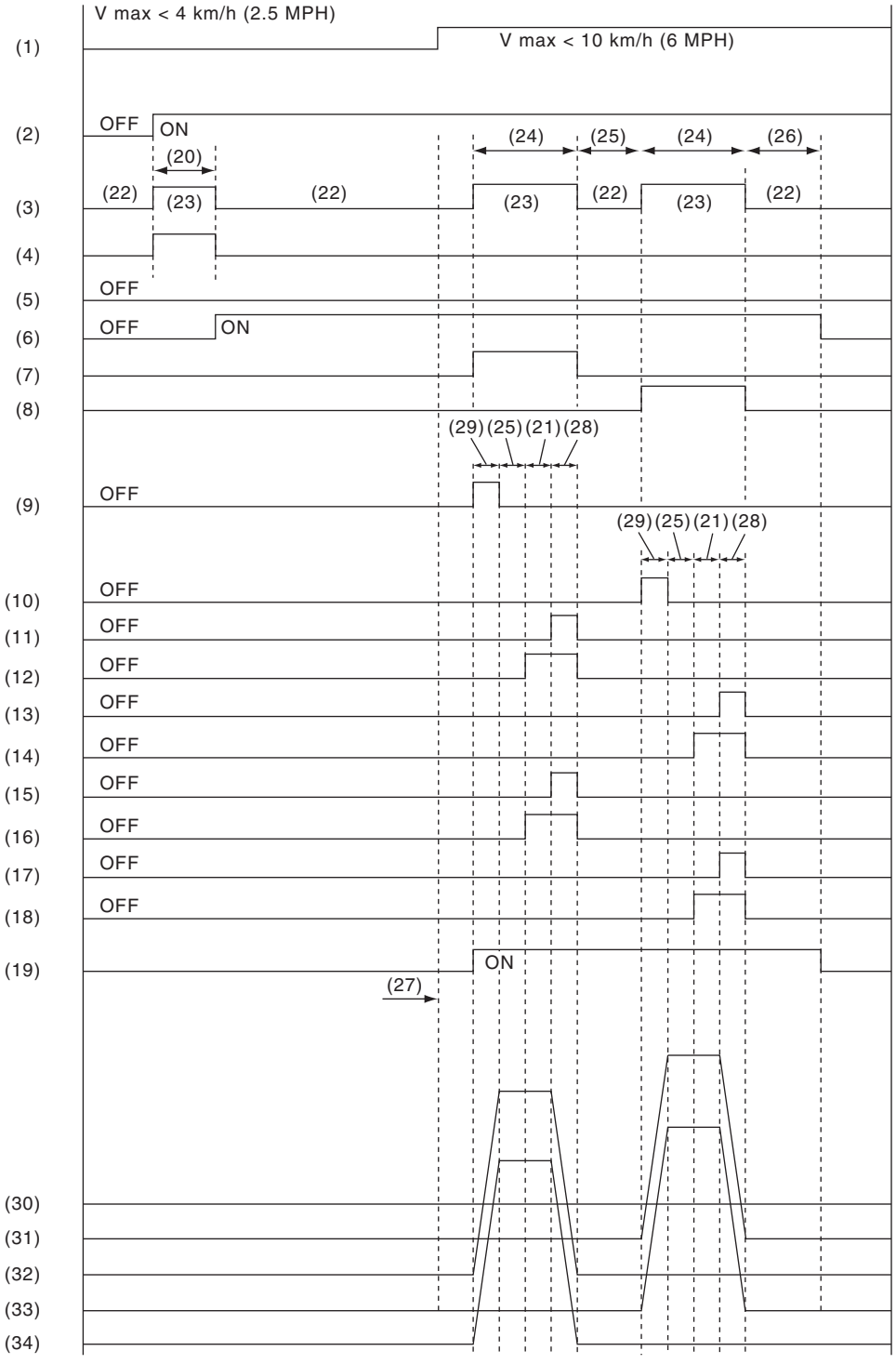

VDC01434

(1) All wheel speed
(2) Ignition key
(3) ABS warning light
(4) VDC warning light
(5) Switch - stop light
(6) Valve relay
(7) VDC switching valve 1 front LH
(8) VDC switching valve 1 front RH
(9) VDC switching valve 2 front LH
(10) VDC switching valve 2 front RH
(11) Front LH decompression valve
(12) Front LH compression valve
(13) Front RH decompression valve
(14) Front RH compression valve
(15) Rear RH decompression valve
(16) Rear RH compression valve
(17) Rear LH decompression valve
(18) Rear LH compression valve
(19) Pump motor
(20) A few seconds
(21) 1.2 seconds
(22) Light OFF
(23) Light ON
(24) 3.4 seconds
(25) 1 second
(26) 1.6 seconds
(27) Point A
(28) 0.4 seconds
(29) 0.8 seconds
(30) Master cylinder pressure
(31) Front RH wheel cylinder pressure
(32) Front LH wheel cylinder pressure
(33) Rear LH wheel cylinder pressure
(34) Rear RH wheel cylinder pressure

B: SPECIFICATION

1. CONDITIONS FOR COMPLETION OF VDC SEQUENCE CONTROL

When the following conditions develop, the VDC sequence control stops and VDC operation is returned to the normal control mode.

- When the speed of at least one wheel reaches 10 km/h (6.2 MPH).
- After completion of VDC sequence control.
- When a malfunction is detected.

7. Brake Lamp Relay

A: NOTE

For brake light relay, refer to “Relay and Fuse”. <Ref. to VDC-6, Relay and Fuse.>

B: OPERATION

1. BRAKE LAMP LIGHTING OPERATION MODE BY SUBARU SELECT MONITOR

CAUTION:
By executing the compulsory operation for the brake lamp relay, the electronic parking brake warning light may illuminate. After the brake light relay compulsory operation is executed, refer to “Basic Diagnostic Procedure” of “Vehicle Dynamics Control (VDC) (DIAGNOSTICS)” and check DTCs and then clear memory. <Ref. to VDC(diag)-2, Basic Diagnostic Procedure.>

NOTE:
In the event of any trouble, brake lamp lighting operation mode will not function.
1) Connect the Subaru Select Monitor to data link connector.

NOTE:
For detailed operation procedures, refer to “Application help”.
(1) On «Start» display, select «Diagnosis».
(2) On «Vehicle selection» display, input the target vehicle information and select «Confirmed».
(3) On «Main Menu» display, select «Each System».
(4) On «Select System» display, select «Brake Control System» and select «Enter».
(5) On «Select Function» display, select «Work Support».
(6) From «Work Support», select «Brake Lamp Lighting Operation».
2) Operate according to the procedures displayed in the Subaru Select Monitor.

C: SPECIFICATION

1. CONDITIONS TO COMPLETE BRAKE LAMP LIGHTING OPERATION MODE

When the following conditions develop, the brake lamp lighting operation mode stops and the normal control mode is restored.
- When the speed of at least one wheel reaches 4 km/h (2 MPH).
- When brake lamp lighting operation mode ends.
- When a malfunction is detected.

8. Yaw Rate and G Sensor

A: NOTE

Yaw rate & longitudinal G and lateral G sensor are integrated with the VDC control module & hydraulic control unit (VDCCM&H/U).

B: INSPECTION

1. YAW RATE & LONGITUDINAL G AND LATERAL G SENSOR SIGNAL

	Step	Check	Yes	No
1	**CHECK YAW RATE & G SENSOR.** 1) Check the installation condition of the VDC control module & hydraulic control module (VDCCM&H/U). 2) Using the Subaru Select Monitor, display «Data monitor». 3) Read the output of «Yaw Rate Sensor», «Longitudinal G Sensor» and «Lateral G Sensor».	When the vehicle is placed horizontally, are the displayed values –1.5 — 1.5 m/s^2 for longitudinal G and lateral G sensor, and –4 — 4 deg/s for yaw rate sensor?	Go to step **2**.	Replace the VDC control module & hydraulic control unit (VDCCM&H/U).
2	**PERFORM DRIVING TEST.** Drive for approximately 10 minutes, and check that there is no system malfunction or the warning light illumination while driving.	Is there any abnormal movement or the warning light illumination while driving?	Perform the diagnosis according to DTCs for the VDC system. <Ref. to VDC(diag)-40, List of Diagnostic Trouble Code (DTC).>	G sensor is normal.

9. Steering Angle Sensor

A: REMOVAL

CAUTION:
• If the steering wheel and steering angle sensor are removed, perform "VSC(VDC) Centering Mode" of the VDC. <Ref. to VDC-15, VDC SENSOR MIDPOINT SETTING MODE, ADJUSTMENT, VDC Control Module and Hydraulic Control Unit (VDCCM&H/U).>
• Before handling the airbag system components, always refer to "CAUTION" of "General Description" in "AIRBAG SYSTEM". <Ref. to AB-10, CAUTION, General Description.>
• Always use the steering wheel puller for removal to avoid deforming the steering wheel.
• If the steering wheel has been removed, make sure that the steering roll connector is not turned from the original position.

1) Position the front wheels straight ahead.
2) Disconnect the ground terminal from the battery sensor, and wait for at least 60 seconds before starting work. <Ref. to RC-4, BATTERY, NOTE, Repair Contents.>
3) Remove the driver's airbag module. <Ref. to AB-32, REMOVAL, Driver's Airbag Module.>
4) Remove the steering wheel. <Ref. to PS-9, REMOVAL, Steering Wheel.>
5) Remove the cover assembly - column.
   (1) Remove the clips, and remove the cover - column (a).
   (2) Remove the screws.
   (3) Release the claws, and remove the cover assembly - column UPR (b) and the cover assembly - column LWR (c).

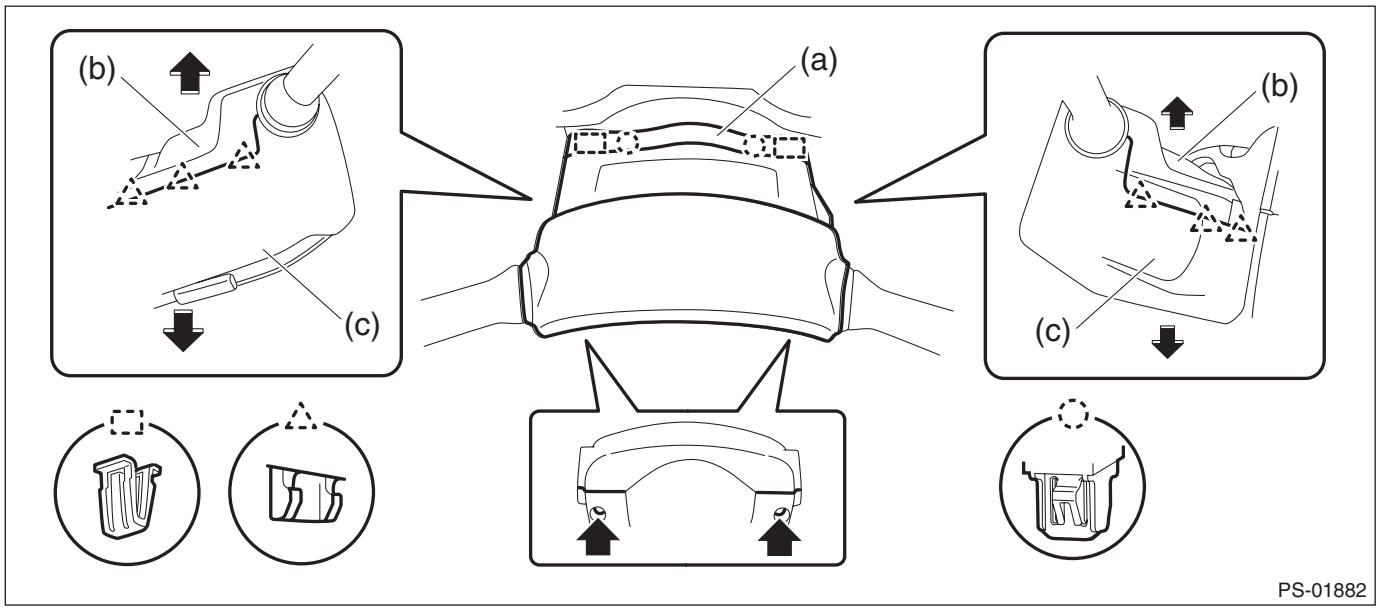

6) Remove the steering roll connector.

CAUTION:
Make sure that the steering roll connector is not turned from the original position.

(1) Disconnect the connector under the steering roll connector.
(2) Release the claws and remove the steering roll connector.

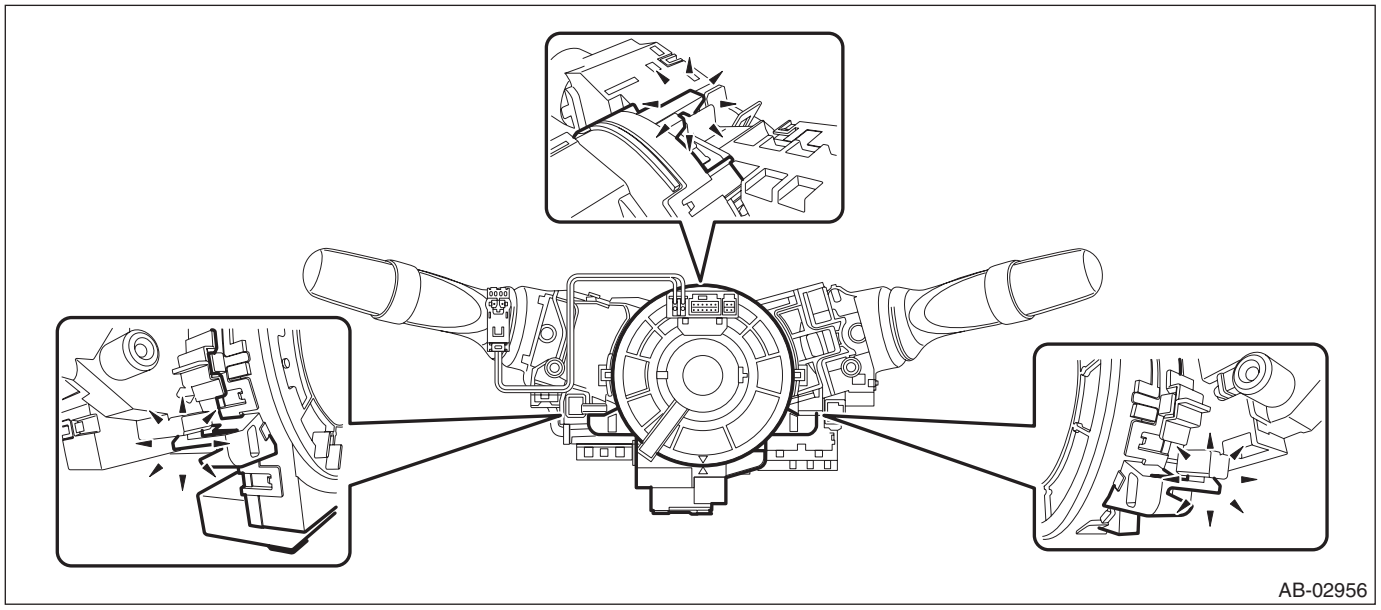

7) Remove the steering angle sensor.

(1) Release the claws and remove the steering angle sensor (b) from the steering roll connector (a).

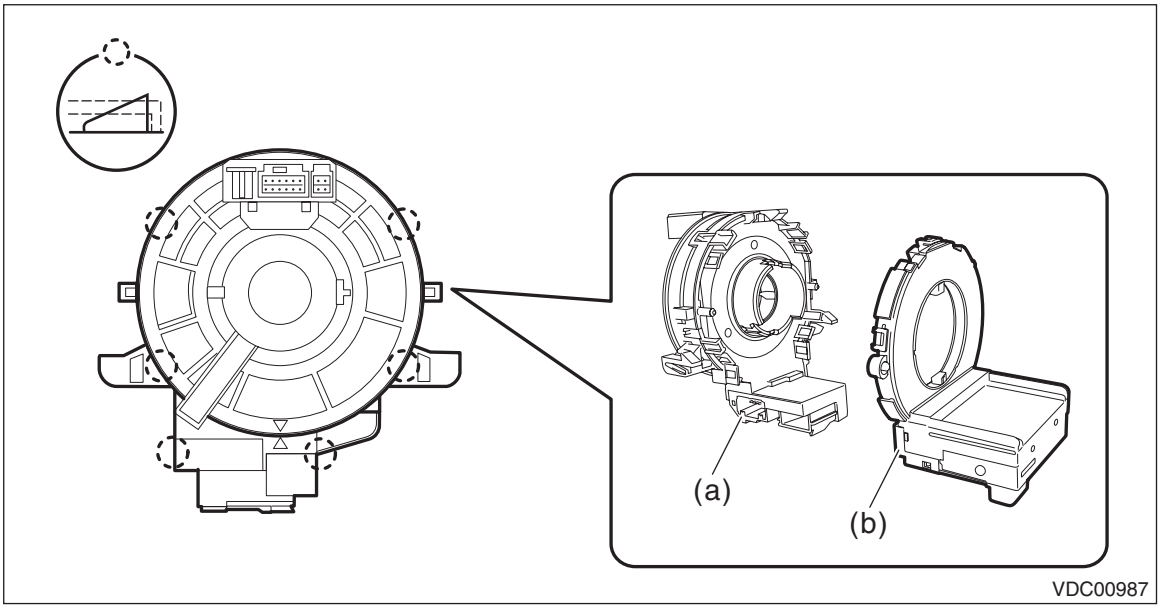

B: INSTALLATION

CAUTION:
• When removing, installing or replacing the VDCCM&H/U, VDCCM&H/U bracket, steering wheel or steering angle sensor (steering roll connector), perform "VSC(VDC) Centering Mode" of the VDC. <Ref. to VDC-15, VDC SENSOR MIDPOINT SETTING MODE, ADJUSTMENT, VDC Control Module and Hydraulic Control Unit (VDCCM&H/U).>
• Before handling the airbag system components, always refer to "CAUTION" of "General Description" in "AIRBAG SYSTEM". <Ref. to AB-10, CAUTION, General Description.>

1) Install the steering angle sensor.
   (1) Apply grease to the protrusion (a) of the new steering angle sensor.

CAUTION:
Do not rotate the steering angle sensor protrusion.

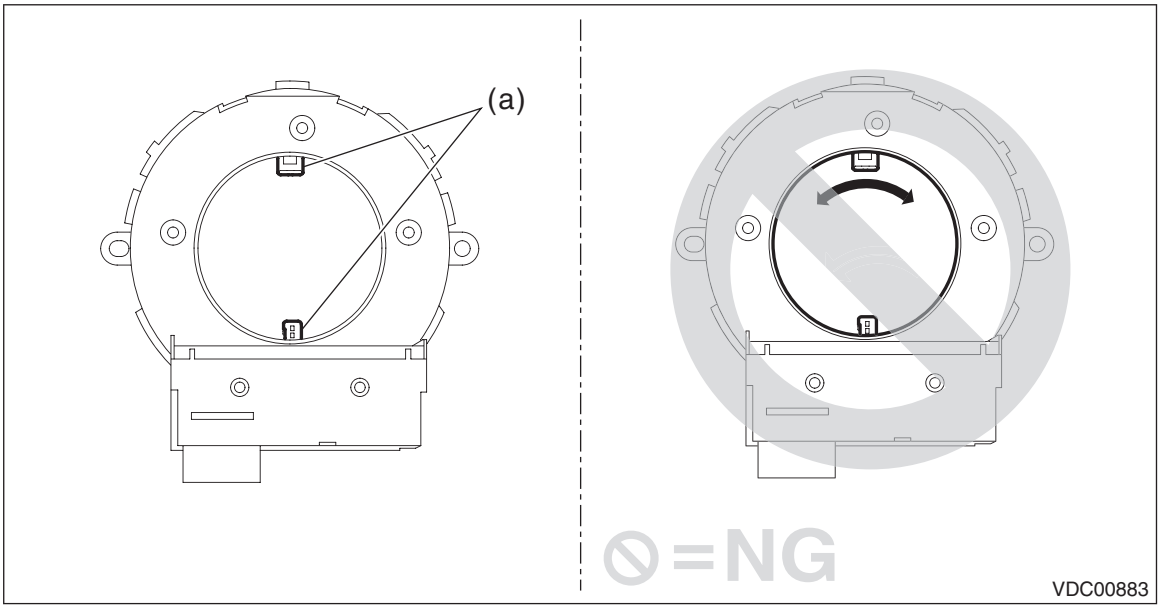

   (2) Align the center of steering roll connector. <Ref. to AB-61, INSTALLATION, Roll Connector.>
   (3) Align the position of the protrusion and install the steering angle sensor to the steering roll connector.
2) Install the cover assembly - column.
3) Install the steering wheel.

Tightening torque:
Steering wheel: 39 N·m (4.0 kgf-m, 28.8 ft-lb)

Clearance:
Between cover assembly - column and steering wheel: 4 — 6 mm (0.16 — 0.24 in)

4) Install the driver's airbag module. <Ref. to AB-33, INSTALLATION, Driver's Airbag Module.>
5) Connect the ground terminal to battery sensor. <Ref. to RC-4, BATTERY, NOTE, Repair Contents.>
6) Perform the neutral position setting of the steering angle sensor. <Ref. to VDC-15, VDC SENSOR MIDPOINT SETTING MODE, ADJUSTMENT, VDC Control Module and Hydraulic Control Unit (VDCCM&H/U).>

10.Front ABS Wheel Speed Sensor

A: REMOVAL

1) Disconnect the ground terminal from battery sensor. <Ref. to RC-4, BATTERY, NOTE, Repair Contents.>
2) Lift up the vehicle, and then remove the front wheels.
3) Remove the front ABS wheel speed sensor.

CAUTION:
- **Be careful not to damage the sensor.**
- **Do not apply excessive force to the sensor harness.**
- **Leave the sensor harness clamp on the vehicle side.**

(1) Disconnect the connector of the front ABS wheel speed sensor in the engine compartment.

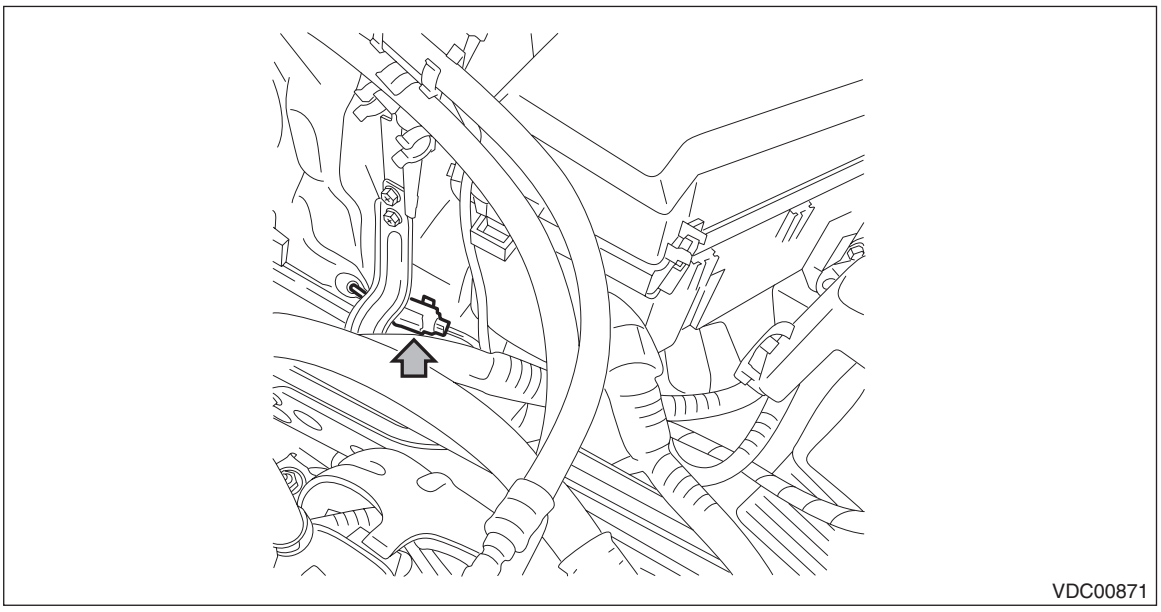

(2) Remove each harness clip and grommet.
(3) Remove the front ABS wheel speed sensor from the housing assembly - front axle.

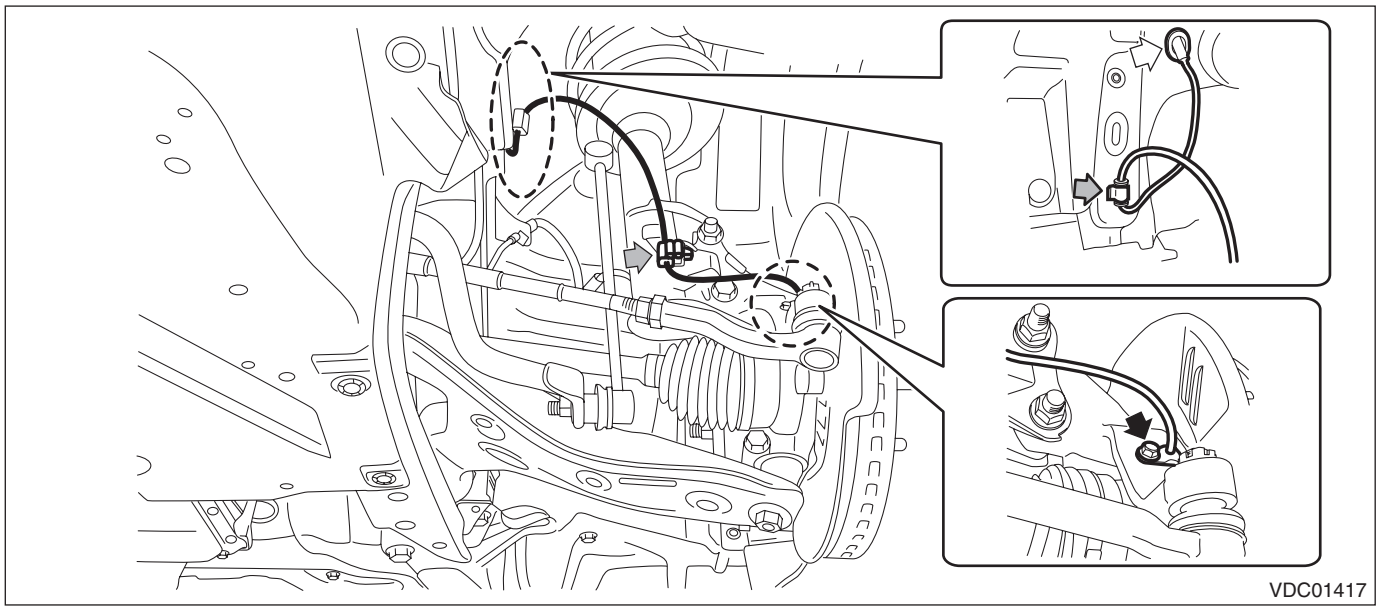

B: INSTALLATION

CAUTION:
- **Be careful not to damage the sensor.**
- **Do not apply excessive force to the sensor harness.**

1) Install the front ABS wheel speed sensor.

Tightening torque:
Front ABS wheel speed sensor: 7.5 N·m (0.8 kgf-m, 5.5 ft-lb)

2) Install the front wheels.

Tightening torque:
Front wheel: 120 N·m (12.2 kgf-m, 88.5 ft-lb)

3) Lower the vehicle.

NOTE:
Check if the harness is not pulled and does not come in contact with the suspension or body while operating the steering.

4) Connect the ground terminal to battery sensor. <Ref. to RC-4, BATTERY, NOTE, Repair Contents.>

C: INSPECTION

1. CHECK WITH SUBARU SELECT MONITOR

1) Connect the Subaru Select Monitor to data link connector.

NOTE:
For detailed operation procedures, refer to “Application help”.
(1) On «Start» display, select «Diagnosis».
(2) On «Vehicle selection» display, input the target vehicle information and select «Confirmed».
(3) On «Main Menu» display, select «Each System».
(4) On «Select System» display, select «Brake Control System» and select «Enter».
(5) On «Select Function» display, select «Data Monitor».
(6) From «Data monitor», select «FR Wheel Speed» and «FL Wheel Speed».

2) Check if the speed indicated on the display changes in the same manner as the speedometer reading during acceleration/deceleration when the steering wheel is in the straight-ahead position.

3) If the speed indicated on the display does not change in the inspection, check the ABS wheel speed sensor. <Ref. to VDC-31, CHECK ABS WHEEL SPEED SENSOR UNIT, INSPECTION, Front ABS Wheel Speed Sensor.>

2. CHECK ABS WHEEL SPEED SENSOR UNIT

1) Visually check the tip of the ABS wheel speed sensor for foreign particles or damage. If necessary, clean the tip or replace the ABS wheel speed sensor.
2) Disconnect the ABS wheel speed sensor connector.
3) Check the ABS wheel speed sensor cable for discontinuity. If defective, replace the ABS wheel speed sensor.
4) Connect a 12 V power supply to No. 1 terminal of ABS wheel speed sensor connector, then attach resistance to the No. 2 terminal. Rotate the wheel at about 2.75 km/h (2 MPH), and measure the voltage using an oscilloscope.

Standard value of output voltage:
0.7 — 1.4 V

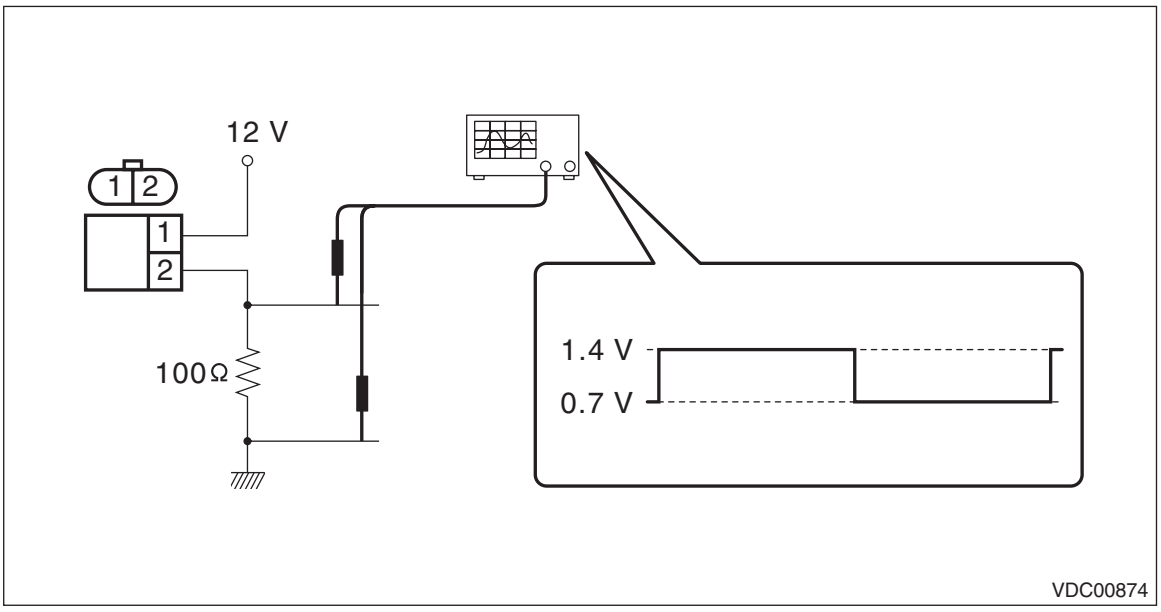

5) Replace the ABS wheel speed sensor if the inspection result is not within the standard value.

11.Rear ABS Wheel Speed Sensor

A: REMOVAL

1) Disconnect the ground terminal from battery sensor. <Ref. to RC-4, BATTERY, NOTE, Repair Contents.>
2) Lift up the vehicle, and then remove the rear wheels.
3) Remove the trunk trim panel assembly - side (sedan model) or rear floor mat (OUTBACK model).
- Sedan model: <Ref. to EI-109, REMOVAL, Trunk Room Trim.>
- OUTBACK model: Remove the rear floor mat and the spacer - rear floor mat.

4) Remove the rear ABS wheel speed sensor.

CAUTION:
- **Be careful not to damage the sensor.**
- **Do not apply excessive force to the sensor harness.**
- **Leave the sensor harness clamp (white arrow) on the vehicle side.**

(1) Disconnect the connector from the rear ABS wheel speed sensor, and remove the grommet.

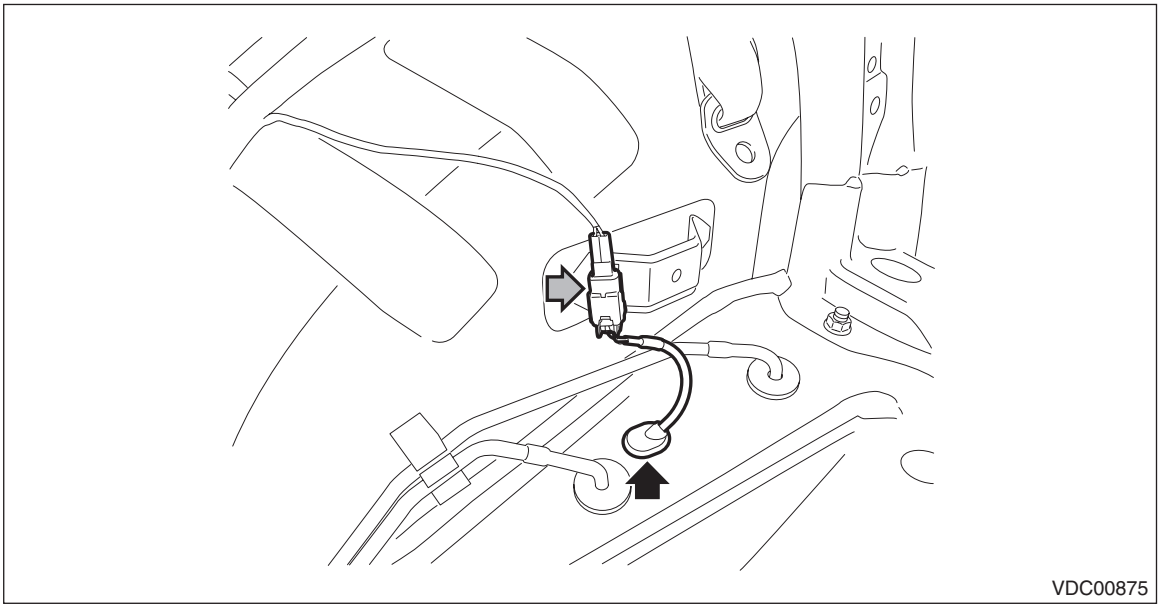
VDC00875

(2) Remove the harness clamp and bolts, and remove the rear ABS wheel speed sensor from the rear axle housing.
- Sedan model

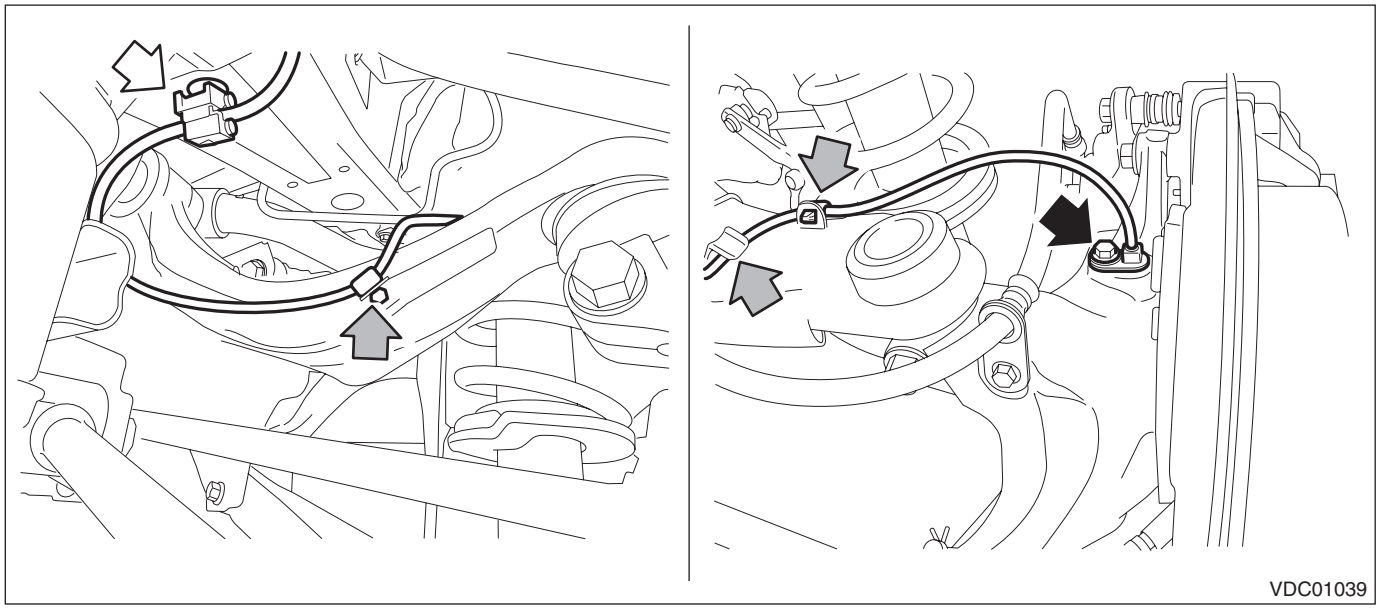
VDC01039

- OUTBACK model

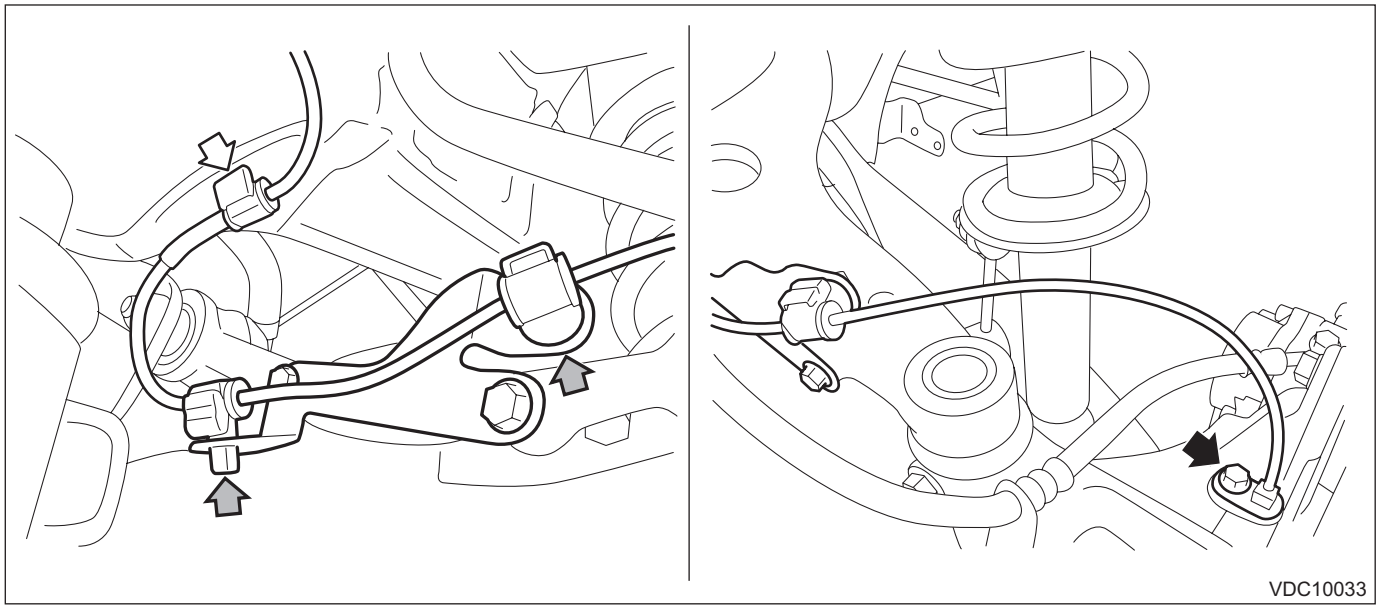

B: INSTALLATION

CAUTION:
- **Be careful not to damage the sensor.**
- **Do not apply excessive force to the sensor harness.**

1) Install the rear ABS wheel speed sensor.

NOTE:
Check the identification (mark) on the harness to make sure there is no warpage. <Ref. to VDC-2, SPECIFICATION, General Description.>

Tightening torque:
Rear ABS wheel speed sensor: 7.5 N·m (0.8 kgf-m, 5.5 ft-lb)

2) Install the grommet, and connect the rear ABS wheel speed sensor connector.
3) Install the trunk trim panel assembly - side (sedan model) or rear floor mat (OUTBACK model).
- Sedan model: <Ref. to EI-110, INSTALLATION, Trunk Room Trim.>
- OUTBACK model: Install the rear floor mat and the spacer - rear floor mat.

4) Install the rear wheels.

Tightening torque:
Rear wheel: 120 N·m (12.2 kgf-m, 88.5 ft-lb)

5) Lower the vehicle.
6) Connect the ground terminal to battery sensor. <Ref. to RC-4, BATTERY, NOTE, Repair Contents.>

C: INSPECTION

1. CHECK WITH SUBARU SELECT MONITOR

1) Connect the Subaru Select Monitor to data link connector.

NOTE:
For detailed operation procedures, refer to “Application help”.
(1) On «Start» display, select «Diagnosis».
(2) On «Vehicle selection» display, input the target vehicle information and select «Confirmed».
(3) On «Main Menu» display, select «Each System».
(4) On «Select System» display, select «Brake Control System» and select «Enter».
(5) On «Select Function» display, select «Data Monitor».
(6) From «Data monitor», select «RR Wheel Speed» and «RL Wheel Speed».

2) Check if the speed indicated on the display changes in the same manner as the speedometer reading during acceleration/deceleration when the steering wheel is in the straight-ahead position.
3) If the speed indicated on the display does not change in the inspection, check the ABS wheel speed sensor. <Ref. to VDC-31, CHECK ABS WHEEL SPEED SENSOR UNIT, INSPECTION, Front ABS Wheel Speed Sensor.>

2. CHECK ABS WHEEL SPEED SENSOR UNIT

1) Visually check the tip of the ABS wheel speed sensor for foreign particles or damage. If necessary, clean the tip or replace the ABS wheel speed sensor.
2) Disconnect the ABS wheel speed sensor connector.
3) Check the ABS wheel speed sensor cable for discontinuity. If defective, replace the ABS wheel speed sensor.
4) Connect a 12 V power supply to No. 1 terminal of ABS wheel speed sensor connector, then attach resistance to the No. 2 terminal. Rotate the wheel at about 2.75 km/h (2 MPH), and measure the voltage using an oscilloscope.

Standard value of output voltage:
0.7 — 1.4 V

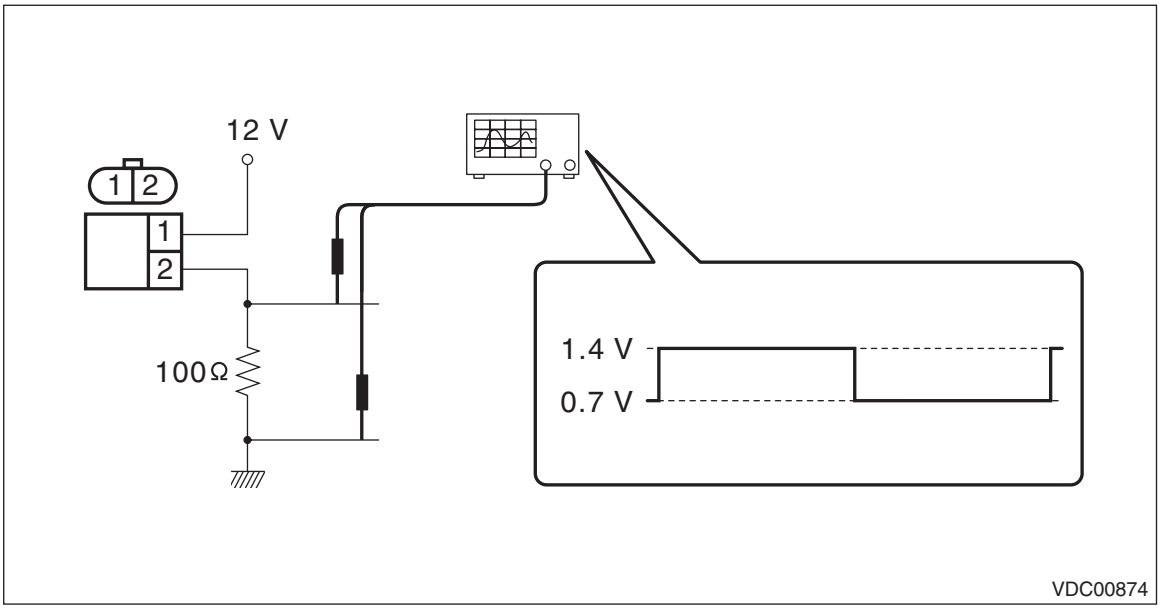

5) Replace the ABS wheel speed sensor if the inspection result is not within the standard value.

12.Front Magnetic Encoder

A: REMOVAL

Refer to “Front Hub Unit Bearing” for removal, because the front magnetic encoder is integrated with the hub unit COMPL - front axle. <Ref. to DS-22, REMOVAL, Front Hub Unit Bearing.>

B: INSTALLATION

Refer to “Front Hub Unit Bearing” for installation, because the front magnetic encoder is integrated with the hub unit COMPL - front axle. <Ref. to DS-24, INSTALLATION, Front Hub Unit Bearing.>

C: INSPECTION

Visually check the magnetic encoder for any damage. If necessary, replace with a new hub unit COMPL - front axle.

NOTE:
Because the magnetic encoder is integrated with hub unit COMPL, replace the hub unit COMPL with a new part if there is any defect found on the magnetic encoder.

13.Rear Magnetic Encoder

A: REMOVAL

Refer to “Rear Hub Unit Bearing” for removal, because the rear magnetic encoder is integrated with the hub unit COMPL - rear axle. <Ref. to DS-34, REMOVAL, Rear Hub Unit Bearing.>

B: INSTALLATION

Refer to “Rear Hub Unit Bearing” for installation, because the rear magnetic encoder is integrated with the hub unit COMPL - rear axle. <Ref. to DS-35, INSTALLATION, Rear Hub Unit Bearing.>

C: INSPECTION

Visually check the magnetic encoder parts for any damage. If necessary, replace with a new hub unit COMPL - rear axle.

NOTE:
Because the magnetic encoder is integrated with hub unit COMPL, replace the hub unit COMPL with a new part if there is any defect found on the magnetic encoder.

14.VDC OFF Switch

A: REMOVAL

1) Disconnect the ground terminal from the battery sensor, and wait for at least 60 seconds before starting work. <Ref. to RC-4, BATTERY, NOTE, Repair Contents.>
2) Remove the cover assembly - instrument panel LWR driver. <Ref. to EI-75, REMOVAL, Instrument Panel Lower Cover.>
3) Release the claws and remove the VDC OFF switch.

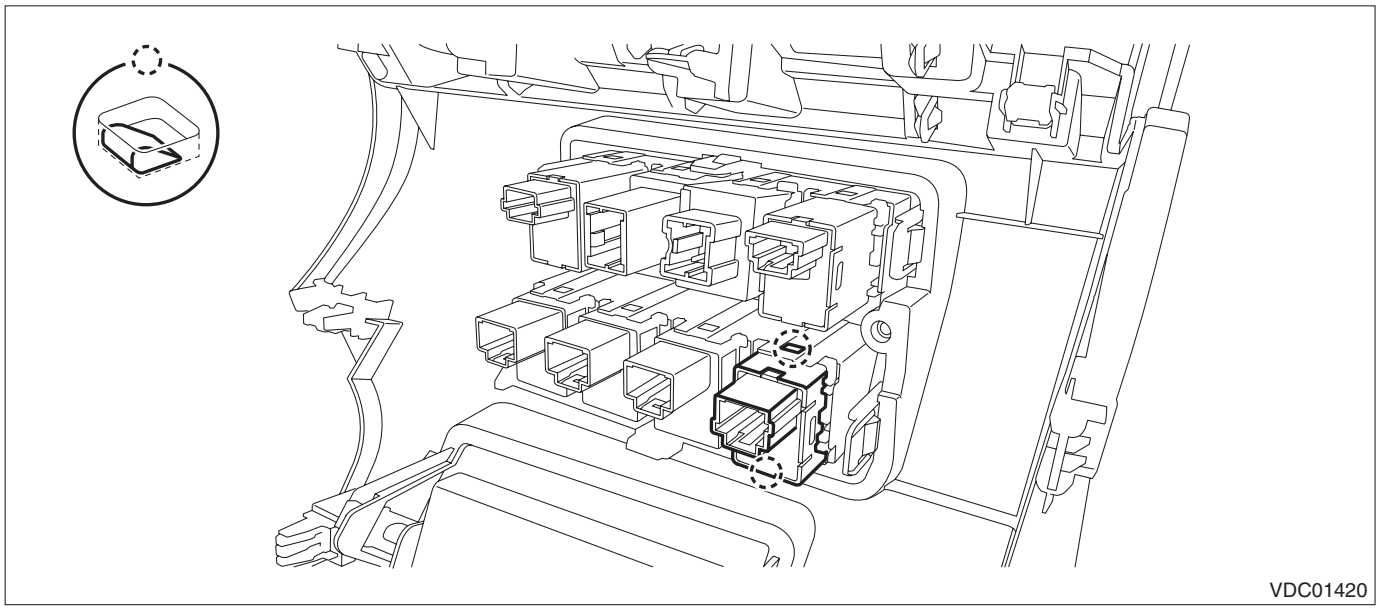

B: INSTALLATION

1) Install the VDC OFF switch.
2) Install the cover assembly - instrument panel LWR driver.
3) Connect the ground terminal to battery sensor. <Ref. to RC-4, BATTERY, NOTE, Repair Contents.>

C: INSPECTION

1) Measure the resistance between connector terminals.

Preparation tool:
Circuit tester

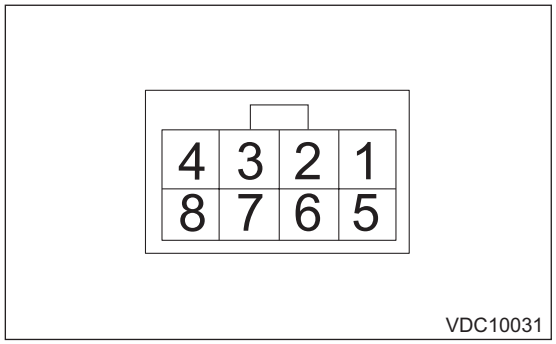

Terminal No.	Inspection conditions	Standard
6 — 8	Switch OFF	1 MΩ or more
	Switch ON	Less than 1 Ω

2) Apply battery voltage between the connector terminals to check lighting condition of illumination inside the switch.

Terminal No.	Inspection conditions	Specification
4 (+) — 1 (–)	Apply battery voltage.	Light ON

3) Replace the VDC OFF switch if the inspection result is not within the standard value.

15.Hill Hold Switch

A: REMOVAL

1) Disconnect the ground terminal from battery sensor. <Ref. to RC-4, BATTERY, NOTE, Repair Contents.>
2) Remove the cover assembly - front. <Ref. to EI-80, REMOVAL, Console Box.>
3) Release the claws and remove the hill hold switch.

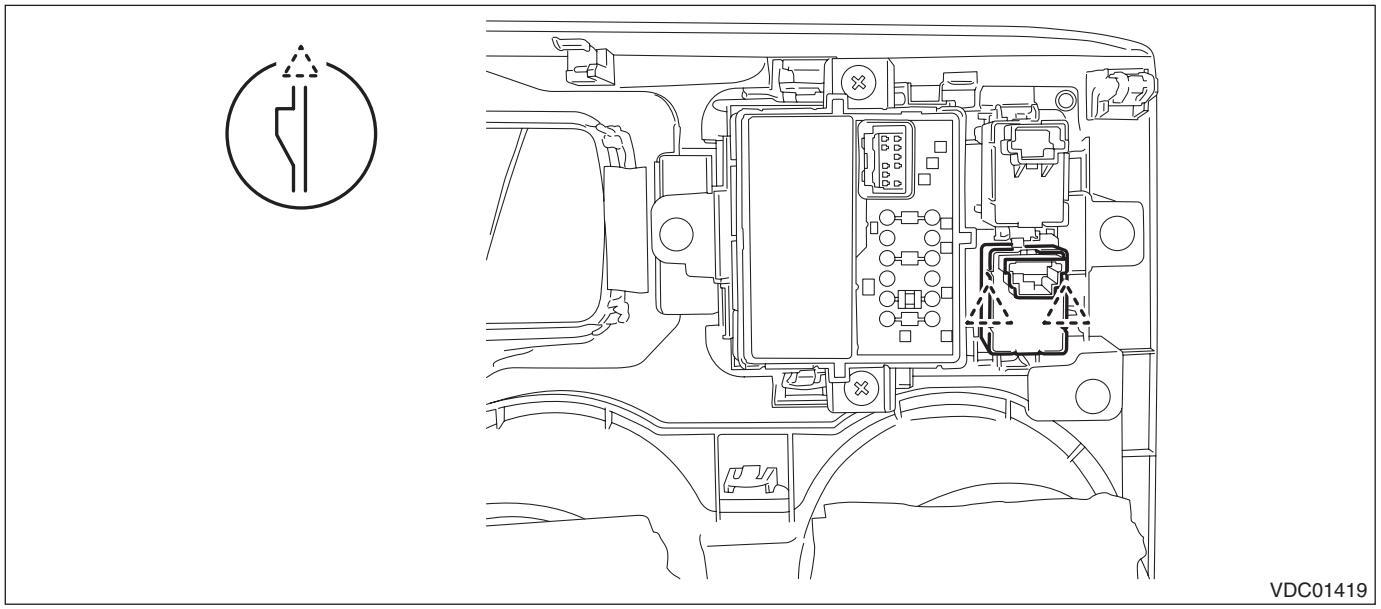

B: INSTALLATION

1) Install the hill hold switch.
2) Install the cover assembly - front. <Ref. to EI-82, INSTALLATION, Console Box.>
3) Connect the ground terminal to battery sensor. <Ref. to RC-4, BATTERY, NOTE, Repair Contents.>

C: INSPECTION

1) Measure the resistance between connector terminals.

Preparation tool:
Circuit tester

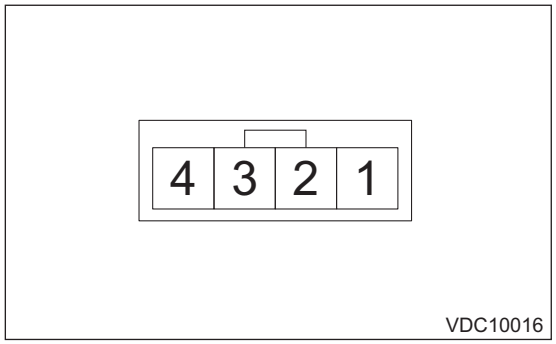

Terminal No.	Inspection conditions	Standard
1 — 4	Switch OFF	1 MΩ or more
	Switch ON	Less than 1 Ω

2) Apply battery voltage between the connector terminals to check lighting condition of illumination inside the switch.

Terminal No.	Inspection conditions	Specification
2 (+) — 3 (–)	Apply battery voltage.	Light ON

3) Replace the hill hold switch if the inspection result is not within the standard value.

VEHICLE DYNAMICS CONTROL (VDC) (DIAGNOSTICS)

VDC(diag)

		Page
1.	Basic Diagnostic Procedure	2
2.	Check List for Interview	4
3.	General Description	12
4.	Electrical Component Location	14
5.	Control Module I/O Signal	17
6.	Subaru Select Monitor	19
7.	Read Diagnostic Trouble Code (DTC)	25
8.	Inspection Mode	26
9.	Clear Memory Mode	27
10.	Warning Light Illumination Pattern	28
11.	List of Diagnostic Trouble Code (DTC)	40
12.	Diagnostic Procedure with Diagnostic Trouble Code (DTC)	44
13.	General Diagnostic Table	111

1. Basic Diagnostic Procedure

A: PROCEDURE

CAUTION:
Remove foreign matter (dust, water, oil etc.) from the VDCCM&H/U connector during removal and installation.

NOTE:
- To check the harness for open or short circuits, shake problem spot or connector.
- Refer to “Check List for Interview”. <Ref. to VDC(diag)-4, Check List for Interview.>

	Step	Check	Yes	No
1	**CHECK PRE-INSPECTION.** 1) Ask the customer when and how the trouble occurred using the interview check list. <Ref. to VDC(diag)-4, Check List for Interview.> 2) Before performing diagnostics, check the component which might affect VDC or parking brake system problems. <Ref. to VDC(diag)-12, INSPECTION, General Description.>	Is the component that might influence the VDC or parking brake system problem normal?	Go to step **2**.	Repair or replace each component.
2	**CHECK INDICATION OF DTC.** 1) Turn the ignition switch to OFF. 2) Connect the Subaru Select Monitor to data link connector. 3) Turn the ignition switch to ON and run the Subaru Select Monitor. 4) Read the DTC using the Subaru Select Monitor. <Ref. to VDC(diag)-25, OPERATION, Read Diagnostic Trouble Code (DTC).> NOTE: If the communication function of the Subaru Select Monitor cannot be executed properly, check the communication circuit. <Ref. to VDC(diag)-23, COMMUNICATION FOR INITIALIZING IMPOSSIBLE, INSPECTION, Subaru Select Monitor.>	Is DTC displayed on Subaru Select Monitor?	Record the DTC, time stamp and freeze frame data. Go to step **4**. NOTE: • For the time stamp, refer to LAN section. <Ref. to LAN(diag)-6, TIME STAMP, CAUTION, General Description.> • Depending on DTCs, time stamp may not be stored.	Go to step **3**.

	Step	Check	Yes	No
3	**PERFORM GENERAL DIAGNOSTICS.** 1) Perform the inspection by referring to “General Diagnostic Table”. <Ref. to VDC(diag)-111, INSPECTION, General Diagnostic Table.> 2) Perform the Clear Memory Mode. <Ref. to VDC(diag)-27, OPERATION, Clear Memory Mode.> 3) Perform the Inspection Mode. <Ref. to VDC(diag)-26, PROCEDURE, Inspection Mode.> 4) Read the DTC. <Ref. to VDC(diag)-25, OPERATION, Read Diagnostic Trouble Code (DTC).> 5) Check that the DTC is not displayed.	Do the VDC warning light & VDC indicator light, VDC OFF indicator light and ABS warning light go off after starting the engine? Do the electronic parking brake operation indicator light and hill hold indicator light go off with the electronic parking brake disengaged?	Finish the diagnosis.	Check the combination meter circuit. <Ref. to VDC(diag)-33, ABS WARNING LIGHT DOES NOT GO OFF, Warning Light Illumination Pattern.> <Ref. to VDC(diag)-34, VDC WARNING LIGHT AND VDC INDICATOR LIGHT DO NOT GO OFF, Warning Light Illumination Pattern.> <Ref. to VDC(diag)-36, VDC OFF INDICATOR LIGHT DOES NOT GO OFF, Warning Light Illumination Pattern.> <Ref. to VDC(diag)-35, ELECTRONIC PARKING BRAKE INDICATOR LIGHT, HILL HOLD INDICATOR LIGHT DO NOT GO OFF, Warning Light Illumination Pattern.>
4	**PERFORM DIAGNOSIS.** 1) Refer to “List of Diagnostic Trouble Code (DTC)”. NOTE: For the DTC list, refer to “List of Diagnostic Trouble Code (DTC)”. <Ref. to VDC(diag)-40, LIST, List of Diagnostic Trouble Code (DTC).> 2) Correct the cause of trouble. 3) Perform the Clear Memory Mode. <Ref. to VDC(diag)-27, OPERATION, Clear Memory Mode.> 4) Perform the Inspection Mode. <Ref. to VDC(diag)-26, PROCEDURE, Inspection Mode.> 5) Read the DTC. <Ref. to VDC(diag)-25, OPERATION, Read Diagnostic Trouble Code (DTC).>	Is DTC displayed?	Repeat step 4 until DTC is not shown.	Finish the diagnosis.

2. Check List for Interview

A: CHECK

Check the following item about the vehicle's state.

1. STATE OF ABS WARNING LIGHT

<table>
<tr><td>ABS warning light illuminates.</td><td colspan="3">❑ Always
❑ Sometimes
❑ Only once
❑ Does not illuminate
• When/How long does it illuminate?</td></tr>
<tr><td>Ignition key position</td><td colspan="3">❑ LOCK
❑ ACC
❑ ON (before starting engine)
❑ START
❑ ON (after starting engine, engine is running)
❑ ON (after starting engine, engine is at a standstill)</td></tr>
<tr><td rowspan="11">Timing</td><td colspan="3">❑ Immediately after turning the ignition switch to ON
❑ Immediately after turning the ignition switch to START</td></tr>
<tr><td rowspan="2">❑ While accelerating</td><td colspan="2">— km/h</td></tr>
<tr><td colspan="2">— MPH</td></tr>
<tr><td>❑ While driving at a constant speed</td><td>km/h</td><td>MPH</td></tr>
<tr><td rowspan="2">❑ While decelerating</td><td colspan="2">— km/h</td></tr>
<tr><td colspan="2">— MPH</td></tr>
<tr><td rowspan="2">❑ When turning to the right</td><td>Steering angle:</td><td>deg</td></tr>
<tr><td>Steering time:</td><td>Sec.</td></tr>
<tr><td rowspan="2">❑ When turning to the left</td><td>Steering angle:</td><td>deg</td></tr>
<tr><td>Steering time:</td><td>Sec.</td></tr>
<tr><td colspan="3">❑ When other electrical parts are operating</td></tr>
<tr><td colspan="3">• Part name:
• Operating condition:</td></tr>
</table>

2. STATE OF VDC WARNING LIGHT & VDC INDICATOR LIGHT

VDC warning light & VDC indicator light illuminates.	❑ Always ❑ Sometimes ❑ Only once ❑ Does not illuminate • When/How long does it illuminate?		
Ignition key position	❑ LOCK ❑ ACC ❑ ON (before starting engine) ❑ START ❑ ON (after starting engine, engine is running) ❑ ON (after starting engine, engine is at a standstill)		
Timing	❑ Immediately after turning the ignition switch to ON ❑ Immediately after turning the ignition switch to START		
	❑ While accelerating	—	km/h
		—	MPH
	❑ While driving at a constant speed	km/h	MPH
	❑ While decelerating	—	km/h
		—	MPH
	❑ When turning to the right	Steering angle:	deg
		Steering time:	Sec.
	❑ When turning to the left	Steering angle:	deg
		Steering time:	Sec.
	❑ When other electrical parts are operating		
	• Part name: • Operating condition:		

3. STATE OF VDC OFF INDICATOR LIGHT

VDC OFF indicator light illuminates.	❑ Always ❑ Sometimes ❑ Only once ❑ Does not illuminate • When/How long does it illuminate?		
Ignition key position	❑ LOCK ❑ ACC ❑ ON (before starting engine) ❑ START ❑ ON (after starting engine, engine is running) ❑ ON (after starting engine, engine is at a standstill)		
Timing	❑ Immediately after turning the ignition switch to ON ❑ Immediately after turning the ignition switch to START		
	❑ While accelerating	—	km/h
		—	MPH
	❑ While driving at a constant speed	km/h	MPH
	❑ While decelerating	—	km/h
		—	MPH
	❑ When turning to the right	Steering angle:	deg
		Steering time:	Sec.
	❑ When turning to the left	Steering angle:	deg
		Steering time:	Sec.
	❑ When other electrical parts are operating		
	• Part name: • Operating condition:		

4. STATE OF BRAKE WARNING LIGHT

<table>
<tr><td>Brake warning light illuminates/goes off/ blinks.</td><td colspan="3">❑ Always
❑ Sometimes
❑ Only once
❑ Does not illuminate
❑ Does not go off
❑ Blinks
• When/How long does illuminate/go off/blink?</td></tr>
<tr><td>Ignition key position</td><td colspan="3">❑ LOCK
❑ ACC
❑ ON (before starting engine)
❑ START
❑ ON (after starting engine, engine is running)
❑ ON (after starting engine, engine is at a standstill)</td></tr>
<tr><td rowspan="12">Timing</td><td colspan="3">❑ Immediately after turning the ignition switch to ON
❑ Immediately after turning the ignition switch to START
❑ When the parking brake switch is pressed
❑ When the parking brake switch is pulled
❑ When the parking brake switch is pressed continually (times)
❑ When the parking brake switch is pulled continually (times)</td></tr>
<tr><td rowspan="2">❑ While accelerating</td><td>—</td><td>km/h</td></tr>
<tr><td>—</td><td>MPH</td></tr>
<tr><td>❑ While driving at a constant speed</td><td>km/h</td><td>MPH</td></tr>
<tr><td rowspan="2">❑ While decelerating</td><td>—</td><td>km/h</td></tr>
<tr><td>—</td><td>MPH</td></tr>
<tr><td rowspan="2">❑ When turning to the right</td><td>Steering angle:</td><td>deg</td></tr>
<tr><td>Steering time:</td><td>Sec.</td></tr>
<tr><td rowspan="2">❑ When turning to the left</td><td>Steering angle:</td><td>deg</td></tr>
<tr><td>Steering time:</td><td>Sec.</td></tr>
<tr><td colspan="3">❑ When other electrical parts are operating</td></tr>
<tr><td colspan="3">• Part name:
• Operating condition:</td></tr>
</table>

5. CONDITION OF ELECTRONIC PARKING BRAKE OPERATION INDICATOR LIGHT

Electronic parking brake operation indicator light illuminates.	❑ Always ❑ Sometimes ❑ Only once ❑ Does not illuminate • When/How long does it illuminate?		
Ignition key position	❑ LOCK ❑ ACC ❑ ON (before starting engine) ❑ START ❑ ON (after starting engine, engine is running) ❑ ON (after starting engine, engine is at a standstill)		
Timing	❑ Immediately after turning the ignition switch to ON ❑ Immediately after turning the ignition switch to START ❑ When the parking brake switch is pressed ❑ When the parking brake switch is pulled ❑ When the parking brake switch is pressed continually (times) ❑ When the parking brake switch is pulled continually (times)		
	❑ While accelerating	—	km/h
		—	MPH
	❑ While driving at a constant speed	km/h	MPH
	❑ While decelerating	—	km/h
		—	MPH
	❑ When turning to the right	Steering angle:	deg
		Steering time:	Sec.
	❑ When turning to the left	Steering angle:	deg
		Steering time:	Sec.
	❑ When other electrical parts are operating		
	• Part name: • Operating condition:		

6. ELECTRONIC PARKING BRAKE WARNING LIGHT CONDITION

<table>
<tr><td>Electronic parking brake warning light illuminates.</td><td colspan="3">❑ Always
❑ Sometimes
❑ Only once
❑ Does not illuminate
• When/How long does it illuminate?</td></tr>
<tr><td>Ignition key position</td><td colspan="3">❑ LOCK
❑ ACC
❑ ON (before starting engine)
❑ START
❑ ON (after starting engine, engine is running)
❑ ON (after starting engine, engine is at a standstill)</td></tr>
<tr><td rowspan="11">Timing</td><td colspan="3">❑ Immediately after turning the ignition switch to ON
❑ Immediately after turning the ignition switch to START
❑ When the parking brake switch is pressed
❑ When the parking brake switch is pulled
❑ When the parking brake switch is pressed continually (times)
❑ When the parking brake switch is pulled continually (times)</td></tr>
<tr><td rowspan="2">❑ While accelerating</td><td>—</td><td>km/h</td></tr>
<tr><td>—</td><td>MPH</td></tr>
<tr><td>❑ While driving at a constant speed</td><td>km/h</td><td>MPH</td></tr>
<tr><td rowspan="2">❑ While decelerating</td><td>—</td><td>km/h</td></tr>
<tr><td>—</td><td>MPH</td></tr>
<tr><td rowspan="2">❑ When turning to the right</td><td>Steering angle:</td><td>deg</td></tr>
<tr><td>Steering time:</td><td>Sec.</td></tr>
<tr><td rowspan="2">❑ When turning to the left</td><td>Steering angle:</td><td>deg</td></tr>
<tr><td>Steering time:</td><td>Sec.</td></tr>
<tr><td colspan="3">❑ When other electrical parts are operating</td></tr>
<tr><td colspan="3">• Part name:
• Operating condition:</td></tr>
</table>

7. HILL HOLD INDICATOR LIGHT CONDITION

Hill hold indicator light illuminates.	❑ Always ❑ Sometimes ❑ Only once ❑ Does not illuminate • When/How long does it illuminate?		
Ignition key position	❑ LOCK ❑ ACC ❑ ON (before starting engine) ❑ START ❑ ON (after starting engine, engine is running) ❑ ON (after starting engine, engine is at a standstill)		
Timing	❑ Immediately after turning the ignition switch to ON ❑ Immediately after turning the ignition switch to START ❑ When the hill hold switch is pressed (seconds) ❑ When the parking brake switch is pressed ❑ When the parking brake switch is pulled ❑ When the parking brake switch is pressed continually (times) ❑ When the parking brake switch is pulled continually (times)		
	❑ While accelerating	—	km/h
		—	MPH
	❑ While driving at a constant speed	km/h	MPH
	❑ While decelerating	—	km/h
		—	MPH
	❑ When turning to the right	Steering angle:	deg
		Steering time:	Sec.
	❑ When turning to the left	Steering angle:	deg
		Steering time:	Sec.
	❑ When other electrical parts are operating		
	• Part name: • Operating condition:		

8. CONDITIONS UNDER WHICH TROUBLE OCCURS

Environment	a) Weather	❑ Fine ❑ Cloudy ❑ Rainy ❑ Snowy ❑ Others:
	b) Ambient temperature	°C (°F)
	c) Road	❑ Inner city ❑ Suburbs ❑ Highway ❑ Local street ❑ Uphill ❑ Downhill ❑ Paved road ❑ Gravel road ❑ Muddy road ❑ Sandy place ❑ Straight road ❑ Sharp curve ❑ Gentle curve ❑ S-curve ❑ Road with a slope on both sides ❑ Others:
	d) Road surface	❑ Dry ❑ Wet ❑ Covered with fresh snow ❑ Covered with hardened snow ❑ Frozen slope ❑ Others:

Condition	a) Brakes	Deceleration:	G
		❑ Continuous / ❑ Intermittent	
	b) Accelerator	Acceleration:	G
		❑ Continuous / ❑ Intermittent	
	c) Vehicle speed	km/h	MPH
		❑ Advancing ❑ While accelerating ❑ While decelerating ❑ At low speed ❑ When turning ❑ Others:	
	d) Tire inflation pressure	Front RH tire:	kPa
		Front LH tire:	kPa
		Rear RH tire:	kPa
		Rear LH tire:	kPa
	e) Degree of wear	Front RH tire:	mm (in)
		Front LH tire:	mm (in)
		Rear RH tire:	mm (in)
		Rear LH tire:	mm (in)
	f) Steering wheel	❑ Sharp turning ❑ Gentle turning ❑ Straight forward motion ❑ Gentle return ❑ Sharp return	
	g) Tire/Wheel size	❑ Specified size ❑ Except specification ( )	
	h) Tire variation	❑ Summer tire ❑ Studless tire (brand:)	
	i) Tire chain is attached: ❑ Yes / ❑ No		
	j) Using T-type tires: ❑ Yes / ❑ No		
	k) Condition of suspension alignment:		
	l) Load condition:		
	m) Repaired parts are used: ❑ Yes / ❑ No		
	• Content:		
	n) Others:		

3. General Description

A: CAUTION

1. SRS AIRBAG SYSTEM

Airbag system wiring harness is routed near the ABS wheel speed sensor and VDCCM&H/U.

CAUTION:
• Do not use electrical test equipment on wiring harness and connector circuits of the airbag system.
• Be careful not to damage the airbag system wiring harness when servicing the ABS wheel speed sensor and VDCCM&H/U.

B: INSPECTION

Before performing diagnosis, check the following items which might affect VDC problems.

1. BATTERY

Check the battery. <Ref. to SC(H4DO)-65, INSPECTION, Battery.> <Ref. to SC(H6DO)-59, INSPECTION, Battery.>

2. GROUND

Check the installation of the ground bolt for VDC.

3. BRAKE FLUID

1) Check the brake fluid level.
2) Check the brake fluid for leaks.

4. HYDRAULIC UNIT

Check the hydraulic unit.
• When using the brake tester <Ref. to VDC-13, CHECKING THE HYDRAULIC UNIT ABS OPERATION WITH THE BRAKE TESTER, INSPECTION, VDC Control Module and Hydraulic Control Unit (VDCCM&H/U).>
• When not using the brake tester <Ref. to VDC-12, CHECKING THE HYDRAULIC UNIT ABS OPERATION BY PRESSURE GAUGE, INSPECTION, VDC Control Module and Hydraulic Control Unit (VDCCM&H/U).>

5. BRAKE DRAG

Check for brake drag.

6. BRAKE PAD AND ROTOR

Check the brake pad and rotor.
• Front <Ref. to BR-22, INSPECTION, Front Brake Pad.> <Ref. to BR-24, INSPECTION, Front Disc Rotor.>
• Rear <Ref. to BR-39, INSPECTION, Rear Brake Pad.> <Ref. to BR-43, INSPECTION, Rear Disc Rotor.>

7. PARKING BRAKE ASSEMBLY

Check the parking brake assembly. <Ref. to PB-3, COMPONENT, General Description.>

8. TIRE

Check the tire specifications, tire wear and air pressure. <Ref. to WT-2, SPECIFICATION, General Description.>

C: PREPARATION TOOL

1. SPECIAL TOOL

ILLUSTRATION	TOOL NUMBER	DESCRIPTION	REMARKS
 STSSM4	— (Newly adopted tool)	SUBARU SELECT MONITOR 4	Used for setting of each function and trouble-shooting for electrical system. NOTE: For detailed operation procedures of Subaru Select Monitor 4, refer to “Application help”.

2. GENERAL TOOL

TOOL NAME	REMARKS
Circuit tester	Used for measuring resistance, voltage and current.
Oscilloscope	Used for measuring the sensor.
DST-i	Used together with Subaru Select Monitor 4.

4. Electrical Component Location

A: LOCATION

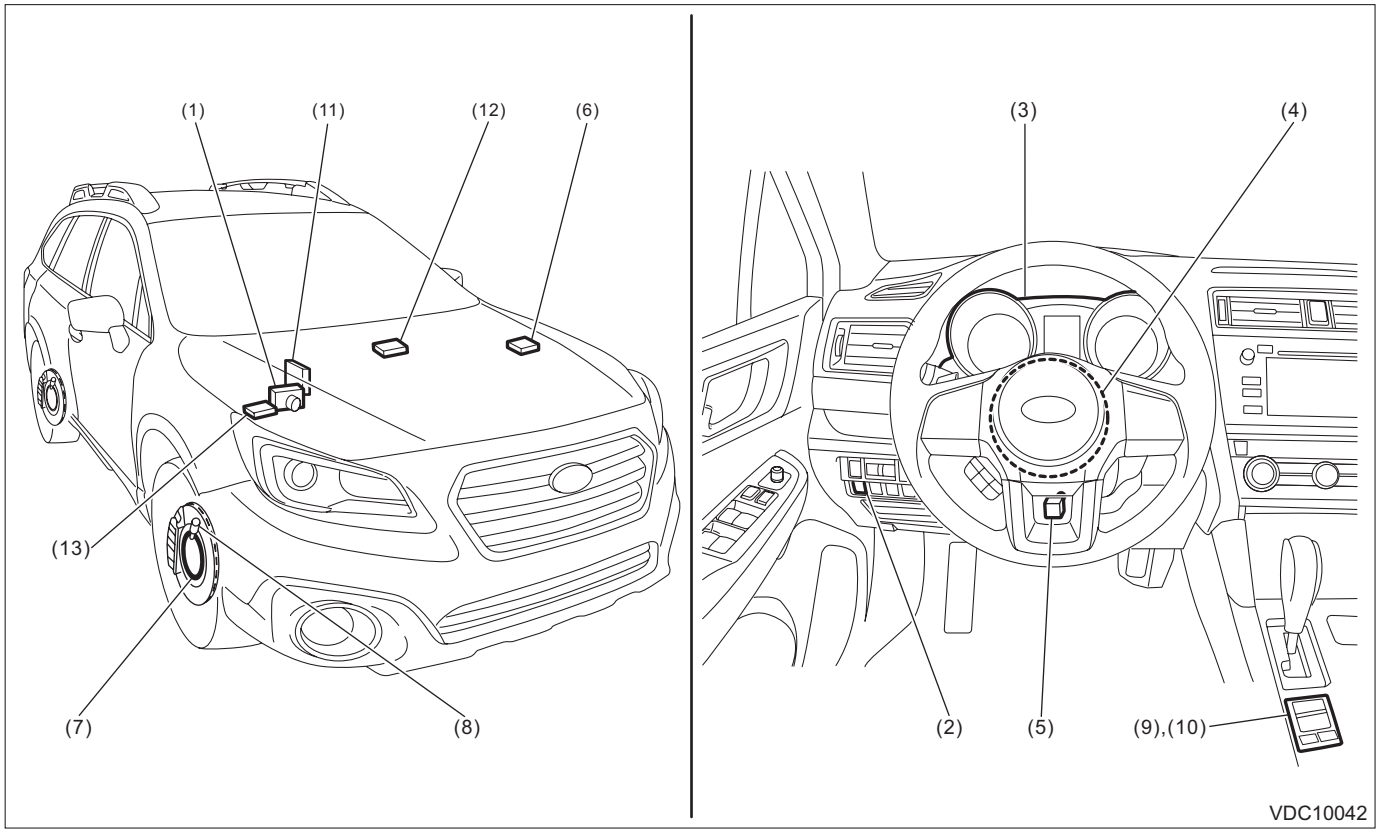

(1) VDC control module and hydraulic control unit (VDCCM&H/U)
(2) VDC OFF switch
(3) Combination meter
(4) Steering angle sensor
(5) Stop light and brake switch
(6) Brake light relay
(7) Magnetic encoder
(8) ABS wheel speed sensor
(9) Parking brake switch
(10) Hill hold switch
(11) Engine control module (ECM)
(12) Transmission control module (TCM) (engine type FB)
(13) Transmission control module (TCM) (engine type EZ)

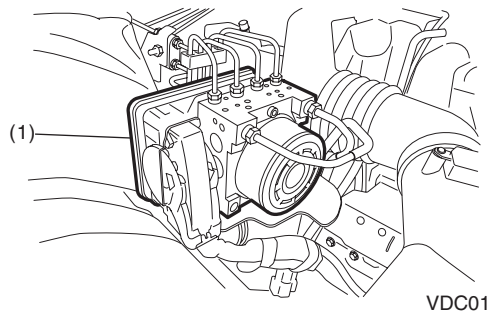

VDC01393

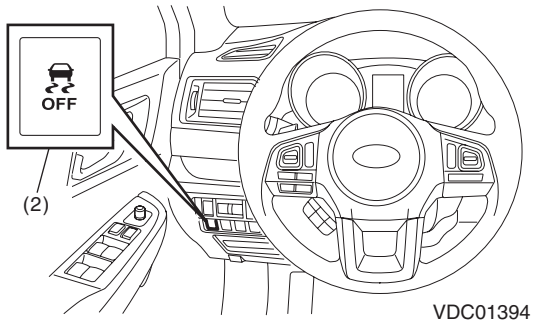

VDC01394

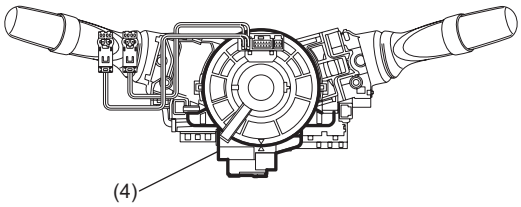

VDC10043

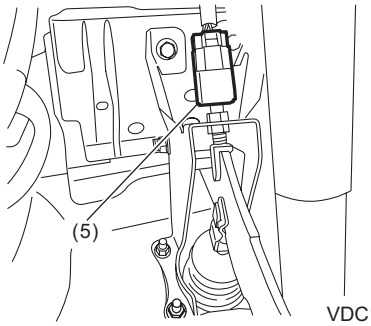

VDC10044

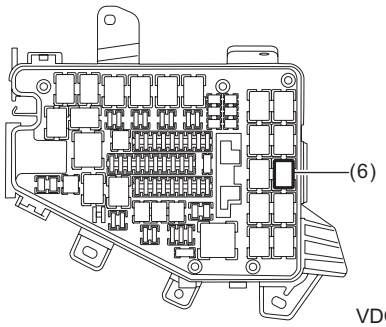

VDC10045

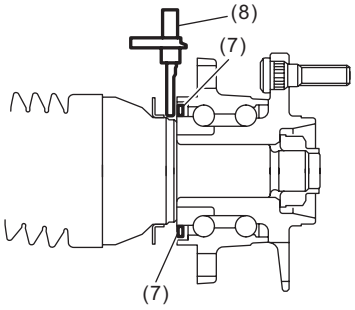

VDC10024

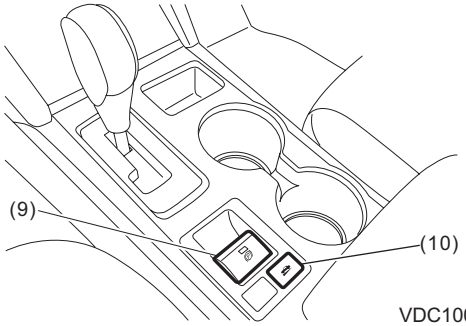

VDC10046

(3) Combination meter

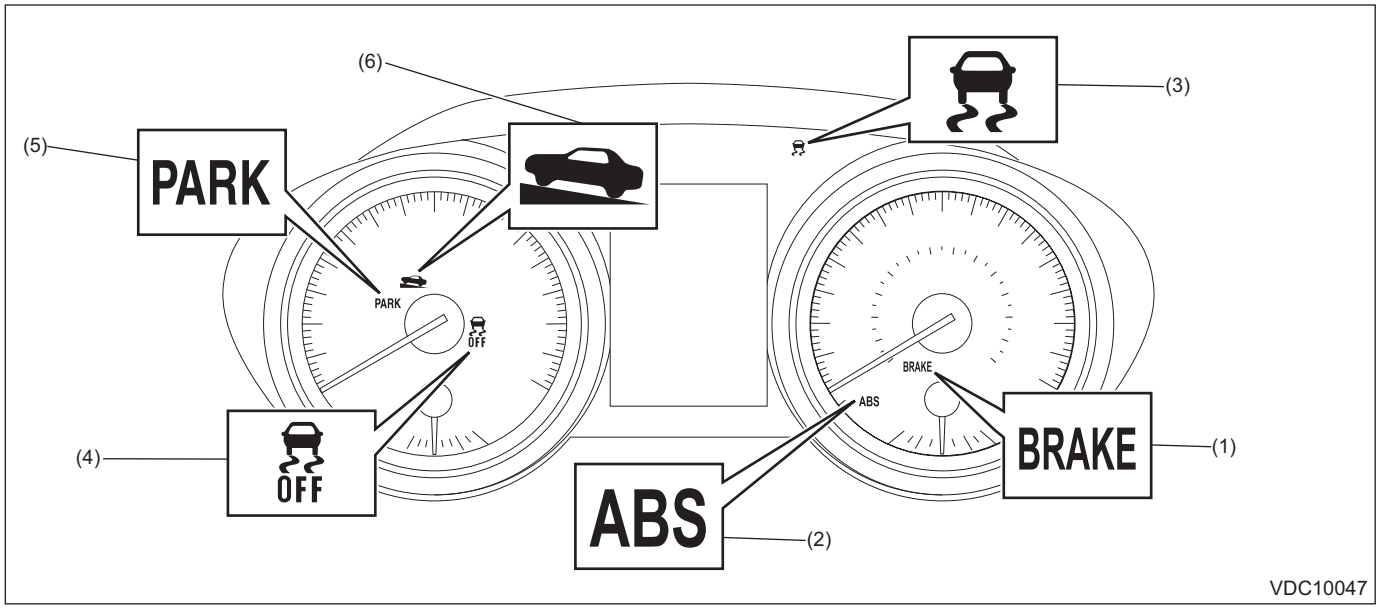

(1)	Brake warning light (EBD warning light) and electronic parking brake warning light	(3)	VDC warning light & VDC indicator light	(5)	Electronic parking brake operation indicator light
(2)	ABS warning light	(4)	VDC OFF indicator light	(6)	Hill hold indicator light

5. Control Module I/O Signal

A: ELECTRICAL SPECIFICATION

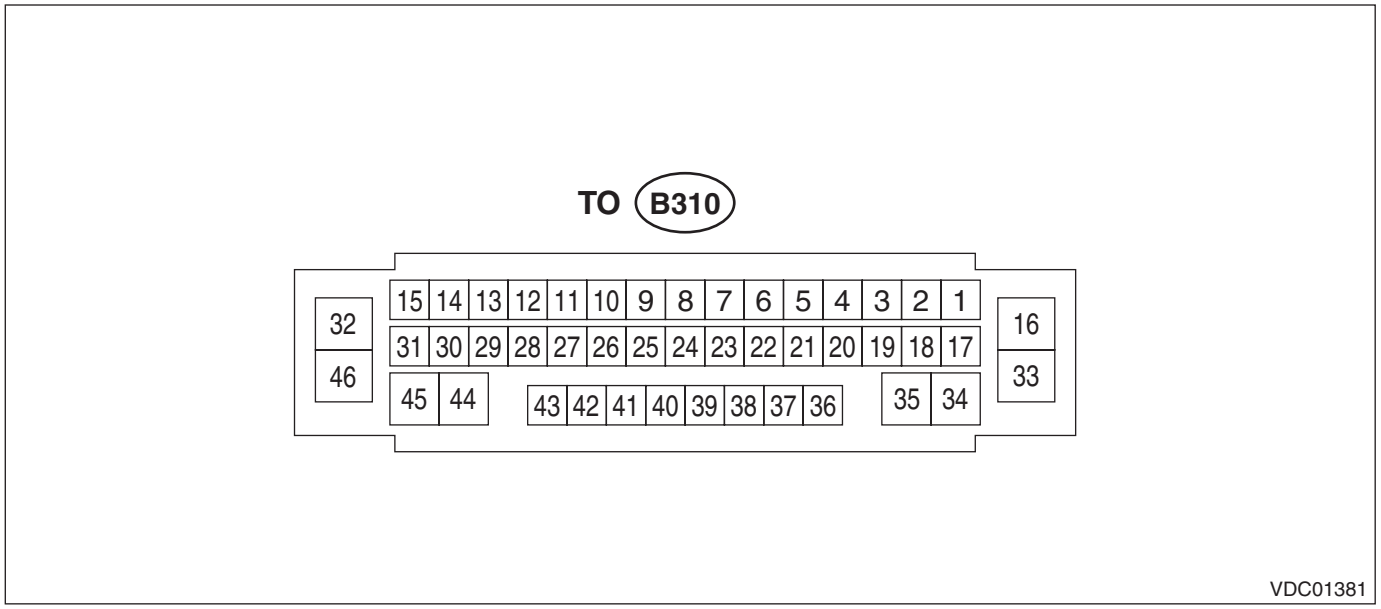

NOTE:
- Terminal numbers in VDCCM&H/U connector (on the control module side) are shown in the figure.
- When the connector is removed from the VDCCM&H/U, the brake warning light (EBD warning light), ABS warning light, VDC warning light & VDC indicator light, VDC OFF indicator light, and the hill hold indicator light illuminate.

Content			Terminal No. (+) — (–)	Input/Output signal Measured value and measuring conditions
Power supply			5 — 46	10 — 15 V when the ignition switch is ON.
ABS wheel speed sensor	Front LH wheel	Power supply	41 — 46	0 — 18 V when the ignition switch is ON.
		Signal	40	7 — 14 mA: Rectangle waveform
	Front RH wheel	Power supply	37 — 46	0 — 18 V when the ignition switch is ON.
		Signal	36	7 — 14 mA: Rectangle waveform
	Rear LH wheel	Power supply	39 — 46	0 — 18 V when the ignition switch is ON.
		Signal	38	7 — 14 mA: Rectangle waveform
	Rear RH wheel	Power supply	43 — 46	0 — 18 V when the ignition switch is ON.
		Signal	42	7 — 14 mA: Rectangle waveform
Valve relay power supply			16 — 46	10 — 15 V
Motor relay power supply			33 — 46	10 — 15 V
Stop light switch			17 — 46	1.5 V or less when the stop light is OFF; 10 — 15 V when the stop light is ON.
Brake light relay power supply			27 — 46	10 — 15 V when the ignition switch is ON.
Vehicle speed output signal			24	0 ←→ 12 V pulse
VDC OFF switch			1 — 46	1 Ω or less when the OFF switch is “ON”; 1 MΩ or more when the switch is “OFF”.
Parking brake switch			19	Pulse signal
Parking brake switch			20	Pulse signal
Parking brake switch			21	Pulse signal
Parking brake switch			26	Pulse signal
Rear brake caliper RH			34 — 35	Pulse signal
Rear brake caliper LH			44 — 45	Pulse signal
Hill hold switch			6 — 46	10 — 15 V when the hill hold switch is ON.
Parking brake indicator light			3 — 46	0 V when the light is on; 10 — 15 V when the light is off.
Brake fluid level switch			8 — 46	10 — 15 V when the ignition switch is ON.
Clutch stroke sensor power supply			11 — 15	4.8 — 5.2 V
Clutch stroke sensor ground			15	—
Clutch stroke sensor signal			10	Pulse signal
CAN communication line (H)			12	Pulse signal
CAN communication line (L)			13	Pulse signal
Ground			46	—

B: WIRING DIAGRAM

Refer to “Vehicle Dynamics Control System” in the wiring diagram. <Ref. to WI-360, Vehicle Dynamics Control System.>

6. Subaru Select Monitor

A: OPERATION

1. HOW TO USE SUBARU SELECT MONITOR

For detailed operation procedures, refer to “Application help”.

2. READ CURRENT DATA

1) On «Start» display, select «Diagnosis».
2) On «Vehicle selection» display, input the vehicle information and select «Confirmed».
3) On «Main Menu» display, select «Each System Check».
4) On «Select System» display, select «Brake Control System».
5) On «Select Function» display, select «Data Monitor».

Display	Contents to be displayed	Unit of measure
Trip Count	Total number of ignition switch ON	times
Count	Counter	—
Time Count [msec]	Elapsed time after ignition switch ON	ms
FR Wheel Speed	Wheel speed detected by front ABS wheel speed sensor RH is displayed.	km/h or MPH
FL Wheel Speed	Wheel speed detected by front ABS wheel speed sensor LH is displayed.	km/h or MPH
RR Wheel Speed	Wheel speed detected by rear ABS wheel speed sensor RH is displayed.	km/h or MPH
RL Wheel Speed	Wheel speed detected by rear ABS wheel speed sensor LH is displayed.	km/h or MPH
Steering Angle Sensor	Steering angle detected by steering angle sensor is displayed.	deg
Yaw Rate Sensor	Angle of the vehicle detected by yaw rate sensor is displayed.	deg/s
Master Cylinder Pressure Sensor	Brake fluid pressure detected by pressure sensor is displayed.	bar
Longitudinal G Sensor	Vehicle longitudinal acceleration detected by longitudinal G sensor is displayed.	m/s^2
Lateral G Sensor	Vehicle lateral acceleration detected by lateral G sensor is displayed.	m/s^2
Voltage of IGN	Voltage supplied to VDCCM&H/U is displayed.	V
M. Relay monitor Voltage	Voltage applied to the motor relay is displayed.	V
FL wheel cylinder pressure sensor output	FL wheel cylinder brake fluid pressure detected by pressure sensor is displayed. (Model with EyeSight)	bar
FR wheel cylinder pressure sensor output	FR wheel cylinder brake fluid pressure detected by pressure sensor is displayed. (Model with EyeSight)	bar
Motor Relay Signal	Motor relay driving signal is displayed.	ON or OFF
Valve Relay Signal	Valve relay driving signal is displayed.	ON or OFF
EBD Warning Light	ON operation of the EBD warning light is displayed.	ON or OFF
ABS Warning Lamp	ON operation of the ABS warning light is displayed.	ON or OFF
VDC Warning Lamp	ON operation of the VDC warning light is displayed.	ON or OFF
EBD Control Flag	EBD operation condition is displayed.	ON or OFF
ABS Control Flag	ABS operation condition is displayed.	ON or OFF
TCS Control Flag	TCS operation condition is displayed.	ON or OFF
VDC Control Flag	VDC operation condition is displayed.	ON or OFF
E/G Torque Down Control Stop Flag	Engine control command signal is displayed.	1 or 0
Stop-lamp relay drive signal	Brake light relay driving signal is displayed.	ON or OFF
X Mode	The status of X mode is displayed. (Model with X mode)	ON or OFF
VDC-OFF Light	ON/OFF condition of VDC OFF indicator light is displayed.	ON or OFF
OFF SW Signal	Operation condition of VDC OFF switch is displayed.	ON or OFF

Display	Contents to be displayed	Unit of measure
Brake Light Switch	Brake ON/OFF is displayed.	ON or OFF
Clutch switch	Clutch ON/OFF is displayed. (MT model)	ON or OFF
Reverse Signal	Reverse gear ON/OFF is displayed.	ON or OFF
Clutch stroke sensor	Pedal stroke amount detected by the clutch stroke sensor is displayed. (MT model)	%
Incline	Incline of the vehicle is displayed.	%
Total Operation Number	Total number of the electronic parking brake operation is displayed.	times
Hill Hold Operation Number	Number of times that hill hold function activated at uphill parking is displayed.	times
Auto Operation Number	Number of times that an electronic parking brake operated automatically while using the adaptive cruise control is displayed.	times
Auto Cancel Number	Number of times that an automatic accelerator interlock cancel function operated at starting is displayed.	times
Parking Operation Number when driving	Number of the parking brake operation while driving is displayed.	times
Engine Torque	Engine torque is displayed.	N·m
Ambient Temp Sensor	Ambient temperature is displayed.	°C
Manual Parking Operation	Parking brake operation condition is displayed.	ON or OFF
Auto Parking Operation	Parking brake operation condition is displayed.	ON or OFF
Parking Operation when driving	Parking brake operation condition is displayed.	ON or OFF
Parking Cancel	Parking brake operation condition is displayed.	ON or OFF
Hill Hold Lamp	Hill hold indicator control condition is displayed.	ON or OFF
Ignition Signal	Input condition of ignition signal is displayed.	ON or OFF
Brake Warning Light	Brake warning light control condition is displayed.	ON or OFF
Parking System Warning Light	Control condition of electric parking brake warning light is displayed.	ON or OFF
Neutral Signal	Input condition of neutral signal is displayed.	ON or OFF
Engine idle flag	Engine speed condition is displayed.	ON or OFF
Door Signal	Input condition of door (4 locations) open/close signal is displayed.	ON or OFF
Driver Seat Belt Signal	Input condition of driver's seat belt buckle signal is displayed.	ON or OFF

NOTE:
For detailed operation procedures, refer to “Application help”.

3. FUNCTION CHECK

Display	Contents of display	Index No.
ABS Sequence Control Mode	Operate the valve and pump motor continuously to perform the ABS sequence control.	<Ref. to VDC-18, ABS Sequence Control.>
VDC Check Mode	Operate the valve and pump motor continuously to perform the VDC sequence control.	<Ref. to VDC-21, VDC Sequence Control.>
Brake Lamp Lighting Operation	Forcibly activate the brake light relay to illuminate the brake light.	<Ref. to VDC-24, BRAKE LAMP LIGHTING OPERATION MODE BY SUBARU SELECT MONITOR, OPERATION, Brake Lamp Relay.>
VSC(VDC) Centering Mode	Set the steering angle sensor neutral position, and the lateral G sensor and longitudinal G sensor “0” point.	<Ref. to VDC-15, VDC SENSOR MIDPOINT SETTING MODE, ADJUSTMENT, VDC Control Module and Hydraulic Control Unit (VDCCM&H/U).>

4. MAINTENANCE MODE

Display	Contents of display	Index No.
Brake Maintenance Mode	Used when inspecting and repairing parts related to rear brake.	<Ref. to VDC-16, BRAKE MAINTENANCE MODE, MAINTENANCE MODE, VDC Control Module and Hydraulic Control Unit (VDCCM&H/U).>
Reading of parameter: ECM to SSM	Read VDCCM parameter data.	<Ref. to VDC-16, VDCCM PARAMETER READING, MAINTENANCE MODE, VDC Control Module and Hydraulic Control Unit (VDCCM&H/U).>
Writing of parameter: SSM to ECM	Write the parameter data to the VDCCM.	<Ref. to VDC-16, VDCCM PARAMETER WRITING, MAINTENANCE MODE, VDC Control Module and Hydraulic Control Unit (VDCCM&H/U).>
Select Parameter	Select and register parameters in the VDCCM.	<Ref. to VDC-17, VDCCM PARAMETER SELECTION, MAINTENANCE MODE, VDC Control Module and Hydraulic Control Unit (VDCCM&H/U).>
Confirm on parameter	Parameters registered in the VDCCM are displayed.	<Ref. to VDC-17, VDCCM PARAMETER CHECK, MAINTENANCE MODE, VDC Control Module and Hydraulic Control Unit (VDCCM&H/U).>

5. READ FREEZE FRAME DATA

1) On «Start» display, select «Diagnosis».
2) On «Vehicle selection» display, input the vehicle information and select «Confirmed».
3) On «Main Menu» display, select «Each System Check».
4) On «Select System» display, select «Brake Control System».
5) On «Select Function» display, select «DTC».
6) On «DTC» display, select «FFD».

Display	Contents to be displayed	Unit of measure
Classification	Recorded trouble code is displayed.	—
Trip Count	Total number of ignition switch ON	times
Count	Counter	—
Time Count [msec]	Elapsed time after ignition switch ON	ms
FR Wheel Speed	Wheel speed detected by front ABS wheel speed sensor RH is displayed.	km/h or MPH
FL Wheel Speed	Wheel speed detected by front ABS wheel speed sensor LH is displayed.	km/h or MPH
RR Wheel Speed	Wheel speed detected by rear ABS wheel speed sensor RH is displayed.	km/h or MPH
RL Wheel Speed	Wheel speed detected by rear ABS wheel speed sensor LH is displayed.	km/h or MPH
Vehicle Speed	Vehicle speed calculated by VDC control module is displayed.	km/h or MPH
Steering Angle Sensor	Steering angle detected by steering angle sensor is displayed.	deg
Yaw Rate Sensor	Angle of the vehicle detected by yaw rate sensor is displayed.	deg/s
Master Cylinder Pressure Sensor	Brake fluid pressure detected by pressure sensor is displayed.	bar
Longitudinal G Sensor	Vehicle longitudinal acceleration detected by longitudinal G sensor is displayed.	m/s^2
Lateral G Sensor	Vehicle lateral acceleration detected by lateral G sensor is displayed.	m/s^2
Voltage of IGN	Voltage supplied to VDC control module is displayed.	V
Acceleration Pedal Position	Accelerator pedal opening angle is displayed.	%
Engine Speed	Engine speed on malfunction occurrence is displayed.	rpm

Display	Contents to be displayed	Unit of measure
FL wheel cylinder pressure sensor output	FL wheel cylinder brake fluid pressure detected by pressure sensor is displayed. (Model with EyeSight)	bar
FR wheel cylinder pressure sensor output	FR wheel cylinder brake fluid pressure detected by pressure sensor is displayed. (Model with EyeSight)	bar
Steering angle flag	Whether the absolute angle of the steering angle sensor was determined is displayed.	Recognized or No recognition
EBD Control Flag	EBD control condition is displayed.	ON or OFF
ABS Control Flag	ABS control condition is displayed.	ON or OFF
TCS Control Flag	TCS control condition is displayed.	ON or OFF
VDC Control Flag	VDC control condition is displayed.	ON or OFF
E/G Torque Down Control Stop Flag	Engine control command signal is displayed.	1 or 0
Stop-lamp relay drive signal	Brake light relay driving signal is displayed.	ON or OFF
X Mode	The status of X mode is displayed. (Model with X mode)	ON or OFF
E/G torques up Control Stop Flag	Engine control command signal is displayed.	1 or 0
OFF Switch Detection	ON/OFF condition of the VDC operated by the driver is displayed.	ON or OFF
Brake Light Switch	Brake ON/OFF is displayed.	ON or OFF
Clutch switch	Clutch ON/OFF is displayed. (MT model)	ON or OFF
Reverse Signal	Reverse gear ON/OFF is displayed. (MT model)	ON or OFF
Clutch stroke sensor	Pedal stroke amount detected by the clutch stroke sensor is displayed. (MT model)	%
Clutch engagement point	Clutch stroke sensor engagement position is displayed. (MT model)	%
Engine Torque	Engine torque is displayed.	N·m
Ambient Temp Sensor	Ambient temperature is displayed.	°C
Manual Parking Operation	Parking brake operation condition is displayed.	ON or OFF
Auto Parking Operation	Parking brake operation condition is displayed.	ON or OFF
Parking Operation when driving	Parking brake operation condition is displayed.	ON or OFF
Parking Cancel	Parking brake operation condition is displayed.	ON or OFF
Hill Hold Lamp	Hill hold indicator control condition is displayed.	ON or OFF
Ignition Signal	Input condition of ignition signal is displayed.	ON or OFF
Neutral Signal	Input condition of neutral signal is displayed.	ON or OFF
Engine idle flag	Engine speed condition is displayed.	ON or OFF
Door Signal	Input condition of door (4 locations) open/close signal is displayed.	ON or OFF
Driver Seat Belt Signal	Input condition of driver's seat belt buckle signal is displayed.	ON or OFF

NOTE:
- Freeze frame data stored at the time of trouble occurrence is shown on the display.
- Each time a trouble occurs, the latest information is stored in the freeze frame data in memory.
- For detailed operation procedures, refer to “Application help”.

B: INSPECTION

1. COMMUNICATION FOR INITIALIZING IMPOSSIBLE

DETECTING CONDITION:
Defective harness connector
TROUBLE SYMPTOM:
Communication is impossible between VDC and Subaru Select Monitor.
WIRING DIAGRAM:
Vehicle dynamics control system <Ref. to WI-360, Vehicle Dynamics Control System.>

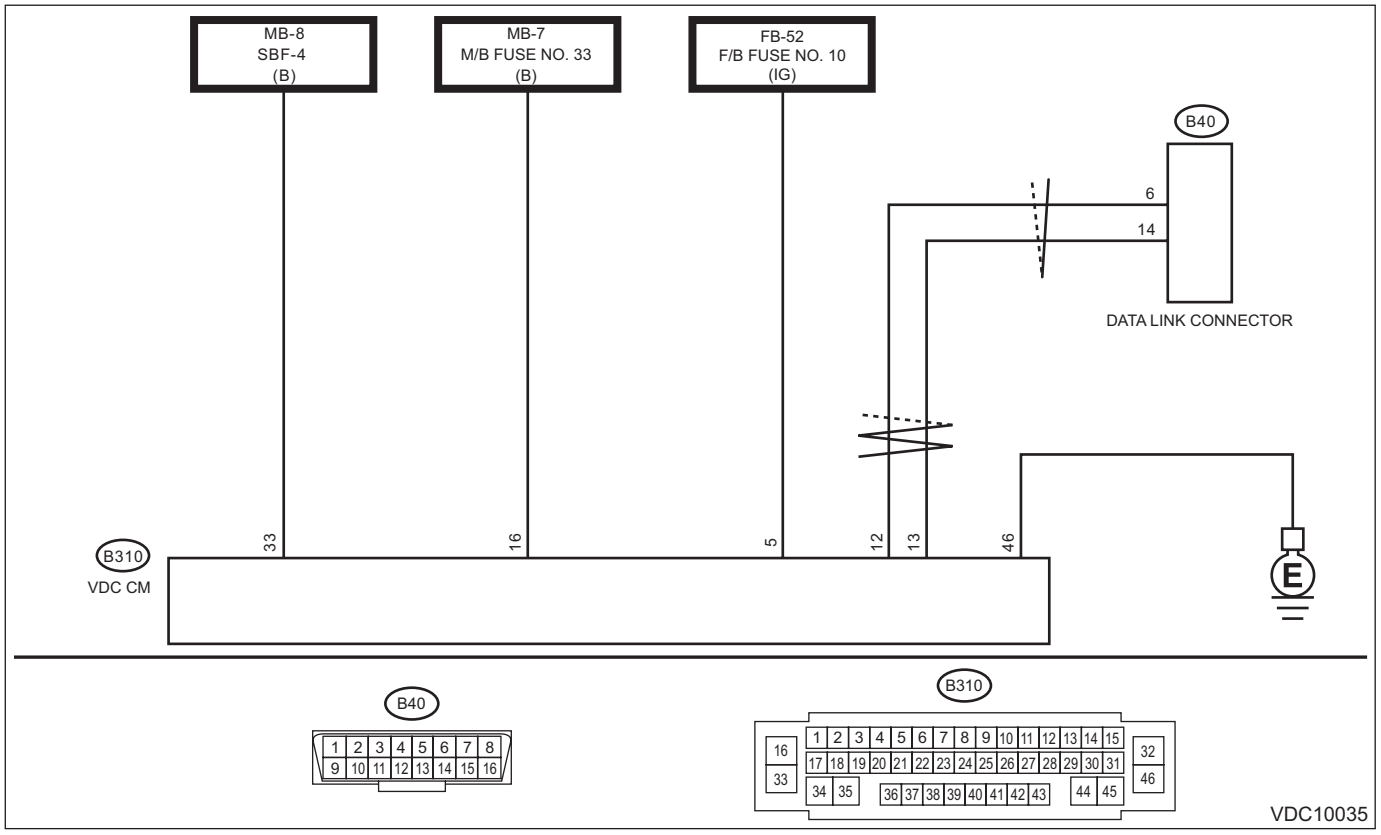

Step		Check	Yes	No
1	**CHECK IGNITION SWITCH.**	Is the ignition switch ON?	Go to step **2**.	Turn the ignition switch to ON, and select VDC using the Subaru Select Monitor.
2	**CHECK BATTERY.** 1) Turn the ignition switch to OFF. 2) Measure the battery voltage.	Is the voltage 11 V or more?	Go to step **3**.	Charge or replace the battery.
3	**CHECK BATTERY TERMINAL.**	Is there poor contact at battery terminal?	Repair or tighten the battery terminal.	Go to step **4**.
4	**CHECK INSTALLATION OF VDCCM&H/U CONNECTOR.** Turn the ignition switch to OFF.	Is the VDCCM&H/U connector inserted into VDCCM&H/U until the clamp locks onto it?	Go to step **5**.	Insert VDCCM&H/U connector into VDCCM&H/U.
5	**CHECK LAN SYSTEM.** Perform the diagnosis for LAN system. <Ref. to LAN(diag)-2, Basic Diagnostic Procedure.>	Is there any fault in LAN system?	Perform the diagnosis according to DTC for LAN system. <Ref. to LAN(diag)-86, List of Diagnostic Trouble Code (DTC).>	Go to step **6**.

	Step	Check	Yes	No
6	**CHECK SUBARU SELECT MONITOR COMMUNICATION.** 1) Turn the ignition switch to ON. 2) Check whether communication to VDC system can be executed normally.	Is the system name displayed on Subaru Select Monitor?	Check the DTC in VDC system. <Ref. to VDC(diag)-25, Read Diagnostic Trouble Code (DTC).>	Go to step **7**.
7	**CHECK POWER SUPPLY CIRCUIT.** 1) Turn the ignition switch to ON. (Engine OFF) 2) Measure the ignition power supply voltage between VDCCM&H/U connector and chassis ground. ***Connector & terminal*** ***(B310) No. 5 (+) — Chassis ground (–):*** ***(B310) No. 16 (+) — Chassis ground (–):*** ***(B310) No. 33 (+) — Chassis ground (–):***	Is the voltage 10 — 15 V?	Go to step **8**.	Repair open circuit in harness between VDCCM&H/U and battery.
8	**CHECK HARNESS CONNECTOR BETWEEN VDCCM&H/U AND CHASSIS GROUND.** 1) Turn the ignition switch to OFF. 2) Disconnect the connector from the VDCCM&H/U. 3) Measure the resistance of harness between VDCCM&H/U connector and chassis ground. ***Connector & terminal*** ***(B310) No. 46 — Chassis ground:***	Is the resistance less than 10 Ω?	Go to step **9**.	Repair the open circuit of VDCCM&H/U ground circuit and poor contact of connector.
9	**CHECK POOR CONTACT OF CONNECTOR.**	Is there poor contact of control module power supply, ground circuit and data link connector?	Repair the connector.	Replace the VDCCM&H/U. <Ref. to VDC-8, VDC Control Module and Hydraulic Control Unit (VDCCM&H/U).>

7. Read Diagnostic Trouble Code (DTC)

A: OPERATION

1) On «Start» display, select «Diagnosis».
2) On «Vehicle selection» display, input the vehicle information and select «Confirmed».
3) On «Main Menu» display, select «Each System Check».
4) On «Select System» display, select «Brake Control System».
5) On «Select Function» display, select «DTC».

NOTE:
- For details concerning DTCs, refer to “List of Diagnostic Trouble Code (DTC)”. <Ref. to VDC(diag)-40, List of Diagnostic Trouble Code (DTC).>
- For detailed operation procedures, refer to “Application help”.

8. Inspection Mode

A: PROCEDURE

1. VDC SYSTEM

1) Delete the DTC.
2) Drive the vehicle at least ten minutes. (Reproduce nearly the same condition as occurred when the DTC was recorded.)

NOTE:
Make sure the vehicle is not dragged to one side under usual driving condition.

2. ELECTRONIC PARKING BRAKE SYSTEM

1) Start the engine, and operate and release the electronic parking brake a few times with the vehicle at a standstill.
2) Check if the warning light illuminates or blinks, or DTC is displayed.

NOTE:
If the DTC is displayed, perform the diagnosis using “Diagnostic Procedure with Diagnostic Trouble Code (DTC)”. <Ref. to VDC(diag)-44, Diagnostic Procedure with Diagnostic Trouble Code (DTC).>
3) Drive the vehicle at least 10 minutes, and operate and release the electronic parking brake a few times.

CAUTION:
Do not drive the vehicle with the warning light illuminated or blinked.

9. Clear Memory Mode

A: OPERATION

1) On «Start» display, select «Diagnosis».
2) On «Vehicle selection» display, input the vehicle information and select «Confirmed».
3) On «Main Menu» display, select «Each System Check».
4) On «Select System» display, select «Brake Control System».
5) On «Select Function» display, select «DTC».
6) On «DTC» display, select «Clear Memory».

NOTE:
For detailed operation procedures, refer to “Application help”.

10.Warning Light Illumination Pattern

A: INSPECTION

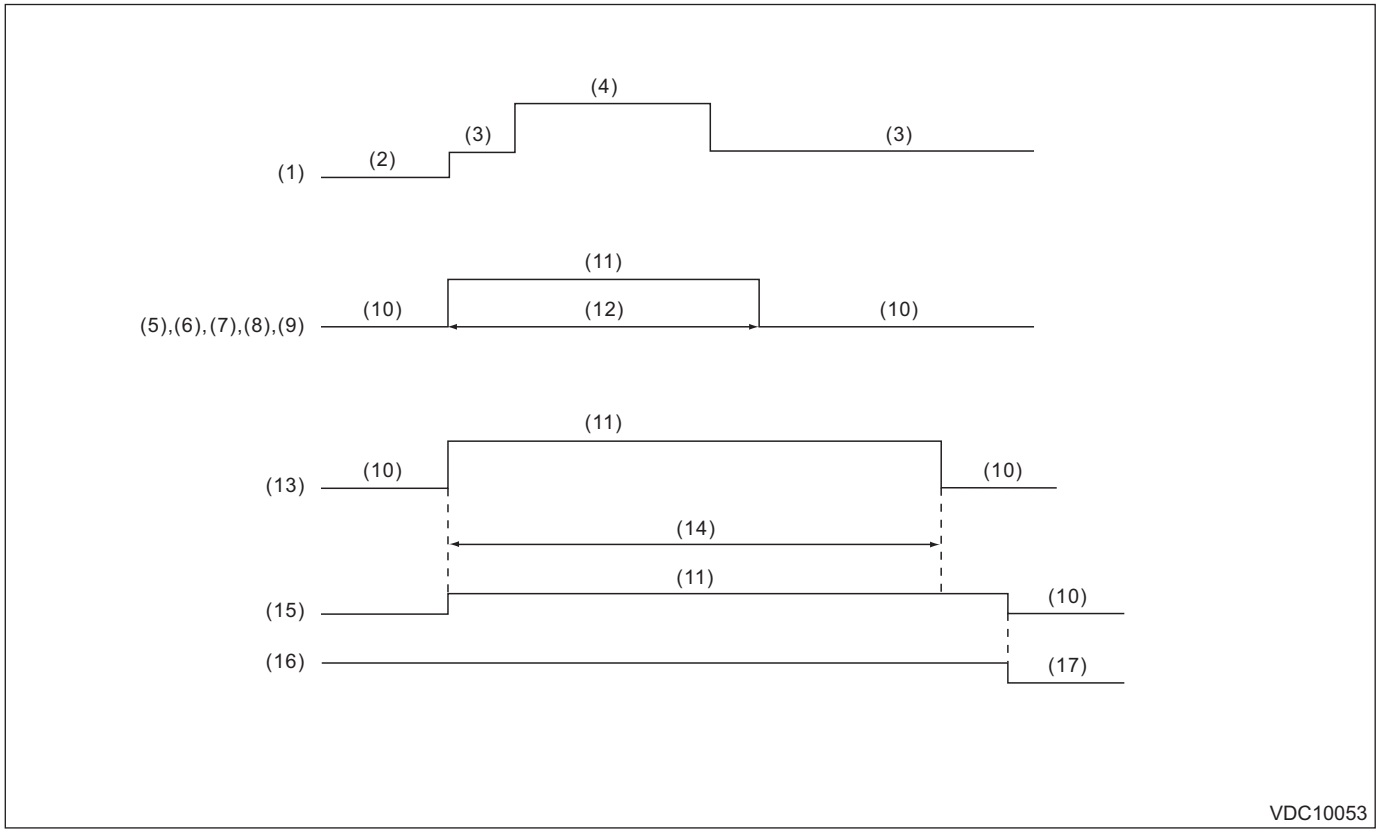

(1)	Ignition switch	(7)	VDC OFF indicator light	(13)	VDC warning light & VDC indicator light
(2)	OFF	(8)	Electronic parking brake warning light	(14)	2 seconds or more
(3)	ON	(9)	Hill hold indicator light	(15)	Electronic parking brake operation indicator light
(4)	Engine start	(10)	Light OFF	(16)	Parking brake
(5)	ABS warning light	(11)	Light ON	(17)	Released
(6)	Brake warning light (EBD warning light)	(12)	2 seconds		

NOTE:
The hill hold indicator light always illuminates when the hill hold is in the ON mode.

1) When warning lights or indicator lights do not illuminate in accordance with this illumination pattern, there must be an electrical malfunction.
2) When the warning lights or indicator lights remain constantly OFF, check the combination meter circuit. <Ref. to VDC(diag)-30, EBD WARNING LIGHT, ABS WARNING, VDC OFF INDICATOR LIGHT, VDC WARNING LIGHT AND VDC INDICATOR LIGHT DO NOT COME ON, Warning Light Illumination Pattern.> <Ref. to VDC(diag)-31, ELECTRONIC PARKING BRAKE INDICATOR LIGHT, HILL HOLD INDICATOR LIGHT DO NOT COME ON, Warning Light Illumination Pattern.>
3) When the ABS warning light, VDC OFF indicator light, VDC warning light & VDC indicator light, and hill hold indicator light do not go off, check the combination meter circuit or CAN communication circuit. <Ref. to VDC(diag)-33, ABS WARNING LIGHT DOES NOT GO OFF, Warning Light Illumination Pattern.> <Ref. to VDC(diag)-36, VDC OFF INDICATOR LIGHT DOES NOT GO OFF, Warning Light Illumination Pattern.> <Ref. to VDC(diag)-34, VDC WARNING LIGHT AND VDC INDICATOR LIGHT DO NOT GO OFF, Warning Light Illumination Pattern.> <Ref. to VDC(diag)-35, ELECTRONIC PARKING BRAKE INDICATOR LIGHT, HILL HOLD INDICATOR LIGHT DO NOT GO OFF, Warning Light Illumination Pattern.>

NOTE:
• Even when the ABS warning light and the VDC warning light & VDC indicator light do not go off in 2 seconds after illuminating, the ABS and VDC functions are normal if the warning lights go off while the vehicle is driven. However, while these lights are on, the functions with their warning lights illuminated do not operate.
• It may take several minutes before the VDC warning light & VDC indicator light goes off, if the vehicle is parked under low temperature for a specified time. This is not defective because it is resulted from low engine coolant temperature. Perform the Clear Memory Mode because DTC may be recorded at this time. <Ref. to VDC(diag)-27, Clear Memory Mode.>
• With the vehicle jack-up/lift-up or set on free rollers, when the wheels lock or spin after starting the engine, ABS warning light, and VDC warning light & VDC indicator light may illuminate because VDCCM&H/U detects the abnormal conditions from ABS wheel speed sensor or longitudinal G sensor. In this case, this is not a malfunction. Perform the Clear Memory Mode. <Ref. to VDC(diag)-27, Clear Memory Mode.>
• When operation and release of the electronic parking brake is repeated excessively, the electronic parking brake warning light may illuminate or the electronic parking brake operation indicator light may blink and then the parking brake switch operation may not be accepted; this is not malfunction.

B: EBD WARNING LIGHT, ABS WARNING, VDC OFF INDICATOR LIGHT, VDC WARNING LIGHT AND VDC INDICATOR LIGHT DO NOT COME ON

DETECTING CONDITION:
Defective combination meter

TROUBLE SYMPTOM:
When the ignition switch is turned to ON (engine OFF), brake warning light (EBD warning light), ABS warning light, VDC OFF indicator light, and VDC warning light & VDC indicator light do not illuminate.

NOTE:
When pressing the VDC OFF switch for 30 seconds or more, the VDC OFF indicator light goes off and cannot operate any more. When turning the ignition switch from OFF to ON, the OFF operation enabled status is restored.

	Step	Check	Yes	No
1	**CHECK OTHER INDICATOR LIGHT.** Turn the ignition switch to ON.	Does other indicator light illuminate soon after “ON”?	Go to step **2**.	Check the combination meter. <Ref. to IDI-6, SELF-DIAGNOSIS DISPLAY MODE, OPERATION, Combination Meter System.>
2	**CHECK VDCCM.** When the engine does not start, display the current data of VDCCM using Subaru Select Monitor.	Immediately after the ignition switch is turned to ON, is the «EBD Warning Light» ON?	Go to step **3**.	Replace the VDCCM&H/U. <Ref. to VDC-8, VDC Control Module and Hydraulic Control Unit (VDCCM&H/U).>
3	**CHECK VDCCM.** When the engine does not start, display the current data of VDCCM using Subaru Select Monitor.	Immediately after the ignition switch is turned to ON, is the «ABS Warning Lamp» ON?	Go to step **4**.	Replace the VDCCM&H/U. <Ref. to VDC-8, VDC Control Module and Hydraulic Control Unit (VDCCM&H/U).>
4	**CHECK VDCCM.** When the engine does not start, display the current data of VDCCM using Subaru Select Monitor.	Immediately after the ignition switch is turned to ON, is the «VDC Warning Lamp» ON?	Check the combination meter. <Ref. to IDI-6, SELF-DIAGNOSIS DISPLAY MODE, OPERATION, Combination Meter System.>	Replace the VDCCM&H/U. <Ref. to VDC-8, VDC Control Module and Hydraulic Control Unit (VDCCM&H/U).>

C: ELECTRONIC PARKING BRAKE INDICATOR LIGHT, HILL HOLD INDICATOR LIGHT DO NOT COME ON

DETECTING CONDITION:
Defective combination meter
TROUBLE SYMPTOM:
• When the ignition switch is ON (engine OFF), the electronic parking brake operation indicator light does not illuminate even when the electronic parking brake switch is operated.
• When the ignition switch is ON (engine OFF), the hill hold indicator light does not illuminate even when the hill hold switch is operated.

	Step	Check	Yes	No
1	**CHECK OTHER INDICATOR LIGHT.** Turn the ignition switch to ON. (Engine OFF)	Do other indicator lights illuminate?	Go to step **2**.	Check the combination meter. <Ref. to IDI-6, SELF-DIAGNOSIS DISPLAY MODE, OPERATION, Combination Meter System.>
2	**READ DTC.** Read the DTC. <Ref. to VDC(diag)-25, Read Diagnostic Trouble Code (DTC).>	Is DTC displayed?	Perform the diagnosis according to DTC. <Ref. to VDC(diag)-40, List of Diagnostic Trouble Code (DTC).>	Go to step **3**.
3	**CHECK LAN SYSTEM.** Perform the diagnosis for LAN system. <Ref. to LAN(diag)-2, Basic Diagnostic Procedure.>	Is there any fault in LAN system?	Perform the diagnosis according to DTC for LAN system. <Ref. to LAN(diag)-86, List of Diagnostic Trouble Code (DTC).>	Go to step **4**.
4	**CHECK COMBINATION METER.** Check the combination meter. <Ref. to IDI-6, SELF-DIAGNOSIS DISPLAY MODE, OPERATION, Combination Meter System.>	Is combination meter OK?	Replace the VDCCM&H/U. <Ref. to VDC-8, VDC Control Module and Hydraulic Control Unit (VDCCM&H/U).>	Replace the combination meter. <Ref. to IDI-11, Combination Meter.>

D: ELECTRONIC PARKING BRAKE INDICATOR LIGHT IS BLINKING

DETECTING CONDITION:

- When VDCCM&H/U was replaced
- When fault was detected or electronic parking brake switch was operated under faulty condition
- When electronic parking brake switch was operated during maintenance mode
- When electronic parking brake was operated while the vehicle was running on the free roller or while the tires were rotating with a help of the free roller
- When electronic parking brake was operated with the brake high in temperature or operated on a steep slope

TROUBLE SYMPTOM:

Electronic parking brake may not operate properly.

	Step	Check	Yes	No
1	**CHECK VDCCM&H/U.** NOTE: If VDCCM&H/U was not replaced, start the diagnosis from step 2.	Was electronic parking brake operated after replacement of VDCCM&H/U?	Go to step **2**.	It is normal if the electronic parking brake operation indicator light comes on by operating the electronic parking brake and goes off by disengaging.
2	**CHECK ELECTRONIC PARKING BRAKE WARNING LIGHT.** Turn the ignition switch to ON. (Engine OFF)	Does electronic parking brake warning light illuminate?	Perform the diagnosis according to DTC. <Ref. to VDC(diag)-40, List of Diagnostic Trouble Code (DTC).>	Go to step **3**.
3	**CHECK VEHICLE CONDITION.**	Is the brake condition other than overheating? Is the electronic parking brake is operated except on a steep road?	Normal	Go to step **4**.
4	**CHECK DRIVING CONDITION.**	Was the vehicle running except on the free roller?	Normal	Go to step **5**.
5	**CHECK OPERATION OF ELECTRONIC PARKING BRAKE.** 1) Perform the Clear Memory Mode. <Ref. to VDC(diag)-27, Clear Memory Mode.> 2) Perform the Inspection Mode. <Ref. to VDC(diag)-26, Inspection Mode.>	Does electronic parking brake operation indicator light blink?	Replace the VDCCM&H/U. <Ref. to VDC-8, VDC Control Module and Hydraulic Control Unit (VDCCM&H/U).>	Electronic parking brake was temporarily prohibited.

E: ABS WARNING LIGHT DOES NOT GO OFF

DETECTING CONDITION:

- Defective combination meter
- Defective engine
- Defective CAN communication

TROUBLE SYMPTOM:

When starting the engine, the ABS warning light is kept on.

	Step	Check	Yes	No
1	**READ DTC.** Read the DTC. <Ref. to VDC(diag)-25, Read Diagnostic Trouble Code (DTC).>	Is DTC displayed?	Perform the diagnosis according to DTC. <Ref. to VDC(diag)-40, List of Diagnostic Trouble Code (DTC).>	Go to step **2**.
2	**CHECK VDCCM.** Display the current data of VDCCM using Subaru Select Monitor.	Is the «ABS Warning Lamp» ON?	Go to step **3**.	Go to step **5**.
3	**CHECK WARNING LIGHT.** 1) Save the freeze frame data. 2) Perform the Clear Memory Mode. <Ref. to VDC(diag)-27, Clear Memory Mode.>	Does the ABS warning light go off?	Normal Perform the Inspection Mode to check that the light does not turn ON again.	Go to step **4**.
4	**READ DTC.** Read the DTC after driving the vehicle at 40 km/h (25 MPH) or more.	Is DTC displayed?	Perform the diagnosis according to DTC. <Ref. to VDC(diag)-40, List of Diagnostic Trouble Code (DTC).>	Go to step **5**.
5	**CHECK LAN SYSTEM.** Perform the diagnosis for LAN system. <Ref. to LAN(diag)-2, Basic Diagnostic Procedure.>	Is there any fault in LAN system?	Perform the diagnosis according to DTC for LAN system. <Ref. to LAN(diag)-86, List of Diagnostic Trouble Code (DTC).>	Go to step **6**.
6	**CHECK COMBINATION METER.** Check the combination meter. <Ref. to IDI-6, SELF-DIAGNOSIS DISPLAY MODE, OPERATION, Combination Meter System.>	Is combination meter OK?	Replace the VDCCM&H/U. <Ref. to VDC-8, VDC Control Module and Hydraulic Control Unit (VDCCM&H/U).>	Replace the combination meter. <Ref. to IDI-11, REMOVAL, Combination Meter.>

F: VDC WARNING LIGHT AND VDC INDICATOR LIGHT DO NOT GO OFF

DETECTING CONDITION:

- Defective combination meter
- Defective engine
- Defective CAN communication

TROUBLE SYMPTOM:

When starting the engine, the VDC warning light & VDC indicator light remains lit.

	Step	Check	Yes	No
1	**READ DTC.** Read the DTC. <Ref. to VDC(diag)-25, Read Diagnostic Trouble Code (DTC).>	Is DTC displayed?	Perform the diagnosis according to DTC. <Ref. to VDC(diag)-40, List of Diagnostic Trouble Code (DTC).>	Go to step **2**.
2	**CHECK VDCCM.** Display the current data of VDCCM using Subaru Select Monitor.	Is the «VDC Warning Lamp» ON?	Go to step **3**.	Go to step **5**.
3	**CHECK WARNING LIGHT.** 1) Save the freeze frame data. 2) Perform the Clear Memory Mode. <Ref. to VDC(diag)-27, Clear Memory Mode.>	Does the VDC warning light & VDC operation indicator light go off?	Normal Perform the Inspection Mode to check that the light does not turn ON again.	Go to step **4**.
4	**READ DTC.** Read the DTC after driving the vehicle at 40 km/h (25 MPH) or more.	Is DTC displayed?	Perform the diagnosis according to DTC. <Ref. to VDC(diag)-40, List of Diagnostic Trouble Code (DTC).>	Go to step **5**.
5	**CHECK LAN SYSTEM.** Perform the diagnosis for LAN system. <Ref. to LAN(diag)-2, Basic Diagnostic Procedure.>	Is there any fault in LAN system?	Perform the diagnosis according to DTC for LAN system. <Ref. to LAN(diag)-86, List of Diagnostic Trouble Code (DTC).>	Go to step **6**.
6	**CHECK COMBINATION METER.** Check the combination meter. <Ref. to IDI-6, SELF-DIAGNOSIS DISPLAY MODE, OPERATION, Combination Meter System.>	Is combination meter OK?	Replace the VDCCM&H/U. <Ref. to VDC-8, VDC Control Module and Hydraulic Control Unit (VDCCM&H/U).>	Replace the combination meter. <Ref. to IDI-11, REMOVAL, Combination Meter.>

G: ELECTRONIC PARKING BRAKE INDICATOR LIGHT, HILL HOLD INDICATOR LIGHT DO NOT GO OFF

DETECTING CONDITION:
Defective combination meter
TROUBLE SYMPTOM:
• When starting the engine, the electronic parking brake operation indicator light does not go off even when the electronic parking brake is released.
• When starting the engine, the hill hold indicator light does not go off even when the hill hold switch is deactivated.

	Step	Check	Yes	No
1	**CHECK INDICATOR LIGHT.** 1) Start the engine. 2) Operate the electronic parking brake switch or hill hold switch.	Does the electronic parking brake operation indicator light or hill hold indicator light go off?	Normal	Go to step **2**.
2	**READ DTC.** Read the DTC. <Ref. to VDC(diag)-25, Read Diagnostic Trouble Code (DTC).>	Is DTC displayed?	Perform the diagnosis according to DTC. <Ref. to VDC(diag)-40, List of Diagnostic Trouble Code (DTC).>	Go to step **3**.
3	**CHECK LAN SYSTEM.** Perform the diagnosis for LAN system. <Ref. to LAN(diag)-2, Basic Diagnostic Procedure.>	Is there any fault in LAN system?	Perform the diagnosis according to DTC. <Ref. to LAN(diag)-86, List of Diagnostic Trouble Code (DTC).>	Go to step **4**.
4	**CHECK VDCCM&H/U.** Connect the Subaru Select Monitor, and display the current data of VDCCM with the engine started.	Is «Parking System Warning Light» ON?	Replace the VDCCM&H/U. <Ref. to VDC-8, VDC Control Module and Hydraulic Control Unit (VDCCM&H/U).>	Go to step **5**.
5	**CHECK VDCCM&H/U.** Connect the Subaru Select Monitor, and display the current data of VDCCM with the engine started.	When the hill hold switch is not operated after starting the engine, is the «Hill hold lamp» ON?	Replace the VDCCM&H/U. <Ref. to VDC-8, VDC Control Module and Hydraulic Control Unit (VDCCM&H/U).>	Go to step **6**.
6	**CHECK COMBINATION METER.** Check the combination meter. <Ref. to IDI-6, SELF-DIAGNOSIS DISPLAY MODE, OPERATION, Combination Meter System.>	Is combination meter OK?	Replace the VDCCM&H/U. <Ref. to VDC-8, VDC Control Module and Hydraulic Control Unit (VDCCM&H/U).>	Replace the combination meter. <Ref. to IDI-11, Combination Meter.>

H: VDC OFF INDICATOR LIGHT DOES NOT GO OFF

DETECTING CONDITION:

- Defective combination meter
- Defective CAN communication
- VDC OFF switch is shorted.

TROUBLE SYMPTOM:

When starting the engine, VDC OFF indicator light is kept ON.

WIRING DIAGRAM:

NOTE:
For the coupling connector, refer to “WIRING SYSTEM”.
Vehicle dynamics control system <Ref. to WI-360, Vehicle Dynamics Control System.>

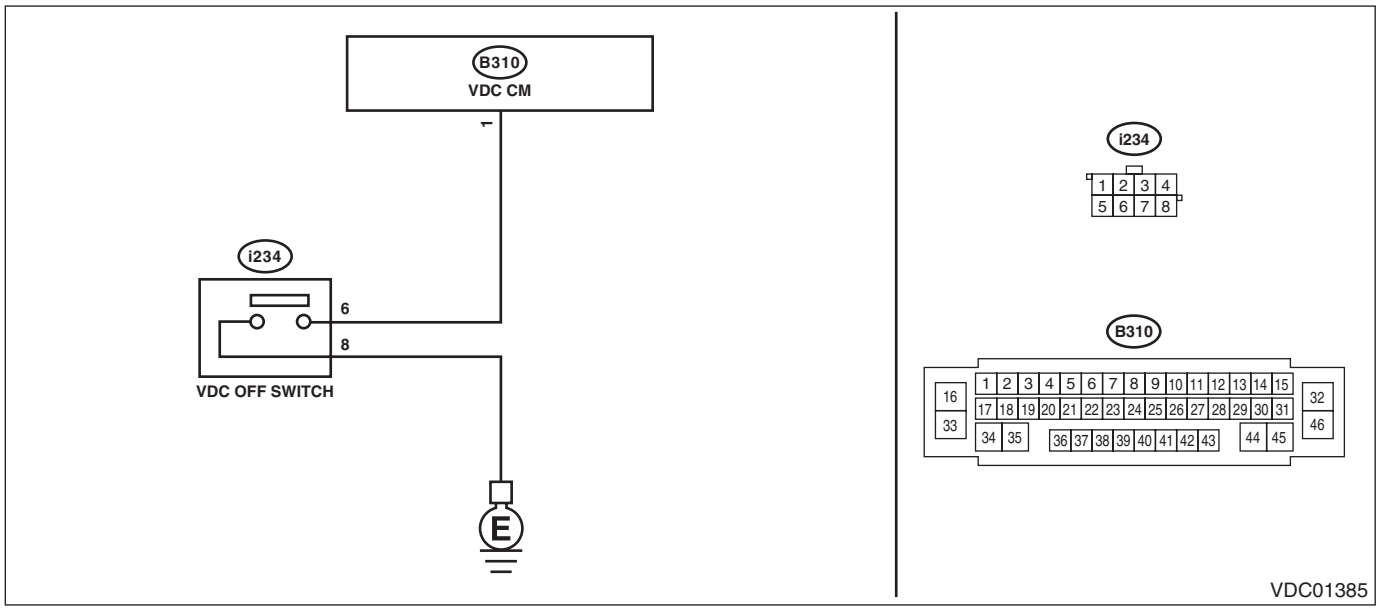

	Step	Check	Yes	No
1	**READ DTC.** Read the DTC. <Ref. to VDC(diag)-25, Read Diagnostic Trouble Code (DTC).>	Is DTC displayed?	Perform the diagnosis according to DTC. <Ref. to VDC(diag)-40, List of Diagnostic Trouble Code (DTC).>	Go to step **2**.
2	**CHECK VDC OFF SWITCH.** Remove and check VDC OFF switch. <Ref. to VDC-37, VDC OFF Switch.>	Is the VDC OFF switch normal?	Go to step **3**.	Replace the VDC OFF switch.
3	**CHECK VDC OFF SWITCH CIRCUIT.** 1) Disconnect the connector from the VDCCM&H/U. 2) Measure the resistance between VDCCM&H/U connector and chassis ground. ***Connector & terminal*** ***(B310) No. 1 — Chassis ground:***	Is the resistance less than 10 Ω?	Check the VDC OFF switch circuit.	Go to step **4**.
4	**CHECK LAN SYSTEM.** Perform the diagnosis for LAN system. <Ref. to LAN(diag)-2, Basic Diagnostic Procedure.>	Is there any fault in LAN system?	Perform the diagnosis according to DTC for LAN system. <Ref. to LAN(diag)-86, List of Diagnostic Trouble Code (DTC).>	Go to step **5**.

Step		Check	Yes	No
5	**CHECK COMBINATION METER.** Check the combination meter. <Ref. to IDI-6, SELF-DIAGNOSIS DISPLAY MODE, OPERATION, Combination Meter System.>	Is combination meter OK?	Replace the VDCCM&H/U. <Ref. to VDC-8, VDC Control Module and Hydraulic Control Unit (VDCCM&H/U).>	Replace the combination meter. <Ref. to IDI-11, REMOVAL, Combination Meter.>

I: BRAKE WARNING LIGHT DOES NOT GO OFF

DETECTING CONDITION:

- Brake warning light circuit is shorted.
- Defective sensor/connector
- Defective CAN communication

TROUBLE SYMPTOM:

After starting the engine, the brake warning light continues to illuminate.

WIRING DIAGRAM:

NOTE:
For the coupling connector, refer to “WIRING SYSTEM”.
Parking brake / brake fluid level warning light system <Ref. to WI-294, Parking Brake / Brake Fluid Level Warning Light System.>

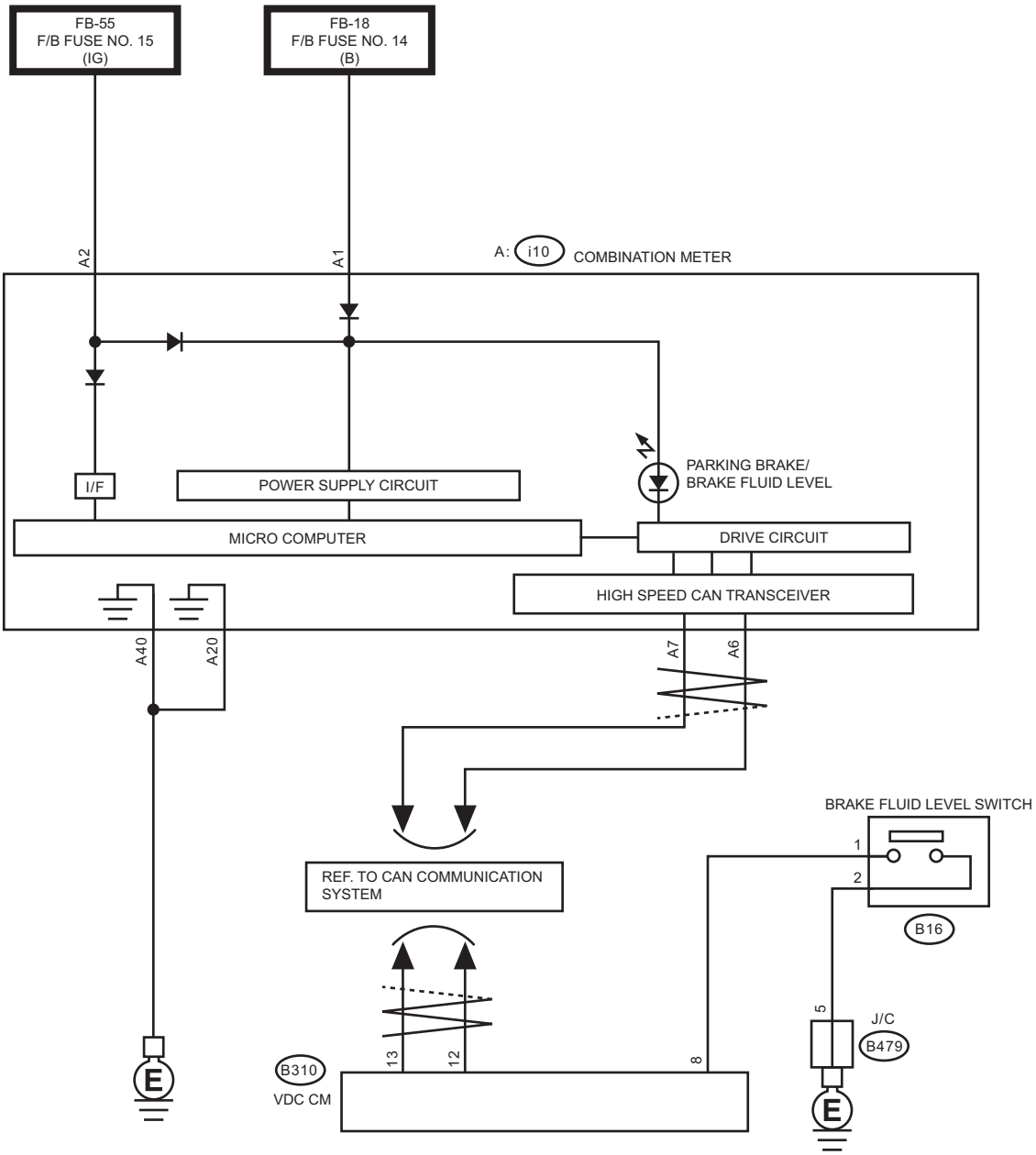

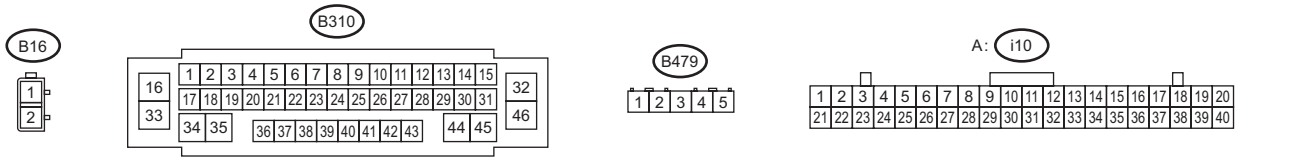

VDC10039

	Step	Check	Yes	No
1	**CHECK INSTALLATION OF VDCCM&H/U CONNECTOR.** 1) Turn the ignition switch to OFF. 2) Check that the VDCCM&H/U connector is inserted until it is locked by clamp.	Is the connector firmly inserted?	Go to step **2**.	Insert the VDCCM&H/U connector until it is locked by clamp.
2	**READ DTC.** Read the DTC. <Ref. to VDC(diag)-25, Read Diagnostic Trouble Code (DTC).>	Is DTC displayed?	Perform the diagnosis according to DTC. <Ref. to VDC(diag)-40, List of Diagnostic Trouble Code (DTC).>	Go to step **3**.
3	**CHECK BRAKE FLUID AMOUNT.** Check the amount of brake fluid in the reservoir tank of master cylinder.	Does the level of the brake fluid amount fall between the lines of “MAX” and “MIN”?	Go to step **4**.	Replenish brake fluid to the specified value.
4	**CHECK BRAKE FLUID LEVEL SWITCH.** 1) Turn the ignition switch to OFF. 2) Disconnect the level switch connector (B16) from master cylinder. 3) Measure the resistance of master cylinder terminals. ***Terminals*** ***No. 1 — No. 2:***	Is the resistance 1 MΩ or more?	Go to step **5**.	Replace the master cylinder. <Ref. to BR-50, Master Cylinder.>
5	**CHECK GROUND SHORT OF HARNESS.** 1) Disconnect the connector from the combination meter. 2) Measure the resistance between combination meter connector and chassis ground. ***Connector & terminal*** ***(i10) No. 23 — Chassis ground:***	Is the resistance 1 MΩ or more?	Go to step **6**.	Repair the harness connector between combination meter and brake fluid level switch.
6	**CHECK LAN SYSTEM.** Perform the diagnosis for LAN system. <Ref. to LAN(diag)-2, Basic Diagnostic Procedure.>	Is there any fault in LAN system?	Perform the diagnosis according to DTC for LAN system. <Ref. to LAN(diag)-86, List of Diagnostic Trouble Code (DTC).>	Go to step **7**.
7	**CHECK COMBINATION METER.** Check the combination meter. <Ref. to IDI-6, SELF-DIAGNOSIS DISPLAY MODE, OPERATION, Combination Meter System.>	Is combination meter OK?	Replace the VDCCM&H/U. <Ref. to VDC-8, VDC Control Module and Hydraulic Control Unit (VDCCM&H/U).>	Replace the combination meter. <Ref. to IDI-11, Combination Meter.>

11.List of Diagnostic Trouble Code (DTC)

A: LIST

DTC	Item	Content of diagnosis	Reference
C1211	FRONT RIGHT ABS SENSOR CIRCUIT	Open/high input of front ABS wheel speed sensor RH	<Ref. to VDC(diag)-44, DTC C1211 FRONT RIGHT ABS SENSOR CIRCUIT, Diagnostic Procedure with Diagnostic Trouble Code (DTC).>
C1212	FRONT RIGHT ABS SENSOR SIGNAL	Front ABS wheel speed sensor RH signal malfunction	<Ref. to VDC(diag)-48, DTC C1212 FRONT RIGHT ABS SENSOR SIGNAL, Diagnostic Procedure with Diagnostic Trouble Code (DTC).>
C1221	FRONT LEFT ABS SENSOR CIRCUIT	Open/high input of front ABS wheel speed sensor LH	<Ref. to VDC(diag)-44, DTC C1221 FRONT LEFT ABS SENSOR CIRCUIT, Diagnostic Procedure with Diagnostic Trouble Code (DTC).>
C1222	FRONT LEFT ABS SENSOR SIGNAL	Front ABS wheel speed sensor LH signal malfunction	<Ref. to VDC(diag)-48, DTC C1222 FRONT LEFT ABS SENSOR SIGNAL, Diagnostic Procedure with Diagnostic Trouble Code (DTC).>
C1231	REAR RIGHT ABS SENSOR CIRCUIT	Open/high input of rear ABS wheel speed sensor RH	<Ref. to VDC(diag)-44, DTC C1231 REAR RIGHT ABS SENSOR CIRCUIT, Diagnostic Procedure with Diagnostic Trouble Code (DTC).>
C1232	REAR RIGHT ABS SENSOR SIGNAL	Rear ABS wheel speed sensor RH signal malfunction	<Ref. to VDC(diag)-48, DTC C1232 REAR RIGHT ABS SENSOR SIGNAL, Diagnostic Procedure with Diagnostic Trouble Code (DTC).>
C1241	REAR LEFT ABS SENSOR CIRCUIT	Open/high input of rear ABS wheel speed sensor LH	<Ref. to VDC(diag)-45, DTC C1241 REAR LEFT ABS SENSOR CIRCUIT, Diagnostic Procedure with Diagnostic Trouble Code (DTC).>
C1242	REAR LEFT ABS SENSOR SIGNAL	Rear ABS wheel speed sensor LH signal malfunction	<Ref. to VDC(diag)-49, DTC C1242 REAR LEFT ABS SENSOR SIGNAL, Diagnostic Procedure with Diagnostic Trouble Code (DTC).>
C1311	FR HOLD VALVE	Front inlet solenoid valve RH malfunction in VDCCM&H/U	<Ref. to VDC(diag)-51, DTC C1311 FR HOLD VALVE, Diagnostic Procedure with Diagnostic Trouble Code (DTC).>
C1312	FR PRESSURE REDUCING VALVE	Front outlet solenoid valve RH malfunction in VDCCM&H/U	<Ref. to VDC(diag)-51, DTC C1312 FR PRESSURE REDUCING VALVE, Diagnostic Procedure with Diagnostic Trouble Code (DTC).>
C1321	FL HOLD VALVE	Front inlet solenoid valve LH malfunction in VDCCM&H/U	<Ref. to VDC(diag)-51, DTC C1321 FL HOLD VALVE, Diagnostic Procedure with Diagnostic Trouble Code (DTC).>
C1322	FL PRESSURE REDUCING VALVE	Front outlet solenoid valve LH malfunction in VDCCM&H/U	<Ref. to VDC(diag)-51, DTC C1322 FL PRESSURE REDUCING VALVE, Diagnostic Procedure with Diagnostic Trouble Code (DTC).>
C1331	RR HOLD VALVE	Rear inlet solenoid valve RH malfunction in VDCCM&H/U	<Ref. to VDC(diag)-51, DTC C1331 RR HOLD VALVE, Diagnostic Procedure with Diagnostic Trouble Code (DTC).>
C1332	RR PRESSURE REDUCING VALVE	Rear outlet solenoid valve RH malfunction in VDCCM&H/U	<Ref. to VDC(diag)-52, DTC C1332 RR PRESSURE REDUCING VALVE, Diagnostic Procedure with Diagnostic Trouble Code (DTC).>
C1341	RL HOLD VALVE	Rear inlet solenoid valve LH malfunction in VDCCM&H/U	<Ref. to VDC(diag)-52, DTC C1341 RL HOLD VALVE, Diagnostic Procedure with Diagnostic Trouble Code (DTC).>
C1342	RL PRESSURE REDUCING VALVE	Rear outlet solenoid valve LH malfunction in VDCCM&H/U	<Ref. to VDC(diag)-52, DTC C1342 RL PRESSURE REDUCING VALVE, Diagnostic Procedure with Diagnostic Trouble Code (DTC).>

DTC	Item	Content of diagnosis	Reference
C1351	NORMAL OPENING VALVE 1	Secondary cut valve malfunction in VDCCM&H/U	<Ref. to VDC(diag)-52, DTC C1351 NORMAL OPENING VALVE 1, Diagnostic Procedure with Diagnostic Trouble Code (DTC).>
C1352	NORMAL OPENING VALVE 2	Primary cut valve malfunction in VDCCM&H/U	<Ref. to VDC(diag)-52, DTC C1352 NORMAL OPENING VALVE 2, Diagnostic Procedure with Diagnostic Trouble Code (DTC).>
C1361	NORMAL CLOSING VALVE 1	Secondary suction valve malfunction in VDCCM&H/U	<Ref. to VDC(diag)-52, DTC C1361 NORMAL CLOSING VALVE 1, Diagnostic Procedure with Diagnostic Trouble Code (DTC).>
C1362	NORMAL CLOSING VALVE 2	Primary suction valve malfunction in VDCCM&H/U	<Ref. to VDC(diag)-53, DTC C1362 NORMAL CLOSING VALVE 2, Diagnostic Procedure with Diagnostic Trouble Code (DTC).>
C1411	ELECTRICAL CONTROL MODULE	VDC control module malfunction	<Ref. to VDC(diag)-55, DTC C1411 ELECTRICAL CONTROL MODULE, Diagnostic Procedure with Diagnostic Trouble Code (DTC).>
C1412	SELECTED PARAMETER	VDC control module parameter failure	<Ref. to VDC(diag)-57, DTC C1412 SELECTED PARAMETER, Diagnostic Procedure with Diagnostic Trouble Code (DTC).>
C1413	POWER SUPPLY VOLTAGE	Power voltage malfunction	<Ref. to VDC(diag)-58, DTC C1413 POWER SUPPLY VOLTAGE, Diagnostic Procedure with Diagnostic Trouble Code (DTC).>
C1422	VDC INTERRUPTION FOR ENGINE CONVENIENCE	VDC interrupted due to some reasons of the engine	<Ref. to VDC(diag)-60, DTC C1422 VDC INTERRUPTION FOR ENGINE CONVENIENCE, Diagnostic Procedure with Diagnostic Trouble Code (DTC).>
C1423	DIFFERENT ECU SPECIFICATIONS	Different VDC control module specification	<Ref. to VDC(diag)-61, DTC C1423 DIFFERENT ECU SPECIFICATIONS, Diagnostic Procedure with Diagnostic Trouble Code (DTC).>
C1424	ECM	Engine control module is faulty	<Ref. to VDC(diag)-63, DTC C1424 ECM, Diagnostic Procedure with Diagnostic Trouble Code (DTC).>
C1431	AT	Transmission control module is faulty	<Ref. to VDC(diag)-64, DTC C1431 AT, Diagnostic Procedure with Diagnostic Trouble Code (DTC).>
C1511	VALVE RELAY	Defective valve relay	<Ref. to VDC(diag)-65, DTC C1511 VALVE RELAY, Diagnostic Procedure with Diagnostic Trouble Code (DTC).>
C1521	MOTOR RELAY	Motor relay malfunction	<Ref. to VDC(diag)-67, DTC C1521 MOTOR RELAY, Diagnostic Procedure with Diagnostic Trouble Code (DTC).>
C1531	BLS OFF STUCK	Stop light switch malfunction	<Ref. to VDC(diag)-69, DTC C1531 BLS OFF STUCK, Diagnostic Procedure with Diagnostic Trouble Code (DTC).>
C1532	BLS ON STUCK	Stop light switch malfunction	<Ref. to VDC(diag)-71, DTC C1532 BLS ON STUCK, Diagnostic Procedure with Diagnostic Trouble Code (DTC).>
C1571	BRAKE LAMP RELAY OFF STUCK	Brake light relay malfunction	<Ref. to VDC(diag)-73, DTC C1571 BRAKE LAMP RELAY OFF STUCK, Diagnostic Procedure with Diagnostic Trouble Code (DTC).>
C1711	STEERING ANGLE SENSOR	Steering angle sensor malfunction	<Ref. to VDC(diag)-75, DTC C1711 STEERING ANGLE SENSOR, Diagnostic Procedure with Diagnostic Trouble Code (DTC).>
C1721	YAW RATE SENSOR	Defective yaw rate sensor	<Ref. to VDC(diag)-78, DTC C1721 YAW RATE SENSOR, Diagnostic Procedure with Diagnostic Trouble Code (DTC).>

DTC	Item	Content of diagnosis	Reference
C1732	LATERAL G SENSOR	Defective lateral G sensor	<Ref. to VDC(diag)-80, DTC C1732 LATERAL G SENSOR, Diagnostic Procedure with Diagnostic Trouble Code (DTC).>
C1733	LONGITUDINAL G SENSOR	Defective longitudinal G sensor	<Ref. to VDC(diag)-82, DTC C1733 LONGITUDINAL G SENSOR, Diagnostic Procedure with Diagnostic Trouble Code (DTC).>
C1741	PRESSURE SENSOR	Defective pressure sensor	<Ref. to VDC(diag)-83, DTC C1741 PRESSURE SENSOR, Diagnostic Procedure with Diagnostic Trouble Code (DTC).>
C1742	WHEEL CYLINDER PRESSURE SENSOR	Defective pressure sensor	<Ref. to VDC(diag)-84, DTC C1742 WHEEL CYLINDER PRESSURE SENSOR, Diagnostic Procedure with Diagnostic Trouble Code (DTC).>
C1811	SYSTEM	System malfunction	<Ref. to VDC(diag)-85, DTC C1811 SYSTEM, Diagnostic Procedure with Diagnostic Trouble Code (DTC).>
C1921	PARKING POSITION SWITCH CIRCUIT	Parking switch malfunction	<Ref. to VDC(diag)-87, DTC C1921 PARKING POSITION SWITCH CIRCUIT, Diagnostic Procedure with Diagnostic Trouble Code (DTC).>
C1922	HILL HOLD SWITCH CIRCUIT	Hill hold switch malfunction	<Ref. to VDC(diag)-89, DTC C1922 HILL HOLD SWITCH CIRCUIT, Diagnostic Procedure with Diagnostic Trouble Code (DTC).>
C1935	IGNITION SWITCH CIRCUIT	No match of IGN input	<Ref. to VDC(diag)-91, DTC C1935 IGNITION SWITCH CIRCUIT, Diagnostic Procedure with Diagnostic Trouble Code (DTC).>
C1942	POWER SUPPLY VOLTAGE	Electronic parking brake power supply voltage is faulty	<Ref. to VDC(diag)-93, DTC C1942 POWER SUPPLY VOLTAGE, Diagnostic Procedure with Diagnostic Trouble Code (DTC).>
C1951	ACTUATOR	Electronic parking brake actuator line is faulty	<Ref. to VDC(diag)-95, DTC C1951 ACTUATOR, Diagnostic Procedure with Diagnostic Trouble Code (DTC).>
C1954	RH ACTUATOR	Electronic parking brake RH actuator is faulty	<Ref. to VDC(diag)-97, DTC C1954 RH ACTUATOR, Diagnostic Procedure with Diagnostic Trouble Code (DTC).>
C1955	LH ACTUATOR	Electronic parking brake LH actuator is faulty	<Ref. to VDC(diag)-99, DTC C1955 LH ACTUATOR, Diagnostic Procedure with Diagnostic Trouble Code (DTC).>
C1956	RH ACTUATOR CIRCUIT	Defective RH drive circuit	<Ref. to VDC(diag)-101, DTC C1956 RH ACTUATOR CIRCUIT, Diagnostic Procedure with Diagnostic Trouble Code (DTC).>
C1957	LH ACTUATOR CIRCUIT	Defective LH drive circuit	<Ref. to VDC(diag)-103, DTC C1957 LH ACTUATOR CIRCUIT, Diagnostic Procedure with Diagnostic Trouble Code (DTC).>
C1971	CLUTCH SENSOR	Defective clutch sensor	<Ref. to VDC(diag)-105, DTC C1971 CLUTCH SENSOR, Diagnostic Procedure with Diagnostic Trouble Code (DTC).>
C1983	HIGH FREQUENCY OPERATION	Electronic parking brake operation is too frequent	<Ref. to VDC(diag)-107, DTC C1983 HIGH FREQUENCY OPERATION, Diagnostic Procedure with Diagnostic Trouble Code (DTC).>
C1984	BRAKE MAINTENANCE MODE	Executing brake maintenance mode	<Ref. to VDC(diag)-108, DTC C1984 BRAKE MAINTENANCE MODE, Diagnostic Procedure with Diagnostic Trouble Code (DTC).>
C1985	FORBIDDEN STATE OF DYNAMIC ACTUATOR OPERATION	Electronic parking brake actuator is faulty	<Ref. to VDC(diag)-109, DTC C1985 FORBIDDEN STATE OF DYNAMIC ACTUATOR OPERATION, Diagnostic Procedure with Diagnostic Trouble Code (DTC).>

DTC	Item	Content of diagnosis	Reference
U0073	CAN FAILURE, BUS 'OFF' DETECTION	Defective CAN communication	<Ref. to VDC(diag)-109, DTC U0073 CONTROL MODULE COMMUNICATION BUS OFF, Diagnostic Procedure with Diagnostic Trouble Code (DTC).>
U0100	LOST COMMUNICATION WITH ECM/PCM "A"	Defective CAN communication	<Ref. to VDC(diag)-109, DTC U0100 LOST COMMUNICATION WITH ECM/PCM "A", Diagnostic Procedure with Diagnostic Trouble Code (DTC).>
U0101	LOST COMMUNICATION WITH TCM	Defective CAN communication	<Ref. to VDC(diag)-109, DTC U0101 LOST COMMUNICATION WITH TCM, Diagnostic Procedure with Diagnostic Trouble Code (DTC).>
U0126	LOST COMMUNICATION WITH STEERING ANGLE SENSOR MODULE	Defective CAN communication	<Ref. to VDC(diag)-109, DTC U0126 LOST COMMUNICATION WITH STEERING ANGLE SENSOR MODULE, Diagnostic Procedure with Diagnostic Trouble Code (DTC).>
U0140	LOST COMMUNICATION WITH BODY CONTROL MODULE	Defective CAN communication	<Ref. to VDC(diag)-109, DTC U0140 LOST COMMUNICATION WITH BODY CONTROL MODULE, Diagnostic Procedure with Diagnostic Trouble Code (DTC).>
U0155	LOST COMMUNICATION WITH INSTRUMENT PANEL CLUSTER (IPC) CONTROL MODULE	Defective CAN communication	<Ref. to VDC(diag)-109, DTC U0155 LOST COMMUNICATION WITH INSTRUMENT PANEL CLUSTER (IPC) CONTROL MODULE, Diagnostic Procedure with Diagnostic Trouble Code (DTC).>
U0401	INVALID DATA RECEIVED FROM ECM/PCM "A"	Defective CAN communication	<Ref. to VDC(diag)-110, DTC U0401 INVALID DATA RECEIVED FROM ECM/PCM "A", Diagnostic Procedure with Diagnostic Trouble Code (DTC).>
U0402	INVALID DATA RECEIVED FROM TCM	Defective CAN communication	<Ref. to VDC(diag)-110, DTC U0402 INVALID DATA RECEIVED FROM TCM, Diagnostic Procedure with Diagnostic Trouble Code (DTC).>
U0422	INVALID DATA RECEIVED FROM BODY CONTROL MODULE	Defective CAN communication	<Ref. to VDC(diag)-110, DTC U0422 INVALID DATA RECEIVED FROM BODY CONTROL MODULE, Diagnostic Procedure with Diagnostic Trouble Code (DTC).>
U0423	INVALID DATA RECEIVED FROM INSTRUMENT PANEL CLUSTER CONTROL MODULE	Defective CAN communication	<Ref. to VDC(diag)-110, DTC U0423 INVALID DATA RECEIVED FROM INSTRUMENT PANEL CLUSTER CONTROL MODULE, Diagnostic Procedure with Diagnostic Trouble Code (DTC).>
U0428	INVALID DATA RECEIVED FROM STEERING ANGLE SENSOR MODULE	Defective CAN communication	<Ref. to VDC(diag)-110, DTC U0428 INVALID DATA RECEIVED FROM STEERING ANGLE SENSOR MODULE, Diagnostic Procedure with Diagnostic Trouble Code (DTC).>
U1235	LOST COMMUNICATION WITH EyeSight	Defective CAN communication	<Ref. to VDC(diag)-110, DTC U1235 LOST COMMUNICATION WITH EyeSight, Diagnostic Procedure with Diagnostic Trouble Code (DTC).>
U1433	INVALID DATA RECEIVED FROM EyeSight	Defective CAN communication	<Ref. to VDC(diag)-110, DTC U1433 INVALID DATA RECEIVED FROM EyeSight, Diagnostic Procedure with Diagnostic Trouble Code (DTC).>

12.Diagnostic Procedure with Diagnostic Trouble Code (DTC)

A: DTC C1211 FRONT RIGHT ABS SENSOR CIRCUIT

NOTE:
For the diagnostic procedure, refer to “DTC C1241 REAR LEFT ABS SENSOR CIRCUIT”. <Ref. to VDC(diag)-45, DTC C1241 REAR LEFT ABS SENSOR CIRCUIT, Diagnostic Procedure with Diagnostic Trouble Code (DTC).>

B: DTC C1221 FRONT LEFT ABS SENSOR CIRCUIT

NOTE:
For the diagnostic procedure, refer to “DTC C1241 REAR LEFT ABS SENSOR CIRCUIT”. <Ref. to VDC(diag)-45, DTC C1241 REAR LEFT ABS SENSOR CIRCUIT, Diagnostic Procedure with Diagnostic Trouble Code (DTC).>

C: DTC C1231 REAR RIGHT ABS SENSOR CIRCUIT

NOTE:
For the diagnostic procedure, refer to “DTC C1241 REAR LEFT ABS SENSOR CIRCUIT”. <Ref. to VDC(diag)-45, DTC C1241 REAR LEFT ABS SENSOR CIRCUIT, Diagnostic Procedure with Diagnostic Trouble Code (DTC).>

D: DTC C1241 REAR LEFT ABS SENSOR CIRCUIT

DTC DETECTING CONDITION:

Judge as malfunction when the current value of the wheel speed sensor is out of normal range for a predetermined time or more.

TROUBLE SYMPTOM:

- ABS does not operate.
- VDC does not operate.
- Hill hold does not function.
- EyeSight does not operate. (Models with EyeSight)

NOTE:

This DTC may be stored when the wheel speed sensor connector is disconnected regardless of the ignition switch condition (ON/OFF). Perform the Clear Memory Mode after diagnosis if a DTC is recorded. <Ref. to VDC(diag)-27, Clear Memory Mode.>

WIRING DIAGRAM:

NOTE:
For the coupling connector, refer to “WIRING SYSTEM”.
Vehicle dynamics control system <Ref. to WI-360, Vehicle Dynamics Control System.>

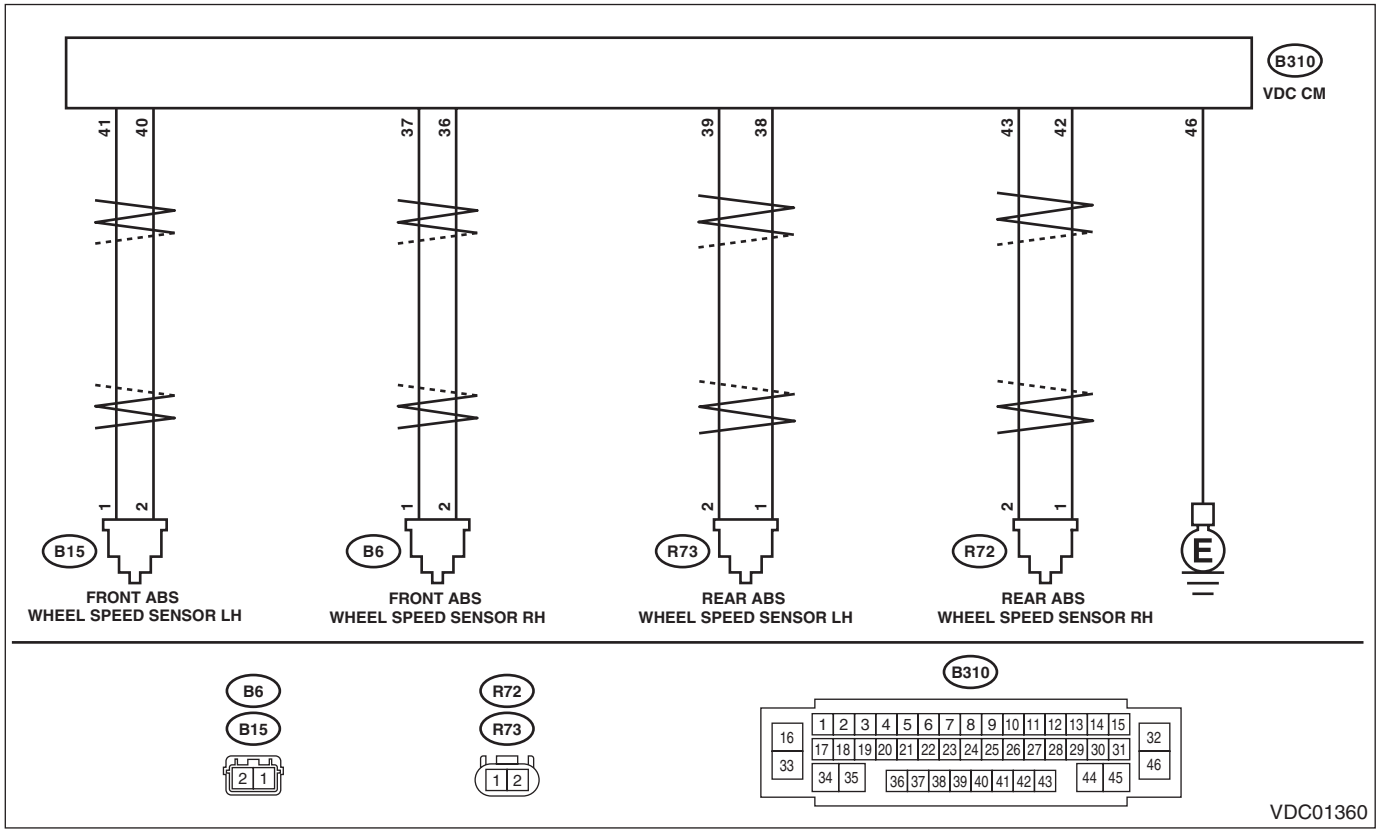

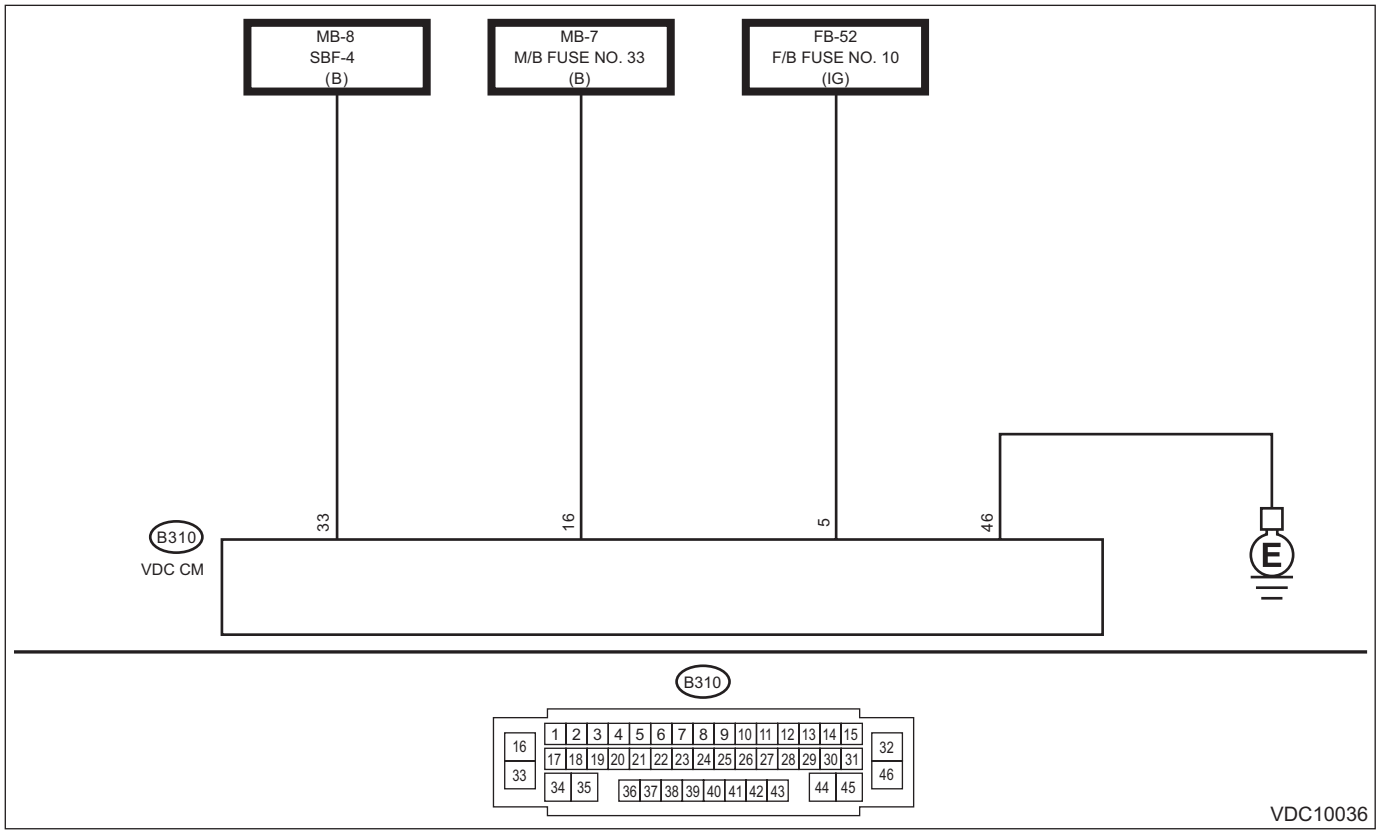

	Step	Check	Yes	No
1	**CHECK POOR CONTACT OF CONNECTOR.** Check if there is poor contact between VDCCM&H/U and ABS wheel speed sensor.	Is there poor contact?	Repair the connector.	Go to step **2**.
2	**CHECK HARNESS CONNECTOR BETWEEN VDCCM&H/U AND ABS WHEEL SPEED SENSOR (CHECK FOR OPEN CIRCUIT).** 1) Turn the ignition switch to OFF. 2) Disconnect the connector (B310) from the VDCCM&H/U. 3) Disconnect the connector from ABS wheel speed sensor. 4) Measure the resistance between VDCCM&H/U connector and ABS wheel speed sensor connector. ***Connector & terminal*** ***DTC C1211*** ***(B310) No. 37 — (B6) No. 1:*** ***(B310) No. 36 — (B6) No. 2:*** ***DTC C1221*** ***(B310) No. 41 — (B15) No. 1:*** ***(B310) No. 40 — (B15) No. 2:*** ***DTC C1231*** ***(B310) No. 42 — (R72) No. 1:*** ***(B310) No. 43 — (R72) No. 2:*** ***DTC C1241*** ***(B310) No. 38 — (R73) No. 1:*** ***(B310) No. 39 — (R73) No. 2:***	Is the resistance less than 1 Ω?	Go to step **3**.	Repair the harness connector between VDCCM&H/U and ABS wheel speed sensor.
3	**CHECK GROUND SHORT OF HARNESS.** Measure the resistance between VDCCM&H/U connector and chassis ground. ***Connector & terminal*** ***DTC C1211*** ***(B310) No. 36 — Chassis ground:*** ***DTC C1221*** ***(B310) No. 40 — Chassis ground:*** ***DTC C1231*** ***(B310) No. 42 — Chassis ground:*** ***DTC C1241*** ***(B310) No. 38 — Chassis ground:***	Is the resistance 1 MΩ or more?	Go to step **4**.	Repair the harness connector between VDCCM&H/U and ABS wheel speed sensor.
4	**CHECK ABS WHEEL SPEED SENSOR POWER SUPPLY CIRCUIT.** 1) Connect the VDCCM&H/U connector. 2) Connect the ABS wheel speed sensor connector. 3) Turn the ignition switch to ON. 4) Measure the voltage between ABS wheel speed sensor connector and chassis ground. ***Connector & terminal*** ***DTC C1211*** ***(B6) No. 1 (+) — Chassis ground (–):*** ***DTC C1221*** ***(B15) No. 1 (+) — Chassis ground (–):*** ***DTC C1231*** ***(R72) No. 2 (+) — Chassis ground (–):*** ***DTC C1241*** ***(R73) No. 2 (+) — Chassis ground (–):***	Is the voltage 5 — 16 V?	Go to step **6**.	Go to step **5**.

	Step	Check	Yes	No
5	**CHECK VDCCM&H/U POWER SUPPLY CIRCUIT.** 1) Turn the ignition switch to OFF. 2) Disconnect the VDCCM&H/U connector. 3) Turn the ignition switch to ON. 4) Measure the voltage between VDCCM&H/U connector terminals. ***Connector & terminal*** ***(B310) No. 5 (+) — (B310) No. 46 (–):*** ***(B310) No. 16 (+) — (B310) No. 46 (–):*** ***(B310) No. 33 (+) — (B310) No. 46 (–):***	Is the voltage 10 — 15 V?	Go to step **6**.	Check the generator, battery and VDCCM&H/U power supply circuit.
6	**CHECK ABS WHEEL SPEED SENSOR SIGNAL.** 1) Prepare an oscilloscope. 2) Check the ABS wheel speed sensor. <Ref. to VDC-31, CHECK ABS WHEEL SPEED SENSOR UNIT, INSPECTION, Front ABS Wheel Speed Sensor.>	Is the pattern the same waveform as shown in the figure?	Go to step **7**.	Replace the ABS wheel speed sensor. <Ref. to VDC-29, Front ABS Wheel Speed Sensor.>
7	**CHECK VDCCM&H/U.** 1) Connect all connectors. 2) Perform the Clear Memory Mode. <Ref. to VDC(diag)-27, Clear Memory Mode.> 3) Perform the Inspection Mode. <Ref. to VDC(diag)-26, Inspection Mode.> 4) Read the DTC. <Ref. to VDC(diag)-25, Read Diagnostic Trouble Code (DTC).>	Is the same DTC displayed?	Replace the VDCCM&H/U. <Ref. to VDC-8, VDC Control Module and Hydraulic Control Unit (VDCCM&H/U).>	Go to step **8**.
8	**CHECK DETECTION OF OTHER DTCS FOR VDC.** <Ref. to VDC(diag)-25, Read Diagnostic Trouble Code (DTC).>	Is any other DTC displayed?	Perform the diagnosis according to DTC. <Ref. to VDC(diag)-40, List of Diagnostic Trouble Code (DTC).>	Currently, it is normal. There may have been a poor contact in the harness and connector or a temporarily noise interference.

E: DTC C1212 FRONT RIGHT ABS SENSOR SIGNAL

NOTE:
For the diagnostic procedure, refer to “DTC C1242 REAR LEFT ABS SENSOR SIGNAL”. <Ref. to VDC(diag)-49, DTC C1242 REAR LEFT ABS SENSOR SIGNAL, Diagnostic Procedure with Diagnostic Trouble Code (DTC).>

F: DTC C1222 FRONT LEFT ABS SENSOR SIGNAL

NOTE:
For the diagnostic procedure, refer to “DTC C1242 REAR LEFT ABS SENSOR SIGNAL”. <Ref. to VDC(diag)-49, DTC C1242 REAR LEFT ABS SENSOR SIGNAL, Diagnostic Procedure with Diagnostic Trouble Code (DTC).>

G: DTC C1232 REAR RIGHT ABS SENSOR SIGNAL

NOTE:
For the diagnostic procedure, refer to “DTC C1242 REAR LEFT ABS SENSOR SIGNAL”. <Ref. to VDC(diag)-49, DTC C1242 REAR LEFT ABS SENSOR SIGNAL, Diagnostic Procedure with Diagnostic Trouble Code (DTC).>

H: DTC C1242 REAR LEFT ABS SENSOR SIGNAL

DTC DETECTING CONDITION:

- A fault is detected if the time of decompression or hold exceeds the predetermined time.
- A fault is detected if noise of the wheel speed sensor signal is detected.
- A fault is detected if the wheel speed sensor signal is lost, or the wheel speed sensor signal continuously indicates significantly low speed by calculating the difference between maximum speed and minimum speed among the four wheels.
- A fault is detected if the wheel speed sensor signal continuously indicates excessively high or low speed.
- A fault is detected if the wheel speed sensor signal changes irregularly.
- A fault is detected if the wheel speed sensor signal drops cyclically.

TROUBLE SYMPTOM:

- ABS does not operate.
- VDC does not operate.
- Hill hold does not function.
- EyeSight does not operate. (Models with EyeSight)

NOTE:
This DTC may be stored when the wheel speed sensor connector is disconnected regardless of the ignition switch condition (ON/OFF). Perform the Clear Memory Mode after diagnosis if a DTC is recorded. <Ref. to VDC(diag)-27, Clear Memory Mode.>

	Step	Check	Yes	No
1	**CHECK OUTPUT OF ABS WHEEL SPEED SENSOR USING SUBARU SELECT MONITOR.** 1) Using the Subaru Select Monitor, select “Data monitor” and “Freeze frame data”. <Ref. to VDC(diag)-19, READ CURRENT DATA, OPERATION, Subaru Select Monitor.> <Ref. to VDC(diag)-21, READ FREEZE FRAME DATA, OPERATION, Subaru Select Monitor.> 2) Read the defective ABS wheel speed sensor output.	During acceleration/deceleration when the steering wheel is in the straight-ahead position, does the speed indicated on the data monitor change in response to the speedometer reading? In addition, are the wheel speed values of the freeze frame data for 4 wheels almost the same?	Go to step **2**.	Go to step **7**.
2	**CHECK POOR CONTACT OF CONNECTOR.** Turn the ignition switch to OFF.	Is there poor contact of connectors between VDCCM&H/U and ABS wheel speed sensor?	Repair the connector.	Go to step **3**.
3	**CHECK CAUSE OF SIGNAL NOISE.** Make sure the radio wave devices and electronic components are installed correctly.	Are the radio wave devices and electronic components installed correctly?	Go to step **4**.	Install the radio wave devices and electronic components properly.
4	**CHECK CAUSE OF SIGNAL NOISE.** Check if the noise sources (such as an antenna) are installed near the sensor harness.	Are noise sources installed?	Install the noise sources apart from sensor harness.	Go to step **5**.
5	**CHECK VDCCM&H/U.** 1) Connect all connectors. 2) Perform the Clear Memory Mode. <Ref. to VDC(diag)-27, Clear Memory Mode.> 3) Perform the Inspection Mode. <Ref. to VDC(diag)-26, Inspection Mode.> 4) Read the DTC. <Ref. to VDC(diag)-25, Read Diagnostic Trouble Code (DTC).>	Is the same DTC displayed?	Replace the VDCCM&H/U. <Ref. to VDC-8, VDC Control Module and Hydraulic Control Unit (VDCCM&H/U).>	Go to step **6**.
6	**CHECK DETECTION OF OTHER DTCS FOR VDC.** <Ref. to VDC(diag)-25, Read Diagnostic Trouble Code (DTC).>	Is any other DTC displayed?	Perform the diagnosis according to DTC. <Ref. to VDC(diag)-40, List of Diagnostic Trouble Code (DTC).>	Currently, it is normal. There may have been a poor contact in the harness and connector or a temporarily noise interference.

Step		Check	Yes	No
7	**CHECK INSTALLATION OF ABS WHEEL SPEED SENSOR.**	Is the ABS wheel speed sensor installation bolt tightened to 7.5 N·m (0.76 kgf-m, 5.5 ft-lb)?	Go to step **8**.	Tighten the ABS wheel speed sensor installation bolts.
8	**CHECK ABS WHEEL SPEED SENSOR SIGNAL.** 1) Prepare an oscilloscope. 2) Check the ABS wheel speed sensor. <Ref. to VDC-31, CHECK ABS WHEEL SPEED SENSOR UNIT, INSPECTION, Front ABS Wheel Speed Sensor.>	Does the oscilloscope indicate the waveform pattern like shown in the figure when the tire is slowly turned? Does the oscilloscope indication repeat the waveform pattern like shown in the figure when the tire is slowly turned in equal speed for one rotation or more?	Go to step **10**.	Go to step **9**.
9	**CHECK ABS WHEEL SPEED SENSOR OR MAGNETIC ENCODER.**	Are there foreign matter, breakage or damage at the tip of ABS wheel speed sensor or magnetic encoder?	Remove dirt thoroughly. Also replace the ABS wheel speed sensor or magnetic encoder as a unit with hub unit bearing if it is broken or damaged.	Go to step **10**.
10	**CHECK CAUSE OF SIGNAL NOISE.** Make sure the radio wave devices and electronic components are installed correctly.	Are the radio wave devices and electronic components installed correctly?	Go to step **11**.	Install the radio wave devices and electronic components properly.
11	**CHECK CAUSE OF SIGNAL NOISE.** Check if the noise sources (such as an antenna) are installed near the sensor harness.	Are noise sources installed?	Install the noise sources apart from sensor harness.	Go to step **12**.
12	**CHECK VDCCM&H/U.** 1) Connect all connectors. 2) Perform the Clear Memory Mode. <Ref. to VDC(diag)-27, Clear Memory Mode.> 3) Perform the Inspection Mode. <Ref. to VDC(diag)-26, Inspection Mode.> 4) Read the DTC. <Ref. to VDC(diag)-25, Read Diagnostic Trouble Code (DTC).>	Is the same DTC displayed?	Go to step **13**.	Go to step **14**.
13	**CHECK FREEZE FRAME DATA OF ABS WHEEL SPEED SENSOR USING SUBARU SELECT MONITOR.** 1) Using the Subaru Select Monitor, select “Freeze Frame Data”. <Ref. to VDC(diag)-21, READ FREEZE FRAME DATA, OPERATION, Subaru Select Monitor.> 2) Read the ABS wheel speed sensor output.	Is the ABS wheel speed sensor output different compared with other wheels?	Replace the ABS wheel speed sensor which has a difference. <Ref. to VDC-29, Front ABS Wheel Speed Sensor.> <Ref. to VDC-32, Rear ABS Wheel Speed Sensor.>	Replace the VDCCM&H/U. <Ref. to VDC-8, VDC Control Module and Hydraulic Control Unit (VDCCM&H/U).>

	Step	Check	Yes	No
14	**CHECK DETECTION OF OTHER DTCS FOR VDC.** <Ref. to VDC(diag)-25, Read Diagnostic Trouble Code (DTC).>	Is any other DTC displayed?	Perform the diagnosis according to DTC. <Ref. to VDC(diag)-40, List of Diagnostic Trouble Code (DTC).>	Currently, it is normal. There may have been a poor contact in the harness and connector or a temporarily noise interference. NOTE: Though the ABS warning light may remain on at this time, this is normal. Drive the vehicle at 40 km/h (25 MPH) or more in order to turn ABS warning light off. Be sure to drive the vehicle and check that the warning light goes off.

I: DTC C1311 FR HOLD VALVE

NOTE:
For the diagnostic procedure, refer to “DTC C1362 NORMAL CLOSING VALVE 2 MALFUNCTION”. <Ref. to VDC(diag)-53, DTC C1362 NORMAL CLOSING VALVE 2, Diagnostic Procedure with Diagnostic Trouble Code (DTC).>

J: DTC C1312 FR PRESSURE REDUCING VALVE

NOTE:
For the diagnostic procedure, refer to “DTC C1362 NORMAL CLOSING VALVE 2 MALFUNCTION”. <Ref. to VDC(diag)-53, DTC C1362 NORMAL CLOSING VALVE 2, Diagnostic Procedure with Diagnostic Trouble Code (DTC).>

K: DTC C1321 FL HOLD VALVE

NOTE:
For the diagnostic procedure, refer to “DTC C1362 NORMAL CLOSING VALVE 2 MALFUNCTION”. <Ref. to VDC(diag)-53, DTC C1362 NORMAL CLOSING VALVE 2, Diagnostic Procedure with Diagnostic Trouble Code (DTC).>

L: DTC C1322 FL PRESSURE REDUCING VALVE

NOTE:
For the diagnostic procedure, refer to “DTC C1362 NORMAL CLOSING VALVE 2 MALFUNCTION”. <Ref. to VDC(diag)-53, DTC C1362 NORMAL CLOSING VALVE 2, Diagnostic Procedure with Diagnostic Trouble Code (DTC).>

M: DTC C1331 RR HOLD VALVE

NOTE:
For the diagnostic procedure, refer to “DTC C1362 NORMAL CLOSING VALVE 2 MALFUNCTION”. <Ref. to VDC(diag)-53, DTC C1362 NORMAL CLOSING VALVE 2, Diagnostic Procedure with Diagnostic Trouble Code (DTC).>

N: DTC C1332 RR PRESSURE REDUCING VALVE

NOTE:
For the diagnostic procedure, refer to “DTC C1362 NORMAL CLOSING VALVE 2 MALFUNCTION”. <Ref. to VDC(diag)-53, DTC C1362 NORMAL CLOSING VALVE 2, Diagnostic Procedure with Diagnostic Trouble Code (DTC).>

O: DTC C1341 RL HOLD VALVE

NOTE:
For the diagnostic procedure, refer to “DTC C1362 NORMAL CLOSING VALVE 2 MALFUNCTION”. <Ref. to VDC(diag)-53, DTC C1362 NORMAL CLOSING VALVE 2, Diagnostic Procedure with Diagnostic Trouble Code (DTC).>

P: DTC C1342 RL PRESSURE REDUCING VALVE

NOTE:
For the diagnostic procedure, refer to “DTC C1362 NORMAL CLOSING VALVE 2 MALFUNCTION”. <Ref. to VDC(diag)-53, DTC C1362 NORMAL CLOSING VALVE 2, Diagnostic Procedure with Diagnostic Trouble Code (DTC).>

Q: DTC C1351 NORMAL OPENING VALVE 1

NOTE:
For the diagnostic procedure, refer to “DTC C1362 NORMAL CLOSING VALVE 2 MALFUNCTION”. <Ref. to VDC(diag)-53, DTC C1362 NORMAL CLOSING VALVE 2, Diagnostic Procedure with Diagnostic Trouble Code (DTC).>

R: DTC C1352 NORMAL OPENING VALVE 2

NOTE:
For the diagnostic procedure, refer to “DTC C1362 NORMAL CLOSING VALVE 2 MALFUNCTION”. <Ref. to VDC(diag)-53, DTC C1362 NORMAL CLOSING VALVE 2, Diagnostic Procedure with Diagnostic Trouble Code (DTC).>

S: DTC C1361 NORMAL CLOSING VALVE 1

NOTE:
For the diagnostic procedure, refer to “DTC C1362 NORMAL CLOSING VALVE 2 MALFUNCTION”. <Ref. to VDC(diag)-53, DTC C1362 NORMAL CLOSING VALVE 2, Diagnostic Procedure with Diagnostic Trouble Code (DTC).>

T: DTC C1362 NORMAL CLOSING VALVE 2

DTC DETECTING CONDITION:
A fault is detected if electrical malfunction judgment is generated for VDCH/U solenoid valve.
TROUBLE SYMPTOM:
- ABS does not operate.
- EBD does not operate.
- VDC does not operate.
- Hill hold does not function.
- EyeSight does not operate. (Models with EyeSight)

WIRING DIAGRAM:
Vehicle dynamics control system <Ref. to WI-360, Vehicle Dynamics Control System.>

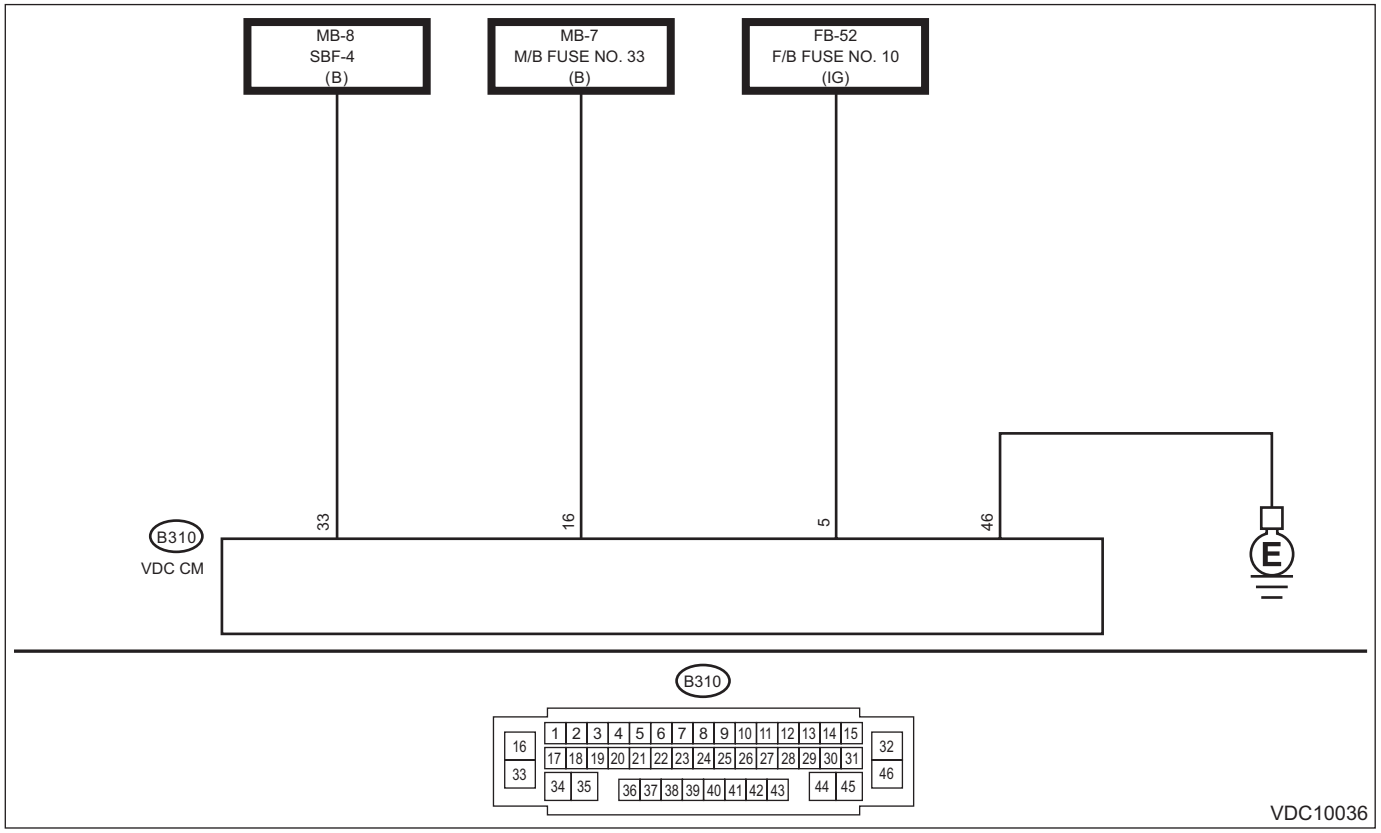

Step		Check	Yes	No
1	**CHECK VDCCM&H/U INPUT VOLTAGE.** 1) Turn the ignition switch to OFF. 2) Disconnect the connector from the VDCCM&H/U. 3) Run the engine at idle. 4) Measure the voltage between VDCCM&H/U connector and chassis ground. ***Connector & terminal*** ***(B310) No. 5 (+) — (B310) No. 46 (–):*** ***(B310) No. 16 (+) — (B310) No. 46 (–):*** ***(B310) No. 33 (+) — (B310) No. 46 (–):***	Is the voltage 10 — 15 V?	Go to step **2**.	Repair the power supply circuit.
2	**CHECK VDCCM&H/U GROUND CIRCUIT (CHECK FOR OPEN CIRCUIT).** 1) Turn the ignition switch to OFF. 2) Measure the resistance between VDCCM&H/U connector and chassis ground. ***Connector & terminal*** ***(B310) No. 46 — Chassis ground:***	Is the resistance less than 10 Ω?	Go to step **3**.	Repair the VDCCM&H/U ground harness.

	Step	Check	Yes	No
3	**CHECK POOR CONTACT OF CONNECTORS.**	Is there poor contact of connector between generator, battery and VDCCM&H/U?	Repair the connector.	Go to step **4**.
4	**CHECK VDCCM&H/U.** 1) Connect all connectors. 2) Perform the Clear Memory Mode. <Ref. to VDC(diag)-27, Clear Memory Mode.> 3) Perform the Inspection Mode. <Ref. to VDC(diag)-26, Inspection Mode.> 4) Read the DTC. <Ref. to VDC(diag)-25, Read Diagnostic Trouble Code (DTC).>	Is the same DTC displayed?	Replace the VDCCM&H/U. <Ref. to VDC-8, VDC Control Module and Hydraulic Control Unit (VDCCM&H/U).>	Go to step **5**.
5	**CHECK DETECTION OF OTHER DTCS FOR VDC.** <Ref. to VDC(diag)-25, Read Diagnostic Trouble Code (DTC).>	Is any other DTC displayed?	Perform the diagnosis according to DTC. <Ref. to VDC(diag)-40, List of Diagnostic Trouble Code (DTC).>	Currently, it is normal. There may have been a poor contact in the harness and connector or a temporarily noise interference.

U: DTC C1411 ELECTRICAL CONTROL MODULE

DTC DETECTING CONDITION:

- Judge as malfunction when ECM internal malfunction is detected.
- This malfunction is stored if the fluid pressure request from the electronic parking brake does not operate.

TROUBLE SYMPTOM:

- ABS does not operate sometimes.
- EBD does not operate sometimes.
- VDC does not operate.
- Hill hold does not function.
- EyeSight does not operate. (Models with EyeSight)

WIRING DIAGRAM:

Vehicle dynamics control system <Ref. to WI-360, Vehicle Dynamics Control System.>

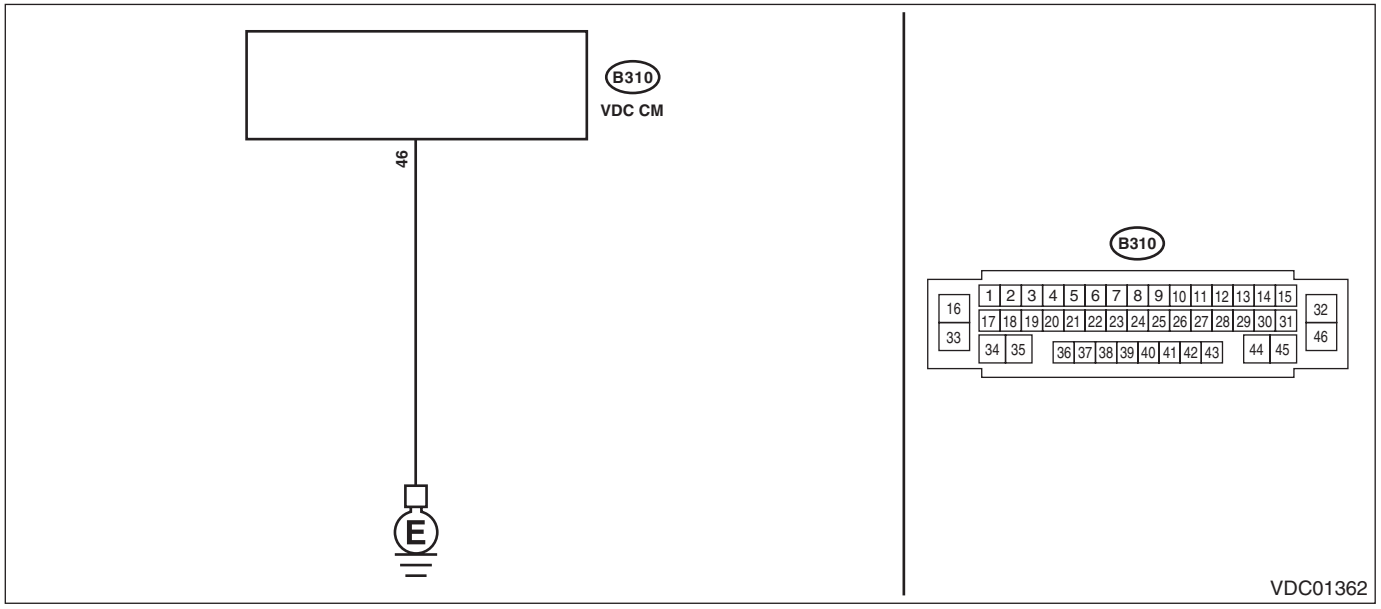

	Step	Check	Yes	No
1	**CHECK VDCCM&H/U GROUND CIRCUIT (CHECK FOR OPEN CIRCUIT).** 1) Turn the ignition switch to OFF. 2) Disconnect the connector from the VDCCM&H/U. 3) Measure the resistance between VDCCM&H/U and chassis ground. ***Connector & terminal (B310) No. 46 — Chassis ground:***	Is the resistance less than 10 Ω?	Go to step **2**.	Repair the VDCCM&H/U ground harness.
2	**CHECK POOR CONTACT OF CONNECTORS.**	Is there poor contact of the connector between the battery, ignition switch and VDCCM&H/U?	Repair the connector.	Go to step **3**.
3	**CHECK CAUSE OF SIGNAL NOISE.**	Are the radio wave devices and electronic components installed correctly?	Go to step **4**.	Install the radio wave devices and electronic components properly.
4	**CHECK CAUSE OF SIGNAL NOISE.**	Is there a noise source (such as an antenna) installed near the sensor harness and VDCCM?	Install the noise sources apart from sensor harness and VDCCM.	Go to step **5**.

	Step	Check	Yes	No
5	**CHECK VDCCM&H/U.** 1) Connect all connectors. 2) Perform the Clear Memory Mode. <Ref. to VDC(diag)-27, Clear Memory Mode.> 3) Perform the Inspection Mode. <Ref. to VDC(diag)-26, Inspection Mode.> 4) Read the DTC. <Ref. to VDC(diag)-25, Read Diagnostic Trouble Code (DTC).>	Is the same DTC displayed?	Replace the VDCCM&H/U. <Ref. to VDC-8, VDC Control Module and Hydraulic Control Unit (VDCCM&H/U).>	Go to step **6**.
6	**CHECK DETECTION OF OTHER DTCS FOR VDC.** <Ref. to VDC(diag)-25, Read Diagnostic Trouble Code (DTC).>	Is any other DTC displayed?	Perform the diagnosis according to DTC. <Ref. to VDC(diag)-40, List of Diagnostic Trouble Code (DTC).>	Currently, it is normal. There may have been a poor contact in the harness and connector or a temporarily noise interference.

V: DTC C1412 SELECTED PARAMETER

DTC DETECTING CONDITION:

- A fault is detected if abnormal set value is found on the vehicle model that were given some parameters.
- A fault is detected if 0 point setting compensation of the sensor is not yet performed.

TROUBLE SYMPTOM:

- ABS does not operate.
- VDC does not operate.
- Hill hold does not function.
- EyeSight does not operate. (Models with EyeSight)

NOTE:
When the VDCCM&H/U is replaced, this DTC may be stored.

	Step	Check	Yes	No
1	**CHECK VDCCM&H/U IDENTIFICATION SYMBOL.** Check the identification symbol attached on the H/U. <Ref. to VDC-2, SPECIFICATION, General Description.>	Is the identification symbol correct?	Go to step **2**.	Replace the VDCCM&H/U. <Ref. to VDC-8, VDC Control Module and Hydraulic Control Unit (VDCCM&H/U).>
2	**CHECK PARAMETER SELECTED IN VDCCM.** <Ref. to VDC-17, VDCCM PARAMETER CHECK, MAINTENANCE MODE, VDC Control Module and Hydraulic Control Unit (VDCCM&H/U).>	Does the parameter registered in the VDCCM match the relevant vehicle?	Go to step **3**.	Select and register the correct parameter. <Ref. to VDC-17, VDCCM PARAMETER SELECTION, MAINTENANCE MODE, VDC Control Module and Hydraulic Control Unit (VDCCM&H/U).>
3	**CHECK SPECIFICATIONS OF OTHER CONTROL MODULES.** Check the specifications of ECM and TCM.	Are the specifications of ECM and TCM the same as vehicle specification?	Replace the VDCCM&H/U. <Ref. to VDC-8, VDC Control Module and Hydraulic Control Unit (VDCCM&H/U).>	Replace the ECM and TCM. <Ref. to FU(H4DO)-82, Engine Control Module (ECM).> <Ref. to FU(H6DO)-83, Engine Control Module (ECM).> <Ref. to CVT(TR580)-159, Transmission Control Module (TCM).> <Ref. to CVT(TR690)-142, Transmission Control Module (TCM).>

W: DTC C1413 POWER SUPPLY VOLTAGE

DTC DETECTING CONDITION:
A fault is detected if the power supply voltage is out of normal range for a predetermined time or more.
TROUBLE SYMPTOM:
- ABS does not operate.
- EBD may not operate.
- VDC does not operate.
- Hill hold does not function.
- EyeSight does not operate. (Models with EyeSight)

NOTE:
Warning lights go off if voltage returns.
WIRING DIAGRAM:
Vehicle dynamics control system <Ref. to WI-360, Vehicle Dynamics Control System.>

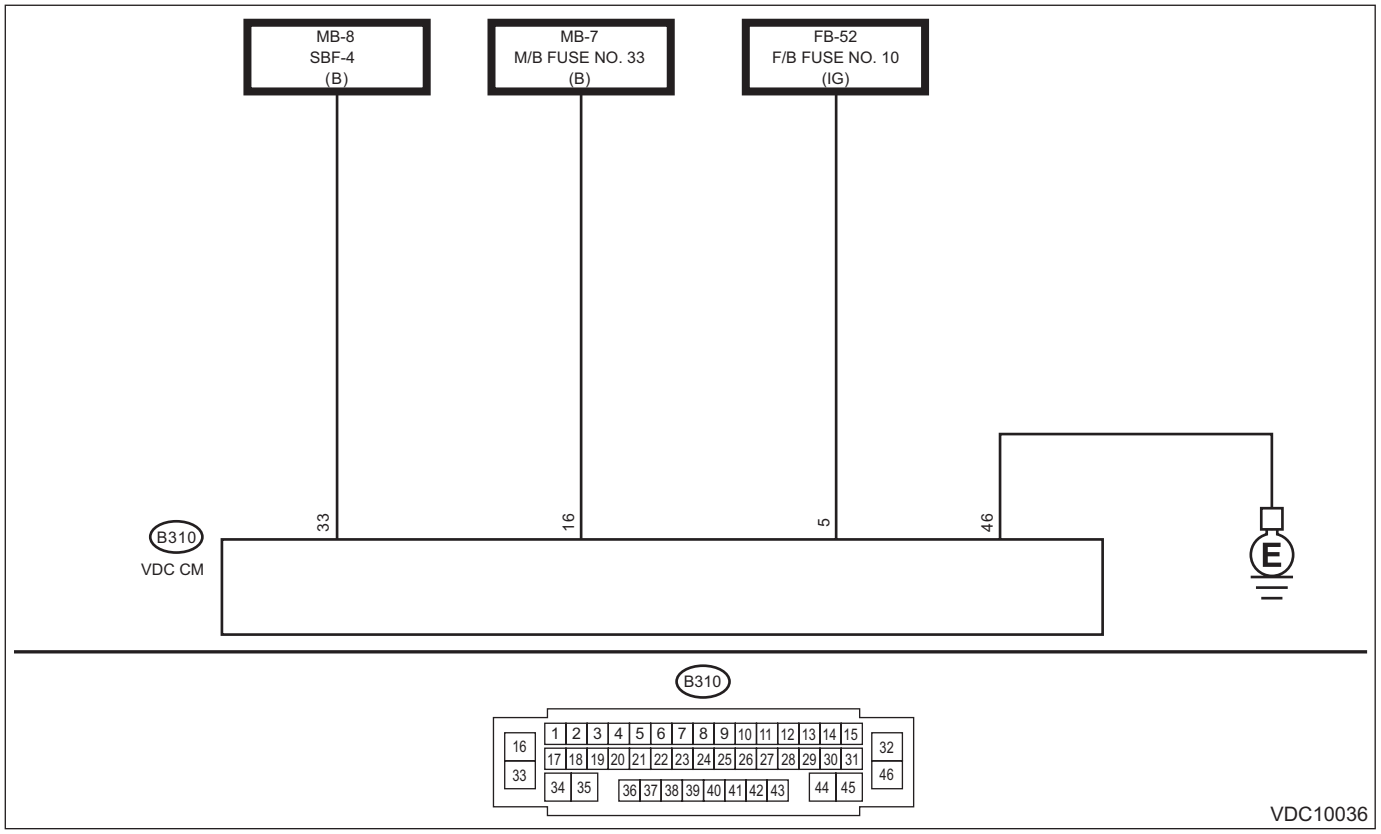

Step		Check	Yes	No
1	**CHECK GENERATOR.** 1) Start the engine. 2) Run the engine at idle after warming up. 3) Measure the voltage between generator terminal B and chassis ground. ***Terminals*** ***Generator terminal B (+) — Chassis ground (–):***	Is the voltage 10 — 15 V?	Go to step **2**.	Repair the generator.
2	**CHECK BATTERY TERMINAL.** Turn the ignition switch to OFF.	Are the positive and negative battery terminals installed tightly?	Go to step **3**.	Install the battery terminal correctly.

	Step	Check	Yes	No
3	**CHECK VDCCM&H/U INPUT VOLTAGE.** 1) Disconnect the connector from the VDCCM&H/U. 2) Run the engine at idle. 3) Operate devices such as headlights, air conditioner, rear defogger, etc. which produce an electrical load. 4) Measure the voltage between VDCCM&H/U connector and chassis ground. ***Connector & terminal*** ***(B310) No. 5 (+) — Chassis ground (–):*** ***(B310) No. 16 (+) — Chassis ground (–):*** ***(B310) No. 33 (+) — Chassis ground (–):***	Is the voltage 10 — 15 V?	Go to step **4**.	Repair the power supply circuit.
4	**CHECK VDCCM&H/U GROUND CIRCUIT (CHECK FOR OPEN CIRCUIT).** 1) Turn the ignition switch to OFF. 2) Measure the resistance between VDCCM&H/U connector and chassis ground. ***Connector & terminal*** ***(B310) No. 46 — Chassis ground:***	Is the resistance less than 10 Ω?	Go to step **5**.	Repair the VDCCM&H/U ground harness circuit.
5	**CHECK POOR CONTACT OF CONNECTORS.**	Is there poor contact of connector between generator, battery and VDCCM&H/U?	Repair the connector.	Go to step **6**.
6	**CHECK VDCCM&H/U.** 1) Connect all connectors. 2) Perform the Clear Memory Mode. <Ref. to VDC(diag)-27, Clear Memory Mode.> 3) Perform the Inspection Mode. <Ref. to VDC(diag)-26, Inspection Mode.> 4) Read the DTC. <Ref. to VDC(diag)-25, Read Diagnostic Trouble Code (DTC).>	Is the same DTC displayed?	Replace the VDCCM&H/U. <Ref. to VDC-8, VDC Control Module and Hydraulic Control Unit (VDCCM&H/U).>	Go to step **7**.
7	**CHECK DETECTION OF OTHER DTCS FOR VDC.** <Ref. to VDC(diag)-25, Read Diagnostic Trouble Code (DTC).>	Is any other DTC displayed?	Perform the diagnosis according to DTC. <Ref. to VDC(diag)-40, List of Diagnostic Trouble Code (DTC).>	Currently, it is normal. There may have been a poor contact in the harness and connector or a temporarily noise interference.

X: DTC C1422 VDC INTERRUPTION FOR ENGINE CONVENIENCE

DTC DETECTING CONDITION:
A fault is detected if engine control prohibition flag from ECM is received.
TROUBLE SYMPTOM:
- VDC does not operate.
- Hill hold does not function.

NOTE:
The warning light goes off if the engine control prohibition flag from ECM returns normally.

	Step	Check	Yes	No
1	**CHECK COOPERATION CONTROL FEASIBILITY OF ECM USING SUBARU SELECT MONITOR.** 1) Start the engine, and run the engine at idle approximately 5 minutes. 2) Using the Subaru Select Monitor, select "Data monitor". <Ref. to VDC(diag)-19, READ CURRENT DATA, OPERATION, Subaru Select Monitor.> 3) Check the «E/G Torque Down Control Stop Flag» displayed on screen.	Does the «E/G Torque Down Control Stop Flag» indicate "1"?	Go to step **4**.	Go to step **2**.
2	**CHECK WARNING LIGHT.** Check whether the VDC warning light illuminates after driving for 1 minute or more at a speed of 10 km/h (6 MPH) or more.	Does the VDC warning light illuminate?	Go to step **3**.	VDC is normal. Perform the Clear Memory Mode. <Ref. to VDC(diag)-27, Clear Memory Mode.> NOTE: DTC may be recorded if cranking is performed during driving.
3	**CHECK POOR CONTACT OF CONNECTORS.**	Is there poor contact of ECM connector?	Repair the connector.	Go to step **4**.
4	**CHECK ENGINE SYSTEM.** Refer to the basic diagnostic procedure of ENGINE (DIAGNOSTICS).	Is ECM normal?	Go to step **5**.	Check the engine system.
5	**CHECK VDCCM&H/U.** 1) Connect all connectors. 2) Perform the Clear Memory Mode. <Ref. to VDC(diag)-27, Clear Memory Mode.> 3) Perform the Inspection Mode. <Ref. to VDC(diag)-26, Inspection Mode.> 4) Read the DTC. <Ref. to VDC(diag)-25, Read Diagnostic Trouble Code (DTC).>	Is the same DTC displayed?	Replace the VDCCM&H/U. <Ref. to VDC-8, VDC Control Module and Hydraulic Control Unit (VDCCM&H/U).>	Go to step **6**.
6	**CHECK DETECTION OF OTHER DTCS FOR VDC.** <Ref. to VDC(diag)-25, Read Diagnostic Trouble Code (DTC).>	Is any other DTC displayed?	Perform the diagnosis according to DTC. <Ref. to VDC(diag)-40, List of Diagnostic Trouble Code (DTC).>	Currently, it is normal. There may have been a poor contact in the harness and connector or a temporarily noise interference.

Y: DTC C1423 DIFFERENT ECU SPECIFICATIONS

DTC DETECTING CONDITION:
A fault is detected if the vehicle type information obtained from ECM via communication is different from the parameter setting information.

TROUBLE SYMPTOM:
- ABS does not operate.
- VDC does not operate.
- Hill hold does not function.
- EyeSight does not operate. (Models with EyeSight)

NOTE:
When parameter selection for VDCCM is improper, this DTC may be memorized.

	Step	Check	Yes	No
1	**CHECK VDCCM&H/U IDENTIFICATION SYMBOL.** Check the identification symbol attached on the H/U. <Ref. to VDC-2, SPECIFICATION, General Description.>	Is the identification symbol correct?	Go to step **2**.	Replace the VDCCM&H/U. <Ref. to VDC-8, VDC Control Module and Hydraulic Control Unit (VDCCM&H/U).>
2	**CHECK PARAMETER SELECTED IN VDCCM.** <Ref. to VDC-17, VDCCM PARAMETER CHECK, MAINTENANCE MODE, VDC Control Module and Hydraulic Control Unit (VDCCM&H/U).>	Does the parameter registered in the VDCCM match the relevant vehicle?	CVT model: Go to step **3**. MT model: Go to step **5**.	Select and register the correct parameter. <Ref. to VDC-17, VDCCM PARAMETER SELECTION, MAINTENANCE MODE, VDC Control Module and Hydraulic Control Unit (VDCCM&H/U).>
3	**CHECK TCM SPECIFICATION.** Check the TCM specification.	Is the specification of TCM same as vehicle specification?	Go to step **4**.	Replace the TCM. <Ref. to CVT(TR580)-159, Transmission Control Module (TCM).> <Ref. to CVT(TR690)-142, Transmission Control Module (TCM).>
4	**CHECK CVT SYSTEM.** 1) Start the engine. 2) Check the DTC in CVT system. <Ref. to CVT(diag)-25, Read Diagnostic Trouble Code (DTC).>	Is DTC of CVT system displayed?	Perform the diagnosis according to DTC. <Ref. to CVT(diag)-44, List of Diagnostic Trouble Code (DTC).>	Go to step **5**.
5	**CHECK ECM SPECIFICATION.** Check the ECM specification.	Is the specification of ECM same as vehicle specification?	Go to step **6**.	Replace the ECM. <Ref. to FU(H4DO)-82, Engine Control Module (ECM).> <Ref. to FU(H6DO)-83, Engine Control Module (ECM).>

	Step	Check	Yes	No
6	**CHECK ENGINE SYSTEM.** 1) Start the engine. 2) Check DTCs of engine system. <Ref. to EN(H4DO)(diag)-63, Read Diagnostic Trouble Code (DTC).> <Ref. to EN(H6DO)(diag)-68, Read Diagnostic Trouble Code (DTC).>	Is engine system DTC displayed?	Perform the diagnosis according to DTC. <Ref. to EN(H4DO)(diag)-102, List of Diagnostic Trouble Code (DTC).> <Ref. to EN(H6DO)(diag)-109, List of Diagnostic Trouble Code (DTC).>	Go to step **7**.
7	**CHECK VDCCM&H/U.** 1) Perform the Clear Memory Mode. <Ref. to VDC(diag)-27, Clear Memory Mode.> 2) Perform the Inspection Mode. <Ref. to VDC(diag)-26, Inspection Mode.> 3) Read the DTC. <Ref. to VDC(diag)-25, Read Diagnostic Trouble Code (DTC).>	Is the same DTC displayed?	Replace the VDCCM&H/U. <Ref. to VDC-8, VDC Control Module and Hydraulic Control Unit (VDCCM&H/U).>	Go to step **8**.
8	**CHECK DETECTION OF OTHER DTCS FOR VDC.** <Ref. to VDC(diag)-25, Read Diagnostic Trouble Code (DTC).>	Is any other DTC displayed?	Perform the diagnosis according to DTC. <Ref. to VDC(diag)-40, List of Diagnostic Trouble Code (DTC).>	Currently, it is normal. There may have been a poor contact in the harness and connector or a temporarily noise interference.

Z: DTC C1424 ECM

DTC DETECTING CONDITION:

A fault is detected if malfunction judgment flag for the engine system is received from ECM for a predetermined time or more.

TROUBLE SYMPTOM:

- Hill hold does not function.
- EyeSight does not operate. (Models with EyeSight)

	Step	Check	Yes	No
1	**CHECK ECM.** 1) Start the engine. 2) Check DTC of ECM. <Ref. to EN(H4DO)(diag)-63, Read Diagnostic Trouble Code (DTC).> <Ref. to EN(H6DO)(diag)-68, Read Diagnostic Trouble Code (DTC).>	Is DTC displayed?	Perform the diagnosis according to DTC. <Ref. to EN(H4DO)(diag)-102, List of Diagnostic Trouble Code (DTC).> <Ref. to EN(H6DO)(diag)-109, List of Diagnostic Trouble Code (DTC).>	Go to step **2**.
2	**CHECK VDCCM&H/U.** 1) Perform the Clear Memory Mode. <Ref. to VDC(diag)-27, Clear Memory Mode.> 2) Perform the Inspection Mode. <Ref. to VDC(diag)-26, Inspection Mode.> 3) Read the DTC. <Ref. to VDC(diag)-25, Read Diagnostic Trouble Code (DTC).>	Is the same DTC displayed?	Replace the VDCCM&H/U. <Ref. to VDC-8, VDC Control Module and Hydraulic Control Unit (VDCCM&H/U).>	Go to step **3**.
3	**CHECK DETECTION OF OTHER DTCS FOR VDC.** <Ref. to VDC(diag)-25, Read Diagnostic Trouble Code (DTC).>	Is any other DTC displayed?	Perform the diagnosis according to DTC. <Ref. to VDC(diag)-40, List of Diagnostic Trouble Code (DTC).>	Currently, it is normal. There may have been a poor contact in the harness and connector or a temporarily noise interference.

AA:DTC C1431 AT

DTC DETECTING CONDITION:
A fault is detected if malfunction flag is received from TCM.
TROUBLE SYMPTOM:
- VDC does not operate.
- Hill hold does not function.
- EyeSight does not operate. (Models with EyeSight)

	Step	Check	Yes	No
1	**CHECK TCM.** 1) Start the engine. 2) Check DTC of TCM. <Ref. to CVT(diag)-25, Read Diagnostic Trouble Code (DTC).>	Is DTC displayed?	Perform the diagnosis according to DTC. <Ref. to CVT(diag)-44, List of Diagnostic Trouble Code (DTC).>	Go to step **2**.
2	**CHECK VDCCM&H/U.** 1) Turn the ignition switch to OFF. 2) After turning the ignition switch to ON for approx. 10 seconds, turn it to OFF. 3) Turn the ignition switch to ON again. 4) Perform the Clear Memory Mode. <Ref. to VDC(diag)-27, Clear Memory Mode.> 5) Perform the Inspection Mode. <Ref. to VDC(diag)-26, Inspection Mode.> 6) Read the DTC. <Ref. to VDC(diag)-25, Read Diagnostic Trouble Code (DTC).>	Is the same DTC displayed?	Replace the VDCCM&H/U. <Ref. to VDC-8, VDC Control Module and Hydraulic Control Unit (VDCCM&H/U).>	Go to step **3**.
3	**CHECK DETECTION OF OTHER DTCS FOR VDC.** <Ref. to VDC(diag)-25, Read Diagnostic Trouble Code (DTC).>	Is any other DTC displayed?	Perform the diagnosis according to DTC. <Ref. to VDC(diag)-40, List of Diagnostic Trouble Code (DTC).>	Currently, it is normal. There may have been a poor contact in the harness and connector or a temporarily noise interference.

AB:DTC C1511 VALVE RELAY

DTC DETECTING CONDITION:

A fault is detected if valve relay drive voltage failure is detected.

TROUBLE SYMPTOM:

- ABS does not operate.
- EBD does not operate.
- VDC does not operate.
- Hill hold does not function.
- EyeSight does not operate. (Models with EyeSight)

WIRING DIAGRAM:

Vehicle dynamics control system <Ref. to WI-360, Vehicle Dynamics Control System.>

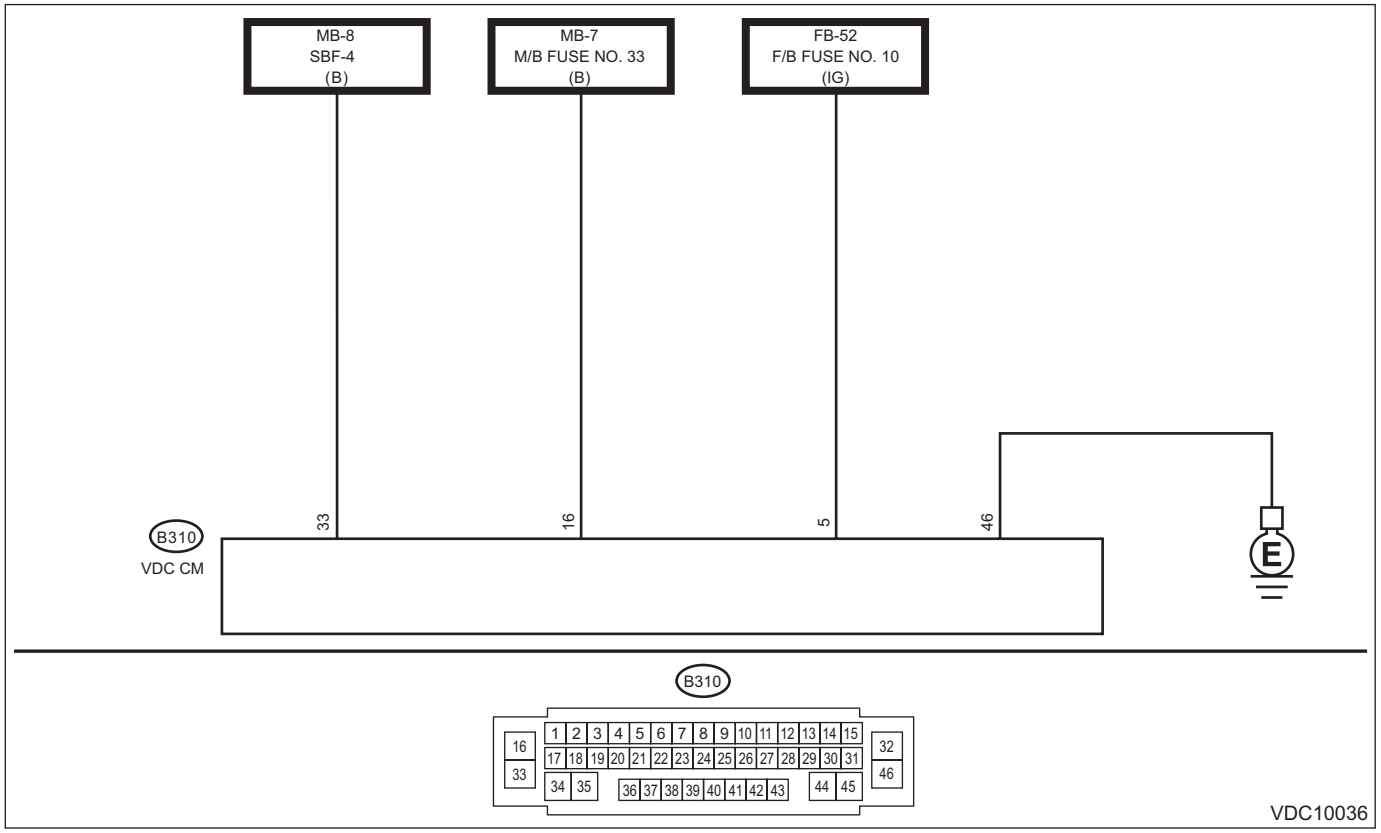

Step		Check	Yes	No
1	**CHECK VDCCM&H/U INPUT VOLTAGE.** 1) Turn the ignition switch to OFF. 2) Disconnect the connector from the VDCCM&H/U. 3) Run the engine at idle. 4) Measure the voltage between VDCCM&H/U connector and chassis ground. ***Connector & terminal*** ***(B310) No. 5 (+) — Chassis ground (–):*** ***(B310) No. 16 (+) — Chassis ground (–):***	Is the voltage 10 — 15 V?	Go to step **2**.	Repair the power supply circuit.
2	**CHECK VDCCM&H/U INPUT VOLTAGE.** Calculate the voltage difference measured in step 1. A: (B310) No. 5 (+) — Chassis ground (–): B: (B310) No. 16 (+) — Chassis ground (–):	Is the voltage difference between A and B 2 V or more?	Repair the power supply circuit.	Go to step **3**.

	Step	Check	Yes	No
3	**CHECK VDCCM&H/U GROUND CIRCUIT (CHECK FOR OPEN CIRCUIT).** 1) Turn the ignition switch to OFF. 2) Measure the resistance between VDCCM&H/U connector and chassis ground. ***Connector & terminal*** ***(B310) No. 46 — Chassis ground:***	Is the resistance less than 10 Ω?	Go to step **4**.	Repair the VDCCM&H/U ground harness.
4	**CHECK POOR CONTACT OF CONNECTORS.**	Is there poor contact of connector between generator, battery and VDCCM&H/U?	Repair the connector.	Go to step **5**.
5	**CHECK VDCCM&H/U.** 1) Connect all connectors. 2) Perform the Clear Memory Mode. <Ref. to VDC(diag)-27, Clear Memory Mode.> 3) Perform the Inspection Mode. <Ref. to VDC(diag)-26, Inspection Mode.> 4) Read the DTC. <Ref. to VDC(diag)-25, Read Diagnostic Trouble Code (DTC).>	Is the same DTC displayed?	Replace the VDCCM&H/U. <Ref. to VDC-8, VDC Control Module and Hydraulic Control Unit (VDCCM&H/U).>	Go to step **6**.
6	**CHECK DETECTION OF OTHER DTCS FOR VDC.** <Ref. to VDC(diag)-25, Read Diagnostic Trouble Code (DTC).>	Is any other DTC displayed?	Perform the diagnosis according to DTC. <Ref. to VDC(diag)-40, List of Diagnostic Trouble Code (DTC).>	Currently, it is normal. There may have been a poor contact in the harness and connector or a temporarily noise interference.

AC:DTC C1521 MOTOR RELAY

DTC DETECTING CONDITION:

A fault is detected if the pump motor supply voltage becomes significantly low when the pump motor is not driven.

TROUBLE SYMPTOM:

- ABS does not operate sometimes.
- VDC does not operate.
- Hill hold does not function.
- EyeSight does not operate. (Models with EyeSight)

WIRING DIAGRAM:

Vehicle dynamics control system <Ref. to WI-360, Vehicle Dynamics Control System.>

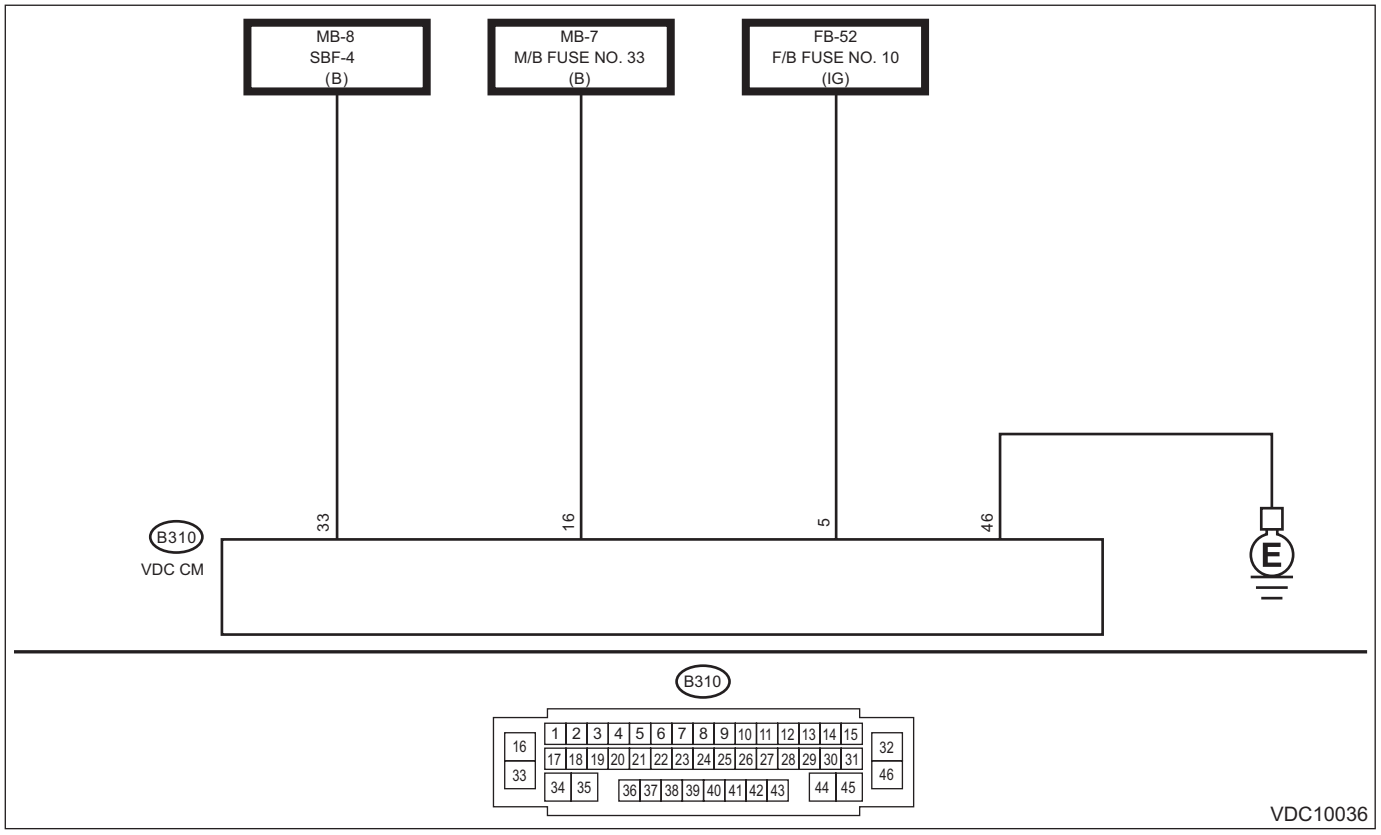

Step		Check	Yes	No
1	**CHECK VDCCM&H/U INPUT VOLTAGE.** 1) Turn the ignition switch to OFF. 2) Disconnect the connector from the VDCCM&H/U. 3) Turn the ignition switch to ON. 4) Measure the voltage between VDCCM&H/U connector and chassis ground. ***Connector & terminal*** ***(B310) No. 5 (+) — Chassis ground (–):*** ***(B310) No. 33 (+) — Chassis ground (–):***	Is the voltage 10 — 15 V?	Go to step **2**.	Repair the VDCCM&H/U power supply circuit.
2	**CHECK VDCCM&H/U INPUT VOLTAGE.** Calculate the voltage difference measured in step 1. A: (B310) No. 5 (+) — Chassis ground (–): B: (B310) No. 33 (+) — Chassis ground (–):	Is the voltage difference between A and B 2 V or more?	Repair the power supply circuit.	Go to step **3**.

	Step	Check	Yes	No
3	**CHECK INSTALLATION OF VDCCM&H/U GROUND.**	Is the VDCCM&H/U ground terminal installation bolt installed correctly?	Go to step **4**.	Install the VDCCM&H/U ground terminal installation bolt correctly.
4	**CHECK VDCCM&H/U GROUND CIRCUIT (CHECK FOR OPEN CIRCUIT).** 1) Turn the ignition switch to OFF. 2) Measure the resistance between VDCCM&H/U connector and chassis ground. ***Connector & terminal*** ***(B310) No. 46 — Chassis ground:***	Is the resistance less than 10 Ω?	Go to step **5**.	Repair the VDCCM&H/U ground harness.
5	**CHECK VDCCM&H/U MOTOR RELAY.** Measure the resistance between VDCCM&H/U terminals. ***Terminals*** ***No. 33 — No. 46:***	Is the resistance 1 MΩ or more?	Go to step **6**.	Replace the VDCCM&H/U. <Ref. to VDC-8, VDC Control Module and Hydraulic Control Unit (VDCCM&H/U).>
6	**CHECK POOR CONTACT OF CONNECTORS.** Turn the ignition switch to OFF.	Is there poor contact of connector between generator, battery and VDCCM&H/U?	Repair the connector.	Go to step **7**.
7	**CHECK VDCCM&H/U.** 1) Connect all connectors. 2) Perform the Clear Memory Mode. <Ref. to VDC(diag)-27, Clear Memory Mode.> 3) Perform the Inspection Mode. <Ref. to VDC(diag)-26, Inspection Mode.> 4) Read the DTC. <Ref. to VDC(diag)-25, Read Diagnostic Trouble Code (DTC).>	Is the same DTC displayed?	Replace the VDCCM&H/U. <Ref. to VDC-8, VDC Control Module and Hydraulic Control Unit (VDCCM&H/U).>	Go to step **8**.
8	**CHECK DETECTION OF OTHER DTCS FOR VDC.** <Ref. to VDC(diag)-25, Read Diagnostic Trouble Code (DTC).>	Is any other DTC displayed?	Perform the diagnosis according to DTC. <Ref. to VDC(diag)-40, List of Diagnostic Trouble Code (DTC).>	Currently, it is normal. There may have been a poor contact in the harness and connector or a temporarily noise interference. NOTE: Though the ABS warning light, and the VDC warning light & VDC indicator light may remain lit at this point, this is normal. Drive the vehicle at 40 km/h (25 MPH) or more in order to turn off the ABS warning light, and the VDC warning light & VDC indicator light. Be sure to drive the vehicle and check that the warning light goes off.

AD:DTC C1531 BLS OFF STUCK

DTC DETECTING CONDITION:

A fault is detected if stop light switch signal is OFF for a predetermined time or more with the pressure signal of the pressure sensor high.

TROUBLE SYMPTOM:

- VDC does not operate.
- Hill hold does not function.
- EyeSight does not operate. (Models with EyeSight)

WIRING DIAGRAM:

Vehicle dynamics control system <Ref. to WI-360, Vehicle Dynamics Control System.>

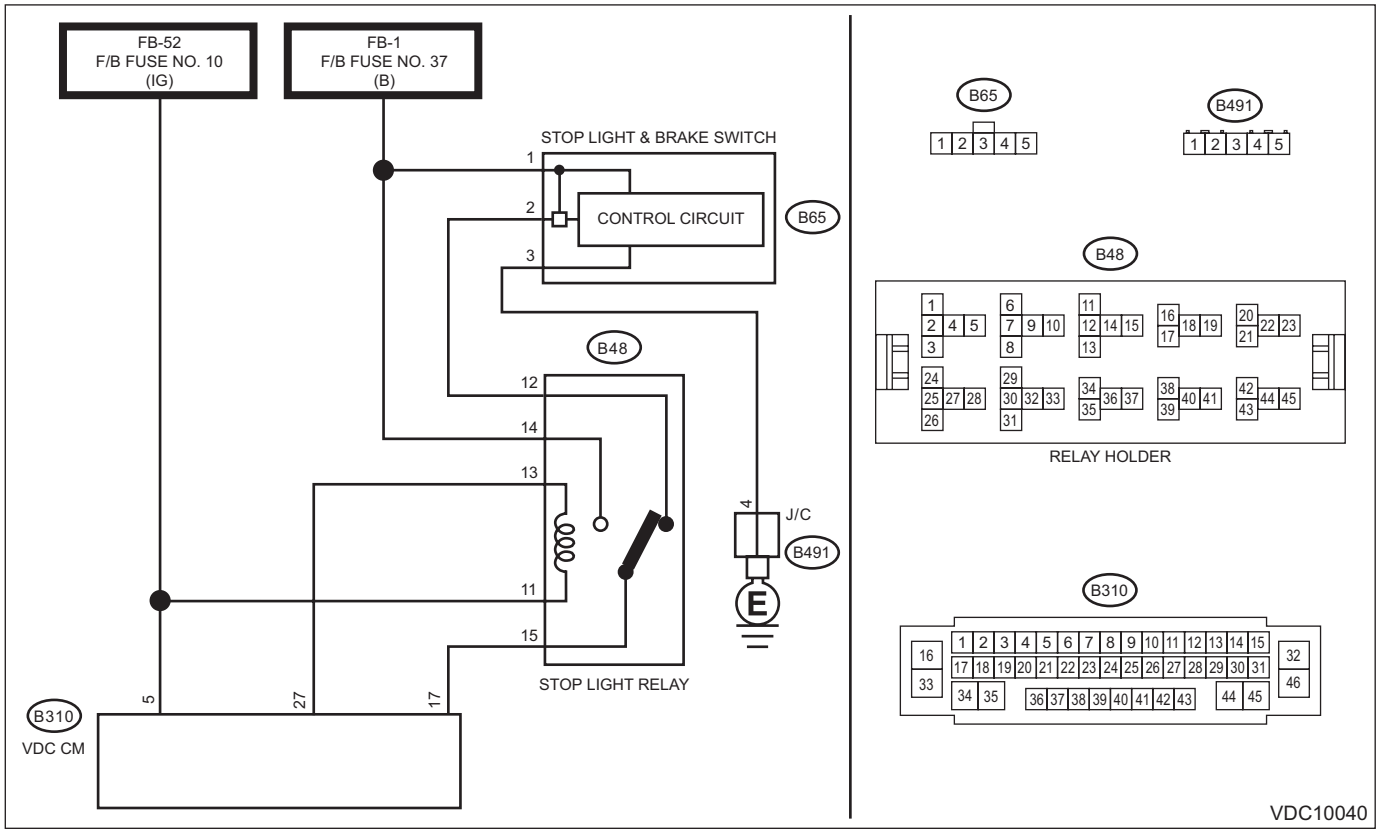

Step		Check	Yes	No
1	**CHECK STOP LIGHT.** 1) Turn the ignition switch to OFF. 2) Check the stop light. <Ref. to LI-21, Stop Light System.>	Are the stop lights OK?	Go to step **2**.	Replace the stop lights. <Ref. to LI-21, Stop Light System.>
2	**CHECK STOP LIGHT SWITCH.** Check the stop light switch. <Ref. to BR-81, INSTALLATION, Stop Light Switch.>	Is the installation position of the stop light switch correct?	Go to step **3**.	Adjust the installation position of the stop light switch. <Ref. to BR-81, INSTALLATION, Stop Light Switch.>
3	**CHECK STOP LIGHT SWITCH.** 1) Disconnect the stop light switch connector. 2) Measure the resistance of stop light switch terminals. ***Terminals*** ***No. 1 — No. 2:***	Is the resistance less than 1 Ω when the stop light switch is ON (when pedal is depressed)?	Go to step **4**.	Replace the stop light switch. <Ref. to BR-81, Stop Light Switch.>

	Step	Check	Yes	No
4	**CHECK STOP LIGHT RELAY.** Measure the resistance of stop light relay terminals. ***Terminals*** ***No. 12 — No. 15:***	Is the resistance less than 1 Ω?	Go to step **5**.	Replace the stop light relay.
5	**CHECK VDCCM&H/U CONNECTOR.** Disconnect the connector from the VDCCM&H/U.	Is there poor contact or damage of the VDCCM&H/U connector?	Repair the VDCCM&H/U connector.	Go to step **6**.
6	**CHECK STOP LIGHT SWITCH CIRCUIT (CHECK FOR OPEN CIRCUIT).** Measure the resistance of stop light switch circuit. ***Connector & terminal*** ***(B310) No. 17 — (B48) No. 15:*** ***(B65) No. 2 — (B48) No. 12:*** ***(B65) No. 1 — (F/B fuse) No. 37:***	Is the resistance less than 1 Ω?	Go to step **7**.	Repair the stop light switch circuit.
7	**CHECK STOP LIGHT SWITCH CIRCUIT.** 1) Connect all connectors. 2) Turn the ignition switch to ON. 3) Measure the voltage between stop light relay and chassis ground. ***Connector & terminal*** ***(B48) No. 15 (+) — Chassis ground (–):***	Is the voltage 10 V or more when the stop light switch is ON (when pedal is depressed)?	Go to step **8**.	Repair the stop light switch circuit.
8	**CHECK VDCCM&H/U.** 1) Perform the Clear Memory Mode. <Ref. to VDC(diag)-27, Clear Memory Mode.> 2) Perform the Inspection Mode. <Ref. to VDC(diag)-26, Inspection Mode.> 3) Read the DTC. <Ref. to VDC(diag)-25, Read Diagnostic Trouble Code (DTC).>	Is the same DTC displayed?	Replace the VDCCM&H/U. <Ref. to VDC-8, VDC Control Module and Hydraulic Control Unit (VDCCM&H/U).>	Go to step **9**.
9	**CHECK DETECTION OF OTHER DTCS FOR VDC.** <Ref. to VDC(diag)-25, Read Diagnostic Trouble Code (DTC).>	Is any other DTC displayed?	Perform the diagnosis according to DTC. <Ref. to VDC(diag)-40, List of Diagnostic Trouble Code (DTC).>	Currently, it is normal. There may have been a poor contact in the harness and connector or a temporarily noise interference.

AE:DTC C1532 BLS ON STUCK

DTC DETECTING CONDITION:

- A fault is detected if a change of the vehicle speed from high to low occurs for a predetermined number of times or more, while a change of the stop light switch from OFF to ON is not detected.
- A fault is detected if stop light switch ON status continues for long time while the vehicle speed is at the predetermined speed or higher.

TROUBLE SYMPTOM:

- VDC does not operate.
- Hill hold does not function.
- EyeSight does not operate sometimes. (Models with EyeSight)

NOTE:
If the pressure sensor is defective, this DTC may probably be stored in addition to pressure sensor malfunction.

WIRING DIAGRAM:
Vehicle dynamics control system <Ref. to WI-360, Vehicle Dynamics Control System.>

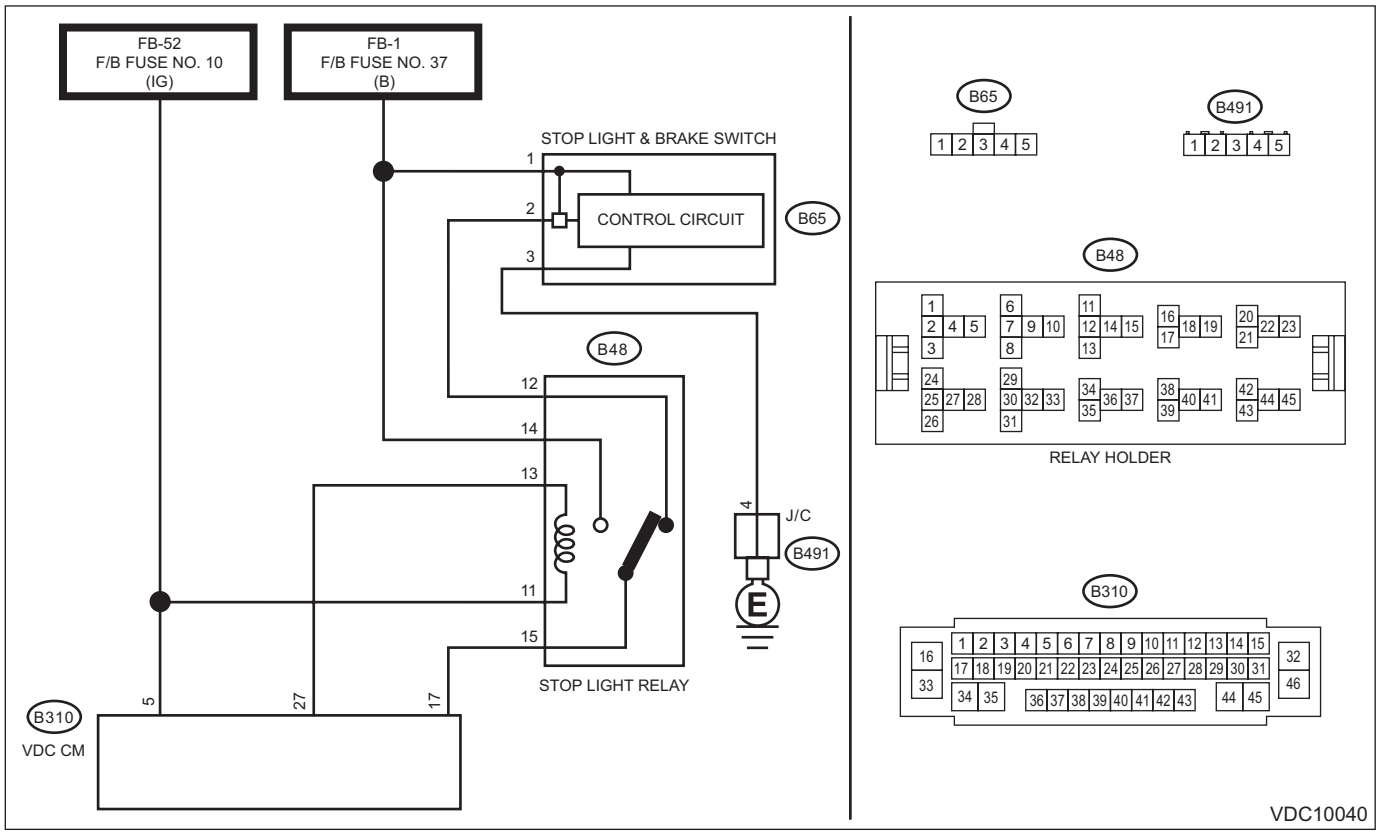

Step		Check	Yes	No
1	**INTERVIEW CUSTOMERS.** Make sure that the operation was performed in which accelerator pedal and brake pedal were depressed simultaneously (with depressing brake pedal with left foot).	Were the acceleration pedal and brake pedal depressed simultaneously?	System is normal. (DTC may be recorded if the brake pedal is always depressed while driving.)	Go to step **2**.
2	**CHECK STOP LIGHT RELAY.** 1) Turn the ignition switch to OFF. 2) Measure the resistance of stop light relay terminals. ***Terminals*** ***No. 14 — No. 15:***	Is the resistance less than 1 Ω?	Replace the stop light relay.	Go to step **3**.

	Step	Check	Yes	No
3	**CHECK VDCCM&H/U CONNECTOR.** Disconnect the connector from the VDCCM&H/U.	Is there poor contact or damage of the VDCCM&H/U connector?	Repair the VDCCM&H/U connector.	Go to step **4**.
4	**CHECK STOP LIGHT SWITCH CIRCUIT.** 1) Turn the ignition switch to ON. 2) Measure the voltage between stop light relay and chassis ground. ***Connector & terminal*** ***(B48) No. 15 (+) — Chassis ground (–):***	Is the voltage 10 V or more when the stop light switch is OFF (when pedal is not depressed)?	Repair the stop light switch circuit.	Go to step **5**.
5	**CHECK VDCCM&H/U.** 1) Connect all connectors. 2) Perform the Clear Memory Mode. <Ref. to VDC(diag)-27, Clear Memory Mode.> 3) Perform the Inspection Mode. <Ref. to VDC(diag)-26, Inspection Mode.> 4) Read the DTC. <Ref. to VDC(diag)-25, Read Diagnostic Trouble Code (DTC).>	Is the same DTC displayed?	Replace the VDCCM&H/U. <Ref. to VDC-8, VDC Control Module and Hydraulic Control Unit (VDCCM&H/U).>	Go to step **6**.
6	**CHECK DETECTION OF OTHER DTCS FOR VDC.** <Ref. to VDC(diag)-25, Read Diagnostic Trouble Code (DTC).>	Is any other DTC displayed?	Perform the diagnosis according to DTC. <Ref. to VDC(diag)-40, List of Diagnostic Trouble Code (DTC).>	Currently, it is normal. There may have been a poor contact in the harness and connector or a temporarily noise interference.

AF:DTC C1571 BRAKE LAMP RELAY OFF STUCK

DTC DETECTING CONDITION:

A fault is detected if the stop light relay operation request were compared with the feedback signal and detected as follows:

- The feedback signal is OFF.
- The stop light relay operation request is ON.

TROUBLE SYMPTOM:

- EyeSight does not operate. (Models with EyeSight)
- Stop lights do not illuminate sometimes.

WIRING DIAGRAM:

Vehicle dynamics control system <Ref. to WI-360, Vehicle Dynamics Control System.>

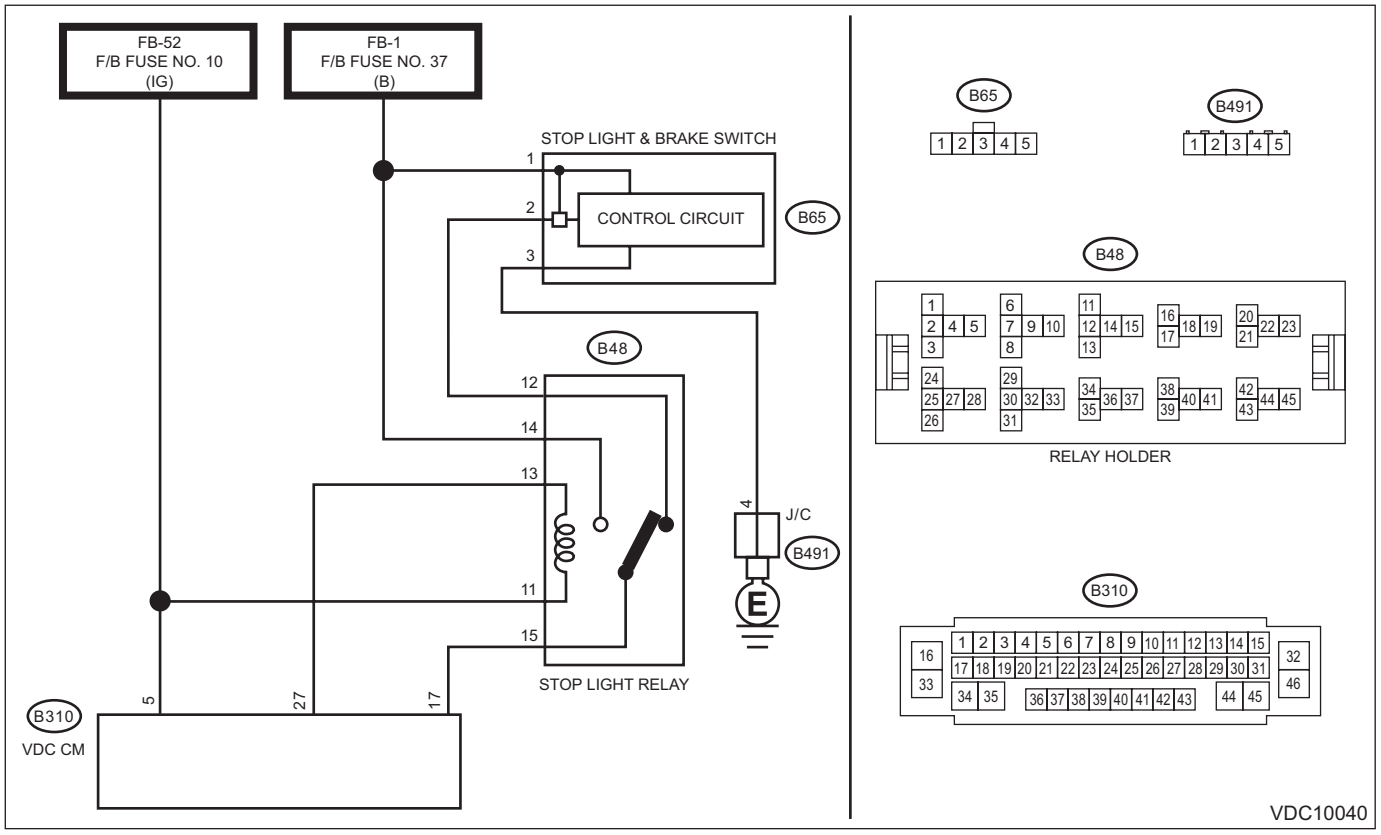

Step		Check	Yes	No
1	**CHECK DTC.** Check the DTC using Subaru Select Monitor. <Ref. to VDC(diag)-25, Read Diagnostic Trouble Code (DTC).>	Are any DTCs related to the stop light switch displayed?	Perform the diagnosis according to DTC. <Ref. to VDC(diag)-40, List of Diagnostic Trouble Code (DTC).>	Go to step **2**.
2	**CHECK STOP LIGHT RELAY.** 1) Turn the ignition switch to OFF. 2) Remove the stop light relay. 3) Measure the resistance between stop light relay terminals No. 13 — No. 11 when the battery voltage is applied. ***Terminals*** ***No. 14 — No. 15:***	Is the resistance less than 1 Ω?	Go to step **3**.	Replace the stop light relay.
3	**CHECK VDCCM&H/U CONNECTOR.** Disconnect the connector from the VDCCM&H/U.	Is there poor contact or damage of the VDCCM&H/U connector?	Repair the VDCCM&H/U connector.	Go to step **4**.

	Step	Check	Yes	No
4	**CHECK STOP LIGHT SWITCH CIRCUIT.** Measure the resistance between the stop light relay and the fuse. ***Connector & terminal*** ***(B48) No. 14 — (F/B fuse) No. 37:***	Is the resistance less than 1 Ω?	Go to step **5**.	Repair the stop light switch circuit.
5	**CHECK STOP LIGHT SWITCH CIRCUIT.** 1) Connect all connectors. 2) Turn the ignition switch to ON. 3) Measure the voltage between stop light relay and chassis ground. ***Connector & terminal*** ***(B48) No. 14 (+) — Chassis ground (–):***	Is the voltage 10 V or more?	Go to step **6**.	Repair the stop light switch circuit.
6	**CHECK STOP LIGHT RELAY CIRCUIT.** 1) Turn the ignition switch to OFF. 2) Remove the stop light relay. 3) Turn the ignition switch to ON. 4) Measure the voltage between stop light relay and chassis ground. ***Connector & terminal*** ***(B48) No. 13 (+) — Chassis ground (–):***	Is the voltage 10 V or more?	Repair the stop light relay circuit.	Go to step **7**.
7	**CHECK VDCCM&H/U.** 1) Turn the ignition switch to OFF. 2) Connect all connectors and relays. 3) Perform the Clear Memory Mode. <Ref. to VDC(diag)-27, Clear Memory Mode.> 4) Read the DTC. <Ref. to VDC(diag)-25, Read Diagnostic Trouble Code (DTC).>	Is the same DTC displayed?	Replace the VDCCM&H/U. <Ref. to VDC-8, VDC Control Module and Hydraulic Control Unit (VDCCM&H/U).>	Go to step **8**.
8	**CHECK DETECTION OF OTHER DTCS FOR VDC.** <Ref. to VDC(diag)-25, Read Diagnostic Trouble Code (DTC).>	Is any other DTC displayed?	Perform the diagnosis according to DTC. <Ref. to VDC(diag)-40, List of Diagnostic Trouble Code (DTC).>	Currently, it is normal. There may have been a poor contact in the harness and connector or a temporarily noise interference.

AG:DTC C1711 STEERING ANGLE SENSOR

DTC DETECTING CONDITION:

- A fault is detected if the sensor signal value is not correct.
- A fault is detected if the yaw rate sensor signal / lateral G sensor signal change while the sensor signal of steering angle sensor indicates a constant value.
- A fault is detected if the communication status of steering angle sensor is abnormal.

TROUBLE SYMPTOM:

- ABS does not operate.
- VDC does not operate.
- Hill hold does not function.
- EyeSight does not operate. (Models with EyeSight)

WIRING DIAGRAM:

NOTE:
For the coupling connector, refer to “WIRING SYSTEM”.
Vehicle dynamics control system <Ref. to WI-360, Vehicle Dynamics Control System.>

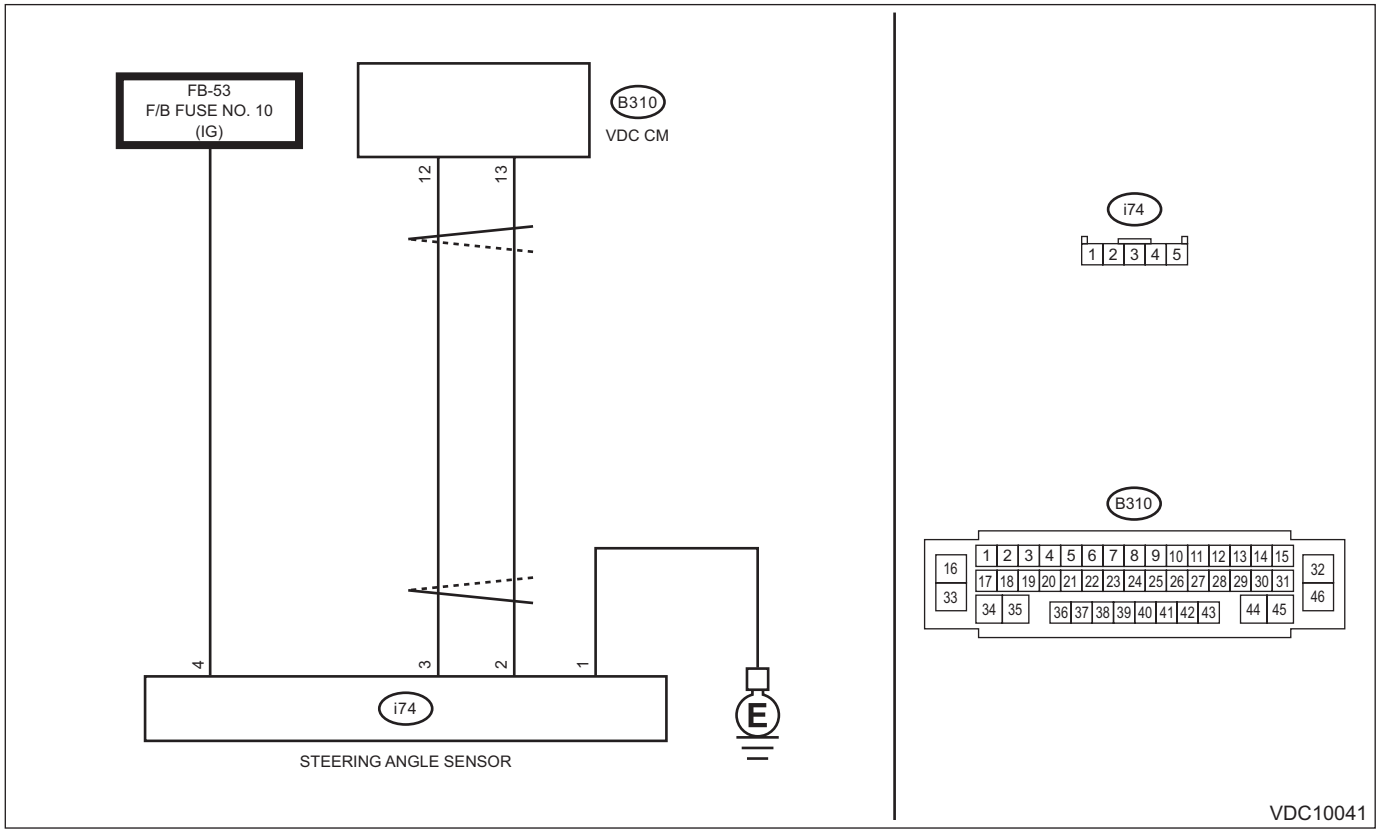

Step		Check	Yes	No
1	**CHECK POWER SUPPLY FOR STEERING ANGLE SENSOR.** 1) Turn the ignition switch to OFF. 2) Disconnect the connector from steering angle sensor. 3) Turn the ignition switch to ON. 4) Measure the voltage between steering angle sensor and chassis ground. ***Connector & terminal*** ***(i74) No. 4 (+) — Chassis ground (–):***	Is the voltage 10 — 15 V?	Go to step **2**.	Repair the steering angle sensor power supply circuit including the fuse.

	Step	Check	Yes	No
2	**CHECK GROUND CIRCUIT OF STEERING ANGLE SENSOR (CHECK FOR OPEN CIRCUIT).** Measure the resistance between steering angle sensor and chassis ground. ***Connector & terminal*** ***(i74) No. 1 — Chassis ground:***	Is the resistance less than 10 Ω?	Go to step **3**.	Repair ground circuit in the steering angle sensor.
3	**CHECK STEERING ANGLE SENSOR HARNESS (CHECK FOR OPEN CIRCUIT).** 1) Disconnect the connector from the VDCCM&H/U. 2) Measure the resistance between VDCCM&H/U and steering angel sensor. ***Connector & terminal*** ***(i74) No. 2 — (B310) No. 13:*** ***(i74) No. 3 — (B310) No. 12:***	Is the resistance less than 1 Ω?	Go to step **4**.	Repair the harness between the steering angle sensor and VDCCM&H/U.
4	**CHECK GROUND SHORT CIRCUIT OF STEERING ANGLE SENSOR HARNESS.** Measure the resistance between steering angle sensor and chassis ground. ***Connector & terminal*** ***(i74) No. 2 — Chassis ground:*** ***(i74) No. 3 — Chassis ground:***	Is the resistance 10 Ω or more?	Go to step **5**.	Repair the harness between the steering angle sensor and VDCCM&H/U.
5	**CHECK STEERING WHEEL.** 1) Drive the vehicle on a flat road. 2) Park the vehicle straight. 3) Check the steering wheel for deviation from center.	Is the deviation from the center of steering wheel less than 5°?	Go to step **6**.	Perform the centering adjustment of steering wheel, and perform the VDC sensor midpoint setting mode. <Ref. to VDC-15, VDC SENSOR MIDPOINT SETTING MODE, ADJUSTMENT, VDC Control Module and Hydraulic Control Unit (VDCCM&H/U).>
6	**CHECK OUTPUT OF STEERING ANGLE SENSOR USING SUBARU SELECT MONITOR.** 1) Adjust steering wheel to the center position. 2) Using the Subaru Select Monitor, select "Data monitor". <Ref. to VDC(diag)-19, READ CURRENT DATA, OPERATION, Subaru Select Monitor.> 3) Read the «Steering Angle Sensor» displayed on display.	Is the indicated reading of the steering angle sensor –10° — 10°?	Perform the VDC sensor midpoint setting mode. <Ref. to VDC-15, VDC SENSOR MIDPOINT SETTING MODE, ADJUSTMENT, VDC Control Module and Hydraulic Control Unit (VDCCM&H/U).> Go to step **7**.	Check the installation of the steering wheel and steering angle sensor.

	Step	Check	Yes	No
7	**CHECK STEERING ANGLE SENSOR USING SUBARU SELECT MONITOR.** 1) Turn the ignition switch to OFF. 2) Connect all connectors. 3) Perform the Clear Memory Mode. <Ref. to VDC(diag)-27, Clear Memory Mode.> 4) Perform the Inspection Mode. <Ref. to VDC(diag)-26, Inspection Mode.> 5) Read the DTC. <Ref. to VDC(diag)-25, Read Diagnostic Trouble Code (DTC).>	Is the same DTC displayed?	Replace the steering angle sensor. <Ref. to VDC-26, Steering Angle Sensor.>	Go to step **8**.
8	**CHECK DETECTION OF OTHER DTCS FOR VDC.** <Ref. to VDC(diag)-25, Read Diagnostic Trouble Code (DTC).>	Is any other DTC displayed?	Perform the diagnosis according to DTC. <Ref. to VDC(diag)-40, List of Diagnostic Trouble Code (DTC).>	Currently, it is normal. There may have been a poor contact in the harness and connector or a temporarily noise interference.
9	**CHECK DETECTION OF OTHER DTCS FOR VDC.** <Ref. to VDC(diag)-25, Read Diagnostic Trouble Code (DTC).>	Is any other DTC displayed?	Perform the diagnosis according to DTC. <Ref. to VDC(diag)-40, List of Diagnostic Trouble Code (DTC).>	Original steering angle sensor malfunction

AH:DTC C1721 YAW RATE SENSOR

DTC DETECTING CONDITION:

- A fault is detected if the sensor signal value is not correct.
- A fault is detected if the steering angle sensor signal / lateral G sensor signal change while the yaw rate sensor signal indicates a constant value.
- A fault is detected if the communication status of yaw rate sensor is abnormal.

TROUBLE SYMPTOM:

- ABS does not operate.
- VDC does not operate.
- Hill hold does not function.
- EyeSight does not operate. (Models with EyeSight)

	Step	Check	Yes	No
1	**INTERVIEW CUSTOMERS.** Check if the vehicle ran the road with banks or sandy surface (which does not mean a dirt road).	Did the vehicle run the road with banks or sandy surface (which does not mean a dirt road)?	VDCCM&H/U may record DTC when the vehicle ran the road with banks or sandy surface (which does not mean a dirt road).	Go to step **2**.
2	**CHECK INSTALLATION OF VDCCM&H/U.**	Is VDCCM&H/U installed properly without being tilted? Is the bracket deformation-free? Are the VDCCM&H/U installation bolts installed without missing or getting loose?	Go to step **3**.	Repair the defective part. • Install VDCCM&H/U properly. • Replace the bracket if faulty. • Tighten the VDCCM&H/U installation bolt. <Ref. to VDC-4, VDC CONTROL MODULE AND HYDRAULIC CONTROL UNIT (VDCCM&H/U), COMPONENT, General Description.> Go to step **3**.
3	**CHECK OUTPUT OF YAW RATE & G SENSOR WITH SUBARU SELECT MONITOR.** 1) Drive the vehicle on a flat road. 2) Park the vehicle straight. 3) Using the Subaru Select Monitor, select “Data monitor”. <Ref. to VDC(diag)-19, READ CURRENT DATA, OPERATION, Subaru Select Monitor.> 4) Read the «Yaw Rate Sensor» displayed on display.	Is the reading indicated on monitor display –4 — 4 deg/s?	Go to step **4**.	Replace the VDCCM&H/U. <Ref. to VDC-8, VDC Control Module and Hydraulic Control Unit (VDCCM&H/U).>

	Step	Check	Yes	No
4	**CHECK OUTPUT OF STEERING ANGLE SENSOR WITH SUBARU SELECT MONITOR.** 1) Drive the vehicle on a flat road. 2) Park the vehicle straight. 3) Using the Subaru Select Monitor, select "Data monitor". <Ref. to VDC(diag)-19, READ CURRENT DATA, OPERATION, Subaru Select Monitor.> 4) Read the «Steering Angle Sensor» displayed on display.	Is the reading indicated on monitor display –10 — 10°?	Go to step **5**.	Perform the centering adjustment of steering wheel.
5	**CHECK VDCCM&H/U.** 1) Turn the ignition switch to OFF. 2) Perform the Clear Memory Mode. <Ref. to VDC(diag)-27, Clear Memory Mode.> 3) Perform the Inspection Mode. <Ref. to VDC(diag)-26, Inspection Mode.> 4) Read the DTC. <Ref. to VDC(diag)-25, Read Diagnostic Trouble Code (DTC).>	Is the same DTC displayed?	Replace the VDCCM&H/U. <Ref. to VDC-8, VDC Control Module and Hydraulic Control Unit (VDCCM&H/U).>	Go to step **6**.
6	**CHECK DETECTION OF OTHER DTCS FOR VDC.** <Ref. to VDC(diag)-25, Read Diagnostic Trouble Code (DTC).>	Is any other DTC displayed?	Perform the diagnosis according to DTC. <Ref. to VDC(diag)-40, List of Diagnostic Trouble Code (DTC).>	Currently, it is normal. There may have been a poor contact in the harness and connector or a temporarily noise interference.

AI: DTC C1732 LATERAL G SENSOR

DTC DETECTING CONDITION:

- A fault is detected if the sensor signal value is not correct.
- A fault is detected if the steering angle sensor signal / yaw rate sensor signal change while the lateral G sensor signal indicates a constant value.
- A fault is detected if the communication status of lateral G sensor is abnormal.

TROUBLE SYMPTOM:

- ABS does not operate.
- VDC does not operate.
- Hill hold does not function.
- EyeSight does not operate. (Models with EyeSight)

	Step	Check	Yes	No
1	**CHECK INSTALLATION OF VDCCM&H/U.**	Is VDCCM&H/U installed properly without being tilted? Is the bracket deformation-free? Are the VDCCM&H/U installation bolts installed without missing or getting loose?	Go to step **2**.	Repair the defective part. • Install VDCCM&H/U properly. • Replace the bracket if faulty. • Tighten the VDCCM&H/U installation bolt. <Ref. to VDC-4, VDC CONTROL MODULE AND HYDRAULIC CONTROL UNIT (VDCCM&H/U), COMPONENT, General Description.> Go to step **2**.
2	**CHECK OUTPUT OF STEERING ANGLE SENSOR USING SUBARU SELECT MONITOR.** 1) Park the vehicle straight on a level surface. 2) Using the Subaru Select Monitor, select "Data monitor". <Ref. to VDC(diag)-19, READ CURRENT DATA, OPERATION, Subaru Select Monitor.> 3) Read the «Steering Angle Sensor» displayed on display.	Is the indicated reading of the steering angle sensor on the monitor display –10° — 10°?	Go to step **3**.	Check the installation of steering angle sensor.
3	**CHECK OUTPUT OF LATERAL G SENSOR AND LONGITUDINAL G SENSOR WITH SUBARU SELECT MONITOR.** 1) Park the vehicle straight on a level surface. 2) Using the Subaru Select Monitor, select "Data monitor". <Ref. to VDC(diag)-19, READ CURRENT DATA, OPERATION, Subaru Select Monitor.> 3) Read the «Lateral G Sensor» «Longitudinal G Sensor» displayed on display.	Is the indicated reading of the lateral G sensor and longitudinal G sensor on the monitor display –2 — 2 m/s^2?	Go to step **4**.	Recheck from step 1, and if the problem is not solved, go to next. Go to step **7**.

	Step	Check	Yes	No
4	**SET 0 POINT OF LATERAL G SENSOR AND LONGITUDINAL G SENSOR WITH SUBARU SELECT MONITOR.** 1) Using the Subaru Select Monitor, select "Work Support". 2) Perform the VDC sensor midpoint setting mode. <Ref. to VDC-15, VDC SENSOR MID-POINT SETTING MODE, ADJUSTMENT, VDC Control Module and Hydraulic Control Unit (VDCCM&H/U).>	Is 0 point setting successful?	Go to step **5**.	Recheck from step 1, and when the 0 point setting is not possible, replace the VDCCM&H/U. <Ref. to VDC-8, VDC Control Module and Hydraulic Control Unit (VDCCM&H/U).>
5	**PERFORM DRIVING TEST.** <Ref. to VDC(diag)-26, Inspection Mode.>	Does the ABS warning light or VDC warning light illuminate during driving? Does ABS or VDC operate abnormally?	Recheck from step 1, and when the warning lights illuminate or improperly operate, replace the VDCCM&H/U. <Ref. to VDC-8, VDC Control Module and Hydraulic Control Unit (VDCCM&H/U).>	Go to step **6**.
6	**CHECK OUTPUT OF LATERAL G SENSOR AND LONGITUDINAL G SENSOR WITH SUBARU SELECT MONITOR.** 1) Park the vehicle on a level surface. 2) Using the Subaru Select Monitor, select "Data monitor". <Ref. to VDC(diag)-19, READ CURRENT DATA, OPERATION, Subaru Select Monitor.> 3) Read the «Lateral G Sensor» «Longitudinal G Sensor» displayed on display.	Is the indicated reading of the lateral G sensor and longitudinal G sensor on the monitor display –1.5 — 1.5 m/s^2?	Currently, it is normal. There may have been a poor contact in the harness and connector or a temporarily noise interference.	Recheck from step 1, and if the problem is not solved, replace the VDCCM&H/U. <Ref. to VDC-8, VDC Control Module and Hydraulic Control Unit (VDCCM&H/U).>
7	**CHECK OUTPUT OF LATERAL G SENSOR AND LONGITUDINAL G SENSOR WITH SUBARU SELECT MONITOR.** 1) Remove the VDCCM&H/U installation bolt and bracket. 2) Keep VDCCM&H/U in a horizontal position. 3) Using the Subaru Select Monitor, select "Data monitor". <Ref. to VDC(diag)-19, READ CURRENT DATA, OPERATION, Subaru Select Monitor.> 4) Read the «Lateral G Sensor» «Longitudinal G Sensor» displayed on display.	When the VDCCM&H/U is in a horizontal position, is the indicated reading of the lateral G sensor and longitudinal G sensor on the monitor display –1.5 — 1.5 m/s^2?	Check the bracket and brake pipe, and install VDCCM&H/U in a horizontal position to the vehicle.	Replace the VDCCM&H/U. <Ref. to VDC-8, VDC Control Module and Hydraulic Control Unit (VDCCM&H/U).>

AJ:DTC C1733 LONGITUDINAL G SENSOR

DTC DETECTING CONDITION:

- A fault is detected if the communication status of longitudinal G sensor is abnormal.
- A fault is detected if malfunction judgment is generated by self-diagnosis test of the longitudinal G sensor.
- A fault is detected if the longitudinal G sensor signal is out of normal range.
- A fault is detected if the longitudinal G sensor compensation value is out of normal range.

TROUBLE SYMPTOM:

- ABS does not operate.
- VDC does not operate.
- Hill hold does not function.
- EyeSight does not operate. (Models with EyeSight)

NOTE:
For the diagnostic procedure, refer to “DTC C1732 LATERAL G SENSOR”. <Ref. to VDC(diag)-80, DTC C1732 LATERAL G SENSOR, Diagnostic Procedure with Diagnostic Trouble Code (DTC).>

AK:DTC C1741 PRESSURE SENSOR

DTC DETECTING CONDITION:

- A fault is detected if two fluid pressure signals in master cylinder are out of normal range.
- A fault is detected if the condition that supply voltage for the fluid pressure sensor is out of normal judgment range continues for predetermined time.
- A fault is detected if the communication status of fluid pressure sensor is abnormal.
- A fault is detected if the data of fluid pressure sensor is abnormal.
- A fault is detected if the offset value of fluid pressure sensor signal exceeds a predetermined judgment value.

TROUBLE SYMPTOM:

- VDC does not operate sometimes.
- The hill hold function may not be operable.

	Step	Check	Yes	No
1	**CHECK STOP LIGHT SWITCH CIRCUIT.** Check stop light switch open circuit.	Is the stop light switch circuit OK?	Go to step **2**.	Repair the stop light switch circuit. NOTE: If there is malfunction in the stop light circuit, DTC may be recorded in the memory.
2	**CHECK OUTPUT OF PRESSURE SENSOR WITH SUBARU SELECT MONITOR.** 1) Using the Subaru Select Monitor, select "Data monitor". <Ref. to VDC(diag)-19, READ CURRENT DATA, OPERATION, Subaru Select Monitor.> 2) Read the «Master Cylinder Pressure Sensor» displayed on display.	With the brake pedal released, does the value for «Master Cylinder Pressure Sensor» fall within 0 — 11 bar?	Go to step **3**.	Replace the VDCCM&H/U. <Ref. to VDC-8, VDC Control Module and Hydraulic Control Unit (VDCCM&H/U).>
3	**CHECK OUTPUT OF PRESSURE SENSOR WITH SUBARU SELECT MONITOR.** 1) Using the Subaru Select Monitor, select "Data monitor". <Ref. to VDC(diag)-19, READ CURRENT DATA, OPERATION, Subaru Select Monitor.> 2) Read the «Master Cylinder Pressure Sensor» displayed on display.	When the brake pedal is operated, does the master cylinder pressure sensor output value on the display change in accordance with the brake pedal operation?	Go to step **4**.	Replace the VDCCM&H/U. <Ref. to VDC-8, VDC Control Module and Hydraulic Control Unit (VDCCM&H/U).>
4	**CHECK VDCCM&H/U.** 1) Perform the Clear Memory Mode. <Ref. to VDC(diag)-27, Clear Memory Mode.> 2) Perform the Inspection Mode. <Ref. to VDC(diag)-26, Inspection Mode.> 3) Read the DTC. <Ref. to VDC(diag)-25, Read Diagnostic Trouble Code (DTC).>	Is the same DTC displayed?	Replace the VDCCM&H/U. <Ref. to VDC-8, VDC Control Module and Hydraulic Control Unit (VDCCM&H/U).>	Go to step **5**.
5	**CHECK DETECTION OF OTHER DTCS FOR VDC.** <Ref. to VDC(diag)-25, Read Diagnostic Trouble Code (DTC).>	Is any other DTC displayed?	Perform the diagnosis according to DTC. <Ref. to VDC(diag)-40, List of Diagnostic Trouble Code (DTC).>	Currently, it is normal. There may have been a poor contact in the harness and connector or a temporarily noise interference.

AL:DTC C1742 WHEEL CYLINDER PRESSURE SENSOR

DTC DETECTING CONDITION:

- A fault is detected if the condition that supply voltage for the fluid pressure sensor is out of normal judgment range continues for predetermined time.
- A fault is detected if the communication status of fluid pressure sensor is abnormal.
- A fault is detected if the data of fluid pressure sensor is abnormal.
- A fault is detected if the offset value of fluid pressure sensor signal exceeds a predetermined judgment value.
- A fault is detected if a difference between fluid pressures for the wheels exceeds a predetermined judgment value.
- A fault is detected if master cylinder pressure and fluid pressures for the wheels exceed predetermined judgment values.

TROUBLE SYMPTOM:

EyeSight does not operate. (Models with EyeSight)

	Step	Check	Yes	No
1	**CHECK STOP LIGHT SWITCH CIRCUIT.**	Is the stop light switch circuit OK?	Go to step **2**.	Repair the stop light switch circuit.
2	**CHECK OUTPUT OF PRESSURE SENSOR WITH SUBARU SELECT MONITOR.** 1) Using the Subaru Select Monitor, select “Data monitor”. <Ref. to VDC(diag)-19, READ CURRENT DATA, OPERATION, Subaru Select Monitor.> 2) Read the «FL wheel cylinder pressure sensor output» and «FR wheel cylinder pressure sensor output» displayed on the screen.	With the brake pedal released, do the values for «FL wheel cylinder pressure sensor output» and «FR wheel cylinder pressure sensor output» fall within 0 — 11 bar?	Go to step **3**.	Replace the VDCCM&H/U. <Ref. to VDC-8, VDC Control Module and Hydraulic Control Unit (VDCCM&H/U).>
3	**CHECK OUTPUT OF PRESSURE SENSOR WITH SUBARU SELECT MONITOR.** 1) Using the Subaru Select Monitor, select “Data monitor”. <Ref. to VDC(diag)-19, READ CURRENT DATA, OPERATION, Subaru Select Monitor.> 2) Read the «FL wheel cylinder pressure sensor output» and «FR wheel cylinder pressure sensor output» displayed on the screen.	When the brake pedal is operated, do the FL wheel cylinder output value and FR wheel cylinder output value displayed on the screen change in accordance with the brake pedal? At this time, is the difference of the output values between FR and FL wheel cylinders less than 10 bar?	Go to step **4**.	Replace the VDCCM&H/U. <Ref. to VDC-8, VDC Control Module and Hydraulic Control Unit (VDCCM&H/U).>
4	**CHECK VDCCM&H/U.** 1) Perform the Clear Memory Mode. <Ref. to VDC(diag)-27, Clear Memory Mode.> 2) Perform the Inspection Mode. <Ref. to VDC(diag)-26, Inspection Mode.> 3) Read the DTC. <Ref. to VDC(diag)-25, Read Diagnostic Trouble Code (DTC).>	Is the same DTC displayed?	Replace the VDCCM&H/U. <Ref. to VDC-8, VDC Control Module and Hydraulic Control Unit (VDCCM&H/U).>	Go to step **5**.
5	**CHECK DETECTION OF OTHER DTCS FOR VDC.** <Ref. to VDC(diag)-25, Read Diagnostic Trouble Code (DTC).>	Is any other DTC displayed?	Perform the diagnosis according to DTC. <Ref. to VDC(diag)-40, List of Diagnostic Trouble Code (DTC).>	Currently, it is normal. There may have been a poor contact in the harness and connector or a temporarily noise interference.

AM:DTC C1811 SYSTEM

DTC DETECTING CONDITION:
A fault is detected if VDC control status continues for 15 seconds or more.
TROUBLE SYMPTOM:
- ABS does not operate.
- VDC does not operate.
- Hill hold does not function.
- EyeSight does not operate. (Models with EyeSight)

	Step	Check	Yes	No
1	**CHECK INSTALLATION OF VDCCM&H/U.**	Is VDCCM&H/U installed properly without being tilted? Is the bracket deformation-free? Are the VDCCM&H/U installation bolts installed without missing or getting loose?	Go to step **2**.	Repair the defective part. • Install VDCCM&H/U properly. • Replace the bracket if faulty. • Tighten the VDCCM&H/U installation bolt. <Ref. to VDC-4, VDC CONTROL MODULE AND HYDRAULIC CONTROL UNIT (VDCCM&H/U), COMPONENT, General Description.> Go to step **2**.
2	**CHECK STEERING WHEEL.** 1) Drive the vehicle on a flat road. 2) Park the vehicle straight. 3) Check the steering wheel for deviation from center.	Is the deviation from the center of steering wheel less than 5°?	Go to step **3**.	Perform the centering adjustment of steering wheel, and perform the VDC sensor midpoint setting mode. <Ref. to VDC-15, VDC SENSOR MIDPOINT SETTING MODE, ADJUSTMENT, VDC Control Module and Hydraulic Control Unit (VDCCM&H/U).> Go to step **3**.
3	**CHECK OUTPUT OF STEERING ANGLE SENSOR USING SUBARU SELECT MONITOR.** 1) Adjust steering wheel to the center position. 2) Using the Subaru Select Monitor, select “Data monitor”. <Ref. to VDC(diag)-19, READ CURRENT DATA, OPERATION, Subaru Select Monitor.> 3) Read the «Steering Angle Sensor» displayed on display.	Is the indicated reading of the steering angle sensor –10° — 10°?	Go to step **4**.	Check the installation of the steering wheel and steering angle sensor, and replace the parts unless wrong installations are found.

	Step	Check	Yes	No
4	**CHECK OUTPUT OF SENSORS USING SUBARU SELECT MONITOR.** 1) Drive the vehicle on a flat road. 2) Park the vehicle straight. 3) Using the Subaru Select Monitor, select "Data monitor". <Ref. to VDC(diag)-19, READ CURRENT DATA, OPERATION, Subaru Select Monitor.> 4) Read output of sensors displayed on display.	Are the indicated reading of sensor outputs following values? Lateral G sensor: –2 — 2 m/s^2 Longitudinal G sensor: –2 — 2 m/s^2 Yaw rate sensor: –4 — 4 deg/s	Go to step **5**.	Recheck from step 1, and if the problem is not solved, go to next. Go to step **8**.
5	**SET 0 POINT SETTING OF LONGITUDINAL G SENSOR USING SUBARU SELECT MONITOR.** 1) Using the Subaru Select Monitor, select "Work Support". 2) Perform the VDC sensor midpoint setting mode. <Ref. to VDC-15, VDC SENSOR MIDPOINT SETTING MODE, ADJUSTMENT, VDC Control Module and Hydraulic Control Unit (VDCCM&H/U).>	Is 0 point setting successful?	Go to step **6**.	Recheck from step 1, and when the 0 point setting is not possible, replace the VDCCM&H/U and steering angle sensor. <Ref. to VDC-8, VDC Control Module and Hydraulic Control Unit (VDCCM&H/U).> <Ref. to VDC-26, Steering Angle Sensor.>
6	**PERFORM DRIVING TEST.** <Ref. to VDC(diag)-26, Inspection Mode.>	Does the ABS warning light or VDC warning light illuminate during driving? Does ABS or VDC operate abnormally?	Recheck from step 1, and when the warning lights illuminate or improperly operate, replace the VDCCM&H/U. <Ref. to VDC-8, VDC Control Module and Hydraulic Control Unit (VDCCM&H/U).>	Go to step **7**.
7	**CHECK OUTPUT OF SENSORS USING SUBARU SELECT MONITOR.** 1) Park the vehicle on a level surface. 2) Using the Subaru Select Monitor, select "Data monitor". <Ref. to VDC(diag)-19, READ CURRENT DATA, OPERATION, Subaru Select Monitor.> 3) Read output of sensors displayed on display.	Are the indicated reading of sensor outputs following values? Lateral G sensor: –2 — 2 m/s^2 Longitudinal G sensor: –2 — 2 m/s^2 Yaw rate sensor: –4 — 4 deg/s	Currently, it is normal. There may have been a poor contact in the harness and connector or a temporarily noise interference.	Replace the VDCCM&H/U. <Ref. to VDC-8, VDC Control Module and Hydraulic Control Unit (VDCCM&H/U).>
8	**CHECK OUTPUT OF SENSORS USING SUBARU SELECT MONITOR.** 1) Remove the VDCCM&H/U installation bolt and bracket. 2) Keep VDCCM&H/U in a horizontal position. 3) Using the Subaru Select Monitor, select "Data monitor". <Ref. to VDC(diag)-19, READ CURRENT DATA, OPERATION, Subaru Select Monitor.> 4) Read output of sensors displayed on display.	When VDCCM&H/U is in a horizontal position, are the indicated reading of sensor outputs following values? Lateral G sensor: –1.5 — 1.5 m/s^2 Longitudinal G sensor: –1.5 — 1.5 m/s^2 Yaw rate sensor: –4 — 4 deg/s	Check the bracket and brake pipe, and install VDCCM&H/U in a horizontal position to the vehicle.	Replace the VDCCM&H/U. <Ref. to VDC-8, VDC Control Module and Hydraulic Control Unit (VDCCM&H/U).>

AN:DTC C1921 PARKING POSITION SWITCH CIRCUIT

DTC DETECTING CONDITION:

- A fault is detected if the switch was positioned at lock or release continuously for 90 seconds while the vehicle is stopped.
- A fault is detected if an irregular switch condition continues for a predetermined period of time immediately after the switch position is changed. A fault is also detected if the switch condition is not confirmed afterwards.
- A fault is detected if the switch harness is open or shorted.

TROUBLE SYMPTOM:

Parking brake system does not operate.

WIRING DIAGRAM:

NOTE:
For the coupling connector, refer to “WIRING SYSTEM”.
Parking brake / brake fluid level warning light system <Ref. to WI-294, Parking Brake / Brake Fluid Level Warning Light System.>

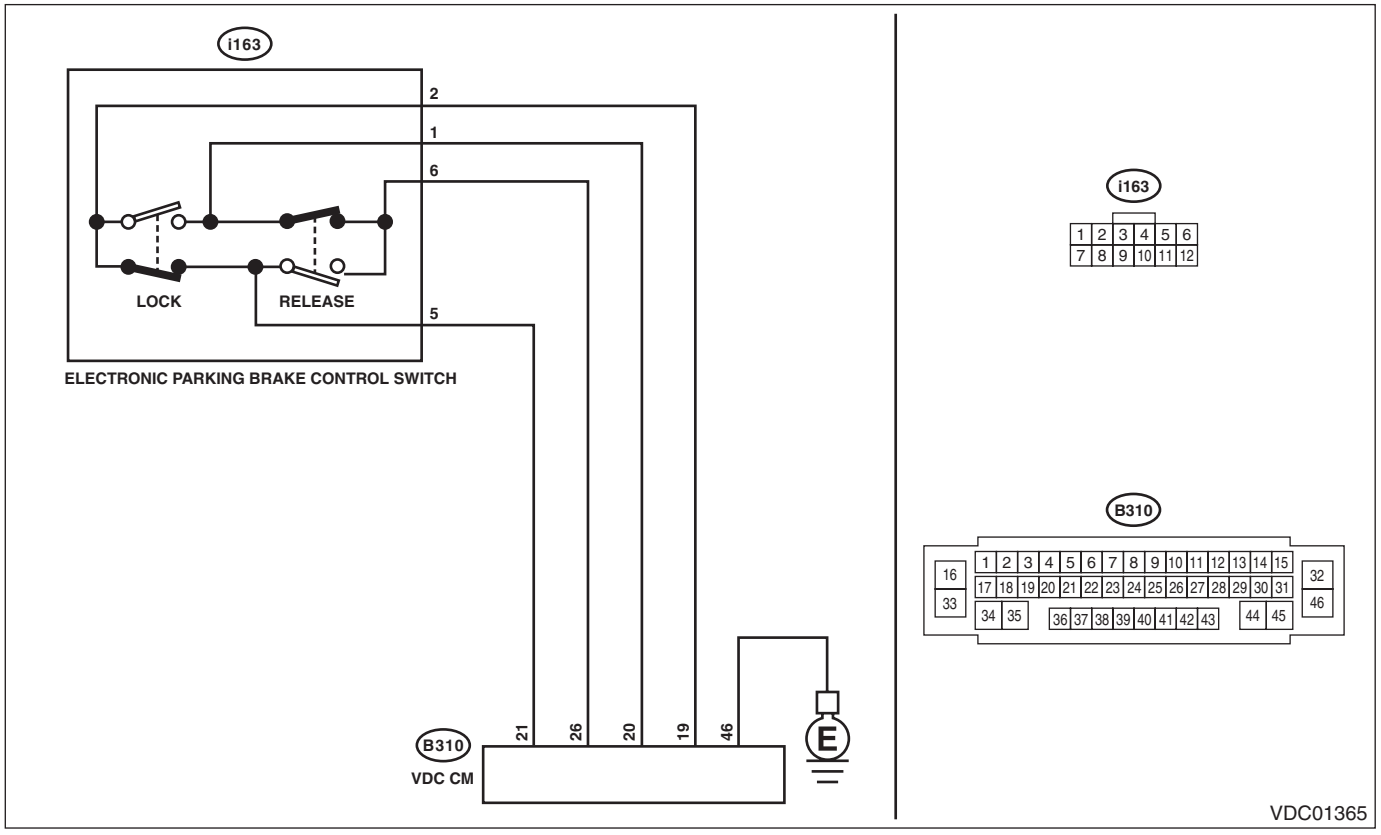

Step		Check	Yes	No
1	**CHECK OPERATION OF ELECTRONIC PARKING BRAKE.** Operate the parking brake switch.	Does the electronic parking brake operate properly?	Ask the customer whether the switch operation was performed normally. If it was normal, temporary poor contact is the cause.	Go to step **2**.

	Step	Check	Yes	No
2	**CHECK HARNESS (CHECK FOR OPEN CIRCUIT).** 1) Turn the ignition switch to OFF. 2) Disconnect the connectors from the VDCCM&H/U and parking brake switch. 3) Measure the resistance between VDCCM&H/U and parking brake switch connector. ***Connector & terminal*** ***(B310) No. 19 — (i163) No. 2:*** ***(B310) No. 20 — (i163) No. 1:*** ***(B310) No. 21 — (i163) No. 5:*** ***(B310) No. 26 — (i163) No. 6:***	Is the resistance less than 1 Ω?	Go to step **3**.	Repair harness and connector between VDCCM&H/U and parking brake switch connector.
3	**CHECK HARNESS (CHECK FOR GROUND SHORT CIRCUIT).** Measure the resistance between the parking brake switch connector and chassis ground. ***Connector & terminal*** ***(i163) No. 2 — Chassis ground:*** ***(i163) No. 1 — Chassis ground:*** ***(i163) No. 5 — Chassis ground:*** ***(i163) No. 6 — Chassis ground:***	Is the resistance 1 MΩ or more?	Go to step **4**.	Repair ground short of harness between VDCCM&H/U and parking brake switch connector.
4	**CHECK HARNESS (CHECK FOR SHORT CIRCUIT TO POWER SUPPLY).** 1) Turn the ignition switch to ON. 2) Measure the voltage between parking brake switch connector and chassis ground. ***Connector & terminal*** ***(i163) No. 2 (+) — Chassis ground (–):*** ***(i163) No. 1 (+) — Chassis ground (–):*** ***(i163) No. 5 (+) — Chassis ground (–):*** ***(i163) No. 6 (+) — Chassis ground (–):***	Is the voltage less than 1 V?	Go to step **5**.	Repair short to power supply of harness between VDCCM&H/U and parking brake switch connector.
5	**CHECK PARKING BRAKE SWITCH.** Check the parking brake switch. <Ref. to PB-15, INSPECTION, Parking Brake Switch.>	Is the parking brake switch normal?	Go to step **6**.	Replace the parking brake switch. <Ref. to PB-14, Parking Brake Switch.>
6	**CHECK VDCCM&H/U.** 1) Connect all connectors. 2) Perform the Clear Memory Mode. <Ref. to VDC(diag)-27, Clear Memory Mode.> 3) Perform the Inspection Mode. <Ref. to VDC(diag)-26, Inspection Mode.> 4) Read the DTC. <Ref. to VDC(diag)-25, Read Diagnostic Trouble Code (DTC).>	Is the same DTC displayed?	Replace the VDCCM&H/U. <Ref. to VDC-8, VDC Control Module and Hydraulic Control Unit (VDCCM&H/U).>	Go to step **7**.
7	**CHECK DETECTION OF OTHER DTCS FOR VDC.** <Ref. to VDC(diag)-25, Read Diagnostic Trouble Code (DTC).>	Is any other DTC displayed?	Perform the diagnosis according to DTC. <Ref. to VDC(diag)-40, List of Diagnostic Trouble Code (DTC).>	Currently, it is normal. There may have been a poor contact in the harness and connector or a temporarily noise interference.

AO:DTC C1922 HILL HOLD SWITCH CIRCUIT

DTC DETECTING CONDITION:
A fault is detected if the hill hold switch is pressed and held for a long period of time.
TROUBLE SYMPTOM:
Hill hold function cannot be set.
WIRING DIAGRAM:

NOTE:
For the coupling connector, refer to “WIRING SYSTEM”.
Parking brake / brake fluid level warning light system <Ref. to WI-294, Parking Brake / Brake Fluid Level Warning Light System.>

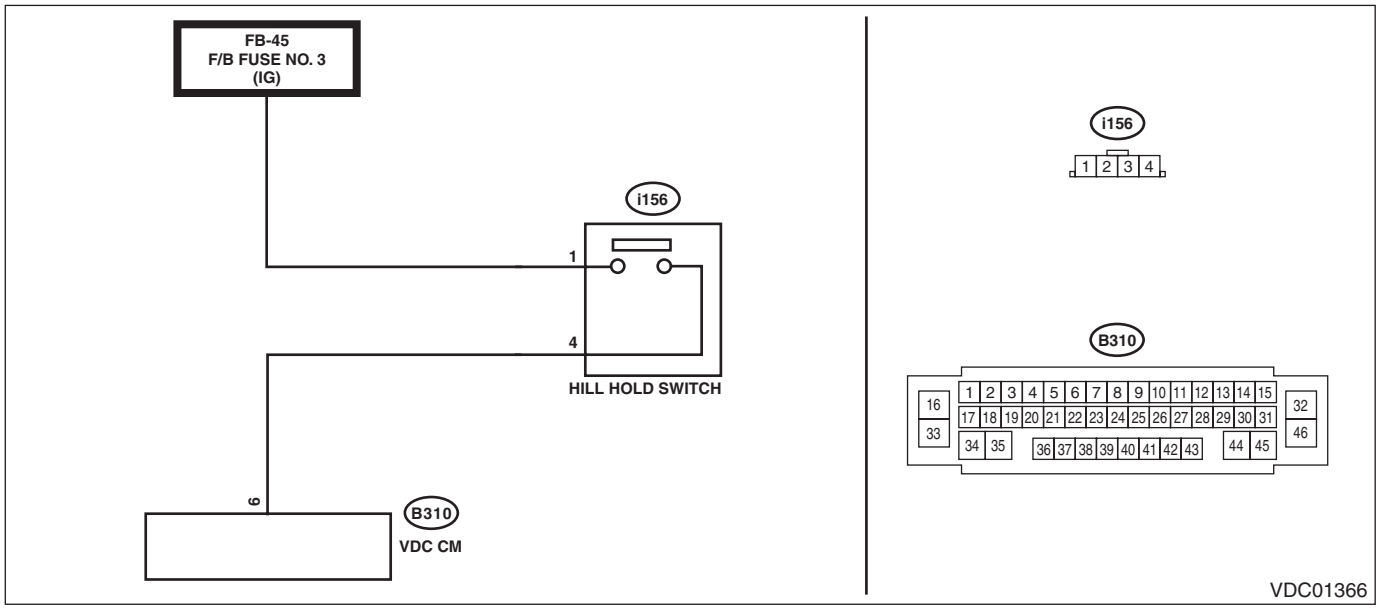

Step		Check	Yes	No
1	**CHECK HILL HOLD SWITCH POWER SUPPLY.** 1) Turn the ignition switch to OFF. 2) Disconnect the connector from hill hold switch. 3) Turn the ignition switch to ON. 4) Measure the voltage between hill hold switch connector and chassis ground. ***Connector & terminal*** ***(i156) No. 1 (+) — Chassis ground (–):***	Is the voltage 10 — 15 V?	Go to step **2**.	Repair the power supply circuit of hill hold switch.
2	**CHECK HARNESS (CHECK FOR OPEN CIRCUIT).** 1) Turn the ignition switch to OFF. 2) Disconnect the connector from the VDCCM&H/U. 3) Measure the resistance between VDCCM&H/U and hill hold switch connector. ***Connector & terminal*** ***(i156) No. 4 — (B310) No. 6:***	Is the resistance less than 1 Ω?	Go to step **3**.	Repair harness and connector between VDCCM&H/U and hill hold switch connector.
3	**CHECK HARNESS (CHECK FOR GROUND SHORT CIRCUIT).** Measure the resistance between hill hold switch connector and chassis ground. ***Connector & terminal*** ***(i156) No. 4 — Chassis ground:***	Is the resistance 1 MΩ or more?	Go to step **4**.	Repair ground short of harness between VDCCM&H/U and hill hold switch connector.

	Step	Check	Yes	No
4	**CHECK HARNESS (CHECK FOR SHORT CIRCUIT TO POWER SUPPLY).** 1) Turn the ignition switch to ON. 2) Measure the voltage between hill hold switch connector and chassis ground. ***Connector & terminal*** ***(i156) No. 4 (+) — Chassis ground (–):***	Is the voltage less than 1 V?	Go to step **5**.	Repair short to power supply of harness between VDCCM&H/U and hill hold switch connector.
5	**CHECK HILL HOLD SWITCH.** Check the hill hold switch. <Ref. to VDC-40, INSPECTION, Hill Hold Switch.>	Is the hill hold switch normal?	Go to step **6**.	Replace the hill hold switch. <Ref. to VDC-39, Hill Hold Switch.>
6	**CHECK VDCCM&H/U.** 1) Connect all connectors. 2) Perform the Clear Memory Mode. <Ref. to VDC(diag)-27, Clear Memory Mode.> 3) Perform the Inspection Mode. <Ref. to VDC(diag)-26, Inspection Mode.> 4) Read the DTC. <Ref. to VDC(diag)-25, Read Diagnostic Trouble Code (DTC).>	Is the same DTC displayed?	Replace the VDCCM&H/U. <Ref. to VDC-8, VDC Control Module and Hydraulic Control Unit (VDCCM&H/U).>	Go to step **7**.
7	**CHECK DETECTION OF OTHER DTCS FOR VDC.** <Ref. to VDC(diag)-25, Read Diagnostic Trouble Code (DTC).>	Is any other DTC displayed?	Perform the diagnosis according to DTC. <Ref. to VDC(diag)-40, List of Diagnostic Trouble Code (DTC).>	Currently, it is normal. There may have been a poor contact in the harness and connector or a temporarily noise interference.

AP:DTC C1935 IGNITION SWITCH CIRCUIT

DTC DETECTING CONDITION:
A fault is detected after a predetermined period of time, if the hardware IGN signal and CAN IGN signal were compared and did not match.

TROUBLE SYMPTOM:
Brake warning light illuminates.

WIRING DIAGRAM:
Parking brake / brake fluid level warning light system <Ref. to WI-294, Parking Brake / Brake Fluid Level Warning Light System.>

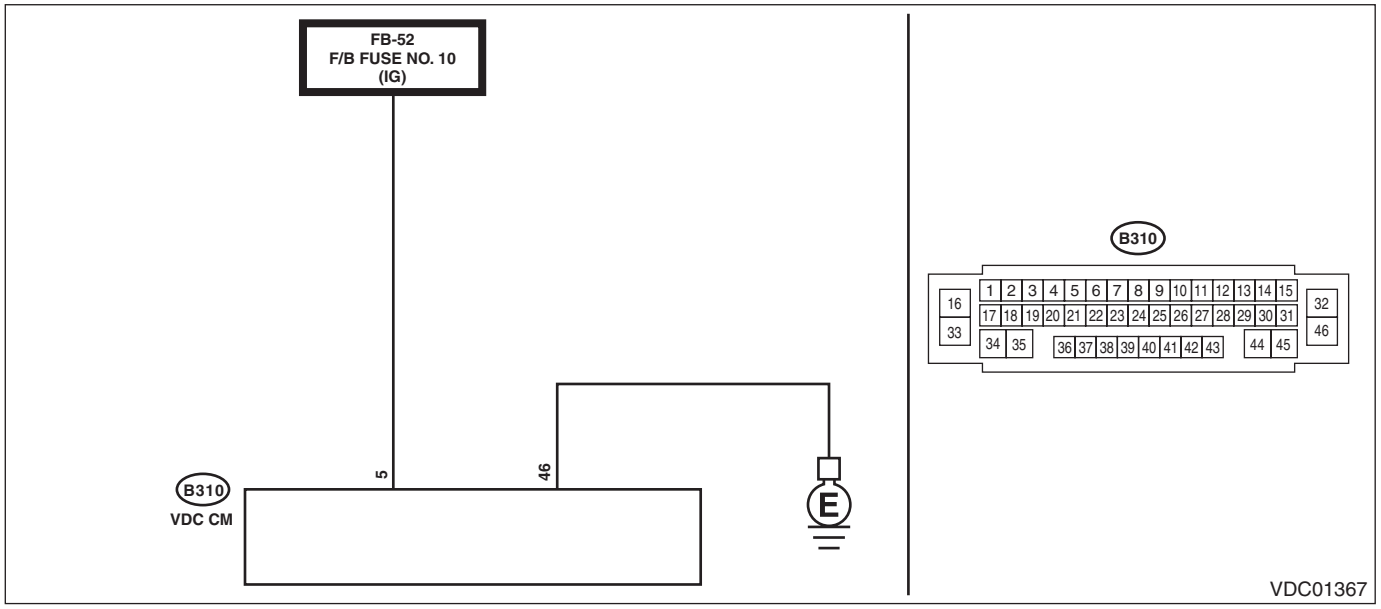

Step		Check	Yes	No
1	**CHECK VDCCM&H/U INPUT VOLTAGE.** 1) Turn the ignition switch to OFF. 2) Disconnect the connector from the VDCCM&H/U. 3) Turn the ignition switch to ON. 4) Measure the voltage between VDCCM&H/U connector and chassis ground. ***Connector & terminal*** ***(B310) No. 5 (+) — Chassis ground (–):***	Is the voltage 10 — 15 V?	Go to step **2**.	Repair the power supply circuit including the fuse.
2	**CHECK VDCCM&H/U GROUND CIRCUIT (CHECK FOR OPEN CIRCUIT).** 1) Turn the ignition switch to OFF. 2) Measure the resistance between VDCCM&H/U connector and chassis ground. ***Connector & terminal*** ***(B310) No. 46 — Chassis ground:***	Is the resistance less than 10 Ω?	Go to step **3**.	Repair the VDCCM&H/U ground circuit.
3	**CHECK INPUT VOLTAGE OF BODY INTEGRATED UNIT.** 1) Using the Subaru Select Monitor, select “Data monitor” in body control system. <Ref. to BC(diag)-20, Read Current Data.> 2) Read the «Voltage of IGN» displayed on the screen.	Is the voltage 10 — 15 V?	Go to step **4**.	Perform the diagnosis for the body control system. <Ref. to BC(diag)-2, Basic Diagnostic Procedure.>

	Step	Check	Yes	No
4	**CHECK LAN SYSTEM.** Check the DTC in LAN system. <Ref. to LAN(diag)-33, OPERATION, Read Diagnostic Trouble Code (DTC).>	Is DTC of LAN system displayed?	Perform the diagnosis according to DTC. <Ref. to LAN(diag)-86, List of Diagnostic Trouble Code (DTC).>	Go to step **5**.
5	**CHECK POOR CONTACT OF CONNECTORS.**	Is there poor contact of power supply circuit, ground circuit and VDCCM&H/U connector?	Repair the connector.	Go to step **6**.
6	**CHECK VDCCM&H/U.** 1) Connect all connectors. 2) Perform the Clear Memory Mode. <Ref. to VDC(diag)-27, Clear Memory Mode.> 3) Perform the Inspection Mode. <Ref. to VDC(diag)-26, Inspection Mode.> 4) Read the DTC. <Ref. to VDC(diag)-25, Read Diagnostic Trouble Code (DTC).>	Is the same DTC displayed?	Replace the VDCCM&H/U. <Ref. to VDC-8, VDC Control Module and Hydraulic Control Unit (VDCCM&H/U).>	Go to step **7**.
7	**CHECK DETECTION OF OTHER DTCS FOR VDC.** <Ref. to VDC(diag)-25, Read Diagnostic Trouble Code (DTC).>	Is any other DTC displayed?	Perform the diagnosis according to DTC. <Ref. to VDC(diag)-40, List of Diagnostic Trouble Code (DTC).>	Currently, it is normal. There may have been a poor contact in the harness and connector or a temporarily noise interference.

AQ:DTC C1942 POWER SUPPLY VOLTAGE

DTC DETECTING CONDITION:
A fault is detected if low voltage is detected during the electronic parking brake operation.
TROUBLE SYMPTOM:
Parking brake system does not operate sometimes.
WIRING DIAGRAM:
Vehicle dynamics control system <Ref. to WI-360, Vehicle Dynamics Control System.>

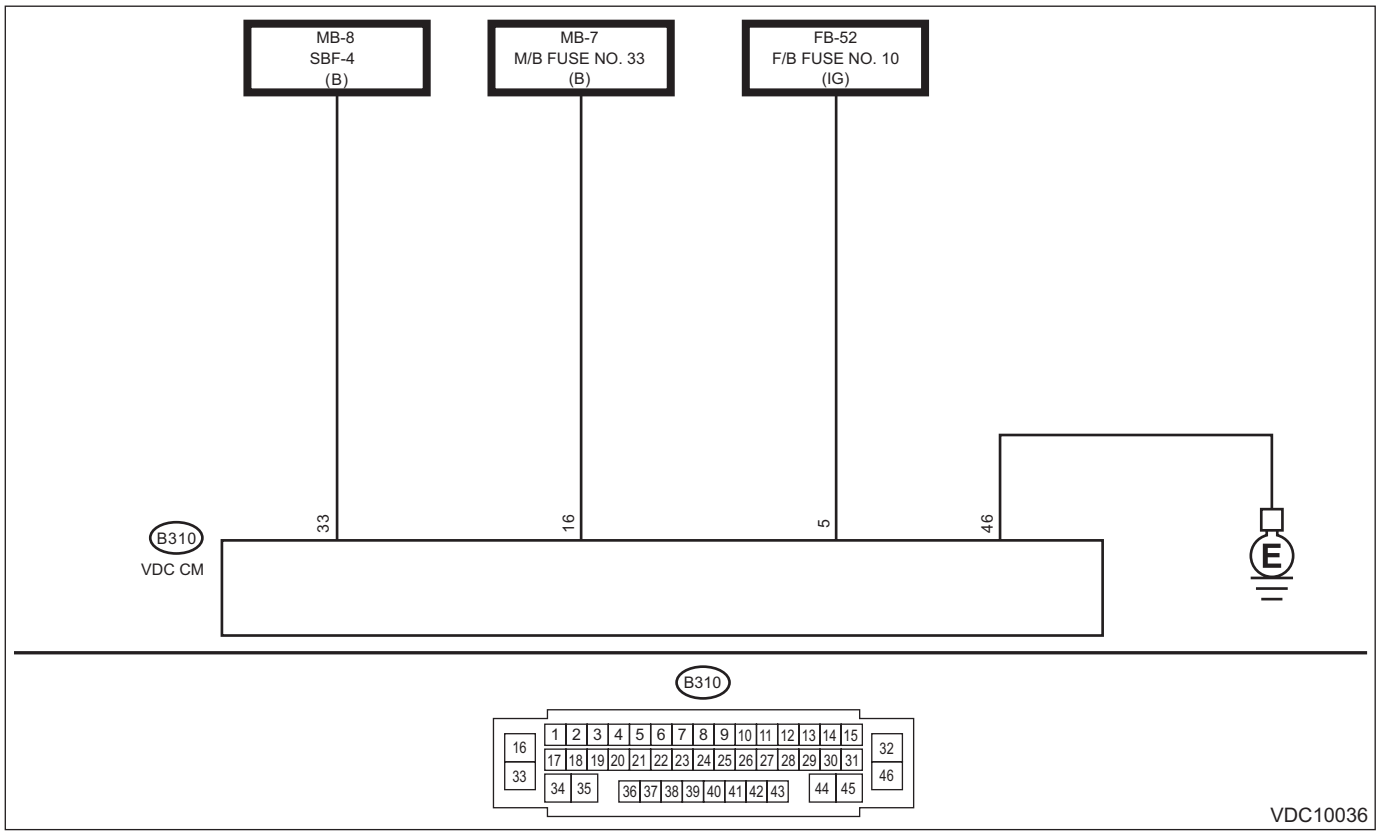

Step		Check	Yes	No
1	**CHECK BATTERY.** 1) Turn the ignition switch to OFF. 2) Check the battery voltage. <Ref. to SC(H4DO)-65, INSPECTION, Battery.> <Ref. to SC(H6DO)-59, INSPECTION, Battery.>	Is the voltage 10 — 15 V?	Go to step **2**.	Charge or replace the battery.
2	**CHECK VDCCM&H/U GROUND CIRCUIT (CHECK FOR OPEN CIRCUIT).** 1) Turn the ignition switch to OFF. 2) Disconnect the connector from the VDCCM&H/U. 3) Measure the resistance between VDCCM&H/U connector and chassis ground. ***Connector & terminal*** ***(B310) No. 46 — Chassis ground:***	Is the resistance less than 10 Ω?	Go to step **3**.	Repair the VDCCM&H/U ground circuit.
3	**CHECK POOR CONTACT OF CONNECTORS.**	Is there poor contact of power supply circuit, ground circuit and VDCCM&H/U connector?	Repair the connector.	Go to step **4**.

	Step	Check	Yes	No
4	**CHECK VDCCM&H/U.** 1) Connect all connectors. 2) Perform the Clear Memory Mode. <Ref. to VDC(diag)-27, Clear Memory Mode.> 3) Perform the Inspection Mode. <Ref. to VDC(diag)-26, Inspection Mode.> 4) Read the DTC. <Ref. to VDC(diag)-25, Read Diagnostic Trouble Code (DTC).>	Is the same DTC displayed?	Replace the VDCCM&H/U. <Ref. to VDC-8, VDC Control Module and Hydraulic Control Unit (VDCCM&H/U).>	Go to step **5**.
5	**CHECK DETECTION OF OTHER DTCS FOR VDC.** <Ref. to VDC(diag)-25, Read Diagnostic Trouble Code (DTC).>	Is any other DTC displayed?	Perform the diagnosis according to DTC. <Ref. to VDC(diag)-40, List of Diagnostic Trouble Code (DTC).>	Currently, it is normal. There may have been a poor contact in the harness and connector or a temporarily noise interference. NOTE: This DTC may be stored if the electronic parking brake is operated during low battery voltage, cranking, or high electric load. Therefore, check the freeze frame data.

AR:DTC C1951 ACTUATOR

DTC DETECTING CONDITION:
A fault is detected if the electronic parking brake operation status does not match the operation request.
TROUBLE SYMPTOM:
Parking brake system does not operate.
WIRING DIAGRAM:

NOTE:
For the coupling connector, refer to “WIRING SYSTEM”.
Parking brake / brake fluid level warning light system <Ref. to WI-294, Parking Brake / Brake Fluid Level Warning Light System.>

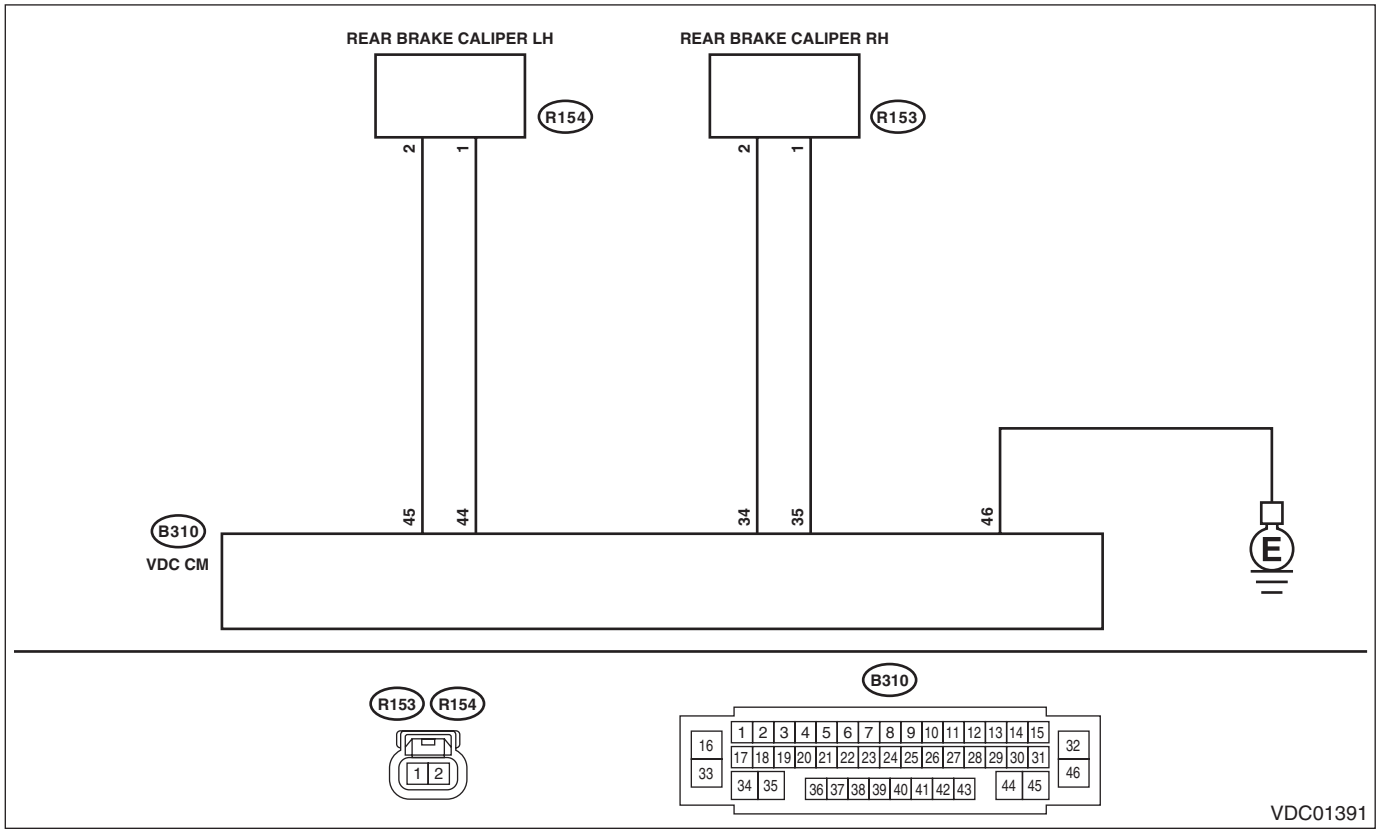

Step		Check	Yes	No
1	**CHECK BATTERY.** 1) Turn the ignition switch to ON. 2) Check the battery voltage. <Ref. to SC(H4DO)-65, INSPECTION, Battery.> <Ref. to SC(H6DO)-59, INSPECTION, Battery.>	Is the voltage 10 — 15 V?	Go to step **2**.	Charge or replace the battery. Check the generator circuit.
2	**CHECK VDCCM&H/U GROUND CIRCUIT (CHECK FOR OPEN CIRCUIT).** 1) Turn the ignition switch to OFF. 2) Disconnect the connector from the VDCCM&H/U. 3) Measure the resistance between VDCCM&H/U connector and chassis ground. ***Connector & terminal*** ***(B310) No. 46 — Chassis ground:***	Is the resistance less than 10 Ω?	Go to step **3**.	Repair the VDCCM&H/U ground circuit.

	Step	Check	Yes	No
3	**CHECK HARNESS (CHECK FOR OPEN CIRCUIT).** 1) Turn the ignition switch to OFF. 2) Disconnect the connectors from rear brake caliper. 3) Measure the resistance between VDCCM&H/U and rear brake caliper connector. ***Connector & terminal*** ***(B310) No. 34 — (R153) No. 2:*** ***(B310) No. 35 — (R153) No. 1:*** ***(B310) No. 44 — (R154) No. 1:*** ***(B310) No. 45 — (R154) No. 2:***	Is the resistance less than 1 Ω?	Go to step **4**.	Repair harness and connector between VDCCM&H/U and rear brake caliper connector.
4	**CHECK POOR CONTACT OF CONNECTORS.**	Is there poor contact of power supply circuit, ground circuit and VDCCM&H/U connector?	Repair the connector.	Go to step **5**.
5	**CHECK DRIVER'S DOOR SWITCH.** Check the driver's door switch. <Ref. to SL-20, CHECK DOOR SWITCH, INSPECTION, Keyless Entry System.>	Is the driver's door switch normal?	Go to step **6**.	Repair the driver's door switch or circuit.
6	**CHECK VDCCM&H/U.** 1) Connect all connectors. 2) Perform the Clear Memory Mode. <Ref. to VDC(diag)-27, Clear Memory Mode.> 3) Set the hill hold function to ON. 4) Read the DTC. <Ref. to VDC(diag)-25, Read Diagnostic Trouble Code (DTC).>	Is the same DTC displayed?	Replace the VDCCM&H/U. <Ref. to VDC-8, VDC Control Module and Hydraulic Control Unit (VDCCM&H/U).>	Go to step **7**.
7	**CHECK DETECTION OF OTHER DTCS FOR VDC.** <Ref. to VDC(diag)-25, Read Diagnostic Trouble Code (DTC).>	Is any other DTC displayed?	Perform the diagnosis according to DTC. <Ref. to VDC(diag)-40, List of Diagnostic Trouble Code (DTC).>	Currently, it is normal. There may have been a poor contact in the harness and connector or a temporarily noise interference. NOTE: This DTC may be stored, if the driver's door is opened while the electronic parking brake is operating. Therefore, check the freeze frame data.

AS:DTC C1954 RH ACTUATOR

DTC DETECTING CONDITION:
A fault is detected if mechanical sticking or abnormal operation of the rear brake caliper RH is detected.
TROUBLE SYMPTOM:
Parking brake system does not operate.
WIRING DIAGRAM:

NOTE:
For the coupling connector, refer to “WIRING SYSTEM”.
Parking brake / brake fluid level warning light system <Ref. to WI-294, Parking Brake / Brake Fluid Level Warning Light System.>

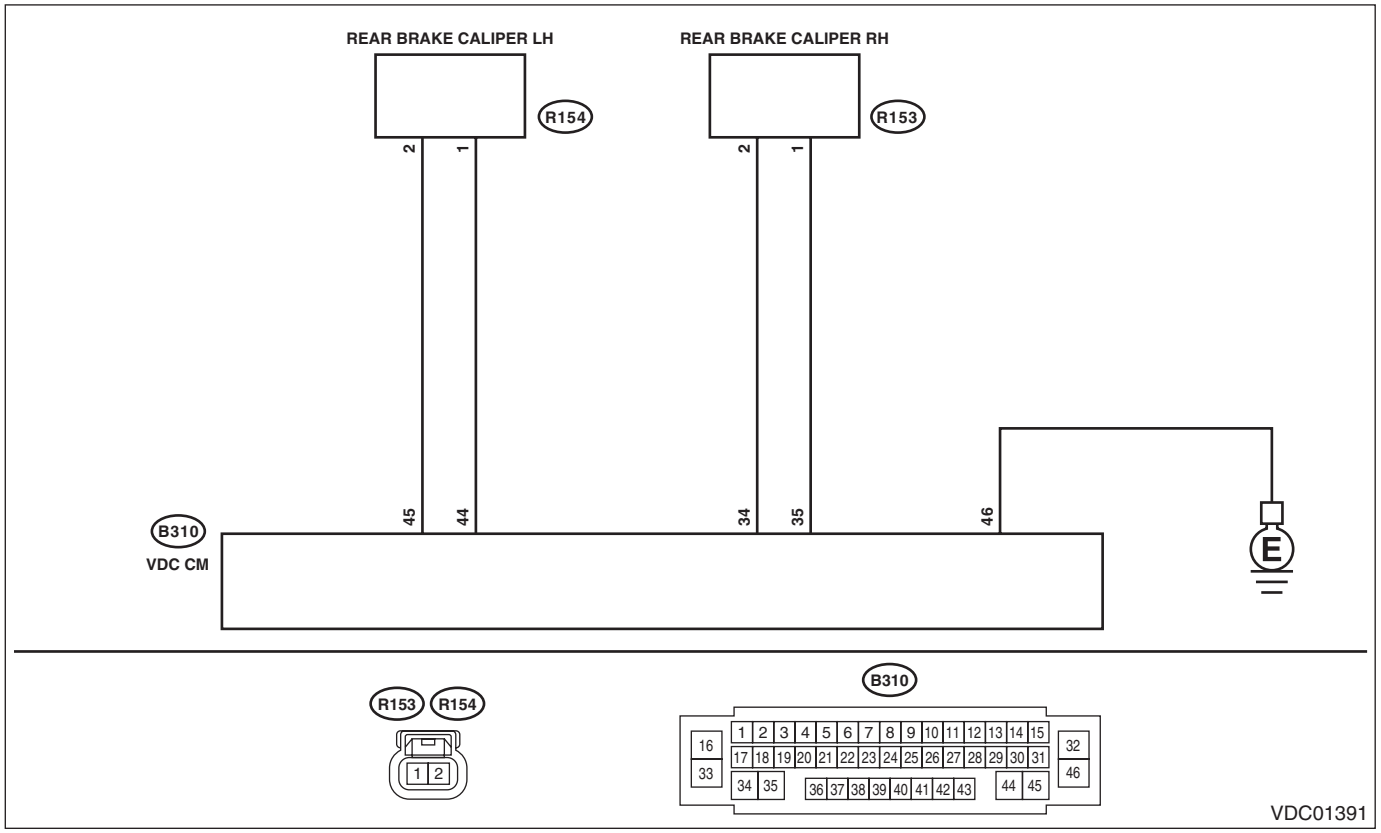

Step		Check	Yes	No
1	**CHECK HARNESS (CHECK FOR OPEN CIRCUIT).** 1) Turn the ignition switch to OFF. 2) Disconnect the connectors from the VDCCM&H/U and rear brake caliper RH. 3) Measure the resistance between VDCCM&H/U and rear brake caliper RH connector. ***Connector & terminal*** ***(B310) No. 34 — (R153) No. 2:*** ***(B310) No. 35 — (R153) No. 1:***	Is the resistance less than 1 Ω?	Go to step **2**.	Repair harness and connector between VDCCM&H/U and rear brake caliper RH connector.
2	**CHECK HARNESS (CHECK FOR GROUND SHORT CIRCUIT).** Measure the resistance between the rear brake caliper RH connector and chassis ground. ***Connector & terminal*** ***(R153) No. 1 — Chassis ground:*** ***(R153) No. 2 — Chassis ground:***	Is the resistance 1 MΩ or more?	Go to step **3**.	Repair ground short of harness between VDCCM&H/U and rear brake caliper RH connector.

	Step	Check	Yes	No
3	**CHECK HARNESS (CHECK FOR SHORT CIRCUIT TO POWER SUPPLY).** 1) Turn the ignition switch to ON. 2) Measure the voltage between the rear brake caliper RH connector and chassis ground. ***Connector & terminal*** ***(R153) No. 1 (+) — Chassis ground (–):*** ***(R153) No. 2 (+) — Chassis ground (–):***	Is the voltage less than 1 V?	Go to step **4**.	Repair short to power supply of harness between VDCCM&H/U and rear brake caliper RH connector.
4	**CHECK POOR CONTACT OF CONNECTORS.**	Is there poor contact of power supply circuit, ground circuit and VDCCM&H/U connector?	Repair the connector.	Go to step **5**.
5	**CHECK REPEATABILITY.** 1) Connect all connectors. 2) Perform the Clear Memory Mode. <Ref. to VDC(diag)-27, Clear Memory Mode.> 3) Perform the Inspection Mode. <Ref. to VDC(diag)-26, Inspection Mode.> 4) Read the DTC. <Ref. to VDC(diag)-25, Read Diagnostic Trouble Code (DTC).>	Is the same DTC displayed?	Go to step **6**.	Temporary poor contact occurs.
6	**CHECK REAR BRAKE CALIPER.** 1) Turn the ignition switch to OFF. 2) Disconnect the connectors from rear brake caliper RH. 3) Measure the resistance between rear brake caliper RH terminals. ***Terminals*** ***No. 1 — No. 2:***	Is the resistance less than 100 Ω?	Replace the VDCCM&H/U. <Ref. to VDC-8, VDC Control Module and Hydraulic Control Unit (VDCCM&H/U).>	Replace the rear brake caliper RH. <Ref. to BR-45, Rear Disc Brake Assembly.>

AT:DTC C1955 LH ACTUATOR

DTC DETECTING CONDITION:
A fault is detected if mechanical sticking or abnormal operation of the rear brake caliper LH is detected.
TROUBLE SYMPTOM:
Parking brake system does not operate.
WIRING DIAGRAM:

NOTE:
For the coupling connector, refer to “WIRING SYSTEM”.
Parking brake / brake fluid level warning light system <Ref. to WI-294, Parking Brake / Brake Fluid Level Warning Light System.>

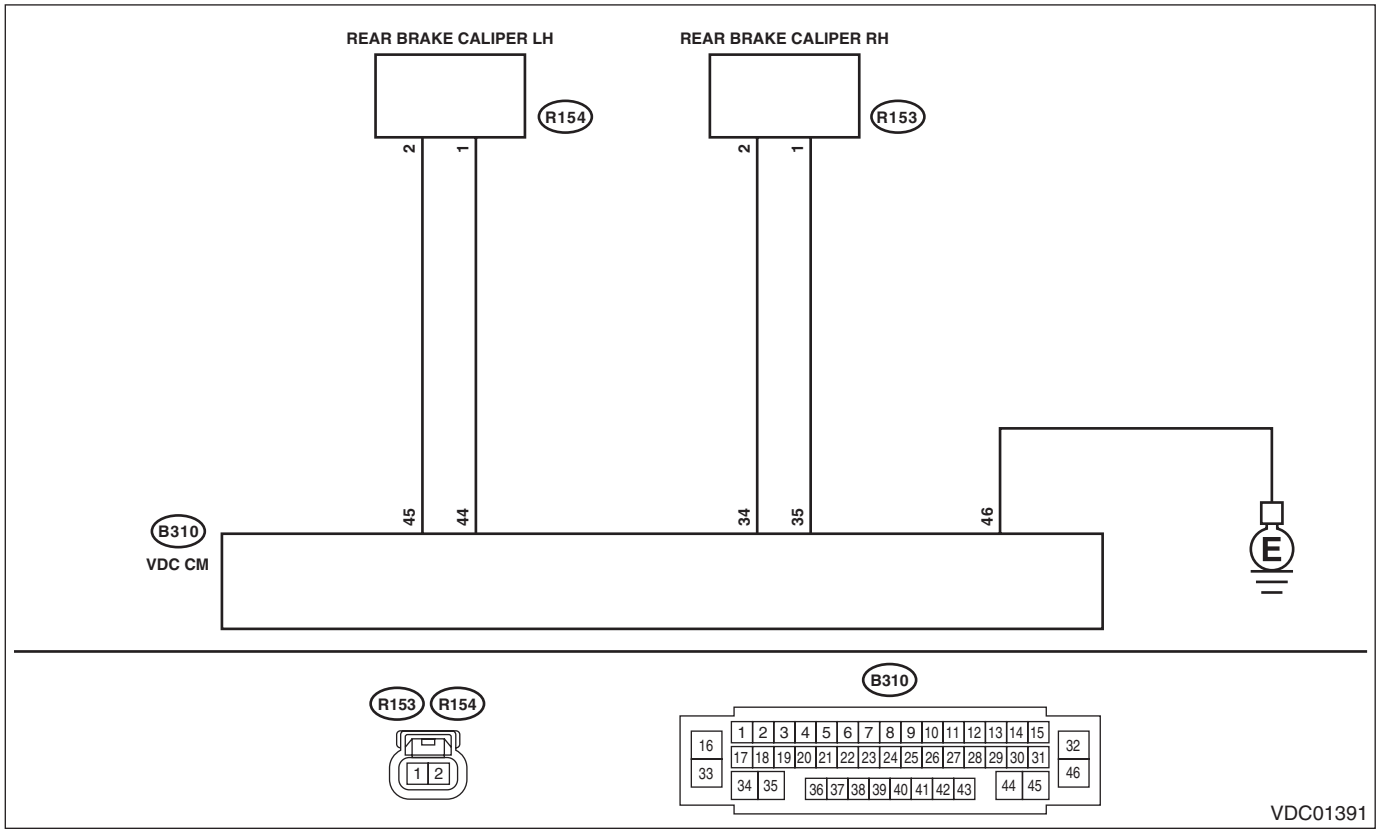

Step		Check	Yes	No
1	**CHECK HARNESS (CHECK FOR OPEN CIRCUIT).** 1) Turn the ignition switch to OFF. 2) Disconnect the connectors from the VDCCM&H/U and rear brake caliper LH. 3) Measure the resistance between VDCCM&H/U and rear brake caliper LH connector. ***Connector & terminal*** ***(B310) No. 44 — (R154) No. 1:*** ***(B310) No. 45 — (R154) No. 2:***	Is the resistance less than 1 Ω?	Go to step **2**.	Repair harness and connector between VDCCM&H/U and rear brake caliper LH connector.
2	**CHECK HARNESS (CHECK FOR GROUND SHORT CIRCUIT).** Measure the resistance between the rear brake caliper LH connector and chassis ground. ***Connector & terminal*** ***(R154) No. 2 — Chassis ground:*** ***(R154) No. 1 — Chassis ground:***	Is the resistance 1 MΩ or more?	Go to step **3**.	Repair ground short of harness between VDCCM&H/U and rear brake caliper LH connector.

	Step	Check	Yes	No
3	**CHECK HARNESS (CHECK FOR SHORT CIRCUIT TO POWER SUPPLY).** 1) Turn the ignition switch to ON. 2) Measure the voltage between the rear brake caliper LH connector and chassis ground. ***Connector & terminal*** ***(R154) No. 2 (+) — Chassis ground (–):*** ***(R154) No. 1 (+) — Chassis ground (–):***	Is the voltage less than 1 V?	Go to step **4**.	Repair short to power supply of harness between VDCCM&H/U and rear brake caliper LH connector.
4	**CHECK POOR CONTACT OF CONNECTORS.**	Is there poor contact of power supply circuit, ground circuit and VDCCM&H/U connector?	Repair the connector.	Go to step **5**.
5	**CHECK REPEATABILITY.** 1) Connect all connectors. 2) Perform the Clear Memory Mode. <Ref. to VDC(diag)-27, Clear Memory Mode.> 3) Perform the Inspection Mode. <Ref. to VDC(diag)-26, Inspection Mode.> 4) Read the DTC. <Ref. to VDC(diag)-25, Read Diagnostic Trouble Code (DTC).>	Is the same DTC displayed?	Go to step **6**.	Temporary poor contact occurs.
6	**CHECK REAR BRAKE CALIPER.** 1) Turn the ignition switch to OFF. 2) Disconnect the connectors from rear brake caliper LH. 3) Measure the resistance between rear brake caliper LH terminals. ***Terminals*** ***No. 1 — No. 2:***	Is the resistance less than 100 Ω?	Replace the VDCCM&H/U. <Ref. to VDC-8, VDC Control Module and Hydraulic Control Unit (VDCCM&H/U).>	Replace the rear brake caliper LH. <Ref. to BR-45, Rear Disc Brake Assembly.>

AU:DTC C1956 RH ACTUATOR CIRCUIT

DTC DETECTING CONDITION:

- A fault is detected, if the motor control mismatch occurs during the motor operation.
- A fault is detected if the motor circuit or harness is open or shorted.

TROUBLE SYMPTOM:

Parking brake system does not operate.

NOTE:

This DTC may be stored when the rear brake caliper connector is disconnected regardless of the ignition switch condition (ON/OFF). Perform the Clear Memory Mode after diagnosis if a DTC is recorded. <Ref. to VDC(diag)-27, Clear Memory Mode.>

WIRING DIAGRAM:

NOTE:

For the coupling connector, refer to “WIRING SYSTEM”.

Parking brake / brake fluid level warning light system <Ref. to WI-294, Parking Brake / Brake Fluid Level Warning Light System.>

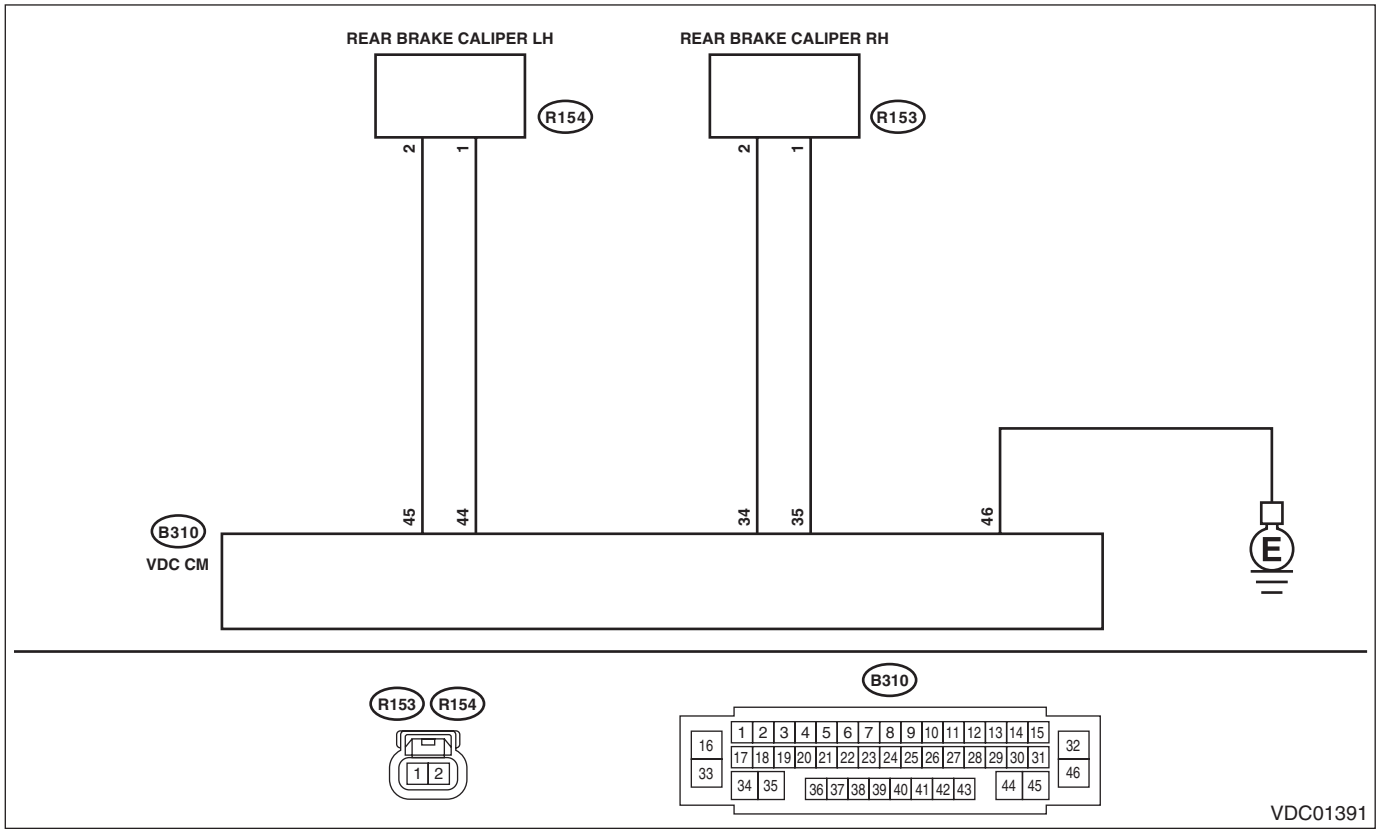

Step		Check	Yes	No
1	**CHECK HARNESS (CHECK FOR OPEN CIRCUIT).** 1) Turn the ignition switch to OFF. 2) Disconnect the connectors from the VDCCM&H/U and rear brake caliper RH. 3) Measure the resistance between VDCCM&H/U and rear brake caliper RH connector. ***Connector & terminal*** ***(B310) No. 34 — (R153) No. 2:*** ***(B310) No. 35 — (R153) No. 1:***	Is the resistance less than 1 Ω?	Go to step **2**.	Repair harness and connector between VDCCM&H/U and rear brake caliper RH connector.

	Step	Check	Yes	No
2	**CHECK HARNESS (CHECK FOR GROUND SHORT CIRCUIT).** Measure the resistance between the rear brake caliper RH connector and chassis ground. ***Connector & terminal*** ***(R153) No. 1 — Chassis ground:*** ***(R153) No. 2 — Chassis ground:***	Is the resistance 1 MΩ or more?	Go to step **3**.	Repair ground short of harness between VDCCM&H/U and rear brake caliper RH connector.
3	**CHECK HARNESS (CHECK FOR SHORT CIRCUIT TO POWER SUPPLY).** 1) Turn the ignition switch to ON. 2) Measure the voltage between the rear brake caliper RH connector and chassis ground. ***Connector & terminal*** ***(R153) No. 1 (+) — Chassis ground (–):*** ***(R153) No. 2 (+) — Chassis ground (–):***	Is the voltage less than 1 V?	Go to step **4**.	Repair short to power supply of harness between VDCCM&H/U and rear brake caliper RH connector.
4	**CHECK POOR CONTACT OF CONNECTORS.**	Is there poor contact of power supply circuit, ground circuit and VDCCM&H/U connector?	Repair the connector.	Go to step **5**.
5	**CHECK REAR BRAKE CALIPER.** 1) Turn the ignition switch to OFF. 2) Disconnect the connectors from rear brake caliper RH. 3) Measure the resistance between rear brake caliper RH terminals. ***Terminals*** ***No. 1 — No. 2:***	Is the resistance less than 100 Ω?	Replace the VDCCM&H/U. <Ref. to VDC-8, VDC Control Module and Hydraulic Control Unit (VDCCM&H/U).>	Replace the rear brake caliper RH. <Ref. to BR-45, Rear Disc Brake Assembly.>

AV:DTC C1957 LH ACTUATOR CIRCUIT

DTC DETECTING CONDITION:

- A fault is detected, if the motor control mismatch occurs during the motor operation.
- A fault is detected if the motor circuit or harness is open or shorted.

TROUBLE SYMPTOM:

Parking brake system does not operate.

NOTE:

This DTC may be stored when the rear brake caliper connector is disconnected regardless of the ignition switch condition (ON/OFF). Perform the Clear Memory Mode after diagnosis if a DTC is recorded. <Ref. to VDC(diag)-27, Clear Memory Mode.>

WIRING DIAGRAM:

NOTE:

For the coupling connector, refer to “WIRING SYSTEM”.

Parking brake / brake fluid level warning light system <Ref. to WI-294, Parking Brake / Brake Fluid Level Warning Light System.>

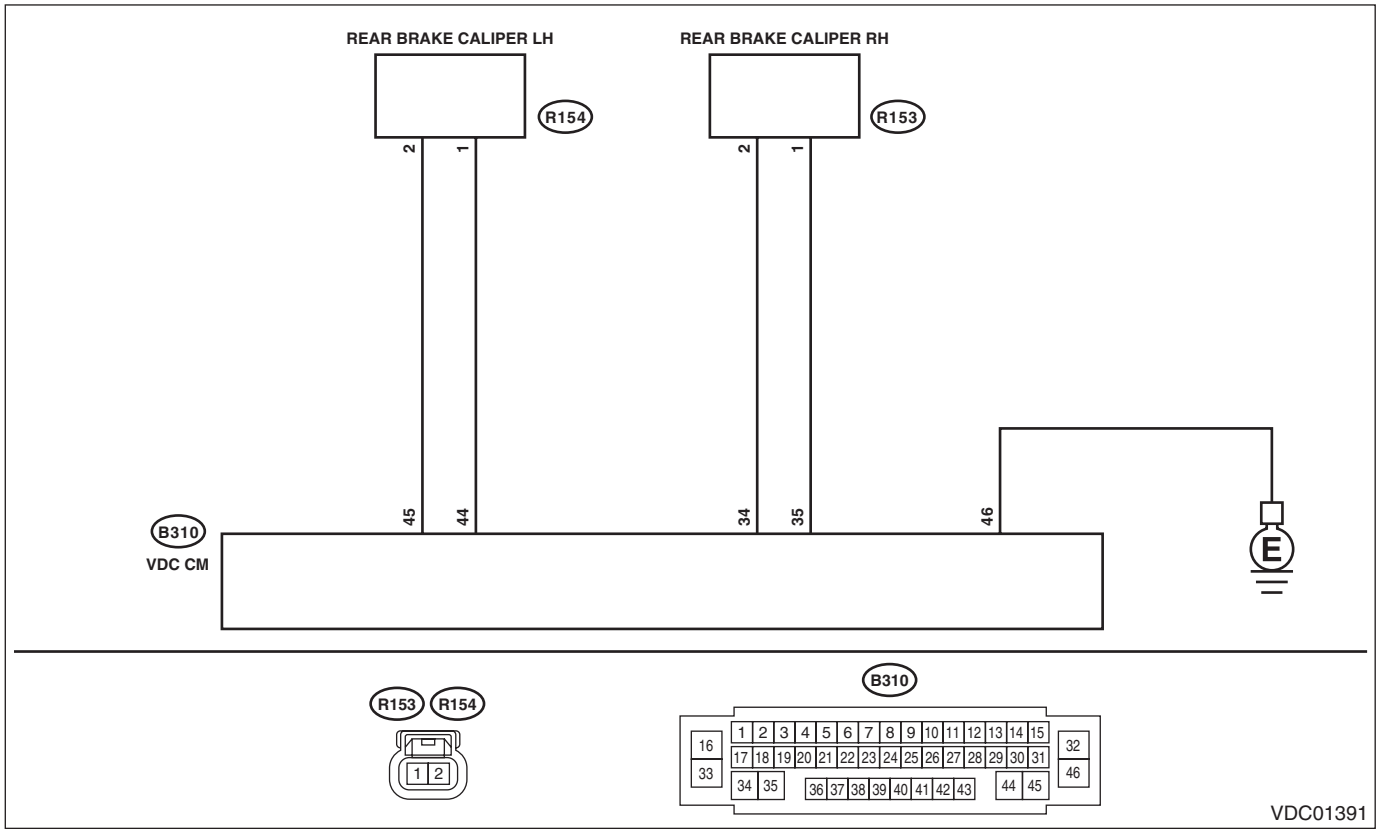

Step		Check	Yes	No
1	**CHECK HARNESS (CHECK FOR OPEN CIRCUIT).** 1) Turn the ignition switch to OFF. 2) Disconnect the connectors from the VDCCM&H/U and rear brake caliper LH. 3) Measure the resistance between VDCCM&H/U and rear brake caliper LH connector. ***Connector & terminal*** ***(B310) No. 44 — (R154) No. 1:*** ***(B310) No. 45 — (R154) No. 2:***	Is the resistance less than 1 Ω?	Go to step **2**.	Repair harness and connector between VDCCM&H/U and rear brake caliper LH connector.

	Step	Check	Yes	No
2	**CHECK HARNESS (CHECK FOR GROUND SHORT CIRCUIT).** Measure the resistance between the rear brake caliper LH connector and chassis ground. ***Connector & terminal*** ***(R154) No. 2 — Chassis ground:*** ***(R154) No. 1 — Chassis ground:***	Is the resistance 1 MΩ or more?	Go to step **3**.	Repair ground short of harness between VDCCM&H/U and rear brake caliper LH connector.
3	**CHECK HARNESS (CHECK FOR SHORT CIRCUIT TO POWER SUPPLY).** 1) Turn the ignition switch to ON. 2) Measure the voltage between the rear brake caliper LH connector and chassis ground. ***Connector & terminal*** ***(R154) No. 2 (+) — Chassis ground (–):*** ***(R154) No. 1 (+) — Chassis ground (–):***	Is the voltage less than 1 V?	Go to step **4**.	Repair short to power supply of harness between VDCCM&H/U and rear brake caliper LH connector.
4	**CHECK POOR CONTACT OF CONNECTORS.**	Is there poor contact of power supply circuit, ground circuit and VDCCM&H/U connector?	Repair the connector.	Go to step **5**.
5	**CHECK REAR BRAKE CALIPER.** 1) Turn the ignition switch to OFF. 2) Disconnect the connectors from rear brake caliper LH. 3) Measure the resistance between rear brake caliper LH terminals. ***Terminals*** ***No. 1 — No. 2:***	Is the resistance less than 100 Ω?	Replace the VDCCM&H/U. <Ref. to VDC-8, VDC Control Module and Hydraulic Control Unit (VDCCM&H/U).>	Replace the rear brake caliper LH. <Ref. to BR-45, Rear Disc Brake Assembly.>

AW:DTC C1971 CLUTCH SENSOR

DTC DETECTING CONDITION:
A fault is detected if electrical malfunction is detected for clutch stroke sensor.
TROUBLE SYMPTOM:
Parking brake system does not operate.
WIRING DIAGRAM:
Vehicle dynamics control system <Ref. to WI-360, Vehicle Dynamics Control System.>

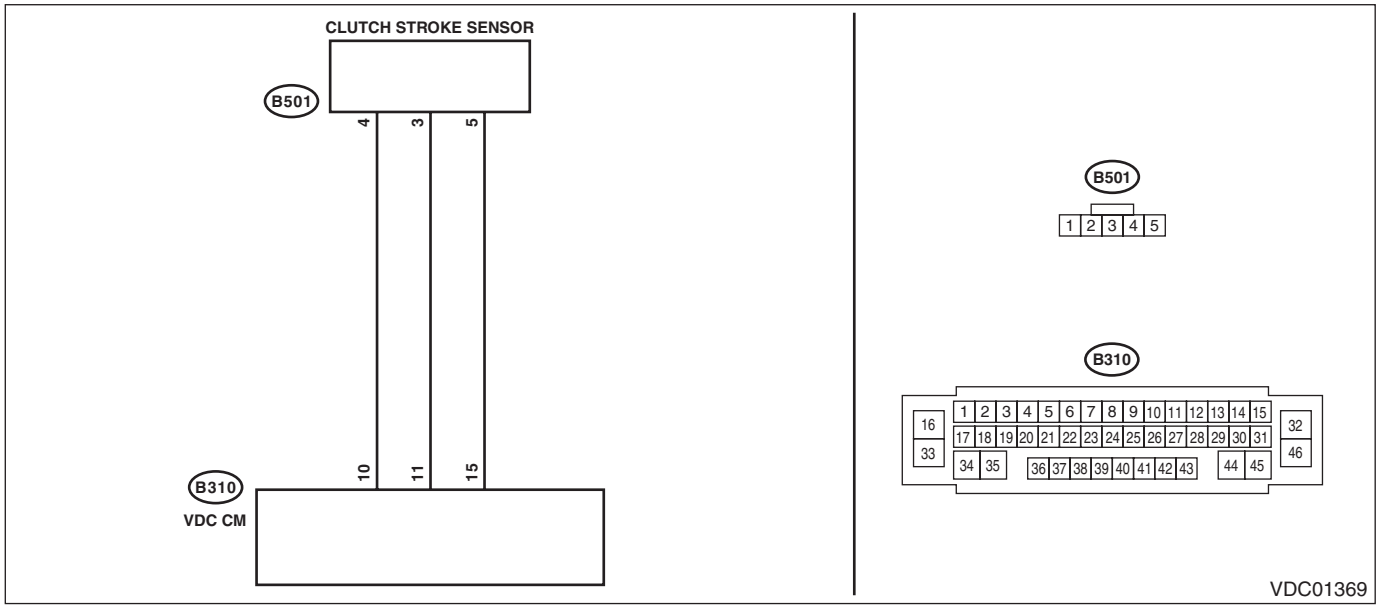

	Step	Check	Yes	No
1	**CHECK OUTPUT OF CLUTCH STROKE SENSOR USING SUBARU SELECT MONITOR.** 1) Using the Subaru Select Monitor, select "Data monitor". <Ref. to VDC(diag)-19, READ CURRENT DATA, OPERATION, Subaru Select Monitor.> 2) Read the «Clutch stroke sensor» displayed on the screen.	When the clutch pedal is operated, does the stroke sensor output value displayed on the screen change in accordance with the clutch pedal?	Go to step **7**.	Go to step **2**.
2	**CHECK HARNESS.** 1) Turn the ignition switch to OFF. 2) Disconnect the connector from clutch stroke sensor. 3) Turn the ignition switch to ON. 4) Measure the voltage between clutch stroke sensor connector terminals. ***Connector & terminal*** ***(B501) No. 3 (+) — (B501) No. 5 (–):***	Is the voltage 4.5 V or more?	Go to step **3**.	Repair the power supply circuit of clutch stroke sensor.
3	**CHECK HARNESS (CHECK FOR OPEN CIRCUIT).** 1) Turn the ignition switch to OFF. 2) Disconnect the connector from the VDCCM&H/U. 3) Measure the resistance of harness between clutch stroke sensor and VDCCM&H/U connector. ***Connector & terminal*** ***(B501) No. 3 — (B310) No. 11:*** ***(B501) No. 4 — (B310) No. 10:*** ***(B501) No. 5 — (B310) No. 15:***	Is the resistance less than 1 Ω?	Go to step **4**.	Repair the harness and connector between clutch stroke sensor and VDCCM&H/U connector.

	Step	Check	Yes	No
4	**CHECK HARNESS (CHECK FOR GROUND SHORT CIRCUIT).** Measure the resistance of harness between clutch stroke sensor and chassis ground. ***Connector & terminal*** ***(B501) No. 3 — Chassis ground:*** ***(B501) No. 4 — Chassis ground:*** ***(B501) No. 5 — Chassis ground:***	Is the resistance 1 MΩ or more?	Go to step **5**.	Repair the ground short of harness between clutch stroke sensor and VDCCM&H/U connector.
5	**CHECK HARNESS (CHECK FOR SHORT CIRCUIT TO POWER SUPPLY).** 1) Turn the ignition switch to ON. 2) Measure the voltage between clutch stroke sensor and chassis ground. ***Connector & terminal*** ***(B501) No. 3 (+) — Chassis ground (–):*** ***(B501) No. 4 (+) — Chassis ground (–):*** ***(B501) No. 5 (+) — Chassis ground (–):***	Is the voltage less than 1 V?	Go to step **6**.	Repair short to power supply of harness between clutch stroke sensor and VDCCM&H/U connector.
6	**CHECK CLUTCH STROKE SENSOR OUTPUT.** 1) Connect all connectors. 2) Turn the ignition switch to ON. 3) Using an oscilloscope, check clutch stroke sensor output. ***Connector & terminal*** ***(B501) No. 4 (+) — Chassis ground (–):***	Is there any output? (Does a cyclic rectangular wave appear?)	Go to step **7**.	Replace the clutch stroke sensor.
7	**CHECK POOR CONTACT OF CONNECTORS.**	Is there poor contact of connector between VDCCM&H/U and clutch stroke sensor?	Repair the connector.	Go to step **8**.
8	**CHECK VDCCM&H/U.** 1) Connect all connectors. 2) Perform the Clear Memory Mode. <Ref. to VDC(diag)-27, Clear Memory Mode.> 3) Read the DTC. <Ref. to VDC(diag)-25, Read Diagnostic Trouble Code (DTC).>	Is the same DTC displayed?	Replace the VDCCM&H/U. <Ref. to VDC-8, VDC Control Module and Hydraulic Control Unit (VDCCM&H/U).>	Go to step **9**.
9	**CHECK DETECTION OF OTHER DTCS FOR VDC.** <Ref. to VDC(diag)-25, Read Diagnostic Trouble Code (DTC).>	Is any other DTC displayed?	Perform the diagnosis according to DTC. <Ref. to VDC(diag)-40, List of Diagnostic Trouble Code (DTC).>	Currently, it is normal. There may have been a poor contact in the harness and connector or a temporarily noise interference.

AX:DTC C1983 HIGH FREQUENCY OPERATION

DTC DETECTING CONDITION:

This malfunction is stored if the electronic parking brake is operated with high frequency in a short period of time.

TROUBLE SYMPTOM:

Parking brake system does not operate sometimes.

	Step	Check	Yes	No
1	**CHECK OUTPUT OF AMBIENT SENSOR USING SUBARU SELECT MONITOR.** 1) Using the Subaru Select Monitor, select "Data monitor". <Ref. to VDC(diag)-19, READ CURRENT DATA, OPERATION, Subaru Select Monitor.> 2) Read the «Ambient Temp Sensor» displayed on the screen.	Is the ambient sensor output value displayed on the monitor within the range of ±10°C from the ambient temperature?	Go to step **2**.	Repair the ambient sensor circuit.
2	**CHECK VDCCM&H/U.** 1) Turn the ignition switch to OFF. 2) Stop the vehicle for approximately one hour. 3) Perform the Clear Memory Mode. <Ref. to VDC(diag)-27, Clear Memory Mode.> 4) Perform the Inspection Mode. <Ref. to VDC(diag)-26, Inspection Mode.> 5) Read the DTC. <Ref. to VDC(diag)-25, Read Diagnostic Trouble Code (DTC).>	Is the same DTC displayed?	Replace the VDCCM&H/U. <Ref. to VDC-8, VDC Control Module and Hydraulic Control Unit (VDCCM&H/U).>	Go to step **3**.
3	**CHECK DETECTION OF OTHER DTCS FOR VDC.** <Ref. to VDC(diag)-25, Read Diagnostic Trouble Code (DTC).>	Is any other DTC displayed?	Perform the diagnosis according to DTC. <Ref. to VDC(diag)-40, List of Diagnostic Trouble Code (DTC).>	Currently, it is normal. There may have been a poor contact in the harness and connector or a temporarily noise interference. NOTE: This DTC may be stored if the electronic parking brake is operated continuously.

AY:DTC C1984 BRAKE MAINTENANCE MODE

DTC DETECTING CONDITION:
This malfunction is stored when the brake maintenance mode is in progress.
TROUBLE SYMPTOM:
Parking brake system does not operate.

	Step	Check	Yes	No
1	**CHECK ELECTRONIC PARKING MODE.**	Is the brake maintenance mode in progress?	Currently, it is normal. This DTC is stored when the brake maintenance mode is in progress. <Ref. to VDC-16, BRAKE MAINTENANCE MODE, MAINTENANCE MODE, VDC Control Module and Hydraulic Control Unit (VDCCM&H/U).> DTC will be cleared when the maintenance mode is finished by following the procedure.	Go to step **2**.
2	**CHECK OPERATION OF ELECTRONIC PARKING BRAKE.** 1) Perform the Clear Memory Mode. <Ref. to VDC(diag)-27, Clear Memory Mode.> 2) Apply the electronic parking brake several times. 3) Read the DTC. <Ref. to VDC(diag)-25, Read Diagnostic Trouble Code (DTC).>	Is DTC stored even though the electronic parking brake operates?	Replace the VDCCM&H/U. <Ref. to VDC-8, VDC Control Module and Hydraulic Control Unit (VDCCM&H/U).>	Go to step **3**.
3	**CHECK DETECTION OF OTHER DTCS FOR VDC.** <Ref. to VDC(diag)-25, Read Diagnostic Trouble Code (DTC).>	Is any other DTC displayed?	Perform the diagnosis according to DTC. <Ref. to VDC(diag)-40, List of Diagnostic Trouble Code (DTC).> Perform the diagnosis from step 1 again, and if the same DTC is stored, replace the VDCCM&H/U. <Ref. to VDC-8, VDC Control Module and Hydraulic Control Unit (VDCCM&H/U).>	Currently, it is normal. Temporary interference from noise is a possible cause.

AZ:DTC C1985 FORBIDDEN STATE OF DYNAMIC ACTUATOR OPERATION

DTC DETECTING CONDITION:
This malfunction is stored if dynamic parking through the electronic parking brake actuator does not operate.
TROUBLE SYMPTOM:
Parking brake system does not operate.

	Step	Check	Yes	No
1	**CHECK DETECTION OF OTHER DTCS FOR VDC.** <Ref. to VDC(diag)-25, Read Diagnostic Trouble Code (DTC).>	Is any other DTC displayed?	Perform the diagnosis according to DTC. <Ref. to VDC(diag)-40, List of Diagnostic Trouble Code (DTC).> NOTE: This DTC is stored for other malfunctions.	Go to step **2**.
2	**CHECK OPERATION OF ELECTRONIC PARKING BRAKE.** 1) Perform the Clear Memory Mode. <Ref. to VDC(diag)-27, Clear Memory Mode.> 2) Perform the Inspection Mode. <Ref. to VDC(diag)-26, Inspection Mode.>	Does it operate properly?	Currently, it is normal. Temporary interference from noise is a possible cause.	Replace the VDCCM&H/U. <Ref. to VDC-8, VDC Control Module and Hydraulic Control Unit (VDCCM&H/U).>

BA:DTC U0073 CONTROL MODULE COMMUNICATION BUS OFF

NOTE:
Refer to “LAN SYSTEM (DIAGNOSTICS)” for diagnostic procedure. <Ref. to LAN(diag)-2, Basic Diagnostic Procedure.>

BB:DTC U0100 LOST COMMUNICATION WITH ECM/PCM "A"

NOTE:
Refer to “LAN SYSTEM (DIAGNOSTICS)” for diagnostic procedure. <Ref. to LAN(diag)-2, Basic Diagnostic Procedure.>

BC:DTC U0101 LOST COMMUNICATION WITH TCM

NOTE:
Refer to “LAN SYSTEM (DIAGNOSTICS)” for diagnostic procedure. <Ref. to LAN(diag)-2, Basic Diagnostic Procedure.>

BD:DTC U0126 LOST COMMUNICATION WITH STEERING ANGLE SENSOR MODULE

NOTE:
Refer to “LAN SYSTEM (DIAGNOSTICS)” for diagnostic procedure. <Ref. to LAN(diag)-2, Basic Diagnostic Procedure.>

BE:DTC U0140 LOST COMMUNICATION WITH BODY CONTROL MODULE

NOTE:
Refer to “LAN SYSTEM (DIAGNOSTICS)” for diagnostic procedure. <Ref. to LAN(diag)-2, Basic Diagnostic Procedure.>

BF:DTC U0155 LOST COMMUNICATION WITH INSTRUMENT PANEL CLUSTER (IPC) CONTROL MODULE

NOTE:
Refer to “LAN SYSTEM (DIAGNOSTICS)” for diagnostic procedure. <Ref. to LAN(diag)-2, Basic Diagnostic Procedure.>

BG:DTC U0401 INVALID DATA RECEIVED FROM ECM/PCM "A"

NOTE:
Refer to “LAN SYSTEM (DIAGNOSTICS)” for diagnostic procedure. <Ref. to LAN(diag)-2, Basic Diagnostic Procedure.>

BH:DTC U0402 INVALID DATA RECEIVED FROM TCM

NOTE:
Refer to “LAN SYSTEM (DIAGNOSTICS)” for diagnostic procedure. <Ref. to LAN(diag)-2, Basic Diagnostic Procedure.>

BI: DTC U0422 INVALID DATA RECEIVED FROM BODY CONTROL MODULE

NOTE:
Refer to “LAN SYSTEM (DIAGNOSTICS)” for diagnostic procedure. <Ref. to LAN(diag)-2, Basic Diagnostic Procedure.>

BJ:DTC U0423 INVALID DATA RECEIVED FROM INSTRUMENT PANEL CLUSTER CONTROL MODULE

NOTE:
Refer to “LAN SYSTEM (DIAGNOSTICS)” for diagnostic procedure. <Ref. to LAN(diag)-2, Basic Diagnostic Procedure.>

BK:DTC U0428 INVALID DATA RECEIVED FROM STEERING ANGLE SENSOR MODULE

NOTE:
Refer to “LAN SYSTEM (DIAGNOSTICS)” for diagnostic procedure. <Ref. to LAN(diag)-2, Basic Diagnostic Procedure.>

BL:DTC U1235 LOST COMMUNICATION WITH EyeSight

NOTE:
Refer to “LAN SYSTEM (DIAGNOSTICS)” for diagnostic procedure. <Ref. to LAN(diag)-2, Basic Diagnostic Procedure.>

BM:DTC U1433 INVALID DATA RECEIVED FROM EyeSight

NOTE:
Refer to “LAN SYSTEM (DIAGNOSTICS)” for diagnostic procedure. <Ref. to LAN(diag)-2, Basic Diagnostic Procedure.>

13.General Diagnostic Table

A: INSPECTION

Symptoms		Main probable cause	Other probable cause
Poor brake performance	Long braking/ stopping distance	• VDCCM&H/U • Brake pad • Aeration to brake line • Tire specifications, tire wear and air pressures • Incorrect wiring or piping connections	• Defective ABS wheel speed sensor or sensor gap • Defective steering angle sensor or improper neutral position • Defective yaw rate & G sensor or improper installation of VDCCM&H/U. • Master cylinder • Brake caliper • Disc rotor • Brake pipe • Brake booster
	Wheel lock	• VDCCM&H/U • Defective ABS wheel speed sensor or sensor gap • Incorrect wiring or piping connections	• Defective steering angle sensor or improper neutral position • Defective yaw rate & G sensor or improper installation of VDCCM&H/U. • Brake caliper • Brake pipe
	Brake drag	• VDCCM&H/U • Defective ABS wheel speed sensor or sensor gap • Master cylinder • Brake caliper • Parking brake • Axle and wheels • Brake pedal play	• Defective steering angle sensor or improper neutral position • Defective yaw rate & G sensor or improper installation of VDCCM&H/U. • Brake pad • Brake pipe
	Long brake pedal stroke	• Aeration to brake line • Brake pedal play	• VDCCM&H/U • Master cylinder • Brake caliper • Brake pad • Brake pipe • Brake booster
	Vehicle vertical pitching	• VDCCM&H/U • Road surface (uneven) • Suspension play or fatigue (reduced damping) • Incorrect wiring or piping connections	• Defective ABS wheel speed sensor or sensor gap • Defective steering angle sensor or improper neutral position • Defective yaw rate & G sensor or improper installation of VDCCM&H/U.
Poor brake performance	Unstable or uneven braking	• VDCCM&H/U • Defective ABS wheel speed sensor or sensor gap • Brake caliper • Brake pad • Road surface (uneven) • Tire specifications, tire wear and air pressures • Incorrect wiring or piping connections	• Defective ABS wheel speed sensor or sensor gap • Defective steering angle sensor or improper neutral position • Defective yaw rate & G sensor or improper installation of VDCCM&H/U. • Master cylinder • Disc rotor • Brake pipe • Axle and wheels • Road with crowns or banks • Suspension play or fatigue (reduced damping)

General Diagnostic Table

Symptoms		Main probable cause	Other probable cause
Vibration or noise • When braking suddenly • When accelerating suddenly • While driving on a slippery road	Excessive brake pedal vibration	• Road surface (uneven) • Incorrect wiring or piping connections	• VDCCM&H/U • Brake booster • Suspension play or fatigue (reduced damping)
	Noise from VDCCM&H/U	• VDCCM&H/U (mount bushing) • Defective ABS wheel speed sensor or sensor gap • Brake pipe	• VDCCM&H/U • Defective steering angle sensor or improper neutral position • Defective yaw rate & G sensor or improper installation of VDCCM&H/U.
	Noise from the front side of vehicle	• VDCCM&H/U (mount bushing) • Defective ABS wheel speed sensor or sensor gap • Master cylinder • Brake caliper • Brake pad • Disc rotor • Brake pipe • Brake booster • Suspension play or fatigue (reduced damping)	• Axle and wheels • Tire specifications, tire wear and air pressures
	Noise from the rear side of vehicle	• Defective ABS wheel speed sensor or sensor gap • Brake caliper • Brake pad • Disc rotor • Parking brake • Brake pipe • Suspension play or fatigue (reduced damping)	• Axle and wheels • Tire specifications, tire wear and air pressures
Engine does not accelerate or goes into a stall when accelerating suddenly or driving on a slippery surface.		• VDCCM&H/U • Defective ABS wheel speed sensor or sensor gap • Master cylinder • Brake caliper • Parking brake • Incorrect wiring or piping	• Defective steering angle sensor or improper neutral position • Defective yaw rate & G sensor or improper installation of VDCCM&H/U. • Brake pad • Brake pipe

Symptoms		Main probable cause	Other probable cause
Poor change-direction-operation stability of TCS	Deviation to right or left direction	• VDCCM&H/U • Defective ABS wheel speed sensor or sensor gap • Defective steering angle sensor or improper neutral position • Defective yaw rate & G sensor or improper installation of VDCCM&H/U. • Brake caliper • Brake pad • Wheel alignment • Road surface (uneven) • Road with crowns or banks • Tire specifications, tire wear and air pressures • Incorrect wiring or piping connections	• Disc rotor • Brake pipe • Axle and wheels • Suspension play or fatigue (reduced damping)
	Vehicle spin	• VDCCM&H/U • Defective ABS wheel speed sensor or sensor gap • Defective steering angle sensor or improper neutral position • Defective yaw rate & G sensor or improper installation of VDCCM&H/U. • Brake pad • Tire specifications, tire wear and air pressures • Incorrect wiring or piping connections	• Brake caliper • Brake pipe
Steering wheel drag while driving		• VDCCM&H/U • Defective ABS wheel speed sensor or sensor gap • Defective steering angle sensor or improper neutral position • Defective yaw rate & G sensor or improper installation of VDCCM&H/U. • Incorrect wiring or piping connections • Power steering system	• Brake caliper • Brake pad • Disc rotor • Wheel alignment • Road surface (uneven) • Road with crowns or banks • Suspension play or fatigue (reduced damping) • Tire specifications, tire wear and air pressures
VDC operates while driving normally.		• VDCCM&H/U • Defective ABS wheel speed sensor or sensor gap • Defective steering angle sensor or improper neutral position • Defective yaw rate & G sensor or improper installation of VDCCM&H/U. • Wheel alignment • Road surface (uneven) • Road with crowns or banks • Suspension play or fatigue (reduced damping) • Tire specifications, tire wear and air pressures • Incorrect wiring or piping connections • Power steering system	

Symptoms		Main probable cause	Other probable cause
VDC OFF indicator light does not illuminate when the VDC OFF switch is depressed. NOTE: When pressing VDC OFF switch for 30 seconds or more, VDC OFF indicator light goes off and cannot operate any more. When turning the ignition switch from OFF to ON, the previous status is restored.		• Harness • Combination meter • VDC OFF switch	
Electronic parking brake warning light illuminates.	Parking brake system does not operate.	• Defective parking brake switch • Defective VDCCM&H/U • Defective CAN communication	
	Hill hold function and accelerator interlocking release function do not operate.	• Defective hill hold switch • Faulty signal received from ECM • Faulty signal received from TCM • Faulty signal received from VDC control module • Defective parameter selection for VDCCM&H/U • No CAN signal received from ECM • No CAN signal received from TCM • No CAN signal received from body integrated unit • Defective clutch stroke sensor (MT model) • Defective longitudinal G sensor	
When the hill hold function is set to ON, drugging of brake may occur when the vehicle starts to move.		—	Driver's seat belt is not fastened.

BRAKE

BR

		Page
1.	General Description	2
2.	Front Brake Pad	16
3.	Front Disc Rotor	23
4.	Front Disc Brake Assembly	26
5.	Rear Brake Pad	38
6.	Rear Disc Rotor	41
7.	Rear Disc Brake Assembly	45
8.	Master Cylinder	50
9.	Brake Booster	55
10.	Brake Fluid	65
11.	Air Bleeding	68
12.	Brake Hose	72
13.	Brake Pipe	76
14.	Brake Pedal	77
15.	Stop Light Switch	81
16.	General Diagnostic Table	84

1. General Description

A: SPECIFICATION

NOTE:
Refer to “PARKING BRAKE” for parking brake specifications. <Ref. to PB-2, SPECIFICATION, General Description.>

1. FRONT DISC BRAKE

Item		Specification		
Size		16-inch		17-inch
Type		Floating 2-POT piston type Ventilated disc		
Effective cylinder diameter	mm (in)	42.8 × 2 (1.685 × 2)		
Pad size (Length × Width × Thickness)	mm (in)	137.4 × 49.2 × 12.0 (5.118 × 2.106 × 0.433)		130.0 × 53.5 × 11.0 (5.118 × 2.106 × 0.433)
Pad thickness	mm (in)	Standard	12 (0.47)	11 (0.43)
		Limit	1.5 (0.059)	
Effective disc diameter	mm (in)	244 (4.61)		261 (10.28)
Rotor size (Thickness × O.D.)	mm (in)	28 × 294 (1.10 × 11.57)		30 × 316 (1.18 × 12.44)
Disc thickness	mm (in)	Standard	28 (1.10)	30 (1.18)
		Limit	26 (1.02)	28 (1.10)
Disc runout	mm (in)	Standard	—	
		Limit	0.05 (0.0020)	
Clearance adjustment		Automatic adjustment		

2. REAR DISC BRAKE

Item		Specification	
Size		17-inch	
Type		Floating 1-POT piston type (Caliper with electric parking) Ventilated disc	
Effective cylinder diameter	mm (in)	40.0 (1.57)	
Pad size (Length × Width × Thickness)	mm (in)	86.8 × 43.5 × 9.0 (3.42 × 1.71 × 0.354)	
Pad thickness	mm (in)	Standard	9.0 (0.354)
		Limit	1.5 (0.059)
Effective disc diameter	mm (in)	255 (10.44)	
Rotor size (Thickness × O.D.)	mm (in)	17 × 300 (0.67 × 11.81)	
Disc thickness	mm (in)	Standard	17 (0.67)
		Limit	15 (0.59)
Disc runout	mm (in)	Standard	—
		Limit	0.05 (0.0020)
Clearance adjustment		Automatic adjustment	

3. MASTER CYLINDER

Item		Specification	
Engine model		H4 model	H6 model
Type		Tandem	
Effective diameter	mm (in)	23.8 (15/16)	
Reservoir type		Sealed type	
Brake fluid reservoir capacity	cm^3 (cu in)	240 (14.64)	250 (15.26)

4. BRAKE BOOSTER

Item		Specification	
Type		Vacuum suspended	
Effective diameter	mm (in)	208 + 229 (8.19 + 9.02)	
Brake fluid pressure		Brake pedal force N (kgf, lbf)	Fluid pressure kPa (kgf/cm^2, psi)
When engine is stopped		147 (15, 33)	514 (5.24, 74.53)
		294 (30, 66)	1,551 (16, 225)
When engine is running and vacuum pressure is at 66.7 kPa (500 mmHg, 19.69 inHg)		147 (15, 33)	6,177 (63, 896)
		294 (30, 66)	11,273 (115, 1,635)

5. BRAKE LINE, BRAKE PEDAL AND BRAKE FLUID

CAUTION:
• Do not let brake fluid come into contact with the painted surface of the vehicle body. Wash away with water immediately and wipe off if it is spilled by accident.
• Avoid mixing brake fluid of different brands or different grades even from the same brand to prevent fluid performance from degrading.
• When refilling brake fluid, do not allow dirt or dust to get into the reservoir tank.
• Always use new SUBARU genuine brake fluid when replacing or refilling the fluid. Do not reuse drained brake fluid.

Item			Specification
Brake line			Dual circuit system
Brake pedal	Type		Suspended type
	Free play	mm (in)	0.5 — 2.7 (0.020 — 0.11) [When pulling the brake pedal upward with a force of less than 10 N (1 kgf, 2 lbf)]
Brake fluid			FMVSS No. 116, DOT3, or DOT4

B: COMPONENT

1. FRONT DISC BRAKE

- 16-inch

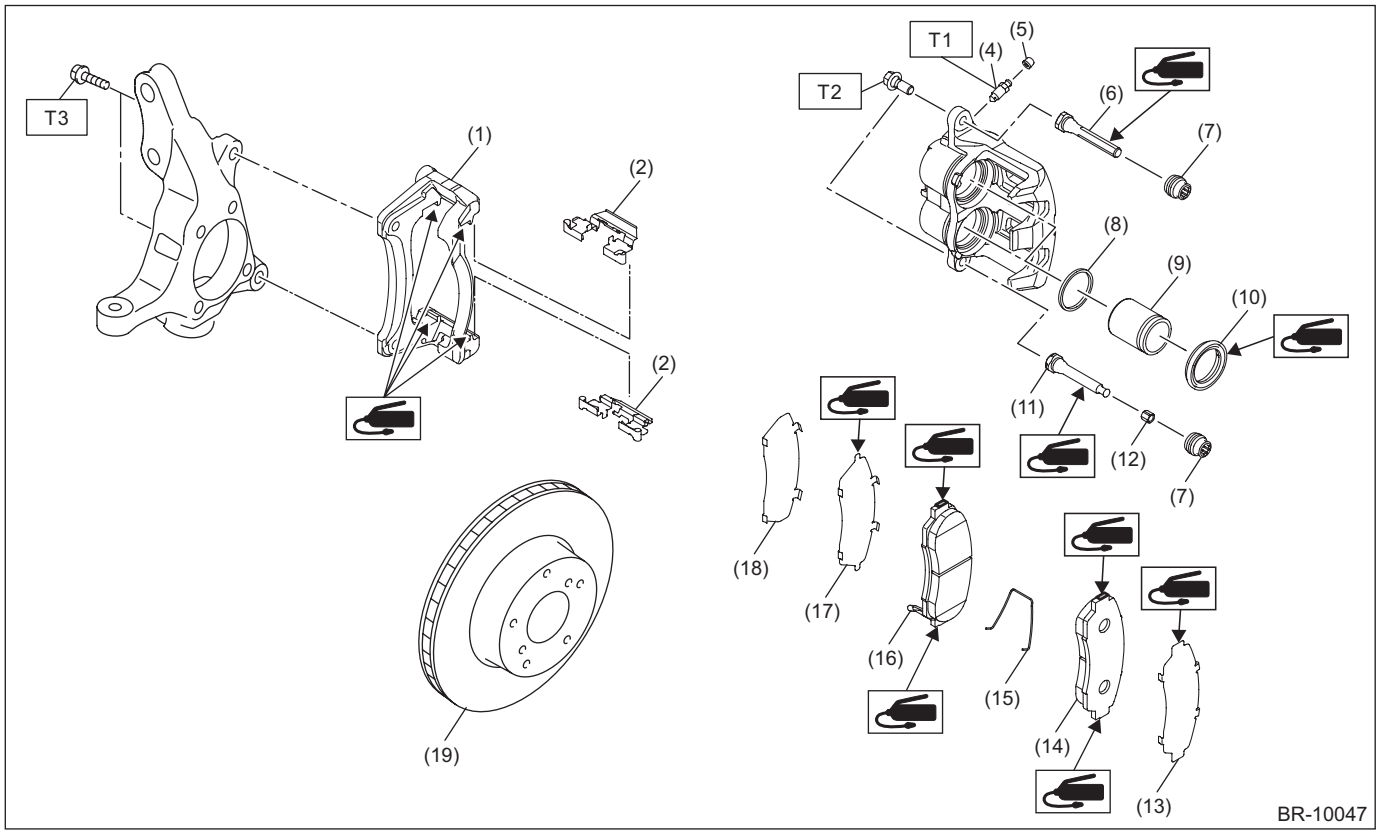

(1)	Support - front disc brake	(9)	Piston - disc brake	(17)	Shim - disc brake front inner A
(2)	Pad clip - front brake	(10)	Piston boot	(18)	Shim - disc brake front inner B
(3)	Caliper body	(11)	Lock pin - front brake	(19)	Disc rotor (ventilated type)
(4)	Bleeder - screw	(12)	Lock pin - sleeve		
(5)	Cap - bleeder	(13)	Shim - disc brake front outer		
(6)	Guide pin - front brake	(14)	Pad - disc brake front outer		
(7)	Pin boot	(15)	Spring - brake pad		
(8)	Piston seal	(16)	Pad - disc brake front inner		

Tightening torque: N·m (kgf-m, ft-lb)
T1: 8 (0.8, 5.9)
T2: 50 (5.1, 36.9)
T3: 120 (12.2, 88.5)

- 17-inch

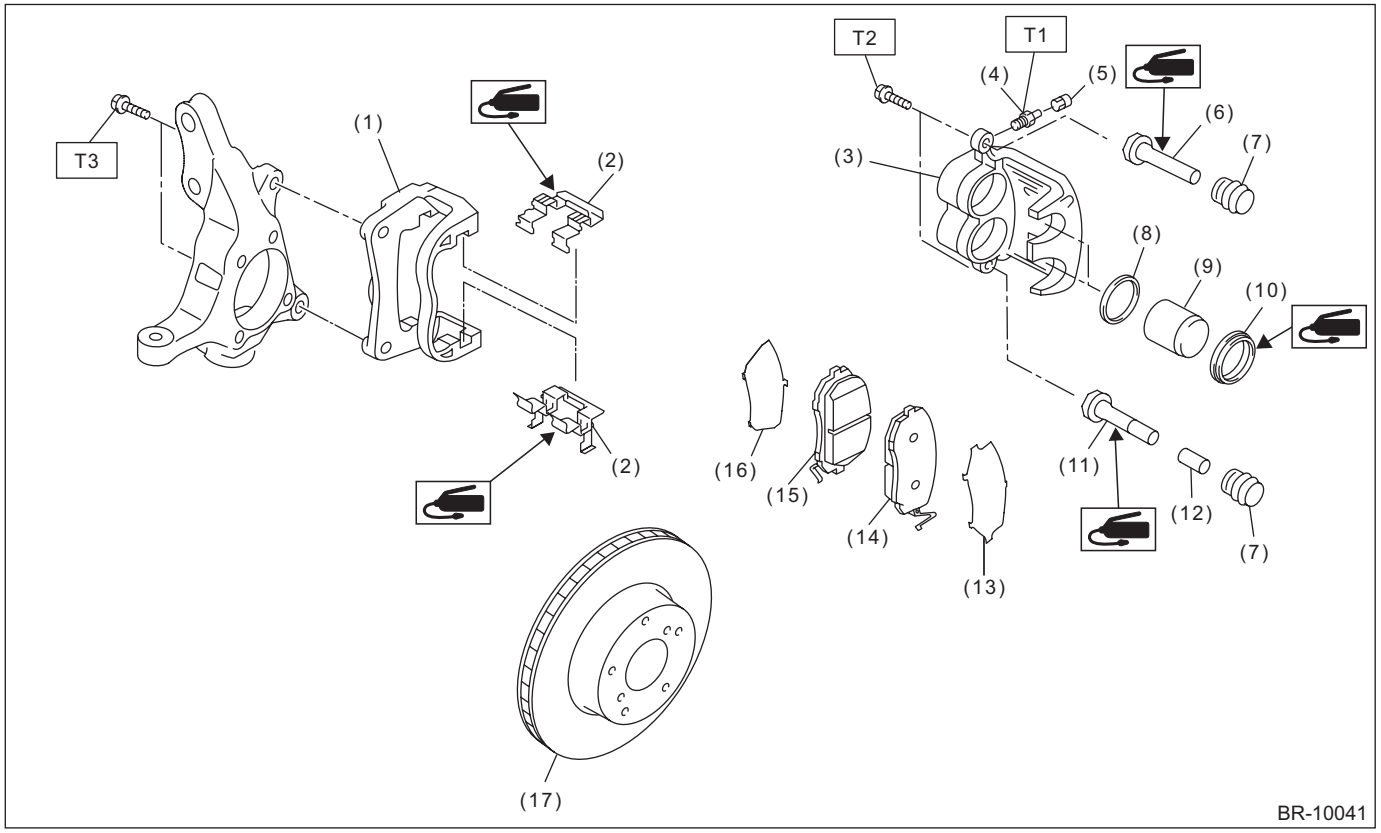

(1) Support - front disc brake
(2) Pad clip - front brake
(3) Caliper body
(4) Bleeder - screw
(5) Cap - bleeder
(6) Guide pin - front brake
(7) Pin boot
(8) Piston seal
(9) Piston - disc brake
(10) Piston boot
(11) Lock pin - front brake
(12) Lock pin - sleeve
(13) Shim - disc brake front outer
(14) Pad - disc brake front outer
(15) Pad - disc brake front inner
(16) Shim - disc brake front inner
(17) Disc rotor (ventilated type)

Tightening torque: N·m (kgf-m, ft-lb)
T1: 8 (0.8, 5.9)
T2: 27 (2.8, 20.3)
T3: 120 (12.2, 88.5)

2. REAR DISC BRAKE

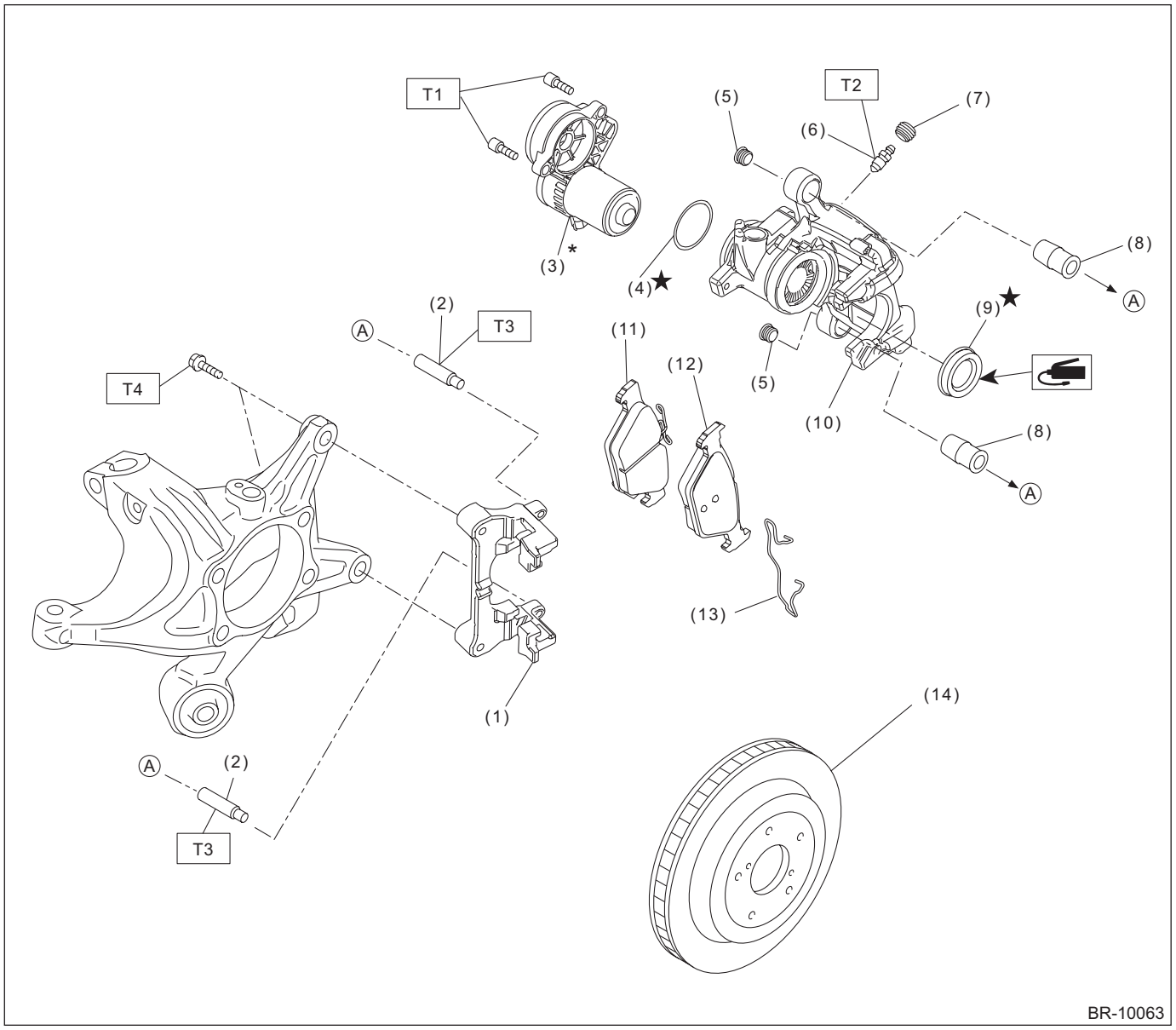

(1)	Support - rear disc brake	(8)	Pin boot	
(2)	Guide pin - rear brake	(9)	Piston boot	
(3)	Parking brake actuator ASSY	(10)	Caliper body	
(4)	O-ring	(11)	Pad - disc brake rear inner	
(5)	Cap	(12)	Pad - disc brake rear outer	
(6)	Bleeder - screw	(13)	Pad clip	
(7)	Cap - bleeder	(14)	Disc rotor (ventilated type)	

Tightening torque: N·m (kgf-m, ft-lb)	
T1:	*8 (0.8, 5.9)*
T2:	*17 (1.7, 12.5)*
T3:	*25 (2.5, 18.4)*
T4:	*66 (6.7, 48.7)*

*: The component cannot be reused when the emergency release of parking brake was performed or when the actuator has a malfunction.

3. MASTER CYLINDER

- H4 model

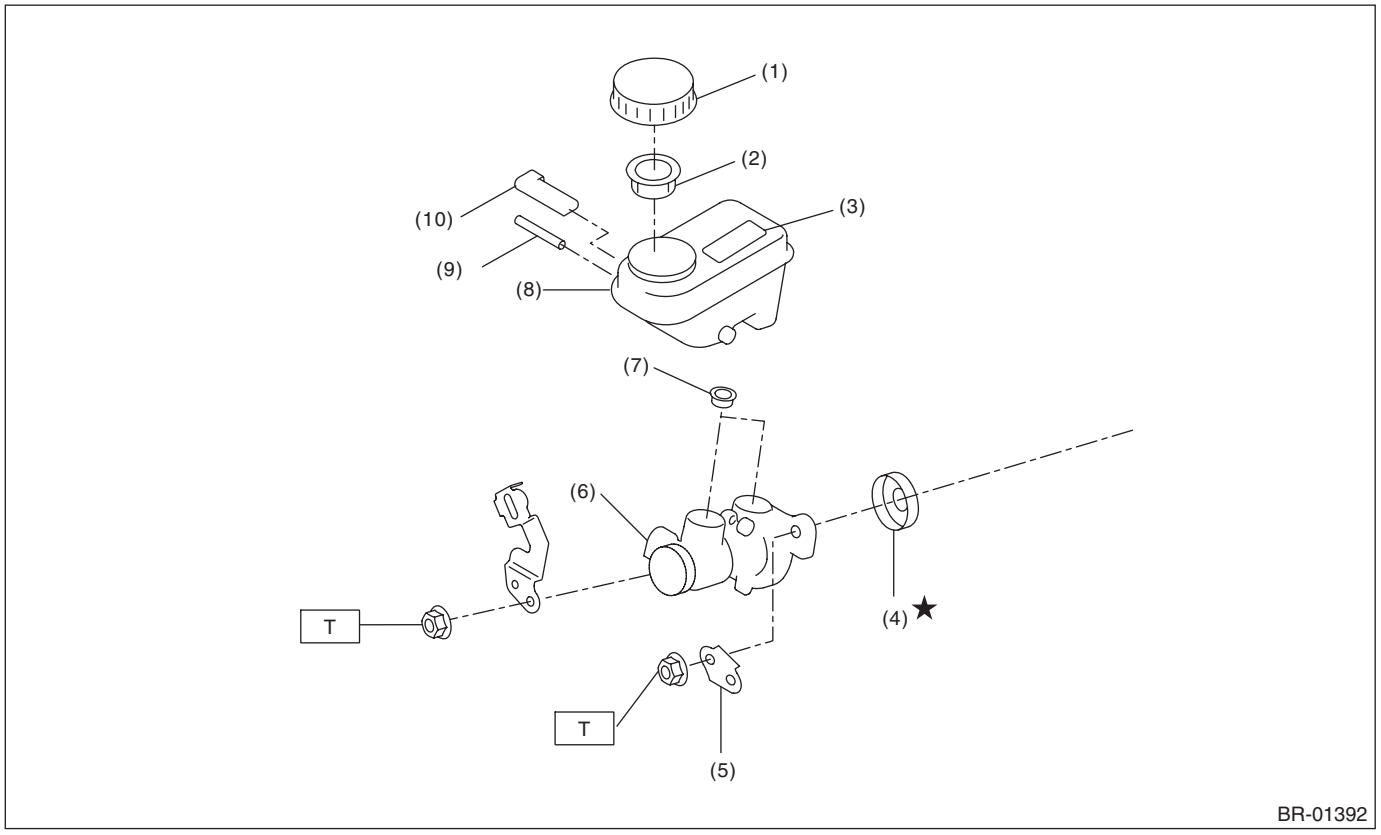

(1)	Cap - reservoir tank	(6)	Cylinder body ASSY
(2)	Filter - master cylinder	(7)	Seal
(3)	Caution label (model with caution label)	(8)	Reservoir tank
(4)	Seal sub ASSY	(9)	Pin
(5)	Bracket - master cylinder	(10)	Level - indicator

Tightening torque: N·m (kgf-m, ft-lb)
T: 13 (1.3, 9.6)

- H6 model

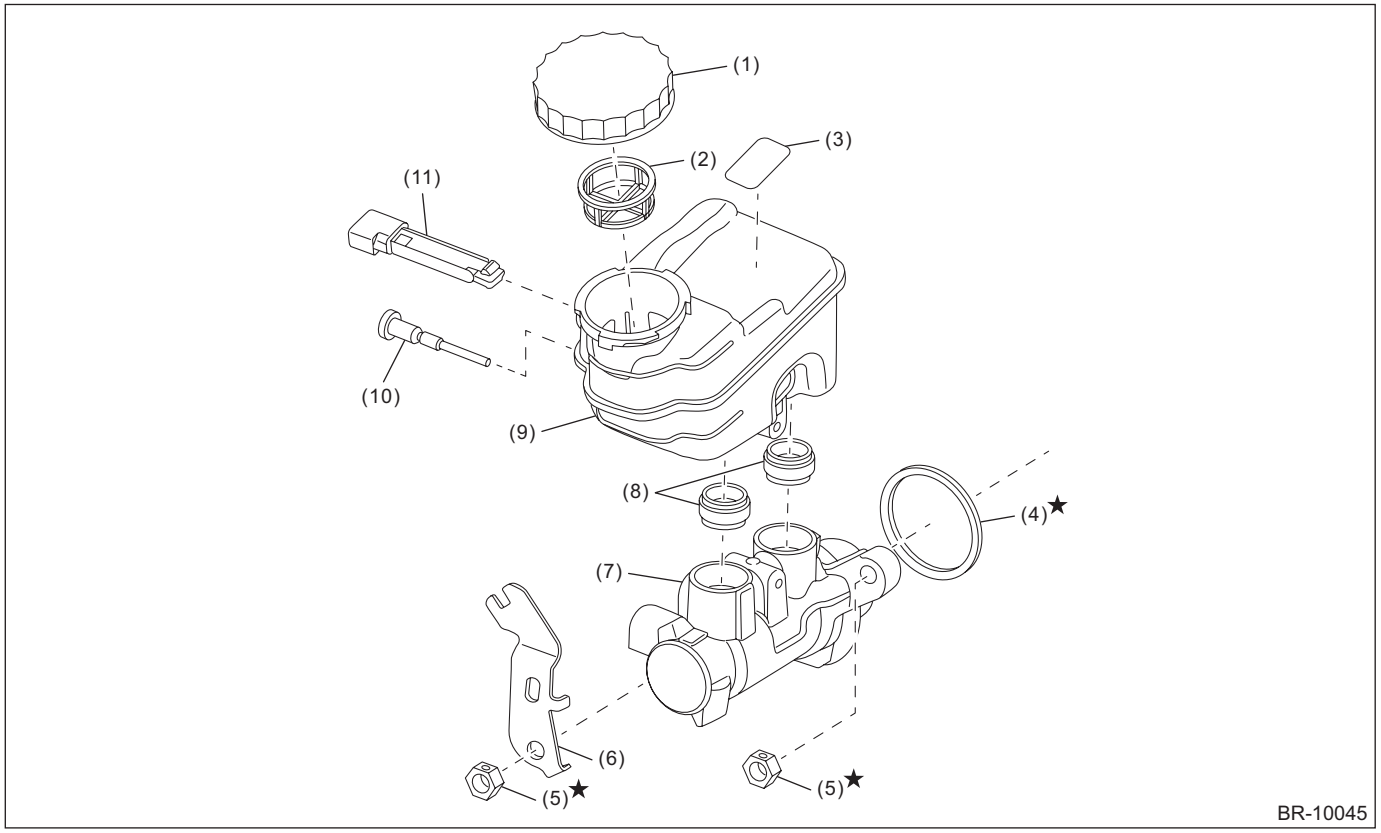

(1)	Cap - reservoir tank	(6)	Bracket - master cylinder	(11)	Level - indicator
(2)	Filter - master cylinder	(7)	Cylinder body ASSY		
(3)	Caution label (model with caution label)	(8)	Seal	***Tightening torque: N·m (kgf-m, ft-lb)***	
(4)	Seal sub ASSY	(9)	Reservoir tank	***T: 13 (1.3, 9.6)***	
(5)	Nut	(10)	Pin		

4. FRONT BRAKE PIPES AND HOSES

- Models without EyeSight

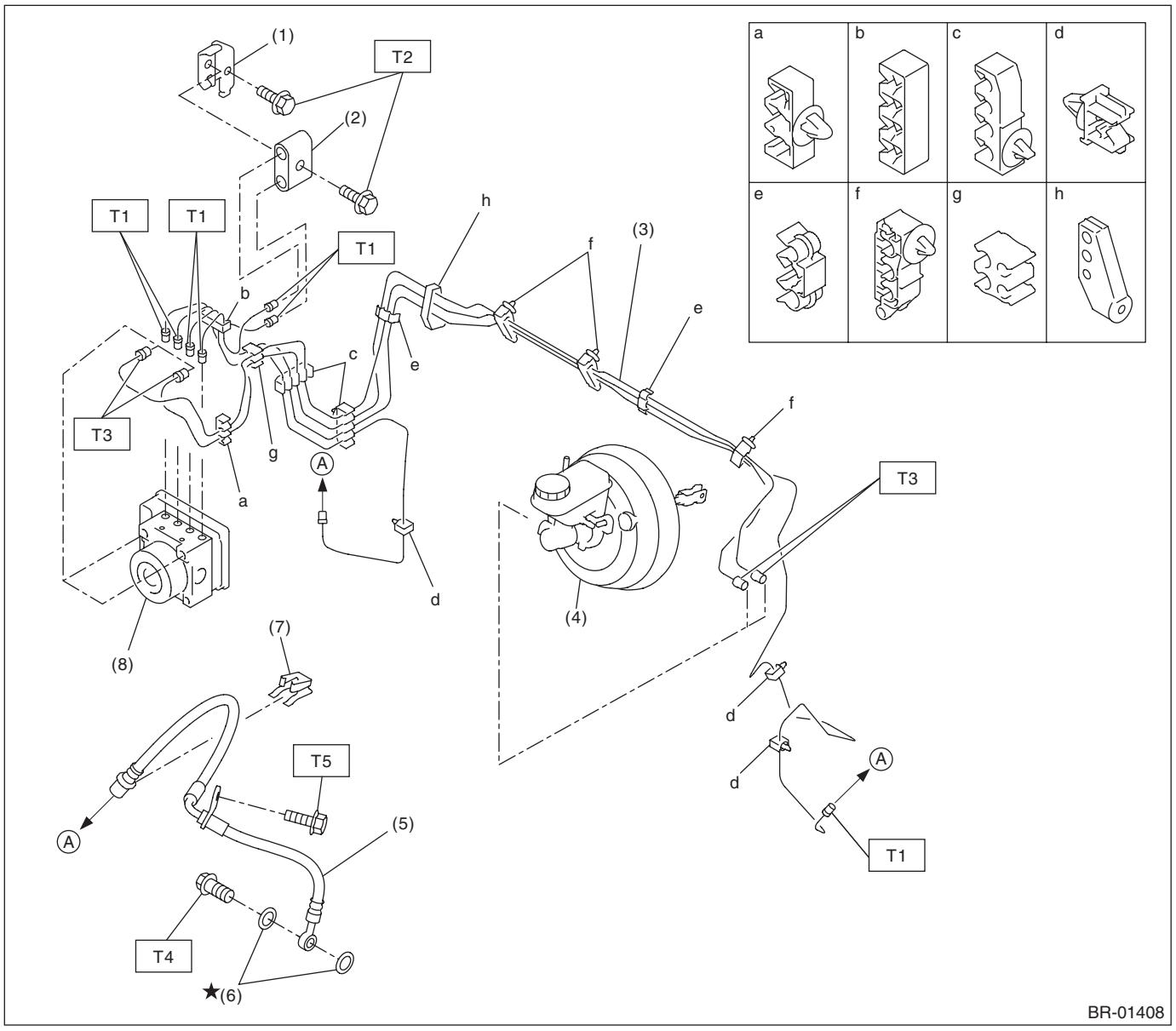

(1)	Bracket	(5)	Front brake hose RH/LH
(2)	Connector - two-way	(6)	Gasket
(3)	Front brake pipe ASSY	(7)	Clamp
(4)	Master cylinder ASSY	(8)	VDC control module and hydraulic control unit (VDCCM&H/U)

Tightening torque: N·m (kgf-m, ft-lb)

T1: 15 (1.5, 11.1)
T2: 18 (1.8, 13.3)
T3: 19 (1.9, 14.0)
T4: 26 (2.7, 19.2)
T5: 33 (3.4, 24.3)

- Models with EyeSight

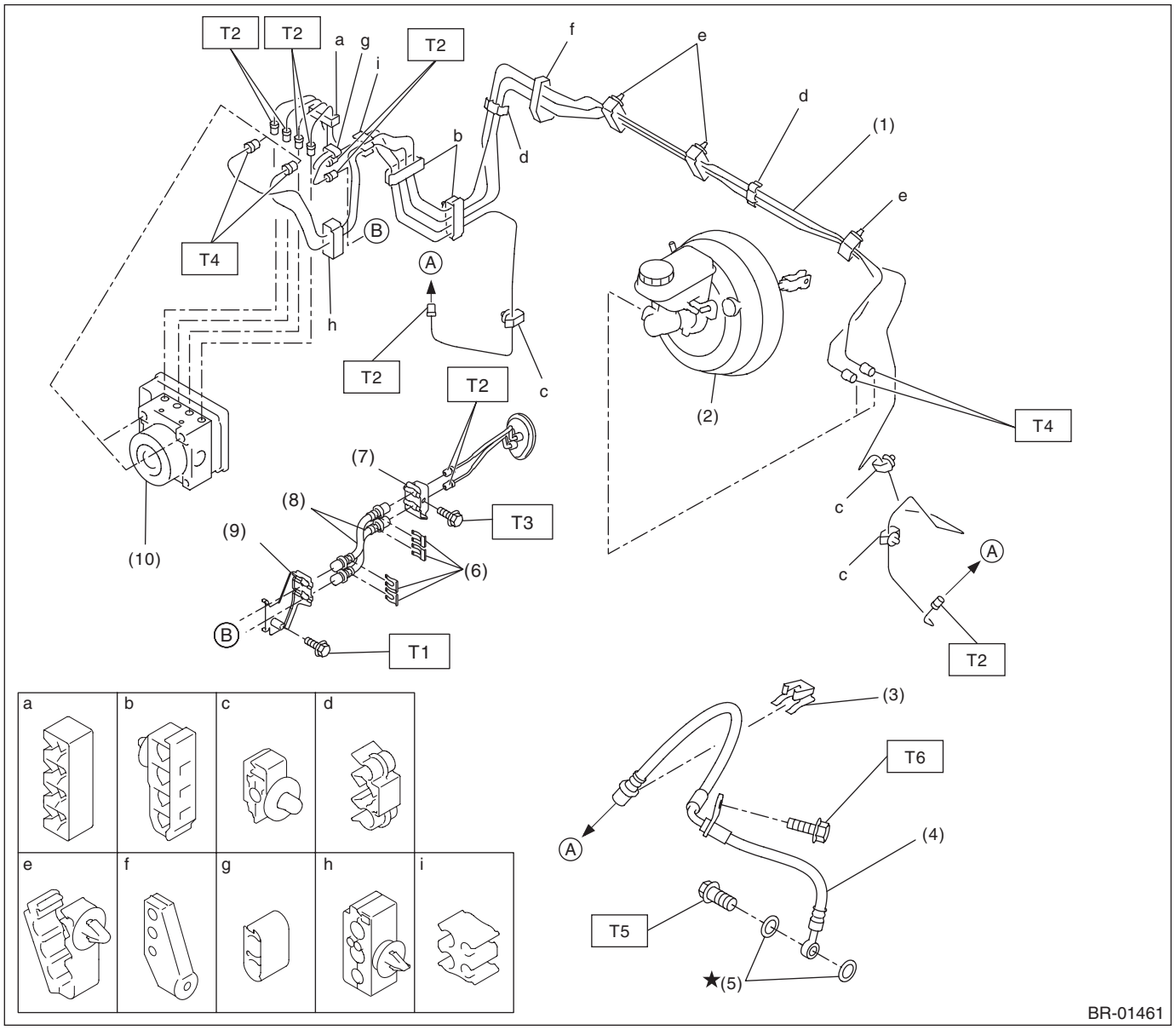

(1)	Front brake pipe ASSY	(6)	Clamp
(2)	Master cylinder ASSY	(7)	Bracket
(3)	Clamp	(8)	Brake hose ASSY
(4)	Front brake hose RH/LH	(9)	Bracket
(5)	Gasket	(10)	VDC control module and hydraulic control unit (VDCCM&H/U)

Tightening torque: N·m (kgf-m, ft-lb)

T1: 7.5 (0.8, 5.5)
T2: 15 (1.5, 11.1)
T3: 18 (1.8, 13.3)
T4: 19 (1.9, 14.0)
T5: 26 (2.7, 19.2)
T6: 33 (3.4, 24.3)

5. CENTER AND REAR BRAKE PIPES AND HOSES

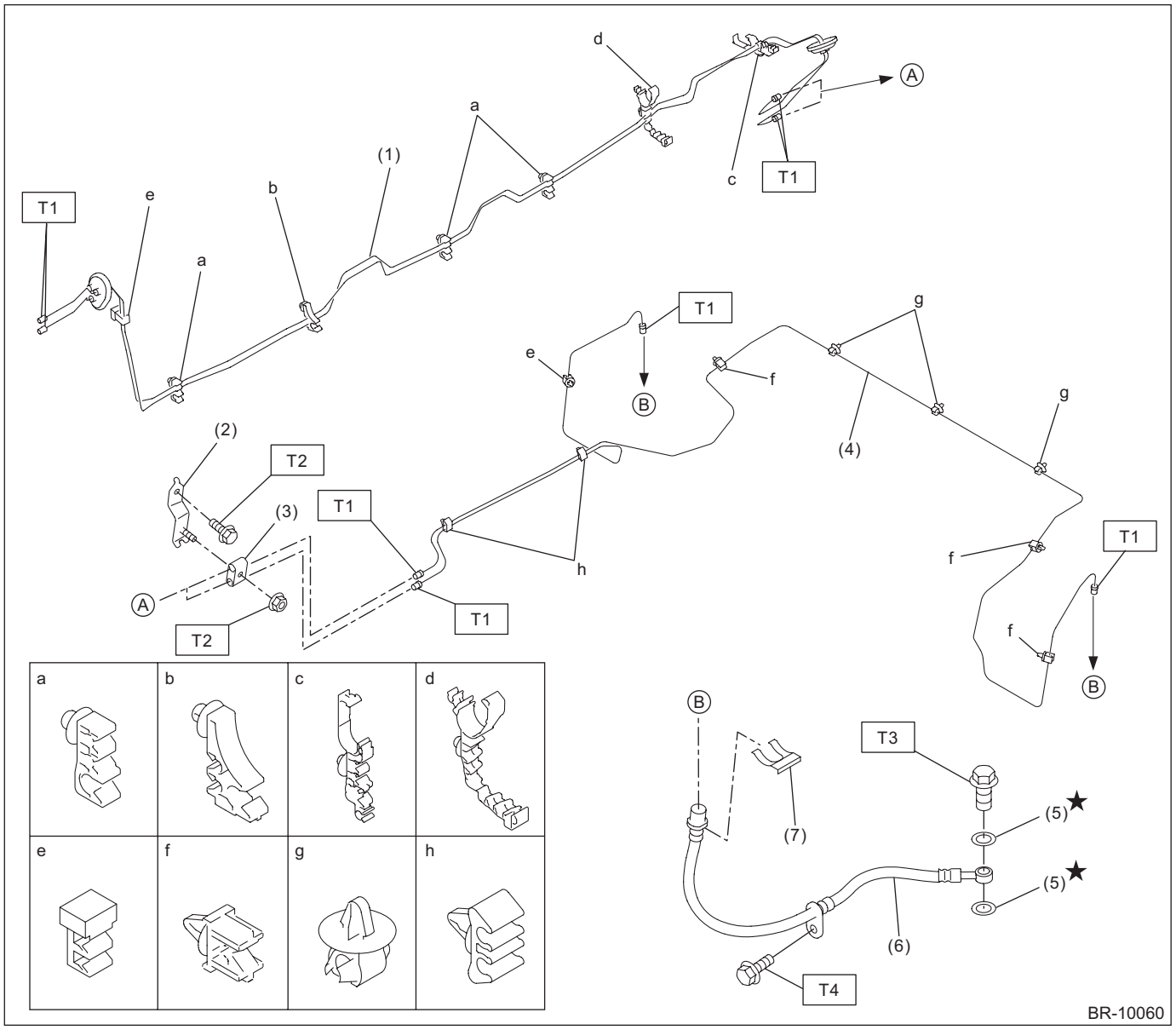

(1) Center brake pipe ASSY
(2) Bracket
(3) Connector
(4) Rear brake pipe ASSY
(5) Gasket
(6) Rear brake hose RH/LH
(7) Clamp

Tightening torque: N·m (kgf-m, ft-lb)
T1: 15 (1.5, 11.1)
T2: 18 (1.8, 13.3)
T3: 26 (2.7, 19.2)
T4: 33 (3.4, 24.3)

6. BRAKE BOOSTER

- H4 model

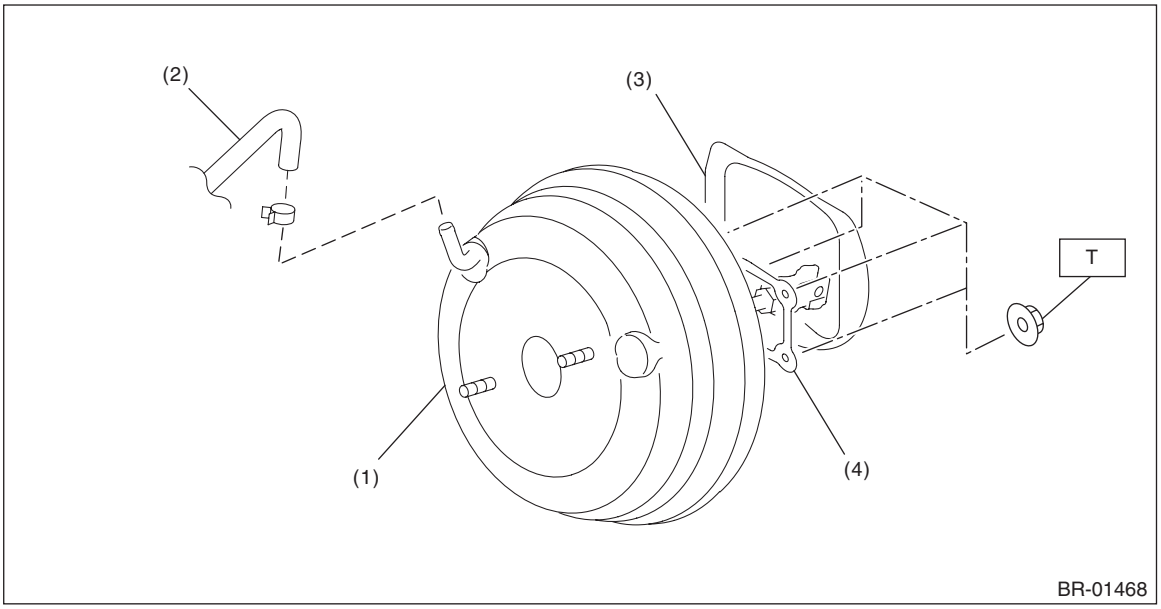

(1) Vacuum booster ASSY
(2) Vacuum hose
(3) Gasket (model with EyeSight)
(4) Gasket

Tightening torque: N·m (kgf-m, ft-lb)
T: 18 (1.8, 13.3)

- H6 model

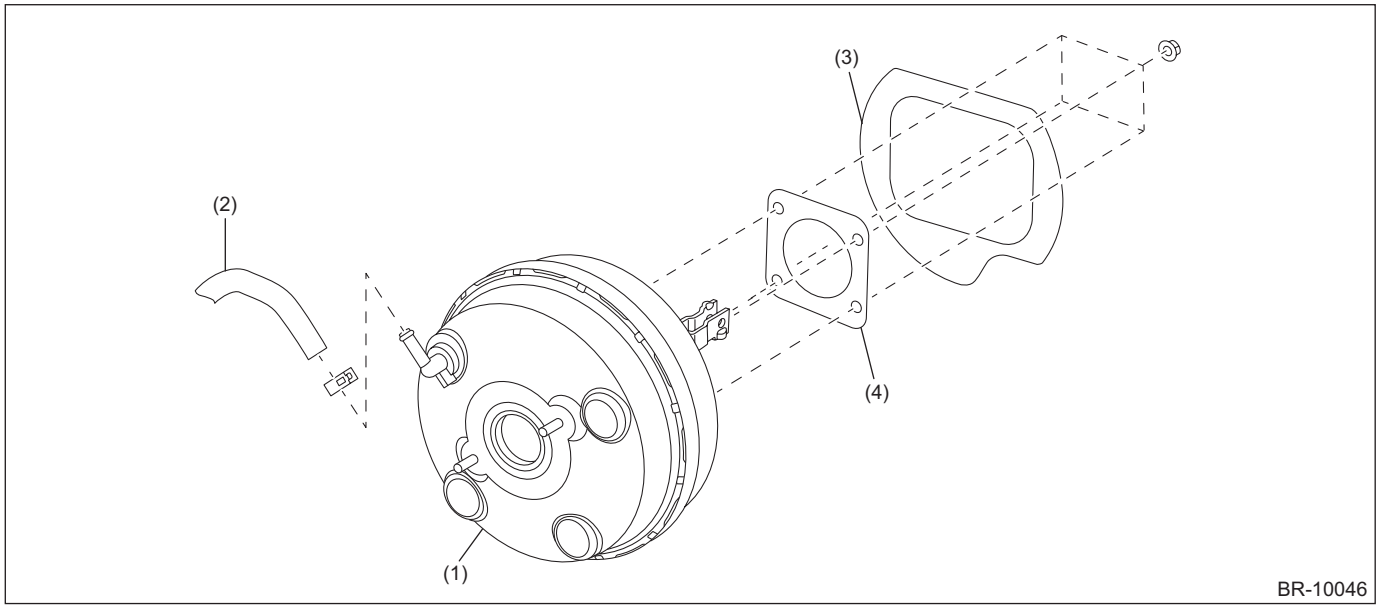

(1) Vacuum booster ASSY
(2) Vacuum hose
(3) Gasket (model with EyeSight)
(4) Gasket

Tightening torque: N·m (kgf-m, ft-lb)
T: 18 (1.8, 13.3)

7. BRAKE PEDAL

- CVT model

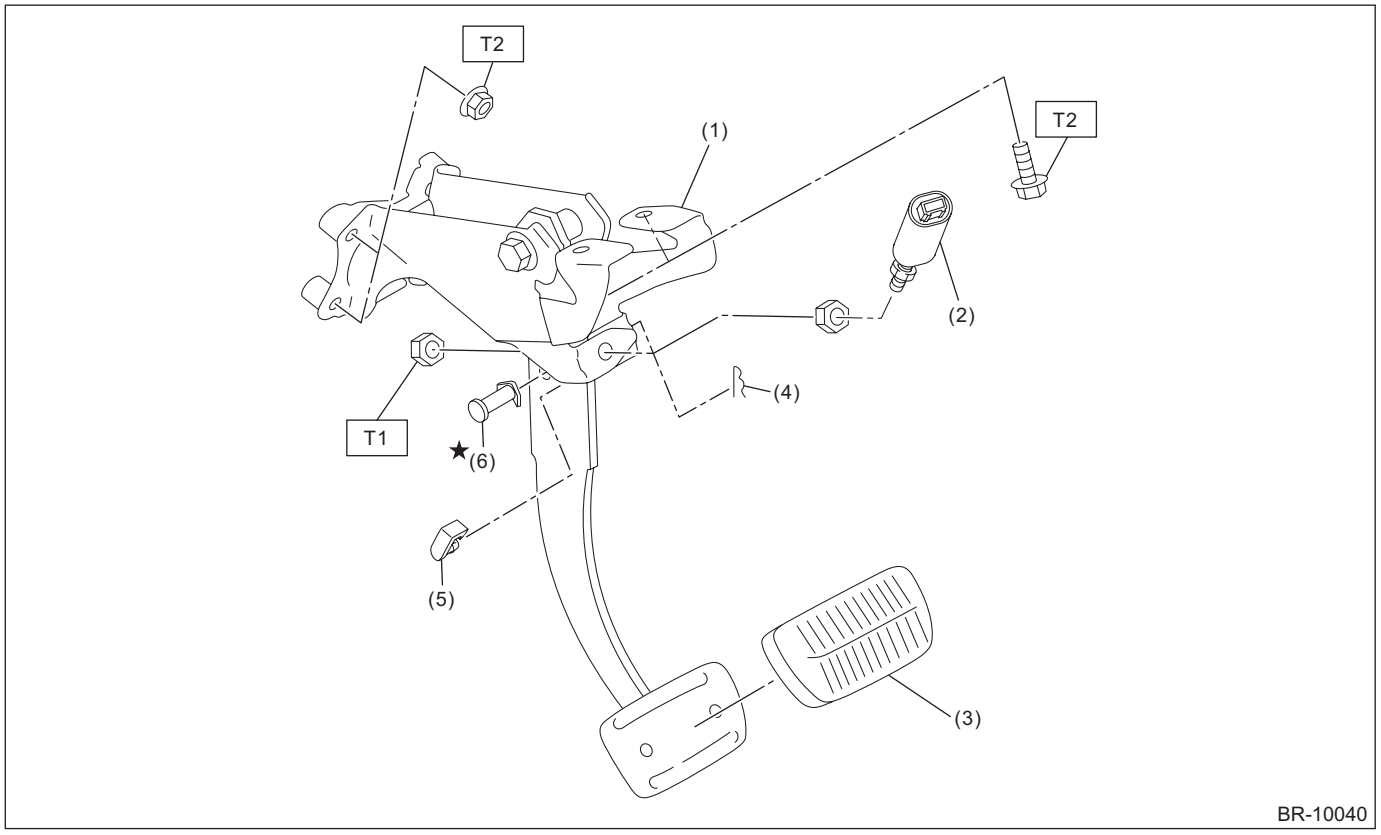

(1)	Brake pedal ASSY	(4)	Snap pin	***Tightening torque: N·m (kgf-m, ft-lb)***
(2)	Stop light switch	(5)	Brake pedal stopper	***T1: 8 (0.8, 5.9)***
(3)	Brake pedal pad	(6)	Clevis pin	***T2: 18 (1.8, 13.3)***

- MT model

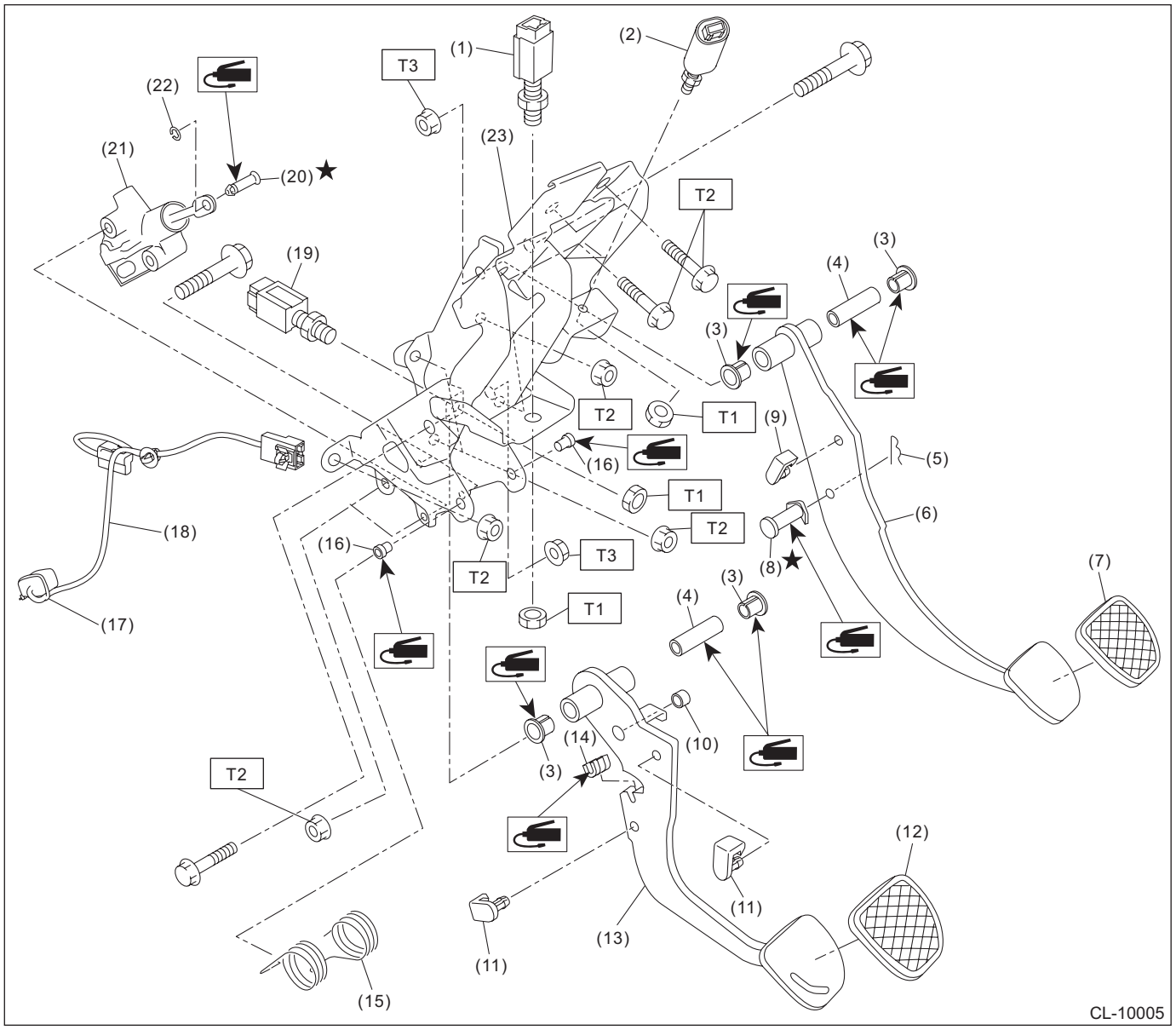

(1) Clutch switch
(2) Stop light switch
(3) Bushing
(4) Spacer
(5) Snap pin
(6) Brake pedal
(7) Brake pedal pad
(8) Clevis pin
(9) Brake pedal stopper
(10) Bushing A
(11) Clutch pedal stopper
(12) Clutch pedal pad
(13) Clutch pedal
(14) Torsion spring bushing
(15) Torsion spring
(16) Assist bushing
(17) Band
(18) Sensor harness
(19) Clutch start switch
(20) Clevis pin
(21) Master cylinder ASSY
(22) Clip
(23) Pedal bracket

Tightening torque: N·m (kgf-m, ft-lb)
T1: 8 (0.8, 5.9)
T2: 18 (1.8, 13.3)
T3: 30 (3.1, 22.1)

C: CAUTION

- When performing any work, always wear work clothes, a work cap and protective shoes. Additionally, wear a helmet, protective goggles, etc. if necessary.
- When performing a repair, identify the cause of trouble and avoid unnecessary removal, disassembly and replacement.
- Some vehicle components are extremely hot immediately after driving. Be wary of receiving burns from heated parts.
- Use SUBARU genuine grease, the recommended or equivalent. Do not mix grease etc. of different grades or manufacturers.
- Be sure to tighten fasteners including bolts and nuts to the specified torque.
- Always use the jack-up point when the shop jacks or rigid racks are used to support the vehicle.
- Apply grease onto sliding or revolving surfaces before installation.
- Be sure that the surface of brake disc, brake pad or brake shoe is free from grease or oil.
- Remove contamination including dirt and corrosion before removal, installation, disassembly or assembly.
- Do not secure a part in a vise directly. Place cushioning materials such as wood blocks, aluminum plates, or waste cloth between the part and the vise.

D: PREPARATION TOOL

1. SPECIAL TOOL

ILLUSTRATION	TOOL NUMBER	DESCRIPTION	REMARKS
 STSSM4	— (Newly adopted tool)	SUBARU SELECT MONITOR 4	Used for setting of each function and trouble-shooting for electrical system. NOTE: For detailed operation procedures of Subaru Select Monitor 4, refer to “Application help”.
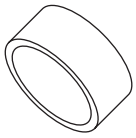 ST99099AL000	99099AL000	PISTON BOOT INSTALLER	Used for installing the piston boot.

2. GENERAL TOOL

TOOL NAME	REMARKS
Circuit tester	Used for measuring resistance, voltage and current.
DST-i	Used together with Subaru Select Monitor 4.
Pressure gauge	Used for measuring the operation and airtightness of the brake booster.
Vacuum gauge	Used for measuring the operation and airtightness of the brake booster.
Dial gauge	Used for measuring brake disc rotor run-out.
Cap	Used for brake hose installing portion of brake disc caliper.

2. Front Brake Pad

A: REMOVAL

1. 16-INCH TYPE

1) Lift up the vehicle, and then remove the front wheels.
2) Remove the pad - disc brake front.

NOTE:
Do not disconnect the brake hose from the caliper body assembly.

(1) Remove the caliper bolt on the lower side.
(2) Lift the caliper body assembly.
(3) Remove the spring - brake pad and the pad - disc brake front.

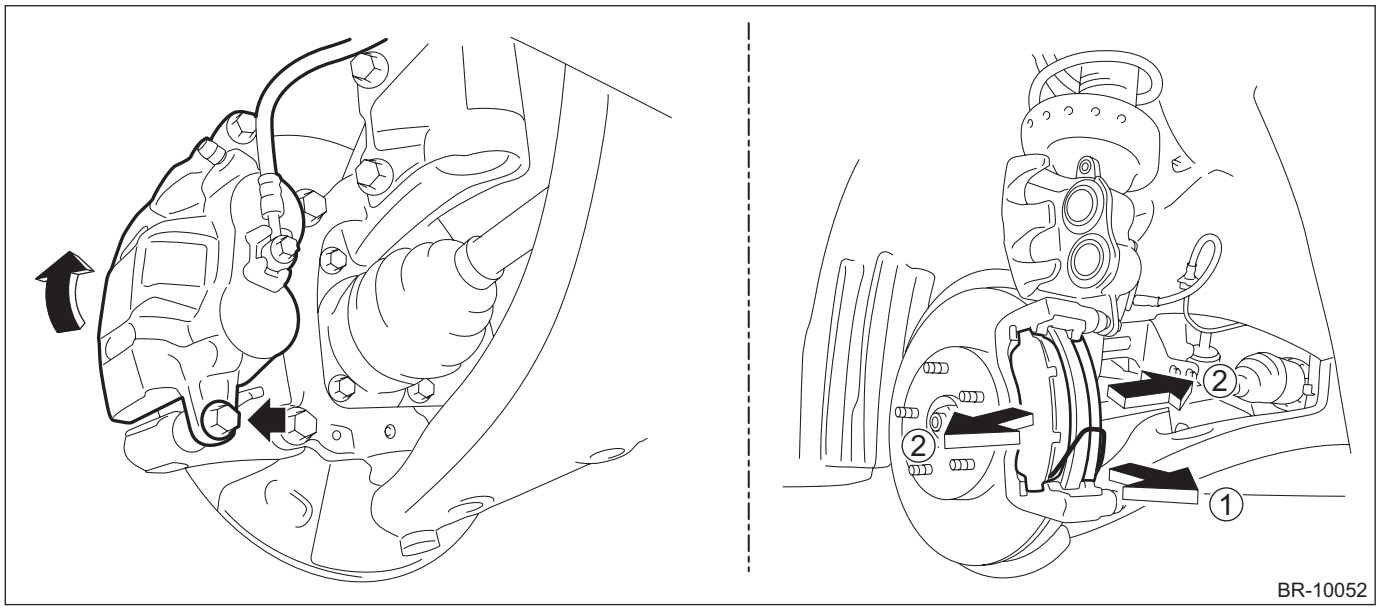

2. 17-INCH TYPE

1) Lift up the vehicle, and then remove the front wheels.
2) Remove the pad - disc brake front.
   (1) Remove the caliper bolt on the lower side.
   (2) Raise the caliper body assembly and remove the pad - disc brake front.

NOTE:
Do not disconnect the brake hose from the caliper body assembly.

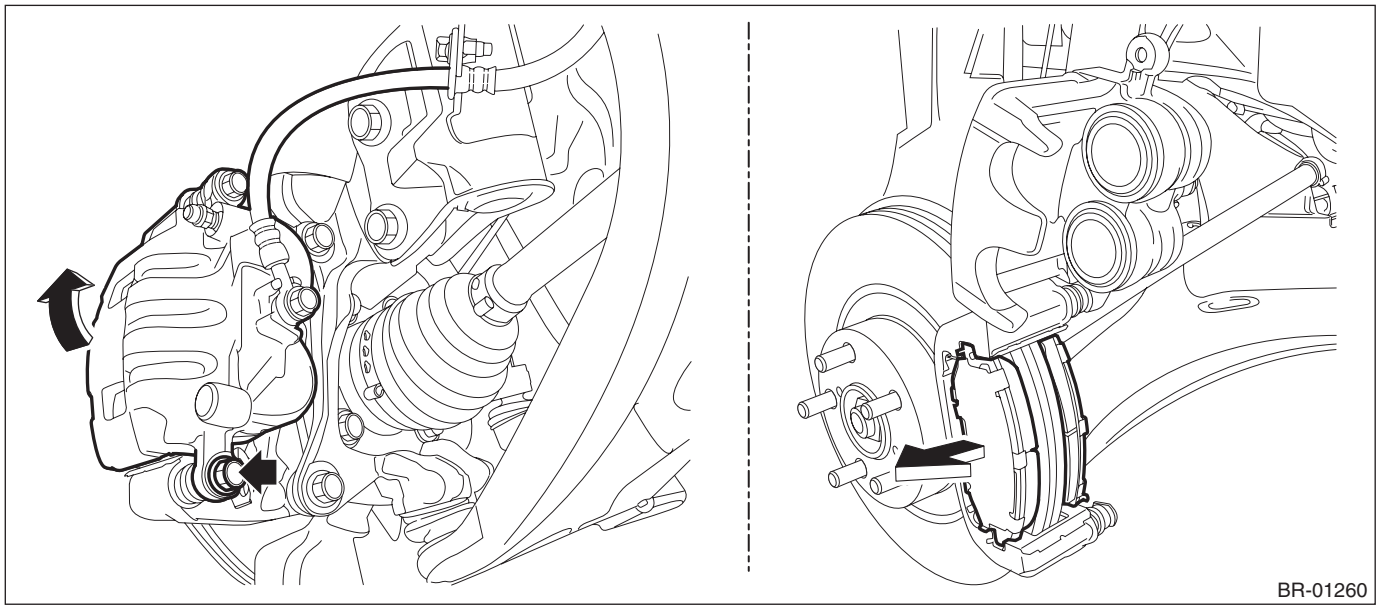

B: INSTALLATION

1. 16-INCH TYPE

NOTE:
Before installation, remove mud and foreign matter from the caliper body assembly and support - front disc brake.

1) Check the brake pad. <Ref. to BR-22, INSPECTION, Front Brake Pad.>
2) Apply a thin coat of grease to the support - front disc brake.

Grease:
Support - front disc brake: Molykote G-5029 or equivalent

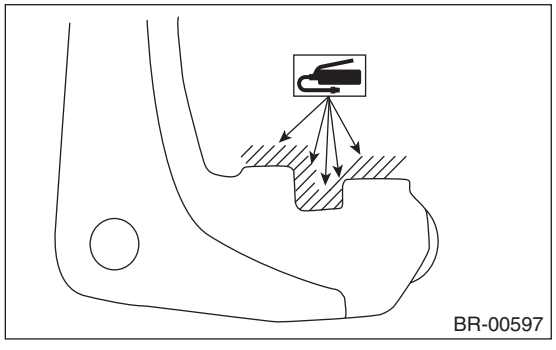

3) Apply a thin coat of grease to the shim - disc brake front and the pad - disc brake front.
- Inner side:

Apply a thin coat of grease to the both sides of shim - disc brake front inner and the pad - disc brake front.

Grease:

Shim and pad: Molykote M77 or equivalent

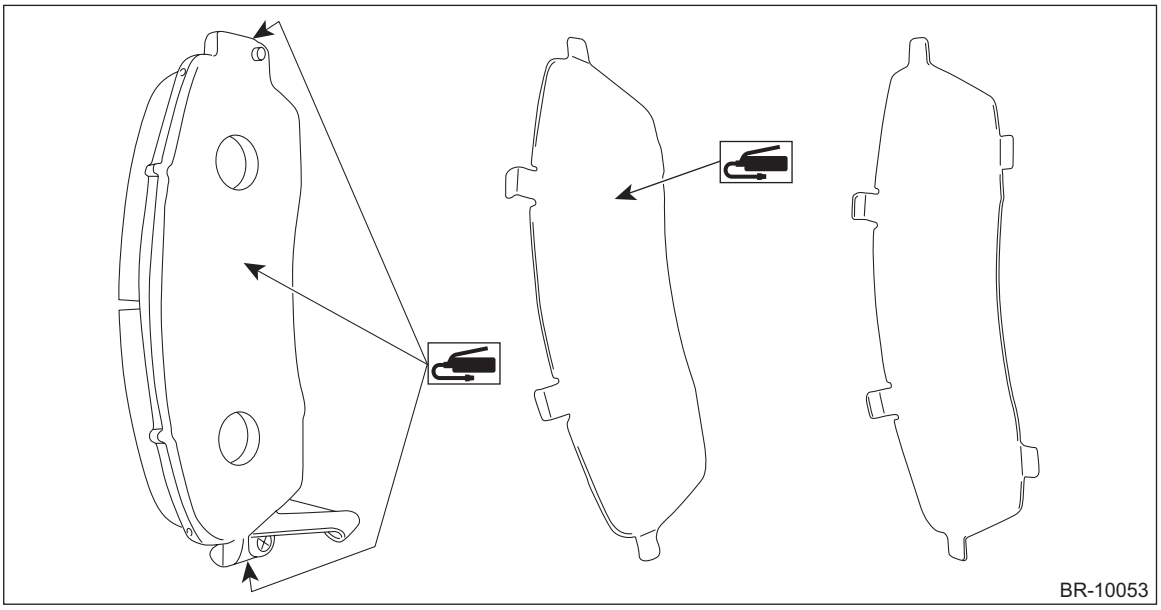

- Outer side:

Apply a thin coat of grease to the pad - disc brake front.

Grease:

Shim and pad: Molykote M77 or equivalent

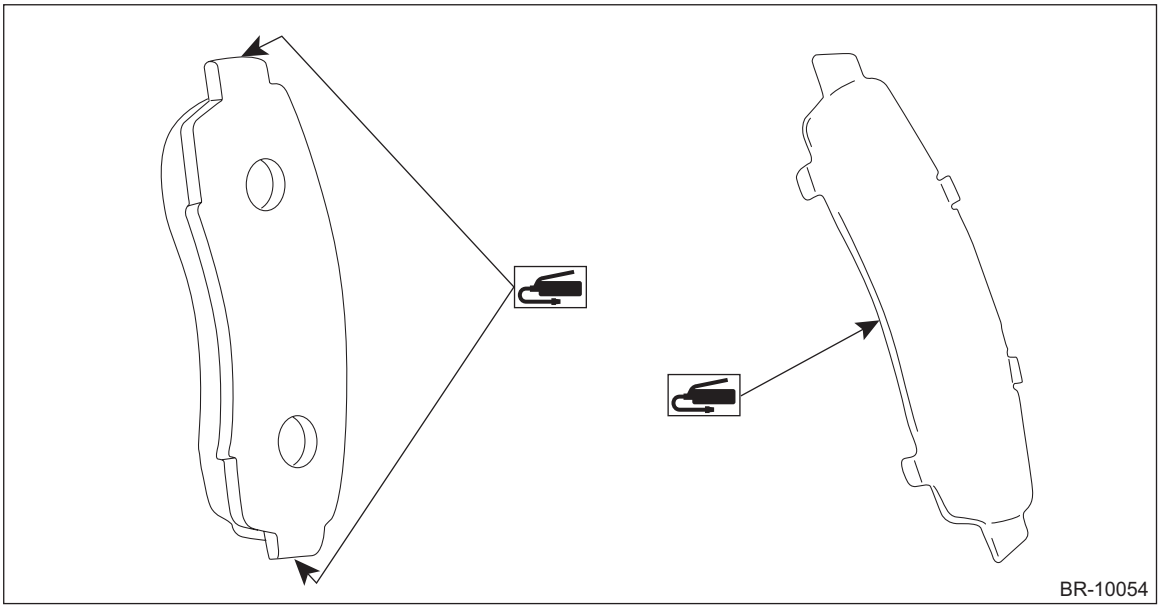

4) Install the spring - brake pad and the pad - disc brake front.

NOTE:
Install so that the pad indicator faces the inner side.

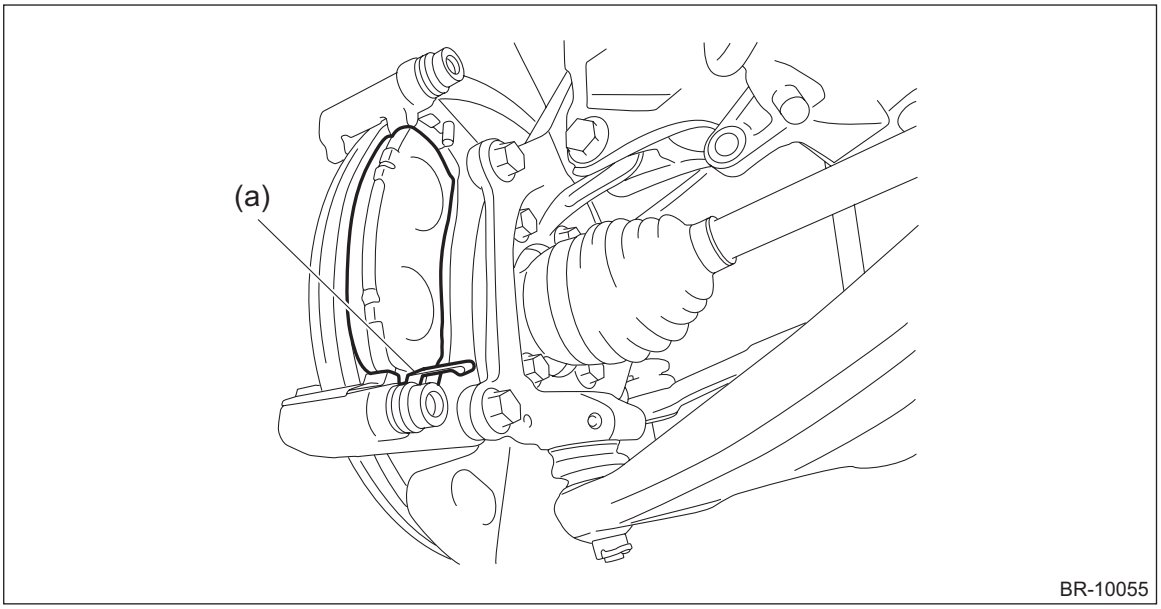

(a) Pad indicator

5) Install the caliper body assembly.

Tightening torque:
50 N·m (5.1 kgf-m, 36.9 ft-lb)

NOTE:
Install so that the spring - brake pad (b) does not protrude out of the hole (a).

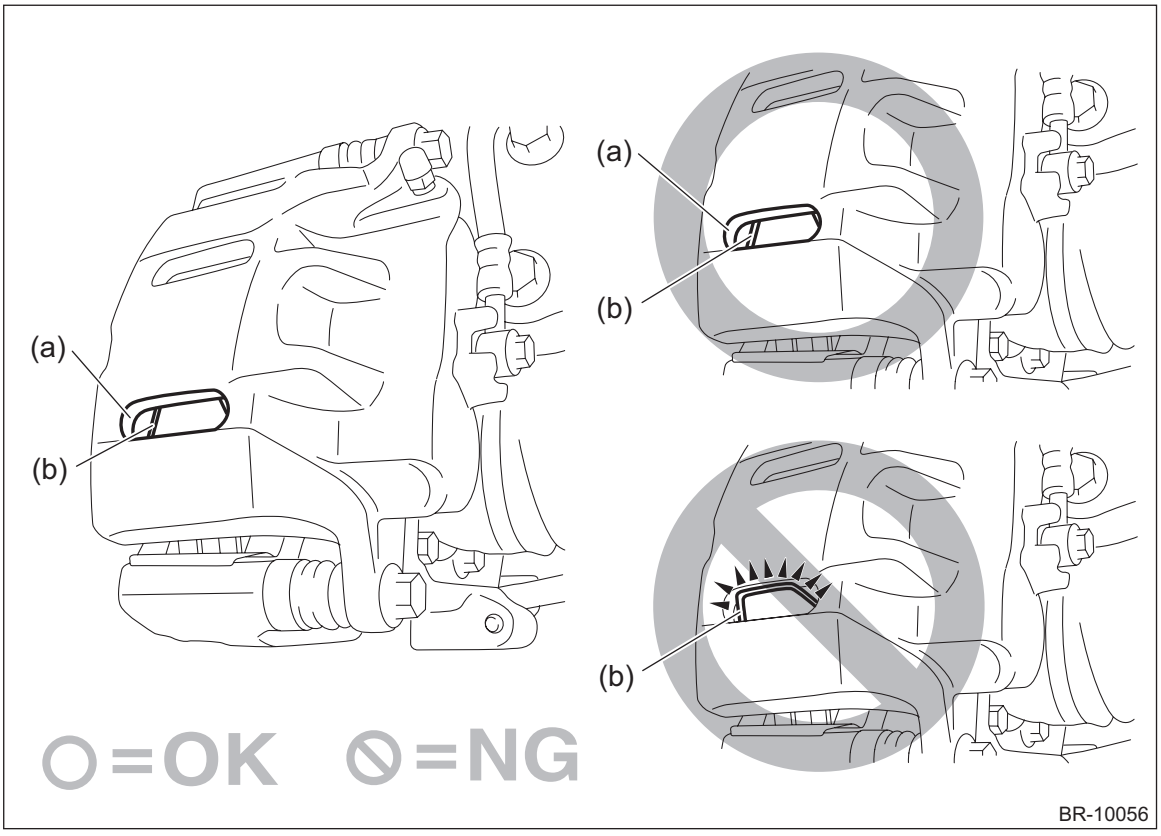

6) Install the front wheels.

Tightening torque:
120 N·m (12.2 kgf-m, 88.5 ft-lb)

2. 17-INCH TYPE

NOTE:
Before installation, remove mud and foreign matter from the caliper body assembly and support - front disc brake.
1) Check the brake pad. <Ref. to BR-22, INSPECTION, Front Brake Pad.>
2) Apply a thin coat of grease to the pad clip.

Grease:
Pad clip: Item contained in the pad kit or equivalent

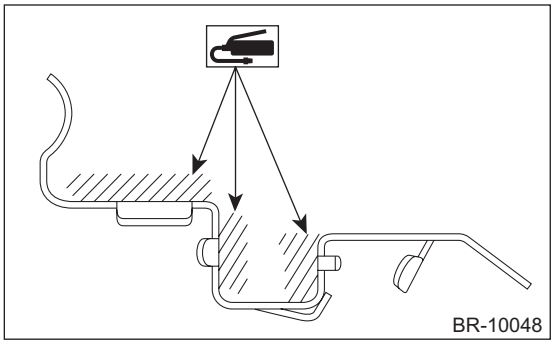

3) Install the pad - disc brake front.

CAUTION:
• Be sure to install so that the pad return spring faces the input side of the direction of disc rotor rotation, as shown in the figure.
• Correctly install the pad return spring to the supporting surface of the pad clip as shown in the figure.
• If the pad return spring is deformed or damaged, replace the pad - disc brake front with a new part.

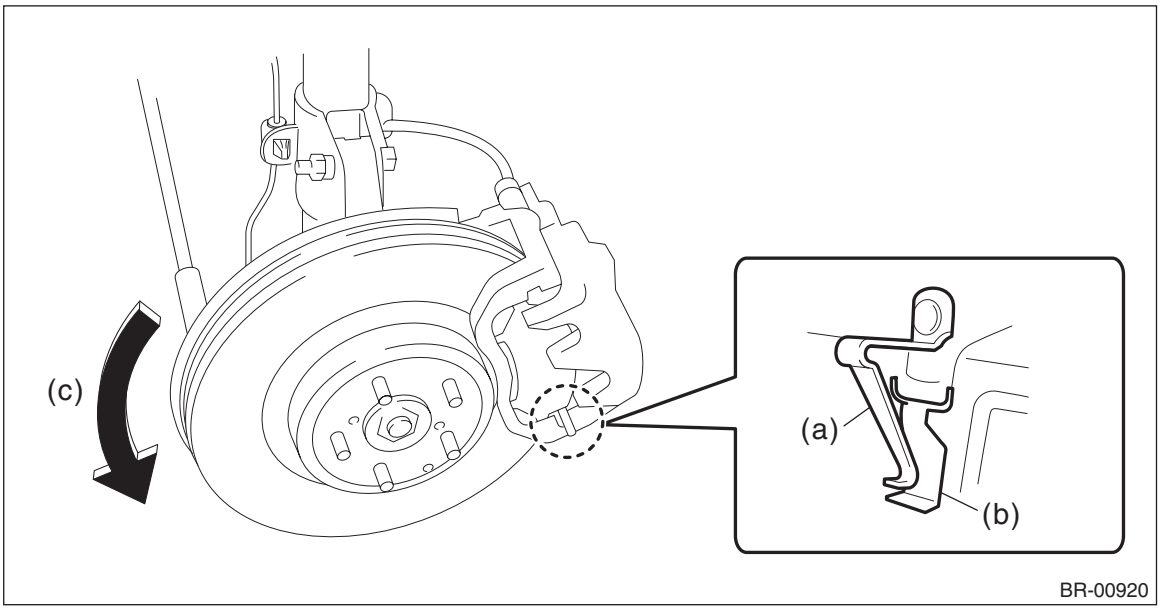

(a) Pad return spring (b) Supporting surface of pad clip (c) Disc rotor rotation direction

NOTE:
Install the pad indicator in proper direction.

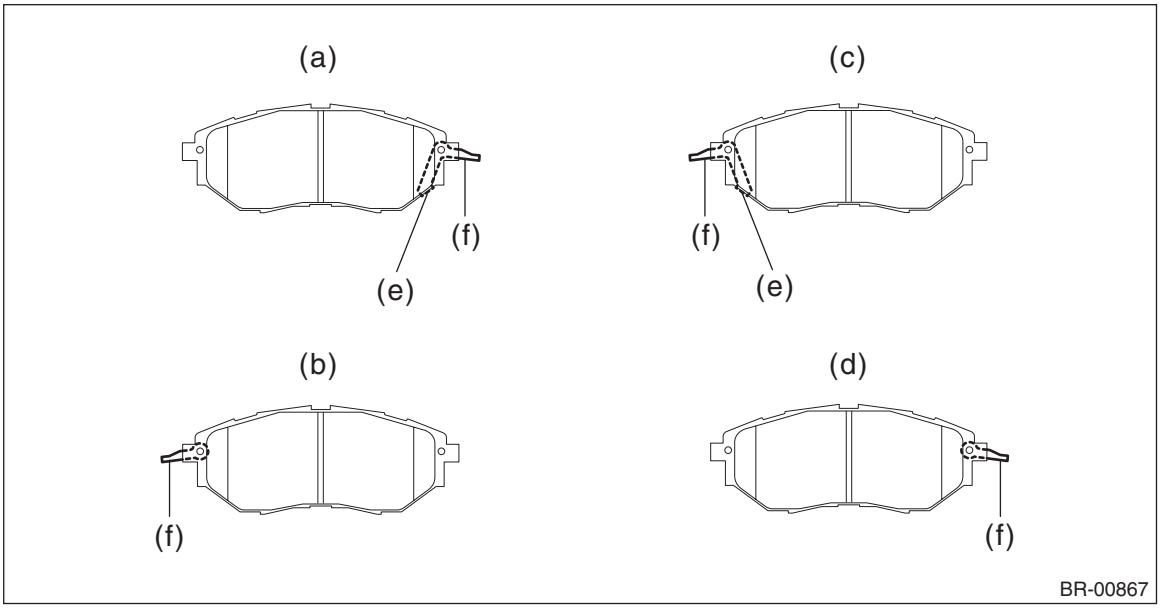

(a) LH — IN
(b) LH — OUT
(c) RH — IN
(d) RH — OUT
(e) Pad indicator
(f) Pad return spring

4) Install the caliper body assembly.

Tightening torque:
27 N·m (2.8 kgf-m, 19.9 ft-lb)

5) Install the front wheels.

Tightening torque:
120 N·m (12.2 kgf-m, 88.5 ft-lb)

C: INSPECTION

1) Check the thickness (A) of the pad - disc brake front.

NOTE:
- Always replace the pads of both wheels and both sides as a set.
- Replace pad clips if they are twisted or worn.
- Replace the pad if there is oil or grease on it.
- Wear indicators are installed on the pad - disc brake front inner and the pad - disc brake front outer, and a squeaking sound is heard if the pad is worn to the limit.

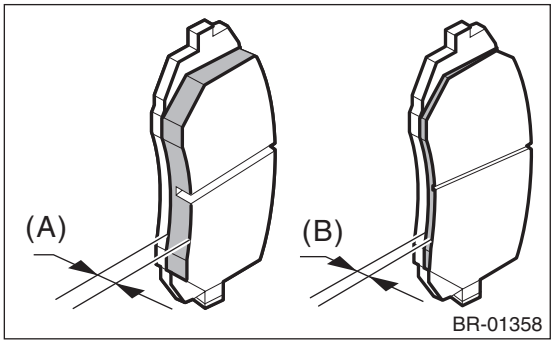

	Brake pad type	Standard (A)	Wear limit (B)
Pad thickness	16-inch type	12 mm (0.47 in)	1.5 mm (0.059 in)
	17-inch type	11 mm (0.43 in)	

2) If the wear limit is exceeded in the inspection, replace the pad - disc brake front. <Ref. to BR-22, REPLACEMENT, Front Brake Pad.>

D: REPLACEMENT

1) Remove the pad - disc brake front.
- 16-inch type: <Ref. to BR-16, 16-INCH TYPE, REMOVAL, Front Brake Pad.>
- 17-inch type: <Ref. to BR-17, 17-INCH TYPE, REMOVAL, Front Brake Pad.>

2) Press back the piston - disc brake.
3) Install the pad - disc brake front. <Ref. to BR-17, INSTALLATION, Front Brake Pad.>
- 16-inch type: <Ref. to BR-17, 16-INCH TYPE, INSTALLATION, Front Brake Pad.>
- 17-inch type: <Ref. to BR-20, 17-INCH TYPE, INSTALLATION, Front Brake Pad.>

3. Front Disc Rotor

A: REMOVAL

1) Lift up the vehicle, and then remove the front wheels.
2) Remove the disc brake assembly.
   (1) Remove the brake hose bracket.
   (2) Remove the mounting bolt, and remove the disc brake assembly.
   (3) Prepare wiring harnesses etc. to be discarded, and suspend the disc brake assembly from the strut assembly.

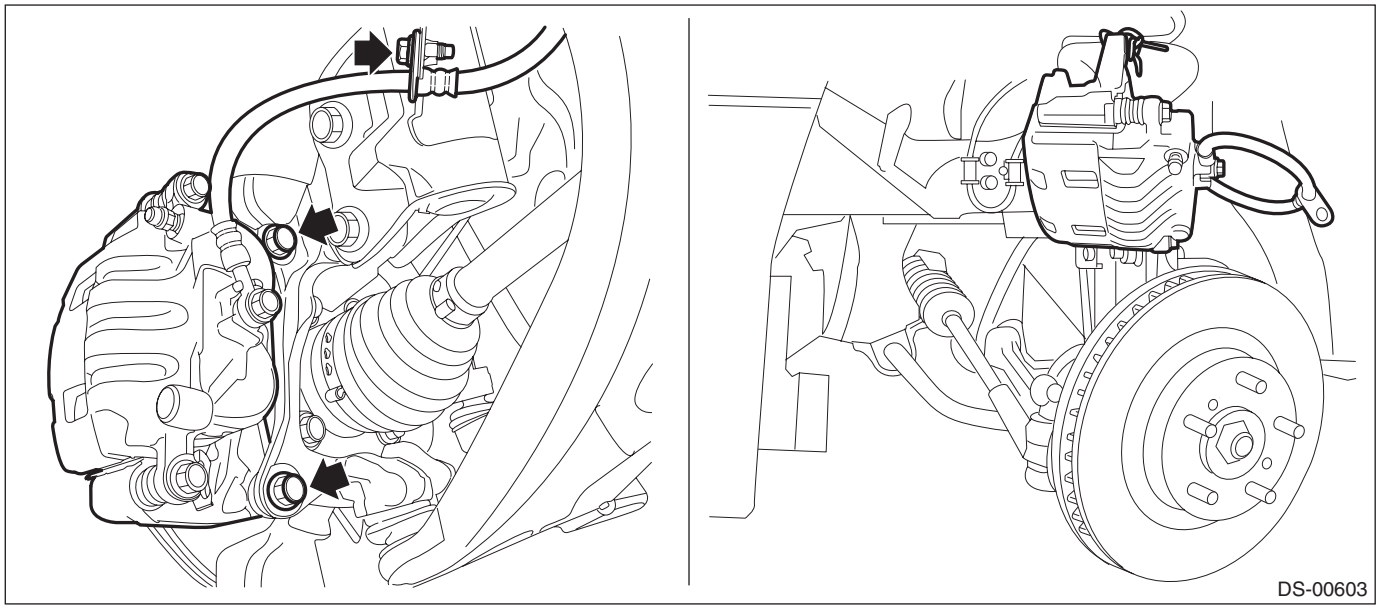

3) Remove the disc rotor.

NOTE:
When the disc rotor is difficult to be removed, screw in 8 mm (0.31 in) bolt to the threaded part of the disc rotor (A), and remove the disc rotor.

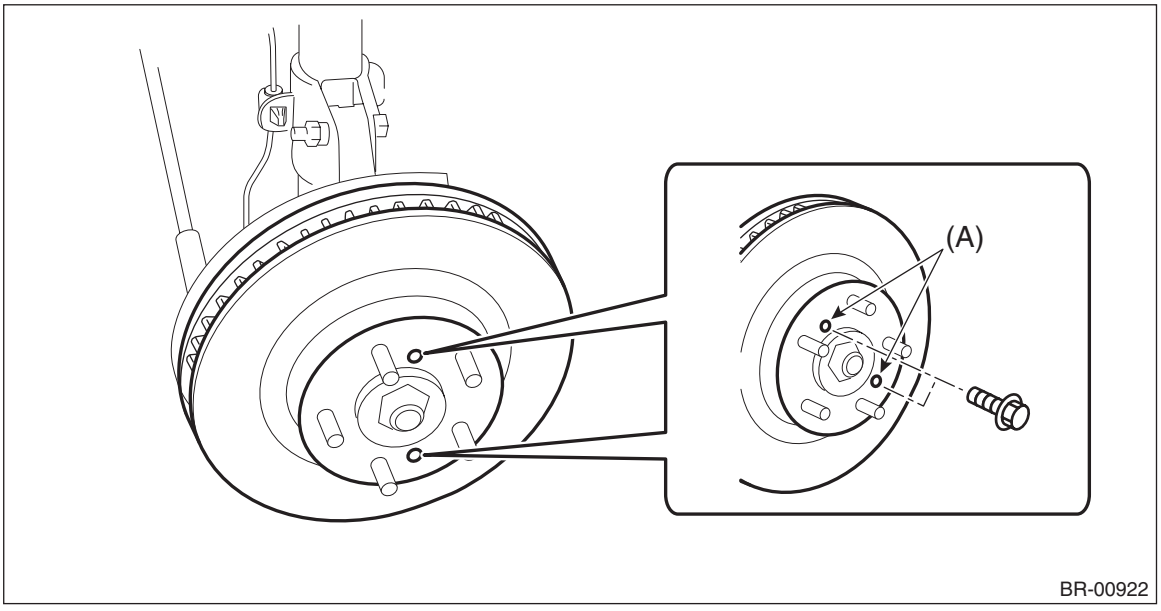

B: INSTALLATION

NOTE:
Before installation, remove mud and foreign matter from the disc brake assembly.
1) Check the front disc rotor. <Ref. to BR-24, INSPECTION, Front Disc Rotor.>
2) Install the disc rotor.
3) Install the disc brake assembly.

Tightening torque:
Mounting bolt: 120 N·m (12.2 kgf-m, 88.5 ft-lb)
Brake hose bracket: 33 N·m (3.4 kgf-m, 24.3 ft-lb)
4) Install the front wheels.

Tightening torque:
120 N·m (12.2 kgf-m, 88.5 ft-lb)

C: INSPECTION

1. DISC ROTOR RUNOUT CHECK

1) Check the hub unit COMPL - front axle for free play and runout before the inspection of disc rotor runout limit. <Ref. to DS-27, INSPECTION, Front Hub Unit Bearing.>
2) Tighten the wheel nuts to secure disc rotor.
3) Set a dial gauge 10 mm (0.39 in) inward from the disc rotor outer circumference, and check the disc rotor runout while rotating the disc rotor.

Disc rotor runout limit:
0.05 mm (0.0020 in)

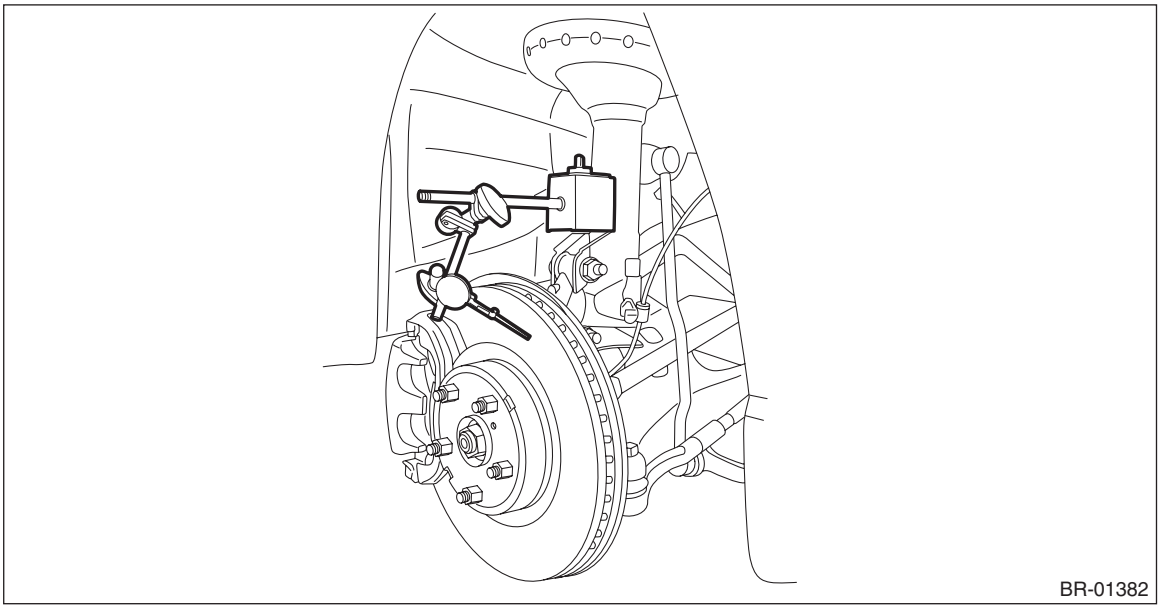

4) If the disc rotor runout exceeds service limit, grind the disc rotor.
5) Check the disc rotor thickness after grinding. <Ref. to BR-25, DISC ROTOR THICKNESS CHECK, INSPECTION, Front Disc Rotor.>

2. DISC ROTOR THICKNESS CHECK

1) Set a micrometer 10 mm (0.39 in) inward from the disc rotor outer perimeter, and then measure the disc rotor thickness (A).

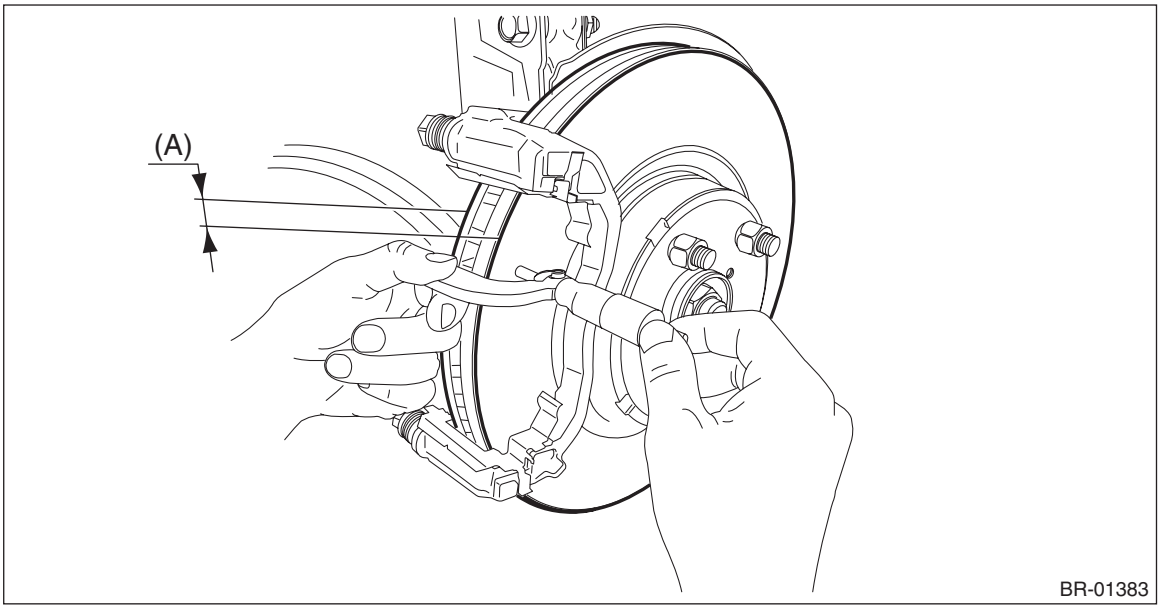

	Size	Standard	Wear limit	Disc rotor outer diameter
Disc rotor thickness (A)	16-inch	28 mm (1.10 in)	26 mm (1.02 in)	294 mm (11.57 in)
	17-inch	30 mm (1.18 in)	28 mm (1.10 in)	326 mm (12.83 in)

2) If the wear limit is exceeded in the inspection, replace the disc rotor.

4. Front Disc Brake Assembly

A: REMOVAL

1. 16-INCH TYPE

1) Lift up the vehicle, and then remove the front wheels.
2) Remove the union bolt and the caliper bolt, and remove the caliper body assembly.

CAUTION:
• Do not allow brake fluid to come in contact with the painted surface of the vehicle body. If it does, wash off with water and wipe away completely.
• Prepare a container to catch grease or oil, etc. If any grease or oil spills, wipe it off and clean immediately to prevent from penetrating into floor or flowing outside.

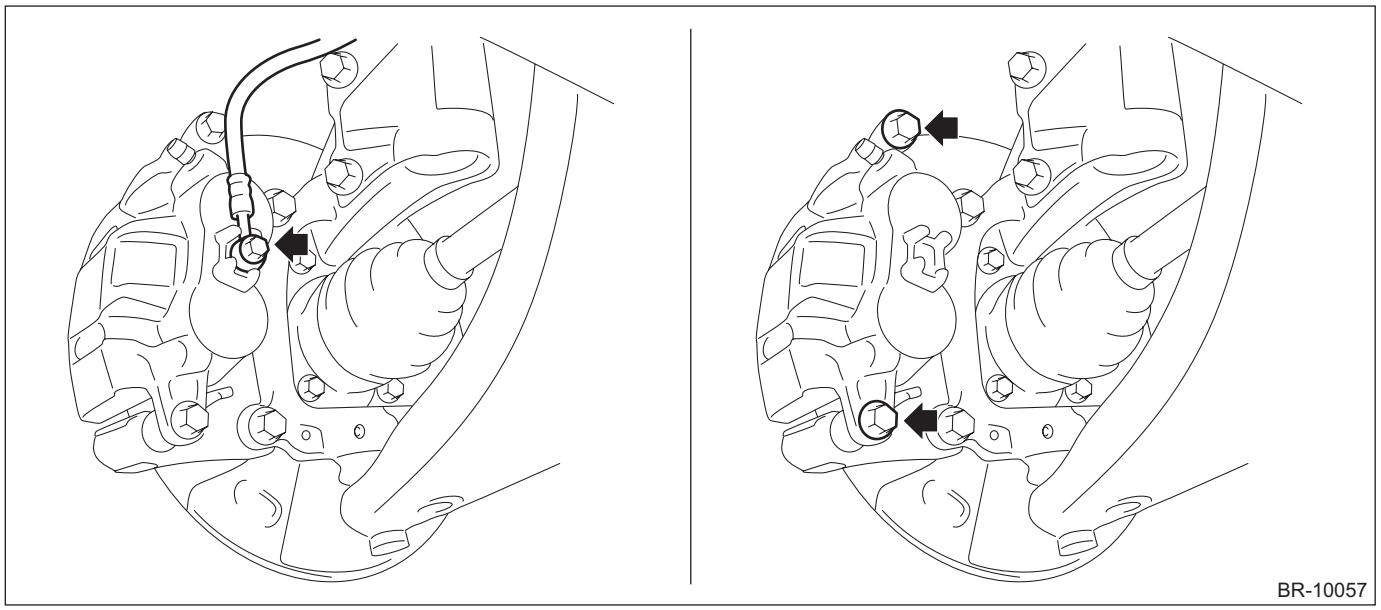

3) Remove the support - front disc brake.
(1) Remove the spring - brake pad and the pad - disc brake front.

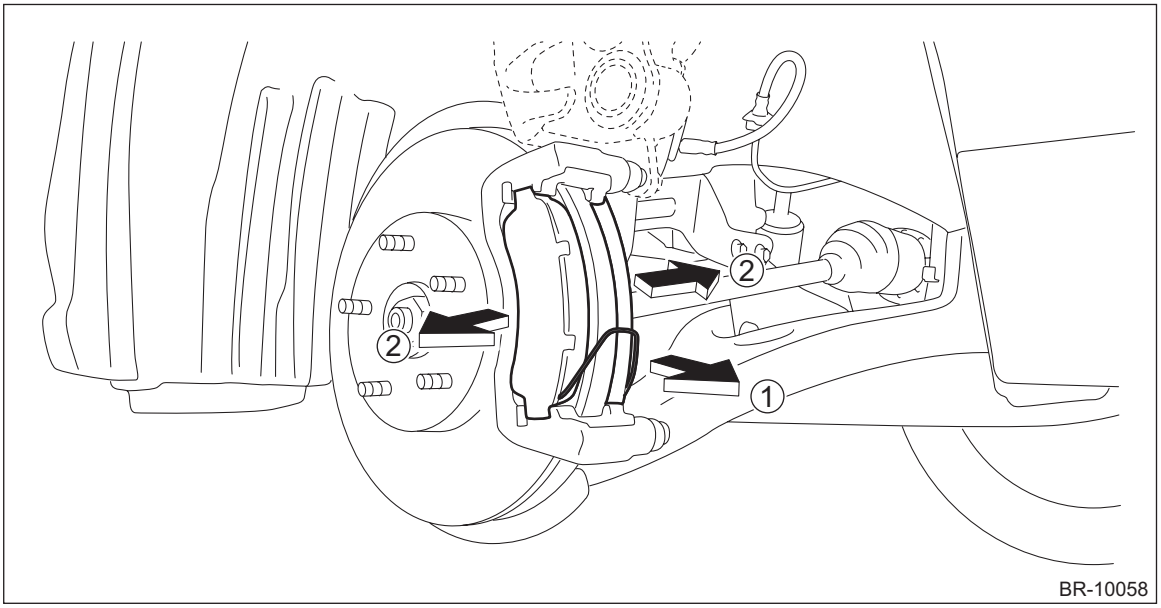

(2) Remove the mounting bolts, and then remove the support - front disc brake.

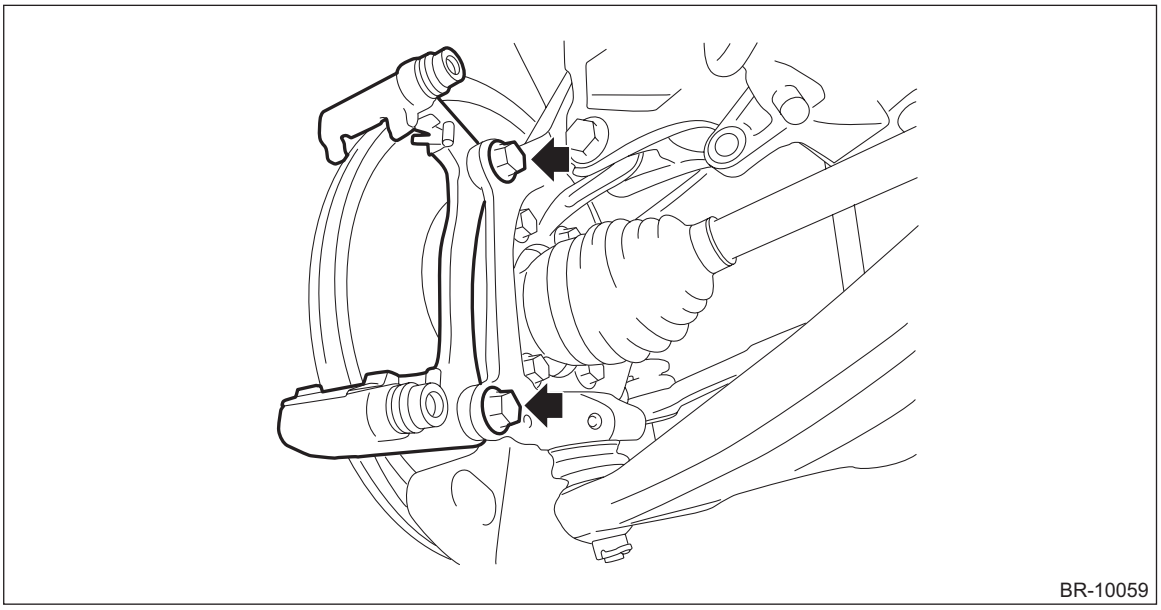

2. 17-INCH TYPE

1) Lift up the vehicle, and then remove the front wheels.
2) Remove the union bolt and the caliper bolt, and remove the caliper body assembly.

CAUTION:
• Do not allow brake fluid to come in contact with the painted surface of the vehicle body. If it does, wash off with water and wipe away completely.
• Prepare a container to catch grease or oil, etc. If any grease or oil spills, wipe it off and clean immediately to prevent from penetrating into floor or flowing outside.

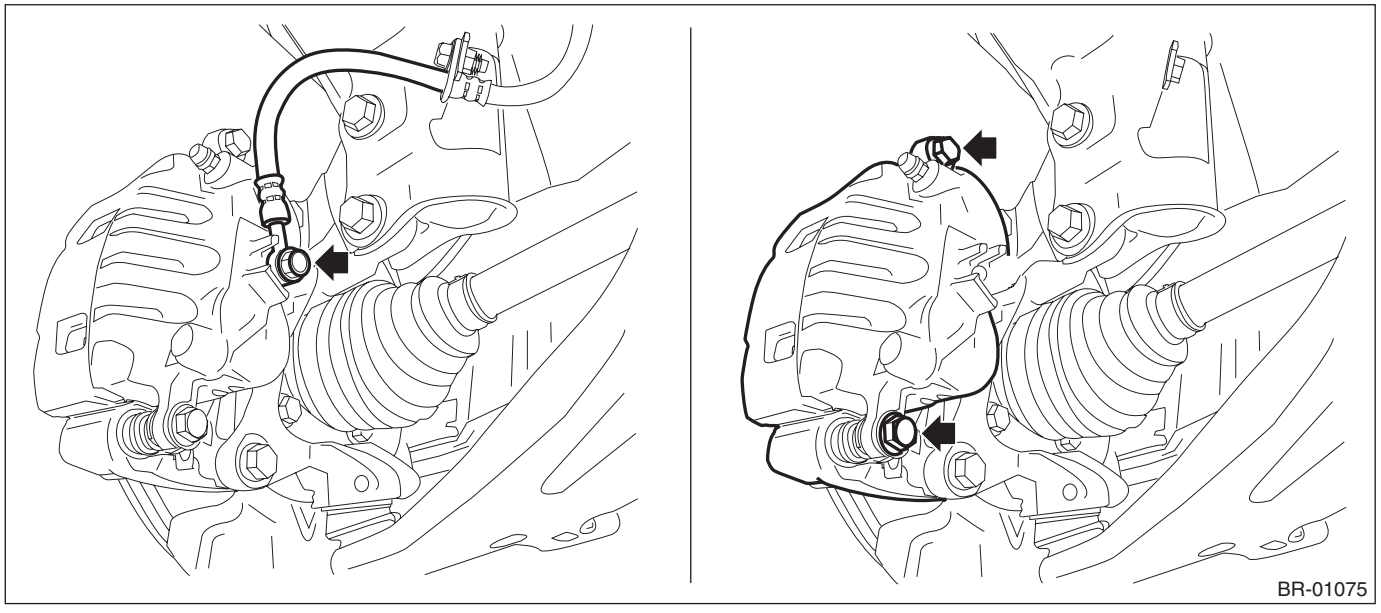

3) Remove the support - front disc brake.
(1) Remove the pad - disc brake front.

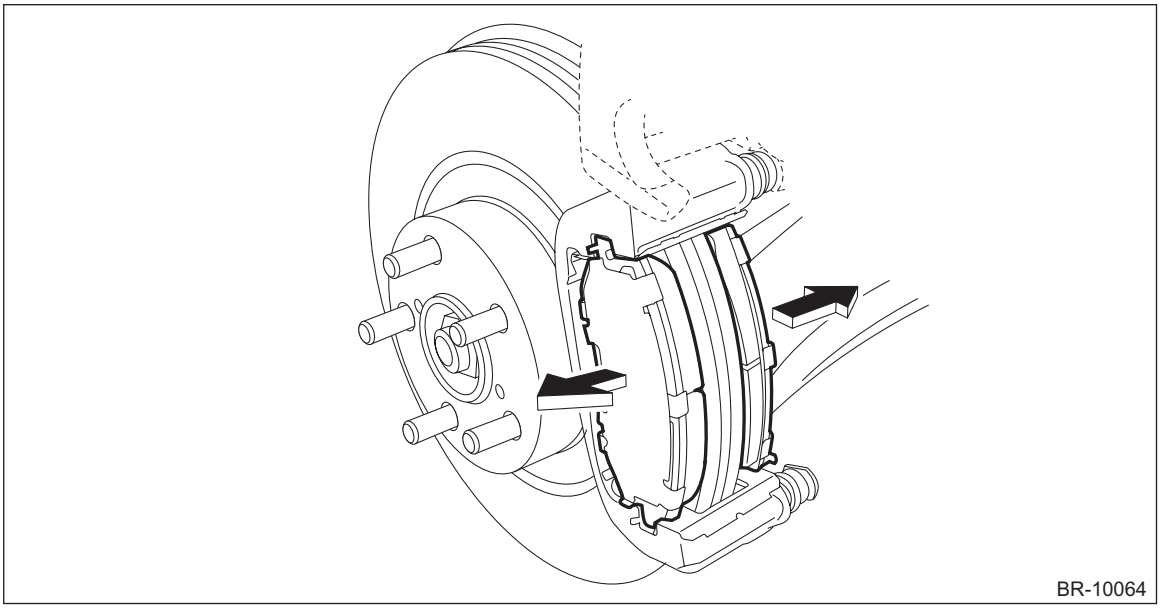

(2) Remove the mounting bolts, and then remove the support - front disc brake.

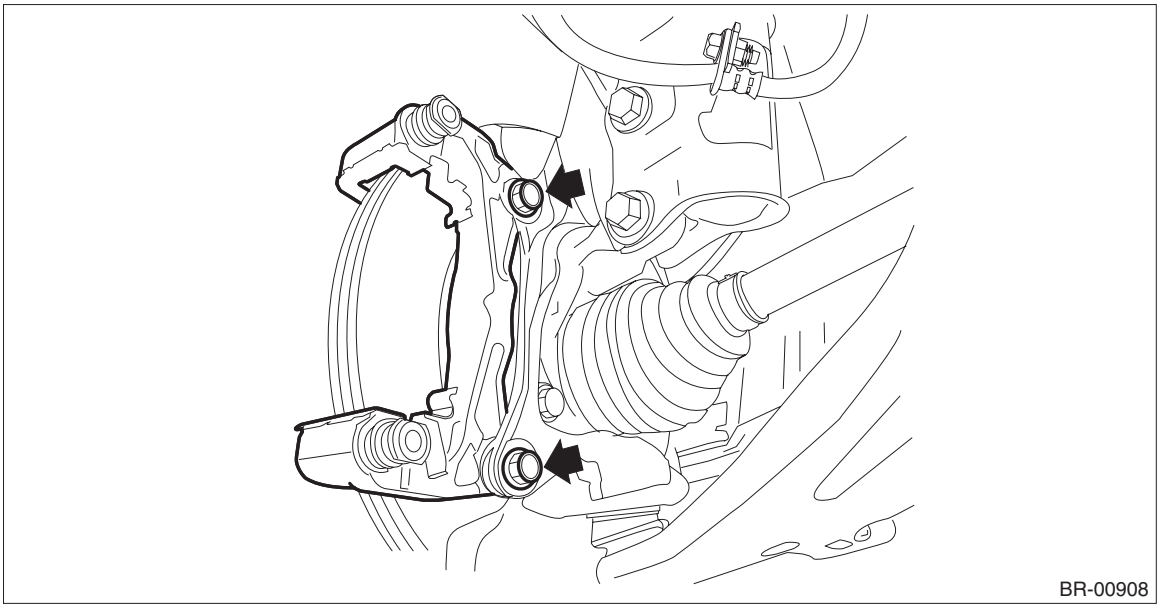

B: INSTALLATION

1. 16-INCH TYPE

NOTE:
Before installation, remove mud and foreign matter from the caliper body assembly and support - front disc brake.
1) Check each part. <Ref. to BR-37, INSPECTION, Front Disc Brake Assembly.>
2) Apply a thin coat of grease to the support - front disc brake.

Grease:
Support - front disc brake: Molykote G-5029 or equivalent

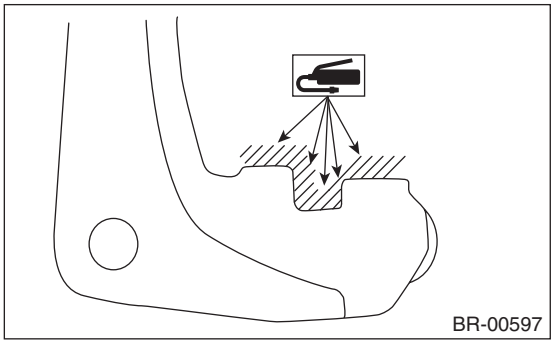

3) Install the support - front disc brake.

Tightening torque:
Mounting bolt: 120 N·m (12.2 kgf-m, 88.5 ft-lb)
4) Apply a thin coat of grease to the shim - disc brake front and the pad - disc brake front.
- Inner side:

Apply a thin coat of grease to the both sides of shim - disc brake front inner and the pad - disc brake front.

Grease:
Shim and pad: Molykote M77 or equivalent

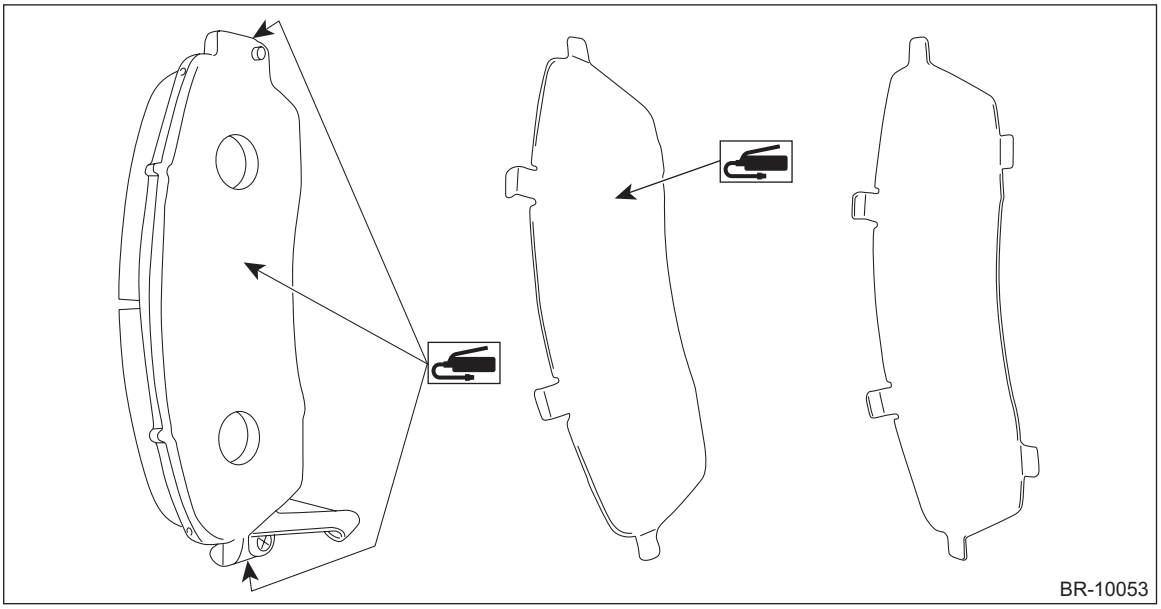

- Outer side:

Apply a thin coat of grease to the pad - disc brake front.

Grease:

Shim and pad: Molykote M77 or equivalent

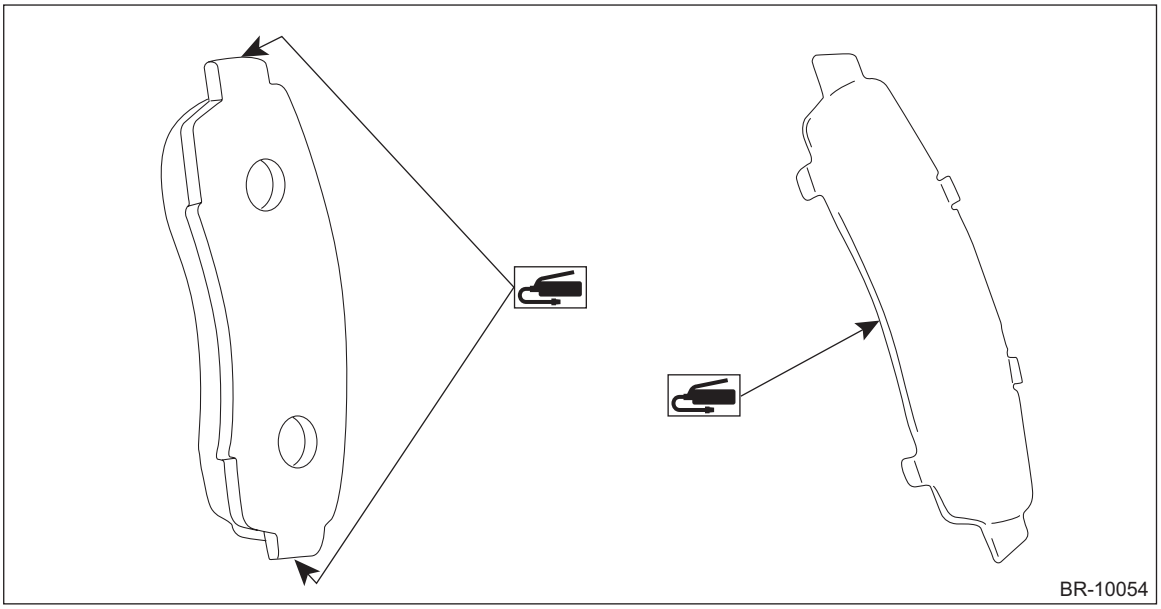

5) Install the spring - brake pad and the pad - disc brake front.

NOTE:
Install so that the pad indicator faces the inner side.

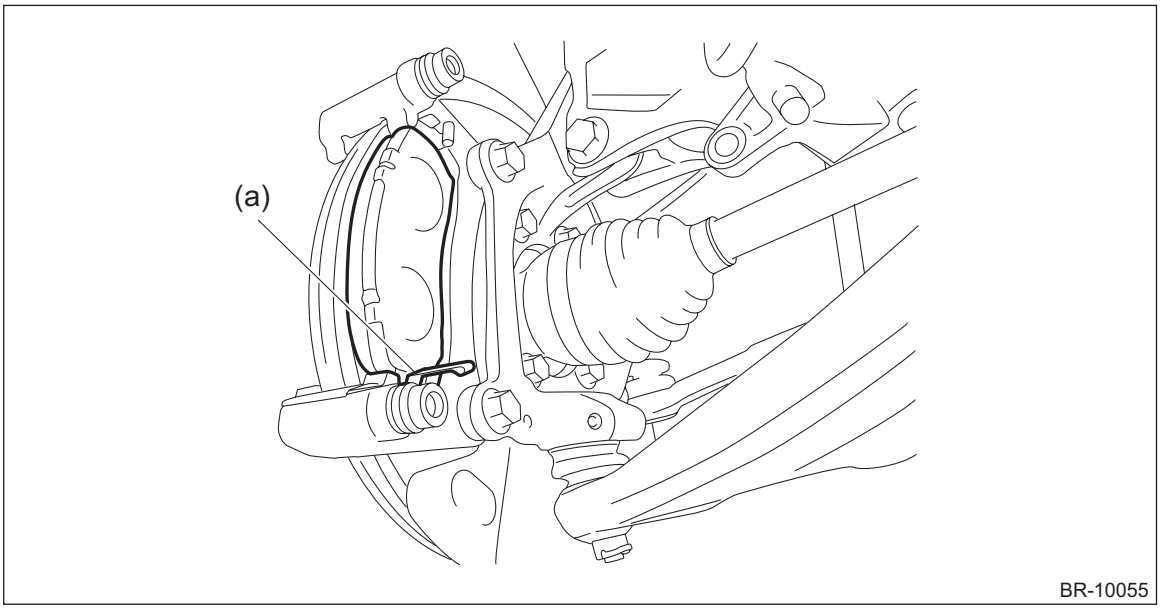

(a) Pad indicator

6) Install the caliper body assembly.

Tightening torque:
50 N·m (5.1 kgf-m, 36.9 ft-lb)

NOTE:
Install so that the spring - brake pad (b) does not protrude out of the hole (a).

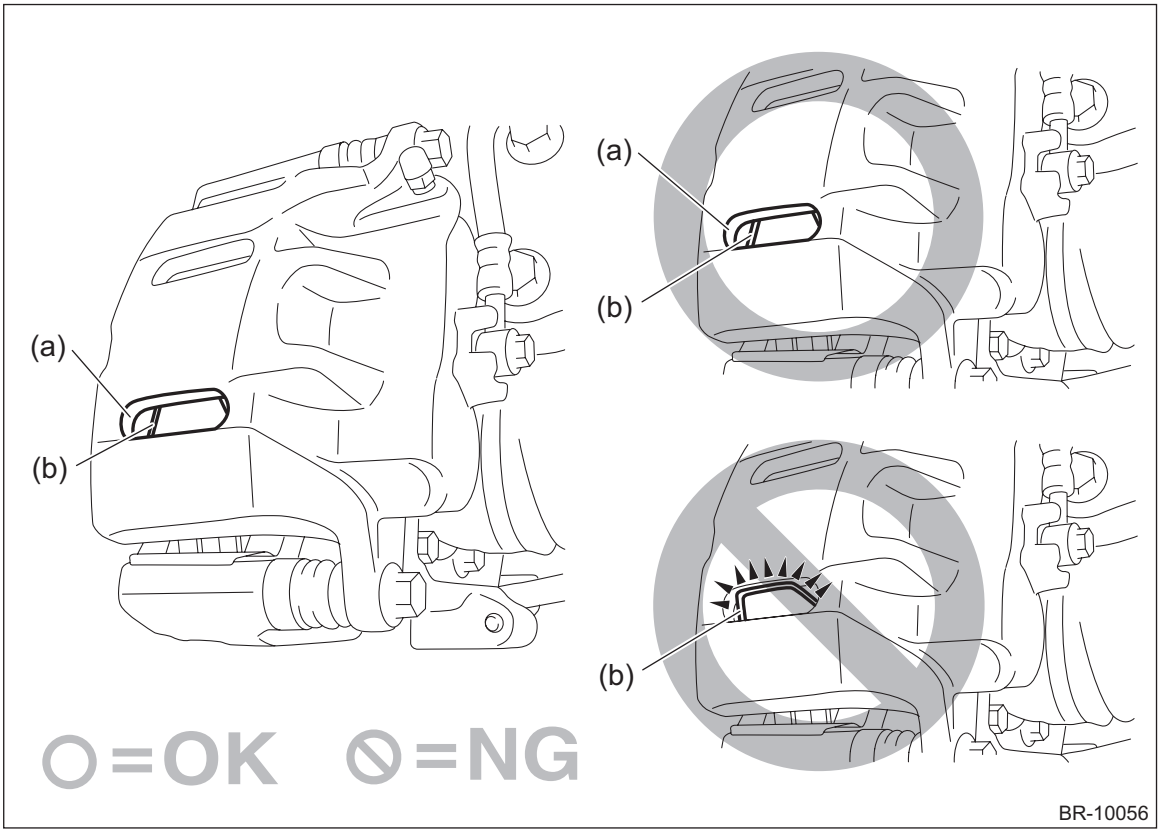

7) Connect the brake hose using a new brake hose gasket.

Tightening torque:
Union bolt: 26 N·m (2.7 kgf-m, 19.2 ft-lb)

8) Bleed air from the brake system. <Ref. to BR-70, BRAKE LINE, PROCEDURE, Air Bleeding.>
9) Install the front wheels.

Tightening torque:
120 N·m (12.2 kgf-m, 88.5 ft-lb)

2. 17-INCH TYPE

NOTE:
Before installation, remove mud and foreign matter from the caliper body assembly and support - front disc brake.
1) Check each part. <Ref. to BR-37, INSPECTION, Front Disc Brake Assembly.>
2) Apply a thin coat of grease to the pad clip.

Grease:
Pad clip: Item contained in the pad kit or equivalent

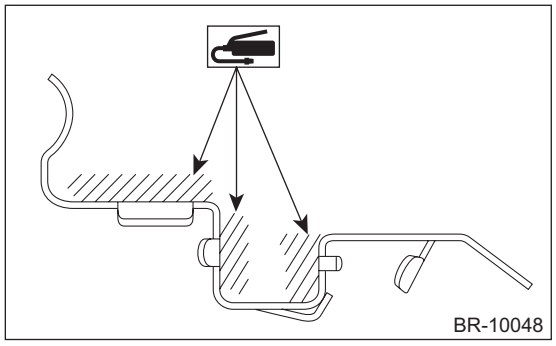

3) Install the support - front disc brake.

Tightening torque:
Mounting bolt: 120 N·m (12.2 kgf-m, 88.5 ft-lb)
4) Install the brake pad.

CAUTION:
• Be sure to install so that the pad return spring faces the input side of the direction of brake rotor rotation, as shown in the figure.
• Correctly install the pad return spring to the supporting surface of the pad clip as shown in the figure.
• If the pad return spring is deformed or damaged, replace the brake pad with a new part.

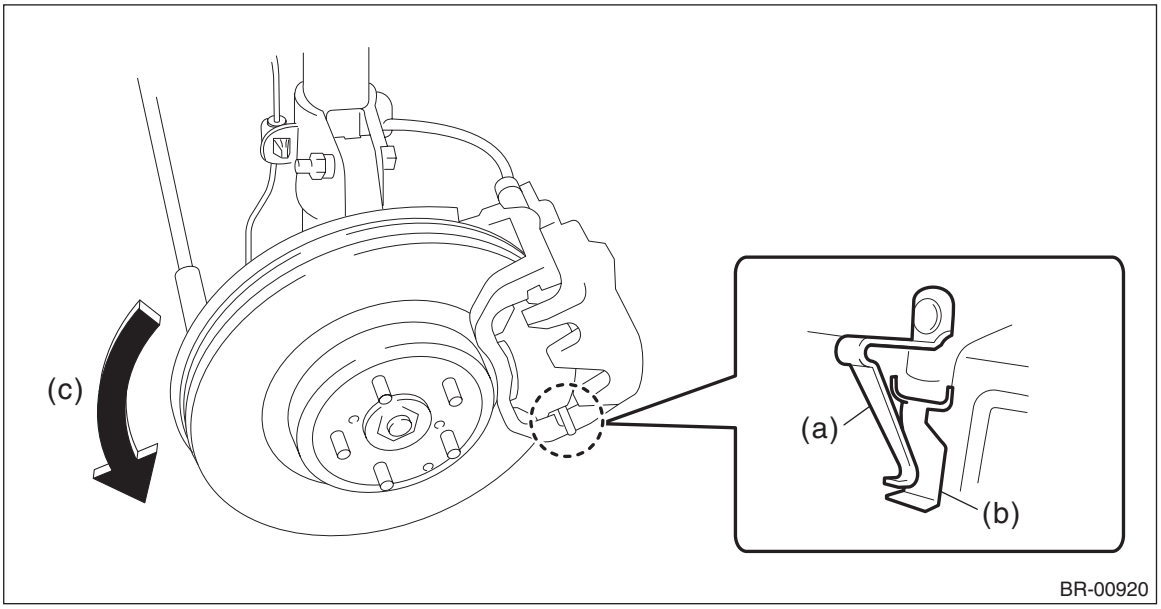

(a) Pad return spring (b) Supporting surface of pad clip (c) Direction of brake rotor rotation

NOTE:
Install the brake pad indicator in proper direction.

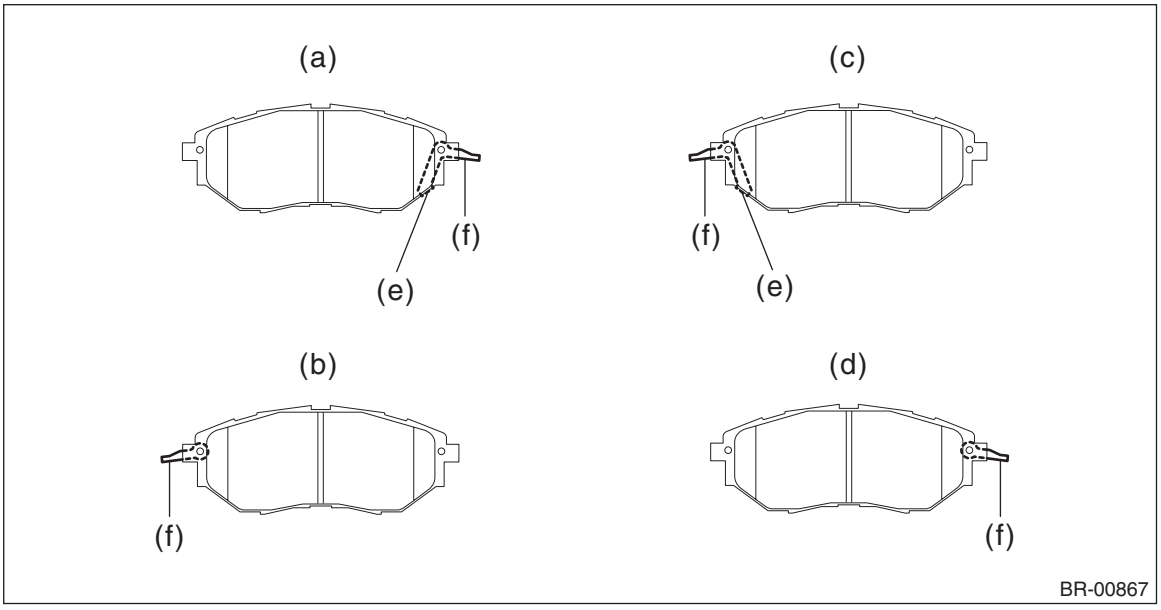

(a) LH — IN
(b) LH — OUT
(c) RH — IN
(d) RH — OUT
(e) Pad indicator
(f) Pad return spring

5) Install the caliper body assembly.

Tightening torque:
27 N·m (2.8 kgf-m, 19.9 ft-lb)

6) Connect the brake hose using a new brake hose gasket.

Tightening torque:
Union bolt: 26 N·m (2.7 kgf-m, 19.2 ft-lb)

7) Bleed air from the brake system. <Ref. to BR-70, BRAKE LINE, PROCEDURE, Air Bleeding.>
8) Install the front wheels.

Tightening torque:
120 N·m (12.2 kgf-m, 88.5 ft-lb)

C: DISASSEMBLY

CAUTION:
Be careful not to allow foreign matter to enter the brake hose connector.

1) Remove mud and foreign matter from the caliper body assembly.
2) Remove the piston - disc brake.
   (1) Place a wooden block in the caliper body as shown in the figure to prevent the piston - disc brake from jumping out and being damaged.
   (2) Using an air gun, gradually apply compressed air via the brake hose installation hole to push out the piston - disc brake.

NOTE:
Instead of removing the pistons one by one, remove all pistons at once after adjusting the amount of protrusion evenly using a wooden block.

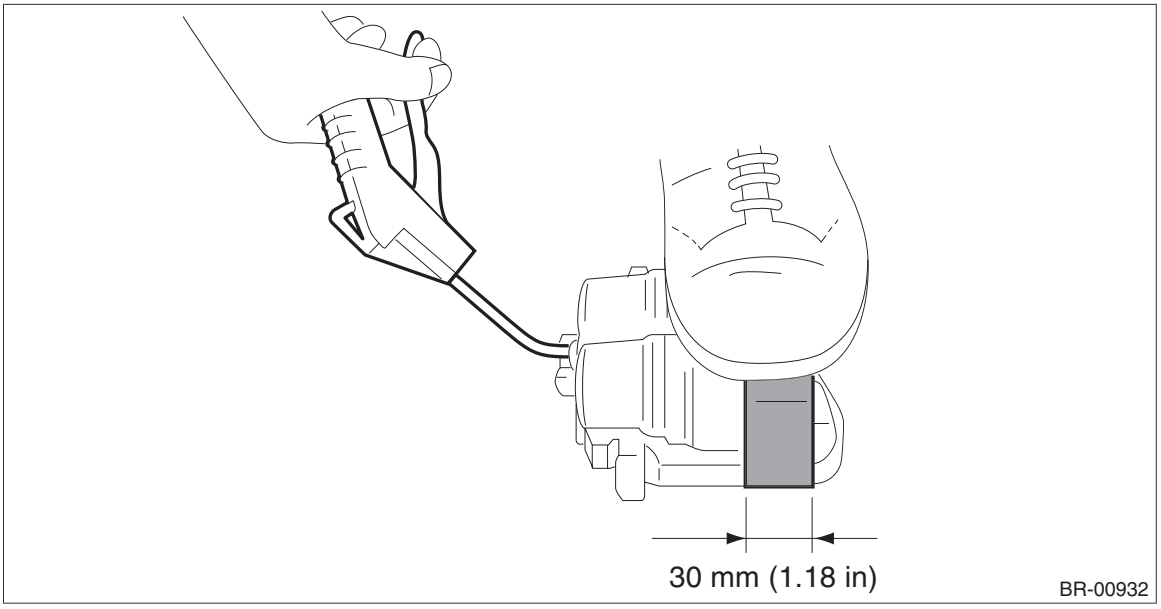

3) Remove the piston boot (b) and piston seal (c) from the caliper body cylinder (a).

CAUTION:
Do not damage the cylinder and piston seal groove.

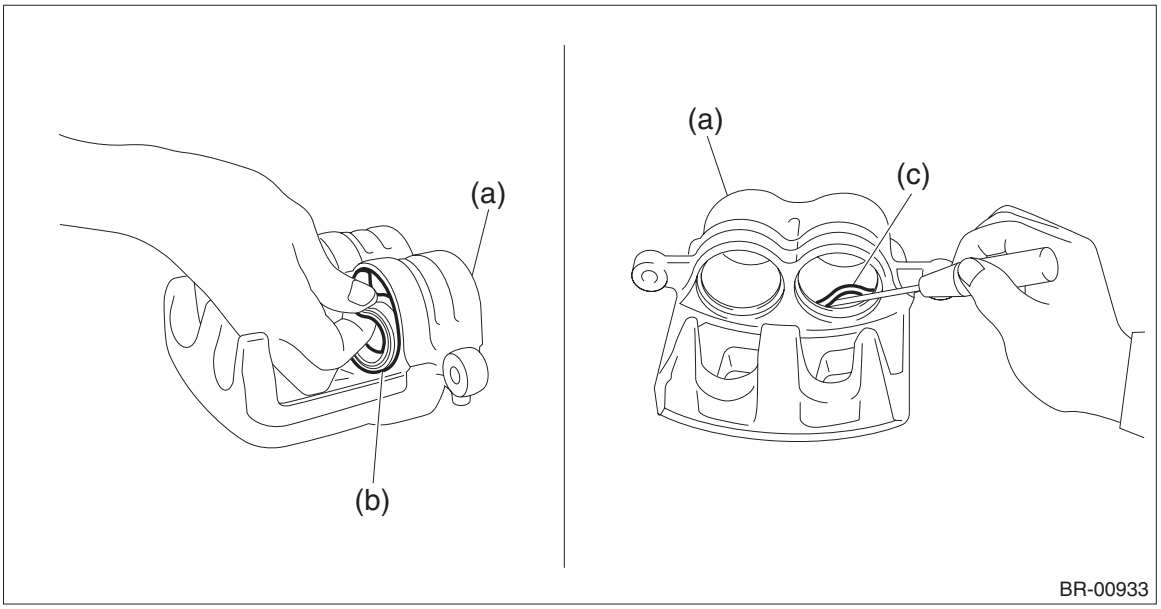

4) Remove each part from support - front disc brake.

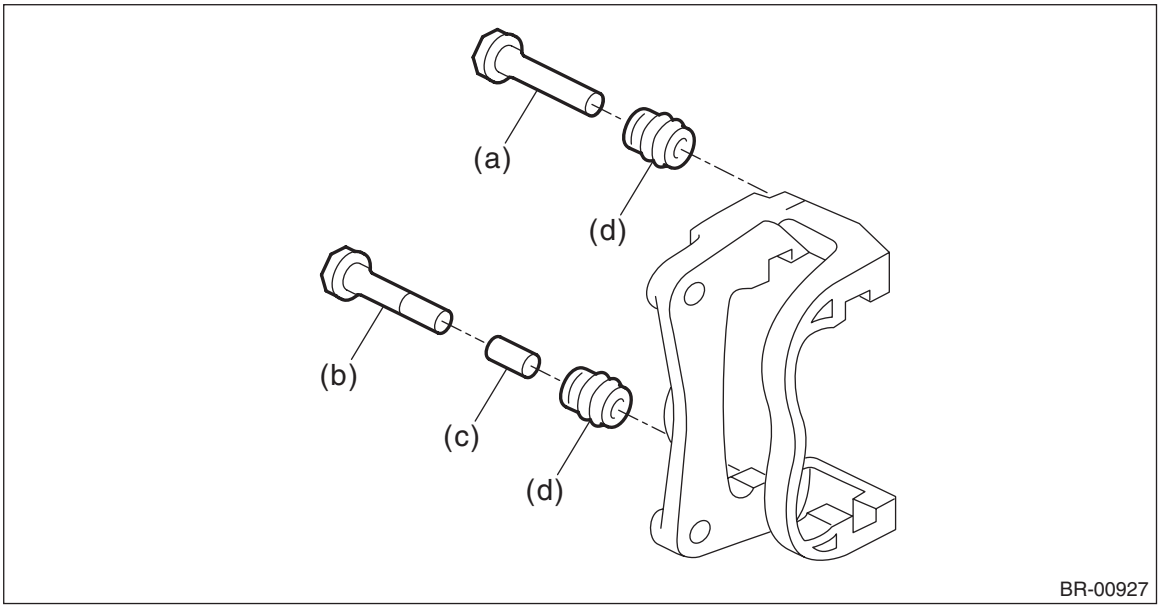

(a) Guide pin - front brake
(b) Lock pin - front brake
(c) Lock pin - sleeve
(d) Pin boot

D: ASSEMBLY

1) Check each part. <Ref. to BR-37, INSPECTION, Front Disc Brake Assembly.>
2) Clean the inside of the caliper body using brake fluid.

Fluid:
FMVSS No. 116, DOT3 or DOT4

3) Install the piston seal and the piston - disc brake.
   (1) Apply a coat of brake fluid to piston seal and install the piston seal to the groove inside caliper body.
   (2) Apply a coat of brake fluid to the piston sliding part of caliper body and the entire outer surface of the piston - disc brake.

Fluid:
FMVSS No. 116, DOT3 or DOT4

   (3) Apply a coat of grease to the piston boot and fit to the groove on the ends of piston - disc brake.

Grease:
An item contained in the piston seal kit or equivalent

   (4) Install the piston - disc brake to the caliper body.

CAUTION:
Do not force the piston - disc brake into the sliding part of caliper body.

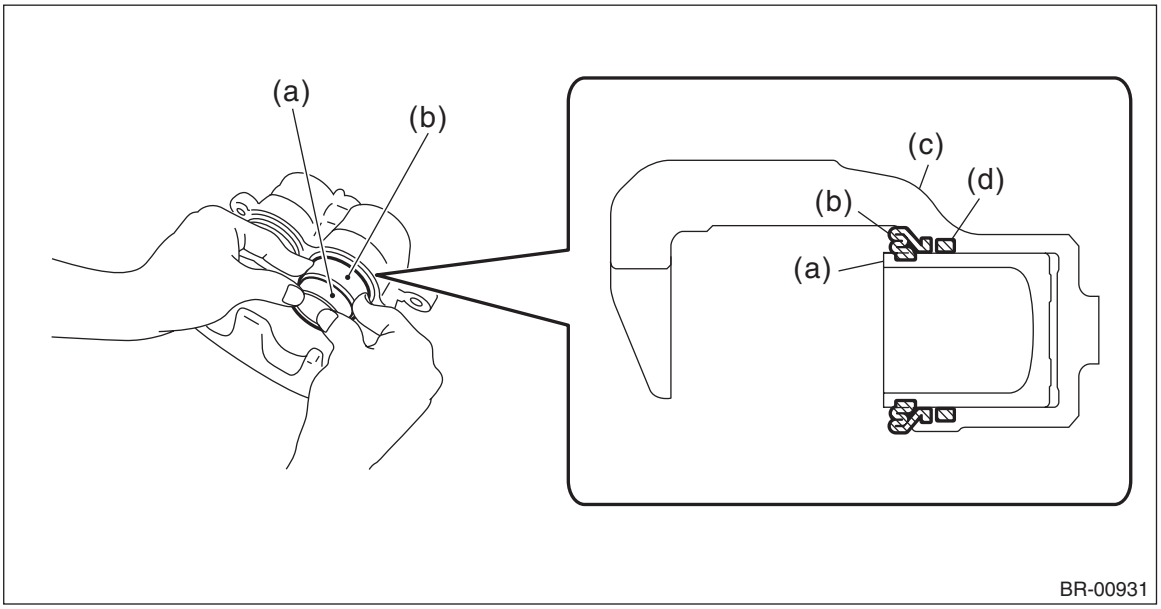

(a) Piston - disc brake
(b) Piston boot
(c) Caliper body assembly
(d) Piston seal

4) Apply grease contained in the piston seal kit (or Nippon Grease NIGLUBE RX-2) to the lock pin - front brake, the outer surface of guide pin - front brake, the pin sliding part of the support - front disc brake, and the grooves of pin boot.

Grease:

An item contained in the piston seal kit or Nippon Grease NIGLUBE RX-2

5) Install the pin boot to the lock pin - front brake and the guide pin - front brake, and insert them into the support - front disc brake.

CAUTION:

Insert the lock pin - front brake and guide pin - front brake into specified position, and make sure that they slide and seat properly.

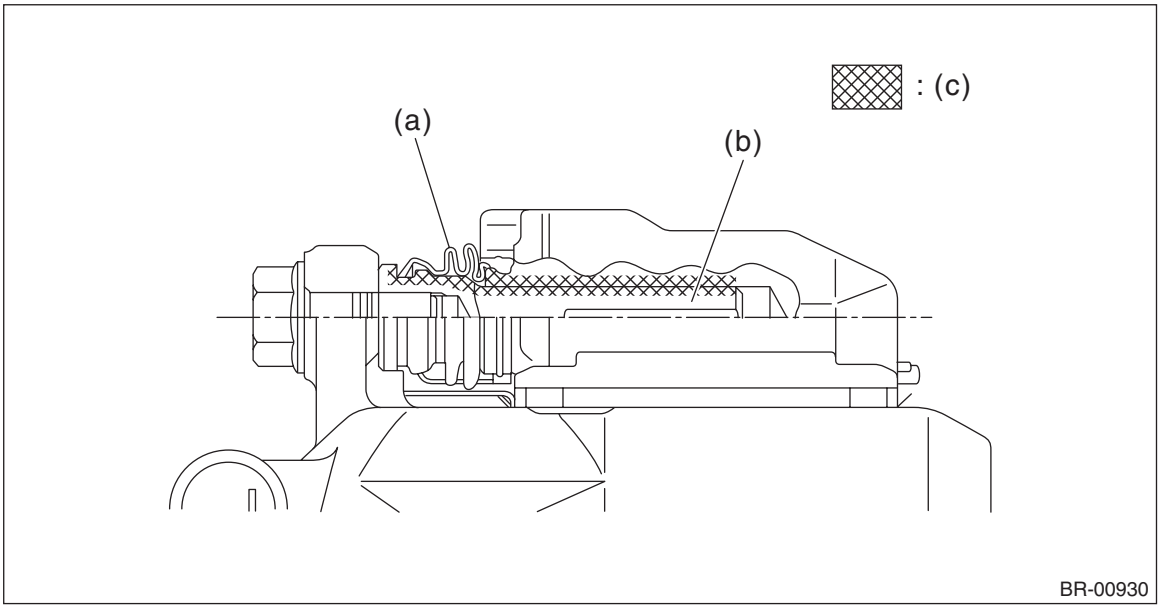

(a) Pin boot
(b) Lock pin - front brake or guide pin - front brake
(c) Grease applied area

E: INSPECTION

1) Check the piston sliding part of caliper body and the piston for uneven wear, damage or rust.
2) Check the rubber parts for damage or deterioration.
3) If faulty is found in the inspection, replace the relevant part.

5. Rear Brake Pad

A: REMOVAL

1) Release the parking brake.
2) Using the Subaru Select Monitor, go to the brake maintenance mode according to the display screen. <Ref. to PB-6, BRAKE MAINTENANCE MODE, OPERATION, Parking Brake System.>

NOTE:
For detailed operation procedures, refer to “Application help”.

3) Disconnect the ground terminal from battery sensor. <Ref. to RC-4, BATTERY, NOTE, Repair Contents.>
4) Lift up the vehicle, and then remove the rear wheels.
5) Remove the pad - disc brake rear.
   (1) Disconnect the connector.
   (2) Remove the pad clip and the brake hose bracket.

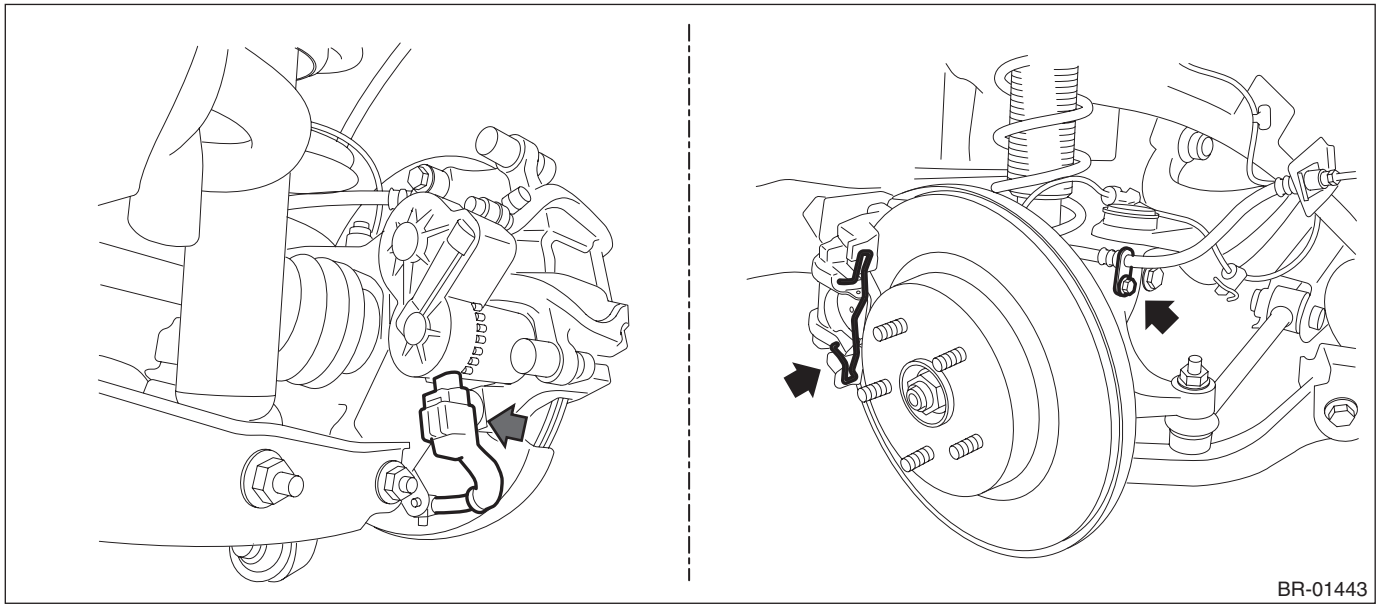
BR-01443

   (3) Remove the cap and the caliper bolt, and remove the caliper body assembly.
   (4) Remove the pad - disc brake rear.

Preparation tool:
Hexagon wrench: 7 mm (0.28 in)

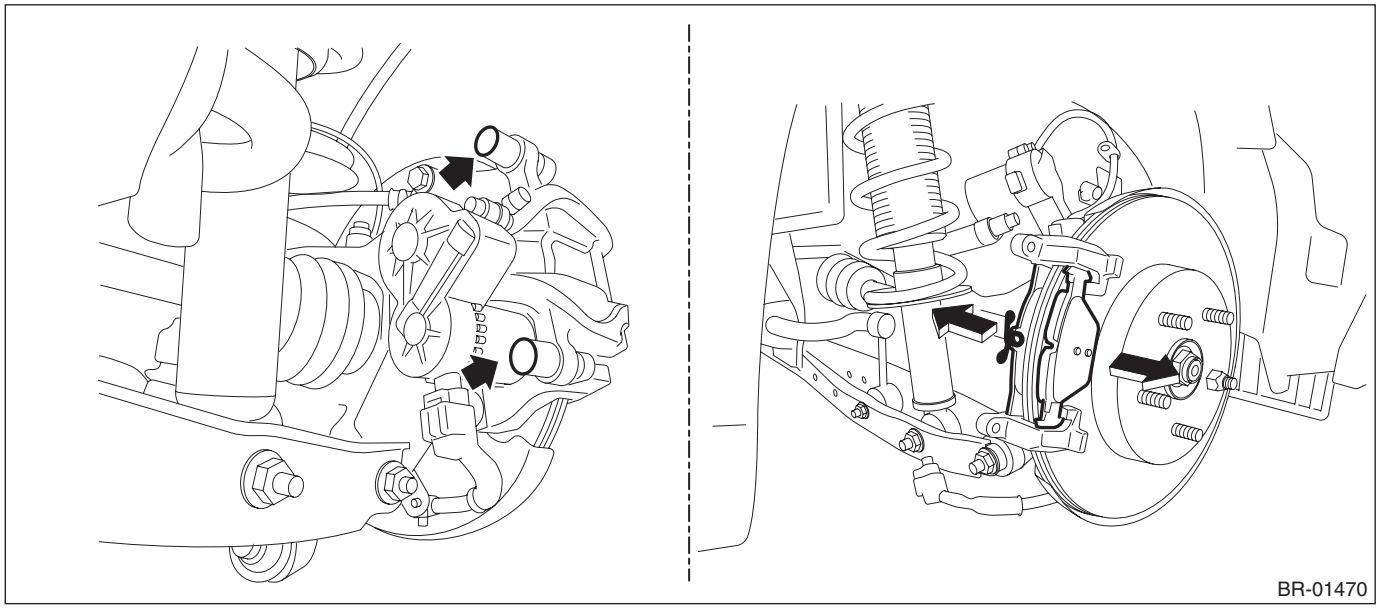
BR-01470

B: INSTALLATION

NOTE:
Before installation, remove mud and foreign matter from the disc brake assembly.
1) Install the pad - disc brake rear.
2) Install the caliper body assembly.

Tightening torque:
Caliper bolt: 25 N·m (2.5 kgf-m, 18.4 ft-lb)
Brake hose bracket: 33 N·m (3.4 kgf-m, 24.3 ft-lb)
3) Connect the ground terminal to battery sensor. <Ref. to RC-4, BATTERY, NOTE, Repair Contents.>
4) Using the Subaru Select Monitor, exit the brake maintenance mode according to the display screen. <Ref. to PB-6, BRAKE MAINTENANCE MODE, OPERATION, Parking Brake System.>

NOTE:
For detailed operation procedures, refer to “Application help”.
5) After the operation is completed, apply and release the parking brake five times and ensure that the brake operates normally.
6) Install the rear wheels.

Tightening torque:
120 N·m (12.2 kgf-m, 88.5 ft-lb)

C: INSPECTION

1) Check the thickness of the pad - disc brake rear.

NOTE:
- Always replace the pads of both wheels and both sides as a set.
- Replace pad clips if they are twisted or worn.
- Replace the pad if there is oil or grease on it.
- Wear indicators are installed on the pad - disc brake rear inner, and a squeaking sound is heard if the pad is worn to the limit.

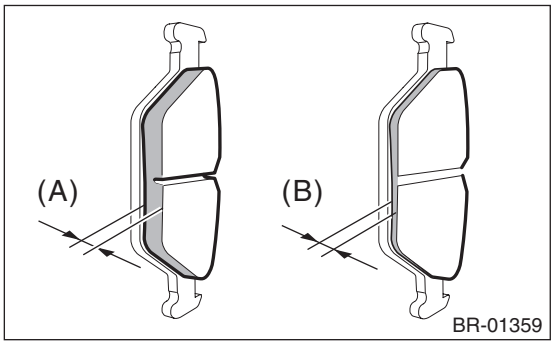

	Standard (A)	Wear limit (B)
Pad thickness	9.0 mm (0.354 in)	1.5 mm (0.059 in)

2) If the wear limit is exceeded in the inspection, replace the brake pad. <Ref. to BR-40, REPLACEMENT, Rear Brake Pad.>

D: REPLACEMENT

1) Release the parking brake.
2) Using the Subaru Select Monitor, go to the brake maintenance mode according to the display screen. <Ref. to PB-6, BRAKE MAINTENANCE MODE, OPERATION, Parking Brake System.>

NOTE:
For detailed operation procedures, refer to “Application help”.
3) Disconnect the ground terminal from battery sensor. <Ref. to RC-4, BATTERY, NOTE, Repair Contents.>
4) Remove the pad - disc brake rear. <Ref. to BR-38, REMOVAL, Rear Brake Pad.>
5) Press back the piston - disc brake.
6) Install the pad - disc brake rear. <Ref. to BR-39, INSTALLATION, Rear Brake Pad.>
7) Connect the ground terminal to battery sensor. <Ref. to RC-4, BATTERY, NOTE, Repair Contents.>
8) Using the Subaru Select Monitor, exit the brake maintenance mode according to the display screen.
9) After the operation is completed, apply and release the parking brake five times and ensure that the brake operates normally.

NOTE:
Perform the following replacement procedure if the Subaru Select Monitor cannot be used.
1. Remove the disc brake assembly and the pad - disc brake rear.
2. Remove the bolt securing the lower side of the support - rear disc brake, loosen the upper side bolt, and then slide the support - rear disc brake upward and hold it.
3. Secure the disc brake assembly as shown in the figure, and push back the piston using the tool.

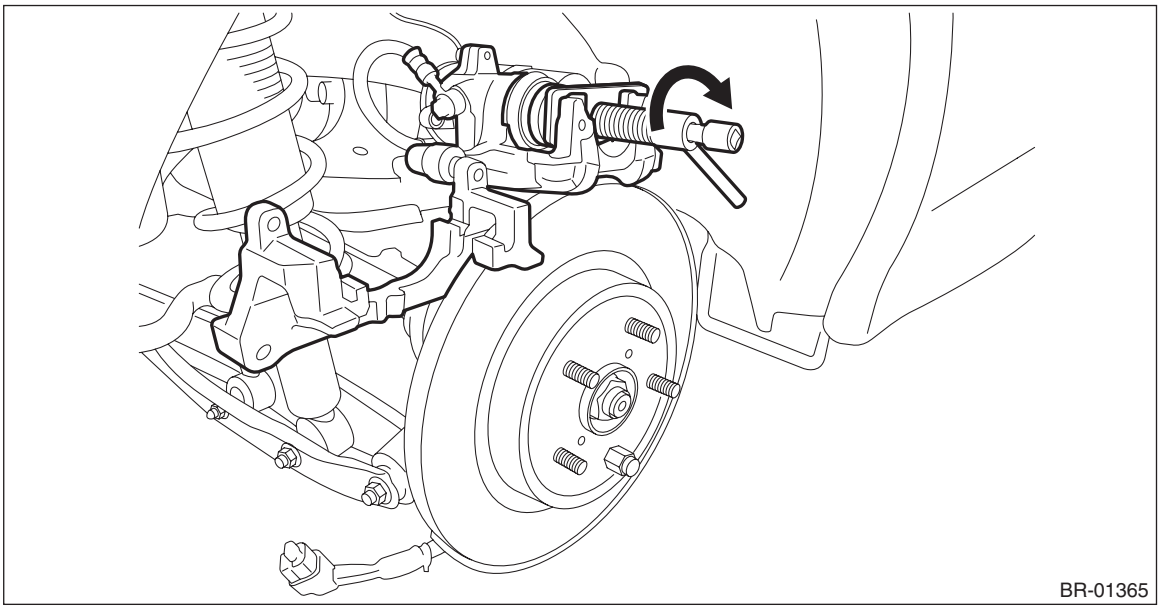

4. Install the support - rear disc brake and the disc brake assembly to the specified tightening torque.

Tightening torque:
Refer to “COMPONENT” of “General Description”. <Ref. to BR-6, REAR DISC BRAKE, COMPONENT, General Description.>

6. Rear Disc Rotor

A: REMOVAL

1) Release the parking brake.
2) Using the Subaru Select Monitor, go to the brake maintenance mode according to the display screen. <Ref. to PB-6, BRAKE MAINTENANCE MODE, OPERATION, Parking Brake System.>

NOTE:
For detailed operation procedures, refer to “Application help”.
3) Disconnect the ground terminal from battery sensor. <Ref. to RC-4, BATTERY, NOTE, Repair Contents.>
4) Lift up the vehicle, and then remove the rear wheels.
5) Remove the disc brake assembly.
   (1) Remove the pad clip, the connector and the brake hose bracket.
   (2) Remove the mounting bolt, and remove the disc brake assembly.
   (3) Prepare wiring harnesses etc. to be discarded, and suspend the disc brake assembly from the shock absorber assembly.

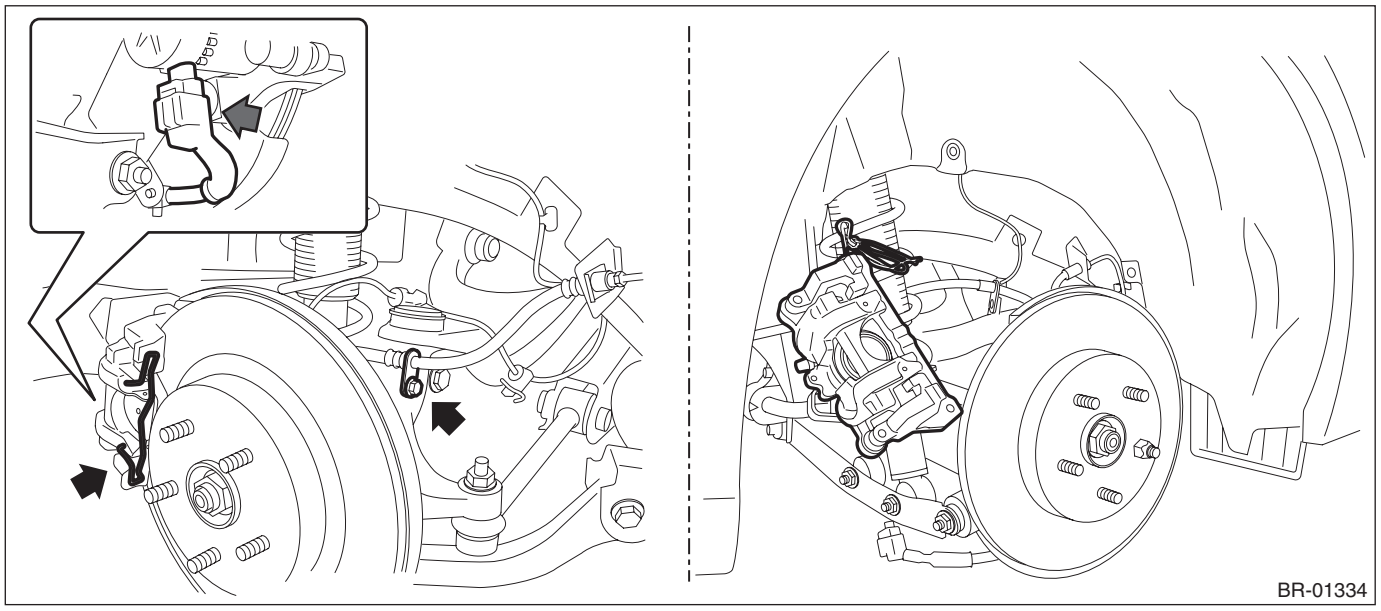

6) Remove the disc rotor.

NOTE:
If the disc rotor is difficult to remove, proceed as follows.
When the disc rotor is difficult to be removed from the hub unit COMPL - rear axle, screw in 8 mm (0.31 in) bolt to the threaded part of the disc rotor (A), and remove the disc rotor.

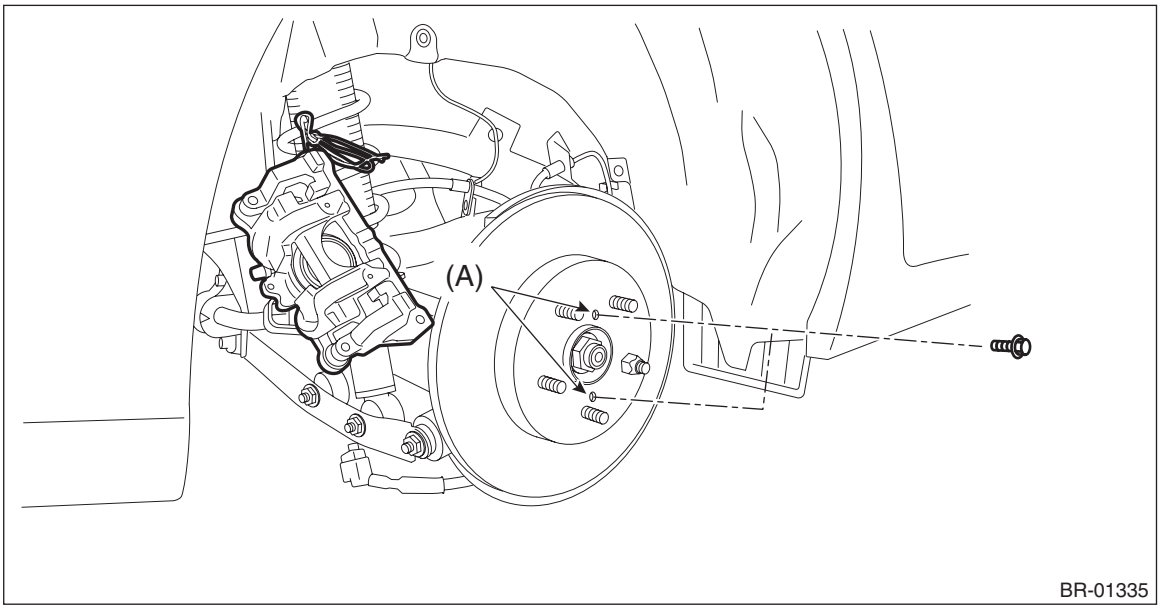

B: INSTALLATION

NOTE:
Before installation, remove mud and foreign matter from the disc brake assembly.
1) Check the rear disc rotor. <Ref. to BR-43, INSPECTION, Rear Disc Rotor.>
2) Install the rear disc rotor.

NOTE:
When installing the rear disc rotor, match the alignment mark (a) of the rear disc rotor and the alignment mark (b) of the bolt - hub.

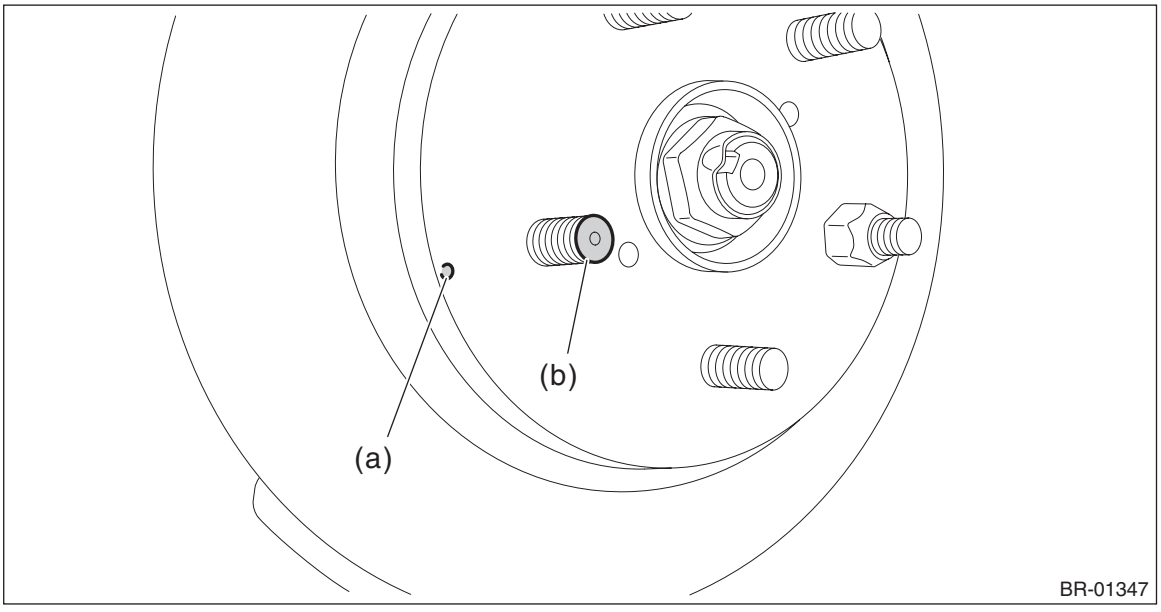

3) Install the disc brake assembly.

Tightening torque:
Mounting bolt: 66 N·m (6.7 kgf-m, 48.7 ft-lb)
Brake hose bracket: 33 N·m (3.4 kgf-m, 24.3 ft-lb)

4) Connect the ground terminal to battery sensor. <Ref. to RC-4, BATTERY, NOTE, Repair Contents.>
5) Using the Subaru Select Monitor, exit the brake maintenance mode according to the display screen. <Ref. to PB-6, BRAKE MAINTENANCE MODE, OPERATION, Parking Brake System.>

NOTE:
For detailed operation procedures, refer to “Application help”.

6) After the operation is completed, apply and release the parking brake five times and ensure that the brake operates normally.
7) Install the rear wheels.

Tightening torque:
120 N·m (12.2 kgf-m, 88.5 ft-lb)

C: INSPECTION

1. DISC ROTOR RUNOUT CHECK

1) Check the hub unit COMPL - rear axle for free play and runout before the inspection of disc rotor runout limit. <Ref. to DS-38, INSPECTION, Rear Hub Unit Bearing.>
2) Check the disc rotor runout.
(1) Remove the caliper body assembly. <Ref. to BR-45, REMOVAL, Rear Disc Brake Assembly.>
(2) Secure the disc rotor by tightening the five wheel nuts.
(3) Set a dial gauge 10 mm (0.39 in) inward from the disc rotor outer circumference, and check the outer disc rotor runout while rotating the disc rotor.

Disc rotor runout limit:
0.05 mm (0.0020 in)

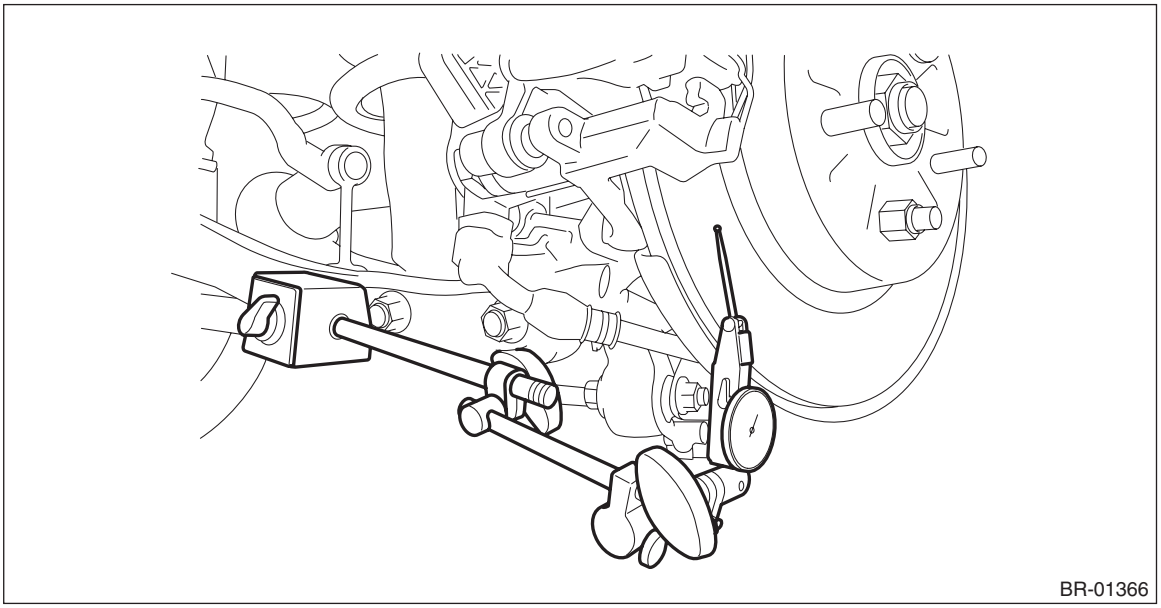
BR-01366

(4) Set a dial gauge 10 mm (0.39 in) inward from the disc rotor outer circumference, and check the inner disc rotor runout while rotating the disc rotor.

Disc rotor runout limit:
0.05 mm (0.0020 in)

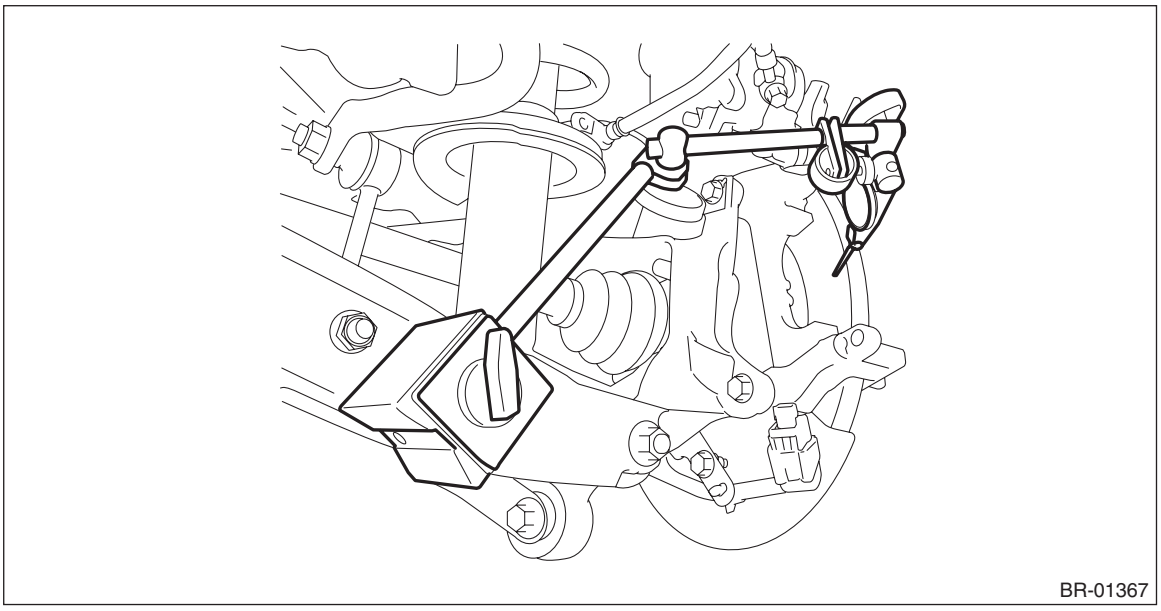
BR-01367

3) If the disc rotor runout exceeds service limit, grind the disc rotor.
4) Check the disc rotor thickness after grinding. <Ref. to BR-44, DISC ROTOR THICKNESS CHECK, INSPECTION, Rear Disc Rotor.>

2. DISC ROTOR THICKNESS CHECK

1) Remove the caliper body assembly. <Ref. to BR-45, REMOVAL, Rear Disc Brake Assembly.>
2) Set a micrometer 17 mm (0.67 in) inward from the disc rotor outer perimeter, and then measure the disc rotor thickness (A).

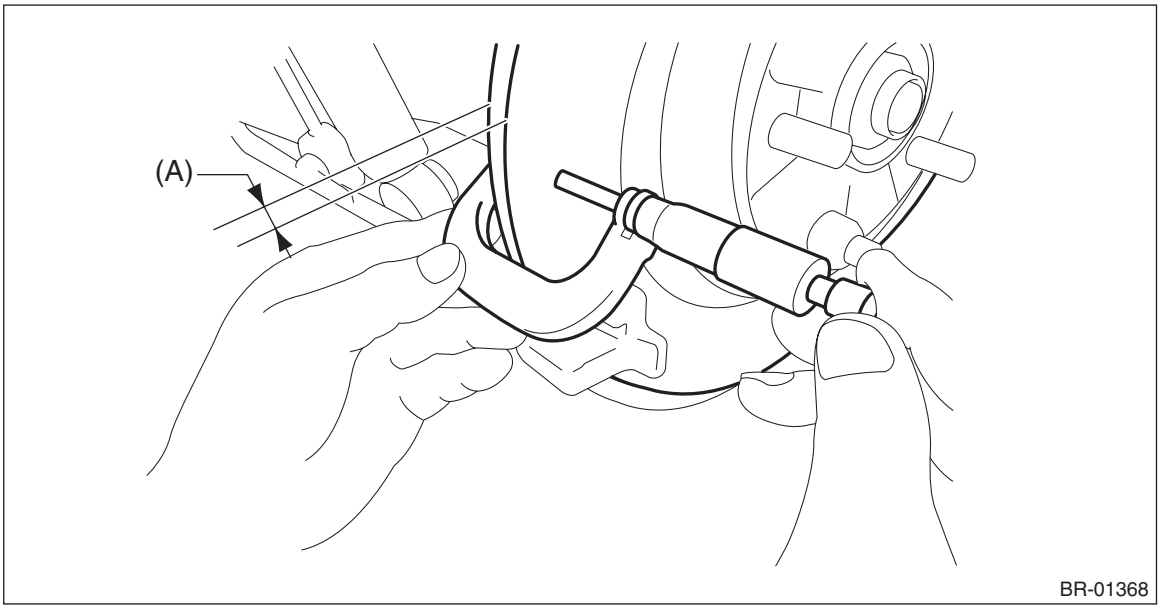

BR-01368

	Standard	Wear limit	Disc rotor outer diameter
Disc rotor thickness (A)	17 mm (0.67 in)	15 mm (0.59 in)	300 mm (11.81 in)

3) If the wear limit is exceeded in the inspection, replace the disc rotor.

7. Rear Disc Brake Assembly

A: REMOVAL

CAUTION:
• Do not allow brake fluid to come in contact with the painted surface of the vehicle body. If it does, wash off with water and wipe away completely.
• Prepare a container to catch grease or oil, etc. If any grease or oil spills, wipe it off and clean immediately to prevent from penetrating into floor or flowing outside.
• Do not remove the parking brake actuator assembly except when there are system malfunctions (such as emergency release of parking brake or abnormal actuator) or when the caliper is replaced. When the parking brake actuator assembly is reused, always replace the O-ring with a new part contained in the caliper body assembly.
1) Release the parking brake.
2) Using the Subaru Select Monitor, go to the brake maintenance mode according to the display screen. <Ref. to PB-6, BRAKE MAINTENANCE MODE, OPERATION, Parking Brake System.>

NOTE:
For detailed operation procedures, refer to “Application help”.
3) Lift up the vehicle, and then remove the rear wheels.
4) Disconnect the ground terminal from battery sensor. <Ref. to RC-4, BATTERY, NOTE, Repair Contents.>
5) Remove the parking brake actuator. <Ref. to PB-11, PARKING BRAKE ACTUATOR, REMOVAL, Parking Brake Actuator.>
6) Remove the caliper body assembly.

CAUTION:
• Do not detach the brake hose except when replacing the caliper body assembly.
• Install the plug bolt to the caliper body assembly when the brake hose is disconnected.
If air enters or fluid leaks by tilting, replace the caliper body assembly.
(1) Remove the union bolt, and then disconnect the brake hose.
(2) Install the fluid leakage protection plug to the caliper body.

Plug:
26642AL000: PLUG BOLT
26642AL010: PLUG GASKET

Tightening torque:
20 N·m (2.0 kgf-m, 14.8 ft-lb)
(3) Remove the pad clip, and disconnect the connector.

(4) Remove the caliper bolts, and then remove the disc brake assembly.

Preparation tool:
Hexagon wrench: 7 mm (0.28 in)

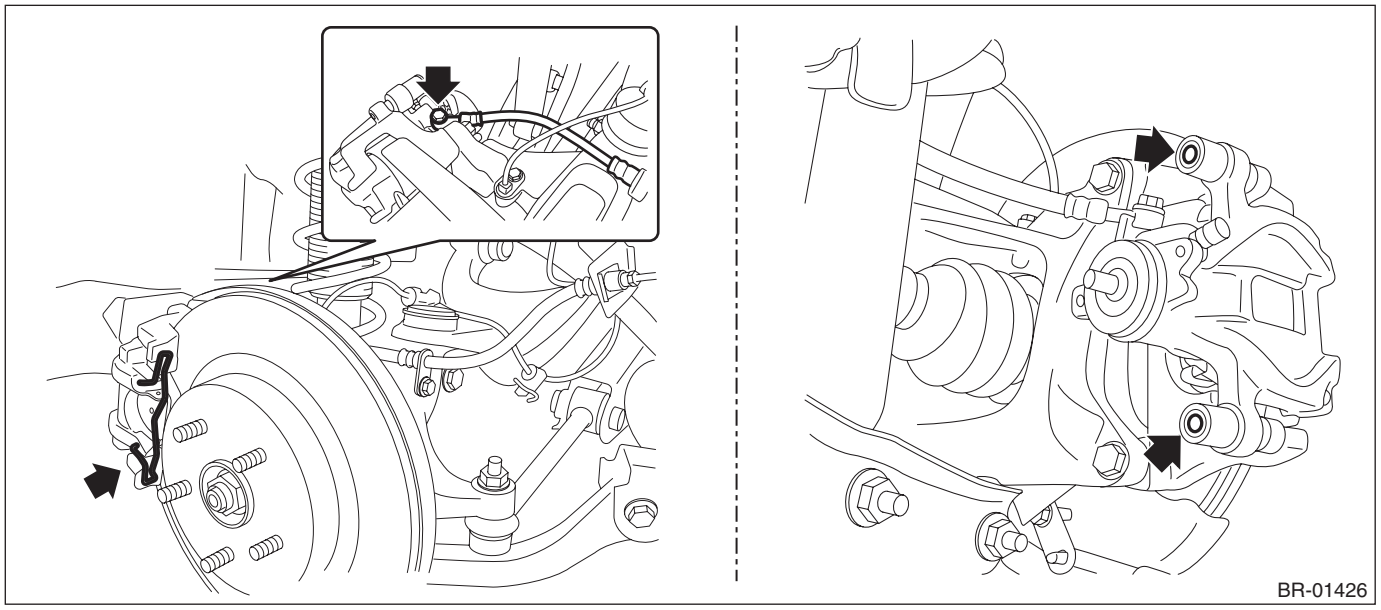

7) Remove the support - rear disc brake.
(1) Remove the pad - disc brake rear.
(2) Remove the mounting bolts, and then remove the support - rear disc brake.

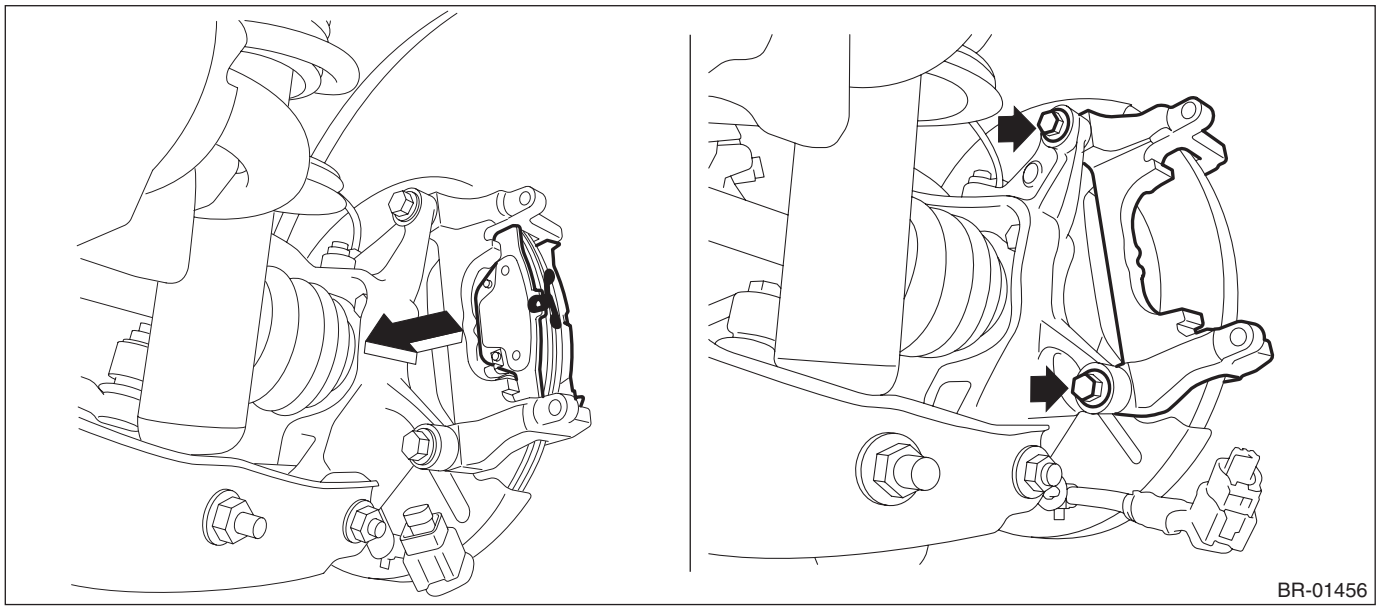

B: INSTALLATION

NOTE:
Before installation, remove mud and foreign matter from the disc brake assembly.
1) Check each part. <Ref. to BR-49, INSPECTION, Rear Disc Brake Assembly.>
2) Install the support - rear disc brake to the housing assembly - rear axle.

Tightening torque:
66 N·m (6.7 kgf-m, 48.7 ft-lb)
3) Install the caliper body assembly.

Tightening torque:
25 N·m (2.5 kgf-m, 18.4 ft-lb)
4) Connect the brake hose using a new brake hose gasket.

Tightening torque:
Union bolt: 26 N·m (2.7 kgf-m, 19.2 ft-lb)
5) Install the parking brake actuator. <Ref. to PB-13, PARKING BRAKE ACTUATOR, INSTALLATION, Parking Brake Actuator.>
6) Bleed air from the brake system. <Ref. to BR-70, BRAKE LINE, PROCEDURE, Air Bleeding.>
7) Connect the ground terminal to battery sensor. <Ref. to RC-4, BATTERY, NOTE, Repair Contents.>
8) Using the Subaru Select Monitor, exit the brake maintenance mode according to the display screen. <Ref. to PB-6, BRAKE MAINTENANCE MODE, OPERATION, Parking Brake System.>

NOTE:
For detailed operation procedures, refer to “Application help”.
9) After the operation is completed, apply and release the parking brake five times and ensure that the brake operates normally.
10) Install the rear wheels.

Tightening torque:
120 N·m (12.2 kgf-m, 88.5 ft-lb)

C: DISASSEMBLY

CAUTION:
- **The piston cannot be removed from the caliper body assembly.**
- **Do not remove the parking brake actuator assembly except when there are system malfunctions (such as emergency release of parking brake or abnormal actuator) or when the caliper is replaced. When the parking brake actuator assembly is reused, always replace the O-ring with a new part contained in the caliper body assembly.**

1) Remove mud and foreign matter from the caliper body assembly.
2) Remove the piston boot.

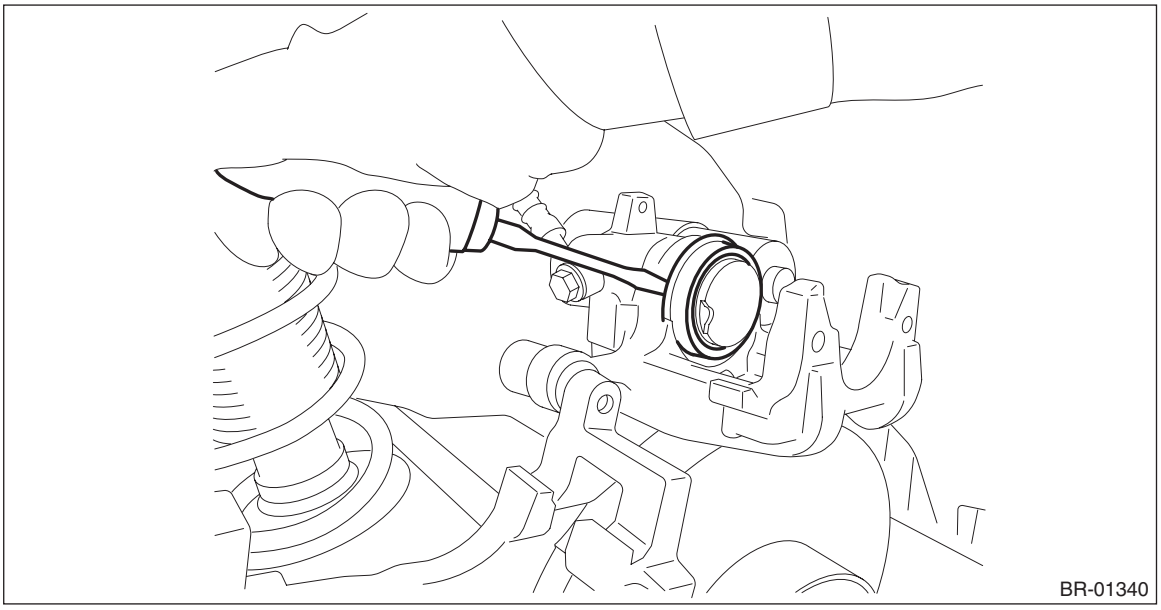

3) Remove the bushing from the support - rear disc brake.

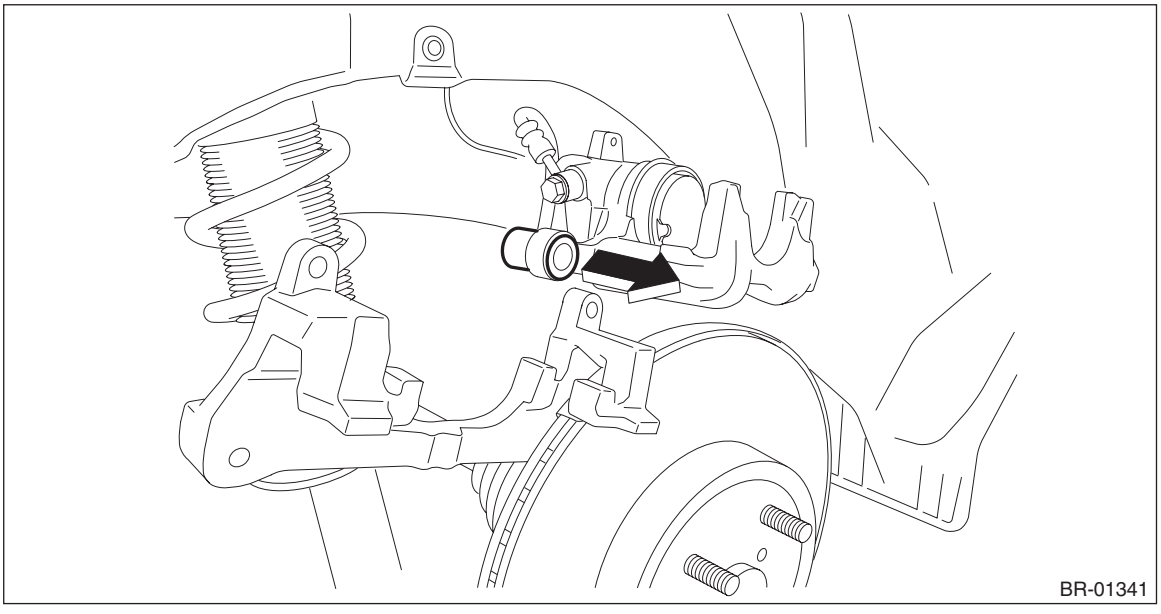

D: ASSEMBLY

NOTE:
If the brake hose is disconnected, air enters inside. Therefore, this operation should be performed on the vehicle without the brake hose disconnected.
1) Check each part. <Ref. to BR-49, INSPECTION, Rear Disc Brake Assembly.>
2) Install the bushing.
3) Using the ST, install the piston boot.

Preparation tool:
ST: PISTON BOOT INSTALLER (99099AL000)

Grease:
Nippon Grease NIGLUBE RX-2

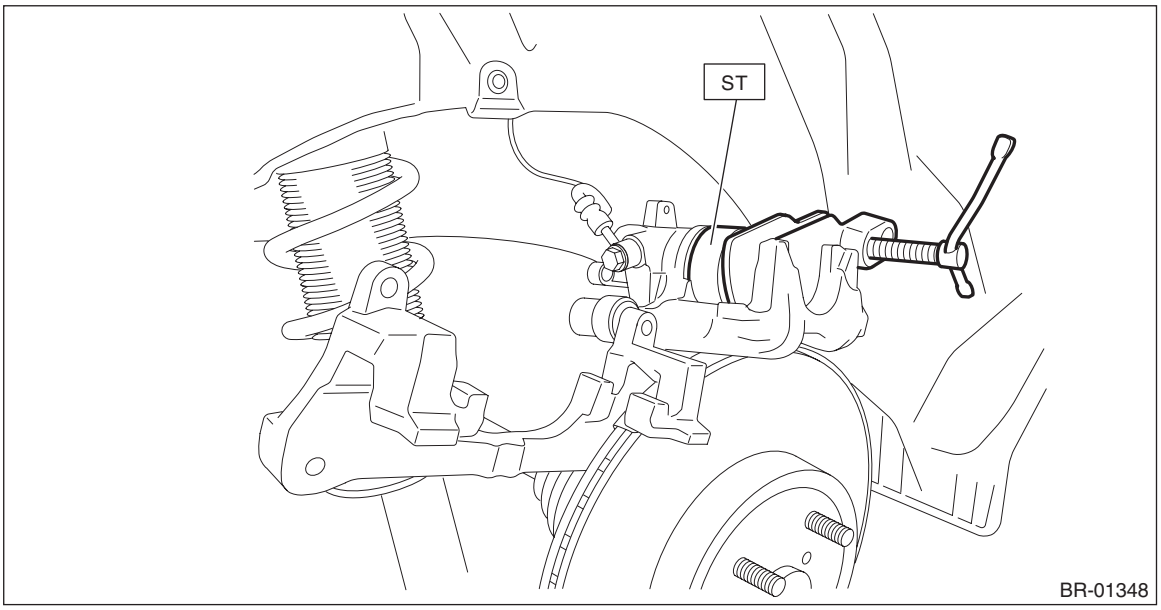

E: INSPECTION

1) Check the piston sliding part of caliper body and the piston - disc brake for uneven wear, damage or rust.
2) Check the rubber parts for damage or deterioration.
3) If faulty is found in the inspection, replace the relevant part.

8. Master Cylinder

A: REMOVAL

CAUTION:
• Do not allow brake fluid to come in contact with the painted surface of the vehicle body. If it does, wash off with water and wipe away completely.
• Prepare a container to catch grease or oil, etc. If any grease or oil spills, wipe it off and clean immediately to prevent from penetrating into floor or flowing outside.
• Since the master cylinder assembly cannot be disassembled, disassembly and cleaning are prohibited. When replacing, replace the master cylinder assembly.
1) Disconnect the ground terminal from battery sensor. <Ref. to RC-4, BATTERY, NOTE, Repair Contents.>
2) Drain brake fluid from the reservoir tank completely.
3) Remove the master cylinder assembly.

CAUTION:
In order to prevent the contact of the bracket and check valve, be sure to loosen the master cylinder mounting nut while holding the bracket with hand. Otherwise it may deform the bracket. (H4 model)

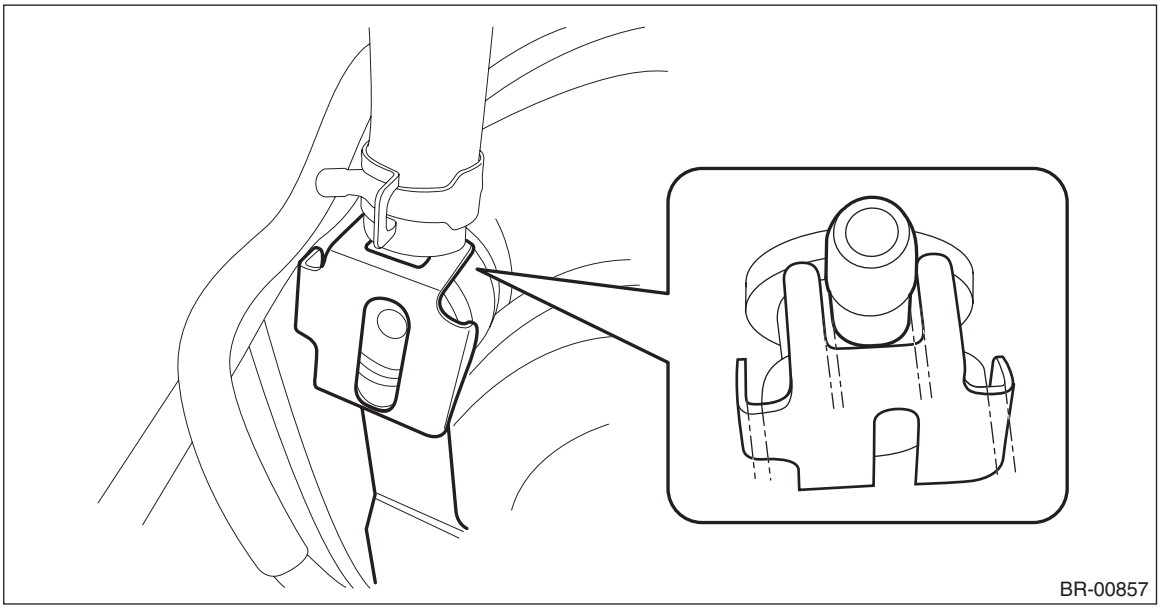

(1) Disconnect the fluid level gauge connector (a).
(2) Disconnect the clutch hose (b). (MT model)
(3) Disconnect the brake pipe (c).
(4) Remove the nut (d), and slowly remove the master cylinder from the brake booster.

- H4 model

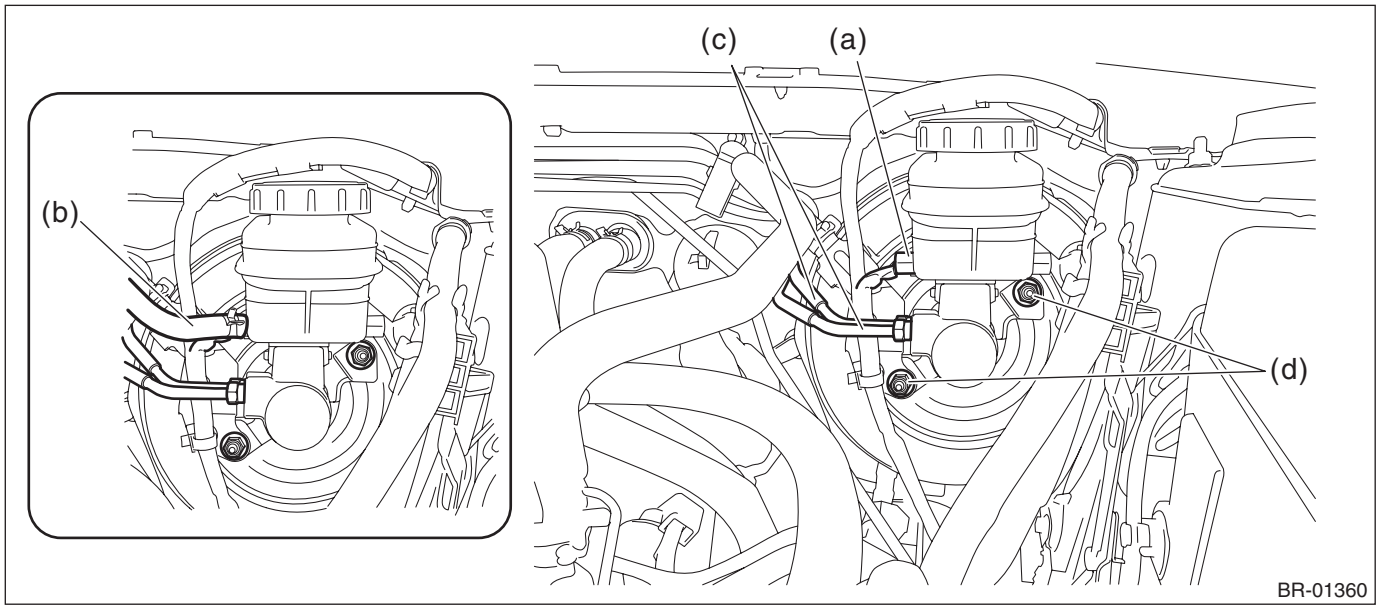

- H6 model

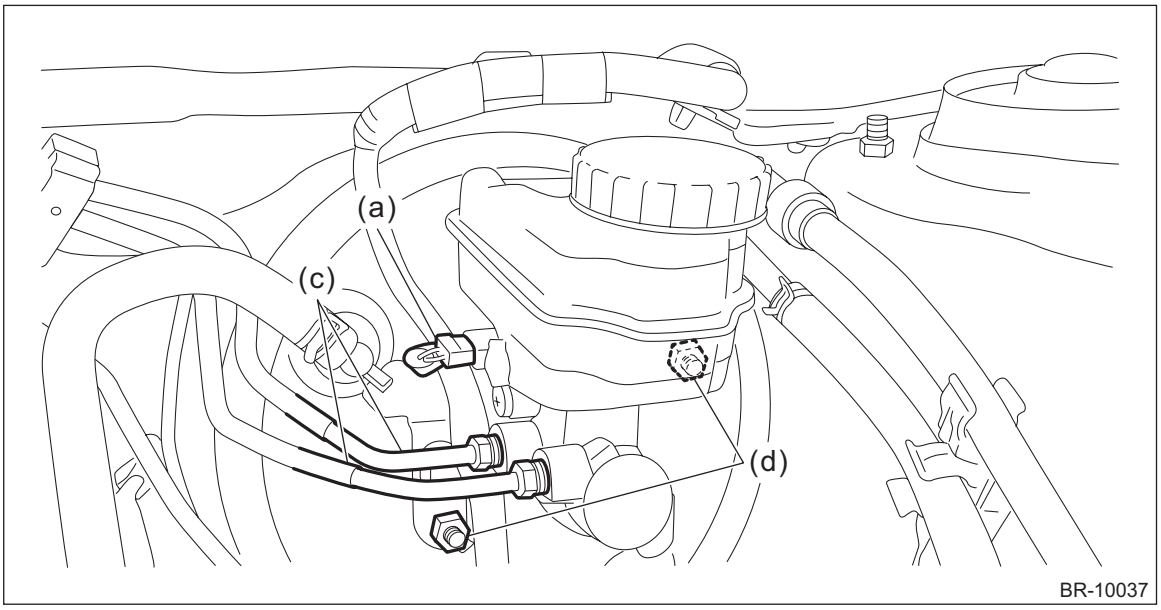

B: INSTALLATION

1) Replace the seal sub assembly for the master cylinder assembly with a new part.

CAUTION:
Be careful not to install the seal sub assembly in the wrong location.

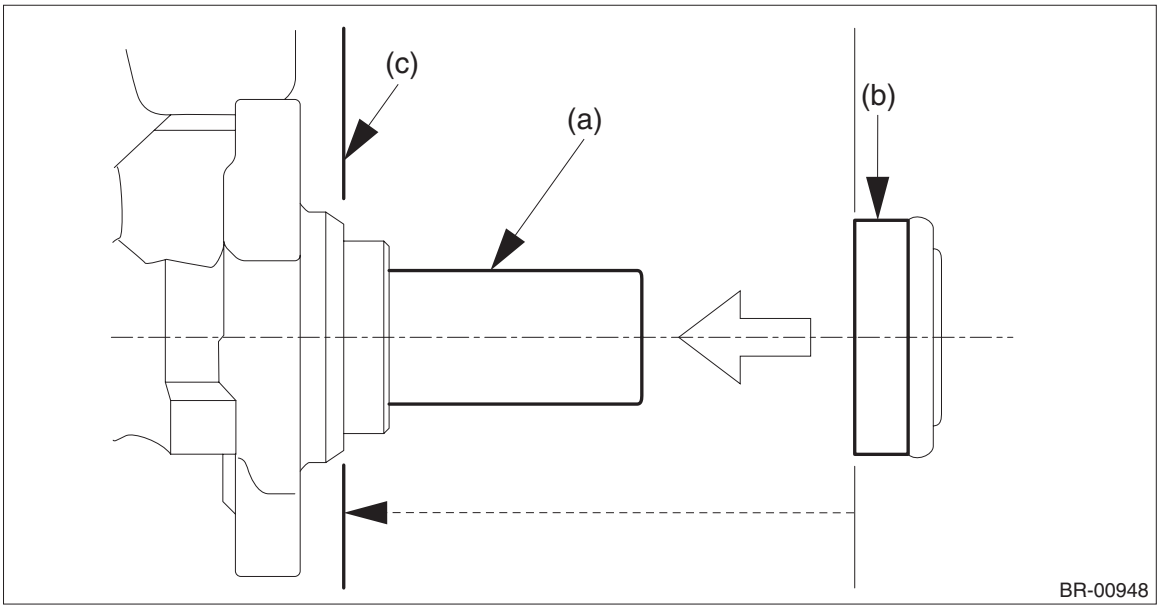

(a) Primary piston
(b) Seal sub ASSY
(c) Install the seal sub ASSY to this surface.

2) Install the master cylinder assembly.

Tightening torque:
13 N·m (1.3 kgf-m, 9.6 ft-lb)

3) Turn and tighten the flare nut (b) by hand while pressing the brake pipe (a) toward the master cylinder assembly side.

CAUTION:
Be careful not to make scratches or other damage to the inside surface of the brake pipe flare.

Tightening torque:
19 N·m (1.9 kgf-m, 14.0 ft-lb)

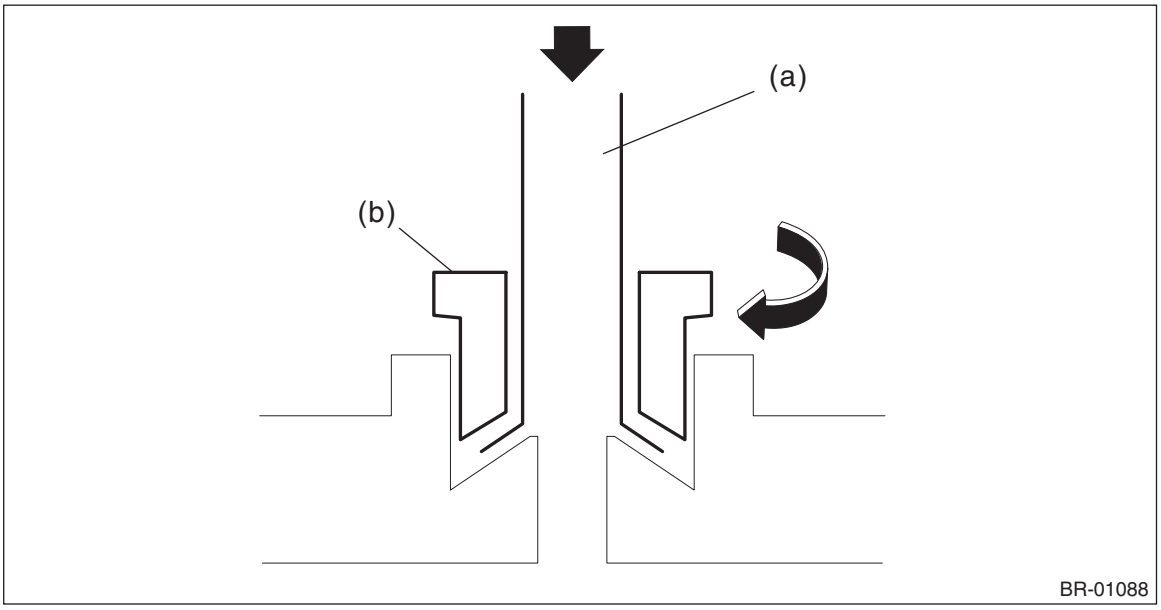

4) Bleed air from the brake system and clutch system (MT model). <Ref. to BR-68, PROCEDURE, Air Bleeding.>
5) Connect the ground terminal to battery sensor. <Ref. to RC-4, BATTERY, NOTE, Repair Contents.>

C: DISASSEMBLY

1) Remove the reservoir tank.

CAUTION:
Be careful not to tighten a vise excessively.

(1) Place the master cylinder assembly between aluminum plates and fix it on a vise.
(2) Drive out the pin using a punch and a hammer to remove the reservoir tank.

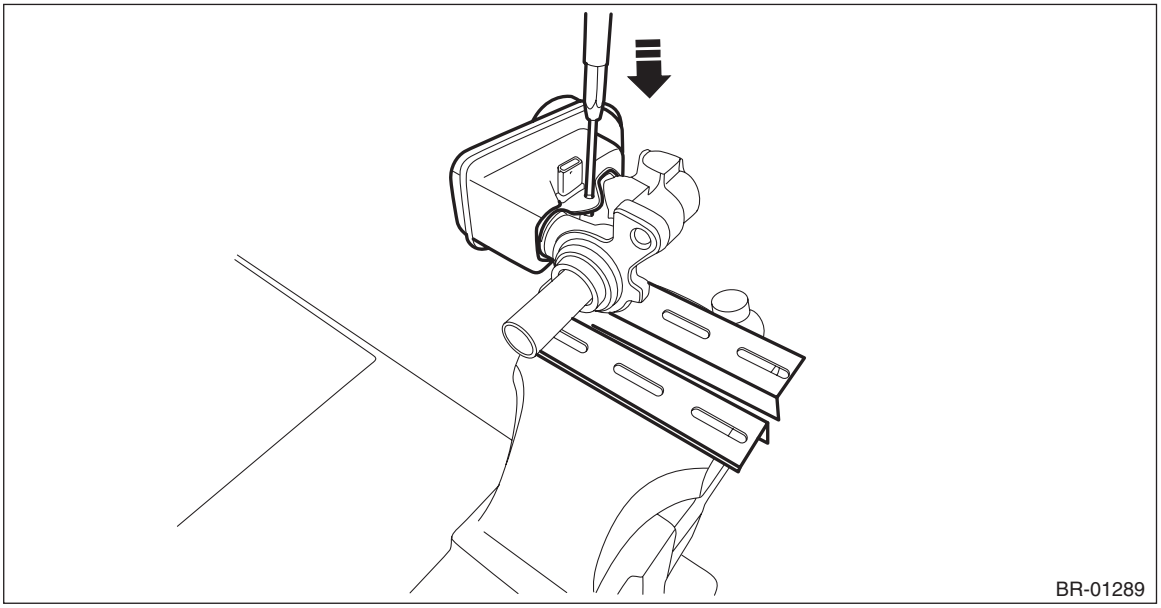

2) Remove the seal from the cylinder body assembly.

D: ASSEMBLY

CAUTION:
When replacing the reservoir tank, adhere the label to the position shown in the figure. (C0 and C5 models)

Fluid caution label:
C0 and C5 models
Part No. 25080GA010

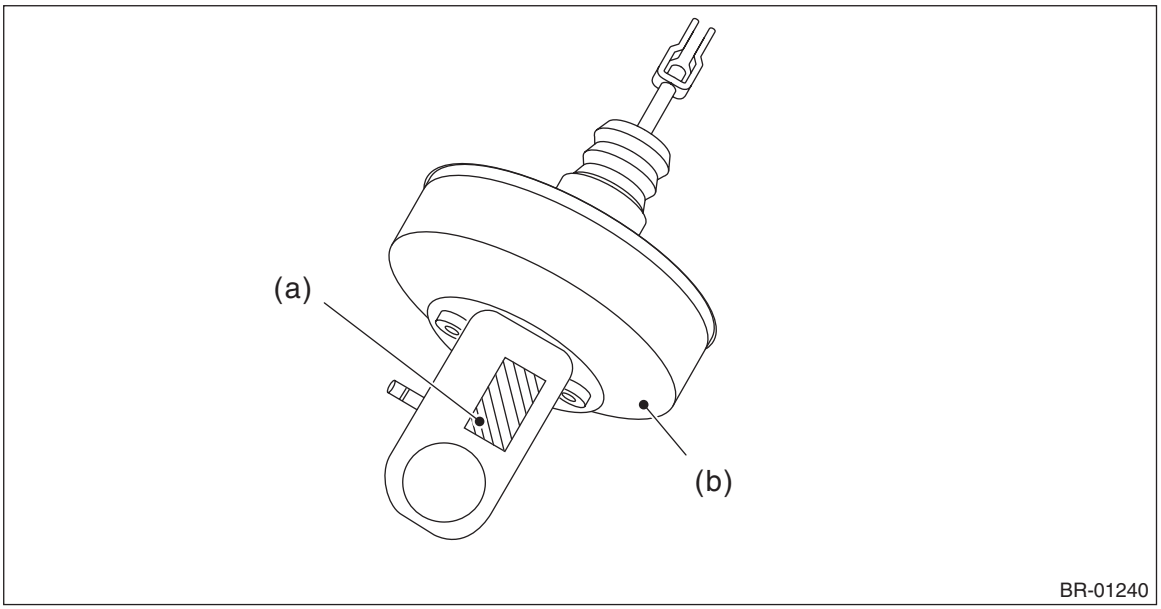

(a) Fluid caution label (b) Brake booster

1) Install the seal to the cylinder body assembly.
2) Install the reservoir tank.

CAUTION:
Be careful not to tighten a vise excessively.
(1) Place the master cylinder assembly between aluminum plates and fix it on a vise.
(2) Drive the pin using a punch and a hammer to install the reservoir tank.

9. Brake Booster

A: REMOVAL

CAUTION:
• Do not allow brake fluid to come in contact with the painted surface of the vehicle body. If it does, wash off with water and wipe away completely.
• Before handling the airbag system components, always refer to "CAUTION" of "General Description" in "AIRBAG SYSTEM". <Ref. to AB-10, CAUTION, General Description.>
1) Disconnect the ground terminal from the battery sensor, and wait for at least 60 seconds before starting work. <Ref. to RC-4, BATTERY, NOTE, Repair Contents.>
2) Remove the vacuum hose.
3) Remove the master cylinder assembly. <Ref. to BR-50, REMOVAL, Master Cylinder.>
4) Remove the bolts and nuts, and then remove the clutch bracket. (MT model)

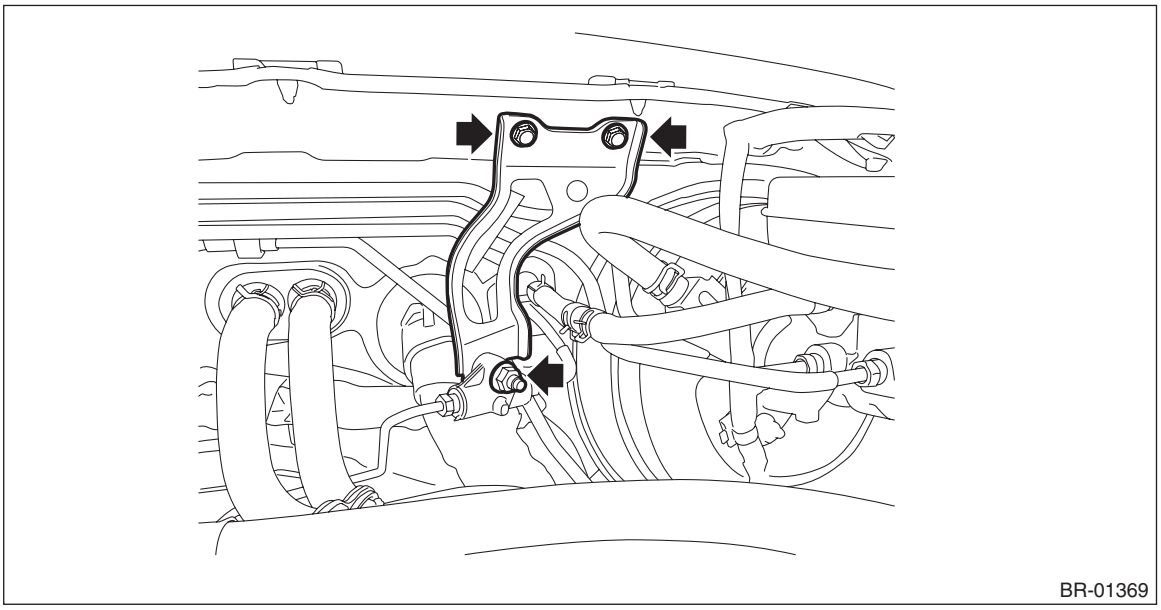
BR-01369

5) Remove the ECM and ECM bracket.
- H4 model: <Ref. to FU(H4DO)-82, REMOVAL, Engine Control Module (ECM).>
- H6 model: <Ref. to FU(H6DO)-83, REMOVAL, Engine Control Module (ECM).>

6) Remove the brake pipe assembly (a).
(1) Disconnect the starter connector (b) and harness clip (c).
(2) Remove the brake pipe assembly (a) from the pipe clip (d).

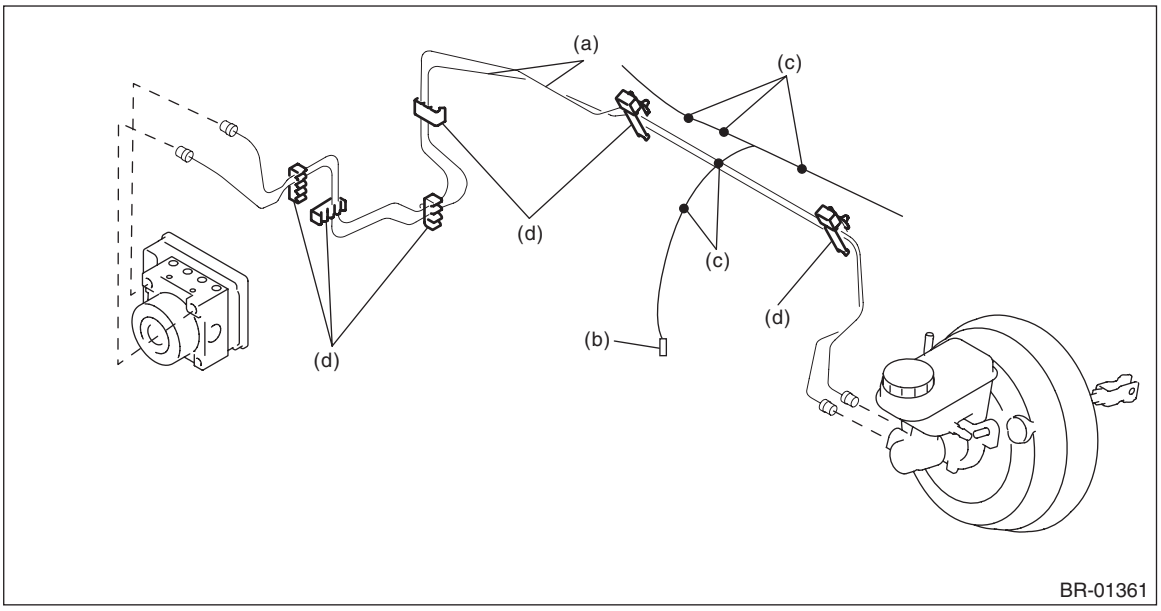

7) Remove the cover assembly - instrument panel LWR driver. <Ref. to EI-75, REMOVAL, Instrument Panel Lower Cover.>
8) Remove the panel - knee guard. <Ref. to PS-20, REMOVAL, Steering Column.>
9) Remove the column assembly - steering. <Ref. to PS-20, REMOVAL, Steering Column.>
10) Remove the snap pin (a) and clevis pin (b), and remove the operating rod from the brake pedal.

CAUTION:
• Be careful not to apply excessive force to the operating rod when handling the operating rod. The angle may change by ±3°, and it may result in damage to power piston cylinder.
• Do not change the push rod length.
• Do not reuse clevis pins. Always replace with a new part.

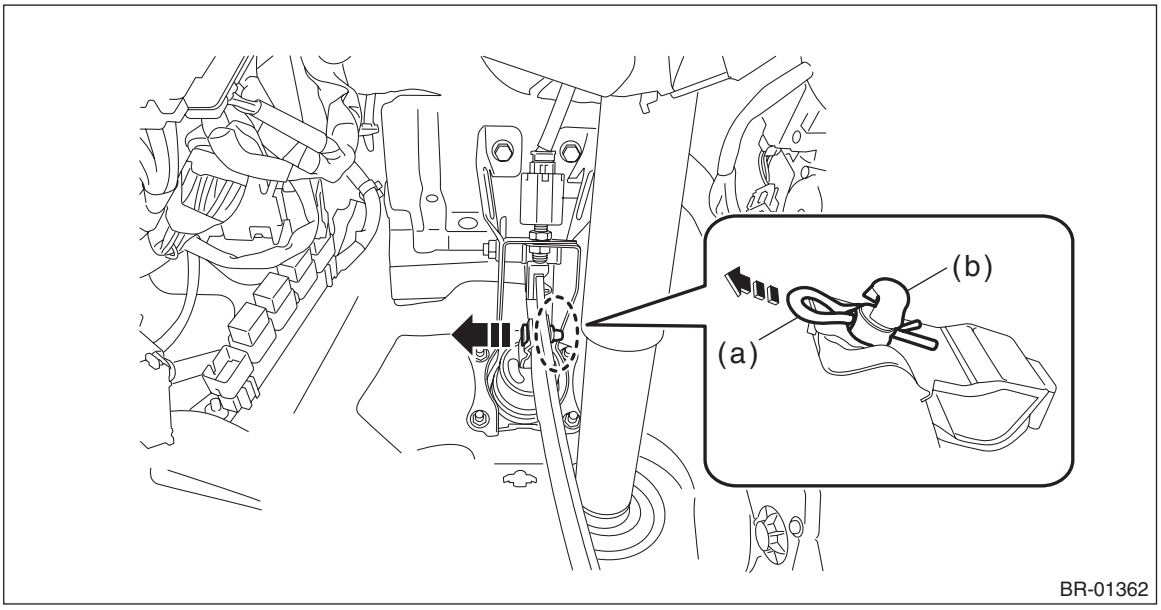

11) Remove the vacuum booster assembly.

CAUTION:
- **Do not disassemble the vacuum booster assembly.**
- **Make sure that the booster shell and vacuum pipe are not subject to strong impacts.**
- **Be careful not to drop the vacuum booster assembly. If the vacuum booster assembly is dropped accidentally, replace it.**
- **Be careful when placing the vacuum booster assembly on floor.**
- **If external force (a) is applied from above when the vacuum booster assembly is placed in this position, the resin portion as indicated by "P" may become damaged.**

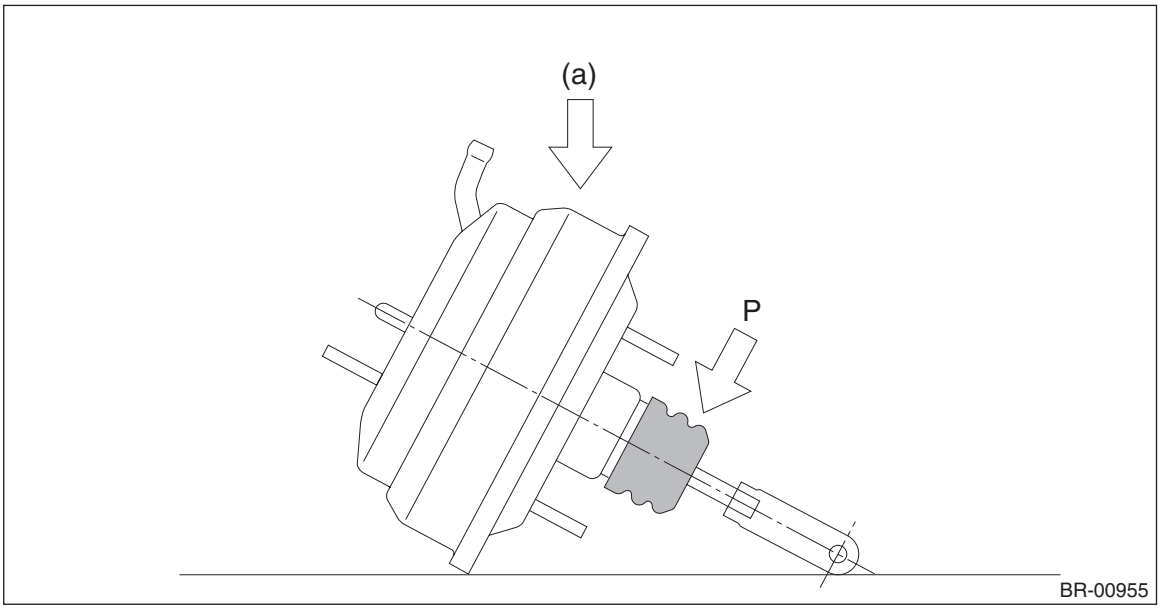

(1) Remove the nuts, and then remove the vacuum booster assembly.

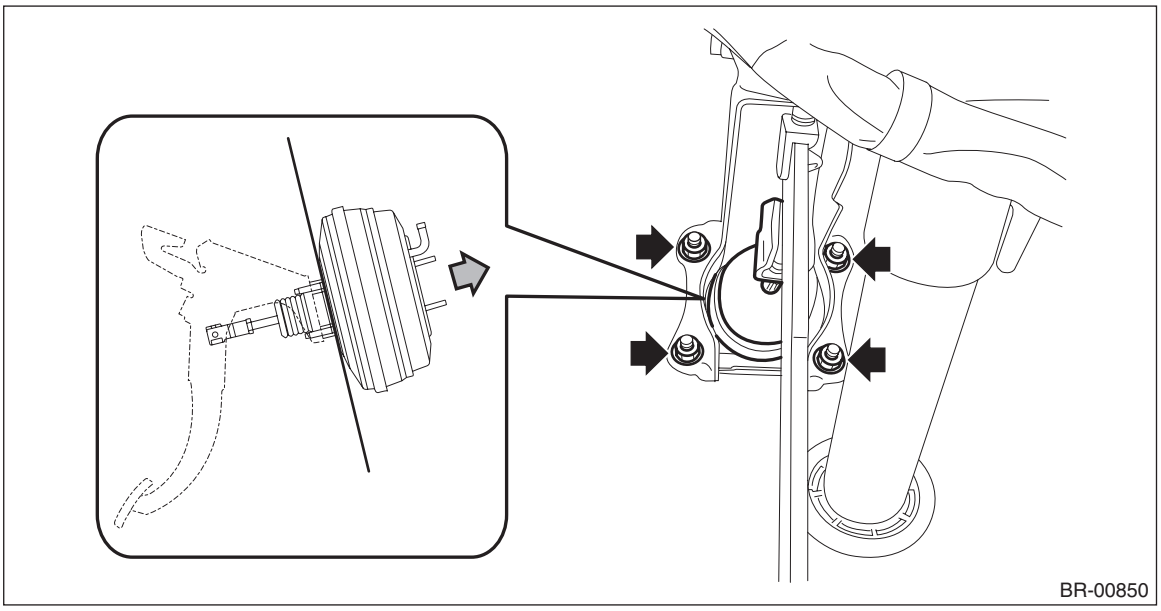

B: INSTALLATION

1) Check and adjust the operating rod of the vacuum booster assembly.
   (1) Measure the length between the vacuum booster assembly mounting surface and clevis pin hole.
   (2) If it is not within the specification, loosen the lock nut, rotate the vacuum booster assembly operating rod to adjust the rod length.

Specification L:
136.3 mm (5.37 in)

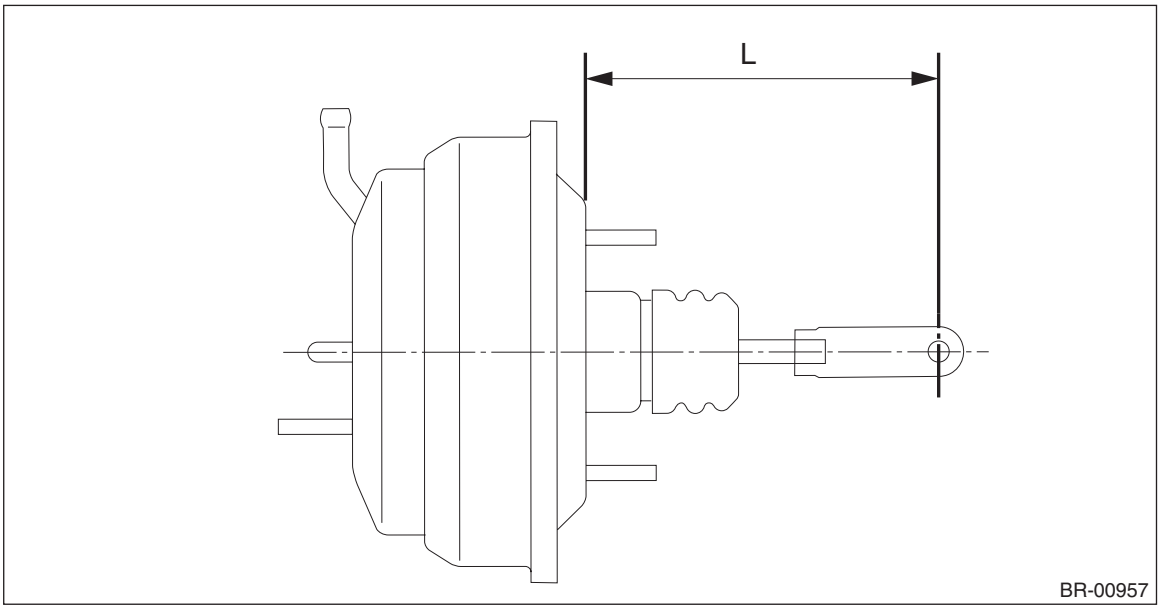

2) Install the vacuum booster assembly.

Tightening torque:
18 N·m (1.8 kgf-m, 13.3 ft-lb)

CAUTION:
• Apply grease to the snap pin to prevent the operating rod from wear.
• Replace the clevis pin with new parts, and apply thin coat of NIGTIGHT LYW No. 2 grease to the clevis pin.
• When installing the master cylinder assembly, replace the seal sub assembly with a new part, and install it to the vacuum booster assembly.

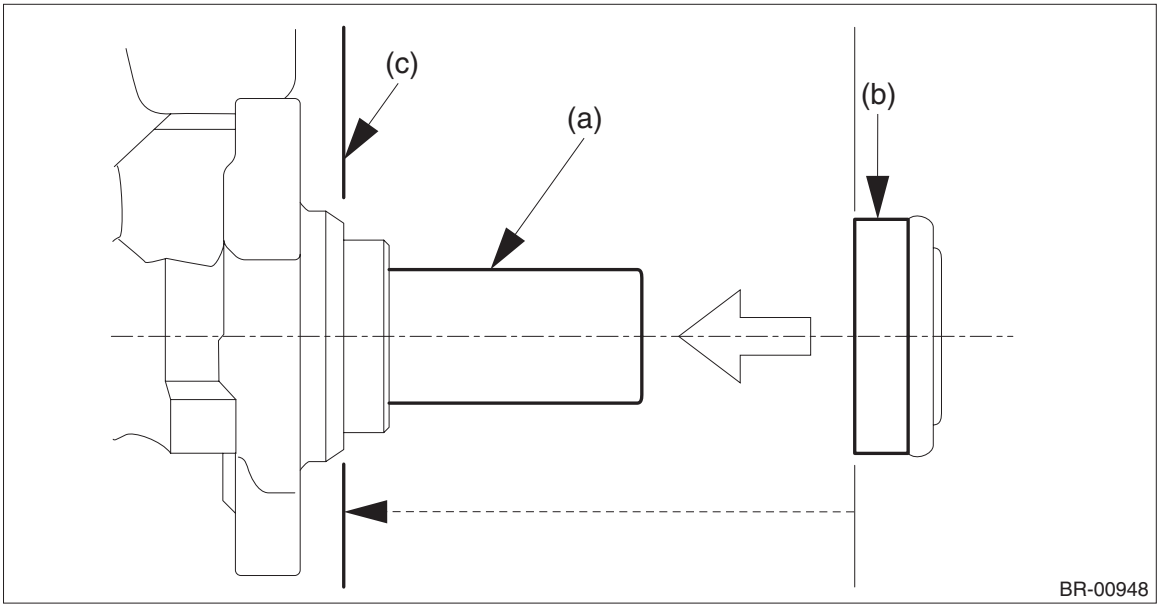

(a) Primary piston
(b) Seal sub ASSY
(c) Install the seal sub ASSY to this surface.

3) Install the column assembly - steering. <Ref. to PS-22, INSTALLATION, Steering Column.>
4) Install the panel - knee guard.

Tightening torque:
7 N·m (0.7 kgf-m, 5.2 ft-lb)
5) Install the cover assembly - instrument panel LWR driver.
6) Install the master cylinder assembly. <Ref. to BR-52, INSTALLATION, Master Cylinder.>
7) Install the clutch bracket. (MT model)

Tightening torque:
Clutch bracket: <Ref. to CL-4, CLUTCH PIPE AND HOSE, COMPONENT, General Description.>
8) Bleed air from the brake system. <Ref. to BR-68, PROCEDURE, Air Bleeding.>
9) Bleed air from the clutch system. (MT model) <Ref. to CL-25, PROCEDURE, Clutch Fluid Air Bleeding.>
10) Connect the ground terminal to battery sensor. <Ref. to RC-4, BATTERY, NOTE, Repair Contents.>
11) Perform a road test to make sure the brakes do not drag.

C: INSPECTION

1. OPERATION CHECK WHEN NOT USING MEASURING DEVICES

CAUTION:
When checking operation, be sure to apply the parking brake securely.
When an operation check is performed with no measuring devices, a faulty part cannot be identified correctly. But it is possible to identify the outline of the defect by performing the check according to the following procedures.

- **Air tightness check**

1) Start the engine, and idle it for 1 to 2 minutes, then turn it OFF.
2) Depress the brake pedal several times applying the normal pedal force.

NOTE:
The pedal stroke should be the longest at the 1st depression, and it should become shorter at each successive depression.
3) If no change occurs in the pedal height when pressed, the vacuum booster assembly is faulty.

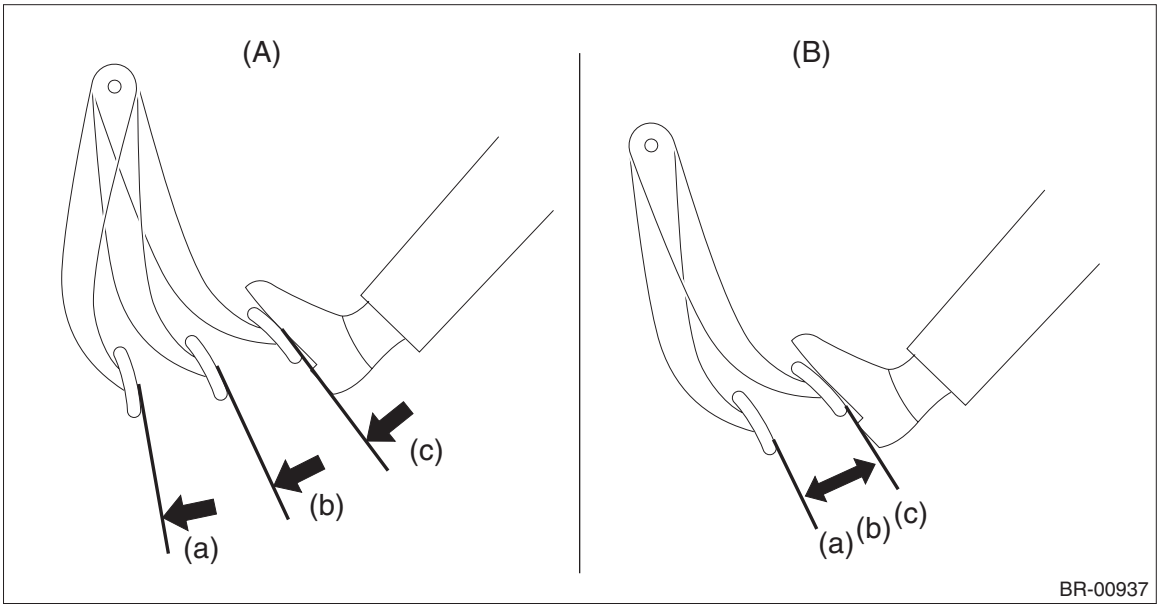

(A) Normal (B) Not OK

(a) 1st (b) 2nd (c) 3rd

NOTE:
- In case of defective operation, inspect the condition of the check valve and vacuum hose as well.
- Replace them if faulty, and perform the test again.
- If no improvement is observed, check precisely with gauges.

- **Check operation**

1) While the engine is OFF, depress the brake pedal several times applying the same pedal force, to check for a change in pedal height.

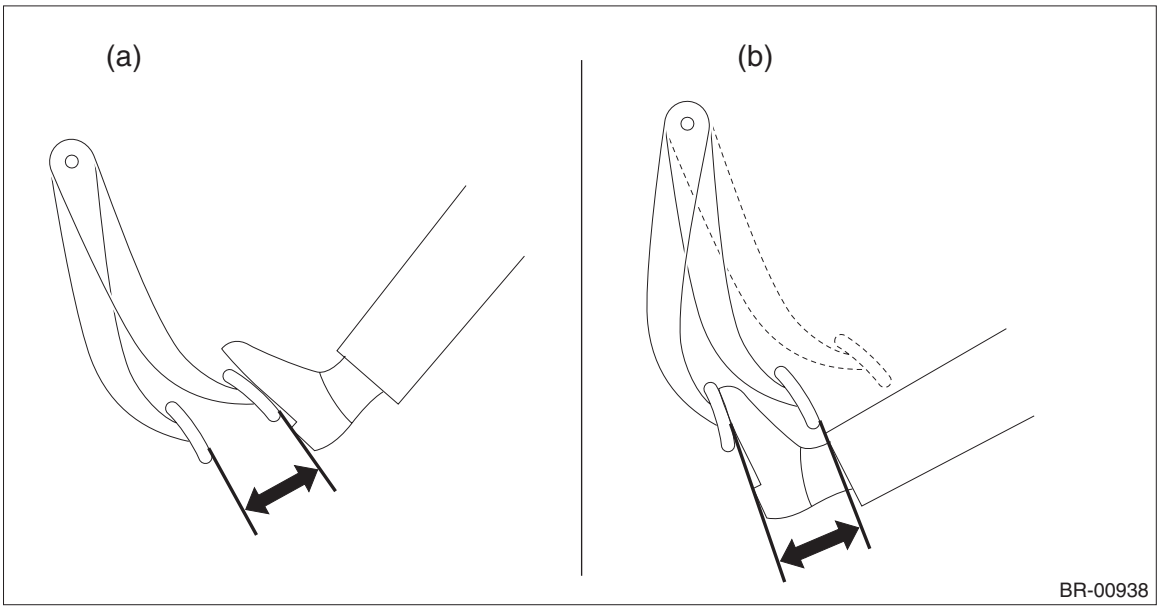

(a) When engine is stopped (b) When engine is started

2) With the brake pedal depressed, start the engine.
3) As the engine starts, the brake pedal should move slowly toward the floor. If the pedal height does not change, the vacuum booster assembly is faulty.

NOTE:
If a faulty part is detected after inspection, check precisely with measuring devices.

- **Loaded air tightness check**

Depress the brake pedal while the engine is running, and turn the engine to OFF while the pedal is depressed.
Keep the pedal depressed for 30 seconds. If the pedal height does not change, the function of vacuum booster assembly is normal. If the pedal height increases, it is faulty.

NOTE:
If a faulty part is detected after inspection, check precisely with measuring devices.

2. OPERATION CHECK WHEN USING MEASURING DEVICES

CAUTION:
When checking operation, be sure to apply the parking brake securely.

• Check with measuring devices

Connect a measuring device as shown in the figure. After bleeding air from the pressure gauge, perform each check.

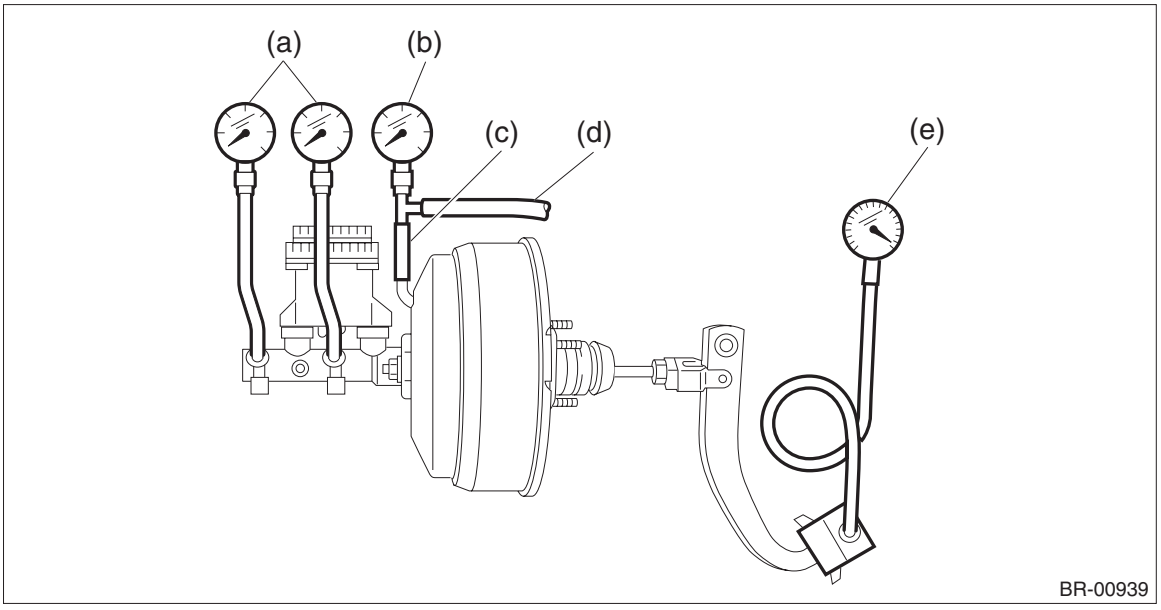

(a) Pressure gauge
(b) Vacuum gauge
(c) Adapter hose
(d) Vacuum hose
(e) Pedal force gauge

• Air tightness check

1) Start the engine and keep it running at idle until vacuum pressure indicates 66.7 kPa (500 mmHg, 19.69 inHg) while the brake pedal is not depressed.

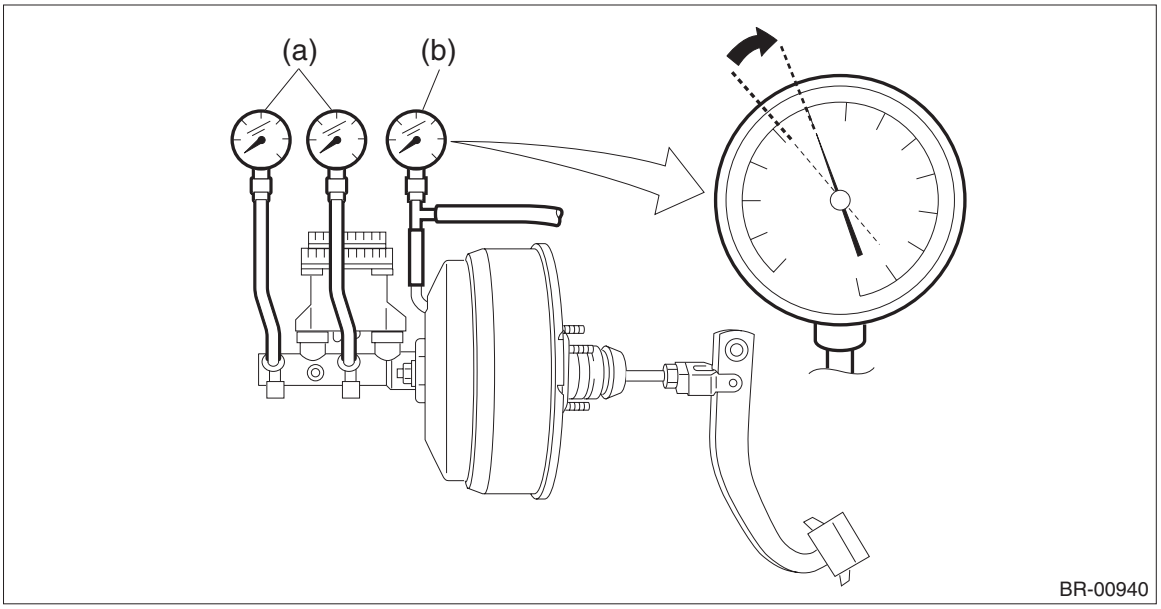

(a) Pressure gauge
(b) Vacuum gauge

2) Stop the engine and check the vacuum pressure.
If the value matches the following standard, the vacuum booster assembly function is normal.

Vacuum pressure: standard
The range of vacuum pressure drop within 15 seconds after stopping the engine is 3.3 kPa (25 mmHg, 0.98 inHg) or less.

If a faulty part is detected after inspection, it may results from one of the following causes.
- Check valve malfunction
- Leak from vacuum hose
- Leak from shell joint section or stud bolt welded section
- Damaged diaphragm
- Leak from valve body seal and bearing section
- Leak from plate and seal assembly section
- Leak from poppet valve assembly section

• Loaded air tightness check

1) Start the engine and depress the brake pedal with a pedal force of 196 N (20 kgf, 44 lbf).
2) Keep the engine running at idle and the pedal depressed until vacuum pressure of the vacuum gauge indicates 66.7 kPa (500 mmHg, 19.69 inHg).

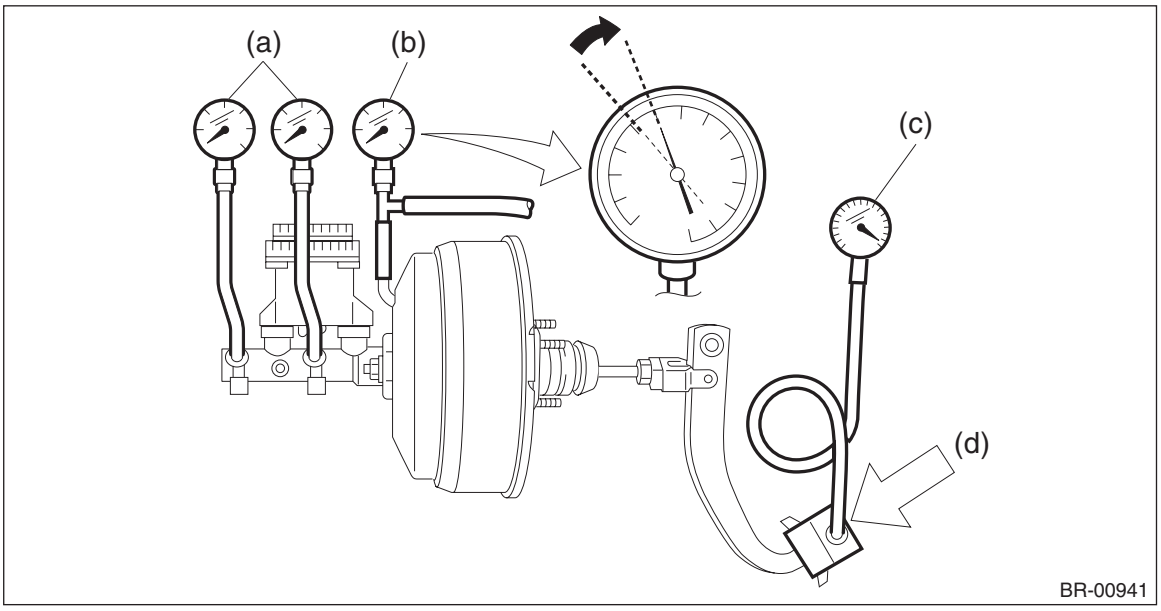

(a) Pressure gauge
(b) Vacuum gauge
(c) Pedal force gauge
(d) Depressed

3) Stop the engine and check the vacuum gauge.
If the value matches the following standard, the vacuum booster function is normal.

Vacuum pressure: standard
The range of vacuum pressure drop within 15 seconds after stopping the engine is 3.3 kPa (25 mmHg, 0.98 inHg) or less.

If a faulty part is detected after inspection, refer to “AIR TIGHTNESS CHECK”.
<Ref. to BR-60, INSPECTION, Brake Booster.>
4) If the vacuum booster assembly is faulty, replace it with a new part.

• Lack of boost action check

1) Turn the engine OFF, and set the value of the vacuum gauge to “0”.
2) Check the fluid pressure when the brake pedal is depressed. The pressure must be greater than the specification listed.

Brake pedal force: N (kgf, lbf)	147 (15, 33)	294 (30, 66)
Fluid pressure: kPa (kgf/cm^2, psi)	533 (5, 77)	1,551 (16, 225)

• Boosting action check

1) Set the vacuum gauge reading to 66.7 kPa (500 mmHg, 19.69 inHg) with the engine running.
2) Check the fluid pressure when the brake pedal is depressed. The pressure must be greater than the specification listed.

Brake pedal force: N (kgf, lbf)	147 (15, 33)	294 (30, 66)
Fluid pressure: kPa (kgf/cm^2, psi)	6,177 (63, 896)	11,273 (115, 1,635)

10.Brake Fluid

A: INSPECTION

CAUTION:
• Do not let brake fluid come into contact with the painted surface of the vehicle body. Wash away with water immediately and wipe off if it is spilled by accident.
• Do not reuse drained brake fluid. When refilling brake fluid, always refill new brake fluid.
• Avoid mixing brake fluid of different brands or different grades even from the same brand to prevent fluid performance from degrading.
• Do not allow dirt or dust to get into the reservoir tank.
1) Check the fluid for discoloration.
2) Check that the amount of brake fluid is between the lines of “MIN” and “MAX” from the front view or from the forward right and left within 90°.

CAUTION:
Always check the level using the specified direction because there is a partition in the reservoir tank.
• H4 model

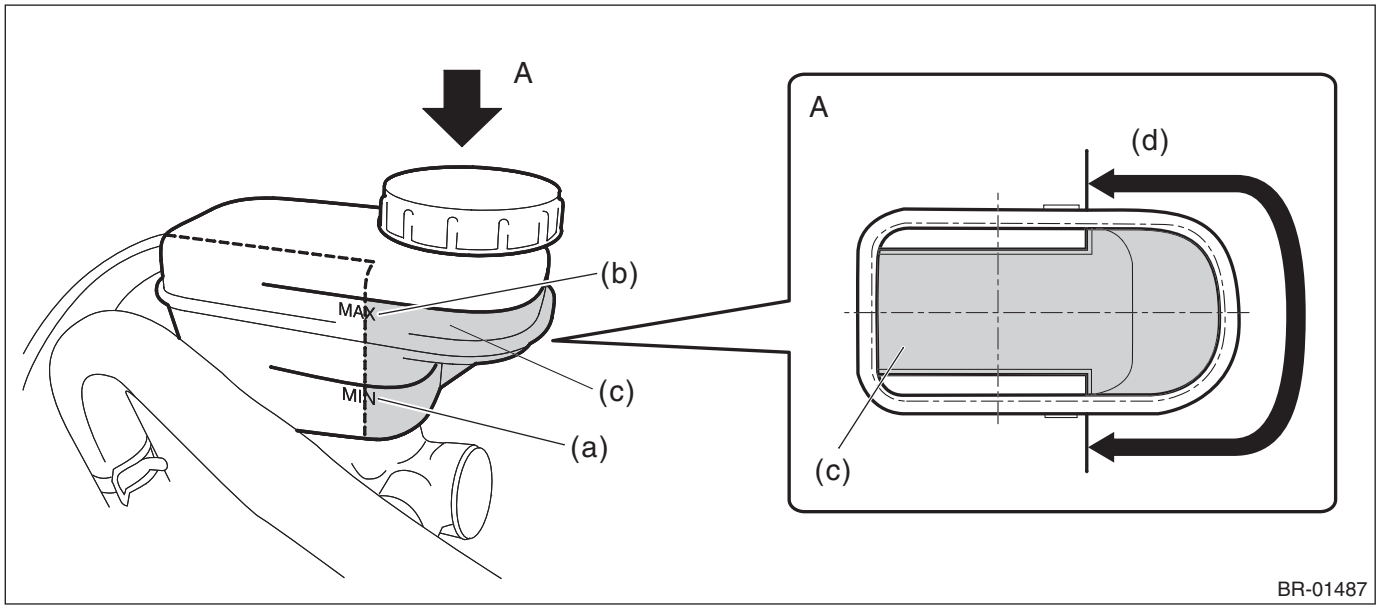

- H6 model

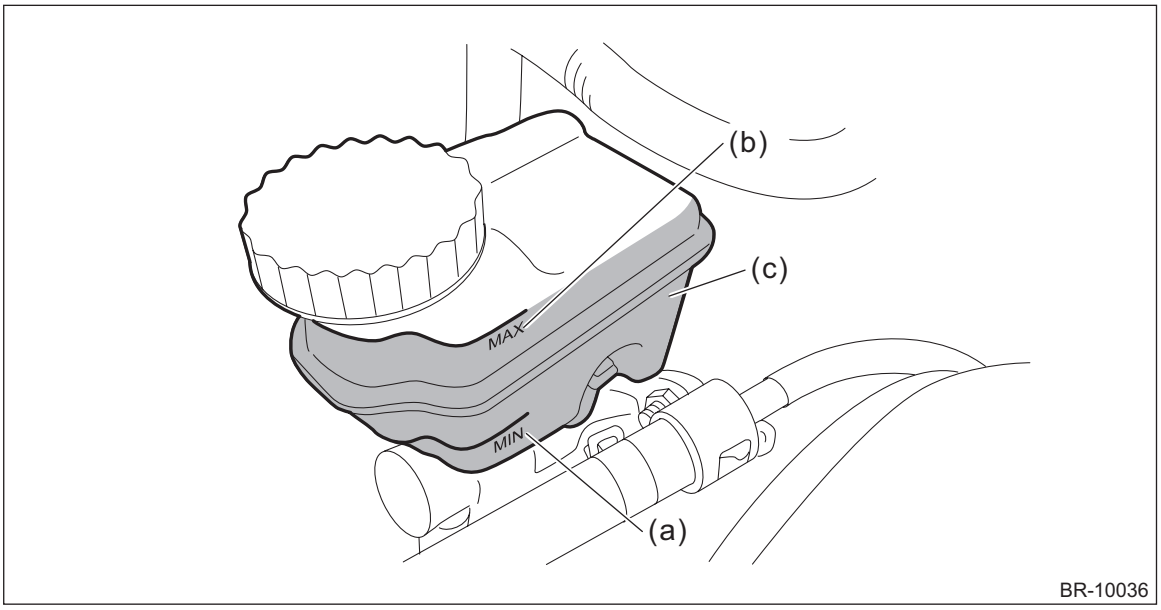

(A) View from upper face

(a) MIN. level
(b) MAX. level
(c) Brake fluid
(d) Brake fluid level check range

3) If the brake fluid level is close to “MIN”, check the brake pipe or brake hose for any leak first. Then, check that the brake fluid level is reduced due to brake pad wear.
4) If the fluid is extremely discolored or the fluid level is less than the specified value after inspection, replenish or replace with the new fluid.

B: REPLACEMENT

CAUTION:
• Do not let brake fluid come into contact with the painted surface of the vehicle body. Wash away with water immediately and wipe off if it is spilled by accident.
• Do not reuse drained brake fluid. When refilling brake fluid, always refill new brake fluid.
• Avoid mixing brake fluid of different brands or different grades even from the same brand to prevent fluid performance from degrading.
• Do not allow dirt or dust to get into the reservoir tank.

NOTE:
• During the operation, keep the reservoir tank filled with brake fluid to prevent entry of air.
• Operate the brake pedal slowly and depress it fully.
• For convenience and safety, perform the work with 2 people.
• The required amount of brake fluid is approximately 500 mL (16.9 US fl oz, 17.6 Imp fl oz) for the entire brake system.
1) Lift up the vehicle.
2) Remove the front/rear and right/left wheels.
3) Drain brake fluid from the reservoir tank.
4) Replenish the reservoir tank with the recommended brake fluid, and perform the same procedure as for bleeding the brake line on each brake caliper. <Ref. to BR-68, PROCEDURE, Air Bleeding.>

Recommended brake fluid:
FMVSS No. 116, DOT3, or DOT4

NOTE:
Repeat the full stroke depressing operation of the brake pedal slowly, until new brake fluid comes out from a transparent vinyl tube. (On each brake caliper, 20 times or more of pedal operations is necessary in order for new brake fluid from the master cylinder to come out from the bleeder - screw.)

11.Air Bleeding

A: PROCEDURE

CAUTION:
• Do not let brake fluid come into contact with the painted surface of the vehicle body. Wash away with water immediately and wipe off if it is spilled by accident.
• Avoid mixing brake fluid of different brands or different grades even from the same brand to prevent fluid performance from degrading.
• Do not reuse drained brake fluid. When refilling brake fluid, always refill new brake fluid.
• Do not allow dirt or dust to get into the reservoir tank.
• Do not mix two different kinds or makes of fluid to prevent fluid performance from degrading.
• For convenience and safety, perform the work with 2 people.
• During the operation, keep the reservoir tank filled with brake fluid at MIN level or higher to prevent entry of air.
For air bleed procedure of each part, refer to the following.
- Master cylinder: <Ref. to BR-68, MASTER CYLINDER, PROCEDURE, Air Bleeding.>
- Brake line: <Ref. to BR-70, BRAKE LINE, PROCEDURE, Air Bleeding.>
- Hydraulic control unit: <Ref. to BR-71, HYDRAULIC CONTROL UNIT, PROCEDURE, Air Bleeding.>
- Caliper: <Ref. to BR-71, CALIPER, PROCEDURE, Air Bleeding.>

1. MASTER CYLINDER

For air bleed procedure of each part, refer to the following.
- Master cylinder: <Ref. to BR-68, MASTER CYLINDER, PROCEDURE, Air Bleeding.>
- Brake line: <Ref. to BR-70, BRAKE LINE, PROCEDURE, Air Bleeding.>
- Hydraulic control unit: <Ref. to BR-71, HYDRAULIC CONTROL UNIT, PROCEDURE, Air Bleeding.>
- Caliper: <Ref. to BR-71, CALIPER, PROCEDURE, Air Bleeding.>

1) Install the brake pipe to the master cylinder assembly.
   (1) Screw and tighten the flare nut (b) so that the end of the nut contacts the back side of the brake pipe flare, while pressing the brake pipe (a) toward the master cylinder assembly side.

CAUTION:
Be careful not to make scratches or other damage to the inside surface of the brake pipe flare.

Tightening torque:
Brake pipe flare nut: 19 N·m (1.9 kgf-m, 14.0 ft-lb)

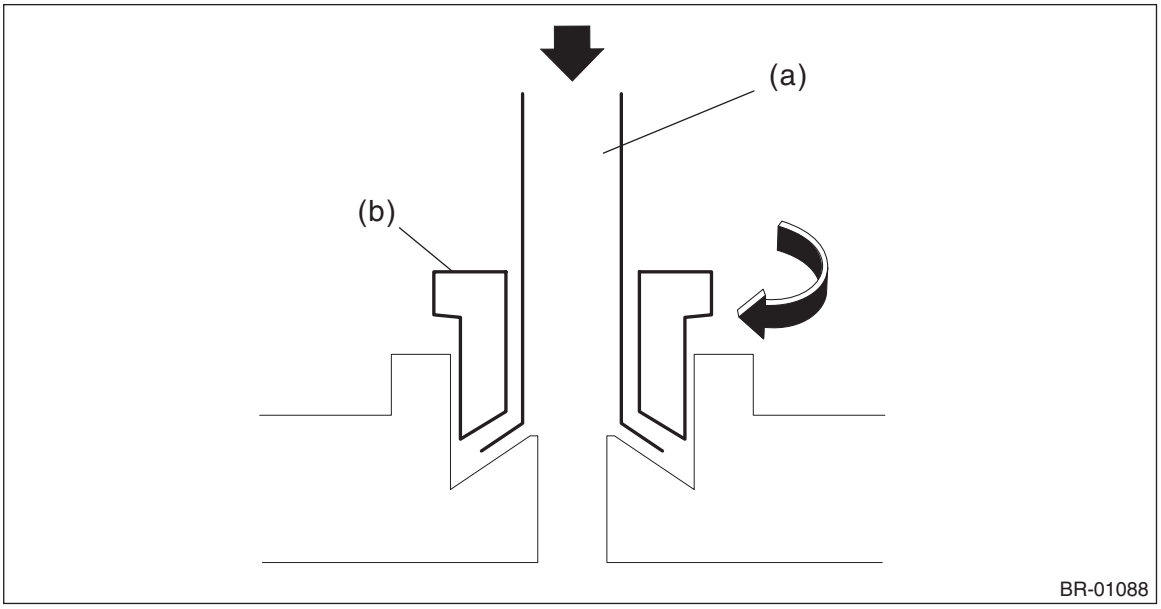

2) Fill the reservoir tank of the master cylinder assembly with brake fluid.

NOTE:
- Replenish brake fluid to the MAX level.
- During the operation, keep the reservoir tank filled with brake fluid at MIN level or higher to prevent entry of air.

3) Attach a transparent vinyl tube to the bleeder - screw of the right front caliper body assembly that is the closest from the VDC control module & hydraulic control unit, and the other end of the vinyl tube to a collection container.
4) Loosen the bleeder - screw, depress the brake pedal slowly and hold it.
5) Tighten the bleeder - screw, and release the brake pedal quickly.
6) Repeat steps 4) and 5) until there are no more air bubbles in the brake fluid in the vinyl tube.

NOTE:
Air bubbles are removed after repeating the procedures six to seven times.
7) Attach a transparent vinyl tube to the bleeder - screw of the left front caliper body assembly, and the other end of the vinyl tube to a brake fluid collection container.
8) Repeat steps 4) and 5) until there are no more air bubbles in the brake fluid in the vinyl tube.

NOTE:
- Air bubbles are removed after repeating the procedures seven to eight times.
- With the procedures so far, bleed is completed for the air that entered in the master cylinder, front brake piping hose passages and front caliper.

Next, perform the following procedures to bleed air that entered in the rear brake piping hose passages and rear caliper from the hydraulic unit.
9) Attach a transparent vinyl tube to the bleeder - screw of the left rear caliper body assembly, and the other end of the vinyl tube to a brake fluid collection container.
10) Loosen the bleeder - screw, and repeat the full stroke depressing operation of the brake pedal slowly, until the brake fluid in the transparent vinyl tube has no more air bubbles, then tighten the bleeder - screw.

NOTE:
By repeating the procedures 15 times or more, air that entered in the rear brake pipe passages from the VDC control module & hydraulic control unit reaches the bleeder - screw of the left rear caliper body assembly and is discharged.
11) Attach a transparent vinyl tube to the bleeder - screw of the right rear caliper body assembly, and the other end of the vinyl tube to a brake fluid collection container.
12) Perform step 10).

NOTE:
- By repeating the procedures 10 times or more, air that entered in the rear brake pipe passages from the VDC control module & hydraulic control unit reaches the bleeder - screw of the right rear caliper body assembly and is discharged.
- With the procedures so far, bleed is completed for the air that entered in the rear brake piping hose passages and rear caliper from the hydraulic unit.

Lastly, perform the following procedures to bleed air that may remain in areas where the brake fluid flow stands.
13) Attach a transparent vinyl tube to the bleeder - screw of the right front caliper body assembly, and the other end of the vinyl tube to a brake fluid collection container.
14) After repeating firmly depressing of the brake pedal quickly five or six times, depress and hold the pedal.
15) Loosen the bleeder - screw to drain brake fluid. When the brake pedal reaches the full stroke position, tighten the bleeder - screw quickly, and release the brake pedal.
16) Repeat steps 14) and 15) until there are no more air bubbles in the transparent vinyl tube.

NOTE:
Repeat the procedures approximately four to five times.
17) Repeat steps 14) to 16) above for each brake caliper.

NOTE:
Bleed air in the order starting from the front RH → front LH → rear LH → rear RH.
18) Tighten the bleeder - screw to the specified torque.

Tightening torque:
Bleeder - screw: 8 N·m (0.82 kgf-m, 5.9 ft-lb)

2. BRAKE LINE

1) When the master cylinder assembly is replaced or the reservoir tank is empty, bleed the master cylinder assembly before bleeding the brake line. <Ref. to BR-68, MASTER CYLINDER, PROCEDURE, Air Bleeding.>
2) Fill the reservoir tank of the master cylinder assembly with brake fluid.

NOTE:
While bleeding air, keep the reservoir tank filled with brake fluid to prevent entry of air.
3) Attach one end of a transparent vinyl tube to the bleeder - screw, and the other end to a brake fluid collection container.

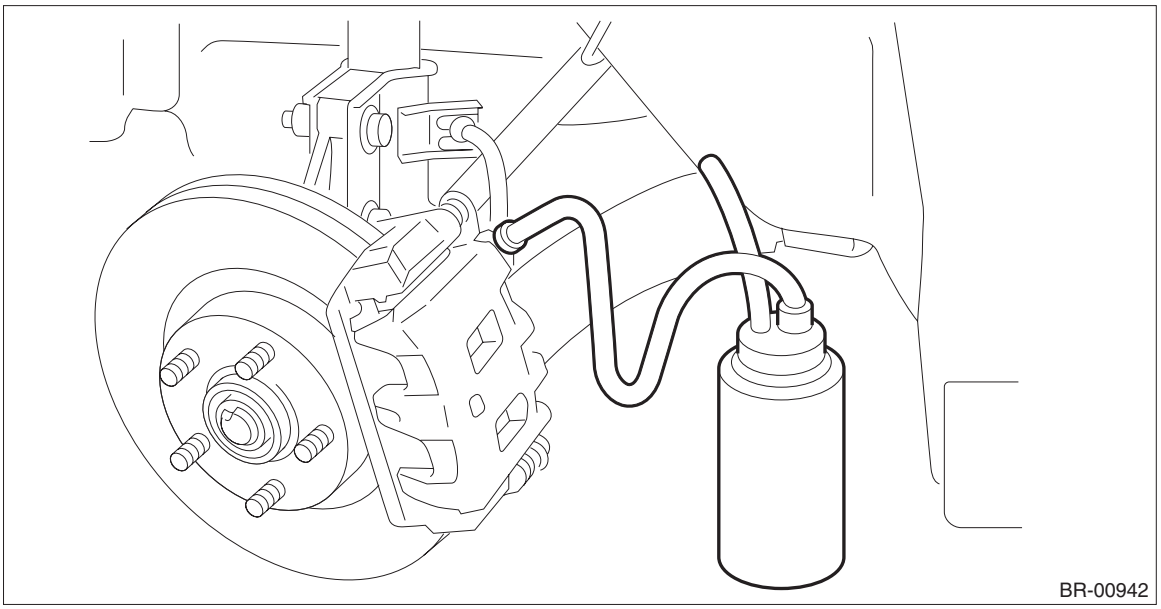

4) Loosen the bleeder - screw, and then repeat the full stroke depressing operation of the brake pedal, until brake fluid in the transparent vinyl tube has no more air bubbles.

NOTE:
Air bubbles are removed after repeating the depressing operation 15 times or more for the front caliper, and 20 times or more for the rear caliper.
5) Perform the steps 2) to 4) above on each brake caliper.

NOTE:
Perform in the order starting from the front RH → front LH → rear LH → rear RH.
6) Tighten the loosened bleeder - screw, repeat firmly depressing of the brake pedal 5 to 6 times, and then depress and hold the brake pedal.
7) Loosen the bleeder - screw to drain the brake fluid. When the brake pedal reaches the full stroke position, immediately tighten the bleeder - screw and return the brake pedal.
8) Repeat steps 6) and 7) until there are no more air bubbles in the transparent vinyl tube.
9) Perform the steps 6) to 8) above on each brake caliper.

NOTE:
Perform in the order starting from the front RH → front LH → rear LH → rear RH.

10) Operate the hydraulic control unit in the sequence control mode for both ABS and VDC systems.

CAUTION:
• If there is a possibility that air enters the pressure control section in the hydraulic control unit, perform steps 11) to 16).
• For normal air bleeding operation, do not operate the sequence control for the hydraulic control unit. (Operating the sequence control may let air in the normal air bleeding passages move to the pressure control section.)

NOTE:
• Normal air bleeding operation does not help bleed air that enters the pressure control section in the hydraulic control unit.
• If there is a possibility that air enters the pressure control section in the hydraulic control unit (if VDC or ABS operates with air contained in the normal air bleeding passage), perform the sequence control mode for both of the ABS and VDC systems.
11) Perform the ABS sequence control mode. <Ref. to VDC-18, ABS Sequence Control.>

CAUTION:
Be sure to perform the ABS sequence control mode first.
12) Perform the air bleeding operation of steps 3) and 4) for the bleeder - screw on each caliper.

NOTE:
• Perform in the order starting from the front RH → front LH → rear LH → rear RH.
• As a reference, the number of the full stroke depressing operation is six times.
13) Perform the VDC sequence control mode. <Ref. to VDC-21, VDC Sequence Control.>
14) Perform the air bleeding operation of steps 3) and 4) for the bleeder - screw on each caliper.
15) Repeat from steps 11) to 14) for three cycles.
16) In case air still remains at step 15), repeat steps 11) to 14) again until all air is removed.
17) Fill the reservoir tank with brake fluid up to the “MAX” level.
18) Tighten the bleeder - screw to the specified torque.

Tightening torque:
Bleeder - screw: 8 N·m (0.82 kgf-m, 5.9 ft-lb)
19) Check that there are no brake fluid leaks at the flare nut portion or in the entire brake system.
20) Perform a road test and ensure that the brakes operate normally.

3. HYDRAULIC CONTROL UNIT

1) Bleed air from the brake line. <Ref. to BR-70, BRAKE LINE, PROCEDURE, Air Bleeding.>

NOTE:
If there is a possibility that air enters the pressure control section in the hydraulic control unit, perform the sequence control mode for both of the ABS and VDC systems. (Refer to steps 10) to 16) for brake lining.)

4. CALIPER

1) Bleed air from the brake line. <Ref. to BR-70, BRAKE LINE, PROCEDURE, Air Bleeding.>

CAUTION:
• For the caliper with electronic parking actuator, never drain the brake fluid in the caliper.
• When removing the caliper with electronic parking actuator from the vehicle, make sure to apply the brake fluid seal before disconnection.
• Do not remove the brake fluid seal of the caliper with replacement electronic parking actuator, except when the caliper is installed on the vehicle.

12.Brake Hose

A: REMOVAL

1. FRONT BRAKE HOSE

1) Disconnect the brake hose (a) and the brake pipe (b).

Tools used:
Flare nut wrench

2) Remove the clamp, strut mounting bolt and union bolt, and remove the front brake hose.

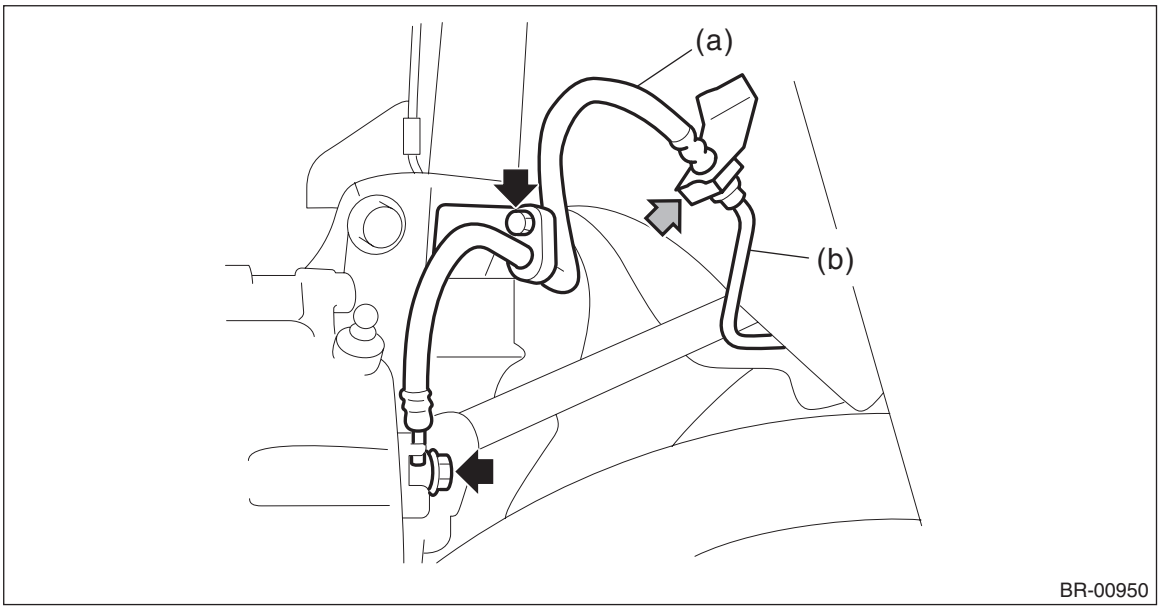

2. REAR BRAKE HOSE

1) Remove the brake hose bracket bolt and union bolt.

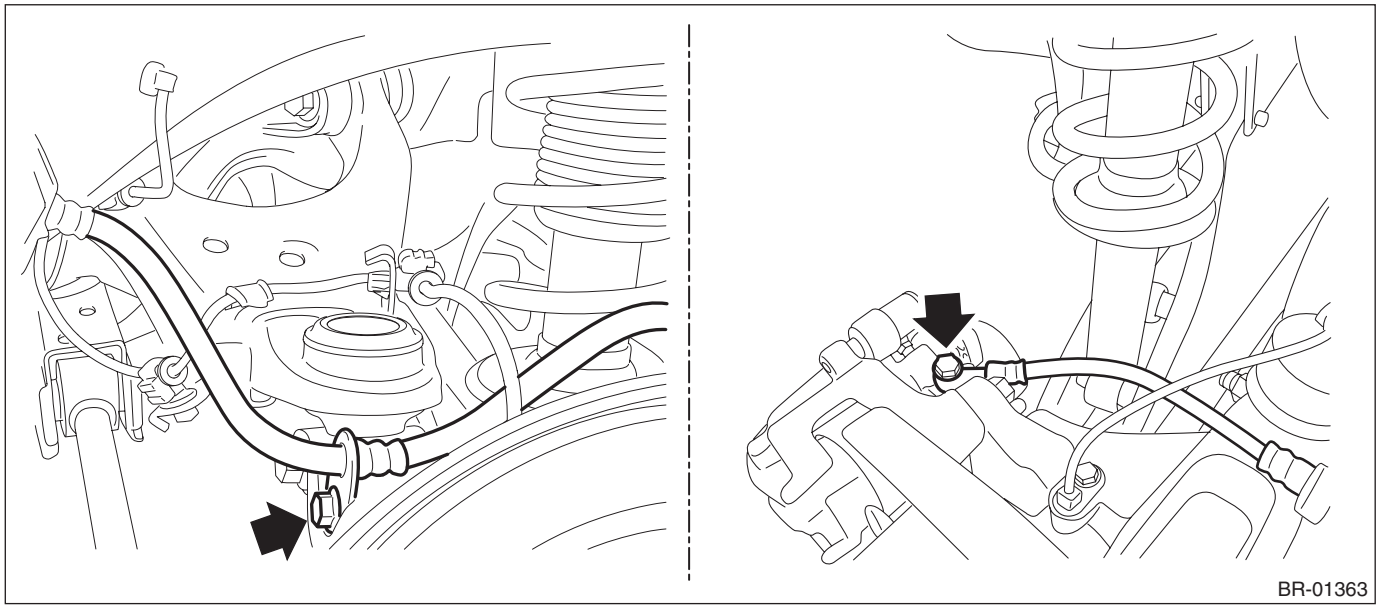

2) Disconnect the brake pipe (a).

Tools used:
Flare nut wrench

3) Remove the brake hose clamp (b), and remove the rear brake hose (c).

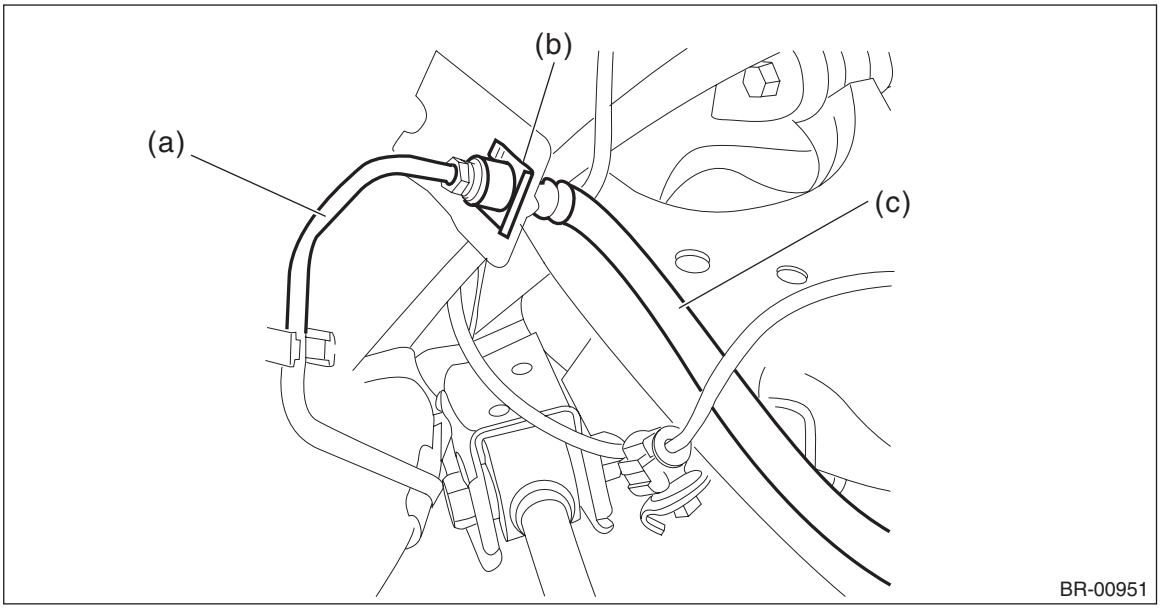

B: INSTALLATION

1. FRONT BRAKE HOSE

1) Secure the brake hose to the brake hose mount part of strut COMPL.

Tightening torque:
Brake hose: 33 N·m (3.4 kgf-m, 24.3 ft-lb)

2) Connect the brake hose to the caliper body assembly using a new gasket.

Tightening torque:
Union bolt: 26 N·m (2.7 kgf-m, 19.2 ft-lb)

3) Position the disc rotor in straight position and route the brake hose through the hole in the bracket on the wheel apron side.

CAUTION:
Do not twist the brake hose.

4) Connect the brake pipe and the hose, then temporarily tighten the flare nut.
5) Secure the brake hose to wheel apron bracket with clamp.

6) Turn and tighten the flare nut (b) by hand while pushing the brake pipe (a) away from yourself.

CAUTION:
Be careful not to make scratches or other damage to the inside surface of the brake pipe flare.

Tightening torque:
Brake pipe flare nut: 15 N·m (1.53 kgf-m, 11.1 ft-lb)

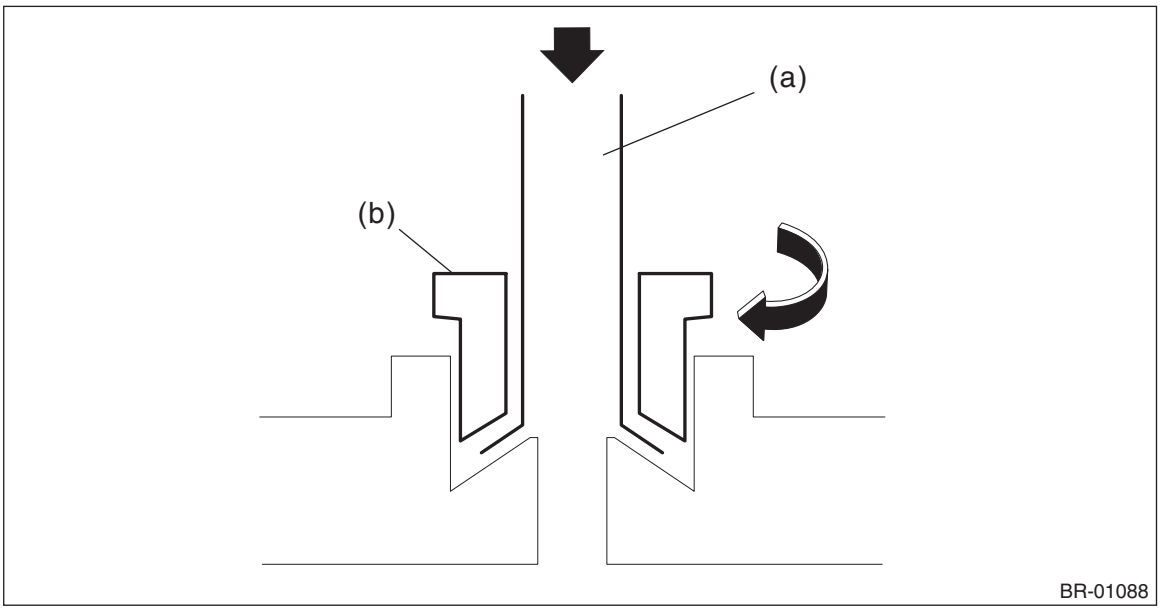

7) Bleed air from the brake system. <Ref. to BR-68, PROCEDURE, Air Bleeding.>

2. REAR BRAKE HOSE

1) Route the brake hose through the hole of bracket, and lightly tighten the flare nut to connect brake pipe.
2) Insert the clamp to secure brake hose.

Tightening torque:
Brake hose bracket: 33 N·m (3.4 kgf-m, 24.3 ft-lb)

3) Install the brake hose to rear caliper body using a new gasket.

Tightening torque:
Union bolt: 26 N·m (2.7 kgf-m, 19.2 ft-lb)

4) Turn and tighten the flare nut (b) by hand while pushing the brake pipe (a) away from yourself.

CAUTION:
Be careful not to make scratches or other damage to the inside surface of the brake pipe flare.

Tightening torque:
Brake pipe flare nut: 15 N·m (1.53 kgf-m, 11.1 ft-lb)

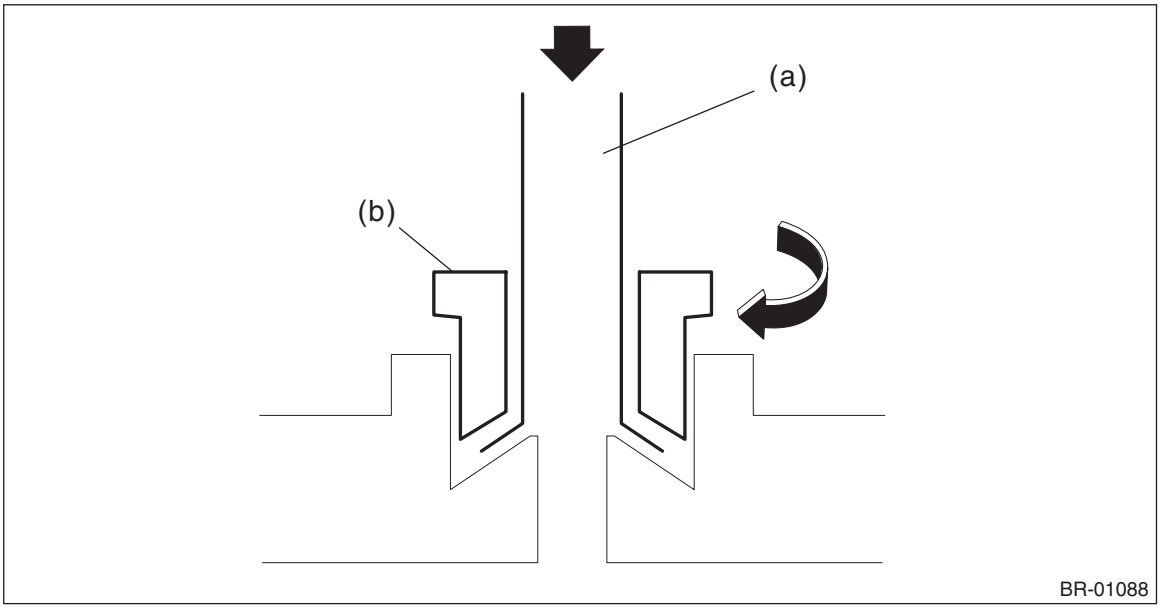

5) Bleed air from the brake system. <Ref. to BR-68, PROCEDURE, Air Bleeding.>

C: INSPECTION

Check the hose for crack, interference with other parts, damage, and fluid leakage on connecting sections. If any faulty is found, repair or replace the relevant part.

13.Brake Pipe

A: REMOVAL

CAUTION:
- **Be careful of the following items. Failure to do so may cause the airbag system malfunction.**
  – Yellow connectors and harnesses with yellow tapes around them are the connectors and harnesses for the airbag system. When using a tester on these circuits, follow the cautions of "AIRBAG SYSTEM". <Ref. to AB-10, CAUTION, General Description.>
  – Be careful not to damage the airbag system wiring harness when servicing the electrical parts around the steering column.
- **Be careful not to damage the airbag system wiring harness when servicing the center brake pipe.**
- **When removing the brake pipe, do not bend.**

NOTE:
The airbag system wiring harness is routed near the center brake pipe.

B: INSTALLATION

CAUTION:
- **Be careful of the following items. Failure to do so may cause the airbag system malfunction.**
  – Yellow connectors and harnesses with yellow tapes around them are the connectors and harnesses for the airbag system. When using a tester on these circuits, follow the cautions of "AIRBAG SYSTEM". <Ref. to AB-10, CAUTION, General Description.>
  – Be careful not to damage the airbag system wiring harness when servicing the electrical parts around the steering column.
- **Be careful not to damage the airbag system wiring harness when servicing the center brake pipe.**
- **When installing the brake pipe, do not bend.**
- **After installing the brake pipe and hose, perform air bleed.**
- **After installing the brake hoses, make sure that they do not contact the tires or suspension assembly, etc.**

NOTE:
The airbag system wiring harness is routed near the center brake pipe.

Tightening torque:
Front brake pipes & hoses: <Ref. to BR-9, FRONT BRAKE PIPES AND HOSES, COMPONENT, General Description.>
Center & rear brake pipes and hoses: <Ref. to BR-11, CENTER AND REAR BRAKE PIPES AND HOSES, COMPONENT, General Description.>

C: INSPECTION

Check the pipe for crack and damage, and also check the connection for fluid leakage. If any faulty is found, repair or replace the relevant part.

NOTE:
Use a mirror when inspecting back sides and other locations which are hard to see.

14.Brake Pedal

A: REMOVAL

1. CVT MODEL

1) Disconnect the ground terminal from the battery sensor, and wait for at least 60 seconds before starting work. <Ref. to RC-4, BATTERY, NOTE, Repair Contents.>
2) Remove the cover assembly - instrument panel LWR driver. <Ref. to EI-75, REMOVAL, Instrument Panel Lower Cover.>
3) Remove the panel - knee guard. <Ref. to PS-20, REMOVAL, Steering Column.>
4) Remove the column assembly - steering. <Ref. to PS-20, REMOVAL, Steering Column.>
5) Remove the brake pedal assembly.
   (1) Disconnect the stop light switch connector.
   (2) Remove the snap pin (a) and clevis pin (b), and remove the operating rod from the brake pedal.

CAUTION:
- **Be careful not to apply excessive force to the operating rod when handling the operating rod. The angle may change by ±3°, and it may result in damage to power piston cylinder.**
- **Do not change the push rod length.**

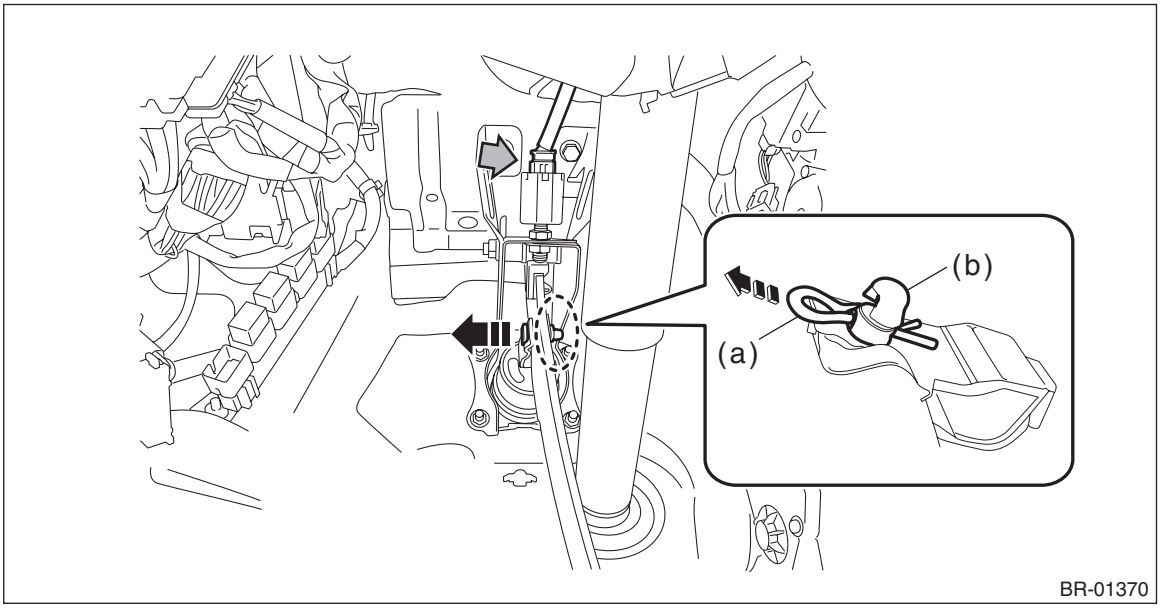

(3) Remove the bolt and nut, and then detach the brake pedal assembly.

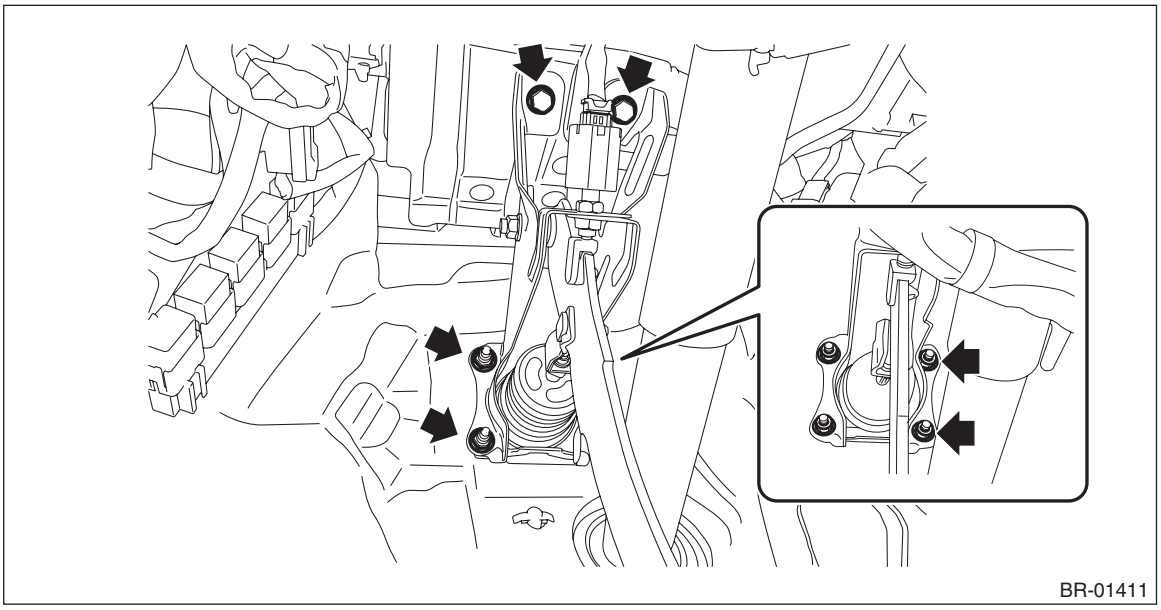

2. MT MODEL

NOTE:
Brake pedal is integrated with the clutch pedal.
For removal procedures of the brake pedal, refer to Clutch section. <Ref. to CL-26, REMOVAL, Clutch Pedal.>

B: INSTALLATION

1. CVT MODEL

1) Install the brake pedal assembly.

CAUTION:
- **Apply grease to the snap pin to prevent the operating rod from wear.**
- **Replace the clevis pin with new parts, and apply thin coat of NIGTIGHT LYW No. 2 grease to the clevis pin.**

Tightening torque:
Brake pedal: 18 N·m (1.8 kgf-m, 13.3 ft-lb)

2) Install the column assembly - steering. <Ref. to PS-22, INSTALLATION, Steering Column.>
3) Install the panel - knee guard.

Tightening torque:
7 N·m (0.7 kgf-m, 5.2 ft-lb)

4) Install the cover assembly - instrument panel LWR driver.
5) Connect the ground terminal to battery sensor. <Ref. to RC-4, BATTERY, NOTE, Repair Contents.>
6) Check that the brake light operate properly.
7) Check the brake pedal after installation. <Ref. to BR-79, INSPECTION, Brake Pedal.>

2. MT MODEL

NOTE:
Brake pedal is integrated with the clutch pedal.
For installation procedure of the brake pedal, refer to Clutch section. <Ref. to CL-27, INSTALLATION, Clutch Pedal.>

C: INSPECTION

1) Move the pad - brake pedal in a horizontal direction with a force of approx. 10 N (1 kgf, 2 lbf), and check that the pedal deflection is in the range of specifications.

CAUTION:
If excessive deflection is noted, replace with a new bushing.

Deflection of brake pedal:
Wear limit: 5.0 mm (0.197 in) or less

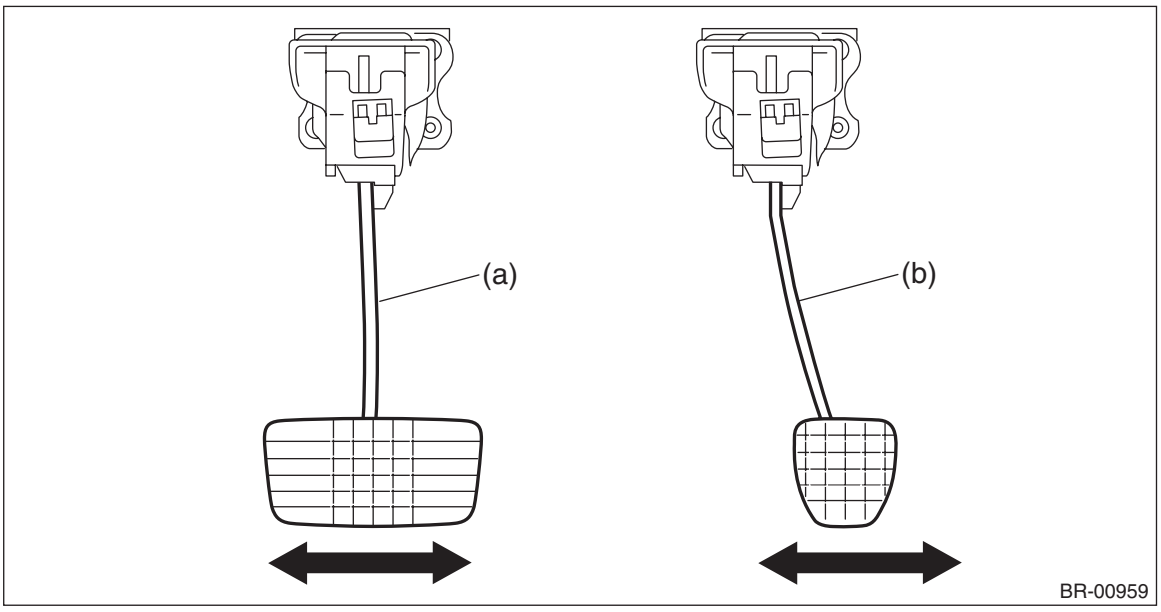

(a) Brake pedal (CVT model) (b) Brake pedal (MT model)

2) Check the position of the pedal pad.

Pedal height L:
125 — 135 mm (4.92 — 5.31 in)

Brake pedal free play A:
0.5 — 2.7 mm (0.020 — 0.11 in) [When pulling the brake pedal upward with a force of less than 10 N (1 kgf, 2 lbf).]

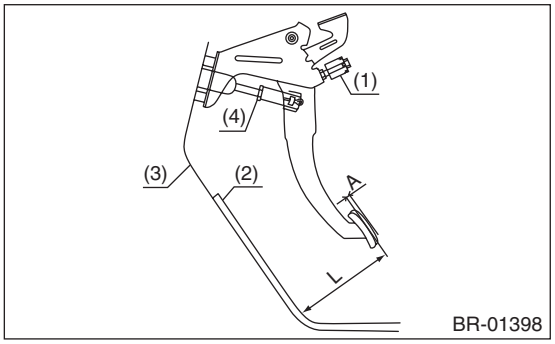

(1) Stop light switch
(2) Mat
(3) Toe board
(4) Brake booster operating rod

3) If it is not within the specification, loosen the lock nuts of vacuum booster operating rod, and rotate the rod to adjust the pedal height L within the specification.
4) Tighten the lock nut.

Tightening torque:
Operating lock nut: 22 N·m (2.2 kgf-m, 16.2 ft-lb)

NOTE:
Check the brake pedal height. When adjusting, also adjust the stop light switch.

15.Stop Light Switch

A: REMOVAL

1) Disconnect the ground terminal from the battery sensor, and wait for at least 60 seconds before starting work. <Ref. to RC-4, BATTERY, NOTE, Repair Contents.>
2) Remove the cover assembly - instrument panel LWR driver. <Ref. to EI-75, REMOVAL, Instrument Panel Lower Cover.>
3) Remove the panel - knee guard. <Ref. to PS-20, REMOVAL, Steering Column.>
4) Remove the stop light switch.
   (1) Disconnect the stop light switch connector.
   (2) Remove the nut, and remove the stop light switch.

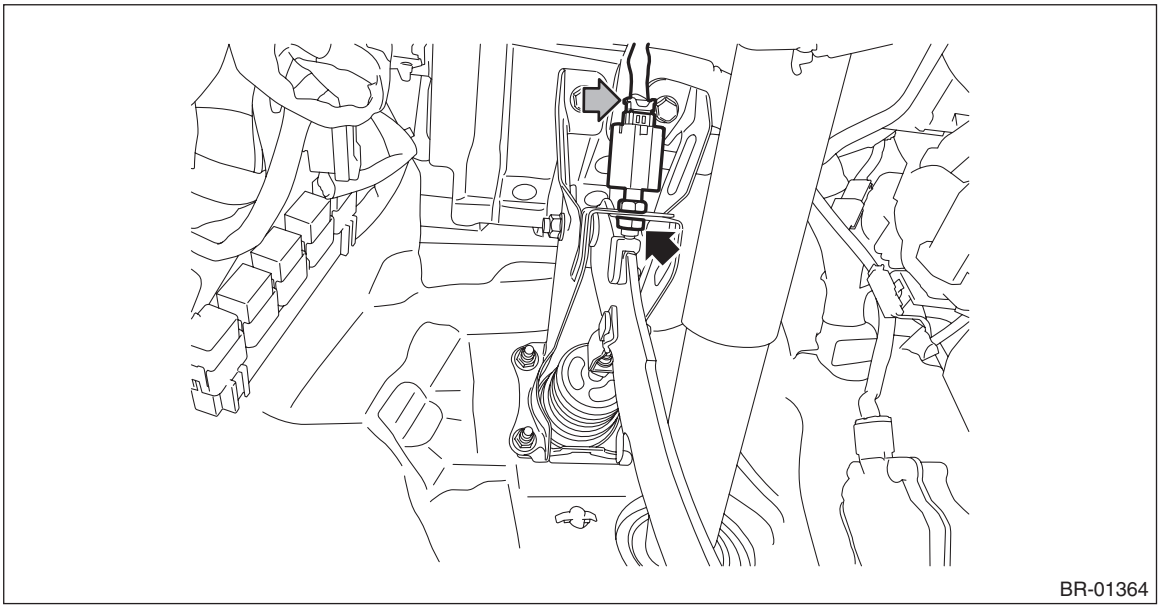

B: INSTALLATION

1) Install the stop light switch onto the bracket with screws and position it with the nut.
2) Adjust the stop light switch position, and then tighten the nut. <Ref. to BR-83, ADJUSTMENT, Stop Light Switch.>

Tightening torque:
8 N·m (0.8 kgf-m, 5.9 ft-lb)
3) Install the panel - knee guard.

Tightening torque:
7 N·m (0.7 kgf-m, 5.2 ft-lb)
4) Install the cover assembly - instrument panel LWR driver.
5) Connect the ground terminal to battery sensor. <Ref. to RC-4, BATTERY, NOTE, Repair Contents.>

C: INSPECTION

1. INSPECT THE SPECIFIED POSITION

1) Measure the specified position of the stop light switch ends.

Specified position L:
3.6 mm ±0.4 mm (0.14 in ±0.016 in)

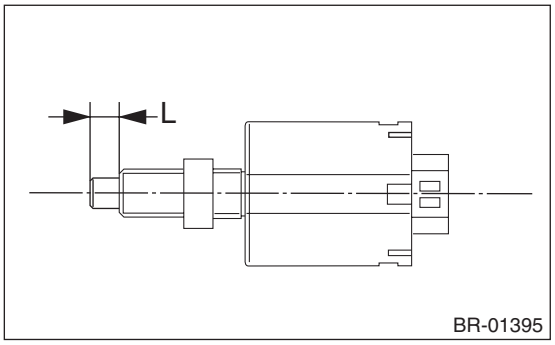

2) Measure the clearance between the end of the stop light switch and the stopper.

CAUTION:
Be careful not to rotate the stop light switch.

Stop light switch clearance A:
1.1 mm (0.03 — 0.04 in)

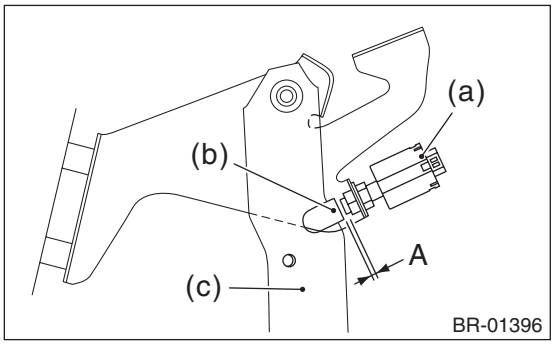

(a) Stop light switch
(b) Stopper
(c) Brake pedal

3) Adjust the position of the stop light switch if the inspection result is not within the standard value. <Ref. to BR-83, ADJUSTMENT, Stop Light Switch.>
4) If the stop light switch does not operate properly or it is not secured at the specified position after adjustment, replace with a new part.

2. INSPECT THE RESISTANCE

1) Check the resistance between connector terminals.

Preparation tool:
Circuit tester

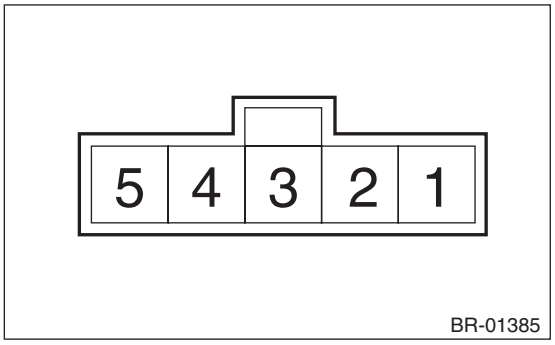

Terminal No.	Inspection conditions	Standard
1 — 2	When brake pedal is depressed	Less than 1 Ω
	When brake pedal is released	1 MΩ or more

2) Replace the stop light switch if the inspection result is not within the standard value.

D: ADJUSTMENT

1) Loosen the lock nut, and adjust the stop light switch position until the clearance (A) between the threaded end of the stop light switch and stopper becomes 1.1 mm (0.04 in). Then, tighten the lock nut.

Tightening torque:
8 N·m (0.8 kgf-m, 5.9 ft-lb)

2) Tighten the lock nut.

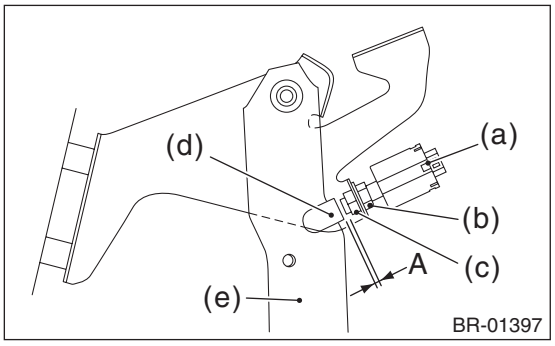

(a) Stop light switch
(b) Lock nut A
(c) Lock nut B
(d) Stopper
(e) Brake pedal

16.General Diagnostic Table

A: INSPECTION

	Trouble and possible cause	Corrective action
1. Insufficient braking	(1) Fluid leakage from the hydraulic mechanism	Repair or replace. (cup, piston seal, piston boot, master cylinder piston kit, pipe or hose)
	(2) Entry of air into the hydraulic mechanism	Bleed air.
	(3) Wear, deteriorated surface material, water or fluid on pad	Replace and clean.
	(4) Improper operation of master cylinder assembly, disc caliper, vacuum booster assembly or check valve	Repair or replace.
2. Unstable or uneven braking	(1) Fluid on pad or rotor	Correct the cause of fluid leakage, and replace.
	(2) Rotor defective	Repair or replace the rotor.
	(3) Improper pad contact, deteriorated surface, deteriorated or worn pad material	Replace.
	(4) Deformed back plate	Repair or replace.
	(5) Overinflation of tires	Adjust the air pressure.
	(6) Defective wheel alignment	Adjust alignment.
	(7) Loose back plate or support installation bolt	Tighten to the specified torque.
	(8) Defective hub unit COMPL	Replace.
	(9) Defective hydraulic system	Replace the cylinder, brake pipe or hose.
	(10) Unstable performance of the parking brake	Check, adjust or replace the rear brake.
3. Excessive pedal stroke	(1) Entry of air into the hydraulic mechanism	Bleed air.
	(2) Excessive play in the master cylinder push rod	Adjust.
	(3) Fluid leakage from the hydraulic mechanism	Repair or replace. (cup, piston seal, piston boot, master cylinder piston kit, pipe or hose)
	(4) Improper pad contact or worn pad	Repair or replace.
4. Brake dragging or improper brake return	(1) Insufficient pedal play	Adjust play.
	(2) Improper master cylinder return	Clean or replace the cylinder.
	(3) Clogged hydraulic system	Replace.
	(4) Improper return of parking brake	Repair or replace.
	(5) Improper disc caliper operation	Repair or replace.
	(6) Faulty wheel bearing	Replace.
5. Brake noise (1) (creaking sound)	(1) Hardened or deteriorated brake pad	Replace the pad.
	(2) Worn brake pad	Replace the pad.
	(3) Loose back plate or support installation bolt	Tighten to the specified torque.
	(4) Loose hub unit COMPL	Tighten to the specified torque.
	(5) Dirty rotor	Clean the rotor, or clean and replace brake assembly.
6. Brake noise (2) (hissing sound)	(1) Worn brake pad	Replace the pad.
	(2) Improperly installed pad	Correct or replace the pad.
	(3) Loose or bent rotor	Retighten or replace.
7. Brake noise (3) (click sound)	Excessively worn pad or support	Replace the pad or the support.

PARKING BRAKE

PB

Page

1. General Description 2
2. Parking Brake System 6
3. Relay and Fuse 7
4. Parking Brake Assembly (Rear Disc Brake) 8
5. Parking Brake Actuator 9
6. Parking Brake Switch 14
7. Emergency Release of Electronic Parking Brake 16
8. General Diagnostic Table 19

1. General Description

A: SPECIFICATION

Item	Specification
Type	Electric type
Clearance adjustment	Automatic adjusting
Operation method	Switch type

B: COMPONENT

1. PARKING BRAKE ACTUATOR

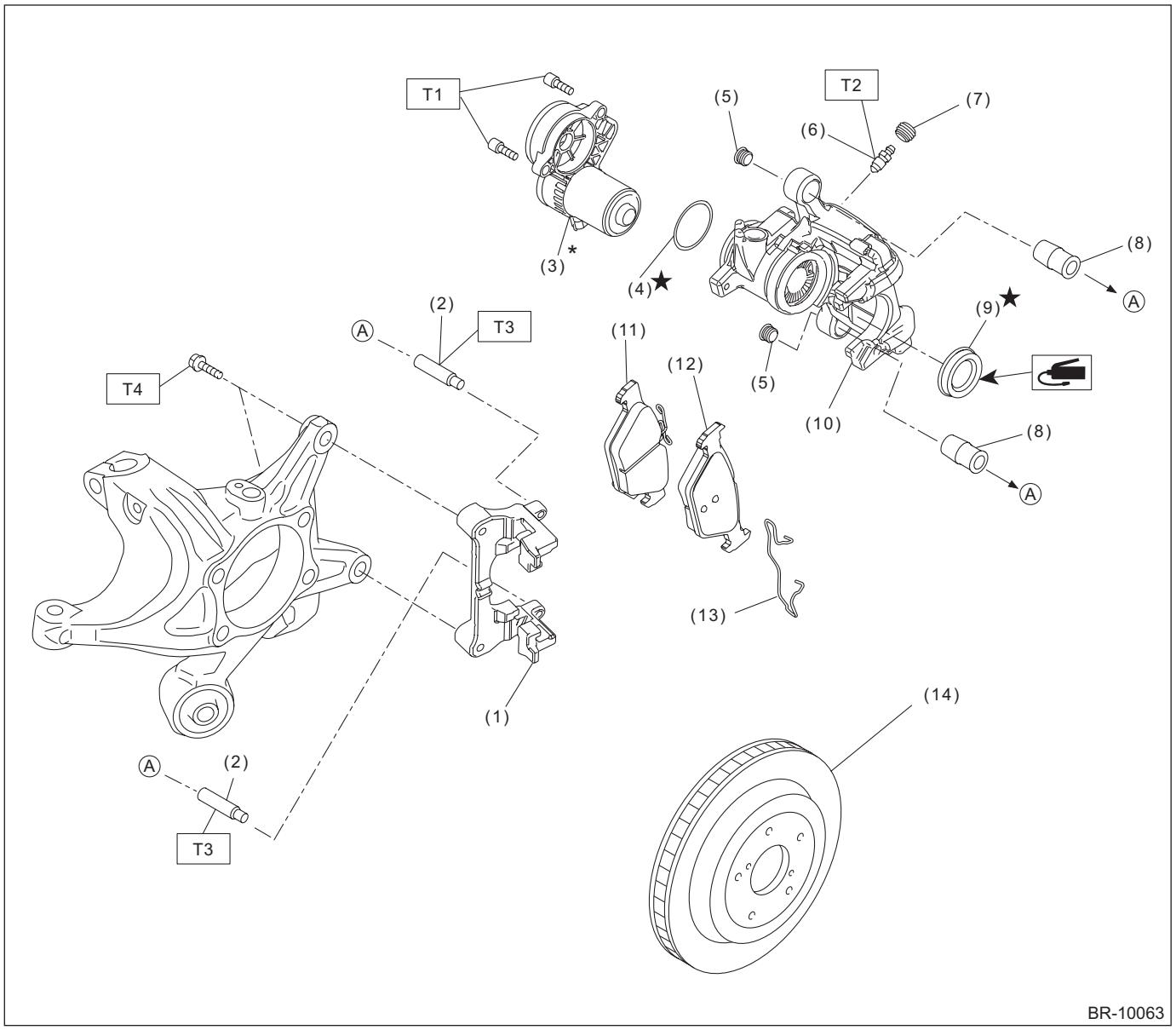

(1)	Support - rear disc brake	(8)	Pin boot
(2)	Guide pin - rear brake	(9)	Piston boot
(3)	Parking brake actuator ASSY	(10)	Caliper body
(4)	O-ring	(11)	Pad - disc brake rear inner
(5)	Cap	(12)	Pad - disc brake rear outer
(6)	Bleeder - screw	(13)	Pad clip
(7)	Cap - bleeder	(14)	Disc rotor (ventilated type)

Tightening torque: N·m (kgf-m, ft-lb)
T1: 8 (0.8, 5.9)
T2: 17 (1.7, 12.5)
T3: 25 (2.5, 18.4)
T4: 66 (6.7, 48.7)

*: The component cannot be reused when the emergency release of parking brake was performed or when the actuator has a malfunction.

2. ELECTRONIC PARKING BRAKE HARNESS

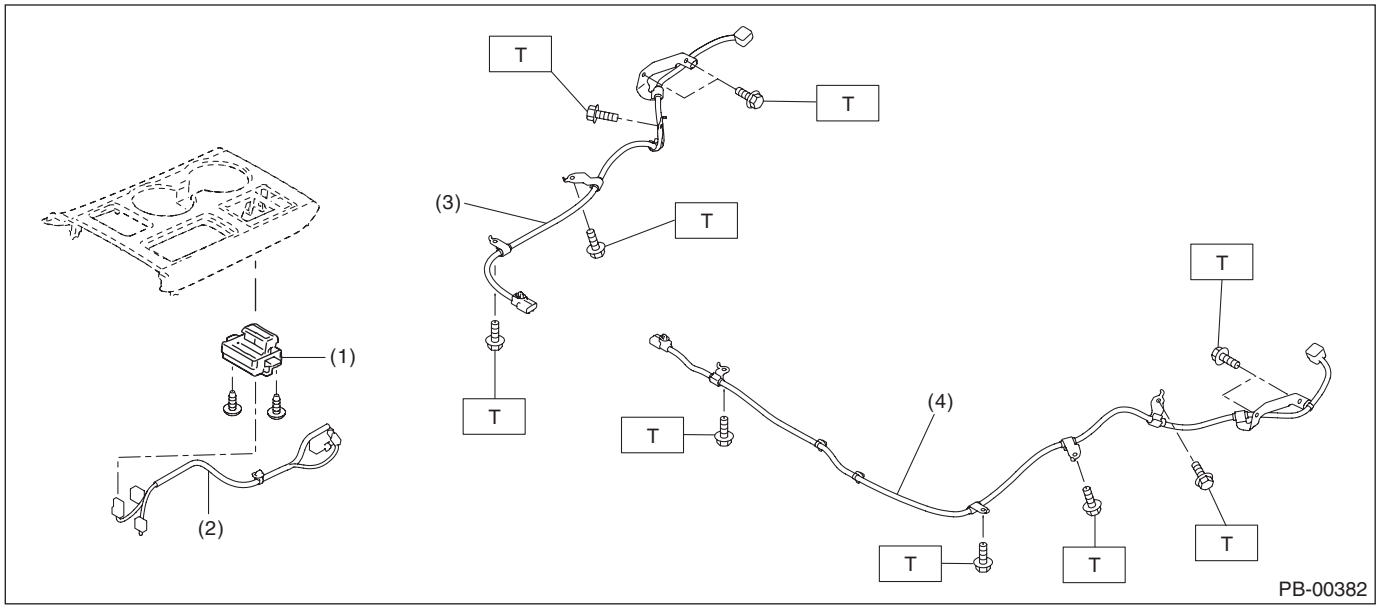

(1)	Switch ASSY - electronic parking brake	(3)	Electronic parking brake harness RH	***Tightening torque: N·m (kgf-m, ft-lb)***
(2)	Console box harness	(4)	Electronic parking brake harness LH	***T: 18 (1.8, 13.3)***

C: CAUTION

- When performing any work, always wear work clothes, a work cap and protective shoes. Additionally, wear a helmet, protective goggles, etc. if necessary.
- When performing a repair, identify the cause of trouble and avoid unnecessary removal, disassembly and replacement.
- Some vehicle components are extremely hot immediately after driving. Be wary of receiving burns from heated parts.
- Use SUBARU genuine grease, the recommended or equivalent. Do not mix grease etc. of different grades or manufacturers.
- Be sure to tighten fasteners including bolts and nuts to the specified torque.
- Always use the jack-up point when the shop jacks or rigid racks are used to support the vehicle.
- Apply grease onto sliding or revolving surfaces before installation.
- Be sure that the surface of brake disc, brake pad or brake shoe is free from grease or oil.

D: PREPARATION TOOL

1. SPECIAL TOOL

ILLUSTRATION	TOOL NUMBER	DESCRIPTION	REMARKS
 STSSM4	— (Newly adopted tool)	SUBARU SELECT MONITOR 4	Used for setting of each function and trouble-shooting for electrical system. NOTE: For detailed operation procedures of Subaru Select Monitor 4, refer to “Application help”.

2. GENERAL TOOL

TOOL NAME	REMARKS
Circuit tester	Used for measuring resistance, voltage and current.
DST-i	Used together with Subaru Select Monitor 4.

2. Parking Brake System

A: WIRING DIAGRAM

Refer to “Parking Brake / Brake Fluid Level Warning Light System” in the wiring diagram. <Ref. to WI-294, WIRING DIAGRAM, Parking Brake / Brake Fluid Level Warning Light System.>

B: ELECTRICAL SPECIFICATION

Refer to the Control Module I/O Signal of “Vehicle Dynamics Control (VDC) (DIAGNOSTICS)”. <Ref. to VDC(diag)-17, ELECTRICAL SPECIFICATION, Control Module I/O Signal.>

C: OPERATION

1. BRAKE MAINTENANCE MODE

CAUTION:
• DTCs may be stored after starting the brake maintenance mode. When the brake maintenance mode is complete, clear the DTCs.
• When the brake maintenance mode is completed, the electronic parking brake automatically operates. Check if any other works are not performed in advance. Sufficient safety consideration is required.

NOTE:
• This function is used when inspecting and repairing the rear brake related parts.
• When the brake maintenance mode is performed, the electronic parking brake warning light illuminates, the electronic parking brake operation light illuminates, and DTC: C1984 is stored. If the system returns from the brake maintenance mode to the normal mode, the electronic parking brake warning light goes off, and DTC is cleared.
• During the brake maintenance mode, the electronic parking brake cannot be applied/released.
1) Connect the Subaru Select Monitor to data link connector.

NOTE:
For detailed operation procedures, refer to “Application help”.
2) Turn the ignition switch to ON.
3) On «Start» display, select «Diagnosis».
4) On «Vehicle selection» display, input the target vehicle information and select «Confirmed».
5) On «Main Menu» display, select «Each System».
6) On «Select System» display, select «ABS/VDC System» and select «Enter».
7) On «Select Function» display, select «Work Support».
8) From the work support item list, select «Brake Maintenance Mode». And then, start the operation.
9) After the operation is complete, exit the brake maintenance mode according to the display screen.

D: INSPECTION

Refer to Basic Diagnostic Procedure of “Vehicle Dynamics Control (VDC) (DIAGNOSTICS)”. <Ref. to VDC(diag)-2, Basic Diagnostic Procedure.>

E: NOTE

For procedure of each component in the parking brake system, refer to the respective section.
• Parking brake actuator: <Ref. to PB-9, Parking Brake Actuator.>
• Parking brake switch: <Ref. to PB-14, Parking Brake Switch.>
• Emergency release of electronic parking brake: <Ref. to PB-16, Emergency Release of Electronic Parking Brake.>

3. Relay and Fuse

A: LOCATION

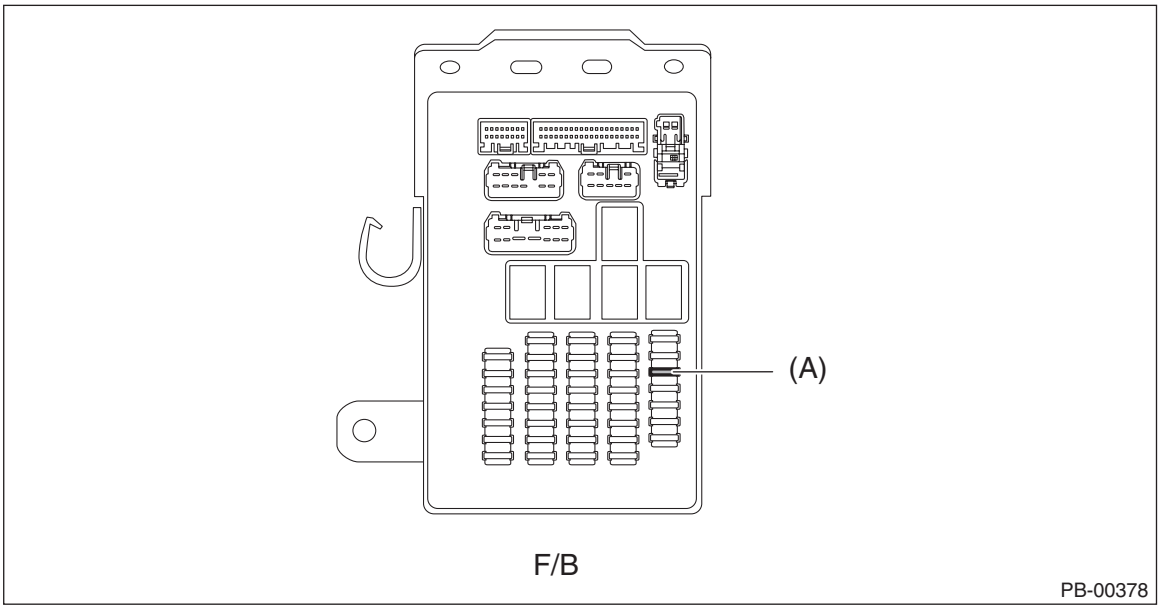

Relay & fuse box (F/B)	Fuse 7.5 A (EPB control switch)	(A)

NOTE:
For other related fuses, refer to the wiring diagram. <Ref. to WI-21, Power Supply Circuit.>

B: INSPECTION

1. CHECK FUSE

1) Remove the fuse and inspect visually.
2) If the fuse is blown out, replace the fuse.

4. Parking Brake Assembly (Rear Disc Brake)

A: REMOVAL

NOTE:
For parking brake assembly removal and disassembly of electronic parking brake model, refer to “BRAKE” section.

- Removal: <Ref. to BR-45, REMOVAL, Rear Disc Brake Assembly.>
- Disassembly: <Ref. to BR-48, DISASSEMBLY, Rear Disc Brake Assembly.>

B: INSTALLATION

NOTE:
For parking brake assembly installation and assembly of electronic parking brake model, refer to “BRAKE” section.

- Installation: <Ref. to BR-47, INSTALLATION, Rear Disc Brake Assembly.>
- Assembly: <Ref. to BR-48, DISASSEMBLY, Rear Disc Brake Assembly.>

5. Parking Brake Actuator

A: REMOVAL

1. PARKING BRAKE HARNESS

1) Disconnect the ground terminal from battery sensor. <Ref. to RC-4, BATTERY, NOTE, Repair Contents.>
2) Lift up the vehicle, and then remove the rear wheels.
3) Remove the bolt and nuts and remove the fuel tank protector.

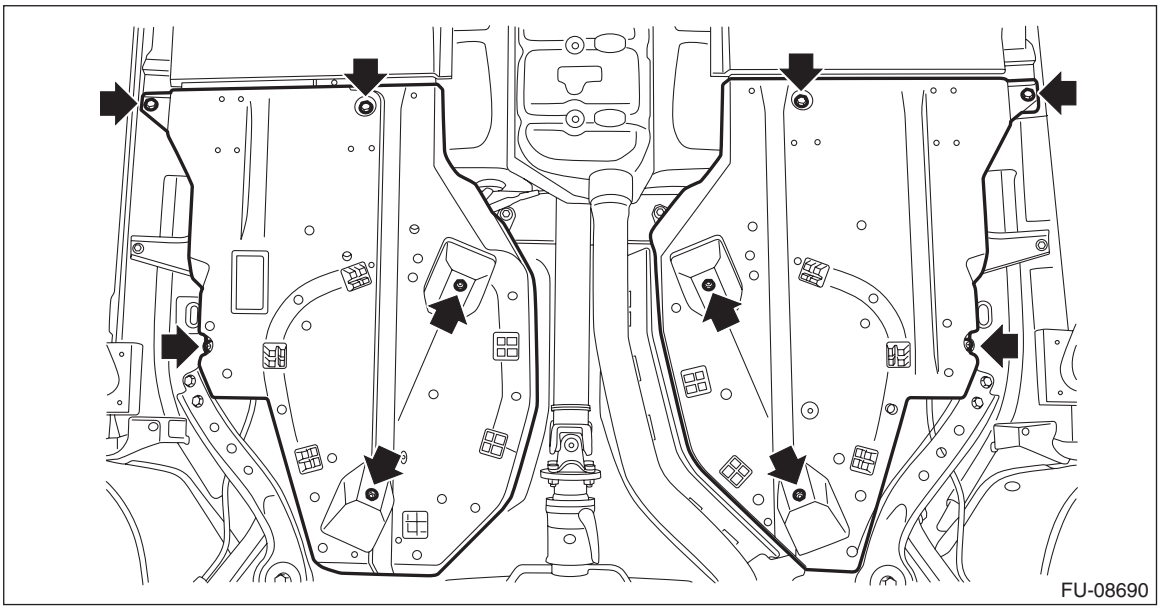

4) Remove the electronic parking brake harness.
   (1) Remove the connectors (a), (b) and (c), and the clip (i).
   (2) Remove the harness clamp (d) from the back plate - rear brake.
   (3) Remove the harness clamp (e) from the trailing link.
   (4) Remove the harness clamp (f) from the rear floor.
   (5) Remove the harness clamp (g) from the rear floor.
   (6) Remove the harness clamp (h) from the rear floor.

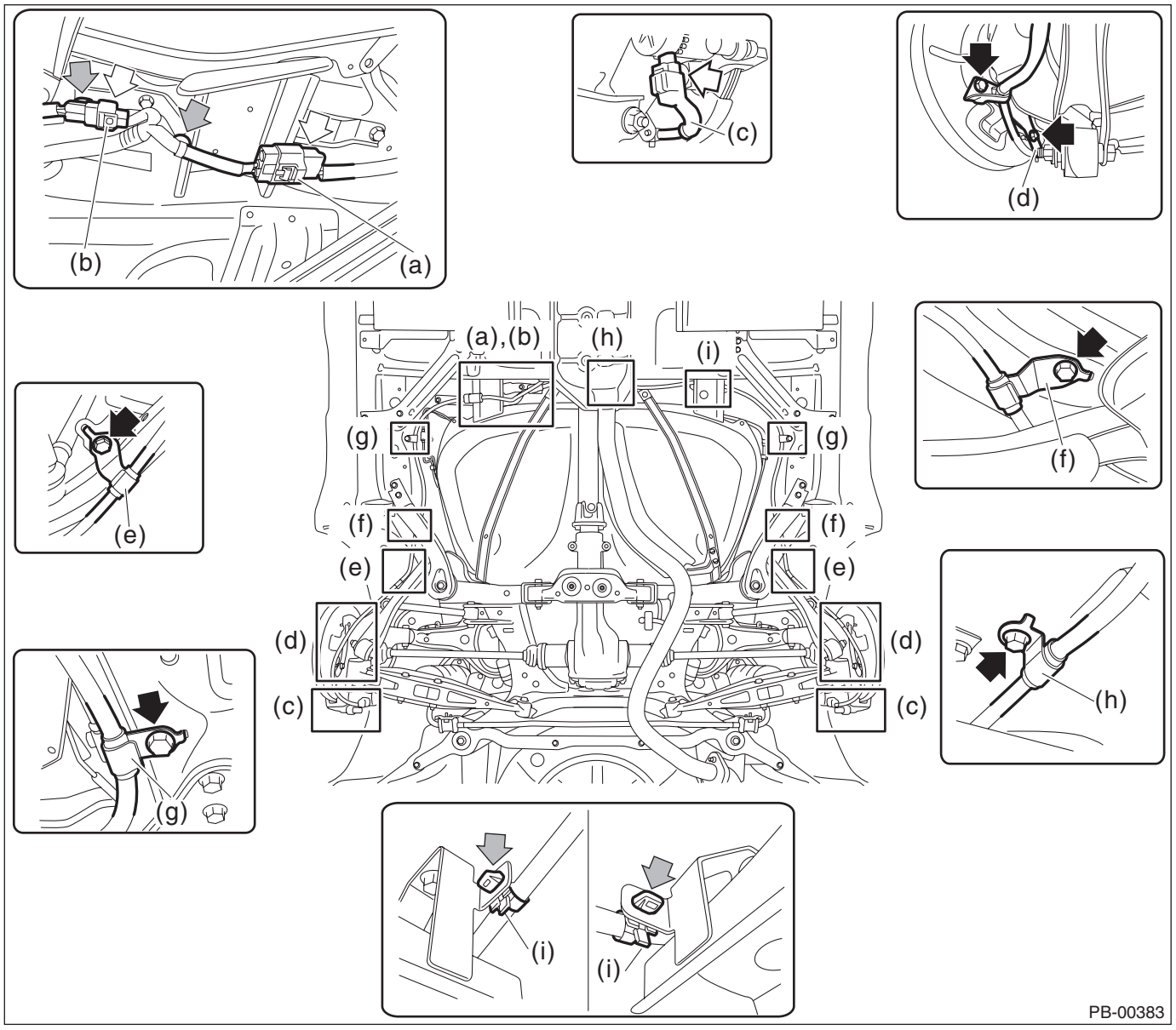

2. PARKING BRAKE ACTUATOR

CAUTION:
• Do not remove the parking brake actuator assembly except when there are system malfunctions (such as emergency release of parking brake or abnormal actuator) or when the caliper is replaced. When the parking brake actuator assembly is reused, always replace the O-ring with a new part contained in the caliper body assembly.
• Do not reuse the parking brake actuator assembly when the emergency release of parking brake was performed or when the actuator has a malfunction. Always replace with a new parking brake actuator assembly.
1) Release the parking brake.
2) Using the Subaru Select Monitor, go to the brake maintenance mode according to the display screen. <Ref. to PB-6, BRAKE MAINTENANCE MODE, OPERATION, Parking Brake System.>

NOTE:
For detailed operation procedures, refer to “Application help”.
3) Disconnect the ground terminal from battery sensor. <Ref. to RC-4, BATTERY, NOTE, Repair Contents.>
4) Lift up the vehicle, and then remove the rear wheels.
5) Remove the parking brake actuator assembly.
(1) Disconnect the connector.

CAUTION:
• Be careful that no water and dust enter inside the connectors.
• When removing the parking brake actuator assembly, do not use any tools. Slide it upward and downward by hand to remove.
(2) Remove the bolts, and remove the parking brake actuator assembly.

Preparation tool:
Hexagon wrench: 5 mm (0.2 in)

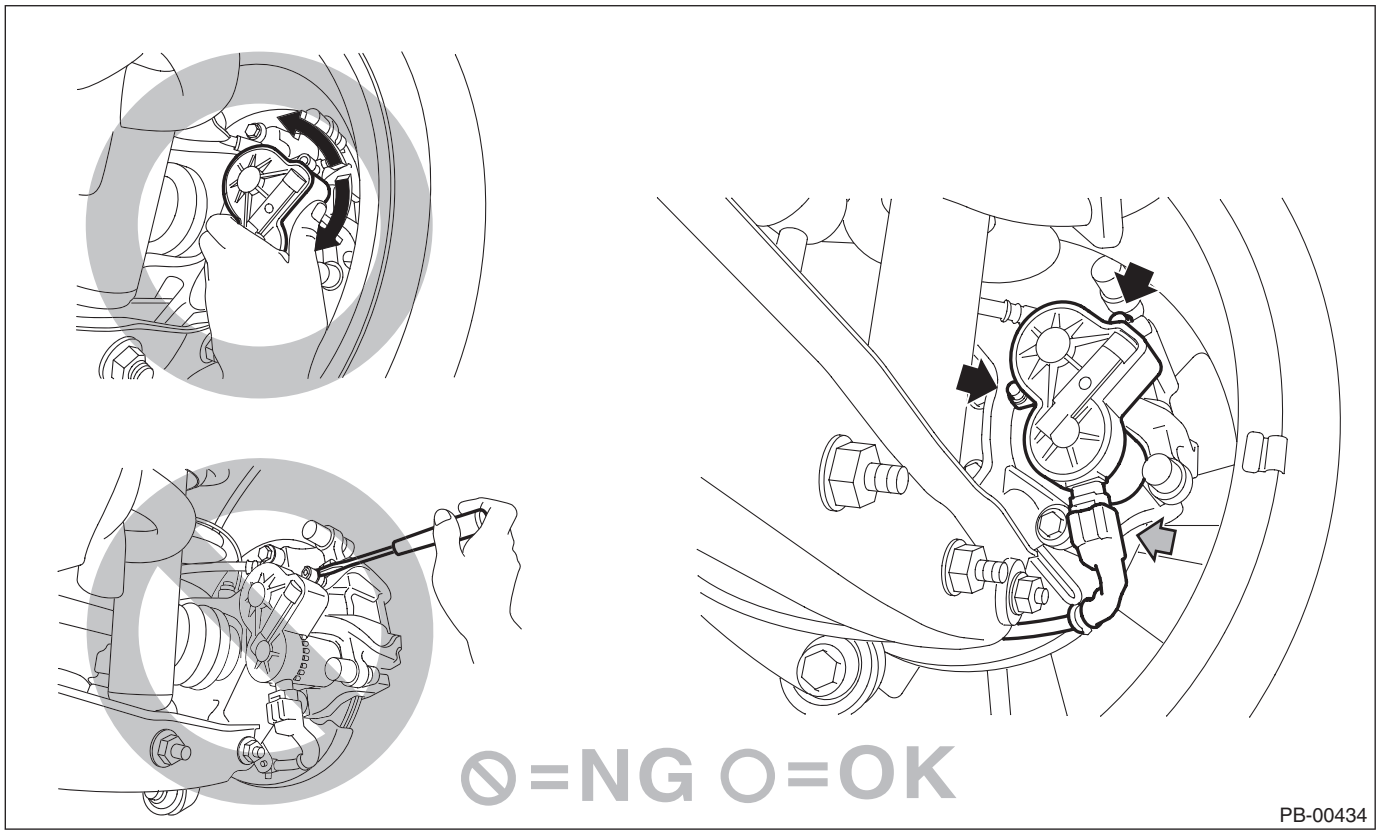

B: INSTALLATION

1. PARKING BRAKE HARNESS

1) Install the electronic parking brake harness.

Tightening torque:
Harness clamp: 18 N·m (1.8 kgf-m, 13.3 ft-lb)

2) Install the fuel tank protector.

NOTE:
Use a new self-locking nut (a).

Tightening torque:
T1: 9 N·m (0.9 kgf-m, 6.6 ft-lb)
T2: 18 N·m (1.8 kgf-m, 13.3 ft-lb)

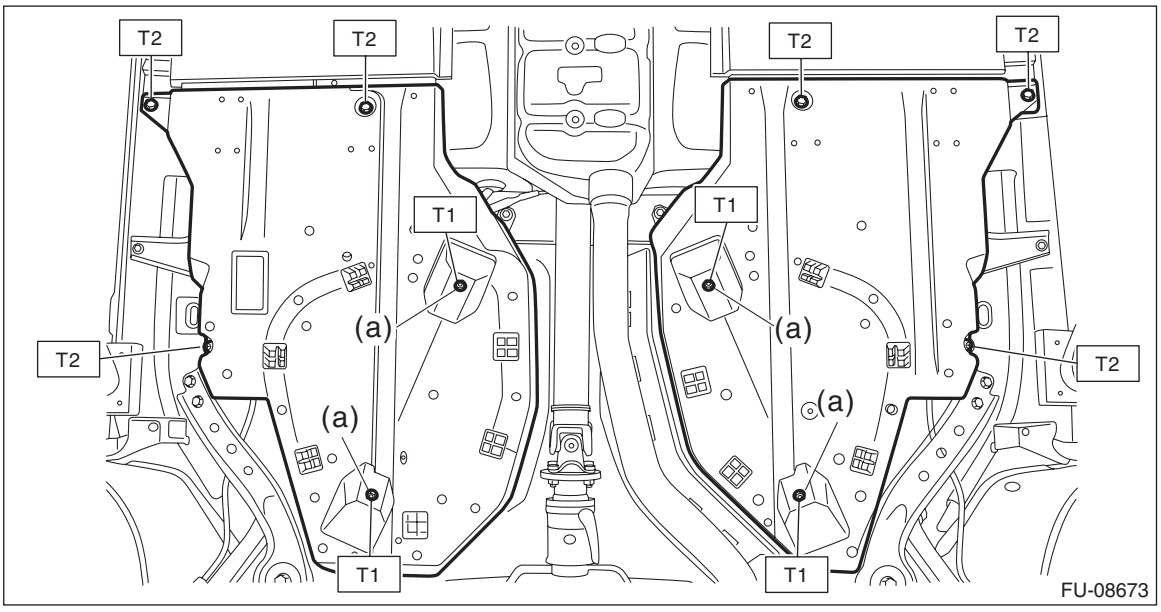

3) Connect the ground terminal to battery sensor. <Ref. to RC-4, BATTERY, NOTE, Repair Contents.>
4) Install the rear wheels.

Tightening torque:
120 N·m (12.2 kgf-m, 88.5 ft-lb)

2. PARKING BRAKE ACTUATOR

CAUTION:
• Do not remove the parking brake actuator assembly except when there are system malfunctions (such as emergency release of parking brake or abnormal actuator) or when the caliper is replaced. When the parking brake actuator assembly is reused, always replace the O-ring with a new part contained in the caliper body assembly.
• Do not reuse the parking brake actuator assembly when the emergency release of parking brake was performed or when the actuator has a malfunction. Always replace with a new parking brake actuator assembly.
1) Install the parking brake actuator assembly.

Tightening torque:
8 N·m (0.8 kgf-m, 5.9 ft-lb)
2) Connect the ground terminal to battery sensor. <Ref. to RC-4, BATTERY, NOTE, Repair Contents.>
3) Using the Subaru Select Monitor, exit the brake maintenance mode according to the display screen. <Ref. to PB-6, BRAKE MAINTENANCE MODE, OPERATION, Parking Brake System.>

NOTE:
For detailed operation procedures, refer to “Application help”.
4) After the operation is completed, apply and release the parking brake five times and ensure that the brake operates normally.
5) Install the rear wheels.

Tightening torque:
120 N·m (12.2 kgf-m, 88.5 ft-lb)

6. Parking Brake Switch

A: REMOVAL

1) Disconnect the ground terminal from battery sensor. <Ref. to RC-4, BATTERY, NOTE, Repair Contents.>

NOTE:
For CVT models, set the select lever to the “N” position before disconnecting the battery.

2) Remove the cover assembly - front. <Ref. to EI-80, REMOVAL, Console Box.>
3) Remove the screws to remove the switch assembly - electronic parking brake.

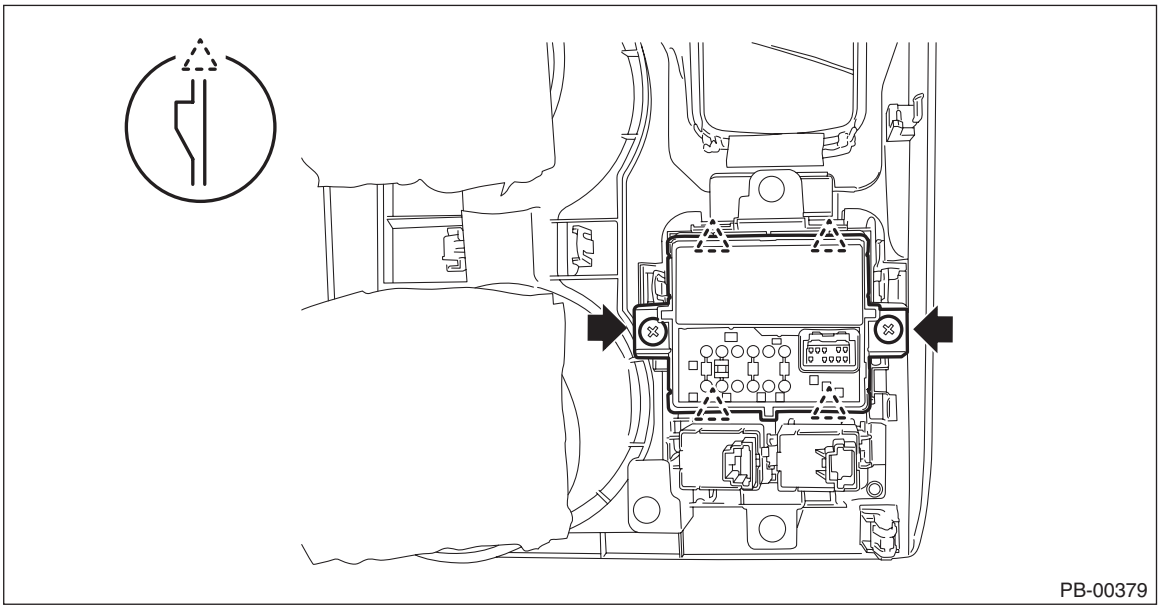

B: INSTALLATION

1) Install the switch assembly - electronic parking brake.
2) Install the cover assembly - front. <Ref. to EI-82, INSTALLATION, Console Box.>
3) Connect the ground terminal to battery sensor. <Ref. to RC-4, BATTERY, NOTE, Repair Contents.>

C: INSPECTION

1. SWITCH ASSY - ELECTRONIC PARKING BRAKE

Check the resistance between connector terminals.

Switch position	Terminal No.	Standard
Press (Release)	6 and 2 6 and 5	Less than 1 Ω
Neutral	6 and 1 2 and 5	Less than 1 Ω
Pull (Lock)	6 and 1 6 and 2	Less than 1 Ω

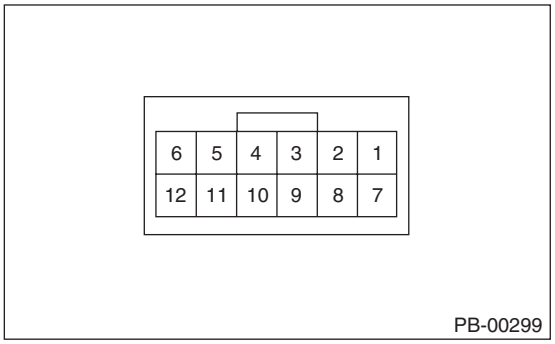

NOTE:
Replace the switch if the inspection result is not within the standard value.

7. Emergency Release of Electronic Parking Brake

A: OPERATION

CAUTION:
• Perform this operation only when the parking brake must be released in emergency situation such as a system malfunction.
• When performing this procedure, be sure to fully confirm safety in the nearby area and park the vehicle on a horizontal ground.
• Always use the jack-up point when the shop jacks or rigid racks are used to support the vehicle.
1) Disconnect the ground terminal from battery sensor. <Ref. to RC-4, BATTERY, NOTE, Repair Contents.>
2) Set the wheel stoppers to front tires.
3) Jack-up the rear side of vehicle and support it with rigid racks.
4) Remove the rear wheels.
5) Remove the parking brake actuator assembly.

CAUTION:
• When removing the bolt, the parking brake actuator assembly turns due to reaction force generated by the motor. Be careful not to pinch your hand.
• Wrap the tip of a screwdriver with cloth in order not to damage the caliper body that will be reused.
• Do not insert a tool into the seal surface (a) on the parking brake actuator assembly.
• Always remove the parking brake actuator assembly while holding it by hand because the parking brake actuator assembly falls off during removal.
(1) Disconnect the connector and remove the bolt.

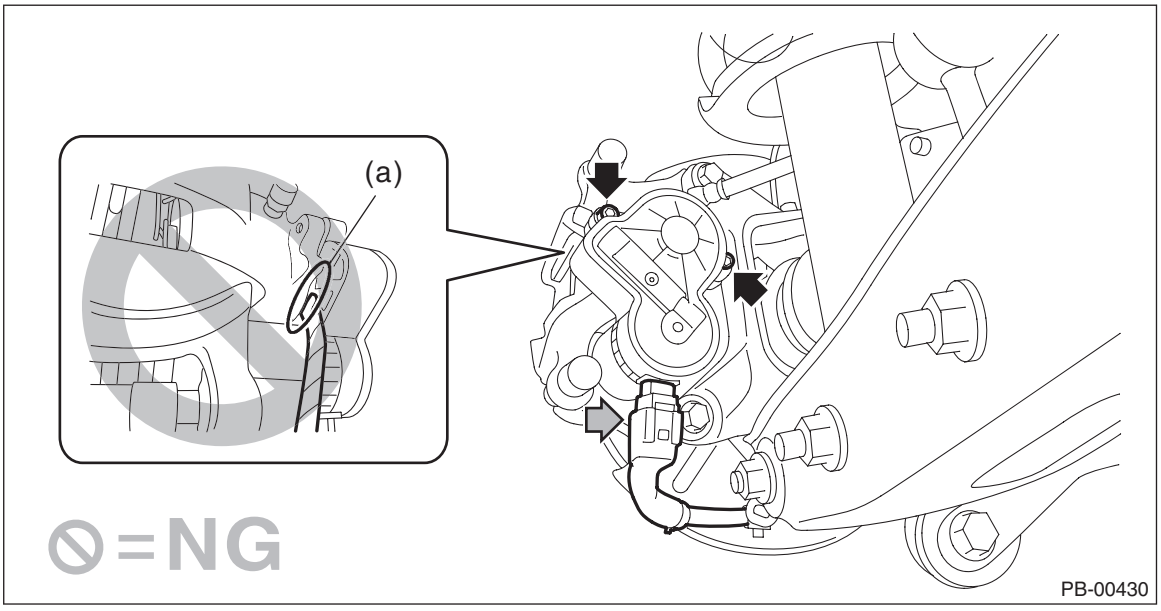

(2) Put a crowbar between the parking brake actuator assembly and the support - rear disc brake (b).
(3) Push out the parking brake actuator assembly toward yourself.
(4) Insert a screwdriver into the gap (c) made by pushing the parking brake actuator assembly, and then remove it.

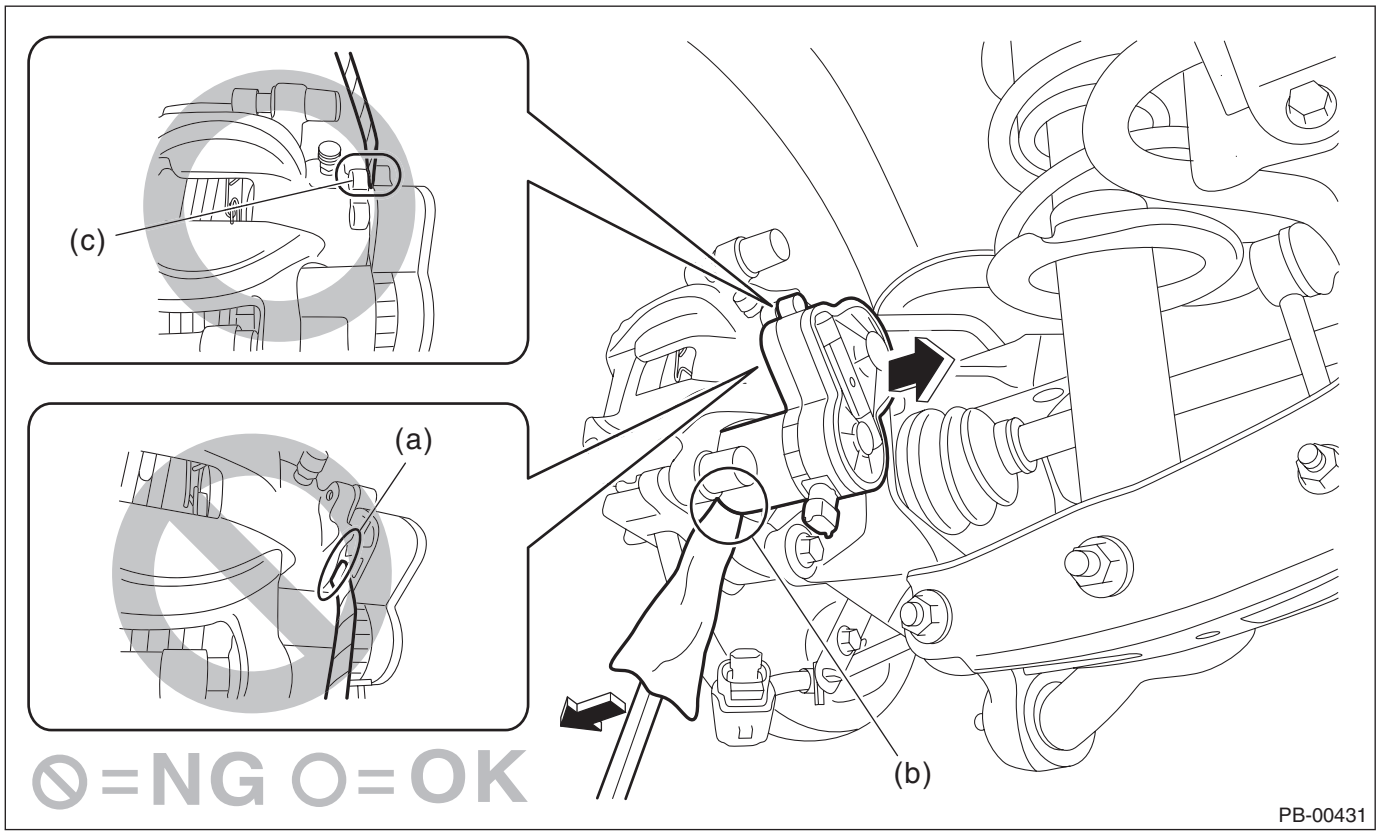

6) Turn the caliper body spindle bolt clockwise by approx. 1 rotation.

NOTE:
Turn both sides of LH and RH clockwise.

Preparation tool:
TORX® E12

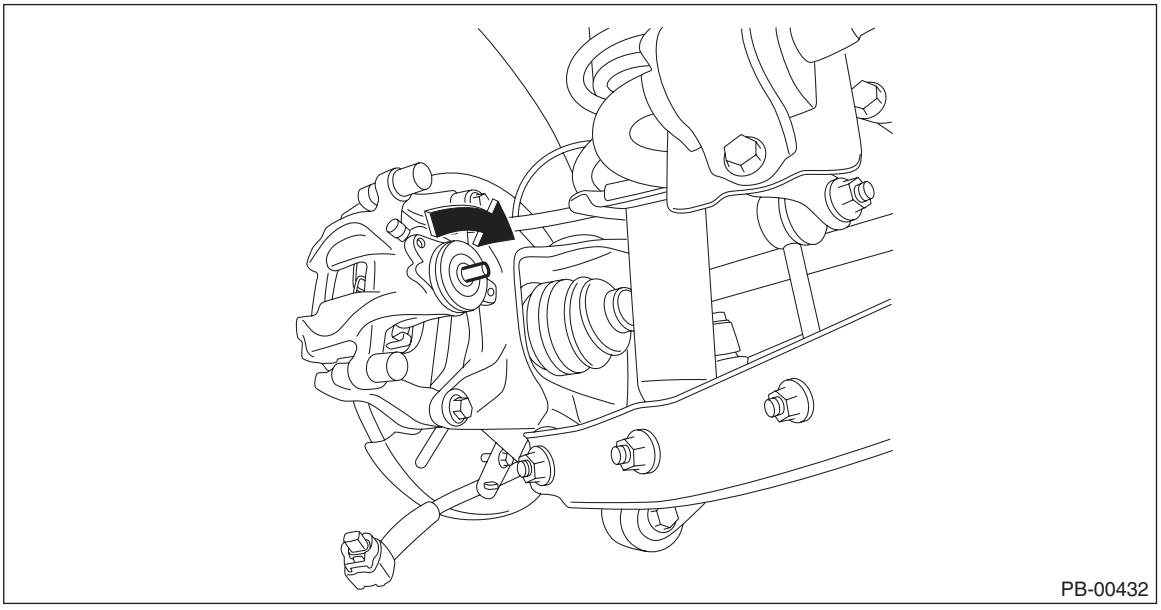

7) Confirm that the parking brake lock is released and the disc rotor rotates.

8) Temporarily install the parking brake actuator assembly.

CAUTION:
• When the emergency release of parking brake was performed, replace the parking brake actuator assembly after the system trouble is resolved.
• Do not connect the actuator connector. It may be locked again due to continuity.
• If the vehicle needs to be moved, cover the actuator connector with vinyl tape to prevent foreign matter from entering, and secure it in an area where no interference occurs.

Tightening torque:
8 N·m (0.8 kgf-m, 5.9 ft-lb)

9) When the emergency release of parking brake was performed, be sure to perform the inspection related to the parking brake system.

NOTE:
For inspection, refer to Basic Diagnostic Procedure of “Vehicle Dynamics Control (VDC) (DIAGNOSTICS)”. <Ref. to VDC(diag)-2, Basic Diagnostic Procedure.>

8. General Diagnostic Table

A: INSPECTION

Symptoms	Possible cause	Corrective action
Brake drag	Defective parking brake switch	Replace.
	Defective parking brake harness	Replace.
	Defective parking brake actuator	Replace.
	Loose parking brake actuator and support installation bolt	Tighten to the specified torque.
Noise from brake	Worn or hardened pad	Replace.
	Defective parking brake actuator	Replace.

POWER ASSISTED SYSTEM (POWER STEERING)

PS

		Page
1.	General Description	2
2.	Power Steering System	8
3.	Steering Wheel	9
4.	Universal Joint	14
5.	Steering Column	20
6.	Electric Power Steering Gearbox	26
7.	Power Steering Control Module	38
8.	General Diagnostic Table	39

1. General Description

A: SPECIFICATION

Model			Sedan model	OUTBACK model
Whole system	Minimum turning radius m (ft)		5.6 (18.37)	5.4 (17.72)
	Steering angle	Inner wheel	37.6°±1.5°	38.6°±1.5°
		Outer wheel	32.8°±1.5°	33.8°±1.5°
	Steering wheel diameter mm (in)		375 (14.76)	
	Lock-to-lock revolution number		2.82	
Gearbox	Type		Rack & pinion type	
	Backlash		0 (automatic adjusting)	
Motor (Temperature 20°C (68°F))	Rated voltage V		13.5	
	Rated torque N·m (kgf-m, ft-lb)		4.43 (0.45,3.27)	
	Rated revolution speed rpm		1380	
	Rated current A		63	
	Rated output W		640	

Steering wheel

Free play	mm (in)	17 (0.67) or less

Column assembly - steering

Clearance Between steering wheel and cover assembly - column	mm (in)	4 — 6 (0.16 — 0.24)

Steering gearbox

Sliding resistance	N (kgf, lbf)		360 (37, 81) or less Difference between right and left sliding resistance: 20% or less
Rack shaft play in the radial direction	mm (in)	Right-turn steering	Play in the horizontal direction: 0.6 (0.024) or less Play in the vertical direction: 0.4 (0.016) or less
		Left-turn steering	0.4 (0.016) or less
Input shaft play	mm (in)	In radial direction	0.18 (0.0071) or less
		In axial direction	0.27 (0.0106) or less
Rotational resistance	N (kgf, lbf)		Maximum allowable value: 18 (1.8, 4.0) or less Difference between right and left sliding resistance: 20% or less

Steering effort (with power steering assist)

At standstill with engine idling on paved road	N (kgf, lbf)	29.4 (3.0, 6.6) or less
At standstill with engine stalled on paved road	N (kgf, lbf)	294.2 (30, 66.2) or less

B: COMPONENT

1. STEERING WHEEL AND COLUMN

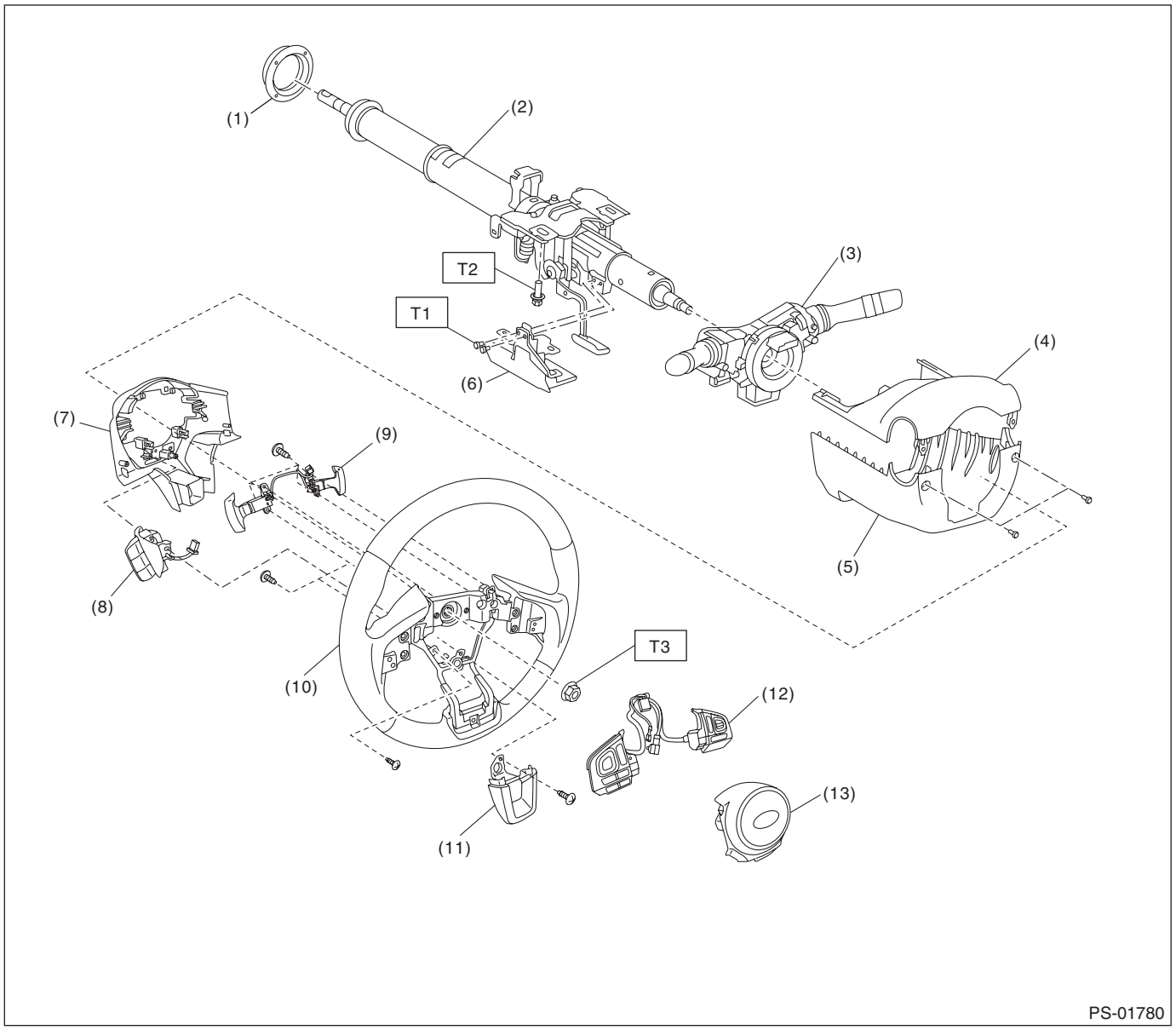

(1)	Bushing	(7)	Cover - steering wheel LWR	(13)	Airbag module
(2)	Column ASSY - steering	(8)	MID switch (multi-information display)		
(3)	Switch ASSY - combination	(9)	Paddle shift	***Tightening torque: N·m (kgf-m, ft-lb)***	
(4)	Cover ASSY - column UPR	(10)	Steering wheel	***T1:***	***4 (0.4, 3.0)***
(5)	Cover ASSY - column LWR	(11)	Cover - spoke	***T2:***	***20 (2.0, 14.8)***
(6)	Knee protector	(12)	Satellite switch	***T3:***	***39 (4.0, 28.8)***

2. STEERING GEARBOX

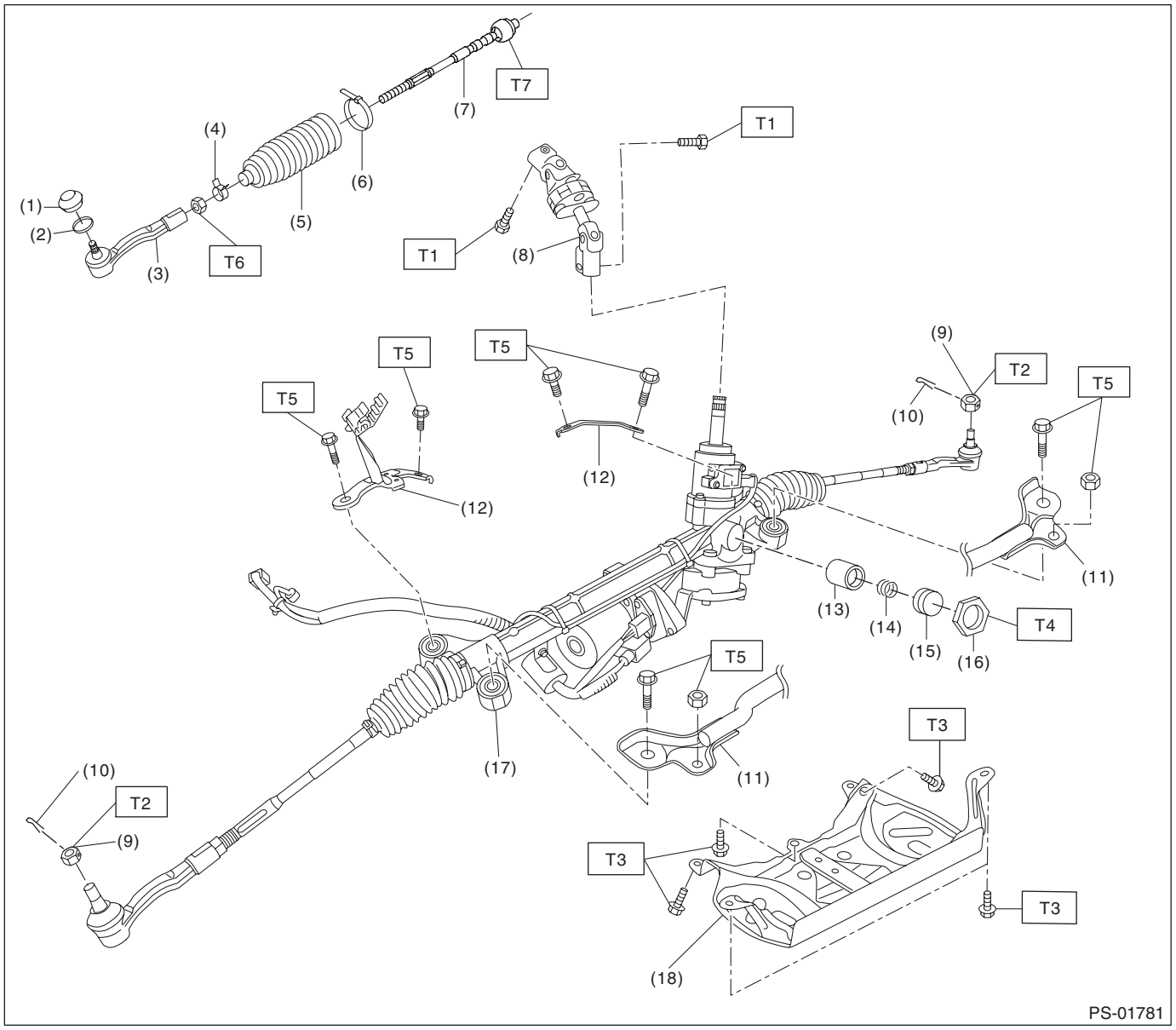

(1)	Dust seal	(10)	Cotter pin
(2)	Clip - boot tie-rod end	(11)	Crossmember support - front
(3)	Tie-rod end	(12)	Stiffener
(4)	Clip - boot tie-rod	(13)	Sleeve
(5)	Boot - steering gearbox	(14)	Spring - gearbox
(6)	Band - boot	(15)	Adjusting screw
(7)	Tie-rod	(16)	Lock nut
(8)	Universal joint ASSY - steering	(17)	Steering gearbox ASSY
(9)	Castle nut	(18)	Guard

Tightening torque: N·m (kgf-m, ft-lb)

T1: 24 (2.4, 17.7)
T2: 27 (2.8, 19.9)
T3: 30 (3.1, 22.1)
T4: 45 (4.6, 33.2)
T5: 60 (6.1, 44.3)
T6: 85 (8.7, 62.7)
T7: 90 (9.2, 66.4)

C: CAUTION

• When performing any work, always wear work clothes, a work cap and protective shoes. Additionally, wear a helmet, protective goggles, etc. if necessary.
• When performing a repair, identify the cause of trouble and avoid unnecessary removal, disassembly and replacement.
• Some vehicle components are extremely hot immediately after driving. Be wary of receiving burns from heated parts.
• Use SUBARU genuine grease, the recommended or equivalent. Do not mix grease etc. of different grades or manufacturers.
• Be sure to tighten fasteners including bolts and nuts to the specified torque.
• Always use the jack-up point when the shop jacks or rigid racks are used to support the vehicle.
• Do not secure a part in a vise directly. Place cushioning materials such as wood blocks, aluminum plates, or waste cloth between the part and the vise.
• When removing, installing or replacing the VDCCM&H/U, VDCCM&H/U bracket, steering wheel or steering angle sensor (steering roll connector), perform “VDC sensor midpoint setting mode” of the VDC. <Ref. to VDC-15, VDC SENSOR MIDPOINT SETTING MODE, ADJUSTMENT, VDC Control Module and Hydraulic Control Unit (VDCCM&H/U).>
• Always remove the universal joint before removing, installing or loosening the following parts to avoid damage to the universal joint. Also, to avoid steering effort from being heavy while driving, make sure that the following parts are firmly engaged before assembling the universal joint and the steering column tilt position is set in neutral.
  – Gearbox assembly
  – Column assembly
  – Cradle
  – Engine mounting bracket
  – Beam COMPL - steering

D: PREPARATION TOOL

1. SPECIAL TOOL

ILLUSTRATION	TOOL NUMBER	DESCRIPTION	REMARKS
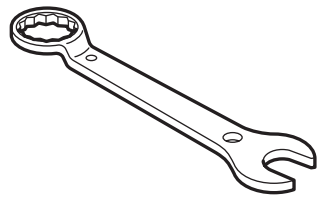 ST34099PA100	34099PA100	SPANNER	Used when measuring the rotational resistance of gearbox assembly.
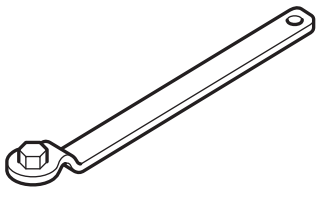 ST34199AJ040	34199AJ040	SPECIAL TOOL EPS	• Used for adjusting the backlash of gearbox. (Adjusting screw side) • Used together with SPECIAL TOOL EPS (34199AJ030).

ILLUSTRATION	TOOL NUMBER	DESCRIPTION	REMARKS
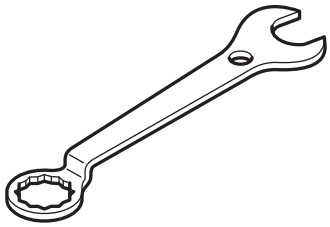 ST34199AJ030	34199AJ030	SPECIAL TOOL EPS	• Used for adjusting the backlash of gearbox. (Lock nut side) • Used together with SPECIAL TOOL EPS (34199AJ040).
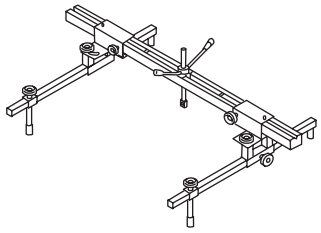 ST99099AJ000	99099AJ000	ENGINE HANGER	• Used for hanging power unit. • Used together with CHAIN BALANCER (99099AJ010).
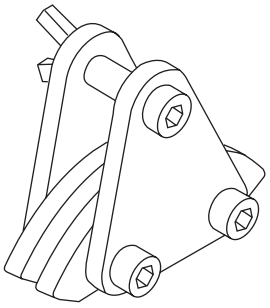 ST99099AJ010	99099AJ010	CHAIN BALANCER	• Used for hanging power unit. • Used together with ENGINE HANGER (99099AJ000).
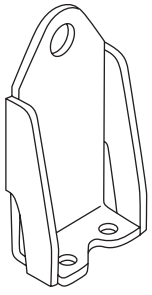 ST18360AA020	18360AA020	HANGER	• Used for hanging power unit. • For H6 model.
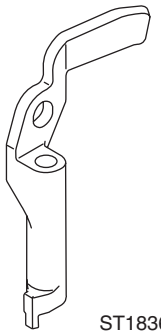 ST18360AA040	18360AA040	HANGER	• Used for removing and installing the cradle. • Used together with BOLT (18363AA050).

ILLUSTRATION	TOOL NUMBER	DESCRIPTION	REMARKS
 ST18363AA050	18363AA050	BOLT	• Used for removing and installing the cradle. • Used together with HANGER (18360AA040).

2. GENERAL TOOL

TOOL NAME	REMARKS
Steering wheel puller	Used for removing the steering wheel.
Circuit tester	Used for measuring resistance, voltage and current.
Chain sling	• Used for hanging power unit. • Diameter: 6 mm (0.24 in) or 6.3 mm (0.25 in) • Length: 0.8 — 1 m (2.6 — 3.3 ft) • Chain inner width: 8.5 mm (0.33 in) or more • Chain external width: 23.5 mm (0.93 in) or less • Load capacity: 1.2 t (2646 lb) or more
Shackle	• Two units used for hanging power unit. • Attached to both end of chain sling and connected to engine hook. • Load capacity: 250 kg (551 lb) or more
Sling belt	• Used to remove and install the cradle. • Width: 35 — 40 mm (1.38 — 1.57 in) • Length: 2 m (6.6 ft) • Load capacity: 1 t (2205 lb) or more
Shackle	• Used to remove and install the cradle. • Load capacity: 500 kg (1103 lb) or more

2. Power Steering System

A: WIRING DIAGRAM

Refer to “Electric Power Steering System” in the wiring diagram. <Ref. to WI-168, WIRING DIAGRAM, Electric Power Steering System.>

B: ELECTRICAL SPECIFICATION

Refer to Control Module I/O Signal of “POWER ASSISTED SYSTEM (POWER STEERING) (DIAGNOSTICS)”. <Ref. to PS(diag)-9, ELECTRICAL SPECIFICATION, Control Module I/O Signal.>

C: INSPECTION

Refer to “POWER ASSISTED SYSTEM (POWER STEERING) (DIAGNOSTICS)”. <Ref. to PS(diag)-2, Basic Diagnostic Procedure.>

D: NOTE

For procedure of each component in the power steering system, refer to the respective section.

- Steering wheel: <Ref. to PS-9, Steering Wheel.>
- Universal joint assembly - steering: <Ref. to PS-14, Universal Joint.>
- Steering column: <Ref. to PS-20, Steering Column.>
- Electric power steering gearbox: <Ref. to PS-26, Electric Power Steering Gearbox.>
- Power steering control module (with built-in gearbox): <Ref. to PS-38, Power Steering Control Module.>

3. Steering Wheel

A: REMOVAL

CAUTION:
Before handling the airbag system components, always refer to "CAUTION" of "General Description" in "AIRBAG SYSTEM". <Ref. to AB-10, CAUTION, General Description.>
1) Disconnect the ground terminal from the battery sensor, and wait for at least 60 seconds before starting work. <Ref. to RC-4, BATTERY, NOTE, Repair Contents.>
2) Set the tire to the straight-ahead position.
3) Remove the driver's airbag module. <Ref. to AB-32, REMOVAL, Driver's Airbag Module.>
4) Remove the steering wheel.

CAUTION:
- **Always use the steering wheel puller for removal to avoid deforming the steering wheel.**
- **If the steering wheel has been removed, make sure that the steering roll connector is not turned from the original position.**

Preparation tool:
Steering wheel puller
(1) Disconnect the connector and remove the nut.
(2) Put an alignment mark (a) using a ruler as shown in the figure, and remove the steering wheel.

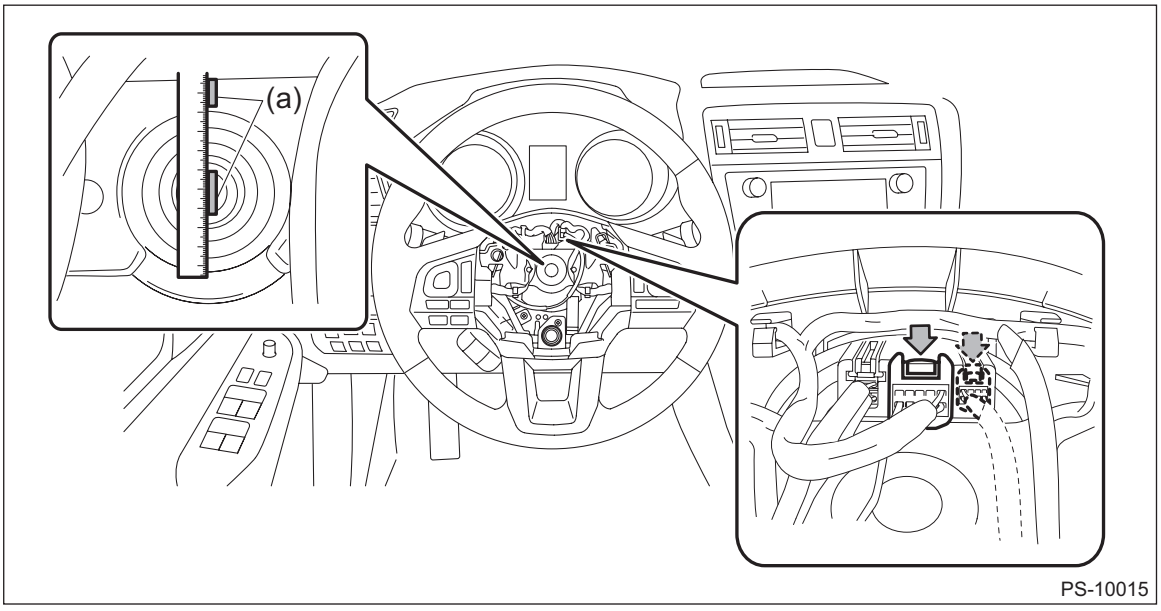

B: INSTALLATION

CAUTION:
• Before handling the airbag system components, refer to "CAUTION" of "General Description" in "AIRBAG SYSTEM". <Ref. to AB-10, CAUTION, General Description.>
• If the steering wheel has been removed, make sure that the steering roll connector is not turned from the original position.
• If the steering wheel and steering angle sensor are removed, perform "VSC(VDC) Centering Mode" of the VDC. <Ref. to VDC-15, VDC SENSOR MIDPOINT SETTING MODE, ADJUSTMENT, VDC Control Module and Hydraulic Control Unit (VDCCM&H/U).>
1) Align the center position of the roll connector. <Ref. to AB-63, ADJUSTMENT, Roll Connector.>
2) Install the steering wheel.

Tightening torque:
Steering wheel: 39 N·m (4.0 kgf-m, 28.8 ft-lb)

Clearance:
Between cover assembly - column and steering wheel: 4 — 6 mm (0.16 — 0.24 in)
3) Install the driver's airbag module. <Ref. to AB-33, INSTALLATION, Driver's Airbag Module.>
4) Connect the ground terminal to battery sensor. <Ref. to RC-4, BATTERY, NOTE, Repair Contents.>

C: DISASSEMBLY

1) Remove the screw, disconnect the connector and remove the paddle shift switch. (Model with paddle shift)

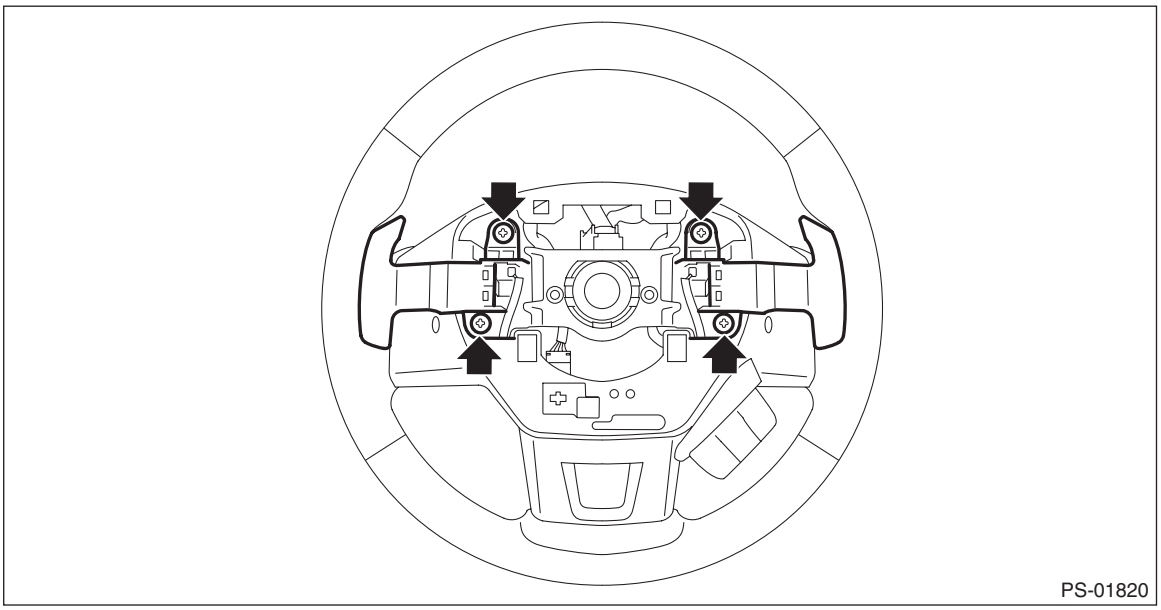

2) Release the claws and remove the screws, then detach the cover - spoke.

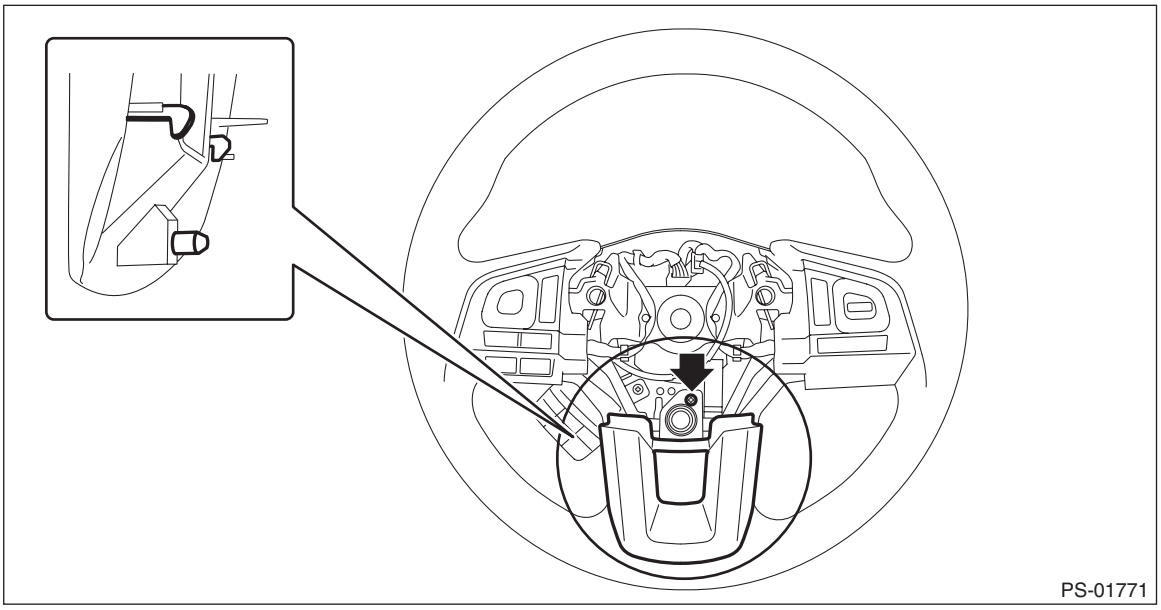

3) Remove connector and screw, and remove the cover - steering wheel LWR.

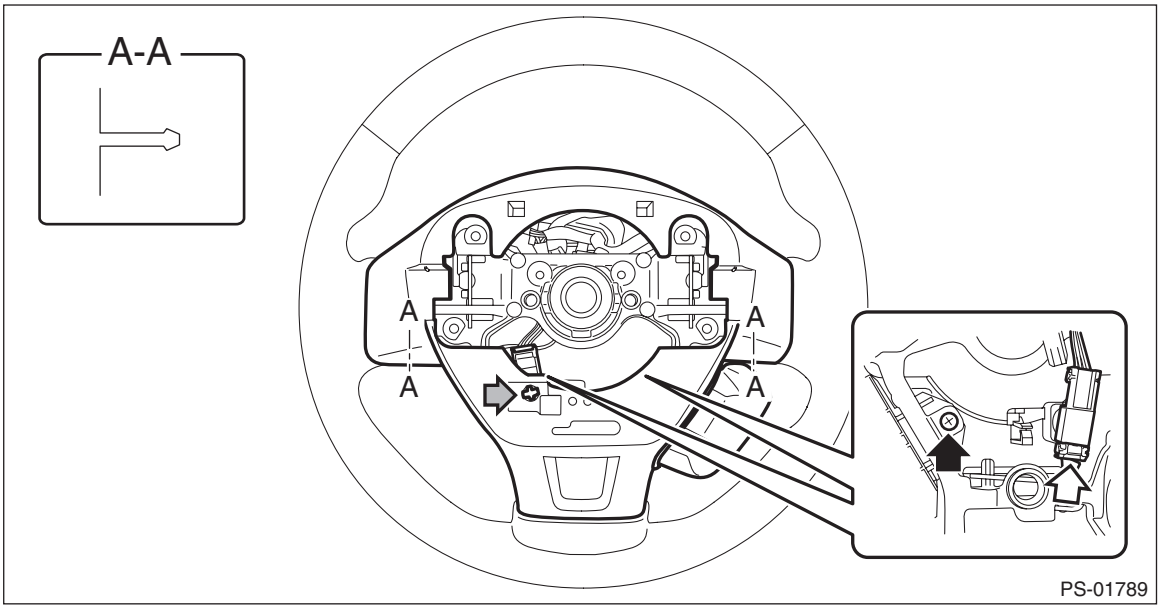

4) Release the claws and remove the screws, then detach the satellite switch.

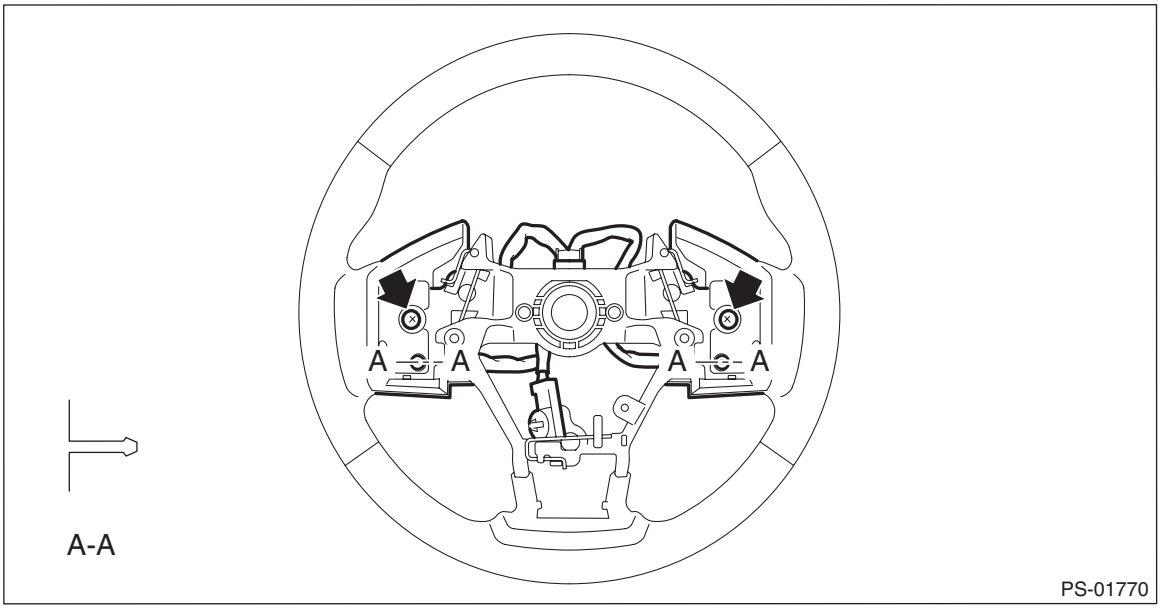

5) Release the claws, and then remove the MID switch.

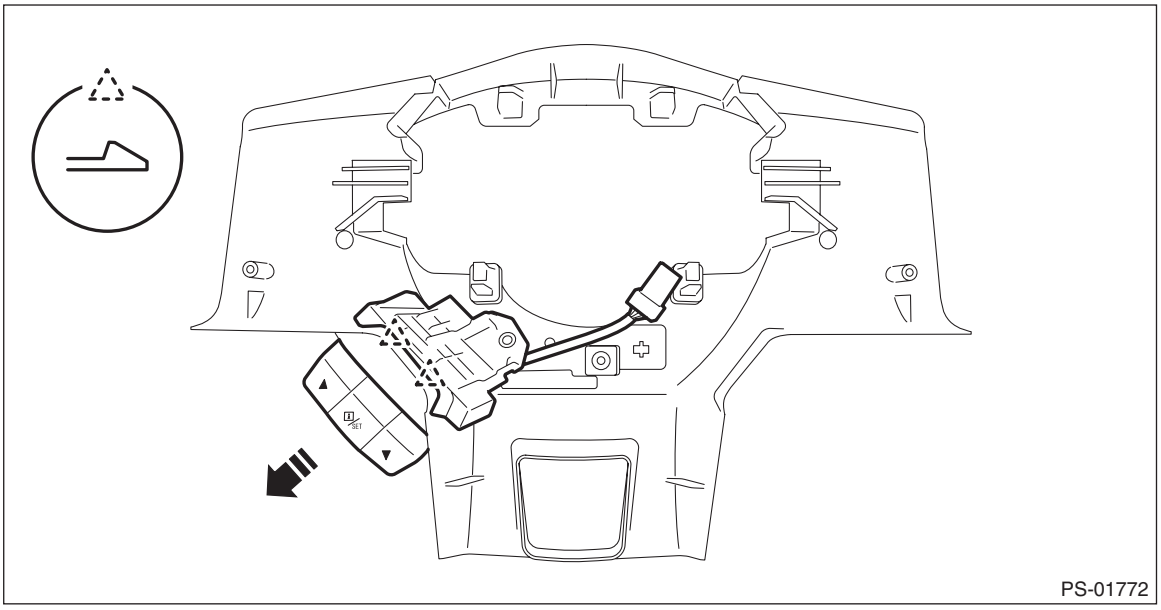

D: ASSEMBLY

CAUTION:
Securely install the switch. Improper insertion of the pin or claw of the switch may cause improper installation.

1) Install the MID switch.
2) Install the satellite switch.
3) Install the cover - steering wheel LWR.
4) Install the paddle shift switch. (Model with paddle shift)

E: INSPECTION

1. PADDLE SHIFT SWITCH

1) Measure the resistance between connector terminals.

Preparation tool:
Circuit tester

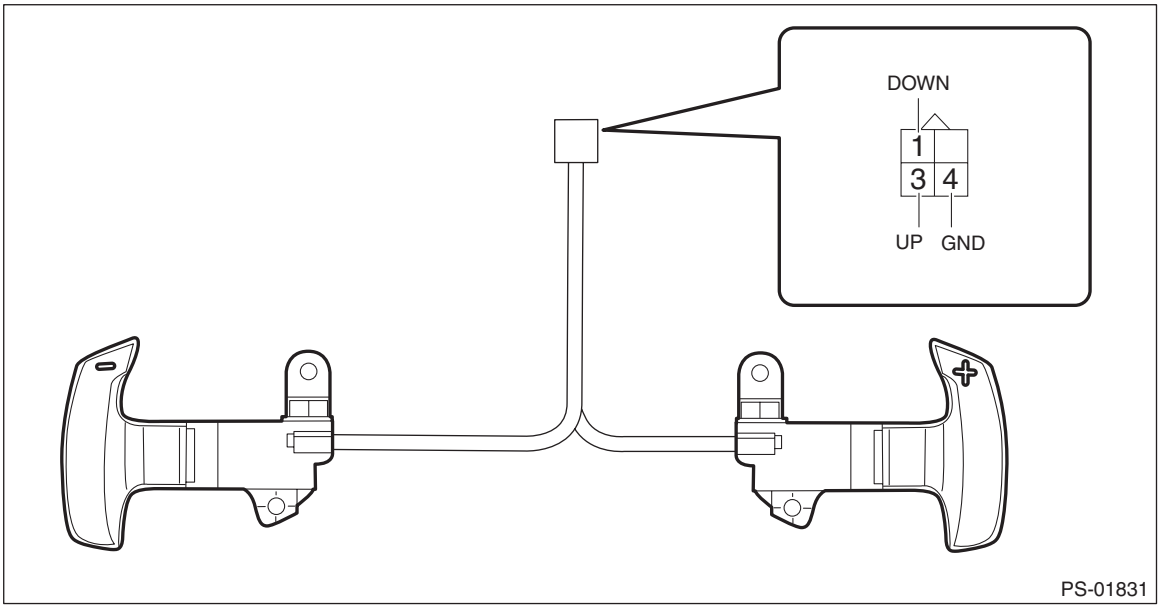

Terminal No.	Inspection conditions	Standard
3 — 4	Operate the + side of paddle shift assembly and hold it.	Less than 10 Ω
1 — 4	Operate the – side of paddle shift assembly and hold it.	Less than 10 Ω
1 — 4 3 — 4	Do not operate the paddle shift assembly.	Is the resistance 1 MΩ or more?

2) Replace the paddle shift switch if the inspection result is not within the standard value.

2. SATELLITE SWITCH ASSEMBLY

Refer to “Steering Satellite Switch” of “ENTERTAINMENT” section. <Ref. to ET-44, SATELLITE SWITCH ASSEMBLY, INSPECTION, Switches and Harness.>

3. SWITCH ASSEMBLY - STEERING

Refer to “Steering Switch” of “INSTRUMENTATION/DRIVER INFO” section. <Ref. to IDI-21, INSPECTION, Switches and Harness.>

4. Universal Joint

A: REMOVAL

1) Adjust the tilt position of the steering column to the neutral position.

CAUTION:
Always place the tilt lever to the lock position after the steering column is adjusted.

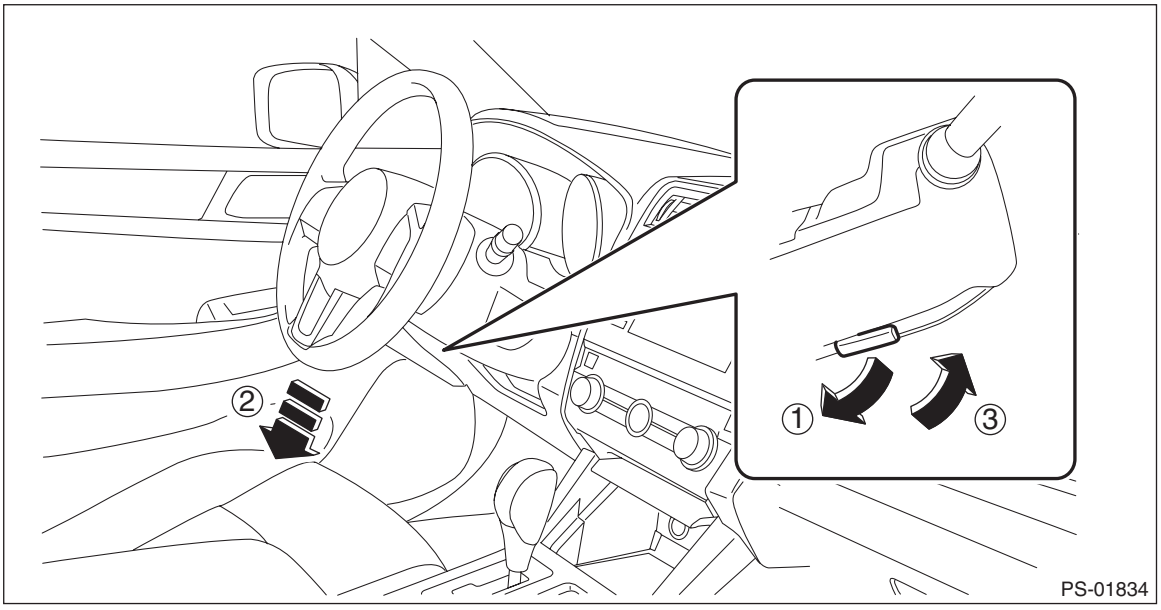

2) Remove the under cover - front. <Ref. to EI-28, REMOVAL, Front Under Cover.>
3) Remove the front exhaust pipe. (H6 model only) <Ref. to EX(H6DO)-6, REMOVAL, Front Exhaust Pipe.>
4) Remove the universal joint assembly - steering.
   (1) Place alignment marks on the universal joint assembly - steering.

NOTE:
Place alignment marks on the following positions.
- Between the column assembly - steering and the universal joint assembly - steering
- Between the steering gearbox assembly and the universal joint assembly - steering

   (2) Remove the bolt, and remove the universal joint assembly - steering.

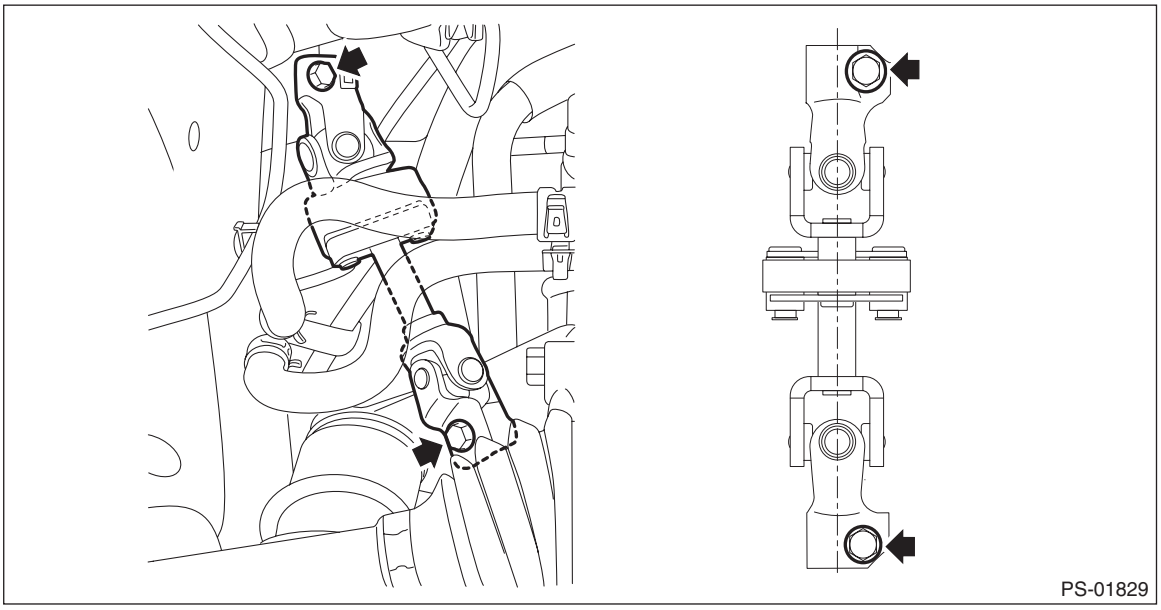

5) Set the driver's seat to the neutral position.

6) Prevent the steering wheel from turning using the seat belt.

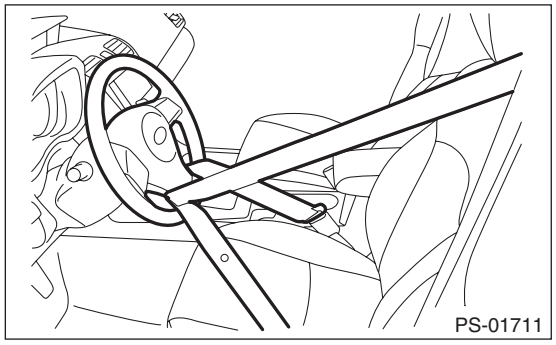

B: INSTALLATION

1) Before installation, check the universal joint assembly - steering. <Ref. to PS-18, INSPECTION, Universal Joint.>
2) Adjust the tilt position of the steering column to the neutral position.

CAUTION:
Always place the tilt lever to the lock position after the steering column is adjusted.

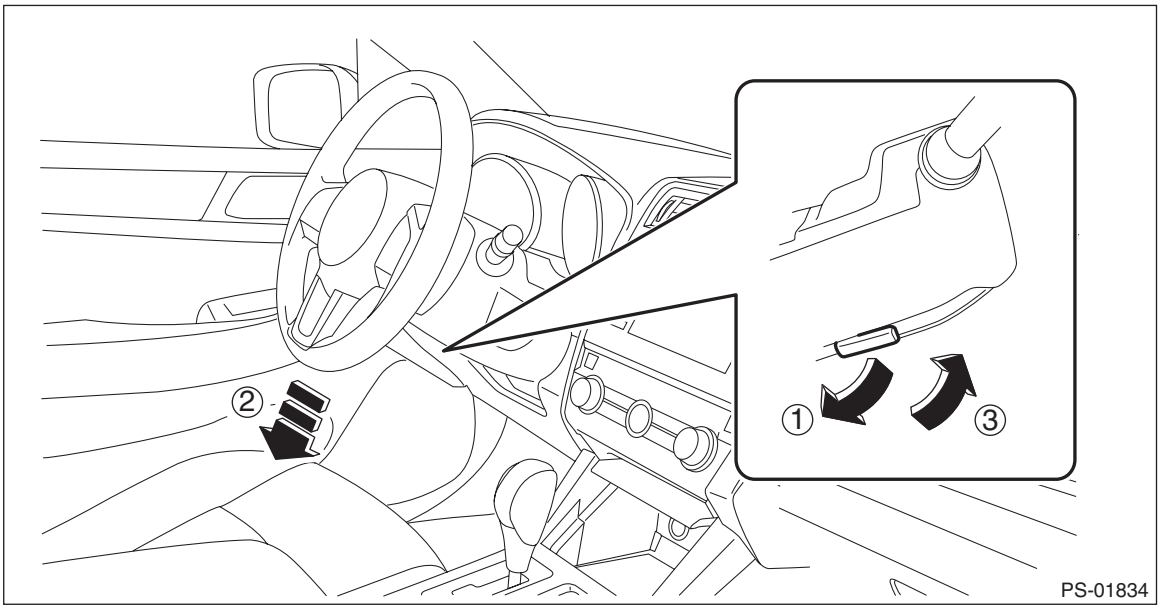

3) Unfasten the seat belt and make the steering wheel turn freely.

4) Install the universal joint assembly - steering to the column shaft.

CAUTION:
• Be sure to align the protrusion section (a) of the column shaft side with the cutout (a) of the serration. If another cutout portions (d) are used for alignment, the bolt of the universal joint assembly - steering cannot be assembled.
• Be sure to follow the tightening order and tightening torque of the universal joint assembly - steering to avoid the steering effort from becoming heavy. After confirming that the steering column position is in the neutral position, tighten the universal joint assembly - steering.
• Always place the tilt lever to the lock position after the steering column is adjusted.

(1) Match the alignment marks that have been marked when removing with the column shaft (c) and the cutout portion (a) at the serrations of the yoke (b).
(2) Connect the universal joint assembly - steering with the column shaft.

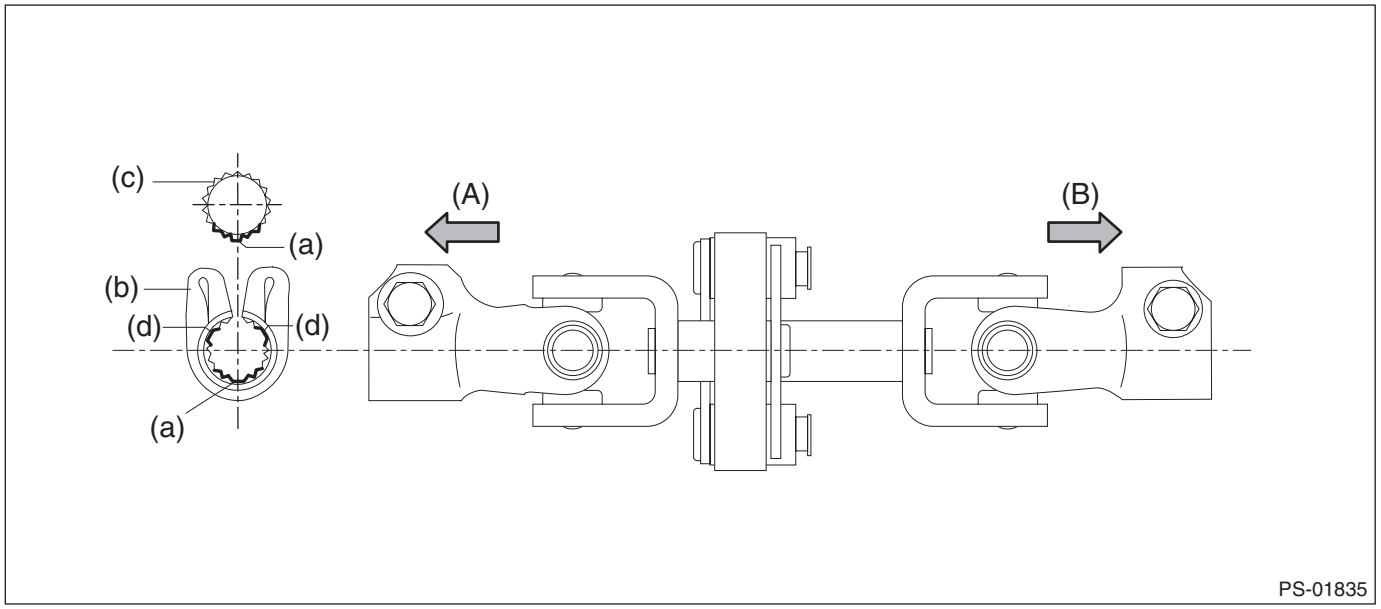

(A) Column shaft side (B) Gearbox side

(3) Install the universal joint assembly - steering to the serrations of the gearbox assembly by matching the alignment marks that have been marked when removing and the cutout portion of the guide (a).

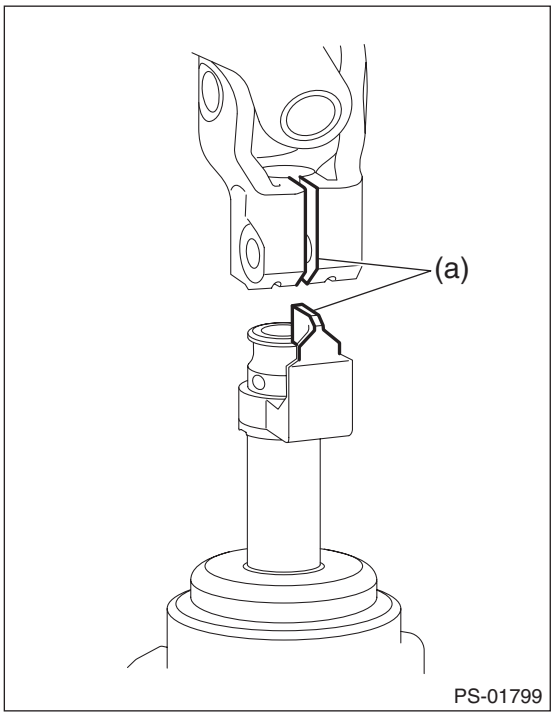

(4) Tighten the bolts on the gearbox side first, and then the column shaft side.

Tightening torque:
24 N·m (2.4 kgf-m, 17.7 ft-lb)

Clearance:
Universal joint assembly - steering coupling to adjacent parts: 15 mm (0.59 in) or more

5) Install the front exhaust pipe. (H6 model only) <Ref. to EX(H6DO)-8, INSTALLATION, Front Exhaust Pipe.>

6) Install the under cover - front. <Ref. to EI-28, INSTALLATION, Front Under Cover.>

CAUTION:
Install the under cover - front so that the front end of the under cover (b) comes inside the bumper face - front (a).

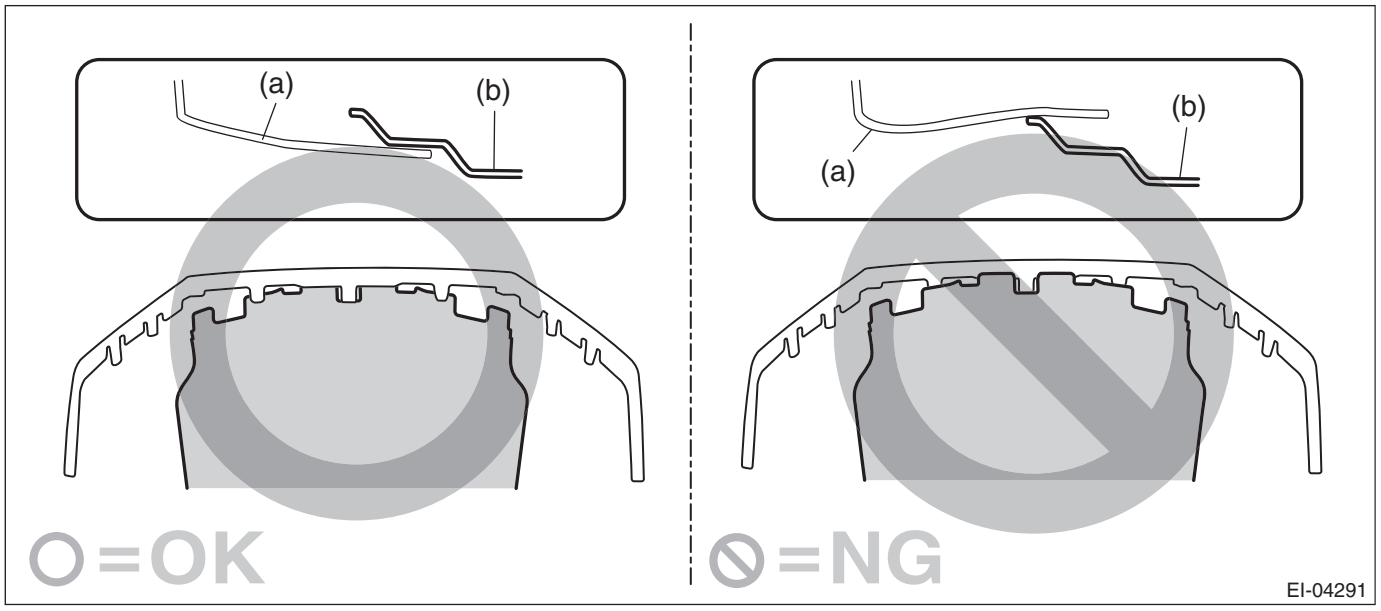

C: INSPECTION

Check for wear, damage or any other faults.
1) Check the universal joint assembly - steering for excessive looseness.

Service limit:
Play of the universal joint assembly - steering: 0 mm (0 in)

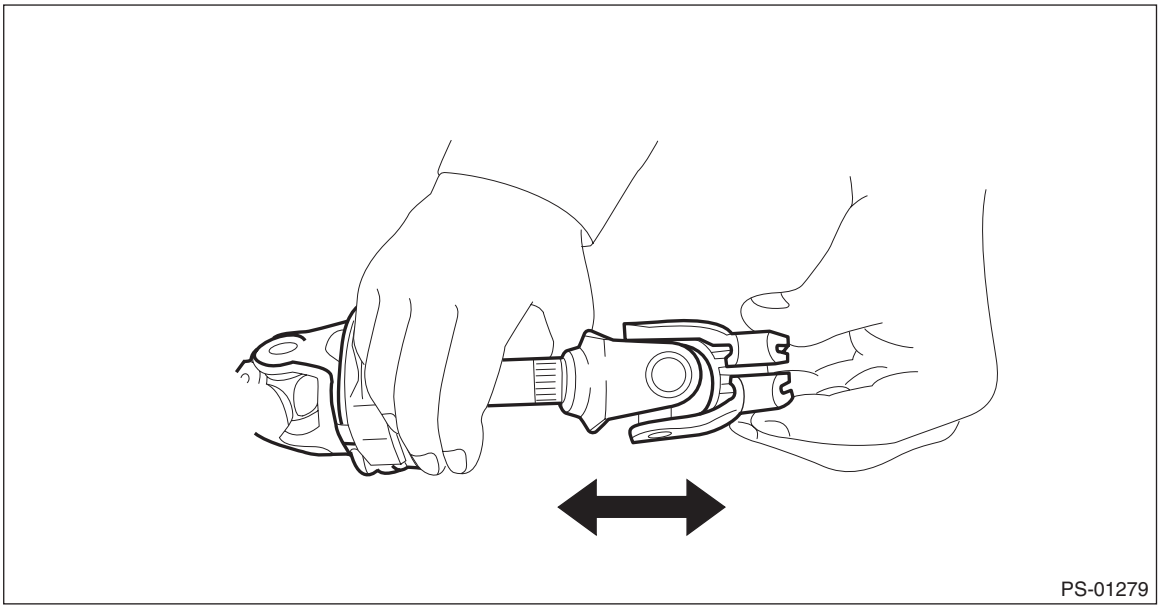

2) Measure the swing load of the universal joint assembly - steering.
(1) Place the universal joint assembly - steering between wooden blocks and fix it on a vise.
(2) With the yoke (a) of gearbox side facing up, measure the swing load in two directions.

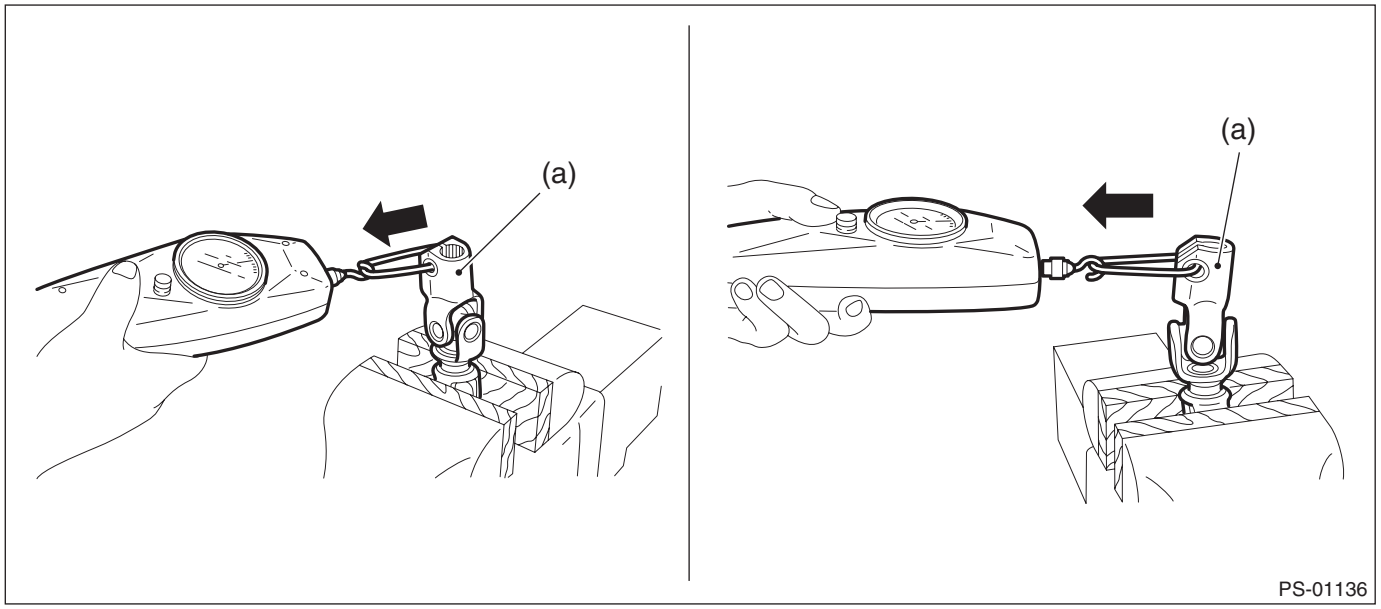

Service limit:
Maximum load:
Except for OUTBACK: 4.5 N (0.46 kgf, 1.01 lbf) or less
OUTBACK: 2.8 N (0.29 kgf, 0.63 lbf) or less

(3) With the yoke (b) of the column assembly - steering side facing up, measure the swing load in two directions.

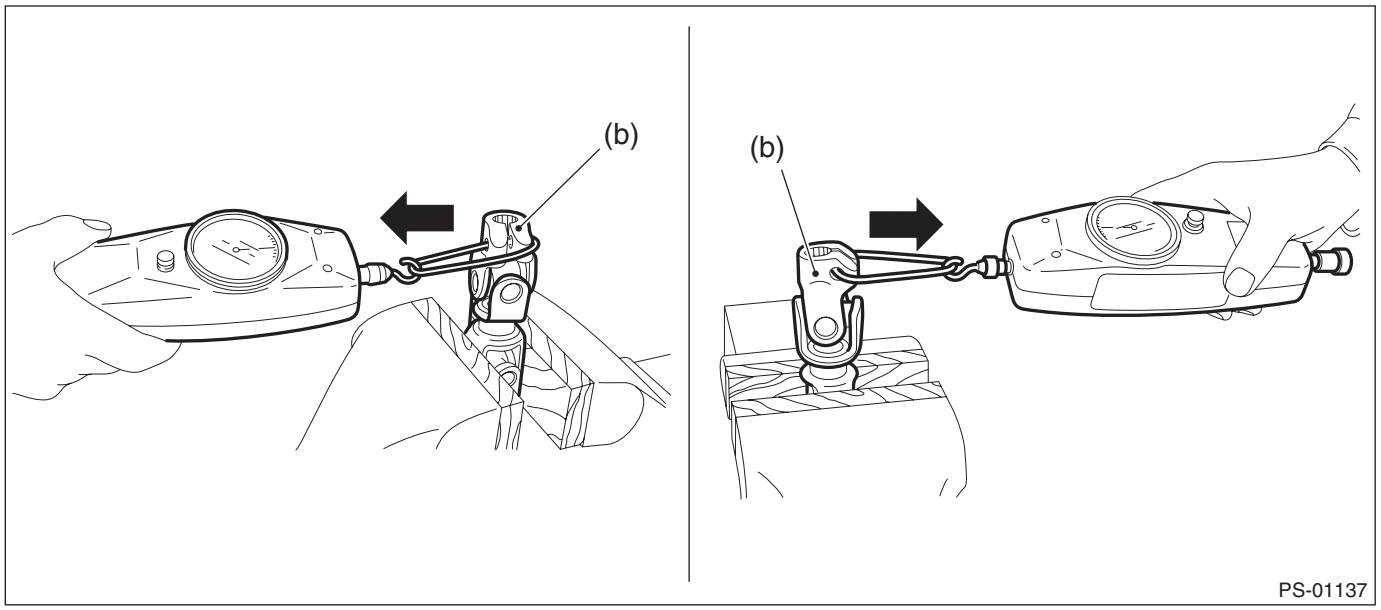

Service limit:

Maximum load: 5.4 N (0.55 kgf, 1.21 lbf) or less

(4) Replace as necessary, if it is found defective.

5. Steering Column

A: REMOVAL

CAUTION:
Before handling the airbag system components, always refer to "CAUTION" of "General Description" in "AIRBAG SYSTEM". <Ref. to AB-10, CAUTION, General Description.>
1) Adjust the tilt position of the steering column to the neutral position and the telescopic position to the longest position.

CAUTION:
Always place the tilt lever to the lock position after the steering column is adjusted.

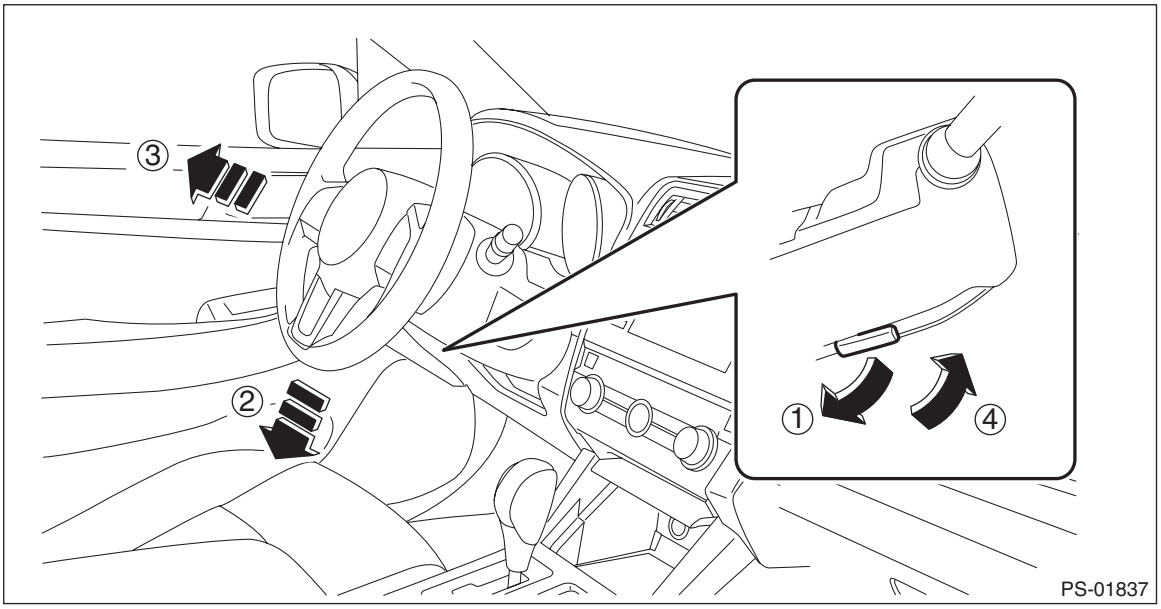

2) Disconnect the ground terminal from the battery sensor, and wait for at least 60 seconds before starting work. <Ref. to RC-4, BATTERY, NOTE, Repair Contents.>
3) Remove the cover assembly - instrument panel LWR driver. <Ref. to EI-75, REMOVAL, Instrument Panel Lower Cover.>
4) Remove the panel - knee guard.

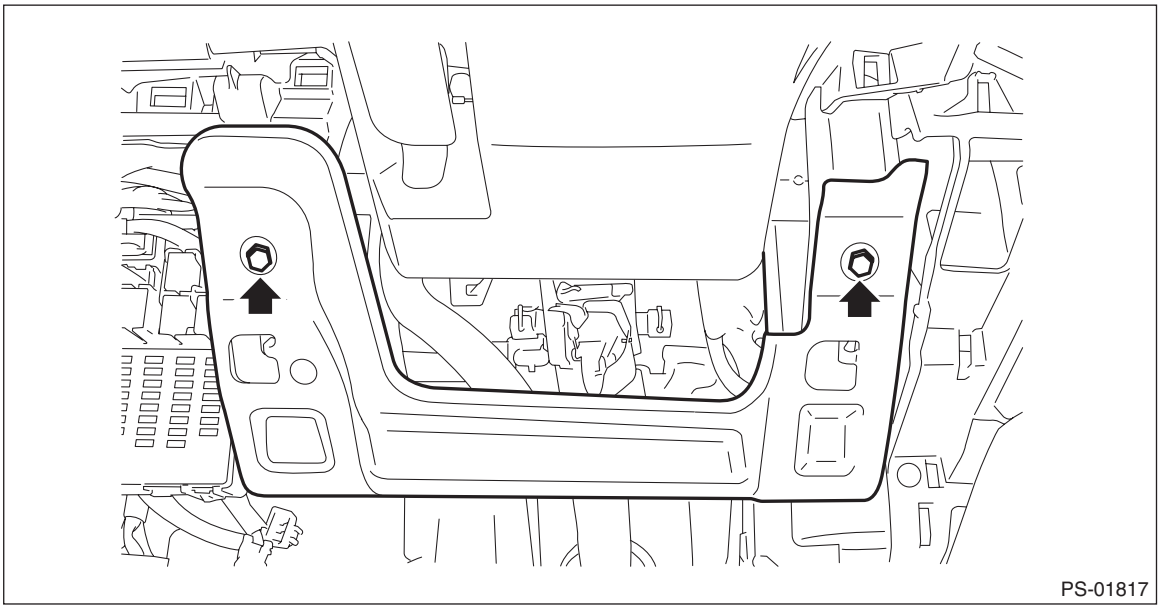

5) Remove the driver's airbag module. <Ref. to AB-32, REMOVAL, Driver's Airbag Module.>
6) Remove the steering wheel. <Ref. to PS-9, REMOVAL, Steering Wheel.>

7) Remove the cover assembly - column.
(1) Remove the clips, and remove the cover - column (a).
(2) Remove the screws.
(3) Release the claws, and remove the cover assembly - column UPR (b) and the cover assembly - column LWR (c).

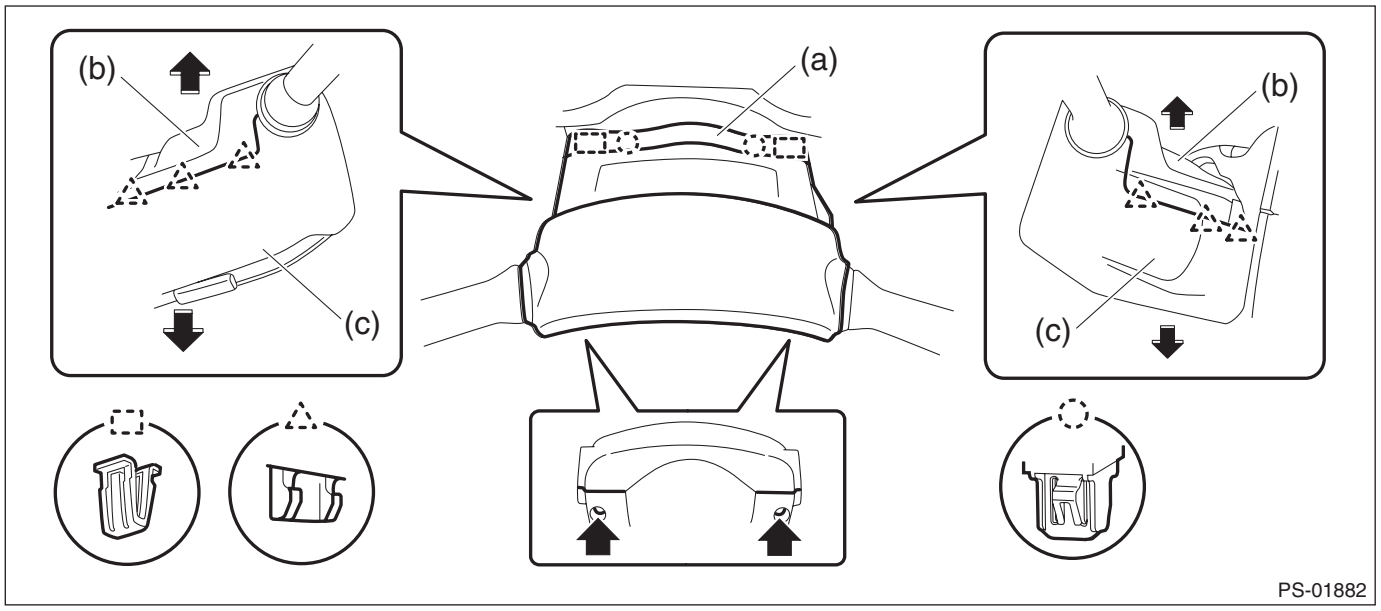

8) Remove the switch assembly - combination.
(1) Disconnect the connector, and loosen the clamp to release the claws.
(2) Pull out the switch assembly - combination from the column assembly - steering.

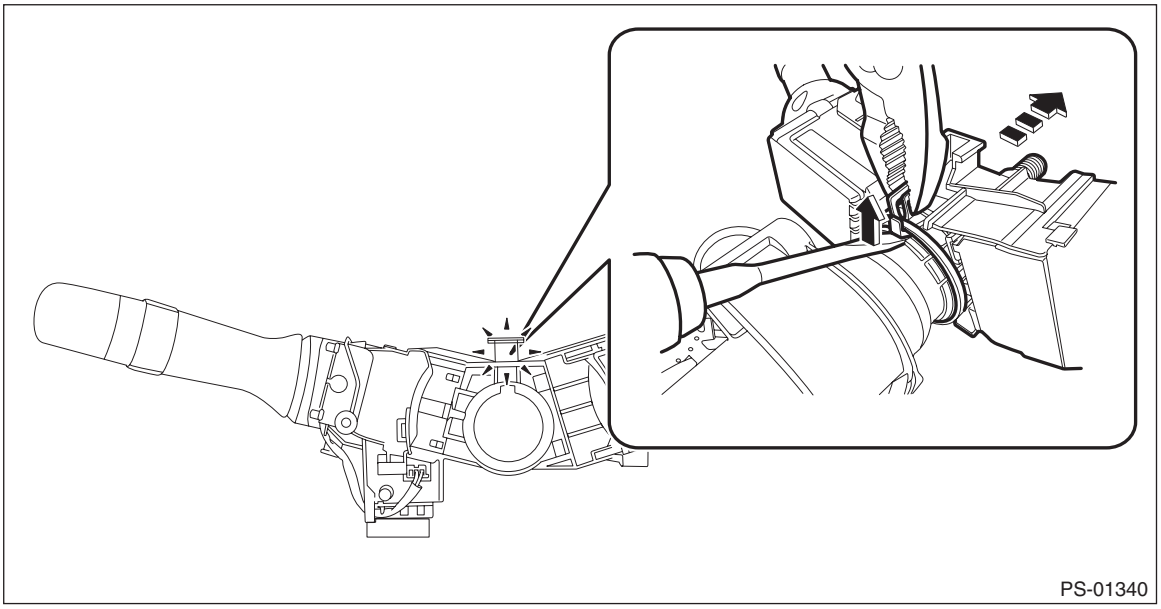

9) Remove all connectors from the column assembly - steering.
10) Remove the universal joint assembly - steering. <Ref. to PS-14, REMOVAL, Universal Joint.>

CAUTION:
To prevent damage to the universal joint assembly - steering and improper steering effort, make sure to remove the universal joint assembly - steering.

11) Remove the bolt under the beam COMPL - steering securing the column assembly - steering.

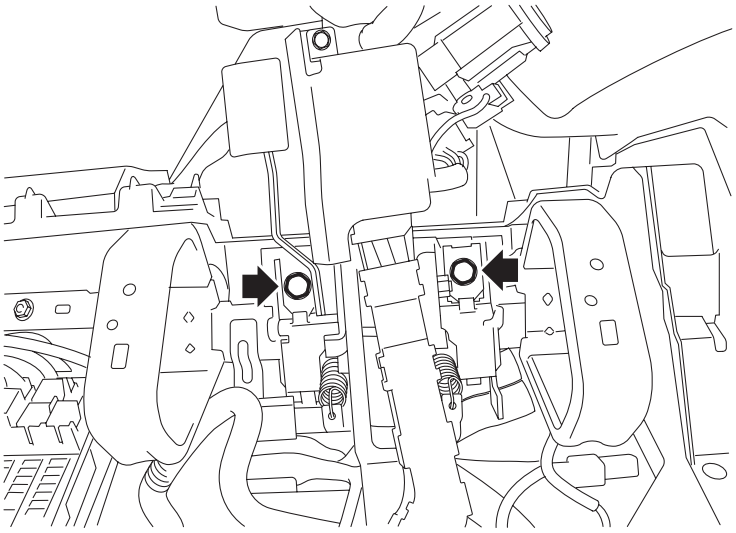
PS-01798

12) Pull out the column assembly - steering from the hole on toe board.

CAUTION:
Do not loosen the tilt lever when the column assembly - steering is not secured to the vehicle.
13) Remove the ignition key lock. <Ref. to SL-68, REPLACEMENT, Ignition Key Lock.>

B: INSTALLATION

CAUTION:
• When removing, installing or replacing the VDCCM&H/U, VDCCM&H/U bracket, steering wheel or steering angle sensor (steering roll connector), perform "VSC(VDC) Centering Mode" of the VDC. <Ref. to VDC-15, VDC SENSOR MIDPOINT SETTING MODE, ADJUSTMENT, VDC Control Module and Hydraulic Control Unit (VDCCM&H/U).>
• Before handling the airbag system components, always refer to "CAUTION" of "General Description" in "AIRBAG SYSTEM". <Ref. to AB-10, CAUTION, General Description.>
1) Install the bushing (a) to the toe board from the passenger compartment side.

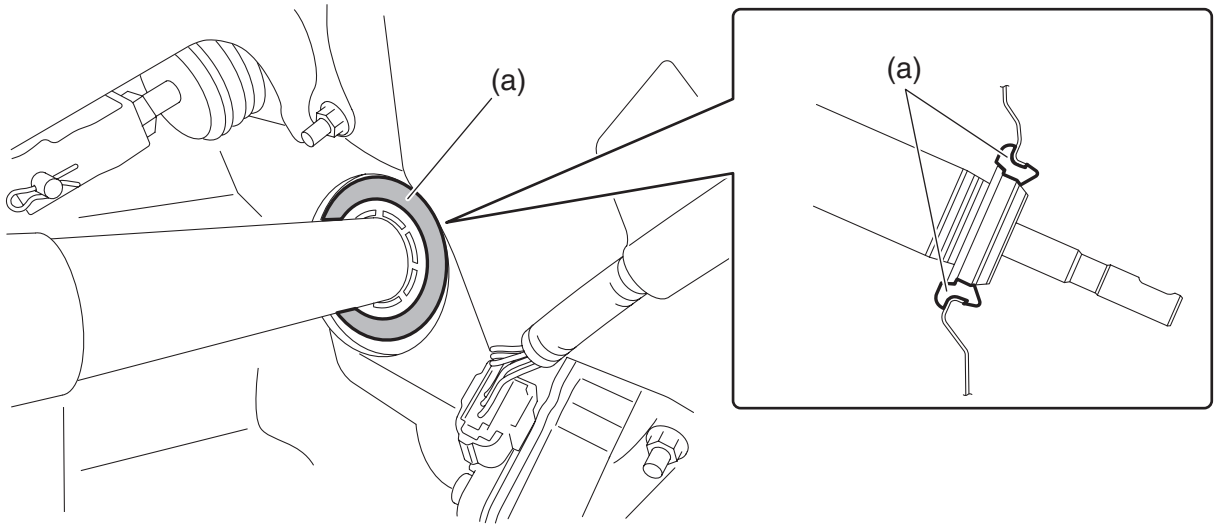

PS-01795

2) Insert the end of the column assembly - steering into the toe board bushing.
3) Tighten the column assembly - steering installation bolt located under the beam COMPL - steering with the tilt lever fixed.

Tightening torque:
20 N·m (2.0 kgf-m, 14.8 ft-lb)
4) Install the ignition key lock. <Ref. to SL-68, REPLACEMENT, Ignition Key Lock.>
5) Install the switch assembly - combination.
6) Connect all the connectors under the instrument panel.
7) Install the universal joint assembly - steering. <Ref. to PS-15, INSTALLATION, Universal Joint.>

CAUTION:
• Always install the universal joint assembly - steering after installing the steering column to avoid damage to the universal joint assembly - steering.
• Be sure to follow the tightening order and tightening torque of the universal joint assembly - steering to avoid the steering effort from becoming heavy. After confirming that the steering column position is in the neutral position, tighten the universal joint assembly - steering.
• Always place the tilt lever to the lock position after the steering column is adjusted.
8) Install the panel - knee guard.

Tightening torque:
7 N·m (0.7 kgf-m, 5.2 ft-lb)
9) Install the cover assembly - instrument panel LWR driver.
10) Install the cover assembly - column.
11) Align the center position of the steering roll connector. <Ref. to AB-63, ADJUSTMENT, Roll Connector.>
12) Install the steering wheel.

Tightening torque:
Steering wheel: 39 N·m (4.0 kgf-m, 28.8 ft-lb)

Clearance:
Between cover assembly - column and steering wheel: 4 — 6 mm (0.16 — 0.24 in)
13) Install the driver's airbag module. <Ref. to AB-33, INSTALLATION, Driver's Airbag Module.>
14) Connect the ground terminal to battery sensor. <Ref. to RC-4, BATTERY, NOTE, Repair Contents.>

C: INSPECTION

1. UNIT INSPECTION

Check the following items, and if there is anything out of standard value, it is considered to be damaged. If so, replace it with a new part.

- Measure the whole length of the column assembly - steering.

Standard: Overall length L

Tilt (measure at the neutral position) and telescopic column (measure at the longest position)

$857.1^{+1.5}_{-1.5}$ mm ($33.74^{+0.059}_{-0.059}$ in)

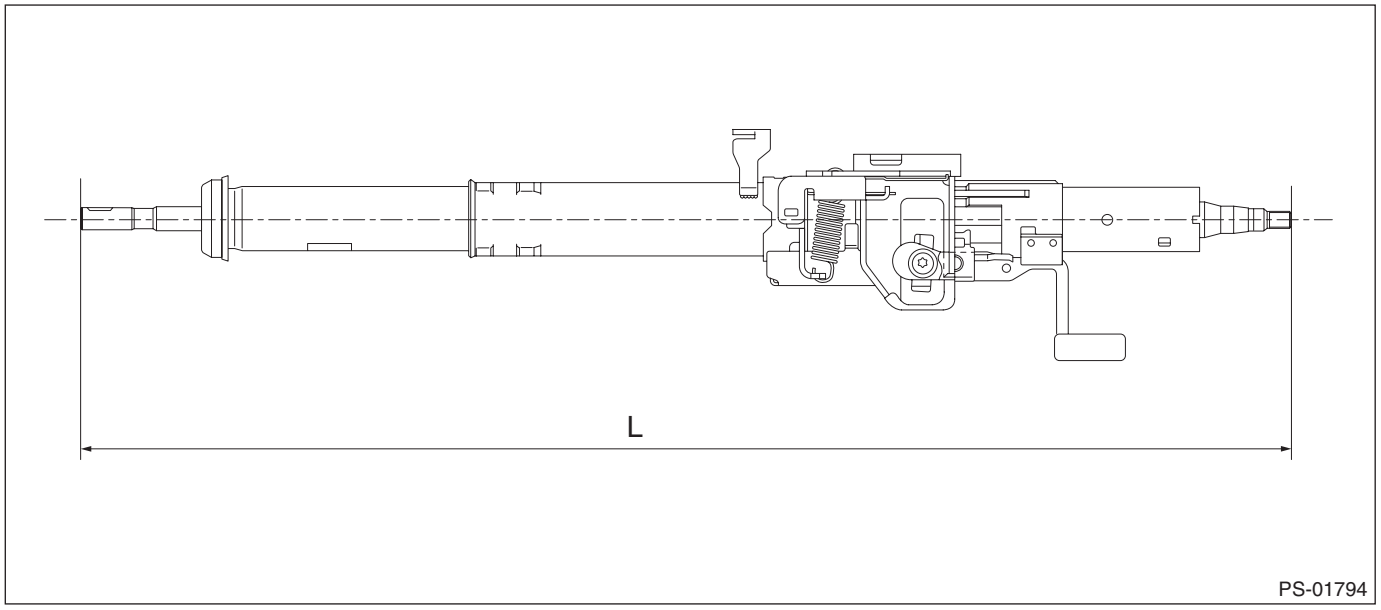

- Check the steering wheel deflection in axial and vertical directions.

Specification:

Axial deflection A (deflection of steering wheel)

Less than 6 mm (0.24 in)

Vertical deflection L (runout of steering wheel)

Less than 17 mm (0.68 in)

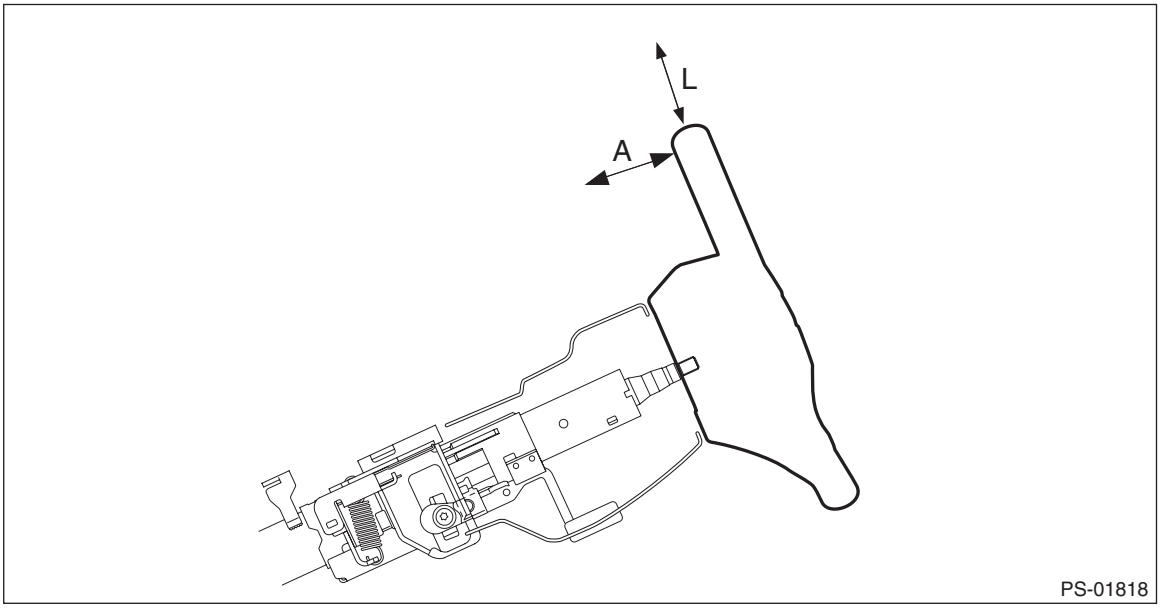

2. INSPECTION OF AIRBAG SYSTEM

Refer to “AIRBAG SYSTEM” section for airbag inspection procedure. <Ref. to AB-33, INSTALLATION, Driver’s Airbag Module.>

6. Electric Power Steering Gearbox

A: REMOVAL

CAUTION:
• The power steering control module continues to operate after the engine stops and calculates the temperature in the control module. Therefore, before starting service of the power steering system which requires disconnection of the connector, stop the engine and allow approx. 30 minutes until the control module becomes cold.
• Be careful not to let any foreign matter (dust, water, oil, etc.) enter into the power steering control module connector when removing or installing. If a foreign matter enters, completely remove it.

1) Disconnect the ground terminal from battery sensor. <Ref. to RC-4, BATTERY, NOTE, Repair Contents.>
2) Remove the universal joint assembly - steering. <Ref. to PS-14, REMOVAL, Universal Joint.>
3) Remove the cradle. <Ref. to FS-21, REMOVAL, Cradle.>
4) Remove the bolts, and remove left and right main mounting brackets.

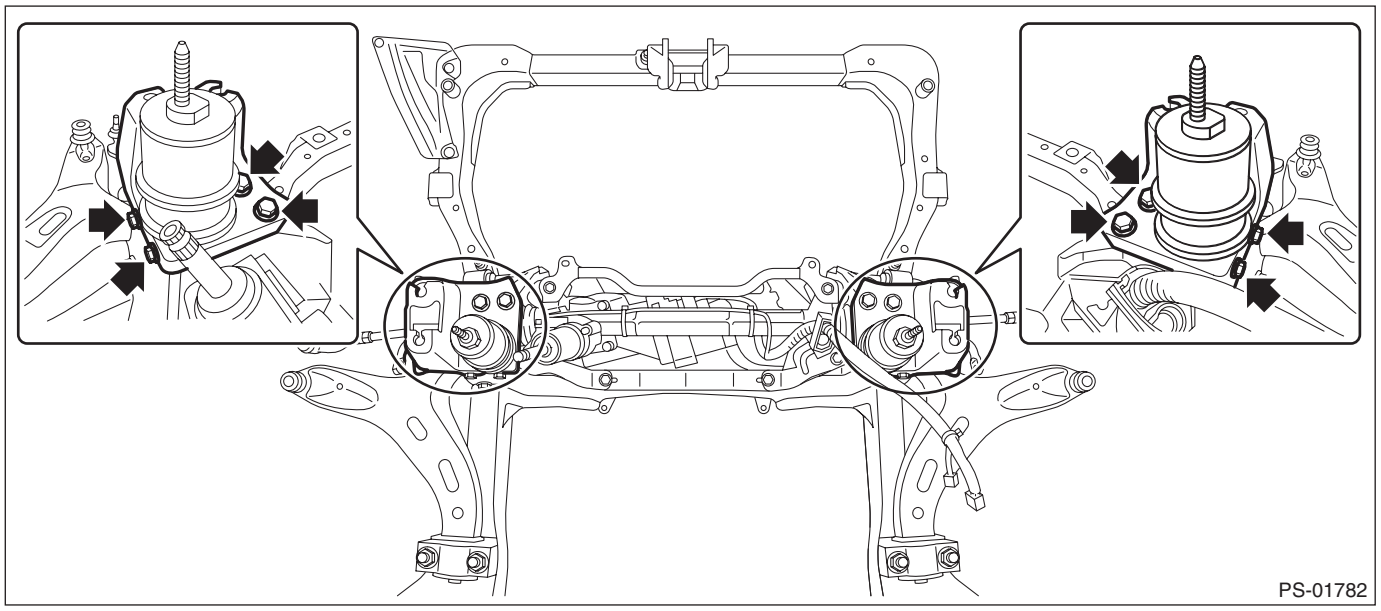
PS-01782

5) Remove the clips and bolts, then remove the steering gearbox.

CAUTION:
Be careful not to damage the steering boot.

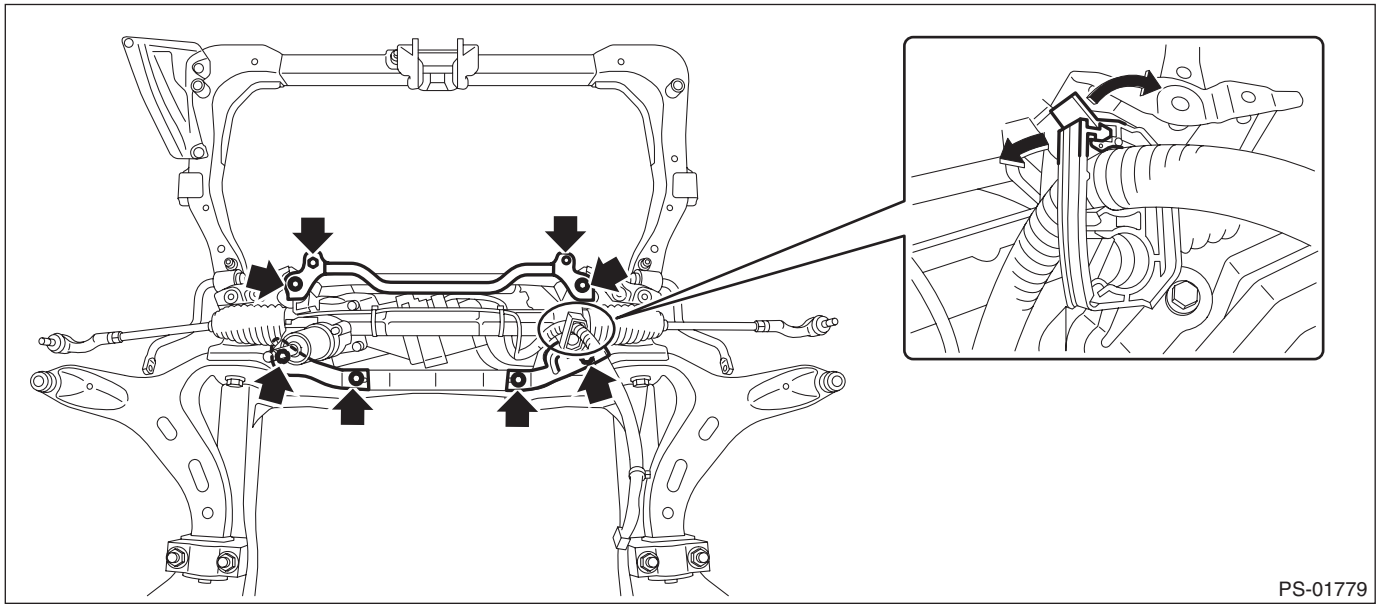
PS-01779

B: INSTALLATION

1) Before installation, check the steering gearbox. <Ref. to PS-32, INSPECTION, Electric Power Steering Gearbox.>
2) Install the steering gearbox assembly by tightening the bolts through the stiffener to the specified torque.

CAUTION:
Be careful not to damage the steering gearbox assembly boot.

Tightening torque:
60 N·m (6.1 kgf-m, 44.3 ft-lb)

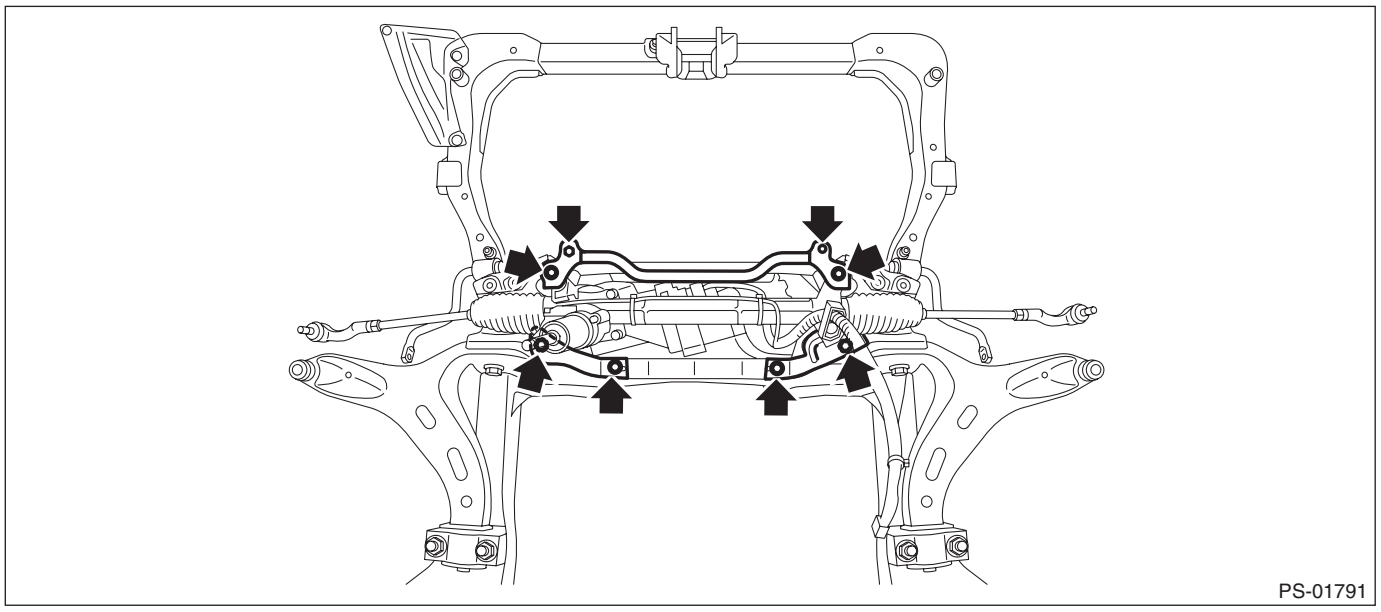

3) Install the main mounting bracket in the numerical order.
(1) Temporarily tighten the main mounting bracket in the numerical order.

Tightening torque:
10 N·m (1.0 kgf-m, 7.4 ft-lb)
(2) Tighten the main mounting bracket in the numerical order.

Tightening torque:
60 N·m (6.1 kgf-m, 44.3 ft-lb)

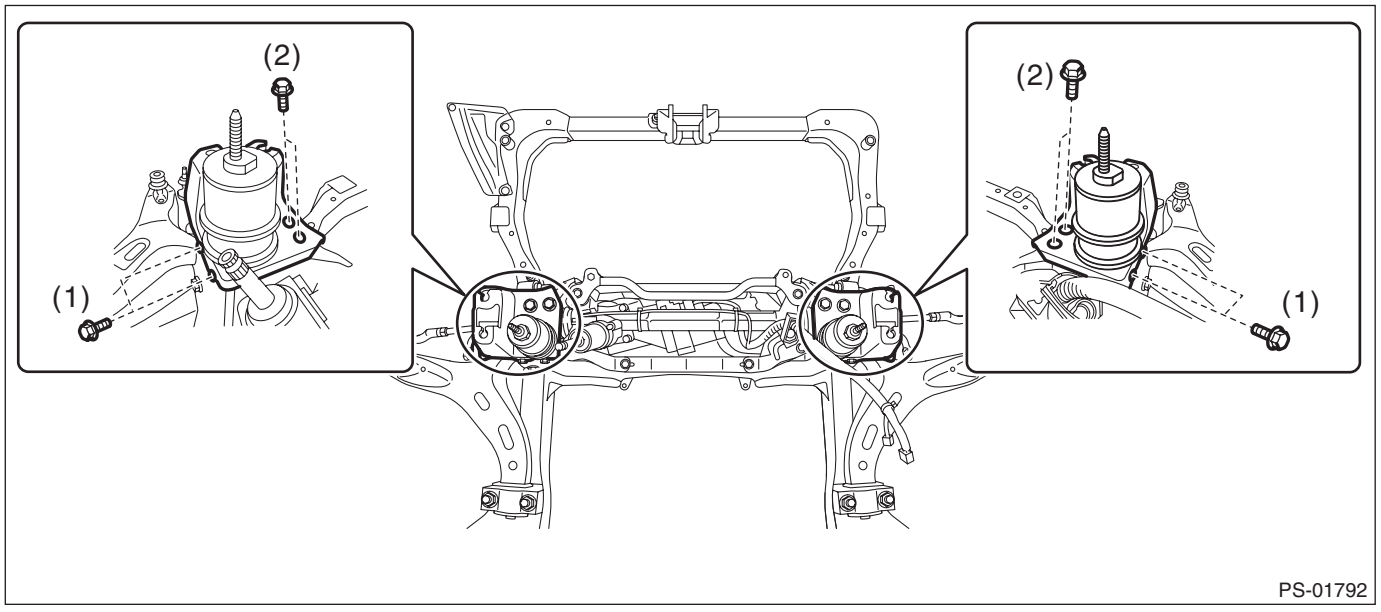

4) Install the cradle. <Ref. to FS-32, INSTALLATION, Cradle.>

5) Install the universal joint assembly - steering. <Ref. to PS-15, INSTALLATION, Universal Joint.>

CAUTION:
• Install the cradle first before tightening the universal joint assembly - steering to avoid the steering effort from becoming heavy.
• Always install the universal joint assembly - steering after installing the steering column to avoid damage to the universal joint assembly - steering.
• Be sure to follow the tightening order and tightening torque of the universal joint assembly - steering to avoid the steering effort from becoming heavy. After confirming that the steering column position is in the neutral position, tighten the universal joint assembly - steering.
• Always place the tilt lever to the lock position after the steering column is adjusted.

6) Connect the ground terminal to battery sensor. <Ref. to RC-4, BATTERY, NOTE, Repair Contents.>
7) After adjusting toe-in and steering angle, tighten the lock nut on tie-rod end.

CAUTION:
When the wheel alignment has been adjusted, perform the following adjustment.
– Lane keep assist learning value clear (model with EyeSight): <Ref. to ES(diag)-49, OPERATION, Clear Active Lane Keep System Learning Value.>
– VDC sensor midpoint setting mode: <Ref. to VDC-15, ADJUSTMENT, VDC Control Module and Hydraulic Control Unit (VDCCM&H/U).>

Tightening torque:
85 N·m (8.7 kgf-m, 62.7 ft-lb)

NOTE:
When adjusting toe-in, hold the boot - steering gearbox as shown to prevent it from being rotated or twisted. If it becomes twisted, straighten it.

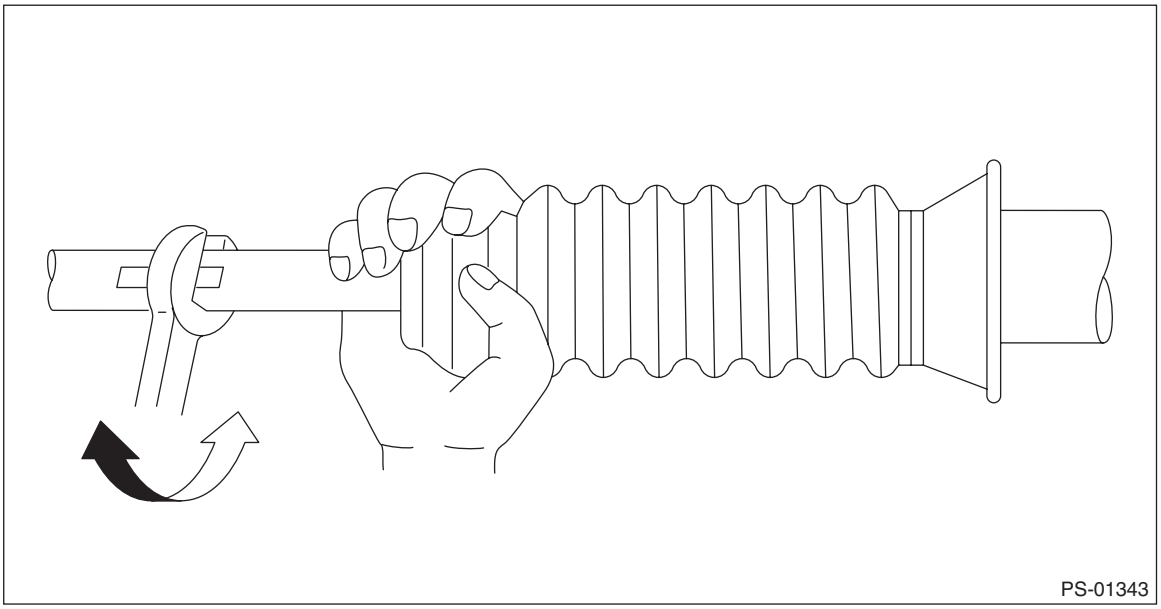

C: DISASSEMBLY

CAUTION:
When fixing the steering gearbox assembly in a vise, apply a wooden piece on the flange portion.
1) Remove the tie-rod end (a) and lock nut (b) from the steering gearbox assembly.
2) Remove the clip - boot tie-rod (c) located outside the boot - steering gearbox using the pliers, and then slide the boot - steering gearbox to the tie-rod end side.

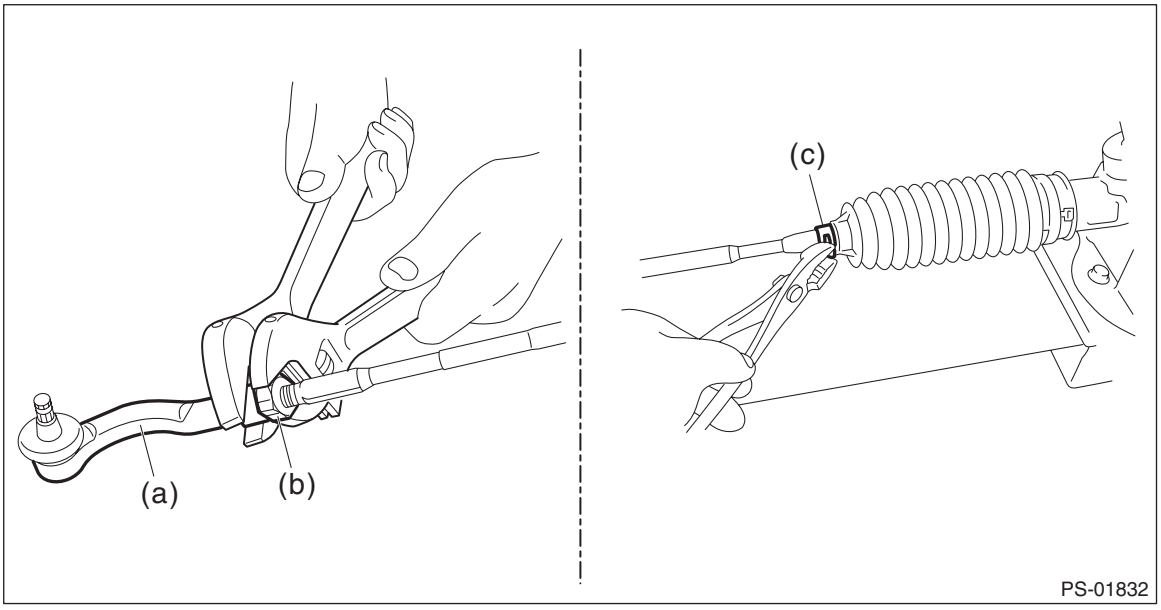

3) Remove the tie-rod (d) from the gearbox assembly.
(1) Using a flat tip screwdriver, remove the band - boot (e) from the boot - steering gearbox.

NOTE:
Replace the boot - steering gearbox or the band - boot (e) if there is damage, cracks or deterioration.
(2) Remove the tie-rod (d).

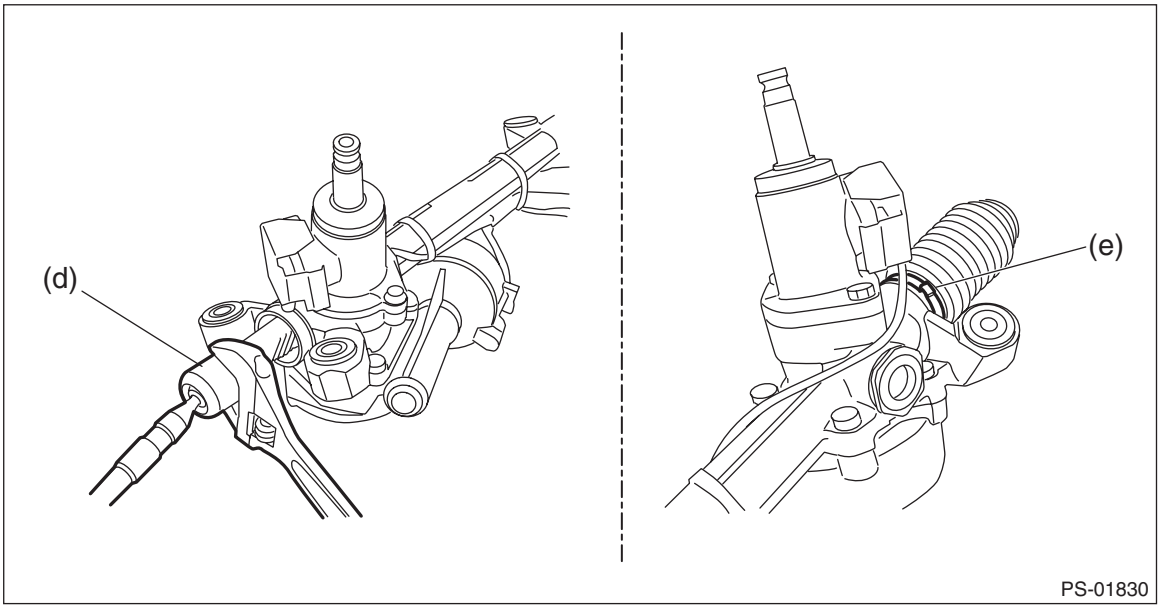

D: ASSEMBLY

1) Install the tie-rod into rack.

Tightening torque:
90 N·m (9.2 kgf-m, 66.4 ft-lb)

NOTE:
Check the mating face of rack and tie-rod for foreign matter such as dust etc.
2) Apply a coat of grease to the tie-rod groove, and then install the boot - steering gearbox to the housing.

CAUTION:
Assemble the small end of the boot - steering gearbox in the tie-rod groove first, and then assemble the large end of the boot - steering gearbox in the housing.

NOTE:
Make sure that the boot - steering gearbox is installed without unusual inflation or deflation.

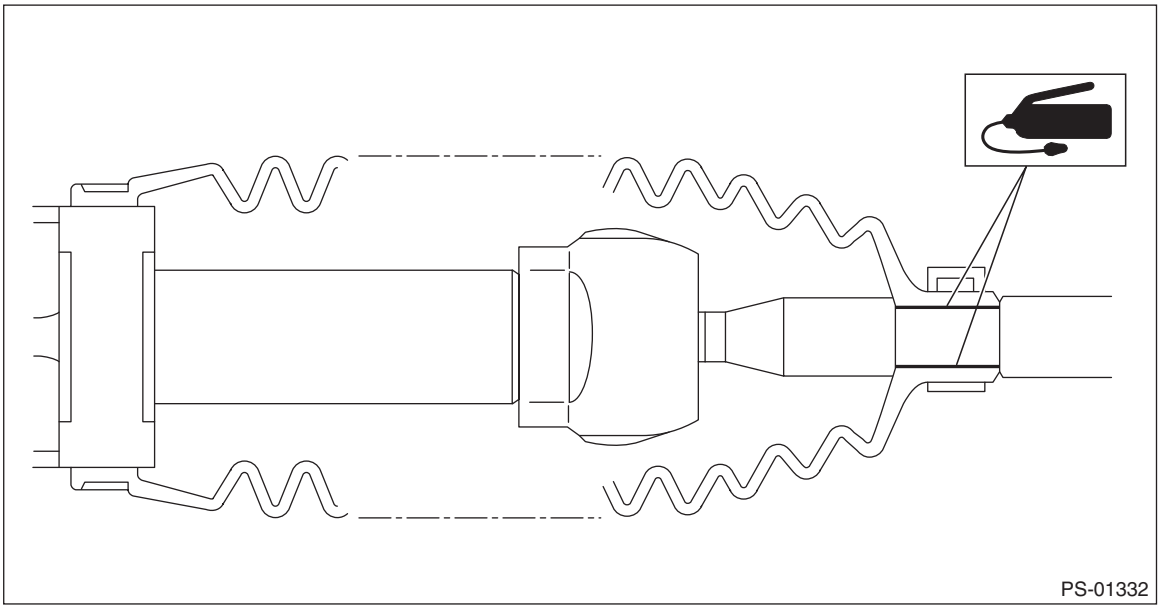
PS-01332

3) Using the boot clamp pliers, crimp the boot so that the clearance (b) of the band - boot (a) crimp portion becomes 2 mm (0.08 in) or less.

NOTE:
Use a new band - boot.

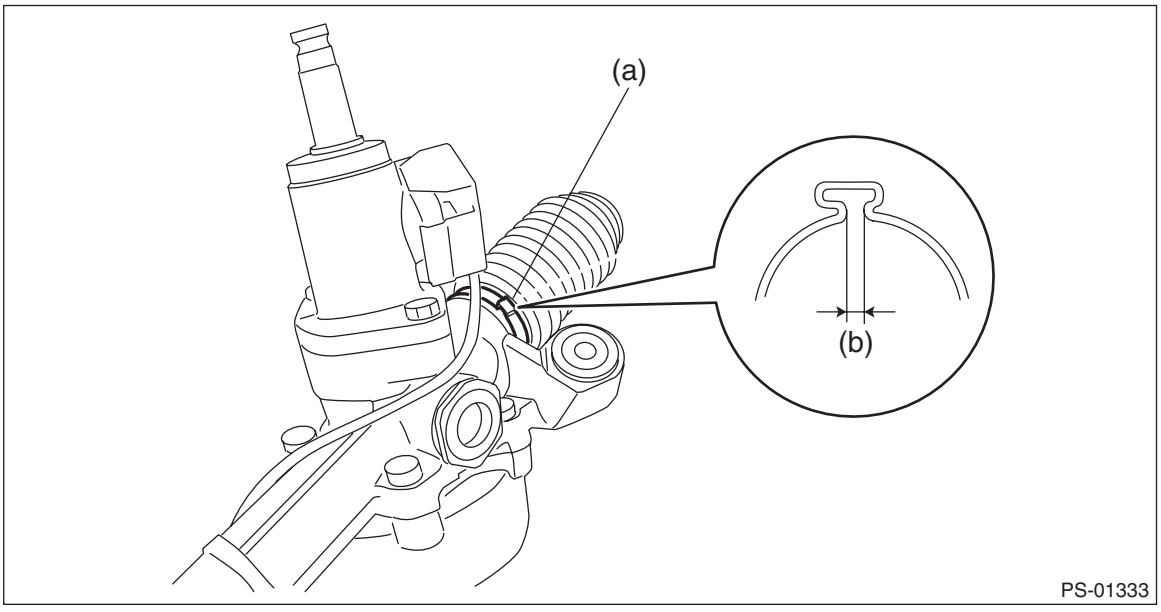

PS-01333

4) Fix the end of the boot - steering gearbox with clip - boot tie-rod (a).
5) After installation, check that the end of the boot - steering gearbox is installed to the groove (b) of the tie-rod.

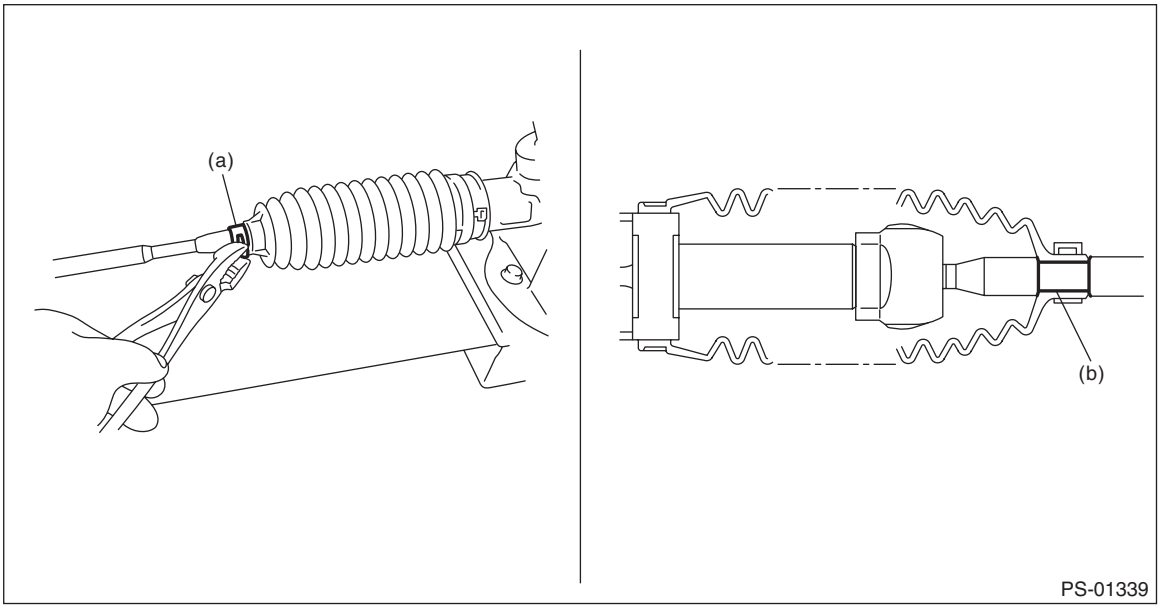

6) If the tie-rod end has been removed, screw in lock nut and tie-rod end to the threaded portion of tie-rod, and tighten the lock nut temporarily in a position as shown in the figure.

Installed tie-rod length L:
27 mm (1.06 in)

7) Inspect the steering gearbox assembly as follows:
1. "A" Holding the tie-rod end, repeat lock to lock several times as quickly as possible.
2. "B" Holding the tie-rod end, turn it slowly at a radius several times as large as possible.
3. Finally, make sure that the boot - steering gearbox is installed in the specified position without inflating.

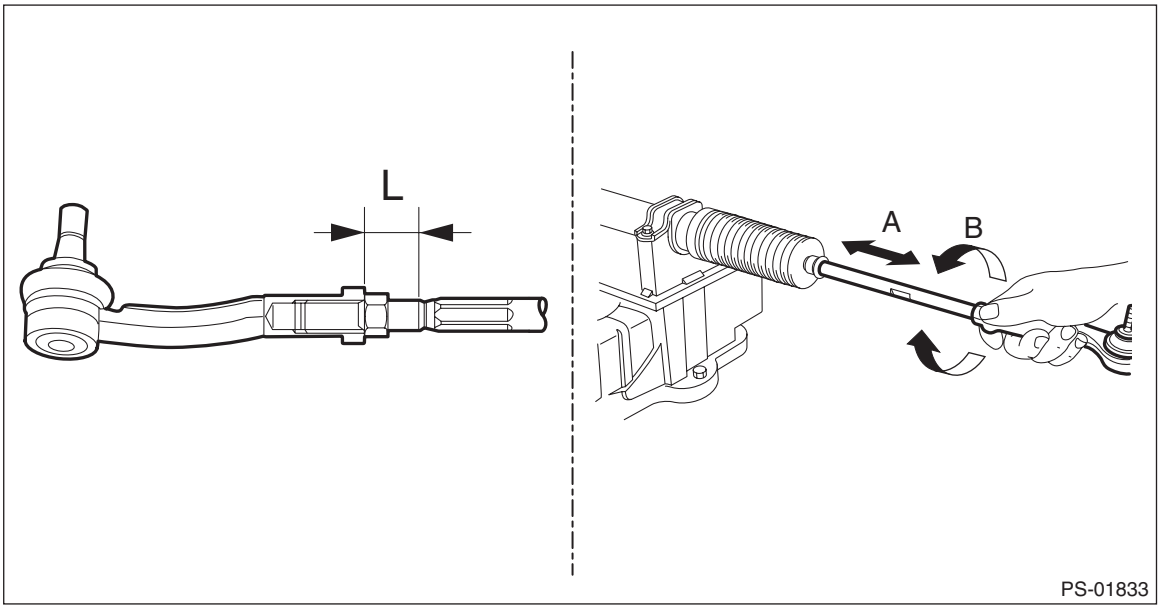

8) Remove the steering gearbox assembly from ST.

E: INSPECTION

1. UNIT INSPECTION

Check components for wear, damage or other faults. Adjust or replace if necessary.

2. LIMIT

Make a measurements as follows. If it exceeds the specified service limits, adjust or replace.

NOTE:
When fixing the steering gearbox assembly in a vise, apply a wooden piece on the flange portion.

Rack shaft sliding resistance:
Limit: 360 N (37 kgf, 81 lbf) or less
Left/right differential of sliding resistance: 20% or less

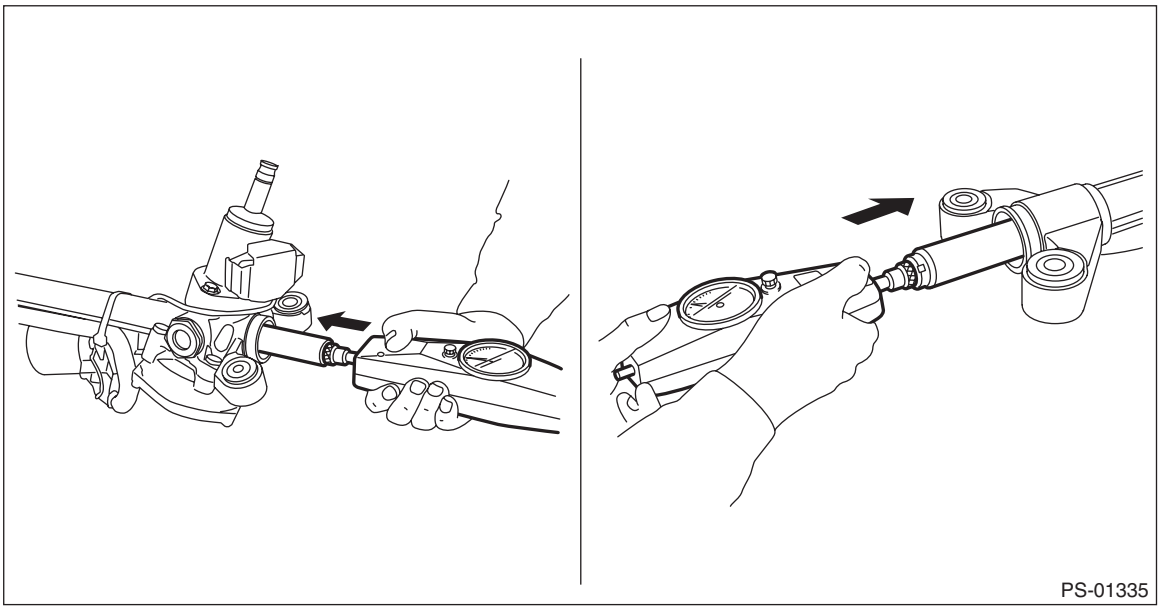

3. RACK SHAFT PLAY IN THE RADIAL DIRECTION

Right-turn steering:
Service limit:
Direction ⬅ ➡: 0.4 mm (0.016 in) or less
Direction ⇦ ⇨: 0.6 mm (0.024 in) or less

Left-turn steering:
Service limit:
Direction ⇦ ⇨ ⬅ ➡: 0.4 mm (0.016 in) or less

Condition:
L: 5 mm (0.20 in)
P: 98 N (10 kgf, 22 lbf)

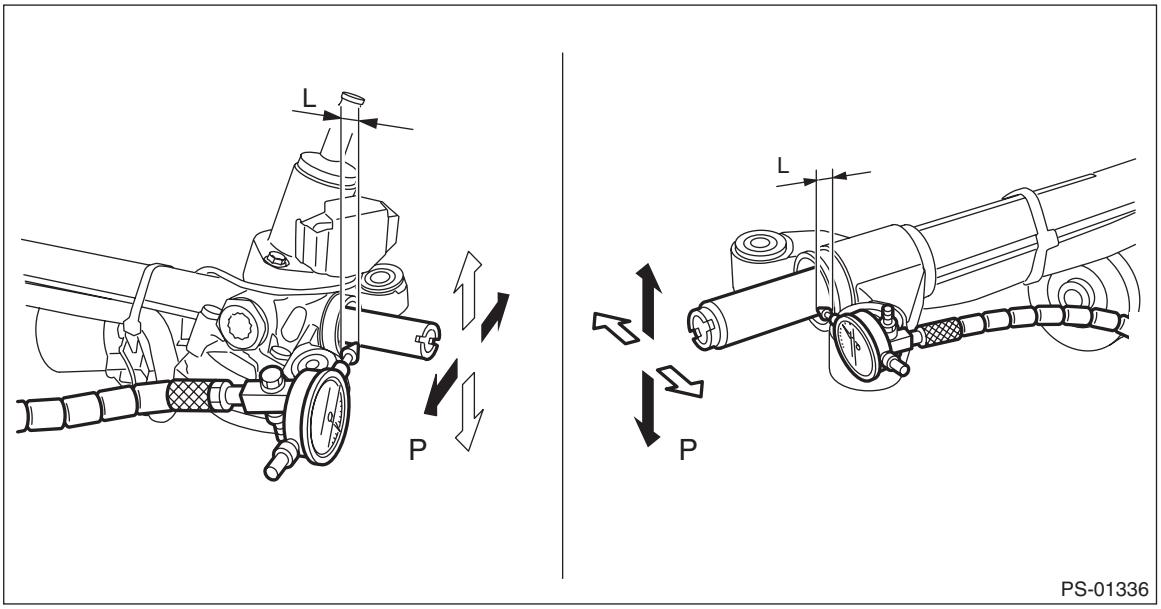

4. INPUT SHAFT PLAY

In radial direction:
Wear limit: 0.18 mm (0.0071 in) or less
Condition: P = 98 N (10 kgf, 22 lbf)

In axial direction:
Wear limit: 0.27 mm (0.0106 in) or less
Condition: P = 20 — 49 N (2 — 5 kgf, 4 — 11 lbf)

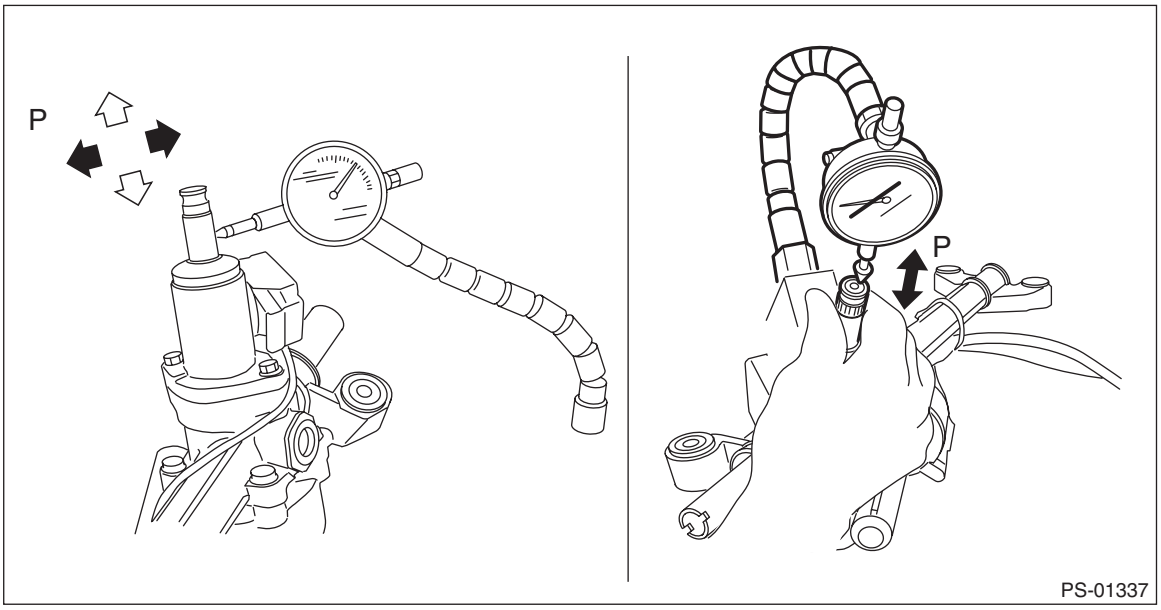

5. ROTATIONAL RESISTANCE OF GEARBOX

1) Using the ST, measure the rotational resistance of the steering gearbox assembly.

Preparation tool:
ST: SPANNER (34099PA100)

Service limit:
Maximum allowable resistance: 18 N (1.8 kgf, 4.0 lbf) or less
Difference between right and left rotational resistance: 20% or less

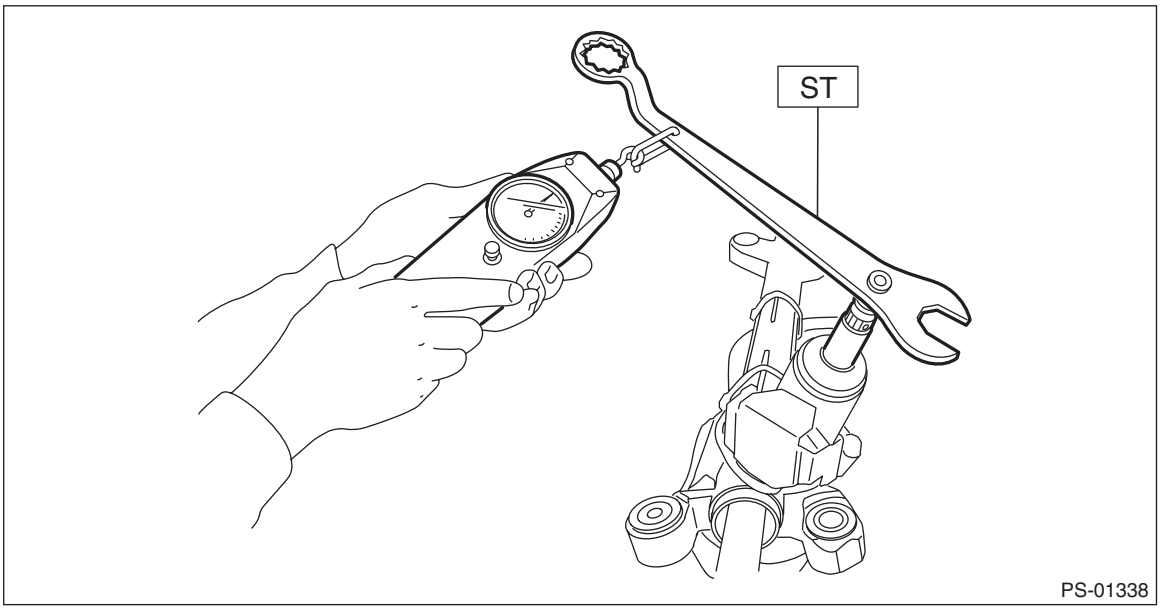

F: ADJUSTMENT

1. GEARBOX BACKLASH ADJUSTMENT (SERVICING ON VEHICLE)

1) Remove the under cover - front. <Ref. to EI-28, REMOVAL, Front Under Cover.>
2) Remove the front stabilizer and slide the front stabilizer. <Ref. to FS-34, REMOVAL, Front Stabilizer.>
3) Remove the front exhaust pipe.
- H4 model: <Ref. to EX(H4DO)-5, REMOVAL, Front Exhaust Pipe.>
- H6 model: <Ref. to EX(H6DO)-6, REMOVAL, Front Exhaust Pipe.>

4) Remove the bolts, then remove the guard.

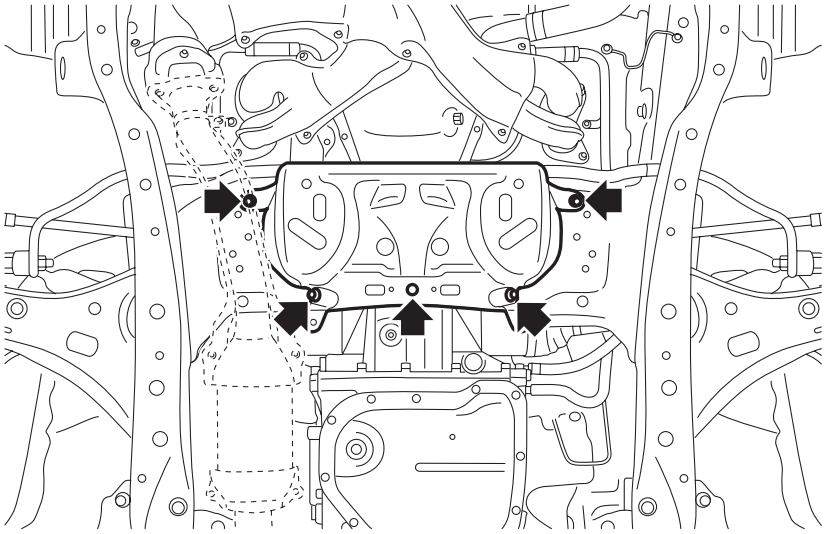
PS-01811

5) Using the ST, loosen the lock nut and adjusting screw.

Preparation tool:
ST1: SPECIAL TOOL EPS (34199AJ030)
ST2: SPECIAL TOOL EPS (34199AJ040)

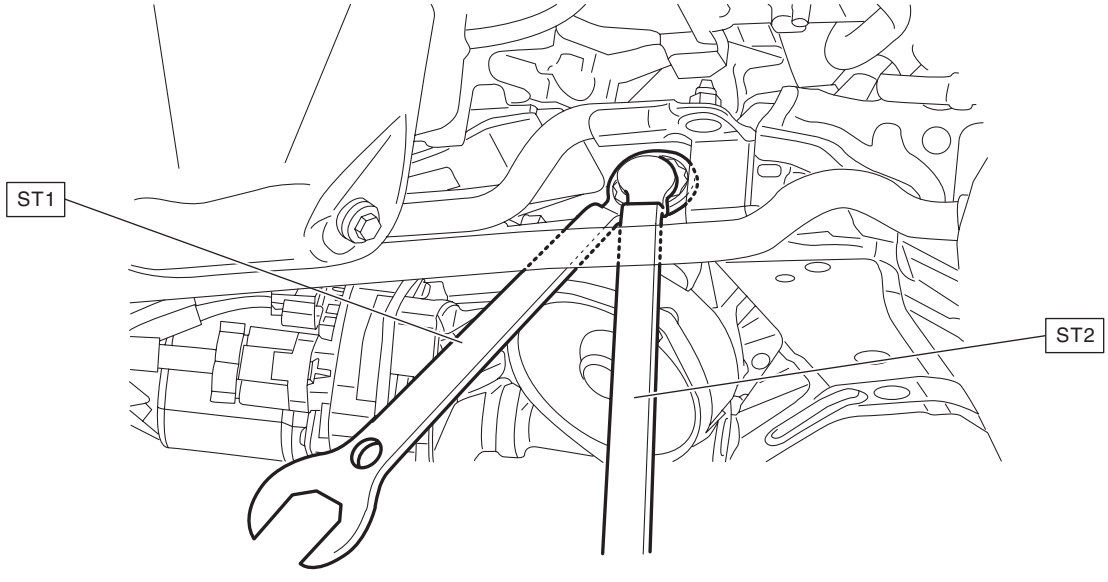

PS-01836

6) Apply a coat of grease to the sliding surface (B) of the pad - pressure (a) and seating surface (C) of spring - gearbox (b), and then insert the pad - pressure (a) into steering body.
7) Charge the adjusting screw (c) with grease (D), and then insert the spring - gearbox (b) into adjusting screw. Then install on the steering body.

Grease:
Molywhite LS-G
8) Apply liquid gasket to 1/3 or more (A) of entire perimeter of adjusting screw thread (c).

Liquid gasket:
SEAL END No. 22

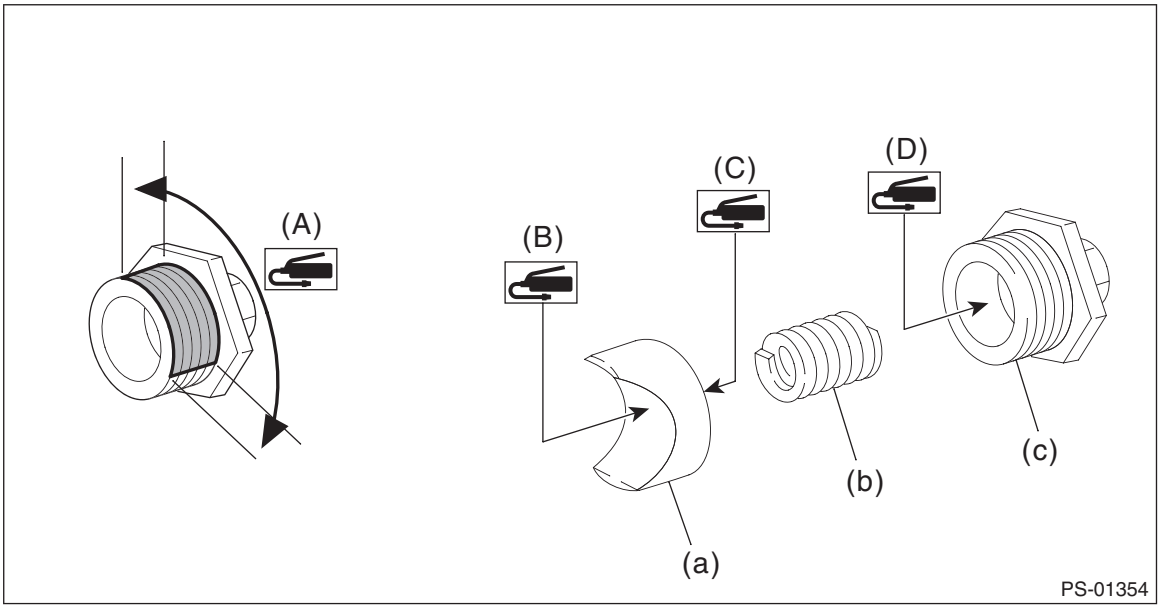

9) Tighten the adjusting screw to 20 N·m (2.0 kgf-m, 14.8 ft-lb), then loosen it.
10) Tighten the adjusting screw to 20 N·m (2.0 kgf-m, 14.8 ft-lb) again, then loosen it.
11) Tighten the adjusting screw to 20 N·m (2.0 kgf-m, 14.8 ft-lb), loosen by 30°, and then fix the screw.
12) Install the lock nut. While holding the adjusting screw with a wrench, tighten the lock nut using ST.
13) Lift up the front wheels, turn the steering wheel to right and left, and perform the adjustment again if the steering is not smooth. Adjust by gradually increasing the angle of loosening up to 40°.

Tightening torque
Lock nut: 45 N·m (4.6 kgf-m, 33.2 ft-lb)

CAUTION:
Hold the adjusting screw with a wrench to prevent it from turning while tightening the lock nut.
14) Install the guard.

Tightening torque:
30 N·m (3.1 kgf-m, 22.1 ft-lb)
15) Install the front exhaust pipe.
- H4 model: <Ref. to EX(H4DO)-7, INSTALLATION, Front Exhaust Pipe.>
- H6 model: <Ref. to EX(H6DO)-8, INSTALLATION, Front Exhaust Pipe.>

16) Install the front stabilizer. <Ref. to FS-35, INSTALLATION, Front Stabilizer.>
17) Install the under cover - front. <Ref. to EI-28, INSTALLATION, Front Under Cover.>

2. FRONT WHEEL ALIGNMENT ADJUSTMENT

1) Adjust the front toe. <Ref. to FS-16, FRONT WHEEL TOE-IN, ADJUSTMENT, Wheel Alignment.>
2) Check the steering angle of the wheels.

Standard of steering angle:

Model	Inner wheel	Outer wheel
Sedan model	37.6°±1.5°	32.8°±1.5°
OUTBACK model	38.6°±1.5°	33.8°±1.5°

3) When the steering wheel is in the following condition, perform the steering wheel installation over again.
- When wheels are set in the straight ahead position, the steering wheel spokes are not horizontal.
- Error is more than 5° on the periphery of the steering wheel.

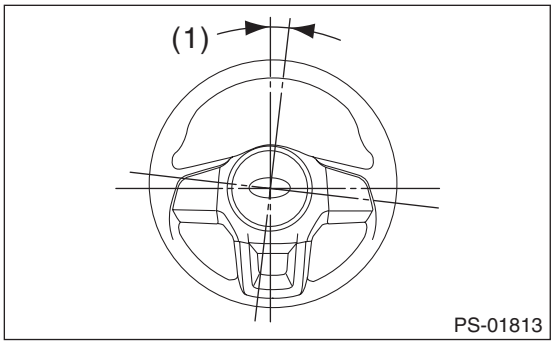

(1) 5° or less

4) If the steering wheel spokes are not horizontal with vehicle set in the straight ahead position after this adjustment, correct it by turning the right and left tie-rods in the opposite direction from each other by the same angle. Also check that there are no abnormal steering effort, failure of the steering wheel to return or other faults.

7. Power Steering Control Module

A: REMOVAL

NOTE:
Power steering control module is integrated with the electric power steering gearbox. Since the power steering control module is a non-disassemble part, it cannot be removed.

B: INSTALLATION

NOTE:
Power steering control module is integrated with the electric power steering gearbox. The power steering control module is a non-disassemble part.

C: INSPECTION

NOTE:
Power steering control module is integrated with the electric power steering gearbox. Refer to “POWER ASSISTED SYSTEM (POWER STEERING) (DIAGNOSTICS)” for inspection. <Ref. to PS(diag)-2, Basic Diagnostic Procedure.>

8. General Diagnostic Table

A: INSPECTION

Trouble	Possible cause	Corrective action
• Steering effort is heavy in all ranges. • Steering effort is heavy at stand still. • Steering wheel vibrates when turning.	1. Tire and wheel • Improper tire out of specifications • Improper wheel out of specification • Tires not properly inflated	Replace or reinflate the tire and wheel.
	2. Measure the steering wheel effort. <Ref. to PS-40, MEASUREMENT OF STEERING EFFORT, INSPECTION, General Diagnostic Table.>	Adjust or replace the faulty parts.
• Vehicle leads to one side or the other. • Returning force of steering wheel to center is poor. • Steering wheel vibrates when turning.	1. Tire and wheel • Flat tire • Mixed use of different tires • Mixed use of different wheels • Abnormal wear of tire • Unequal tread remaining • Unequal pressure of tire	Adjust, repair or replace the tire and wheel.
	2. Front wheel alignment • Improper or unequal caster • Improper or unequal toe-in • Loose suspension connections	Adjust or retighten.
	3. Measure the steering wheel effort. <Ref. to PS-40, MEASUREMENT OF STEERING EFFORT, INSPECTION, General Diagnostic Table.>	Adjust or replace the faulty parts.

NOTE:
When performing repeated steering operation with the vehicle at standstill, the steering effort may be temporarily heavy because the heat generated in the system activates the power steering protection control. This is not a malfunction caused by the steering system. After a while, it will return to normal steering effort. (In this case, the steering warning light will not come on and there will be no DTC.)

1. NOISE AND VIBRATION

NOTE:
• When turning the steering wheel with the brake applied when the vehicle is parked, a screeching noise may be generated by the brake disc and pads. This is not a fault in the steering system.
• There may be a small vibration around the steering devices when turning the steering wheel at standstill, even though the component parts are operating properly.

Trouble	Possible cause	Corrective action
Rattling noise (intermittent) While engine is running.	Interference with adjacent parts	Check the clearance. Correct if necessary.
	Looseness of linkage, play of steering, improper tightening (looseness) of suspension joint or steering column	Retighten or replace.
	Noise emitted from inside of the gearbox	Replace the gearbox assembly.
Knocking When turning steering wheel in both directions with small angle repeatedly at engine ON or OFF.	Excessive backlash Loosened lock nut for adjusting backlash	Adjust the backlash. When the noise remains after adjustment, replace the gearbox assembly.
	Insufficient tightening or play in the tie-rod or tie-rod end	Retighten or replace.
Grinding noise (intermittent) While engine is running. (While operating the steering.)	Fault inside of gearbox	Replace the gearbox assembly.
	Faulty bearing of the column assembly - steering	Apply grease or replace.
	Occurs when turning the steering wheel with brakes (service or parking) applied.	If the noise goes off when brake is released, it is normal.
Vibration While engine is running. (with/without steering turned)	Excessive play in steering, looseness of suspension parts	Retighten.

2. MEASUREMENT OF STEERING EFFORT

	Step	Check	Yes	No
1	**CHECK STEERING WARNING LIGHT.**	Does the STEERING warning light illuminate?	Read the DTC, and inspect according to it.	Go to step **2**.
2	**CHECK STEERING WARNING LIGHT.** 1) Connect the Subaru Select Monitor, and turn the steering wheel. (One lock to lock) 2) Check the “EPS operation flag” in the current data.	Is the EPS operation flag normal without displaying any DTC code?	Go to step **3**.	If the EPS operation flag is “Assist limitation”, stop the engine for approx. 30 minutes and perform the procedures from step 1 again.
3	**CHECK STEERING EFFORT.** 1) Stop the vehicle on paved road. 2) Set the tire air pressure to the specification. 3) Start the engine. 4) Run the engine at idle. 5) Install a spring scale on the steering wheel. 6) Pull the spring scale at a right angle to the steering wheel, and measure both right and left steering wheel efforts. 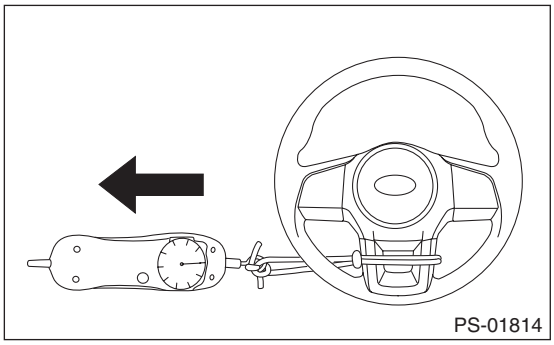 PS-01814	Is the steering effort less than 29.4 N (3.0 kgf, 6.6 lbf)?	Go to step **4**.	Go to step **8**.
4	**CHECK STEERING EFFORT.** 1) Stop the engine. 2) Pull the spring scale at a right angle to the steering wheel, and measure both right and left steering wheel efforts.	Is the steering effort less than 294.2 N (30 kgf, 66.2 lbf)?	Go to step **5**.	Perform the inspection or adjustment around the suspension part.
5	**CHECK TORQUE SENSOR OUTPUT VALUE.** 1) Connect the Subaru Select Monitor. 2) Read the output of torque sensor voltage. NOTE: When measuring, place the steering wheel at the center position.	Is the voltage 2.425 — 2.575 V?	Go to step **6**.	Replace the gearbox assembly. <Ref. to PS-26, Electric Power Steering Gearbox.>
6	**CHECK TORQUE SENSOR OUTPUT VALUE.** 1) Remove the universal joint assembly - steering. 2) Connect the Subaru Select Monitor. 3) Read the output of torque sensor voltage.	Is the voltage 2.425 — 2.575 V?	Go to step **7**.	Replace the gearbox assembly. <Ref. to PS-26, Electric Power Steering Gearbox.>

	Step	Check	Yes	No
7	**CHECK TORQUE SENSOR OUTPUT VALUE.** 1) Remove the universal joint assembly - steering. NOTE: Check that the universal joint assembly - steering moves up and down smoothly without installing the bolt. Then tighten the bolts first on the gearbox side and then on the column shaft side. 2) Connect the Subaru Select Monitor. 3) Read the output of torque sensor voltage.	Is the voltage 2.425 — 2.575 V?	Go to step **8**.	Check the universal joint assembly - steering. <Ref. to PS-26, Electric Power Steering Gearbox.>
8	**CHECK STEERING WHEEL EFFORT.** 1) Remove the universal joint assembly - steering. 2) Measure the steering wheel effort.	Is the steering effort less than 2.26 N (0.23 kgf, 0.51 lbf)?	Go to step **9**.	Replace the column assembly - steering. <Ref. to PS-26, Electric Power Steering Gearbox.>
9	**CHECK STEERING WHEEL EFFORT.** Measure the steering wheel effort.	Is the difference of steering effort between right and left less than 20%?	Go to step **10**.	Replace the column assembly - steering. <Ref. to PS-20, Steering Column.>
10	**CHECK UNIVERSAL JOINT ASSEMBLY - STEERING.** Measure the bending load of joint. (Yoke of column assembly - steering side) <Ref. to PS-18, INSPECTION, Universal Joint.>	Is the bending load of the universal joint assembly - steering less than 5.4 N (0.55 kgf, 1.21 lbf)?	Go to step **11**.	Replace the universal joint assembly - steering with a new part. <Ref. to PS-14, Universal Joint.>
11	**CHECK UNIVERSAL JOINT ASSEMBLY - STEERING.** Measure the bending load of joint. (Yoke of gearbox side) <Ref. to PS-18, INSPECTION, Universal Joint.>	Except for OUTBACK model: Is the bending load of the universal joint assembly - steering less than 4.5 N (0.46 kgf, 1.01 lbf)? OUTBACK model: Is the bending load of the universal joint assembly - steering less than 2.8 N (0.29 kgf, 0.63 lbf)?	Go to step **12**.	Replace the universal joint assembly - steering with a new part. <Ref. to PS-14, Universal Joint.>
12	**CHECK FRONT WHEEL.** Check the front wheels.	Does the front wheels have unsteady revolution or rattling, or does the brake drag?	Inspect, readjust and replace if necessary.	Go to step **13**.
13	**CHECK TIE-ROD ENDS.** Remove the tie-rod ends.	Does the tie-rod ends of suspension have unsteady revolution or rattling?	Inspect and replace if necessary.	Go to step **14**.
14	**CHECK BALL JOINT.** Remove the ball joint.	Does the ball joints of suspension have unsteady revolution or rattling?	Inspect and replace if necessary.	Go to step **15**.
15	**CHECK GEARBOX.** Measure the rotating of gearbox. <Ref. to PS-32, LIMIT, INSPECTION, Electric Power Steering Gearbox.>	Is the turn resistance of the steering gearbox less than 18 N (1.8 kgf, 4.0 lbf)? Is the difference between the right and left rotational resistances less than 20%?	Go to step **16**.	Replace the gearbox assembly. <Ref. to PS-26, Electric Power Steering Gearbox.>
16	**CHECK GEARBOX.** Measure the sliding of gearbox.	Is the sliding resistance of the steering gearbox less than 360 N (36.7 kgf, 80.9 lbf)? Is the difference between the right and left sliding resistances less than 20%?	Steering effort is normal.	Replace the gearbox assembly. <Ref. to PS-26, Electric Power Steering Gearbox.>

POWER ASSISTED SYSTEM (POWER STEERING) (DIAGNOSTICS)

PS(diag)

		Page
1.	Basic Diagnostic Procedure	2
2.	Check List for Interview	4
3.	General Description	7
4.	Electrical Component Location	8
5.	Control Module I/O Signal	9
6.	Subaru Select Monitor	10
7.	Read Diagnostic Trouble Code (DTC)	15
8.	Inspection Mode	16
9.	Clear Memory Mode	17
10.	STEERING Warning Light	18
11.	List of Diagnostic Trouble Code (DTC)	21
12.	Diagnostic Procedure with Diagnostic Trouble Code (DTC)	23

1. Basic Diagnostic Procedure

A: PROCEDURE

CAUTION:
• The power steering control module continues to operate after the engine stops and calculate the temperature in the control module. Therefore, before starting service of the power steering system which requires disconnection of the connector, stop the engine and allow approx. 30 minutes until the control module becomes cold.
• Before removal or installation, be sure to remove any foreign matter (dust, moisture, oil, etc.) from the power steering control module connector.

NOTE:
• Shake the connector at the suspected trouble location to check for open or short circuits of the harness.
• Refer to “Check List for Interview”. <Ref. to PS(diag)-4, Check List for Interview.>

	Step	Check	Yes	No
1	**CHECK PRE-INSPECTION.** 1) Ask the customer when and how the trouble occurred using the interview check list. <Ref. to PS(diag)-4, Check List for Interview.> 2) Check the illumination status of the STEERING warning light while the engine is running. 3) Before performing diagnostics, check components which might affect power steering problems. <Ref. to PS(diag)-7, INSPECTION, General Description.> 4) Save the data of «Overheating protection intervention history», «IG Count after ECU Overheat Protection(latest)», «IG Count after ECU Overheat Protection(Previous)», «IG Count after ECU Overheat Protection(Before Previous)», and «Assist limit history (low voltage)» using Subaru Select Monitor. <Ref. to PS(diag)-10, READ CURRENT DATA, OPERATION, Subaru Select Monitor.>	Are components that might influence the power steering problem operating properly?	Go to step **2**.	Repair or replace each component.
2	**CHECK INDICATION OF DTC.** 1) Turn the ignition switch to OFF. 2) Connect the Subaru Select Monitor to data link connector. 3) Turn the ignition switch to ON and run the Subaru Select Monitor. 4) Read the DTC using the Subaru Select Monitor. <Ref. to PS(diag)-15, OPERATION, Read Diagnostic Trouble Code (DTC).> NOTE: If the communication function of the Subaru Select Monitor cannot be executed properly, check the communication circuit. <Ref. to PS(diag)-12, COMMUNICATION FOR INITIALIZING IMPOSSIBLE, INSPECTION, Subaru Select Monitor.>	Are DTC, time stamp and freeze frame data displayed?	Record the DTC, time stamp and freeze frame data. Go to step **4**. NOTE: • For the time stamp, refer to LAN section. <Ref. to LAN(diag)-6, TIME STAMP, CAUTION, General Description.> • Depending on DTCs, time stamp may not be stored.	Go to step **3**.

	Step	Check	Yes	No
3	**PERFORM GENERAL DIAGNOSTICS.** 1) If the STEERING warning light is illuminated while the engine is running, perform the Clear Memory Mode. <Ref. to PS(diag)-17, OPERATION, Clear Memory Mode.> 2) Perform the Inspection Mode. <Ref. to PS(diag)-16, Inspection Mode.> 3) Read the DTC. <Ref. to PS(diag)-15, OPERATION, Read Diagnostic Trouble Code (DTC).> Check that the DTC is not displayed.	Does the STEERING warning light illuminate at ignition switch ON, and turn off two seconds after the engine is started?	Finish the diagnosis.	<Ref. to PS(diag)-14, WITHOUT DTC, INSPECTION, Subaru Select Monitor.>
4	**PERFORM DIAGNOSIS.** 1) Refer to “List of Diagnostic Trouble Code (DTC)”. <Ref. to PS(diag)-21, LIST, List of Diagnostic Trouble Code (DTC).> 2) Correct the cause of trouble. 3) Check the illumination status of the STEERING warning light while the engine is running, and if the warning light is lit, perform Clear Memory Mode. <Ref. to PS(diag)-17, OPERATION, Clear Memory Mode.> 4) Perform the Inspection Mode. <Ref. to PS(diag)-16, Inspection Mode.> 5) Read the DTC. <Ref. to PS(diag)-15, OPERATION, Read Diagnostic Trouble Code (DTC).>	Is DTC displayed?	Repeat step 4 until DTC is not shown.	Finish the diagnosis.

2. Check List for Interview

A: CHECK

Check the following items regarding condition of the vehicle.

1. TROUBLE STATUS

Phenomenon of the vehicle	❑ Steering is heavy ❑ Steering is not smooth ❑ Steering is unstable (wondering) ❑ Steering does not return to center ❑ Steering is not straight
	❑ Steering force required is not the same for right and left turn ❑ Steering force required is not even ❑ Steering is too light
	❑ Noise ❑ Vibration ❑ STEERING warning light illuminates ❑ Other
Frequency	❑ Always ❑ Sometimes ❑ Immediately after starting the engine ❑ Only once ❑ Other
	❑ Recovers after leaving it for minutes
Steering wheel operation	❑ Dry steering ❑ When turning ❑ Quick steering ❑ Slow steering ❑ Returning the steering wheel
	❑ Releasing the steering wheel ❑ Only supporting the steering wheel by hand ❑ Repetitive dry steering
Steering wheel status / direction	❑ Around center position ❑ Near end of lock to lock
	❑ When turning the steering to right ❑ When turning the steering to left ❑ Both to right and to left ❑ (1) Steering angle: degrees ❑ (2) Maneuvering time: minutes
	❑ Slow steering ❑ Quick steering ❑ While holding the steering ❑ When repeating the dry wheel operation
Vehicle speed	❑ Stall 0 km/h (0 MPH) ❑ Very low speed — 20 km/h (— 12 MPH) ❑ Low speed — 40 km/h (— 25 MPH) ❑ Medium speed — 80 km/h (— 50 MPH) ❑ High speed — 80 km/h or more (— 50 MPH or more)
	❑ At starting ❑ While accelerating ❑ While decelerating ❑ When accelerating rapidly ❑ When decelerating rapidly
	❑ Other
Engine speed	❑ Idling ❑ (1) Around rpm ❑ (2) rpm — rpm ❑ (3) rpm or more / or less

2. STATE OF STEERING WARNING LIGHT

STEERING warning light illuminates	❑ Always ❑ Sometimes ❑ Only once ❑ Does not illuminate ❑ Other
Ignition key position	❑ LOCK ❑ ACC ❑ ON (when starting engine) ❑ START ❑ ON (when starting engine, while engine is running) ❑ ON (when starting engine, when engine is at a standstill)
Timing	❑ Immediately after turning the ignition ON ❑ Immediately after turning the ignition to START
	❑ Idling ❑ While accelerating ❑ While decelerating ❑ When cruising at — km/h (MPH)
	❑ When other electrical parts are operating (parts name: operating condition:)

3. ENVIRONMENT

a) Weather	❑ Fine ❑ Cloudy ❑ Rainy ❑ Snowy ❑ Others:
b) Outside temperature	❑ °C (°F)
c) Road	❑ Inner city ❑ Suburbs ❑ Highway ❑ Local street ❑ Alley way ❑ Private road ❑ Parking lot ❑ Mountain road ❑ Paved road ❑ Unpaved road ❑ Gravel road ❑ Sandy place ❑ Muddy road ❑ Concrete road ❑ Stone pavement ❑ Racetrack ❑ Others:
d) Road surface	❑ Dry ❑ Wet ❑ Covered with fresh snow ❑ Covered with hardened snow ❑ Others:
e) Tire	❑ Tire chain ❑ Studless tire ❑ T-type tire (front RH, front LH, rear RH, rear LH)
f) Tire inflation pressure	Front RH: kPa Front LH: kPa Rear RH: kPa Rear LH: kPa
g) Degree of wear	Front RH: mm (in) Front LH: mm (in) Rear RH: mm (in) Rear LH: mm (in)
h) Genuine part	❑ Yes ❑ No Record after-market parts if any. (Steering wheel, audio, tires, and similar parts)
i) Condition of suspension alignment	
j) Electrical load conditions	❑ Audio ❑ Air conditioner ❑ Other
k) Loaded state	Condition:
l) Repair parts	❑ None ❑ Provided Contents:
m) Others	

3. General Description

A: CAUTION

1. SRS AIRBAG SYSTEM

CAUTION:
Do not use electrical test equipment on wiring harness and connector circuits of the airbag system.

B: INSPECTION

Before performing diagnosis, check the following items which might be affecting the power steering problem.

1. BATTERY

Check the battery. <Ref. to SC(H4DO)-65, INSPECTION, Battery.> <Ref. to SC(H6DO)-59, INSPECTION, Battery.>

2. TIRE

Check the tire specifications, tire wear and air pressure. <Ref. to WT-2, SPECIFICATION, General Description.>

C: PREPARATION TOOL

1. SPECIAL TOOL

ILLUSTRATION	TOOL NUMBER	DESCRIPTION	REMARKS
 STSSM4	— (Newly adopted tool)	SUBARU SELECT MONITOR 4	Used for setting of each function and troubleshooting for electrical system. NOTE: For detailed operation procedures of Subaru Select Monitor 4, refer to “Application help”.
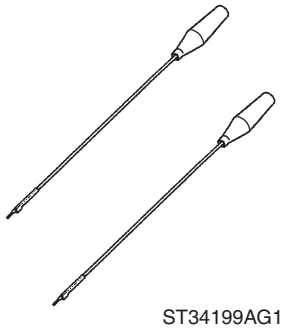 ST34199AG100	34199AG100	SPECIAL TOOL HARNESS	Used for troubleshooting the electrical system.

2. GENERAL TOOL

TOOL NAME	REMARKS
Circuit tester	Used for measuring resistance, voltage and current.
Oscilloscope	Used for measuring the sensor.
DST-i	Used together with Subaru Select Monitor 4.

4. Electrical Component Location

A: LOCATION

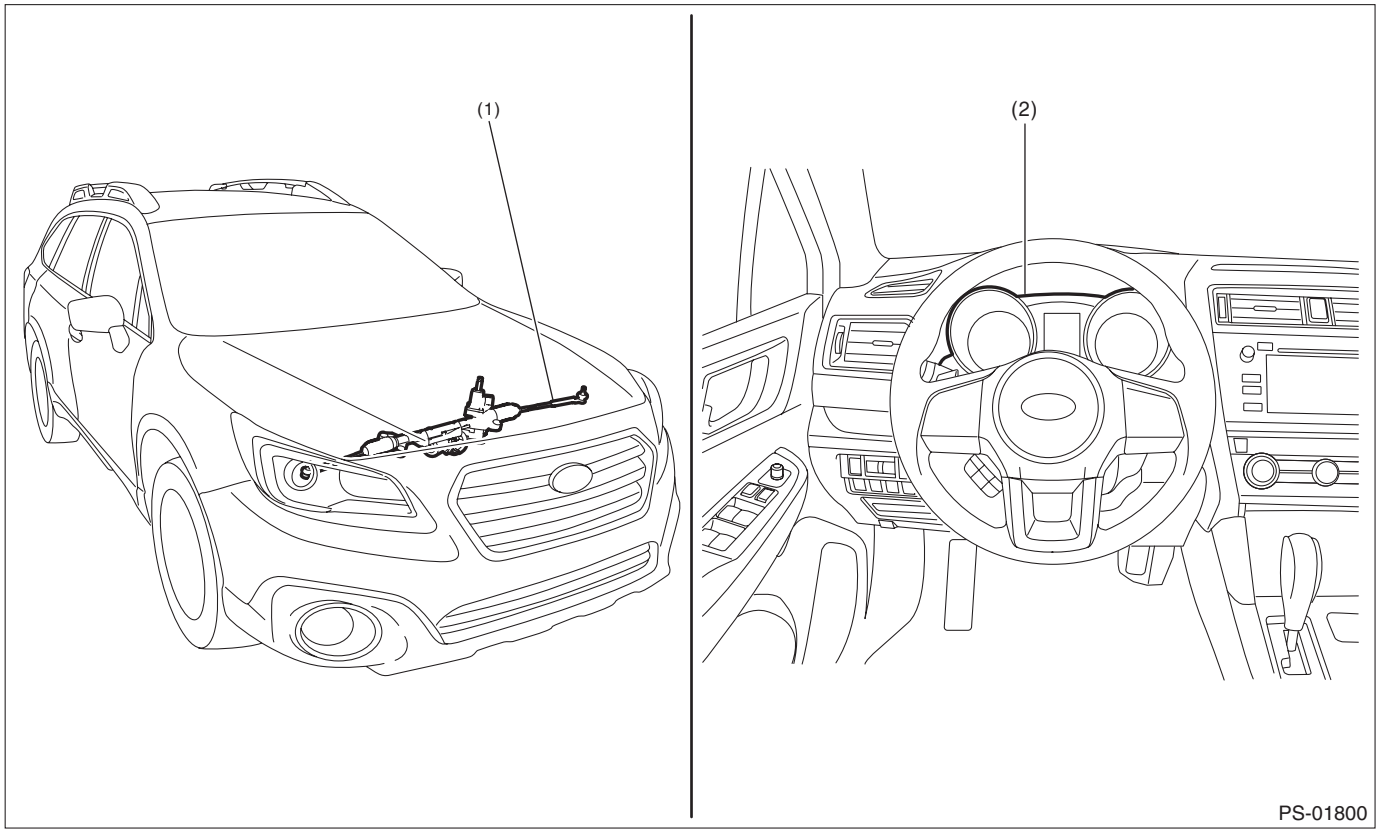

(1) Steering gearbox (including power steering control module)
(2) STEERING warning light

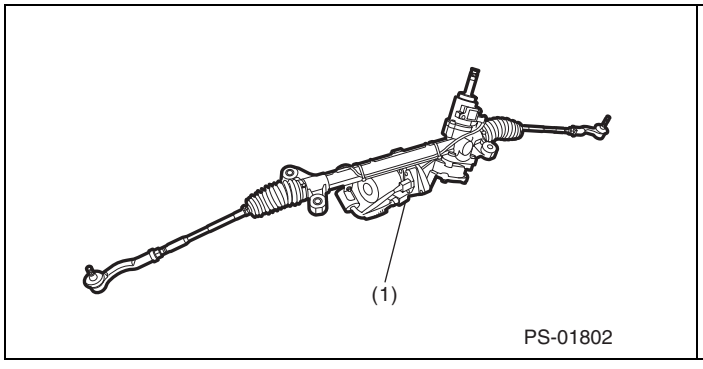

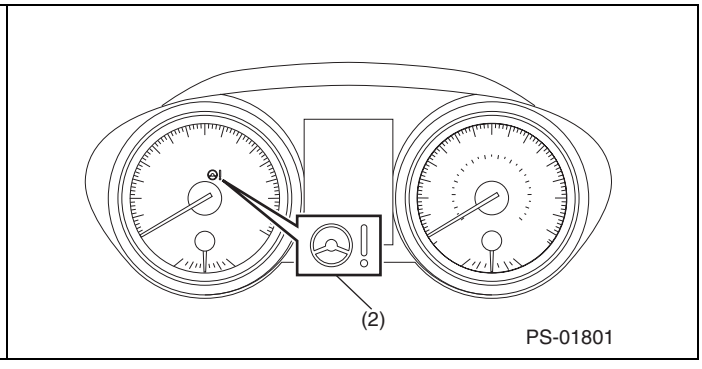

5. Control Module I/O Signal

A: ELECTRICAL SPECIFICATION

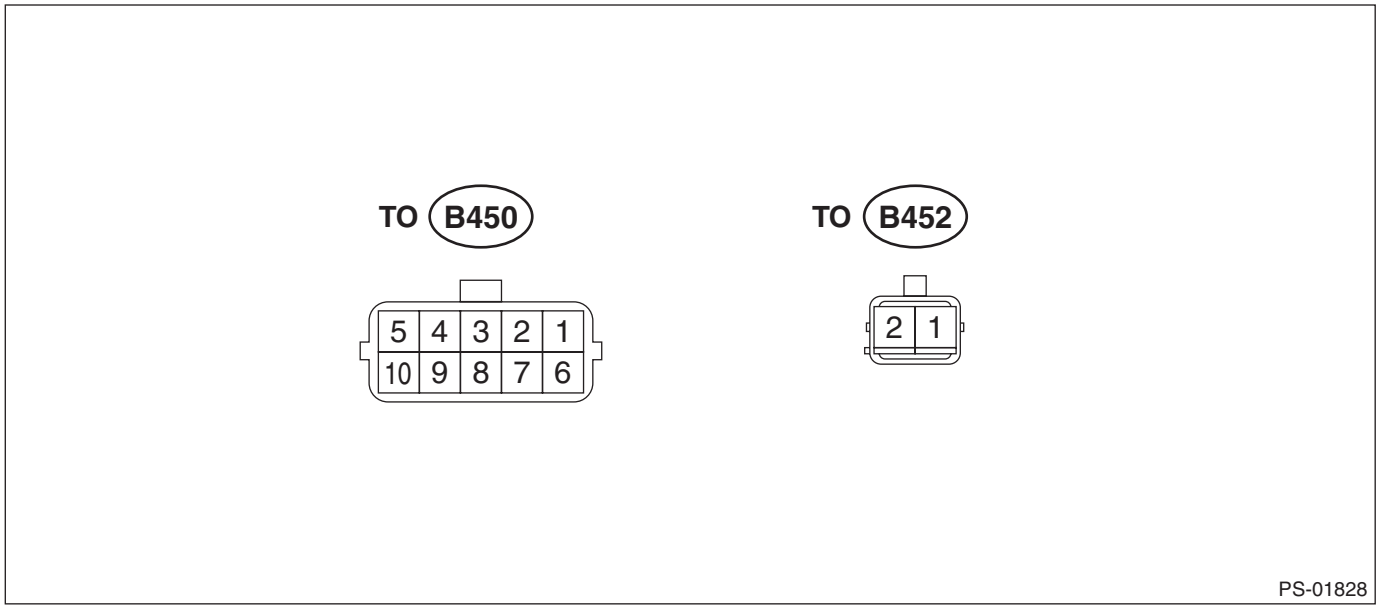

NOTE:
The terminal numbers of the power steering control module connectors are as indicated in the figure.

Content	Connector No.	Terminal No.	Input/output signal
			Measured value and measuring conditions
Power supply (IG SW)	B450	5	Battery voltage is detected with the ignition switch ON when measuring between (B450) No. 5 — (B452) No. 2.
Main torque sensor	B450	2	The voltage changes when the steering is operated to the right or left with the ignition switch ON.
Sub torque sensor	B450	1	The voltage changes when the steering is operated to the right or left with the ignition switch ON.
Torque sensor power supply	B450	6	Approximately 5 V is detected with ignition switch ON.
Torque sensor ground	B450	7	0 V is constantly detected.
CAN communication	B450	9	Digital signal; can not be measured
CAN communication	B450	10	Digital signal; can not be measured
Power supply	B452	1	Battery voltage is constantly detected when measuring between 1 — 2.
Ground	B452	2	

B: WIRING DIAGRAM

Refer to “Electric Power Steering System” in the wiring diagram. <Ref. to WI-168, Electric Power Steering System.>

6. Subaru Select Monitor

A: OPERATION

1. HOW TO USE SUBARU SELECT MONITOR

For detailed operation procedures, refer to “Application help”.

2. READ CURRENT DATA

1) On «Start» display, select «Diagnosis».
2) On «Vehicle selection» display, input the vehicle information and select «Confirmed».
3) On «Main Menu» display, select «Each System Check».
4) On «Select System» display, select «Power Steering».
5) On «Select Function» display, select «Data Monitor».

Display	Contents to be displayed	Range	Unit
Torque sensor main output	Main torque sensor output voltage is displayed.	0 — 5	V
Torque sensor sub output	Sub torque sensor output voltage is displayed.	0 — 5	V
Vehicle Speed	Vehicle speed is displayed. (CAN communication data)	0 — 255	km/h
Engine Speed	Engine speed is displayed. (CAN communication data)	0 — 12750	rpm
CU Sensing Current(q)	The current flowing to the motor relay is displayed.	–128 — 127	A
3-phase motor current (U-phase)	The U phase actual current value as calculated by the micro-computer from the torque sensor input is displayed.	–128 — 127	A
3-phase motor current (V-phase)	The V phase actual current value as calculated by the micro-computer from the torque sensor input is displayed.	–128 — 127	A
Motor angular speed	Data from the resolver sensor is displayed.	–4096 — 4064	rpm
CU Temperature	The thermistor temperature of the steering control module is displayed.	–50 — 205	°C
Power supply voltage	Battery voltage is displayed.	0 — 25.5	V
Torque sensor power supply voltage	The power supply voltage output to the torque sensor is displayed.	0 — 10.2	V
IG Voltage	The power supply voltage supplied to the ECM is displayed.	0 — 25.5	V
CAN Bus Status	Either Active/Passive/Bus Off is displayed.	—	—
EPS Status	Either Normal/Assist Stop/Assist Limitation is displayed.	—	—
CU Target current(q)	The motor target current value required for assist is displayed.	–128 — 127	A
Steering Angle	Steering angle of steering wheel is displayed.	–640 — 635	deg
Overheating protection intervention history	Number of interventions to the overheat protection control (assist limitation for protecting the power steering from overheating)*1	0 — 250	times
IG Count after ECU Overheat Protection(latest)	Number of times the ignition switch is ON from the intervention to overheat protection control (most recent) until now*2	0 — 65000	times
IG Count after ECU Overheat Protection(Previous)	Number of times the ignition switch is ON from the intervention to overheat protection control (previous) until now*2	0 — 65000	times
IG Count after ECU Overheat Protection(Before Previous)	Number of times the ignition switch is ON from the intervention to overheat protection control (before previous) until now*2	0 — 65000	times
Assist limit history (low voltage)	Number of intervention to assist limit when the power supply voltage is low*1	0 — 250	times
Torque Sensor Amplifier	Torque sensor control voltage is displayed.	0 — 5	V
Motor Current	The current flowing to the motor relay is displayed.	–128 — 127	Arms

NOTE:
- *1 When the value exceeds the maximum of 250 times, 250 is displayed.
- *2 When there is no intervention of the overheating protection control, “65535” is displayed. If an error such as control unit memory error, etc. occurs, “65534” is displayed.
- For detailed operation procedures, refer to “Application help”.

3. FREEZE FRAME DATA

1) On «Start» display, select «Diagnosis».
2) On «Vehicle selection» display, input the vehicle information and select «Confirmed».
3) On «Main Menu» display, select «Each System Check».
4) On «Select System» display, select «Power Steering».
5) On «Select Function» display, select «DTC».
6) On «DTC» display, select «FFD».

Display	Contents to be displayed	Range	Unit
Torque sensor main output	Main torque sensor output voltage is displayed.	0 — 5	V
Torque sensor sub output	Sub torque sensor output voltage is displayed.	0 — 5	V
Vehicle Speed	Vehicle speed is displayed. (CAN communication data)	0 — 255	km/h
Engine Speed	Engine speed is displayed. (CAN communication data)	0 — 12750	rpm
CU Sensing Current(q)	The current flowing to the motor relay is displayed.	–128 — 127	A
3-phase motor current (U-phase)	The U phase actual current value as calculated by the micro-computer from the torque sensor input is displayed.	–128 — 127	A
3-phase motor current (V-phase)	The V phase actual current value as calculated by the micro-computer from the torque sensor input is displayed.	–128 — 127	A
Motor angular speed	Data from the resolver sensor is displayed.	–4096 — 4064	rpm
CU Temperature	The thermistor temperature of the steering control module is displayed.	–50 — 205	°C
Power supply voltage	Battery voltage is displayed.	0 — 25.5	V
Torque sensor power supply voltage	The power supply voltage output to the torque sensor is displayed.	0 — 10.2	V
IG Voltage	The power supply voltage supplied to the ECM is displayed.	0 — 25.5	V
CAN Bus Status	Either Active/Passive/Bus Off is displayed.	—	—
EPS Status	Either Normal/Assist Stop/Assist Limitation is displayed.	—	—
CU Target current(q)	The motor target current value required for assist is displayed.	–128 — 127	A
Steering Angle	Steering angle of steering wheel is displayed.	–640 — 635	deg
Overheating protection intervention history	Number of interventions to the overheat protection control (assist limitation for protecting the power steering from overheating)*1	0 — 250	times
IG Count after ECU Overheat Protection(latest)	Number of times the ignition switch is ON from the intervention to overheat protection control (most recent) until now*2	0 — 65000	times
IG Count after ECU Overheat Protection(Previous)	Number of times the ignition switch is ON from the intervention to overheat protection control (previous) until now*2	0 — 65000	times
IG Count after ECU Overheat Protection(Before Previous)	Number of times the ignition switch is ON from the intervention to overheat protection control (before previous) until now*2	0 — 65000	times
Assist limit history (low voltage)	Number of intervention to assist limit when the power supply voltage is low*1	0 — 250	times
Torque Sensor Amplifier	Torque sensor control voltage is displayed.	0 — 5	V
Motor Current	The current flowing to the motor relay is displayed.	–128 — 127	Arms

NOTE:
- *1 When the value exceeds the maximum of 250 times, 250 is displayed.
- *2 When there is no intervention of the overheating protection control, “65535” is displayed. If an error such as control unit memory error, etc. occurs, “65534” is displayed.
- Freeze frame data stored at the time of trouble occurrence is shown on the display.
- Data of the first trouble occurrence is stored as the freeze frame data in memory.
- Three freeze frame data are stored.
- For detailed operation procedures, refer to “Application help”.

B: INSPECTION

1. COMMUNICATION FOR INITIALIZING IMPOSSIBLE

DETECTING CONDITION:

- Defective harness connector
- Defective power steering control module

TROUBLE SYMPTOM:

- Communication is impossible between the power steering control module and Subaru Select Monitor.
- After starting the engine, the STEERING warning light does not illuminate but steering effort is heavy.

WIRING DIAGRAM:

Electric power steering system <Ref. to WI-168, Electric Power Steering System.>

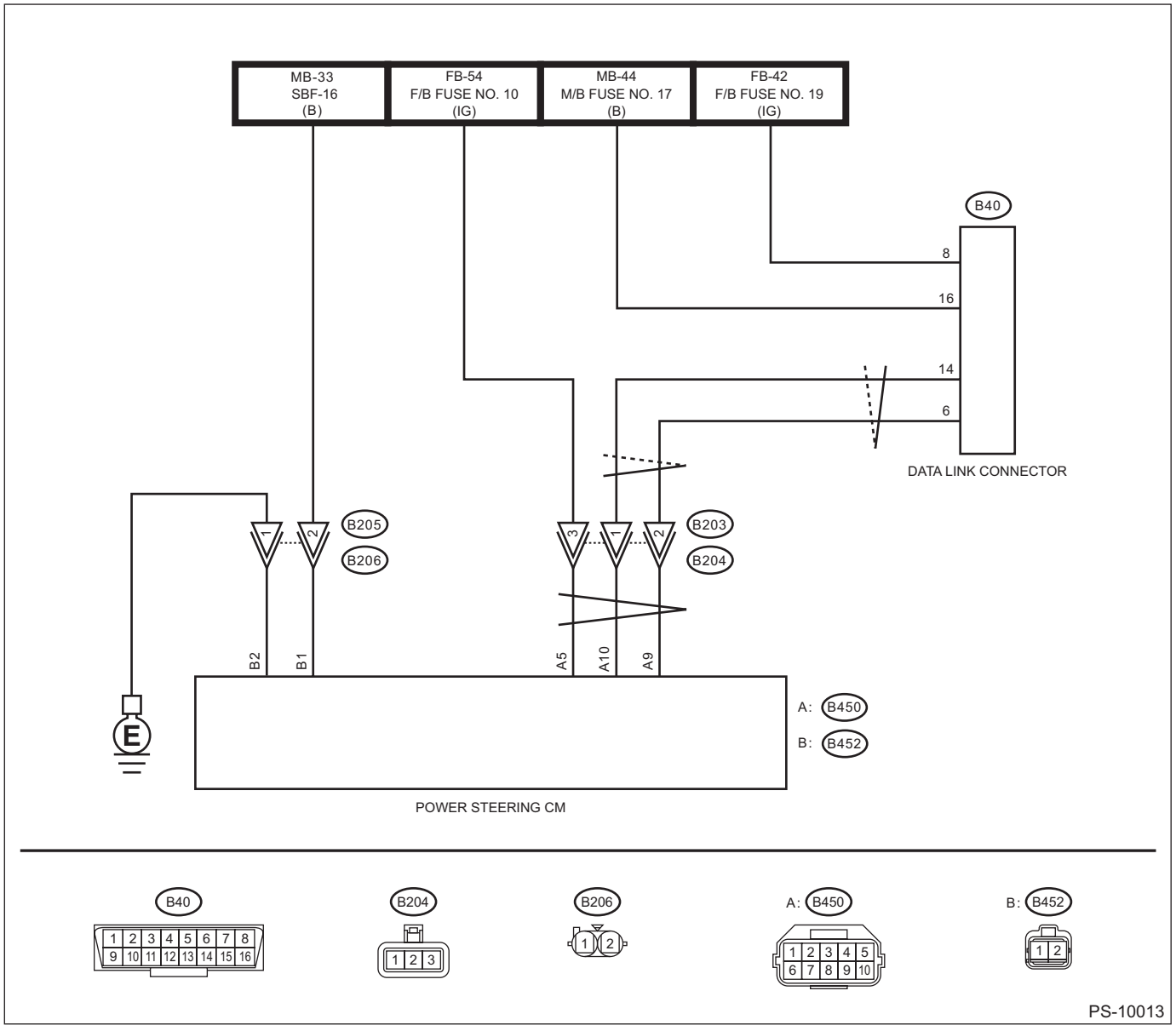

Step	Check	Yes	No
1 **CHECK IGNITION SWITCH.**	Is the ignition switch ON?	Go to step **2**.	Turn the ignition switch to ON, and select the power steering using the Subaru Select Monitor.

	Step	Check	Yes	No
2	**CHECK BATTERY.** 1) Turn the ignition switch to OFF. 2) Measure the battery voltage.	Is the voltage 11 V or more?	Go to step **3**.	Charge or replace the battery.
3	**CHECK BATTERY TERMINAL.**	Is there poor contact at battery terminal?	Repair or tighten the battery terminal.	Go to step **4**.
4	**CHECK POWER STEERING CONTROL MODULE CONNECTOR INSTALLATION.** Turn the ignition switch to OFF.	Is the power steering control module connector inserted into the power steering control module until the clamp locks?	Go to step **5**.	Insert the power steering control module connector into the power steering control module.
5	**CHECK LAN SYSTEM.** Perform the diagnosis for LAN system. <Ref. to LAN(diag)-2, Basic Diagnostic Procedure.>	Is there any fault in LAN system?	Perform the diagnosis according to DTC for LAN system. <Ref. to LAN(diag)-86, List of Diagnostic Trouble Code (DTC).>	Go to step **6**.
6	**CHECK SUBARU SELECT MONITOR COMMUNICATION.** 1) Turn the ignition switch to ON. 2) Check whether communication to electric power steering system can be executed normally.	Is the system name displayed on Subaru Select Monitor?	Check DTC of electric power steering system. <Ref. to PS(diag)-15, Read Diagnostic Trouble Code (DTC).>	Go to step **7**.
7	**CHECK POWER SUPPLY CIRCUIT.** 1) Turn the ignition switch to ON. (Engine OFF) 2) Measure the ignition power supply voltage between the power steering control module connector and chassis ground. ***Connector & terminal*** ***(B204) No. 3 (+) — Chassis ground (–):*** ***(B206) No. 2 (+) — Chassis ground (–):***	Is the voltage 10 — 15 V?	Go to step **8**.	Repair the open circuit in the harness between the power steering control module and the battery.
8	**CHECK HARNESS CONNECTOR BETWEEN POWER STEERING CONTROL MODULE AND CHASSIS GROUND.** 1) Turn the ignition switch to OFF. 2) Disconnect the power steering control module connector. 3) Measure the resistance of harness between power steering control module connector and chassis ground. ***Connector & terminal*** ***(B206) No. 1 — Chassis ground:***	Is the resistance less than 10 Ω?	Go to step **9**.	Repair the open circuit of the power steering control module ground circuit and the poor contact of connector.
9	**CHECK POOR CONTACT OF CONNECTOR.**	Is there poor contact of power steering control module power supply, ground circuit and data link connector?	Repair the connector.	Replace the steering gearbox. <Ref. to PS-26, Electric Power Steering Gearbox.>

2. WITHOUT DTC

DETECTING CONDITION:

- Defective combination meter
- Open circuit of harness

TROUBLE SYMPTOM:

- The STEERING warning light will not turn off.
- «No Diagnostic Code Present» will be displayed on Subaru Select Monitor.

NOTE:
When the STEERING warning light is OFF and «No Diagnostic Code Present» is displayed on Subaru Select Monitor when all DTCs are read, the system is operating properly.

	Step	Check	Yes	No
1	**CHECK LAN SYSTEM.** Perform the diagnosis for LAN system using the Subaru Select Monitor. <Ref. to LAN(diag)-2, Basic Diagnostic Procedure.>	Is DTC U0131 detected?	Perform the diagnosis according to DTC for LAN system. <Ref. to LAN(diag)-86, List of Diagnostic Trouble Code (DTC).>	Go to step **2**.
2	**CHECK COMBINATION METER.** Check the STEERING warning light when the ignition is turned from OFF to ON.	Does the STEERING warning light illuminate at ignition switch ON, and turn off two seconds after the engine is started?	Finish the diagnosis.	Replace the combination meter. <Ref. to IDI-11, Combination Meter.>

7. Read Diagnostic Trouble Code (DTC)

A: OPERATION

1) On «Start» display, select «Diagnosis».
2) On «Vehicle selection» display, input the vehicle information and select «Confirmed».
3) On «Main Menu» display, select «Each System Check».
4) On «Select System» display, select «Power Steering».
5) On «Select Function» display, select «DTC».

NOTE:
- For details concerning the DTC, refer to “List of Diagnostic Trouble Code (DTC)”. <Ref. to PS(diag)-21, List of Diagnostic Trouble Code (DTC).>
- For detailed operation procedures, refer to “Application help”.

8. Inspection Mode

A: PROCEDURE

1) Start the engine.
2) Idle the engine for five seconds or more.
3) Operate the steering wheel from side to side.
4) Reproduce the malfunction occurrence condition as much as possible.

9. Clear Memory Mode

A: OPERATION

1) On «Start» display, select «Diagnosis».
2) On «Vehicle selection» display, input the vehicle information and select «Confirmed».
3) On «Main Menu» display, select «Each System Check».
4) On «Select System» display, select «Power Steering».
5) On «Select Function» display, select «DTC».
6) On «DTC» display, select «Clear Memory».

NOTE:

- Before performing memory clear, check the current data, and if there are any data of DTC, trouble status information, overheating protection intervention history, IGN count from overheating protection and assist limit history, save them.
- For detailed operation procedures, refer to “Application help”.

10.STEERING Warning Light

A: STEERING WARNING LIGHT DOES NOT COME ON

1. POWER STEERING ASSIST ENABLED

DETECTING CONDITION:

- Defective combination meter
- Defective harness

TROUBLE SYMPTOM:

When the ignition switch is turned to ON (engine OFF), the STEERING warning light does not illuminate.

NOTE:
It is operating normally if the warning light illuminates when the ignition switch is turned to ON (engine OFF), and turns off approximately two seconds after engine start.

	Step	Check	Yes	No
1	**CHECK ILLUMINATION OF OTHER LIGHTS.** Turn the ignition switch to ON. (Engine OFF)	Do other warning lights illuminate?	Go to step **2**.	Check the combination meter. <Ref. to IDI-10, INSPECTION, Combination Meter System.>
2	**CHECK LAN SYSTEM.** Perform the diagnosis for LAN system using the Subaru Select Monitor. <Ref. to LAN(diag)-2, Basic Diagnostic Procedure.>	Is a DTC of the CAN communication system displayed?	Perform the diagnosis according to DTC. <Ref. to LAN(diag)-86, List of Diagnostic Trouble Code (DTC).>	Go to step **3**.
3	**CHECK COMBINATION METER.** Perform the self-diagnosis of combination meter. <Ref. to IDI-6, SELF-DIAGNOSIS DISPLAY MODE, OPERATION, Combination Meter System.>	Is the self diagnosis normal?	Current condition is normal.	Check the combination meter. <Ref. to IDI-10, INSPECTION, Combination Meter System.>

2. POWER STEERING ASSIST DISABLED

DETECTING CONDITION:

CAN communication error (engine rpm signal not received)

TROUBLE SYMPTOM:

- Not assisted due to power supply voltage failure.
- The STEERING warning light is normal but there is no power steering assist (steering feels heavy).

	Step	Check	Yes	No
1	**CHECK BATTERY.** Check the battery. <Ref. to SC(H4DO)-65, INSPECTION, Battery.> <Ref. to SC(H6DO)-59, INSPECTION, Battery.>	Is the voltage 12 V or more? Is the specific gravity 1.260 or more? Is the battery OK?	Go to step **2**.	Charge or replace the battery.
2	**CHECK BATTERY TERMINAL AND FUSE.** Check the battery terminals and the fuse.	Is there any defectiveness in the battery terminals and the fuse?	Repair the defective part.	Go to step **3**.
3	**CHECK DTC.** Read the DTC of VDC system using the Subaru Select Monitor.	Is DTC related to VDC system or ignition power supply system displayed?	Perform the diagnosis according to DTC. <Ref. to VDC(diag)-40, List of Diagnostic Trouble Code (DTC).>	Go to step **4**.
4	**CHECK CURRENT DATA.** 1) Start the engine. 2) Display the current data «Engine Speed» of the power steering control module using the Subaru Select Monitor.	Is «Engine Speed» the same as that in the combination meter?	Go to step **5**.	Check the CAN communication. <Ref. to LAN(diag)-2, Basic Diagnostic Procedure.>
5	**CHECK CURRENT DATA.** Display the current data «EPS Status» of the power steering control module using the Subaru Select Monitor.	Is «Assist limitation» displayed?	It is possible that temporary assist limitation has occurred due to overheat protection. Stop the engine for approx. 30 minutes, and check again.	Go to step **6**.
6	**CHECK CURRENT DATA.** 1) Display the current data «Torque sensor main output» and «Torque sensor sub output» of the power steering control module using the Subaru Select Monitor. 2) Move the steering wheel to the left and right.	Do the values of «Torque sensor main output» and «Torque sensor sub output» change according to the operations?	Go to step **7**.	Check for poor contact of the torque sensor connector.
7	**CHECK CURRENT DATA.** Display the current data «IG Voltage» of the power steering control module using the Subaru Select Monitor.	Is the value of «IG Voltage» steady? (While shaking the harness)	Go to step **8**.	Check the ignition switch and IG voltage harness, and repair the defective part.
8	**CHECK CONNECTOR.** 1) Turn the ignition switch to OFF. 2) Disconnect the connector (B206).	Are there any damages to terminal or other parts either on the power steering control module side or on the connector side?	Repair the terminal.	Replace the steering gearbox. <Ref. to PS-26, Electric Power Steering Gearbox.>

NOTE:

- During driving, the assist system will not be activated when the ignition voltage drops.
- Power steering assist is not started unless both of the ignition switch ON signal and the engine speed signal are input.

• In any of the following cases, the power steering assist is limited and steering wheel operation may become heavy.
If the steering wheel is held to an end for a long time, or the steering wheel turning to right and left at slow speed is repeated during parking, the assist limitation (overheat protection control) may operate to prevent failures by overheat.
In this case, by stopping the engine for approx. 30 minutes for cooling, the assist will start operating. While assist limitation (overheat protection control) is in active, «Assist limitation» is displayed in the «EPS operating condition» in the Subaru Select Monitor “Data monitor”.
• History can be confirmed on «Overheating protection intervention history» or «IGN count from overheating protection» of “Data monitor”.
• The overheat protection control system is normal operation, therefore, the STEERING warning light will not come on and there will be no DTC displayed.
• If the power steering system connector is disconnected while cooling under the overheat protection control, different DTC may be recorded. If there is no DTC and assist limitation is in active, stop the engine for approx. 30 minutes for cooling.

B: STEERING WARNING LIGHT DOES NOT GO OFF

DETECTING CONDITION:
- Defective combination meter
- Open circuit of harness

TROUBLE SYMPTOM:
When starting the engine, the STEERING warning light continues to illuminate.

Step		Check	Yes	No
1	**CHECK DTC.** Read the DTC of the power steering control module using the Subaru Select Monitor. <Ref. to PS(diag)-15, Read Diagnostic Trouble Code (DTC).>	Is DTC displayed?	Perform the diagnosis according to DTC. <Ref. to PS(diag)-21, List of Diagnostic Trouble Code (DTC).>	Go to step **2**.
2	**CHECK LAN SYSTEM.** Perform the diagnosis for LAN system using the Subaru Select Monitor. <Ref. to LAN(diag)-2, Basic Diagnostic Procedure.>	Is a DTC related to CAN communication system detected?	Perform the diagnosis according to DTC. <Ref. to LAN(diag)-86, List of Diagnostic Trouble Code (DTC).>	Check the combination meter. <Ref. to IDI-10, INSPECTION, Combination Meter System.>

11.List of Diagnostic Trouble Code (DTC)

A: LIST

DTC	Item	Content of diagnosis	Note
None	Without DTC	Normal	<Ref. to PS(diag)-14, WITHOUT DTC, INSPECTION, Subaru Select Monitor.>
	«Assist limitation» is displayed in the current data «EPS operating condition».	Assist limitation is performed due to overheat protection control.	<Ref. to PS(diag)-19, POWER STEERING ASSIST DISABLED, STEERING WARNING LIGHT DOES NOT COME ON, STEERING Warning Light.>
	"Overheating protection intervention history" in current data display shows 1 or more.	There are previous records of intervention to overheat protection control.	<Ref. to PS(diag)-19, POWER STEERING ASSIST DISABLED, STEERING WARNING LIGHT DOES NOT COME ON, STEERING Warning Light.>
C2511	TORQUE SENSOR MAIN	• Poor connector contact • Forgot to connect connector • Faulty torque sensor section circuit • Faulty torque sensor coil	<Ref. to PS(diag)-23, DTC C2511 TORQUE SENSOR MAIN, Diagnostic Procedure with Diagnostic Trouble Code (DTC).>
C2512	TORQUE SENSOR SUB		<Ref. to PS(diag)-24, DTC C2512 TORQUE SENSOR SUB, Diagnostic Procedure with Diagnostic Trouble Code (DTC).>
C2513	TORQUE SENSOR MUCH TOLERANCE		<Ref. to PS(diag)-24, DTC C2513 TORQUE SENSOR MUCH TOLERANCE, Diagnostic Procedure with Diagnostic Trouble Code (DTC).>
C2514	TORQUE SENSOR POWER SUPPLY		<Ref. to PS(diag)-24, DTC C2514 TORQUE SENSOR POWER SUPPLY, Diagnostic Procedure with Diagnostic Trouble Code (DTC).>
C2521	MOTOR MALFUNCTION	• Poor connector contact • Forgot to connect connector • Harness open/short circuit • Motor open circuit • Power transistor shorted/open • Terminal power supply or ground short	<Ref. to PS(diag)-24, DTC C2521 MOTOR MALFUNCTION, Diagnostic Procedure with Diagnostic Trouble Code (DTC).>
C2522	RESOLVER SENSOR		<Ref. to PS(diag)-24, DTC C2522 RESOLVER SENSOR, Diagnostic Procedure with Diagnostic Trouble Code (DTC).>
C2531	CONTROL MODULE CPU	Faulty main unit of power steering control module	<Ref. to PS(diag)-24, DTC C2531 CONTROL MODULE CPU, Diagnostic Procedure with Diagnostic Trouble Code (DTC).>
C2532	CONTROL MODULE PERIPHERAL CIRCUIT	Faulty main unit of power steering control module	<Ref. to PS(diag)-25, DTC C2532 CONTROL MODULE PERIPHERAL CIRCUIT, Diagnostic Procedure with Diagnostic Trouble Code (DTC).>
C2533	CONTROL MODULE BOARD TEMPERATURE SENSOR	Faulty main unit of power steering control module	<Ref. to PS(diag)-25, DTC C2533 CONTROL MODULE BOARD TEMPERATURE SENSOR, Diagnostic Procedure with Diagnostic Trouble Code (DTC).>
C2541	VEHICLE DYNAMICS CONTROL MODULE VEHICLE SPEED SENSOR	• Poor connector contact • Forgot to connect connector • Harness open/short circuit • VDC system failure	<Ref. to PS(diag)-26, DTC C2541 VEHICLE DYNAMICS CONTROL MODULE VEHICLE SPEED SENSOR, Diagnostic Procedure with Diagnostic Trouble Code (DTC).>
C2543	ERROR PASSIVE	Defective CAN communication	<Ref. to PS(diag)-27, DTC C2543 ERROR PASSIVE, Diagnostic Procedure with Diagnostic Trouble Code (DTC).>
C2544	Auto Start Stop SYSTEM	Auto Start Stop system failure	<Ref. to PS(diag)-29, DTC C2544 Auto Start Stop SYSTEM, Diagnostic Procedure with Diagnostic Trouble Code (DTC).>
C2545	EyeSight SYSTEM	EyeSight system failure	<Ref. to PS(diag)-29, DTC C2545 EyeSight SYSTEM, Diagnostic Procedure with Diagnostic Trouble Code (DTC).>

DTC	Item	Content of diagnosis	Note
C2546	EyeSight VALUE	EyeSight system failure	<Ref. to PS(diag)-30, DTC C2546 EyeSight VALUE, Diagnostic Procedure with Diagnostic Trouble Code (DTC).>
C2547	EyeSight CHECK SUM	• EyeSight system failure • Defective CAN communication	<Ref. to PS(diag)-30, DTC C2547 EyeSight CHECK SUM, Diagnostic Procedure with Diagnostic Trouble Code (DTC).>
C2548	VEHICLE DYNAMICS CONTROL MODULE SYSTEM	VDC system failure	<Ref. to PS(diag)-31, DTC C2548 VEHICLE DYNAMICS CONTROL MODULE SYSTEM, Diagnostic Procedure with Diagnostic Trouble Code (DTC).>
C2551	POWER SUPPLY RELAY	• Power supply voltage malfunction • Faulty relay contact	<Ref. to PS(diag)-32, DTC C2551 POWER SUPPLY RELAY, Diagnostic Procedure with Diagnostic Trouble Code (DTC).>
U0073	CAN FAILURE, BUS 'OFF' DETECTION	Defective CAN communication	<Ref. to PS(diag)-34, DTC U0073 CONTROL MODULE COMMUNICATION BUS OFF, Diagnostic Procedure with Diagnostic Trouble Code (DTC).>
U0100	LOST COMMUNICATION WITH ECM/PCM "A"	Defective CAN communication	<Ref. to PS(diag)-34, DTC U0100 LOST COMMUNICATION WITH ECM/PCM "A", Diagnostic Procedure with Diagnostic Trouble Code (DTC).>
U0122	LOST COMMUNICATION WITH VEHICLE DYNAMICS CONTROL MODULE	Defective CAN communication	<Ref. to PS(diag)-34, DTC U0122 LOST COMMUNICATION WITH VEHICLE DYNAMICS CONTROL MODULE, Diagnostic Procedure with Diagnostic Trouble Code (DTC).>
U0126	LOST COMMUNICATION WITH STEERING ANGLE SENSOR MODULE	Defective CAN communication	<Ref. to PS(diag)-34, DTC U0126 LOST COMMUNICATION WITH STEERING ANGLE SENSOR MODULE, Diagnostic Procedure with Diagnostic Trouble Code (DTC).>
U0155	LOST COMMUNICATION WITH INSTRUMENT PANEL CLUSTER (IPC) CONTROL MODULE	Defective CAN communication	<Ref. to PS(diag)-34, DTC U0155 LOST COMMUNICATION WITH INSTRUMENT PANEL CLUSTER (IPC) CONTROL MODULE, Diagnostic Procedure with Diagnostic Trouble Code (DTC).>
U0401	INVALID DATA RECEIVED FROM ECM/PCM "A"	Defective CAN communication	<Ref. to PS(diag)-34, DTC U0401 INVALID DATA RECEIVED FROM ECM/PCM "A", Diagnostic Procedure with Diagnostic Trouble Code (DTC).>
U0416	INVALID DATA RECEIVED FROM VEHICLE DYNAMICS CONTROL MODULE	Defective CAN communication	<Ref. to PS(diag)-34, DTC U0416 INVALID DATA RECEIVED FROM VEHICLE DYNAMICS CONTROL MODULE, Diagnostic Procedure with Diagnostic Trouble Code (DTC).>
U1120	LOST COMMUNICATION WITH AUTOSTART STOP CONTROL MODULE	Defective CAN communication	<Ref. to PS(diag)-34, DTC U1120 LOST COMMUNICATION WITH AUTOSTART STOP CONTROL MODULE, Diagnostic Procedure with Diagnostic Trouble Code (DTC).>
U1235	LOST COMMUNICATION WITH EyeSight	Defective CAN communication	<Ref. to PS(diag)-34, DTC U1235 LOST COMMUNICATION WITH EyeSight, Diagnostic Procedure with Diagnostic Trouble Code (DTC).>
U1433	INVALID DATA RECEIVED FROM EyeSight	Defective CAN communication	<Ref. to PS(diag)-34, DTC U1433 INVALID DATA RECEIVED FROM EyeSight, Diagnostic Procedure with Diagnostic Trouble Code (DTC).>
U1469	INVALID DATA RECEIVED FROM AUTOSTART STOP CONTROL MODULE	Defective CAN communication	<Ref. to PS(diag)-35, DTC U1469 INVALID DATA RECEIVED FROM AUTOSTART STOP CONTROL MODULE, Diagnostic Procedure with Diagnostic Trouble Code (DTC).>

12.Diagnostic Procedure with Diagnostic Trouble Code (DTC)

A: DTC C2511 TORQUE SENSOR MAIN

DTC DETECTING CONDITION:

When torque sensor main output voltage failure is detected after the ignition switch is ON.

TROUBLE SYMPTOM:

- The steering wheel operation feels heavy.
- STEERING warning light illuminates.

WIRING DIAGRAM:

Electric power steering system <Ref. to WI-168, Electric Power Steering System.>

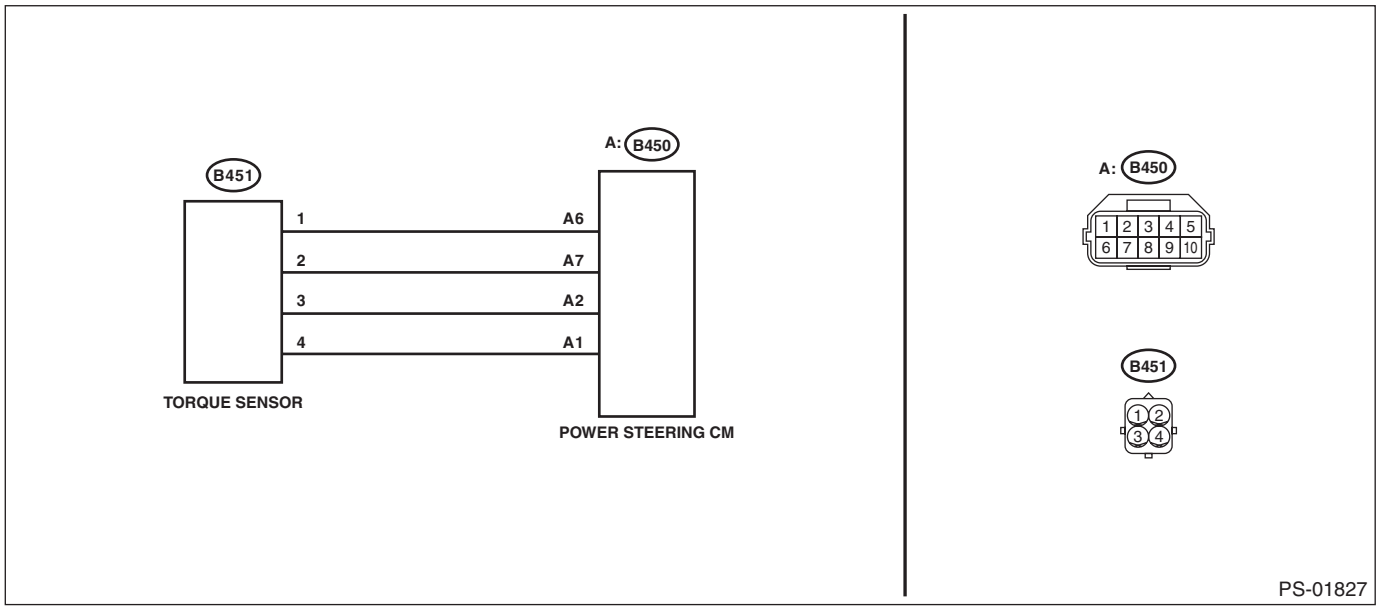

	Step	Check	Yes	No
1	**CHECK TORQUE SENSOR SIGNAL.** 1) Display the current data of the power steering control module using the Subaru Select Monitor. 2) Check the voltage of «Torque sensor main output», «Torque sensor sub output» and «Torque sensor power supply voltage».	Are the voltage of «Torque sensor main output» and «Torque sensor sub output» 2.5±0.3 V? Is the voltage of «Torque sensor power supply voltage» 5±0.3 V?	Check for poor contact of the connector, and check the conditions again. If the condition recur, go to the next step. Go to step **2**. If it does not recur, complete the inspection.	Go to step **2**.
2	**CHECK HARNESS.** 1) Turn the ignition switch to OFF. 2) Remove the cradle. <Ref. to FS-21, Cradle.> 3) Disconnect the connectors (B450, B451). 4) Using a tester and special tool harness, check the resistance between harness terminals. ***Connector & terminal*** ***(B451) No. 1 — (B450) No. 6:*** ***(B451) No. 2 — (B450) No. 7:*** ***(B451) No. 3 — (B450) No. 2:*** ***(B451) No. 4 — (B450) No. 1:***	Is the resistance less than 10 Ω?	Replace the steering gearbox. <Ref. to PS-26, Electric Power Steering Gearbox.>	Repair or replace the harness.

B: DTC C2512 TORQUE SENSOR SUB

DTC DETECTING CONDITION:
When torque sensor sub output voltage failure is detected after the ignition switch is ON.

NOTE:
Refer to “DTC C2511 TORQUE SENSOR MAIN” for diagnostic procedure. <Ref. to PS(diag)-23, DTC C2511 TORQUE SENSOR MAIN, Diagnostic Procedure with Diagnostic Trouble Code (DTC).>

C: DTC C2513 TORQUE SENSOR MUCH TOLERANCE

DTC DETECTING CONDITION:
When torque sensor main/sub output voltage failure is detected after the ignition switch is ON.

NOTE:
Refer to “DTC C2511 TORQUE SENSOR MAIN” for diagnostic procedure. <Ref. to PS(diag)-23, DTC C2511 TORQUE SENSOR MAIN, Diagnostic Procedure with Diagnostic Trouble Code (DTC).>

D: DTC C2514 TORQUE SENSOR POWER SUPPLY

DTC DETECTING CONDITION:
When torque sensor power supply voltage failure is detected after the ignition switch is ON.

NOTE:
Refer to “DTC C2511 TORQUE SENSOR MAIN” for diagnostic procedure. <Ref. to PS(diag)-23, DTC C2511 TORQUE SENSOR MAIN, Diagnostic Procedure with Diagnostic Trouble Code (DTC).>

E: DTC C2521 MOTOR MALFUNCTION

DTC DETECTING CONDITION:
- When motor driving element malfunction is detected after assist starts with 500 rpm engine speed reception.
- When motor current failure is detected after assist starts with 500 rpm engine speed reception.
- When motor voltage failure is detected after assist starts with 500 rpm engine speed reception.

TROUBLE SYMPTOM:
- The steering wheel operation feels heavy.
- STEERING warning light illuminates.

NOTE:
When this code is displayed, replace the steering gearbox with a new part. <Ref. to PS-26, Electric Power Steering Gearbox.>

F: DTC C2522 RESOLVER SENSOR

DTC DETECTING CONDITION:
When resolver signal output voltage failure is detected after assist starts with 500 rpm engine speed reception.

TROUBLE SYMPTOM:
- The steering wheel operation feels heavy.
- STEERING warning light illuminates.

NOTE:
When this code is displayed, replace the steering gearbox with a new part. <Ref. to PS-26, Electric Power Steering Gearbox.>

G: DTC C2531 CONTROL MODULE CPU

DTC DETECTING CONDITION:
When microcomputer malfunction is detected after the ignition switch is ON.

TROUBLE SYMPTOM:
- The steering wheel operation feels heavy.
- STEERING warning light illuminates.

NOTE:
When this code is displayed, replace the steering gearbox with a new part. <Ref. to PS-26, Electric Power Steering Gearbox.>

H: DTC C2532 CONTROL MODULE PERIPHERAL CIRCUIT

DTC DETECTING CONDITION:

- When torque sensor peripheral circuit malfunction inside the power steering control module is detected after assist starts with 500 rpm engine speed reception.
- When storage medium IC malfunction inside the power steering control module is detected at initial check.
- When motor drive circuit malfunction is detected after assist starts with 500 rpm engine speed reception.
- When motor driving element driver malfunction is detected after the ignition switch is ON.
- When intercommunication error of the power steering control module is detected after the ignition switch is ON.

TROUBLE SYMPTOM:

- The steering wheel operation feels heavy.
- STEERING warning light illuminates.

NOTE:
When this code is displayed, replace the steering gearbox with a new part. <Ref. to PS-26, Electric Power Steering Gearbox.>

I: DTC C2533 CONTROL MODULE BOARD TEMPERATURE SENSOR

DTC DETECTING CONDITION:

When thermistor malfunction is detected after the ignition switch is ON.

TROUBLE SYMPTOM:

The steering wheel operation feels heavy.

NOTE:
When this code is displayed, replace the steering gearbox with a new part. <Ref. to PS-26, Electric Power Steering Gearbox.>

J: DTC C2541 VEHICLE DYNAMICS CONTROL MODULE VEHICLE SPEED SENSOR

DTC DETECTING CONDITION:
When VDCCM reception failure (related to vehicle speed sensor) is detected after the ignition switch is ON.
TROUBLE SYMPTOM:
The steering wheel operation feels heavy.

	Step	Check	Yes	No
1	**CHECK DTC.** Read the DTC of VDC system using the Subaru Select Monitor.	Is a DTC related to VDC system or vehicle speed signal system detected?	Perform the diagnosis according to the DTC. <Ref. to VDC(diag)-40, List of Diagnostic Trouble Code (DTC).>	Go to step **2**.
2	**CHECK LAN SYSTEM.** Perform the diagnosis for LAN system using the Subaru Select Monitor. <Ref. to LAN(diag)-2, Basic Diagnostic Procedure.>	Is a DTC related to CAN communication detected?	Perform the diagnosis according to the DTC. <Ref. to LAN(diag)-86, List of Diagnostic Trouble Code (DTC).>	Go to step **3**.
3	**CHECK VEHICLE SPEED SIGNAL.** 1) Display the current data «Vehicle Speed» of the power steering control module using the Subaru Select Monitor. 2) Lift up the vehicle (so that the wheels turn freely), start the engine, and raise engine speed in gear. **CAUTION:** **Be careful that no one is near the spinning tires and nothing gets caught in them.** 3) Check for whether the data changes according to vehicle speed.	Is the data in sync with the vehicle speed?	It is possible that temporary poor communication occurs. Perform the Clear Memory Mode. <Ref. to PS(diag)-17, Clear Memory Mode.>	Replace the steering gearbox. <Ref. to PS-26, Electric Power Steering Gearbox.>

K: DTC C2543 ERROR PASSIVE

DTC DETECTING CONDITION:
When send/receive failure of CAN communication is detected after the ignition switch is ON.
TROUBLE SYMPTOM:
The steering wheel operation feels heavy.
WIRING DIAGRAM:
Electric power steering system <Ref. to WI-168, Electric Power Steering System.>

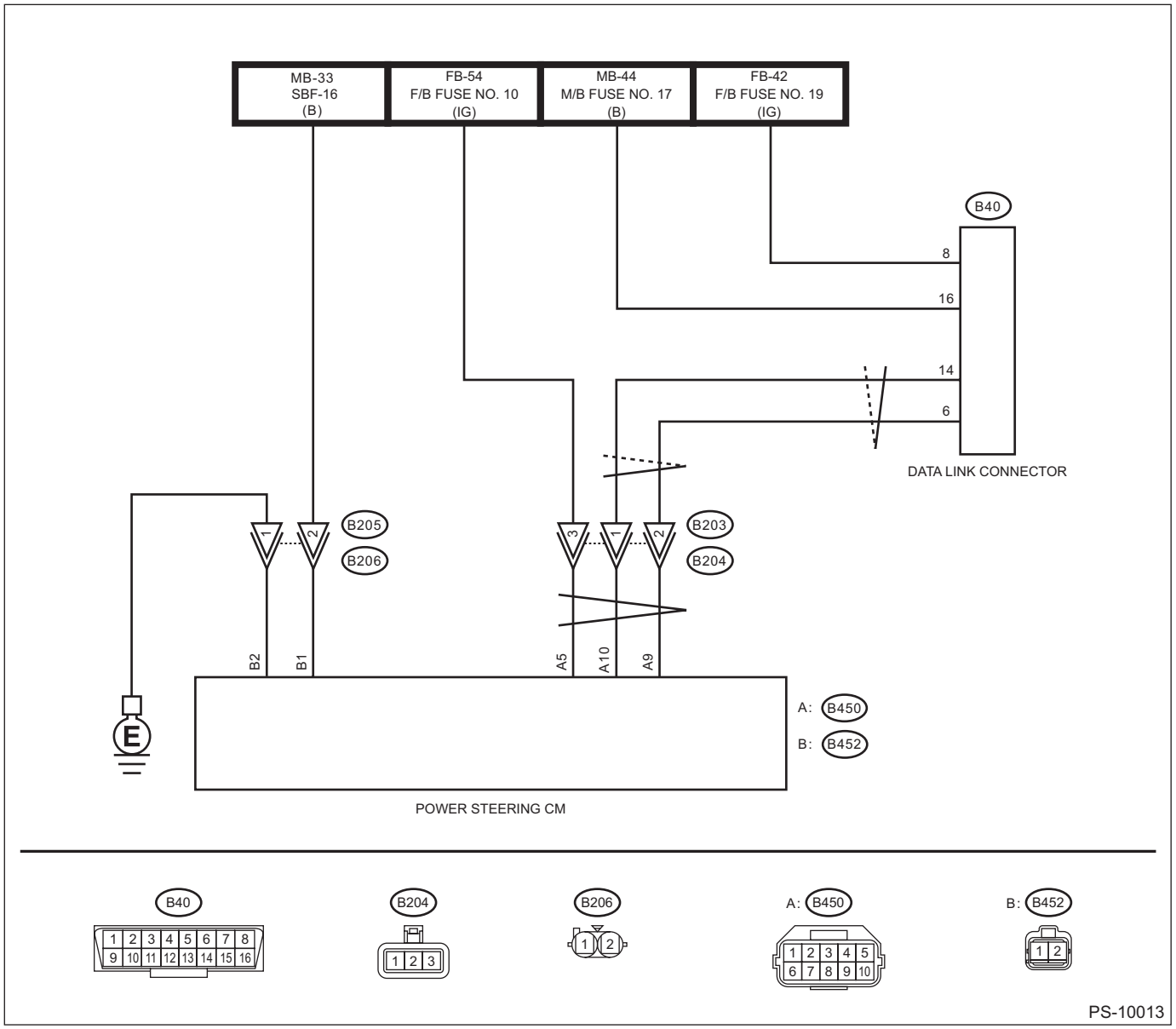

Step		Check	Yes	No
1	**CHECK PERIPHERALS.** Check the data link connector.	Is any other electrical part connected to the data link connector or harness?	Disconnect the connection of electrical parts and perform inspection again.	Go to step **2**.

	Step	Check	Yes	No
2	**CHECK LAN SYSTEM.** Perform the diagnosis for LAN system using the Subaru Select Monitor. <Ref. to LAN(diag)-2, Basic Diagnostic Procedure.>	Is a DTC related to CAN communication detected?	Perform the diagnosis according to the DTC. <Ref. to LAN(diag)-86, List of Diagnostic Trouble Code (DTC).>	Go to step **3**.
3	**CHECK DTC.** Read the DTC of the power steering control module using the Subaru Select Monitor. <Ref. to PS(diag)-15, Read Diagnostic Trouble Code (DTC).>	Is DTC C2543 a current malfunction?	Go to step **4**.	System is normal. Temporary interference from noise is a possible cause.
4	**CHECK CONNECTOR.** Check the connecting condition of connector.	Is the connector firmly installed?	Go to step **5**.	Install the connector, and check again.
5	**CHECK CONNECTOR.** 1) Turn the ignition switch to OFF. 2) Disconnect the connector (B204).	Is there crimped or spread portion in connector terminal on vehicle harness side and power steering control module side?	Repair or replace faulty parts.	Go to step **6**.
6	**CHECK HARNESS.** Check the harness related to CAN communication system.	Is there any fault in the harness?	Repair or replace the harness.	Replace the steering gearbox. <Ref. to PS-26, Electric Power Steering Gearbox.>

L: DTC C2544 Auto Start Stop SYSTEM

DTC DETECTING CONDITION:

- When a failure of CAN communication is detected after the ignition switch is ON.
- When the power steering control module has a detection error after the ignition switch is ON.

TROUBLE SYMPTOM:

DTC C2544 is stored in the power steering control module.

	Step	Check	Yes	No
1	**CHECK LAN SYSTEM.** Perform the diagnosis for LAN system using the Subaru Select Monitor. <Ref. to LAN(diag)-2, Basic Diagnostic Procedure.>	Is a DTC related to CAN communication detected?	Perform the diagnosis according to DTC. <Ref. to LAN(diag)-86, List of Diagnostic Trouble Code (DTC).>	Go to step **2**.
2	**CHECK POWER STEERING CONTROL MODULE.** 1) Perform the Clear Memory Mode. <Ref. to PS(diag)-17, Clear Memory Mode.> 2) Perform the Inspection Mode. <Ref. to PS(diag)-16, Inspection Mode.> 3) Read the DTC.	Is DTC C2544 detected?	Replace the steering gearbox. <Ref. to PS-26, Electric Power Steering Gearbox.>	It results from a temporary noise interference.

M: DTC C2545 EyeSight SYSTEM

DTC DETECTING CONDITION:

When the EyeSight system fail flag from stereo camera is received after the ignition switch is ON.

TROUBLE SYMPTOM:

EyeSight steering support function does not operate.

	Step	Check	Yes	No
1	**CHECK POOR CONTACT OF CONNECTOR.**	Is there poor contact of the stereo camera connector?	Repair the poor contact of connector.	Go to step **2**.
2	**CHECK DTC.** Read the DTC for the EyeSight system using the Subaru Select Monitor.	Is DTC of EyeSight system detected?	Perform the diagnosis according to the DTC.	Go to step **3**.
3	**CHECK LAN SYSTEM.** Perform the diagnosis for LAN system using the Subaru Select Monitor. <Ref. to LAN(diag)-2, Basic Diagnostic Procedure.>	Is a DTC related to CAN communication detected?	Perform the diagnosis according to DTC. <Ref. to LAN(diag)-86, List of Diagnostic Trouble Code (DTC).>	Go to step **4**.
4	**CHECK POWER STEERING CONTROL MODULE.** 1) Connect all connectors. 2) Perform the Clear Memory Mode. <Ref. to PS(diag)-17, Clear Memory Mode.> 3) Perform the Inspection Mode. <Ref. to PS(diag)-16, Inspection Mode.> 4) Read the DTC.	Is DTC C2545 detected?	Replace the steering gearbox. <Ref. to PS-26, Electric Power Steering Gearbox.>	It results from a temporary noise interference.

N: DTC C2546 EyeSight VALUE

DTC DETECTING CONDITION:
When the steering support indication value from stereo camera is out of range after the ignition switch is ON.
TROUBLE SYMPTOM:
EyeSight steering support function does not operate.

	Step	Check	Yes	No
1	**CHECK POOR CONTACT OF CONNECTOR.**	Is there poor contact of the stereo camera connector?	Repair the poor contact of connector.	Go to step **2**.
2	**CHECK DTC.** Read the DTC for the EyeSight system using the Subaru Select Monitor.	Is DTC of EyeSight system detected?	Perform the diagnosis according to the DTC.	Go to step **3**.
3	**CHECK LAN SYSTEM.** Perform the diagnosis for LAN system using the Subaru Select Monitor. <Ref. to LAN(diag)-2, Basic Diagnostic Procedure.>	Is a DTC related to CAN communication detected?	Perform the diagnosis according to DTC. <Ref. to LAN(diag)-86, List of Diagnostic Trouble Code (DTC).>	Go to step **4**.
4	**CHECK POWER STEERING CONTROL MODULE.** 1) Connect all connectors. 2) Perform the Clear Memory Mode. <Ref. to PS(diag)-17, Clear Memory Mode.> 3) Perform the Inspection Mode. <Ref. to PS(diag)-16, Inspection Mode.> 4) Read the DTC.	Is DTC C2546 detected?	Replace the steering gearbox. <Ref. to PS-26, Electric Power Steering Gearbox.>	It results from a temporary noise interference.

O: DTC C2547 EyeSight CHECK SUM

DTC DETECTING CONDITION:
When check sum error of EyeSight transmission data is detected after the ignition switch is ON.
TROUBLE SYMPTOM:
EyeSight steering support function does not operate.

	Step	Check	Yes	No
1	**CHECK POOR CONTACT OF CONNECTOR.**	Is there poor contact of the stereo camera connector?	Repair the poor contact of connector.	Go to step **2**.
2	**CHECK DTC.** Read the DTC for the EyeSight system using the Subaru Select Monitor.	Is DTC of EyeSight system detected?	Perform the diagnosis according to the DTC.	Go to step **3**.
3	**CHECK LAN SYSTEM.** Perform the diagnosis for LAN system using the Subaru Select Monitor. <Ref. to LAN(diag)-2, Basic Diagnostic Procedure.>	Is a DTC related to CAN communication detected?	Perform the diagnosis according to DTC. <Ref. to LAN(diag)-86, List of Diagnostic Trouble Code (DTC).>	Go to step **4**.
4	**CHECK POWER STEERING CONTROL MODULE.** 1) Connect all connectors. 2) Perform the Clear Memory Mode. <Ref. to PS(diag)-17, Clear Memory Mode.> 3) Perform the Inspection Mode. <Ref. to PS(diag)-16, Inspection Mode.> 4) Read the DTC.	Is DTC C2547 detected?	Replace the steering gearbox. <Ref. to PS-26, Electric Power Steering Gearbox.>	It results from a temporary noise interference.

P: DTC C2548 VEHICLE DYNAMICS CONTROL MODULE SYSTEM

DTC DETECTING CONDITION:

When error flag from VDCCM is detected for 2 seconds after the ignition switch is ON.

	Step	Check	Yes	No
1	**CHECK DTC.** Read the DTC of VDC system using the Subaru Select Monitor.	Is a DTC related to VDC system (sensors) detected?	Perform the diagnosis according to the DTC. <Ref. to VDC(diag)-40, List of Diagnostic Trouble Code (DTC).>	Go to step **2**.
2	**CHECK LAN SYSTEM.** Perform the diagnosis for LAN system using the Subaru Select Monitor. <Ref. to LAN(diag)-2, Basic Diagnostic Procedure.>	Is a DTC related to CAN communication detected?	Perform the diagnosis according to the DTC. <Ref. to LAN(diag)-86, List of Diagnostic Trouble Code (DTC).>	Replace the steering gearbox. <Ref. to PS-26, Electric Power Steering Gearbox.>

Q: DTC C2551 POWER SUPPLY RELAY

DTC DETECTING CONDITION:

- When contact deposit malfunction of power supply relay is detected at initial check.
- When power supply voltage failure is detected after the ignition switch is ON.
- When power supply voltage drop is detected with 500 rpm engine speed reception.

TROUBLE SYMPTOM:

- The steering wheel operation feels heavy.
- STEERING warning light illuminates.

NOTE:
If power supply voltage failure exists at the vehicle side, the warning light goes off if the normal voltage returns.

WIRING DIAGRAM:
Electric power steering system <Ref. to WI-168, Electric Power Steering System.>

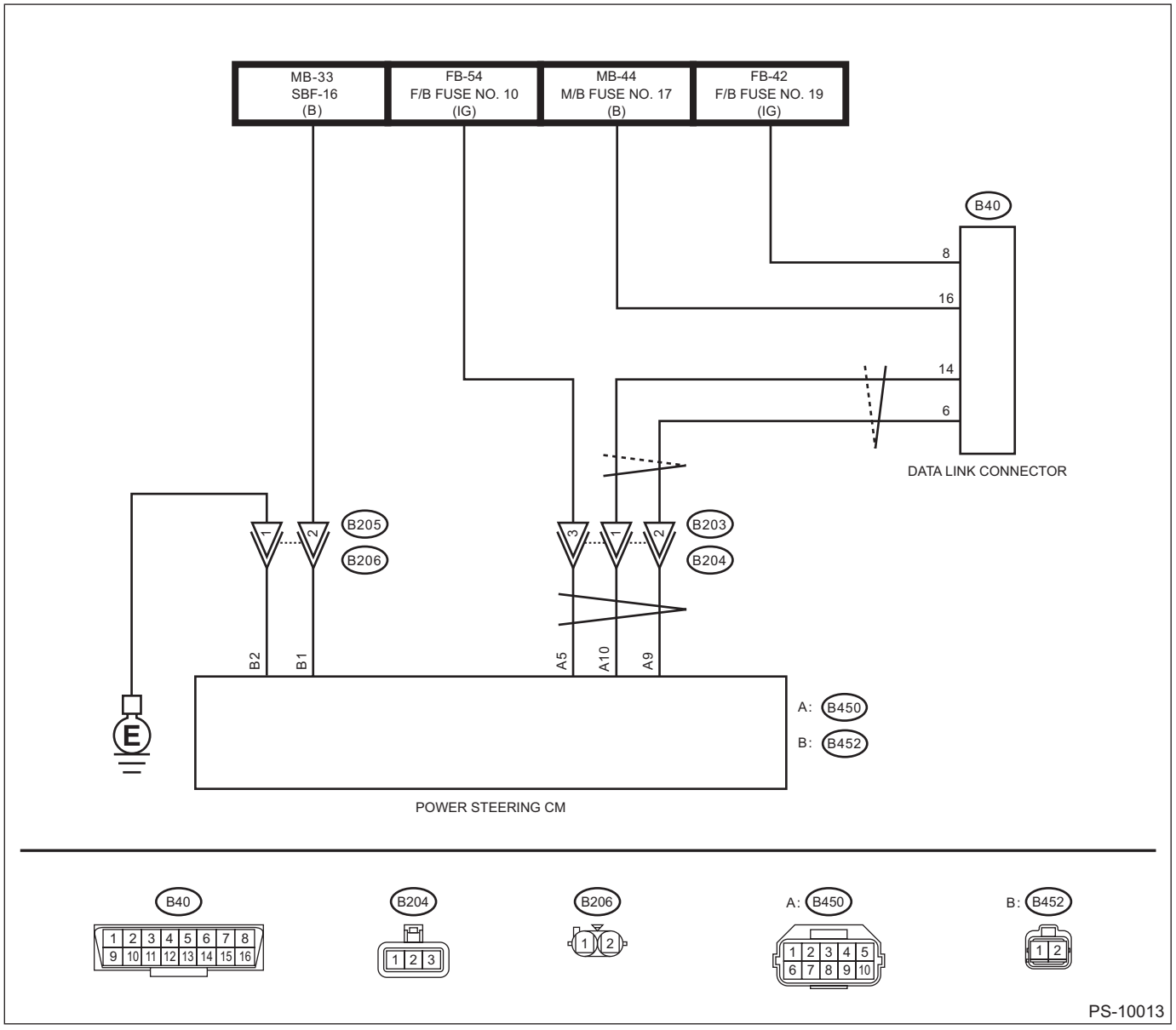

	Step	Check	Yes	No
1	**CHECK BATTERY.** Check the battery. <Ref. to SC(H4DO)-65, INSPECTION, Battery.> <Ref. to SC(H6DO)-59, INSPECTION, Battery.>	Is the voltage 12 V or more? Is the specific gravity 1.260 or more? Is the battery OK?	Go to step **2**.	Charge or replace the battery.
2	**CHECK BATTERY TERMINAL AND FUSE.** Check the battery terminals and the fuse.	Is there any defectiveness in the battery terminals and the fuse?	Repair the defective part.	Go to step **3**.
3	**CHECK WIRING HARNESS.** 1) Disconnect the connector. (B205, B206) 2) Turn the ignition switch to ON. 3) Using a tester and special tool harness, check the voltage between terminals. ***Connector & terminal*** ***(B205) No. 2 (+) — Chassis ground (–):***	Is the voltage 12 V or more?	Go to step **4**.	Repair the open circuit of harness or the poor contact of connector between the power steering control module and the battery.
4	**CHECK GROUND CIRCUIT.** 1) Turn the ignition switch to OFF. 2) Using a tester and special tool harness, check the resistance between terminals. ***Connector & terminal*** ***(B205) No. 1 — Chassis ground:***	Is the resistance less than 1 Ω?	Go to step **5**.	Repair the open circuit or poor contact of the harness between the power steering control module and chassis ground.
5	**CHECK HARNESS.** 1) Turn the ignition switch to OFF. 2) Disconnect the power steering control module connector (B452). 3) Using a tester and special tool harness, check the resistance between harness terminals. ***Connector & terminal*** ***(B206) No. 1 — (B452) No. 2:*** ***(B206) No. 2 — (B452) No. 1:***	Is the resistance less than 10 Ω?	Replace the steering gearbox. <Ref. to PS-26, Electric Power Steering Gearbox.>	Repair or replace the harness.

R: DTC U0073 CONTROL MODULE COMMUNICATION BUS OFF

NOTE:
Refer to “LAN SYSTEM (DIAGNOSTICS)” for diagnostic procedure. <Ref. to LAN(diag)-2, Basic Diagnostic Procedure.>

S: DTC U0100 LOST COMMUNICATION WITH ECM/PCM "A"

NOTE:
Refer to “LAN SYSTEM (DIAGNOSTICS)” for diagnostic procedure. <Ref. to LAN(diag)-2, Basic Diagnostic Procedure.>

T: DTC U0122 LOST COMMUNICATION WITH VEHICLE DYNAMICS CONTROL MODULE

NOTE:
Refer to “LAN SYSTEM (DIAGNOSTICS)” for diagnostic procedure. <Ref. to LAN(diag)-2, Basic Diagnostic Procedure.>

U: DTC U0126 LOST COMMUNICATION WITH STEERING ANGLE SENSOR MODULE

NOTE:
Refer to “LAN SYSTEM (DIAGNOSTICS)” for diagnostic procedure. <Ref. to LAN(diag)-2, Basic Diagnostic Procedure.>

V: DTC U0155 LOST COMMUNICATION WITH INSTRUMENT PANEL CLUSTER (IPC) CONTROL MODULE

NOTE:
Refer to “LAN SYSTEM (DIAGNOSTICS)” for diagnostic procedure. <Ref. to LAN(diag)-2, Basic Diagnostic Procedure.>

W: DTC U0401 INVALID DATA RECEIVED FROM ECM/PCM "A"

NOTE:
Refer to “LAN SYSTEM (DIAGNOSTICS)” for diagnostic procedure. <Ref. to LAN(diag)-2, Basic Diagnostic Procedure.>

X: DTC U0416 INVALID DATA RECEIVED FROM VEHICLE DYNAMICS CONTROL MODULE

NOTE:
Refer to “LAN SYSTEM (DIAGNOSTICS)” for diagnostic procedure. <Ref. to LAN(diag)-2, Basic Diagnostic Procedure.>

Y: DTC U1120 LOST COMMUNICATION WITH AUTOSTART STOP CONTROL MODULE

NOTE:
Refer to “LAN SYSTEM (DIAGNOSTICS)” for diagnostic procedure. <Ref. to LAN(diag)-2, Basic Diagnostic Procedure.>

Z: DTC U1235 LOST COMMUNICATION WITH EyeSight

NOTE:
Refer to “LAN SYSTEM (DIAGNOSTICS)” for diagnostic procedure. <Ref. to LAN(diag)-2, Basic Diagnostic Procedure.>

AA:DTC U1433 INVALID DATA RECEIVED FROM EyeSight

NOTE:
Refer to “LAN SYSTEM (DIAGNOSTICS)” for diagnostic procedure. <Ref. to LAN(diag)-2, Basic Diagnostic Procedure.>

AB:DTC U1469 INVALID DATA RECEIVED FROM AUTOSTART STOP CONTROL MODULE

NOTE:
Refer to “LAN SYSTEM (DIAGNOSTICS)” for diagnostic procedure. <Ref. to LAN(diag)-2, Basic Diagnostic Procedure.>

BODY SECTION

This service manual has been prepared to provide SUBARU service personnel with the necessary information and data for the correct maintenance and repair of SUBARU vehicles.
This manual includes the procedures for maintenance, disassembling, reassembling, inspection and adjustment of components and diagnostics for guidance of experienced mechanics.
Please peruse and utilize this manual fully to ensure complete repair work for satisfying our customers by keeping their vehicle in optimum condition. When replacement of parts during repair work is needed, be sure to use SUBARU genuine parts.

All information, illustration and specifications contained in this manual are based on the latest product information available at the time of publication approval.

HVAC SYSTEM (HEATER, VENTILATOR AND A/C)	AC
HVAC SYSTEM (DIAGNOSTICS)	AC(diag)
AIRBAG SYSTEM	AB
AIRBAG SYSTEM (DIAGNOSTICS)	AB(diag)
OCCUPANT DETECTION SYSTEM (DIAGNOSTICS)	OD(diag)
SEAT BELT SYSTEM	SB
LIGHTING SYSTEM	LI
AUTO HEADLIGHT BEAM LEVELER SYSTEM (DIAGNOSTICS)	AL(diag)
STEERING RESPONSIVE FOG LIGHTS (DIAGNOSTICS)	SRF(diag)
WIPER AND WASHER SYSTEMS	WW
ENTERTAINMENT	ET
INFOTAINMENT SYSTEM (DIAGNOSTICS)	INF(diag)
COMMUNICATION SYSTEM	COM
GLASS/WINDOWS/MIRRORS	GW
BODY STRUCTURE	BS
INSTRUMENTATION/DRIVER INFO	IDI
COMBINATION METER (DIAGNOSTICS)	MET(diag)

BODY SECTION

SEATS	SE
POWER SEAT MEMORY SYSTEM (DIAGNOSTICS)	PSM(diag)
SECURITY AND LOCKS	SL
SUNROOF/T-TOP/CONVERTIBLE TOP (SUNROOF)	SR
EXTERIOR/INTERIOR TRIM	EI
EXTERIOR BODY PANELS	EB
POWER REAR GATE SYSTEM	PRG
POWER REAR GATE SYSTEM (DIAGNOSTICS)	PRG(diag)
CRUISE CONTROL SYSTEM	CC
CRUISE CONTROL SYSTEM (DIAGNOSTICS)	CC(diag)
IMMOBILIZER (DIAGNOSTICS)	IM(diag)
LAN SYSTEM (DIAGNOSTICS)	LAN(diag)
EyeSight	ES
EyeSight (DIAGNOSTICS)	ES(diag)
Blind Spot Detection/Rear Cross Traffic Alert	RVD
Blind Spot Detection/Rear Cross Traffic Alert (DIAGNOSTICS)	RVD(diag)
KEYLESS ACCESS WITH PUSH BUTTON START SYSTEM (DIAGNOSTICS)	KPS(diag)

BODY SECTION

BODY CONTROL SYSTEM (DIAGNOSTICS) BC(diag)

TELEMATICS SYSTEM (DIAGNOSTICS) TEL(diag)

HVAC SYSTEM (HEATER, VENTILATOR AND A/C)

AC

		Page
1.	General Description	2
2.	Air Conditioning System	23
3.	Refrigerant Pressure with Manifold Gauge Set	24
4.	Refrigerant Recovery Procedure	29
5.	Refrigerant Charging Procedure	31
6.	Refrigerant Leak Check	34
7.	Relay and Fuse	36
8.	Compressor Oil	37
9.	Blower Motor Unit Assembly	38
10.	Blower Motor	40
11.	Power Transistor (Auto A/C Model)	42
12.	Blower Resistor (Manual A/C Model)	43
13.	Heater Core	45
14.	Control Panel	47
15.	Control Unit	49
16.	Compressor	50
17.	Condenser	54
18.	Heater and Cooling Unit	59
19.	Evaporator	61
20.	Expansion Valve	63
21.	Hose and Pipe	65
22.	Pressure Sensor	70
23.	Ambient Sensor	71
24.	Sunload Sensor (Auto A/C Model)	73
25.	In-Vehicle Sensor (Auto A/C Model)	75
26.	Evaporator Sensor	78
27.	FRESH/RECIRC Door Actuator	81
28.	Mode Door Actuator	83
29.	Air Mix Door Actuator	86
30.	Rear Vent Door Actuator	90
31.	Air Vent Grille	92
32.	Heater Duct	95
33.	Heater Vent Duct	99
34.	A/C Filter	100
35.	Diagnostics with Phenomenon	101

1. General Description

A: SPECIFICATION

1. HEATER SYSTEM

Item		Specifications	Condition
Heating capacity		4.8 kW (4,127 kcal/h, 16,377 BTU/h) or more	• Air flow control switch: FOOT • Temperature control dial: HI (MAX HOT) • Temperature difference between hot water and inlet air: 65°C (149°F) • Hot water flow rate: 360 L (95.1 US gal, 79.2 Imp gal)/h
Air flow rate		300 m^3 (10,596 cu ft)/h	FOOT mode (FRESH), MAX HOT at 12.5 V
Max air flow rate		495 m^3 (17,483 cu ft)/h	• Temperature control dial: LO (MAX COOL) • Fan switch or dial: HI (MAX) – Auto A/C model: 7th position – Manual A/C model: 4th position • FRESH/RECIRC switch: RECIRC
Heater core size (height × length × width)		264 × 100 × 27 mm (10.4 × 3.94 × 1.06 in)	—
Blower motor	Type	Magnet motor 260 W or less	12 V
	Fan type and size (diameter × width)	Sirocco fan type 150 × 75 mm (5.91 × 2.95 in)	—

2. A/C SYSTEM

Item		Specifications
Type of air conditioner		Reheat air-mix type
Cooling capacity		4.18 kW [at 500 m^3 (17,660 cu ft)/h] (3,594 kcal/h, 14,262 BTU/h)
Refrigerant		HFC-134a (CH_2FCF_3) [0.425±0.025 kg (0.94±0.06 lb)]
Compressor	Type	H4 model: Swash plate, variable volume (TSE14F) H6 model: Swash plate, variable volume (TSE14C)
	Discharge	140.6 cc (8.58 cu in)/rev
	Max. permissible speed	6,000 r/min
Pulley	Type of belt	V-belt 6 PK
	Pulley dia. (effective dia.)	110 mm (4.33 in)
	Pulley ratio	1.3
Condenser	Type	Corrugated fin (sub cool type)
	Core face area	0.186 m^2 (2.002 sq ft)
	Core thickness	11.5 mm (0.45 in)
	Radiation area	3.516 m^2 (37.85 sq ft)
Receiver drier	Effective inner capacity	190 cm^3 (11.6 cu in)
Expansion valve	Type	Internally equalizing
Evaporator	Type	Double tank
	Dimensions (W × H × T)	293.1 × 171 × 38 mm (11.54 × 6.73 × 1.5 in)
Blower fan	Fan type	Sirocco fan
	Outer diameter × Width	150 × 75 mm (5.91 × 2.95 in)
	Power consumption	260 W

Item			Specifications
Condenser fan (sub fan)		Motor type	Magnet
		Power consumption	H4 model: 120 W H6 model: 240 W
		Fan outer diameter	320 mm (12.6 in)
Radiator fan (main fan)		Motor type	Magnet
		Power consumption	H4 model: 120 W H6 model: 240 W
		Fan outer diameter	320 mm (12.6 in)
Idle speed	MPFI model	No load	H4 MT model: 650±100 r/min H4 CVT model: 675±100 r/min H6 model: 700±100 r/min
		A/C ON	H4 MT model: 800 — 850±100 r/min H4 CVT model: 700±100 r/min H6 model: 700 — 910±100 r/min

3. BASIC OPERATION

The cooling system cools down the compartment by using the pipes connecting parts and cycling the evaporable liquid (refrigerant) within the sealed system in a repeated process of “vaporization — liquefaction — re-vaporization”.

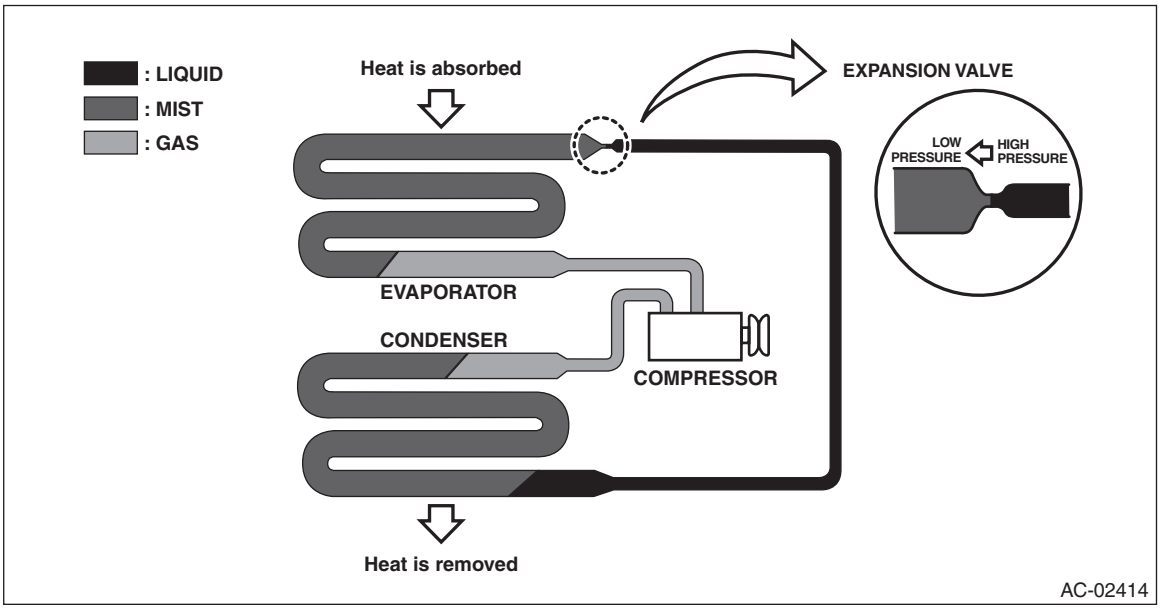

Item	Operation
Compressor	Sucks and pressurizes the low temperature, low pressure refrigerant gas that was vaporized at the evaporator by absorbing heat from the compartment, and sends the high temperature, high pressure refrigerant gas to the condenser.
Condenser	Cools the high temperature, high pressure refrigerant gas sent from the compressor for condense and liquefaction.
Expansion valve	• Sprays the high temperature, high pressure liquid refrigerant from the small hole in order to let the refrigerant expand rapidly to turn it into low temperature, low pressure mist. • The refrigerant amount is adjusted according to the refrigerant vaporization condition in the evaporator.
Evaporator	The evaporator turns into a low temperature condition when the mist refrigerant that was turned into a low temperature, low pressure condition at the expansion valve is vaporized in large quantity in the evaporator. Passing air flow through the low temperature evaporator emits cold air.

B: LOCATION

Refer to “Electrical Component Location” for “HVAC SYSTEM (AUTO A/C) (DIAGNOSTICS)” section. <Ref. to AC(diag)-4, Electrical Component Location.>

C: COMPONENT

1. HEATER COOLING UNIT

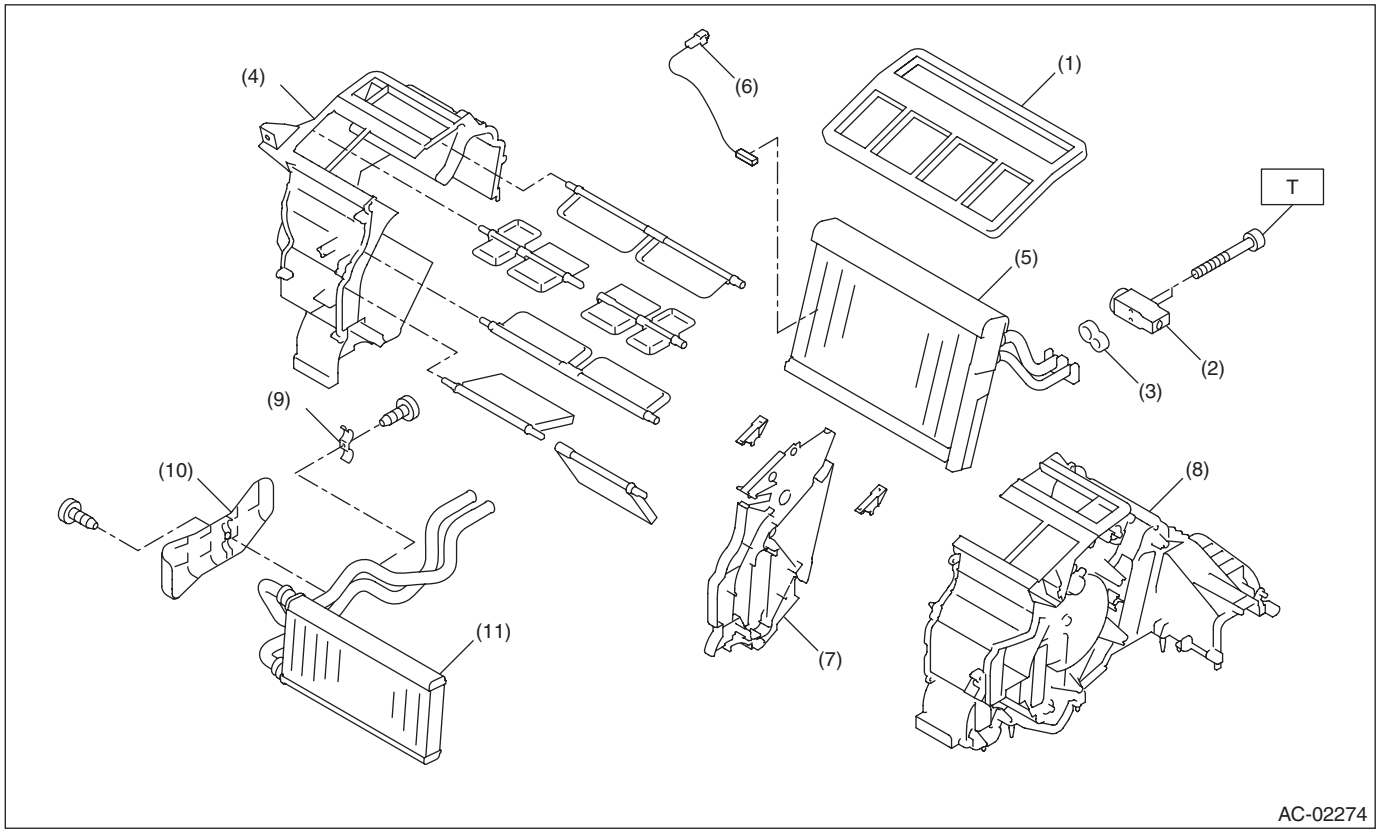

(1) Packing - heater unit
(2) Expansion valve - cooling
(3) Packing
(4) Case - heater unit LH
(5) Evaporator ASSY - cooling
(6) Thermostat - cooling
(7) Plate
(8) Case - heater unit RH
(9) Clamp
(10) Cover
(11) Heater core

Tightening torque: N·m (kgf-m, ft-lb)
T: 3.5 (0.4, 2.6)

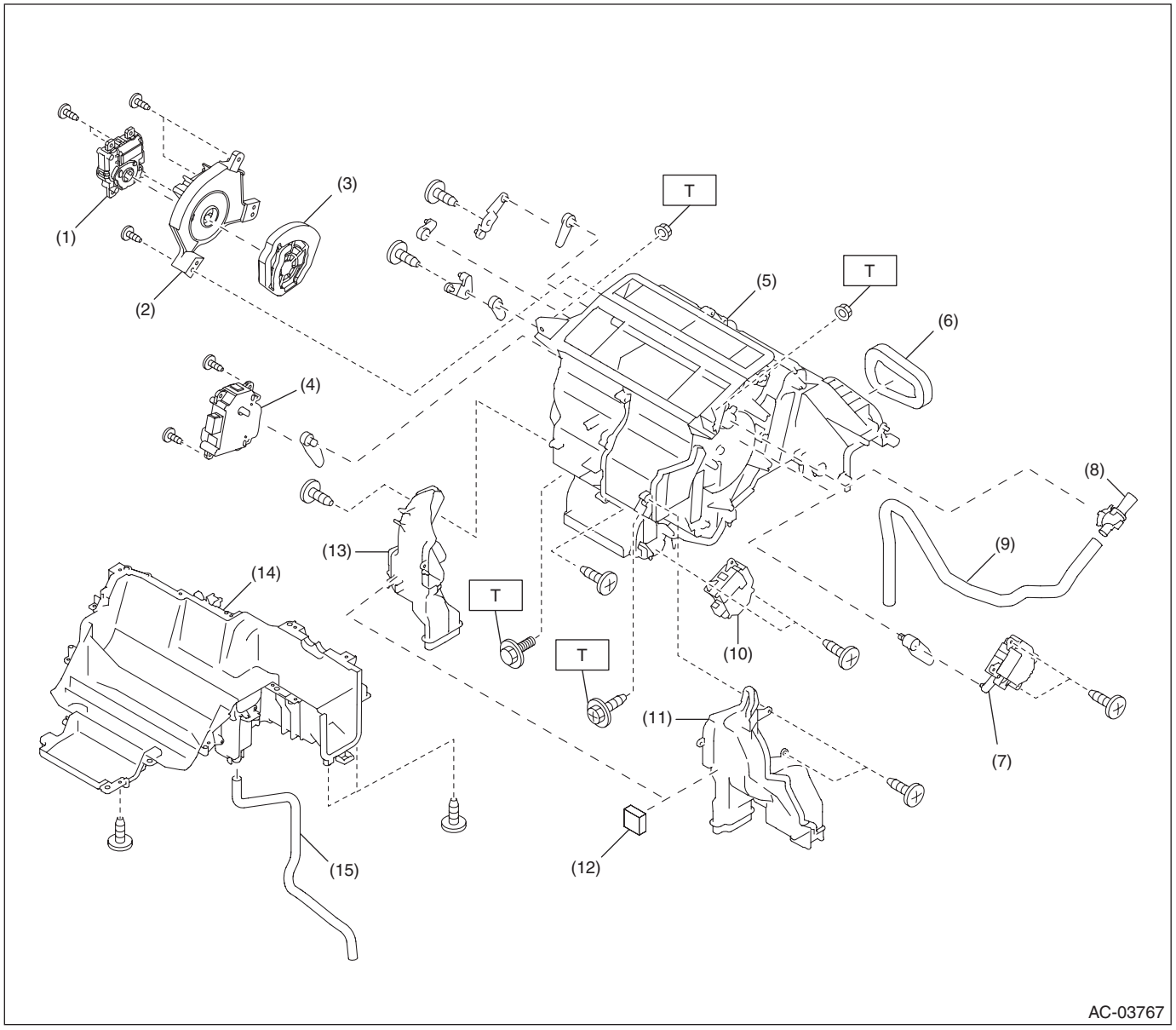

(1) Motor - actuator mode
(2) Cover - actuator
(3) Link plate
(4) Motor - actuator mix LH
(5) Heater cooling unit
(6) Packing
(7) Motor - actuator mix RH
(8) Aspirator
(9) Aspirator hose
(10) Motor ASSY - rear heater
(11) Duct - foot assist
(12) Packing
(13) Duct - foot driver
(14) Case - heater lower
(15) Hose - heater drain

Tightening torque: N·m (kgf-m, ft-lb)
T: 7.5 (0.8, 5.5)

2. BLOWER MOTOR UNIT

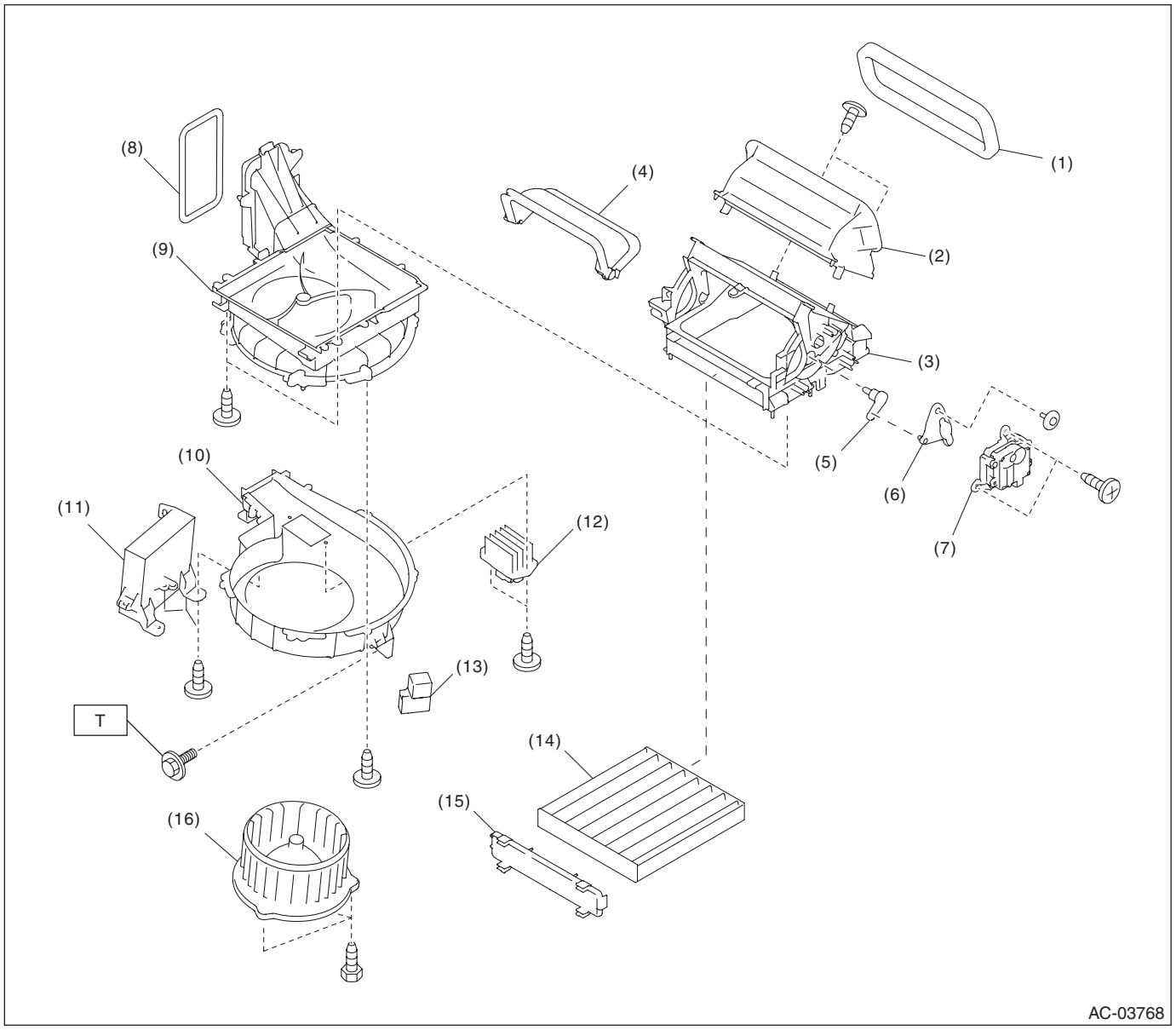

(1) Packing
(2) Air duct cover UPR
(3) Air duct cover LWR
(4) Shutter - heater
(5) Lever
(6) Link plate
(7) Intake door actuator
(8) Packing - blower
(9) Case upper - blower
(10) Case lower - blower
(11) Control module
(12) Power transistor (auto A/C model) or resistor (manual A/C model)
(13) Blower motor relay
(14) Filter
(15) Filter cover
(16) Blower motor ASSY

Tightening torque: N·m (kgf-m, ft-lb)

T: 7.5 (0.8, 5.5)

3. CONTROL PANEL

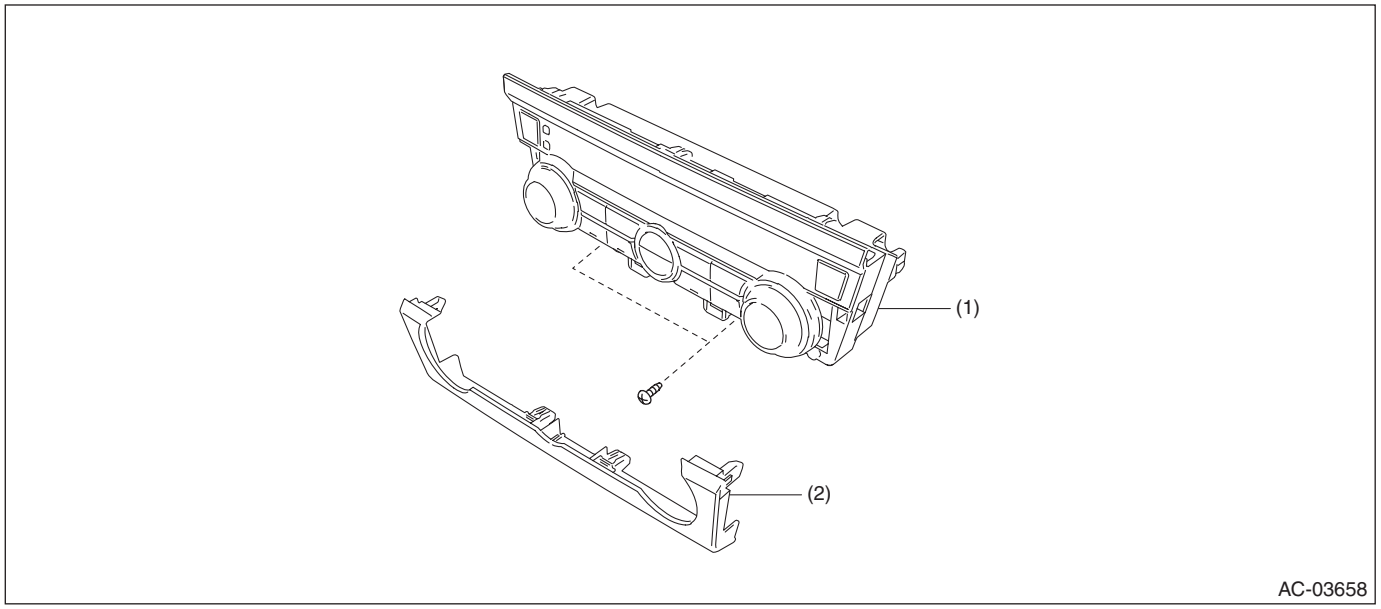

(1) Heater control ASSY
(2) Control module cover

4. AIR CONDITIONING UNIT

- H4 model

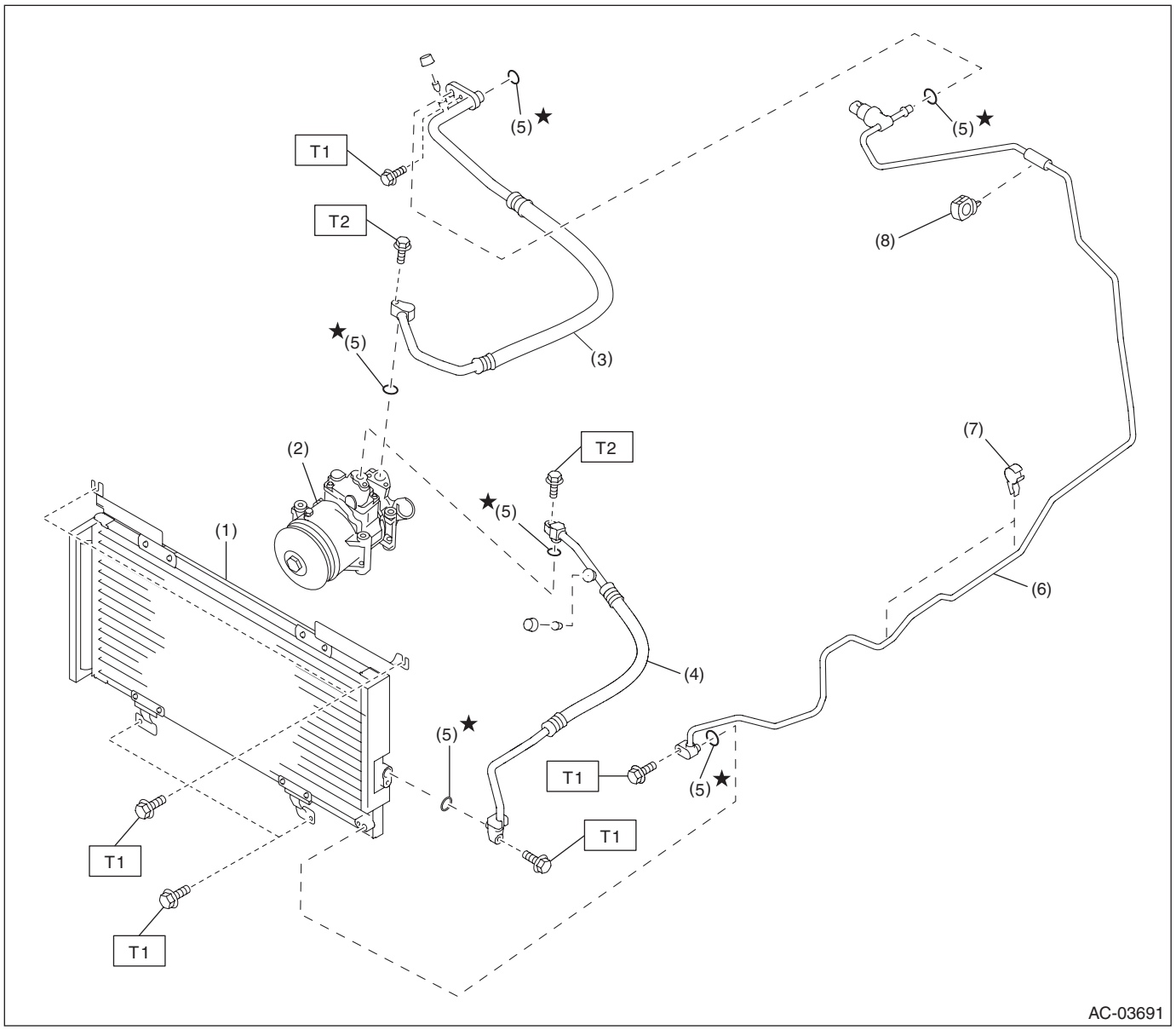

(1)	Condenser ASSY - air conditioner	(5)	Seal O-ring
(2)	Compressor ASSY	(6)	Pipe - evaporator cooling
(3)	Hose - pressure suction	(7)	Clip - pipe
(4)	Hose - pressure discharge	(8)	Clip

Tightening torque: N·m (kgf-m, ft-lb)
T1: 7.5 (0.8, 5.5)
T2: 10 (1, 7.4)

- H6 model

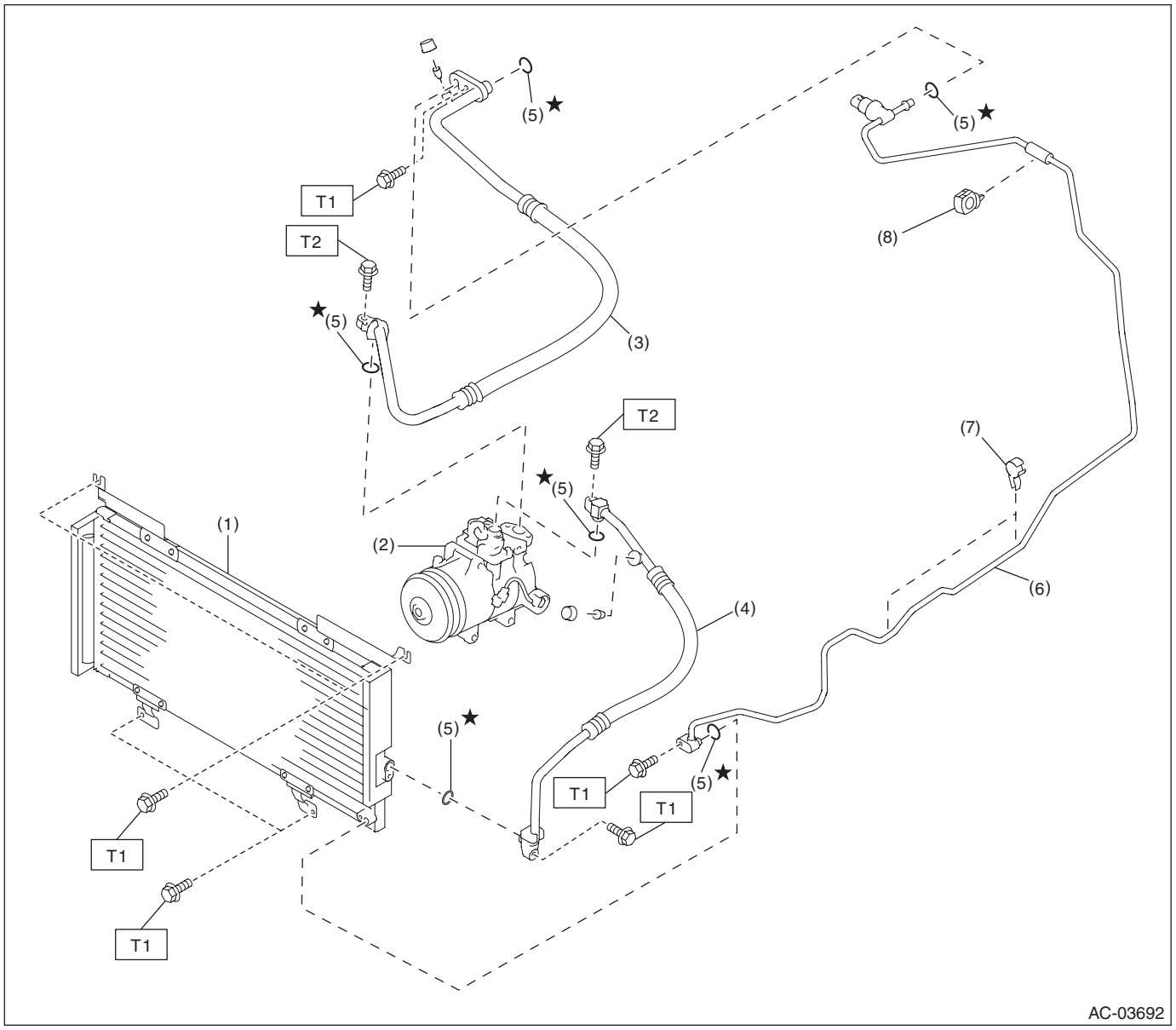

(1)	Condenser ASSY - air conditioner	(5)	Seal O-ring
(2)	Compressor ASSY	(6)	Pipe - evaporator cooling
(3)	Hose - pressure suction	(7)	Clip - pipe
(4)	Hose - pressure discharge	(8)	Clip

Tightening torque: N·m (kgf-m, ft-lb)
T1: 7.5 (0.8, 5.5)
T2: 10 (1, 7.4)

5. HEATER HOSE

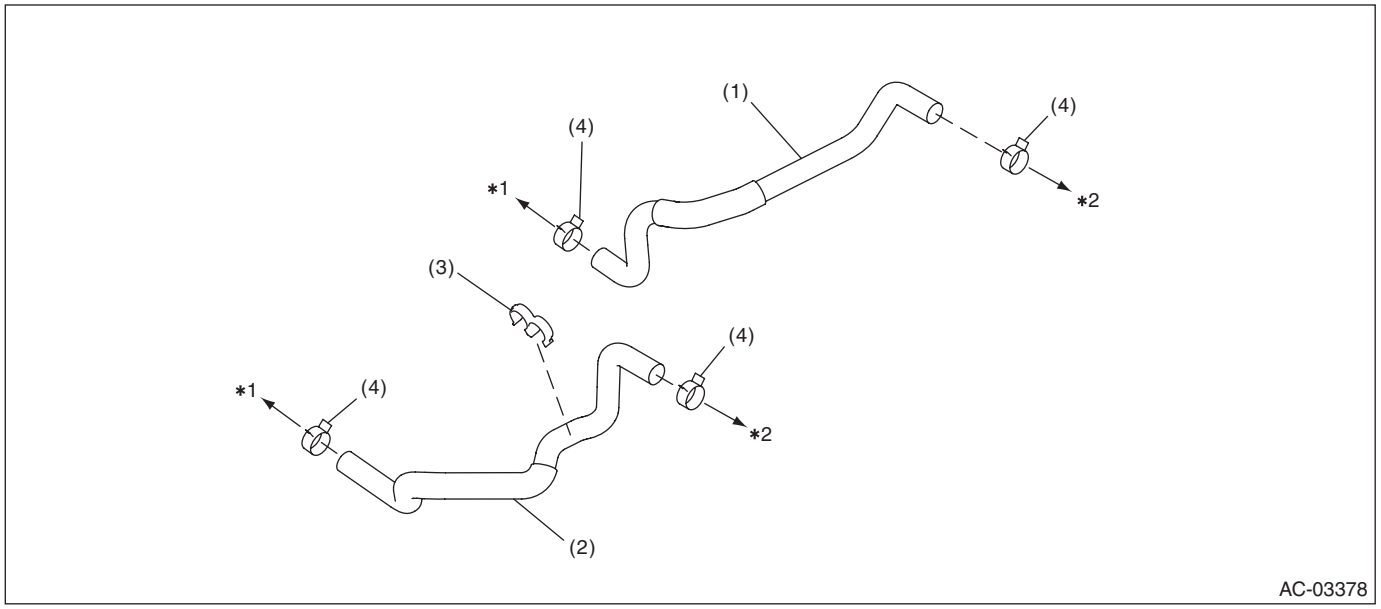

(1) Hose - heater outlet
(2) Hose - heater inlet
(3) Clip
(4) Clamp

*1: Engine side
*2: Heater core side

6. COMPRESSOR

- H4 model

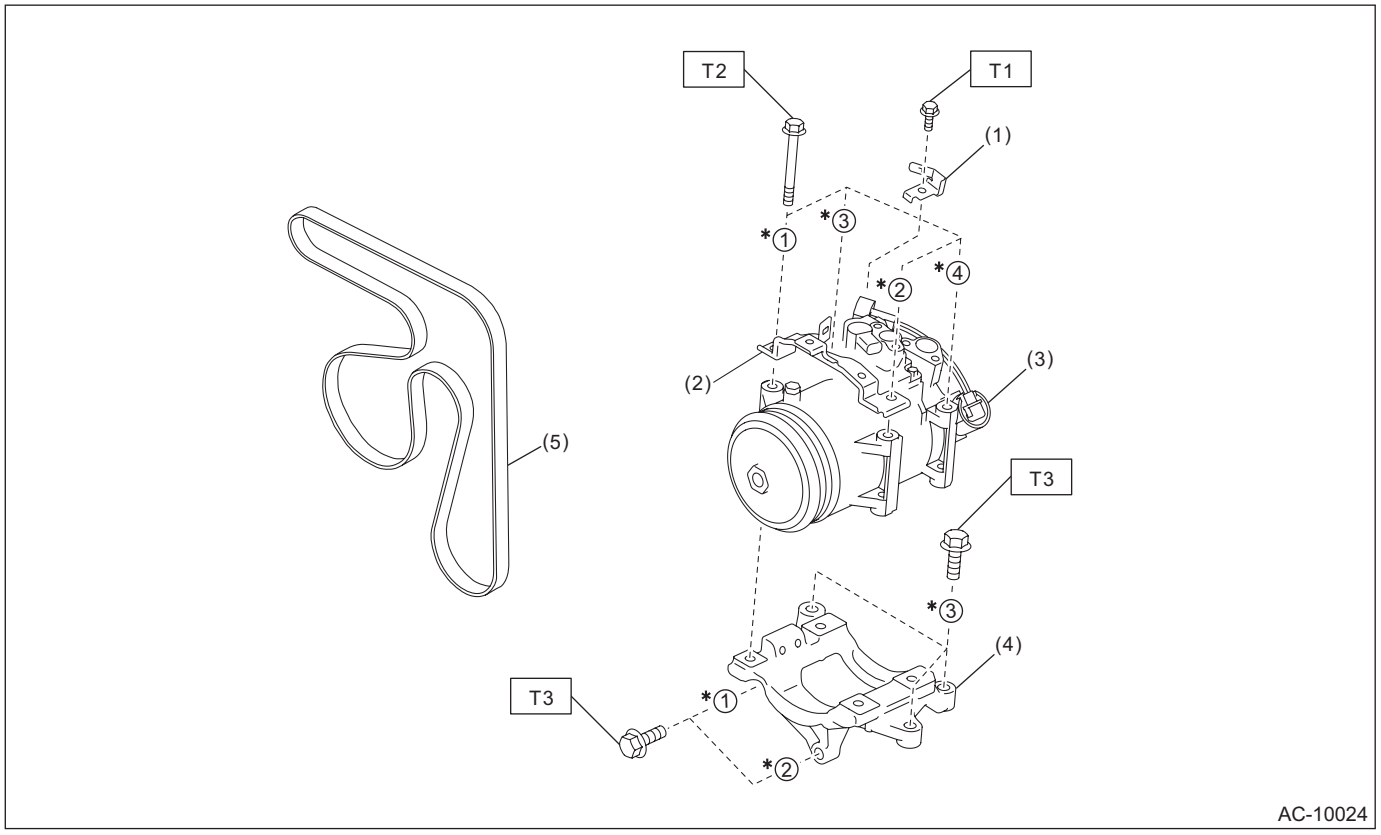

(1)	Bracket - connector	(4)	Bracket - air conditioner
(2)	Bracket - V-belt cover	(5)	V-belt (6 PK)
(3)	Compressor ASSY		

Tightening torque: N·m (kgf-m, ft-lb)
T1: 6.4 (0.7, 4.7)
T2: 25 (2.5, 18.4)
T3: 36 (3.7, 26.6)

* Tighten the compressor assembly and the bracket - air conditioner in the numerical order as shown in the figure.

- H6 model

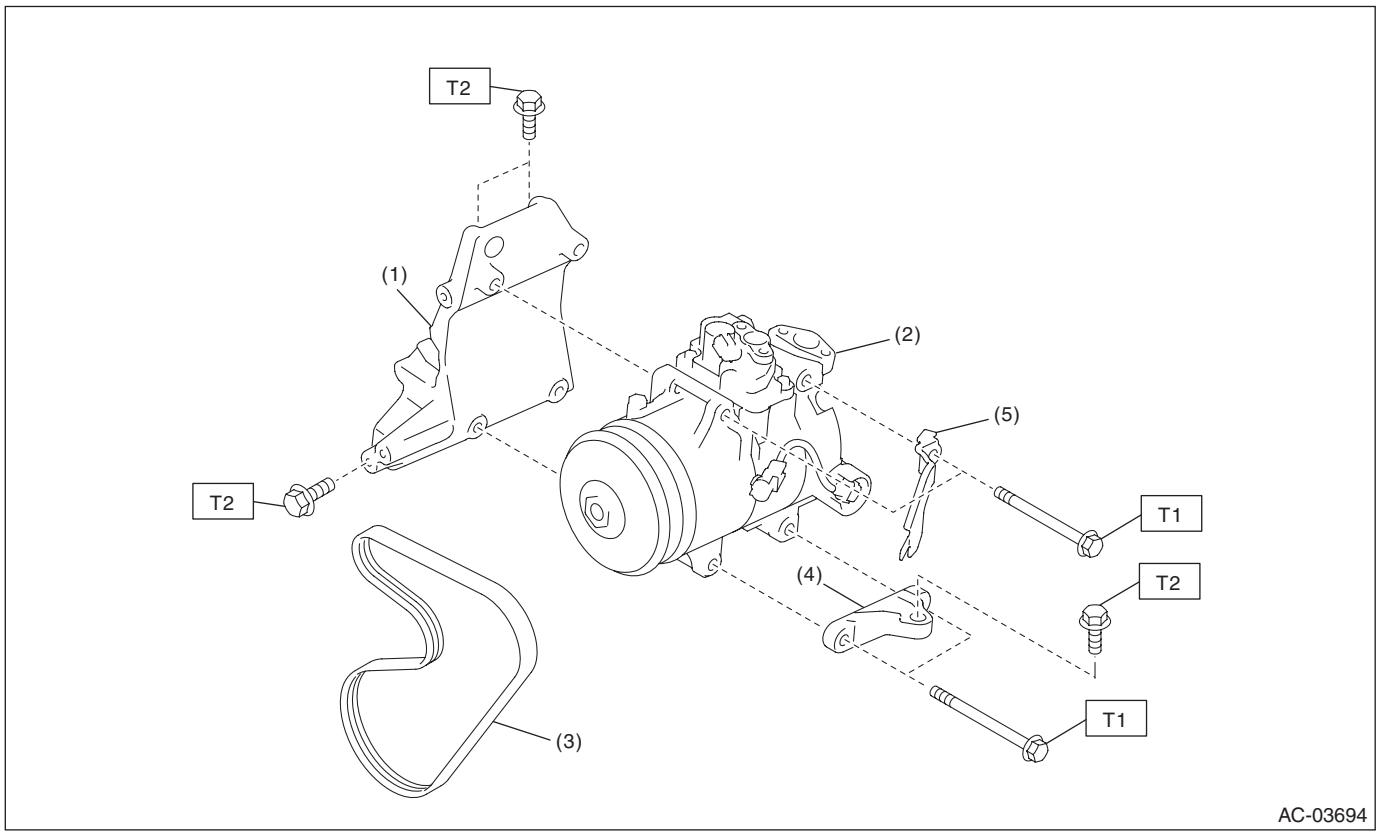

(1) Bracket ASSY - compressor
(2) Compressor ASSY
(3) V-belt (6 PK)
(4) Bracket - air conditioner
(5) Bracket - connector

Tightening torque: N·m (kgf-m, ft-lb)
T1: 26.5 (2.7, 19.5)
T2: 36 (3.7, 26.6)

7. HEATER DUCT

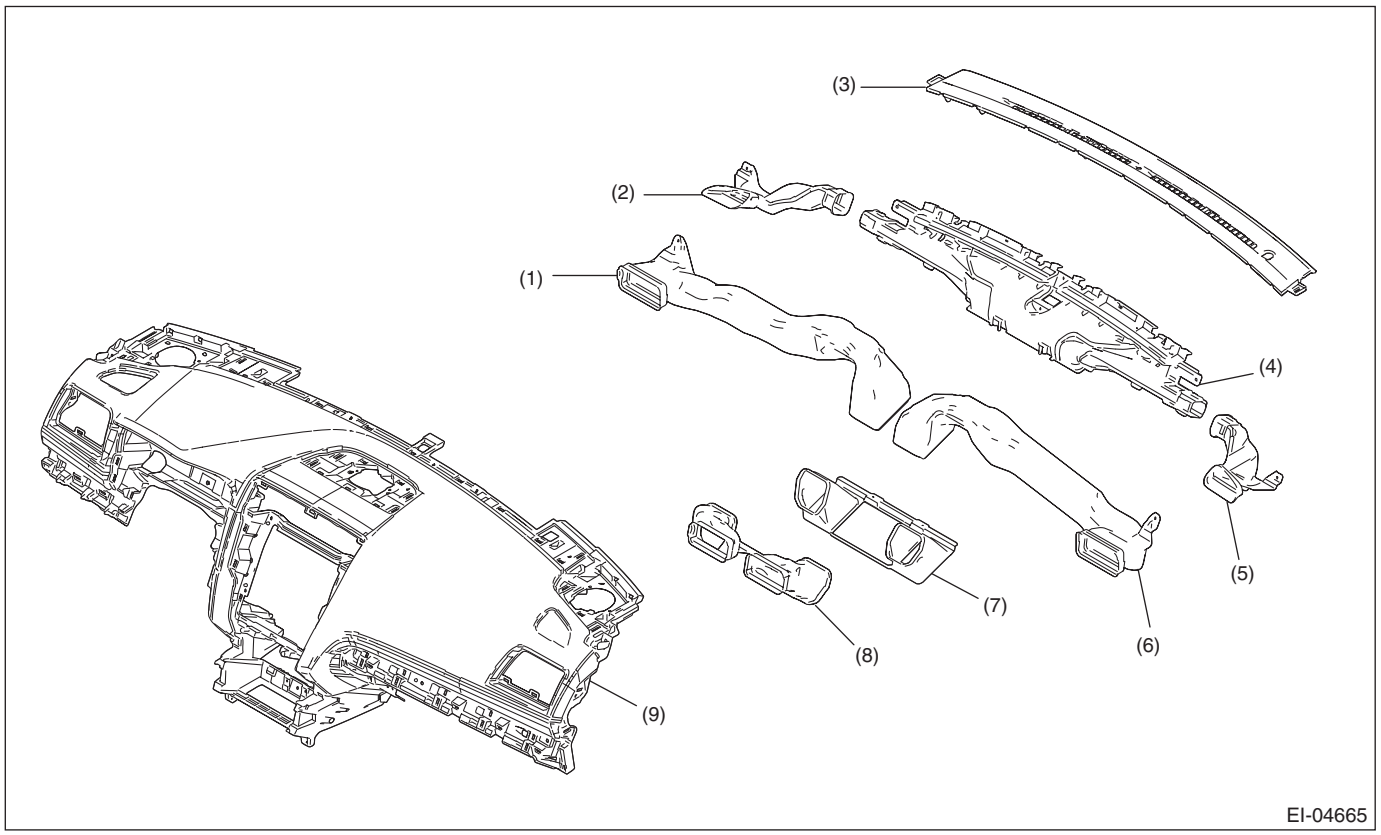

(1) Duct - side ventilation LH
(2) Duct - side defroster LH
(3) Grille - front defroster
(4) Nozzle - front defroster
(5) Duct - side defroster RH
(6) Duct - side ventilation RH
(7) Duct - center vent
(8) Duct - center vent front
(9) Panel COMPL - instrument

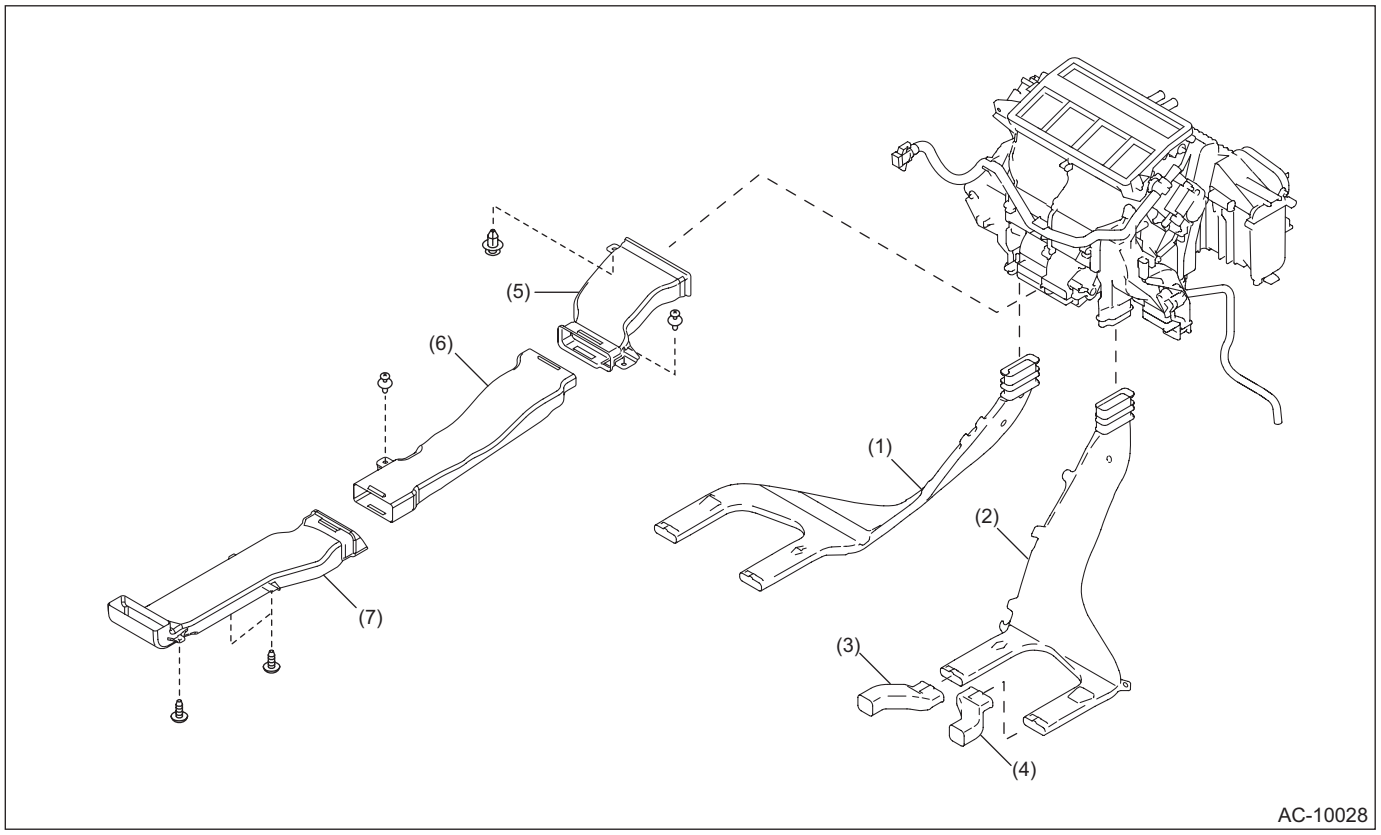

(1) Duct - rear heater LH
(2) Duct - rear heater RH
(3) Duct - extension LH
(4) Duct - extension RH
(5) Duct - console front
(6) Duct - console center
(7) Duct - console rear

8. AIR VENT GRILLE

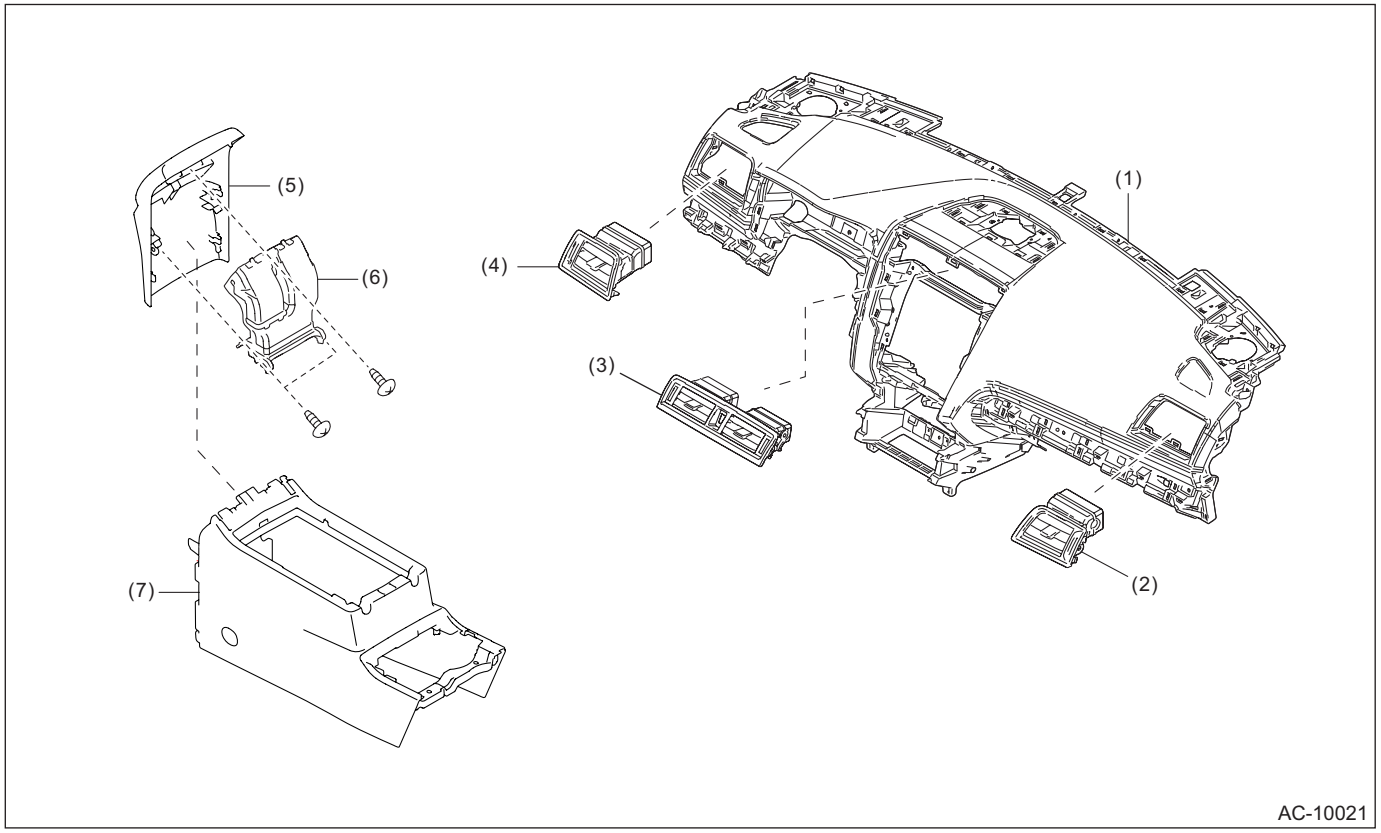

(1) Panel COMPL - instrument
(2) Grille ASSY - ventilation RH
(3) Grille ASSY - CTR ventilation
(4) Grille ASSY - ventilation LH
(5) End cover - console box
(6) Grille ASSY - rear heater
(7) Console box outer

D: CAUTION

Before disconnecting connectors of sensors or units, be sure to disconnect the ground cable from battery. When replacing the electrical parts provided with memory functions that store contents specified by a customer, record the memory contents before disconnecting the battery ground cable.

1. HFC-134A A/C SYSTEM

- The cooling system components for the HFC-134a system using such as the refrigerant and compressor oil are different from the conventional CFC-12 system components and they are incompatible with each other.
- Vehicles with the HFC-134a system can be identified by the label (a) attached to the vehicle.

Before maintenance, check A/C system which is installed to the vehicle.

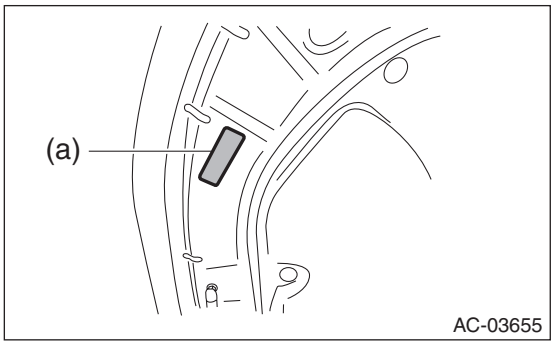

2. COMPRESSOR OIL

- HFC-134a compressor oil has no compatibility with that of CFC-12 system.
- Use only the manufacturer-authorized compressor oil, ND-OIL8, for the HFC-134a system.
- Do not mix multiple compressor oils.

If CFC-12 compressor oil is used in the HFC-134a A/C system, the compressor may become stuck due to poor lubrication, or the refrigerant may leak due to swelling of rubber parts.
On the other hand, if HFC-134a compressor oil is used in a CFC-12 A/C system, the durability of the A/C system will be lowered.

- HFC-134a compressor oil is very hygroscopic. When replacing or installing/removing A/C parts, immediately isolate the oil from atmosphere using a plug or tape. In order to avoid moisture, store the oil in a container with its cap tightly closed.

3. REFRIGERANT

- CFC-12 refrigerant cannot be used in a HFC-134a A/C system. HFC-134a refrigerant, also cannot be used in a CFC-12 A/C system.
- If an incorrect or no refrigerant is used, it will result in poor lubrication and the compressor may be damaged.

4. HANDLING OF REFRIGERANT

• The refrigerant boils at approx. –30°C (–22°F). When handling it, be sure to wear protective goggles and protective gloves. Direct contact of the refrigerant with skin may cause frostbite.
If the refrigerant gets into your eye, avoid rubbing your eyes with your hands. Wash your eyes with plenty of water, and receive medical treatment from an eye doctor.
• Do not heat a service can. If a service can is directly heated, or put into boiling water, the inside pressure will become extremely high. This may cause the can to explode. If a service can must be warmed up, use warm water of 40°C (104°F) or less.
• Do not drop or impact a service can. (Observe the precautions and operation procedure described on the refrigerant container.)
• When the engine is running, do not open the high-pressure valve of manifold gauge. The high-pressure gas will back-flow resulting in an explosion of the can.
• Provide good ventilation and do not work in a closed area.
• In order to prevent global warming, avoid releasing HFC-134a into the atmosphere. Using a refrigerant recovery system, discharge and recycle the gas.

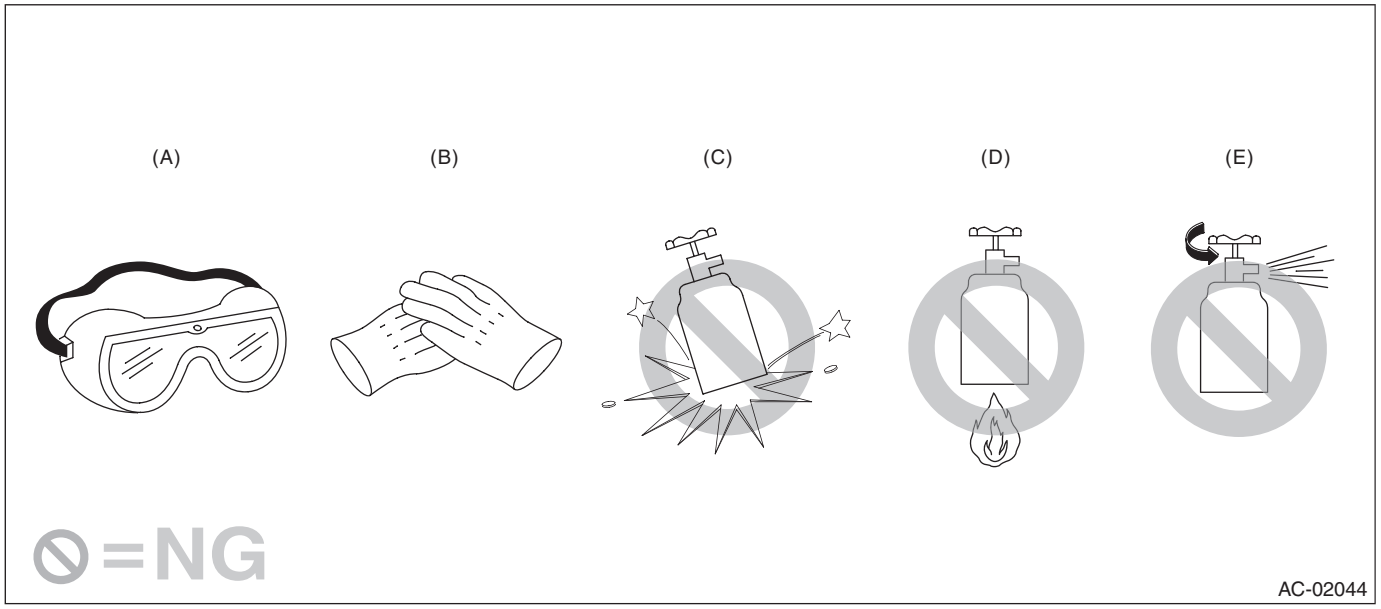

(A) Goggles
(B) Gloves
(C) Do not apply impact.
(D) No direct heat on container
(E) Do not discharge

5. O-RING CONNECTIONS

- Always use a new O-ring.
- In order to keep the O-rings free of lint which will cause a refrigerant gas leak, perform work without using gloves or waste cloths.
- Apply compressor oil to O-rings to avoid sticking, before installation.
- Use a torque wrench to tighten the O-ring fittings. Over-tightening will result in damage of the O-ring and deformation of the pipe end.
- If the work is interrupted before completing pipe connections, recap the pipes, components and fittings with a plug or tape to prevent foreign matter from entering.
- Visually check the surfaces and mating surfaces of O-rings, threads and connecting points. If a failure is found, replace the applicable parts.
- Install the O-rings straight against the pipe groove.

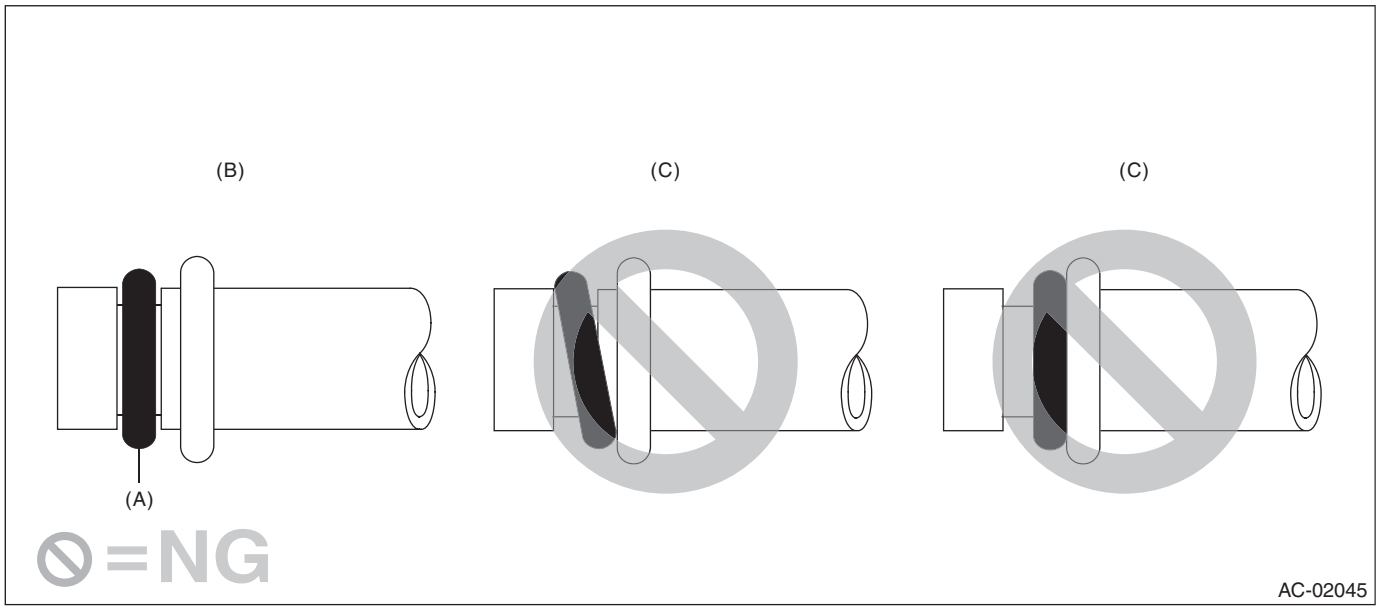

(A) O-ring (B) OK (C) NG

• Use compressor oil specified in the service manual to lubricate the O-rings.
Apply oil to the top and sides of O-rings before installation.
Apply compressor oil to the pipe grooves.

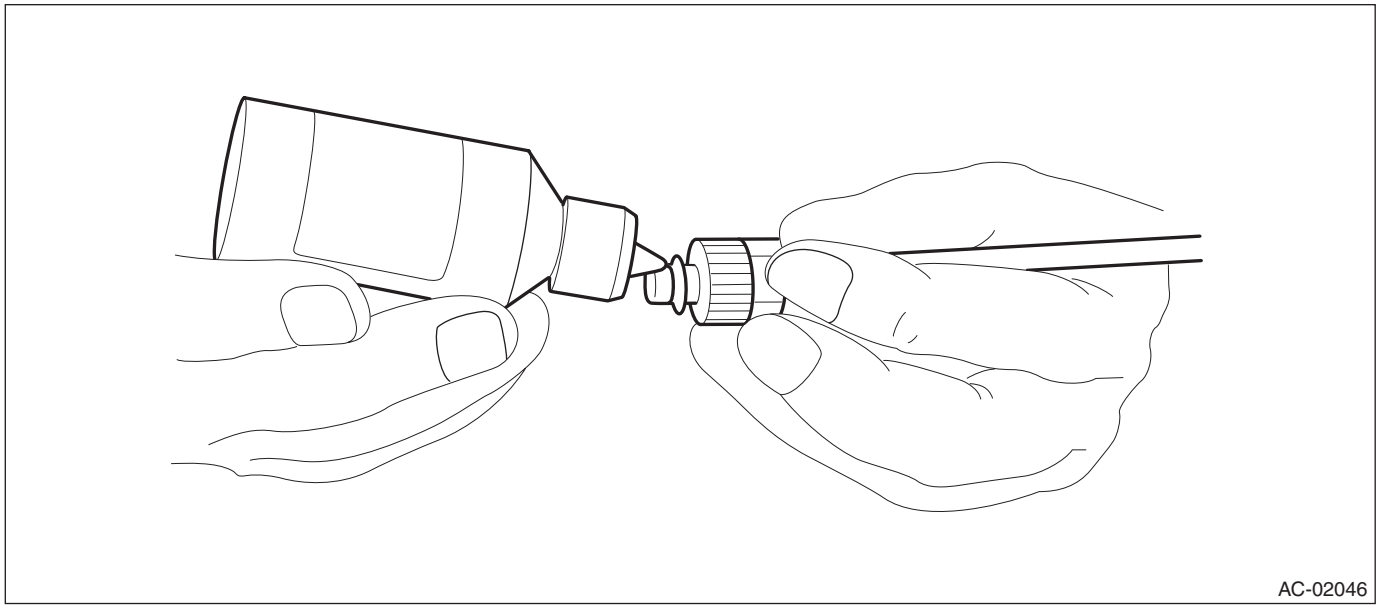

• After tightening, use a clean cloth to remove excess compressor oil from the connections and any oil which may have run on the vehicle body or other parts.
• If any leakage is suspected after tightening, do not tighten the connections further, but disconnect the connections, remove the O-rings, and check the O-rings, threads, and connections.

E: PREPARATION TOOL

1. SPECIAL TOOL

ILLUSTRATION	TOOL NUMBER	DESCRIPTION	REMARKS
 STSSM4	— (Newly adopted tool)	SUBARU SELECT MONITOR 4	Used for setting of each function and trouble-shooting for electrical system. NOTE: For detailed operation procedures of Subaru Select Monitor 4, refer to “Application help”.
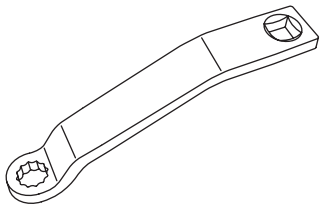 ST73099SG000	73099SG000	SPECIAL TOOL CONDENSER	Used for installing the condenser.

2. GENERAL TOOL

CAUTION:
When working on vehicles with a HFC-134a system, only use HFC-134a specified tools and parts. Do not mix CFC-12 tools and parts. If HFC-134a and CFC-12 refrigerant or compressor oil is mixed, it will result in poor lubrication and the compressor may be damaged.
In order to prevent the mixture of HFC-134a and CFC-12 parts and liquid, the type of tool and screw, and the replacement valves used are different. The gas leak detectors for the HFC-134a and CFC-12 systems must also not be interchanged.

	HFC-134a	CFC-12
Tool and screw type	Millimeter size	Inch size
Valve type	Quick joint type	Screw-in type

TOOL NAME/ILLUSTRATION	REMARKS
Circuit tester	Used for measuring resistance, voltage and current.
DST-i	Used together with Subaru Select Monitor 4.
Wrench 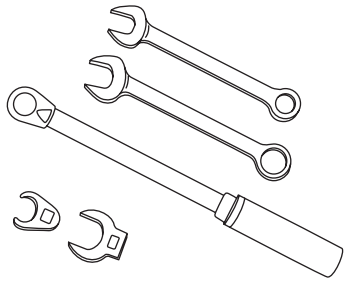 AC-00213	Various **WRENCHES** will be required to service any A/C system.7 — 40 N·m (0.7 to 4.1 kgf-m, 5 to 30 ft-lb) torque wrench and various crow-foot wrenches will be needed. Open end or flare nut wrenches will be needed to affix the pipe and hose fittings.
Applicator bottle 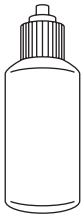 AC-00012	A small **APPLICATOR BOTTLE** is recommended to apply compressor oil to the various parts. It can be available at a hardware store.
Manifold gauge set 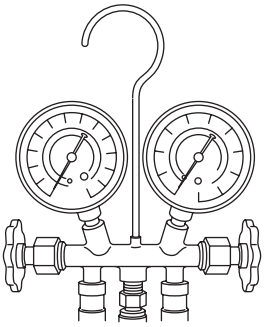 AC-00013	A **MANIFOLD GAUGE SET** (with hoses) is available at either a refrigerant supplier or an automotive equipment supplier.

TOOL NAME/ILLUSTRATION	REMARKS
Refrigerant recovery system 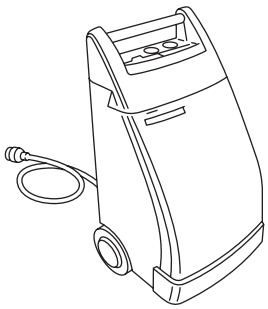 AC-00014	A **REFRIGERANT RECOVERY SYSTEM** is used for the recovery and recycling of A/C system refrigerant after contaminants and moisture have been removed from the refrigerant.
Syringe 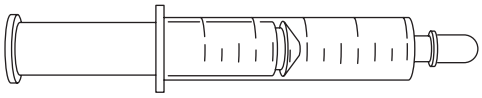 AC-00015	A graduated plastic **SYRINGE** will be needed to add oil into the system again. A syringe can be available at a pharmacy or drug store.
Vacuum pump 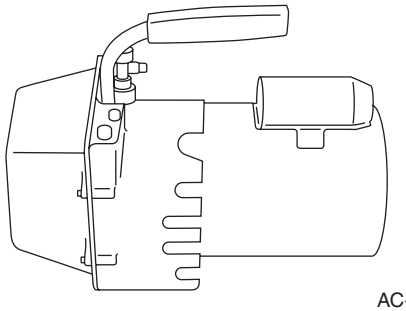 AC-00016	A **VACUUM PUMP** is necessary (for a good working condition), and may be available at either a refrigerant supplier or an automotive equipment supplier.
Can tap 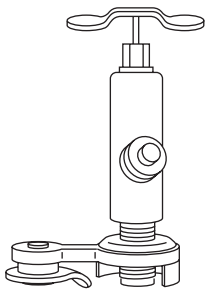 AC-00017	A **CAN TAP** for the 397 g (14 oz) can is available at an automotive equipment supplier.

TOOL NAME/ILLUSTRATION	REMARKS
Thermometer/hygrometer 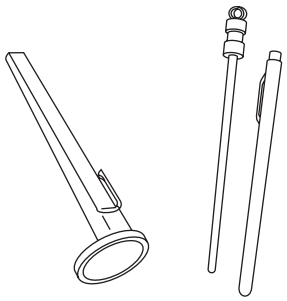 AC-00018	A Pocket **THERMOMETER/HYGROMETER** is available at either a industrial hardware store or a refrigerant supplier.
Electronic leak detector 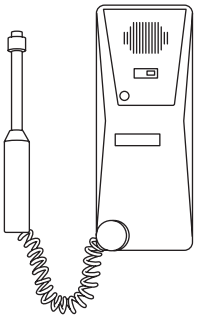 AC-00019	An **ELECTRONIC LEAK DETECTOR** can be available at either a specialty tool supplier or an A/C equipment supplier.
Weight scale 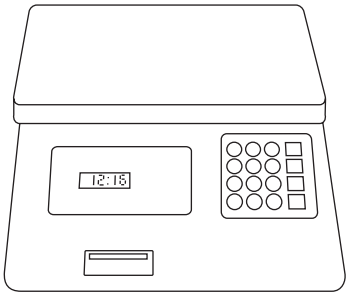 AC-00020	A **WEIGHT SCALE** such as an electronic charging scale or a bathroom scale with digital display will be needed, if a 13.6 kg (30 lb) refrigerant container is used.

2. Air Conditioning System

A: WIRING DIAGRAM

Refer to “Air Conditioning System” in the wiring diagram.
- Manual A/C model: <Ref. to WI-94, MANUAL A/C, WIRING DIAGRAM, Air Conditioning System.>
- Auto A/C model: <Ref. to WI-98, AUTO A/C, WIRING DIAGRAM, Air Conditioning System.>

B: ELECTRICAL SPECIFICATION

Refer to “Auto A/C Control Module I/O Signal” of “HVAC SYSTEM (DIAGNOSTICS)” section. <Ref. to AC(diag)-6, ELECTRICAL SPECIFICATION, Control Module I/O Signal.>

C: INSPECTION

Refer to “Basic Diagnostic Procedure” of “HVAC SYSTEM (DIAGNOSTICS)” section. <Ref. to AC(diag)-2, Basic Diagnostic Procedure.>

D: NOTE

For procedure of each component in the air conditioning system, refer to the respective section.
- Blower motor unit assembly: <Ref. to AC-38, Blower Motor Unit Assembly.>
- Blower motor: <Ref. to AC-40, Blower Motor.>
- Power transistor (auto A/C model): <Ref. to AC-42, Power Transistor (Auto A/C Model).>
- Blower resistor (manual A/C model): <Ref. to AC-43, Blower Resistor (Manual A/C Model).>
- Control panel: <Ref. to AC-47, Control Panel.>
- Control module: <Ref. to AC-49, Control Unit.>
- Compressor: <Ref. to AC-50, Compressor.>
- Condenser: <Ref. to AC-54, Condenser.>
- Heater and cooling unit: <Ref. to AC-59, Heater and Cooling Unit.>
- Evaporator: <Ref. to AC-61, Evaporator.>
- Expansion valve: <Ref. to AC-63, Expansion Valve.>
- Hose & pipe: <Ref. to AC-65, Hose and Pipe.>
- Ambient sensor: <Ref. to AC-71, Ambient Sensor.>
- Sunload sensor (auto A/C model): <Ref. to AC-73, Sunload Sensor (Auto A/C Model).>
- In-vehicle sensor (auto A/C model): <Ref. to AC-75, In-Vehicle Sensor (Auto A/C Model).>
- Evaporator sensor: <Ref. to AC-78, Evaporator Sensor.>
- Intake door actuator: <Ref. to AC-81, FRESH/RECIRC Door Actuator.>
- Mode door actuator: <Ref. to AC-83, Mode Door Actuator.>
- Air mix door actuator: <Ref. to AC-86, Air Mix Door Actuator.>
- Rear vent actuator: <Ref. to AC-90, Rear Vent Door Actuator.>

3. Refrigerant Pressure with Manifold Gauge Set

A: PROCEDURE

1. CHECK REFRIGERANT GAS PRESSURE

1) Prepare the vehicle.

NOTE:
Check that the ambient temperature is 25 — 40°C (77 — 104°F) and that the humidity is 30% — 80%.
- Place the vehicle in the shade and windless condition, and open the front hood.
- Open the front windows and close all doors.

2) Check the refrigerant pressure.

Preparation tool:
Manifold gauge set

(1) Connect the manifold gauge set, and start the engine.
(2) Set the vehicle to the following conditions.

Item	Condition
Engine	Warmed up (Engine coolant temperature indicator light: OFF)
Air vent grille	Shutter is fully open.
AC switch	ON
Temperature adjustment dial	LO (MAX COOL)
FRESH/RECIRC switch	RECIRC
Air flow control switch	VENT
Fan switch (auto A/C model)	5/7 level
Fan dial (manual A/C model)	3/4 level

(3) In the condition of step (2), idle the engine for 30 minutes.
(4) Read the gauge values on both high pressure side and low pressure side for manifold gauge.

3) Measure the air vent grille outlet opening temperature, ambient temperature and humidity.

Preparation tool:
Thermometer and hygrometer

NOTE:
For outlet opening temperature, measure the average temperature of center grille assembly and side grille assembly.

4) Check that the high and low pressures and outlet opening temperature for ambient temperature and humidity is within the standard value described in the chart below.

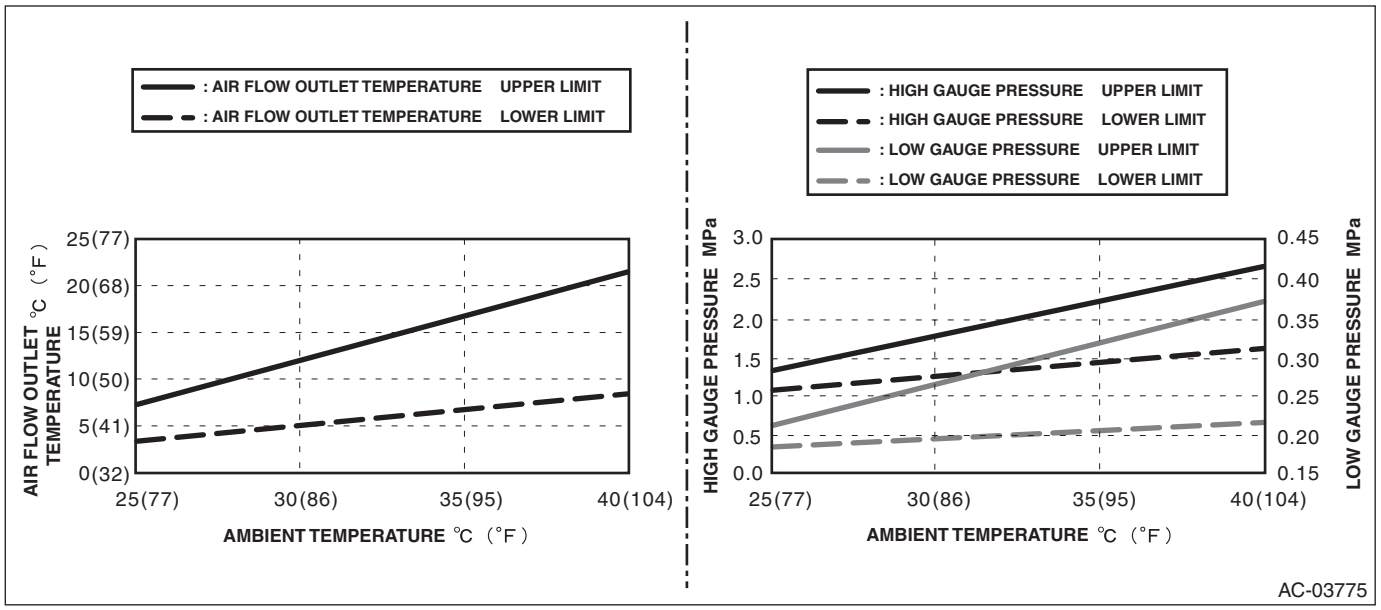

5) Refer to “DIAGNOSIS WITH SYMPTOM” if the inspection result is not within the standard value. <Ref. to AC-25, INSPECTION WITH PRESSURE SYMPTOM, INSPECTION, Refrigerant Pressure with Manifold Gauge Set.>

B: INSPECTION

1. INSPECTION WITH PRESSURE SYMPTOM

Symptoms	Reference
Both high and low pressure sides are low	<Ref. to AC-26, BOTH HIGH AND LOW PRESSURE SIDES ARE LOW, INSPECTION, Refrigerant Pressure with Manifold Gauge Set.>
Both high and low pressure sides are high	<Ref. to AC-26, BOTH HIGH AND LOW PRESSURE SIDES ARE HIGH, INSPECTION, Refrigerant Pressure with Manifold Gauge Set.>
High and low pressure sides are equal, high-pressure side is low	<Ref. to AC-26, HIGH AND LOW PRESSURE SIDES ARE EQUAL, OR HIGH-PRESSURE SIDE IS LOW, INSPECTION, Refrigerant Pressure with Manifold Gauge Set.>
High-pressure side is high	<Ref. to AC-27, HIGH-PRESSURE SIDE IS HIGH, INSPECTION, Refrigerant Pressure with Manifold Gauge Set.>
Low-pressure side is low	<Ref. to AC-27, LOW-PRESSURE SIDE IS LOW, INSPECTION, Refrigerant Pressure with Manifold Gauge Set.>
Low-pressure side is high	<Ref. to AC-28, LOW-PRESSURE SIDE IS HIGH, INSPECTION, Refrigerant Pressure with Manifold Gauge Set.>

2. BOTH HIGH AND LOW PRESSURE SIDES ARE LOW

	Step	Check	Yes	No
1	**CHECK REFRIGERANT LEAKS.** Check the refrigerant for leaks. <Ref. to AC-34, INSPECTION, Refrigerant Leak Check.> NOTE: When high-pressure side is less than 0.69Mpa: Go to step 2.	Are there refrigerant leaks?	Repair the refrigerant leaking points.	Go to step **2**.
2	**FILL PROPER AMOUNT OF REFRIGERANT.** Drain all refrigerant, and refill proper amount of refrigerant. • Recovery: <Ref. to AC-29, PROCEDURE, Refrigerant Recovery Procedure.> • Fill: <Ref. to AC-31, PROCEDURE, Refrigerant Charging Procedure.>	Is refrigerant pressure within the standard value?	Refrigerant pressure is normal.	Perform corresponding "INSPECTION WITH PRESSURE SYMPTOM".

3. BOTH HIGH AND LOW PRESSURE SIDES ARE HIGH

	Step	Check	Yes	No
1	**FILL PROPER AMOUNT OF REFRIGERANT.** Drain all refrigerant, and refill proper amount of refrigerant. • Recovery: <Ref. to AC-29, PROCEDURE, Refrigerant Recovery Procedure.> • Fill: <Ref. to AC-31, PROCEDURE, Refrigerant Charging Procedure.>	Is refrigerant pressure within the standard value?	Refrigerant pressure is normal.	Perform corresponding "INSPECTION WITH PRESSURE SYMPTOM".

4. HIGH AND LOW PRESSURE SIDES ARE EQUAL, OR HIGH-PRESSURE SIDE IS LOW

	Step	Check	Yes	No
1	**CHECK REFRIGERANT LEAKS.** Check the refrigerant for leaks. <Ref. to AC-34, INSPECTION, Refrigerant Leak Check.> NOTE: When high-pressure side is less than 0.69Mpa: Go to step 2.	Are there refrigerant leaks?	Repair the refrigerant leaking points.	Go to step **2**.
2	**FILL PROPER AMOUNT OF REFRIGERANT.** Drain all refrigerant, and refill proper amount of refrigerant. • Recovery: <Ref. to AC-29, PROCEDURE, Refrigerant Recovery Procedure.> • Fill: <Ref. to AC-31, PROCEDURE, Refrigerant Charging Procedure.>	Is refrigerant pressure within the standard value?	Refrigerant pressure is normal.	Inspect the compressor. <Ref. to AC(diag)-36, COLD AIR DOES NOT COME OUT EVEN WHEN THE A/C SWITCH IS PRESSED. THE GLASS CANNOT BE DEFOGGED. (COMPRESSOR DOES NOT OPERATE. (VARIABLE)), DIAGNOSTIC PROCEDURE WITH PHENOMENON, Diagnostics with Phenomenon.>

5. HIGH-PRESSURE SIDE IS HIGH

	Step	Check	Yes	No
1	**CHECK CONDENSER.** Check the condenser. <Ref. to AC-58, INSPECTION, Condenser.>	Is condenser OK?	Go to step **2**.	Clean or replace the condenser.
2	**CHECK RADIATOR FAN.** Check the radiator fan system. • H4 model: <Ref. to CO(H4DO)-8, Radiator Fan System.> • H6 model: <Ref. to CO(H6DO)-8, Radiator Fan System.>	Is radiator fan system normal?	Go to step **3**.	Repair the radiator fan system or replace the faulty parts.
3	**FILL PROPER AMOUNT OF REFRIGERANT.** Drain all refrigerant, and refill proper amount of refrigerant. • Recovery: <Ref. to AC-29, PROCEDURE, Refrigerant Recovery Procedure.> • Fill: <Ref. to AC-31, PROCEDURE, Refrigerant Charging Procedure.>	Is refrigerant pressure within the standard value?	Refrigerant pressure is normal.	Check the high-pressure hose and condenser for kinks or clogging, and replace if defective.

6. LOW-PRESSURE SIDE IS LOW

	Step	Check	Yes	No
1	**CHECK REFRIGERANT LEAKS.** Check the refrigerant for leaks. <Ref. to AC-34, INSPECTION, Refrigerant Leak Check.> NOTE: When high-pressure side is less than 0.69Mpa: Go to step 2.	Are there refrigerant leaks?	Repair the refrigerant leaking points.	Go to step **2**.
2	**FILL PROPER AMOUNT OF REFRIGERANT.** Drain all refrigerant, and refill proper amount of refrigerant. • Recovery: <Ref. to AC-29, PROCEDURE, Refrigerant Recovery Procedure.> • Fill: <Ref. to AC-31, PROCEDURE, Refrigerant Charging Procedure.>	Is refrigerant pressure within the standard value?	Refrigerant pressure is normal.	Go to step **3**.
3	**REPLACE EXPANSION VALVE.** Replace the expansion valve. <Ref. to AC-63, REMOVAL, Expansion Valve.>	Is refrigerant pressure within the standard value?	Refrigerant pressure is normal.	Inspect the compressor. <Ref. to AC(diag)-36, COLD AIR DOES NOT COME OUT EVEN WHEN THE A/C SWITCH IS PRESSED. THE GLASS CANNOT BE DEFOGGED. (COMPRESSOR DOES NOT OPERATE. (VARIABLE)), DIAGNOSTIC PROCEDURE WITH PHENOMENON, Diagnostics with Phenomenon.>

7. LOW-PRESSURE SIDE IS HIGH

	Step	Check	Yes	No
1	**FILL PROPER AMOUNT OF REFRIGERANT.** Drain all refrigerant, and refill proper amount of refrigerant. • Recovery: <Ref. to AC-29, PROCEDURE, Refrigerant Recovery Procedure.> • Fill: <Ref. to AC-31, PROCEDURE, Refrigerant Charging Procedure.>	Is refrigerant pressure within the standard value?	Refrigerant pressure is normal.	Go to step **2**.
2	**REPLACE EXPANSION VALVE.** Replace the expansion valve. <Ref. to AC-63, REMOVAL, Expansion Valve.>	Is refrigerant pressure within the standard value?	Refrigerant pressure is normal.	Replace the evaporator. <Ref. to AC-61, REMOVAL, Evaporator.>

4. Refrigerant Recovery Procedure

A: PROCEDURE

CAUTION:
• During operation, be sure to wear protective goggles and protective gloves.
• Connect the refrigerant recovery system with the manifold gauge set to discharge the refrigerant from the A/C system and recycle the gas.
• When recycling the discharged refrigerant, keep service cans on hand. Because the recovery rate with the recovery system is approx. 90%, service cans are necessary to charge the refrigerant.
• Follow the detailed operation procedure described in the operation manual attached to the refrigerant recovery system.

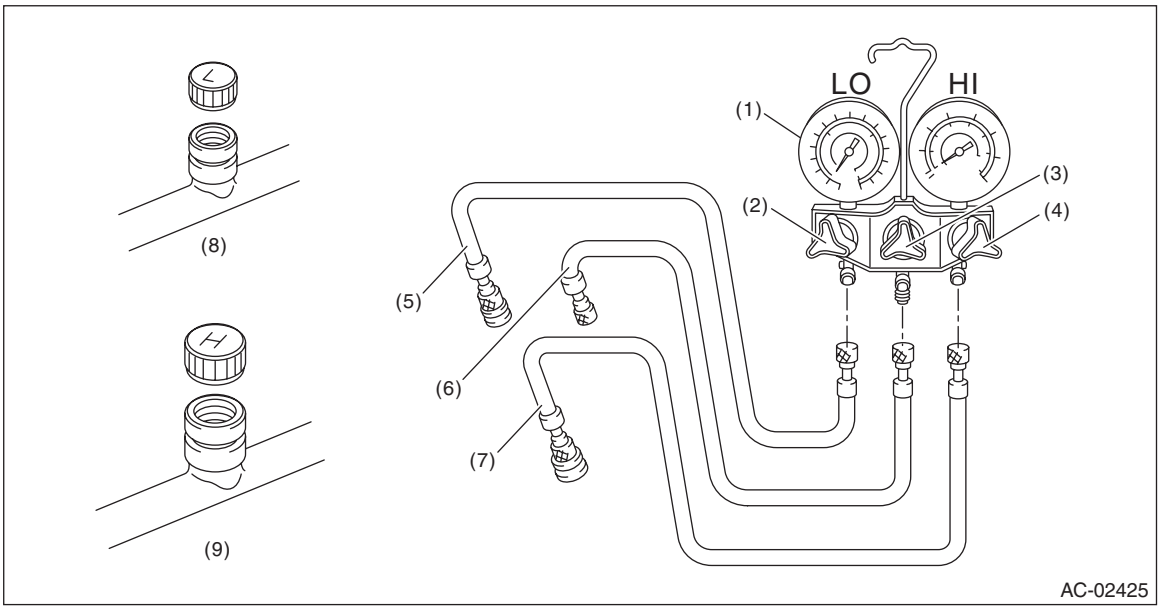

(1) Manifold gauge
(2) Low pressure valve
(3) Center valve
(4) High pressure valve
(5) Low-pressure hose
(6) Center manifold hose (vacuum pump and charge)
(7) High-pressure hose
(8) Low-pressure side service port
(9) High-pressure side service port

1) Perform compressor oil return operation. <Ref. to AC-37, PROCEDURE, Compressor Oil.>
2) Turn the ignition switch to OFF.
3) Remove the collector cover. (H6 model)
   (1) Carefully pull up the rear of collector cover at two positions (A).
   (2) Carefully pull up the front of collector cover at two positions (B) while moving it forward.

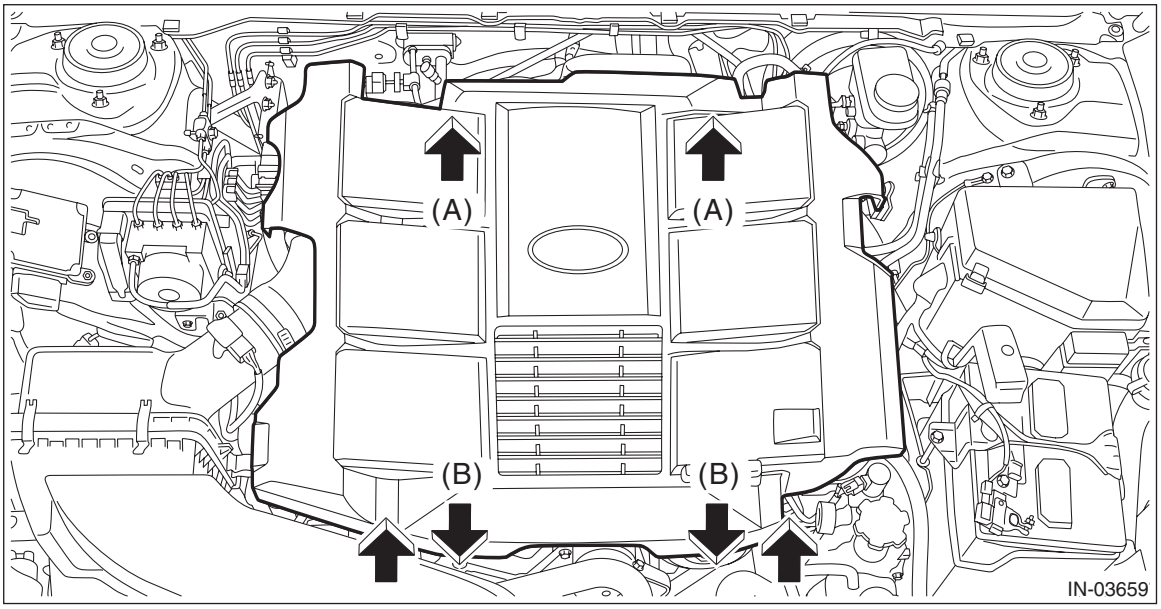

4) Attach the manifold gauge set.

Preparation tool:
Manifold gauge set
(1) Check that all valves are fully closed.
(2) Install the low/high pressure hoses to the service ports on the low/high pressure sides of the vehicle respectively.

CAUTION:
Confirm that the connections are secure.
(3) Connect the center hose to the refrigerant recovery system.

Preparation tool:
Refrigerant recovery system
5) Follow the operation manual attached to the refrigerant recovery system to collect the refrigerant.

5. Refrigerant Charging Procedure

A: PROCEDURE

CAUTION:
- **While working, be sure to wear protective goggles and protective gloves.**
- **Air in the cycle can cause insufficient air conditioning, and water in the cycle can cause clogging in the cycle (icing) and rust. To remove this air and water content, use a vacuum pump to perform evacuation before filling with refrigerant. By making the inside of the cycle a vacuum, the water content will evaporate even at normal temperatures, and can be removed.**

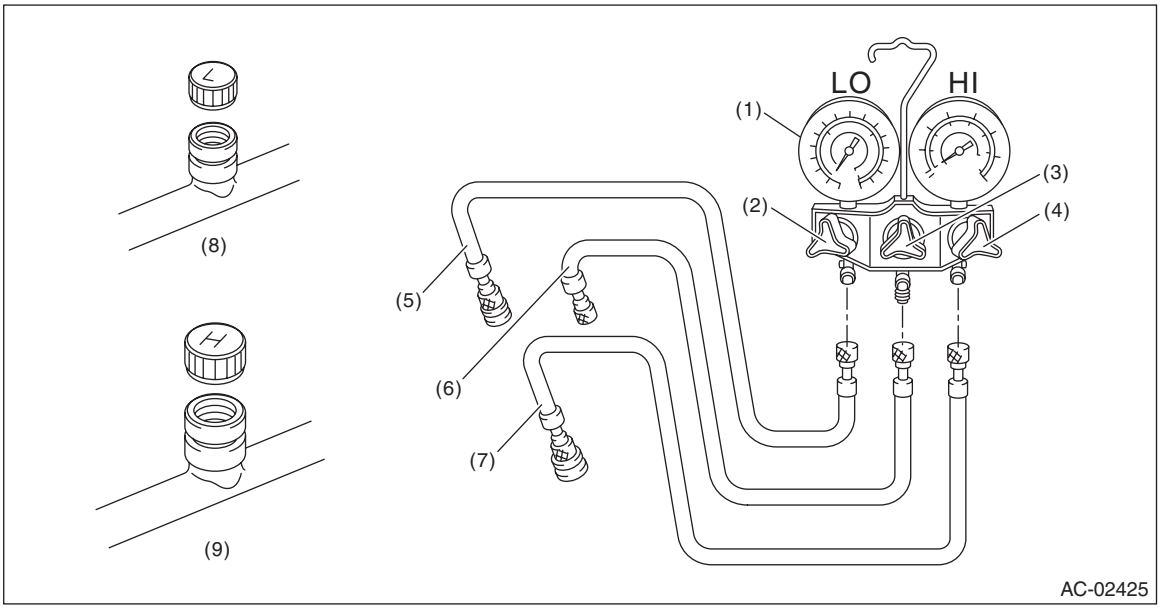

(1)	Manifold gauge	(4)	High pressure valve	(7)	High-pressure hose
(2)	Low pressure valve	(5)	Low-pressure hose	(8)	Low-pressure side service port
(3)	Center valve	(6)	Center manifold hose (vacuum pump and charge)	(9)	High-pressure side service port

1) Attach the manifold gauge set.

Preparation tool:
Manifold gauge set
(1) Check that all valves are fully closed.
(2) Install the low/high pressure hoses to the service ports on the low/high pressure sides of the vehicle respectively.

CAUTION:
Confirm that the connections are secure.
(3) Connect the center manifold hose of the manifold gauge to the vacuum pump.

Preparation tool:
Vacuum pump
2) Perform evacuation.

CAUTION:
Make sure to perform evacuation using a vacuum pump.
(1) Open the low-pressure valve, high-pressure valve and center valve.
(2) Operate the vacuum pump.
(3) Perform evacuation for 5 minutes or more, and when the low pressure gauge needle reaches -0.1 MPa (-1 kgf/cm^2, –14 psi), close the center manifold hose valve, and stop the vacuum pump.

(4) Leave alone for 5 to 10 minutes after closing the low pressure and high pressure valves, and check whether there is any change in the low pressure gauge needle indication.
If the needle position changes, this indicates a leak. Check the pipe and hose connections, and repair the location with the problem.
After repair, retry charging the refrigerant from the step 1).
(5) If there is no leakage, continue evacuation for additional 20 — 30 minutes, close all valves and then stop the vacuum pump.

3) Charge refrigerant.
(1) Follow the can tap operation manual to attach it to the refrigerant can.

Preparation tool:
Can tap

(2) Disconnect the center manifold hose from the vacuum pump, and connect the hose to the tap valve.

Preparation tool:
Weight scale

NOTE:
When 13.6 kg (30 lb) refrigerant container (1) is used, measure the amount of refrigerant with a refrigerant charging scale (2), and connect with the center manifold hose.

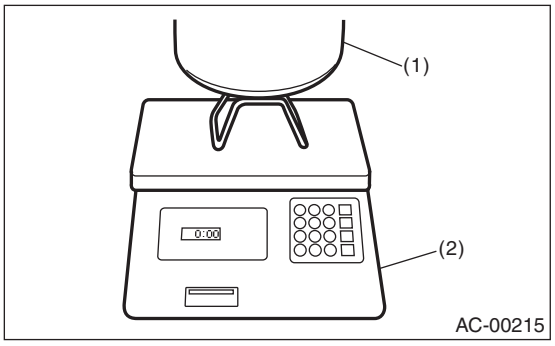

(3) Open the tap valve of HFC-134a supply container (refrigerant can or refrigerant container).
(4) Loosen the center manifold hose connection on the manifold gauge for a few seconds (if there is a purge valve on the manifold gauge, push this instead) to allow the air in the center manifold hose to be bled by the refrigerant pressure.
(5) Open the high pressure and low pressure valves of the manifold gauge to fill with refrigerant.

NOTE:
If the HFC-134a supply container is empty, close all manifold gauge valves and the tap valve of HFC-134a supply container, and replace the empty supply container with a new one. After replacing with a new HFC-134a supply container, perform air purge, and resume the filling operation.

(6) If the low pressure gauge indicates approximately 0.2 MPa (2 kgf/cm^2, 29 psi) or refrigerant filling efficiency drops, close the low pressure and high pressure valves.
(7) Check that the low pressure and high pressure valves are closed, turn off the A/C switch and start the engine.

CAUTION:
When filling operation is performed with the engine running, do not open the high pressure valve. Always fill from the low pressure valve.

(8) To prevent damage to the compressor, push the A/C switch ON-OFF quickly a few times.
(9) Set the vehicle to the following conditions.

Item	Condition
Engine speed	1,500 r/min
A/C switch	ON
Temperature adjustment dial	LO (MAX COOL)
Fan switch or dial	HI (MAX)
FRESH/RECIRC switch	RECIRC
Air flow control switch	VENT
Window	OPEN

(10) Open the low pressure valve, check the refrigerant pressure with a manifold gauge and fill with refrigerant up to the specified amount. <Ref. to AC-25, INSPECTION WITH PRESSURE SYMPTOM, INSPECTION, Refrigerant Pressure with Manifold Gauge Set.>

4) Using an electronic leak detector (leak tester), check for refrigerant leaks in the system. <Ref. to AC-34, INSPECTION, Refrigerant Leak Check.>
5) After filling with refrigerant, close all valves and remove the manifold gauge set.
6) Attach cap to the service port of the low pressure side and high pressure side.

6. Refrigerant Leak Check

A: INSPECTION

1) Attach the manifold gauge set.

Preparation tool:

Manifold gauge set

(1) Check that all valves are fully closed.

(2) Install the low/high pressure hoses to the service ports on the low/high pressure sides of the vehicle respectively.

CAUTION:

Confirm that the connections are secure.

(3) Start the engine, operate the A/C system for approx. 10 minutes, and check that the high-pressure side indicates 0.69 MPa (7 kgf/cm^2, 100 psi) or more.

2) Stop the engine to start the leak test.

Preparation tool:

Electronic leak detector (leak tester)

Items	Condition	Corrective action
Pipe	Check the connections of pipe and expansion valve.	Check the O-ring at connection and tightening torque. If necessary, replace each part.
	Check the connection between pressure switch or pressure sensor and high-pressure pipe.	Replace the pressure switch or pressure sensor.
	Check the connection between pipe and condenser.	Check the O-ring at connection and tightening torque. If necessary, replace each part.
Condenser	Check the welded part of condenser and core.	Replace the condenser.
Hose (high-pressure)	Check the connection between hose (high-pressure) and compressor.	Check the O-ring at connection and tightening torque. If necessary, replace each part.
	Check the connection between hose (high-pressure) and condenser.	Check the O-ring at connection and tightening torque. If necessary, replace each part.
	Check the rubber part of the flexible hose and pipe seam. **CAUTION:** **Carefully check the external surface of flexible hoses and pipes at approx. 25 mm (0.98 in) per second.**	Replace the hose (high pressure).
	Check the valve and cap in the service port.	Check the rubber seal of the valve and cap. If necessary, replace valve or cap.
Compressor	Check the compressor pulley and vicinity of shaft seal. **CAUTION:** **Some shaft seals will show a slight amount of leakage, about 3 g (0.1 oz) per year. This is not a problem.**	Replace the compressor.

Items	Condition	Corrective action
Hose (low-pressure)	Check the connection between hose (low pressure) and expansion valve.	Check the O-ring at connection and tightening torque. If necessary, replace each part.
	Check the connection between hose (low pressure) and compressor.	Check the O-ring at connection and tightening torque. If necessary, replace each part.
	Check the rubber part of the flexible hose and pipe seam. **CAUTION:** **Carefully check the external surface of flexible hoses and pipes at approx. 25 mm (0.98 in) per second.**	Replace the hose (low pressure).
	Check the valve and cap in the service port.	Check the rubber seal of the valve and cap. If necessary, replace valve or cap.
Evaporator	Remove the drain hose from the heater case, and check the end part for 10 seconds or more.	Replace the evaporator.
	Check the air vent grille. NOTE: Turn the ignition switch to ON, and run the blower at high speed for approx. 1 minute. Stop the blower to check the air vent grille on the instrument panel. While moving the tester closer to the grille, run the blower for 1 or 2 seconds, then stop it. Check the grille at that position for at least 10 seconds.	Replace the evaporator.

7. Relay and Fuse

A: LOCATION

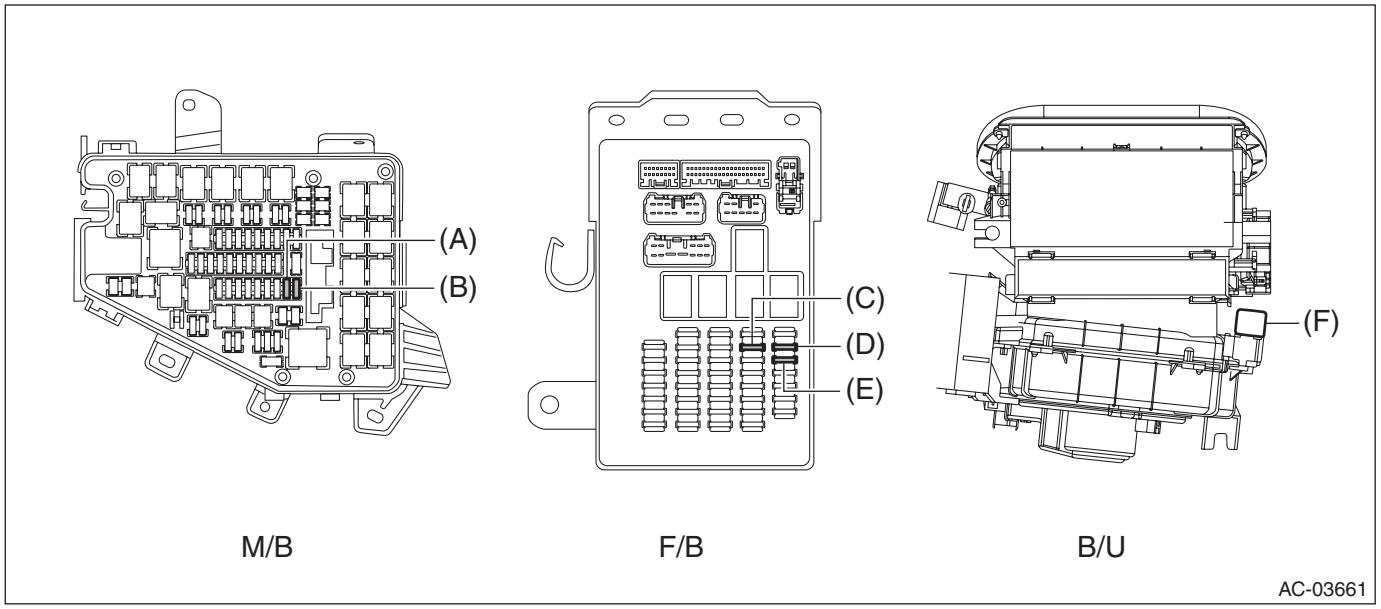

Main fuse box (M/B)	Fuse 15 A (blower motor relay)	(A)
	Fuse 15 A (blower motor relay)	(B)
Fuse & relay box (F/B)	Fuse 15 A (blower motor relay, intake door actuator, A/C control module)	(C)
	Fuse 7.5 A (A/C control module, A/C control panel)	(D)
	Fuse 7.5 A (A/C control panel)	(E)
Blower motor unit (B/U)	Blower motor relay	(F)

NOTE:
For other related fuses, refer to the wiring diagram. <Ref. to WI-21, Power Supply Circuit.>

B: INSPECTION

1. CHECK FUSE

1) Remove the fuse and inspect visually.
2) If the fuse is blown out, replace the fuse.

NOTE:
If the fuse is blown again, check the system wiring harness.

2. CHECK RELAY

1) Measure the resistance between blower motor relay terminals.

Terminal No.	Inspection conditions	Standard	Circuit
1 — 4	Always	1 MΩ or more	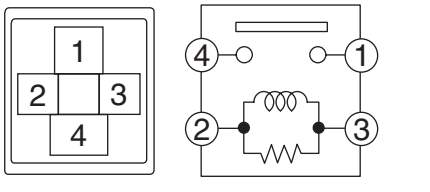
	Apply battery voltage between terminals 2 and 3.	Less than 1 Ω	

2) Replace the blower motor relay if the inspection result is not within the standard value.

8. Compressor Oil

A: PROCEDURE

NOTE:
Before making repairs, perform the oil return operation to return the compressor oil in circulation with the refrigerant to the compressor.
1) Increase the engine speed to 1,500 r/min.
2) Turn the A/C switch to ON.
3) Turn the temperature control dial to LO (MAX COOL).
4) Turn the FRESH/RECIRC switch to RECIRC position.
5) Turn the fan switch or dial to HI (MAX).
6) Leave in this condition for 10 minutes.

B: ADJUSTMENT

- If a component has been replaced, add an appropriate amount of compressor oil (same as the amount of remaining oil in removed component).
- When replacing the compressor, the new compressor will already have the specified amount of oil in it. Adjust the oil amount (so that the amount remains the same as that of the removed compressor) and install the new compressor.

NOTE:
Since the hygroscopicity of compressor oil is high, perform this series of works quickly.

9. Blower Motor Unit Assembly

A: REMOVAL

CAUTION:
• Before handling the airbag system components, refer to "CAUTION" of "General Description" in "AIRBAG SYSTEM". <Ref. to AB-10, CAUTION, General Description.>
• Do not detach the immobilizer control module except when replacing the blower motor unit assembly.
• Replace the air duct cover LWR with a new part when the immobilizer control module is removed. If the air duct cover LWR is reused, screw tightening force is reduced and the immobilizer control module may be detached due to vibration while driving.
1) Disconnect the ground terminal from the battery sensor, and wait for at least 60 seconds before starting work. <Ref. to RC-4, BATTERY, NOTE, Repair Contents.>
2) Remove the heater and cooling unit assembly. <Ref. to AC-59, REMOVAL, Heater and Cooling Unit.>
3) Remove the blower motor unit assembly.
(1) Release the claws and remove the screws.

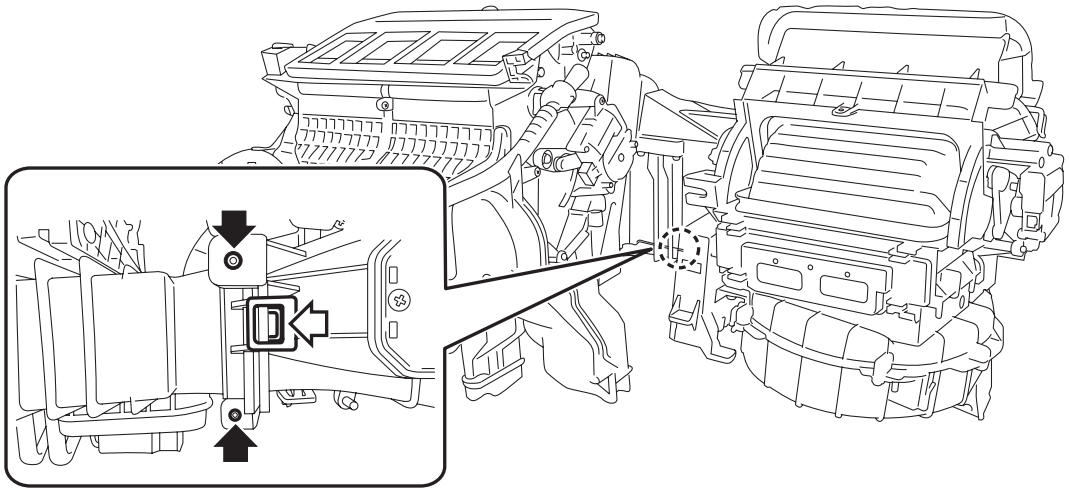
AC-03662

(2) Remove the blower motor unit assembly as shown in the figure.

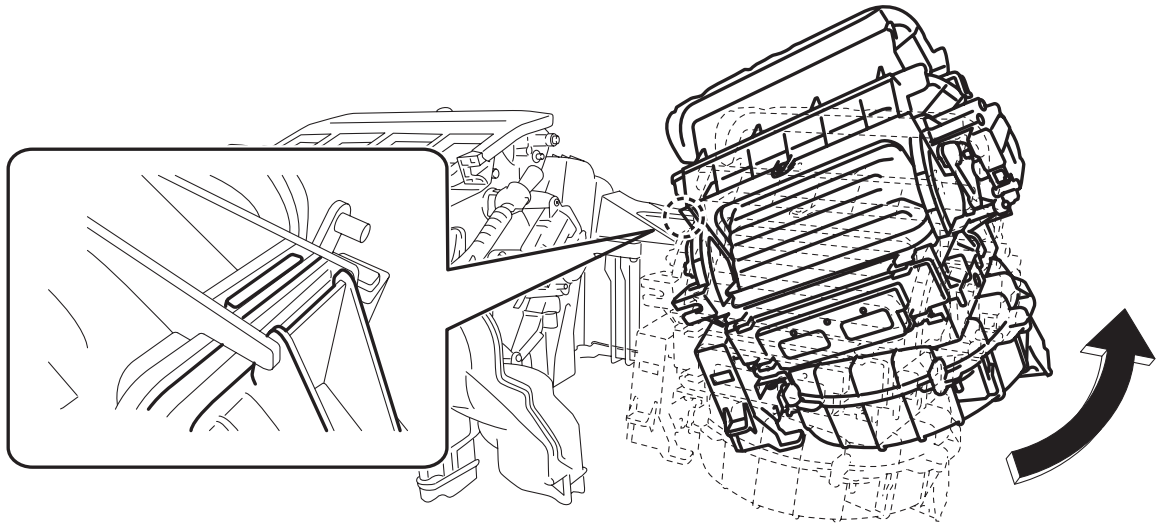
AC-03663

B: INSTALLATION

CAUTION:
- **Do not start the engine before charging refrigerant.**
- **If the engine is started with no refrigerant charge, replace the compressor assembly.**
- **Replace O-rings and pipe clamps with new parts and install securely.**
- **Before handling the airbag system components, refer to "CAUTION" of "General Description" in "AIRBAG SYSTEM". <Ref. to AB-10, CAUTION, General Description.>**

1) Install the blower motor unit assembly.
2) Install the heater and cooling unit assembly. <Ref. to AC-60, INSTALLATION, Heater and Cooling Unit.>
3) Connect the ground terminal to battery sensor. <Ref. to RC-4, BATTERY, NOTE, Repair Contents.>

10.Blower Motor

A: REMOVAL

1) Disconnect the ground terminal from battery sensor. <Ref. to RC-4, BATTERY, NOTE, Repair Contents.>
2) Release the hook, and remove the under cover assembly - passenger.

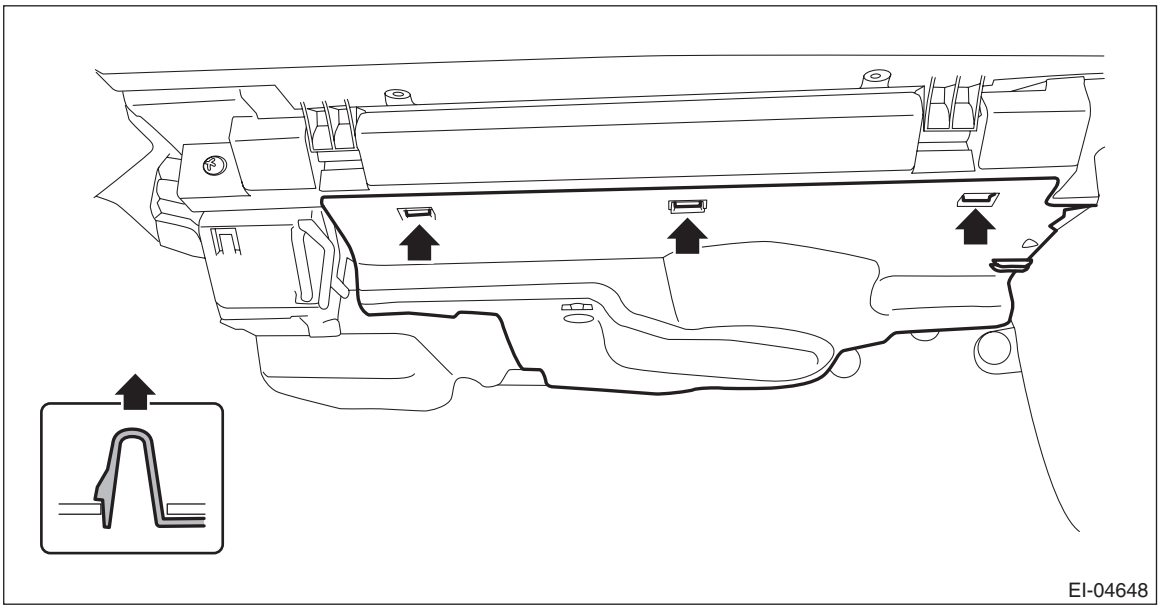

3) Remove the blower motor.
   (1) Disconnect the connector.
   (2) Remove the screws and detach the blower motor.

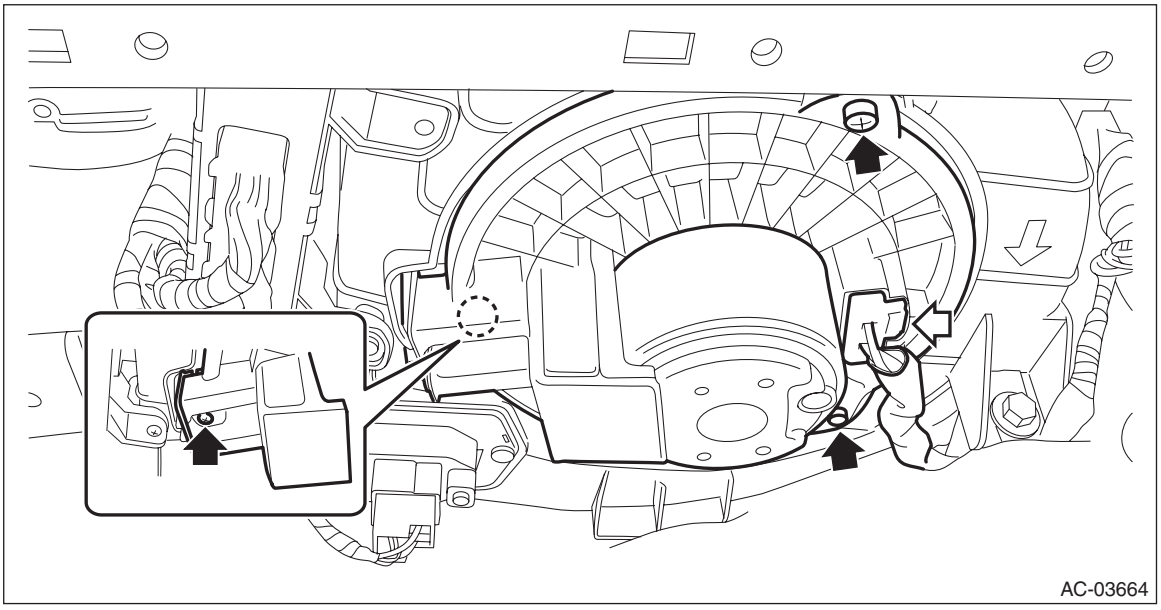

B: INSTALLATION

1) Install the blower motor.
2) Install the under cover assembly - passenger.
3) Connect the ground terminal to battery sensor. <Ref. to RC-4, BATTERY, NOTE, Repair Contents.>

C: INSPECTION

1) Check the motor operation when battery voltage is applied between the connector terminals.

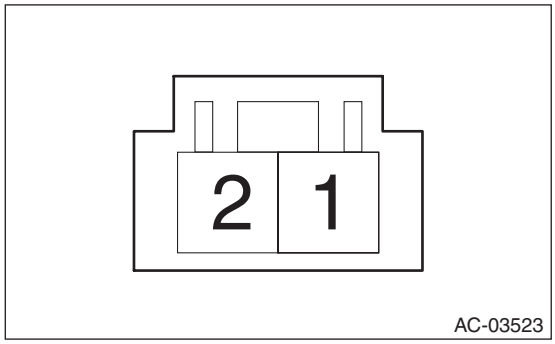

Terminal No.	Inspection conditions	Specification
2 (+) — 1 (–)	Apply battery voltage.	Rotation

2) If the blower motor does not operate normally, replace the blower motor.

11.Power Transistor (Auto A/C Model)

A: REMOVAL

1) Disconnect the ground terminal from battery sensor. <Ref. to RC-4, BATTERY, NOTE, Repair Contents.>
2) Release the hook, and remove the under cover assembly - passenger.

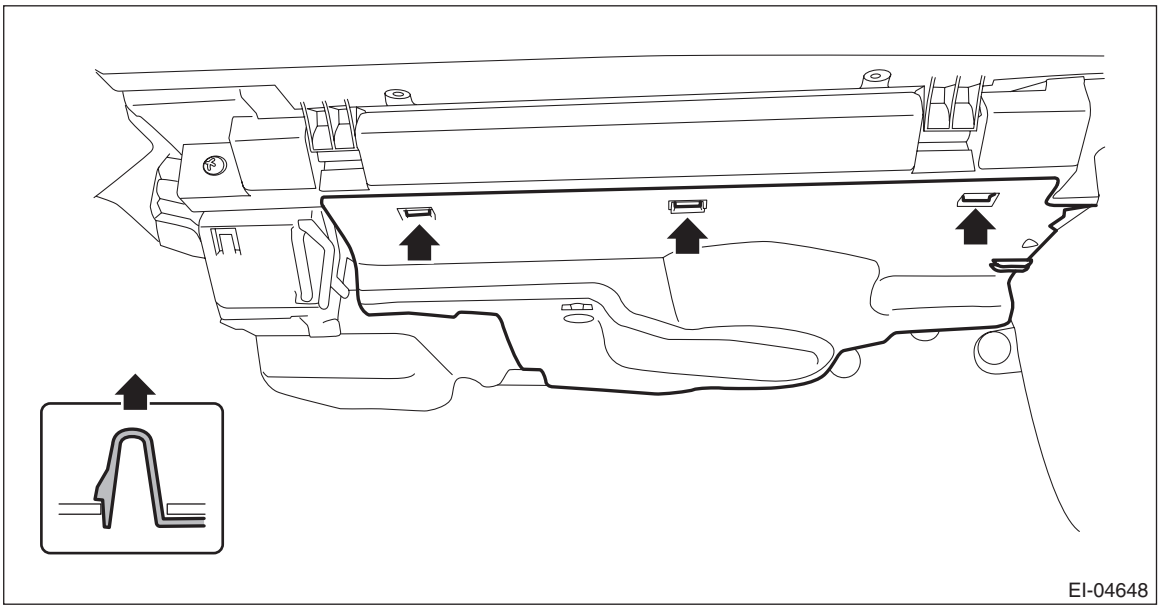

3) Remove the power transistor.
   (1) Disconnect the connector.
   (2) Remove the screws and remove the power transistor.

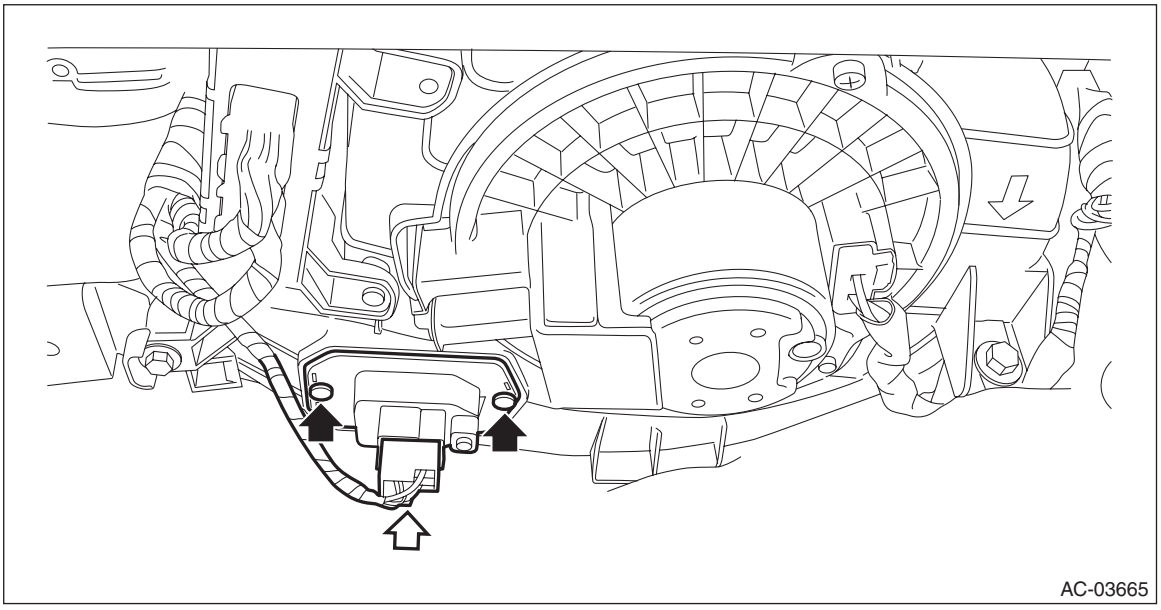

B: INSTALLATION

1) Install the power transistor.
2) Install the under cover assembly - passenger.
3) Connect the ground terminal to battery sensor. <Ref. to RC-4, BATTERY, NOTE, Repair Contents.>

12.Blower Resistor (Manual A/C Model)

A: REMOVAL

1) Disconnect the ground terminal from battery sensor. <Ref. to RC-4, BATTERY, NOTE, Repair Contents.>
2) Release the hook, and remove the under cover assembly - passenger.

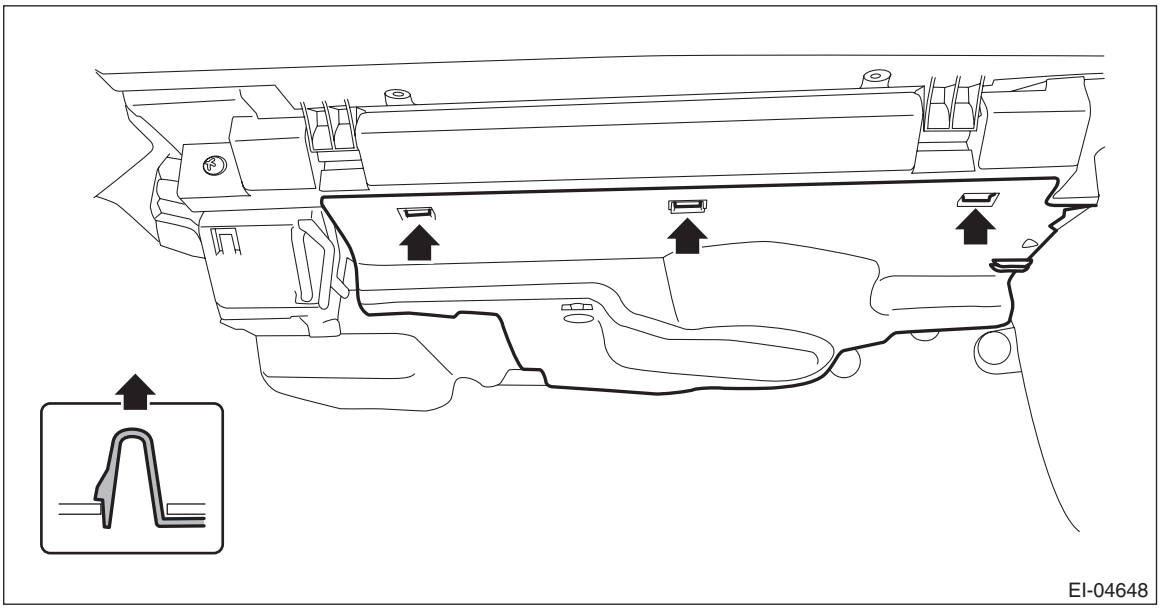

3) Remove the blower resistor.
   (1) Disconnect the connector.
   (2) Remove the screw and remove the blower resistor.

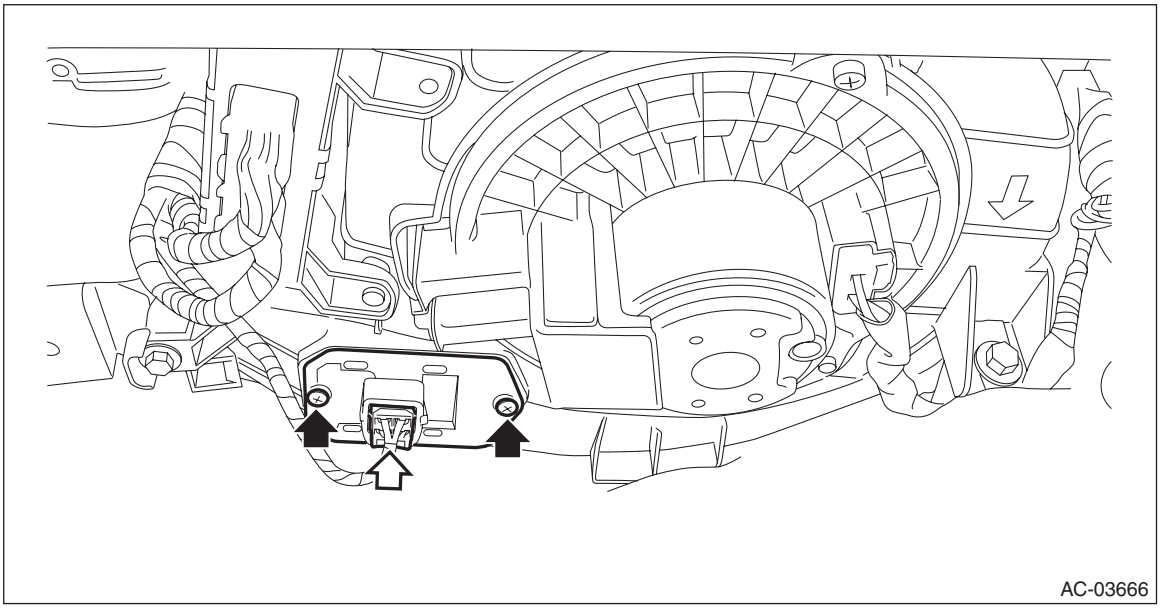

B: INSTALLATION

1) Install the blower resistor.
2) Install the under cover assembly - passenger.
3) Connect the ground terminal to battery sensor. <Ref. to RC-4, BATTERY, NOTE, Repair Contents.>

C: INSPECTION

1) Measure the resistance between connector terminals.

Preparation tool: Circuit tester

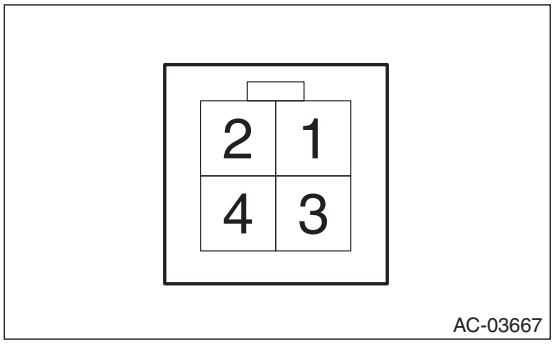

Terminal No.	Inspection conditions	Standard
4 — 2	Always	Approx. 0.44 Ω
4 — 3		Approx. 1.12 Ω
4 — 1		Approx. 2.92 Ω

2) Replace the blower resistor if the inspection result is not within the standard value.

13.Heater Core

A: REMOVAL

CAUTION:
Before handling the airbag system components, refer to "CAUTION" of "General Description" in "AIRBAG SYSTEM". <Ref. to AB-10, CAUTION, General Description.>

1) Disconnect the ground terminal from the battery sensor, and wait for at least 60 seconds before starting work. <Ref. to RC-4, BATTERY, NOTE, Repair Contents.>
2) Remove the heater and cooling unit assembly. <Ref. to AC-59, REMOVAL, Heater and Cooling Unit.>
3) Remove the heater core.
(1) Remove the screws, and remove the duct - foot driver.

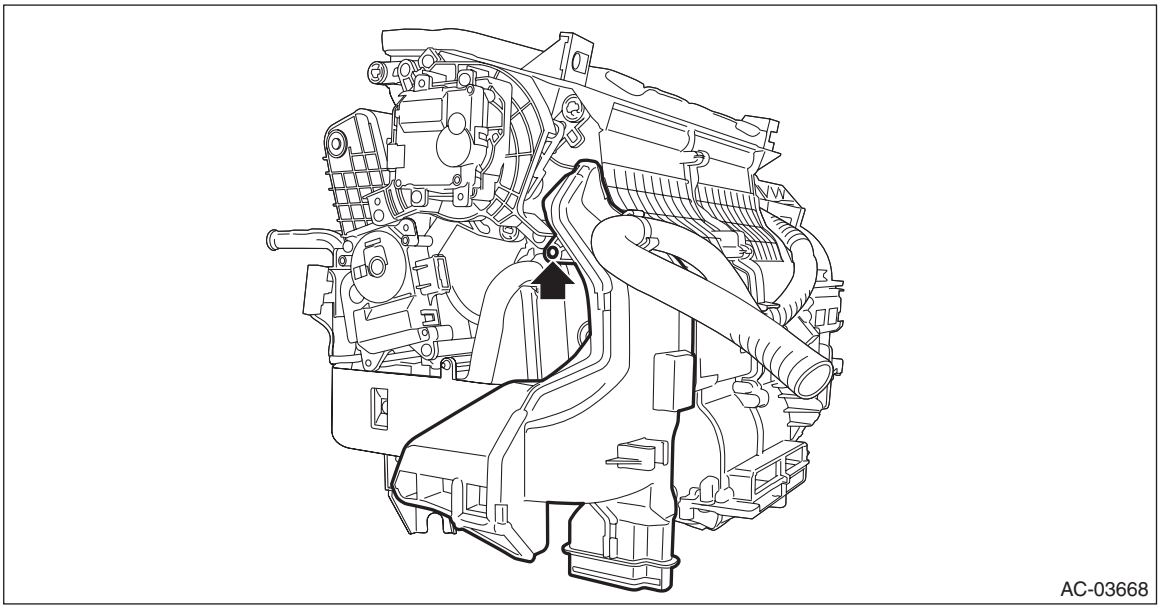
AC-03668

(2) Remove the screw and detach the heater pipe cover.

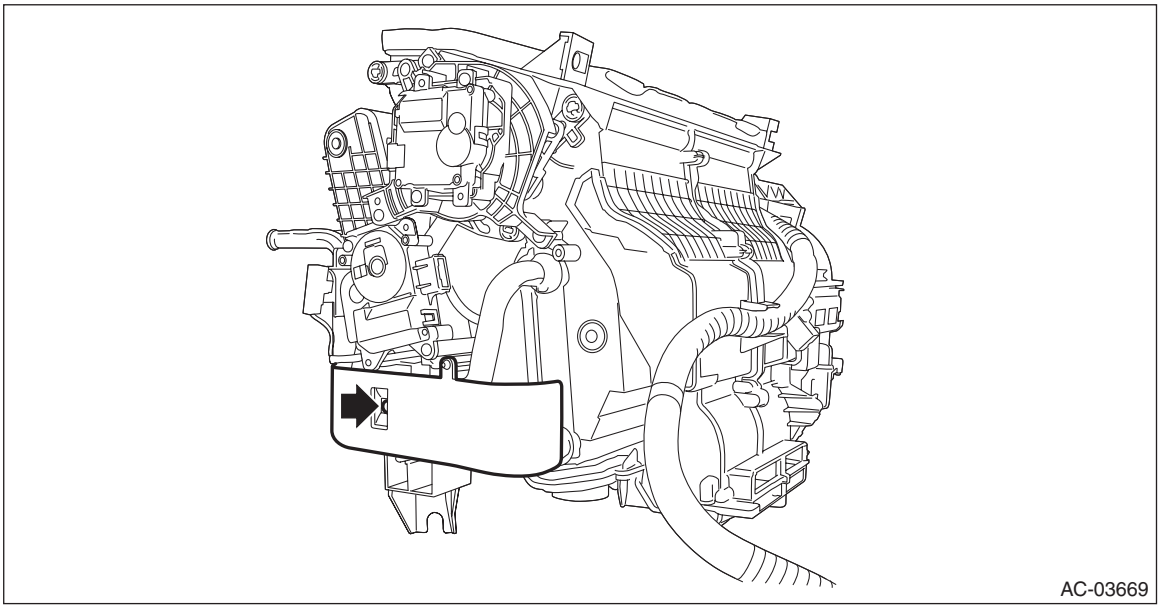
AC-03669

(3) Remove the screw and remove the heater pipe clamp.

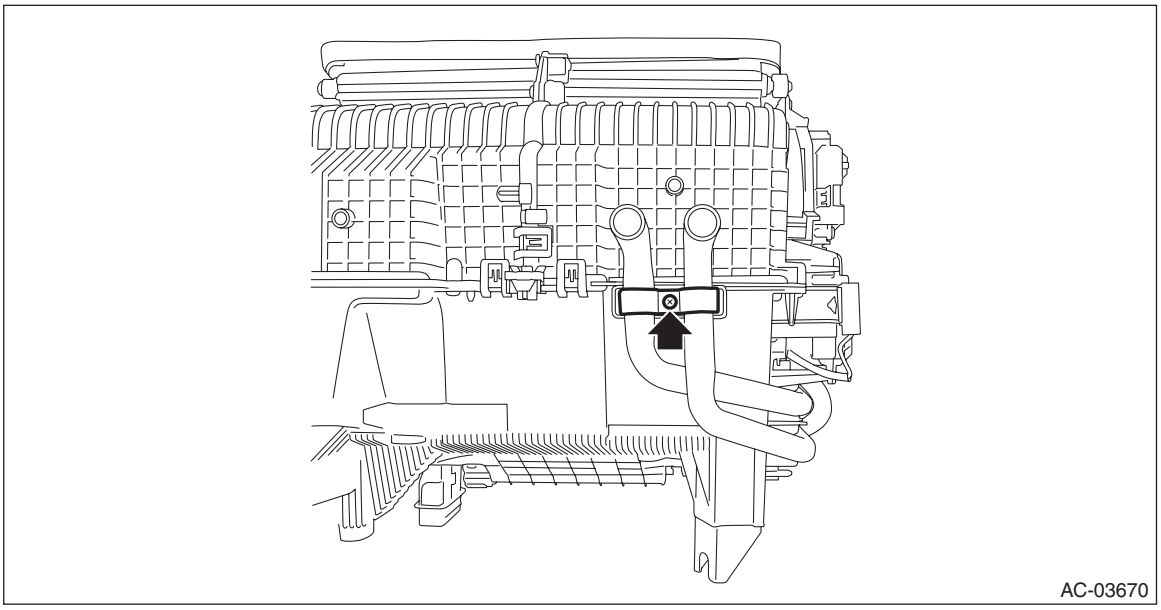

(4) Remove the heater core.

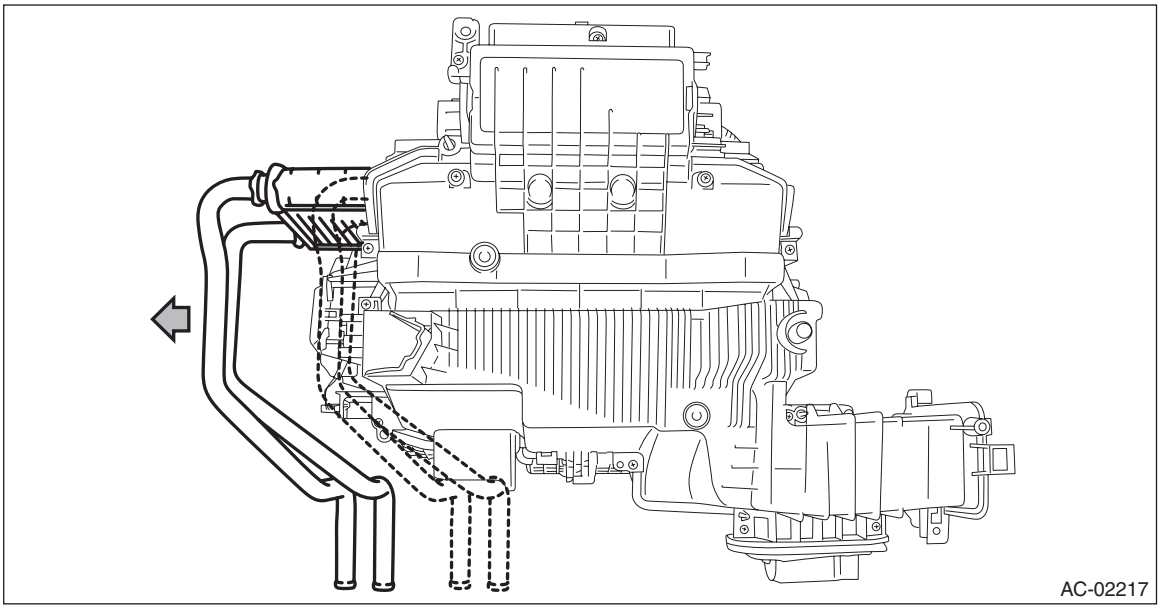

B: INSTALLATION

CAUTION:
- **Do not start the engine before charging refrigerant.**
- **If the engine is started with no refrigerant charge, replace the compressor assembly.**
- **Replace O-rings and pipe clamps with new parts and install securely.**
- **Before handling the airbag system components, refer to "CAUTION" of "General Description" in "AIRBAG SYSTEM". <Ref. to AB-10, CAUTION, General Description.>**

1) Attach the heater core.
   (1) Install the heater pipe clamp.
   (2) Install the heater pipe cover.
   (3) Install the duct - foot driver.
2) Install the heater and cooling unit assembly. <Ref. to AC-60, INSTALLATION, Heater and Cooling Unit.>
3) Connect the ground terminal to battery sensor. <Ref. to RC-4, BATTERY, NOTE, Repair Contents.>

14.Control Panel

A: REMOVAL

1) Disconnect the ground terminal from battery sensor. <Ref. to RC-4, BATTERY, NOTE, Repair Contents.>
2) Remove the heater control assembly.
   (1) Release the clips and claws, then detach the control module cover.

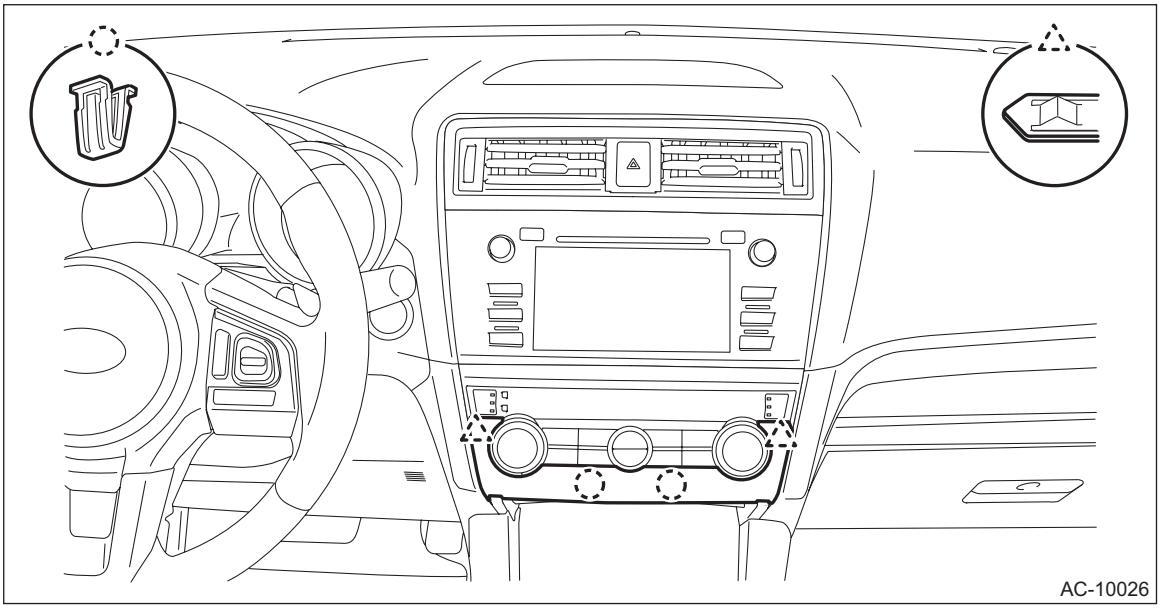

   (2) Release the screws and clips, then detach the heater control assembly.

CAUTION:
• Insert a flat tip screwdriver wrapped with a protection tape into the position (a) shown in the figure, and move it in the arrow direction to remove the clip. When both clips are removed, pull out the heater control assembly by hand inserted through the space.
• Be careful not to damage the clips and the control panel.

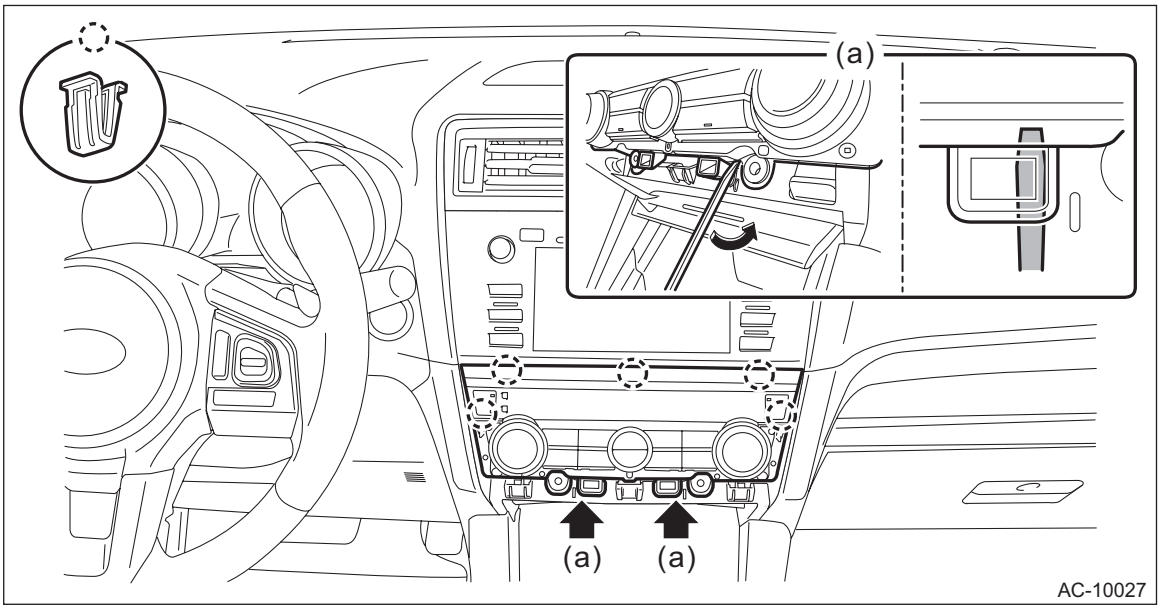

B: INSTALLATION

1) Install the heater control assembly.
2) Install the control module cover.
3) Connect the ground terminal to battery sensor. <Ref. to RC-4, BATTERY, NOTE, Repair Contents.>

C: INSPECTION

1) Check the illumination operation when battery voltage is applied between the connector terminals.

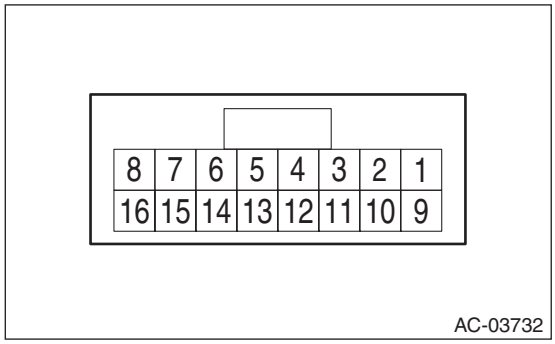

Terminal No.	Inspection conditions	Specification
2 (+) — 6 (–)	Apply battery voltage.	Light ON

2) If it does not operate normally, replace the heater control assembly.

15.Control Unit

A: REMOVAL

1) Disconnect the ground terminal from battery sensor. <Ref. to RC-4, BATTERY, NOTE, Repair Contents.>
2) Remove the pocket assembly and the back panel - pocket. <Ref. to EI-77, REMOVAL, Glove Box.>
3) Remove the control module.
   (1) Disconnect the connector.
   (2) Remove the screws, and remove the control module.

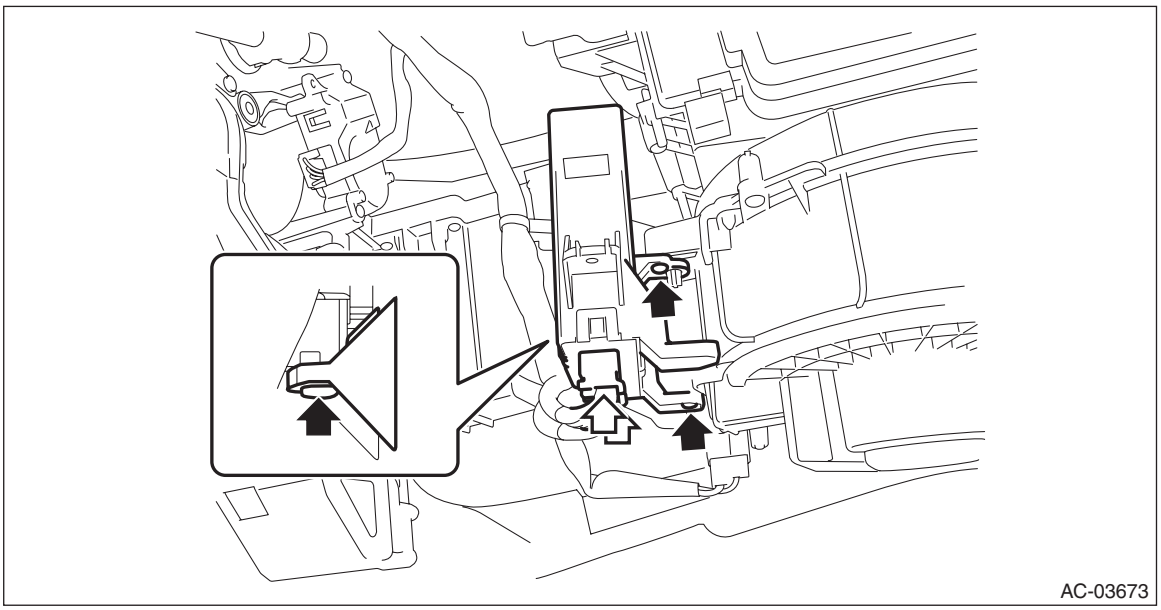

B: INSTALLATION

1) Install the control module.
2) Install the pocket assembly and the back panel - pocket.
3) Connect the ground terminal to battery sensor. <Ref. to RC-4, BATTERY, NOTE, Repair Contents.>

16.Compressor

A: REMOVAL

1. H4 MODEL

1) Perform compressor oil return operation. <Ref. to AC-37, PROCEDURE, Compressor Oil.>
2) Turn the A/C switch to OFF and stop the engine.
3) Using the refrigerant recovery system, discharge refrigerant. <Ref. to AC-29, PROCEDURE, Refrigerant Recovery Procedure.>
4) Disconnect the ground terminal from battery sensor. <Ref. to RC-4, BATTERY, NOTE, Repair Contents.>
5) Remove the V-belts. <Ref. to ME(H4DO)-71, REMOVAL, V-belt.>
6) Remove the bolts and remove the V-belt cover bracket.

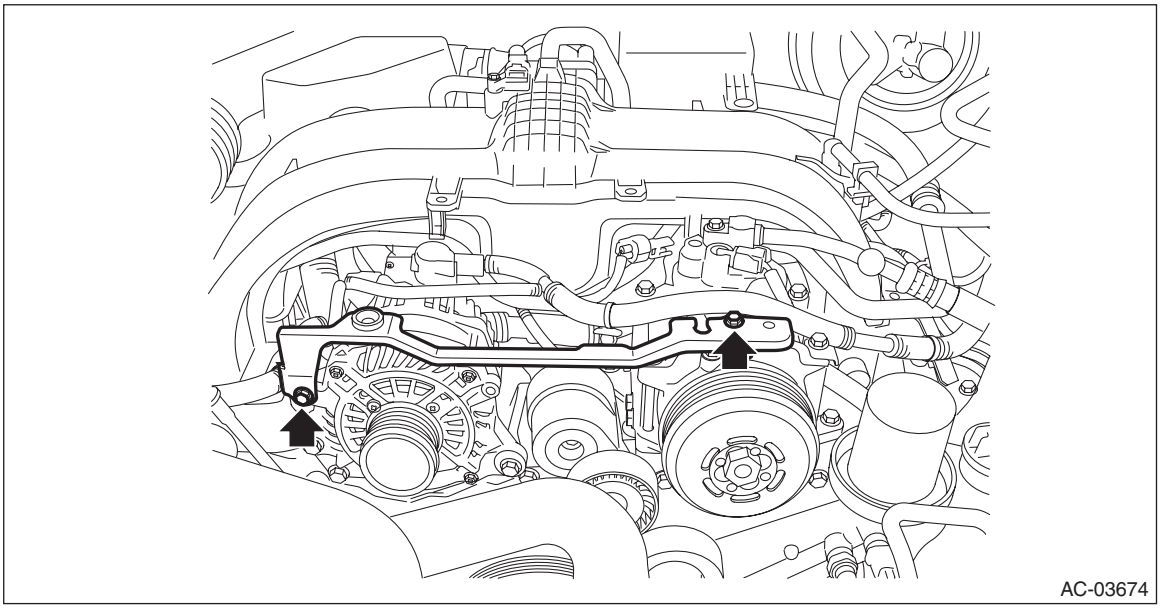
AC-03674

7) Remove the bolt, and detach the hose - pressure suction and the hose - pressure discharge.

CAUTION:
Seal the disconnected hose and engaging part of compressor with a plug or vinyl tape to prevent foreign matter from entering.

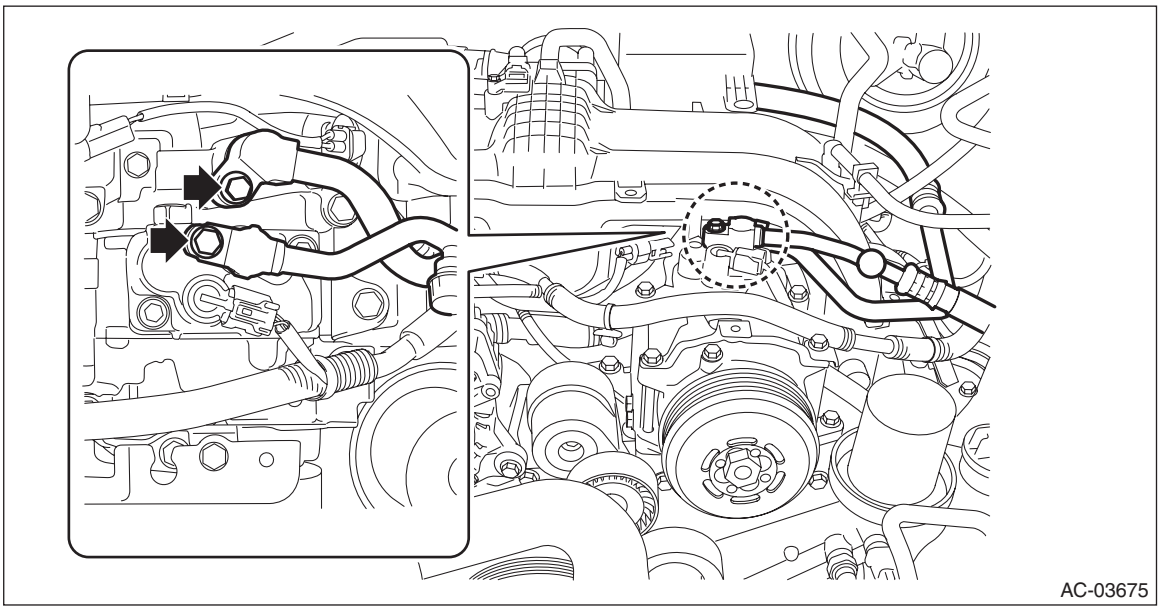
AC-03675

8) Remove the bolts and connector, and remove the compressor assembly.

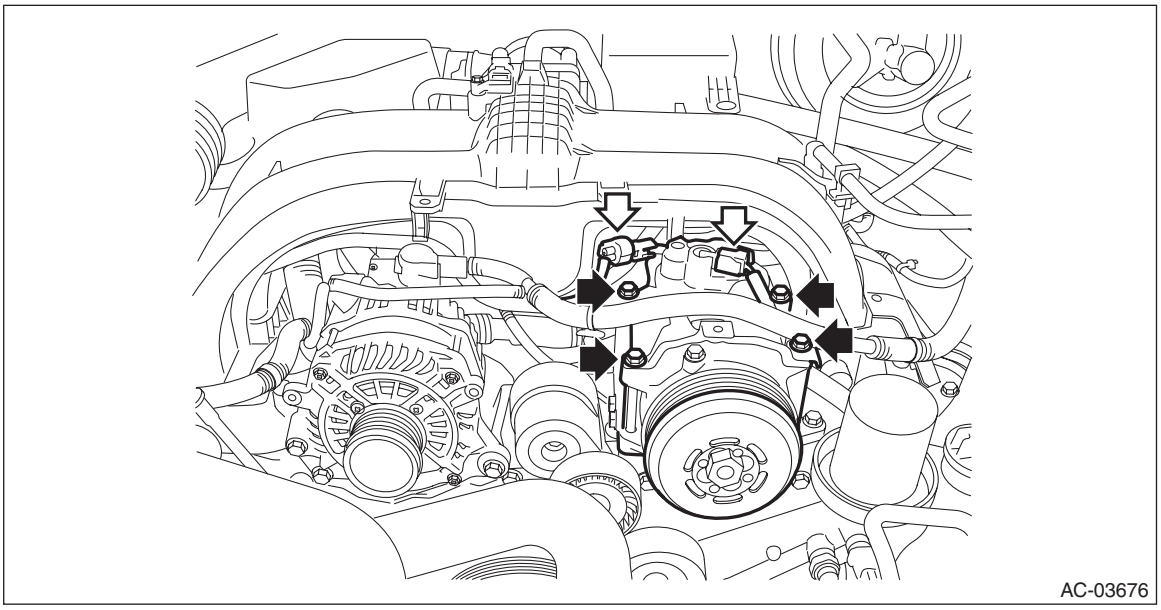

NOTE:
Leave the bracket on the harness side.

2. H6 MODEL

1) Perform compressor oil return operation. <Ref. to AC-37, PROCEDURE, Compressor Oil.>
2) Turn the A/C switch to OFF and stop the engine.
3) Using the refrigerant recovery system, discharge refrigerant. <Ref. to AC-29, PROCEDURE, Refrigerant Recovery Procedure.>
4) Disconnect the ground terminal from battery sensor. <Ref. to RC-4, BATTERY, NOTE, Repair Contents.>
5) Remove the V-belts. <Ref. to ME(H6DO)-74, REMOVAL, V-belt.>
6) Remove the collector cover bracket.
   (1) Disconnect the connector, and detach the harness clamp.
   (2) Remove the bolts and then remove the collector cover bracket.

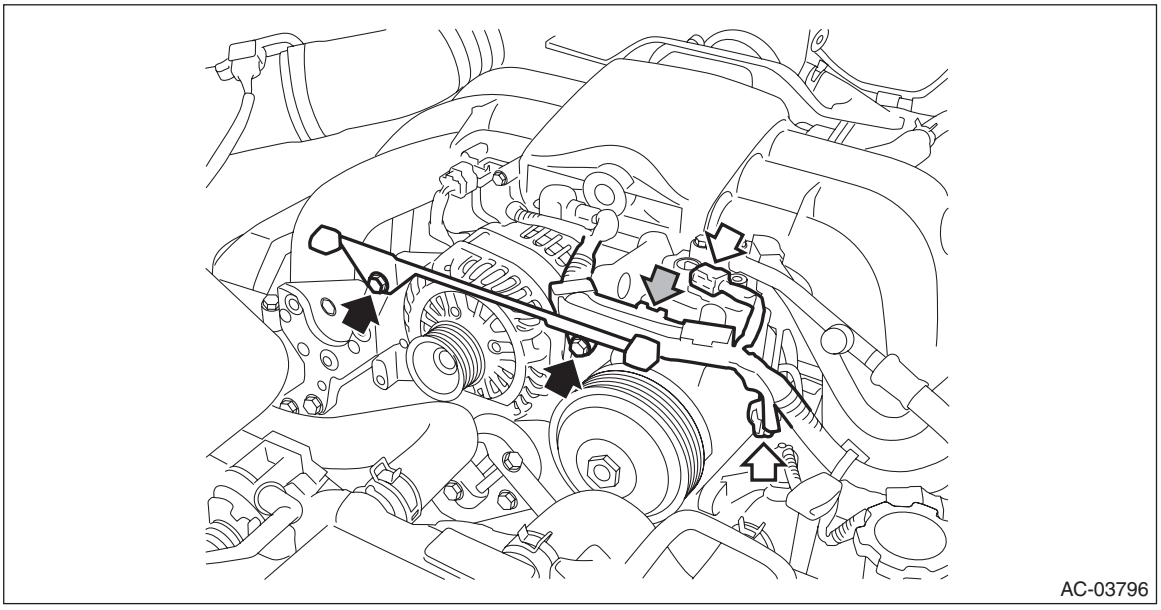

7) Remove the bolt, and detach the hose - pressure suction and the hose - pressure discharge.

CAUTION:
Seal the disconnected hose and engaging part of compressor assembly with a plug or vinyl tape to prevent foreign matter from entering.

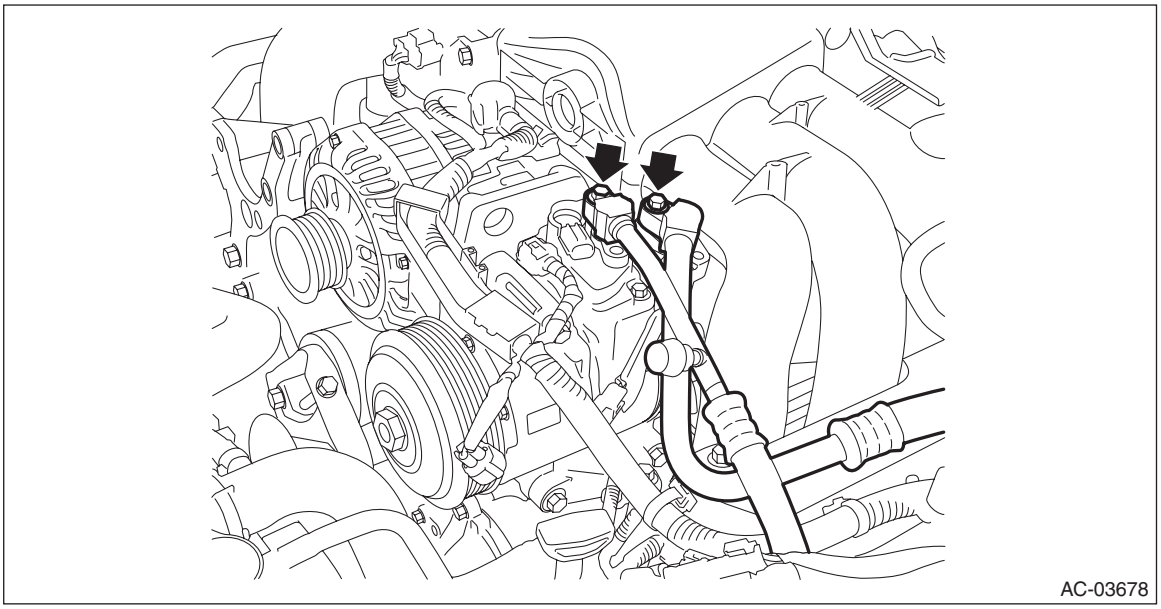
AC-03678

8) Remove the bolts and remove the compressor assembly.

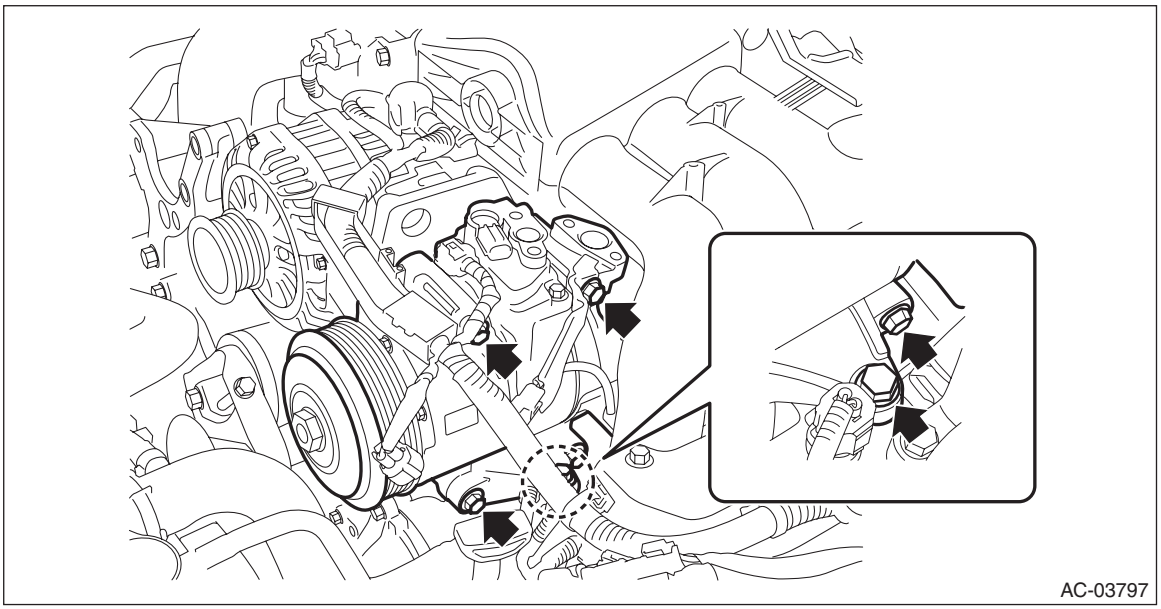
AC-03797

B: INSTALLATION

CAUTION:
• Replace the O-rings on the hose - pressure suction and the hose - pressure discharge with new parts, and apply compressor oil.
• If the compressor assembly is replaced, adjust the amount of the compressor oil. <Ref. to AC-37, ADJUSTMENT, Compressor Oil.>
• After installing the compressor, do not start the engine until the A/C system is charged with refrigerant.
• If the engine is started with no refrigerant charge, replace the compressor assembly.

1) Install the compressor assembly.

NOTE:
Tighten the compressor assembly for H4 model in the numerical order as shown in the figure. <Ref. to AC-11, COMPRESSOR, COMPONENT, General Description.>

Tightening torque:
H4 model: 25 N·m (2.5 kgf-m, 18.4 ft-lb)
H6 model: 26.5 N·m (2.7 kgf-m, 19.5 ft-lb)

2) Install the hose - pressure suction and the hose - pressure discharge.

Tightening torque:
10 N·m (1 kgf-m, 7.4 ft-lb)

3) Install the V-belt cover bracket. (H4 model)

Tightening torque:
6.4 N·m (0.7 kgf-m, 4.7 ft-lb)

4) Install the collector cover bracket. (H6 model) <Ref. to SC(H6DO)-35, INSTALLATION, Generator.>
5) Install the V-belts.
- H4 model: <Ref. to ME(H4DO)-73, INSTALLATION, V-belt.>
- H6 model: <Ref. to ME(H6DO)-75, INSTALLATION, V-belt.>

6) Connect the ground terminal to battery sensor. <Ref. to RC-4, BATTERY, NOTE, Repair Contents.>
7) Charge refrigerant. <Ref. to AC-31, PROCEDURE, Refrigerant Charging Procedure.>
8) After installing the compressor assembly, perform a break-in operation according to the following steps.

NOTE:
Do not increase the engine speed to and above 4,000 r/min unless the break-in operation finishes.

(1) Check that all connectors are locked securely.
(2) Reset the control module. (Disconnect and then connect the connector)
(3) Attach a delivery (test) mode fuse to the main fuse box.
(4) Set the fan dial to MAX (4th position). (manual A/C model)
(5) Connect the Subaru Select Monitor.
(6) On «Start» display, select «Diagnosis».
(7) On «Vehicle selection» display, enter vehicle information and select «Confirmed».
(8) On «Main Menu» display, select «Each System».
(9) On «Select System» display, select «Air Condition System» and select «Enter».
(10) On «Select Function» display, select «Work Support».
(11) Select «Variable compressor break-in drive» mode from the work support list, and display «Variable compressor break-in drive finish status» by following the procedure.
(12) Start and idle the engine at or below 1,800 r/min. (The compressor operation is automatically changed to the break-in drive mode.)
(13) When «Variable compressor break-in drive finish status» changes from «incomplete» → «Finished», stop the engine.

CAUTION:
If the engine may have been started with no refrigerant charge, check for any diagnosis code (DTC) using Subaru Select Monitor. If the code B14A8 (REFRIGERANT NOT SEALED DRIVE ERROR) is output, replace the compressor assembly.

(14) Remove the delivery (test) mode fuse from the main fuse box.
(15) The break-in operation finishes.

17.Condenser

A: REMOVAL

1) Using the refrigerant recovery system, discharge refrigerant. <Ref. to AC-29, PROCEDURE, Refrigerant Recovery Procedure.>
2) Disconnect the ground terminal from battery sensor. <Ref. to RC-4, BATTERY, NOTE, Repair Contents.>
3) Remove the air intake duct.
- H4 model: <Ref. to IN(H4DO)-12, REMOVAL, Air Intake Duct.>
- H6 model: <Ref. to IN(H6DO)-12, REMOVAL, Air Intake Duct.>

4) Remove the reservoir tank.
- H4 model: <Ref. to CO(H4DO)-61, REMOVAL, Reservoir Tank.>
- H6 model: <Ref. to CO(H6DO)-46, REMOVAL, Reservoir Tank.>

5) Remove the bumper face - front. <Ref. to EI-34, REMOVAL, Front Bumper.>
6) Remove the active grille shutter. (H4 model) <Ref. to CO(H4DO)-63, REMOVAL, Active Grille Shutter.>
7) Remove the clip, and remove the bracket - grille.

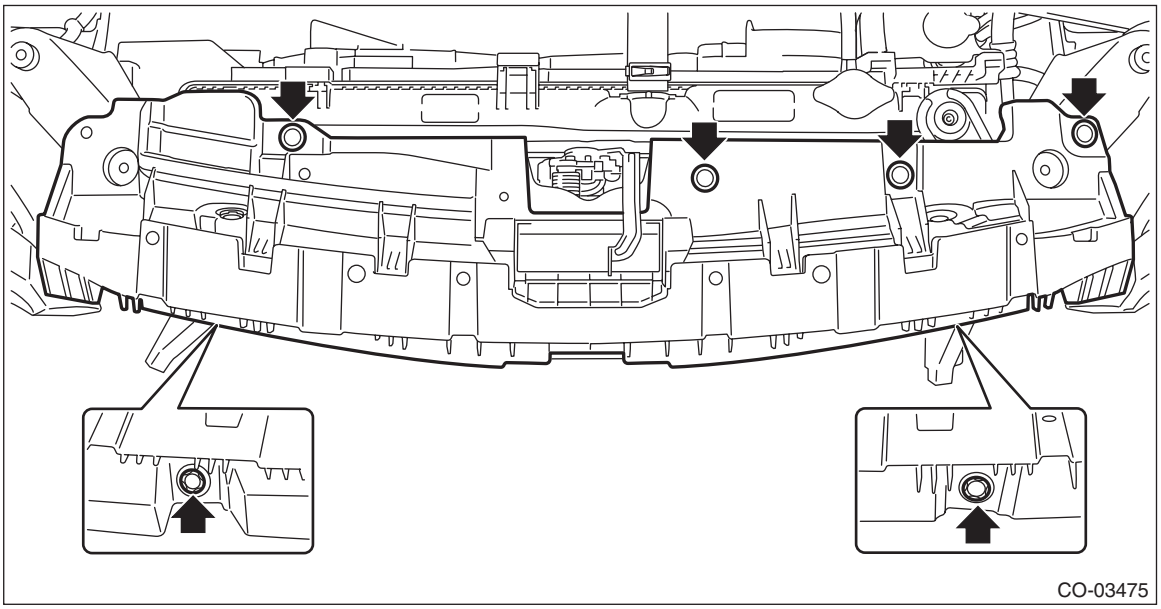

8) Remove the bolt, and detach the hose - pressure discharge and the pipe - evaporator cooling.

CAUTION:
Seal the disconnected hose, pipe and engaging part of condenser assembly with a plug or vinyl tape to prevent foreign matter from entering.

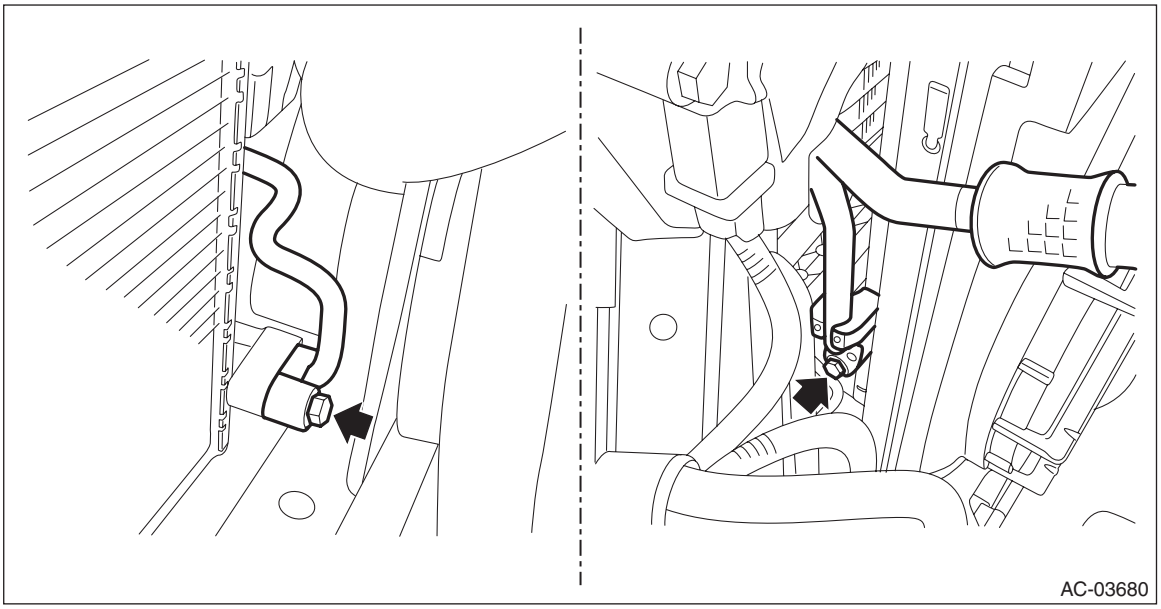

9) Remove the bolts and remove the radiator upper bracket.

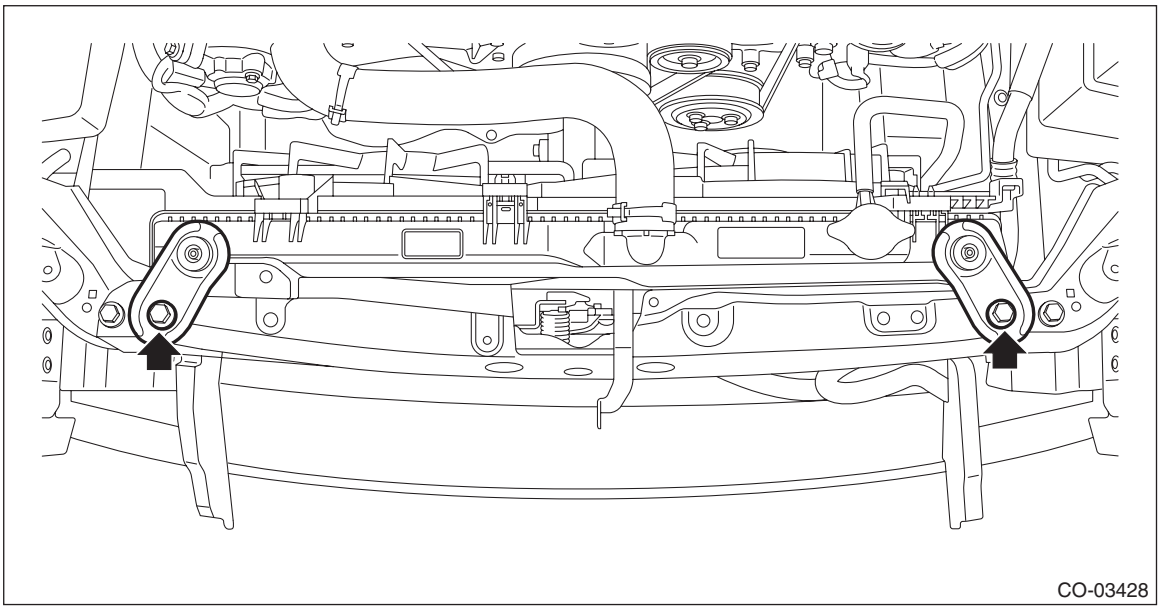

10) Remove the bolts, and remove the condenser assembly - air conditioner.

CAUTION:
• Push the radiator to the engine side, and pull it out through the space between the radiator and the radiator panel.
• Be careful not to damage the condenser and radiator fin. If a damaged fin is found, repair it using a thin screwdriver.

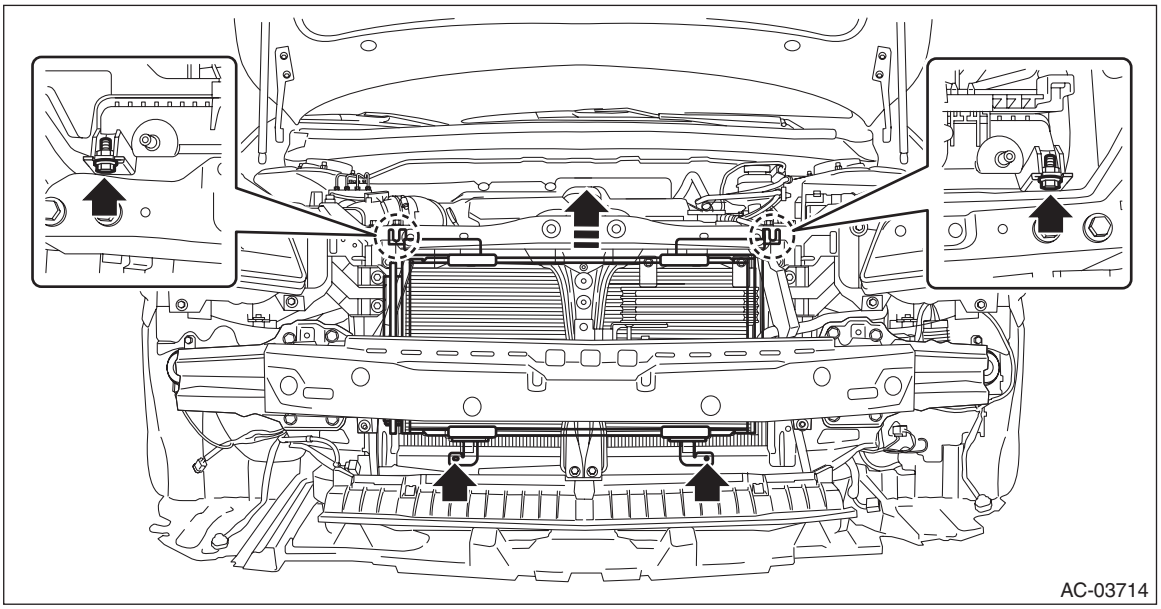

B: INSTALLATION

CAUTION:
- **Do not start the engine before charging refrigerant.**
- **If the engine is started with no refrigerant charge, replace the compressor assembly.**
- **If the condenser has been replaced, add an appropriate amount of compressor oil to the compressor. <Ref. to AC-37, ADJUSTMENT, Compressor Oil.>**
- **Replace the O-rings with new parts, and then apply compressor oil.**

1) Install the condenser assembly - air conditioner.

NOTE:
To tighten the bolts at the bottom of the condenser, use the ST.

Preparation tool:
ST: SPECIAL TOOL CONDENSER (73099SG000)

Tightening torque:

Calculation formula
T = L/(100 mm (3.94 in) + L) × 7.5 N·m (0.8 kgf-m, 5.5 ft-lb)
T: Tightening torque L: Effective length of torque wrench NOTE: If the effective length of the torque wrench used is unknown, consult the manufacturer of the torque wrench.

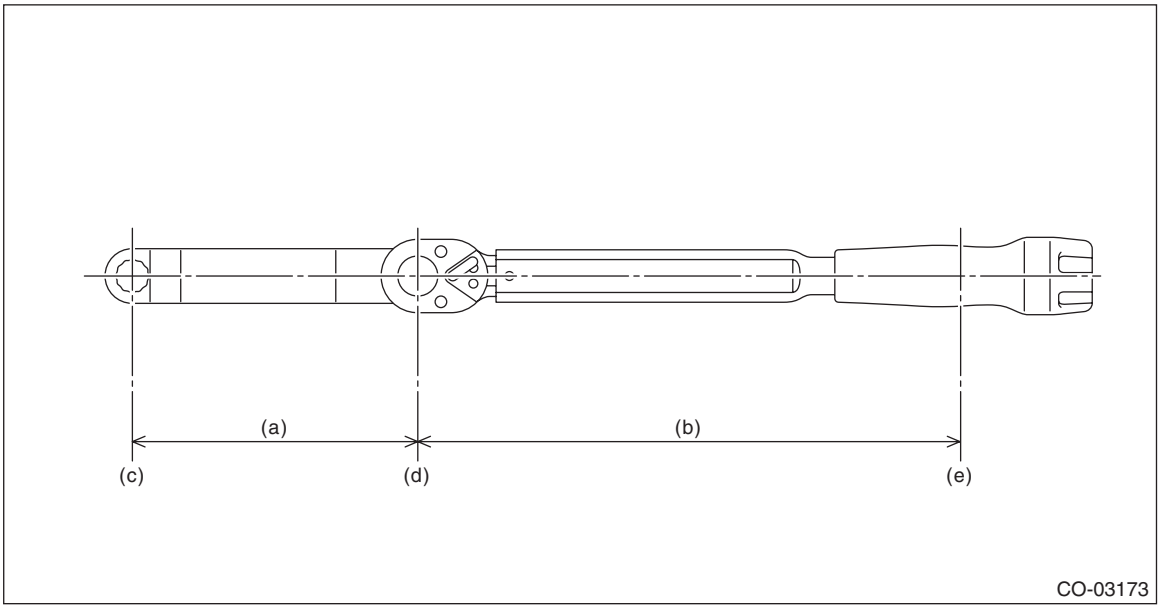

(a) Effective length of the ST
(b) Effective length of the torque wrench
(c) Center of drive angle of the ST
(d) Center of drive angle of the torque wrench
(e) Center of the position where a force is applied by hand

2) Install the radiator upper brackets.

Tightening torque:
12 N·m (1.2 kgf-m, 8.9 ft-lb)

3) Install the hose - pressure discharge and the pipe - evaporator cooling.

Tightening torque:
7.5 N·m (0.8 kgf-m, 5.5 ft-lb)

4) Attach the grille bracket.
5) Install the active grille shutter. (H4 model)

Tightening torque:
7.5 N·m (0.8 kgf-m, 5.5 ft-lb)
6) Install the bumper face - front. <Ref. to EI-38, INSTALLATION, Front Bumper.>
7) Install the reservoir tank.

Tightening torque:
7.5 N·m (0.8 kgf-m, 5.5 ft-lb)
8) Install the air intake duct.
9) Connect the ground terminal to battery sensor. <Ref. to RC-4, BATTERY, NOTE, Repair Contents.>
10) Charge refrigerant. <Ref. to AC-31, PROCEDURE, Refrigerant Charging Procedure.>

C: INSPECTION

1) Check to see that the condenser fins are not clogged with debris or insects. Blow with compressed air or flush fins with water as needed.
2) If any oil leak is found from the condenser, replace the condenser.

18.Heater and Cooling Unit

A: REMOVAL

CAUTION:
Before handling the airbag system components, refer to "CAUTION" of "General Description" in "AIRBAG SYSTEM". <Ref. to AB-10, CAUTION, General Description.>
1) Disconnect the ground terminal from the battery sensor, and wait for at least 60 seconds before starting work. <Ref. to RC-4, BATTERY, NOTE, Repair Contents.>
2) Using the refrigerant recovery system, discharge refrigerant. <Ref. to AC-29, PROCEDURE, Refrigerant Recovery Procedure.>
3) Drain the coolant from the radiator.
• H4 model: <Ref. to CO(H4DO)-15, DRAINING OF ENGINE COOLANT, REPLACEMENT, Engine Coolant.>
• H6 model: <Ref. to CO(H6DO)-13, DRAINING OF ENGINE COOLANT, REPLACEMENT, Engine Coolant.>
4) Disconnect the hose - pressure suction and the pipe - evaporator cooling.

CAUTION:
Seal the disconnected hose, pipe and engaging part of expansion valve with a plug or vinyl tape to prevent foreign matter from entering.
(1) Disconnect the connector.
(2) Detach the clips and bolts, and detach the hose - pressure suction and the pipe - evaporator cooling.
5) Loosen the heater hose clamps and detach the hoses.

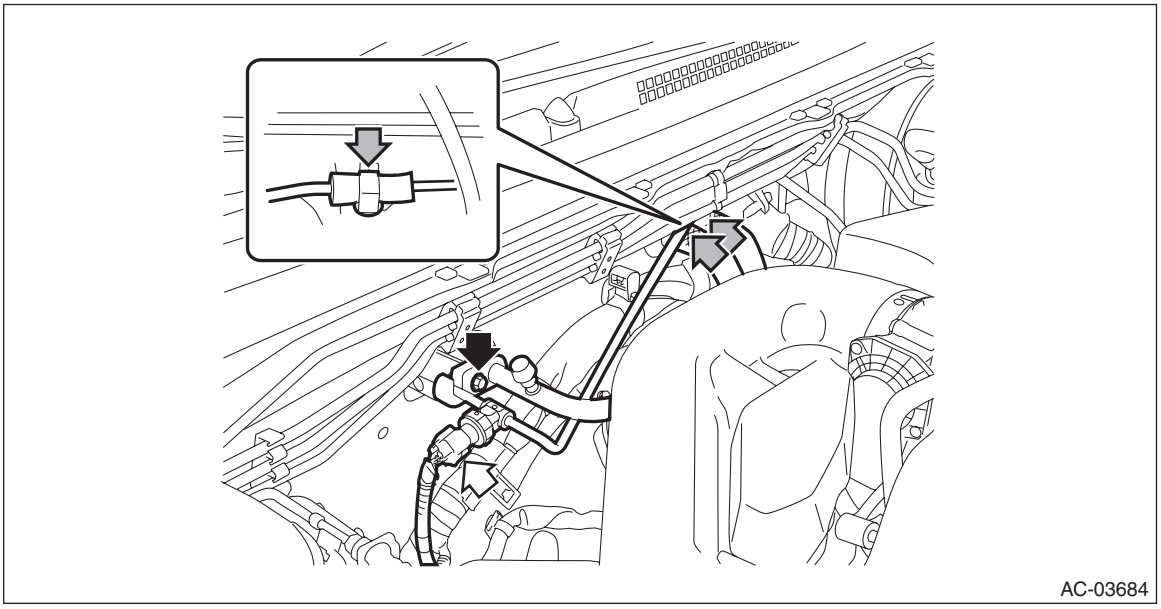
AC-03684

NOTE:
Put alignment marks to hoses, clamps, etc.
6) Remove the instrument panel assembly and the beam COMPL - steering. <Ref. to EI-83, REMOVAL, Instrument Panel Assembly.>
7) Remove the heater and cooling unit assembly.
(1) Remove the clips, and remove the duct - console front.
(2) Remove the hose - heater drain.
(3) Turn over the floor carpet and remove the slide lock of the duct - rear heater.

(4) Remove the bolt and remove the heater and cooling unit assembly.

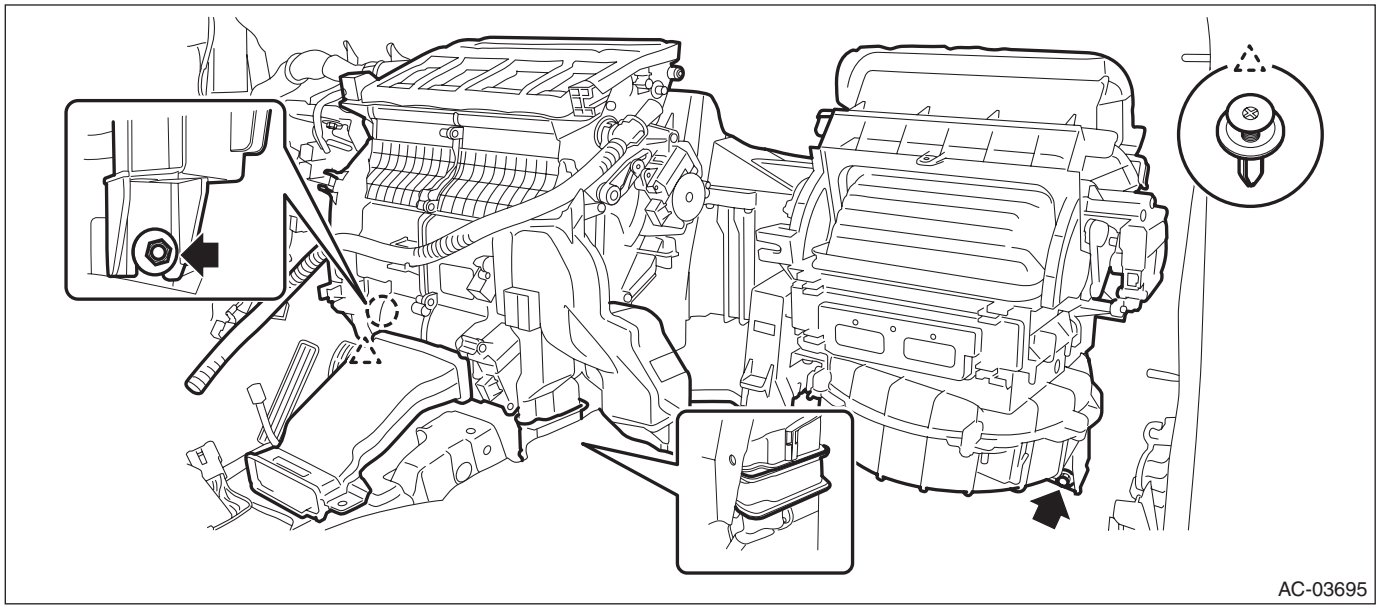

8) Remove the blower motor unit assembly. <Ref. to AC-38, REMOVAL, Blower Motor Unit Assembly.>

CAUTION:
• Do not detach the immobilizer control module except when replacing the blower motor unit assembly.
• Replace the air duct cover LWR with a new part when the immobilizer control module is removed. If the air duct cover LWR is reused, screw tightening force is reduced and the immobilizer control module may be detached due to vibration while driving.

B: INSTALLATION

CAUTION:
• Do not start the engine before charging refrigerant.
• If the engine is started with no refrigerant charge, replace the compressor assembly.
• Replace O-rings and pipe clamps with new parts and install securely.
• Before handling the airbag system components, refer to "CAUTION" of "General Description" in "AIRBAG SYSTEM". <Ref. to AB-10, CAUTION, General Description.>

1) Install the blower motor unit assembly.

Tightening torque:
7.5 N·m (0.8 kgf-m, 5.5 ft-lb)

2) Install the heater and cooling unit assembly.

Tightening torque:
7.5 N·m (0.8 kgf-m, 5.5 ft-lb)

3) Install the instrument panel assembly and the beam COMPL - steering. <Ref. to EI-88, INSTALLATION, Instrument Panel Assembly.>
4) Attach the heater hose.
5) Install the hose - pressure suction and the pipe - evaporator cooling.

Tightening torque:
7.5 N·m (0.8 kgf-m, 5.5 ft-lb)

6) Connect the ground terminal to battery sensor. <Ref. to RC-4, BATTERY, NOTE, Repair Contents.>
7) Fill engine coolant.
- H4 model: <Ref. to CO(H4DO)-16, FILLING OF ENGINE COOLANT, REPLACEMENT, Engine Coolant.>
- H6 model: <Ref. to CO(H6DO)-14, FILLING OF ENGINE COOLANT, REPLACEMENT, Engine Coolant.>

8) Charge refrigerant. <Ref. to AC-31, PROCEDURE, Refrigerant Charging Procedure.>

19.Evaporator

A: REMOVAL

CAUTION:
Before handling the airbag system components, refer to "CAUTION" of "General Description" in "AIRBAG SYSTEM". <Ref. to AB-10, CAUTION, General Description.>

1) Disconnect the ground terminal from the battery sensor, and wait for at least 60 seconds before starting work. <Ref. to RC-4, BATTERY, NOTE, Repair Contents.>
2) Remove the heater and cooling unit assembly. <Ref. to AC-59, REMOVAL, Heater and Cooling Unit.>
3) Pull out the heater core. <Ref. to AC-45, REMOVAL, Heater Core.>
4) Remove the screws, and remove the duct - foot assist.

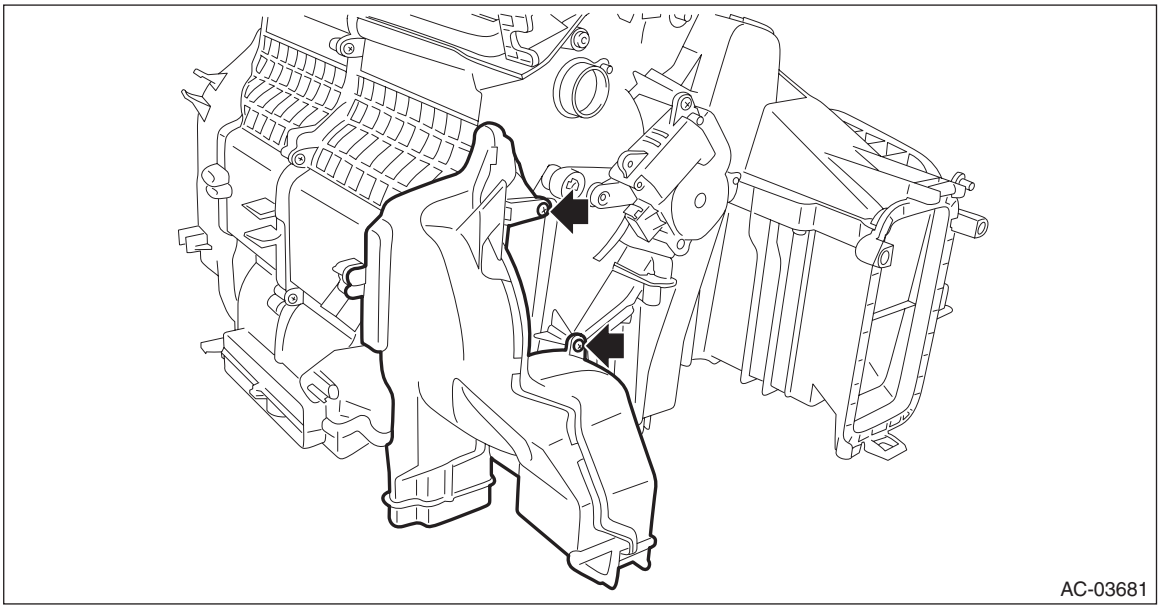
AC-03681

5) Remove the heater case lower.
   (1) Remove the clip, and remove the connector.
   (2) Remove the packing.
   (3) Remove the screw and lock, then remove the heater case lower.

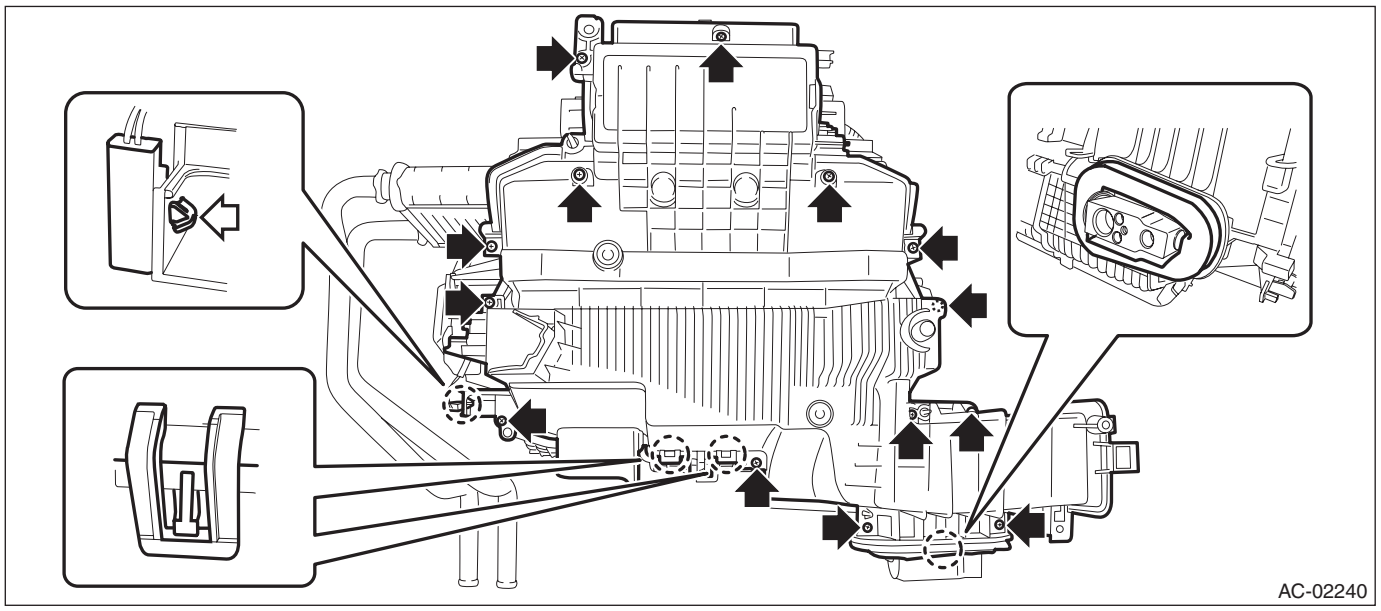
AC-02240

6) Remove the evaporator.

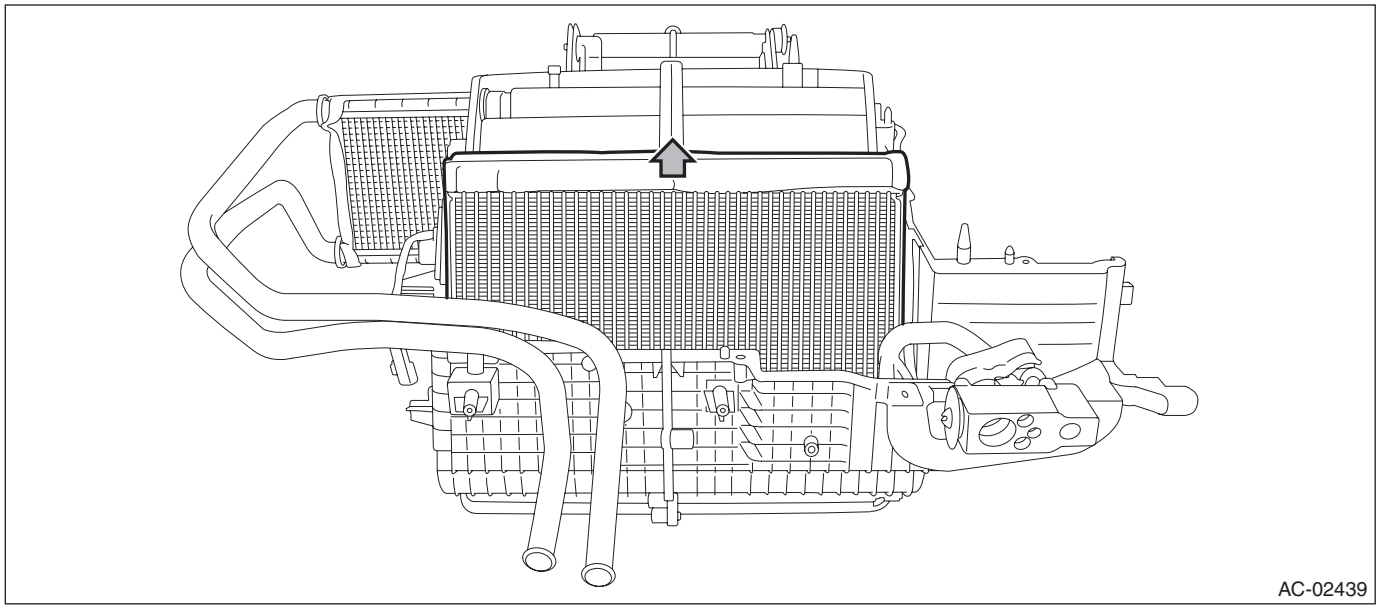

7) Remove the expansion valve - cooling. <Ref. to AC-63, REMOVAL, Expansion Valve.>
8) Remove the evaporator sensor. <Ref. to AC-78, REMOVAL, Evaporator Sensor.>

B: INSTALLATION

CAUTION:
- **Do not start the engine before charging refrigerant.**
- **If the engine is started with no refrigerant charge, replace the compressor assembly.**
- **If the evaporator has been replaced, add an appropriate amount of compressor oil to the compressor. <Ref. to AC-37, ADJUSTMENT, Compressor Oil.>**
- **When the evaporator has been replaced, always replace the packing for expansion valve with a new one and apply the compressor oil on it.**
- **Make sure that the water seal packing on the cover attachment area is securely attached.**
- **Replace the O-rings with new parts, and then apply compressor oil.**
- **Before handling the airbag system components, refer to "CAUTION" of "General Description" in "AIRBAG SYSTEM". <Ref. to AB-10, CAUTION, General Description.>**

1) Install the evaporator sensor to the specified location. <Ref. to AC-78, INSTALLATION, Evaporator Sensor.>
2) Install the expansion valve - cooling.

Tightening torque:
5 N·m (0.5 kgf-m, 3.7 ft-lb)

3) Install the evaporator.
4) Attach the heater case lower.
5) Install the duct - foot assist.
6) Attach the heater core.
7) Install the heater and cooling unit assembly. <Ref. to AC-60, INSTALLATION, Heater and Cooling Unit.>
8) Connect the ground terminal to battery sensor. <Ref. to RC-4, BATTERY, NOTE, Repair Contents.>

C: INSPECTION

1) Check the evaporator fin for dust. Blow with compressed air or flush fins with water as needed.
2) If any oil leak is found from the evaporator, replace the evaporator.

20.Expansion Valve

A: REMOVAL

1) Disconnect the ground terminal from battery sensor. <Ref. to RC-4, BATTERY, NOTE, Repair Contents.>
2) Using the refrigerant recovery system, discharge refrigerant. <Ref. to AC-29, PROCEDURE, Refrigerant Recovery Procedure.>
3) Disconnect the hose - pressure suction and the pipe - evaporator cooling.

CAUTION:
Seal the disconnected hose, pipe and engaging part of expansion valve with a plug or vinyl tape to prevent foreign matter from entering.

(1) Disconnect the connector.
(2) Detach the clips and bolts, and detach the hose - pressure suction and the pipe - evaporator cooling.

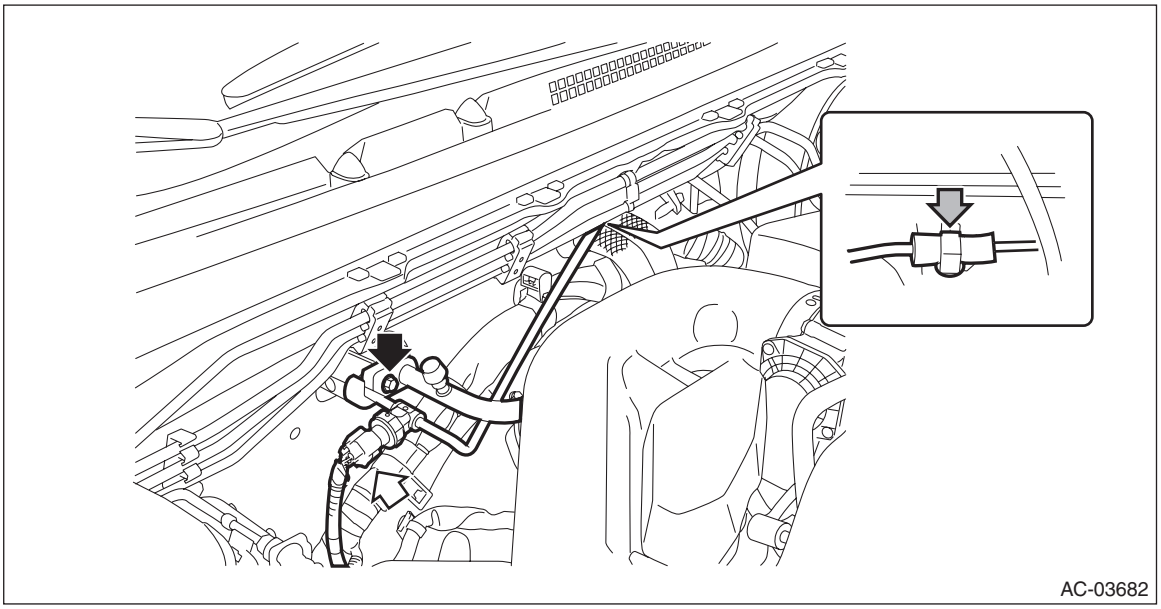

4) Remove the bolt, and remove the expansion valve - cooling.

CAUTION:
Seal the pipe and engaging part of expansion valve with a plug or vinyl tape to prevent foreign matter from entering.

Preparation tool:
Hexagon wrench: 4 mm (0.16 in)

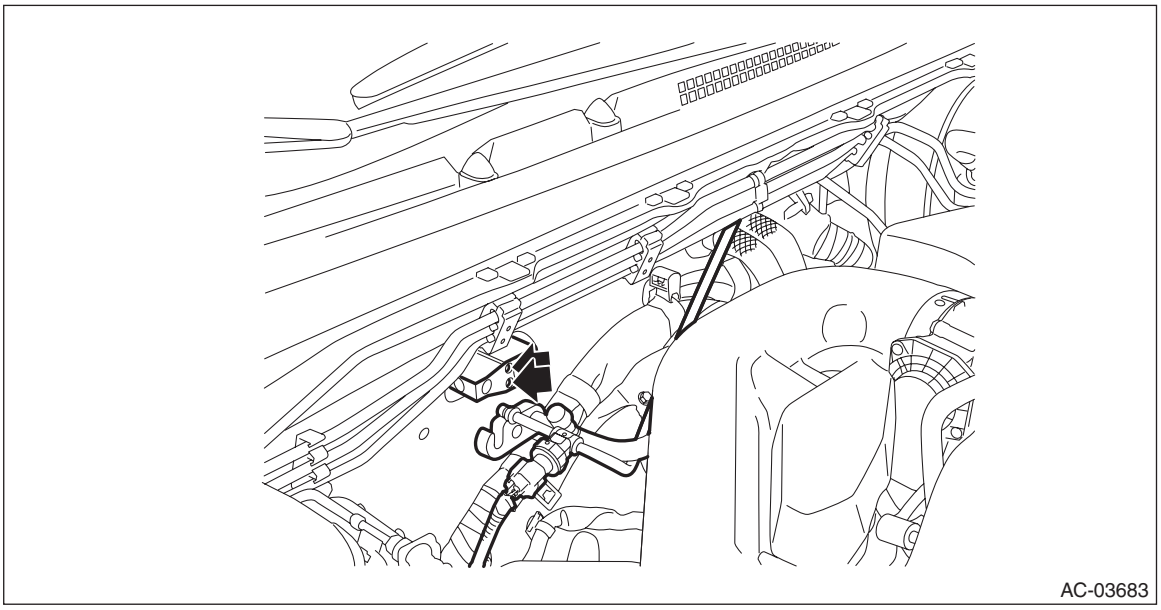

B: INSTALLATION

CAUTION:
- **Do not start the engine before charging refrigerant.**
- **If the engine is started with no refrigerant charge, replace the compressor assembly.**
- **Replace the gasket and O-rings with new parts, and then apply compressor oil.**

1) Install the expansion valve - cooling.

Tightening torque:
5 N·m (0.5 kgf-m, 3.7 ft-lb)

2) Install the hose - pressure suction and the pipe - evaporator cooling.

Tightening torque:
7.5 N·m (0.8 kgf-m, 5.5 ft-lb)

3) Connect the ground terminal to battery sensor. <Ref. to RC-4, BATTERY, NOTE, Repair Contents.>
4) Charge refrigerant. <Ref. to AC-31, PROCEDURE, Refrigerant Charging Procedure.>

21.Hose and Pipe

A: REMOVAL

1. LOW-PRESSURE HOSE

1) Disconnect the ground terminal from battery sensor. <Ref. to RC-4, BATTERY, NOTE, Repair Contents.>
2) Using the refrigerant recovery system, discharge refrigerant. <Ref. to AC-29, PROCEDURE, Refrigerant Recovery Procedure.>
3) Remove the bolts and detach the hose - pressure discharge on the compressor side. (H6 model)
4) Remove the bolts and remove the hose - pressure suction.

CAUTION:
- **Do not apply excessive force to the hose.**
- **Seal the disconnected hose, compressor assembly and engaging part of expansion valve with a plug or vinyl tape to prevent foreign matter from entering.**

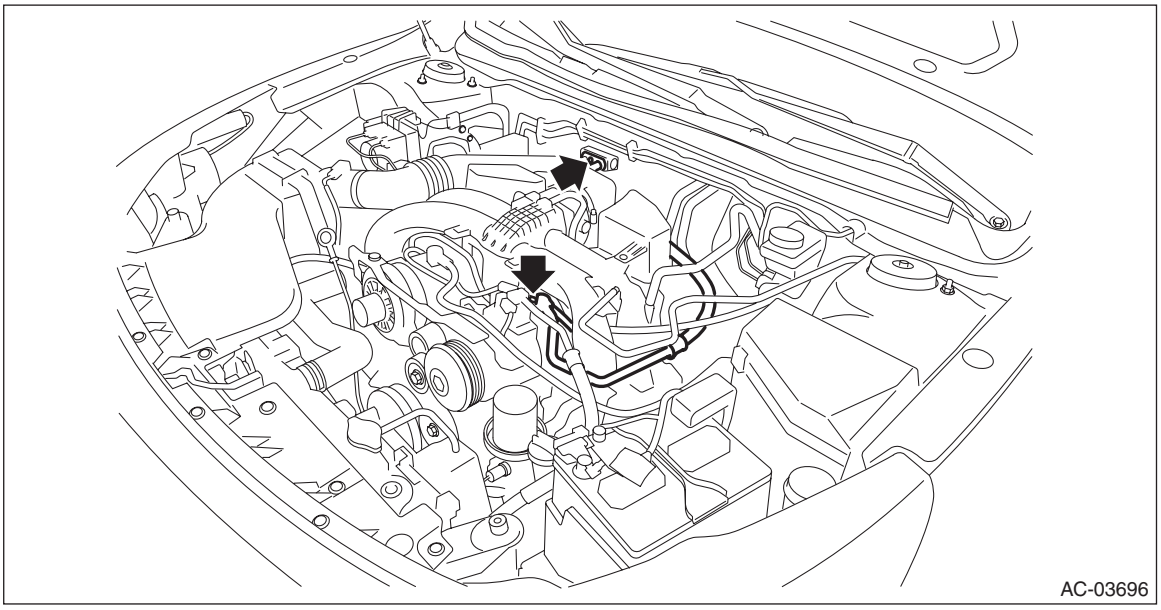

2. HIGH-PRESSURE HOSE

1) Disconnect the ground terminal from battery sensor. <Ref. to RC-4, BATTERY, NOTE, Repair Contents.>
2) Using the refrigerant recovery system, discharge refrigerant. <Ref. to AC-29, PROCEDURE, Refrigerant Recovery Procedure.>
3) Remove the reservoir tank.
- H4 model: <Ref. to CO(H4DO)-61, REMOVAL, Reservoir Tank.>
- H6 model: <Ref. to CO(H6DO)-46, REMOVAL, Reservoir Tank.>

4) Remove the bolts and remove the hose - pressure discharge.

CAUTION:
- **Do not apply excessive force to the hose.**
- **Seal the disconnected hose, compressor assembly and engaging part of compressor with a plug or vinyl tape to prevent foreign matter from entering.**

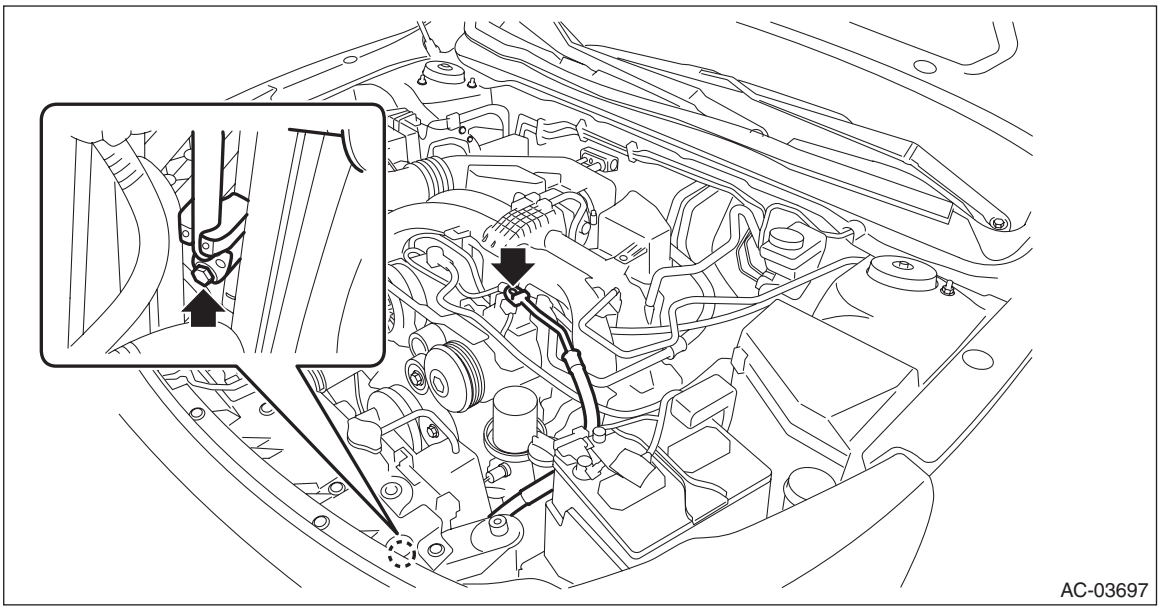

3. A/C PIPE

1) Disconnect the ground terminal from battery sensor. <Ref. to RC-4, BATTERY, NOTE, Repair Contents.>
2) Using the refrigerant recovery system, discharge refrigerant. <Ref. to AC-29, PROCEDURE, Refrigerant Recovery Procedure.>
3) Remove the battery and battery box.
- H4 model: <Ref. to SC(H4DO)-63, REMOVAL, Battery.>
- H6 model: <Ref. to SC(H6DO)-57, REMOVAL, Battery.>

4) Remove the air intake boot.
- H4 model: <Ref. to IN(H4DO)-10, REMOVAL, Air Intake Boot.>
- H6 model: <Ref. to IN(H6DO)-10, REMOVAL, Air Intake Boot.>

5) Remove the clutch pipe, connector and connector bracket. (MT model) <Ref. to CL-21, REMOVAL, Clutch Pipe and Hose.>
6) Remove the reservoir tank.
- H4 model: <Ref. to CO(H4DO)-61, REMOVAL, Reservoir Tank.>
- H6 model: <Ref. to CO(H6DO)-46, REMOVAL, Reservoir Tank.>

7) Remove the bumper face - front. <Ref. to EI-34, REMOVAL, Front Bumper.>
8) Remove the active grille shutter. (H4 model) <Ref. to CO(H4DO)-63, REMOVAL, Active Grille Shutter.>

9) Remove the bolts and detach the hose - pressure suction.

CAUTION:
Seal the disconnected hose and engaging part of expansion valve with a plug or vinyl tape to prevent foreign matter from entering.

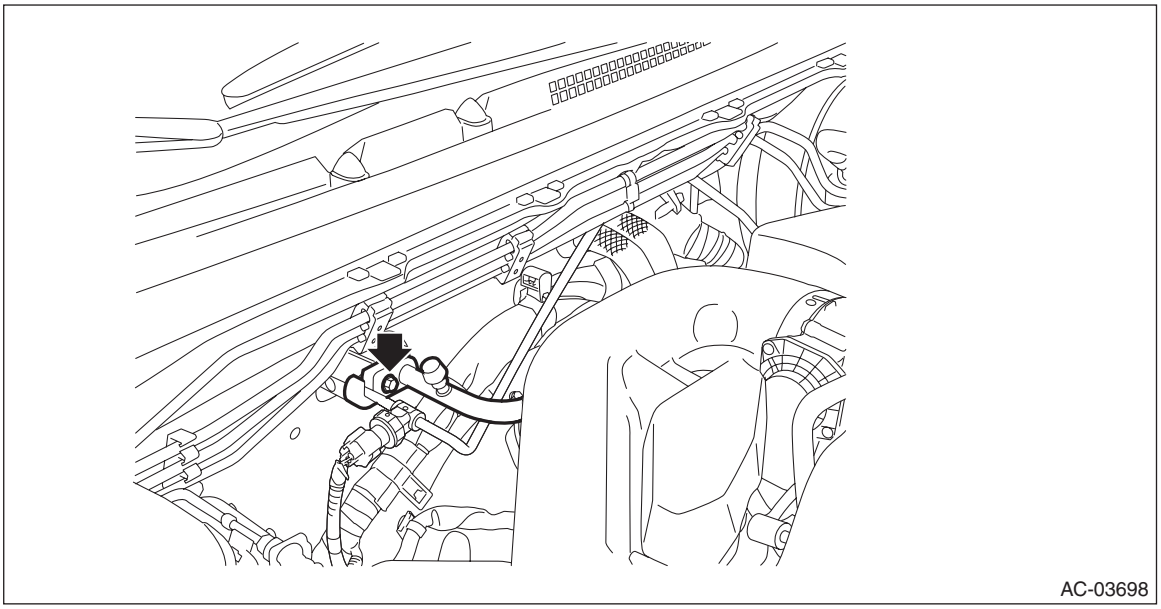

10) Remove the pipe - evaporator cooling.
(1) Remove the clamp and remove the vacuum hose.
(2) Remove the cable clamps and bolts, and remove the battery cable bracket.
(3) Remove the engine harness clips.
(4) Disconnect the pressure switch connector.
(5) Remove the bolt, and detach the pipe - evaporator cooling.

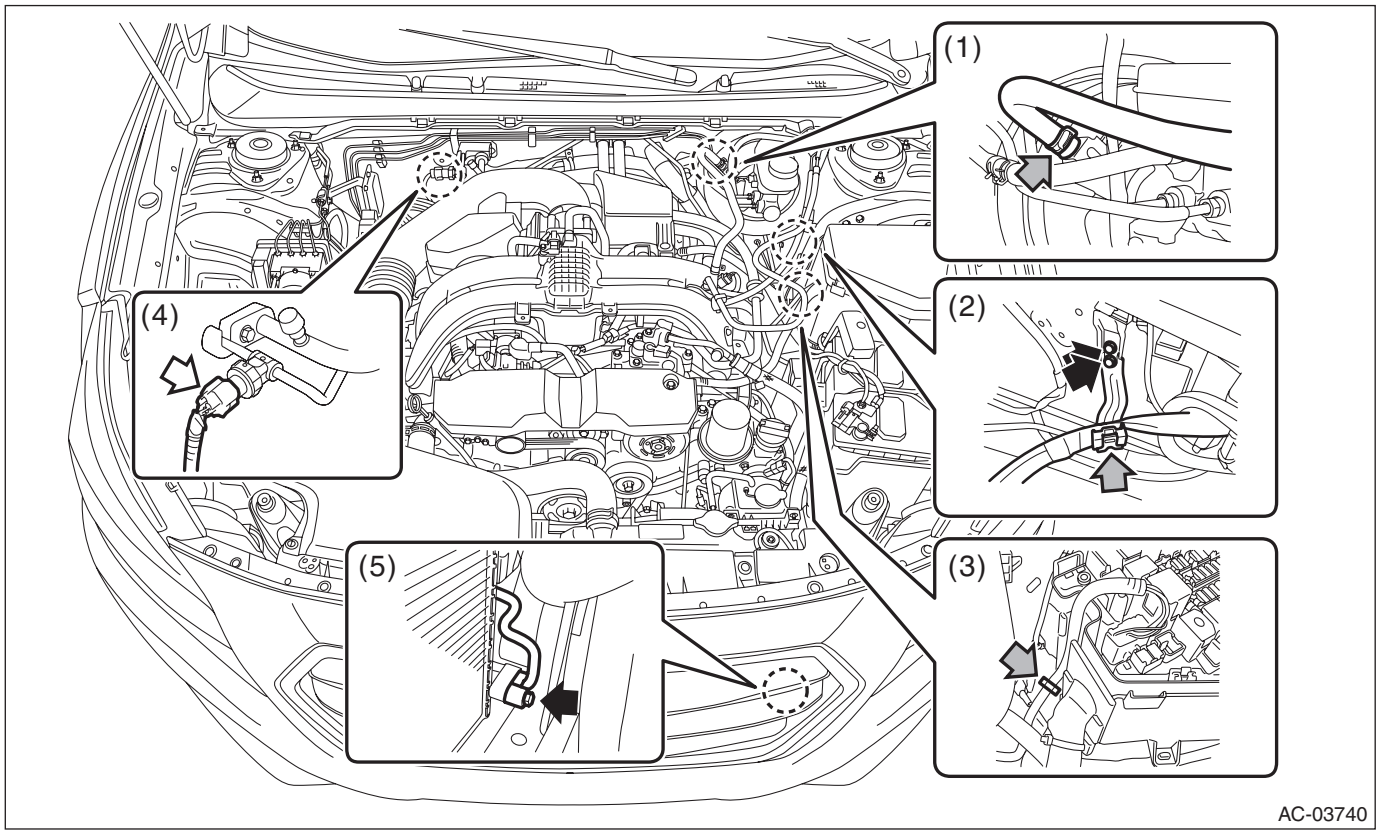

(6) Remove the clip - pipe and the clip, and remove the pipe - evaporator cooling in numerical order as shown in the figure.

CAUTION:
• Do not apply excessive force to the pipe.
• Seal the disconnected pipe, expansion valve and engaging part of condenser with a plug or vinyl tape to prevent foreign matter from entering.
• Do not pull the harness and cable forcibly.

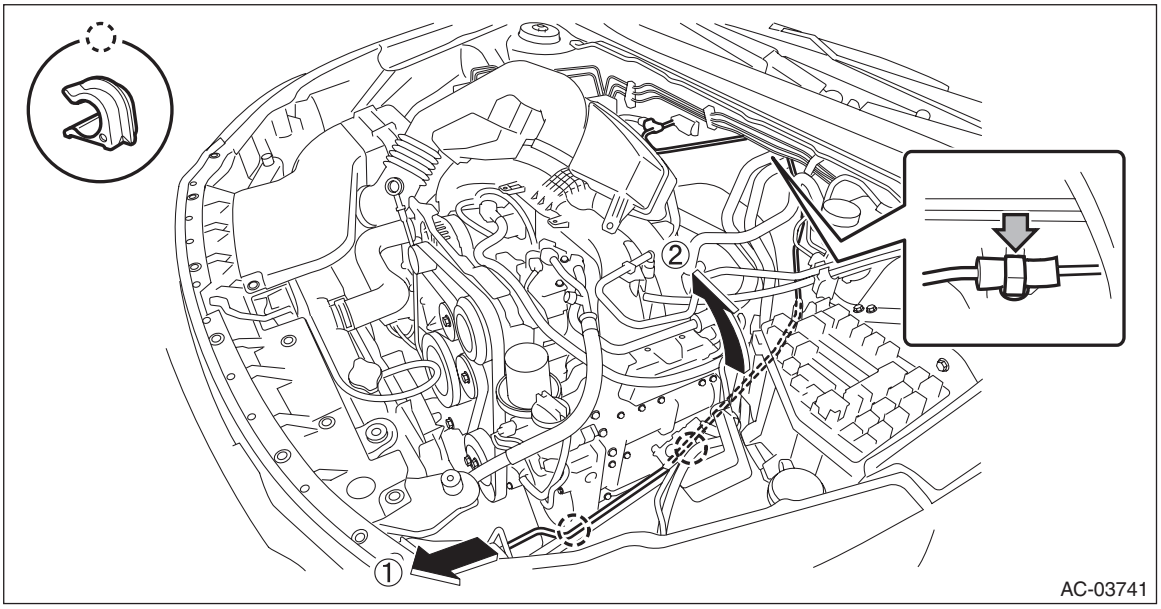

B: INSTALLATION

1. LOW-PRESSURE HOSE

CAUTION:
• If the hose and pipe has been replaced, add an appropriate amount of compressor oil to the compressor. <Ref. to AC-37, ADJUSTMENT, Compressor Oil.>
• Do not start the engine before charging refrigerant.
• If the engine is started with no refrigerant charge, replace the compressor assembly.
• Replace the O-rings with new parts, and then apply compressor oil.
• When connecting hoses, do not apply an excessive force to them. After installing, check that no torsion or excessive tension applied to the hoses.

1) Install the hose - pressure suction.

Tightening torque:
Air conditioning unit: <Ref. to AC-8, AIR CONDITIONING UNIT, COMPONENT, General Description.>

2) Install the hose - pressure suction discharge. (H6 model)

Tightening torque:
10 N·m (1 kgf-m, 7.4 ft-lb)

3) Connect the ground terminal to battery sensor. <Ref. to RC-4, BATTERY, NOTE, Repair Contents.>
4) Charge refrigerant. <Ref. to AC-31, PROCEDURE, Refrigerant Charging Procedure.>

2. HIGH-PRESSURE HOSE

CAUTION:
• If the hose and pipe has been replaced, add an appropriate amount of compressor oil to the compressor. <Ref. to AC-37, ADJUSTMENT, Compressor Oil.>
• Do not start the engine before charging refrigerant.
• If the engine is started with no refrigerant charge, replace the compressor assembly.
• Replace the O-rings with new parts, and then apply compressor oil.
• When connecting hoses, do not apply an excessive force to them. After installing, check that no torsion or excessive tension applied to the hoses.
1) Install the hose - pressure suction discharge.

Tightening torque:
Air conditioning unit: <Ref. to AC-8, AIR CONDITIONING UNIT, COMPONENT, General Description.>
2) Install the reservoir tank.

Tightening torque:
7.5 N·m (0.8 kgf-m, 5.5 ft-lb)
3) Connect the ground terminal to battery sensor. <Ref. to RC-4, BATTERY, NOTE, Repair Contents.>
4) Charge refrigerant. <Ref. to AC-31, PROCEDURE, Refrigerant Charging Procedure.>

3. A/C PIPE

CAUTION:
• If the hose and pipe has been replaced, add an appropriate amount of compressor oil to the compressor. <Ref. to AC-37, ADJUSTMENT, Compressor Oil.>
• Do not start the engine before charging refrigerant.
• If the engine is started with no refrigerant charge, replace the compressor assembly.
• Replace the O-rings with new parts, and then apply compressor oil.
• When connecting pipes, do not apply an excessive force to them. After installation, check that the pipes are not damaged.
1) Install the pipe - evaporator cooling.

Tightening torque:
7.5 N·m (0.8 kgf-m, 5.5 ft-lb)
2) Install the hose - pressure suction.

Tightening torque:
7.5 N·m (0.8 kgf-m, 5.5 ft-lb)
3) Install the active grille shutter. (H4 model) <Ref. to CO(H4DO)-64, INSTALLATION, Active Grille Shutter.>
4) Install the bumper face - front. <Ref. to EI-34, REMOVAL, Front Bumper.>
5) Install the reservoir tank.

Tightening torque:
7.5 N·m (0.8 kgf-m, 5.5 ft-lb)
6) Install the clutch pipe, connector and connector bracket. (MT model) <Ref. to CL-22, INSTALLATION, Clutch Pipe and Hose.>
7) Install the air intake boot.

Tightening torque:
3 N·m (0.3 kgf-m, 2.2 ft-lb)
8) Install the battery and battery box.
- H4 model: <Ref. to SC(H4DO)-64, INSTALLATION, Battery.>
- H6 model: <Ref. to SC(H6DO)-58, INSTALLATION, Battery.>

9) Connect the ground terminal to battery sensor. <Ref. to RC-4, BATTERY, NOTE, Repair Contents.>
10) Charge refrigerant. <Ref. to AC-31, PROCEDURE, Refrigerant Charging Procedure.>

C: INSPECTION

1) Check the hoses for cracks, damage and expansion. Replace the hose if faulty.
2) Check the pipes for crack or damage. Replace the pipe if faulty.

22.Pressure Sensor

A: INSPECTION

1) Perform a diagnosis code (DTC) check by connecting the Subaru Select Monitor. <Ref. to AC(diag)-43, OPERATION, Read Diagnostic Trouble Code (DTC).>
2) If any diagnosis code (DTC) is displayed, refer to “List of Diagnostic Trouble Code (DTC)” in “HVAC SYSTEM (DIAGNOSTICS)” section. <Ref. to AC(diag)-52, LIST, List of Diagnostic Trouble Code (DTC).>

23.Ambient Sensor

A: REMOVAL

1) Disconnect the ground terminal from battery sensor. <Ref. to RC-4, BATTERY, NOTE, Repair Contents.>
2) Remove the clips, and turn over the mud guard - front.

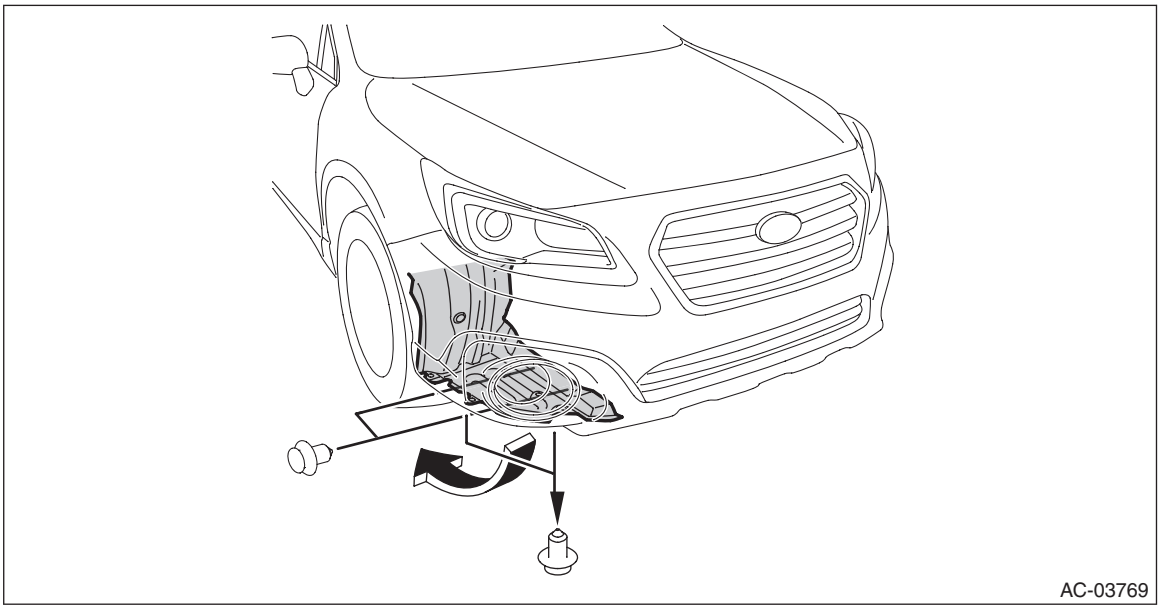

3) Disconnect the connector and remove the ambient sensor.

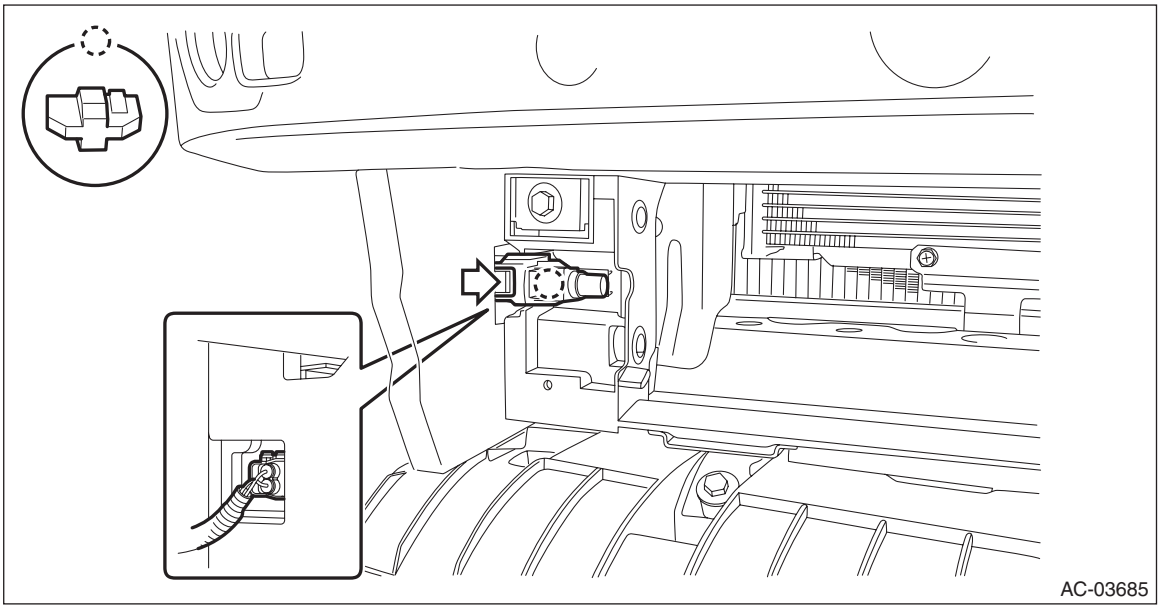

B: INSTALLATION

1) Install the ambient sensor.
2) Install the mud guard - front.
3) Connect the ground terminal to battery sensor. <Ref. to RC-4, BATTERY, NOTE, Repair Contents.>

C: INSPECTION

1) Visually check the ambient sensor for dirt or damage, and clean or replace as necessary.
2) Measure the resistance between ambient sensor terminals.

CAUTION:
During inspection, be careful not to touch the sensor end in order to avoid misjudgment due to body temperature.

Preparation tool:
Circuit tester

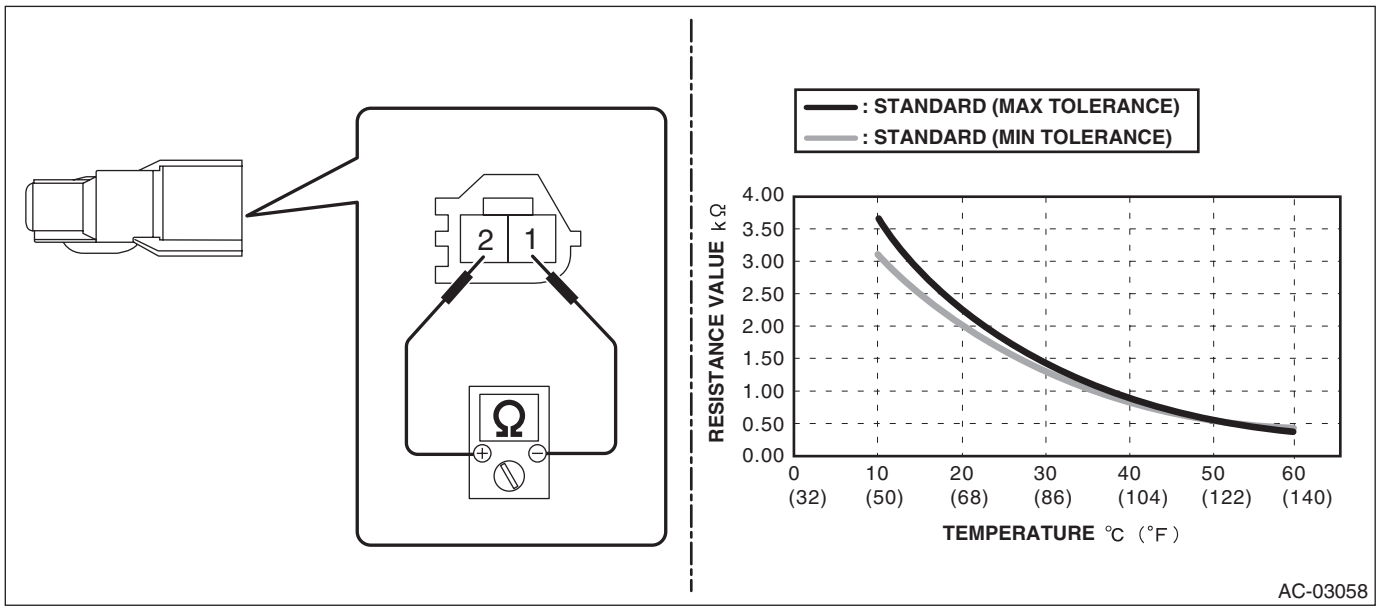

Terminal No.	Inspection conditions	Standard
1 — 2	10°C	3.12 — 3.70 kΩ
	15°C	2.49 — 2.88 kΩ
	20°C	2 — 2.26 kΩ
	25°C	1.62 — 1.79 kΩ
	30°C	1.32 — 1.42 kΩ
	35°C	1.08 — 1.14 kΩ
	40°C	0.89 — 0.92 kΩ
	45°C	0.74 — 0.75 kΩ
	50°C	0.62 — 0.62 kΩ
	55°C	0.52 — 0.51 kΩ
	60°C	0.44 — 0.42 kΩ

3) Replace the ambient sensor if the inspection result is not within the standard value.

24.Sunload Sensor (Auto A/C Model)

A: REMOVAL

1) Disconnect the ground terminal from battery sensor. <Ref. to RC-4, BATTERY, NOTE, Repair Contents.>
2) Remove the trim panel - front pillar UPR. <Ref. to EI-96, REMOVAL, Upper Inner Trim.>
3) Release the clips and claws, then detach the grille speaker side. <Ref. to ET-24, TWEETER, REMOVAL, Front Speaker.>
4) Remove the sunload sensor.
   (1) Release the claws of the grille - front defroster.

CAUTION:
• Secure minimum space for performing the operation. Do not remove the grille - front defroster. If the grille - front defroster is removed, it cannot be reinstalled unless the instrument panel is removed.
• Be careful not to damage the sensor and interior trim.

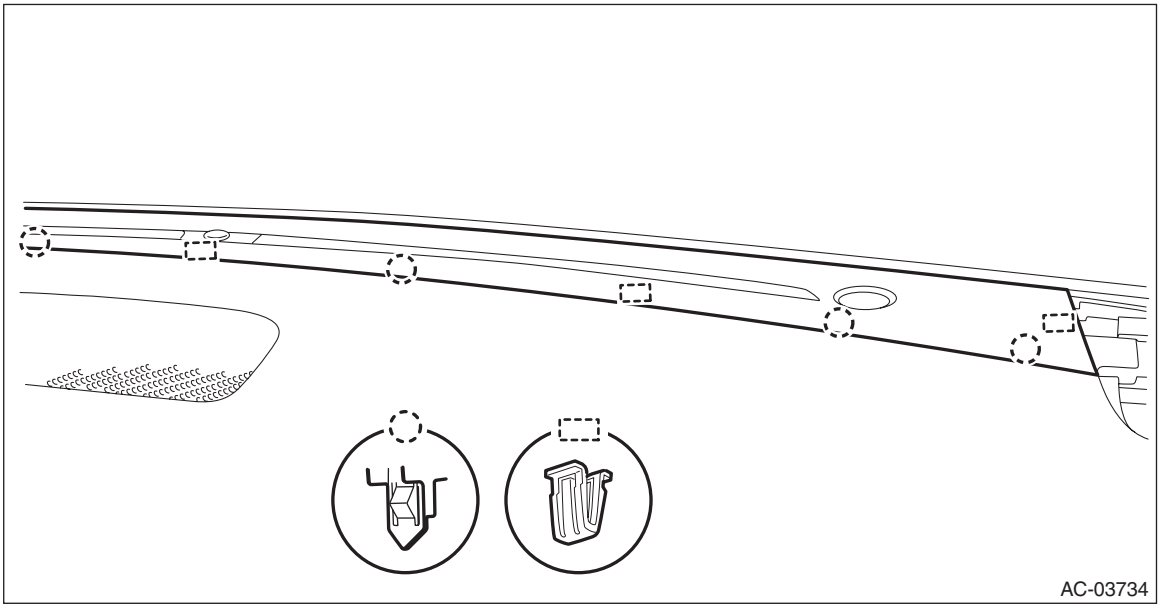
AC-03734

   (2) Release the claws, and then pull out the sunload sensor from the grille - front defroster.
   (3) Disconnect the connector and remove the sunload sensor.

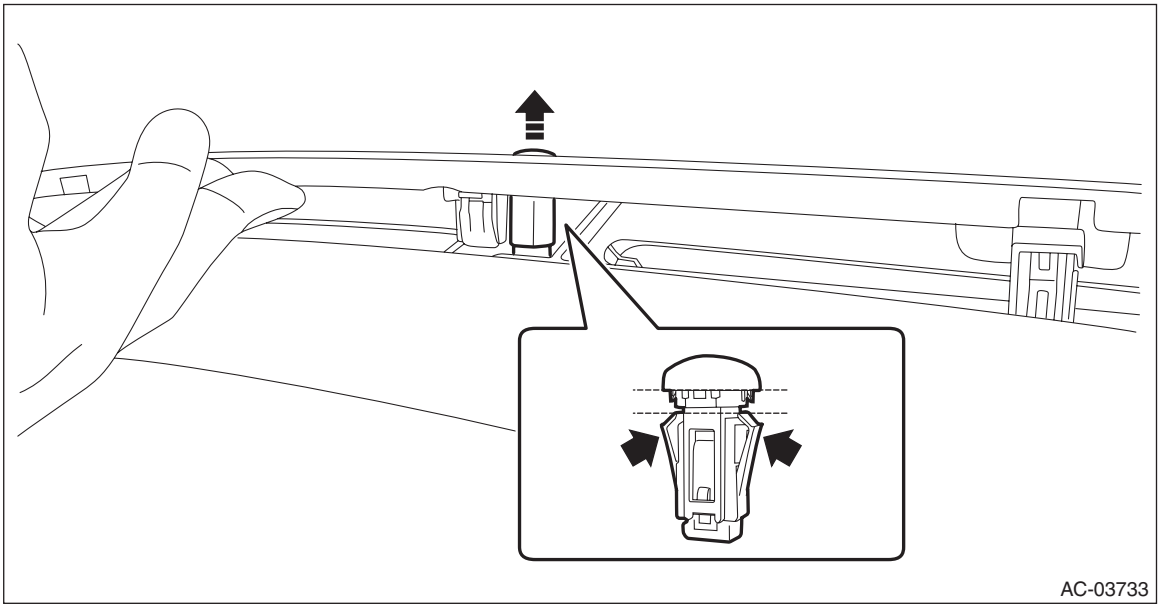
AC-03733

B: INSTALLATION

1) Install the sunload sensor.
2) Install the grille - front defroster.
3) Install the grille speaker side.
4) Install the trim panel - front pillar UPR. <Ref. to EI-97, INSTALLATION, Upper Inner Trim.>
5) Connect the ground terminal to battery sensor. <Ref. to RC-4, BATTERY, NOTE, Repair Contents.>

C: INSPECTION

1) Check if there is anything that affects sensing, around the sunload sensor.
   (1) Is the sunload sensor free from any object that disturbs sensing?
   (2) Is the windshield glass free from any object such as sticker or film that disturbs sensing?
   - **Yes** → Go to step 2).
   - **No** → Remove everything that affects sensing.
2) Check the sunload sensor using the Subaru Select Monitor.

NOTE:
For detailed operation procedures, refer to “Application help”.
   (1) Connect the Subaru Select Monitor.
   (2) On «Start» display, select «Diagnosis».
   (3) On «Vehicle selection» display, enter vehicle information and select «Confirmed».
   (4) On «Select System» display, select «Air Condition System» and select «Enter».
   (5) On «Select Function» display, select «Data Monitor».
   (6) From the data monitor item list, select «Quantity of Sunload».
   (7) Cover the sunload sensor with cloth and the like to avoid direct light. Does «Quantity of Sunload» indicate «0 W/m^2»?
   - **Yes** → Go to step 3).
   - **No** → Replace the sunload sensor.
3) From step 2), expose the sunload sensor to light.
   (1) Place intense light such as incandescent light at 30 cm or less from the sunload sensor.
   (2) Does «Quantity of Sunload» indicate «2,000 W/m^2» or less?

CAUTION:
The value changes depending on the angle of light.
   - **Yes** → The sunload sensor is normal.
   - **No** → Replace the sunload sensor.

25.In-Vehicle Sensor (Auto A/C Model)

A: REMOVAL

1) Disconnect the ground terminal from battery sensor. <Ref. to RC-4, BATTERY, NOTE, Repair Contents.>
2) Remove the cover assembly - instrument panel LWR driver. <Ref. to EI-75, REMOVAL, Instrument Panel Lower Cover.>
3) Release the claws and remove the in-vehicle sensor.

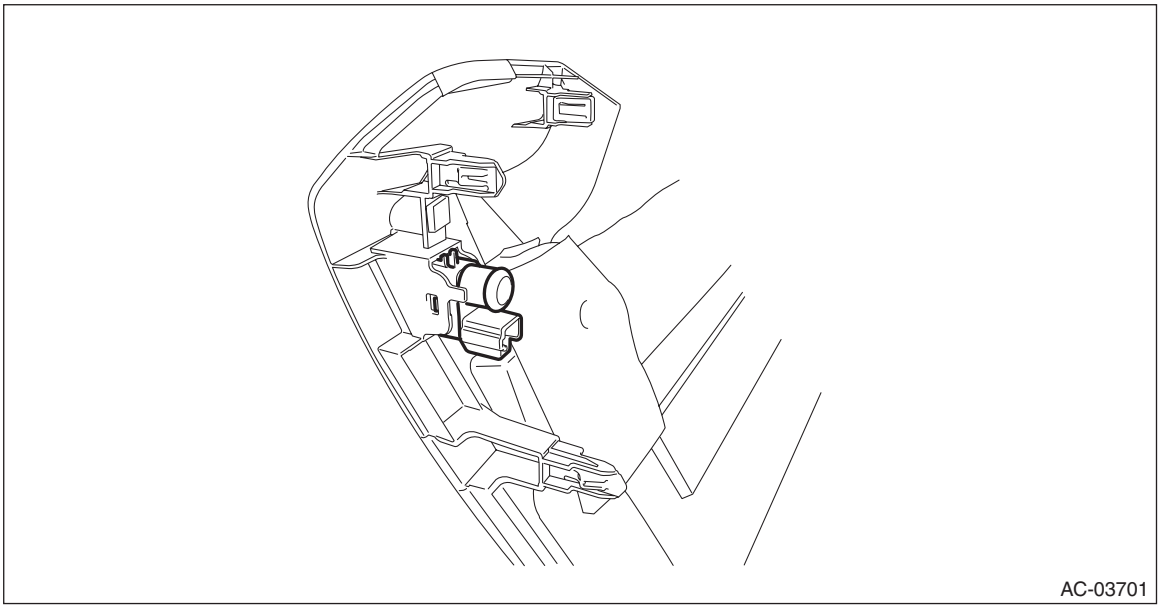

B: INSTALLATION

1) Install the in-vehicle sensor.
2) Install the cover assembly - instrument panel LWR driver.
3) Connect the ground terminal to battery sensor. <Ref. to RC-4, BATTERY, NOTE, Repair Contents.>

C: INSPECTION

1) Set the vehicle to the following conditions.

Item	Condition
Ignition switch	ON
AC switch	ON
Temperature adjustment dial	HI (MAX HOT)
Air flow control switch	DEF
Fan switch	HI (MAX)

2) Check the suction port (a) for in-vehicle sensor of the cover assembly - instrument panel LWR driver.

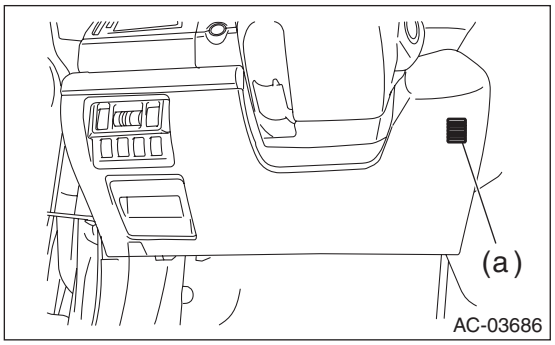

(1) Put a strip of paper close to the front side of the suction port (a).
(2) Can you see the paper moving towards the port and the air being sucked into the port?

CAUTION:
Be careful not to let the paper get sucked into the port.

- **Yes** → Go to step 5).
- **No** → Go to step 3).

3) Remove the cover assembly - instrument panel LWR driver, and check the aspirator hose (a).

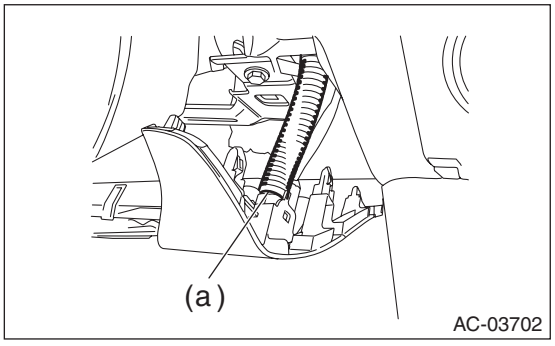

(1) Are the aspirator hoses on both sides of the case and sensor connected securely?
(2) Is the aspirator hose free from any kinks or cracks?

- **Yes** → Go to step 4).
- **No** → Repair or replace the aspirator hose if necessary.

4) Check if there is anything that affects sensing, around the in-vehicle sensor.
(1) Is the in-vehicle sensor hole free from clogging?
(2) Is the peripheral area of in-vehicle sensor free from any heat-producing parts (such as audio, navigation system etc.)?

- **Yes** → Go to step 5).
- **No** → Remove everything that affects sensing.

5) Check in-vehicle sensor.
(1) Disconnect the connector.
(2) Measure the resistance between connector terminals.

Preparation tool:
Circuit tester

CAUTION:
During inspection, be careful not to touch the sensor end in order to avoid misjudgment due to body temperature.

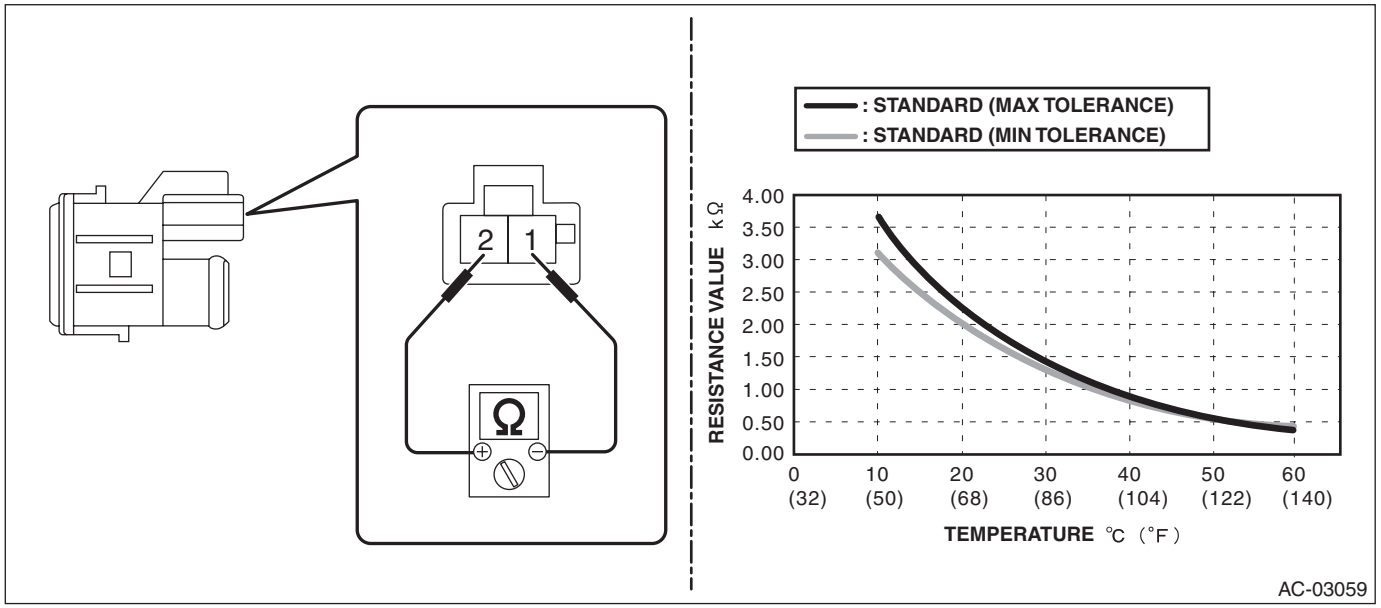

Terminal No.	Inspection conditions	Standard
1 — 2	10°C	3.12 — 3.7 kΩ
	15°C	2.49 — 2.88 kΩ
	20°C	2 — 2.26 kΩ
	25°C	1.62 — 1.79 kΩ
	30°C	1.32 — 1.42 kΩ
	35°C	1.08 — 1.14 kΩ
	40°C	0.89 — 0.92 kΩ
	45°C	0.74 — 0.75 kΩ
	50°C	0.62 — 0.62 kΩ
	55°C	0.52 — 0.51 kΩ
	60°C	0.44 — 0.42 kΩ

- **Yes** → The in-vehicle sensor is normal.
- **No** → Replace the in-vehicle sensor.

26.Evaporator Sensor

A: REMOVAL

CAUTION:
Before handling the airbag system components, refer to "CAUTION" of "General Description" in "AIRBAG SYSTEM". <Ref. to AB-10, CAUTION, General Description.>
1) Disconnect the ground terminal from the battery sensor, and wait for at least 60 seconds before starting work. <Ref. to RC-4, BATTERY, NOTE, Repair Contents.>
2) Using the refrigerant recovery system, discharge refrigerant. <Ref. to AC-29, PROCEDURE, Refrigerant Recovery Procedure.>
3) Remove the evaporator assembly - cooling. <Ref. to AC-61, REMOVAL, Evaporator.>
4) Remove the evaporator sensor.

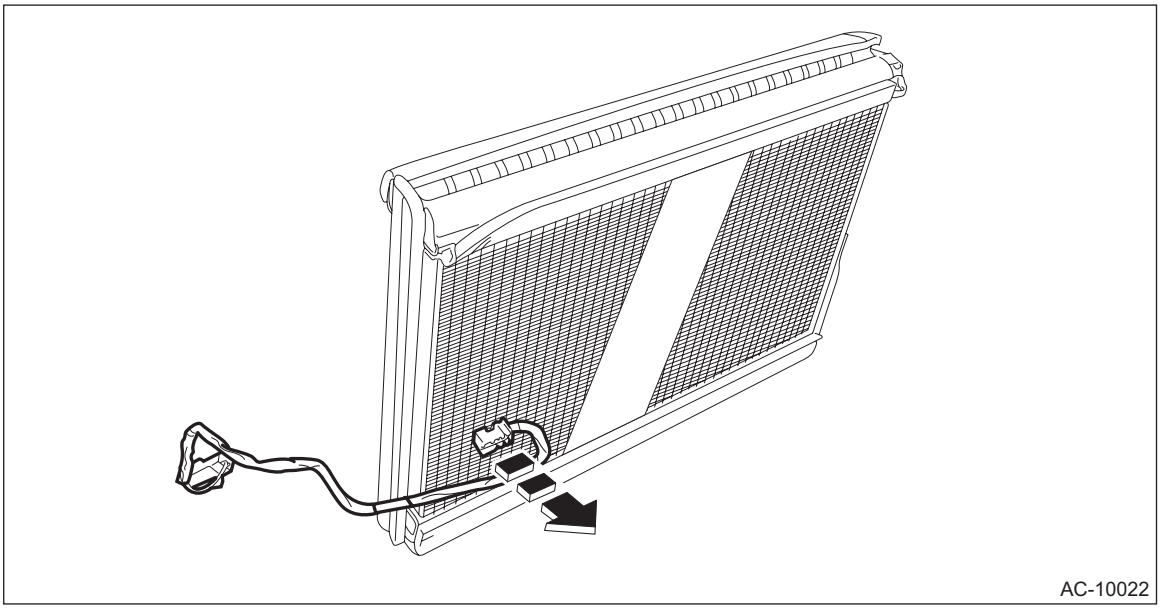

B: INSTALLATION

CAUTION:
- **Do not start the engine before charging refrigerant.**
- **If the engine is started with no refrigerant charge, replace the compressor assembly.**
- **Make sure that the water seal packing on the cover attachment area is securely attached.**
- **Replace the O-rings with new parts, and then apply compressor oil.**
- **Before handling the airbag system components, refer to "CAUTION" of "General Description" in "AIRBAG SYSTEM". <Ref. to AB-10, CAUTION, General Description.>**

1) Install the evaporator sensor at the position shown in the figure below.

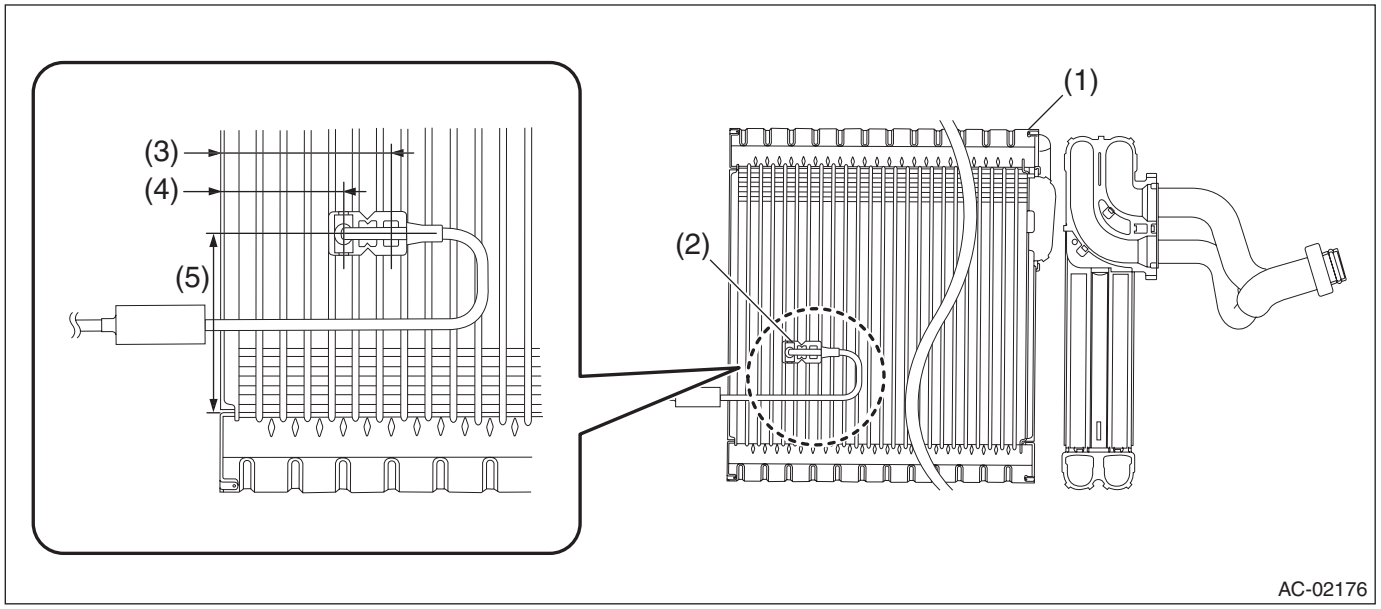

(1)	Evaporator	(3)	47.7 mm (1.88 in)	(5)	50 mm (1.97 in)
(2)	Evaporator sensor	(4)	34.3 mm (1.35 in)		

2) Install the evaporator assembly - cooling. <Ref. to AC-62, INSTALLATION, Evaporator.>
3) Connect the ground terminal to battery sensor. <Ref. to RC-4, BATTERY, NOTE, Repair Contents.>
4) Charge refrigerant. <Ref. to AC-31, PROCEDURE, Refrigerant Charging Procedure.>

C: INSPECTION

1) Prepare the vehicle.

NOTE:
Check that the ambient temperature is 25 — 40°C (77 — 104°F) and that the humidity is 30% — 80%.
- Place the vehicle in the workshop or in the shade and windless condition.
- Open all windows.

2) Set the vehicle to the following conditions.

Item	Condition
Engine	Idling
Air vent grille	Shutter is fully open.
AC switch	OFF
Temperature adjustment dial	LO (MAX COOL)
FRESH/RECIRC switch	RECIRC
Air flow control switch	VENT
Fan switch (auto A/C model)	5/7 level
Fan dial (manual A/C model)	3/4 level

3) Using the Subaru Select Monitor, check the evaporator sensor.

NOTE:
For detailed operation procedures, refer to “Application help”.
(1) Connect the Subaru Select Monitor.
(2) On «Start» display, select «Diagnosis».
(3) On «Vehicle selection» display, enter vehicle information and select «Confirmed».
(4) On «Select System» display, select «Air Condition System» and select «Enter».
(5) On «Select Function» display, select «Data Monitor».
(6) From the data monitor item list, select «Evaporator Temperature».

(7) Idle the engine for 15 minutes, and then compare the air flow outlet temperature with «Evaporator Temperature Target».

Preparation tool:
Thermometer and hygrometer

NOTE:
For outlet opening temperature, measure the average temperature of center grille assembly and side grille assembly.

(8) Do the air flow outlet temperature and «Evaporator Temperature Target» differ by 3°C (5.4°F) or more?
- **Yes** → Go to step 4).
- **No** → Evaporator sensor is normal.

4) Check the evaporator sensor.
(1) Disconnect the connector.
(2) Measure the resistance between connector terminals.

Preparation tool:
Circuit tester

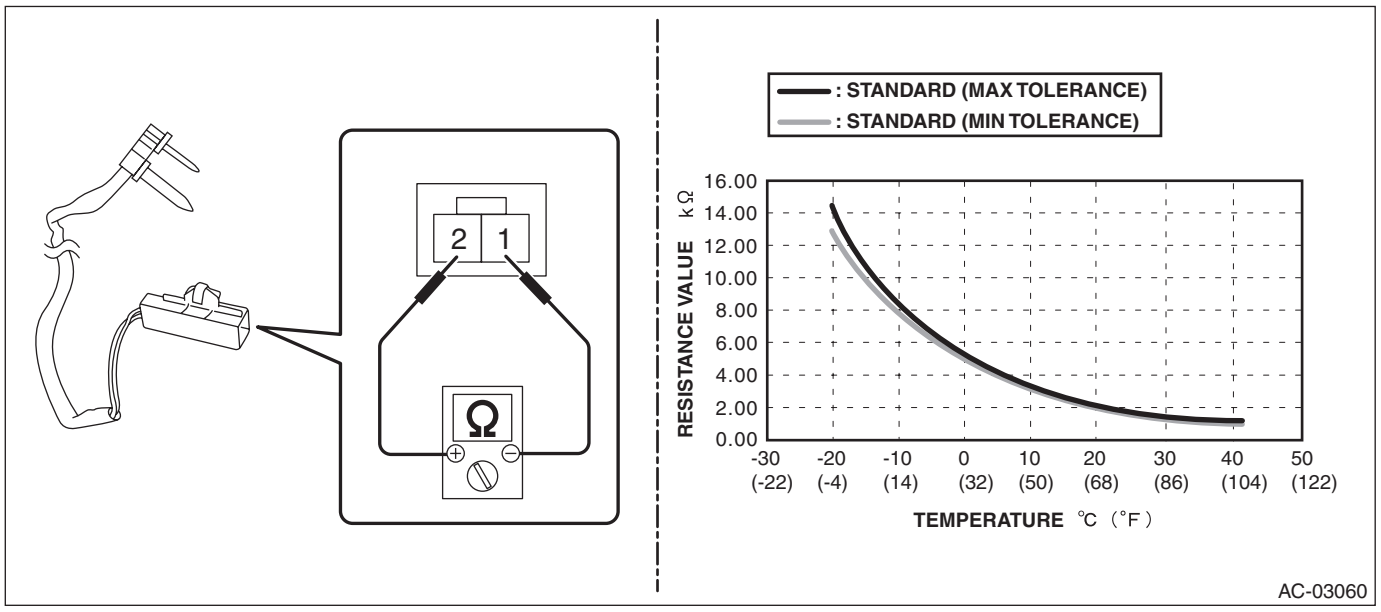

Terminal No.	Inspection conditions	Standard
1 — 2	–20°C	13.584 — 14.541 kΩ
	–15°C	10.34 — 10.946 kΩ
	–10°C	7.938 — 8.313 kΩ
	–5°C	6.143 — 6.366 kΩ
	0°C	4.79 — 4.914 kΩ
	5°C	3.718 — 3.829 kΩ
	10°C	2.889 — 3.031 kΩ
	15°C	2.247 — 2.435 kΩ
	20°C	1.785 — 1.952 kΩ
	25°C	1.427 — 1.574 kΩ
	30°C	1.149 — 1.278 kΩ
	35°C	0.931 — 1.044 kΩ
	40°C	0.759 — 0.858 kΩ

- **Yes** → Evaporator sensor is normal.
- **No** → Replace the evaporator sensor.

27.FRESH/RECIRC Door Actuator

A: REMOVAL

CAUTION:
Before handling the airbag system components, refer to "CAUTION" of "General Description" in "AIRBAG SYSTEM". <Ref. to AB-10, CAUTION, General Description.>

1) Disconnect the ground terminal from the battery sensor, and wait for at least 60 seconds before starting work. <Ref. to RC-4, BATTERY, NOTE, Repair Contents.>
2) Remove the instrument panel assembly. <Ref. to EI-83, REMOVAL, Instrument Panel Assembly.>
3) Remove the screws and detach the motor - actuator blower.

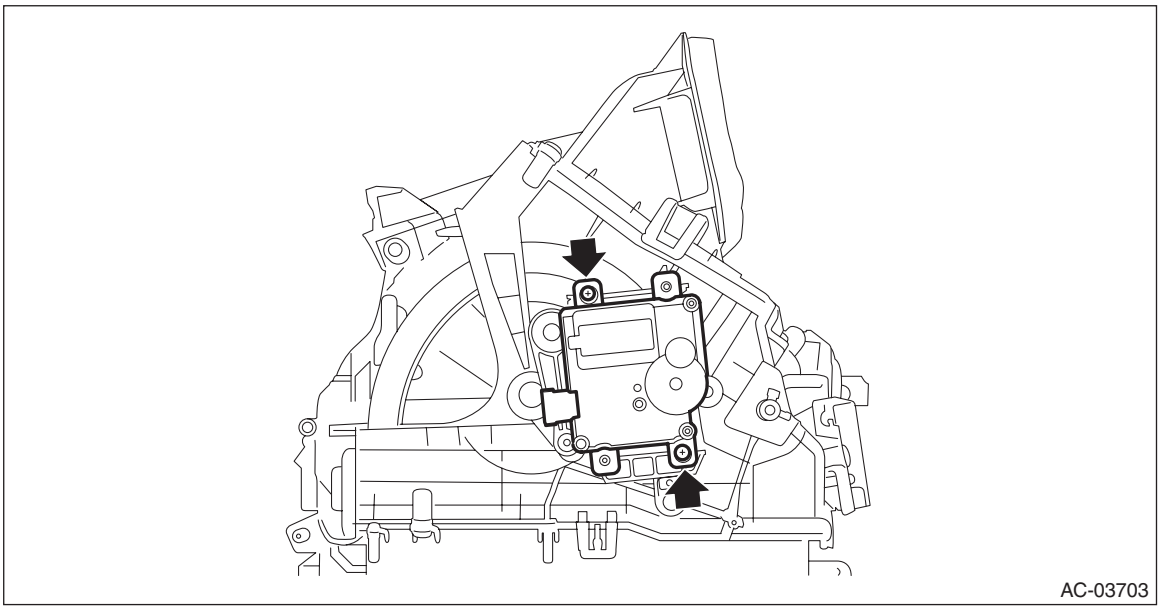

B: INSTALLATION

CAUTION:
Before handling the airbag system components, refer to "CAUTION" of "General Description" in "AIRBAG SYSTEM". <Ref. to AB-10, CAUTION, General Description.>

1) When replacing the actuator with a new part, apply a thin coat of grease evenly to the side face (a) of lever pin by using approx. 5 mm (0.2 in) width and approx. 0.1 g (0.004 oz) of grease squeezed out from a tube.

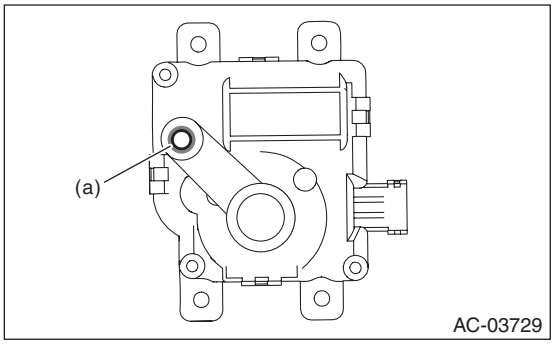

NOTE:
After installing the actuator, perform 3 — 5 times of adaptation for the grease to fit in.

Grease:
SUBARU genuine grease (Part No. 72129AJ000)

2) Install the motor - actuator blower.
3) Install the instrument panel assembly. <Ref. to EI-88, INSTALLATION, Instrument Panel Assembly.>
4) Connect the ground terminal to battery sensor. <Ref. to RC-4, BATTERY, NOTE, Repair Contents.>

C: INSPECTION

1. ACTUATOR LINK

1) Visually check the operating range of the link, and remove the foreign matter if any.
2) Operate the FRESH/RECIRC switch, and check that the link operates normally.
3) If it does not operate normally as the result of inspection, perform a unit inspection of motor - actuator blower.

2. CHECK ACTUATOR

1) Check the actuator operation when battery voltage is applied between the connector terminals.

CAUTION:
Disconnect the battery immediately after the actuator stops operation. Otherwise, the motor may be damaged.

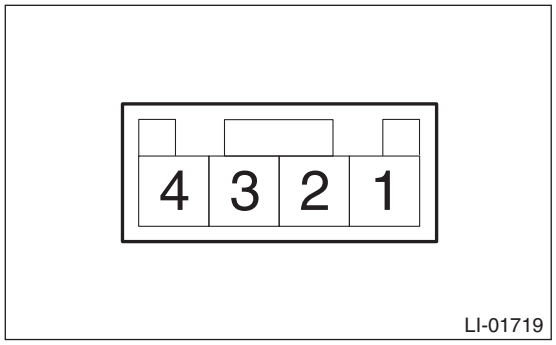

Terminal No.	Inspection conditions	Operating position
4 (+) — 2 (–)	Apply battery voltage.	FRESH
4 (+) — 1 (–)		RECIRC

2) If it does not operate normally as the result of inspection, replace the motor - actuator blower.

28.Mode Door Actuator

A: REMOVAL

1) Disconnect the ground terminal from battery sensor. <Ref. to RC-4, BATTERY, NOTE, Repair Contents.>
2) Remove the cover assembly - instrument panel LWR driver. <Ref. to EI-75, REMOVAL, Instrument Panel Lower Cover.>
3) Remove the bolts, and then remove the panel - knee guard.

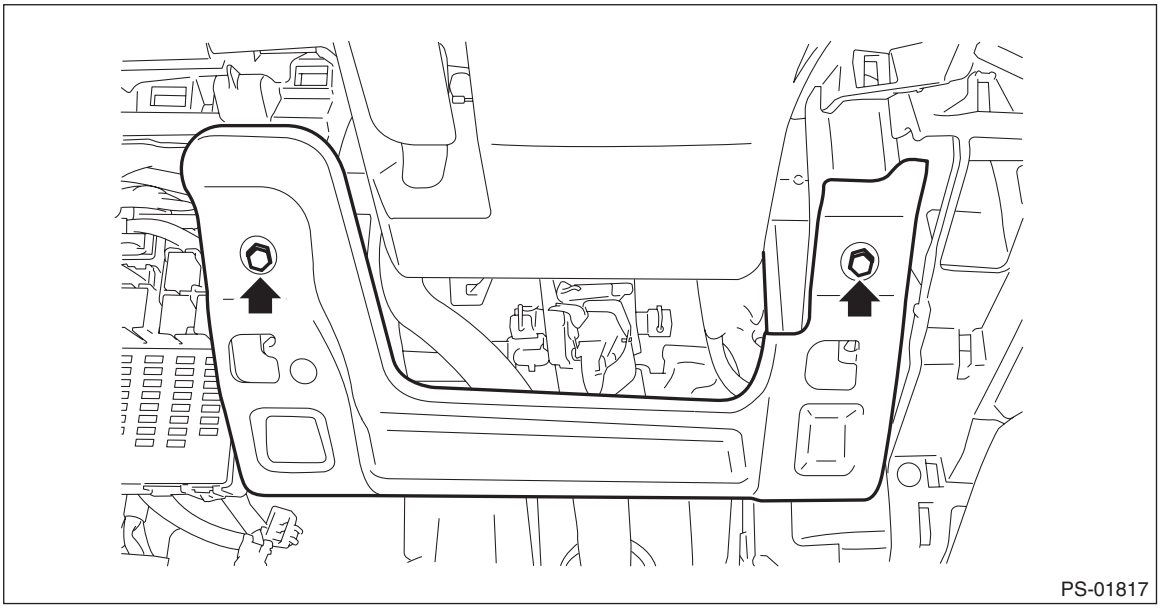
PS-01817

4) Remove the motor - actuator mode.
   (1) Disconnect the connector.
   (2) Remove the screws, and remove the motor - actuator assembly.

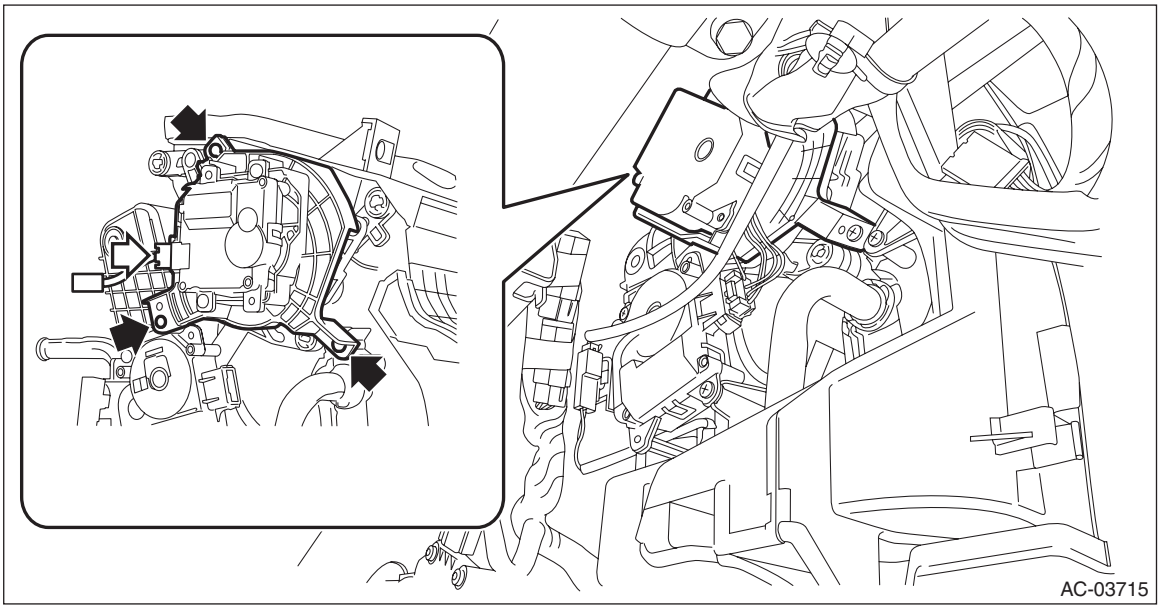
AC-03715

   (3) Release the lock and remove the link plate.

(4) Remove the screws and detach the motor - actuator mode.

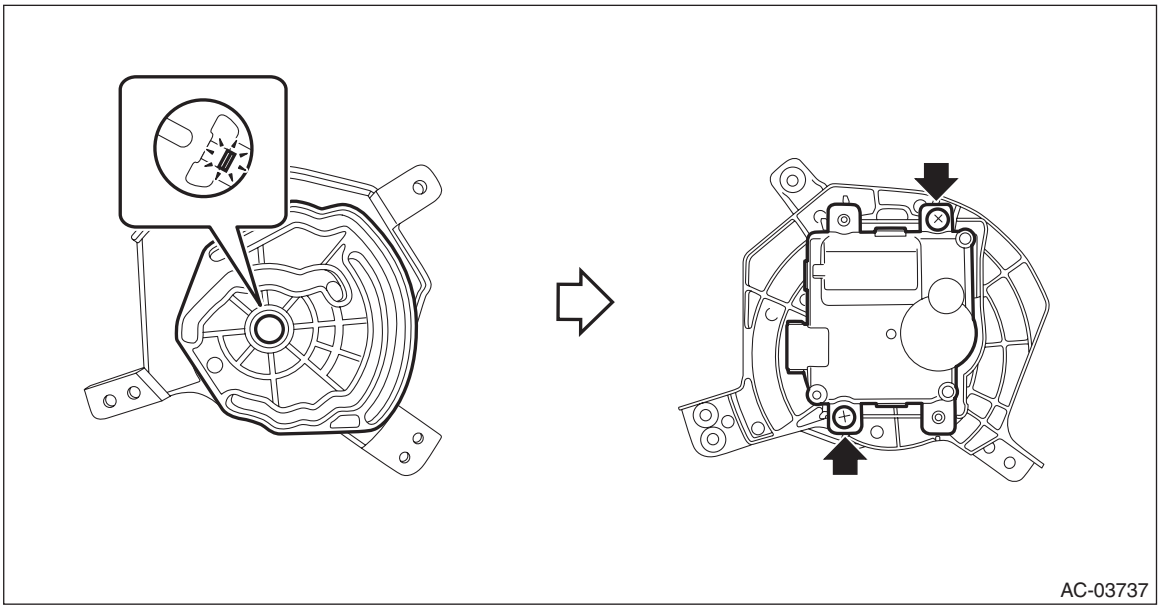

B: INSTALLATION

1) When replacing the actuator with a new part, apply a thin coat of grease evenly to the contact area (a) inside the rail of link plate by using approx. 5 mm (0.2 in) width and approx. 0.1 g (0.004 oz) of grease squeezed out from a tube. Also apply a thin coat of grease evenly to the contact areas (b) through (f), by using the same amount of grease to each area.

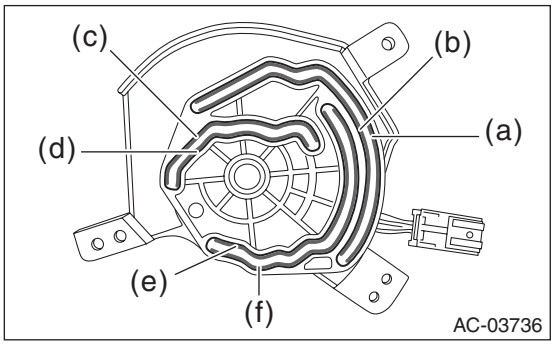

NOTE:
After installing the actuator, perform 3 — 5 times of adaptation for the grease to fit in.

Grease:
SUBARU genuine grease (Part No. 72129AJ000)

2) Install the motor - actuator mode and the link plate to the cover - actuator.
3) Install the motor - actuator assembly.
4) Install the panel - knee guard.

Tightening torque:
7 N·m (0.7 kgf-m, 5.2 ft-lb)

5) Install the cover assembly - instrument panel LWR driver.
6) Connect the ground terminal to battery sensor. <Ref. to RC-4, BATTERY, NOTE, Repair Contents.>

C: INSPECTION

1. ACTUATOR LINK

1) Visually check the operating range of the link, and remove the foreign matter if any.
2) Operate the mode change switch, and check that the link operates normally.
3) If it does not operate normally as the result of inspection, perform a unit inspection of motor - actuator mode.

2. CHECK ACTUATOR OPERATION

1) Check the actuator operation when battery voltage is applied between the connector terminals.

CAUTION:
Disconnect the battery immediately after the actuator stops operation. Otherwise, the motor may be damaged.

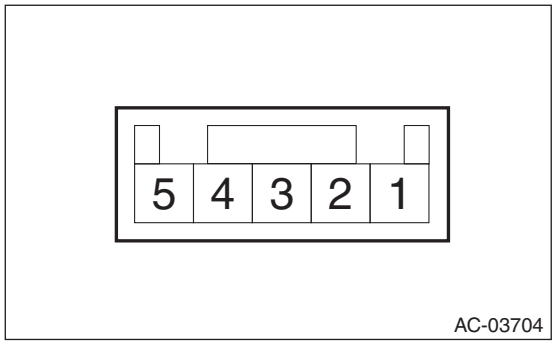

Terminal No.	Inspection conditions	Operating position
4 (+) — 5 (–)	Apply battery voltage.	DEF
5 (+) — 4 (–)		FACE

2) Measure the resistance between connector terminals.

Preparation tool:
Circuit tester

Terminal No.	Inspection conditions	Operating position
1 — 3	Always	4.2 — 7.8 Ω

3) Connect the connector, turn the ignition switch to ON, and check the voltage between actuator terminals.

Terminal No.	Inspection conditions	Operating position
2 (+) — 1 (–)	FACE	Approx. 4 V
	DEF	Approx. 1 V

4) Replace the motor - actuator mode if it is found defective as a result of inspection.

29.Air Mix Door Actuator

A: REMOVAL

1. DRIVER'S SIDE

1) Disconnect the ground terminal from battery sensor. <Ref. to RC-4, BATTERY, NOTE, Repair Contents.>
2) Remove the cover assembly - instrument panel LWR driver. <Ref. to EI-75, REMOVAL, Instrument Panel Lower Cover.>
3) Remove the bolts, and then remove the panel - knee guard.

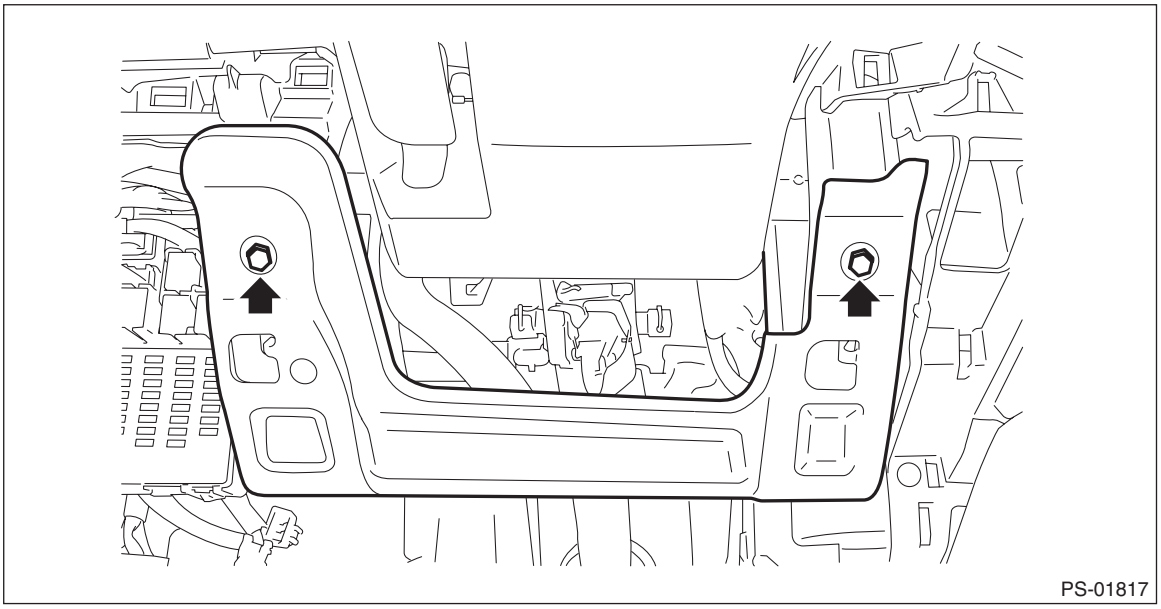
PS-01817

4) Remove the motor - actuator mix.
   (1) Disconnect the connector.
   (2) Remove the screws and detach the motor - actuator mix.

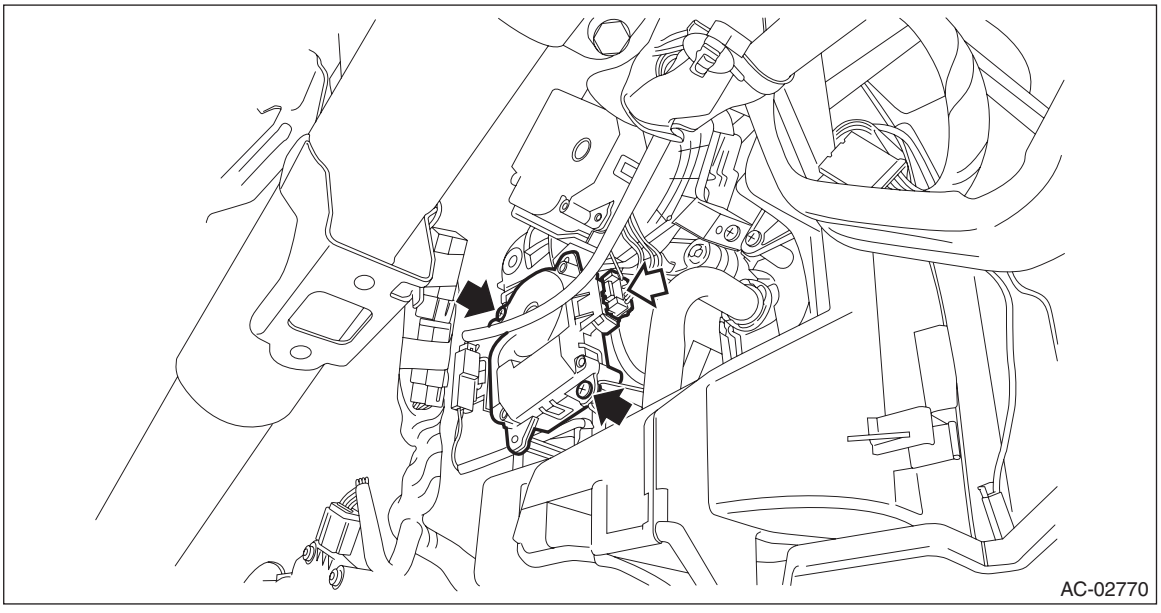
AC-02770

2. PASSENGER'S SIDE

1) Disconnect the ground terminal from battery sensor. <Ref. to RC-4, BATTERY, NOTE, Repair Contents.>
2) Remove the pocket assembly and the back panel - pocket. <Ref. to EI-77, REMOVAL, Glove Box.>
3) Remove the motor - actuator mix.
   (1) Disconnect the connector.
   (2) Remove the screws and detach the motor - actuator mix.

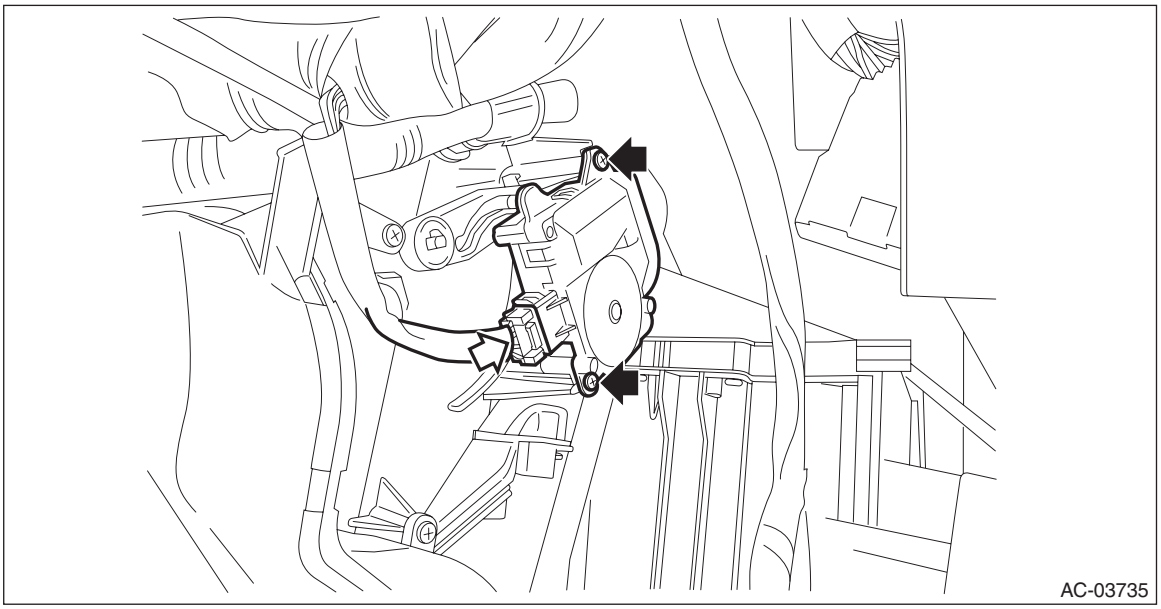

B: INSTALLATION

1. DRIVER'S SIDE

1) When replacing the actuator with a new part, apply a thin coat of grease evenly to the side face (a) of lever pin by using approx. 5 mm (0.2 in) width and approx. 0.1 g (0.004 oz) of grease squeezed out from a tube.

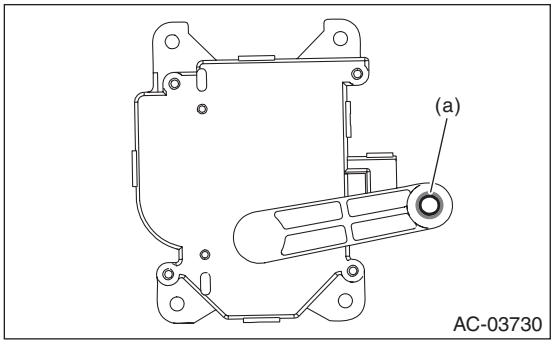

NOTE:
After installing the actuator, perform 3 — 5 times of adaptation for the grease to fit in.

Grease:
SUBARU genuine grease (Part No. 72129AJ000)

2) Install the motor - actuator mix.
3) Install the panel - knee guard.

Tightening torque:
7 N·m (0.7 kgf-m, 5.2 ft-lb)

4) Install the cover assembly - instrument panel LWR driver.
5) Connect the ground terminal to battery sensor. <Ref. to RC-4, BATTERY, NOTE, Repair Contents.>

2. PASSENGER'S SIDE

1) When replacing the actuator with a new part, apply a thin coat of grease evenly to the side face (a) of lever pin by using approx. 5 mm (0.2 in) width and approx. 0.1 g (0.004 oz) of grease squeezed out from a tube.

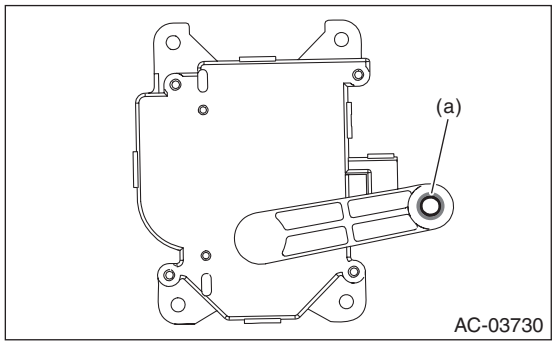

NOTE:
After installing the actuator, perform 3 — 5 times of adaptation for the grease to fit in.

Grease:
SUBARU genuine grease (Part No. 72129AJ000)

2) Install the motor - actuator mix.
3) Install the pocket assembly and the back panel - pocket.
4) Connect the ground terminal to battery sensor. <Ref. to RC-4, BATTERY, NOTE, Repair Contents.>

C: INSPECTION

1. ACTUATOR LINK

1) Visually check the operating range of the link, and remove the foreign matter if any.
2) Operate the temperature control switch, and check that the link operates normally.
3) If it does not operate normally as the result of inspection, perform a unit inspection of motor - actuator mix.

2. CHECK ACTUATOR OPERATION

1) Check the actuator operation when battery voltage is applied between the connector terminals.

CAUTION:
Disconnect the battery immediately after the actuator stops operation. Otherwise, the motor may be damaged.

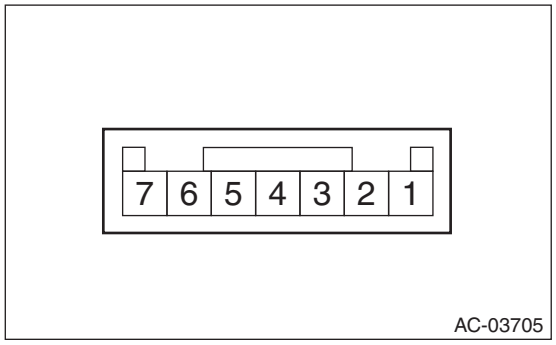

Terminal No.	Inspection conditions	Operating position
6 (+) — 7 (–)	Connect battery to the terminals	• Driver's seat: COOL • Passenger's seat: HOT
7 (+) — 6 (–)		• Driver's seat: HOT • Passenger's seat: COOL

2) Measure the resistance between connector terminals.

Preparation tool:
Circuit tester

Terminal No.	Inspection conditions	Operating position
1 — 3	Always	4.2 — 7.8 Ω

3) Connect the connector, turn the ignition switch to ON, and check the voltage between actuator terminals.
- Driver's seat

Terminal No.	Inspection conditions	Operating position
5 (+) — 3 (–)	HOT	Approx. 1 V
	COOL	Approx. 4 V

- Passenger's seat

Terminal No.	Inspection conditions	Operating position
5 (+) — 1 (–)	HOT	Approx. 1 V
	COOL	Approx. 4 V

4) Replace the motor - actuator mix if it is found defective as a result of inspection.

30.Rear Vent Door Actuator

A: REMOVAL

CAUTION:
Before handling the airbag system components, refer to "CAUTION" of "General Description" in "AIRBAG SYSTEM". <Ref. to AB-10, CAUTION, General Description.>

1) Disconnect the ground terminal from the battery sensor, and wait for at least 60 seconds before starting work. <Ref. to RC-4, BATTERY, NOTE, Repair Contents.>
2) Remove the instrument panel assembly and the beam COMPL - steering. <Ref. to EI-83, REMOVAL, Instrument Panel Assembly.>
3) Remove the duct - foot assist.
   (1) Turn over the floor carpet and remove the slide lock of the duct - rear heater.
   (2) Remove the screws, and remove the duct - foot assist.

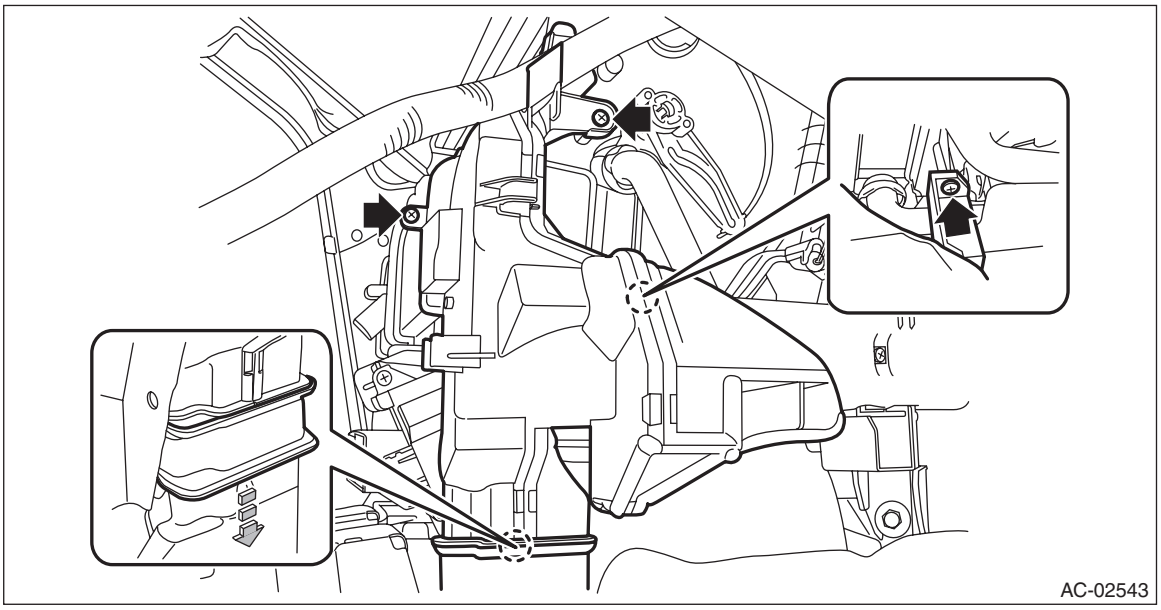
AC-02543

4) Remove the screws and remove the motor assembly - rear heater.

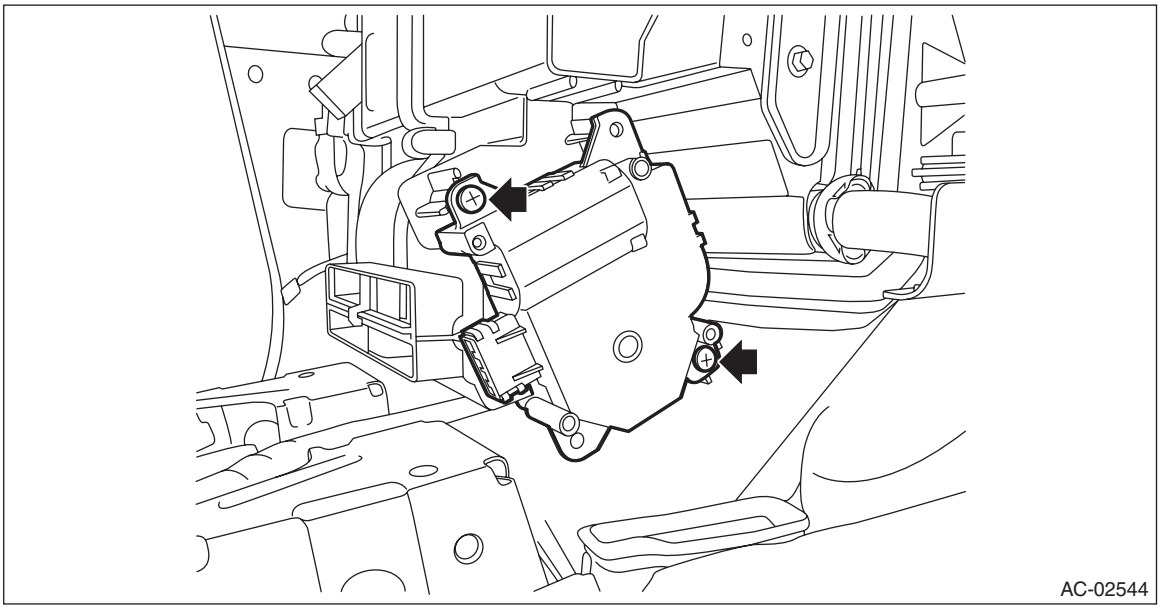
AC-02544

B: INSTALLATION

CAUTION:
Before handling the airbag system components, refer to "CAUTION" of "General Description" in "AIRBAG SYSTEM". <Ref. to AB-10, CAUTION, General Description.>

1) Install the motor assembly - rear heater.
2) Install the duct - foot assist.
3) Install the instrument panel assembly and the beam COMPL - steering. <Ref. to EI-88, INSTALLATION, Instrument Panel Assembly.>
4) Connect the ground terminal to battery sensor. <Ref. to RC-4, BATTERY, NOTE, Repair Contents.>

C: INSPECTION

1. ACTUATOR LINK

1) Visually check the operating range of the link, and remove the foreign matter if any.
2) Operate the temperature control switch, and check that the link operates normally.
3) If it does not operate normally as the result of inspection, perform a unit inspection of motor assembly - rear heater.

2. CHECK ACTUATOR OPERATION

1) Check the actuator operation when battery voltage is applied between the connector terminals.

CAUTION:
Disconnect the battery immediately after the actuator stops operation. Otherwise, the motor may be damaged.

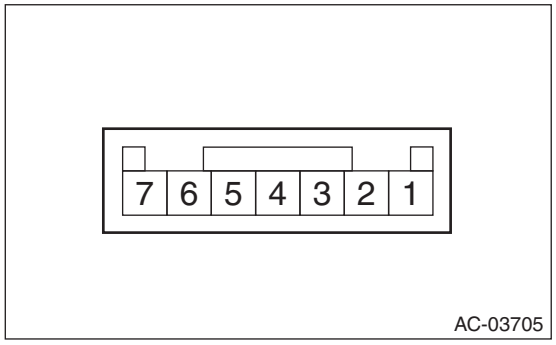

Terminal No.	Inspection conditions	Operating position
6 (+) — 7 (–)	Connect battery to the terminals	COOL
7 (+) — 6 (–)		HOT

2) Measure the resistance between connector terminals.

Preparation tool:
Circuit tester

Terminal No.	Inspection conditions	Operating position
1 — 3	Always	4.2 — 7.8 Ω

3) Connect the connector, turn the ignition switch to ON, and check the voltage between actuator terminals.

Terminal No.	Inspection conditions	Operating position
5 (+) — 3 (–)	HOT	Approx. 1 V
	COOL	Approx. 4 V

4) Replace the motor assembly - rear heater if faulty is found in the inspection.

31.Air Vent Grille

A: REMOVAL

1. CENTER GRILLE ASSEMBLY

1) Disconnect the ground terminal from battery sensor. <Ref. to RC-4, BATTERY, NOTE, Repair Contents.>
2) Remove the panel - center grille assembly.
   (1) Release the clips and claws.
   (2) Detach the connectors, and remove the panel - center grille assembly.

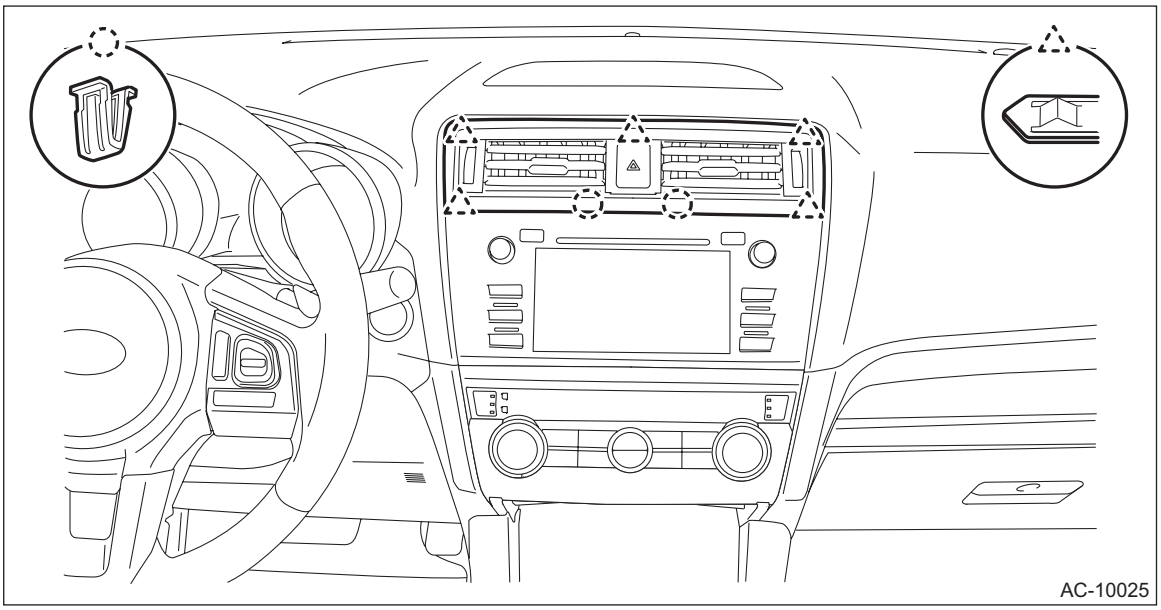

   (3) Remove the switch - hazard. <Ref. to LI-37, REMOVAL, Hazard Switch.>

2. SIDE GRILLE ASSEMBLY

Release the claws and clips, then detach the grille assembly - ventilation.

- LH side

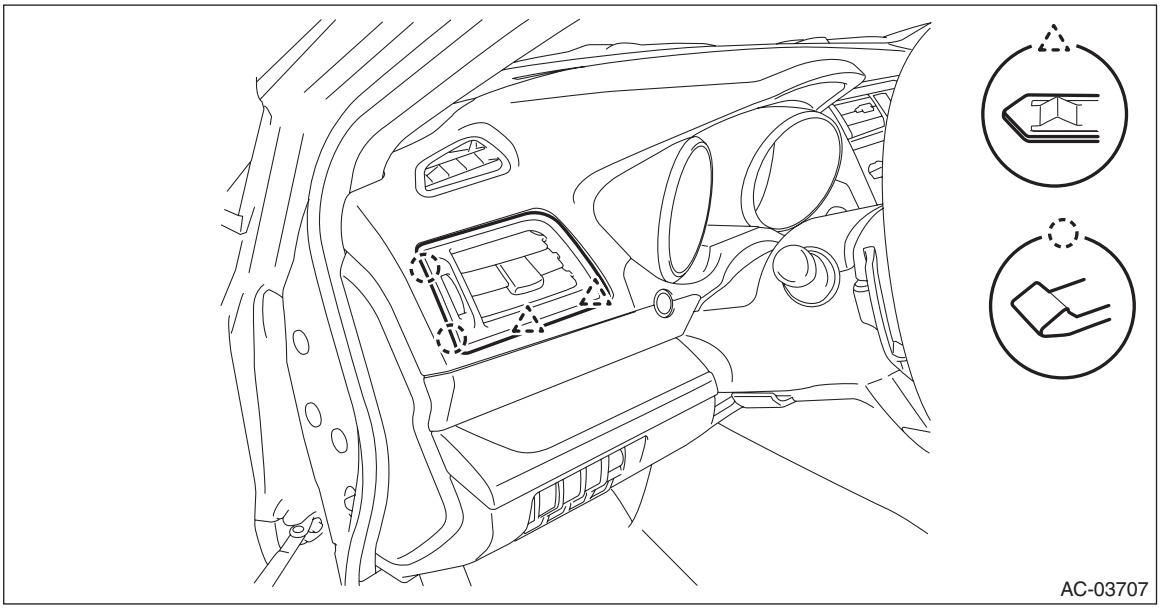

- RH side

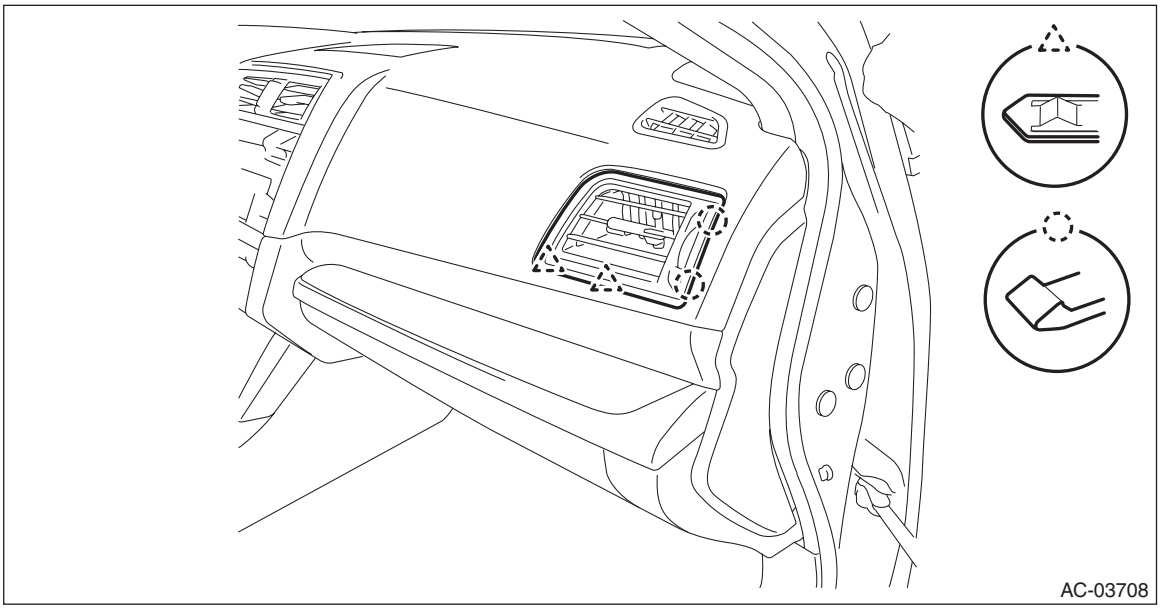

3. REAR GRILLE ASSEMBLY

1) Disconnect the ground terminal from the battery sensor, and wait for at least 60 seconds before starting work. <Ref. to RC-4, BATTERY, NOTE, Repair Contents.>
2) Remove the cover assembly - front and the console box assembly. <Ref. to EI-80, REMOVAL, Console Box.>
3) Remove the screws, and remove the duct - console rear. <Ref. to AC-96, CONSOLE DUCT, REMOVAL, Heater Duct.>
4) Release the claws and remove the end cover - console box.

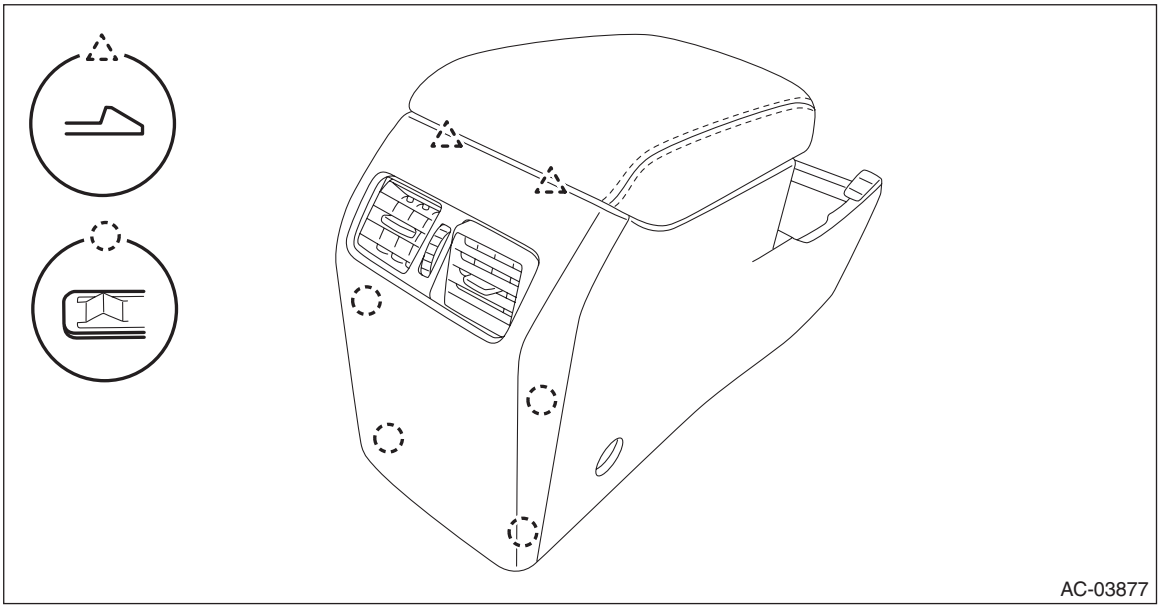

5) Remove the screws and remove the grille assembly - rear heater.

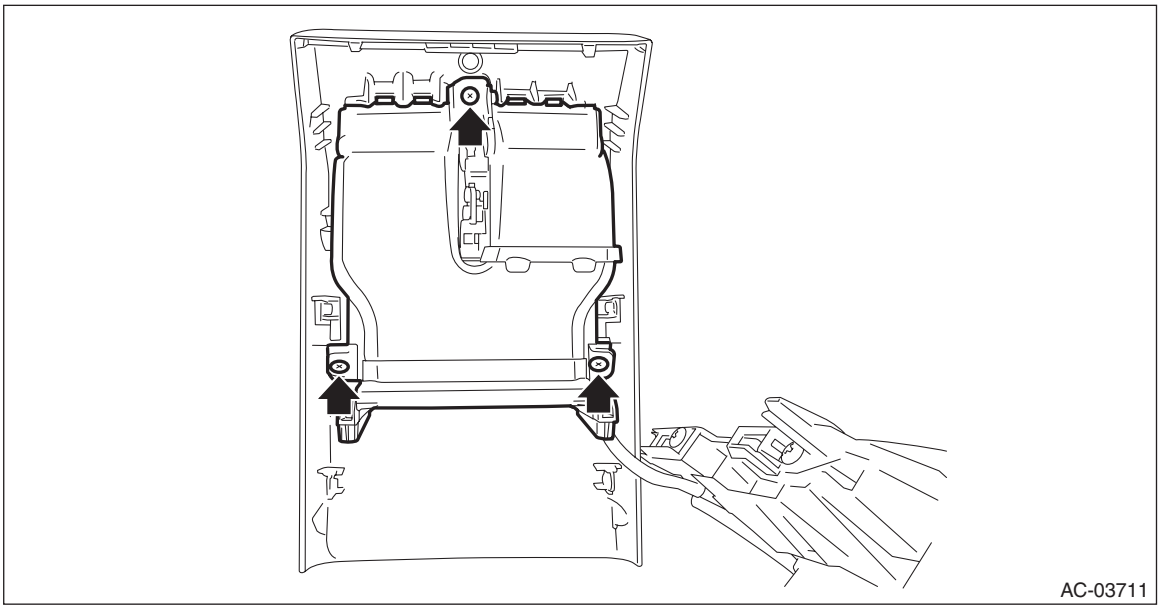

B: INSTALLATION

CAUTION:
After installing the center grille assembly, check that the air vent grille of the center grille assembly is inserted correctly into the air vent duct.

1) Install the switch - hazard. (Center grille assembly)
2) Install the grille assembly.
3) Install the end cover - console box. (Rear grille assembly)
4) Install the cover assembly - front and the console box assembly. (Rear grille assembly)

Tightening torque:
6.5 N·m (0.7 kgf-m, 4.8 ft-lb)

5) Connect the ground terminal to battery sensor. <Ref. to RC-4, BATTERY, NOTE, Repair Contents.>

C: INSPECTION

1) Check that the direction and amount of air can be adjusted smoothly. Replace the air vent grille if faulty.
2) Check that the adjustment can be maintained in each position. Replace the air vent grille if faulty.

32.Heater Duct

A: REMOVAL

1. REAR HEATER DUCT

CAUTION:
Before handling the airbag system components, refer to "CAUTION" of "General Description" in "AIRBAG SYSTEM". <Ref. to AB-10, CAUTION, General Description.>
1) Disconnect the ground terminal from the battery sensor, and wait for at least 60 seconds before starting work. <Ref. to RC-4, BATTERY, NOTE, Repair Contents.>
2) Turn over the floor mat. <Ref. to EI-123, REMOVAL, Floor Mat.>
3) Remove the rear heater duct.
   (1) Release the clips, and remove the adapter cord.
   (2) Remove the slide lock of the duct - rear heater.
   (3) Release the claws, and then remove the duct - rear heater LH and RH.

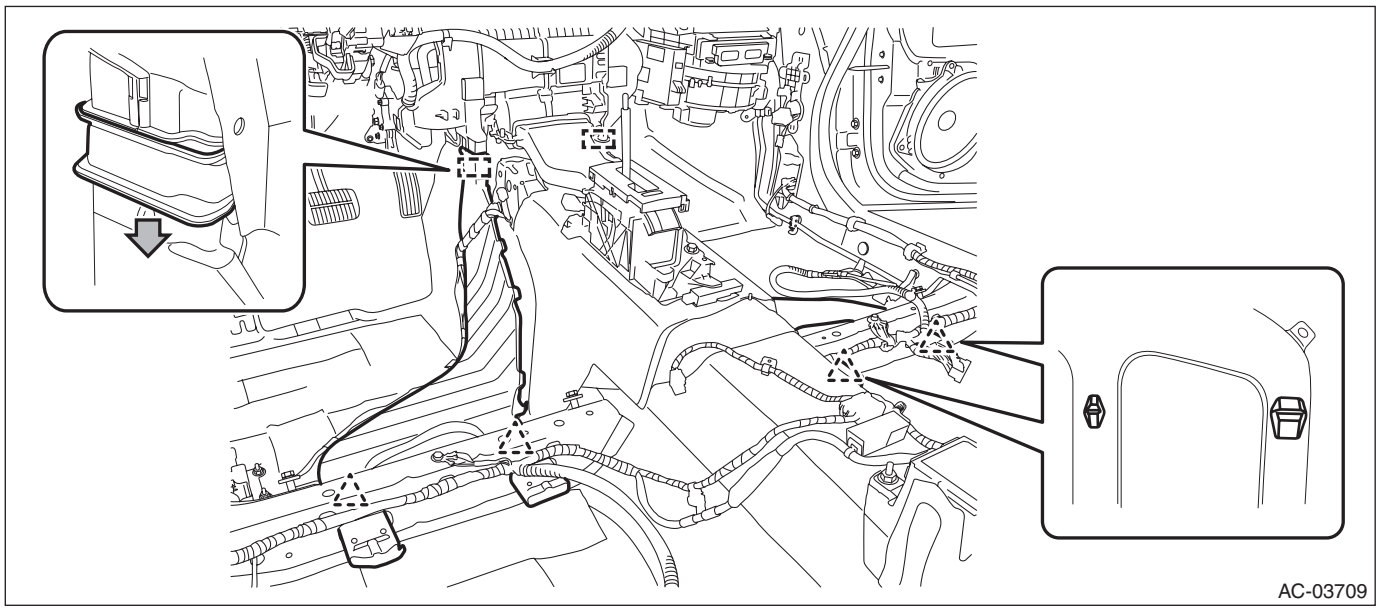

NOTE:
For models with amplifier, remove the extension duct.

2. CONSOLE DUCT

Front

CAUTION:
Before handling the airbag system components, refer to "CAUTION" of "General Description" in "AIRBAG SYSTEM". <Ref. to AB-10, CAUTION, General Description.>

1) Disconnect the ground terminal from the battery sensor, and wait for at least 60 seconds before starting work. <Ref. to RC-4, BATTERY, NOTE, Repair Contents.>
2) Remove the cover assembly - front and the console box assembly. <Ref. to EI-80, REMOVAL, Console Box.>
3) Remove the clips, and remove the duct - console center.

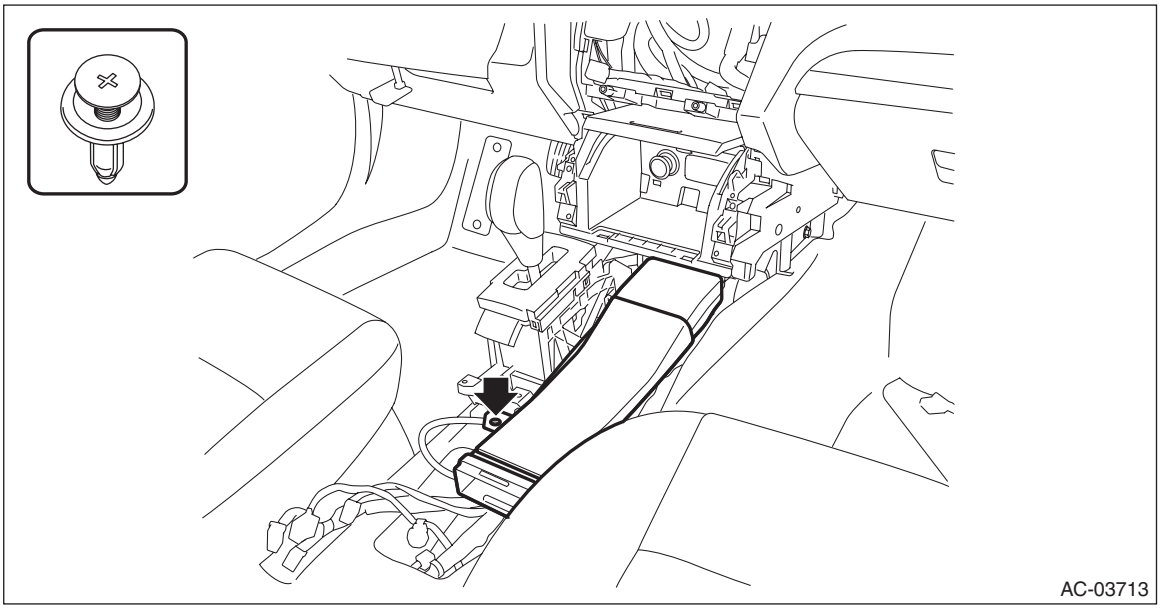
AC-03713

4) Remove the instrument panel assembly. <Ref. to EI-83, REMOVAL, Instrument Panel Assembly.>
5) Remove the clips, and remove the duct - console front.

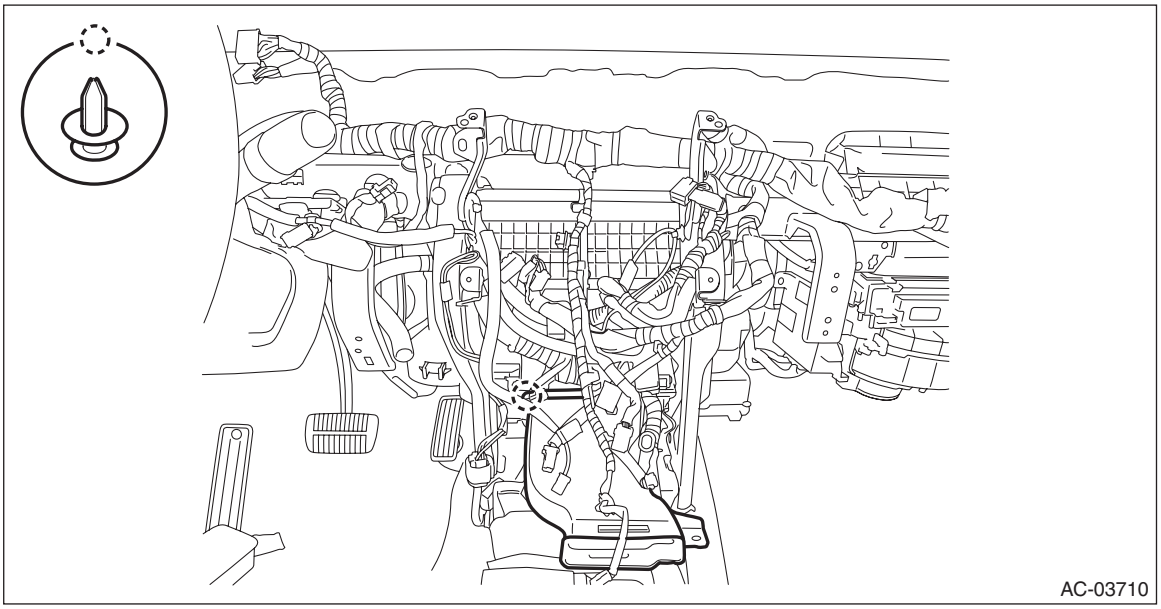
AC-03710

Center

1) Disconnect the ground terminal from the battery sensor, and wait for at least 60 seconds before starting work. <Ref. to RC-4, BATTERY, NOTE, Repair Contents.>
2) Remove the cover assembly - front and the console box assembly. <Ref. to EI-80, REMOVAL, Console Box.>
3) Remove the clips, and remove the duct - console center.

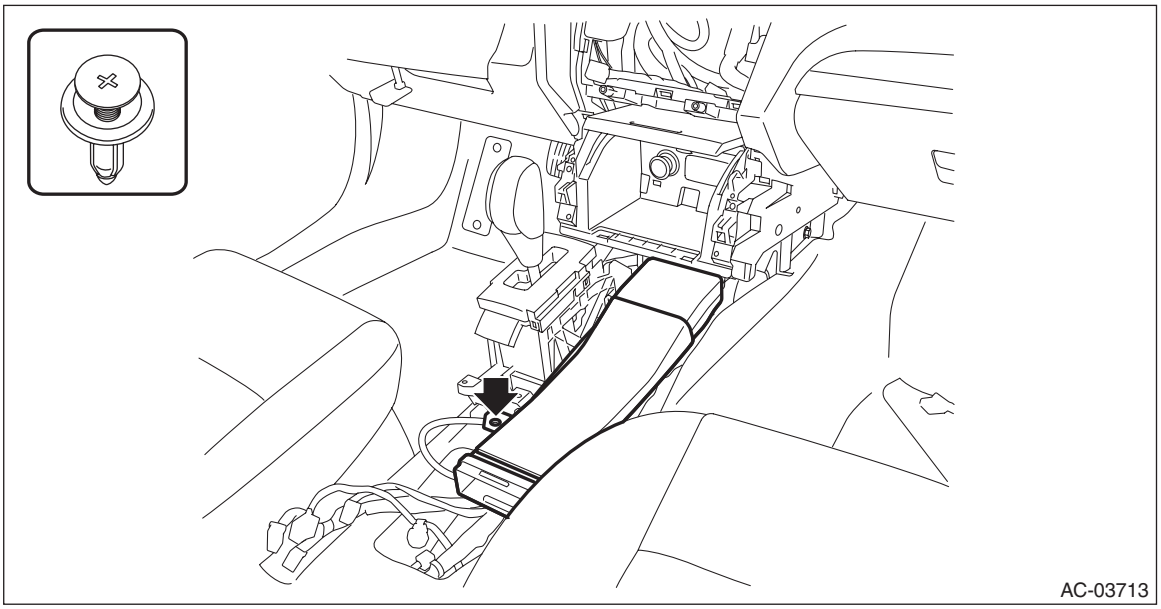

Rear

1) Disconnect the ground terminal from the battery sensor, and wait for at least 60 seconds before starting work. <Ref. to RC-4, BATTERY, NOTE, Repair Contents.>
2) Remove the cover assembly - front and the console box assembly. <Ref. to EI-80, REMOVAL, Console Box.>
3) Remove the screws, and remove the duct - console rear.

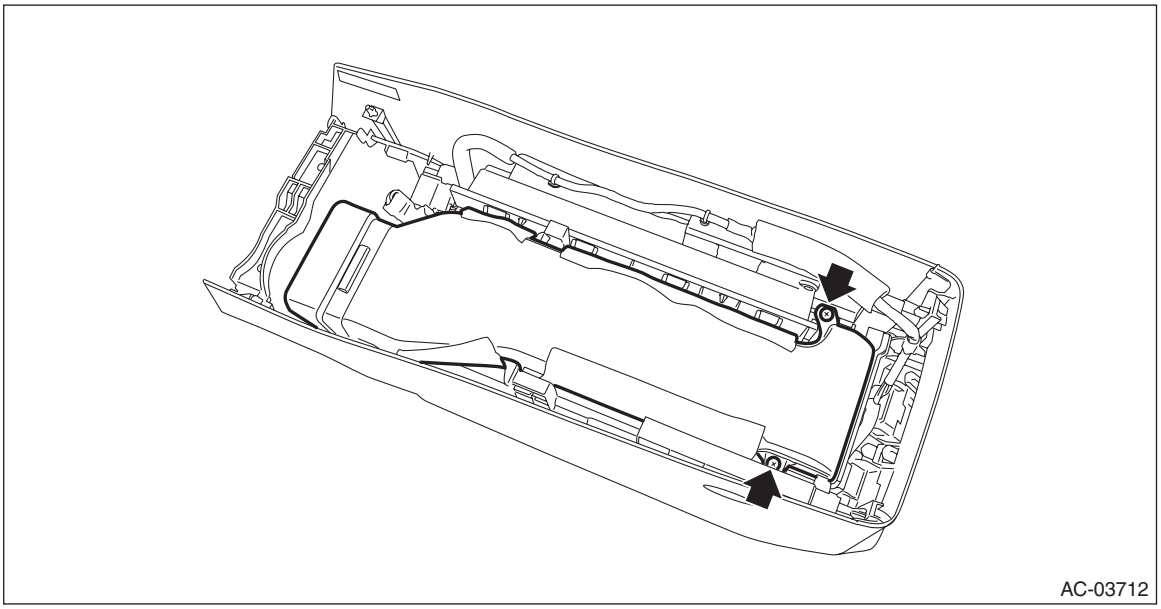

B: INSTALLATION

1. REAR HEATER DUCT

CAUTION:
Before handling the airbag system components, refer to "CAUTION" of "General Description" in "AIRBAG SYSTEM". <Ref. to AB-10, CAUTION, General Description.>

1) Install the duct - rear heater.
2) Install the floor mat. <Ref. to EI-124, INSTALLATION, Floor Mat.>
3) Connect the ground terminal to battery sensor. <Ref. to RC-4, BATTERY, NOTE, Repair Contents.>

2. CONSOLE DUCT

1) Install the console duct.
2) Install the instrument panel assembly. (Front) <Ref. to EI-88, INSTALLATION, Instrument Panel Assembly.>
3) Install the cover assembly - front and the console box assembly. <Ref. to EI-82, INSTALLATION, Console Box.>

Tightening torque:
6.5 N·m (0.7 kgf-m, 4.8 ft-lb)

4) Connect the ground terminal to battery sensor. <Ref. to RC-4, BATTERY, NOTE, Repair Contents.>

C: INSPECTION

1) Check installation condition of duct. Connect the duct properly if defective.
2) Check that no foreign matter is mixed in the duct. Remove the foreign matter if any.

33.Heater Vent Duct

A: REMOVAL

CAUTION:
Before handling the airbag system components, refer to "CAUTION" of "General Description" in "AIRBAG SYSTEM". <Ref. to AB-10, CAUTION, General Description.>

1) Disconnect the ground terminal from battery sensor. <Ref. to RC-4, BATTERY, NOTE, Repair Contents.>
2) Remove the instrument panel assembly. <Ref. to EI-83, REMOVAL, Instrument Panel Assembly.>
3) Remove the screws and remove the duct - center vent (A) and the duct - side ventilation (B) on LH and RH sides.

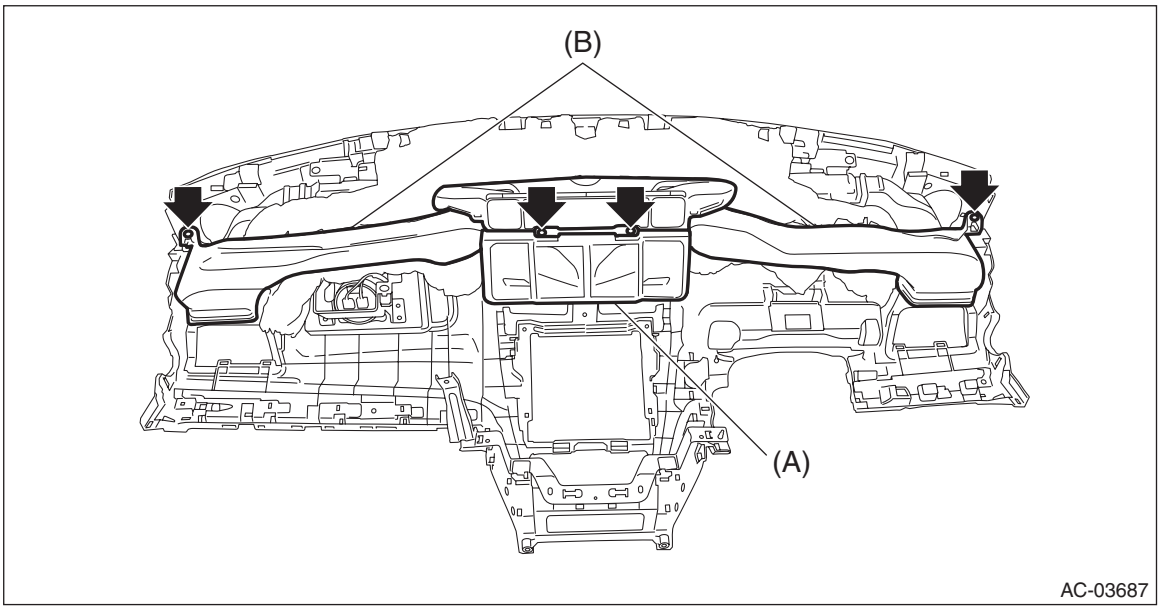

B: INSTALLATION

CAUTION:
Before handling the airbag system components, refer to "CAUTION" of "General Description" in "AIRBAG SYSTEM". <Ref. to AB-10, CAUTION, General Description.>

1) Install the duct - center vent and the duct - side ventilation.
2) Install the instrument panel assembly. <Ref. to EI-88, INSTALLATION, Instrument Panel Assembly.>
3) Connect the ground terminal to battery sensor. <Ref. to RC-4, BATTERY, NOTE, Repair Contents.>

C: INSPECTION

1) Check installation condition of duct. Connect the duct properly if defective.
2) Check that no foreign matter is mixed in the duct. Remove the foreign matter if any.

34.A/C Filter

A: REPLACEMENT

1) Remove the pocket assembly. <Ref. to EI-77, REMOVAL, Glove Box.>
2) Remove the A/C filter.
   (1) Release the lock and remove the A/C filter cover.

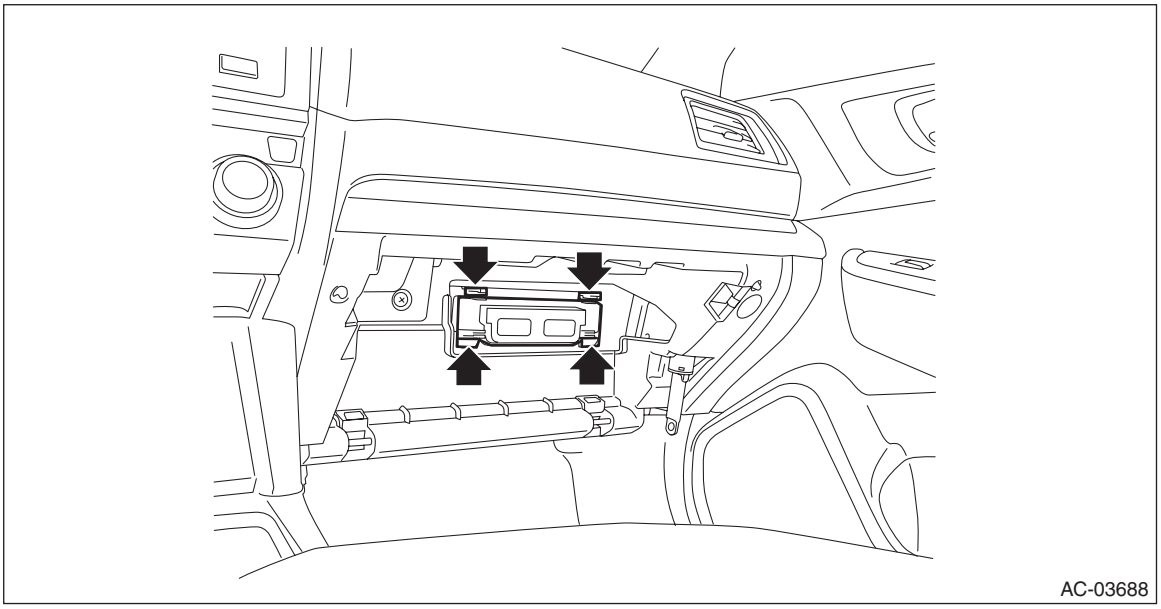

   (2) Remove the A/C filter.

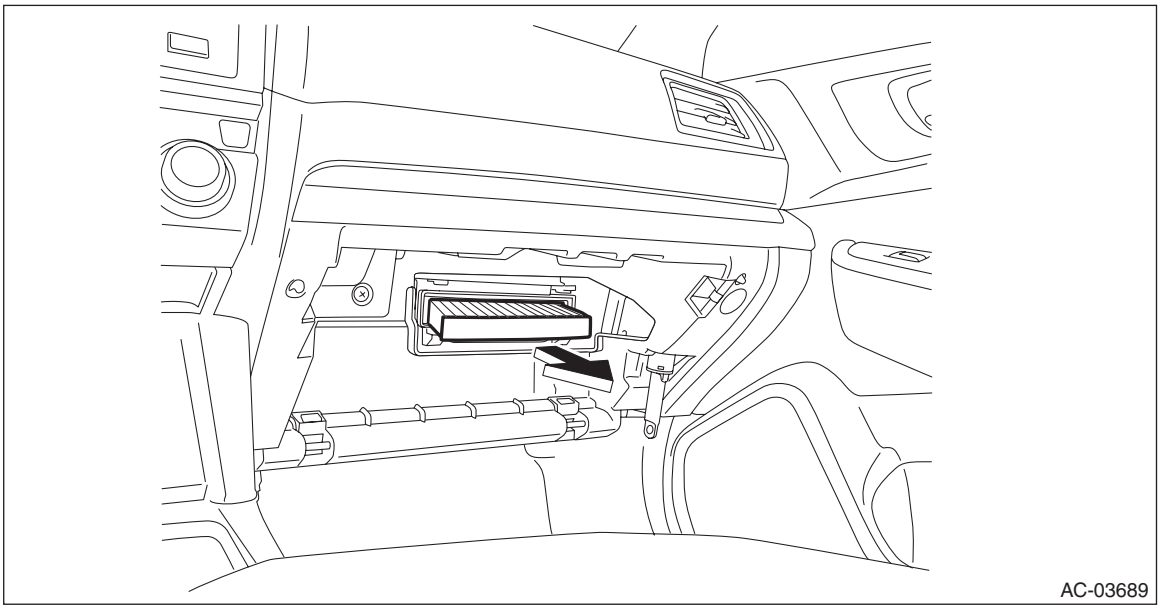

NOTE:
Pull out slowly so that foreign materials attached to the filter do not fall into the filter insertion part.
3) Install a new A/C filter.
4) Install the pocket assembly.

B: INSPECTION

Check the A/C filter for dust or dirt, and clean or replace as necessary.

35.Diagnostics with Phenomenon

A: INSPECTION

Refer to “Diagnostics with Phenomenon” of “HVAC SYSTEM (DIAGNOSTICS)” section. <Ref. to AC(diag)-9, Diagnostics with Phenomenon.>

HVAC SYSTEM (DIAGNOSTICS)

AC(diag)

Page

1. Basic Diagnostic Procedure 2
2. General Description 3
3. Electrical Component Location 4
4. Control Module I/O Signal 6
5. Diagnostics with Phenomenon 9
6. Subaru Select Monitor 42
7. Read Diagnostic Trouble Code (DTC) 43
8. Clear Memory Mode 44
9. Inspection Mode 45
10. Read Current Data 47
11. System Operation Check Mode 49
12. Diagnostic Procedure for Subaru Select Monitor Communication 50
13. List of Diagnostic Trouble Code (DTC) 52
14. Diagnostic Procedure with Diagnostic Trouble Code (DTC) 55

1. Basic Diagnostic Procedure

A: PROCEDURE

NOTE:
When the sunload sensor check is performed indoors or in the shade, it could be diagnosed as sensor having an open circuit. Always perform the inspection in direct sunlight.

	Step	Check	Yes	No
1	**START INSPECTIONS.** 1) Prepare the tools. <Ref. to AC-19, PREPARATION TOOL, General Description.> 2) Perform the pre-inspection. <Ref. to AC(diag)-3, INSPECTION, General Description.>	Is any malfunction found in pre-inspection?	Fix the malfunction found in pre-inspection, and go to the next inspection step. Go to step **2**.	Go to step **2**.
2	**CHECK DTC.** 1) Under the failure condition, leave the vehicle for one minute or more. 2) Read the DTC using Subaru Select Monitor. <Ref. to AC(diag)-43, Read Diagnostic Trouble Code (DTC).> NOTE: • If the communication function of the Subaru Select Monitor cannot be executed properly, check the communication circuit. <Ref. to AC(diag)-50, COMMUNICATION FOR INITIALIZING IMPOSSIBLE, Diagnostic Procedure for Subaru Select Monitor Communication.> • Record the freeze frame data recorded together with the DTC.	Is DTC displayed?	Perform diagnosis according to the DTC. <Ref. to AC(diag)-52, LIST, List of Diagnostic Trouble Code (DTC).> After diagnosis, Go to step **3**.	Refer to Diagnostics with Phenomenon. <Ref. to AC(diag)-9, INSPECTION, Diagnostics with Phenomenon.>
3	**PERFORM DIAGNOSIS.** 1) Perform the Clear Memory Mode. <Ref. to AC(diag)-44, Clear Memory Mode.> 2) Perform the Inspection Mode. <Ref. to AC(diag)-45, Inspection Mode.>	Is DTC displayed on Subaru Select Monitor?	Perform diagnosis according to the DTC.	Finish the diagnosis.

2. General Description

A: CAUTION

1) Never connect the battery in reverse polarity.
• Doing so may immediately damage the A/C CM.
2) Do not disconnect the battery terminals while the engine is running.
• A large counter electromotive force will be generated in the generator, and this voltage may damage electronic parts such as A/C CM etc.
3) Before disconnecting the connectors of sensors and the A/C CM, be sure to turn off the ignition switch.
• A/C CM may be damaged.
4) Every A/C-related part is a precision part. Do not drop them.
5) Airbag system wiring harness is routed near the A/C control panel and junction box.

CAUTION:
• Do not use electrical test equipment on the airbag system wiring harness and connector.
• Be careful not to damage the airbag system wiring harness when servicing the A/C control panel and junction box.

B: INSPECTION

Before performing the diagnosis, check the following items which may cause problems in the A/C system.

1. BATTERY

Check the battery. <Ref. to SC(H4DO)-65, INSPECTION, Battery.> <Ref. to SC(H6DO)-59, INSPECTION, Battery.>

NOTE:
If the battery voltage does not reach the specified value, recharge or replace the battery.

C: PREPARATION TOOL

1. SPECIAL TOOL

ILLUSTRATION	TOOL NUMBER	DESCRIPTION	REMARKS
 STSSM4	— (Newly adopted tool)	SUBARU SELECT MONITOR 4	Used for setting of each function and trouble-shooting for electrical system. NOTE: For detailed operation procedures of Subaru Select Monitor 4, refer to “Application help”.

2. GENERAL TOOL

TOOL NAME	REMARKS
Circuit tester	Used for measuring resistance, voltage and current.
DST-i	Used together with Subaru Select Monitor 4.

3. Electrical Component Location

A: LOCATION

1. ENGINE COMPARTMENT

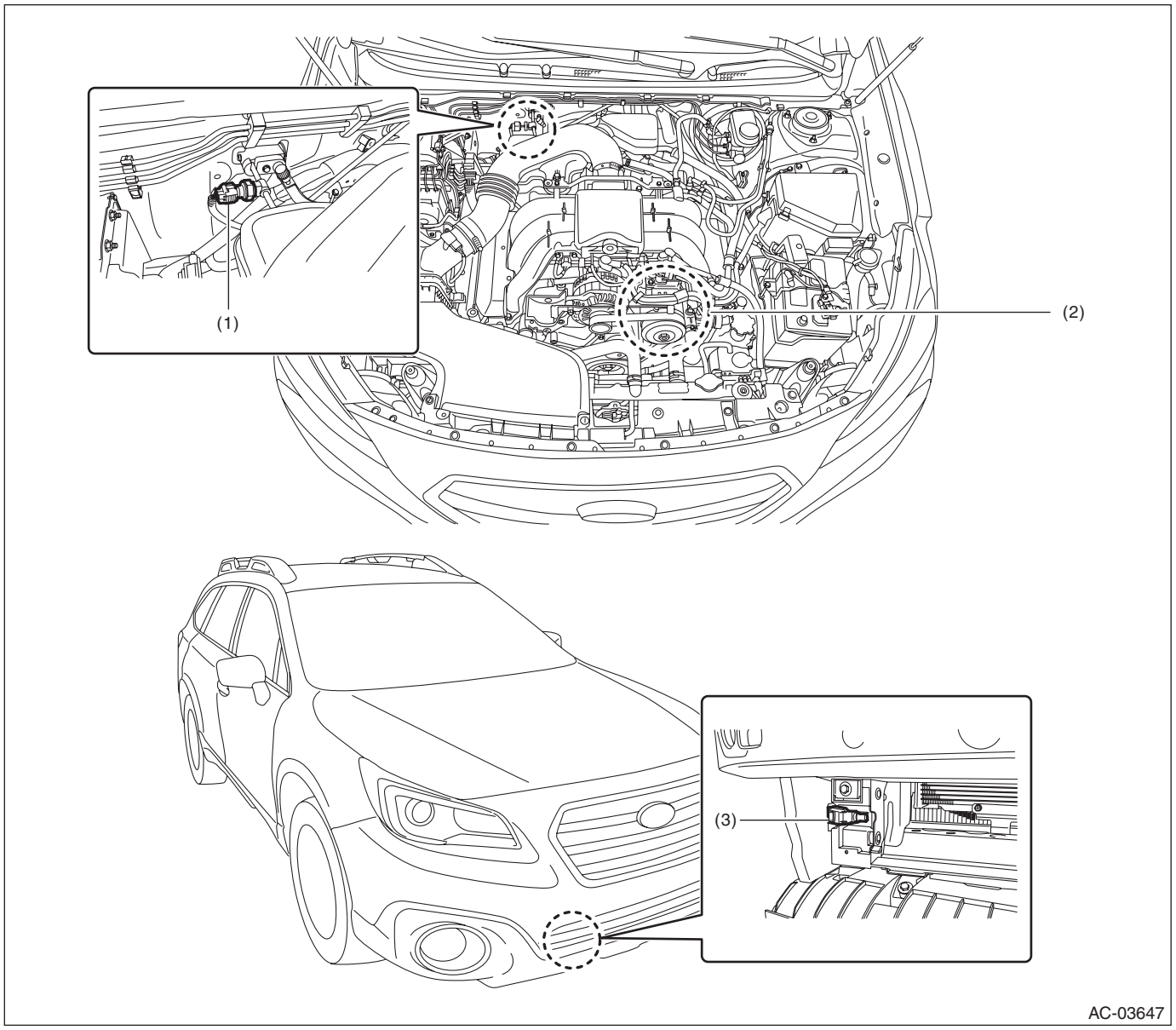

(1) Pressure sensor
(2) A/C compressor (Refrigerant flow sensor, variable flow change solenoid)
(3) Ambient sensor

2. PASSENGER COMPARTMENT

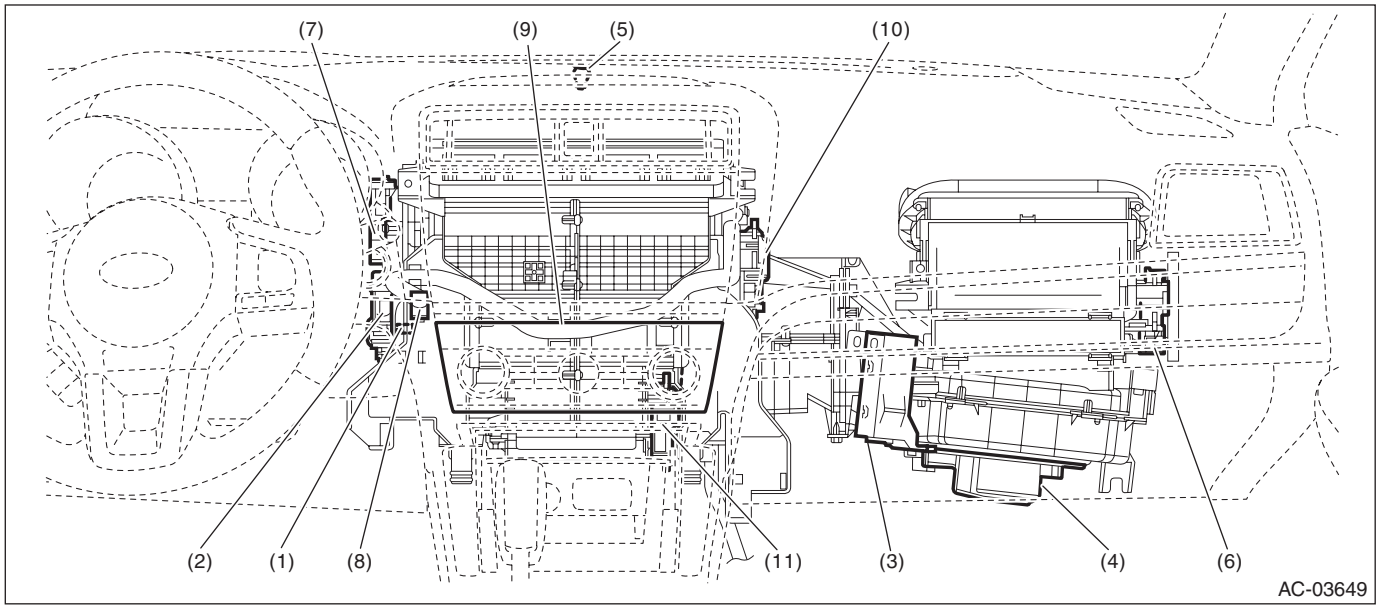

(1) Evaporator sensor
(2) Air mix door actuator*1 or air mix door actuator LH*2
(3) A/C CM
(4) Blower motor
(5) Sunload sensor
(6) Intake door actuator
(7) Mode door actuator
(8) In-vehicle sensor
(9) A/C control panel
(10) Air mix door actuator RH*2
(11) Rear vent actuator*3

*1: Manual A/C
*2: Auto A/C
*3: With rear seat A/C

4. Control Module I/O Signal

A: ELECTRICAL SPECIFICATION

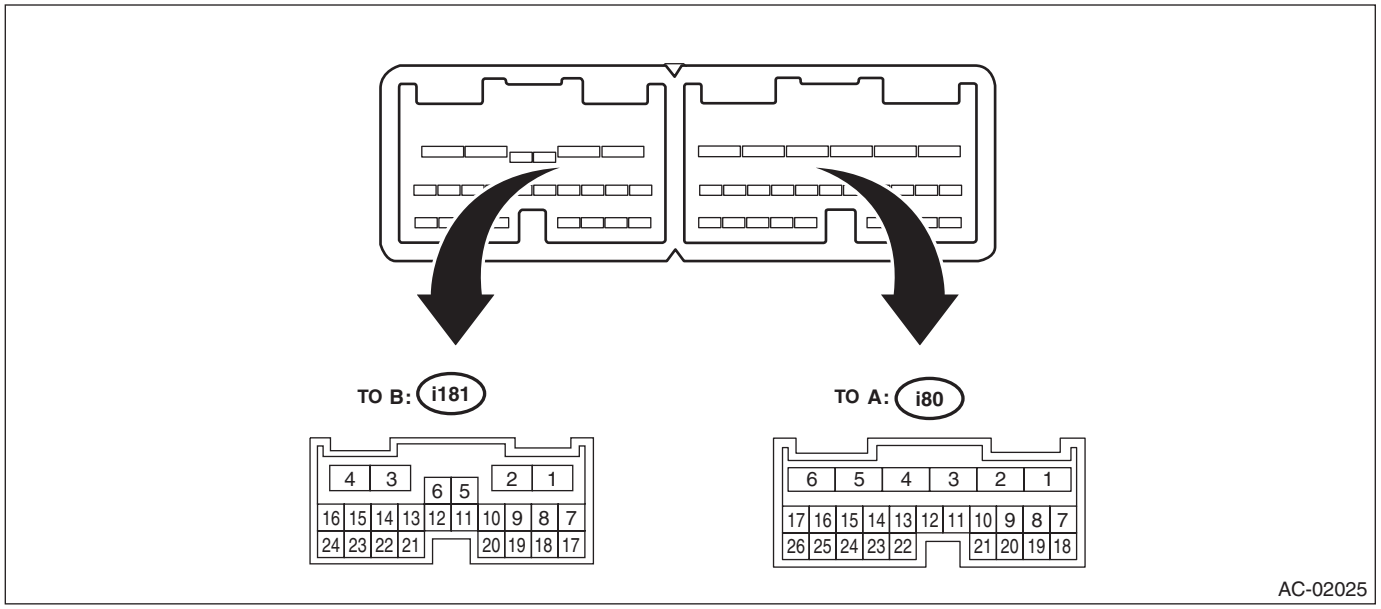

Terminal No.	Content	Measuring condition	Standard
A1 ←→ Chassis ground	Ignition power supply	Ignition switch: ON	Battery voltage
A2	CAN-H (CAN communication line)	Measurement load (digital signal)	—
A3	CAN-L (CAN communication line)	Measurement load (digital signal)	—
A4 ←→ Chassis ground	Ground	Always	0 V
A5 ←→ Chassis ground	Driver's side seat heater temperature sensor*4	Ignition switch: ON Varies depending on temperature at seat heater	0 — 5 V
A6 ←→ Chassis ground	Mode door actuator position signal	Ignition switch: ON Mode door FACE position	4 V
		Ignition switch: ON Mode door DEF position	1 V
A7 ←→ Chassis ground	Mode servo drive signal (FACE)	When turning towards FACE side: A7 is 12 V, B18 is GND	While operating: 12 V While not operating: 0 V
A8 ←→ Chassis ground	Battery power supply	Always	Battery voltage
A9	—	—	—
A10	—	—	—
A11 ←→ Chassis ground	Air mix door actuator drive signal (HOT)*1 or air mix door actuator (driver's seat) drive signal (HOT)*2	Turning towards HOT side: A11 is 12 V, A21 is GND	While operating: 12 V While not operating: 0 V
A12 ←→ Chassis ground	Each potentiometer and sensor power supply	Ignition switch: ON	5 V
A13	—	—	—
A14 ←→ Chassis ground	Passenger's side seat heater temperature sensor*4	Ignition switch: ON Varies depending on temperature at seat heater	0 — 5 V

Terminal No.	Content	Measuring condition	Standard
A15 ←→ Chassis ground	Rear vent actuator position signal*3	Ignition switch: ON Air mix door: Maximum cool position	1.8 V
		Ignition switch: ON Air mix door: Maximum hot position	4.1 V
A16 ←→ Chassis ground	Air mix door actuator (passenger's side) position signal*2	Ignition switch: ON Air mix door: Maximum cool position	4 V
		Ignition switch: ON Air mix door: Maximum hot position	1 V
A17 ←→ Chassis ground	Air mix door position signal*1 or air mix door (driver's side) position signal*2	Ignition switch: ON Air mix door: Maximum cool position	4 V
		Ignition switch: ON Air mix door: Maximum hot position	1 V
A18 ←→ Chassis ground	Mode servo drive signal (DEF)	When turning towards DEF side: A18 is 12 V, A7 is GND	While operating: 12 V While not operating: 0 V
A19	—	—	—
A20 ←→ Chassis ground	ACC power supply	Ignition switch: ACC	Battery voltage
A21 ←→ Chassis ground	Air mix door actuator drive signal (COOL)*1 or air mix door actuator (driver's side) drive signal (COOL)*2	Turning towards COOL side: A21 is 12 V, A11 is GND	While operating: 12 V While not operating: 0 V
A22 ←→ Chassis ground	After-evaporator sensor signal	Ignition switch: ON Varies depending on temperature after the evaporator	1 — 4.5 V
A23 ←→ Chassis ground	In-vehicle sensor signal	Ignition switch: ON	25°C (77°F): Approx. 1.5 V 40°C (104°F): Approx. 1.0 V
A24 ←→ Chassis ground	Pressure sensor signal	Ignition switch: ON	0.5 — 4.9 V
A25 ←→ Chassis ground	Sunload sensor signal	Ignition switch: ON (0 V: No sunload)	0 — 4.9 V
A26 ←→ Chassis ground	Flow sensor signal	Ignition switch: ON	0.3 — 4.7 V
B1 ←→ Chassis ground	Driver's side seat heater control *4	Ignition switch: ON Seat heater switch: ON	0 V or battery voltage
B2 ←→ Chassis ground	Seat heater (driver's side) GND *4	Always	Less than 0.5 V
B3 ←→ Chassis ground	Passenger's side seat heater control *4	Ignition switch: ON Seat heater switch: ON	0 V or battery voltage
B4 ←→ Chassis ground	Seat heater (passenger's side) GND *4	Always	Less than 0.5 V
B5 ←→ Chassis ground	Blower motor voltage feedback*2	Ignition switch: ON Blower switch: ON	0.45 — 10 V
B6 ←→ Chassis ground	Blower motor control signal*2	Ignition switch: ON Blower switch: ON	9.05 V
B7 ←→ Chassis ground	Intake door actuator drive signal (RECIRC)	Intake door actuator operating on the RECIRC side	0.7 V or less
B8 ←→ Chassis ground	Variable compressor solenoid valve	Ignition switch: ON Blower switch: ON A/C switch: ON	2 — 12 V
B9	—	—	—
B10	—	—	—
B11	A/C control panel communication	Measurement load (digital signal)	—
B12	A/C control panel communication	Measurement load (digital signal)	—

Terminal No.	Content	Measuring condition	Standard
B13 ←→ Chassis ground	Heater main relay drive signal*2	Ignition switch: ON Blower switch: ON	0.7 V or less
B14	—	—	—
B15 ←→ Chassis ground	Air mix door actuator (passenger's side) drive signal (HOT)*2	Turning towards HOT side: B14 is 12 V, B15 is GND	While operating: 12 V While not operating: 0 V
B16 ←→ Chassis ground	Air mix door actuator (passenger's side) drive signal (COOL)*2	Turning towards COOL side: B15 is 12 V, B14 is GND	While operating: 12 V While not operating: 0 V
B17 ←→ Chassis ground	Intake door actuator drive signal (FRESH)	Intake door actuator operating on the FRESH side	0.7 V or less
B18 ←→ Chassis ground	Sensor GND	Always	Less than 0.5 V
B19	—	—	—
B20	—	—	—
B21	—	—	—
B22	—	—	—
B23 ←→ Chassis ground	Rear vent actuator drive signal (HOT)*3	Turning towards HOT side: B22 is 12 V, B23 is GND	While operating: 12 V While not operating: 0 V
B24 ←→ Chassis ground	Rear vent actuator drive signal (COOL)*3	Turning towards COOL side: B23 is 12 V, B22 is GND	While operating: 12 V While not operating: 0 V

*1: Manual A/C
*2: Auto A/C
*3: With rear seat A/C
*4: With seat heater

B: WIRING DIAGRAM

Refer to "Air Conditioning System" in the wiring diagram. <Ref. to WI-94, WIRING DIAGRAM, Air Conditioning System.>

5. Diagnostics with Phenomenon

A: INSPECTION

1. Perform diagnosis according to the diagnosis procedure for the corresponding symptom listed in the symptom table.
2. If there are multiple symptoms, perform the diagnosis in the order of symptom number (1 → 2 → ... → 13).

1. SYMPTOM TABLE

Symptoms		Diagnosis procedure
1	Nothing is displayed on the screen or indicators do not illuminate.	<Ref. to AC(diag)-10, NOTHING IS DISPLAYED ON THE SCREEN OR INDICATORS DO NOT ILLUMINATE, DIAGNOSTIC PROCEDURE WITH PHENOMENON, Diagnostics with Phenomenon.>
2	Air conditioner does not stop even when the OFF switch is pressed. (vehicles with fully automatic air conditioner)	<Ref. to AC(diag)-12, AIR CONDITIONER DOES NOT STOP EVEN WHEN THE OFF SWITCH IS PRESSED. (VEHICLES WITH FULLY AUTOMATIC AIR CONDITIONER), DIAGNOSTIC PROCEDURE WITH PHENOMENON, Diagnostics with Phenomenon.>
3	The windshield glass is not cleared even when the DEF switch is pressed. (vehicles with fully automatic air conditioner)	<Ref. to AC(diag)-13, THE WINDSHIELD GLASS IS NOT CLEARED EVEN WHEN THE DEF SWITCH IS PRESSED. (VEHICLES WITH FULLY AUTOMATIC AIR CONDITIONER), DIAGNOSTIC PROCEDURE WITH PHENOMENON, Diagnostics with Phenomenon.>
4	Cold air not emitted.	<Ref. to AC(diag)-14, COLD AIR NOT EMITTED, DIAGNOSTIC PROCEDURE WITH PHENOMENON, Diagnostics with Phenomenon.>
5	Warm air not emitted.	<Ref. to AC(diag)-17, WARM AIR NOT EMITTED, DIAGNOSTIC PROCEDURE WITH PHENOMENON, Diagnostics with Phenomenon.>
6	Compartment temperature is excessively lower than setting temperature.	<Ref. to AC(diag)-20, COMPARTMENT TEMPERATURE IS EXCESSIVELY LOWER THAN SETTING TEMPERATURE, DIAGNOSTIC PROCEDURE WITH PHENOMENON, Diagnostics with Phenomenon.>
7	Compartment temperature is excessively higher than setting temperature.	<Ref. to AC(diag)-23, COMPARTMENT TEMPERATURE IS EXCESSIVELY HIGHER THAN SETTING TEMPERATURE, DIAGNOSTIC PROCEDURE WITH PHENOMENON, Diagnostics with Phenomenon.>
8	Air does not come out, or airflow capacity is insufficient. (Blower motor does not rotate.)	<Ref. to AC(diag)-26, AIR DOES NOT COME OUT, OR AIRFLOW CAPACITY IS INSUFFICIENT, DIAGNOSTIC PROCEDURE WITH PHENOMENON, Diagnostics with Phenomenon.>
9	Air goes out of control. (Blower motor rotates at high speed.)	<Ref. to AC(diag)-33, AIR GOES OUT OF CONTROL, DIAGNOSTIC PROCEDURE WITH PHENOMENON, Diagnostics with Phenomenon.>
10	Cold air does not come out even when the A/C switch is pressed. The glass cannot be defogged. (Compressor does not operate. (variable))	<Ref. to AC(diag)-36, COLD AIR DOES NOT COME OUT EVEN WHEN THE A/C SWITCH IS PRESSED. THE GLASS CANNOT BE DEFOGGED. (COMPRESSOR DOES NOT OPERATE. (VARIABLE)), DIAGNOSTIC PROCEDURE WITH PHENOMENON, Diagnostics with Phenomenon.>
11	Unable to switch suction vents.	<Ref. to AC(diag)-38, UNABLE TO SWITCH SUCTION VENTS, DIAGNOSTIC PROCEDURE WITH PHENOMENON, Diagnostics with Phenomenon.>
12	Unable to switch blow vents.	<Ref. to AC(diag)-40, UNABLE TO SWITCH VENTS, DIAGNOSTIC PROCEDURE WITH PHENOMENON, Diagnostics with Phenomenon.>
13	Illumination does not come on, or cannot dim.	<Ref. to AC(diag)-41, ILLUMINATION DOES NOT COME ON OR CANNOT DIM, DIAGNOSTIC PROCEDURE WITH PHENOMENON, Diagnostics with Phenomenon.>

B: DIAGNOSTIC PROCEDURE WITH PHENOMENON

1. NOTHING IS DISPLAYED ON THE SCREEN OR INDICATORS DO NOT ILLUMINATE

TROUBLE SYMPTOM:

- When the AUTO button is pressed with IGN ON, nothing is displayed on the screen or indicators do not illuminate.
- Self diagnosis using A/C control panel does not operate.

Trouble causes:

- Control module power supply circuit failure
- A/C control panel power supply failure
- UART communication failure

WIRING DIAGRAM:

NOTE:
For the coupling connector, refer to “WIRING SYSTEM”.
Air conditioning system <Ref. to WI-94, WIRING DIAGRAM, Air Conditioning System.>

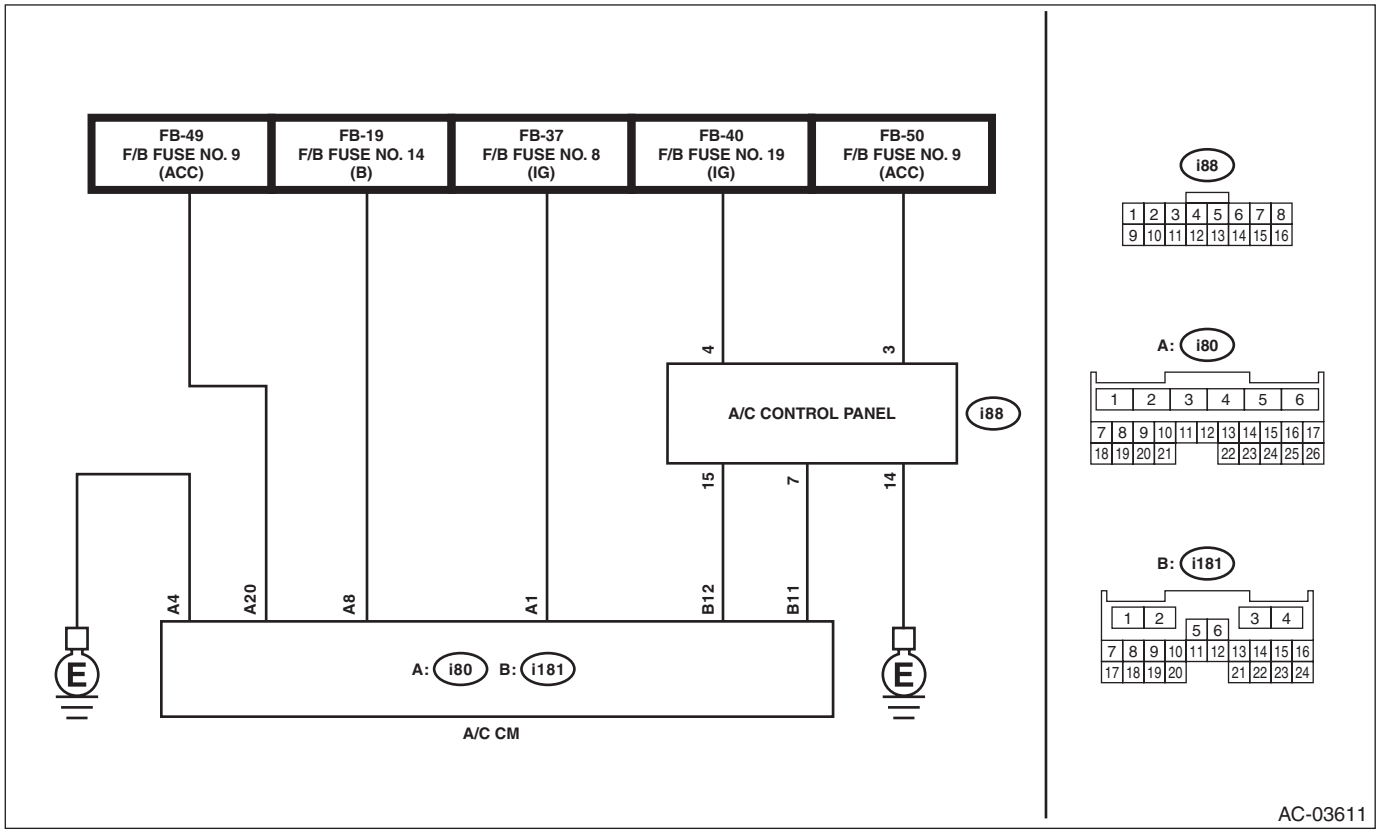

Step		Check	Yes	No
1	**CHECK FUSE.** 1) Turn the ignition switch to OFF. 2) Remove the fuses No. 8, 14, 22 and 26 from fuse & relay box. 3) Check the condition of fuse.	Is the fuse blown out?	Replace the fuse.	Go to step **2**.
2	**CHECK CONNECTOR.** Check poor contact of A/C control panel connector, A/C CM connector and coupling connector.	Is there poor contact of connector?	Repair the connector.	Go to step **3**.

	Step	Check	Yes	No
3	**CHECK A/C CONTROL PANEL POWER CIRCUIT.** 1) Remove the A/C control panel. 2) Disconnect the A/C control panel connector. 3) Measure the voltage between A/C control panel connector terminal and chassis ground after turning the ignition switch to ON. ***Connector & terminal*** ***(i88) No. 3 (+) — Chassis ground (–):*** ***(i88) No. 4 (+) — Chassis ground (–):***	Is the voltage 10 V or more?	Go to step **4**.	Check for open or short circuit in the harness between A/C control panel and fuse.
4	**CHECK A/C CONTROL PANEL GROUND CIRCUIT.** Measure the resistance of harness between A/C control panel and chassis ground after turning the ignition switch to OFF. ***Connector & terminal*** ***(i88) No. 14 — Chassis ground:***	Is the resistance less than 10 Ω?	Go to step **5**.	Repair the harness for ground line.
5	**CHECK A/C CM POWER SUPPLY CIRCUIT.** 1) Install the A/C control panel. 2) Disconnect the A/C CM connector. 3) Measure the voltage between A/C CM connector terminal and chassis ground after turning the ignition switch to ON. ***Connector & terminal*** ***(i80) No. 1 (+) — Chassis ground (–):*** ***(i80) No. 8 (+) — Chassis ground (–):*** ***(i80) No. 20 (+) — Chassis ground (–):***	Is the voltage 10 V or more?	Go to step **6**.	Check for open or short circuit in the harness between A/C CM and fuse.
6	**CHECK A/C CM GROUND CIRCUIT.** Measure the resistance of harness between A/C CM and chassis ground. ***Connector & terminal*** ***(i80) No. 4 — Chassis ground:***	Is the resistance less than 5 Ω?	Go to step **7**.	Repair the harness for ground line.
7	**CHECK COMMUNICATION CIRCUIT (OPEN CIRCUIT).** Measure the resistance of harness between A/C control panel and air conditioner control module. ***Connector & terminal*** ***(i88) No. 7 — (i181) No. 11:*** ***(i88) No. 15 — (i181) No. 12:***	Is there continuity?	Go to step **8**.	Repair the harness.
8	**CHECK COMMUNICATION CIRCUIT HARNESS (GROUND SHORT CIRCUIT).** Measure the resistance between communication circuit harness and chassis ground. ***Connector & terminal*** ***(i181) No. 11 — Chassis ground:*** ***(i181) No. 12 — Chassis ground:***	Is there continuity?	Repair or replace the short circuit of the harness.	Go to step **9**.
9	**CHECK HARNESS (SHORTED BETWEEN LINES).** Using a tester, check continuity between terminals. ***Connector & terminal*** ***(i181) No. 11 — (i181) No. 12:***	Is there continuity?	Repair or replace the short circuit of the harness.	Go to step **10**.
10	**CHECK A/C CONTROL PANEL.** 1) Turn the ignition switch to OFF. 2) Replace the A/C control panel with a properly functioning part.	Does the A/C control panel operate normally?	Since the A/C control panel has an internal error, replace A/C control panel with a new one. <Ref. to AC-47, REMOVAL, Control Panel.>	Since the A/C CM has an internal error, replace A/C CM with a new one. <Ref. to AC-49, REMOVAL, Control Unit.>

2. AIR CONDITIONER DOES NOT STOP EVEN WHEN THE OFF SWITCH IS PRESSED. (VEHICLES WITH FULLY AUTOMATIC AIR CONDITIONER)

TROUBLE SYMPTOM:

Even when the OFF switch is pressed, the blower fan does not turn off, the inlet opening remains in FRESH mode, and the compressor does not turn off.

Trouble causes:

- UART communication failure
- A/C control panel failure
- Blower motor failure
- Intake door actuator failure
- Compressor failure

	Step	Check	Yes	No
1	**CHECK A/C CONTROL PANEL.** 1) Turn the ignition switch to ON. 2) Press the OFF switch of the A/C control panel. 3) Using Subaru Select Monitor, check the following data in “Read Current Data”. <Ref. to AC(diag)-47, Read Current Data.> • «Blower Fan Level» • «Variable Flow Change Solenoid Duty» (vehicles with variable air conditioner) • «Fresh/Recircle Air Door Actuator Position Target»	Does «Blower Fan Level» indicate 0, «Variable Flow Change Solenoid Duty» indicate 0%, and «Fresh/Recircle Air Door Actuator Position Target» indicate 100% respectively?	Go to step **2**.	Replace the A/C control panel. <Ref. to AC-47, REMOVAL, Control Panel.>
2	**CHECK BLOWER MOTOR.** With the OFF switch pressed, check the blower motor operation.	Is the blower motor stopped?	Go to step **3**.	<Ref. to AC(diag)-33, AIR GOES OUT OF CONTROL, DIAGNOSTIC PROCEDURE WITH PHENOMENON, Diagnostics with Phenomenon.>
3	**CHECK INTAKE DOOR ACTUATOR.** With the OFF switch pressed, check the FRESH/RECIRC door operation.	Does the FRESH/RECIRC door set to FRESH?	Go to step **4**.	<Ref. to AC(diag)-38, UNABLE TO SWITCH SUCTION VENTS, DIAGNOSTIC PROCEDURE WITH PHENOMENON, Diagnostics with Phenomenon.>

	Step	Check	Yes	No
4	**CHECK COMPRESSOR.** With the OFF switch pressed, check the compressor operation.	Is the compressor stopped?	The circuit has returned to a normal condition at this time. Reproduce the failure, and then perform the diagnosis again. NOTE: In this case, temporary poor contact of connector, temporary open or short circuit of harness may be the cause.	<Ref. to AC(diag)-36, COLD AIR DOES NOT COME OUT EVEN WHEN THE A/C SWITCH IS PRESSED. THE GLASS CANNOT BE DEFOGGED. (COMPRESSOR DOES NOT OPERATE. (VARIABLE)), DIAGNOSTIC PROCEDURE WITH PHENOMENON, Diagnostics with Phenomenon.>

3. THE WINDSHIELD GLASS IS NOT CLEARED EVEN WHEN THE DEF SWITCH IS PRESSED. (VEHICLES WITH FULLY AUTOMATIC AIR CONDITIONER)

TROUBLE SYMPTOM:

Even when the DEF switch is pressed, the defroster indicator does not illuminate, the outlet opening is not set to DEF, the compressor does not turn on and the outlet opening is not set to FRESH.

Trouble causes:

- UART communication failure
- A/C control panel failure
- Mode door actuator failure
- Compressor failure
- Intake door actuator failure

	Step	Check	Yes	No
1	**CHECK A/C CONTROL PANEL.** 1) Turn the ignition switch to ON. 2) Press the DEF switch of the A/C control panel. 3) Using Subaru Select Monitor, check the following data in “Read Current Data”. <Ref. to AC(diag)-47, Read Current Data.> • «Mode Door Actuator Position Target» • «Variable Flow Change Solenoid Duty» (vehicles with variable air conditioner) • «Fresh/Recircle Air Door Actuator Position Target»	Does «Mode Door Actuator Position Target» indicate 100%, «Variable Flow Change Solenoid Duty» indicate 0% or more, and «Fresh/Recircle Air Door Actuator Position Target» indicate 100% respectively?	Go to step **2**.	Replace the A/C control panel. <Ref. to AC-47, REMOVAL, Control Panel.>
2	**CHECK MODE DOOR ACTUATOR.** With the DEF switch ON, check the mode door operation.	Does the air come out from the DEF outlet opening?	Go to step **3**.	<Ref. to AC(diag)-40, UNABLE TO SWITCH VENTS, DIAGNOSTIC PROCEDURE WITH PHENOMENON, Diagnostics with Phenomenon.>

	Step	Check	Yes	No
3	**CHECK INTAKE DOOR ACTUATOR.** With the DEF switch ON, check the FRESH/RECIRC door operation.	Does the FRESH/RECIRC door operate normally?	Go to step **4**.	<Ref. to AC(diag)-38, UNABLE TO SWITCH SUCTION VENTS, DIAGNOSTIC PROCEDURE WITH PHENOMENON, Diagnostics with Phenomenon.>
4	**CHECK COMPRESSOR.** With the DEF switch ON, check the compressor operation.	Does the compressor operate?	The circuit has returned to a normal condition at this time. Reproduce the failure, and then perform the diagnosis again. NOTE: In this case, temporary poor contact of connector, temporary open or short circuit of harness may be the cause.	<Ref. to AC(diag)-36, COLD AIR DOES NOT COME OUT EVEN WHEN THE A/C SWITCH IS PRESSED. THE GLASS CANNOT BE DEFOGGED. (COMPRESSOR DOES NOT OPERATE. (VARIABLE)), DIAGNOSTIC PROCEDURE WITH PHENOMENON, Diagnostics with Phenomenon.>

4. COLD AIR NOT EMITTED

TROUBLE SYMPTOM:

Cold air not emitted.

Trouble causes:

- Airflow capacity failure
- Refrigerant pressure failure
- UART communication failure
- A/C control panel failure
- Air mix actuator (driver's) failure
- Air mix actuator (passenger's) failure (with left/right independent air conditioner only)
- Rear vent actuator failure (with rear seat air conditioning only)
- Intake door actuator failure
- Evaporator sensor failure (vehicles with automatic air conditioner only)
- In-vehicle sensor failure (vehicles with automatic air conditioner only)
- Ambient sensor failure (vehicles with automatic air conditioner only)
- Sunload sensor failure (vehicles with automatic air conditioner only)

	Step	Check	Yes	No
1	**CHECK MAX COOL.** Set the A/C control panel switch as described below. Temperature control switch: MAX COOL FRESH/RECIRC switch: RECIRC Mode switch: VENT A/C switch: ON	Does it fail to blow the cold air?	Go to step **2**.	Go to step **4**.

	Step	Check	Yes	No
2	**CHECK AIRFLOW CAPACITY.** Check the airflow capacity. <Ref. to AC(diag)-26, AIR DOES NOT COME OUT, OR AIRFLOW CAPACITY IS INSUFFICIENT, DIAGNOSTIC PROCEDURE WITH PHENOMENON, Diagnostics with Phenomenon.>	Is the airflow capacity normal?	Go to step **3**.	Perform repair according to inspection procedure.
3	**CHECK AMOUNT OF REFRIGERANT PRESSURE.** Check the refrigerant pressure. <Ref. to AC-24, CHECK REFRIGERANT GAS PRESSURE, PROCEDURE, Refrigerant Pressure with Manifold Gauge Set.>	Is the refrigerant pressure normal?	For vehicles with automatic air conditioner Go to step **4**. For vehicles with manual air conditioner Go to step **6**.	Perform repair according to refrigerant pressure inspection.
4	**CHECK A/C CONTROL PANEL (VEHICLES WITH AUTOMATIC AIR CONDITIONER).** 1) Turn both temperature control dials to the lowest setting. 2) Using Subaru Select Monitor, display the following data in “Read Current Data”. <Ref. to AC(diag)-47, Read Current Data.> • «Heater Control Panel Setting Value (Driver’s)» • «Heater Control Panel Setting Value (Passenger’s)» • «Rr Vent Door Actuator Position Target» (with rear seat air conditioning only)	Do «Heater Control Panel Setting Value (Driver’s)» and «Heater Control Panel Setting Value (Passenger’s)» indicate 60? And does «Rr Vent Door Actuator Position Target» (only for models with rear seat A/C) indicate 74.5?	Go to step **5**.	Replace the A/C control panel. <Ref. to AC-47, REMOVAL, Control Panel.>
5	**CHECK A/C CONTROL PANEL (VEHICLES WITH AUTOMATIC AIR CONDITIONER).** 1) Turn the temperature control dial (driver’s side) to the highest setting. 2) Using Subaru Select Monitor, display the following data in “Read Current Data”. <Ref. to AC(diag)-47, Read Current Data.> • «Heater Control Panel Setting Value (Driver’s)» • «Heater Control Panel Setting Value (Passenger’s)» • «Rr Vent Door Actuator Position Target» (with rear seat air conditioning only)	Do «Heater Control Panel Setting Value (Driver’s)» and «Heater Control Panel Setting Value (Passenger’s)» indicate 90? And does «Rr Vent Door Actuator Position Target» (only for models with rear seat A/C) indicate –5.5?	Go to step **8**.	Replace the A/C control panel. <Ref. to AC-47, REMOVAL, Control Panel.>
6	**CHECK A/C CONTROL PANEL (VEHICLES WITH MANUAL AIR CONDITIONER).** 1) Turn the temperature control dial to the lowest setting. 2) Using Subaru Select Monitor, display the following data in “Read Current Data”. <Ref. to AC(diag)-47, Read Current Data.> • «Target air mix door actuator position (driver’s side)»	Does the display indicate 0%?	Go to step **7**.	Replace the A/C control panel. <Ref. to AC-47, REMOVAL, Control Panel.>
7	**CHECK A/C CONTROL PANEL (VEHICLES WITH MANUAL AIR CONDITIONER).** 1) Turn the temperature control dial to the highest setting. 2) Using Subaru Select Monitor, display the following data in “Read Current Data”. <Ref. to AC(diag)-47, Read Current Data.> • «Target air mix door actuator position (driver’s side)»	Does the display indicate 100%?	Go to step **8**.	Replace the A/C control panel. <Ref. to AC-47, REMOVAL, Control Panel.>

	Step	Check	Yes	No
8	**CHECK DTC.** 1) Turn the ignition switch to ON. 2) Turn the temperature control dial to the lowest setting, and leave for 16 seconds or more. (For vehicles with left/right independent air conditioner, perform setting on both sides.) 3) Read the DTC using Subaru Select Monitor. <Ref. to AC(diag)-43, Read Diagnostic Trouble Code (DTC).>	Are B1440, B1442, B1446, B1436, B1437, B1441, B1448, B1449 and B144A displayed?	Perform the diagnosis according to DTC.	Go to step **9**.
9	**CHECK DTC.** 1) Turn the ignition switch to ON. 2) Turn the temperature control dial to the highest setting, and leave for 16 seconds or more. (For vehicles with left/right independent air conditioner, perform setting on both sides.) 3) Read the DTC using Subaru Select Monitor. <Ref. to AC(diag)-43, Read Diagnostic Trouble Code (DTC).>	Are B1440, B1442, B1446, B1436, B1437, B1441, B1448, B1449 and B144A displayed?	Perform the diagnosis according to DTC.	Go to step **10**.
10	**CHECK INTAKE DOOR ACTUATOR.** Visually check the intake door actuator operation.	Is the intake door actuator normal?	Go to step **11**.	Check the intake door actuator. <Ref. to AC(diag)-38, UNABLE TO SWITCH SUCTION VENTS, DIAGNOSTIC PROCEDURE WITH PHENOMENON, Diagnostics with Phenomenon.>
11	**CHECK EVAPORATOR SENSOR UNIT (VEHICLES WITH AUTOMATIC AIR CONDITIONER ONLY).** Perform the inspection of evaporator sensor unit. <Ref. to AC-79, INSPECTION, Evaporator Sensor.>	Is the evaporator sensor normal?	Go to step **12**.	Replace the evaporator sensor. <Ref. to AC-78, REMOVAL, Evaporator Sensor.>
12	**CHECK IN-VEHICLE SENSOR UNIT (VEHICLES WITH AUTOMATIC AIR CONDITIONER ONLY).** Check in-vehicle sensor. <Ref. to AC-76, INSPECTION, In-Vehicle Sensor (Auto A/C Model).>	Is the in-vehicle sensor normal?	Go to step **13**.	Replace the in-vehicle sensor. <Ref. to AC-75, REMOVAL, In-Vehicle Sensor (Auto A/C Model).>
13	**CHECK AMBIENT SENSOR (VEHICLES WITH AUTOMATIC AIR CONDITIONER ONLY).** Check the ambient sensor. <Ref. to AC-72, INSPECTION, Ambient Sensor.>	Is the ambient sensor normal?	Go to step **14**.	Replace the ambient sensor. <Ref. to AC-71, REMOVAL, Ambient Sensor.>

	Step	Check	Yes	No
14	**CHECK SUNLOAD SENSOR UNIT (VEHICLES WITH AUTOMATIC AIR CONDITIONER ONLY).** Check the sunload sensor unit. <Ref. to AC-74, INSPECTION, Sunload Sensor (Auto A/C Model).>	Is the sunload sensor normal?	The circuit has returned to a normal condition at this time. Reproduce the failure, and then perform the diagnosis again. NOTE: In this case, temporary poor contact of connector, temporary open or short circuit of harness may be the cause.	Replace the sunload sensor. <Ref. to AC-73, REMOVAL, Sunload Sensor (Auto A/C Model).>

5. WARM AIR NOT EMITTED

TROUBLE SYMPTOM:
Warm air not emitted.
Trouble causes:
- Airflow capacity failure
- Coolant failure
- UART communication failure
- A/C control panel failure
- Air mix actuator (driver's) failure
- Air mix actuator (passenger's) failure (with left/right independent air conditioner only)
- Rear vent actuator failure (with rear seat air conditioning only)
- Intake door actuator failure
- Evaporator sensor failure (vehicles with automatic air conditioner only)
- In-vehicle sensor failure (vehicles with automatic air conditioner only)
- Ambient sensor failure (vehicles with automatic air conditioner only)
- Sunload sensor failure (vehicles with automatic air conditioner only)

	Step	Check	Yes	No
1	**CHECK MAX HOT.** Set the A/C control panel switch as described below. Temperature control dial: MAX HOT FRESH/RECIRC switch: FRESH Mode switch: HEAT A/C switch: OFF	Does it fail to blow the hot air?	Go to step **2**.	Go to step **4**.
2	**CHECK AIRFLOW CAPACITY.** Check the airflow capacity. <Ref. to AC(diag)-26, AIR DOES NOT COME OUT, OR AIRFLOW CAPACITY IS INSUFFICIENT, DIAGNOSTIC PROCEDURE WITH PHENOMENON, Diagnostics with Phenomenon.>	Is the airflow capacity normal?	Go to step **3**.	Perform repair according to inspection procedure.

	Step	Check	Yes	No
3	**CHECK ENGINE COOLANT.** Check engine coolant amount.	Is the engine coolant amount normal?	For vehicles with automatic air conditioner Go to step **4**. For vehicles with manual air conditioner Go to step **6**.	Fill engine coolant. If there is coolant leakage, repair the leaks according to Engine Cooling System Trouble in General. <Ref. to CO(H4DO)-65, Engine Cooling System Trouble in General.> <Ref. to CO(H6DO)-51, Engine Cooling System Trouble in General.>
4	**CHECK A/C CONTROL PANEL (VEHICLES WITH AUTOMATIC AIR CONDITIONER).** 1) Turn both temperature control dials to the lowest setting. 2) Using Subaru Select Monitor, display the following data in “Read Current Data”. <Ref. to AC(diag)-47, Read Current Data.> • «Heater Control Panel Setting Value (Driver’s)» • «Heater Control Panel Setting Value (Passenger’s)» • «Rr Vent Door Actuator Position Target» (with rear seat air conditioning only)	Do «Heater Control Panel Setting Value (Driver’s)» and «Heater Control Panel Setting Value (Passenger’s)» indicate 60? And does «Rr Vent Door Actuator Position Target» (only for models with rear seat A/C) indicate 74.5?	Go to step **5**.	Replace the A/C control panel. <Ref. to AC-47, REMOVAL, Control Panel.>
5	**CHECK A/C CONTROL PANEL (VEHICLES WITH AUTOMATIC AIR CONDITIONER).** 1) Turn the temperature control dial (driver’s side) to the highest setting. 2) Using Subaru Select Monitor, display the following data in “Read Current Data”. <Ref. to AC(diag)-47, Read Current Data.> • «Heater Control Panel Setting Value (Driver’s)» • «Heater Control Panel Setting Value (Passenger’s)» • «Rr Vent Door Actuator Position Target» (with rear seat air conditioning only)	Do «Heater Control Panel Setting Value (Driver’s)» and «Heater Control Panel Setting Value (Passenger’s)» indicate 90? And does «Rr Vent Door Actuator Position Target» (only for models with rear seat A/C) indicate –5.5?	Go to step **8**.	Replace the A/C control panel. <Ref. to AC-47, REMOVAL, Control Panel.>
6	**CHECK A/C CONTROL PANEL (VEHICLES WITH MANUAL AIR CONDITIONER).** 1) Turn the temperature control dial to the lowest setting. 2) Using Subaru Select Monitor, display the following data in “Read Current Data”. <Ref. to AC(diag)-47, Read Current Data.> • «Target air mix door actuator position (driver’s side)»	Does the display indicate 0%?	Go to step **7**.	Replace the A/C control panel. <Ref. to AC-47, REMOVAL, Control Panel.>
7	**CHECK A/C CONTROL PANEL (VEHICLES WITH MANUAL AIR CONDITIONER).** 1) Turn the temperature control dial to the highest setting. 2) Using Subaru Select Monitor, display the following data in “Read Current Data”. <Ref. to AC(diag)-47, Read Current Data.> • «Target air mix door actuator position (driver’s side)»	Does the display indicate 100%?	Go to step **8**.	Replace the A/C control panel. <Ref. to AC-47, REMOVAL, Control Panel.>

	Step	Check	Yes	No
8	**CHECK DTC.** 1) Turn the ignition switch to ON. 2) Turn the temperature control dial to the lowest setting, and leave for 16 seconds or more. (For vehicles with left/right independent air conditioner, perform setting on both sides.) 3) Read the DTC using Subaru Select Monitor. <Ref. to AC(diag)-43, Read Diagnostic Trouble Code (DTC).>	Are B1440, B1442, B1446, B1436, B1437, B1441, B1448, B1449 and B144A displayed?	Perform the diagnosis according to DTC.	Go to step **9**.
9	**CHECK DTC.** 1) Turn the ignition switch to ON. 2) Turn the temperature control dial to the highest setting, and leave for 16 seconds or more. (For vehicles with left/right independent air conditioner, perform setting on both sides.) 3) Read the DTC using Subaru Select Monitor. <Ref. to AC(diag)-43, Read Diagnostic Trouble Code (DTC).>	Are B1440, B1442, B1446, B1436, B1437, B1441, B1448, B1449 and B144A displayed?	Perform the diagnosis according to DTC.	Go to step **10**.
10	**CHECK INTAKE DOOR ACTUATOR.** Visually check the intake door actuator operation.	Is the intake door actuator normal?	Go to step **11**.	Check the intake door actuator. <Ref. to AC(diag)-38, UNABLE TO SWITCH SUCTION VENTS, DIAGNOSTIC PROCEDURE WITH PHENOMENON, Diagnostics with Phenomenon.>
11	**CHECK EVAPORATOR SENSOR UNIT (VEHICLES WITH AUTOMATIC AIR CONDITIONER ONLY).** Perform the inspection of evaporator sensor unit. <Ref. to AC-79, INSPECTION, Evaporator Sensor.>	Is the evaporator sensor normal?	Go to step **12**.	Replace the evaporator sensor. <Ref. to AC-78, REMOVAL, Evaporator Sensor.>
12	**CHECK IN-VEHICLE SENSOR UNIT (VEHICLES WITH AUTOMATIC AIR CONDITIONER ONLY).** Check in-vehicle sensor circuit. <Ref. to AC-76, INSPECTION, In-Vehicle Sensor (Auto A/C Model).>	Is the in-vehicle sensor circuit normal?	Go to step **13**.	Replace the in-vehicle sensor. <Ref. to AC-75, REMOVAL, In-Vehicle Sensor (Auto A/C Model).>
13	**CHECK AMBIENT SENSOR (VEHICLES WITH AUTOMATIC AIR CONDITIONER ONLY).** Check the ambient sensor. <Ref. to AC-72, INSPECTION, Ambient Sensor.>	Is the ambient sensor normal?	Go to step **14**.	Replace the ambient sensor. <Ref. to AC-71, REMOVAL, Ambient Sensor.>

	Step	Check	Yes	No
14	**CHECK SUNLOAD SENSOR UNIT (VEHICLES WITH AUTOMATIC AIR CONDITIONER ONLY).** Check the sunload sensor unit. <Ref. to AC-74, INSPECTION, Sunload Sensor (Auto A/C Model).>	Is the sunload sensor normal?	The circuit has returned to a normal condition at this time. Reproduce the failure, and then perform the diagnosis again. NOTE: In this case, temporary poor contact of connector, temporary open or short circuit of harness may be the cause.	Replace the sunload sensor. <Ref. to AC-73, REMOVAL, Sunload Sensor (Auto A/C Model).>

6. COMPARTMENT TEMPERATURE IS EXCESSIVELY LOWER THAN SETTING TEMPERATURE

TROUBLE SYMPTOM:

Compartment temperature is excessively lower than setting temperature.

Trouble causes:

- Large airflow capacity
- Refrigerant pressure failure
- UART communication failure
- A/C control panel failure
- Air mix actuator (driver's) failure
- Air mix actuator (passenger's) failure (with left/right independent air conditioner only)
- Rear vent actuator failure (with rear seat air conditioning only)
- Evaporator sensor failure (vehicles with automatic air conditioner only)
- In-vehicle sensor failure (vehicles with automatic air conditioner only)
- Ambient sensor failure (vehicles with automatic air conditioner only)
- Sunload sensor failure (vehicles with automatic air conditioner only)

	Step	Check	Yes	No
1	**CHECK AIRFLOW CAPACITY.** Check the airflow capacity. <Ref. to AC(diag)-33, AIR GOES OUT OF CONTROL, DIAGNOSTIC PROCEDURE WITH PHENOMENON, Diagnostics with Phenomenon.>	Is the airflow capacity normal?	Go to step **2**.	Perform repair according to inspection procedure.
2	**CHECK AMOUNT OF REFRIGERANT PRESSURE.** Check the refrigerant pressure. <Ref. to AC-24, CHECK REFRIGERANT GAS PRESSURE, PROCEDURE, Refrigerant Pressure with Manifold Gauge Set.>	Is the refrigerant pressure normal?	For vehicles with automatic air conditioner Go to step **3**. For vehicles with manual air conditioner Go to step **5**.	Perform repair according to refrigerant pressure inspection.

	Step	Check	Yes	No
3	**CHECK A/C CONTROL PANEL (VEHICLES WITH AUTOMATIC AIR CONDITIONER).** 1) Turn both temperature control dials to the lowest setting. 2) Using Subaru Select Monitor, display the following data in “Read Current Data”. <Ref. to AC(diag)-47, Read Current Data.> • «Heater Control Panel Setting Value (Driver’s)» • «Heater Control Panel Setting Value (Passenger’s)» • «Rr Vent Door Actuator Position Target» (with rear seat air conditioning only)	Do «Heater Control Panel Setting Value (Driver’s)» and «Heater Control Panel Setting Value (Passenger’s)» indicate 60? And does «Rr Vent Door Actuator Position Target» (only for models with rear seat A/C) indicate 74.5?	Go to step **4**.	Replace the A/C control panel. <Ref. to AC-47, REMOVAL, Control Panel.>
4	**CHECK A/C CONTROL PANEL (VEHICLES WITH AUTOMATIC AIR CONDITIONER).** 1) Turn both temperature control dials to the highest setting. 2) Using Subaru Select Monitor, display the following data in “Read Current Data”. <Ref. to AC(diag)-47, Read Current Data.> • «Heater Control Panel Setting Value (Driver’s)» • «Heater Control Panel Setting Value (Passenger’s)» • «Rr Vent Door Actuator Position Target» (with rear seat air conditioning only)	Do «Heater Control Panel Setting Value (Driver’s)» and «Heater Control Panel Setting Value (Passenger’s)» indicate 90? And does «Rr Vent Door Actuator Position Target» (only for models with rear seat A/C) indicate –5.5?	Go to step **5**.	Replace the A/C control panel. <Ref. to AC-47, REMOVAL, Control Panel.>
5	**CHECK A/C CONTROL PANEL (VEHICLES WITH MANUAL AIR CONDITIONER).** 1) Turn the temperature control dial to the lowest setting. 2) Using Subaru Select Monitor, display the following data in “Read Current Data”. <Ref. to AC(diag)-47, Read Current Data.> • «Target air mix door actuator position (driver’s side)»	Does the display indicate 0%?	Go to step **6**.	Replace the A/C control panel. <Ref. to AC-47, REMOVAL, Control Panel.>
6	**CHECK A/C CONTROL PANEL (VEHICLES WITH MANUAL AIR CONDITIONER).** 1) Turn both temperature control dials to the highest setting. 2) Using Subaru Select Monitor, display the following data in “Read Current Data”. <Ref. to AC(diag)-47, Read Current Data.> • «Target air mix door actuator position (driver’s side)»	Does the display indicate 100%?	Go to step **7**.	Replace the A/C control panel. <Ref. to AC-47, REMOVAL, Control Panel.>
7	**CHECK DTC.** 1) Turn the ignition switch to ON. 2) Turn the temperature control dial to the lowest setting, and leave for 16 seconds or more. (For vehicles with left/right independent air conditioner, perform setting on both sides.) 3) Read the DTC using Subaru Select Monitor. <Ref. to AC(diag)-43, Read Diagnostic Trouble Code (DTC).>	Are B1440, B1442, B1446, B1436, B1437, B1441, B1448, B1449 and B144A displayed?	Perform the diagnosis according to DTC.	Go to step **8**.

	Step	Check	Yes	No
8	**CHECK DTC.** 1) Turn the ignition switch to ON. 2) Turn the temperature control dial to the highest setting, and leave for 16 seconds or more. (For vehicles with left/right independent air conditioner, perform setting on both sides.) 3) Read the DTC using Subaru Select Monitor. <Ref. to AC(diag)-43, Read Diagnostic Trouble Code (DTC).>	Are B1440, B1442, B1446, B1436, B1437, B1441, B1448, B1449 and B144A displayed?	Perform the diagnosis according to DTC.	Go to step **9**.
9	**CHECK EVAPORATOR SENSOR UNIT (VEHICLES WITH AUTOMATIC AIR CONDITIONER ONLY).** Perform the inspection of evaporator sensor unit. <Ref. to AC-79, INSPECTION, Evaporator Sensor.>	Is the evaporator sensor normal?	Go to step **10**.	Replace the evaporator sensor. <Ref. to AC-78, REMOVAL, Evaporator Sensor.>
10	**CHECK IN-VEHICLE SENSOR UNIT (VEHICLES WITH AUTOMATIC AIR CONDITIONER ONLY).** Check in-vehicle sensor circuit. <Ref. to AC-76, INSPECTION, In-Vehicle Sensor (Auto A/C Model).>	Is the in-vehicle sensor circuit normal?	Go to step **11**.	Replace the in-vehicle sensor. <Ref. to AC-75, REMOVAL, In-Vehicle Sensor (Auto A/C Model).>
11	**CHECK AMBIENT SENSOR (VEHICLES WITH AUTOMATIC AIR CONDITIONER ONLY).** Check ambient sensor circuit. <Ref. to AC-72, INSPECTION, Ambient Sensor.>	Is the ambient sensor circuit normal?	Go to step **12**.	Replace the ambient sensor. <Ref. to AC-71, REMOVAL, Ambient Sensor.>
12	**CHECK SUNLOAD SENSOR UNIT (VEHICLES WITH AUTOMATIC AIR CONDITIONER ONLY).** Check the sunload sensor unit. <Ref. to AC-74, INSPECTION, Sunload Sensor (Auto A/C Model).>	Is the sunload sensor normal?	The circuit has returned to a normal condition at this time. Reproduce the failure, and then perform the diagnosis again. NOTE: In this case, temporary poor contact of connector, temporary open or short circuit of harness may be the cause.	Replace the sunload sensor. <Ref. to AC-73, REMOVAL, Sunload Sensor (Auto A/C Model).>

7. COMPARTMENT TEMPERATURE IS EXCESSIVELY HIGHER THAN SETTING TEMPERATURE

TROUBLE SYMPTOM:
Compartment temperature is excessively higher than setting temperature.
Trouble causes:
- Large airflow capacity
- UART communication failure
- A/C control panel failure
- Air mix actuator (driver's) failure
- Air mix actuator (passenger's) failure (with left/right independent air conditioner only)
- Rear vent actuator failure (with rear seat air conditioning only)
- Intake door actuator failure
- Evaporator sensor failure (vehicles with automatic air conditioner only)
- In-vehicle sensor failure (vehicles with automatic air conditioner only)
- Ambient sensor failure (vehicles with automatic air conditioner only)
- Sunload sensor failure (vehicles with automatic air conditioner only)

	Step	Check	Yes	No
1	**CHECK AIRFLOW CAPACITY.** Check the airflow capacity. <Ref. to AC(diag)-33, AIR GOES OUT OF CONTROL, DIAGNOSTIC PROCEDURE WITH PHENOMENON, Diagnostics with Phenomenon.>	Is the airflow capacity normal?	For vehicles with automatic air conditioner Go to step **2**. For vehicles with manual air conditioner Go to step **4**.	Perform repair according to inspection procedure.
2	**CHECK A/C CONTROL PANEL (VEHICLES WITH AUTOMATIC AIR CONDITIONER).** 1) Turn both temperature control dials to the lowest setting. 2) Using Subaru Select Monitor, display the following data in "Read Current Data". <Ref. to AC(diag)-47, Read Current Data.> • «Heater Control Panel Setting Value (Driver's)» • «Heater Control Panel Setting Value (Passenger's)» • «Rr Vent Door Actuator Position Target» (with rear seat air conditioning only)	Do «Heater Control Panel Setting Value (Driver's)» and «Heater Control Panel Setting Value (Passenger's)» indicate 60? And does «Rr Vent Door Actuator Position Target» (only for models with rear seat A/C) indicate 74.5?	Go to step **3**.	Replace the A/C control panel. <Ref. to AC-47, REMOVAL, Control Panel.>
3	**CHECK A/C CONTROL PANEL (VEHICLES WITH AUTOMATIC AIR CONDITIONER).** 1) Turn the temperature control dial (driver's side) to the highest setting. 2) Using Subaru Select Monitor, display the following data in "Read Current Data". <Ref. to AC(diag)-47, Read Current Data.> • «Heater Control Panel Setting Value (Driver's)» • «Heater Control Panel Setting Value (Passenger's)» • «Rr Vent Door Actuator Position Target» (with rear seat air conditioning only)	Do «Heater Control Panel Setting Value (Driver's)» and «Heater Control Panel Setting Value (Passenger's)» indicate 90? And does «Rr Vent Door Actuator Position Target» (only for models with rear seat A/C) indicate –5.5?	Go to step **4**.	Replace the A/C control panel. <Ref. to AC-47, REMOVAL, Control Panel.>

	Step	Check	Yes	No
4	**CHECK A/C CONTROL PANEL (VEHICLES WITH MANUAL AIR CONDITIONER).** 1) Turn the temperature control dial to the lowest setting. 2) Using Subaru Select Monitor, display the following data in “Read Current Data”. <Ref. to AC(diag)-47, Read Current Data.> • «Target air mix door actuator position (driver’s side)»	Does the display indicate 0%?	Go to step **5**.	Replace the A/C control panel. <Ref. to AC-47, REMOVAL, Control Panel.>
5	**CHECK A/C CONTROL PANEL (VEHICLES WITH MANUAL AIR CONDITIONER).** 1) Turn the temperature control dial to the highest setting. 2) Using Subaru Select Monitor, display the following data in “Read Current Data”. <Ref. to AC(diag)-47, Read Current Data.> • «Target air mix door actuator position (driver’s side)»	Does the display indicate 100%?	Go to step **6**.	Replace the A/C control panel. <Ref. to AC-47, REMOVAL, Control Panel.>
6	**CHECK DTC.** 1) Turn the ignition switch to ON. 2) Turn the temperature control dial to the lowest setting, and leave for 16 seconds or more. (For vehicles with left/right independent air conditioner, perform setting on both sides.) 3) Read the DTC using Subaru Select Monitor. <Ref. to AC(diag)-43, Read Diagnostic Trouble Code (DTC).>	Are B1440, B1442, B1446, B1436, B1437, B1441, B1448, B1449 and B144A displayed?	Perform the diagnosis according to DTC.	Go to step **7**.
7	**CHECK DTC.** 1) Turn the ignition switch to ON. 2) Turn the temperature control dial to the highest setting, and leave for 16 seconds or more. (For vehicles with left/right independent air conditioner, perform setting on both sides.) 3) Read the DTC using Subaru Select Monitor. <Ref. to AC(diag)-43, Read Diagnostic Trouble Code (DTC).>	Are B1440, B1442, B1446, B1436, B1437, B1441, B1448, B1449 and B144A displayed?	Perform the diagnosis according to DTC.	Go to step **8**.
8	**CHECK INTAKE DOOR ACTUATOR.** Visually check the intake door actuator operation.	Is the intake door actuator normal?	Go to step **9**.	Check the intake door actuator. <Ref. to AC(diag)-38, UNABLE TO SWITCH SUCTION VENTS, DIAGNOSTIC PROCEDURE WITH PHENOMENON, Diagnostics with Phenomenon.>
9	**CHECK EVAPORATOR SENSOR UNIT (VEHICLES WITH AUTOMATIC AIR CONDITIONER ONLY).** Perform the inspection of evaporator sensor unit. <Ref. to AC-79, INSPECTION, Evaporator Sensor.>	Is the evaporator sensor normal?	Go to step **10**.	Replace the evaporator sensor. <Ref. to AC-78, REMOVAL, Evaporator Sensor.>
10	**CHECK IN-VEHICLE SENSOR UNIT (VEHICLES WITH AUTOMATIC AIR CONDITIONER ONLY).** Check in-vehicle sensor circuit. <Ref. to AC-76, INSPECTION, In-Vehicle Sensor (Auto A/C Model).>	Is the in-vehicle sensor circuit normal?	Go to step **11**.	Replace the in-vehicle sensor. <Ref. to AC-75, REMOVAL, In-Vehicle Sensor (Auto A/C Model).>

	Step	Check	Yes	No
11	**CHECK AMBIENT SENSOR (VEHICLES WITH AUTOMATIC AIR CONDITIONER ONLY).** Check ambient sensor circuit. <Ref. to AC-72, INSPECTION, Ambient Sensor.>	Is the ambient sensor circuit normal?	Go to step **12**.	Replace the ambient sensor. <Ref. to AC-71, REMOVAL, Ambient Sensor.>
12	**CHECK SUNLOAD SENSOR UNIT (VEHICLES WITH AUTOMATIC AIR CONDITIONER ONLY).** Check the sunload sensor unit. <Ref. to AC-74, INSPECTION, Sunload Sensor (Auto A/C Model).>	Is the sunload sensor normal?	The circuit has returned to a normal condition at this time. Reproduce the failure, and then perform the diagnosis again. NOTE: In this case, temporary poor contact of connector, temporary open or short circuit of harness may be the cause.	Replace the sunload sensor. <Ref. to AC-73, REMOVAL, Sunload Sensor (Auto A/C Model).>

8. AIR DOES NOT COME OUT, OR AIRFLOW CAPACITY IS INSUFFICIENT

TROUBLE SYMPTOM:

- Airflow capacity is insufficient.
- No air comes out even when the fan switch or fan dial is operated.
- There is a fan speed at which no air comes out.

Trouble causes:

- Airflow capacity failure
- UART communication failure
- A/C control panel failure
- Blower motor failure

Auto A/C

WIRING DIAGRAM:

NOTE:
For the coupling connector, refer to “WIRING SYSTEM”.
Air conditioning system <Ref. to WI-98, AUTO A/C, WIRING DIAGRAM, Air Conditioning System.>

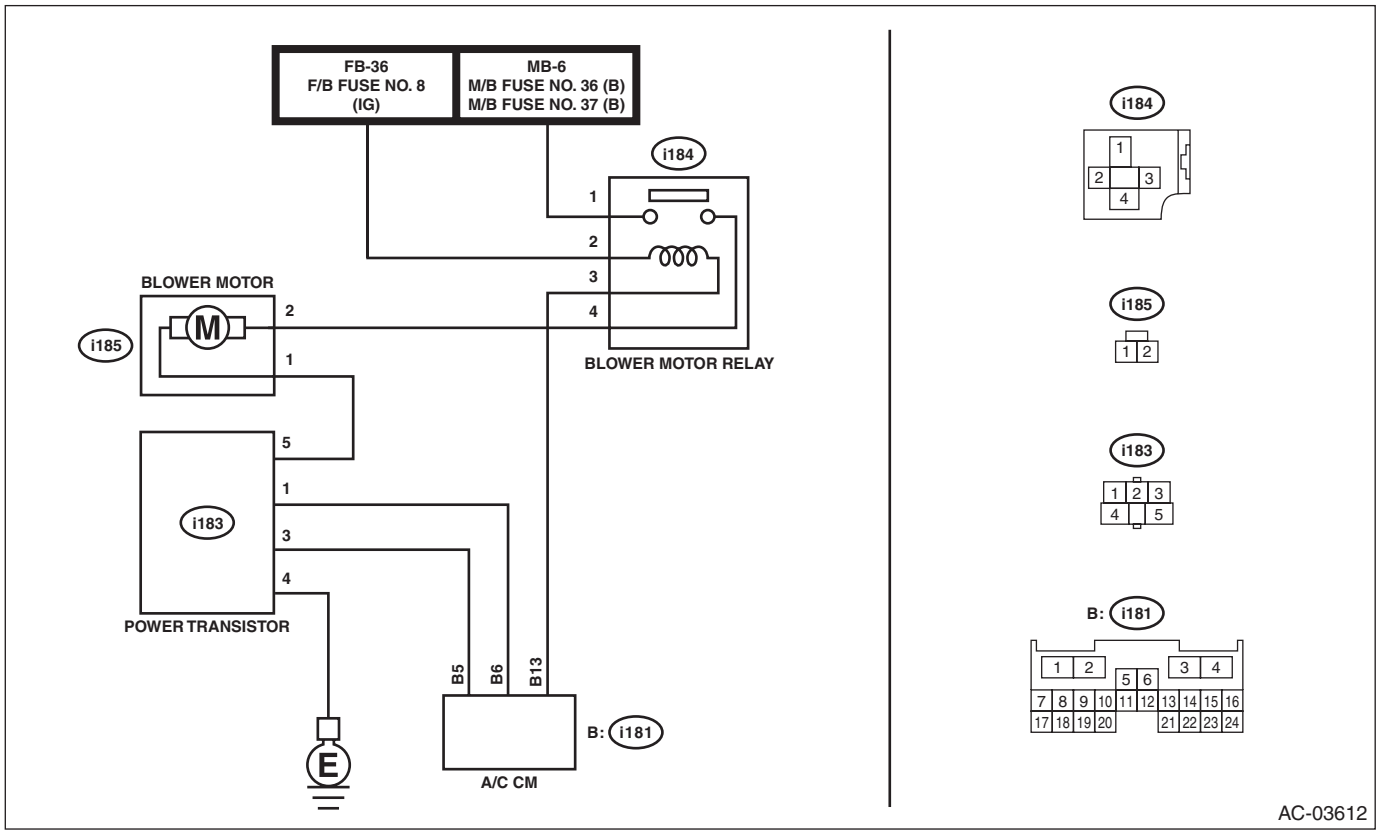

	Step	Check	Yes	No
1	**CHECK BLOWER OPERATION.** 1) Using Subaru Select Monitor, display the following data in "Read Current Data". <Ref. to AC(diag)-47, Read Current Data.> • «Air mix door actuator position (driver's side)» • «Air mix door actuator position (passenger's side)» (with left/right independent air conditioner) • «Blower Fan Level» 2) Turn the temperature control dial to the lowest setting, and increase or decrease the A/C control panel fan switch. (For vehicles with left/right independent air conditioner, perform setting on both sides.)	Do «Air mix door actuator position (driver's side)» and «Air mix door actuator position (passenger's side)» (with left/right independent air conditioner) indicate 0%? Also, does «Blower Fan Level» increase or decrease in accordance with the fan switch operation?	Go to step **2**.	Go to step **5**.
2	**CHECK AIRFLOW CAPACITY.** Turn the temperature control dial to the lowest setting (both dials for the models equipped with left/right independent air conditioning function), and set A/C control panel fan switch to MAX and FRESH/RECIRC switch to RECIRC.	Is the airflow capacity insufficient for the same model?	Go to step **3**.	The circuit has returned to a normal condition at this time. Reproduce the failure, and then perform the diagnosis again. NOTE: In this case, temporary poor contact of connector, temporary open or short circuit of harness may be the cause.
3	**CHECK A/C FILTER.** Check the A/C filter. <Ref. to AC-100, INSPECTION, A/C Filter.>	Is the A/C filter normal?	Go to step **4**.	Clean or replace the A/C filter.
4	**CHECK EACH DUCT.** Check each duct joint for disconnection or clogging. <Ref. to AC-94, INSPECTION, Air Vent Grille.> <Ref. to AC-98, INSPECTION, Heater Duct.> <Ref. to AC-99, INSPECTION, Heater Vent Duct.>	Is each duct normal?	Go to step **5**.	Repair the faulty duct.
5	**CHECK A/C CONTROL PANEL.** 1) Turn the ignition switch to ON. 2) Set the fan switch to maximum position. 3) Using the Subaru Select Monitor, check «Blower Fan Level» of the current data from the A/C diagnosis. <Ref. to AC(diag)-47, Read Current Data.>	Does the display indicate 31?	Go to step **6**.	Replace the A/C control panel. <Ref. to AC-47, REMOVAL, Control Panel.>
6	**CHECK A/C CONTROL PANEL.** 1) Set the fan switch to minimum position. 2) Using the Subaru Select Monitor, check «Blower Fan Level» of the current data from the A/C diagnosis. <Ref. to AC(diag)-47, Read Current Data.>	Does the display indicate 1?	Go to step **7**.	Replace the A/C control panel. <Ref. to AC-47, REMOVAL, Control Panel.>
7	**CHECK CONNECTOR.** Check poor contact of the blower motor connector, blower motor relay connector, power transistor connector, A/C CM connector and coupling connector.	Is there poor contact of connector?	Repair the connector.	Go to step **8**.

	Step	Check	Yes	No
8	**CHECK FUSE.** 1) Remove the fuse No. 8 of the fuse & relay box and the fuses No. 36 and No. 37 of the main fuse box. 2) Check the condition of fuse.	Is the fuse blown out?	Replace the fuse.	Go to step **9**.
9	**CHECK BLOWER MOTOR RELAY ON SIGNAL.** 1) Stop the engine. 2) Turn the fan switch to OFF. 3) Turn the ignition switch to ON. 4) Using a tester, measure the voltage between the A/C CM connector and chassis ground. ***Connector & terminal*** ***(i181) No. 13 (+) — Chassis ground (–):***	Is the voltage 10 V or more?	Go to step **10**.	• Check for an open or short circuit in the harness between the F/B fuse No. 8 and ECM. • Check the blower relay connector and relay unit. <Ref. to AC-36, CHECK RELAY, INSPECTION, Relay and Fuse.>
10	**CHECK BLOWER MOTOR RELAY ON SIGNAL.** 1) Start the engine. 2) Turn the fan switch to ON. 3) Using a tester, measure the voltage between the A/C CM connector and chassis ground. ***Connector & terminal*** ***(i181) No. 13 (+) — Chassis ground (–):***	Is the voltage 0 V?	Go to step **11**.	Replace the A/C CM. <Ref. to AC-49, REMOVAL, Control Unit.>
11	**CHECK BLOWER MOTOR POWER SUPPLY CIRCUIT.** 1) Turn the ignition switch to ON. 2) Turn the fan switch to ON. 3) Use a tester to measure the voltage between the blower motor connector and chassis ground. ***Connector & terminal*** ***(i185) No. 2 (+) — Chassis ground (–):***	Is the voltage 10 V or more?	Go to step **12**.	• Check the harness of blower motor power supply line for open circuit and the coupling connector. • Check the blower relay connector and relay unit. <Ref. to AC-36, CHECK RELAY, INSPECTION, Relay and Fuse.>
12	**CHECK BLOWER MOTOR UNIT.** Check the blower motor. <Ref. to AC-41, INSPECTION, Blower Motor.>	Is the blower motor OK?	Go to step **13**.	Replace the blower motor. <Ref. to AC-40, REMOVAL, Blower Motor.>
13	**CHECK HARNESS.** 1) Disconnect the power transistor and A/C CM connector. 2) Using a tester, measure the resistance between harness terminals. ***Connector & terminal*** ***(i185) No. 1 — (i183) No. 5:*** ***(i183) No. 3 — (i181) No. 5:*** ***(i183) No. 1 — (i181) No. 6:*** ***(i183) No. 4 — Chassis ground:***	Is the resistance less than 1 Ω?	Go to step **14**.	Repair or replace the open circuit of harness.

Step		Check	Yes	No
14	**CHECK HARNESS.** Use a tester to measure the harness resistance between the power transistor connector and chassis ground. ***Connector & terminal*** ***(i183) No. 1 — Chassis ground:*** ***(i183) No. 3 — Chassis ground:***	Is the resistance less than 1 Ω?	Repair or replace the short circuit of the harness.	Go to step **15**.
15	**CHECK POWER TRANSISTOR.** Replace the power transistor with a properly functioning part.	Does the blower motor rotate?	Replace the power transistor. <Ref. to AC-42, REMOVAL, Power Transistor (Auto A/C Model).>	Replace the A/C CM <Ref. to AC-49, REMOVAL, Control Unit.>

Manual A/C

WIRING DIAGRAM:

NOTE:
For the coupling connector, refer to “WIRING SYSTEM”.
Air conditioning system <Ref. to WI-94, MANUAL A/C, WIRING DIAGRAM, Air Conditioning System.>

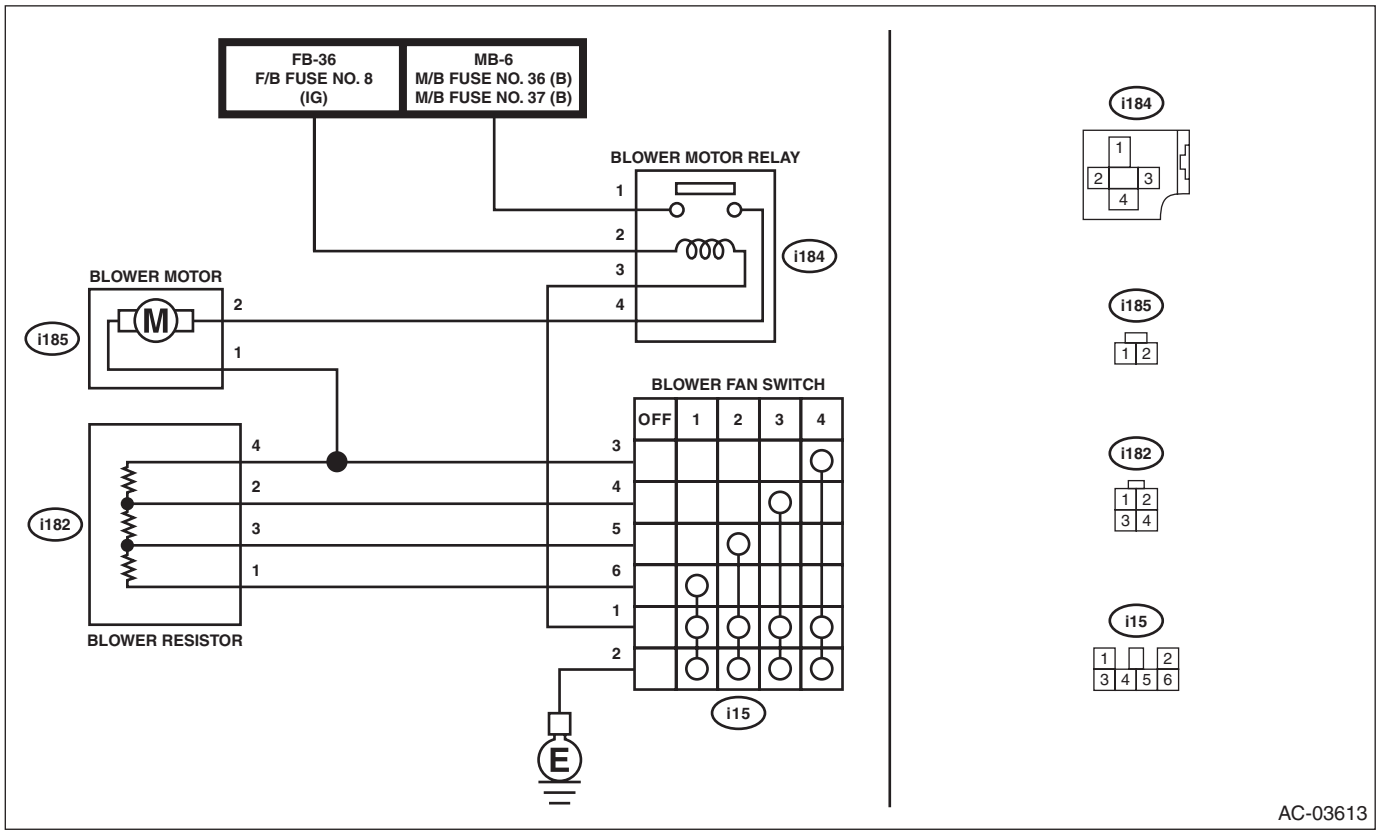

Step		Check	Yes	No
1	**CHECK BLOWER OPERATION.** Turn the temperature control dial to the lowest setting, and increase or decrease the fan dial.	Does the airflow capacity increase or decrease in accordance with the dial operation?	Go to step **2**.	Go to step **5**.
2	**CHECK AIRFLOW CAPACITY.** Turn the temperature control dial to the highest setting, and set the fan switch to MAX and FRESH/RECIRC switch to RECIRC.	Is the airflow capacity insufficient for the same model?	Go to step **3**.	The circuit has returned to a normal condition at this time. Reproduce the failure, and then perform the diagnosis again. NOTE: In this case, temporary poor contact of connector, temporary open or short circuit of harness may be the cause.
3	**CHECK A/C FILTER.** Check the A/C filter. <Ref. to AC-100, INSPECTION, A/C Filter.>	Is the A/C filter normal?	Go to step **4**.	Clean or replace the A/C filter.

	Step	Check	Yes	No
4	**CHECK EACH DUCT.** Check each duct joint for disconnection or clogging. <Ref. to AC-94, INSPECTION, Air Vent Grille.> <Ref. to AC-98, INSPECTION, Heater Duct.> <Ref. to AC-99, INSPECTION, Heater Vent Duct.>	Is each duct normal?	Go to step **5**.	Repair the faulty duct.
5	**CHECK CONNECTOR.** Check poor contact of the blower motor relay connector, blower motor connector, blower resistor connector, blower fan switch connector and coupling connector.	Is there poor contact of connector?	Repair the connector.	Go to step **6**.
6	**CHECK FUSE.** 1) Remove the fuse No. 8 of the fuse & relay box and the fuses No. 36 and No. 37 of the main fuse box. 2) Check the condition of fuse.	Is the fuse blown out?	Replace the fuse.	Go to step **7**.
7	**CHECK BLOWER MOTOR RELAY ON SIGNAL.** 1) Stop the engine. 2) Turn the fan switch to OFF. 3) Turn the ignition switch to ON. 4) Use a tester to measure the voltage between the blower fan switch and chassis ground. ***Connector & terminal*** ***(i15) No. 1 (+) — Chassis ground (–):***	Is the voltage 10 V or more?	Go to step **8**.	• Check for an open or short circuit between the F/B fuse No. 8 and blower fan switch. • Check the blower relay connector and relay unit.
8	**CHECK BLOWER MOTOR RELAY ON SIGNAL.** 1) Start the engine. 2) Turn the fan switch to OFF. 3) Turn the ignition switch to ON. 4) Use a tester to measure the voltage between the blower fan switch and chassis ground. ***Connector & terminal*** ***(i15) No. 1 (+) — Chassis ground (–):***	Is the voltage 0 V?	Go to step **9**.	Replace the A/C control panel. <Ref. to AC-47, REMOVAL, Control Panel.>
9	**CHECK BLOWER MOTOR POWER SUPPLY.** 1) Turn the ignition switch to ON. 2) Turn the blower switch to ON. 3) Use a tester to measure the voltage between the blower motor connector and chassis ground. ***Connector & terminal*** ***(i185) No. 2 (+) — Chassis ground (–):***	Is the voltage 10 V or more?	Go to step **10**.	• Check the harness of blower motor power supply line for open circuit and the coupling connector. • Check the blower relay connector and relay unit.
10	**CHECK BLOWER MOTOR.** Check the blower motor. <Ref. to AC-41, INSPECTION, Blower Motor.>	Is the blower motor OK?	Go to step **11**.	Replace the blower motor. <Ref. to AC-40, REMOVAL, Blower Motor.>

	Step	Check	Yes	No
11	**CHECK HARNESS.** 1) Disconnect the connector from blower motor, blower resistor and blower fan switch. 2) Use a tester to measure the resistance of the harness between terminals. ***Connector & terminal*** ***(i185) No. 1 — (i182) No. 4:*** ***(i185) No. 1 — (i15) No. 3:*** ***(i182) No. 1 — (i15) No. 6:*** ***(i182) No. 2 — (i15) No. 4:*** ***(i182) No. 3 — (i15) No. 5:***	Is the resistance less than 1 Ω?	Go to step **12**.	Repair or replace the open circuit of harness.
12	**CHECK BLOWER RESISTOR.** Check the blower resistor. <Ref. to AC-44, INSPECTION, Blower Resistor (Manual A/C Model).>	Is the blower resistor OK?	Replace the A/C control panel. <Ref. to AC-47, REMOVAL, Control Panel.>	Replace the blower resistor. <Ref. to AC-43, REMOVAL, Blower Resistor (Manual A/C Model).>

9. AIR GOES OUT OF CONTROL

TROUBLE SYMPTOM:

- The blower rotates even though the blower switch is not turned on.
- The blower motor continues to rotate at high speed. (Not adjustable.)

Trouble causes:

- Airflow capacity failure
- UART communication failure
- A/C control panel failure
- Blower motor failure

Auto A/C

WIRING DIAGRAM:

NOTE:
For the coupling connector, refer to “WIRING SYSTEM”.
Air conditioning system <Ref. to WI-98, AUTO A/C, WIRING DIAGRAM, Air Conditioning System.>

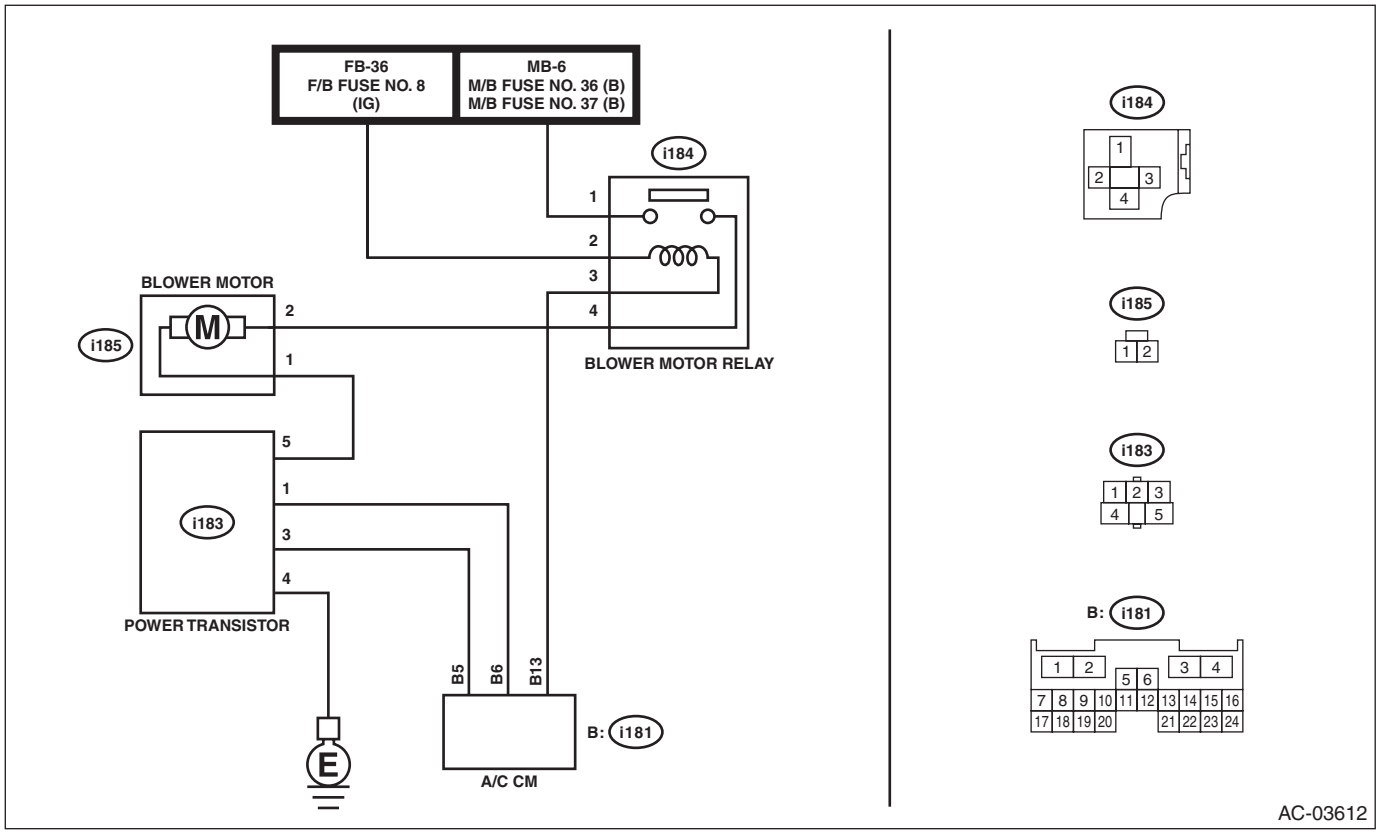

Step		Check	Yes	No
1	**CHECK A/C CONTROL PANEL.** 1) Turn the ignition switch to ON. 2) Set the fan switch to maximum position. 3) Using the Subaru Select Monitor, check «Blower Fan Level» of the current data from the A/C diagnosis. <Ref. to AC(diag)-47, Read Current Data.>	Does the display indicate 31?	Go to step **2**.	Replace the A/C control panel. <Ref. to AC-47, REMOVAL, Control Panel.>
2	**CHECK A/C CONTROL PANEL.** 1) Set the fan switch to minimum position. 2) Using the Subaru Select Monitor, check «Blower Fan Level» of the current data from the A/C diagnosis. <Ref. to AC(diag)-47, Read Current Data.>	Does the display indicate 1?	Go to step **3**.	Replace the A/C control panel. <Ref. to AC-47, REMOVAL, Control Panel.>

	Step	Check	Yes	No
3	**CHECK HARNESS.** 1) Turn the ignition switch to OFF. 2) Disconnect the power transistor connector. 3) Use a tester to measure the resistance between the power transistor connector and chassis ground. ***Connector & terminal*** ***(i183) No. 5 — Chassis ground:***	Is the resistance less than 1 Ω?	Repair or replace the short circuit of the harness between blower motor and power transistor.	Go to step **4**.
4	**CHECK HARNESS.** 1) Remove the A/C CM. 2) Turn the ignition switch to ON. 3) Use a tester to measure the resistance between the power transistor connector and chassis ground. ***Connector & terminal*** ***(i183) No. 1 — Chassis ground:***	Is the resistance less than 1 Ω?	Repair or replace the short circuit of the harness between A/C CM and power transistor.	Go to step **5**.
5	**CHECK HARNESS.** 1) Connect the disconnected connectors. 2) Turn the ignition switch to ON. 3) Use a tester to measure the voltage between the power transistor connector and chassis ground. ***Connector & terminal*** ***(i183) No. 1 (+) — Chassis ground (–):***	Is the voltage approx. 10 V when the fan switch is set to 1st, and approx. 1 V when set to 6th?	Replace the power transistor. <Ref. to AC-42, REMOVAL, Power Transistor (Auto A/C Model).>	Go to step **6**.
6	**CHECK A/C CM.** 1) Turn the fan switch to OFF. 2) Disconnect the power transistor connector. 3) Use a tester to measure the resistance between the power transistor connector and chassis ground. ***Connector & terminal*** ***(i183) No. 1 — Chassis ground:***	When the fan switch is OFF and other than OFF, does the resistance change?	Replace the power transistor. <Ref. to AC-42, REMOVAL, Power Transistor (Auto A/C Model).>	Replace the A/C CM. <Ref. to AC-49, REMOVAL, Control Unit.>

Manual A/C

WIRING DIAGRAM:

NOTE:
For the coupling connector, refer to “WIRING SYSTEM”.
Air conditioning system <Ref. to WI-94, MANUAL A/C, WIRING DIAGRAM, Air Conditioning System.>

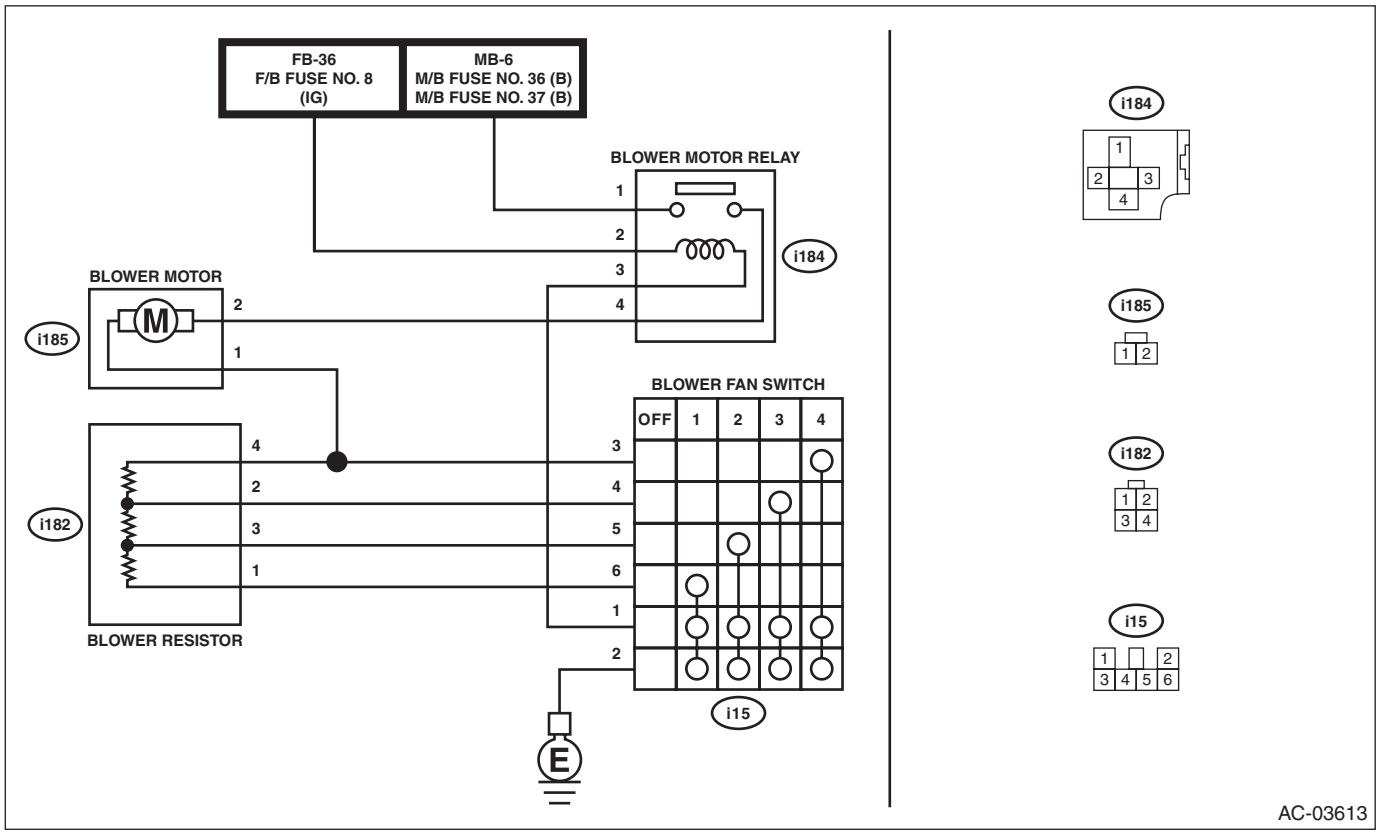

Step		Check	Yes	No
1	**CHECK BLOWER MOTOR CIRCUIT.** 1) Turn the ignition switch to OFF. 2) Disconnect the blower fan switch connector and blower resistor connector. 3) Use a tester to measure the resistance between each terminal and chassis ground. ***Connector & terminal*** ***(i182) No. 4 — Chassis ground:*** ***(i15) No. 3 — Chassis ground:*** ***(i15) No. 4 — Chassis ground:*** ***(i15) No. 5 — Chassis ground:*** ***(i15) No. 6 — Chassis ground:***	Is the resistance less than 1 Ω?	Repair or replace the short circuit of the harness.	Go to step **2**.
2	**CHECK BLOWER RESISTOR.** Check the blower resistor. <Ref. to AC-44, INSPECTION, Blower Resistor (Manual A/C Model).>	Is the blower resistor OK?	Replace the A/C control panel. <Ref. to AC-47, REMOVAL, Control Panel.>	Replace the blower resistor. <Ref. to AC-43, REMOVAL, Blower Resistor (Manual A/C Model).>

10.COLD AIR DOES NOT COME OUT EVEN WHEN THE A/C SWITCH IS PRESSED. THE GLASS CANNOT BE DEFOGGED. (COMPRESSOR DOES NOT OPERATE. (VARIABLE))

TROUBLE SYMPTOM:
Compressor does not operate even when the A/C switch is turned on and the fan switch is set to LO — HI.
Trouble causes:
Compressor failure
WIRING DIAGRAM:

NOTE:
For the coupling connector, refer to “WIRING SYSTEM”.
Air conditioning system <Ref. to WI-94, WIRING DIAGRAM, Air Conditioning System.>

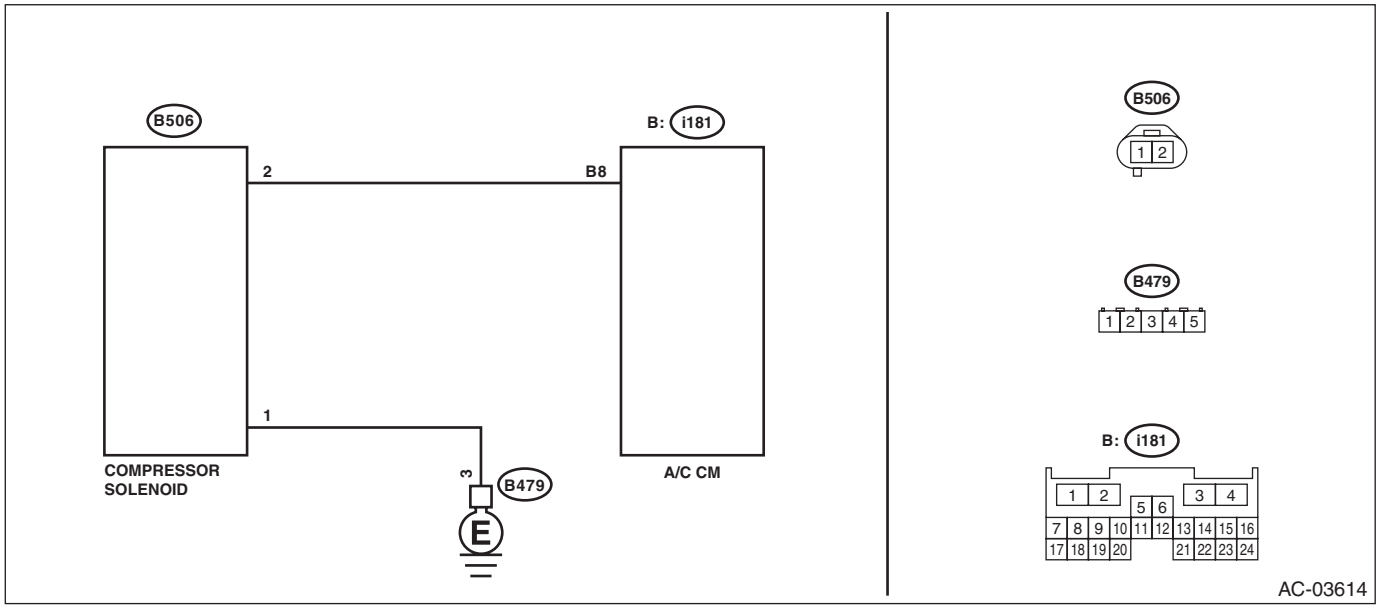

Step		Check	Yes	No
1	**CHECK A/C CONTROL PANEL.** 1) Leave the vehicle under the condition at ambient temperature of 15°C (59°F) or more. 2) Turn the ignition switch to ON. 3) Set the fan switch to maximum position. 4) Press the A/C switch.	Is A/C indicator displayed on the A/C control panel?	Go to step **2**.	Replace the A/C control panel. <Ref. to AC-47, REMOVAL, Control Panel.>
2	**CHECK VARIABLE FLOW CHANGE SOLENOID DUTY VALUE.** Using the Subaru Select Monitor, check «Variable Flow Change Solenoid Duty» of the current data from the A/C diagnosis. <Ref. to AC(diag)-47, Read Current Data.>	Does the display indicate the value greater than zero?	Go to step **7**.	Go to step **3**.
3	**CHECK EVAPORATOR SENSOR.** Using the Subaru Select Monitor, check «Evaporator Temp.» of the current data from the A/C diagnosis. <Ref. to AC(diag)-47, Read Current Data.>	Does the display indicate –0.5 degree or more?	Go to step **5**.	Go to step **4**.
4	**CHECK EVAPORATOR SENSOR.** Check the evaporator sensor. <Ref. to AC-79, INSPECTION, Evaporator Sensor.>	Is the sensor normal?	Go to step **5**.	Replace the evaporator sensor.
5	**CHECK REFRIGERANT PRESSURE SENSOR.** Using the Subaru Select Monitor, check «Refrigerant Pressure» of the current data from the A/C diagnosis. <Ref. to AC(diag)-47, Read Current Data.>	Does the display indicate 0.21 Mpa — 3.03 Mpa?	Go to step **7**.	Go to step **6**.

	Step	Check	Yes	No
6	**CHECK AMOUNT OF REFRIGERANT PRESSURE.** Check the refrigerant pressure. <Ref. to AC-24, CHECK REFRIGERANT GAS PRESSURE, PROCEDURE, Refrigerant Pressure with Manifold Gauge Set.>	Is the refrigerant pressure normal?	Go to step **7**.	Perform repair according to refrigerant pressure inspection.
7	**CHECK FLOW SENSOR CIRCUIT.** 1) Turn the ignition switch to ON. 2) Wait at least 1 second. 3) Read the DTC using Subaru Select Monitor. <Ref. to AC(diag)-43, Read Diagnostic Trouble Code (DTC).>	Are DTCs B14A5 and B14A6 displayed?	Perform the diagnosis according to DTC.	Go to step **8**.
8	**CHECK VARIABLE SOLENOID CIRCUIT.** 1) Start the engine. 2) Turn the A/C switch to ON. 3) Set the fan switch to maximum position. 4) Set the temperature control switch to LO, and wait for 30 seconds or more. 5) Read the DTC using Subaru Select Monitor. <Ref. to AC(diag)-43, Read Diagnostic Trouble Code (DTC).>	Is B14A7 displayed?	Perform the diagnosis according to DTC.	Replace the compressor. <Ref. to AC-50, REMOVAL, Compressor.>

11.UNABLE TO SWITCH SUCTION VENTS

TROUBLE SYMPTOM:

Even when the FRESH/RECIRC switch is pressed, the inlet opening does not switch to RECIRC → FRESH or FRESH → RECIRC.

Trouble causes:

Intake door actuator failure

WIRING DIAGRAM:

Air conditioning system <Ref. to WI-94, WIRING DIAGRAM, Air Conditioning System.>

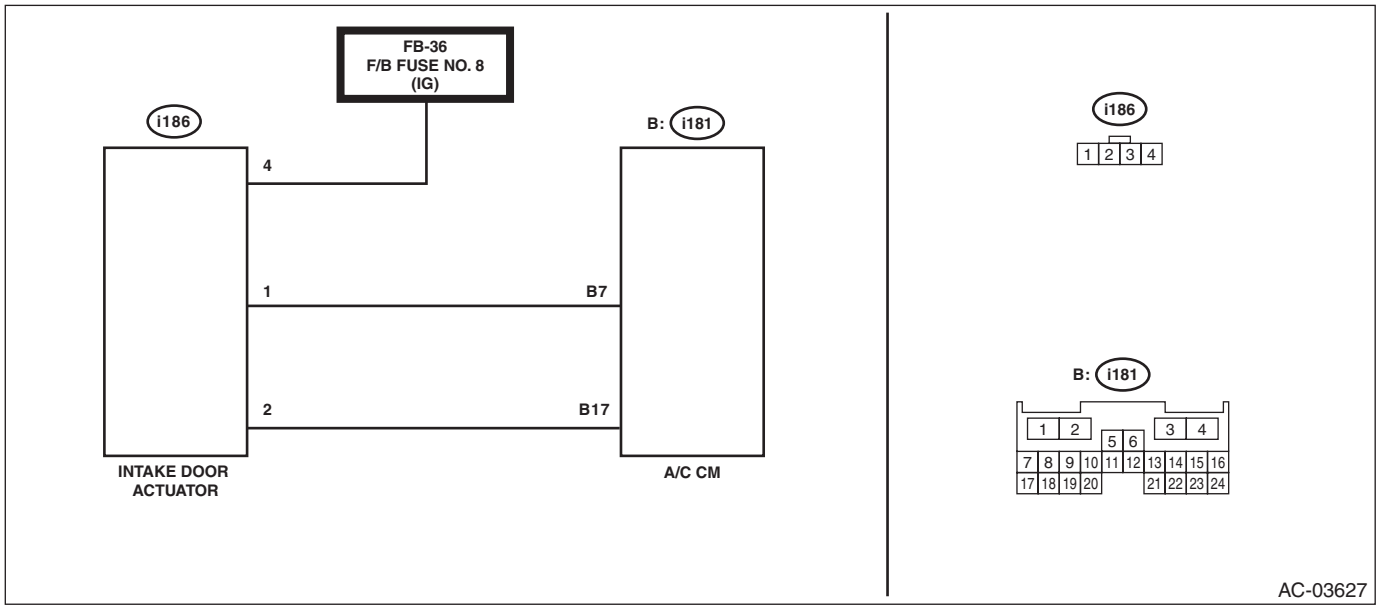

Step		Check	Yes	No
1	**VISUALLY CHECK FRESH/RECIRC DOOR OPERATION.** 1) Remove the glove box. <Ref. to EI-77, REMOVAL, Glove Box.> 2) Operate the FRESH/RECIRC switch, and visually check the intake door operation.	Does the intake door operate normally? Is the position between the intake door and intake door case sealed completely?	The circuit has returned to a normal condition at this time. Reproduce the failure, and then perform the diagnosis again. NOTE: In this case, temporary poor contact of connector, temporary open or short circuit of harness may be the cause.	Go to step **2**.
2	**CHECK A/C CONTROL PANEL.** 1) Turn the ignition switch to ON. 2) Using the Subaru Select Monitor, check «Fresh/Recircle Air Door Actuator Position Target» of the current data from the A/C diagnosis. <Ref. to AC(diag)-47, Read Current Data.> 3) Operate the FRESH/RECIRC switch.	Does the display indicate 0 ←→ 100?	Go to step **3**.	Replace the A/C control panel. <Ref. to AC-47, REMOVAL, Control Panel.>
3	**CHECK CONNECTOR.** Check connecting condition of the intake door actuator connector, A/C CM connector and coupling connector.	Is there poor contact?	Repair the connector.	Go to step **4**.

	Step	Check	Yes	No
4	**CHECK FUSE.** 1) Remove the fuse No. 8 from fuse & relay box. 2) Check the fuse.	Is the fuse OK?	Go to step **5**.	Replace the fuse.
5	**CHECK POWER SUPPLY FOR INTAKE DOOR ACTUATOR.** 1) Turn the ignition switch to OFF. 2) Disconnect the intake door actuator connector. 3) Turn the ignition switch to ON. 4) Measure the voltage between intake door actuator connector and chassis ground. ***Connector & terminal*** ***(i186) No. 4 (+) — Chassis ground (–):***	Is the voltage 10 V or more?	Go to step **6**.	Check for open or short circuit in the harness between intake door actuator and fuse.
6	**CHECK HARNESS BETWEEN A/C CM AND INTAKE DOOR ACTUATOR.** 1) Turn the ignition switch to OFF. 2) Disconnect the A/C CM connector. 3) Measure the resistance between intake door actuator connector and A/C CM connector. ***Connector & terminal*** ***(i186) No. 1 — (i181) No. 7:*** ***(i186) No. 2 — (i181) No. 17:***	Is the resistance less than 10 Ω?	Go to step **7**.	Repair the open circuit of harness between A/C CM and intake door actuator.
7	**CHECK OPERATION OF INTAKE DOOR ACTUATOR.** 1) Connect the intake door actuator connector. 2) Ground the A/C CM connector with a suitable wire. 3) Turn the ignition switch to ON, and check the operation of intake door actuator. ***Connector & terminal*** ***(i181) No. 7 — Chassis ground:***	Does the intake door actuator move to the FRESH side?	Go to step **8**.	Replace the intake door actuator. <Ref. to AC-81, REMOVAL, FRESH/RECIRC Door Actuator.>
8	**CHECK OPERATION OF INTAKE DOOR ACTUATOR.** 1) Turn the ignition switch to OFF. 2) Ground the A/C CM connector with a suitable wire. 3) Turn the ignition switch to ON, and check the operation of intake door actuator. ***Connector & terminal:*** ***(i181) No. 17 — Chassis ground:***	Does the intake door actuator move to the RECIRC side?	Replace the A/C CM. <Ref. to AC-49, REMOVAL, Control Unit.>	Replace the intake door actuator. <Ref. to AC-81, REMOVAL, FRESH/RECIRC Door Actuator.>

12.UNABLE TO SWITCH VENTS

TROUBLE SYMPTOM:

- Unable to switch blow vents.
- Selected mode does not work even when mode switch is operated.

Trouble causes:

Mode door actuator failure

	Step	Check	Yes	No
1	**CHECK A/C CONTROL PANEL.** 1) Turn the ignition switch to ON. 2) Using the Subaru Select Monitor, check «Mode Door Actuator Position Target» of the current data from the A/C diagnosis. <Ref. to AC(diag)-47, Read Current Data.> 3) Operate the mode change switch.	Does the value for «Mode Door Actuator Position Target» change?	Go to step **2**.	Replace the A/C control panel. <Ref. to AC-47, REMOVAL, Control Panel.>
2	**CHECK DTC.** 1) Set the mode change switch to DEF, and wait for 16 seconds or more. 2) Read the DTC using Subaru Select Monitor. <Ref. to AC(diag)-43, Read Diagnostic Trouble Code (DTC).>	Are B1438, B1439 and B1443 displayed?	Perform the diagnosis according to DTC.	Go to step **3**.
3	**CHECK DTC.** 1) Set the mode change switch to VENT, and wait for 16 seconds or more. 2) Using the Subaru Select Monitor, read DTC of A/C CM. <Ref. to AC(diag)-43, Read Diagnostic Trouble Code (DTC).>	Are B1438, B1439 and B1443 displayed?	Perform the diagnosis according to DTC.	The circuit has returned to a normal condition at this time. Reproduce the failure, and then perform the diagnosis again. NOTE: In this case, temporary poor contact of connector, temporary open or short circuit of harness may be the cause.

13.ILLUMINATION DOES NOT COME ON OR CANNOT DIM

TROUBLE SYMPTOM:

Even when the lighting switch is operated, the illumination does not come on. Even when the illumination control is operated, the illumination does not dim.

TROUBLE SYMPTOM:

Open circuit in illumination circuit

WIRING DIAGRAM:

NOTE:
For the coupling connector, refer to “WIRING SYSTEM”.
Clearance Light and Illumination Light System <Ref. to WI-136, WIRING DIAGRAM, Clearance Light and Illumination Light System.>

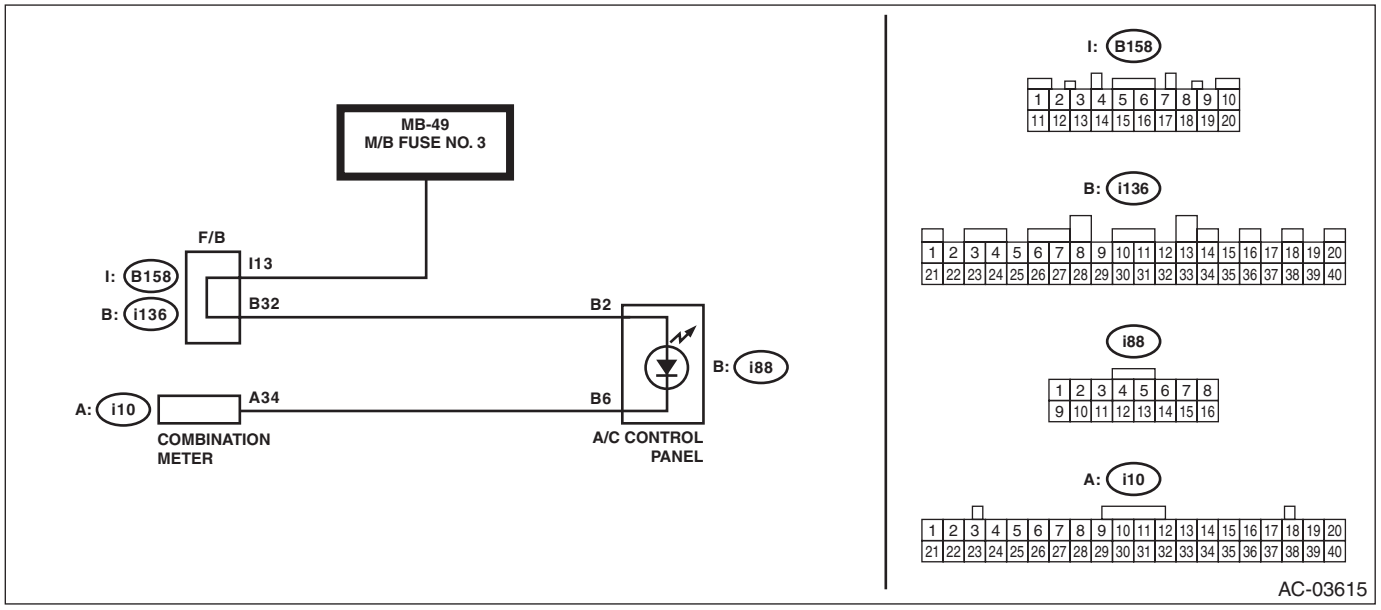

	Step	Check	Yes	No
1	**CHECK CONNECTOR.** Check poor contact of F/B connector, A/C control panel connector, combination meter connector and coupling connector.	Is there poor contact?	Repair the connector.	Go to step **2**.
2	**CHECK HARNESS.** 1) Turn the ignition switch to ON. 2) Using a tester, measure the voltage between the A/C control panel connector and chassis ground. ***Connector & terminal*** ***(i88) No. 2 (+) — Chassis ground (–):***	Is the voltage 10 V or more?	Go to step **3**.	Repair or replace the open circuit of harness.
3	**CHECK HARNESS.** 1) Turn the ignition switch to OFF. 2) Measure the resistance between A/C control panel connector and combination meter connector. ***Connector & terminal*** ***(i88) No. 6 — (i10) No. 34:***	Is the resistance less than 10 Ω?	Replace the A/C control panel. <Ref. to AC-47, REMOVAL, Control Panel.>	Repair or replace the open circuit of harness.

6. Subaru Select Monitor

A: OPERATION

For detailed operation procedures, refer to “Application help”.

NOTE:
When initialization communication using Select Monitor is impossible, perform diagnosis according to “Diagnostic Procedure Used When Abnormal Communication with Subaru Select Monitor Occurs”. <Ref. to AC(diag)-50, COMMUNICATION FOR INITIALIZING IMPOSSIBLE, Diagnostic Procedure for Subaru Select Monitor Communication.>

7. Read Diagnostic Trouble Code (DTC)

A: OPERATION

1) On «Start» display, select «Diagnosis».
2) On «Vehicle selection» display, input the target vehicle information and select «Confirmed».
3) On «Main Menu» display, select «Each System».
4) On «Select System» display, select «Air Conditioner» and select «Enter».
5) On «Select Function» display, select «DTC».

NOTE:
- For detailed operation procedures, refer to “Application help”.
- For details concerning DTC, refer to “List of Diagnostic Trouble Code (DTC)”. <Ref. to AC(diag)-52, List of Diagnostic Trouble Code (DTC).>

8. Clear Memory Mode

A: OPERATION

1) On «Start» display, select «Diagnosis».
2) On «Vehicle selection» display, input the target vehicle information and select «Confirmed».
3) On «Main Menu» display, select «Each System».
4) On «Select System» display, select «Air Conditioner» and select «Enter».
5) On «Select Function» display, select «DTC».
6) On «DTC» display, select «Clear Memory».

NOTE:
For detailed operation procedures, refer to “Application help”.

9. Inspection Mode

A: PROCEDURE

It is possible to diagnose the DTC by performing the indicated inspection mode. After correcting the DTC, perform a necessary inspection mode and make sure that the function is resumed correctly and the DTC is recorded.

1. INSPECTION MODE 1

DTC	Item	Note
B1430	IN-VEHICLE (POST EVAPORATOR) TEMPERATURE SENSOR CIRCUIT OPEN	—
B1431	IN-VEHICLE (POST EVAPORATOR) TEMPERATURE SENSOR CIRCUIT SHORT-CIRCUIT	—
B1432	AMBIENT TEMPERATURE SENSOR CIRCUIT OPEN (AIR-CONDITIONER)	—
B1433	AMBIENT TEMPERATURE SENSOR CIRCUIT SHORT-CIRCUIT (AIR-CONDITIONER)	—
B1434	EVAPORATOR TEMPERATURE SENSOR CIRCUIT OPEN	—
B1435	EVAPORATOR TEMPERATURE SENSOR CIRCUIT SHORT-CIRCUIT	—
B1436	AIR MIX DOOR ACTUATOR CIRCUIT OPEN (PASSENGER)	—
B1437	AIR MIX DOOR ACTUATOR CIRCUIT SHORT-CIRCUIT (PASSENGER)	—
B1438	MODE DOOR ACTUATOR CIRCUIT OPEN	—
B1439	MODE DOOR ACTUATOR CIRCUIT SHORT-CIRCUIT	—
B1440	AIR MIX DOOR ACTUATOR CIRCUIT OPEN (DRIVER)	—
B1441	AIR MIX DOOR ACTUATOR CIRCUIT STUCK (PASSENGER)	—
B1442	AIR MIX DOOR ACTUATOR CIRCUIT SHORT-CIRCUIT (DRIVER)	—
B1443	MODE DOOR ACTUATOR CIRCUIT STUCK	—
B1446	MODE DOOR ACTUATOR CIRCUIT STUCK	—
B1448	REAR VENT DOOR ACTUATOR CIRCUIT OPEN	—
B1449	REAR VENT DOOR ACTUATOR CIRCUIT SHORT-CIRCUIT	—
B144A	REAR VENT DOOR ACTUATOR CIRCUIT STUCK	—
B14A3	REFRIGERANT PRESSURE SENSOR CIRCUIT OPEN	—
B14A4	REFRIGERANT PRESSURE SENSOR CIRCUIT SHORT-CIRCUIT	—
B14A5	REFRIGERANT FLOW SENSOR CIRCUIT OPEN	—
B14A6	REFRIGERANT FLOW SENSOR CIRCUIT SHORT-CIRCUIT	—
B14A7	VARIABLE SOLENOID VALVE CIRCUIT	—
B14A8	COMPRESSOR BREAK-IN MALFUNCTION LOW REFRIGERANT	—
B14B1	SEAT HEATER THERMISTOR CIRCUIT OPEN (DRIVER)	—
B14B2	SEAT HEATER THERMISTOR CIRCUIT SHORT-CIRCUIT (DRIVER)	—
B14B3	SEAT HEATER THERMISTOR CIRCUIT OPEN (PASSENGER)	—
B14B4	SEAT HEATER THERMISTOR CIRCUIT SHORT-CIRCUIT (DRIVER)	—
U0002	CAN COMMUNICATION ERROR	—
U0028	HEATER CONTROL PANEL COMMUNICATION ERROR	—
U0073	CAN FAILURE, BUS ‘OFF’ DETECTION	—

Diagnostic procedure:
1) Perform the Clear Memory Mode. <Ref. to AC(diag)-44, Clear Memory Mode.>
2) Read the DTC and check that the DTC is not displayed. <Ref. to AC(diag)-43, Read Diagnostic Trouble Code (DTC).>

NOTE:
If the DTC is displayed on the screen, the trouble is still present. Perform the diagnosis according to DTC. After solving the DTC, repeat from step 1).
3) Turn the ignition switch to ON and then leave it for 1 second or more.

4) Read the DTC and check that the DTC is not displayed. <Ref. to AC(diag)-43, Read Diagnostic Trouble Code (DTC).>

NOTE:
If the DTC is displayed on the screen, the trouble is still present. Perform the diagnosis according to DTC.

2. INSPECTION MODE 2

DTC	Item	Note
B14A1	SUNLOAD SENSOR CIRCUIT LOW/OPEN	—
B14A2	SUNLOAD SENSOR CIRCUIT SHORT-CIRCUIT	—

Diagnostic procedure:
1) Perform the Clear Memory Mode. <Ref. to AC(diag)-44, Clear Memory Mode.>
2) Read the DTC and check that the DTC is not displayed. <Ref. to AC(diag)-43, Read Diagnostic Trouble Code (DTC).>

NOTE:
If the DTC is displayed on the screen, the trouble is still present. Perform the diagnosis according to DTC. After solving the DTC, repeat from step 1).
3) Park the vehicle in the place subjected to direct sunlight.
4) Turn the ignition switch to ON and then leave it for 1 second or more.
5) Read the DTC and check that the DTC is not displayed. <Ref. to AC(diag)-43, Read Diagnostic Trouble Code (DTC).>

NOTE:
If the DTC is displayed on the screen, the trouble is still present. Perform the diagnosis according to DTC.

10.Read Current Data

A: OPERATION

1) On «Start» display, select «Diagnosis».
2) On «Vehicle selection» display, input the target vehicle information and select «Confirmed».
3) On «Main Menu» display, select «Each System».
4) On «Select System» display, select «Air Conditioner» and select «Enter».
5) On «Select Function» display, select «Data Monitor».

NOTE:
For detailed operation procedures, refer to “Application help”.

B: LIST

Item	Description	Unit	Note
In-vehicle Sensor Temperature	A/C CM input value	°C	Auto A/C
A/C Pressure Sensor	A/C CM input value	MPa	Variable compressor
Refrigerant flow quantity sensor	A/C CM input value	kg/h	Variable compressor
Quantity of Sunload	A/C CM input value	W/m^2	Auto A/C
Heater Water Temperature	CAN received data value	°C	
Heater Control Panel Setting Value (Driver’s)	Control panel display value	—	Auto A/C
Heater Control Panel Setting Value (Passenger’s)	Control panel display value	—	Auto A/C
Blower outlet Door Request Temperature (Driver’s)	A/C CM internal setting value	°C	Auto A/C
Blower outlet Door Request Temperature (Passenger’s)	A/C CM internal setting value	°C	Auto A/C
Airmix Door Actuator Position (Driver’s)	A/C CM input value	%	
Airmix Door Actuator Position (Passenger’s)	A/C CM input value	%	Auto A/C
Mode Door Actuator Position	A/C CM input value	%	
Fresh/Recircle Air Door Actuator Position	A/C CM input value	%	
Rr Vent Door Actuator Position	A/C CM input value	%	With rear seat air conditioning
Airmix Actuator Position Target (Driver’s)	A/C CM input value	%	
Airmix Actuator Position Target (Passenger’s)	A/C CM input value	%	Auto A/C
Mode Door Actuator Position Target	A/C CM input value	%	
Fresh/Recircle Air Door Actuator Position Target	A/C CM input value	• Room Temperature • Ambient Temperature	
Rr Vent Door Actuator Position Target	A/C CM input value	%	With rear seat air conditioning
Blower Fan Level	A/C CM output value	—	
Ambient Air Temperature	CAN received data value	°C	
Compressor Operating Condition	A/C CM input value	• OFF • ON	
Blower Fan Operating Condition	A/C CM input value	• MANU • AUTO	Auto A/C
A/C Operating Condition	A/C CM input value	• MANU • AUTO	Auto A/C
Fresh/Recircle Air Operating Condition	A/C CM input value	• MANU • AUTO	Auto A/C
Mode Operating Condition	A/C CM input value	• MANU • AUTO	Auto A/C
Rear Defogger	A/C CM input value	• OFF • ON	
Engine Speed	CAN received data value	rpm	

Read Current Data

Item	Description	Unit	Note
Vehicle speed	CAN received data value	km/h	
Evaporator Temp.	A/C CM input value	°C	
Evaporator Temperature Target	A/C CM input value	°C	
Variable Flow Change Solenoid Duty	A/C CM input value	%	Variable compressor
Compressor load torque value	A/C CM input value	Nm	Variable compressor
Blower outlet Door Request Temperature	A/C CM internal setting value	°C	Auto A/C
Accel opening angle	CAN received data value		
Request idling speed	A/C CM output value	rpm	Variable compressor
Request engine speed	A/C CM output value	• Without Request • Cooler H • Heater H • Cooler L • Heater L • Heater M • Heater LL	Variable compressor
Discharge pressure	A/C CM input value	MPa	
Intake pressure	A/C CM input value	MPa	
Cooler request distinction	A/C CM input value	• No request • Request	
Heater request distinction	A/C CM input value	• No request • Request	
Seat Heater operation steps (Driver's)	A/C CM input value	—	With seat heater
Seat Heater operation steps (Passenger's)	A/C CM input value	—	With seat heater
Seat Heater Temp.(Driver's)	A/C CM output value	—	With seat heater
Seat Heater Temp.(Passenger's)	A/C CM output value	—	With seat heater

11.System Operation Check Mode

A: OPERATION

1) On «Start» display, select «Diagnosis».
2) On «Vehicle selection» display, input the target vehicle information and select «Confirmed».
3) On «Main Menu» display, select «Each System».
4) On «Select System» display, select «Air Conditioner» and select «Enter».
5) On «Select Function» display, select «Active Test».

NOTE:
For detailed operation procedures, refer to “Application help”.

B: LIST

NOTE:
If not equipped (based on area or condition), some items are not displayed.

System operation check mode item	Display	Unit	Note
In-vehicle Air Temperature setting	-72.47 — 193.82	°C	—
Ambient Air Temperature Setting	-40 — 80	°C	—
Quantity of Sunload Setting	0 — 4448	W/m^2	—
Heater Water Temperature Setting	-40 — 215	°C	—
AUTO SW setting	—	—	—
Air mix door actuator target open (driver’s side)	-32.68 — 133.33	%	—
Air mix door actuator target open (passenger’s side)	-32.68 — 133.33	%	—
Fresh/Rec Air Dr Act Trgt Open Angle	REC/FRS	—	—
Rear Vent Dr Act Trgt Open Angle	-32.68 — 133.33	%	—
Mode Door Actuator Opening Angle Target	-32.68 — 133.33	%	—
Blower Fan Level Setting	1 — 31	—	—
Rear Defogger Setting	ON/OFF	—	—
A/C Change Setting	—	—	—
Actuator origin reset	—	—	—
Variable Flow Change Solenoid Duty	0 — 100	%	—

12.Diagnostic Procedure for Subaru Select Monitor Communication

A: COMMUNICATION FOR INITIALIZING IMPOSSIBLE

DIAGNOSIS:
Defective CAN communication circuit
TROUBLE SYMPTOM:
- LAN system is abnormal.
- Communication failure between Subaru Select Monitor and A/C CM

WIRING DIAGRAM:

NOTE:
For the coupling connector, refer to “WIRING SYSTEM”.
- Air conditioning system <Ref. to WI-94, WIRING DIAGRAM, Air Conditioning System.>
- CAN communication system <Ref. to WI-132, WIRING DIAGRAM, CAN Communication System.>

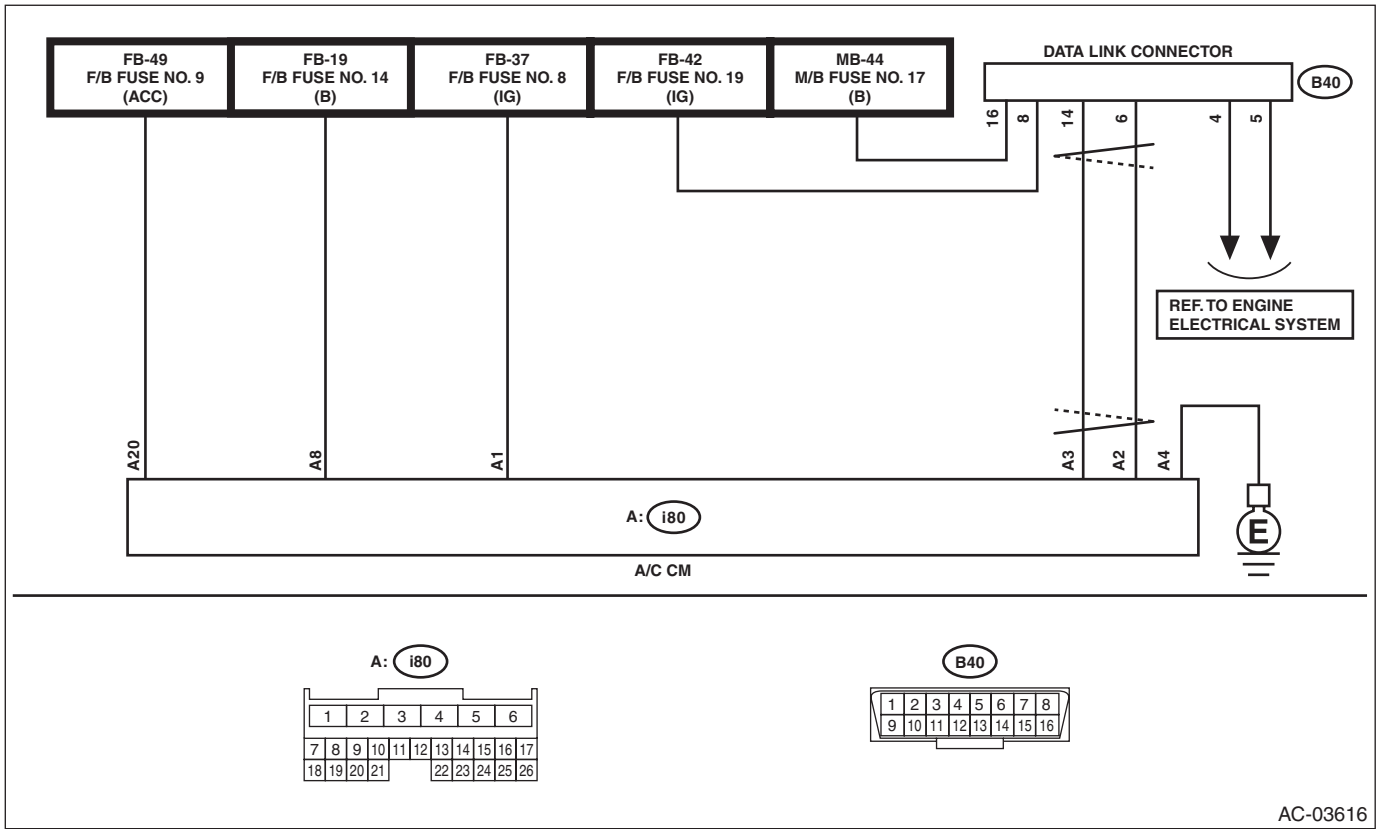

Step		Check	Yes	No
1	**CHECK POWER SUPPLY CIRCUIT.** Connect DST-i to data link connector.	Does DST-i turn ON?	Go to step **4**.	Go to step **2**.
2	**CHECK POWER SUPPLY CIRCUIT.** 1) Turn the ignition switch to ON. 2) Measure the voltage between data link connector and chassis ground. ***Connector & terminal*** ***(B40) No. 8 (+) — Chassis ground (–):*** ***(B40) No. 16 (+) — Chassis ground (–):***	Is the voltage 10 V or more?	Go to step **3**.	Repair the power supply circuit. NOTE: In this case, repair the following item: • Open or ground short circuit of harness between battery and data link connector • Blown out of fuse (M/B No. 17, 19)

	Step	Check	Yes	No
3	**CHECK HARNESS BETWEEN DATA LINK CONNECTOR AND CHASSIS GROUND.** 1) Turn the ignition switch to OFF. 2) Measure the resistance of harness between data link connector and chassis ground. ***Connector & terminal*** ***(B40) No. 4 — Chassis ground:*** ***(B40) No. 5 — Chassis ground:***	Is the resistance less than 5 Ω?	Repair the poor contact of data link connector.	Repair the harness and connector.
4	**CHECK SUBARU SELECT MONITOR.** 1) Connect the Subaru Select Monitor to a normal vehicle. 2) Start the engine and perform communication between the Subaru Select Monitor and vehicle.	Is communication possible?	Go to step **5**.	Use another Subaru Select Monitor because the CAN communication circuit of the Subaru Select Monitor is faulty.
5	**CHECK CAN COMMUNICATION CIRCUIT.** Check the CAN communication circuit. <Ref. to LAN(diag)-36, CAN Communication Circuit Check.>	Is the CAN communication circuit normal?	Go to step **6**.	Repair the CAN communication circuit.
6	**CHECK CONNECTOR.** Check poor contact of A/C CM connector, data link connector and coupling connector.	Is there poor contact of connector?	Repair the connector.	Go to step **7**.
7	**CHECK FUSE.** 1) Turn the ignition switch to OFF. 2) Remove the fuses No. 8, 9, 14 from main fuse box. 3) Check the fuse.	Is the fuse blown out?	Replace the fuse.	Go to step **8**.
8	**CHECK A/C CM POWER SUPPLY CIRCUIT.** 1) Install the A/C control panel. 2) Disconnect the A/C CM connector. 3) Measure the voltage between A/C CM connector terminal and chassis ground after turning the ignition switch to ON. ***Connector & terminal*** ***(i80) No. 1 (+) — Chassis ground (–):*** ***(i80) No. 8 (+) — Chassis ground (–):*** ***(i80) No. 20 (+) — Chassis ground (–):***	Is the voltage 10 V or more?	Go to step **9**.	Check for open or short circuit in the harness between A/C CM and fuse.
9	**CHECK A/C CM GROUND CIRCUIT.** Measure the resistance of harness between A/C CM and chassis ground. ***Connector & terminal*** ***(i80) No. 4 — Chassis ground:***	Is the resistance less than 5 Ω?	Check the connection between the data link connector and Subaru Select Monitor.	Repair the harness for ground line.

13.List of Diagnostic Trouble Code (DTC)

A: LIST

NOTE:
When the sunload sensor check is performed indoors or in the shade, it could be diagnosed as having an open circuit. Always check the sunload sensor in direct sunlight.

DTC	Item	Note
B1430	IN-VEHICLE (POST EVAPORATOR) TEMPERATURE SENSOR CIRCUIT OPEN	<Ref. to AC(diag)-55, DTC B1430 IN-VEHICLE (POST EVAPORATOR) TEMPERATURE SENSOR CIRCUIT OPEN, Diagnostic Procedure with Diagnostic Trouble Code (DTC).>
B1431	IN-VEHICLE (POST EVAPORATOR) TEMPERATURE SENSOR CIRCUIT SHORT-CIRCUIT	<Ref. to AC(diag)-57, DTC B1431 IN-VEHICLE (POST EVAPORATOR) TEMPERATURE SENSOR CIRCUIT SHORT-CIRCUIT, Diagnostic Procedure with Diagnostic Trouble Code (DTC).>
B1432	AMBIENT TEMPERATURE SENSOR CIRCUIT OPEN (AIR-CONDITIONER)	<Ref. to AC(diag)-59, DTC B1432 AMBIENT TEMPERATURE SENSOR CIRCUIT OPEN (AIR-CONDITIONER), Diagnostic Procedure with Diagnostic Trouble Code (DTC).>
B1433	AMBIENT TEMPERATURE SENSOR CIRCUIT SHORT-CIRCUIT (AIR-CONDITIONER)	<Ref. to AC(diag)-61, DTC B1433 AMBIENT TEMPERATURE SENSOR CIRCUIT SHORT-CIRCUIT (AIR-CONDITIONER), Diagnostic Procedure with Diagnostic Trouble Code (DTC).>
B1434	EVAPORATOR TEMPERATURE SENSOR CIRCUIT OPEN	<Ref. to AC(diag)-63, DTC B1434 EVAPORATOR TEMPERATURE SENSOR CIRCUIT OPEN, Diagnostic Procedure with Diagnostic Trouble Code (DTC).>
B1435	EVAPORATOR TEMPERATURE SENSOR CIRCUIT SHORT-CIRCUIT	<Ref. to AC(diag)-65, DTC B1435 EVAPORATOR TEMPERATURE SENSOR CIRCUIT SHORT-CIRCUIT, Diagnostic Procedure with Diagnostic Trouble Code (DTC).>
B1436	AIR MIX DOOR ACTUATOR CIRCUIT OPEN (PASSENGER)	<Ref. to AC(diag)-67, DTC B1436 AIR MIX DOOR ACTUATOR CIRCUIT OPEN (PASSENGER), Diagnostic Procedure with Diagnostic Trouble Code (DTC).>
B1437	AIR MIX DOOR ACTUATOR CIRCUIT SHORT-CIRCUIT (PASSENGER)	<Ref. to AC(diag)-69, DTC B1437 AIR MIX DOOR ACTUATOR CIRCUIT SHORT-CIRCUIT (PASSENGER), Diagnostic Procedure with Diagnostic Trouble Code (DTC).>
B1438	MODE DOOR ACTUATOR CIRCUIT OPEN	<Ref. to AC(diag)-71, DTC B1438 MODE DOOR ACTUATOR CIRCUIT OPEN, Diagnostic Procedure with Diagnostic Trouble Code (DTC).>
B1439	MODE DOOR ACTUATOR CIRCUIT SHORT-CIRCUIT	<Ref. to AC(diag)-73, DTC B1439 MODE DOOR ACTUATOR CIRCUIT SHORT-CIRCUIT, Diagnostic Procedure with Diagnostic Trouble Code (DTC).>
B1440	AIR MIX DOOR ACTUATOR CIRCUIT OPEN (DRIVER)	<Ref. to AC(diag)-74, DTC B1440 AIR MIX DOOR ACTUATOR CIRCUIT OPEN (DRIVER), Diagnostic Procedure with Diagnostic Trouble Code (DTC).>
B1441	AIR MIX DOOR ACTUATOR CIRCUIT STUCK (PASSENGER)	<Ref. to AC(diag)-76, DTC B1441 AIR MIX DOOR ACTUATOR CIRCUIT STUCK (PASSENGER), Diagnostic Procedure with Diagnostic Trouble Code (DTC).>
B1442	AIR MIX DOOR ACTUATOR CIRCUIT SHORT-CIRCUIT (DRIVER)	<Ref. to AC(diag)-78, DTC B1442 AIR MIX DOOR ACTUATOR CIRCUIT SHORT-CIRCUIT (DRIVER), Diagnostic Procedure with Diagnostic Trouble Code (DTC).>

DTC	Item	Note
B1443	MODE DOOR ACTUATOR CIRCUIT STUCK	<Ref. to AC(diag)-80, DTC B1443 MODE DOOR ACTUATOR CIRCUIT STUCK, Diagnostic Procedure with Diagnostic Trouble Code (DTC).>
B1446	AIR MIX DOOR ACTUATOR CIRCUIT STUCK (DRIVER)	<Ref. to AC(diag)-82, DTC B1446 AIR MIX DOOR ACTUATOR CIRCUIT STUCK (DRIVER), Diagnostic Procedure with Diagnostic Trouble Code (DTC).>
B1448	REAR VENT DOOR ACTUATOR CIRCUIT OPEN	<Ref. to AC(diag)-84, DTC B1448 REAR VENT DOOR ACTUATOR CIRCUIT OPEN, Diagnostic Procedure with Diagnostic Trouble Code (DTC).>
B1449	REAR VENT DOOR ACTUATOR CIRCUIT SHORT-CIRCUIT	<Ref. to AC(diag)-86, DTC B1449 REAR VENT DOOR ACTUATOR CIRCUIT SHORT-CIRCUIT, Diagnostic Procedure with Diagnostic Trouble Code (DTC).>
B144A	REAR VENT DOOR ACTUATOR CIRCUIT STUCK	<Ref. to AC(diag)-87, DTC B144A REAR VENT DOOR ACTUATOR CIRCUIT STUCK, Diagnostic Procedure with Diagnostic Trouble Code (DTC).>
B14A1	SUNLOAD SENSOR CIRCUIT LOW/OPEN	<Ref. to AC(diag)-89, DTC B14A1 SUNLOAD SENSOR CIRCUIT LOW/OPEN, Diagnostic Procedure with Diagnostic Trouble Code (DTC).> NOTE: When the sunload sensor inspection is performed indoors or in the shade, it may be diagnosed as having an open circuit due to an insufficient light volume. In this case, check the sunload sensor at a location exposed to direct sunlight.
B14A2	SUNLOAD SENSOR CIRCUIT SHORT-CIRCUIT	<Ref. to AC(diag)-91, DTC B14A2 SUNLOAD SENSOR CIRCUIT SHORT-CIRCUIT, Diagnostic Procedure with Diagnostic Trouble Code (DTC).> NOTE: When the sunload sensor inspection is performed indoors or in the shade, it may be diagnosed as having an open circuit due to an insufficient light volume. In this case, check the sunload sensor at a location exposed to direct sunlight.
B14A3	REFRIGERANT PRESSURE SENSOR CIRCUIT OPEN	<Ref. to AC(diag)-93, DTC B14A3 REFRIGERANT PRESSURE SENSOR CIRCUIT OPEN, Diagnostic Procedure with Diagnostic Trouble Code (DTC).>
B14A4	REFRIGERANT PRESSURE SENSOR CIRCUIT SHORT-CIRCUIT	<Ref. to AC(diag)-95, DTC B14A4 REFRIGERANT PRESSURE SENSOR CIRCUIT SHORT-CIRCUIT, Diagnostic Procedure with Diagnostic Trouble Code (DTC).>
B14A5	REFRIGERANT FLOW SENSOR CIRCUIT OPEN	<Ref. to AC(diag)-97, DTC B14A5 REFRIGERANT FLOW SENSOR CIRCUIT OPEN, Diagnostic Procedure with Diagnostic Trouble Code (DTC).>
B14A6	REFRIGERANT FLOW SENSOR CIRCUIT SHORT-CIRCUIT	<Ref. to AC(diag)-99, DTC B14A6 REFRIGERANT FLOW SENSOR CIRCUIT SHORT-CIRCUIT, Diagnostic Procedure with Diagnostic Trouble Code (DTC).>
B14A7	VARIABLE SOLENOID VALVE CIRCUIT	<Ref. to AC(diag)-101, DTC B14A7 VARIABLE SOLENOID VALVE CIRCUIT, Diagnostic Procedure with Diagnostic Trouble Code (DTC).>
B14A8	COMPRESSOR BREAK-IN MALFUNCTION LOW REFRIGERANT	<Ref. to AC(diag)-103, DTC B14A8 COMPRESSOR BREAK-IN MALFUNCTION LOW REFRIGERANT, Diagnostic Procedure with Diagnostic Trouble Code (DTC).>
B14B1	SEAT HEATER THERMISTOR CIRCUIT OPEN (DRIVER)	<Ref. to AC(diag)-104, DTC B14B1 SEAT HEATER THERMISTOR CIRCUIT OPEN (DRIVER), Diagnostic Procedure with Diagnostic Trouble Code (DTC).>

DTC	Item	Note
B14B2	SEAT HEATER THERMISTOR CIRCUIT SHORT-CIRCUIT (DRIVER)	<Ref. to AC(diag)-106, DTC B14B2 SEAT HEATER THERMISTOR CIRCUIT SHORT-CIRCUIT (DRIVER), Diagnostic Procedure with Diagnostic Trouble Code (DTC).>
B14B3	SEAT HEATER THERMISTOR CIRCUIT OPEN (PASSENGER)	<Ref. to AC(diag)-108, DTC B14B3 SEAT HEATER THERMISTOR CIRCUIT OPEN (PASSENGER), Diagnostic Procedure with Diagnostic Trouble Code (DTC).>
B14B4	SEAT HEATER THERMISTOR CIRCUIT SHORT-CIRCUIT (DRIVER)	<Ref. to AC(diag)-110, DTC B14B4 SEAT HEATER THERMISTOR CIRCUIT SHORT-CIRCUIT (DRIVER), Diagnostic Procedure with Diagnostic Trouble Code (DTC).>
U0002	CAN COMMUNICATION ERROR	<Ref. to AC(diag)-112, DTC U0002 CAN COMMUNICATION ERROR, Diagnostic Procedure with Diagnostic Trouble Code (DTC).>
U0028	HEATER CONTROL PANEL COMMUNICATION ERROR	<Ref. to AC(diag)-113, DTC U0028 HEATER CONTROL PANEL COMMUNICATION ERROR, Diagnostic Procedure with Diagnostic Trouble Code (DTC).>
U0073	CAN FAILURE, BUS ‘OFF’ DETECTION	<Ref. to AC(diag)-115, DTC U0073 CONTROL MODULE COMMUNICATION BUS OFF, Diagnostic Procedure with Diagnostic Trouble Code (DTC).>

14.Diagnostic Procedure with Diagnostic Trouble Code (DTC)

A: DTC B1430 IN-VEHICLE (POST EVAPORATOR) TEMPERATURE SENSOR CIRCUIT OPEN

DTC DETECTING CONDITION:
In-vehicle sensor circuit is open.
TROUBLE SYMPTOM:
In-vehicle air temperature is falsely recognized as 25°C (77°F), and the compartment temperature is adjusted.
WIRING DIAGRAM:
Air conditioning system <Ref. to WI-94, WIRING DIAGRAM, Air Conditioning System.>

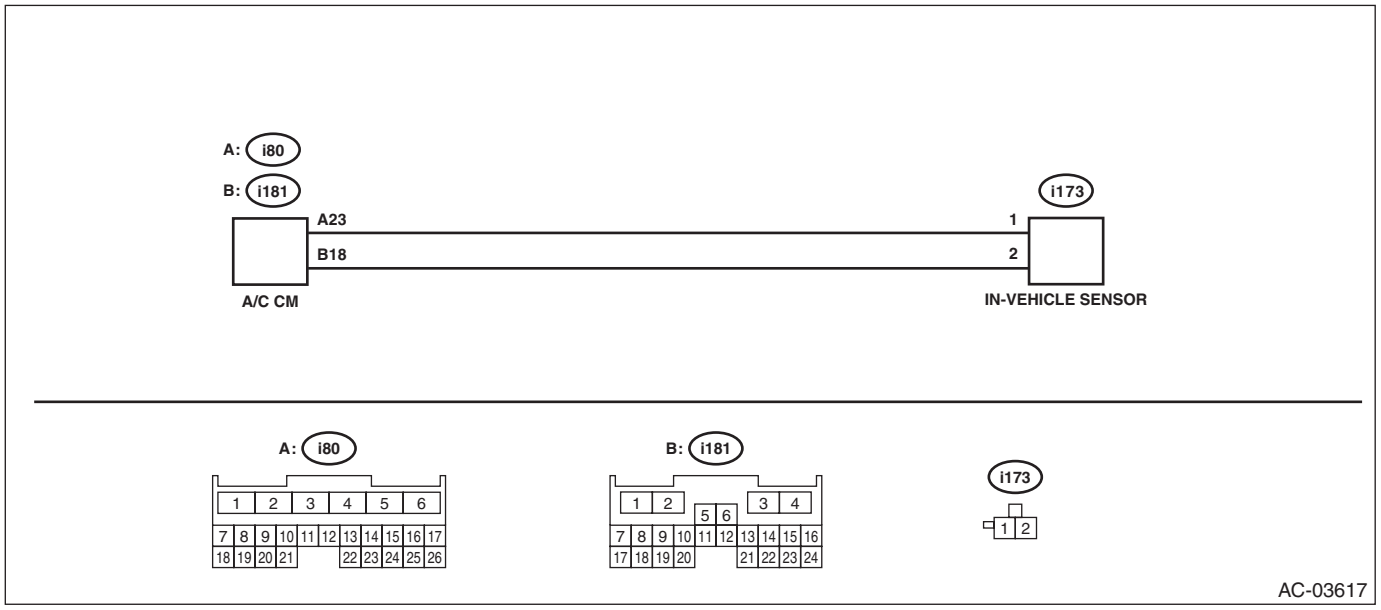

Step		Check	Yes	No
1	**CHECK CONNECTOR.** 1) Check connecting condition of the A/C CM connector and in-vehicle sensor connector. 2) Read the DTC using Subaru Select Monitor. <Ref. to AC(diag)-43, Read Diagnostic Trouble Code (DTC).>	Is B1430 displayed?	Go to step **2**.	Even if DTC is displayed, the circuit has returned to a normal condition at this time. Reproduce the failure, and then perform the diagnosis again. NOTE: In this case, temporary poor contact of connector, temporary open or short circuit of harness may be the cause.
2	**CHECK IN-VEHICLE SENSOR.** 1) Disconnect the in-vehicle sensor. 2) Short the connector i173. 3) Read the DTC of the A/C CM using the Subaru Select Monitor. <Ref. to AC(diag)-43, Read Diagnostic Trouble Code (DTC).>	Is B1431 displayed?	Replace the in-vehicle sensor. <Ref. to AC-75, REMOVAL, In-Vehicle Sensor (Auto A/C Model).>	Go to step **3**.

	Step	Check	Yes	No
3	**CHECK HARNESS.** 1) Restore the temporary shorted lines made in step 2. 2) Turn the ignition switch to ON. 3) Using the tester, measure the voltage between terminals. ***Connector & terminal*** ***(i173) No. 1 (+) — No. 2 (–):***	Is the voltage 4.5 — 5.0 V?	Go to step **4**.	Repair or replace the open circuit of harness.
4	**CHECK HARNESS (OPEN CIRCUIT).** 1) Disconnect the connector from A/C CM. 2) Using a tester, check continuity between terminals. ***Connector & terminal*** ***(i173) No. 1 — (i80) No. 23:*** ***(i173) No. 2 — (i181) No. 18:***	Is there continuity?	Replace the A/C CM. <Ref. to AC-49, REMOVAL, Control Unit.>	Repair or replace the open circuit of harness.

B: DTC B1431 IN-VEHICLE (POST EVAPORATOR) TEMPERATURE SENSOR CIRCUIT SHORT-CIRCUIT

DTC DETECTING CONDITION:
In-vehicle sensor circuit is shorted.
TROUBLE SYMPTOM:
In-vehicle air temperature is falsely recognized as 25°C (77°F), and the compartment temperature is adjusted.
WIRING DIAGRAM:
Air conditioning system <Ref. to WI-94, WIRING DIAGRAM, Air Conditioning System.>

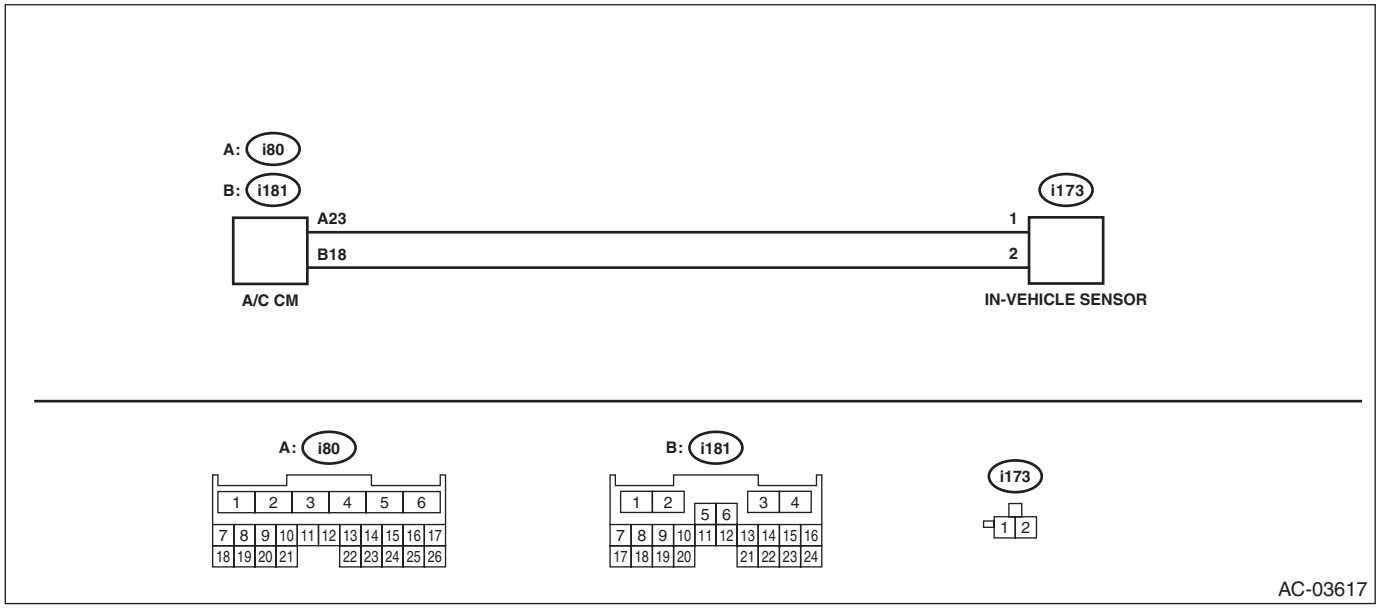

	Step	Check	Yes	No
1	**CHECK CONNECTOR.** 1) Check connecting condition of the A/C CM connector and in-vehicle sensor connector. 2) Read the DTC using Subaru Select Monitor. <Ref. to AC(diag)-43, Read Diagnostic Trouble Code (DTC).>	Is B1431 displayed?	Go to step **2**.	Even if DTC is displayed, the circuit has returned to a normal condition at this time. Reproduce the failure, and then perform the diagnosis again. NOTE: In this case, temporary poor contact of connector, temporary open or short circuit of harness may be the cause.
2	**CHECK IN-VEHICLE SENSOR.** 1) Disconnect the in-vehicle sensor. <Ref. to AC-75, REMOVAL, In-Vehicle Sensor (Auto A/C Model).> 2) Read the DTC of the A/C CM using the Subaru Select Monitor. <Ref. to AC(diag)-43, Read Diagnostic Trouble Code (DTC).>	Is B1430 displayed?	Replace the in-vehicle sensor. <Ref. to AC-75, REMOVAL, In-Vehicle Sensor (Auto A/C Model).>	Go to step **3**.

	Step	Check	Yes	No
3	**CHECK HARNESS.** 1) Turn the ignition switch to ON. 2) Using the tester, measure the voltage between terminals. ***Connector & terminal*** ***(i173) No. 1 (+) — No. 2 (–):***	Is the voltage 4.5 — 5.0 V?	Even if DTC is displayed, the circuit has returned to a normal condition at this time. Reproduce the failure, and then perform the diagnosis again. NOTE: In this case, temporary poor contact of connector, temporary open or short circuit of harness may be the cause.	Go to step **4**.
4	**CHECK HARNESS (SHORTED BETWEEN LINES).** 1) Disconnect the connector from A/C CM. 2) Using a tester, check continuity between terminals. ***Connector & terminal*** ***(i173) No. 1 — No. 2:***	Is there continuity?	Repair or replace the short circuit of the harness.	Replace the A/C CM. <Ref. to AC-49, REMOVAL, Control Unit.>

C: DTC B1432 AMBIENT TEMPERATURE SENSOR CIRCUIT OPEN (AIR-CONDITIONER)

DTC DETECTING CONDITION:

- Ambient sensor to combination meter circuit is open.
- Data to be received from the combination meter via CAN communication do not arrive.

TROUBLE SYMPTOM:

- Defective ambient temperature display
- Ambient temperature is falsely recognized as 15.2°C, and the compartment temperature is adjusted.

WIRING DIAGRAM:

NOTE:
For the coupling connector, refer to “WIRING SYSTEM”.
Air conditioning system <Ref. to WI-94, WIRING DIAGRAM, Air Conditioning System.>

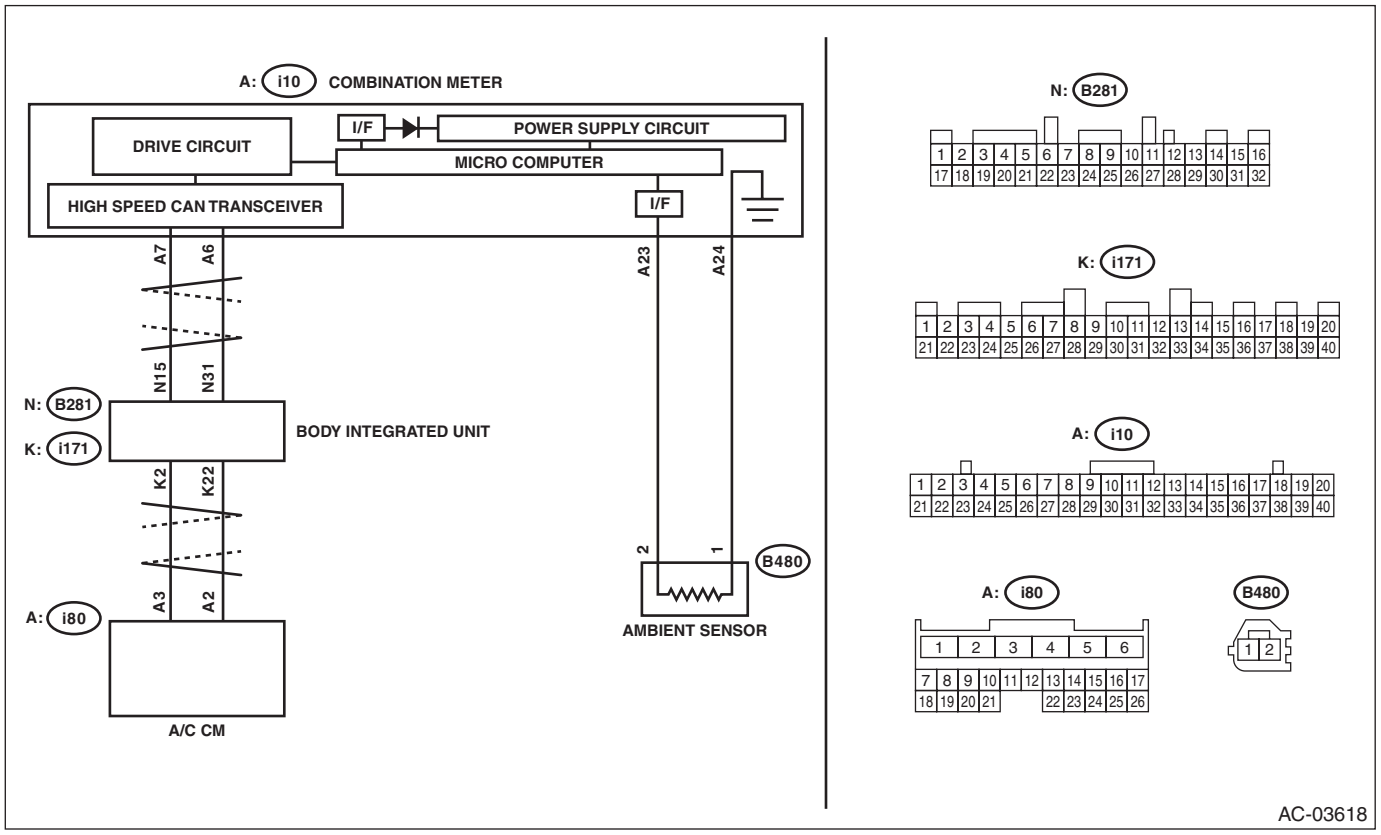

Step		Check	Yes	No
1	**CHECK CONNECTOR.** 1) Check the connecting conditions of combination meter connector and ambient sensor connector. 2) Read the DTC using Subaru Select Monitor. <Ref. to AC(diag)-43, Read Diagnostic Trouble Code (DTC).>	Is B1432 displayed?	Go to step **2**.	Even if DTC is displayed, the circuit has returned to a normal condition at this time. Reproduce the failure, and then perform the diagnosis again. NOTE: In this case, temporary poor contact of connector, temporary open or short circuit of harness may be the cause.

	Step	Check	Yes	No
2	**CHECK AMBIENT SENSOR.** 1) Disconnect the ambient sensor. 2) Short the connector B480. 3) Read the DTC of the A/C CM using the Subaru Select Monitor. <Ref. to AC(diag)-43, Read Diagnostic Trouble Code (DTC).>	Is B1433 displayed?	Replace the ambient sensor. <Ref. to AC-71, REMOVAL, Ambient Sensor.>	Go to step **3**.
3	**CHECK HARNESS.** 1) Restore the temporary shorted lines made in step 2. 2) Turn the ignition switch to ON. 3) Using the tester, measure the voltage between terminals. ***Connector & terminal*** ***(B480) No. 1 (+) — No. 2 (–):***	Is the voltage 4.5 — 5.0 V?	Go to step **4**.	Repair or replace the open circuit of harness.
4	**CHECK HARNESS (OPEN CIRCUIT).** 1) Disconnect the connector from the combination meter. 2) Using a tester, check continuity between terminals. ***Connector & terminal*** ***(B480) No. 1 — (i10) No. 24:*** ***(B480) No. 2 — (i10) No. 23:***	Is there continuity?	Replace the combination meter. <Ref. to IDI-11, REMOVAL, Combination Meter.>	Repair or replace the open circuit of harness.

D: DTC B1433 AMBIENT TEMPERATURE SENSOR CIRCUIT SHORT-CIRCUIT (AIR-CONDITIONER)

DTC DETECTING CONDITION:

- Ambient sensor to combination meter circuit is shorted.
- Data to be received from the combination meter via CAN communication do not arrive.

TROUBLE SYMPTOM:

- Defective ambient temperature display
- Ambient temperature is falsely recognized as 15.2°C, and the compartment temperature is adjusted.

WIRING DIAGRAM:

NOTE:
For the coupling connector, refer to “WIRING SYSTEM”.
Air conditioning system <Ref. to WI-94, WIRING DIAGRAM, Air Conditioning System.>

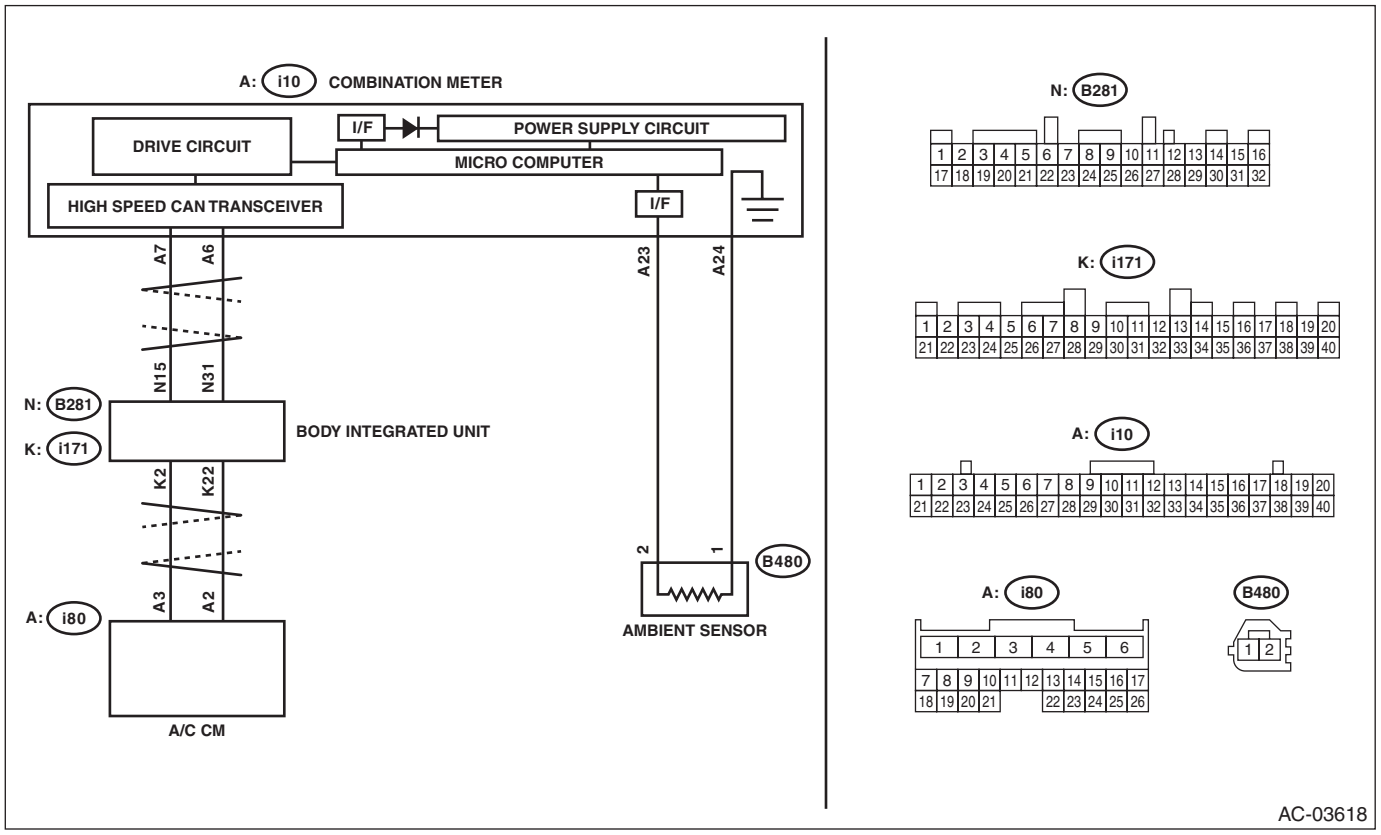

Step		Check	Yes	No
1	**CHECK CONNECTOR.** 1) Check the connecting conditions of combination meter connector and ambient sensor connector. 2) Read the DTC using Subaru Select Monitor. <Ref. to AC(diag)-43, Read Diagnostic Trouble Code (DTC).>	Is B1433 displayed?	Go to step **2**.	Even if DTC is displayed, the circuit has returned to a normal condition at this time. Reproduce the failure, and then perform the diagnosis again. NOTE: In this case, temporary poor contact of connector, temporary open or short circuit of harness may be the cause.

	Step	Check	Yes	No
2	**CHECK AMBIENT SENSOR.** 1) Disconnect the ambient sensor. <Ref. to AC-71, REMOVAL, Ambient Sensor.> 2) Read the DTC of the A/C CM using the Subaru Select Monitor. <Ref. to AC(diag)-43, Read Diagnostic Trouble Code (DTC).>	Is B1432 displayed?	Replace the ambient sensor. <Ref. to AC-71, REMOVAL, Ambient Sensor.>	Go to step **3**.
3	**CHECK HARNESS.** 1) Turn the ignition switch to ON. 2) Using the tester, measure the voltage between terminals. ***Connector & terminal*** ***(B480) No. 1 (+) — No. 2 (–):***	Is the voltage 4.5 — 5.0 V?	Even if DTC is displayed, the circuit has returned to a normal condition at this time. Reproduce the failure, and then perform the diagnosis again. NOTE: In this case, temporary poor contact of connector, temporary open or short circuit of harness may be the cause.	Go to step **4**.
4	**CHECK HARNESS (SHORTED BETWEEN LINES).** 1) Disconnect the connector from the combination meter. 2) Using a tester, check continuity between terminals. ***Connector & terminal*** ***(B480) No. 1 — No. 2:***	Is there continuity?	Repair or replace the short circuit of the harness.	Replace the combination meter. <Ref. to IDI-11, REMOVAL, Combination Meter.>

E: DTC B1434 EVAPORATOR TEMPERATURE SENSOR CIRCUIT OPEN

DTC DETECTING CONDITION:
Evaporator sensor circuit is open.

TROUBLE SYMPTOM:
- Compressor does not operate.
- Evaporator temperature is falsely recognized as low, and the compartment temperature is adjusted.

WIRING DIAGRAM:
Air conditioning system <Ref. to WI-94, WIRING DIAGRAM, Air Conditioning System.>

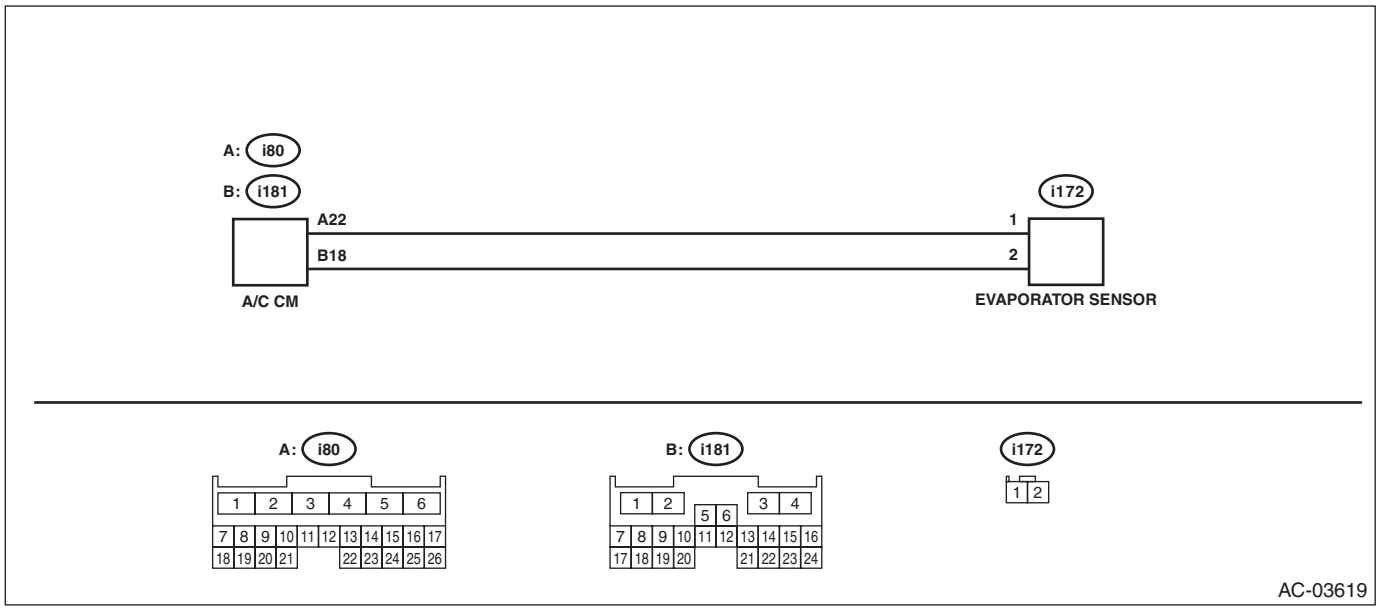

	Step	Check	Yes	No
1	**CHECK CONNECTOR.** 1) Check connecting condition of the A/C CM connector and evaporator sensor connector. 2) Read the DTC using Subaru Select Monitor. <Ref. to AC(diag)-43, Read Diagnostic Trouble Code (DTC).>	Is B1434 displayed?	Go to step **2**.	Even if DTC is displayed, the circuit has returned to a normal condition at this time. Reproduce the failure, and then perform the diagnosis again. NOTE: In this case, temporary poor contact of connector, temporary open or short circuit of harness may be the cause.
2	**CHECK EVAPORATOR SENSOR.** 1) Disconnect the evaporator sensor. 2) Short the i172 connector. 3) Read the DTC of the A/C CM using the Subaru Select Monitor. <Ref. to AC(diag)-43, Read Diagnostic Trouble Code (DTC).>	Is B1435 displayed?	Replace the evaporator sensor. <Ref. to AC-61, REMOVAL, Evaporator.>	Go to step **3**.

	Step	Check	Yes	No
3	**CHECK HARNESS.** 1) Restore the temporary shorted lines made in step 2. 2) Turn the ignition switch to ON. 3) Using the tester, measure the voltage between terminals. ***Connector & terminal*** ***(i172) No. 1 (+) — No. 2 (–):***	Is the voltage 4.5 — 5.0 V?	Go to step **4**.	Repair or replace the open circuit of harness.
4	**CHECK HARNESS (OPEN CIRCUIT).** 1) Disconnect the connector from A/C CM. 2) Using a tester, check continuity between terminals. ***Connector & terminal*** ***(i172) No. 1 — (i80) No. 22:*** ***(i172) No. 2 — (i181) No. 18:***	Is there continuity?	Replace the A/C CM. <Ref. to AC-49, REMOVAL, Control Unit.>	Repair or replace the open circuit of harness.

F: DTC B1435 EVAPORATOR TEMPERATURE SENSOR CIRCUIT SHORT-CIRCUIT

DTC DETECTING CONDITION:
Evaporator sensor circuit is shorted.
TROUBLE SYMPTOM:
- Compressor does not operate. (Variable compressor)
- Evaporator temperature is falsely recognized as high, and the compartment temperature is adjusted.

WIRING DIAGRAM:
Air conditioning system <Ref. to WI-94, WIRING DIAGRAM, Air Conditioning System.>

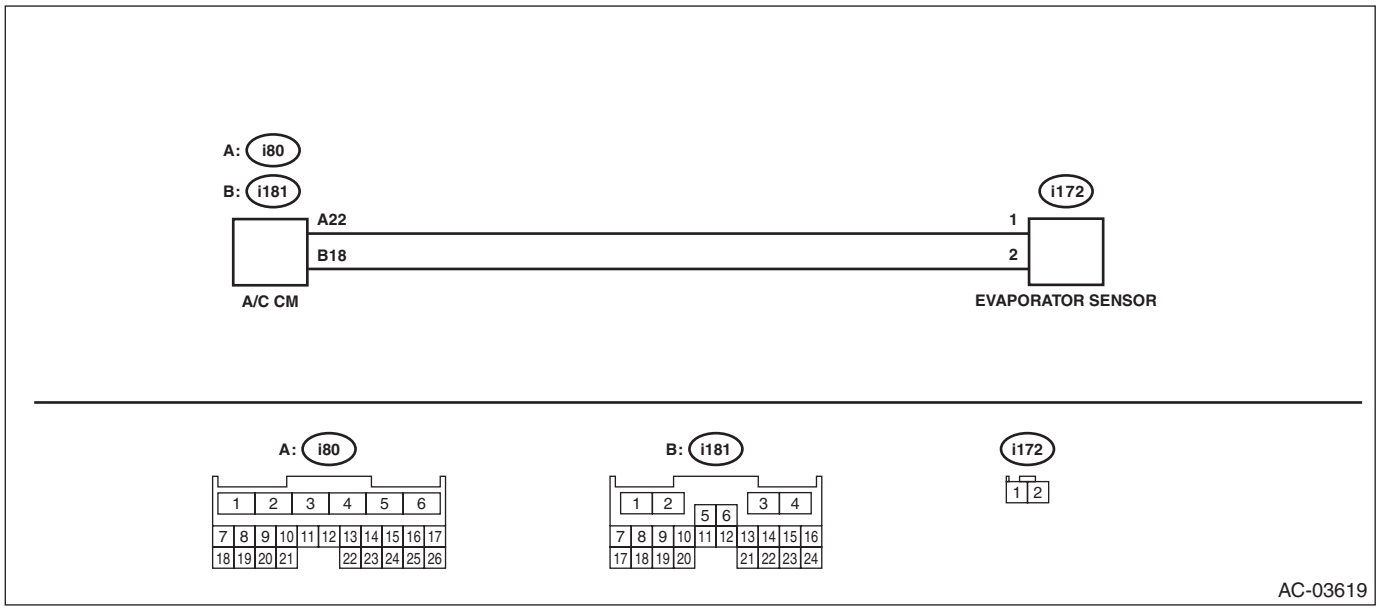

Step		Check	Yes	No
1	**CHECK CONNECTOR.** 1) Check connecting condition of the A/C CM connector and evaporator sensor connector. 2) Read the DTC using Subaru Select Monitor. <Ref. to AC(diag)-43, Read Diagnostic Trouble Code (DTC).>	Is B1435 displayed?	Go to step **2**.	Even if DTC is displayed, the circuit has returned to a normal condition at this time. Reproduce the failure, and then perform the diagnosis again. NOTE: In this case, temporary poor contact of connector, temporary open or short circuit of harness may be the cause.
2	**CHECK EVAPORATOR SENSOR.** 1) Disconnect the evaporator sensor. 2) Read the DTC of the A/C CM using the Subaru Select Monitor. <Ref. to AC(diag)-43, Read Diagnostic Trouble Code (DTC).>	Is B1434 displayed?	Replace the evaporator sensor. <Ref. to AC-61, REMOVAL, Evaporator.>	Go to step **3**.

	Step	Check	Yes	No
3	**CHECK HARNESS.** 1) Turn the ignition switch to ON. 2) Using the tester, measure the voltage between terminals. ***Connector & terminal*** ***(i172) No. 1 (+) — No. 2 (–):***	Is the voltage 4.5 — 5.0 V?	Even if DTC is displayed, the circuit has returned to a normal condition at this time. Reproduce the failure, and then perform the diagnosis again. NOTE: In this case, temporary poor contact of connector, temporary open or short circuit of harness may be the cause.	Go to step **4**.
4	**CHECK HARNESS (SHORTED BETWEEN LINES).** 1) Disconnect the connector from A/C CM. 2) Using a tester, check continuity between terminals. ***Connector & terminal*** ***(i172) No. 1 — No. 2:***	Is there continuity?	Repair or replace the short circuit of the harness.	Replace the A/C CM. <Ref. to AC-49, REMOVAL, Control Unit.>

G: DTC B1436 AIR MIX DOOR ACTUATOR CIRCUIT OPEN (PASSENGER)

DTC DETECTING CONDITION:
Air mix door actuator potentiometer circuit is open.
TROUBLE SYMPTOM:
Temperature of the passenger's side cannot be adjusted for model with left/right independent air conditioner.
WIRING DIAGRAM:
Air conditioning system <Ref. to WI-94, WIRING DIAGRAM, Air Conditioning System.>

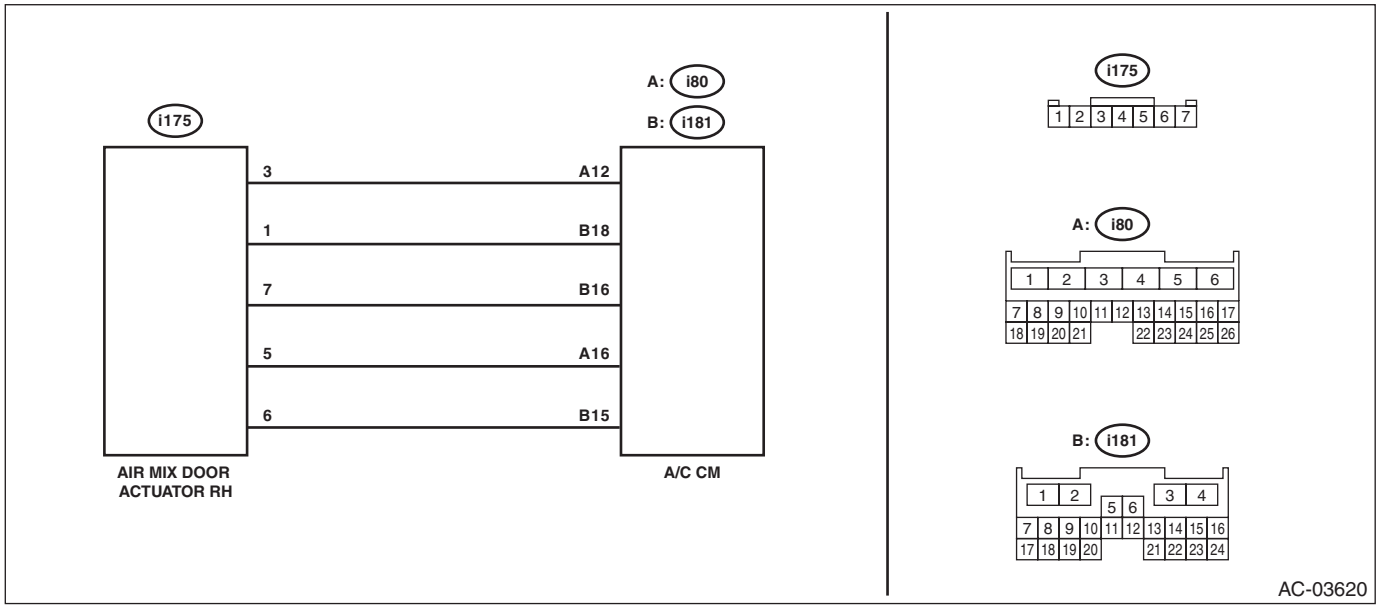

Step		Check	Yes	No
1	**CHECK CONNECTOR.** 1) Check connecting condition of the A/C CM connector and air mix door actuator RH connector. 2) Read the DTC using Subaru Select Monitor. <Ref. to AC(diag)-43, Read Diagnostic Trouble Code (DTC).>	Is B1436 displayed?	Go to step **2**.	Even if DTC is displayed, the circuit has returned to a normal condition at this time. Reproduce the failure, and then perform the diagnosis again. NOTE: In this case, temporary poor contact of connector, temporary open or short circuit of harness may be the cause.
2	**CHECK ACTUATOR.** 1) Disconnect the air mix door actuator RH. 2) Short No. 1 and No. 5 of connector i175. 3) Read the DTC using Subaru Select Monitor. <Ref. to AC(diag)-43, Read Diagnostic Trouble Code (DTC).>	Is B1437 displayed?	Replace the air mix door actuator RH. <Ref. to AC-86, REMOVAL, Air Mix Door Actuator.>	Go to step **3**.
3	**CHECK HARNESS.** 1) Restore the temporary shorted lines made in step 2. 2) Turn the ignition switch to ON. 3) Using the tester, measure the voltage between terminals. ***Connector & terminal*** ***(i175) No. 3 (+) — No. 1 (–):***	Is the voltage 4.5 — 5.0 V?	Go to step **4**.	Repair or replace the open circuit of harness.

Step		Check	Yes	No
4	**CHECK HARNESS (OPEN CIRCUIT).** 1) Disconnect the connector from A/C CM. 2) Using the tester, measure the resistance between terminals. ***Connector & terminal*** ***(i175) No. 1 — (i181) No. 18:*** ***(i175) No. 3 — (i80) No. 12:*** ***(i175) No. 5 — (i80) No. 16:***	Is there continuity?	Replace the A/C CM. <Ref. to AC-49, REMOVAL, Control Unit.>	Repair or replace the open circuit of harness.

H: DTC B1437 AIR MIX DOOR ACTUATOR CIRCUIT SHORT-CIRCUIT (PASSENGER)

DTC DETECTING CONDITION:
Air mix door actuator potentiometer circuit is shorted.
TROUBLE SYMPTOM:
Temperature of the passenger's side cannot be adjusted for model with left/right independent air conditioner.
WIRING DIAGRAM:
Air conditioning system <Ref. to WI-94, WIRING DIAGRAM, Air Conditioning System.>

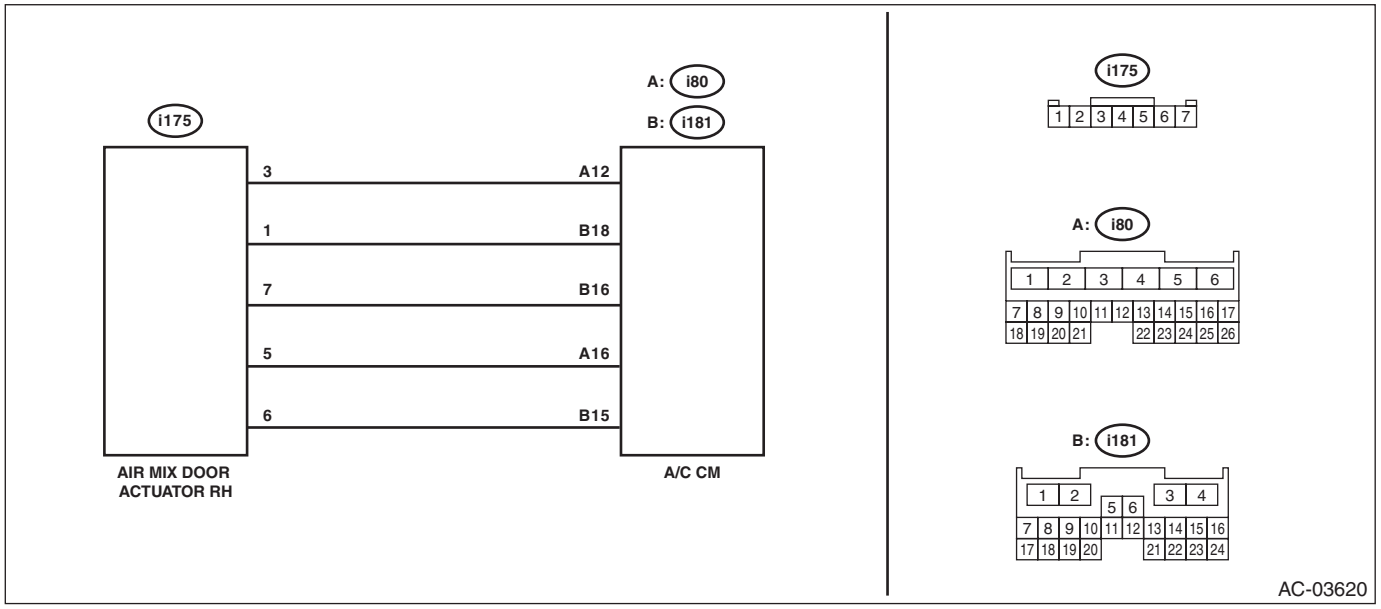

Step		Check	Yes	No
1	**CHECK CONNECTOR.** 1) Check connecting condition of the A/C CM connector and air mix door actuator RH connector. 2) Read the DTC using Subaru Select Monitor. <Ref. to AC(diag)-43, Read Diagnostic Trouble Code (DTC).>	Is B1437 displayed?	Go to step **2**.	Even if DTC is displayed, the circuit has returned to a normal condition at this time. Reproduce the failure, and then perform the diagnosis again. NOTE: In this case, temporary poor contact of connector, temporary open or short circuit of harness may be the cause.
2	**CHECK ACTUATOR.** 1) Disconnect the air mix door actuator RH. 2) Read the DTC of the A/C CM using the Subaru Select Monitor. <Ref. to AC(diag)-43, Read Diagnostic Trouble Code (DTC).>	Is B1436 displayed?	Replace the air mix door actuator RH. <Ref. to AC-86, REMOVAL, Air Mix Door Actuator.>	Go to step **3**.
3	**CHECK HARNESS.** 1) Turn the ignition switch to ON. 2) Using the tester, measure the voltage between terminals. ***Connector & terminal*** ***(i175) No. 3 (+) — No. 1 (–):***	Is the voltage 4.5 — 5.0 V?	Go to step **4**.	Repair or replace the open circuit of harness.

	Step	Check	Yes	No
4	**CHECK HARNESS (SHORTED BETWEEN LINES AND SHORTED TO GROUND).** 1) Disconnect the connector from A/C CM. 2) Using a tester, check continuity between terminals. ***Connector & terminal*** ***(i175) No. 1 — No. 5:*** ***(i175) No. 5 — Chassis ground:***	Is there continuity?	Repair or replace the short circuit of the harness.	Replace the A/C CM. <Ref. to AC-49, REMOVAL, Control Unit.>

I: DTC B1438 MODE DOOR ACTUATOR CIRCUIT OPEN

DTC DETECTING CONDITION:
Mode door actuator potentiometer circuit is open.
TROUBLE SYMPTOM:
Vent does not change.
WIRING DIAGRAM:
Air conditioning system <Ref. to WI-94, WIRING DIAGRAM, Air Conditioning System.>

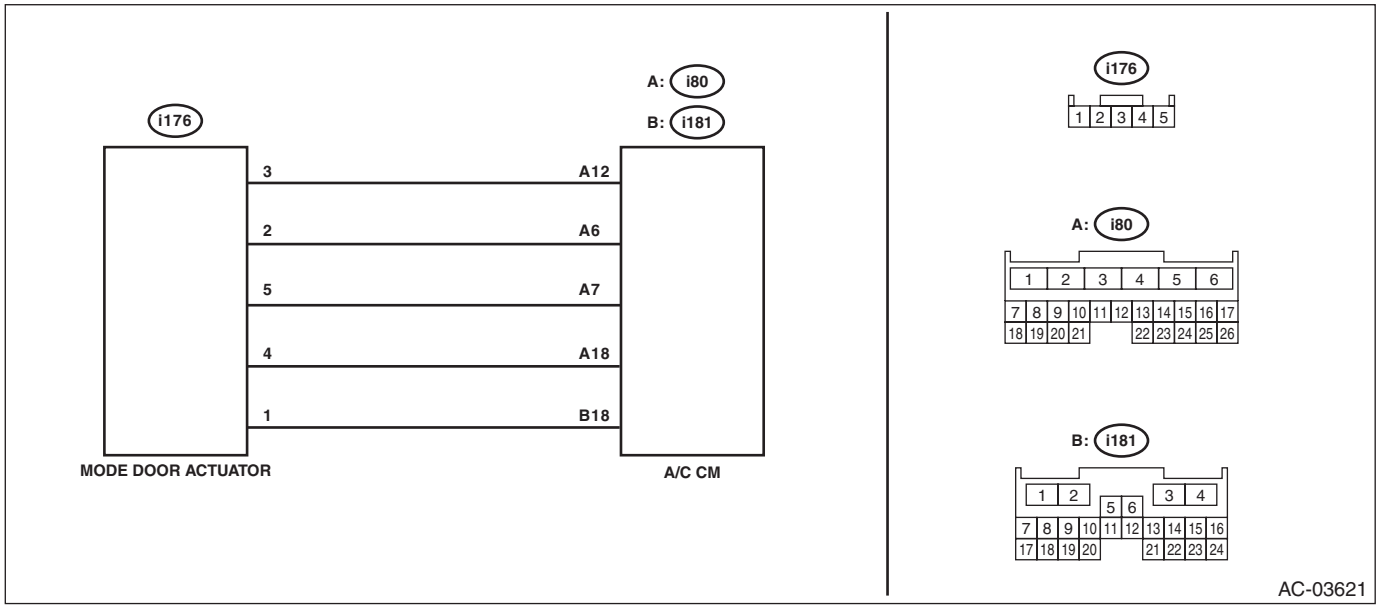

Step		Check	Yes	No
1	**CHECK CONNECTOR.** 1) Check connecting condition of the A/C CM connector and mode door actuator connector. 2) Read the DTC using Subaru Select Monitor. <Ref. to AC(diag)-43, Read Diagnostic Trouble Code (DTC).>	Is B1438 displayed?	Go to step **2**.	Even if DTC is displayed, the circuit has returned to a normal condition at this time. Reproduce the failure, and then perform the diagnosis again. NOTE: In this case, temporary poor contact of connector, temporary open or short circuit of harness may be the cause.
2	**CHECK ACTUATOR.** 1) Disconnect the mode door actuator. 2) Short No. 2 and No. 3 of (i176) connector. 3) Read the DTC using Subaru Select Monitor. <Ref. to AC(diag)-43, Read Diagnostic Trouble Code (DTC).>	Is B1439 displayed?	Replace the mode door actuator. <Ref. to AC-83, REMOVAL, Mode Door Actuator.>	Go to step **3**.
3	**CHECK HARNESS.** 1) Restore the temporary shorted lines made in step 2. 2) Turn the ignition switch to ON. 3) Using the tester, measure the voltage between terminals. ***Connector & terminal*** ***(i176) No. 1 (+) — No. 2 (–):***	Is the voltage 4.5 — 5.0 V?	Go to step **4**.	Repair the open circuit of harness.

Step		Check	Yes	No
4	**CHECK HARNESS (OPEN CIRCUIT).** Using a tester, check continuity between terminals. ***Connector & terminal*** ***(i176) No. 1 — (i181) No. 18:*** ***(i176) No. 2 — (i80) No. 6:*** ***(i176) No. 3 — (i80) No. 12:***	Is there continuity?	Replace the A/C CM. <Ref. to AC-49, REMOVAL, Control Unit.>	Repair or replace the open circuit of harness.

J: DTC B1439 MODE DOOR ACTUATOR CIRCUIT SHORT-CIRCUIT

DTC DETECTING CONDITION:
Mode door actuator potentiometer circuit is shorted.
TROUBLE SYMPTOM:
Vent does not change.
WIRING DIAGRAM:
Air conditioning system <Ref. to WI-94, WIRING DIAGRAM, Air Conditioning System.>

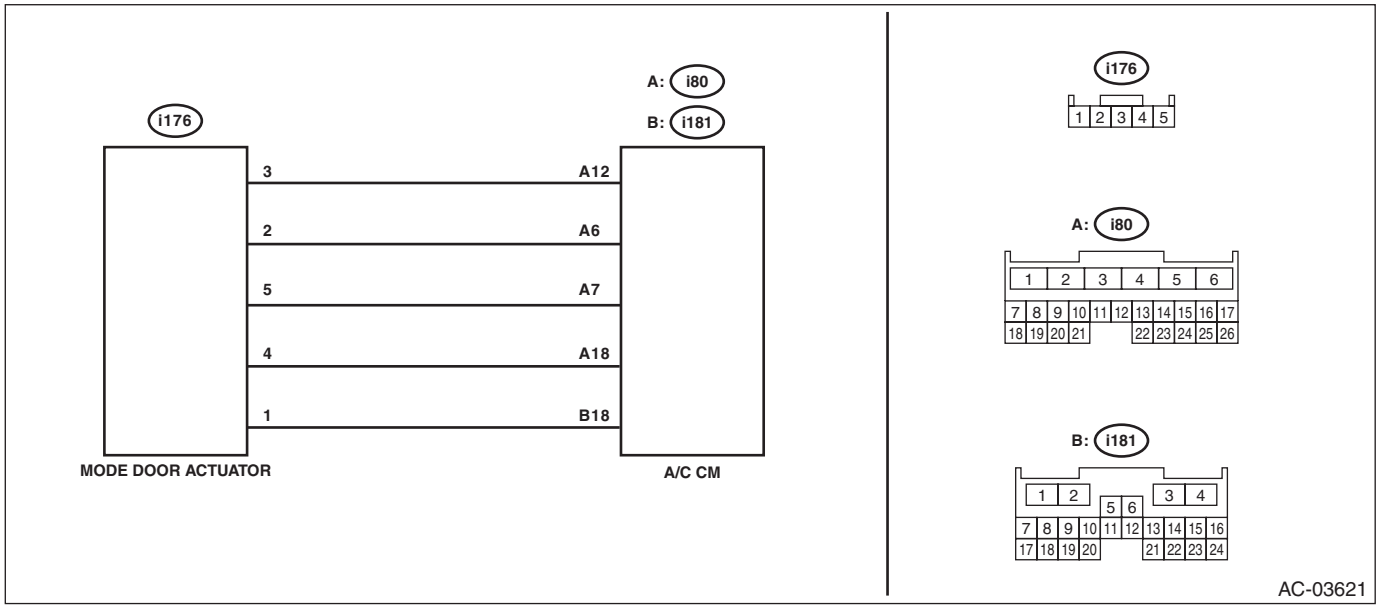

Step		Check	Yes	No
1	**CHECK CONNECTOR.** 1) Check connecting condition of the A/C CM connector and mode door actuator connector. 2) Read the DTC using Subaru Select Monitor. <Ref. to AC(diag)-43, Read Diagnostic Trouble Code (DTC).>	Is B1439 displayed?	Go to step **2**.	Even if DTC is displayed, the circuit has returned to a normal condition at this time. Reproduce the failure, and then perform the diagnosis again. NOTE: In this case, temporary poor contact of connector, temporary open or short circuit of harness may be the cause.
2	**CHECK ACTUATOR.** 1) Disconnect the mode door actuator. 2) Read the DTC using Subaru Select Monitor. <Ref. to AC(diag)-43, Read Diagnostic Trouble Code (DTC).>	Is B1438 displayed?	Replace the mode door actuator. <Ref. to AC-83, REMOVAL, Mode Door Actuator.>	Go to step **3**.
3	**CHECK HARNESS (SHORTED BETWEEN LINES AND SHORTED TO GROUND).** 1) Disconnect the connector from A/C CM. 2) Using a tester, check continuity between terminals. ***Connector & terminal*** ***(i176) No. 2 — No. 3:*** ***(i176) No. 3 — Chassis ground:***	Is there continuity?	Repair or replace the short circuit of the harness.	Replace the A/C CM. <Ref. to AC-49, REMOVAL, Control Unit.>

K: DTC B1440 AIR MIX DOOR ACTUATOR CIRCUIT OPEN (DRIVER)

DTC DETECTING CONDITION:
Air mix door actuator potentiometer circuit is open.

TROUBLE SYMPTOM:
- Temperature cannot be adjusted.
- Temperature of the driver's side cannot be adjusted for model with left/right independent air conditioner.

WIRING DIAGRAM:
Air conditioning system <Ref. to WI-94, WIRING DIAGRAM, Air Conditioning System.>

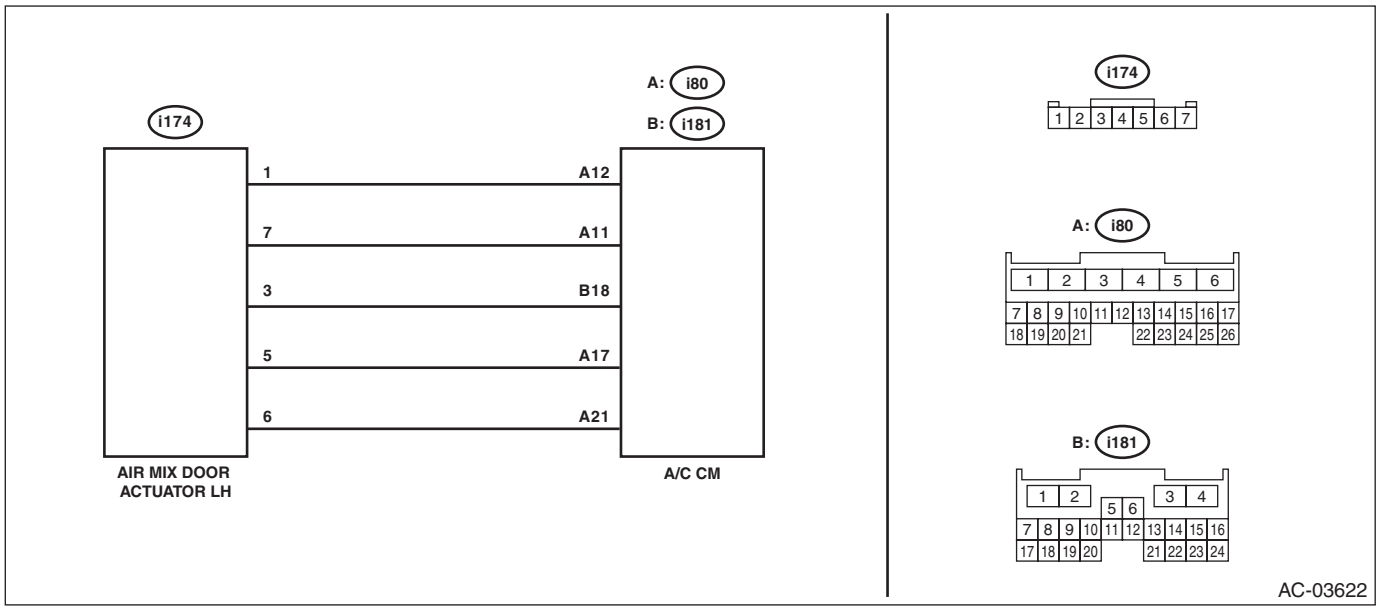

Step		Check	Yes	No
1	**CHECK CONNECTOR.** 1) Check connecting condition of the A/C CM connector and air mix door actuator LH connector. 2) Read the DTC using Subaru Select Monitor. <Ref. to AC(diag)-43, Read Diagnostic Trouble Code (DTC).>	Is B1440 displayed?	Go to step **2**.	Even if DTC is displayed, the circuit has returned to a normal condition at this time. Reproduce the failure, and then perform the diagnosis again. NOTE: In this case, temporary poor contact of connector, temporary open or short circuit of harness may be the cause.
2	**CHECK ACTUATOR.** 1) Disconnect the air mix door actuator LH. 2) Short No. 3 and No. 5 of i174 connector. 3) Read the DTC using Subaru Select Monitor. <Ref. to AC(diag)-43, Read Diagnostic Trouble Code (DTC).>	Is B1442 displayed?	Replace the air mix door actuator LH. <Ref. to AC-86, REMOVAL, Air Mix Door Actuator.>	Go to step **3**.

	Step	Check	Yes	No
3	**CHECK HARNESS.** 1) Restore the temporary shorted lines made in step 2. 2) Turn the ignition switch to ON. 3) Using the tester, measure the voltage between terminals. ***Connector & terminal*** ***(i174) No. 1 (+) — No. 3 (–):***	Is the voltage 4.5 — 5.0 V?	Go to step **4**.	Repair or replace the open circuit of harness.
4	**CHECK HARNESS (OPEN CIRCUIT).** 1) Disconnect the connector from A/C CM. 2) Using a tester, check continuity between terminals. ***Connector & terminal*** ***(i174) No. 1 — (i80) No. 12:*** ***(i174) No. 3 — (i181) No. 18:*** ***(i174) No. 5 — (i80) No. 17:***	Is there continuity?	Replace the A/C CM. <Ref. to AC-49, REMOVAL, Control Unit.>	Repair or replace the open circuit of harness.

L: DTC B1441 AIR MIX DOOR ACTUATOR CIRCUIT STUCK (PASSENGER)

DTC DETECTING CONDITION:
Air mix door actuator RH is locked.

TROUBLE SYMPTOM:
Temperature of the passenger's side cannot be adjusted for model with left/right independent air conditioner.

WIRING DIAGRAM:
Air conditioning system <Ref. to WI-94, WIRING DIAGRAM, Air Conditioning System.>

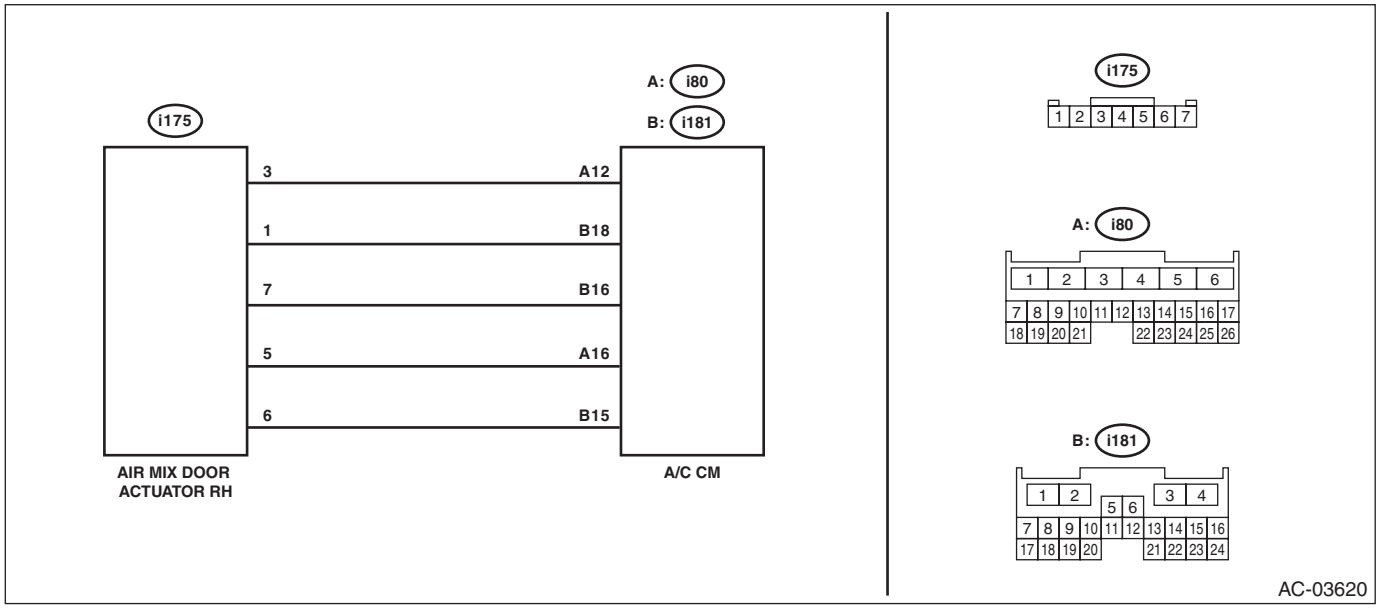

Step		Check	Yes	No
1	**CHECK CONNECTOR.** 1) Check connecting condition of the A/C CM connector and air mix door actuator RH connector. 2) Read the DTC using Subaru Select Monitor. <Ref. to AC(diag)-43, Read Diagnostic Trouble Code (DTC).>	Is B1441 displayed?	Go to step **2**.	Even if DTC is displayed, the circuit has returned to a normal condition at this time. Reproduce the failure, and then perform the diagnosis again. NOTE: In this case, temporary poor contact of connector, temporary open or short circuit of harness may be the cause.
2	**CHECK ACTUATOR.** Using the Subaru Select Monitor, change the setting of «Air mix Dr Act Trgt Open Angle(Pas's)» from the A/C diagnosis and perform the system operation check. <Ref. to AC(diag)-49, System Operation Check Mode.>	Did the actuator move to the specified target opening angle?	Air mix door actuator circuit is normal.	Go to step **3**.
3	**CHECK HARNESS.** 1) Disconnect the air mix door actuator RH connector (i175). 2) Turn the ignition switch to ON. 3) Using the tester, measure the voltage between terminals. ***Connector & terminal*** ***(i175) No. 3 (+) — No. 1 (–):***	Is the voltage 4.5 — 5.0 V?	Go to step **4**.	Repair or replace the open, short circuit of the harness.

	Step	Check	Yes	No
4	**CHECK HARNESS (OPEN CIRCUIT).** 1) Disconnect the connector from A/C CM. 2) Using a tester, check continuity between terminals. ***Connector & terminal*** ***(i175) No. 5 — (i80) No. 16:*** ***(i175) No. 3 — (i80) No. 12:*** ***(i175) No. 1 — (i181) No. 18:*** ***(i175) No. 7 — (i181) No. 16:*** ***(i175) No. 6 — (i181) No. 15:***	Is there continuity?	Go to step **5**.	Repair or replace the open circuit of harness.
5	**CHECK AIR MIX DOOR ACTUATOR RH.** Check the air mix door actuator RH parts. <Ref. to AC-88, INSPECTION, Air Mix Door Actuator.>	Is the air mix door actuator RH normal?	Replace the A/C CM. <Ref. to AC-49, REMOVAL, Control Unit.>	Replace the air mix door actuator RH. <Ref. to AC-86, REMOVAL, Air Mix Door Actuator.>

M: DTC B1442 AIR MIX DOOR ACTUATOR CIRCUIT SHORT-CIRCUIT (DRIVER)

DTC DETECTING CONDITION:
Air mix door actuator potentiometer circuit is shorted.

TROUBLE SYMPTOM:
- Temperature cannot be adjusted.
- Temperature of the driver's side cannot be adjusted for model with left/right independent air conditioner.

WIRING DIAGRAM:
Air conditioning system <Ref. to WI-94, WIRING DIAGRAM, Air Conditioning System.>

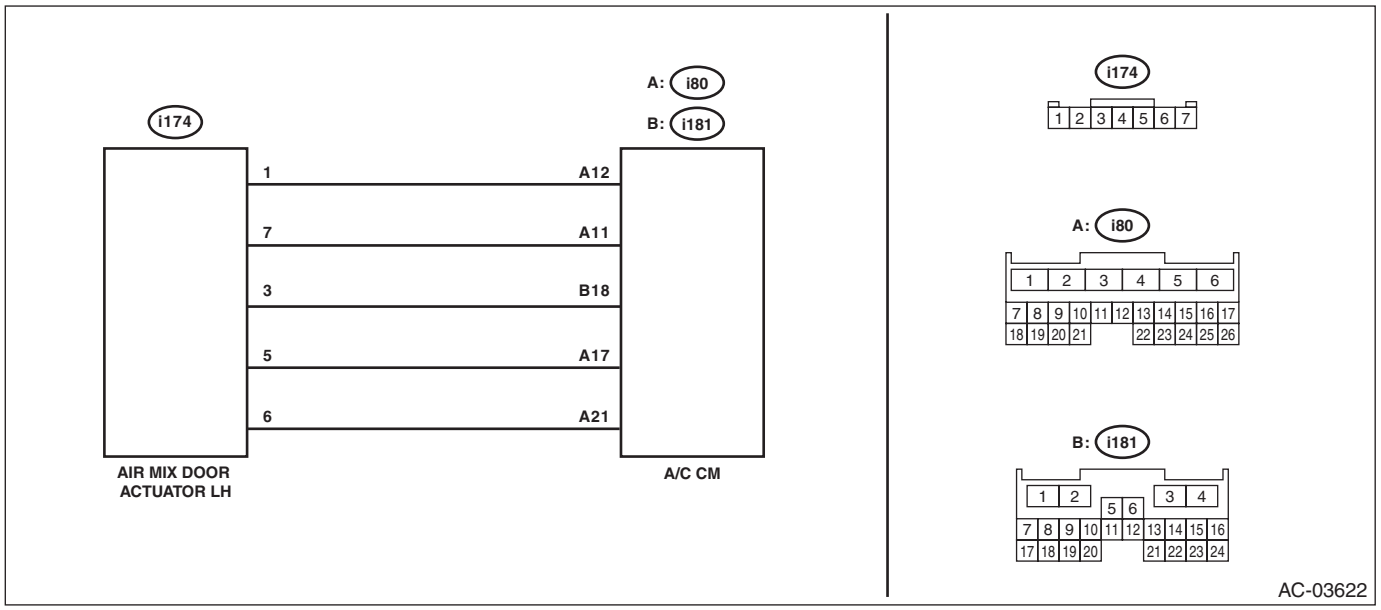

Step		Check	Yes	No
1	**CHECK CONNECTOR.** 1) Check connecting condition of the A/C CM connector and air mix door actuator LH connector. 2) Read the DTC using Subaru Select Monitor. <Ref. to AC(diag)-43, Read Diagnostic Trouble Code (DTC).>	Is B1442 displayed?	Go to step **2**.	Even if DTC is displayed, the circuit has returned to a normal condition at this time. Reproduce the failure, and then perform the diagnosis again. NOTE: In this case, temporary poor contact of connector, temporary open or short circuit of harness may be the cause.
2	**CHECK AIR MIX DOOR ACTUATOR LH.** 1) Disconnect the air mix door actuator LH. 2) Read the DTC using Subaru Select Monitor. <Ref. to AC(diag)-43, Read Diagnostic Trouble Code (DTC).>	Is B1440 displayed?	Replace the air mix door actuator LH. <Ref. to AC-86, REMOVAL, Air Mix Door Actuator.>	Go to step **3**.

	Step	Check	Yes	No
3	**CHECK HARNESS (SHORTED BETWEEN LINES AND SHORTED TO GROUND).** 1) Disconnect the connector from A/C CM. 2) Using a tester, check continuity between terminals. ***Connector & terminal*** ***(i174) No. 3 — (i174) No. 5:*** ***(i174) No. 5 — Chassis ground:***	Is there continuity?	Repair or replace the short circuit of the harness.	Replace the A/C CM. <Ref. to AC-49, REMOVAL, Control Unit.>

N: DTC B1443 MODE DOOR ACTUATOR CIRCUIT STUCK

DTC DETECTING CONDITION:
Mode door actuator is locked.
TROUBLE SYMPTOM:
Vent does not change.
WIRING DIAGRAM:
Air conditioning system <Ref. to WI-94, WIRING DIAGRAM, Air Conditioning System.>

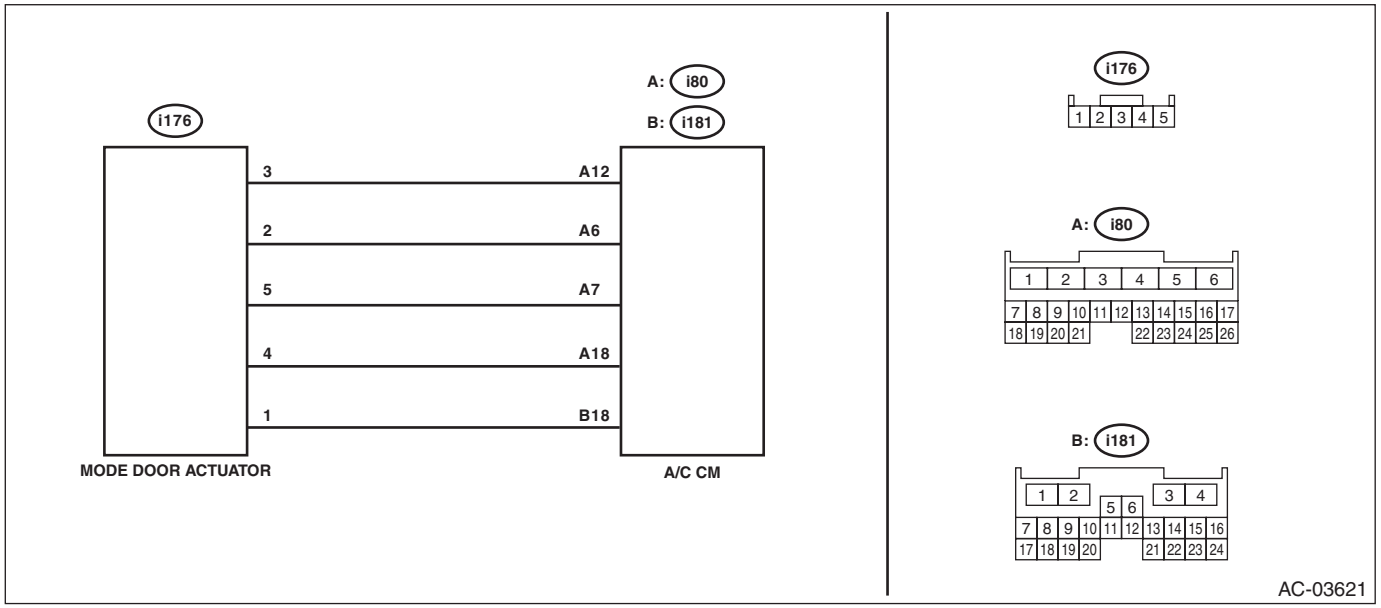

Step		Check	Yes	No
1	**CHECK CONNECTOR.** 1) Check connecting condition of the A/C CM connector and mode door actuator connector. 2) Read the DTC using Subaru Select Monitor. <Ref. to AC(diag)-43, Read Diagnostic Trouble Code (DTC).>	Is B1443 displayed?	Go to step **2**.	Even if DTC is displayed, the circuit has returned to a normal condition at this time. Reproduce the failure, and then perform the diagnosis again. NOTE: In this case, temporary poor contact of connector, temporary open or short circuit of harness may be the cause.
2	**CHECK ACTUATOR.** Using the Subaru Select Monitor, change the setting of «Mode Door Actuator Opening Angle Target» from the A/C diagnosis and perform the system operation check. <Ref. to AC(diag)-49, System Operation Check Mode.>	Did the mode door actuator move to the specified target opening angle?	Mode door actuator circuit is normal.	Go to step **3**.
3	**CHECK HARNESS.** 1) Turn the ignition switch to ON. 2) Using the tester, measure the voltage between terminals. ***Connector & terminal*** ***(i176) No. 2 (+) — No. 1 (–):***	Is the voltage 4.5 — 5.0 V?	Go to step **4**.	Repair or replace the open, short circuit of the harness.

	Step	Check	Yes	No
4	**CHECK HARNESS (OPEN CIRCUIT).** 1) Disconnect the connector from A/C CM. 2) Using a tester, check continuity between terminals. ***Connector & terminal*** ***(i176) No. 3 — (i80) No. 12:*** ***(i176) No. 1 — (i181) No. 18:*** ***(i176) No. 2 — (i80) No. 6:*** ***(i176) No. 4 — (i80) No. 18:*** ***(i176) No. 5 — (i80) No. 7:***	Is there continuity?	Go to step **5**.	Repair or replace the open circuit of harness.
5	**CHECK MODE DOOR ACTUATOR.** Check the mode door actuator parts. <Ref. to AC-84, INSPECTION, Mode Door Actuator.>	Is the mode door actuator OK?	Replace the A/C CM. <Ref. to AC-49, REMOVAL, Control Unit.>	Replace the mode door actuator. <Ref. to AC-83, REMOVAL, Mode Door Actuator.>

O: DTC B1446 AIR MIX DOOR ACTUATOR CIRCUIT STUCK (DRIVER)

DTC DETECTING CONDITION:

- Air mix door actuator LH is locked.
- The potentiometer value of the actuator does not change.

TROUBLE SYMPTOM:

Temperature of the driver's side cannot be adjusted for model with left/right independent air conditioner.

WIRING DIAGRAM:

Air conditioning system <Ref. to WI-94, WIRING DIAGRAM, Air Conditioning System.>

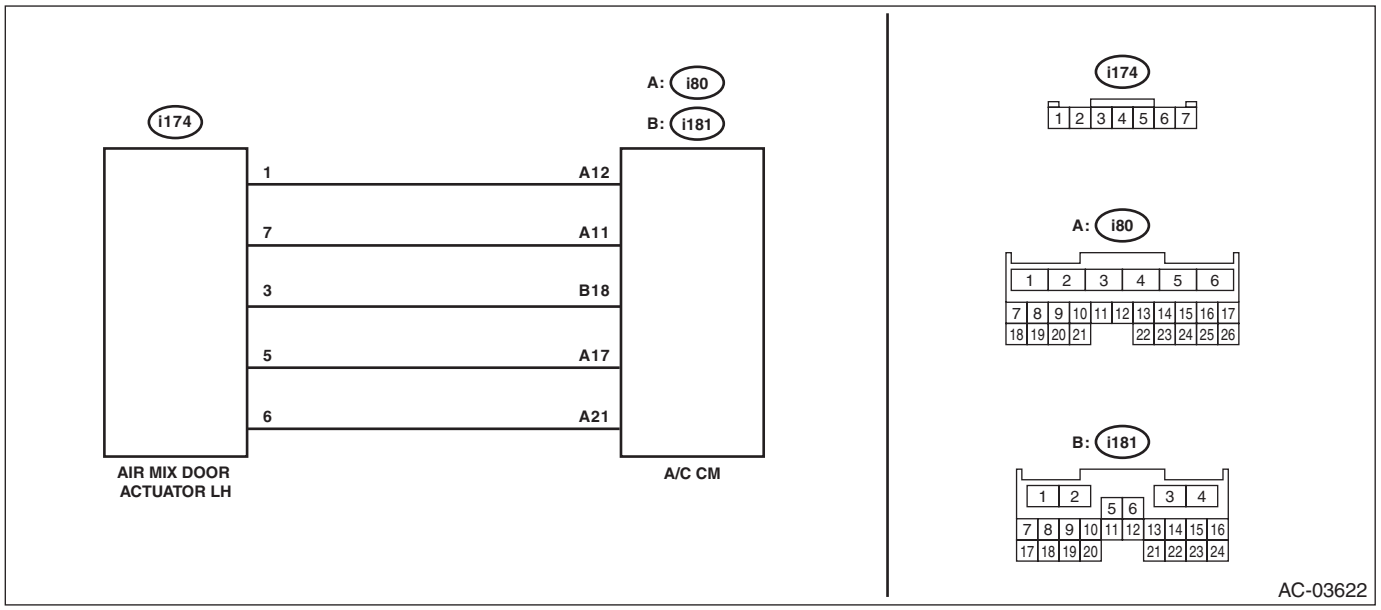

	Step	Check	Yes	No
1	**CHECK CONNECTOR.** 1) Check connecting condition of the A/C CM connector and air mix door actuator LH connector. 2) Read the DTC using Subaru Select Monitor. <Ref. to AC(diag)-43, Read Diagnostic Trouble Code (DTC).>	Is B1446 displayed?	Go to step **2**.	Even if DTC is displayed, the circuit has returned to a normal condition at this time. Reproduce the failure, and then perform the diagnosis again. NOTE: In this case, temporary poor contact of connector, temporary open or short circuit of harness may be the cause.
2	**CHECK ACTUATOR.** Using the Subaru Select Monitor, change the setting of «Air mix Dr Act Trgt Open Angle(Driver's)» from the A/C diagnosis and perform the system operation check. <Ref. to AC(diag)-49, System Operation Check Mode.>	Did the air mix door actuator LH move to the specified target opening angle?	Air mix door actuator LH circuit is normal.	Go to step **3**.
3	**CHECK HARNESS.** 1) Turn the ignition switch to ON. 2) Using the tester, measure the voltage between terminals. ***Connector & terminal*** ***(i174) No. 1 (+) — No. 3 (–):***	Is the voltage 4.5 — 5.0 V?	Go to step **4**.	Repair or replace the open, short circuit of the harness.

	Step	Check	Yes	No
4	**CHECK HARNESS (OPEN CIRCUIT).** 1) Disconnect the connector from A/C CM. 2) Using a tester, check continuity between terminals. ***Connector & terminal*** ***(i174) No. 5 — (i80) No. 17:*** ***(i174) No. 1 — (i80) No. 12:*** ***(i174) No. 3 — (i181) No. 18:*** ***(i174) No. 6 — (i181) No. 21:*** ***(i174) No. 7 — (i181) No. 11:***	Is there continuity?	Go to step **5**.	Repair or replace the open circuit of harness.
5	**CHECK AIR MIX DOOR ACTUATOR LH.** Check the air mix door actuator LH parts. <Ref. to AC-88, INSPECTION, Air Mix Door Actuator.>	Is the air mix door actuator LH normal?	Replace the A/C CM. <Ref. to AC-49, REMOVAL, Control Unit.>	Replace the air mix door actuator LH. <Ref. to AC-86, REMOVAL, Air Mix Door Actuator.>

P: DTC B1448 REAR VENT DOOR ACTUATOR CIRCUIT OPEN

DTC DETECTING CONDITION:
Rear vent actuator potentiometer circuit is open.
TROUBLE SYMPTOM:
Unable to control the rear vent temperature.
WIRING DIAGRAM:
Air conditioning system <Ref. to WI-94, WIRING DIAGRAM, Air Conditioning System.>

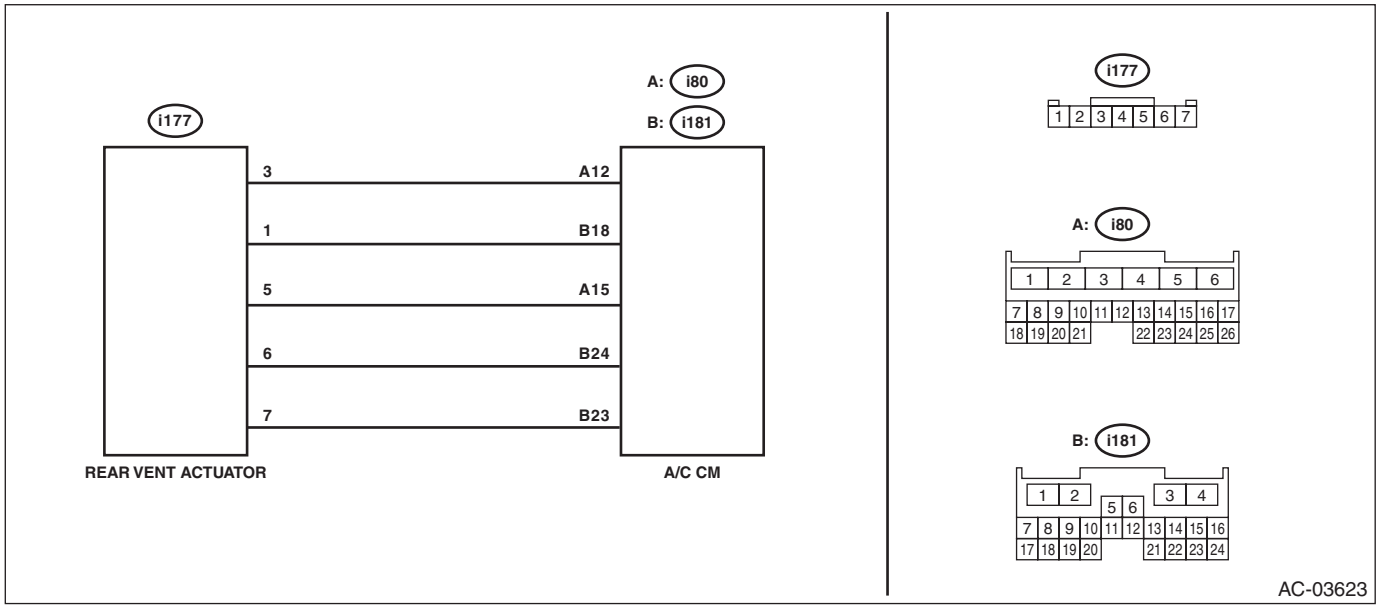

Step		Check	Yes	No
1	**CHECK CONNECTOR.** 1) Check connecting condition of the A/C CM connector and rear vent actuator connector. 2) Read the DTC using Subaru Select Monitor. <Ref. to AC(diag)-43, Read Diagnostic Trouble Code (DTC).>	Is B1448 displayed?	Go to step **2**.	Even if DTC is displayed, the circuit has returned to a normal condition at this time. Reproduce the failure, and then perform the diagnosis again. NOTE: In this case, temporary poor contact of connector, temporary open or short circuit of harness may be the cause.
2	**CHECK REAR VENT ACTUATOR.** 1) Disconnect the rear vent actuator. 2) Short No. 1 and No. 5 of (i177) connector. 3) Read the DTC using Subaru Select Monitor. <Ref. to AC(diag)-43, Read Diagnostic Trouble Code (DTC).>	Is B1449 displayed?	Replace the rear vent actuator. <Ref. to AC-90, REMOVAL, Rear Vent Door Actuator.>	Go to step **3**.
3	**CHECK HARNESS.** 1) Restore the temporary shorted lines made in step 2. 2) Turn the ignition switch to ON. 3) Using the tester, measure the voltage between terminals. ***Connector & terminal*** ***(i177) No. 3 (+) — No. 1 (–):***	Is the voltage 4.5 — 5.0 V?	Go to step **4**.	Repair or replace the open circuit of harness.

	Step	Check	Yes	No
4	**CHECK HARNESS (OPEN CIRCUIT).** Using a tester, check continuity between terminals. ***Connector & terminal*** ***(i177) No. 3 — (i80) No. 12:*** ***(i177) No. 1 — (i181) No. 18:*** ***(i177) No. 5 — (i80) No. 15:***	Is there continuity?	Replace the A/C CM. <Ref. to AC-49, REMOVAL, Control Unit.>	Repair or replace the open circuit of harness.

Q: DTC B1449 REAR VENT DOOR ACTUATOR CIRCUIT SHORT-CIRCUIT

DTC DETECTING CONDITION:
Rear vent actuator potentiometer circuit is shorted.
TROUBLE SYMPTOM:
Unable to control the rear vent temperature.
WIRING DIAGRAM:
Air conditioning system <Ref. to WI-94, WIRING DIAGRAM, Air Conditioning System.>

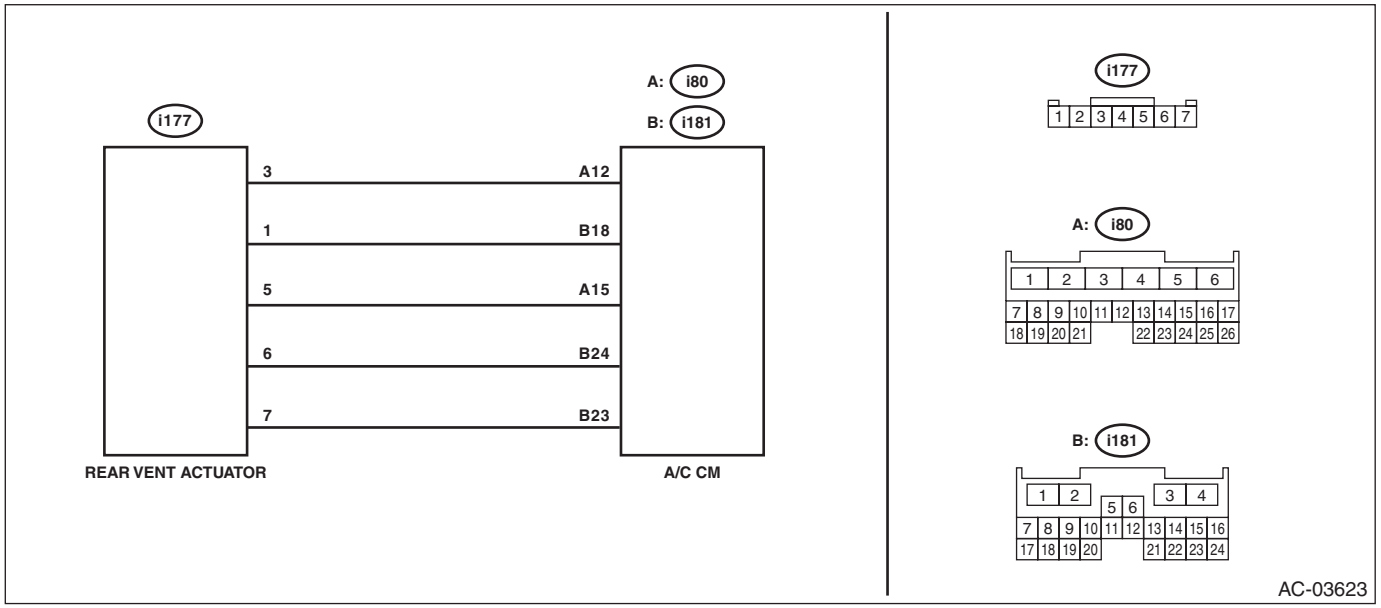

Step		Check	Yes	No
1	**CHECK CONNECTOR.** 1) Check connecting condition of the A/C CM connector and rear vent actuator connector. 2) Read the DTC using Subaru Select Monitor. <Ref. to AC(diag)-43, Read Diagnostic Trouble Code (DTC).>	Is B1449 displayed?	Go to step **2**.	Even if DTC is displayed, the circuit has returned to a normal condition at this time. Reproduce the failure, and then perform the diagnosis again. NOTE: In this case, temporary poor contact of connector, temporary open or short circuit of harness may be the cause.
2	**CHECK REAR VENT ACTUATOR.** 1) Disconnect the rear vent actuator. 2) Read the DTC using Subaru Select Monitor. <Ref. to AC(diag)-43, Read Diagnostic Trouble Code (DTC).>	Is B1448 displayed?	Replace the rear vent actuator. <Ref. to AC-90, REMOVAL, Rear Vent Door Actuator.>	Go to step **3**.
3	**CHECK HARNESS (SHORTED BETWEEN LINES AND SHORTED TO GROUND).** Using a tester, check continuity between terminals. ***Connector & terminal*** ***(i177) No. 5 — (i177) No. 1:*** ***(i177) No. 5 — Chassis ground:***	Is there continuity?	Repair or replace the short circuit of the harness.	Replace the A/C CM. <Ref. to AC-49, REMOVAL, Control Unit.>

R: DTC B144A REAR VENT DOOR ACTUATOR CIRCUIT STUCK

DTC DETECTING CONDITION:
Rear vent actuator is locked.
TROUBLE SYMPTOM:
Unable to control the rear vent temperature.
WIRING DIAGRAM:
Air conditioning system <Ref. to WI-94, WIRING DIAGRAM, Air Conditioning System.>

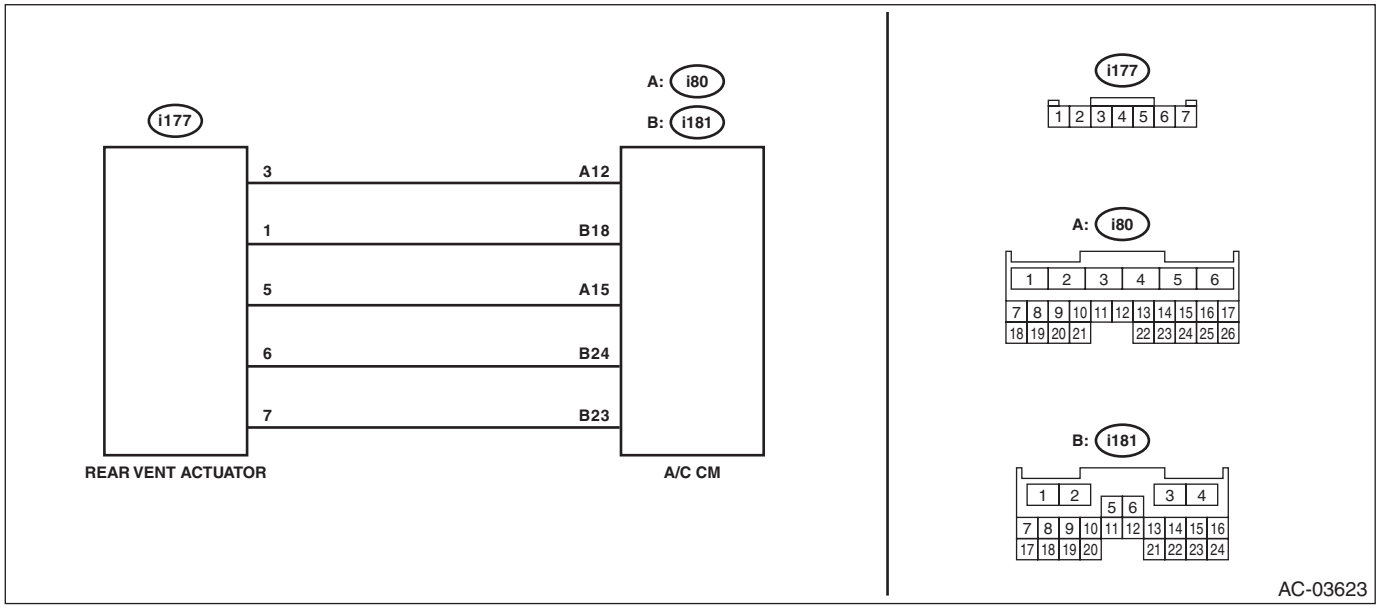

Step		Check	Yes	No
1	**CHECK CONNECTOR.** 1) Check connecting condition of the A/C CM connector and rear vent actuator connector. 2) Read the DTC using Subaru Select Monitor. <Ref. to AC(diag)-43, Read Diagnostic Trouble Code (DTC).>	Is B144A displayed?	Go to step **2**.	Even if DTC is displayed, the circuit has returned to a normal condition at this time. Reproduce the failure, and then perform the diagnosis again. NOTE: In this case, temporary poor contact of connector, temporary open or short circuit of harness may be the cause.
2	**CHECK ACTUATOR.** Using the Subaru Select Monitor, change the setting of «Rear Vent Dr Act Trgt Open Angle» from the A/C diagnosis and perform the system operation check. <Ref. to AC(diag)-49, System Operation Check Mode.>	Did the rear vent actuator move to the specified target opening angle?	Rear vent actuator circuit is normal.	Go to step **3**.
3	**CHECK HARNESS.** 1) Turn the ignition switch to ON. 2) Using a tester, check the voltage between terminals. ***Connector & terminal*** ***(i177) No. 3 (+) — (i80) No. 12 (–):***	Is the voltage 4.5 — 5.0 V?	Go to step **4**.	Repair or replace the open, short circuit of the harness.

	Step	Check	Yes	No
4	**CHECK HARNESS (OPEN CIRCUIT).** 1) Disconnect the connector from A/C CM. 2) Using a tester, check continuity between terminals. ***Connector & terminal*** ***(i177) No. 5 — (i80) No. 15:*** ***(i177) No. 3 — (i80) No. 12:*** ***(i177) No. 1 — (i181) No. 18:*** ***(i177) No. 7 — (i181) No. 23:*** ***(i177) No. 6 — (i181) No. 24:***	Is there continuity?	Go to step **5**.	Repair or replace the open circuit of harness.
5	**CHECK REAR VENT ACTUATOR.** Check the rear vent actuator parts. <Ref. to AC-91, INSPECTION, Rear Vent Door Actuator.>	Is the rear vent actuator normal?	Replace the A/C CM. <Ref. to AC-49, REMOVAL, Control Unit.>	Replace the rear vent actuator. <Ref. to AC-90, REMOVAL, Rear Vent Door Actuator.>

S: DTC B14A1 SUNLOAD SENSOR CIRCUIT LOW/OPEN

DTC DETECTING CONDITION:

Open circuit in the sunload sensor is detected for 3 seconds or more. (Displayed for current malfunction)

NOTE:

When the sunload sensor check is performed indoors or in the shade, it could be diagnosed as having an open circuit. Always check the sunload sensor in direct sunlight.

TROUBLE SYMPTOM:

Operation is performed as no sunload.

WIRING DIAGRAM:

Air conditioning system <Ref. to WI-94, WIRING DIAGRAM, Air Conditioning System.>

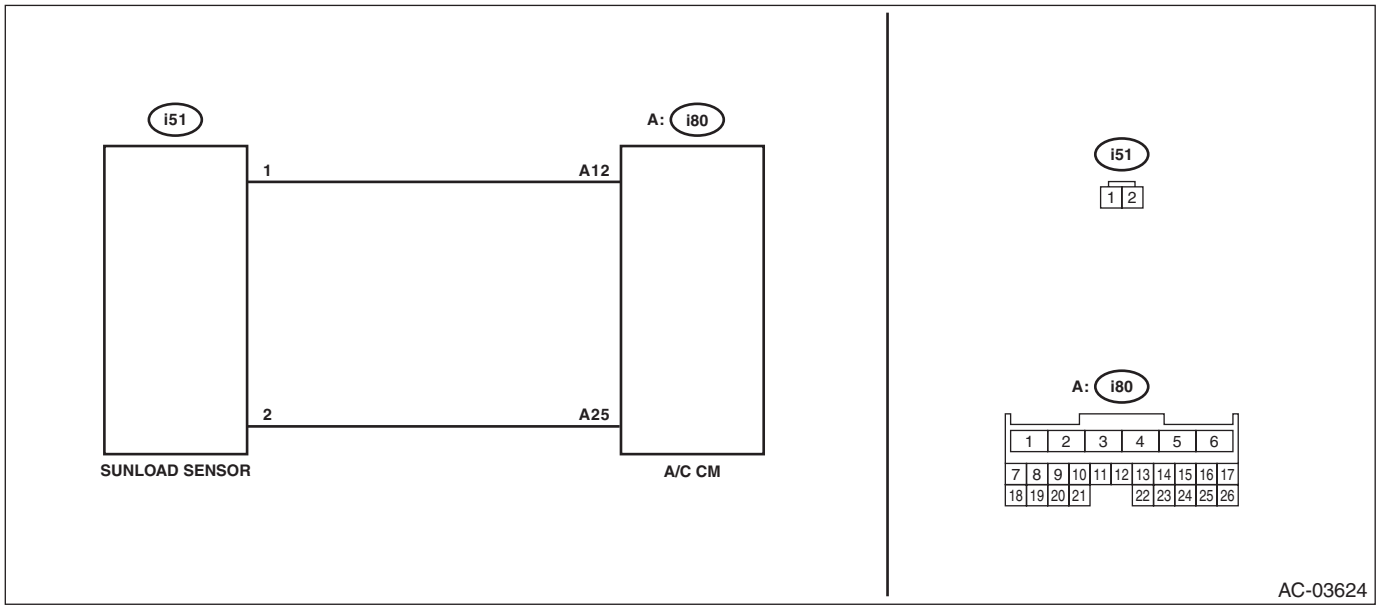

Step		Check	Yes	No
1	**CHECK CONNECTOR.** 1) Check connecting condition of the A/C CM connector and sunload sensor connector. 2) Read the DTC using Subaru Select Monitor. <Ref. to AC(diag)-43, Read Diagnostic Trouble Code (DTC).>	Is B14A1 displayed?	Go to step **2**.	Even if DTC is displayed, the circuit has returned to a normal condition at this time. Reproduce the failure, and then perform the diagnosis again. NOTE: In this case, temporary poor contact of connector, temporary open or short circuit of harness may be the cause.
2	**CHECK SUNLOAD SENSOR.** 1) Disconnect the sunload sensor. 2) Short the connector. 3) Read the DTC using Subaru Select Monitor. <Ref. to AC(diag)-43, Read Diagnostic Trouble Code (DTC).>	Is B14A2 displayed?	Replace the sunload sensor. <Ref. to AC-73, REMOVAL, Sunload Sensor (Auto A/C Model).>	Go to step **3**.

	Step	Check	Yes	No
3	**CHECK HARNESS.** 1) Restore the temporary shorted lines made in step 2. 2) Turn the ignition switch to ON. 3) Using the tester, measure the voltage between terminals. ***Connector & terminal*** ***(i51) No. 2 (+) — No. 1 (–):***	Is the voltage 4.5 — 5.0 V?	Go to step **4**.	Repair or replace the open circuit of the harness.
4	**CHECK HARNESS (OPEN CIRCUIT).** 1) Disconnect the connector from A/C CM. 2) Using a tester, check continuity between terminals. ***Connector & terminal*** ***(i51) No. 1 — (i80) No. 12:*** ***(i51) No. 2 — (i80) No. 25:***	Is there continuity?	Replace the A/C CM. <Ref. to AC-49, REMOVAL, Control Unit.>	Repair or replace the open circuit of harness.

T: DTC B14A2 SUNLOAD SENSOR CIRCUIT SHORT-CIRCUIT

DTC DETECTING CONDITION:
Short circuit in the sunload sensor is detected for 3 seconds or more.
TROUBLE SYMPTOM:
Operation is performed as no sunload.
WIRING DIAGRAM:
Air conditioning system <Ref. to WI-94, WIRING DIAGRAM, Air Conditioning System.>

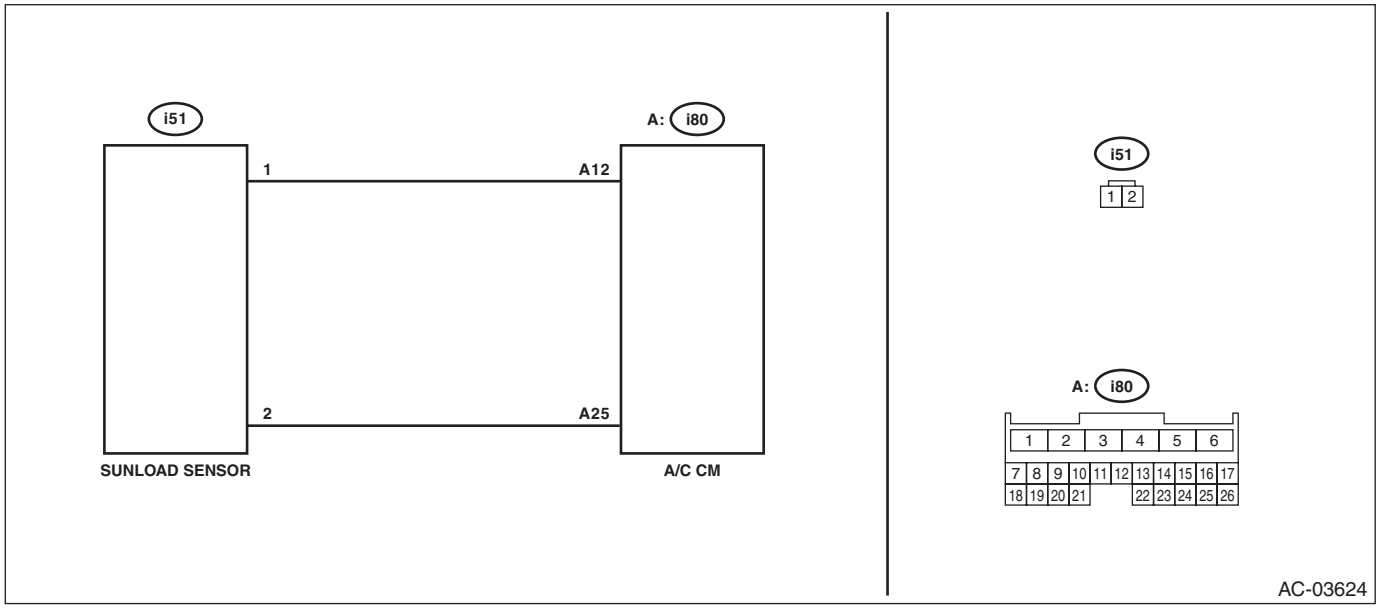

Step		Check	Yes	No
1	**CHECK CONNECTOR.** 1) Check connecting condition of the A/C CM connector and sunload sensor connector. 2) Read the DTC using Subaru Select Monitor. <Ref. to AC(diag)-43, Read Diagnostic Trouble Code (DTC).>	Is B14A2 displayed?	Go to step **2**.	Even if DTC is displayed, the circuit has returned to a normal condition at this time. Reproduce the failure, and then perform the diagnosis again. NOTE: In this case, temporary poor contact of connector, temporary open or short circuit of harness may be the cause.
2	**CHECK SUNLOAD SENSOR.** 1) Disconnect the sunload sensor. 2) Read the DTC using Subaru Select Monitor. <Ref. to AC(diag)-43, Read Diagnostic Trouble Code (DTC).>	Is B14A1 displayed?	Replace the sunload sensor. <Ref. to AC-73, REMOVAL, Sunload Sensor (Auto A/C Model).>	Go to step **3**.
3	**CHECK HARNESS.** 1) Turn the ignition switch to ON. 2) Using the tester, measure the voltage between terminals. ***Connector & terminal*** ***(i51) No. 2 (+) — No. 1 (–):***	Is the voltage 4.5 — 5.0 V?	Check the connection of the sunload sensor circuit.	Go to step **4**.

	Step	Check	Yes	No
4	**CHECK HARNESS (SHORTED BETWEEN LINES).** 1) Disconnect the connector from A/C CM. 2) Using a tester, check continuity between terminals. ***Connector & terminal (i51) No. 1 — No. 2:***	Is there continuity?	Repair or replace the short circuit of the harness.	Replace the A/C CM. <Ref. to AC-49, REMOVAL, Control Unit.>

U: DTC B14A3 REFRIGERANT PRESSURE SENSOR CIRCUIT OPEN

DTC DETECTING CONDITION:
Refrigerant pressure sensor circuit is open.
TROUBLE SYMPTOM:
Compressor does not operate. (Variable compressor)
WIRING DIAGRAM:

NOTE:
For the coupling connector, refer to “WIRING SYSTEM”.
Air conditioning system <Ref. to WI-94, WIRING DIAGRAM, Air Conditioning System.>

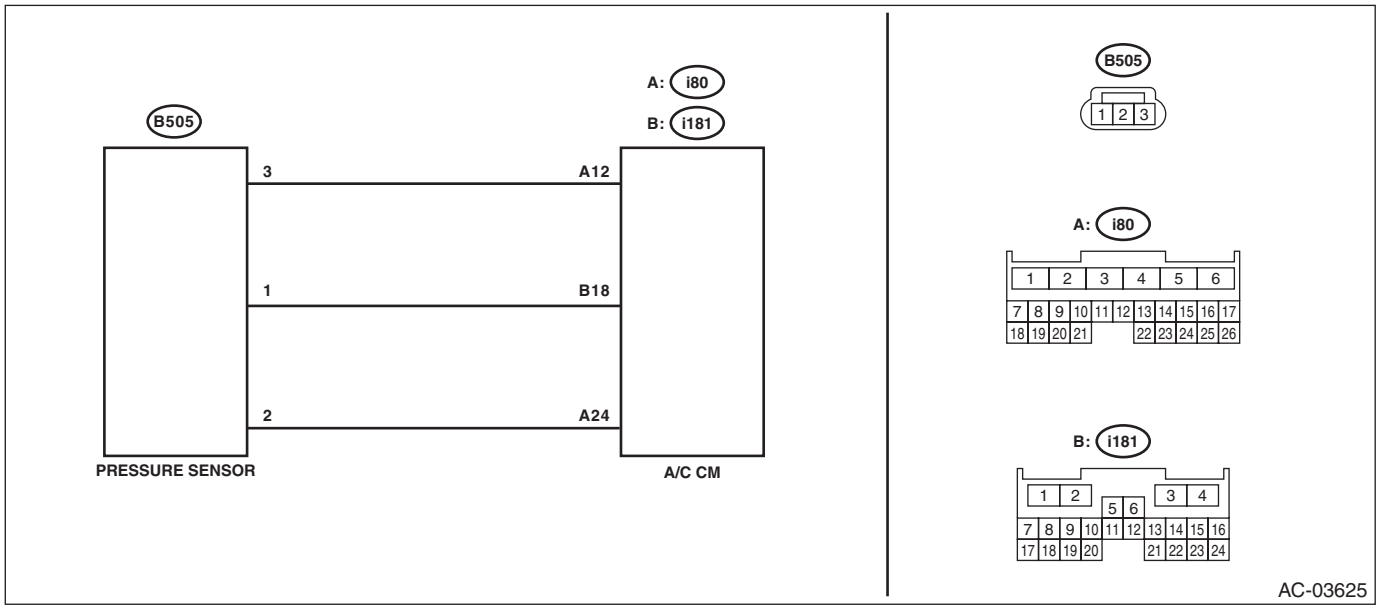

Step		Check	Yes	No
1	**CHECK CONNECTOR.** 1) Check connecting condition of the A/C CM connector, refrigerant pressure sensor connector and coupling connector. 2) Read the DTC using Subaru Select Monitor. <Ref. to AC(diag)-43, Read Diagnostic Trouble Code (DTC).>	Is B14A3 displayed?	Go to step **2**.	Even if DTC is displayed, the circuit has returned to a normal condition at this time. Reproduce the failure, and then perform the diagnosis again. NOTE: In this case, temporary poor contact of connector, temporary open or short circuit of harness may be the cause.
2	**CHECK PRESSURE SENSOR.** 1) Disconnect the refrigerant pressure sensor. 2) Short No. 1 and No. 2 of B505 connector. 3) Read the DTC of the A/C CM using the Subaru Select Monitor. <Ref. to AC(diag)-43, Read Diagnostic Trouble Code (DTC).>	Is B14A4 displayed?	Replace the refrigerant pressure sensor. <Ref. to AC-65, REMOVAL, Hose and Pipe.>	Go to step **3**.

	Step	Check	Yes	No
3	**CHECK HARNESS.** 1) Restore the temporary shorted lines made in step 2. 2) Turn the ignition switch to ON. 3) Using the tester, measure the voltage between terminals. ***Connector & terminal*** ***(B505) No. 3 (+) — No. 1 (–):***	Is the voltage 4.5 — 5.0 V?	Go to step **4**.	Repair or replace the open circuit of harness.
4	**CHECK HARNESS (OPEN CIRCUIT).** 1) Disconnect the connector from A/C CM. 2) Using a tester, check continuity between terminals. ***Connector & terminal*** ***(B505) No. 1 — (i181) No. 18:*** ***(B505) No. 2 — (i80) No. 24:*** ***(B505) No. 3 — (i80) No. 12:***	Is there continuity?	Replace the A/C CM. <Ref. to AC-49, REMOVAL, Control Unit.>	Repair or replace the open circuit of harness.

V: DTC B14A4 REFRIGERANT PRESSURE SENSOR CIRCUIT SHORT-CIRCUIT

DTC DETECTING CONDITION:
Refrigerant pressure sensor circuit is shorted.
TROUBLE SYMPTOM:
Compressor does not operate. (Variable compressor)
WIRING DIAGRAM:

NOTE:
For the coupling connector, refer to “WIRING SYSTEM”.
Air conditioning system <Ref. to WI-94, WIRING DIAGRAM, Air Conditioning System.>

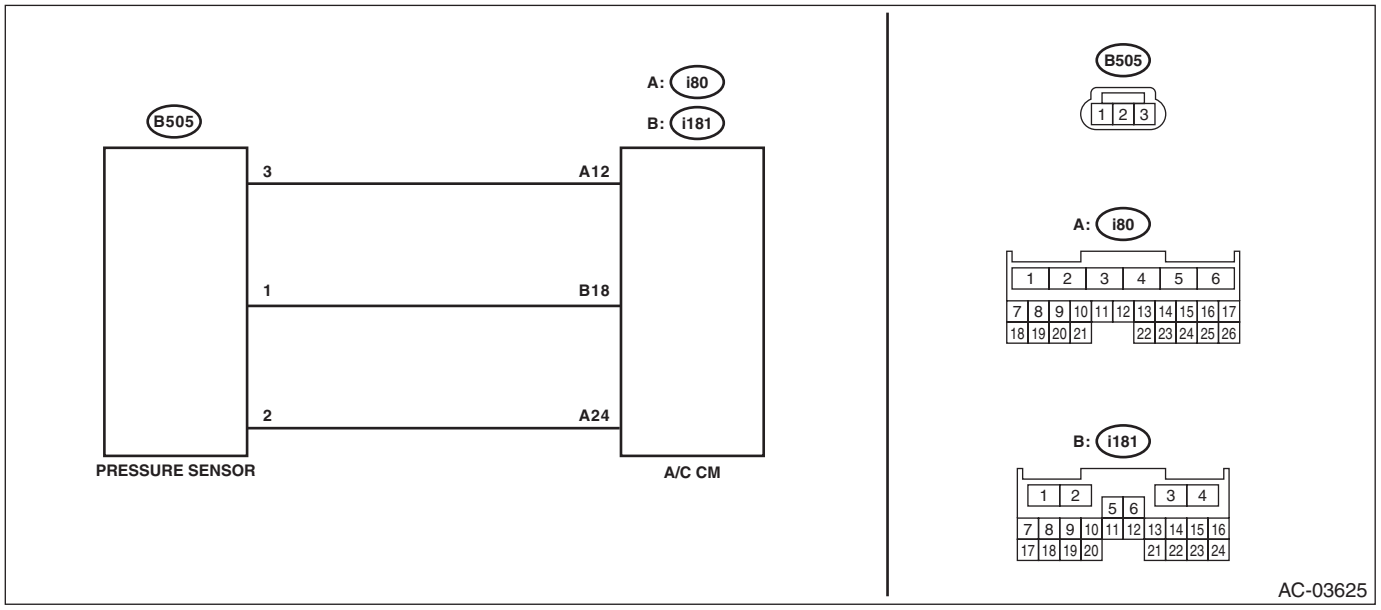

Step		Check	Yes	No
1	**CHECK CONNECTOR.** 1) Check connecting condition of the A/C CM connector, refrigerant pressure sensor connector and coupling connector. 2) Read the DTC using Subaru Select Monitor. <Ref. to AC(diag)-43, Read Diagnostic Trouble Code (DTC).>	Is B14A4 displayed?	Go to step **2**.	Even if DTC is displayed, the circuit has returned to a normal condition at this time. Reproduce the failure, and then perform the diagnosis again. NOTE: In this case, temporary poor contact of connector, temporary open or short circuit of harness may be the cause.
2	**CHECK REFRIGERANT PRESSURE SENSOR.** 1) Disconnect the refrigerant pressure sensor. 2) Read the DTC of the A/C CM using the Subaru Select Monitor. <Ref. to AC(diag)-43, Read Diagnostic Trouble Code (DTC).>	Is B14A3 displayed?	Replace the refrigerant pressure sensor. <Ref. to AC-65, REMOVAL, Hose and Pipe.>	Go to step **3**.

	Step	Check	Yes	No
3	**CHECK HARNESS (SHORTED BETWEEN LINES AND SHORTED TO GROUND).** 1) Disconnect the connector from A/C CM. 2) Using a tester, check continuity between terminals. ***Connector & terminal*** ***(B505) No. 1 — No. 2:*** ***(B505) No. 2 — Chassis ground:***	Is there continuity?	Repair or replace the short circuit of the harness.	Replace the A/C CM. <Ref. to AC-49, REMOVAL, Control Unit.>

W: DTC B14A5 REFRIGERANT FLOW SENSOR CIRCUIT OPEN

DTC DETECTING CONDITION:

- The voltage of the refrigerant flow sensor signal line increased to 4.7 V or more.
- Open circuit in refrigerant flow sensor

TROUBLE SYMPTOM:

A/C does not function because refrigerant flow amount cannot be measured.

WIRING DIAGRAM:

NOTE:
For the coupling connector, refer to “WIRING SYSTEM”.
Air conditioning system <Ref. to WI-94, WIRING DIAGRAM, Air Conditioning System.>

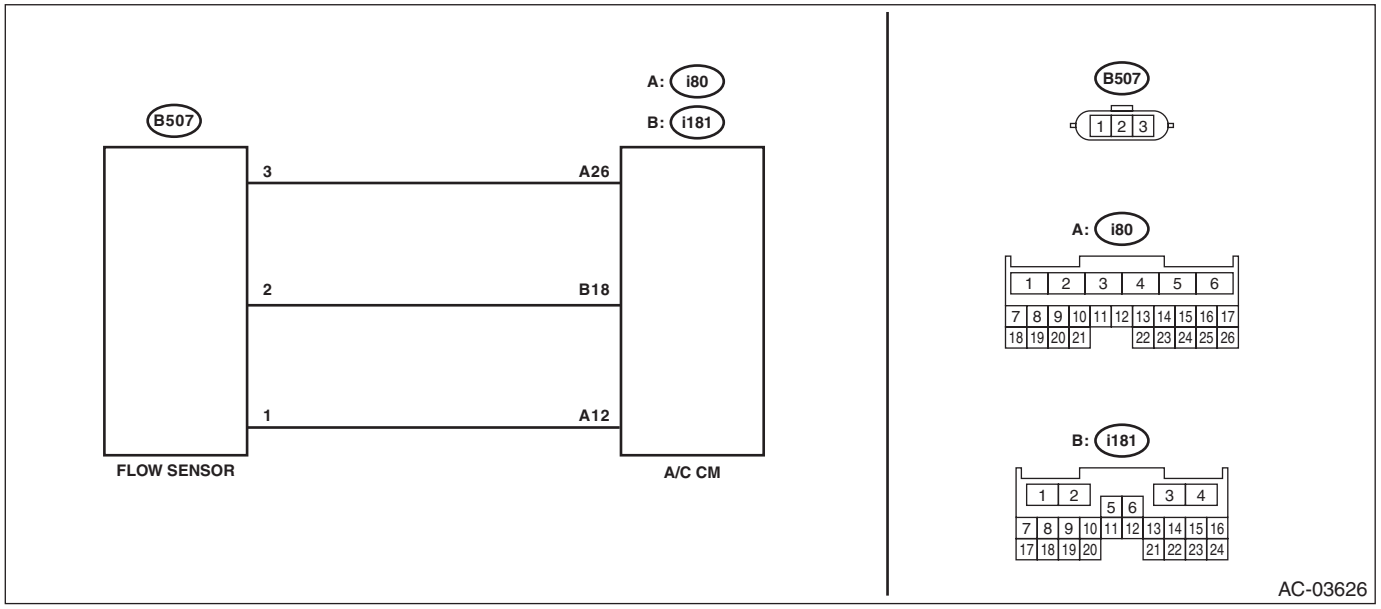

Step		Check	Yes	No
1	**CHECK CONNECTOR.** 1) Check connecting condition of the A/C CM connector, refrigerant flow sensor connector and coupling connector. 2) Read the DTC using Subaru Select Monitor. <Ref. to AC(diag)-43, Read Diagnostic Trouble Code (DTC).>	Is B14A5 displayed?	Go to step **2**.	Even if DTC is displayed, the circuit has returned to a normal condition at this time. Reproduce the failure, and then perform the diagnosis again. NOTE: In this case, temporary poor contact of connector, temporary open or short circuit of harness may be the cause.
2	**CHECK REFRIGERANT FLOW SENSOR.** 1) Disconnect the refrigerant flow sensor connector. 2) Short No. 2 and No. 3 of the refrigerant flow sensor connector (B507). 3) Read the DTC using Subaru Select Monitor. <Ref. to AC(diag)-43, Read Diagnostic Trouble Code (DTC).>	Is B14A6 displayed?	Replace the compressor. <Ref. to AC-50, REMOVAL, Compressor.>	Go to step **3**.

	Step	Check	Yes	No
3	**CHECK HARNESS.** 1) Restore the temporary shorted lines made in step 2. 2) Turn the ignition switch to ON. 3) Using the tester, measure the voltage between terminals. ***Connector & terminal*** ***(B507) No. 1 (+) — No. 2 (–):***	Is the voltage 4.5 — 5.0 V?	Go to step **4**.	Repair or replace the open circuit of harness.
4	**CHECK HARNESS (OPEN CIRCUIT).** 1) Disconnect the A/C CM connector. 2) Using a tester, check continuity between terminals. ***Connector & terminal*** ***(B507) No. 3 — (i80) No. 26:*** ***(B507) No. 2 — (i181) No. 18:*** ***(B507) No. 1 — (i80) No. 12:***	Is there continuity?	Replace the A/C CM. <Ref. to AC-49, REMOVAL, Control Unit.>	Repair or replace the open circuit of harness.

X: DTC B14A6 REFRIGERANT FLOW SENSOR CIRCUIT SHORT-CIRCUIT

DTC DETECTING CONDITION:

- The voltage of the refrigerant flow sensor signal line decreased to 0.3 V or less.
- Short-circuit in refrigerant flow sensor

TROUBLE SYMPTOM:

A/C does not function because refrigerant flow amount cannot be measured.

WIRING DIAGRAM:

NOTE:
For the coupling connector, refer to “WIRING SYSTEM”.
Air conditioning system <Ref. to WI-94, WIRING DIAGRAM, Air Conditioning System.>

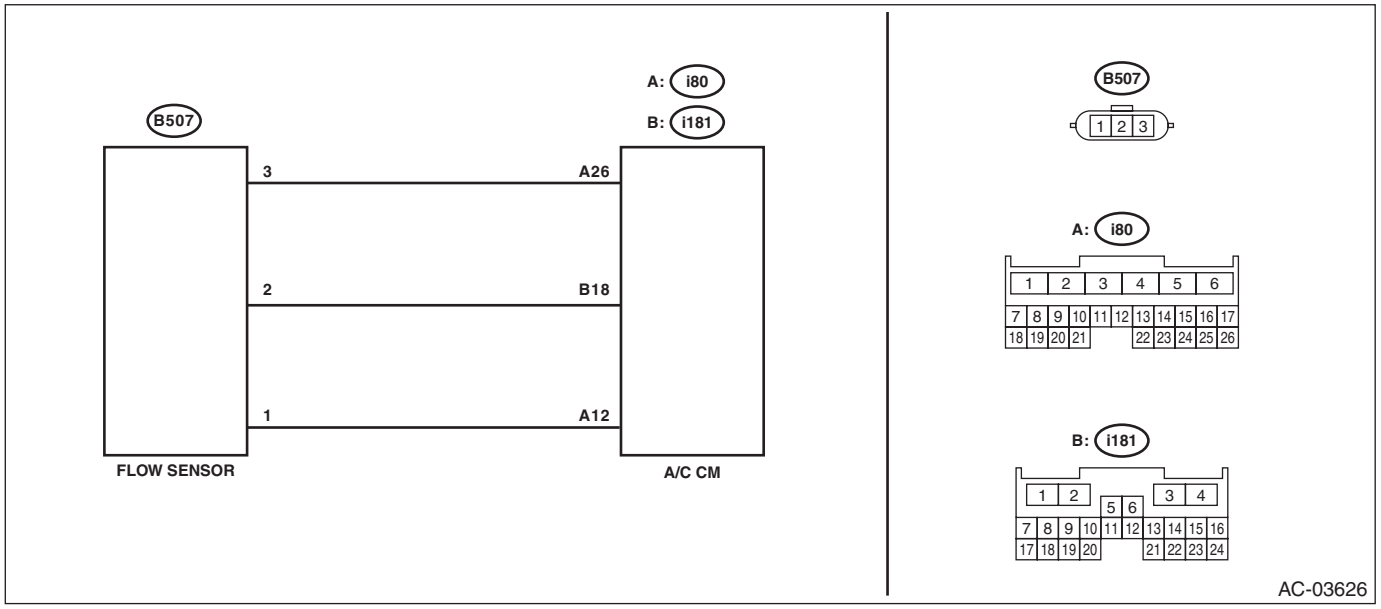

Step		Check	Yes	No
1	**CHECK CONNECTOR.** 1) Check connecting condition of the A/C CM connector, refrigerant flow sensor connector and coupling connector. 2) Read the DTC using Subaru Select Monitor. <Ref. to AC(diag)-43, Read Diagnostic Trouble Code (DTC).>	Is B14A6 displayed?	Go to step **2**.	Even if DTC is displayed, the circuit has returned to a normal condition at this time. Reproduce the failure, and then perform the diagnosis again. NOTE: In this case, temporary poor contact of connector, temporary open or short circuit of harness may be the cause.
2	**CHECK REFRIGERANT FLOW SENSOR.** 1) Disconnect the refrigerant flow sensor connector. 2) Read the DTC using Subaru Select Monitor. <Ref. to AC(diag)-43, Read Diagnostic Trouble Code (DTC).>	Is B14A5 displayed?	Replace the compressor. <Ref. to AC-50, REMOVAL, Compressor.>	Go to step **3**.

	Step	Check	Yes	No
3	**CHECK HARNESS (SHORTED BETWEEN LINES AND SHORTED TO GROUND).** 1) Disconnect the A/C CM connector. 2) Using a tester, check continuity between terminals. ***Connector & terminal*** ***(B507) No. 2 — (B507) No. 3:*** ***(B507) No. 3 — Chassis ground:***	Is there continuity?	Repair or replace the short circuit of the harness.	Replace the A/C CM. <Ref. to AC-49, REMOVAL, Control Unit.>

Y: DTC B14A7 VARIABLE SOLENOID VALVE CIRCUIT

DTC DETECTING CONDITION:
Variable flow change solenoid valve circuit is open or shorted
TROUBLE SYMPTOM:
Refrigerant pressure cannot be changed.
WIRING DIAGRAM:
Air conditioning system <Ref. to WI-94, WIRING DIAGRAM, Air Conditioning System.>

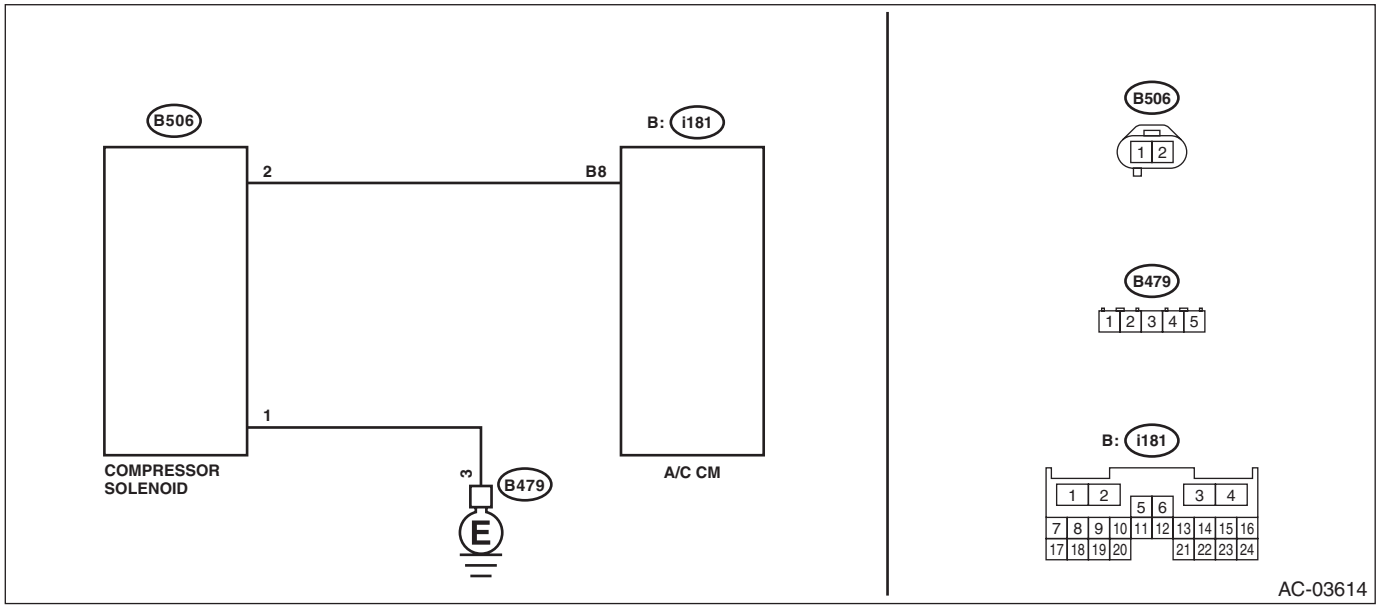

Step		Check	Yes	No
1	**CHECK CONNECTOR.** 1) Check connecting condition of the A/C CM connector and variable flow change solenoid connector. 2) Read the DTC using Subaru Select Monitor. <Ref. to AC(diag)-43, Read Diagnostic Trouble Code (DTC).>	Is B14A7 displayed?	Go to step **2**.	Even if DTC is displayed, the circuit has returned to a normal condition at this time. Reproduce the failure, and then perform the diagnosis again. NOTE: In this case, temporary poor contact of connector, temporary open or short circuit of harness may be the cause.
2	**CHECK SYSTEM OPERATION.** 1) Attach the manifold gauge. 2) Using the Subaru Select Monitor, change the setting of «Variable Flow Change Sol Duty Setting» from the A/C diagnosis and perform the system operation check. <Ref. to AC(diag)-49, System Operation Check Mode.>	Did the variable flow change solenoid operate to the specified target, and the pressure change?	Variable flow change solenoid circuit is normal.	Go to step **3**.

	Step	Check	Yes	No
3	**CHECK VARIABLE FLOW CHANGE SOLENOID.** 1) Disconnect the variable flow change solenoid connector. 2) Using a tester, measure the resistance between terminals of the solenoid. ***Connector & terminal*** ***(Compressor solenoid side) No. 1 — No. 2:***	Is the resistance 10 — 12 Ω?	Go to step **4**.	Replace the compressor. <Ref. to AC-50, REMOVAL, Compressor.>
4	**CHECK HARNESS (OPEN CIRCUIT).** 1) Disconnect the A/C CM connector. 2) Using a tester, check for continuity between the harness terminals. ***Connector & terminal*** ***(B506) No. 2 — (i181) No. 8:*** ***(B506) No. 1 — Chassis ground:***	Is there continuity?	Go to step **5**.	Repair or replace the open circuit of harness.
5	**CHECK HARNESS (SHORTED BETWEEN LINES AND SHORTED TO GROUND).** Using a tester, check for continuity between the harness terminals. ***Connector & terminal*** ***(B506) No. 2 — Chassis ground:*** ***(B506) No. 1 — (B506) No. 2:***	Is there continuity?	Repair or replace the short circuit of the harness.	Replace the A/C CM. <Ref. to AC-49, REMOVAL, Control Unit.>

Z: DTC B14A8 COMPRESSOR BREAK-IN MALFUNCTION LOW REFRIGERANT

DTC DETECTING CONDITION:

- Compressor was operated while refrigerant was low.
- Compressor was operated while refrigerant pressure was extremely low.
- Judgment is made only when the delivery mode fuse is installed.

TROUBLE SYMPTOM:

A/C does not operate.

WIRING DIAGRAM:

NOTE:
For the coupling connector, refer to “WIRING SYSTEM”.
Air conditioning system <Ref. to WI-94, WIRING DIAGRAM, Air Conditioning System.>

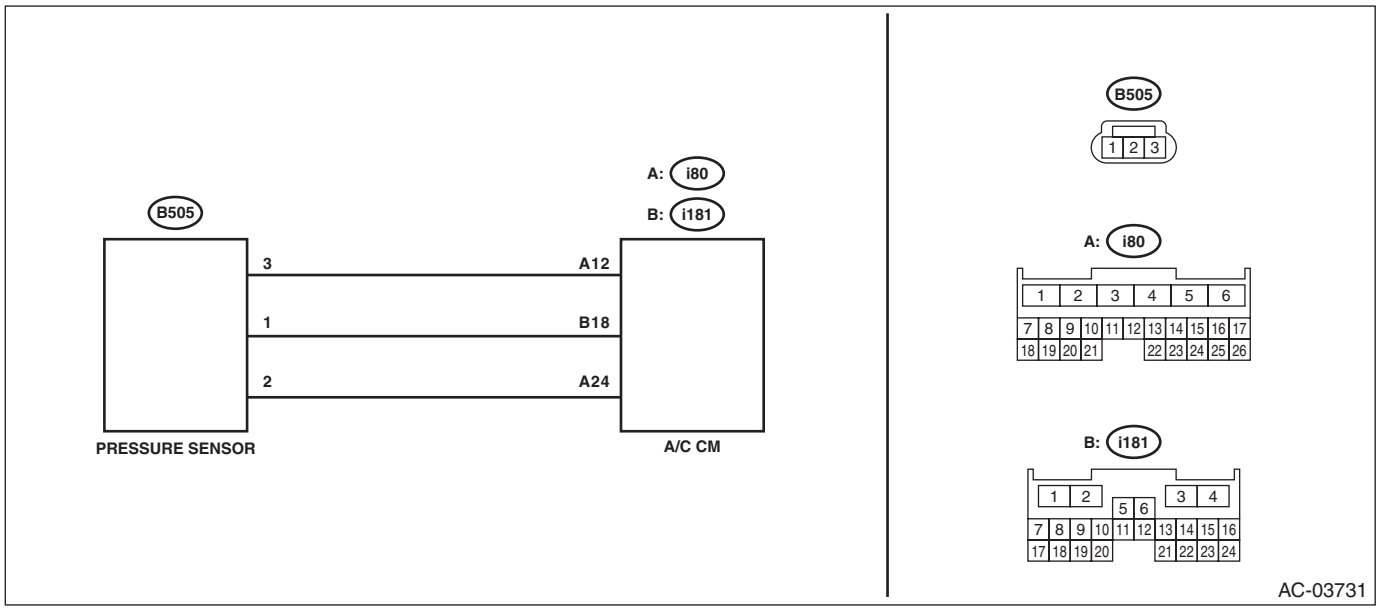

Step		Check	Yes	No
1	**CHECK AMOUNT OF REFRIGERANT.** Check the refrigerant pressure and filling amount. <Ref. to AC-24, PROCEDURE, Refrigerant Pressure with Manifold Gauge Set.>	Is the filling amount a standard value?	Check that DTC B14A3 (open circuit malfunction) or B14A4 (short circuit malfunction) is recorded, and if either one of these DTCs is recorded, perform the diagnosis according to the DTC. If nothing is recorded, replace the compressor. <Ref. to AC-50, Compressor.>	Replace the compressor. <Ref. to AC-50, Compressor.>

AA:DTC B14B1 SEAT HEATER THERMISTOR CIRCUIT OPEN (DRIVER)

DTC DETECTING CONDITION:
Open circuit in seat heater thermistor.
TROUBLE SYMPTOM:
Seat heater LH does not function.
WIRING DIAGRAM:

NOTE:
For the coupling connector, refer to “WIRING SYSTEM”.
Seat Heater System <Ref. to WI-331, WIRING DIAGRAM, Seat Heater System.>

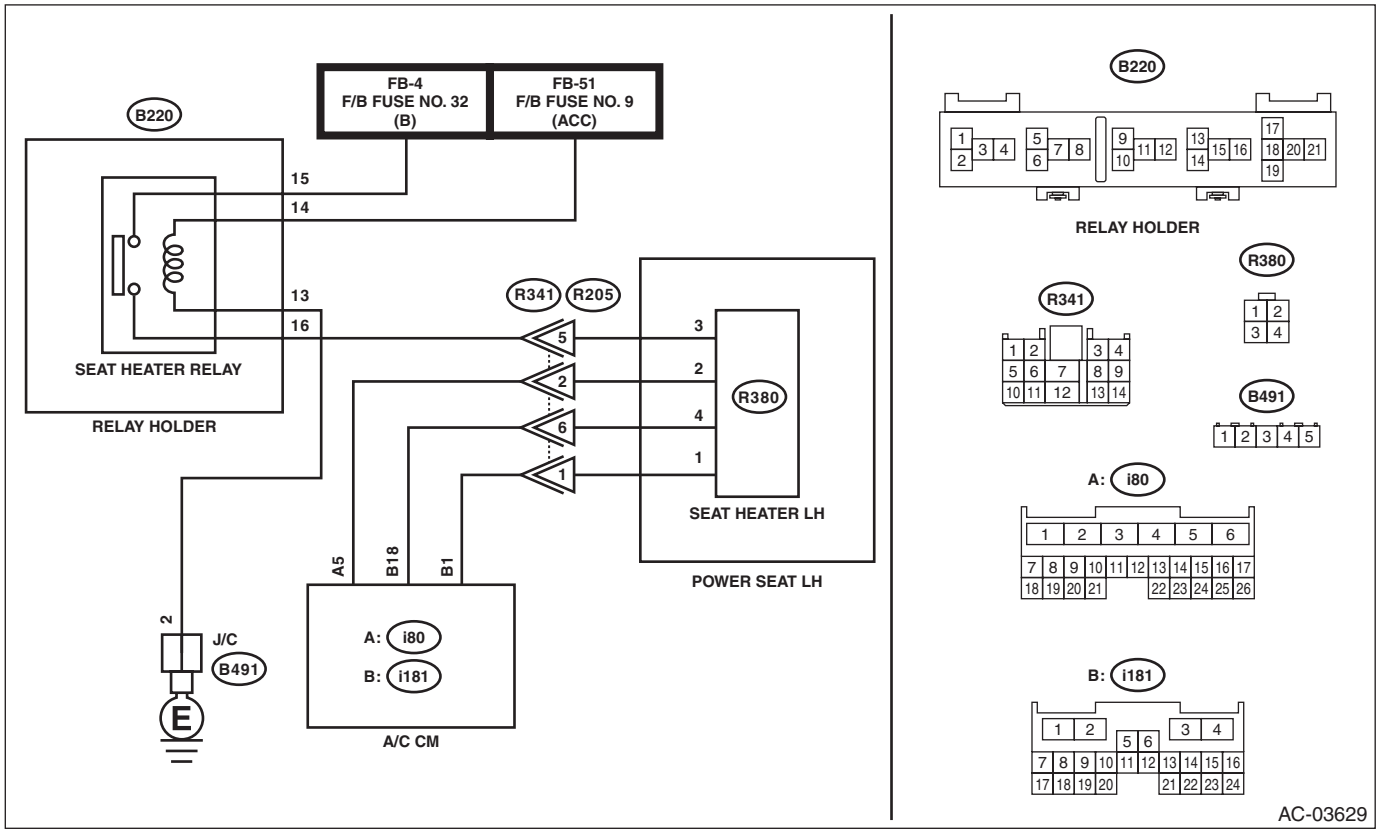

Step		Check	Yes	No
1	**CHECK CONNECTOR.** 1) Check connecting condition of the A/C CM connector, seat heater relay connector, seat connector and coupling connector. 2) Read the DTC using Subaru Select Monitor. <Ref. to AC(diag)-43, Read Diagnostic Trouble Code (DTC).>	Is B14B1 displayed?	Go to step **2**.	Even if DTC is displayed, the circuit has returned to a normal condition at this time. Reproduce the failure, and then perform the diagnosis again. NOTE: In this case, temporary poor contact of connector, temporary open or short circuit of harness may be the cause.

	Step	Check	Yes	No
2	**CHECK SEAT HEATER LH.** 1) Disconnect the seat connector (R341). 2) Short No. 2 and No. 6 of seat connector (R341). 3) Read the DTC using Subaru Select Monitor. <Ref. to AC(diag)-43, Read Diagnostic Trouble Code (DTC).>	Is B14B2 displayed?	Replace the seat heater module. <Ref. to SE-75, SEAT HEATER MODULE - FRONT, REMOVAL, Seat Heater System.>	Go to step **3**.
3	**CHECK HARNESS.** 1) Restore the temporary shorted lines made in step 2. 2) Turn the ignition switch to ON. 3) Turn the seat heater switch LH to ON. 4) Using the tester, measure the voltage between terminals. ***Connector & terminal*** ***(R341) No. 2 (+) — (R341) No. 6 (–):***	Is the voltage 4.5 — 5.0 V?	Go to step **4**.	Repair or replace the open circuit of harness.
4	**CHECK HARNESS (OPEN CIRCUIT).** 1) Disconnect the A/C CM connector. 2) Using a tester, check continuity between terminals. ***Connector & terminal*** ***(R341) No. 2 — (i80) No. 5:*** ***(R341) No. 6 — (i181) No. 18:***	Is there continuity?	Replace the A/C CM. <Ref. to AC-49, REMOVAL, Control Unit.>	Repair or replace the open circuit of harness.

AB:DTC B14B2 SEAT HEATER THERMISTOR CIRCUIT SHORT-CIRCUIT (DRIVER)

DTC DETECTING CONDITION:
Short-circuit in seat heater thermistor.
TROUBLE SYMPTOM:
Seat heater LH does not function.
WIRING DIAGRAM:

NOTE:
For the coupling connector, refer to “WIRING SYSTEM”.
Seat Heater System <Ref. to WI-331, WIRING DIAGRAM, Seat Heater System.>

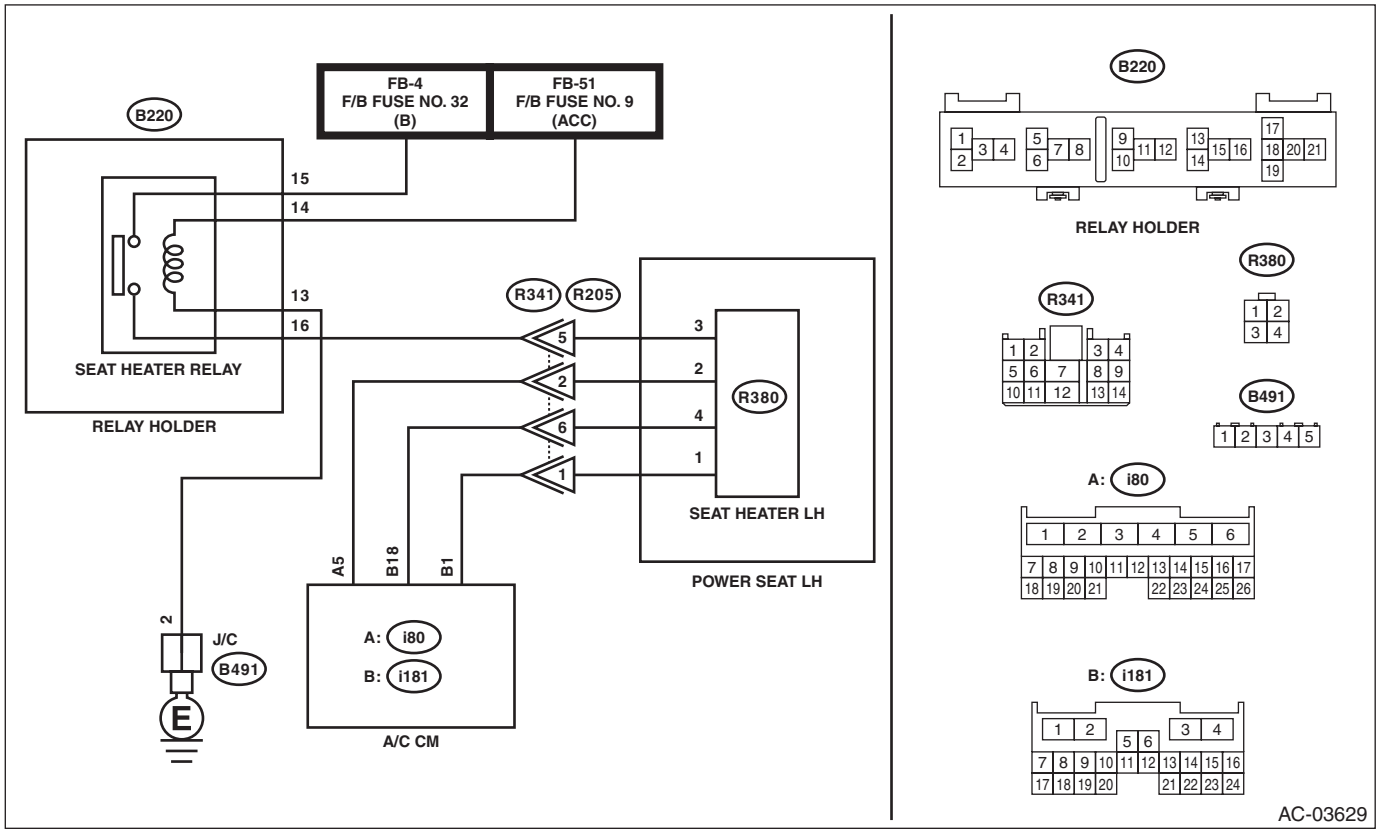

Step		Check	Yes	No
1	**CHECK CONNECTOR.** 1) Check connecting condition of the A/C CM connector, seat heater relay connector, seat connector and coupling connector. 2) Read the DTC using Subaru Select Monitor. <Ref. to AC(diag)-43, Read Diagnostic Trouble Code (DTC).>	Is B14B2 displayed?	Go to step **2**.	Even if DTC is displayed, the circuit has returned to a normal condition at this time. Reproduce the failure, and then perform the diagnosis again. NOTE: In this case, temporary poor contact of connector, temporary open or short circuit of harness may be the cause.

	Step	Check	Yes	No
2	**CHECK SEAT HEATER LH.** 1) Disconnect the seat connector. 2) Read the DTC using Subaru Select Monitor. <Ref. to AC(diag)-43, Read Diagnostic Trouble Code (DTC).>	Is B14B1 displayed?	Replace the seat heater module. <Ref. to SE-75, SEAT HEATER MODULE - FRONT, REMOVAL, Seat Heater System.>	Go to step **3**.
3	**CHECK HARNESS.** 1) Turn the ignition switch to ON. 2) Turn the seat heater switch LH to ON. 3) Using the tester, measure the voltage between terminals. ***Connector & terminal*** ***(R341) No. 2 (+) — (R341) No. 6 (–):***	Is the voltage 4.5 — 5.0 V?	Go to step **4**.	Repair or replace the open circuit of harness.
4	**CHECK HARNESS (SHORTED BETWEEN LINES AND SHORTED TO GROUND).** 1) Disconnect the A/C CM connector. 2) Using a tester, check continuity between terminals. ***Connector & terminal*** ***(R341) No. 2 — (R341) No. 6:*** ***(R341) No. 2 — Chassis ground:***	Is there continuity?	Repair or replace the short circuit of the harness.	Replace the A/C CM. <Ref. to AC-49, REMOVAL, Control Unit.>

AC:DTC B14B3 SEAT HEATER THERMISTOR CIRCUIT OPEN (PASSENGER)

DTC DETECTING CONDITION:
Open circuit in seat heater thermistor.
TROUBLE SYMPTOM:
Seat heater RH does not function.
WIRING DIAGRAM:

NOTE:
For the coupling connector, refer to “WIRING SYSTEM”.
Seat Heater System <Ref. to WI-331, WIRING DIAGRAM, Seat Heater System.>

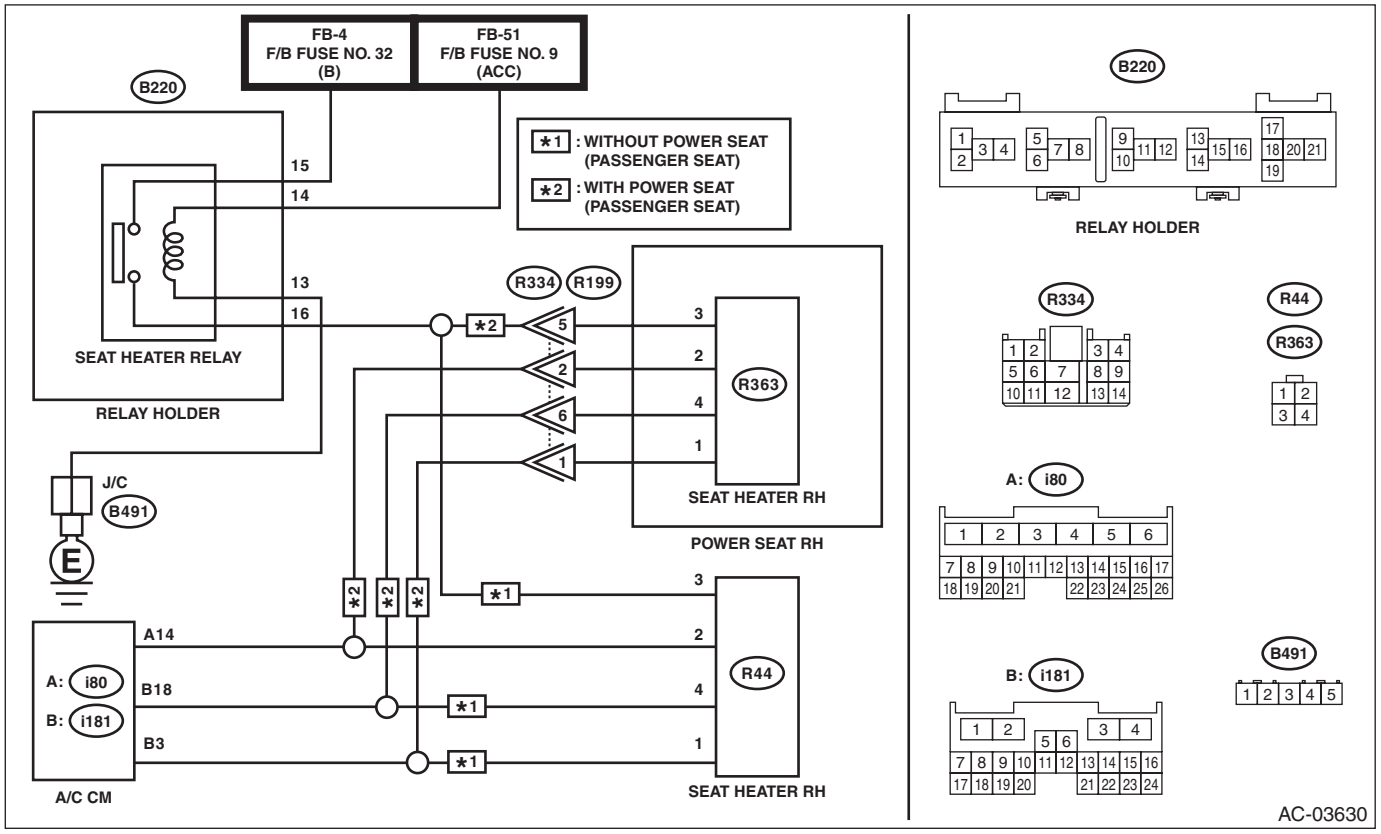

Step		Check	Yes	No
1	**CHECK CONNECTOR.** 1) Check connecting condition of the A/C CM connector, seat heater relay connector, seat connector and coupling connector. 2) Read the DTC using Subaru Select Monitor. <Ref. to AC(diag)-43, Read Diagnostic Trouble Code (DTC).>	Is B14B3 displayed?	Go to step **2**.	Even if DTC is displayed, the circuit has returned to a normal condition at this time. Reproduce the failure, and then perform the diagnosis again. NOTE: In this case, temporary poor contact of connector, temporary open or short circuit of harness may be the cause.

	Step	Check	Yes	No
2	**CHECK SEAT HEATER RH.** 1) Disconnect the seat connector (R334) or (R44). 2) For vehicle with power seat, short No. 2 and No. 6 of seat connector (R334). For vehicle without power seat, short No. 2 and No. 4 of seat connector (R44). 3) Read the DTC using Subaru Select Monitor. <Ref. to AC(diag)-43, Read Diagnostic Trouble Code (DTC).>	Is B14B4 displayed?	Replace the seat heater module and wire set - front seat cushion. <Ref. to SE-75, SEAT HEATER MODULE - FRONT, REMOVAL, Seat Heater System.>	Go to step **3**.
3	**CHECK HARNESS.** 1) Restore the temporary shorted lines made in step 2. 2) Turn the ignition switch to ON. 3) Turn the seat heater switch RH to ON. 4) Using the tester, measure the voltage between terminals. ***Connector & terminal*** ***With power seat*** ***(R334) No. 2 (+) — (R334) No. 6 (–):*** ***Without power seat*** ***(R44) No. 2 (+) — (R44) No. 4 (–):***	Is the voltage 4.5 — 5.0 V?	Go to step **4**.	Repair or replace the open circuit of harness.
4	**CHECK HARNESS (OPEN CIRCUIT).** 1) Disconnect the A/C CM connector. 2) Using a tester, check continuity between terminals. ***Connector & terminal*** ***With power seat*** ***(R334) No. 2 — (i80) No. 14:*** ***(R334) No. 6 — (i181) No. 18:*** ***Without power seat*** ***(R44) No. 2 — (i80) No. 14:*** ***(R44) No. 4 — (i181) No. 18:***	Is there continuity?	Replace the A/C CM. <Ref. to AC-49, REMOVAL, Control Unit.>	Repair or replace the open circuit of harness.

AD:DTC B14B4 SEAT HEATER THERMISTOR CIRCUIT SHORT-CIRCUIT (DRIVER)

DTC DETECTING CONDITION:
Short-circuit in seat heater thermistor.
TROUBLE SYMPTOM:
Seat heater RH does not function.
WIRING DIAGRAM:

NOTE:
For the coupling connector, refer to “WIRING SYSTEM”.
Seat Heater System <Ref. to WI-331, WIRING DIAGRAM, Seat Heater System.>

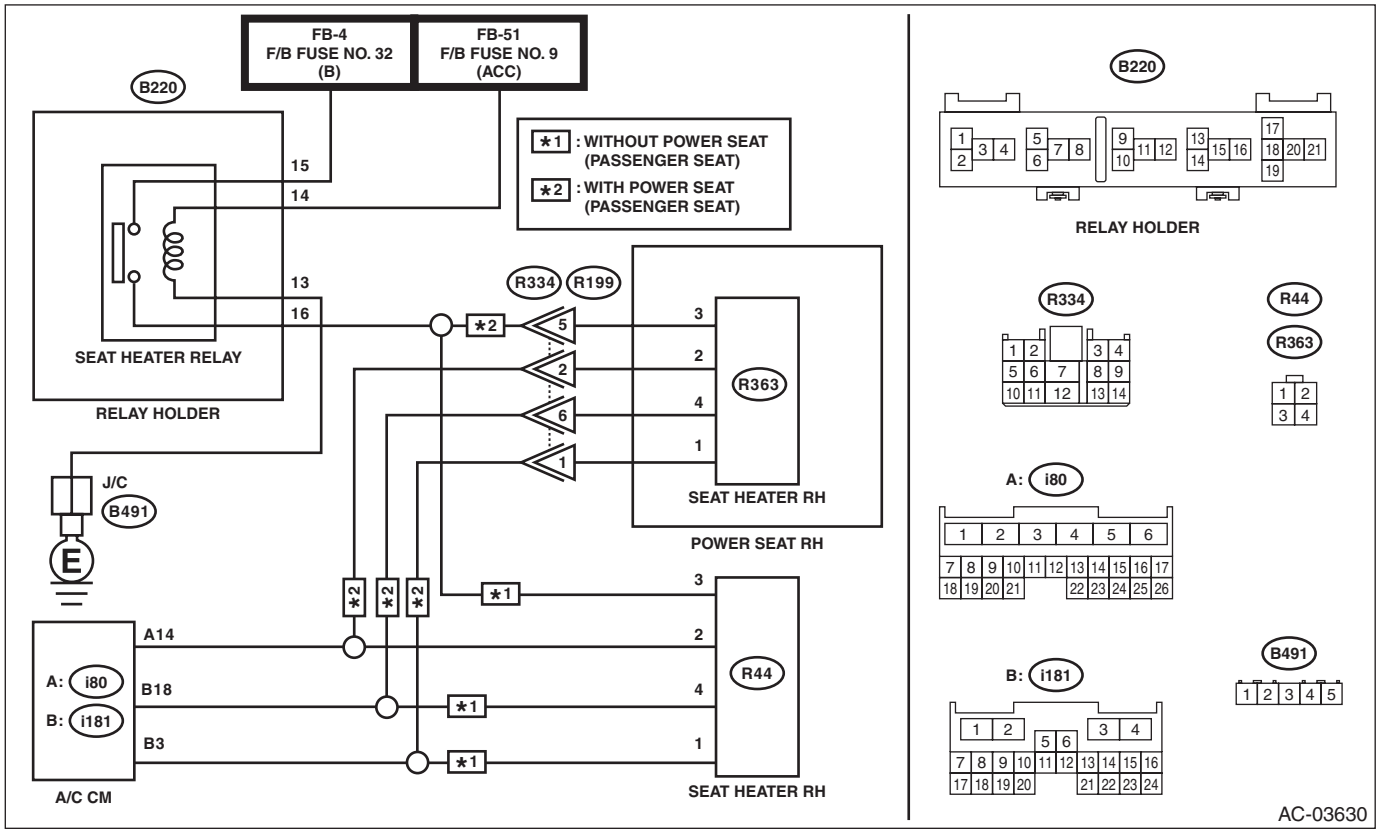

Step		Check	Yes	No
1	**CHECK CONNECTOR.** 1) Check connecting condition of the A/C CM connector, seat heater relay connector, seat connector and coupling connector. 2) Read the DTC using Subaru Select Monitor. <Ref. to AC(diag)-43, Read Diagnostic Trouble Code (DTC).>	Is B14B4 displayed?	Go to step **2**.	Even if DTC is displayed, the circuit has returned to a normal condition at this time. Reproduce the failure, and then perform the diagnosis again. NOTE: In this case, temporary poor contact of connector, temporary open or short circuit of harness may be the cause.

	Step	Check	Yes	No
2	**CHECK SEAT HEATER RH.** 1) Disconnect the seat connector (R334) or (R44). 2) Read the DTC using Subaru Select Monitor. <Ref. to AC(diag)-43, Read Diagnostic Trouble Code (DTC).>	Is B14B3 displayed?	Replace the seat heater module and wire set - front seat cushion. <Ref. to SE-75, SEAT HEATER MODULE - FRONT, REMOVAL, Seat Heater System.>	Go to step **3**.
3	**CHECK HARNESS.** 1) Turn the ignition switch to ON. 2) Turn the seat heater switch RH to ON. 3) Using the tester, measure the voltage between terminals. ***Connector & terminal*** ***With power seat*** ***(R334) No. 2 (+) — (R334) No. 6 (–):*** ***Without power seat*** ***(R44) No. 2 (+) — (R44) No. 4 (–):***	Is the voltage 4.5 — 5.0 V?	Go to step **4**.	Repair or replace the open circuit of harness.
4	**CHECK HARNESS (SHORTED BETWEEN LINES).** 1) Disconnect the A/C CM connector. 2) Using a tester, check continuity between terminals. ***Connector & terminal*** ***With power seat*** ***(R334) No. 2 — (R334) No. 6:*** ***Without power seat*** ***(R44) No. 2 — (R44) No. 4:***	Is there continuity?	Repair or replace the short circuit of the harness.	Replace the A/C CM. <Ref. to AC-49, REMOVAL, Control Unit.>

AE:DTC U0002 CAN COMMUNICATION ERROR

DTC DETECTING CONDITION:

- Data to be received via CAN communication do not arrive.
- A/C cooperation control does not operate.

TROUBLE SYMPTOM:

A/C does not operate fully automatically.

	Step	Check	Yes	No
1	**CHECK LAN SYSTEM.** Check LAN system using the Subaru Select Monitor. <Ref. to LAN(diag)-2, Basic Diagnostic Procedure.>	Is there any fault?	Perform the diagnosis according to the inspection for LAN system.	Go to step **2**.
2	**CHECK A/C CM.** 1) Replace with a normally operating A/C CM. 2) Read the DTC using Subaru Select Monitor. <Ref. to AC(diag)-43, Read Diagnostic Trouble Code (DTC).>	Is U0002 detected?	Go to step **3**.	Replace the A/C CM. <Ref. to AC-49, REMOVAL, Control Unit.>
3	**CHECK CAN COMMUNICATION CIRCUIT.** Check the CAN communication circuit. <Ref. to LAN(diag)-41, LIST, CAN Communication Circuit Check.>	Is the CAN communication circuit normal?	It is possible that temporary poor communication occurs. Clear the memory. <Ref. to AC(diag)-44, Clear Memory Mode.>	Repair or replace the CAN communication circuit.

AF:DTC U0028 HEATER CONTROL PANEL COMMUNICATION ERROR

DTC DETECTING CONDITION:
UART communication failure

TROUBLE SYMPTOM:
- Unable to operate A/C.
- DTC “U0028” HEATER CONTROL PANEL COMMUNICATION ERROR was detected.

WIRING DIAGRAM:
Air conditioning system <Ref. to WI-98, AUTO A/C, WIRING DIAGRAM, Air Conditioning System.>

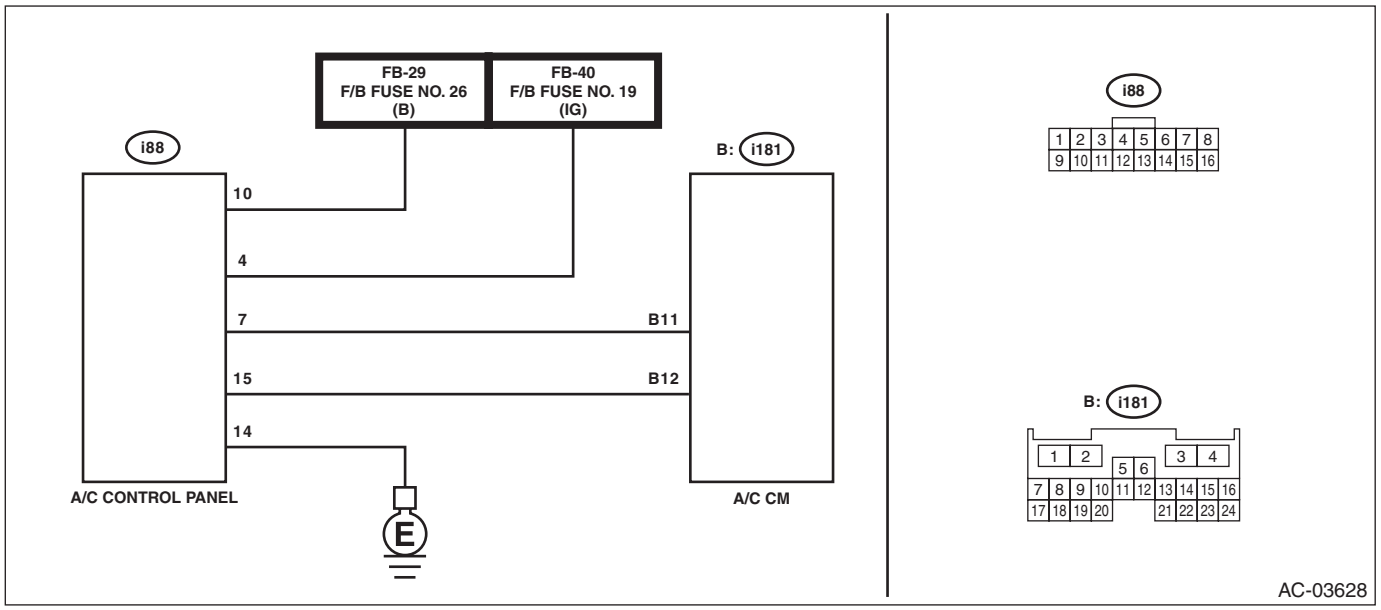

Step		Check	Yes	No
1	**CHECK CONNECTOR.** Check poor contact of the power supply circuit connectors, A/C control panel connector and A/C CM connector.	Is there poor contact?	Repair the connector.	Go to step **2**.
2	**CHECK FUSE.** 1) Turn the ignition switch to OFF. 2) Remove the fuses No. 19 and 26 from the main fuse box or fuse & relay box. 3) Check the condition of fuse. <Ref. to AC-36, Relay and Fuse.>	Is the fuse blown out?	Replace the fuse.	Go to step **3**.
3	**CHECK A/C CONTROL PANEL POWER CIRCUIT.** 1) Remove the A/C control panel. 2) Disconnect the A/C control panel connector. 3) Measure the voltage between A/C control panel connector terminal and chassis ground after turning the ignition switch to ON. ***Connector & terminal*** ***(i88) No. 10 (+) — Chassis ground (–):*** ***(i88) No. 4 (+) — Chassis ground (–):***	Is the voltage 10 V or more?	Go to step **4**.	Check for open or short circuit in the harness between A/C control panel and fuse.
4	**CHECK A/C CONTROL PANEL GROUND CIRCUIT.** Measure the resistance of harness between A/C control panel and chassis ground after turning the ignition switch to OFF. ***Connector & terminal*** ***(i88) No. 14 — Chassis ground:***	Is the resistance less than 10 Ω?	Go to step **5**.	Repair the harness for ground line.

	Step	Check	Yes	No
5	**CHECK COMMUNICATION CIRCUIT HARNESS.** 1) Disconnect the connector from A/C control panel and A/C CM. 2) Using a tester, check for continuity between the harness terminals. ***Connector & terminal*** ***(i181) No. 11 — (i88) No. 7:*** ***(i181) No. 12 — (i88) No. 15:***	Is there continuity?	Go to step **6**.	Repair or replace the open circuit of harness.
6	**CHECK HARNESS.** Using a tester, check continuity between terminals. ***Connector & terminal*** ***(i181) No. 11 — No. 12:*** ***(i181) No. 11 — Chassis ground:*** ***(i181) No. 12 — Chassis ground:***	Is there continuity?	Repair or replace the short circuit of the harness.	Replace the A/C control panel. <Ref. to AC-47, REMOVAL, Control Panel.>

AG:DTC U0073 CONTROL MODULE COMMUNICATION BUS OFF

DTC DETECTING CONDITION:

- Data to be received via CAN communication do not arrive.
- A/C cooperation control does not operate.

TROUBLE SYMPTOM:

A/C does not operate fully automatically.

	Step	Check	Yes	No
1	**CHECK LAN SYSTEM.** Check LAN system using the Subaru Select Monitor. <Ref. to LAN(diag)-2, Basic Diagnostic Procedure.>	Is there any fault?	Perform the diagnosis according to the inspection for LAN system.	Go to step **2**.
2	**CHECK A/C CM.** 1) Replace with a normally operating A/C CM. 2) Read the DTC using Subaru Select Monitor. <Ref. to AC(diag)-43, Read Diagnostic Trouble Code (DTC).>	Is U0073 detected?	Go to step **3**.	Replace the A/C CM. <Ref. to AC-49, REMOVAL, Control Unit.>
3	**CHECK CAN COMMUNICATION CIRCUIT.** Check the CAN communication circuit. <Ref. to LAN(diag)-41, LIST, CAN Communication Circuit Check.>	Is the CAN communication circuit normal?	It is possible that temporary poor communication occurs. Clear the memory. <Ref. to AC(diag)-44, Clear Memory Mode.>	Repair or replace the CAN communication circuit.

AIRBAG SYSTEM

AB

Page

1. General Description 2
2. Airbag Connector 18
3. Inspection Locations after a Collision 26
4. Driver's Airbag Module 32
5. Passenger's Airbag Module 34
6. Seat Cushion Airbag Module 37
7. Side Airbag Module 40
8. Curtain Airbag Module 43
9. Airbag Control Module 50
10. Front Sub Sensor 52
11. Front Door Impact Sensor 54
12. Side Airbag Sensor 56
13. Curtain Airbag Sensor 58
14. Roll Connector 60
15. Airbag Module Disposal (Deployment Processing on Vehicle) 64

1. General Description

A: COMPONENT

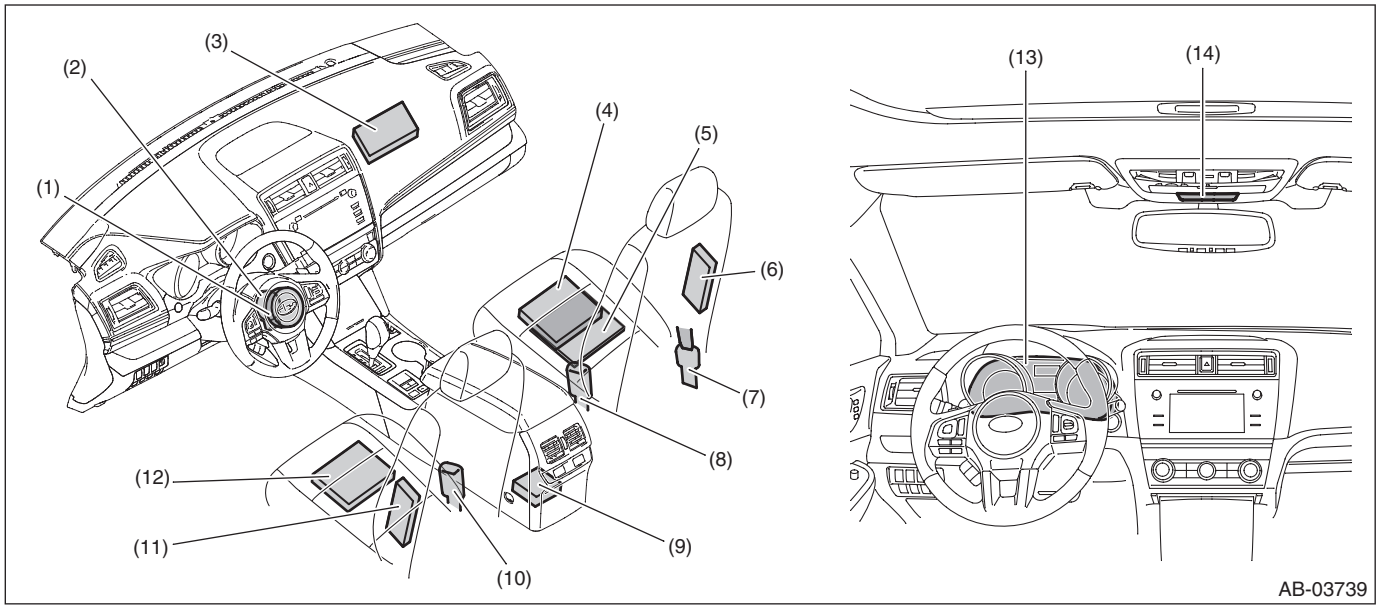

(1) Driver's airbag module
(2) Steering roll connector
(3) Passenger's airbag module
(4) Seat cushion airbag module RH
(5) Occupant detection control module and sensor
(6) Side airbag module RH
(7) Belt tension sensor
(8) Buckle switch RH
(9) Airbag control module
(10) Buckle switch LH
(11) Side airbag module LH
(12) Seat cushion airbag module LH
(13) Airbag warning light (in combination meter)
(14) Airbag ON/OFF indicator light (in warning box)

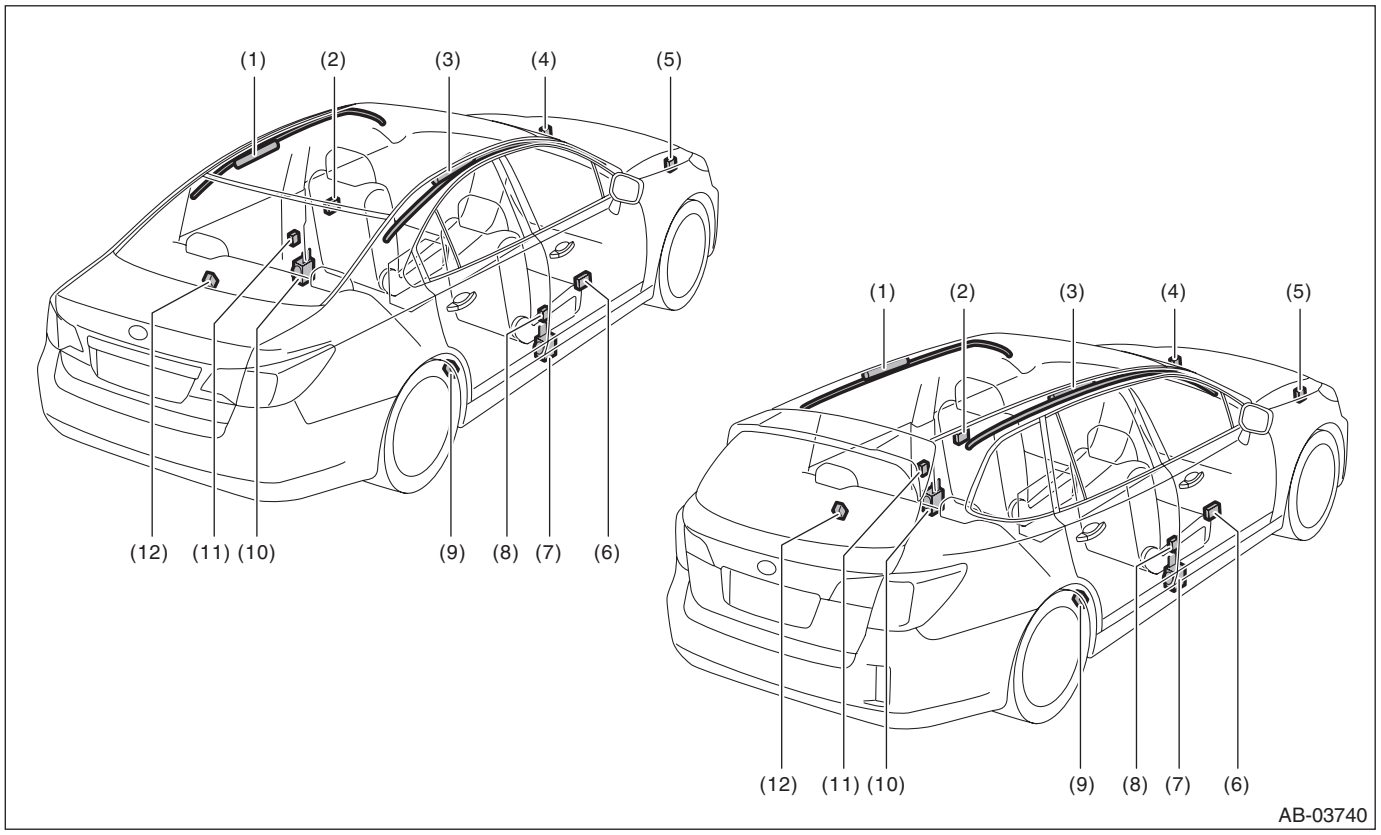

(1) Curtain airbag module LH
(2) Front door impact sensor LH
(3) Curtain airbag module RH
(4) Front sub sensor LH
(5) Front sub sensor RH
(6) Front door impact sensor RH
(7) Seat belt pretensioner RH
(8) Side airbag sensor RH
(9) Curtain airbag sensor RH
(10) Seat belt pretensioner LH
(11) Side airbag sensor LH
(12) Curtain airbag sensor LH

1. DRIVER'S AIRBAG MODULE

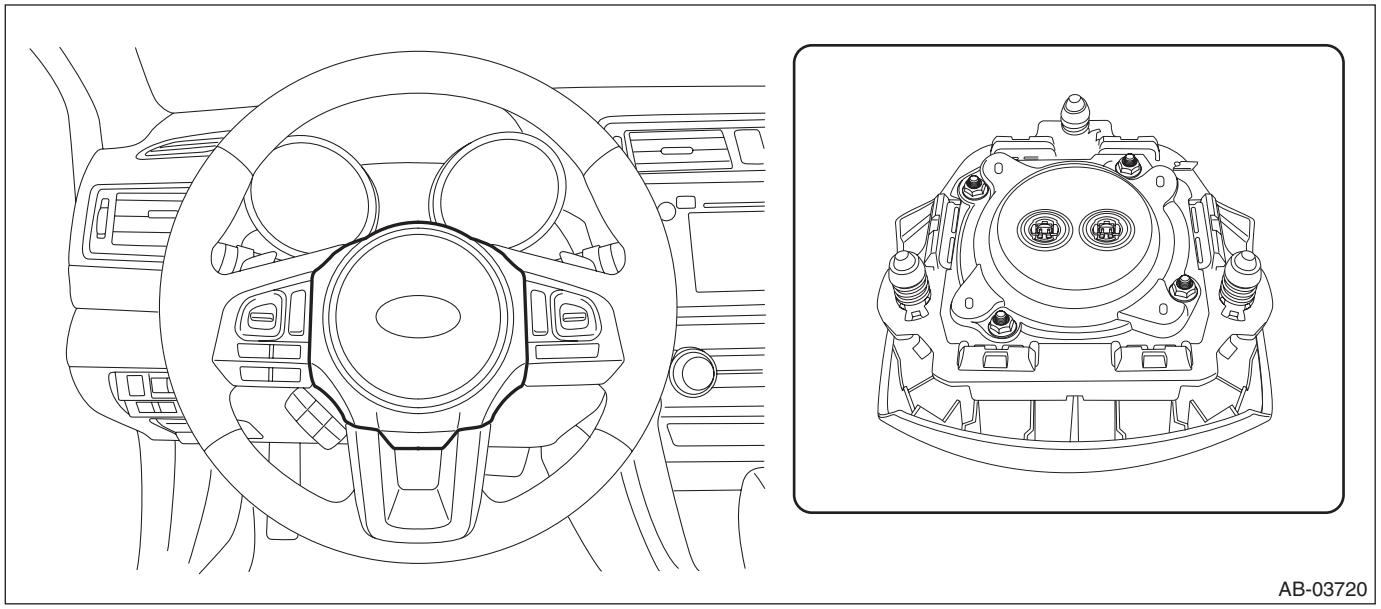

2. PASSENGER'S AIRBAG MODULE

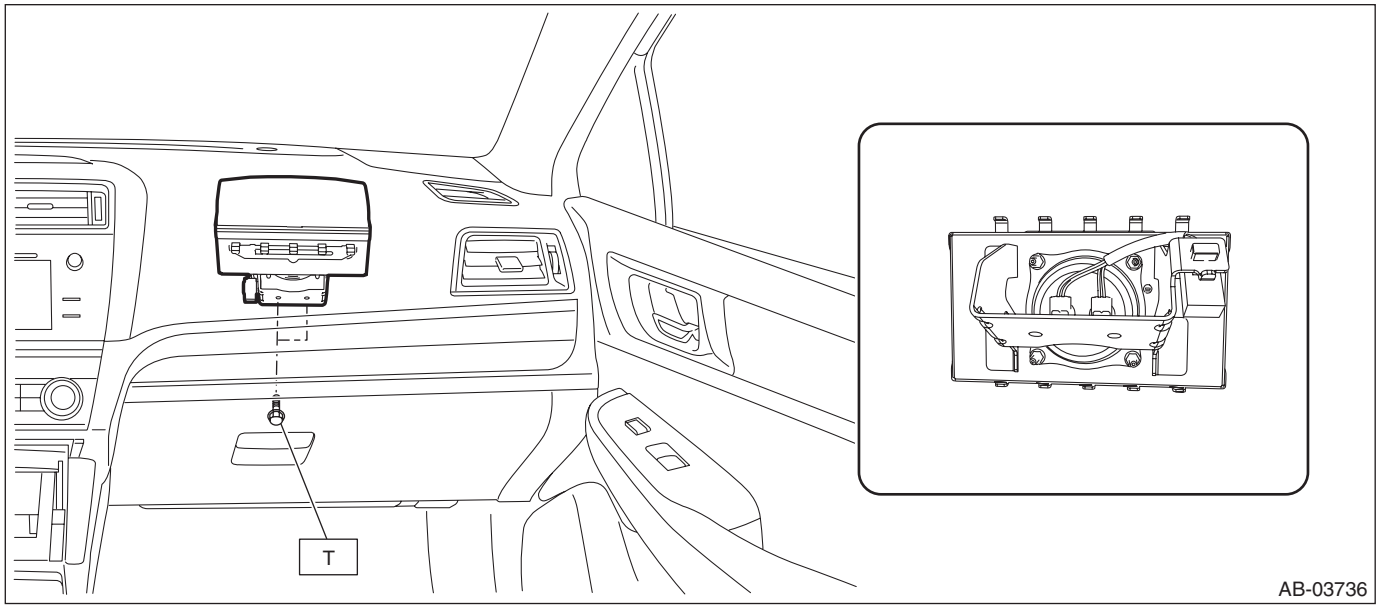

Tightening torque: N·m (kgf-m, ft-lb)
T: 7.5 (0.8, 5.5)

3. SIDE AIRBAG MODULE

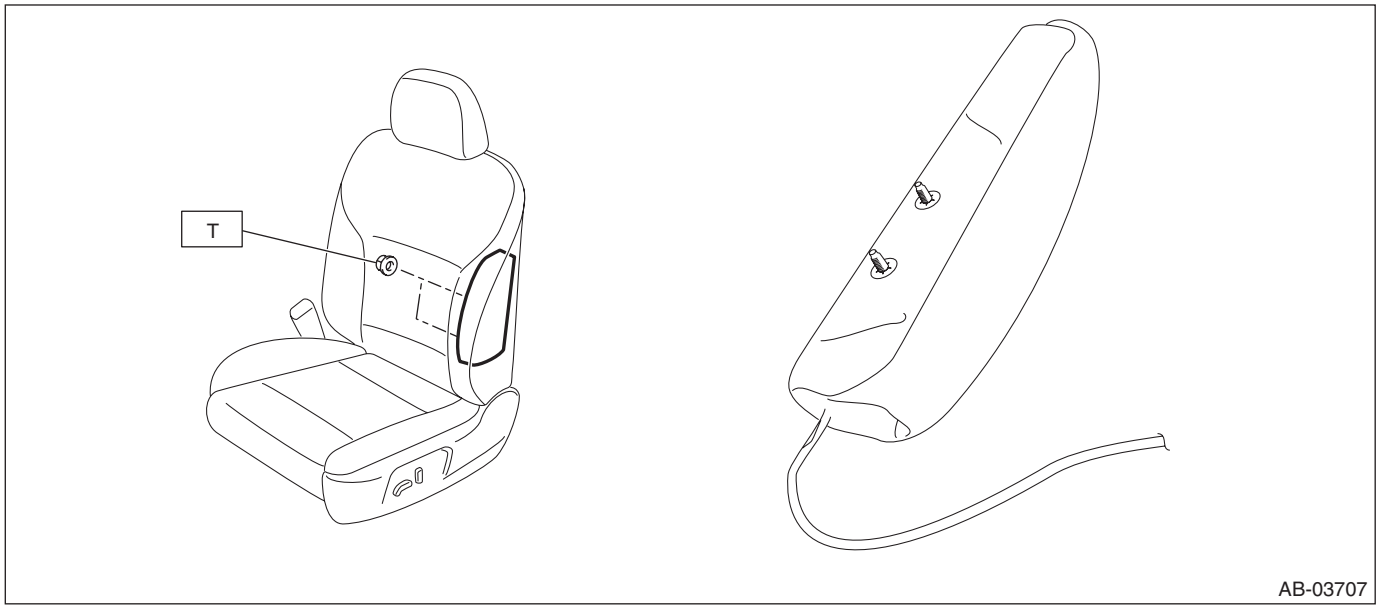

Tightening torque: N·m (kgf-m, ft-lb)
T: 6 (0.6, 4.4)

4. SEAT CUSHION AIRBAG MODULE

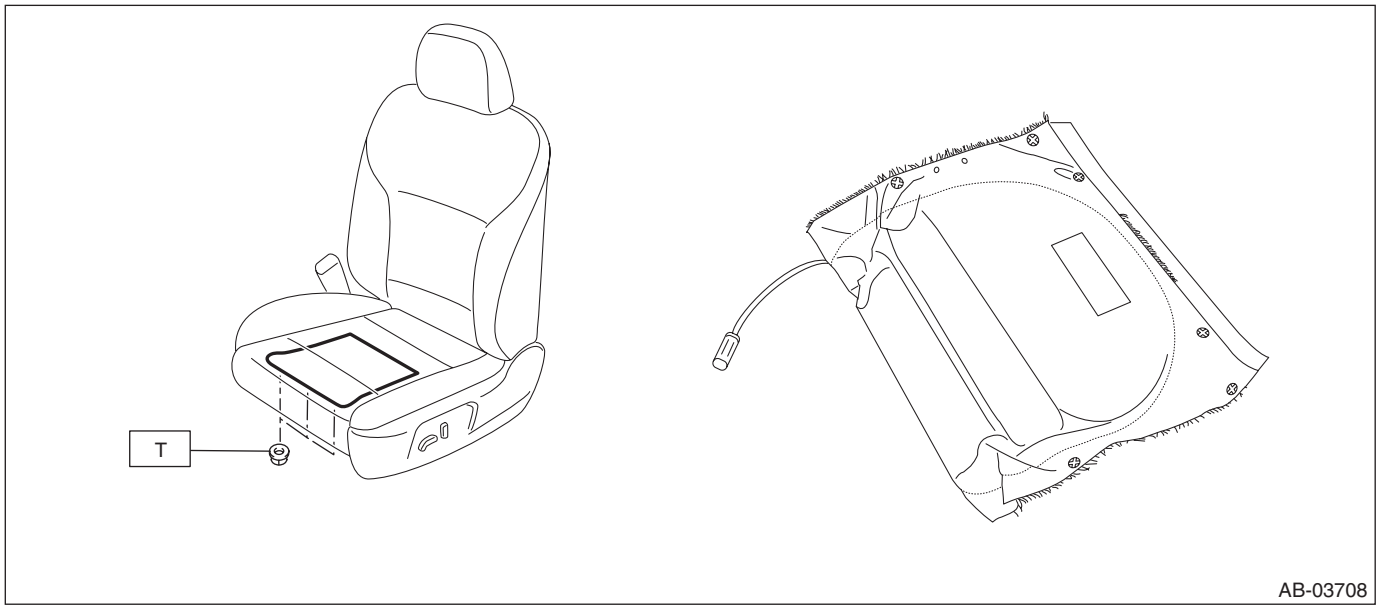

Tightening torque: N·m (kgf-m, ft-lb)
T: 6 (0.6, 4.4)

5. CURTAIN AIRBAG MODULE

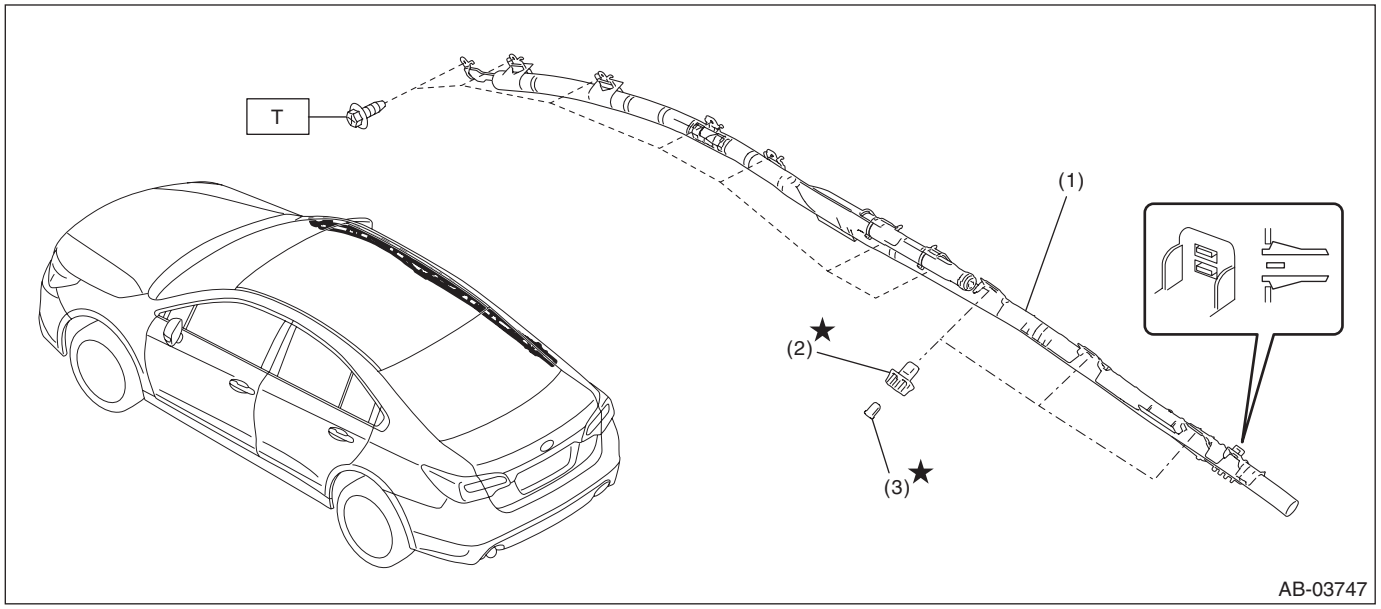

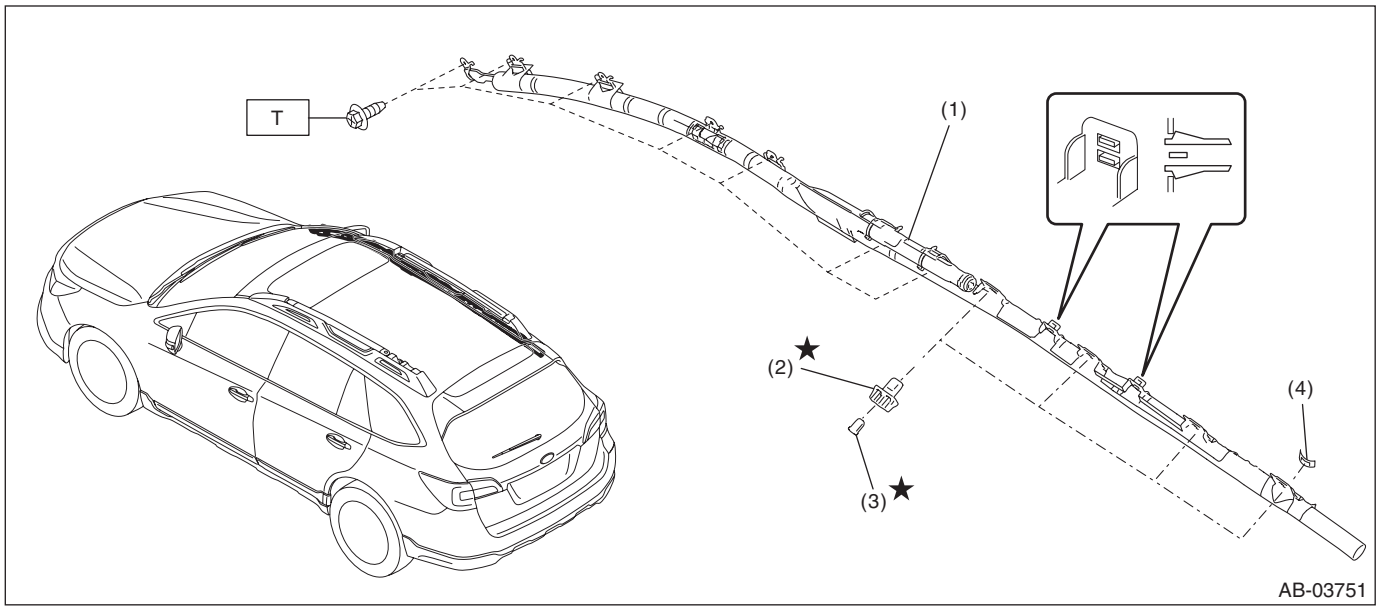

(1) Curtain airbag module
(2) Clip - bushing
(3) Clip - pin
(4) Plastic spacer

Tightening torque: N·m (kgf-m, ft-lb)
T: 7.5 (0.8, 5.5)

6. AIRBAG CONTROL MODULE

CAUTION:
Do not reuse mounting bolts and nuts.

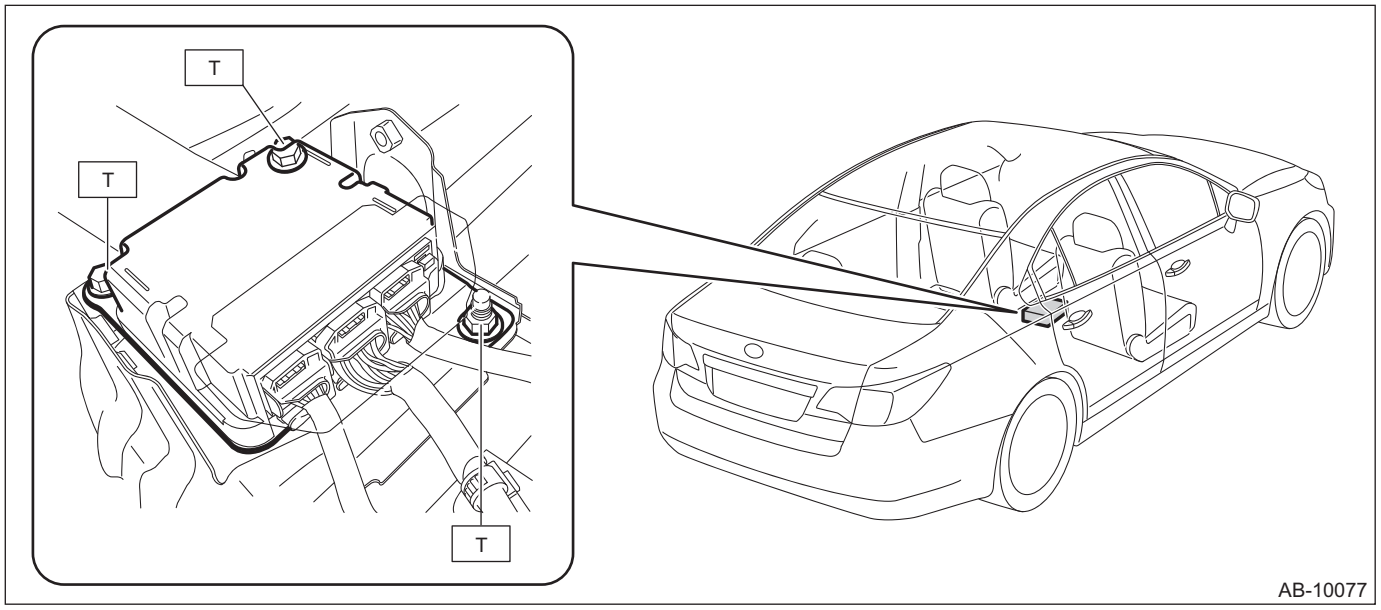

Tightening torque: N·m (kgf-m, ft-lb)
T: 25 (2.5, 18.4)

7. FRONT SUB SENSOR

CAUTION:
Do not reuse mounting bolts and nuts.

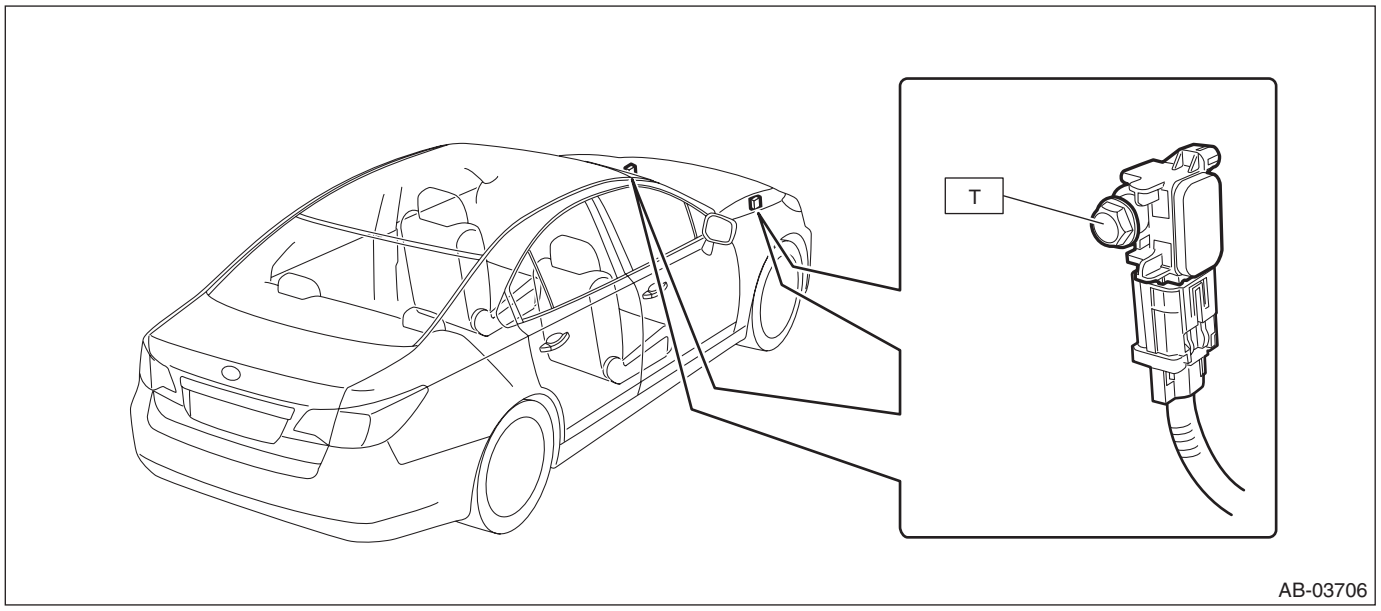

Tightening torque: N·m (kgf-m, ft-lb)
T: 13 (1.3, 9.6)

8. FRONT DOOR IMPACT SENSOR

CAUTION:
Do not reuse mounting bolts and nuts.

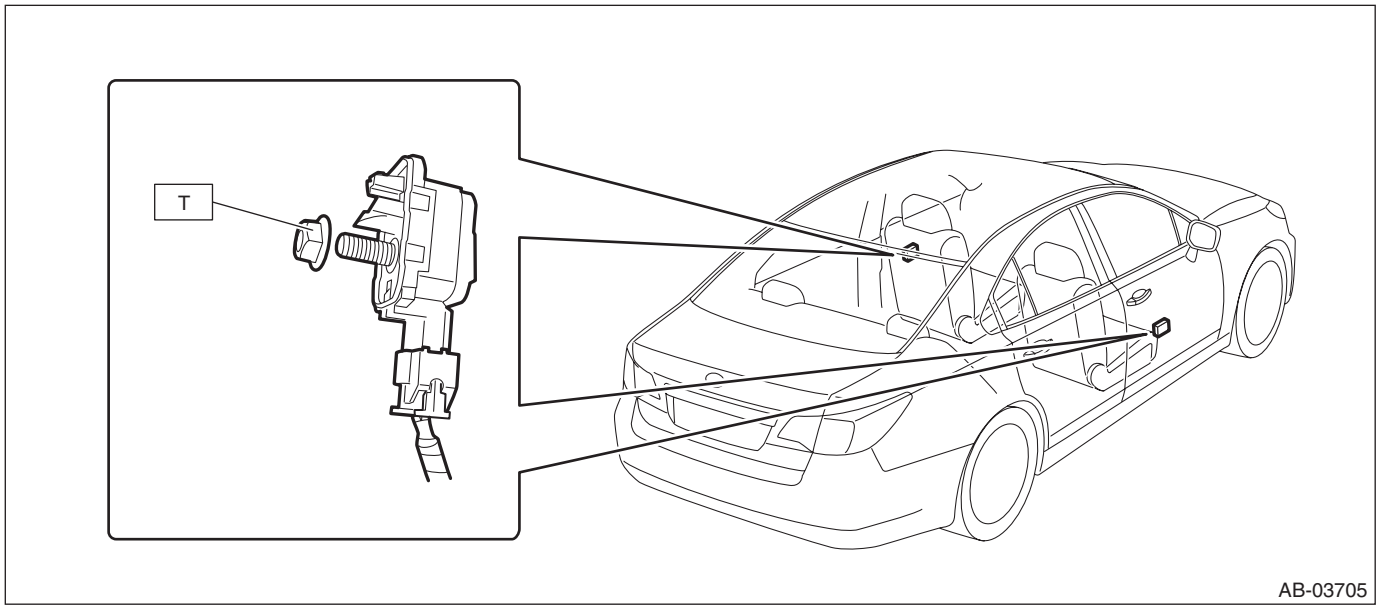

Tightening torque: N·m (kgf-m, ft-lb)
T: 7.5 (0.8, 5.5)

9. SIDE AIRBAG SENSOR

CAUTION:
Do not reuse mounting bolts and nuts.

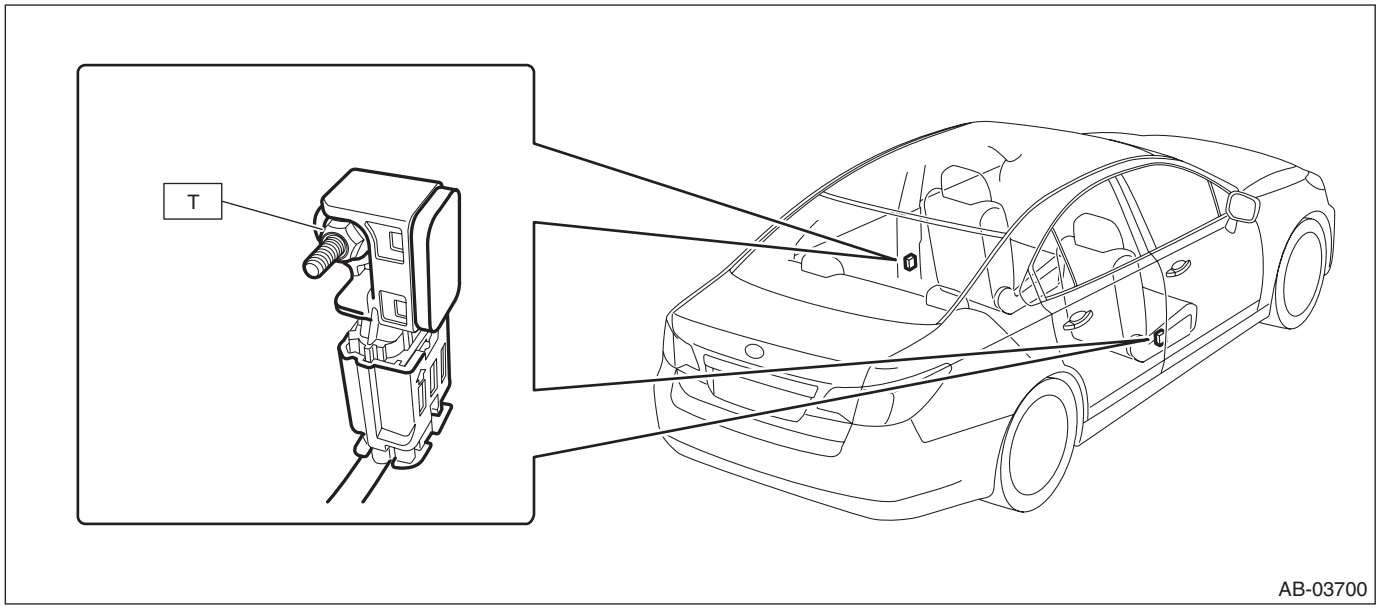

Tightening torque: N·m (kgf-m, ft-lb)
T: 7.5 (0.8, 5.5)

10.CURTAIN AIRBAG SENSOR

CAUTION:
Do not reuse mounting bolts and nuts.

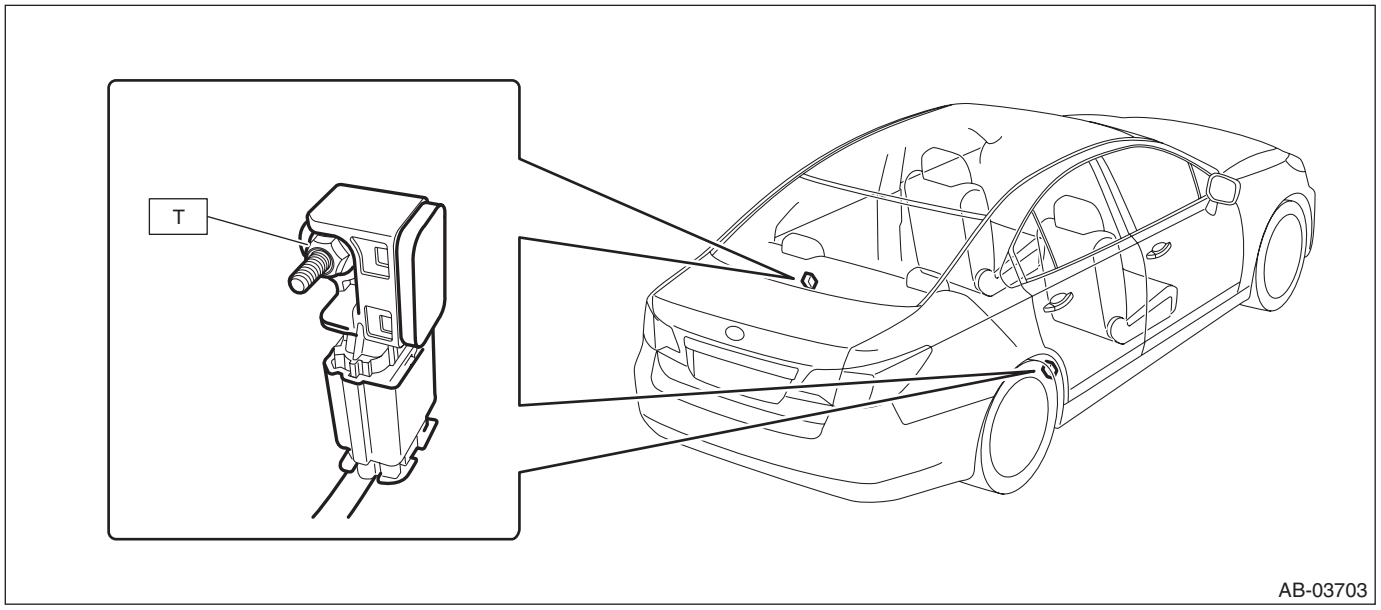

Tightening torque: N·m (kgf-m, ft-lb)
T: 7.5 (0.8, 5.5)

11.STEERING ROLL CONNECTOR

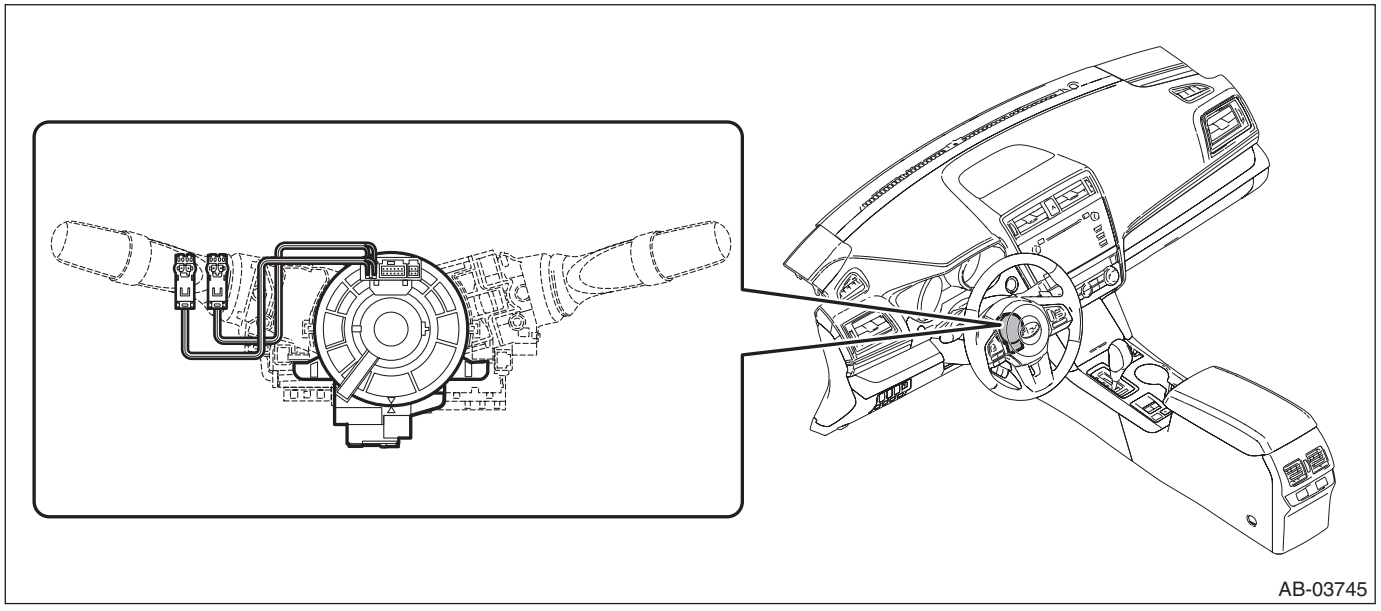

B: CAUTION

1. BEFORE STARTING ALL WORKS

• The airbag system (including pretensioner) is fitted with a backup power supply. After disconnecting the battery ground cable, the airbag may operate if you do not wait for 60 seconds or more before starting the service of airbag system.
• When performing an operation with the airbag system parts including pretensioners exposed, do not apply any impact to airbag modules and sensors.
• When servicing a vehicle, be sure to turn the ignition switch to OFF, disconnect the ground cable from battery, and wait for 60 seconds or more before starting work.
• If the airbag warning light illuminates, check or repair the vehicle immediately to prevent it from airbag system malfunction.
• Do not allow water or oil to come in contact with the connector terminals. Also, do not touch the connector terminals directly.

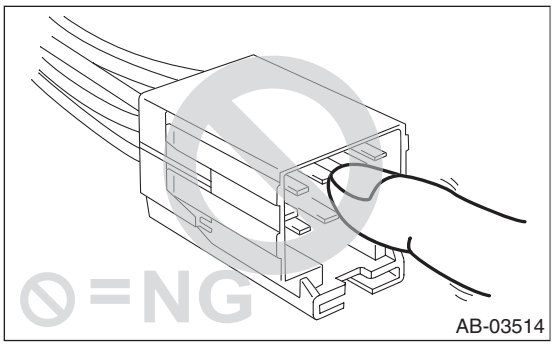

• If damage, open circuit or rust is found on airbag system wiring harness, do not repair the harness. Always replace the faulty harness with a new genuine part.

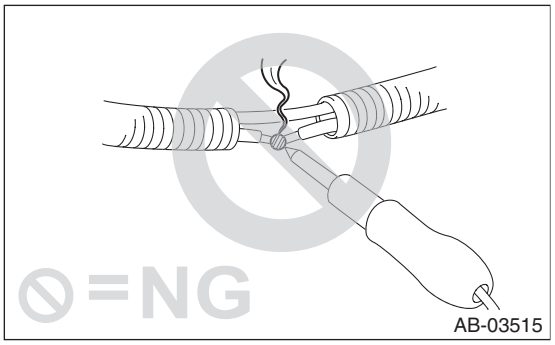

• When painting or performing sheet metal work on the front part of the vehicle, including the front wheel apron, front fender and radiator panel side, remove the front sub sensors and wiring harness of airbag system.
• When painting or performing sheet metal work on the side of the vehicle, including the side sill, center pillar and front and rear doors, remove the front door impact sensor, side airbag sensors, curtain airbag sensor and wiring harness of the airbag system.

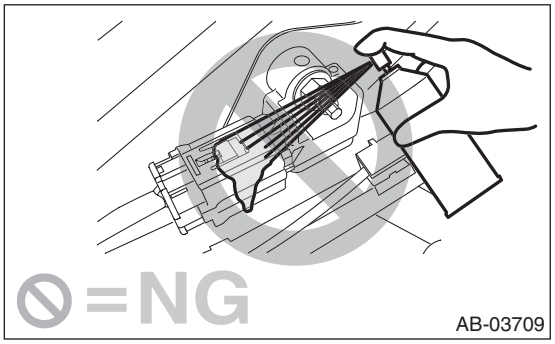

• When attaching the steering wheel and steering roll connector, be sure to adjust the steering roll connector.

2. BEFORE STARTING PARTS REPLACEMENT

• If airbag sensors, airbag module, airbag control module, pretensioners and harnesses are deformed or damaged, replace with new parts.

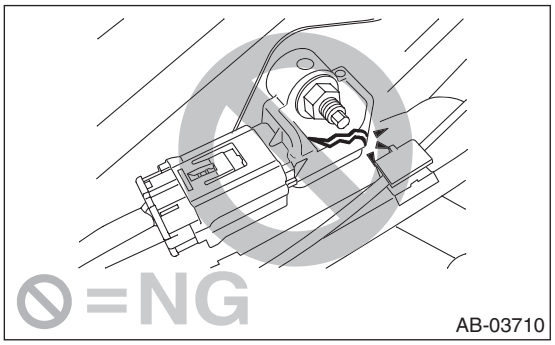

• Install the wiring harness securely with the specified clips to avoid interference or tangled with other parts.

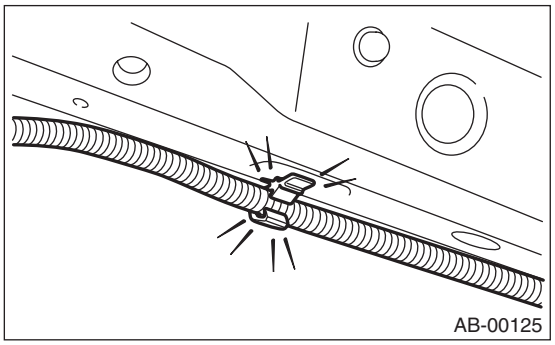

• Do not use the airbag or pretensioner parts from other vehicles. Always replace the defective parts with new parts.
• Never reuse any activated airbag module and pretensioner.
• Do not discard undeployed airbag or pretensioner.
• Do not reuse the bolts and nuts when the following parts are removed. Always replace with the specified new bolts and nuts.
  – Airbag control module
  – Front door impact sensor
  – Front sub sensor
  – Side airbag sensor
  – Curtain airbag sensor
• When attaching the steering wheel and steering roll connector, be sure to adjust the steering roll connector.
• After removing each parts of the airbag system, keep them with the pad side facing upward on a dry, clean and flat surface away from heat, light sources, moisture and dust.

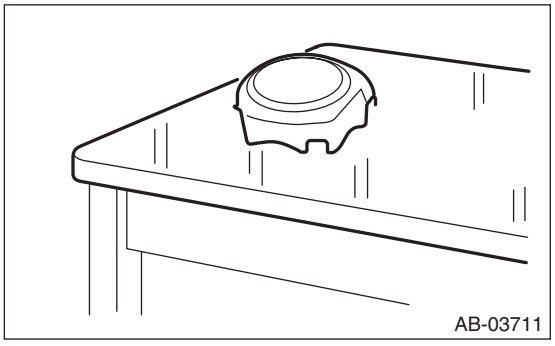

• Observe the following; the airbag system component or the internal parts of seat belt pretensioner may be damaged or the reliability may be greatly lowered.
  – Do not drop or otherwise apply impact.
  – Do not store under the condition at high temperature of 85°C (185°F) or more, or expose to flame.
  – Do not allow water, oil or grease to come in contact.

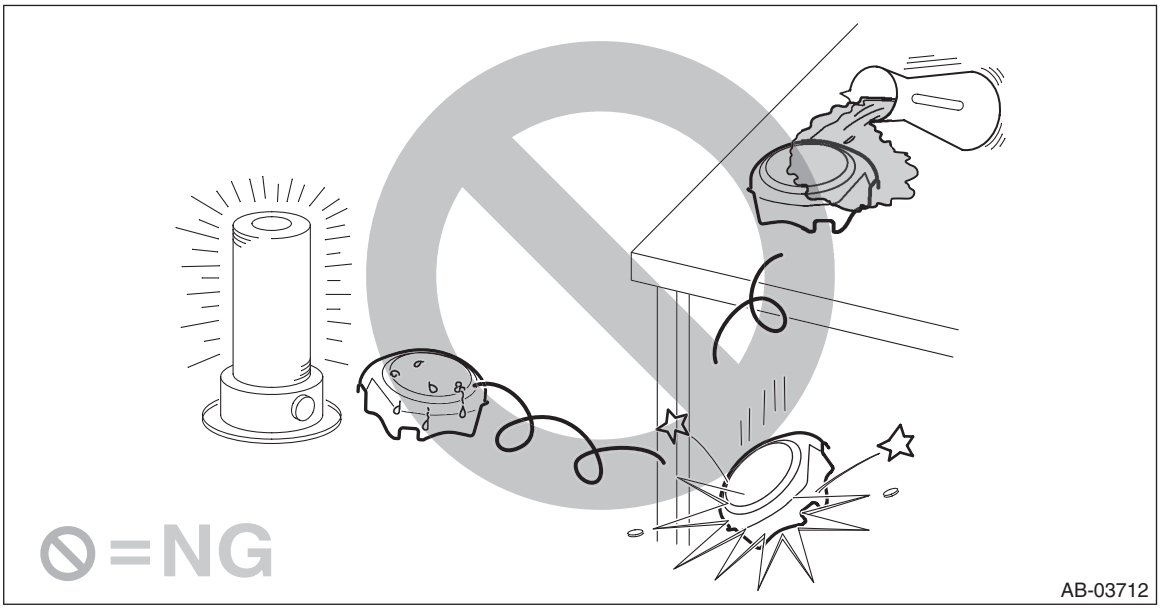

• When storing a removed airbag module, observe the following items. If the pad of the airbag module is in contact with other objects, it may cause a serious accident if the airbag accidentally operates.
  – Do not place the airbag module with the pad side facing downward.
  – Do not place any objects on the airbag module.
  – Do not pile up the airbag module.
  • Driver's airbag module

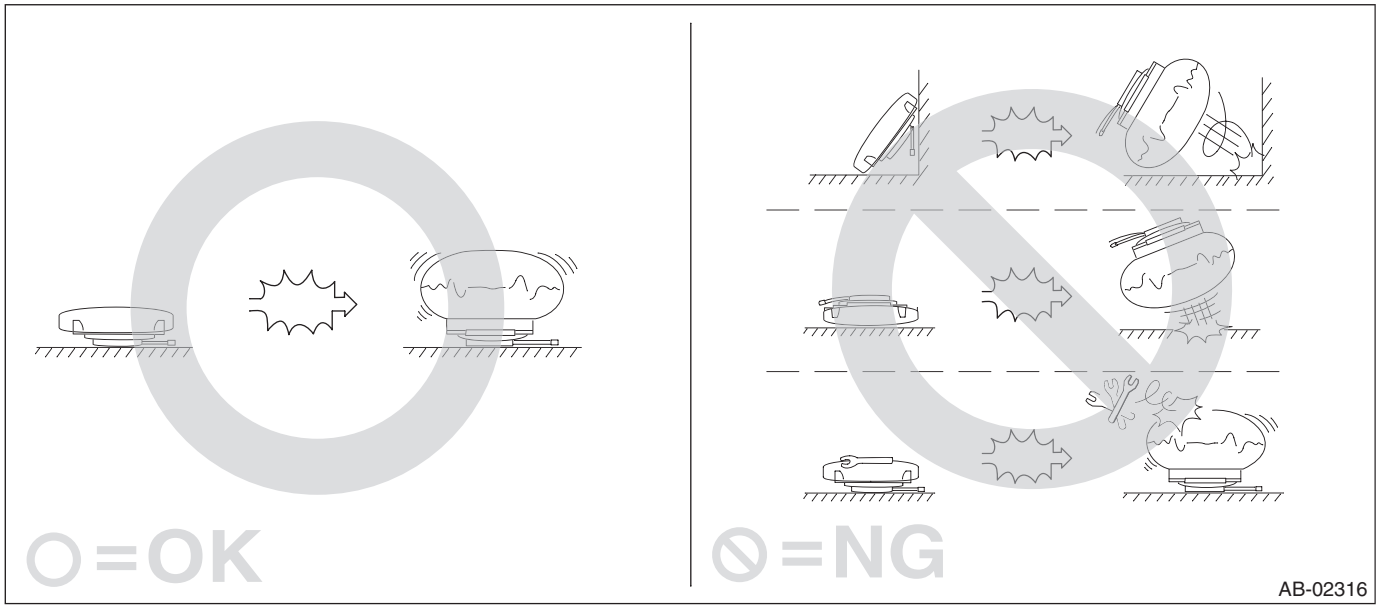

- Passenger's airbag module, side airbag module and seat cushion airbag module

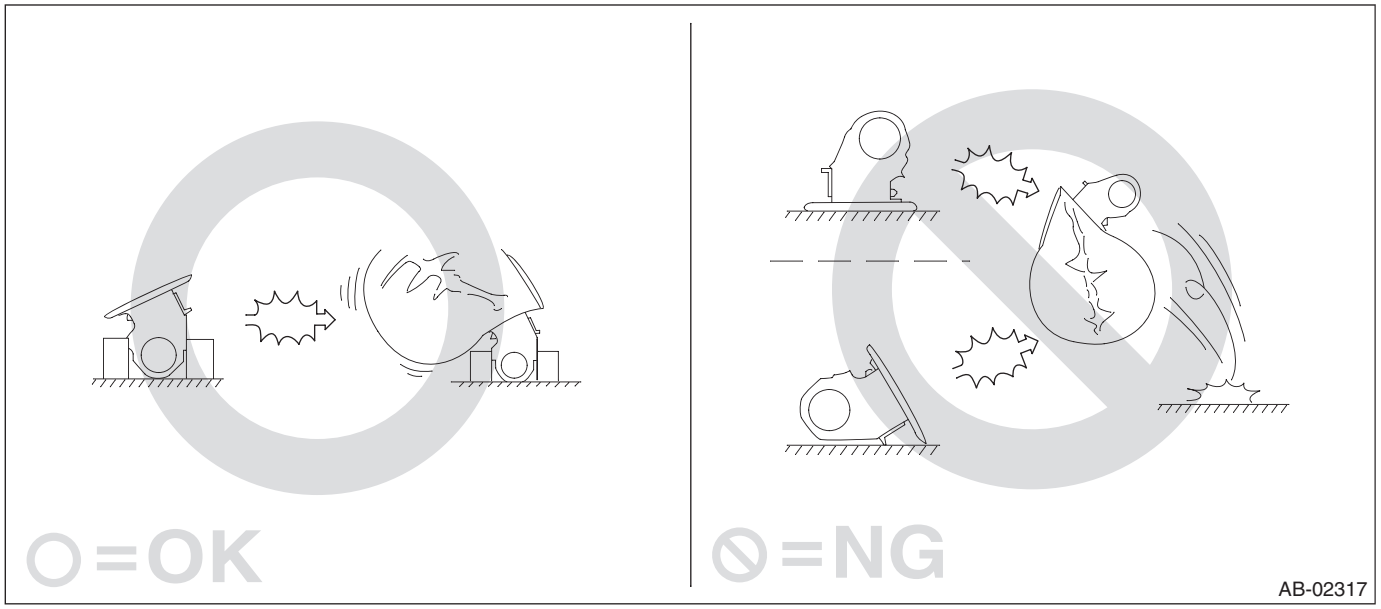

- Do not disassemble driver's airbag module, seat cushion airbag module, passenger's airbag module, side airbag modules, curtain airbag module or pretensioner.

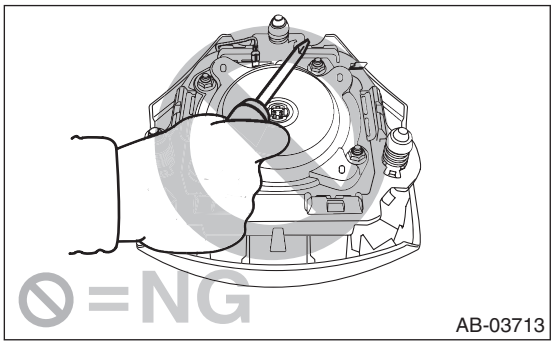

- The removed front seat with airbag module must be kept at least 200 mm (8 in) away from walls and other objects.

3. BEFORE STARTING TROUBLESHOOTING

• Even if any part must be replaced as the result of troubleshooting, do not use an airbag part or pretensioner part from other vehicles. Always replace the defective parts with new parts.
• When checking the airbag system, be sure to use a digital circuit tester. Use of an analog circuit tester may cause the airbag to activate erroneously due to a minimal current inside tester.

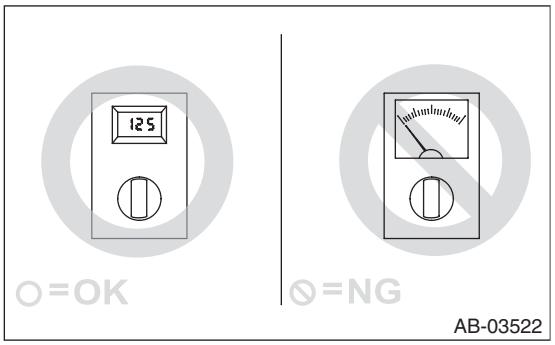

• Do not allow water or oil to come in contact with the connector terminals. Also, do not touch the connector terminals directly.

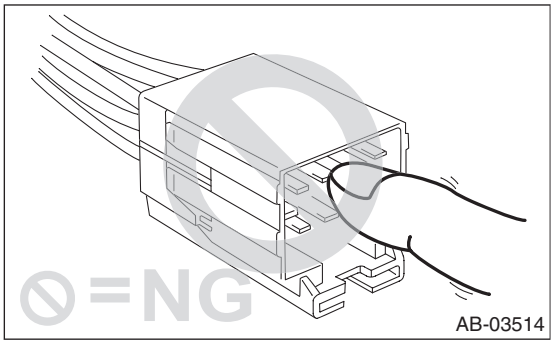

• When checking, use a test harness (1). Damage to connector terminal causes malfunction. Do not directly put the tester probe on airbag connector terminal.

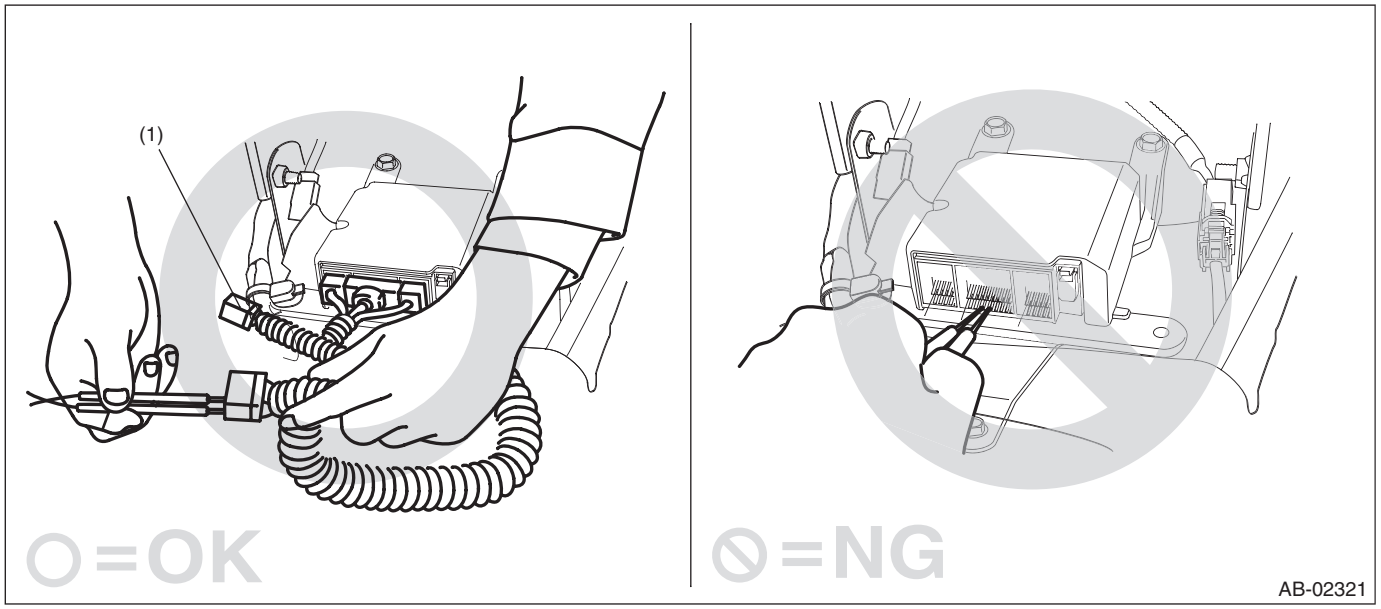

• Do not check continuity of the driver's airbag module, seat cushion airbag module, passenger's airbag module, side airbag module, curtain airbag module or pretensioner.

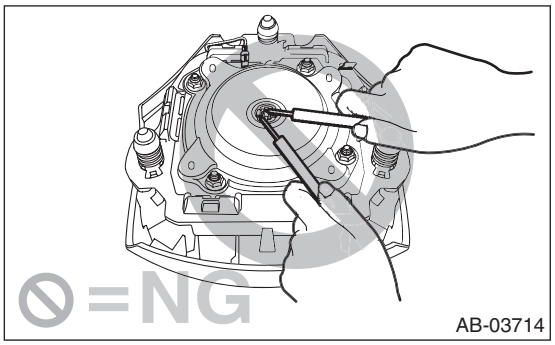

• If damage, open circuit or rust is found on airbag system wiring harness, do not repair the harness. Always replace the faulty harness with a new genuine part.

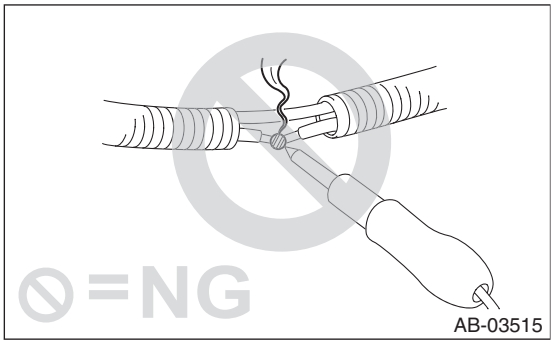

C: PREPARATION TOOL

1. SPECIAL TOOL

• TEST HARNESS N

ILLUSTRATION	TOOL NUMBER	DESCRIPTION	REMARKS
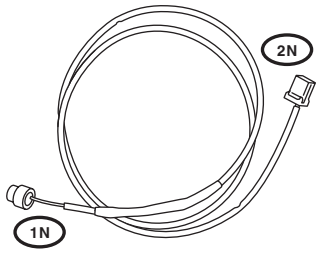 ST98299SA000	98299SA000	TEST HARNESS N	Used for unit inspection of steering roll connector.

• TEST HARNESS Q

ILLUSTRATION	TOOL NUMBER	DESCRIPTION	REMARKS
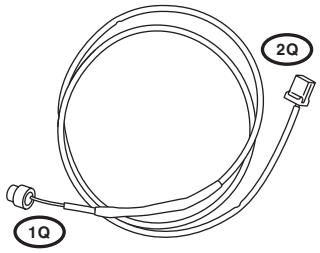 ST98299SA040	98299SA040	TEST HARNESS Q	Used for unit inspection of steering roll connector.

- TEST HARNESS ADAPTER D

ILLUSTRATION	TOOL NUMBER	DESCRIPTION	REMARKS
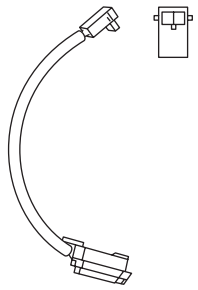 ST98299SA010	98299SA010	TEST HARNESS ADAPTER D	• Used for operation process of curtain airbag module. • Used together with AIRBAG DEPLOYMENT TOOL. (98299PA030)

- TEST HARNESS ADAPTER AM

ILLUSTRATION	TOOL NUMBER	DESCRIPTION	REMARKS
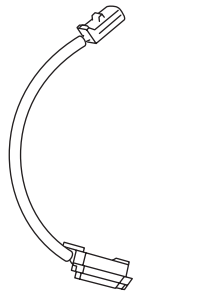 ST98299FJ000	98299FJ000	TEST HARNESS ADAPTER AM	• Used for operation process of passenger's airbag module. • Used together with AIRBAG DEPLOYMENT TOOL. (98299PA030)

- TEST HARNESS ADAPTER AU

ILLUSTRATION	TOOL NUMBER	DESCRIPTION	REMARKS
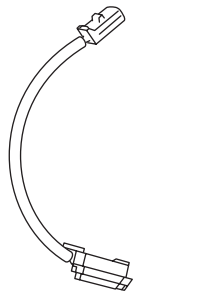 ST98299AL000	98299AL000 (Newly adopted tool)	TEST HARNESS ADAPTER AU	• Used for operation process of seat cushion airbag module. • Used together with AIRBAG DEPLOYMENT TOOL. (98299PA030)

- TEST HARNESS ADAPTER AR

ILLUSTRATION	TOOL NUMBER	DESCRIPTION	REMARKS
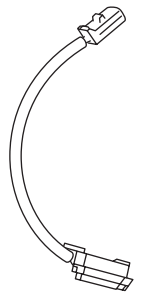 ST98299CA000	98299CA000	TEST HARNESS ADAPTER AR	• Used for operation process of side airbag module. • Used together with AIRBAG DEPLOYMENT TOOL. (98299PA030)

- AIRBAG DEPLOYMENT TOOL

ILLUSTRATION	TOOL NUMBER	DESCRIPTION	REMARKS
 ST98299PA030	98299PA030	AIRBAG DEPLOYMENT TOOL	• Used for operation process of airbag module. • Used together with each test harness adapter.

2. GENERAL TOOL

TOOL NAME	REMARKS
Steering wheel puller	Used for removing and installing the steering wheel.
TORX® T40	Used for removing and installing the beam COMPL - steering.
Circuit tester	Used for measuring resistance, voltage and current.

2. Airbag Connector

A: PROCEDURE

1. POWER SUPPLY

1) How to disconnect:

CAUTION:
When pulling the slide lock or disconnecting connector, be sure to hold the connector, not the harness.

(1) Pull the slide lock (a) in the direction of arrow.
(2) With the slide lock pulled, disconnect the connector.

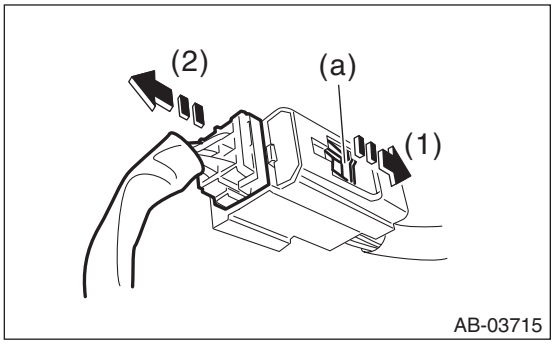

2) How to connect:

CAUTION:
Be sure to insert the connector in until it is locked. Then pull it gently to make sure that it is locked.
Holding the connector, push it in securely until a clicking sound is heard.

2. AIRBAG CONTROL MODULE

1) How to disconnect:

(1) Push the lock lever plate (a).
(2) While holding down the lock lever plate (a), disconnect the connector.

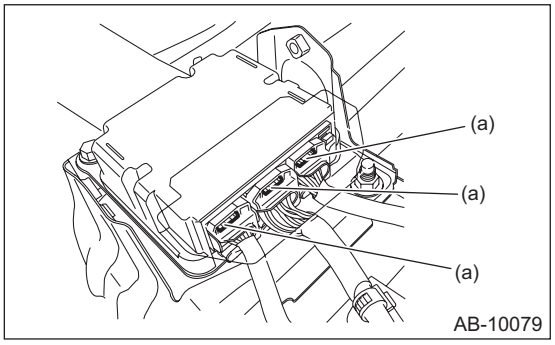

2) How to connect:

CAUTION:
Be sure to insert the connector in until it is locked. Then pull it gently to make sure that it is locked.
Holding the connector, push it in securely until a clicking sound is heard.

3. DRIVER'S AIRBAG MODULE (ROLL CONNECTOR)

1) How to disconnect:

CAUTION:
When pulling the slide lock or disconnecting connector, be sure to hold the connector, not the harness.

(1) Pull the slide lock (a) in the direction of arrow.

(2) With the slide lock pulled, disconnect the connector.

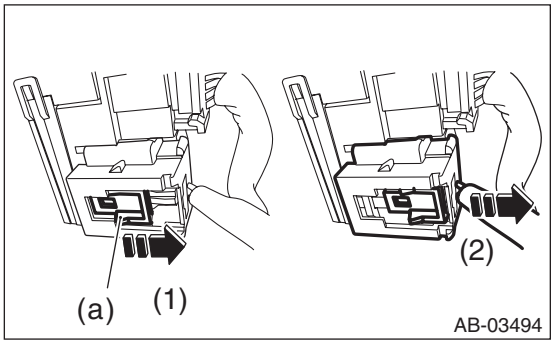

2) How to connect:

CAUTION:
Be sure to insert the connector in until it is locked. Then pull it gently to make sure that it is locked.
Holding the connector, push it in securely until a clicking sound is heard.

4. PASSENGER'S AIRBAG MODULE

1) How to disconnect:

CAUTION:
When pulling the slide lock or disconnecting connector, be sure to hold the connector, not the harness.

(1) Pull the slide lock (a) in the direction of arrow.
(2) With the slide lock pulled, disconnect the connector.

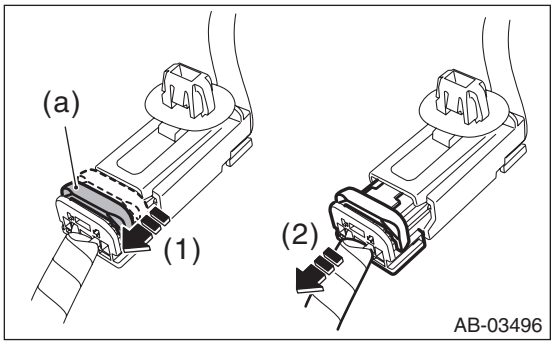

2) How to connect:

CAUTION:
Be sure to insert the connector in until it is locked. Then pull it gently to make sure that it is locked.
Holding the connector, push it in securely until a clicking sound is heard.

5. DRIVER'S AIRBAG MODULE, CURTAIN AIRBAG MODULE AND PRETENSIONER

1) How to disconnect:
   (1) Using a flat tip screwdriver, pry the push lock upward to unlock.
   (2) Pull the connector to disconnect from the airbag module assembly or the retractor assembly.

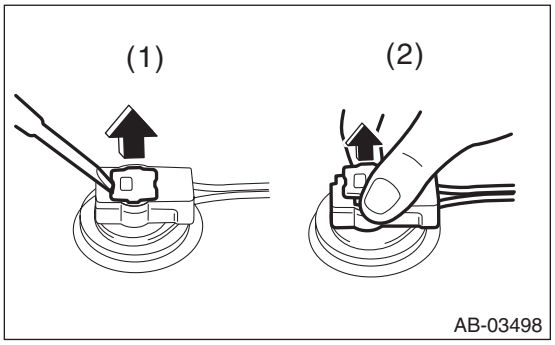

2) How to connect:

CAUTION:
- **Be sure to insert the connector in until it is locked.**
- **Press in the push lock securely. Then pull it gently to make sure that it is locked.**

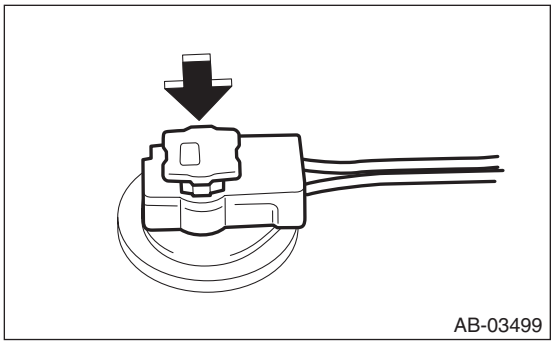

Connect the connector in the reverse order of disconnecting. At this time, be sure to insert until a clicking sound is heard.

6. FRONT SUB SENSOR

1) How to disconnect:

CAUTION:
When pulling the slide lock or disconnecting connector, be sure to hold the connector, not the harness.

(1) Push the lock arm.
(2) Holding outer part, pull it one step in the direction of arrow.

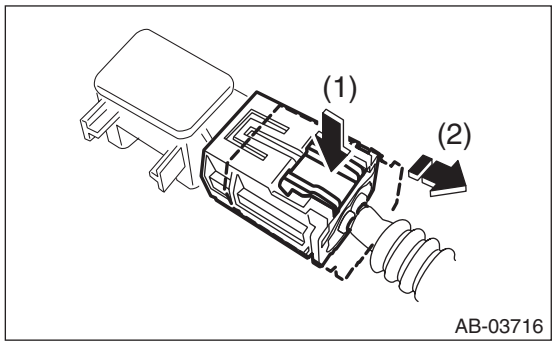

(3) Push the lock arm again.
(4) Holding outer part, pull it in the direction of arrow to disconnect the connector.

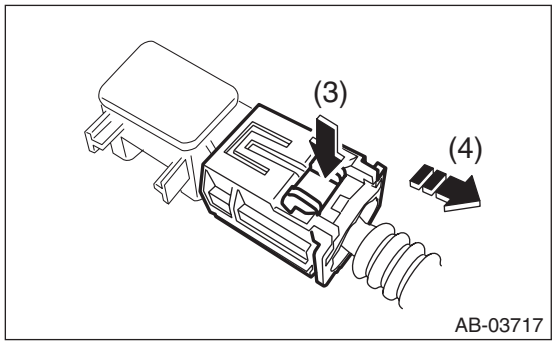

2) How to connect:

CAUTION:
Be sure to insert the connector in until it is locked. Then pull it gently to make sure that it is locked.
Holding the connector, push it in securely until a clicking sound is heard.

7. FRONT DOOR IMPACT SENSOR

1) How to disconnect:

CAUTION:
When pulling the slide lock or disconnecting connector, be sure to hold the connector, not the harness.

(1) Pull the lock arm (a).
(2) Hold the outer part of connector, and disconnect the connector.

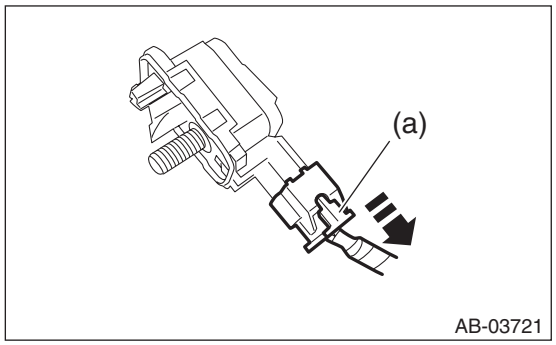

2) How to connect:

CAUTION:
Be sure to insert the connector in until it is locked. Then pull it gently to make sure that it is locked.
Insert the connector, and push the lock arm securely until a clicking sound is heard.

8. SIDE AIRBAG SENSOR AND CURTAIN AIRBAG SENSOR

1) How to disconnect:

CAUTION:
When pulling the slide lock or disconnecting connector, be sure to hold the connector, not the harness.
Holding outer part (a), pull it in the direction of arrow.

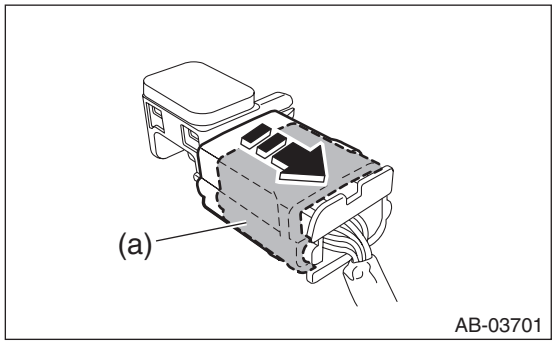

2) How to connect:

CAUTION:
- **The outer part (a) returns to the original position. Therefore do not touch the outer part.**
- **Be sure to insert the connector in until it is locked. Then pull it gently to make sure that it is locked.**

Holding the connector, push it in securely until a clicking sound is heard.

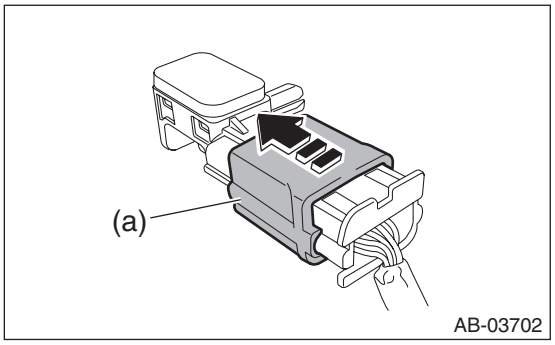

9. FRONT DOOR IMPACT SENSOR (BETWEEN AIRBAG REAR HARNESS AND FRONT DOOR HARNESS)

1) How to disconnect:

CAUTION:
When pulling the slide lock or disconnecting connector, be sure to hold the connector, not the harness.

(1) Pull the slide lock (a) in the direction of arrow.
(2) With the slide lock pulled, disconnect the connector.

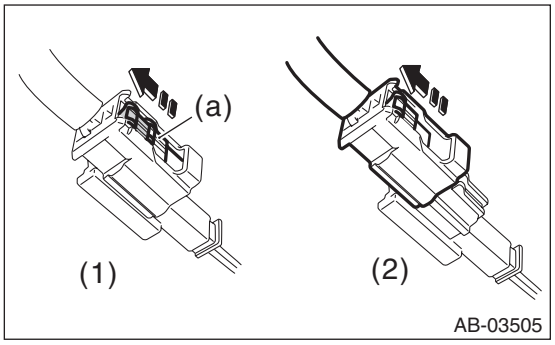

2) How to connect:

CAUTION:
- **The outer part (a) returns to the original position. Therefore do not touch the outer part.**
- **Be sure to insert the connector in until it is locked. Then pull it gently to make sure that it is locked.**

Holding the connector, push it in securely until a clicking sound is heard.

10.SIDE AIRBAG MODULE

1) How to disconnect:

CAUTION:
When pulling the slide lock or disconnecting connector, be sure to hold the connector, not the harness.

(1) Pull the lock arm (a) one step while pushing.
(2) Holding outer part, pull it one step in the direction of arrow.

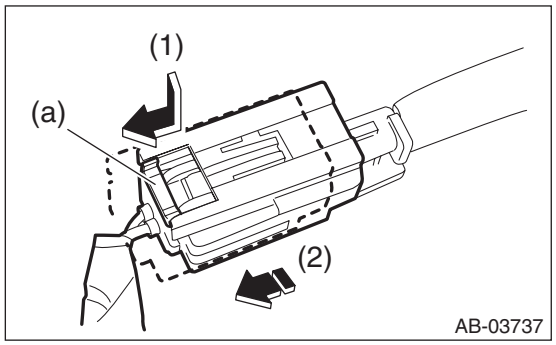

(3) Push the lock arm again.
(4) Holding outer part, pull it in the direction of arrow to disconnect the connector.

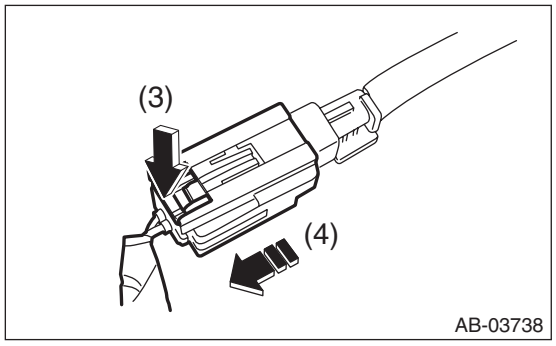

2) How to connect:

CAUTION:
Be sure to insert the connector in until it is locked. Then pull it gently to make sure that it is locked.
Holding the connector, push it in securely until a clicking sound is heard.

11.SEAT CUSHION AIRBAG MODULE AND BUCKLE SWITCH RH

1) How to disconnect:

CAUTION:
When pulling the slide lock or disconnecting connector, be sure to hold the connector, not the harness.

(1) Move the slide lock (A) in the direction of arrow and hold it.
(2) While holding the slide lock (A), pull the connector (B) in the direction of arrow.

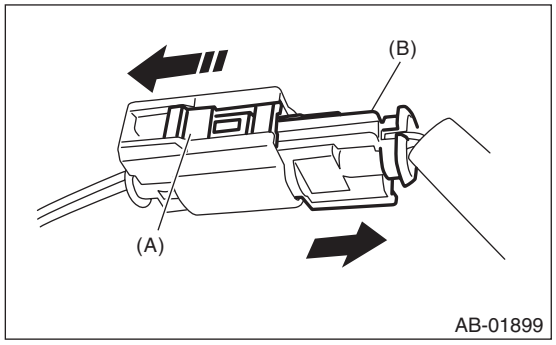

2) How to connect:

CAUTION:
Be sure to insert the connector in until it is locked. Then pull it gently to make sure that it is locked.
Holding the connector, push it in securely until a clicking sound is heard.

12.BELT TENSION SENSOR

1) How to disconnect:
Press the lock arm (a) and disconnect the connector.

CAUTION:
When pulling the slide lock or disconnecting connector, be sure to hold the connector, not the harness.

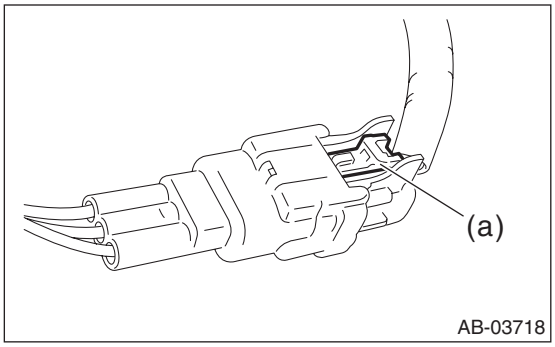

2) How to connect:
Holding the connector, push it in securely until a clicking sound is heard.

CAUTION:
Be sure to insert the connector in until it is locked. Then pull it gently to make sure that it is locked.

13.OCCUPANT DETECTION SYSTEM (BETWEEN AIRBAG REAR HARNESS AND SEAT HARNESS)

Refer to “OCCUPANT DETECTION SYSTEM” section. <Ref. to OD(diag)-15, OCCUPANT DETECTION SYSTEM (BETWEEN AIRBAG REAR HARNESS AND SEAT HARNESS), PROCEDURE, Airbag Connector.>

3. Inspection Locations after a Collision

A: INSPECTION

If the vehicle is involved in a collision, even if it is a slight collision, be sure to check the following systems.

1. DRIVER'S AIRBAG MODULE ASSEMBLY

1) Frontal collision (driver's airbag module assembly activated)

1. Replace the following parts with new ones.
   - Airbag control module
   - Driver's airbag module
   - Passenger's airbag module (if deployed)
   - Driver's seat cushion airbag
   - Passenger's seat cushion airbag (if deployed)
   - Curtain airbag module (right and left / if deployed)
   - Seat belt pretensioner (right and left)
   - Front sub sensor (right and left)
   - Instrument panel assembly (because it is integrated with passenger's airbag module) (if passenger's airbag module is deployed)
   - Column ASSY - steering
   - Roll connector
   - Trim panel - roof assembly (if the curtain airbag is deployed)
   - Trim panel of each pillar (if the curtain airbag is deployed)
2. Visually inspect the following items and replace any damaged part with a new one.
   - Steering wheel
   - Beam COMPL - steering
   - Harnesses and connectors on body side that are linked to the replaced parts

2) Frontal collision (driver's airbag module not activated)

Visually inspect the following items and replace any damaged or cracked part with a new one.
Specially inspect the damage of airbag module body, mounting bracket and harness connector.

- Driver's airbag module
- Passenger's airbag module
- Seat cushion airbag module
- Seat belt pretensioner (right and left)
- Front sub sensor (right and left)
- Instrument panel assembly (because it is integrated with passenger's airbag module)

3) No frontal collision

Visually inspect the airbag modules for damage or contamination and replace any faulty part with a new one.

2. PASSENGER'S AIRBAG MODULE

1) Frontal collision (passenger's airbag module activated)

1. Replace the following parts with new ones.
   - Airbag control module
   - Driver's airbag module
   - Seat cushion airbag module (right and left)
   - Passenger's airbag module
   - Curtain airbag module (right and left / if deployed)
   - Seat belt pretensioner (right and left)
   - Front sub sensor (right and left)
   - Instrument panel assembly (because it is integrated with passenger's airbag module)
   - Trim panel - roof assembly (if the curtain airbag is deployed)
   - Trim panel of each pillar (if the curtain airbag is deployed)
2. Visually inspect the following items and replace any damaged part with a new one.
   - Beam COMPL - steering
   - Harnesses and connectors on body side that are linked to the replaced parts

2) Frontal collision (passenger's airbag module not activated)
Visually inspect the following items and replace any damaged or cracked part with a new one.
Specially inspect the damage of airbag module body, mounting bracket and harness connector.
- Driver's airbag module
- Driver's seat cushion airbag
- Passenger's seat cushion airbag (if deployed)
- Passenger's airbag module
- Seat belt pretensioner (right and left)
- Front sub sensor (right and left)
- Instrument panel assembly (because it is integrated with passenger's airbag module)3) No frontal collision

Visually inspect the airbag modules for damage or contamination and replace any faulty part with a new one.

3. SEAT CUSHION AIRBAG MODULE

1) Frontal collision (seat cushion airbag module activated)
1. Replace the following parts with new ones.
   - Frame assembly - front seat cushion (driver's seat side only)
   - Panel - front seat (driver's seat side only)
   - Seat cushion pad and frame assembly (passenger's seat side only) (when the passenger's seat cushion airbag is deployed)
   - Airbag control module
   - Driver's airbag module
   - Driver's seat cushion airbag
   - Passenger's seat cushion airbag (if deployed)
   - Passenger's airbag module
   - Curtain airbag module (right and left / if deployed)
   - Seat belt pretensioner (right and left)
   - Front sub sensor (right and left)
   - Column assembly - steering
   - Trim panel - roof assembly (if the curtain airbag is deployed)
   - Trim panel of each pillar (if the curtain airbag is deployed)
2. Visually inspect the following items and replace any damaged part with a new one.
   - Side airbag module
   - Seat belt inner - front
   - Harness assembly - power seat
   - Pad assembly - front seat cushion
   - Cover COMPL - front seat cushion
   - Seat heater module - front seat cushion
   - Headrest assembly
   - Bushing - lock headrest
   - Slide rail assembly - OUT
   - Slide rail assembly - INN
   - Harnesses and connectors on body side that are linked to the replaced parts

2) Frontal collision (seat cushion airbag module not activated)
Visually inspect the following items and replace any damaged or cracked part with a new one.
Specially inspect the damage of airbag module body, mounting bracket and harness connector.
- Driver's airbag module
- Seat cushion airbag module
- Passenger's airbag module
- Seat belt pretensioner (right and left)
- Front sub sensor (right and left)
- Instrument panel assembly (because it is integrated with passenger's airbag module)

3) No frontal collision
Visually inspect the airbag modules for damage or contamination and replace any faulty part with a new one.

4. SIDE AIRBAG MODULE

1) Side impact (side airbag module activated)

1. Replace the following parts with new ones.
   - Airbag control module
   - Seat cushion airbag module (collision side)
   - Front door impact sensor (collision side)
   - Seat belt pretensioner (collision side / if deployed)
   - Side airbag module (collision side)
   - Side airbag sensor (collision side)
   - Curtain airbag module (collision side)
   - Curtain airbag sensor (collision side)
   - Pad assembly - front seat backrest (collision side)
   - Frame assembly - front seat cushion (collision side)
   - Frame assembly - front seat backrest (collision side)
   - Cover COMPL - front seat backrest (collision side)
   - Trim panel - roof assembly (collision side)
   - Trim panel for each pillar (collision side)
2. Visually inspect the following items and replace any damaged part (collision side) with a new one.
   - Headrest assembly
   - Bushing - lock headrest
   - Slide rail assembly - OUT
   - Slide rail assembly - INN
   - Cover - hinge front seat
   - Knob - lifter
   - Lever - reclining
   - Harnesses and connectors on body side that are linked to the replaced parts

2) Side impact (side airbag module not activated)

Visually inspect the following items and replace any damaged or cracked part (collision side) with a new one.
Specially inspect the damage of airbag module body, mounting bracket and harness connector.

- Pad assembly - front seat backrest
- Frame assembly - front backrest
- Cover COMPL - front backrest
- Front door impact sensor
- Side airbag module
- Side airbag sensor
- Curtain airbag module
- Curtain airbag sensor

3) No side impact

Visually inspect the airbag modules for contamination and replace any faulty part with a new one.

5. CURTAIN AIRBAG MODULE

1) Side impact or roll over (curtain airbag module activated)

1. Replace the following parts with new ones.
   - Airbag control module
   - Seat cushion airbag module (collision side)
   - Curtain airbag module (operating side)
   - Seat belt pretensioner (if deployed)
   - Front door impact sensor (operating side)
   - Side airbag sensor (operating side)
   - Curtain airbag sensor (operating side)
   - Pad assembly - front seat backrest (collision side)
   - Frame assembly - front seat cushion (collision side)
   - Frame assembly - front seat backrest (collision side)
   - Cover COMPL - front seat backrest (collision side)
   - Trim panel - roof assembly (operating side)
   - Trim panel for each pillar (operating side)
2. Visually inspect the following items and replace any damaged part (collision side) with a new one.
   - Assist rail - front and rear
   - Bracket - assist rail front and rear
   - Harnesses and connectors on body side that are linked to the replaced parts

2) Side impact (curtain airbag module not activated)

Visually inspect the following items and replace any damaged or cracked part (collision side) with a new one.
Specially inspect the damage of airbag module body, mounting bracket and harness connector.

- Trim panel - roof assembly
- Trim panel for each pillar
- Curtain airbag module
- Front door impact sensor
- Side airbag sensor
- Curtain airbag sensor

3) No side impact

Visually inspect the airbag covers for damage or contamination and replace any faulty part with a new one.

6. AIRBAG CONTROL MODULE

Check for the following, and replace the damaged parts with new parts.

- Control module is cracked or deformed.
- Mounting bracket is cracked or deformed.
- Connector is scratched, cracked or deformed.
- Driver’s airbag module has been activated.
- Passenger’s airbag module has been activated.
- Seat cushion airbag module has been activated.
- Side airbag module has been activated.
- Curtain airbag module has been activated.
- Seat belt pretensioner has been activated.

7. FRONT SUB SENSOR

If the section of vehicle as shown in the figure is damaged, check the following items and replace the damaged parts with new parts.

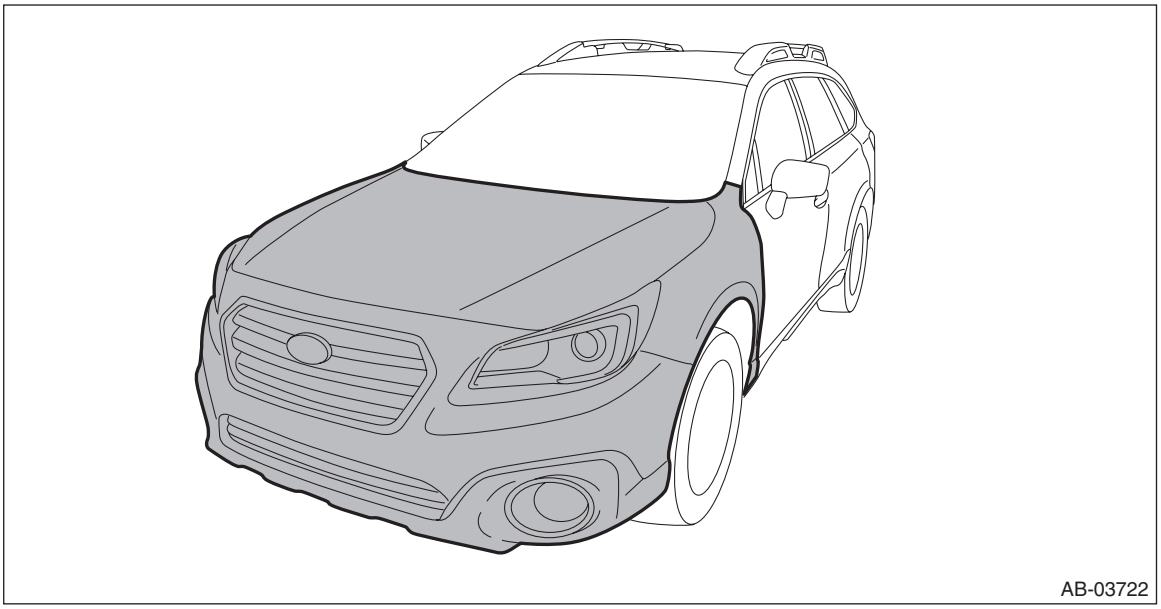

- Front sub sensor is cracked or deformed.
- Connector is scratched, cracked or deformed.
- Driver's airbag module, passenger's airbag module or seat cushion airbag module has been activated.

8. FRONT DOOR IMPACT SENSOR, SIDE AIRBAG SENSOR AND CURTAIN AIRBAG SENSOR

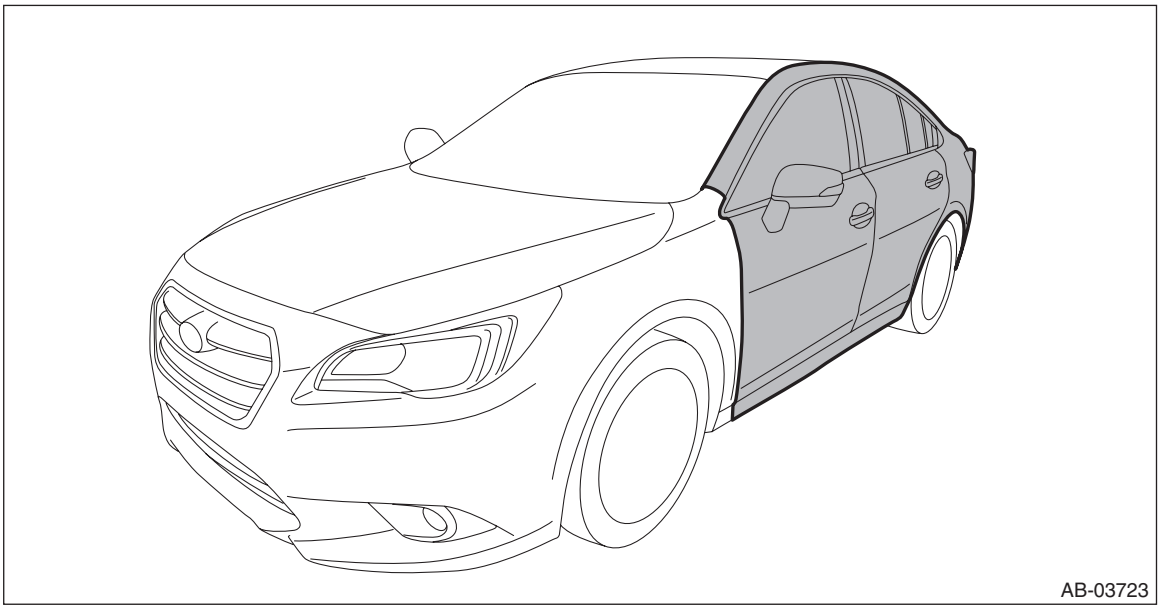

- Front door impact sensor, side airbag sensor and curtain airbag sensor are cracked or deformed.
- Connector is scratched, cracked or deformed.
- Side airbag module or curtain airbag module has been activated. (Operating side)
- Front door is dented or deformed. (Operating side)

9. ROLL CONNECTOR

Check for the following, and replace the damaged parts such as cracks, deformation, etc. with new parts.

- Combination switch
- Steering roll connector

10.COLUMN ASSEMBLY - STEERING & STEERING WHEEL

Check the following items, and if there is anything out of standard value, it is considered to be damaged. If so, replace it with a new part. <Ref. to PS-24, INSPECTION, Steering Column.>

11.PASSENGER'S SEAT

Check for the following, and replace the damaged parts with new parts.
- Body or bracket of the seat belt inner - front is scratched, cracked or deformed.
- Frame assembly - front backrest is cracked or deformed.
- Headrest assembly for deformation or play
- If the cover - front cushion and the cover COMPL - front backrest is damaged or frayed, replace the cover with a new part.
- If the cover - front cushion and the seat heater are replaced, replace the cover hang wire with a new part.

CAUTION:
If any of the following applies, replace the pad assembly - front seat cushion & frame assembly - front cushion as a unit. Do not disassemble.
- **The frame assembly - front cushion or the pad assembly - front seat cushion is cracked or deformed.**
- **Scratches, cracks, or deformation found on the occupant detection system sensor mat or occupant detection control module, or attachment brackets of the control module.**
- **Harness and/or connector is cracked, deformed or open. Harness wire is exposed.**

12.INSPECTION OF OTHER PARTS

Check for the following parts, and replace the damaged parts with new parts.
1) Steering wheel and column assembly - steering
- Mounting conditions and deflection of front and rear, upward and downward directions of the steering wheel and column assembly - steering
- Deflection in the front/rear and upward/downward directions of the column assembly - steering, as well as its mounting condition to vehicle body (After a collision, absorbing structure on the column assembly - steering may have been functioned.)

2) Check the direct type connector of driver's airbag module, curtain airbag module, pretensioner, etc. for damage, and also check each harness for pinch and connector damage. Replace the main harness as a unit if damage is found.
3) Check the seat cushion, backrest, slide rail and headrest for installation condition and looseness.
4) If any break or fray is found in the cover COMPL - front backrest of the driver's seat or passenger's seat, the side airbag system may not operate normally. In this case, replace the cover COMPL - front backrest with a new part.
5) For the passenger's seat, replace the frame assembly - front cushion with a new part if the frame assembly - front cushion is deformed or cracked.
6) If there are tears or loosening in the seat cover COMPL - front seat on the passenger's side, it may interfere with the proper operation of the occupant detection system. Replace the cover - front cushion with a new part.
7) When the passenger's seat cover COMPL - front seat has been removed or replaced, make sure that the occupant detection system operates normally.
8) Use the Subaru Select Monitor to check whether the passenger's seat belt buckle switch is operating normally.
9) If the securing clip mounting area of curtain airbag module or the bracket - assist rail is deformed or cracked, replace the defective part.

4. Driver's Airbag Module

A: REMOVAL

CAUTION:
Refer to "CAUTION" of "General Description" before handling the airbag system components. <Ref. to AB-10, CAUTION, General Description.>

1) Position the front wheels straight ahead.
2) Turn the ignition switch to OFF.
3) Disconnect the ground terminal from the battery sensor, and wait for at least 60 seconds before starting work. <Ref. to RC-4, BATTERY, NOTE, Repair Contents.>
4) Remove the driver's airbag module.
   (1) Using a hexagon wrench etc. wrapped by protective tape, insert the snap pins and release the locks (three locations).

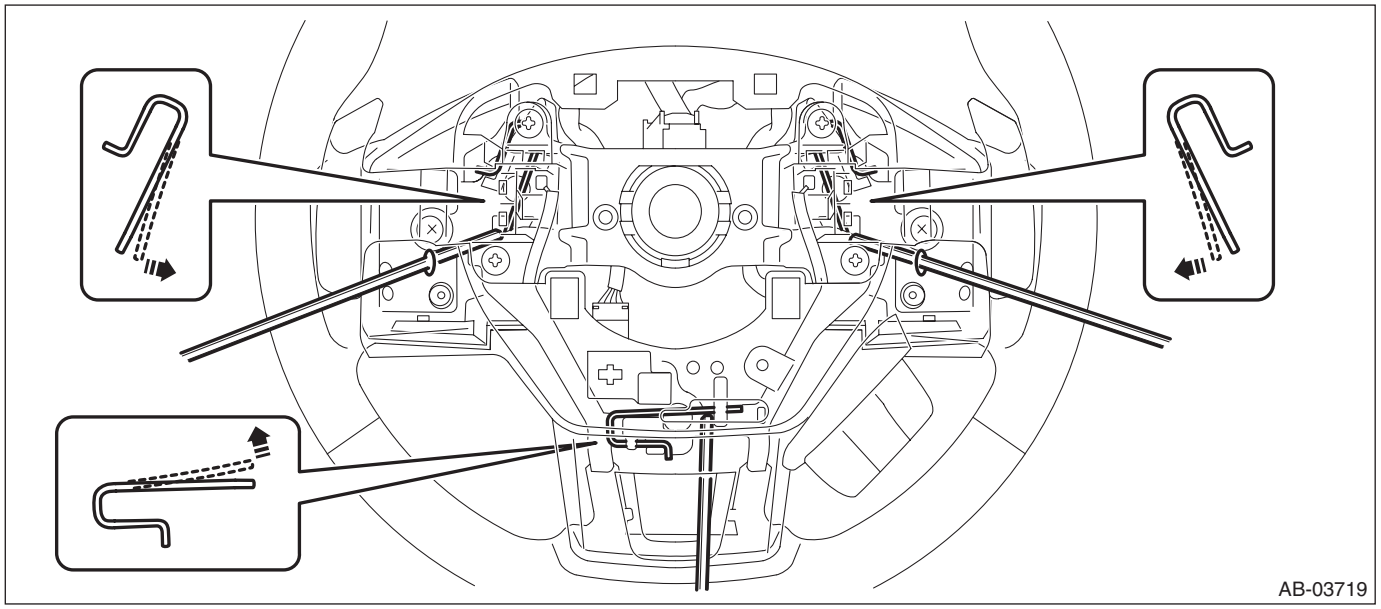

   (2) Disconnect the horn harness and airbag connector, and remove the driver's airbag module. <Ref. to AB-20, DRIVER'S AIRBAG MODULE, CURTAIN AIRBAG MODULE AND PRETENSIONER, PROCEDURE, Airbag Connector.>

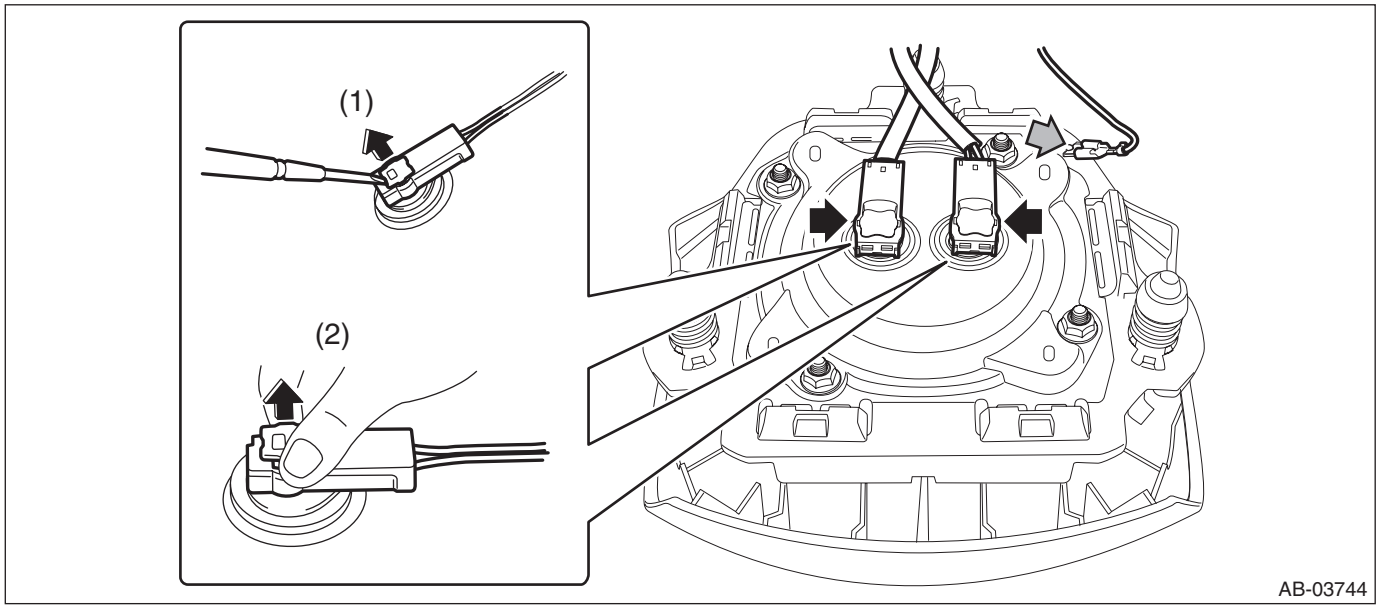

B: INSTALLATION

CAUTION:
• Refer to "CAUTION" of "General Description" before handling the airbag system components. <Ref. to AB-10, CAUTION, General Description.>
• Do not allow harness and connectors to interfere or get tangled up with other parts.
1) Before installation, inspect the following items and replace any faulty part with a new one.
- Airbag module is cracked or deformed.
- Harness and/or connector is cracked, deformed or open.
- Harness wire is exposed.
- The steering wheel is in the way, making it difficult to install the airbag module.
- The clearance between the driver's airbag module and steering wheel is not constant.

2) Install the driver's airbag module.
(1) Connect the airbag connector to the airbag module securely.

CAUTION:
- **Be sure to insert the connector in until it is locked.**
- **Press in the push lock securely. Then pull it gently to make sure that it is locked.**

(2) Connect the horn harness.
(3) Press in the locks (three positions) to install the airbag module.

CAUTION:
Make sure that the airbag module locks (three positions) are securely locked.
3) Connect the ground terminal to battery sensor. <Ref. to RC-4, BATTERY, NOTE, Repair Contents.>

5. Passenger's Airbag Module

A: REMOVAL

CAUTION:
Refer to "CAUTION" of "General Description" before handling the airbag system components. <Ref. to AB-10, CAUTION, General Description.>

1) Turn the ignition switch to OFF.
2) Disconnect the ground terminal from the battery sensor, and wait for at least 60 seconds before starting work. <Ref. to RC-4, BATTERY, NOTE, Repair Contents.>

NOTE:
- On CVT models, shift the select lever into "N" before disconnecting the battery ground cable.
- For models with power seat, remove the slide rail installing bolt before disconnecting the ground terminal from the battery sensor.

3) Remove the front seats. <Ref. to SE-11, REMOVAL, Front Seat.>
4) Remove the ornament panel - console, cover assembly - front, console box assembly and the panel center LWR. <Ref. to EI-80, REMOVAL, Console Box.>
5) Remove the cover assembly - instrument panel LWR driver. <Ref. to EI-75, REMOVAL, Instrument Panel Lower Cover.>
6) Remove the left and right grille speaker side and the trim panel - front pillar UPR. <Ref. to EI-96, REMOVAL, Upper Inner Trim.>
7) Remove the glove box assembly. <Ref. to EI-77, REMOVAL, Glove Box.>
8) Remove the center grille assembly. <Ref. to AC-92, CENTER GRILLE ASSEMBLY, REMOVAL, Air Vent Grille.>
9) Remove the heater control assembly. <Ref. to AC-47, REMOVAL, Control Panel.>
10) Remove the audio assembly or navigation assembly. <Ref. to ET-23, REMOVAL, Audio.>
11) Remove the pocket assembly - CTR. <Ref. to ET-60, REMOVAL, External Connection Terminal.>
12) Remove the panel - switch and combination meter assembly. <Ref. to IDI-11, REMOVAL, Combination Meter.>
13) Remove the keyless access CM. <Ref. to SL-102, REMOVAL, Keyless Access CM.>
14) Disconnect the bolts and connectors of passenger's airbag module. <Ref. to AB-19, PASSENGER'S AIRBAG MODULE, PROCEDURE, Airbag Connector.>

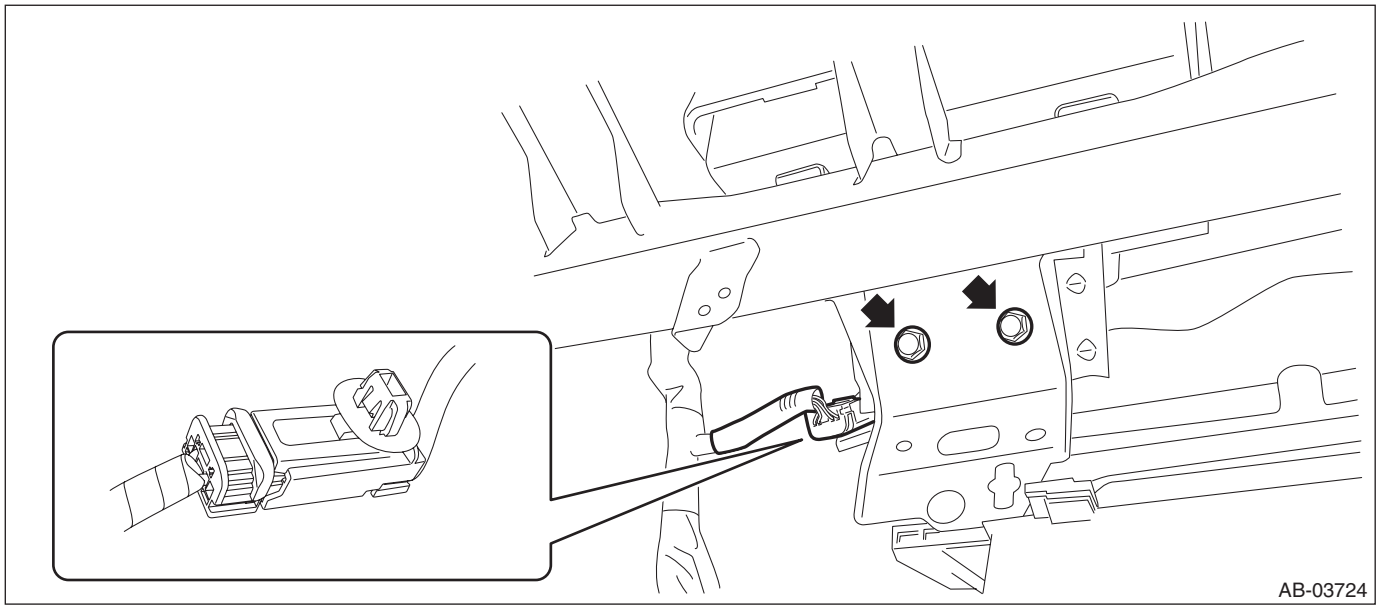

15) Remove the column assembly - steering. <Ref. to PS-20, REMOVAL, Steering Column.>
16) Remove the cover side sill - front and the front cover - side sill on the left and right sides. <Ref. to EI-92, REMOVAL, Lower Inner Trim.>
17) Remove the body side weather strip - flange front.
18) Remove the panel COMPL - instrument. <Ref. to EI-83, REMOVAL, Instrument Panel Assembly.>

19) Remove the claws, and remove the passenger's airbag module.

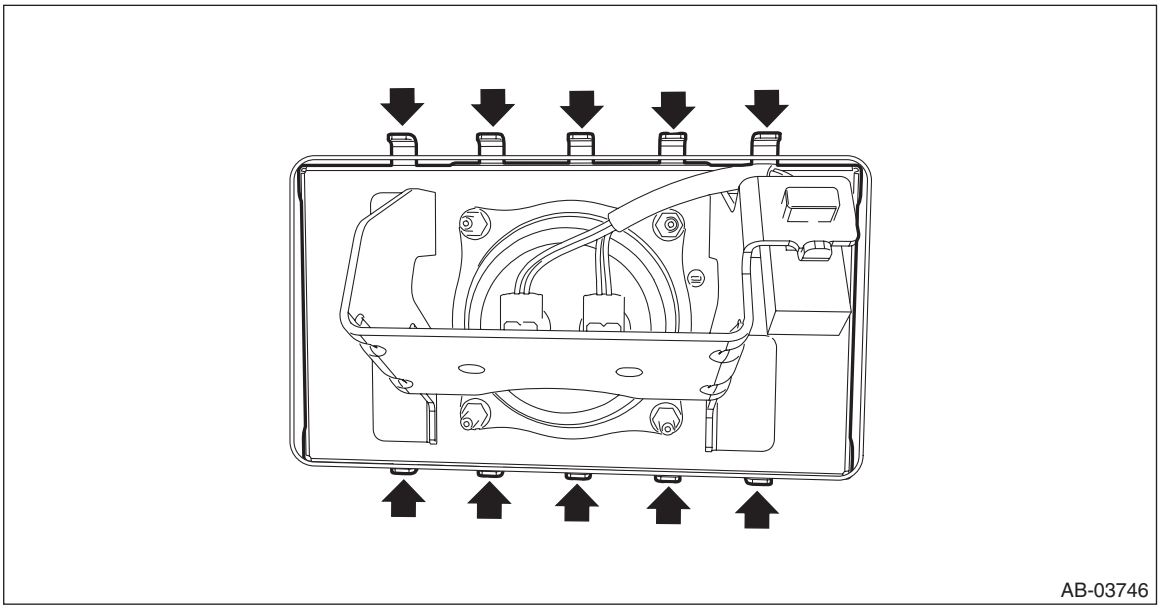

20) For handling of the removed airbag module, refer to "CAUTION". <Ref. to AB-10, CAUTION, General Description.>

B: INSTALLATION

CAUTION:
• Refer to "CAUTION" of "General Description" before handling the airbag system components. <Ref. to AB-10, CAUTION, General Description.>
• Do not allow harness and connectors to interfere or get tangled up with other parts.
• When reusing the tether clip on the upper part of the trim panel - front pillar UPR, check that there is no damage to the tether clip. If the clip is damaged, its holding force is reduced and the trim panel - front pillar UPR may come off. Be sure to replace it with a new clip.

1) Before installation, inspect the following items and replace any faulty part with a new one.
- Passenger's airbag lid (instrument panel surface) is cracked or deformed.
- Airbag module is cracked or deformed.
- Harness and/or connector is cracked, deformed or open.
- Harness wire is exposed.
- Mounting bracket is cracked or deformed.

2) Install the instrument panel assembly. <Ref. to EI-88, INSTALLATION, Instrument Panel Assembly.>
3) Install the cover side sill - front and the front cover - side sill on the left and right sides.
4) Install the column assembly - steering. <Ref. to PS-22, INSTALLATION, Steering Column.>
5) Install the keyless access CM.

Tightening torque:
7.5 N·m (0.8 kgf-m, 5.5 ft-lb)

6) Install the combination meter assembly.
7) Install the pocket assembly - CTR.
8) Install the audio assembly or navigation assembly.
9) Install the heater control assembly.
10) Install the center grille assembly.
11) Install the panel center assembly.
12) Install the glove box assembly.
13) Install the trim panel - front pillar UPR on the RH and LH sides. <Ref. to EI-97, INSTALLATION, Upper Inner Trim.>
14) Install the grille speaker side on the RH and LH sides.

15) Install the panel - knee guard.

Tightening torque:
7 N·m (0.7 kgf-m, 5.2 ft-lb)
16) Install the panel - switch.
17) Install the cover assembly - instrument panel LWR driver.
18) Install the panel center LWR on the RH and LH sides.
19) Install the cover - shift lever and the console box assembly.

Tightening torque:
Console box assembly: 6.5 N·m (0.7 kgf-m, 4.8 ft-lb)
20) Connect the ground terminal to battery sensor. <Ref. to RC-4, BATTERY, NOTE, Repair Contents.>

6. Seat Cushion Airbag Module

A: REMOVAL

CAUTION:
Refer to "CAUTION" of "General Description" before handling the airbag system components. <Ref. to AB-10, CAUTION, General Description.>
1) Turn the ignition switch to OFF.
2) Disconnect the ground terminal from the battery sensor, and wait for at least 60 seconds before starting work. <Ref. to RC-4, BATTERY, NOTE, Repair Contents.>

NOTE:
For models with power seat, remove the slide rail installing bolt before disconnecting the ground terminal from the battery sensor.
3) Remove the front seats. <Ref. to SE-11, REMOVAL, Front Seat.>
4) Separate the backrest assembly and the seat cushion assembly. <Ref. to SE-12, DISASSEMBLY, Front Seat.>
5) Remove the seat cushion airbag module.

CAUTION:
• Passenger's seat cushion airbag module is integrated in the seat cushion pad & frame assembly. Do not remove it unless when discarding the seat cushion airbag module.
• If the protection felt for the seat cushion airbag module is broken or damaged, replace the seat cushion airbag module with a new part.

(1) Remove the hook, and remove the pad assembly - front seat cushion and the cover - front cushion.

NOTE:
Turn over the rear side of the seat, and remove the hook on the front side of the seat cushion frame.

(2) Remove the hexagon cap nuts, and remove the power seat control module. (Model with power seats with memory function)

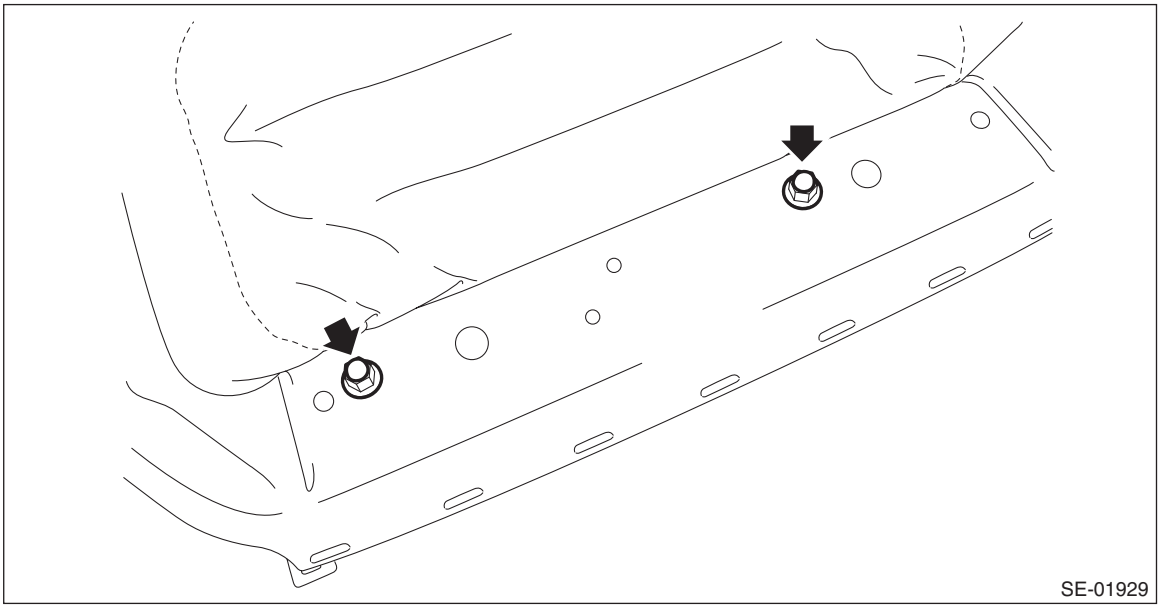

(3) Remove the seat cushion airbag connector clamp.

(4) Remove the nuts and then remove the seat cushion airbag module.

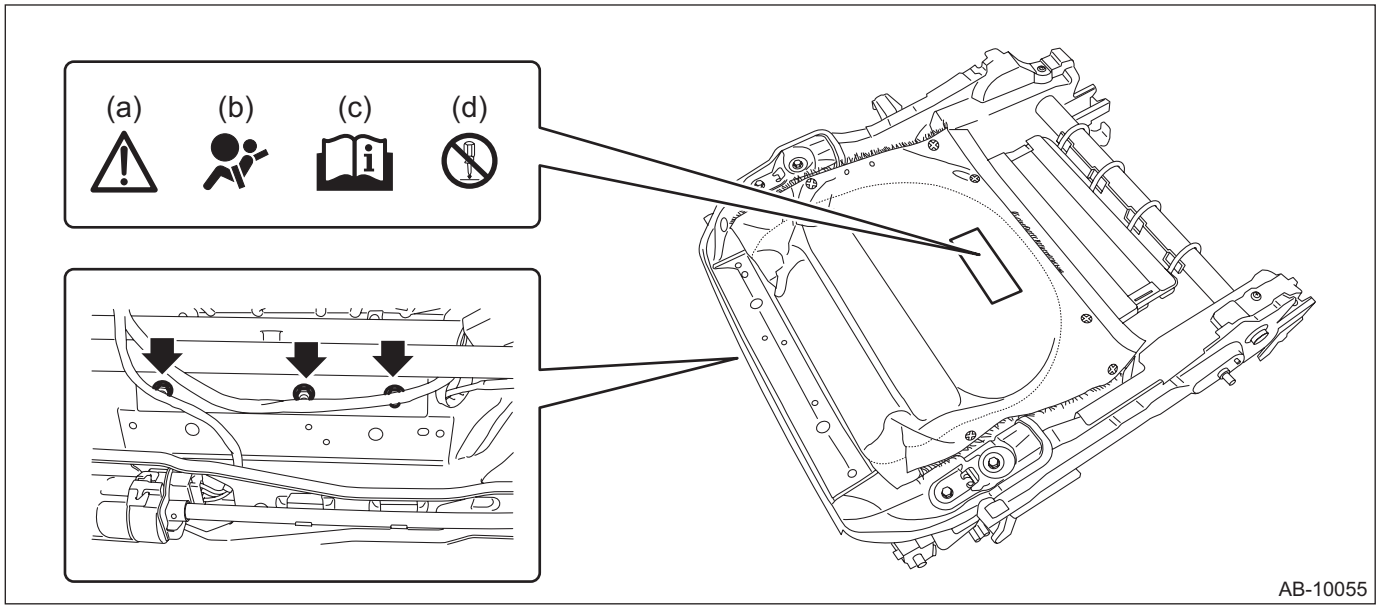

*1 Meaning of pictograms indicated on the label

(a) Flammable explosive substance encapsulated parts; be careful of handling.
(b) Indicates that this part is an airbag module.
(c) Before handling, always refer to “CAUTION” of “General Description” in “AIRBAG SYSTEM” in the service manual. For the disposal procedures of the airbag modules, refer to “Airbag Module Disposal”.
(d) Do not disassemble the airbag module.

B: INSTALLATION

CAUTION:
• Refer to “CAUTION” of “General Description” before handling the airbag system components. <Ref. to AB-10, CAUTION, General Description.>
• Do not allow harness and connectors to interfere or get tangled up with other parts.

1) Before installation, inspect the following items and replace any faulty part with a new one.
• Airbag module is cracked or deformed.
• Frame assembly - front seat cushion is cracked or deformed.
• Harness and/or connector is cracked, deformed or open.
• Harness wire is exposed.
• Installation of seat cushion airbag module is difficult due to the condition of the frame assembly - front seat cushion.

2) Install the seat cushion airbag module.

CAUTION:
• Be careful that the end of airbag module is not turned over.
• Be sure to insert the connector in until it is locked.
• Press in the connector securely. Then pull it gently to make sure that it is locked.

Tightening torque:
6 N·m (0.6 kgf-m, 4.4 ft-lb)

3) Assemble the front seat. <Ref. to SE-25, ASSEMBLY, Front Seat.>

CAUTION:
• After assembling the seat cushion, make sure that the two-dimensional codes (two positions) attached on the seat cushion airbag module can be seen. If it is not assembled correctly, the seat cushion airbag may not operate properly.

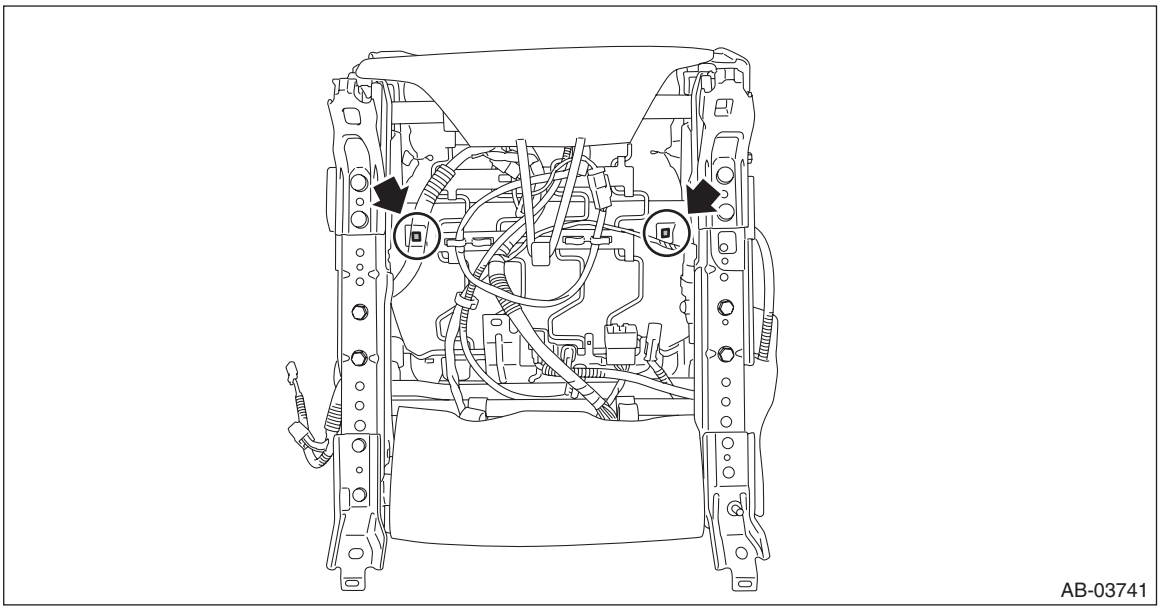

• After assembling the seat, operate the reclining and sliding mechanisms to check that the airbag harness is not caught.

4) Install the front seat assembly to the body. <Ref. to SE-12, INSTALLATION, Front Seat.>
5) Connect the ground terminal to battery sensor. <Ref. to RC-4, BATTERY, NOTE, Repair Contents.>

7. Side Airbag Module

A: REMOVAL

CAUTION:
Refer to "CAUTION" of "General Description" before handling the airbag system components. <Ref. to AB-10, CAUTION, General Description.>
1) Turn the ignition switch to OFF.
2) Disconnect the ground terminal from the battery sensor, and wait for at least 60 seconds before starting work. <Ref. to RC-4, BATTERY, NOTE, Repair Contents.>

NOTE:
For models with power seat, remove the slide rail installing bolt before disconnecting the ground terminal from the battery sensor.
3) Remove the front seats. <Ref. to SE-11, REMOVAL, Front Seat.>
4) Separate the backrest assembly and the seat cushion assembly. <Ref. to SE-12, DISASSEMBLY, Front Seat.>
5) Remove the side airbag module.

CAUTION:
Do not open the protective cover of the side airbag module. If any damage is present in the protective cover or the cloth of side airbag module comes out from the protective cover slit, replace the side airbag module with a new part.
(1) Remove the plastic fastener at the back side (bottom) of backrest assembly.
(2) Open the fastener at the rear side of backrest assembly.

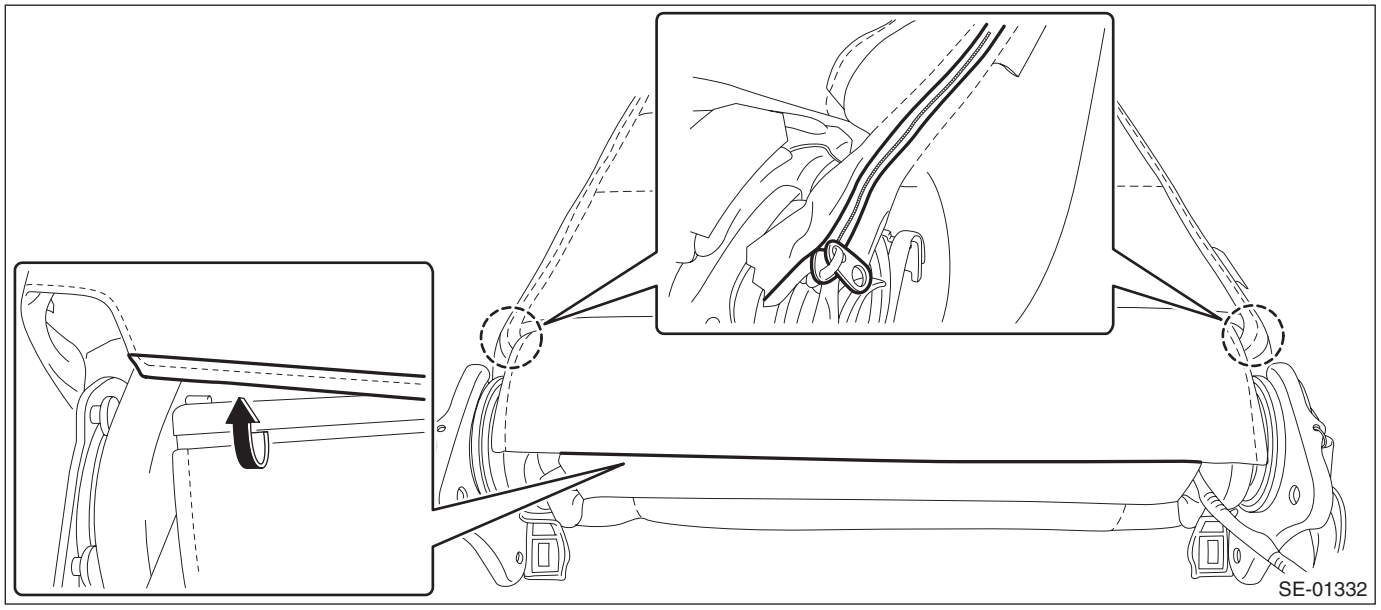

(3) Remove the hexagon cap nut and nuts.

(4) While taking care not to damage the airbag protective cover, remove the side airbag module.

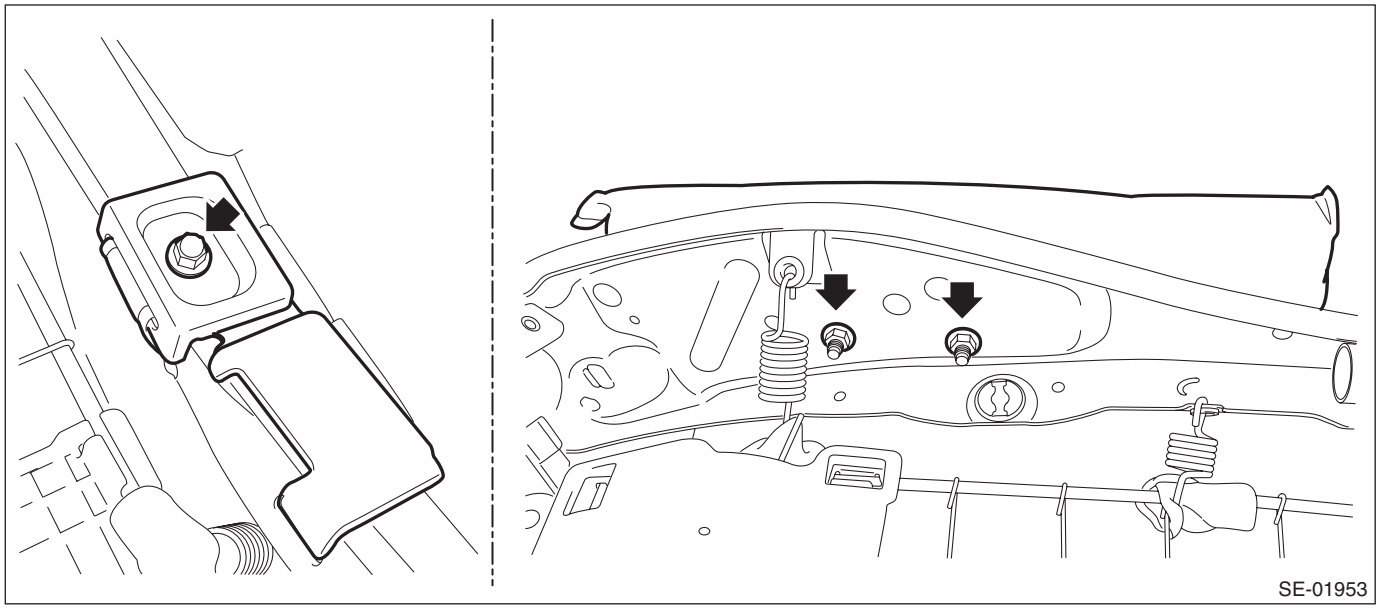

B: INSTALLATION

CAUTION:

- **Refer to "CAUTION" of "General Description" before handling the airbag system components. <Ref. to AB-10, CAUTION, General Description.>**
- **Make sure that the side airbag module is installed as shown in the figure.**

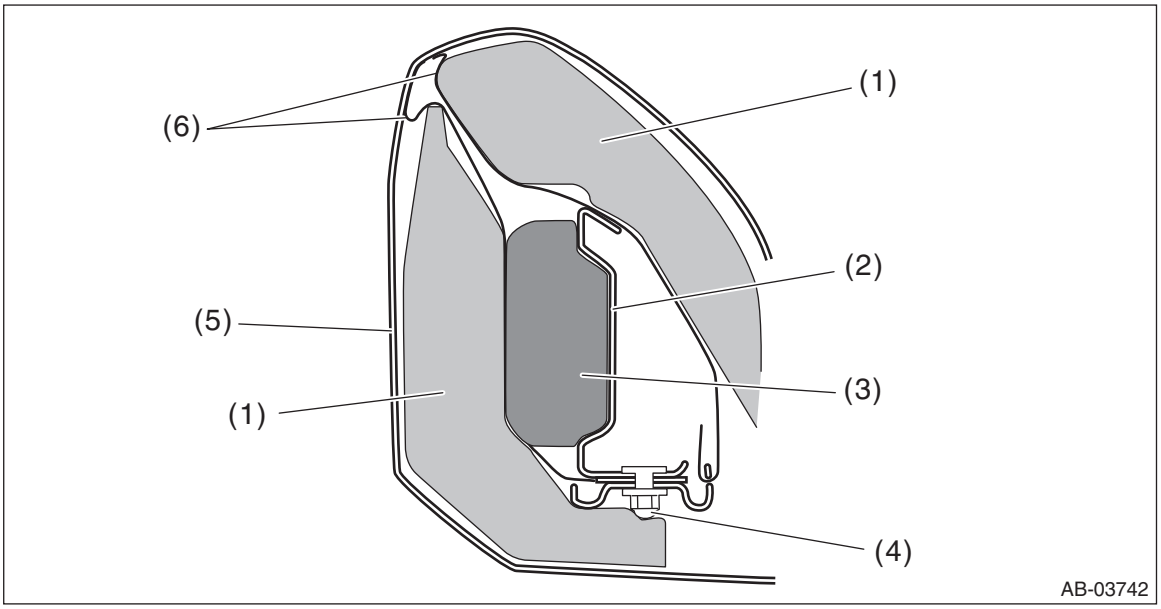

(1)	Pad ASSY - front seat backrest	(3)	Side airbag module	(5)	Cover COMPL - front backrest
(2)	Frame ASSY - front backrest	(4)	Hexagon cap nut	(6)	Side airbag guide cloth

- **Be careful not to stain or damage the cover COMPL - front backrest during assembly.**
- **Do not reuse hog rings.**
- **Secure the hog ring using hog ring pliers.**
- **Install the hog rings to the specified points securely and make sure that there is no wrinkle or twisting on the cover COMPL - front backrest.**

1) Before installation, inspect the following items and replace any faulty part with a new one.
- Make sure that there is no foreign matter on side airbag module.
- Front seat, airbag module and mounting bracket are damaged or deformed.
- Harness and/or connector is cracked, deformed or open.
- Harness wire is exposed.

2) Install the side airbag module to the frame assembly - front backrest.

Tightening torque:
6 N·m (0.6 kgf-m, 4.4 ft-lb)

3) Assemble the front seat. <Ref. to SE-25, ASSEMBLY, Front Seat.>

CAUTION:
After restoring the seat, operate the reclining and sliding mechanisms to check that the airbag harness is not caught.

4) Install the front seat assembly to the body. <Ref. to SE-12, INSTALLATION, Front Seat.>
5) Connect the ground terminal to battery sensor. <Ref. to RC-4, BATTERY, NOTE, Repair Contents.>

8. Curtain Airbag Module

A: REMOVAL

1. SEDAN MODEL

CAUTION:
Refer to "CAUTION" of "General Description" before handling the airbag system components. <Ref. to AB-10, CAUTION, General Description.>
1) Turn the ignition switch to OFF.
2) Disconnect the ground terminal from the battery sensor, and wait for at least 60 seconds before starting work. <Ref. to RC-4, BATTERY, NOTE, Repair Contents.>

NOTE:
On CVT models, shift the select lever into "N" before disconnecting the battery ground cable.
3) Remove the trim panel - roof assembly. <Ref. to EI-113, REMOVAL, Roof Trim.>
4) Remove the curtain airbag module.

CAUTION:
- **Be careful not to damage the curtain airbag module during removal.**
- **Never open the curtain airbag module before activation. Never reuse the deployed curtain airbag module.**
- **Do not reuse the clip securing the curtain airbag module.**
- **Remove the modules in order starting from the vehicle front.**

(1) Disconnect the curtain airbag module connector. <Ref. to AB-20, DRIVER'S AIRBAG MODULE, CURTAIN AIRBAG MODULE AND PRETENSIONER, PROCEDURE, Airbag Connector.>

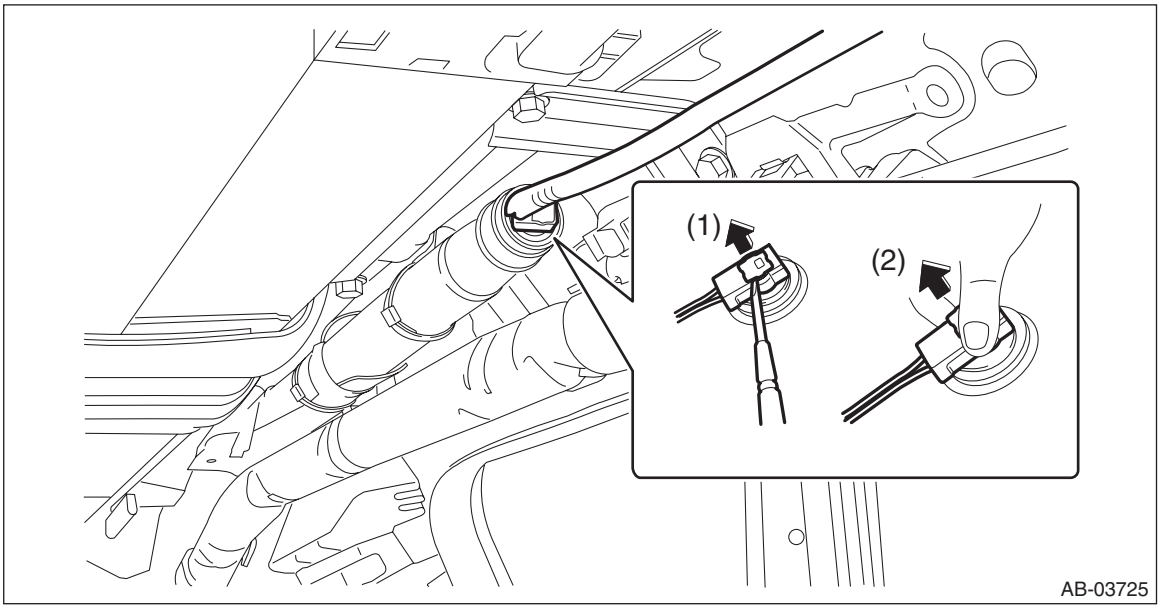

(2) Remove all the bolts and clips, and remove the curtain airbag module.

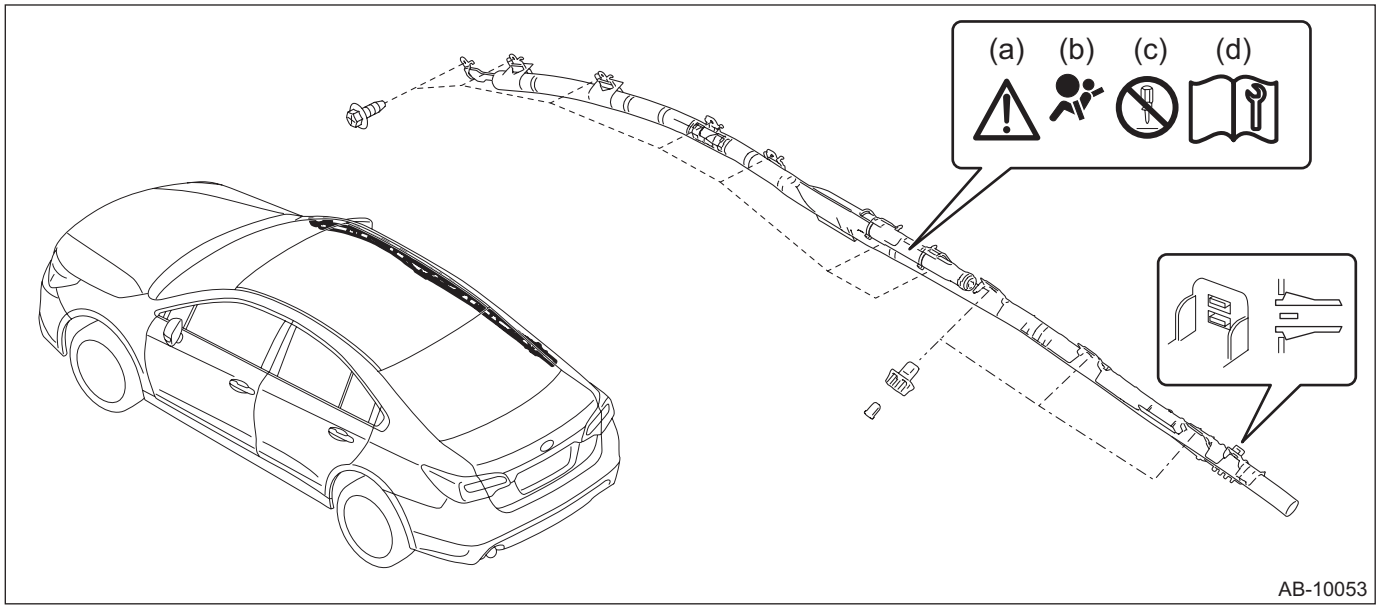

*1 Meaning of pictograms indicated on the label

(a) Flammable explosive substance encapsulated parts; be careful of handling.
(b) Indicates that this part is an airbag module.
(c) Do not disassemble the airbag module.
(d) Before handling, always refer to “CAUTION” of “General Description” in “AIRBAG SYSTEM” in the service manual. For the disposal procedures of the airbag modules, refer to “Airbag Module Disposal”.

NOTE:
Remove the securing clip of curtain airbag module in the following procedures.

1. Using a pair of nippers, cut off the clip base (a).
2. Remove the clip - pin while holding the lock (b) with needle nose pliers.
3. Release the locks (c) of the clips - bushing at two locations at the top and bottom completely using thin flat head screwdriver (d), and remove the clip - bushing.

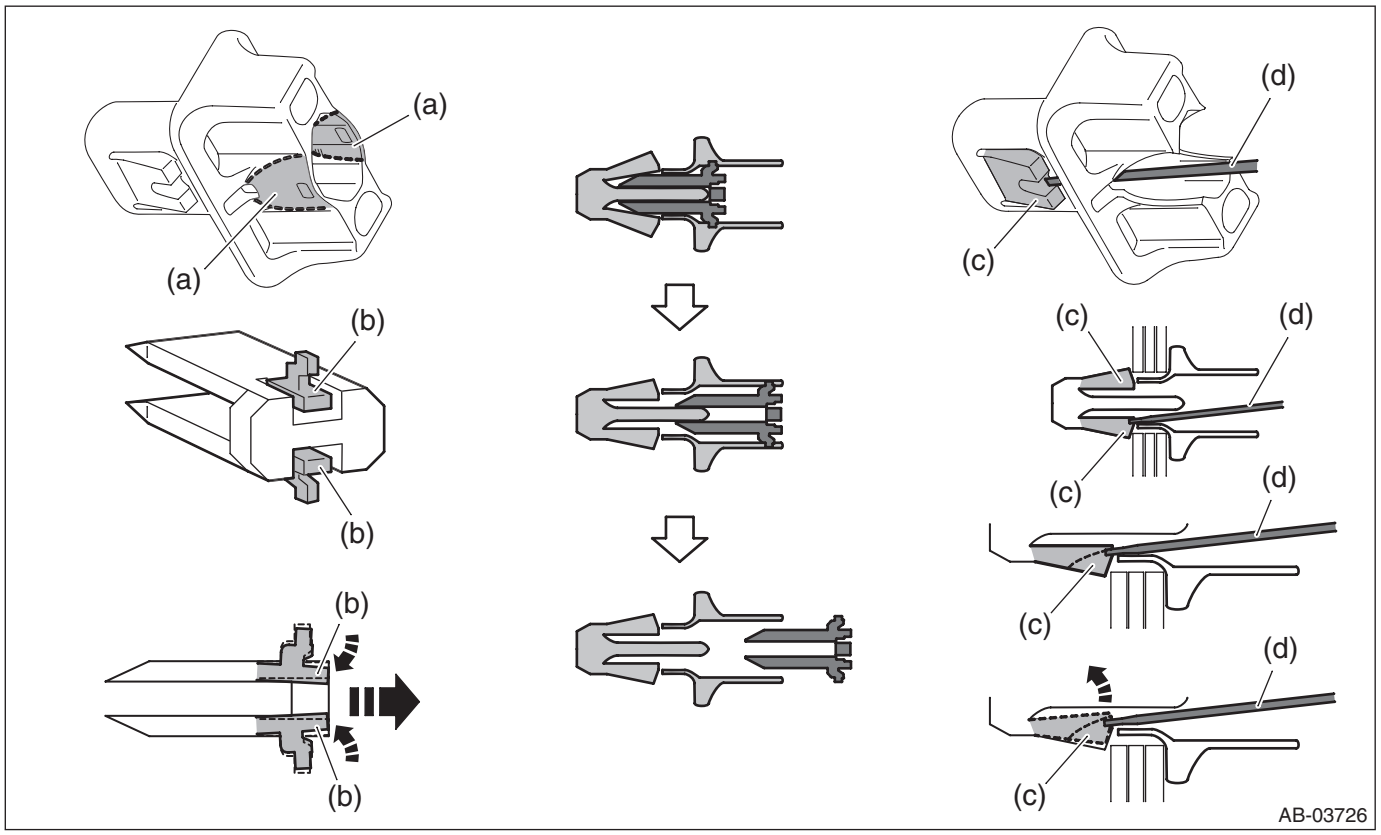

2. OUTBACK MODEL

CAUTION:
Refer to "CAUTION" of "General Description" before handling the airbag system components. <Ref. to AB-10, CAUTION, General Description.>
1) Turn the ignition switch to OFF.
2) Disconnect the ground terminal from the battery sensor, and wait for at least 60 seconds before starting work. <Ref. to RC-4, BATTERY, NOTE, Repair Contents.>

NOTE:
On CVT models, shift the select lever into "N" before disconnecting the battery ground cable.
3) Remove the trim panel - roof assembly. <Ref. to EI-113, REMOVAL, Roof Trim.>
4) Remove the curtain airbag module.

CAUTION:
- **Be careful not to damage the curtain airbag module during removal.**
- **Never open the curtain airbag module before activation. Never reuse the deployed curtain airbag module.**
- **Do not reuse the clip securing the curtain airbag module.**
- **Remove the modules in order starting from the vehicle front.**

(1) Disconnect the curtain airbag module connector. <Ref. to AB-20, DRIVER'S AIRBAG MODULE, CURTAIN AIRBAG MODULE AND PRETENSIONER, PROCEDURE, Airbag Connector.>

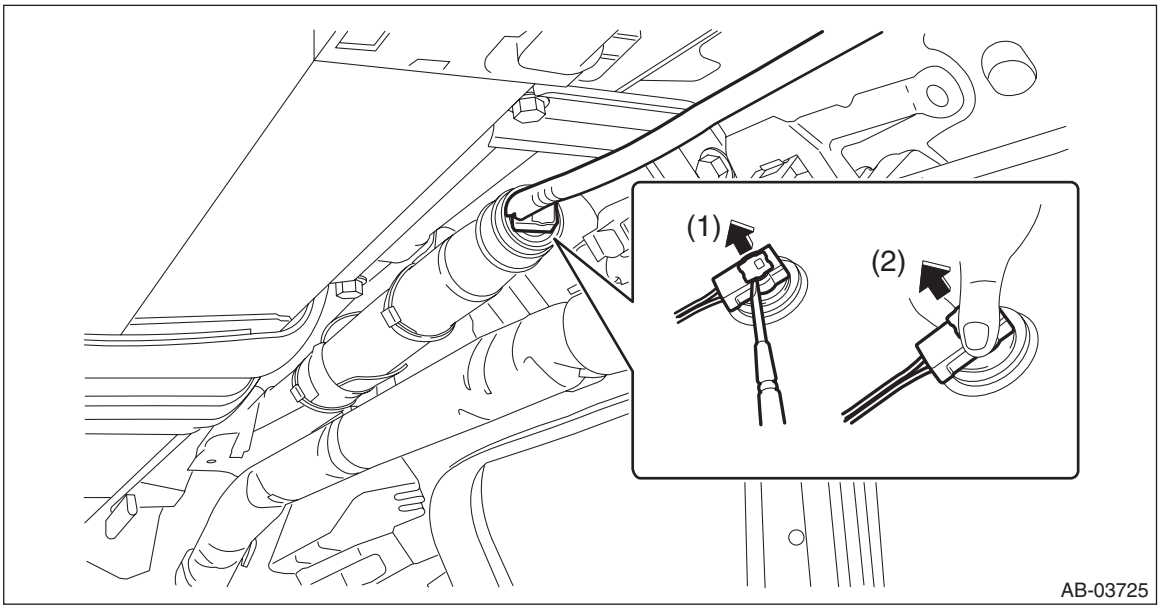

(2) Remove all the bolts and clips, and remove the curtain airbag module.

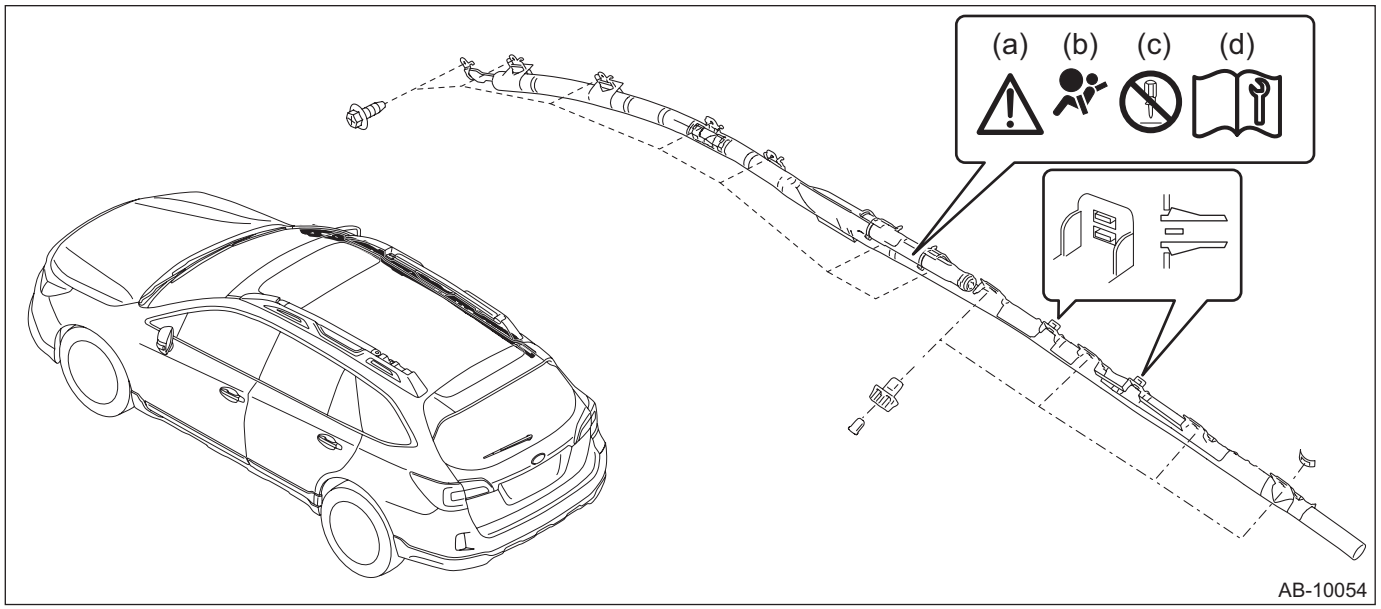

*1 Meaning of pictograms indicated on the label

(a) Flammable explosive substance encapsulated parts; be careful of handling.
(b) Indicates that this part is an airbag module.
(c) Do not disassemble the airbag module.
(d) Before handling, always refer to "CAUTION" of "General Description" in "AIRBAG SYSTEM" in the service manual. For the disposal procedures of the airbag modules, refer to "Airbag Module Disposal".

NOTE:
Remove the securing clip of curtain airbag module in the following procedures.

1. Using a pair of nippers, cut off the clip base (a).
2. Remove the clip - pin while holding the lock (b) with needle nose pliers.
3. Release the locks (c) of the clips - bushing at two locations at the top and bottom completely using thin flat head screwdriver (d), and remove the clip - bushing.

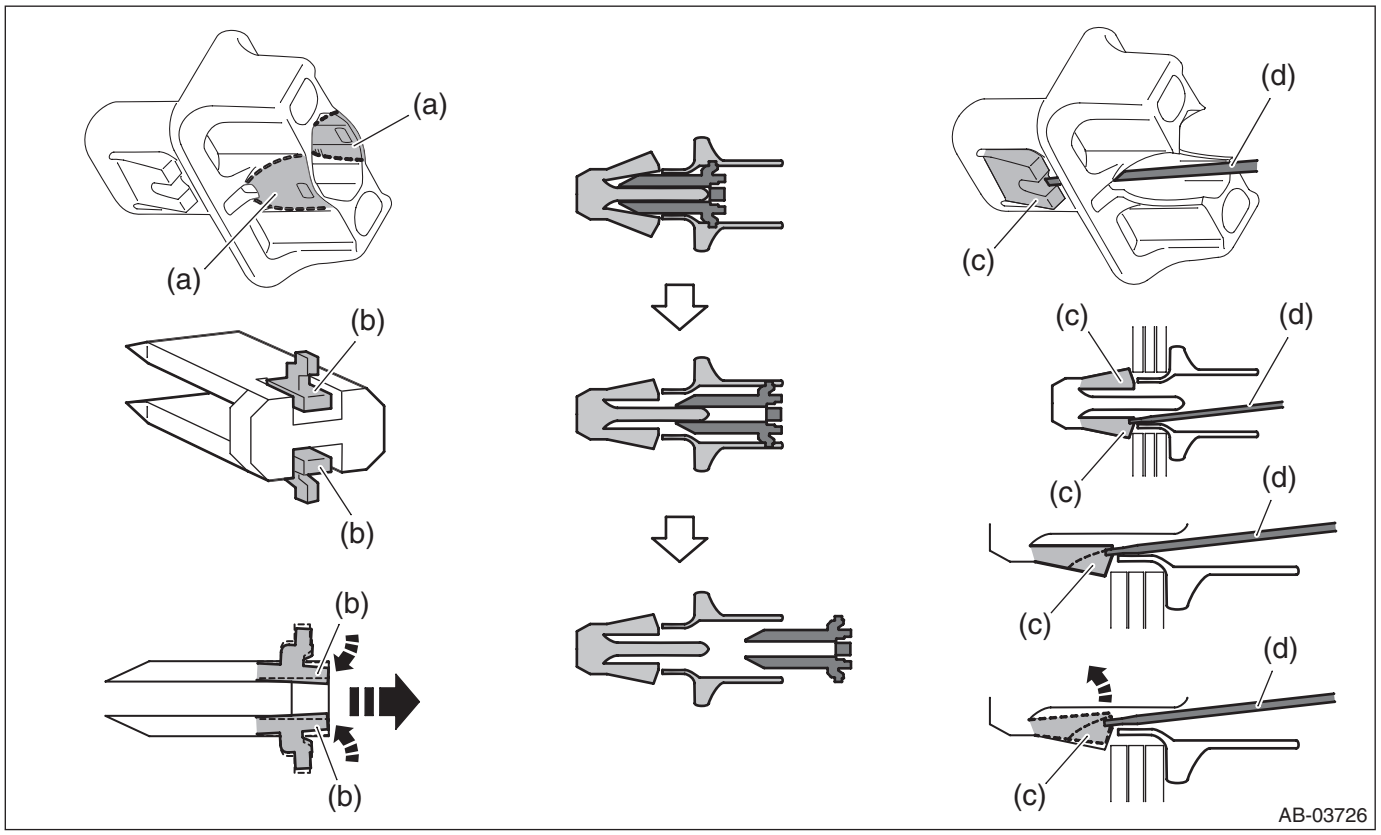

B: INSTALLATION

CAUTION:
• Refer to "CAUTION" of "General Description" before handling the airbag system components. <Ref. to AB-10, CAUTION, General Description.>
• When installing the curtain airbag module, install a specified part at specified place.
• Be careful not to damage the curtain airbag module during installation.
• Never open the curtain airbag module before activation. Never reuse the deployed curtain airbag module.
• Make sure that there are no foreign matter on airbag module.
• Do not reuse the clip securing the curtain airbag module.
• If deformation or crack is found in the bracket - assist rail by visual check, replace the defective part.
• If deformation is found in the clip mounting holes of the side rail and rear quarter metal sections, repair or replace the defective part.

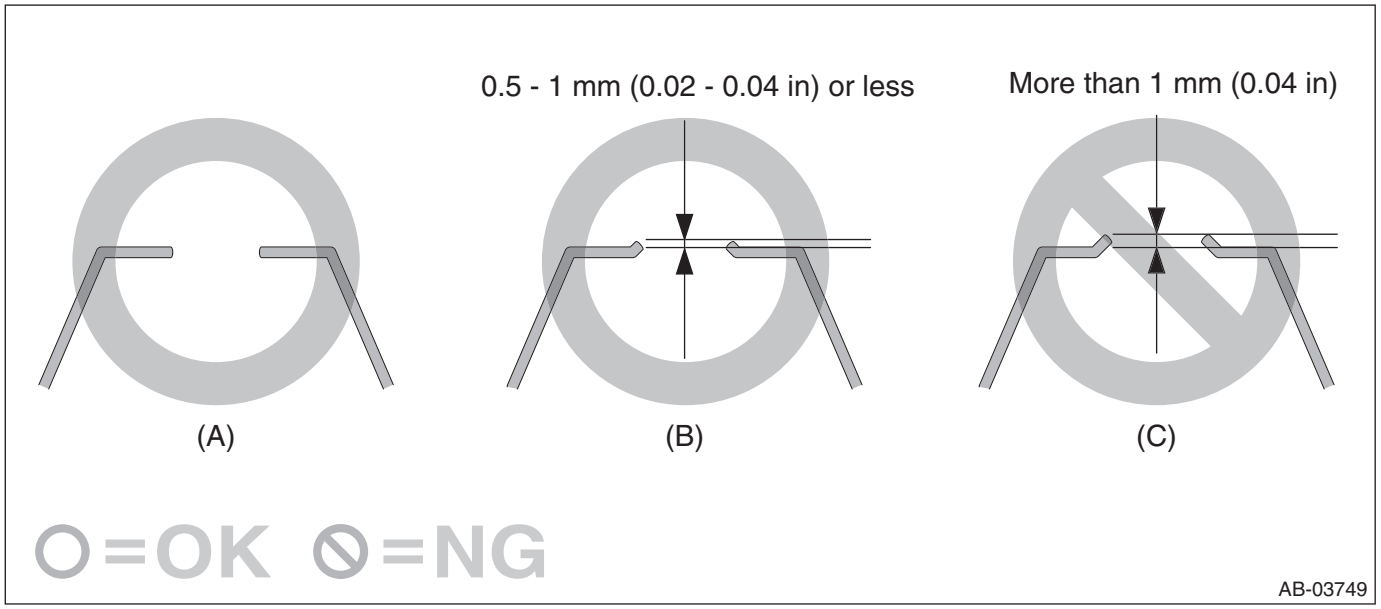

(A) If no deformation is found, install the curtain airbag module with a new securing clip.
(B) If deformation is 0.5 — 1 mm (0.02 — 0.04 in), correct the deformed section to be flat and install the curtain airbag module with a new securing clip.
(C) If deformation is 1 mm (0.04 in) or more, replace the deformed part together with the panel. Refer to the repair manual for body panel replacement.

• When reusing the tether clip on the upper part of the trim panel - front pillar UPR, check that there is no damage to the tether clip. If the tether clip is damaged, always replace it with a new tether clip. If the tether clip is damaged, its holding force is reduced and the trim panel - front pillar UPR may come off.
• For installation of the stereo camera cover, refer to "INSTALLATION", "Stereo Camera" in the "EyeSight" section and observe the precautions for installation. <Ref. to ES-11, INSTALLATION, Stereo Camera.>
1) Before installation, inspect the following items and replace any faulty part with a new one.
- Airbag cover is scratched or torn.
- Harness and/or connector is cracked, deformed or open.
- Harness wire is exposed.
- Mounting bracket and securing clip are cracked or deformed.

2) Install the curtain airbag module.

CAUTION:
- **Be sure to insert the connector in until it is locked.**
- **Press in the push lock securely. Then pull it gently to make sure that it is locked.**
- **Do not reuse the clip securing the curtain airbag module.**
- **Install a new clip - bushing securely, and press the clip - pin securely into the clip - bushing.**

After pressing the clip - pin securely, make sure that the heights of clip - bushing top surface and the clip - pin top surface are 9.9±0.2 mm (0.39±0.01 in).

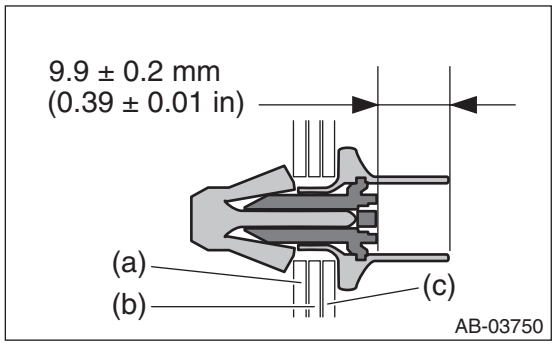

(a) Body panel
(b) Plastic cover or plastic spacer
(c) Airbag module tab portion

The plastic spacer is installed only to the rearmost position of OUTBACK model.

Tightening torque:
7.5 N·m (0.8 kgf-m, 5.5 ft-lb)

3) Install the trim panel - roof assembly. <Ref. to EI-118, INSTALLATION, Roof Trim.>
4) Connect the ground terminal to battery sensor. <Ref. to RC-4, BATTERY, NOTE, Repair Contents.>

9. Airbag Control Module

A: REMOVAL

CAUTION:
• Refer to "CAUTION" of "General Description" before handling the airbag system components. <Ref. to AB-10, CAUTION, General Description.>
• Do not disassemble the airbag control module.
• If the airbag control module is deformed or if there is any trace of water on the module, replace the airbag control module with a new one.
• Do not drop the airbag control module.
• After removal, keep the airbag control module on a dry, clean surface away from moisture, heat and dust.

1) Turn the ignition switch to OFF.
2) Disconnect the ground terminal from the battery sensor, and wait for at least 60 seconds before starting work. <Ref. to RC-4, BATTERY, NOTE, Repair Contents.>

NOTE:
On CVT models, shift the select lever into "N" before disconnecting the battery ground cable.

3) Remove the cover - shift lever and the console box assembly. <Ref. to EI-80, REMOVAL, Console Box.>
4) Remove the airbag control module.
   (1) Disconnect the connector from airbag control module. <Ref. to AB-18, AIRBAG CONTROL MODULE, PROCEDURE, Airbag Connector.>
   (2) Remove the bolt and nuts and remove the airbag control module.

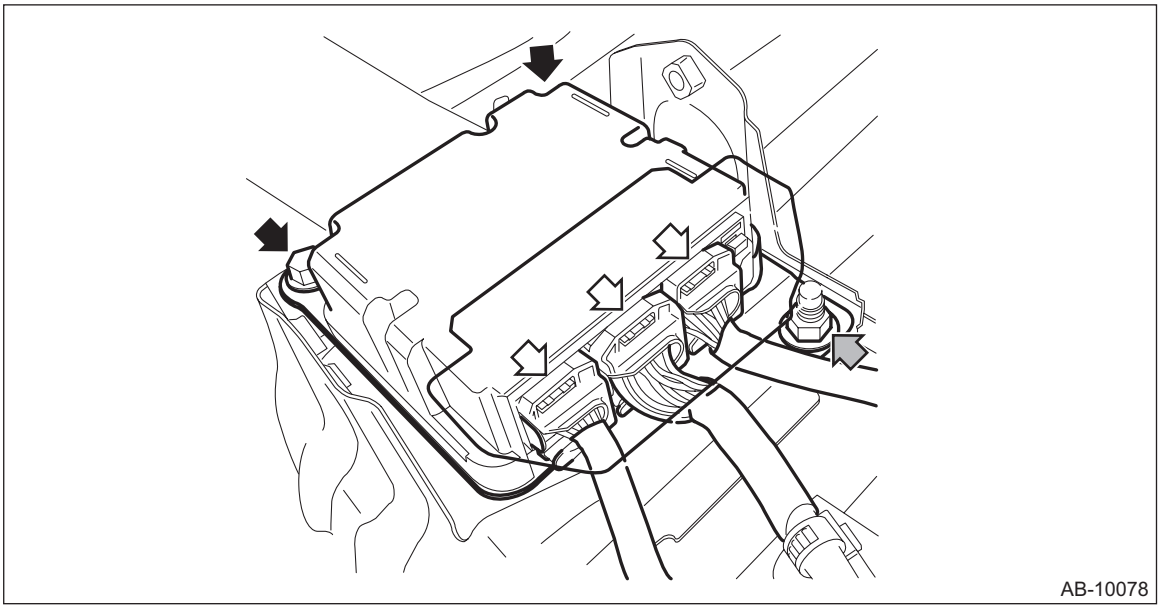

B: INSTALLATION

1) Before installation, inspect the following items and replace any faulty part with a new part.
- Control module is deformed.
- Control module connector is damaged.
- Control module mounting bracket is damaged.

2) Install the airbag control module.

CAUTION:
Do not reuse the bolt and nut.
Always replace with the specified new bolts and nuts.

Tightening torque:
25 N·m (2.5 kgf-m, 18.4 ft-lb)

3) Install the cover - shift lever and the console box assembly.

Tightening torque:
6.5 N·m (0.7 kgf-m, 4.8 ft-lb)

4) Connect the ground terminal to battery sensor. <Ref. to RC-4, BATTERY, NOTE, Repair Contents.>

10.Front Sub Sensor

A: REMOVAL

CAUTION:
Refer to "CAUTION" of "General Description" before handling the airbag system components. <Ref. to AB-10, CAUTION, General Description.>

1) Turn the ignition switch to OFF.
2) Disconnect the ground terminal from the battery sensor, and wait for at least 60 seconds before starting work. <Ref. to RC-4, BATTERY, NOTE, Repair Contents.>
3) Remove the front sub sensor.
   (1) Remove the clips and remove the air intake duct. (When removing the sensor RH)

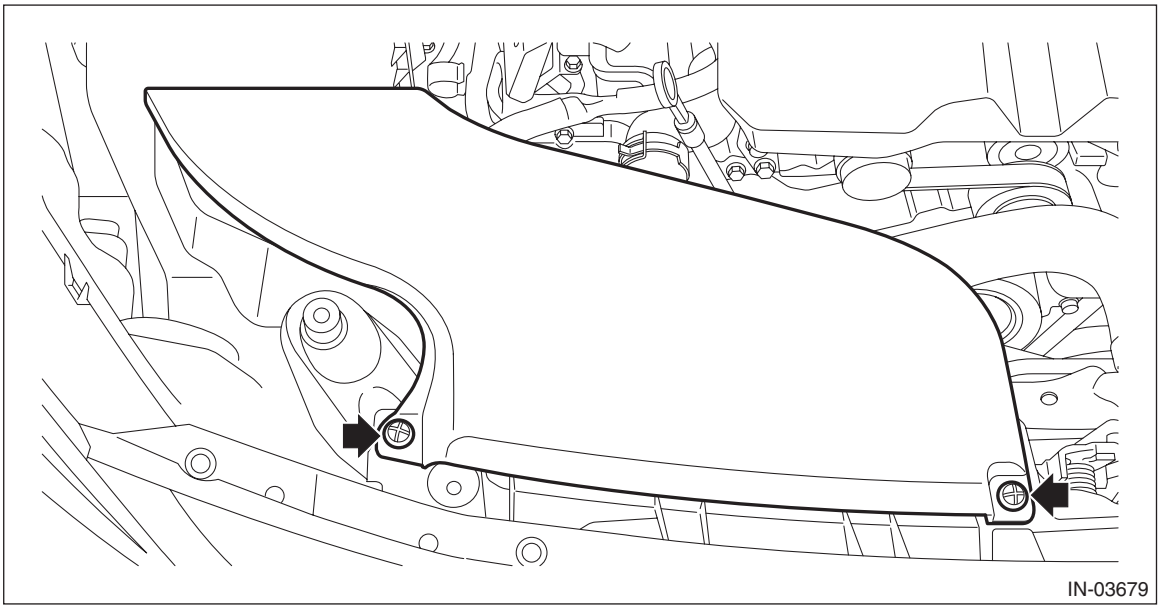

   (2) Remove the bolt, and then detach the front sub sensor.
   (3) Disconnect the connector of front sub sensor. <Ref. to AB-21, FRONT SUB SENSOR, PROCEDURE, Airbag Connector.>

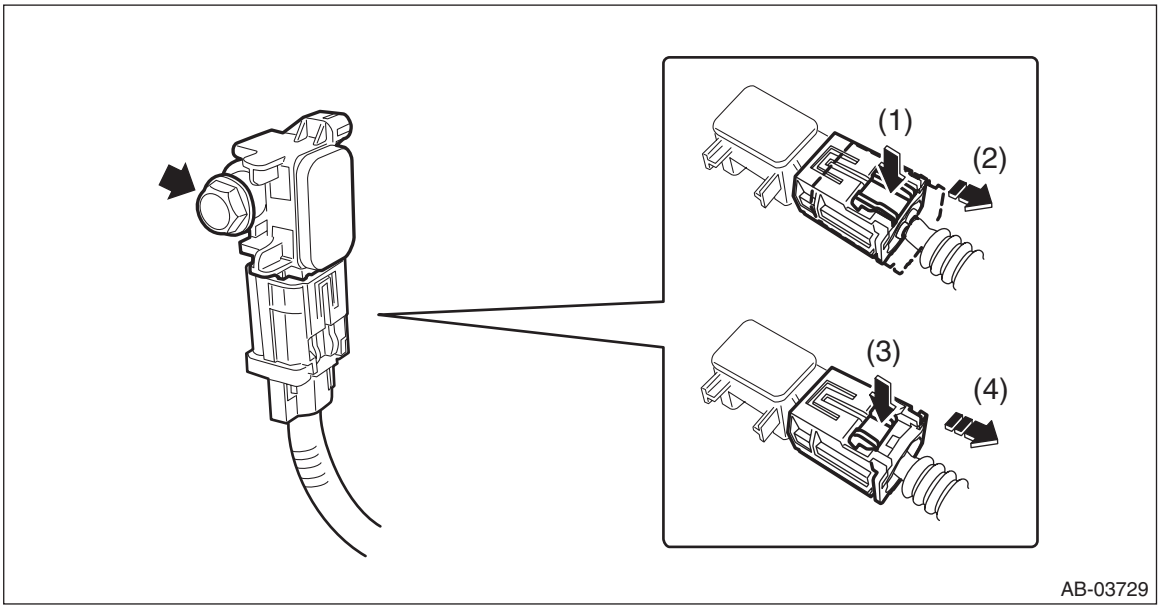

B: INSTALLATION

CAUTION:
- **If the airbag has been activated, replace the front sub sensor with a new part.**
- **Do not reuse the bolt and nut.**

Always replace with the specified new bolts and nuts.
- **When installing the sensor, insert the set pin on the backside of the sensor into the hole on the body side securely.**

1) Before installation, inspect the following items and replace any faulty part with a new part.
- Front sub sensor or connector is damaged.

2) Install the front sub sensor.

Tightening torque:
13 N·m (1.3 kgf-m, 9.6 ft-lb)

3) Install the air intake duct. (When removing the sensor RH)
4) Connect the ground terminal to battery sensor. <Ref. to RC-4, BATTERY, NOTE, Repair Contents.>

11.Front Door Impact Sensor

A: REMOVAL

CAUTION:
• Refer to "CAUTION" of "General Description" before handling the airbag system components. <Ref. to AB-10, CAUTION, General Description.>
• When the front door impact sensor is removed, always replace it with a new front door impact sensor. If it is reused, sealing capability on the contacting surface of door panel may be insufficient and impact pressure may not be detected correctly.
1) Operate the power window switch to close the front door glass.
2) Turn the ignition switch to OFF.
3) Disconnect the ground terminal from the battery sensor, and wait for at least 60 seconds before starting work. <Ref. to RC-4, BATTERY, NOTE, Repair Contents.>
4) Remove the trim panel - front door. (On the side where airbag door sensor is removed) <Ref. to EI-71, FRONT DOOR, REMOVAL, Door Trim.>
5) Remove the sealing cover. <Ref. to EB-30, REMOVAL, Front Sealing Cover.>
6) Remove the front door impact sensor.

CAUTION:
If it is removed with an excessive force, the panel assembly - front door may be deformed. Also, if the clip is damaged, replace it with a new clip.
(1) Remove the plate - door (a).
(2) Remove the nuts and then remove the front door impact sensor.
(3) Pull the lock arm (b) and disconnect the airbag connector to remove the front door impact sensor. <Ref. to AB-22, FRONT DOOR IMPACT SENSOR, PROCEDURE, Airbag Connector.>

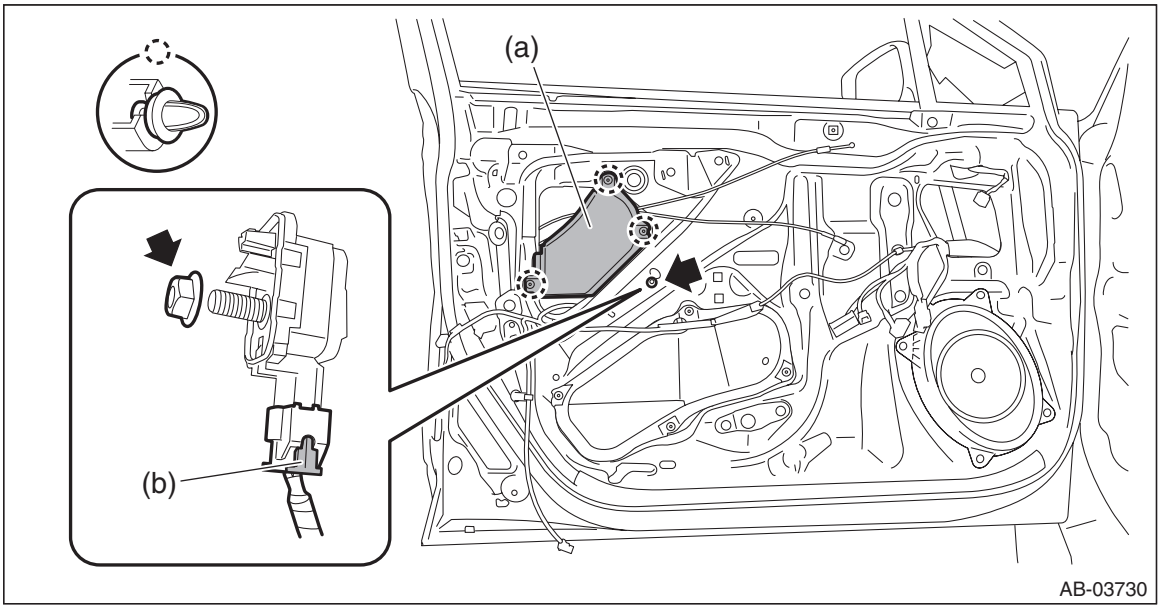

B: INSTALLATION

1) Before installation, inspect the following items and replace any faulty part with a new part.
- The front door impact sensor or connector is damaged.
- Inner panel area of the panel assembly - front door is deformed.
- Plate - door is deformed.
- Side airbag module has been activated.

2) Install the front door impact sensor.

CAUTION:
- **Do not reuse the bolt and nut.**

Always replace with the specified new bolts and nuts.
- **Thoroughly clean the sensor mounting area before installing the front door impact sensor.**
- **When installing the sensor, insert the set pin on the backside of the sensor into the hole on the body side securely.**

Tightening torque:
7.5 N·m (0.8 kgf-m, 5.5 ft-lb)

3) Install the sealing cover.
4) Install the trim panel - front door.
5) Connect the ground terminal to battery sensor. <Ref. to RC-4, BATTERY, NOTE, Repair Contents.>

12.Side Airbag Sensor

A: REMOVAL

CAUTION:
• Refer to "CAUTION" of "General Description" before handling the airbag system components. <Ref. to AB-10, CAUTION, General Description.>
• If the hook - rear seat is disconnected from the vehicle body, make sure to replace the hook - rear seat with a new part to prevent the decline of the fixed force of the seat.

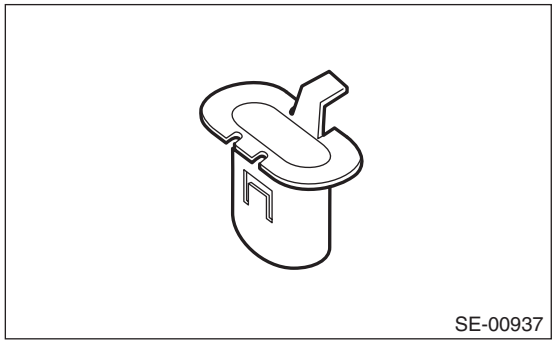

1) Move the seat all the way forward, from which the side airbag sensor is to be removed.

NOTE:
This is to remove the seat belt retractor assembly.
2) Turn the ignition switch to OFF.
3) Disconnect the ground terminal from the battery sensor, and wait for at least 60 seconds before starting work. <Ref. to RC-4, BATTERY, NOTE, Repair Contents.>

NOTE:
For model with the power seat, move the seat to the front-most position before removing the battery ground terminal.
4) Remove the rear seat cushion assembly. <Ref. to SE-33, REMOVAL, Rear Seat.>
5) Remove the cover side sill - front, cover side sill - rear, and the trim panel - center pillar LWR. (On the side where the side airbag sensor is removed) <Ref. to EI-92, REMOVAL, Lower Inner Trim.>
6) Remove the seat belt retractor. (On the side where the side airbag sensor is removed)
(1) Disconnect connector of the pretensioner. <Ref. to AB-20, DRIVER'S AIRBAG MODULE, CURTAIN AIRBAG MODULE AND PRETENSIONER, PROCEDURE, Airbag Connector.>
(2) Remove the bolt to remove the seat belt retractor.

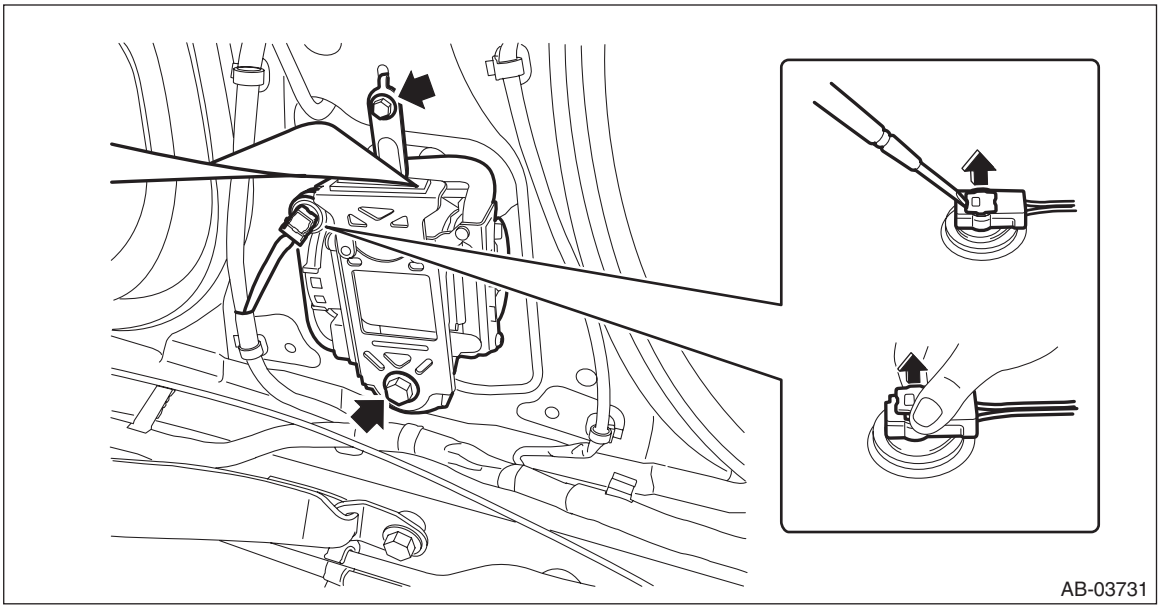

7) Remove the nuts and then remove the side airbag sensor. <Ref. to AB-22, SIDE AIRBAG SENSOR AND CURTAIN AIRBAG SENSOR, PROCEDURE, Airbag Connector.>

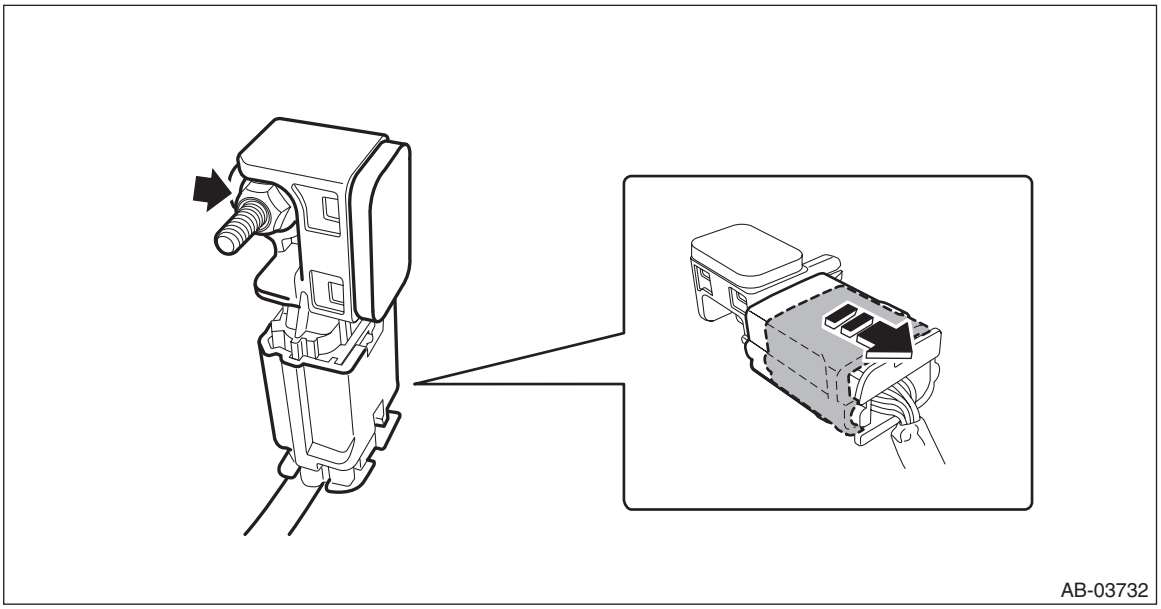

B: INSTALLATION

CAUTION:
If the hook - rear seat is disconnected from the vehicle body, make sure to replace the hook - rear seat with a new part to prevent the decline of the fixed force of the seat.

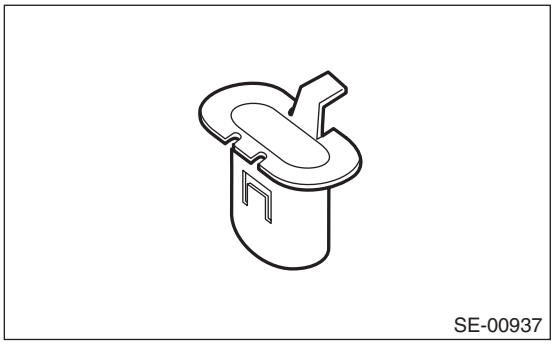

1) Before installation, inspect the following items and replace any faulty part with a new part.
- The side airbag sensor or connector are damaged.
- Side airbag module has been activated.

2) Install the side airbag sensor.

CAUTION:
- **Do not reuse the bolt and nut.**

Always replace with the specified new bolts and nuts.
- **When installing the sensor, insert the set pin on the backside of the sensor into the hole on the body side securely.**

Tightening torque:
7.5 N·m (0.8 kgf-m, 5.5 ft-lb)

3) Install the seat belt retractor.

Tightening torque:
Front seat belt: <Ref. to SB-2, FRONT SEAT BELT, COMPONENT, General Description.>

4) Install the cover side sill - front, cover side sill - rear, and the trim panel - center pillar LWR.
5) Install the rear seat cushion assembly.
6) Connect the ground terminal to battery sensor. <Ref. to RC-4, BATTERY, NOTE, Repair Contents.>

13.Curtain Airbag Sensor

A: REMOVAL

CAUTION:
• Refer to "CAUTION" of "General Description" before handling the airbag system components. <Ref. to AB-10, CAUTION, General Description.>
• If the hook - rear seat is disconnected from the vehicle body, make sure to replace the hook - rear seat with a new part to prevent the decline of the fixed force of the seat.

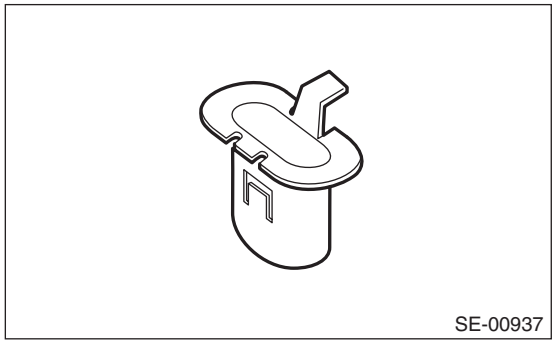
SE-00937

1) Turn the ignition switch to OFF.
2) Disconnect the ground terminal from the battery sensor, and wait for at least 60 seconds before starting work. <Ref. to RC-4, BATTERY, NOTE, Repair Contents.>
3) Remove the rear seat cushion assembly and the side pad assembly - backrest (on the side where curtain airbag sensor is removed). <Ref. to SE-33, REMOVAL, Rear Seat.>
- Sedan model: <Ref. to SE-33, SEDAN MODEL, REMOVAL, Rear Seat.>
- OUTBACK model: <Ref. to SE-35, OUTBACK MODEL, REMOVAL, Rear Seat.>

4) Remove the cover side sill - rear. (On the side where the curtain airbag sensor is removed) <Ref. to EI-92, REMOVAL, Lower Inner Trim.>
5) Remove the nuts and then remove the curtain airbag sensor. <Ref. to AB-22, SIDE AIRBAG SENSOR AND CURTAIN AIRBAG SENSOR, PROCEDURE, Airbag Connector.>

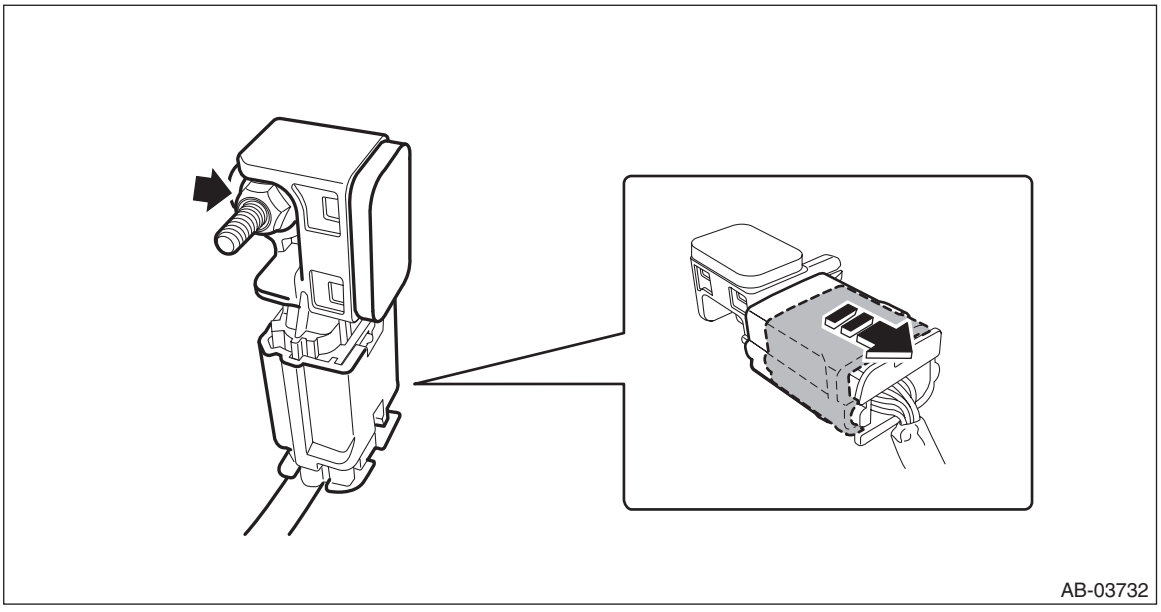
AB-03732

B: INSTALLATION

CAUTION:
If the hook - rear seat is disconnected from the vehicle body, make sure to replace the hook - rear seat with a new part to prevent the decline of the fixed force of the seat.

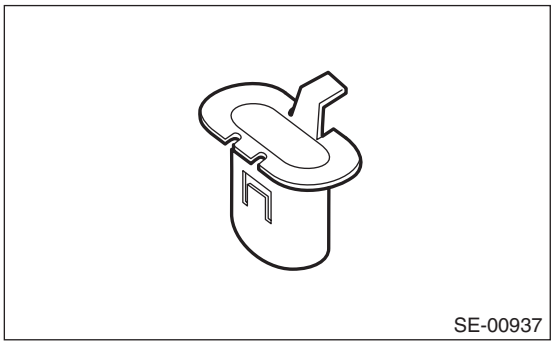

1) Before installation, inspect the following items and replace any faulty part with a new one.
- Curtain airbag sensor or connector is damaged.
- Curtain airbag module has been activated.

2) Install the curtain airbag sensor.

CAUTION:
- **Do not reuse the bolt and nut.**

Always replace with the specified new bolts and nuts.
- **When installing the sensor, insert the set pin on the backside of the sensor into the hole on the body side securely.**

Tightening torque:
7.5 N·m (0.8 kgf-m, 5.5 ft-lb)

3) Install the cover side sill - rear and the trim panel - rear pillar LWR.
4) Install the side pad assembly - backrest.

Tightening torque:
53 N·m (5.4 kgf-m, 39.1 ft-lb)

5) Install the rear seat cushion assembly.
6) Connect the ground terminal to battery sensor. <Ref. to RC-4, BATTERY, NOTE, Repair Contents.>

14.Roll Connector

A: REMOVAL

CAUTION:
Refer to "CAUTION" of "General Description" before handling the airbag system components. <Ref. to AB-10, CAUTION, General Description.>

1) Position the front wheels straight ahead.
2) Turn the ignition switch to OFF.
3) Disconnect the ground terminal from the battery sensor, and wait for at least 60 seconds before starting work. <Ref. to RC-4, BATTERY, NOTE, Repair Contents.>
4) Remove the driver's airbag module. <Ref. to AB-32, REMOVAL, Driver's Airbag Module.>
5) Remove the steering wheel. <Ref. to PS-9, REMOVAL, Steering Wheel.>
6) Remove the cover assembly - column. <Ref. to PS-20, REMOVAL, Steering Column.>
7) Remove the roll connector.

CAUTION:
Make sure that the roll connector is not turned from the original position.

(1) Disconnect the connector under the roll connector.
(2) Release the claws and remove the roll connector.

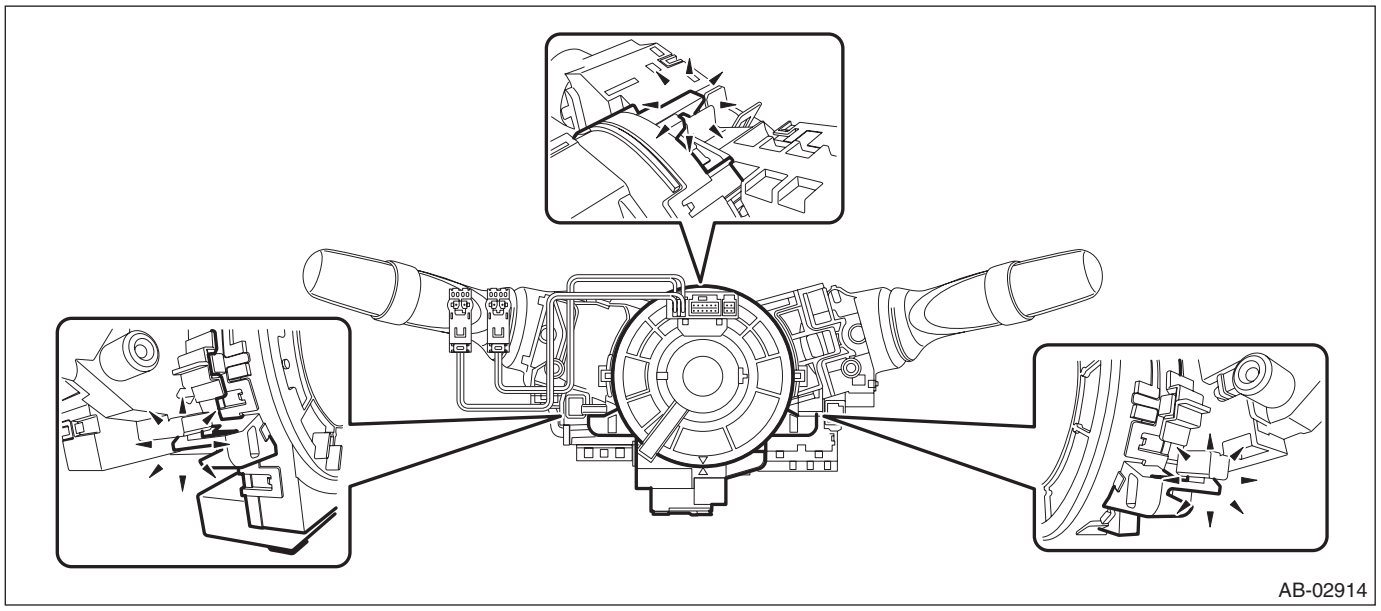

(3) Release the claws and separate the roll connector (a) and steering angle sensor (b).

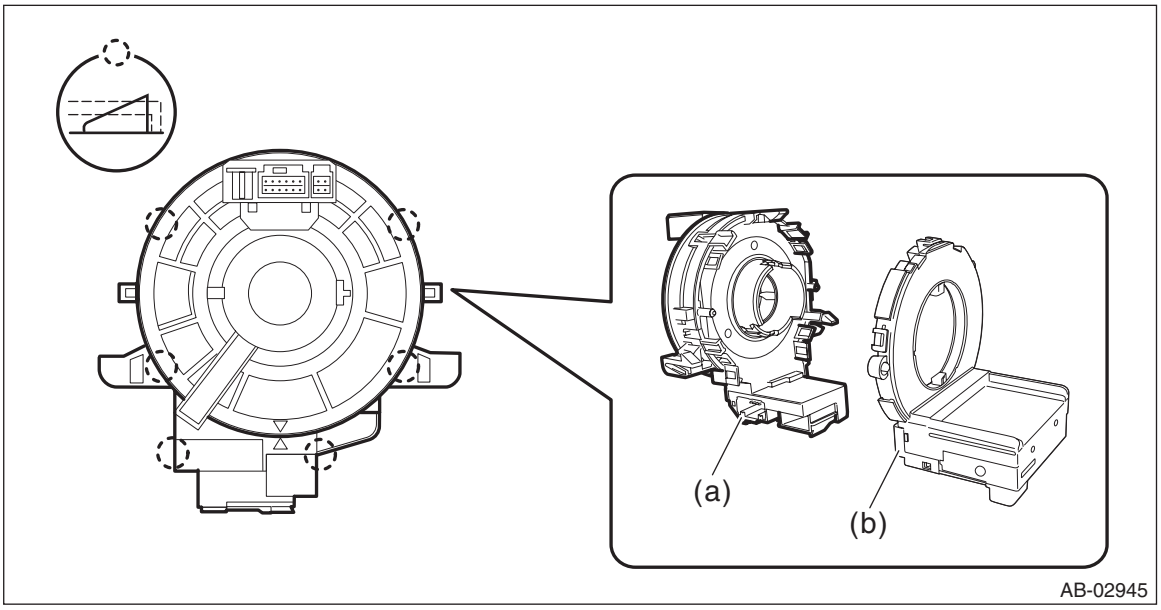

B: INSTALLATION

CAUTION:
If the steering wheel and steering angle sensor are removed, perform "VDC sensor midpoint setting mode" of the VDC. <Ref. to VDC-15, VDC SENSOR MIDPOINT SETTING MODE, ADJUSTMENT, VDC Control Module and Hydraulic Control Unit (VDCCM&H/U).>

1) Before attaching a new roll connector, apply a thin coat of grease contained in the connector onto the areas shown by the arrows.

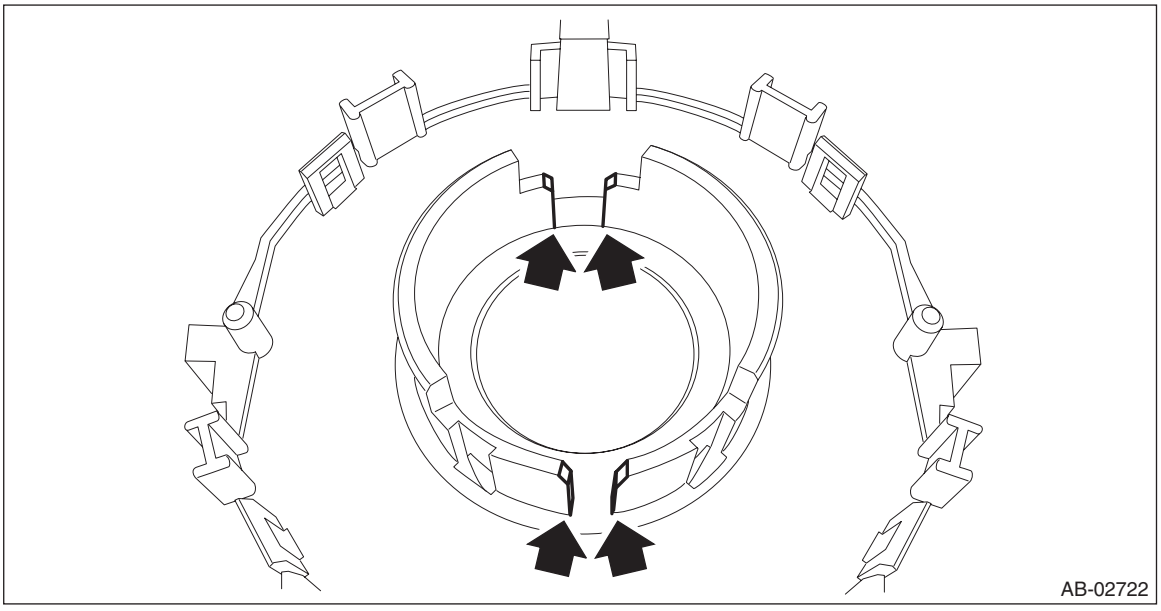

2) Install the cover assembly - column.
3) Install the roll connector.
4) Align the center position of the steering roll connector. <Ref. to AB-63, ADJUSTMENT, Roll Connector.>
5) Install the steering wheel.

Tightening torque:
Steering wheel: 39 N·m (4.0 kgf-m, 28.8 ft-lb)

Clearance:
Between cover assembly - column and steering wheel: 4 — 6 mm (0.16 — 0.24 in)

6) Install the driver's airbag module. <Ref. to AB-33, INSTALLATION, Driver's Airbag Module.>
7) Connect the ground terminal to battery sensor. <Ref. to RC-4, BATTERY, NOTE, Repair Contents.>
8) Perform the neutral position setting of the steering angle sensor. <Ref. to VDC-15, VDC SENSOR MID-POINT SETTING MODE, ADJUSTMENT, VDC Control Module and Hydraulic Control Unit (VDCCM&H/U).>

C: INSPECTION

1. VISUAL INSPECTION

Check for the following, and replace the damaged parts with new parts.
- Combination switch is cracked or deformed.
- Roll connector is cracked or deformed.

2. UNIT INSPECTION OF ROLL CONNECTOR

CAUTION:
• Do not rotate the roll connector to more than the specified number of turns. Otherwise, the roll connector internal wire may be broken.
• When determining the end stop, rotate the connector slowly without applying excessive force. Applying excessive force at the end stop may break the internal wire.
1) Adjust the roll connector. <Ref. to AB-63, ADJUSTMENT, Roll Connector.>
2) Set the roll connector to the central position.
3) Connect the test harness to the connector E and connector F.

Preparation tool:
Test harness N (98299SA000)
Test harness Q (98299SA040)
- Connector E - Test harness N (1N)
- Connector F - Test harness Q (1Q)

4) With the following conditions, check the resistance between the test harness connector terminals.
- Perform the check with the roll connector centered (front wheels direct straightforward).
- Rotate the roll connector counterclockwise from the center (front wheels direct straightforward) to an end stop. Then, perform the check while rotating it clockwise to approximately 4.5 turns.

Preparation tool:
Circuit tester

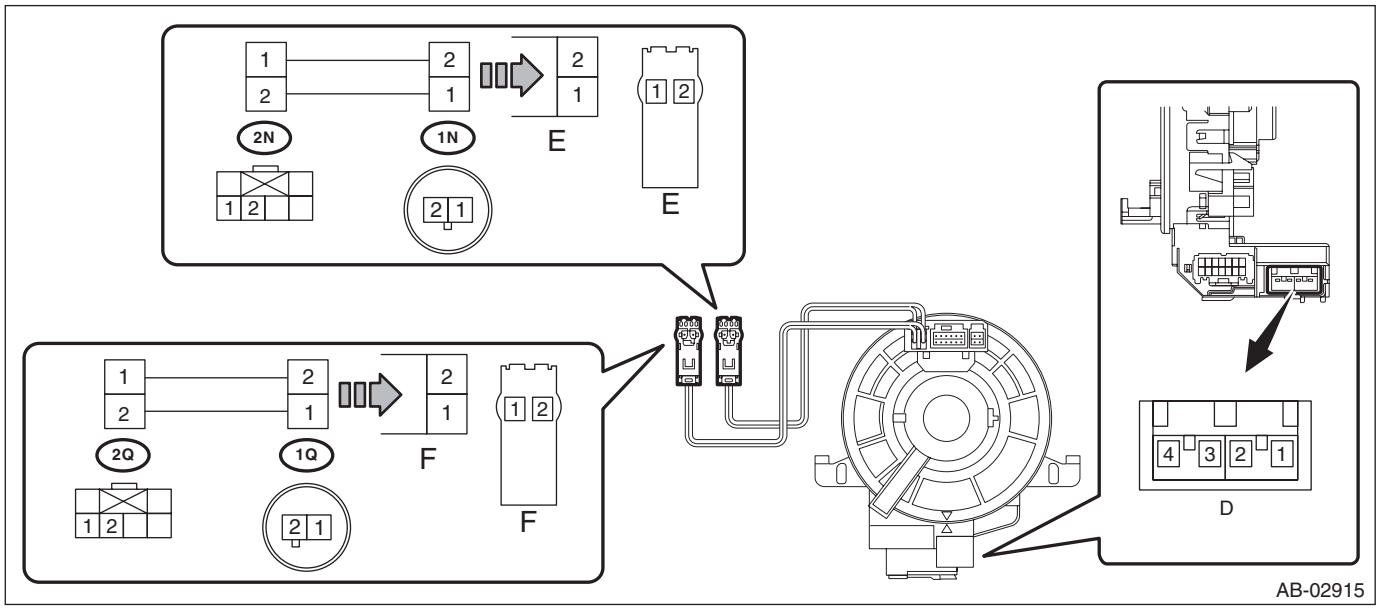

Terminal No.	Inspection conditions	Standard
(2N) No. 1 — (2N) No. 2	Always	Less than 1 Ω
(2Q) No. 1 — (2Q) No. 2	Always	Less than 1 Ω

NOTE:
The connector D is designed to short the terminals D1/D2 and D3/D4 when disconnected.
5) Replace the roll connector with a new part if the inspection result is not within the standard value.

D: ADJUSTMENT

CAUTION:
• Do not rotate the roll connector to more than the specified number of turns. Otherwise, the roll connector internal wire may be broken.
• When determining the end stop, rotate the connector slowly without applying excessive force. Applying excessive force at the end stop may break the internal wire.
1) Check that front wheels are positioned in straight ahead direction.
2) Rotate the roll connector counterclockwise until it stops.
3) Rotate the roll connector clockwise approx. 2.5 turns until "▲" marks are aligned.

NOTE:
When the roll connector comes to the center position, the orange roller (b) can be seen from the sight glass (a).

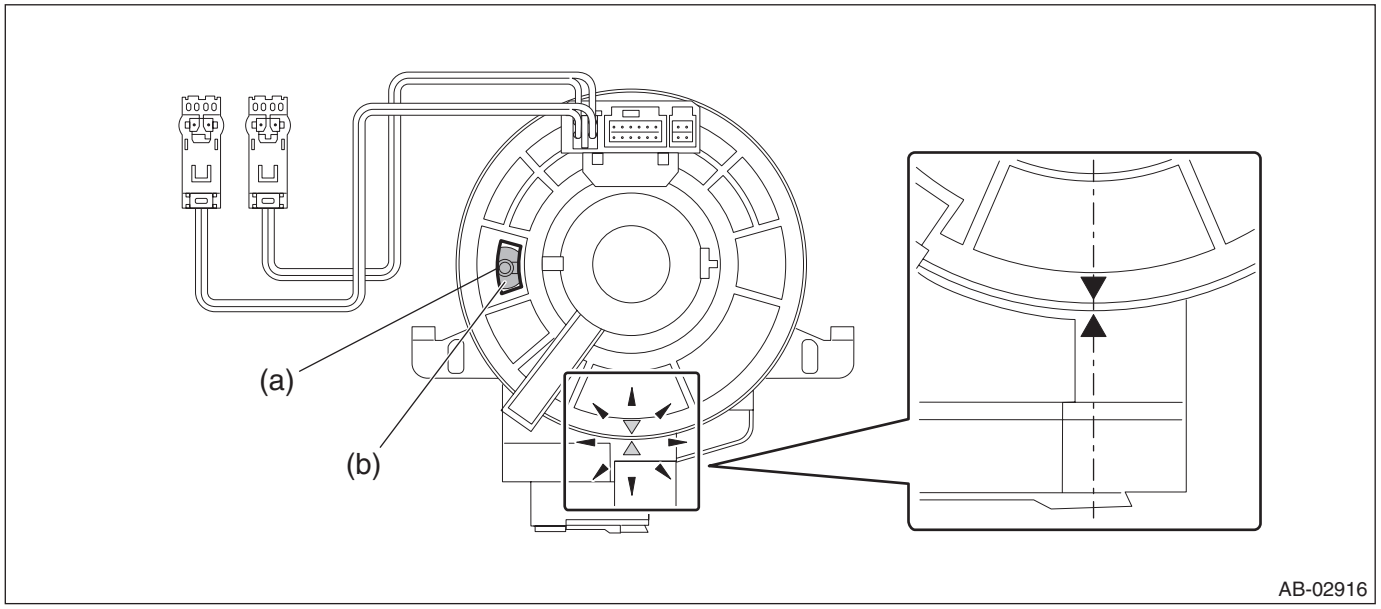

15.Airbag Module Disposal (Deployment Processing on Vehicle)

A: PROCEDURE

WARNING:
Make sure to follow the instructions below. Otherwise, personal injuries may occur.
• Before discarding an airbag module, always perform an operation process to prevent any false activation.
• Wear protective gloves, safety goggles and earplugs during this operation. Wash your hands afterwards.
• Do not touch the airbag module just after activation because it is very hot. Before handling it for disposal, wait for 40 minutes.

CAUTION:
• Airbag module operation process should be performed on a flat place in safety area. Do not perform the process outdoors when there is rain or strong wind.
• Activating an airbag module causes a high explosive noise, be sure to warn people in the area, and do not allow anyone within 5 m (16 ft) radius of the disposal site.
• After activating the airbag module, smoke may arise. Therefore, it must be activated in a well-ventilated place with no smoke detector nearby.
• Do not expose the activated airbag module to water.
• Wrap the activated airbag module in a sealed vinyl bag when discarding.
• If it is impossible to perform an airbag module operation process due to some situational reasons, consult SUBARU dealership or one of the authorized workshops.

1. DRIVER'S AIRBAG MODULE

1) Turn the ignition switch to OFF.
2) Disconnect the ground terminal from the battery sensor, and wait for at least 60 seconds before starting work. <Ref. to RC-4, BATTERY, NOTE, Repair Contents.>
3) Remove the cover assembly - column.
   (1) Remove the clips, and remove the cover - column.
   (2) Remove the screws.
   (3) Release the claw, and remove the cover assembly - column UPR and the cover assembly - column LWR.

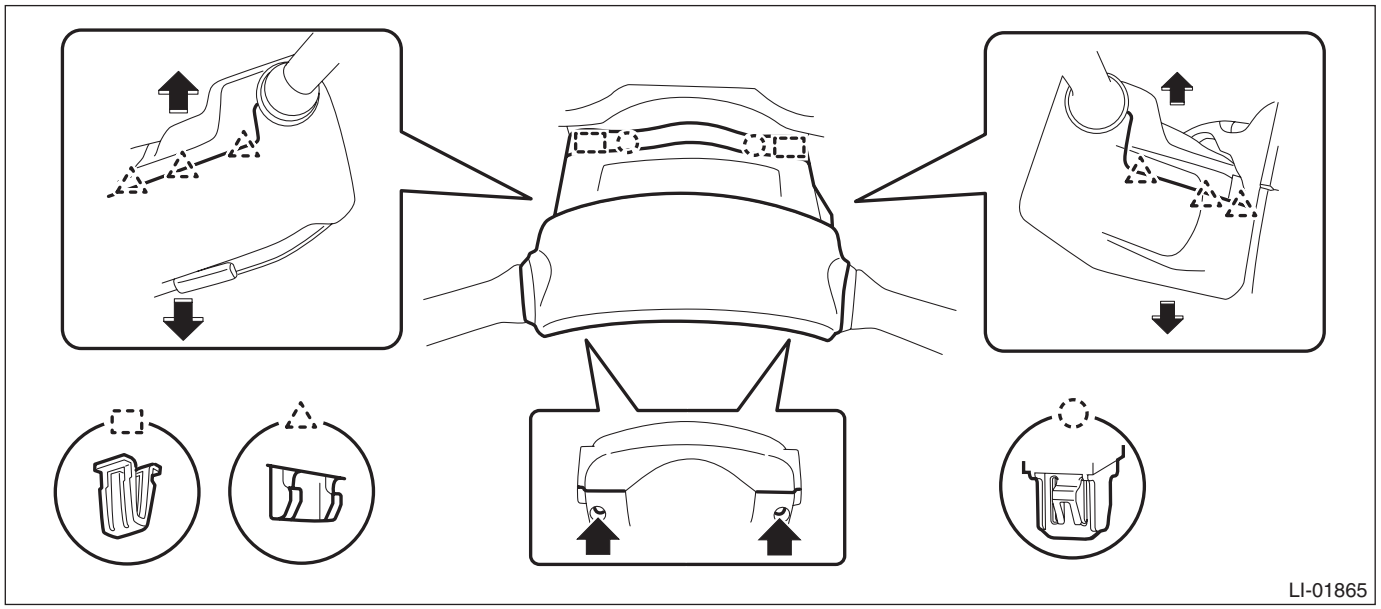

4) Disconnect the driver's airbag module connector.

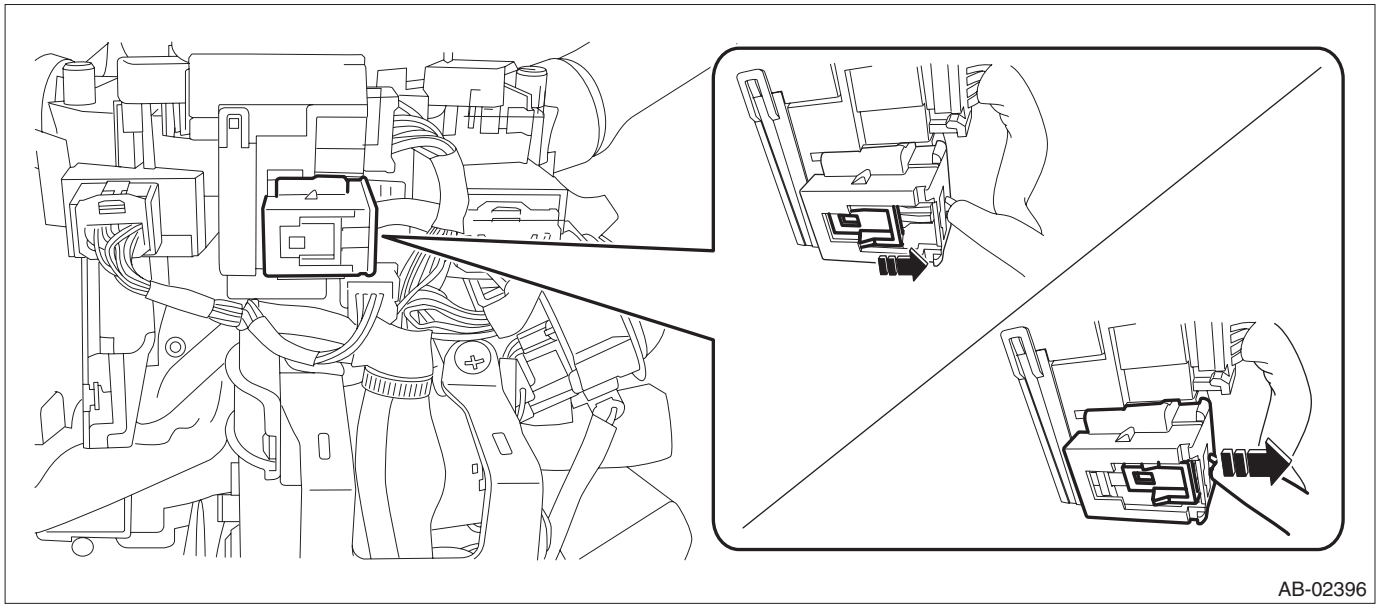

5) Cut off the harness on the body side of the removed connector approx. 70 mm (2.76 in) from the edge of the connector.

Preparation tool:
Nippers

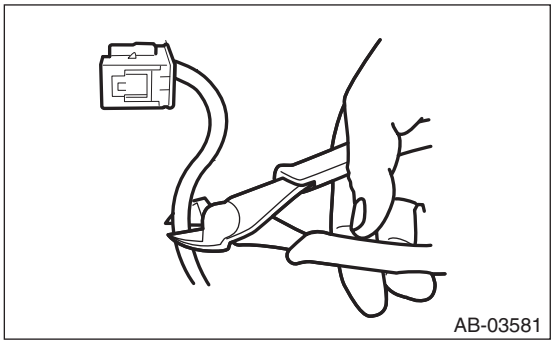

6) Peel off the shield approx. 20 mm (0.79 in) from the two harnesses of the removed body side connector.

Preparation tool:
Wire stripper

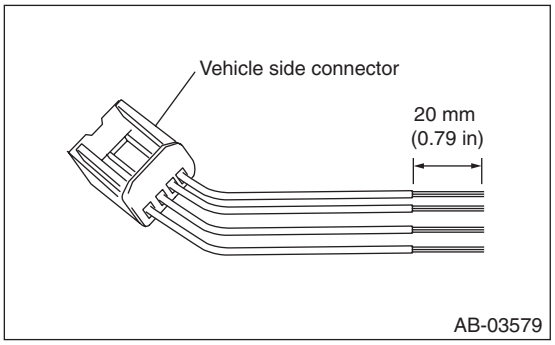

7) Twist the end of harness as shown in the figure.

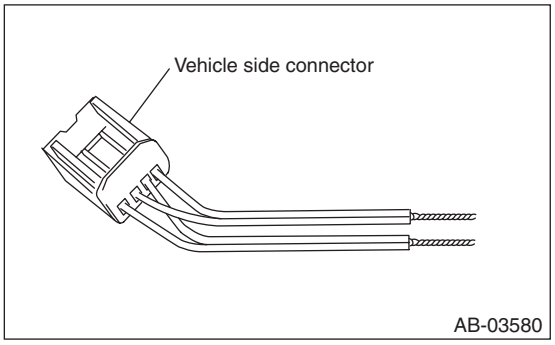

8) Prepare a six-meter (19 ft) long vinyl-shielded parallel wire. Peel off the shield of both ends approx. 20 mm (0.79 in) and twist one end together into shorted condition.
9) The other end, not shorted, will be connected to harnesses of repaired body connector as shown in the figure, and insulated with vinyl tape.

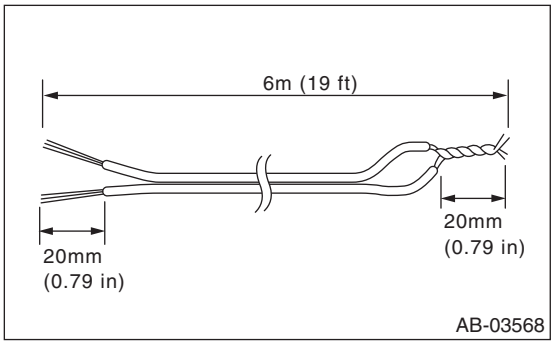

NOTE:
No concern about polarity.
10) After completing the connecting work, connect the body side connector to the connector of the airbag connector lower side again.

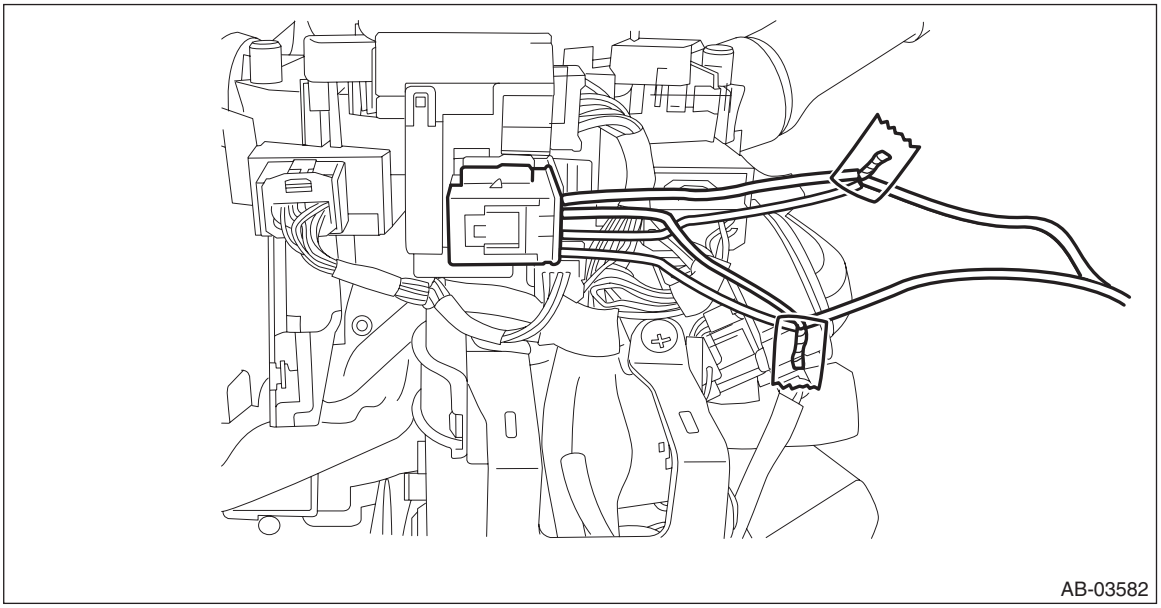

11) Bring the vinyl wire for operation out of the vehicle and make sure there is no person in the vehicle.

12) Extend the wiring of airbag deployment tool to the limit, and close all the windows and sunroof completely.

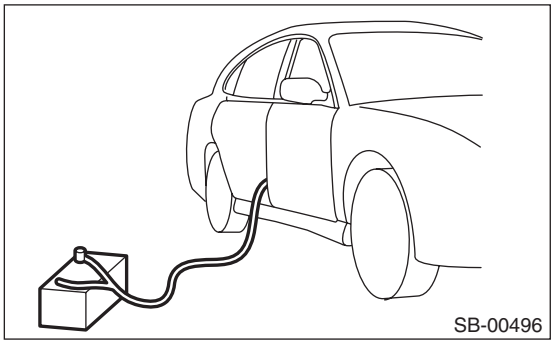
SB-00496

13) Move the battery at least 5 m (16 ft) from the vehicle, and confirm safety in the area.
14) Connect the airbag deployment tool alligator clip to the battery negative (–) terminal.
15) Connect the other cable of airbag deployment tool to the battery positive (+) terminal, and activate the airbag module.

CAUTION:
• After activation, the airbag module will be extremely hot. Let it cool down for at least 40 minutes in an area with no one around.
• Do not expose the activated airbag module to water.

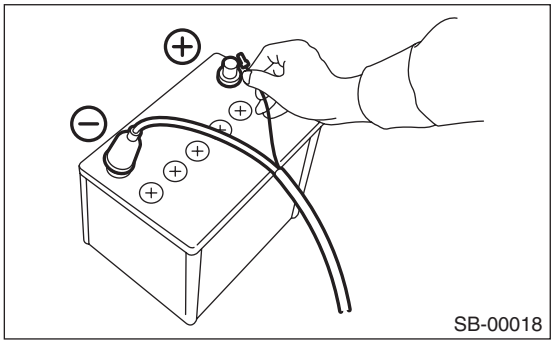
SB-00018

16) Remove the driver's airbag module. <Ref. to AB-32, REMOVAL, Driver's Airbag Module.>
17) Place the activated airbag module in a sealed vinyl bag, then discard.

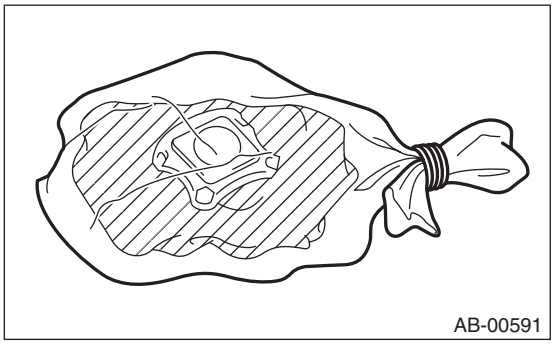
AB-00591

2. PASSENGER'S AIRBAG MODULE

1) Turn the ignition switch to OFF.
2) Disconnect the ground terminal from the battery sensor, and wait for at least 60 seconds before starting work. <Ref. to RC-4, BATTERY, NOTE, Repair Contents.>
3) Remove the glove box assembly. <Ref. to EI-77, REMOVAL, Glove Box.>
4) Disconnect the passenger's airbag module connector.

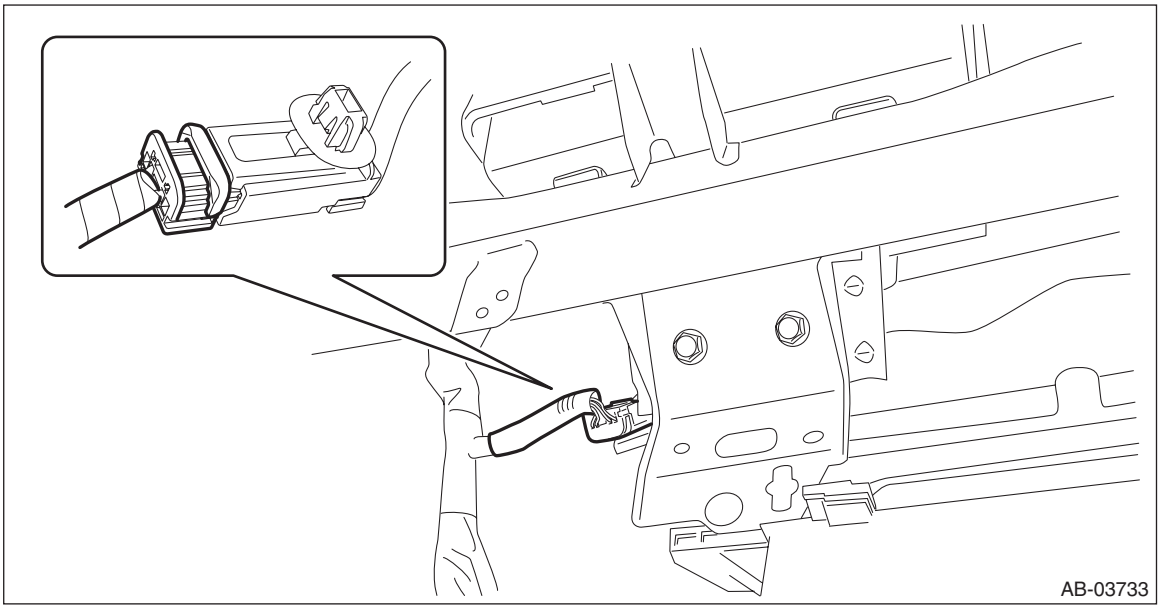

5) Short the terminal to the alligator clip furnished as airbag deployment tool.

CAUTION:
The airbag deployment tool should be kept shorted on the terminals until just before activation of airbag module.

Preparation tool:
ST: AIRBAG DEPLOYMENT TOOL (98299PA030)

6) Connect airbag deployment tool (A) and test harness adapter AM (B).

Preparation tool:
ST: TEST HARNESS ADAPTER AM (98299FJ000)

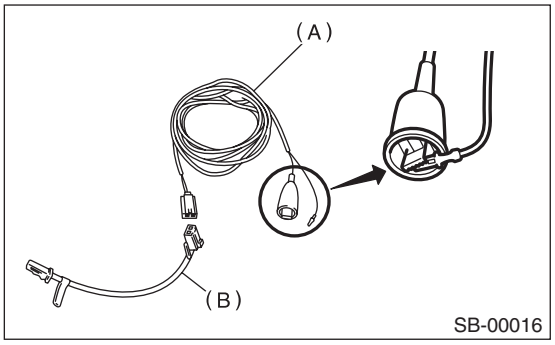

7) Connect test harness adapter AM to airbag connector.

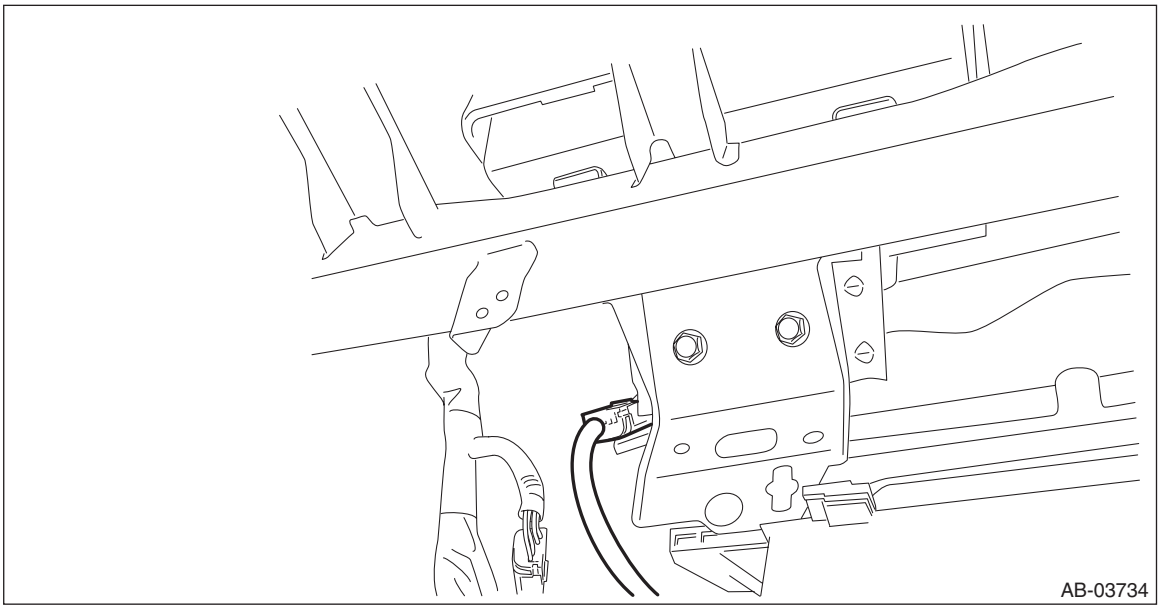

8) Make sure there is no one inside the vehicle.
9) Extend the wiring of airbag deployment tool to the limit, and close all the windows and sunroof completely.

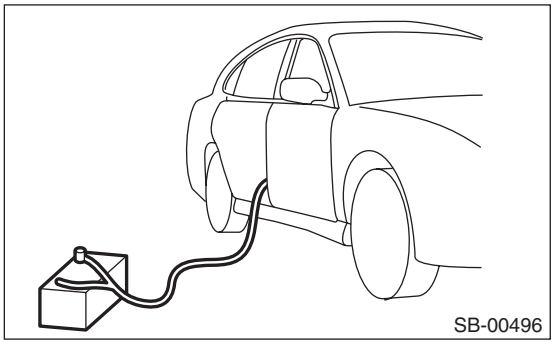

10) Move the battery at least 5 m (16 ft) from the vehicle, and confirm safety in the area.
11) Connect the airbag deployment tool alligator clip to the battery negative (–) terminal.
12) Connect the other cable of airbag deployment tool to the battery positive (+) terminal, and activate the airbag module.

CAUTION:
• After activation, the airbag module will be extremely hot. Let it cool down for at least 40 minutes in an area with no one around.
• Do not expose the activated airbag module to water.

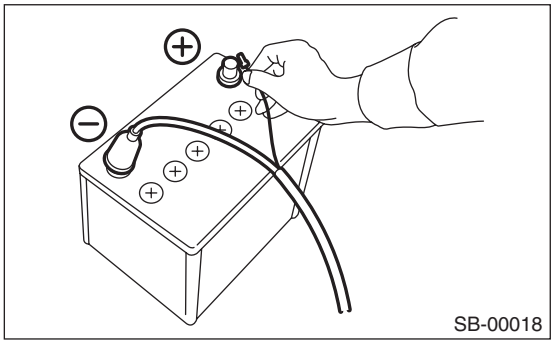

13) Remove the passenger's airbag module. <Ref. to AB-34, REMOVAL, Passenger's Airbag Module.>

14) Place the activated airbag module in a sealed vinyl bag, then discard.

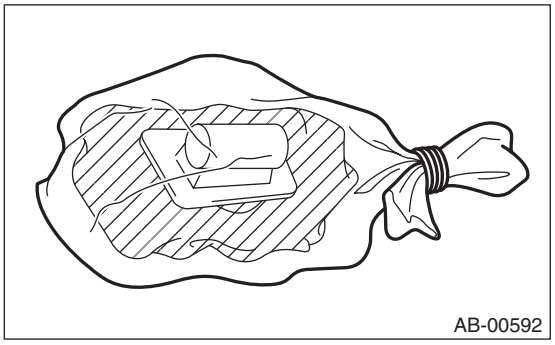

3. SEAT CUSHION AIRBAG MODULE

1) Turn the ignition switch to OFF.
2) Disconnect the ground terminal from the battery sensor, and wait for at least 60 seconds before starting work. <Ref. to RC-4, BATTERY, NOTE, Repair Contents.>
3) Disconnect the seat cushion airbag module connector under the front seat cushion. <Ref. to AB-24, SEAT CUSHION AIRBAG MODULE AND BUCKLE SWITCH RH, PROCEDURE, Airbag Connector.>
4) Adjust both the front seat and front seat backrest to the center positions.
5) Short the terminal to the alligator clip furnished as airbag deployment tool.

CAUTION:
The airbag deployment tool should be kept shorted on the terminals until just before activation of airbag module.

Preparation tool:
ST: AIRBAG DEPLOYMENT TOOL (98299PA030)

6) Connect airbag deployment tool (A) and test harness adapter AU (B).

Preparation tool:
ST: TEST HARNESS ADAPTER AU (98299AL000)

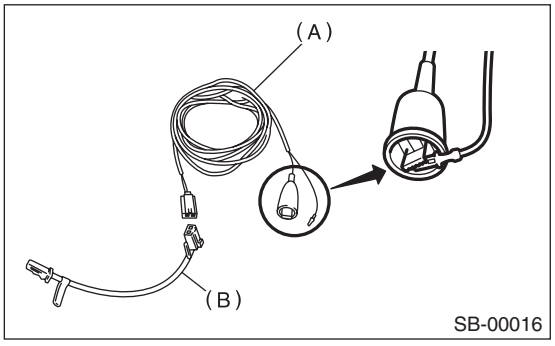

7) Connect the test harness adapter AU to the seat cushion airbag module connector (yellow).

CAUTION:
Do not place any object on front seat.

8) Make sure there is no one inside the vehicle.

9) Extend the wiring of airbag deployment tool to the limit, and close all the windows and sunroof completely.

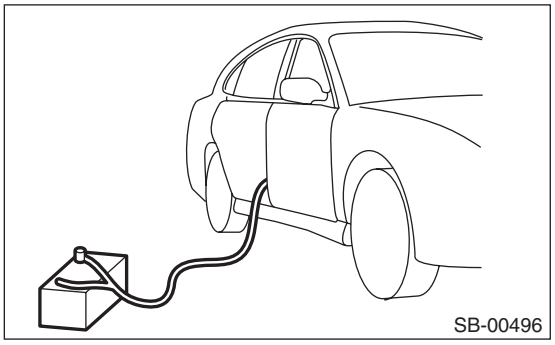

10) Move the battery at least 5 m (16 ft) from the vehicle, and confirm safety in the area.
11) Connect the airbag deployment tool alligator clip to the battery negative (–) terminal.
12) Connect the other cable of airbag deployment tool to the battery positive (+) terminal, and activate the airbag module.

CAUTION:
• After activation, the airbag module will be extremely hot. Let it cool down for at least 40 minutes in an area with no one around.
• Do not expose the activated airbag module to water.

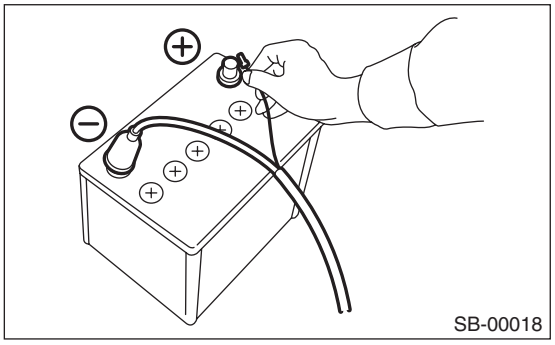

13) Remove the seat cushion airbag module. <Ref. to AB-37, REMOVAL, Seat Cushion Airbag Module.>
14) Place the activated airbag module in a sealed vinyl bag, then discard.

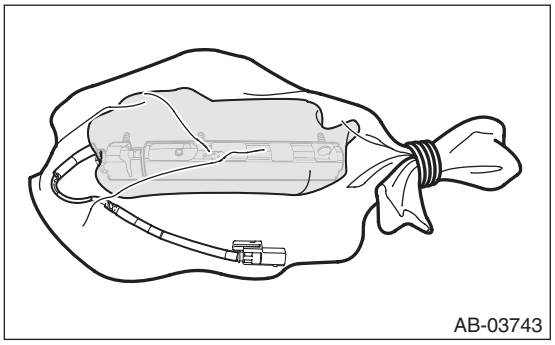

4. SIDE AIRBAG MODULE

1) Turn the ignition switch to OFF.
2) Disconnect the ground terminal from the battery sensor, and wait for at least 60 seconds before starting work. <Ref. to RC-4, BATTERY, NOTE, Repair Contents.>
3) Disconnect the side airbag module connector under the front seat cushion. <Ref. to AB-23, FRONT DOOR IMPACT SENSOR (BETWEEN AIRBAG REAR HARNESS AND FRONT DOOR HARNESS), PROCEDURE, Airbag Connector.>
4) Adjust both the front seat and front seat backrest to the center positions.
5) Short the terminal to the alligator clip furnished as airbag deployment tool.

CAUTION:
The airbag deployment tool should be kept shorted on the terminals until just before activation of airbag module.

Preparation tool:
ST: AIRBAG DEPLOYMENT TOOL (98299PA030)
6) Connect airbag deployment tool (A) and test harness adapter AR (B).

Preparation tool:
ST: TEST HARNESS ADAPTER AR (98299CA000)

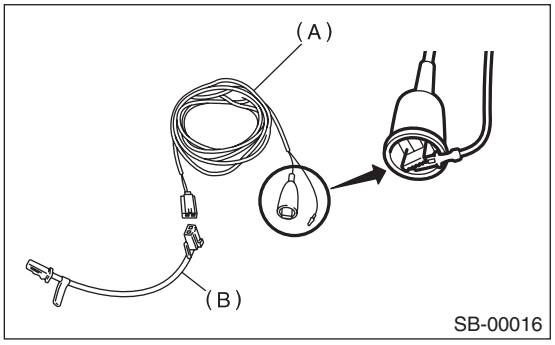

7) Connect the test harness adapter AR to the side airbag module connector (yellow).

CAUTION:
Do not place any object on front seat.
8) Make sure there is no one inside the vehicle.
9) Extend the wiring of airbag deployment tool to the limit, and close all the windows and sunroof completely.

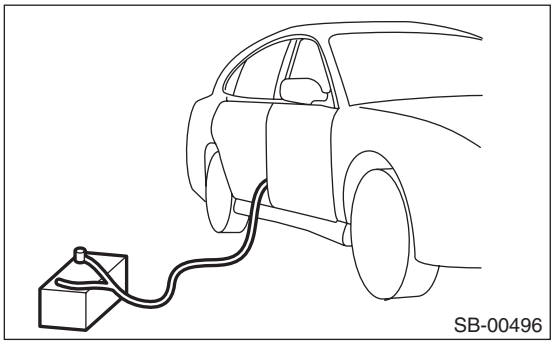

10) Move the battery at least 5 m (16 ft) from the vehicle, and confirm safety in the area.
11) Connect the airbag deployment tool alligator clip to the battery negative (–) terminal.

12) Connect the other cable of airbag deployment tool to the battery positive (+) terminal, and activate the airbag module.

CAUTION:
• After activation, the airbag module will be extremely hot. Let it cool down for at least 40 minutes in an area with no one around.
• Do not expose the activated airbag module to water.

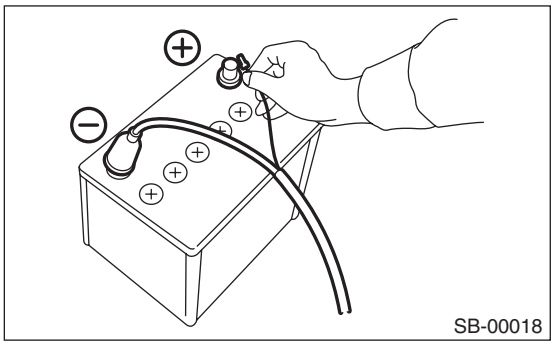

13) Remove the side airbag module. <Ref. to AB-40, REMOVAL, Side Airbag Module.>
14) Place the activated airbag module in a sealed vinyl bag, then discard.

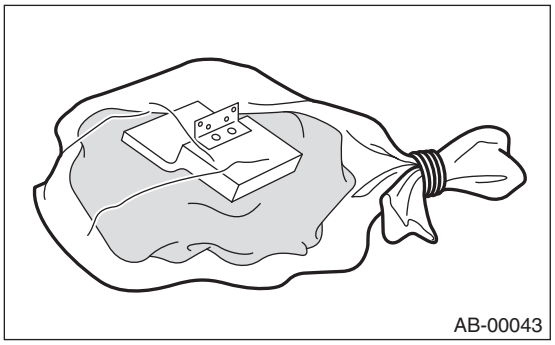

5. CURTAIN AIRBAG MODULE

1) Turn the ignition switch to OFF.
2) Disconnect the ground terminal from the battery sensor, and wait for at least 60 seconds before starting work. <Ref. to RC-4, BATTERY, NOTE, Repair Contents.>
3) Remove the roof trim.
- Sedan model: <Ref. to EI-113, SEDAN MODEL, REMOVAL, Roof Trim.>
- OUTBACK model: <Ref. to EI-116, OUTBACK MODEL, REMOVAL, Roof Trim.>

4) Disconnect the curtain airbag harness. <Ref. to AB-18, PROCEDURE, Airbag Connector.>

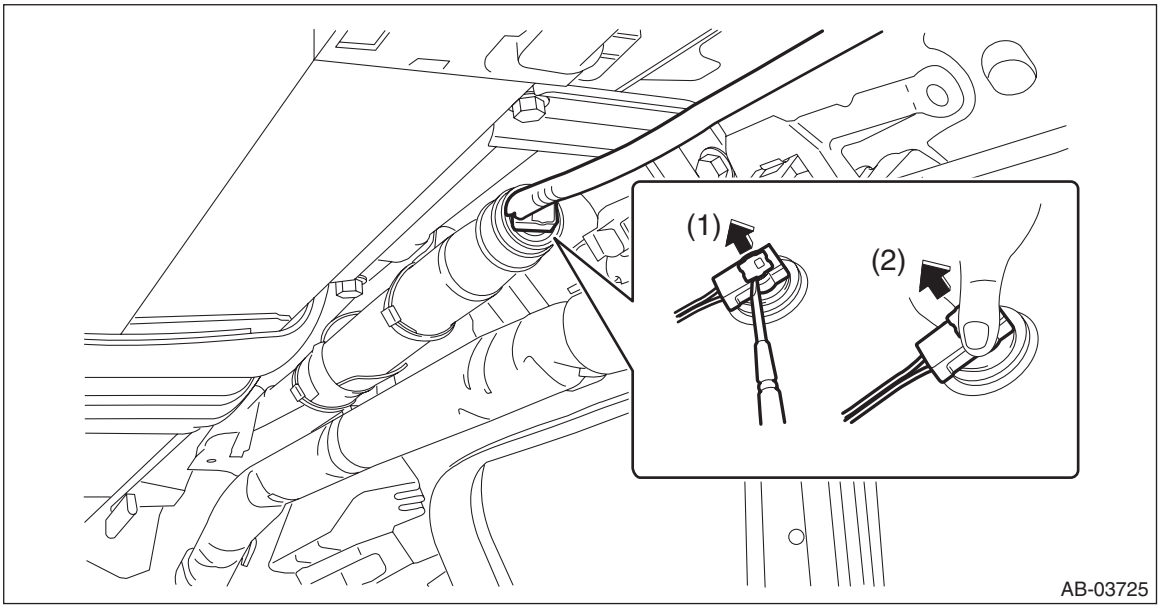

5) Short the terminal to the alligator clip furnished as airbag deployment tool.

CAUTION:
The airbag deployment tool should be kept shorted on the terminals until just before activation of airbag module.

Preparation tool:
ST: AIRBAG DEPLOYMENT TOOL (98299PA030)

6) Connect the airbag deployment tool (A) and test harness adapter D (B).

Preparation tool:
ST: TEST HARNESS ADAPTER D (98299SA010)

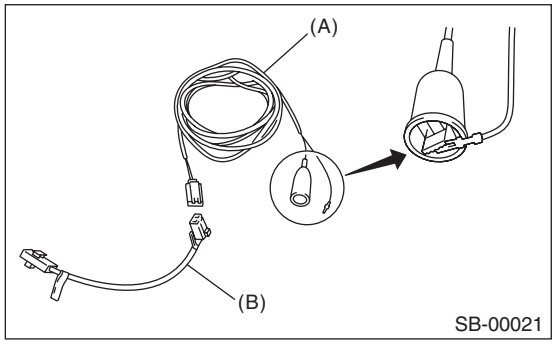

7) Connect the test harness adapter D to the curtain airbag module.

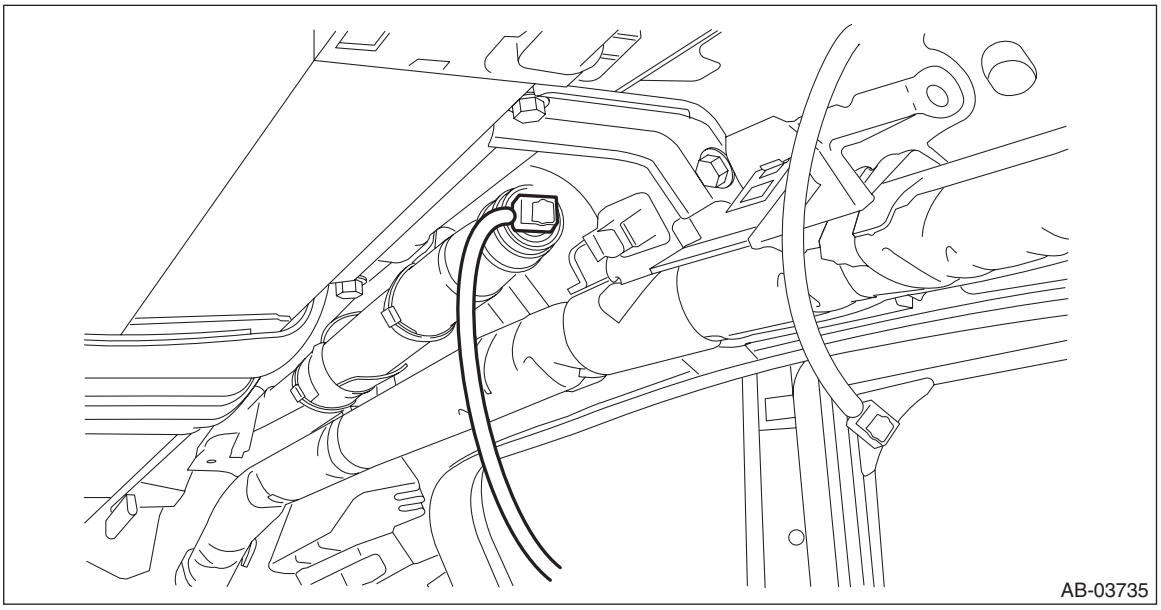

8) Make sure there is no one inside the vehicle.
9) Extend the wiring of airbag deployment tool to the limit, and close all the windows and sunroof completely.

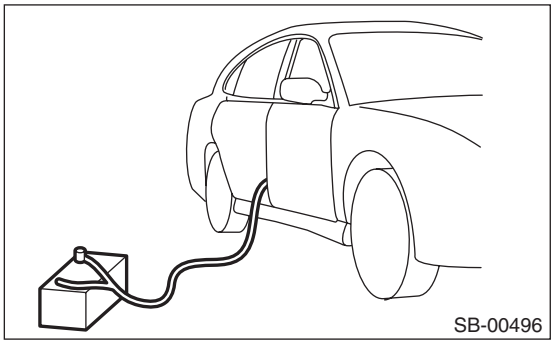

10) Move the battery at least 5 m (16 ft) from the vehicle, and confirm safety in the area.
11) Connect the airbag deployment tool alligator clip to the battery negative (–) terminal.
12) Connect the other cable of airbag deployment tool to the battery positive (+) terminal, and activate the airbag module.

CAUTION:
• After activation, the airbag module will be extremely hot. Let it cool down for at least 40 minutes in an area with no one around.
• Do not expose the activated airbag module to water.

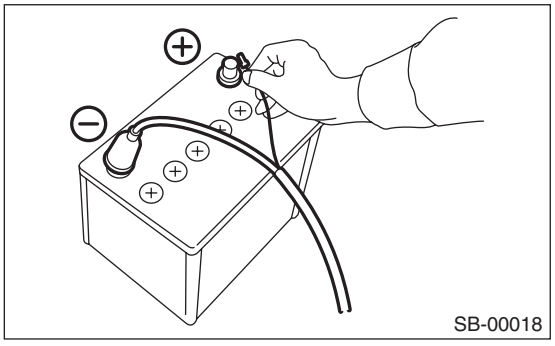

13) Remove the bolts and clips, and remove the curtain airbag module.

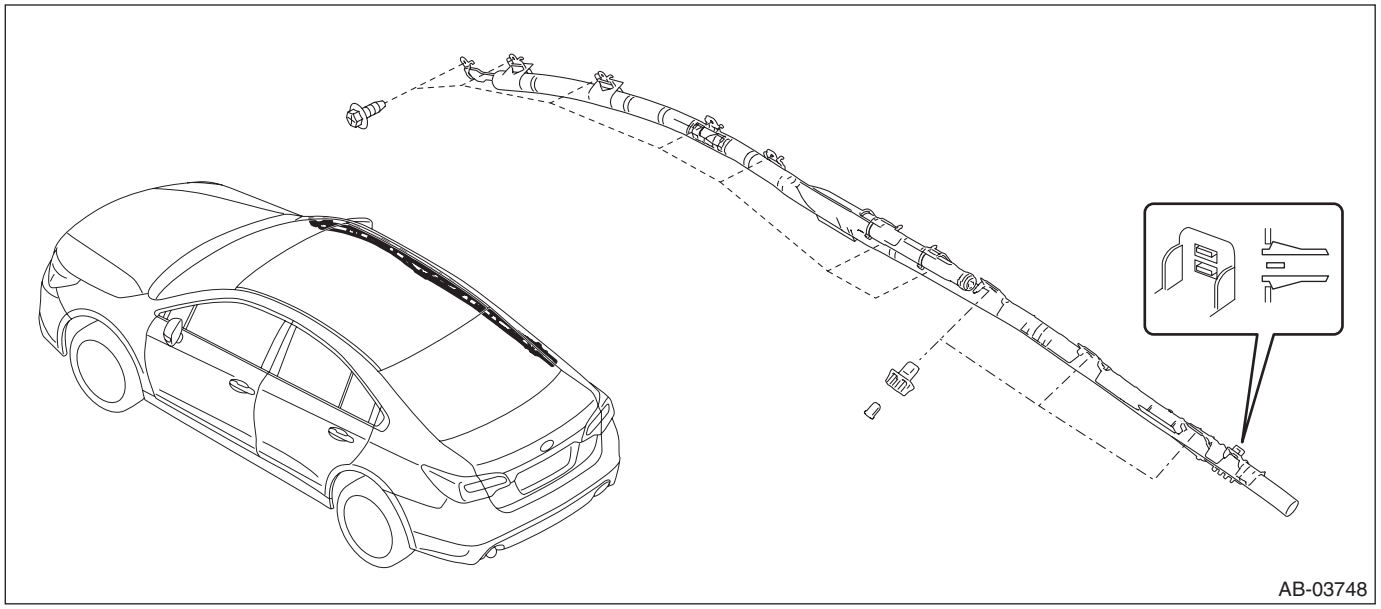

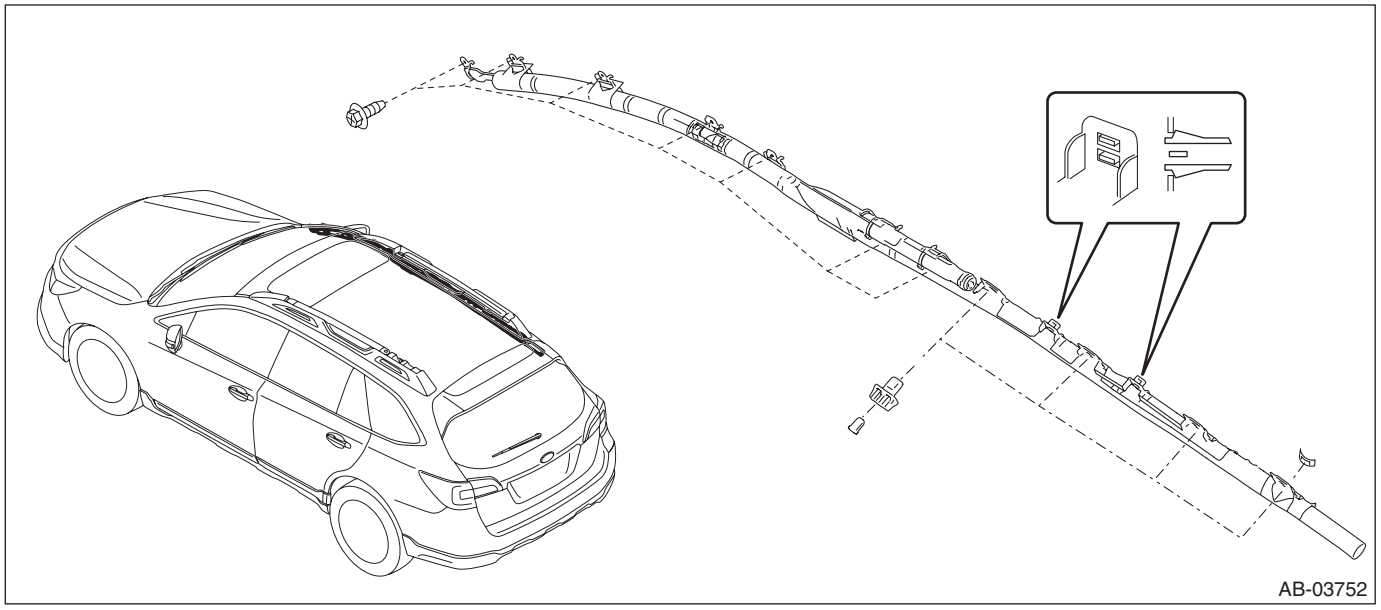

14) Place the activated airbag module in a sealed vinyl bag, then discard.

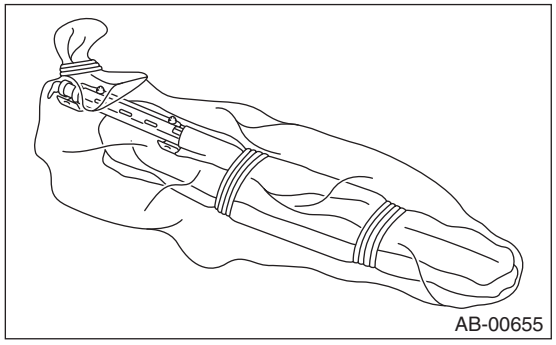

NOTE:
When necessary, fold the fabric part of airbag into three or four sections, rope and seal in a vinyl bag.

AIRBAG SYSTEM (DIAGNOSTICS)

AB(diag)

		Page
1.	Basic Diagnostic Procedure	2
2.	Check List for Interview	3
3.	General Description	4
4.	Electrical Component Location	21
5.	Airbag Connector	23
6.	Airbag Control Module I/O Signal	24
7.	Subaru Select Monitor	27
8.	Read Diagnostic Trouble Code (DTC)	30
9.	Inspection Mode	31
10.	Clear Memory Mode	32
11.	Read Current Data	33
12.	Event Record Data	34
13.	Batch save of Event record data	35
14.	Airbag Warning Light Illumination Pattern	36
15.	Airbag Warning Light Failure	37
16.	List of Diagnostic Trouble Code (DTC)	38
17.	Diagnostic Chart with Trouble Code	44

1. Basic Diagnostic Procedure

A: PROCEDURE

	Step	Check	Yes	No
1	**CHECK WARNING LIGHT.** Check whether the airbag warning light in the combination meter is lit.	Does the airbag warning light illuminate?	Go to step **2**.	Perform the diagnosis according to phenomenon of the problem.
2	**READ DTC.** 1) Turn the ignition switch to OFF. 2) Connect the Subaru Select Monitor to data link connector. 3) Turn the ignition switch to ON and run the Subaru Select Monitor. 4) Read the DTC. (Current malfunction) <Ref. to AB(diag)-30, Read Diagnostic Trouble Code (DTC).> NOTE: If the communication function of the Subaru Select Monitor cannot be executed properly, check the communication circuit. <Ref. to AB(diag)-27, COMMUNICATION FOR INITIALIZING IMPOSSIBLE, INSPECTION, Subaru Select Monitor.> 5) Record all DTCs, time stamp and freeze frame data. NOTE: For time stamp, refer to “LAN SYSTEM”. <Ref. to LAN(diag)-6, TIME STAMP, CAUTION, General Description.>	Is DTC displayed?	Go to step **3**.	Go to “Airbag Warning Light Failure” <Ref. to AB(diag)-37, Airbag Warning Light Failure.>.
3	**PERFORM DIAGNOSIS.** 1) Determine the possible cause from “List of Diagnostic Trouble Code (DTC)” <Ref. to AB(diag)-38, List of Diagnostic Trouble Code (DTC).>. 2) Inspect the DTC using “List of Diagnostic Trouble Code (DTC)”. 3) Repair the trouble cause. 4) Perform the Clear Memory Mode. <Ref. to AB(diag)-32, Clear Memory Mode.> 5) Perform the Inspection Mode. <Ref. to AB(diag)-31, Inspection Mode.> 6) Read any other DTCs displayed.	Is DTC displayed?	Perform the procedure 1) to 5) in step 3.	Finish the diagnosis.

2. Check List for Interview

A: CHECK

Customer's Name		Inspector's Name	
Date Vehicle Brought in	/ /	Registration No.	
Odometer reading	km miles	V.I.N.	
Date Problem Occurred	/ /	Registration Year	/ /
Weather	❑ Fine ❑ Cloudy ❑ Rainy ❑ Snowy ❑ Others:		
Temperature	°C (°F)		
Road Condition	❑ Flat road ❑ Uphill ❑ Downhill ❑ Gravel road ❑ Others:		

Vehicle Operation	❑ Starting
	❑ Idling
	❑ Driving
	  ❑ Constant speed
	  ❑ Accelerating
	  ❑ Decelerating
	  ❑ Turning
	  ❑ Others:		

Details of Problem			
Airbag Warning Light Operation	❑ Normal (After turning the ignition switch to ON, lit for approximately 6 seconds and goes off.) ❑ Remains ON ❑ Remains OFF		
DTC output	❑ OK code ❑ DTC: (Code:)		

3. General Description

A: CAUTION

Refer to “CAUTION” in “General Description” in AIRBAG SYSTEM. <Ref. to AB-10, CAUTION, General Description.>

B: INSPECTION

Check the battery. <Ref. to SC(H4DO)-65, INSPECTION, Battery.> <Ref. to SC(H6DO)-59, INSPECTION, Battery.>

C: PREPARATION TOOL

CAUTION:
To measure the voltage and resistance of airbag system component, be sure to use the specified test harness.

1. SPECIAL TOOL

- SUBARU SELECT MONITOR

ILLUSTRATION	TOOL NUMBER	DESCRIPTION	REMARKS
 STSSM4	— (Newly adopted tool)	SUBARU SELECT MONITOR 4	Used for setting of each function and trouble-shooting for electrical system. NOTE: For detailed operation procedures of Subaru Select Monitor 4, refer to “Application help”.

- TEST HARNESS H

ILLUSTRATION	TOOL NUMBER	DESCRIPTION	REMARKS
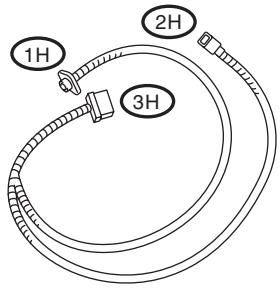 ST98299FA030	98299FA030	TEST HARNESS H	Used when measuring voltage and resistance of the front sub sensor.

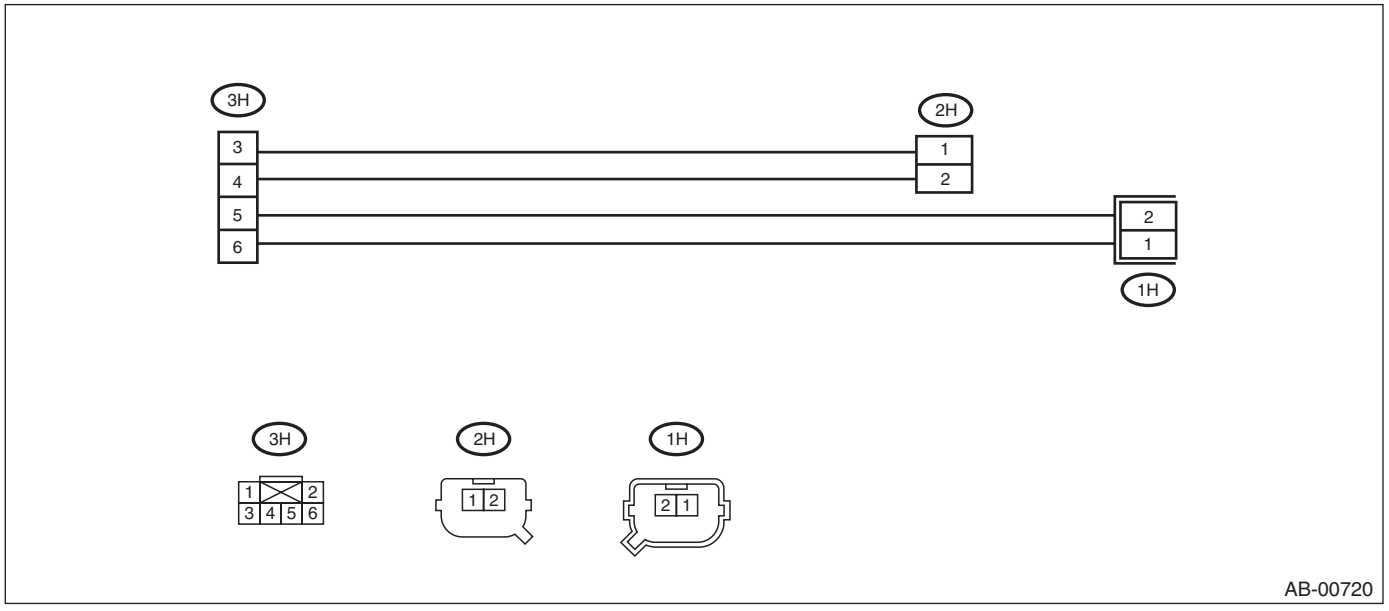

- TEST HARNESS D

ILLUSTRATION	TOOL NUMBER	DESCRIPTION	REMARKS
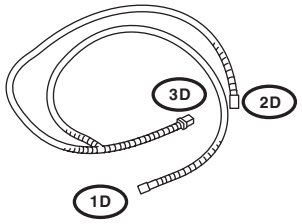 ST98299AG060	98299AG060	TEST HARNESS D	Used when measuring voltage and resistance of the seat cushion airbag.

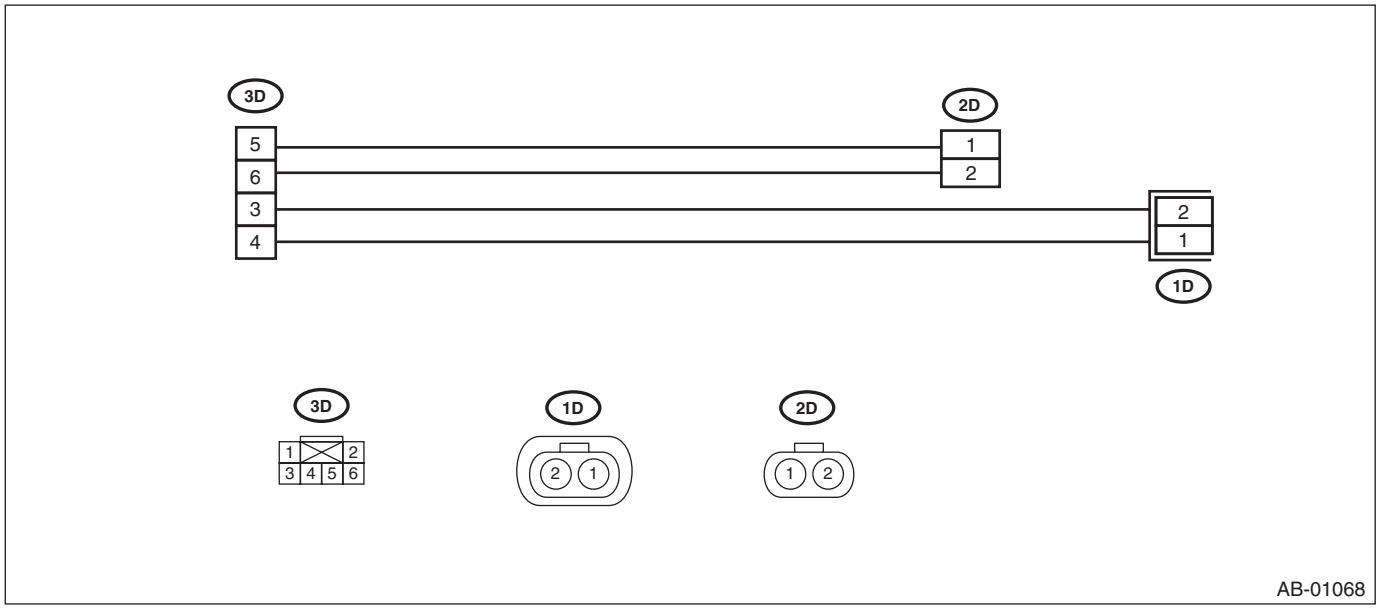

- TEST HARNESS N

ILLUSTRATION	TOOL NUMBER	DESCRIPTION	REMARKS
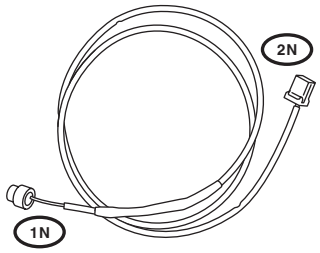 ST98299SA000	98299SA000	TEST HARNESS N	Used when measuring voltage and resistance of driver's airbag module, seat belt pretensioner and curtain airbag module.

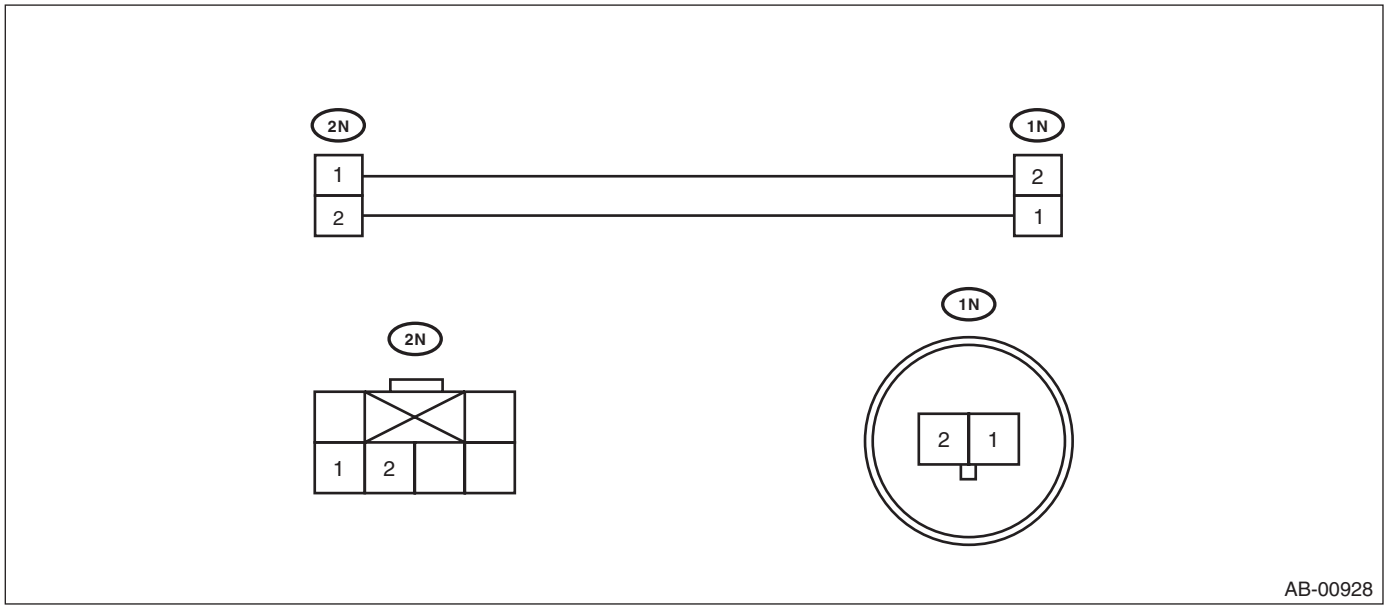

AB-00928

- TEST HARNESS Q

ILLUSTRATION	TOOL NUMBER	DESCRIPTION	REMARKS
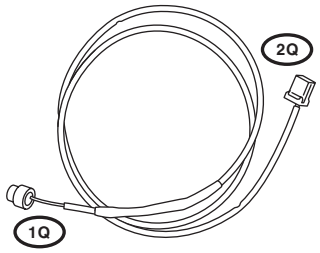 ST98299SA040	98299SA040	TEST HARNESS Q	Used when measuring voltage and resistance of driver's airbag module.

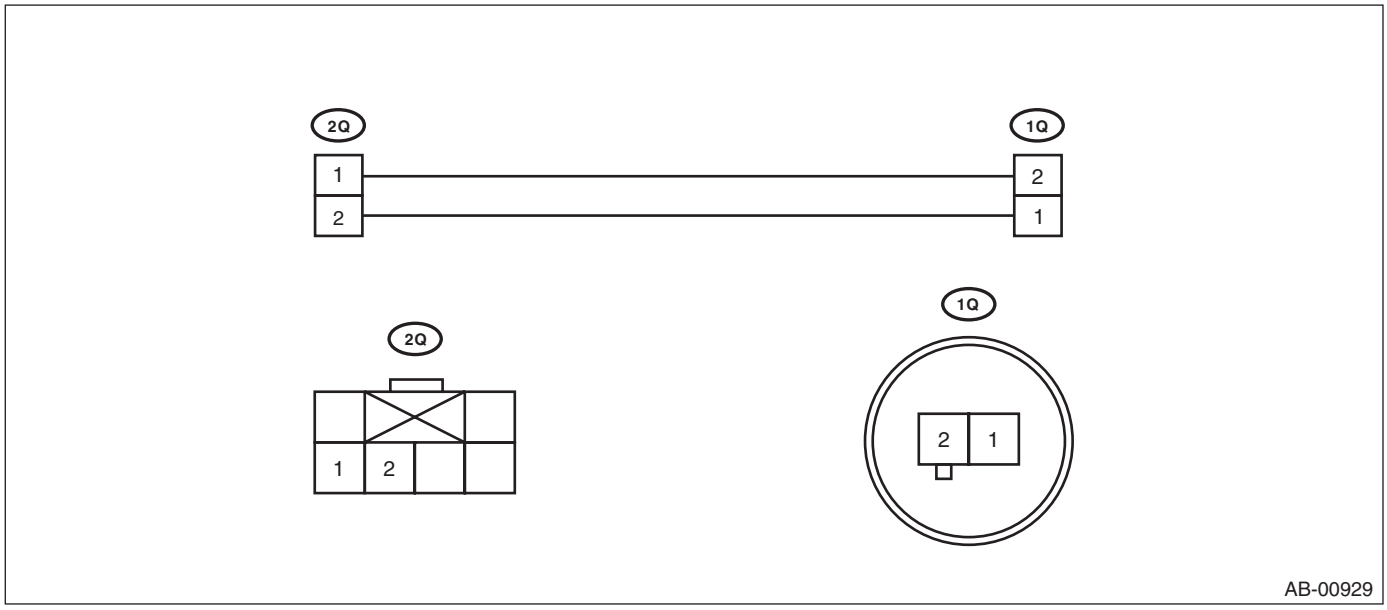

AB-00929

- TEST HARNESS AG

ILLUSTRATION	TOOL NUMBER	DESCRIPTION	REMARKS
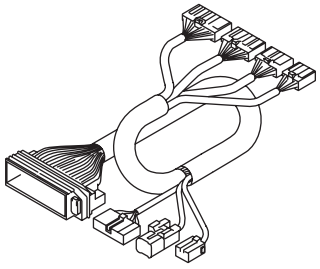 ST98299AG070	98299AG070	TEST HARNESS AG	Used when measuring voltage and resistance of airbag control module.

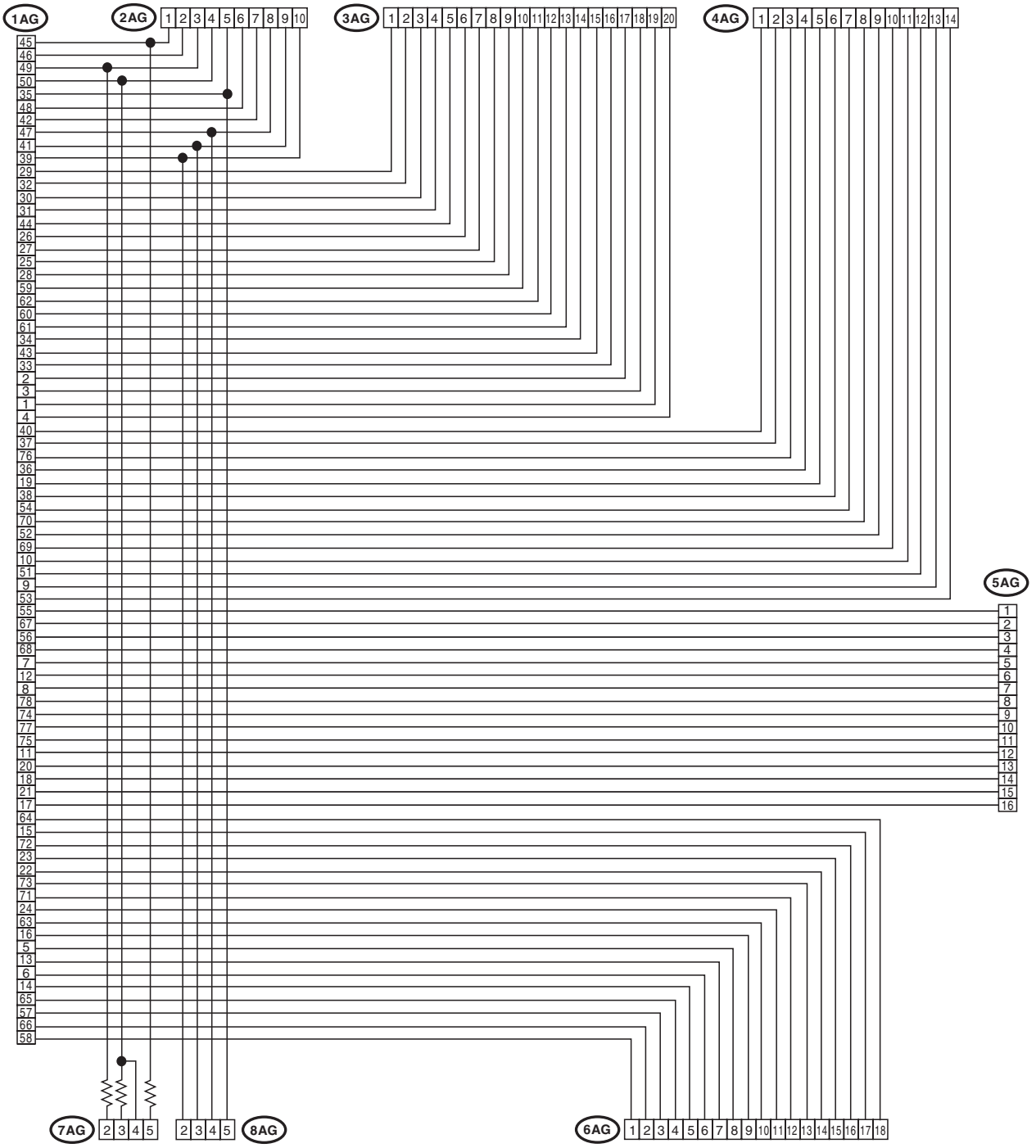
1AG
45 46 49 50 35 48 42 47 41 39 29 32 30 31 44 26 27 25 28 59 62 60 61 34 43 33 2 3 1 4 40 37 76 36 19 38 54 70 52 69 10 51 9 53 55 67 56 68 7 12 8 78 74 77 75 11 20 18 21 17 64 15 72 23 22 73 71 24 63 16 5 13 6 14 65 57 66 58
2AG
1 2 3 4 5 6 7 8 9 10
3AG
1 2 3 4 5 6 7 8 9 10 11 12 13 14 15 16 17 18 19 20
4AG
1 2 3 4 5 6 7 8 9 10 11 12 13 14
5AG
1 2 3 4 5 6 7 8 9 10 11 12 13 14 15 16
7AG
2 3 4 5
8AG
2 3 4 5
6AG
1 2 3 4 5 6 7 8 9 10 11 12 13 14 15 16 17 18

AB-01902

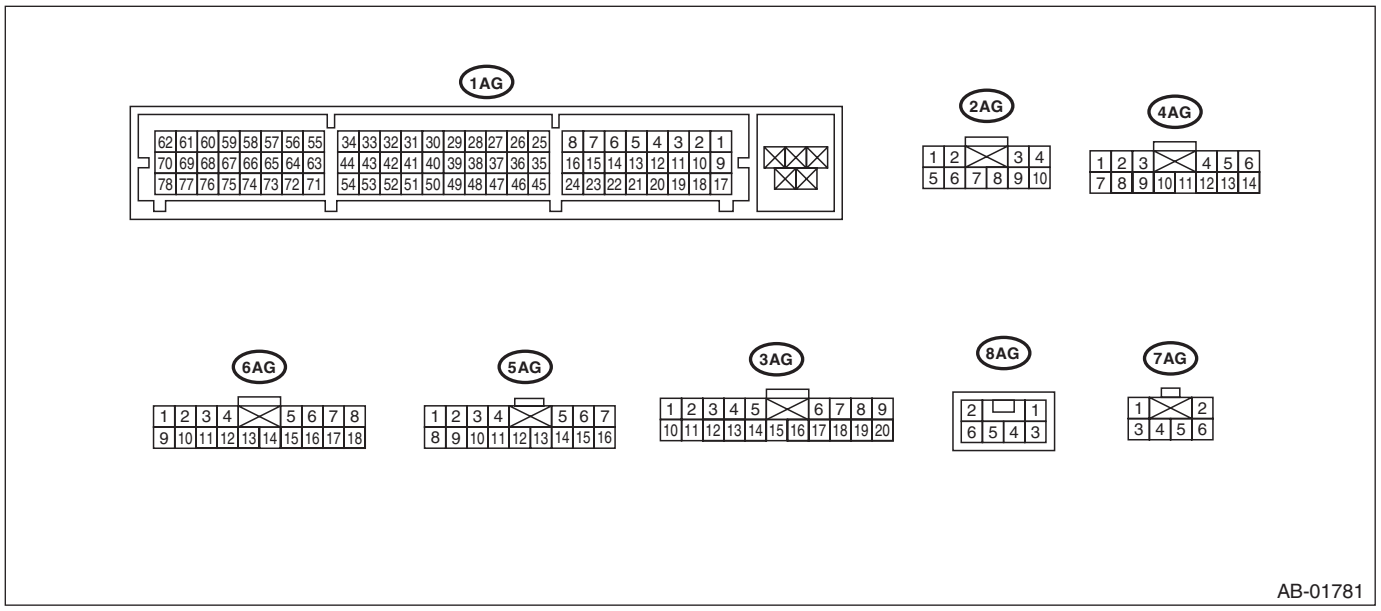

- TEST HARNESS AD AV

ILLUSTRATION	TOOL NUMBER	DESCRIPTION	REMARKS
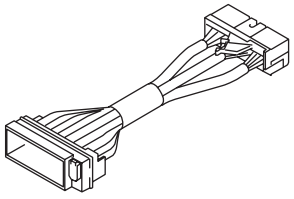 ST98299AL010	98299AL010	TEST HARNESS AD AV	Used together with test harness AG when measuring voltage and resistance of the airbag control module.

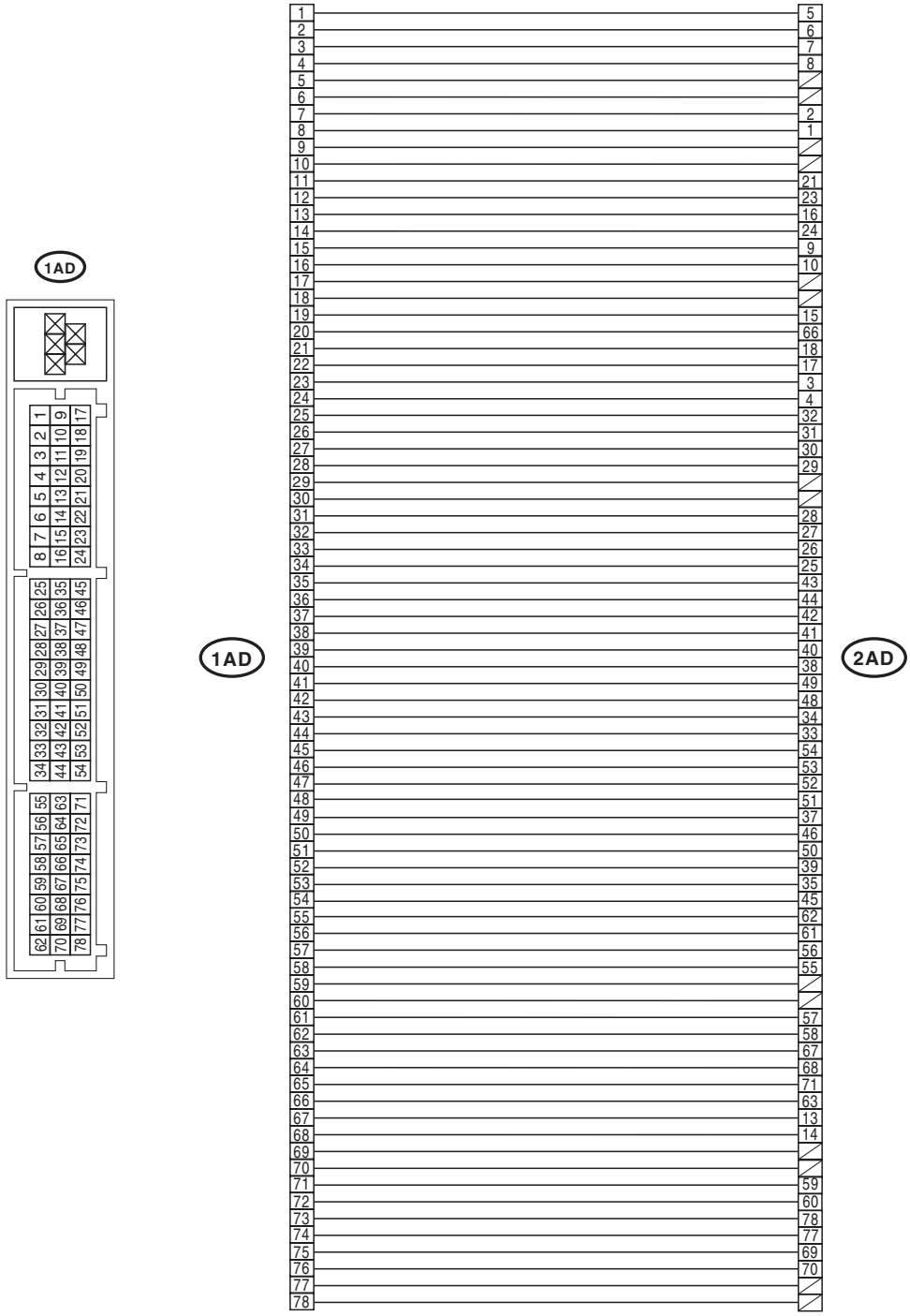

AB-03610

- TEST HARNESS V

ILLUSTRATION	TOOL NUMBER	DESCRIPTION	REMARKS
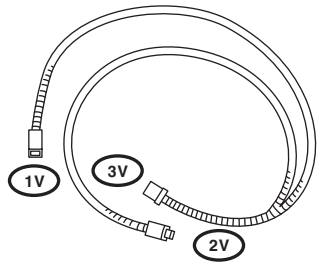 ST98299AG010	98299AG010	TEST HARNESS V	Used when measuring voltage and resistance of side airbag sensor and curtain airbag sensor.

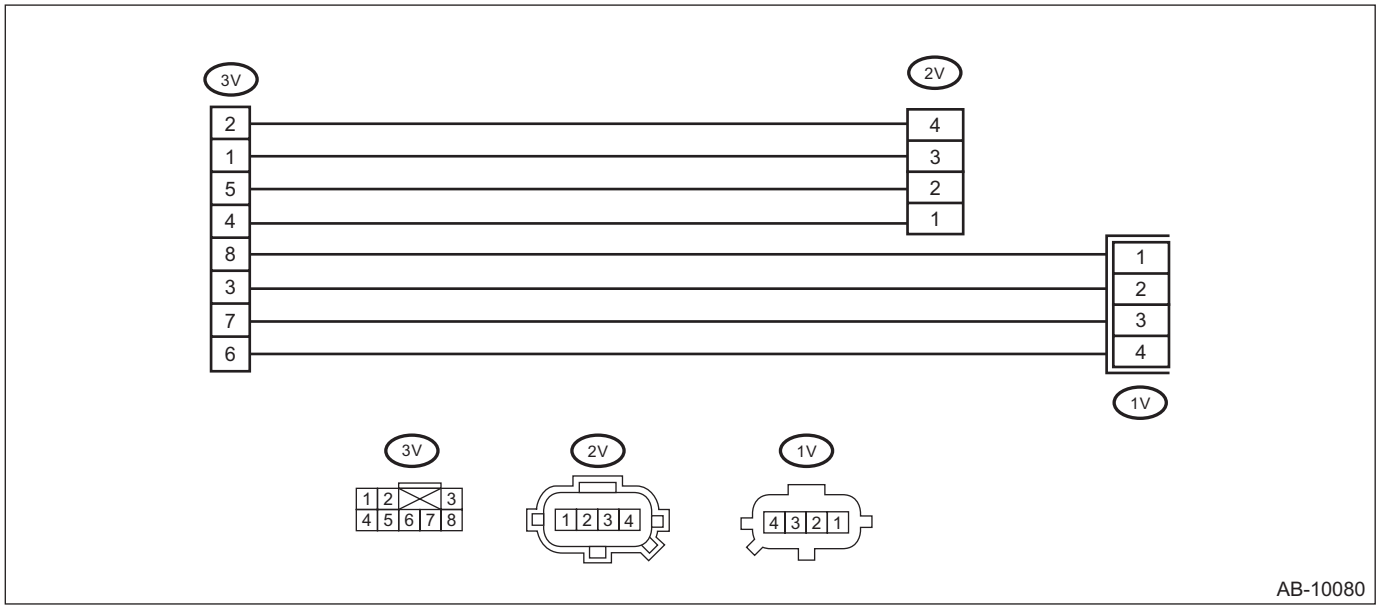

- AIRBAG RESISTOR

ILLUSTRATION	TOOL NUMBER	DESCRIPTION	REMARKS
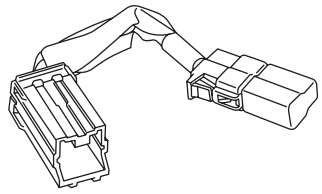 ST98299PA040	98299PA040	AIRBAG RESISTOR	Used in replacement of airbag module for which resistance value is same as airbag module. Two STs are required for diagnosis of two-stage inflator type airbag module.

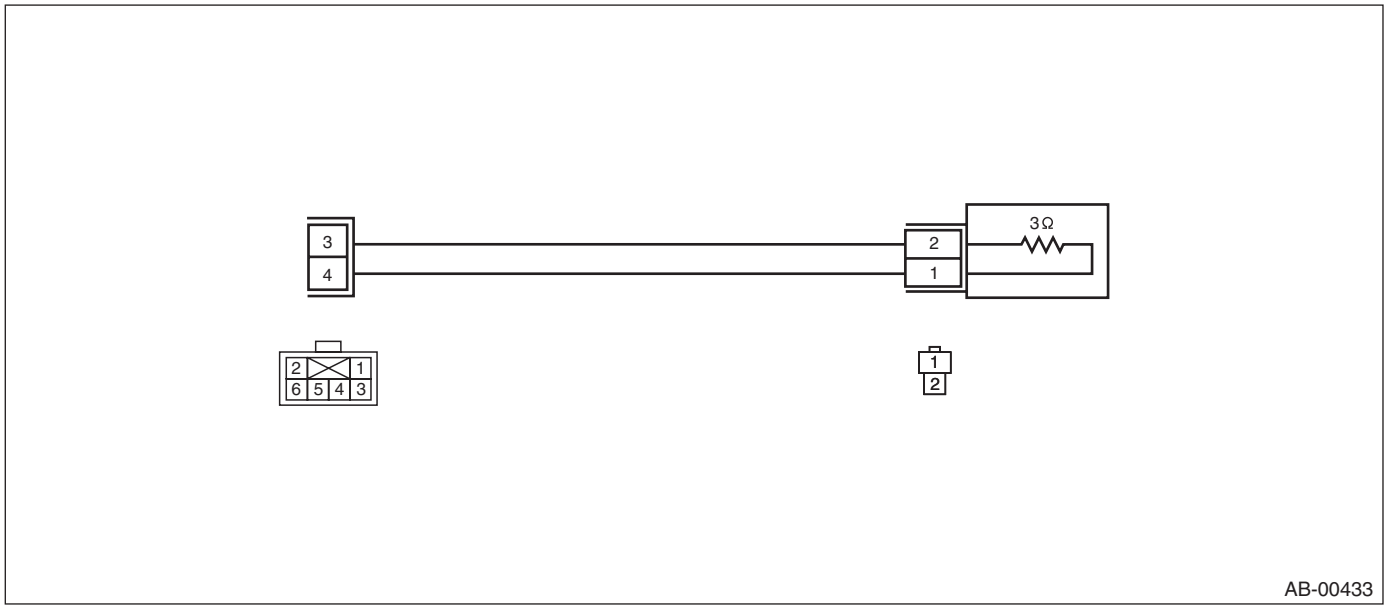

- TEST HARNESS AT

ILLUSTRATION	TOOL NUMBER	DESCRIPTION	REMARKS
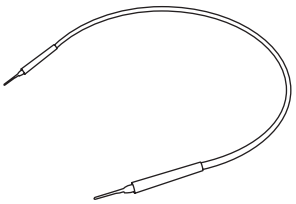 ST98299CA020	98299CA020	TEST HARNESS AT	Used when measuring power supply and resistance of side airbag harness. Two sets may be required.


AB-03647

- TEST HARNESS AI

ILLUSTRATION	TOOL NUMBER	DESCRIPTION	REMARKS
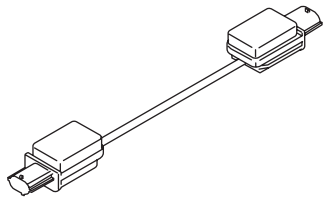 ST98299AG090	98299AG090	TEST HARNESS AI	• Used for diagnoses of side airbag sensor and curtain airbag sensor. • Used together with test harness V.

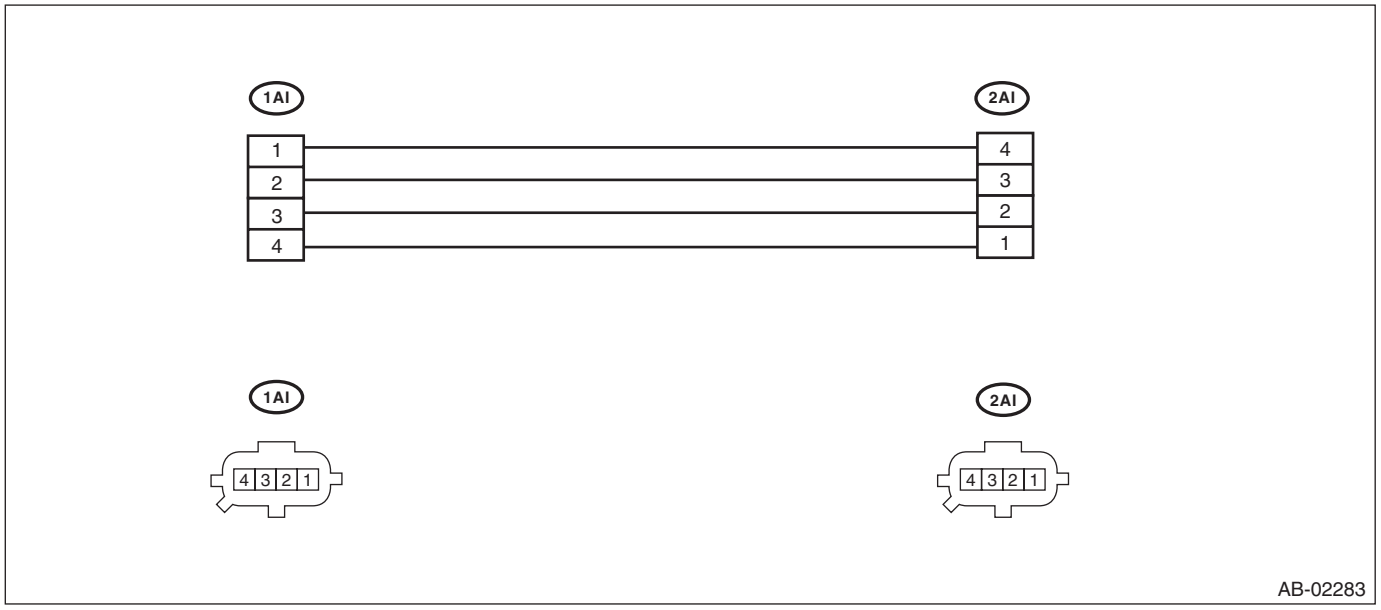

- TEST HARNESS AW

ILLUSTRATION	TOOL NUMBER	DESCRIPTION	REMARKS
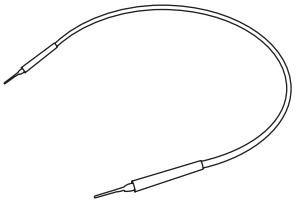 ST98299AL020	98299AL020	TEST HARNESS AW	Used when diagnosing occupant detection system.

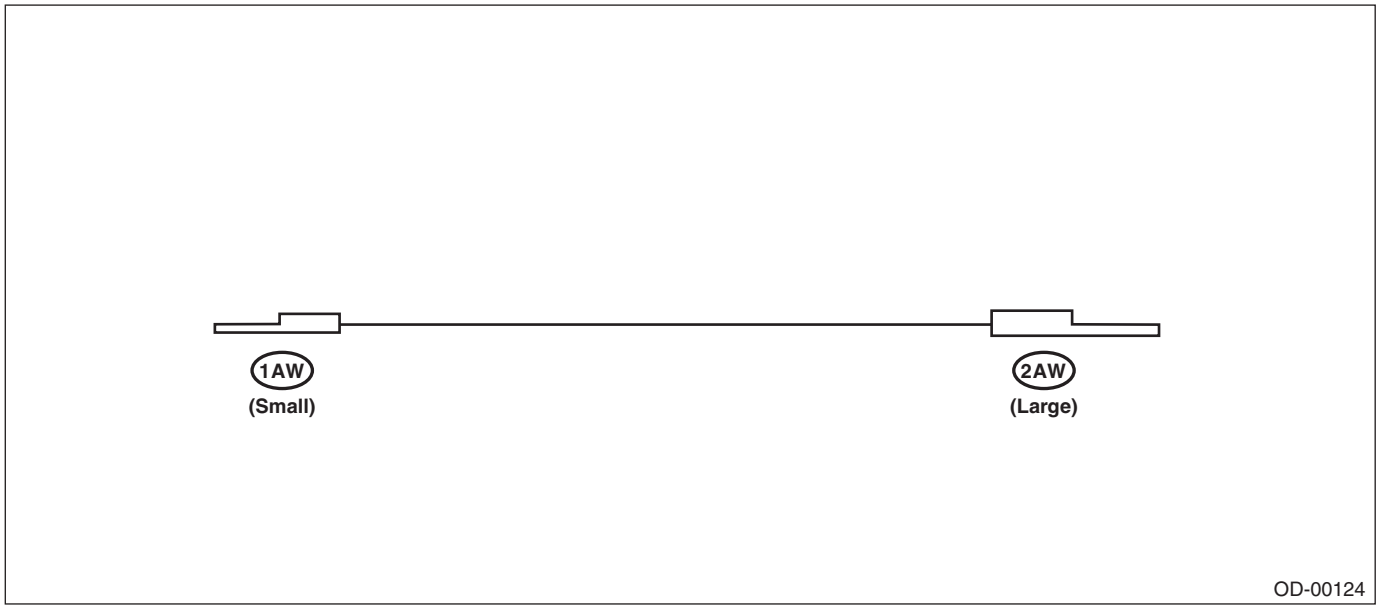

- TEST HARNESS Y

ILLUSTRATION	TOOL NUMBER	DESCRIPTION	REMARKS
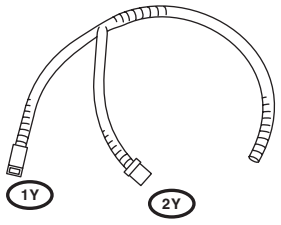 ST98299AG040	98299AG040	TEST HARNESS Y	Used for troubleshooting seat belt buckle switch.

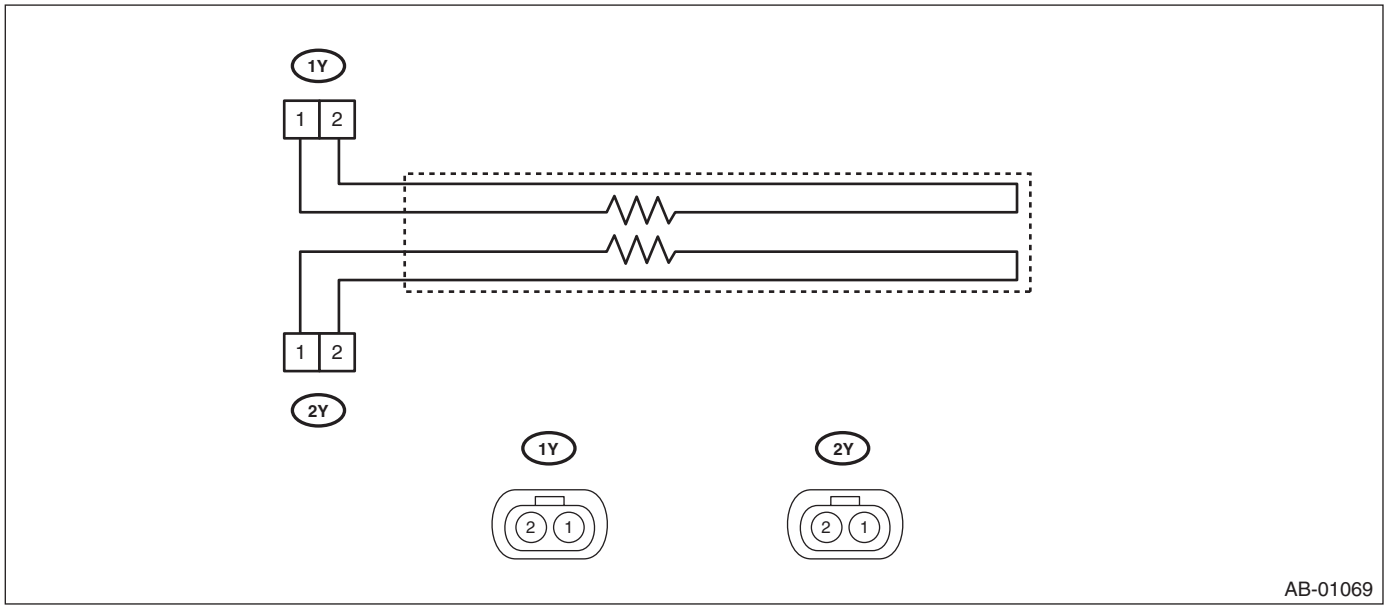

AB-01069

- TEST HARNESS AE

ILLUSTRATION	TOOL NUMBER	DESCRIPTION	REMARKS
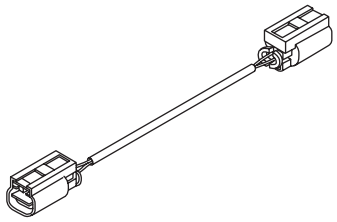 ST98299XA030	98299XA030	TEST HARNESS AE	TEST HARNESS Y adapter harness. Used for troubleshooting seat belt buckle switch.

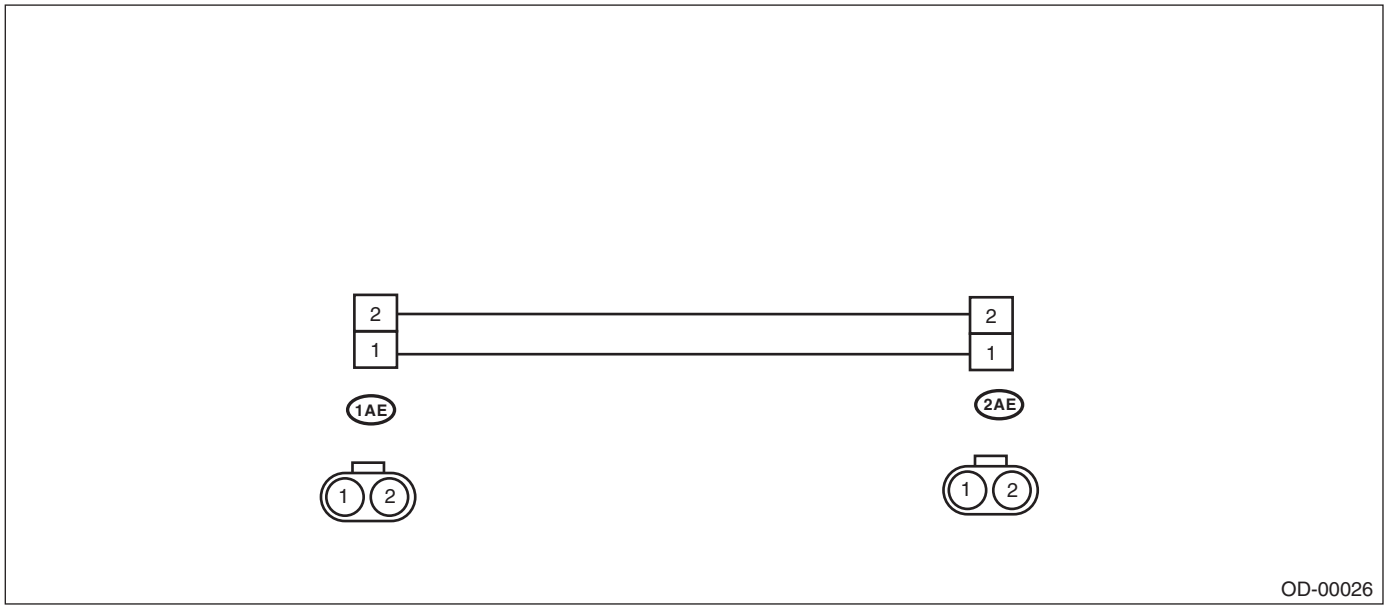

2. GENERAL TOOL

TOOL NAME	REMARKS
Circuit tester	Used for measuring resistance, voltage and current.
Probe	Used when measuring voltage and resistance of passenger's airbag module and front door impact sensor.
DST-i	Used together with Subaru Select Monitor 4.

3. HOW TO USE PROBE

- Passenger's airbag module

Insert the probe into the harness hole, and contact it with the terminal.

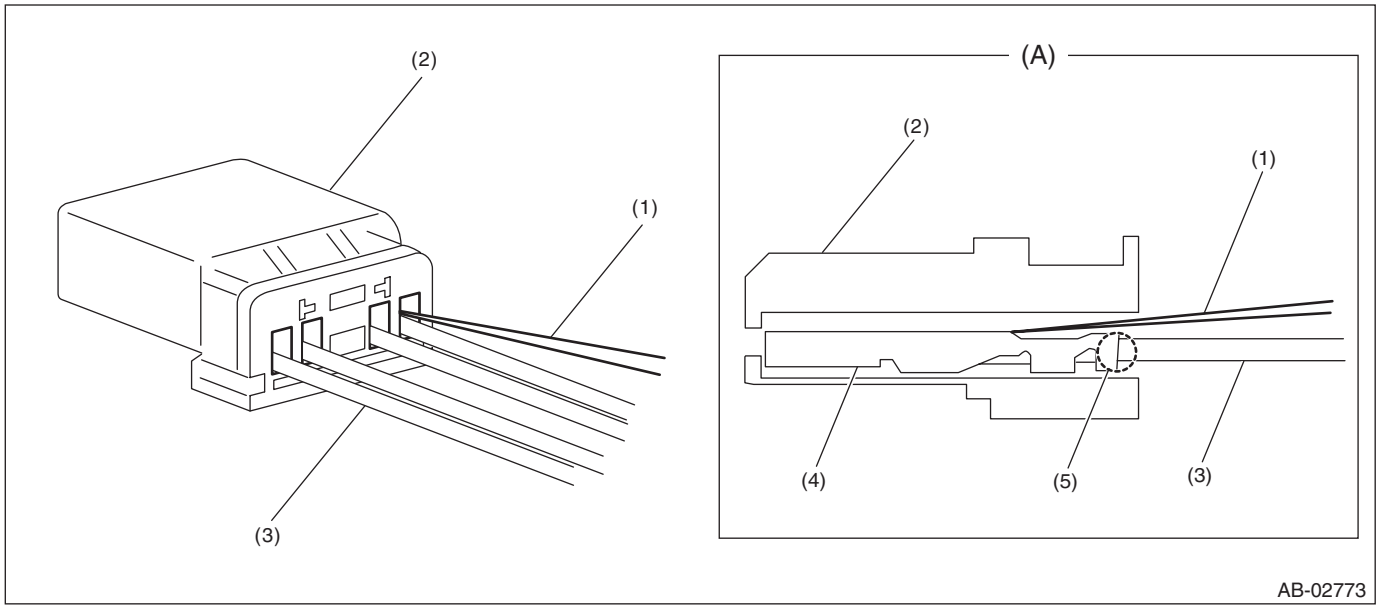

(A) Cross section

(1) Probe
(2) Connector (housing)
(3) Harness
(4) Terminal
(5) Connection

CAUTION:

- **Do not insert the probe forcibly.**
- **Be careful not to contact it to the connection (5) between the terminal and harness. (Harness will come off easily from connector if doing so.)**

- Front door impact sensor

Insert the probe into the inspection hole to contact with the terminal.

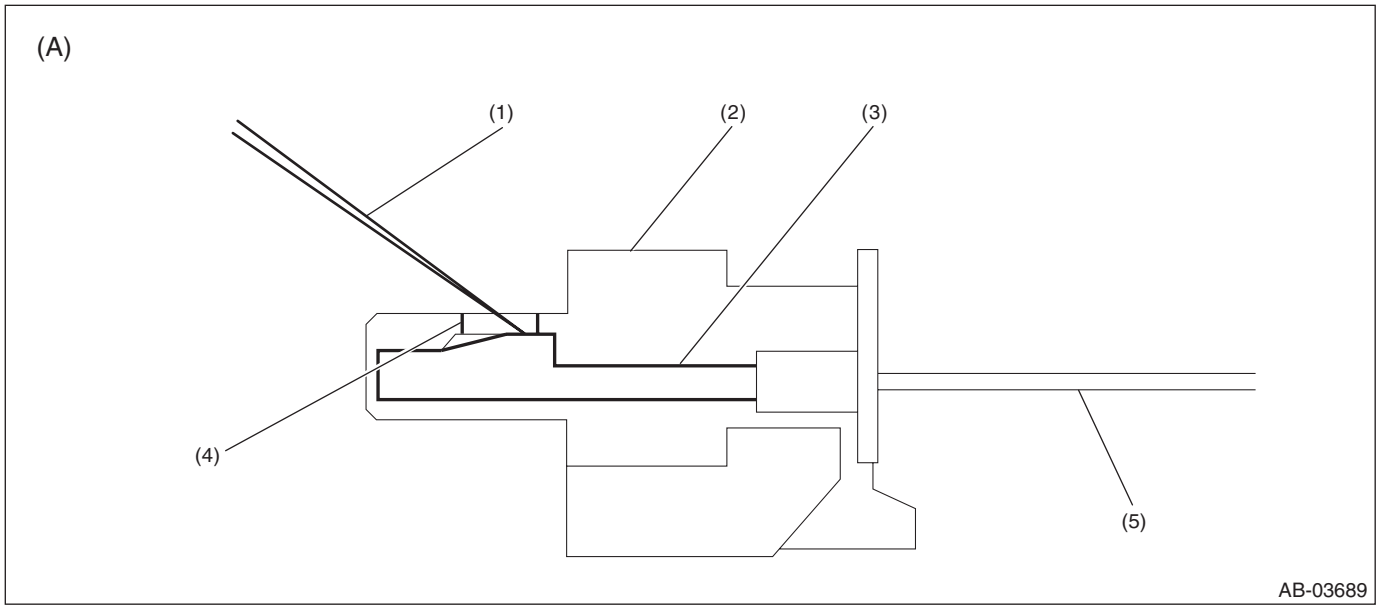

(A) Cross section

(1) Probe
(2) Connector (housing)
(3) Terminal
(4) Inspection hole
(5) Harness

CAUTION:

- **Do not push the probe with excessive force against the terminal. (Terminal will come off easily from housing if doing so.)**
- **Do not insert the probe anywhere other than inspection hole. (Waterproof property will be lost if doing so.)**

4. Electrical Component Location

A: LOCATION

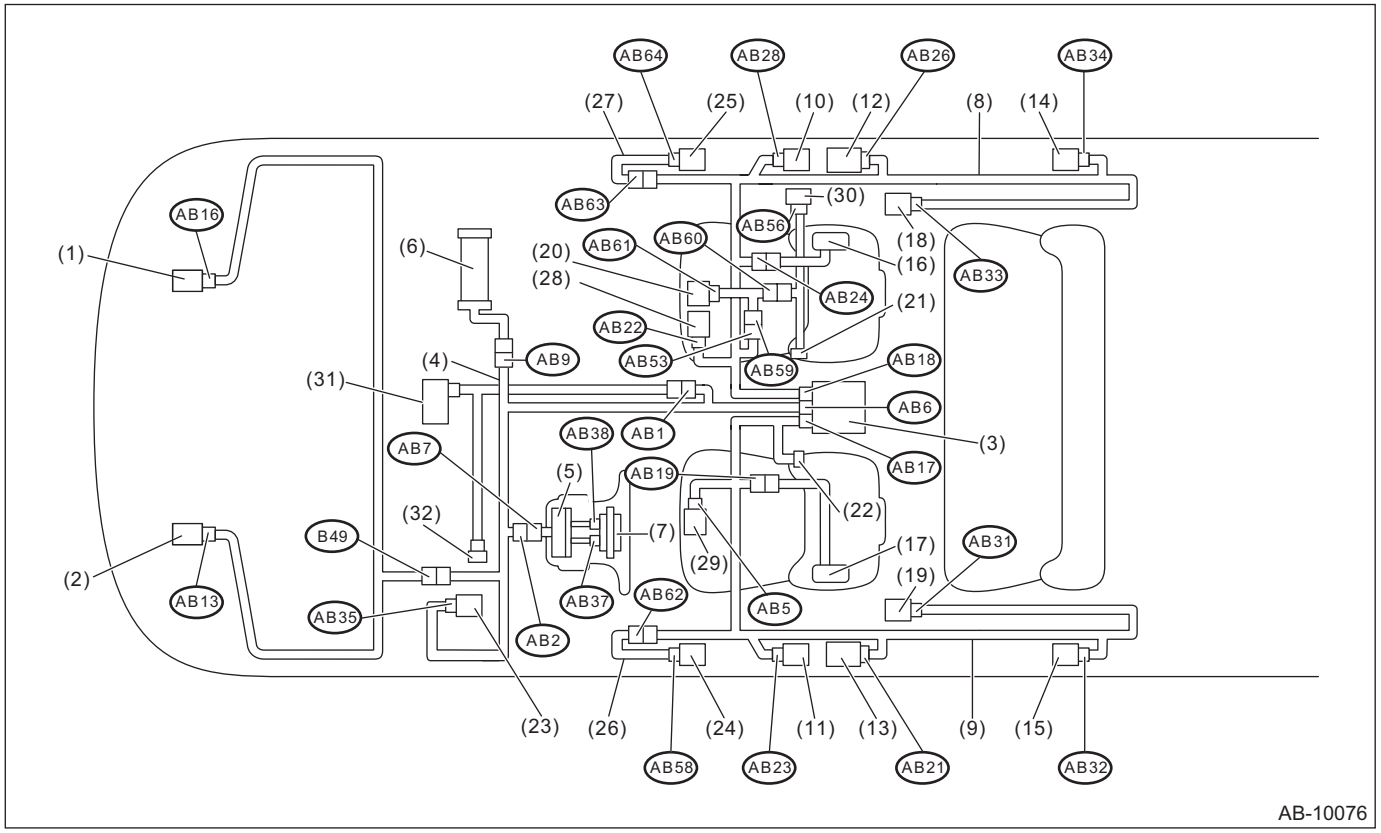

(1) Front sub sensor RH
(2) Front sub sensor LH
(3) Airbag control module
(4) Airbag main harness
(5) Roll connector
(6) Passenger's airbag inflator
(7) Driver's airbag inflator
(8) Airbag rear harness RH
(9) Airbag rear harness LH
(10) Side airbag sensor RH
(11) Side airbag sensor LH
(12) Seat belt pretensioner RH
(13) Seat belt pretensioner LH
(14) Curtain airbag sensor RH
(15) Curtain airbag sensor LH
(16) Side airbag inflator RH
(17) Side airbag inflator LH
(18) Curtain airbag inflator RH
(19) Curtain airbag inflator LH
(20) Occupant detection control module
(21) Buckle switch (RH)
(22) Buckle switch (LH)
(23) Fuse box
(24) Front door impact sensor LH
(25) Front door impact sensor RH
(26) Door harness LH
(27) Door harness RH
(28) Seat cushion airbag inflator RH
(29) Seat cushion airbag inflator LH
(30) Belt tension sensor
(31) Data communication module
(32) Data link connector

Connector No.	(AB1)	(AB2)	(AB5)	(AB6)	(AB7)	(AB9)	(AB13)	(AB16)	(AB17)	(AB18)	(AB19)	(AB21)
Pin	2	4	2	28	4	4	2	2	22	22	2	2
Color	★	Yellow	Yellow	Yellow	Yellow	Yellow	Yellow	Yellow	Yellow	Yellow	Yellow	Black
Male/Female	Female	Female	Female	Female	Male	Female	Female	Female	Female	Female	Female	Female

Connector No.	(AB22)	(AB23)	(AB24)	(AB26)	(AB28)	(AB31)	(AB32)	(AB33)	(AB34)	(AB35)	(AB37)	(AB38)
Pin	2	4	2	2	4	2	4	2	4	2	2	2
Color	Yellow	Yellow	Yellow	Black	Yellow	Black	Yellow	Black	Yellow	★	Orange	Black
Male/Female	Female	Female	Female	Female	Female	Female	Female	Female	Female	Female	Female	Female

Connector No.	(AB53)	(AB56)	(AB58)	(AB59)	(AB60)	(AB61)	(AB62)	(AB63)	(AB64)	(B49)		
Pin	6	3	2	6	2	6	2	2	2	6		
Color	Black	Brown	Black	Black	Yellow	Black	Yellow	Yellow	Black	Yellow		
Male/Female	Female	Female	Female	Male	Male	Female	Female	Female	Female	Female		

★: White or natural color

5. Airbag Connector

A: PROCEDURE

For operation procedures, refer to “Airbag Connector” of Airbag System. <Ref. to AB-18, Airbag Connector.>

6. Airbag Control Module I/O Signal

A: ELECTRICAL SPECIFICATION

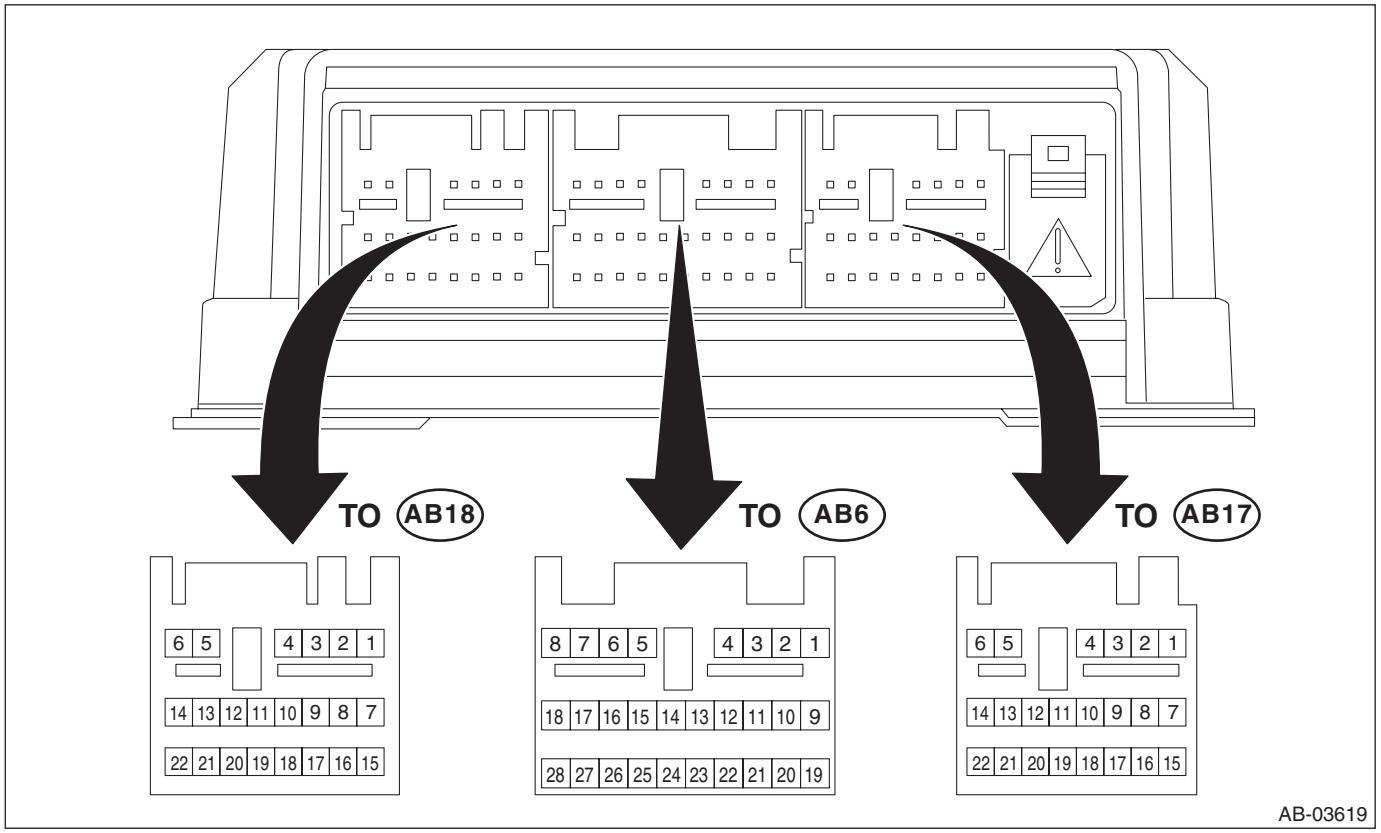

- Terminal numbers in airbag control module connector are shown in the figure.
- The airbag warning light illuminates when the connector is removed from the airbag control module.

Terminal No.	Content
(AB6) No. 1	Driver's airbag module, 2nd stage +
(AB6) No. 2	Driver's airbag module, 2nd stage –
(AB6) No. 3	Driver's airbag module, 1st stage –
(AB6) No. 4	Driver's airbag module, 1st stage +
(AB6) No. 5	Passenger's airbag module, 1st stage +
(AB6) No. 6	Passenger's airbag module, 1st stage –
(AB6) No. 7	Passenger's airbag module, 2nd stage –
(AB6) No. 8	Passenger's airbag module, 2nd stage +
(AB6) No. 9	—
(AB6) No. 10	—
(AB6) No. 11	—
(AB6) No. 12	—
(AB6) No. 13	—
(AB6) No. 14	—
(AB6) No. 15	Ground
(AB6) No. 16	For disposal
(AB6) No. 17	—
(AB6) No. 18	—
(AB6) No. 19	Front sub sensor LH +
(AB6) No. 20	Front sub sensor RH +
(AB6) No. 21	Front sub sensor LH –
(AB6) No. 22	Front sub sensor RH –

Terminal No.	Content
(AB6) No. 23	CAN H
(AB6) No. 24	CAN L
(AB6) No. 25	Ground
(AB6) No. 26	—
(AB6) No. 27	Telematics communication line
(AB6) No. 28	Ignition power supply
(AB17) No. 1	Curtain airbag module LH +
(AB17) No. 2	Curtain airbag module LH –
(AB17) No. 3	Side airbag module LH –
(AB17) No. 4	Side airbag module LH +
(AB17) No. 5	Seat cushion airbag module LH –
(AB17) No. 6	Seat cushion airbag module LH +
(AB17) No. 7	—
(AB17) No. 8	—
(AB17) No. 9	—
(AB17) No. 10	—
(AB17) No. 11	—
(AB17) No. 12	—
(AB17) No. 13	—
(AB17) No. 14	—
(AB17) No. 15	—
(AB17) No. 16	—
(AB17) No. 17	Seat belt buckle switch LH –
(AB17) No. 18	Seat belt buckle switch LH +
(AB17) No. 19	Side airbag sensor LH –
(AB17) No. 20	Side airbag sensor LH +
(AB17) No. 21	Front pretensioner LH –
(AB17) No. 22	Front pretensioner LH +
(AB18) No. 1	Seat cushion airbag module RH +
(AB18) No. 2	Seat cushion airbag module RH –
(AB18) No. 3	Side airbag module RH –
(AB18) No. 4	Side airbag module RH +
(AB18) No. 5	Curtain airbag module RH –
(AB18) No. 6	Curtain airbag module RH +
(AB18) No. 7	—
(AB18) No. 8	—
(AB18) No. 9	Occupant detection system –
(AB18) No. 10	Occupant detection system +
(AB18) No. 11	—
(AB18) No. 12	—
(AB18) No. 13	—
(AB18) No. 14	—
(AB18) No. 15	Front pretensioner RH +
(AB18) No. 16	Front pretensioner RH –
(AB18) No. 17	Side airbag sensor RH +
(AB18) No. 18	Side airbag sensor RH –
(AB18) No. 19	—
(AB18) No. 20	—
(AB18) No. 21	—
(AB18) No. 22	—

B: WIRING DIAGRAM

Refer to “Airbag System” in WI section. <Ref. to WI-89, WIRING DIAGRAM, Airbag System.>

7. Subaru Select Monitor

A: OPERATION

For detailed operation procedures, refer to “Application help”.

B: INSPECTION

1. COMMUNICATION FOR INITIALIZING IMPOSSIBLE

DTC DETECTING CONDITION:

- Defective harness connector
- Defective CAN communication

TROUBLE SYMPTOM:

Communication is impossible between the airbag control module and the Subaru Select Monitor.

CAUTION:

Before performing diagnosis, refer to “CAUTION” in “General Description”. <Ref. to AB(diag)-4, CAUTION, General Description.>

WIRING DIAGRAM:

NOTE:
For the coupling connector, refer to “WIRING SYSTEM”.
Airbag system <Ref. to WI-89, WIRING DIAGRAM, Airbag System.>

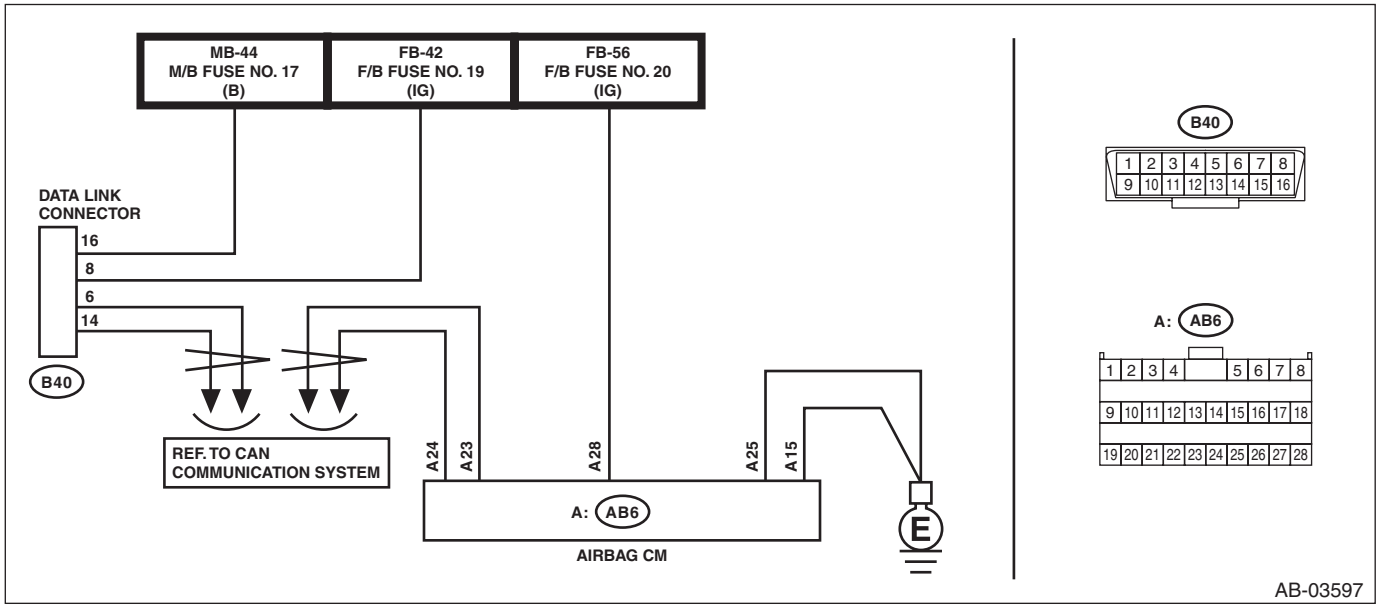

Step		Check	Yes	No
1	**CHECK IGNITION SWITCH.**	Is the ignition switch ON?	Go to step **2**.	Turn the ignition switch to ON, and select the airbag mode using the Subaru Select Monitor.
2	**CHECK BATTERY.** 1) Turn the ignition switch to OFF. 2) Measure the battery voltage.	Is the voltage 11 V or more?	Go to step **3**.	Charge or replace the battery.
3	**CHECK BATTERY TERMINAL.**	Is there poor contact at battery terminal?	Repair or tighten the battery terminal.	Go to step **4**.

	Step	Check	Yes	No
4	**CHECK SUBARU SELECT MONITOR COMMUNICATION.** 1) Turn the ignition switch to ON. 2) Using the Subaru Select Monitor, check whether communication to other systems can be executed normally.	Is the system name displayed on Subaru Select Monitor?	Go to step **9**.	Go to step **5**.
5	**CHECK SUBARU SELECT MONITOR.**	Is Subaru Select Monitor powered on?	Go to step **7**.	Go to step **6**.
6	**CHECK FUSE.** Remove a fuse in the data link connector and visually check the fuse.	Is the fuse OK?	Repair the harness between the battery and the data link connector.	Replace the fuse. If the fuse is blown out again, check the power supply circuit.
7	**CHECK AIRBAG CONTROL MODULE CONNECTOR.** 1) Turn the ignition switch to OFF, disconnect the battery ground cable, and wait for 60 seconds or more. 2) Confirm that the connectors of airbag control module (AB6, AB17, AB18) are securely connected.	Is the connector of the airbag control module securely connected?	Go to step **8**.	Connect the connector of the airbag control module.
8	**CHECK SUBARU SELECT MONITOR COMMUNICATION.** 1) Disconnect the airbag control module connector. 2) Connect the battery ground terminal. 3) Turn the ignition switch to ON. 4) Check whether communication to other systems can be executed normally.	Is the system name displayed on Subaru Select Monitor?	Replace the airbag control module. <Ref. to AB-50, Airbag Control Module.>	Go to step **9**.
9	**CHECK FUSE.** Remove fuse No. 20 from the fuse & relay box, and perform visual inspection.	Is the fuse OK?	Go to step **10**.	Replace the fuse. If the fuse is blown out again, check the power supply circuit.
10	**CHECK AIRBAG CONTROL MODULE CONNECTOR.** 1) Turn the ignition switch to OFF, disconnect the battery ground cable, and wait for 60 seconds or more. 2) Confirm that the connectors of airbag control module (AB6, AB17, AB18) are securely connected.	Is the connector of the airbag control module securely connected?	Go to step **11**.	Connect the connector of the airbag control module.
11	**CHECK CAN COMMUNICATION.** Inspect LAN system. <Ref. to LAN(diag)-2, PROCEDURE, Basic Diagnostic Procedure.>	Is there any fault?	Repair it according to the diagnosis for LAN system.	Go to step **12**.

	Step	Check	Yes	No
12	**CHECK POWER SUPPLY CIRCUIT.** 1) Disconnect the connectors (AB6, AB17, AB18) from airbag control module. 2) Connect the connector (1AD) in test harness AD AV to the connectors (AB6, AB17, AB18). 3) Connect the connector (2AD) in test harness AD AV and the connector (1AG) in test harness AG. 4) Turn the ignition switch to ON. 5) Measure the voltage between connector (2AG) in the test harness AG and chassis ground. ***Connector & terminal*** ***(2AG) No. 1 (+) — Chassis ground (–):***	Is the voltage 10 V or more?	Go to step **13**.	Repair the harness between the airbag control module and the battery. Or replace the airbag main harness along with the bulkhead harness.
13	**CHECK BETWEEN AIRBAG CONTROL MODULE AND CHASSIS GROUND (OPEN CIRCUIT).** 1) Turn the ignition switch to OFF. 2) Measure the resistance between connector (2AG) in the test harness AG and chassis ground. ***Connector & terminal*** ***(2AG) No. 4 — Chassis ground:*** ***(2AG) No. 3 — Chassis ground:***	Is the resistance less than 10 Ω?	Go to step **14**.	Repair the harness between the airbag control module and the chassis ground. Or replace the airbag main harness along with the bulkhead harness.
14	**CHECK POOR CONTACT OF CONNECTOR.**	Is there poor contact of the control module power supply, ground circuit and data link connector?	Repair the connector. (Replace the harness without repairing the airbag system connector.)	Replace the airbag control module. <Ref. to AB-50, REMOVAL, Airbag Control Module.>

8. Read Diagnostic Trouble Code (DTC)

A: OPERATION

1) On «Start» display, select «Diagnosis».
2) On «Vehicle selection» display, input the target vehicle information and select «Confirmed».
3) On «Main Menu» display, select «Each System».
4) On «Select System» display, select «Airbag» and select «Enter».
5) On «Airbag» display, select «DTC».

NOTE:
- For detailed operation procedures, refer to “Application help”.
- For details concerning DTC, refer to List of Diagnostic Trouble Code (DTC) in AIRBAG SYSTEM. <Ref. to AB(diag)-38, List of Diagnostic Trouble Code (DTC).>

9. Inspection Mode

A: PROCEDURE

Recreate the circumstance by referring to the conditions described in the checklist.

10.Clear Memory Mode

A: OPERATION

1) On «Start» display, select «Diagnosis».
2) On «Vehicle selection» display, input the target vehicle information and select «Confirmed».
3) On «Main Menu» display, select «Each System».
4) On «Select System» display, select «Airbag» and select «Enter».
5) On «Airbag» display, select «DTC».
6) On «DTC» display, select «Clear Memory».

NOTE:
- For detailed operation procedures, refer to “Application help”.
- Clear the DTC stored in the airbag control module after repairing the airbag system.

11.Read Current Data

A: OPERATION

Check the operating condition of each sensor in the event of malfunction in the seat belt buckle switch, or when the seat belt buckle switch has been replaced.
1) On «Start» display, select «Diagnosis».
2) On «Vehicle selection» display, input the target vehicle information and select «Confirmed».
3) On «Main Menu» display, select «Each System».
4) On «Select System» display, select «Airbag» and select «Enter».
5) On «Airbag» display, select «Data monitor».

NOTE:
For detailed operation procedures, refer to “Application help”.

B: LIST

Item	Display	Note
Trip Count	—	<Ref. to LAN(diag)-6, TIME STAMP, CAUTION, General Description.>
Count	—	
Time Count [msec]	—	
Belt Buckle Switch LH	Unbelted/Belted/Other	“Belted” when the left side seat belt is fastened “Unbelted” when the left side seat belt is not fastened “Other” in other cases
Belt Buckle Switch RH	Unbelted/Belted/Other	“Belted” when the right side seat belt is fastened “Unbelted” when the right side seat belt is not fastened “Other” in other cases
Passenger Occupant Status	Occupied/Adult/Child/Empty or CRS	“Occupied” when the occupant is present “Adult” “Child” “Empty or CRS” when the seat is unoccupied or when child restraint seat is installed **CAUTION:** **When checking the operating status, be careful of the followings.** **• When the seat is unoccupied: Do not place anything on the seat.** **• Child restraint seat: Install the seat according to its instruction manual.** **• When the seat is occupied: Someone who weighs at least approx. 70 kg (155 lb) must be seated during the check.**
Passenger Airbag Status	ON/OFF	“ON” when the passenger occupant status is “Occupied” “OFF” when the status is “Empty or CRS”
Data record No.	No Definition/1	Displays “1” when any EDR data is recorded.
Data record No.	No Definition/1	Displays “1” when any EDR data is recorded.

12.Event Record Data

A: OPERATION

1) On «Start» display, select «Diagnosis».
2) On «Vehicle selection» display, input the target vehicle information and select «Confirmed».
3) On «Main Menu» display, select «Each System».
4) On «Select System» display, select «Airbag» and select «Enter».
5) On «Airbag» display, select «Work Support».
6) On «Work Support item» display, select «Event Record Data». After selection, «IMPORTANT NOTICE» screen is displayed.
7) After checking the content of «IMPORTANT NOTICE», click the checkbox for “Yes”.
8) If the applicable law is not violated, click the «Yes» button to display the EDR data.

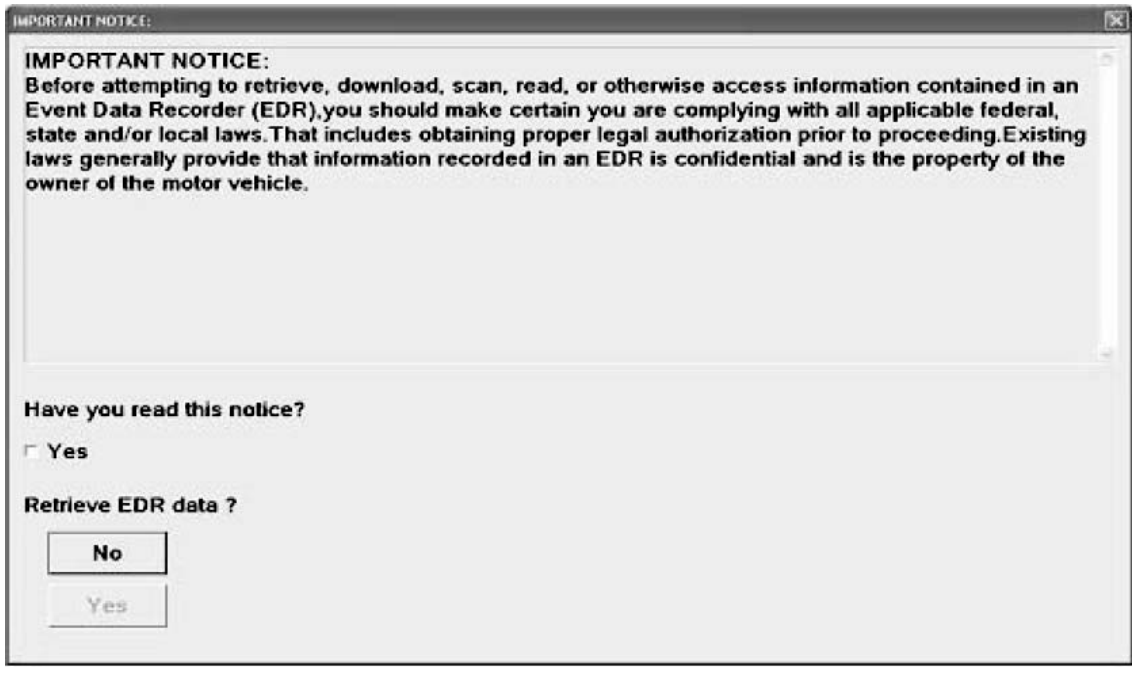

9) Select the items to be checked from each event record data.
10) Select the record data to be checked from each record data.
11) The selected record data is displayed. If there is no data recorded, «Event record data are not recorded» is displayed.
12) Select «Exit» to return to each event record data screen.

13.Batch save of Event record data

A: OPERATION

1) On «Start» display, select «Diagnosis».
2) On «Vehicle selection» display, input the target vehicle information and select «Confirmed».
3) On «Main Menu» display, select «Each System».
4) On «Select System» display, select «Airbag» and select «Enter».
5) On «Airbag» display, select «Work Support».
6) On «Work Support item» display, select «Batch save of Event record data». After selection, «IMPORTANT NOTICE» screen is displayed.
7) After checking the content of «IMPORTANT NOTICE», click the checkbox for “Yes”.
8) If the applicable law is not violated, click the «Yes» button to display the EDR data.

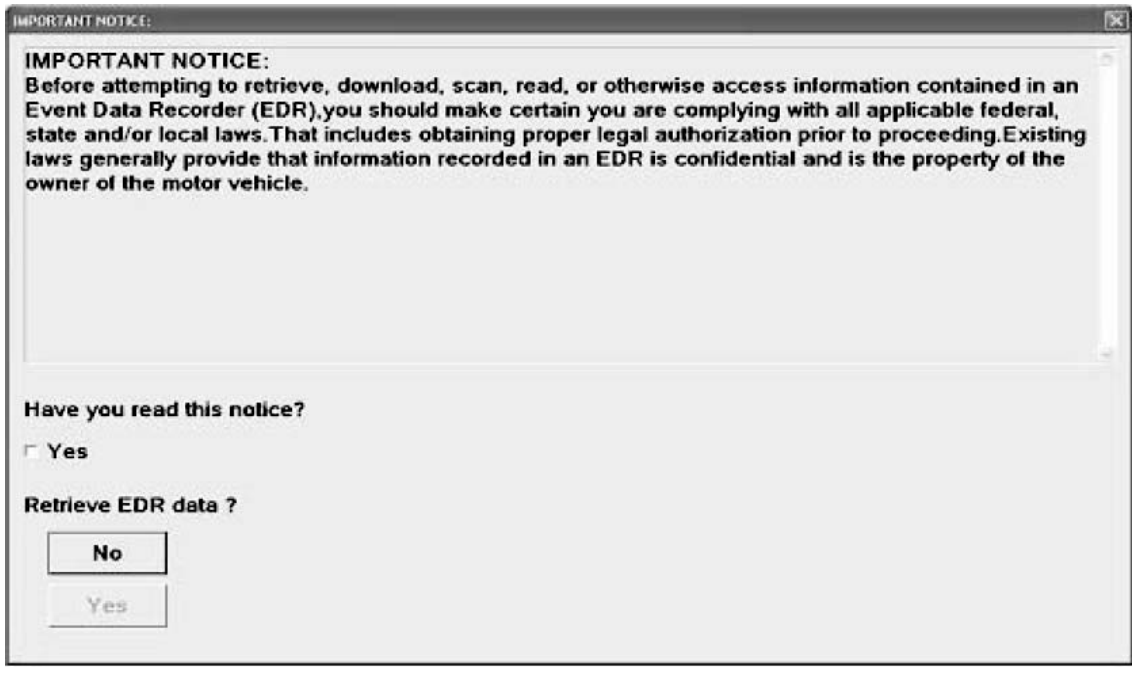

AB-02847

9) Specify the destination for the event record data to save the data there.
10) After saving the file, click the «OK» button to return the menu screen.

14.Airbag Warning Light Illumination Pattern

A: INSPECTION

Turn the ignition switch to ON, and confirm that the airbag warning light remains on for approx. 6 seconds then turns off afterwards.

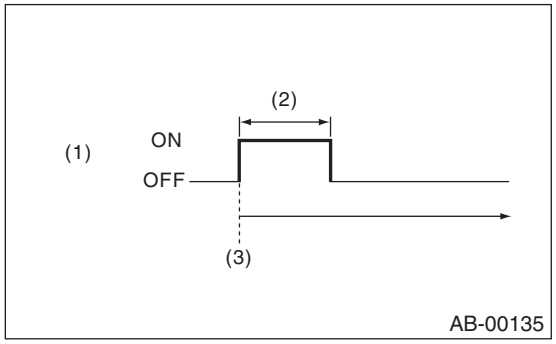

(1) Airbag warning light
(2) Approx. 6 seconds
(3) Ignition switch ON

15.Airbag Warning Light Failure

A: AIRBAG WARNING LIGHT REMAINS ON

DETECTING CONDITION:

- Airbag warning light is faulty.
- Airbag control module to combination meter circuit is shorted or open.
- Grounding circuit is faulty.
- Airbag control module is faulty.
- Connector connection is improper.
- Connections of (AB6, AB17, AB18) to airbag control module are improper.

CAUTION:
Before performing diagnosis, refer to "CAUTION" in "General Description". <Ref. to AB(diag)-4, CAUTION, General Description.>

	Step	Check	Yes	No
1	**CHECK CAN COMMUNICATION.** Inspect LAN system. <Ref. to LAN(diag)-2, PROCEDURE, Basic Diagnostic Procedure.>	Is there any fault?	Repair it according to diagnosis of LAN system.	Go to step **2**.
2	**CHECK DTC.** 1) Turn the ignition switch to OFF, disconnect the battery ground cable, and wait for 60 seconds or more. 2) Check the connection status of airbag CM connector.	Is there poor contact of connector?	Reconnect the connector. Or repair the connector.	Go to step **3**.
3	**CHECK FOR POOR CONTACT.** Check the combination meter. <Ref. to IDI-6, SELF-DIAGNOSIS DISPLAY MODE, OPERATION, Combination Meter System.>	Is there any fault?	Replace the combination meter. <Ref. to IDI-11, REMOVAL, Combination Meter.>	Replace the airbag CM. <Ref. to AB-50, REMOVAL, Airbag Control Module.>

B: AIRBAG WARNING LIGHT REMAINS OFF

NOTE:
For the diagnostic procedure, refer to "AIRBAG WARNING LIGHT REMAINS ON". <Ref. to AB(diag)-37, AIRBAG WARNING LIGHT REMAINS ON, Airbag Warning Light Failure.>

16.List of Diagnostic Trouble Code (DTC)

A: LIST

DTC	Item	Reference
U0073	CAN FAILURE, BUS 'OFF' DETECTION	<Ref. to AB(diag)-44, DTC U0073 CONTROL MODULE COMMUNICATION BUS OFF, Diagnostic Chart with Trouble Code.>
U0100	LOST COMMUNICATION WITH ECM/PCM "A"	<Ref. to AB(diag)-44, DTC U0100 LOST COMMUNICATION WITH ECM/PCM "A", Diagnostic Chart with Trouble Code.>
U0101	LOST COMMUNICATION WITH TCM	<Ref. to AB(diag)-44, DTC U0101 LOST COMMUNICATION WITH TCM, Diagnostic Chart with Trouble Code.>
U0122	LOST COMMUNICATION WITH VEHICLE DYNAMICS CONTROL MODULE	<Ref. to AB(diag)-44, DTC U0122 LOST COMMUNICATION WITH VEHICLE DYNAMICS CONTROL MODULE, Diagnostic Chart with Trouble Code.>
U0140	LOST COMMUNICATION WITH BODY CONTROL MODULE	<Ref. to AB(diag)-44, DTC U0140 LOST COMMUNICATION WITH BODY CONTROL MODULE, Diagnostic Chart with Trouble Code.>
U0155	LOST COMMUNICATION WITH INSTRUMENT PANEL CLUSTER (IPC) CONTROL MODULE	<Ref. to AB(diag)-44, DTC U0155 LOST COMMUNICATION WITH INSTRUMENT PANEL CLUSTER (IPC) CONTROL MODULE, Diagnostic Chart with Trouble Code.>
U0401	INVALID DATA RECEIVED FROM ECM/PCM "A"	<Ref. to AB(diag)-44, DTC U0401 INVALID DATA RECEIVED FROM ECM/PCM "A", Diagnostic Chart with Trouble Code.>
U0402	INVALID DATA RECEIVED FROM TCM	<Ref. to AB(diag)-44, DTC U0402 INVALID DATA RECEIVED FROM TCM, Diagnostic Chart with Trouble Code.>
U0416	INVALID DATA RECEIVED FROM VEHICLE DYNAMICS CONTROL MODULE	<Ref. to AB(diag)-45, DTC U0416 INVALID DATA RECEIVED FROM VEHICLE DYNAMICS CONTROL MODULE, Diagnostic Chart with Trouble Code.>
U0422	INVALID DATA RECEIVED FROM BODY CONTROL MODULE	<Ref. to AB(diag)-45, DTC U0422 INVALID DATA RECEIVED FROM BODY CONTROL MODULE, Diagnostic Chart with Trouble Code.>
U0423	INVALID DATA RECEIVED FROM INSTRUMENT PANEL CLUSTER CONTROL MODULE	<Ref. to AB(diag)-45, DTC U0423 INVALID DATA RECEIVED FROM INSTRUMENT PANEL CLUSTER CONTROL MODULE, Diagnostic Chart with Trouble Code.>
B1000	AIRBAG ECU MALFUNCTION	<Ref. to AB(diag)-46, DTC B1000 AIRBAG ECU MALFUNCTION, Diagnostic Chart with Trouble Code.>
B1003	AIRBAG ECU MALFUNCTION	<Ref. to AB(diag)-46, DTC B1003 AIRBAG ECU MALFUNCTION, Diagnostic Chart with Trouble Code.>
B1004	AIRBAG ECU MALFUNCTION	<Ref. to AB(diag)-46, DTC B1004 AIRBAG ECU MALFUNCTION, Diagnostic Chart with Trouble Code.>
B1005	AIRBAG ECU MALFUNCTION	<Ref. to AB(diag)-46, DTC B1005 AIRBAG ECU MALFUNCTION, Diagnostic Chart with Trouble Code.>
B1006	AIRBAG ECU MALFUNCTION	<Ref. to AB(diag)-46, DTC B1006 AIRBAG ECU MALFUNCTION, Diagnostic Chart with Trouble Code.>
B111A	AIRBAG ECU MALFUNCTION	<Ref. to AB(diag)-46, DTC B111A AIRBAG ECU MALFUNCTION, Diagnostic Chart with Trouble Code.>
B111B	AIRBAG ECU MALFUNCTION	<Ref. to AB(diag)-46, DTC B111B AIRBAG ECU MALFUNCTION, Diagnostic Chart with Trouble Code.>
B1125	AIRBAG ECU MALFUNCTION	<Ref. to AB(diag)-46, DTC B1125 AIRBAG ECU MALFUNCTION, Diagnostic Chart with Trouble Code.>
B1126	AIRBAG ECU MALFUNCTION	<Ref. to AB(diag)-46, DTC B1126 AIRBAG ECU MALFUNCTION, Diagnostic Chart with Trouble Code.>
B1135	AIRBAG ECU MALFUNCTION	<Ref. to AB(diag)-47, DTC B1135 AIRBAG ECU MALFUNCTION, Diagnostic Chart with Trouble Code.>
B1136	AIRBAG ECU MALFUNCTION	<Ref. to AB(diag)-47, DTC B1136 AIRBAG ECU MALFUNCTION, Diagnostic Chart with Trouble Code.>
B113A	AIRBAG ECU MALFUNCTION	<Ref. to AB(diag)-47, DTC B113A AIRBAG ECU MALFUNCTION, Diagnostic Chart with Trouble Code.>
B1145	AIRBAG ECU MALFUNCTION	<Ref. to AB(diag)-47, DTC B1145 AIRBAG ECU MALFUNCTION, Diagnostic Chart with Trouble Code.>

DTC	Item	Reference
B1146	AIRBAG ECU MALFUNCTION	<Ref. to AB(diag)-47, DTC B1146 AIRBAG ECU MALFUNCTION, Diagnostic Chart with Trouble Code.>
B117A	AIRBAG ECU MALFUNCTION	<Ref. to AB(diag)-47, DTC B117A AIRBAG ECU MALFUNCTION, Diagnostic Chart with Trouble Code.>
B1185	AIRBAG ECU MALFUNCTION	<Ref. to AB(diag)-47, DTC B1185 AIRBAG ECU MALFUNCTION, Diagnostic Chart with Trouble Code.>
B1195	AIRBAG ECU MALFUNCTION	<Ref. to AB(diag)-47, DTC B1195 AIRBAG ECU MALFUNCTION, Diagnostic Chart with Trouble Code.>
B1196	AIRBAG ECU MALFUNCTION	<Ref. to AB(diag)-47, DTC B1196 AIRBAG ECU MALFUNCTION, Diagnostic Chart with Trouble Code.>
B1197	AIRBAG ECU MALFUNCTION	<Ref. to AB(diag)-47, DTC B1197 AIRBAG ECU MALFUNCTION, Diagnostic Chart with Trouble Code.>
B1198	AIRBAG ECU MALFUNCTION	<Ref. to AB(diag)-47, DTC B1198 AIRBAG ECU MALFUNCTION, Diagnostic Chart with Trouble Code.>
B1199	AIRBAG ECU MALFUNCTION	<Ref. to AB(diag)-48, DTC B1199 AIRBAG ECU MALFUNCTION, Diagnostic Chart with Trouble Code.>
B11E0	ROLLOVER DEPLOYMENT HISTORY	<Ref. to AB(diag)-48, DTC B11E0 ROLLOVER DEPLOYMENT HISTORY, Diagnostic Chart with Trouble Code.>
B11F0	DISPOSAL PROCESS COMPLETE	<Ref. to AB(diag)-49, DTC B11F0 DISPOSAL PROCESS COMPLETE, Diagnostic Chart with Trouble Code.>
B11F3	FRONT IMPACT DEPLOYMENT	<Ref. to AB(diag)-49, DTC B11F3 FRONT IMPACT DEPLOYMENT, Diagnostic Chart with Trouble Code.>
B11F4	FRONT IMPACT DEPLOYMENT	<Ref. to AB(diag)-49, DTC B11F4 FRONT IMPACT DEPLOYMENT, Diagnostic Chart with Trouble Code.>
B11F5	FRONT IMPACT DEPLOYMENT	<Ref. to AB(diag)-49, DTC B11F5 FRONT IMPACT DEPLOYMENT, Diagnostic Chart with Trouble Code.>
B11F7	SIDE IMPACT DEPLOYMENT	<Ref. to AB(diag)-50, DTC B11F7 SIDE IMPACT DEPLOYMENT, Diagnostic Chart with Trouble Code.>
B11F8	SIDE IMPACT DEPLOYMENT	<Ref. to AB(diag)-50, DTC B11F8 SIDE IMPACT DEPLOYMENT, Diagnostic Chart with Trouble Code.>
B11F9	SIDE IMPACT DEPLOYMENT	<Ref. to AB(diag)-50, DTC B11F9 SIDE IMPACT DEPLOYMENT, Diagnostic Chart with Trouble Code.>
B11FA	SIDE IMPACT DEPLOYMENT	<Ref. to AB(diag)-50, DTC B11FA SIDE IMPACT DEPLOYMENT, Diagnostic Chart with Trouble Code.>
B11FB	SIDE IMPACT DEPLOYMENT	<Ref. to AB(diag)-50, DTC B11FB SIDE IMPACT DEPLOYMENT, Diagnostic Chart with Trouble Code.>
B11FC	SIDE IMPACT DEPLOYMENT	<Ref. to AB(diag)-51, DTC B11FC SIDE IMPACT DEPLOYMENT, Diagnostic Chart with Trouble Code.>
B1610	FRONT SUB SENSOR RH FAILURE	<Ref. to AB(diag)-51, DTC B1610 FRONT SUB SENSOR RH FAILURE, Diagnostic Chart with Trouble Code.>
B1612	FRONT SUB SENSOR RH LOST COMMUNICATION	<Ref. to AB(diag)-52, DTC B1612 FRONT SUB SENSOR RH LOST COMMUNICATION, Diagnostic Chart with Trouble Code.>
B1613	FRONT SUB SENSOR RH INITIALIZATION ERROR	<Ref. to AB(diag)-54, DTC B1613 FRONT SUB SENSOR RH INITIALIZATION ERROR, Diagnostic Chart with Trouble Code.>
B1615	FRONT SUB SENSOR LH FAILURE	<Ref. to AB(diag)-55, DTC B1615 FRONT SUB SENSOR LH FAILURE, Diagnostic Chart with Trouble Code.>
B1617	FRONT SUB SENSOR LH LOST COMMUNICATION	<Ref. to AB(diag)-56, DTC B1617 FRONT SUB SENSOR LH LOST COMMUNICATION, Diagnostic Chart with Trouble Code.>
B1618	FRONT SUB SENSOR LH INITIALIZATION ERROR	<Ref. to AB(diag)-58, DTC B1618 FRONT SUB SENSOR LH INITIALIZATION ERROR, Diagnostic Chart with Trouble Code.>
B1620	SIDE AIRBAG SENSOR RH FAILURE	<Ref. to AB(diag)-59, DTC B1620 SIDE AIRBAG SENSOR RH FAILURE, Diagnostic Chart with Trouble Code.>
B1622	SIDE AIRBAG SENSOR RH LOST COMMUNICATION	<Ref. to AB(diag)-60, DTC B1622 SIDE AIRBAG SENSOR RH LOST COMMUNICATION, Diagnostic Chart with Trouble Code.>

DTC	Item	Reference
B1623	SIDE AIRBAG SENSOR RH INITIALIZATION ERROR	<Ref. to AB(diag)-63, DTC B1623 SIDE AIRBAG SENSOR RH INITIALIZATION ERROR, Diagnostic Chart with Trouble Code.>
B1625	SIDE AIRBAG SENSOR LH FAILURE	<Ref. to AB(diag)-64, DTC B1625 SIDE AIRBAG SENSOR LH FAILURE, Diagnostic Chart with Trouble Code.>
B1627	SIDE AIRBAG SENSOR LH LOST COMMUNICATION	<Ref. to AB(diag)-65, DTC B1627 SIDE AIRBAG SENSOR LH LOST COMMUNICATION, Diagnostic Chart with Trouble Code.>
B1628	SIDE AIRBAG SENSOR LH INITIALIZATION ERROR	<Ref. to AB(diag)-68, DTC B1628 SIDE AIRBAG SENSOR LH INITIALIZATION ERROR, Diagnostic Chart with Trouble Code.>
B1630	CURTAIN AIRBAG SENSOR RH FAILURE	<Ref. to AB(diag)-69, DTC B1630 CURTAIN AIRBAG SENSOR RH FAILURE, Diagnostic Chart with Trouble Code.>
B1632	CURTAIN AIRBAG SENSOR RH LOST COMMUNICATION	<Ref. to AB(diag)-70, DTC B1632 CURTAIN AIRBAG SENSOR RH LOST COMMUNICATION, Diagnostic Chart with Trouble Code.>
B1633	CURTAIN AIRBAG SENSOR RH INITIALIZATION ERROR	<Ref. to AB(diag)-73, DTC B1633 CURTAIN AIRBAG SENSOR RH INITIALIZATION ERROR, Diagnostic Chart with Trouble Code.>
B1635	CURTAIN AIRBAG SENSOR LH FAILURE	<Ref. to AB(diag)-74, DTC B1635 CURTAIN AIRBAG SENSOR LH FAILURE, Diagnostic Chart with Trouble Code.>
B1637	CURTAIN AIRBAG SENSOR LH LOST COMMUNICATION	<Ref. to AB(diag)-75, DTC B1637 CURTAIN AIRBAG SENSOR LH LOST COMMUNICATION, Diagnostic Chart with Trouble Code.>
B1638	CURTAIN AIRBAG SENSOR LH INITIALIZATION ERROR	<Ref. to AB(diag)-78, DTC B1638 CURTAIN AIRBAG SENSOR LH INITIALIZATION ERROR, Diagnostic Chart with Trouble Code.>
B1643	SIDE SATELLITE SENSOR BUS RH INITIALIZATION ERROR	<Ref. to AB(diag)-80, DTC B1643 SIDE SATELLITE SENSOR BUS RH INITIALIZATION ERROR, Diagnostic Chart with Trouble Code.>
B1648	SIDE SATELLITE SENSOR BUS LH INITIALIZATION ERROR	<Ref. to AB(diag)-85, DTC B1648 SIDE SATELLITE SENSOR BUS LH INITIALIZATION ERROR, Diagnostic Chart with Trouble Code.>
B1650	OCCUPANT DETECTION SYSTEM MALFUNCTION	<Ref. to AB(diag)-90, DTC B1650 OCCUPANT DETECTION SYSTEM MALFUNCTION, Diagnostic Chart with Trouble Code.>
B1652	HALF CONNECTION IN AIRBAG SENSOR ASSEMBLY CONNECTOR	<Ref. to AB(diag)-91, DTC B1652 HALF CONNECTION IN AIRBAG SENSOR ASSEMBLY CONNECTOR, Diagnostic Chart with Trouble Code.>
B1655	FRONT BUCKLE SWITCH RH FAILURE	<Ref. to AB(diag)-92, DTC B1655 FRONT BUCKLE SWITCH RH FAILURE, Diagnostic Chart with Trouble Code.>
B1656	FRONT BUCKLE SWITCH LH FAILURE	<Ref. to AB(diag)-93, DTC B1656 FRONT BUCKLE SWITCH LH FAILURE, Diagnostic Chart with Trouble Code.>
B1661	PASSENGER'S AIRBAG ON/OFF INDICATOR FAILURE	<Ref. to AB(diag)-95, DTC B1661 PASSENGER'S AIRBAG ON/OFF INDICATOR FAILURE, Diagnostic Chart with Trouble Code.>
B1690	DOOR SENSOR RH FAILURE	<Ref. to AB(diag)-95, DTC B1690 DOOR SENSOR RH FAILURE, Diagnostic Chart with Trouble Code.>
B1692	LOST COMMUNICATION WITH DOOR SENSOR RH	<Ref. to AB(diag)-96, DTC B1692 LOST COMMUNICATION WITH DOOR SENSOR RH, Diagnostic Chart with Trouble Code.>
B1693	DOOR SENSOR RH INITIALIZATION INCOMPLETE	<Ref. to AB(diag)-99, DTC B1693 DOOR SENSOR RH INITIALIZATION INCOMPLETE, Diagnostic Chart with Trouble Code.>
B1695	DOOR SENSOR LH FAILURE	<Ref. to AB(diag)-100, DTC B1695 DOOR SENSOR LH FAILURE, Diagnostic Chart with Trouble Code.>
B1697	LOST COMMUNICATION WITH DOOR SENSOR LH	<Ref. to AB(diag)-101, DTC B1697 LOST COMMUNICATION WITH DOOR SENSOR LH, Diagnostic Chart with Trouble Code.>
B1698	DOOR SENSOR LH INITIALIZATION INCOMPLETE	<Ref. to AB(diag)-104, DTC B1698 DOOR SENSOR LH INITIALIZATION INCOMPLETE, Diagnostic Chart with Trouble Code.>
B169F	DOOR SENSOR FAILURE: ABNORMAL PRESSURE	<Ref. to AB(diag)-106, DTC B169F DOOR SENSOR FAILURE: ABNORMAL PRESSURE, Diagnostic Chart with Trouble Code.>
B16A2	SHORT IN FRONT SUB SENSOR RH (TO GROUND)	<Ref. to AB(diag)-107, DTC B16A2 SHORT IN FRONT SUB SENSOR RH (TO GROUND), Diagnostic Chart with Trouble Code.>
B16A3	SHORT IN FRONT SUB SENSOR RH (TO +B)	<Ref. to AB(diag)-109, DTC B16A3 SHORT IN FRONT SUB SENSOR RH (TO +B), Diagnostic Chart with Trouble Code.>
B16A4	SHORT IN FRONT SUB SENSOR RH	<Ref. to AB(diag)-111, DTC B16A4 SHORT IN FRONT SUB SENSOR RH, Diagnostic Chart with Trouble Code.>

DTC	Item	Reference
B16A7	SHORT IN FRONT SUB SENSOR LH (TO GROUND)	<Ref. to AB(diag)-113, DTC B16A7 SHORT IN FRONT SUB SENSOR LH (TO GROUND), Diagnostic Chart with Trouble Code.>
B16A8	SHORT IN FRONT SUB SENSOR LH (TO +B)	<Ref. to AB(diag)-115, DTC B16A8 SHORT IN FRONT SUB SENSOR LH (TO +B), Diagnostic Chart with Trouble Code.>
B16A9	SHORT IN FRONT SUB SENSOR LH	<Ref. to AB(diag)-117, DTC B16A9 SHORT IN FRONT SUB SENSOR LH, Diagnostic Chart with Trouble Code.>
B16B2	SHORT IN SIDE SATELLITE SENSOR BUS RH (TO GROUND)	<Ref. to AB(diag)-119, DTC B16B2 SHORT IN SIDE SATELLITE SENSOR BUS RH (TO GROUND), Diagnostic Chart with Trouble Code.>
B16B3	SHORT IN SIDE SATELLITE SENSOR BUS RH (TO +B)	<Ref. to AB(diag)-122, DTC B16B3 SHORT IN SIDE SATELLITE SENSOR BUS RH (TO +B), Diagnostic Chart with Trouble Code.>
B16B4	SHORT IN SIDE SATELLITE SENSOR BUS RH	<Ref. to AB(diag)-124, DTC B16B4 SHORT IN SIDE SATELLITE SENSOR BUS RH, Diagnostic Chart with Trouble Code.>
B16B7	SHORT IN SIDE SATELLITE SENSOR BUS LH (TO GROUND)	<Ref. to AB(diag)-126, DTC B16B7 SHORT IN SIDE SATELLITE SENSOR BUS LH (TO GROUND), Diagnostic Chart with Trouble Code.>
B16B8	SHORT IN SIDE SATELLITE SENSOR BUS LH (TO +B)	<Ref. to AB(diag)-129, DTC B16B8 SHORT IN SIDE SATELLITE SENSOR BUS LH (TO +B), Diagnostic Chart with Trouble Code.>
B16B9	SHORT IN SIDE SATELLITE SENSOR BUS LH	<Ref. to AB(diag)-131, DTC B16B9 SHORT IN SIDE SATELLITE SENSOR BUS LH, Diagnostic Chart with Trouble Code.>
B16EA	SIDE AIRBAG SENSOR RH INITIALIZATION ERROR	<Ref. to AB(diag)-133, DTC B16EA SIDE AIRBAG SENSOR RH INITIALIZATION ERROR, Diagnostic Chart with Trouble Code.>
B16EB	SIDE AIRBAG SENSOR LH INITIALIZATION ERROR	<Ref. to AB(diag)-136, DTC B16EB SIDE AIRBAG SENSOR LH INITIALIZATION ERROR, Diagnostic Chart with Trouble Code.>
B16EC	CURTAIN AIRBAG SENSOR RH INITIALIZATION ERROR	<Ref. to AB(diag)-139, DTC B16EC CURTAIN AIRBAG SENSOR RH INITIALIZATION ERROR, Diagnostic Chart with Trouble Code.>
B16ED	CURTAIN AIRBAG SENSOR LH INITIALIZATION ERROR	<Ref. to AB(diag)-142, DTC B16ED CURTAIN AIRBAG SENSOR LH INITIALIZATION ERROR, Diagnostic Chart with Trouble Code.>
B1800	SHORT IN DRIVER'S AIRBAG	<Ref. to AB(diag)-145, DTC B1800 SHORT IN DRIVER'S AIRBAG, Diagnostic Chart with Trouble Code.>
B1801	OPEN IN DRIVER'S AIRBAG	<Ref. to AB(diag)-147, DTC B1801 OPEN IN DRIVER'S AIRBAG, Diagnostic Chart with Trouble Code.>
B1802	SHORT IN DRIVER'S AIRBAG (TO GROUND)	<Ref. to AB(diag)-149, DTC B1802 SHORT IN DRIVER'S AIRBAG (TO GROUND), Diagnostic Chart with Trouble Code.>
B1803	SHORT IN DRIVER'S AIRBAG (TO +B)	<Ref. to AB(diag)-151, DTC B1803 SHORT IN DRIVER'S AIRBAG (TO +B), Diagnostic Chart with Trouble Code.>
B1804	SHORT IN DRIVER'S AIRBAG	<Ref. to AB(diag)-153, DTC B1804 SHORT IN DRIVER'S AIRBAG, Diagnostic Chart with Trouble Code.>
B1805	SHORT IN PASSENGER'S AIRBAG	<Ref. to AB(diag)-155, DTC B1805 SHORT IN PASSENGER'S AIRBAG, Diagnostic Chart with Trouble Code.>
B1806	OPEN IN PASSENGER'S AIRBAG	<Ref. to AB(diag)-158, DTC B1806 OPEN IN PASSENGER'S AIRBAG, Diagnostic Chart with Trouble Code.>
B1807	SHORT IN PASSENGER'S AIRBAG (TO GROUND)	<Ref. to AB(diag)-161, DTC B1807 SHORT IN PASSENGER'S AIRBAG (TO GROUND), Diagnostic Chart with Trouble Code.>
B1808	SHORT IN PASSENGER'S AIRBAG (TO +B)	<Ref. to AB(diag)-164, DTC B1808 SHORT IN PASSENGER'S AIRBAG (TO +B), Diagnostic Chart with Trouble Code.>
B1809	SHORT IN PASSENGER'S AIRBAG	<Ref. to AB(diag)-167, DTC B1809 SHORT IN PASSENGER'S AIRBAG, Diagnostic Chart with Trouble Code.>
B1810	SHORT IN DRIVER'S AIRBAG DUAL STAGE - 2ND STEP	<Ref. to AB(diag)-170, DTC B1810 SHORT IN DRIVER'S AIRBAG DUAL STAGE - 2ND STEP, Diagnostic Chart with Trouble Code.>
B1811	OPEN IN DRIVER'S AIRBAG DUAL STAGE - 2ND STEP	<Ref. to AB(diag)-172, DTC B1811 OPEN IN DRIVER'S AIRBAG DUAL STAGE - 2ND STEP, Diagnostic Chart with Trouble Code.>
B1812	SHORT IN DRIVER'S AIRBAG DUAL STAGE - 2ND STEP (TO GROUND)	<Ref. to AB(diag)-174, DTC B1812 SHORT IN DRIVER'S AIRBAG DUAL STAGE - 2ND STEP (TO GROUND), Diagnostic Chart with Trouble Code.>

DTC	Item	Reference
B1813	SHORT IN DRIVER'S AIRBAG DUAL STAGE - 2ND STEP CIRCUIT (TO +B)	<Ref. to AB(diag)-176, DTC B1813 SHORT IN DRIVER'S AIRBAG DUAL STAGE - 2ND STEP CIRCUIT (TO +B), Diagnostic Chart with Trouble Code.>
B1814	SHORT IN DRIVER'S AIRBAG DUAL STAGE - 2ND STEP	<Ref. to AB(diag)-178, DTC B1814 SHORT IN DRIVER'S AIRBAG DUAL STAGE - 2ND STEP, Diagnostic Chart with Trouble Code.>
B1815	SHORT IN PASSENGER'S AIRBAG DUAL STAGE - 2ND STEP	<Ref. to AB(diag)-180, DTC B1815 SHORT IN PASSENGER'S AIRBAG DUAL STAGE - 2ND STEP, Diagnostic Chart with Trouble Code.>
B1816	OPEN IN PASSENGER'S AIRBAG DUAL STAGE - 2ND STEP	<Ref. to AB(diag)-183, DTC B1816 OPEN IN PASSENGER'S AIRBAG DUAL STAGE - 2ND STEP, Diagnostic Chart with Trouble Code.>
B1817	SHORT IN PASSENGER'S AIRBAG DUAL STAGE - 2ND STEP (TO GROUND)	<Ref. to AB(diag)-186, DTC B1817 SHORT IN PASSENGER'S AIRBAG DUAL STAGE - 2ND STEP (TO GROUND), Diagnostic Chart with Trouble Code.>
B1818	SHORT IN PASSENGER'S AIRBAG DUAL STAGE - 2ND STEP CIRCUIT (TO +B)	<Ref. to AB(diag)-189, DTC B1818 SHORT IN PASSENGER'S AIRBAG DUAL STAGE - 2ND STEP CIRCUIT (TO +B), Diagnostic Chart with Trouble Code.>
B1819	SHORT IN PASSENGER'S AIRBAG DUAL STAGE - 2ND STEP	<Ref. to AB(diag)-192, DTC B1819 SHORT IN PASSENGER'S AIRBAG DUAL STAGE - 2ND STEP, Diagnostic Chart with Trouble Code.>
B1820	SHORT IN SIDE AIRBAG RH	<Ref. to AB(diag)-195, DTC B1820 SHORT IN SIDE AIRBAG RH, Diagnostic Chart with Trouble Code.>
B1821	OPEN IN SIDE AIRBAG RH	<Ref. to AB(diag)-198, DTC B1821 OPEN IN SIDE AIRBAG RH, Diagnostic Chart with Trouble Code.>
B1822	SHORT IN SIDE AIRBAG RH (TO GROUND)	<Ref. to AB(diag)-200, DTC B1822 SHORT IN SIDE AIRBAG RH (TO GROUND), Diagnostic Chart with Trouble Code.>
B1823	SHORT IN SIDE AIRBAG RH (TO +B)	<Ref. to AB(diag)-202, DTC B1823 SHORT IN SIDE AIRBAG RH (TO +B), Diagnostic Chart with Trouble Code.>
B1824	SHORT IN SIDE AIRBAG RH	<Ref. to AB(diag)-204, DTC B1824 SHORT IN SIDE AIRBAG RH, Diagnostic Chart with Trouble Code.>
B1825	SHORT IN SIDE AIRBAG LH	<Ref. to AB(diag)-207, DTC B1825 SHORT IN SIDE AIRBAG LH, Diagnostic Chart with Trouble Code.>
B1826	OPEN IN SIDE AIRBAG LH	<Ref. to AB(diag)-210, DTC B1826 OPEN IN SIDE AIRBAG LH, Diagnostic Chart with Trouble Code.>
B1827	SHORT IN SIDE AIRBAG LH (TO GROUND)	<Ref. to AB(diag)-212, DTC B1827 SHORT IN SIDE AIRBAG LH (TO GROUND), Diagnostic Chart with Trouble Code.>
B1828	SHORT IN SIDE AIRBAG LH (TO +B)	<Ref. to AB(diag)-214, DTC B1828 SHORT IN SIDE AIRBAG LH (TO +B), Diagnostic Chart with Trouble Code.>
B1829	SHORT IN SIDE AIRBAG LH	<Ref. to AB(diag)-216, DTC B1829 SHORT IN SIDE AIRBAG LH, Diagnostic Chart with Trouble Code.>
B1830	SHORT IN CURTAIN AIRBAG RH SQUIB CIRCUIT	<Ref. to AB(diag)-219, DTC B1830 SHORT IN CURTAIN AIRBAG RH SQUIB CIRCUIT, Diagnostic Chart with Trouble Code.>
B1831	OPEN IN CURTAIN AIRBAG RH SQUIB CIRCUIT	<Ref. to AB(diag)-221, DTC B1831 OPEN IN CURTAIN AIRBAG RH SQUIB CIRCUIT, Diagnostic Chart with Trouble Code.>
B1832	SHORT IN CURTAIN AIRBAG RH SQUIB CIRCUIT (TO GROUND)	<Ref. to AB(diag)-223, DTC B1832 SHORT IN CURTAIN AIRBAG RH SQUIB CIRCUIT (TO GROUND), Diagnostic Chart with Trouble Code.>
B1833	SHORT IN CURTAIN SHIELD AIRBAG RH SQUIB CIRCUIT (TO +B)	<Ref. to AB(diag)-225, DTC B1833 SHORT IN CURTAIN SHIELD AIRBAG RH SQUIB CIRCUIT (TO +B), Diagnostic Chart with Trouble Code.>
B1834	SHORT IN CURTAIN AIRBAG RH SQUIB CIRCUIT	<Ref. to AB(diag)-227, DTC B1834 SHORT IN CURTAIN AIRBAG RH SQUIB CIRCUIT, Diagnostic Chart with Trouble Code.>
B1835	SHORT IN CURTAIN AIRBAG LH SQUIB CIRCUIT	<Ref. to AB(diag)-229, DTC B1835 SHORT IN CURTAIN AIRBAG LH SQUIB CIRCUIT, Diagnostic Chart with Trouble Code.>
B1836	OPEN IN CURTAIN AIRBAG LH SQUIB CIRCUIT	<Ref. to AB(diag)-231, DTC B1836 OPEN IN CURTAIN AIRBAG LH SQUIB CIRCUIT, Diagnostic Chart with Trouble Code.>

DTC	Item	Reference
B1837	SHORT IN CURTAIN AIRBAG LH SQUIB CIRCUIT (TO GROUND)	<Ref. to AB(diag)-233, DTC B1837 SHORT IN CURTAIN AIRBAG LH SQUIB CIRCUIT (TO GROUND), Diagnostic Chart with Trouble Code.>
B1838	SHORT IN CURTAIN SHIELD AIRBAG LH SQUIB CIRCUIT (TO +B)	<Ref. to AB(diag)-235, DTC B1838 SHORT IN CURTAIN SHIELD AIRBAG LH SQUIB CIRCUIT (TO +B), Diagnostic Chart with Trouble Code.>
B1839	SHORT IN CURTAIN AIRBAG LH SQUIB CIRCUIT	<Ref. to AB(diag)-237, DTC B1839 SHORT IN CURTAIN AIRBAG LH SQUIB CIRCUIT, Diagnostic Chart with Trouble Code.>
B1870	SHORT IN FRONT SEAT CUSHION AIRBAG RH	<Ref. to AB(diag)-239, DTC B1870 SHORT IN FRONT SEAT CUSHION AIRBAG RH, Diagnostic Chart with Trouble Code.>
B1871	OPEN IN FRONT SEAT CUSHION AIRBAG RH	<Ref. to AB(diag)-241, DTC B1871 OPEN IN FRONT SEAT CUSHION AIRBAG RH, Diagnostic Chart with Trouble Code.>
B1872	SHORT IN FRONT SEAT CUSHION AIRBAG RH (TO GROUND)	<Ref. to AB(diag)-243, DTC B1872 SHORT IN FRONT SEAT CUSHION AIRBAG RH (TO GROUND), Diagnostic Chart with Trouble Code.>
B1873	SHORT IN FRONT SEAT CUSHION AIRBAG RH (TO +B)	<Ref. to AB(diag)-245, DTC B1873 SHORT IN FRONT SEAT CUSHION AIRBAG RH (TO +B), Diagnostic Chart with Trouble Code.>
B1874	SHORT IN FRONT SEAT CUSHION AIRBAG RH	<Ref. to AB(diag)-247, DTC B1874 SHORT IN FRONT SEAT CUSHION AIRBAG RH, Diagnostic Chart with Trouble Code.>
B1875	SHORT IN FRONT SEAT CUSHION AIRBAG LH	<Ref. to AB(diag)-249, DTC B1875 SHORT IN FRONT SEAT CUSHION AIRBAG LH, Diagnostic Chart with Trouble Code.>
B1876	OPEN IN FRONT SEAT CUSHION AIRBAG LH	<Ref. to AB(diag)-251, DTC B1876 OPEN IN FRONT SEAT CUSHION AIRBAG LH, Diagnostic Chart with Trouble Code.>
B1877	SHORT IN FRONT SEAT CUSHION AIRBAG LH (TO GROUND)	<Ref. to AB(diag)-253, DTC B1877 SHORT IN FRONT SEAT CUSHION AIRBAG LH (TO GROUND), Diagnostic Chart with Trouble Code.>
B1878	SHORT IN FRONT SEAT CUSHION AIRBAG LH (TO +B)	<Ref. to AB(diag)-255, DTC B1878 SHORT IN FRONT SEAT CUSHION AIRBAG LH (TO +B), Diagnostic Chart with Trouble Code.>
B1879	SHORT IN FRONT SEAT CUSHION AIRBAG LH	<Ref. to AB(diag)-257, DTC B1879 SHORT IN FRONT SEAT CUSHION AIRBAG LH, Diagnostic Chart with Trouble Code.>
B1900	SHORT IN FRONT P/T RH	<Ref. to AB(diag)-259, DTC B1900 SHORT IN FRONT P/T RH, Diagnostic Chart with Trouble Code.>
B1901	OPEN IN FRONT P/T RH	<Ref. to AB(diag)-261, DTC B1901 OPEN IN FRONT P/T RH, Diagnostic Chart with Trouble Code.>
B1902	SHORT IN FRONT P/T RH (TO GROUND)	<Ref. to AB(diag)-263, DTC B1902 SHORT IN FRONT P/T RH (TO GROUND), Diagnostic Chart with Trouble Code.>
B1903	SHORT IN FRONT P/T RH (TO +B)	<Ref. to AB(diag)-265, DTC B1903 SHORT IN FRONT P/T RH (TO +B), Diagnostic Chart with Trouble Code.>
B1904	SHORT IN FRONT P/T RH	<Ref. to AB(diag)-267, DTC B1904 SHORT IN FRONT P/T RH, Diagnostic Chart with Trouble Code.>
B1905	SHORT IN FRONT P/T LH	<Ref. to AB(diag)-269, DTC B1905 SHORT IN FRONT P/T LH, Diagnostic Chart with Trouble Code.>
B1906	OPEN IN FRONT P/T LH	<Ref. to AB(diag)-271, DTC B1906 OPEN IN FRONT P/T LH, Diagnostic Chart with Trouble Code.>
B1907	SHORT IN FRONT P/T LH (TO GROUND)	<Ref. to AB(diag)-273, DTC B1907 SHORT IN FRONT P/T LH (TO GROUND), Diagnostic Chart with Trouble Code.>
B1908	SHORT IN FRONT P/T LH (TO +B)	<Ref. to AB(diag)-275, DTC B1908 SHORT IN FRONT P/T LH (TO +B), Diagnostic Chart with Trouble Code.>
B1909	SHORT IN FRONT P/T LH	<Ref. to AB(diag)-277, DTC B1909 SHORT IN FRONT P/T LH, Diagnostic Chart with Trouble Code.>

17.Diagnostic Chart with Trouble Code

A: DTC U0073 CONTROL MODULE COMMUNICATION BUS OFF

DIAGNOSIS START CONDITION:
Ignition voltage remains at 10 V or more for 1 second.
DTC DETECTING CONDITION:
Detected when malfunction occurs in CAN line.

NOTE:
Perform the diagnosis for LAN system. <Ref. to LAN(diag)-2, PROCEDURE, Basic Diagnostic Procedure.>

B: DTC U0100 LOST COMMUNICATION WITH ECM/PCM "A"

DTC DETECTING CONDITION:
Detected when CAN data from ECM does not arrive.

NOTE:
Perform the diagnosis for LAN system. <Ref. to LAN(diag)-2, PROCEDURE, Basic Diagnostic Procedure.>

C: DTC U0101 LOST COMMUNICATION WITH TCM

DTC DETECTING CONDITION:
Detected when CAN data from TCM does not arrive.

NOTE:
Perform the diagnosis for LAN system. <Ref. to LAN(diag)-2, PROCEDURE, Basic Diagnostic Procedure.>

D: DTC U0122 LOST COMMUNICATION WITH VEHICLE DYNAMICS CONTROL MODULE

DTC DETECTING CONDITION:
Detected when CAN data from VDC CM does not arrive.

NOTE:
Perform the diagnosis for LAN system. <Ref. to LAN(diag)-2, PROCEDURE, Basic Diagnostic Procedure.>

E: DTC U0140 LOST COMMUNICATION WITH BODY CONTROL MODULE

DTC DETECTING CONDITION:
Detected when CAN data from body integrated unit does not arrive.

NOTE:
Perform the diagnosis for LAN system. <Ref. to LAN(diag)-2, PROCEDURE, Basic Diagnostic Procedure.>

F: DTC U0155 LOST COMMUNICATION WITH INSTRUMENT PANEL CLUSTER (IPC) CONTROL MODULE

DTC DETECTING CONDITION:
Detected when CAN data from combination meter does not arrive.

NOTE:
Perform the diagnosis for LAN system. <Ref. to LAN(diag)-2, PROCEDURE, Basic Diagnostic Procedure.>

G: DTC U0401 INVALID DATA RECEIVED FROM ECM/PCM "A"

DTC DETECTING CONDITION:
Detected when CAN data from ECM is abnormal.

NOTE:
Perform the diagnosis for LAN system. <Ref. to LAN(diag)-2, PROCEDURE, Basic Diagnostic Procedure.>

H: DTC U0402 INVALID DATA RECEIVED FROM TCM

DTC DETECTING CONDITION:
This is detected when CAN data from TCM is abnormal.

NOTE:
Perform the diagnosis for LAN system. <Ref. to LAN(diag)-2, PROCEDURE, Basic Diagnostic Procedure.>

I: DTC U0416 INVALID DATA RECEIVED FROM VEHICLE DYNAMICS CONTROL MODULE

DTC DETECTING CONDITION:
Detected when CAN data from VDC CM is abnormal.

NOTE:
Perform the diagnosis for LAN system. <Ref. to LAN(diag)-2, PROCEDURE, Basic Diagnostic Procedure.>

J: DTC U0422 INVALID DATA RECEIVED FROM BODY CONTROL MODULE

DTC DETECTING CONDITION:
Detected when CAN data from body integrated unit is abnormal.

NOTE:
Perform the diagnosis for LAN system. <Ref. to LAN(diag)-2, PROCEDURE, Basic Diagnostic Procedure.>

K: DTC U0423 INVALID DATA RECEIVED FROM INSTRUMENT PANEL CLUSTER CONTROL MODULE

DTC DETECTING CONDITION:
Detected when CAN data from combination meter is abnormal.

NOTE:
Perform the diagnosis for LAN system. <Ref. to LAN(diag)-2, PROCEDURE, Basic Diagnostic Procedure.>

L: DTC B1000 AIRBAG ECU MALFUNCTION

DIAGNOSIS START CONDITION:
Ignition voltage is 10 V to 16 V.
DTC DETECTING CONDITION:
Airbag control module is faulty.

CAUTION:
Before performing diagnosis, refer to "CAUTION" in "General Description". <Ref. to AB(diag)-4, CAUTION, General Description.>

	Step	Check	Yes	No
1	**CHECK DTC.** Read the DTC. (Current malfunction) <Ref. to AB(diag)-30, Read Diagnostic Trouble Code (DTC).>	Is «Airbag ECU Malfunction» displayed?	Replace the airbag control module. <Ref. to AB-50, Airbag Control Module.>	Perform the Clear Memory Mode. <Ref. to AB(diag)-32, Clear Memory Mode.>

M: DTC B1003 AIRBAG ECU MALFUNCTION

NOTE:
Refer to DTC B1103 for details on DTC B1000. <Ref. to AB(diag)-46, DTC B1000 AIRBAG ECU MALFUNCTION, Diagnostic Chart with Trouble Code.>

N: DTC B1004 AIRBAG ECU MALFUNCTION

NOTE:
Refer to DTC B1104 for details on DTC B1000. <Ref. to AB(diag)-46, DTC B1000 AIRBAG ECU MALFUNCTION, Diagnostic Chart with Trouble Code.>

O: DTC B1005 AIRBAG ECU MALFUNCTION

NOTE:
Refer to DTC B1105 for details on DTC B1000. <Ref. to AB(diag)-46, DTC B1000 AIRBAG ECU MALFUNCTION, Diagnostic Chart with Trouble Code.>

P: DTC B1006 AIRBAG ECU MALFUNCTION

NOTE:
Refer to DTC B1106 for details on DTC B1000. <Ref. to AB(diag)-46, DTC B1000 AIRBAG ECU MALFUNCTION, Diagnostic Chart with Trouble Code.>

Q: DTC B111A AIRBAG ECU MALFUNCTION

NOTE:
For details on DTC B111A, refer to DTC B1000. <Ref. to AB(diag)-46, DTC B1000 AIRBAG ECU MALFUNCTION, Diagnostic Chart with Trouble Code.>

R: DTC B111B AIRBAG ECU MALFUNCTION

NOTE:
For details on DTC B111B, refer to DTC B1000. <Ref. to AB(diag)-46, DTC B1000 AIRBAG ECU MALFUNCTION, Diagnostic Chart with Trouble Code.>

S: DTC B1125 AIRBAG ECU MALFUNCTION

NOTE:
Refer to DTC B1125 for details on DTC B1000. <Ref. to AB(diag)-46, DTC B1000 AIRBAG ECU MALFUNCTION, Diagnostic Chart with Trouble Code.>

T: DTC B1126 AIRBAG ECU MALFUNCTION

NOTE:
Refer to DTC B1126 for details on DTC B1000. <Ref. to AB(diag)-46, DTC B1000 AIRBAG ECU MALFUNCTION, Diagnostic Chart with Trouble Code.>

U: DTC B1135 AIRBAG ECU MALFUNCTION

NOTE:
Refer to DTC B1135 for details on DTC B1000. <Ref. to AB(diag)-46, DTC B1000 AIRBAG ECU MALFUNCTION, Diagnostic Chart with Trouble Code.>

V: DTC B1136 AIRBAG ECU MALFUNCTION

NOTE:
Refer to DTC B1136 for details on DTC B1000. <Ref. to AB(diag)-46, DTC B1000 AIRBAG ECU MALFUNCTION, Diagnostic Chart with Trouble Code.>

W: DTC B113A AIRBAG ECU MALFUNCTION

NOTE:
For details on DTC B113A, refer to DTC B1000. <Ref. to AB(diag)-46, DTC B1000 AIRBAG ECU MALFUNCTION, Diagnostic Chart with Trouble Code.>

X: DTC B1145 AIRBAG ECU MALFUNCTION

NOTE:
Refer to DTC B1145 for details on DTC B1000. <Ref. to AB(diag)-46, DTC B1000 AIRBAG ECU MALFUNCTION, Diagnostic Chart with Trouble Code.>

Y: DTC B1146 AIRBAG ECU MALFUNCTION

NOTE:
Refer to DTC B1146 for details on DTC B1000. <Ref. to AB(diag)-46, DTC B1000 AIRBAG ECU MALFUNCTION, Diagnostic Chart with Trouble Code.>

Z: DTC B117A AIRBAG ECU MALFUNCTION

NOTE:
For details on DTC B117A, refer to DTC B1000. <Ref. to AB(diag)-46, DTC B1000 AIRBAG ECU MALFUNCTION, Diagnostic Chart with Trouble Code.>

AA:DTC B1185 AIRBAG ECU MALFUNCTION

NOTE:
Refer to DTC B1185 for details on DTC B1000. <Ref. to AB(diag)-46, DTC B1000 AIRBAG ECU MALFUNCTION, Diagnostic Chart with Trouble Code.>

AB:DTC B1195 AIRBAG ECU MALFUNCTION

NOTE:
Refer to DTC B1195 for details on DTC B1000. <Ref. to AB(diag)-46, DTC B1000 AIRBAG ECU MALFUNCTION, Diagnostic Chart with Trouble Code.>

AC:DTC B1196 AIRBAG ECU MALFUNCTION

NOTE:
Refer to DTC B1196 for details on DTC B1000. <Ref. to AB(diag)-46, DTC B1000 AIRBAG ECU MALFUNCTION, Diagnostic Chart with Trouble Code.>

AD:DTC B1197 AIRBAG ECU MALFUNCTION

NOTE:
Refer to DTC B1197 for details on DTC B1000. <Ref. to AB(diag)-46, DTC B1000 AIRBAG ECU MALFUNCTION, Diagnostic Chart with Trouble Code.>

AE:DTC B1198 AIRBAG ECU MALFUNCTION

NOTE:
Refer to DTC B1198 for details on DTC B1000. <Ref. to AB(diag)-46, DTC B1000 AIRBAG ECU MALFUNCTION, Diagnostic Chart with Trouble Code.>

AF:DTC B1199 AIRBAG ECU MALFUNCTION

NOTE:
Refer to DTC B1199 for details on DTC B1000. <Ref. to AB(diag)-46, DTC B1000 AIRBAG ECU MALFUNCTION, Diagnostic Chart with Trouble Code.>

AG:DTC B11E0 ROLLOVER DEPLOYMENT HISTORY

DIAGNOSIS START CONDITION:
Ignition voltage is 10 V to 16 V.
DTC DETECTING CONDITION:
This DTC is indicated when the curtain airbag module and the seat belt pretensioner are deployed.
Once this DTC is displayed, the memory cannot be cleared. Replace the following parts.

- Airbag control module <Ref. to AB-50, Airbag Control Module.>
- Curtain airbag module (operating side) <Ref. to AB-43, Curtain Airbag Module.>
- Curtain airbag sensor (operating side) <Ref. to AB-58, Curtain Airbag Sensor.>
- Front outer seat belt with pretensioner (operating side) <Ref. to SB-19, Front Seat Belt.>

AH:DTC B11F0 DISPOSAL PROCESS COMPLETE

DIAGNOSIS START CONDITION:
Ignition voltage is 10 V to 16 V.
DTC DETECTING CONDITION:
Disposal process of airbag control module is completed.

CAUTION:
Before performing diagnosis, refer to "CAUTION" in "General Description". <Ref. to AB(diag)-4, CAUTION, General Description.>

	Step	Check	Yes	No
1	**CHECK DTC.** Read the DTC. (Current malfunction) <Ref. to AB(diag)-30, Read Diagnostic Trouble Code (DTC).>	Is DTC B11F0 displayed?	Replace the airbag control module. <Ref. to AB-50, Airbag Control Module.>	Perform memory clear. <Ref. to AB(diag)-32, Clear Memory Mode.>

AI: DTC B11F3 FRONT IMPACT DEPLOYMENT

DIAGNOSIS START CONDITION:
Ignition voltage is 10 V to 16 V.
DTC DETECTING CONDITION:
Front impact ignition, ignition delay (on the 2nd stage ignition)
This DTC is indicated when the front airbag module and the pretensioner are deployed.
Once this DTC is displayed, the memory cannot be cleared. Therefore replace the following parts.

- Airbag control module <Ref. to AB-50, Airbag Control Module.>
- Driver's airbag module <Ref. to AB-32, Driver's Airbag Module.>
- Passenger's airbag module <Ref. to AB-34, Passenger's Airbag Module.>
- Front sub sensor of both sides <Ref. to AB-52, Front Sub Sensor.>
- Front outer seat belt with pretensioner of both sides <Ref. to SB-19, Front Seat Belt.>
- Steering roll connector <Ref. to AB-60, Roll Connector.>
- Occupant detection system (passenger's seat cushion & frame assembly) <Ref. to SE-11, Front Seat.>
- Curtain airbag module (if deployed) <Ref. to AB-43, Curtain Airbag Module.>
- Seat cushion airbag module <Ref. to AB-37, Seat Cushion Airbag Module.>

AJ:DTC B11F4 FRONT IMPACT DEPLOYMENT

DIAGNOSIS START CONDITION:
Ignition voltage is 10 V to 16 V.
DTC DETECTING CONDITION:
Front impact ignition, ignition delay (on the 1st stage ignition)

NOTE:
For details on DTC B11F4, refer to DTC B11F3. <Ref. to AB(diag)-49, DTC B11F3 FRONT IMPACT DEPLOYMENT, Diagnostic Chart with Trouble Code.>

AK:DTC B11F5 FRONT IMPACT DEPLOYMENT

DIAGNOSIS START CONDITION:
Ignition voltage is 10 V to 16 V.
DTC DETECTING CONDITION:
Front impact ignition, ignition delay (when ignited simultaneously)

NOTE:
For details on DTC B11F5, refer to DTC B11F3. <Ref. to AB(diag)-49, DTC B11F3 FRONT IMPACT DEPLOYMENT, Diagnostic Chart with Trouble Code.>

AL:DTC B11F7 SIDE IMPACT DEPLOYMENT

DIAGNOSIS START CONDITION:
Ignition voltage is 10 V to 16 V.
DTC DETECTING CONDITION:
Side impact ignition, side airbag sensor RH ignited
This DTC is displayed when the side airbag module and curtain airbag module are deployed.
Once this DTC is displayed, the memory cannot be cleared. Replace the following parts.

- Airbag control module <Ref. to AB-50, Airbag Control Module.>
- Side airbag module (operating side) <Ref. to AB-40, Side Airbag Module.>
- Side airbag sensor (operating side) <Ref. to AB-56, Side Airbag Sensor.>
- Curtain airbag module (operating side) <Ref. to AB-43, Curtain Airbag Module.>
- Curtain airbag sensor (operating side) <Ref. to AB-58, Curtain Airbag Sensor.>
- Front door impact sensor (operating side) <Ref. to AB-54, Front Door Impact Sensor.>
- Front outer seat belt with pretensioner (operating side) <Ref. to SB-19, Front Seat Belt.>

AM:DTC B11F8 SIDE IMPACT DEPLOYMENT

DIAGNOSIS START CONDITION:
Ignition voltage is 10 V to 16 V.
DTC DETECTING CONDITION:
Side impact ignition, side airbag sensor LH ignited

NOTE:
For details on DTC B11F8. refer to DTC B11F7. <Ref. to AB(diag)-50, DTC B11F7 SIDE IMPACT DEPLOYMENT, Diagnostic Chart with Trouble Code.>

AN:DTC B11F9 SIDE IMPACT DEPLOYMENT

DIAGNOSIS START CONDITION:
Ignition voltage is 10 V to 16 V.
DTC DETECTING CONDITION:
Side impact ignition, curtain airbag sensor RH ignited

NOTE:
For details on DTC B11F9, refer to DTC B11F7. <Ref. to AB(diag)-50, DTC B11F7 SIDE IMPACT DEPLOYMENT, Diagnostic Chart with Trouble Code.>

AO:DTC B11FA SIDE IMPACT DEPLOYMENT

DIAGNOSIS START CONDITION:
Ignition voltage is 10 V to 16 V.
DTC DETECTING CONDITION:
Side impact ignition, curtain airbag sensor LH ignited

NOTE:
For details on DTC B11FA, refer to DTC B11F7. <Ref. to AB(diag)-50, DTC B11F7 SIDE IMPACT DEPLOYMENT, Diagnostic Chart with Trouble Code.>

AP:DTC B11FB SIDE IMPACT DEPLOYMENT

DIAGNOSIS START CONDITION:
Ignition voltage is 10 V to 16 V.
DTC DETECTING CONDITION:
Side impact ignition, door sensor RH ignited

NOTE:
For details on DTC B11FB, refer to DTC B11F7. <Ref. to AB(diag)-50, DTC B11F7 SIDE IMPACT DEPLOYMENT, Diagnostic Chart with Trouble Code.>

AQ:DTC B11FC SIDE IMPACT DEPLOYMENT

DIAGNOSIS START CONDITION:
Ignition voltage is 10 V to 16 V.
DTC DETECTING CONDITION:
Side impact ignition, door sensor LH ignited

NOTE:
For details on DTC B11FC, refer to DTC B11F7. <Ref. to AB(diag)-50, DTC B11F7 SIDE IMPACT DEPLOYMENT, Diagnostic Chart with Trouble Code.>

AR:DTC B1610 FRONT SUB SENSOR RH FAILURE

DIAGNOSIS START CONDITION:
Ignition voltage is 10 V to 16 V.
DTC DETECTING CONDITION:
Front sub sensor RH unit internal malfunction
If DTC B1610 is displayed, the circuit within the front sub sensor RH is faulty.
Replace the front sub sensor RH. <Ref. to AB-52, Front Sub Sensor.>

AS:DTC B1612 FRONT SUB SENSOR RH LOST COMMUNICATION

DIAGNOSIS START CONDITION:
Ignition voltage is 10 V to 16 V.
DTC DETECTING CONDITION:
Front sub sensor RH communication error (open/short circuit or connector connection failure between airbag CM and sensor, sensor internal communication circuit failure, CM internal communication circuit failure)

CAUTION:
Before performing diagnosis, refer to "CAUTION" in "General Description". <Ref. to AB(diag)-4, CAUTION, General Description.>
WIRING DIAGRAM:

NOTE:
For the coupling connector, refer to "WIRING SYSTEM".
Airbag system <Ref. to WI-89, WIRING DIAGRAM, Airbag System.>

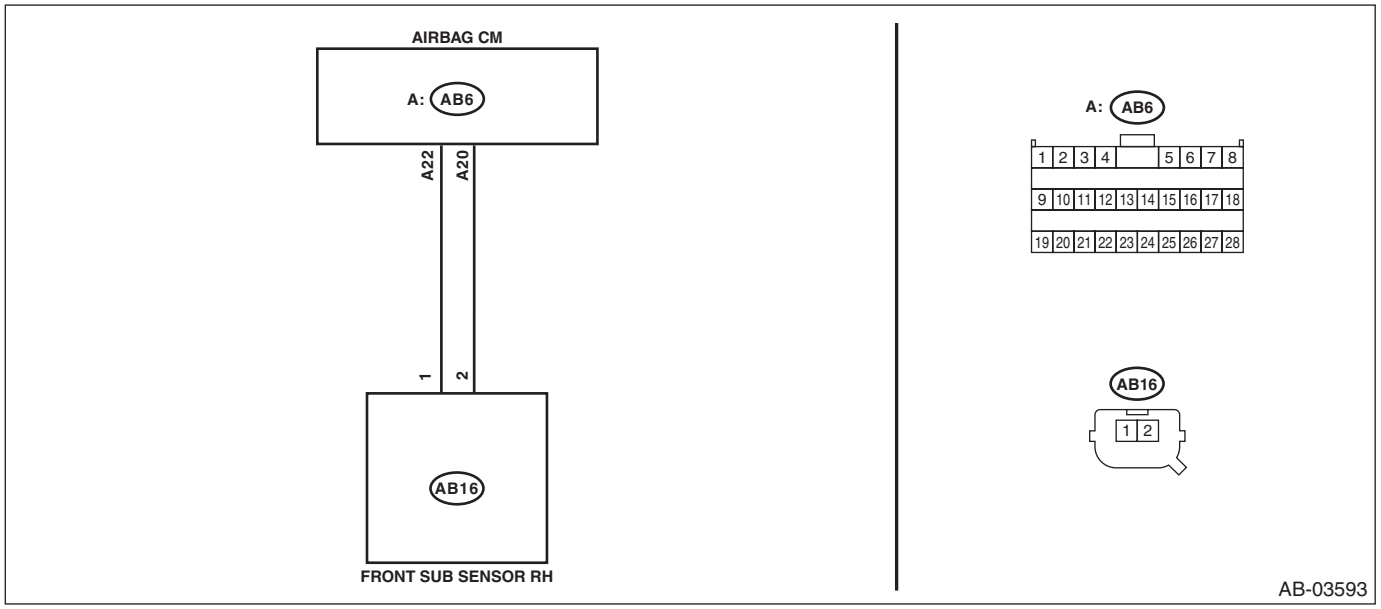

Step		Check	Yes	No
1	**CHECK POOR CONTACT OF CONNECTORS.** Check for poor contact of the connectors (AB6, AB16) between the airbag control module and the front sub sensor RH.	Is there poor contact?	Replace the airbag main harness along with body harness.	Go to step **2**.

	Step	Check	Yes	No
2	**CHECK AIRBAG MAIN HARNESS (FRONT SENSOR BUS RH) (OPEN CIRCUIT).** 1) Turn the ignition switch to OFF, disconnect the battery ground cable, and wait for 60 seconds or more. 2) Remove the instrument panel lower cover and column cover, and disconnect the connectors (AB7) and (AB2). 3) Remove the console front panel and disconnect the connector (AB9). 4) Disconnect the connectors (AB6, AB17, AB18) from airbag control module. 5) Connect the connector (1AD) in test harness AD AV to the connectors (AB6, AB17, AB18). 6) Connect the connector (2AD) in test harness AD AV and the connector (1AG) in test harness AG. 7) Disconnect the connector (AB16) from the front sub sensor RH, and then connect the connector (1H) in the test harness H to connector (AB16). 8) Measure the resistance between connector (4AG) in the test harness AG and connector (3H) in the test harness H. ***Connector & terminal*** ***(4AG) No. 14 — (3H) No. 5:*** ***(4AG) No. 12 — (3H) No. 6:***	Is the resistance less than 10 Ω?	Go to step **3**.	Replace the airbag main harness along with body harness.
3	**CHECK AIRBAG MAIN HARNESS (FRONT SENSOR BUS RH) (SHORTED TO GROUND AND SHORTED BETWEEN LINES).** Measure the resistance between connector (4AG) in the test harness AG and chassis ground, and the resistance between connector (4AG) terminals in the test harness AG. ***Connector & terminal*** ***(4AG) No. 12 — Chassis ground:*** ***(4AG) No. 14 — Chassis ground:*** ***(4AG) No. 12 — (4AG) No. 14:***	Is the resistance 1 MΩ or more?	Go to step **4**.	Replace the airbag main harness along with body harness.
4	**CHECK AIRBAG CONTROL MODULE.** 1) Connect all connectors. 2) Clear the memory. <Ref. to AB(diag)-32, Clear Memory Mode.> 3) Perform the Inspection Mode. <Ref. to AB(diag)-31, Inspection Mode.> 4) Read the DTC. (Current malfunction) <Ref. to AB(diag)-30, Read Diagnostic Trouble Code (DTC).>	Is DTC B1612 displayed?	Replace the front sub sensor RH. <Ref. to AB-52, REMOVAL, Front Sub Sensor.> Replace the airbag control module if not operating normally even after replacing the sensor. <Ref. to AB-50, REMOVAL, Airbag Control Module.>	Go to step **5**.
5	**CHECK FOR ANY OTHER DTC ON DISPLAY.** Read the DTC. (Current malfunction) <Ref. to AB(diag)-30, Read Diagnostic Trouble Code (DTC).>	Is any other DTC displayed?	Check DTC using "List of Diagnostic Trouble Code". <Ref. to AB(diag)-38, List of Diagnostic Trouble Code (DTC).>	Finish the diagnosis.

AT:DTC B1613 FRONT SUB SENSOR RH INITIALIZATION ERROR

DIAGNOSIS START CONDITION:
Ignition voltage is 10 V to 16 V.
DTC DETECTING CONDITION:
Front sub sensor RH unit malfunction (sensor type abnormal, sensor unit initialization error)

CAUTION:
Before performing diagnosis, refer to "CAUTION" in "General Description". <Ref. to AB(diag)-4, CAUTION, General Description.>
WIRING DIAGRAM:

NOTE:
For the coupling connector, refer to "WIRING SYSTEM".
Airbag system <Ref. to WI-89, WIRING DIAGRAM, Airbag System.>

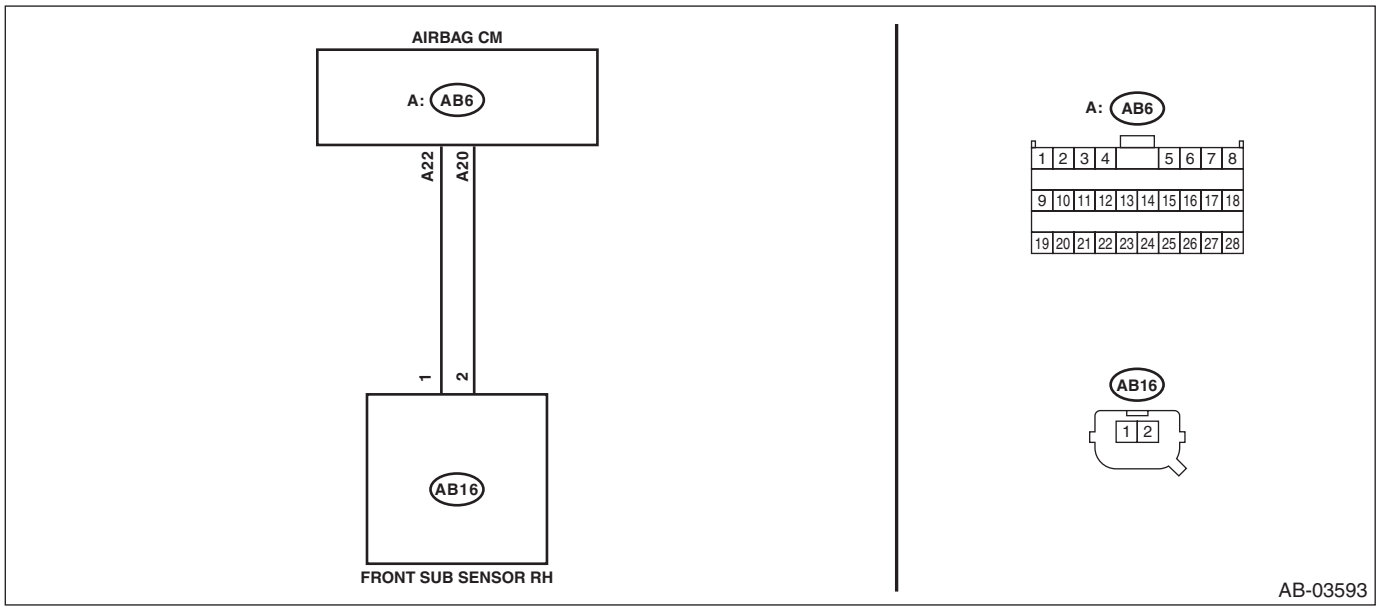

Step		Check	Yes	No
1	**CHECK POOR CONTACT OF CONNECTORS.** Check for poor contact of the connectors (AB6, AB16) between the airbag control module and the front sub sensor RH.	Is there poor contact?	Replace the airbag main harness along with body harness.	Go to step **2**.
2	**CHECK FRONT SUB SENSOR RH.** 1) Turn the ignition switch to OFF, disconnect the battery ground cable, and wait for 60 seconds or more. 2) Replace the front sub sensor RH by the front sub sensor LH. <Ref. to AB-52, Front Sub Sensor.> 3) Connect all connectors. 4) Clear the memory. <Ref. to AB(diag)-32, Clear Memory Mode.> 5) Perform the Inspection Mode. <Ref. to AB(diag)-31, Inspection Mode.> 6) Read the DTC. (Current malfunction) <Ref. to AB(diag)-30, Read Diagnostic Trouble Code (DTC).>	Is DTC B1613 displayed?	Go to step **3**.	Replace the front sub sensor RH. <Ref. to AB-52, Front Sub Sensor.>

	Step	Check	Yes	No
3	**CHECK AIRBAG CONTROL MODULE.** 1) Turn the ignition switch to OFF, disconnect the battery ground cable, and wait for 60 seconds or more. 2) Restore the front sub sensors RH and LH back to their original position. <Ref. to AB-52, Front Sub Sensor.> 3) Connect all connectors. 4) Clear the memory. <Ref. to AB(diag)-32, Clear Memory Mode.> 5) Perform the Inspection Mode. <Ref. to AB(diag)-31, Inspection Mode.> 6) Read the DTC. (Current malfunction) <Ref. to AB(diag)-30, Read Diagnostic Trouble Code (DTC).>	Is DTC B1613 displayed?	Replace the airbag control module. <Ref. to AB-50, REMOVAL, Airbag Control Module.>	Go to step **4**.
4	**CHECK FOR ANY OTHER DTC ON DISPLAY.** Read the DTC. (Current malfunction) <Ref. to AB(diag)-30, Read Diagnostic Trouble Code (DTC).>	Is any other DTC displayed?	Check DTC using "List of Diagnostic Trouble Code". <Ref. to AB(diag)-38, List of Diagnostic Trouble Code (DTC).>	Finish the diagnosis.

AU:DTC B1615 FRONT SUB SENSOR LH FAILURE

DIAGNOSIS START CONDITION:
Ignition voltage is 10 V to 16 V.
DTC DETECTING CONDITION:
Front sub sensor LH unit internal malfunction
If DTC B1615 is displayed, the circuit within the front sub sensor LH is faulty.
Replace the front sub sensor LH. <Ref. to AB-52, Front Sub Sensor.>

AV:DTC B1617 FRONT SUB SENSOR LH LOST COMMUNICATION

DIAGNOSIS START CONDITION:
Ignition voltage is 10 V to 16 V.
DTC DETECTING CONDITION:
Front sub sensor LH communication error (open/short circuit or connector connection failure between airbag CM and sensor, sensor internal communication circuit failure, CM internal communication circuit failure)

CAUTION:
Before performing diagnosis, refer to "CAUTION" in "General Description". <Ref. to AB(diag)-4, CAUTION, General Description.>
WIRING DIAGRAM:

NOTE:
For the coupling connector, refer to "WIRING SYSTEM".
Airbag system <Ref. to WI-89, WIRING DIAGRAM, Airbag System.>

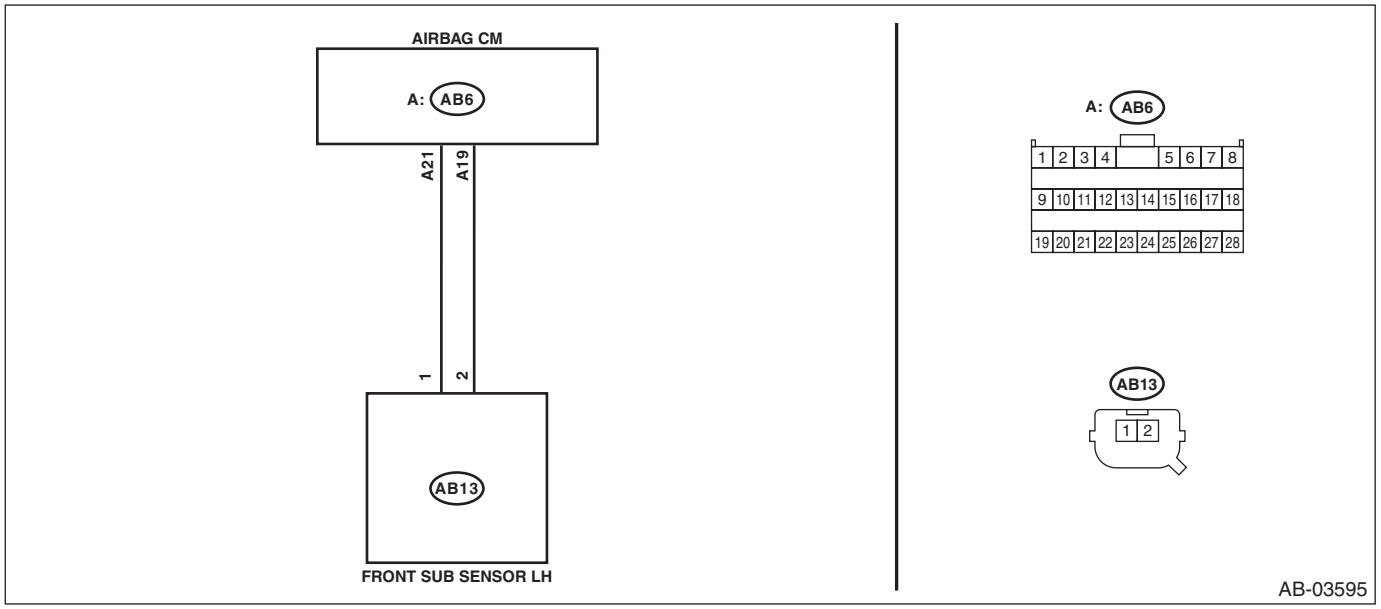

Step		Check	Yes	No
1	**CHECK POOR CONTACT OF CONNECTORS.** Check for poor contact of the connectors (AB6, AB13) between the airbag control module and the front sub sensor LH.	Is there poor contact?	Replace the airbag main harness along with body harness.	Go to step **2**.

	Step	Check	Yes	No
2	**CHECK AIRBAG MAIN HARNESS (FRONT SENSOR BUS LH) (OPEN CIRCUIT).** 1) Turn the ignition switch to OFF, disconnect the battery ground cable, and wait for 60 seconds or more. 2) Remove the instrument panel lower cover and column cover, and disconnect the connectors (AB7) and (AB2). 3) Remove the console front panel and disconnect the connector (AB9). 4) Disconnect the connectors (AB6, AB17, AB18) from airbag control module. 5) Connect the connector (1AD) in test harness AD AV to the connectors (AB6, AB17, AB18). 6) Connect the connector (2AD) in test harness AD AV and the connector (1AG) in test harness AG. 7) Disconnect the connector (AB13) from the front sub sensor LH, and then connect the connector (1H) in the test harness H to connector (AB13). 8) Measure the resistance between connector (4AG) in the test harness AG and connector (3H) in the test harness H. ***Connector & terminal*** ***(4AG) No. 7 — (3H) No. 5:*** ***(4AG) No. 9 — (3H) No. 6:***	Is the resistance less than 10 Ω?	Go to step **3**.	Replace the airbag main harness along with body harness.
3	**CHECK AIRBAG MAIN HARNESS (FRONT SENSOR BUS LH) (SHORTED TO GROUND AND SHORTED BETWEEN LINES).** Measure the resistance between connector (4AG) in the test harness AG and chassis ground, and the resistance between connector (4AG) terminals in the test harness AG. ***Connector & terminal*** ***(4AG) No. 7 — Chassis ground:*** ***(4AG) No. 9 — Chassis ground:*** ***(4AG) No. 7 — (4AG) No. 9:***	Is the resistance 1 MΩ or more?	Go to step **4**.	Replace the airbag main harness along with body harness.
4	**CHECK AIRBAG CONTROL MODULE.** 1) Connect all connectors. 2) Clear the memory. <Ref. to AB(diag)-32, Clear Memory Mode.> 3) Perform the Inspection Mode. <Ref. to AB(diag)-31, Inspection Mode.> 4) Read the DTC. (Current malfunction) <Ref. to AB(diag)-30, Read Diagnostic Trouble Code (DTC).>	Is DTC B1617 displayed?	Replace the front sub sensor LH. <Ref. to AB-52, REMOVAL, Front Sub Sensor.> Replace the airbag control module if not operating normally even after replacing the sensor. <Ref. to AB-50, REMOVAL, Airbag Control Module.>	Go to step **5**.
5	**CHECK FOR ANY OTHER DTC ON DISPLAY.**	Is any other DTC displayed?	Check DTC using "List of Diagnostic Trouble Code". <Ref. to AB(diag)-38, List of Diagnostic Trouble Code (DTC).>	Finish the diagnosis.

AW:DTC B1618 FRONT SUB SENSOR LH INITIALIZATION ERROR

DIAGNOSIS START CONDITION:
Ignition voltage is 10 V to 16 V.
DTC DETECTING CONDITION:
Front sub sensor LH unit malfunction (sensor type abnormal, sensor unit initialization error)

CAUTION:
Before performing diagnosis, refer to "CAUTION" in "General Description". <Ref. to AB(diag)-4, CAUTION, General Description.>
WIRING DIAGRAM:

NOTE:
For the coupling connector, refer to "WIRING SYSTEM".
Airbag system <Ref. to WI-89, WIRING DIAGRAM, Airbag System.>

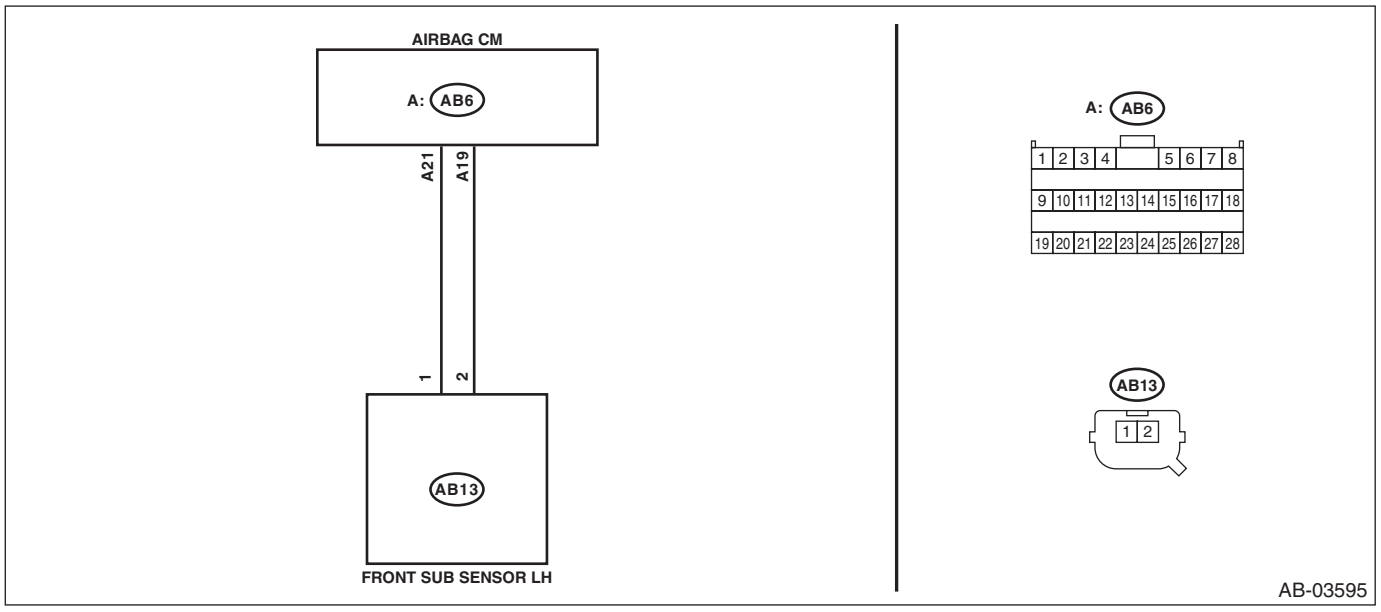

Step		Check	Yes	No
1	**CHECK POOR CONTACT OF CONNECTORS.** Check for poor contact of the connectors (AB6, AB13) between the airbag control module and the front sub sensor LH.	Is there poor contact?	Replace the airbag main harness along with body harness.	Go to step **2**.
2	**CHECK FRONT SUB SENSOR LH.** 1) Turn the ignition switch to OFF, disconnect the battery ground cable, and wait for 60 seconds or more. 2) Replace the front sub sensor LH by the front sub sensor RH. <Ref. to AB-52, REMOVAL, Front Sub Sensor.> 3) Connect all connectors. 4) Clear the memory. <Ref. to AB(diag)-32, Clear Memory Mode.> 5) Perform the Inspection Mode. <Ref. to AB(diag)-31, Inspection Mode.> 6) Read the DTC. (Current malfunction) <Ref. to AB(diag)-30, Read Diagnostic Trouble Code (DTC).>	Is DTC B1618 displayed?	Go to step **3**.	Replace the front sub sensor LH. <Ref. to AB-52, REMOVAL, Front Sub Sensor.>

	Step	Check	Yes	No
3	**CHECK AIRBAG CONTROL MODULE.** 1) Turn the ignition switch to OFF, disconnect the battery ground cable, and wait for 60 seconds or more. 2) Restore the front sub sensors LH and RH back to their original position. <Ref. to AB-52, REMOVAL, Front Sub Sensor.> 3) Connect all connectors. 4) Clear the memory. <Ref. to AB(diag)-32, Clear Memory Mode.> 5) Perform the Inspection Mode. <Ref. to AB(diag)-31, Inspection Mode.> 6) Read the DTC. (Current malfunction) <Ref. to AB(diag)-30, Read Diagnostic Trouble Code (DTC).>	Is DTC B1618 displayed?	Replace the airbag control module. <Ref. to AB-50, REMOVAL, Airbag Control Module.>	Go to step **4**.
4	**CHECK FOR ANY OTHER DTC ON DISPLAY.** Read the DTC. (Current malfunction) <Ref. to AB(diag)-30, Read Diagnostic Trouble Code (DTC).>	Is any other DTC displayed?	Check DTC using "List of Diagnostic Trouble Code". <Ref. to AB(diag)-38, List of Diagnostic Trouble Code (DTC).>	Finish the diagnosis.

AX:DTC B1620 SIDE AIRBAG SENSOR RH FAILURE

DIAGNOSIS START CONDITION:
Ignition voltage is 10 V to 16 V.
DTC DETECTING CONDITION:
Side airbag sensor RH unit internal malfunction
When DTC B1620 is displayed, the circuit within the side airbag sensor RH is faulty.
Replace the side airbag sensor RH. <Ref. to AB-56, Side Airbag Sensor.>

AY:DTC B1622 SIDE AIRBAG SENSOR RH LOST COMMUNICATION

DIAGNOSIS START CONDITION:
Ignition voltage is 10 V to 16 V.
DTC DETECTING CONDITION:
Side airbag sensor RH communication error (open/short circuit or connector connection failure between airbag CM and sensor, sensor internal communication circuit failure, CM internal communication circuit failure)

CAUTION:
Before performing diagnosis, refer to "CAUTION" in "General Description". <Ref. to AB(diag)-4, CAUTION, General Description.>
WIRING DIAGRAM:

NOTE:
For the coupling connector, refer to "WIRING SYSTEM".
Airbag system <Ref. to WI-89, WIRING DIAGRAM, Airbag System.>

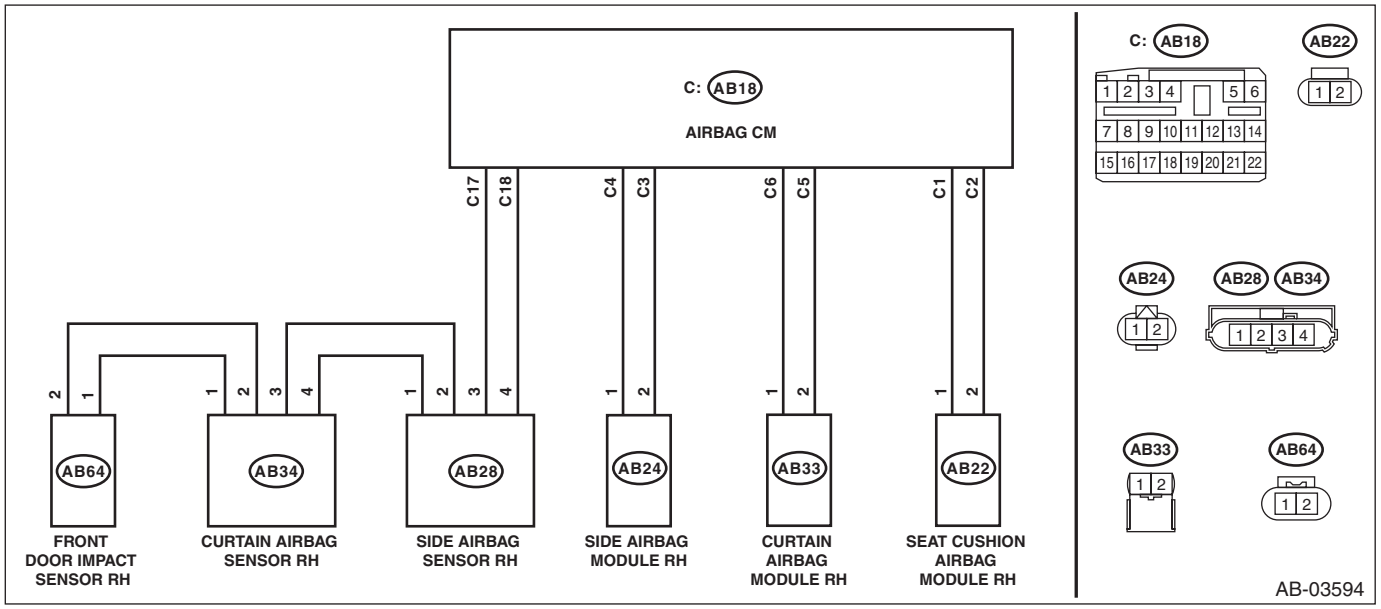

Step		Check	Yes	No
1	**CHECK POOR CONTACT OF CONNECTORS.** Check for poor contact of the connectors between the airbag control module and the side airbag sensor RH.	Is there poor contact?	Replace the airbag main harness along with body harness.	Go to step **2**.

	Step	Check	Yes	No
2	**CHECK AIRBAG REAR HARNESS (BETWEEN AIRBAG CONTROL MODULE AND SIDE AIRBAG SENSOR RH) (OPEN CIRCUIT).** 1) Turn the ignition switch to OFF, disconnect the battery ground cable, and wait for 60 seconds or more. 2) Disconnect the connector (AB26) from seat belt pretensioner RH. 3) Disconnect the connector (AB22) from seat cushion airbag module RH. 4) Disconnect the connector (AB33) from curtain airbag module RH. 5) Disconnect the connector (AB24) of side airbag module RH. 6) Disconnect the connectors (AB6, AB17, AB18) from airbag control module. 7) Connect the connector (1AD) in test harness AD AV to the connectors (AB6, AB17, AB18). 8) Connect the connector (2AD) in test harness AD AV and the connector (1AG) in test harness AG. 9) Disconnect the connector (AB28) from side airbag sensor RH, and connect the connector (2V) in test harness V to connector (AB28). 10) Measure the resistance between connector (5AG) in the test harness AG and connector (3V) in the test harness V. ***Connector & terminal*** ***(5AG) No. 8 — (3V) No. 1:*** ***(5AG) No. 10 — (3V) No. 2:***	Is the resistance less than 10 Ω?	Go to step **3**.	Replace the airbag rear harness along with body harness.
3	**CHECK AIRBAG REAR HARNESS (BETWEEN AIRBAG CONTROL MODULE AND SIDE AIRBAG SENSOR RH) (SHORTED TO GROUND AND SHORTED BETWEEN LINES).** Measure the resistance between connector (5AG) in the test harness AG and chassis ground, and the resistance between connector (5AG) terminals in the test harness AG. ***Connector & terminal*** ***(3V) No. 1 — Chassis ground:*** ***(3V) No. 2 — Chassis ground:*** ***(3V) No. 1 — (3V) No. 2:***	Is the resistance 1 MΩ or more?	Go to step **4**.	Replace the airbag rear harness along with body harness.
4	**CHECK AIRBAG CONTROL MODULE.** 1) Connect all connectors. 2) Clear the memory. <Ref. to AB(diag)-32, Clear Memory Mode.> 3) Perform the Inspection Mode. <Ref. to AB(diag)-31, Inspection Mode.> 4) Read the DTC. (Current malfunction) <Ref. to AB(diag)-30, Read Diagnostic Trouble Code (DTC).>	Is DTC B1622 displayed?	Go to step **5**.	Go to step **8**.

	Step	Check	Yes	No
5	**CHECK SIDE AIRBAG SENSOR RH.** 1) Turn the ignition switch to OFF, disconnect the battery ground cable, and wait for 60 seconds or more. 2) Replace the side airbag sensor RH by the side airbag sensor LH. <Ref. to AB-56, REMOVAL, Side Airbag Sensor.> 3) Connect all connectors. 4) Clear the memory. <Ref. to AB(diag)-32, Clear Memory Mode.> 5) Perform the Inspection Mode. <Ref. to AB(diag)-31, Inspection Mode.> 6) Read the DTC. (Current malfunction) <Ref. to AB(diag)-30, Read Diagnostic Trouble Code (DTC).>	Is DTC B1622 displayed?	Go to step **6**.	Replace the curtain airbag sensor RH. <Ref. to AB-58, REMOVAL, Curtain Airbag Sensor.>
6	**CHECK CURTAIN AIRBAG SENSOR RH.** 1) Turn the ignition switch to OFF, disconnect the battery ground cable, and wait for 60 seconds or more. 2) Restore the side airbag sensors RH and LH back to their original position. <Ref. to AB-56, REMOVAL, Side Airbag Sensor.> 3) Replace the curtain airbag sensor RH by the curtain airbag sensor LH. <Ref. to AB-58, REMOVAL, Curtain Airbag Sensor.> 4) Connect all connectors. 5) Clear the memory. <Ref. to AB(diag)-32, Clear Memory Mode.> 6) Perform the Inspection Mode. <Ref. to AB(diag)-31, Inspection Mode.> 7) Read the DTC. (Current malfunction) <Ref. to AB(diag)-30, Read Diagnostic Trouble Code (DTC).>	Is DTC B1622 displayed?	Go to step **7**.	Replace the curtain airbag sensor RH. <Ref. to AB-58, REMOVAL, Curtain Airbag Sensor.>
7	**CHECK AIRBAG CONTROL MODULE.** 1) Turn the ignition switch to OFF, disconnect the battery ground cable, and wait for 60 seconds or more. 2) Restore the curtain airbag sensors RH and LH back to their original position. <Ref. to AB-58, REMOVAL, Curtain Airbag Sensor.> 3) Connect all connectors. 4) Clear the memory. <Ref. to AB(diag)-32, Clear Memory Mode.> 5) Perform the Inspection Mode. <Ref. to AB(diag)-31, Inspection Mode.> 6) Read the DTC. (Current malfunction) <Ref. to AB(diag)-30, Read Diagnostic Trouble Code (DTC).>	Is DTC B1622 displayed?	Replace the airbag control module. <Ref. to AB-50, REMOVAL, Airbag Control Module.>	Go to step **8**.
8	**CHECK FOR ANY OTHER DTC ON DISPLAY.** Read the DTC. (Current malfunction) <Ref. to AB(diag)-30, Read Diagnostic Trouble Code (DTC).>	Is any other DTC displayed?	Check DTC using "List of Diagnostic Trouble Code (DTC)". <Ref. to AB(diag)-38, List of Diagnostic Trouble Code (DTC).>	Finish the diagnosis.

AZ:DTC B1623 SIDE AIRBAG SENSOR RH INITIALIZATION ERROR

DIAGNOSIS START CONDITION:
Ignition voltage is 10 V to 16 V.
DTC DETECTING CONDITION:
Side airbag sensor RH unit malfunction (sensor type abnormal, sensor unit initialization error)

CAUTION:
Before performing diagnosis, refer to "CAUTION" in "General Description". <Ref. to AB(diag)-4, CAUTION, General Description.>
WIRING DIAGRAM:

NOTE:
For the coupling connector, refer to "WIRING SYSTEM".
Airbag system <Ref. to WI-89, WIRING DIAGRAM, Airbag System.>

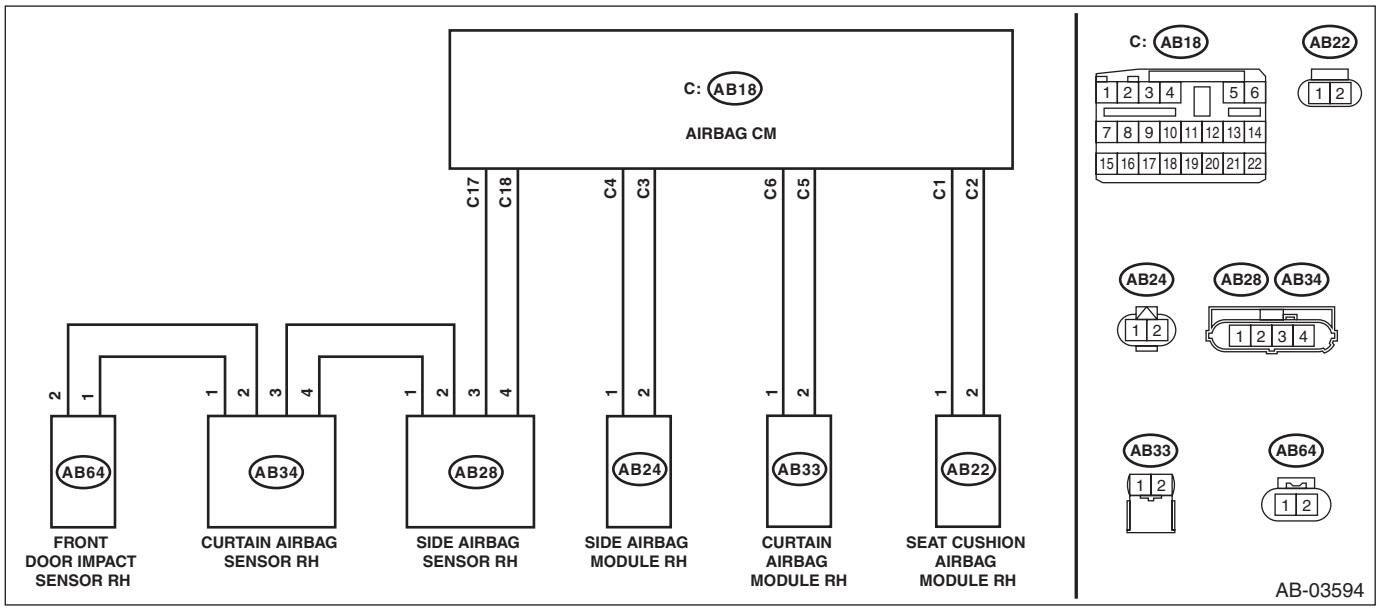

Step		Check	Yes	No
1	**CHECK POOR CONTACT OF CONNECTORS.** Check for poor contact of the connectors between the airbag control module and the side airbag sensor RH.	Is there poor contact?	Replace the airbag main harness along with body harness.	Go to step **2**.
2	**CHECK SIDE AIRBAG SENSOR RH.** 1) Turn the ignition switch to OFF, disconnect the battery ground cable, and wait for 60 seconds or more. 2) Replace the side airbag sensor RH by the side airbag sensor LH. <Ref. to AB-56, REMOVAL, Side Airbag Sensor.> 3) Connect all connectors. 4) Clear the memory. <Ref. to AB(diag)-32, Clear Memory Mode.> 5) Perform the Inspection Mode. <Ref. to AB(diag)-31, Inspection Mode.> 6) Read the DTC. (Current malfunction) <Ref. to AB(diag)-30, Read Diagnostic Trouble Code (DTC).>	Is DTC B1623 displayed?	Go to step **3**.	Replace the side airbag sensor RH. <Ref. to AB-56, REMOVAL, Side Airbag Sensor.>

	Step	Check	Yes	No
3	**CHECK SIDE AIRBAG SENSOR RH.** 1) Turn the ignition switch to OFF, disconnect the battery ground cable, and wait for 60 seconds or more. 2) Restore the side airbag sensors RH and LH back to their original position. <Ref. to AB-56, REMOVAL, Side Airbag Sensor.> 3) Replace the curtain airbag sensor RH by the curtain airbag sensor LH. <Ref. to AB-58, REMOVAL, Curtain Airbag Sensor.> 4) Connect all connectors. 5) Clear the memory. <Ref. to AB(diag)-32, Clear Memory Mode.> 6) Perform the Inspection Mode. <Ref. to AB(diag)-31, Inspection Mode.> 7) Read the DTC. (Current malfunction) <Ref. to AB(diag)-30, Read Diagnostic Trouble Code (DTC).>	Is DTC B1623 displayed?	Go to step **4**.	Replace the curtain airbag sensor RH. <Ref. to AB-58, REMOVAL, Curtain Airbag Sensor.>
4	**CHECK AIRBAG CONTROL MODULE.** 1) Turn the ignition switch to OFF, disconnect the battery ground cable, and wait for 60 seconds or more. 2) Restore the curtain airbag sensors RH and LH back to their original position. <Ref. to AB-58, REMOVAL, Curtain Airbag Sensor.> 3) Connect all connectors. 4) Clear the memory. <Ref. to AB(diag)-32, Clear Memory Mode.> 5) Perform the Inspection Mode. <Ref. to AB(diag)-31, Inspection Mode.> 6) Read the DTC. (Current malfunction) <Ref. to AB(diag)-30, Read Diagnostic Trouble Code (DTC).>	Is DTC B1623 displayed?	Replace the airbag control module. <Ref. to AB-50, REMOVAL, Airbag Control Module.>	Go to step **5**.
5	**CHECK FOR ANY OTHER DTC ON DISPLAY.** Read the DTC. (Current malfunction) <Ref. to AB(diag)-30, Read Diagnostic Trouble Code (DTC).>	Is any other DTC displayed?	Check DTC using “List of Diagnostic Trouble Code (DTC)”. <Ref. to AB(diag)-38, List of Diagnostic Trouble Code (DTC).>	Finish the diagnosis.

BA:DTC B1625 SIDE AIRBAG SENSOR LH FAILURE

DIAGNOSIS START CONDITION:
Ignition voltage is 10 V to 16 V.
DTC DETECTING CONDITION:
Side airbag sensor LH unit internal malfunction
When DTC B1625 is displayed, the circuit within the side airbag sensor LH is faulty.
Replace the side airbag sensor LH. <Ref. to AB-56, Side Airbag Sensor.>

BB:DTC B1627 SIDE AIRBAG SENSOR LH LOST COMMUNICATION

DIAGNOSIS START CONDITION:
Ignition voltage is 10 V to 16 V.
DTC DETECTING CONDITION:
Side airbag sensor LH communication error (open/short circuit or connector connection failure between airbag CM and sensor, sensor internal communication circuit failure, CM internal communication circuit failure)

CAUTION:
Before performing diagnosis, refer to "CAUTION" in "General Description". <Ref. to AB(diag)-4, CAUTION, General Description.>
WIRING DIAGRAM:

NOTE:
For the coupling connector, refer to "WIRING SYSTEM".
Airbag system <Ref. to WI-89, WIRING DIAGRAM, Airbag System.>

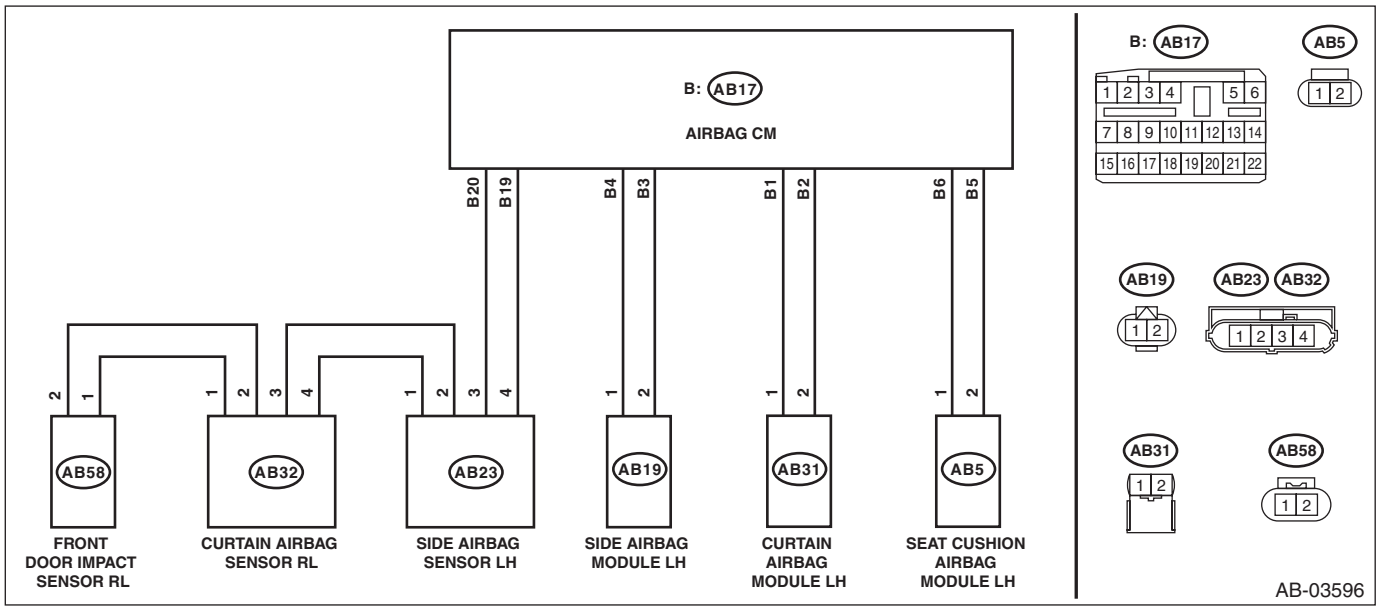

Step		Check	Yes	No
1	**CHECK POOR CONTACT OF CONNECTORS.** Check for poor contact of the connectors between the airbag control module and the side airbag sensor LH.	Is there poor contact?	Replace the airbag main harness along with body harness.	Go to step **2**.

	Step	Check	Yes	No
2	**CHECK AIRBAG REAR HARNESS (BETWEEN AIRBAG CONTROL MODULE AND SIDE AIRBAG SENSOR LH) (OPEN CIRCUIT).** 1) Turn the ignition switch to OFF, disconnect the battery ground cable, and wait for 60 seconds or more. 2) Disconnect the connector (AB21) from seat belt pretensioner LH. 3) Disconnect the connector (AB5) from seat cushion airbag module LH. 4) Disconnect the connector (AB31) from curtain airbag module LH. 5) Disconnect the connector (AB19) of the side airbag module LH. 6) Disconnect the connectors (AB6, AB17, AB18) from airbag control module. 7) Connect the connector (1AD) in test harness AD AV to the connectors (AB6, AB17, AB18). 8) Connect the connector (2AD) in test harness AD AV and the connector (1AG) in test harness AG. 9) Disconnect the connector (AB23) from side airbag sensor LH, and connect the connector (2V) in test harness V to connector (AB23). 10) Measure the resistance between connector (5AG) in the test harness AG and connector (3V) in the test harness V. ***Connector & terminal*** ***(5AG) No. 14 — (3V) No. 2:*** ***(5AG) No. 16 — (3V) No. 1:***	Is the resistance less than 10 Ω?	Go to step **3**.	Replace the airbag rear harness along with body harness.
3	**CHECK AIRBAG REAR HARNESS (BETWEEN AIRBAG CONTROL MODULE AND SIDE AIRBAG SENSOR LH) (SHORTED TO GROUND AND SHORTED BETWEEN LINES).** Measure the resistance between connector (5AG) in the test harness AG and chassis ground, and the resistance between connector (5AG) terminals in the test harness AG. ***Connector & terminal*** ***(3V) No. 1 — Chassis ground:*** ***(3V) No. 2 — Chassis ground:*** ***(3V) No. 1 — (3V) No. 2:***	Is the resistance 1 MΩ or more?	Go to step **4**.	Replace the airbag rear harness along with body harness.
4	**CHECK AIRBAG CONTROL MODULE.** 1) Connect all connectors. 2) Clear the memory. <Ref. to AB(diag)-32, Clear Memory Mode.> 3) Perform the Inspection Mode. <Ref. to AB(diag)-31, Inspection Mode.> 4) Read the DTC. (Current malfunction) <Ref. to AB(diag)-30, Read Diagnostic Trouble Code (DTC).>	Is DTC B1627 displayed?	Go to step **5**.	Go to step **8**.

	Step	Check	Yes	No
5	**CHECK SIDE AIRBAG SENSOR LH.** 1) Turn the ignition switch to OFF, disconnect the battery ground cable, and wait for 60 seconds or more. 2) Replace the side airbag sensor LH by the side airbag sensor RH. <Ref. to AB-56, REMOVAL, Side Airbag Sensor.> 3) Connect all connectors. 4) Clear the memory. <Ref. to AB(diag)-32, Clear Memory Mode.> 5) Perform the Inspection Mode. <Ref. to AB(diag)-31, Inspection Mode.> 6) Read the DTC. (Current malfunction) <Ref. to AB(diag)-30, Read Diagnostic Trouble Code (DTC).>	Is DTC B1627 displayed?	Go to step **6**.	Replace the side airbag sensor LH. <Ref. to AB-56, REMOVAL, Side Airbag Sensor.>
6	**CHECK CURTAIN AIRBAG SENSOR LH.** 1) Turn the ignition switch to OFF, disconnect the battery ground cable, and wait for 60 seconds or more. 2) Restore the side airbag sensors LH and RH back to their original position. <Ref. to AB-56, REMOVAL, Side Airbag Sensor.> 3) Replace the curtain airbag sensor LH by the curtain airbag sensor RH. <Ref. to AB-58, REMOVAL, Curtain Airbag Sensor.> 4) Connect all connectors. 5) Clear the memory. <Ref. to AB(diag)-32, Clear Memory Mode.> 6) Perform the Inspection Mode. <Ref. to AB(diag)-31, Inspection Mode.> 7) Read the DTC. (Current malfunction) <Ref. to AB(diag)-30, Read Diagnostic Trouble Code (DTC).>	Is DTC B1627 displayed?	Go to step **7**.	Replace the curtain airbag sensor LH. <Ref. to AB-58, REMOVAL, Curtain Airbag Sensor.>
7	**CHECK AIRBAG CONTROL MODULE.** 1) Turn the ignition switch to OFF, disconnect the battery ground cable, and wait for 60 seconds or more. 2) Restore the curtain airbag sensors RH and LH back to their original position. <Ref. to AB-58, REMOVAL, Curtain Airbag Sensor.> 3) Connect all connectors. 4) Clear the memory. <Ref. to AB(diag)-32, Clear Memory Mode.> 5) Perform the Inspection Mode. <Ref. to AB(diag)-31, Inspection Mode.> 6) Read the DTC. (Current malfunction) <Ref. to AB(diag)-30, Read Diagnostic Trouble Code (DTC).>	Is DTC B1627 displayed?	Replace the airbag control module. <Ref. to AB-50, REMOVAL, Airbag Control Module.>	Go to step **8**.
8	**CHECK FOR ANY OTHER DTC ON DISPLAY.** Read the DTC. (Current malfunction) <Ref. to AB(diag)-30, Read Diagnostic Trouble Code (DTC).>	Is any other DTC displayed?	Check DTC using "List of Diagnostic Trouble Code (DTC)". <Ref. to AB(diag)-38, List of Diagnostic Trouble Code (DTC).>	Finish the diagnosis.

BC:DTC B1628 SIDE AIRBAG SENSOR LH INITIALIZATION ERROR

DIAGNOSIS START CONDITION:
Ignition voltage is 10 V to 16 V.
DTC DETECTING CONDITION:
Side airbag sensor LH unit malfunction (sensor type abnormal, sensor unit initialization error)

CAUTION:
Before performing diagnosis, refer to "CAUTION" in "General Description". <Ref. to AB(diag)-4, CAUTION, General Description.>
WIRING DIAGRAM:

NOTE:
For the coupling connector, refer to "WIRING SYSTEM".
Airbag system <Ref. to WI-89, WIRING DIAGRAM, Airbag System.>

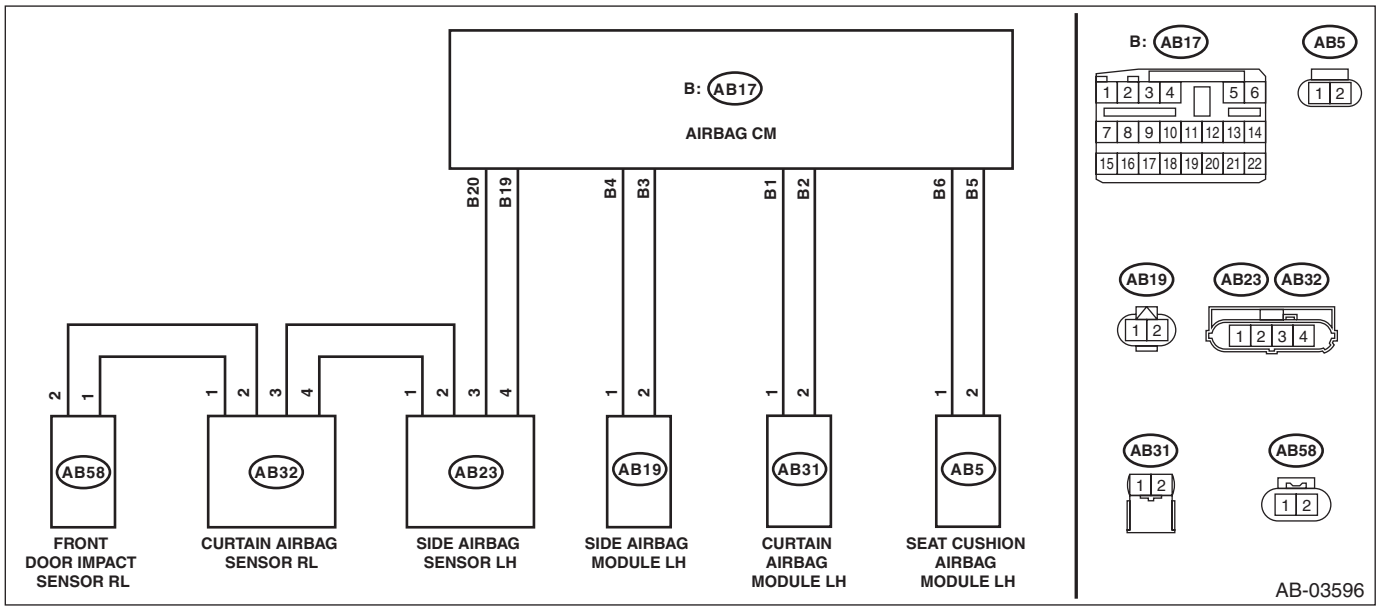

Step		Check	Yes	No
1	**CHECK POOR CONTACT OF CONNECTORS.** Check for poor contact of the connectors between the airbag control module and the side airbag sensor LH.	Is there poor contact?	Replace the airbag main harness along with body harness.	Go to step **2**.
2	**CHECK SIDE AIRBAG SENSOR LH.** 1) Turn the ignition switch to OFF, disconnect the battery ground cable, and wait for 60 seconds or more. 2) Replace the side airbag sensor LH by the side airbag sensor RH. <Ref. to AB-56, REMOVAL, Side Airbag Sensor.> 3) Connect all connectors. 4) Clear the memory. <Ref. to AB(diag)-32, Clear Memory Mode.> 5) Perform the Inspection Mode. <Ref. to AB(diag)-31, Inspection Mode.> 6) Read the DTC. (Current malfunction) <Ref. to AB(diag)-30, Read Diagnostic Trouble Code (DTC).>	Is DTC B1628 displayed?	Go to step **3**.	Replace the side airbag sensor LH. <Ref. to AB-56, REMOVAL, Side Airbag Sensor.>

	Step	Check	Yes	No
3	**CHECK CURTAIN AIRBAG SENSOR LH.** 1) Turn the ignition switch to OFF, disconnect the battery ground cable, and wait for 60 seconds or more. 2) Restore the side airbag sensors LH and RH back to their original position. <Ref. to AB-56, REMOVAL, Side Airbag Sensor.> 3) Replace the curtain airbag sensor LH by the curtain airbag sensor RH. <Ref. to AB-58, REMOVAL, Curtain Airbag Sensor.> 4) Connect all connectors. 5) Clear the memory. <Ref. to AB(diag)-32, Clear Memory Mode.> 6) Perform the Inspection Mode. <Ref. to AB(diag)-31, Inspection Mode.> 7) Read the DTC. (Current malfunction) <Ref. to AB(diag)-30, Read Diagnostic Trouble Code (DTC).>	Is DTC B1628 displayed?	Go to step **4**.	Replace the curtain airbag sensor LH. <Ref. to AB-58, REMOVAL, Curtain Airbag Sensor.>
4	**CHECK AIRBAG CONTROL MODULE.** 1) Turn the ignition switch to OFF, disconnect the battery ground cable, and wait for 60 seconds or more. 2) Restore the curtain airbag sensors RH and LH back to their original position. <Ref. to AB-58, REMOVAL, Curtain Airbag Sensor.> 3) Connect all connectors. 4) Clear the memory. <Ref. to AB(diag)-32, Clear Memory Mode.> 5) Perform the Inspection Mode. <Ref. to AB(diag)-31, Inspection Mode.> 6) Read the DTC. (Current malfunction) <Ref. to AB(diag)-30, Read Diagnostic Trouble Code (DTC).>	Is DTC B1628 displayed?	Replace the airbag control module. <Ref. to AB-50, REMOVAL, Airbag Control Module.>	Go to step **5**.
5	**CHECK FOR ANY OTHER DTC ON DISPLAY.** Read the DTC. (Current malfunction) <Ref. to AB(diag)-30, Read Diagnostic Trouble Code (DTC).>	Is any other DTC displayed?	Check DTC using “List of Diagnostic Trouble Code (DTC)”. <Ref. to AB(diag)-38, List of Diagnostic Trouble Code (DTC).>	Finish the diagnosis.

BD:DTC B1630 CURTAIN AIRBAG SENSOR RH FAILURE

DIAGNOSIS START CONDITION:

Ignition voltage is 10 V to 16 V.

DTC DETECTING CONDITION:

Curtain airbag sensor RH unit internal malfunction

If DTC B1630 is displayed, the circuit within the curtain airbag sensor RH is faulty.

Replace the curtain airbag sensor RH. <Ref. to AB-58, Curtain Airbag Sensor.>

BE:DTC B1632 CURTAIN AIRBAG SENSOR RH LOST COMMUNICATION

DIAGNOSIS START CONDITION:
Ignition voltage is 10 V to 16 V.
DTC DETECTING CONDITION:
Curtain airbag sensor RH communication error (open/short circuit or connector connection failure between airbag CM and sensor, sensor internal communication circuit failure, CM internal communication circuit failure)

CAUTION:
Before performing diagnosis, refer to "CAUTION" in "General Description". <Ref. to AB(diag)-4, CAUTION, General Description.>
WIRING DIAGRAM:

NOTE:
For the coupling connector, refer to "WIRING SYSTEM".
Airbag system <Ref. to WI-89, WIRING DIAGRAM, Airbag System.>

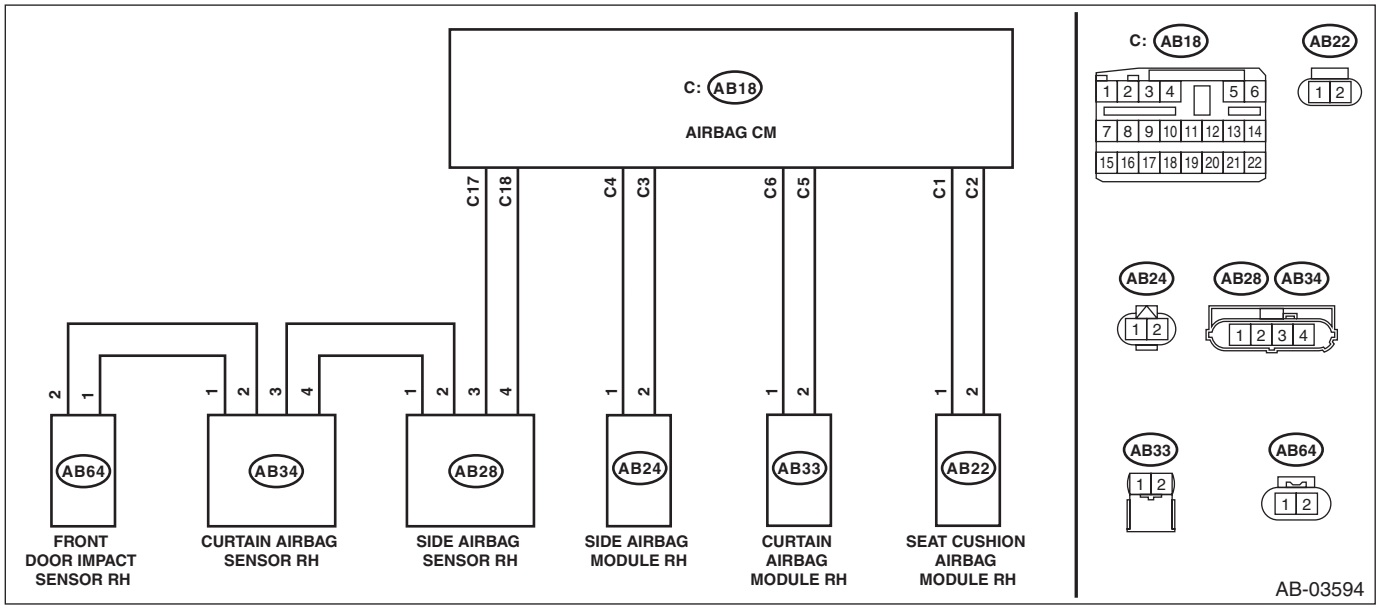

Step		Check	Yes	No
1	**CHECK DTC.** Read the DTC. (Current malfunction) <Ref. to AB(diag)-30, Read Diagnostic Trouble Code (DTC).>	Is DTC B1622 displayed?	Perform the diagnosis according to DTC.	Go to step **2**.
2	**CHECK POOR CONTACT OF CONNECTORS.** Check for poor contact of the connectors between the airbag control module and the door sensor RH.	Is there poor contact?	Replace the airbag rear harness and the door harness.	Go to step **3**.

	Step	Check	Yes	No
3	**CHECK AIRBAG REAR HARNESS (BETWEEN SIDE AIRBAG SENSOR RH AND CURTAIN AIRBAG SENSOR RH) (OPEN CIRCUIT).** 1) Turn the ignition switch to OFF, disconnect the battery ground cable, and wait for 60 seconds or more. 2) Disconnect the connector (AB26) from seat belt pretensioner RH. 3) Disconnect the connector (AB22) from seat cushion airbag module RH. 4) Disconnect the connector (AB33) from curtain airbag module RH. 5) Disconnect the connector (AB24) of side airbag module RH. 6) Disconnect the connector (AB28) of side airbag sensor RH. 7) Connect the connector (AB28) of side airbag sensor RH and the connector (1AI) in the test harness AI. 8) Connect the connector (2AI) in the test harness AI and the connector (1V) in the test harness V. 9) Disconnect the connector (AB34) from curtain airbag sensor (RH), and connect the connector (2V) in test harness V to connector (AB34). 10) Measure the resistance between connector (3V) terminals in the test harness V. ***Connector & terminal*** ***(3V) No. 2 — (3V) No. 6:*** ***(3V) No. 1 — (3V) No. 7:***	Is the resistance less than 10 Ω?	Go to step **4**.	Replace the airbag rear harness along with body harness.
4	**CHECK AIRBAG REAR HARNESS (BETWEEN SIDE AIRBAG SENSOR AND CURTAIN AIRBAG SENSOR RH) (SHORTED TO GROUND AND SHORTED BETWEEN LINES).** Measure the resistance between connector (3V) in test harness V and chassis ground, and the resistance between connector (3V) in test harness V. ***Connector & terminal*** ***(3V) No. 2 — Chassis ground:*** ***(3V) No. 1 — Chassis ground:*** ***(3V) No. 2 — (3V) No. 1:***	Is the resistance 1 MΩ or more?	Go to step **5**.	Replace the airbag rear harness along with body harness.
5	**CHECK AIRBAG CONTROL MODULE.** 1) Connect all connectors. 2) Clear the memory. <Ref. to AB(diag)-32, Clear Memory Mode.> 3) Perform the Inspection Mode. <Ref. to AB(diag)-31, Inspection Mode.> 4) Read the DTC. (Current malfunction) <Ref. to AB(diag)-30, Read Diagnostic Trouble Code (DTC).>	Is DTC B1632 displayed?	Go to step **6**.	Go to step **9**.

	Step	Check	Yes	No
6	**CHECK CURTAIN AIRBAG SENSOR RH.** 1) Turn the ignition switch to OFF, disconnect the battery ground cable, and wait for 60 seconds or more. 2) Replace the curtain airbag sensor RH by the curtain airbag sensor LH. <Ref. to AB-58, REMOVAL, Curtain Airbag Sensor.> 3) Connect all connectors. 4) Clear the memory. <Ref. to AB(diag)-32, Clear Memory Mode.> 5) Perform the Inspection Mode. <Ref. to AB(diag)-31, Inspection Mode.> 6) Read the DTC. (Current malfunction) <Ref. to AB(diag)-30, Read Diagnostic Trouble Code (DTC).>	Is DTC B1632 displayed?	Go to step **7**.	Replace the curtain airbag sensor RH. <Ref. to AB-58, REMOVAL, Curtain Airbag Sensor.>
7	**CHECK SIDE AIRBAG SENSOR RH.** 1) Turn the ignition switch to OFF, disconnect the battery ground cable, and wait for 60 seconds or more. 2) Restore the curtain airbag sensors RH and LH back to their original position. <Ref. to AB-58, REMOVAL, Curtain Airbag Sensor.> 3) Replace the side airbag sensor RH by the side airbag sensor LH. <Ref. to AB-56, REMOVAL, Side Airbag Sensor.> 4) Connect all connectors. 5) Clear the memory. <Ref. to AB(diag)-32, Clear Memory Mode.> 6) Perform the Inspection Mode. <Ref. to AB(diag)-31, Inspection Mode.> 7) Read the DTC. (Current malfunction) <Ref. to AB(diag)-30, Read Diagnostic Trouble Code (DTC).>	Is DTC B1632 displayed?	Go to step **8**.	Replace the side airbag sensor RH. <Ref. to AB-56, REMOVAL, Side Airbag Sensor.>
8	**CHECK AIRBAG CONTROL MODULE.** 1) Turn the ignition switch to OFF, disconnect the battery ground cable, and wait for 60 seconds or more. 2) Restore the side airbag sensors RH and LH back to their original position. <Ref. to AB-56, REMOVAL, Side Airbag Sensor.> 3) Connect all connectors. 4) Clear the memory. <Ref. to AB(diag)-32, Clear Memory Mode.> 5) Perform the Inspection Mode. <Ref. to AB(diag)-31, Inspection Mode.> 6) Read the DTC. (Current malfunction) <Ref. to AB(diag)-30, Read Diagnostic Trouble Code (DTC).>	Is DTC B1632 displayed?	Replace the airbag control module. <Ref. to AB-50, REMOVAL, Airbag Control Module.>	Go to step **9**.
9	**CHECK FOR ANY OTHER DTC ON DISPLAY.** Read the DTC. (Current malfunction) <Ref. to AB(diag)-30, Read Diagnostic Trouble Code (DTC).>	Is any other DTC displayed?	Check DTC using "List of Diagnostic Trouble Code (DTC)". <Ref. to AB(diag)-38, List of Diagnostic Trouble Code (DTC).>	Finish the diagnosis.

BF:DTC B1633 CURTAIN AIRBAG SENSOR RH INITIALIZATION ERROR

DIAGNOSIS START CONDITION:
Ignition voltage is 10 V to 16 V.
DTC DETECTING CONDITION:
Curtain airbag sensor RH unit malfunction (sensor type abnormal, sensor unit initialization error)

CAUTION:
Before performing diagnosis, refer to "CAUTION" in "General Description". <Ref. to AB(diag)-4, CAUTION, General Description.>
WIRING DIAGRAM:

NOTE:
For the coupling connector, refer to "WIRING SYSTEM".
Airbag system <Ref. to WI-89, WIRING DIAGRAM, Airbag System.>

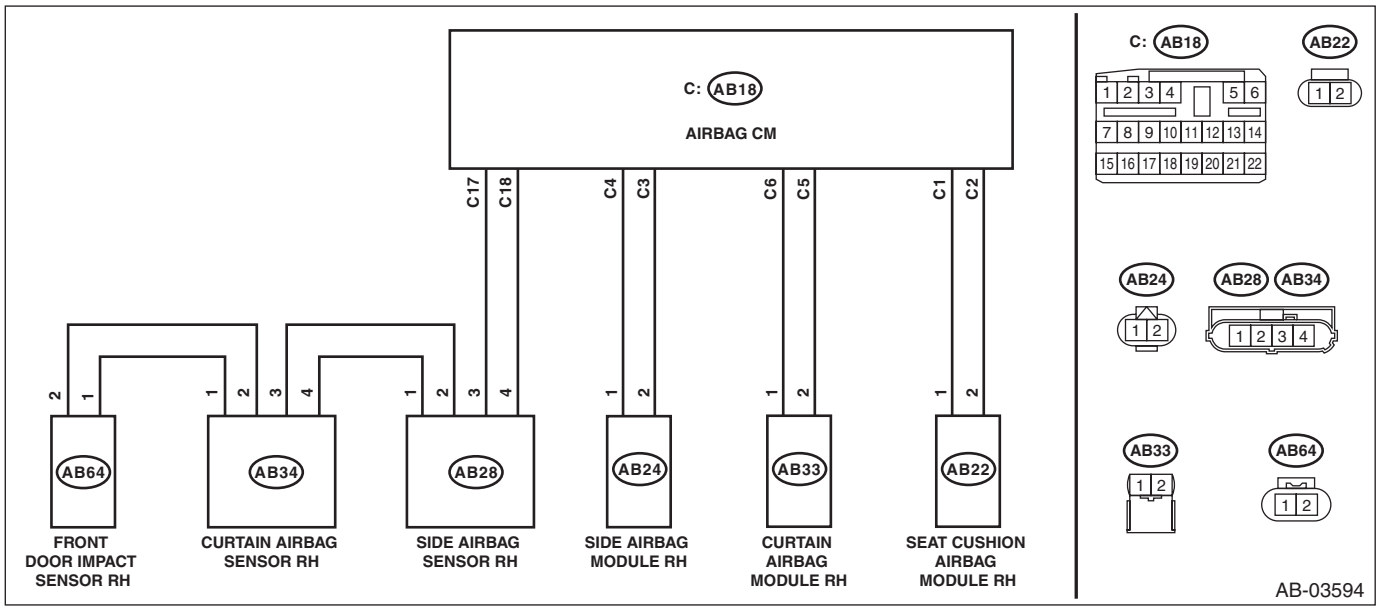

Step		Check	Yes	No
1	**CHECK POOR CONTACT OF CONNECTORS.** Check for poor contact of the connectors between the airbag control module and the curtain airbag sensor RH.	Is there poor contact?	Replace the airbag main harness along with body harness.	Go to step **2**.
2	**CHECK CURTAIN AIRBAG SENSOR RH.** 1) Turn the ignition switch to OFF, disconnect the battery ground cable, and wait for 60 seconds or more. 2) Replace the curtain airbag sensor RH by the curtain airbag sensor LH. <Ref. to AB-58, REMOVAL, Curtain Airbag Sensor.> 3) Connect all connectors. 4) Clear the memory. <Ref. to AB(diag)-32, Clear Memory Mode.> 5) Perform the Inspection Mode. <Ref. to AB(diag)-31, Inspection Mode.> 6) Read the DTC. (Current malfunction) <Ref. to AB(diag)-30, Read Diagnostic Trouble Code (DTC).>	Is DTC B1633 displayed?	Go to step **3**.	Replace the curtain airbag sensor RH. <Ref. to AB-58, REMOVAL, Curtain Airbag Sensor.>

	Step	Check	Yes	No
3	**CHECK AIRBAG CONTROL MODULE.** 1) Turn the ignition switch to OFF, disconnect the battery ground cable, and wait for 60 seconds or more. 2) Restore the curtain airbag sensors RH and LH back to their original position. <Ref. to AB-58, REMOVAL, Curtain Airbag Sensor.> 3) Connect all connectors. 4) Clear the memory. <Ref. to AB(diag)-32, Clear Memory Mode.> 5) Perform the Inspection Mode. <Ref. to AB(diag)-31, Inspection Mode.> 6) Read the DTC. (Current malfunction) <Ref. to AB(diag)-30, Read Diagnostic Trouble Code (DTC).>	Is DTC B1633 displayed?	Replace the airbag control module. <Ref. to AB-50, REMOVAL, Airbag Control Module.>	Go to step **4**.
4	**CHECK FOR ANY OTHER DTC ON DISPLAY.** Read the DTC. (Current malfunction) <Ref. to AB(diag)-30, Read Diagnostic Trouble Code (DTC).>	Is any other DTC displayed?	Check DTC using "List of Diagnostic Trouble Code (DTC)". <Ref. to AB(diag)-38, List of Diagnostic Trouble Code (DTC).>	Finish the diagnosis.

BG:DTC B1635 CURTAIN AIRBAG SENSOR LH FAILURE

DIAGNOSIS START CONDITION:
Ignition voltage is 10 V to 16 V.
DTC DETECTING CONDITION:
Curtain airbag sensor LH unit internal malfunction
If DTC B1635 is displayed, the circuit within the curtain airbag sensor LH is faulty.
Replace the curtain airbag sensor LH. <Ref. to AB-58, Curtain Airbag Sensor.>

BH:DTC B1637 CURTAIN AIRBAG SENSOR LH LOST COMMUNICATION

DIAGNOSIS START CONDITION:
Ignition voltage is 10 V to 16 V.
DTC DETECTING CONDITION:
Curtain airbag sensor LH communication error (open/short circuit or connector connection failure between airbag CM and sensor, sensor internal communication circuit failure, CM internal communication circuit failure)

CAUTION:
Before performing diagnosis, refer to "CAUTION" in "General Description". <Ref. to AB(diag)-4, CAUTION, General Description.>
WIRING DIAGRAM:

NOTE:
For the coupling connector, refer to "WIRING SYSTEM".
Airbag system <Ref. to WI-89, WIRING DIAGRAM, Airbag System.>

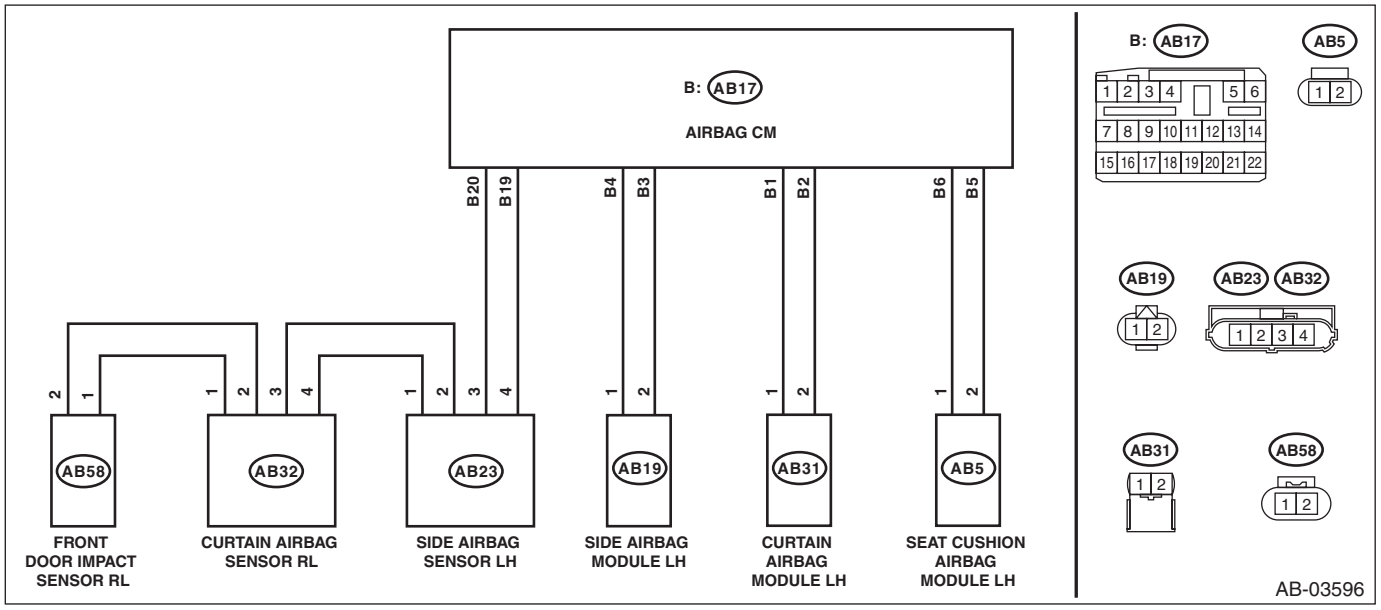

Step		Check	Yes	No
1	**CHECK DTC.** Read the DTC. (Current malfunction) <Ref. to AB(diag)-30, Read Diagnostic Trouble Code (DTC).>	Is DTC B1637 displayed?	Perform the diagnosis according to DTC.	Go to step **2**.
2	**CHECK POOR CONTACT OF CONNECTORS.** Check for poor contact of the connectors between the airbag control module and the door sensor LH.	Is there poor contact?	Replace the airbag rear harness and the door harness.	Go to step **3**.

	Step	Check	Yes	No
3	**CHECK AIRBAG REAR HARNESS (BETWEEN SIDE AIRBAG SENSOR LH AND CURTAIN AIRBAG SENSOR LH) (OPEN CIRCUIT).** 1) Turn the ignition switch to OFF, disconnect the battery ground cable, and wait for 60 seconds or more. 2) Disconnect the connector (AB21) from seat belt pretensioner LH. 3) Disconnect the connector (AB5) from seat cushion airbag module LH. 4) Disconnect the connector (AB31) from curtain airbag module LH. 5) Disconnect the connector (AB19) of the side airbag module LH. 6) Disconnect the connector (AB23) in the side airbag sensor LH. 7) Connect the connector (AB23) of side airbag sensor LH and the connector (1AI) in the test harness AI. 8) Connect the connector (2AI) in the test harness AI and the connector (1V) in the test harness V. 9) Disconnect the connector (AB32) from curtain airbag sensor LH, and connect it to the connector (2V) in test harness V. 10) Measure the resistance between connector (3V) terminals in the test harness V. ***Connector & terminal*** ***(3V) No. 2 — (3V) No. 6:*** ***(3V) No. 1 — (3V) No. 7:***	Is the resistance less than 10 Ω?	Go to step **4**.	Replace the airbag rear harness along with body harness.
4	**CHECK AIRBAG REAR HARNESS (BETWEEN SIDE AIRBAG SENSOR AND CURTAIN AIRBAG SENSOR LH) (SHORTED TO GROUND AND SHORTED BETWEEN LINES).** Measure the resistance between connector (3V) in test harness V and chassis ground, and the resistance between connector (3V) in test harness V. ***Connector & terminal*** ***(3V) No. 1 — Chassis ground:*** ***(3V) No. 2 — Chassis ground:*** ***(3V) No. 1 — (3V) No. 2:***	Is the resistance 1 MΩ or more?	Go to step **5**.	Replace the airbag rear harness along with body harness.
5	**CHECK AIRBAG CONTROL MODULE.** 1) Connect all connectors. 2) Clear the memory. <Ref. to AB(diag)-32, Clear Memory Mode.> 3) Perform the Inspection Mode. <Ref. to AB(diag)-31, Inspection Mode.> 4) Read the DTC. (Current malfunction) <Ref. to AB(diag)-30, Read Diagnostic Trouble Code (DTC).>	Is DTC B1637 displayed?	Go to step **6**.	Go to step **7**.

	Step	Check	Yes	No
6	**CHECK CURTAIN AIRBAG SENSOR LH.** 1) Turn the ignition switch to OFF, disconnect the battery ground cable, and wait for 60 seconds or more. 2) Replace the curtain airbag sensor LH by the curtain airbag sensor RH. <Ref. to AB-58, REMOVAL, Curtain Airbag Sensor.> 3) Connect all connectors. 4) Clear the memory. <Ref. to AB(diag)-32, Clear Memory Mode.> 5) Perform the Inspection Mode. <Ref. to AB(diag)-31, Inspection Mode.> 6) Read the DTC. (Current malfunction) <Ref. to AB(diag)-30, Read Diagnostic Trouble Code (DTC).>	Is DTC B1637 displayed?	Go to step **7**.	Replace the curtain airbag sensor LH. <Ref. to AB-58, REMOVAL, Curtain Airbag Sensor.>
7	**CHECK SIDE AIRBAG SENSOR LH.** 1) Turn the ignition switch to OFF, disconnect the battery ground cable, and wait for 60 seconds or more. 2) Restore the curtain airbag sensors LH and RH back to their original position. <Ref. to AB-58, REMOVAL, Curtain Airbag Sensor.> 3) Replace the side airbag sensor LH by the side airbag sensor RH. <Ref. to AB-56, REMOVAL, Side Airbag Sensor.> 4) Connect all connectors. 5) Clear the memory. <Ref. to AB(diag)-32, Clear Memory Mode.> 6) Perform the Inspection Mode. <Ref. to AB(diag)-31, Inspection Mode.> 7) Read the DTC. (Current malfunction) <Ref. to AB(diag)-30, Read Diagnostic Trouble Code (DTC).>	Is DTC B1637 displayed?	Go to step **8**.	Replace the side airbag sensor LH. <Ref. to AB-56, REMOVAL, Side Airbag Sensor.>
8	**CHECK AIRBAG CONTROL MODULE.** 1) Turn the ignition switch to OFF, disconnect the battery ground cable, and wait for 60 seconds or more. 2) Restore the side airbag sensors RH and LH back to their original position. <Ref. to AB-56, REMOVAL, Side Airbag Sensor.> 3) Connect all connectors. 4) Clear the memory. <Ref. to AB(diag)-32, Clear Memory Mode.> 5) Perform the Inspection Mode. <Ref. to AB(diag)-31, Inspection Mode.> 6) Read the DTC. (Current malfunction) <Ref. to AB(diag)-30, Read Diagnostic Trouble Code (DTC).>	Is DTC B1637 displayed?	Replace the airbag control module. <Ref. to AB-50, REMOVAL, Airbag Control Module.>	Go to step **9**.
9	**CHECK FOR ANY OTHER DTC ON DISPLAY.** Read the DTC. (Current malfunction) <Ref. to AB(diag)-30, Read Diagnostic Trouble Code (DTC).>	Is any other DTC displayed?	Check DTC using "List of Diagnostic Trouble Code (DTC)". <Ref. to AB(diag)-38, List of Diagnostic Trouble Code (DTC).>	Finish the diagnosis.

BI: DTC B1638 CURTAIN AIRBAG SENSOR LH INITIALIZATION ERROR

DIAGNOSIS START CONDITION:
Ignition voltage is 10 V to 16 V.
DTC DETECTING CONDITION:
Curtain airbag sensor LH unit malfunction (sensor type abnormal, sensor unit initialization error)

CAUTION:
Before performing diagnosis, refer to "CAUTION" in "General Description". <Ref. to AB(diag)-4, CAUTION, General Description.>
WIRING DIAGRAM:

NOTE:
For the coupling connector, refer to "WIRING SYSTEM".
Airbag system <Ref. to WI-89, WIRING DIAGRAM, Airbag System.>

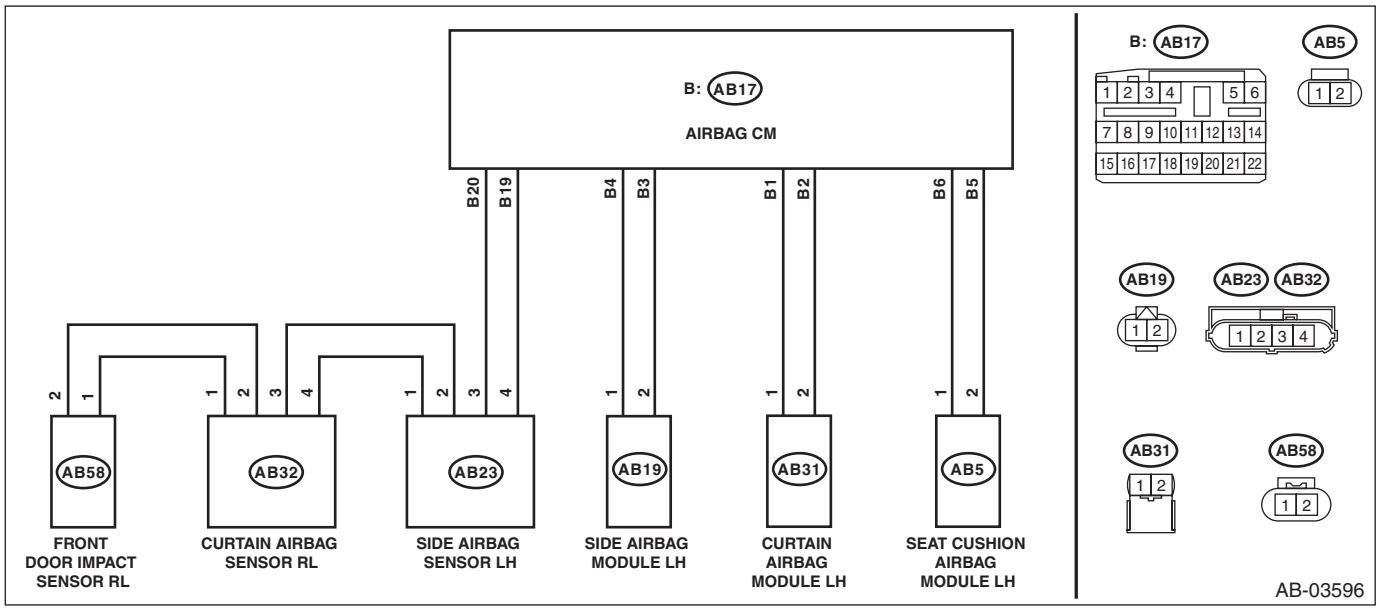

Step		Check	Yes	No
1	**CHECK POOR CONTACT OF CONNECTORS.** Check for poor contact of the connectors between the airbag control module and the curtain airbag sensor LH.	Is there poor contact?	Replace the airbag main harness along with body harness.	Go to step **2**.
2	**CHECK CURTAIN AIRBAG SENSOR LH.** 1) Turn the ignition switch to OFF, disconnect the battery ground cable, and wait for 60 seconds or more. 2) Replace the curtain airbag sensor LH by the curtain airbag sensor RH. <Ref. to AB-58, REMOVAL, Curtain Airbag Sensor.> 3) Connect all connectors. 4) Clear the memory. <Ref. to AB(diag)-32, Clear Memory Mode.> 5) Perform the Inspection Mode. <Ref. to AB(diag)-31, Inspection Mode.> 6) Read the DTC. (Current malfunction) <Ref. to AB(diag)-30, Read Diagnostic Trouble Code (DTC).>	Is DTC B1638 displayed?	Go to step **3**.	Replace the curtain airbag sensor LH. <Ref. to AB-58, REMOVAL, Curtain Airbag Sensor.>

	Step	Check	Yes	No
3	**CHECK AIRBAG CONTROL MODULE.** 1) Turn the ignition switch to OFF, disconnect the battery ground cable, and wait for 60 seconds or more. 2) Restore the curtain airbag sensors RH and LH back to their original position. <Ref. to AB-58, REMOVAL, Curtain Airbag Sensor.> 3) Connect all connectors. 4) Clear the memory. <Ref. to AB(diag)-32, Clear Memory Mode.> 5) Perform the Inspection Mode. <Ref. to AB(diag)-31, Inspection Mode.> 6) Read the DTC. (Current malfunction) <Ref. to AB(diag)-30, Read Diagnostic Trouble Code (DTC).>	Is DTC B1638 displayed?	Replace the airbag control module. <Ref. to AB-50, REMOVAL, Airbag Control Module.>	Go to step **4**.
4	**CHECK FOR ANY OTHER DTC ON DISPLAY.** Read the DTC. (Current malfunction) <Ref. to AB(diag)-30, Read Diagnostic Trouble Code (DTC).>	Is any other DTC displayed?	Check DTC using "List of Diagnostic Trouble Code (DTC)". <Ref. to AB(diag)-38, List of Diagnostic Trouble Code (DTC).>	Finish the diagnosis.

BJ:DTC B1643 SIDE SATELLITE SENSOR BUS RH INITIALIZATION ERROR

DIAGNOSIS START CONDITION:
Ignition voltage is 10 V to 16 V.
DTC DETECTING CONDITION:
Side sensor RH bus line communication initialization error (open/short circuit or connector connection failure between airbag CM and side airbag sensor RH, open/short circuit or connector connection failure between side airbag sensor RH and curtain airbag sensor RH, open/short circuit or connector connection failure between curtain airbag sensor RH and front door impact sensor RH, side airbag sensor RH internal communication circuit failure, curtain airbag sensor RH internal communication circuit failure, front door impact sensor RH internal communication circuit failure, ECM internal communication circuit failure)

CAUTION:
Before performing diagnosis, refer to "CAUTION" in "General Description". <Ref. to AB(diag)-4, CAUTION, General Description.>
WIRING DIAGRAM:

NOTE:
For the coupling connector, refer to "WIRING SYSTEM".
Airbag system <Ref. to WI-89, WIRING DIAGRAM, Airbag System.>

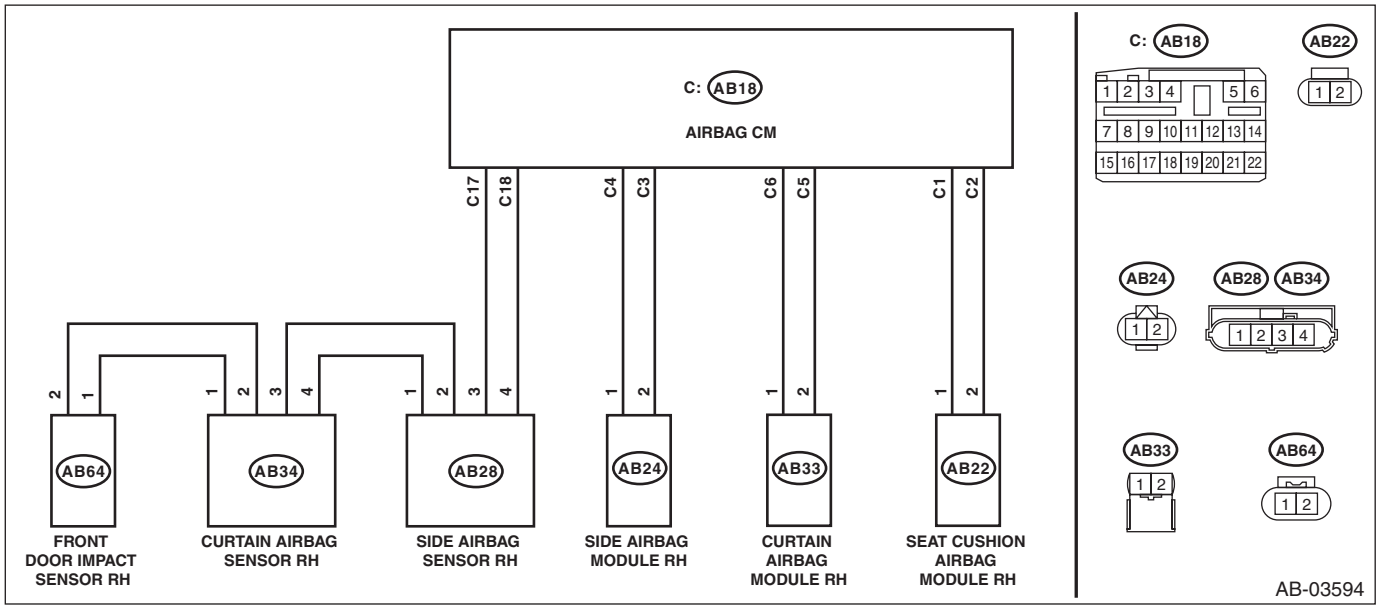

Step		Check	Yes	No
1	**CHECK DTC.** Read the DTC. (Current malfunction) <Ref. to AB(diag)-30, Read Diagnostic Trouble Code (DTC).>	Is DTC B1622, B1623 or B16EA displayed?	Perform the diagnosis according to DTC.	Go to step **2**.
2	**CHECK DTC.** Read the DTC. (Current malfunction) <Ref. to AB(diag)-30, Read Diagnostic Trouble Code (DTC).>	Is DTC B1632, B1633 or B16EC displayed?	Perform the diagnosis according to DTC.	Go to step **3**.
3	**CHECK DTC.** Read the DTC. (Current malfunction) <Ref. to AB(diag)-30, Read Diagnostic Trouble Code (DTC).>	Is DTC B1692 or B1693 displayed?	Perform the diagnosis according to DTC.	Go to step **4**.
4	**CHECK POOR CONTACT OF CONNECTORS.** Check for poor contact of the connectors between the airbag control module and the front door impact sensor RH.	Is there poor contact?	Replace the airbag rear harness and the door harness.	Go to step **5**.

	Step	Check	Yes	No
5	**CHECK AIRBAG REAR HARNESS (BETWEEN AIRBAG CONTROL MODULE AND SIDE AIRBAG SENSOR RH) (OPEN CIRCUIT).** 1) Turn the ignition switch to OFF, disconnect the battery ground cable, and wait for 60 seconds or more. 2) Disconnect the connector (AB26) from seat belt pretensioner RH. 3) Disconnect the connector (AB22) from seat cushion airbag module RH. 4) Disconnect the connector (AB33) from curtain airbag module RH. 5) Disconnect the connector (AB24) of side airbag module RH. 6) Disconnect the connectors (AB6, AB17, AB18) from airbag control module. 7) Connect the connector (1AD) in test harness AD AV to the connectors (AB6, AB17, AB18). 8) Connect the connector (2AD) in test harness AD AV and the connector (1AG) in test harness AG. 9) Disconnect the connector (AB28) from side airbag sensor RH. 10) Connect the connector (2V) in the test harness V to the connector (AB28). 11) Measure the resistance between connector (5AG) in the test harness AG and connector (3V) in the test harness V. ***Connector & terminal*** ***(5AG) No. 8 — (3V) No. 1:*** ***(5AG) No. 10 — (3V) No. 2:***	Is the resistance less than 10 Ω?	Go to step **6**.	Replace the airbag rear harness along with body harness.
6	**CHECK AIRBAG REAR HARNESS (BETWEEN AIRBAG CONTROL MODULE AND SIDE AIRBAG SENSOR RH) (SHORTED TO GROUND AND SHORTED BETWEEN LINES).** Measure the resistance between connector (3V) in test harness V and chassis ground, and the resistance between connector (3V) terminals. ***Connector & terminal*** ***(3V) No. 1 — Chassis ground:*** ***(3V) No. 2 — Chassis ground:*** ***(3V) No. 1 — (3V) No. 2:***	Is the resistance 1 MΩ or more?	Go to step **7**.	Replace the airbag rear harness along with body harness.

Step		Check	Yes	No
7	**CHECK AIRBAG REAR HARNESS (BETWEEN SIDE AIRBAG SENSOR AND CURTAIN AIRBAG SENSOR RH) (OPEN CIRCUIT).** 1) Disconnect the connector (2V) in the test harness V from the connector (AB28) of side airbag sensor RH. 2) Connect the connector (AB28) of side airbag sensor RH and the connector (1AI) in the test harness AI. 3) Connect the connector (2AI) in the test harness AI and the connector (1V) in the test harness V. 4) Disconnect the connector (AB34) from curtain airbag sensor (RH), and connect the connector (2V) in test harness V to connector (AB34). 5) Measure the resistance between connector (3V) terminals in the test harness V. ***Connector & terminal*** ***(3V) No. 1 — (3V) No. 7:*** ***(3V) No. 2 — (3V) No. 6:***	Is the resistance less than 10 Ω?	Go to step **8**.	Replace the airbag rear harness along with body harness.
8	**CHECK AIRBAG REAR HARNESS (BETWEEN SIDE AIRBAG SENSOR AND CURTAIN AIRBAG SENSOR RH) (SHORTED TO GROUND AND SHORTED BETWEEN LINES).** Measure the resistance between connector (3V) in test harness V and chassis ground, and the resistance between connector (3V) terminals in test harness V. ***Connector & terminal*** ***(3V) No. 1 — Chassis ground:*** ***(3V) No. 2 — Chassis ground:*** ***(3V) No. 1 — (3V) No. 2:***	Is the resistance 1 MΩ or more?	Go to step **9**.	Replace the airbag rear harness along with body harness.
9	**CHECK AIRBAG REAR HARNESS AND DOOR HARNESS (BETWEEN CURTAIN AIRBAG SENSOR RH AND DOOR SENSOR RH) (OPEN CIRCUIT).** 1) Disconnect the connector (AB64) from front door impact sensor RH. 2) Using a probe, measure the resistance between the connector (3V) in test harness V and connector (AB64). <Ref. to AB(diag)-19, HOW TO USE PROBE, PREPARATION TOOL, General Description.> **CAUTION:** **When measuring the resistance, make sure to insert the probe from the inspection hole of the connector. Also, do not insert the probe forcibly.** ***Connector & terminal*** ***(3V) No. 4 — (AB64) No. 1:*** ***(3V) No. 5 — (AB64) No. 2:***	Is the resistance less than 10 Ω?	Go to step **10**.	Replace the airbag rear harness along with body harness.

	Step	Check	Yes	No
10	**CHECK AIRBAG REAR HARNESS AND DOOR HARNESS (BETWEEN CURTAIN AIRBAG SENSOR RH AND FRONT DOOR IMPACT SENSOR RH) (SHORTED TO GROUND AND SHORTED BETWEEN LINES).** Measure the resistance between connector (3V) in test harness V and chassis ground, and the resistance between connector (3V) terminals in test harness V. ***Connector & terminal*** ***(3V) No. 4 — Chassis ground:*** ***(3V) No. 5 — Chassis ground:*** ***(3V) No. 4 — (3V) No. 5:***	Is the resistance 1 MΩ or more?	Go to step **11**.	Check the door harness, and if any fault is found, replace the harness. If there is no fault, replace the airbag rear harness together with body harness.
11	**CHECK AIRBAG CONTROL MODULE.** 1) Connect all connectors. 2) Clear the memory. <Ref. to AB(diag)-32, Clear Memory Mode.> 3) Perform the Inspection Mode. <Ref. to AB(diag)-31, Inspection Mode.> 4) Read the DTC. (Current malfunction) <Ref. to AB(diag)-30, Read Diagnostic Trouble Code (DTC).>	Is DTC B1643 displayed?	Go to step **12**.	Go to step **16**.
12	**CHECK SIDE AIRBAG SENSOR RH.** 1) Turn the ignition switch to OFF, disconnect the battery ground cable, and wait for 60 seconds or more. 2) Replace the side airbag sensor RH by the side airbag sensor LH. <Ref. to AB-56, REMOVAL, Side Airbag Sensor.> 3) Connect all connectors. 4) Clear the memory. <Ref. to AB(diag)-32, Clear Memory Mode.> 5) Perform the Inspection Mode. <Ref. to AB(diag)-31, Inspection Mode.> 6) Read the DTC. (Current malfunction) <Ref. to AB(diag)-30, Read Diagnostic Trouble Code (DTC).>	Is DTC B1643 displayed?	Go to step **13**.	Replace the side airbag sensor RH. <Ref. to AB-56, REMOVAL, Side Airbag Sensor.>
13	**CHECK CURTAIN AIRBAG SENSOR RH.** 1) Turn the ignition switch to OFF, disconnect the battery ground cable, and wait for 60 seconds or more. 2) Restore the side airbag sensors RH and LH back to their original position. <Ref. to AB-56, REMOVAL, Side Airbag Sensor.> 3) Replace the curtain airbag sensor RH by the curtain airbag sensor LH. <Ref. to AB-58, REMOVAL, Curtain Airbag Sensor.> 4) Connect all connectors. 5) Clear the memory. <Ref. to AB(diag)-32, Clear Memory Mode.> 6) Perform the Inspection Mode. <Ref. to AB(diag)-31, Inspection Mode.> 7) Read the DTC. (Current malfunction) <Ref. to AB(diag)-30, Read Diagnostic Trouble Code (DTC).>	Is DTC B1643 displayed?	Go to step **14**.	Replace the curtain airbag sensor RH. <Ref. to AB-58, REMOVAL, Curtain Airbag Sensor.>

	Step	Check	Yes	No
14	**CHECK FRONT DOOR IMPACT SENSOR RH.** 1) Turn the ignition switch to OFF, disconnect the battery ground cable, and wait for 60 seconds or more. 2) Restore the curtain airbag sensors RH and LH back to their original position. <Ref. to AB-58, REMOVAL, Curtain Airbag Sensor.> 3) Disconnect the connector (AB64) from front door impact sensor RH. <Ref. to AB-54, REMOVAL, Front Door Impact Sensor.> 4) Temporarily connect a new front door impact sensor to the connector (AB64). 5) Connect all connectors. 6) Clear the memory. <Ref. to AB(diag)-32, Clear Memory Mode.> 7) Perform the Inspection Mode. <Ref. to AB(diag)-31, Inspection Mode.> 8) Read the DTC. (Current malfunction) <Ref. to AB(diag)-30, Read Diagnostic Trouble Code (DTC).>	Is DTC B1643 displayed?	Go to step **15**.	Replace the front door impact sensor RH. <Ref. to AB-54, REMOVAL, Front Door Impact Sensor.>
15	**CHECK FRONT DOOR IMPACT SENSOR RH.** 1) Turn the ignition switch to OFF, disconnect the battery ground cable, and wait for 60 seconds or more. 2) Restore the front door impact sensor RH back to the original position. <Ref. to AB-54, REMOVAL, Front Door Impact Sensor.> 3) Connect all connectors. 4) Clear the memory. <Ref. to AB(diag)-32, Clear Memory Mode.> 5) Perform the Inspection Mode. <Ref. to AB(diag)-31, Inspection Mode.> 6) Read the DTC. (Current malfunction) <Ref. to AB(diag)-30, Read Diagnostic Trouble Code (DTC).>	Is DTC B1643 displayed?	Replace the airbag control module. <Ref. to AB-50, REMOVAL, Airbag Control Module.>	Go to step **16**.
16	**CHECK FOR ANY OTHER DTC ON DISPLAY.** Read the DTC. (Current malfunction) <Ref. to AB(diag)-30, Read Diagnostic Trouble Code (DTC).>	Is any other DTC displayed?	Check DTC using “List of Diagnostic Trouble Code”. <Ref. to AB(diag)-38, List of Diagnostic Trouble Code (DTC).>	Finish the diagnosis.

BK:DTC B1648 SIDE SATELLITE SENSOR BUS LH INITIALIZATION ERROR

DIAGNOSIS START CONDITION:
Ignition voltage is 10 V to 16 V.
DTC DETECTING CONDITION:
Side sensor LH bus line communication initialization error (open/short circuit or connector connection failure between airbag CM and side airbag sensor LH, open/short circuit or connector connection failure between side airbag sensor LH and curtain airbag sensor LH, open/short circuit or connector connection failure between curtain airbag sensor LH and front door impact sensor LH, side airbag sensor LH internal communication circuit failure, curtain airbag sensor LH internal communication circuit failure, front door impact sensor LH internal communication circuit failure, ECM internal communication circuit failure)

CAUTION:
Before performing diagnosis, refer to "CAUTION" in "General Description". <Ref. to AB(diag)-4, CAUTION, General Description.>
WIRING DIAGRAM:

NOTE:
For the coupling connector, refer to "WIRING SYSTEM".
Airbag system <Ref. to WI-89, WIRING DIAGRAM, Airbag System.>

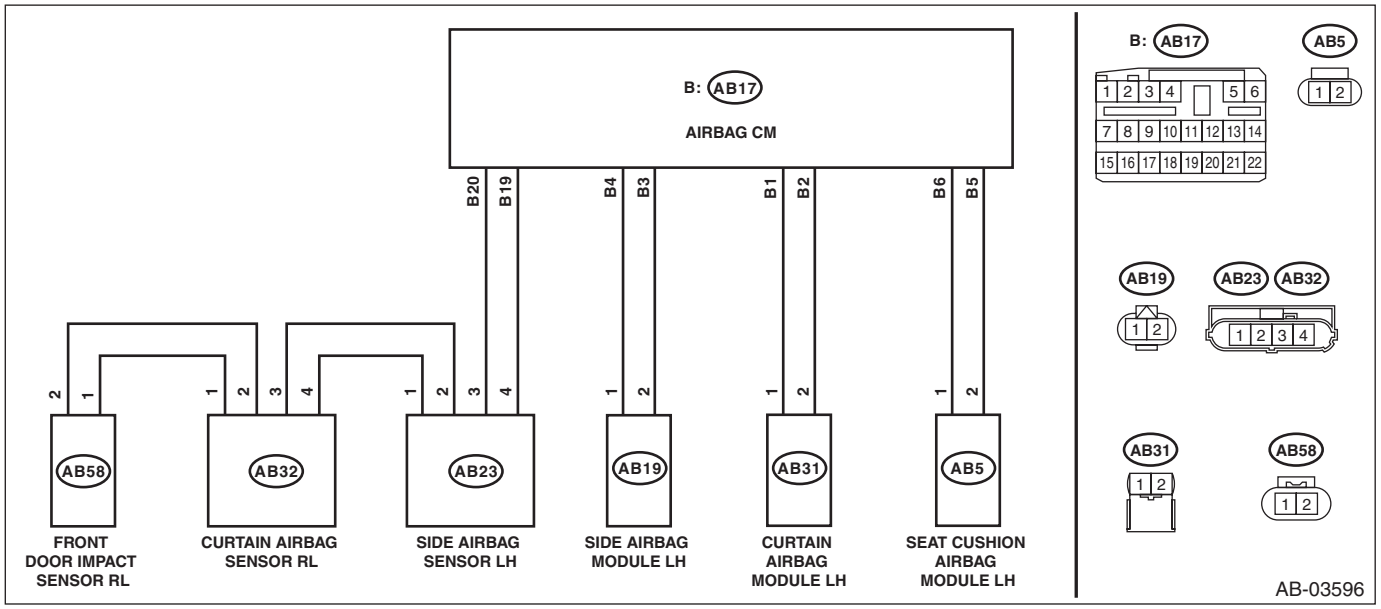

Step		Check	Yes	No
1	**CHECK DTC.** Read the DTC. (Current malfunction) <Ref. to AB(diag)-30, Read Diagnostic Trouble Code (DTC).>	Is DTC B1627, B1628 or B16EB displayed?	Perform the diagnosis according to DTC.	Go to step **2**.
2	**CHECK DTC.** Read the DTC. (Current malfunction) <Ref. to AB(diag)-30, Read Diagnostic Trouble Code (DTC).>	Is DTC B1637, B1638 or B16ED displayed?	Perform the diagnosis according to DTC.	Go to step **3**.
3	**CHECK DTC.** Read the DTC. (Current malfunction) <Ref. to AB(diag)-30, Read Diagnostic Trouble Code (DTC).>	Is DTC B1697 or B1698 displayed?	Perform the diagnosis according to DTC.	Go to step **4**.
4	**CHECK POOR CONTACT OF CONNECTORS.** Check for poor contact of the connectors between the airbag control module and the front door impact sensor LH.	Is there poor contact?	Replace the airbag rear harness and the door harness.	Go to step **5**.

	Step	Check	Yes	No
5	**CHECK AIRBAG REAR HARNESS (BETWEEN AIRBAG CONTROL MODULE AND SIDE AIRBAG SENSOR LH) (OPEN CIRCUIT).** 1) Turn the ignition switch to OFF, disconnect the battery ground cable, and wait for 60 seconds or more. 2) Disconnect the connector (AB21) from seat belt pretensioner LH. 3) Disconnect the connector (AB5) from seat cushion airbag module LH. 4) Disconnect the connector (AB31) from curtain airbag module LH. 5) Disconnect the connector (AB19) of the side airbag module LH. 6) Disconnect the connectors (AB6, AB17, AB18) from airbag control module. 7) Connect the connector (1AD) in test harness AD AV to the connectors (AB6, AB17, AB18). 8) Connect the connector (2AD) in test harness AD AV and the connector (1AG) in test harness AG. 9) Disconnect the connector (AB23) from the side airbag sensor LH. 10) Connect the connector (2V) in the test harness V to the connector (AB23). 11) Measure the resistance between connector (5AG) in the test harness AG and connector (3V) in the test harness V. ***Connector & terminal*** ***(5AG) No. 14 — (3V) No. 2:*** ***(5AG) No. 16 — (3V) No. 1:***	Is the resistance less than 10 Ω?	Go to step **6**.	Replace the airbag rear harness along with body harness.
6	**CHECK AIRBAG REAR HARNESS (BETWEEN AIRBAG CONTROL MODULE AND SIDE AIRBAG SENSOR LH) (SHORTED TO GROUND AND SHORTED BETWEEN LINES).** Measure the resistance between connector (3V) in test harness V and chassis ground, and the resistance between connector (3V) terminals. ***Connector & terminal*** ***(3V) No. 1 — Chassis ground:*** ***(3V) No. 2 — Chassis ground:*** ***(3V) No. 1 — (3V) No. 2:***	Is the resistance 1 MΩ or more?	Go to step **7**.	Replace the airbag rear harness along with body harness.

	Step	Check	Yes	No
7	**CHECK AIRBAG REAR HARNESS (BETWEEN SIDE AIRBAG SENSOR AND CURTAIN AIRBAG SENSOR LH) (OPEN CIRCUIT).** 1) Disconnect the connector (2V) in the test harness V from the connector (AB23) of side airbag sensor LH. 2) Connect the connector (AB23) of side airbag sensor LH and the connector (1AI) in the test harness AI. 3) Connect the connector (2AI) in the test harness AI and the connector (1V) in the test harness V. 4) Disconnect the connector (AB32) from curtain airbag sensor LH, and connect the connector (2V) in test harness V to connector (AB32). 5) Measure the resistance between connector (3V) terminals in the test harness V. ***Connector & terminal*** ***(3V) No. 1 — (3V) No. 7:*** ***(3V) No. 2 — (3V) No. 6:***	Is the resistance less than 10 Ω?	Go to step **8**.	Replace the airbag rear harness along with body harness.
8	**CHECK AIRBAG REAR HARNESS (BETWEEN SIDE AIRBAG SENSOR AND CURTAIN AIRBAG SENSOR LH) (SHORTED TO GROUND AND SHORTED BETWEEN LINES).** Measure the resistance between connector (3V) in test harness V and chassis ground, and the resistance between connector (3V) terminals in test harness V. ***Connector & terminal*** ***(3V) No. 1 — Chassis ground:*** ***(3V) No. 2 — Chassis ground:*** ***(3V) No. 1 — (3V) No. 2:***	Is the resistance 1 MΩ or more?	Go to step **9**.	Replace the airbag rear harness along with body harness.
9	**CHECK AIRBAG REAR HARNESS AND DOOR HARNESS (BETWEEN CURTAIN AIRBAG SENSOR LH AND DOOR SENSOR LH) (OPEN CIRCUIT).** 1) Disconnect the connector (AB58) from front door impact sensor LH. 2) Using a probe, measure the resistance between the connector (3V) in test harness V and connector (AB58). <Ref. to AB(diag)-19, HOW TO USE PROBE, PREPARATION TOOL, General Description.> **CAUTION:** **When measuring the resistance, make sure to insert the probe from the inspection hole of the connector. Also, do not insert the probe forcibly.** ***Connector & terminal*** ***(3V) No. 4 — (AB58) No. 1:*** ***(3V) No. 5 — (AB58) No. 2:***	Is the resistance less than 10 Ω?	Go to step **10**.	Replace the airbag rear harness along with body harness.

	Step	Check	Yes	No
10	**CHECK AIRBAG REAR HARNESS AND DOOR HARNESS (BETWEEN CURTAIN AIRBAG SENSOR LH AND DOOR SENSOR LH) (SHORTED TO GROUND AND SHORTED BETWEEN LINES).** Measure the resistance between connector (3V) in test harness V and chassis ground, and the resistance between connector (3V) terminals in test harness V. ***Connector & terminal*** ***(3V) No. 4 — Chassis ground:*** ***(3V) No. 5 — Chassis ground:*** ***(3V) No. 4 — (3V) No. 5:***	Is the resistance 1 MΩ or more?	Go to step **11**.	Check the door harness, and if any fault is found, replace the harness. If there is no fault, replace the airbag rear harness together with body harness.
11	**CHECK AIRBAG CONTROL MODULE.** 1) Connect all connectors. 2) Clear the memory. <Ref. to AB(diag)-32, Clear Memory Mode.> 3) Perform the Inspection Mode. <Ref. to AB(diag)-31, Inspection Mode.> 4) Read the DTC. (Current malfunction) <Ref. to AB(diag)-30, Read Diagnostic Trouble Code (DTC).>	Is DTC B1648 displayed?	Go to step **12**.	Go to step **16**.
12	**CHECK SIDE AIRBAG SENSOR LH.** 1) Turn the ignition switch to OFF, disconnect the battery ground cable, and wait for 60 seconds or more. 2) Replace the side airbag sensor LH by the side airbag sensor RH. <Ref. to AB-56, REMOVAL, Side Airbag Sensor.> 3) Connect all connectors. 4) Clear the memory. <Ref. to AB(diag)-32, Clear Memory Mode.> 5) Perform the Inspection Mode. <Ref. to AB(diag)-31, Inspection Mode.> 6) Read the DTC. (Current malfunction) <Ref. to AB(diag)-30, Read Diagnostic Trouble Code (DTC).>	Is DTC B1648 displayed?	Go to step **13**.	Replace the side airbag sensor LH. <Ref. to AB-56, REMOVAL, Side Airbag Sensor.>
13	**CHECK CURTAIN AIRBAG SENSOR LH.** 1) Turn the ignition switch to OFF, disconnect the battery ground cable, and wait for 60 seconds or more. 2) Restore the side airbag sensors RH and LH back to their original position. <Ref. to AB-56, REMOVAL, Side Airbag Sensor.> 3) Replace the curtain airbag sensor LH by the curtain airbag sensor RH. <Ref. to AB-58, REMOVAL, Curtain Airbag Sensor.> 4) Connect all connectors. 5) Clear the memory. <Ref. to AB(diag)-32, Clear Memory Mode.> 6) Perform the Inspection Mode. <Ref. to AB(diag)-31, Inspection Mode.> 7) Read the DTC. (Current malfunction) <Ref. to AB(diag)-30, Read Diagnostic Trouble Code (DTC).>	Is DTC B1648 displayed?	Go to step **14**.	Replace the curtain airbag sensor LH. <Ref. to AB-58, REMOVAL, Curtain Airbag Sensor.>

	Step	Check	Yes	No
14	**CHECK FRONT DOOR IMPACT SENSOR LH.** 1) Turn the ignition switch to OFF, disconnect the battery ground cable, and wait for 60 seconds or more. 2) Restore the curtain airbag sensors RH and LH back to their original position. <Ref. to AB-58, REMOVAL, Curtain Airbag Sensor.> 3) Disconnect the connector (AB58) from front door impact sensor LH. <Ref. to AB-54, REMOVAL, Front Door Impact Sensor.> 4) Temporarily connect a new front door impact sensor to the connector (AB58). 5) Connect all connectors. 6) Clear the memory. <Ref. to AB(diag)-32, Clear Memory Mode.> 7) Perform the Inspection Mode. <Ref. to AB(diag)-31, Inspection Mode.> 8) Read the DTC. (Current malfunction) <Ref. to AB(diag)-30, Read Diagnostic Trouble Code (DTC).>	Is DTC B1648 displayed?	Go to step **15**.	Replace the front door impact sensor LH. <Ref. to AB-54, REMOVAL, Front Door Impact Sensor.>
15	**CHECK AIRBAG CONTROL MODULE.** 1) Turn the ignition switch to OFF, disconnect the battery ground cable, and wait for 60 seconds or more. 2) Restore the front door impact sensor LH back to the original position. <Ref. to AB-54, REMOVAL, Front Door Impact Sensor.> 3) Connect all connectors. 4) Clear the memory. <Ref. to AB(diag)-32, Clear Memory Mode.> 5) Perform the Inspection Mode. <Ref. to AB(diag)-31, Inspection Mode.> 6) Read the DTC. (Current malfunction) <Ref. to AB(diag)-30, Read Diagnostic Trouble Code (DTC).>	Is DTC B1648 displayed?	Replace the airbag control module. <Ref. to AB-50, REMOVAL, Airbag Control Module.>	Go to step **16**.
16	**CHECK FOR ANY OTHER DTC ON DISPLAY.** Read the DTC. (Current malfunction) <Ref. to AB(diag)-30, Read Diagnostic Trouble Code (DTC).>	Is any other DTC displayed?	Check DTC using “List of Diagnostic Trouble Code”. <Ref. to AB(diag)-38, List of Diagnostic Trouble Code (DTC).>	Finish the diagnosis.

BL:DTC B1650 OCCUPANT DETECTION SYSTEM MALFUNCTION

DIAGNOSIS START CONDITION:
Ignition voltage is 10 V to 16 V.
DTC DETECTING CONDITION:
Occupant detection sensor malfunction, communication failure between airbag CM and occupant detection sensor, rear harness malfunction, seat harness malfunction, blown out of fuse for occupant detection system

CAUTION:
Before performing diagnosis, refer to "CAUTION" in "General Description". <Ref. to AB(diag)-4, CAUTION, General Description.>

	Step	Check	Yes	No
1	**CHECK DTC.** Read the DTC of the occupant detection system. <Ref. to OD(diag)-20, Read Diagnostic Trouble Code (DTC).>	Is DTC displayed?	Perform the diagnosis according to DTC.	Go to step **2**.
2	**CHECK AIRBAG CONTROL MODULE.** 1) Connect all connectors. 2) Clear the memory. <Ref. to AB(diag)-32, Clear Memory Mode.> 3) Perform the Inspection Mode. <Ref. to AB(diag)-31, Inspection Mode.> 4) Read the DTC. (Current malfunction) <Ref. to AB(diag)-30, Read Diagnostic Trouble Code (DTC).>	Is DTC B1650 displayed?	Replace the airbag control module. <Ref. to AB-50, REMOVAL, Airbag Control Module.>	Go to step **3**.
3	**CHECK FOR ANY OTHER DTC ON DISPLAY.** Read the DTC. (Current malfunction) <Ref. to AB(diag)-30, Read Diagnostic Trouble Code (DTC).>	Is any other DTC displayed?	Check DTC using "List of Diagnostic Trouble Code". <Ref. to AB(diag)-38, List of Diagnostic Trouble Code (DTC).>	Finish the diagnosis.

BM:DTC B1652 HALF CONNECTION IN AIRBAG SENSOR ASSEMBLY CONNECTOR

DIAGNOSIS START CONDITION:
Ignition voltage is 10 V to 16 V.
DTC DETECTING CONDITION:
Connection failure of airbag CM connector

CAUTION:
Before performing diagnosis, refer to "CAUTION" in "General Description". <Ref. to AB(diag)-4, CAUTION, General Description.>

	Step	Check	Yes	No
1	**CHECK CONNECTOR.** Check for poor contact of the airbag control module connector.	Is there poor contact?	When the connector is not fully connected, reconnect the connector correctly. Replace the faulty harness if the connector is faulty. (Replace the airbag main harness along with body harness. Or replace the airbag rear harness along with body harness.)	Go to step **2**.
2	**CHECK CONNECTOR.** Check the airbag main harness connector and the airbag rear harness connector.	Is there poor contact?	When the connector is not fully connected, reconnect the connector correctly. Replace the faulty harness if the connector is faulty. (Replace the airbag main harness along with body harness. Or replace the airbag rear harness along with body harness.)	Even if DTC is detected, the circuit has returned to a normal condition at this time. Reproduce the failure, and then perform the diagnosis again. NOTE: In this case, temporary poor contact of connector, temporary open or short circuit of harness may be the cause.

BN:DTC B1655 FRONT BUCKLE SWITCH RH FAILURE

DIAGNOSIS START CONDITION:
Ignition voltage is 10 V to 16 V.
DTC DETECTING CONDITION:
Buckle switch RH failure (open, short, unit failure), seat harness malfunction (open, short), occupant detection system failure
WIRING DIAGRAM:
Occupant detection system <Ref. to WI-291, WIRING DIAGRAM, Occupant Detection System.>

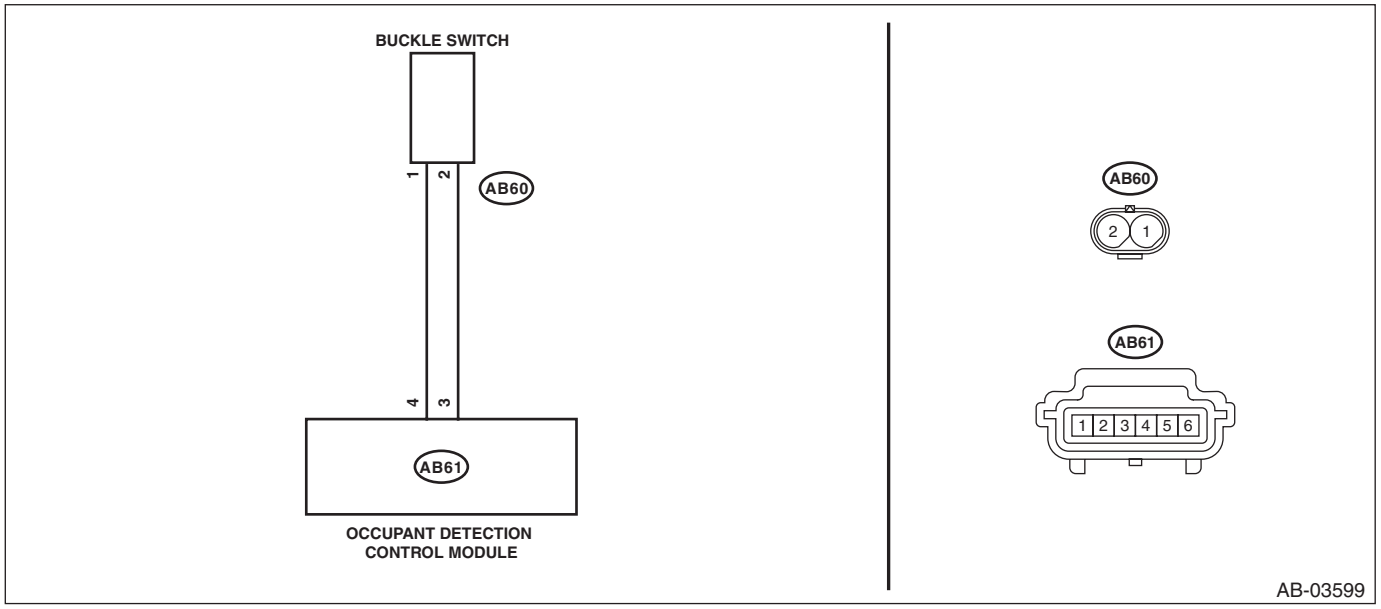

	Step	Check	Yes	No
1	**CHECK DTC.** Read the DTC of the occupant detection system. (Current malfunction)	Is DTC other than B1650 and B1655 displayed?	Perform the diagnosis according to DTC.	Go to step **2**.
2	**CHECK POOR CONTACT OF CONNECTORS.** Check for poor contact of the connectors between the occupant detection control module and buckle switch.	Is there poor contact?	Reconnect the connector. If the fault is not fixed, replace the occupant detection harness.	Go to step **3**.
3	**CHECK BUCKLE SWITCH.** 1) Turn the ignition switch to OFF, disconnect the battery ground terminal, and wait for 60 seconds. 2) Disconnect the buckle switch connector (AB60). 3) Connect the test harness AE and test harness connector Y to buckle switch connector (AB60). 4) Connect the battery ground terminal and turn the ignition switch to ON.	Does the airbag warning light illuminate for 6 seconds and go off?	Replace the buckle switch. <Ref. to SB-19, SEAT BELT OUTER - FRONT, REMOVAL, Front Seat Belt.>	Check the occupant detection harness, and if any fault is found, replace the occupant detection harness. If the fault is not fixed, replace the occupant detection system. <Ref. to SE-25, PASSENGER'S SEAT, DISASSEMBLY, Front Seat.>

BO:DTC B1656 FRONT BUCKLE SWITCH LH FAILURE

DIAGNOSIS START CONDITION:
Ignition voltage is 10 V to 16 V.
DTC DETECTING CONDITION:
Buckle switch LH failure (open, short, unit failure), seat harness malfunction (open, short), occupant detection system failure
WIRING DIAGRAM:
Occupant detection system <Ref. to WI-291, WIRING DIAGRAM, Occupant Detection System.>

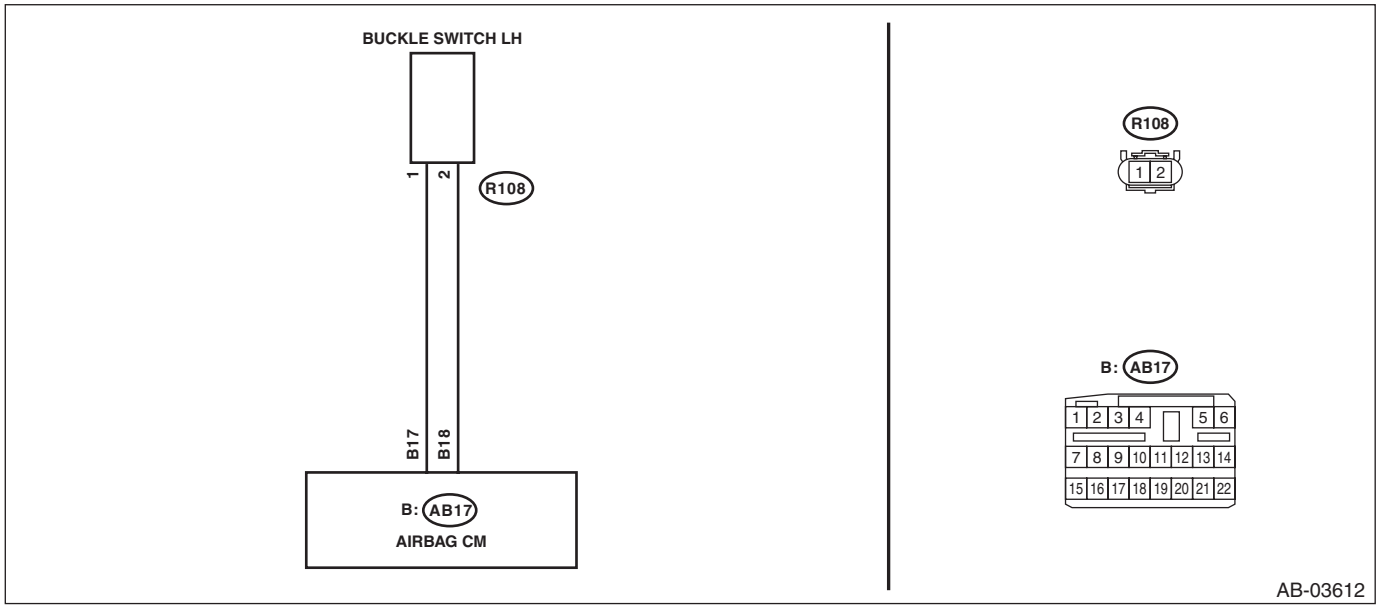

Step		Check	Yes	No
1	**CHECK DTC.** Read the DTC. (Current malfunction) <Ref. to AB(diag)-30, Read Diagnostic Trouble Code (DTC).>	Is DTC other than B1656 displayed?	Perform the diagnosis according to DTC.	Go to step **2**.
2	**CHECK POOR CONTACT OF CONNECTORS.** Check for poor contact of the connectors between the airbag control module and the buckle switch.	Is there poor contact?	When the connector is not fully connected, reconnect the connector correctly. Replace the airbag rear harness together with body harness, if the connector is faulty.	Go to step **3**.

	Step	Check	Yes	No
3	**CHECK AIRBAG REAR HARNESS (BETWEEN AIRBAG CONTROL MODULE AND BUCKLE SWITCH) (OPEN CIRCUIT).** 1) Turn the ignition switch to OFF, disconnect the battery ground terminal, and wait for 60 seconds. 2) Disconnect the connector (AB21) from seat belt pretensioner LH. 3) Disconnect the connector (AB5) from seat cushion airbag module LH. 4) Disconnect the connector (AB31) from curtain airbag module LH. 5) Disconnect the connector (AB19) of the side airbag module LH. 6) Disconnect the connectors (AB6, AB17, AB18) from airbag control module. 7) Connect the connector (1AD) in test harness AD AV to the connectors (AB6, AB17, AB18). 8) Connect the connector (2AD) in test harness AD AV and the connector (1AG) in test harness AG. 9) Disconnect the buckle switch connector (R108). 10) Measure the resistance between connector (6AG) in the test harness AG and connector (R108). **CAUTION:** **Connect terminal (1AW) in test harness AW to connector (R108) terminal, and apply the tester to terminal (2AW).** ***Connector & terminal*** ***(6AG) No. 17 — (R108) No. 1:*** ***(6AG) No. 2 — (R108) No. 2:***	Is the resistance less than 10 Ω?	Go to step **4**.	Replace the airbag main harness along with body harness.
4	**CHECK AIRBAG REAR HARNESS (BETWEEN AIRBAG CONTROL MODULE AND BUCKLE SWITCH) (SHORTED TO GROUND).** Measure the resistance between connector (6AG) in the test harness AG and chassis ground. ***Connector & terminal*** ***(6AG) No. 17 — Chassis ground:*** ***(6AG) No. 2 — Chassis ground:***	Is the resistance 1 MΩ or more?	Go to step **5**.	Replace the airbag main harness along with body harness.
5	**CHECK AIRBAG REAR HARNESS (BETWEEN AIRBAG CONTROL MODULE AND BUCKLE SWITCH) (SHORTED TO POWER SUPPLY).** 1) Turn the ignition switch to ON. 2) Measure the resistance between connector (6AG) in the test harness AG and chassis ground. ***Connector & terminal*** ***(6AG) No. 17 (+) — Chassis ground (–):*** ***(6AG) No. 2 (+) — Chassis ground (–):***	Is the voltage less than 1 V?	Go to step **6**.	Replace the airbag main harness along with body harness.

	Step	Check	Yes	No
6	**REPLACE BUCKLE SWITCH AND CHECK AIRBAG CONTROL MODULE AFTER REPLACEMENT.** 1) Turn the ignition switch to OFF, disconnect the battery ground cable, and wait for 60 seconds or more. 2) Replace the buckle switch. <Ref. to SB-19, SEAT BELT OUTER - FRONT, REMOVAL, Front Seat Belt.> 3) Connect all connectors. 4) Clear the memory. <Ref. to AB(diag)-32, Clear Memory Mode.> 5) Perform the Inspection Mode. <Ref. to AB(diag)-31, Inspection Mode.> 6) Read the DTC. (Current malfunction) <Ref. to AB(diag)-30, Read Diagnostic Trouble Code (DTC).>	Is DTC B1656 displayed?	Replace the airbag control module. <Ref. to AB-50, REMOVAL, Airbag Control Module.>	Go to step **7**.
7	**CHECK FOR ANY OTHER DTC ON DISPLAY.** Read the DTC. (Current malfunction) <Ref. to AB(diag)-30, Read Diagnostic Trouble Code (DTC).>	Is any other DTC displayed?	Check DTC using “List of Diagnostic Trouble Code”. <Ref. to AB(diag)-38, LIST, List of Diagnostic Trouble Code (DTC).>	Finish the diagnosis.

BP:DTC B1661 PASSENGER'S AIRBAG ON/OFF INDICATOR FAILURE

DIAGNOSIS START CONDITION:
Ignition voltage is 10 V to 16 V.
DTC DETECTING CONDITION:
Passenger’s airbag indicator failure received (CAN signal from combination meter)

NOTE:
Perform the diagnosis for combination meter. <Ref. to MET(diag)-2, PROCEDURE, Basic Diagnostic Procedure.>

BQ:DTC B1690 DOOR SENSOR RH FAILURE

DIAGNOSIS START CONDITION:
Ignition voltage is 10 V to 16 V.
DTC DETECTING CONDITION:
Front door impact sensor RH unit internal malfunction
If DTC B1690 is displayed, the circuit within the front door impact sensor RH is faulty.
Replace the front door impact sensor RH. <Ref. to AB-54, REMOVAL, Front Door Impact Sensor.>

BR:DTC B1692 LOST COMMUNICATION WITH DOOR SENSOR RH

DIAGNOSIS START CONDITION:
Ignition voltage is 10 V to 16 V.
DTC DETECTING CONDITION:
Front door impact sensor RH communication error (open/short circuit or connector connection failure between airbag CM and front door impact sensor, front door impact sensor internal communication circuit failure, CM internal communication circuit failure)

CAUTION:
Before performing diagnosis, refer to "CAUTION" in "General Description". <Ref. to AB(diag)-4, CAUTION, General Description.>
WIRING DIAGRAM:

NOTE:
For the coupling connector, refer to "WIRING SYSTEM".
Airbag system <Ref. to WI-89, WIRING DIAGRAM, Airbag System.>

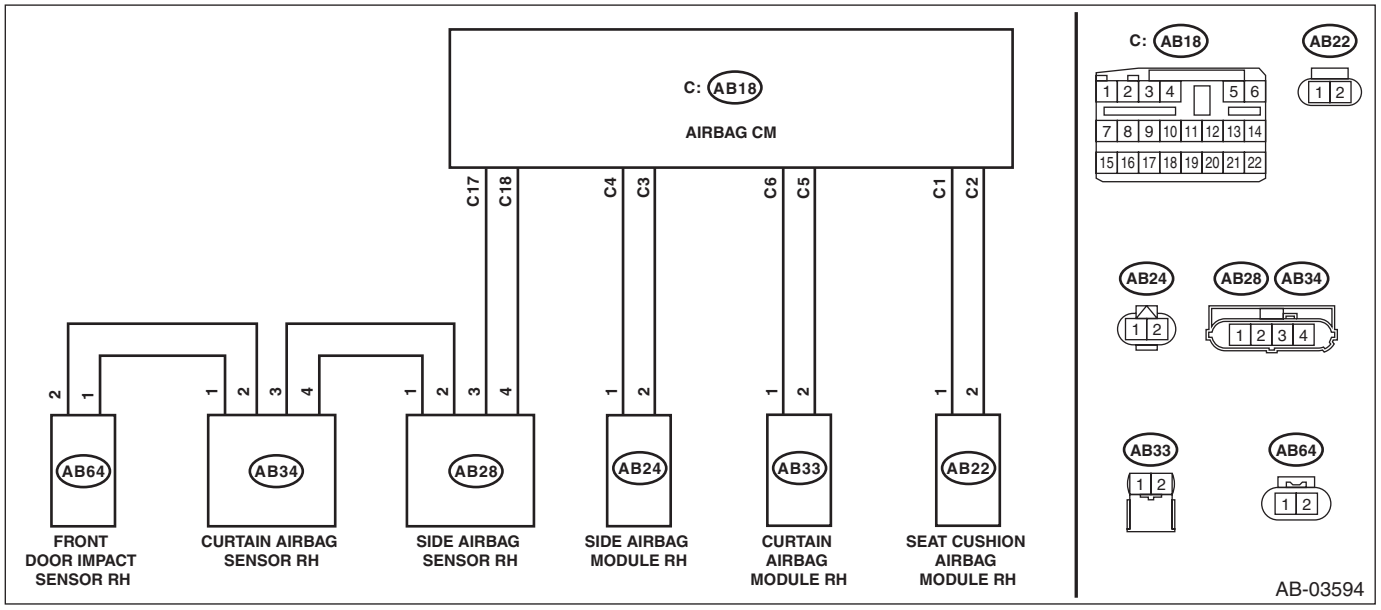

Step		Check	Yes	No
1	**CHECK DTC.** Read the DTC. (Current malfunction) <Ref. to AB(diag)-30, Read Diagnostic Trouble Code (DTC).>	Is DTC B1622 or B1632 displayed?	Perform the diagnosis according to DTC.	Go to step **2**.
2	**CHECK POOR CONTACT OF CONNECTORS.** Check for poor contact of the connectors between the airbag control module and the front door impact sensor RH.	Is there poor contact?	Replace the airbag rear harness and the door harness.	Go to step **3**.

	Step	Check	Yes	No
3	**CHECK AIRBAG REAR HARNESS AND DOOR HARNESS (BETWEEN CURTAIN AIRBAG SENSOR RH AND DOOR SENSOR RH) (OPEN CIRCUIT).** 1) Turn the ignition switch to OFF, disconnect the battery ground cable, and wait for 60 seconds or more. 2) Disconnect the connector (AB26) from seat belt pretensioner RH. 3) Disconnect the connector (AB22) from seat cushion airbag module RH. 4) Disconnect the connector (AB33) from curtain airbag module RH. 5) Disconnect the connector (AB24) from side airbag module RH. 6) Disconnect the connector (AB34) from curtain airbag sensor (RH), and connect the connector (2V) in test harness V to connector (AB34). 7) Disconnect the connector (AB64) from front door impact sensor RH. 8) Using a probe, measure the resistance between the connector (3V) in test harness V and connector (AB64). <Ref. to AB(diag)-19, HOW TO USE PROBE, PREPARATION TOOL, General Description.> **CAUTION:** **When measuring the resistance, make sure to insert the probe from the inspection hole of the connector. Also, do not insert the probe forcibly.** ***Connector & terminal*** ***(3V) No. 4 — (AB64) No. 1:*** ***(3V) No. 5 — (AB64) No. 2:***	Is the resistance less than 10 Ω?	Go to step **4**.	Check the door harness, and if any fault is found, replace the harness. If there is no fault, replace the airbag rear harness together with body harness.
4	**CHECK AIRBAG REAR HARNESS AND DOOR HARNESS (BETWEEN CURTAIN AIRBAG SENSOR RH AND DOOR SENSOR RH) (SHORTED TO GROUND AND SHORTED BETWEEN LINES).** Measure the resistance between connector (3V) in test harness V and chassis ground, and the resistance between connector (3V) terminals in test harness V. ***Connector & terminal*** ***(3V) No. 4 — Chassis ground:*** ***(3V) No. 5 — Chassis ground:*** ***(3V) No. 4 — (3V) No. 5:***	Is the resistance 1 MΩ or more?	Go to step **5**.	Check the door harness, and if any fault is found, replace the harness. If there is no fault, replace the airbag rear harness together with body harness.
5	**CHECK AIRBAG CONTROL MODULE.** 1) Connect all connectors. 2) Clear the memory. <Ref. to AB(diag)-32, Clear Memory Mode.> 3) Perform the Inspection Mode. <Ref. to AB(diag)-31, Inspection Mode.> 4) Read the DTC. (Current malfunction) <Ref. to AB(diag)-30, Read Diagnostic Trouble Code (DTC).>	Is DTC B1692 displayed?	Go to step **6**.	Go to step **9**.

	Step	Check	Yes	No
6	**CHECK FRONT DOOR IMPACT SENSOR RH.** 1) Turn the ignition switch to OFF, disconnect the battery ground cable, and wait for 60 seconds or more. 2) Disconnect the connector (AB64) from front door impact sensor RH. <Ref. to AB-54, REMOVAL, Front Door Impact Sensor.> 3) Temporarily connect a new front door impact sensor to the connector (AB64). 4) Connect all connectors. 5) Clear the memory. <Ref. to AB(diag)-32, Clear Memory Mode.> 6) Perform the Inspection Mode. <Ref. to AB(diag)-31, Inspection Mode.> 7) Read the DTC. (Current malfunction) <Ref. to AB(diag)-30, Read Diagnostic Trouble Code (DTC).>	Is DTC B1692 displayed?	Go to step **7**.	Go to step **8**.
7	**CHECK CURTAIN AIRBAG SENSOR RH.** 1) Turn the ignition switch to OFF, disconnect the battery ground cable, and wait for 60 seconds or more. 2) Restore the front door impact sensor RH back to the original position. <Ref. to AB-54, REMOVAL, Front Door Impact Sensor.> 3) Replace the curtain airbag sensor RH by the curtain airbag sensor LH. <Ref. to AB-58, REMOVAL, Curtain Airbag Sensor.> 4) Connect all connectors. 5) Clear the memory. <Ref. to AB(diag)-32, Clear Memory Mode.> 6) Perform the Inspection Mode. <Ref. to AB(diag)-31, Inspection Mode.> 7) Read the DTC. (Current malfunction) <Ref. to AB(diag)-30, Read Diagnostic Trouble Code (DTC).>	Is DTC B1692 displayed?	Go to step **8**.	Replace the curtain airbag sensor RH. <Ref. to AB-58, REMOVAL, Curtain Airbag Sensor.>
8	**CHECK AIRBAG CONTROL MODULE.** 1) Turn the ignition switch to OFF, disconnect the battery ground cable, and wait for 60 seconds or more. 2) Restore the curtain airbag sensors RH and LH back to their original position. <Ref. to AB-58, REMOVAL, Curtain Airbag Sensor.> 3) Connect all connectors. 4) Clear the memory. <Ref. to AB(diag)-32, Clear Memory Mode.> 5) Perform the Inspection Mode. <Ref. to AB(diag)-31, Inspection Mode.> 6) Read the DTC. (Current malfunction) <Ref. to AB(diag)-30, Read Diagnostic Trouble Code (DTC).>	Is DTC B1692 displayed?	Replace the airbag control module. <Ref. to AB-50, REMOVAL, Airbag Control Module.>	Go to step **9**.
9	**CHECK FOR ANY OTHER DTC ON DISPLAY.** Read the DTC. (Current malfunction) <Ref. to AB(diag)-30, Read Diagnostic Trouble Code (DTC).>	Is any other DTC displayed?	Check DTC using “List of Diagnostic Trouble Code”. <Ref. to AB(diag)-38, LIST, List of Diagnostic Trouble Code (DTC).>	Finish the diagnosis.

BS:DTC B1693 DOOR SENSOR RH INITIALIZATION INCOMPLETE

DIAGNOSIS START CONDITION:
Ignition voltage is 10 V to 16 V.
DTC DETECTING CONDITION:
Front door impact sensor RH unit malfunction (sensor type abnormal, sensor unit initialization error)

CAUTION:
Before performing diagnosis, refer to "CAUTION" in "General Description". <Ref. to AB(diag)-4, CAUTION, General Description.>
WIRING DIAGRAM:

NOTE:
For the coupling connector, refer to "WIRING SYSTEM".
Airbag system <Ref. to WI-89, WIRING DIAGRAM, Airbag System.>

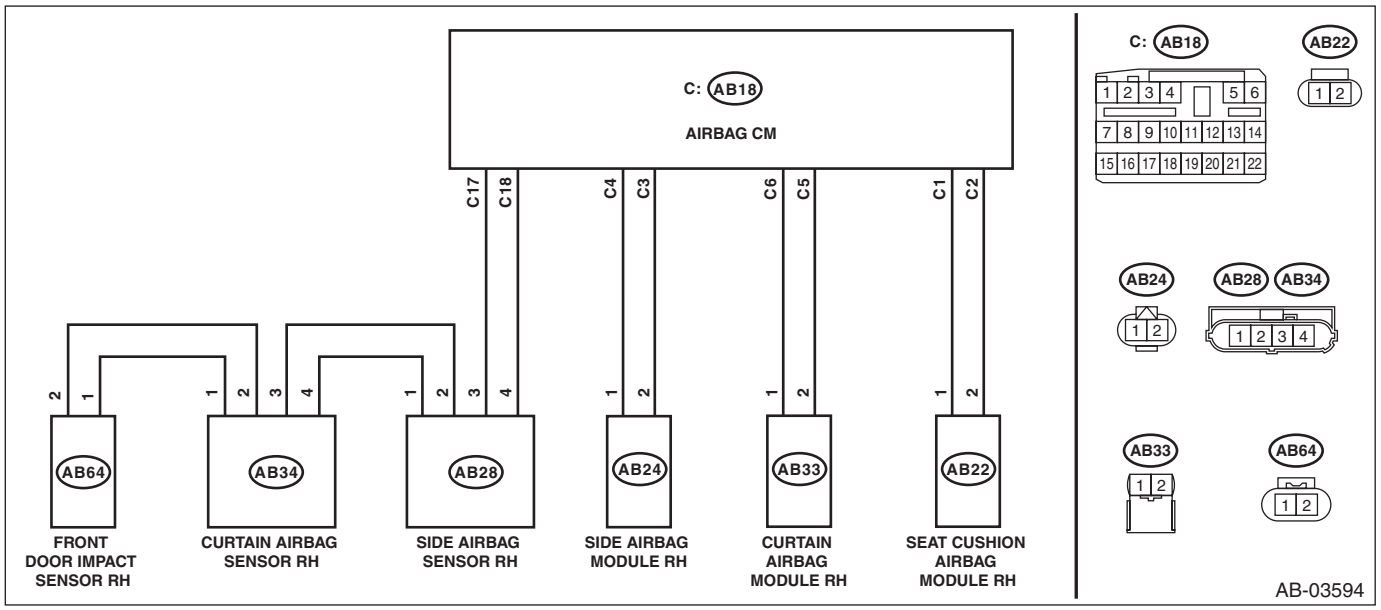

Step		Check	Yes	No
1	**CHECK POOR CONTACT OF CONNECTORS.** Check for poor contact of the connectors between the airbag control module and the front door impact sensor RH.	Is there poor contact?	Replace the airbag rear harness and the door harness.	Go to step **2**.
2	**CHECK FRONT DOOR IMPACT SENSOR RH.** 1) Turn the ignition switch to OFF, disconnect the battery ground cable, and wait for 60 seconds or more. 2) Disconnect the connector (AB64) from front door impact sensor RH. <Ref. to AB-54, REMOVAL, Front Door Impact Sensor.> 3) Temporarily connect a new front door impact sensor to the connector (AB64). 4) Connect all connectors. 5) Clear the memory. <Ref. to AB(diag)-32, Clear Memory Mode.> 6) Perform the Inspection Mode. <Ref. to AB(diag)-31, Inspection Mode.> 7) Read the DTC. (Current malfunction) <Ref. to AB(diag)-30, Read Diagnostic Trouble Code (DTC).>	Is DTC B1693 displayed?	Go to step **3**.	Replace the front door impact sensor RH. <Ref. to AB-54, REMOVAL, Front Door Impact Sensor.>

	Step	Check	Yes	No
3	**CHECK AIRBAG CONTROL MODULE.** 1) Turn the ignition switch to OFF, disconnect the battery ground cable, and wait for 60 seconds or more. 2) Restore the front door impact sensor RH back to the original position. <Ref. to AB-54, REMOVAL, Front Door Impact Sensor.> 3) Connect all connectors. 4) Clear the memory. <Ref. to AB(diag)-32, Clear Memory Mode.> 5) Perform the Inspection Mode. <Ref. to AB(diag)-31, Inspection Mode.> 6) Read the DTC. (Current malfunction) <Ref. to AB(diag)-30, Read Diagnostic Trouble Code (DTC).>	Is DTC B1693 displayed?	Replace the airbag control module. <Ref. to AB-50, REMOVAL, Airbag Control Module.>	Go to step **4**.
4	**CHECK FOR ANY OTHER DTC ON DISPLAY.** Read the DTC. (Current malfunction) <Ref. to AB(diag)-30, Read Diagnostic Trouble Code (DTC).>	Is any other DTC displayed?	Check DTC using "List of Diagnostic Trouble Code". <Ref. to AB(diag)-38, LIST, List of Diagnostic Trouble Code (DTC).>	Finish the diagnosis.

BT:DTC B1695 DOOR SENSOR LH FAILURE

DIAGNOSIS START CONDITION:
Ignition voltage is 10 V to 16 V.
DTC DETECTING CONDITION:
Front door impact sensor RH unit internal malfunction
If DTC AB is displayed, the circuit within the front door impact sensor LH is faulty.
Replace the front door impact sensor LH. <Ref. to AB-54, REMOVAL, Front Door Impact Sensor.>

BU:DTC B1697 LOST COMMUNICATION WITH DOOR SENSOR LH

DIAGNOSIS START CONDITION:
Ignition voltage is 10 V to 16 V.
DTC DETECTING CONDITION:
Front door impact sensor LH communication error (open/short circuit or connector connection failure between airbag CM and front door impact sensor, front door impact sensor internal communication circuit failure, CM internal communication circuit failure)

CAUTION:
Before performing diagnosis, refer to "CAUTION" in "General Description". <Ref. to AB(diag)-4, CAUTION, General Description.>
WIRING DIAGRAM:

NOTE:
For the coupling connector, refer to "WIRING SYSTEM".
Airbag system <Ref. to WI-89, WIRING DIAGRAM, Airbag System.>

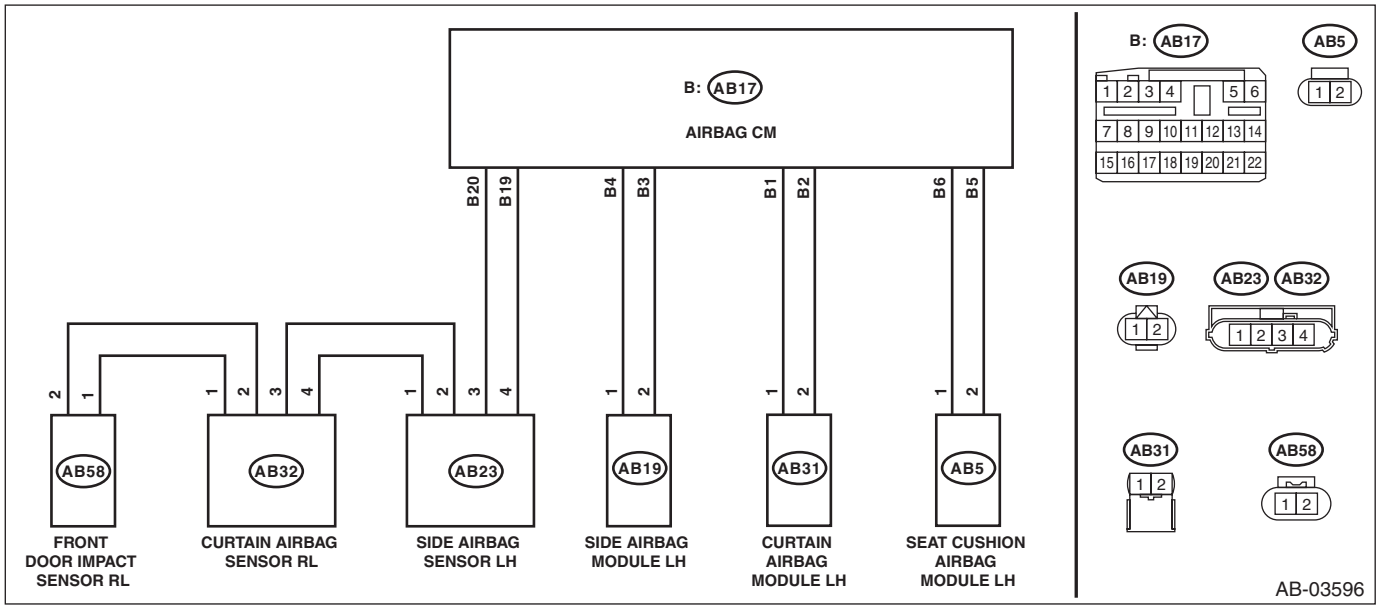

Step		Check	Yes	No
1	**CHECK DTC.** Read the DTC. (Current malfunction) <Ref. to AB(diag)-30, Read Diagnostic Trouble Code (DTC).>	Is DTC B1627 or B1637 displayed?	Perform the diagnosis according to DTC.	Go to step **2**.
2	**CHECK POOR CONTACT OF CONNECTORS.** Check for poor contact of the connectors between the airbag control module and the front door impact sensor LH.	Is there poor contact?	Replace the airbag rear harness and the door harness.	Go to step **3**.

	Step	Check	Yes	No
3	**CHECK AIRBAG REAR HARNESS AND DOOR HARNESS (BETWEEN CURTAIN AIRBAG SENSOR LH AND FRONT DOOR IMPACT SENSOR LH) (OPEN CIRCUIT).** 1) Turn the ignition switch to OFF, disconnect the battery ground cable, and wait for 60 seconds or more. 2) Disconnect the connector (AB21) from seat belt pretensioner LH. 3) Disconnect the connector (AB5) from seat cushion airbag module LH. 4) Disconnect the connector (AB31) from curtain airbag module LH. 5) Disconnect the connector (AB19) from side airbag module LH. 6) Disconnect the connector (AB32) from curtain airbag sensor LH, and connect the connector (2V) in test harness V to connector (AB32). 7) Disconnect the connector (AB58) from front door impact sensor LH. 8) Using a probe, measure the resistance between the connector (3V) terminal in test harness V and connector (AB58) terminal. <Ref. to AB(diag)-19, HOW TO USE PROBE, PREPARATION TOOL, General Description.> **CAUTION:** **When measuring the resistance, make sure to insert the probe from the inspection hole of the connector. Also, do not insert the probe forcibly.** ***Connector & terminal*** ***(3V) No. 4 — (AB58) No. 1:*** ***(3V) No. 5 — (AB58) No. 2:***	Is the resistance less than 10 Ω?	Go to step **4**.	Check the door harness, and if any fault is found, replace the harness. If there is no fault, replace the airbag rear harness together with body harness.
4	**CHECK AIRBAG REAR HARNESS AND DOOR HARNESS (BETWEEN CURTAIN AIRBAG SENSOR LH AND FRONT DOOR IMPACT SENSOR LH) (SHORTED TO GROUND AND SHORTED BETWEEN LINES).** Measure the resistance between connector (3V) in test harness V and chassis ground, and the resistance between connector (3V) terminals in test harness V. ***Connector & terminal*** ***(3V) No. 4 — Chassis ground:*** ***(3V) No. 5 — Chassis ground:*** ***(3V) No. 4 — (3V) No. 5:***	Is the resistance 1 MΩ or more?	Go to step **5**.	Check the door harness, and if any fault is found, replace the harness. If there is no fault, replace the airbag rear harness together with body harness.
5	**CHECK AIRBAG CONTROL MODULE.** 1) Connect all connectors. 2) Clear the memory. <Ref. to AB(diag)-32, Clear Memory Mode.> 3) Perform the Inspection Mode. <Ref. to AB(diag)-31, Inspection Mode.> 4) Read the DTC. (Current malfunction) <Ref. to AB(diag)-30, Read Diagnostic Trouble Code (DTC).>	Is DTC B1697 displayed?	Go to step **6**.	Go to step **9**.

	Step	Check	Yes	No
6	**CHECK FRONT DOOR IMPACT SENSOR LH.** 1) Turn the ignition switch to OFF, disconnect the battery ground cable, and wait for 60 seconds or more. 2) Disconnect the connector (AB58) from front door impact sensor LH. <Ref. to AB-54, REMOVAL, Front Door Impact Sensor.> 3) Temporarily connect a new front door impact sensor to the connector (AB58). 4) Connect all connectors. 5) Clear the memory. <Ref. to AB(diag)-32, Clear Memory Mode.> 6) Perform the Inspection Mode. <Ref. to AB(diag)-31, Inspection Mode.> 7) Read the DTC. (Current malfunction) <Ref. to AB(diag)-30, Read Diagnostic Trouble Code (DTC).>	Is DTC B1697 displayed?	Go to step **7**.	Replace the front door impact sensor LH. <Ref. to AB-54, REMOVAL, Front Door Impact Sensor.>
7	**CHECK CURTAIN AIRBAG SENSOR LH.** 1) Turn the ignition switch to OFF, disconnect the battery ground cable, and wait for 60 seconds or more. 2) Restore the front door impact sensor LH back to the original position. <Ref. to AB-54, REMOVAL, Front Door Impact Sensor.> 3) Replace the curtain airbag sensor RH by the curtain airbag sensor LH. <Ref. to AB-58, REMOVAL, Curtain Airbag Sensor.> 4) Connect all connectors. 5) Clear the memory. <Ref. to AB(diag)-32, Clear Memory Mode.> 6) Perform the Inspection Mode. <Ref. to AB(diag)-31, Inspection Mode.> 7) Read the DTC. (Current malfunction) <Ref. to AB(diag)-30, Read Diagnostic Trouble Code (DTC).>	Is DTC B1697 displayed?	Replace the curtain airbag sensor LH. <Ref. to AB-58, REMOVAL, Curtain Airbag Sensor.>	Go to step **8**.
8	**CHECK AIRBAG CONTROL MODULE.** 1) Turn the ignition switch to OFF, disconnect the battery ground cable, and wait for 60 seconds or more. 2) Restore the curtain airbag sensors RH and LH back to their original position. <Ref. to AB-58, REMOVAL, Curtain Airbag Sensor.> 3) Connect all connectors. 4) Clear the memory. <Ref. to AB(diag)-32, Clear Memory Mode.> 5) Perform the Inspection Mode. <Ref. to AB(diag)-31, Inspection Mode.> 6) Read the DTC. (Current malfunction) <Ref. to AB(diag)-30, Read Diagnostic Trouble Code (DTC).>	Is DTC B1697 displayed?	Replace the airbag control module. <Ref. to AB-50, REMOVAL, Airbag Control Module.>	Go to step **9**.
9	**CHECK FOR ANY OTHER DTC ON DISPLAY.** Read the DTC. (Current malfunction) <Ref. to AB(diag)-30, Read Diagnostic Trouble Code (DTC).>	Is any other DTC displayed?	Check DTC using “List of Diagnostic Trouble Code”. <Ref. to AB(diag)-38, LIST, List of Diagnostic Trouble Code (DTC).>	Finish the diagnosis.

BV:DTC B1698 DOOR SENSOR LH INITIALIZATION INCOMPLETE

DIAGNOSIS START CONDITION:
Ignition voltage is 10 V to 16 V.
DTC DETECTING CONDITION:
Front door impact sensor LH unit malfunction (sensor type abnormal, sensor unit initialization error)

CAUTION:
Before performing diagnosis, refer to "CAUTION" in "General Description". <Ref. to AB(diag)-4, CAUTION, General Description.>
WIRING DIAGRAM:

NOTE:
For the coupling connector, refer to "WIRING SYSTEM".
Airbag system <Ref. to WI-89, WIRING DIAGRAM, Airbag System.>

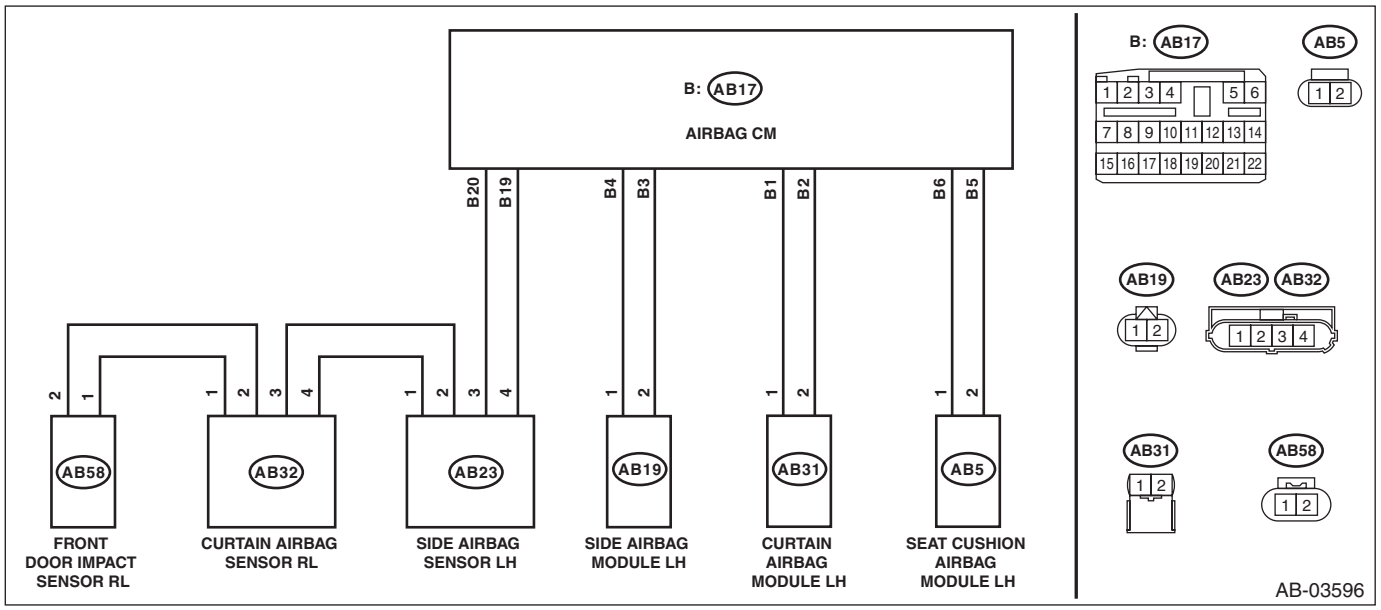

Step		Check	Yes	No
1	**CHECK POOR CONTACT OF CONNECTORS.** Check for poor contact of the connectors between the airbag control module and the front door impact sensor LH.	Is there poor contact?	Replace the airbag rear harness and the door harness.	Go to step **2**.
2	**CHECK FRONT DOOR IMPACT SENSOR LH.** 1) Turn the ignition switch to OFF, disconnect the battery ground cable, and wait for 60 seconds or more. 2) Disconnect the connector (AB58) from front door impact sensor LH. <Ref. to AB-54, REMOVAL, Front Door Impact Sensor.> 3) Temporarily connect a new front door impact sensor to the connector (AB58). 4) Connect all connectors. 5) Clear the memory. <Ref. to AB(diag)-32, Clear Memory Mode.> 6) Perform the Inspection Mode. <Ref. to AB(diag)-31, Inspection Mode.> 7) Read the DTC. (Current malfunction) <Ref. to AB(diag)-30, Read Diagnostic Trouble Code (DTC).>	Is DTC B1698 displayed?	Go to step **3**.	Replace the front door impact sensor LH. <Ref. to AB-54, REMOVAL, Front Door Impact Sensor.>

	Step	Check	Yes	No
3	**CHECK AIRBAG CONTROL MODULE.** 1) Turn the ignition switch to OFF, disconnect the battery ground cable, and wait for 60 seconds or more. 2) Restore the front door impact sensor LH back to the original position. <Ref. to AB-54, REMOVAL, Front Door Impact Sensor.> 3) Connect all connectors. 4) Clear the memory. <Ref. to AB(diag)-32, Clear Memory Mode.> 5) Perform the Inspection Mode. <Ref. to AB(diag)-31, Inspection Mode.> 6) Read the DTC. (Current malfunction) <Ref. to AB(diag)-30, Read Diagnostic Trouble Code (DTC).>	Is DTC B1698 displayed?	Replace the airbag control module. <Ref. to AB-50, REMOVAL, Airbag Control Module.>	Go to step **3**.
4	**CHECK FOR ANY OTHER DTC ON DISPLAY.** Read the DTC. (Current malfunction) <Ref. to AB(diag)-30, Read Diagnostic Trouble Code (DTC).>	Is any other DTC displayed?	Check DTC using “List of Diagnostic Trouble Code”. <Ref. to AB(diag)-38, LIST, List of Diagnostic Trouble Code (DTC).>	Finish the diagnosis.

BW:DTC B169F DOOR SENSOR FAILURE: ABNORMAL PRESSURE

DIAGNOSIS START CONDITION:
Ignition voltage is 10 V to 16 V.
DTC DETECTING CONDITION:
Front door impact sensor detected value abnormal (difference of the detected pressure values between front door impact sensor RH and LH exceeds a predetermined value), airbag CM process failure

	Step	Check	Yes	No
1	**CHECK FRONT DOOR IMPACT SENSOR RH.** 1) Turn the ignition switch to OFF, disconnect the battery ground cable, and wait for 60 seconds or more. 2) Disconnect the connector (AB64) from front door impact sensor RH. <Ref. to AB-54, REMOVAL, Front Door Impact Sensor.> 3) Connect a new front door impact sensor RH to connector (AB64). 4) Clear the memory. <Ref. to AB(diag)-32, Clear Memory Mode.> 5) Perform the Inspection Mode. <Ref. to AB(diag)-31, Inspection Mode.> 6) Read the DTC. (Current malfunction) <Ref. to AB(diag)-30, Read Diagnostic Trouble Code (DTC).>	Is DTC B169F displayed?	Go to step **2**.	Replace the front door impact sensor RH. <Ref. to AB-54, REMOVAL, Front Door Impact Sensor.>
2	**CHECK FRONT DOOR IMPACT SENSOR LH.** 1) Turn the ignition switch to OFF, disconnect the battery ground cable, and wait for 60 seconds or more. 2) Restore the front door impact sensor RH back to the original position. 3) Disconnect the connector (AB58) from front door impact sensor LH. <Ref. to AB-54, REMOVAL, Front Door Impact Sensor.> 4) Connect a new front door impact sensor LH to connector (AB58). 5) Clear the memory. <Ref. to AB(diag)-32, Clear Memory Mode.> 6) Perform the Inspection Mode. <Ref. to AB(diag)-31, Inspection Mode.> 7) Read the DTC. (Current malfunction) <Ref. to AB(diag)-30, Read Diagnostic Trouble Code (DTC).>	Is DTC B169F displayed?	Go to step **3**.	Replace the front door impact sensor LH. <Ref. to AB-54, REMOVAL, Front Door Impact Sensor.>
3	**CHECK AIRBAG CONTROL MODULE.** 1) Turn the ignition switch to OFF, disconnect the battery ground cable, and wait for 60 seconds or more. 2) Restore the front door impact sensor LH back to the original position. 3) Clear the memory. <Ref. to AB(diag)-32, Clear Memory Mode.> 4) Perform the Inspection Mode. <Ref. to AB(diag)-31, Inspection Mode.> 5) Read the DTC. (Current malfunction) <Ref. to AB(diag)-30, Read Diagnostic Trouble Code (DTC).>	Is DTC B169F displayed?	Replace the airbag control module. <Ref. to AB-50, REMOVAL, Airbag Control Module.>	Check DTC using “List of Diagnostic Trouble Code”. <Ref. to AB(diag)-38, LIST, List of Diagnostic Trouble Code (DTC).>

BX:DTC B16A2 SHORT IN FRONT SUB SENSOR RH (TO GROUND)

DIAGNOSIS START CONDITION:
Ignition voltage is 10 V to 16 V.
DTC DETECTING CONDITION:
Shorted between front sub sensor RH circuit and GND circuit
WIRING DIAGRAM:

NOTE:
For the coupling connector, refer to “WIRING SYSTEM”.
Airbag system <Ref. to WI-89, WIRING DIAGRAM, Airbag System.>

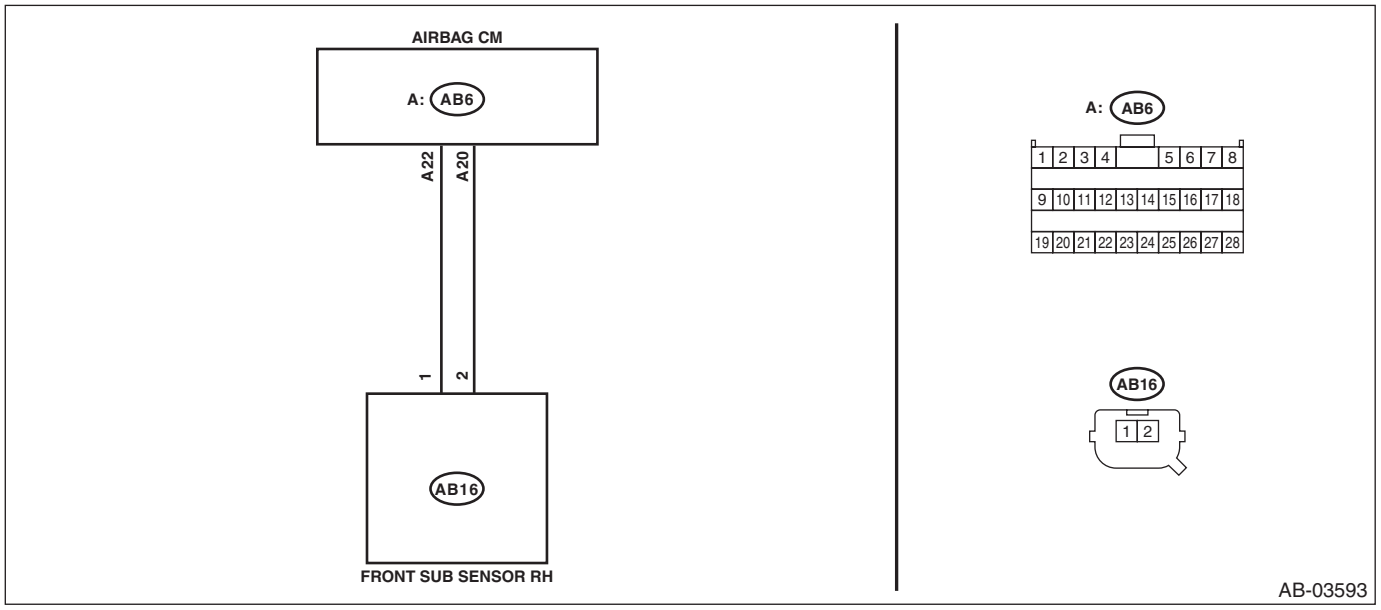

Step		Check	Yes	No
1	**CHECK POOR CONTACT OF CONNECTORS.** Check for poor contact of the connectors between the airbag control module and the front sub sensor RH.	Is there poor contact?	Replace the airbag main harness along with body harness.	Go to step **2**.
2	**CHECK AIRBAG MAIN HARNESS (FRONT SENSOR BUS RH) (SHORTED TO GROUND).** 1) Turn the ignition switch to OFF, disconnect the battery ground cable, and wait for 60 seconds or more. 2) Remove the instrument panel lower cover and column cover, and disconnect the connectors (AB7) and (AB2). 3) Remove the console front panel and disconnect the connector (AB9). 4) Disconnect the connectors (AB6, AB17, AB18) from airbag control module. 5) Disconnect the connector (AB16) from the front sub sensor RH, and then connect the connector (1H) in the test harness H to connector (AB16). 6) Measure the resistance between connector in the test harness H and chassis ground. ***Connector & terminal*** ***(3H) No. 5 — Chassis ground:*** ***(3H) No. 6 — Chassis ground:***	Is the resistance 1 MΩ or more?	Go to step **3**.	Replace the airbag main harness along with body harness.

	Step	Check	Yes	No
3	**CHECK FRONT SUB SENSOR RH.** 1) Turn the ignition switch to OFF, disconnect the battery ground cable, and wait for 60 seconds or more. 2) Replace the front sub sensor RH by the front sub sensor LH. <Ref. to AB-52, REMOVAL, Front Sub Sensor.> 3) Connect all connectors. 4) Clear the memory. <Ref. to AB(diag)-32, Clear Memory Mode.> 5) Perform the Inspection Mode. <Ref. to AB(diag)-31, Inspection Mode.> 6) Read the DTC. (Current malfunction) <Ref. to AB(diag)-30, Read Diagnostic Trouble Code (DTC).>	Is DTC B16A2 displayed?	Go to step **4**.	Replace the front sub sensor RH. <Ref. to AB-52, REMOVAL, Front Sub Sensor.>
4	**CHECK AIRBAG CONTROL MODULE.** 1) Turn the ignition switch to OFF, disconnect the battery ground cable, and wait for 60 seconds or more. 2) Restore the front sub sensors RH and LH back to their original position. <Ref. to AB-52, REMOVAL, Front Sub Sensor.> 3) Connect all connectors. 4) Clear the memory. <Ref. to AB(diag)-32, Clear Memory Mode.> 5) Perform the Inspection Mode. <Ref. to AB(diag)-31, Inspection Mode.> 6) Read the DTC. (Current malfunction) <Ref. to AB(diag)-30, Read Diagnostic Trouble Code (DTC).>	Is DTC B16A2 displayed?	Replace the airbag control module. <Ref. to AB-50, REMOVAL, Airbag Control Module.>	Go to step **5**.
5	**CHECK FOR ANY OTHER DTC ON DISPLAY.** Read the DTC. (Current malfunction) <Ref. to AB(diag)-30, Read Diagnostic Trouble Code (DTC).>	Is any other DTC displayed?	Check DTC using “List of Diagnostic Trouble Code”. <Ref. to AB(diag)-38, LIST, List of Diagnostic Trouble Code (DTC).>	Finish the diagnosis.

BY:DTC B16A3 SHORT IN FRONT SUB SENSOR RH (TO +B)

DIAGNOSIS START CONDITION:
Ignition voltage is 10 V to 16 V.
DTC DETECTING CONDITION:
Shorted between front sub sensor RH circuit and power supply circuit
WIRING DIAGRAM:

NOTE:
For the coupling connector, refer to “WIRING SYSTEM”.
Airbag system <Ref. to WI-89, WIRING DIAGRAM, Airbag System.>

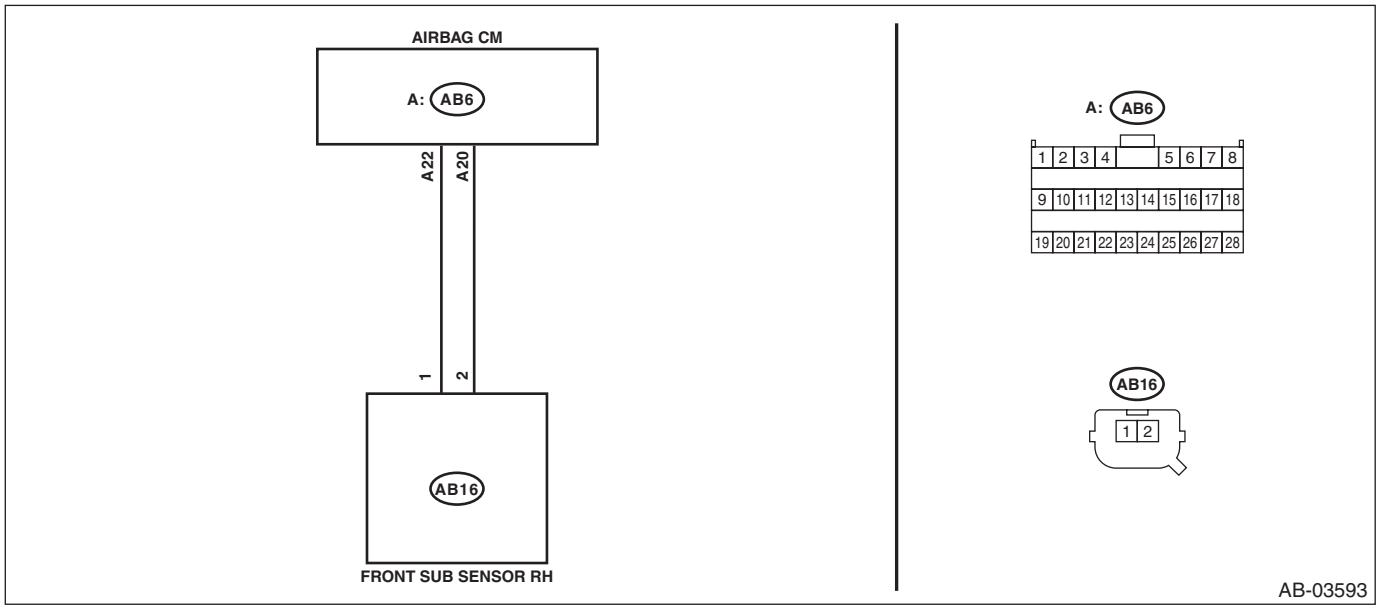

Step		Check	Yes	No
1	**CHECK POOR CONTACT OF CONNECTORS.** Check for poor contact of the connectors between the airbag control module and the front sub sensor RH.	Is there poor contact?	Replace the airbag main harness along with body harness.	Go to step **2**.

	Step	Check	Yes	No
2	**CHECK AIRBAG MAIN HARNESS (FRONT SENSOR BUS RH) (SHORTED TO POWER SUPPLY).** 1) Turn the ignition switch to OFF, disconnect the battery ground cable, and wait for 60 seconds or more. 2) Remove the instrument panel lower cover and column cover, and disconnect the connectors (AB7) and (AB2). 3) Remove the console front panel and disconnect the connector (AB9). 4) Disconnect the connectors (AB6, AB17, AB18) from airbag control module. 5) Disconnect the connector (AB16) from the front sub sensor RH, and then connect the connector (1H) in the test harness H to connector (AB16). 6) Connect the battery ground terminal and turn the ignition switch to ON. 7) Measure the voltage between connector (3H) in the test harness H and chassis ground. ***Connector & terminal*** ***(3H) No. 5 (+) — Chassis ground (–):*** ***(3H) No. 6 (+) — Chassis ground (–):***	Is the voltage less than 1 V?	Go to step **3**.	Replace the airbag main harness along with body harness.
3	**CHECK AIRBAG CONTROL MODULE.** 1) Connect all connectors. 2) Clear the memory. <Ref. to AB(diag)-32, Clear Memory Mode.> 3) Perform the Inspection Mode. <Ref. to AB(diag)-31, Inspection Mode.> 4) Read the DTC. (Current malfunction) <Ref. to AB(diag)-30, Read Diagnostic Trouble Code (DTC).>	Is DTC B16A3 displayed?	Replace the airbag control module. <Ref. to AB-50, REMOVAL, Airbag Control Module.>	Go to step **4**.
4	**CHECK FOR ANY OTHER DTC ON DISPLAY.** Read the DTC. (Current malfunction) <Ref. to AB(diag)-30, Read Diagnostic Trouble Code (DTC).>	Is any other DTC displayed?	Check DTC using “List of Diagnostic Trouble Code”. <Ref. to AB(diag)-38, LIST, List of Diagnostic Trouble Code (DTC).>	Finish the diagnosis.

BZ:DTC B16A4 SHORT IN FRONT SUB SENSOR RH

DIAGNOSIS START CONDITION:
Ignition voltage is 10 V to 16 V.
DTC DETECTING CONDITION:
Short circuit between front sub sensor RH circuit and other sensor circuit
WIRING DIAGRAM:

NOTE:
For the coupling connector, refer to “WIRING SYSTEM”.
Airbag system <Ref. to WI-89, WIRING DIAGRAM, Airbag System.>

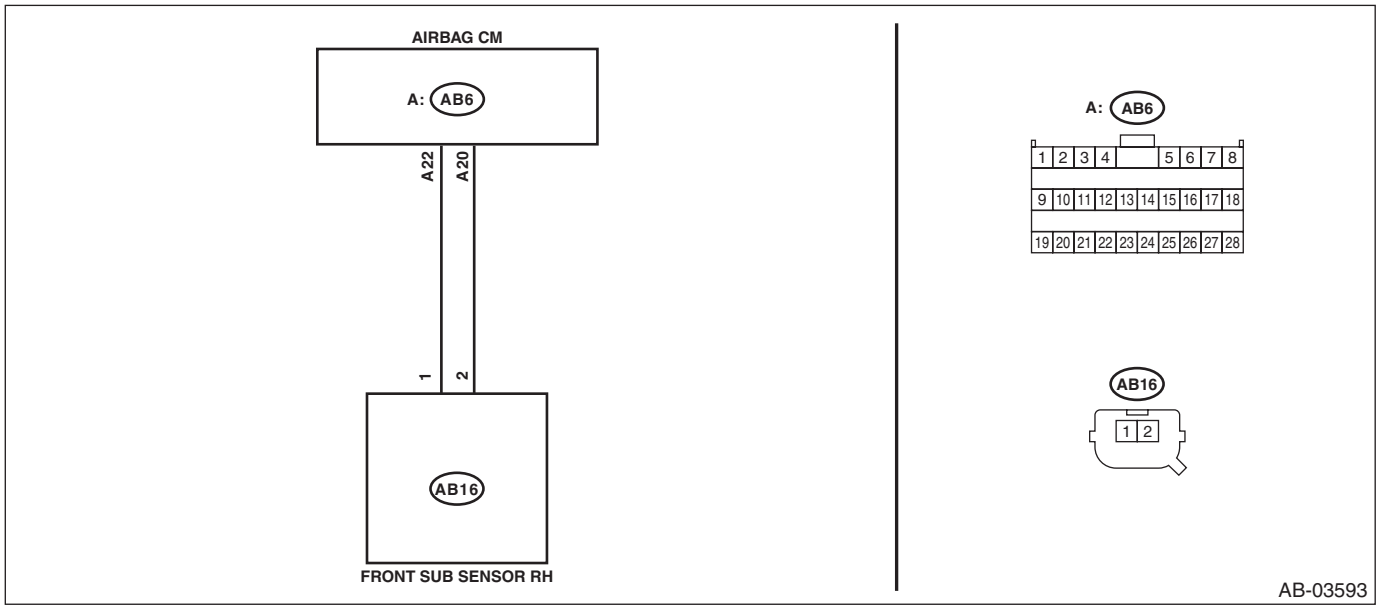

Step		Check	Yes	No
1	**CHECK POOR CONTACT OF CONNECTORS.** Check for poor contact of the connectors between the airbag control module and the front sub sensor RH.	Is there poor contact?	Replace the airbag main harness along with body harness.	Go to step **2**.

	Step	Check	Yes	No
2	**CHECK AIRBAG MAIN HARNESS (FRONT SENSOR BUS RH) (SHORTED BETWEEN LINES).** 1) Turn the ignition switch to OFF, disconnect the battery ground cable, and wait for 60 seconds or more. 2) Remove the instrument panel lower cover and column cover, and disconnect the connectors (AB7) and (AB2). 3) Remove the console front panel and disconnect the connector (AB9). 4) Disconnect the connectors (AB6, AB17, AB18) from airbag control module. 5) Connect the connector (1AD) in test harness AD AV to the connectors (AB6, AB17, AB18). 6) Connect the connector (2AD) in test harness AD AV and the connector (1AG) in test harness AG. 7) Disconnect the connector (AB16) from the front sub sensor RH, and then connect the connector (1H) in the test harness H to connector (AB16). 8) Measure the resistance between connector (4AG) in the test harness AG and all connector terminals in the test harness AG. ***Connector & terminal*** ***(4AG) No. 14 — All terminals in test harness AG:*** ***(4AG) No. 12 — All terminals in test harness AG:***	Is the resistance 1 MΩ or more?	Replace the airbag control module. <Ref. to AB-50, REMOVAL, Airbag Control Module.>	Replace the faulty harness. (Replace the airbag main harness along with body harness. Or replace the airbag rear harness along with body harness.)

CA:DTC B16A7 SHORT IN FRONT SUB SENSOR LH (TO GROUND)

DIAGNOSIS START CONDITION:
Ignition voltage is 10 V to 16 V.
DTC DETECTING CONDITION:
Shorted between front sub sensor LH circuit and GND circuit
WIRING DIAGRAM:

NOTE:
For the coupling connector, refer to “WIRING SYSTEM”.
Airbag system <Ref. to WI-89, WIRING DIAGRAM, Airbag System.>

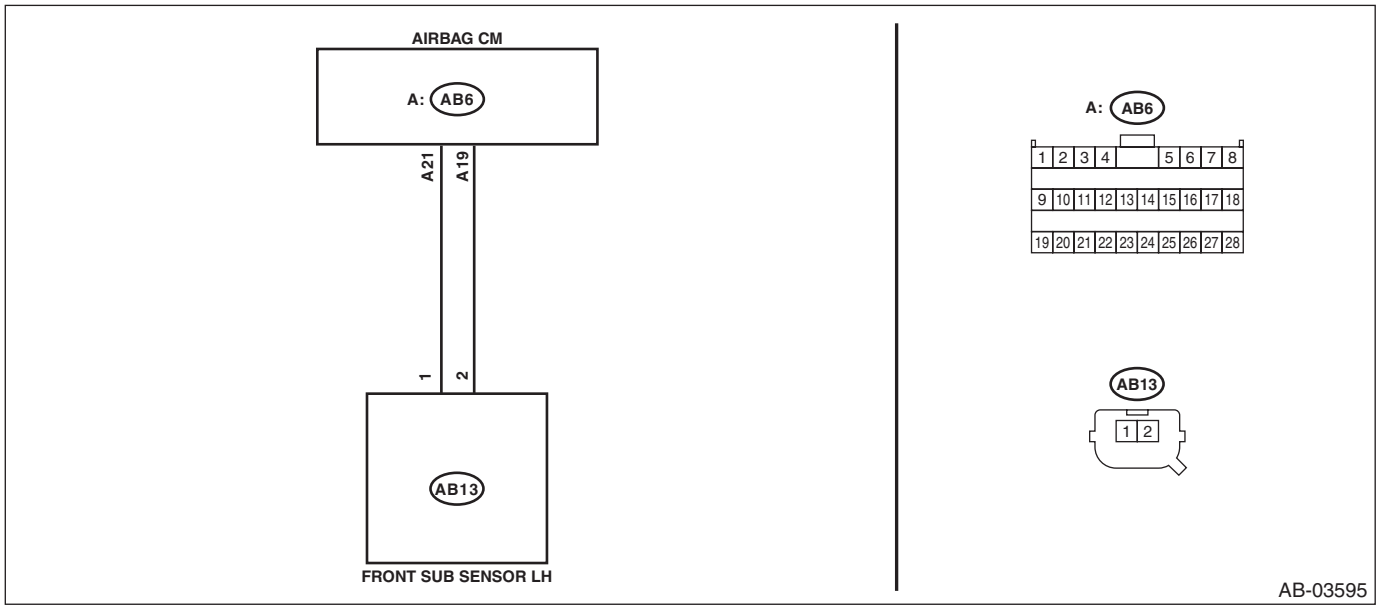

Step		Check	Yes	No
1	**CHECK POOR CONTACT OF CONNECTORS.** Check for poor contact of the connectors between the airbag control module and the front sub sensor LH.	Is there poor contact?	Replace the airbag main harness along with body harness.	Go to step **2**.
2	**CHECK AIRBAG MAIN HARNESS (FRONT SENSOR BUS LH) (SHORTED TO GROUND).** 1) Turn the ignition switch to OFF, disconnect the battery ground cable, and wait for 60 seconds or more. 2) Remove the instrument panel lower cover and column cover, and disconnect the connectors (AB7) and (AB2). 3) Remove the console front panel and disconnect the connector (AB9). 4) Disconnect the connectors (AB6, AB17, AB18) from airbag control module. 5) Disconnect the connector (AB13) from the front sub sensor LH, and then connect the connector (1H) in the test harness H to connector (AB13). 6) Measure the resistance between connector (3H) in the test harness H and chassis ground. ***Connector & terminal*** ***(3H) No. 5 — Chassis ground:*** ***(3H) No. 6 — Chassis ground:***	Is the resistance 1 MΩ or more?	Go to step **3**.	Replace the airbag main harness along with body harness.

	Step	Check	Yes	No
3	**CHECK FRONT SUB SENSOR LH.** 1) Turn the ignition switch to OFF, disconnect the battery ground cable, and wait for 60 seconds or more. 2) Replace the front sub sensor LH by the front sub sensor RH. <Ref. to AB-52, REMOVAL, Front Sub Sensor.> 3) Connect all connectors. 4) Clear the memory. <Ref. to AB(diag)-32, Clear Memory Mode.> 5) Perform the Inspection Mode. <Ref. to AB(diag)-31, Inspection Mode.> 6) Read the DTC. (Current malfunction) <Ref. to AB(diag)-30, Read Diagnostic Trouble Code (DTC).>	Is DTC B16A7 displayed?	Go to step **4**.	Replace the front sub sensor LH. <Ref. to AB-52, REMOVAL, Front Sub Sensor.>
4	**CHECK AIRBAG CONTROL MODULE.** 1) Turn the ignition switch to OFF, disconnect the battery ground cable, and wait for 60 seconds or more. 2) Restore the front sub sensors RH and LH back to their original position. <Ref. to AB-52, REMOVAL, Front Sub Sensor.> 3) Connect all connectors. 4) Clear the memory. <Ref. to AB(diag)-32, Clear Memory Mode.> 5) Perform the Inspection Mode. <Ref. to AB(diag)-31, Inspection Mode.> 6) Read the DTC. (Current malfunction) <Ref. to AB(diag)-30, Read Diagnostic Trouble Code (DTC).>	Is DTC B16A7 displayed?	Replace the airbag control module. <Ref. to AB-50, REMOVAL, Airbag Control Module.>	Go to step **5**.
5	**CHECK FOR ANY OTHER DTC ON DISPLAY.** Read the DTC. (Current malfunction) <Ref. to AB(diag)-30, Read Diagnostic Trouble Code (DTC).>	Is any other DTC displayed?	Check DTC using “List of Diagnostic Trouble Code”. <Ref. to AB(diag)-38, LIST, List of Diagnostic Trouble Code (DTC).>	Finish the diagnosis.

CB:DTC B16A8 SHORT IN FRONT SUB SENSOR LH (TO +B)

DIAGNOSIS START CONDITION:
Ignition voltage is 10 V to 16 V.
DTC DETECTING CONDITION:
Shorted between front sub sensor LH circuit and power supply circuit
WIRING DIAGRAM:

NOTE:
For the coupling connector, refer to “WIRING SYSTEM”.
Airbag system <Ref. to WI-89, WIRING DIAGRAM, Airbag System.>

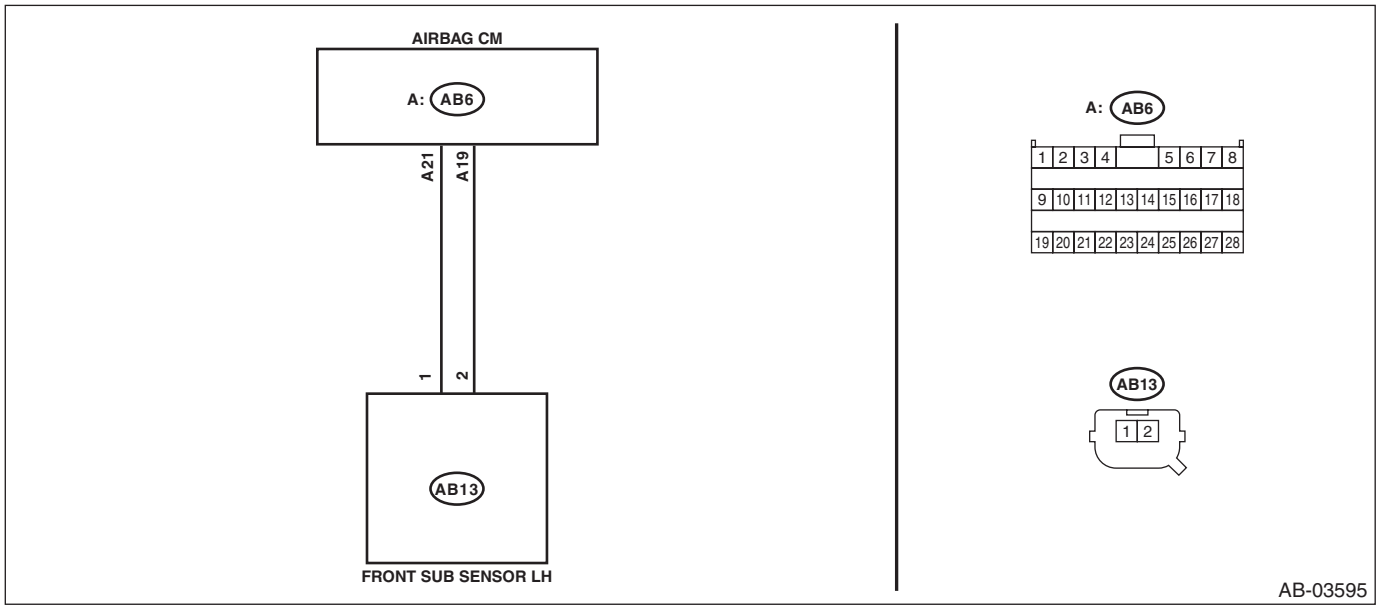

Step		Check	Yes	No
1	**CHECK POOR CONTACT OF CONNECTORS.** Check for poor contact of the connectors between the airbag control module and the front sub sensor LH.	Is there poor contact?	Replace the airbag main harness along with body harness.	Go to step **2**.

	Step	Check	Yes	No
2	**CHECK AIRBAG MAIN HARNESS (FRONT SENSOR BUS LH) (SHORTED TO POWER SUPPLY).** 1) Turn the ignition switch to OFF, disconnect the battery ground cable, and wait for 60 seconds or more. 2) Remove the instrument panel lower cover and column cover, and disconnect the connectors (AB7) and (AB2). 3) Remove the console front panel and disconnect the connector (AB9). 4) Disconnect the connectors (AB6, AB17, AB18) from airbag control module. 5) Disconnect the connector (AB13) from the front sub sensor LH, and then connect the connector (1H) in the test harness H to connector (AB13). 6) Connect the battery ground terminal and turn the ignition switch to ON. 7) Measure the voltage between connector (3H) in the test harness H and chassis ground. ***Connector & terminal*** ***(3H) No. 5 (+) — Chassis ground (–):*** ***(3H) No. 6 (+) — Chassis ground (–):***	Is the voltage less than 1 V?	Go to step **3**.	Replace the airbag main harness along with body harness.
3	**CHECK AIRBAG CONTROL MODULE.** 1) Connect all connectors. 2) Clear the memory. <Ref. to AB(diag)-32, Clear Memory Mode.> 3) Perform the Inspection Mode. <Ref. to AB(diag)-31, Inspection Mode.> 4) Read the DTC. (Current malfunction) <Ref. to AB(diag)-30, Read Diagnostic Trouble Code (DTC).>	Is DTC B16A8 displayed?	Replace the airbag control module. <Ref. to AB-50, REMOVAL, Airbag Control Module.>	Go to step **4**.
4	**CHECK FOR ANY OTHER DTC ON DISPLAY.** Read the DTC. (Current malfunction) <Ref. to AB(diag)-30, Read Diagnostic Trouble Code (DTC).>	Is any other DTC displayed?	Check DTC using “List of Diagnostic Trouble Code”. <Ref. to AB(diag)-38, LIST, List of Diagnostic Trouble Code (DTC).>	Finish the diagnosis.

CC:DTC B16A9 SHORT IN FRONT SUB SENSOR LH

DIAGNOSIS START CONDITION:
Ignition voltage is 10 V to 16 V.
DTC DETECTING CONDITION:
Short circuit between front sub sensor LH circuit and other sensor circuit
WIRING DIAGRAM:

NOTE:
For the coupling connector, refer to “WIRING SYSTEM”.
Airbag system <Ref. to WI-89, WIRING DIAGRAM, Airbag System.>

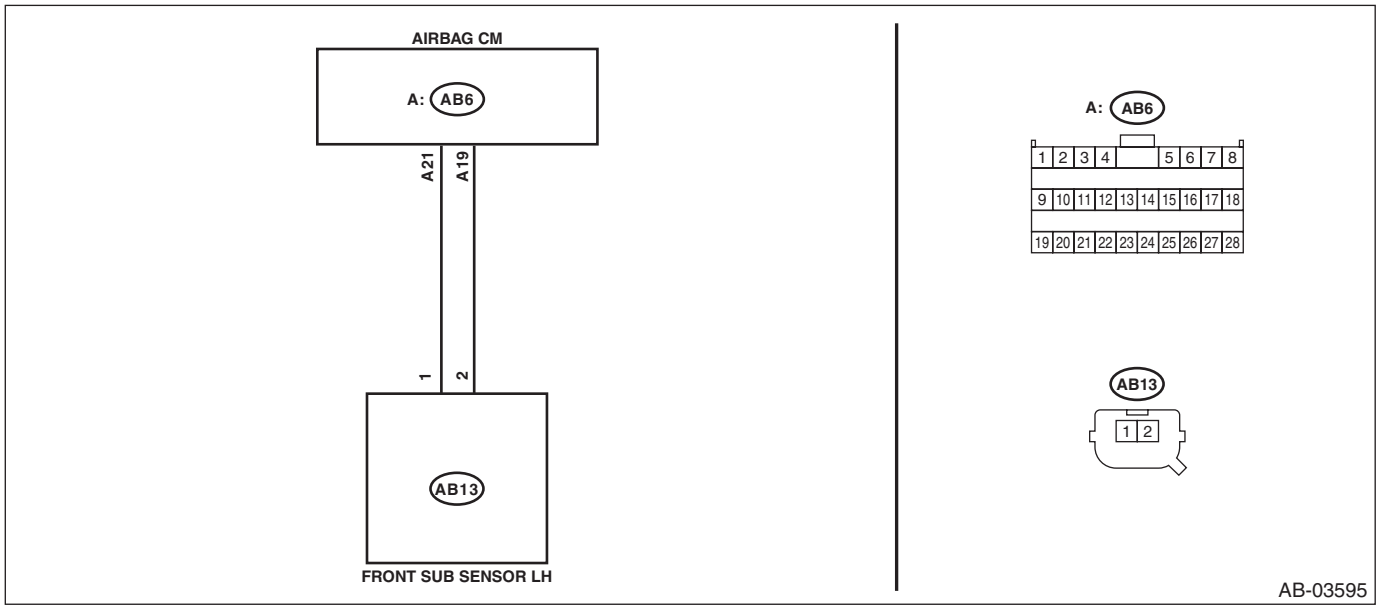

Step		Check	Yes	No
1	**CHECK POOR CONTACT OF CONNECTORS.** Check for poor contact of the connectors between the airbag control module and the front sub sensor LH.	Is there poor contact?	Replace the airbag main harness along with body harness.	Go to step **2**.

	Step	Check	Yes	No
2	**CHECK AIRBAG MAIN HARNESS (FRONT SENSOR BUS LH) (SHORTED BETWEEN LINES).** 1) Turn the ignition switch to OFF, disconnect the battery ground cable, and wait for 60 seconds or more. 2) Remove the instrument panel lower cover and column cover, and disconnect the connectors (AB7) and (AB2). 3) Remove the console front panel and disconnect the connector (AB9). 4) Disconnect the connectors (AB6, AB17, AB18) from airbag control module. 5) Connect the connector (1AD) in test harness AD AV to the connectors (AB6, AB17, AB18). 6) Connect the connector (2AD) in test harness AD AV and the connector (1AG) in test harness AG. 7) Disconnect the connector (AB13) from the front sub sensor LH, and then connect the connector (1H) in the test harness H to connector (AB13). 8) Measure the resistance between connector (4AG) in the test harness AG and all connector terminals in the test harness AG. ***Connector & terminal*** ***(4AG) No. 7 — All terminals in test harness AG:*** ***(4AG) No. 9 — All terminals in test harness AG:***	Is the resistance 1 MΩ or more?	Replace the airbag control module. <Ref. to AB-50, REMOVAL, Airbag Control Module.>	Replace the faulty harness. (Replace the airbag main harness along with body harness. Or replace the airbag rear harness along with body harness.)

CD:DTC B16B2 SHORT IN SIDE SATELLITE SENSOR BUS RH (TO GROUND)

DIAGNOSIS START CONDITION:
Ignition voltage is 10 V to 16 V.
DTC DETECTING CONDITION:
Shorted between side sensor RH circuit and GND circuit
WIRING DIAGRAM:

NOTE:
For the coupling connector, refer to “WIRING SYSTEM”.
Airbag system <Ref. to WI-89, WIRING DIAGRAM, Airbag System.>

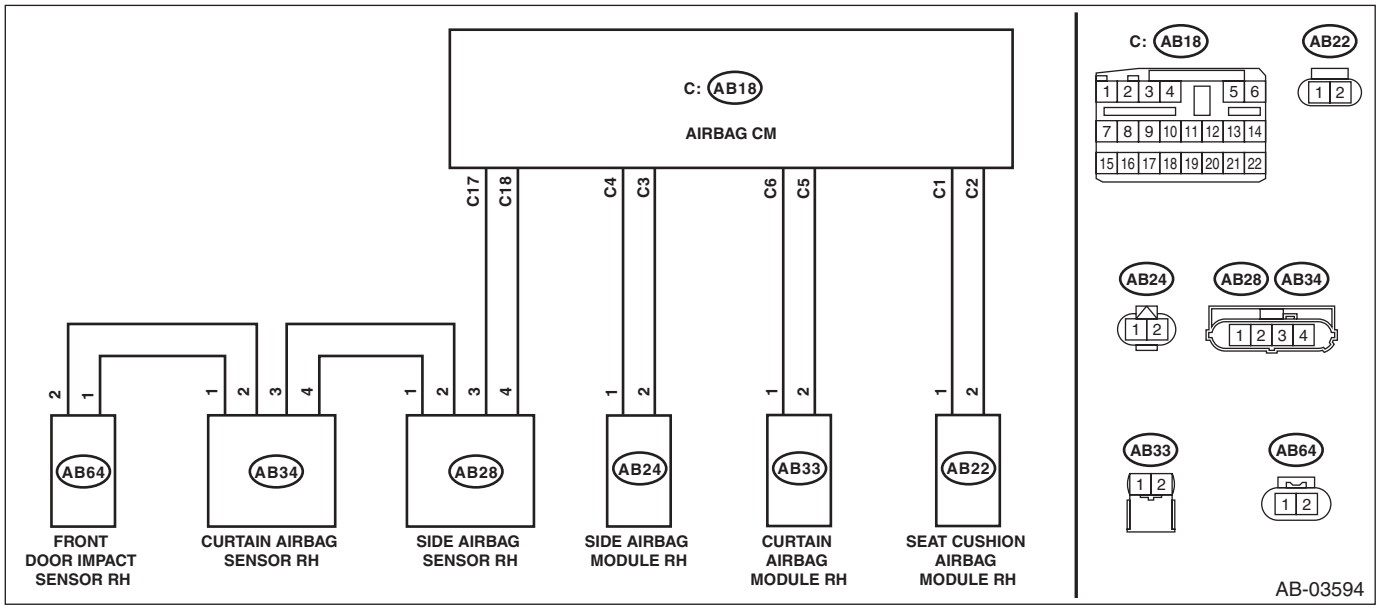

Step		Check	Yes	No
1	**CHECK POOR CONTACT OF CONNECTORS.** Check for poor contact of the connectors between the airbag control module and side airbag sensor RH, curtain airbag sensor RH, or front door impact sensor RH.	Is there poor contact?	Replace the airbag rear harness along with body harness.	Go to step **2**.

	Step	Check	Yes	No
2	**CHECK AIRBAG REAR HARNESS (SIDE SENSOR BUS RH) (SHORTED TO GROUND).** 1) Turn the ignition switch to OFF, disconnect the battery ground cable, and wait for 60 seconds or more. 2) Disconnect the connector (AB26) from seat belt pretensioner RH. 3) Disconnect the connector (AB22) from seat cushion airbag module RH. 4) Disconnect the connector (AB33) from curtain airbag module RH. 5) Disconnect the connector (AB24) from side airbag module RH. 6) Disconnect the connectors (AB6, AB17, AB18) from airbag control module. 7) Connect the connector (1AD) in test harness AD AV to the connectors (AB6, AB17, AB18). 8) Connect the connector (2AD) in test harness AD AV and the connector (1AG) in test harness AG. 9) Disconnect the connector (AB28) from side airbag sensor RH. 10) Disconnect the connector (AB34) from curtain airbag sensor RH. 11) Disconnect the connector (AB64) from front door impact sensor RH. 12) Measure the resistance between connector (5AG) in the test harness AG and chassis ground. ***Connector & terminal*** ***(5AG) No. 8 — Chassis ground:*** ***(5AG) No. 10 — Chassis ground:***	Is the resistance 1 MΩ or more?	Go to step **3**.	Replace the airbag rear harness along with body harness.
3	**CHECK AIRBAG CONTROL MODULE.** 1) Connect all connectors. 2) Clear the memory. <Ref. to AB(diag)-32, Clear Memory Mode.> 3) Perform the Inspection Mode. <Ref. to AB(diag)-31, Inspection Mode.> 4) Read the DTC. (Current malfunction) <Ref. to AB(diag)-30, Read Diagnostic Trouble Code (DTC).>	Is DTC B16B2 displayed?	Go to step **4**.	Go to step **7**.
4	**CHECK CURTAIN AIRBAG SENSOR RH.** 1) Turn the ignition switch to OFF, disconnect the battery ground cable, and wait for 60 seconds or more. 2) Replace the curtain airbag sensor RH by the curtain airbag sensor LH. <Ref. to AB-58, REMOVAL, Curtain Airbag Sensor.> 3) Connect all connectors. 4) Clear the memory. <Ref. to AB(diag)-32, Clear Memory Mode.> 5) Perform the Inspection Mode. <Ref. to AB(diag)-31, Inspection Mode.> 6) Read the DTC. (Current malfunction) <Ref. to AB(diag)-30, Read Diagnostic Trouble Code (DTC).>	Is DTC B16B2 displayed?	Go to step **5**.	Replace the curtain airbag sensor RH. <Ref. to AB-58, REMOVAL, Curtain Airbag Sensor.>

	Step	Check	Yes	No
5	**CHECK SIDE AIRBAG SENSOR RH.** 1) Turn the ignition switch to OFF, disconnect the battery ground cable, and wait for 60 seconds or more. 2) Restore the curtain airbag sensors RH and LH back to their original position. <Ref. to AB-58, REMOVAL, Curtain Airbag Sensor.> 3) Replace the side airbag sensor RH by the side airbag sensor LH. <Ref. to AB-56, REMOVAL, Side Airbag Sensor.> 4) Connect all connectors. 5) Clear the memory. <Ref. to AB(diag)-32, Clear Memory Mode.> 6) Perform the Inspection Mode. <Ref. to AB(diag)-31, Inspection Mode.> 7) Read the DTC. (Current malfunction) <Ref. to AB(diag)-30, Read Diagnostic Trouble Code (DTC).>	Is DTC B16B2 displayed?	Go to step **6**.	Replace the side airbag sensor RH. <Ref. to AB-56, REMOVAL, Side Airbag Sensor.>
6	**CHECK AIRBAG CONTROL MODULE.** 1) Turn the ignition switch to OFF, disconnect the battery ground cable, and wait for 60 seconds or more. 2) Restore the side airbag sensors RH and LH back to their original position. <Ref. to AB-56, REMOVAL, Side Airbag Sensor.> 3) Connect all connectors. 4) Clear the memory. <Ref. to AB(diag)-32, Clear Memory Mode.> 5) Perform the Inspection Mode. <Ref. to AB(diag)-31, Inspection Mode.> 6) Read the DTC. (Current malfunction) <Ref. to AB(diag)-30, Read Diagnostic Trouble Code (DTC).>	Is DTC B16B2 displayed?	Replace the airbag control module. <Ref. to AB-50, REMOVAL, Airbag Control Module.>	Go to step **7**.
7	**CHECK FOR ANY OTHER DTC ON DISPLAY.** Read the DTC. (Current malfunction) <Ref. to AB(diag)-30, Read Diagnostic Trouble Code (DTC).>	Is any other DTC displayed?	Check DTC using “List of Diagnostic Trouble Code”. <Ref. to AB(diag)-38, LIST, List of Diagnostic Trouble Code (DTC).>	Finish the diagnosis.

CE:DTC B16B3 SHORT IN SIDE SATELLITE SENSOR BUS RH (TO +B)

DIAGNOSIS START CONDITION:
Ignition voltage is 10 V to 16 V.
DTC DETECTING CONDITION:
Shorted between side sensor RH circuit and power supply circuit
WIRING DIAGRAM:

NOTE:
For the coupling connector, refer to “WIRING SYSTEM”.
Airbag system <Ref. to WI-89, WIRING DIAGRAM, Airbag System.>

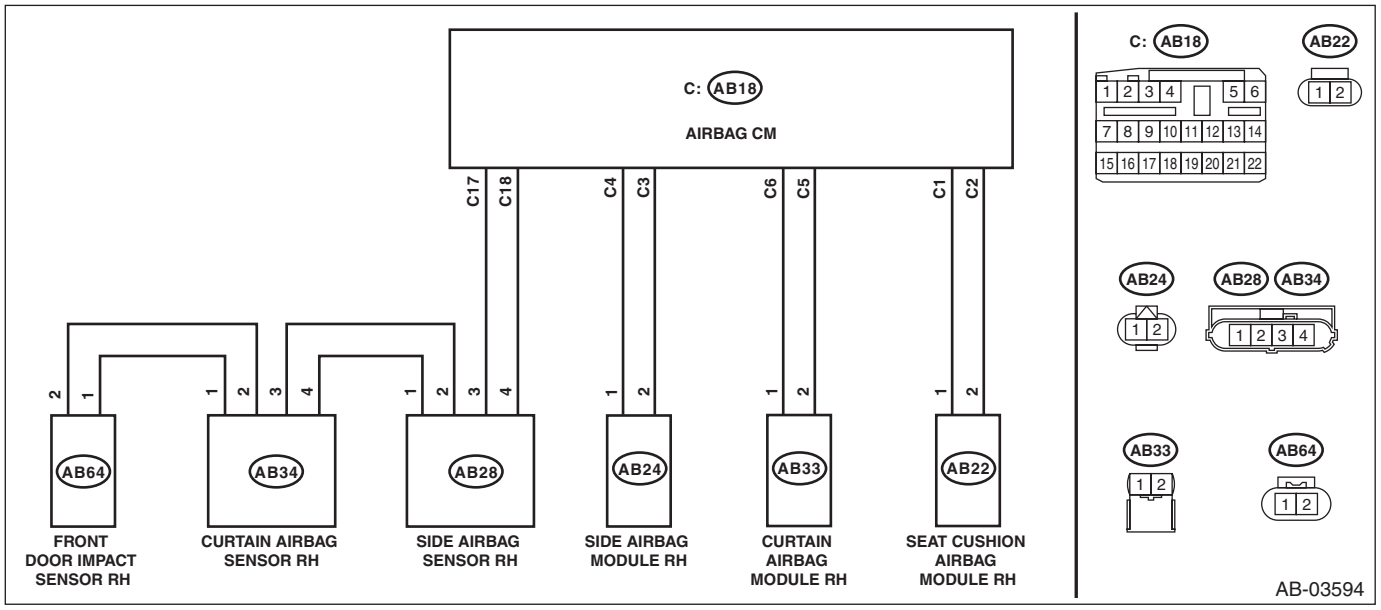

Step		Check	Yes	No
1	**CHECK POOR CONTACT OF CONNECTORS.** Check for poor contact of the connectors between the airbag control module and side airbag sensor RH, curtain airbag sensor RH, or front door impact sensor RH.	Is there poor contact?	Replace the airbag rear harness along with body harness.	Go to step **2**.

	Step	Check	Yes	No
2	**CHECK AIRBAG REAR HARNESS (SIDE SENSOR BUS RH) (SHORTED TO POWER SUPPLY).** 1) Turn the ignition switch to OFF, disconnect the battery ground cable, and wait for 60 seconds or more. 2) Disconnect the connector (AB26) from seat belt pretensioner RH. 3) Disconnect the connector (AB22) from seat cushion airbag module RH. 4) Disconnect the connector (AB33) from curtain airbag module RH. 5) Disconnect the connector (AB24) from side airbag module RH. 6) Disconnect the connectors (AB6, AB17, AB18) from airbag control module. 7) Connect the connector (1AD) in test harness AD AV to the connectors (AB6, AB17, AB18). 8) Connect the connector (2AD) in test harness AD AV and the connector (1AG) in test harness AG. 9) Disconnect the connector (AB28) from side airbag sensor RH. 10) Disconnect the connector (AB34) from curtain airbag sensor RH. 11) Disconnect the connector (AB64) from front door impact sensor RH. 12) Turn the ignition switch to ON. 13) Measure the voltage between connector (5AG) in the test harness AG and chassis ground. ***Connector & terminal*** ***(5AG) No. 8 (+) — Chassis ground (–):*** ***(5AG) No. 10 (+) — Chassis ground (–):***	Is the voltage less than 1 V?	Go to step **3**.	Replace the airbag rear harness along with body harness.
3	**CHECK AIRBAG CONTROL MODULE.** 1) Connect all connectors. 2) Clear the memory. <Ref. to AB(diag)-32, Clear Memory Mode.> 3) Perform the Inspection Mode. <Ref. to AB(diag)-31, Inspection Mode.> 4) Read the DTC. (Current malfunction) <Ref. to AB(diag)-30, Read Diagnostic Trouble Code (DTC).>	Is DTC B16B3 displayed?	Replace the airbag control module. <Ref. to AB-50, REMOVAL, Airbag Control Module.>	Go to step **4**.
4	**CHECK FOR ANY OTHER DTC ON DISPLAY.** Read the DTC. (Current malfunction) <Ref. to AB(diag)-30, Read Diagnostic Trouble Code (DTC).>	Is any other DTC displayed?	Check DTC using "List of Diagnostic Trouble Code". <Ref. to AB(diag)-38, LIST, List of Diagnostic Trouble Code (DTC).>	Finish the diagnosis.

CF:DTC B16B4 SHORT IN SIDE SATELLITE SENSOR BUS RH

DIAGNOSIS START CONDITION:
Ignition voltage is 10 V to 16 V.
DTC DETECTING CONDITION:
Short circuit between side sensor RH circuit and other sensor circuit
WIRING DIAGRAM:

NOTE:
For the coupling connector, refer to “WIRING SYSTEM”.
Airbag system <Ref. to WI-89, WIRING DIAGRAM, Airbag System.>

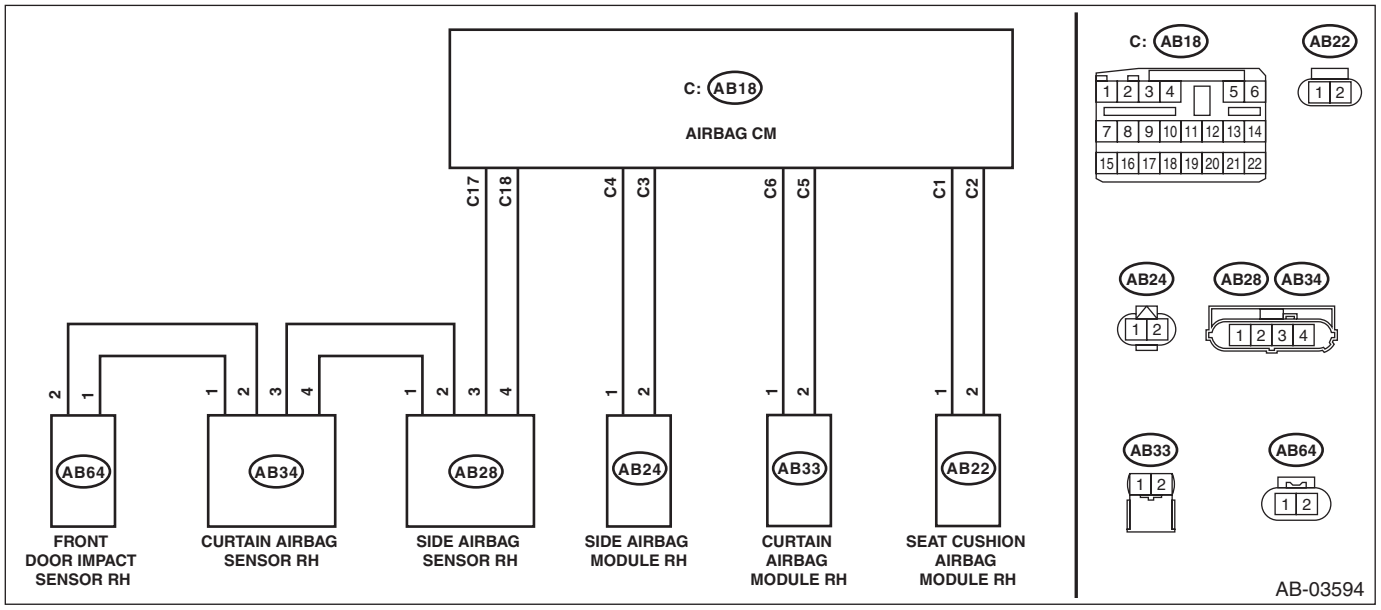

Step		Check	Yes	No
1	**CHECK POOR CONTACT OF CONNECTORS.** Check for poor contact of the connectors between the airbag control module and side airbag sensor RH, curtain airbag sensor RH, or front door impact sensor RH.	Is there poor contact?	Replace the airbag rear harness along with body harness.	Go to step **2**.

	Step	Check	Yes	No
2	**CHECK AIRBAG REAR HARNESS (SIDE SENSOR BUS RH) (SHORTED BETWEEN LINES).** 1) Turn the ignition switch to OFF, disconnect the battery ground cable, and wait for 60 seconds or more. 2) Disconnect the connector (AB26) from seat belt pretensioner RH. 3) Disconnect the connector (AB22) from seat cushion airbag module RH. 4) Disconnect the connector (AB33) from curtain airbag module RH. 5) Disconnect the connector (AB24) from side airbag module RH. 6) Disconnect the connectors (AB6, AB17, AB18) from airbag control module. 7) Connect the connector (1AD) in test harness AD AV to the connectors (AB6, AB17, AB18). 8) Connect the connector (2AD) in test harness AD AV and the connector (1AG) in test harness AG. 9) Disconnect the connector (AB28) from side airbag sensor RH. 10) Disconnect the connector (AB34) from curtain airbag sensor RH. 11) Disconnect the connector (AB64) from front door impact sensor RH. 12) Measure the resistance between connector (5AG) in the test harness AG and all connector terminals in the test harness AG. ***Connector & terminal*** ***(5AG) No. 8 — All terminals in test harness AG:*** ***(5AG) No. 10 — All terminals in test harness AG:***	Is the resistance 1 MΩ or more?	Go to step **3**.	Replace the faulty harness. (Replace the airbag main harness along with body harness. Or replace the airbag rear harness along with body harness.)
3	**CHECK AIRBAG CONTROL MODULE.** 1) Connect all connectors. 2) Clear the memory. <Ref. to AB(diag)-32, Clear Memory Mode.> 3) Perform the Inspection Mode. <Ref. to AB(diag)-31, Inspection Mode.> 4) Read the DTC. (Current malfunction) <Ref. to AB(diag)-30, Read Diagnostic Trouble Code (DTC).>	Is DTC B16B4 displayed?	Replace the airbag control module. <Ref. to AB-50, REMOVAL, Airbag Control Module.>	Go to step **4**.
4	**CHECK FOR ANY OTHER DTC ON DISPLAY.** Read the DTC. (Current malfunction) <Ref. to AB(diag)-30, Read Diagnostic Trouble Code (DTC).>	Is any other DTC displayed?	Check DTC using “List of Diagnostic Trouble Code”. <Ref. to AB(diag)-38, LIST, List of Diagnostic Trouble Code (DTC).>	Finish the diagnosis.

CG:DTC B16B7 SHORT IN SIDE SATELLITE SENSOR BUS LH (TO GROUND)

DIAGNOSIS START CONDITION:
Ignition voltage is 10 V to 16 V.
DTC DETECTING CONDITION:
Shorted between side sensor LH circuit and GND circuit
WIRING DIAGRAM:

NOTE:
For the coupling connector, refer to “WIRING SYSTEM”.
Airbag system <Ref. to WI-89, WIRING DIAGRAM, Airbag System.>

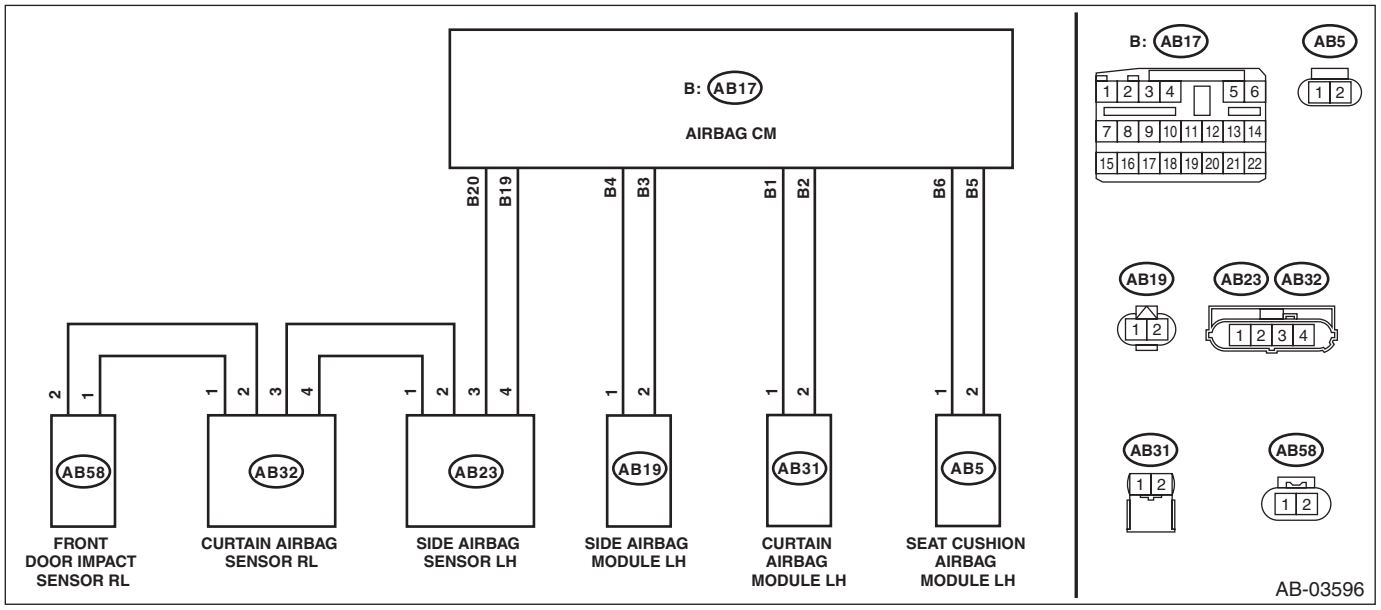

Step		Check	Yes	No
1	**CHECK POOR CONTACT OF CONNECTORS.** Check for poor contact of the connectors between the airbag control module and side airbag sensor LH, curtain airbag sensor LH, or front door impact sensor LH.	Is there poor contact?	Replace the airbag rear harness along with body harness.	Go to step **2**.

	Step	Check	Yes	No
2	**CHECK AIRBAG REAR HARNESS (SIDE SENSOR BUS LH) (SHORTED TO GROUND).** 1) Turn the ignition switch to OFF, disconnect the battery ground cable, and wait for 60 seconds or more. 2) Disconnect the connector (AB21) from seat belt pretensioner LH. 3) Disconnect the connector (AB5) from seat cushion airbag module LH. 4) Disconnect the connector (AB19) from side airbag module LH. 5) Disconnect the connector (AB31) from curtain airbag module LH. 6) Disconnect the connectors (AB6, AB17, AB18) from airbag control module. 7) Connect the connector (1AD) in test harness AD AV to the connectors (AB6, AB17, AB18). 8) Connect the connector (2AD) in test harness AD AV and the connector (1AG) in test harness AG. 9) Disconnect the connector (AB23) from the side airbag sensor LH. 10) Disconnect the connector (AB32) from curtain airbag sensor LH. 11) Disconnect the connector (AB58) from front door impact sensor LH. 12) Measure the resistance between connector (5AG) in the test harness AG and chassis ground. ***Connector & terminal*** ***(5AG) No. 14 — Chassis ground:*** ***(5AG) No. 16 — Chassis ground:***	Is the resistance 1 MΩ or more?	Go to step **3**.	Replace the airbag rear harness along with body harness.
3	**CHECK AIRBAG CONTROL MODULE.** 1) Connect all connectors. 2) Clear the memory. <Ref. to AB(diag)-32, Clear Memory Mode.> 3) Perform the Inspection Mode. <Ref. to AB(diag)-31, Inspection Mode.> 4) Read the DTC. (Current malfunction) <Ref. to AB(diag)-30, Read Diagnostic Trouble Code (DTC).>	Is DTC B16B7 displayed?	Go to step **4**.	Go to step **7**.
4	**CHECK CURTAIN AIRBAG SENSOR LH.** 1) Turn the ignition switch to OFF, disconnect the battery ground cable, and wait for 60 seconds or more. 2) Replace the curtain airbag sensor LH by the curtain airbag sensor RH. <Ref. to AB-58, REMOVAL, Curtain Airbag Sensor.> 3) Connect all connectors. 4) Clear the memory. <Ref. to AB(diag)-32, Clear Memory Mode.> 5) Perform the Inspection Mode. <Ref. to AB(diag)-31, Inspection Mode.> 6) Read the DTC. (Current malfunction) <Ref. to AB(diag)-30, Read Diagnostic Trouble Code (DTC).>	Is DTC B16B7 displayed?	Go to step **5**.	Replace the curtain airbag sensor LH. <Ref. to AB-58, REMOVAL, Curtain Airbag Sensor.>

	Step	Check	Yes	No
5	**CHECK SIDE AIRBAG SENSOR LH.** 1) Turn the ignition switch to OFF, disconnect the battery ground cable, and wait for 60 seconds or more. 2) Restore the curtain airbag sensors RH and LH back to their original position. <Ref. to AB-58, REMOVAL, Curtain Airbag Sensor.> 3) Replace the side airbag sensor LH by the side airbag sensor RH. <Ref. to AB-56, REMOVAL, Side Airbag Sensor.> 4) Connect all connectors. 5) Clear the memory. <Ref. to AB(diag)-32, Clear Memory Mode.> 6) Perform the Inspection Mode. <Ref. to AB(diag)-31, Inspection Mode.> 7) Read the DTC. (Current malfunction) <Ref. to AB(diag)-30, Read Diagnostic Trouble Code (DTC).>	Is DTC B16B7 displayed?	Go to step **6**.	Replace the side airbag sensor LH. <Ref. to AB-56, REMOVAL, Side Airbag Sensor.>
6	**CHECK AIRBAG CONTROL MODULE.** 1) Turn the ignition switch to OFF, disconnect the battery ground cable, and wait for 60 seconds or more. 2) Restore the side airbag sensors LH and RH back to their original position. <Ref. to AB-56, REMOVAL, Side Airbag Sensor.> 3) Connect all connectors. 4) Clear the memory. <Ref. to AB(diag)-32, Clear Memory Mode.> 5) Perform the Inspection Mode. <Ref. to AB(diag)-31, Inspection Mode.> 6) Read the DTC. (Current malfunction) <Ref. to AB(diag)-30, Read Diagnostic Trouble Code (DTC).>	Is DTC B16B7 displayed?	Replace the airbag control module. <Ref. to AB-50, REMOVAL, Airbag Control Module.>	Go to step **7**.
7	**CHECK FOR ANY OTHER DTC ON DISPLAY.** Read the DTC. (Current malfunction) <Ref. to AB(diag)-30, Read Diagnostic Trouble Code (DTC).>	Is any other DTC displayed?	Check DTC using “List of Diagnostic Trouble Code”. <Ref. to AB(diag)-38, LIST, List of Diagnostic Trouble Code (DTC).>	Finish the diagnosis.

CH:DTC B16B8 SHORT IN SIDE SATELLITE SENSOR BUS LH (TO +B)

DIAGNOSIS START CONDITION:
Ignition voltage is 10 V to 16 V.
DTC DETECTING CONDITION:
Shorted between side sensor LH circuit and power supply circuit
WIRING DIAGRAM:

NOTE:
For the coupling connector, refer to “WIRING SYSTEM”.
Airbag system <Ref. to WI-89, WIRING DIAGRAM, Airbag System.>

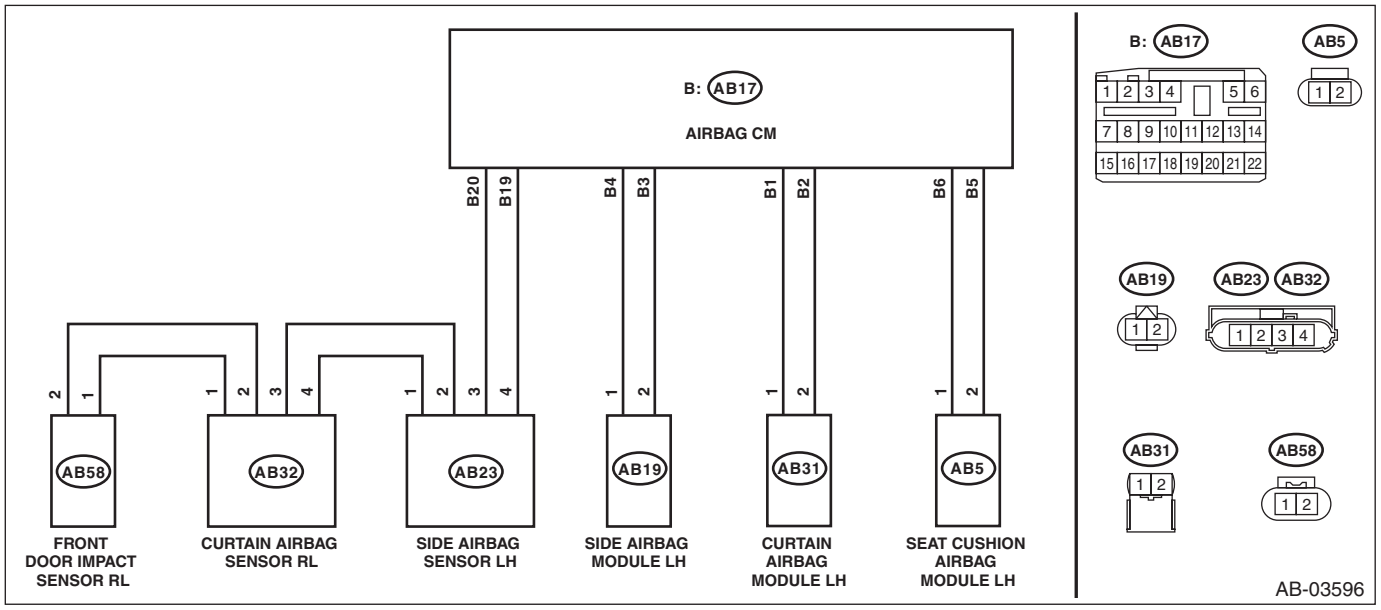

Step		Check	Yes	No
1	**CHECK POOR CONTACT OF CONNECTORS.** Check for poor contact of the connectors between the airbag control module and side airbag sensor LH, curtain airbag sensor LH, or front door impact sensor LH.	Is there poor contact?	Replace the airbag rear harness along with body harness.	Go to step **2**.

	Step	Check	Yes	No
2	**CHECK AIRBAG REAR HARNESS (SIDE SENSOR BUS LH) (SHORTED TO POWER SUPPLY).** 1) Turn the ignition switch to OFF, disconnect the battery ground cable, and wait for 60 seconds or more. 2) Disconnect the connector (AB21) from seat belt pretensioner LH. 3) Disconnect the connector (AB5) from seat cushion airbag module LH. 4) Disconnect the connector (AB19) from side airbag module LH. 5) Disconnect the connector (AB31) from curtain airbag module LH. 6) Disconnect the connectors (AB6, AB17, AB18) from airbag control module. 7) Connect the connector (1AD) in test harness AD AV to the connectors (AB6, AB17, AB18). 8) Connect the connector (2AD) in test harness AD AV and the connector (1AG) in test harness AG. 9) Disconnect the connector (AB23) from the side airbag sensor LH. 10) Disconnect the connector (AB32) from curtain airbag sensor LH. 11) Disconnect the connector (AB58) from front door impact sensor LH. 12) Turn the ignition switch to ON. 13) Measure the voltage between connector (5AG) in the test harness AG and chassis ground. ***Connector & terminal*** ***(5AG) No. 14 (+) — Chassis ground (–):*** ***(5AG) No. 16 (+) — Chassis ground (–):***	Is the voltage less than 1 V?	Go to step **3**.	Replace the airbag rear harness along with body harness.
3	**CHECK AIRBAG CONTROL MODULE.** 1) Connect all connectors. 2) Clear the memory. <Ref. to AB(diag)-32, Clear Memory Mode.> 3) Perform the Inspection Mode. <Ref. to AB(diag)-31, Inspection Mode.> 4) Read the DTC. (Current malfunction) <Ref. to AB(diag)-30, Read Diagnostic Trouble Code (DTC).>	Is DTC B16B8 displayed?	Replace the airbag control module. <Ref. to AB-50, REMOVAL, Airbag Control Module.>	Go to step **4**.
4	**CHECK FOR ANY OTHER DTC ON DISPLAY.** Read the DTC. (Current malfunction) <Ref. to AB(diag)-30, Read Diagnostic Trouble Code (DTC).>	Is any other DTC displayed?	Check DTC using "List of Diagnostic Trouble Code". <Ref. to AB(diag)-38, LIST, List of Diagnostic Trouble Code (DTC).>	Finish the diagnosis.

CI: DTC B16B9 SHORT IN SIDE SATELLITE SENSOR BUS LH

DIAGNOSIS START CONDITION:
Ignition voltage is 10 V to 16 V.
DTC DETECTING CONDITION:
Short circuit between side sensor LH circuit and other sensor circuit
WIRING DIAGRAM:

NOTE:
For the coupling connector, refer to “WIRING SYSTEM”.
Airbag system <Ref. to WI-89, WIRING DIAGRAM, Airbag System.>

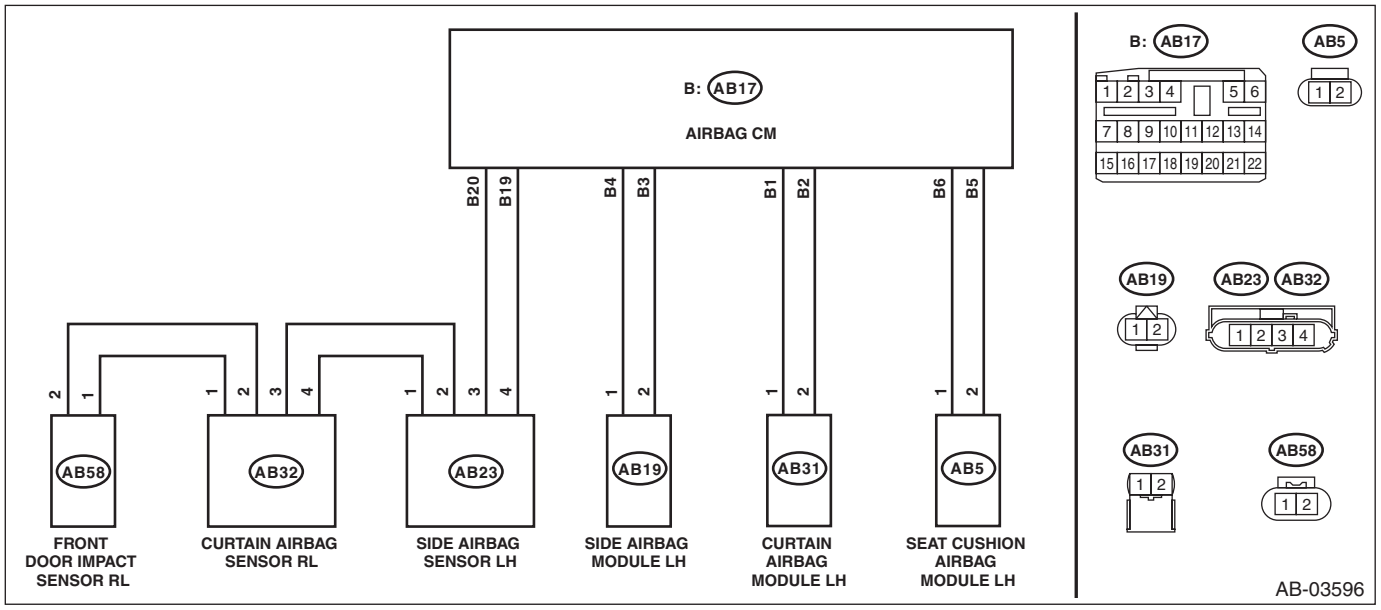

Step		Check	Yes	No
1	**CHECK POOR CONTACT OF CONNECTORS.** Check for poor contact of the connectors between the airbag control module and side airbag sensor LH, curtain airbag sensor LH, or front door impact sensor LH.	Is there poor contact?	Replace the airbag rear harness along with body harness.	Go to step **2**.

	Step	Check	Yes	No
2	**CHECK AIRBAG REAR HARNESS (SIDE SENSOR BUS LH) (SHORTED BETWEEN LINES).** 1) Turn the ignition switch to OFF, disconnect the battery ground cable, and wait for 60 seconds or more. 2) Disconnect the connector (AB21) from seat belt pretensioner LH. 3) Disconnect the connector (AB5) from seat cushion airbag module LH. 4) Disconnect the connector (AB19) from side airbag module LH. 5) Disconnect the connector (AB31) from curtain airbag module LH. 6) Disconnect the connectors (AB6, AB17, AB18) from airbag control module. 7) Connect the connector (1AD) in test harness AD AV to the connectors (AB6, AB17, AB18). 8) Connect the connector (2AD) in test harness AD AV and the connector (1AG) in test harness AG. 9) Disconnect the connector (AB23) from the side airbag sensor LH. 10) Disconnect the connector (AB32) from curtain airbag sensor LH. 11) Disconnect the connector (AB58) from front door impact sensor LH. 12) Measure the resistance between connector (5AG) in the test harness AG and all connector terminals in the test harness AG. ***Connector & terminal*** ***(5AG) No. 14 — All terminals in test harness AG:*** ***(5AG) No. 16 — All terminals in test harness AG:***	Is the resistance 1 MΩ or more?	Go to step **3**.	Replace the faulty harness. (Replace the airbag main harness along with body harness. Or replace the airbag rear harness along with body harness.)
3	**CHECK AIRBAG CONTROL MODULE.** 1) Connect all connectors. 2) Clear the memory. <Ref. to AB(diag)-32, Clear Memory Mode.> 3) Perform the Inspection Mode. <Ref. to AB(diag)-31, Inspection Mode.> 4) Read the DTC. (Current malfunction) <Ref. to AB(diag)-30, Read Diagnostic Trouble Code (DTC).>	Is DTC B16B9 displayed?	Replace the airbag control module. <Ref. to AB-50, REMOVAL, Airbag Control Module.>	Go to step **4**.
4	**CHECK FOR ANY OTHER DTC ON DISPLAY.** Read the DTC. (Current malfunction) <Ref. to AB(diag)-30, Read Diagnostic Trouble Code (DTC).>	Is any other DTC displayed?	Check DTC using “List of Diagnostic Trouble Code”. <Ref. to AB(diag)-38, LIST, List of Diagnostic Trouble Code (DTC).>	Finish the diagnosis.

CJ:DTC B16EA SIDE AIRBAG SENSOR RH INITIALIZATION ERROR

DIAGNOSIS START CONDITION:
Ignition voltage is 10 V to 16 V.
DTC DETECTING CONDITION:
Side airbag sensor LH initialization error
WIRING DIAGRAM:

NOTE:
For the coupling connector, refer to “WIRING SYSTEM”.
Airbag system <Ref. to WI-89, WIRING DIAGRAM, Airbag System.>

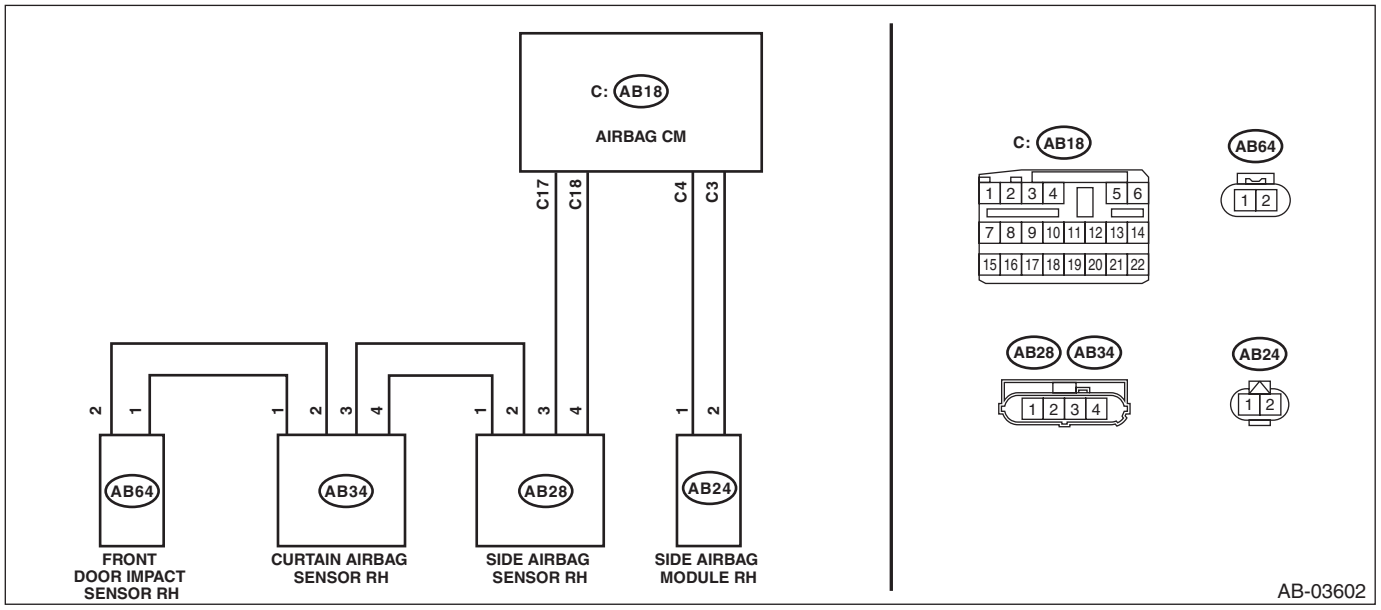

Step		Check	Yes	No
1	**CHECK POOR CONTACT OF CONNECTORS.** Check for poor contact of the connectors between the airbag control module and the side airbag sensor RH.	Is there poor contact?	Replace the airbag main harness along with body harness.	Go to step **2**.

	Step	Check	Yes	No
2	**CHECK AIRBAG REAR HARNESS (BETWEEN AIRBAG CONTROL MODULE AND SIDE AIRBAG SENSOR RH) (OPEN CIRCUIT).** 1) Turn the ignition switch to OFF, disconnect the battery ground cable, and wait for 60 seconds or more. 2) Disconnect the connector (AB26) from seat belt pretensioner RH. 3) Disconnect the connector (AB22) from seat cushion airbag module RH. 4) Disconnect the connector (AB33) from curtain airbag module RH. 5) Disconnect the connector (AB24) from side airbag module RH. 6) Disconnect the connectors (AB6, AB17, AB18) from airbag control module. 7) Connect the connector (1AD) in test harness AD AV to the connectors (AB6, AB17, AB18). 8) Connect the connector (2AD) in test harness AD AV and the connector (1AG) in test harness AG. 9) Disconnect the connector (AB28) from side airbag sensor RH, and connect the connector (2V) in test harness V to connector (AB28). 10) Measure the resistance between connector (5AG) in the test harness AG and connector (3V) in the test harness V. ***Connector & terminal*** ***(5AG) No. 8 — (3V) No. 1:*** ***(5AG) No. 10 — (3V) No. 2:***	Is the resistance less than 10 Ω?	Go to step **3**.	Replace the airbag rear harness along with body harness.
3	**CHECK AIRBAG REAR HARNESS (BETWEEN AIRBAG CONTROL MODULE AND SIDE AIRBAG SENSOR RH) (SHORTED TO GROUND AND SHORTED BETWEEN LINES).** Measure the resistance between test harness AG connectors (5AG) and chassis ground, and the resistance between connectors (5AG) of the test harness AG. ***Connector & terminal*** ***(3V) No. 1 — Chassis ground:*** ***(3V) No. 2 — Chassis ground:*** ***(3V) No. 1 — (3V) No. 2:***	Is the resistance 1 MΩ or more?	Go to step **4**.	Replace the airbag rear harness along with body harness.
4	**CHECK AIRBAG CONTROL MODULE.** 1) Connect all connectors. 2) Clear the memory. <Ref. to AB(diag)-32, Clear Memory Mode.> 3) Perform the Inspection Mode. <Ref. to AB(diag)-31, Inspection Mode.> 4) Read the DTC. (Current malfunction) <Ref. to AB(diag)-30, Read Diagnostic Trouble Code (DTC).>	Is DTC B16EA displayed?	Go to step **5**.	Go to step **7**.

	Step	Check	Yes	No
5	**CHECK SIDE AIRBAG SENSOR RH.** 1) Turn the ignition switch to OFF, disconnect the battery ground cable, and wait for 60 seconds or more. 2) Replace the side airbag sensor RH by the side airbag sensor LH. <Ref. to AB-56, REMOVAL, Side Airbag Sensor.> 3) Connect all connectors. 4) Clear the memory. <Ref. to AB(diag)-32, Clear Memory Mode.> 5) Perform the Inspection Mode. <Ref. to AB(diag)-31, Inspection Mode.> 6) Read the DTC. (Current malfunction) <Ref. to AB(diag)-30, Read Diagnostic Trouble Code (DTC).>	Is DTC B16EA displayed?	Go to step **6**.	Replace the side airbag sensor RH. <Ref. to AB-56, REMOVAL, Side Airbag Sensor.>
6	**CHECK AIRBAG CONTROL MODULE.** 1) Turn the ignition switch to OFF, disconnect the battery ground cable, and wait for 60 seconds or more. 2) Restore the side airbag sensors RH and LH back to their original position. <Ref. to AB-56, REMOVAL, Side Airbag Sensor.> 3) Connect all connectors. 4) Clear the memory. <Ref. to AB(diag)-32, Clear Memory Mode.> 5) Perform the Inspection Mode. <Ref. to AB(diag)-31, Inspection Mode.> 6) Read the DTC. (Current malfunction) <Ref. to AB(diag)-30, Read Diagnostic Trouble Code (DTC).>	Is DTC B16EA displayed?	Replace the airbag control module. <Ref. to AB-50, REMOVAL, Airbag Control Module.>	Go to step **7**.
7	**CHECK FOR ANY OTHER DTC ON DISPLAY.** Read the DTC. (Current malfunction) <Ref. to AB(diag)-30, Read Diagnostic Trouble Code (DTC).>	Is any other DTC displayed?	Check DTC using “List of Diagnostic Trouble Code (DTC)”. <Ref. to AB(diag)-38, List of Diagnostic Trouble Code (DTC).>	Finish the diagnosis.

CK:DTC B16EB SIDE AIRBAG SENSOR LH INITIALIZATION ERROR

DIAGNOSIS START CONDITION:
Ignition voltage is 10 V to 16 V.
DTC DETECTING CONDITION:
Side airbag sensor LH initialization error
WIRING DIAGRAM:

NOTE:
For the coupling connector, refer to “WIRING SYSTEM”.
Airbag system <Ref. to WI-89, WIRING DIAGRAM, Airbag System.>

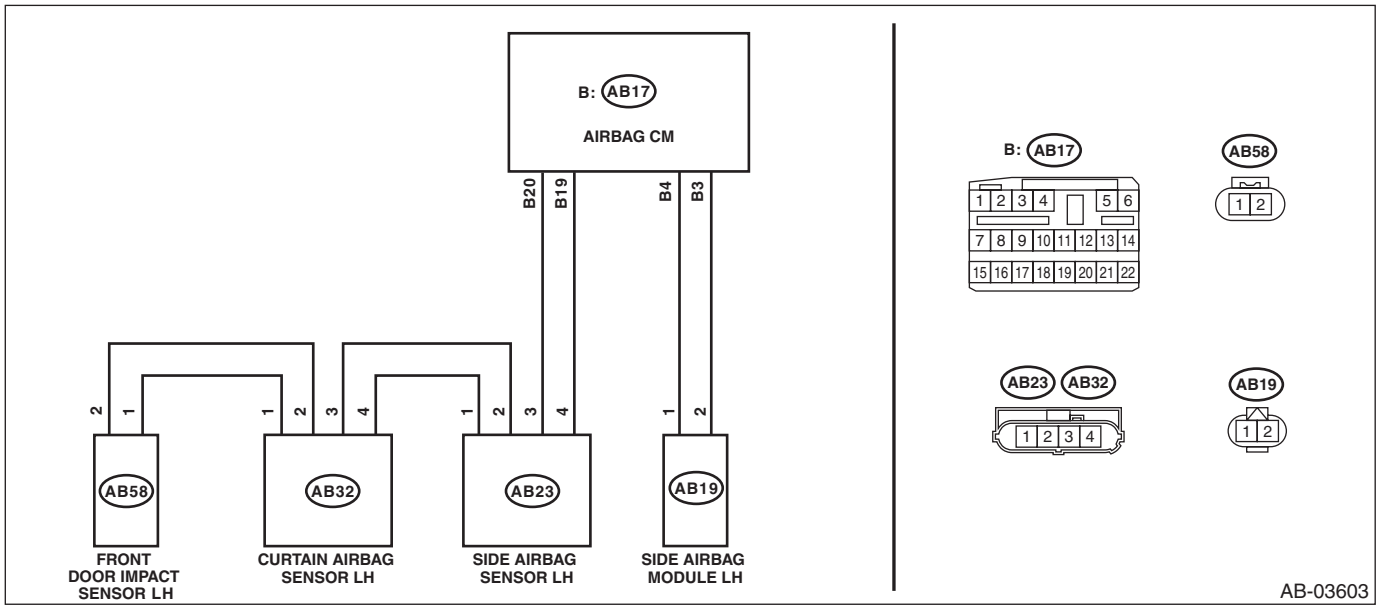

Step		Check	Yes	No
1	**CHECK POOR CONTACT OF CONNECTORS.** Check for poor contact of the connectors between the airbag control module and the side airbag sensor LH.	Is there poor contact?	Replace the airbag main harness along with body harness.	Go to step **2**.

	Step	Check	Yes	No
2	**CHECK AIRBAG REAR HARNESS (BETWEEN AIRBAG CONTROL MODULE AND SIDE AIRBAG SENSOR LH) (OPEN CIRCUIT).** 1) Turn the ignition switch to OFF, disconnect the battery ground cable, and wait for 60 seconds or more. 2) Disconnect the connector (AB21) from seat belt pretensioner LH. 3) Disconnect the connector (AB5) from seat cushion airbag module LH. 4) Disconnect the connector (AB31) from curtain airbag module LH. 5) Disconnect the connector (AB19) from side airbag module LH. 6) Disconnect the connectors (AB6, AB17, AB18) from airbag control module. 7) Connect the connector (1AD) in test harness AD AV to the connectors (AB6, AB17, AB18). 8) Connect the connector (2AD) in test harness AD AV and the connector (1AG) in test harness AG. 9) Disconnect the connector (AB23) from side airbag sensor LH, and connect the connector (2V) in test harness V to connector (AB23). 10) Measure the resistance between connector (5AG) in the test harness AG and connector (3V) in the test harness V. ***Connector & terminal*** ***(5AG) No. 14 — (3V) No. 2:*** ***(5AG) No. 16 — (3V) No. 1:***	Is the resistance less than 10 Ω?	Go to step **3**.	Replace the airbag rear harness along with body harness.
3	**CHECK AIRBAG REAR HARNESS (BETWEEN AIRBAG CONTROL MODULE AND SIDE AIRBAG SENSOR LH) (SHORTED TO GROUND AND SHORTED BETWEEN LINES).** Measure the resistance between test harness AG connectors (5AG) and chassis ground, and the resistance between connectors (5AG) of the test harness AG. ***Connector & terminal*** ***(3V) No. 1 — Chassis ground:*** ***(3V) No. 2 — Chassis ground:*** ***(3V) No. 1 — (3V) No. 2:***	Is the resistance 1 MΩ or more?	Go to step **4**.	Replace the airbag rear harness along with body harness.
4	**CHECK AIRBAG CONTROL MODULE.** 1) Connect all connectors. 2) Clear the memory. <Ref. to AB(diag)-32, Clear Memory Mode.> 3) Perform the Inspection Mode. <Ref. to AB(diag)-31, Inspection Mode.> 4) Read the DTC. (Current malfunction) <Ref. to AB(diag)-30, Read Diagnostic Trouble Code (DTC).>	Is DTC B16EB displayed?	Go to step **5**.	Go to step **7**.

	Step	Check	Yes	No
5	**CHECK SIDE AIRBAG SENSOR LH.** 1) Turn the ignition switch to OFF, disconnect the battery ground cable, and wait for 60 seconds or more. 2) Replace the side airbag sensor LH by the side airbag sensor RH. <Ref. to AB-56, REMOVAL, Side Airbag Sensor.> 3) Connect all connectors. 4) Clear the memory. <Ref. to AB(diag)-32, Clear Memory Mode.> 5) Perform the Inspection Mode. <Ref. to AB(diag)-31, Inspection Mode.> 6) Read the DTC. (Current malfunction) <Ref. to AB(diag)-30, Read Diagnostic Trouble Code (DTC).>	Is DTC B16EB displayed?	Go to step **6**.	Replace the side airbag sensor LH. <Ref. to AB-56, REMOVAL, Side Airbag Sensor.>
6	**REPLACE SIDE AIRBAG SENSOR LH AND CHECK AIRBAG CONTROL MODULE AFTER REPLACEMENT.** 1) Turn the ignition switch to OFF, disconnect the battery ground cable, and wait for 60 seconds or more. 2) Restore the side airbag sensors RH and LH back to their original position. <Ref. to AB-56, REMOVAL, Side Airbag Sensor.> 3) Connect all connectors. 4) Clear the memory. <Ref. to AB(diag)-32, Clear Memory Mode.> 5) Perform the Inspection Mode. <Ref. to AB(diag)-31, Inspection Mode.> 6) Read the DTC. (Current malfunction) <Ref. to AB(diag)-30, Read Diagnostic Trouble Code (DTC).>	Is DTC B16EB displayed?	Replace the airbag control module. <Ref. to AB-50, REMOVAL, Airbag Control Module.>	Go to step **7**.
7	**CHECK FOR ANY OTHER DTC ON DISPLAY.** Read the DTC. (Current malfunction) <Ref. to AB(diag)-30, Read Diagnostic Trouble Code (DTC).>	Is any other DTC displayed?	Check DTC using “List of Diagnostic Trouble Code”. <Ref. to AB(diag)-38, LIST, List of Diagnostic Trouble Code (DTC).>	Finish the diagnosis.

CL:DTC B16EC CURTAIN AIRBAG SENSOR RH INITIALIZATION ERROR

DIAGNOSIS START CONDITION:
Ignition voltage is 10 V to 16 V.
DTC DETECTING CONDITION:
Curtain airbag sensor RH initialization error
WIRING DIAGRAM:

NOTE:
For the coupling connector, refer to “WIRING SYSTEM”.
Airbag system <Ref. to WI-89, WIRING DIAGRAM, Airbag System.>

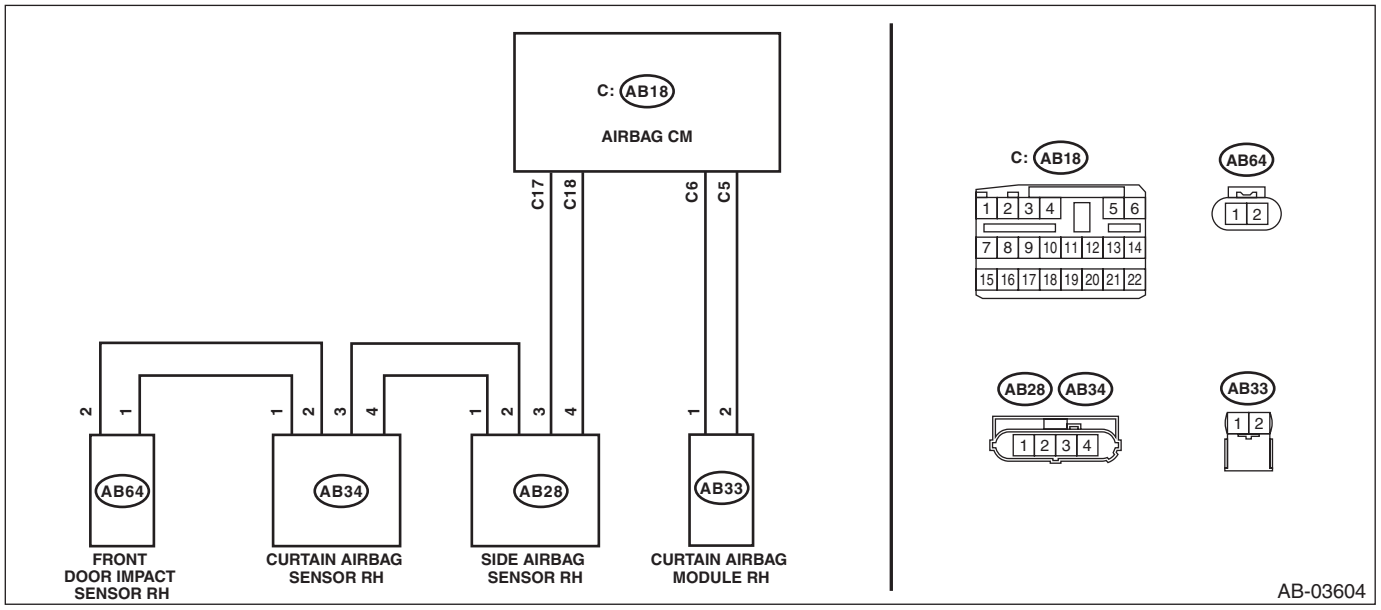

Step		Check	Yes	No
1	**CHECK DTC.** Read the DTC. (Current malfunction) <Ref. to AB(diag)-30, Read Diagnostic Trouble Code (DTC).>	Is DTC B1622 displayed?	Perform the diagnosis according to DTC.	Go to step **2**.
2	**CHECK POOR CONTACT OF CONNECTORS.** Check for poor contact of the connectors between the airbag control module and the front door impact sensor RH.	Is there poor contact?	Replace the airbag rear harness and the door harness.	Go to step **3**.

	Step	Check	Yes	No
3	**CHECK AIRBAG REAR HARNESS (BETWEEN SIDE AIRBAG SENSOR RH AND CURTAIN AIRBAG SENSOR RH) (OPEN CIRCUIT).** 1) Turn the ignition switch to OFF, disconnect the battery ground cable, and wait for 60 seconds or more. 2) Disconnect the connector (AB26) from seat belt pretensioner RH. 3) Disconnect the connector (AB22) from seat cushion airbag module RH. 4) Disconnect the connector (AB33) from curtain airbag module RH. 5) Disconnect the connector (AB24) from side airbag module RH. 6) Disconnect the connector (AB28) from side airbag sensor RH. 7) Connect the connector (AB28) of side airbag sensor RH and the connector (1AI) in test harness AI. 8) Connect the connector (2AI) in the test harness AI and the connector (1V) in the test harness V. 9) Disconnect the connector (AB34) from curtain airbag sensor (RH), and connect the connector (2V) in test harness V to connector (AB34). 10) Measure the resistance between connector (3V) terminals in the test harness V. ***Connector & terminal*** ***(3V) No. 2 — (3V) No. 6:*** ***(3V) No. 1 — (3V) No. 7:***	Is the resistance less than 10 Ω?	Go to step **4**.	Replace the airbag rear harness along with body harness.
4	**CHECK AIRBAG REAR HARNESS (BETWEEN SIDE AIRBAG SENSOR AND CURTAIN AIRBAG SENSOR RH) (SHORTED TO GROUND AND SHORTED BETWEEN LINES).** Measure the resistance between connector (3V) in test harness V and chassis ground, and the resistance between connector (3V) in test harness V. ***Connector & terminal*** ***(3V) No. 2 — Chassis ground:*** ***(3V) No. 1 — Chassis ground:*** ***(3V) No. 2 — (3V) No. 1:***	Is the resistance 1 MΩ or more?	Go to step **5**.	Replace the airbag rear harness along with body harness.
5	**CHECK AIRBAG CONTROL MODULE.** 1) Connect all connectors. 2) Clear the memory. <Ref. to AB(diag)-32, Clear Memory Mode.> 3) Perform the Inspection Mode. <Ref. to AB(diag)-31, Inspection Mode.> 4) Read the DTC. (Current malfunction) <Ref. to AB(diag)-30, Read Diagnostic Trouble Code (DTC).>	Is DTC B16EC displayed?	Go to step **6**.	Go to step **8**.

	Step	Check	Yes	No
6	**CHECK CURTAIN AIRBAG SENSOR RH.** 1) Turn the ignition switch to OFF, disconnect the battery ground cable, and wait for 60 seconds or more. 2) Replace the curtain airbag sensor RH by the curtain airbag sensor LH. <Ref. to AB-58, REMOVAL, Curtain Airbag Sensor.> 3) Connect all connectors. 4) Clear the memory. <Ref. to AB(diag)-32, Clear Memory Mode.> 5) Perform the Inspection Mode. <Ref. to AB(diag)-31, Inspection Mode.> 6) Read the DTC. (Current malfunction) <Ref. to AB(diag)-30, Read Diagnostic Trouble Code (DTC).>	Is DTC B16EC displayed?	Go to step **7**.	Replace the curtain airbag sensor RH. <Ref. to AB-58, REMOVAL, Curtain Airbag Sensor.>
7	**CHECK AIRBAG CONTROL MODULE.** 1) Turn the ignition switch to OFF, disconnect the battery ground cable, and wait for 60 seconds or more. 2) Restore the curtain airbag sensors RH and LH back to their original position. <Ref. to AB-58, REMOVAL, Curtain Airbag Sensor.> 3) Connect all connectors. 4) Clear the memory. <Ref. to AB(diag)-32, Clear Memory Mode.> 5) Perform the Inspection Mode. <Ref. to AB(diag)-31, Inspection Mode.> 6) Read the DTC. (Current malfunction) <Ref. to AB(diag)-30, Read Diagnostic Trouble Code (DTC).>	Is DTC B16EC displayed?	Replace the airbag control module. <Ref. to AB-50, REMOVAL, Airbag Control Module.>	Go to step **8**.
8	**CHECK FOR ANY OTHER DTC ON DISPLAY.** Read the DTC. (Current malfunction) <Ref. to AB(diag)-30, Read Diagnostic Trouble Code (DTC).>	Is any other DTC displayed?	Check DTC using “List of Diagnostic Trouble Code”. <Ref. to AB(diag)-38, LIST, List of Diagnostic Trouble Code (DTC).>	Finish the diagnosis.

CM:DTC B16ED CURTAIN AIRBAG SENSOR LH INITIALIZATION ERROR

DIAGNOSIS START CONDITION:
Ignition voltage is 10 V to 16 V.
DTC DETECTING CONDITION:
Curtain airbag sensor LH initialization error
WIRING DIAGRAM:

NOTE:
For the coupling connector, refer to “WIRING SYSTEM”.
Airbag system <Ref. to WI-89, WIRING DIAGRAM, Airbag System.>

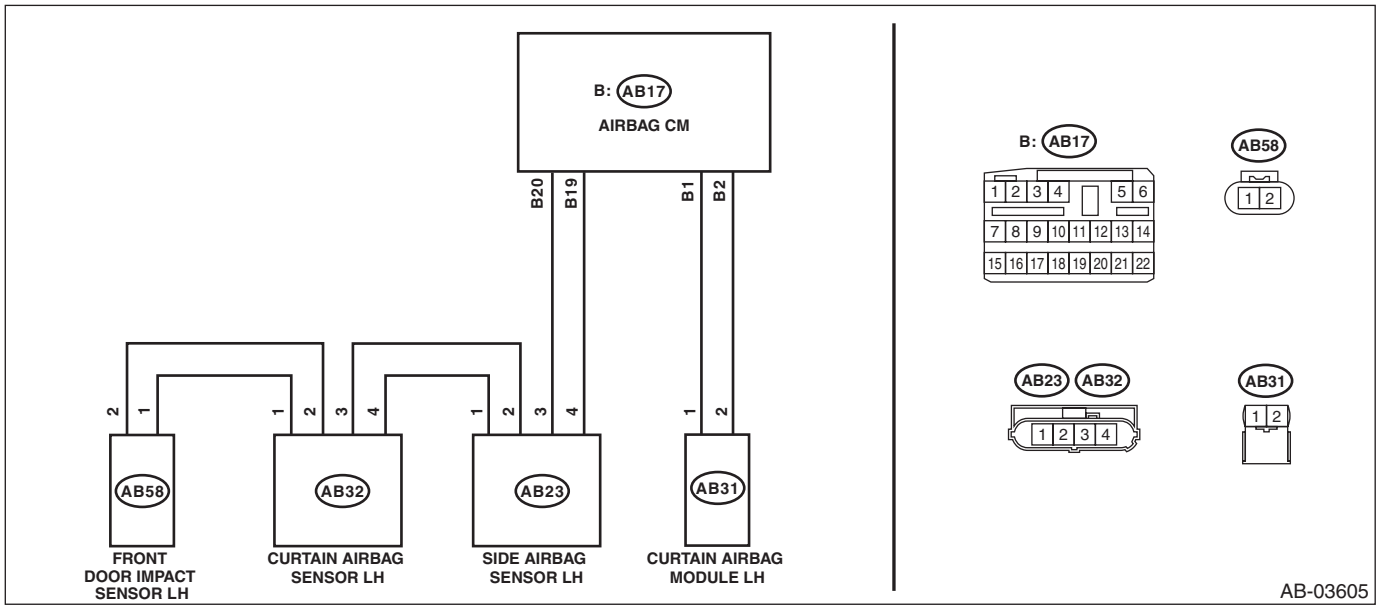

Step		Check	Yes	No
1	**CHECK DTC.**	Is DTC B1627 displayed?	Perform the diagnosis according to DTC.	Go to step **2**.
2	**CHECK POOR CONTACT OF CONNECTORS.** Check for poor contact of the connectors between the airbag control module and the door sensor LH.	Is there poor contact?	Replace the airbag rear harness and the door harness.	Go to step **3**.

	Step	Check	Yes	No
3	**CHECK AIRBAG REAR HARNESS (BETWEEN SIDE AIRBAG SENSOR LH AND CURTAIN AIRBAG SENSOR LH) (OPEN CIRCUIT).** 1) Turn the ignition switch to OFF, disconnect the battery ground cable, and wait for 60 seconds or more. 2) Disconnect the connector (AB21) from seat belt pretensioner LH. 3) Disconnect the connector (AB5) from seat cushion airbag module LH. 4) Disconnect the connector (AB31) from curtain airbag module LH. 5) Disconnect the connector (AB19) from side airbag module LH. 6) Disconnect the connector (AB23) from the side airbag sensor LH. 7) Connect the connector (AB23) of side airbag sensor LH and the connector (1AI) in the test harness AI. 8) Connect the connector (2AI) in the test harness AI and the connector (1V) in the test harness V. 9) Disconnect the connector (AB32) from curtain airbag sensor LH, and connect the connector (2V) in test harness V to connector (AB32). 10) Measure the resistance between connector (3V) terminals in the test harness V. ***Connector & terminal*** ***(3V) No. 2 — (3V) No. 6:*** ***(3V) No. 1 — (3V) No. 7:***	Is the resistance less than 10 Ω?	Go to step **4**.	Replace the airbag rear harness along with body harness.
4	**CHECK AIRBAG REAR HARNESS (BETWEEN SIDE AIRBAG SENSOR AND CURTAIN AIRBAG SENSOR LH) (SHORTED TO GROUND AND SHORTED BETWEEN LINES).** Measure the resistance between connector (3V) in test harness V and chassis ground, and the resistance between connector (3V) in test harness V. ***Connector & terminal*** ***(3V) No. 1 — Chassis ground:*** ***(3V) No. 2 — Chassis ground:*** ***(3V) No. 1 — (3V) No. 2:***	Is the resistance 1 MΩ or more?	Go to step **5**.	Replace the airbag rear harness along with body harness.
5	**CHECK AIRBAG CONTROL MODULE.** 1) Connect all connectors. 2) Clear the memory. <Ref. to AB(diag)-32, Clear Memory Mode.> 3) Perform the Inspection Mode. <Ref. to AB(diag)-31, Inspection Mode.> 4) Read the DTC. (Current malfunction) <Ref. to AB(diag)-30, Read Diagnostic Trouble Code (DTC).>	Is DTC B16ED displayed?	Go to step **6**.	Go to step **8**.

	Step	Check	Yes	No
6	**CHECK CURTAIN AIRBAG SENSOR LH.** 1) Turn the ignition switch to OFF, disconnect the battery ground cable, and wait for 60 seconds or more. 2) Replace the curtain airbag sensor LH by the curtain airbag sensor RH. <Ref. to AB-58, REMOVAL, Curtain Airbag Sensor.> 3) Connect all connectors. 4) Clear the memory. <Ref. to AB(diag)-32, Clear Memory Mode.> 5) Perform the Inspection Mode. <Ref. to AB(diag)-31, Inspection Mode.> 6) Read the DTC. (Current malfunction) <Ref. to AB(diag)-30, Read Diagnostic Trouble Code (DTC).>	Is DTC B16ED displayed?	Go to step **7**.	Replace the curtain airbag sensor LH. <Ref. to AB-58, REMOVAL, Curtain Airbag Sensor.>
7	**CHECK AIRBAG CONTROL MODULE.** 1) Turn the ignition switch to OFF, disconnect the battery ground cable, and wait for 60 seconds or more. 2) Replace the curtain airbag sensor LH. <Ref. to AB-58, REMOVAL, Curtain Airbag Sensor.> 3) Connect all connectors. 4) Clear the memory. <Ref. to AB(diag)-32, Clear Memory Mode.> 5) Perform the Inspection Mode. <Ref. to AB(diag)-31, Inspection Mode.> 6) Read the DTC. (Current malfunction) <Ref. to AB(diag)-30, Read Diagnostic Trouble Code (DTC).>	Is DTC B16ED displayed?	Replace the airbag control module. <Ref. to AB-50, REMOVAL, Airbag Control Module.>	Go to step **8**.
8	**CHECK FOR ANY OTHER DTC ON DISPLAY.** Read the DTC. (Current malfunction) <Ref. to AB(diag)-30, Read Diagnostic Trouble Code (DTC).>	Is any other DTC displayed?	Check DTC using “List of Diagnostic Trouble Code (DTC)”. <Ref. to AB(diag)-38, List of Diagnostic Trouble Code (DTC).>	Finish the diagnosis.

CN:DTC B1800 SHORT IN DRIVER'S AIRBAG

DIAGNOSIS START CONDITION:
Ignition voltage is 10 V to 16 V.
DTC DETECTING CONDITION:
Shorted between +/– lines (shorted between main harness lines, shorted between roll connector lines, shorted between driver's airbag lines, shorted between airbag CM internal lines)

CAUTION:
Before performing diagnosis, refer to "CAUTION" in "General Description". <Ref. to AB(diag)-4, CAUTION, General Description.>

NOTE:
Prior to starting work, prepare two AIRBAG RESISTORs (98299PA040).
WIRING DIAGRAM:
Airbag system <Ref. to WI-89, WIRING DIAGRAM, Airbag System.>

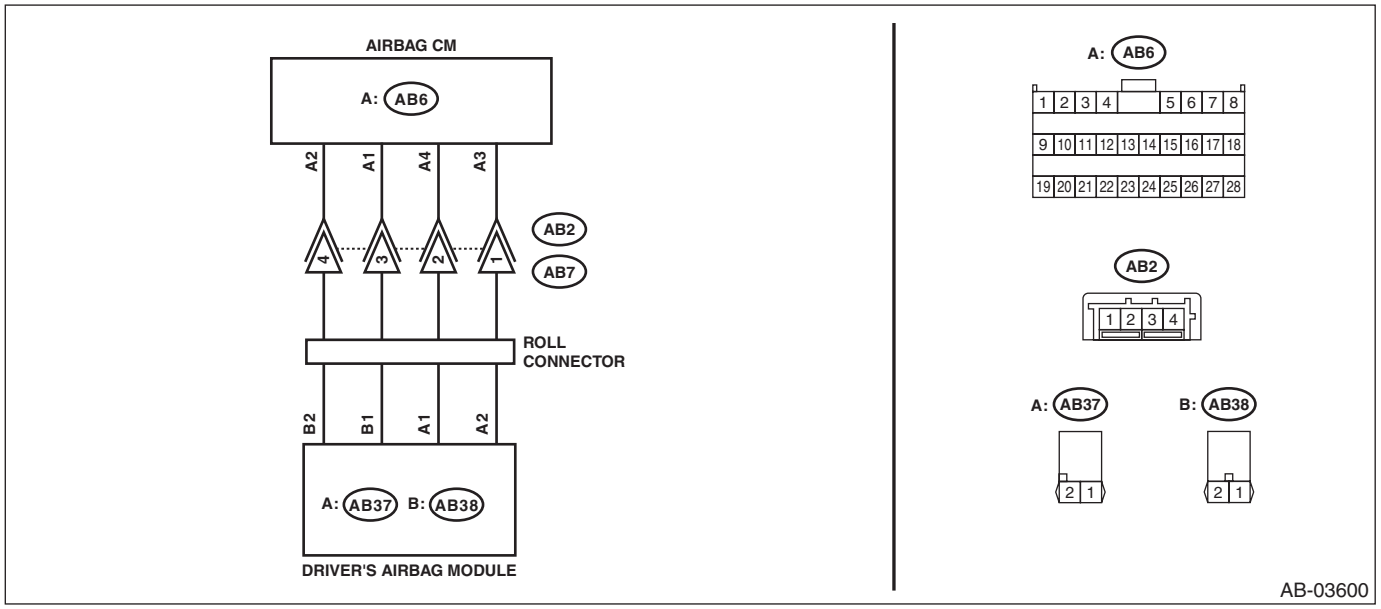

Step		Check	Yes	No
1	**CHECK POOR CONTACT OF CONNECTORS.** Check for poor contact of the connectors between the airbag control module and the driver's airbag module.	Is there poor contact?	Replace the airbag harness.	Go to step **2**.
2	**CHECK DRIVER'S AIRBAG MODULE.** 1) Turn the ignition switch to OFF, disconnect the battery ground cable, and wait for 60 seconds or more. 2) Remove the driver's airbag module. 3) Connect the connector (1N) in the test harness N to the connector (AB38). 4) Connect the airbag resistor to the connector (2N) of test harness N. 5) Connect the connector (1Q) in the test harness Q to connector (AB37). 6) Connect the airbag resistor to the connector (2Q) in the test harness Q. 7) Connect the battery ground terminal and turn the ignition switch to ON.	Does the airbag warning light illuminate for six seconds and go off?	Replace the driver's airbag module. <Ref. to AB-32, Driver's Airbag Module.>	Go to step **3**.

	Step	Check	Yes	No
3	**CHECK ROLL CONNECTOR AND AIRBAG MAIN HARNESS (DRIVER'S AIRBAG HARNESS) (SHORTED BETWEEN LINES).** 1) Turn the ignition switch to OFF, disconnect the battery ground cable, and wait for 60 seconds or more. 2) Remove the console front panel and disconnect the connector (AB9). 3) Disconnect the airbag resistor from the connector (2N) in test harness N and from the connector (2Q) in test harness Q. 4) Disconnect the connectors (AB6, AB17, AB18) from airbag control module. 5) Connect the connector (1AD) in test harness AD AV to the connectors (AB6, AB17, AB18). 6) Connect the connector (2AD) in test harness AD AV and the connector (1AG) in test harness AG. 7) Measure the resistance between connector (2Q) terminals in test harness Q. ***Connector & terminal*** ***(2Q) No. 1 — (2Q) No. 2:***	Is the resistance 1 MΩ or more?	Go to step **5**.	Go to step **4**.
4	**CHECK AIRBAG MAIN HARNESS (DRIVER'S AIRBAG HARNESS) (SHORTED BETWEEN LINES).** 1) Remove the instrument panel lower cover and column cover, and disconnect the connector (AB7) from (AB2). 2) Measure the resistance between connector (3AG) terminals in test harness AG. ***Connector & terminal*** ***(3AG) No. 1 — (3AG) No. 3:***	Is the resistance 1 MΩ or more?	Replace the roll connector. <Ref. to AB-60, Roll Connector.>	Replace the airbag main harness along with body harness.
5	**CHECK AIRBAG CONTROL MODULE.** 1) Connect all connectors. 2) Clear the memory. <Ref. to AB(diag)-32, Clear Memory Mode.> 3) Perform the Inspection Mode. <Ref. to AB(diag)-31, Inspection Mode.> 4) Read the DTC. (Current malfunction) <Ref. to AB(diag)-30, Read Diagnostic Trouble Code (DTC).>	Is DTC B1800 displayed?	Replace the airbag control module. <Ref. to AB-50, Airbag Control Module.>	Go to step **6**.
6	**CHECK FOR ANY OTHER DTC ON DISPLAY.** Read the DTC. (Current malfunction) <Ref. to AB(diag)-30, Read Diagnostic Trouble Code (DTC).>	Is any other DTC displayed?	Check DTC using "List of Diagnostic Trouble Code (DTC)". <Ref. to AB(diag)-38, List of Diagnostic Trouble Code (DTC).>	Finish the diagnosis.

CO:DTC B1801 OPEN IN DRIVER'S AIRBAG

DIAGNOSIS START CONDITION:
Ignition voltage is 10 V to 16 V.
DTC DETECTING CONDITION:
Open circuit failure (open circuit in main harness, open circuit in roll connector, open circuit in driver's airbag, open circuit in airbag CM internal circuit, connectors connection failure)

CAUTION:
Before performing diagnosis, refer to "CAUTION" in "General Description". <Ref. to AB(diag)-4, CAUTION, General Description.>

NOTE:
Prior to starting work, prepare two AIRBAG RESISTORs (98299PA040).
WIRING DIAGRAM:
Airbag system <Ref. to WI-89, WIRING DIAGRAM, Airbag System.>

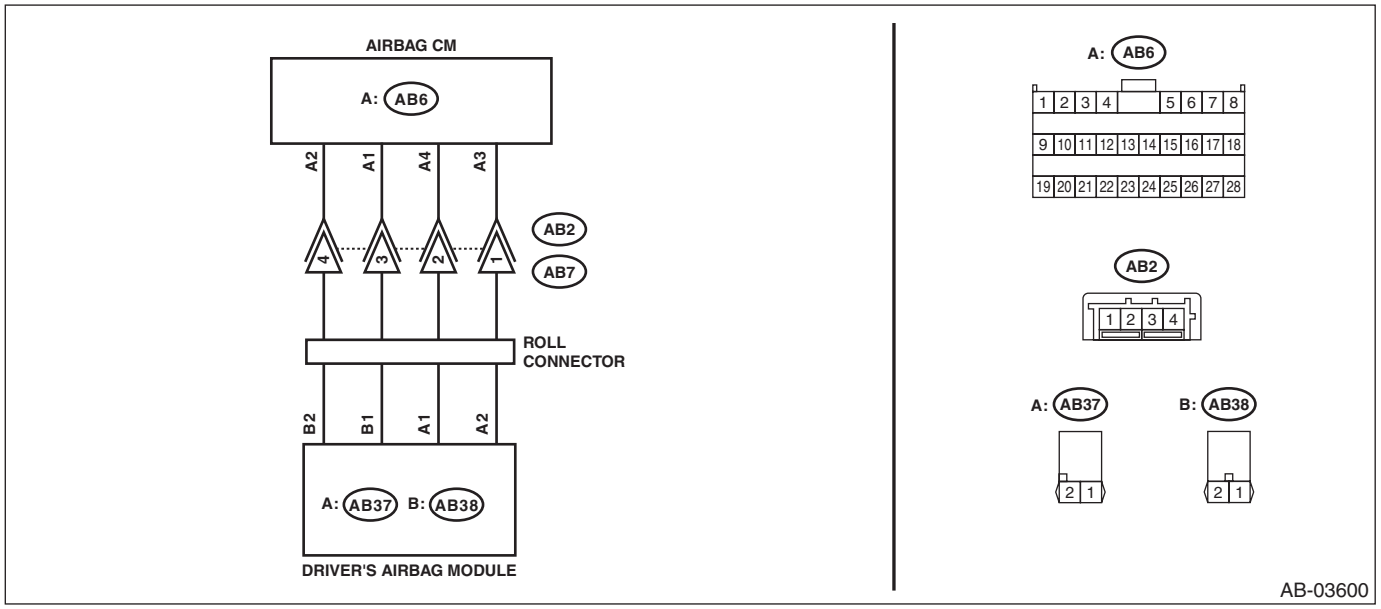

Step		Check	Yes	No
1	**CHECK POOR CONTACT OF CONNECTORS.** Check for poor contact of the connectors between the airbag control module and the driver's airbag module.	Is there poor contact?	Replace the airbag harness.	Go to step **2**.
2	**CHECK DRIVER'S AIRBAG MODULE.** 1) Turn the ignition switch to OFF, disconnect the battery ground cable, and wait for 60 seconds or more. 2) Remove the driver's airbag module. 3) Connect the connector (1N) in the test harness N to the connector (AB38). 4) Connect the airbag resistor to the connector (2N) of test harness N. 5) Connect the connector (1Q) in the test harness Q to connector (AB37). 6) Connect the airbag resistor to the connector (2Q) in the test harness Q. 7) Connect the battery ground terminal and turn the ignition switch to ON.	Does the airbag warning light illuminate for six seconds and go off?	Replace the driver's airbag module. <Ref. to AB-32, Driver's Airbag Module.>	Go to step **3**.

	Step	Check	Yes	No
3	**CHECK ROLL CONNECTOR AND AIRBAG MAIN HARNESS (DRIVER'S AIRBAG HARNESS) (SHORTED BETWEEN LINES).** 1) Turn the ignition switch to OFF, disconnect the battery ground cable, and wait for 60 seconds or more. 2) Remove the console front panel and disconnect the connector (AB9). 3) Disconnect the airbag resistor from the connector (2N) in test harness N. 4) Disconnect the airbag resistor from the connector (2Q) of test harness Q. 5) Disconnect the connectors (AB6, AB17, AB18) from airbag control module. 6) Measure the resistance between connector (2Q) terminals in test harness Q. ***Connector & terminal (2Q) No. 1 — (2Q) No. 2:***	Is the resistance less than 10 Ω?	Go to step **5**.	Go to step **4**.
4	**CHECK ROLL CONNECTOR (SHORTED BETWEEN LINES).** 1) Remove the instrument panel lower cover and column cover, and disconnect the connector (AB7) from (AB2). 2) Measure the resistance between connector (2Q) terminals in test harness Q. ***Connector & terminal (2Q) No. 1 — (2Q) No. 2:***	Is the resistance less than 10 Ω?	Replace the airbag main harness along with body harness.	Replace the roll connector. <Ref. to AB-60, Roll Connector.>
5	**CHECK AIRBAG CONTROL MODULE.** 1) Connect all connectors. 2) Clear the memory. <Ref. to AB(diag)-32, Clear Memory Mode.> 3) Perform the Inspection Mode. <Ref. to AB(diag)-31, Inspection Mode.> 4) Read the DTC. (Current malfunction) <Ref. to AB(diag)-30, Read Diagnostic Trouble Code (DTC).>	Is DTC B1801 displayed?	Replace the airbag control module. <Ref. to AB-50, Airbag Control Module.>	Go to step **6**.
6	**CHECK FOR ANY OTHER DTC ON DISPLAY.** Read the DTC. (Current malfunction) <Ref. to AB(diag)-30, Read Diagnostic Trouble Code (DTC).>	Is any other DTC displayed?	Check DTC using "List of Diagnostic Trouble Code (DTC)". <Ref. to AB(diag)-38, List of Diagnostic Trouble Code (DTC).>	Finish the diagnosis.

CP:DTC B1802 SHORT IN DRIVER'S AIRBAG (TO GROUND)

DIAGNOSIS START CONDITION:
Ignition voltage is 10 V to 16 V.
DTC DETECTING CONDITION:
GND short circuit failure (shorted to ground in main harness, shorted to ground in roll connector, shorted to ground in driver's airbag, shorted to ground in airbag CM internal circuit)

CAUTION:
Before performing diagnosis, refer to "CAUTION" in "General Description". <Ref. to AB(diag)-4, CAUTION, General Description.>

NOTE:
Prior to starting work, prepare two AIRBAG RESISTORs (98299PA040).
WIRING DIAGRAM:
Airbag system <Ref. to WI-89, WIRING DIAGRAM, Airbag System.>

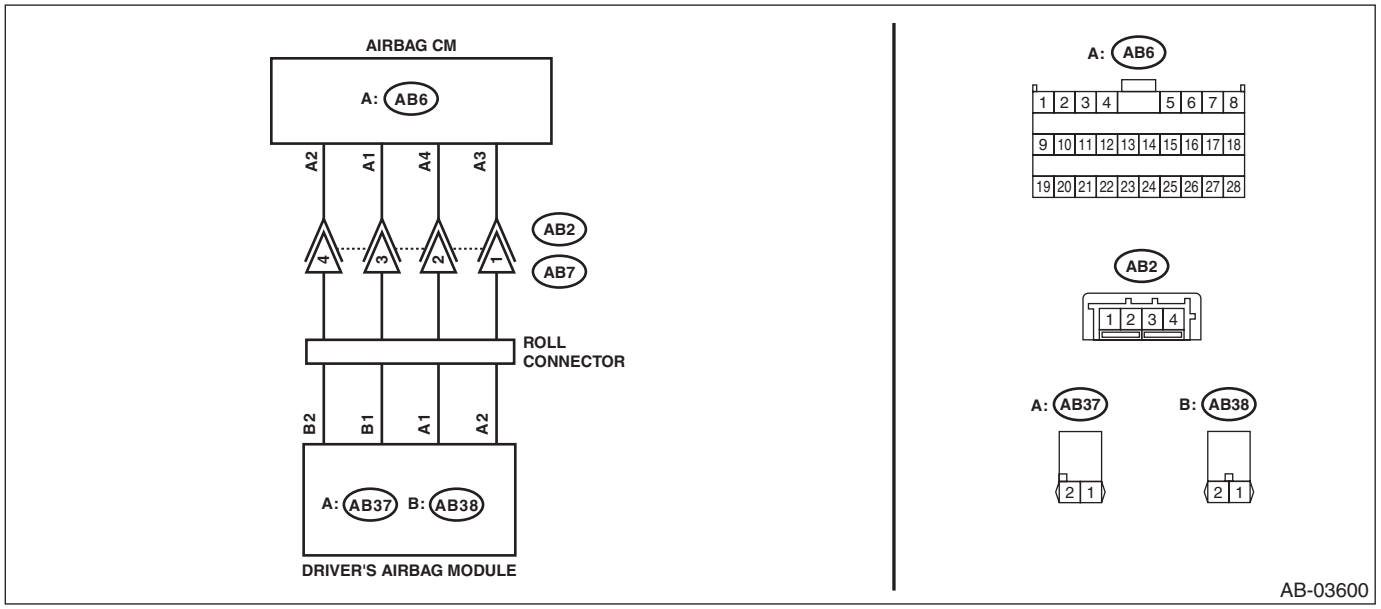

Step		Check	Yes	No
1	**CHECK POOR CONTACT OF CONNECTORS.** Check for poor contact of the connectors between the airbag control module and the driver's airbag module.	Is there poor contact?	Replace the airbag harness.	Go to step **2**.
2	**CHECK DRIVER'S AIRBAG MODULE.** 1) Turn the ignition switch to OFF, disconnect the battery ground cable, and wait for 60 seconds or more. 2) Remove the driver's airbag module. 3) Connect the connector (1N) in the test harness N to the connector (AB38). 4) Connect the airbag resistor to the connector (2N) of test harness N. 5) Connect the connector (1Q) in the test harness Q to connector (AB37). 6) Connect the airbag resistor to the connector (2Q) in the test harness Q. 7) Connect the battery ground terminal and turn the ignition switch to ON.	Does the airbag warning light illuminate for six seconds and go off?	Replace the driver's airbag module. <Ref. to AB-32, Driver's Airbag Module.>	Go to step **3**.

	Step	Check	Yes	No
3	**CHECK ROLL CONNECTOR (SHORTED TO GROUND).** 1) Turn the ignition switch to OFF, disconnect the battery ground cable, and wait for 60 seconds or more. 2) Remove the instrument panel lower cover and column cover, and disconnect the connector (AB7) from (AB2). 3) Disconnect the airbag resistor from the connector (2N) in test harness N and from the connector (2Q) in test harness Q. 4) Measure the resistance between connector (2Q) in the test harness Q and chassis ground. ***Connector & terminal*** ***(2Q) No. 1 — Chassis ground:*** ***(2Q) No. 2 — Chassis ground:***	Is the resistance 1 MΩ or more?	Go to step **4**.	Replace the roll connector. <Ref. to AB-60, Roll Connector.>
4	**CHECK AIRBAG MAIN HARNESS (DRIVER'S AIRBAG HARNESS) (SHORTED TO GROUND).** 1) Disconnect the test harness N from connector (AB38). 2) Disconnect the test harness Q from connector (AB37). 3) Remove the console front panel and disconnect the connector (AB9). 4) Disconnect the connectors (AB6, AB17, AB18) from airbag control module. 5) Connect the connector (1AD) in test harness AD AV to the connectors (AB6, AB17, AB18). 6) Connect the connector (2AD) in test harness AD AV and the connector (1AG) in test harness AG. 7) Measure the resistance between connector (3AG) in the test harness AG and chassis ground. ***Connector & terminal*** ***(3AG) No. 1 — Chassis ground:*** ***(3AG) No. 3 — Chassis ground:***	Is the resistance 1 MΩ or more?	Go to step **5**.	Replace the airbag main harness along with body harness.
5	**CHECK AIRBAG CONTROL MODULE.** 1) Connect all connectors. 2) Clear the memory. <Ref. to AB(diag)-32, Clear Memory Mode.> 3) Perform the Inspection Mode. <Ref. to AB(diag)-31, Inspection Mode.> 4) Read the DTC. (Current malfunction) <Ref. to AB(diag)-30, Read Diagnostic Trouble Code (DTC).>	Is DTC B1802 displayed?	Replace the airbag control module. <Ref. to AB-50, Airbag Control Module.>	Go to step **6**.
6	**CHECK FOR ANY OTHER DTC ON DISPLAY.** Read the DTC. (Current malfunction) <Ref. to AB(diag)-30, Read Diagnostic Trouble Code (DTC).>	Is any other DTC displayed?	Check DTC using "List of Diagnostic Trouble Code (DTC)". <Ref. to AB(diag)-38, List of Diagnostic Trouble Code (DTC).>	Finish the diagnosis.

CQ:DTC B1803 SHORT IN DRIVER'S AIRBAG (TO +B)

DIAGNOSIS START CONDITION:
Ignition voltage is 10 V to 16 V.
DTC DETECTING CONDITION:
Short circuit failure in power supply (shorted in main harness power supply, shorted in roll connector power supply, shorted in driver's airbag power supply, shorted in airbag CM internal circuit power supply)

CAUTION:
Before performing diagnosis, refer to "CAUTION" in "General Description". <Ref. to AB(diag)-4, CAUTION, General Description.>

NOTE:
Prior to starting work, prepare two AIRBAG RESISTORs (98299PA040).
WIRING DIAGRAM:
Airbag system <Ref. to WI-89, WIRING DIAGRAM, Airbag System.>

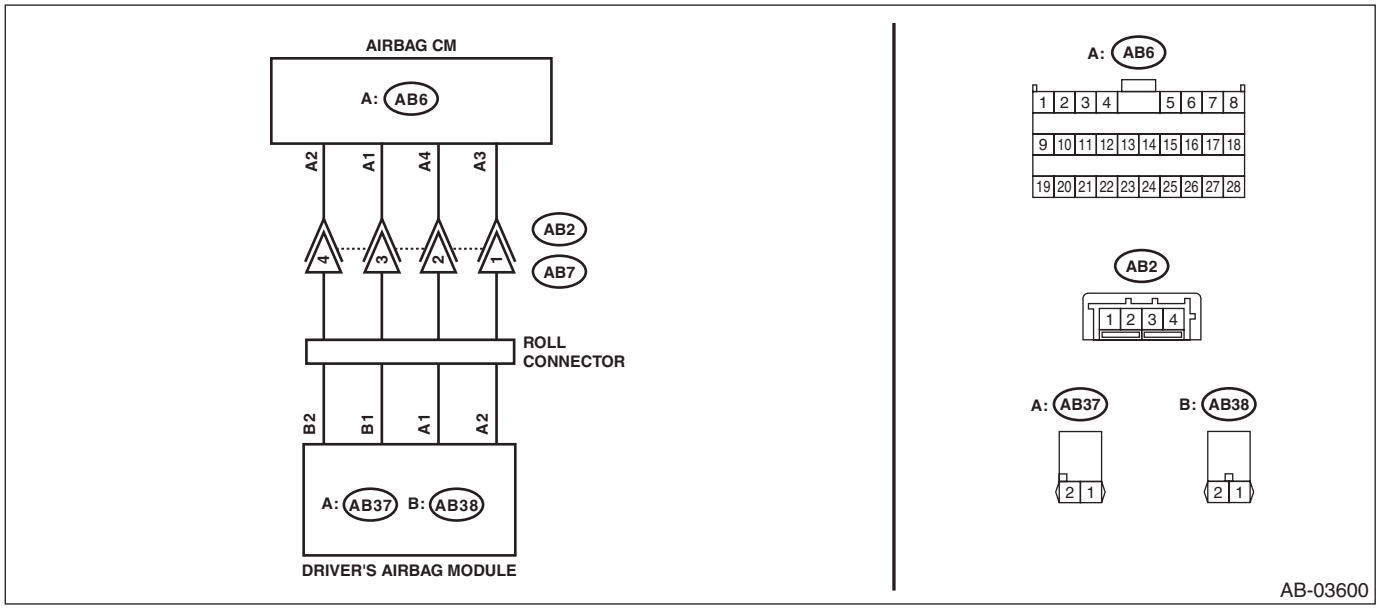

Step		Check	Yes	No
1	**CHECK POOR CONTACT OF CONNECTORS.** Check for poor contact of the connectors between the airbag control module and the driver's airbag module.	Is there poor contact?	Replace the airbag harness.	Go to step **2**.
2	**CHECK DRIVER'S AIRBAG MODULE.** 1) Turn the ignition switch to OFF, disconnect the battery ground cable, and wait for 60 seconds or more. 2) Remove the driver's airbag module. 3) Connect the connector (1N) in the test harness N to the connector (AB38). 4) Connect the airbag resistor to the connector (2N) of test harness N. 5) Connect the connector (1Q) in the test harness Q to connector (AB37). 6) Connect the airbag resistor to the connector (2Q) in the test harness Q. 7) Connect the battery ground terminal and turn the ignition switch to ON.	Does the airbag warning light illuminate for six seconds and go off?	Replace the driver's airbag module. <Ref. to AB-32, Driver's Airbag Module.>	Go to step **3**.

	Step	Check	Yes	No
3	**CHECK ROLL CONNECTOR (SHORTED TO POWER SUPPLY).** 1) Turn the ignition switch to OFF, disconnect the battery ground cable, and wait for 60 seconds or more. 2) Remove the instrument panel lower cover and column cover, and disconnect the connector (AB7) from (AB2). 3) Disconnect the airbag resistor from the connector (2N) in test harness N and from the connector (2Q) in test harness Q. 4) Measure the voltage between connector (2Q) in the test harness Q and chassis ground. ***Connector & terminal*** ***(2Q) No. 1 (+) — Chassis ground (–):*** ***(2Q) No. 2 (+) — Chassis ground (–):***	Is the voltage less than 1 V?	Go to step **4**.	Replace the roll connector. <Ref. to AB-60, Roll Connector.>
4	**CHECK AIRBAG MAIN HARNESS (DRIVER'S AIRBAG HARNESS) (SHORTED TO POWER SUPPLY).** 1) Disconnect the test harness N from connector (AB38). 2) Disconnect the test harness Q from connector (AB37). 3) Remove the console front panel and disconnect the connector (AB9). 4) Disconnect the connectors (AB6, AB17, AB18) from airbag control module. 5) Connect the connector (1AD) in test harness AD AV to the connectors (AB6, AB17, AB18). 6) Connect the connector (2AD) in test harness AD AV and the connector (1AG) in test harness AG. 7) Connect the battery ground terminal and turn the ignition switch to ON. 8) Measure the voltage between connector (3AG) in the test harness AG and chassis ground. ***Connector & terminal*** ***(3AG) No. 1 (+) — Chassis ground (–):*** ***(3AG) No. 3 (+) — Chassis ground (–):***	Is the voltage less than 1 V?	Go to step **5**.	Replace the airbag main harness along with body harness.
5	**CHECK AIRBAG CONTROL MODULE.** 1) Connect all connectors. 2) Clear the memory. <Ref. to AB(diag)-32, Clear Memory Mode.> 3) Perform the Inspection Mode. <Ref. to AB(diag)-31, Inspection Mode.> 4) Read the DTC. (Current malfunction) <Ref. to AB(diag)-30, Read Diagnostic Trouble Code (DTC).>	Is DTC B1803 displayed?	Replace the airbag control module. <Ref. to AB-50, Airbag Control Module.>	Go to step **6**.
6	**CHECK FOR ANY OTHER DTC ON DISPLAY.** Read the DTC. (Current malfunction) <Ref. to AB(diag)-30, Read Diagnostic Trouble Code (DTC).>	Is any other DTC displayed?	Check DTC using "List of Diagnostic Trouble Code (DTC)". <Ref. to AB(diag)-38, List of Diagnostic Trouble Code (DTC).>	Finish the diagnosis.

CR:DTC B1804 SHORT IN DRIVER'S AIRBAG

DIAGNOSIS START CONDITION:
Ignition voltage is 10 V to 16 V.
DTC DETECTING CONDITION:
Short circuit between driver's airbag circuit and other circuit

CAUTION:
Before performing diagnosis, refer to "CAUTION" in "General Description". <Ref. to AB(diag)-4, CAUTION, General Description.>

NOTE:
Prior to starting work, prepare two AIRBAG RESISTORs (98299PA040).
WIRING DIAGRAM:
Airbag system <Ref. to WI-89, WIRING DIAGRAM, Airbag System.>

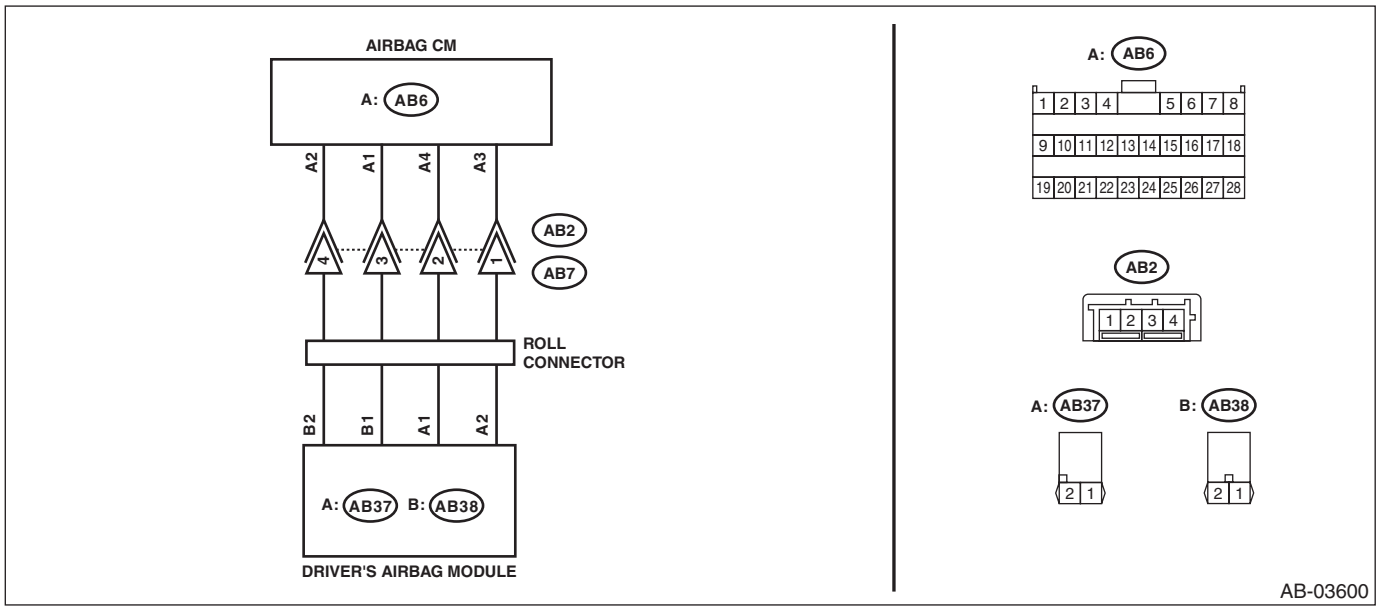

Step		Check	Yes	No
1	**CHECK POOR CONTACT OF CONNECTORS.** Check for poor contact of the connectors between the airbag control module and the driver's airbag module.	Is there poor contact?	Replace the airbag harness.	Go to step **2**.
2	**CHECK DRIVER'S AIRBAG MODULE.** 1) Turn the ignition switch to OFF, disconnect the battery ground cable, and wait for 60 seconds or more. 2) Remove the driver's airbag module. 3) Connect the connector (1N) in the test harness N to the connector (AB38). 4) Connect the airbag resistor to the connector (2N) of test harness N. 5) Connect the connector (1Q) in the test harness Q to connector (AB37). 6) Connect the airbag resistor to the connector (2Q) in the test harness Q. 7) Connect the battery ground terminal and turn the ignition switch to ON.	Does the airbag warning light illuminate for six seconds and go off?	Replace the driver's airbag module. <Ref. to AB-32, Driver's Airbag Module.>	Go to step **3**.

	Step	Check	Yes	No
3	**CHECK ROLL CONNECTOR (SHORTED BETWEEN LINES).** 1) Turn the ignition switch to OFF, disconnect the battery ground cable, and wait for 60 seconds or more. 2) Remove the instrument panel lower cover and column cover, and disconnect the connector (AB7) from (AB2). 3) Remove the console front panel and disconnect the connector (AB9). 4) Disconnect the connectors (AB6, AB17, AB18) from airbag control module. 5) Connect the connector (1AD) in test harness AD AV to the connectors (AB6, AB17, AB18). 6) Connect the connector (2AD) in test harness AD AV and the connector (1AG) in test harness AG. 7) Disconnect the airbag resistor from the connector (2N) in test harness N and from the connector (2Q) in test harness Q. 8) Measure the resistance between connector (2Q) in the test harness Q and all connector terminals in the test harness AG. ***Connector & terminal*** ***(2Q) No. 1 — All terminals in test harness AG (except for (3AG) No. 3):*** ***(2Q) No. 2 — All terminals in test harness AG (except for (3AG) No. 1):***	Is the resistance 1 MΩ or more?	Go to step **4**.	Roll connector <Ref. to AB-60, Roll Connector.> and faulty harness need to be replaced. (Replace the airbag main harness along with body harness. Or replace the airbag rear harness along with body harness.)
4	**CHECK AIRBAG MAIN HARNESS (DRIVER'S AIRBAG HARNESS) (SHORTED BETWEEN LINES).** 1) Disconnect the test harness N from connector (AB38). 2) Disconnect the test harness Q from connector (AB37). 3) Measure the resistance between connector (3AG) in the test harness AG and all connector terminals in the test harness AG. ***Connector & terminal*** ***(3AG) No. 3 (+) — All terminals in test harness AG:*** ***(3AG) No. 1 (+) — All terminals in test harness AG:***	Is the resistance 1 MΩ or more?	Replace the airbag control module <Ref. to AB-50, REMOVAL, Airbag Control Module.>	Replace the faulty harness. (Replace the airbag main harness along with body harness. Or replace the airbag rear harness along with body harness.)

CS:DTC B1805 SHORT IN PASSENGER'S AIRBAG

DIAGNOSIS START CONDITION:
Ignition voltage is 10 V to 16 V.
DTC DETECTING CONDITION:
Shorted between +/– lines (shorted between main harness lines, shorted between passenger's airbag lines, shorted between airbag CM internal lines)

CAUTION:
Before performing diagnosis, refer to "CAUTION" in "General Description". <Ref. to AB(diag)-4, CAUTION, General Description.>

NOTE:
Prior to starting work, prepare two AIRBAG RESISTORs (98299PA040).
WIRING DIAGRAM:
Airbag system <Ref. to WI-89, WIRING DIAGRAM, Airbag System.>

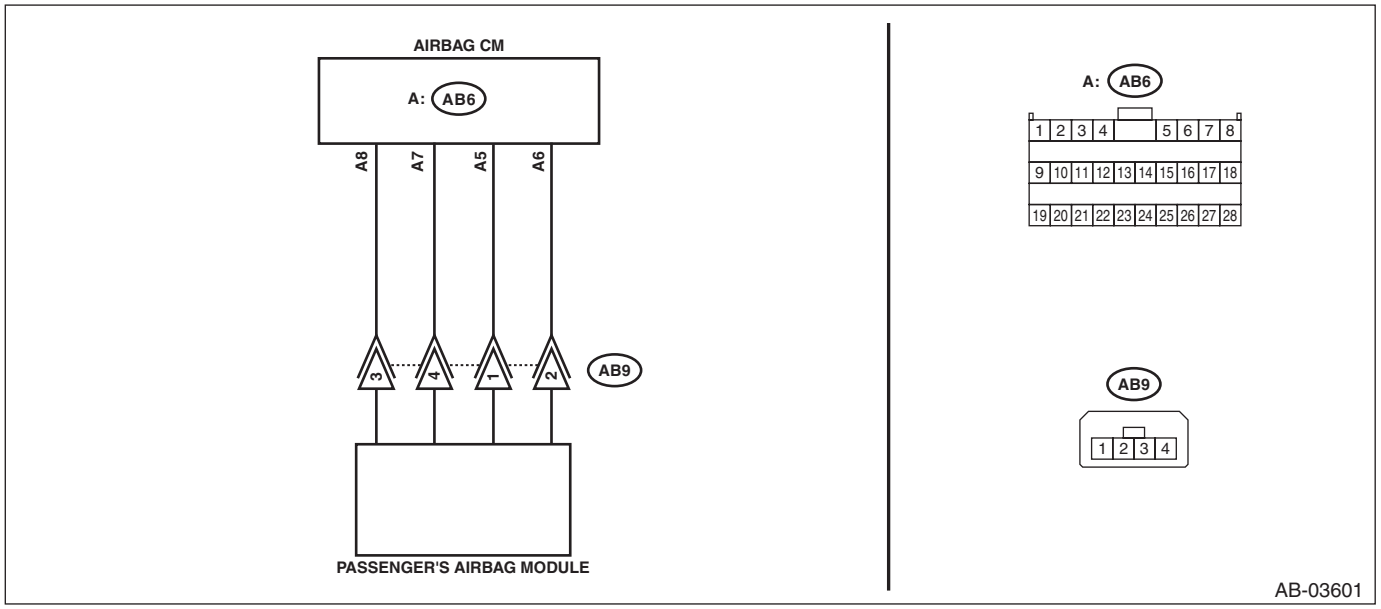

Step		Check	Yes	No
1	**CHECK POOR CONTACT OF CONNECTORS.** Check for poor contact of the connectors between the airbag control module and the passenger's airbag module.	Is there poor contact?	Replace the airbag main harness along with body harness.	Go to step **2**.

	Step	Check	Yes	No
2	**CHECK AIRBAG MAIN HARNESS (PASSENGER'S AIRBAG HARNESS) (SHORTED BETWEEN LINES).** 1) Turn the ignition switch to OFF, disconnect the battery ground cable, and wait for 60 seconds or more. 2) Disconnect the connectors (AB7) and (AB2). 3) Disconnect the passenger's airbag module connector (AB9). 4) Disconnect the connectors (AB6, AB17, AB18) from airbag control module. 5) Connect the connector (1AD) in test harness AD AV to the connectors (AB6, AB17, AB18). 6) Connect the connector (2AD) in test harness AD AV and the connector (1AG) in test harness AG. 7) Using a probe, measure the resistance between the terminals of connector (AB9). <Ref. to AB(diag)-19, HOW TO USE PROBE, PREPARATION TOOL, General Description.> **CAUTION:** **When measuring the resistance, make sure that the probe is inserted from the back side (harness side) of the connector. Also, do not insert the probe forcibly.** ***Connector & terminal*** ***(AB9) No. 1 — (AB9) No. 2:***	Is the resistance 1 MΩ or more?	Go to step **3**.	Replace the airbag main harness along with body harness.
3	**CHECK AIRBAG CONTROL MODULE.** 1) Disconnect the test harness AD AV from the connectors (AB6, AB17, AB18). 2) Connect the connector other than passenger's airbag module connector (AB9). 3) Connect the battery ground terminal and turn the ignition switch to ON. 4) Clear the memory. <Ref. to AB(diag)-32, Clear Memory Mode.> 5) Perform the Inspection Mode. <Ref. to AB(diag)-31, Inspection Mode.> 6) Read the DTC. (Current malfunction) <Ref. to AB(diag)-30, Read Diagnostic Trouble Code (DTC).>	Is DTC B1805 displayed?	Replace the airbag control module. <Ref. to AB-50, REMOVAL, Airbag Control Module.>	Go to step **4**.
4	**CHECK PASSENGER'S AIRBAG MODULE.** 1) Turn the ignition switch to OFF, disconnect the battery ground cable, and wait for 60 seconds or more. 2) Connect the passenger's airbag module connector (AB9). 3) Connect the battery ground terminal and turn the ignition switch to ON. 4) Clear the memory. <Ref. to AB(diag)-32, Clear Memory Mode.> 5) Perform the Inspection Mode. <Ref. to AB(diag)-31, Inspection Mode.> 6) Read the DTC. (Current malfunction) <Ref. to AB(diag)-30, Read Diagnostic Trouble Code (DTC).>	Is DTC B1805 displayed?	Replace the passenger's airbag module. <Ref. to AB-34, REMOVAL, Passenger's Airbag Module.>	Go to step **5**.

	Step	Check	Yes	No
5	**CHECK FOR ANY OTHER DTC ON DISPLAY.** Read the DTC. (Current malfunction) <Ref. to AB(diag)-30, Read Diagnostic Trouble Code (DTC).>	Is any other DTC displayed?	Check DTC using "List of Diagnostic Trouble Code (DTC)". <Ref. to AB(diag)-38, List of Diagnostic Trouble Code (DTC).>	Finish the diagnosis.

CT:DTC B1806 OPEN IN PASSENGER'S AIRBAG

DIAGNOSIS START CONDITION:
Ignition voltage is 10 V to 16 V.
DTC DETECTING CONDITION:
Open circuit failure (open circuit in main harness, open circuit in passenger's airbag, open circuit in airbag CM internal circuit, connector connection failure)

CAUTION:
Before performing diagnosis, refer to "CAUTION" in "General Description". <Ref. to AB(diag)-4, CAUTION, General Description.>

NOTE:
Prior to starting work, prepare two AIRBAG RESISTORs (98299PA040).
WIRING DIAGRAM:
Airbag system <Ref. to WI-89, WIRING DIAGRAM, Airbag System.>

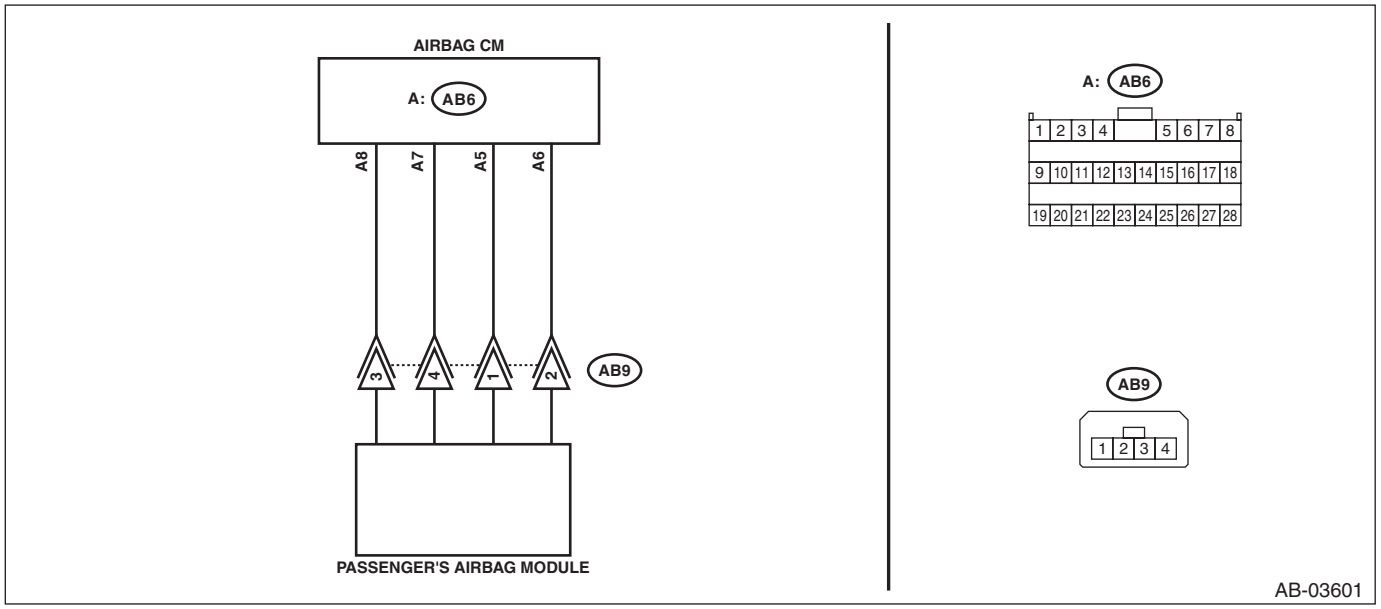

Step		Check	Yes	No
1	**CHECK POOR CONTACT OF CONNECTORS.** Check for poor contact of the connectors between the airbag control module and the passenger's airbag module.	Is there poor contact?	Replace the airbag main harness.	Go to step **2**.

	Step	Check	Yes	No
2	**CHECK AIRBAG MAIN HARNESS (PASSENGER'S AIRBAG HARNESS) (OPEN CIRCUIT).** 1) Turn the ignition switch to OFF, disconnect the battery ground cable, and wait for 60 seconds or more. 2) Disconnect the connectors (AB7) and (AB2). 3) Disconnect the passenger's airbag module connector (AB9). 4) Disconnect the connectors (AB6, AB17, AB18) from airbag control module. 5) Using a probe, measure the resistance between the terminals of connector (AB9). <Ref. to AB(diag)-19, HOW TO USE PROBE, PREPARATION TOOL, General Description.> **CAUTION:** **When measuring the resistance, make sure that the probe is inserted from the back side (harness side) of the connector. Also, do not insert the probe forcibly.** ***Connector & terminal*** ***(AB9) No. 1 — (AB9) No. 2:***	Is the resistance less than 10 Ω?	Go to step **3**.	Replace the airbag main harness along with body harness.
3	**CHECK AIRBAG CONTROL MODULE.** 1) Connect the connector other than passenger's airbag module connector (AB9). 2) Using a probe, short the terminals No. 1 and No. 2 of connector (AB9). <Ref. to AB(diag)-19, HOW TO USE PROBE, PREPARATION TOOL, General Description.> **CAUTION:** **When shorting the terminals, make sure that the probe is inserted from the back side (harness side) of the connector. Also, do not insert the probe forcibly.** ***Connector & terminal*** ***(AB9) No. 1 — (AB9) No. 2:*** 3) Connect the battery ground terminal and turn the ignition switch to ON. 4) Clear the memory. <Ref. to AB(diag)-32, Clear Memory Mode.> 5) Perform the Inspection Mode. <Ref. to AB(diag)-31, Inspection Mode.> 6) Read the DTC. (Current malfunction) <Ref. to AB(diag)-30, Read Diagnostic Trouble Code (DTC).>	Is DTC B1805 displayed?	Go to step **4**.	Replace the airbag control module. <Ref. to AB-50, REMOVAL, Airbag Control Module.>

	Step	Check	Yes	No
4	**CHECK PASSENGER'S AIRBAG MODULE.** 1) Turn the ignition switch to OFF, disconnect the battery ground cable, and wait for 60 seconds or more. 2) Connect the passenger's airbag module connector (AB9). 3) Connect the battery ground terminal and turn the ignition switch to ON. 4) Clear the memory. <Ref. to AB(diag)-32, Clear Memory Mode.> 5) Perform the Inspection Mode. <Ref. to AB(diag)-31, Inspection Mode.> 6) Read the DTC. (Current malfunction) <Ref. to AB(diag)-30, Read Diagnostic Trouble Code (DTC).>	Is DTC B1806 displayed?	Replace the passenger's airbag module. <Ref. to AB-34, REMOVAL, Passenger's Airbag Module.>	Go to step **5**.
5	**CHECK FOR ANY OTHER DTC ON DISPLAY.** Read the DTC. (Current malfunction) <Ref. to AB(diag)-30, Read Diagnostic Trouble Code (DTC).>	Is any other DTC displayed?	Check DTC using "List of Diagnostic Trouble Code (DTC)". <Ref. to AB(diag)-38, List of Diagnostic Trouble Code (DTC).>	Finish the diagnosis.

CU:DTC B1807 SHORT IN PASSENGER'S AIRBAG (TO GROUND)

DIAGNOSIS START CONDITION:
Ignition voltage is 10 V to 16 V.
DTC DETECTING CONDITION:
GND short circuit failure (shorted to ground in main harness, shorted to ground in passenger's airbag, shorted to ground in airbag CM internal circuit)

CAUTION:
Before performing diagnosis, refer to "CAUTION" in "General Description". <Ref. to AB(diag)-4, CAUTION, General Description.>

NOTE:
Prior to starting work, prepare two AIRBAG RESISTORs (98299PA040).
WIRING DIAGRAM:
Airbag system <Ref. to WI-89, WIRING DIAGRAM, Airbag System.>

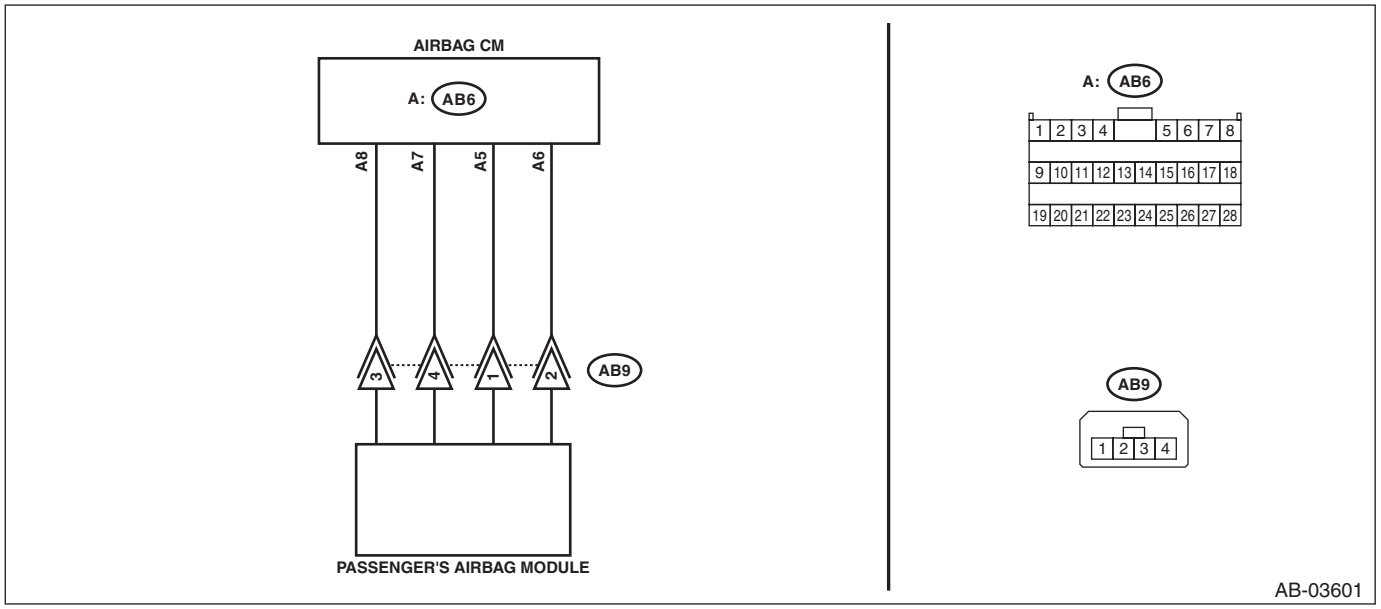

Step		Check	Yes	No
1	**CHECK POOR CONTACT OF CONNECTORS.** Check for poor contact of the connectors between the airbag control module and the passenger's airbag module.	Is there poor contact?	Replace the airbag main harness.	Go to step **2**.

	Step	Check	Yes	No
2	**CHECK AIRBAG MAIN HARNESS (PASSENGER'S AIRBAG HARNESS) (SHORTED TO GROUND).** 1) Turn the ignition switch to OFF, disconnect the battery ground cable, and wait for 60 seconds or more. 2) Disconnect the connectors (AB7) and (AB2). 3) Disconnect the passenger's airbag module connector (AB9). 4) Disconnect the connectors (AB6, AB17, AB18) from airbag control module. 5) Using a probe, measure the resistance between the connector (AB9) and chassis ground. <Ref. to AB(diag)-19, HOW TO USE PROBE, PREPARATION TOOL, General Description.> **CAUTION:** **When measuring the resistance, make sure that the probe is inserted from the back side (harness side) of the connector. Also, do not insert the probe forcibly.** ***Connector & terminal*** ***(AB9) No. 1 — Chassis ground:*** ***(AB9) No. 2 — Chassis ground:***	Is the resistance 1 MΩ or more?	Go to step **3**.	Replace the airbag main harness along with body harness.
3	**CHECK AIRBAG CONTROL MODULE.** 1) Connect the connector other than passenger's airbag module connector (AB9). 2) Using a probe, short the terminals No. 1 and No. 2 of connector (AB9). <Ref. to AB(diag)-19, HOW TO USE PROBE, PREPARATION TOOL, General Description.> **CAUTION:** **When shorting the terminals, make sure that the probe is inserted from the back side (harness side) of the connector. Also, do not insert the probe forcibly.** ***Connector & terminal*** ***(AB9) No. 1 — (AB9) No. 2:*** 3) Connect the battery ground terminal and turn the ignition switch to ON. 4) Clear the memory. <Ref. to AB(diag)-32, Clear Memory Mode.> 5) Perform the Inspection Mode. <Ref. to AB(diag)-31, Inspection Mode.> 6) Read the DTC. (Current malfunction) <Ref. to AB(diag)-30, Read Diagnostic Trouble Code (DTC).>	Is DTC B1805 displayed?	Go to step **4**.	Replace the airbag control module. <Ref. to AB-50, REMOVAL, Airbag Control Module.>

	Step	Check	Yes	No
4	**CHECK PASSENGER'S AIRBAG MODULE.** 1) Turn the ignition switch to OFF, disconnect the battery ground cable, and wait for 60 seconds or more. 2) Connect the passenger's airbag module connector (AB9). 3) Connect the battery ground terminal and turn the ignition switch to ON. 4) Clear the memory. <Ref. to AB(diag)-32, Clear Memory Mode.> 5) Perform the Inspection Mode. <Ref. to AB(diag)-31, Inspection Mode.> 6) Read the DTC. (Current malfunction) <Ref. to AB(diag)-30, Read Diagnostic Trouble Code (DTC).>	Is DTC B1807 displayed?	Replace the passenger's airbag module. <Ref. to AB-34, REMOVAL, Passenger's Airbag Module.>	Go to step **5**.
5	**CHECK FOR ANY OTHER DTC ON DISPLAY.** Read the DTC. (Current malfunction) <Ref. to AB(diag)-30, Read Diagnostic Trouble Code (DTC).>	Is any other DTC displayed?	Check DTC using "List of Diagnostic Trouble Code (DTC)". <Ref. to AB(diag)-38, List of Diagnostic Trouble Code (DTC).>	Finish the diagnosis.

CV:DTC B1808 SHORT IN PASSENGER'S AIRBAG (TO +B)

DIAGNOSIS START CONDITION:
Ignition voltage is 10 V to 16 V.
DTC DETECTING CONDITION:
Short circuit failure in power supply (shorted in main harness power supply, shorted in passenger's airbag power supply, shorted in airbag CM internal circuit power supply)

CAUTION:
Before performing diagnosis, refer to "CAUTION" in "General Description". <Ref. to AB(diag)-4, CAUTION, General Description.>

NOTE:
Prior to starting work, prepare two AIRBAG RESISTORs (98299PA040).
WIRING DIAGRAM:
Airbag system <Ref. to WI-89, WIRING DIAGRAM, Airbag System.>

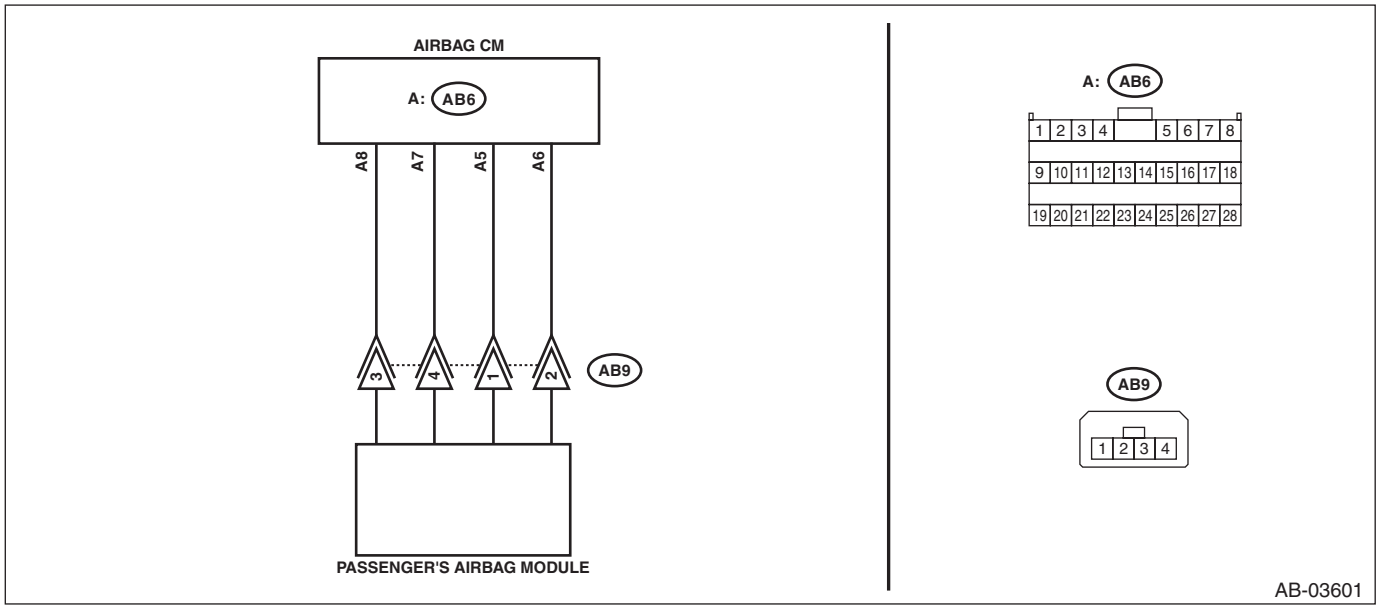

Step		Check	Yes	No
1	**CHECK POOR CONTACT OF CONNECTORS.** Check for poor contact of the connectors between the airbag control module and the passenger's airbag module.	Is there poor contact?	Replace the airbag main harness.	Go to step **2**.

	Step	Check	Yes	No
2	**CHECK AIRBAG MAIN HARNESS (PASSENGER'S AIRBAG HARNESS) (SHORTED TO POWER SUPPLY).** 1) Turn the ignition switch to OFF, disconnect the battery ground cable, and wait for 60 seconds or more. 2) Disconnect the connectors (AB7) and (AB2). 3) Disconnect the passenger's airbag module connector (AB9). 4) Disconnect the connectors (AB6, AB17, AB18) from airbag control module. 5) Using a probe, measure the voltage between the connector (AB9) and chassis ground. <Ref. to AB(diag)-19, HOW TO USE PROBE, PREPARATION TOOL, General Description.> **CAUTION:** **When measuring the voltage, make sure that the probe is inserted from the back side (harness side) of the connector. Also, do not insert the probe forcibly.** ***Connector & terminal*** ***(AB9) No. 1 (+) — Chassis ground (–):*** ***(AB9) No. 2 (+) — Chassis ground (–):***	Is the voltage less than 1 V?	Go to step **3**.	Replace the airbag main harness along with body harness.
3	**CHECK AIRBAG CONTROL MODULE.** 1) Connect the connector other than passenger's airbag module connector (AB9). 2) Using a probe, short the terminals No. 1 and No. 2 of connector (AB9). <Ref. to AB(diag)-19, HOW TO USE PROBE, PREPARATION TOOL, General Description.> **CAUTION:** **When shorting the terminals, make sure that the probe is inserted from the back side (harness side) of the connector. Also, do not insert the probe forcibly.** ***Connector & terminal*** ***(AB9) No. 1 — (AB9) No. 2:*** 3) Connect the battery ground terminal and turn the ignition switch to ON. 4) Clear the memory. <Ref. to AB(diag)-32, Clear Memory Mode.> 5) Perform the Inspection Mode. <Ref. to AB(diag)-31, Inspection Mode.> 6) Read the DTC. (Current malfunction) <Ref. to AB(diag)-30, Read Diagnostic Trouble Code (DTC).>	Is DTC B1805 displayed?	Go to step **4**.	Replace the airbag control module. <Ref. to AB-50, REMOVAL, Airbag Control Module.>

	Step	Check	Yes	No
4	**CHECK PASSENGER'S AIRBAG MODULE.** 1) Turn the ignition switch to OFF, disconnect the battery ground cable, and wait for 60 seconds or more. 2) Connect the passenger's airbag module connector (AB9). 3) Connect the battery ground terminal and turn the ignition switch to ON. 4) Clear the memory. <Ref. to AB(diag)-32, Clear Memory Mode.> 5) Perform the Inspection Mode. <Ref. to AB(diag)-31, Inspection Mode.> 6) Read the DTC. (Current malfunction) <Ref. to AB(diag)-30, Read Diagnostic Trouble Code (DTC).>	Is DTC B1808 displayed?	Replace the passenger's airbag module. <Ref. to AB-34, REMOVAL, Passenger's Airbag Module.>	Go to step **5**.
5	**CHECK FOR ANY OTHER DTC ON DISPLAY.** Read the DTC. (Current malfunction) <Ref. to AB(diag)-30, Read Diagnostic Trouble Code (DTC).>	Is any other DTC displayed?	Check DTC using "List of Diagnostic Trouble Code (DTC)". <Ref. to AB(diag)-38, List of Diagnostic Trouble Code (DTC).>	Finish the diagnosis.

CW:DTC B1809 SHORT IN PASSENGER'S AIRBAG

DIAGNOSIS START CONDITION:
Ignition voltage is 10 V to 16 V.
DTC DETECTING CONDITION:
Short circuit between passenger's airbag circuit and other circuit

CAUTION:
Before performing diagnosis, refer to "CAUTION" in "General Description". <Ref. to AB(diag)-4, CAUTION, General Description.>

NOTE:
Prior to starting work, prepare two AIRBAG RESISTORs (98299PA040).
WIRING DIAGRAM:
Airbag system <Ref. to WI-89, WIRING DIAGRAM, Airbag System.>

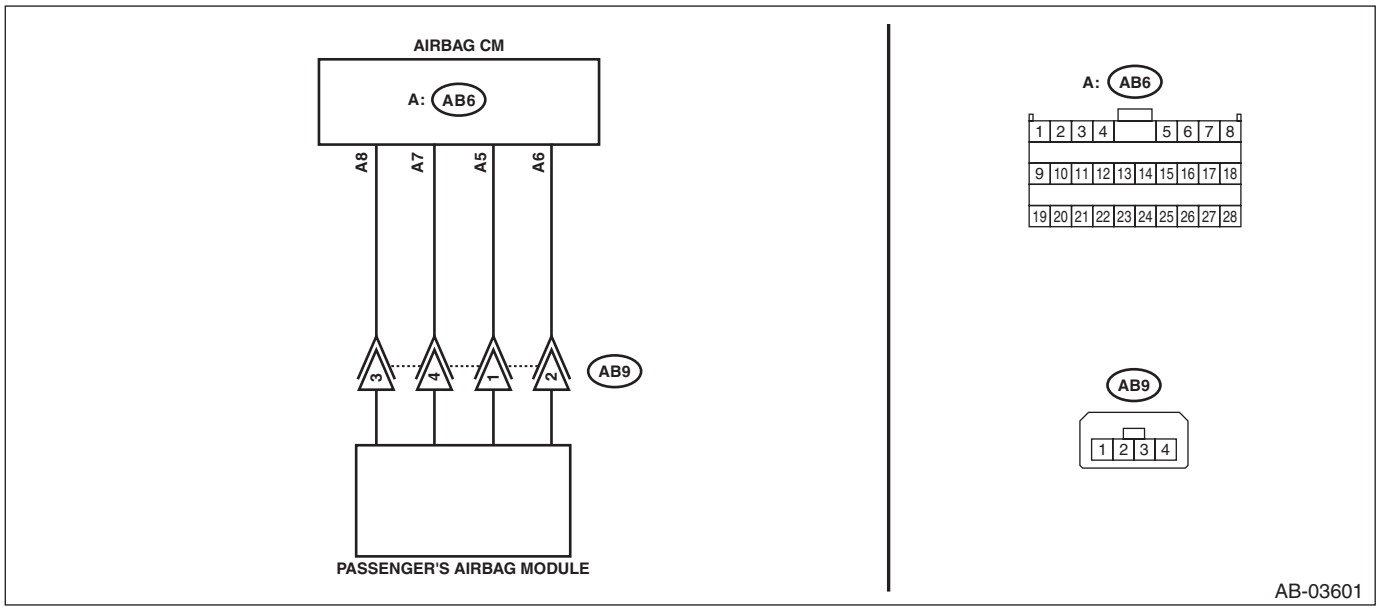

Step		Check	Yes	No
1	**CHECK POOR CONTACT OF CONNECTORS.** Check for poor contact of the connectors between the airbag control module and the passenger's airbag module.	Is there poor contact?	Replace the airbag main harness.	Go to step **2**.

	Step	Check	Yes	No
2	**CHECK AIRBAG MAIN HARNESS (PASSENGER'S AIRBAG HARNESS) (SHORTED BETWEEN LINES).** 1) Turn the ignition switch to OFF, disconnect the battery ground cable, and wait for 60 seconds or more. 2) Disconnect the connectors (AB7) and (AB2). 3) Disconnect the passenger's airbag module connector (AB9). 4) Disconnect the connectors (AB6, AB17, AB18) from airbag control module. 5) Connect the connector (1AD) in test harness AD AV to the connectors (AB6, AB17, AB18). 6) Connect the connector (2AD) in test harness AD AV and the connector (1AG) in test harness AG. 7) Using a probe, measure the resistance between the connector (AB9) and terminals of all connectors in test harness AG. <Ref. to AB(diag)-19, HOW TO USE PROBE, PREPARATION TOOL, General Description.> **CAUTION:** **When measuring the resistance, make sure that the probe is inserted from the back side (harness side) of the connector. Also, do not insert the probe forcibly.** ***Connector & terminal*** ***(AB9) No. 1 — All terminals in test harness AG (except for (3AG) No. 9):*** ***(AB9) No. 2 — All terminals in test harness AG (except for (3AG) No. 7):***	Is the resistance 1 MΩ or more?	Go to step **3**.	Replace the airbag main harness along with body harness.
3	**CHECK AIRBAG CONTROL MODULE.** 1) Connect the connector other than passenger's airbag module connector (AB9). 2) Using a probe, short the terminals No. 1 and No. 2 of connector (AB9). <Ref. to AB(diag)-19, HOW TO USE PROBE, PREPARATION TOOL, General Description.> **CAUTION:** **When shorting the terminals, make sure that the probe is inserted from the back side (harness side) of the connector. Also, do not insert the probe forcibly.** ***Connector & terminal*** ***(AB9) No. 1 — (AB9) No. 2:*** 3) Connect the battery ground terminal and turn the ignition switch to ON. 4) Clear the memory. <Ref. to AB(diag)-32, Clear Memory Mode.> 5) Perform the Inspection Mode. <Ref. to AB(diag)-31, Inspection Mode.> 6) Read the DTC. (Current malfunction) <Ref. to AB(diag)-30, Read Diagnostic Trouble Code (DTC).>	Is DTC B1805 displayed?	Go to step **4**.	Replace the airbag control module. <Ref. to AB-50, REMOVAL, Airbag Control Module.>

	Step	Check	Yes	No
4	**CHECK PASSENGER'S AIRBAG MODULE.** 1) Turn the ignition switch to OFF, disconnect the battery ground cable, and wait for 60 seconds or more. 2) Connect the passenger's airbag module connector (AB9). 3) Connect the battery ground terminal and turn the ignition switch to ON. 4) Clear the memory. <Ref. to AB(diag)-32, Clear Memory Mode.> 5) Perform the Inspection Mode. <Ref. to AB(diag)-31, Inspection Mode.> 6) Read the DTC. (Current malfunction) <Ref. to AB(diag)-30, Read Diagnostic Trouble Code (DTC).>	Is DTC B1809 displayed?	Replace the passenger's airbag module. <Ref. to AB-34, REMOVAL, Passenger's Airbag Module.>	Go to step **5**.
5	**CHECK FOR ANY OTHER DTC ON DISPLAY.** Read the DTC. (Current malfunction) <Ref. to AB(diag)-30, Read Diagnostic Trouble Code (DTC).>	Is any other DTC displayed?	Check DTC using "List of Diagnostic Trouble Code (DTC)". <Ref. to AB(diag)-38, List of Diagnostic Trouble Code (DTC).>	Finish the diagnosis.

CX:DTC B1810 SHORT IN DRIVER'S AIRBAG DUAL STAGE - 2ND STEP

DIAGNOSIS START CONDITION:
Ignition voltage is 10 V to 16 V.
DTC DETECTING CONDITION:
Open circuit failure (open circuit in main harness, open circuit in roll connector, open circuit in driver's airbag, open circuit in airbag CM internal circuit, connector connection failure)

CAUTION:
Before performing diagnosis, refer to "CAUTION" in "General Description". <Ref. to AB(diag)-4, CAUTION, General Description.>

NOTE:
Prior to starting work, prepare two AIRBAG RESISTORs (98299PA040).
WIRING DIAGRAM:
Airbag system <Ref. to WI-89, WIRING DIAGRAM, Airbag System.>

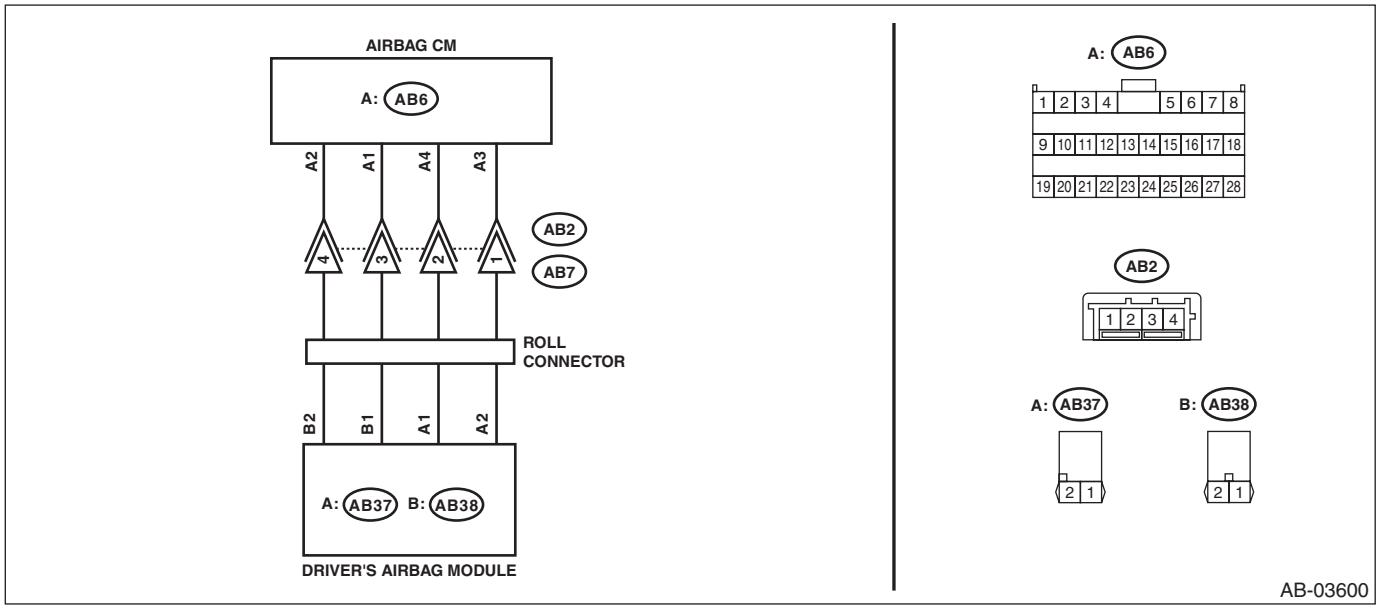

Step		Check	Yes	No
1	**CHECK POOR CONTACT OF CONNECTORS.** Check for poor contact of the connectors between the airbag control module and the driver's airbag module.	Is there poor contact?	Replace the airbag harness.	Go to step **2**.
2	**CHECK DRIVER'S AIRBAG MODULE.** 1) Turn the ignition switch to OFF, disconnect the battery ground cable, and wait for 60 seconds or more. 2) Remove the driver's airbag module. 3) Connect the connector (1N) in the test harness N to the connector (AB38). 4) Connect the airbag resistor to the connector (2N) of test harness N. 5) Connect the connector (1Q) in the test harness Q to connector (AB37). 6) Connect the airbag resistor to the connector (2Q) in the test harness Q. 7) Connect the battery ground terminal and turn the ignition switch to ON.	Does the airbag warning light illuminate for six seconds and go off?	Replace the driver's airbag module. <Ref. to AB-32, Driver's Airbag Module.>	Go to step **3**.

	Step	Check	Yes	No
3	**CHECK ROLL CONNECTOR AND AIRBAG MAIN HARNESS (DRIVER'S AIRBAG HARNESS) (SHORTED BETWEEN LINES).** 1) Turn the ignition switch to OFF, disconnect the battery ground cable, and wait for 60 seconds or more. 2) Remove the console front panel and disconnect the connector (AB9). 3) Disconnect the airbag resistor from the connector (2N) in test harness N and from the connector (2Q) in test harness Q. 4) Disconnect the connectors (AB6, AB17, AB18) from airbag control module. 5) Connect the connector (1AD) in test harness AD AV to the connectors (AB6, AB17, AB18). 6) Connect the connector (2AD) in test harness AD AV and the connector (1AG) in test harness AG. 7) Measure the resistance between connector (2N) terminals in test harness N. ***Connector & terminal*** ***(2N) No. 1 — (2N) No. 2:***	Is the resistance 1 MΩ or more?	Go to step **5**.	Go to step **4**.
4	**CHECK AIRBAG MAIN HARNESS (DRIVER'S AIRBAG HARNESS).** 1) Remove the instrument panel lower cover and column cover, and disconnect the connector (AB7) from (AB2). 2) Disconnect the test harness Q from connector (AB37). 3) Measure the resistance between connector (3AG) terminals in test harness AG. ***Connector & terminal*** ***(3AG) No. 2 — (3AG) No. 4:***	Is the resistance 1 MΩ or more?	Replace the roll connector. <Ref. to AB-60, Roll Connector.>	Replace the airbag main harness along with body harness.
5	**CHECK AIRBAG CONTROL MODULE.** 1) Connect all connectors. 2) Clear the memory. <Ref. to AB(diag)-32, Clear Memory Mode.> 3) Perform the Inspection Mode. <Ref. to AB(diag)-31, Inspection Mode.> 4) Read the DTC. (Current malfunction) <Ref. to AB(diag)-30, Read Diagnostic Trouble Code (DTC).>	Is DTC B1810 displayed?	Replace the airbag control module. <Ref. to AB-50, Airbag Control Module.>	Go to step **6**.
6	**CHECK FOR ANY OTHER DTC ON DISPLAY.** Read the DTC. (Current malfunction) <Ref. to AB(diag)-30, Read Diagnostic Trouble Code (DTC).>	Is any other DTC displayed?	Check DTC using "List of Diagnostic Trouble Code (DTC)". <Ref. to AB(diag)-38, List of Diagnostic Trouble Code (DTC).>	Finish the diagnosis.

CY:DTC B1811 OPEN IN DRIVER'S AIRBAG DUAL STAGE - 2ND STEP

DIAGNOSIS START CONDITION:
Ignition voltage is 10 V to 16 V.
DTC DETECTING CONDITION:
Open circuit failure (open circuit in main harness, open circuit in roll connector, open circuit in driver's airbag, open circuit in airbag CM internal circuit, connector connection failure)

CAUTION:
Before performing diagnosis, refer to "CAUTION" in "General Description". <Ref. to AB(diag)-4, CAUTION, General Description.>

NOTE:
Prior to starting work, prepare two AIRBAG RESISTORs (98299PA040).
WIRING DIAGRAM:
Airbag system <Ref. to WI-89, WIRING DIAGRAM, Airbag System.>

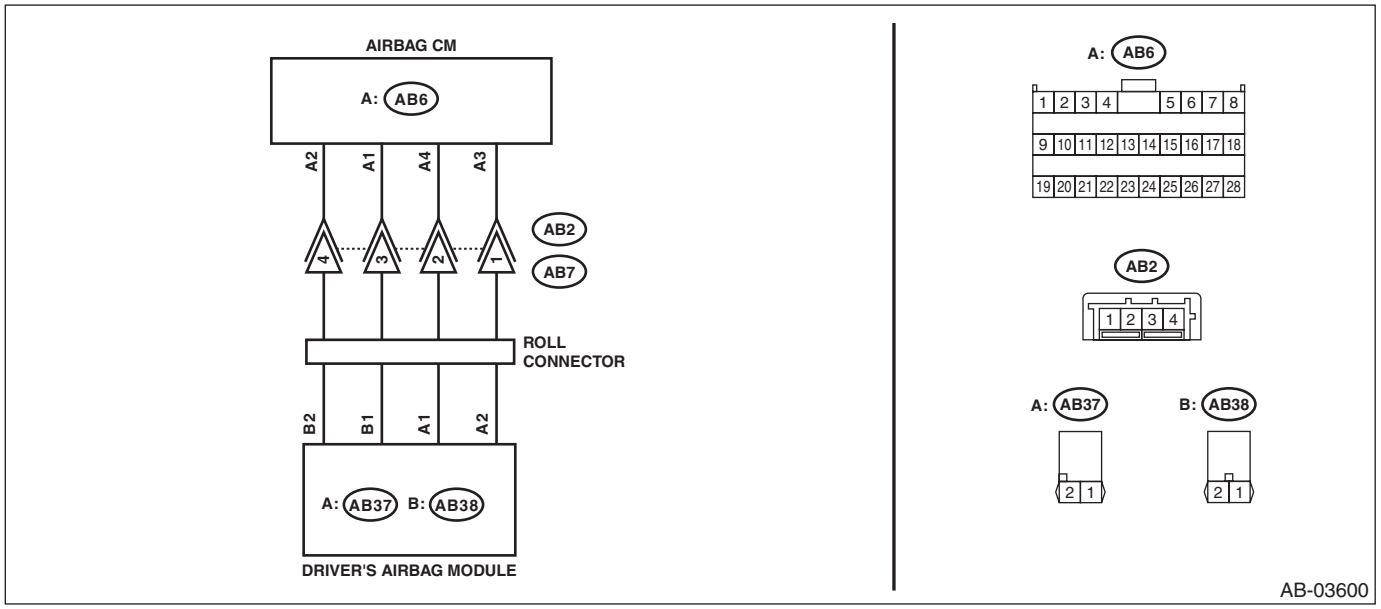

Step		Check	Yes	No
1	**CHECK POOR CONTACT OF CONNECTORS.** Check for poor contact of the connectors between the airbag control module and the driver's airbag module.	Is there poor contact?	Replace the airbag harness.	Go to step **2**.
2	**CHECK DRIVER'S AIRBAG MODULE.** 1) Turn the ignition switch to OFF, disconnect the battery ground cable, and wait for 60 seconds or more. 2) Remove the driver's airbag module. 3) Connect the connector (1N) in the test harness N to the connector (AB38). 4) Connect the airbag resistor to the connector (2N) of test harness N. 5) Connect the connector (1Q) in the test harness Q to connector (AB37). 6) Connect the airbag resistor to the connector (2Q) in the test harness Q. 7) Connect the battery ground terminal and turn the ignition switch to ON.	Does the airbag warning light illuminate for six seconds and go off?	Replace the driver's airbag module. <Ref. to AB-32, Driver's Airbag Module.>	Go to step **3**.

	Step	Check	Yes	No
3	**CHECK ROLL CONNECTOR AND AIRBAG MAIN HARNESS (DRIVER'S AIRBAG HARNESS).** 1) Turn the ignition switch to OFF, disconnect the battery ground cable, and wait for 60 seconds or more. 2) Remove the console front panel and disconnect the connector (AB9). 3) Disconnect the airbag resistor from the connector (2N) in test harness N. 4) Disconnect the airbag resistor from the connector (2Q) of test harness Q. 5) Disconnect the connectors (AB6, AB17, AB18) from airbag control module. 6) Measure the resistance between connector (2N) terminals in test harness N. ***Connector & terminal*** ***(2N) No. 1 — (2N) No. 2:***	Is the resistance less than 10 Ω?	Go to step **5**.	Go to step **4**.
4	**CHECK ROLL CONNECTOR.** 1) Remove the instrument panel lower cover and column cover, and disconnect the connector (AB7) from (AB2). 2) Measure the resistance between connector (2N) terminals in test harness N. ***Connector & terminal*** ***(2N) No. 1 — (2N) No. 2:***	Is the resistance less than 10 Ω?	Replace the airbag main harness along with body harness.	Replace the roll connector. <Ref. to AB-60, Roll Connector.>
5	**CHECK AIRBAG CONTROL MODULE.** 1) Connect all connectors. 2) Clear the memory. <Ref. to AB(diag)-32, Clear Memory Mode.> 3) Perform the Inspection Mode. <Ref. to AB(diag)-31, Inspection Mode.> 4) Read the DTC. (Current malfunction) <Ref. to AB(diag)-30, Read Diagnostic Trouble Code (DTC).>	Is DTC B1811 displayed?	Replace the airbag control module. <Ref. to AB-50, Airbag Control Module.>	Go to step **6**.
6	**CHECK FOR ANY OTHER DTC ON DISPLAY.** Read the DTC. (Current malfunction) <Ref. to AB(diag)-30, Read Diagnostic Trouble Code (DTC).>	Is any other DTC displayed?	Check DTC using "List of Diagnostic Trouble Code (DTC)". <Ref. to AB(diag)-38, List of Diagnostic Trouble Code (DTC).>	Finish the diagnosis.

CZ:DTC B1812 SHORT IN DRIVER'S AIRBAG DUAL STAGE - 2ND STEP (TO GROUND)

DIAGNOSIS START CONDITION:
Ignition voltage is 10 V to 16 V.
DTC DETECTING CONDITION:
GND short circuit failure (shorted to ground in main harness, shorted to ground in roll connector, shorted to ground in driver's airbag, shorted to ground in airbag CM internal circuit)

CAUTION:
Before performing diagnosis, refer to "CAUTION" in "General Description". <Ref. to AB(diag)-4, CAUTION, General Description.>

NOTE:
Prior to starting work, prepare two AIRBAG RESISTORs (98299PA040).
WIRING DIAGRAM:
Airbag system <Ref. to WI-89, WIRING DIAGRAM, Airbag System.>

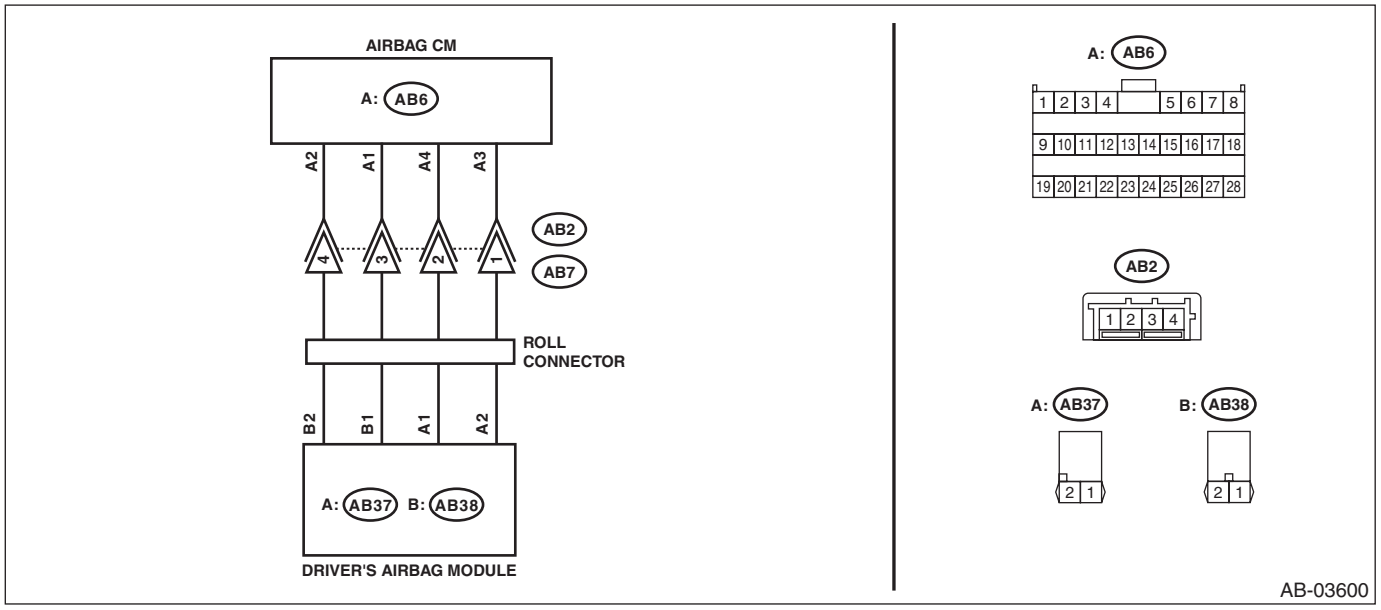

	Step	Check	Yes	No
1	**CHECK POOR CONTACT OF CONNECTORS.** Check for poor contact of the connectors between the airbag control module and the driver's airbag module.	Is there poor contact?	Replace the airbag harness.	Go to step **2**.
2	**CHECK DRIVER'S AIRBAG MODULE.** 1) Turn the ignition switch to OFF, disconnect the battery ground cable, and wait for 60 seconds or more. 2) Remove the driver's airbag module. 3) Connect the connector (1N) in the test harness N to the connector (AB38). 4) Connect the airbag resistor to the connector (2N) of test harness N. 5) Connect the connector (1Q) in the test harness Q to connector (AB37). 6) Connect the airbag resistor to the connector (2Q) in the test harness Q. 7) Connect the battery ground terminal and turn the ignition switch to ON.	Does the airbag warning light illuminate for six seconds and go off?	Replace the driver's airbag module. <Ref. to AB-32, Driver's Airbag Module.>	Go to step **3**.

	Step	Check	Yes	No
3	**CHECK ROLL CONNECTOR (SHORTED TO GROUND).** 1) Turn the ignition switch to OFF, disconnect the battery ground cable, and wait for 60 seconds or more. 2) Remove the instrument panel lower cover and column cover, and disconnect the connector (AB7) from (AB2). 3) Disconnect the airbag resistor from the connector (2N) in test harness N and from the connector (2Q) in test harness Q. 4) Measure the resistance between connector (2N) in the test harness N and chassis ground. ***Connector & terminal*** ***(2N) No. 1 — Chassis ground:*** ***(2N) No. 2 — Chassis ground:***	Is the resistance 1 MΩ or more?	Go to step **4**.	Replace the roll connector. <Ref. to AB-60, Roll Connector.>
4	**CHECK AIRBAG MAIN HARNESS (DRIVER'S AIRBAG HARNESS) (SHORTED TO GROUND).** 1) Disconnect the test harness N from connector (AB38). 2) Disconnect the test harness Q from connector (AB37). 3) Remove the console front panel and disconnect the connector (AB9). 4) Disconnect the connectors (AB6, AB17, AB18) from airbag control module. 5) Connect the connector (1AD) in test harness AD AV to the connectors (AB6, AB17, AB18). 6) Connect the connector (2AD) in test harness AD AV and the connector (1AG) in test harness AG. 7) Measure the resistance between connector (3AG) in the test harness AG and chassis ground. ***Connector & terminal*** ***(3AG) No. 2 — Chassis ground:*** ***(3AG) No. 4 — Chassis ground:***	Is the resistance 1 MΩ or more?	Go to step **5**.	Replace the airbag main harness along with body harness.
5	**CHECK AIRBAG CONTROL MODULE.** 1) Connect all connectors. 2) Clear the memory. <Ref. to AB(diag)-32, Clear Memory Mode.> 3) Perform the Inspection Mode. <Ref. to AB(diag)-31, Inspection Mode.> 4) Read the DTC. (Current malfunction) <Ref. to AB(diag)-30, Read Diagnostic Trouble Code (DTC).>	Is DTC B1812 displayed?	Replace the airbag control module. <Ref. to AB-50, Airbag Control Module.>	Go to step **6**.
6	**CHECK FOR ANY OTHER DTC ON DISPLAY.** Read the DTC. (Current malfunction) <Ref. to AB(diag)-30, Read Diagnostic Trouble Code (DTC).>	Is any other DTC displayed?	Check DTC using "List of Diagnostic Trouble Code (DTC)". <Ref. to AB(diag)-38, List of Diagnostic Trouble Code (DTC).>	Finish the diagnosis.

DA:DTC B1813 SHORT IN DRIVER'S AIRBAG DUAL STAGE - 2ND STEP CIRCUIT (TO +B)

DIAGNOSIS START CONDITION:
Ignition voltage is 10 V to 16 V.
DTC DETECTING CONDITION:
Short circuit failure in power supply (shorted in main harness power supply, shorted in roll connector power supply, shorted in driver's airbag power supply, shorted in airbag CM internal circuit power supply)

CAUTION:
Before performing diagnosis, refer to "CAUTION" in "General Description". <Ref. to AB(diag)-4, CAUTION, General Description.>

NOTE:
Prior to starting work, prepare two AIRBAG RESISTORs (98299PA040).
WIRING DIAGRAM:
Airbag system <Ref. to WI-89, WIRING DIAGRAM, Airbag System.>

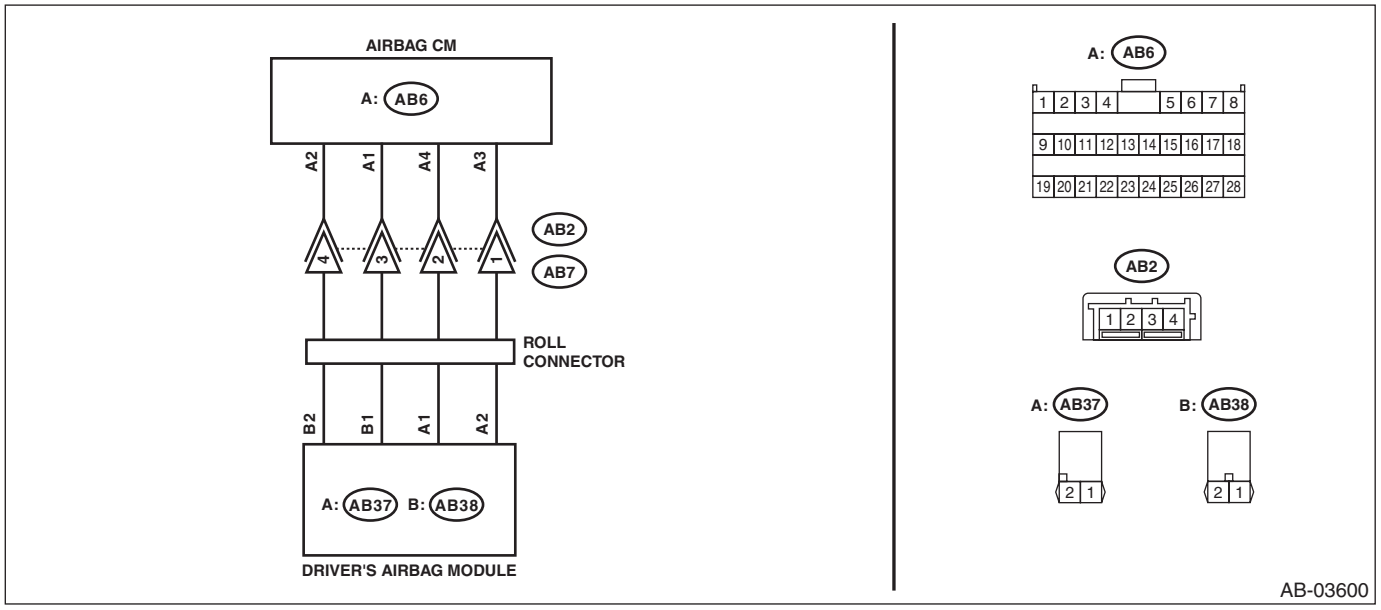

Step		Check	Yes	No
1	**CHECK POOR CONTACT OF CONNECTORS.** Check for poor contact of the connectors between the airbag control module and the driver's airbag module.	Is there poor contact?	Replace the airbag harness.	Go to step **2**.
2	**CHECK DRIVER'S AIRBAG MODULE.** 1) Turn the ignition switch to OFF, disconnect the battery ground cable, and wait for 60 seconds or more. 2) Remove the driver's airbag module. 3) Connect the connector (1N) in the test harness N to the connector (AB38). 4) Connect the airbag resistor to the connector (2N) of test harness N. 5) Connect the connector (1Q) in the test harness Q to connector (AB37). 6) Connect the airbag resistor to the connector (2Q) in the test harness Q. 7) Connect the battery ground terminal and turn the ignition switch to ON.	Does the airbag warning light illuminate for six seconds and go off?	Replace the driver's airbag module. <Ref. to AB-32, Driver's Airbag Module.>	Go to step **3**.

	Step	Check	Yes	No
3	**CHECK ROLL CONNECTOR (SHORTED TO POWER SUPPLY).** 1) Turn the ignition switch to OFF, disconnect the battery ground cable, and wait for 60 seconds or more. 2) Remove the instrument panel lower cover and column cover, and disconnect the connector (AB7) from (AB2). 3) Disconnect the airbag resistor from the connector (2N) in test harness N and from the connector (2Q) in test harness Q. 4) Measure the voltage between connector (2N) in the test harness N and chassis ground. ***Connector & terminal*** ***(2N) No. 1 (+) — Chassis ground (–):*** ***(2N) No. 2 (+) — Chassis ground (–):***	Is the voltage less than 1 V?	Go to step **4**.	Replace the roll connector. <Ref. to AB-60, Roll Connector.>
4	**CHECK AIRBAG MAIN HARNESS (DRIVER'S AIRBAG HARNESS) (SHORTED TO POWER SUPPLY).** 1) Disconnect the test harness N from connector (AB38). 2) Disconnect the test harness Q from connector (AB37). 3) Remove the console front panel and disconnect the connector (AB9). 4) Disconnect the connectors (AB6, AB17, AB18) from airbag control module. 5) Connect the connector (1AD) in test harness AD AV to the connectors (AB6, AB17, AB18). 6) Connect the connector (2AD) in test harness AD AV and the connector (1AG) in test harness AG. 7) Measure the voltage between connector (3AG) in the test harness AG and chassis ground. ***Connector & terminal*** ***(3AG) No. 2 (+) — Chassis ground (–):*** ***(3AG) No. 4 (+) — Chassis ground (–):***	Is the voltage less than 1 V?	Go to step **5**.	Replace the airbag main harness along with body harness.
5	**CHECK AIRBAG CONTROL MODULE.** 1) Connect all connectors. 2) Clear the memory. <Ref. to AB(diag)-32, Clear Memory Mode.> 3) Perform the Inspection Mode. <Ref. to AB(diag)-31, Inspection Mode.> 4) Read the DTC. (Current malfunction) <Ref. to AB(diag)-30, Read Diagnostic Trouble Code (DTC).>	Is DTC B1813 displayed?	Replace the airbag control module. <Ref. to AB-50, Airbag Control Module.>	Go to step **6**.
6	**CHECK FOR ANY OTHER DTC ON DISPLAY.** Read the DTC. (Current malfunction) <Ref. to AB(diag)-30, Read Diagnostic Trouble Code (DTC).>	Is any other DTC displayed?	Check DTC using "List of Diagnostic Trouble Code (DTC)". <Ref. to AB(diag)-38, List of Diagnostic Trouble Code (DTC).>	Finish the diagnosis.

DB:DTC B1814 SHORT IN DRIVER'S AIRBAG DUAL STAGE - 2ND STEP

DIAGNOSIS START CONDITION:
Ignition voltage is 10 V to 16 V.
DTC DETECTING CONDITION:
Short circuit between driver's airbag circuit and other circuit

CAUTION:
Before performing diagnosis, refer to "CAUTION" in "General Description". <Ref. to AB(diag)-4, CAUTION, General Description.>

NOTE:
Prior to starting work, prepare two AIRBAG RESISTORs (98299PA040).
WIRING DIAGRAM:
Airbag system <Ref. to WI-89, WIRING DIAGRAM, Airbag System.>

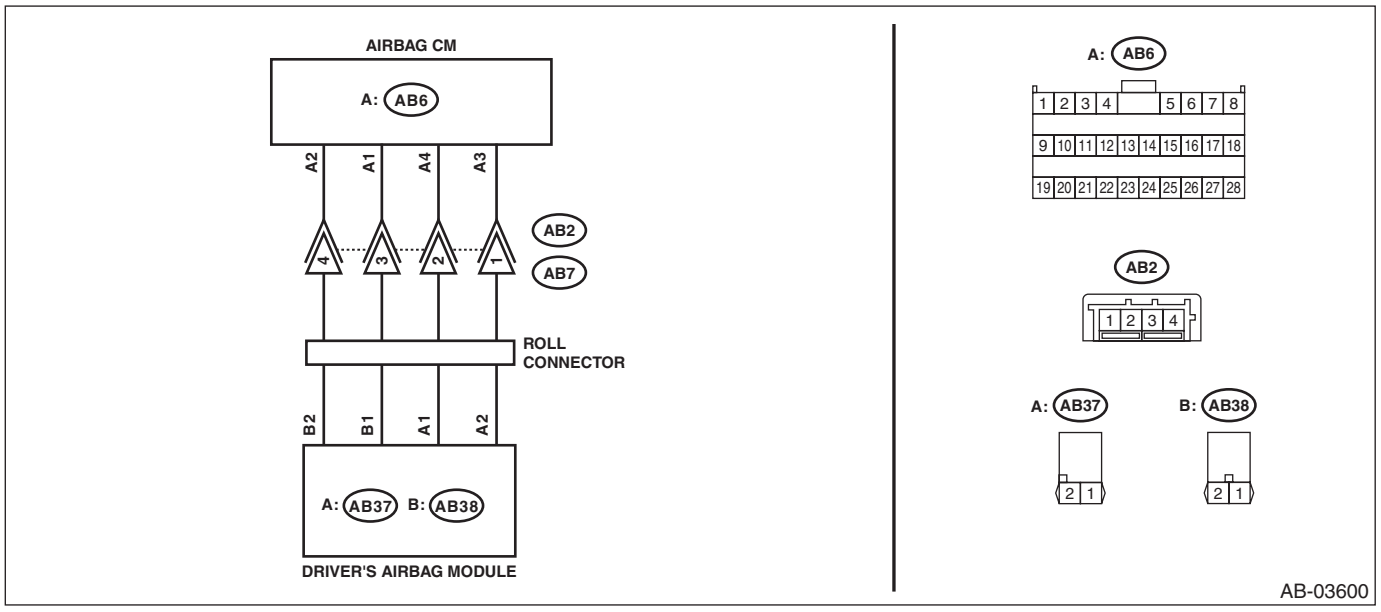

Step		Check	Yes	No
1	**CHECK POOR CONTACT OF CONNECTORS.** Check for poor contact of the connectors between the airbag control module and the driver's airbag module.	Is there poor contact?	Replace the airbag harness.	Go to step **2**.
2	**CHECK DRIVER'S AIRBAG MODULE.** 1) Turn the ignition switch to OFF, disconnect the battery ground cable, and wait for 60 seconds or more. 2) Remove the driver's airbag module. 3) Connect the connector (1N) in the test harness N to the connector (AB38). 4) Connect the airbag resistor to the connector (2N) of test harness N. 5) Connect the connector (1Q) in the test harness Q to connector (AB37). 6) Connect the airbag resistor to the connector (2Q) in the test harness Q. 7) Connect the battery ground terminal and turn the ignition switch to ON.	Does the airbag warning light illuminate for six seconds and go off?	Replace the driver's airbag module. <Ref. to AB-32, Driver's Airbag Module.>	Go to step **3**.

	Step	Check	Yes	No
3	**CHECK ROLL CONNECTOR (SHORTED BETWEEN LINES).** 1) Turn the ignition switch to OFF, disconnect the battery ground cable, and wait for 60 seconds or more. 2) Remove the instrument panel lower cover and column cover, and disconnect the connector (AB7) from (AB2). 3) Remove the console front panel and disconnect the connector (AB9). 4) Disconnect the connectors (AB6, AB17, AB18) from airbag control module. 5) Connect the connector (1AD) in test harness AD AV to the connectors (AB6, AB17, AB18). 6) Disconnect the airbag resistor from the connector (2N) in test harness N and from the connector (2Q) in test harness Q. 7) Measure the resistance between connector (2N) in the test harness N and all connector terminals in the test harness AG. ***Connector & terminal*** ***(2N) No. 1 — All terminals in test harness AG (except for (3AG) No. 4):*** ***(2N) No. 2 — All terminals in test harness AG (except for (3AG) No. 2):***	Is the resistance 1 MΩ or more?	Go to step **4**.	Roll connector <Ref. to AB-60, Roll Connector.> and faulty harness need to be replaced. (Replace the airbag main harness along with body harness. Or replace the airbag rear harness along with body harness.)
4	**CHECK AIRBAG MAIN HARNESS (DRIVER'S AIRBAG HARNESS) (SHORTED BETWEEN LINES).** 1) Disconnect the test harness N from connector (AB38). 2) Disconnect the test harness Q from connector (AB37). 3) Measure the resistance between connector (3AG) in the test harness AG and all connector terminals in the test harness AG. ***Connector & terminal*** ***(3AG) No. 2 — All terminals in test harness AG:*** ***(3AG) No. 4 — All terminals in test harness AG:***	Is the resistance 1 MΩ or more?	Replace the airbag control module. <Ref. to AB-50, REMOVAL, Airbag Control Module.>	Replace the faulty harness. (Replace the airbag main harness along with body harness. Or replace the airbag rear harness along with body harness.)

DC:DTC B1815 SHORT IN PASSENGER'S AIRBAG DUAL STAGE - 2ND STEP

DIAGNOSIS START CONDITION:
Ignition voltage is 10 V to 16 V.
DTC DETECTING CONDITION:
Shorted between +/– lines (shorted between main harness lines, shorted between passenger's airbag lines, shorted between airbag CM internal lines)

CAUTION:
Before performing diagnosis, refer to "CAUTION" in "General Description". <Ref. to AB(diag)-4, CAUTION, General Description.>

NOTE:
Prior to starting work, prepare two AIRBAG RESISTORs (98299PA040).
WIRING DIAGRAM:
Airbag system <Ref. to WI-89, WIRING DIAGRAM, Airbag System.>

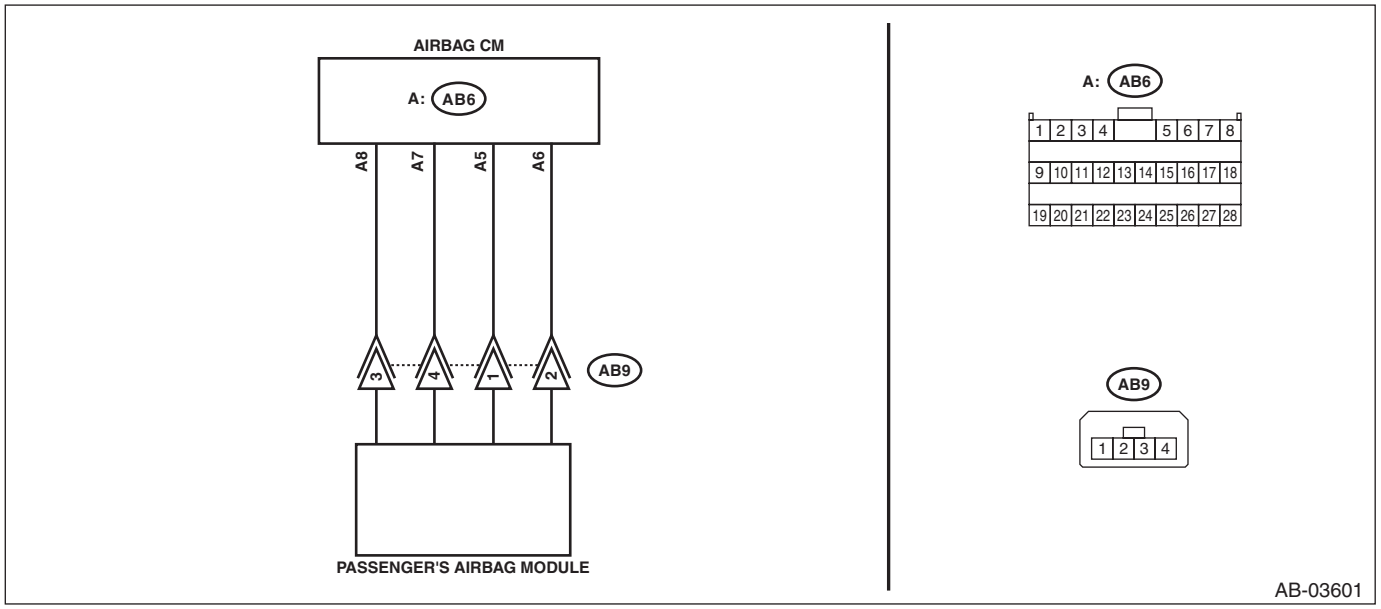

Step		Check	Yes	No
1	**CHECK POOR CONTACT OF CONNECTORS.** Check for poor contact of the connectors between the airbag control module and the passenger's airbag module.	Is there poor contact?	Replace the airbag main harness along with body harness.	Go to step **2**.

	Step	Check	Yes	No
2	**CHECK AIRBAG MAIN HARNESS (PASSENGER'S AIRBAG HARNESS) (SHORTED BETWEEN LINES).** 1) Turn the ignition switch to OFF, disconnect the battery ground cable, and wait for 60 seconds or more. 2) Disconnect the connectors (AB7) and (AB2). 3) Disconnect the passenger's airbag module connector (AB9). 4) Disconnect the connectors (AB6, AB17, AB18) from airbag control module. 5) Connect the connector (1AD) in test harness AD AV to the connectors (AB6, AB17, AB18). 6) Connect the connector (2AD) in test harness AD AV and the connector (1AG) in test harness AG. 7) Using a probe, measure the resistance between the terminals of connector (AB9). <Ref. to AB(diag)-19, HOW TO USE PROBE, PREPARATION TOOL, General Description.> **CAUTION:** **When measuring the resistance, make sure that the probe is inserted from the back side (harness side) of the connector. Also, do not insert the probe forcibly.** ***Connector & terminal*** ***(AB9) No. 3 — (AB9) No. 4:***	Is the resistance 1 MΩ or more?	Go to step **3**.	Replace the airbag main harness along with body harness.
3	**CHECK AIRBAG CONTROL MODULE.** 1) Disconnect the test harness AD AV from the connectors (AB6, AB17, AB18). 2) Connect the connector other than passenger's airbag module connector (AB9). 3) Connect the battery ground terminal and turn the ignition switch to ON. 4) Clear the memory. <Ref. to AB(diag)-32, Clear Memory Mode.> 5) Perform the Inspection Mode. <Ref. to AB(diag)-31, Inspection Mode.> 6) Read the DTC. (Current malfunction) <Ref. to AB(diag)-30, Read Diagnostic Trouble Code (DTC).>	Is DTC B1815 displayed?	Replace the airbag control module. <Ref. to AB-50, REMOVAL, Airbag Control Module.>	Go to step **4**.
4	**CHECK PASSENGER'S AIRBAG MODULE.** 1) Turn the ignition switch to OFF, disconnect the battery ground cable, and wait for 60 seconds or more. 2) Connect the passenger's airbag module connector (AB9). 3) Connect the battery ground terminal and turn the ignition switch to ON. 4) Clear the memory. <Ref. to AB(diag)-32, Clear Memory Mode.> 5) Perform the Inspection Mode. <Ref. to AB(diag)-31, Inspection Mode.> 6) Read the DTC. (Current malfunction) <Ref. to AB(diag)-30, Read Diagnostic Trouble Code (DTC).>	Is DTC B1815 displayed?	Replace the passenger's airbag module. <Ref. to AB-34, REMOVAL, Passenger's Airbag Module.>	Go to step **5**.

	Step	Check	Yes	No
5	**CHECK FOR ANY OTHER DTC ON DISPLAY.** Read the DTC. (Current malfunction) <Ref. to AB(diag)-30, Read Diagnostic Trouble Code (DTC).>	Is any other DTC displayed?	Check DTC using "List of Diagnostic Trouble Code (DTC)". <Ref. to AB(diag)-38, List of Diagnostic Trouble Code (DTC).>	Finish the diagnosis.

DD:DTC B1816 OPEN IN PASSENGER'S AIRBAG DUAL STAGE - 2ND STEP

DIAGNOSIS START CONDITION:
Ignition voltage is 10 V to 16 V.
DTC DETECTING CONDITION:
Open circuit failure (open circuit in main harness, open circuit in passenger's airbag, open circuit in airbag CM internal circuit, connector connection failure)

CAUTION:
Before performing diagnosis, refer to "CAUTION" in "General Description". <Ref. to AB(diag)-4, CAUTION, General Description.>

NOTE:
Prior to starting work, prepare two AIRBAG RESISTORs (98299PA040).
WIRING DIAGRAM:
Airbag system <Ref. to WI-89, WIRING DIAGRAM, Airbag System.>

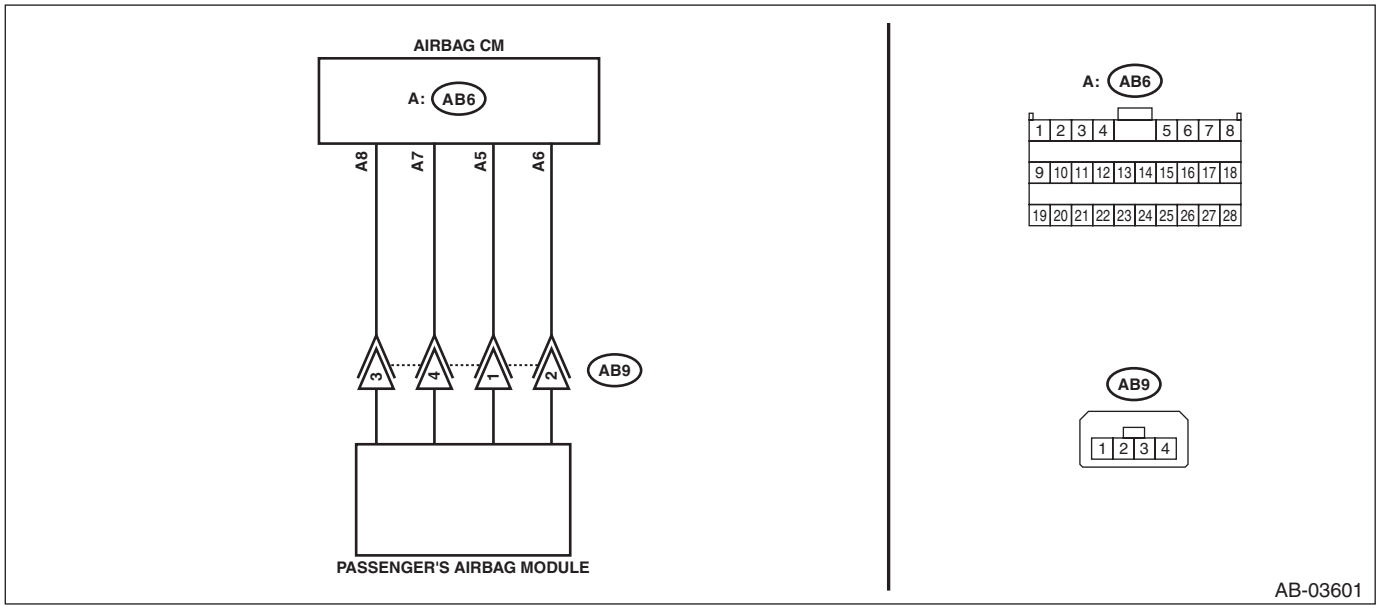

Step		Check	Yes	No
1	**CHECK POOR CONTACT OF CONNECTORS.** Check for poor contact of the connectors between the airbag control module and the passenger's airbag module.	Is there poor contact?	Replace the airbag main harness.	Go to step **2**.

	Step	Check	Yes	No
2	**CHECK AIRBAG MAIN HARNESS (PASSENGER'S AIRBAG HARNESS).** 1) Turn the ignition switch to OFF, disconnect the battery ground cable, and wait for 60 seconds or more. 2) Disconnect the connectors (AB7) and (AB2). 3) Disconnect the passenger's airbag module connector (AB9). 4) Disconnect the connectors (AB6, AB17, AB18) from airbag control module. 5) Using a probe, measure the resistance between the terminals of connector (AB9). <Ref. to AB(diag)-19, HOW TO USE PROBE, PREPARATION TOOL, General Description.> **CAUTION:** **When measuring the resistance, make sure that the probe is inserted from the back side (harness side) of the connector. Also, do not insert the probe forcibly.** ***Connector & terminal*** ***(AB9) No. 3 — (AB9) No. 4:***	Is the resistance less than 10 Ω?	Go to step **3**.	Replace the airbag main harness along with body harness.
3	**CHECK AIRBAG CONTROL MODULE.** 1) Connect the connector other than passenger's airbag module connector (AB9). 2) Using a probe, short the terminals No. 3 and No. 4 of connector (AB9). <Ref. to AB(diag)-19, HOW TO USE PROBE, PREPARATION TOOL, General Description.> **CAUTION:** **When shorting the terminals, make sure that the probe is inserted from the back side (harness side) of the connector. Also, do not insert the probe forcibly.** ***Connector & terminal*** ***(AB9) No. 3 — (AB9) No. 4:*** 3) Connect the battery ground terminal and turn the ignition switch to ON. 4) Clear the memory. <Ref. to AB(diag)-32, Clear Memory Mode.> 5) Perform the Inspection Mode. <Ref. to AB(diag)-31, Inspection Mode.> 6) Read the DTC. (Current malfunction) <Ref. to AB(diag)-30, Read Diagnostic Trouble Code (DTC).>	Is DTC B1815 displayed?	Go to step **4**.	Replace the airbag control module. <Ref. to AB-50, REMOVAL, Airbag Control Module.>
4	**CHECK PASSENGER'S AIRBAG MODULE.** 1) Turn the ignition switch to OFF, disconnect the battery ground cable, and wait for 60 seconds or more. 2) Connect the passenger's airbag module connector (AB9). 3) Connect the battery ground terminal and turn the ignition switch to ON. 4) Clear the memory. <Ref. to AB(diag)-32, Clear Memory Mode.> 5) Perform the Inspection Mode. <Ref. to AB(diag)-31, Inspection Mode.> 6) Read the DTC. (Current malfunction) <Ref. to AB(diag)-30, Read Diagnostic Trouble Code (DTC).>	Is DTC B1816 displayed?	Replace the passenger's airbag module. <Ref. to AB-34, REMOVAL, Passenger's Airbag Module.>	Go to step **5**.

	Step	Check	Yes	No
5	**CHECK FOR ANY OTHER DTC ON DISPLAY.** Read the DTC. (Current malfunction) <Ref. to AB(diag)-30, Read Diagnostic Trouble Code (DTC).>	Is any other DTC displayed?	Check DTC using "List of Diagnostic Trouble Code (DTC)". <Ref. to AB(diag)-38, List of Diagnostic Trouble Code (DTC).>	Finish the diagnosis.

DE:DTC B1817 SHORT IN PASSENGER'S AIRBAG DUAL STAGE - 2ND STEP (TO GROUND)

DIAGNOSIS START CONDITION:
Ignition voltage is 10 V to 16 V.
DTC DETECTING CONDITION:
GND short circuit failure (shorted to ground in main harness, shorted to ground in passenger's airbag, shorted to ground in airbag CM internal circuit)

CAUTION:
Before performing diagnosis, refer to "CAUTION" in "General Description". <Ref. to AB(diag)-4, CAUTION, General Description.>

NOTE:
Prior to starting work, prepare two AIRBAG RESISTORs (98299PA040).
WIRING DIAGRAM:
Airbag system <Ref. to WI-89, WIRING DIAGRAM, Airbag System.>

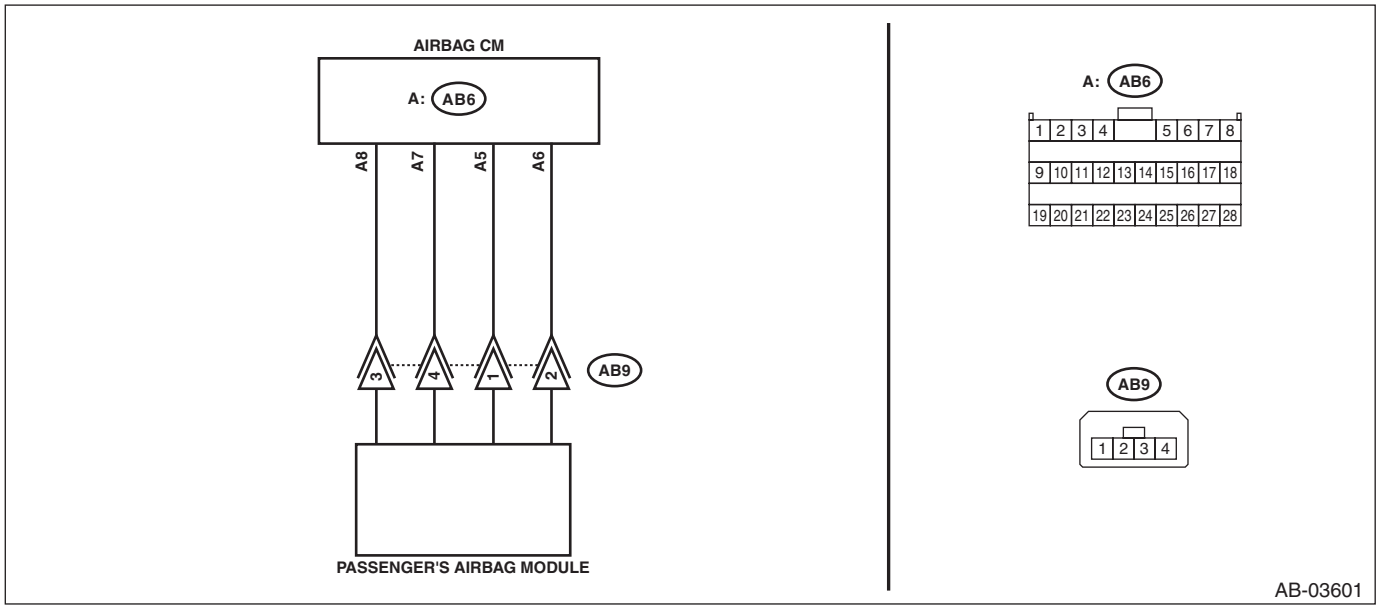

Step		Check	Yes	No
1	**CHECK POOR CONTACT OF CONNECTORS.** Check for poor contact of the connectors between the airbag control module and the passenger's airbag module.	Is there poor contact?	Replace the airbag main harness.	Go to step **2**.

	Step	Check	Yes	No
2	**CHECK AIRBAG MAIN HARNESS (PASSENGER'S AIRBAG HARNESS) (SHORTED TO GROUND).** 1) Turn the ignition switch to OFF, disconnect the battery ground cable, and wait for 60 seconds or more. 2) Disconnect the connectors (AB7) and (AB2). 3) Disconnect the passenger's airbag module connector (AB9). 4) Disconnect the connectors (AB6, AB17, AB18) from airbag control module. 5) Using a probe, measure the resistance between the connector (AB9) and chassis ground. <Ref. to AB(diag)-19, HOW TO USE PROBE, PREPARATION TOOL, General Description.> **CAUTION:** **When measuring the resistance, make sure that the probe is inserted from the back side (harness side) of the connector. Also, do not insert the probe forcibly.** ***Connector & terminal*** ***(AB9) No. 3 — Chassis ground:*** ***(AB9) No. 4 — Chassis ground:***	Is the resistance 1 MΩ or more?	Go to step **3**.	Replace the airbag main harness along with body harness.
3	**CHECK AIRBAG CONTROL MODULE (SHORTED TO GROUND).** 1) Connect the connector other than passenger's airbag module connector (AB9). 2) Using a probe, short the terminals No. 3 and No. 4 of connector (AB9). <Ref. to AB(diag)-19, HOW TO USE PROBE, PREPARATION TOOL, General Description.> **CAUTION:** **When shorting the terminals, make sure that the probe is inserted from the back side (harness side) of the connector. Also, do not insert the probe forcibly.** ***Connector & terminal*** ***(AB9) No. 3 — (AB9) No. 4:*** 3) Connect the battery ground terminal and turn the ignition switch to ON. 4) Clear the memory. <Ref. to AB(diag)-32, Clear Memory Mode.> 5) Perform the Inspection Mode. <Ref. to AB(diag)-31, Inspection Mode.> 6) Read the DTC. (Current malfunction) <Ref. to AB(diag)-30, Read Diagnostic Trouble Code (DTC).>	Is DTC B1815 displayed?	Go to step **4**.	Replace the airbag control module. <Ref. to AB-50, REMOVAL, Airbag Control Module.>

	Step	Check	Yes	No
4	**CHECK PASSENGER'S AIRBAG MODULE.** 1) Turn the ignition switch to OFF, disconnect the battery ground cable, and wait for 60 seconds or more. 2) Connect the passenger's airbag module connector (AB9). 3) Connect the battery ground terminal and turn the ignition switch to ON. 4) Clear the memory. <Ref. to AB(diag)-32, Clear Memory Mode.> 5) Perform the Inspection Mode. <Ref. to AB(diag)-31, Inspection Mode.> 6) Read the DTC. (Current malfunction) <Ref. to AB(diag)-30, Read Diagnostic Trouble Code (DTC).>	Is DTC B1817 displayed?	Replace the passenger's airbag module. <Ref. to AB-34, REMOVAL, Passenger's Airbag Module.>	Go to step **5**.
5	**CHECK FOR ANY OTHER DTC ON DISPLAY.** Read the DTC. (Current malfunction) <Ref. to AB(diag)-30, Read Diagnostic Trouble Code (DTC).>	Is any other DTC displayed?	Check DTC using "List of Diagnostic Trouble Code (DTC)". <Ref. to AB(diag)-38, List of Diagnostic Trouble Code (DTC).>	Finish the diagnosis.

DF:DTC B1818 SHORT IN PASSENGER'S AIRBAG DUAL STAGE - 2ND STEP CIRCUIT (TO +B)

DIAGNOSIS START CONDITION:
Ignition voltage is 10 V to 16 V.
DTC DETECTING CONDITION:
Short circuit failure in power supply (shorted in main harness power supply, shorted in passenger's airbag power supply, shorted in airbag CM internal circuit power supply)

CAUTION:
Before performing diagnosis, refer to "CAUTION" in "General Description". <Ref. to AB(diag)-4, CAUTION, General Description.>

NOTE:
Prior to starting work, prepare two AIRBAG RESISTORs (98299PA040).
WIRING DIAGRAM:
Airbag system <Ref. to WI-89, WIRING DIAGRAM, Airbag System.>

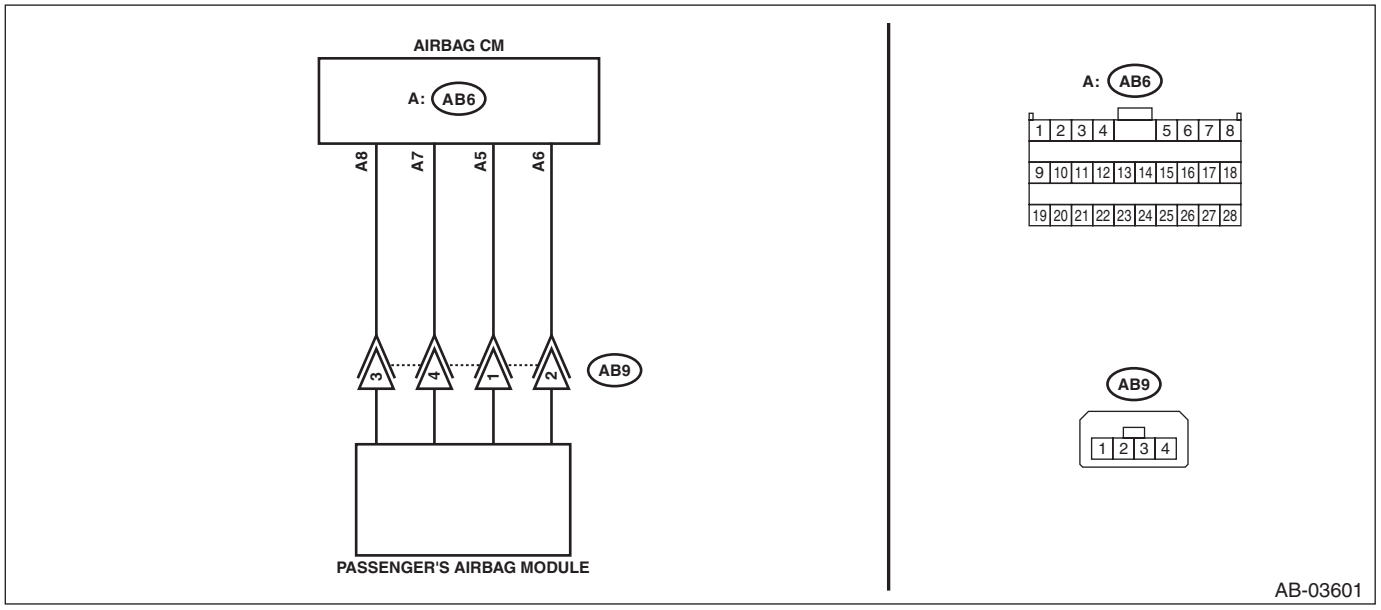

Step		Check	Yes	No
1	**CHECK POOR CONTACT OF CONNECTORS.** Check for poor contact of the connectors between the airbag control module and the passenger's airbag module.	Is there poor contact?	Replace the airbag main harness.	Go to step **2**.

	Step	Check	Yes	No
2	**CHECK AIRBAG MAIN HARNESS (PASSENGER'S AIRBAG HARNESS) (SHORTED TO POWER SUPPLY).** 1) Turn the ignition switch to OFF, disconnect the battery ground cable, and wait for 60 seconds or more. 2) Disconnect the connectors (AB7) and (AB2). 3) Disconnect the passenger's airbag module connector (AB9). 4) Disconnect the connectors (AB6, AB17, AB18) from airbag control module. 5) Using a probe, measure the voltage between the connector (AB9) and chassis ground. <Ref. to AB(diag)-19, HOW TO USE PROBE, PREPARATION TOOL, General Description.> **CAUTION:** **When measuring the voltage, make sure that the probe is inserted from the back side (harness side) of the connector. Also, do not insert the probe forcibly.** ***Connector & terminal*** ***(AB9) No. 3 (+) — Chassis ground (–):*** ***(AB9) No. 4 (+) — Chassis ground (–):***	Is the voltage less than 1 V?	Go to step **3**.	Replace the airbag main harness along with body harness.
3	**CHECK AIRBAG CONTROL MODULE.** 1) Connect the connector other than passenger's airbag module connector (AB9). 2) Using a probe, short the terminals No. 3 and No. 4 of connector (AB9). <Ref. to AB(diag)-19, HOW TO USE PROBE, PREPARATION TOOL, General Description.> **CAUTION:** **When shorting the terminals, make sure that the probe is inserted from the back side (harness side) of the connector. Also, do not insert the probe forcibly.** ***Connector & terminal*** ***(AB9) No. 3 — (AB9) No. 4:*** 3) Connect the battery ground terminal and turn the ignition switch to ON. 4) Clear the memory. <Ref. to AB(diag)-32, Clear Memory Mode.> 5) Perform the Inspection Mode. <Ref. to AB(diag)-31, Inspection Mode.> 6) Read the DTC. (Current malfunction) <Ref. to AB(diag)-30, Read Diagnostic Trouble Code (DTC).>	Is DTC B1815 displayed?	Go to step **4**.	Replace the airbag control module. <Ref. to AB-50, REMOVAL, Airbag Control Module.>

	Step	Check	Yes	No
4	**CHECK PASSENGER'S AIRBAG MODULE.** 1) Turn the ignition switch to OFF, disconnect the battery ground cable, and wait for 60 seconds or more. 2) Connect the passenger's airbag module connector (AB9). 3) Connect the battery ground terminal and turn the ignition switch to ON. 4) Clear the memory. <Ref. to AB(diag)-32, Clear Memory Mode.> 5) Perform the Inspection Mode. <Ref. to AB(diag)-31, Inspection Mode.> 6) Read the DTC. (Current malfunction) <Ref. to AB(diag)-30, Read Diagnostic Trouble Code (DTC).>	Is DTC B1818 displayed?	Replace the passenger's airbag module. <Ref. to AB-34, REMOVAL, Passenger's Airbag Module.>	Go to step **5**.
5	**CHECK FOR ANY OTHER DTC ON DISPLAY.** Read the DTC. (Current malfunction) <Ref. to AB(diag)-30, Read Diagnostic Trouble Code (DTC).>	Is any other DTC displayed?	Check DTC using "List of Diagnostic Trouble Code (DTC)". <Ref. to AB(diag)-38, List of Diagnostic Trouble Code (DTC).>	Finish the diagnosis.

DG:DTC B1819 SHORT IN PASSENGER'S AIRBAG DUAL STAGE - 2ND STEP

DIAGNOSIS START CONDITION:
Ignition voltage is 10 V to 16 V.
DTC DETECTING CONDITION:
Short circuit between passenger's airbag circuit and other circuit

CAUTION:
Before performing diagnosis, refer to "CAUTION" in "General Description". <Ref. to AB(diag)-4, CAUTION, General Description.>

NOTE:
Prior to starting work, prepare two AIRBAG RESISTORs (98299PA040).
WIRING DIAGRAM:
Airbag system <Ref. to WI-89, WIRING DIAGRAM, Airbag System.>

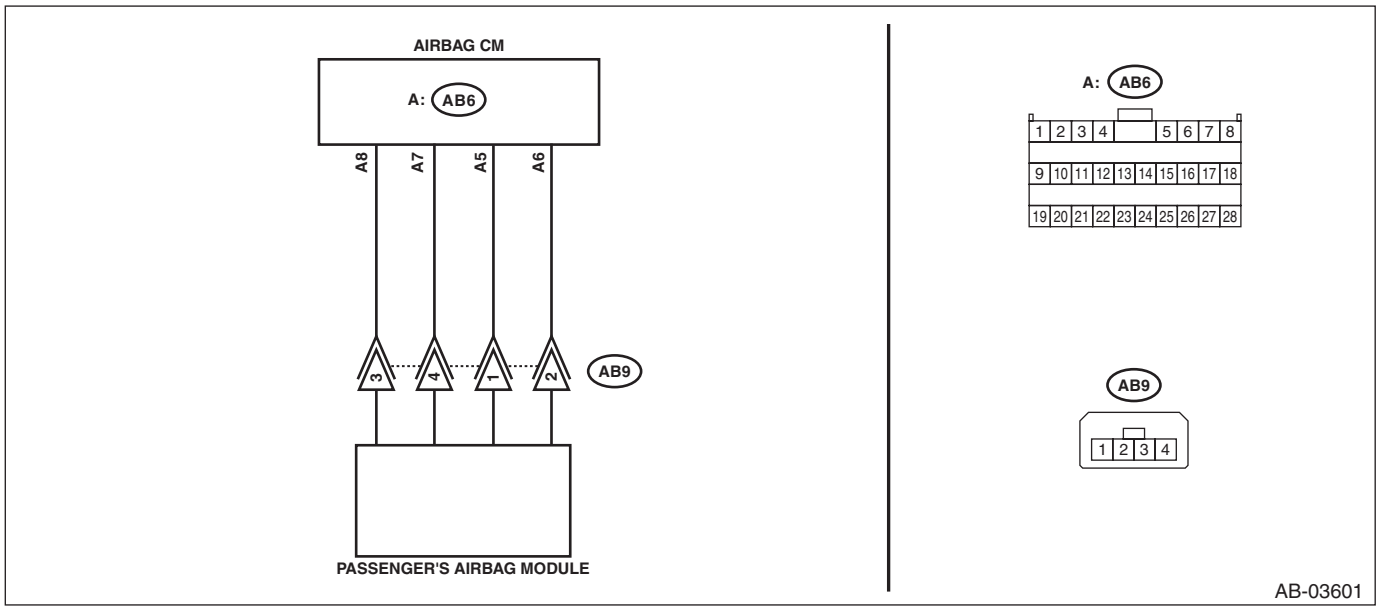

Step		Check	Yes	No
1	**CHECK POOR CONTACT OF CONNECTORS.** Check for poor contact of the connectors between the airbag control module and the passenger's airbag module.	Is there poor contact?	Replace the airbag main harness.	Go to step **2**.

	Step	Check	Yes	No
2	**CHECK AIRBAG MAIN HARNESS (PASSENGER'S AIRBAG HARNESS) (SHORTED BETWEEN LINES).** 1) Turn the ignition switch to OFF, disconnect the battery ground cable, and wait for 60 seconds or more. 2) Disconnect the connectors (AB7) and (AB2). 3) Disconnect the passenger's airbag module connector (AB9). 4) Disconnect the connectors (AB6, AB17, AB18) from airbag control module. 5) Connect the connector (1AD) in test harness AD AV to the connectors (AB6, AB17, AB18). 6) Connect the connector (2AD) in test harness AD AV and the connector (1AG) in test harness AG. 7) Using a probe, measure the resistance between the connector (AB9) and terminals of all connectors in test harness AG. <Ref. to AB(diag)-19, HOW TO USE PROBE, PREPARATION TOOL, General Description.> **CAUTION:** **When measuring the voltage, make sure that the probe is inserted from the back side (harness side) of the connector. Also, do not insert the probe forcibly.** ***Connector & terminal*** ***(AB9) No. 3 — All terminals in test harness AG (except for (3AG) No. 8):*** ***(AB9) No. 4 — All terminals in test harness AG (except for (3AG) No. 6):***	Is the resistance 1 MΩ or more?	Go to step **3**.	Replace the airbag main harness along with body harness.
3	**CHECK AIRBAG CONTROL MODULE.** 1) Connect the connector other than passenger's airbag module connector (AB9). 2) Using a probe, short the terminals No. 3 and No. 4 of connector (AB9). <Ref. to AB(diag)-19, HOW TO USE PROBE, PREPARATION TOOL, General Description.> **CAUTION:** **When shorting the terminals, make sure that the probe is inserted from the back side (harness side) of the connector. Also, do not insert the probe forcibly.** ***Connector & terminal*** ***(AB9) No. 3 — (AB9) No. 4:*** 3) Connect the battery ground terminal and turn the ignition switch to ON. 4) Clear the memory. <Ref. to AB(diag)-32, Clear Memory Mode.> 5) Perform the Inspection Mode. <Ref. to AB(diag)-31, Inspection Mode.> 6) Read the DTC. (Current malfunction) <Ref. to AB(diag)-30, Read Diagnostic Trouble Code (DTC).>	Is DTC B1815 displayed?	Go to step **4**.	Replace the airbag control module. <Ref. to AB-50, REMOVAL, Airbag Control Module.>

	Step	Check	Yes	No
4	**CHECK PASSENGER'S AIRBAG MODULE.** 1) Turn the ignition switch to OFF, disconnect the battery ground cable, and wait for 60 seconds or more. 2) Connect the passenger's airbag module connector (AB9). 3) Connect the battery ground terminal and turn the ignition switch to ON. 4) Clear the memory. <Ref. to AB(diag)-32, Clear Memory Mode.> 5) Perform the Inspection Mode. <Ref. to AB(diag)-31, Inspection Mode.> 6) Read the DTC. (Current malfunction) <Ref. to AB(diag)-30, Read Diagnostic Trouble Code (DTC).>	Is DTC B1819 displayed?	Replace the passenger's airbag module. <Ref. to AB-34, REMOVAL, Passenger's Airbag Module.>	Go to step **5**.
5	**CHECK FOR ANY OTHER DTC ON DISPLAY.** Read the DTC. (Current malfunction) <Ref. to AB(diag)-30, Read Diagnostic Trouble Code (DTC).>	Is any other DTC displayed?	Check DTC using "List of Diagnostic Trouble Code (DTC)". <Ref. to AB(diag)-38, List of Diagnostic Trouble Code (DTC).>	Finish the diagnosis.

DH:DTC B1820 SHORT IN SIDE AIRBAG RH

DIAGNOSIS START CONDITION:
Ignition voltage is 10 V to 16 V.
DTC DETECTING CONDITION:
Shorted between +/– lines (shorted between main harness lines, shorted between front seat side airbag RH lines, shorted between airbag CM internal lines)

CAUTION:
Before performing diagnosis, refer to "CAUTION" in "General Description". <Ref. to AB(diag)-4, CAUTION, General Description.>

NOTE:
Before starting work, prepare two sets of TEST HARNESS AT (98299CA020).
WIRING DIAGRAM:

NOTE:
For the coupling connector, refer to "WIRING SYSTEM".
Airbag system <Ref. to WI-89, WIRING DIAGRAM, Airbag System.>

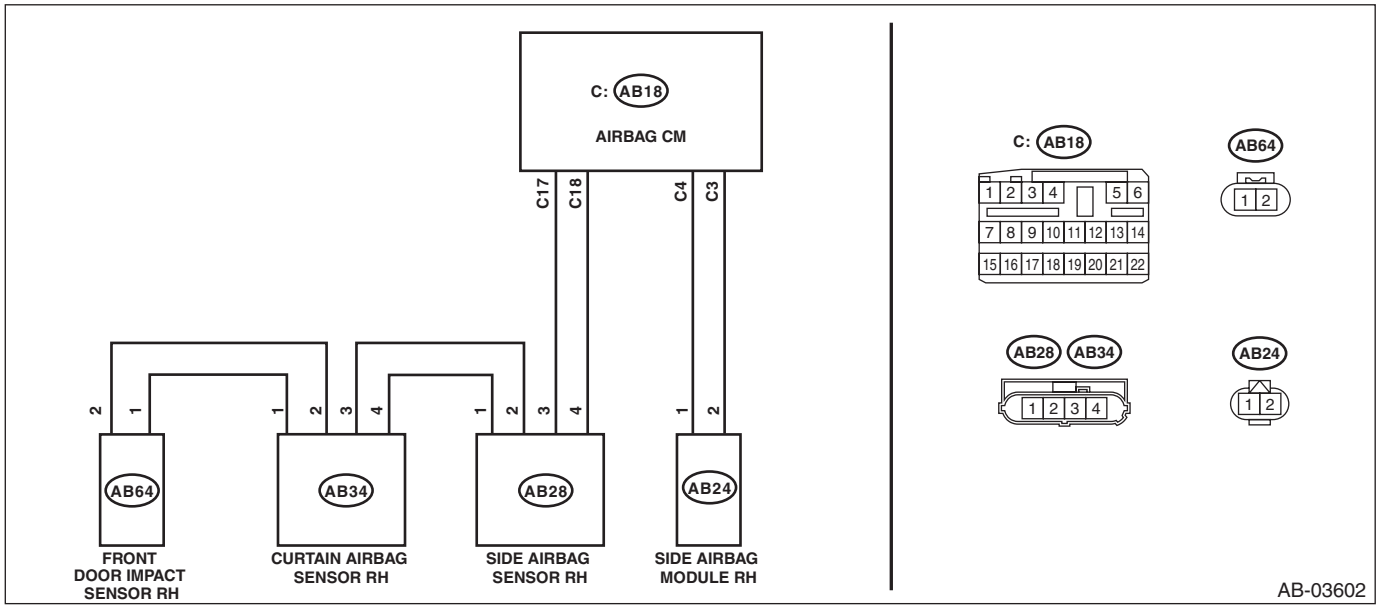

Step		Check	Yes	No
1	**CHECK POOR CONTACT OF CONNECTORS.** Check for poor contact of the connectors between the airbag control module, side airbag module RH and the side airbag sensor RH.	Is there poor contact?	Replace the airbag rear harness along with body harness.	Go to step **2**.

	Step	Check	Yes	No
2	**CHECK AIRBAG REAR HARNESS (SIDE AIRBAG MODULE HARNESS RH) (SHORTED BETWEEN LINES).** 1) Turn the ignition switch to OFF, disconnect the battery ground cable, and wait for 60 seconds or more. 2) Disconnect the connector (AB26) from seat belt pretensioner RH. 3) Disconnect the connector (AB22) from seat cushion airbag module RH. 4) Disconnect the connector (AB24) from side airbag module RH. 5) Disconnect the connector (AB33) from curtain airbag module RH. 6) Disconnect the connectors (AB6, AB17, AB18) from airbag control module. 7) Connect the connector (1AD) in test harness AD AV to the connectors (AB6, AB17, AB18). 8) Connect the connector (2AD) in test harness AD AV and the connector (1AG) in test harness AG. 9) Measure the resistance between terminals of connector (AB24) of side airbag module RH. **CAUTION:** **Connect the terminal in test harness AT to connector (AB24) terminal, and apply the tester to test harness AT. Two sets of test harness AT are required.** ***Connector & terminal (AB24) No. 1 — (AB24) No. 2:***	Is the resistance 1 MΩ or more?	Go to step **3**.	Replace the airbag rear harness along with body harness.
3	**CHECK AIRBAG CONTROL MODULE.** 1) Connect all connectors other than side airbag module RH connector (AB24). 2) Connect the battery ground terminal and turn the ignition switch to ON. 3) Clear the memory. <Ref. to AB(diag)-32, Clear Memory Mode.> 4) Perform the Inspection Mode. <Ref. to AB(diag)-31, Inspection Mode.> 5) Read the DTC. (Current malfunction) <Ref. to AB(diag)-30, Read Diagnostic Trouble Code (DTC).>	Is DTC B1820 displayed?	Replace the airbag control module. <Ref. to AB-50, Airbag Control Module.>	Go to step **4**.
4	**CHECK SIDE AIRBAG MODULE.** 1) Turn the ignition switch to OFF, disconnect the battery ground cable, and wait for 60 seconds or more. 2) Connect all connectors. 3) Connect the battery ground terminal and turn the ignition switch to ON. 4) Clear the memory. <Ref. to AB(diag)-32, Clear Memory Mode.> 5) Perform the Inspection Mode. <Ref. to AB(diag)-31, Inspection Mode.> 6) Read the DTC. (Current malfunction) <Ref. to AB(diag)-30, Read Diagnostic Trouble Code (DTC).>	Is DTC B1820 displayed?	Replace the side airbag module RH. <Ref. to AB-40, REMOVAL, Side Airbag Module.>	Go to step **5**.

Step		Check	Yes	No
5	**CHECK FOR ANY OTHER DTC ON DISPLAY.** Read the DTC. (Current malfunction) <Ref. to AB(diag)-30, Read Diagnostic Trouble Code (DTC).>	Is any other DTC displayed?	Check DTC using "List of Diagnostic Trouble Code (DTC)". <Ref. to AB(diag)-38, List of Diagnostic Trouble Code (DTC).>	Finish the diagnosis.

DI: DTC B1821 OPEN IN SIDE AIRBAG RH

DIAGNOSIS START CONDITION:
Ignition voltage is 10 V to 16 V.
DTC DETECTING CONDITION:
Open circuit failure (open circuit in main harness, open circuit in front seat side airbag RH, open circuit in airbag CM internal circuit, connector connection failure)

NOTE:
Before starting work, prepare two sets of TEST HARNESS AT (98299CA020).

CAUTION:
Before performing diagnosis, refer to "CAUTION" in "General Description". <Ref. to AB(diag)-4, CAUTION, General Description.>
WIRING DIAGRAM:

NOTE:
For the coupling connector, refer to "WIRING SYSTEM".
Airbag system <Ref. to WI-89, WIRING DIAGRAM, Airbag System.>

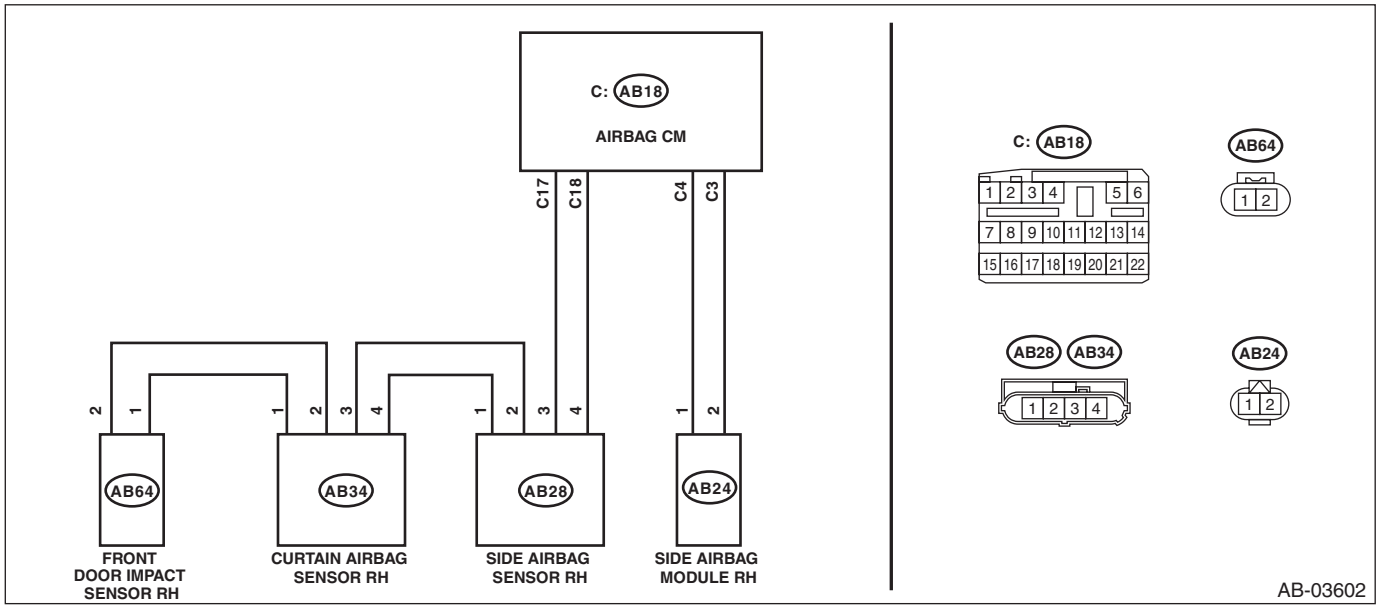

Step		Check	Yes	No
1	**CHECK POOR CONTACT OF CONNECTORS.** Check for poor contact of the connectors between the airbag control module, side airbag module RH and the side airbag sensor RH.	Is there poor contact?	Replace the airbag rear harness along with body harness.	Go to step **2**.

	Step	Check	Yes	No
2	**CHECK AIRBAG REAR HARNESS (SIDE AIRBAG MODULE HARNESS RH) (OPEN CIRCUIT).** 1) Turn the ignition switch to OFF, disconnect the battery ground cable, and wait for 60 seconds or more. 2) Disconnect the connector (AB26) from seat belt pretensioner RH. 3) Disconnect the connector (AB22) from seat cushion airbag module RH. 4) Disconnect the connector (AB24) from side airbag module RH. 5) Disconnect the connector (AB33) from curtain airbag module RH. 6) Disconnect the connectors (AB6, AB17, AB18) from airbag control module. 7) Measure the resistance between terminals of connector (AB24) of side airbag module RH. **CAUTION:** **Connect the terminal in test harness AT to connector (AB24) terminal, and apply the tester to test harness AT. Two sets of test harness AT are required.** ***Connector & terminal*** ***(AB24) No. 1 — (AB24) No. 2:***	Is the resistance less than 10 Ω?	Go to step **3**.	Replace the airbag rear harness along with body harness.
3	**CHECK AIRBAG CONTROL MODULE.** 1) Connect all connectors other than side airbag module RH connector (AB24). 2) Connect the battery ground terminal and turn the ignition switch to ON. 3) Clear the memory. <Ref. to AB(diag)-32, Clear Memory Mode.> 4) Perform the Inspection Mode. <Ref. to AB(diag)-31, Inspection Mode.> 5) Read the DTC. (Current malfunction) <Ref. to AB(diag)-30, Read Diagnostic Trouble Code (DTC).>	Is DTC B1821 displayed?	Replace the airbag control module. <Ref. to AB-50, Airbag Control Module.>	Go to step **4**.
4	**CHECK SIDE AIRBAG MODULE.** 1) Turn the ignition switch to OFF, disconnect the battery ground cable, and wait for 60 seconds or more. 2) Connect all connectors. 3) Connect the battery ground terminal and turn the ignition switch to ON. 4) Clear the memory. <Ref. to AB(diag)-32, Clear Memory Mode.> 5) Perform the Inspection Mode. <Ref. to AB(diag)-31, Inspection Mode.> 6) Read the DTC. (Current malfunction) <Ref. to AB(diag)-30, Read Diagnostic Trouble Code (DTC).>	Is DTC B1821 displayed?	Replace the side airbag module RH. <Ref. to AB-40, REMOVAL, Side Airbag Module.>	Go to step **5**.
5	**CHECK FOR ANY OTHER DTC ON DISPLAY.** Read the DTC. (Current malfunction) <Ref. to AB(diag)-30, Read Diagnostic Trouble Code (DTC).>	Is any other DTC displayed?	Check DTC using "List of Diagnostic Trouble Code (DTC)". <Ref. to AB(diag)-38, List of Diagnostic Trouble Code (DTC).>	Finish the diagnosis.

DJ:DTC B1822 SHORT IN SIDE AIRBAG RH (TO GROUND)

DIAGNOSIS START CONDITION:
Ignition voltage is 10 V to 16 V.
DTC DETECTING CONDITION:
GND short circuit failure (shorted to ground in main harness, shorted to ground in front seat side airbag RH, shorted to ground in airbag CM internal circuit)

CAUTION:
Before performing diagnosis, refer to "CAUTION" in "General Description". <Ref. to AB(diag)-4, CAUTION, General Description.>
WIRING DIAGRAM:

NOTE:
For the coupling connector, refer to "WIRING SYSTEM".
Airbag system <Ref. to WI-89, WIRING DIAGRAM, Airbag System.>

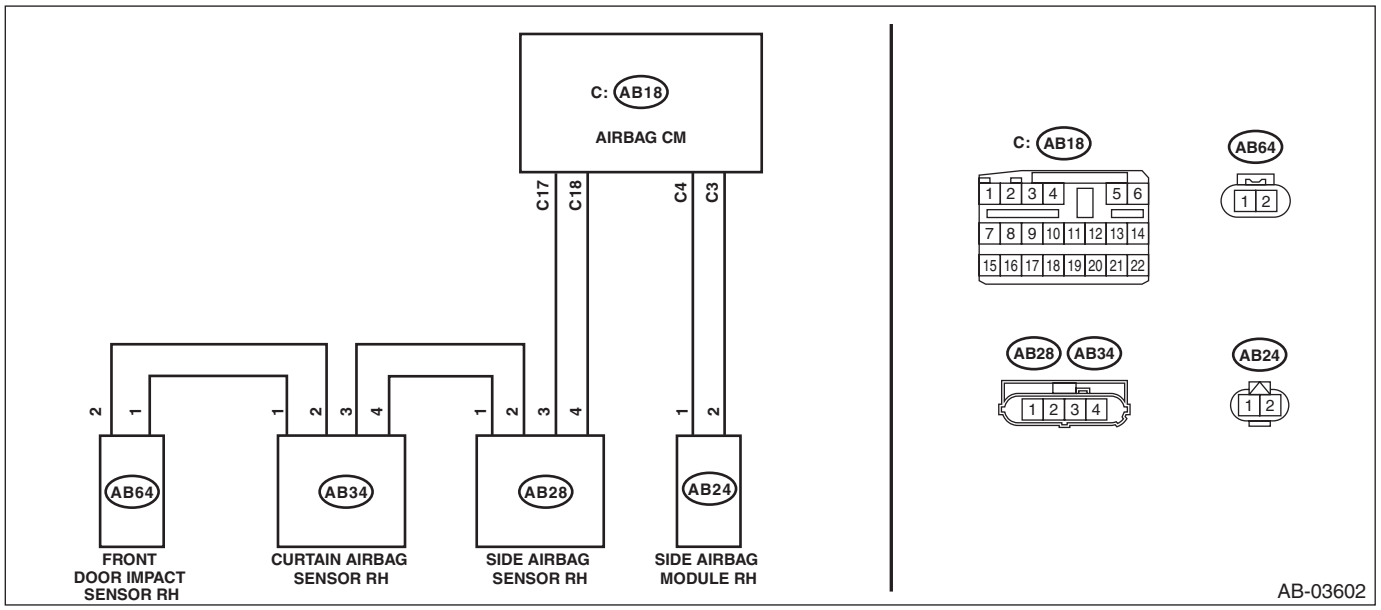

Step		Check	Yes	No
1	**CHECK POOR CONTACT OF CONNECTORS.** Check for poor contact of the connectors between the airbag control module, side airbag module RH and the side airbag sensor RH.	Is there poor contact?	Replace the airbag rear harness along with body harness.	Go to step **2**.

	Step	Check	Yes	No
2	**CHECK AIRBAG REAR HARNESS (SIDE AIRBAG MODULE HARNESS RH) (SHORTED TO GROUND).** 1) Turn the ignition switch to OFF, disconnect the battery ground cable, and wait for 60 seconds or more. 2) Disconnect the connector (AB26) from seat belt pretensioner RH. 3) Disconnect the connector (AB22) from seat cushion airbag module RH. 4) Disconnect the connector (AB24) from side airbag module RH. 5) Disconnect the connector (AB33) from curtain airbag module RH. 6) Disconnect the connectors (AB6, AB17, AB18) from airbag control module. 7) Measure the resistance between connector (AB24) of side airbag module RH and chassis ground. **CAUTION:** **Connect the terminal in test harness AT to connector (AB24) terminal, and apply the tester to test harness AT.** ***Connector & terminal*** ***(AB24) No. 1 — Chassis ground:*** ***(AB24) No. 2 — Chassis ground:***	Is the resistance 1 MΩ or more?	Go to step **3**.	Replace the airbag rear harness along with body harness.
3	**CHECK AIRBAG CONTROL MODULE.** 1) Connect all connectors other than side airbag module RH connector (AB24). 2) Connect the battery ground terminal and turn the ignition switch to ON. 3) Clear the memory. <Ref. to AB(diag)-32, Clear Memory Mode.> 4) Perform the Inspection Mode. <Ref. to AB(diag)-31, Inspection Mode.> 5) Read the DTC. (Current malfunction) <Ref. to AB(diag)-30, Read Diagnostic Trouble Code (DTC).>	Is DTC B1822 displayed?	Replace the airbag control module. <Ref. to AB-50, Airbag Control Module.>	Go to step **4**.
4	**CHECK SIDE AIRBAG MODULE.** 1) Turn the ignition switch to OFF, disconnect the battery ground cable, and wait for 60 seconds or more. 2) Connect all connectors. 3) Connect the battery ground terminal and turn the ignition switch to ON. 4) Clear the memory. <Ref. to AB(diag)-32, Clear Memory Mode.> 5) Perform the Inspection Mode. <Ref. to AB(diag)-31, Inspection Mode.> 6) Read the DTC. (Current malfunction) <Ref. to AB(diag)-30, Read Diagnostic Trouble Code (DTC).>	Is DTC B1822 displayed?	Replace the side airbag module RH. <Ref. to AB-40, REMOVAL, Side Airbag Module.>	Go to step **5**.
5	**CHECK FOR ANY OTHER DTC ON DISPLAY.** Read the DTC. (Current malfunction) <Ref. to AB(diag)-30, Read Diagnostic Trouble Code (DTC).>	Is any other DTC displayed?	Check DTC using "List of Diagnostic Trouble Code (DTC)". <Ref. to AB(diag)-38, List of Diagnostic Trouble Code (DTC).>	Finish the diagnosis.

DK:DTC B1823 SHORT IN SIDE AIRBAG RH (TO +B)

DIAGNOSIS START CONDITION:
Ignition voltage is 10 V to 16 V.
DTC DETECTING CONDITION:
Short circuit failure in power supply (shorted in main harness power supply, shorted in front seat side airbag RH power supply, shorted in airbag CM internal circuit power supply)

CAUTION:
Before performing diagnosis, refer to "CAUTION" in "General Description". <Ref. to AB(diag)-4, CAUTION, General Description.>
WIRING DIAGRAM:

NOTE:
For the coupling connector, refer to "WIRING SYSTEM".
Airbag system <Ref. to WI-89, WIRING DIAGRAM, Airbag System.>

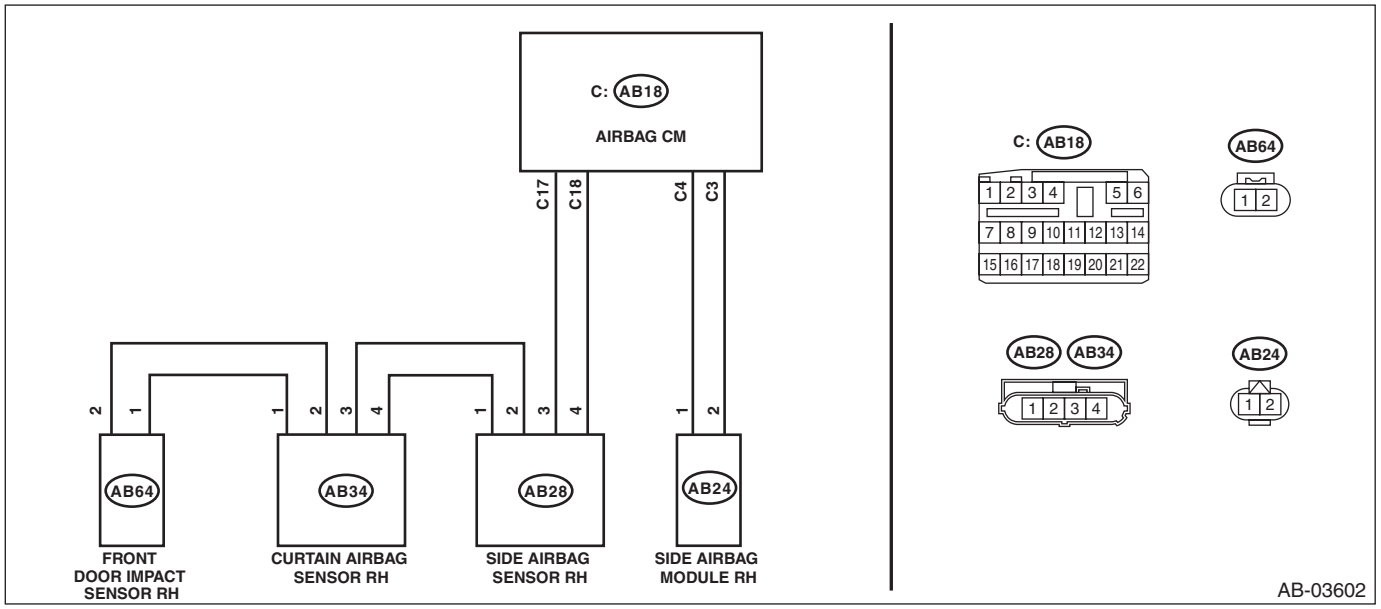

Step		Check	Yes	No
1	**CHECK POOR CONTACT OF CONNECTORS.** Check for poor contact of the connectors between the airbag control module, side airbag module RH and the side airbag sensor RH.	Is there poor contact?	Replace the airbag rear harness along with body harness.	Go to step **2**.

	Step	Check	Yes	No
2	**CHECK AIRBAG REAR HARNESS (SIDE AIRBAG MODULE HARNESS RH) (SHORTED TO POWER SUPPLY).** 1) Turn the ignition switch to OFF, disconnect the battery ground cable, and wait for 60 seconds or more. 2) Disconnect the connector (AB26) from seat belt pretensioner RH. 3) Disconnect the connector (AB22) from seat cushion airbag module RH. 4) Disconnect the connector (AB24) from side airbag module RH. 5) Disconnect the connector (AB33) from curtain airbag module RH. 6) Disconnect the connectors (AB6, AB17, AB18) from airbag control module. 7) Measure the voltage between connector (AB24) of side airbag module RH and chassis ground. **CAUTION:** **Connect the terminal in test harness AT to connector (AB24) terminal, and apply the tester to test harness AT.** ***Connector & terminal*** ***(AB24) No. 1 (+) — Chassis ground (–):*** ***(AB24) No. 2 (+) — Chassis ground (–):***	Is the voltage less than 1 V?	Go to step **3**.	Replace the airbag rear harness along with body harness.
3	**CHECK AIRBAG CONTROL MODULE.** 1) Connect all connectors other than side airbag module RH connector (AB24). 2) Connect the battery ground terminal and turn the ignition switch to ON. 3) Clear the memory. <Ref. to AB(diag)-32, Clear Memory Mode.> 4) Perform the Inspection Mode. <Ref. to AB(diag)-31, Inspection Mode.> 5) Read the DTC. (Current malfunction) <Ref. to AB(diag)-30, Read Diagnostic Trouble Code (DTC).>	Is DTC B1823 displayed?	Replace the airbag control module. <Ref. to AB-50, Airbag Control Module.>	Go to step **4**.
4	**CHECK SIDE AIRBAG MODULE.** 1) Turn the ignition switch to OFF, disconnect the battery ground cable, and wait for 60 seconds or more. 2) Connect all connectors. 3) Connect the battery ground terminal and turn the ignition switch to ON. 4) Clear the memory. <Ref. to AB(diag)-32, Clear Memory Mode.> 5) Perform the Inspection Mode. <Ref. to AB(diag)-31, Inspection Mode.> 6) Read the DTC. (Current malfunction) <Ref. to AB(diag)-30, Read Diagnostic Trouble Code (DTC).>	Is DTC B1823 displayed?	Replace the side airbag module RH. <Ref. to AB-40, REMOVAL, Side Airbag Module.>	Go to step **5**.
5	**CHECK FOR ANY OTHER DTC ON DISPLAY.** Read the DTC. (Current malfunction) <Ref. to AB(diag)-30, Read Diagnostic Trouble Code (DTC).>	Is any other DTC displayed?	Check DTC using "List of Diagnostic Trouble Code (DTC)". <Ref. to AB(diag)-38, List of Diagnostic Trouble Code (DTC).>	Finish the diagnosis.

DL:DTC B1824 SHORT IN SIDE AIRBAG RH

DIAGNOSIS START CONDITION:
Ignition voltage is 10 V to 16 V.
DTC DETECTING CONDITION:
Short circuit between front seat side airbag RH circuit and other circuit

CAUTION:
Before performing diagnosis, refer to "CAUTION" in "General Description". <Ref. to AB(diag)-4, CAUTION, General Description.>
WIRING DIAGRAM:

NOTE:
For the coupling connector, refer to "WIRING SYSTEM".
Airbag system <Ref. to WI-89, WIRING DIAGRAM, Airbag System.>

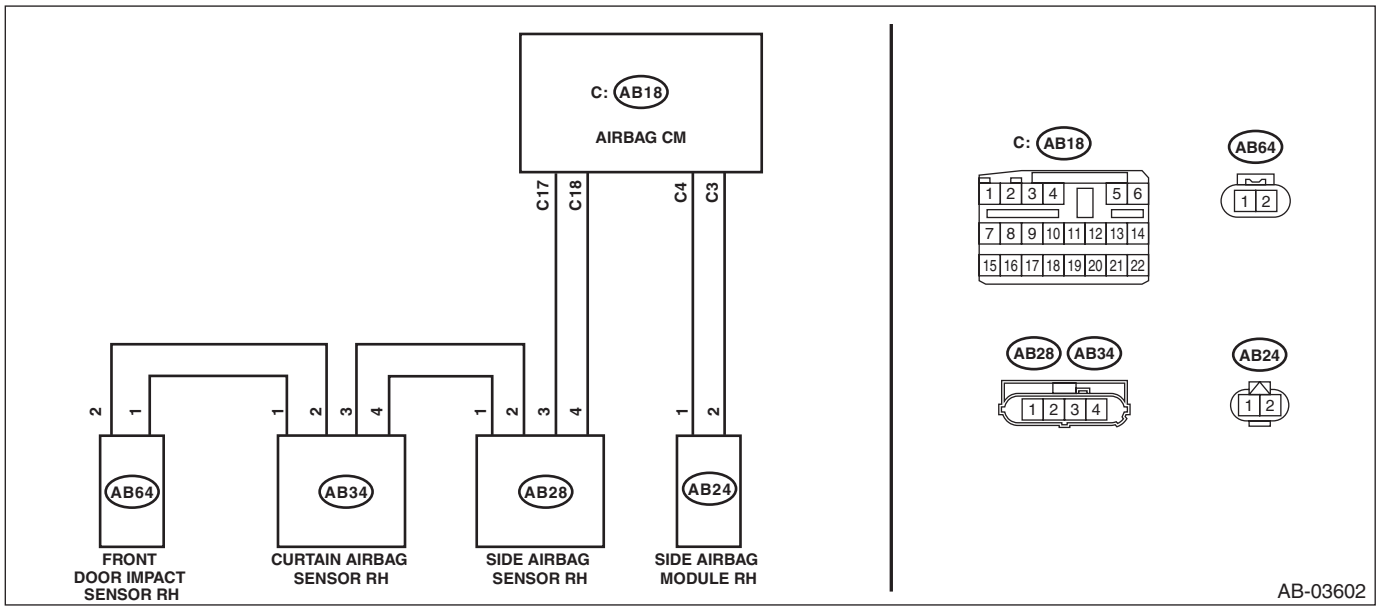

Step		Check	Yes	No
1	**CHECK POOR CONTACT OF CONNECTORS.** Check for poor contact of the connectors between the airbag control module, side airbag module RH and the side airbag sensor RH.	Is there poor contact?	Replace the airbag rear harness along with body harness.	Go to step **2**.

	Step	Check	Yes	No
2	**CHECK AIRBAG REAR HARNESS (SIDE AIRBAG MODULE HARNESS RH) (SHORTED BETWEEN LINES).** 1) Turn the ignition switch to OFF, disconnect the battery ground cable, and wait for 60 seconds or more. 2) Disconnect the connector (AB26) from seat belt pretensioner RH. 3) Disconnect the connector (AB22) from seat cushion airbag module RH. 4) Disconnect the connector (AB24) from side airbag module RH. 5) Disconnect the connector (AB33) from curtain airbag module RH. 6) Disconnect the connectors (AB6, AB17, AB18) from airbag control module. 7) Connect the connector (1AD) in test harness AD AV to the connectors (AB6, AB17, AB18). 8) Connect the connector (2AD) in test harness AD AV and the connector (1AG) in test harness AG. 9) Measure the resistance between connector (5AG) in the test harness AG and all connector terminals in the test harness AG. ***Connector & terminal*** ***(5AG) No. 1 — All terminals in test harness AG:*** ***(5AG) No. 3 — All terminals in test harness AG:***	Is the resistance 1 MΩ or more?	Go to step **3**.	Replace the airbag rear harness along with body harness.
3	**CHECK AIRBAG CONTROL MODULE.** 1) Connect all connectors other than side airbag module RH connector (AB24). 2) Connect the battery ground terminal and turn the ignition switch to ON. 3) Clear the memory. <Ref. to AB(diag)-32, Clear Memory Mode.> 4) Perform the Inspection Mode. <Ref. to AB(diag)-31, Inspection Mode.> 5) Read the DTC. (Current malfunction) <Ref. to AB(diag)-30, Read Diagnostic Trouble Code (DTC).>	Is DTC B1824 displayed?	Replace the airbag control module. <Ref. to AB-50, Airbag Control Module.>	Go to step **4**.
4	**CHECK SIDE AIRBAG MODULE.** 1) Turn the ignition switch to OFF, disconnect the battery ground cable, and wait for 60 seconds or more. 2) Connect all connectors. 3) Connect the battery ground terminal and turn the ignition switch to ON. 4) Clear the memory. <Ref. to AB(diag)-32, Clear Memory Mode.> 5) Perform the Inspection Mode. <Ref. to AB(diag)-31, Inspection Mode.> 6) Read the DTC. (Current malfunction) <Ref. to AB(diag)-30, Read Diagnostic Trouble Code (DTC).>	Is DTC B1824 displayed?	Replace the side airbag module RH. <Ref. to AB-40, REMOVAL, Side Airbag Module.>	Go to step **5**.

	Step	Check	Yes	No
5	**CHECK FOR ANY OTHER DTC ON DISPLAY.** Read the DTC. (Current malfunction) <Ref. to AB(diag)-30, Read Diagnostic Trouble Code (DTC).>	Is any other DTC displayed?	Check DTC using "List of Diagnostic Trouble Code (DTC)". <Ref. to AB(diag)-38, List of Diagnostic Trouble Code (DTC).>	Finish the diagnosis.

DM:DTC B1825 SHORT IN SIDE AIRBAG LH

DIAGNOSIS START CONDITION:
Ignition voltage is 10 V to 16 V.
DTC DETECTING CONDITION:
Shorted between +/– lines (shorted between main harness lines, shorted between front seat side airbag LH lines, shorted between airbag CM internal lines)

NOTE:
Before starting work, prepare two sets of TEST HARNESS AT (98299CA020).

CAUTION:
Before performing diagnosis, refer to "CAUTION" in "General Description". <Ref. to AB(diag)-4, CAUTION, General Description.>
WIRING DIAGRAM:

NOTE:
For the coupling connector, refer to "WIRING SYSTEM".
Airbag system <Ref. to WI-89, WIRING DIAGRAM, Airbag System.>

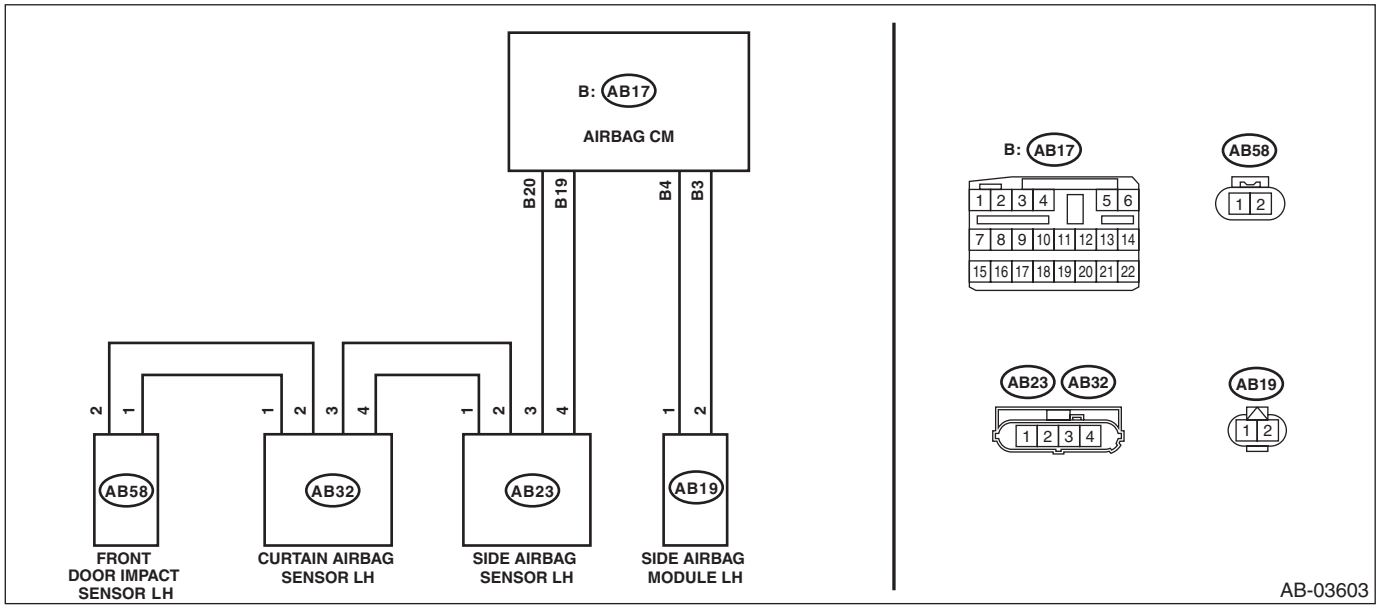

Step		Check	Yes	No
1	**CHECK POOR CONTACT OF CONNECTORS.** Check for poor contact of the connectors between the airbag control module, side airbag module LH and the side airbag sensor LH.	Is there poor contact?	Replace the airbag rear harness along with body harness.	Go to step **2**.

	Step	Check	Yes	No
2	**CHECK AIRBAG REAR HARNESS (SIDE AIRBAG MODULE HARNESS LH) (SHORTED BETWEEN LINES).** 1) Turn the ignition switch to OFF, disconnect the battery ground cable, and wait for 60 seconds or more. 2) Disconnect the connector (AB21) from seat belt pretensioner LH. 3) Disconnect the connector (AB5) from seat cushion airbag module LH. 4) Disconnect the connector (AB19) from side airbag module LH. 5) Disconnect the connector (AB31) from curtain airbag module LH. 6) Disconnect the connectors (AB6, AB17, AB18) from airbag control module. 7) Connect the connector (1AD) in test harness AD AV to the connectors (AB6, AB17, AB18). 8) Connect the connector (2AD) in test harness AD AV and the connector (1AG) in test harness AG. 9) Measure the resistance between terminals of connector (AB19) of side airbag module LH. **CAUTION:** **Connect the terminal in test harness AT to connector (AB19) terminal, and apply the tester to test harness AT. Two sets of test harness AT are required.** ***Connector & terminal (AB19) No. 1 — (AB19) No. 2:***	Is the resistance 1 MΩ or more?	Go to step **3**.	Replace the airbag rear harness along with body harness.
3	**CHECK AIRBAG CONTROL MODULE.** 1) Connect all connectors other than side airbag module LH connector (AB19). 2) Connect the battery ground terminal and turn the ignition switch to ON. 3) Clear the memory. <Ref. to AB(diag)-32, Clear Memory Mode.> 4) Perform the Inspection Mode. <Ref. to AB(diag)-31, Inspection Mode.> 5) Read the DTC. (Current malfunction) <Ref. to AB(diag)-30, Read Diagnostic Trouble Code (DTC).>	Is DTC B1825 displayed?	Replace the airbag control module. <Ref. to AB-50, Airbag Control Module.>	Go to step **4**.
4	**CHECK SIDE AIRBAG MODULE.** 1) Turn the ignition switch to OFF, disconnect the battery ground cable, and wait for 60 seconds or more. 2) Connect all connectors. 3) Connect the battery ground terminal and turn the ignition switch to ON. 4) Clear the memory. <Ref. to AB(diag)-32, Clear Memory Mode.> 5) Perform the Inspection Mode. <Ref. to AB(diag)-31, Inspection Mode.> 6) Read the DTC. (Current malfunction) <Ref. to AB(diag)-30, Read Diagnostic Trouble Code (DTC).>	Is DTC B1825 displayed?	Replace the side airbag module LH. <Ref. to AB-40, REMOVAL, Side Airbag Module.>	Go to step **5**.

	Step	Check	Yes	No
5	**CHECK FOR ANY OTHER DTC ON DISPLAY.** Read the DTC. (Current malfunction) <Ref. to AB(diag)-30, Read Diagnostic Trouble Code (DTC).>	Is any other DTC displayed?	Check DTC using "List of Diagnostic Trouble Code (DTC)". <Ref. to AB(diag)-38, List of Diagnostic Trouble Code (DTC).>	Finish the diagnosis.

DN:DTC B1826 OPEN IN SIDE AIRBAG LH

DIAGNOSIS START CONDITION:
Ignition voltage is 10 V to 16 V.
DTC DETECTING CONDITION:
Open circuit failure (open circuit in main harness, open circuit in front seat side airbag LH, open circuit in airbag CM internal circuit, connector connection failure)

NOTE:
Before starting work, prepare two sets of TEST HARNESS AT (98299CA020).

CAUTION:
Before performing diagnosis, refer to "CAUTION" in "General Description". <Ref. to AB(diag)-4, CAUTION, General Description.>
WIRING DIAGRAM:

NOTE:
For the coupling connector, refer to "WIRING SYSTEM".
Airbag system <Ref. to WI-89, WIRING DIAGRAM, Airbag System.>

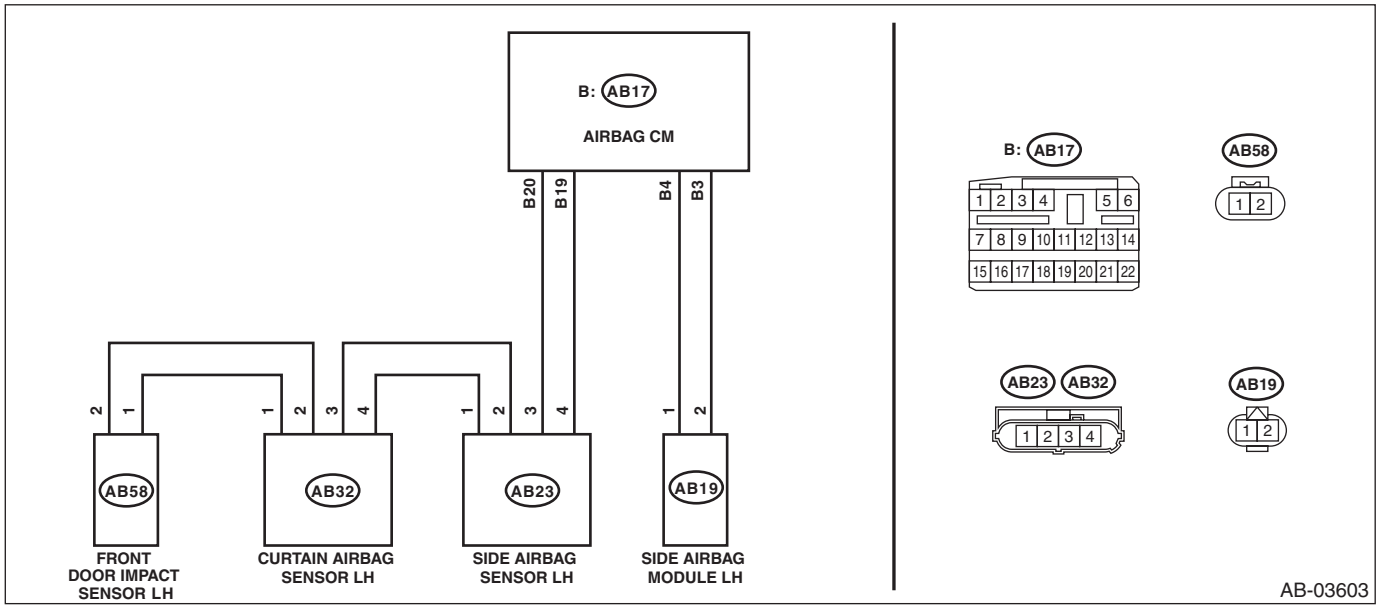

Step		Check	Yes	No
1	**CHECK POOR CONTACT OF CONNECTORS.** Check for poor contact of the connectors between the airbag control module, side airbag module LH and the side airbag sensor LH.	Is there poor contact?	Replace the airbag rear harness along with body harness.	Go to step **2**.

	Step	Check	Yes	No
2	**CHECK AIRBAG REAR HARNESS (SIDE AIRBAG MODULE HARNESS LH) (OPEN CIRCUIT).** 1) Turn the ignition switch to OFF, disconnect the battery ground cable, and wait for 60 seconds or more. 2) Disconnect the connector (AB21) from seat belt pretensioner LH. 3) Disconnect the connector (AB5) from seat cushion airbag module LH. 4) Disconnect the connector (AB19) from side airbag module LH. 5) Disconnect the connector (AB31) from curtain airbag module LH. 6) Disconnect the connectors (AB6, AB17, AB18) from airbag control module. 7) Measure the resistance between terminals of connector (AB19) of side airbag module LH. **CAUTION:** **Connect the terminal in test harness AT to connector (AB19) terminal, and apply the tester to test harness AT. Two sets of test harness AT are required.** ***Connector & terminal*** ***(AB19) No. 1 — (AB19) No. 2:***	Is the resistance less than 10 Ω?	Go to step **3**.	Replace the airbag rear harness along with body harness.
3	**CHECK AIRBAG CONTROL MODULE.** 1) Connect all connectors other than side airbag module LH connector (AB19). 2) Connect the battery ground terminal and turn the ignition switch to ON. 3) Clear the memory. <Ref. to AB(diag)-32, Clear Memory Mode.> 4) Perform the Inspection Mode. <Ref. to AB(diag)-31, Inspection Mode.> 5) Read the DTC. (Current malfunction) <Ref. to AB(diag)-30, Read Diagnostic Trouble Code (DTC).>	Is DTC B1826 displayed?	Replace the airbag control module. <Ref. to AB-50, Airbag Control Module.>	Go to step **4**.
4	**CHECK SIDE AIRBAG MODULE.** 1) Turn the ignition switch to OFF, disconnect the battery ground cable, and wait for 60 seconds or more. 2) Connect all connectors. 3) Connect the battery ground terminal and turn the ignition switch to ON. 4) Clear the memory. <Ref. to AB(diag)-32, Clear Memory Mode.> 5) Perform the Inspection Mode. <Ref. to AB(diag)-31, Inspection Mode.> 6) Read the DTC. (Current malfunction) <Ref. to AB(diag)-30, Read Diagnostic Trouble Code (DTC).>	Is DTC B1826 displayed?	Replace the side airbag module LH. <Ref. to AB-40, REMOVAL, Side Airbag Module.>	Go to step **5**.
5	**CHECK FOR ANY OTHER DTC ON DISPLAY.** Read the DTC. (Current malfunction) <Ref. to AB(diag)-30, Read Diagnostic Trouble Code (DTC).>	Is any other DTC displayed?	Check DTC using "List of Diagnostic Trouble Code (DTC)". <Ref. to AB(diag)-38, List of Diagnostic Trouble Code (DTC).>	Finish the diagnosis.

DO:DTC B1827 SHORT IN SIDE AIRBAG LH (TO GROUND)

DIAGNOSIS START CONDITION:
Ignition voltage is 10 V to 16 V.
DTC DETECTING CONDITION:
GND short circuit failure (shorted to ground in main harness, shorted to ground in front seat side airbag LH, shorted to ground in airbag CM internal circuit)

CAUTION:
Before performing diagnosis, refer to "CAUTION" in "General Description". <Ref. to AB(diag)-4, CAUTION, General Description.>
WIRING DIAGRAM:

NOTE:
For the coupling connector, refer to "WIRING SYSTEM".
Airbag system <Ref. to WI-89, WIRING DIAGRAM, Airbag System.>

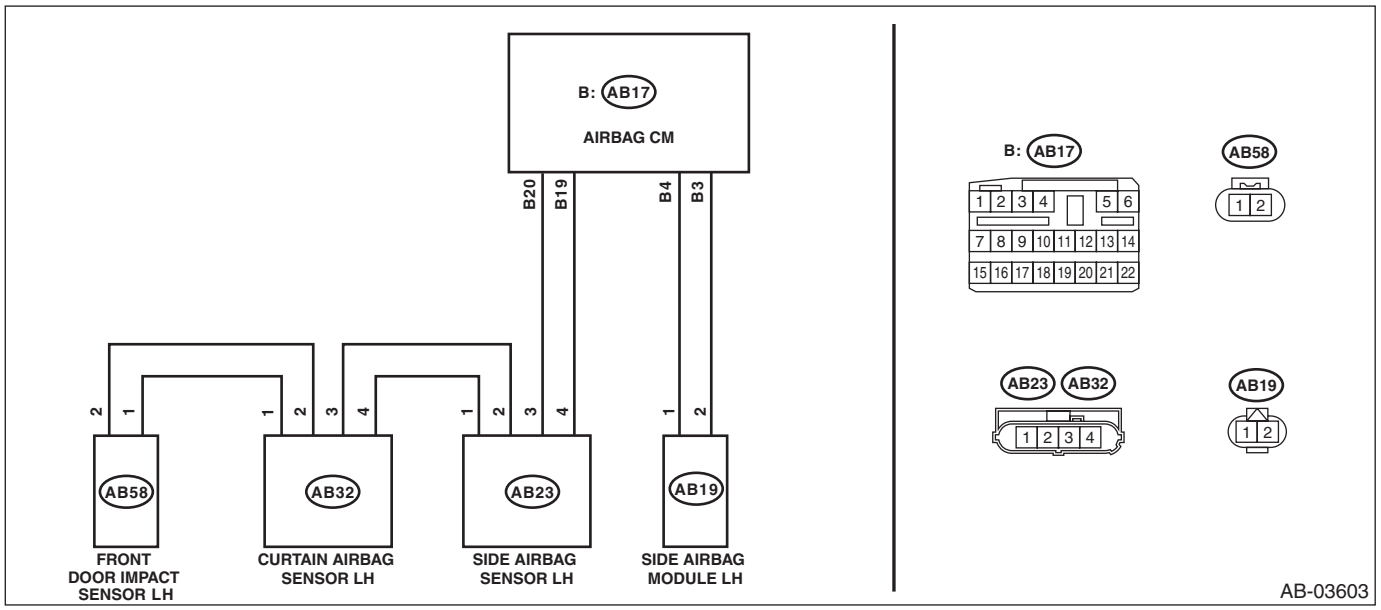

Step		Check	Yes	No
1	**CHECK POOR CONTACT OF CONNECTORS.** Check for poor contact of the connectors between the airbag control module, side airbag module LH and the side airbag sensor LH.	Is there poor contact?	Replace the airbag rear harness along with body harness.	Go to step **2**.

	Step	Check	Yes	No
2	**CHECK AIRBAG REAR HARNESS (SIDE AIRBAG MODULE HARNESS LH) (SHORTED TO GROUND).** 1) Turn the ignition switch to OFF, disconnect the battery ground cable, and wait for 60 seconds or more. 2) Disconnect the connector (AB21) from seat belt pretensioner LH. 3) Disconnect the connector (AB5) from seat cushion airbag module LH. 4) Disconnect the connector (AB19) from side airbag module LH. 5) Disconnect the connector (AB31) from curtain airbag module LH. 6) Disconnect the connectors (AB6, AB17, AB18) from airbag control module. 7) Measure the resistance between connector (AB19) of side airbag module LH and chassis ground. **CAUTION:** **Connect the terminal in test harness AT to connector (AB19) terminal, and apply the tester to test harness AT.** ***Connector & terminal*** ***(AB19) No. 1 — Chassis ground:*** ***(AB19) No. 2 — Chassis ground:***	Is the resistance 1 MΩ or more?	Go to step **3**.	Replace the airbag rear harness along with body harness.
3	**CHECK AIRBAG CONTROL MODULE.** 1) Connect all connectors other than side airbag module LH connector (AB19). 2) Connect the battery ground terminal and turn the ignition switch to ON. 3) Clear the memory. <Ref. to AB(diag)-32, Clear Memory Mode.> 4) Perform the Inspection Mode. <Ref. to AB(diag)-31, Inspection Mode.> 5) Read the DTC. (Current malfunction) <Ref. to AB(diag)-30, Read Diagnostic Trouble Code (DTC).>	Is DTC B1827 displayed?	Replace the airbag control module. <Ref. to AB-50, Airbag Control Module.>	Go to step **4**.
4	**CHECK SIDE AIRBAG MODULE.** 1) Turn the ignition switch to OFF, disconnect the battery ground cable, and wait for 60 seconds or more. 2) Connect all connectors. 3) Connect the battery ground terminal and turn the ignition switch to ON. 4) Clear the memory. <Ref. to AB(diag)-32, Clear Memory Mode.> 5) Perform the Inspection Mode. <Ref. to AB(diag)-31, Inspection Mode.> 6) Read the DTC. (Current malfunction) <Ref. to AB(diag)-30, Read Diagnostic Trouble Code (DTC).>	Is DTC B1827 displayed?	Replace the side airbag module LH. <Ref. to AB-40, REMOVAL, Side Airbag Module.>	Go to step **5**.
5	**CHECK FOR ANY OTHER DTC ON DISPLAY.** Read the DTC. (Current malfunction) <Ref. to AB(diag)-30, Read Diagnostic Trouble Code (DTC).>	Is any other DTC displayed?	Check DTC using "List of Diagnostic Trouble Code (DTC)". <Ref. to AB(diag)-38, List of Diagnostic Trouble Code (DTC).>	Finish the diagnosis.

DP:DTC B1828 SHORT IN SIDE AIRBAG LH (TO +B)

DIAGNOSIS START CONDITION:
Ignition voltage is 10 V to 16 V.
DTC DETECTING CONDITION:
Short circuit failure in power supply (shorted in main harness power supply, shorted in front seat side airbag LH power supply, shorted in airbag CM internal circuit power supply)

CAUTION:
Before performing diagnosis, refer to "CAUTION" in "General Description". <Ref. to AB(diag)-4, CAUTION, General Description.>
WIRING DIAGRAM:

NOTE:
For the coupling connector, refer to "WIRING SYSTEM".
Airbag system <Ref. to WI-89, WIRING DIAGRAM, Airbag System.>

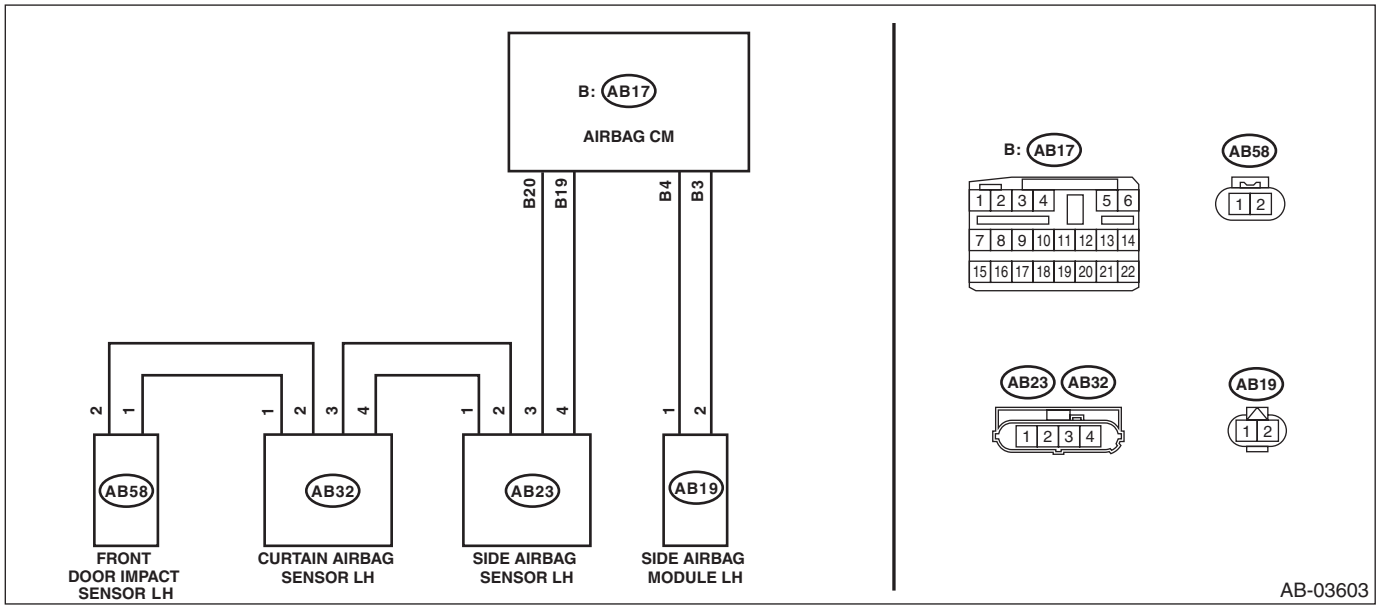

Step		Check	Yes	No
1	**CHECK POOR CONTACT OF CONNECTORS.** Check for poor contact of the connectors between the airbag control module, side airbag module LH and the side airbag sensor LH.	Is there poor contact?	Replace the airbag rear harness along with body harness.	Go to step **2**.

	Step	Check	Yes	No
2	**CHECK AIRBAG REAR HARNESS (SIDE AIRBAG MODULE HARNESS LH) (SHORTED TO POWER SUPPLY).** 1) Turn the ignition switch to OFF, disconnect the battery ground cable, and wait for 60 seconds or more. 2) Disconnect the connector (AB21) from seat belt pretensioner LH. 3) Disconnect the connector (AB5) from seat cushion airbag module LH. 4) Disconnect the connector (AB19) from side airbag module LH. 5) Disconnect the connector (AB31) from curtain airbag module LH. 6) Disconnect the connectors (AB6, AB17, AB18) from airbag control module. 7) Measure the voltage between connector (AB19) of side airbag module LH and chassis ground. **CAUTION:** **Connect the terminal in test harness AT to connector (AB19) terminal, and apply the tester to test harness AT.** ***Connector & terminal*** ***(AB19) No. 1 (+) — Chassis ground (–):*** ***(AB19) No. 2 (+) — Chassis ground (–):***	Is the voltage less than 1 V?	Go to step **3**.	Replace the airbag rear harness along with body harness.
3	**CHECK AIRBAG CONTROL MODULE.** 1) Connect all connectors other than side airbag module LH connector (AB19). 2) Connect the battery ground terminal and turn the ignition switch to ON. 3) Clear the memory. <Ref. to AB(diag)-32, Clear Memory Mode.> 4) Perform the Inspection Mode. <Ref. to AB(diag)-31, Inspection Mode.> 5) Read the DTC. (Current malfunction) <Ref. to AB(diag)-30, Read Diagnostic Trouble Code (DTC).>	Is DTC B1828 displayed?	Replace the airbag control module. <Ref. to AB-50, Airbag Control Module.>	Go to step **4**.
4	**CHECK SIDE AIRBAG MODULE.** 1) Turn the ignition switch to OFF, disconnect the battery ground cable, and wait for 60 seconds or more. 2) Connect all connectors. 3) Connect the battery ground terminal and turn the ignition switch to ON. 4) Clear the memory. <Ref. to AB(diag)-32, Clear Memory Mode.> 5) Perform the Inspection Mode. <Ref. to AB(diag)-31, Inspection Mode.> 6) Read the DTC. (Current malfunction) <Ref. to AB(diag)-30, Read Diagnostic Trouble Code (DTC).>	Is DTC B1828 displayed?	Replace the side airbag module LH. <Ref. to AB-40, REMOVAL, Side Airbag Module.>	Go to step **5**.
5	**CHECK FOR ANY OTHER DTC ON DISPLAY.** Read the DTC. (Current malfunction) <Ref. to AB(diag)-30, Read Diagnostic Trouble Code (DTC).>	Is any other DTC displayed?	Check DTC using "List of Diagnostic Trouble Code (DTC)". <Ref. to AB(diag)-38, List of Diagnostic Trouble Code (DTC).>	Finish the diagnosis.

DQ:DTC B1829 SHORT IN SIDE AIRBAG LH

DIAGNOSIS START CONDITION:
Ignition voltage is 10 V to 16 V.
DTC DETECTING CONDITION:
Short circuit between front seat side airbag LH circuit and other circuit

CAUTION:
Before performing diagnosis, refer to "CAUTION" in "General Description". <Ref. to AB(diag)-4, CAUTION, General Description.>
WIRING DIAGRAM:

NOTE:
For the coupling connector, refer to "WIRING SYSTEM".
Airbag system <Ref. to WI-89, WIRING DIAGRAM, Airbag System.>

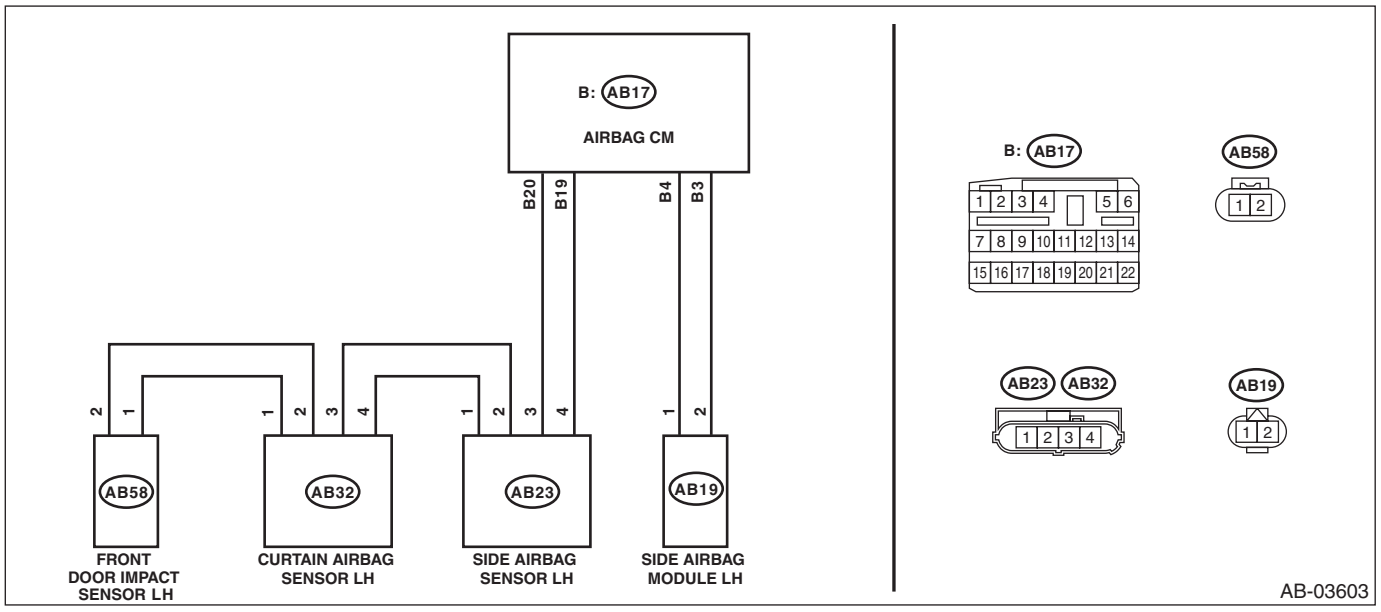

Step		Check	Yes	No
1	**CHECK POOR CONTACT OF CONNECTORS.** Check for poor contact of the connectors between the airbag control module, side airbag module LH and the side airbag sensor LH.	Is there poor contact?	Replace the airbag rear harness along with body harness.	Go to step **2**.

	Step	Check	Yes	No
2	**CHECK AIRBAG REAR HARNESS (SIDE AIRBAG MODULE HARNESS LH) (SHORTED BETWEEN LINES).** 1) Turn the ignition switch to OFF, disconnect the battery ground cable, and wait for 60 seconds or more. 2) Disconnect the connector (AB21) from seat belt pretensioner LH. 3) Disconnect the connector (AB5) from seat cushion airbag module LH. 4) Disconnect the connector (AB19) from side airbag module LH. 5) Disconnect the connector (AB31) from curtain airbag module LH. 6) Disconnect the connectors (AB6, AB17, AB18) from airbag control module. 7) Connect the connector (1AD) in test harness AD AV to the connectors (AB6, AB17, AB18). 8) Connect the connector (2AD) in test harness AD AV and the connector (1AG) in test harness AG. 9) Measure the resistance between connector (5AG) in the test harness AG and all connector terminals in the test harness AG. ***Connector & terminal*** ***(5AG) No. 5 — All terminals in test harness AG:*** ***(5AG) No. 7 — All terminals in test harness AG:***	Is the resistance 1 MΩ or more?	Go to step **3**.	Replace the airbag rear harness along with body harness.
3	**CHECK AIRBAG CONTROL MODULE.** 1) Connect all connectors other than side airbag module LH connector (AB19). 2) Connect the battery ground terminal and turn the ignition switch to ON. 3) Clear the memory. <Ref. to AB(diag)-32, Clear Memory Mode.> 4) Perform the Inspection Mode. <Ref. to AB(diag)-31, Inspection Mode.> 5) Read the DTC. (Current malfunction) <Ref. to AB(diag)-30, Read Diagnostic Trouble Code (DTC).>	Is DTC B1829 displayed?	Replace the airbag control module. <Ref. to AB-50, Airbag Control Module.>	Go to step **4**.
4	**CHECK SIDE AIRBAG MODULE.** 1) Turn the ignition switch to OFF, disconnect the battery ground cable, and wait for 60 seconds or more. 2) Connect all connectors. 3) Connect the battery ground terminal and turn the ignition switch to ON. 4) Clear the memory. <Ref. to AB(diag)-32, Clear Memory Mode.> 5) Perform the Inspection Mode. <Ref. to AB(diag)-31, Inspection Mode.> 6) Read the DTC. (Current malfunction) <Ref. to AB(diag)-30, Read Diagnostic Trouble Code (DTC).>	Is DTC B1829 displayed?	Replace the side airbag module LH. <Ref. to AB-40, REMOVAL, Side Airbag Module.>	Go to step **5**.

	Step	Check	Yes	No
5	**CHECK FOR ANY OTHER DTC ON DISPLAY.** Read the DTC. (Current malfunction) <Ref. to AB(diag)-30, Read Diagnostic Trouble Code (DTC).>	Is any other DTC displayed?	Check DTC using "List of Diagnostic Trouble Code (DTC)". <Ref. to AB(diag)-38, List of Diagnostic Trouble Code (DTC).>	Finish the diagnosis.

DR:DTC B1830 SHORT IN CURTAIN AIRBAG RH SQUIB CIRCUIT

DIAGNOSIS START CONDITION:
Ignition voltage is 10 V to 16 V.
DTC DETECTING CONDITION:
Shorted between +/– lines (shorted between main harness lines, shorted between curtain airbag RH lines, shorted between airbag CM internal lines)

CAUTION:
Before performing diagnosis, refer to "CAUTION" in "General Description". <Ref. to AB(diag)-4, CAUTION, General Description.>
WIRING DIAGRAM:

NOTE:
For the coupling connector, refer to "WIRING SYSTEM".
Airbag system <Ref. to WI-89, WIRING DIAGRAM, Airbag System.>

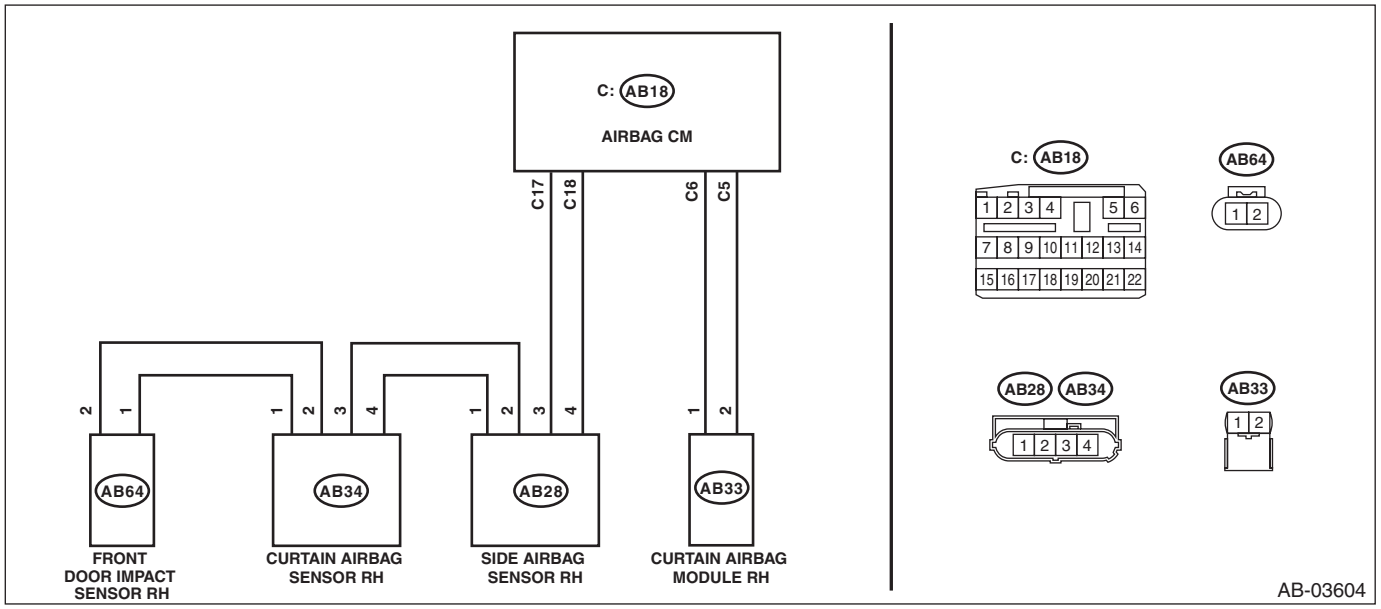

Step		Check	Yes	No
1	**CHECK POOR CONTACT OF CONNECTORS.** Check for poor contact of the connectors between the airbag control module, curtain airbag module RH and the curtain airbag sensor RH.	Is there poor contact?	Replace the airbag rear harness along with body harness.	Go to step **2**.
2	**CHECK CURTAIN AIRBAG MODULE.** 1) Turn the ignition switch to OFF, disconnect the battery ground cable, and wait for 60 seconds or more. 2) Disconnect the connector (AB33) from curtain airbag module RH. 3) Connect the connector (1N) in the test harness N to the connector (AB33). 4) Connect the airbag resistor to the connector (2N) of test harness N. 5) Connect the battery ground terminal and turn the ignition switch to ON.	Does the airbag warning light illuminate for 6 seconds and go off?	Replace the curtain airbag module RH. <Ref. to AB-43, Curtain Airbag Module.>	Go to step **3**.

	Step	Check	Yes	No
3	**CHECK AIRBAG REAR HARNESS (CURTAIN AIRBAG MODULE HARNESS RH) (SHORTED BETWEEN LINES).** 1) Turn the ignition switch to OFF, disconnect the battery ground cable, and wait for 60 seconds or more. 2) Disconnect the connector (AB26) from seat belt pretensioner RH. 3) Disconnect the connector (AB22) from seat cushion airbag module RH. 4) Disconnect the connector (AB24) from side airbag module RH. 5) Disconnect the airbag resistor from test harness N. 6) Disconnect the connectors (AB6, AB17, AB18) from airbag control module. 7) Connect the connector (1AD) in test harness AD AV to the connectors (AB6, AB17, AB18). 8) Connect the connector (2AD) in test harness AD AV and the connector (1AG) in test harness AG. 9) Measure the resistance between connector (2N) terminals in test harness N. ***Connector & terminal (2N) No. 1 — (2N) No. 2:***	Is the resistance 1 MΩ or more?	Go to step **4**.	Replace the airbag rear harness along with body harness.
4	**CHECK AIRBAG CONTROL MODULE.** 1) Connect all connectors. 2) Clear the memory. <Ref. to AB(diag)-32, Clear Memory Mode.> 3) Perform the Inspection Mode. <Ref. to AB(diag)-31, Inspection Mode.> 4) Read the DTC. (Current malfunction) <Ref. to AB(diag)-30, Read Diagnostic Trouble Code (DTC).>	Is DTC B1830 displayed?	Replace the airbag control module. <Ref. to AB-50, Airbag Control Module.>	Go to step **5**.
5	**CHECK FOR ANY OTHER DTC ON DISPLAY.** Read the DTC. (Current malfunction) <Ref. to AB(diag)-30, Read Diagnostic Trouble Code (DTC).>	Is any other DTC displayed?	Check DTC using "List of Diagnostic Trouble Code (DTC)". <Ref. to AB(diag)-38, List of Diagnostic Trouble Code (DTC).>	Finish the diagnosis.

DS:DTC B1831 OPEN IN CURTAIN AIRBAG RH SQUIB CIRCUIT

DIAGNOSIS START CONDITION:
Ignition voltage is 10 V to 16 V.
DTC DETECTING CONDITION:
Open circuit failure (open circuit in main harness, open circuit in curtain airbag RH, open circuit in airbag CM internal circuit, connector connection failure)

CAUTION:
Before performing diagnosis, refer to "CAUTION" in "General Description". <Ref. to AB(diag)-4, CAUTION, General Description.>
WIRING DIAGRAM:

NOTE:
For the coupling connector, refer to "WIRING SYSTEM".
Airbag system <Ref. to WI-89, WIRING DIAGRAM, Airbag System.>

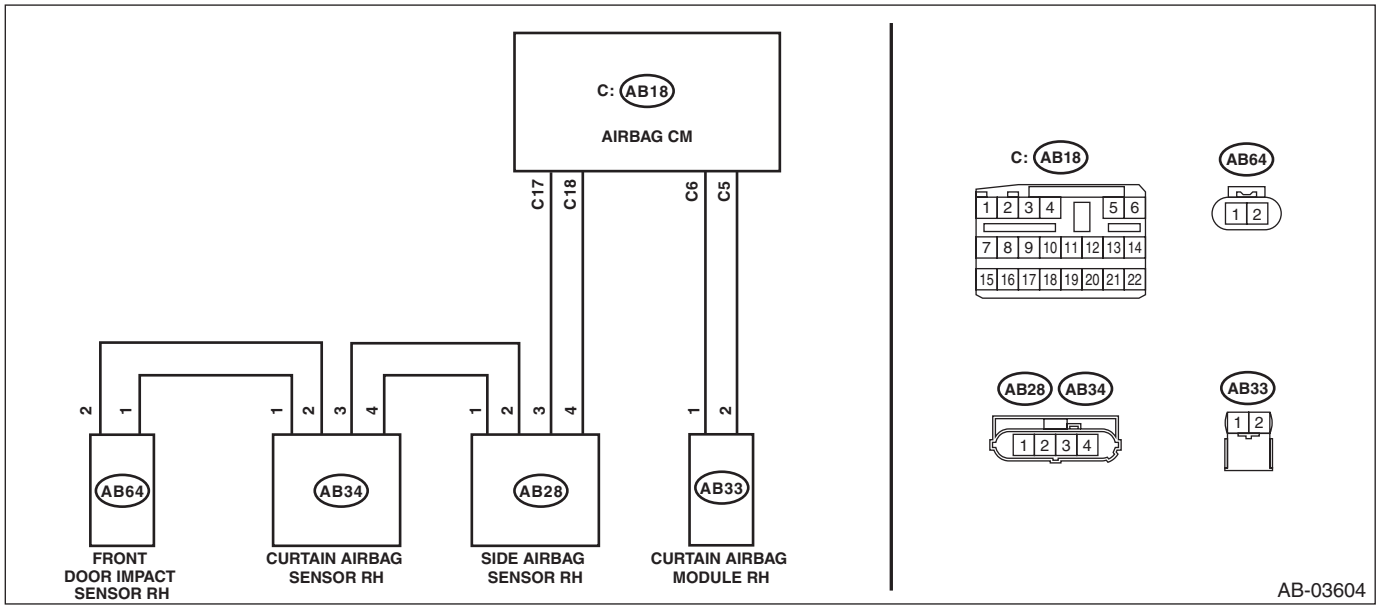

Step		Check	Yes	No
1	**CHECK POOR CONTACT OF CONNECTORS.** Check for poor contact of the connectors between the airbag control module, curtain airbag module RH and the curtain airbag sensor RH.	Is there poor contact?	Replace the airbag rear harness along with body harness.	Go to step **2**.
2	**CHECK CURTAIN AIRBAG MODULE.** 1) Turn the ignition switch to OFF, disconnect the battery ground cable, and wait for 60 seconds or more. 2) Disconnect the connector (AB33) from curtain airbag module RH. 3) Connect the connector (1N) in the test harness N to the connector (AB33). 4) Connect the airbag resistor to the connector (2N) of test harness N. 5) Connect the battery ground terminal and turn the ignition switch to ON.	Does the airbag warning light illuminate for 6 seconds and go off?	Replace the curtain airbag module RH. <Ref. to AB-43, Curtain Airbag Module.>	Go to step **3**.

	Step	Check	Yes	No
3	**CHECK AIRBAG REAR HARNESS (CURTAIN AIRBAG MODULE HARNESS RH) (OPEN CIRCUIT).** 1) Turn the ignition switch to OFF, disconnect the battery ground cable, and wait for 60 seconds or more. 2) Disconnect the connector (AB26) from seat belt pretensioner RH. 3) Disconnect the connector (AB22) from seat cushion airbag module RH. 4) Disconnect the connector (AB24) from side airbag module RH. 5) Disconnect the airbag resistor from test harness N. 6) Disconnect the connectors (AB6, AB17, AB18) from airbag control module. 7) Connect the connector (1AD) in test harness AD AV to the connectors (AB6, AB17, AB18). 8) Connect the connector (2AD) in test harness AD AV and the connector (1AG) in test harness AG. 9) Measure the resistance between connector (6AG) in the test harness AG and connector (2N) in the test harness N. ***Connector & terminal*** ***(6AG) No. 1 — (2N) No. 2:*** ***(6AG) No. 3 — (2N) No. 1:***	Is the resistance less than 10 Ω?	Go to step **4**.	Replace the airbag rear harness along with body harness.
4	**CHECK AIRBAG CONTROL MODULE.** 1) Connect all connectors. 2) Clear the memory. <Ref. to AB(diag)-32, Clear Memory Mode.> 3) Perform the Inspection Mode. <Ref. to AB(diag)-31, Inspection Mode.> 4) Read the DTC. (Current malfunction) <Ref. to AB(diag)-30, Read Diagnostic Trouble Code (DTC).>	Is DTC B1831 displayed?	Replace the airbag control module. <Ref. to AB-50, Airbag Control Module.>	Go to step **5**.
5	**CHECK FOR ANY OTHER DTC ON DISPLAY.** Read the DTC. (Current malfunction) <Ref. to AB(diag)-30, Read Diagnostic Trouble Code (DTC).>	Is any other DTC displayed?	Check DTC using "List of Diagnostic Trouble Code (DTC)". <Ref. to AB(diag)-38, List of Diagnostic Trouble Code (DTC).>	Finish the diagnosis.

DT:DTC B1832 SHORT IN CURTAIN AIRBAG RH SQUIB CIRCUIT (TO GROUND)

DIAGNOSIS START CONDITION:
Ignition voltage is 10 V to 16 V.
DTC DETECTING CONDITION:
GND short circuit failure (shorted to ground in main harness, shorted to ground in curtain airbag RH, shorted to ground in airbag CM internal circuit)

CAUTION:
Before performing diagnosis, refer to "CAUTION" in "General Description". <Ref. to AB(diag)-4, CAUTION, General Description.>
WIRING DIAGRAM:

NOTE:
For the coupling connector, refer to "WIRING SYSTEM".
Airbag system <Ref. to WI-89, WIRING DIAGRAM, Airbag System.>

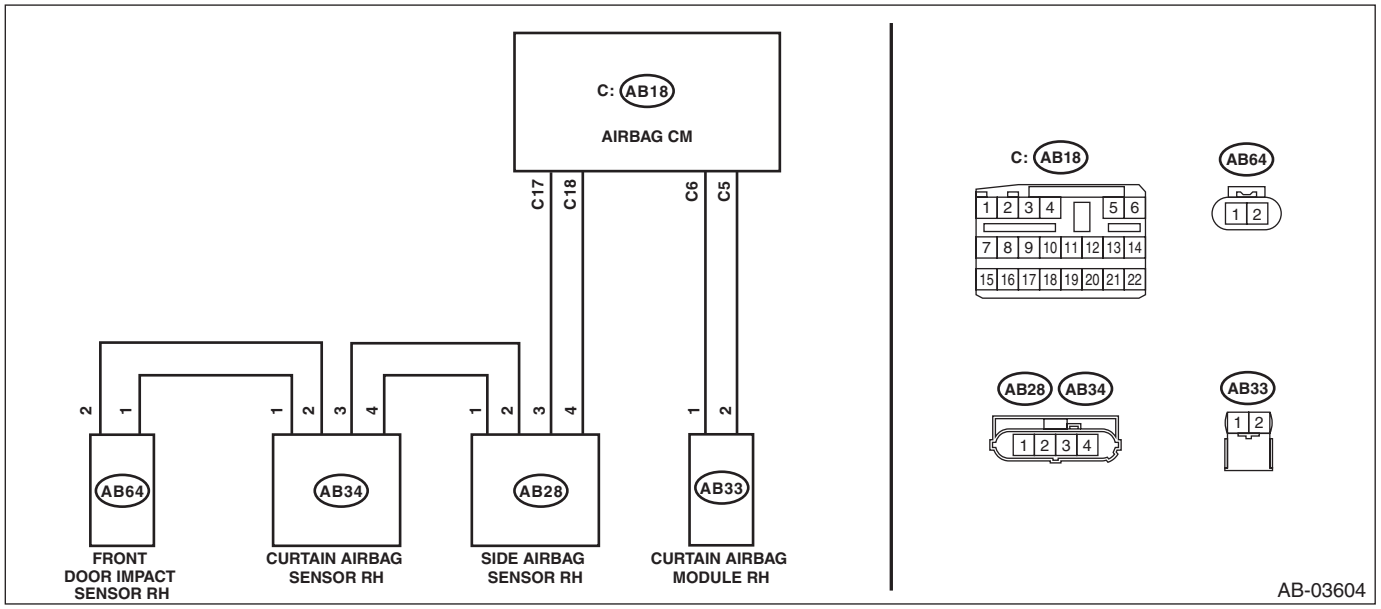

Step		Check	Yes	No
1	**CHECK POOR CONTACT OF CONNECTORS.** Check for poor contact of the connectors between the airbag control module, curtain airbag module RH and the curtain airbag sensor RH.	Is there poor contact?	Replace the airbag rear harness along with body harness.	Go to step **2**.
2	**CHECK CURTAIN AIRBAG MODULE.** 1) Turn the ignition switch to OFF, disconnect the battery ground cable, and wait for 60 seconds or more. 2) Disconnect the connector (AB33), and connect the connector (1N) in test harness N to connector (AB33). 3) Connect the airbag resistor to the connector (2N) of test harness N. 4) Connect the battery ground terminal and turn the ignition switch to ON.	Does the airbag warning light illuminate for six seconds and go off?	Replace the curtain airbag module RH. <Ref. to AB-43, Curtain Airbag Module.>	Go to step **3**.

	Step	Check	Yes	No
3	**CHECK AIRBAG REAR HARNESS (CURTAIN AIRBAG MODULE HARNESS RH) (SHORTED TO GROUND).** 1) Turn the ignition switch to OFF, disconnect the battery ground cable, and wait for 60 seconds or more. 2) Disconnect the connector (AB26) from seat belt pretensioner RH. 3) Disconnect the connector (AB22) from seat cushion airbag module RH. 4) Disconnect the connector (AB24) from side airbag module RH. 5) Disconnect the airbag resistor from test harness N. 6) Disconnect the connectors (AB6, AB17, AB18) from airbag control module. 7) Connect the connector (1AD) in test harness AD AV to the connectors (AB6, AB17, AB18). 8) Connect the connector (2AD) in test harness AD AV and the connector (1AG) in test harness AG. 9) Measure the resistance between connector (2N) in the test harness N and chassis ground. ***Connector & terminal*** ***(2N) No. 1 — Chassis ground:*** ***(2N) No. 2 — Chassis ground:***	Is the resistance 1 MΩ or more?	Go to step **4**.	Replace the airbag rear harness along with body harness.
4	**CHECK AIRBAG CONTROL MODULE.** 1) Connect all connectors. 2) Clear the memory. <Ref. to AB(diag)-32, Clear Memory Mode.> 3) Perform the Inspection Mode. <Ref. to AB(diag)-31, Inspection Mode.> 4) Read the DTC. (Current malfunction) <Ref. to AB(diag)-30, Read Diagnostic Trouble Code (DTC).>	Is DTC B1832 displayed?	Replace the airbag control module. <Ref. to AB-50, Airbag Control Module.>	Go to step **5**.
5	**CHECK FOR ANY OTHER DTC ON DISPLAY.** Read the DTC. (Current malfunction) <Ref. to AB(diag)-30, Read Diagnostic Trouble Code (DTC).>	Is any other DTC displayed?	Check DTC using “List of Diagnostic Trouble Code (DTC)”. <Ref. to AB(diag)-38, List of Diagnostic Trouble Code (DTC).>	Finish the diagnosis.

DU:DTC B1833 SHORT IN CURTAIN SHIELD AIRBAG RH SQUIB CIRCUIT (TO +B)

DIAGNOSIS START CONDITION:
Ignition voltage is 10 V to 16 V.
DTC DETECTING CONDITION:
Short circuit failure in power supply (shorted in main harness power supply, shorted in curtain airbag RH power supply, shorted in airbag CM internal circuit power supply)

CAUTION:
Before performing diagnosis, refer to "CAUTION" in "General Description". <Ref. to AB(diag)-4, CAUTION, General Description.>
WIRING DIAGRAM:

NOTE:
For the coupling connector, refer to "WIRING SYSTEM".
Airbag system <Ref. to WI-89, WIRING DIAGRAM, Airbag System.>

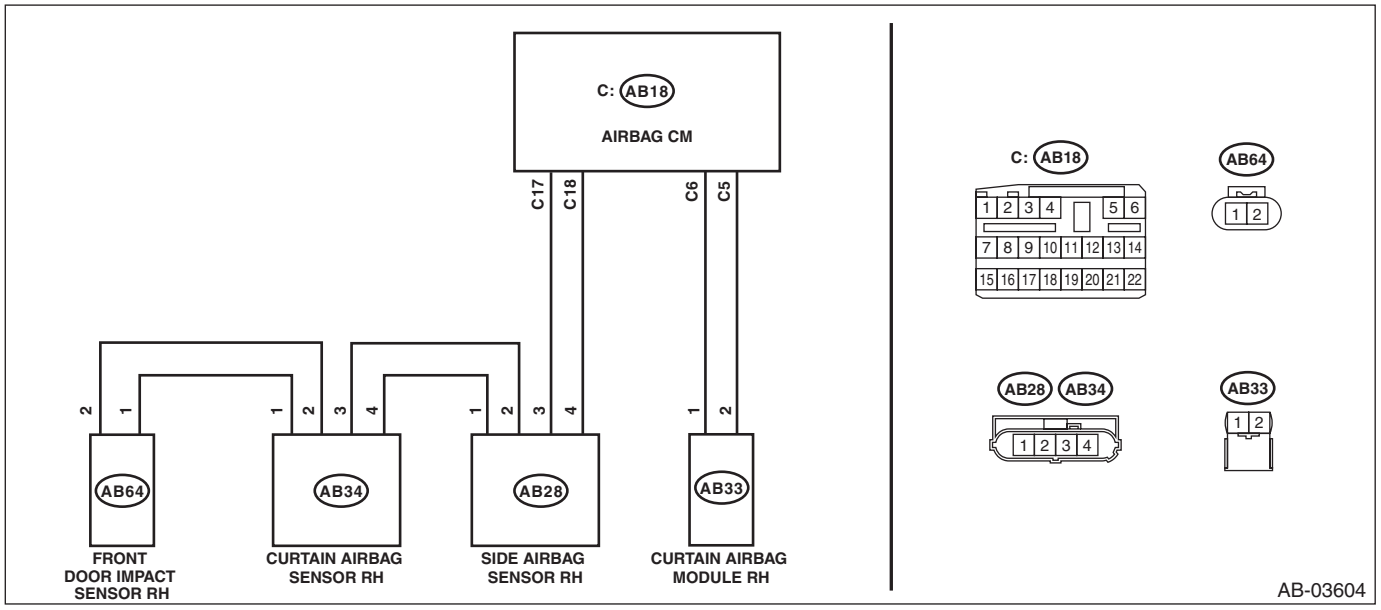

Step		Check	Yes	No
1	**CHECK POOR CONTACT OF CONNECTORS.** Check for poor contact of the connectors between the airbag control module, curtain airbag module RH and the curtain airbag sensor RH.	Is there poor contact?	Replace the airbag rear harness along with body harness.	Go to step **2**.
2	**CHECK CURTAIN AIRBAG MODULE.** 1) Turn the ignition switch to OFF, disconnect the battery ground cable, and wait for 60 seconds or more. 2) Disconnect the connector (AB33), and connect the connector (1N) in test harness N to connector (AB33). 3) Connect the airbag resistor to the connector (2N) of test harness N. 4) Connect the battery ground terminal and turn the ignition switch to ON.	Does the airbag warning light illuminate for six seconds and go off?	Replace the curtain airbag module RH. <Ref. to AB-43, Curtain Airbag Module.>	Go to step **3**.

	Step	Check	Yes	No
3	**CHECK AIRBAG REAR HARNESS (CURTAIN AIRBAG MODULE HARNESS RH) (SHORTED TO POWER SUPPLY).** 1) Turn the ignition switch to OFF, disconnect the battery ground cable, and wait for 60 seconds or more. 2) Disconnect the connector (AB26) from seat belt pretensioner RH. 3) Disconnect the connector (AB22) from seat cushion airbag module RH. 4) Disconnect the connector (AB24) from side airbag module RH. 5) Disconnect the airbag resistor from test harness N. 6) Disconnect the connectors (AB6, AB17, AB18) from airbag control module. 7) Connect the connector (1AD) in test harness AD AV to the connectors (AB6, AB17, AB18). 8) Connect the connector (2AD) in test harness AD AV and the connector (1AG) in test harness AG. 9) Connect the battery ground terminal and turn the ignition switch to ON. 10) Measure the voltage between connector (2N) in the test harness N and chassis ground. ***Connector & terminal*** ***(2N) No. 1 (+) — Chassis ground (–):*** ***(2N) No. 2 (+) — Chassis ground (–):***	Is the voltage less than 1 V?	Go to step **4**.	Replace the airbag rear harness along with body harness.
4	**CHECK AIRBAG CONTROL MODULE.** 1) Connect all connectors. 2) Clear the memory. <Ref. to AB(diag)-32, Clear Memory Mode.> 3) Perform the Inspection Mode. <Ref. to AB(diag)-31, Inspection Mode.> 4) Read the DTC. (Current malfunction) <Ref. to AB(diag)-30, Read Diagnostic Trouble Code (DTC).>	Is DTC B1833 displayed?	Replace the airbag control module. <Ref. to AB-50, Airbag Control Module.>	Go to step **5**.
5	**CHECK FOR ANY OTHER DTC ON DISPLAY.** Read the DTC. (Current malfunction) <Ref. to AB(diag)-30, Read Diagnostic Trouble Code (DTC).>	Is any other DTC displayed?	Check DTC using “List of Diagnostic Trouble Code (DTC)”. <Ref. to AB(diag)-38, List of Diagnostic Trouble Code (DTC).>	Finish the diagnosis.

DV:DTC B1834 SHORT IN CURTAIN AIRBAG RH SQUIB CIRCUIT

DIAGNOSIS START CONDITION:
Ignition voltage is 10 V to 16 V.
DTC DETECTING CONDITION:
Short circuit between curtain airbag RH circuit and other circuit

CAUTION:
Before performing diagnosis, refer to "CAUTION" in "General Description". <Ref. to AB(diag)-4, CAUTION, General Description.>
WIRING DIAGRAM:

NOTE:
For the coupling connector, refer to "WIRING SYSTEM".
Airbag system <Ref. to WI-89, WIRING DIAGRAM, Airbag System.>

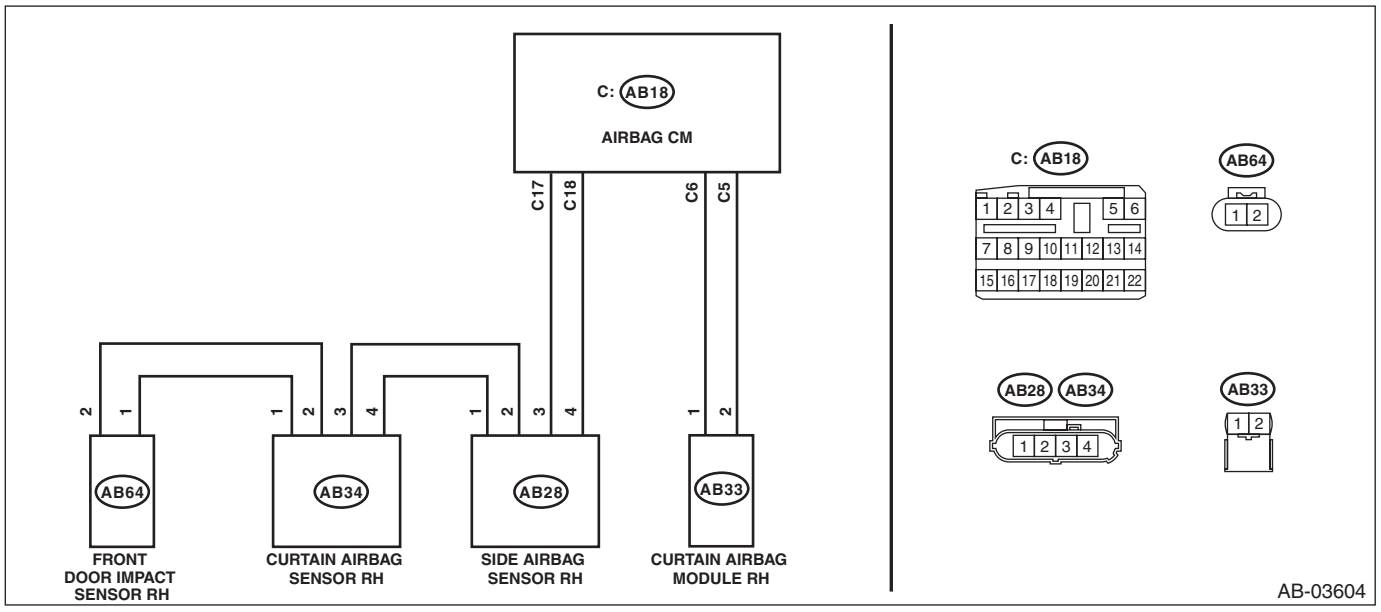

Step		Check	Yes	No
1	**CHECK POOR CONTACT OF CONNECTORS.** Check for poor contact of the connectors between the airbag control module, curtain airbag module RH and the curtain airbag sensor RH.	Is there poor contact?	Replace the airbag rear harness along with body harness.	Go to step **2**.
2	**CHECK CURTAIN AIRBAG MODULE.** 1) Turn the ignition switch to OFF, disconnect the battery ground cable, and wait for 60 seconds or more. 2) Disconnect the connector (AB33), and connect the connector (1N) in test harness N to connector (AB33). 3) Connect the airbag resistor to the connector (2N) of test harness N. 4) Connect the battery ground terminal and turn the ignition switch to ON.	Does the airbag warning light illuminate for six seconds and go off?	Replace the curtain airbag module RH. <Ref. to AB-43, Curtain Airbag Module.>	Go to step **3**.

	Step	Check	Yes	No
3	**CHECK AIRBAG REAR HARNESS (CURTAIN AIRBAG MODULE HARNESS RH) (SHORTED BETWEEN LINES).** 1) Turn the ignition switch to OFF, disconnect the battery ground cable, and wait for 60 seconds or more. 2) Disconnect the connector (AB26) from seat belt pretensioner RH. 3) Disconnect the connector (AB22) from seat cushion airbag module RH. 4) Disconnect the connector (AB24) from side airbag module RH. 5) Disconnect the airbag resistor from test harness N. 6) Disconnect the connectors (AB6, AB17, AB18) from airbag control module. 7) Connect the connector (1AD) in test harness AD AV to the connectors (AB6, AB17, AB18). 8) Connect the connector (2AD) in test harness AD AV and the connector (1AG) in test harness AG. 9) Measure the resistance between connector (6AG) in the test harness AG and all connector terminals in the test harness AG. ***Connector & terminal*** ***(6AG) No. 1 — All terminals in test harness AG:*** ***(6AG) No. 3 — All terminals in test harness AG:***	Is the resistance 1 MΩ or more?	Go to step **4**.	Replace the airbag rear harness along with body harness.
4	**CHECK AIRBAG CONTROL MODULE.** 1) Connect all connectors. 2) Clear the memory. <Ref. to AB(diag)-32, Clear Memory Mode.> 3) Perform the Inspection Mode. <Ref. to AB(diag)-31, Inspection Mode.> 4) Read the DTC. (Current malfunction) <Ref. to AB(diag)-30, Read Diagnostic Trouble Code (DTC).>	Is DTC B1834 displayed?	Replace the airbag control module. <Ref. to AB-50, Airbag Control Module.>	Go to step **5**.
5	**CHECK FOR ANY OTHER DTC ON DISPLAY.** Read the DTC. (Current malfunction) <Ref. to AB(diag)-30, Read Diagnostic Trouble Code (DTC).>	Is any other DTC displayed?	Check DTC using "List of Diagnostic Trouble Code (DTC)". <Ref. to AB(diag)-38, List of Diagnostic Trouble Code (DTC).>	Finish the diagnosis.

DW:DTC B1835 SHORT IN CURTAIN AIRBAG LH SQUIB CIRCUIT

DIAGNOSIS START CONDITION:
Ignition voltage is 10 V to 16 V.
DTC DETECTING CONDITION:
Shorted between +/– lines (shorted between main harness lines, shorted between curtain airbag LH lines, shorted between airbag CM internal lines)

CAUTION:
Before performing diagnosis, refer to "CAUTION" in "General Description". <Ref. to AB(diag)-4, CAUTION, General Description.>
WIRING DIAGRAM:

NOTE:
For the coupling connector, refer to "WIRING SYSTEM".
Airbag system <Ref. to WI-89, WIRING DIAGRAM, Airbag System.>

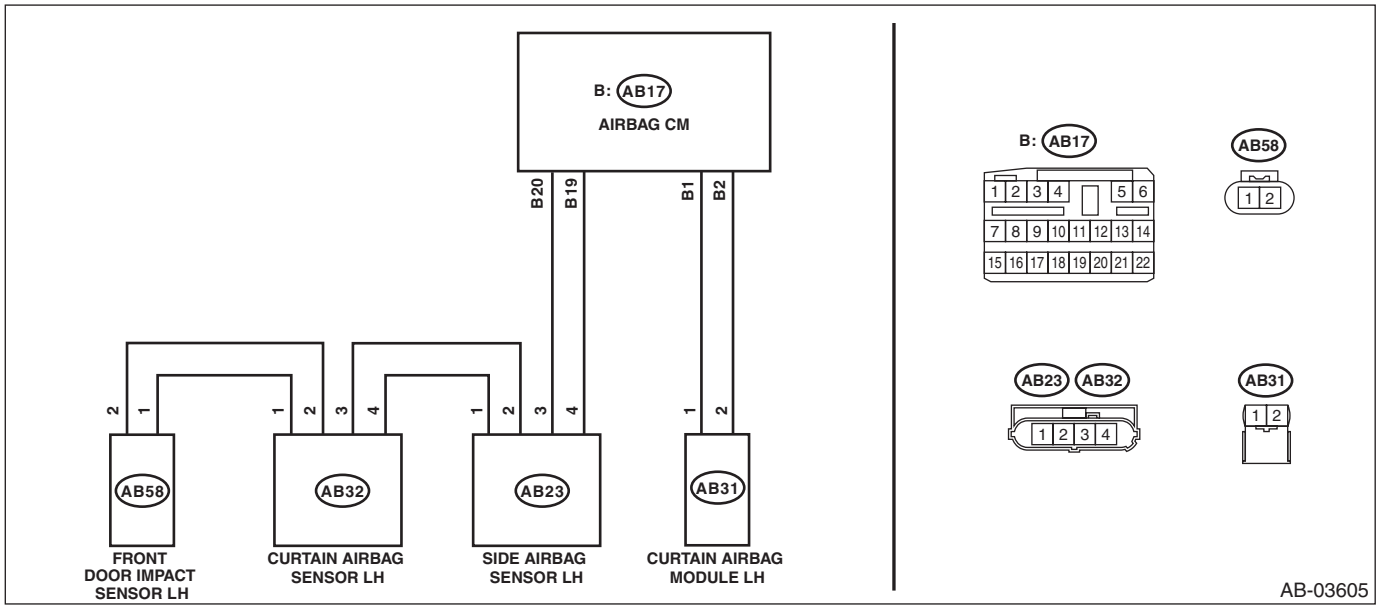

Step		Check	Yes	No
1	**CHECK POOR CONTACT OF CONNECTORS.** Check for poor contact of the connectors between the airbag control module, curtain airbag module LH and the curtain airbag sensor LH.	Is there poor contact?	Replace the airbag rear harness along with body harness.	Go to step **2**.
2	**CHECK CURTAIN AIRBAG MODULE.** 1) Turn the ignition switch to OFF, disconnect the battery ground cable, and wait for 60 seconds or more. 2) Disconnect the connector (AB31) from curtain airbag module LH. 3) Connect the connector (1N) in the test harness N to the connector (AB31). 4) Connect the airbag resistor to the connector (2N) of test harness N. 5) Connect the battery ground terminal and turn the ignition switch to ON.	Does the airbag warning light illuminate for 6 seconds and go off?	Replace the curtain airbag module LH. <Ref. to AB-43, Curtain Airbag Module.>	Go to step **3**.

	Step	Check	Yes	No
3	**CHECK AIRBAG REAR HARNESS (CURTAIN AIRBAG MODULE HARNESS LH) (SHORTED BETWEEN LINES).** 1) Turn the ignition switch to OFF, disconnect the battery ground cable, and wait for 60 seconds or more. 2) Disconnect the connector (AB21) from seat belt pretensioner LH. 3) Disconnect the connector (AB5) from seat cushion airbag module LH. 4) Disconnect the connector (AB19) from side airbag module LH. 5) Disconnect the airbag resistor from test harness N. 6) Disconnect the connectors (AB6, AB17, AB18) from airbag control module. 7) Connect the connector (1AD) in test harness AD AV to the connectors (AB6, AB17, AB18). 8) Connect the connector (2AD) in test harness AD AV and the connector (1AG) in test harness AG. 9) Measure the resistance between connector (2N) terminals in test harness N. ***Connector & terminal (2N) No. 1 — (2N) No. 2:***	Is the resistance 1 MΩ or more?	Go to step **4**.	Replace the airbag rear harness along with body harness.
4	**CHECK AIRBAG CONTROL MODULE.** 1) Connect all connectors. 2) Clear the memory. <Ref. to AB(diag)-32, Clear Memory Mode.> 3) Perform the Inspection Mode. <Ref. to AB(diag)-31, Inspection Mode.> 4) Read the DTC. (Current malfunction) <Ref. to AB(diag)-30, Read Diagnostic Trouble Code (DTC).>	Is DTC B1835 displayed?	Replace the airbag control module. <Ref. to AB-50, Airbag Control Module.>	Go to step **5**.
5	**CHECK FOR ANY OTHER DTC ON DISPLAY.** Read the DTC. (Current malfunction) <Ref. to AB(diag)-30, Read Diagnostic Trouble Code (DTC).>	Is any other DTC displayed?	Check DTC using "List of Diagnostic Trouble Code (DTC)". <Ref. to AB(diag)-38, List of Diagnostic Trouble Code (DTC).>	Finish the diagnosis.

DX:DTC B1836 OPEN IN CURTAIN AIRBAG LH SQUIB CIRCUIT

DIAGNOSIS START CONDITION:
Ignition voltage is 10 V to 16 V.
DTC DETECTING CONDITION:
Open circuit failure (open circuit in main harness, open circuit in curtain airbag LH, open circuit in airbag CM internal circuit, connector connection failure)

CAUTION:
Before performing diagnosis, refer to "CAUTION" in "General Description". <Ref. to AB(diag)-4, CAUTION, General Description.>
WIRING DIAGRAM:

NOTE:
For the coupling connector, refer to "WIRING SYSTEM".
Airbag system <Ref. to WI-89, WIRING DIAGRAM, Airbag System.>

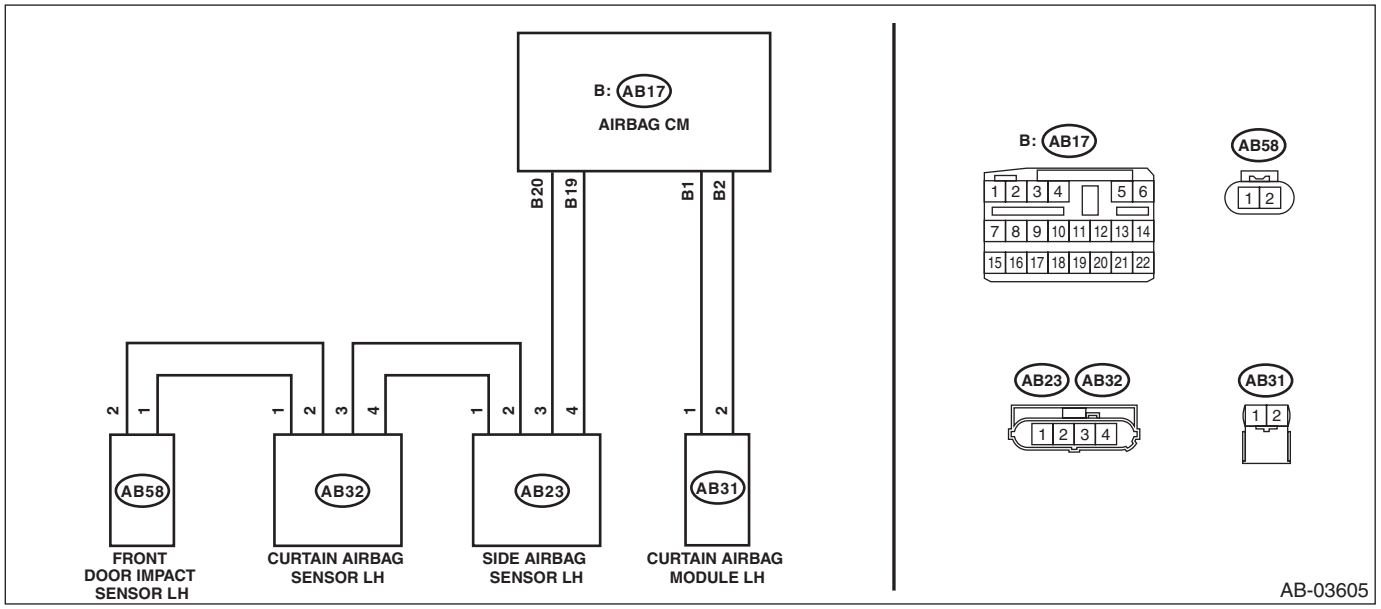

Step		Check	Yes	No
1	**CHECK POOR CONTACT OF CONNECTORS.** Check for poor contact of the connectors between the airbag control module, curtain airbag module LH and the curtain airbag sensor LH.	Is there poor contact?	Replace the airbag rear harness along with body harness.	Go to step **2**.
2	**CHECK CURTAIN AIRBAG MODULE.** 1) Turn the ignition switch to OFF, disconnect the battery ground cable, and wait for 60 seconds or more. 2) Disconnect the connector (AB31) from curtain airbag module LH. 3) Connect the connector (1N) in the test harness N to the connector (AB31). 4) Connect the airbag resistor to the connector (2N) of test harness N. 5) Connect the battery ground terminal and turn the ignition switch to ON.	Does the airbag warning light illuminate for 6 seconds and go off?	Replace the curtain airbag module LH. <Ref. to AB-43, Curtain Airbag Module.>	Go to step **3**.

	Step	Check	Yes	No
3	**CHECK AIRBAG REAR HARNESS (CURTAIN AIRBAG MODULE HARNESS LH) (OPEN CIRCUIT).** 1) Turn the ignition switch to OFF, disconnect the battery ground cable, and wait for 60 seconds or more. 2) Disconnect the connector (AB21) from seat belt pretensioner LH. 3) Disconnect the connector (AB5) from seat cushion airbag module LH. 4) Disconnect the connector (AB19) from side airbag module LH. 5) Disconnect the airbag resistor from test harness N. 6) Disconnect the connectors (AB6, AB17, AB18) from airbag control module. 7) Connect the connector (1AD) in test harness AD AV to the connectors (AB6, AB17, AB18). 8) Connect the connector (2AD) in test harness AD AV and the connector (1AG) in test harness AG. 9) Measure the resistance between connector (6AG) in the test harness AG and connector (2N) in the test harness N. ***Connector & terminal*** ***(6AG) No. 8 — (2N) No. 2:*** ***(6AG) No. 6 — (2N) No. 1:***	Is the resistance less than 10 Ω?	Go to step **4**.	Replace the airbag rear harness along with body harness.
4	**CHECK AIRBAG CONTROL MODULE.** 1) Connect all connectors. 2) Clear the memory. <Ref. to AB(diag)-32, Clear Memory Mode.> 3) Perform the Inspection Mode. <Ref. to AB(diag)-31, Inspection Mode.> 4) Read the DTC. (Current malfunction) <Ref. to AB(diag)-30, Read Diagnostic Trouble Code (DTC).>	Is DTC B1836 displayed?	Replace the airbag control module. <Ref. to AB-50, Airbag Control Module.>	Go to step **5**.
5	**CHECK FOR ANY OTHER DTC ON DISPLAY.** Read the DTC. (Current malfunction) <Ref. to AB(diag)-30, Read Diagnostic Trouble Code (DTC).>	Is any other DTC displayed?	Check DTC using “List of Diagnostic Trouble Code (DTC)”. <Ref. to AB(diag)-38, List of Diagnostic Trouble Code (DTC).>	Finish the diagnosis.

DY:DTC B1837 SHORT IN CURTAIN AIRBAG LH SQUIB CIRCUIT (TO GROUND)

DIAGNOSIS START CONDITION:
Ignition voltage is 10 V to 16 V.
DTC DETECTING CONDITION:
GND short circuit failure (shorted to ground in main harness, shorted to ground in curtain airbag LH, shorted to ground in airbag CM internal circuit)

CAUTION:
Before performing diagnosis, refer to "CAUTION" in "General Description". <Ref. to AB(diag)-4, CAUTION, General Description.>
WIRING DIAGRAM:

NOTE:
For the coupling connector, refer to "WIRING SYSTEM".
Airbag system <Ref. to WI-89, WIRING DIAGRAM, Airbag System.>

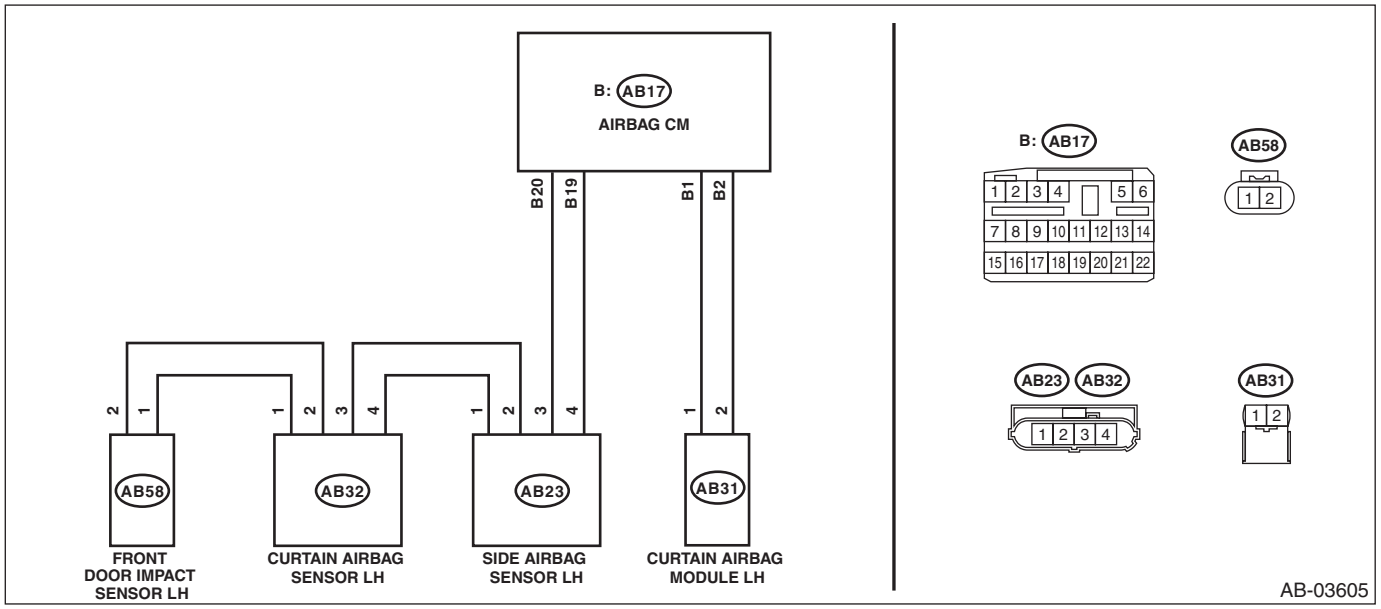

Step		Check	Yes	No
1	**CHECK POOR CONTACT OF CONNECTORS.** Check for poor contact of the connectors between the airbag control module, curtain airbag module LH and the curtain airbag sensor LH.	Is there poor contact?	Replace the airbag rear harness along with body harness.	Go to step **2**.
2	**CHECK CURTAIN AIRBAG MODULE.** 1) Turn the ignition switch to OFF, disconnect the battery ground cable, and wait for 60 seconds or more. 2) Disconnect the connector (AB31), and connect the connector (1N) in test harness N to connector (AB31). 3) Connect the airbag resistor to the connector (2N) of test harness N. 4) Connect the battery ground terminal and turn the ignition switch to ON.	Does the airbag warning light illuminate for six seconds and go off?	Replace the curtain airbag module LH. <Ref. to AB-43, Curtain Airbag Module.>	Go to step **3**.

	Step	Check	Yes	No
3	**CHECK AIRBAG REAR HARNESS (CURTAIN AIRBAG MODULE HARNESS LH) (SHORTED TO GROUND).** 1) Turn the ignition switch to OFF, disconnect the battery ground cable, and wait for 60 seconds or more. 2) Disconnect the connector (AB21) from seat belt pretensioner LH. 3) Disconnect the connector (AB5) from seat cushion airbag module LH. 4) Disconnect the connector (AB19) from side airbag module LH. 5) Disconnect the airbag resistor from test harness N. 6) Disconnect the connectors (AB6, AB17, AB18) from airbag control module. 7) Connect the connector (1AD) in test harness AD AV to the connectors (AB6, AB17, AB18). 8) Connect the connector (2AD) in test harness AD AV and the connector (1AG) in test harness AG. 9) Measure the resistance between connector (2N) in the test harness N and chassis ground. ***Connector & terminal*** ***(2N) No. 1 — Chassis ground:*** ***(2N) No. 2 — Chassis ground:***	Is the resistance 1 MΩ or more?	Go to step **4**.	Replace the airbag rear harness along with body harness.
4	**CHECK AIRBAG CONTROL MODULE.** 1) Connect all connectors. 2) Clear the memory. <Ref. to AB(diag)-32, Clear Memory Mode.> 3) Perform the Inspection Mode. <Ref. to AB(diag)-31, Inspection Mode.> 4) Read the DTC. (Current malfunction) <Ref. to AB(diag)-30, Read Diagnostic Trouble Code (DTC).>	Is DTC B1837 displayed?	Replace the airbag control module. <Ref. to AB-50, Airbag Control Module.>	Go to step **5**.
5	**CHECK FOR ANY OTHER DTC ON DISPLAY.** Read the DTC. (Current malfunction) <Ref. to AB(diag)-30, Read Diagnostic Trouble Code (DTC).>	Is any other DTC displayed?	Check DTC using "List of Diagnostic Trouble Code (DTC)". <Ref. to AB(diag)-38, List of Diagnostic Trouble Code (DTC).>	Finish the diagnosis.

DZ:DTC B1838 SHORT IN CURTAIN SHIELD AIRBAG LH SQUIB CIRCUIT (TO +B)

DIAGNOSIS START CONDITION:
Ignition voltage is 10 V to 16 V.
DTC DETECTING CONDITION:
Short circuit failure in power supply (shorted in main harness power supply, shorted in curtain airbag LH power supply, shorted in airbag CM internal circuit power supply)

CAUTION:
Before performing diagnosis, refer to "CAUTION" in "General Description". <Ref. to AB(diag)-4, CAUTION, General Description.>
WIRING DIAGRAM:

NOTE:
For the coupling connector, refer to "WIRING SYSTEM".
Airbag system <Ref. to WI-89, WIRING DIAGRAM, Airbag System.>

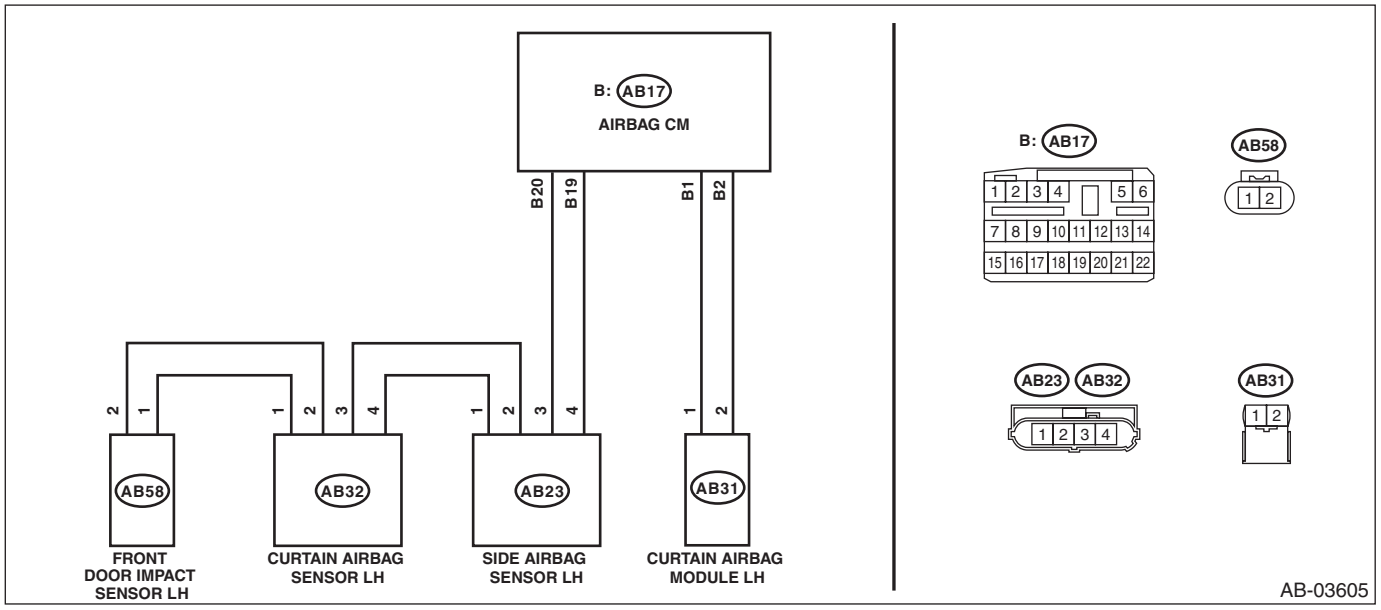

Step		Check	Yes	No
1	**CHECK POOR CONTACT OF CONNECTORS.** Check for poor contact of the connectors between the airbag control module, curtain airbag module LH and the curtain airbag sensor LH.	Is there poor contact?	Replace the airbag rear harness along with body harness.	Go to step **2**.
2	**CHECK CURTAIN AIRBAG MODULE.** 1) Turn the ignition switch to OFF, disconnect the battery ground cable, and wait for 60 seconds or more. 2) Disconnect the connector (AB31), and connect the connector (1N) in test harness N to connector (AB31). 3) Connect the airbag resistor to the connector (2N) of test harness N. 4) Connect the battery ground terminal and turn the ignition switch to ON.	Does the airbag warning light illuminate for six seconds and go off?	Replace the curtain airbag module LH. <Ref. to AB-43, Curtain Airbag Module.>	Go to step **3**.

	Step	Check	Yes	No
3	**CHECK AIRBAG REAR HARNESS (CURTAIN AIRBAG MODULE HARNESS LH) (SHORTED TO POWER SUPPLY).** 1) Turn the ignition switch to OFF, disconnect the battery ground cable, and wait for 60 seconds or more. 2) Disconnect the connector (AB21) from seat belt pretensioner LH. 3) Disconnect the connector (AB5) from seat cushion airbag module LH. 4) Disconnect the connector (AB19) from side airbag module LH. 5) Disconnect the airbag resistor from test harness N. 6) Disconnect the connectors (AB6, AB17, AB18) from airbag control module. 7) Connect the connector (1AD) in test harness AD AV to the connectors (AB6, AB17, AB18). 8) Connect the connector (2AD) in test harness AD AV and the connector (1AG) in test harness AG. 9) Connect the battery ground terminal and turn the ignition switch to ON. 10) Measure the voltage between connector (2N) in the test harness N and chassis ground. ***Connector & terminal*** ***(2N) No. 1 (+) — Chassis ground (–):*** ***(2N) No. 2 (+) — Chassis ground (–):***	Is the voltage less than 1 V?	Go to step **4**.	Replace the airbag rear harness along with body harness.
4	**CHECK AIRBAG CONTROL MODULE.** 1) Connect all connectors. 2) Clear the memory. <Ref. to AB(diag)-32, Clear Memory Mode.> 3) Perform the Inspection Mode. <Ref. to AB(diag)-31, Inspection Mode.> 4) Read the DTC. (Current malfunction) <Ref. to AB(diag)-30, Read Diagnostic Trouble Code (DTC).>	Is DTC B1838 displayed?	Replace the airbag control module. <Ref. to AB-50, Airbag Control Module.>	Go to step **5**.
5	**CHECK FOR ANY OTHER DTC ON DISPLAY.** Read the DTC. (Current malfunction) <Ref. to AB(diag)-30, Read Diagnostic Trouble Code (DTC).>	Is any other DTC displayed?	Check DTC using “List of Diagnostic Trouble Code (DTC)”. <Ref. to AB(diag)-38, List of Diagnostic Trouble Code (DTC).>	Finish the diagnosis.

EA:DTC B1839 SHORT IN CURTAIN AIRBAG LH SQUIB CIRCUIT

DIAGNOSIS START CONDITION:
Ignition voltage is 10 V to 16 V.
DTC DETECTING CONDITION:
GND short circuit failure (shorted to ground in main harness, shorted to ground in curtain airbag LH, shorted to ground in airbag CM internal circuit)

CAUTION:
Before performing diagnosis, refer to "CAUTION" in "General Description". <Ref. to AB(diag)-4, CAUTION, General Description.>
WIRING DIAGRAM:

NOTE:
For the coupling connector, refer to "WIRING SYSTEM".
Airbag system <Ref. to WI-89, WIRING DIAGRAM, Airbag System.>

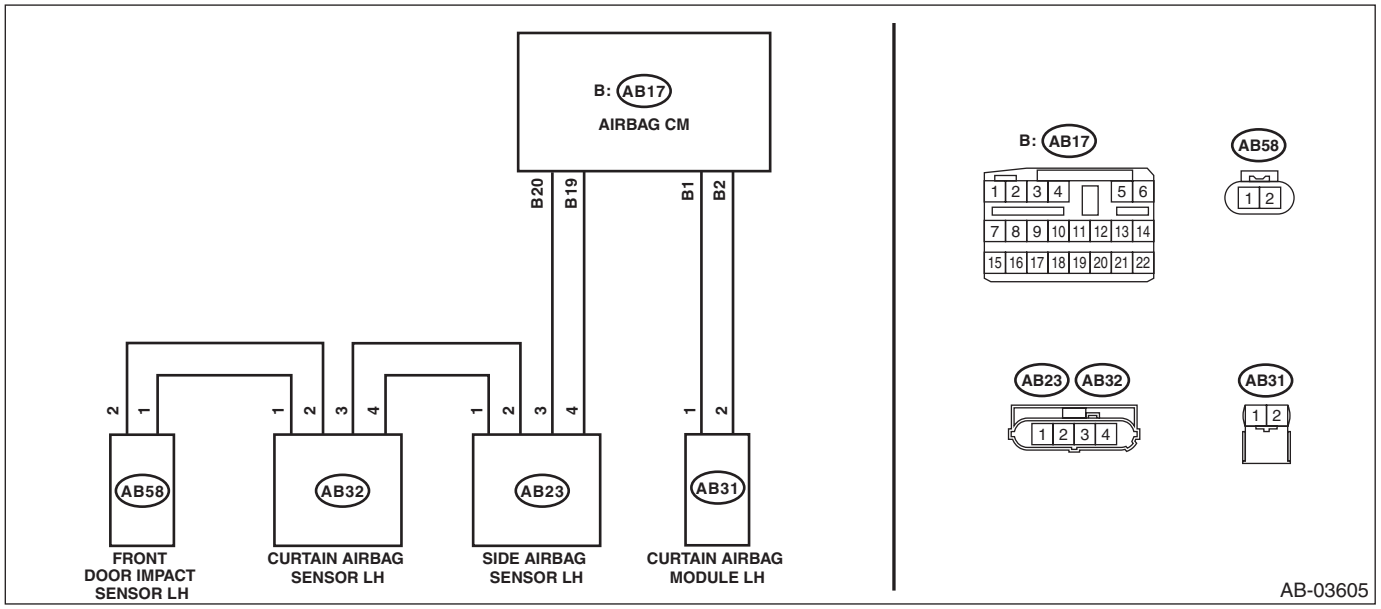

Step		Check	Yes	No
1	**CHECK POOR CONTACT OF CONNECTORS.** Check for poor contact of the connectors between the airbag control module, curtain airbag module LH and the curtain airbag sensor LH.	Is there poor contact?	Replace the airbag rear harness along with body harness.	Go to step **2**.
2	**CHECK CURTAIN AIRBAG MODULE.** 1) Turn the ignition switch to OFF, disconnect the battery ground cable, and wait for 60 seconds or more. 2) Disconnect the connector (AB31), and connect the connector (1N) in test harness N to connector (AB31). 3) Connect the airbag resistor to the connector (2N) of test harness N. 4) Connect the battery ground terminal and turn the ignition switch to ON.	Does the airbag warning light illuminate for six seconds and go off?	Replace the curtain airbag module LH. <Ref. to AB-43, Curtain Airbag Module.>	Go to step **3**.

	Step	Check	Yes	No
3	**CHECK AIRBAG REAR HARNESS (CURTAIN AIRBAG MODULE HARNESS LH) (SHORTED BETWEEN LINES).** 1) Turn the ignition switch to OFF, disconnect the battery ground cable, and wait for 60 seconds or more. 2) Disconnect the connector (AB21) from seat belt pretensioner LH. 3) Disconnect the connector (AB5) from seat cushion airbag module LH. 4) Disconnect the connector (AB19) from side airbag module LH. 5) Disconnect the airbag resistor from test harness N. 6) Disconnect the connectors (AB6, AB17, AB18) from airbag control module. 7) Connect the connector (1AD) in test harness AD AV to the connectors (AB6, AB17, AB18). 8) Connect the connector (2AD) in test harness AD AV and the connector (1AG) in test harness AG. 9) Measure the resistance between connector (6AG) in the test harness AG and all connector terminals in the test harness AG. ***Connector & terminal*** ***(6AG) No. 8 — All terminals in test harness AG:*** ***(6AG) No. 6 — All terminals in test harness AG:***	Is the resistance 1 MΩ or more?	Go to step **4**.	Replace the airbag rear harness along with body harness.
4	**CHECK AIRBAG CONTROL MODULE.** 1) Connect all connectors. 2) Clear the memory. <Ref. to AB(diag)-32, Clear Memory Mode.> 3) Perform the Inspection Mode. <Ref. to AB(diag)-31, Inspection Mode.> 4) Read the DTC. (Current malfunction) <Ref. to AB(diag)-30, Read Diagnostic Trouble Code (DTC).>	Is DTC B1839 displayed?	Replace the airbag control module. <Ref. to AB-50, Airbag Control Module.>	Go to step **5**.
5	**CHECK FOR ANY OTHER DTC ON DISPLAY.** Read the DTC. (Current malfunction) <Ref. to AB(diag)-30, Read Diagnostic Trouble Code (DTC).>	Is any other DTC displayed?	Check DTC using "List of Diagnostic Trouble Code (DTC)". <Ref. to AB(diag)-38, List of Diagnostic Trouble Code (DTC).>	Finish the diagnosis.

EB:DTC B1870 SHORT IN FRONT SEAT CUSHION AIRBAG RH

DIAGNOSIS START CONDITION:
Ignition voltage is 10 V to 16 V.
DTC DETECTING CONDITION:
Shorted between +/– lines (shorted between rear harness lines, shorted between front seat cushion airbag RH lines, shorted between airbag CM internal lines)

CAUTION:
Before performing diagnosis, refer to "CAUTION" in "General Description". <Ref. to AB(diag)-4, CAUTION, General Description.>
WIRING DIAGRAM:
Airbag system <Ref. to WI-89, WIRING DIAGRAM, Airbag System.>

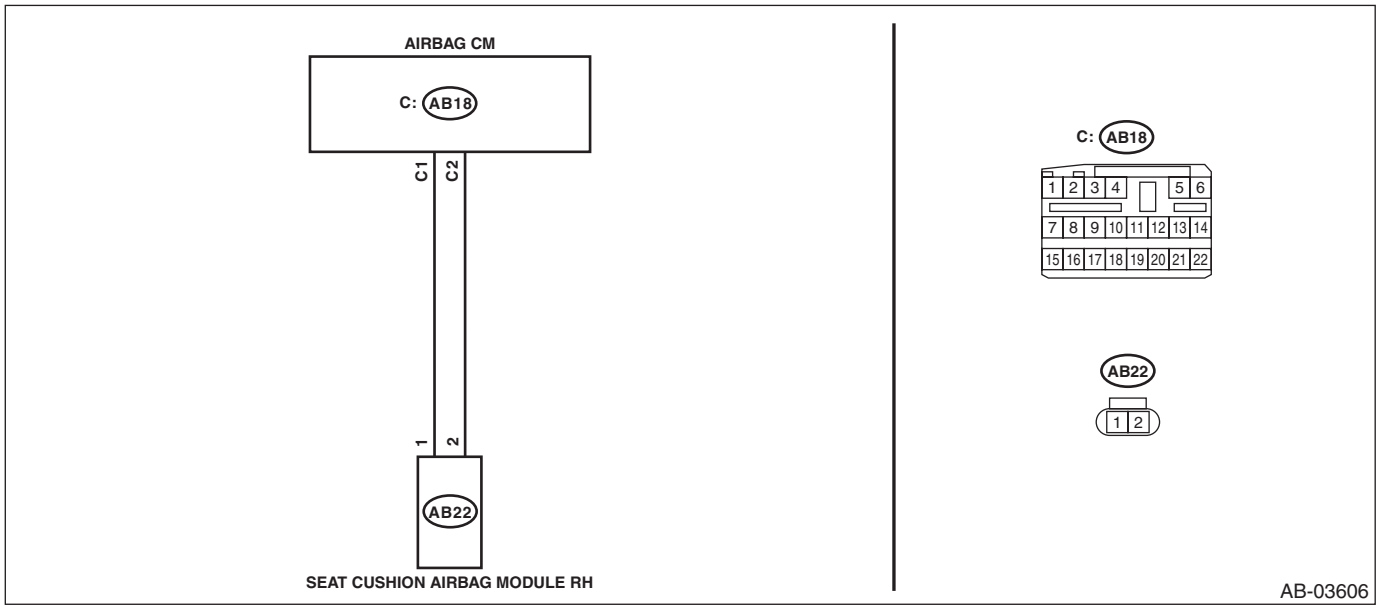

	Step	Check	Yes	No
1	**CHECK POOR CONTACT OF CONNECTORS.** Check for poor contact of the connectors between the airbag control module and the seat cushion airbag module RH.	Is there poor contact?	Replace the airbag rear harness along with body harness.	Go to step **2**.
2	**CHECK SEAT CUSHION AIRBAG MODULE.** 1) Turn the ignition switch to OFF, disconnect the battery ground cable, and wait for 60 seconds or more. 2) Disconnect the connector (AB22) from the seat cushion airbag module RH, and connect the connector (1D) in the test harness D to connector (AB22). 3) Connect the airbag resistor to connector (3D) in the test harness D. 4) Connect the battery ground terminal and turn the ignition switch to ON.	Does the airbag warning light illuminate for 6 seconds and go off?	Replace the seat cushion airbag module RH. <Ref. to AB-37, Seat Cushion Airbag Module.>	Go to step **3**.

	Step	Check	Yes	No
3	**CHECK AIRBAG REAR HARNESS (SEAT CUSHION AIRBAG MODULE HARNESS RH) (SHORTED BETWEEN LINES).** 1) Turn the ignition switch to OFF, disconnect the battery ground cable, and wait for 60 seconds or more. 2) Disconnect the connector (AB26) from seat belt pretensioner RH. 3) Disconnect the connector (AB24) of side airbag module RH. 4) Disconnect the connector (AB33) from curtain airbag module RH. 5) Disconnect the airbag resistor from test harness D. 6) Disconnect the connectors (AB6, AB17, AB18) from airbag control module. 7) Connect the connector (1AD) in test harness AD AV to the connectors (AB6, AB17, AB18). 8) Connect the connector (2AD) in test harness AD AV and the connector (1AG) in test harness AG. 9) Measure the resistance between connector (3D) terminals in test harness D. ***Connector & terminal (3D) No. 3 — (3D) No. 4:***	Is the resistance 1 MΩ or more?	Go to step **4**.	Replace the airbag rear harness along with body harness.
4	**CHECK AIRBAG CONTROL MODULE.** 1) Connect all connectors. 2) Clear the memory. <Ref. to AB(diag)-32, Clear Memory Mode.> 3) Perform the Inspection Mode. <Ref. to AB(diag)-31, Inspection Mode.> 4) Read the DTC. (Current malfunction) <Ref. to AB(diag)-30, Read Diagnostic Trouble Code (DTC).>	Is DTC B1870 displayed?	Replace the airbag control module. <Ref. to AB-50, Airbag Control Module.>	Go to step **5**.
5	**CHECK FOR ANY OTHER DTC ON DISPLAY.** Read the DTC. (Current malfunction) <Ref. to AB(diag)-30, Read Diagnostic Trouble Code (DTC).>	Is any other DTC displayed?	Check DTC using "List of Diagnostic Trouble Code (DTC)". <Ref. to AB(diag)-38, List of Diagnostic Trouble Code (DTC).>	Finish the diagnosis.

EC:DTC B1871 OPEN IN FRONT SEAT CUSHION AIRBAG RH

DIAGNOSIS START CONDITION:
Ignition voltage is 10 V to 16 V.
DTC DETECTING CONDITION:
Open circuit failure (open circuit in rear harness, open circuit in front seat cushion airbag RH, open circuit in airbag CM internal circuit, connector connection failure)

CAUTION:
Before performing diagnosis, refer to "CAUTION" in "General Description". <Ref. to AB(diag)-4, CAUTION, General Description.>
WIRING DIAGRAM:
Airbag system <Ref. to WI-89, WIRING DIAGRAM, Airbag System.>

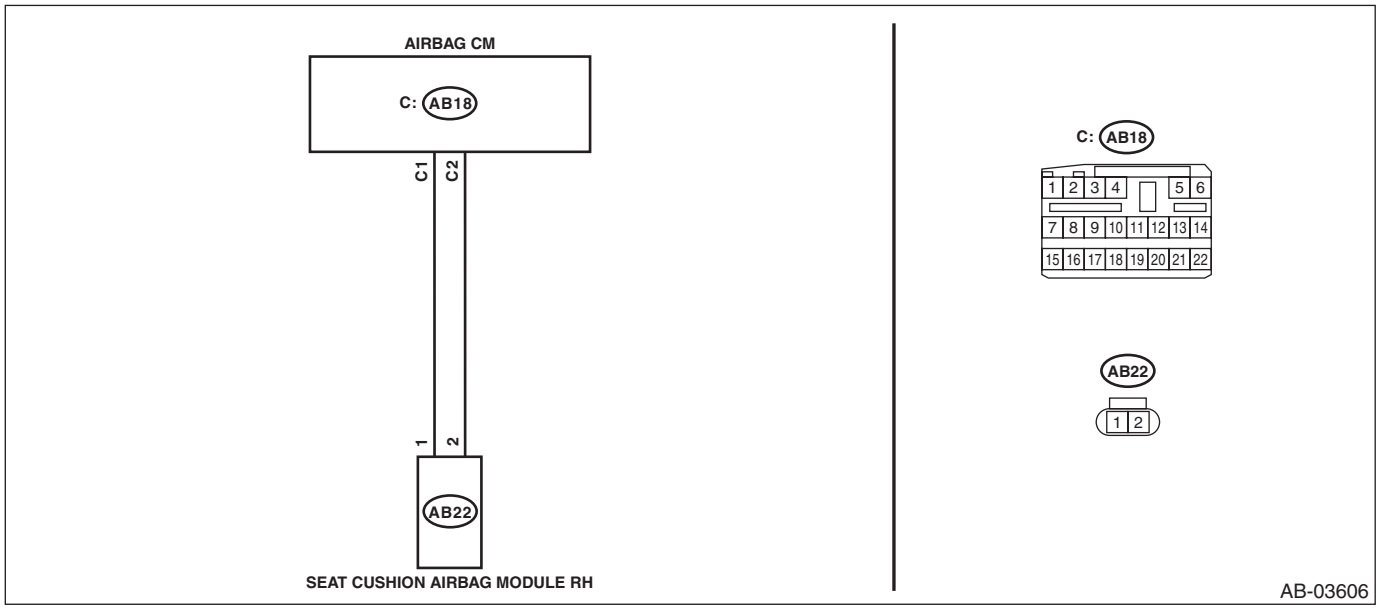

	Step	Check	Yes	No
1	**CHECK POOR CONTACT OF CONNECTORS.** Check for poor contact of the connectors between the airbag control module and the seat cushion airbag module RH.	Is there poor contact?	Replace the airbag rear harness along with body harness.	Go to step **2**.
2	**CHECK SEAT CUSHION AIRBAG MODULE.** 1) Turn the ignition switch to OFF, disconnect the battery ground cable, and wait for 60 seconds or more. 2) Disconnect the connector (AB22) from the seat cushion airbag module RH, and connect the connector (1D) in the test harness D to connector (AB22). 3) Connect the airbag resistor to connector (3D) in the test harness D. 4) Connect the battery ground terminal and turn the ignition switch to ON.	Does the airbag warning light illuminate for 6 seconds and go off?	Replace the seat cushion airbag module RH. <Ref. to AB-37, Seat Cushion Airbag Module.>	Go to step **3**.

	Step	Check	Yes	No
3	**CHECK AIRBAG REAR HARNESS (SEAT CUSHION AIRBAG MODULE HARNESS RH) (OPEN CIRCUIT).** 1) Turn the ignition switch to OFF, disconnect the battery ground cable, and wait for 60 seconds or more. 2) Disconnect the connector (AB26) from seat belt pretensioner RH. 3) Disconnect the connector (AB24) of side airbag module RH. 4) Disconnect the connector (AB33) from curtain airbag module RH. 5) Disconnect the airbag resistor from test harness D. 6) Disconnect the connectors (AB6, AB17, AB18) from airbag control module. 7) Connect the connector (1AD) in test harness AD AV to the connectors (AB6, AB17, AB18). 8) Connect the connector (2AD) in test harness AD AV and the connector (1AG) in test harness AG. 9) Measure the resistance between connector (3AG) in the test harness AG and connector (3D) in the test harness D. ***Connector & terminal*** ***(3AG) No. 11 — (3D) No. 4:*** ***(3AG) No. 13 — (3D) No. 3:***	Is the resistance less than 10 Ω?	Go to step **4**.	Replace the airbag rear harness along with body harness.
4	**CHECK AIRBAG CONTROL MODULE.** 1) Connect all connectors. 2) Clear the memory. <Ref. to AB(diag)-32, Clear Memory Mode.> 3) Perform the Inspection Mode. <Ref. to AB(diag)-31, Inspection Mode.> 4) Read the DTC. (Current malfunction) <Ref. to AB(diag)-30, Read Diagnostic Trouble Code (DTC).>	Is DTC B1871 displayed?	Replace the airbag control module. <Ref. to AB-50, Airbag Control Module.>	Go to step **5**.
5	**CHECK FOR ANY OTHER DTC ON DISPLAY.** Read the DTC. (Current malfunction) <Ref. to AB(diag)-30, Read Diagnostic Trouble Code (DTC).>	Is any other DTC displayed?	Check DTC using “List of Diagnostic Trouble Code (DTC)”. <Ref. to AB(diag)-38, List of Diagnostic Trouble Code (DTC).>	Finish the diagnosis.

ED:DTC B1872 SHORT IN FRONT SEAT CUSHION AIRBAG RH (TO GROUND)

DIAGNOSIS START CONDITION:
Ignition voltage is 10 V to 16 V.
DTC DETECTING CONDITION:
GND short circuit failure (shorted to ground in main harness, shorted to ground in front seat side airbag RH, shorted to ground in airbag CM internal circuit)

CAUTION:
Before performing diagnosis, refer to "CAUTION" in "General Description". <Ref. to AB(diag)-4, CAUTION, General Description.>
WIRING DIAGRAM:

NOTE:
For the coupling connector, refer to "WIRING SYSTEM".
Airbag system <Ref. to WI-89, WIRING DIAGRAM, Airbag System.>

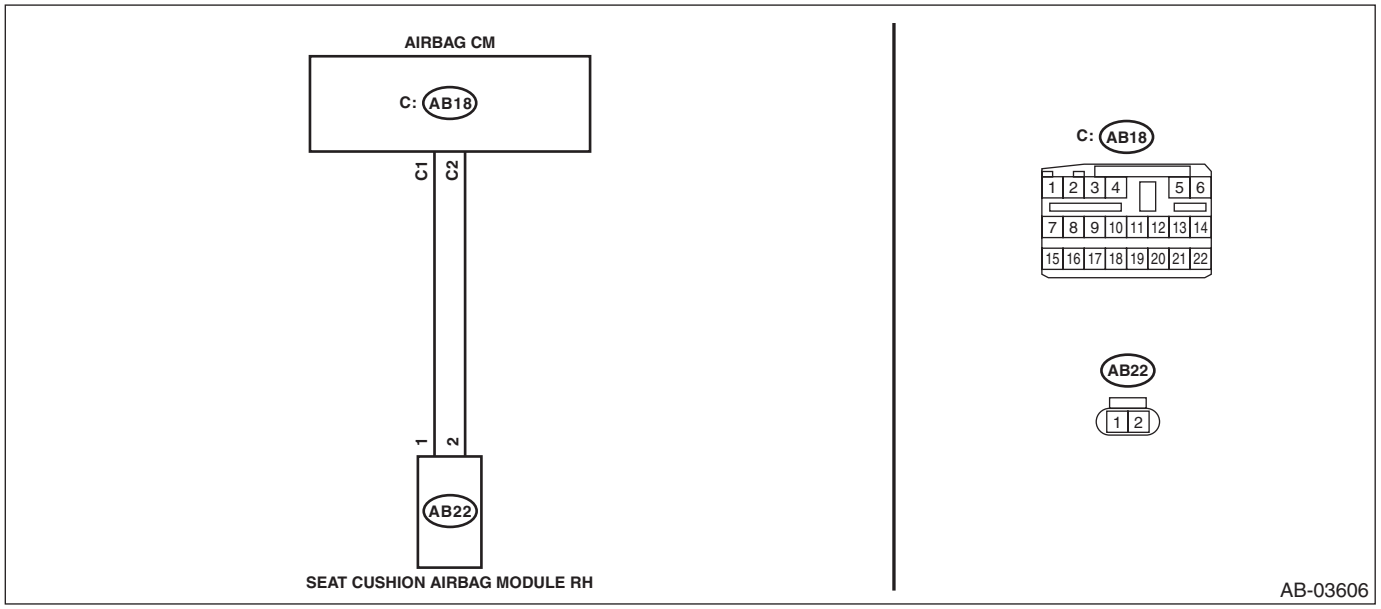

	Step	Check	Yes	No
1	**CHECK POOR CONTACT OF CONNECTORS.** Check for poor contact of the connectors between the airbag control module and the seat cushion airbag module RH.	Is there poor contact?	Replace the airbag rear harness along with body harness.	Go to step **2**.
2	**CHECK SEAT CUSHION AIRBAG MODULE.** 1) Turn the ignition switch to OFF, disconnect the battery ground cable, and wait for 60 seconds or more. 2) Disconnect the connector (AB22) from the seat cushion airbag module RH, and connect the connector (1D) in the test harness D to connector (AB22). 3) Connect the airbag resistor to connector (3D) in the test harness D. 4) Connect the battery ground terminal and turn the ignition switch to ON.	Does the airbag warning light illuminate for six seconds and go off?	Replace the seat cushion airbag module RH. <Ref. to AB-37, Seat Cushion Airbag Module.>	Go to step **3**.

	Step	Check	Yes	No
3	**CHECK AIRBAG REAR HARNESS (SEAT CUSHION AIRBAG MODULE HARNESS RH) (SHORTED TO GROUND).** 1) Turn the ignition switch to OFF, disconnect the battery ground cable, and wait for 60 seconds or more. 2) Disconnect the connector (AB26) from seat belt pretensioner RH. 3) Disconnect the connector (AB24) from side airbag module RH. 4) Disconnect the connector (AB33) from curtain airbag module RH. 5) Disconnect the airbag resistor from test harness D. 6) Disconnect the connectors (AB6, AB17, AB18) from airbag control module. 7) Connect the connector (1AD) in test harness AD AV to the connectors (AB6, AB17, AB18). 8) Connect the connector (2AD) in test harness AD AV and the connector (1AG) in test harness AG. 9) Measure the resistance between connector (3D) in the test harness D and chassis ground. ***Connector & terminal*** ***(3D) No. 4 — Chassis ground:*** ***(3D) No. 3 — Chassis ground:***	Is the resistance 1 MΩ or more?	Go to step **4**.	Replace the airbag rear harness along with body harness.
4	**CHECK AIRBAG CONTROL MODULE.** 1) Connect all connectors. 2) Clear the memory. <Ref. to AB(diag)-32, Clear Memory Mode.> 3) Perform the Inspection Mode. <Ref. to AB(diag)-31, Inspection Mode.> 4) Read the DTC. (Current malfunction) <Ref. to AB(diag)-30, Read Diagnostic Trouble Code (DTC).>	Is DTC B1872 displayed?	Replace the airbag control module. <Ref. to AB-50, Airbag Control Module.>	Go to step **5**.
5	**CHECK FOR ANY OTHER DTC ON DISPLAY.** Read the DTC. (Current malfunction) <Ref. to AB(diag)-30, Read Diagnostic Trouble Code (DTC).>	Is any other DTC displayed?	Check DTC using "List of Diagnostic Trouble Code (DTC)". <Ref. to AB(diag)-38, List of Diagnostic Trouble Code (DTC).>	Finish the diagnosis.

EE:DTC B1873 SHORT IN FRONT SEAT CUSHION AIRBAG RH (TO +B)

DIAGNOSIS START CONDITION:
Ignition voltage is 10 V to 16 V.
DTC DETECTING CONDITION:
Short circuit failure in power supply (shorted in main harness power supply, shorted in front seat side airbag RH power supply, shorted in airbag CM internal circuit power supply)

CAUTION:
Before performing diagnosis, refer to "CAUTION" in "General Description". <Ref. to AB(diag)-4, CAUTION, General Description.>
WIRING DIAGRAM:
Airbag system <Ref. to WI-89, WIRING DIAGRAM, Airbag System.>

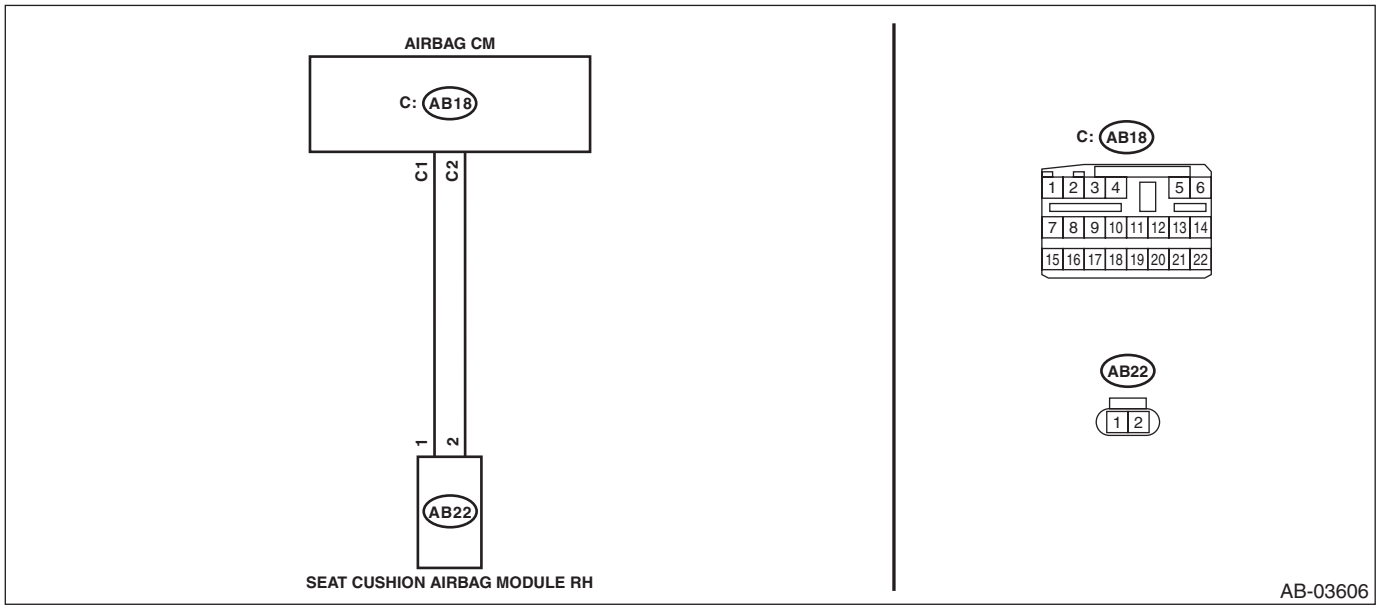

	Step	Check	Yes	No
1	**CHECK POOR CONTACT OF CONNECTORS.** Check for poor contact of the connectors between the airbag control module and the seat cushion airbag module RH.	Is there poor contact?	Replace the airbag rear harness along with body harness.	Go to step **2**.
2	**CHECK SEAT CUSHION AIRBAG MODULE.** 1) Turn the ignition switch to OFF, disconnect the battery ground cable, and wait for 60 seconds or more. 2) Disconnect the connector (AB22) from the seat cushion airbag module RH, and connect the connector (1D) in the test harness D to connector (AB22). 3) Connect the airbag resistor to connector (3D) in the test harness D. 4) Connect the battery ground terminal and turn the ignition switch to ON.	Does the airbag warning light illuminate for six seconds and go off?	Replace the seat cushion airbag module RH. <Ref. to AB-37, Seat Cushion Airbag Module.>	Go to step **3**.

	Step	Check	Yes	No
3	**CHECK AIRBAG REAR HARNESS (SEAT CUSHION AIRBAG MODULE HARNESS RH) (SHORTED TO POWER SUPPLY).** 1) Turn the ignition switch to OFF, disconnect the battery ground cable, and wait for 60 seconds or more. 2) Disconnect the connector (AB26) from seat belt pretensioner RH. 3) Disconnect the connector (AB24) from side airbag module RH. 4) Disconnect the connector (AB33) from curtain airbag module RH. 5) Disconnect the airbag resistor from test harness D. 6) Disconnect the connectors (AB6, AB17, AB18) from airbag control module. 7) Connect the connector (1AD) in test harness AD AV to the connectors (AB6, AB17, AB18). 8) Connect the connector (2AD) in test harness AD AV and the connector (1AG) in test harness AG. 9) Connect the battery ground terminal and turn the ignition switch to ON. 10) Measure the voltage between connector (3D) in the test harness D and chassis ground. ***Connector & terminal*** ***(3D) No. 4 (+) — Chassis ground (–):*** ***(3D) No. 3 (+) — Chassis ground (–):***	Is the voltage less than 1 V?	Go to step **4**.	Replace the airbag rear harness along with body harness.
4	**CHECK AIRBAG CONTROL MODULE.** 1) Connect all connectors. 2) Clear the memory. <Ref. to AB(diag)-32, Clear Memory Mode.> 3) Perform the Inspection Mode. <Ref. to AB(diag)-31, Inspection Mode.> 4) Read the DTC. (Current malfunction) <Ref. to AB(diag)-30, Read Diagnostic Trouble Code (DTC).>	Is DTC B1873 displayed?	Replace the airbag control module. <Ref. to AB-50, Airbag Control Module.>	Go to step **5**.
5	**CHECK FOR ANY OTHER DTC ON DISPLAY.** Read the DTC. (Current malfunction) <Ref. to AB(diag)-30, Read Diagnostic Trouble Code (DTC).>	Is any other DTC displayed?	Check DTC using "List of Diagnostic Trouble Code (DTC)". <Ref. to AB(diag)-38, List of Diagnostic Trouble Code (DTC).>	Finish the diagnosis.

EF:DTC B1874 SHORT IN FRONT SEAT CUSHION AIRBAG RH

DIAGNOSIS START CONDITION:
Ignition voltage is 10 V to 16 V.
DTC DETECTING CONDITION:
Short circuit between front seat side airbag RH circuit and other circuit

CAUTION:
Before performing diagnosis, refer to "CAUTION" in "General Description". <Ref. to AB(diag)-4, CAUTION, General Description.>
WIRING DIAGRAM:
Airbag system <Ref. to WI-89, WIRING DIAGRAM, Airbag System.>

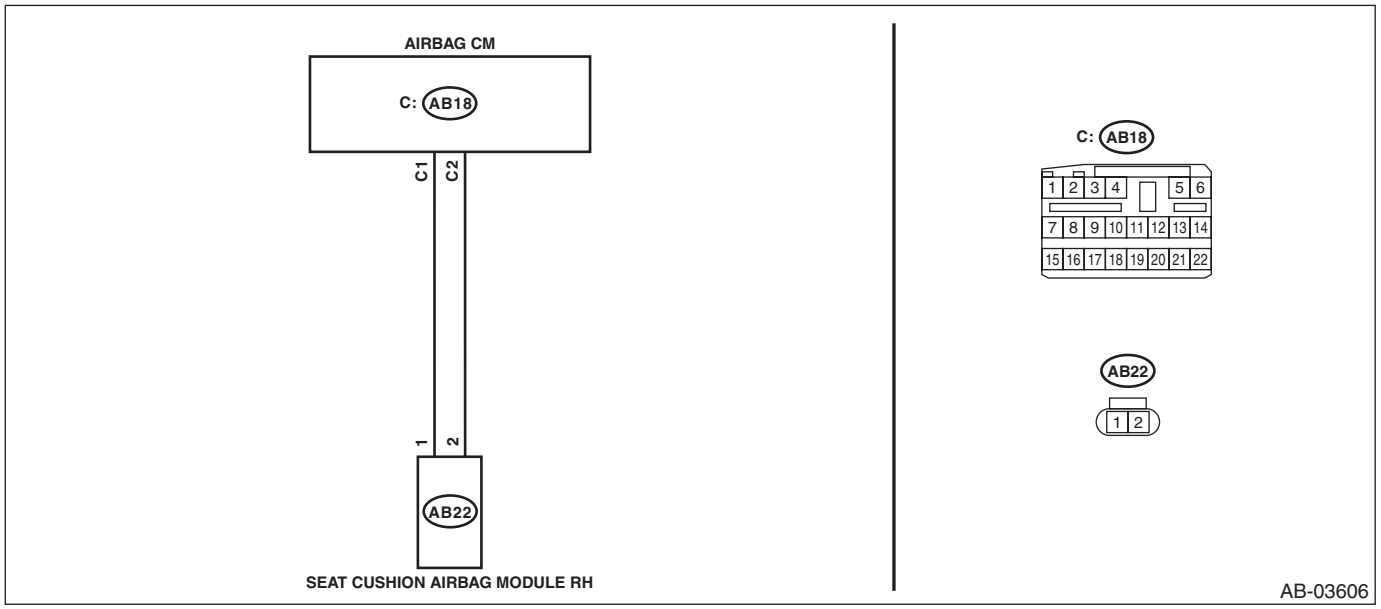

	Step	Check	Yes	No
1	**CHECK POOR CONTACT OF CONNECTORS.** Check for poor contact of the connectors between the airbag control module and the seat cushion airbag module RH.	Is there poor contact?	Replace the airbag rear harness along with body harness.	Go to step **2**.
2	**CHECK SEAT CUSHION AIRBAG MODULE.** 1) Turn the ignition switch to OFF, disconnect the battery ground cable, and wait for 60 seconds or more. 2) Disconnect the connector (AB22) from the seat cushion airbag module RH, and connect the connector (1D) in the test harness D to connector (AB22). 3) Connect the airbag resistor to connector (3D) in the test harness D. 4) Connect the battery ground terminal and turn the ignition switch to ON.	Does the airbag warning light illuminate for six seconds and go off?	Replace the seat cushion airbag module RH. <Ref. to AB-37, Seat Cushion Airbag Module.>	Go to step **3**.

	Step	Check	Yes	No
3	**CHECK AIRBAG REAR HARNESS (SEAT CUSHION AIRBAG MODULE HARNESS RH) (SHORTED BETWEEN LINES).** 1) Turn the ignition switch to OFF, disconnect the battery ground cable, and wait for 60 seconds or more. 2) Disconnect the connector (AB26) from seat belt pretensioner RH. 3) Disconnect the connector (AB24) from side airbag module RH. 4) Disconnect the connector (AB33) from curtain airbag module RH. 5) Disconnect the airbag resistor from test harness D. 6) Disconnect the connectors (AB6, AB17, AB18) from airbag control module. 7) Connect the connector (1AD) in test harness AD AV to the connectors (AB6, AB17, AB18). 8) Connect the connector (2AD) in test harness AD AV and the connector (1AG) in test harness AG. 9) Measure the resistance between connector (3AG) in the test harness AG and all connector terminals in the test harness AG. ***Connector & terminal*** ***(3AG) No. 11 — All terminals in test harness AG:*** ***(3AG) No. 13 — All terminals in test harness AG:***	Is the resistance 1 MΩ or more?	Go to step **4**.	Replace the faulty harness. (Replace the airbag main harness along with body harness. Or replace the airbag rear harness along with body harness.)
4	**CHECK AIRBAG CONTROL MODULE.** 1) Connect all connectors. 2) Clear the memory. <Ref. to AB(diag)-32, Clear Memory Mode.> 3) Perform the Inspection Mode. <Ref. to AB(diag)-31, Inspection Mode.> 4) Read the DTC. (Current malfunction) <Ref. to AB(diag)-30, Read Diagnostic Trouble Code (DTC).>	Is DTC B1874 displayed?	Replace the airbag control module. <Ref. to AB-50, Airbag Control Module.>	Go to step **5**.
5	**CHECK FOR ANY OTHER DTC ON DISPLAY.** Read the DTC. (Current malfunction) <Ref. to AB(diag)-30, Read Diagnostic Trouble Code (DTC).>	Is any other DTC displayed?	Check DTC using “List of Diagnostic Trouble Code (DTC)”. <Ref. to AB(diag)-38, List of Diagnostic Trouble Code (DTC).>	Finish the diagnosis.

EG:DTC B1875 SHORT IN FRONT SEAT CUSHION AIRBAG LH

DIAGNOSIS START CONDITION:
Ignition voltage is 10 V to 16 V.
DTC DETECTING CONDITION:
Shorted between +/– lines (shorted between rear harness lines, shorted between front seat cushion airbag LH lines, shorted between airbag CM internal lines)

CAUTION:
Before performing diagnosis, refer to "CAUTION" in "General Description". <Ref. to AB(diag)-4, CAUTION, General Description.>
WIRING DIAGRAM:
Airbag system <Ref. to WI-89, WIRING DIAGRAM, Airbag System.>

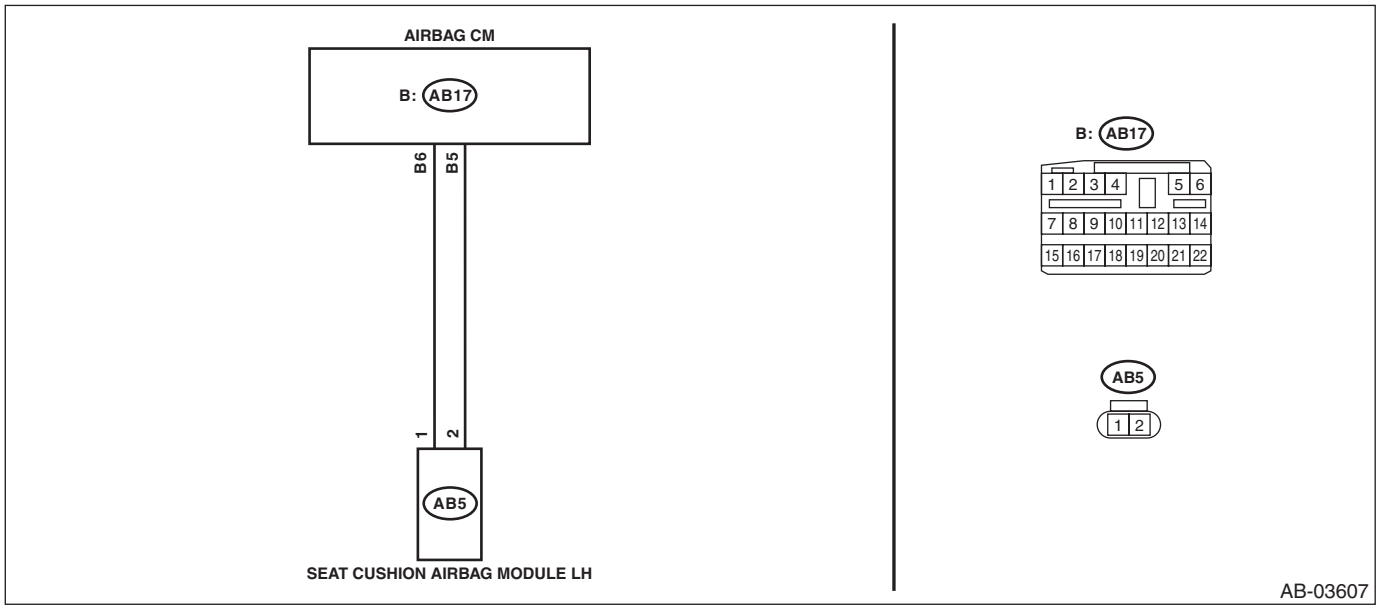

	Step	Check	Yes	No
1	**CHECK POOR CONTACT OF CONNECTORS.** Check for poor contact of the connectors between the airbag control module and the seat cushion airbag module LH.	Is there poor contact?	Replace the airbag rear harness along with body harness.	Go to step **2**.
2	**CHECK SEAT CUSHION AIRBAG MODULE.** 1) Turn the ignition switch to OFF, disconnect the battery ground cable, and wait for 60 seconds or more. 2) Disconnect the connector (AB5) from the seat cushion airbag module LH, and connect the connector (1D) in the test harness D to connector (AB5). 3) Connect the airbag resistor to connector (3D) in the test harness D. 4) Connect the battery ground terminal and turn the ignition switch to ON.	Does the airbag warning light illuminate for 6 seconds and go off?	Replace the seat cushion airbag module LH. <Ref. to AB-37, Seat Cushion Airbag Module.>	Go to step **3**.

	Step	Check	Yes	No
3	**CHECK AIRBAG REAR HARNESS (SEAT CUSHION AIRBAG MODULE HARNESS LH) (SHORTED BETWEEN LINES).** 1) Turn the ignition switch to OFF, disconnect the battery ground cable, and wait for 60 seconds or more. 2) Disconnect the connector (AB21) from seat belt pretensioner LH. 3) Disconnect the connector (AB19) of the side airbag module LH. 4) Disconnect the connector (AB31) from curtain airbag module LH. 5) Disconnect the airbag resistor from test harness D. 6) Disconnect the connectors (AB6, AB17, AB18) from airbag control module. 7) Connect the connector (1AD) in test harness AD AV to the connectors (AB6, AB17, AB18). 8) Connect the connector (2AD) in test harness AD AV and the connector (1AG) in test harness AG. 9) Measure the resistance between connector (3D) terminals in test harness D. ***Connector & terminal (3D) No. 3 — (3D) No. 4:***	Is the resistance 1 MΩ or more?	Go to step **4**.	Replace the airbag rear harness along with body harness.
4	**CHECK AIRBAG CONTROL MODULE.** 1) Connect all connectors. 2) Clear the memory. <Ref. to AB(diag)-32, Clear Memory Mode.> 3) Perform the Inspection Mode. <Ref. to AB(diag)-31, Inspection Mode.> 4) Read the DTC. (Current malfunction) <Ref. to AB(diag)-30, Read Diagnostic Trouble Code (DTC).>	Is DTC B1875 displayed?	Replace the airbag control module. <Ref. to AB-50, Airbag Control Module.>	Go to step **5**.
5	**CHECK FOR ANY OTHER DTC ON DISPLAY.** Read the DTC. (Current malfunction) <Ref. to AB(diag)-30, Read Diagnostic Trouble Code (DTC).>	Is any other DTC displayed?	Check DTC using "List of Diagnostic Trouble Code (DTC)". <Ref. to AB(diag)-38, List of Diagnostic Trouble Code (DTC).>	Finish the diagnosis.

EH:DTC B1876 OPEN IN FRONT SEAT CUSHION AIRBAG LH

DIAGNOSIS START CONDITION:
Ignition voltage is 10 V to 16 V.
DTC DETECTING CONDITION:
Open circuit failure (open circuit in rear harness, open circuit in front seat cushion airbag LH, open circuit in airbag CM internal circuit, connector connection failure)

CAUTION:
Before performing diagnosis, refer to "CAUTION" in "General Description". <Ref. to AB(diag)-4, CAUTION, General Description.>
WIRING DIAGRAM:
Airbag system <Ref. to WI-89, WIRING DIAGRAM, Airbag System.>

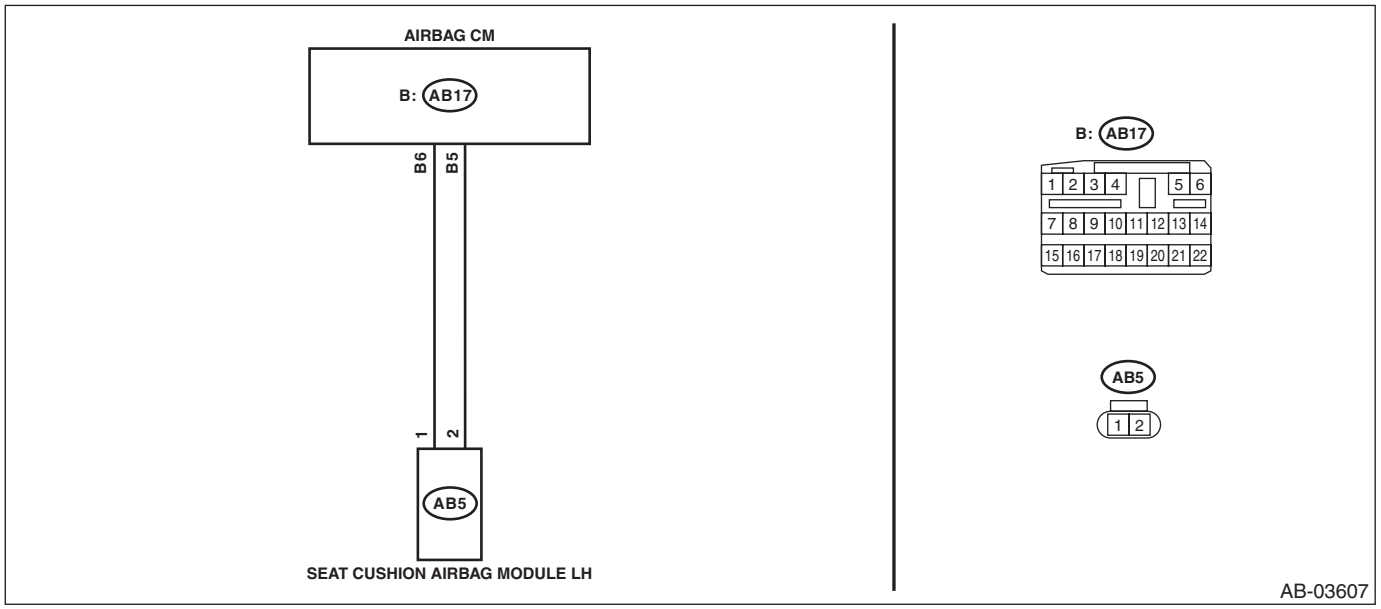

	Step	Check	Yes	No
1	**CHECK POOR CONTACT OF CONNECTORS.** Check for poor contact of the connectors between the airbag control module and the seat cushion airbag module LH.	Is there poor contact?	Replace the airbag rear harness along with body harness.	Go to step **2**.
2	**CHECK SEAT CUSHION AIRBAG MODULE.** 1) Turn the ignition switch to OFF, disconnect the battery ground cable, and wait for 60 seconds or more. 2) Disconnect the connector (AB5) from the seat cushion airbag module LH, and connect the connector (1D) in the test harness D to connector (AB5). 3) Connect the airbag resistor to connector (3D) in the test harness D. 4) Connect the battery ground terminal and turn the ignition switch to ON.	Does the airbag warning light illuminate for 6 seconds and go off?	Replace the seat cushion airbag module LH. <Ref. to AB-37, Seat Cushion Airbag Module.>	Go to step **3**.

	Step	Check	Yes	No
3	**CHECK AIRBAG REAR HARNESS (SEAT CUSHION AIRBAG MODULE HARNESS LH) (OPEN CIRCUIT).** 1) Turn the ignition switch to OFF, disconnect the battery ground cable, and wait for 60 seconds or more. 2) Disconnect the connector (AB21) from seat belt pretensioner LH. 3) Disconnect the connector (AB19) of the side airbag module LH. 4) Disconnect the connector (AB31) from curtain airbag module LH. 5) Disconnect the airbag resistor from test harness D. 6) Disconnect the connectors (AB6, AB17, AB18) from airbag control module. 7) Connect the connector (1AD) in test harness AD AV to the connectors (AB6, AB17, AB18). 8) Connect the connector (2AD) in test harness AD AV and the connector (1AG) in test harness AG. 9) Measure the resistance between connector (3AG) in the test harness AG and connector (3D) in the test harness D. ***Connector & terminal*** ***(3AG) No. 17 — (3D) No. 3:*** ***(3AG) No. 19 — (3D) No. 4:***	Is the resistance less than 10 Ω?	Go to step **4**.	Replace the airbag rear harness along with body harness.
4	**CHECK AIRBAG CONTROL MODULE.** 1) Connect all connectors. 2) Clear the memory. <Ref. to AB(diag)-32, Clear Memory Mode.> 3) Perform the Inspection Mode. <Ref. to AB(diag)-31, Inspection Mode.> 4) Read the DTC. (Current malfunction) <Ref. to AB(diag)-30, Read Diagnostic Trouble Code (DTC).>	Is DTC B1876 displayed?	Replace the airbag control module. <Ref. to AB-50, Airbag Control Module.>	Go to step **5**.
5	**CHECK FOR ANY OTHER DTC ON DISPLAY.** Read the DTC. (Current malfunction) <Ref. to AB(diag)-30, Read Diagnostic Trouble Code (DTC).>	Is any other DTC displayed?	Check DTC using “List of Diagnostic Trouble Code (DTC)”. <Ref. to AB(diag)-38, List of Diagnostic Trouble Code (DTC).>	Finish the diagnosis.

EI: DTC B1877 SHORT IN FRONT SEAT CUSHION AIRBAG LH (TO GROUND)

DIAGNOSIS START CONDITION:
Ignition voltage is 10 V to 16 V.
DTC DETECTING CONDITION:
GND short circuit failure (shorted to ground in main harness, shorted to ground in front seat cushion airbag LH, shorted to ground in airbag CM internal circuit)

CAUTION:
Before performing diagnosis, refer to "CAUTION" in "General Description". <Ref. to AB(diag)-4, CAUTION, General Description.>
WIRING DIAGRAM:
Airbag system <Ref. to WI-89, WIRING DIAGRAM, Airbag System.>

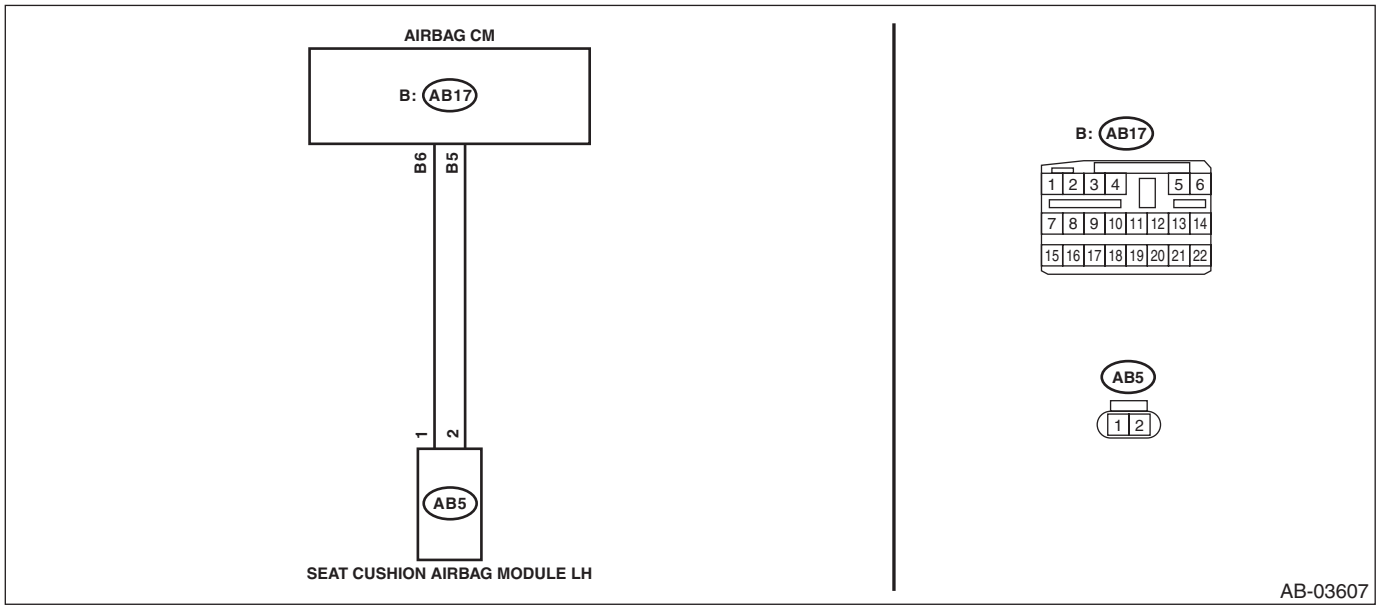

	Step	Check	Yes	No
1	**CHECK POOR CONTACT OF CONNECTORS.** Check for poor contact of the connectors between the airbag control module and the seat cushion airbag module LH.	Is there poor contact?	Replace the airbag rear harness along with body harness.	Go to step **2**.
2	**CHECK SEAT CUSHION AIRBAG MODULE.** 1) Turn the ignition switch to OFF, disconnect the battery ground cable, and wait for 60 seconds or more. 2) Disconnect the connector (AB5) from the seat cushion airbag module LH, and connect the connector (1D) in the test harness D to connector (AB5). 3) Connect the airbag resistor to connector (3D) in the test harness D. 4) Connect the battery ground terminal and turn the ignition switch to ON.	Does the airbag warning light illuminate for six seconds and go off?	Replace the seat cushion airbag module LH. <Ref. to AB-37, Seat Cushion Airbag Module.>	Go to step **3**.

	Step	Check	Yes	No
3	**CHECK AIRBAG REAR HARNESS (SEAT CUSHION AIRBAG MODULE HARNESS LH) (SHORTED TO GROUND).** 1) Turn the ignition switch to OFF, disconnect the battery ground cable, and wait for 60 seconds or more. 2) Disconnect the connector (AB21) from seat belt pretensioner LH. 3) Disconnect the connector (AB19) of the side airbag module LH. 4) Disconnect the connector (AB31) from curtain airbag module LH. 5) Disconnect the airbag resistor from test harness D. 6) Disconnect the connectors (AB6, AB17, AB18) from airbag control module. 7) Connect the connector (1AD) in test harness AD AV to the connectors (AB6, AB17, AB18). 8) Connect the connector (2AD) in test harness AD AV and the connector (1AG) in test harness AG. 9) Measure the resistance between connector (3D) in the test harness D and chassis ground. ***Connector & terminal*** ***(3D) No. 4 — Chassis ground:*** ***(3D) No. 3 — Chassis ground:***	Is the resistance 1 MΩ or more?	Go to step **4**.	Replace the airbag rear harness along with body harness.
4	**CHECK AIRBAG CONTROL MODULE.** 1) Connect all connectors. 2) Clear the memory. <Ref. to AB(diag)-32, Clear Memory Mode.> 3) Perform the Inspection Mode. <Ref. to AB(diag)-31, Inspection Mode.> 4) Read the DTC. (Current malfunction) <Ref. to AB(diag)-30, Read Diagnostic Trouble Code (DTC).>	Is DTC B1877 displayed?	Replace the airbag control module. <Ref. to AB-50, Airbag Control Module.>	Go to step **5**.
5	**CHECK FOR ANY OTHER DTC ON DISPLAY.** Read the DTC. (Current malfunction) <Ref. to AB(diag)-30, Read Diagnostic Trouble Code (DTC).>	Is any other DTC displayed?	Check DTC using "List of Diagnostic Trouble Code (DTC)". <Ref. to AB(diag)-38, List of Diagnostic Trouble Code (DTC).>	Finish the diagnosis.

EJ: DTC B1878 SHORT IN FRONT SEAT CUSHION AIRBAG LH (TO +B)

DIAGNOSIS START CONDITION:
Ignition voltage is 10 V to 16 V.
DTC DETECTING CONDITION:
Short circuit failure in power supply (shorted in main harness power supply, shorted in front seat cushion airbag LH power supply, shorted in airbag CM internal circuit power supply)

CAUTION:
Before performing diagnosis, refer to "CAUTION" in "General Description". <Ref. to AB(diag)-4, CAUTION, General Description.>
WIRING DIAGRAM:
Airbag system <Ref. to WI-89, WIRING DIAGRAM, Airbag System.>

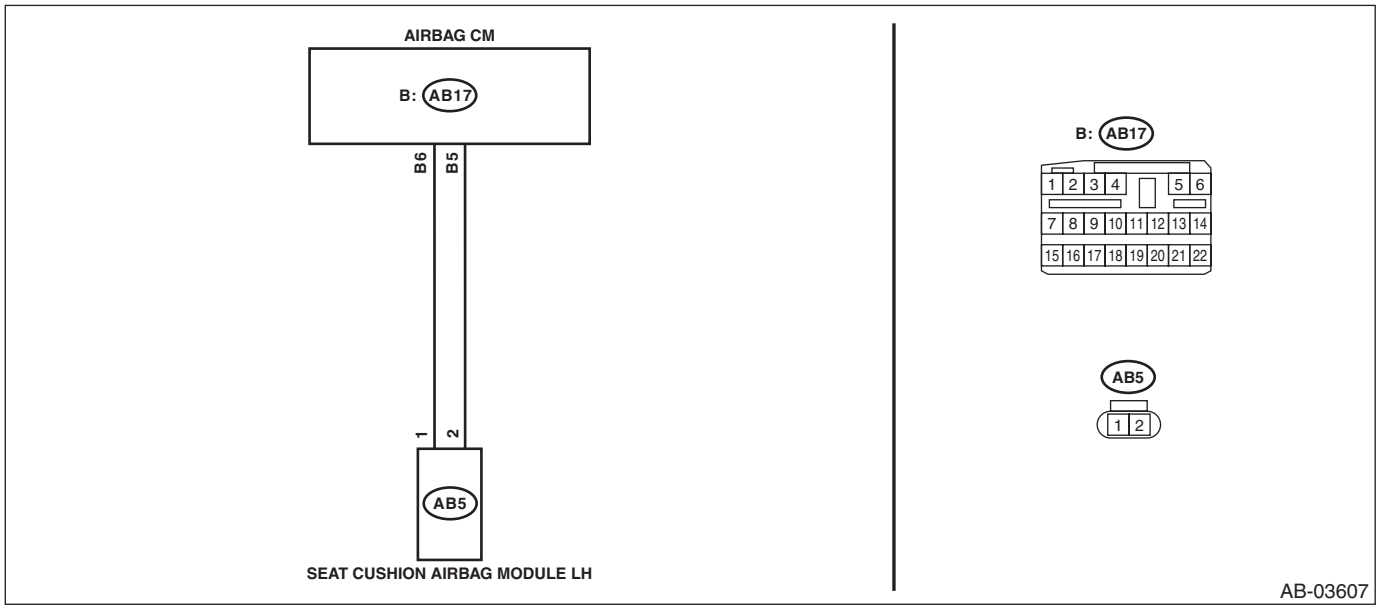

	Step	Check	Yes	No
1	**CHECK POOR CONTACT OF CONNECTORS.** Check for poor contact of the connectors between the airbag control module and the seat cushion airbag module LH.	Is there poor contact?	Replace the airbag rear harness along with body harness.	Go to step **2**.
2	**CHECK SEAT CUSHION AIRBAG MODULE.** 1) Turn the ignition switch to OFF, disconnect the battery ground cable, and wait for 60 seconds or more. 2) Disconnect the connector (AB5) from the seat cushion airbag module LH, and connect the connector (1D) in the test harness D to connector (AB5). 3) Connect the airbag resistor to connector (3D) in the test harness D. 4) Connect the battery ground terminal and turn the ignition switch to ON.	Does the airbag warning light illuminate for six seconds and go off?	Replace the seat cushion airbag module LH. <Ref. to AB-37, Seat Cushion Airbag Module.>	Go to step **3**.

	Step	Check	Yes	No
3	**CHECK AIRBAG REAR HARNESS (SEAT CUSHION AIRBAG MODULE HARNESS LH) (SHORTED TO POWER SUPPLY).** 1) Turn the ignition switch to OFF, disconnect the battery ground cable, and wait for 60 seconds or more. 2) Disconnect the connector (AB21) from seat belt pretensioner LH. 3) Disconnect the connector (AB19) of the side airbag module LH. 4) Disconnect the connector (AB31) from curtain airbag module LH. 5) Disconnect the airbag resistor from test harness D. 6) Disconnect the connectors (AB6, AB17, AB18) from airbag control module. 7) Connect the connector (1AD) in test harness AD AV to the connectors (AB6, AB17, AB18). 8) Connect the connector (2AD) in test harness AD AV and the connector (1AG) in test harness AG. 9) Connect the battery ground terminal and turn the ignition switch to ON. 10) Measure the voltage between connector (3D) in the test harness D and chassis ground. ***Connector & terminal*** ***(3D) No. 4 (+) — Chassis ground (–):*** ***(3D) No. 3 (+) — Chassis ground (–):***	Is the voltage less than 1 V?	Go to step **4**.	Replace the airbag rear harness along with body harness.
4	**CHECK AIRBAG CONTROL MODULE.** 1) Connect all connectors. 2) Clear the memory. <Ref. to AB(diag)-32, Clear Memory Mode.> 3) Perform the Inspection Mode. <Ref. to AB(diag)-31, Inspection Mode.> 4) Read the DTC. (Current malfunction) <Ref. to AB(diag)-30, Read Diagnostic Trouble Code (DTC).>	Is DTC B1878 displayed?	Replace the airbag control module. <Ref. to AB-50, Airbag Control Module.>	Go to step **5**.
5	**CHECK FOR ANY OTHER DTC ON DISPLAY.** Read the DTC. (Current malfunction) <Ref. to AB(diag)-30, Read Diagnostic Trouble Code (DTC).>	Is any other DTC displayed?	Check DTC using "List of Diagnostic Trouble Code (DTC)". <Ref. to AB(diag)-38, List of Diagnostic Trouble Code (DTC).>	Finish the diagnosis.

EK:DTC B1879 SHORT IN FRONT SEAT CUSHION AIRBAG LH

DIAGNOSIS START CONDITION:
Ignition voltage is 10 V to 16 V.
DTC DETECTING CONDITION:
Short circuit between front seat cushion airbag LH circuit and other circuit

CAUTION:
Before performing diagnosis, refer to "CAUTION" in "General Description". <Ref. to AB(diag)-4, CAUTION, General Description.>
WIRING DIAGRAM:
Airbag system <Ref. to WI-89, WIRING DIAGRAM, Airbag System.>

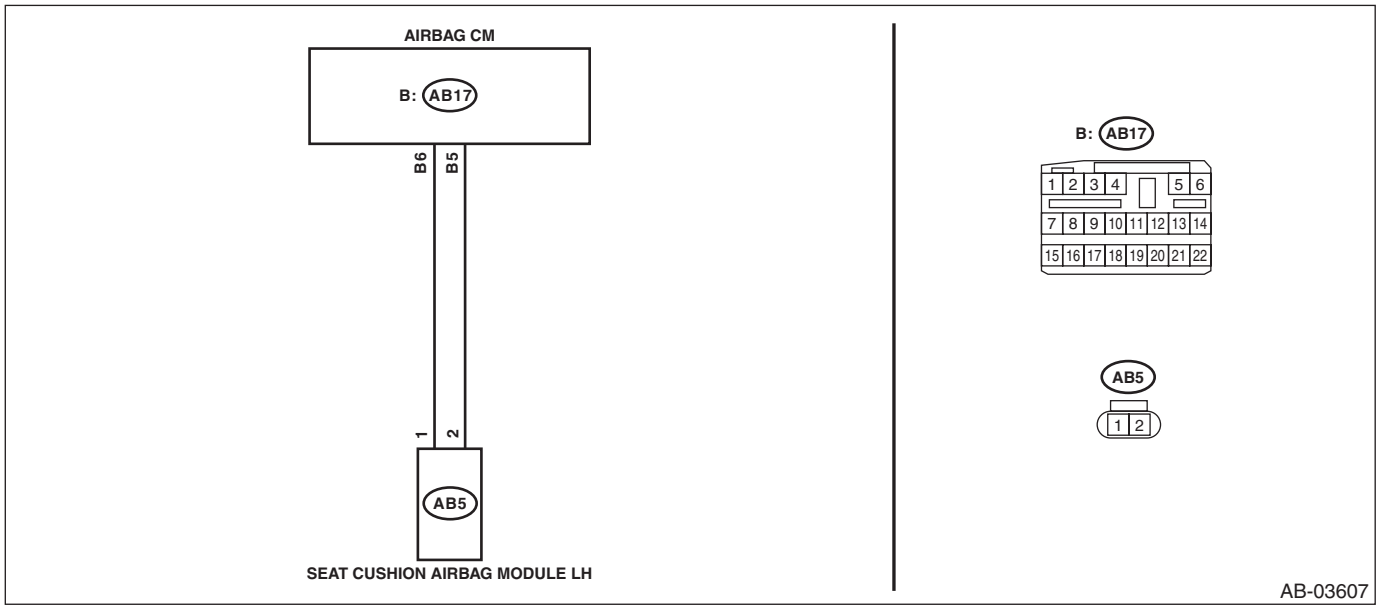

	Step	Check	Yes	No
1	**CHECK POOR CONTACT OF CONNECTORS.** Check for poor contact of the connectors between the airbag control module and the seat cushion airbag module LH.	Is there poor contact?	Replace the airbag rear harness along with body harness.	Go to step **2**.
2	**CHECK SEAT CUSHION AIRBAG MODULE.** 1) Turn the ignition switch to OFF, disconnect the battery ground cable, and wait for 60 seconds or more. 2) Disconnect the connector (AB5) from the seat cushion airbag module LH, and connect the connector (1D) in the test harness D to connector (AB5). 3) Connect the airbag resistor to connector (3D) in the test harness D. 4) Connect the battery ground terminal and turn the ignition switch to ON.	Does the airbag warning light illuminate for six seconds and go off?	Replace the seat cushion airbag module LH. <Ref. to AB-37, Seat Cushion Airbag Module.>	Go to step **3**.

	Step	Check	Yes	No
3	**CHECK AIRBAG REAR HARNESS (SEAT CUSHION AIRBAG MODULE HARNESS LH) (SHORTED BETWEEN LINES).** 1) Turn the ignition switch to OFF, disconnect the battery ground cable, and wait for 60 seconds or more. 2) Disconnect the connector (AB21) from seat belt pretensioner LH. 3) Disconnect the connector (AB19) of the side airbag module LH. 4) Disconnect the connector (AB31) from curtain airbag module LH. 5) Disconnect the airbag resistor from test harness D. 6) Disconnect the connectors (AB6, AB17, AB18) from airbag control module. 7) Connect the connector (1AD) in test harness AD AV to the connectors (AB6, AB17, AB18). 8) Connect the connector (2AD) in test harness AD AV and the connector (1AG) in test harness AG. 9) Measure the resistance between connector (3AG) in the test harness AG and all connector terminals in the test harness AG. ***Connector & terminal*** ***(3AG) No. 17 — All terminals in test harness AG:*** ***(3AG) No. 19 — All terminals in test harness AG:***	Is the resistance 1 MΩ or more?	Go to step **4**.	Replace the faulty harness. (Replace the airbag main harness along with body harness. Or replace the airbag rear harness along with body harness.)
4	**CHECK AIRBAG CONTROL MODULE.** 1) Connect all connectors. 2) Clear the memory. <Ref. to AB(diag)-32, Clear Memory Mode.> 3) Perform the Inspection Mode. <Ref. to AB(diag)-31, Inspection Mode.> 4) Read the DTC. (Current malfunction) <Ref. to AB(diag)-30, Read Diagnostic Trouble Code (DTC).>	Is DTC B1879 displayed?	Replace the airbag control module. <Ref. to AB-50, Airbag Control Module.>	Go to step **5**.
5	**CHECK FOR ANY OTHER DTC ON DISPLAY.** Read the DTC. (Current malfunction) <Ref. to AB(diag)-30, Read Diagnostic Trouble Code (DTC).>	Is any other DTC displayed?	Check DTC using “List of Diagnostic Trouble Code (DTC)”. <Ref. to AB(diag)-38, List of Diagnostic Trouble Code (DTC).>	Finish the diagnosis.

EL:DTC B1900 SHORT IN FRONT P/T RH

DIAGNOSIS START CONDITION:
Ignition voltage is 10 V to 16 V.
DTC DETECTING CONDITION:
Shorted between +/– lines (shorted between rear harness lines, shorted between front seat pretensioner RH lines, shorted between airbag CM internal lines)

CAUTION:
Before performing diagnosis, refer to "CAUTION" in "General Description". <Ref. to AB(diag)-4, CAUTION, General Description.>
WIRING DIAGRAM:
Airbag system <Ref. to WI-89, WIRING DIAGRAM, Airbag System.>

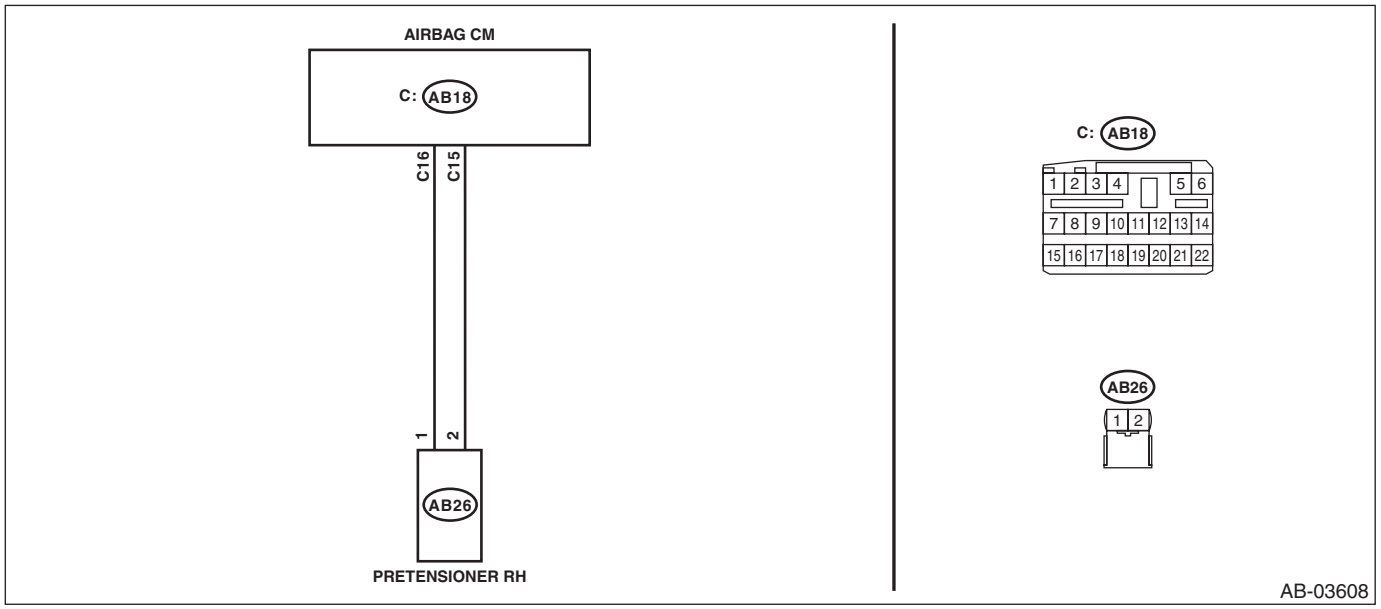

	Step	Check	Yes	No
1	**CHECK POOR CONTACT OF CONNECTORS.** Check for poor contact of the connectors between the airbag control module and the seat belt pretensioner RH.	Is there poor contact?	Replace the airbag rear harness along with body harness.	Go to step **2**.
2	**CHECK SEAT BELT PRETENSIONER.** 1) Turn the ignition switch to OFF, disconnect the battery ground cable, and wait for 60 seconds or more. 2) Disconnect the connector (AB26) from seat belt pretensioner RH. 3) Connect the connector (1N) in the test harness N to the connector (AB26). 4) Connect the airbag resistor to the connector (2N) of test harness N. 5) Connect the battery ground terminal and turn the ignition switch to ON.	Does the airbag warning light illuminate for 6 seconds and go off?	Replace the seat belt pretensioner RH. <Ref. to SB-19, Front Seat Belt.>	Go to step **3**.

	Step	Check	Yes	No
3	**CHECK AIRBAG REAR HARNESS (PRETENSIONER HARNESS RH) (SHORTED BETWEEN LINES).** 1) Turn the ignition switch to OFF, disconnect the battery ground cable, and wait for 60 seconds or more. 2) Disconnect the airbag resistor from test harness N. 3) Disconnect the connector (AB22) from seat cushion airbag module RH. 4) Disconnect the connector (AB24) from side airbag module RH. 5) Disconnect the connector (AB33) from curtain airbag module RH. 6) Disconnect the connectors (AB6, AB17, AB18) from airbag control module. 7) Connect the connector (1AD) in test harness AD AV to the connectors (AB6, AB17, AB18). 8) Connect the connector (2AD) in test harness AD AV and the connector (1AG) in test harness AG. 9) Measure the resistance between connector (3AG) terminals in test harness AG. ***Connector & terminal (3AG) No. 10 — (3AG) No. 12:***	Is the resistance 1 MΩ or more?	Go to step **4**.	Replace the airbag rear harness along with body harness.
4	**CHECK AIRBAG CONTROL MODULE.** 1) Connect all connectors. 2) Clear the memory. <Ref. to AB(diag)-32, Clear Memory Mode.> 3) Perform the Inspection Mode. <Ref. to AB(diag)-31, Inspection Mode.> 4) Read the DTC. (Current malfunction) <Ref. to AB(diag)-30, Read Diagnostic Trouble Code (DTC).>	Is DTC B1900 displayed?	Replace the airbag control module. <Ref. to AB-50, Airbag Control Module.>	Go to step **5**.
5	**CHECK FOR ANY OTHER DTC ON DISPLAY.** Read the DTC. (Current malfunction) <Ref. to AB(diag)-30, Read Diagnostic Trouble Code (DTC).>	Is any other DTC displayed?	Check DTC using "List of Diagnostic Trouble Code (DTC)". <Ref. to AB(diag)-38, List of Diagnostic Trouble Code (DTC).>	Finish the diagnosis.

EM:DTC B1901 OPEN IN FRONT P/T RH

DIAGNOSIS START CONDITION:
Ignition voltage is 10 V to 16 V.
DTC DETECTING CONDITION:
Open circuit failure (open circuit in rear harness, open circuit in front seat pretensioner RH, open circuit in airbag CM internal circuit, connector connection failure)

CAUTION:
Before performing diagnosis, refer to "CAUTION" in "General Description". <Ref. to AB(diag)-4, CAUTION, General Description.>
WIRING DIAGRAM:
Airbag system <Ref. to WI-89, WIRING DIAGRAM, Airbag System.>

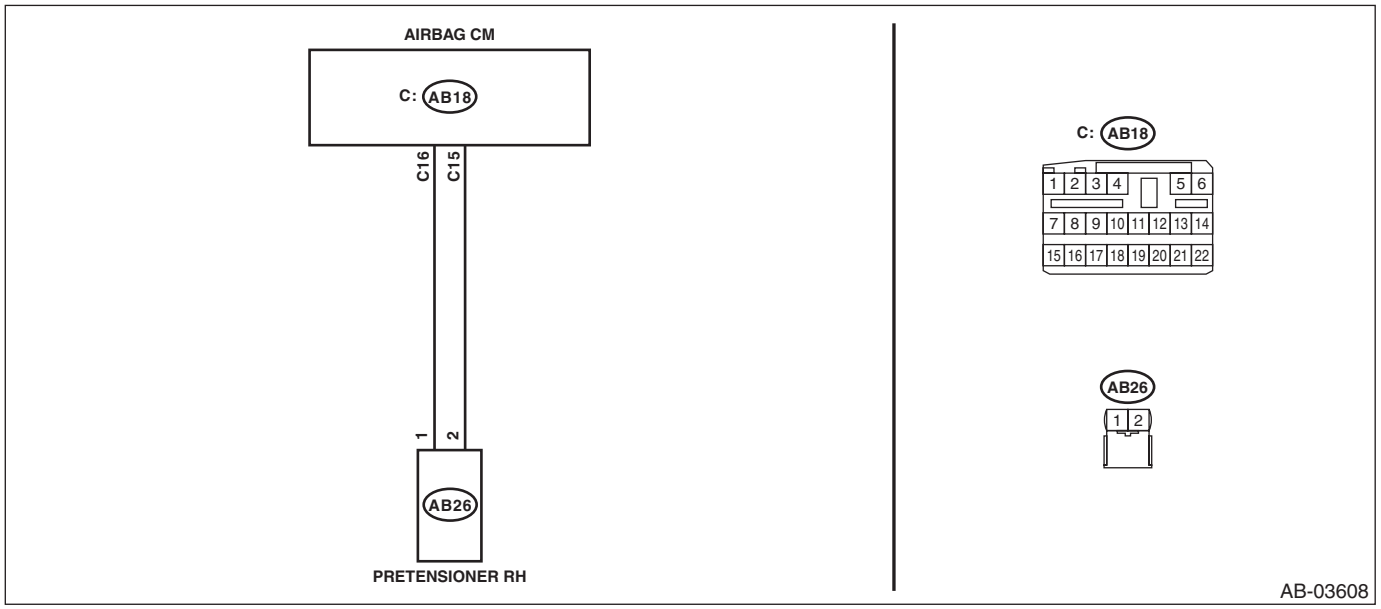

Step		Check	Yes	No
1	**CHECK POOR CONTACT OF CONNECTORS.** Check for poor contact of the connectors between the airbag control module and the seat belt pretensioner RH.	Is there poor contact?	Replace the airbag rear harness along with body harness.	Go to step **2**.
2	**CHECK SEAT BELT PRETENSIONER.** 1) Turn the ignition switch to OFF, disconnect the battery ground cable, and wait for 60 seconds or more. 2) Disconnect the connector (AB26) from seat belt pretensioner RH. 3) Connect the connector (1N) in the test harness N to the connector (AB26). 4) Connect the airbag resistor to the connector (2N) of test harness N. 5) Connect the battery ground terminal and turn the ignition switch to ON.	Does the airbag warning light illuminate for 6 seconds and go off?	Replace the seat belt pretensioner RH. <Ref. to SB-19, Front Seat Belt.>	Go to step **3**.

	Step	Check	Yes	No
3	**CHECK AIRBAG REAR HARNESS (PRETENSIONER HARNESS RH) (OPEN CIRCUIT).** 1) Turn the ignition switch to OFF, disconnect the battery ground cable, and wait for 60 seconds or more. 2) Disconnect the airbag resistor from the connector (2N) of test harness N. 3) Disconnect the connector (AB22) from seat cushion airbag module RH. 4) Disconnect the connector (AB24) from side airbag module RH. 5) Disconnect the connector (AB33) from curtain airbag module RH. 6) Disconnect the connectors (AB6, AB17, AB18) from airbag control module. 7) Connect the connector (1AD) in test harness AD AV to the connectors (AB6, AB17, AB18). 8) Connect the connector (2AD) in test harness AD AV and the connector (1AG) in test harness AG. 9) Measure the resistance between connector (3AG) in the test harness AG and connector (2N) in the test harness N. ***Connector & terminal*** ***(3AG) No. 10 — (2N) No. 2:*** ***(3AG) No. 12 — (2N) No. 1:***	Is the resistance less than 10 Ω?	Go to step **4**.	Replace the airbag rear harness along with body harness.
4	**CHECK AIRBAG CONTROL MODULE.** 1) Connect all connectors. 2) Clear the memory. <Ref. to AB(diag)-32, Clear Memory Mode.> 3) Perform the Inspection Mode. <Ref. to AB(diag)-31, Inspection Mode.> 4) Read the DTC. (Current malfunction) <Ref. to AB(diag)-30, Read Diagnostic Trouble Code (DTC).>	Is DTC B1901 displayed?	Replace the airbag control module. <Ref. to AB-50, Airbag Control Module.>	Go to step **5**.
5	**CHECK FOR ANY OTHER DTC ON DISPLAY.** Read the DTC. (Current malfunction) <Ref. to AB(diag)-30, Read Diagnostic Trouble Code (DTC).>	Is any other DTC displayed?	Check DTC using "List of Diagnostic Trouble Code (DTC)". <Ref. to AB(diag)-38, List of Diagnostic Trouble Code (DTC).>	Finish the diagnosis.

EN:DTC B1902 SHORT IN FRONT P/T RH (TO GROUND)

DIAGNOSIS START CONDITION:
Ignition voltage is 10 V to 16 V.
DTC DETECTING CONDITION:
GND short circuit failure (shorted to ground in rear harness, shorted to ground in front seat pretensioner RH, shorted to ground in airbag CM internal circuit)

CAUTION:
Before performing diagnosis, refer to "CAUTION" in "General Description". <Ref. to AB(diag)-4, CAUTION, General Description.>
WIRING DIAGRAM:
Airbag system <Ref. to WI-89, WIRING DIAGRAM, Airbag System.>

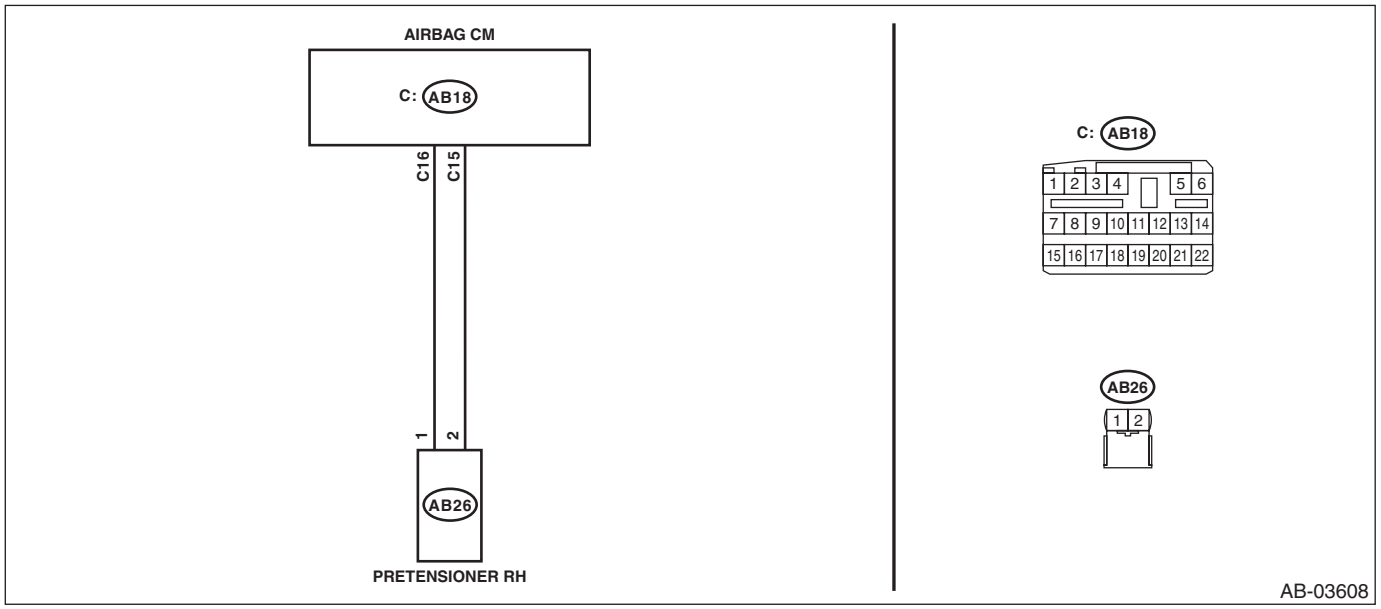

Step		Check	Yes	No
1	**CHECK POOR CONTACT OF CONNECTORS.** Check for poor contact of the connectors between the airbag control module and the seat belt pretensioner RH.	Is there poor contact?	Replace the airbag rear harness along with body harness.	Go to step **2**.
2	**CHECK SEAT BELT PRETENSIONER.** 1) Turn the ignition switch to OFF, disconnect the battery ground cable, and wait for 60 seconds or more. 2) Disconnect the connector (AB26) from seat belt pretensioner RH. 3) Connect the connector (1N) in the test harness N to the connector (AB26). 4) Connect the airbag resistor to the connector (2N) of test harness N. 5) Connect the battery ground terminal and turn the ignition switch to ON.	Does the airbag warning light illuminate for six seconds and go off?	Replace the seat belt pretensioner RH. <Ref. to SB-19, Front Seat Belt.>	Go to step **3**.

	Step	Check	Yes	No
3	**CHECK AIRBAG REAR HARNESS (PRETENSIONER HARNESS RH) (SHORTED TO GROUND).** 1) Turn the ignition switch to OFF, disconnect the battery ground cable, and wait for 60 seconds or more. 2) Disconnect the airbag resistor from the connector (2N) of test harness N. 3) Disconnect the connector (AB22) from seat cushion airbag module RH. 4) Disconnect the connector (AB24) from side airbag module RH. 5) Disconnect the connector (AB33) from curtain airbag module RH. 6) Disconnect the connectors (AB6, AB17, AB18) from airbag control module. 7) Connect the connector (1AD) in test harness AD AV to the connectors (AB6, AB17, AB18). 8) Connect the connector (2AD) in test harness AD AV and the connector (1AG) in test harness AG. 9) Measure the resistance between connector (3AG) in the test harness AG and chassis ground. ***Connector & terminal*** ***(3AG) No. 10 — Chassis ground:*** ***(3AG) No. 12 — Chassis ground:***	Is the resistance 1 MΩ or more?	Go to step **4**.	Replace the airbag rear harness along with body harness.
4	**CHECK AIRBAG CONTROL MODULE.** 1) Connect all connectors. 2) Clear the memory. <Ref. to AB(diag)-32, Clear Memory Mode.> 3) Perform the Inspection Mode. <Ref. to AB(diag)-31, Inspection Mode.> 4) Read the DTC. (Current malfunction) <Ref. to AB(diag)-30, Read Diagnostic Trouble Code (DTC).>	Is DTC B1902 displayed?	Replace the airbag control module. <Ref. to AB-50, Airbag Control Module.>	Go to step **5**.
5	**CHECK FOR ANY OTHER DTC ON DISPLAY.** Read the DTC. (Current malfunction) <Ref. to AB(diag)-30, Read Diagnostic Trouble Code (DTC).>	Is any other DTC displayed?	Check DTC using "List of Diagnostic Trouble Code (DTC)". <Ref. to AB(diag)-38, List of Diagnostic Trouble Code (DTC).>	Finish the diagnosis.

EO:DTC B1903 SHORT IN FRONT P/T RH (TO +B)

DIAGNOSIS START CONDITION:
Ignition voltage is 10 V to 16 V.
DTC DETECTING CONDITION:
Short circuit failure in power supply (shorted in rear harness power supply, shorted in front seat pretensioner RH power supply, shorted in airbag CM internal circuit power supply)

CAUTION:
Before performing diagnosis, refer to "CAUTION" in "General Description". <Ref. to AB(diag)-4, CAUTION, General Description.>
WIRING DIAGRAM:
Airbag system <Ref. to WI-89, WIRING DIAGRAM, Airbag System.>

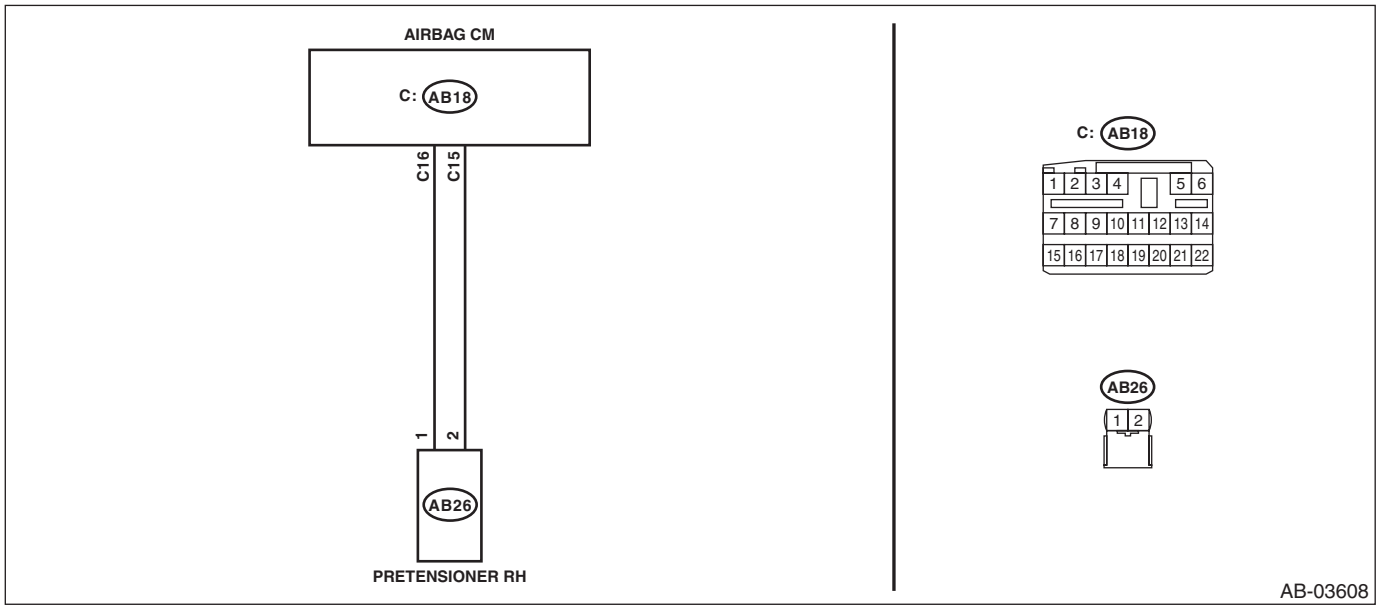

Step		Check	Yes	No
1	**CHECK POOR CONTACT OF CONNECTORS.** Check for poor contact of the connectors between the airbag control module and the seat belt pretensioner RH.	Is there poor contact?	Replace the airbag rear harness along with body harness.	Go to step **2**.
2	**CHECK SEAT BELT PRETENSIONER.** 1) Turn the ignition switch to OFF, disconnect the battery ground cable, and wait for 60 seconds or more. 2) Disconnect the connector (AB26) from seat belt pretensioner RH. 3) Connect the connector (1N) in the test harness N to the connector (AB26). 4) Connect the airbag resistor to the connector (2N) of test harness N. 5) Connect the battery ground terminal and turn the ignition switch to ON.	Does the airbag warning light illuminate for six seconds and go off?	Replace the seat belt pretensioner RH. <Ref. to SB-19, Front Seat Belt.>	Go to step **3**.

	Step	Check	Yes	No
3	**CHECK AIRBAG REAR HARNESS (PRETENSIONER HARNESS RH) (SHORTED TO POWER SUPPLY).** 1) Turn the ignition switch to OFF, disconnect the battery ground cable, and wait for 60 seconds or more. 2) Disconnect the airbag resistor from the connector (2N) of test harness N. 3) Disconnect the connector (AB22) from seat cushion airbag module RH. 4) Disconnect the connector (AB24) from side airbag module RH. 5) Disconnect the connector (AB33) from curtain airbag module RH. 6) Disconnect the connectors (AB6, AB17, AB18) from airbag control module. 7) Connect the connector (1AD) in test harness AD AV to the connectors (AB6, AB17, AB18). 8) Connect the connector (2AD) in test harness AD AV and the connector (1AG) in test harness AG. 9) Connect the battery ground terminal and turn the ignition switch to ON. 10) Measure the voltage between connector (3AG) in the test harness AG and chassis ground. ***Connector & terminal*** ***(3AG) No. 10 (+) — Chassis ground (–):*** ***(3AG) No. 12 (+) — Chassis ground (–):***	Is the voltage less than 1 V?	Go to step **4**.	Replace the airbag rear harness along with body harness.
4	**CHECK AIRBAG CONTROL MODULE.** 1) Connect all connectors. 2) Clear the memory. <Ref. to AB(diag)-32, Clear Memory Mode.> 3) Perform the Inspection Mode. <Ref. to AB(diag)-31, Inspection Mode.> 4) Read the DTC. (Current malfunction) <Ref. to AB(diag)-30, Read Diagnostic Trouble Code (DTC).>	Is DTC B1903 displayed?	Replace the airbag control module. <Ref. to AB-50, Airbag Control Module.>	Go to step **5**.
5	**CHECK FOR ANY OTHER DTC ON DISPLAY.** Read the DTC. (Current malfunction) <Ref. to AB(diag)-30, Read Diagnostic Trouble Code (DTC).>	Is any other DTC displayed?	Check DTC using "List of Diagnostic Trouble Code (DTC)". <Ref. to AB(diag)-38, List of Diagnostic Trouble Code (DTC).>	Finish the diagnosis.

EP:DTC B1904 SHORT IN FRONT P/T RH

DIAGNOSIS START CONDITION:
Ignition voltage is 10 V to 16 V.
DTC DETECTING CONDITION:
Short circuit between front seat pretensioner RH circuit and other circuit

CAUTION:
Before performing diagnosis, refer to "CAUTION" in "General Description". <Ref. to AB(diag)-4, CAUTION, General Description.>
WIRING DIAGRAM:
Airbag system <Ref. to WI-89, WIRING DIAGRAM, Airbag System.>

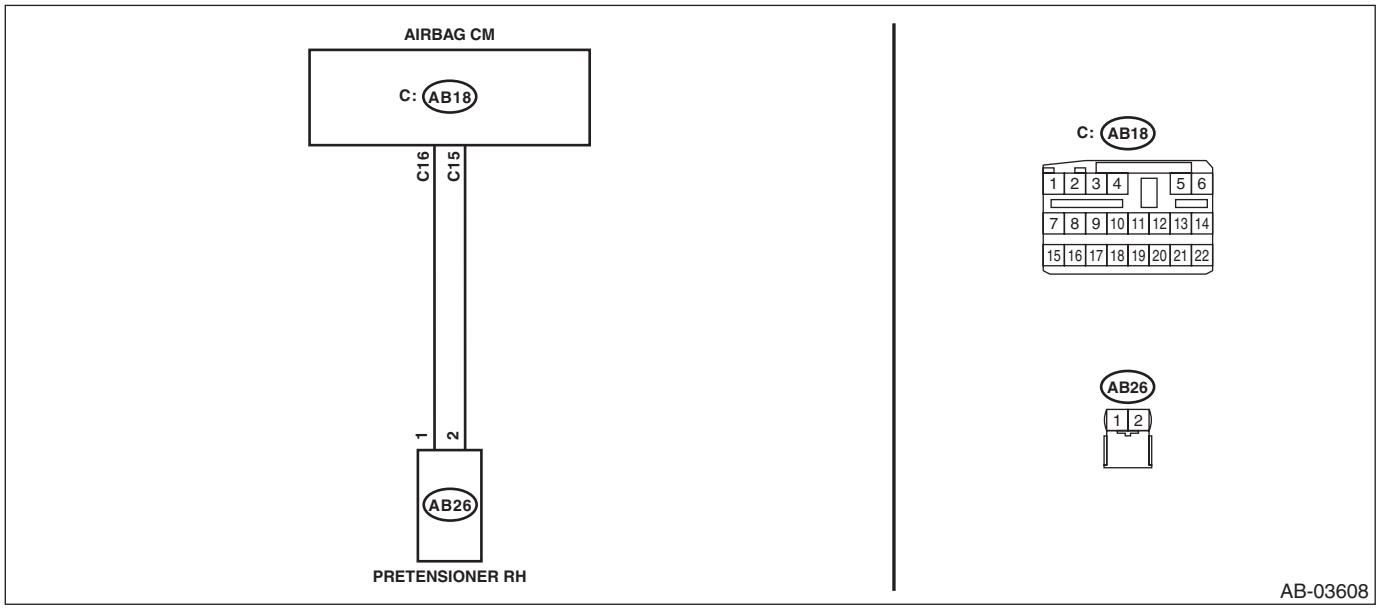

Step		Check	Yes	No
1	**CHECK POOR CONTACT OF CONNECTORS.** Check for poor contact of the connectors between the airbag control module and the seat belt pretensioner RH.	Is there poor contact?	Replace the airbag rear harness along with body harness.	Go to step **2**.
2	**CHECK SEAT BELT PRETENSIONER.** 1) Turn the ignition switch to OFF, disconnect the battery ground cable, and wait for 60 seconds or more. 2) Disconnect the connector (AB26) from seat belt pretensioner RH. 3) Connect the connector (1N) in the test harness N to the connector (AB26). 4) Connect the airbag resistor to the connector (2N) of test harness N. 5) Connect the battery ground terminal and turn the ignition switch to ON.	Does the airbag warning light illuminate for six seconds and go off?	Replace the seat belt pretensioner RH. <Ref. to SB-19, Front Seat Belt.>	Go to step **3**.

	Step	Check	Yes	No
3	**CHECK AIRBAG REAR HARNESS (PRETENSIONER HARNESS RH) (SHORTED BETWEEN LINES).** 1) Turn the ignition switch to OFF, disconnect the battery ground cable, and wait for 60 seconds or more. 2) Disconnect the airbag resistor from the connector (2N) of test harness N. 3) Disconnect the connector (AB22) from seat cushion airbag module RH. 4) Disconnect the connector (AB24) from side airbag module RH. 5) Disconnect the connector (AB33) from curtain airbag module RH. 6) Disconnect the connectors (AB6, AB17, AB18) from airbag control module. 7) Connect the connector (1AD) in test harness AD AV to the connectors (AB6, AB17, AB18). 8) Connect the connector (2AD) in test harness AD AV and the connector (1AG) in test harness AG. 9) Measure the resistance between connector (3AG) in the test harness AG and all connector terminals in the test harness AG. ***Connector & terminal*** ***(3AG) No. 10 — All terminals in test harness AG:*** ***(3AG) No. 12 — All terminals in test harness AG:***	Is the resistance 1 MΩ or more?	Go to step **4**.	Replace the faulty harness. (Replace the airbag main harness along with body harness. Or replace the airbag rear harness along with body harness.)
4	**CHECK AIRBAG CONTROL MODULE.** 1) Connect all connectors. 2) Clear the memory. <Ref. to AB(diag)-32, Clear Memory Mode.> 3) Perform the Inspection Mode. <Ref. to AB(diag)-31, Inspection Mode.> 4) Read the DTC. (Current malfunction) <Ref. to AB(diag)-30, Read Diagnostic Trouble Code (DTC).>	Is DTC B1904 displayed?	Replace the airbag control module. <Ref. to AB-50, Airbag Control Module.>	Go to step **5**.
5	**CHECK FOR ANY OTHER DTC ON DISPLAY.** Read the DTC. (Current malfunction) <Ref. to AB(diag)-30, Read Diagnostic Trouble Code (DTC).>	Is any other DTC displayed?	Check DTC using “List of Diagnostic Trouble Code (DTC)”. <Ref. to AB(diag)-38, List of Diagnostic Trouble Code (DTC).>	Finish the diagnosis.

EQ:DTC B1905 SHORT IN FRONT P/T LH

DIAGNOSIS START CONDITION:
Ignition voltage is 10 V to 16 V.
DTC DETECTING CONDITION:
Shorted between +/– lines (shorted between rear harness lines, shorted between front seat pretensioner LH lines, shorted between airbag CM internal lines)

CAUTION:
Before performing diagnosis, refer to "CAUTION" in "General Description". <Ref. to AB(diag)-4, CAUTION, General Description.>
WIRING DIAGRAM:
Airbag system <Ref. to WI-89, WIRING DIAGRAM, Airbag System.>

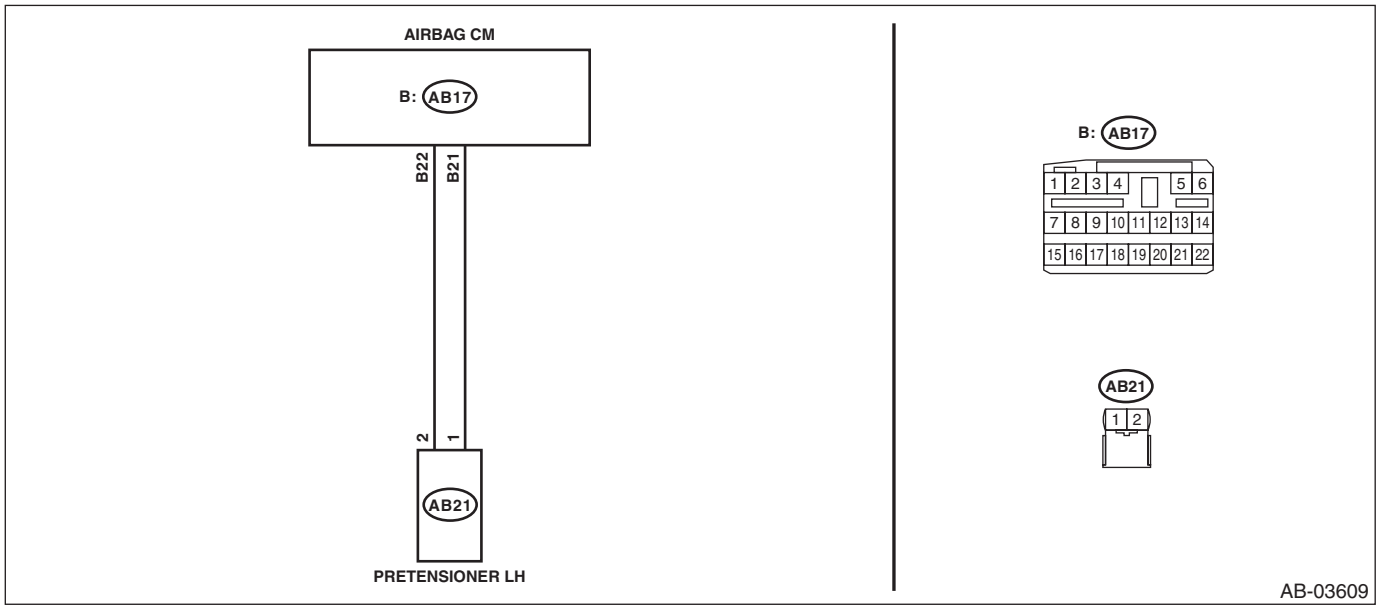

	Step	Check	Yes	No
1	**CHECK POOR CONTACT OF CONNECTORS.** Check for poor contact of the connectors between the airbag control module and the seat belt pretensioner LH.	Is there poor contact?	Replace the airbag rear harness along with body harness.	Go to step **2**.
2	**CHECK SEAT BELT PRETENSIONER.** 1) Turn the ignition switch to OFF, disconnect the battery ground cable, and wait for 60 seconds or more. 2) Disconnect the connector (AB21) from seat belt pretensioner LH. 3) Connect the connector (1N) in the test harness N to the connector (AB21). 4) Connect the airbag resistor to the connector (2N) of test harness N. 5) Connect the battery ground terminal and turn the ignition switch to ON.	Does the airbag warning light illuminate for 6 seconds and go off?	Replace the seat belt pretensioner LH. <Ref. to SB-19, Front Seat Belt.>	Go to step **3**.

	Step	Check	Yes	No
3	**CHECK AIRBAG REAR HARNESS (PRETENSIONER HARNESS LH) (SHORTED BETWEEN LINES).** 1) Turn the ignition switch to OFF, disconnect the battery ground cable, and wait for 60 seconds or more. 2) Disconnect the airbag resistor from the connector (2N) of test harness N. 3) Disconnect the connector (AB5) from seat cushion airbag module LH. 4) Disconnect the connector (AB19) from side airbag module LH. 5) Disconnect the connector (AB31) from curtain airbag module LH. 6) Disconnect the connectors (AB6, AB17, AB18) from airbag control module. 7) Connect the connector (1AD) in test harness AD AV to the connectors (AB6, AB17, AB18). 8) Connect the connector (2AD) in test harness AD AV and the connector (1AG) in test harness AG. 9) Measure the resistance between connector (3AG) terminals in test harness AG. ***Connector & terminal (3AG) No. 18 — (3AG) No. 20:***	Is the resistance 1 MΩ or more?	Go to step **4**.	Replace the airbag rear harness along with body harness.
4	**CHECK AIRBAG CONTROL MODULE.** 1) Connect all connectors. 2) Clear the memory. <Ref. to AB(diag)-32, Clear Memory Mode.> 3) Perform the Inspection Mode. <Ref. to AB(diag)-31, Inspection Mode.> 4) Read the DTC. (Current malfunction) <Ref. to AB(diag)-30, Read Diagnostic Trouble Code (DTC).>	Is DTC B1905 displayed?	Replace the airbag control module. <Ref. to AB-50, Airbag Control Module.>	Go to step **5**.
5	**CHECK FOR ANY OTHER DTC ON DISPLAY.** Read the DTC. (Current malfunction) <Ref. to AB(diag)-30, Read Diagnostic Trouble Code (DTC).>	Is any other DTC displayed?	Check DTC using "List of Diagnostic Trouble Code (DTC)". <Ref. to AB(diag)-38, List of Diagnostic Trouble Code (DTC).>	Finish the diagnosis.

ER:DTC B1906 OPEN IN FRONT P/T LH

DIAGNOSIS START CONDITION:
Ignition voltage is 10 V to 16 V.
DTC DETECTING CONDITION:
Open circuit failure (open circuit in rear harness, open circuit in front seat pretensioner LH, open circuit in airbag CM internal circuit, connector connection failure)

CAUTION:
Before performing diagnosis, refer to "CAUTION" in "General Description". <Ref. to AB(diag)-4, CAUTION, General Description.>
WIRING DIAGRAM:
Airbag system <Ref. to WI-89, WIRING DIAGRAM, Airbag System.>

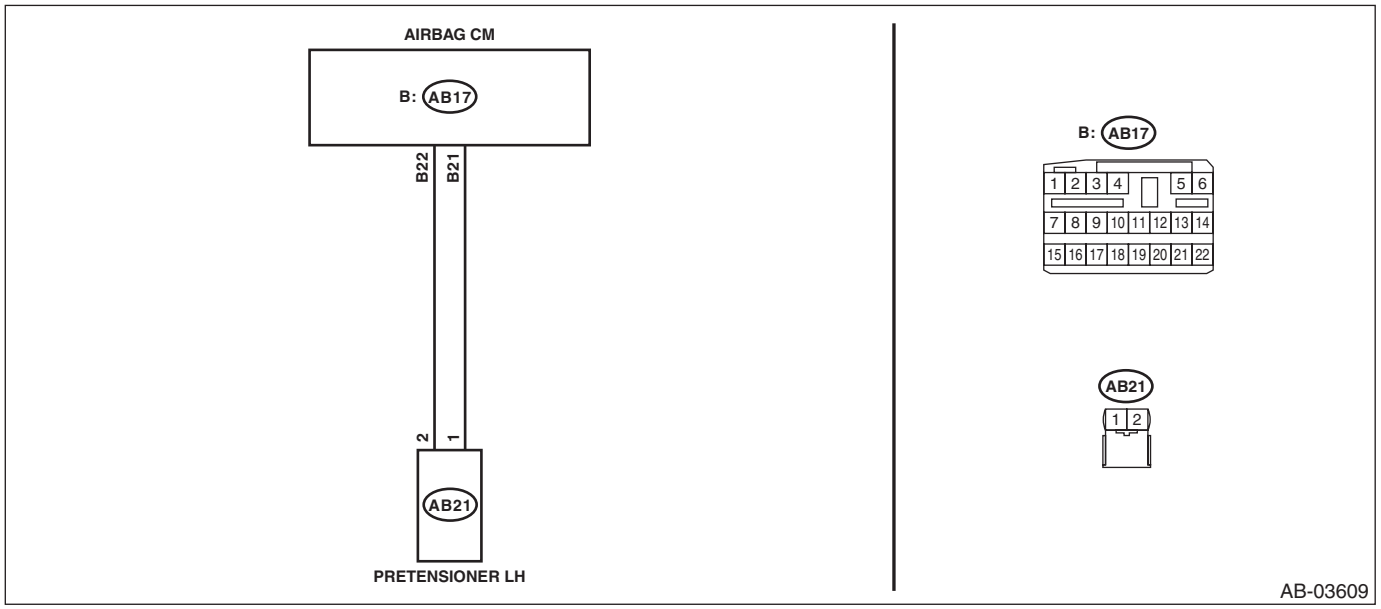

	Step	Check	Yes	No
1	**CHECK POOR CONTACT OF CONNECTORS.** Check for poor contact of the connectors between the airbag control module and the seat belt pretensioner LH.	Is there poor contact?	Replace the airbag rear harness along with body harness.	Go to step **2**.
2	**CHECK SEAT BELT PRETENSIONER.** 1) Turn the ignition switch to OFF, disconnect the battery ground cable, and wait for 60 seconds or more. 2) Disconnect the connector (AB21) from seat belt pretensioner LH. 3) Connect the connector (1N) in the test harness N to the connector (AB21). 4) Connect the airbag resistor to the connector (2N) of test harness N. 5) Connect the battery ground terminal and turn the ignition switch to ON.	Does the airbag warning light illuminate for 6 seconds and go off?	Replace the seat belt pretensioner LH. <Ref. to SB-19, Front Seat Belt.>	Go to step **3**.

	Step	Check	Yes	No
3	**CHECK AIRBAG REAR HARNESS (PRETENSIONER HARNESS LH) (OPEN CIRCUIT).** 1) Turn the ignition switch to OFF, disconnect the battery ground cable, and wait for 60 seconds or more. 2) Disconnect the airbag resistor from the connector (2N) of test harness N. 3) Disconnect the connector (AB5) from seat cushion airbag module LH. 4) Disconnect the connector (AB19) from side airbag module LH. 5) Disconnect the connector (AB31) from curtain airbag module LH. 6) Disconnect the connectors (AB6, AB17, AB18) from airbag control module. 7) Connect the connector (1AD) in test harness AD AV to the connectors (AB6, AB17, AB18). 8) Connect the connector (2AD) in test harness AD AV and the connector (1AG) in test harness AG. 9) Measure the resistance between connector (3AG) in the test harness AG and connector (2N) in the test harness N. ***Connector & terminal*** ***(3AG) No. 18 — (2N) No. 1:*** ***(3AG) No. 20 — (2N) No. 2:***	Is the resistance less than 10 Ω?	Go to step **4**.	Replace the airbag rear harness along with body harness.
4	**CHECK AIRBAG CONTROL MODULE.** 1) Connect all connectors. 2) Clear the memory. <Ref. to AB(diag)-32, Clear Memory Mode.> 3) Perform the Inspection Mode. <Ref. to AB(diag)-31, Inspection Mode.> 4) Read the DTC. (Current malfunction) <Ref. to AB(diag)-30, Read Diagnostic Trouble Code (DTC).>	Is DTC B1906 displayed?	Replace the airbag control module. <Ref. to AB-50, Airbag Control Module.>	Go to step **5**.
5	**CHECK FOR ANY OTHER DTC ON DISPLAY.** Read the DTC. (Current malfunction) <Ref. to AB(diag)-30, Read Diagnostic Trouble Code (DTC).>	Is any other DTC displayed?	Check DTC using "List of Diagnostic Trouble Code (DTC)". <Ref. to AB(diag)-38, List of Diagnostic Trouble Code (DTC).>	Finish the diagnosis.

ES:DTC B1907 SHORT IN FRONT P/T LH (TO GROUND)

DIAGNOSIS START CONDITION:
Ignition voltage is 10 V to 16 V.
DTC DETECTING CONDITION:
GND short circuit failure (shorted to ground in rear harness, shorted to ground in front seat pretensioner LH, shorted to ground in airbag CM internal circuit)

CAUTION:
Before performing diagnosis, refer to "CAUTION" in "General Description". <Ref. to AB(diag)-4, CAUTION, General Description.>
WIRING DIAGRAM:
Airbag system <Ref. to WI-89, WIRING DIAGRAM, Airbag System.>

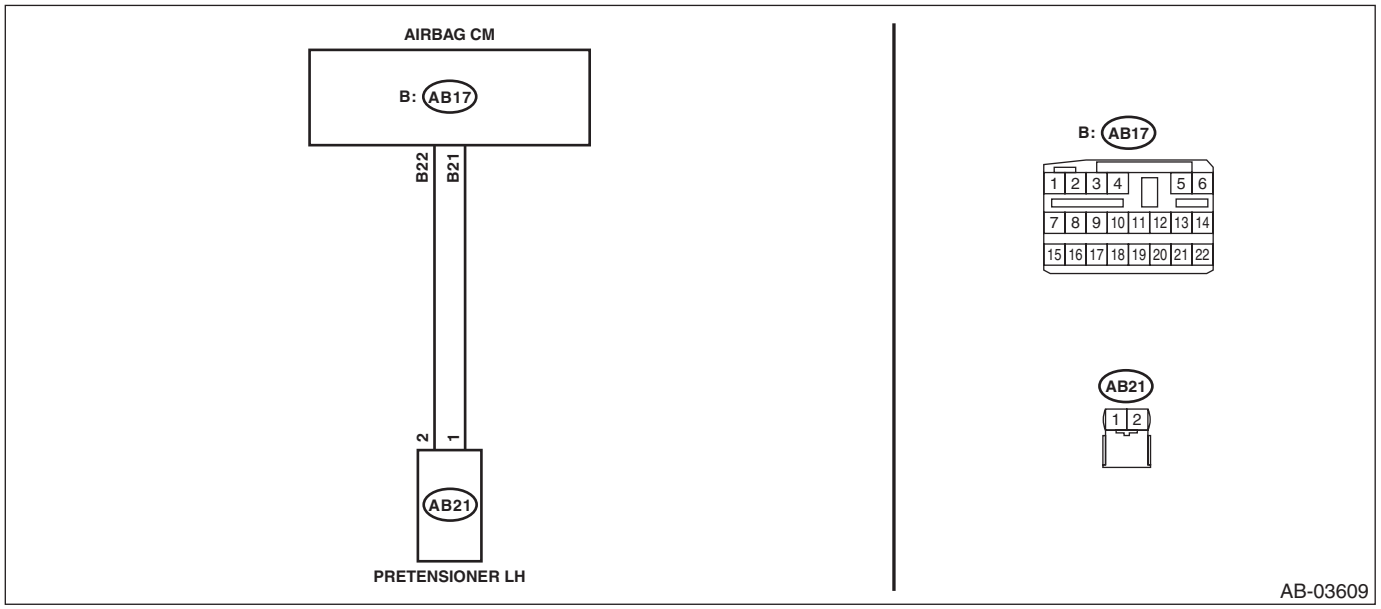

	Step	Check	Yes	No
1	**CHECK POOR CONTACT OF CONNECTORS.** Check for poor contact of the connectors between the airbag control module and the seat belt pretensioner LH.	Is there poor contact?	Replace the airbag rear harness along with body harness.	Go to step **2**.
2	**CHECK SEAT BELT PRETENSIONER.** 1) Turn the ignition switch to OFF, disconnect the battery ground cable, and wait for 60 seconds or more. 2) Disconnect the connector (AB21) from seat belt pretensioner LH. 3) Connect the connector (1N) in the test harness N to the connector (AB21). 4) Connect the airbag resistor to the connector (2N) of test harness N. 5) Connect the battery ground terminal and turn the ignition switch to ON.	Does the airbag warning light illuminate for six seconds and go off?	Replace the seat belt pretensioner LH. <Ref. to SB-19, Front Seat Belt.>	Go to step **3**.

	Step	Check	Yes	No
3	**CHECK AIRBAG REAR HARNESS (PRETENSIONER HARNESS LH) (SHORTED TO GROUND).** 1) Turn the ignition switch to OFF, disconnect the battery ground cable, and wait for 60 seconds or more. 2) Disconnect the airbag resistor from the connector (2N) of test harness N. 3) Disconnect the connector (AB5) from seat cushion airbag module LH. 4) Disconnect the connector (AB19) from side airbag module LH. 5) Disconnect the connector (AB31) from curtain airbag module LH. 6) Disconnect the connectors (AB6, AB17, AB18) from airbag control module. 7) Connect the connector (1AD) in test harness AD AV to the connectors (AB6, AB17, AB18). 8) Connect the connector (2AD) in test harness AD AV and the connector (1AG) in test harness AG. 9) Measure the resistance between connector (3AG) in the test harness AG and chassis ground. ***Connector & terminal*** ***(3AG) No. 18 — Chassis ground:*** ***(3AG) No. 20 — Chassis ground:***	Is the resistance 1 MΩ or more?	Go to step **4**.	Replace the airbag rear harness along with body harness.
4	**CHECK AIRBAG CONTROL MODULE.** 1) Connect all connectors. 2) Clear the memory. <Ref. to AB(diag)-32, Clear Memory Mode.> 3) Perform the Inspection Mode. <Ref. to AB(diag)-31, Inspection Mode.> 4) Read the DTC. (Current malfunction) <Ref. to AB(diag)-30, Read Diagnostic Trouble Code (DTC).>	Is DTC B1907 displayed?	Replace the airbag control module. <Ref. to AB-50, Airbag Control Module.>	Go to step **5**.
5	**CHECK FOR ANY OTHER DTC ON DISPLAY.** Read the DTC. (Current malfunction) <Ref. to AB(diag)-30, Read Diagnostic Trouble Code (DTC).>	Is any other DTC displayed?	Check DTC using "List of Diagnostic Trouble Code (DTC)". <Ref. to AB(diag)-38, List of Diagnostic Trouble Code (DTC).>	Finish the diagnosis.

ET:DTC B1908 SHORT IN FRONT P/T LH (TO +B)

DIAGNOSIS START CONDITION:
Ignition voltage is 10 V to 16 V.
DTC DETECTING CONDITION:
Short circuit failure in power supply (shorted in rear harness power supply, shorted in front seat pretensioner LH power supply, shorted in airbag CM internal circuit power supply)

CAUTION:
Before performing diagnosis, refer to "CAUTION" in "General Description". <Ref. to AB(diag)-4, CAUTION, General Description.>
WIRING DIAGRAM:
Airbag system <Ref. to WI-89, WIRING DIAGRAM, Airbag System.>

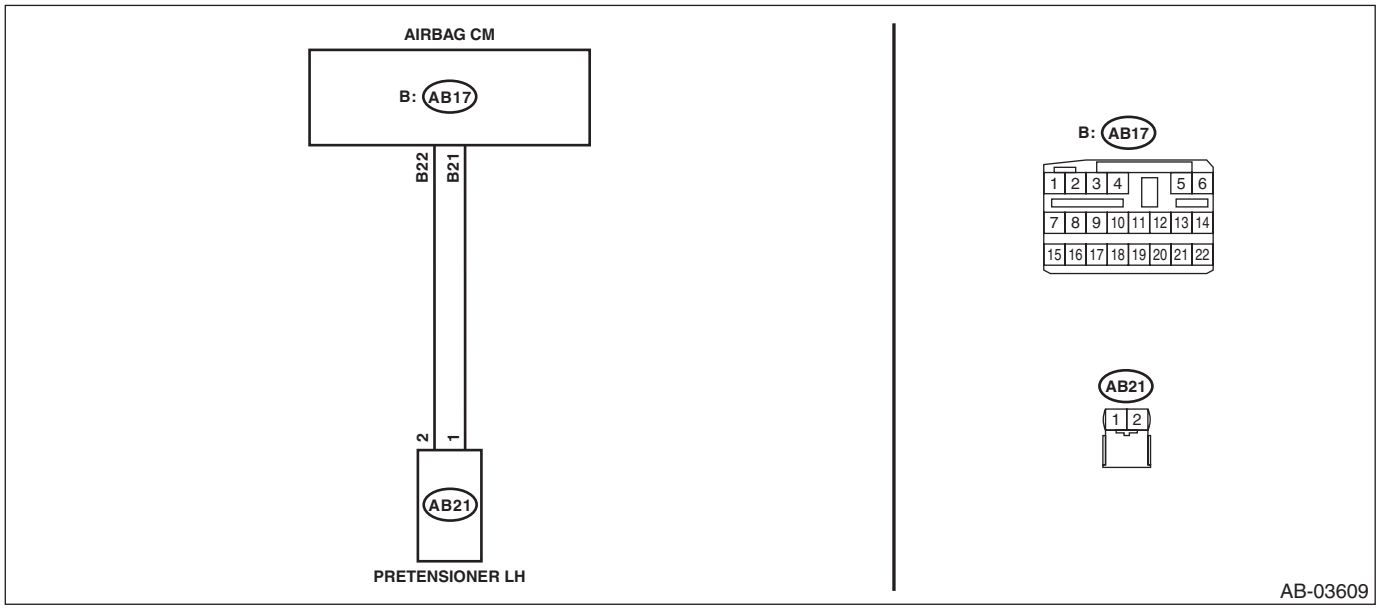

	Step	Check	Yes	No
1	**CHECK POOR CONTACT OF CONNECTORS.** Check for poor contact of the connectors between the airbag control module and the seat belt pretensioner LH.	Is there poor contact?	Replace the airbag rear harness along with body harness.	Go to step **2**.
2	**CHECK SEAT BELT PRETENSIONER.** 1) Turn the ignition switch to OFF, disconnect the battery ground cable, and wait for 60 seconds or more. 2) Disconnect the connector (AB21) from seat belt pretensioner LH. 3) Connect the connector (1N) in the test harness N to the connector (AB21). 4) Connect the airbag resistor to the connector (2N) of test harness N. 5) Connect the battery ground terminal and turn the ignition switch to ON.	Does the airbag warning light illuminate for six seconds and go off?	Replace the seat belt pretensioner LH. <Ref. to SB-19, Front Seat Belt.>	Go to step **3**.

	Step	Check	Yes	No
3	**CHECK AIRBAG REAR HARNESS (PRETENSIONER HARNESS LH) (SHORTED TO POWER SUPPLY).** 1) Turn the ignition switch to OFF, disconnect the battery ground cable, and wait for 60 seconds or more. 2) Disconnect the airbag resistor from the connector (2N) of test harness N. 3) Disconnect the connector (AB5) from seat cushion airbag module LH. 4) Disconnect the connector (AB19) from side airbag module LH. 5) Disconnect the connector (AB31) from curtain airbag module LH. 6) Disconnect the connectors (AB6, AB17, AB18) from airbag control module. 7) Connect the connector (1AD) in test harness AD AV to the connectors (AB6, AB17, AB18). 8) Connect the connector (2AD) in test harness AD AV and the connector (1AG) in test harness AG. 9) Connect the battery ground terminal and turn the ignition switch to ON. 10) Measure the voltage between connector (3AG) in the test harness AG and chassis ground. ***Connector & terminal*** ***(3AG) No. 18 (+) — Chassis ground (–):*** ***(3AG) No. 20 (+) — Chassis ground (–):***	Is the voltage less than 1 V?	Go to step **4**.	Replace the airbag rear harness along with body harness.
4	**CHECK AIRBAG CONTROL MODULE.** 1) Connect all connectors. 2) Clear the memory. <Ref. to AB(diag)-32, Clear Memory Mode.> 3) Perform the Inspection Mode. <Ref. to AB(diag)-31, Inspection Mode.> 4) Read the DTC. (Current malfunction) <Ref. to AB(diag)-30, Read Diagnostic Trouble Code (DTC).>	Is DTC B1908 displayed?	Replace the airbag control module. <Ref. to AB-50, Airbag Control Module.>	Go to step **5**.
5	**CHECK FOR ANY OTHER DTC ON DISPLAY.** Read the DTC. (Current malfunction) <Ref. to AB(diag)-30, Read Diagnostic Trouble Code (DTC).>	Is any other DTC displayed?	Check DTC using "List of Diagnostic Trouble Code (DTC)". <Ref. to AB(diag)-38, List of Diagnostic Trouble Code (DTC).>	Finish the diagnosis.

EU:DTC B1909 SHORT IN FRONT P/T LH

DIAGNOSIS START CONDITION:
Ignition voltage is 10 V to 16 V.
DTC DETECTING CONDITION:
Short circuit between front seat pretensioner LH circuit and other circuit

CAUTION:
Before performing diagnosis, refer to "CAUTION" in "General Description". <Ref. to AB(diag)-4, CAUTION, General Description.>
WIRING DIAGRAM:
Airbag system <Ref. to WI-89, WIRING DIAGRAM, Airbag System.>

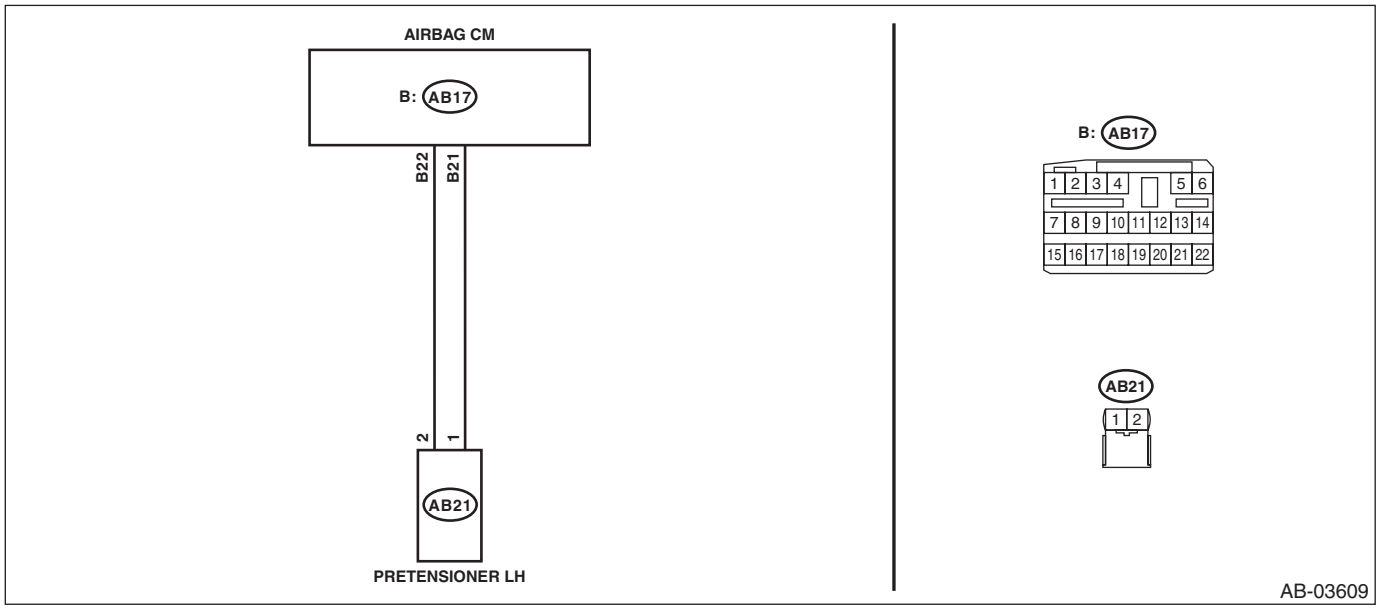

	Step	Check	Yes	No
1	**CHECK POOR CONTACT OF CONNECTORS.** Check for poor contact of the connectors between the airbag control module and the seat belt pretensioner LH.	Is there poor contact?	Replace the airbag rear harness along with body harness.	Go to step **2**.
2	**CHECK SEAT BELT PRETENSIONER.** 1) Turn the ignition switch to OFF, disconnect the battery ground cable, and wait for 60 seconds or more. 2) Disconnect the connector (AB21) from seat belt pretensioner LH. 3) Connect the connector (1N) in the test harness N to the connector (AB21). 4) Connect the airbag resistor to the connector (2N) of test harness N. 5) Connect the battery ground terminal and turn the ignition switch to ON.	Does the airbag warning light illuminate for six seconds and go off?	Replace the seat belt pretensioner LH. <Ref. to SB-19, Front Seat Belt.>	Go to step **3**.

	Step	Check	Yes	No
3	**CHECK AIRBAG REAR HARNESS (PRETENSIONER HARNESS LH) (SHORTED BETWEEN LINES).** 1) Turn the ignition switch to OFF, disconnect the battery ground cable, and wait for 60 seconds or more. 2) Disconnect the airbag resistor from the connector (2N) of test harness N. 3) Disconnect the connector (AB5) from seat cushion airbag module LH. 4) Disconnect the connector (AB19) from side airbag module LH. 5) Disconnect the connector (AB31) from curtain airbag module LH. 6) Disconnect the connectors (AB6, AB17, AB18) from airbag control module. 7) Connect the connector (1AD) in test harness AD AV to the connectors (AB6, AB17, AB18). 8) Connect the connector (2AD) in test harness AD AV and the connector (1AG) in test harness AG. 9) Measure the resistance between connector (3AG) in the test harness AG and all connector terminals in the test harness AG. ***Connector & terminal*** ***(3AG) No. 18 — All terminals in test harness AG:*** ***(3AG) No. 20 — All terminals in test harness AG:***	Is the resistance 1 MΩ or more?	Go to step **4**.	Replace the faulty harness. (Replace the airbag main harness along with body harness. Or replace the airbag rear harness along with body harness.)
4	**CHECK AIRBAG CONTROL MODULE.** 1) Connect all connectors. 2) Clear the memory. <Ref. to AB(diag)-32, Clear Memory Mode.> 3) Perform the Inspection Mode. <Ref. to AB(diag)-31, Inspection Mode.> 4) Read the DTC. (Current malfunction) <Ref. to AB(diag)-30, Read Diagnostic Trouble Code (DTC).>	Is DTC B1909 displayed?	Replace the airbag control module. <Ref. to AB-50, Airbag Control Module.>	Go to step **5**.
5	**CHECK FOR ANY OTHER DTC ON DISPLAY.** Read the DTC. (Current malfunction) <Ref. to AB(diag)-30, Read Diagnostic Trouble Code (DTC).>	Is any other DTC displayed?	Check DTC using “List of Diagnostic Trouble Code (DTC)”. <Ref. to AB(diag)-38, List of Diagnostic Trouble Code (DTC).>	Finish the diagnosis.

OCCUPANT DETECTION SYSTEM (DIAGNOSTICS)

OD(diag)

		Page
1.	Basic Diagnostic Procedure	2
2.	Check List for Interview	3
3.	General Description	4
4.	Electrical Component Location	14
5.	Airbag Connector	15
6.	Control Module I/O Signal	16
7.	Subaru Select Monitor	17
8.	Read Diagnostic Trouble Code (DTC)	20
9.	Inspection Mode	21
10.	Clear Memory Mode	22
11.	Read Current Data	23
12.	Rezero	24
13.	Airbag Warning Light Illumination Pattern	26
14.	Passenger's Airbag ON/OFF Indicator Light Illumination Pattern	27
15.	List of Diagnostic Trouble Code (DTC)	28
16.	Diagnostic Procedure with Diagnostic Trouble Code (DTC)	30

1. Basic Diagnostic Procedure

A: PROCEDURE

	Step	Check	Yes	No
1	**CHECK WARNING LIGHT.** Check whether the airbag warning light in the combination meter is lit.	Does the airbag warning light illuminate?	Go to step **2**.	Perform the diagnosis according to phenomenon of the problem.
2	**READ DTC.** 1) Turn the ignition switch to OFF. 2) Connect the Subaru Select Monitor to data link connector. 3) Turn the ignition switch to ON and run the Subaru Select Monitor. 4) Read the DTC. <Ref. to OD(diag)-20, OPERATION, Read Diagnostic Trouble Code (DTC).> NOTE: If the communication function of the Subaru Select Monitor cannot be executed properly, check the communication circuit. <Ref. to OD(diag)-17, INSPECTION, Subaru Select Monitor.> 5) Record all DTCs and freeze frame data.	Is DTC displayed?	Go to step **3**.	Go to "Airbag Warning Light Failure" <Ref. to AB(diag)-37, Airbag Warning Light Failure.>.
3	**PERFORM DIAGNOSIS.** 1) Determine the possible cause from "List of Diagnostic Trouble Code (DTC)" <Ref. to OD(diag)-28, List of Diagnostic Trouble Code (DTC).>. 2) Inspect the DTC using "List of Diagnostic Trouble Code (DTC)". 3) Repair the trouble cause. 4) Perform the Clear Memory Mode. <Ref. to OD(diag)-22, Clear Memory Mode.> 5) Perform the Inspection Mode. <Ref. to OD(diag)-21, Inspection Mode.> 6) Read any other DTCs displayed.	Is DTC displayed?	Perform the procedure 1) to 5) in step 3.	Finish the diagnosis.

2. Check List for Interview

A: CHECK

Customer's Name		Inspector's Name	
Date Vehicle Brought in	/ /	Registration No.	
Odometer reading	km miles	V.I.N.	
Date Problem Occurred	/ /	Registration Year	/ /
Weather	❑ Fine ❑ Cloudy ❑ Rainy ❑ Snowy ❑ Others:		
Temperature	°C (°F)		
Road Condition	❑ Flat road ❑ Uphill ❑ Downhill ❑ Gravel road ❑ Others:		
Vehicle Operation	❑ Starting ❑ Idling ❑ Driving ❑ Constant speed ❑ Accelerating ❑ Decelerating ❑ Turning ❑ Others:		
Details of Problem			
Airbag Warning Light Operation	❑ Normal (After turning the ignition switch to ON, illuminates for 6 seconds then goes off.) ❑ Remains ON ❑ Remains OFF		
Passengers airbag ON/OFF indicator operation	❑ Normal (After turning the ignition switch to ON, illuminates for 6 seconds then goes off for 2 seconds; Lights ON (adult) or OFF (children/unoccupied).) ❑ Both remain ON ❑ Both remain OFF		
DTC output	❑ OK code ❑ DTC: (Code:)		

3. General Description

A: CAUTION

1) When replacing the occupant detection system, or removing or disassembling the passenger's seat, always perform «Rezero» of the occupant detection system after installing a seat in the vehicle. <Ref. to OD(diag)-24, Rezero.>
2) The occupant detection system (passenger seat only) control module and the occupant detection sensor are fixed to the seat cushion frame. Never remove the occupant detection control module or the occupant detection sensor from the seat cushion frame.
3) Do not replace the seat cushion pad by itself. Always replace the seat cushion pad and frame assembly as a set. The seat cushion pad and cushion frame are adjusted as a set at the time of manufacture. If cushion pads and cushion frames are combined from those of other vehicles or other sets, the occupant detection system may not operate properly.
4) If the seat cushion cover is removed, make sure to replace the hang wire on the seat cushion side with a new wire.
5) Never connect the battery in reverse polarity. Occupant detection system may be destroyed instantly.
6) Do not disconnect the battery terminals while the engine is running. A large counter electromotive force will be generated in the generator, and this voltage may damage electronic parts such as occupant detection control module.
7) Before disconnecting the connectors of each sensor and control module, be sure to turn the ignition switch to OFF and wait for 60 seconds or more. Occupant detection control module may be damaged.
8) Every occupant detection system-related part is a precision part. Do not drop them.

CAUTION:
• Do not use electrical test equipment on wiring harness and connector circuits of the airbag system.
• Be careful not to damage the airbag system wiring harness when servicing the occupant detection system.
• Refer to CAUTION in Airbag System when repairing the occupant detection system. <Ref. to AB-10, CAUTION, General Description.>

B: INSPECTION

Check the battery. <Ref. to SC(H4DO)-63, Battery.> <Ref. to SC(H6DO)-57, Battery.>

C: PREPARATION TOOL

CAUTION:
To measure the voltage and resistance of airbag system and occupant detection system components, be sure to use the specified test harness.

1. SPECIAL TOOL

ILLUSTRATION	TOOL NUMBER	DESCRIPTION	REMARKS
 STSSM4	— (Newly adopted tool)	SUBARU SELECT MONITOR 4	Used for setting of each function and trouble-shooting for electrical system. NOTE: For detailed operation procedures of Subaru Select Monitor 4, refer to "Application help".

- TEST HARNESS Y

ILLUSTRATION	TOOL NUMBER	DESCRIPTION	REMARKS
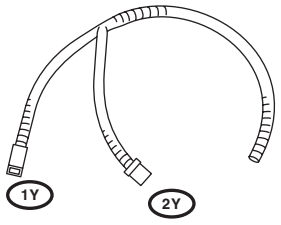 ST98299AG040	98299AG040	TEST HARNESS Y	Used for troubleshooting seat belt buckle switch.

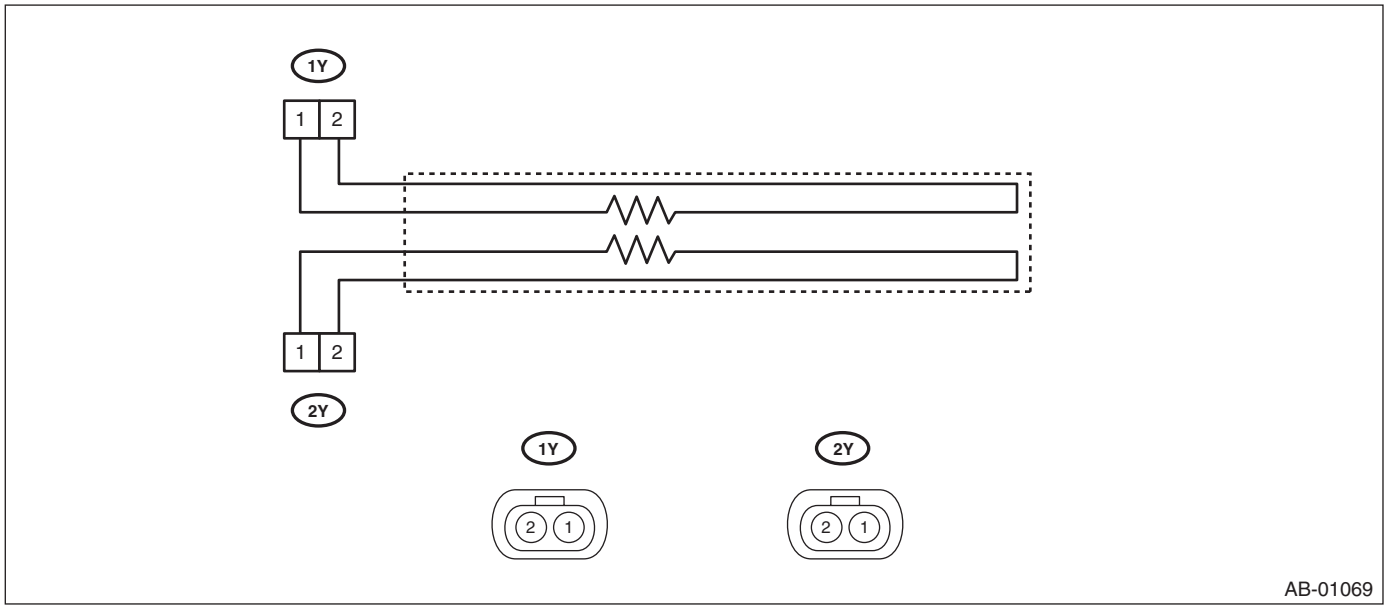

AB-01069

- TEST HARNESS AE

ILLUSTRATION	TOOL NUMBER	DESCRIPTION	REMARKS
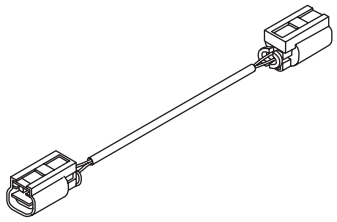 ST98299XA030	98299XA030	TEST HARNESS AE	TEST HARNESS Y adapter harness. Used for troubleshooting seat belt buckle switch.

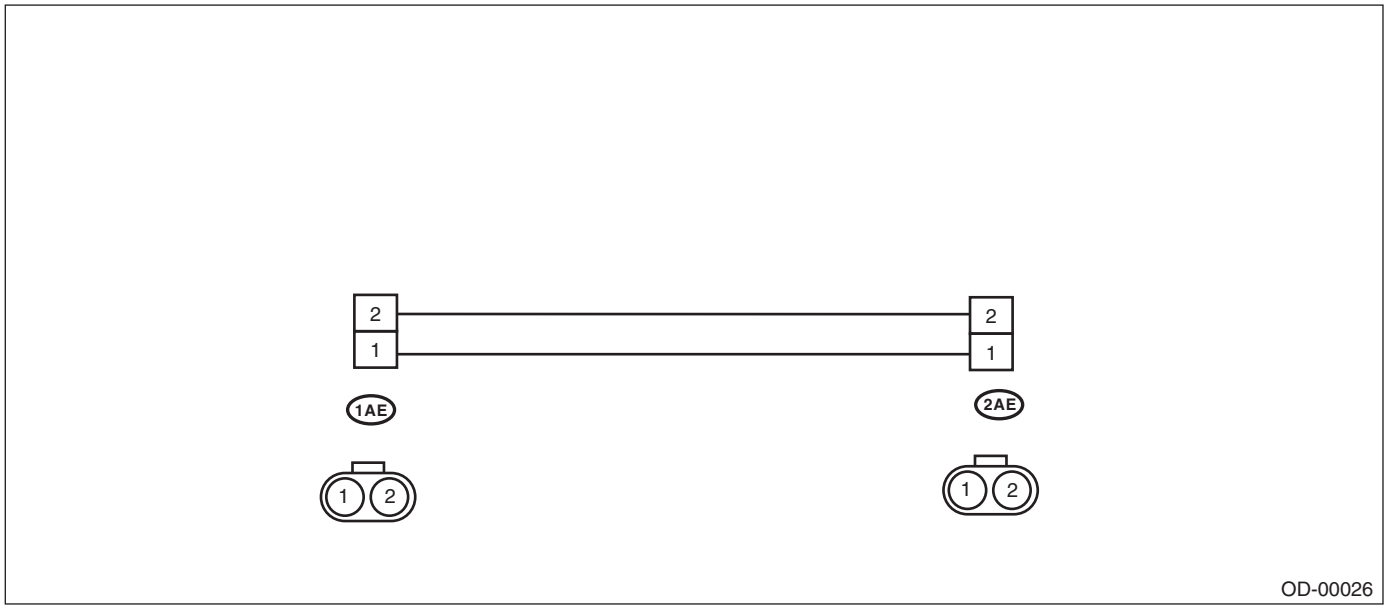

- TEST HARNESS AG

ILLUSTRATION	TOOL NUMBER	DESCRIPTION	REMARKS
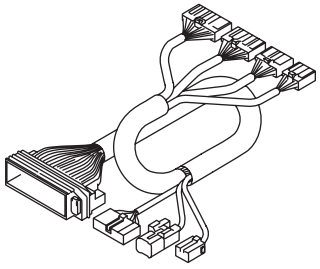 ST98299AG070	98299AG070	TEST HARNESS AG	Used when measuring voltage and resistance of occupant detection system.

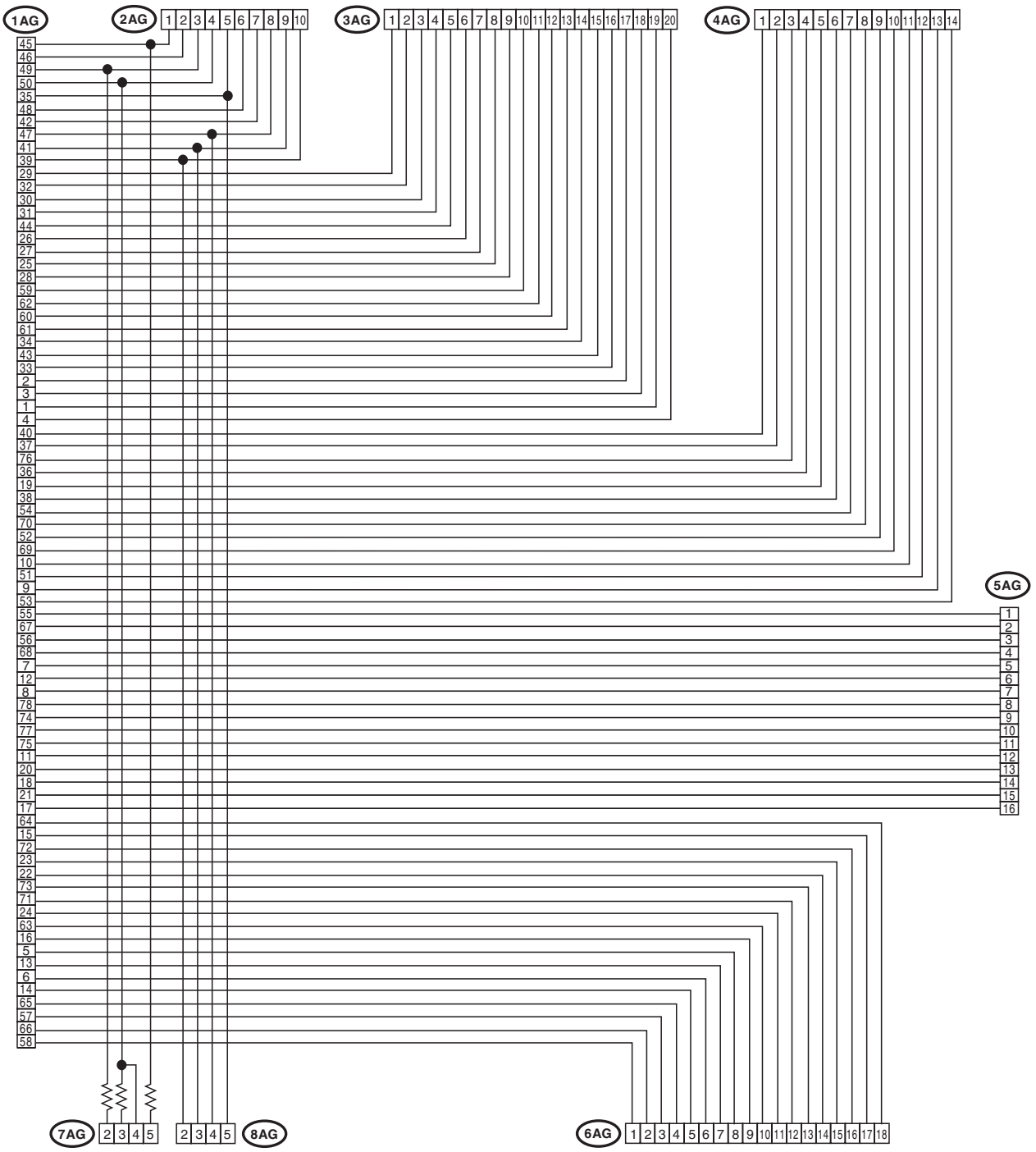

AB-01902

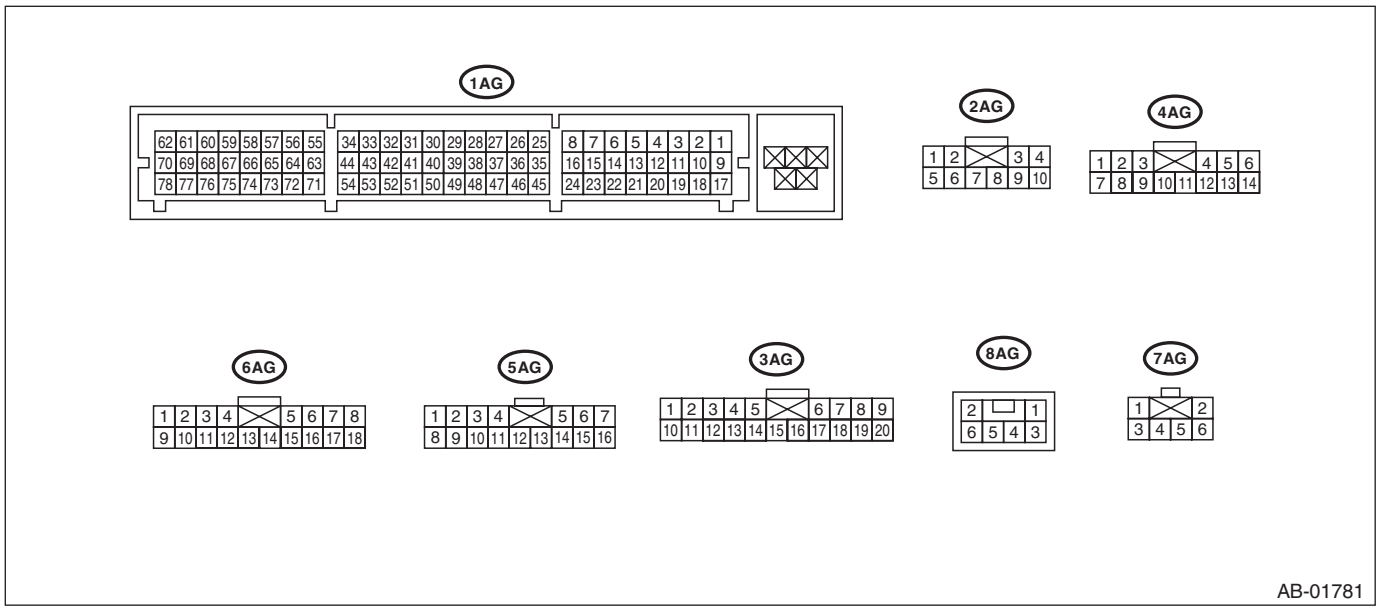

- TEST HARNESS AD AV

ILLUSTRATION	TOOL NUMBER	DESCRIPTION	REMARKS
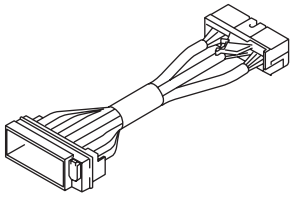 ST98299AL010	98299AL010	TEST HARNESS AD AV	Used together with test harness AG when measuring voltage and resistance of the occupant detection system.

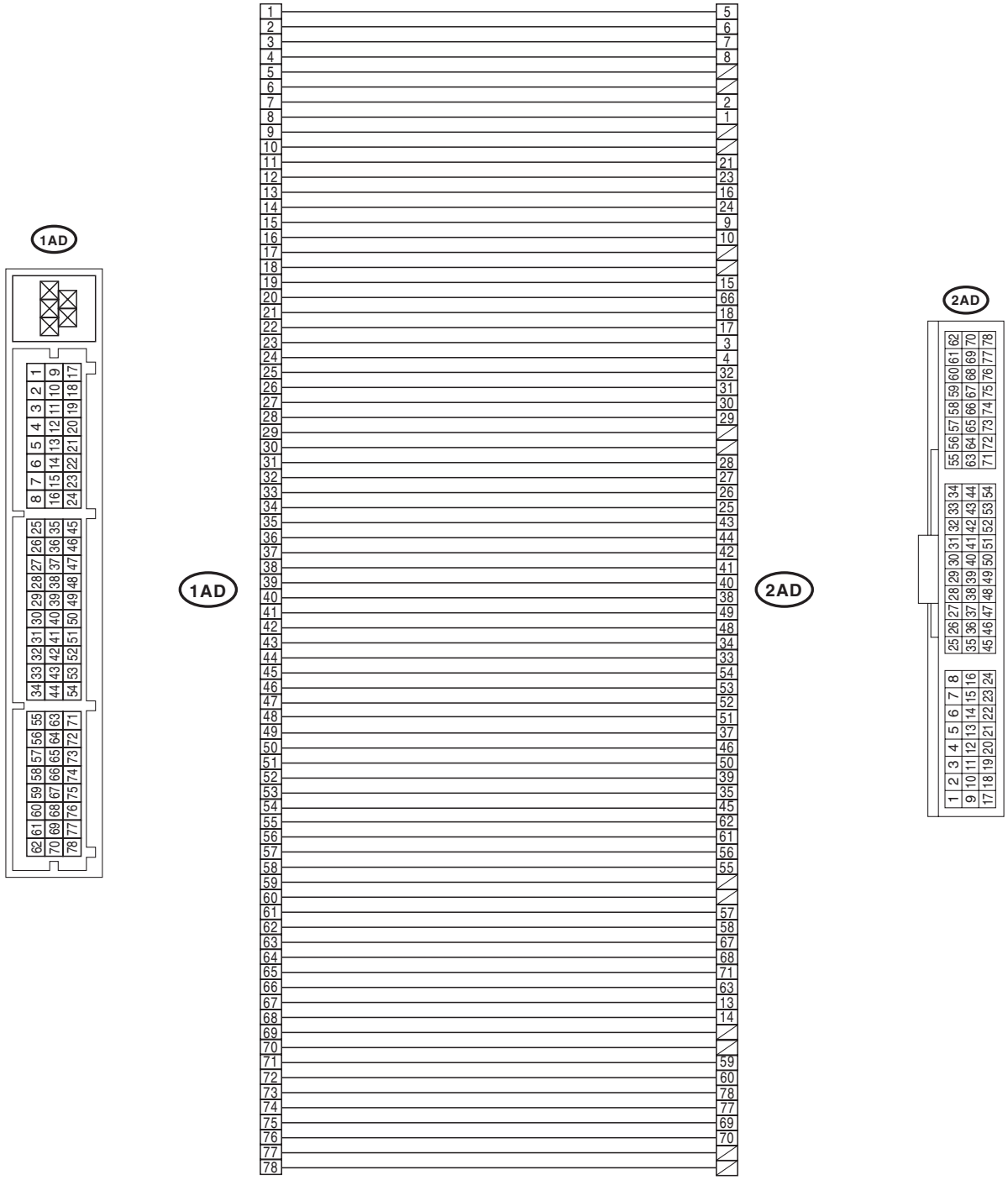

AB-03610

- TEST HARNESS AW

ILLUSTRATION	TOOL NUMBER	DESCRIPTION	REMARKS
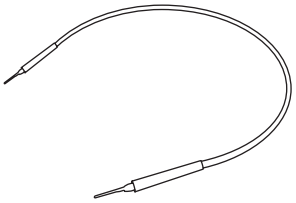 ST98299AL020	98299AL020	TEST HARNESS AW	Used when measuring voltage and resistance of occupant detection system.

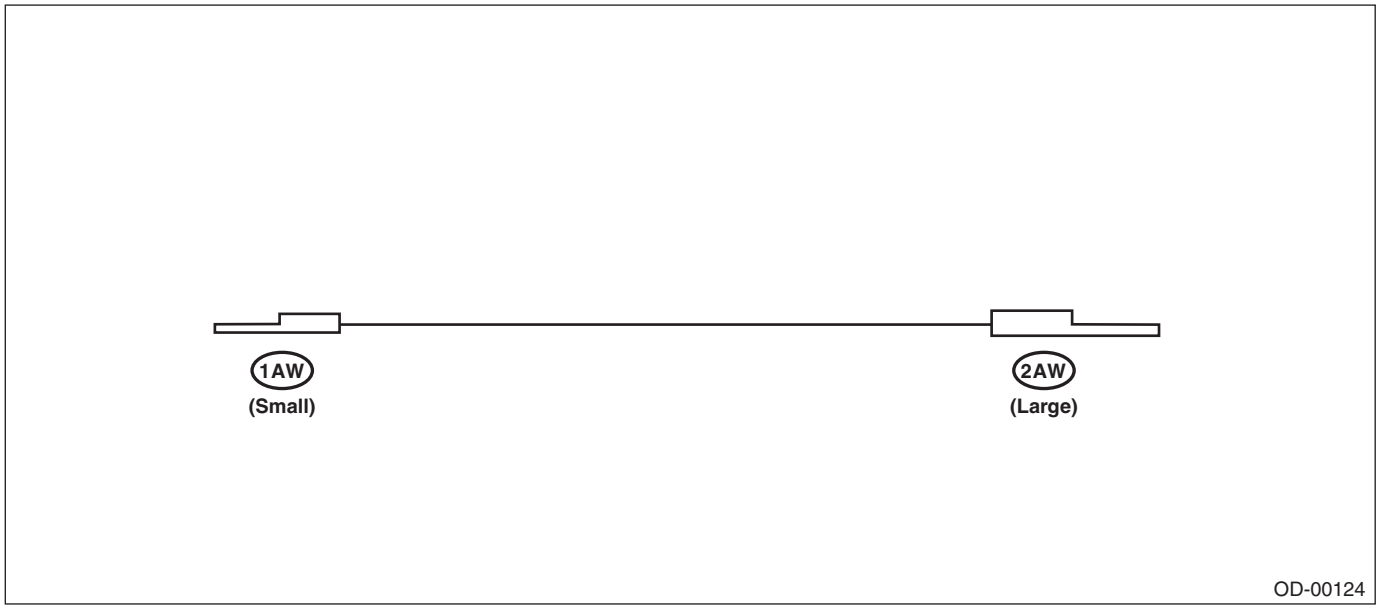

- TEST HARNESS AC

ILLUSTRATION	TOOL NUMBER	DESCRIPTION	REMARKS
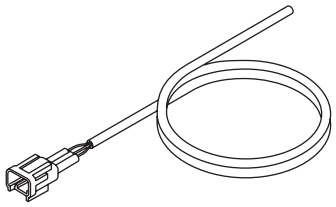 ST98299XA010	98299XA010	TEST HARNESS AC	Used for troubleshooting seat belt tension sensor.

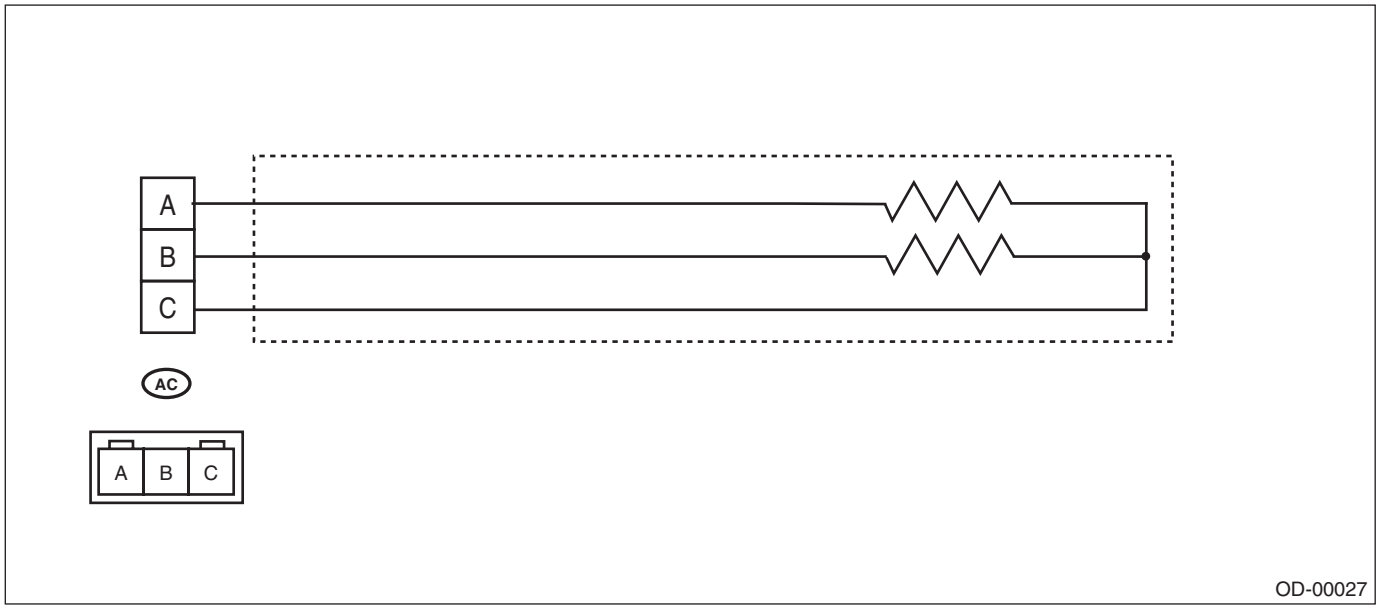

- TEST HARNESS AD

ILLUSTRATION	TOOL NUMBER	DESCRIPTION	REMARKS
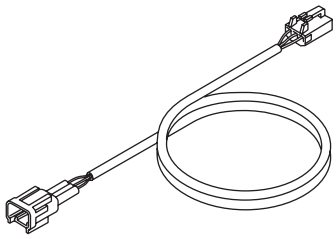 ST98299XA020	98299XA020	TEST HARNESS AD	Used when measuring voltage and resistance of the seat belt tension sensor.

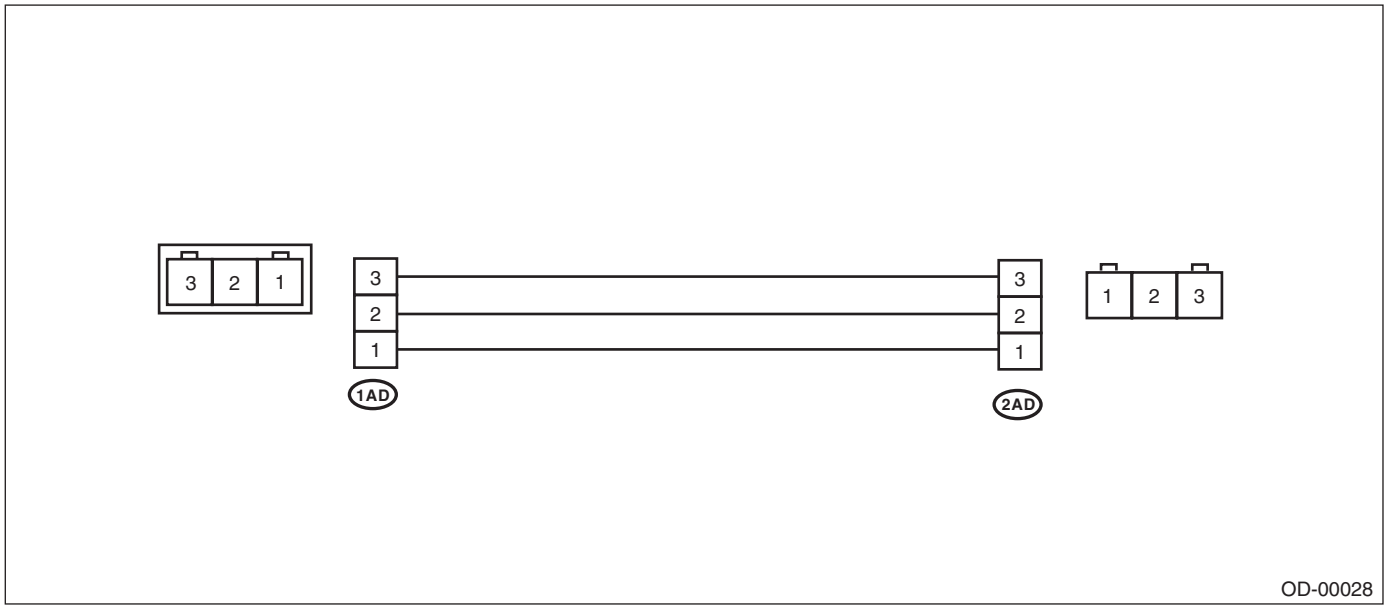

- TEST HARNESS AX

ILLUSTRATION	TOOL NUMBER	DESCRIPTION	REMARKS
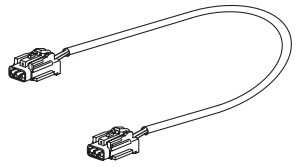 ST98299AL030	98299AL030	TEST HARNESS AX	Used when measuring voltage and resistance of the seat belt tension sensor.

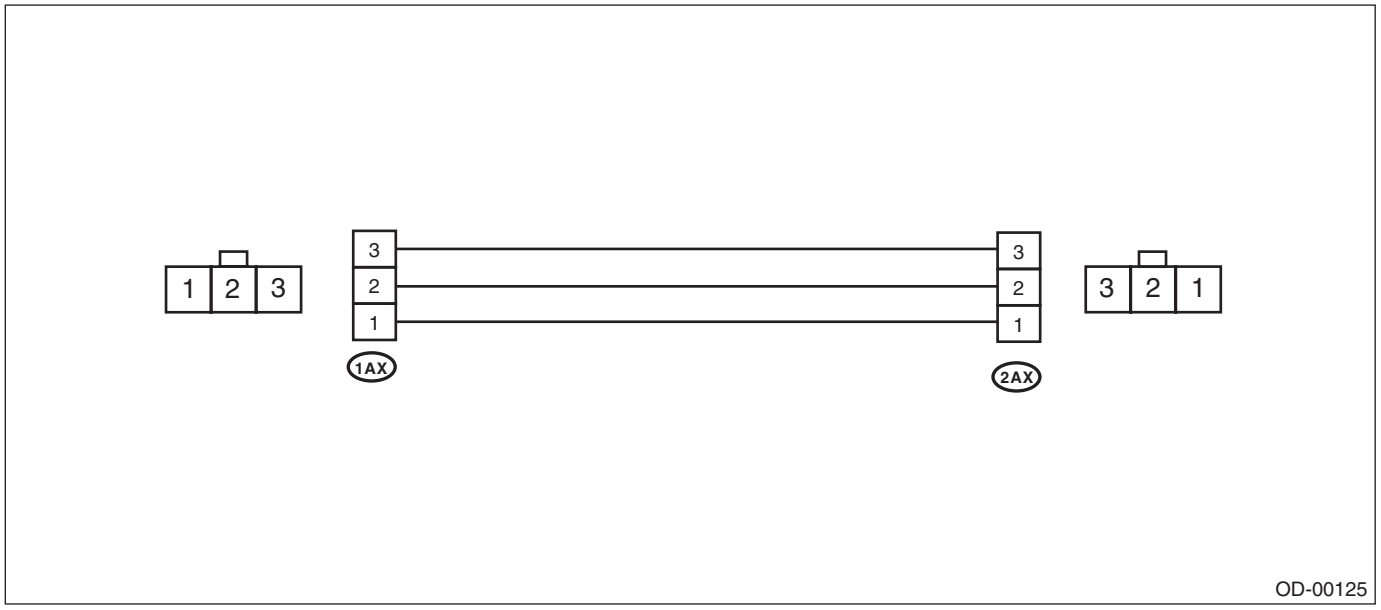

2. GENERAL TOOL

TOOL NAME	REMARKS
Circuit tester	Used for measuring resistance, voltage and current.
DST-i	Used together with Subaru Select Monitor 4.

4. Electrical Component Location

A: LOCATION

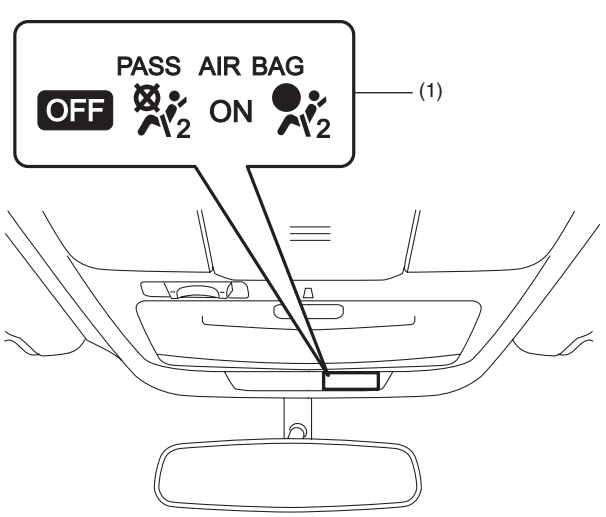

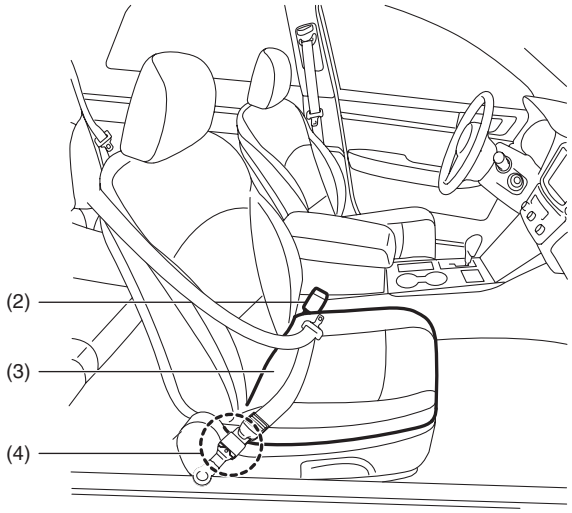

OD-00120

(1) Airbag ON/OFF indicator light

(2) Buckle switch (passenger's seat)

(3) Seat cushion & frame ASSY (occupant detection control module & occupant detection sensor)

(4) Belt tension sensor

5. Airbag Connector

A: PROCEDURE

1. OCCUPANT DETECTION SYSTEM (BETWEEN AIRBAG REAR HARNESS AND SEAT HARNESS)

1) How to disconnect:
Press the lock arm (A) and disconnect the connector.

CAUTION:
When pulling the slide lock or disconnecting connector, be sure to hold the connector, not the harness.

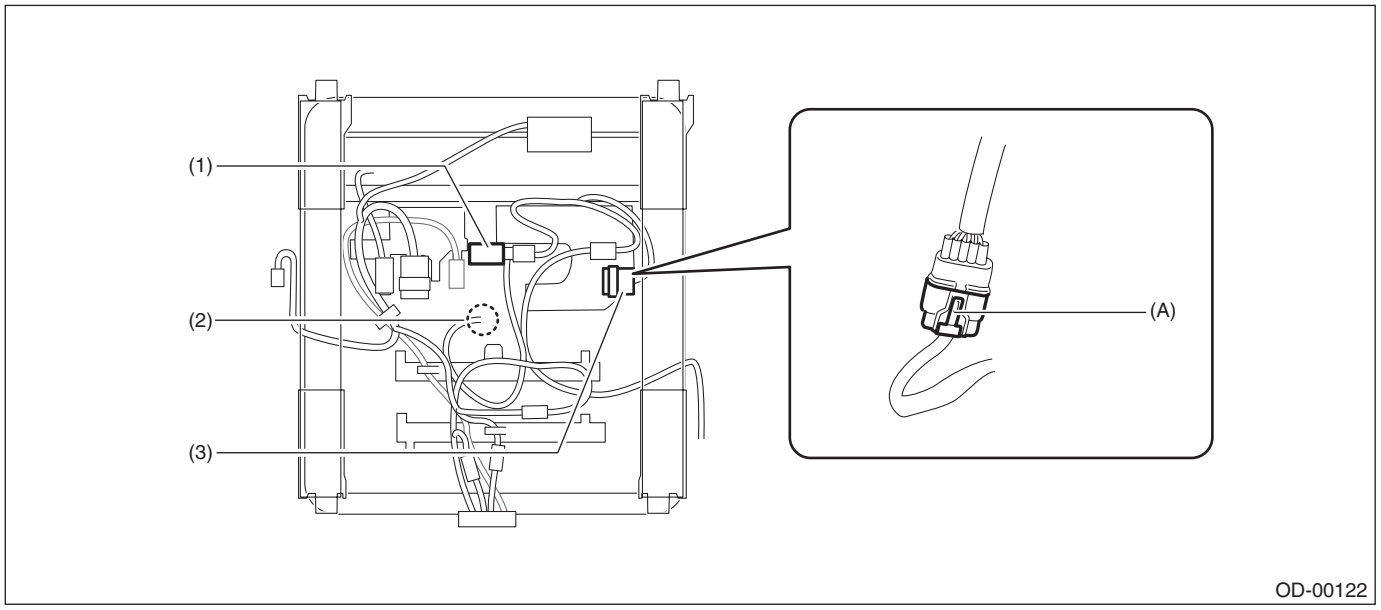

(A) Lock arm

(1) Occupant detection control module
(2) Occupant detection sensor
(3) Occupant detection connector & harness

2) How to connect:
Holding the connector, push it in securely until a clicking sound is heard.

CAUTION:
Be sure to insert the connector in until it is locked. Then pull it gently to make sure that it is locked.

2. AIRBAG CONTROL MODULE

Refer to the airbag system section. <Ref. to AB-18, AIRBAG CONTROL MODULE, PROCEDURE, Airbag Connector.>

3. BUCKLE SWITCH RH

Refer to the airbag system section. <Ref. to AB-24, SEAT CUSHION AIRBAG MODULE AND BUCKLE SWITCH RH, PROCEDURE, Airbag Connector.>

6. Control Module I/O Signal

A: ELECTRICAL SPECIFICATION

CAUTION:
Never remove the occupant detection control module, occupant detection sensor or seat frame because they are integrated into one unit.

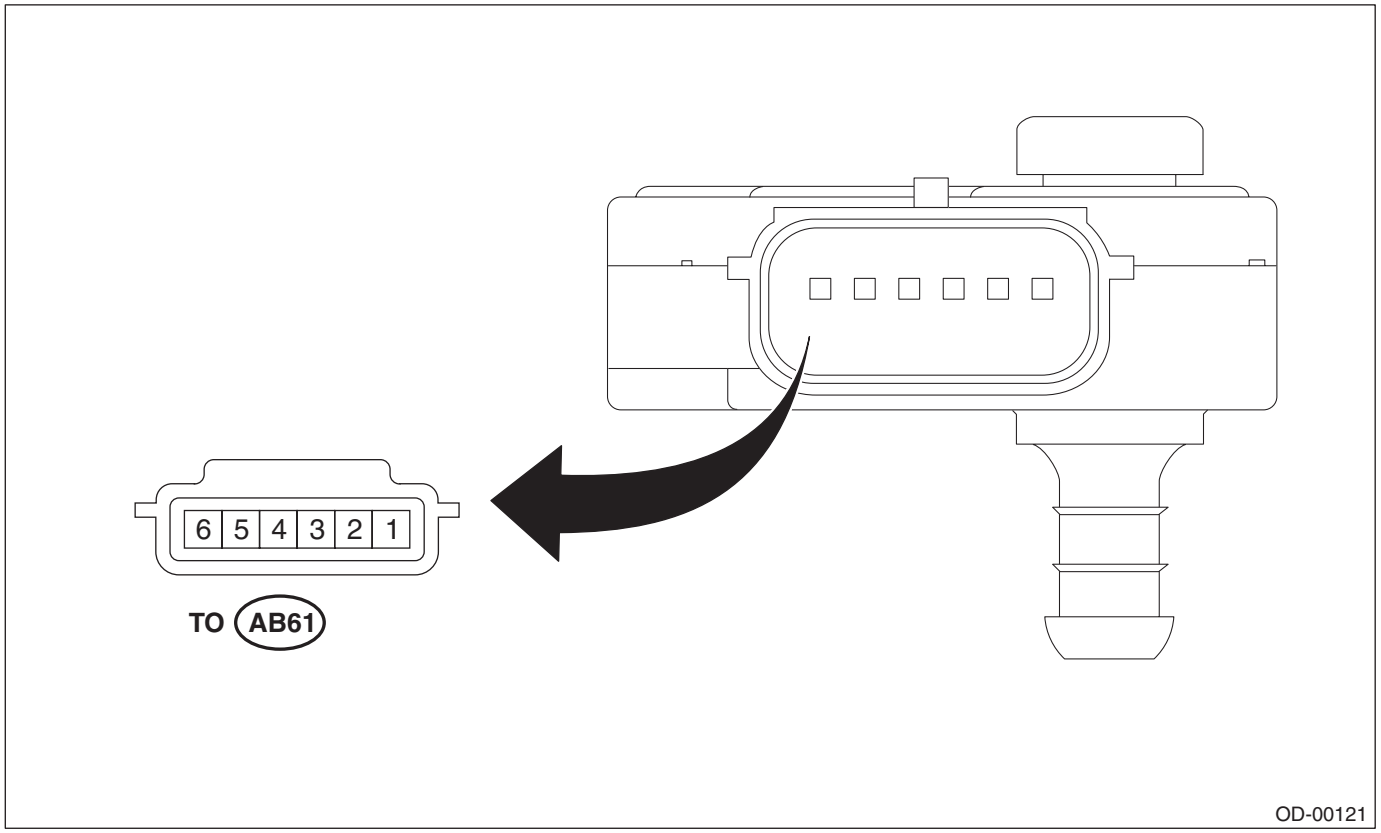

Terminal No.	Description
1	Belt tension sensor output
2	Belt tension sensor power supply
3	GND
4	Seat belt buckle switch output
5	LIN communication line (airbag CM)
6	Ignition power supply

B: WIRING DIAGRAM

Refer to “Occupant Detection System” in the wiring diagram. <Ref. to WI-291, WIRING DIAGRAM, Occupant Detection System.>

7. Subaru Select Monitor

A: OPERATION

For detailed operation procedures, refer to “Application help”.

B: INSPECTION

1. COMMUNICATION FOR INITIALIZING THE AIRBAG SYSTEM IS IMPOSSIBLE

DETECTING CONDITION:
Defective harness connector
TROUBLE SYMPTOM:
Communication is impossible between the airbag control module and the Subaru Select Monitor.

NOTE:
Refer to “Communication for Initializing Impossible” in AIRBAG SYSTEM (DIAGNOSTICS). <Ref. to AB(diag)-27, COMMUNICATION FOR INITIALIZING IMPOSSIBLE, INSPECTION, Subaru Select Monitor.>

2. COMMUNICATION FOR INITIALIZING ONLY THE OCCUPANT DETECTION SYSTEM IS IMPOSSIBLE

NOTE:
The occupant detection system communicates with the Subaru Select Monitor via the airbag control module.
DETECTING CONDITION:
Defective harness connector between airbag control module and occupant detection control module
TROUBLE SYMPTOM:
Communication is impossible between the airbag control module and the occupant detection control module.

CAUTION:
Before performing diagnosis, refer to “CAUTION” in “General Description”. <Ref. to AB(diag)-4, CAUTION, General Description.>
WIRING DIAGRAM:

NOTE:
For the coupling connector, refer to “WIRING SYSTEM”.
Occupant detection system <Ref. to WI-291, WIRING DIAGRAM, Occupant Detection System.>

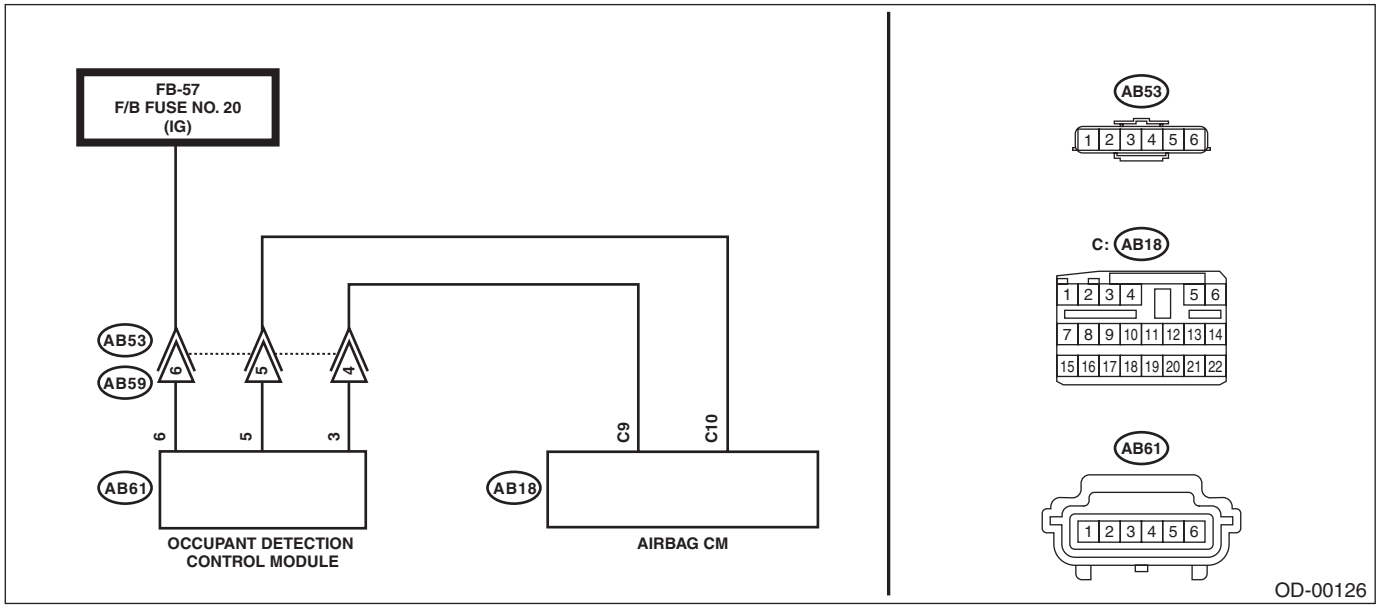

	Step	Check	Yes	No
1	**CHECK POOR CONTACT OF CONNECTORS.** Check for poor contact of the connectors between the occupant detection control module and airbag control module.	Is there poor contact?	When the connector is not fully connected, reconnect the connector correctly. Replace the faulty harness if the connector is faulty. (Replace the airbag rear harness along with body harness. Or replace the occupant detection harness (seat harness).)	Go to step **2**.
2	**CHECK AIRBAG REAR HARNESS.** 1) Turn the ignition switch to OFF, disconnect the battery ground cable, and wait for 60 seconds or more. 2) Disconnect the connectors (AB59) and (AB53) under the passenger's seat. 3) Disconnect the connectors (AB6, AB17, AB18) from airbag control module. 4) Connect the connector (1AD) in test harness AD AV to the connectors (AB6, AB17, AB18). 5) Connect the connector (2AD) in test harness AD AV and the connector (1AG) in test harness AG. 6) Measure the resistance between connector (6AG) in the test harness AG and connector (AB53). **CAUTION:** **Connect terminal (1AW) in the test harness AW to connector (AB53) terminal, and apply the tester to terminal (2AW).** ***Connector & terminal*** ***(6AG) No. 10 — (AB53) No. 5:*** ***(6AG) No. 12 — (AB53) No. 4:***	Is the resistance less than 10 Ω?	Go to step **3**.	Replace the airbag rear harness along with body harness.
3	**CHECK AIRBAG REAR HARNESS.** Measure the resistance between connector (6AG) in the test harness AG and chassis ground. ***Connector & terminal*** ***(6AG) No. 10 — Chassis ground:*** ***(6AG) No. 12 — Chassis ground:*** ***(6AG) No. 10 — (6AG) No. 12:***	Is the resistance 1 MΩ or more?	Go to step **4**.	Replace the airbag rear harness along with body harness.

	Step	Check	Yes	No
4	**CHECK OCCUPANT DETECTION HARNESS.** 1) Turn the ignition switch to ON. 2) Measure the voltage between connector (AB53) and chassis ground. **CAUTION:** **Connect terminal (1AW) in the test harness AW to connector (AB53) terminal, and apply the tester to terminal (2AW).** ***Connector & terminal*** ***(AB53) No. 6 (+) — Chassis ground (–):***	Is the voltage 10 V or more?	Replace the occupant detection harness (seat harness). If defective is not improved, replace the occupant detection system (seat cushion & frame assembly), and then the airbag control module in this order. <Ref. to SE-25, PASSENGER'S SEAT, DISASSEMBLY, Front Seat.>	Check the battery voltage and fuse. If there is no fault, replace the airbag rear harness together with body harness.

8. Read Diagnostic Trouble Code (DTC)

A: OPERATION

Read out DTCs stored in the airbag system and the occupant detection system.

1. AIRBAG SYSTEM

1) On «Start» display, select «Diagnosis».
2) On «Vehicle selection» display, input the target vehicle information and select «Confirmed».
3) On «Main Menu» display, select «Each System».
4) On «Select System» display, select «Airbag» and select «Enter».
5) On «Airbag» display, select «DTC».

NOTE:
- For detailed operation procedures, refer to “Application help”.
- For details concerning DTC, refer to List of Diagnostic Trouble Code (DTC) in AIRBAG SYSTEM. <Ref. to AB(diag)-38, List of Diagnostic Trouble Code (DTC).>

2. OCCUPANT DETECTION SYSTEM

1) On «Start» display, select «Diagnosis».
2) On «Vehicle selection» display, input the target vehicle information and select «Confirmed».
3) On «Main Menu» display, select «Each System».
4) On «Select System» display, select «Occupant Detection» and then select «Enter».
5) On «Occupant Detection» display, select «DTC».

NOTE:
- For detailed operation procedures, refer to “Application help”.
- For details concerning DTC, refer to “List of Diagnostic Trouble Code (DTC)”. <Ref. to OD(diag)-28, List of Diagnostic Trouble Code (DTC).>

9. Inspection Mode

A: PROCEDURE

Recreate the circumstance by referring to the conditions described in the checklist.

10.Clear Memory Mode

A: OPERATION

After repairing the occupant detection system, clear the DTCs stored in the airbag control module and the occupant detection control module.

1. AIRBAG SYSTEM

1) On «Start» display, select «Diagnosis».
2) On «Vehicle selection» display, input the target vehicle information and select «Confirmed».
3) On «Main Menu» display, select «Each System».
4) On «Select System» display, select «Airbag» and select «Enter».
5) On «Airbag» display, select «DTC».
6) On «DTC» display, select «Clear Memory».

NOTE:
For detailed operation procedures, refer to “Application help”.

2. OCCUPANT DETECTION SYSTEM

1) On «Start» display, select «Diagnosis».
2) On «Vehicle selection» display, input the target vehicle information and select «Confirmed».
3) On «Main Menu» display, select «Each System».
4) On «Select System» display, select «Occupant Detection» and then select «Enter».
5) On «Occupant Detection» display, select «DTC».
6) On «DTC» display, select «Clear Memory».

NOTE:
For detailed operation procedures, refer to “Application help”.

11.Read Current Data

A: OPERATION

Check the operating condition of each sensor in the event of malfunction in the seat belt buckle switch, or when the seat belt buckle switch has been replaced.

NOTE:
For detailed operation procedures, refer to “Application help”.
1) On «Start» display, select «Diagnosis».
2) On «Vehicle selection» display, input the target vehicle information and select «Confirmed».
3) On «Main Menu» display, select «Each System».
4) On «Select System» display, select «Occupant Detection».
5) On «Occupant Detection» display, select «Data Monitor».

B: LIST

Item	Display	Note
Trip Count	—	<Ref. to LAN(diag)-6, TIME STAMP, CAUTION, General Description.>
Count	—	
Time Count [msec]	—	
Belt Buckle Switch LH	Unbelted/Belted/Other	“Belted” when the left side seat belt is fastened “Unbelted” when the left side seat belt is not fastened “Other” in other cases
Belt Buckle Switch RH	Unbelted/Belted/Other	“Belted” when the right side seat belt is fastened “Unbelted” when the right side seat belt is not fastened “Other” in other cases
Passenger Occupant Status	Occupied/Adult/Child/Empty or CRS	“Occupied” when the occupant is present “Adult” “Child” “Empty or CRS” when the seat is unoccupied or when child restraint seat is installed **CAUTION:** **When checking the operating status, be careful of the followings.** **• When the seat is unoccupied: Do not place anything on the seat.** **• Child restraint seat: Install the seat according to its instruction manual.** **• When the seat is occupied: Someone who weighs at least approx. 70 kg (155 lb) must be seated during the check.**
Passenger Airbag Status	ON/OFF	“ON” when the passenger occupant status is “Occupied” “OFF” when the status is “Empty or CRS”
Data record No.	No Definition/1	Displays “1” when any EDR data is recorded.
Data record No.	No Definition/1	Displays “1” when any EDR data is recorded.

12.Rezero

A: OPERATION

NOTE:
When replacing the occupant detection system, or removing or disassembling the passenger's seat, always perform «Rezero» after installing a seat in the vehicle.

CAUTION:
When the trouble occurs in the system during «Rezero», «DTC B1762 OCCUPANT DETECTION MODULE CALIBRATION NOT INITIALIZED» of the occupant detection system is detected, and the airbag warning light illuminates. In this case, turn the ignition switch to OFF, and then perform «Rezero» again. Or, fix the fault, and then perform «Rezero».

1) Park empty vehicle on a level surface.
2) Check that all harness and connectors are connected.
3) Check the following items to adjust the condition of the vehicle.
- Adjust the seat backrest to be fully upright. (For models with power seats, press the power seat button until the backrest comes to a stop.)
- Adjust the seat slide position all the way back. (For models with power seats, press the power seat button until the seat slide does not move any further.)
- Do not place anything on the top of the seat cushion.
- Sit on the seat cushion to smooth the seat surface.
- Check that the passenger's seat belt is not inserted into the buckle, not tense or not stuck.
- Check that ambient temperature is in a range from 0 to 40°C (32 to 104°F).

4) Turn the ignition switch to OFF, then turn it to ON again.

NOTE:
- This operation is performed to readjust the standard of occupant detection sensor.
- Do not touch the seat until the Rezero is completed. If you have touched the seat even if only once, perform operations from the step 3) again.

5) On «Start» display, select «Diagnosis».
6) On «Vehicle selection» display, input the target vehicle information and select «Confirmed».
7) On «Main Menu» display, select «Each System».
8) On «Select System» display, select «Occupant Detection».
9) On «Occupant Detection» display, select «Work Support».
10) On «Work Support» display, select «Rezero».
11) When «See service manual. And check vehicle condition for successfully completing Rezero.» is displayed, check the condition of the vehicle.

12) The message, «Rezero Adjust the passenger seat to the condition shown in service manual.», is displayed on the screen. Slide the passenger's seat all the way to the back, check that the backrest is adjusted to the most upright position, and select «YES».

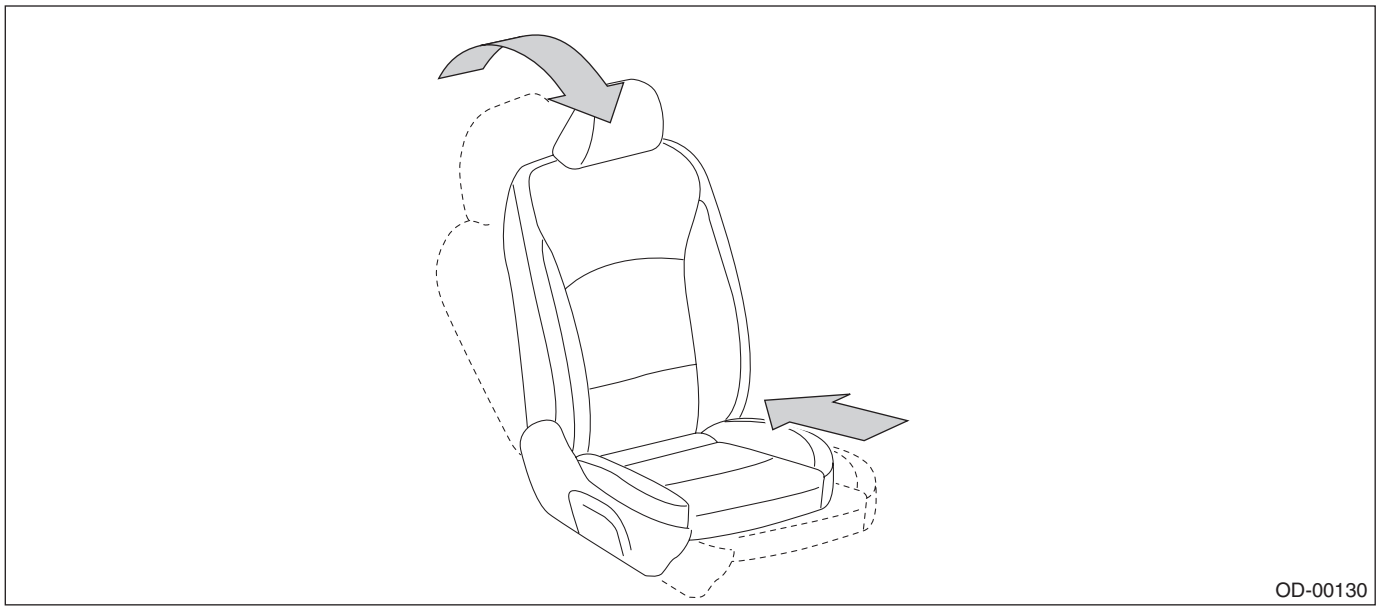

13) When «Rezeroing Unbelt the passenger seatbelt. YES NO» is displayed, make sure the passenger's seat belt is unfastened from the buckle, and select «YES».
14) When «Rezeroing Confirm seat temperature between 0 and 40°C (32 and 104°F) YES NO» is displayed, check that ambient temperature of the seat is in a range from 0 to 40°C (32 to 104°F), and select «YES».
15) When «Rezeroing Empty the passenger seat. Turn Ignition OFF, and within 10 seconds, turn Ignition ON again. YES NO» is displayed, turn the ignition switch to OFF and then ON again while the passenger's seat is empty, make sure that airbag OFF indicator illuminates and airbag ON indicator does not illuminate, and then select «YES».

NOTE:
• After selecting «YES», «In process... Please wait for a while without touching vehicle.» is displayed. Do not touch or rock the vehicle while the message is displayed.
• During the Rezero process, if «Rezero is unsuccessful See service manual. Press "YES" to END» is displayed, go to step 15).
16) When the Rezero is ended normally, «Rezero is successfully completed Press "YES" to END» is displayed. And then turn the ignition switch to OFF to finish the diagnosis.
17) During the Rezero process, if «Rezero is unsuccessful See service manual. Press "YES" to END» is displayed, turn the ignition switch to OFF and ON again, and then read the DTC of the airbag system. <Ref. to OD(diag)-20, Read Diagnostic Trouble Code (DTC).>
When DTC is input, fix the fault and then perform the Rezero. When DTC is not input, check the seat and vehicle status and then perform the Rezero again. <Ref. to OD(diag)-24, Rezero.>

NOTE:
When the Rezero is unsuccessful, there could be occupant detection system failure or improper seat and vehicle status. When the airbag warning light illuminates, read the DTC of the airbag system, and perform the diagnosis while referring to List of Diagnostic Trouble Code (DTC). <Ref. to OD(diag)-20, Read Diagnostic Trouble Code (DTC).>

13.Airbag Warning Light Illumination Pattern

A: INSPECTION

Turn the ignition switch to ON, and confirm that the airbag warning light remains on for approx. 6 seconds then turns off afterwards.

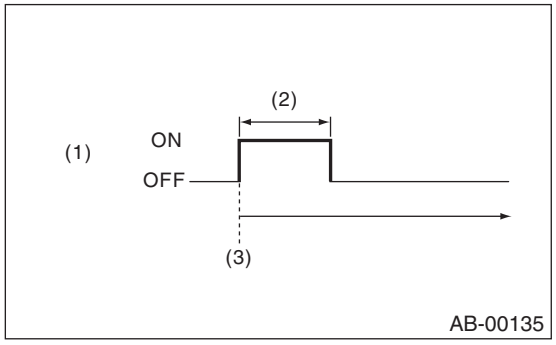

(1) Airbag warning light
(2) Approx. 6 seconds
(3) Ignition switch ON

14.Passenger's Airbag ON/OFF Indicator Light Illumination Pattern

A: INSPECTION

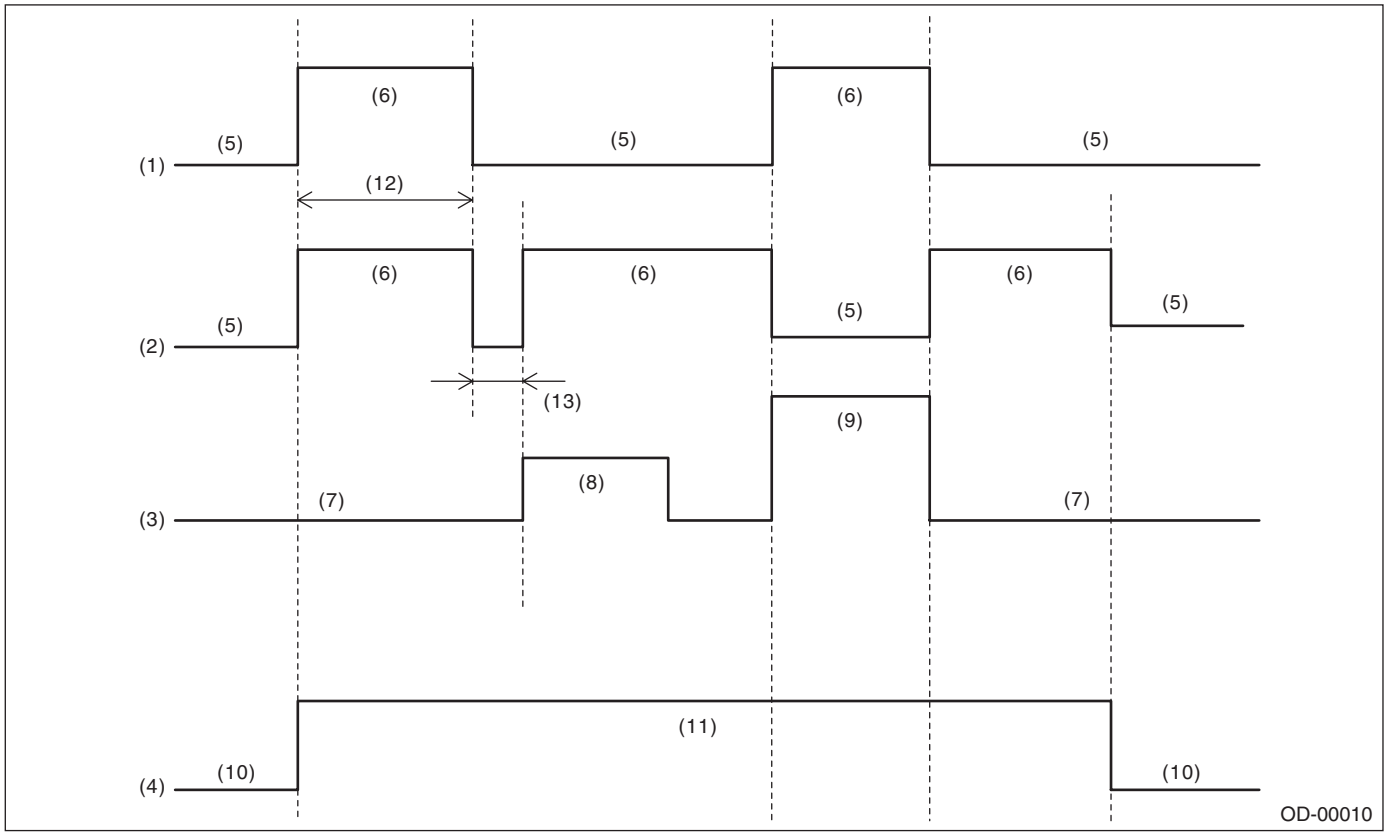

(1)	Passenger's airbag ON indicator light	(6)	Light ON	(10)	OFF
(2)	Passenger's airbag OFF indicator light	(7)	Empty	(11)	ON
(3)	Occupant seating	(8)	Child	(12)	Approx. 6 seconds
(4)	Ignition switch	(9)	Adult	(13)	Approx. 2 seconds
(5)	Light OFF				

15.List of Diagnostic Trouble Code (DTC)

A: LIST

DTC	Item	Note
B1762	OCCUPANT DETECTION MODULE CALIBRATION NOT INITIALIZED	<Ref. to OD(diag)-30, DTC B1762 OCCUPANT DETECTION MODULE CALIBRATION NOT INITIALIZED, Diagnostic Procedure with Diagnostic Trouble Code (DTC).>
B1763	OCCUPANT DETECTION MODULE CALIBRATION CHECKSUM	<Ref. to OD(diag)-31, DTC B1763 OCCUPANT DETECTION MODULE CALIBRATION CHECKSUM, Diagnostic Procedure with Diagnostic Trouble Code (DTC).>
B1764	OCCUPANT DETECTION MODULE CALIBRATION UNCOMPLETED	<Ref. to OD(diag)-31, DTC B1764 OCCUPANT DETECTION MODULE CALIBRATION UNCOMPLETED, Diagnostic Procedure with Diagnostic Trouble Code (DTC).>
B1765	OCCUPANT DETECTION MODULE ROM CHECKSUM	<Ref. to OD(diag)-31, DTC B1765 OCCUPANT DETECTION MODULE ROM CHECKSUM, Diagnostic Procedure with Diagnostic Trouble Code (DTC).>
B1766	OCCUPANT DETECTION MODULE STACK OVERFLOW	<Ref. to OD(diag)-32, DTC B1766 OCCUPANT DETECTION MODULE STACK OVERFLOW, Diagnostic Procedure with Diagnostic Trouble Code (DTC).>
B1767	OCCUPANT DETECTION MODULE EEPROM INITIALIZING	<Ref. to OD(diag)-32, DTC B1767 OCCUPANT DETECTION MODULE EEPROM INITIALIZING, Diagnostic Procedure with Diagnostic Trouble Code (DTC).>
B1768	OCCUPANT DETECTION MODULE EEPROM STATE	<Ref. to OD(diag)-32, DTC B1768 OCCUPANT DETECTION MODULE EEPROM STATE, Diagnostic Procedure with Diagnostic Trouble Code (DTC).>
B1769	OCCUPANT DETECTION SENSOR TEMPERATURE CIRCUIT OPEN	<Ref. to OD(diag)-32, DTC B1769 OCCUPANT DETECTION SENSOR TEMPERATURE CIRCUIT OPEN, Diagnostic Procedure with Diagnostic Trouble Code (DTC).>
B176A	OCCUPANT DETECTION SENSOR PRESSURE CIRCUIT OPEN	<Ref. to OD(diag)-32, DTC B176A OCCUPANT DETECTION SENSOR PRESSURE CIRCUIT OPEN, Diagnostic Procedure with Diagnostic Trouble Code (DTC).>
B176B	OCCUPANT DETECTION SENSOR PRESSURE TOO LOW	<Ref. to OD(diag)-32, DTC B176B OCCUPANT DETECTION SENSOR PRESSURE TOO LOW, Diagnostic Procedure with Diagnostic Trouble Code (DTC).>
B176C	OCCUPANT DETECTION SENSOR PRESSURE TOO HIGH	<Ref. to OD(diag)-32, DTC B176C OCCUPANT DETECTION SENSOR PRESSURE TOO HIGH, Diagnostic Procedure with Diagnostic Trouble Code (DTC).>
B176D	OCCUPANT DETECTION SENSOR INPUT VOLTAGE LOW AT IG-SW ON	<Ref. to OD(diag)-33, DTC B176D OCCUPANT DETECTION SENSOR INPUT VOLTAGE LOW AT IG-SW ON, Diagnostic Procedure with Diagnostic Trouble Code (DTC).>
B176E	OCCUPANT DETECTION SENSOR GEL RUN OUT	<Ref. to OD(diag)-33, DTC B176E OCCUPANT DETECTION SENSOR GEL RUN OUT, Diagnostic Procedure with Diagnostic Trouble Code (DTC).>
B176F	OCCUPANT DETECTION SENSOR INPUT VOLTAGE LOW	<Ref. to OD(diag)-33, DTC B176F OCCUPANT DETECTION SENSOR INPUT VOLTAGE LOW, Diagnostic Procedure with Diagnostic Trouble Code (DTC).>
B1770	OCCUPANT DETECTION SENSOR TEMPERATURE TOO HIGH	<Ref. to OD(diag)-33, DTC B1770 OCCUPANT DETECTION SENSOR TEMPERATURE TOO HIGH, Diagnostic Procedure with Diagnostic Trouble Code (DTC).>
B1772	OCCUPANT DETECTION SENSOR TEMPERATURE TOO LOW	<Ref. to OD(diag)-33, DTC B1772 OCCUPANT DETECTION SENSOR TEMPERATURE TOO LOW, Diagnostic Procedure with Diagnostic Trouble Code (DTC).>
B1773	BELT TENSION SENSOR CIRCUIT OPEN	<Ref. to OD(diag)-34, DTC B1773 BELT TENSION SENSOR CIRCUIT OPEN, Diagnostic Procedure with Diagnostic Trouble Code (DTC).>
B1774	BELT TENSION SENSOR OUTPUT TOO HIGH	<Ref. to OD(diag)-36, DTC B1774 BELT TENSION SENSOR OUTPUT TOO HIGH, Diagnostic Procedure with Diagnostic Trouble Code (DTC).>
B1775	BELT TENSION SENSOR OUTPUT TOO LOW	<Ref. to OD(diag)-36, DTC B1775 BELT TENSION SENSOR OUTPUT TOO LOW, Diagnostic Procedure with Diagnostic Trouble Code (DTC).>
B1776	BELT TENSION SENSOR INPUT VOLTAGE HIGH	<Ref. to OD(diag)-36, DTC B1776 BELT TENSION SENSOR INPUT VOLTAGE HIGH, Diagnostic Procedure with Diagnostic Trouble Code (DTC).>
B1777	BELT TENSION SENSOR INPUT VOLTAGE LOW	<Ref. to OD(diag)-36, DTC B1777 BELT TENSION SENSOR INPUT VOLTAGE LOW, Diagnostic Procedure with Diagnostic Trouble Code (DTC).>

DTC	Item	Note
B1778	BELT TENSION SENSOR CONTROL MODULE	<Ref. to OD(diag)-37, DTC B1778 BELT TENSION SENSOR CONTROL MODULE, Diagnostic Procedure with Diagnostic Trouble Code (DTC).>
B1779	BUCKLE SWITCH CIRCUIT OPEN	<Ref. to OD(diag)-37, DTC B1779 BUCKLE SWITCH CIRCUIT OPEN, Diagnostic Procedure with Diagnostic Trouble Code (DTC).>
B177A	BUCKLE SWITCH CIRCUIT LOW	<Ref. to OD(diag)-37, DTC B177A BUCKLE SWITCH CIRCUIT LOW, Diagnostic Procedure with Diagnostic Trouble Code (DTC).>
B177B	BUCKLE SWITCH CIRCUIT HIGH	<Ref. to OD(diag)-37, DTC B177B BUCKLE SWITCH CIRCUIT HIGH, Diagnostic Procedure with Diagnostic Trouble Code (DTC).>
B177C	IGNITION POWER SUPPLY HIGH VOLTAGE	<Ref. to OD(diag)-38, DTC B177C IGNITION POWER SUPPLY HIGH VOLTAGE, Diagnostic Procedure with Diagnostic Trouble Code (DTC).>
B177D	IGNITION POWER SUPPLY LOW VOLTAGE	<Ref. to OD(diag)-40, DTC B177D IGNITION POWER SUPPLY LOW VOLTAGE, Diagnostic Procedure with Diagnostic Trouble Code (DTC).>
B177E	BUCKLE SWITCH RANGE	<Ref. to OD(diag)-42, DTC B177E BUCKLE SWITCH RANGE, Diagnostic Procedure with Diagnostic Trouble Code (DTC).>
B1795	OCCUPANT DETECTION MODULE INTERNAL CIRCUIT	<Ref. to OD(diag)-44, DTC B1795 OCCUPANT DETECTION MODULE INTERNAL CIRCUIT, Diagnostic Procedure with Diagnostic Trouble Code (DTC).>

16.Diagnostic Procedure with Diagnostic Trouble Code (DTC)

A: DTC B1762 OCCUPANT DETECTION MODULE CALIBRATION NOT INITIALIZED

DTC DETECTING CONDITION:

- «Rezero» of the occupant detection system is not completed normally.
- Occupant detection control module is faulty.

	Step	Check	Yes	No
1	**CHECK DTC.** Read the DTC of the occupant detection system. <Ref. to OD(diag)-20, Read Diagnostic Trouble Code (DTC).>	Are DTCs other than DTC B1762 displayed for the occupant detection system?	Perform the diagnosis according to DTC. <Ref. to OD(diag)-28, List of Diagnostic Trouble Code (DTC).>	Go to step **2**.
2	**PERFORM RE-ZEROING.** Perform «Rezero». <Ref. to OD(diag)-24, Rezero.>	Did «Rezero» complete properly?	Go to step **3**.	Replace the occupant detection system (seat cushion & frame assembly). <Ref. to SE-25, PASSENGER'S SEAT, DISASSEMBLY, Front Seat.>
3	**CHECK DTC.** 1) Perform the Clear Memory Mode. <Ref. to OD(diag)-22, Clear Memory Mode.> 2) Turn the ignition switch to OFF, and wait for 60 seconds or more. 3) Read the DTC of the occupant detection system. <Ref. to OD(diag)-20, Read Diagnostic Trouble Code (DTC).>	Is DTC B1762 displayed?	Replace the occupant detection system (seat cushion & frame assembly). <Ref. to SE-25, PASSENGER'S SEAT, DISASSEMBLY, Front Seat.>	When DTC other than B1762 is displayed for the occupant detection system, perform the diagnosis according to the DTC. <Ref. to OD(diag)-28, List of Diagnostic Trouble Code (DTC).> When DTC is not displayed, end the diagnosis.

B: DTC B1763 OCCUPANT DETECTION MODULE CALIBRATION CHECKSUM

DTC DETECTING CONDITION:

- Malfunction is detected on vehicle delivery or at memory writing for «Rezero».
- Occupant detection control module is faulty.

	Step	Check	Yes	No
1	**CHECK DTC.** Read the DTC of the occupant detection system. <Ref. to OD(diag)-20, Read Diagnostic Trouble Code (DTC).>	Are DTCs other than DTC B1762 and B1763 displayed for the occupant detection system?	Perform the diagnosis according to DTC. <Ref. to OD(diag)-28, List of Diagnostic Trouble Code (DTC).>	Go to step **2**.
2	**PERFORM RE-ZEROING.** Perform «Rezero». <Ref. to OD(diag)-24, Rezero.>	Did «Rezero» complete properly?	Go to step **3**.	Replace the occupant detection system (seat cushion & frame assembly). <Ref. to SE-25, PASSENGER'S SEAT, DISASSEMBLY, Front Seat.>
3	**CHECK DTC.** 1) Perform the Clear Memory Mode. <Ref. to OD(diag)-22, Clear Memory Mode.> 2) Turn the ignition switch to OFF, and wait for 60 seconds or more. 3) Read the DTC of the occupant detection system. <Ref. to OD(diag)-20, Read Diagnostic Trouble Code (DTC).>	Is DTC B1763 displayed?	Replace the occupant detection system (seat cushion & frame assembly). <Ref. to SE-25, PASSENGER'S SEAT, DISASSEMBLY, Front Seat.>	When DTC other than B1762 is displayed for the occupant detection system, perform the diagnosis according to the DTC. <Ref. to OD(diag)-28, List of Diagnostic Trouble Code (DTC).> When DTC is not displayed, end the diagnosis.

C: DTC B1764 OCCUPANT DETECTION MODULE CALIBRATION UNCOMPLETED

DTC DETECTING CONDITION:

- Memory writing is incomplete on the front seat delivery.
- Calibration of occupant detection control module is incomplete.
- Occupant detection control module is faulty.

When this DTC is displayed, the occupant detection control module is faulty. Replace the occupant detection system (passenger's & frame assembly). <Ref. to SE-25, PASSENGER'S SEAT, DISASSEMBLY, Front Seat.>

D: DTC B1765 OCCUPANT DETECTION MODULE ROM CHECKSUM

DTC DETECTING CONDITION:

Occupant detection control module is faulty.

When this DTC is displayed, the occupant detection control module is faulty.

Replace the occupant detection system (passenger's & frame assembly). <Ref. to SE-25, PASSENGER'S SEAT, DISASSEMBLY, Front Seat.>

E: DTC B1766 OCCUPANT DETECTION MODULE STACK OVERFLOW

DTC DETECTING CONDITION:
Occupant detection control module is faulty.
When this DTC is displayed, the occupant detection control module is faulty.
Replace the occupant detection system (passenger's & frame assembly). <Ref. to SE-25, PASSENGER'S SEAT, DISASSEMBLY, Front Seat.>

F: DTC B1767 OCCUPANT DETECTION MODULE EEPROM INITIALIZING

DTC DETECTING CONDITION:
Occupant detection control module is faulty.
When this DTC is displayed, the occupant detection control module is faulty.
Replace the occupant detection system (passenger's & frame assembly). <Ref. to SE-25, PASSENGER'S SEAT, DISASSEMBLY, Front Seat.>

G: DTC B1768 OCCUPANT DETECTION MODULE EEPROM STATE

DTC DETECTING CONDITION:
Occupant detection control module is faulty.
When this DTC is displayed, the occupant detection control module is faulty.
Replace the occupant detection system (passenger's & frame assembly). <Ref. to SE-25, PASSENGER'S SEAT, DISASSEMBLY, Front Seat.>

H: DTC B1769 OCCUPANT DETECTION SENSOR TEMPERATURE CIRCUIT OPEN

DTC DETECTING CONDITION:
Occupant detection control module is faulty.
When this DTC is displayed, the occupant detection control module is faulty.
Replace the occupant detection system (passenger's & frame assembly). <Ref. to SE-25, PASSENGER'S SEAT, DISASSEMBLY, Front Seat.>

I: DTC B176A OCCUPANT DETECTION SENSOR PRESSURE CIRCUIT OPEN

DTC DETECTING CONDITION:
Occupant detection control module is faulty.
When this DTC is displayed, the occupant detection control module is faulty.
Replace the occupant detection system (passenger's & frame assembly). <Ref. to SE-25, PASSENGER'S SEAT, DISASSEMBLY, Front Seat.>

J: DTC B176B OCCUPANT DETECTION SENSOR PRESSURE TOO LOW

DTC DETECTING CONDITION:
Occupant detection control module is faulty.
When this DTC is displayed, the occupant detection control module is faulty.
Replace the occupant detection system (passenger's & frame assembly). <Ref. to SE-25, PASSENGER'S SEAT, DISASSEMBLY, Front Seat.>

K: DTC B176C OCCUPANT DETECTION SENSOR PRESSURE TOO HIGH

DTC DETECTING CONDITION:
Occupant detection control module is faulty.
When this DTC is displayed, the occupant detection control module is faulty.
Replace the occupant detection system (passenger's & frame assembly). <Ref. to SE-25, PASSENGER'S SEAT, DISASSEMBLY, Front Seat.>

L: DTC B176D OCCUPANT DETECTION SENSOR INPUT VOLTAGE LOW AT IG-SW ON

DTC DETECTING CONDITION:
Occupant detection control module is faulty.
When this DTC is displayed, the occupant detection control module is faulty.
Replace the occupant detection system (passenger's & frame assembly). <Ref. to SE-25, PASSENGER'S SEAT, DISASSEMBLY, Front Seat.>

M: DTC B176E OCCUPANT DETECTION SENSOR GEL RUN OUT

DTC DETECTING CONDITION:
Occupant detection control module is faulty.
When this DTC is displayed, the occupant detection control module is faulty.
Replace the occupant detection system (passenger's & frame assembly). <Ref. to SE-25, PASSENGER'S SEAT, DISASSEMBLY, Front Seat.>

N: DTC B176F OCCUPANT DETECTION SENSOR INPUT VOLTAGE LOW

DTC DETECTING CONDITION:
Occupant detection control module is faulty.
When this DTC is displayed, the occupant detection control module is faulty.
Replace the occupant detection system (passenger's & frame assembly). <Ref. to SE-25, PASSENGER'S SEAT, DISASSEMBLY, Front Seat.>

O: DTC B1770 OCCUPANT DETECTION SENSOR TEMPERATURE TOO HIGH

DTC DETECTING CONDITION:
Occupant detection control module is faulty.
When this DTC is displayed, the occupant detection control module is faulty.
Replace the occupant detection system (passenger's & frame assembly). <Ref. to SE-25, PASSENGER'S SEAT, DISASSEMBLY, Front Seat.>

P: DTC B1772 OCCUPANT DETECTION SENSOR TEMPERATURE TOO LOW

DTC DETECTING CONDITION:
Occupant detection control module is faulty.
When this DTC is displayed, the occupant detection control module is faulty.
Replace the occupant detection system (passenger's & frame assembly). <Ref. to SE-25, PASSENGER'S SEAT, DISASSEMBLY, Front Seat.>

Q: DTC B1773 BELT TENSION SENSOR CIRCUIT OPEN

DTC DETECTING CONDITION:

- Passenger's seat belt tension sensor is faulty.
- Airbag main harness circuit is open or shorted.
- Occupant detection control module is faulty.

CAUTION:
Before performing diagnosis, refer to "CAUTION" in "General Description". <Ref. to AB(diag)-4, CAUTION, General Description.>
WIRING DIAGRAM:

NOTE:
For the coupling connector, refer to "WIRING SYSTEM".
Occupant detection system <Ref. to WI-291, WIRING DIAGRAM, Occupant Detection System.>

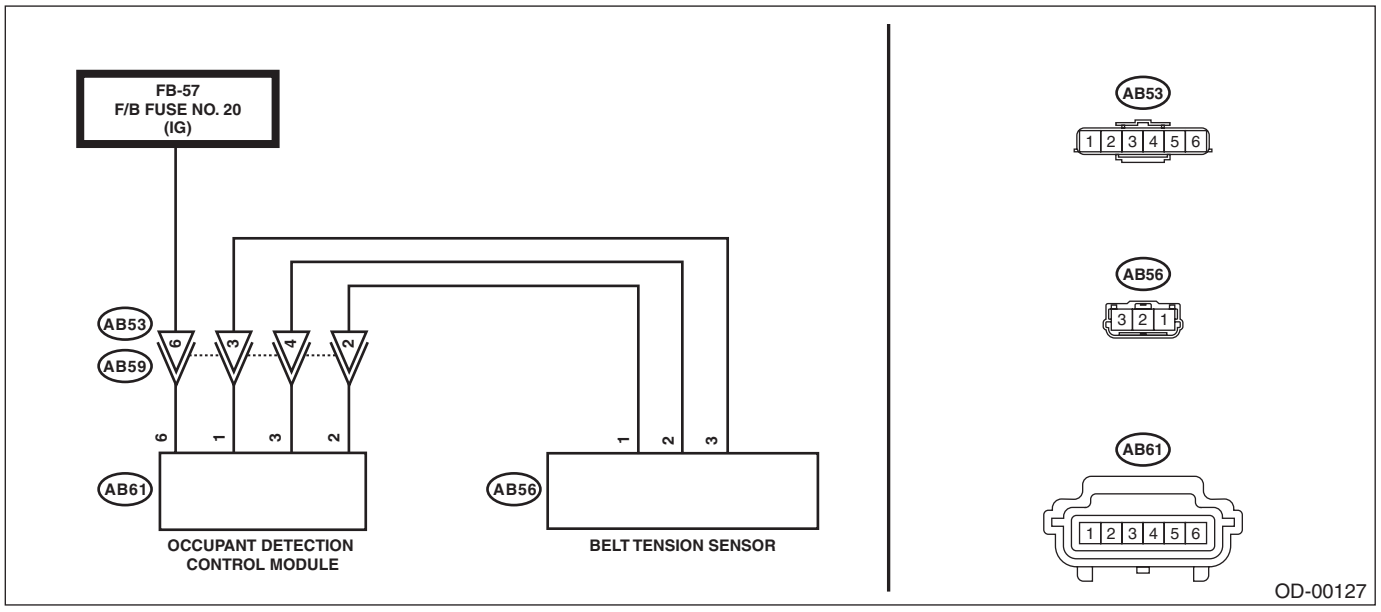

Step		Check	Yes	No
1	**CHECK POOR CONTACT OF CONNECTORS.** Check for poor contact of the connectors between the occupant detection control module and belt tension sensor.	Is there poor contact?	When the connector is not fully connected, reconnect the connector correctly. Replace the faulty harness if the connector is faulty. (Replace the airbag rear harness along with body harness, or replace the occupant detection harness (seat harness).)	Go to step **2**.

	Step	Check	Yes	No
2	**CHECK BELT TENSION SENSOR.** 1) Turn the ignition switch to OFF, disconnect the battery ground cable, and wait for 60 seconds or more. 2) Disconnect the belt tension sensor connector (AB56) from the airbag harness. 3) Connect the connector (1AX) in the test harness AX to the connector (AB56). 4) Connect the connector (2AX) in the test harness AX and the test harness AC. 5) Connect the ground cable to battery.	Does the airbag warning light illuminate for approximately 6 seconds and go off?	Replace the seat belt outer. <Ref. to SB-19, SEAT BELT OUTER - FRONT, REMOVAL, Front Seat Belt.>	Go to step **3**.
3	**CHECK AIRBAG HARNESS.** 1) Turn the ignition switch to OFF, disconnect the battery ground cable, and wait for 60 seconds or more. 2) Disconnect the test harness AC from the connector (2AX) in test harness AX. 3) Connect the connector (2AX) in test harness AX and the connector (1AD) in test harness AD. 4) Disconnect the airbag harness connector (AB53), and connect the connector (1AW) of test harness AW. 5) Measure the resistance between connector (2AD) in test harness AD and connector (AB53). **CAUTION:** **Connect terminal (1AW) in the test harness AW to connector (AB53) terminal, and apply the tester to terminal (2AW).** ***Connector & terminal*** ***(AB53) No. 2 — (2AD) No. 3:*** ***(AB53) No. 4 — (2AD) No. 2:*** ***(AB53) No. 3 — (2AD) No. 1:***	Is the resistance less than 10 Ω?	Go to step **4**.	Replace the airbag harness along with chassis harness.
4	**CHECK AIRBAG HARNESS.** Measure the resistance between connector (AB53) terminals and between connector (AB53) and chassis ground. **CAUTION:** **Connect terminal (1AW) in the test harness AW to connector (AB53) terminal, and apply the tester to terminal (2AW).** ***Connector & terminal*** ***(AB53) No. 2 — (2AD) No. 2:*** ***(AB53) No. 2 — (2AD) No. 1:*** ***(AB53) No. 3 — (2AD) No. 3:*** ***(AB53) No. 3 — (2AD) No. 2:*** ***(AB53) No. 4 — (2AD) No. 3:*** ***(AB53) No. 4 — (2AD) No. 1:*** ***(AB53) No. 2 — Chassis ground:*** ***(AB53) No. 3 — Chassis ground:*** ***(AB53) No. 4 — Chassis ground:***	Is the resistance 1 MΩ or more?	Go to step **5**.	Replace the airbag harness along with chassis harness.

	Step	Check	Yes	No
5	**CHECK AIRBAG HARNESS.** 1) Connect the battery ground terminal and turn the ignition switch to ON. 2) Measure the voltage between connector (AB53) and chassis ground. **CAUTION:** **Connect terminal (1AW) in the test harness AW to connector (AB53) terminal, and apply the tester to terminal (2AW).** ***Connector & terminal*** ***(2AD) No. 1 (+) — Chassis ground (–):*** ***(2AD) No. 3 (+) — Chassis ground (–):***	Is the voltage 1 V or less?	Check the seat harness, and if any fault is found, replace the seat harness. If the fault is not fixed, replace the occupant detection system. <Ref. to SE-25, PASSENGER'S SEAT, DISASSEMBLY, Front Seat.>	Replace the airbag harness along with chassis harness.

R: DTC B1774 BELT TENSION SENSOR OUTPUT TOO HIGH

DTC DETECTING CONDITION:

- Passenger's seat belt tension sensor is faulty.
- Airbag main harness circuit is open or shorted.
- Occupant detection control module is faulty.

For the diagnostic procedure, refer to DTC B1773. <Ref. to OD(diag)-34, DTC B1773 BELT TENSION SENSOR CIRCUIT OPEN, Diagnostic Procedure with Diagnostic Trouble Code (DTC).>

S: DTC B1775 BELT TENSION SENSOR OUTPUT TOO LOW

DTC DETECTING CONDITION:

- Passenger's seat belt tension sensor is faulty.
- Airbag main harness circuit is open or shorted.
- Occupant detection control module is faulty.

For the diagnostic procedure, refer to DTC B1773. <Ref. to OD(diag)-34, DTC B1773 BELT TENSION SENSOR CIRCUIT OPEN, Diagnostic Procedure with Diagnostic Trouble Code (DTC).>

T: DTC B1776 BELT TENSION SENSOR INPUT VOLTAGE HIGH

DTC DETECTING CONDITION:

- Passenger's seat belt tension sensor is faulty.
- Airbag main harness circuit is open or shorted.
- Occupant detection control module is faulty.

For the diagnostic procedure, refer to DTC B1773. <Ref. to OD(diag)-34, DTC B1773 BELT TENSION SENSOR CIRCUIT OPEN, Diagnostic Procedure with Diagnostic Trouble Code (DTC).>

U: DTC B1777 BELT TENSION SENSOR INPUT VOLTAGE LOW

DTC DETECTING CONDITION:

- Passenger's seat belt tension sensor is faulty.
- Airbag main harness circuit is open or shorted.
- Occupant detection control module is faulty.

For the diagnostic procedure, refer to DTC B1773. <Ref. to OD(diag)-34, DTC B1773 BELT TENSION SENSOR CIRCUIT OPEN, Diagnostic Procedure with Diagnostic Trouble Code (DTC).>

V: DTC B1778 BELT TENSION SENSOR CONTROL MODULE

DTC DETECTING CONDITION:

- Passenger's seat belt tension sensor is faulty.
- Airbag main harness circuit is open or shorted.
- Occupant detection control module is faulty.

For the diagnostic procedure, refer to DTC B1773. <Ref. to OD(diag)-34, DTC B1773 BELT TENSION SENSOR CIRCUIT OPEN, Diagnostic Procedure with Diagnostic Trouble Code (DTC).>

W: DTC B1779 BUCKLE SWITCH CIRCUIT OPEN

DTC DETECTING CONDITION:

- Passenger's buckle switch circuit is open, shorted or shorted to ground.
- Seat harness circuit is open, shorted or shorted to ground.
- Occupant detection control module is faulty.

For the diagnostic procedure, refer to DTC B177E. <Ref. to OD(diag)-42, DTC B177E BUCKLE SWITCH RANGE, Diagnostic Procedure with Diagnostic Trouble Code (DTC).>

X: DTC B177A BUCKLE SWITCH CIRCUIT LOW

DTC DETECTING CONDITION:

- Passenger's buckle switch circuit is open, shorted or shorted to ground.
- Seat harness circuit is open, shorted or shorted to ground.
- Occupant detection control module is faulty.

For the diagnostic procedure, refer to DTC B177E. <Ref. to OD(diag)-42, DTC B177E BUCKLE SWITCH RANGE, Diagnostic Procedure with Diagnostic Trouble Code (DTC).>

Y: DTC B177B BUCKLE SWITCH CIRCUIT HIGH

DTC DETECTING CONDITION:

- Passenger's buckle switch circuit is open, shorted or shorted to ground.
- Seat harness circuit is open, shorted or shorted to ground.
- Occupant detection control module is faulty.

For the diagnostic procedure, refer to DTC B177E. <Ref. to OD(diag)-42, DTC B177E BUCKLE SWITCH RANGE, Diagnostic Procedure with Diagnostic Trouble Code (DTC).>

Z: DTC B177C IGNITION POWER SUPPLY HIGH VOLTAGE

DTC DETECTING CONDITION:

- Power supply voltage of occupant detection control module is faulty.
- Occupant detection control module is faulty.
- Seat harness circuit is open, shorted or shorted to ground.

CAUTION:
Before performing diagnosis, refer to "CAUTION" in "General Description". <Ref. to AB(diag)-4, CAUTION, General Description.>
WIRING DIAGRAM:

NOTE:
For the coupling connector, refer to "WIRING SYSTEM".
Occupant detection system <Ref. to WI-291, WIRING DIAGRAM, Occupant Detection System.>

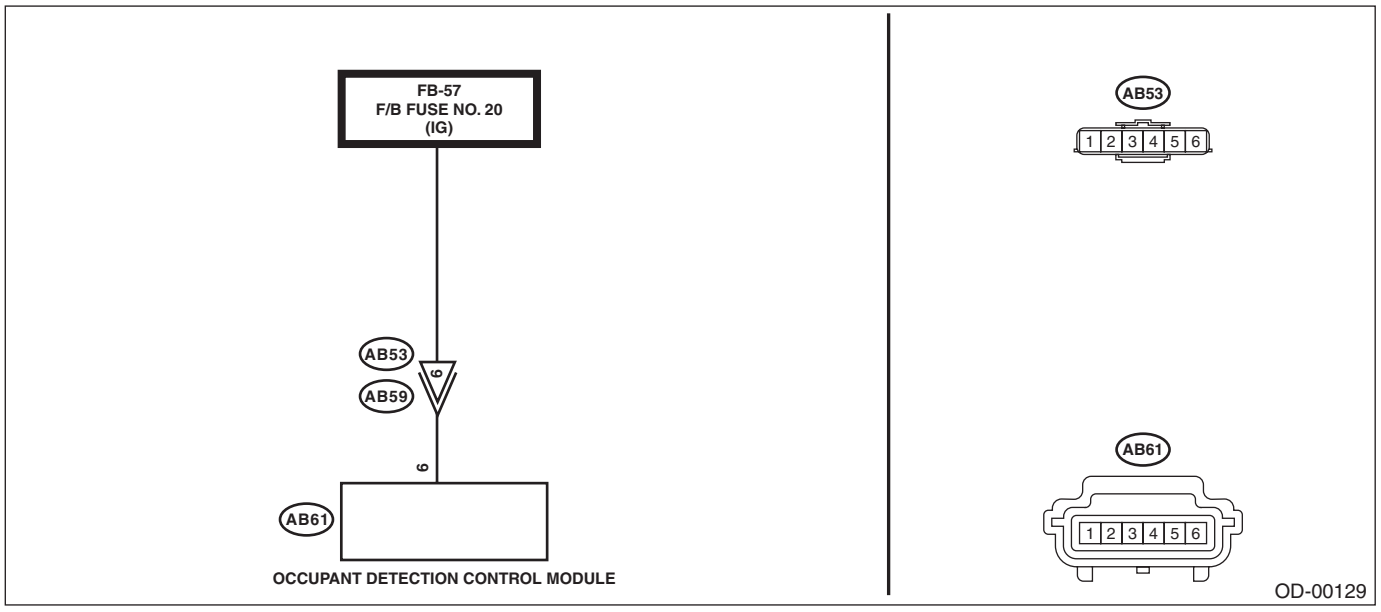

	Step	Check	Yes	No
1	**CHECK BATTERY VOLTAGE.** Measure the battery voltage.	Is the battery voltage 16 V or more?	Check the battery. <Ref. to SC(H4DO)-65, INSPECTION, Battery.> <Ref. to SC(H6DO)-59, INSPECTION, Battery.>	Go to step **2**.
2	**CHECK FUSE.** Check the fuse. (F/B fuse No. 20)	Is the fuse OK?	Go to step **3**.	Replace the fuse. If the replaced fuse blows out easily, repair the ground short circuit in the harness between the battery and occupant detection CM.

	Step	Check	Yes	No
3	**CHECK POOR CONTACT OF CONNECTORS.** Check for poor contact of the connectors between the occupant detection control module and airbag control module.	Is there poor contact?	When the connector is not fully connected, reconnect the connector correctly. Replace the faulty harness if the connector is faulty. (Replace the airbag rear harness along with body harness, or replace the occupant detection harness (seat harness).)	Go to step **4**.
4	**CHECK AIRBAG REAR HARNESS.** 1) Turn the ignition switch to OFF, disconnect the battery ground cable, and wait for 60 seconds or more. 2) Disconnect the connectors (AB59) and (AB53) under the passenger's seat. 3) Turn the ignition switch to ON. 4) Measure the voltage between connector (AB53) and chassis ground. **CAUTION:** **Connect terminal (1AW) in the test harness AW to connector (AB53) terminal, and apply the tester to terminal (2AW).** ***Connector & terminal*** ***(AB53) No. 6 (+) — Chassis ground (–):***	Is the voltage 16 V or less?	Replace the occupant detection harness (seat harness). If defective is not improved, replace the occupant detection system (seat cushion & frame assembly) <Ref. to SE-25, PASSENGER'S SEAT, DISASSEMBLY, Front Seat.>, and then the airbag control module <Ref. to AB-50, REMOVAL, Airbag Control Module.> in this order.	Replace the airbag rear harness along with body harness.

AA:DTC B177D IGNITION POWER SUPPLY LOW VOLTAGE

DTC DETECTING CONDITION:

- Power supply voltage of occupant detection control module is faulty.
- Occupant detection control module is faulty.
- Seat harness circuit is open, shorted or shorted to ground.

CAUTION:
Before performing diagnosis, refer to "CAUTION" in "General Description". <Ref. to AB(diag)-4, CAUTION, General Description.>
WIRING DIAGRAM:

NOTE:
For the coupling connector, refer to "WIRING SYSTEM".
Occupant detection system <Ref. to WI-291, WIRING DIAGRAM, Occupant Detection System.>

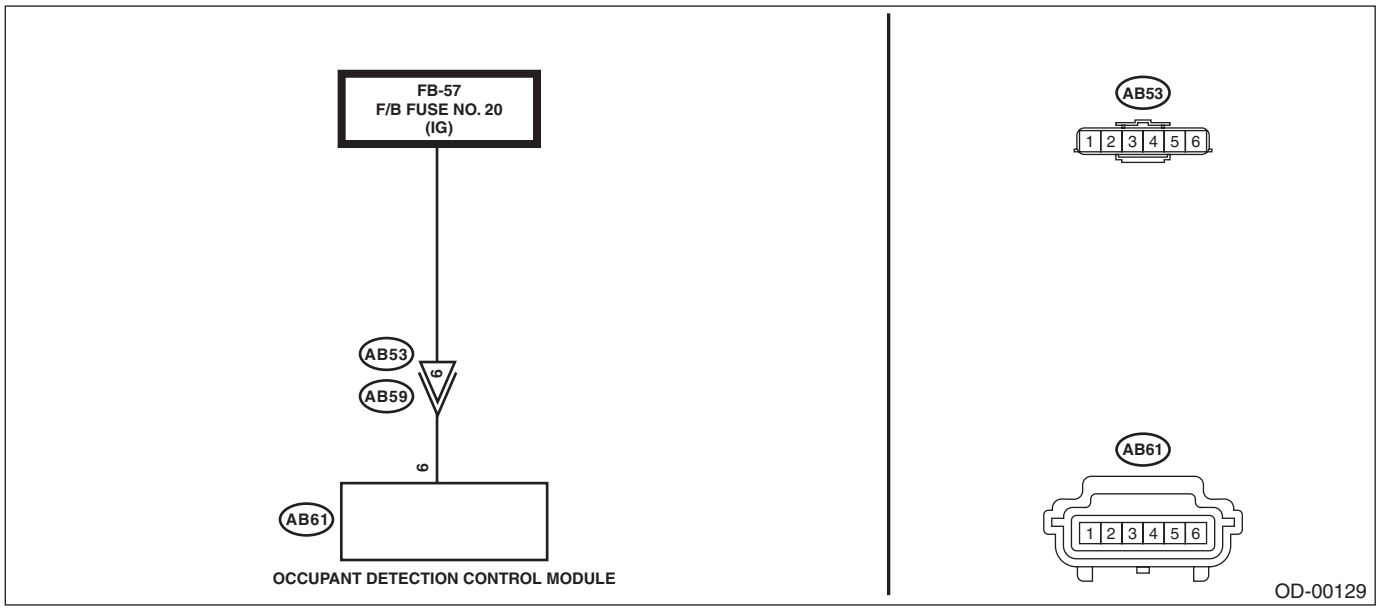

	Step	Check	Yes	No
1	**CHECK BATTERY VOLTAGE.** Measure the battery voltage.	Is the battery voltage 8 V or less?	Check the battery. <Ref. to SC(H4DO)-65, INSPECTION, Battery.> <Ref. to SC(H6DO)-59, INSPECTION, Battery.>	Go to step **2**.
2	**CHECK FUSE.** Check the fuse. (F/B fuse No. 20)	Is the fuse OK?	Go to step **3**.	Replace the fuse. If the replaced fuse blows out easily, repair the ground short circuit in the harness between the battery and occupant detection CM.

	Step	Check	Yes	No
3	**CHECK POOR CONTACT OF CONNECTORS.** Check for poor contact of the connectors between the occupant detection control module and airbag control module.	Is there poor contact?	When the connector is not fully connected, reconnect the connector correctly. Replace the faulty harness if the connector is faulty. (Replace the airbag rear harness along with body harness, or replace the occupant detection harness (seat harness).)	Go to step **4**.
4	**CHECK AIRBAG REAR HARNESS.** 1) Turn the ignition switch to OFF, disconnect the battery ground cable, and wait for 60 seconds or more. 2) Disconnect the connectors (AB59) and (AB53) under the passenger's seat. 3) Turn the ignition switch to ON. 4) Measure the voltage between connector (AB53) and chassis ground. **CAUTION:** **Connect terminal (1AW) in the test harness AW to connector (AB53) terminal, and apply the tester to terminal (2AW).** ***Connector & terminal*** ***(AB53) No. 6 (+) — Chassis ground (–):***	Is the voltage 8 V or more?	Replace the occupant detection harness (seat harness). If defective is not improved, replace the occupant detection system (seat cushion & frame assembly) <Ref. to SE-25, PASSENGER'S SEAT, DISASSEMBLY, Front Seat.>, and then the airbag control module <Ref. to AB-50, REMOVAL, Airbag Control Module.> in this order.	Replace the airbag rear harness along with body harness.

AB:DTC B177E BUCKLE SWITCH RANGE

DTC DETECTING CONDITION:

- Passenger's buckle switch circuit is open, shorted or shorted to ground.
- Seat harness circuit is open, shorted or shorted to ground.
- Occupant detection control module is faulty.

CAUTION:
Before performing diagnosis, refer to "CAUTION" in "General Description". <Ref. to AB(diag)-4, CAUTION, General Description.>
WIRING DIAGRAM:

NOTE:
For the coupling connector, refer to "WIRING SYSTEM".
Occupant detection system <Ref. to WI-291, WIRING DIAGRAM, Occupant Detection System.>

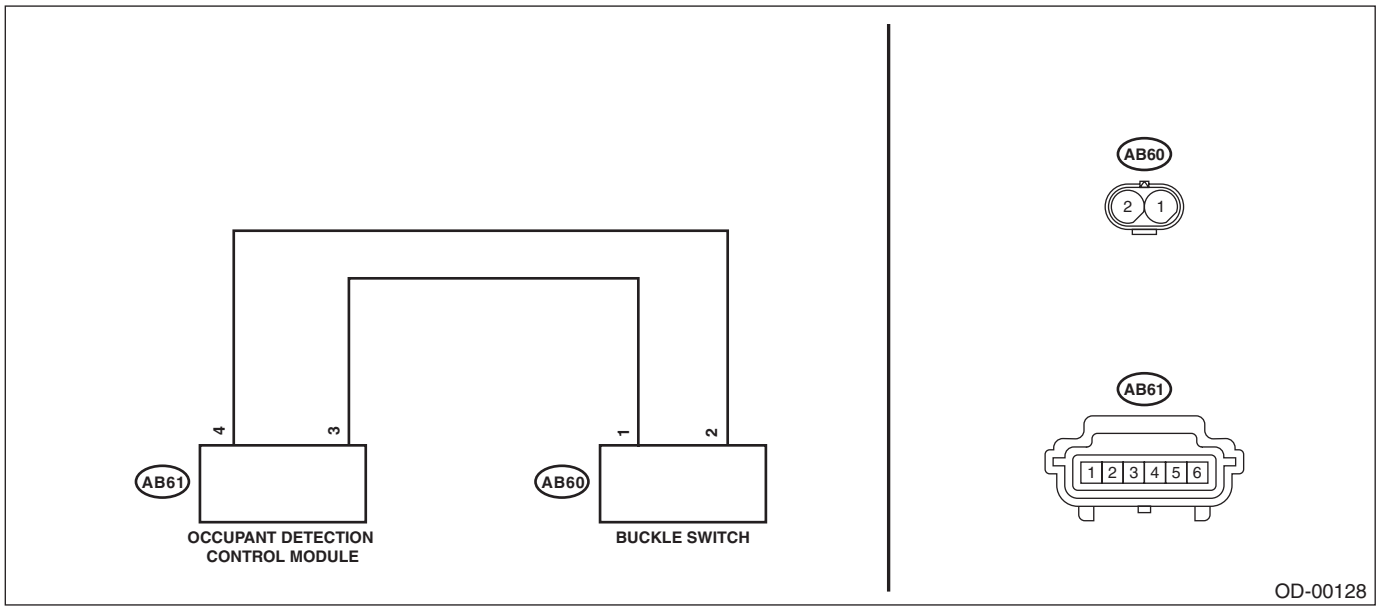

Step		Check	Yes	No
1	**CHECK DTC.** Read the DTC of the occupant detection system. <Ref. to OD(diag)-20, Read Diagnostic Trouble Code (DTC).>	Is DTC other than DTC B177E, B1779, B177A or B177B displayed for the occupant detection system?	Perform the diagnosis according to DTC.	Go to step **2**.
2	**CHECK POOR CONTACT OF CONNECTORS.** Check for poor contact of the connectors between the occupant detection control module and buckle switch.	Is there poor contact?	When the connector is not fully connected, reconnect the connector correctly. Replace the occupant detection harness (seat harness) if the connector is faulty.	Go to step **3**.

Step		Check	Yes	No
3	**CHECK BUCKLE SWITCH.** 1) Turn the ignition switch to OFF, disconnect the battery ground terminal, and wait for 60 seconds. 2) Disconnect the buckle switch connector (AB60). 3) Connect the test harness AE and test harness connector Y to buckle switch connector (AB60). 4) Connect the battery ground terminal and turn the ignition switch to ON.	Does the airbag warning light illuminate for 6 seconds and go off?	Replace the buckle switch. <Ref. to SB-19, SEAT BELT OUTER - FRONT, REMOVAL, Front Seat Belt.>	Check the occupant detection harness, and if any fault is found, replace the occupant detection harness. If the fault is not fixed, replace the occupant detection system. <Ref. to SE-25, PASSENGER'S SEAT, DISASSEMBLY, Front Seat.>

AC:DTC B1795 OCCUPANT DETECTION MODULE INTERNAL CIRCUIT

DTC DETECTING CONDITION:

When the following DTCs are detected:
B1763, B1764, B1765, B1766, B1767, B1768, B1769, B176A, B176B, B176C, B176D, B176E, B176F, B1770, B1772, B1776, B1777, B1778

NOTE:
DTC B1795 is detected at the same time when any of the DTCs above is detected. When the detected DTC is eliminated, DTC B1795 is cleared at the same time.

	Step	Check	Yes	No
1	**CHECK DTC.** Read the DTC of the occupant detection system. <Ref. to OD(diag)-20, Read Diagnostic Trouble Code (DTC).>	Is any of B1763, B1764, B1765, B1766, B1767, B1768, B1769, B176A, B176B, B176C, B176D, B176E, B176F, B1770, B1772, B1776, B1777, or B1778 displayed for the occupant detection system?	Perform the diagnosis according to DTC. <Ref. to OD(diag)-28, List of Diagnostic Trouble Code (DTC).>	Go to step **2**.
2	**CHECK DTC.** 1) Perform the Clear Memory Mode. <Ref. to OD(diag)-22, Clear Memory Mode.> 2) Turn the ignition switch to OFF, and wait for 60 seconds or more. 3) Read the DTC of the occupant detection system. <Ref. to OD(diag)-20, Read Diagnostic Trouble Code (DTC).>	Is DTC B1795 displayed?	Replace the occupant detection system (seat cushion & frame assembly). <Ref. to SE-25, PASSENGER'S SEAT, DISASSEMBLY, Front Seat.>	When DTC other than B1795 is displayed for the occupant detection system, perform the diagnosis according to the DTC. <Ref. to OD(diag)-28, List of Diagnostic Trouble Code (DTC).> When DTC is not displayed, end the diagnosis.

SEAT BELT SYSTEM

SB

Page

1. General Description 2
2. Pretensioner Connector 14
3. Inspection Locations after a Collision 15
4. Seat Belt Warning System 16
5. Front Seat Belt 19
6. Rear Seat Belt 25
7. Disposal of Pretensioner 37

1. General Description

A: COMPONENT

1. FRONT SEAT BELT

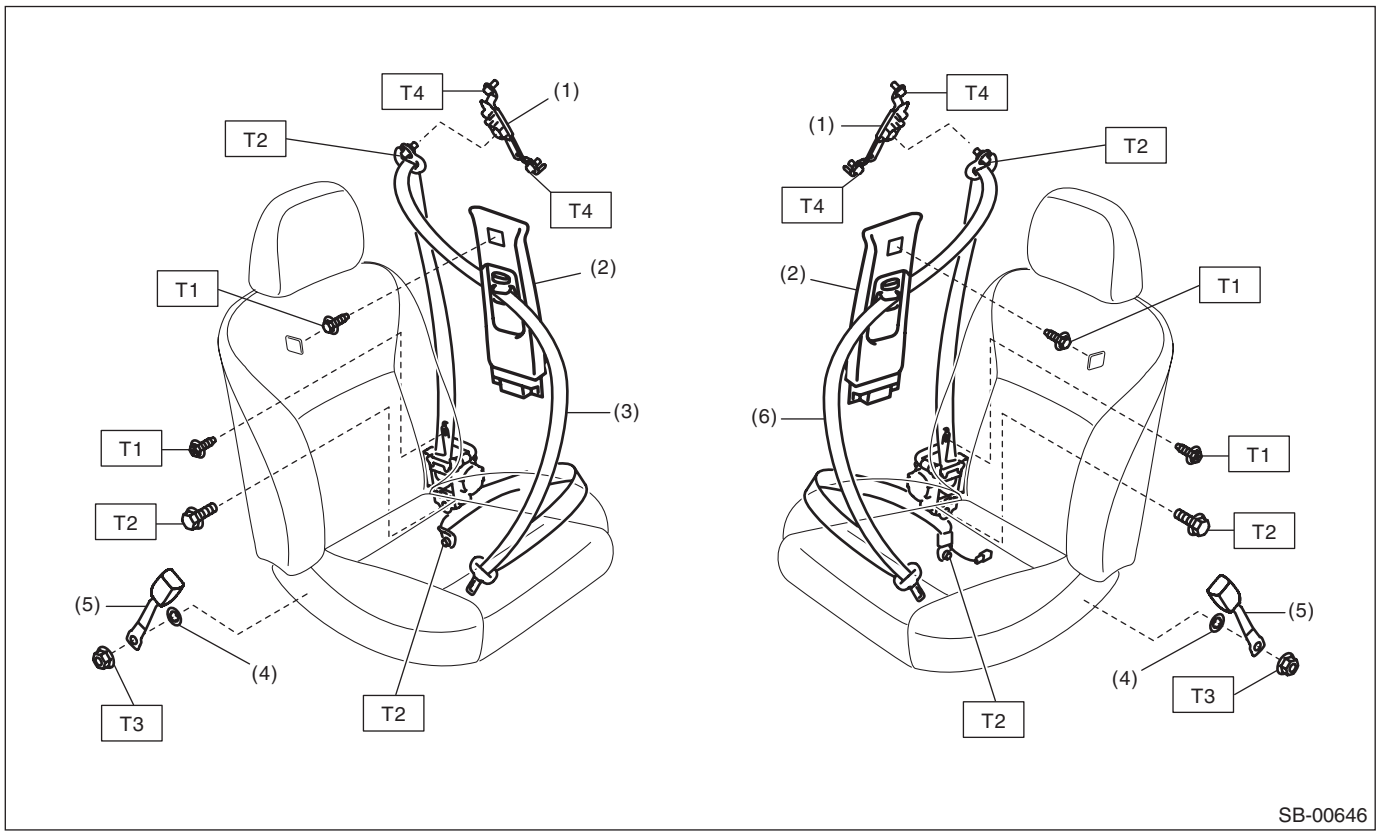

(1) Adjuster ASSY - seat belt
(2) Trim panel - center pillar UPR
(3) Seat belt outer - front
(4) Wave washer
(5) Seat belt inner - front
(6) Seat belt outer - front (only on passenger's side with belt tension sensor)

Tightening torque: N·m (kgf-m, ft-lb)
T1: 7.5 (0.8, 5.5)
T2: 30 (3.1, 22.1)
T3: 38 (3.9, 28.0)
T4: 53 (5.4, 39.1)

2. REAR SEAT BELT (SEDAN MODEL)

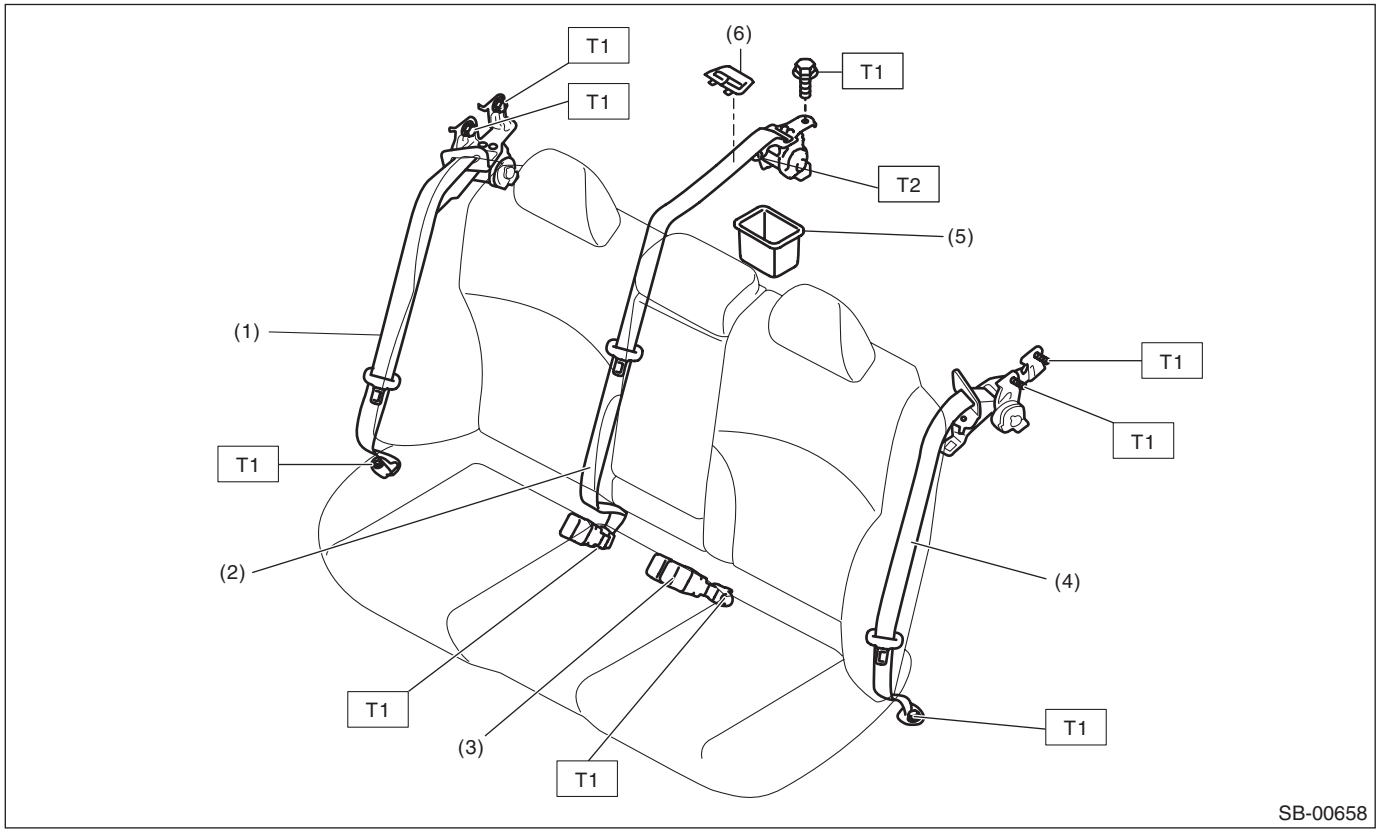

(1) Seat belt outer - rear RH
(2) Seat belt - rear shoulder CTR
(3) Seat belt - CTR LH
(4) Seat belt outer - rear LH
(5) Cover - ELR
(6) Cover - belt rear

Tightening torque: N·m (kgf-m, ft-lb)
T1: 30 (3.1, 22.1)
T2: 53 (5.4, 39.1)

3. REAR SEAT BELT (OUTBACK MODEL)

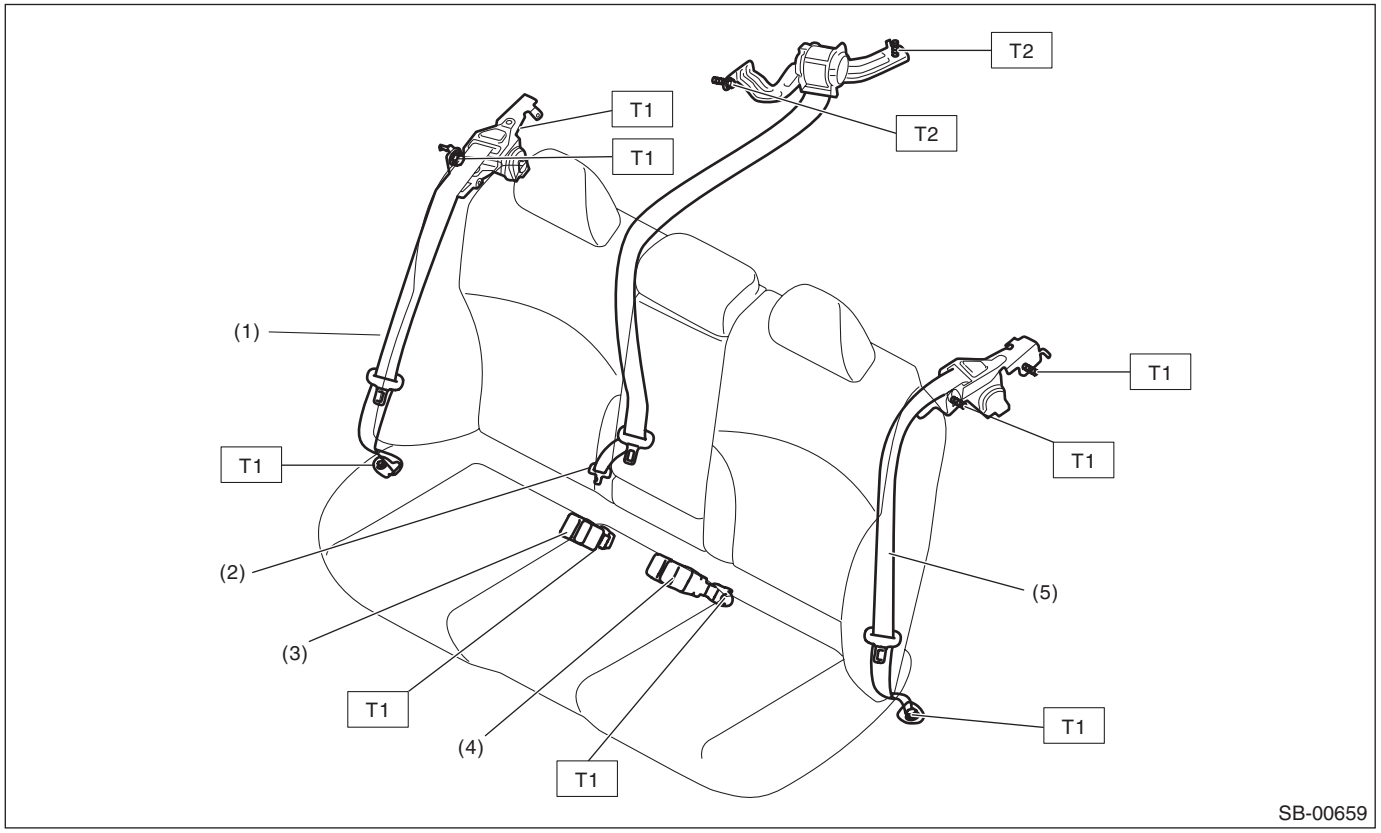

(1) Seat belt outer - rear RH
(2) Seat belt - rear shoulder CTR
(3) Seat belt - CTR RH
(4) Seat belt - CTR LH
(5) Seat belt outer - rear LH

Tightening torque: N·m (kgf-m, ft-lb)
T1: 30 (3.1, 22.1)
T2: 53 (5.4, 39.1)

B: CAUTION

• Before starting the work, turn the ignition switch to OFF, disconnect the battery ground cable and wait for 60 seconds or more.
• The airbag system (including pretensioner) is fitted with a backup power supply. After disconnecting the battery ground cable, the airbag may operate if you do not wait for 60 seconds or more before starting the service of airbag system.
• Do not drop or apply any impact to the pretensioner.
• If oil, grease or water gets on the pretensioner, wipe it off immediately with a dry cloth.
• Do not expose the pretensioner to high temperature or flame.
• Do not allow current to flow through or voltage to reach the pretensioner. Do not use a circuit tester to check resistance of the pretensioner.
• Do not disassemble or attempt to repair the pretensioner. If it is dented, cracked or deformed, replace it with a new genuine part.
• Do not use the airbag or pretensioner parts from other vehicles. Always use a new genuine part for replacement.
• When handling a seat belt with deployed pretensioner, wear gloves and goggles. Wash your hands afterwards.
• Do not reuse a seat belt with deployed pretensioner.
• Before disposal, make sure to perform an operation process to the pretensioners.
• If material from the pretensioner enters the eyes or contacts skin during operation process, wash it away with clean water, and then consult a doctor.

C: PREPARATION TOOL

1. SPECIAL TOOL

• Subaru Select Monitor

ILLUSTRATION	TOOL NUMBER	DESCRIPTION	REMARKS
 STSSM4	— (Newly adopted tool)	SUBARU SELECT MONITOR 4	Used for setting of each function and trouble-shooting for electrical system. NOTE: For detailed operation procedures of Subaru Select Monitor 4, refer to “Application help”.

- TEST HARNESS AW

ILLUSTRATION	TOOL NUMBER	DESCRIPTION	REMARKS
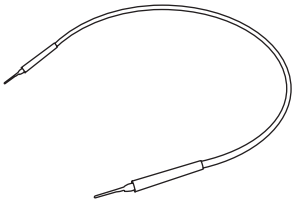 ST98299AL020	98299AL020	TEST HARNESS AW	Used when measuring voltage and resistance of occupant detection system.



OD-00124

- TEST HARNESS AG

ILLUSTRATION	TOOL NUMBER	DESCRIPTION	REMARKS
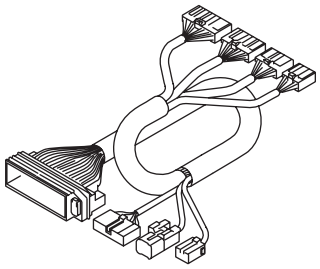 ST98299AG070	98299AG070	TEST HARNESS AG	• Used when measuring voltage and resistance of airbag control module. • Used together with TEST HARNESS AD AV. (98299AL010)

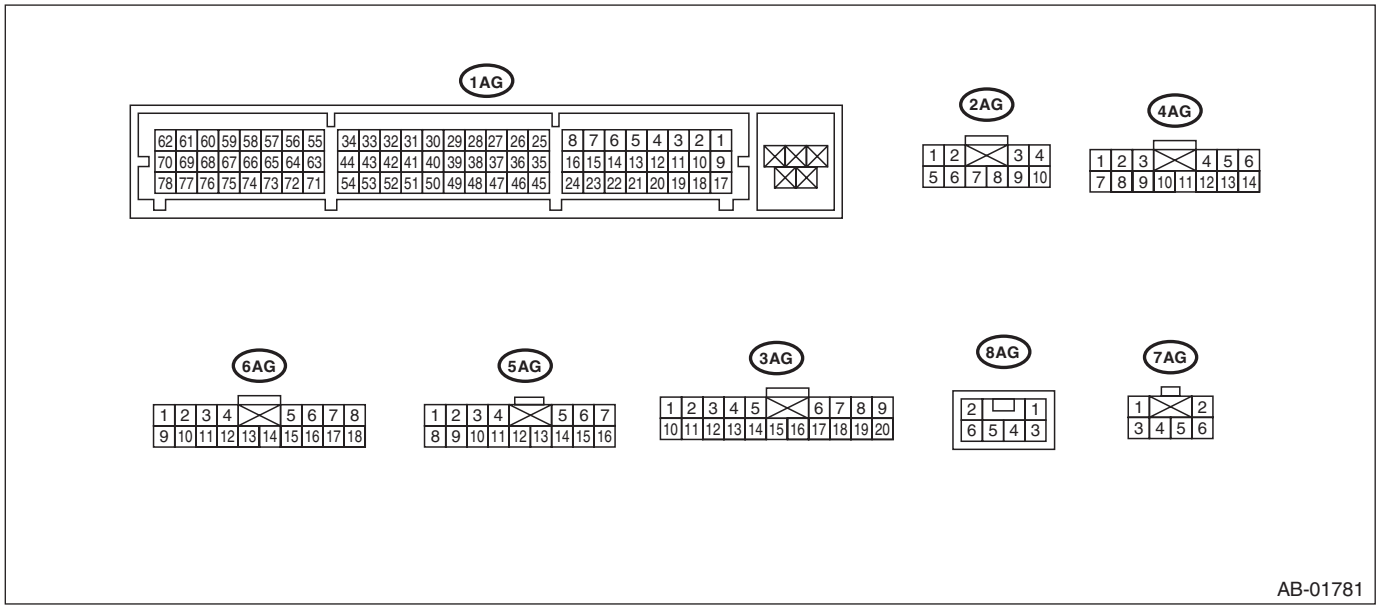

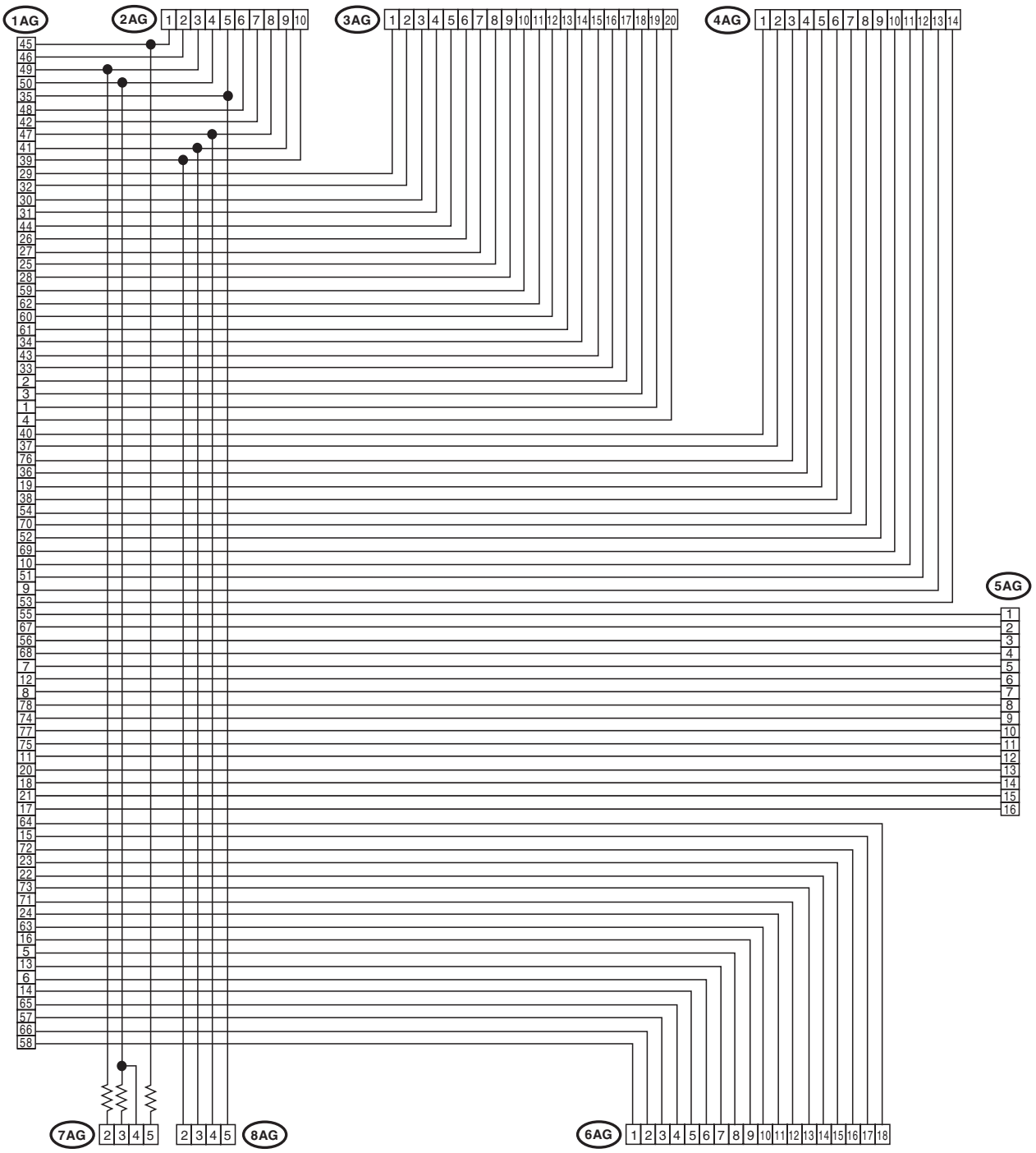

AB-01902

- TEST HARNESS AD AV

ILLUSTRATION	TOOL NUMBER	DESCRIPTION	REMARKS
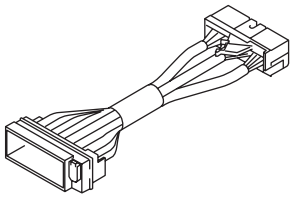 ST98299AL010	98299AL010	TEST HARNESS AD AV	• Used when measuring voltage and resistance of airbag control module. • Used together with test harness AG. (98299AG070)

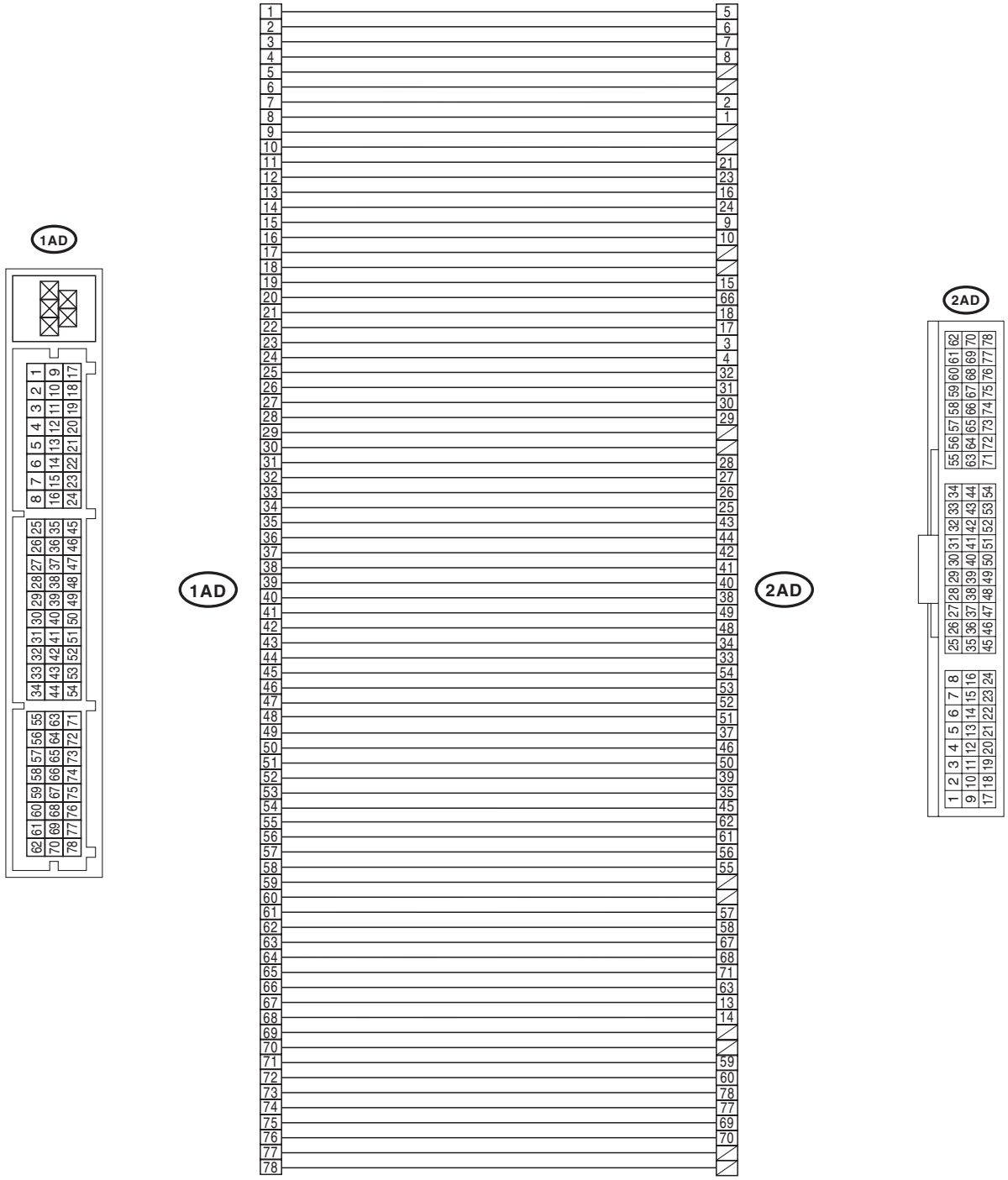

AB-03610

- TEST HARNESS Y

ILLUSTRATION	TOOL NUMBER	DESCRIPTION	REMARKS
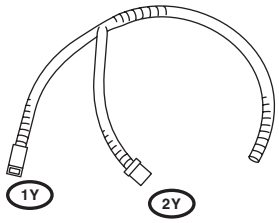 ST98299AG040	98299AG040	TEST HARNESS Y	Used for troubleshooting seat belt buckle switch.

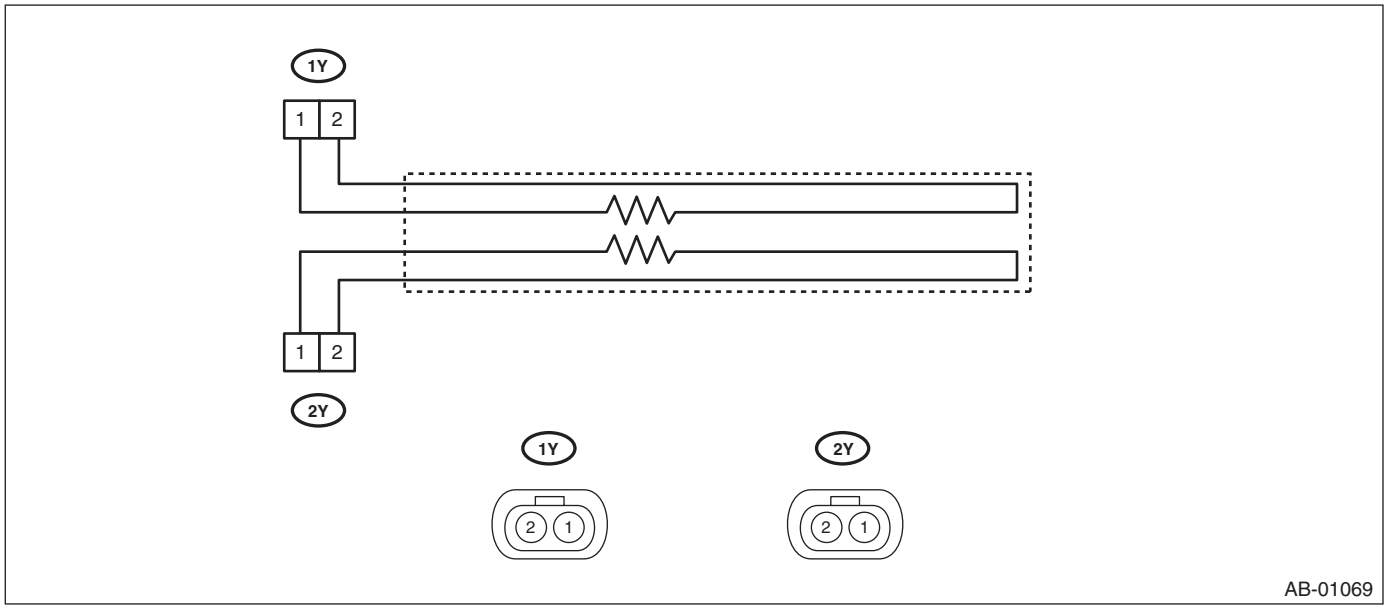

AB-01069

- AIRBAG RESISTOR

ILLUSTRATION	TOOL NUMBER	DESCRIPTION	REMARKS
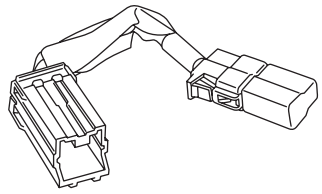 ST98299PA040	98299PA040	AIRBAG RESISTOR	Used in replacement of airbag module for which resistance value is same as airbag module.

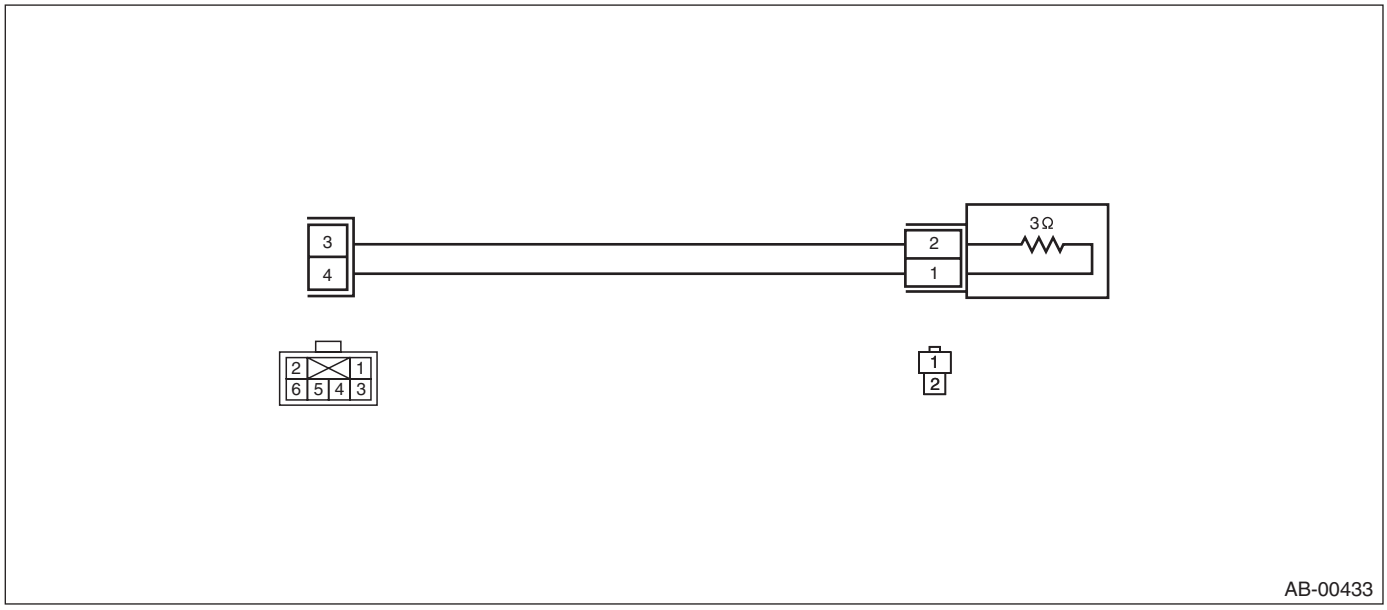

- TEST HARNESS ADAPTER D

ILLUSTRATION	TOOL NUMBER	DESCRIPTION	REMARKS
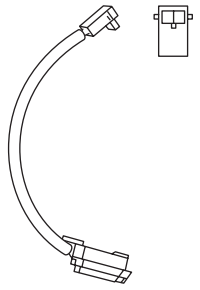 ST98299SA010	98299SA010	TEST HARNESS ADAPTER D	• Used for operation process of pretensioner. • Used together with AIRBAG DEPLOYMENT TOOL. (98299PA030)

- AIRBAG DEPLOYMENT TOOL

ILLUSTRATION	TOOL NUMBER	DESCRIPTION	REMARKS
 ST98299PA030	98299PA030	AIRBAG DEPLOYMENT TOOL	• Used for operation process of pretensioner. • Used together with each test harness adapter.

2. GENERAL TOOL

TOOL NAME	REMARKS
Circuit tester	Used for measuring resistance, voltage and current.
DST-i	Used together with Subaru Select Monitor 4.

2. Pretensioner Connector

A: PROCEDURE

For connectors of seat belt pretensioner and buckle switch RH, refer to “Airbag Connector” of “AIRBAG SYSTEM” section or “OCCUPANT DETECTION SYSTEM” section.

- Airbag system: <Ref. to AB-18, PROCEDURE, Airbag Connector.>
- Occupant detection system: <Ref. to OD(diag)-15, PROCEDURE, Airbag Connector.>

3. Inspection Locations after a Collision

A: INSPECTION

Refer to “Inspection Locations after a Collision” of “AIRBAG SYSTEM” section. <Ref. to AB-26, Inspection Locations after a Collision.>

4. Seat Belt Warning System

A: WIRING DIAGRAM

Refer to “Seat Belt Warning System” in the wiring diagram. <Ref. to WI-330, WIRING DIAGRAM, Seat Belt Warning System.>

B: INSPECTION

CAUTION:
• Refer to “CAUTION” of “General Description” before handling the airbag system components. <Ref. to AB-10, CAUTION, General Description.>
• When inspecting the airbag main harness, disconnect the driver’s seat airbag module connector and passenger’s seat airbag module connector for safety reasons.
• When inspecting the airbag rear harness, disconnect the side airbag module connector, seat cushion airbag module connector, curtain airbag module connector and seat belt pretensioner connector for safety reasons.
TROUBLE SYMPTOM:
- Driver’s side seat belt warning light does not illuminate or it remains illuminating.
- Warning buzzer does not beep.

	Step	Check	Yes	No
1	**CHECK FUNCTION.** 1) Sit on the driver’s seat and passenger’s seat and disconnect the seat belts of the both. 2) Turn the ignition switch to ON (engine OFF). 3) Check the illumination of the driver’s seat belt warning light in the combination meter, and the passenger’s seat belt warning light in the warning box, and the sounding of the buzzer.	Do the driver’s warning light and passenger’s warning light blink and the buzzer sound while blinking?	Go to step **2**.	Go to step **9**.
2	**CHECK FUNCTION.** 1) Wait until the buzzer sound stops in step 1. (For approximately six seconds after starting sounding) 2) Connect and disconnect the seat belts of the driver’s and passenger’s. 3) Check the illumination of the driver’s seat belt warning light in the combination meter and the passenger’s seat belt warning light in the warning box.	Do the seat belts warning light illuminate ←→ go off according to the operation?	Go to step **3**.	Go to step **5**.
3	**CHECK FUNCTION.** 1) Wait until the buzzer sound stops in step 2. (For approximately six seconds after starting sounding) 2) Start the engine, and set the vehicle speed at 20 km/h (12 MPH) or more. 3) Check the seat belt warning lights of the driver’s and the passenger’s, and if the warning buzzer sounds.	Do the driver’s warning light and passenger’s warning light blink and the buzzer sound while blinking?	Go to step **4**.	Go to step **10**.
4	**CHECK DATA MONITOR.** Check for poor contact of the connectors between the airbag control module and the seat belt buckle switch LH. 1) Sit in the driver’s seat. 2) Select «Data monitor» in the combination meter in Subaru Select Monitor, and display the data of «Belt Buckle Switch LH». 3) Fasten and detach the driver’s side seat belt buckle, and read the data of the seat belt switch. <Ref. to AB(diag)-33, OPERATION, Read Current Data.>	Does the seat belt switch display change Belted ←→ Unbelted according to the operation of the seat belt buckle?	Go to step **6**.	Go to step **5**.

	Step	Check	Yes	No
5	**CHECK BUCKLE SWITCH LH.** Perform the check in accordance with the diagnostic procedure DTC B1656 of the occupant detection system. <Ref. to AB(diag)-93, DTC B1656 FRONT BUCKLE SWITCH LH FAILURE, Diagnostic Chart with Trouble Code.>	Is the inspection result normal?	Go to step **6**.	Repair or replace with new parts according to DTC B1656.
6	**CHECK DATA MONITOR.** 1) Sit in the passenger's seat. 2) Select «Data monitor» in the combination meter in Subaru Select Monitor, and display the data of «Belt Buckle Switch RH». 3) Fasten and detach the passenger's side seat belt buckle, and read the data of the seat belt switch. <Ref. to AB(diag)-33, OPERATION, Read Current Data.>	Does the seat belt switch display change Belted ←→ Unbelted according to the operation of the seat belt buckle?	Go to step **8**.	Go to step **7**.
7	**CHECK AIRBAG SYSTEM AND OCCUPANT DETECTION SYSTEM.** Perform the check in accordance with the diagnostic procedure DTC B1650 of the airbag system. <Ref. to AB(diag)-90, DTC B1650 OCCUPANT DETECTION SYSTEM MALFUNCTION, Diagnostic Chart with Trouble Code.>	Is the inspection result normal?	Go to step **8**.	Repair or replace with new parts according to DTC B1650.
8	**CHECK BUCKLE SWITCH RH.** Perform the check in accordance with the diagnostic procedure DTC B1655 of the occupant detection system. <Ref. to AB(diag)-92, DTC B1655 FRONT BUCKLE SWITCH RH FAILURE, Diagnostic Chart with Trouble Code.>	Is the inspection result normal?	Go to step **9**.	Repair or replace with new parts according to DTC B1655.
9	**CHECK AIRBAG CONTROL MODULE AND COMBINATION METER COMMUNICATION CIRCUIT.** Perform the inspection according to the basic diagnostic procedure for LAN system. <Ref. to LAN(diag)-2, PROCEDURE, Basic Diagnostic Procedure.>	Is the inspection result normal?	Go to step **10**.	Repair or replace with new parts according to DTC B16F1.
10	**CHECK WARNING BOX POWER SUPPLY VOLTAGE.** 1) Disconnect the warning box connector. 2) Turn the ignition switch to ON. 3) Measure the voltage between the ignition power supply and the warning box. ***Connector & terminal*** ***(R353) No. 2 (+) — Chassis ground (–):***	Is the voltage 10 V or more?	Go to step **11**.	Check the harness for open or short between the fuse and the warning box.
11	**CHECK WARNING BOX GROUND CIRCUIT.** 1) Turn the ignition switch to OFF. 2) Measure the resistance between the warning box and chassis ground. ***Connector & terminal*** ***(R353) No. 5 — Chassis ground:***	Is the resistance less than 10 Ω?	Go to step **12**.	Repair or replace the harness.
12	**CHECK HARNESS BETWEEN WARNING BOX AND COMBINATION METER.** 1) Disconnect the harness of the warning box and the combination meter. 2) Measure the resistance between warning box and combination meter. ***Connector & terminal*** ***(R353) No. 7 — (i10) No. 12:***	Is the resistance less than 10 Ω?	Go to step **13**.	Repair or replace the harness.

	Step	Check	Yes	No
13	**CHECK COMMUNICATION STATUS BETWEEN WARNING BOX AND COMBINATION METER.** 1) Remove the warning box, and install a properly operating warning box (new warning box). 2) Connect the connector and then turn the ignition switch to ON.	Is the warning box properly displayed?	Replace the warning box.	Replace the combination meter case assembly.

5. Front Seat Belt

A: REMOVAL

1. SEAT BELT OUTER - FRONT

CAUTION:
• Refer to "CAUTION" of "General Description" before handling the airbag system components. <Ref. to AB-10, CAUTION, General Description.>
• Do not drop or subject the pretensioner to any impact.
• Since the pretensioner and bracket are integrated as a unit, do not disassemble them.
• If the hook - rear seat is disconnected from the vehicle body, make sure to replace the hook - rear seat with a new part to prevent the decline of the fixed force of the seat.

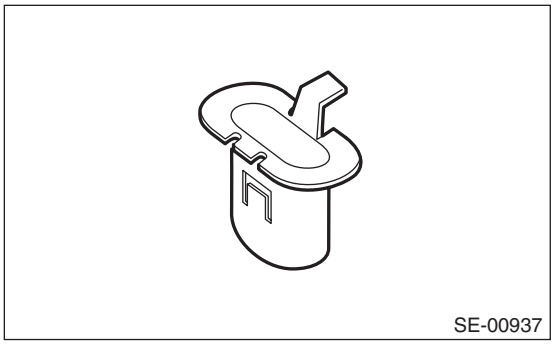
SE-00937

1) Turn the ignition switch to OFF.
2) Disconnect the ground terminal from the battery sensor, and wait for at least 60 seconds before starting work. <Ref. to RC-4, BATTERY, NOTE, Repair Contents.>

NOTE:
For model with the power seat, move the seat to the front-most position before removing the battery ground terminal.
3) Tilt the front seat backrest assembly forward, and move the front seat all the way forward.

CAUTION:
For the power seat, move the seat, disconnect the battery ground cable, and then wait for 60 seconds or more before starting work.
4) Remove the rear seat cushion assembly. <Ref. to SE-33, REMOVAL, Rear Seat.>
5) Remove the cover side sill - front, cover side sill - rear, and the trim panel - center pillar LWR. (On the side where seat belt assembly is removed) <Ref. to EI-92, REMOVAL, Lower Inner Trim.>

6) Remove the trim panel - center pillar UPR. (On the side where seat belt assembly is removed)
(1) Remove the cap (a), and remove the bolts.
(2) Remove the lower anchor bolt of the seat belt outer - front.

NOTE:
On passenger's side, disconnect the connector of the seat belt tension sensor. <Ref. to AB-25, BELT TENSION SENSOR, PROCEDURE, Airbag Connector.>

(3) Release the clip by pulling the lower part of the trim toward you.
(4) Expand the claws outward, and remove the trim panel - center pillar UPR.

CAUTION:
• Do not expand the trim panel - center pillar UPR excessively. Doing so may damage the trim.
• If the claw is damaged, always replace the trim panel - center pillar UPR with a new part, because the damaged claw cannot hold the part sufficiently.

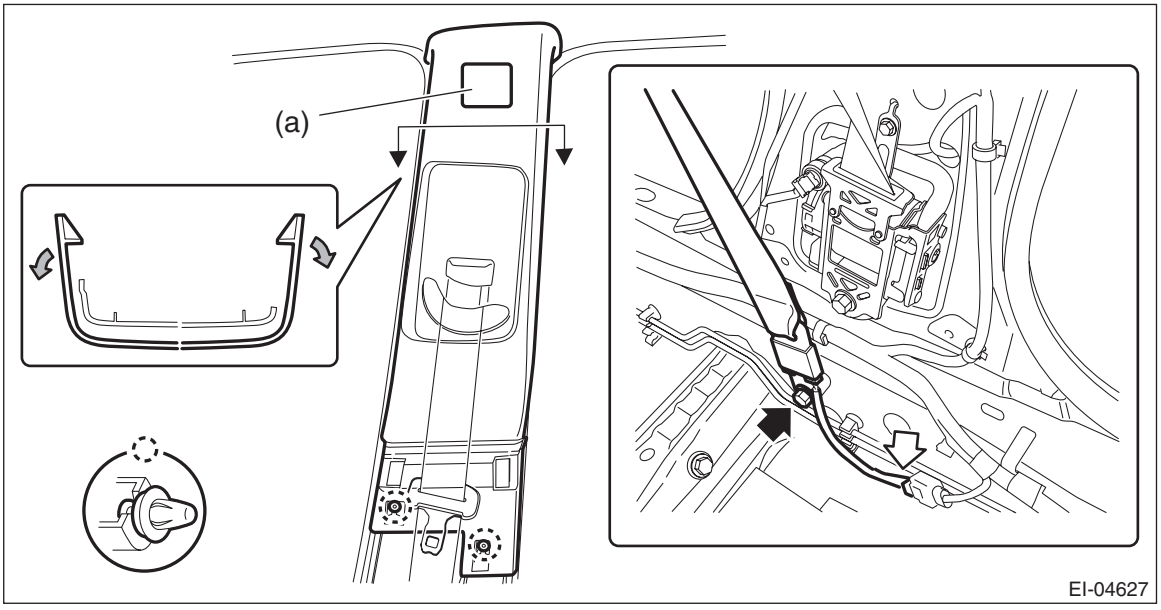

7) Remove the seat belt outer - front.
(1) Disconnect connector of the pretensioner. <Ref. to AB-20, DRIVER'S AIRBAG MODULE, CURTAIN AIRBAG MODULE AND PRETENSIONER, PROCEDURE, Airbag Connector.>
(2) Remove the bolt to remove the seat belt retractor.

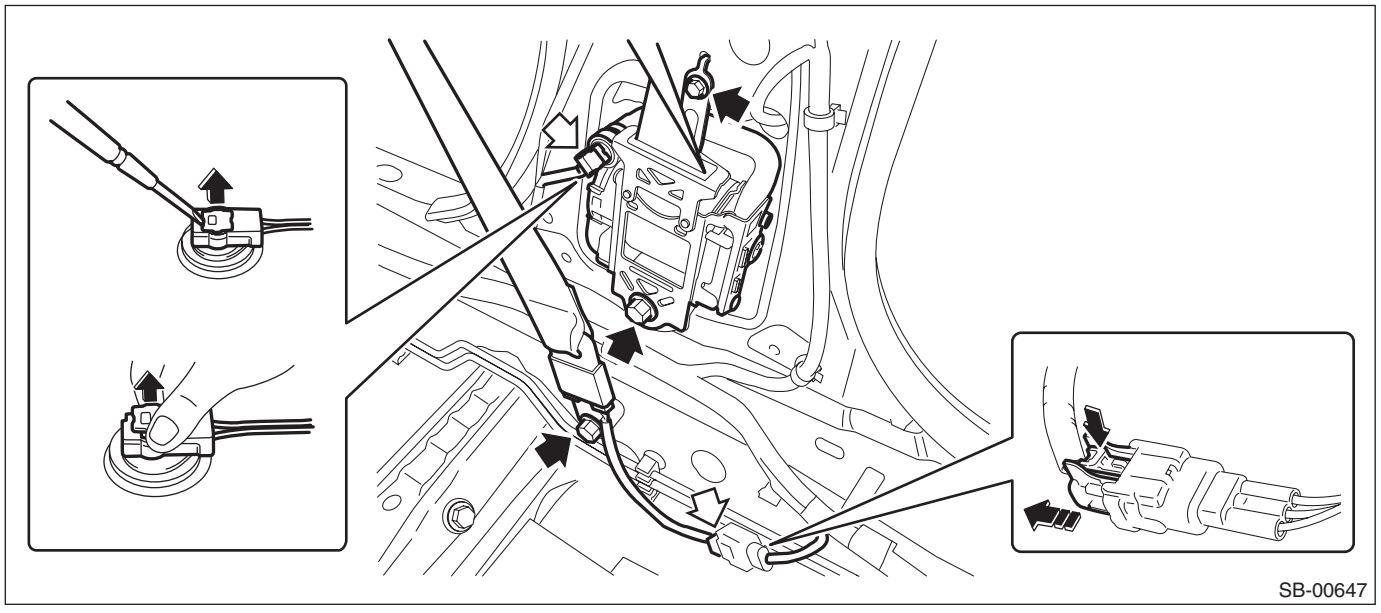

(3) Remove the upper anchor bolt, and remove the seat belt outer - front.

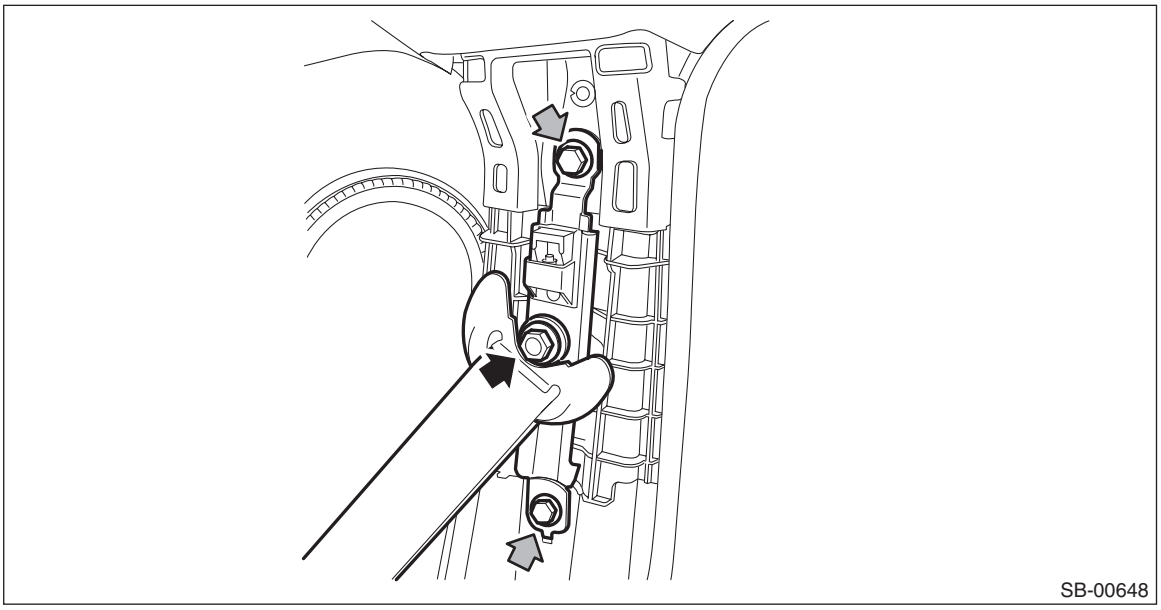

NOTE:
Remove the bolts and remove the adjuster assembly - seat belt as necessary.

2. SEAT BELT INNER - FRONT

CAUTION:
Refer to "CAUTION" of "General Description" before handling the airbag system components. <Ref. to AB-10, CAUTION, General Description.>
1) Turn the ignition switch to OFF.
2) Disconnect the ground terminal from the battery sensor, and wait for at least 60 seconds before starting work. <Ref. to RC-4, BATTERY, NOTE, Repair Contents.>

NOTE:
- For driver's side, lift the seating face before removing the seat.
- For models with power seat, remove the slide rail installing bolt before disconnecting the ground terminal from the battery sensor.

3) Remove the front seats. <Ref. to SE-11, REMOVAL, Front Seat.>
4) Remove the nut, and remove the seat belt inner - front.

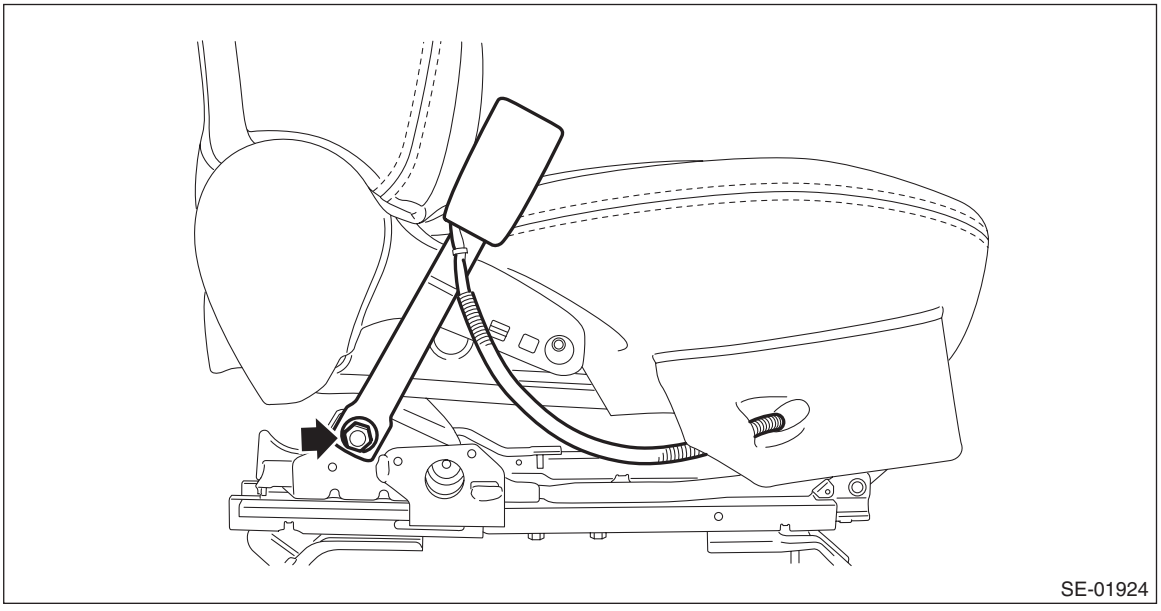

NOTE:
For driver's side, remove the metal clip holding the inner belt harness to the slide rail.

B: INSTALLATION

1. SEAT BELT OUTER - FRONT

CAUTION:
• Refer to "CAUTION" of "General Description" before handling the airbag system components. <Ref. to AB-10, CAUTION, General Description.>
• The parts of the driver and passenger sides are not the same. Before installation, make sure that the correct part is used.
• During installation, make sure that the seat belts are not twisted.
• After installation, make sure that the seat belt can be pulled out and retracted smoothly.
• Make sure that the seat belt harness is not caught anywhere. Wrong harness rooting may cause the harness short from pinch.
• If the hook - rear seat is disconnected from the vehicle body, make sure to replace the hook - rear seat with a new part to prevent the decline of the fixed force of the seat.

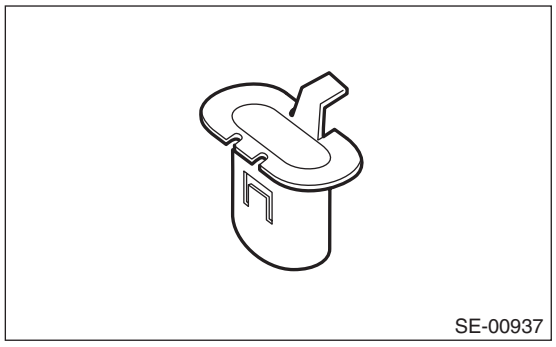
SE-00937

1) Before installation, perform a unit inspection of retractor. <Ref. to SB-23, INSPECTION, Front Seat Belt.>
2) Install the adjuster assembly - seat belt and the seat belt outer - front.

Tightening torque:
Refer to "COMPONENT" of "General Description". <Ref. to SB-2, FRONT SEAT BELT, COMPONENT, General Description.>
3) Install the trim panel - rear pillar UPR.

Tightening torque:
7.5 N·m (0.8 kgf-m, 5.5 ft-lb)
4) Install the trim panel - center pillar LWR, cover side sill - front, and cover side sill - rear.
5) Install the rear seat cushion assembly.
6) Connect the ground terminal to battery sensor. <Ref. to RC-4, BATTERY, NOTE, Repair Contents.>
7) After installation, check the following points.
• The seat belt is not twisted.
• The seat belt can be pulled out and retracted smoothly.
• The adjuster assembly - seat belt can be moved smoothly.
• Check that the airbag warning light lights up for approximately 6 seconds and then turns off when connecting the battery ground cable and turning the ignition switch to ON.

2. SEAT BELT INNER - FRONT

CAUTION:
- **Before installation, make sure that the correct part is used.**
- **During installation, make sure that the seat belts are not twisted.**
- **Check that there is no pinching of the seat belt harness. Wrong harness rooting may cause the harness short from pinch.**
- **Do not forget the wave washer, when installing front seat inner belt assembly.**

1) Install the seat belt inner - front.

Tightening torque:
53 N·m (5.4 kgf-m, 39.1 ft-lb)

2) Install the seat assembly to the body. <Ref. to SE-12, INSTALLATION, Front Seat.>
3) Connect the ground terminal to battery sensor. <Ref. to RC-4, BATTERY, NOTE, Repair Contents.>

C: INSPECTION

1. VISUAL INSPECTION

Check for the following, and replace with new parts if necessary.
- Pretensioner is cracked or deformed.
- Adjuster assembly - seat belt is cracked or deformed.
- Seat belt is slackened, bent or worn.
- Seat belt is abnormally wound or extended.
- Seat belt inner - front is deformed or damaged.
- Seat belt buckle cannot be engaged properly.

2. ELR LOCK MECHANISM INSPECTION

1) Hold the retractor upright (as installed in the vehicle) and check the ELR lock mechanism.
2) Tilt the retractor from the upright posture and check the following points.
- It does not lock if the inclination angle is 15° or less.

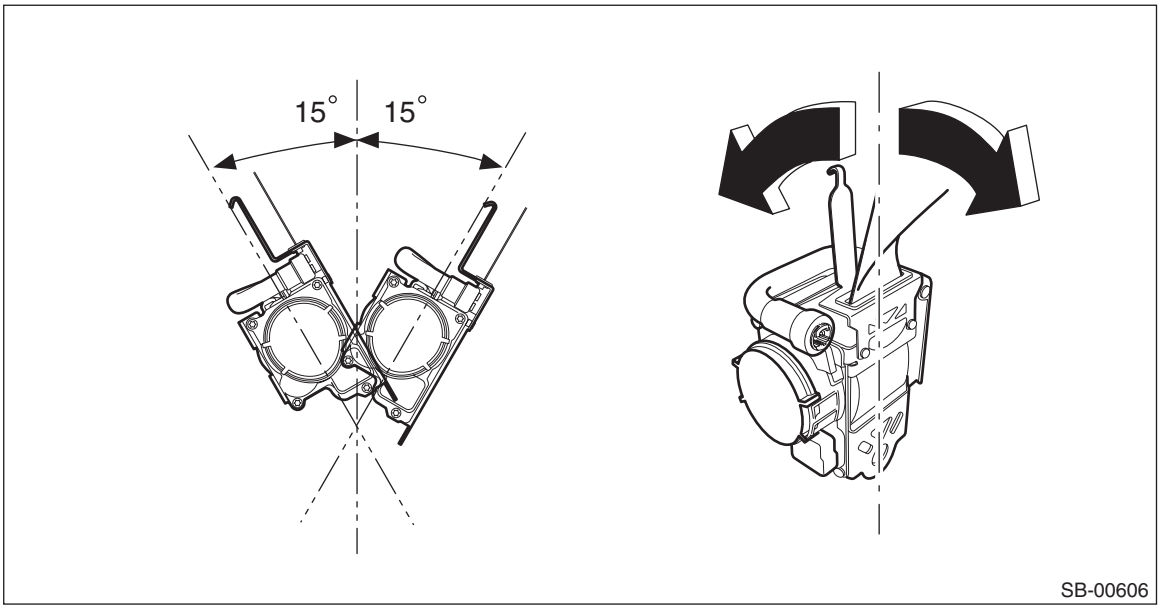

- It remains locked if the inclination angle is 27° or more.

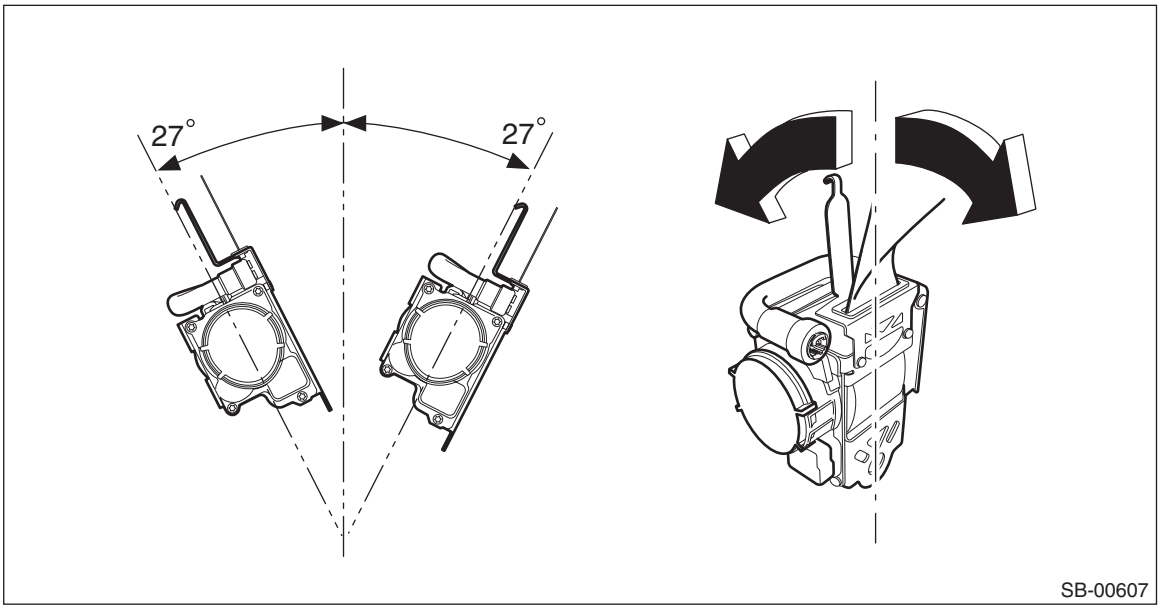

3) If the ELR lock mechanism does not operate properly, replace the seat belt outer - front with a new part.

3. SEAT BELT SWITCH INSPECTION

Preparation tool:
Circuit tester

Measure the current value between the terminals when the seat belt inner - front is in each of the following operation conditions.

Terminal No.	Inspection conditions	Standard	Circuit
1 — 2	Tongue plate inserted	12 — 18 mA	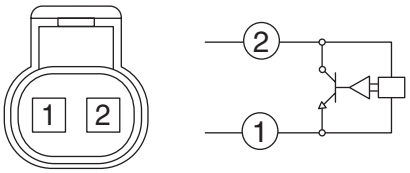
1 — 2	Tongue plate detached	4 — 7 mA	

Replace the seat belt inner - front if the inspection result is not within the standard.

6. Rear Seat Belt

A: REMOVAL

1. SEAT BELT OUTER - REAR RH & LH (SEDAN MODEL)

CAUTION:
• Refer to "CAUTION" of "General Description" before handling the airbag system components. <Ref. to AB-10, CAUTION, General Description.>
• If the hook - rear seat is disconnected from the vehicle body, make sure to replace the hook - rear seat with a new part to prevent the decline of the fixed force of the seat.

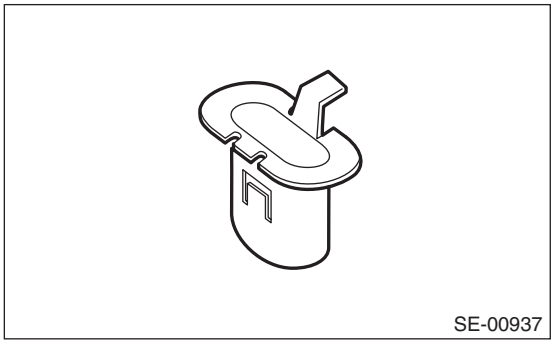
SE-00937

1) Turn the ignition switch to OFF.
2) Disconnect the ground terminal from the battery sensor, and wait for at least 60 seconds before starting work. <Ref. to RC-4, BATTERY, NOTE, Repair Contents.>
3) Remove the rear seat cushion assembly and side pad assembly - backrest. (On the side where seat belt assembly is removed) <Ref. to SE-33, SEDAN MODEL, REMOVAL, Rear Seat.>
4) Remove the trim panel - rear pillar UPR. (On the side where seat belt assembly is removed) <Ref. to EI-99, SEDAN MODEL, REMOVAL, Rear Quarter Trim.>
5) Remove the bolts, and remove the seat belt outer - rear.

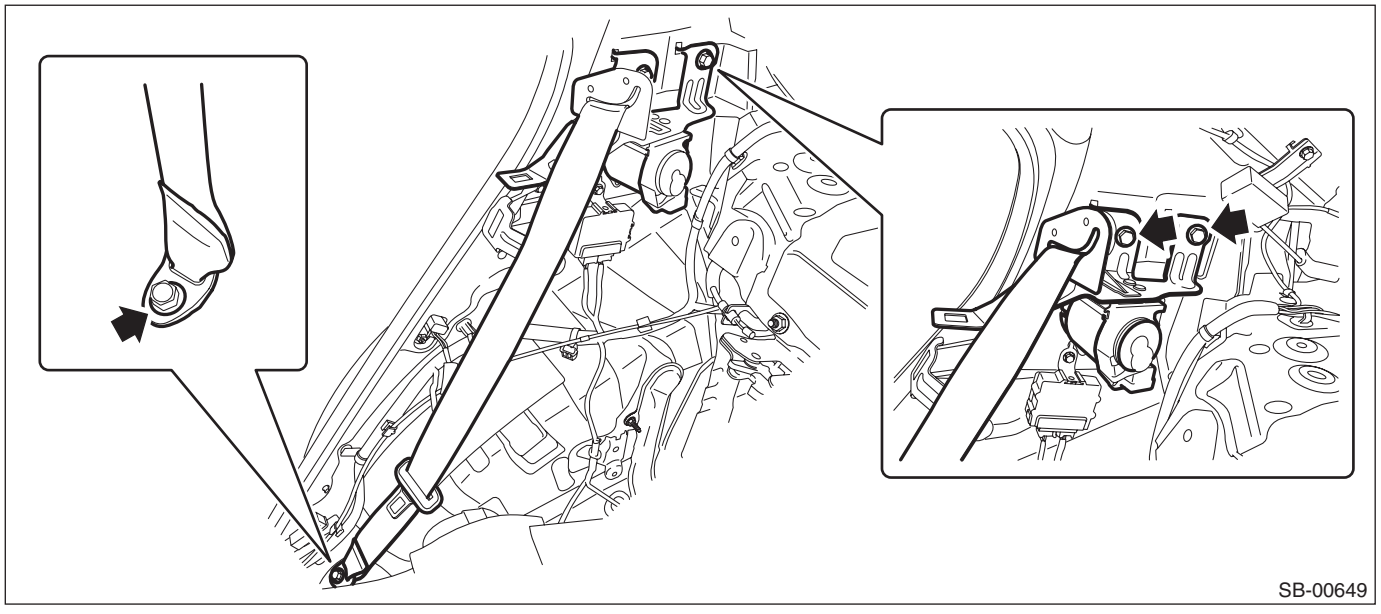
SB-00649

2. SEAT BELT OUTER - REAR RH & LH (OUTBACK MODEL)

CAUTION:
• Refer to "CAUTION" of "General Description" before handling the airbag system components. <Ref. to AB-10, CAUTION, General Description.>
• If the hook - rear seat is disconnected from the vehicle body, make sure to replace the hook - rear seat with a new part to prevent the decline of the fixed force of the seat.

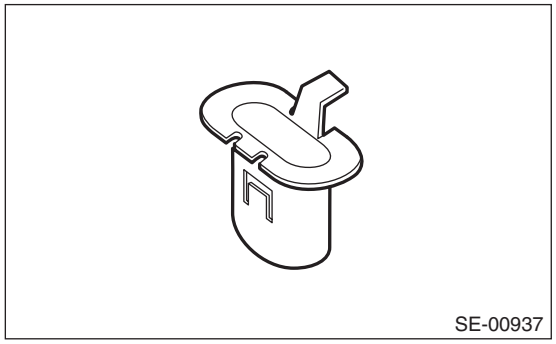
SE-00937

1) Turn the ignition switch to OFF.
2) Disconnect the ground terminal from the battery sensor, and wait for at least 60 seconds before starting work. <Ref. to RC-4, BATTERY, NOTE, Repair Contents.>
3) Remove the rear seat cushion assembly and side pad assembly - backrest. (On the side where seat belt assembly is removed) <Ref. to SE-35, OUTBACK MODEL, REMOVAL, Rear Seat.>
4) Remove the following parts. <Ref. to EI-100, OUTBACK MODEL, REMOVAL, Rear Quarter Trim.>
- Trim panel - rear skirt
- Trim panel - rear apron
- Mat - rear floor, box - sub trunk
- Spacer - rear floor

5) Remove the bolts, and remove the seat belt outer - rear.

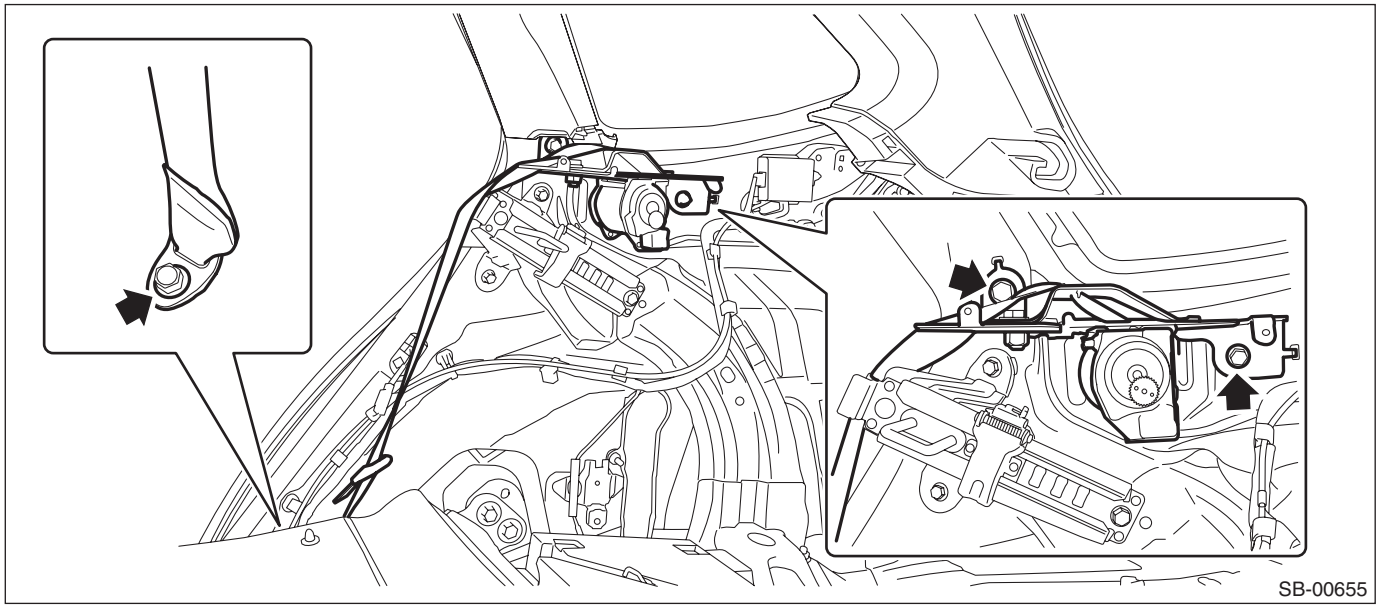
SB-00655

3. SEAT BELT - REAR SHOULDER CTR (SEDAN MODEL)

CAUTION:
• Refer to "CAUTION" of "General Description" before handling the airbag system components. <Ref. to AB-10, CAUTION, General Description.>
• If the hook - rear seat is disconnected from the vehicle body, make sure to replace the hook - rear seat with a new part to prevent the decline of the fixed force of the seat.

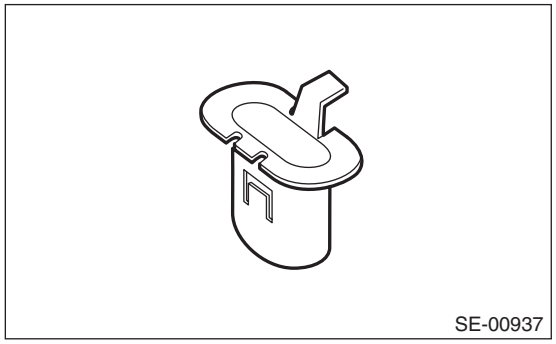
SE-00937

1) Turn the ignition switch to OFF.
2) Disconnect the ground terminal from the battery sensor, and wait for at least 60 seconds before starting work. <Ref. to RC-4, BATTERY, NOTE, Repair Contents.>
3) Remove the rear seat cushion assembly. <Ref. to SE-33, SEDAN MODEL, REMOVAL, Rear Seat.>
4) Remove the side sill covers - rear and the trim panels - rear pillar UPR from the left and right sides. <Ref. to EI-99, REMOVAL, Rear Quarter Trim.>
5) Remove the bolts, and remove the lower anchor of the seat belt - rear shoulder CTR.

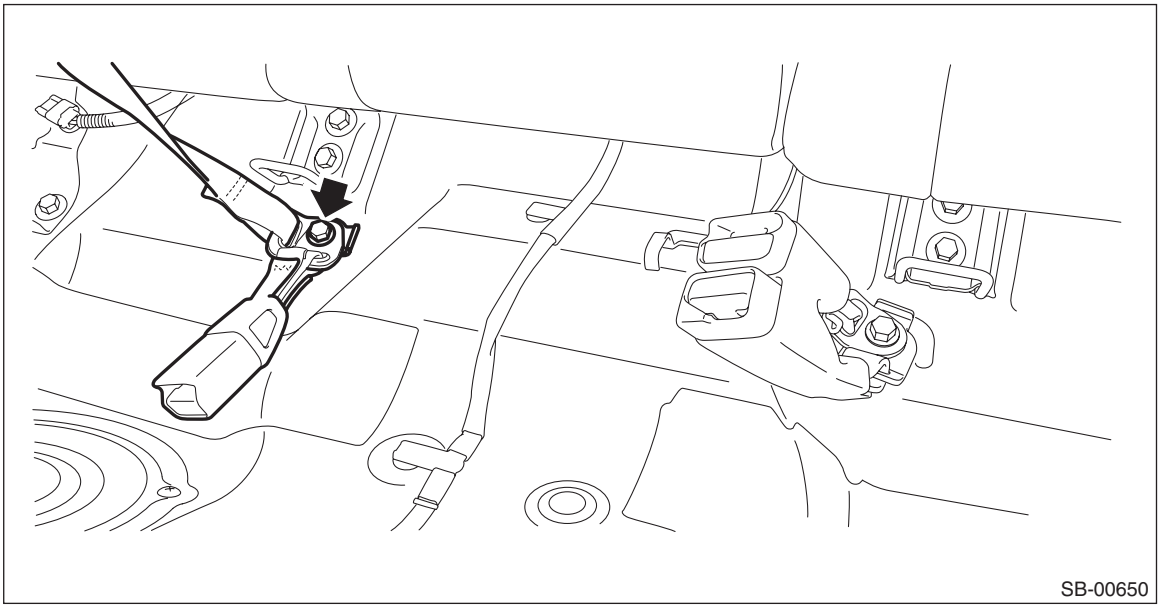
SB-00650

6) Remove the high-mounted stop light. <Ref. to LI-64, REMOVAL, High-mounted Stop Light.>
7) Remove the trim panel - rear shelf assembly. <Ref. to EI-105, REMOVAL, Rear Shelf Trim.>
8) Remove the seat belt - rear shoulder CTR.
(1) Remove the bolts and remove the plate - mass damper.

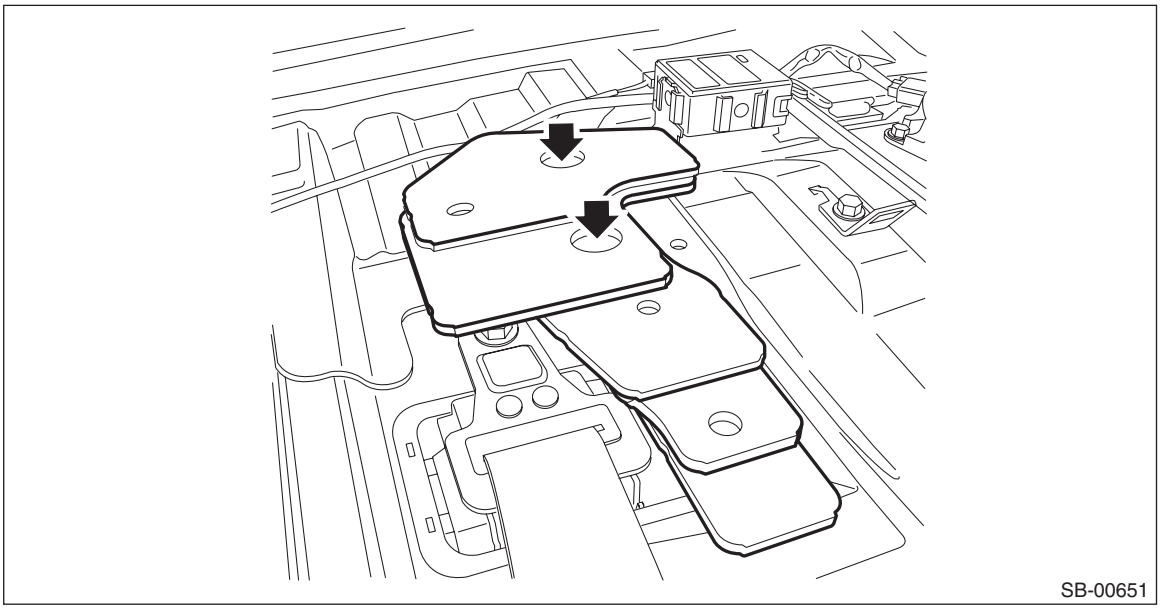
SB-00651

(2) Remove the bolts, and remove the seat belt - rear shoulder CTR.

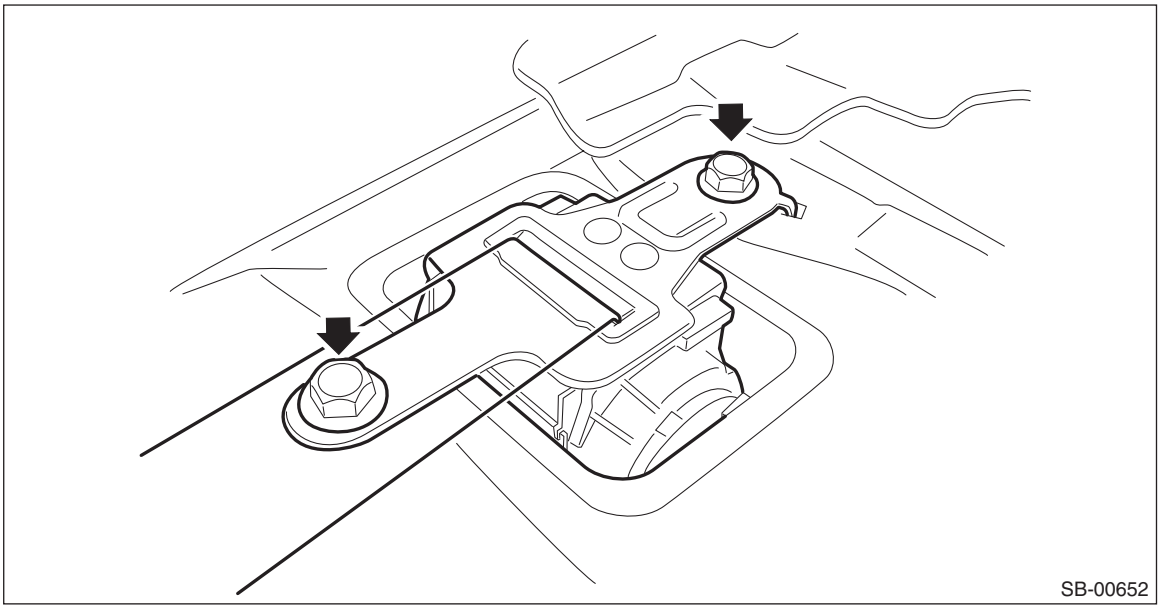
SB-00652

4. SEAT BELT - REAR SHOULDER CTR (OUTBACK MODEL)

CAUTION:
• Refer to "CAUTION" of "General Description" before handling the airbag system components. <Ref. to AB-10, CAUTION, General Description.>
• If the hook - rear seat is disconnected from the vehicle body, make sure to replace the hook - rear seat with a new part to prevent the decline of the fixed force of the seat.

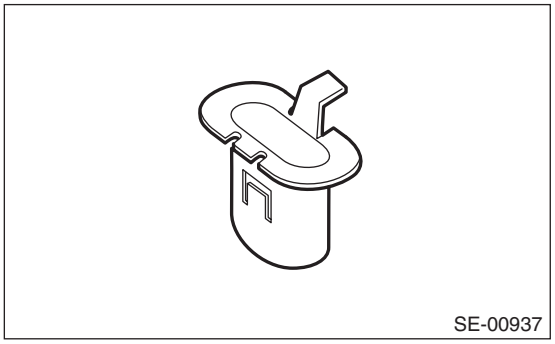
SE-00937

1) Turn the ignition switch to OFF.
2) Disconnect the ground terminal from the battery sensor, and wait for at least 60 seconds before starting work. <Ref. to RC-4, BATTERY, NOTE, Repair Contents.>
3) Remove the rear seat cushion assembly. <Ref. to SE-35, OUTBACK MODEL, REMOVAL, Rear Seat.>
4) Remove the trim panel - roof assembly. <Ref. to EI-116, OUTBACK MODEL, REMOVAL, Roof Trim.>
5) Remove the bolts, and remove the seat belt - rear shoulder CTR.

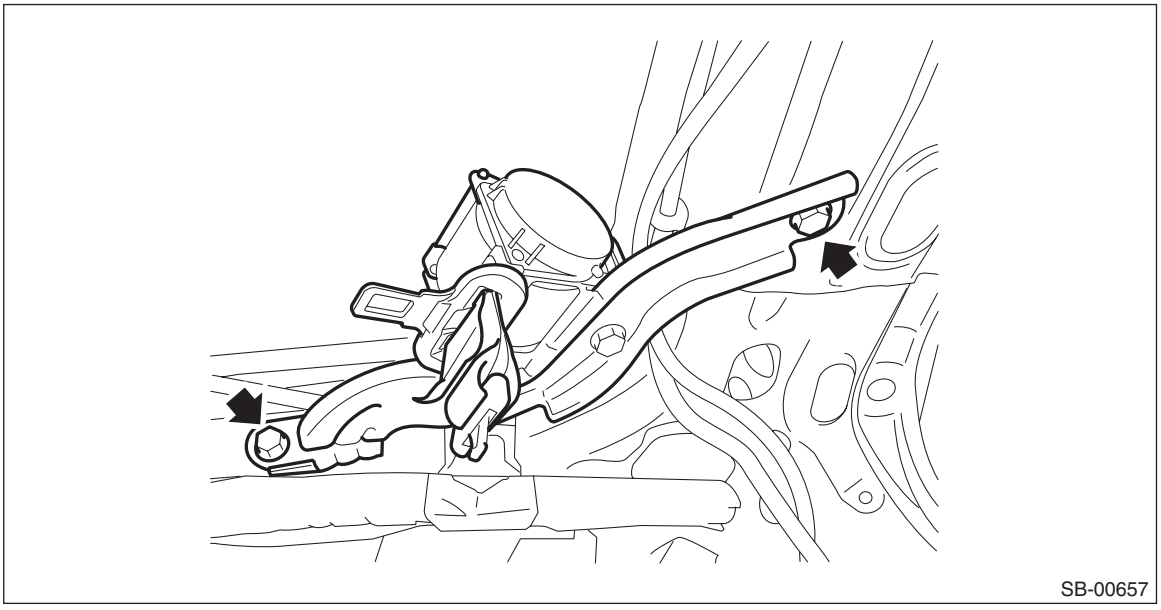
SB-00657

5. SEAT BELT - CTR RH AND LH

CAUTION:
If the hook - rear seat is disconnected from the vehicle body, make sure to replace the hook - rear seat with a new part to prevent the decline of the fixed force of the seat.

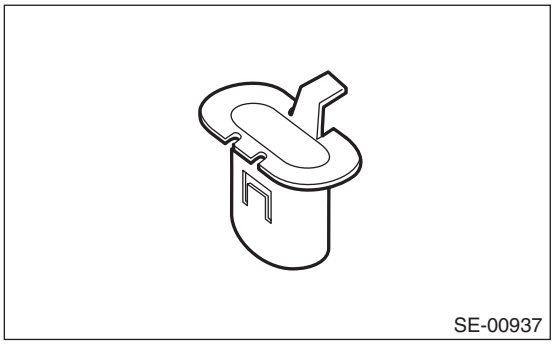
SE-00937

1) Turn the ignition switch to OFF.
2) Disconnect the ground terminal from battery sensor. <Ref. to RC-4, BATTERY, NOTE, Repair Contents.>
3) Remove the rear seat cushion assembly. <Ref. to SE-33, REMOVAL, Rear Seat.>

4) Remove the bolts, and remove the seat belt - CTR RH and LH.

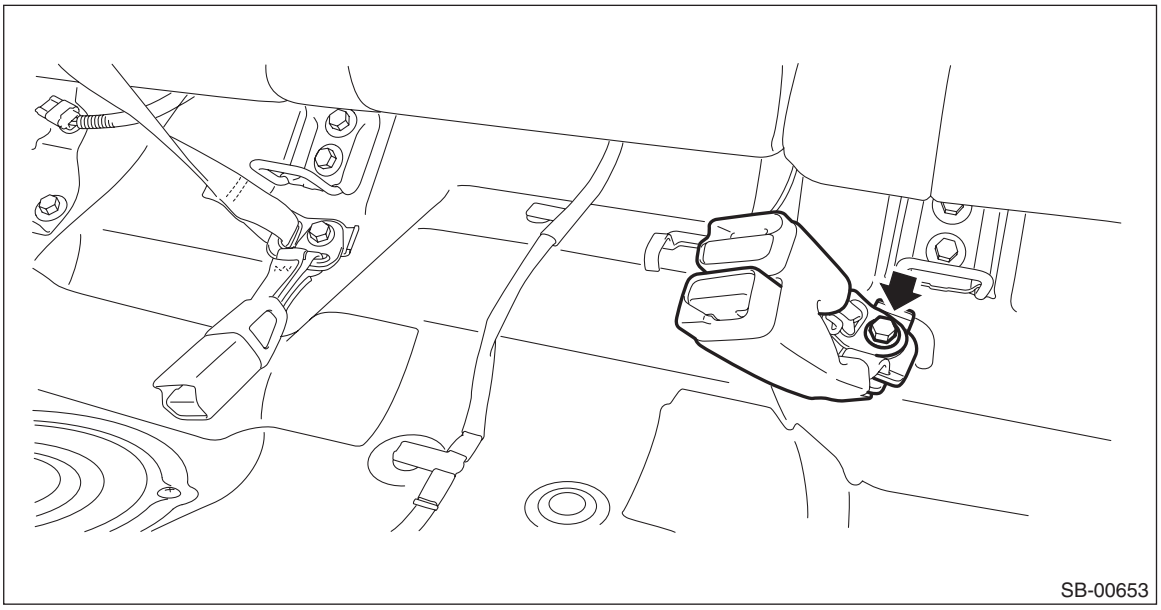
SB-00653

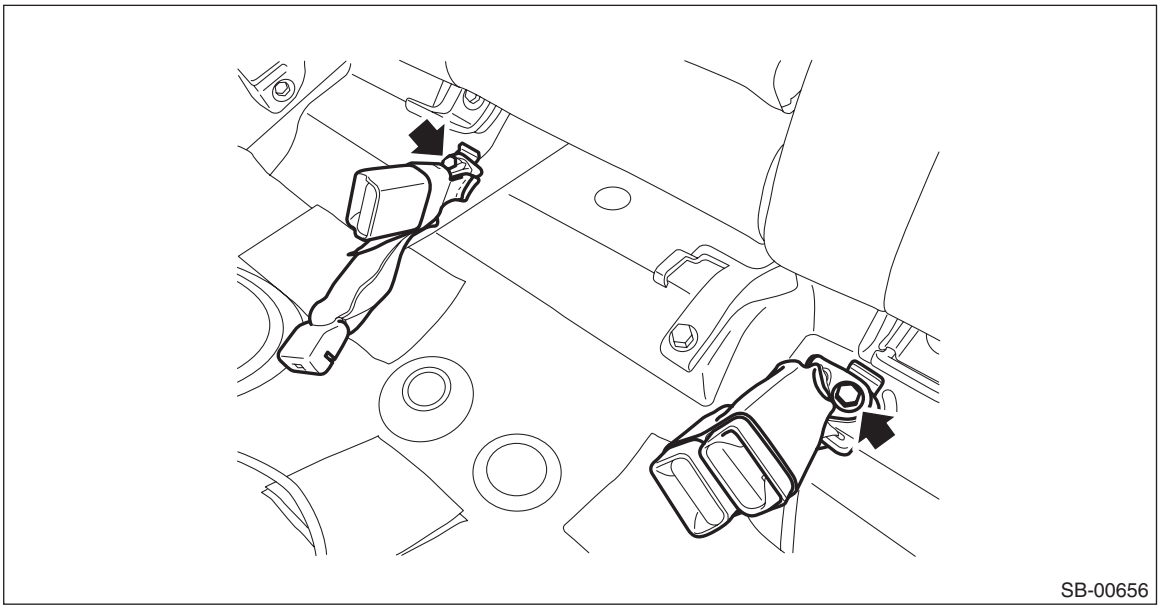
SB-00656

B: INSTALLATION

1. SEAT BELT OUTER - REAR RH & LH (SEDAN MODEL)

CAUTION:
If the hook - rear seat is disconnected from the vehicle body, make sure to replace the hook - rear seat with a new part to prevent the decline of the fixed force of the seat.

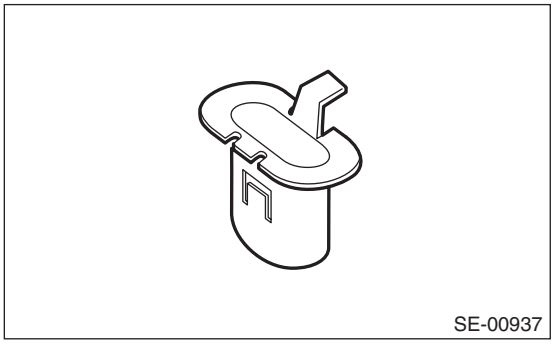
SE-00937

1) Before installation, perform a unit inspection of retractor. <Ref. to SB-35, INSPECTION, Rear Seat Belt.>
2) Install the seat belt outer - rear.

CAUTION:
- **During installation, make sure that the seat belts are not twisted.**
- **After installation, make sure that the seat belts are smoothly extended and wound.**

Tightening torque:
Refer to "COMPONENT" of "General Description". <Ref. to SB-3, REAR SEAT BELT (SEDAN MODEL), COMPONENT, General Description.>
3) Install the side pad assembly - backrest and the trim panel - rear pillar UPR.

Tightening torque:
Side pad assembly - backrest: 53 N·m (5.4 kgf-m, 39.1 ft-lb)
4) Install the rear seat cushion assembly.
5) Connect the ground terminal to battery sensor. <Ref. to RC-4, BATTERY, NOTE, Repair Contents.>
6) After installation, check the following points.
- The seat belt is not twisted.
- The seat belt can be pulled out and retracted smoothly.

2. SEAT BELT OUTER - REAR RH & LH (OUTBACK MODEL)

CAUTION:
If the hook - rear seat is disconnected from the vehicle body, make sure to replace the hook - rear seat with a new part to prevent the decline of the fixed force of the seat.

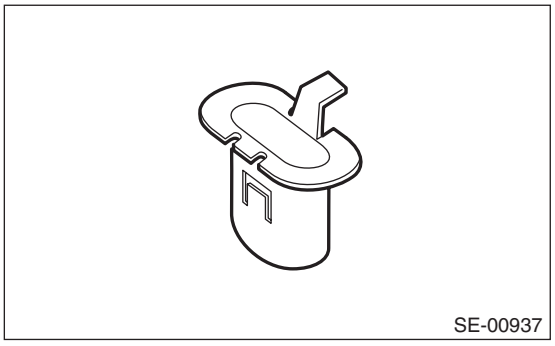
SE-00937

1) Before installation, perform a unit inspection of retractor. <Ref. to SB-35, INSPECTION, Rear Seat Belt.>
2) Install the seat belt outer - rear.

CAUTION:
- **During installation, make sure that the seat belts are not twisted.**
- **After installation, make sure that the seat belts are smoothly extended and wound.**

Tightening torque:
Refer to "COMPONENT" of "General Description". <Ref. to SB-4, REAR SEAT BELT (OUTBACK MODEL), COMPONENT, General Description.>

3) Install the trim panel - rear skirt and the trim panel - rear apron.
4) Install the mat - rear floor, spacer - rear floor, and sub trunk box.
5) Install the side pad assembly - backrest.

Tightening torque:
53 N·m (5.4 kgf-m, 39.1 ft-lb)

6) Install the rear seat cushion assembly.
7) Connect the ground terminal to battery sensor. <Ref. to RC-4, BATTERY, NOTE, Repair Contents.>
8) After installation, check the following points.
- The seat belt is not twisted.
- The seat belt can be pulled out and retracted smoothly.

3. SEAT BELT - REAR SHOULDER CTR (SEDAN MODEL)

CAUTION:
If the hook - rear seat is disconnected from the vehicle body, make sure to replace the hook - rear seat with a new part to prevent the decline of the fixed force of the seat.

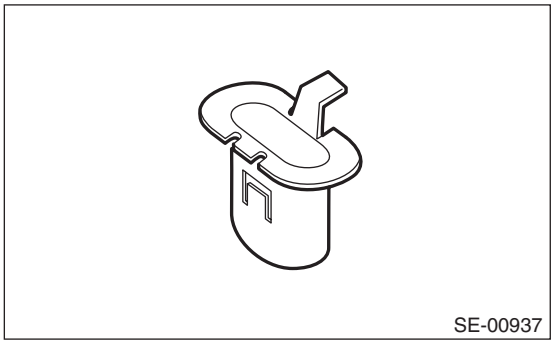
SE-00937

1) Install the retractor of seat belt - rear shoulder CTR.

Tightening torque:
Refer to "COMPONENT" of "General Description".: <Ref. to SB-3, REAR SEAT BELT (SEDAN MODEL), COMPONENT, General Description.>

2) Install the trim panel assembly - rear shelf.
3) Install the high-mounted stop light.
4) Install the lower anchor of seat belt - rear shoulder CTR.

CAUTION:
- **During installation, make sure that the seat belts are not twisted.**
- **After installation, make sure that the seat belts are smoothly extended and wound.**

Tightening torque:
30 N·m (3.1 kgf-m, 22.1 ft-lb)
5) Install the side pad assembly - backrest and the trim panel - rear pillar UPR.

Tightening torque:
Side pad assembly - backrest: 53 N·m (5.4 kgf-m, 39.1 ft-lb)
6) Install the rear seat cushion assembly.
7) Connect the ground terminal to battery sensor. <Ref. to RC-4, BATTERY, NOTE, Repair Contents.>
8) After installation, check the following points.
- The seat belt is not twisted.
- The seat belt can be pulled out and retracted smoothly.

4. SEAT BELT - REAR SHOULDER CTR (OUTBACK MODEL)

CAUTION:
If the hook - rear seat is disconnected from the vehicle body, make sure to replace the hook - rear seat with a new part to prevent the decline of the fixed force of the seat.

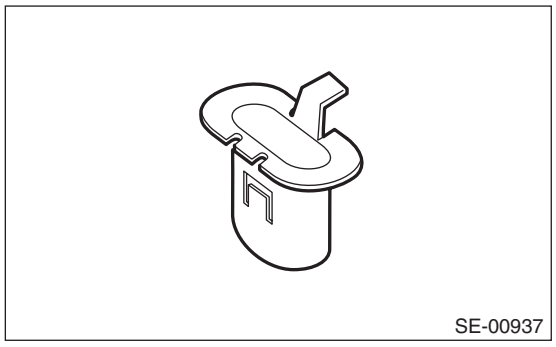
SE-00937

1) Install the retractor of seat belt - rear shoulder CTR.

Tightening torque:
Refer to "COMPONENT" of "General Description". <Ref. to SB-4, REAR SEAT BELT (OUTBACK MODEL), COMPONENT, General Description.>
2) Install the trim panel - roof assembly.
3) Install the rear seat cushion assembly.
4) Connect the ground terminal to battery sensor. <Ref. to RC-4, BATTERY, NOTE, Repair Contents.>
5) After installation, check the following points.
- The seat belt is not twisted.
- The seat belt can be pulled out and retracted smoothly.

5. SEAT BELT - CTR RH AND LH

CAUTION:
If the hook - rear seat is disconnected from the vehicle body, make sure to replace the hook - rear seat with a new part to prevent the decline of the fixed force of the seat.

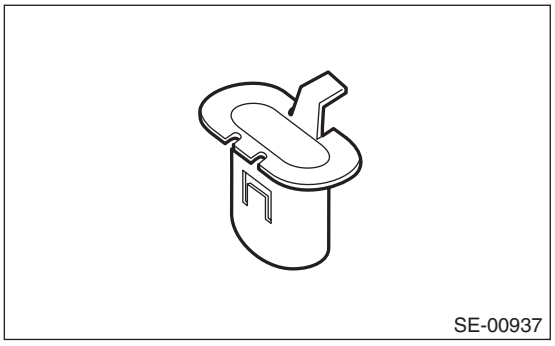
SE-00937

1) Install the seat belt - CTR RH/LH.

Tightening torque:
30 N·m (3.1 kgf-m, 22.1 ft-lb)

2) Install the rear seat cushion assembly.
3) Connect the ground terminal to battery sensor. <Ref. to RC-4, BATTERY, NOTE, Repair Contents.>
4) After installation, check the following points.
- The seat belt is not twisted.
- The seat belt buckle is pulled out properly, and seat belt engagement can be performed smoothly.

C: INSPECTION

1. VISUAL INSPECTION

Check for the following, and replace with new parts if necessary.
- Seat belt is slackened, bent or worn.
- Seat belt is abnormally wound or extended.
- Seat belt inner - rear is deformed or damaged.
- Seat belt buckle cannot be engaged properly.

2. ELR LOCK MECHANISM INSPECTION

1) Hold the retractor upright (as installed in the vehicle) and check the ELR lock mechanism.
2) Tilt the retractor from the upright posture and check the following points.

- It does not lock if the inclination angle is 15° or less.

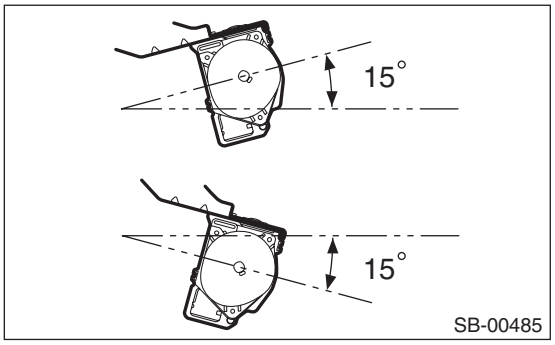

- It remains locked if the inclination angle is 27° or more.

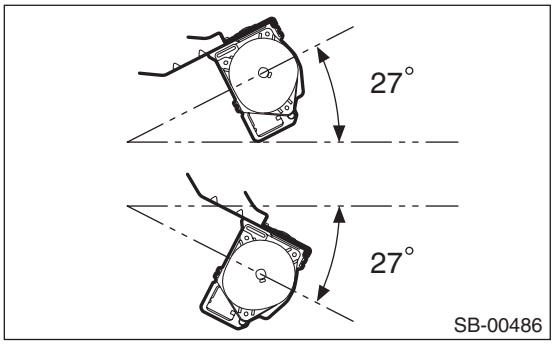

3) If the ELR lock mechanism does not operate properly, replace the seat belt outer - rear with a new part.

7. Disposal of Pretensioner

A: PROCEDURE

WARNING:
Make sure to follow the instructions below. Otherwise, personal injuries may occur.
• Before discarding a pretensioner, always perform an activation process to prevent any false activation.
• Wear protective gloves, safety goggles and earplugs during this operation. Wash your hands afterwards.
• Do not touch the pretensioner just after activation because it is very hot. Before handling it for disposal, wait for 40 minutes.

CAUTION:
• Perform a pretensioner operation process in a safe, level place. Do not perform the process outdoors when there is a strong rain or wind.
• Do not drop or damage the pretensioner.
• A large explosive noise will occur when the pretensioner is deployed. Warn persons in the area, and do not allow anyone to approach a radius of 5 m (16 ft) from the discard location.
• After activating the pretensioner, smoke may arise. Therefore, always perform an operation process in a well-ventilated place without any smoke sensor.
• Do not expose the activated pretensioner to water.
• Wrap the activated pretensioner in a sealed vinyl bag when discarding.
• If it is impossible to perform a pretensioner activation process due to some situational reasons, consult SUBARU dealership or one of the authorized workshops.
1) Fold the backrest all the way forward, and move the front seat all the way forward.
2) Turn the ignition switch to OFF.
3) Disconnect the ground terminal from the battery sensor, and wait for at least 60 seconds before starting work. <Ref. to RC-4, BATTERY, NOTE, Repair Contents.> <Ref. to RC-4, BATTERY, NOTE, Repair Contents.>
4) Remove the cover side sill - front INN, cover side sill - rear INN, and trim panel - center pillar LWR. (On the side where seat belt assembly is removed) <Ref. to EI-92, REMOVAL, Lower Inner Trim.>
5) Disconnect connector (a) of the pretensioner.

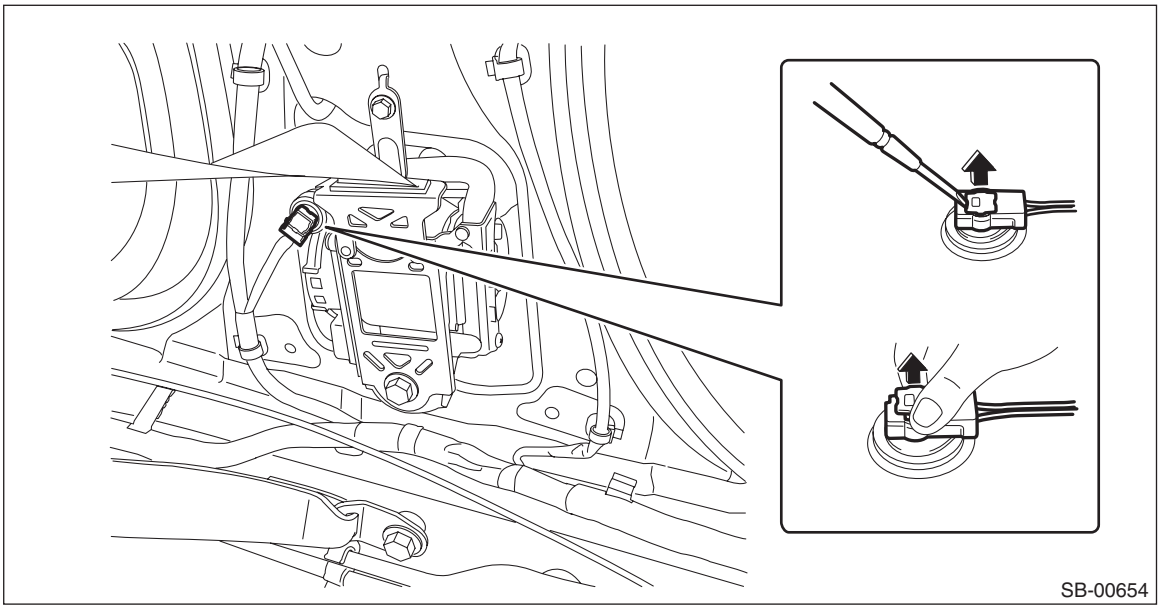
SB-00654

6) Short the alligator clip and terminal of the airbag deployment tool together.

CAUTION:
Short the airbag deployment tool terminals until just before the pretensioner operation process.

Preparation tool:
ST: AIRBAG DEPLOYMENT TOOL (98299PA030)

7) Connect the airbag deployment tool (A) and test harness adapter D (B).

Preparation tool:
ST: TEST HARNESS ADAPTER D (98299SA010)

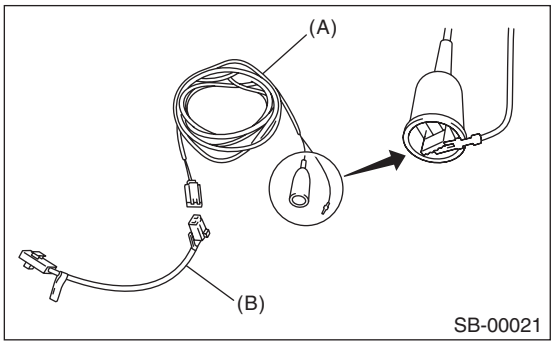

8) Connect the test harness adapter D connector to the pretensioner.
9) Make sure there is no one inside the vehicle.
10) Extend the wiring of airbag deployment tool to the limit, and close all the windows and rear gate completely.

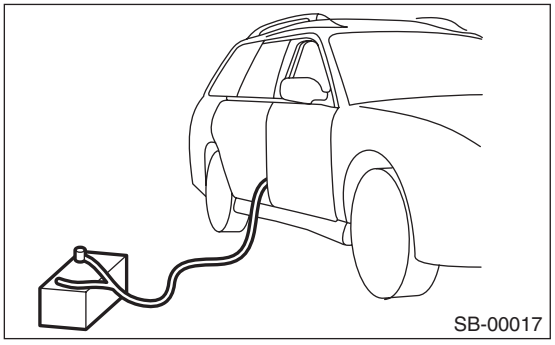

11) Move the battery 5 m (16 ft) or more from the vehicle, and affix nearby.
12) Connect the airbag deployment tool alligator clip to the battery negative (–) terminal.
13) Connect the other cable of airbag deployment tool to the battery positive (+) terminal, and activate the pretensioner.

CAUTION:
• After activation, the pretensioner will be extremely hot. Let it cool down for at least 40 minutes in an area with no one around.
• Do not expose the activated pretensioner to water.

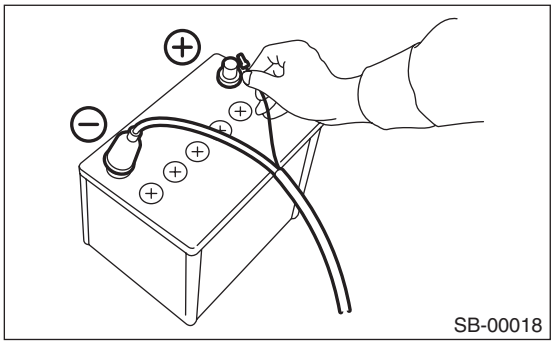

14) Remove the seat belt outer - front. <Ref. to SB-19, REMOVAL, Front Seat Belt.>

15) Cut the seat belt at a position as close as possible to the seat belt retractor.

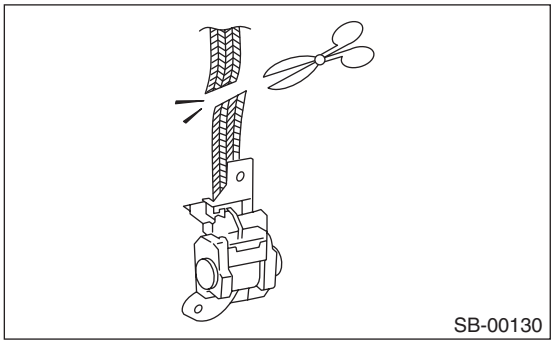

16) Place the activated pretensioner in a sealed vinyl bag, then discard.

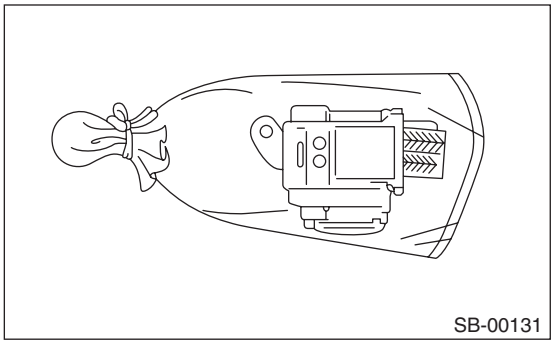

LIGHTING SYSTEM

LI

		Page
1.	General Description	2
2.	Relay and Fuse	5
3.	Headlight System	7
4.	Day Time Running Light System	14
5.	Clearance Light and Illumination Light System	15
6.	Front Fog Light System	16
7.	Turn Signal Light and Hazard Light System	17
8.	Back-up Light System	20
9.	Stop Light System	21
10.	Interior Light System	22
11.	Auto Headlight Beam Leveler System	23
12.	Combination Switch (Light)	25
13.	Light Control Sensor	28
14.	Headlight Assembly	30
15.	Headlight Bulb	36
16.	Hazard Switch	37
17.	Front Turn Signal Light Bulb	39
18.	Clearance/Parking Light Bulb	40
19.	Front Side Marker Light Bulb	41
20.	Front Fog Light Assembly	42
21.	Front Fog Light Bulb	47
22.	Side Turn Signal Light Assembly	48
23.	Rear Combination Light Assembly	49
24.	Tail/Stop Light Bulb	54
25.	Rear Turn Signal Light Bulb	55
26.	Rear Side Marker Light Bulb	56
27.	Rear Finisher Light Assembly	57
28.	Back-up Light Bulb	59
29.	License Plate Light	61
30.	High-mounted Stop Light	64
31.	Spot Map Light	66
32.	Room Light	68
33.	Luggage Room Light	70
34.	Trunk Room Light	72
35.	Door Step Light	74
36.	LED Illumination Light	75
37.	Vanity Mirror Light	78
38.	Ignition Switch Illumination	79
39.	Auto Headlight Beam Leveler Control Module	80
40.	Reflex Reflector	82
41.	Rear Height Sensor	83
42.	Day Time Running Resistor	85
43.	Door Switch	87
44.	Steering Responsive Fog Lights CM	88
45.	SRF OFF Switch	89

1. General Description

A: SPECIFICATION

- Sedan model

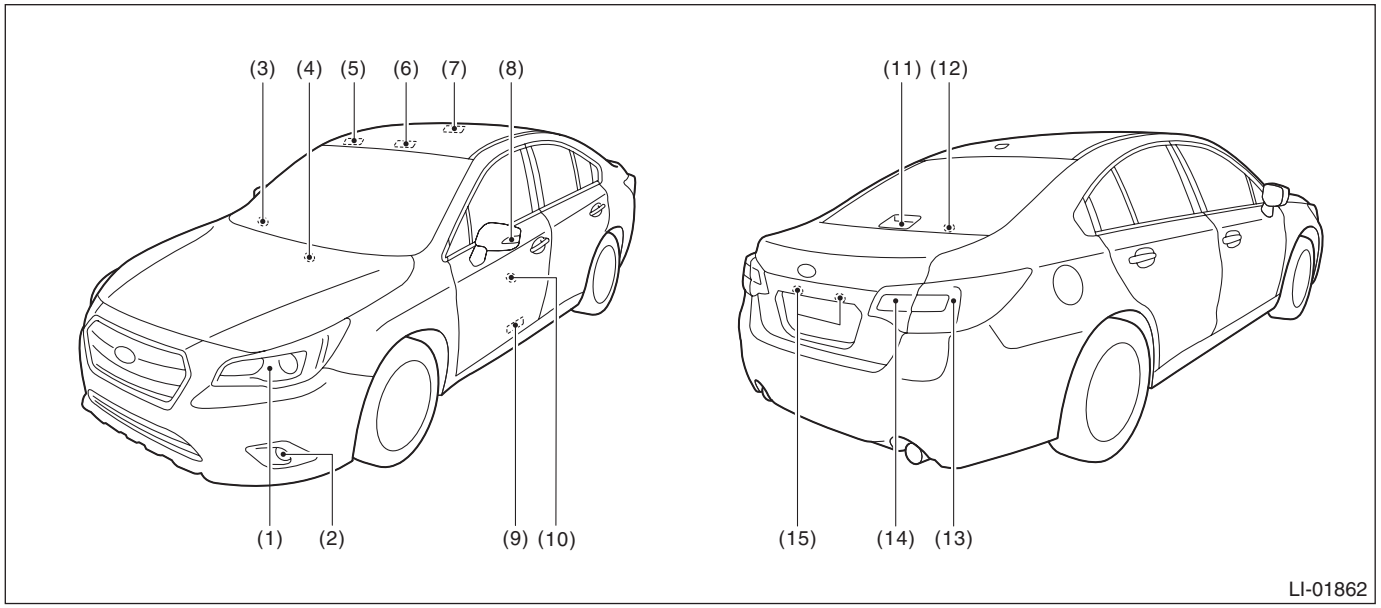

No.	Description		Capacity and wattage	Type
(1)	Headlight	Low beam (halogen type)	12 V — 55 W	H11
		Low beam (HID type)	12 V — 35 W	D4S
		High beam	12 V — 60 W	HB3
		Front turn signal light	12 V — 21 W	WY21W
		Parking light	12 V — 1.2 W (LED)	*
		Side marker light	12 V — 5 W	W5W
(2)	Front fog light	Model without SRF	12 V — 19 W	H16
		Model with SRF	12 V — 55 W	H11
(3)	Glove box light		12 V — 1.4 W (LED)	*
(4)	Pocket light		12 V — 1.4 W (LED)	*
(5)	Vanity mirror light		14 V — 1.4 W	—
(6)	Spot map light		12 V — 8 W	—
(7)	Room light		12 V — 8 W	—
(8)	Side turn signal light		12 V — 1.1 W (LED)	*
(9)	Door step light		12 V — 5 W	W5W
(10)	Door pocket light		12 V — 1.4 W (LED)	*
(11)	High-mounted stop light		12 V — 0.8 W (LED)	*
(12)	Trunk room light		12 V — 3.8 W	SAE#194
(13)	Rear combination light	Tail & stop light	12 V — 0.4/4.7 W (LED)	*
		Turn signal light	12 V — 21 W	WY21W
		Side marker light	12 V — 5 W	W5W
(14)	Rear finisher light	Back-up light	12 V — 16 W	W16W
(15)	License plate light		12 V — 5 W	W5W

*: Non-disassembly type

- OUTBACK model

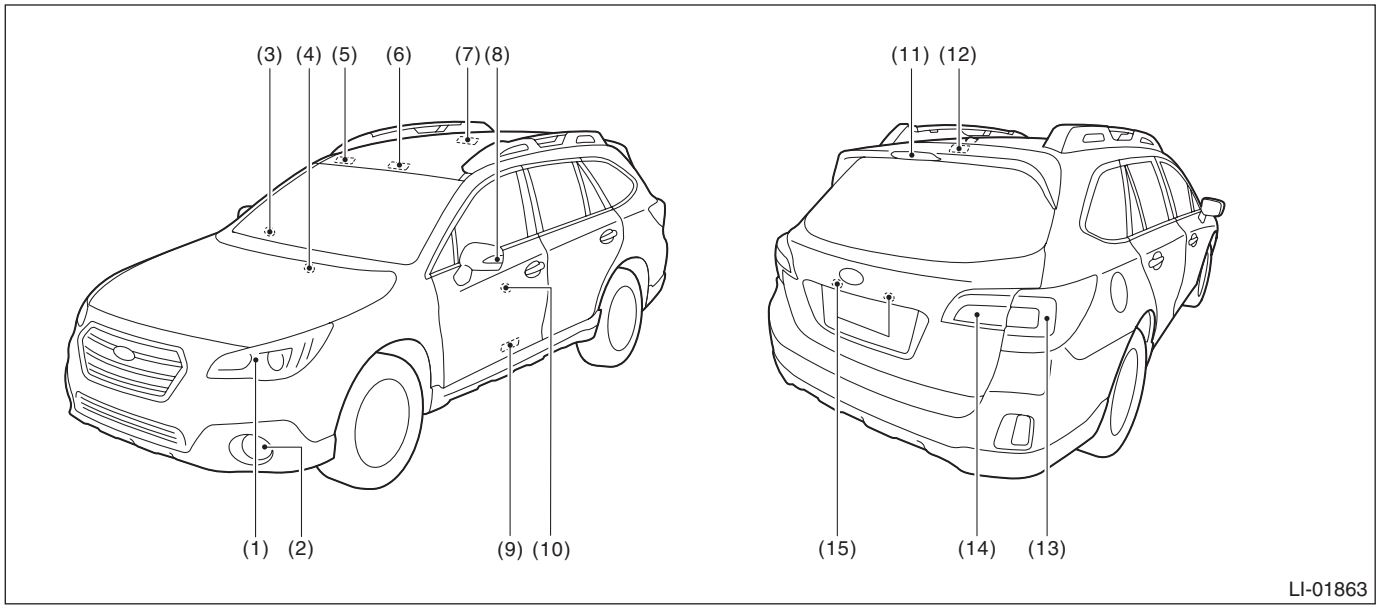

No.	Description		Capacity and wattage	Type
(1)	Headlight	Low beam (halogen type)	12 V — 55 W	H11
		Low beam (HID type)	12 V — 35 W	D4S
		High beam	12 V — 60 W	HB3
		Front turn signal light	12 V — 21 W	WY21W
		Parking light	12 V — 1.2 W (LED)	*
		Side marker light	12 V — 5 W	W5W
(2)	Front fog light	Model without SRF	12 V — 55 W	H11
		Model with SRF	12 V — 55 W	H11
(3)	Glove box light		12 V — 1.4 W (LED)	*
(4)	Pocket light		12 V — 1.4 W (LED)	*
(5)	Vanity mirror light		14 V — 1.4 W	—
(6)	Spot map light		12 V — 8 W	—
(7)	Room light		12 V — 8 W	—
(8)	Side turn signal light		12 V — 1.1 W (LED)	*
(9)	Door step light		12 V — 5 W	W5W
(10)	Door pocket light		12 V — 1.4 W (LED)	*
(11)	High-mounted stop light		12 V — 1.1 W (LED)	*
(12)	Luggage room light		12 V — 13 W	SAE#912
(13)	Rear combination light	Tail & stop light	12 V — 0.4/4.7 W (LED)	*
		Turn signal light	12 V — 21 W	WY21W
		Side marker light	12 V — 5 W	W5W
(14)	Rear finisher light	Back-up light	12 V — 16 W	W16W
(15)	License plate light		12 V — 5 W	W5W

*: Non-disassembly type

B: CAUTION

• Before disconnecting connectors of sensors or units, be sure to disconnect the ground cable from battery. When replacing the electrical parts provided with memory functions that store contents specified by a customer, record the memory contents before disconnecting the battery ground cable.
• Be careful of the following items. Failing to do so may cause the airbag system malfunction.
  – Yellow connectors and harnesses with yellow tapes around them are the connectors and harnesses for the airbag system. When using a tester on these circuits, follow the cautions of “AIRBAG SYSTEM”. <Ref. to AB-10, CAUTION, General Description.>
  – Be careful not to damage the airbag system wiring harness when servicing the electrical parts around the steering column.
• When removing, installing or replacing the VDCCM&H/U, VDCCM&H/U bracket, steering wheel or steering angle sensor (steering roll connector), perform “VDC sensor midpoint setting mode” of the VDC. <Ref. to VDC-15, VDC SENSOR MIDPOINT SETTING MODE, ADJUSTMENT, VDC Control Module and Hydraulic Control Unit (VDCCM&H/U).>
• Use a dry clean cloth so that no grease or water adheres to the glass portion of the bulb.
• Always replace with a bulb that is the same model and wattage as those of the old one.

C: PREPARATION TOOL

1. SPECIAL TOOL

ILLUSTRATION	TOOL NUMBER	DESCRIPTION	REMARKS
 STSSM4	— (Newly adopted tool)	SUBARU SELECT MONITOR 4	Used for setting of each function and trouble-shooting for electrical system. NOTE: For detailed operation procedures of Subaru Select Monitor 4, refer to “Application help”.

2. GENERAL TOOL

TOOL NAME	REMARKS
Circuit tester	Used for measuring resistance, voltage and current.
DST-i	Used together with Subaru Select Monitor 4.

2. Relay and Fuse

A: LOCATION

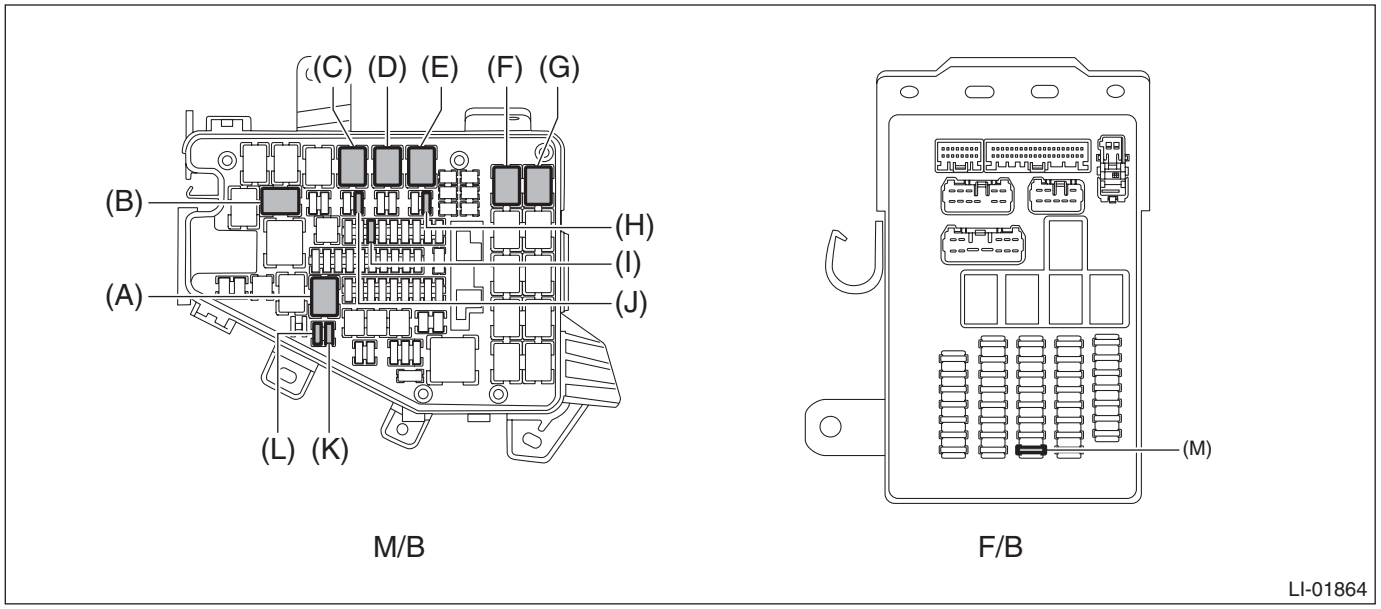

Main fuse box (M/B)	Front fog light relay	(A)
	Headlight relay HI (RH)	(B)
	Tail and illumination relay	(C)
	Headlight relay LO	(D)
	Headlight relay HI (LH)	(E)
	Daytime running light relay (RH)	(F)
	Daytime running light relay (LH)	(G)
	Fuse 10 A (headlight HI (LH))	(H)
	Fuse 10 A (headlight HI (RH))	(I)
	Fuse 10 A (license light (LH/RH), rear combination light (LH/RH))	(J)
	Fuse 10 A (front fog light (LH), SRF CM)	(K)
	Fuse 10 A (front fog light (RH), SRF CM)	(L)
Fuse & relay box (F/B)	Fuse 7.5 A (stop light and brake switch)	(M)

NOTE:
For other related fuses, refer to the wiring diagram. <Ref. to WI-21, Power Supply Circuit.>

B: INSPECTION

1. CHECK FUSE

1) Remove the fuse and inspect visually.
2) If the fuse is blown out, replace the fuse.

NOTE:
If the fuse is blown again, check the system wiring harness.

2. CHECK RELAY

1) Measure the resistance between relay terminals.

Terminal No.	Inspection conditions	Standard	Circuit
1 — 2	Always	1 MΩ or more	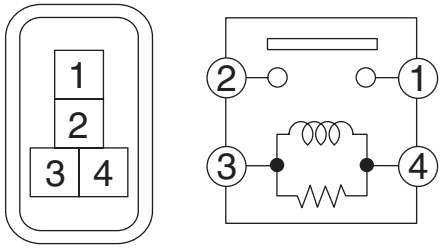 LI-01273
1 — 2	Apply battery voltage between terminals 4 and 3.	Less than 1 Ω	

Terminal No.	Inspection conditions	Standard	Circuit
1 — 2	Always	1 MΩ or more	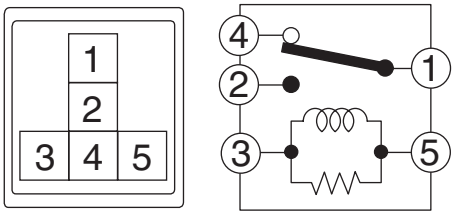 LI-01274
1 — 4	Always	Less than 1 Ω	
1 — 2	Apply battery voltage between terminals 3 and 5.	Less than 1 Ω	

2) Replace the relay if the inspection result is not within the standard value.

3. Headlight System

A: WIRING DIAGRAM

Refer to “Headlight System” in the wiring diagram. <Ref. to WI-246, WIRING DIAGRAM, Headlight System.>

B: INSPECTION

1. CHECK HEADLIGHT SYSTEM

	Step	Check	Yes	No
1	**CHECK HEADLIGHT AND TAIL LIGHT ILLUMINATION.** 1) Turn the ignition switch to ON. 2) Set the lighting switch to the switch 1 (PARKING) and switch 2 (HEAD).	Do the headlight and tail light illuminate?	The headlight system is normal.	Go to step **2**.
2	**CHECK BULB.** Check the headlight bulb.	Is the bulb normal?	Go to step **3**.	Replace the headlight bulb.
3	**CHECK CURRENT DATA.** Display the data of «Lighting I Switch Input» and «Lighting II Switch Input» using Subaru Select Monitor. NOTE: For detailed procedures, refer to “Application help”.	Does the display switch between OFF ←→ ON when the lighting switch is moved to the switch 1 (PARKING) and switch 2 (HEAD) positions?	Go to step **6**.	Go to step **4**.
4	**CHECK COMBINATION SWITCH (LIGHT).** 1) Turn the ignition switch to OFF. 2) Check the combination switch (light).	Is the combination switch (light) normal?	Go to step **5**.	Replace the combination switch (light).
5	**CHECK HARNESS.** 1) Disconnect the connectors of body integrated unit and combination switch (light). 2) Check the harness between body integrated unit and combination switch (light).	Is harness normal?	Check the body integrated unit and replace it if defective. <Ref. to BC(diag)-2, Basic Diagnostic Procedure.>	Repair or replace the harness.
6	**CHECK CURRENT DATA.** 1) Turn the ignition switch to ON. 2) Display the data of «Lighting I Lamp Output» and «Lighting II Lamp Output» using Subaru Select Monitor.	Does the display switch between OFF ←→ ON when the lighting switch is moved to the switch 1 (PARKING) and switch 2 (HEAD) positions?	Check the body integrated unit and replace it if defective. <Ref. to BC(diag)-2, Basic Diagnostic Procedure.>	Go to step **7**.
7	**CHECK HARNESS.** 1) Turn the ignition switch to OFF. 2) Check the harness between body integrated unit and headlight and between body integrated unit and tail light.	Is harness normal?	Check the body integrated unit and replace it if defective. <Ref. to BC(diag)-2, Basic Diagnostic Procedure.>	Repair or replace the harness.

2. AUTO HEADLIGHT SYSTEM CHECK

NOTE:
Check the headlight system before checking the auto headlight system. <Ref. to LI-7, CHECK HEADLIGHT SYSTEM, INSPECTION, Headlight System.>

	Step	Check	Yes	No
1	**CHECK HEADLIGHT AND TAIL LIGHT ILLUMINATION.** 1) Turn the ignition switch to ON. 2) Make the light control sensor vicinity dark. 3) Set the lighting switch to AUTO position. 4) Make the light control sensor vicinity bright. 5) Turn the lighting switch to the OFF position and turn to the AUTO position again.	Do the headlight and tail light illuminate?	The auto headlight system is normal.	Go to step **2**.
2	**CHECK CURRENT DATA.** 1) Using the Subaru Select Monitor, display the data of «Illumination Sensor Output». 2) Measure the voltage when the area around the light control sensor, which was dark, becomes bright. NOTE: For detailed procedures, refer to “Application help”. ***Illumination sensor output*** ***Dark condition: Approx. 0.6 V or less*** ***Bright condition: Approx. 3.0 V or more***	Is the voltage output according to the brightness?	Go to step **5**.	Go to step **3**.
3	**CHECK LIGHT CONTROL SENSOR.** Check the light control sensor. <Ref. to LI-29, INSPECTION, Light Control Sensor.>	Is the light control sensor normal?	Go to step **4**.	Replace the light control sensor.
4	**CHECK HARNESS.** 1) Disconnect the connectors from body integrated unit and light control sensor. 2) Check the harness between body integrated unit and light control sensor. ***Connector & terminal*** ***(i171) No. 8 — (i89) No. 1:*** ***(i171) No. 27 — (i89) No. 2:*** ***(i171) No. 28 — (i89) No. 3:***	Is harness normal?	Check the body integrated unit and replace it if defective. <Ref. to BC(diag)-2, Basic Diagnostic Procedure.>	Repair or replace the harness.
5	**CHECK CURRENT DATA.** Using the Subaru Select Monitor, display the data of «Lighting AUTO input».	Does the display switch between OFF ←→ ON when the lighting switch is moved to the AUTO position?	Check the body integrated unit and replace it if defective. <Ref. to BC(diag)-2, Basic Diagnostic Procedure.>	Go to step **6**.
6	**CHECK COMBINATION SWITCH (LIGHT).** 1) Turn the ignition switch to OFF. 2) Check the combination switch (light). <Ref. to LI-27, INSPECTION, Combination Switch (Light).>	Is the combination switch (light) normal?	Go to step **7**.	Replace the combination switch (light).
7	**CHECK HARNESS.** 1) Disconnect the connectors of body integrated unit and combination switch (light). 2) Check the harness between body integrated unit and combination switch (light).	Is harness normal?	Check the body integrated unit and replace it if defective. <Ref. to BC(diag)-2, Basic Diagnostic Procedure.>	Repair or replace the harness.

3. AUTO DIMMER CANCEL

	Step	Check	Yes	No
1	**CHECK BODY INTEGRATED UNIT SETTING.** Display the data of «Auto Dimmer Cancel Setting» using Subaru Select Monitor. NOTE: For detailed procedures, refer to “Application help”.	Is the setting ON (except for 0)?	Go to step **2**.	Turn the setting to ON.
2	**AUTO HEADLIGHT SYSTEM CHECK.** Check the operation of auto headlight system.	Is the auto headlight system normal?	Go to step **3**.	Check and repair the auto headlight system. <Ref. to LI-8, AUTO HEADLIGHT SYSTEM CHECK, INSPECTION, Headlight System.>
3	**CHECK ILLUMINATION CONTROL SYSTEM.** Check the operation of illumination control system.	Is the illumination control system normal?	Check the body integrated unit and replace it if defective. <Ref. to BC(diag)-2, Basic Diagnostic Procedure.>	Check and repair the illumination control system. <Ref. to IDI-10, SWITCH, INSPECTION, Combination Meter System.>

4. CHECK OF WELCOME LIGHTING SYSTEM

TROUBLE SYMPTOM:

Welcome lighting does not illuminate.

	Step	Check	Yes	No
1	**CHECK BODY INTEGRATED UNIT SETTING.** Display the data of «Welcome Light Off Delay Time(Approaching)» or «Welcome Light Off Delay Time(Exiting)» using the Subaru Select Monitor. NOTE: For detailed procedures, refer to “Application help”.	Is the setting ON?	Go to step **2**.	Turn to the setting other than OFF.
2	**CHECK BODY INTEGRATED UNIT SETTING.** Display the data of «Illumination Sensor Setting» using Subaru Select Monitor.	Is the setting “ON”?	Go to step **3**.	Turn the setting to “ON”.
3	**CHECK AUTO HEADLIGHT.** 1) Set the lighting switch to AUTO position. 2) Make the light control sensor vicinity dark. 3) Turn the ignition switch to ON.	Do the parking light, tail and headlight illuminate?	Go to step **4**.	Check the auto headlight system. <Ref. to LI-8, AUTO HEADLIGHT SYSTEM CHECK, INSPECTION, Headlight System.>

	Step	Check	Yes	No
4	**CHECK DOOR LOCK.** Operate the door lock using the keyless transmitter or the access key.	Do the lock and unlock operate properly?	Go to step **5**.	• Check keyless entry system. <Ref. to SL-18, INSPECTION, Keyless Entry System.> • Check the keyless access with push button start system. <Ref. to KPS(diag)-2, Basic Diagnostic Procedure.>
5	**CHECK BODY INTEGRATED UNIT.** 1) Display the data of «IG power supply voltage» using Subaru Select Monitor. 2) Turn the ignition switch to ON.	Is the voltage 10 — 15 V?	Replace the body integrated unit. <Ref. to SL-83, Body Integrated Unit.>	Repair or replace the harness.

5. CHECK OF WELCOME LIGHTING SYSTEM

TROUBLE SYMPTOM:

Welcome lighting does not go off.

	Step	Check	Yes	No
1	**CHECK BODY INTEGRATED UNIT SETTING.** Display the data of «Welcome Light Off Delay Time(Approaching)» or «Welcome Light Off Delay Time(Exiting)» using the Subaru Select Monitor. NOTE: For detailed procedures, refer to “Application help”.	Is the illumination time setting correct?	Go to step **2**.	Set the illumination time.
2	**CHECK THE LIGHTS.** Set the lighting switch to the switch 1 (PARKING) and switch 2 (HEAD).	Do the parking light, tail light and headlight illuminate?	Go to step **3**.	Check the combination switch (light) and each light circuit.
3	**CHECK BODY INTEGRATED UNIT.** Using the Subaru Select Monitor, display the data of «Driver’s door SW input».	Does the display switch between OFF ←→ ON when driver’s door is opened/closed?	Go to step **4**.	Check the door switch. <Ref. to SL-20, CHECK DOOR SWITCH, INSPECTION, Keyless Entry System.>
4	**CHECK DOOR LOCK.** Operate the door lock using the keyless transmitter or the access key.	Do the lock and unlock operate properly?	Replace the body integrated unit. <Ref. to SL-83, Body Integrated Unit.>	• Check keyless entry system. <Ref. to SL-18, INSPECTION, Keyless Entry System.> • Check the keyless access with push button start system. <Ref. to KPS(diag)-2, Basic Diagnostic Procedure.>

6. CHECK WIPER INTERLOCK HEADLIGHT SYSTEM

TROUBLE SYMPTOM:

The headlights do not go off when the wiper is deactivated, or the headlights do not turn on when the wiper is activated.

	Step	Check	Yes	No
1	**CHECK HEADLIGHT SYSTEM.** Check the operation of the headlight system.	Is the headlight system normal?	Go to step **2**.	Check and repair the headlight system. <Ref. to LI-7, CHECK HEADLIGHT SYSTEM, INSPECTION, Headlight System.>
2	**CHECK BODY INTEGRATED UNIT SETTING.** Display the data of «Illumination Sensor Setting» using Subaru Select Monitor. NOTE: For detailed procedures, refer to “Application help”.	Is the setting “ON”?	Go to step **3**.	Turn the setting to “ON”.
3	**CHECK BODY INTEGRATED UNIT SETTING.** Display the data of «Wiper link Auto Light Setup» using Subaru Select Monitor.	Is the setting ON?	Go to step **4**.	Turn the setting to ON.
4	**CHECK BODY INTEGRATED UNIT.** 1) Display the data of «IG power supply voltage» using Subaru Select Monitor. 2) Turn the ignition switch to ON.	Is the voltage 10 — 15 V?	Go to step **7**.	Go to step **5**.
5	**CHECK HARNESS.** Measure the voltage between F/B fuse No. 5 and chassis ground.	Is the voltage 10 V or more?	Repair or replace the harness between the body integrated unit and the ignition switch.	Go to step **6**.
6	**CHECK CONNECTOR.** Check the connector or terminal of the body integrated unit for poor contact.	Is there any fault?	Repair or replace the connector and harness.	Check the body integrated unit and replace it if defective. <Ref. to BC(diag)-2, Basic Diagnostic Procedure.>
7	**CHECK BODY INTEGRATED UNIT.** Using the Subaru Select Monitor, display the data of «Lighting AUTO input».	Does the display switch between OFF ←→ ON when the lighting switch is moved to the AUTO position?	Go to step **12**.	Go to step **8**.
8	**CHECK BODY INTEGRATED UNIT.** Measure the voltage between the body integrated unit connector and chassis ground. ***Connector & terminal*** ***(i81) No. 20 (+) — Chassis ground (–):***	Does the voltage switch between OFF (9 to 16 V) ←→ ON (less than 1 V) when the lighting switch is moved to the AUTO position?	Check the body integrated unit and replace it if defective. <Ref. to BC(diag)-2, Basic Diagnostic Procedure.>	Go to step **9**.
9	**CHECK HARNESS.** 1) Disconnect the connectors of the combination switch (light) and the body integrated unit. 2) Check the harness between the combination switch (light) and the body integrated unit. ***Connector & terminal*** ***(i73) No. 12 — (i81) No. 20:***	Is the resistance less than 10 Ω?	Go to step **10**.	Repair or replace the harness between the combination switch (light) and the body integrated unit.

	Step	Check	Yes	No
10	**CHECK HARNESS.** Check the harness between the combination switch (light) and chassis ground. ***Connector & terminal*** ***(i73) No. 19 — Chassis ground:***	Is the resistance less than 10 Ω?	Go to step **11**.	Repair or replace the harness between the combination switch (light) and chassis ground.
11	**CHECK COMBINATION SWITCH (LIGHT).** Check the combination switch (light). <Ref. to LI-27, INSPECTION, Combination Switch (Light).>	Is the combination switch (light) normal when the combination switch (light) is moved to AUTO position?	Check the body integrated unit and replace it if defective. <Ref. to BC(diag)-2, Basic Diagnostic Procedure.>	Replace the combination switch (light).
12	**CHECK BODY INTEGRATED UNIT.** Using the Subaru Select Monitor, display the data of «Fr wiper input».	Does the display switch between OFF ←→ ON when the combination switch (wiper) is operated to INT/LO/HI?	Go to step **17**.	Go to step **13**.
13	**CHECK BODY INTEGRATED UNIT.** Measure the voltage between the body integrated unit connector and chassis ground. ***Connector & terminal*** ***(B280) No. 1 (+) — Chassis ground (–):***	Does the voltage switch between OFF (less than 1 V) ←→ ON (9 to 16 V) when the combination switch (wiper) is operated to INT/LO/HI?	Check the body integrated unit and replace it if defective. <Ref. to BC(diag)-2, Basic Diagnostic Procedure.>	Go to step **14**.
14	**CHECK HARNESS.** 1) Disconnect the connectors of the front wiper motor and the body integrated unit. 2) Check the harness between the front wiper motor and the body integrated unit. ***Connector & terminal*** ***(B8) No. 3 — (B280) No. 1:***	Is the resistance less than 10 Ω?	Go to step **15**.	Repair or replace the harness between the front wiper motor and the body integrated unit.
15	**CHECK HARNESS.** Check the harness between the front wiper motor and chassis ground. ***Connector & terminal*** ***(B8) No. 4 — Chassis ground:***	Is the resistance less than 10 Ω?	Go to step **16**.	Repair or replace the harness between the he front wiper motor and chassis ground.
16	**CHECK FRONT WIPER MOTOR.** Check the continuity between front wiper motor terminals. ***Connector & terminal*** ***(B8) No. 3 — (B8) No. 5:***	Is there continuity?	Check the body integrated unit and replace it if defective. <Ref. to BC(diag)-2, Basic Diagnostic Procedure.>	Replace the front wiper motor. <Ref. to WW-32, Front Wiper Motor and Link.>
17	**CHECK BODY INTEGRATED UNIT.** Using the Subaru Select Monitor, display the data of «Front washer switch input».	Does the display switch between OFF ←→ ON when the front washer switch on the combination switch (wiper) is operated?	Check the connection status of the harness and connector that may have a temporary poor contact.	Go to step **18**.
18	**CHECK BODY INTEGRATED UNIT.** Measure the voltage between the body integrated unit connector and chassis ground. ***Connector & terminal*** ***(i81) No. 12 (+) — Chassis ground (–):***	Does the voltage switch between OFF (less than 1 V) ←→ ON (9 to 16 V) when the front washer switch on the combination switch (wiper) is operated?	Check the body integrated unit and replace it if defective. <Ref. to BC(diag)-2, Basic Diagnostic Procedure.>	Go to step **19**.

	Step	Check	Yes	No
19	**CHECK HARNESS.** 1) Disconnect the connectors of the combination switch (wiper) and the body integrated unit. 2) Check the harness between the combination switch (wiper) and the body integrated unit. ***Connector & terminal*** ***(i68) No. 3 — (i81) No. 12:***	Is the resistance less than 10 Ω?	Go to step **20**.	Repair or replace the harness between the combination switch (wiper) and the body integrated unit.
20	**CHECK HARNESS.** Check the harness between the combination switch (wiper) and chassis ground. ***Connector & terminal*** ***(i68) No. 2 — Chassis ground:***	Is the resistance less than 10 Ω?	Go to step **21**.	Repair or replace the harness between the combination switch (wiper) and chassis ground.
21	**CHECK COMBINATION SWITCH (WIPER).** Check the continuity between terminals when the front washer switch on the combination switch (wiper) is pressed. ***Connector & terminal*** ***(i68) No. 3 — (i68) No. 2:***	Is there continuity?	Check the body integrated unit and replace it if defective. <Ref. to BC(diag)-2, Basic Diagnostic Procedure.>	Replace the combination switch (wiper). <Ref. to WW-11, Combination Switch (Wiper).>

7. CHECK LIGHTING SWITCH

Refer to “Combination Switch (Light)”. <Ref. to LI-27, INSPECTION, Combination Switch (Light).>

8. CHECK DIMMER & PASSING SWITCH

Refer to “Combination Switch (Light)”. <Ref. to LI-27, INSPECTION, Combination Switch (Light).>

C: NOTE

For operation procedures of each component of the headlight system, refer to the respective section.

- Headlight Assembly: <Ref. to LI-30, Headlight Assembly.>
- Headlight bulb: <Ref. to LI-36, Headlight Bulb.>
- Combination switch (light): <Ref. to LI-25, Combination Switch (Light).>
- Light control sensor: <Ref. to LI-28, Light Control Sensor.>

4. Day Time Running Light System

A: WIRING DIAGRAM

Refer to “Headlight System” in the wiring diagram. <Ref. to WI-246, WIRING DIAGRAM, Headlight System.>

B: INSPECTION

1. DAYTIME RUNNING LIGHT MODULE CHECK

	Step	Check	Yes	No
1	**CHECK BODY INTEGRATED UNIT.** Read the DTC of body integrated unit using Subaru Select Monitor. NOTE: For detailed procedures, refer to “Application help”.	Is DTC displayed?	Perform the diagnosis according to DTC.	Go to step **2**.
2	**CHECK CURRENT DATA.** Display the following items using Subaru Select Monitor. • «EPB Operating status» • «Shift position» • «Lighting II Switch Input»	Is the input signal normal?	Go to step **3**.	Check the defective part.
3	**CHECK FUSE.** Check the headlight HI fuse (LH/RH). <Ref. to LI-5, Relay and Fuse.>	Is the fuse OK?	Go to step **4**.	Replace the fuse.
4	**CHECK HEADLIGHT ILLUMINATION.** 1) Turn the ignition switch to ON. 2) Turn the lighting switch to the switch 2 (HEAD) position. 3) Turn the dimmer & passing switch to the switch UP position.	Does the headlight (high beam) illuminate?	Go to step **5**.	Check the combination switch (light) and headlight bulb.
5	**CHECK RELAY.** Check the daytime running light relay (LH/RH) and headlight HI relay (LO/HI). <Ref. to LI-5, Relay and Fuse.>	Is each relay normal?	Go to step **6**.	Replace the relay.
6	**CHECK DAYTIME RUNNING LIGHT RESISTOR.** Check the daytime running light resistor. <Ref. to LI-86, INSPECTION, Day Time Running Resistor.>	Does the daytime running light resistor normal?	Go to step **7**.	Replace the daytime running light resistor.
7	**CHECK HARNESS.** 1) Disconnect the connectors of body integrated unit, daytime running light relay, daytime running light resistor, and headlight. 2) Check each harness.	Is harness normal?	Replace the body integrated unit. <Ref. to SL-83, Body Integrated Unit.>	Repair or replace the harness.

C: NOTE

For operation procedures of each component of the daytime running light system, refer to the respective section.

- Headlight Assembly: <Ref. to LI-30, Headlight Assembly.>
- Headlight bulb: <Ref. to LI-36, Headlight Bulb.>
- Combination switch (light): <Ref. to LI-25, Combination Switch (Light).>
- Daytime running resistor: <Ref. to LI-85, Day Time Running Resistor.>

5. Clearance Light and Illumination Light System

A: WIRING DIAGRAM

Refer to “Clearance Light and Illumination Light System” in the wiring diagram. <Ref. to WI-136, WIRING DIAGRAM, Clearance Light and Illumination Light System.>

B: INSPECTION

1. CHECK LIGHTING SWITCH

Refer to “Combination Switch (Light)”. <Ref. to LI-27, INSPECTION, Combination Switch (Light).>

C: NOTE

For operation procedures of each component of the clearance light & illumination light system, refer to the respective sections.

- Headlight Assembly: <Ref. to LI-30, Headlight Assembly.>
- Combination switch (light): <Ref. to LI-25, Combination Switch (Light).>
- Parking light bulb: <Ref. to LI-40, Clearance/Parking Light Bulb.>
- Front side marker light bulb: <Ref. to LI-41, Front Side Marker Light Bulb.>
- Rear combination light assembly: <Ref. to LI-49, Rear Combination Light Assembly.>
- Tail light/stop light bulb: <Ref. to LI-54, Tail/Stop Light Bulb.>
- Rear side marker light bulb: <Ref. to LI-56, Rear Side Marker Light Bulb.>
- License plate light: <Ref. to LI-61, License Plate Light.>
- Ignition switch illumination: <Ref. to LI-79, Ignition Switch Illumination.>

6. Front Fog Light System

A: WIRING DIAGRAM

Refer to “Front Fog Light System” in the wiring diagram. <Ref. to WI-237, WIRING DIAGRAM, Front Fog Light System.>

B: INSPECTION

1. CHECK STEERING RESPONSIVE FOG LIGHT SYSTEM

Refer to “Basic Diagnostic Procedure” of “STEERING RESPONSIVE FOG LIGHTS (DIAGNOSTICS)”. <Ref. to SRF(diag)-2, Basic Diagnostic Procedure.>

2. CHECK FRONT FOG LIGHT SWITCH

Refer to “Combination Switch (Light)”. <Ref. to LI-27, INSPECTION, Combination Switch (Light).>

C: NOTE

For operation procedures of each component of the front fog light system, refer to the respective section.

- Combination switch (light): <Ref. to LI-25, Combination Switch (Light).>
- Front fog light assembly: <Ref. to LI-42, Front Fog Light Assembly.>
- Front fog light bulb: <Ref. to LI-47, Front Fog Light Bulb.>

7. Turn Signal Light and Hazard Light System

A: WIRING DIAGRAM

Refer to “Turn Signal Light and Hazard Light System” in the wiring diagram. <Ref. to WI-357, WIRING DIAGRAM, Turn Signal Light and Hazard Light System.>

B: INSPECTION

1. CHECK HAZARD LIGHT SYSTEM

	Step	Check	Yes	No
1	**CHECK HAZARD LIGHT OPERATION.** 1) Turn the hazard switch to ON. 2) Check that the hazard light operates properly.	Does the hazard light blink?	The hazard light system is normal.	Go to step **2**.
2	**CHECK BULB.** Check the hazard (turn signal) light bulb.	Is the bulb normal?	Go to step **3**.	Replace the hazard (turn signal) light bulb.
3	**CHECK CURRENT DATA.** Using the Subaru Select Monitor, display the data of «Hazard switch Input». NOTE: For detailed procedures, refer to “Application help”.	Does the display change to OFF ←→ ON, when the hazard switch is turned to ON?	Go to step **6**.	Go to step **4**.
4	**CHECK HAZARD SWITCH.** Check the hazard switch. <Ref. to LI-38, INSPECTION, Hazard Switch.>	Is the hazard switch normal?	Go to step **5**.	Replace the hazard switch.
5	**CHECK HARNESS.** 1) Disconnect the connectors of body integrated unit and hazard switch. 2) Check the harness between body integrated unit and hazard switch.	Is harness normal?	Check the body integrated unit and replace it if defective. <Ref. to BC(diag)-2, Basic Diagnostic Procedure.>	Repair or replace the harness.
6	**CHECK CURRENT DATA.** Display the data of «Left turn signal output» and «Right turn signal output» using Subaru Select Monitor.	Does the display change to OFF ←→ ON, when the hazard switch is turned to ON?	Check the body integrated unit and replace it if defective. <Ref. to BC(diag)-2, Basic Diagnostic Procedure.>	Go to step **7**.
7	**CHECK HARNESS.** 1) Disconnect the connectors of body integrated unit and each turn signal light. 2) Check the harness between body integrated unit and each turn signal light.	Is harness normal?	Check the body integrated unit and replace it if defective. <Ref. to BC(diag)-2, Basic Diagnostic Procedure.>	Repair or replace the harness.

2. CHECK TURN SIGNAL LIGHT SYSTEM

	Step	Check	Yes	No
1	**CHECK TURN SIGNAL LIGHT OPERATION.** 1) Turn the ignition switch to ON. 2) Turn the turn signal light switch LH and RH to ON.	Does the turn signal light blink?	The turn signal light system is normal.	Go to step **2**.
2	**CHECK CURRENT DATA.** Display the data of «Left turn signal input» and «Right turn signal input» using Subaru Select Monitor. NOTE: For detailed procedures, refer to “Application help”.	Does the display change to OFF ⟷ ON, when the turn signal switch is turned to ON?	Check the body integrated unit and replace it if defective. <Ref. to BC(diag)-2, Basic Diagnostic Procedure.>	Go to step **3**.
3	**CHECK TURN SIGNAL SWITCH.** Check the turn signal switch. <Ref. to LI-38, INSPECTION, Hazard Switch.>	Is the turn signal switch OK?	Go to step **4**.	Replace the combination switch (light).
4	**CHECK HARNESS.** 1) Disconnect the connectors of body integrated unit and combination switch (light). 2) Check the harness between body integrated unit and combination switch (light).	Is harness normal?	Check the body integrated unit and replace it if defective. <Ref. to BC(diag)-2, Basic Diagnostic Procedure.>	Repair or replace the harness.

3. CHECK OF LANE CHANGE SIGNAL

TROUBLE SYMPTOM:

Lane change signal does not operate.

	Step	Check	Yes	No
1	**CHECK HAZARD LIGHT SYSTEM.** Check the hazard light system. <Ref. to LI-17, CHECK HAZARD LIGHT SYSTEM, INSPECTION, Turn Signal Light and Hazard Light System.>	Is the hazard light system normal?	Go to step **2**.	Repair the hazard light system.
2	**CHECK TURN SIGNAL LIGHT SYSTEM.** Check the turn signal light system. <Ref. to LI-18, CHECK TURN SIGNAL LIGHT SYSTEM, INSPECTION, Turn Signal Light and Hazard Light System.>	Is the turn signal light system normal?	Go to step **3**.	Repair the turn signal light system.
3	**CHECK BODY INTEGRATED UNIT SETTING.** Display the data of «Lane change signal setting» using Subaru Select Monitor. NOTE: For detailed procedures, refer to “Application help”.	Is the setting ON?	Check the body integrated unit and replace it if defective. <Ref. to BC(diag)-2, Basic Diagnostic Procedure.>	Turn the setting to ON.

4. CHECK TURN SIGNAL SWITCH

Refer to “Combination Switch (Light)”. <Ref. to LI-27, INSPECTION, Combination Switch (Light).>

5. CHECK HAZARD SWITCH

Refer to “Hazard Switch”. <Ref. to LI-38, INSPECTION, Hazard Switch.>

C: NOTE

For operation procedures of each component of the turn signal and hazard light system, refer to the respective sections.

- Headlight Assembly: <Ref. to LI-30, Headlight Assembly.>
- Combination switch (light): <Ref. to LI-25, Combination Switch (Light).>
- Front turn signal light bulb: <Ref. to LI-39, Front Turn Signal Light Bulb.>
- Side turn signal light assembly: <Ref. to LI-48, Side Turn Signal Light Assembly.>
- Rear combination light assembly: <Ref. to LI-49, Rear Combination Light Assembly.>
- Rear turn signal light bulb: <Ref. to LI-55, Rear Turn Signal Light Bulb.>
- Hazard switch: <Ref. to LI-37, Hazard Switch.>

8. Back-up Light System

A: WIRING DIAGRAM

Refer to “Back-up Light System” in the wiring diagram.

- Sedan model
  – H4 model: <Ref. to WI-122, SEDAN MODEL (ENGINE TYPE FB), WIRING DIAGRAM, Back-up Light System.>
  – H6 model: <Ref. to WI-124, SEDAN MODEL (ENGINE TYPE EZ), WIRING DIAGRAM, Back-up Light System.>
- OUTBACK model
  – H4 model: <Ref. to WI-126, OUTBACK MODEL (ENGINE TYPE FB), WIRING DIAGRAM, Back-up Light System.>
  – H6 model: <Ref. to WI-128, OUTBACK MODEL (ENGINE TYPE EZ), WIRING DIAGRAM, Back-up Light System.>

B: INSPECTION

1. CHECK BACK-UP LIGHT SWITCH (MT MODEL)

Refer to the “Switches and Harness” in “MANUAL TRANSMISSION AND DIFFERENTIAL” section. <Ref. to 6MT-57, INSPECTION, Switches and Harness.>

2. CHECK INHIBITOR SWITCH (CVT MODEL)

Refer to “Inhibitor Switch” in “CONTINUOUSLY VARIABLE TRANSMISSION” section.

- H4 model: <Ref. to CVT(TR580)-104, Inhibitor Switch.>
- H6 model: <Ref. to CVT(TR690)-102, Inhibitor Switch.>

C: NOTE

For operation procedures of each component of the back-up light system, refer to the respective section.

- Rear finisher light assembly: <Ref. to LI-57, Rear Finisher Light Assembly.>
- Back-up light bulb: <Ref. to LI-59, Back-up Light Bulb.>

9. Stop Light System

A: WIRING DIAGRAM

Refer to “Stop Light System” in the wiring diagram.
- Sedan model: <Ref. to WI-344, SEDAN MODEL, WIRING DIAGRAM, Stop Light System.>
- OUTBACK model: <Ref. to WI-346, OUTBACK MODEL, WIRING DIAGRAM, Stop Light System.>

B: INSPECTION

1. CHECK STOP LIGHT SWITCH

Refer to “Stop Light Switch” in “BRAKE” section. <Ref. to BR-82, INSPECTION, Stop Light Switch.>

C: NOTE

For operation procedures of each component of the stop light system, refer to the respective section.
- Rear combination light assembly: <Ref. to LI-49, Rear Combination Light Assembly.>
- Tail light/stop light bulb: <Ref. to LI-54, Tail/Stop Light Bulb.>
- High-mounted stop light: <Ref. to LI-64, High-mounted Stop Light.>

10.Interior Light System

A: WIRING DIAGRAM

Refer to “Interior Light System” in the wiring diagram. <Ref. to WI-256, WIRING DIAGRAM, Interior Light System.>

B: INSPECTION

1. CHECK DOOR SWITCH

Refer to “Door Switch”. <Ref. to LI-87, INSPECTION, Door Switch.>

2. CHECK TRUNK LID LATCH SWITCH

Refer to “Trunk Lid Latch and Actuator Assembly” in “SECURITY AND LOCKS” section. <Ref. to SL-54, ACTUATOR, INSPECTION, Trunk Lid Latch and Actuator Assembly.>

3. CHECK REAR GATE LATCH SWITCH

Refer to the following for “Rear gate latch and actuator assembly”.

- Model without power rear gate: <Ref. to SL-51, ACTUATOR, INSPECTION, Rear Gate Latch and Actuator Assembly.>
- Model with power rear gate: <Ref. to PRG-12, ACTUATOR, INSPECTION, Power Rear Gate Auto Closer.>

C: NOTE

For operation procedures of each component of the interior light system, refer to the respective section.

- Spot map light: <Ref. to LI-66, Spot Map Light.>
- Room light: <Ref. to LI-68, Room Light.>
- Trunk room light: <Ref. to LI-72, Trunk Room Light.>
- Luggage room light: <Ref. to LI-70, Luggage Room Light.>
- LED illumination light: <Ref. to LI-75, LED Illumination Light.>
- Vanity mirror light: <Ref. to LI-78, Vanity Mirror Light.>
- Door step light: <Ref. to LI-74, Door Step Light.>
- Door switch: <Ref. to LI-87, Door Switch.>

11.Auto Headlight Beam Leveler System

A: WIRING DIAGRAM

Refer to “Headlight Beam Leveler System” in the wiring diagram.
- Model without SRF: <Ref. to WI-242, WITHOUT SRF, WIRING DIAGRAM, Headlight Beam Leveler System.>
- Model with SRF: <Ref. to WI-244, WITH SRF, WIRING DIAGRAM, Headlight Beam Leveler System.>

B: SPECIFICATION

1. TERMINAL ARRANGEMENT OF AUTO HEADLIGHT BEAM LEVELER CM

Refer to “Control Module I/O Signal” of “AUTO HEADLIGHT BEAM LEVELER SYSTEM (DIAGNOSTICS)” section. <Ref. to AL(diag)-6, ELECTRICAL SPECIFICATION, Control Module I/O Signal.>

C: INSPECTION

Refer to “Basic Diagnostic Procedure” of “AUTO HEADLIGHT BEAM LEVELER SYSTEM (DIAGNOSTICS)” section. <Ref. to AL(diag)-2, Basic Diagnostic Procedure.>

D: PROCEDURE

When parts related to the auto headlight beam leveler system are removed or replaced, perform the following procedures to initialize or reinitialize.

NOTE:
Before performing initialization or reinitialization, check the following:
- The vehicle is parked on a level surface.
- The inflation pressure of tires is correct.
- The vehicle does not have load.
- Vehicle’s fuel tank is fully filled.
- Refer to the following chart to determine whether to initialize or reinitialize.

Initialization	When the auto headlight beam leveler CM was replaced with a new module.
Reinitialization	• When the auto headlight beam leveler CM was replaced with a part from another vehicle. • When suspension parts have been removed or replaced. (Cradle, front arm, sub frame, lateral link, housing, strut, etc.) • When the vehicle height sensor has been replaced or removed.

CAUTION:
If the indicator does not flash three times or the headlight beam does not operate, it can be assumed that there is an open circuit or faulty wiring in the harness of the auto headlight beam leveler CM, vehicle height sensors or headlight assembly. Perform inspection and repair according to the inspection results, then perform initialization/reinitialization again.
- **Initialization: <Ref. to LI-23, INITIALIZATION, PROCEDURE, Auto Headlight Beam Leveler System.>**
- **Reinitialization: <Ref. to LI-24, REINITIALIZATION, PROCEDURE, Auto Headlight Beam Leveler System.>**

1. INITIALIZATION

1) Check that the indicator in the meter is flashing twice repeatedly.
2) Bounce the vehicle several times to normalize the suspension.
3) Make certain that someone is seated in the driver’s seat.
4) Turn the ignition switch to ON, and within 1.5 — 20 seconds, turn the lighting switch OFF → ON for three successive times.
5) Make sure that the indicator in the meter flashes three times and then turns OFF, indicating that initialization has been successfully completed. (At this time, the headlight beam drops once, and then returns to the original position.)
6) Perform beam adjustment for the headlight. <Ref. to LI-34, ADJUSTMENT, Headlight Assembly.>

2. REINITIALIZATION

1) Bounce the vehicle several times to normalize the suspension.
2) Make certain that someone is seated in the driver's seat.
3) Turn the ignition switch to ON, and, within 1.5 — 10 seconds, turn the lighting switch OFF → ON five or more successive times.
4) Check that the headlight beam drops once, then returns to normal.
5) After confirming 4), turn the ignition switch to OFF within 30 seconds.
6) Turn the ignition switch to ON again, and within 1.5 — 10 seconds, turn the lighting switch OFF → ON five or more successive times.
7) Make sure that the indicator in the meter flashes three times and then turns OFF, indicating that reinitialization has been successfully completed. (At this time, the headlight beam drops once, and then returns to the original position.)
8) Perform beam adjustment for the headlight. <Ref. to LI-34, ADJUSTMENT, Headlight Assembly.>

E: NOTE

For operation procedures of each component of the auto headlight beam leveler system, refer to the respective section.

- Auto headlight beam leveler CM: <Ref. to LI-80, Auto Headlight Beam Leveler Control Module.>
- Vehicle height sensor: <Ref. to LI-83, Rear Height Sensor.>

12.Combination Switch (Light)

A: REMOVAL

CAUTION:
Before handling the airbag system components, refer to "CAUTION" of "General Description" in "AIRBAG SYSTEM". <Ref. to AB-10, CAUTION, General Description.>

1) Set the tire to the straight-ahead position.
2) Disconnect the ground terminal from the battery sensor, and wait for at least 60 seconds before starting work. <Ref. to RC-4, BATTERY, NOTE, Repair Contents.>
3) Remove the driver's airbag module. <Ref. to AB-32, REMOVAL, Driver's Airbag Module.>
4) Remove the steering wheel. <Ref. to PS-9, REMOVAL, Steering Wheel.>
5) Remove the cover assembly - column.
   (1) Remove the clips, and remove the cover - column (a).
   (2) Remove the screws.
   (3) Release the claws, and remove the cover assembly - column UPR (b) and the cover assembly - column LWR (c).

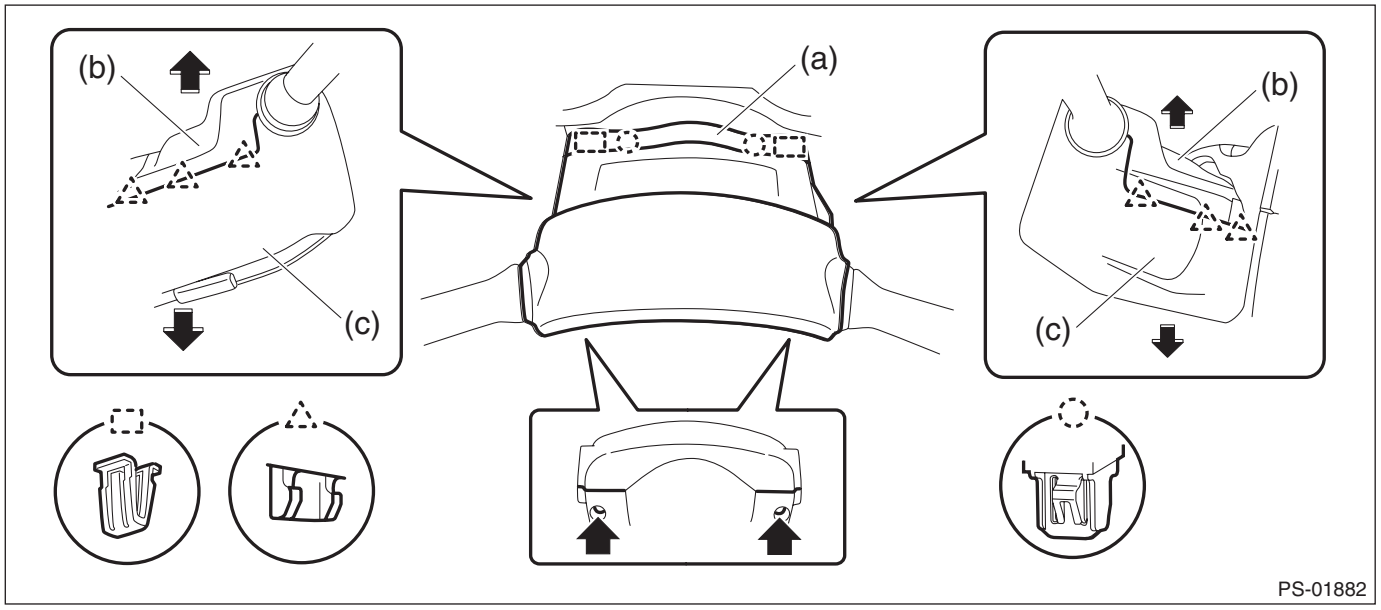

6) Remove the steering roll connector. <Ref. to AB-60, REMOVAL, Roll Connector.>
7) Remove the switch assembly - combination wiper select. <Ref. to WW-11, REMOVAL, Combination Switch (Wiper).>
8) Remove the switch assembly - combination turn dimmer.
   (1) Disconnect the connector.
   (2) Using pliers, loosen the clamp.

(3) With the clamp loosened, release the claw using a flat tip screwdriver, and remove the switch assembly - combination turn dimmer.

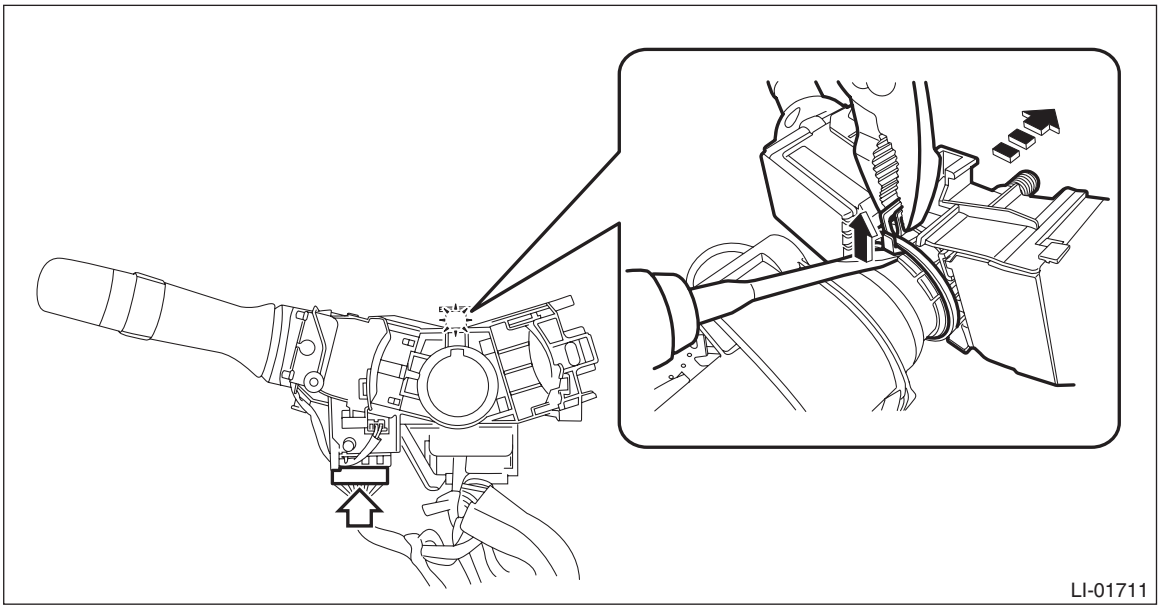

B: INSTALLATION

CAUTION:
• Before handling the airbag system components, refer to "CAUTION" of "General Description" in "AIRBAG SYSTEM". <Ref. to AB-10, CAUTION, General Description.>
• Do not allow harness and connectors to interfere or get tangled up with other parts.
• If the steering wheel has been removed, make sure that the steering roll connector is not turned from the original position.
• If the steering wheel and steering angle sensor (steering roll connector) are removed, perform "VSC(VDC) Centering Mode" of the VDC. <Ref. to VDC-15, VDC SENSOR MIDPOINT SETTING MODE, ADJUSTMENT, VDC Control Module and Hydraulic Control Unit (VDCCM&H/U).>

1) Install the switch assembly - combination turn dimmer.
2) Install the switch assembly - combination wiper select.
3) Install the steering roll connector. <Ref. to AB-61, INSTALLATION, Roll Connector.>
4) Install the cover assembly - column.
5) Install the steering wheel.

Tightening torque:
39 N·m (4.0 kgf-m, 28.8 ft-lb)

Clearance:
Between cover assembly - column and steering wheel: 4 — 6 mm (0.16 — 0.24 in)

6) Install the driver's airbag module. <Ref. to AB-33, INSTALLATION, Driver's Airbag Module.>
7) Connect the ground terminal to battery sensor. <Ref. to RC-4, BATTERY, NOTE, Repair Contents.>

C: INSPECTION

1) Measure the resistance between connector terminals.

Preparation tool:
Circuit tester

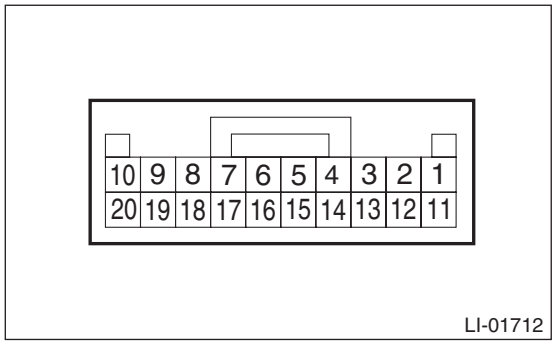

- Lighting switch

Terminal No.	Inspection conditions	Standard
18 — 12 19 — 12 20 — 12	Switch OFF	1 MΩ or more
19 — 12	Switch AUTO	Less than 1 Ω
18 — 12	Switch 1 (PARKING)	Less than 1 Ω
18 — 12 20 — 12	Switch 2 (HEAD)	Less than 1 Ω

- Dimmer & passing switch

Terminal No.	Inspection conditions	Standard
11 — 12 17 — 12	Switch PASS	Less than 1 Ω
11 — 12	Switch UP	Less than 1 Ω

- Turn signal switch

Terminal No.	Inspection conditions	Standard
13 — 12	Switch TURN (RH)	Less than 1 Ω
15 — 12	Switch TURN (LH)	Less than 1 Ω

- Front fog light switch

Terminal No.	Inspection conditions	Standard
4 — 3	Switch OFF	1 MΩ or more
	Switch ON	Less than 1 Ω

2) Replace the switch assembly - combination turn dimmer if the inspection result is not within the standard value.

13.Light Control Sensor

A: REMOVAL

1) Disconnect the ground terminal from battery sensor. <Ref. to RC-4, BATTERY, NOTE, Repair Contents.>
2) Remove the trim panel - front pillar UPR. <Ref. to EI-96, REMOVAL, Upper Inner Trim.>
3) Release the clips and claws, then detach the grille speaker side. <Ref. to ET-24, TWEETER, REMOVAL, Front Speaker.>
4) Remove the sensor - automatic light.
   (1) Release the claws of the duct - front defroster.

CAUTION:
• Secure minimum space for performing the operation. Do not remove the duct - front defroster. If the duct - front defroster is removed, it cannot be reinstalled unless the instrument panel is removed.
• Be careful not to damage the sensor and interior trim.

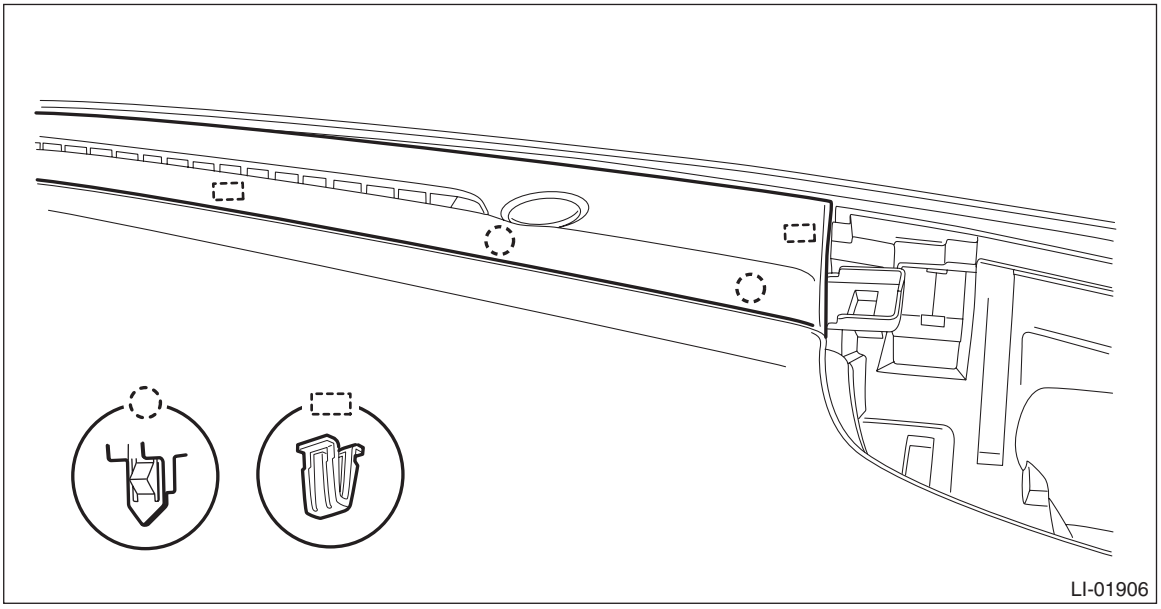
LI-01906

   (2) Release the claws, and then pull out the sensor - automatic light from the duct - front defroster.
   (3) Disconnect the connector and remove the sensor - automatic light.

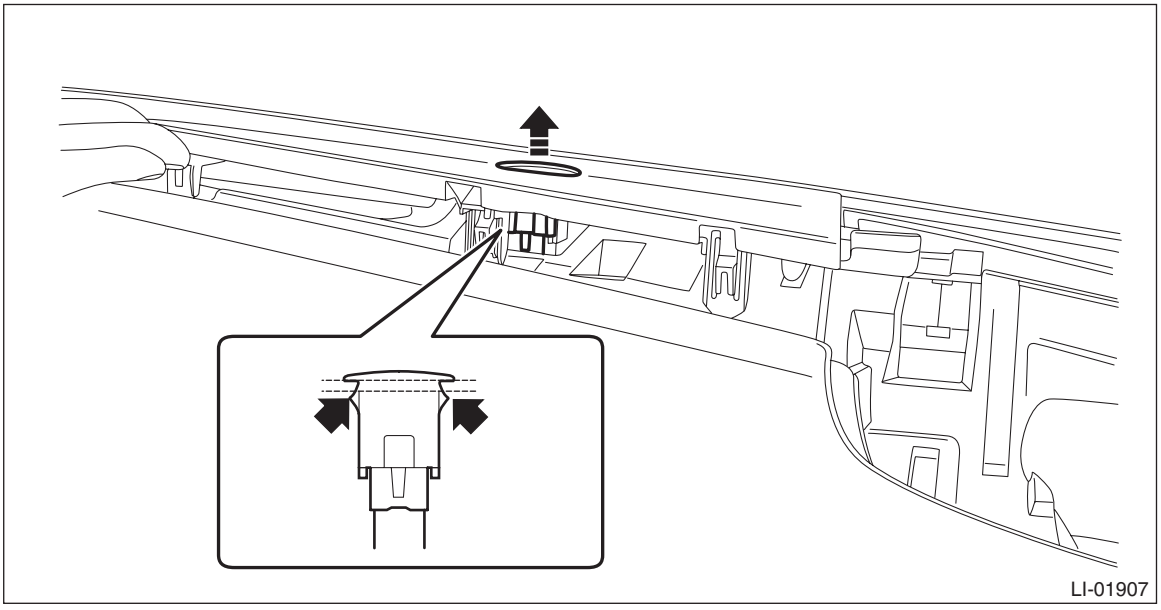
LI-01907

B: INSTALLATION

1) Install the sensor - automatic light.
2) Install the duct - front defroster.
3) Install the grille speaker side.
4) Install the trim panel - front pillar UPR. <Ref. to EI-97, INSTALLATION, Upper Inner Trim.>
5) Connect the ground terminal to battery sensor. <Ref. to RC-4, BATTERY, NOTE, Repair Contents.>

C: INSPECTION

1) Connect the connector.
2) Turn the ignition switch to ON, and set the lighting switch to the AUTO position.
3) Measure the voltage between connector terminals.

Preparation tool:
Circuit tester

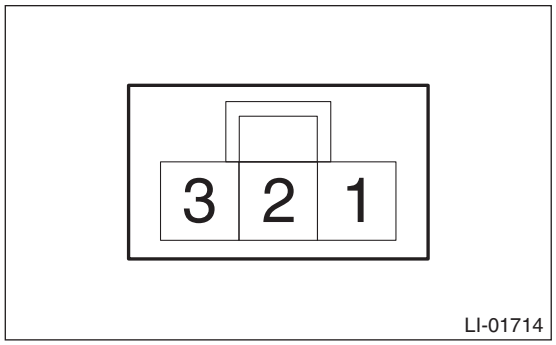

Terminal No.	Inspection conditions	Standard
2 (+) — 1 (–)	Measure the voltage when the area around the sensor - automatic light, which was dark, becomes bright.	Dark condition: Approx. 0.6 V or less
		Bright condition: Approx. 3.0 V or more

4) Replace the sensor - automatic light if the inspection result is not within the standard value.

14.Headlight Assembly

A: REMOVAL

CAUTION:
Do not perform work with wet hands, because there is a possibility of electrical shock.

1) Disconnect the ground terminal from battery sensor. <Ref. to RC-4, BATTERY, NOTE, Repair Contents.>
2) Remove the bumper face - front. <Ref. to EI-34, REMOVAL, Front Bumper.>
3) Remove the cover - front fender.
   (1) Remove the clip.
   (2) Release the claws, and then remove the cover - front fender UPR.

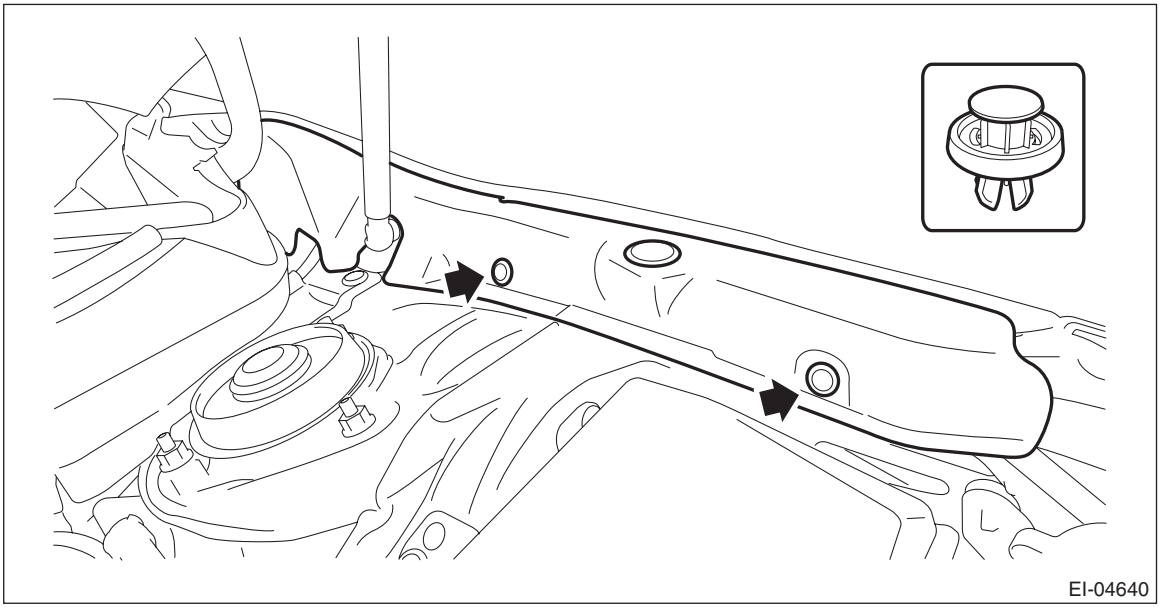
EI-04640

4) Remove the bolts, and then remove the bracket - front bumper corner.

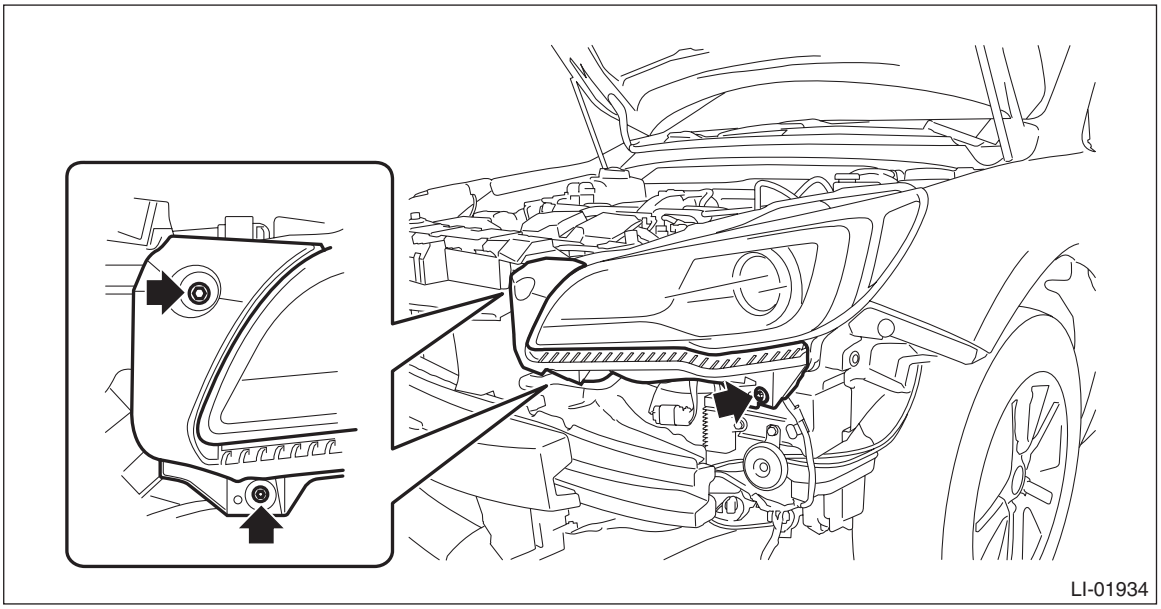
LI-01934

5) Remove the light assembly - head.
(1) Disconnect the connector.
(2) Remove the bolts and clips, and remove the light assembly - head.

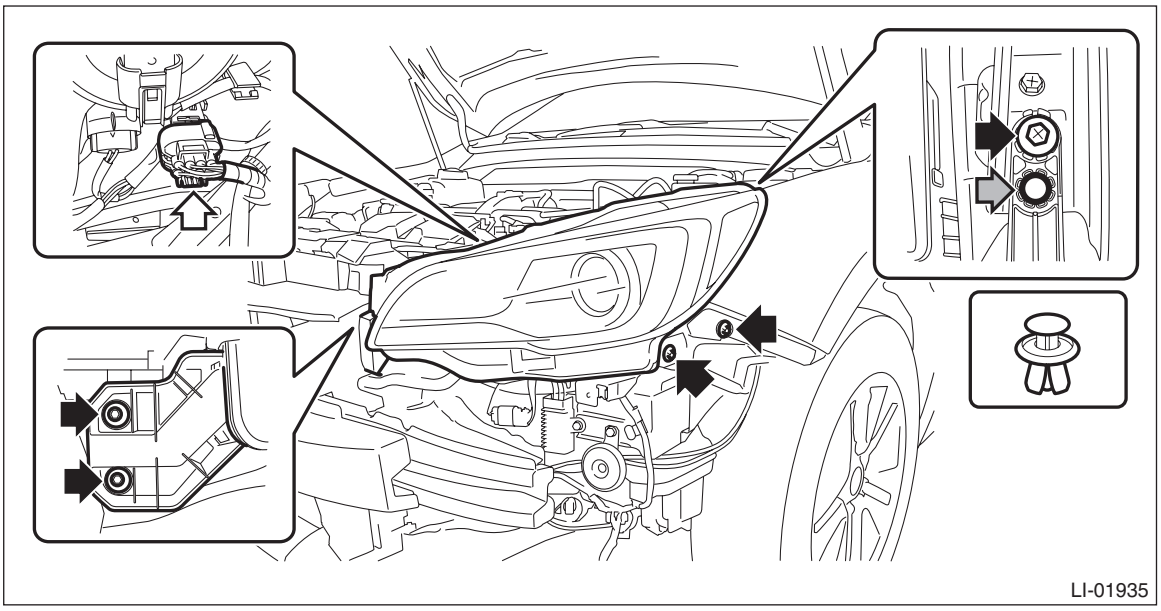

B: INSTALLATION

CAUTION:
• Install the bumper face - front so that the front end of the under cover (b) comes inside the bumper face - front (a), and the front end of the mud guard (c) comes outside the bumper face - front (a).

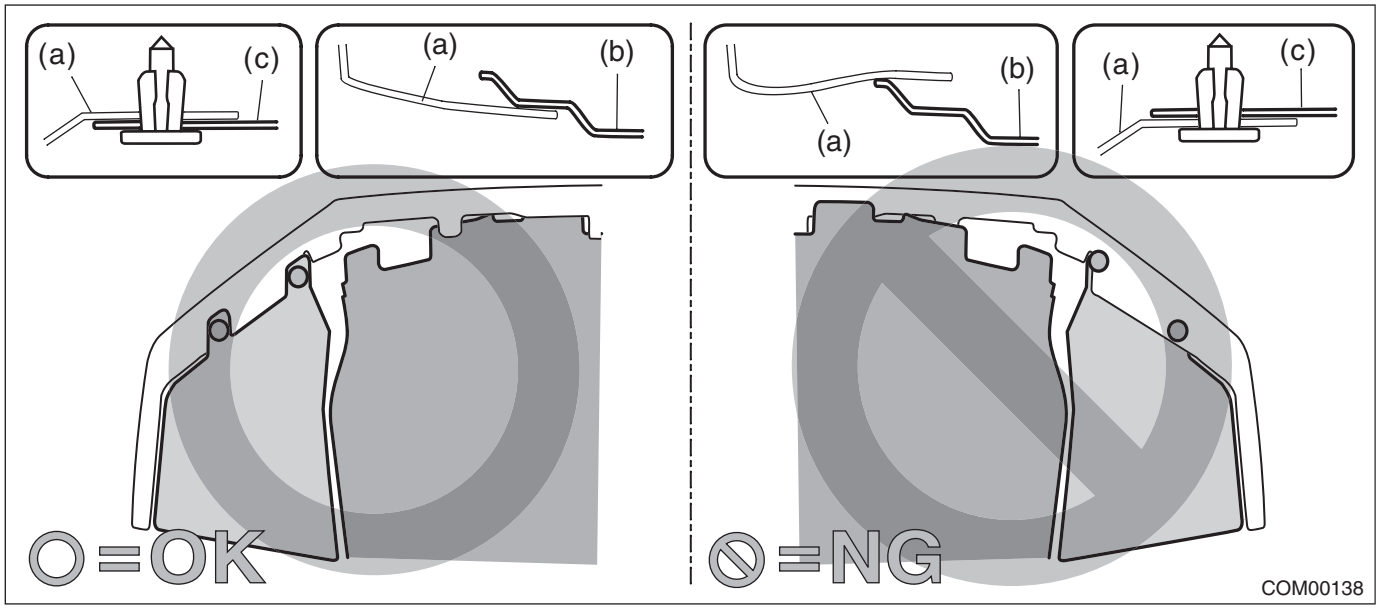

• Before installing the bumper face, match the claws on the bracket - front bumper with the engaging position of flange section on the bumper face side. If the engaging position is not correct, the flange section may be broken or the clearance between fender panel and bumper face may not be uniform.
1) Install the light assembly - head.

Tightening torque:
7.5 N·m (0.8 kgf-m, 5.5 ft-lb)
2) Install the bracket - front bumper corner.

Tightening torque:
7.5 N·m (0.8 kgf-m, 5.5 ft-lb)

3) Install the cover - front fender UPR.
4) Install the bumper face - front. <Ref. to EI-38, INSTALLATION, Front Bumper.>
5) Connect the ground terminal to battery sensor. <Ref. to RC-4, BATTERY, NOTE, Repair Contents.>
6) Adjust the headlight beam and fog light beam.
• Adjust the headlight beam. <Ref. to LI-34, HEADLIGHT BEAM ADJUSTMENT, ADJUSTMENT, Headlight Assembly.>
• Adjust the fog light beam. (Model with fog light) <Ref. to LI-44, FOG LIGHT AIMING, ADJUSTMENT, Front Fog Light Assembly.>

C: DISASSEMBLY

CAUTION:
Use a dry clean cloth so that no grease or water adheres to the glass portion of the bulb.

1. HIGH BEAM BULB

1) Disconnect the connector.
2) Rotate in the direction of arrow shown in the figure to remove the high beam bulb.

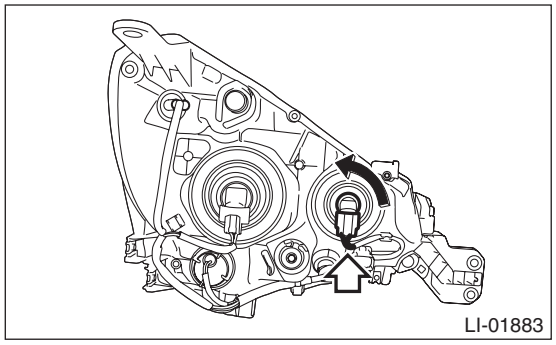

2. LOW BEAM BULB (HALOGEN TYPE)

1) Disconnect the connector.
2) Rotate in the direction of arrow shown in the figure to remove the low beam bulb.

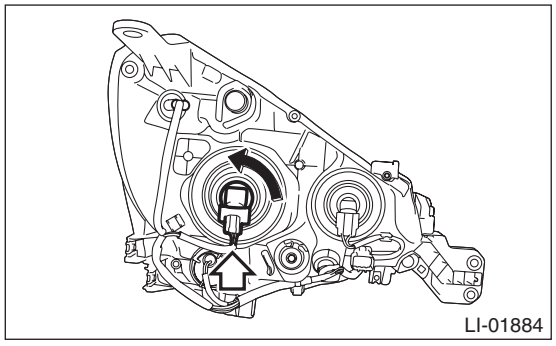

3. LOW BEAM BULB (HID TYPE)

1) Remove the connector and rotate the ballast - headlight in the arrow direction shown in the figure.
2) Rotate the bulb socket in the arrow direction shown in the figure to remove the ballast - headlight.
3) Unlock the bulb spring, and remove the low beam bulb.

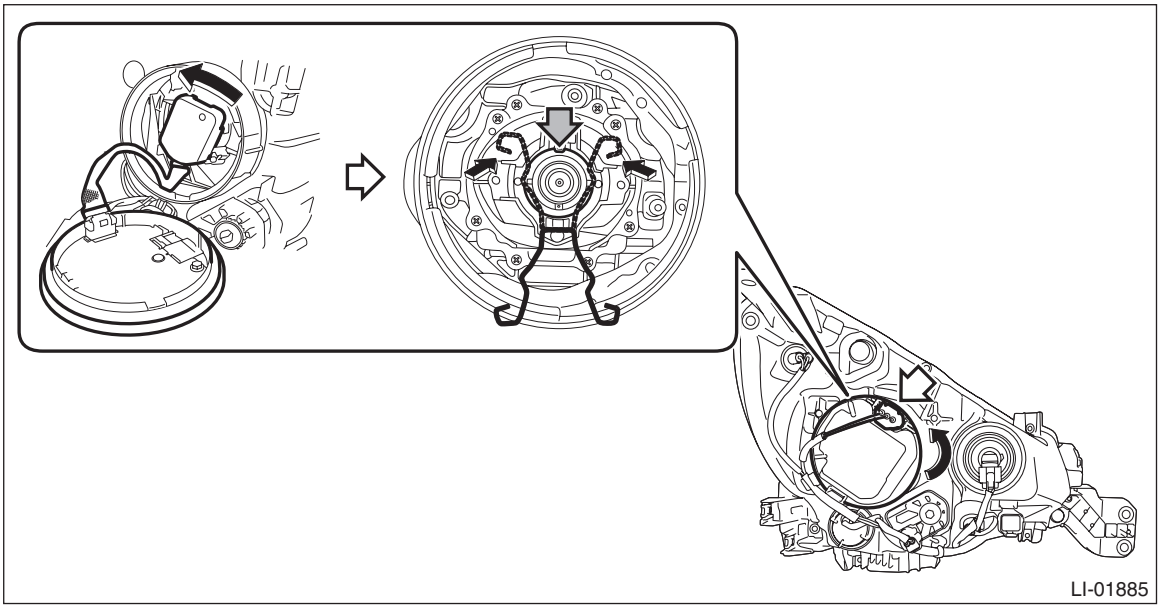

4. PARKING LIGHT BULB

NOTE:
Since the LED type is a non-disassembled part, it cannot be removed.

5. SIDE MARKER LIGHT BULB

Rotate the bulb socket in the direction of arrow shown in the figure to remove the side marker light bulb.

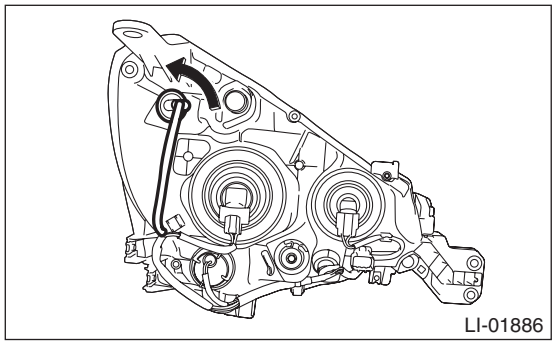

6. TURN SIGNAL LIGHT BULB

Rotate the bulb socket in the direction of arrow shown in the figure to remove the turn signal light bulb.

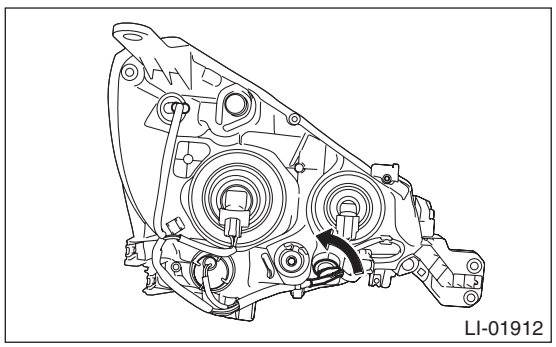

D: ASSEMBLY

CAUTION:
Use a dry clean cloth so that no grease or water adheres to the glass portion of the bulb.

1. HIGH BEAM BULB

1) Install the high beam bulb.
2) Connect the connector.

2. LOW BEAM BULB (HALOGEN TYPE)

1) Install the low beam bulb.
2) Connect the connector.

3. LOW BEAM BULB (HID TYPE)

1) Install the low beam bulb.
2) Install the ballast - headlight.

4. SIDE MARKER LIGHT BULB

1) Install the side marker light bulb.
2) Install the bulb socket.

5. TURN SIGNAL LIGHT BULB

1) Install the turn signal light bulb.
2) Install the bulb socket.

E: ADJUSTMENT

1. HEADLIGHT BEAM ADJUSTMENT

CAUTION:
• Turn off the light before adjusting the headlight beam level. If it is necessary to inspect the beam level, do not keep the light on for two minutes or more.
• When blocking the light emitted from the headlight, use a light shield or equivalent.
Do not apply the tape on the lens or place the cloth over it. It may raise the temperature in the light and cause deformation/bubble formations of the plastic lens.
1) Before checking the headlight beam level, be sure of the following:
- Check the area around the headlight for any scratches, damage or other type of deformation.
- The vehicle is parked on a level surface.
- The inflation pressure of tires is correct.
- The vehicle does not have load.
- Vehicle's fuel tank is fully filled.

2) Set the headlight beam leveler switch to "0" position. (Model with manual leveler)
3) Bounce the vehicle several times to normalize the suspension.
4) Make certain that someone is seated in the driver's seat.
5) Measure the distance between the low beam bulb centers and the height of the bulb center.

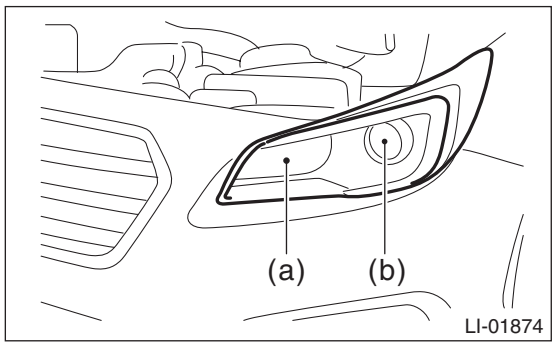

(a) High beam
(b) Low beam

6) Adjust the headlight beam.
(1) Place the vehicle with the front end facing to the measurement panel, open the front hood, and then illuminate the low beam.

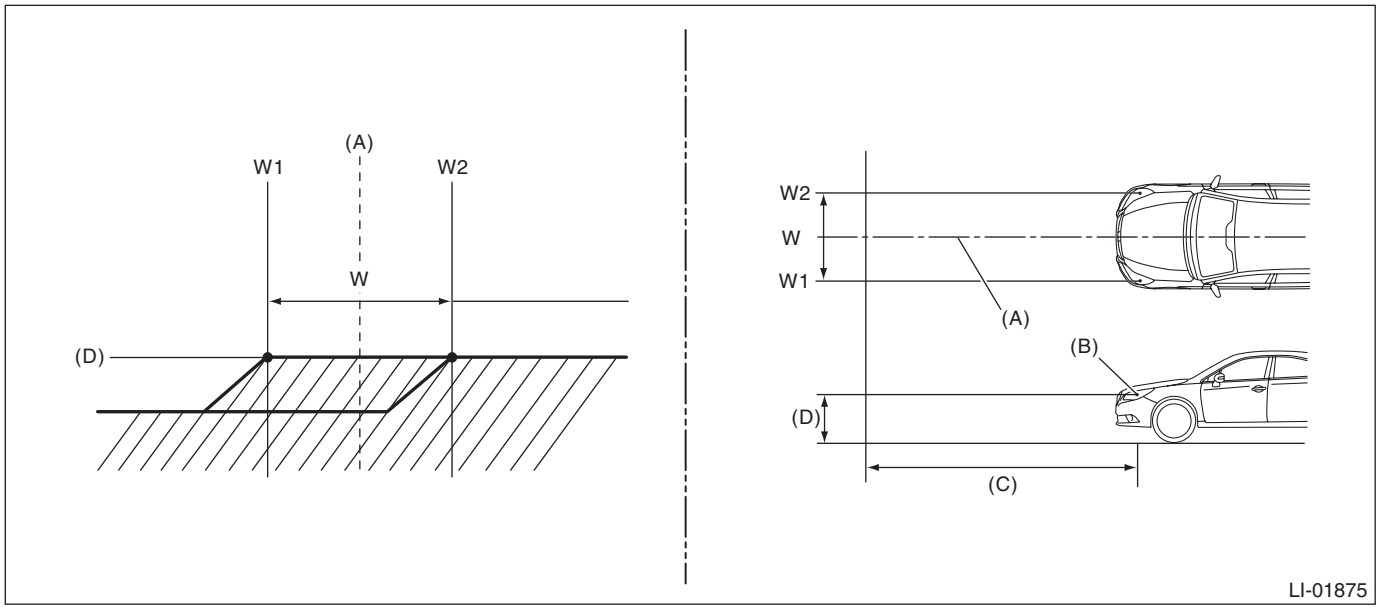

(A) Vehicle center
(B) Bulb center marking
(C) 3 m (10 ft)
(D) Height of headlight center

W mm (in)
1,430 (56.3)

(2) Adjust the beam level by turning the aiming screw.

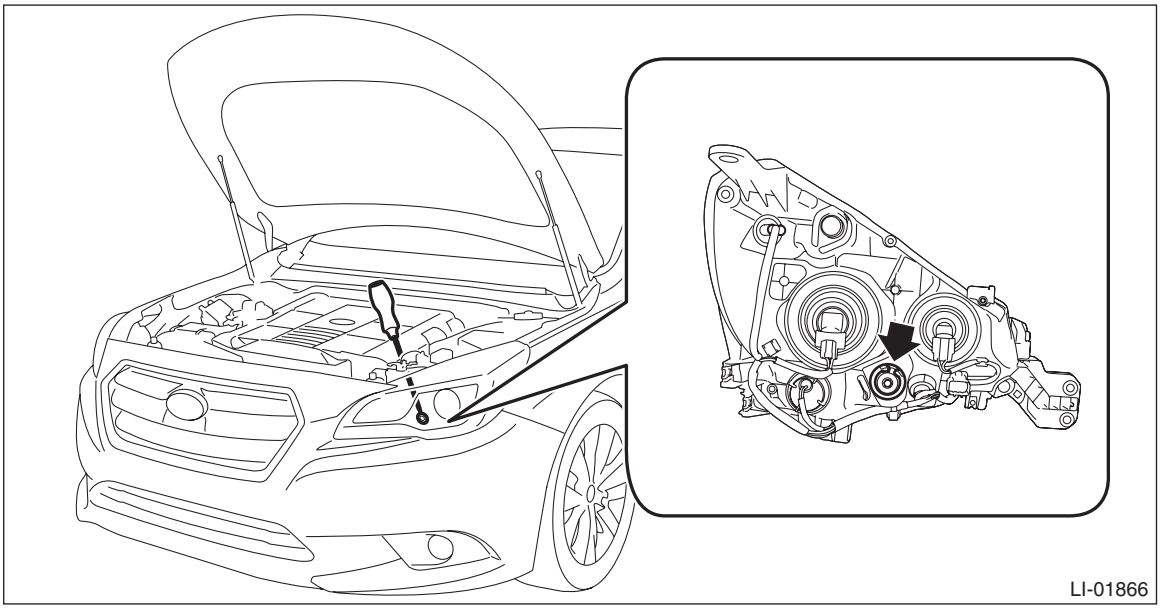

15.Headlight Bulb

A: REMOVAL

1. HIGH BEAM

CAUTION:
- **Do not perform work with wet hands, because there is a possibility of electrical shock.**
- **Do not leave the light assembly - head without the bulb for a long time. Dust, moisture, etc. entering the light may affect its performance.**

1) Disconnect the ground terminal from battery sensor. <Ref. to RC-4, BATTERY, NOTE, Repair Contents.>
2) Remove the high beam bulb. <Ref. to LI-32, HIGH BEAM BULB, DISASSEMBLY, Headlight Assembly.>

2. LOW BEAM

CAUTION:
- **Do not perform work with wet hands, because there is a possibility of electrical shock.**
- **Do not leave the light assembly - head without the bulb for a long time. Dust, moisture, etc. entering the light may affect its performance.**

1) Disconnect the ground terminal from battery sensor. <Ref. to RC-4, BATTERY, NOTE, Repair Contents.>
2) Remove the low beam bulb. <Ref. to LI-32, LOW BEAM BULB (HALOGEN TYPE), DISASSEMBLY, Headlight Assembly.>
- Halogen type: <Ref. to LI-32, LOW BEAM BULB (HALOGEN TYPE), DISASSEMBLY, Headlight Assembly.>
- HID type: <Ref. to LI-33, LOW BEAM BULB (HID TYPE), DISASSEMBLY, Headlight Assembly.>

B: INSTALLATION

1. HIGH BEAM

1) Install the high beam bulb. <Ref. to LI-34, HIGH BEAM BULB, ASSEMBLY, Headlight Assembly.>
2) Connect the ground terminal to battery sensor. <Ref. to RC-4, BATTERY, NOTE, Repair Contents.>

2. LOW BEAM

1) Install the low beam bulb. <Ref. to LI-34, LOW BEAM BULB (HALOGEN TYPE), ASSEMBLY, Headlight Assembly.>
2) Connect the ground terminal to battery sensor. <Ref. to RC-4, BATTERY, NOTE, Repair Contents.>

16.Hazard Switch

A: REMOVAL

1) Disconnect the ground terminal from battery sensor. <Ref. to RC-4, BATTERY, NOTE, Repair Contents.>
2) Remove the center grille assembly. <Ref. to AC-92, CENTER GRILLE ASSEMBLY, REMOVAL, Air Vent Grille.>
3) Release the claws, and then remove the switch - hazard.

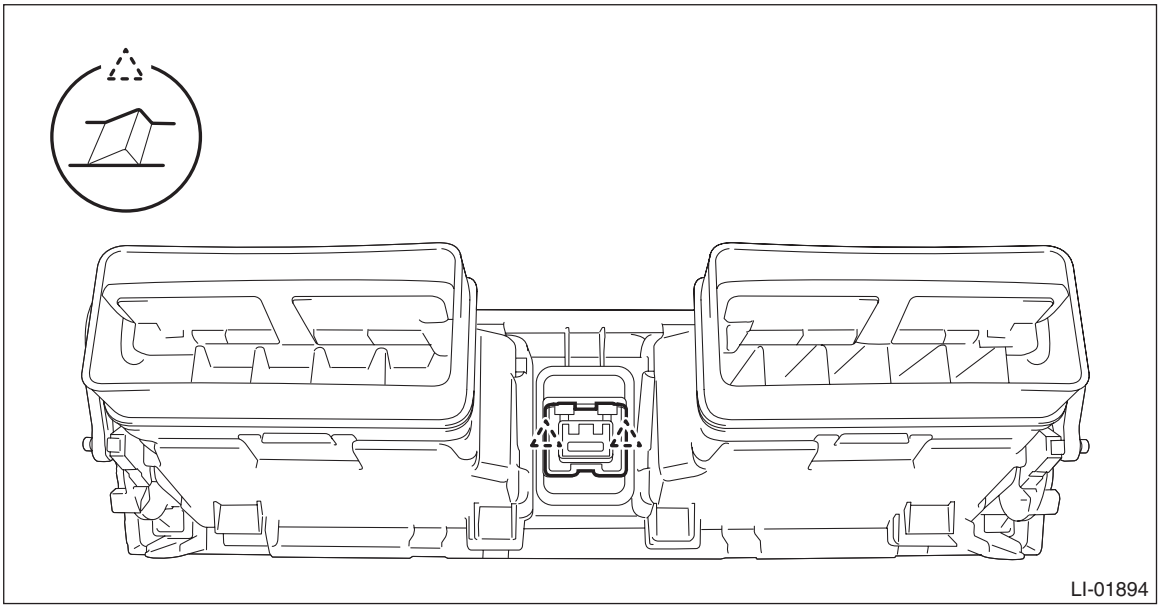

B: INSTALLATION

CAUTION:
After installing the center grille assembly, check that the air vent grille of the center grille assembly is inserted correctly into the air vent duct.
1) Install the switch - hazard.
2) Install the center grille assembly.
3) Connect the ground terminal to battery sensor. <Ref. to RC-4, BATTERY, NOTE, Repair Contents.>

C: INSPECTION

1) Measure the resistance between connector terminals.

Preparation tool:
Circuit tester

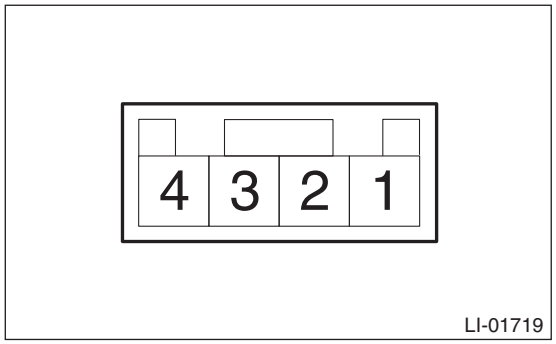

Terminal No.	Inspection conditions	Standard
2 — 3	Switch OFF	1 MΩ or more
	Switch ON	Less than 1 Ω

2) Apply battery voltage between the connector terminals to check the lighting condition of the light.

Terminal No.	Inspection conditions	Specification
4 (+) — 1 (–)	Apply battery voltage.	Light ON

3) Replace the switch - hazard if the inspection result is not within the standard value.

17.Front Turn Signal Light Bulb

A: REMOVAL

1) Disconnect the ground terminal from battery sensor. <Ref. to RC-4, BATTERY, NOTE, Repair Contents.>
2) Remove the front turn signal light bulb. <Ref. to LI-33, TURN SIGNAL LIGHT BULB, DISASSEMBLY, Headlight Assembly.>

B: INSTALLATION

1) Install the front turn signal light bulb. <Ref. to LI-34, TURN SIGNAL LIGHT BULB, ASSEMBLY, Headlight Assembly.>
2) Connect the ground terminal to battery sensor. <Ref. to RC-4, BATTERY, NOTE, Repair Contents.>

18.Clearance/Parking Light Bulb

A: NOTE

Since the parking light bulb (LED) is a non-disassembled part, it cannot be removed from the headlight assembly.

19.Front Side Marker Light Bulb

A: REMOVAL

1) Disconnect the ground terminal from battery sensor. <Ref. to RC-4, BATTERY, NOTE, Repair Contents.>
2) Remove the front side marker light bulb. <Ref. to LI-33, SIDE MARKER LIGHT BULB, DISASSEMBLY, Headlight Assembly.>

B: INSTALLATION

1) Install the front side marker light bulb. <Ref. to LI-34, SIDE MARKER LIGHT BULB, ASSEMBLY, Headlight Assembly.>
2) Connect the ground terminal to battery sensor. <Ref. to RC-4, BATTERY, NOTE, Repair Contents.>

20.Front Fog Light Assembly

A: REMOVAL

1) Disconnect the ground terminal from battery sensor. <Ref. to RC-4, BATTERY, NOTE, Repair Contents.>
2) Lift up the vehicle.
3) Remove the clips, and turn over the mud guard - front.

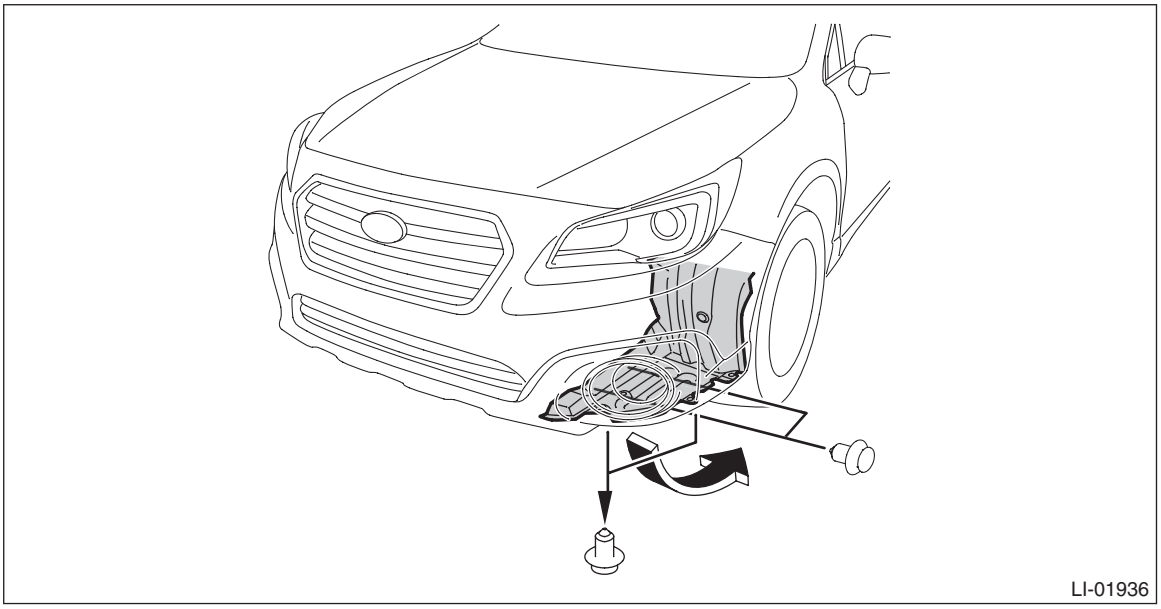

4) Remove the fog light assembly - front.
   (1) Disconnect the connector.
   (2) Remove the screws and clips, and remove the fog light assembly - front.
   • Sedan model

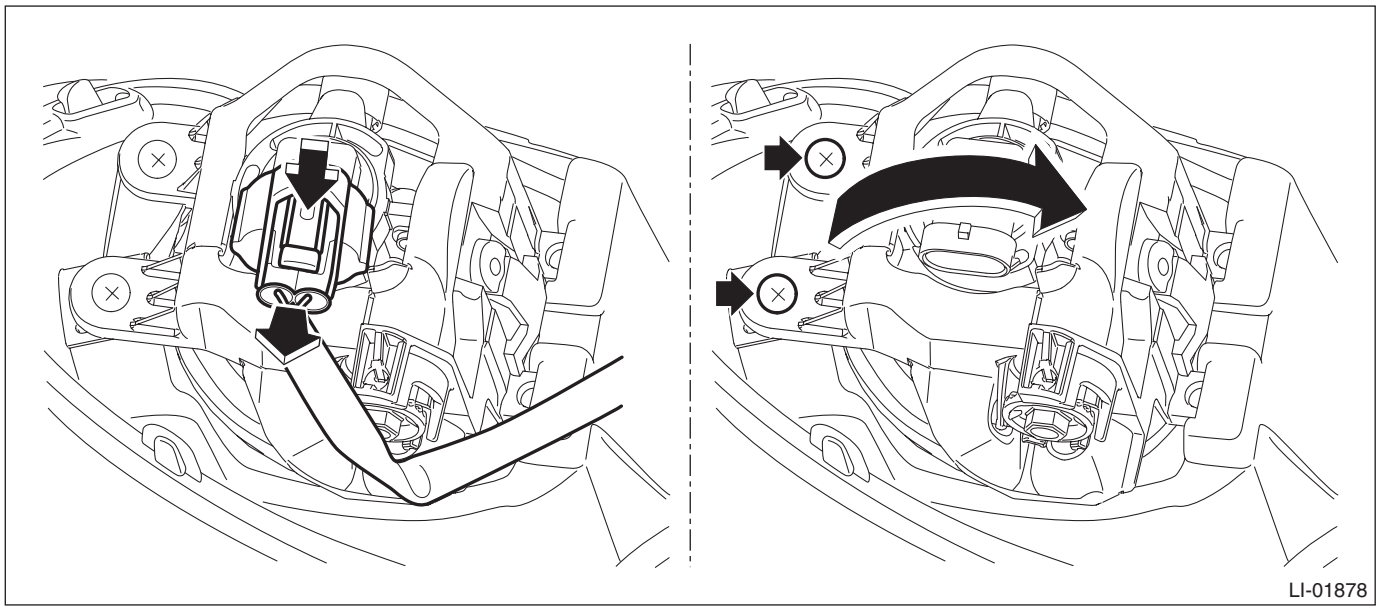

- OUTBACK model

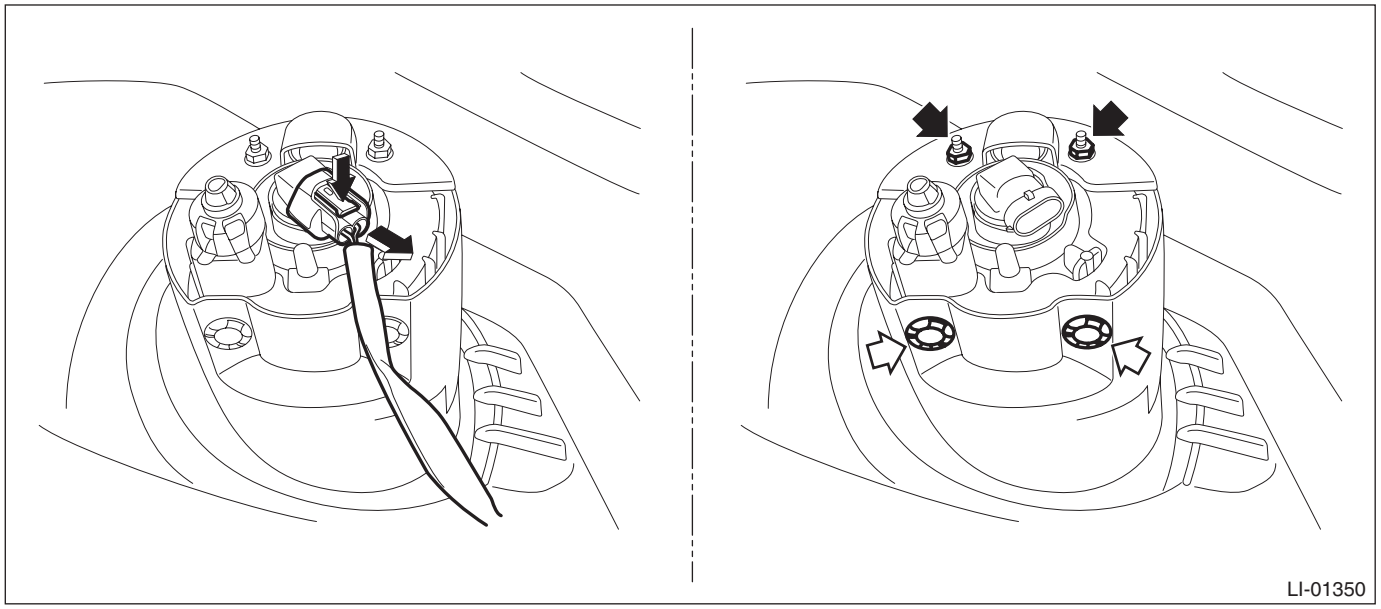

B: INSTALLATION

CAUTION:
Install the mud guard - front so that the front end of the mud guard (b) comes outside the bumper face - front (a).

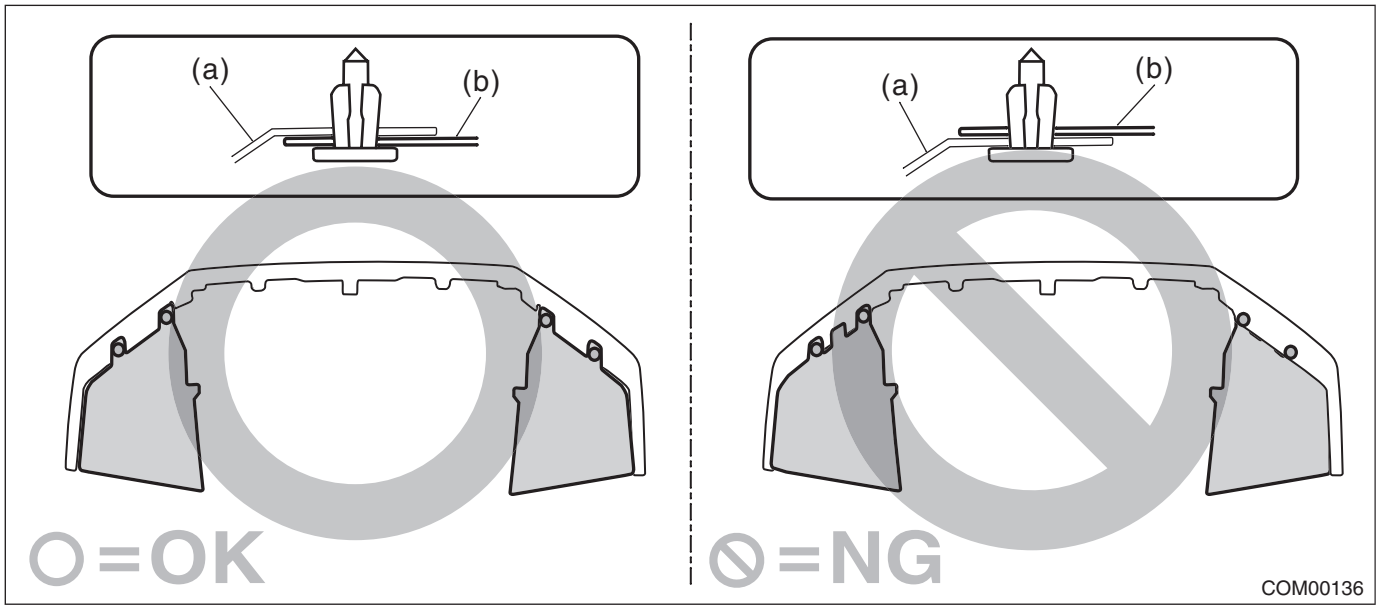

1) Install the fog light assembly - front.
2) Install the mud guard - front.
3) Lower the vehicle.
4) Connect the ground terminal to battery sensor. <Ref. to RC-4, BATTERY, NOTE, Repair Contents.>
5) Adjust the fog light beam. <Ref. to LI-44, FOG LIGHT AIMING, ADJUSTMENT, Front Fog Light Assembly.>

C: DISASSEMBLY

CAUTION:
Use a dry clean cloth so that no grease or water adheres to the glass portion of the bulb.
Rotate in the direction of arrow shown in the figure to remove the front fog light bulb.

- Sedan model

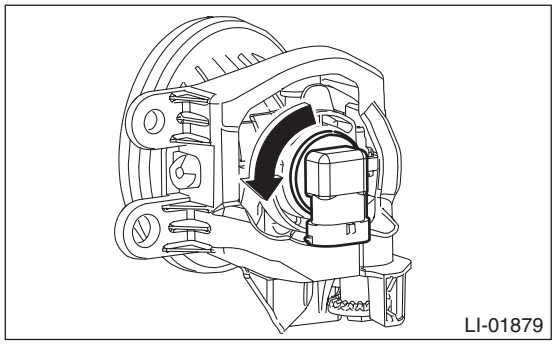

- OUTBACK model

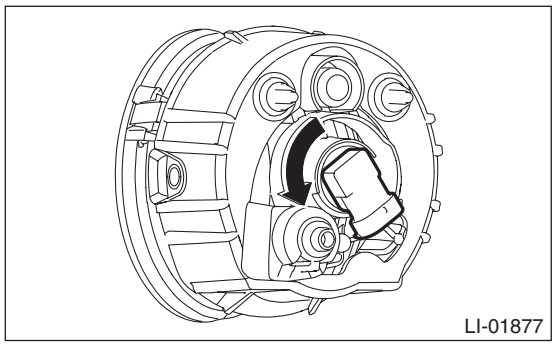

D: ASSEMBLY

CAUTION:
Use a dry clean cloth so that no grease or water adheres to the glass portion of the bulb.
Install the front fog light bulb.

E: ADJUSTMENT

1. FOG LIGHT AIMING

1) Before checking the fog light beam level, be sure of the following:
- Check the area around the fog light for any scratches, damage or other type of deformation.
- The vehicle is parked on a level surface.
- The inflation pressure of tires is correct.
- The vehicle does not have load.
- Vehicle's fuel tank is fully filled.

2) Bounce the vehicle several times to normalize the suspension.
3) Make certain that someone is seated in the driver's seat.

4) Place the vehicle with the front end facing to the measurement panel.

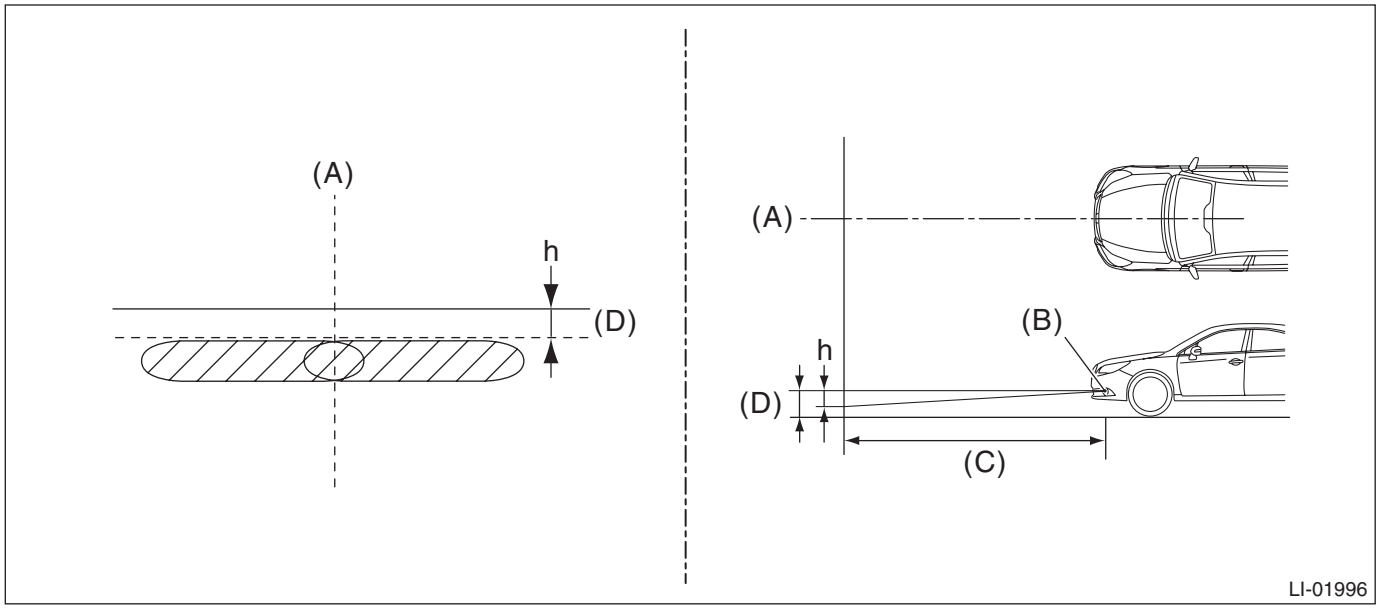

(A) Vehicle center
(B) Bulb center marking
(C) 3 m (10 ft)
(D) Height of fog light center

h mm (in) at 3 m (10 ft)
40 (1.58)

5) Adjust the fog light beam.
(1) Remove the clips, and turn over the mud guard - front.

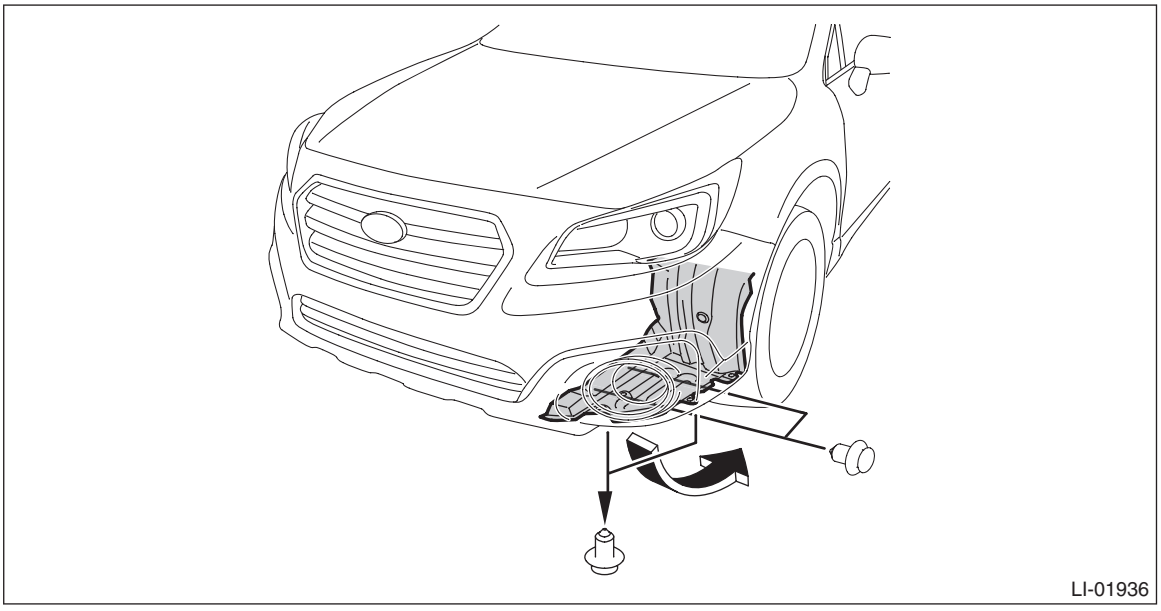

(2) Adjust the beam level by turning the aiming screw.

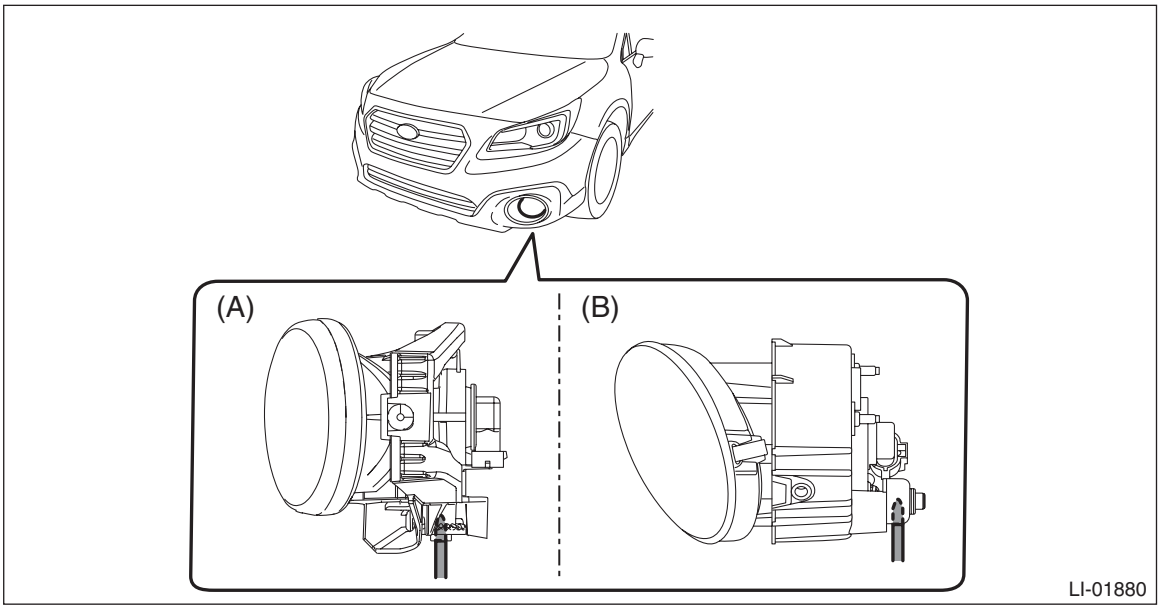

(A) Sedan model (B) OUTBACK model

(3) Install the mud guard - front.

CAUTION:
Install the mud guard - front so that the front end of the mud guard (b) comes outside the bumper face - front (a).

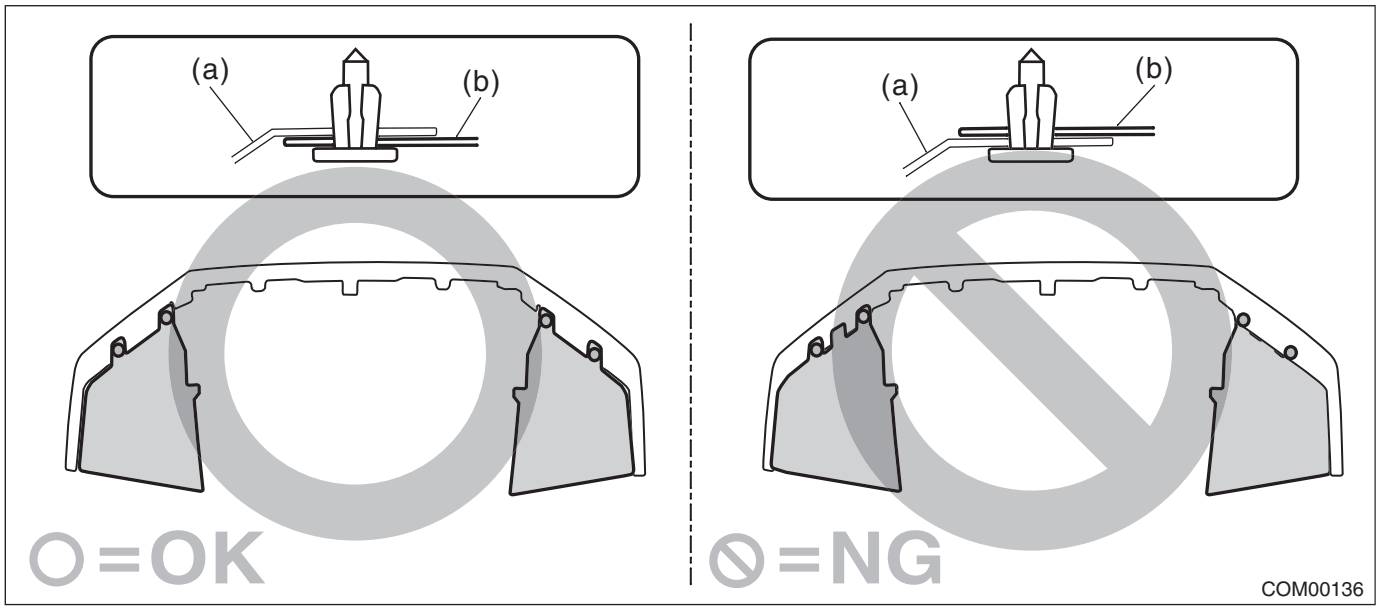

21.Front Fog Light Bulb

A: REMOVAL

1) Disconnect the ground terminal from battery sensor. <Ref. to RC-4, BATTERY, NOTE, Repair Contents.>
2) Remove the clips, and turn over the mud guard - front.

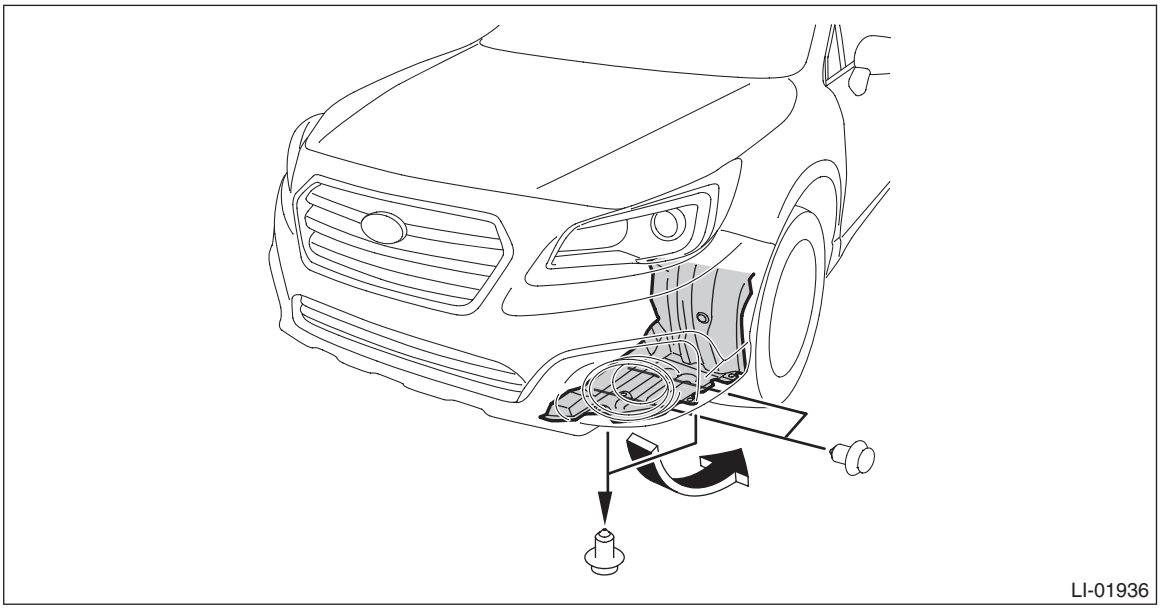

3) Remove the front fog light bulb. <Ref. to LI-44, DISASSEMBLY, Front Fog Light Assembly.>

B: INSTALLATION

CAUTION:
Install the mud guard - front so that the front end of the mud guard (b) comes outside the bumper face - front (a).

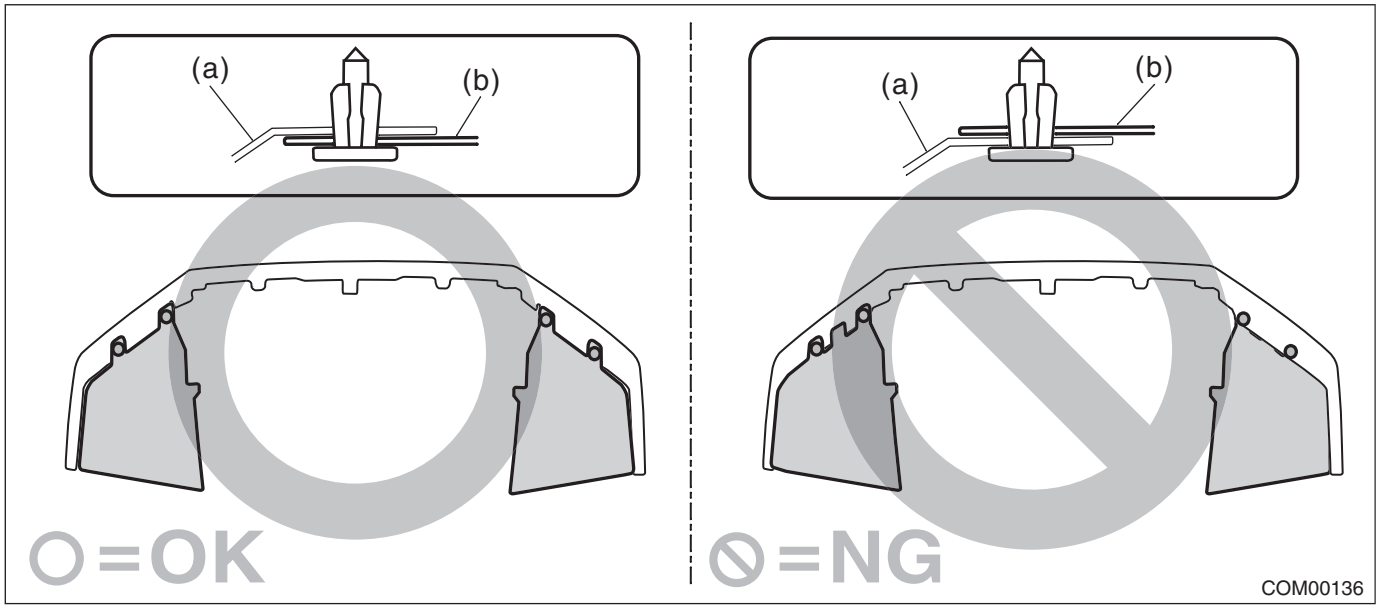

CAUTION:
After connecting the connector, make sure that the bulb is locked securely.
1) Install the front fog light bulb. <Ref. to LI-44, ASSEMBLY, Front Fog Light Assembly.>
2) Install the mud guard - front.
3) Connect the ground terminal to battery sensor. <Ref. to RC-4, BATTERY, NOTE, Repair Contents.>

22.Side Turn Signal Light Assembly

A: REMOVAL

1) Disconnect the ground terminal from battery sensor. <Ref. to RC-4, BATTERY, NOTE, Repair Contents.>
2) Remove the side turn signal light assembly. <Ref. to GW-29, DISASSEMBLY, Outer Mirror Assembly.>

B: INSTALLATION

1) Install the side turn signal light assembly. <Ref. to GW-31, ASSEMBLY, Outer Mirror Assembly.>
2) Connect the ground terminal to battery sensor. <Ref. to RC-4, BATTERY, NOTE, Repair Contents.>

23.Rear Combination Light Assembly

A: REMOVAL

1. SEDAN MODEL

1) Disconnect the ground terminal from battery sensor. <Ref. to RC-4, BATTERY, NOTE, Repair Contents.>
2) Remove the trunk trim panel - side. <Ref. to EI-109, REMOVAL, Trunk Room Trim.>
3) Remove the light assembly - rear combination.
   (1) Remove the harness clip and connector.
   (2) Release the nuts and clips, then remove the light assembly - rear combination.

CAUTION:
Be careful not to damage the clips.

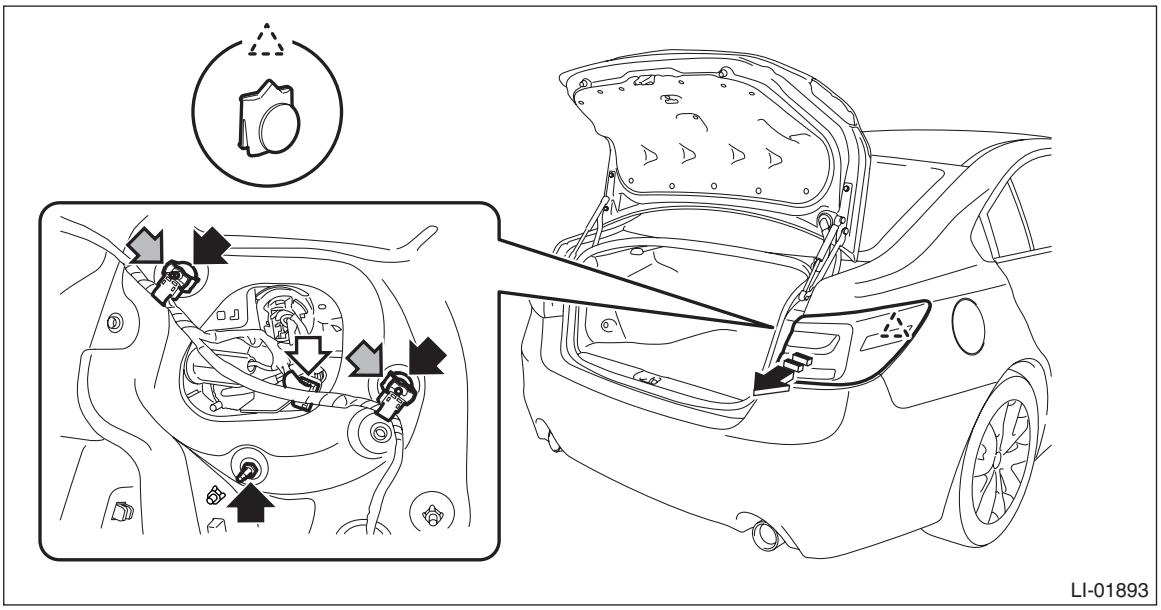

2. OUTBACK MODEL

1) Disconnect the ground terminal from battery sensor. <Ref. to RC-4, BATTERY, NOTE, Repair Contents.>
2) Remove the light assembly - rear combination.
   (1) Remove the clips and detach the rear combination light covers.
   (2) Remove the bolt and release the clip.
   (3) Disconnect the connector and remove the light assembly - rear combination.

CAUTION:
Be careful not to damage the clips.

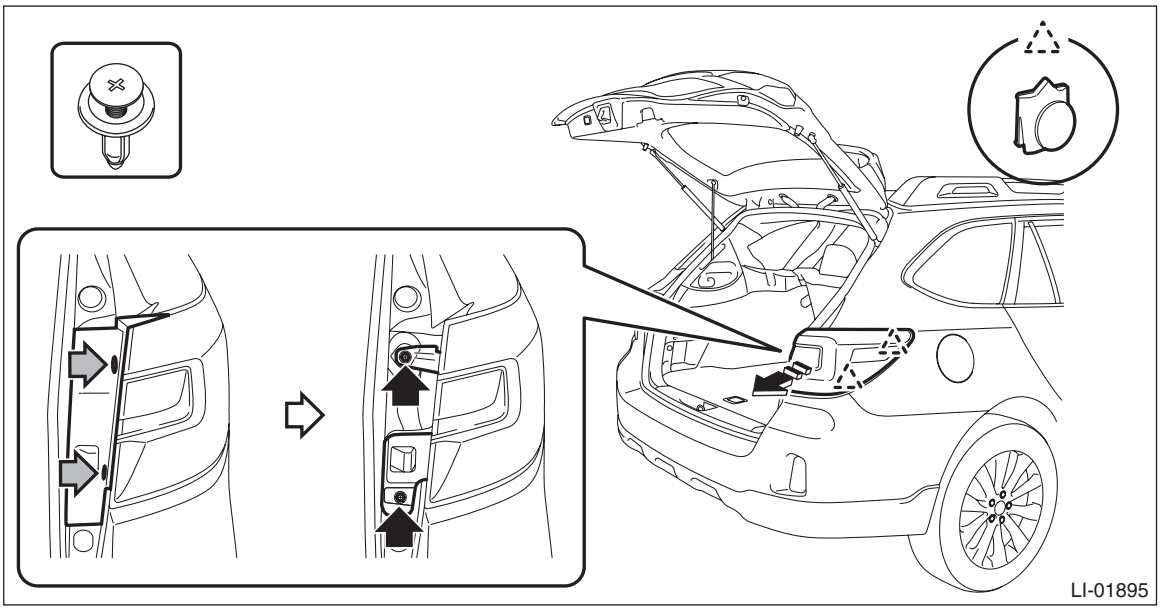

B: INSTALLATION

1. SEDAN MODEL

1) Replace the light assembly gasket with a new part.
2) Install the light assembly - rear combination.

CAUTION:
Be careful not to catch the harness in between the parts.

Tightening torque:
4.5 N·m (0.5 kgf-m, 3.3 ft-lb)

3) Install the trunk trim panel - side.
4) Connect the ground terminal to battery sensor. <Ref. to RC-4, BATTERY, NOTE, Repair Contents.>

2. OUTBACK MODEL

1) Install the light assembly - rear combination.

CAUTION:
Be careful not to catch the harness in between the parts.

Tightening torque:
7.5 N·m (8.0 kgf-m, 5.5 ft-lb)

2) Connect the ground terminal to battery sensor. <Ref. to RC-4, BATTERY, NOTE, Repair Contents.>

C: DISASSEMBLY

CAUTION:
Use a dry clean cloth so that no grease or water adheres to the glass portion of the bulb.

1. TAIL LIGHT/STOP LIGHT BULB

NOTE:
Since the LED type is a non-disassembled part, it cannot be removed.

2. TURN SIGNAL LIGHT BULB

Rotate the bulb socket in the direction of arrow shown in the figure to remove the turn signal light bulb.

- Sedan model

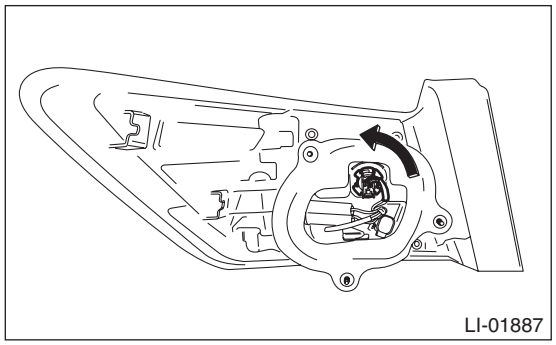

- OUTBACK model

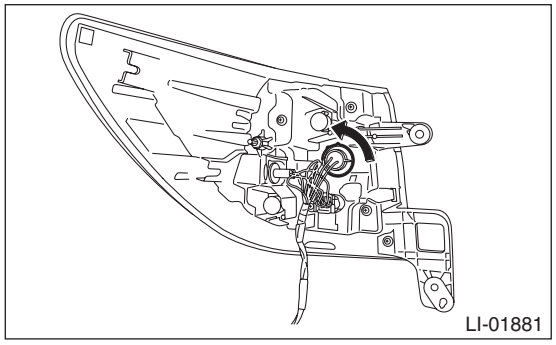

3. SIDE MARKER LIGHT BULB

1) Rotate the bulb socket in the direction of arrow shown in the figure to remove the side marker light bulb.

- Sedan model

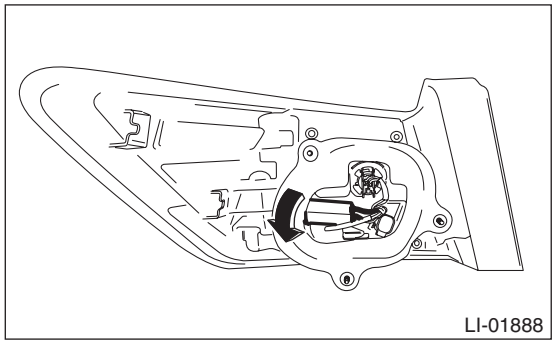

- OUTBACK model

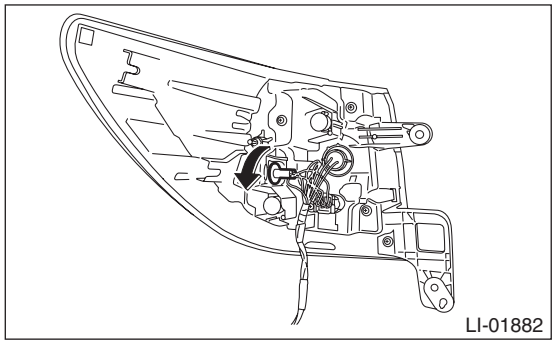

D: ASSEMBLY

CAUTION:
Use a dry clean cloth so that no grease or water adheres to the glass portion of the bulb.

1. TURN SIGNAL LIGHT BULB

1) Install the turn signal light bulb.
2) Install the bulb socket.

2. SIDE MARKER LIGHT BULB

1) Install the side marker light bulb.
2) Install the bulb socket.

E: INSPECTION

1) Apply battery voltage between the connector terminals to check the lighting condition of the light.

- Sedan model

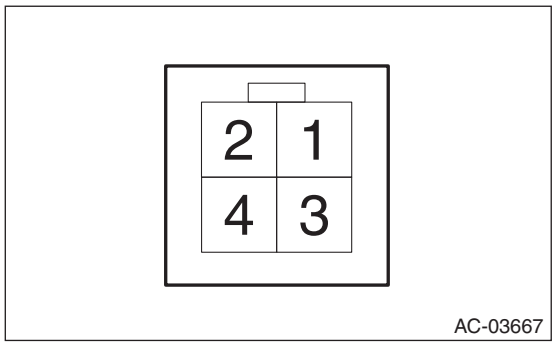

Terminal No.	Inspection conditions	Specification
3 (+) — 2 (–)	Apply battery voltage.	Stop light on
4 (+) — 2 (–)		Tail / side marker light on
1 (+) — 2 (–)		Turn signal light on

- OUTBACK model

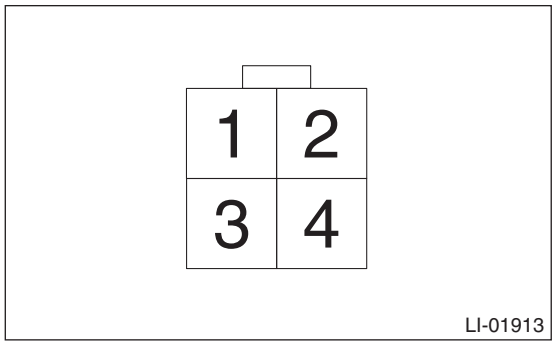

Terminal No.	Inspection conditions	Specification
4 (+) — 3 (–)	Apply battery voltage.	Stop light on
2 (+) — 3 (–)		Tail / side marker light on
1 (+) — 3 (–)		Turn signal light on

2) Replace the harness and bulb if it is found defective.

24.Tail/Stop Light Bulb

A: NOTE

Since the tail light / stop light bulb (LED) is a non-disassembled part, it cannot be removed from the rear combination light assembly.

25.Rear Turn Signal Light Bulb

A: REMOVAL

1. SEDAN MODEL

1) Disconnect the ground terminal from battery sensor. <Ref. to RC-4, BATTERY, NOTE, Repair Contents.>
2) Remove the trunk trim panel - side. <Ref. to EI-109, REMOVAL, Trunk Room Trim.>
3) Remove the rear turn signal light bulb. <Ref. to LI-51, TURN SIGNAL LIGHT BULB, DISASSEMBLY, Rear Combination Light Assembly.>

2. OUTBACK MODEL

1) Disconnect the ground terminal from battery sensor. <Ref. to RC-4, BATTERY, NOTE, Repair Contents.>
2) Remove the light assembly - rear combination. <Ref. to LI-50, OUTBACK MODEL, REMOVAL, Rear Combination Light Assembly.>
3) Remove the rear turn signal light bulb. <Ref. to LI-51, TURN SIGNAL LIGHT BULB, DISASSEMBLY, Rear Combination Light Assembly.>

B: INSTALLATION

1. SEDAN MODEL

1) Install the rear turn signal light bulb. <Ref. to LI-52, TURN SIGNAL LIGHT BULB, ASSEMBLY, Rear Combination Light Assembly.>
2) Install the trunk trim panel - side.
3) Connect the ground terminal to battery sensor. <Ref. to RC-4, BATTERY, NOTE, Repair Contents.>

2. OUTBACK MODEL

1) Install the rear turn signal light bulb. <Ref. to LI-52, TURN SIGNAL LIGHT BULB, ASSEMBLY, Rear Combination Light Assembly.>
2) Install the light assembly - rear combination.

Tightening torque:
7.5 N·m (0.8 kgf-m, 5.5 ft-lb)
3) Connect the ground terminal to battery sensor. <Ref. to RC-4, BATTERY, NOTE, Repair Contents.>

26.Rear Side Marker Light Bulb

A: REMOVAL

1. SEDAN MODEL

1) Disconnect the ground terminal from battery sensor. <Ref. to RC-4, BATTERY, NOTE, Repair Contents.>
2) Remove the trunk trim panel - side. <Ref. to EI-109, REMOVAL, Trunk Room Trim.>
3) Remove the rear side marker light bulb. <Ref. to LI-52, SIDE MARKER LIGHT BULB, DISASSEMBLY, Rear Combination Light Assembly.>

2. OUTBACK MODEL

1) Disconnect the ground terminal from battery sensor. <Ref. to RC-4, BATTERY, NOTE, Repair Contents.>
2) Remove the light assembly - rear combination. <Ref. to LI-50, OUTBACK MODEL, REMOVAL, Rear Combination Light Assembly.>
3) Remove the rear side marker light bulb. <Ref. to LI-52, SIDE MARKER LIGHT BULB, DISASSEMBLY, Rear Combination Light Assembly.>

B: INSTALLATION

1. SEDAN MODEL

1) Install the rear side marker light bulb. <Ref. to LI-52, SIDE MARKER LIGHT BULB, ASSEMBLY, Rear Combination Light Assembly.>
2) Install the trunk trim panel - side.
3) Connect the ground terminal to battery sensor. <Ref. to RC-4, BATTERY, NOTE, Repair Contents.>

2. OUTBACK MODEL

1) Install the rear side marker light bulb. <Ref. to LI-52, SIDE MARKER LIGHT BULB, ASSEMBLY, Rear Combination Light Assembly.>
2) Install the light assembly - rear combination.

Tightening torque:
7.5 N·m (0.8 kgf-m, 5.5 ft-lb)
3) Connect the ground terminal to battery sensor. <Ref. to RC-4, BATTERY, NOTE, Repair Contents.>

27.Rear Finisher Light Assembly

A: REMOVAL

1. SEDAN MODEL

1) Disconnect the ground terminal from battery sensor. <Ref. to RC-4, BATTERY, NOTE, Repair Contents.>
2) Remove the trim panel - trunk lid. <Ref. to EI-109, REMOVAL, Trunk Room Trim.>
3) Remove the garnish - trunk. <Ref. to EI-61, REMOVAL, Trunk Lid Garnish.>
4) Remove the rear finisher light assembly.
   (1) Disconnect the connector.
   (2) Remove the nuts and release the pin, then remove the rear finisher light assembly.

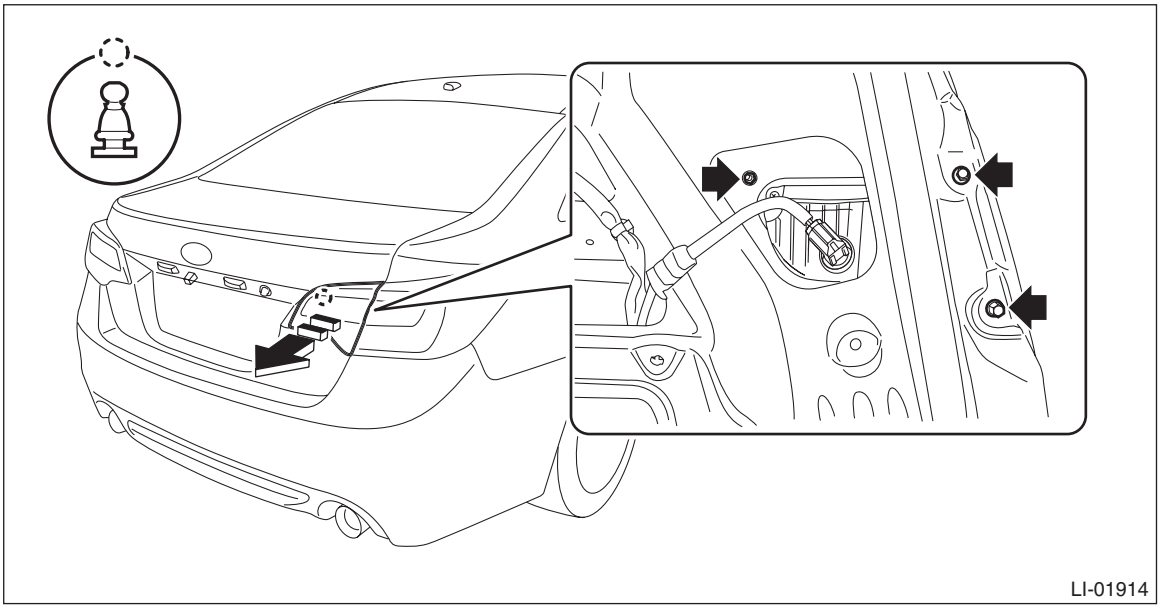

2. OUTBACK MODEL

1) Disconnect the ground terminal from battery sensor. <Ref. to RC-4, BATTERY, NOTE, Repair Contents.>
2) Remove the trim panel - rear gate. <Ref. to EI-121, REMOVAL, Rear Gate Trim.>
3) Remove the garnish assembly - rear gate. <Ref. to EI-62, REMOVAL, Rear Gate Garnish.>
4) Remove the rear finisher light assembly.
   (1) Disconnect the connector.
   (2) Remove the nuts and release the pin, then remove the rear finisher light assembly.

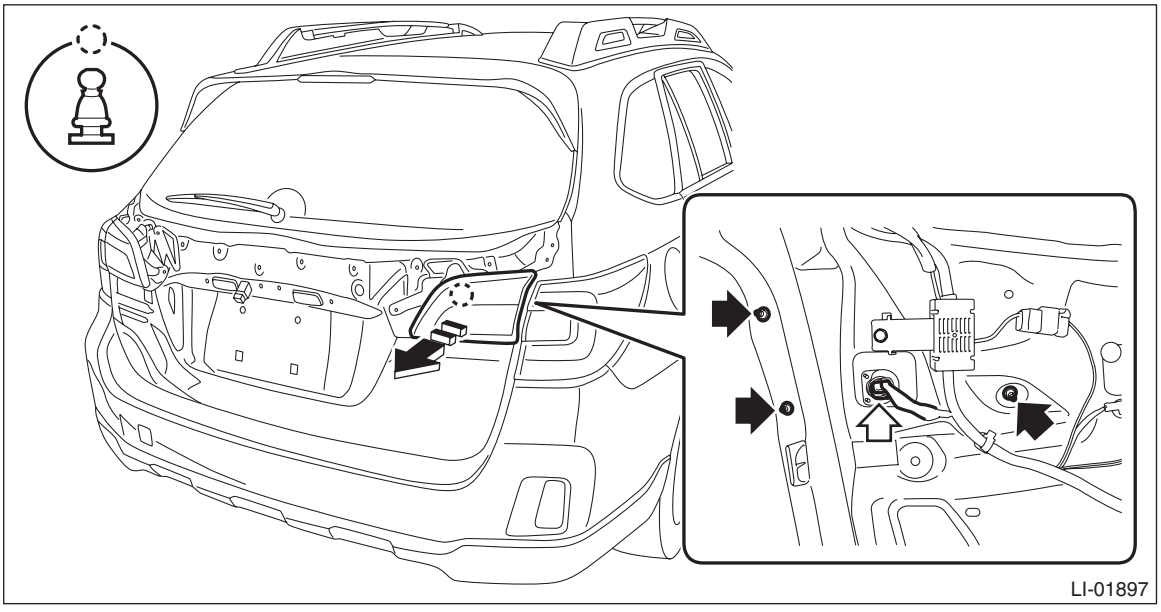

B: INSTALLATION

1. SEDAN MODEL

1) Replace the light assembly gasket with a new part.
2) Install the rear finisher light assembly.
3) Install the garnish - trunk.

Tightening torque:
4.5 N·m (0.5 kgf-m, 3.3 ft-lb)

4) Install the trim panel - trunk lid.
5) Connect the ground terminal to battery sensor. <Ref. to RC-4, BATTERY, NOTE, Repair Contents.>

2. OUTBACK MODEL

1) Replace the light assembly gasket with a new part.
2) Install the rear finisher light assembly.
3) Install the garnish assembly - rear gate.

Tightening torque:
4.5 N·m (0.5 kgf-m, 3.3 ft-lb)

4) Install the trim panel - rear gate.
5) Connect the ground terminal to battery sensor. <Ref. to RC-4, BATTERY, NOTE, Repair Contents.>

28.Back-up Light Bulb

A: REMOVAL

1. SEDAN MODEL

1) Disconnect the ground terminal from battery sensor. <Ref. to RC-4, BATTERY, NOTE, Repair Contents.>
2) Remove the trim panel - trunk lid. <Ref. to EI-109, REMOVAL, Trunk Room Trim.>
3) Remove the bulb socket and back-up light bulb.

CAUTION:
Use a dry clean cloth so that no grease or water adheres to the glass portion of the bulb.

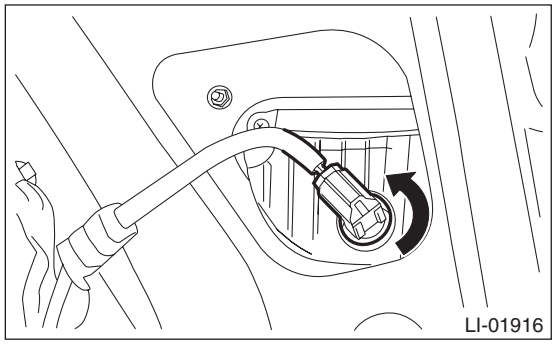

2. OUTBACK MODEL

1) Disconnect the ground terminal from battery sensor. <Ref. to RC-4, BATTERY, NOTE, Repair Contents.>
2) Release the claws and remove the bulb inspection cover of rear gate trim.

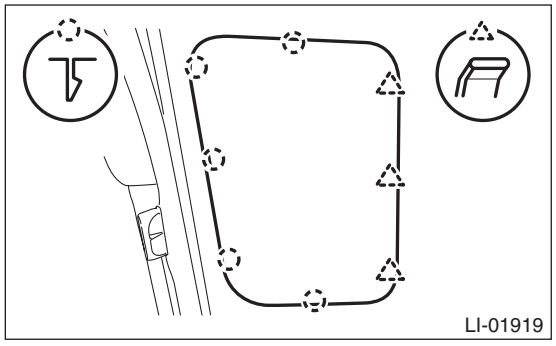

3) Remove the bulb socket and back-up light bulb.

CAUTION:
Use a dry clean cloth so that no grease or water adheres to the glass portion of the bulb.

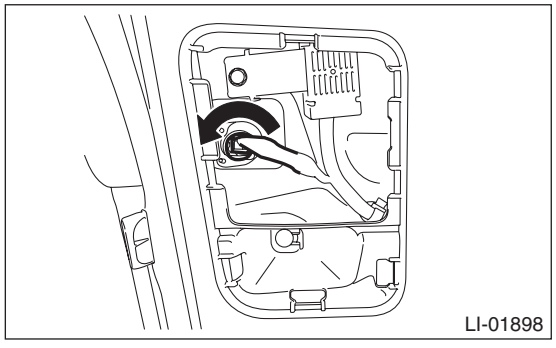

B: INSTALLATION

1. SEDAN MODEL

1) Install the back-up light bulb.

CAUTION:
Use a dry clean cloth so that no grease or water adheres to the glass portion of the bulb.
2) Install the trim panel - trunk lid.
3) Connect the ground terminal to battery sensor. <Ref. to RC-4, BATTERY, NOTE, Repair Contents.>

2. OUTBACK MODEL

1) Install the back-up light bulb.

CAUTION:
Use a dry clean cloth so that no grease or water adheres to the glass portion of the bulb.
2) Install the bulb inspection cover.
3) Connect the ground terminal to battery sensor. <Ref. to RC-4, BATTERY, NOTE, Repair Contents.>

29.License Plate Light

A: REMOVAL

1. SEDAN MODEL

1) Disconnect the ground terminal from battery sensor. <Ref. to RC-4, BATTERY, NOTE, Repair Contents.>
2) Remove the trim panel - trunk lid. <Ref. to EI-109, REMOVAL, Trunk Room Trim.>

NOTE:
When removing the bulb only, remove the trim panel - trunk lid, then remove the bulb socket and the bulb.

CAUTION:
Use a dry clean cloth so that no grease or water adheres to the glass portion of the bulb.

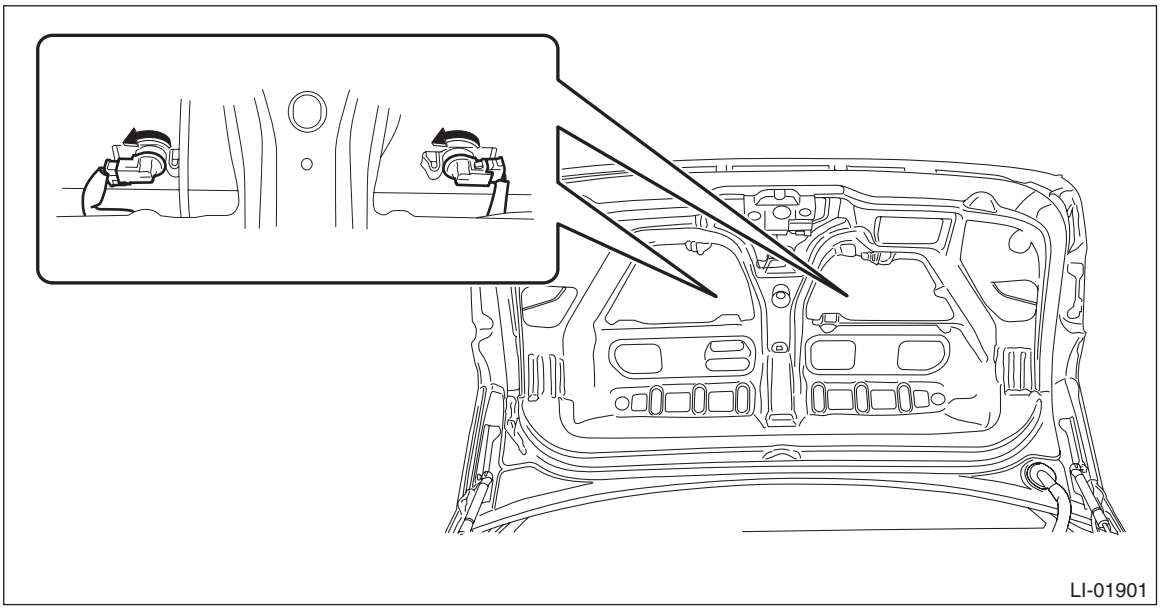
LI-01901

3) Remove the garnish - trunk. <Ref. to EI-61, REMOVAL, Trunk Lid Garnish.>
4) Remove the license plate light.
   (1) Release the claws and pull out the license plate light.
   (2) Disconnect the connector, and remove the license plate light.

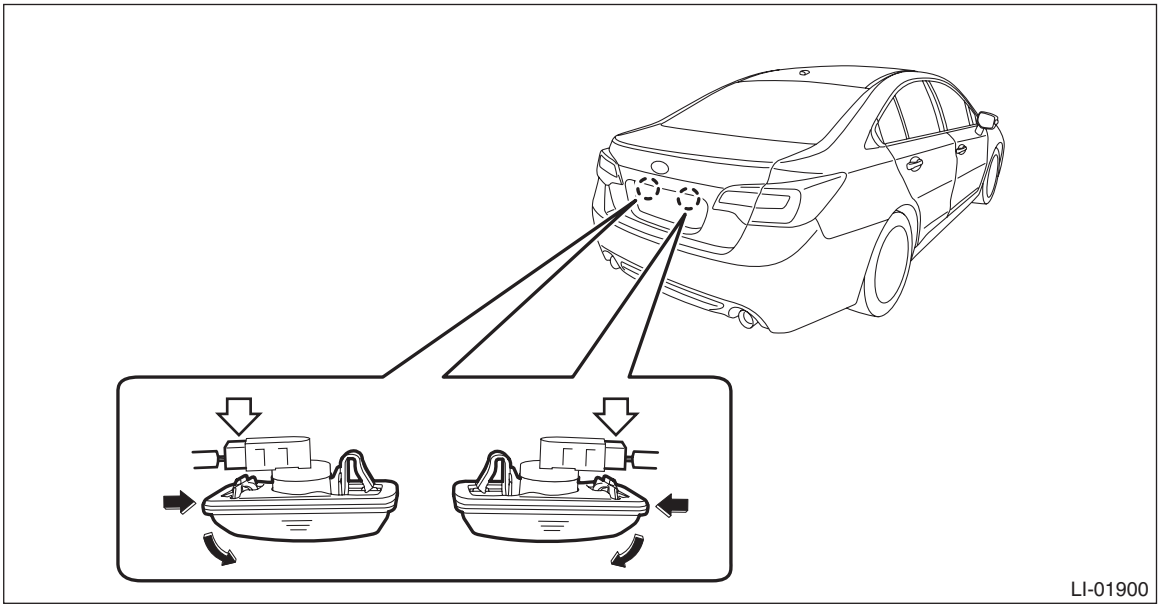
LI-01900

5) Rotate the bulb socket in the direction of arrow shown in the figure to remove the license plate light bulb.

CAUTION:
Use a dry clean cloth so that no grease or water adheres to the glass portion of the bulb.

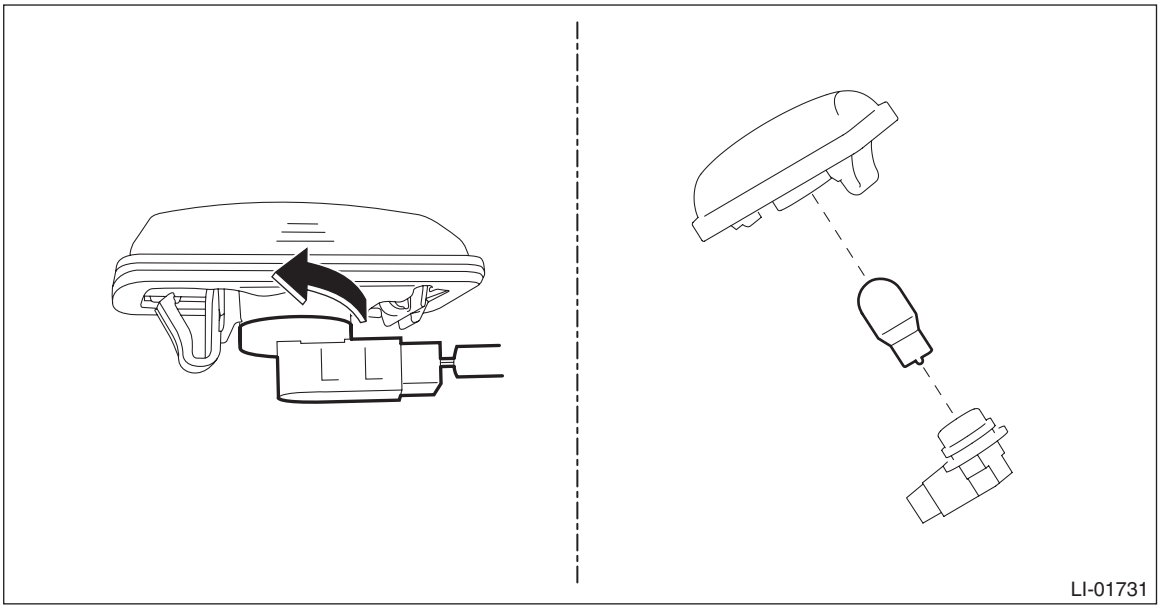

2. OUTBACK MODEL

1) Disconnect the ground terminal from battery sensor. <Ref. to RC-4, BATTERY, NOTE, Repair Contents.>
2) Remove the license plate light.
   (1) Release the claws and pull out the license plate light.
   (2) Disconnect the connector, and remove the license plate light.

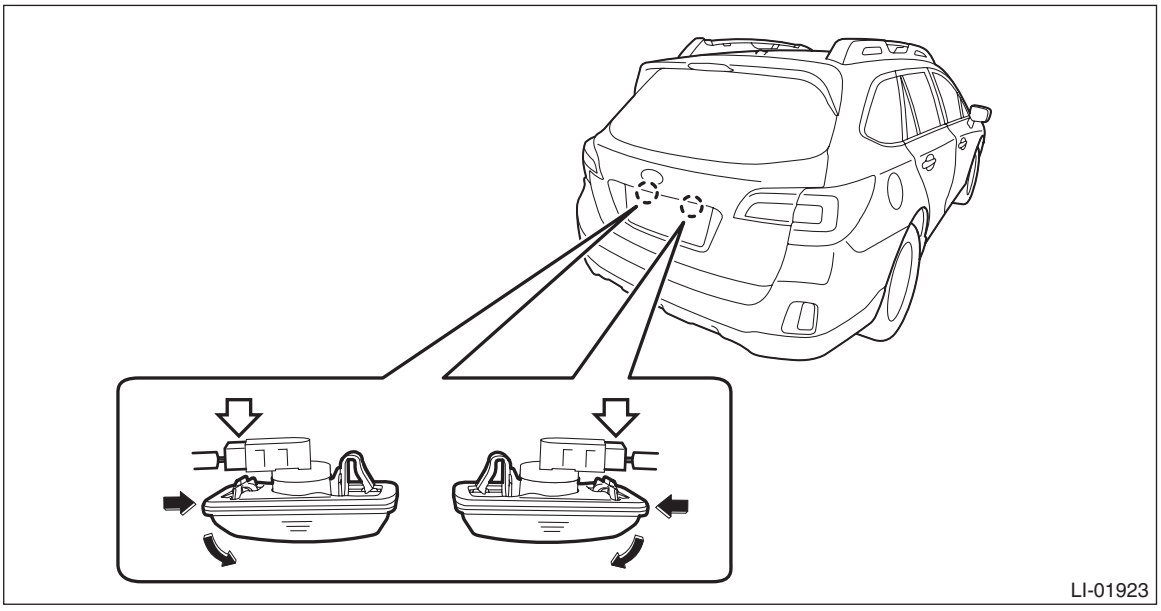

3) Rotate the bulb socket in the direction of arrow shown in the figure to remove the license plate light bulb.

CAUTION:
Use a dry clean cloth so that no grease or water adheres to the glass portion of the bulb.

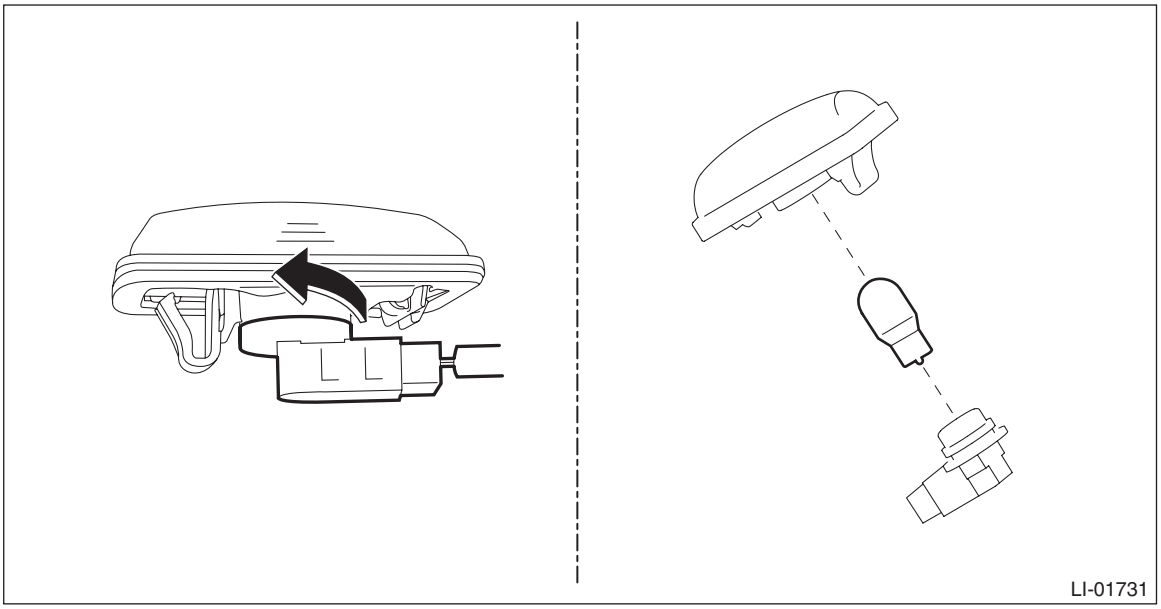

B: INSTALLATION

1. SEDAN MODEL

1) Install the license plate light bulb.

CAUTION:
Use a dry clean cloth so that no grease or water adheres to the glass portion of the bulb.
2) Install the license plate light.
3) Install the garnish - trunk. <Ref. to EI-61, INSTALLATION, Trunk Lid Garnish.>

Tightening torque:
4.5 N·m (0.5 kgf-m, 3.3 ft-lb)
4) Install the trim panel - trunk lid.
5) Connect the ground terminal to battery sensor. <Ref. to RC-4, BATTERY, NOTE, Repair Contents.>

2. OUTBACK MODEL

1) Install the license plate light bulb.

CAUTION:
Use a dry clean cloth so that no grease or water adheres to the glass portion of the bulb.
2) Install the license plate light.
3) Connect the ground terminal to battery sensor. <Ref. to RC-4, BATTERY, NOTE, Repair Contents.>

30.High-mounted Stop Light

A: REMOVAL

1. SEDAN MODEL

1) Disconnect the ground terminal from the battery sensor, and wait for at least 60 seconds before starting work. <Ref. to RC-4, BATTERY, NOTE, Repair Contents.>
2) Remove the trim panel assembly - rear shelf. <Ref. to EI-105, REMOVAL, Rear Shelf Trim.>
3) Remove the light assembly - high-mounted.
   (1) Disconnect the connector.
   (2) Remove the lock washers and remove the high-mounted stop light.

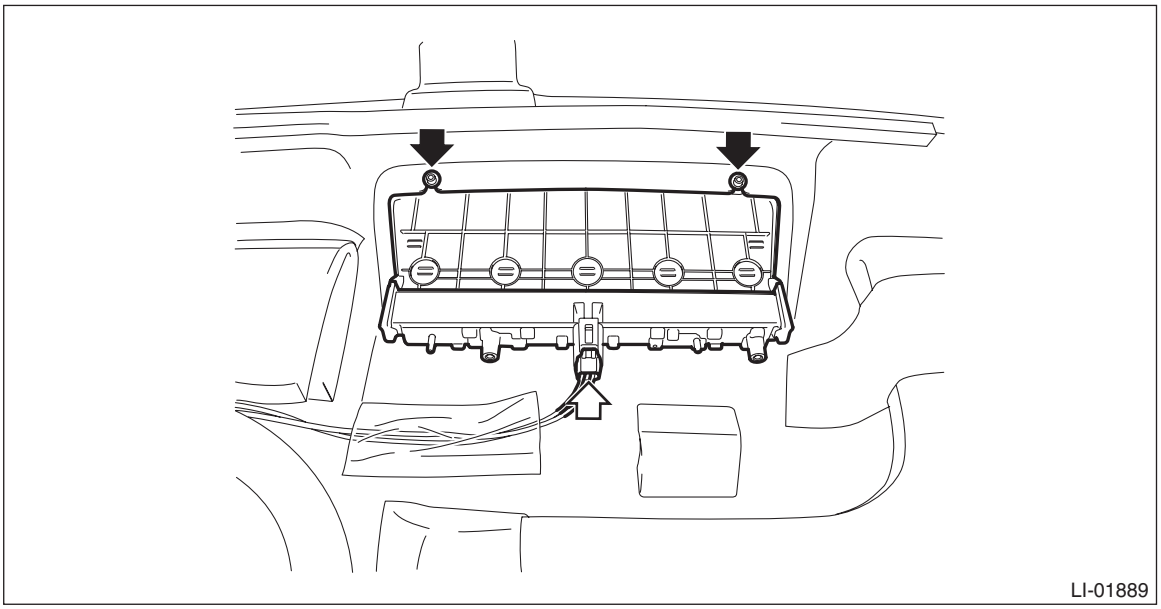

2. OUTBACK MODEL

1) Disconnect the ground terminal from battery sensor. <Ref. to RC-4, BATTERY, NOTE, Repair Contents.>
2) Remove the trim panel - rear gate. <Ref. to EI-121, REMOVAL, Rear Gate Trim.>
3) Remove the roof spoiler. <Ref. to EI-67, REMOVAL, Roof Spoiler.>
4) Remove the nuts and remove the light assembly - high-mounted.

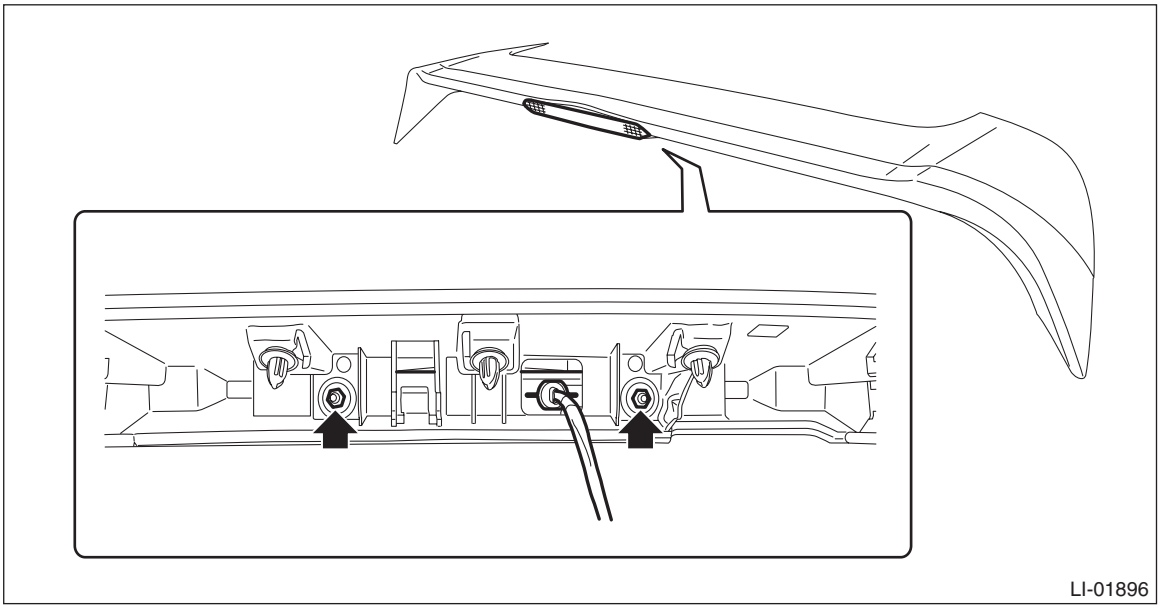

B: INSTALLATION

1. SEDAN MODEL

1) Install the light assembly - high-mounted.
2) Install the trim panel assembly - rear shelf. <Ref. to EI-107, INSTALLATION, Rear Shelf Trim.>
3) Connect the ground terminal to battery sensor. <Ref. to RC-4, BATTERY, NOTE, Repair Contents.>

2. OUTBACK MODEL

CAUTION:
Make sure the bolt is tightened securely because improper roof spoiler installation may cause water leakage.
1) Install the light assembly - high-mounted.

Tightening torque:
4.5 N·m (0.5 kgf-m, 3.3 ft-lb)
2) Install the roof spoiler.

Tightening torque:
7.5 N·m (0.8 kgf-m, 5.5 ft-lb)
3) Install the trim panel - rear gate.
4) Connect the ground terminal to battery sensor. <Ref. to RC-4, BATTERY, NOTE, Repair Contents.>

C: INSPECTION

1) Apply battery voltage between the connector terminals to check the lighting condition of the light.
- Sedan model

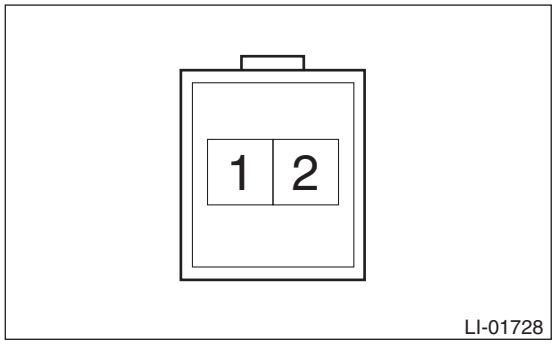

Terminal No.	Inspection conditions	Specification
1 (+) — 2 (–)	Apply battery voltage.	Light ON

- OUTBACK model

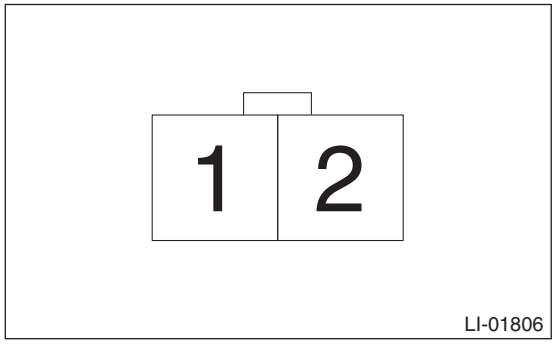

Terminal No.	Inspection conditions	Specification
1 (+) — 2 (–)	Apply battery voltage.	Light ON

2) Replace the light assembly - high-mounted if faulty is found in the inspection.

31.Spot Map Light

A: REMOVAL

NOTE:
• The spot map light is a single unit with the overhead console or stereo camera cover. Replace the overhead console or stereo camera cover if faulty.
• Do not remove the spot map light if removing the bulb only.
1) Disconnect the ground terminal from battery sensor. <Ref. to RC-4, BATTERY, NOTE, Repair Contents.>
2) Remove the overhead console. (Models without EyeSight)
(1) Release the clips and claws.
(2) Disconnect the connector, and remove the overhead console.

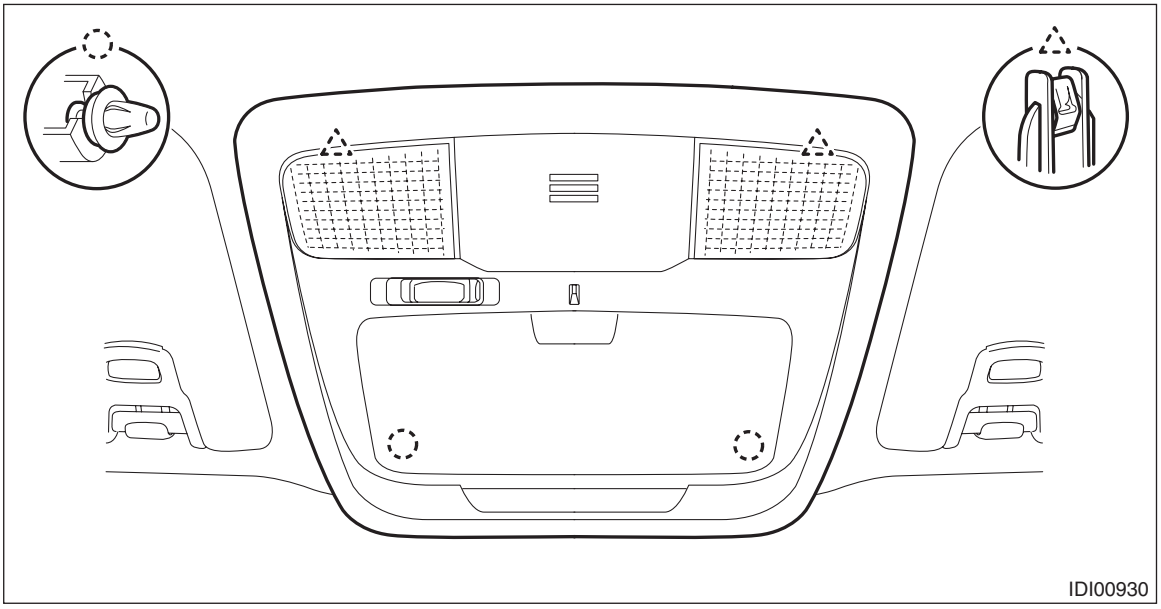

3) Remove the stereo camera cover assembly. (Models with EyeSight) <Ref. to ES-8, REMOVAL, Stereo Camera.>

4) Release the claws, then detach the spot map light cover and bulb.

CAUTION:
• Use a dry clean cloth so that no grease or water adheres to the glass portion of the bulb.
• When using a flat tip screwdriver, apply protective tape or cloth and be careful not to cause damage.

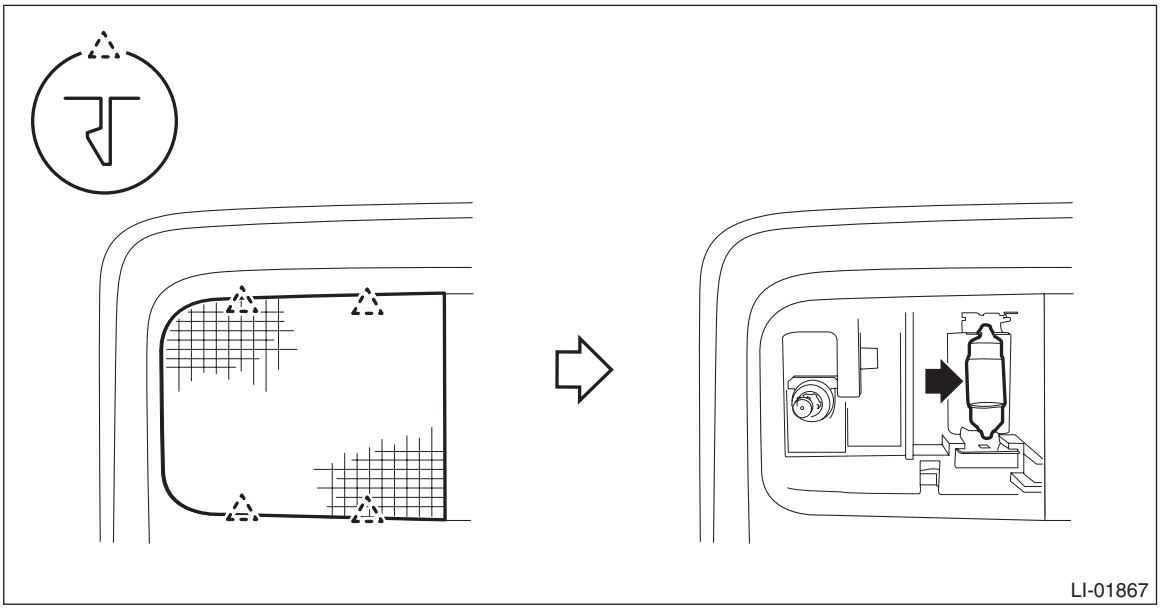

B: INSTALLATION

1) Install the spot map light cover and bulb.

CAUTION:
Use a dry clean cloth so that no grease or water adheres to the glass portion of the bulb.
2) Install the overhead console. (Models without EyeSight)
3) Install the stereo camera cover assembly. (Models with EyeSight) <Ref. to ES-11, INSTALLATION, Stereo Camera.>
4) Connect the ground terminal to battery sensor. <Ref. to RC-4, BATTERY, NOTE, Repair Contents.>

C: INSPECTION

1) Measure the resistance between connector terminals.

Preparation tool:
Circuit tester

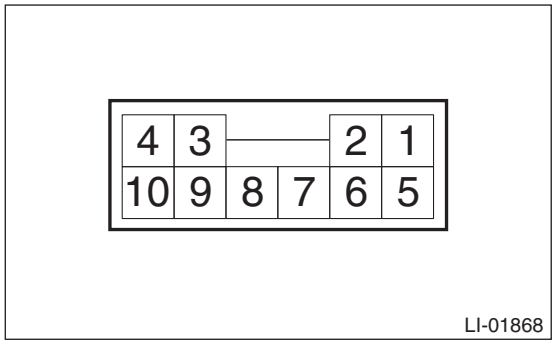

Terminal No.	Inspection conditions	Standard
5 — 6	Switch OFF	1 MΩ or more
	Switch ON	Approx. 18 Ω

2) Replace the overhead console or stereo camera cover if the inspection result is not within the standard value.

32.Room Light

A: REMOVAL

NOTE:
Do not remove the room light if removing the bulb only.
1) Disconnect the ground terminal from battery sensor. <Ref. to RC-4, BATTERY, NOTE, Repair Contents.>
2) Remove the light assembly - room.
(1) Remove the clips, and then remove the hook.

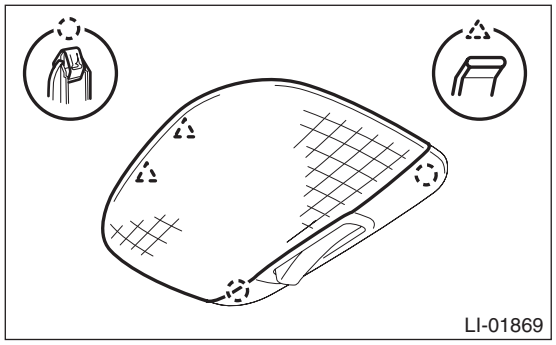

(2) Disconnect the connector and remove the light assembly - room.
3) Release the claws, and detach the lens and bulb.

CAUTION:
• Use a dry clean cloth so that no grease or water adheres to the glass portion of the bulb.
• When using a flat tip screwdriver, apply protective tape or cloth and be careful not to cause damage.

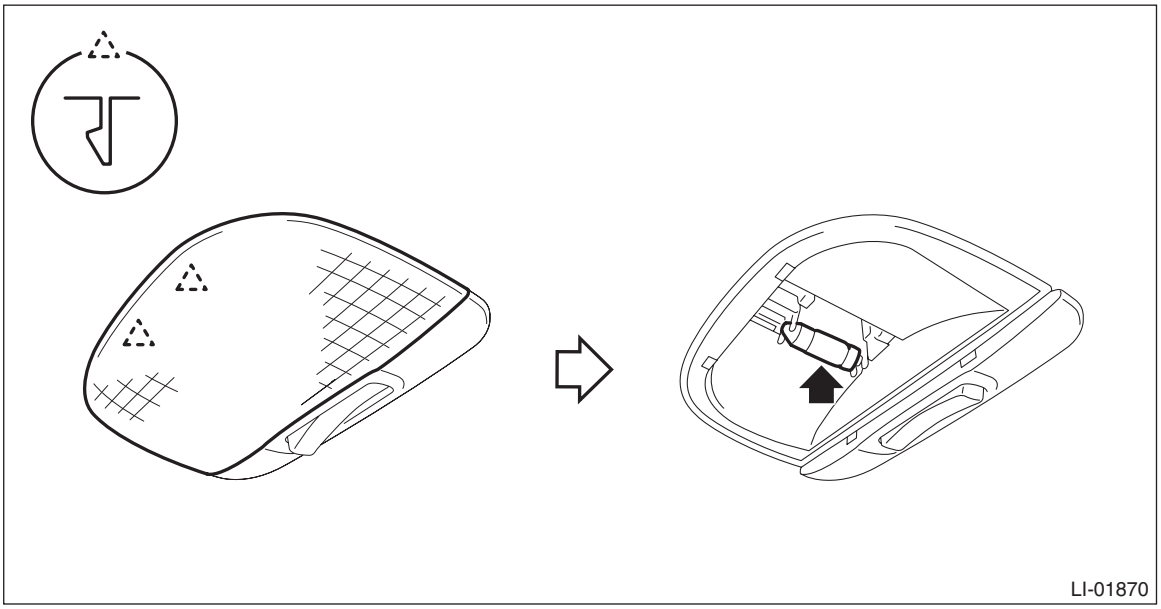

B: INSTALLATION

1) Install the lens and bulb.

CAUTION:
Use a dry clean cloth so that no grease or water adheres to the glass portion of the bulb.
2) Install the light assembly - room.
3) Connect the ground terminal to battery sensor. <Ref. to RC-4, BATTERY, NOTE, Repair Contents.>

C: INSPECTION

1) Measure the resistance between connector terminals.

Preparation tool:
Circuit tester

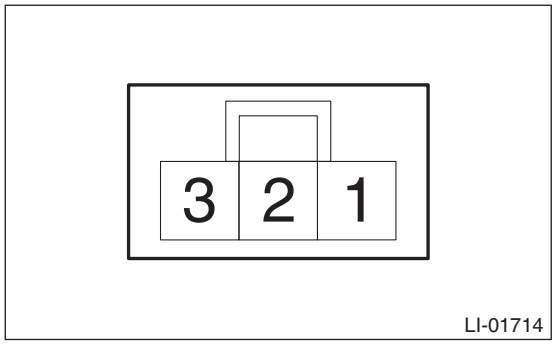

Terminal No.	Inspection conditions	Standard
1 — 3	Switch OFF	1 MΩ or more
	Switch ON	Less than 1 Ω
2 — 3	Switch door	Less than 1 Ω

2) Apply battery voltage between the connector terminals to check the lighting condition of the light.

Terminal No.	Inspection conditions	Specification
3 (+) — 1 (–) 3 (+) — 2 (–)	Switch OFF	Light OFF
	Switch ON	Light ON
	Switch door	Light ON

3) Replace the light assembly - room if the inspection result is not within the standard value.

33.Luggage Room Light

A: REMOVAL

NOTE:
Do not remove the luggage room light if removing the bulb only.
1) Disconnect the ground terminal from battery sensor. <Ref. to RC-4, BATTERY, NOTE, Repair Contents.>
2) Remove the luggage room light.
   (1) Release the claws.
   (2) Disconnect the connector and remove the light assembly - luggage room.

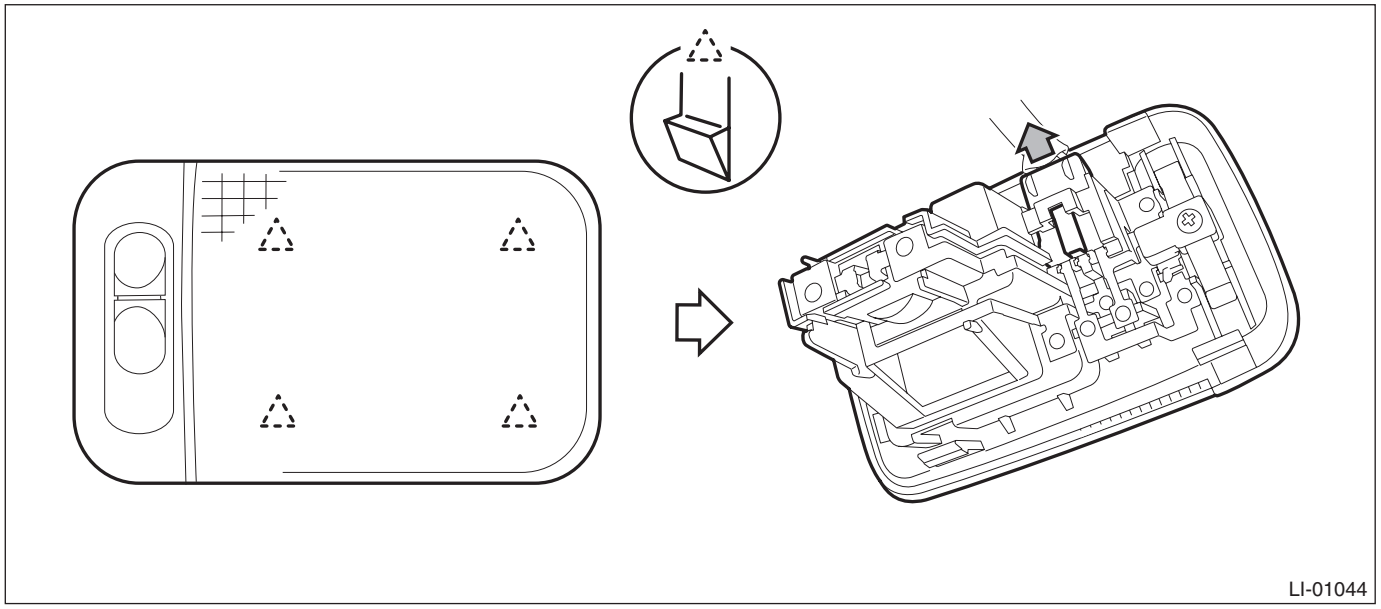

3) Release the claws, and detach the lens and bulb.

CAUTION:
- **Use a dry clean cloth so that no grease or water adheres to the glass portion of the bulb.**
- **When using a flat tip screwdriver, apply protective tape or cloth and be careful not to cause damage.**

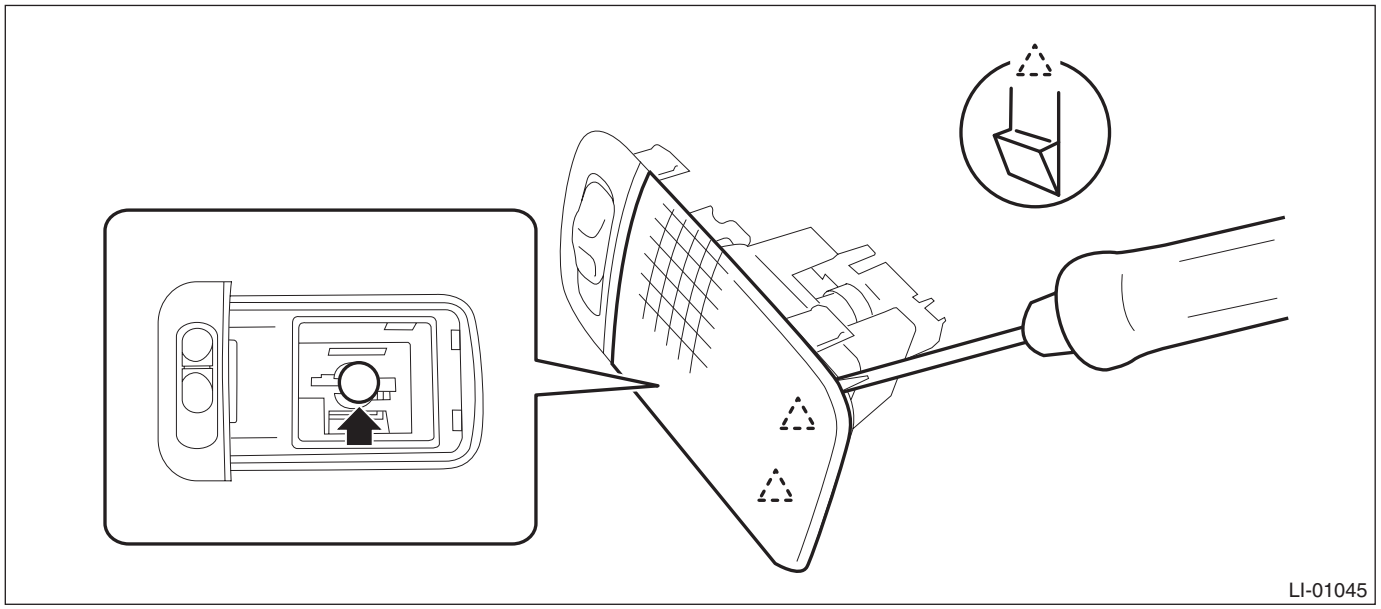

B: INSTALLATION

1) Install the lens and bulb.

CAUTION:
Use a dry clean cloth so that no grease or water adheres to the glass portion of the bulb.
2) Install the light assembly - luggage room.
3) Connect the ground terminal to battery sensor. <Ref. to RC-4, BATTERY, NOTE, Repair Contents.>

C: INSPECTION

1) Measure the resistance between connector terminals.

Preparation tool:
Circuit tester

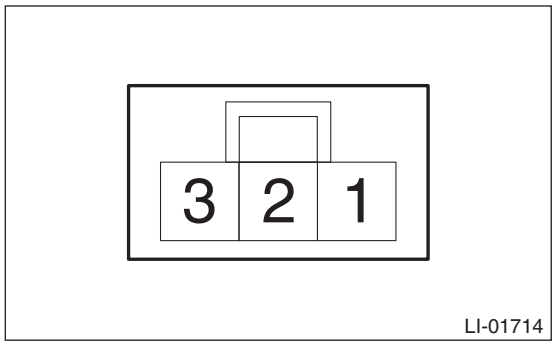

Terminal No.	Inspection conditions	Standard
1 — 2	Switch OFF	1 MΩ or more
	Switch ON	Less than 1 Ω
2 — 3	Switch door	Less than 1 Ω

2) Replace the light assembly - luggage room if the inspection result is not within the standard value.

34.Trunk Room Light

A: REMOVAL

NOTE:
Do not remove the trunk room light if removing the bulb only.
1) Disconnect the ground terminal from battery sensor. <Ref. to RC-4, BATTERY, NOTE, Repair Contents.>
2) Remove the light assembly - trunk room.
   (1) Release the claws.
   (2) Disconnect the connector and remove the light assembly - trunk room.

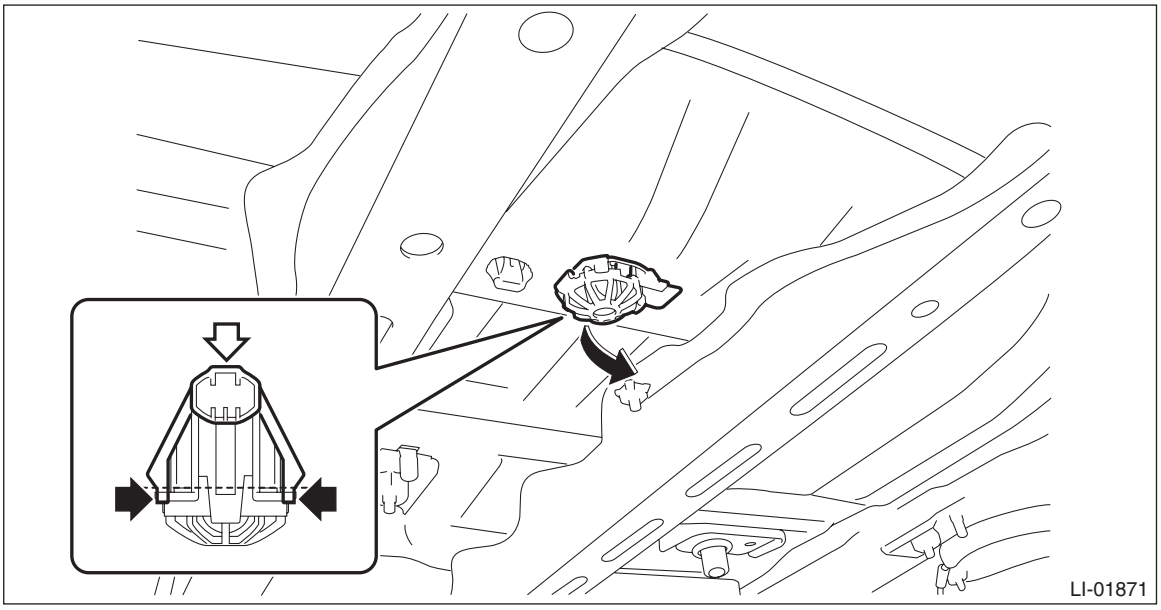

3) Release the claws to open the bulb cover, then remove the bulb.

CAUTION:
- **Use a dry clean cloth so that no grease or water adheres to the glass portion of the bulb.**
- **When using a flat tip screwdriver, apply protective tape or cloth and be careful not to cause damage.**

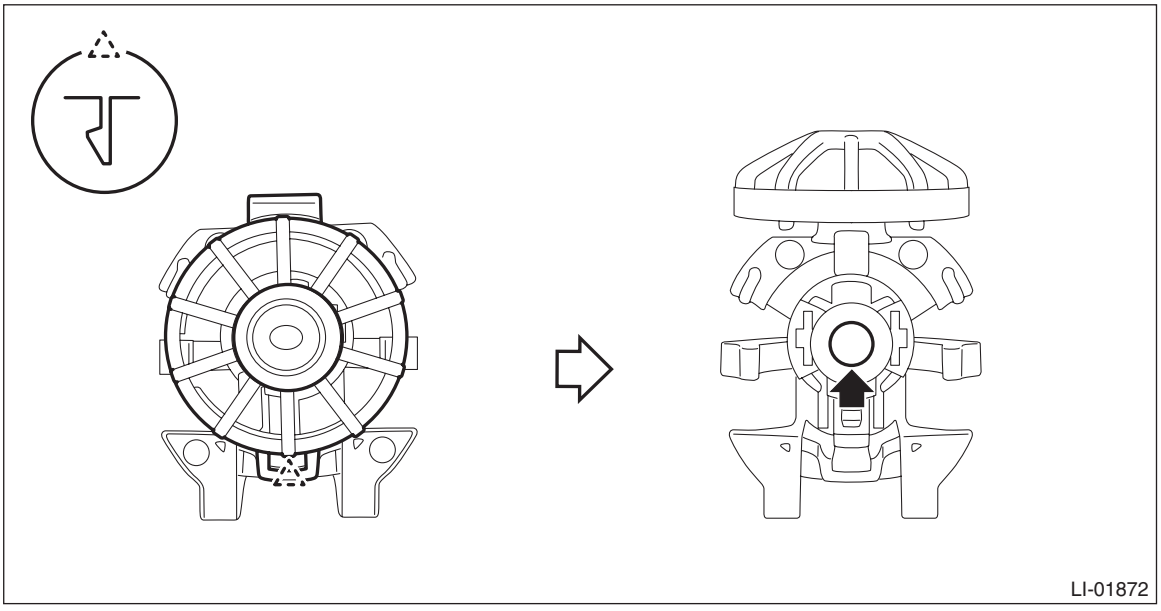

B: INSTALLATION

1) Install the bulb and bulb cover.

CAUTION:
Use a dry clean cloth so that no grease or water adheres to the glass portion of the bulb.

2) Install the light assembly - trunk room.
3) Connect the ground terminal to battery sensor. <Ref. to RC-4, BATTERY, NOTE, Repair Contents.>

35.Door Step Light

A: REMOVAL

1) Disconnect the ground terminal from battery sensor. <Ref. to RC-4, BATTERY, NOTE, Repair Contents.>
2) Remove the light assembly - door step.

CAUTION:
- **Use a dry clean cloth so that no grease or water adheres to the glass portion of the bulb.**
- **When using a flat tip screwdriver, apply protective tape or cloth and be careful not to cause damage.**

(1) Insert a flat tip screwdriver into the slit of the light assembly - door step to release the claw.
(2) Disconnect the connector and remove the light assembly - door step and the bulb.

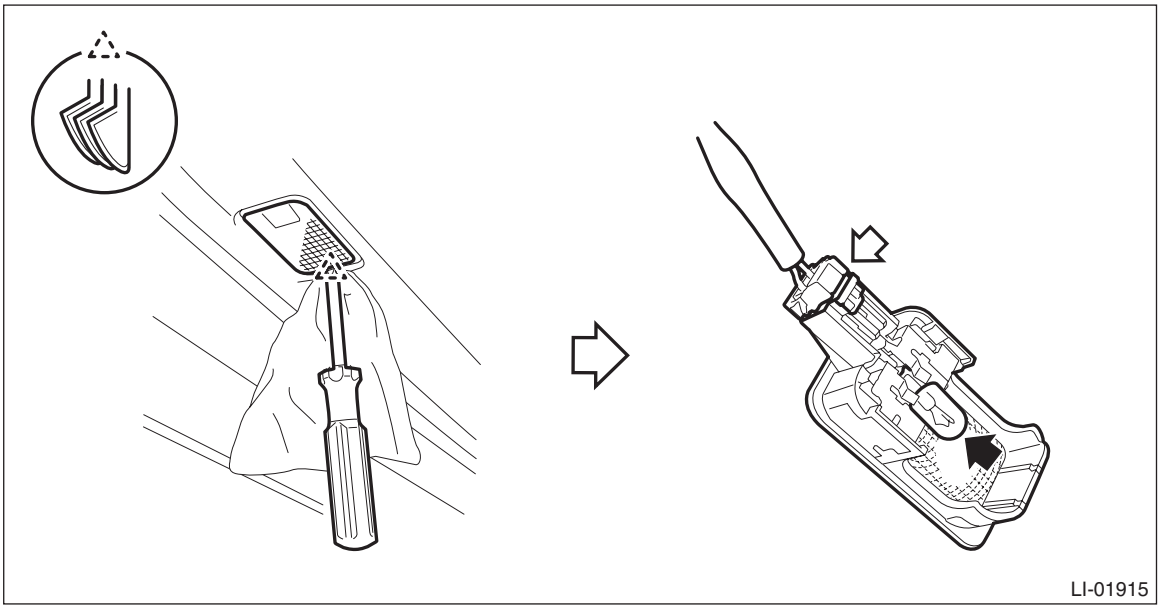

B: INSTALLATION

1) Install the bulb and light assembly - door step.

CAUTION:
Use a dry clean cloth so that no grease or water adheres to the glass portion of the bulb.
2) Connect the ground terminal to battery sensor. <Ref. to RC-4, BATTERY, NOTE, Repair Contents.>

36.LED Illumination Light

A: REMOVAL

1. GLOVE BOX LIGHT

1) Disconnect the ground terminal from battery sensor. <Ref. to RC-4, BATTERY, NOTE, Repair Contents.>
2) Remove the pocket assembly. <Ref. to EI-77, REMOVAL, Glove Box.>
3) Remove the light - pocket cover.

CAUTION:
When using a flat tip screwdriver, apply protective tape or cloth and be careful not to cause damage.
(1) Release the claws.
(2) Disconnect the connector, and remove the light - pocket cover.
4) Release the claws, and remove the light - pocket.

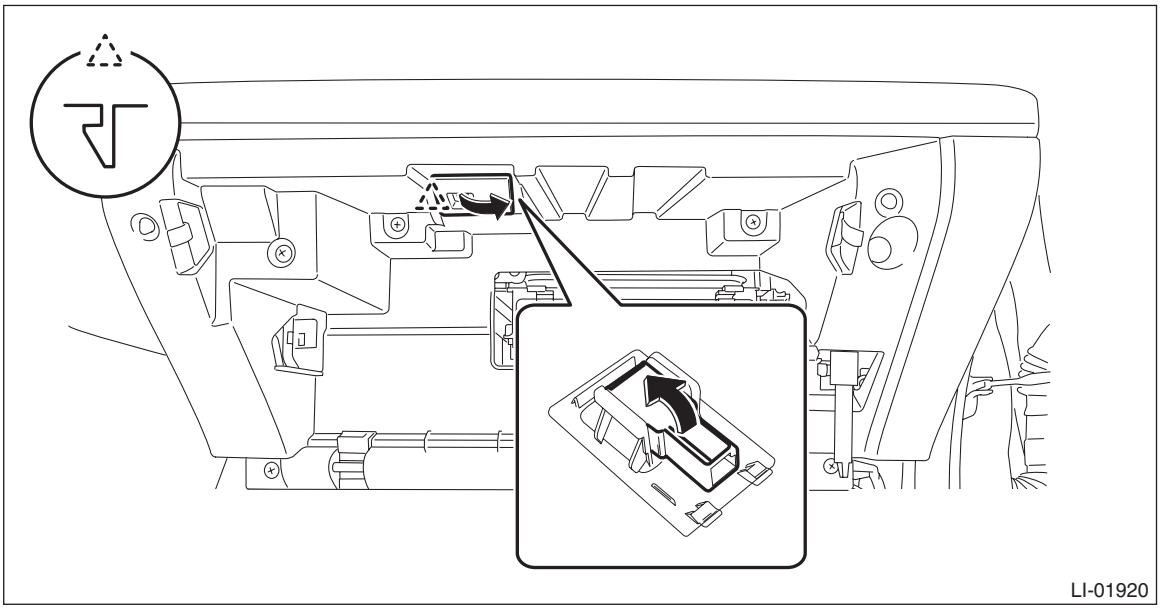

2. POCKET LIGHT

1) Disconnect the ground terminal from battery sensor. <Ref. to RC-4, BATTERY, NOTE, Repair Contents.>
2) Remove the heater control assembly. <Ref. to AC-47, REMOVAL, Control Panel.>
3) Remove the light - pocket.

CAUTION:
When using a flat tip screwdriver, apply protective tape or cloth and be careful not to cause damage.

(1) Disconnect the connector.
(2) Release the claws, and remove the light - pocket.

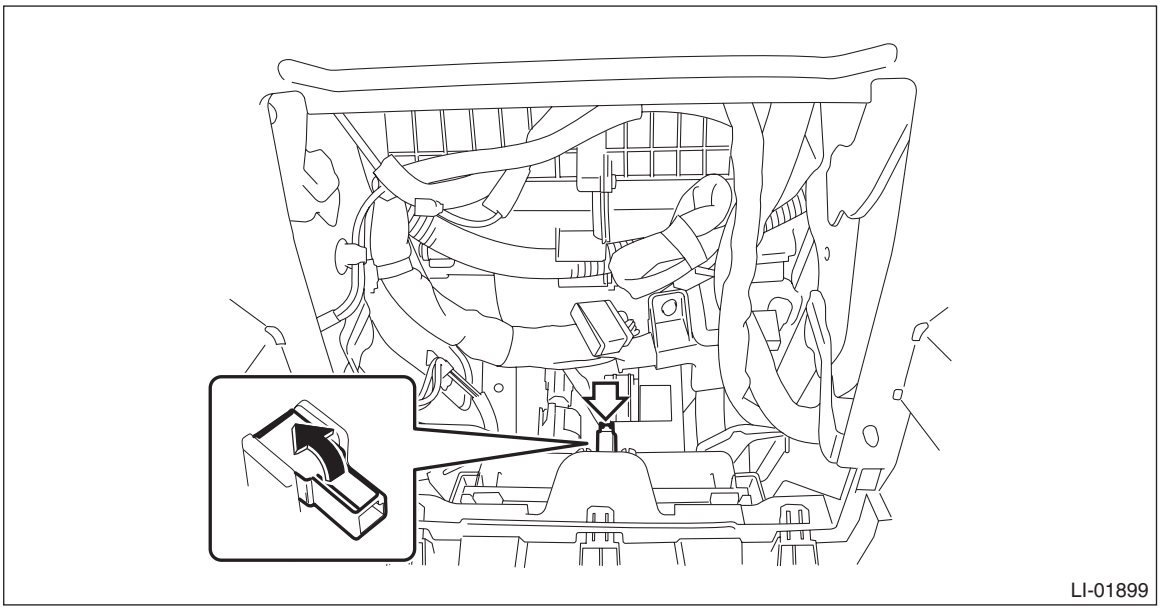

3. DOOR POCKET LIGHT

1) Disconnect the ground terminal from battery sensor. <Ref. to RC-4, BATTERY, NOTE, Repair Contents.>
2) Remove the trim panel - front door. <Ref. to EI-71, REMOVAL, Door Trim.>
3) Release the claws, and remove the light - door pocket.

CAUTION:
When using a flat tip screwdriver, apply protective tape or cloth and be careful not to cause damage.

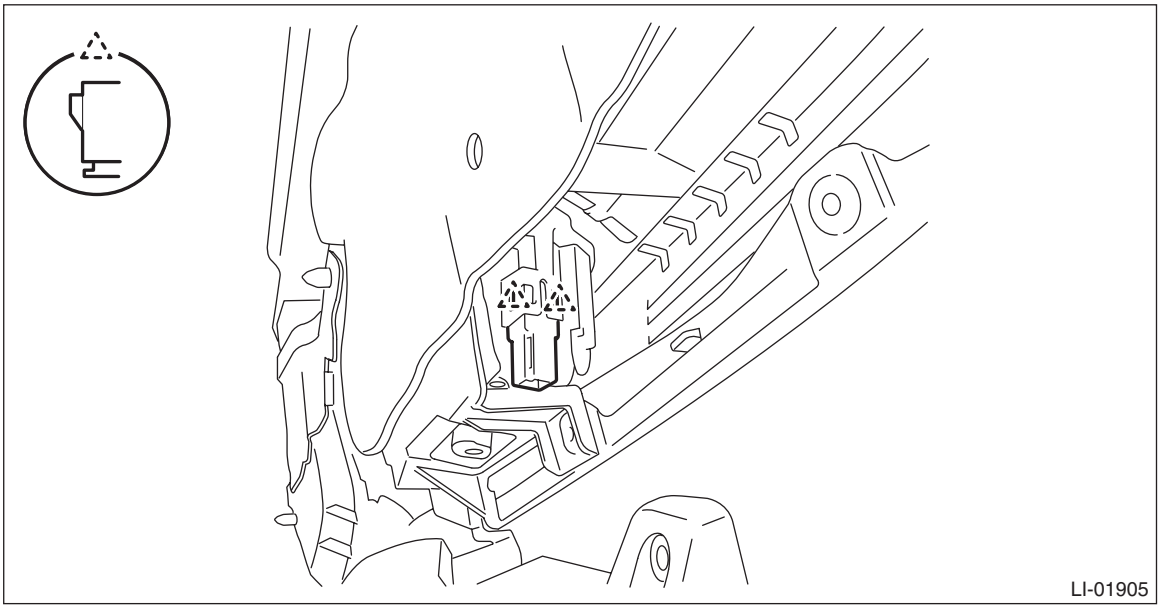

B: INSTALLATION

1. GLOVE BOX LIGHT

1) Install the light - pocket.
2) Install the light - pocket cover.
3) Install the pocket assembly.
4) Connect the ground terminal to battery sensor. <Ref. to RC-4, BATTERY, NOTE, Repair Contents.>

2. POCKET LIGHT

1) Install the light - pocket.
2) Install the heater control assembly.
3) Connect the ground terminal to battery sensor. <Ref. to RC-4, BATTERY, NOTE, Repair Contents.>

3. DOOR POCKET LIGHT

1) Install the light - door pocket.
2) Install the trim panel - front door. <Ref. to EI-73, INSTALLATION, Door Trim.>
3) Connect the ground terminal to battery sensor. <Ref. to RC-4, BATTERY, NOTE, Repair Contents.>

37.Vanity Mirror Light

A: REMOVAL

NOTE:
• The vanity mirror light is integrated into the sun visor assembly. Replace the sun visor assembly if faulty. <Ref. to EI-111, REMOVAL, Sun Visor.>
• Do not remove the sun visor assembly if removing the bulb only.
1) Disconnect the ground terminal from battery sensor. <Ref. to RC-4, BATTERY, NOTE, Repair Contents.>
2) Remove the sun visor assembly. <Ref. to EI-111, REMOVAL, Sun Visor.>
3) Release the claws and remove the lens and vanity mirror light bulb.

CAUTION:
• Use a dry clean cloth so that no grease or water adheres to the glass portion of the bulb.
• When using a flat tip screwdriver, apply protective tape or cloth and be careful not to cause damage.

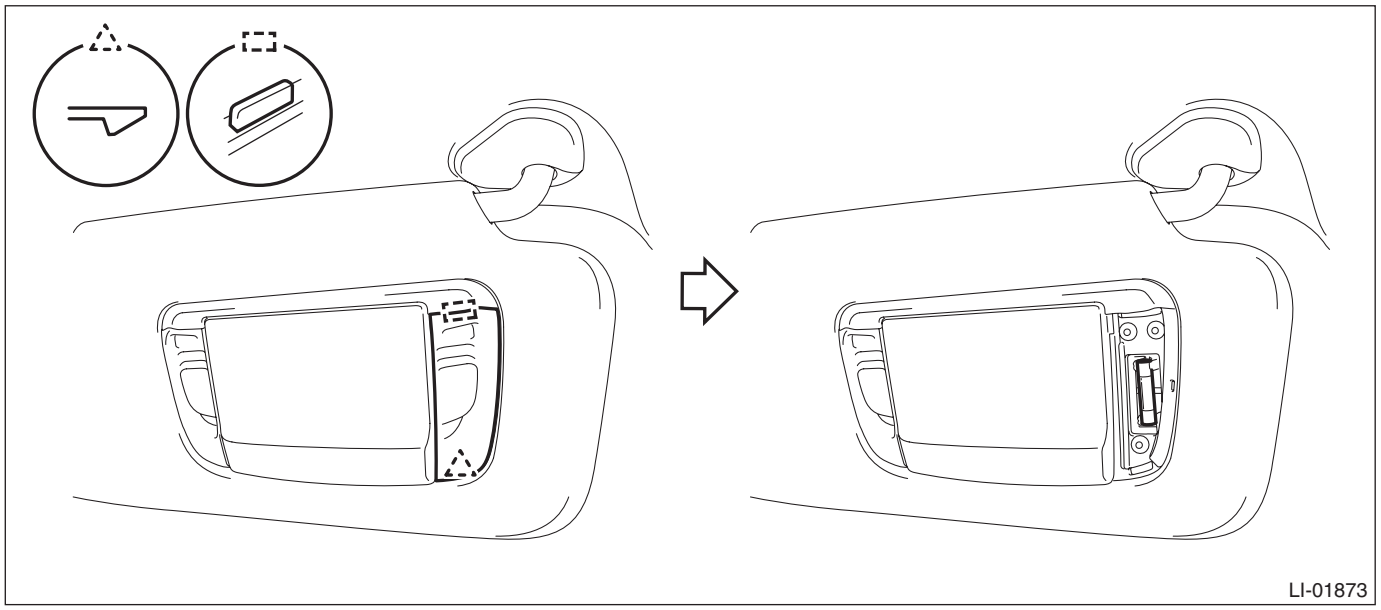

B: INSTALLATION

1) Install the bulb and lens.

CAUTION:
Use a dry clean cloth so that no grease or water adheres to the glass portion of the bulb.
2) Install the sun visor assembly.
3) Connect the ground terminal to battery sensor. <Ref. to RC-4, BATTERY, NOTE, Repair Contents.>

38.Ignition Switch Illumination

A: NOTE

The ignition switch illumination is integrated into the immobilizer antenna assembly. For operation procedures, refer to the “SECURITY AND LOCKS” section. <Ref. to SL-91, Immobilizer Antenna.>

B: INSPECTION

	Step	Check	Yes	No
1	**CHECK IGNITION SWITCH ILLUMINATION.** 1) Turn the ignition switch to ON. 2) Check the lighting condition of the ignition switch illumination.	Does the ignition switch illumination blink?	Check the function setting of body integrated unit. <Ref. to BC(diag)-70, General Diagnostic Table.>	Go to step **2**.
2	**CHECK IGNITION SWITCH ILLUMINATION OPERATION.** 1) Turn the ignition switch to OFF. 2) Open and close the driver’s side door.	When door is opened/closed, does the ignition switch illumination switch between ON ←→ OFF?	Ignition switch illumination is normal.	Go to step **3**.
3	**CHECK CURRENT DATA.** Using the Subaru Select Monitor, display the data of «Driver’s door SW input». NOTE: For detailed procedures, refer to “Application help”.	Does the display change to OFF → ON, when the door is opened/closed?	Go to step **4**.	Check the door switch circuit. <Ref. to SL-20, CHECK DOOR SWITCH, INSPECTION, Keyless Entry System.>
4	**CHECK CURRENT DATA.** Display the data of «Key Illumination Light Output» using Subaru Select Monitor.	Does the display change to OFF → ON, when the door is opened/closed?	CHECK THE IGNITION SWITCH ILLUMINATION CIRCUIT. <Ref. to SL-25, CHECK IGNITION SWITCH ILLUMINATION, INSPECTION, Keyless Entry System.>	Check the body integrated unit and replace it if defective. <Ref. to BC(diag)-2, Basic Diagnostic Procedure.>

39.Auto Headlight Beam Leveler Control Module

A: REMOVAL

1) Disconnect the ground terminal from battery sensor. <Ref. to RC-4, BATTERY, NOTE, Repair Contents.>
2) Remove the cover assembly - instrument panel LWR driver. <Ref. to EI-75, REMOVAL, Instrument Panel Lower Cover.>
3) Remove the bolts, and then remove the panel - knee guard.

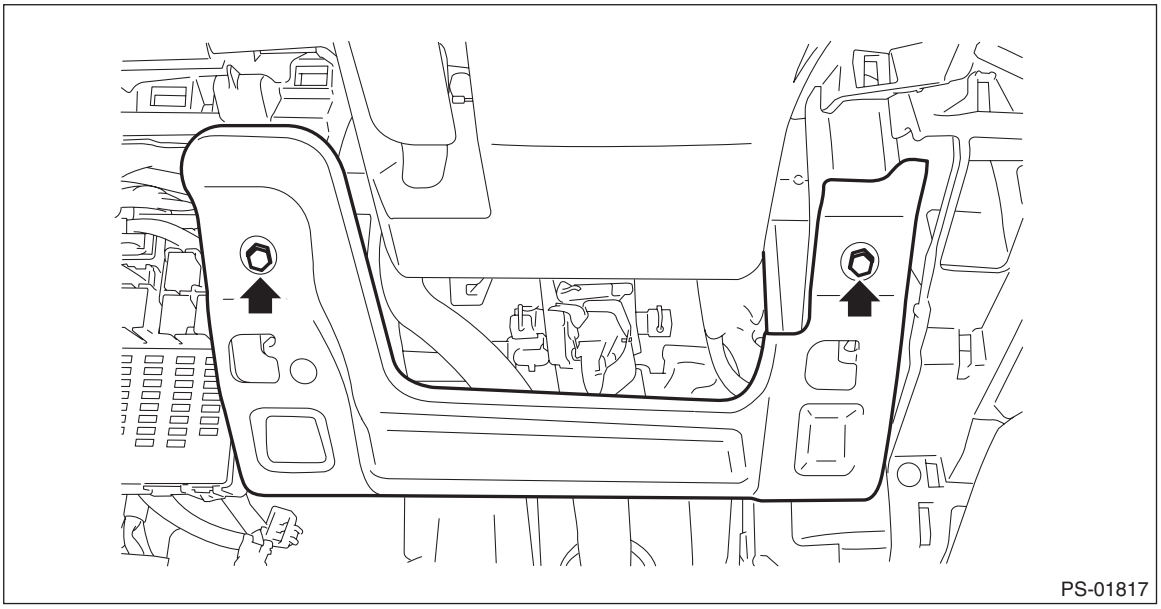
PS-01817

4) Release the lock and remove the relay holder.

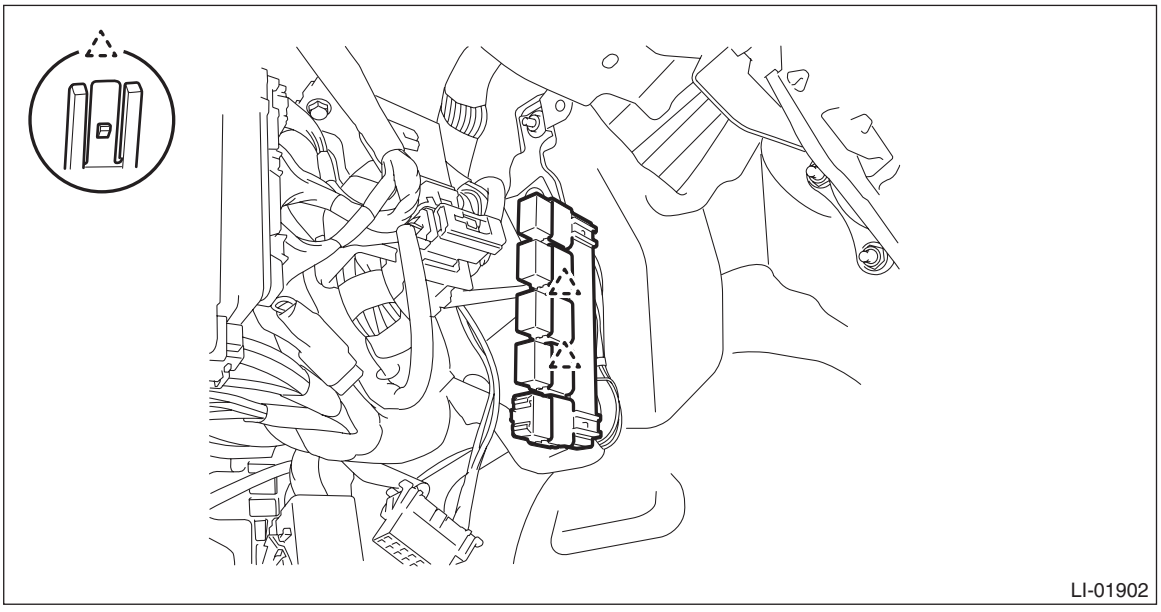
LI-01902

5) Remove the auto headlight beam leveler CM.
   (1) Remove the nut.
   (2) Disconnect the connector and remove the auto headlight beam leveler CM.

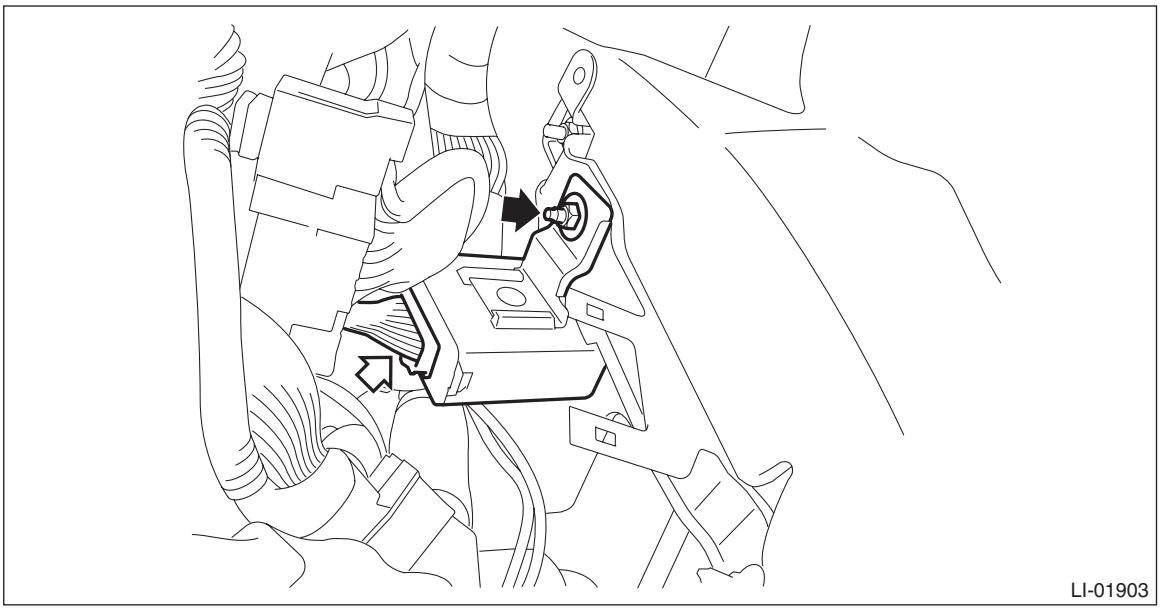

B: INSTALLATION

1) Install the auto headlight beam leveler CM.

Tightening torque:
7.5 N·m (0.8 kgf-m, 5.5 ft-lb)

2) Install the relay holder.
3) Install the panel - knee guard.

Tightening torque:
7 N·m (0.7 kgf-m, 5.2 ft-lb)

4) Install the cover assembly - instrument panel LWR driver.
5) Connect the ground terminal to battery sensor. <Ref. to RC-4, BATTERY, NOTE, Repair Contents.>
6) Perform initialization and reinitialization of the auto headlight beam leveler system. <Ref. to LI-23, PROCEDURE, Auto Headlight Beam Leveler System.>

40.Reflex Reflector

A: REMOVAL

Release the claws and then remove the reflex reflector.

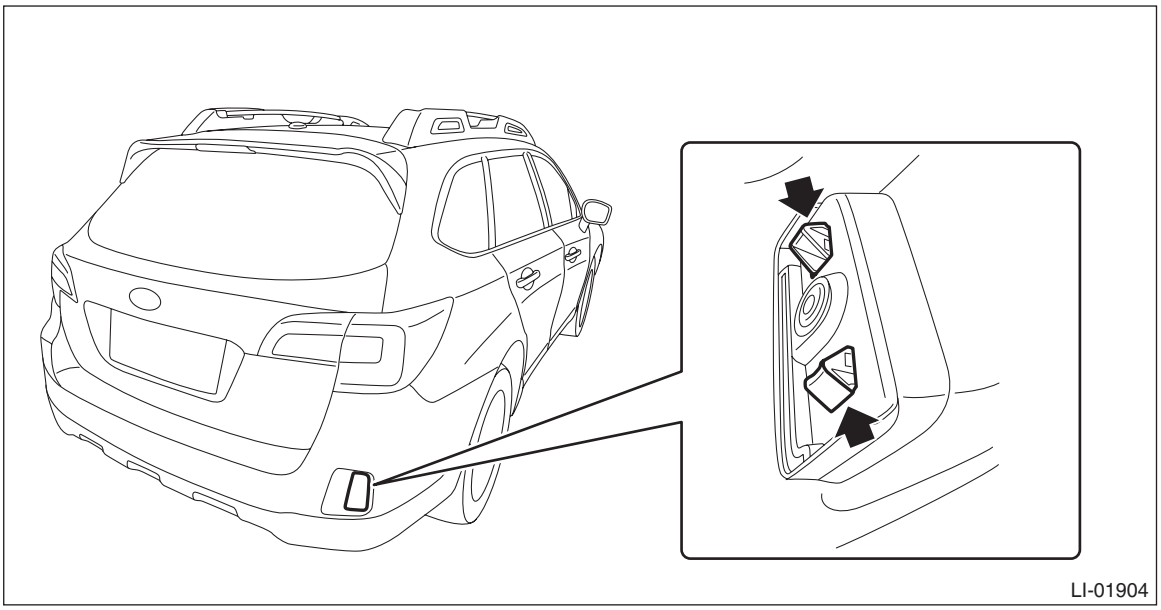

B: INSTALLATION

Install the reflex reflector.

41.Rear Height Sensor

A: REMOVAL

CAUTION:
Always remove the sensor assembly - headlight beam leveler before removing any parts related to the suspension.

1) Disconnect the ground terminal from battery sensor. <Ref. to RC-4, BATTERY, NOTE, Repair Contents.>
2) Lift up the vehicle.
3) Remove the rear wheel on the left side.
4) Remove the sensor assembly - headlight beam leveler.

CAUTION:
Do not disassemble the sensor and lever.

(1) Disconnect the connector.
(2) Remove the nuts, and remove the sensor assembly - headlight beam leveler.

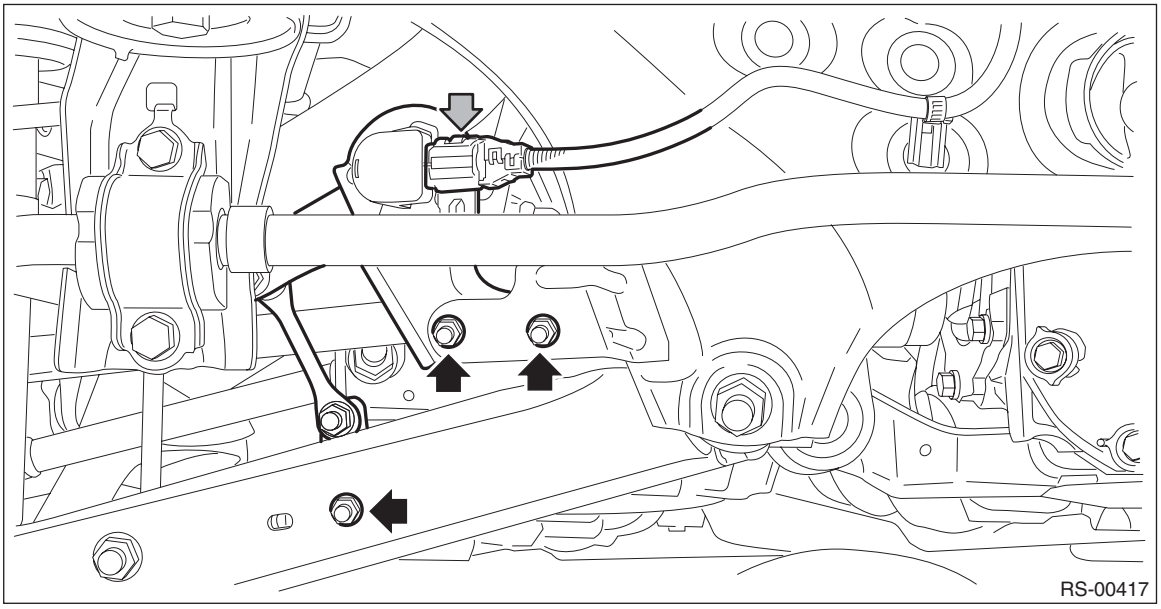

B: INSTALLATION

1) Install the sensor assembly - headlight beam leveler.

Tightening torque:
7.5 N·m (0.8 kgf-m, 5.5 ft-lb)

2) Install the rear wheels.

Tightening torque:
120 N·m (12.2 kgf-m, 88.5 ft-lb)

3) Lower the vehicle.
4) Connect the ground terminal to battery sensor. <Ref. to RC-4, BATTERY, NOTE, Repair Contents.>
5) Perform reinitialization of the auto headlight beam leveler system. <Ref. to LI-24, REINITIALIZATION, PROCEDURE, Auto Headlight Beam Leveler System.>

NOTE:
When replacing the rear vehicle height sensor with a new part, perform the initialization. <Ref. to LI-23, INITIALIZATION, PROCEDURE, Auto Headlight Beam Leveler System.>

C: INSPECTION

Preparation tool:
Circuit tester

1) Connect three dry cell batteries (1.5 V) in series.

NOTE:
- Use new dry-cell batteries.
- Using circuit tester, check that the initial voltage of a single dry-cell battery is 1.6 V or more. And also check that the voltage of three batteries in series is between 4.8 V and 5.2 V.
- For power supply, 5 V DC voltage source can also be used.

2) Connect the cell battery positive terminal to the connector terminal No. 3, and the cell battery negative terminal to the connector terminal No. 1.
3) With voltage applied, measure the voltage between connector terminals when the sensor link is moved slowly up and down.

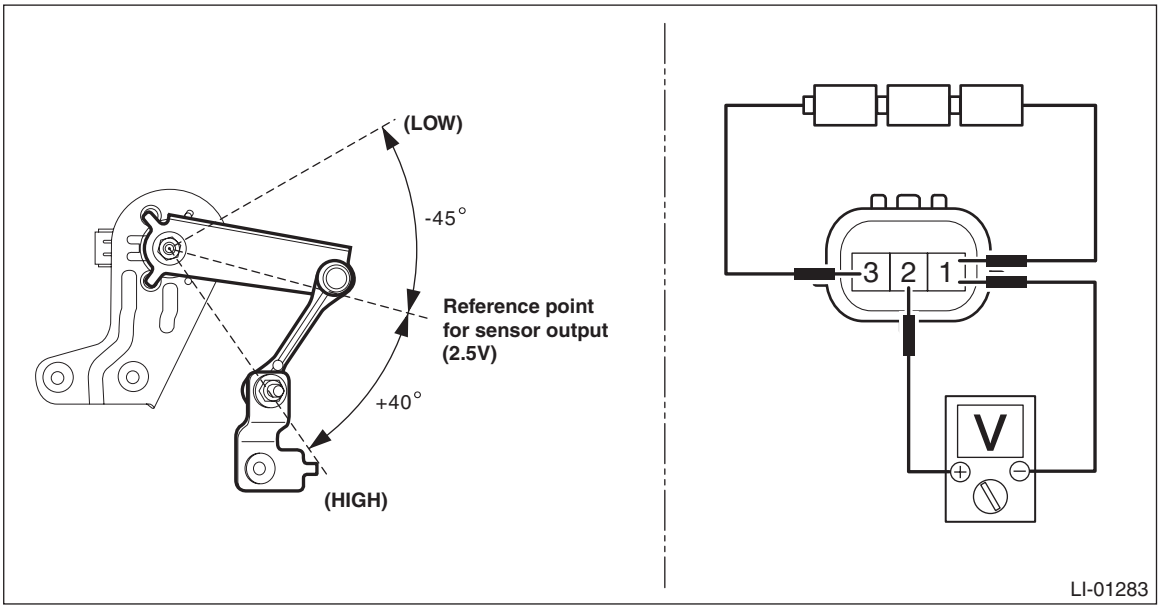

Terminal No.	Inspection conditions	Standard
2 (+) — 1 (–)	Move the link within the operation range.	0.5 — 4.1 V

4) Replace the sensor assembly - headlight beam leveler if the inspection result is not within the standard value.

42.Day Time Running Resistor

A: REMOVAL

1) Disconnect the ground terminal from battery sensor. <Ref. to RC-4, BATTERY, NOTE, Repair Contents.>
2) Remove the bumper face - front. <Ref. to EI-34, REMOVAL, Front Bumper.>
3) Remove the resistor assembly - daytime running light.

CAUTION:
The resistor may become hot. Be careful not to burn yourself when removing it.

(1) Disconnect the connector.
(2) Remove the bolts, then remove the resistor assembly - daytime running light.

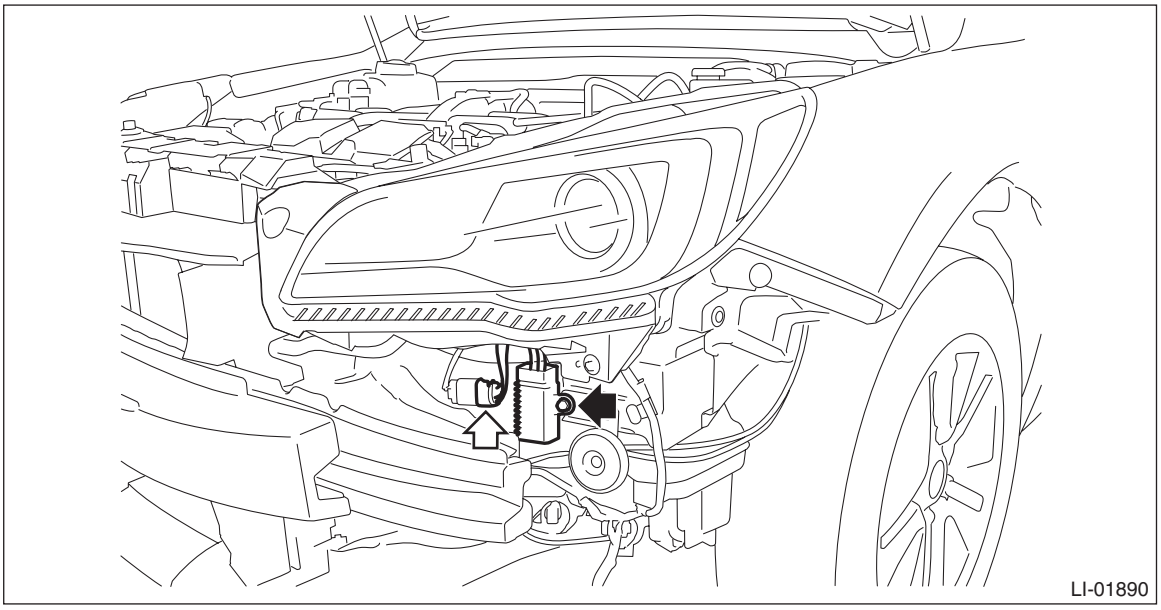

B: INSTALLATION

CAUTION:
Install so that the front end of the under cover (b) comes inside the bumper face - front (a), and the front end of the mud guard (c) comes outside the bumper face - front (a).

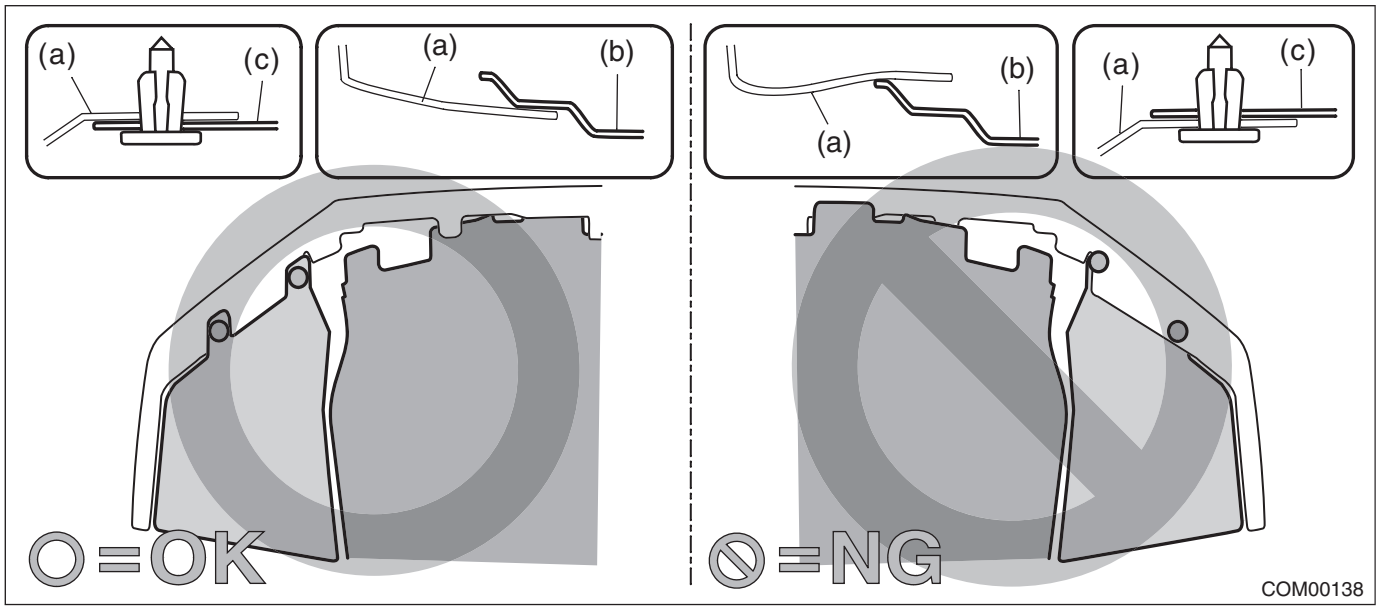

1) Install the resistor assembly - daytime running light.

CAUTION:
Be careful not to allow the harness to interfere with vehicle body, etc. and prevent excessive force from being applied.

Tightening torque:
7.5 N·m (0.8 kgf-m, 5.5 ft-lb)

2) Install the bumper face - front.
3) Connect the ground terminal to battery sensor. <Ref. to RC-4, BATTERY, NOTE, Repair Contents.>
4) Adjust the front fog light beam. (Model with front fog light) <Ref. to LI-44, FOG LIGHT AIMING, ADJUSTMENT, Front Fog Light Assembly.>

C: INSPECTION

1) Measure the resistance between connector terminals.

Preparation tool:
Circuit tester

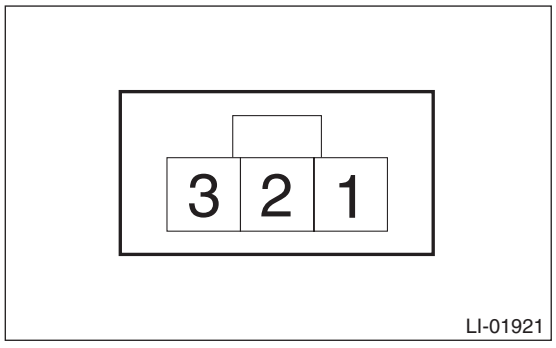

Terminal No.	Inspection conditions	Standard
1 — 2 2 — 3	Always	1.82±0.07 Ω

2) Replace the resistor assembly - daytime running light if the inspection result is not within the standard.

43.Door Switch

A: REMOVAL

1) Disconnect the ground terminal from battery sensor. <Ref. to RC-4, BATTERY, NOTE, Repair Contents.>
2) Remove the switch assembly - door.
   (1) Remove the screws, and pull out the switch assembly - door toward you.
   (2) Disconnect the connector and remove the switch assembly - door.

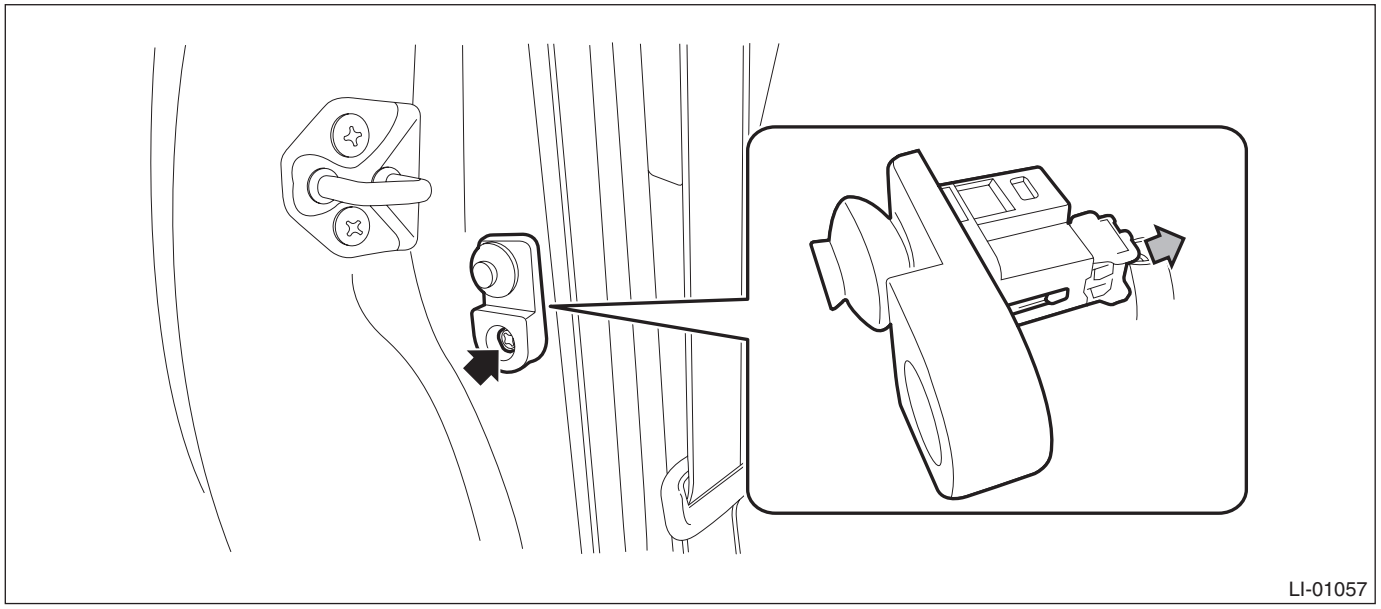

B: INSTALLATION

1) Install the switch assembly - door.
2) Connect the ground terminal to battery sensor. <Ref. to RC-4, BATTERY, NOTE, Repair Contents.>

C: INSPECTION

1) Measure the resistance between connector terminals.

Preparation tool:
Circuit tester

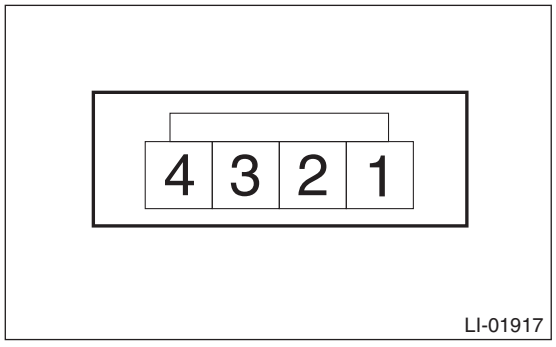

Terminal No.	Inspection conditions	Standard
Front LH: 1 — 2 Except for front LH: 1 — 4	When the switch is not pressed	Less than 1 Ω
	When the switch is pressed	1 MΩ or more

2) Replace the switch assembly - door if the inspection result is not within the standard value.

44.Steering Responsive Fog Lights CM

A: NOTE

The installation position of the auto headlight beam leveler control module can be used for the steering responsive fog light CM installation position. Refer to “Auto Headlight Beam Leveler Control Module” section for operation procedures. <Ref. to LI-80, Auto Headlight Beam Leveler Control Module.>

45.SRF OFF Switch

A: REMOVAL

1) Disconnect the ground terminal from battery sensor. <Ref. to RC-4, BATTERY, NOTE, Repair Contents.>
2) Remove the cover assembly - instrument panel LWR driver. <Ref. to EI-75, REMOVAL, Instrument Panel Lower Cover.>
3) Release the claws and remove the SRF OFF switch (b).

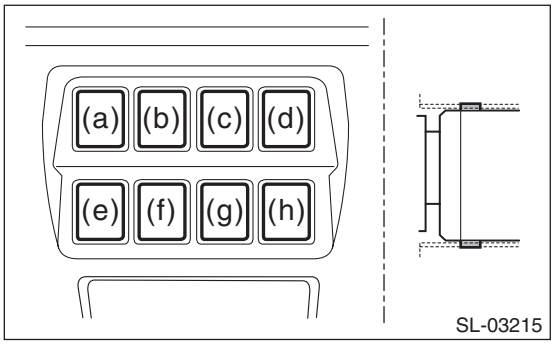

B: INSTALLATION

1) Install the SRF OFF switch.
2) Install the cover assembly - instrument panel LWR driver.
3) Connect the ground terminal to battery sensor. <Ref. to RC-4, BATTERY, NOTE, Repair Contents.>

C: INSPECTION

1) Measure the resistance between connector terminals.

Preparation tool:
Circuit tester

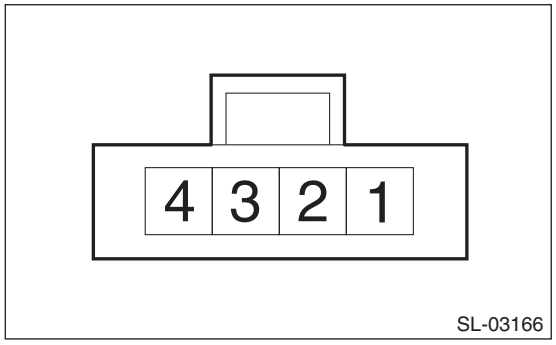

Terminal No.	Inspection conditions	Standard
1 — 4	OFF	1 MΩ or more
	ON	Less than 1 Ω

2) Apply battery voltage between the connector terminals to check lighting condition of illumination inside the switch.

Terminal No.	Inspection conditions	Specification
2 (+) — 3 (–)	Apply battery voltage.	Light ON

3) Replace the SRF OFF switch if the inspection result is not within the standard value.

AUTO HEADLIGHT BEAM LEVELER SYSTEM (DIAGNOSTICS)

AL(diag)

		Page
1.	Basic Diagnostic Procedure	2
2.	Check List for Interview	3
3.	General Description	4
4.	Electrical Component Location	5
5.	Control Module I/O Signal	6
6.	Subaru Select Monitor	8
7.	Read Diagnostic Trouble Code (DTC)	11
8.	Clear Memory Mode	12
9.	Inspection Mode	13
10.	Read Current Data	14
11.	List of Diagnostic Trouble Code (DTC)	15
12.	Diagnostic Procedure with Diagnostic Trouble Code (DTC)	16
13.	Diagnostics with Phenomenon	20

1. Basic Diagnostic Procedure

A: PROCEDURE

NOTE:
Refer to STEERING RESPONSIVE FOG LIGHTS (DIAGNOSTICS) for models with steering responsive fog light system. <Ref. to SRF(diag)-2, Basic Diagnostic Procedure.>

	Step	Check	Yes	No
1	**PERFORM CUSTOMER INTERVIEW.** Using the Check List for Interview, ask the customer the condition of how the trouble occurred. <Ref. to AL(diag)-3, CHECK, Check List for Interview.>	Did you interview the customer?	Go to step **2**.	Interview the customer. <Ref. to AL(diag)-3, CHECK, Check List for Interview.>
2	**CHECK LAN SYSTEM.** Inspect LAN system. <Ref. to LAN(diag)-2, PROCEDURE, Basic Diagnostic Procedure.>	Is there any fault?	Perform the inspection according to the diagnosis for LAN system.	Go to step **3**.
3	**CHECK AUTO HEADLIGHT BEAM LEVELER SYSTEM.** Using the Subaru Select Monitor, read DTC of auto headlight beam leveler system. <Ref. to AL(diag)-11, Read Diagnostic Trouble Code (DTC).> NOTE: If the communication function of the Subaru Select Monitor cannot be executed properly, check the communication circuit. <Ref. to AL(diag)-9, COMMUNICATION FOR INITIALIZING IMPOSSIBLE, INSPECTION, Subaru Select Monitor.>	Is DTC displayed?	Record DTC and time stamp, and perform the diagnosis according to DTC. <Ref. to AL(diag)-15, LIST, List of Diagnostic Trouble Code (DTC).> For time stamp, refer to “LAN SYSTEM”. <Ref. to LAN(diag)-6, TIME STAMP, CAUTION, General Description.> After diagnosis is completed, Go to step **6**.	Go to step **4**.
4	**CHECK DIAGNOSTICS WITH PHENOMENON.** Check “Diagnostics with Phenomenon”. <Ref. to AL(diag)-20, Diagnostics with Phenomenon.>	Does the symptom apply?	Perform diagnosis according to the procedures in the diagnostics with phenomenon.	Go to step **5**.
5	**CHECK TROUBLE PHENOMENON.** 1) Perform the basic inspection and function check. <Ref. to AL(diag)-4, INSPECTION, General Description.> 2) Check the auto headlight beam leveler CM. <Ref. to AL(diag)-6, Control Module I/O Signal.> 3) Perform check of current data. <Ref. to AL(diag)-14, Read Current Data.> 4) Perform a unit check.	Was the trouble cause found?	Repair or replace the cause of trouble.	System is normal.
6	**PERFORM DIAGNOSIS.** 1) Perform the Clear Memory Mode. <Ref. to AL(diag)-12, Clear Memory Mode.> 2) Perform the Inspection Mode. <Ref. to AL(diag)-13, Inspection Mode.>	Is DTC displayed?	Perform the diagnosis according to DTC. <Ref. to AL(diag)-15, LIST, List of Diagnostic Trouble Code (DTC).>	Finish the diagnosis.

2. Check List for Interview

A: CHECK

- Inspect the following items regarding the vehicle's state.
- Print out this page for interviewing customers.

Auto Headlight Beam Leveler System Check List for Interview Date the Vehicle is Received Year Month Day			
Customer's name		Registration No.	Initial year of registration Year Month Date
		Vehicle model	Frame number
Interviewer	Inspector	Engine type	Odometer reading
Customer specified content • • •			
Date and time when the trouble occurred		Frequency of trouble occurrence	Always occurs Sometimes occurs (times per day, times per month)
Condition of trouble occurrence (How the trouble occurs)		Weather	Fine • Cloudy • Rainy • Snowy • Others ( )
		Temperature	°C (°F) — °C (°F)
Road conditions		Occurrence location	
Accessory installation condition			
Confirmation of trouble condition			
❑ Diagnostic code			

3. General Description

A: CAUTION

1. AIRBAG SYSTEM

CAUTION:
• Do not use the electrical test equipment on the airbag system wiring harnesses and connector circuits.
• Be careful not to damage the airbag system wiring harness.

B: INSPECTION

1. BASIC INSPECTION

Before performing the diagnosis, check the following items which may cause problems relating the wiper or light.
1) Check the battery. <Ref. to SC(H4DO)-65, INSPECTION, Battery.> <Ref. to SC(H6DO)-59, INSPECTION, Battery.>
2) Check the relay and fuse condition. <Ref. to LI-5, Relay and Fuse.>
3) Check the connecting condition of harness and harness connector.

2. FUNCTION CHECK

AUTO HEADLIGHT BEAM LEVELER SYSTEM

1) Turn the ignition switch to ON.
2) Turn on the headlight low beam.
3) Check that the beam axes move when the vehicle condition is kept for three seconds or more after the vehicle posture is changed with the vehicle stopped.

C: PREPARATION TOOL

1. SPECIAL TOOL

ILLUSTRATION	TOOL NUMBER	DESCRIPTION	REMARKS
 STSSM4	— (Newly adopted tool)	SUBARU SELECT MONITOR 4	Used for setting of each function and trouble-shooting for electrical system. NOTE: For detailed operation procedures of Subaru Select Monitor 4, refer to “Application help”.

2. GENERAL TOOL

TOOL NAME	REMARKS
Circuit tester	Used for measuring resistance, voltage and current.
DST-i	Used together with Subaru Select Monitor 4.

4. Electrical Component Location

A: LOCATION

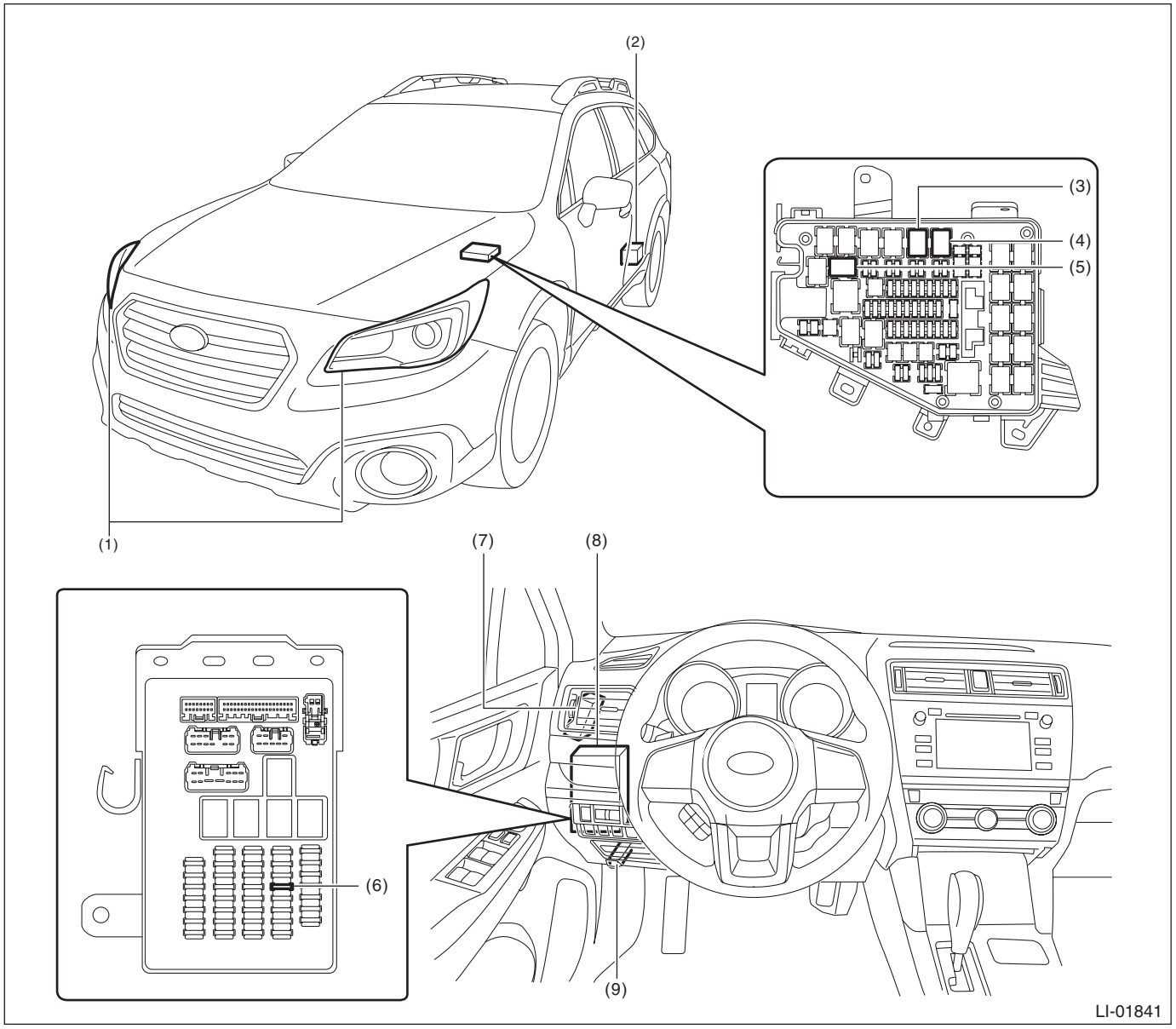

(1) Headlight ASSY
– Headlight beam leveler actuator
(2) Rear vehicle height sensor
(3) Headlight relay Lo
(4) Headlight relay Hi LH
(5) Headlight relay Hi RH
(6) Fuse 7.5A (auto headlight beam leveler CM)
(7) Auto headlight beam leveler CM
(8) Body integrated unit
(9) Data link connector

5. Control Module I/O Signal

A: ELECTRICAL SPECIFICATION

1. AUTO HEADLIGHT BEAM LEVELER CM

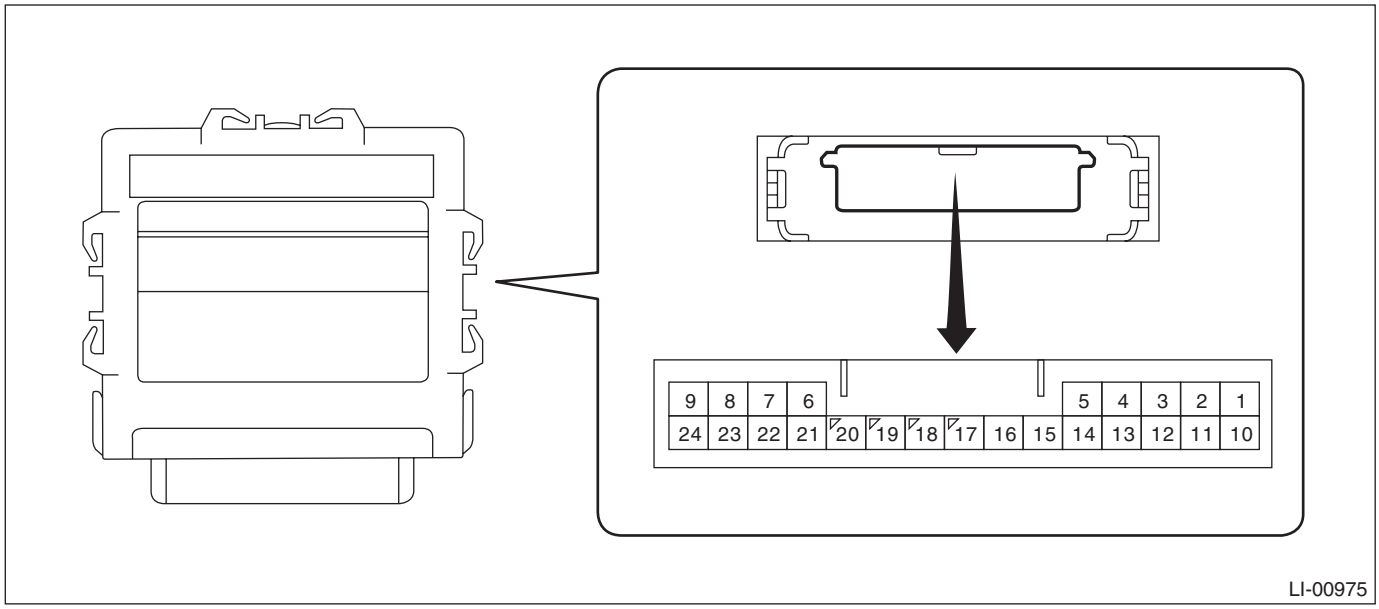

Terminal No.	Content	Measuring condition	Standard
1 ←→ Chassis ground	Ignition power supply	Ignition switch ON	8 — 16 V
2 ←→ Chassis ground	GND	Always	Less than 1 Ω
3 ←→ Chassis ground	Rr vehicle height sensor GND	Always	Less than 1 Ω
4	—	—	—
5	—	—	—
6	—	—	—
7	—	—	—
8	—	—	—
9	—	—	—
10 ←→ Chassis ground	Leveling actuator power supply	Ignition switch ON	8 — 16 V
11 ←→ Chassis ground	Leveling actuator GND	Always	Less than 1 Ω
12 ←→ 3	Rr vehicle height sensor power supply	Ignition switch ON	4.75 — 5.25 V
13	—	—	—
14	—	—	—
15	—	—	—
16	—	—	—
17 ←→ Chassis ground	Leveling actuator signal	Headlight off → on	Less than 1 V → 1.0 — 14.4 V (for 17 seconds)
		Headlight on, no vehicle height change → change and hold vehicle height for 3 seconds or more	
18	—	—	—
19 ←→ Chassis ground	Rr sensor signal	IG ON (with no passenger, no load and vehicle stopped)	Approx. 2.5 V (changes according to vehicle condition)

Terminal No.	Content	Measuring condition	Standard
20	—	—	—
21	—	—	—
22	—	—	—
23	CAN-H	Cannot be measured (CAN communication line)	—
24	CAN-L	Cannot be measured (CAN communication line)	—

B: WIRING DIAGRAM

Refer to “Headlight Beam Leveler System” in the wiring diagram. <Ref. to WI-242, WIRING DIAGRAM, Headlight Beam Leveler System.>

6. Subaru Select Monitor

A: OPERATION

- For operation procedures, refer to “Application help”.
- If the auto headlight beam leveler CM can not communicate with Subaru Select Monitor, perform “COMMUNICATION FOR INITIALIZING IMPOSSIBLE”. <Ref. to AL(diag)-9, INSPECTION, Subaru Select Monitor.>

B: INSPECTION

1. COMMUNICATION FOR INITIALIZING IMPOSSIBLE

Communication error with auto headlight beam leveler CM

DETECTING CONDITION:

- Defective harness connector
- Power supply circuit malfunction
- Defective auto headlight beam leveler CM
- Defective CAN communication circuit
- Defective Subaru Select Monitor

TROUBLE SYMPTOM:

Communication is impossible between auto headlight beam leveler CM and Subaru Select Monitor.

CAUTION:

Initialization is required after replacing the auto headlight beam leveler CM.

WIRING DIAGRAM:

NOTE:

For the coupling connector, refer to “WIRING SYSTEM”.

Headlight beam leveler system <Ref. to WI-242, WIRING DIAGRAM, Headlight Beam Leveler System.>

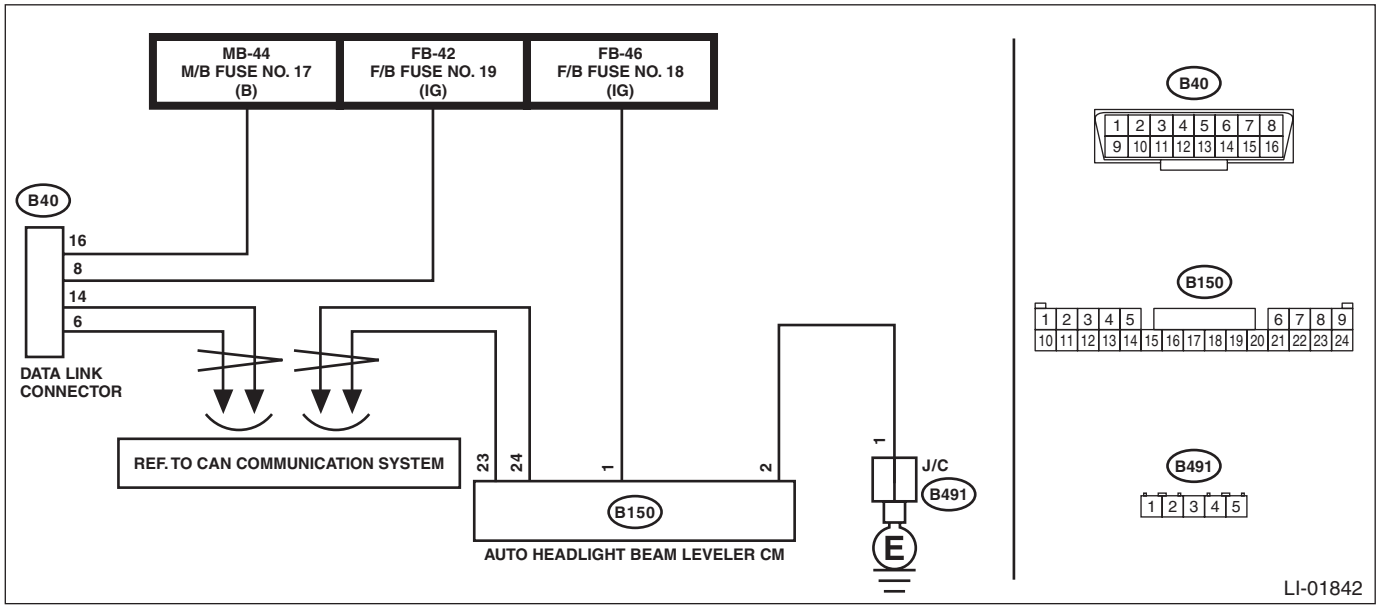

Step		Check	Yes	No
1	**CHECK OTHER COMMUNICATION.** Communicate with the system other than the auto headlight beam leveler CM using the Subaru Select Monitor.	Is the communication to other control module possible?	Go to step **2**.	Perform the “Communication for Initializing Impossible” of LAN system. <Ref. to LAN(diag)-11, COMMUNICATION FOR INITIALIZING IMPOSSIBLE, Subaru Select Monitor.>
2	**CHECK LAN SYSTEM.** Inspect LAN system. <Ref. to LAN(diag)-2, PROCEDURE, Basic Diagnostic Procedure.>	Is there any fault?	Perform the inspection according to the diagnosis for LAN system.	Go to step **3**.

Step		Check	Yes	No
3	**CHECK FOR POOR CONTACT.** 1) Turn the ignition switch to OFF. 2) Disconnect the auto headlight beam leveler CM connector. 3) Connect the disconnected connectors. 4) Communicate with the auto headlight beam leveler CM using the Subaru Select Monitor.	Is communication possible?	It is possible that temporary poor communication occurs.	Replace the auto headlight beam leveler CM. <Ref. to LI-80, Auto Headlight Beam Leveler Control Module.>

7. Read Diagnostic Trouble Code (DTC)

A: OPERATION

1) On «Start» display, select «Diagnosis».
2) On «Vehicle selection» display, input the target vehicle information and select «Confirmed».
3) On «Main Menu» display, select «Each System».
4) On «Select System» display, select «Headlight / Foglight» and then select «Enter».
5) On «Select Function» display, select «DTC».

NOTE:
- For detailed operation procedures, refer to “Application help”.
- For details concerning DTC, refer to “List of Diagnostic Trouble Code (DTC)”. <Ref. to AL(diag)-15, List of Diagnostic Trouble Code (DTC).>

8. Clear Memory Mode

A: OPERATION

1) On «Start» display, select «Diagnosis».
2) On «Vehicle selection» display, input the target vehicle information and select «Confirmed».
3) On «Main Menu» display, select «Each System».
4) On «Select System» display, select «Headlight / Foglight» and then select «Enter».
5) On «Select Function» display, select «DTC».
6) On «DTC» display, select «Clear Memory».

NOTE:
For detailed operation procedures, refer to “Application help”.

9. Inspection Mode

A: PROCEDURE

1) Turn the ignition switch to ON.
2) Turn on the headlight low beam.
3) Check that the beam axes move when the vehicle condition is kept for three seconds or more after the vehicle posture is changed with the vehicle stopped.
4) Read the DTC and check that the DTC is not displayed. <Ref. to AL(diag)-11, Read Diagnostic Trouble Code (DTC).>

NOTE:
If the DTC is displayed on the screen, the trouble is still present. Perform the diagnosis according to DTC.

10.Read Current Data

A: OPERATION

1) On «Start» display, select «Diagnosis».
2) On «Vehicle selection» display, input the target vehicle information and select «Confirmed».
3) On «Main Menu» display, select «Each System».
4) On «Select System» display, select «Headlight / Foglight» and then select «Enter».
5) On «Select Function» display, select «Data Monitor».

NOTE:
For detailed operation procedures, refer to “Application help”.

B: LIST

Item Name	Contents	Standard	Note
Trip Count	Time stamp information, trip counter	—	—
Count	Time stamp information, original counter identification information	—	—
Time Count [msec]	Time stamp information, time counter	—	—
F Sensor Signal	Output voltage value from front vehicle height sensor	5V	Fixed at 5 V because front vehicle height sensor is not equipped.
R Sensor Signal	Output voltage value from rear vehicle height sensor	Approx. 2.5 V	Changes according to vehicle condition.
Actuator Signal	Power supply voltage value to headlight beam leveler actuator	Not in operation: 0% In operation: 10 — 90% (17 seconds)	Changes according to vehicle condition.
ECU ACC	IG voltage condition of auto headlight beam leveler CM	8 — 16 V	—
Indicator Signal	Meter indicator condition	Light off: Normal Light up: Abnormal Blinks 3 times at 2 Hz.: When blinking 3 times at 2 Hz Blinks 2 times at 2 Hz.: When blinking twice at 2 Hz Check Bulb: When checking bulbs	—
Vehicle Speed Signal	Vehicle speed condition	Show vehicle speed	—
H/L Lo Signal	Headlight lighting condition	Light off: light switch OFF Light up: light switch HEAD or light switch AUTO with light sensor operated	—
LED HEADLAMP(LH) error Signal	Open circuit detection signal status	OFF: Open circuit not detected ON: Open circuit detected	Displays as «Invalid» because the LED headlight is not equipped.
LED HEADLAMP(RH) error Signal	Open circuit detection signal status	OFF: Open circuit not detected ON: Open circuit detected	Displays as «Invalid» because the LED headlight is not equipped.

11.List of Diagnostic Trouble Code (DTC)

A: LIST

DTC	Item	Reference
U0074	CONTROL MODULE COMMUNICATION BUS "BODY-CAN" OFF	<Ref. to AL(diag)-16, DTC U0074 CONTROL MODULE COMMUNICATION BUS "BODY-CAN" OFF, Diagnostic Procedure with Diagnostic Trouble Code (DTC).>
U0122	LOST COMMUNICATION WITH VEHICLE DYNAMICS CONTROL MODULE	<Ref. to AL(diag)-16, DTC U0122 LOST COMMUNICATION WITH VEHICLE DYNAMICS CONTROL MODULE, Diagnostic Procedure with Diagnostic Trouble Code (DTC).>
U0416	INVALID DATA RECEIVED FROM VEHICLE DYNAMICS CONTROL MODULE	<Ref. to AL(diag)-16, DTC U0416 INVALID DATA RECEIVED FROM VEHICLE DYNAMICS CONTROL MODULE, Diagnostic Procedure with Diagnostic Trouble Code (DTC).>
U1140	LOST COMMUNICATION WITH BODY CONTROL MODULE BODY-CAN	<Ref. to AL(diag)-16, DTC U1140 LOST COMMUNICATION WITH BODY CONTROL MODULE BODY-CAN, Diagnostic Procedure with Diagnostic Trouble Code (DTC).>
U1422	INVALID DATA RECEIVED FROM BODY CONTROL MODULE BODY-CAN	<Ref. to AL(diag)-16, DTC U1422 INVALID DATA RECEIVED FROM BODY CONTROL MODULE BODY-CAN, Diagnostic Procedure with Diagnostic Trouble Code (DTC).>
B2900	AHL CONTROL	<Ref. to AL(diag)-17, DTC B2900 AHL CONTROL, Diagnostic Procedure with Diagnostic Trouble Code (DTC).>
B2902	REAR HEIGHT SENSOR CIRCUIT	<Ref. to AL(diag)-18, DTC B2902 REAR HEIGHT SENSOR CIRCUIT, Diagnostic Procedure with Diagnostic Trouble Code (DTC).>

12.Diagnostic Procedure with Diagnostic Trouble Code (DTC)

A: DTC U0074 CONTROL MODULE COMMUNICATION BUS "BODY-CAN" OFF

Detected when CAN line abnormality is detected.

NOTE:
Perform the diagnosis for LAN system. <Ref. to LAN(diag)-2, PROCEDURE, Basic Diagnostic Procedure.>

B: DTC U0122 LOST COMMUNICATION WITH VEHICLE DYNAMICS CONTROL MODULE

Detected when CAN data (vehicle speed signal) is not received from VDC.

NOTE:
Perform the diagnosis for LAN system. <Ref. to LAN(diag)-2, PROCEDURE, Basic Diagnostic Procedure.>

C: DTC U0416 INVALID DATA RECEIVED FROM VEHICLE DYNAMICS CONTROL MODULE

DTC DETECTING CONDITION:
Detected when data (vehicle speed signal) from VDC CM is abnormal.
TROUBLE SYMPTOM:
The auto headlight beam leveler does not operate.

NOTE:
Perform the diagnosis for VDC. <Ref. to VDC(diag)-2, PROCEDURE, Basic Diagnostic Procedure.>

D: DTC U1140 LOST COMMUNICATION WITH BODY CONTROL MODULE BODY-CAN

Detected when CAN data (headlights ON signal) is not received from the body integrated unit.

NOTE:
Perform the diagnosis for LAN system. <Ref. to LAN(diag)-2, PROCEDURE, Basic Diagnostic Procedure.>

E: DTC U1422 INVALID DATA RECEIVED FROM BODY CONTROL MODULE BODY-CAN

Detected when CAN data (headlights ON signal) is invalid.

NOTE:
Perform the diagnosis for LAN system. <Ref. to LAN(diag)-2, PROCEDURE, Basic Diagnostic Procedure.>

F: DTC B2900 AHL CONTROL

DTC DETECTING CONDITION:
Detected when internal malfunction occurs in the auto headlight beam leveler CM.
TROUBLE SYMPTOM:
The auto headlight beam leveler does not operate.

CAUTION:
Initialization is required after replacing the auto headlight beam leveler CM.

Step		Check	Yes	No
1	**CHECK DTC.** 1) Turn the ignition switch to OFF → ON. 2) Turn on the headlight low beam. 3) Using the Subaru Select Monitor, clear the auto headlight beam leveler system memory. <Ref. to AL(diag)-12, Clear Memory Mode.> 4) Use the Subaru Select Monitor and read DTCs. <Ref. to AL(diag)-11, Read Diagnostic Trouble Code (DTC).>	Is DTC B2900 displayed? (current malfunction)	Replace the auto headlight beam leveler CM. <Ref. to LI-80, Auto Headlight Beam Leveler Control Module.>	Even if DTC is displayed, the circuit has returned to a normal condition at this time. Reproduce the failure, and then perform the diagnosis again. NOTE: In this case, temporary poor contact of connector, temporary open or short circuit of harness may be the cause.

G: DTC B2902 REAR HEIGHT SENSOR CIRCUIT

DTC DETECTING CONDITION:
Rear vehicle height sensor error is detected for 10 seconds or more.
TROUBLE SYMPTOM:
The auto headlight beam leveler does not operate.

CAUTION:
Initialization is required after replacing the auto headlight beam leveler CM.
WIRING DIAGRAM:

NOTE:
For the coupling connector, refer to “WIRING SYSTEM”.
Headlight beam leveler system <Ref. to WI-242, WIRING DIAGRAM, Headlight Beam Leveler System.>

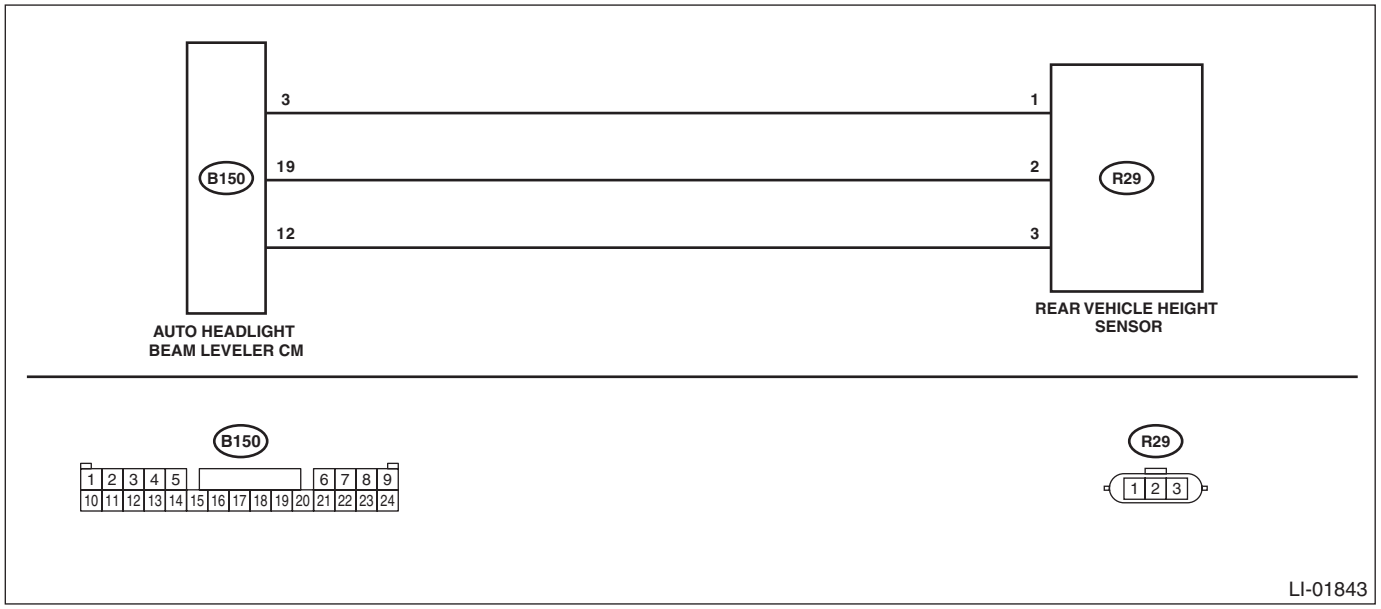

	Step	Check	Yes	No
1	**CHECK DTC.** 1) Turn the ignition switch to OFF → ON. 2) Turn on the headlight low beam. 3) Using the Subaru Select Monitor, clear the auto headlight beam leveler system memory. <Ref. to AL(diag)-12, Clear Memory Mode.> 4) Use the Subaru Select Monitor and read DTCs. <Ref. to AL(diag)-11, Read Diagnostic Trouble Code (DTC).>	Is DTC B2902 displayed? (current malfunction)	Go to step **2**.	Even if DTC is displayed, the circuit has returned to a normal condition at this time. Reproduce the failure, and then perform the diagnosis again. NOTE: In this case, temporary poor contact of connector, temporary open or short circuit of harness may be the cause.
2	**CHECK CURRENT DATA.** Display «R Sensor Signal» using Subaru Select Monitor. <Ref. to AL(diag)-14, Read Current Data.>	Does the data indicate the standard value (approx. 2.5 V when on a level road with one person in the vehicle)?	Replace the auto headlight beam leveler CM. <Ref. to LI-80, Auto Headlight Beam Leveler Control Module.>	Go to step **3**.

	Step	Check	Yes	No
3	**CHECK CURRENT DATA.** 1) Display «R Sensor Signal» using Subaru Select Monitor. <Ref. to AL(diag)-14, Read Current Data.> 2) Change the vehicle posture.	Does the data change?	Go to step **6**.	Go to step **4**.
4	**CHECK OUTPUT VOLTAGE BETWEEN AUTO HEADLIGHT BEAM LEVELER CM AND VEHICLE HEIGHT SENSOR.** 1) Disconnect the vehicle height sensor connector. 2) Turn the ignition switch to ON. 3) Measure the voltage between the vehicle height sensor connector and chassis ground. ***Connector & terminal*** ***(R29) No. 3 (+) — Chassis ground (–):***	Is the voltage 5±0.25 V?	Go to step **5**.	Replace the auto headlight beam leveler CM. <Ref. to LI-80, Auto Headlight Beam Leveler Control Module.>
5	**CHECK REAR HEIGHT SENSOR.** 1) Remove the rear vehicle height sensor. 2) Perform the inspection of rear height sensor unit. <Ref. to LI-84, INSPECTION, Rear Height Sensor.>	Is the rear height sensor normal?	Go to step **6**.	Replace the rear height sensor. <Ref. to LI-83, Rear Height Sensor.>
6	**CHECK HARNESS (OPEN CIRCUIT).** 1) Disconnect the auto headlight beam leveler CM connector. 2) Using a tester, measure the resistance between the auto headlight beam leveler CM connector and rear height sensor connector. ***Connector & terminal*** ***(B150) No. 3 — (R29) No. 1:*** ***(B150) No. 19 — (R29) No. 2:*** ***(B150) No. 12 — (R29) No. 3:***	Is there continuity?	Go to step **7**.	Repair or replace the open circuit of harness.
7	**CHECK HARNESS (GROUND SHORT CIRCUIT).** Using a tester, measure the resistance between the auto headlight beam leveler CM connector and chassis ground. ***Connector & terminal*** ***(B150) No. 3 — Chassis ground:*** ***(B150) No. 19 — Chassis ground:*** ***(B150) No. 12 — Chassis ground:***	Is the resistance 10 kΩ or more?	Replace the auto headlight beam leveler CM. <Ref. to LI-80, Auto Headlight Beam Leveler Control Module.>	Repair or replace the short circuit of the harness.

13.Diagnostics with Phenomenon

A: INSPECTION

1. BEAM LEVEL CONTROL DOES NOT FUNCTION

CAUTION:
- **Before performing diagnosis, check the fuse in this circuit.**
- **Initialization is required after replacing the auto headlight beam leveler CM.**

WIRING DIAGRAM:

NOTE:
For the coupling connector, refer to “WIRING SYSTEM”.
Headlight beam leveler system <Ref. to WI-242, WIRING DIAGRAM, Headlight Beam Leveler System.>

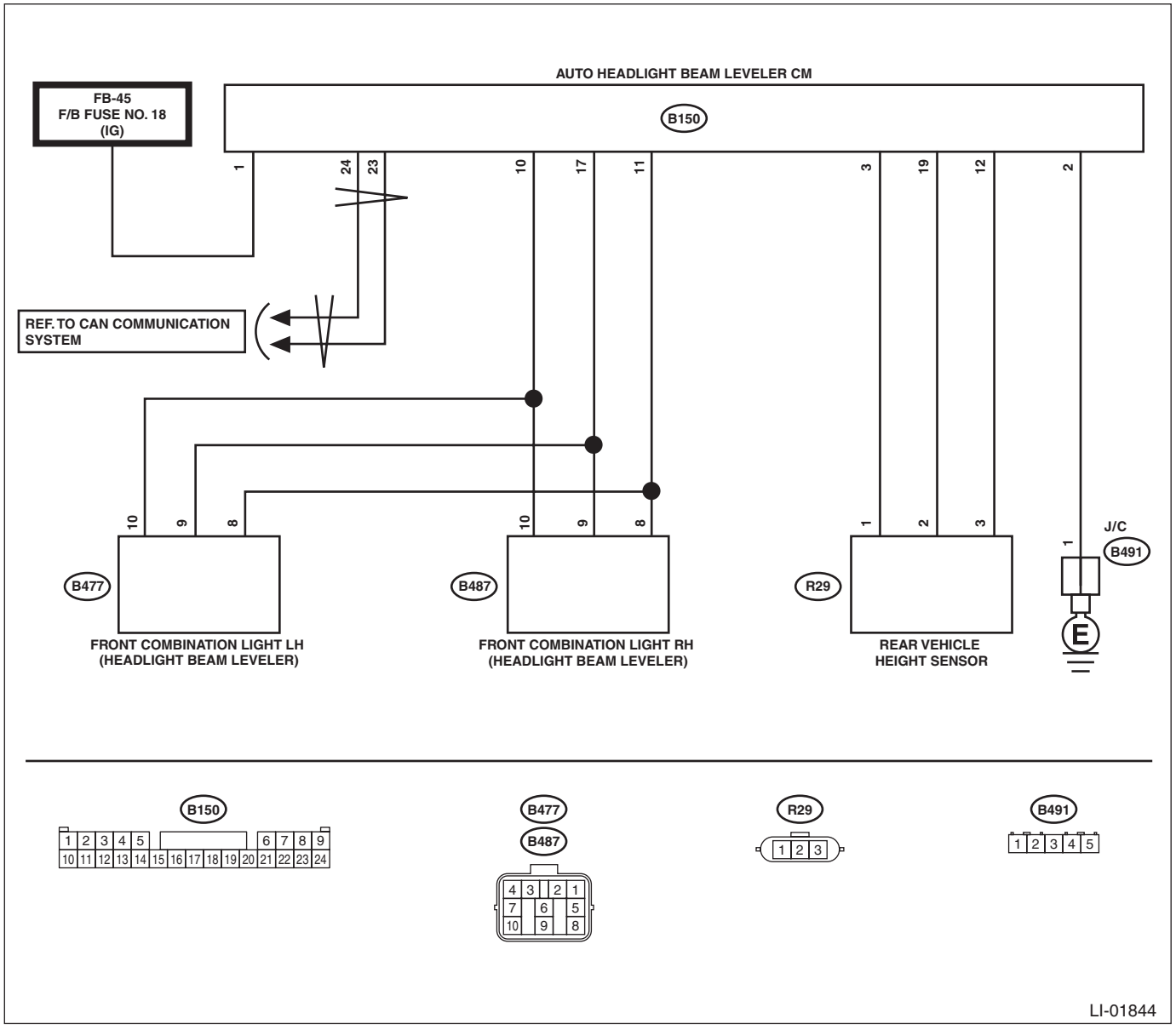

Step		Check	Yes	No
1	**CHECK CURRENT DATA.** Display «Control module voltage» using Subaru Select Monitor. <Ref. to AL(diag)-14, Read Current Data.>	Does the current data indicate the standard value?	Go to step **3**.	Go to step **2**.

	Step	Check	Yes	No
2	**CHECK HARNESS BETWEEN POWER SUPPLY — AUTO HEADLIGHT BEAM LEVELER CM.** 1) Disconnect the auto headlight beam leveler CM connector. 2) Turn the ignition switch to ON. 3) Measure the voltage between the auto headlight beam leveler CM connector and chassis ground. ***Connector & terminal*** ***(B150) No. 1 (+) — Chassis ground (–):***	Is the voltage 8 — 16 V?	Replace the auto headlight beam leveler CM. <Ref. to LI-80, Auto Headlight Beam Leveler Control Module.>	Repair or replace the harness.
3	**CHECK INDICATOR OUTPUT.** Turn the ignition switch to ON.	Does the warning indicator turn on for three seconds?	Go to step **5**.	Go to step **4**.
4	**CHECK CURRENT DATA.** 1) Display «Indicator Signal» using Subaru Select Monitor. <Ref. to AL(diag)-14, Read Current Data.> 2) Turn the ignition switch to ON.	Is it set as ON for 3 seconds?	Check the combination meter. <Ref. to MET(diag)-2, PROCEDURE, Basic Diagnostic Procedure.>	Replace the auto headlight beam leveler CM. <Ref. to LI-80, Auto Headlight Beam Leveler Control Module.>
5	**CHECK INDICATOR OUTPUT.** Leave the ignition switch to ON for 10 seconds.	Does the warning indicator light go off?	Go to step **6**.	Go to step **10**.
6	**CHECK HEADLIGHT ASSEMBLY (ACTUATOR) DRIVE.** 1) Connect the auto headlight beam leveler CM connector. 2) Turn the ignition switch to ON, and within 10 seconds, repeat the OFF → Low beam of headlight switch 5 times. 3) Check that the headlight beam drops once, then returns to normal. 4) Then, after waiting for 30 seconds or more with the ignition ON, turn the ignition switch to OFF.	Does the headlight beam drop down once, and then return?	Replace the auto headlight beam leveler CM. <Ref. to LI-80, Auto Headlight Beam Leveler Control Module.>	Go to step **7**.
7	**CHECK HEADLIGHT ASSEMBLY (ACTUATOR) OUTPUT.** 1) Display «Actuator Signal» using Subaru Select Monitor. <Ref. to AL(diag)-14, Read Current Data.> 2) Turn the ignition switch to ON, and within 10 seconds, repeat the OFF → Low beam of headlight switch 5 times. 3) Check that the headlight beam drops once, then returns to normal. 4) Then, after waiting for 30 seconds or more with the ignition ON, turn the ignition switch to OFF.	Does the current data indicate the standard value? (Does the value change at 10 — 90%?)	Go to step **8**.	Replace the auto headlight beam leveler CM. <Ref. to LI-80, Auto Headlight Beam Leveler Control Module.>
8	**CHECK OUTPUT VOLTAGE BETWEEN HEADLIGHT ASSEMBLY (ACTUATOR).** 1) Disconnect the auto headlight beam leveler CM connector. 2) Turn the ignition switch to ON. 3) Measure the voltage between the auto headlight beam leveler CM connector and chassis ground. ***Connector & terminal*** ***(B150) No. 10 (+) — Chassis ground (–):***	Is the voltage 8 — 16 V?	Replace the headlight assembly. <Ref. to LI-30, Headlight Assembly.>	Go to step **9**.

	Step	Check	Yes	No
9	**CHECK HARNESS BETWEEN AUTO HEADLIGHT BEAM LEVELER CM AND HEADLIGHT ASSEMBLY (ACTUATOR).** 1) Disconnect the connector of headlight assembly. 2) Measure the continuity between the auto headlight beam leveler CM connector and headlight assembly (actuator) connector. ***Connector & terminal*** ***• Headlight beam leveler RH*** ***(B150) No. 10 — (B487) No. 10:*** ***(B150) No. 17 — (B487) No. 9:*** ***(B150) No. 11 — (B487) No. 8:*** ***• Headlight beam leveler LH*** ***(B150) No. 10 — (B477) No. 10:*** ***(B150) No. 17 — (B477) No. 9:*** ***(B150) No. 11 — (B477) No. 8:***	Is there continuity?	Replace the auto headlight beam leveler CM. <Ref. to LI-80, Auto Headlight Beam Leveler Control Module.>	Repair the open circuit or poor contact of the connector in the harness between headlight assembly and auto headlight beam leveler CM.
10	**CHECK DTC.** Display DTC using the Subaru Select Monitor. <Ref. to AL(diag)-11, Read Diagnostic Trouble Code (DTC).>	Is DTC displayed?	Perform the diagnosis according to DTC. <Ref. to AL(diag)-15, LIST, List of Diagnostic Trouble Code (DTC).>	Replace the auto headlight beam leveler CM. <Ref. to LI-80, Auto Headlight Beam Leveler Control Module.>

STEERING RESPONSIVE FOG LIGHTS (DIAGNOSTICS)

SRF(diag)

		Page
1.	Basic Diagnostic Procedure	2
2.	Check List for Interview	3
3.	General Description	4
4.	Electrical Component Location	5
5.	Control Module I/O Signal	7
6.	Subaru Select Monitor	9
7.	Read Diagnostic Trouble Code (DTC)	11
8.	Clear Memory Mode	12
9.	Inspection Mode	13
10.	Read Current Data	14
11.	System Operation Check Mode	16
12.	List of Diagnostic Trouble Code (DTC)	17
13.	Diagnostic Procedure with Diagnostic Trouble Code (DTC)	18
14.	Diagnostics with Phenomenon	26

1. Basic Diagnostic Procedure

A: PROCEDURE

	Step	Check	Yes	No
1	**PERFORM CUSTOMER INTERVIEW.** Using the Check List for Interview, ask the customer the condition of how the trouble occurred. <Ref. to SRF(diag)-3, CHECK, Check List for Interview.>	Did you interview the customer?	Go to step **2**.	Interview the customer. <Ref. to SRF(diag)-3, CHECK, Check List for Interview.>
2	**CHECK LAN SYSTEM.** Inspect LAN system. <Ref. to LAN(diag)-2, PROCEDURE, Basic Diagnostic Procedure.>	Is there any fault?	Perform the inspection according to the diagnosis for LAN system.	Go to step **3**.
3	**CHECK DTC.** Read the DTC of the steering responsive fog light using the Subaru Select Monitor. <Ref. to SRF(diag)-11, OPERATION, Read Diagnostic Trouble Code (DTC).> NOTE: If the communication function of the Subaru Select Monitor cannot be executed properly, check the communication circuit. <Ref. to SRF(diag)-9, COMMUNICATION FOR INITIALIZING IMPOSSIBLE, INSPECTION, Subaru Select Monitor.>	Is DTC displayed?	Record DTC and time stamp, and perform the diagnosis according to DTC. <Ref. to SRF(diag)-17, LIST, List of Diagnostic Trouble Code (DTC).> For time stamp, refer to “LAN SYSTEM”. <Ref. to LAN(diag)-6, TIME STAMP, CAUTION, General Description.> After diagnosis is completed, Go to step **6**.	Go to step **4**.
4	**CHECK DIAGNOSTICS WITH PHENOMENON.** Check “Diagnostics with Phenomenon”. <Ref. to SRF(diag)-26, Diagnostics with Phenomenon.>	Does the symptom apply?	Perform diagnosis according to the procedures in the diagnostics with phenomenon.	Go to step **5**.
5	**CHECK TROUBLE PHENOMENON.** 1) Perform the basic inspection and function check. <Ref. to SRF(diag)-4, INSPECTION, General Description.> 2) Check the SRF CM. <Ref. to SRF(diag)-7, Control Module I/O Signal.> 3) Perform check of current data. <Ref. to SRF(diag)-14, Read Current Data.> 4) Perform a unit check.	Was the trouble cause found?	Repair or replace the cause of trouble.	System is normal.
6	**PERFORM DIAGNOSIS.** 1) Perform the Clear Memory Mode. <Ref. to SRF(diag)-12, Clear Memory Mode.> 2) Perform the Inspection Mode. <Ref. to SRF(diag)-13, Inspection Mode.>	Is DTC displayed?	Perform the diagnosis according to DTC. <Ref. to SRF(diag)-17, LIST, List of Diagnostic Trouble Code (DTC).>	Finish the diagnosis.

2. Check List for Interview

A: CHECK

- Inspect the following items regarding the vehicle's state.
- Print out this page for interviewing customers.

<table>
<tr><td colspan="4">Steering Responsive Fog Light Check List for Interview
Date the Vehicle is Received Year Month Day</td></tr>
<tr><td colspan="2" rowspan="2">Customer's name</td><td>Registration No.</td><td>Initial year of registration
Year Month Date</td></tr>
<tr><td>Vehicle model</td><td>Frame number</td></tr>
<tr><td>Interviewer</td><td>Inspector</td><td>Engine type</td><td>Odometer reading</td></tr>
<tr><td colspan="4">Customer specified content
•
•
•</td></tr>
<tr><td>Date and time when the trouble occurred</td><td></td><td>Frequency of trouble occurrence</td><td>Always occurs
Sometimes occurs
(times per day, times per month)</td></tr>
<tr><td rowspan="2">Condition of trouble occurrence
(How the trouble occurs)</td><td rowspan="2"></td><td>Weather</td><td>Fine • Cloudy • Rainy • Snowy • Others ( )</td></tr>
<tr><td>Temperature</td><td>°C (°F) — °C (°F)</td></tr>
<tr><td>Road conditions</td><td></td><td>Occurrence location</td><td></td></tr>
<tr><td>Accessory installation condition</td><td colspan="3"></td></tr>
<tr><td>Confirmation of trouble condition</td><td colspan="3"></td></tr>
<tr><td>❑ Diagnostic code</td><td colspan="3"></td></tr>
</table>

3. General Description

A: CAUTION

1. AIRBAG SYSTEM

CAUTION:
• Do not use the electrical test equipment on the airbag system wiring harnesses and connector circuits.
• Be careful not to damage the airbag system wiring harness.

B: INSPECTION

1. BASIC INSPECTION

Before performing the diagnosis, check the following items which may cause problems relating the wiper or light.
1) Check the battery. <Ref. to SC(H4DO)-65, INSPECTION, Battery.> <Ref. to SC(H6DO)-59, INSPECTION, Battery.>
2) Check the relay and fuse condition. <Ref. to LI-5, Relay and Fuse.>
3) Check the connecting condition of harness and harness connector.

2. FUNCTION CHECK

Steering responsive fog light

1) Start the engine.
2) Turn the fog light switch to OFF.
3) Turn on the headlight low beam.
4) Check if when turning the steering wheel by 45 degrees or more at a vehicle speed of 10 km/h (6 MPH) or more, the fog light on the turning side is only illuminated.

AUTO HEADLIGHT BEAM LEVELER SYSTEM

1) Turn the ignition switch to ON.
2) Turn on the headlight low beam.
3) Check that the beam axes move when the vehicle condition is kept for three seconds or more after the vehicle posture is changed with the vehicle stopped.

C: PREPARATION TOOL

1. SPECIAL TOOL

ILLUSTRATION	TOOL NUMBER	DESCRIPTION	REMARKS
 STSSM4	— (Newly adopted tool)	SUBARU SELECT MONITOR 4	Used for setting of each function and trouble-shooting for electrical system. NOTE: For detailed operation procedures of Subaru Select Monitor 4, refer to “Application help”.

2. GENERAL TOOL

TOOL NAME	REMARKS
Circuit tester	Used for measuring resistance, voltage and current.
DST-i	Used together with Subaru Select Monitor 4.

4. Electrical Component Location

A: LOCATION

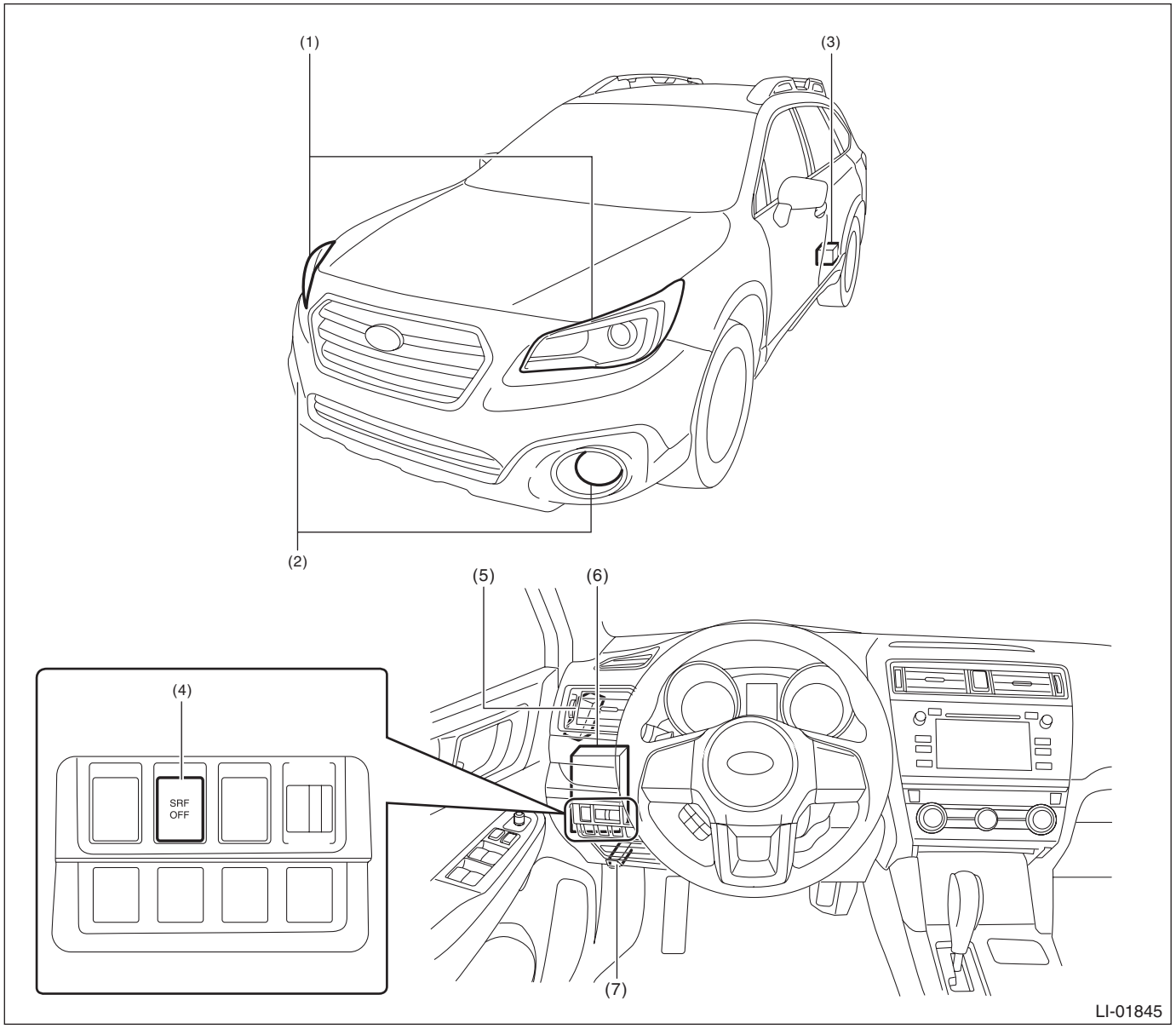

(1) Headlight ASSY
– Headlight beam leveler actuator
(2) Fog light ASSY
(3) Rear vehicle height sensor
(4) SRF OFF switch
(5) SRF CM
NOTE:
Part label: LIGHTING CONTROL MODULE
(6) Body integrated unit
(7) Data link connector

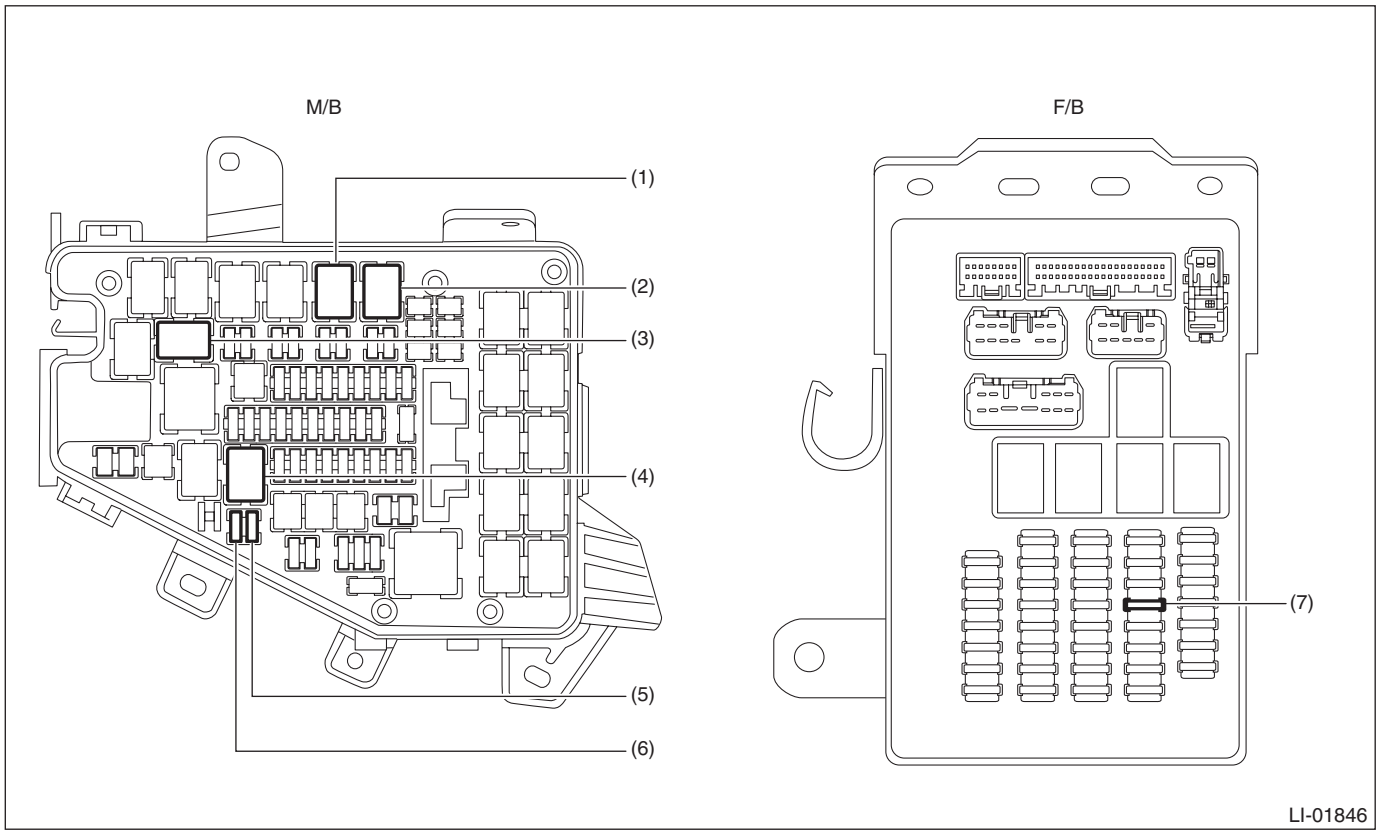

(1) Headlight relay Lo
(2) Headlight relay Hi (LH)
(3) Headlight relay Hi (RH)
(4) Front fog light relay
(5) Fuse 10A (SRF CM)
(6) Fuse 10A (SRF CM)
(7) Fuse 7.5A (SRF CM)

5. Control Module I/O Signal

A: ELECTRICAL SPECIFICATION

1. SRF CM

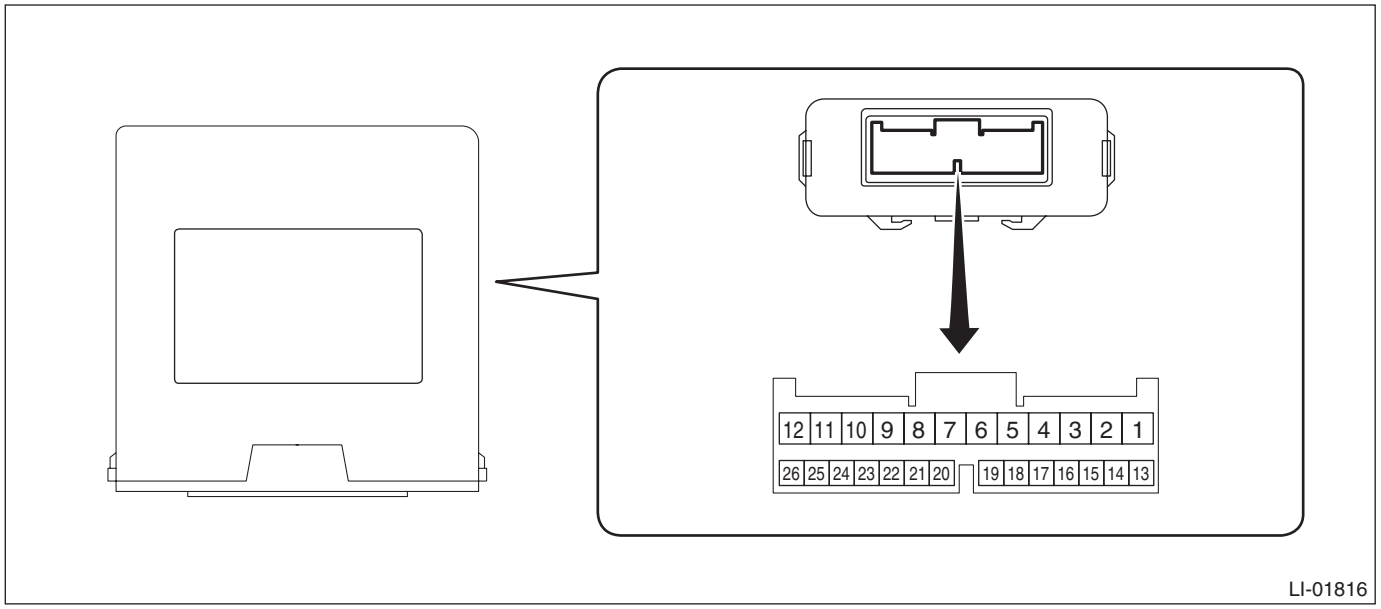

Terminal No.	Content	Measuring condition	Standard
1 ←→ Chassis ground	Battery power supply (right)	Always	8 — 16 V
2 ←→ Chassis ground	—	—	—
3 ←→ Chassis ground	Fog light output (right)	Fog light switch ON	8 — 16 V
4 ←→ Chassis ground	—	—	—
5 ←→ Chassis ground	SRF OFF switch	SRF OFF switch OFF → ON	5 V or more → 1.5 V or less
6 ←→ Chassis ground	—	—	—
7 ←→ Chassis ground	—	—	—
8 ←→ Chassis ground	Rear vehicle height sensor signal*1	IG ON (with no passenger, no load and vehicle stopped)	Approx. 2.5 V (changes according to vehicle condition)
9 ←→ Chassis ground	—	—	—
10 ←→ Chassis ground	Fog light output (left)	Fog light switch ON	8 — 16 V
11 ←→ Chassis ground	—	—	—
12 ←→ Chassis ground	Battery power supply (left)	Always	8 — 16 V
13 ←→ Chassis ground	GND	Always	Less than 1 Ω
14 ←→ Chassis ground	Ignition power supply	Ignition switch ON	8 — 16 V
15 ←→ Chassis ground	Leveling actuator power supply*1	Ignition switch ON	8 — 16 V
16 ←→ Chassis ground	Leveling actuator GND*1	Always	Less than 1 Ω
17 ←→ Chassis ground	—	—	—
18 ←→ Chassis ground	—	—	—
19 ←→ Chassis ground	—	—	—
20 ←→ Chassis ground	—	—	—
21 ←→ Chassis ground	Leveling actuator signal*1	Headlight off → on	Less than 1 V → 1.0 — 14.4 V (for 17 seconds)
		Headlight on, no vehicle height change → change and hold vehicle height for 3 seconds or more	
22 ←→ Chassis ground	—	—	—
23 ←→ Chassis ground	Rear vehicle height sensor power supply*1	Ignition switch ON	4.75 — 5.25 V

Terminal No.	Content	Measuring condition	Standard
24 ←→ Chassis ground	Rear vehicle height sensor GND*1	Always	Less than 1 Ω
25 ←→ Chassis ground	CAN-H (CAN communication line)	Cannot be measured	—
26 ←→ Chassis ground	CAN-L (CAN communication line)	Cannot be measured	—

*1: With auto headlight beam leveler system

B: WIRING DIAGRAM

- With auto headlight beam leveler system

Refer to “Headlight Beam Leveler System” in the wiring diagram. <Ref. to WI-237, WIRING DIAGRAM, Front Fog Light System.> <Ref. to WI-242, WIRING DIAGRAM, Headlight Beam Leveler System.>

- Without auto headlight beam leveler system

Refer to “Front Fog Light System” in the wiring diagram. <Ref. to WI-237, WIRING DIAGRAM, Front Fog Light System.>

6. Subaru Select Monitor

A: OPERATION

- For detailed operation procedures, refer to “Application help”.
- If the SRF CM cannot communicate with Subaru Select Monitor, perform “COMMUNICATION FOR INITIALIZING IMPOSSIBLE”. <Ref. to SRF(diag)-9, INSPECTION, Subaru Select Monitor.>

B: INSPECTION

1. COMMUNICATION FOR INITIALIZING IMPOSSIBLE

Communication error with SRF CM

DETECTING CONDITION:

- Defective harness connector
- Power supply circuit malfunction
- Defective SRF CM
- Defective CAN communication circuit
- Defective Subaru Select Monitor

TROUBLE SYMPTOM:

Communication is impossible between SRF CM and Subaru Select Monitor.

CAUTION:
Initialization is required after replacing the SRF CM.
WIRING DIAGRAM:

NOTE:
For the coupling connector, refer to “WIRING SYSTEM”.
Front fog light system <Ref. to WI-237, WIRING DIAGRAM, Front Fog Light System.>
Headlight beam leveler system <Ref. to WI-242, WIRING DIAGRAM, Headlight Beam Leveler System.>

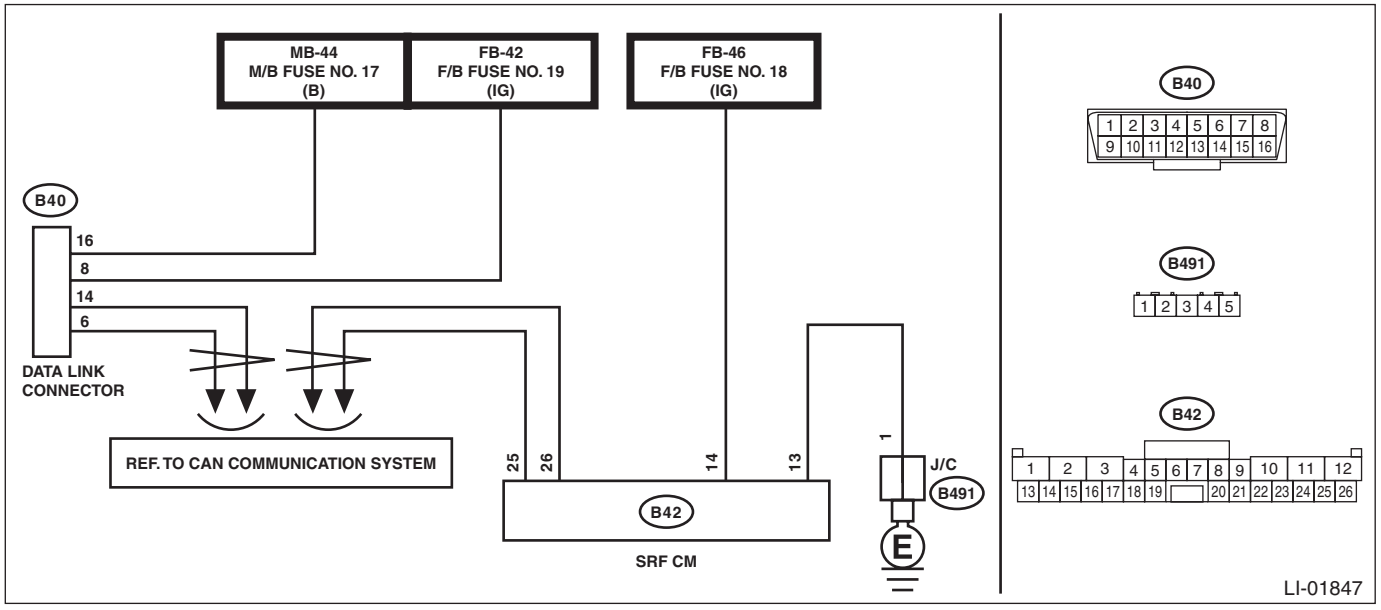

	Step	Check	Yes	No
1	**CHECK OTHER COMMUNICATION.** Communicate with the system other than the SRF CM using the Subaru Select Monitor.	Is the communication to other control module possible?	Go to step **2**.	Perform the "Communication for Initializing Impossible" of LAN system. <Ref. to LAN(diag)-11, COMMUNICATION FOR INITIALIZING IMPOSSIBLE, Subaru Select Monitor.>
2	**CHECK LAN SYSTEM.** Inspect LAN system. <Ref. to LAN(diag)-2, PROCEDURE, Basic Diagnostic Procedure.>	Is there any fault?	Perform the inspection according to the diagnosis for LAN system.	Go to step **3**.
3	**CHECK FOR POOR CONTACT.** 1) Turn the ignition switch to OFF. 2) Disconnect the SRF CM connector. 3) Connect the disconnected connectors. 4) Communicate with the SRF CM using the Subaru Select Monitor.	Is communication possible?	It is possible that temporary poor communication occurs.	Replace the SRF CM. <Ref. to LI-88, Steering Responsive Fog Lights CM.>

7. Read Diagnostic Trouble Code (DTC)

A: OPERATION

1) On «Start» display, select «Diagnosis».
2) On «Vehicle selection» display, input the target vehicle information and select «Confirmed».
3) On «Main Menu» display, select «Each System».
4) On «Select System» display, select «Headlight / Foglight» and then select «Enter».
5) On «Select Function» display, select «DTC».

NOTE:
- For detailed operation procedures, refer to “Application help”.
- For details concerning DTC, refer to “List of Diagnostic Trouble Code (DTC)”. <Ref. to SRF(diag)-17, List of Diagnostic Trouble Code (DTC).>

8. Clear Memory Mode

A: OPERATION

1) On «Start» display, select «Diagnosis».
2) On «Vehicle selection» display, input the target vehicle information and select «Confirmed».
3) On «Main Menu» display, select «Each System».
4) On «Select System» display, select «Headlight / Foglight» and then select «Enter».
5) On «Select Function» display, select «DTC».
6) On «DTC» display, select «Clear Memory».

NOTE:
For detailed operation procedures, refer to “Application help”.

9. Inspection Mode

A: PROCEDURE

1. AUTO HEADLIGHT BEAM LEVELER SYSTEM

1) Turn the ignition switch to ON.
2) Turn on the headlight low beam.
3) Check that the beam axes move when the vehicle condition is kept for three seconds or more after the vehicle posture is changed with the vehicle stopped.
4) Read the DTC and check that the DTC is not displayed. <Ref. to SRF(diag)-11, Read Diagnostic Trouble Code (DTC).>

NOTE:
If the DTC is displayed on the screen, the trouble is still present. Perform the diagnosis according to DTC.

2. STEERING RESPONSIVE FOG LIGHT

1) Turn the ignition switch to ON.
2) Turn on the headlight low beam.
3) Turn the fog light switch to ON.
4) Check that the fog light illuminates.
5) Read the DTC and check that the DTC is not displayed. <Ref. to SRF(diag)-11, Read Diagnostic Trouble Code (DTC).>

NOTE:
If the DTC is displayed on the screen, the trouble is still present. Perform the diagnosis according to DTC.

10.Read Current Data

A: OPERATION

1) On «Start» display, select «Diagnosis».
2) On «Vehicle selection» display, input the target vehicle information and select «Confirmed».
3) On «Main Menu» display, select «Each System».
4) On «Select System» display, select «Headlight / Foglight» and then select «Enter».
5) On «Select Function» display, select «Data Monitor».

NOTE:
For detailed operation procedures, refer to “Application help”.

B: LIST

Item Name	Contents	Standard	Note
Trip Count	Time stamp information, trip counter	—	—
Count	Time stamp information, original counter identification information	—	—
Time Count	Time stamp information, time counter	—	—
R Sensor Signal	Output voltage value from rear vehicle height sensor	Approx. 2.5 V	Changes according to vehicle condition. Not displayed for models without auto headlight beam leveler system.
Actuator Signal	Power supply voltage value to headlight beam leveler actuator	Not in operation: 0% In operation: 10 — 90% (17 seconds)	Changes according to vehicle condition. Not displayed for models without auto headlight beam leveler system.
ECU ACC	IG voltage condition of SRF CM	8 — 16 V	—
Indicator Signal	Meter indicator condition	Light off: Normal Light up: Abnormal Blinks 3 times at 2 Hz.: When blinking 3 times at 2 Hz Blinks 2 times at 2 Hz.: When blinking twice at 2 Hz Check Bulb: When checking bulbs	Fixed to OFF for models without auto headlight beam leveler system.
Vehicle speed signal	Vehicle speed condition	Show vehicle speed	—
H/L Lo Signal	Headlight (Lo) lighting condition	OFF: when unlit ON: when lit	—
Headlight High Beam Signal	Headlight (Hi) lighting condition	OFF: when unlit ON: when lit	—
Fog Light SW Signal	Front fog light switch status	OFF: when switch OFF ON: when switch ON	—
Steering Angle Signal	Steering angle status	Displays steering angle	—
Shift Position Signal	Shift lever position	Displays shift lever position	—

Item Name	Contents	Standard	Note
SRF Status	SRF switch status	SRF Function ON: when switch ON SRF Function OFF: when switch OFF	—
Fog Light Control Status	SRF operation status	LH/RH Light off: when all unlit LH Light on: when left fog light is lit RH Light on: when right fog light is lit LH/RH Light on: when all lit	—

11.System Operation Check Mode

A: OPERATION

1) On «Start» display, select «Diagnosis».
2) On «Vehicle selection» display, input the target vehicle information and select «Confirmed».
3) On «Main Menu» display, select «Each System».
4) On «Select System» display, select «Headlight / Foglight» and then select «Enter».
5) On «Select Function» display, select «Active Test».
6) On «Active Test» display, select «Fog Light Lighting Test».

NOTE:
For detailed operation procedures, refer to “Application help”.

System operation check mode item	Display	Note
Fog Light Lighting Test	LH	Left side fog light is illuminated.
	RH	Right side fog light is illuminated.

12.List of Diagnostic Trouble Code (DTC)

A: LIST

DTC	Item	Reference
U0074	CONTROL MODULE COMMUNICATION BUS "BODY-CAN" OFF	<Ref. to SRF(diag)-18, DTC U0074 CONTROL MODULE COMMUNICATION BUS "BODY-CAN" OFF, Diagnostic Procedure with Diagnostic Trouble Code (DTC).>
U0101	LOST COMMUNICATION WITH TCM	<Ref. to SRF(diag)-18, DTC U0101 LOST COMMUNICATION WITH TCM, Diagnostic Procedure with Diagnostic Trouble Code (DTC).>
U0122	LOST COMMUNICATION WITH VEHICLE DYNAMICS CONTROL MODULE	<Ref. to SRF(diag)-18, DTC U0122 LOST COMMUNICATION WITH VEHICLE DYNAMICS CONTROL MODULE, Diagnostic Procedure with Diagnostic Trouble Code (DTC).>
U0402	INVALID DATA RECEIVED FROM TCM	<Ref. to SRF(diag)-18, DTC U0402 INVALID DATA RECEIVED FROM TCM, Diagnostic Procedure with Diagnostic Trouble Code (DTC).>
U0416	INVALID DATA RECEIVED FROM VEHICLE DYNAMICS CONTROL MODULE	<Ref. to SRF(diag)-18, DTC U0416 INVALID DATA RECEIVED FROM VEHICLE DYNAMICS CONTROL MODULE, Diagnostic Procedure with Diagnostic Trouble Code (DTC).>
U1140	LOST COMMUNICATION WITH BODY CONTROL MODULE BODY-CAN	<Ref. to SRF(diag)-18, DTC U1140 LOST COMMUNICATION WITH BODY CONTROL MODULE BODY-CAN, Diagnostic Procedure with Diagnostic Trouble Code (DTC).>
U1422	INVALID DATA RECEIVED FROM BODY CONTROL MODULE BODY-CAN	<Ref. to SRF(diag)-18, DTC U1422 INVALID DATA RECEIVED FROM BODY CONTROL MODULE BODY-CAN, Diagnostic Procedure with Diagnostic Trouble Code (DTC).>
B2900	AHL CONTROL	<Ref. to SRF(diag)-19, DTC B2900 AHL CONTROL, Diagnostic Procedure with Diagnostic Trouble Code (DTC).>
B2902	REAR HEIGHT SENSOR CIRCUIT	<Ref. to SRF(diag)-20, DTC B2902 REAR HEIGHT SENSOR CIRCUIT, Diagnostic Procedure with Diagnostic Trouble Code (DTC).>
B2906	FRONT FOG LIGHT CIRCUIT RH	<Ref. to SRF(diag)-22, DTC B2906 FRONT FOG LIGHT CIRCUIT RH, Diagnostic Procedure with Diagnostic Trouble Code (DTC).>
B2907	FRONT FOG LIGHT CIRCUIT LH	<Ref. to SRF(diag)-24, DTC B2907 FRONT FOG LIGHT CIRCUIT LH, Diagnostic Procedure with Diagnostic Trouble Code (DTC).>

13.Diagnostic Procedure with Diagnostic Trouble Code (DTC)

A: DTC U0074 CONTROL MODULE COMMUNICATION BUS "BODY-CAN" OFF

Detected when CAN line abnormality is detected.

NOTE:
Perform the diagnosis for LAN system. <Ref. to LAN(diag)-2, PROCEDURE, Basic Diagnostic Procedure.>

B: DTC U0101 LOST COMMUNICATION WITH TCM

Detected when CAN data (vehicle speed signal) is not received from TCM.

NOTE:
Perform the diagnosis for LAN system. <Ref. to LAN(diag)-2, PROCEDURE, Basic Diagnostic Procedure.>

C: DTC U0122 LOST COMMUNICATION WITH VEHICLE DYNAMICS CONTROL MODULE

Detected when CAN data (vehicle speed signal) is not received from VDC CM.

NOTE:
Perform the diagnosis for LAN system. <Ref. to LAN(diag)-2, PROCEDURE, Basic Diagnostic Procedure.>

D: DTC U0402 INVALID DATA RECEIVED FROM TCM

Detected when CAN data from TCM does not arrive.

NOTE:
Perform the diagnosis for LAN system. <Ref. to LAN(diag)-2, PROCEDURE, Basic Diagnostic Procedure.>

E: DTC U0416 INVALID DATA RECEIVED FROM VEHICLE DYNAMICS CONTROL MODULE

Detected when data from VDC CM is abnormal.

NOTE:
Perform the diagnosis for LAN system. <Ref. to LAN(diag)-2, PROCEDURE, Basic Diagnostic Procedure.>

F: DTC U1140 LOST COMMUNICATION WITH BODY CONTROL MODULE BODY-CAN

Detected when CAN data is not received from body integrated unit.

NOTE:
Perform the diagnosis for LAN system. <Ref. to LAN(diag)-2, PROCEDURE, Basic Diagnostic Procedure.>

G: DTC U1422 INVALID DATA RECEIVED FROM BODY CONTROL MODULE BODY-CAN

Detected when data from body integrated unit is abnormal.

NOTE:
Perform the diagnosis for LAN system. <Ref. to LAN(diag)-2, PROCEDURE, Basic Diagnostic Procedure.>

H: DTC B2900 AHL CONTROL

DTC DETECTING CONDITION:
Detected when internal malfunction occurs in SRF CM.
TROUBLE SYMPTOM:
The auto headlight beam leveler does not operate.

CAUTION:
Initialization is required after replacing the SRF CM.
(Initialization is not required for models without auto headlight beam leveler system)

	Step	Check	Yes	No
1	**CHECK DTC.** 1) Turn the ignition switch to OFF → ON. 2) Turn on the headlight low beam. 3) Using the Subaru Select Monitor, clear the auto headlight beam leveler system memory. <Ref. to SRF(diag)-12, Clear Memory Mode.> 4) Use the Subaru Select Monitor and read DTCs. <Ref. to SRF(diag)-11, Read Diagnostic Trouble Code (DTC).>	Is DTC B2900 displayed? (current malfunction)	Replace the SRF CM. <Ref. to LI-88, Steering Responsive Fog Lights CM.>	Even if DTC is displayed, the circuit has returned to a normal condition at this time. Reproduce the failure, and then perform the diagnosis again. NOTE: In this case, temporary poor contact of connector, temporary open or short circuit of harness may be the cause.

I: DTC B2902 REAR HEIGHT SENSOR CIRCUIT

DTC DETECTING CONDITION:
Rear vehicle height sensor error is detected for 10 seconds or more.
TROUBLE SYMPTOM:
The auto headlight beam leveler does not operate.

CAUTION:
Initialization is required after replacing the SRF CM.
WIRING DIAGRAM:
Headlight beam leveler system <Ref. to WI-242, WIRING DIAGRAM, Headlight Beam Leveler System.>

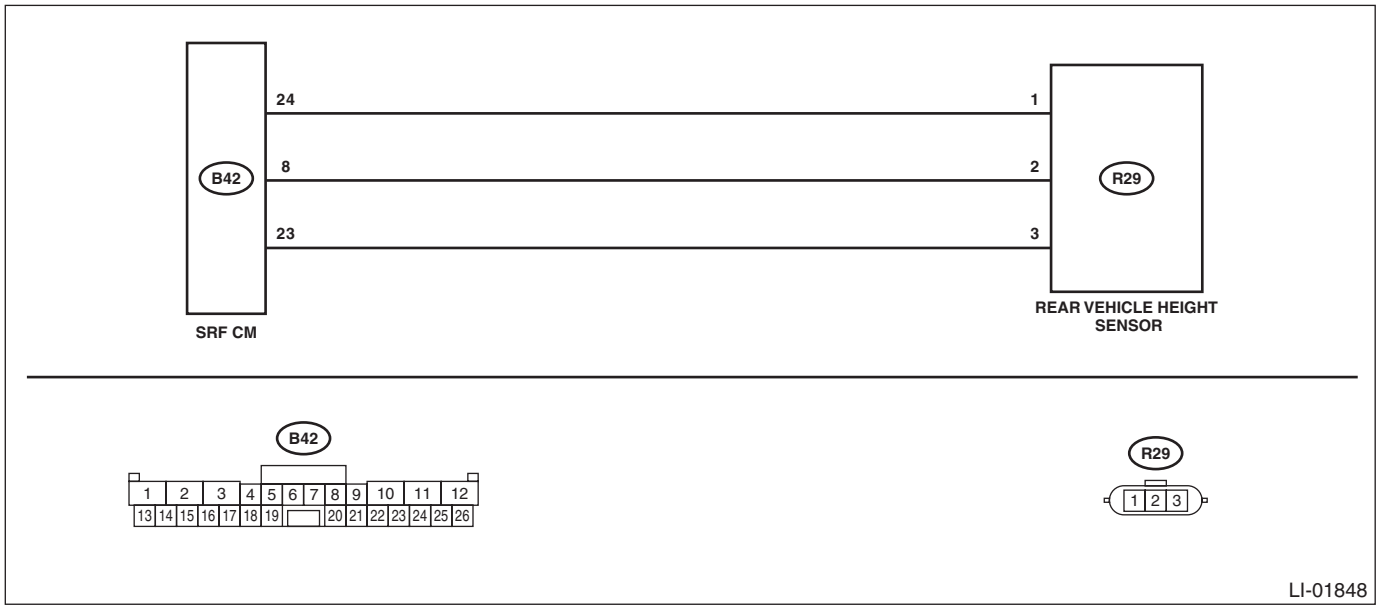

	Step	Check	Yes	No
1	**CHECK DTC.** 1) Turn the ignition switch to OFF → ON. 2) Turn on the headlight low beam. 3) Using the Subaru Select Monitor, clear the auto headlight beam leveler system memory. <Ref. to SRF(diag)-12, Clear Memory Mode.> 4) Use the Subaru Select Monitor and read DTCs. <Ref. to SRF(diag)-11, Read Diagnostic Trouble Code (DTC).>	Is DTC B2902 displayed? (current malfunction)	Go to step **2**.	Even if DTC is displayed, the circuit has returned to a normal condition at this time. Reproduce the failure, and then perform the diagnosis again. NOTE: In this case, temporary poor contact of connector, temporary open or short circuit of harness may be the cause.
2	**CHECK CURRENT DATA.** Display «R Sensor Signal» using Subaru Select Monitor. <Ref. to SRF(diag)-14, Read Current Data.>	Does the data indicate the standard value (approx. 2.5 V when on a level road with one person in the vehicle)?	Replace the SRF CM. <Ref. to LI-88, Steering Responsive Fog Lights CM.>	Go to step **3**.
3	**CHECK CURRENT DATA.** 1) Display «R Sensor Signal» using Subaru Select Monitor. <Ref. to SRF(diag)-14, Read Current Data.> 2) Change the vehicle posture.	Does the data change?	Go to step **6**.	Go to step **4**.

	Step	Check	Yes	No
4	**CHECK OUTPUT VOLTAGE BETWEEN SRF CM AND VEHICLE HEIGHT SENSOR.** 1) Disconnect the vehicle height sensor connector. 2) Turn the ignition switch to ON. 3) Measure the voltage between the vehicle height sensor connector and chassis ground. ***Connector & terminal*** ***(R29) No. 3 (+) — Chassis ground (–):***	Is the voltage 5±0.25 V?	Go to step **5**.	Replace the SRF CM. <Ref. to LI-88, Steering Responsive Fog Lights CM.>
5	**CHECK REAR HEIGHT SENSOR.** 1) Remove the rear vehicle height sensor. 2) Perform the inspection of rear height sensor unit. <Ref. to LI-84, INSPECTION, Rear Height Sensor.>	Is the rear height sensor normal?	Go to step **6**.	Replace the rear height sensor. <Ref. to LI-83, Rear Height Sensor.>
6	**CHECK HARNESS (OPEN CIRCUIT).** 1) Disconnect the SRF CM connector. 2) Using a tester, measure the resistance between SRF CM connector and rear height sensor connector. ***Connector & terminal*** ***(B42) No. 24 — (R29) No. 1:*** ***(B42) No. 8 — (R29) No. 2:*** ***(B42) No. 23 — (R29) No. 3:***	Is there continuity?	Go to step **7**.	Repair or replace the open circuit of harness.
7	**CHECK HARNESS (GROUND SHORT CIRCUIT).** Using a tester, measure the resistance between SRF CM connector and chassis ground. ***Connector & terminal*** ***(B42) No. 24 — Chassis ground:*** ***(B42) No. 8 — Chassis ground:*** ***(B42) No. 23 — Chassis ground:***	Is the resistance 10 kΩ or more?	Replace the SRF CM. <Ref. to LI-88, Steering Responsive Fog Lights CM.>	Repair or replace the short circuit of the harness.

J: DTC B2906 FRONT FOG LIGHT CIRCUIT RH

DTC DETECTING CONDITION:
Front fog light (RH) malfunction signal line error is detected.
TROUBLE SYMPTOM:
Warning will be displayed for front fog light malfunction, SRF malfunction.

CAUTION:
Initialization is required after replacing the SRF CM.
(Initialization is not required for models without auto headlight beam leveler system)
WIRING DIAGRAM:

NOTE:
For the coupling connector, refer to “WIRING SYSTEM”.

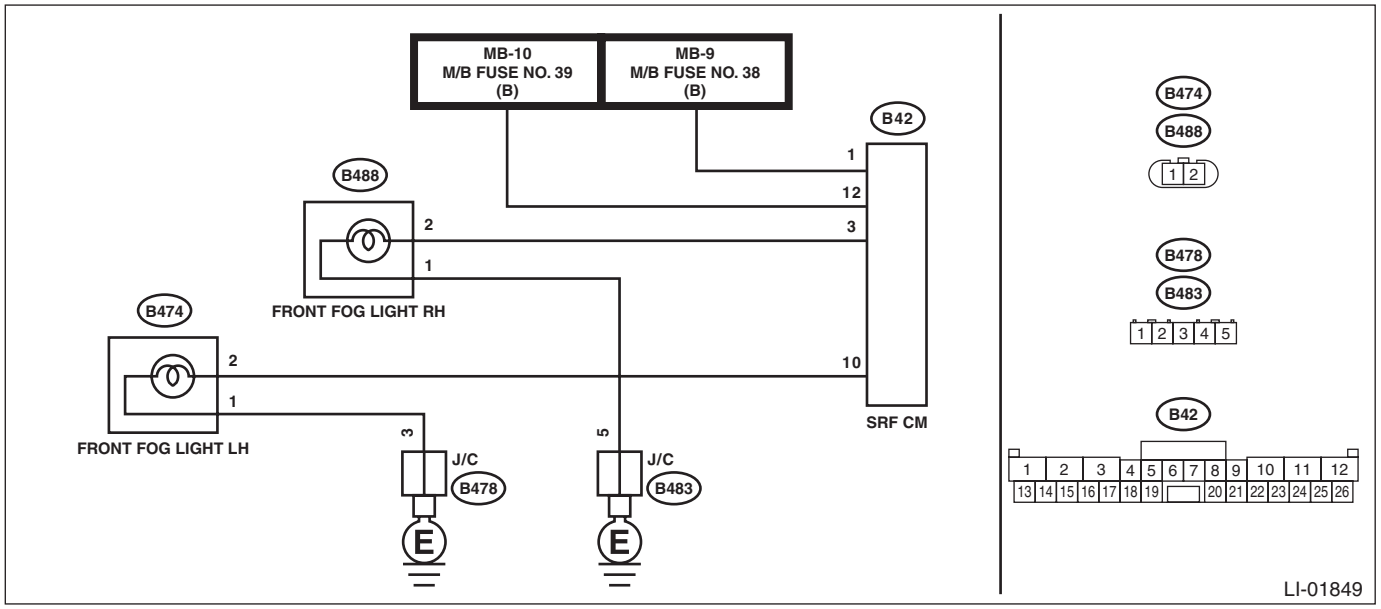

Step		Check	Yes	No
1	**CHECK FUSE.** Check the fuse.	Is there any fault?	Replace the fuse. If the replaced fuse has blown out immediately, repair the short circuit to ground in harness between battery and SRF CM.	Go to step **2**.
2	**CHECK DTC.** 1) Turn the ignition switch to OFF → ON. 2) Turn on the headlight low beam. 3) Using the Subaru Select Monitor, clear the auto headlight beam leveler system memory. <Ref. to SRF(diag)-12, Clear Memory Mode.> 4) Use the Subaru Select Monitor and read DTCs. <Ref. to SRF(diag)-11, Read Diagnostic Trouble Code (DTC).>	Is DTC B2906 displayed? (current malfunction)	Go to step **3**.	Even if DTC is displayed, the circuit has returned to a normal condition at this time. Reproduce the failure, and then perform the diagnosis again. NOTE: In this case, temporary poor contact of connector, temporary open or short circuit of harness may be the cause.

	Step	Check	Yes	No
3	**CHECK HARNESS (OPEN CIRCUIT).** 1) Disconnect the SRF CM connector. 2) Using a tester, measure the voltage between SRF CM connector and chassis ground. ***Connector & terminal*** ***(B42) No. 1 (+) — Chassis ground (–):***	Is the voltage 8 — 16 V?	Go to step **4**.	Repair or replace the open circuit of harness.
4	**CHECK HARNESS (OPEN CIRCUIT).** 1) Disconnect the front fog light RH connector. 2) Using a tester, measure the resistance between SRF CM connector and front fog light RH connector. ***Connector & terminal*** ***(B42) No. 3 — (B488) No. 2:***	Is the resistance less than 1 Ω?	Go to step **5**.	Repair or replace the open circuit of harness.
5	**CHECK HARNESS (OPEN CIRCUIT).** Use a tester to measure the resistance between front fog light RH connector and chassis ground. ***Connector & terminal*** ***(B488) No. 1 — Chassis ground:***	Is the resistance less than 1 Ω?	Go to step **6**.	Repair or replace the open circuit of harness.
6	**CHECK FRONT FOG LIGHT.** Check the front fog light bulb.	Is there any fault?	Replace the bulb. <Ref. to LI-47, Front Fog Light Bulb.>	Replace the SRF CM. <Ref. to LI-88, Steering Responsive Fog Lights CM.>

K: DTC B2907 FRONT FOG LIGHT CIRCUIT LH

DTC DETECTING CONDITION:
Front fog light (LH) malfunction signal line error is detected.
TROUBLE SYMPTOM:
Warning will be displayed for front fog light malfunction, SRF malfunction.

CAUTION:
Initialization is required after replacing the SRF CM.
(Initialization is not required for models without auto headlight beam leveler system)
WIRING DIAGRAM:

NOTE:
For the coupling connector, refer to “WIRING SYSTEM”.

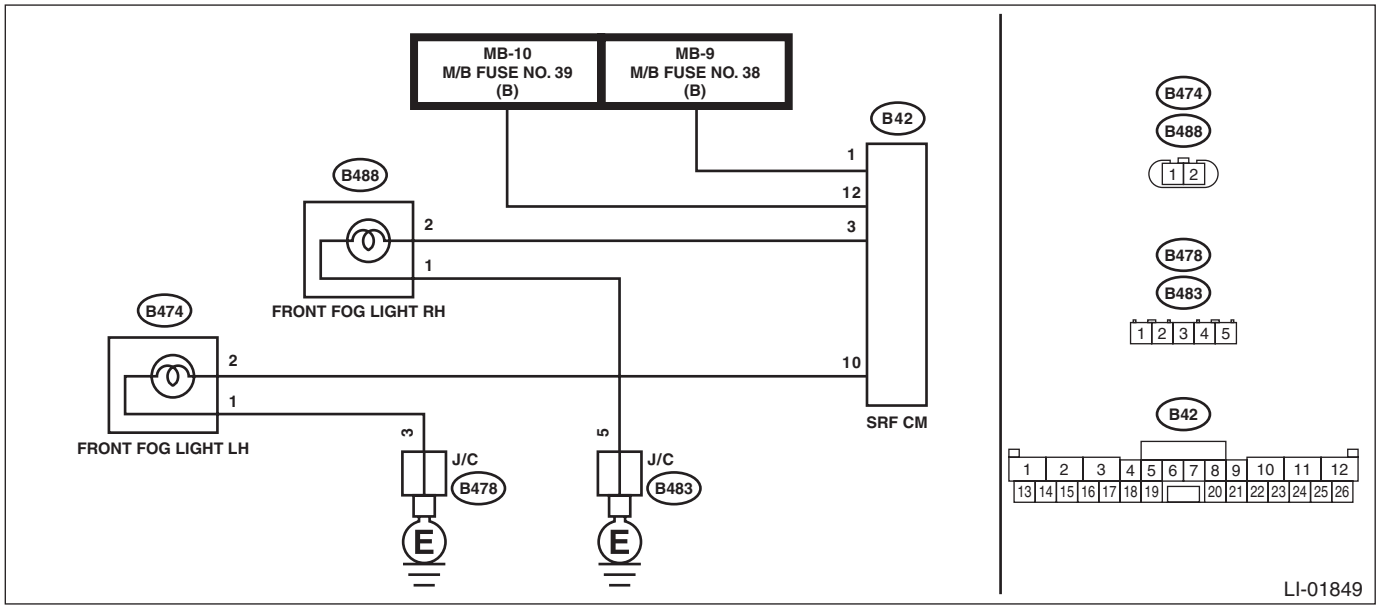

Step		Check	Yes	No
1	**CHECK FUSE.** Check the fuse.	Is there any fault?	Replace the fuse. If the replaced fuse has blown out immediately, repair the short circuit to ground in harness between battery and SRF CM.	Go to step **2**.
2	**CHECK DTC.** 1) Turn the ignition switch to OFF → ON. 2) Turn on the headlight low beam. 3) Using the Subaru Select Monitor, clear the auto headlight beam leveler system memory. <Ref. to SRF(diag)-12, Clear Memory Mode.> 4) Use the Subaru Select Monitor and read DTCs. <Ref. to SRF(diag)-11, Read Diagnostic Trouble Code (DTC).>	Is DTC B2907 displayed? (current malfunction)	Go to step **3**.	Even if DTC is displayed, the circuit has returned to a normal condition at this time. Reproduce the failure, and then perform the diagnosis again. NOTE: In this case, temporary poor contact of connector, temporary open or short circuit of harness may be the cause.

	Step	Check	Yes	No
3	**CHECK HARNESS (OPEN CIRCUIT).** 1) Disconnect the SRF CM connector. 2) Using a tester, measure the voltage between SRF CM connector and chassis ground. ***Connector & terminal*** ***(B42) No. 12 (+) — Chassis ground (–):***	Is the voltage 8 — 16 V?	Go to step **4**.	Repair or replace the open circuit of harness.
4	**CHECK HARNESS (OPEN CIRCUIT).** 1) Disconnect the front fog light LH connector. 2) Using a tester, measure the resistance between SRF CM connector and front fog light LH connector. ***Connector & terminal*** ***(B42) No. 10 — (B474) No. 2:***	Is the resistance less than 1 Ω?	Go to step **5**.	Repair or replace the open circuit of harness.
5	**CHECK HARNESS (OPEN CIRCUIT).** Use a tester to measure the resistance between front fog light LH connector and chassis ground. ***Connector & terminal*** ***(B474) No. 1 — Chassis ground:***	Is the resistance less than 1 Ω?	Go to step **6**.	Repair or replace the open circuit of harness.
6	**CHECK FRONT FOG LIGHT.** Check the front fog light bulb.	Is there any fault?	Replace the bulb. <Ref. to LI-47, Front Fog Light Bulb.>	Replace the SRF CM. <Ref. to LI-88, Steering Responsive Fog Lights CM.>

14.Diagnostics with Phenomenon

A: INSPECTION

1. DOES NOT CONTROL HEADLIGHT BEAM AXIS

CAUTION:
- **Before performing diagnosis, check the fuse in this circuit.**
- **Initialization is required after replacing the SRF CM.**

WIRING DIAGRAM:

NOTE:
For the coupling connector, refer to “WIRING SYSTEM”.
Headlight beam leveler system <Ref. to WI-242, WIRING DIAGRAM, Headlight Beam Leveler System.>

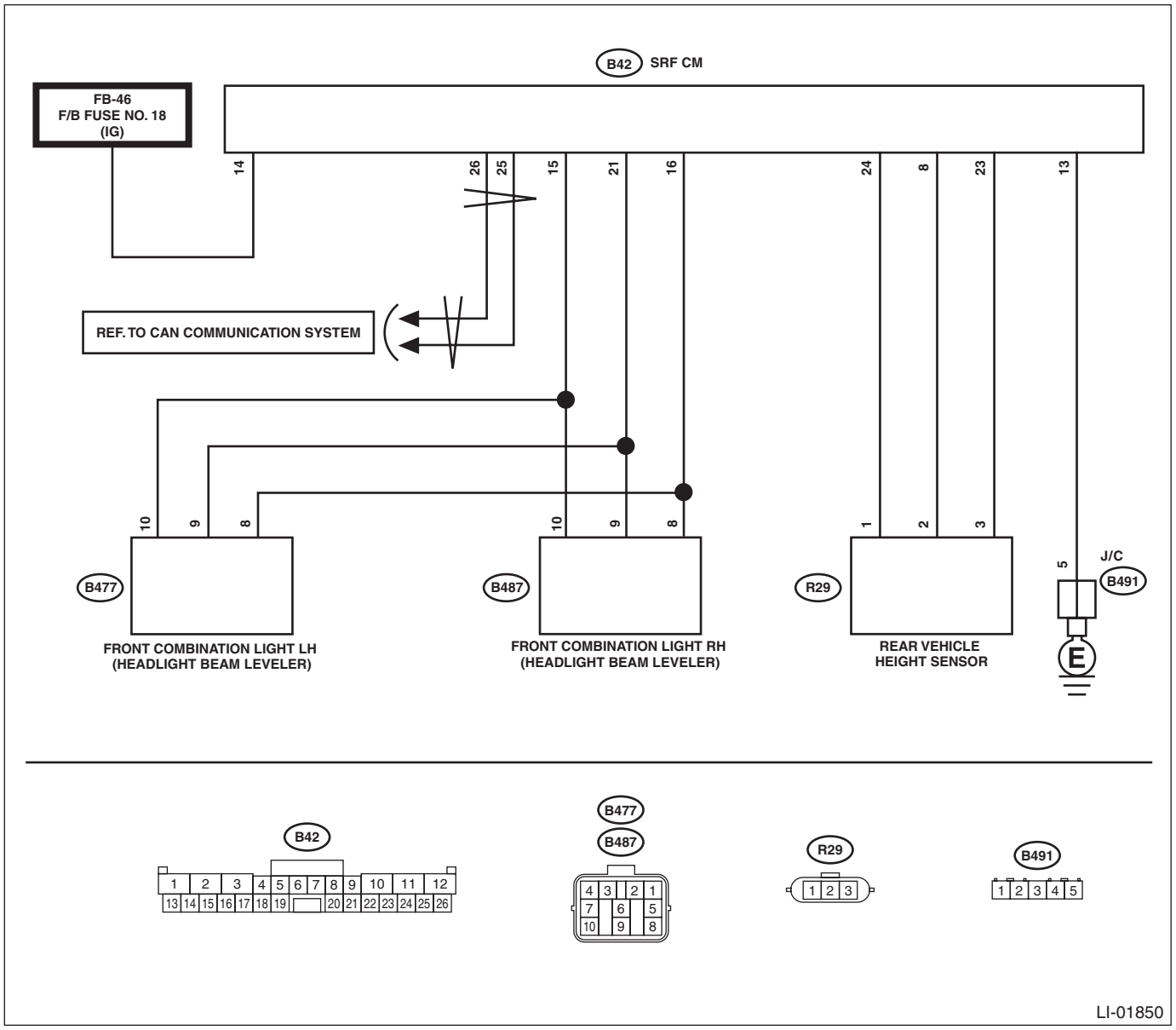

	Step	Check	Yes	No
1	**CHECK CURRENT DATA.** Display {ECU ACC} using Subaru Select Monitor.	Does the current data indicate the standard value?	Go to step **3**.	Go to step **2**.
2	**CHECK HARNESS BETWEEN IG POWER SUPPLY — SRF CM.** 1) Disconnect the SRF CM connector. 2) Turn the ignition switch to ON. 3) Measure the voltage between SRF CM connector and chassis ground. ***Connector & terminal*** ***(B42) No. 14 (+) — Chassis ground (–):***	Is the voltage 8 — 16 V?	Replace the SRF CM. <Ref. to LI-88, Steering Responsive Fog Lights CM.>	Repair or replace the harness.
3	**CHECK INDICATOR OUTPUT.** Turn the ignition switch to ON.	Does the warning indicator turn on for three seconds?	Go to step **5**.	Go to step **4**.
4	**CHECK CURRENT DATA.** 1) Display «Indicator Signal» using Subaru Select Monitor. <Ref. to SRF(diag)-14, Read Current Data.> 2) Turn the ignition switch to ON.	Is it set as ON for 3 seconds?	Check the combination meter. <Ref. to MET(diag)-2, PROCEDURE, Basic Diagnostic Procedure.>	Replace the SRF CM. <Ref. to LI-88, Steering Responsive Fog Lights CM.>
5	**CHECK INDICATOR OUTPUT.** Leave the ignition switch to ON for 10 seconds.	Does the warning indicator light go off?	Go to step **6**.	Go to step **10**.
6	**CHECK HEADLIGHT ASSEMBLY (ACTUATOR) DRIVE.** 1) Connect the SRF CM connector. 2) Turn the ignition switch to ON, and within 10 seconds, repeat the OFF → Low beam of headlight switch 5 times. 3) Check that the headlight beam drops once, then returns to normal. 4) Then, after waiting for 30 seconds or more with the ignition ON, turn the ignition switch to OFF.	Does the headlight beam drop down once, and then return?	Replace the SRF CM. <Ref. to LI-88, Steering Responsive Fog Lights CM.>	Go to step **7**.
7	**CHECK HEADLIGHT ASSEMBLY (ACTUATOR) OUTPUT.** 1) Display «Actuator Signal» using Subaru Select Monitor. <Ref. to SRF(diag)-14, Read Current Data.> 2) Turn the ignition switch to ON, and within 10 seconds, repeat the OFF → Low beam of headlight switch 5 times. 3) Check that the headlight beam drops once, then returns to normal. 4) Then, after waiting for 30 seconds or more with the ignition ON, turn the ignition switch to OFF.	Does the current data indicate the standard value? (Does the value change at 10 — 90%?)	Go to step **8**.	Replace the SRF CM. <Ref. to LI-88, Steering Responsive Fog Lights CM.>
8	**CHECK OUTPUT VOLTAGE BETWEEN HEADLIGHT ASSEMBLY (ACTUATOR).** 1) Disconnect the SRF CM connector. 2) Turn the ignition switch to ON. 3) Measure the voltage between SRF CM connector and chassis ground. ***Connector & terminal*** ***(B42) No. 16 (+) — Chassis ground (–):***	Is the voltage 8 — 16 V?	Replace the headlight assembly. <Ref. to LI-30, Headlight Assembly.>	Go to step **9**.

	Step	Check	Yes	No
9	**CHECK HARNESS BETWEEN SRF CM AND HEADLIGHT ASSEMBLY (ACTUATOR).** 1) Disconnect the connector of headlight assembly. 2) Measure the continuity between SRF CM connector and headlight assembly (actuator) connector. ***Connector & terminal*** ***• Headlight beam leveler RH*** ***(B42) No. 16 — (B487) No. 8:*** ***(B42) No. 21 — (B487) No. 9:*** ***(B42) No. 15 — (B487) No. 10:*** ***• Headlight beam leveler LH*** ***(B42) No. 16 — (B477) No. 8:*** ***(B42) No. 21 — (B477) No. 9:*** ***(B42) No. 15 — (B477) No. 10:***	Is there continuity?	Replace the SRF CM. <Ref. to LI-88, Steering Responsive Fog Lights CM.>	Repair the open circuit or poor contact of the connector in the harness between headlight assembly and SRF CM.
10	**CHECK DTC.** Display DTC using the Subaru Select Monitor. <Ref. to SRF(diag)-11, Read Diagnostic Trouble Code (DTC).>	Is DTC displayed?	Perform the diagnosis according to DTC. <Ref. to SRF(diag)-17, LIST, List of Diagnostic Trouble Code (DTC).>	Replace the SRF CM. <Ref. to LI-88, Steering Responsive Fog Lights CM.>

WIPER AND WASHER SYSTEMS

WW

		Page
1.	General Description	2
2.	Relay and Fuse	8
3.	Wiper and Washer System	10
4.	Combination Switch (Wiper)	11
5.	Wiper Blade	17
6.	Washer Tank and Motor	22
7.	Front Wiper Arm	30
8.	Front Wiper Motor and Link	32
9.	Front Washer Nozzle	36
10.	Rear Wiper Arm	41
11.	Rear Wiper Motor	43
12.	Rear Washer	46

1. General Description

A: SPECIFICATION

Front wiper motor	Input	12 V — 72 W or less
Rear wiper motor	Input	12 V — 42 W or less
Front washer motor	Pump type	Centrifugal
	Input	12 V — 60 W or less
Rear washer motor	Pump type	Centrifugal
	Input	12 V — 36 W or less

B: COMPONENT

1. FRONT WIPER

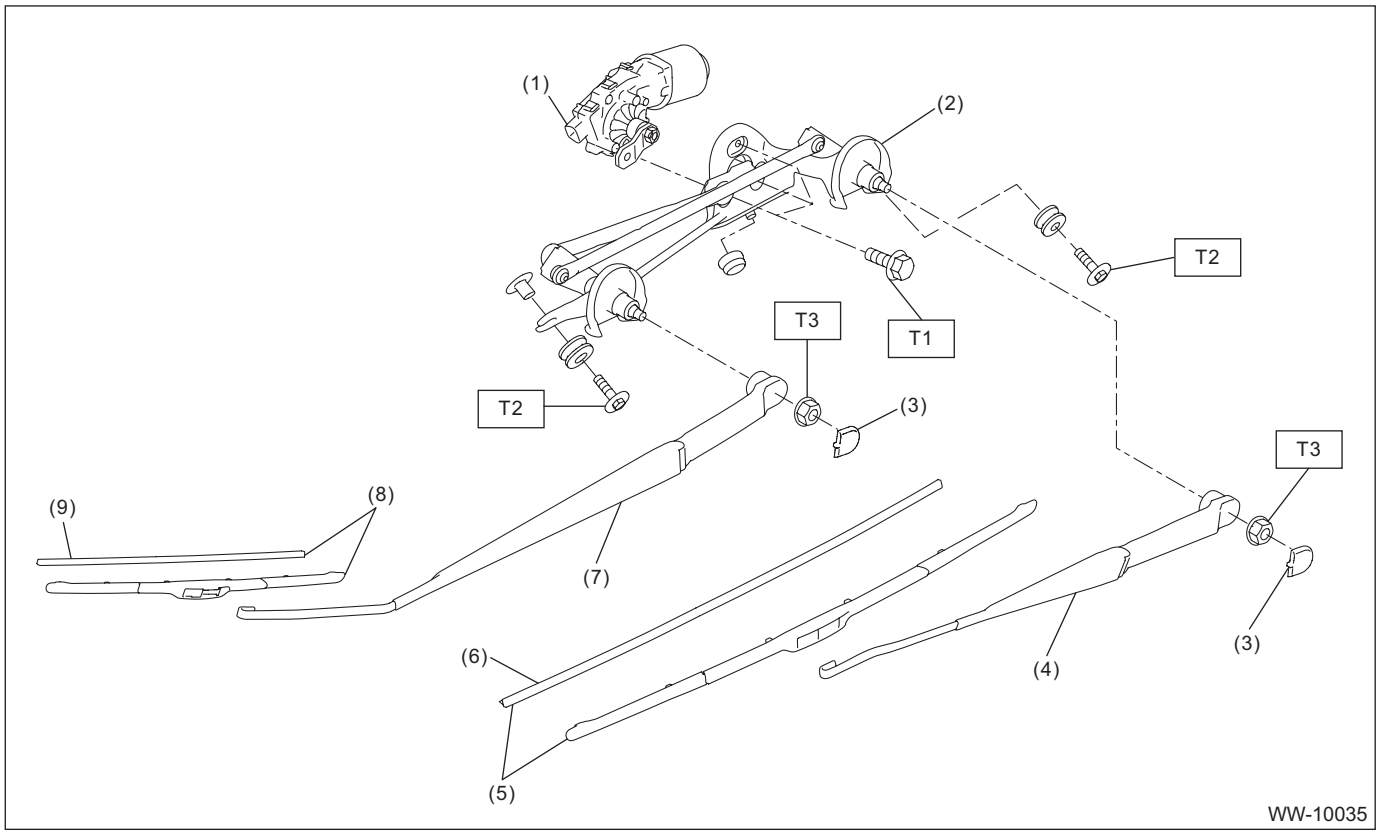

(1) Motor ASSY - windshield wiper
(2) Link ASSY - windshield wiper
(3) Cover - windshield wiper arm
(4) Arm ASSY - windshield wiper driver
(5) Blade ASSY - windshield wiper driver
(6) Rubber ASSY - windshield wiper driver
(7) Arm ASSY - windshield wiper assistor
(8) Blade ASSY - windshield wiper assistor
(9) Rubber ASSY - windshield wiper assistor

Tightening torque: N·m (kgf-m, ft-lb)

T1: 5.4 (0.6, 4)
T2: 6 (0.6, 4.4)
T3: 22 (2.2, 16.2)

2. REAR WIPER

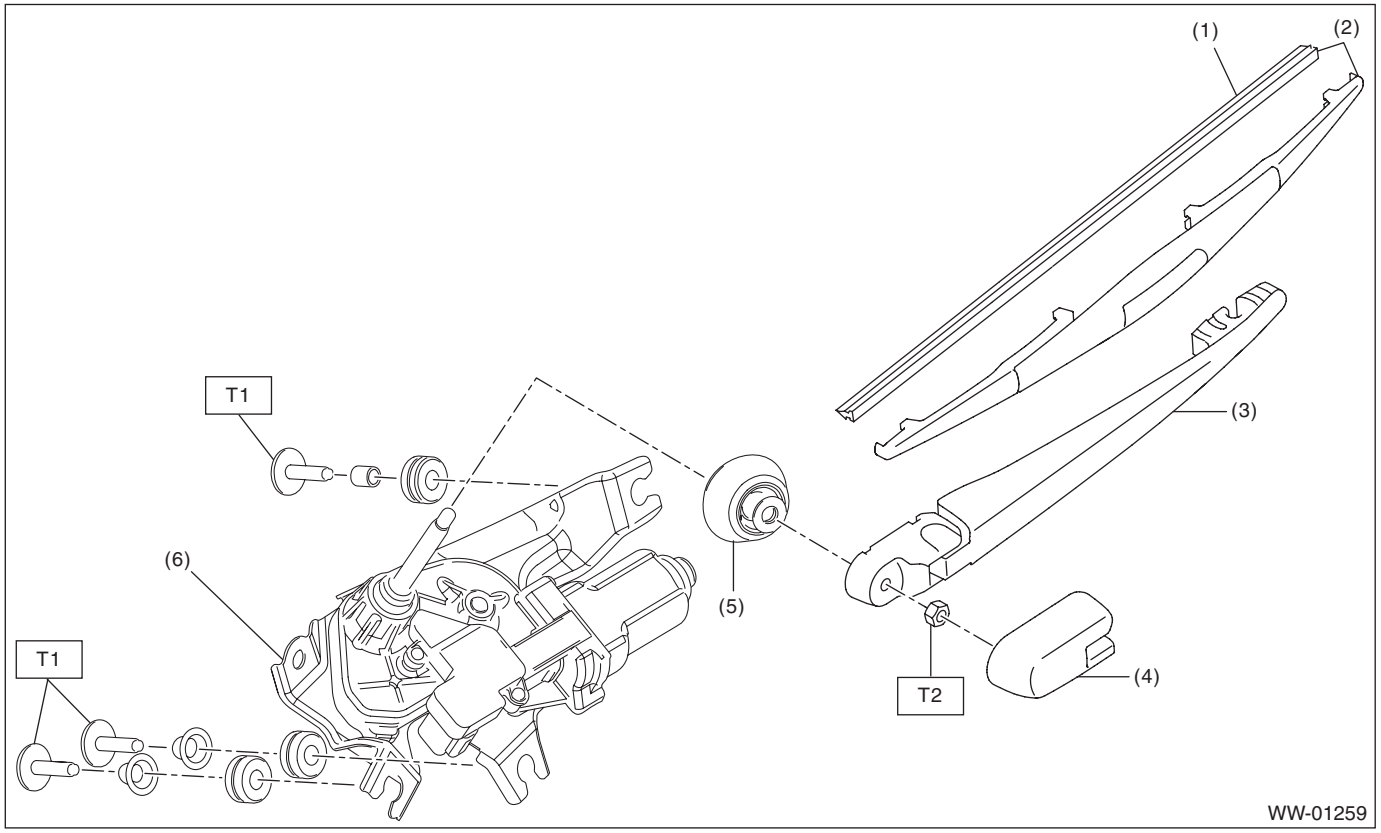

(1)	Rubber ASSY - rear wiper	(4)	Cover - rear wiper arm	***Tightening torque: N·m (kgf-m, ft-lb)***
(2)	Blade ASSY - rear wiper	(5)	Cap - pivot wiper	***T1: 7 (0.7, 5.2)***
(3)	Arm ASSY - rear wiper	(6)	Motor ASSY - rear wiper	***T2: 8 (0.8, 5.9)***

3. WASHER TANK (FRONT)

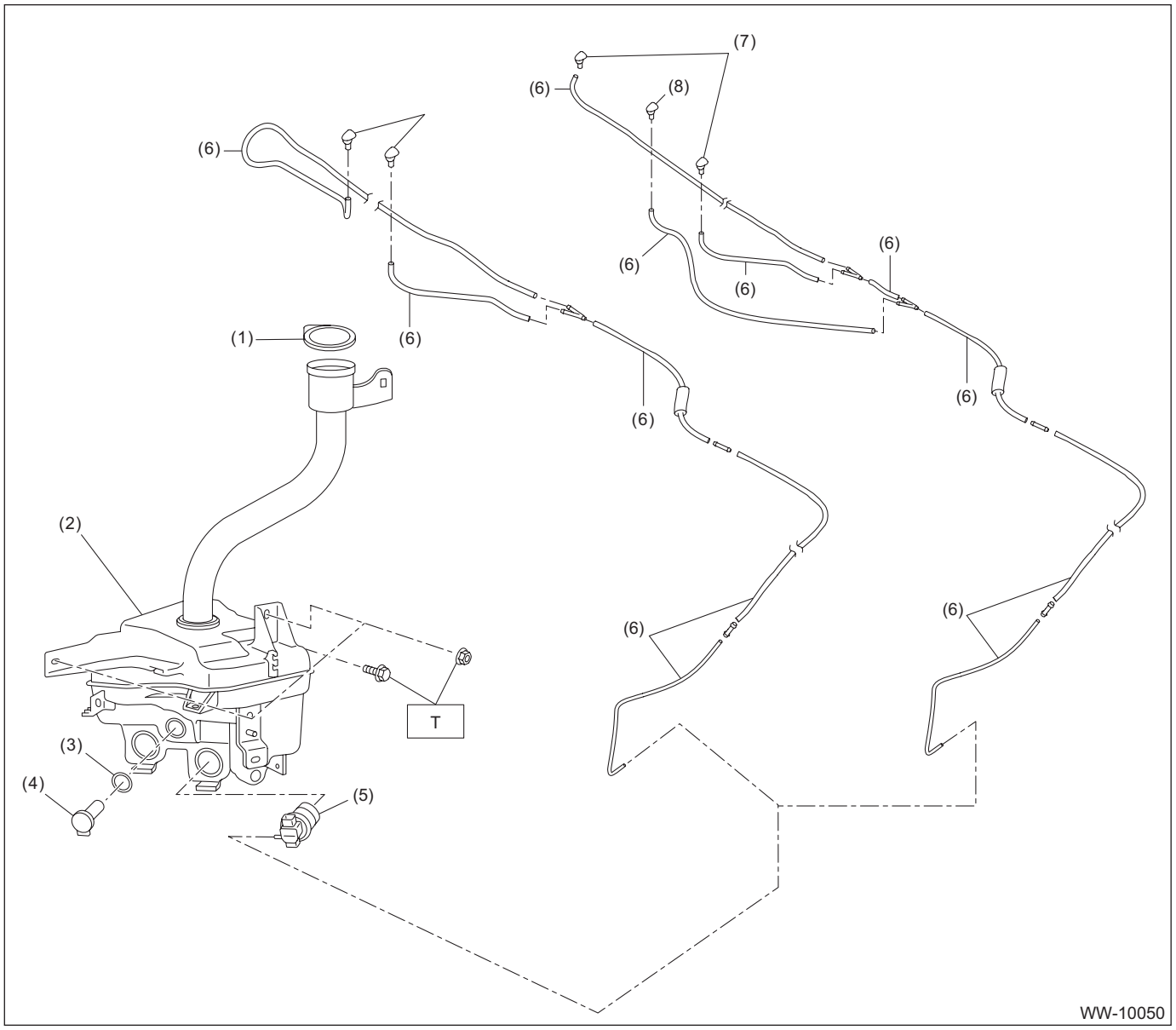

(1) Cap - washer tank
(2) Clip
(3) Tank - washer
(4) Packing - sensor
(5) Sensor - washer tank
(6) Packing - motor pump
(7) Motor pump ASSY - washer front
(8) Holder - hose
(9) Hose - windshield washer
(10) Nozzle - windshield washer
(11) Nozzle - windshield washer EyeSight (model with EyeSight)

Tightening torque: N·m (kgf-m, ft-lb)
T: 6 (0.6, 4.4)

4. WASHER TANK (REAR)

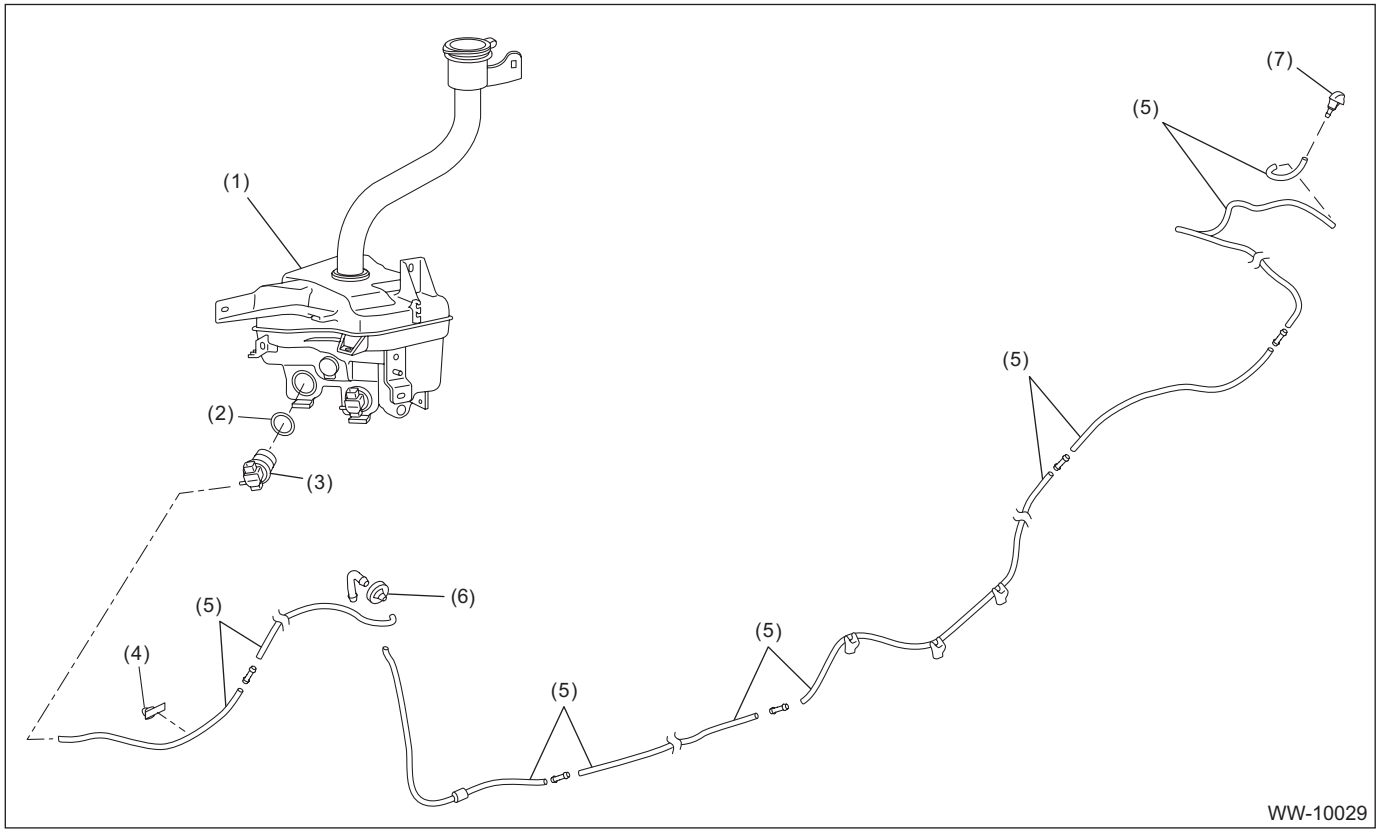

(1) Tank - washer
(2) Packing - motor pump
(3) Motor pump ASSY - washer rear
(4) Holder - hose
(5) Hose ASSY - rear washer
(6) Grommet - washer hose
(7) Nozzle - rear washer

C: CAUTION

- Be careful of the following items. Failing to do so may cause the airbag system malfunction.
  – Yellow connectors and harnesses with yellow tapes around them are the connectors and harnesses for the airbag system. When using a tester on these circuits, follow the cautions of “AIRBAG SYSTEM”. <Ref. to AB-10, CAUTION, General Description.>
  – Be careful not to damage the airbag system wiring harness when servicing the electrical parts around the steering column.
- When connecting the pipe hoses, be careful not to cause bend or blockage.
- If even a small amount of silicon oil or grease enters the tank - washer and the washer fluid passages, an oil film will be formed on the glass and will cause the wiper to chatter and judder. Make sure that no oil comes into contact with the system.

D: PREPARATION TOOL

1. SPECIAL TOOL

ILLUSTRATION	TOOL NUMBER	DESCRIPTION	REMARKS
 STSSM4	— (Newly adopted tool)	SUBARU SELECT MONITOR 4	Used for setting of each function and trouble-shooting for electrical system. NOTE: For detailed operation procedures of Subaru Select Monitor 4, refer to “Application help”.

2. GENERAL TOOL

TOOL NAME	REMARKS
DST-i	Used together with Subaru Select Monitor 4.
Circuit tester	Used for measuring resistance, voltage and current.

NOTE:
Referring to the data described below, prepare the materials to make a nozzle - windshield washer adjustment tool.

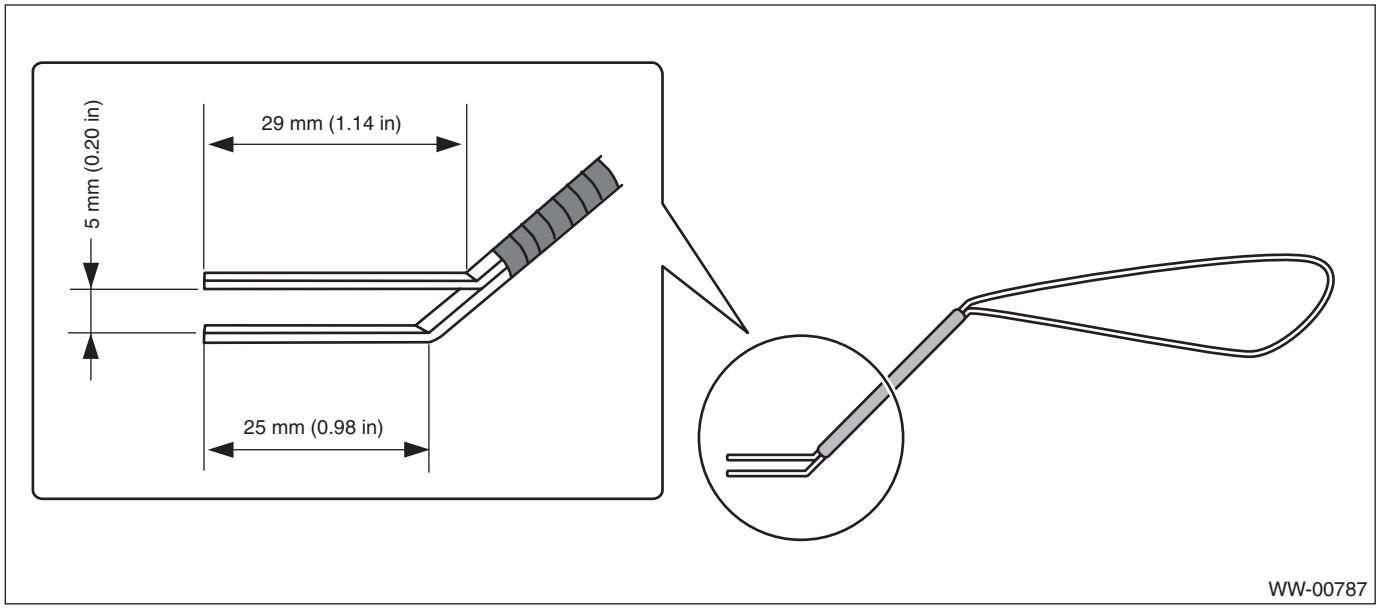

Materials
- Vertebra of wiper blade which is to be discarded
- Vinyl tape

Steps of making a front washer nozzle adjustment tool

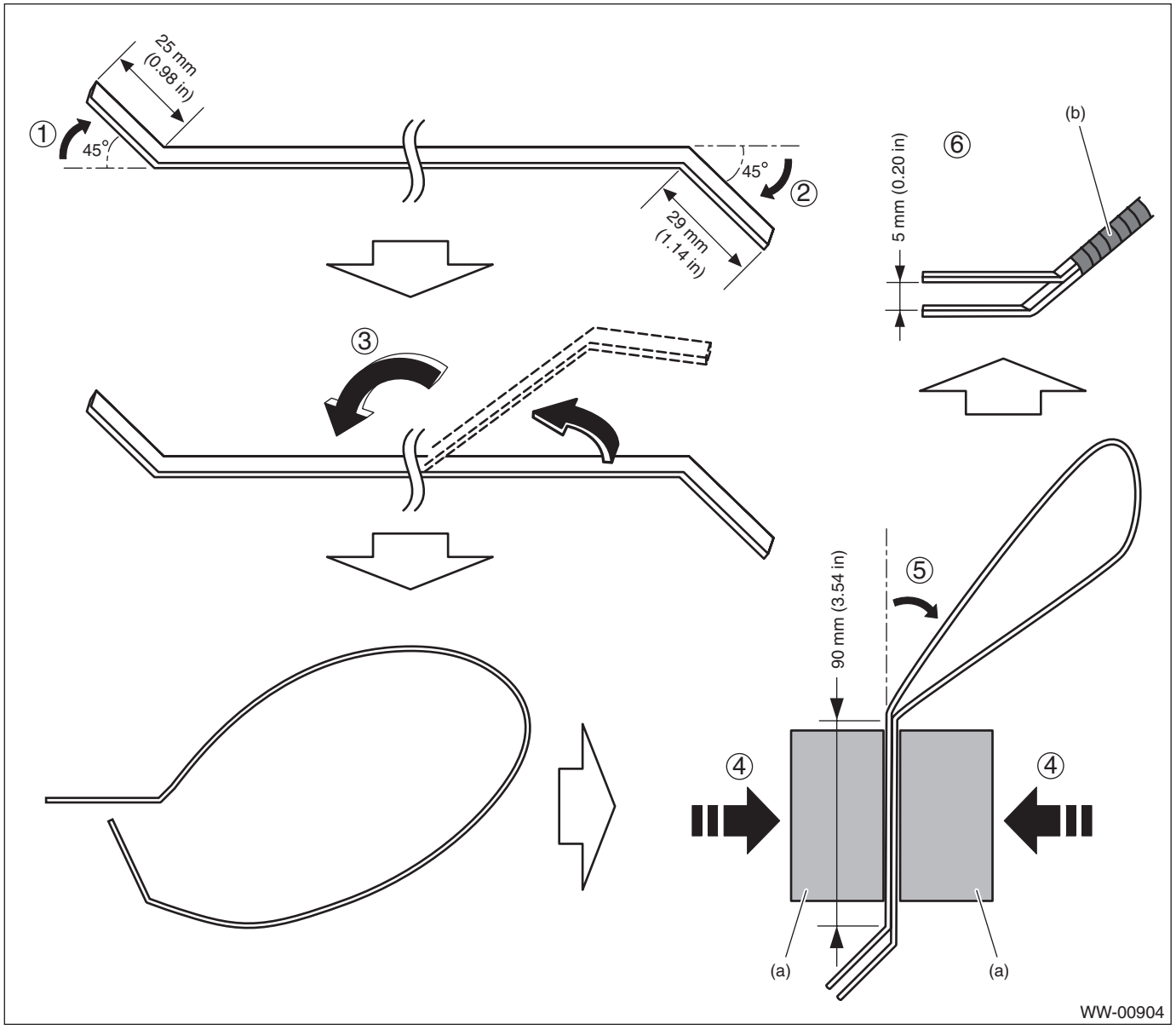

1. Bend the vertebra at the position 25 mm (0.98 in) away from its end by 45°.
2. Bend the vertebra at the position 29 mm (1.14 in) away from the other end by 45°.
3. Double up the vertebra so that the longer end (29 mm (1.14 in)) comes upward.
4. Secure the vertebra with a vise (a) so that the tip clearance becomes 5 mm (0.20 in).
5. Bend the vertebra at the position approximately 90 mm (3.54 in) away from the bending point for the longer end.
6. Check that the tip clearance is 5 mm (0.20 in), and secure the vertebra with vinyl tape (b).

2. Relay and Fuse

A: LOCATION

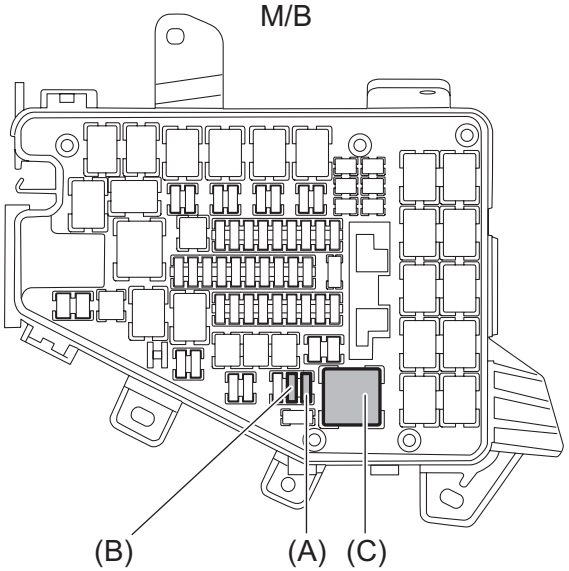

WW-10038

Main fuse box (M/B)	Fuse 30 A	(A)
	Fuse 15 A	(B)
	Relay	(C)

NOTE:
For other related fuses, refer to the wiring diagram. <Ref. to WI-21, Power Supply Circuit.>

B: INSPECTION

1. CHECK FUSE

1) Remove the fuse and inspect visually.
2) If the fuse is blown out, replace the fuse.

2. CHECK RELAY

1) Measure the resistance between relay terminals.

Terminal No.	Inspection conditions	Standard	Circuit
1 — 2	Always	1 MΩ or more	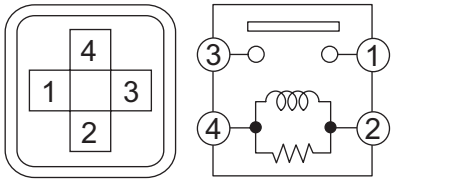 WW-10039
1 — 2	Apply battery voltage between terminals 4 and 3.	Less than 1 Ω	

Terminal No.	Inspection conditions	Standard	Circuit
1 — 2	Always	1 MΩ or more	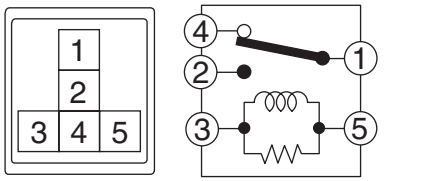 SL-01085
1 — 4	Always	Less than 1 Ω	
1 — 2	Apply battery voltage between terminals 3 and 5.	Less than 1 Ω	

2) Replace the relay if the inspection result is not within the standard value.

3. Wiper and Washer System

A: WIRING DIAGRAM

1. WIPER AND WASHER (FRONT)

Refer to “Front Wiper and Washer System” in the wiring diagram. <Ref. to WI-239, WIRING DIAGRAM, Front Wiper and Washer System.>

2. WIPER AND WASHER (REAR)

Refer to “Rear Wiper and Washer System” in the wiring diagram. <Ref. to WI-324, WIRING DIAGRAM, Rear Wiper and Washer System.>

B: INSPECTION

Symptoms	Repair order
Wiper and washers do not operate.	1. Wiper fuse 2. Combination switch 3. Motor assembly - wiper 4. Wiring harness
Wipers do not operate in LO or HI.	1. Combination switch 2. Motor assembly - wiper 3. Wiring harness
Wipers do not operate in INT.	1. Combination switch 2. Motor assembly - wiper 3. Wiring harness
Washer motor does not operate.	1. Combination switch 2. Motor pump assembly - washer 3. Wiring harness
Wipers do not operate when washer switch is ON.	1. Motor assembly - wiper 2. Wiring harness
Washer fluid spray does not operate properly.	1. Motor pump assembly - washer 2. Hose assembly - washer 3. Nozzle - washer
Wiper chatters or judders during operation.	1. Oil film and dirt on the glass 2. Arm assembly - windshield wiper 3. Motor assembly - wiper

C: NOTE

For procedure of each component of the wiper and washer system, refer to the respective sections.

- Combination switch (wiper): <Ref. to WW-11, Combination Switch (Wiper).>
- Wiper blade: <Ref. to WW-17, Wiper Blade.>
- Front wiper arm: <Ref. to WW-30, Front Wiper Arm.>
- Front wiper motor and link: <Ref. to WW-32, Front Wiper Motor and Link.>
- Rear wiper arm: <Ref. to WW-41, Rear Wiper Arm.>
- Rear wiper motor: <Ref. to WW-43, Rear Wiper Motor.>
- Washer tank and motor: <Ref. to WW-22, Washer Tank and Motor.>
- Front washer nozzle: <Ref. to WW-36, Front Washer Nozzle.>
- Rear washer nozzle: <Ref. to WW-46, Rear Washer.>

4. Combination Switch (Wiper)

A: REMOVAL

1) Disconnect the ground terminal from battery sensor. <Ref. to RC-4, BATTERY, NOTE, Repair Contents.>
2) Remove the cover assembly - column.
   (1) Remove the clips, and remove the cover - column.
   (2) Remove the screws by turning the steering wheel to right and left.
   (3) Release the claw, and remove the cover assembly - column UPR and the cover assembly - column LWR.

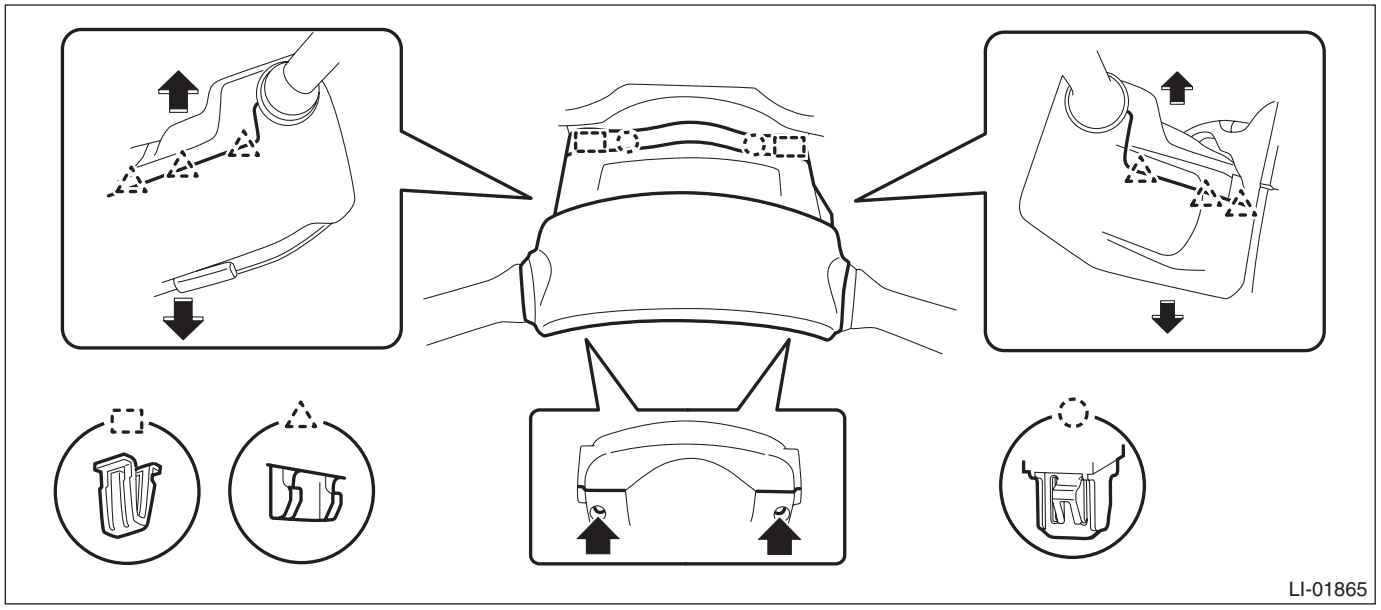

3) Remove the switch assembly - combination wiper select.
   (1) Disconnect the connector.
   (2) Release the claws, and pull out the switch assembly - combination wiper select.

CAUTION:
Do not press the claws with excessive force. They may be damaged.

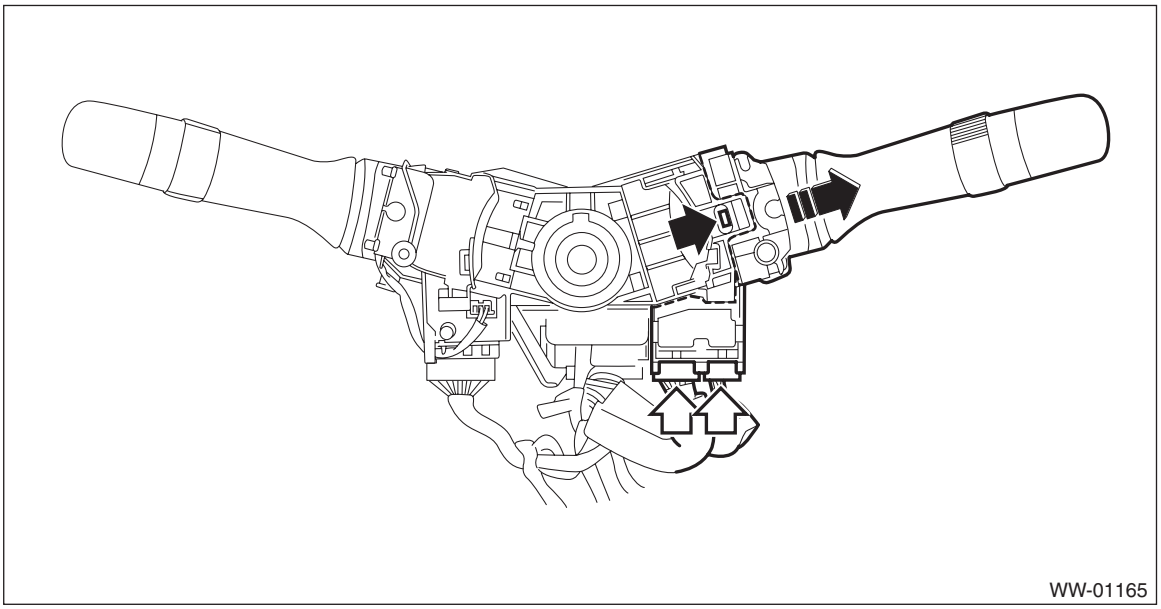

B: INSTALLATION

1) Install the switch assembly - combination wiper select.
2) Install the cover assembly - column.
3) Connect the ground terminal to battery sensor. <Ref. to RC-4, BATTERY, NOTE, Repair Contents.>

C: INSPECTION

1. INSPECTION OF SWITCH UNIT

1) Operate the switches to check the continuity between terminals.

Preparation tool:
Circuit tester

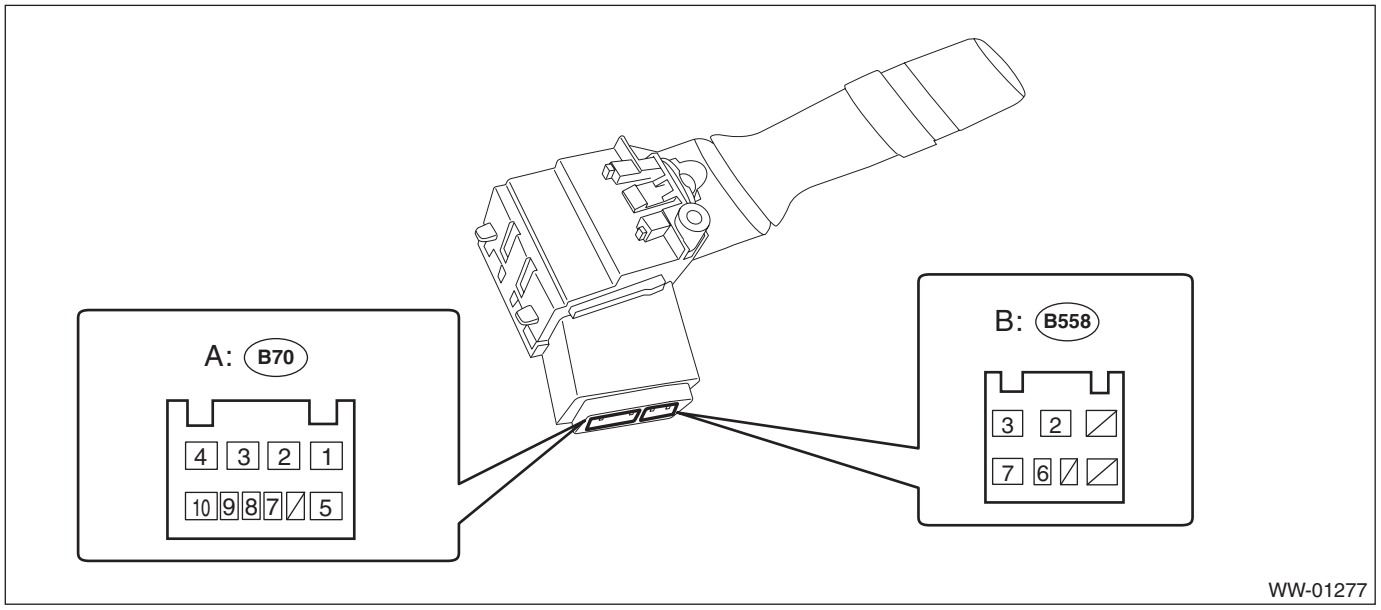

Switch position	Terminal No.	Standard
OFF	A1 and A3	Less than 1 Ω
INT	A1 and A3	Less than 1 Ω
LO	A2 and A3	Less than 1 Ω
HI	A2 and A4	Less than 1 Ω
Washer ON	B2 and B3	Less than 1 Ω

2) Replace the switch if the inspection result is not within the standard value.
3) Install the switch assembly - combination wiper select. <Ref. to WW-11, INSTALLATION, Combination Switch (Wiper).>

2. FRONT WIPER

1) Check with Subaru Select Monitor
   (1) Check the input signal when the switch assembly - combination wiper select is turned to LO or HI, using the current data display.
   (2) Does the input signal change corresponding to the switch operation?
   - **Yes** → Finish the diagnosis.
   - **No** → Check the harness.

2) Check the intermittent operation (inspection of the wiper switch alone)

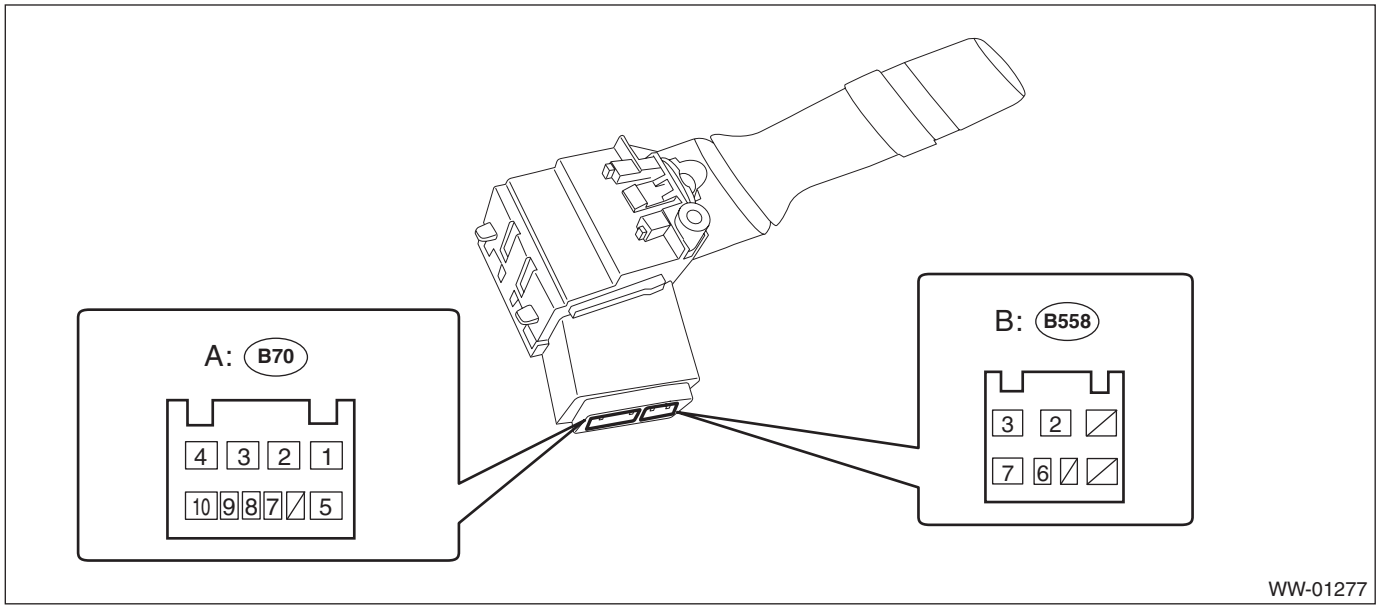

(1) Set the voltmeter between terminals No. A2 (+) and No. B2 (–).
(2) Connect the battery to connector. (Terminal No. A2 (+), terminal No. B2 & A3 (–))
(3) Turn the switch assembly - combination wiper select to INT.
(4) Connect the battery (+) to the terminal No. A2 for 5 seconds.
(5) Connect the battery (–) to the terminal No. B2, and check the voltage between terminals No. A2 and No. A3 during intermittent operation.
(6) Perform step (1) to (5) above when intermittent control switch is in MIN or MAX, and replace the switch if the operation is not as specified.

Intermittent stationary time
MIN: Approx. 2 seconds
MAX: Approx. 16 seconds

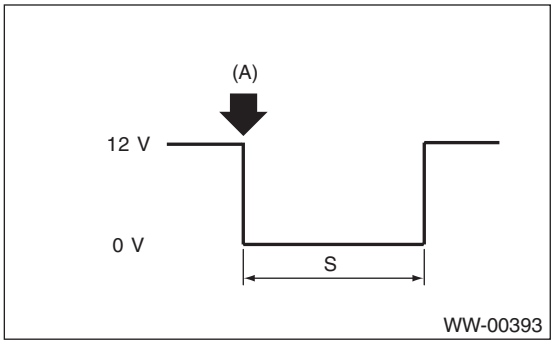

(A): Connect the battery (–) to the terminal No. B2.
S: Intermittent downtime (sec.)

3. REAR WIPER

1) Check input of body integrated unit
Check the input signal when the rear wiper switch is operated using Subaru Select Monitor.
(1) Turn the ignition switch to ON.
(2) Operate the rear wiper switch to ON and Washer ON.
(3) Does the input signal change corresponding to the switch operation?
- **Yes** → Go to step 4.
- **No** → Go to step 2.

2) Check harness
(1) Turn the ignition switch to OFF, disconnect the ground cable from battery.
(2) Disconnect the connector of body integrated unit and wiper switch.
(3) Measure the resistance between body integrated unit and wiper switch.

Connector & terminal
(i81) No. 1 — (i69) No. 5:
(i81) No. 3 — (i68) No. 6:
(i81) No. 19 — (i68) No. 7:
(4) Is the resistance less than 10 Ω?
- **Yes** → Go to step 3.
- **No** → Repair the harness between the body integrated unit and wiper switch.

3) Check input voltage of body integrated unit
(1) Connect the ground cable to battery.
(2) Turn the ignition switch to ON and check the input voltage of body integrated unit.

Connector & terminal
(B280) No. 4 (+) — Chassis ground (–):
(B280) No. 7 (+) — Chassis ground (–):
(B281) No. 32 (+) — Chassis ground (–):
(3) Is the voltage 10 V or more?
- **Yes** → Go to step 4.
- **No** → Check the harness and fuse.

4) Check output of body integrated unit
Check the output signal when the rear wiper switch is operated using Subaru Select Monitor.
(1) Turn the ignition switch to ON.
(2) Operate the rear wiper switch to ON and Washer ON.
(3) When the operation in step (2) is performed, check the output signal of body integrated unit to rear wiper motor.
(4) When the rear wiper switch is set to ON, is ON output continuous? Also, when the washer is set to ON, is ON output?
- **Yes** → Go to step 5.
- **No** → Replace the body integrated unit. <Ref. to SL-83, Body Integrated Unit.>

5) Check harness between body integrated unit and rear wiper motor
(1) Turn the ignition switch to OFF, disconnect the ground cable from battery.
(2) Disconnect the connector of body integrated unit and wiper switch.
(3) Measure the resistance between the harness connector terminals of the body integrated unit and rear wiper motor.

Connector & terminal
(i81) No. 1 — (B147) No. 1:
(4) Is the resistance less than 10 Ω?
- **Yes** → Go to step 6.
- **No** → Repair the open circuit of the harness between body integrated unit and rear wiper motor.

6) Check power supply circuit of the rear wiper motor
(1) Disconnect the harness connector of the rear wiper motor.
(2) Turn the ignition switch to ON.
(3) Measure the voltage between the rear wiper motor harness connector terminal and chassis ground.

Connector & terminal
(B147) No. 2 (+) — Chassis ground (–):
(4) Is the voltage 10 V or more?
- **Yes** → Go to step 7.
- **No** → Check the fuse (No. 42 in main fuse box).

7) Check ground circuit of rear wiper motor
(1) Turn the ignition switch to OFF.
(2) Measure the resistance between the rear wiper motor harness connector terminal and chassis ground.

Connector & terminal
(B147) No. 1 — Chassis ground:
(3) Is the resistance less than 10 Ω?
- **Yes** → Go to step 8.
- **No** → Repair the open circuit of the rear wiper motor ground circuit.

8) Check harness between body integrated unit and rear wiper motor
(1) Turn the ignition switch to OFF.
(2) Disconnect the harness connector of body integrated unit.
(3) Disconnect the harness connector of the rear wiper motor.
(4) Measure the resistance between the harness connector terminals of the body integrated unit and rear wiper motor.

Connector & terminal
(i81) No. 1 — (B147) No. 1:
(5) Is the resistance less than 10 Ω?
- **Yes** → Go to step 9.
- **No** → Repair the open circuit of the harness between body integrated unit and rear wiper motor.

9) Check output of body integrated unit
(1) Connect the harness connector of body integrated unit.
(2) Disconnect the connector of the rear wiper motor.
(3) Turn the ignition switch to ON.
(4) Measure the voltage between rear wiper motor connector and chassis ground.

Connector & terminal
(B147) No. 2 (+) — Chassis ground (–):
(5) Is the voltage less than 1.5 V when the rear wiper switch is OFF, and is the voltage 10 V or more when the rear wiper switch is ON?
- **Yes** → Go to step 10.
- **No** → Replace the body integrated unit. <Ref. to SL-83, Body Integrated Unit.>

10) Check operation of rear wiper motor
(1) Remove the rear wiper motor.
(2) Check the rear wiper motor. <Ref. to WW-44, INSPECTION, Rear Wiper Motor.>
(3) Does the rear wiper motor rotate normally?
- **Yes** → Finished.
- **No** → Replace the rear wiper motor assembly.

NOTE:
Rear wiper intermittent time

Select lever position	Vehicle speed (km/h (MPH))	Intermittent stopping time (sec.)
Rev.	—	Continuous operation
Except for reverse mode	80 — (50 —)	3
	50 — 80 (31 — 50)	6
	20 — 50 (12 — 31)	9
	0 — 20 (0 — 12)	12

5. Wiper Blade

A: REMOVAL

1. FRONT

NOTE:
Since the arm assembly - windshield wiper LH and RH can interfere with each other, remove the driver's side first.
1) Lift up the locking clip (A).
2) Turn the blade assembly - windshield wiper in the arrow direction.
3) Push in the arm assembly - windshield wiper.
4) Pull out the arm assembly - windshield wiper while pulling it up, and remove the blade assembly - windshield wiper from the arm assembly - windshield wiper.

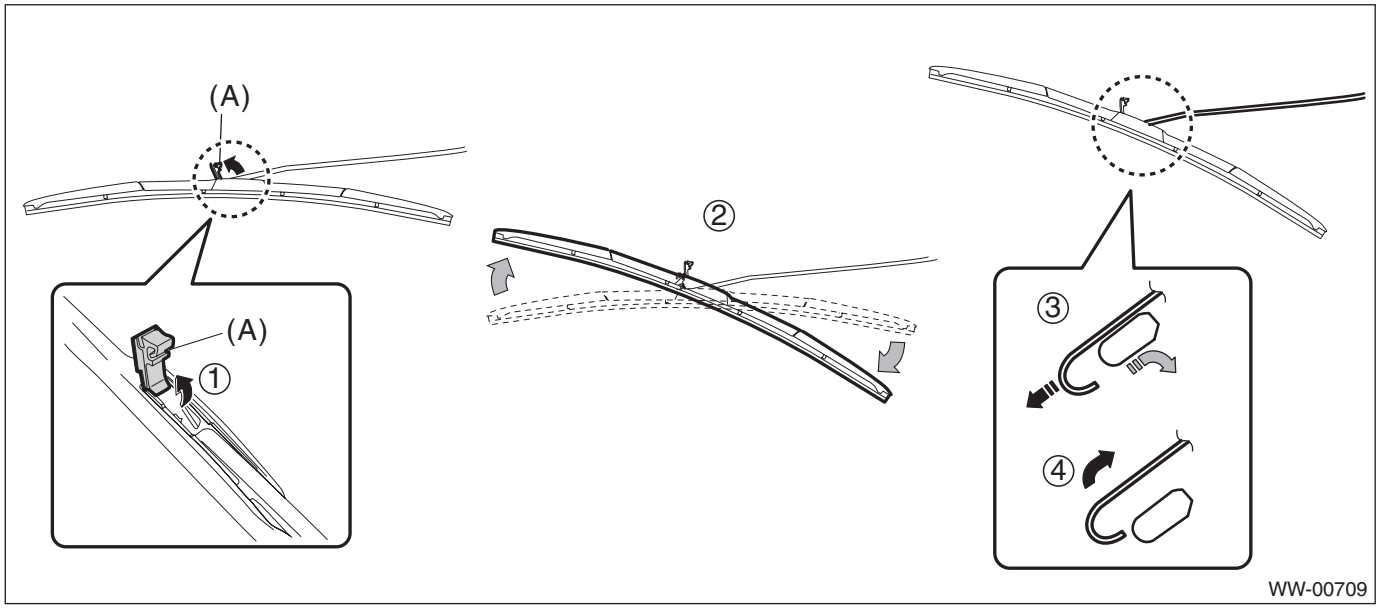

2. REAR

Turn the blade assembly - rear wiper in the direction of arrow (A) and remove it from the arm assembly - rear wiper.

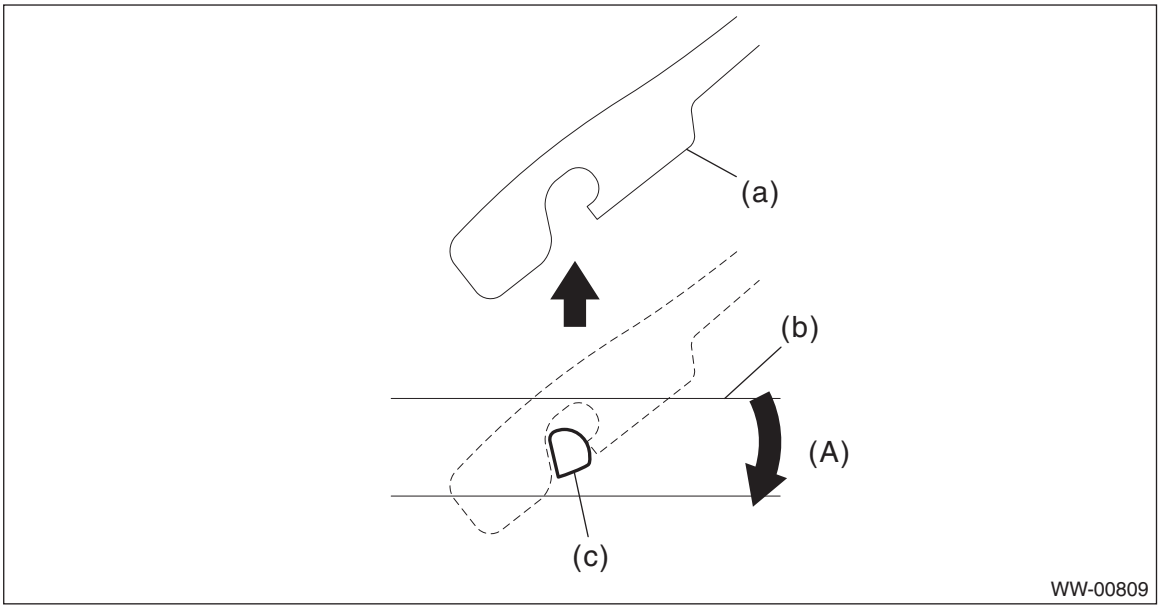

(A) Rotate the blade ASSY - rear wiper.

(a) Arm ASSY - rear wiper

(b) Blade ASSY - rear wiper

(c) Blade ASSY - rear wiper installation portion

B: INSTALLATION

Install each part in the reverse order of removal.

CAUTION:
Make sure the locking clip is secured.

NOTE:
Since the arm assembly - windshield wiper LH and RH can interfere with each other, install the passenger's side first.

C: DISASSEMBLY

1. FRONT

Pull side (A) of the wiper rubber stopper, and remove the rubber assembly - windshield wiper from the blade assembly - windshield wiper.

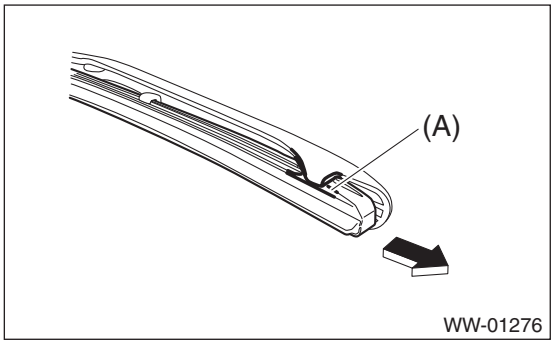

2. REAR

Slightly pull the top of the rubber assembly - rear wiper from the stopper (A), and pull out completely.

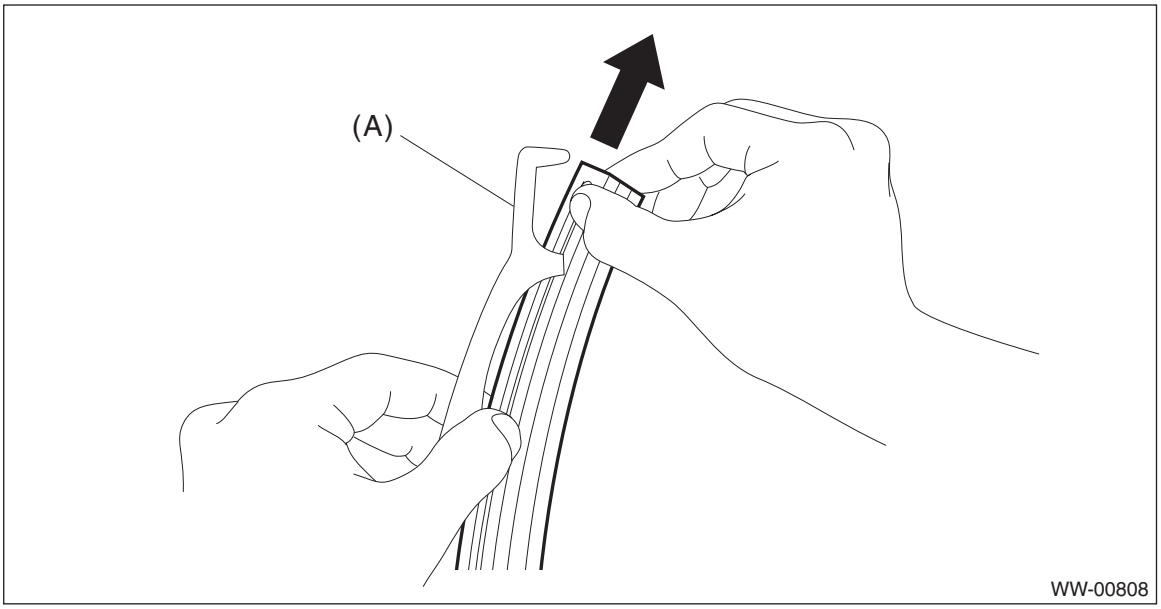

D: ASSEMBLY

1. FRONT

1) Insert the rubber assembly - windshield wiper onto the blade - windshield wiper so that the stopper is in the position shown in the figure.

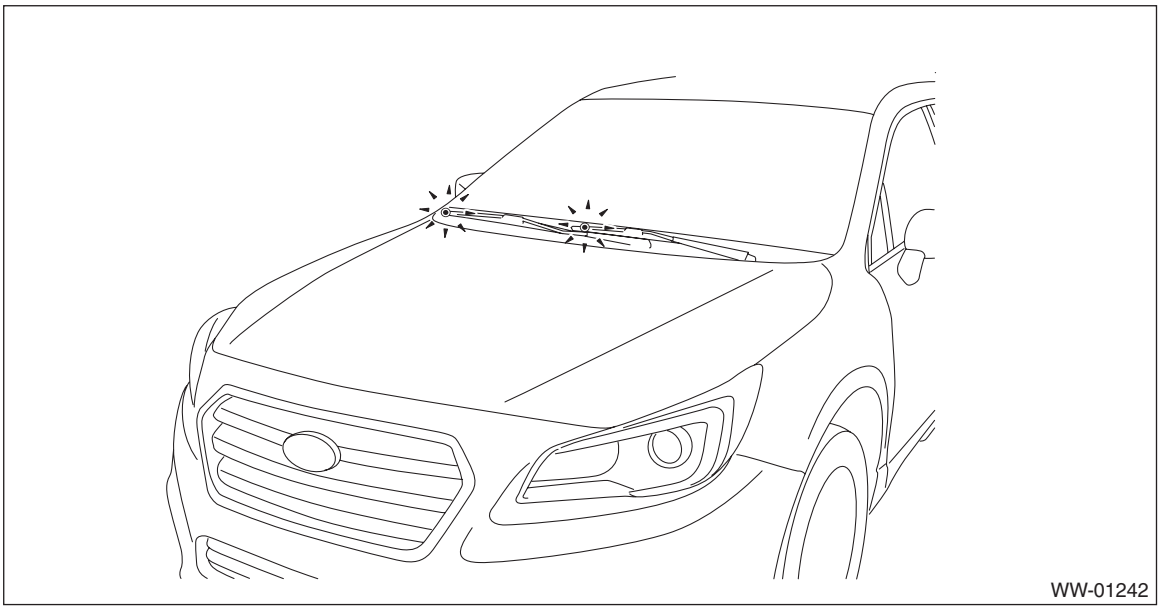

2) Make sure the rubber assembly - windshield wiper is securely fastened to the pull stopper (A).

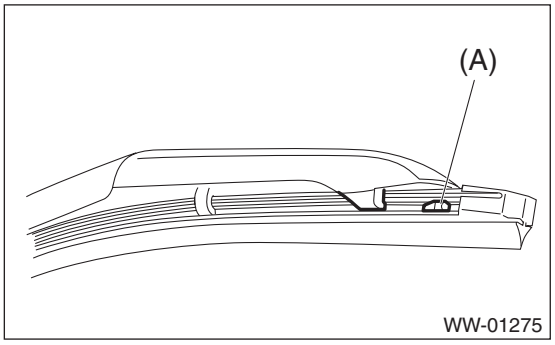

2. REAR

1) Insert the rubber assembly - rear wiper into claw (B).

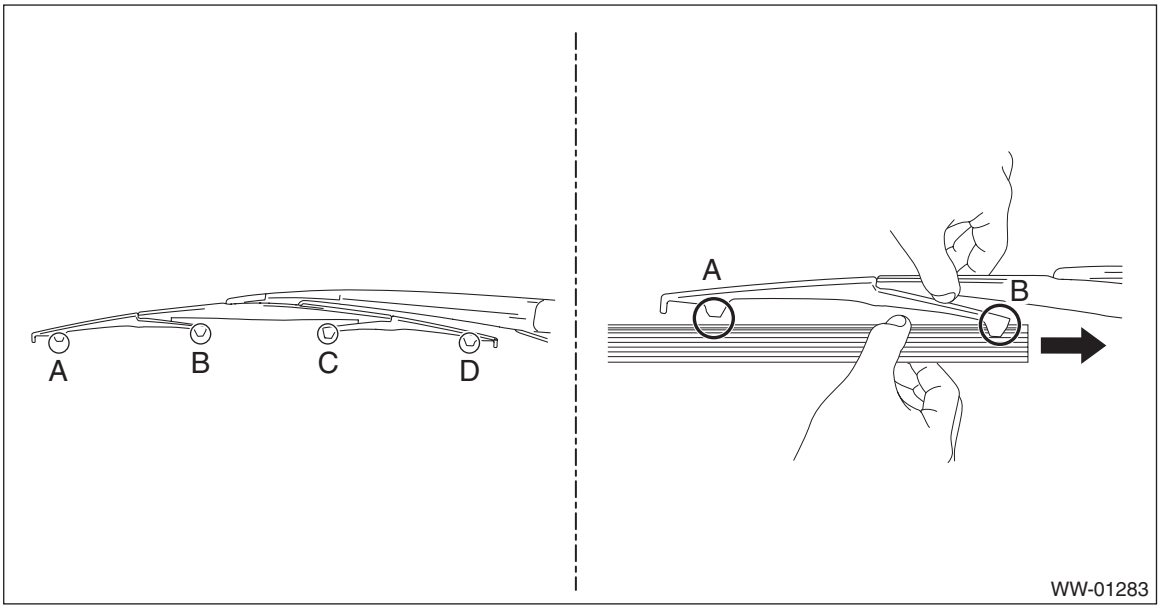

2) Insert the rubber assembly - rear wiper until its top end protrudes approx. 20 mm (0.79 in) from stopper (D).

3) Insert the rubber assembly - rear wiper into claw (A).

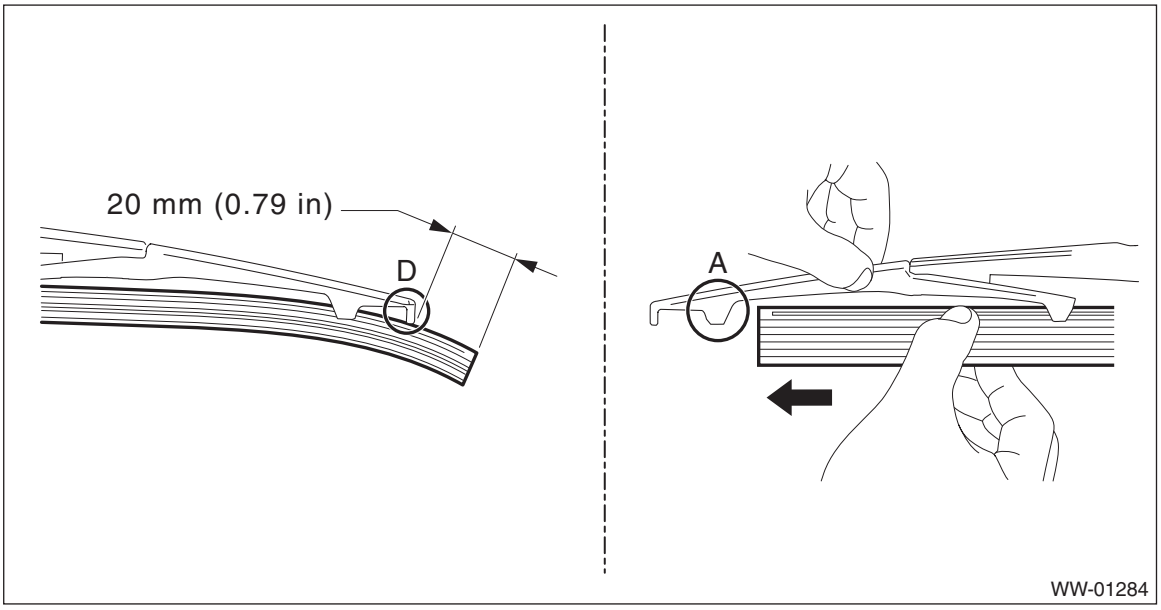

E: INSPECTION

1) Check and clean the rubber assembly - wiper.

CAUTION:
• Do not use organic solvent-based cleaner when cleaning rubber parts in order to avoid rubber part deterioration.
• Do not continue to use damaged blade rubber.
The windshield glass may be damaged. If the wiping performance decreases or any distinct streak is found, replace it as soon as possible.
• Clean rubber parts using a soft cloth or paper towel dampened with windshield washer fluid or mild synthetic detergent.
• Use Subaru genuine part only for wiper blade body and blade rubber.
For model with EyeSight, using the part other than genuine part will affect the recognition of the stereo camera, which may cause the function not to operate correctly.

Replace the rubber assembly - wiper if rubber part hardening, deformation or damage is found.

2) Operate the washer system to check if a chattering sound or insufficient wiping occurs.

3) If a chattering sound or insufficient wiping occurs, perform the following procedures.
(1) Make sure that the blade assembly - wiper is not deformed and the movable part moves smoothly.
(2) Remove oil film and dirt from the glass.

CAUTION:
• When powder-type glass cleaner is used, use after having been dissolved in water sufficiently. If it is used in less water, the glass surface may be damaged.
• Clean the glass surface using a soft cloth or sponge with glass cleaner.
(3) Operate the windshield wiper again. If a chattering sound or insufficient wiping occurs, perform the procedures again.

4) If defective is not improved after performing step 1) to step 3), replace the rubber assembly - wiper with a new part.

6. Washer Tank and Motor

A: REMOVAL

1. WASHER TANK

1) Disconnect the ground terminal from battery sensor. <Ref. to RC-4, BATTERY, NOTE, Repair Contents.>
2) Remove the bumper face - front. <Ref. to EI-34, REMOVAL, Front Bumper.>
3) Remove the tank - washer assembly.
   (1) Press the claw and remove the clip of the holder - windshield washer tank.

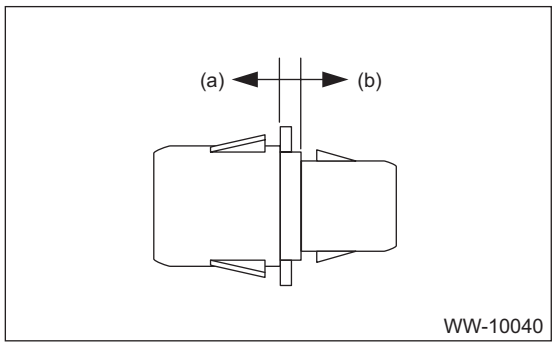

(a) Vehicle body side
(b) Washer tank side

   (2) Disconnect the connector from the motor pump assembly - washer and the sensor - washer tank, and then remove the harness clip.
   (3) Prepare a container before disconnecting the hose - washer, and drain all washer fluid in the tank - washer.
   (4) Remove the bolt and nuts and remove the tank - washer assembly.

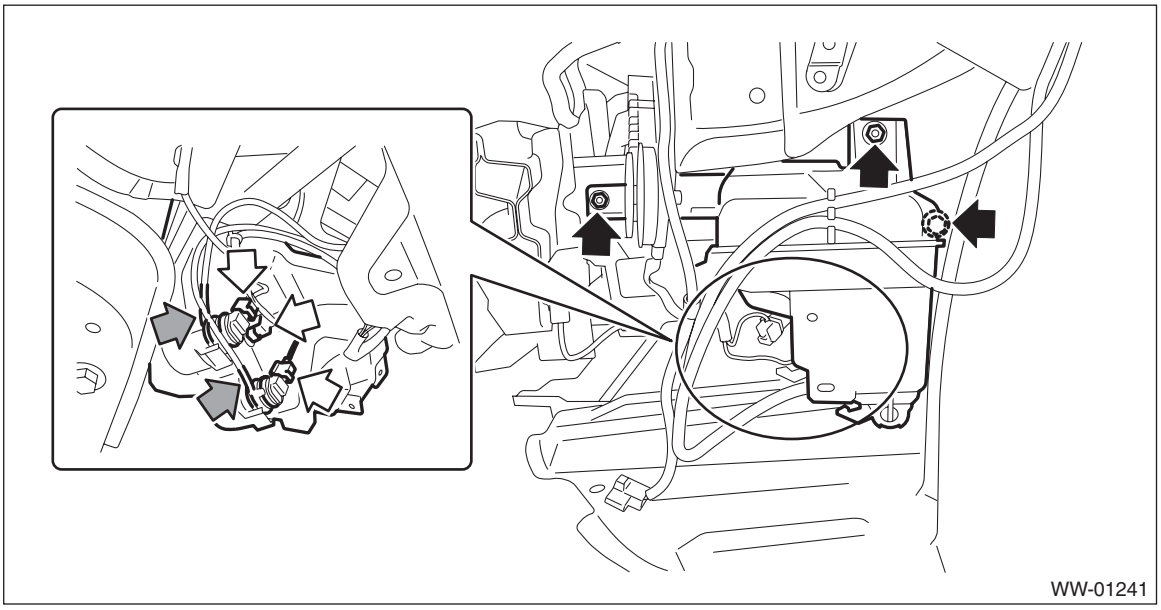

2. WASHER MOTOR AND HOSE

1) Disconnect the ground terminal from battery sensor. <Ref. to RC-4, BATTERY, NOTE, Repair Contents.>
2) Remove the clips, and turn over the mud guard - front LH.

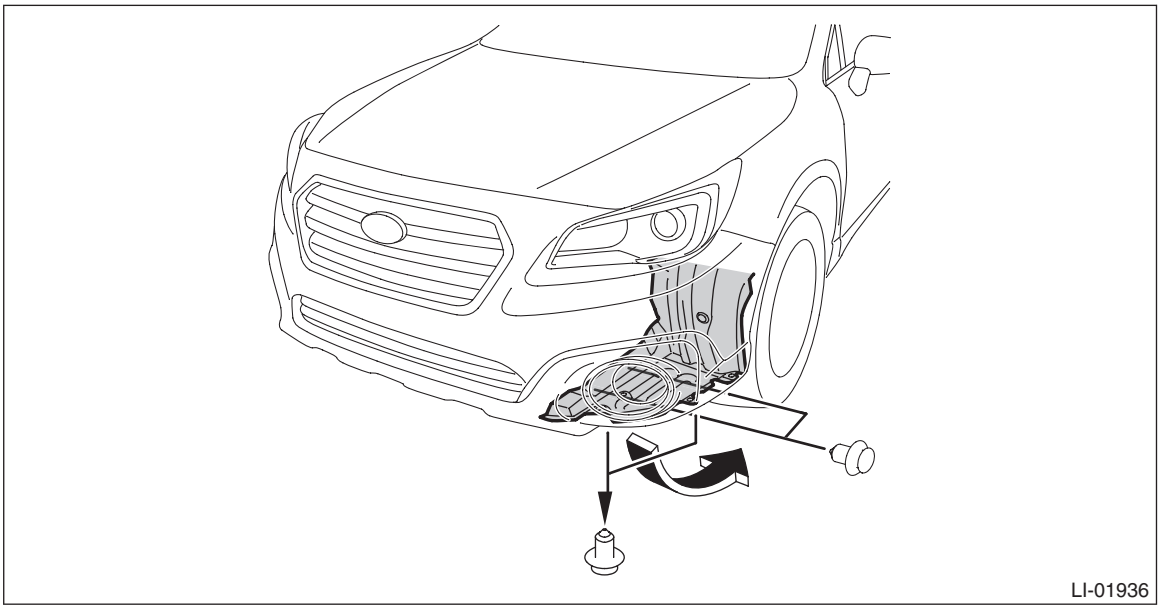

3) Disconnect the connector from the motor pump assembly - washer and remove the harness clip.
4) Prepare a container before disconnecting the hose - washer, and drain all washer fluid in the tank - washer.
5) Remove the motor pump assembly - washer.

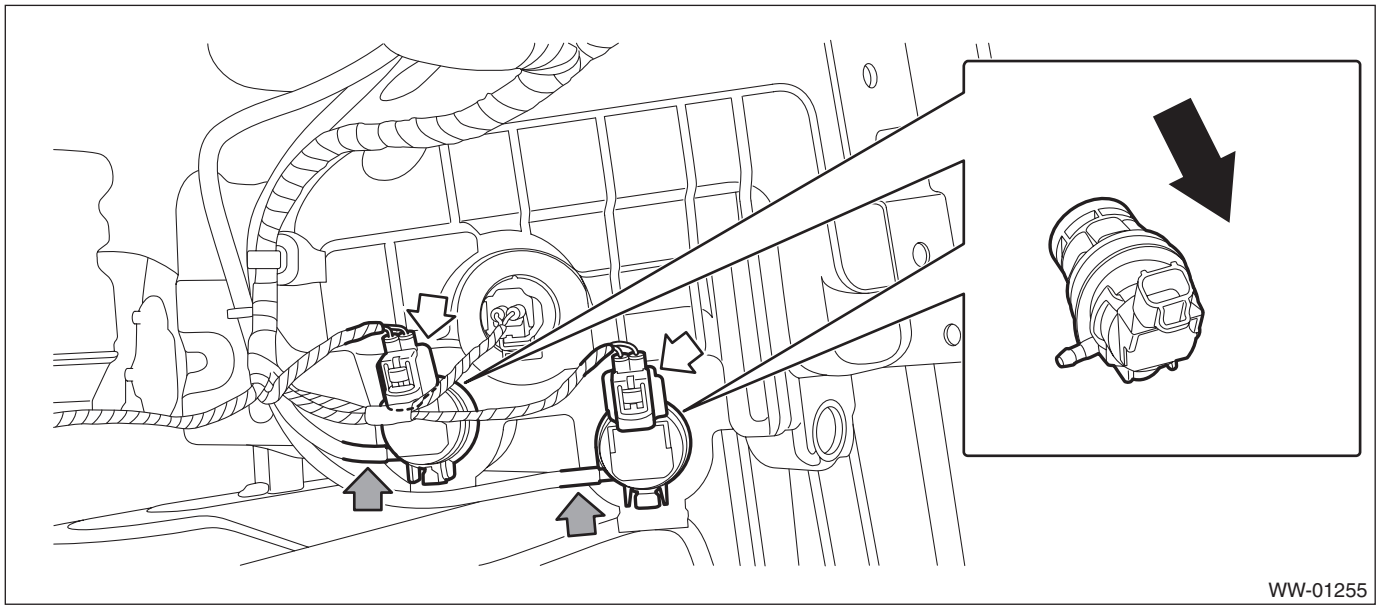

6) Replace the washer hose if necessary.

3. WASHER FLUID LEVEL SENSOR

1) Disconnect the ground terminal from battery sensor. <Ref. to RC-4, BATTERY, NOTE, Repair Contents.>
2) Remove the clips, and turn over the mud guard - front LH.

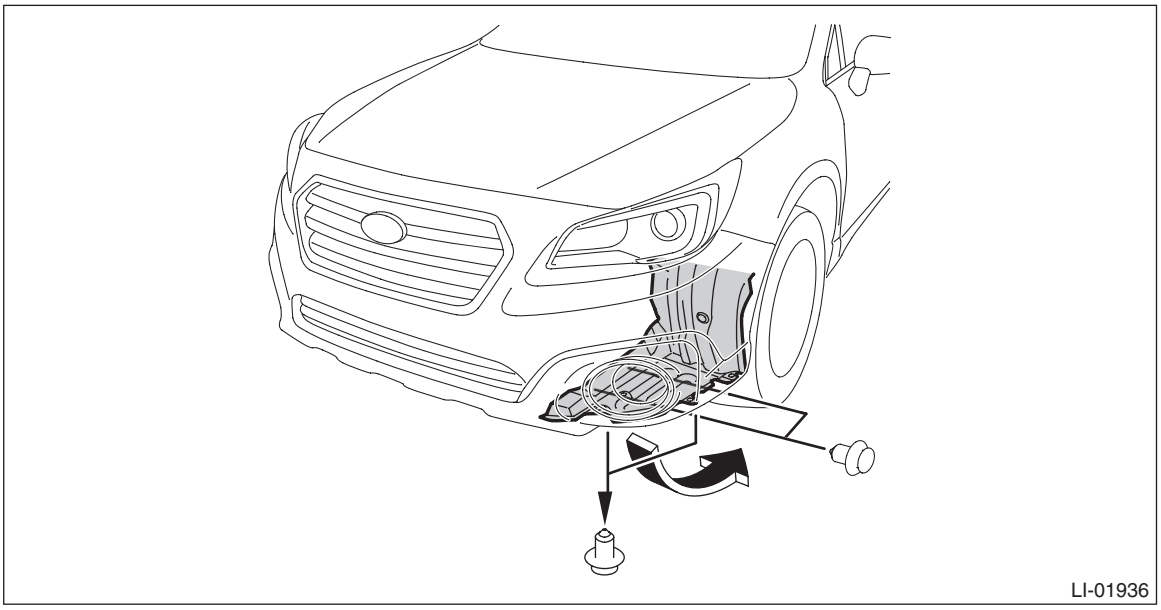

3) Disconnect the connector from the sensor - washer tank, and remove the harness clip.
4) Prepare a container before disconnecting the hose - washer, and drain all washer fluid in the tank - washer.
5) Push the section (a) in the direction of the arrow with a thick towel or the like to remove the sensor - washer tank.

CAUTION:
Do not hit or apply any impact to the sensor - washer tank, because it has a poor resistance to impact. Sensor internal parts may be damaged when an impact is applied.

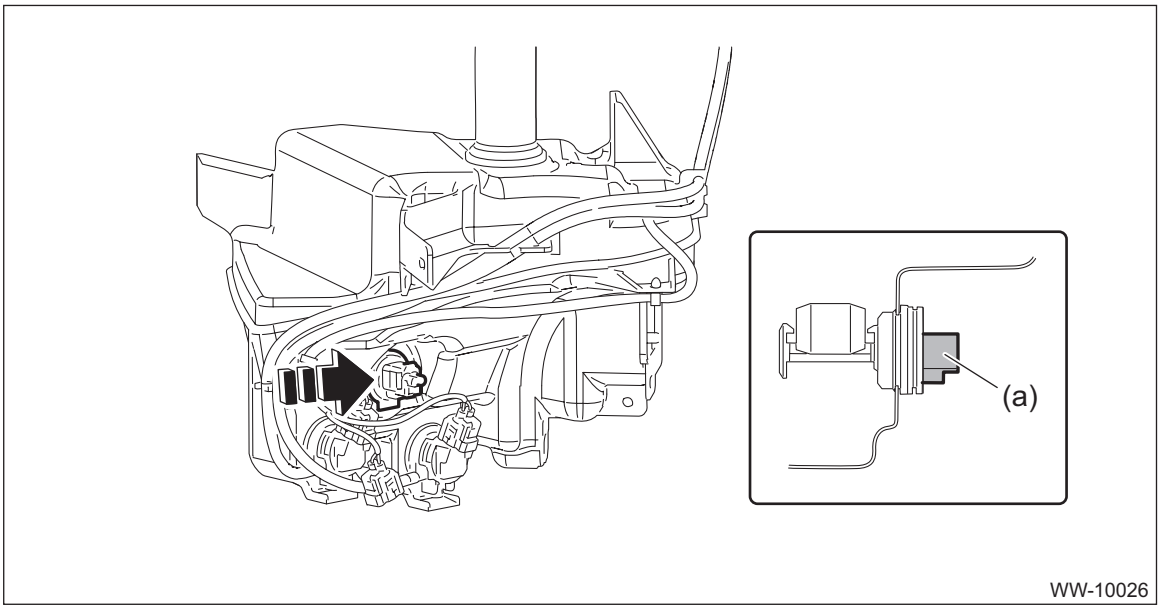

B: INSTALLATION

1. WASHER TANK

CAUTION:
• Install so that the front end of the under cover (b) comes inside the bumper face - front (a), and the front end of the mud guard (c) comes outside the bumper face - front (a).

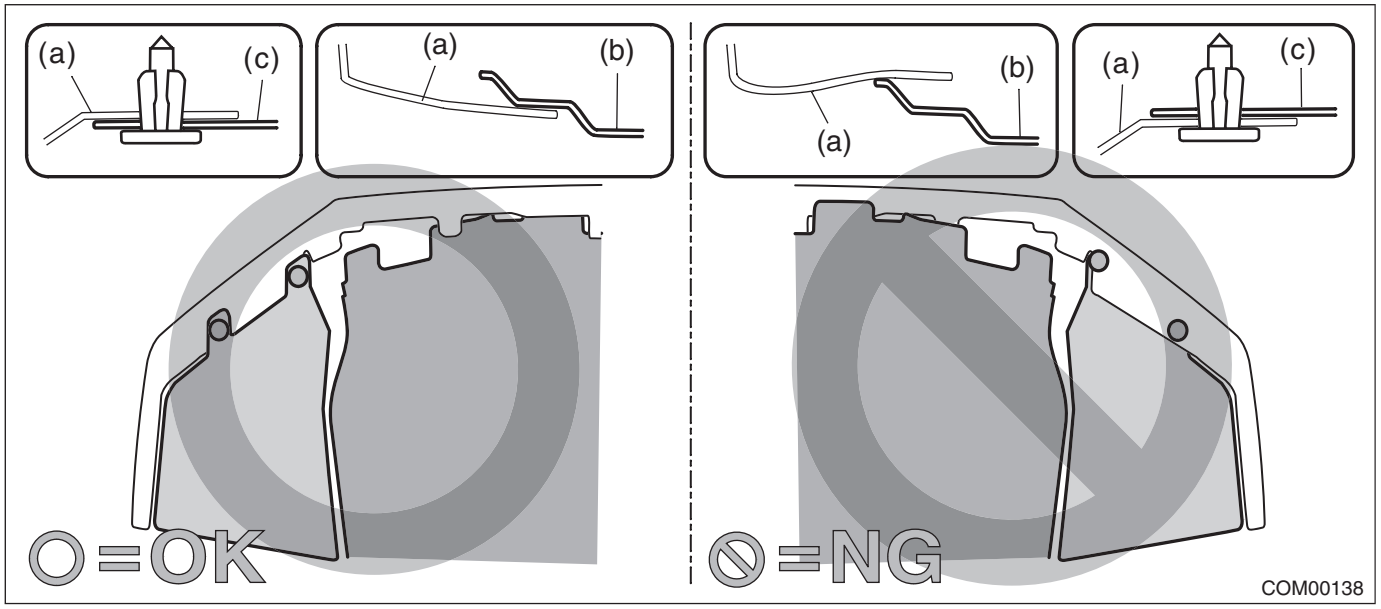

• Before installing the bumper face, match the claws on the bracket - front bumper with the engaging position of flange section on the bumper face side. If the engaging position is not correct, the flange section may be broken or the clearance between fender panel and bumper face may not be uniform.
1) Install the tank - washer assembly.

Tightening torque:
6 N·m (0.6 kgf-m, 4.4 ft-lb)
2) Connect the hose - washer.
3) Connect each connector and install the harness clip.
4) Install the mud guard - front.
5) Install the bumper face - front. <Ref. to EI-38, INSTALLATION, Front Bumper.>
6) Connect the ground terminal to battery sensor. <Ref. to RC-4, BATTERY, NOTE, Repair Contents.>
7) Add new washer fluid.
8) Adjust the fog light beam. (Model with fog light) <Ref. to LI-44, FOG LIGHT AIMING, ADJUSTMENT, Front Fog Light Assembly.>

2. WASHER MOTOR AND HOSE

CAUTION:
Install the mud guard - front so that the front end of the mud guard (b) comes outside the bumper face - front (a).

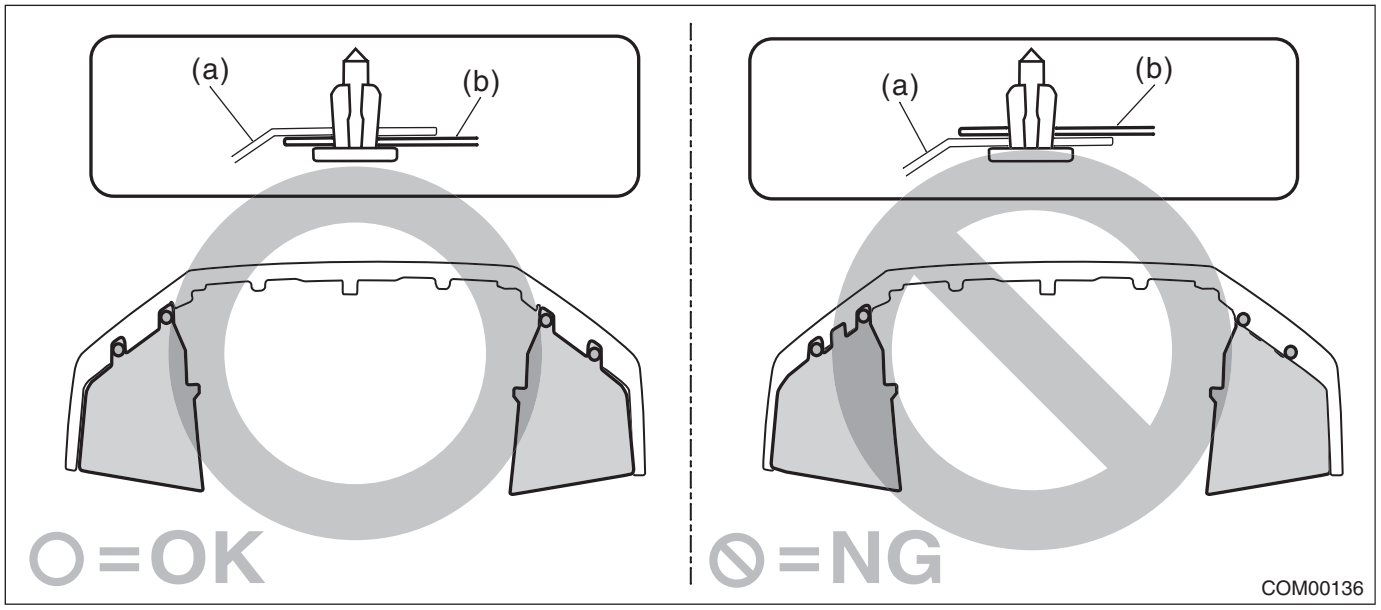

1) When the washer hose or the holder - hose is replaced, install the holder - hose in the following position.
   (1) Add a marking (c) at the positions (A) and (B) from the hose end.
   (2) Align the marking (c) with the holder end (f), and affix with tape.

Tape:
NITTO DENKO No. 21 or equivalent

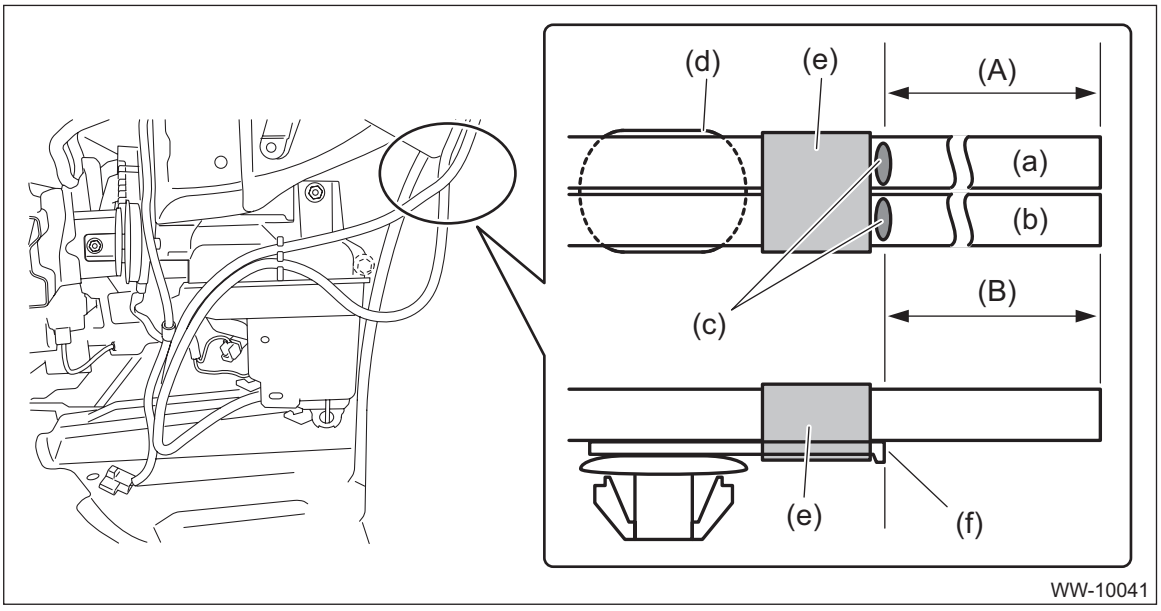

(A)	Washer hose - front: 258 mm (10.2 in)	(B)	Washer hose - rear: 543 mm (21.4 in)		
(a)	Washer hose - front	(c)	Position alignment marking	(e)	Tape
(b)	Washer hose - rear	(d)	Holder - hose	(f)	Holder end

2) Install the motor pump assembly - washer to the tank - washer.
3) Connect the hose - washer.

4) Connect each connector and install the harness clip.
5) Install the mud guard - front LH.
6) Connect the ground terminal to battery sensor. <Ref. to RC-4, BATTERY, NOTE, Repair Contents.>
7) Add new washer fluid.
8) Adjust the fog light beam. (Model with fog light) <Ref. to LI-44, FOG LIGHT AIMING, ADJUSTMENT, Front Fog Light Assembly.>

3. WASHER FLUID LEVEL SENSOR

CAUTION:
Install the mud guard - front so that the front end of the mud guard (b) comes outside the bumper face - front (a).

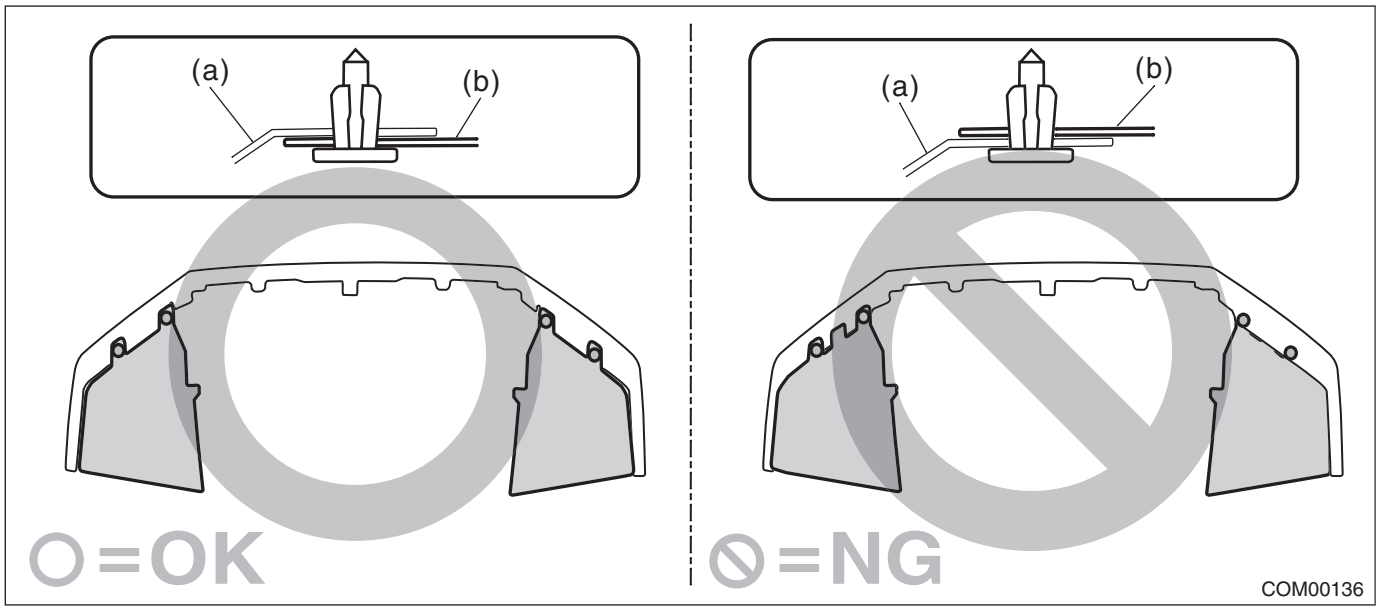

1) Align the protrusion (a) of the sensor - washer tank with a center position of double line marks (b) on the tank - washer side, and push the flat surface (c) to install.

CAUTION:
- **Do not hit or apply any impact to the sensor - washer tank when it is reused, because it has a poor resistance to impact.**
- **When the installation is difficult, apply washer fluid to the packing. Do not use silicone grease.**

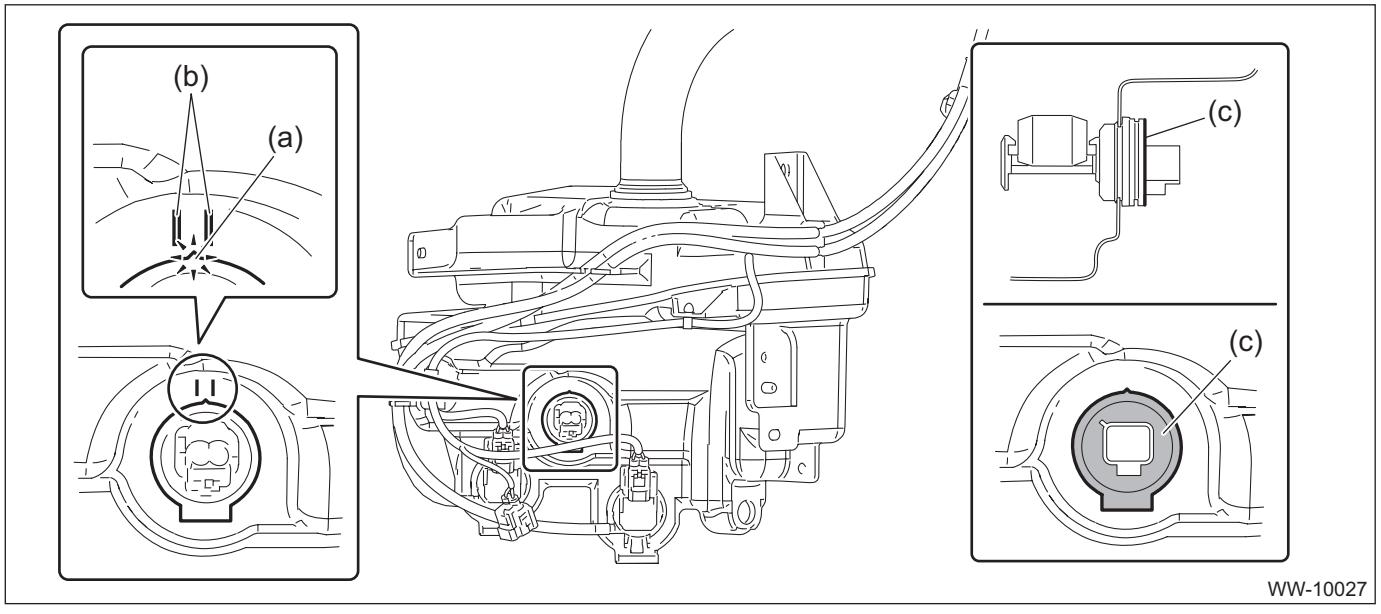

2) After installing the sensor - washer tank, perform the following confirmations.
- There is no gap between the tank - washer and the packing.
- There is no gap between the packing and the sensor - washer tank.
- There is no turn over to the packing and its peripheral area.

3) Connect each connector and install the harness clip.
4) Install the mud guard - front LH.
5) Connect the ground terminal to battery sensor. <Ref. to RC-4, BATTERY, NOTE, Repair Contents.>
6) Add new washer fluid.
7) Adjust the fog light beam. (Model with fog light) <Ref. to LI-44, FOG LIGHT AIMING, ADJUSTMENT, Front Fog Light Assembly.>

C: INSPECTION

1. WASHER PUMP

Apply battery voltage to the connector terminal of the motor pump assembly - washer, and make sure that the motor operates.

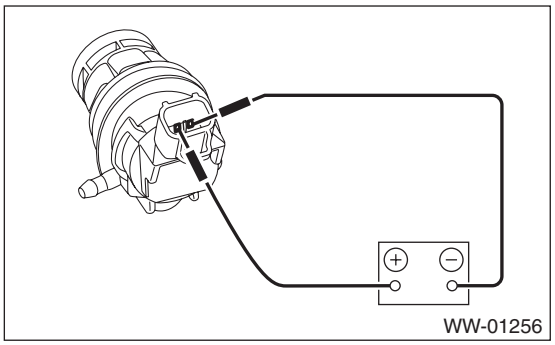

2. WASHER FLUID LEVEL SENSOR

1) Check the connection status of washer fluid level sensor connector.
2) Does the low washer fluid warning light illuminate after draining the washer fluid? And does the low washer fluid warning light go off after refilling the washer fluid?
- **Yes → Normal operation.**
- **No → Perform step 3.**

3) Using a tester, measure the voltage of the washer fluid level sensor connector.
   (1) Is the voltage approx. 8.5 V or more?
   - **Yes → Perform step 4.**
   - **No → Check harness, meter and integrated unit, and replace if necessary.**

4) Does the meter indicator illuminate if you short the washer fluid level sensor connector?
- **Yes → Perform step 5.**
- **No → Check meter and integrated unit, and replace if necessary.**

5) Using a tester, measure the resistance of the washer fluid level sensor.
   (1) Turn over the mud guard.

(2) Measure the resistance of the washer fluid level sensor.

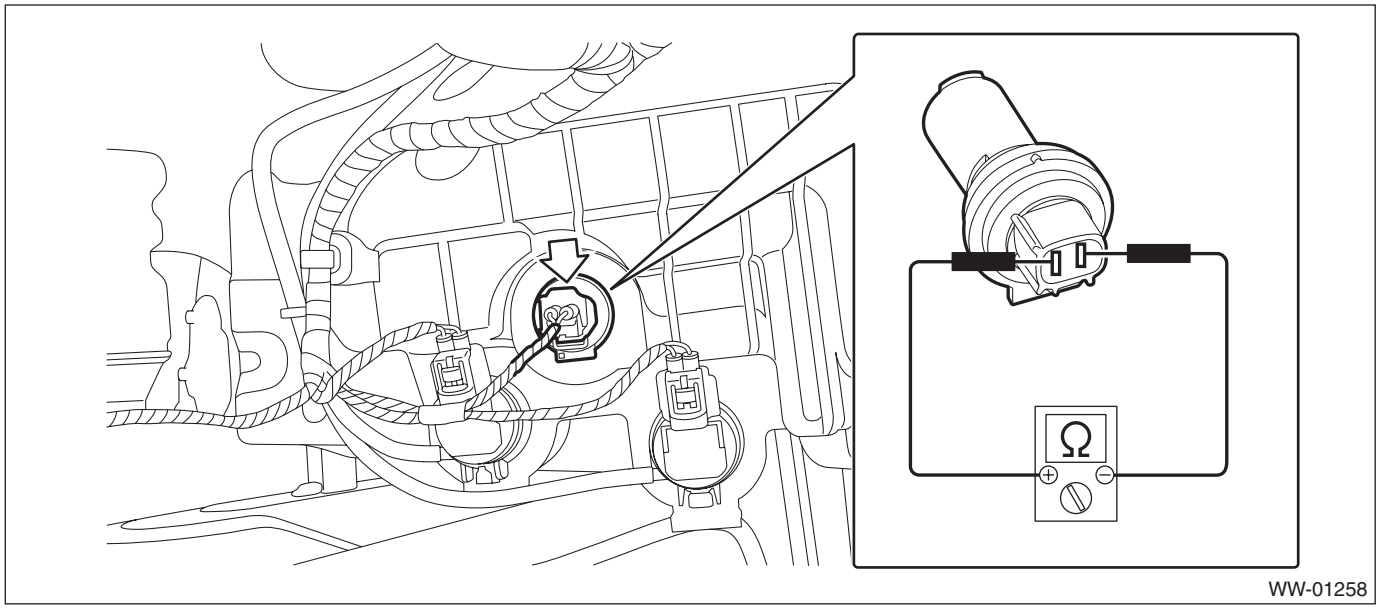

Amount of washer fluid in the tank	Standard
No remaining quantity (ON)	Less than 10 Ω
There is remaining quantity (OFF)	1 MΩ or more

(3) Is the resistance within the standard?
- **Yes → Normal operation.**
- **No → Replace the washer level sensor.**

7. Front Wiper Arm

A: REMOVAL

1) Remove the cover - windshield wiper arm.
2) Remove the nuts, and remove the arm assembly - windshield wiper.

NOTE:
Since the arm assembly - windshield wiper LH and RH can interfere with each other, remove the driver's side first.

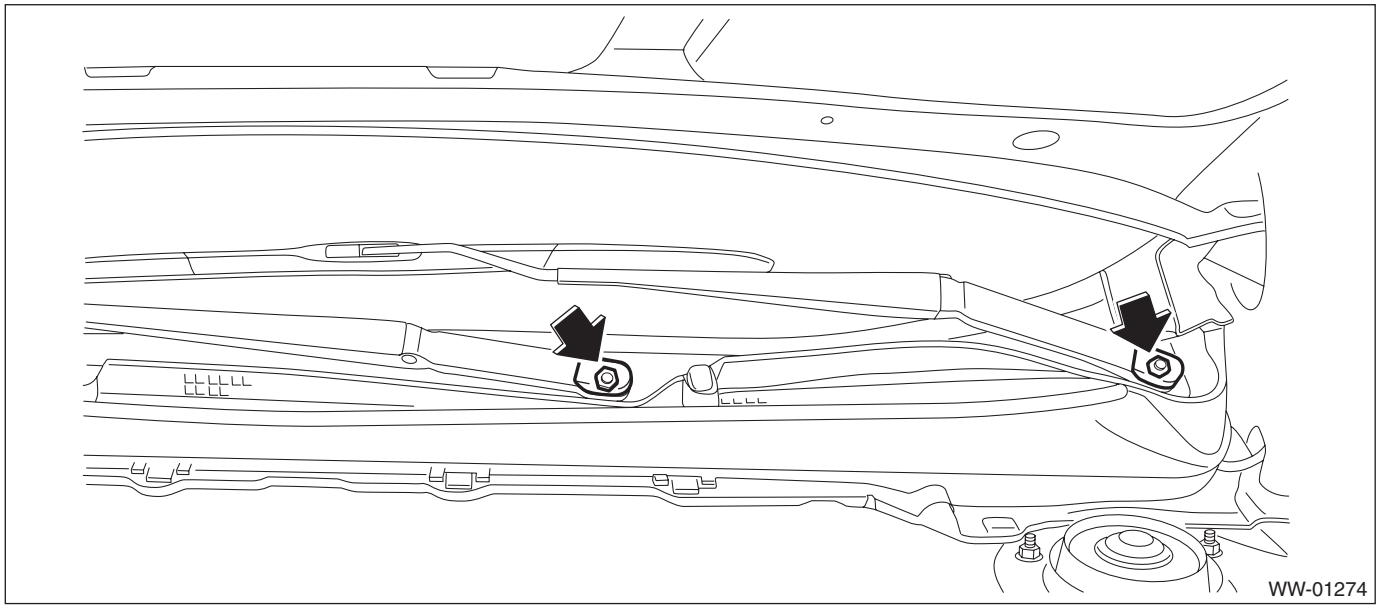

B: INSTALLATION

1) Install the arm assembly - windshield wiper.

NOTE:
Since the arm assembly - windshield wiper LH and RH can interfere with each other, install the passenger's side first.

(1) Assemble the arm assembly - windshield wiper so that the blade assembly - windshield wiper is aligned to the ceramic print point mark of the windshield glass.

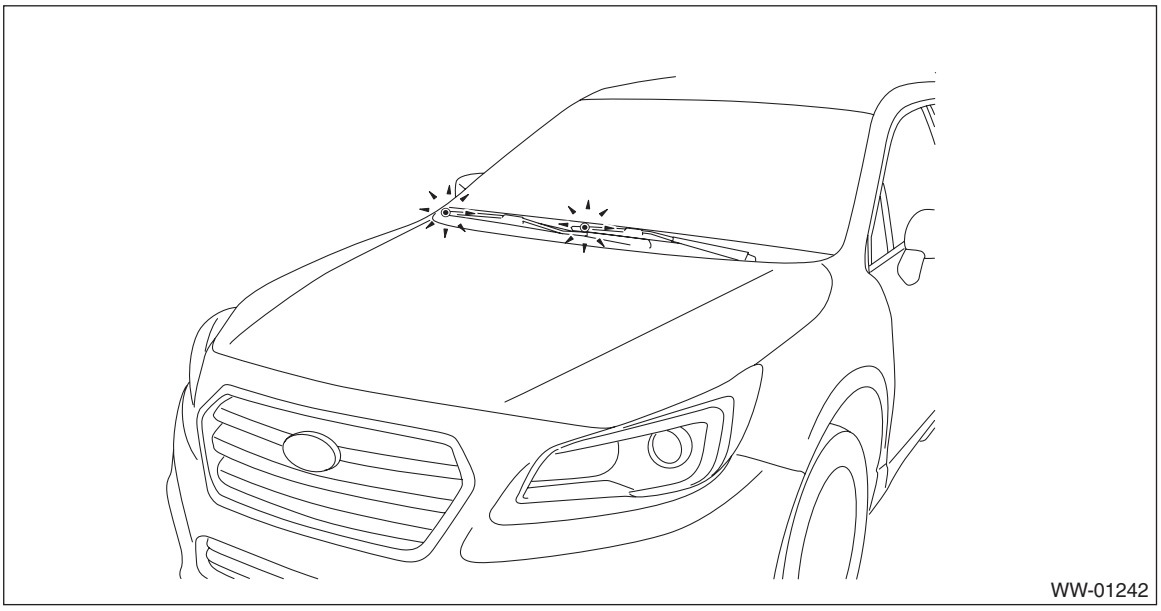

(2) Tighten the arm assembly - windshield wiper to specified torque and install the cap.

Tightening torque:
22 N·m (2.2 kgf-m, 16.2 ft-lb)

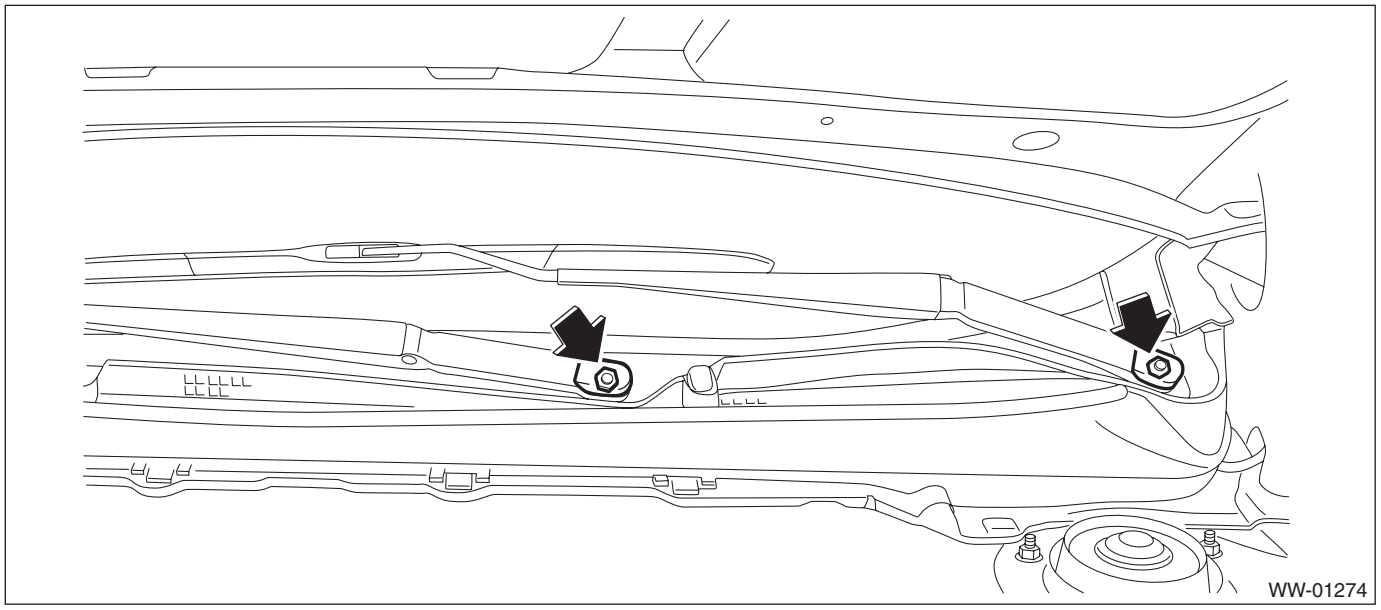

2) Check the position of windshield wiper. <Ref. to WW-31, ADJUSTMENT, Front Wiper Arm.>

C: ADJUSTMENT

1) Operate the windshield wiper once.
2) Check that the wiper blade is aligned with the point mark.

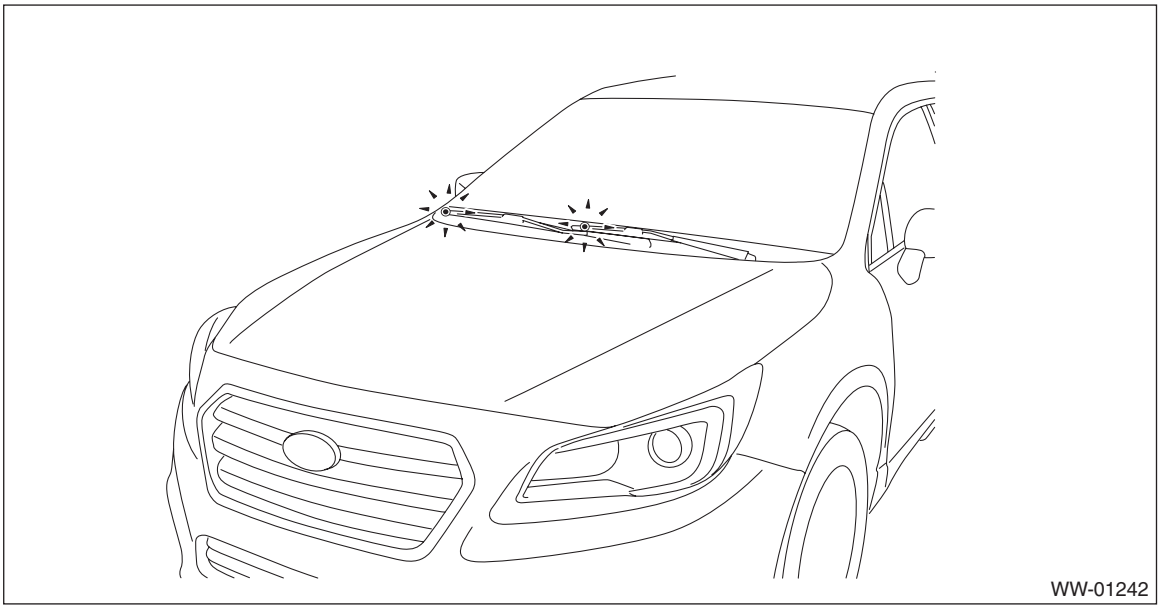

3) If the wiper blade is not aligned with the point mark, perform the removal and installation of the windshield wiper. <Ref. to WW-30, REMOVAL, Front Wiper Arm.>

8. Front Wiper Motor and Link

A: REMOVAL

1) Disconnect the ground terminal from battery sensor. <Ref. to RC-4, BATTERY, NOTE, Repair Contents.>
2) Remove the arm assembly - windshield wiper. <Ref. to WW-30, REMOVAL, Front Wiper Arm.>
3) Remove the cowl panel - side and the cowl panel assembly. <Ref. to EI-51, REMOVAL, Cowl Panel.>

CAUTION:
Before removing the cowl panel, use an air blower and nylon brush to sweep gravel from the lower area of the front side of the glass.

4) Remove the link assembly - windshield wiper.
   (1) Disconnect the connector of the motor assembly - windshield wiper.
   (2) Remove the bolts and harness clips, and remove the link assembly - windshield wiper.

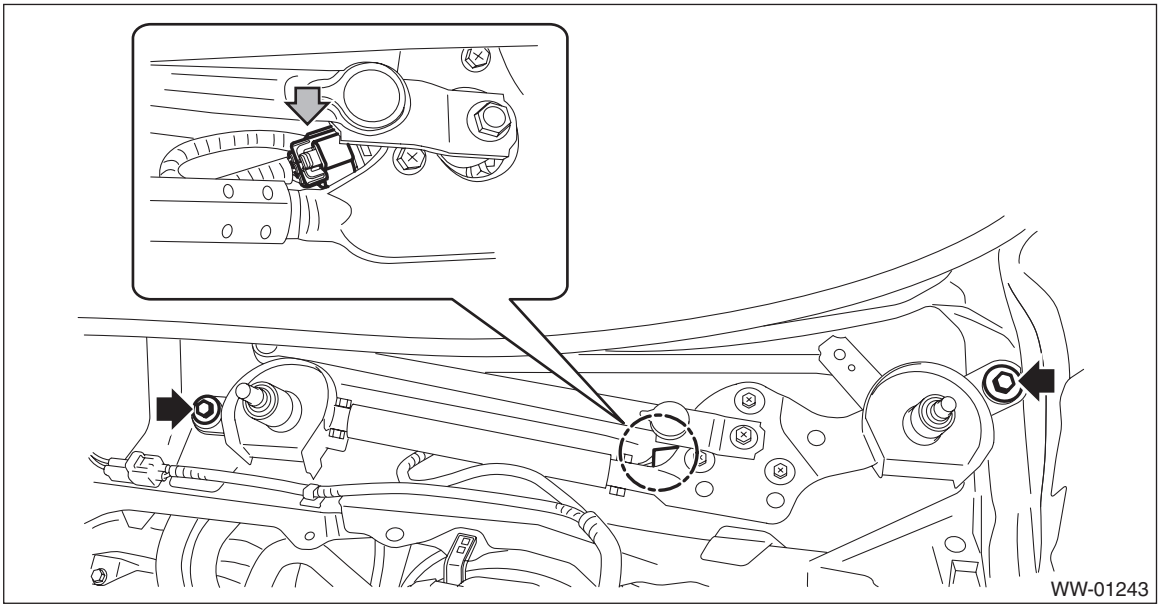

5) Remove the motor assembly - windshield wiper.
   (1) Using a crowbar wrapped with protective tape, disconnect the link assembly - windshield wiper from the link plate.
   (2) Remove the bolts, and remove the motor assembly - windshield wiper.

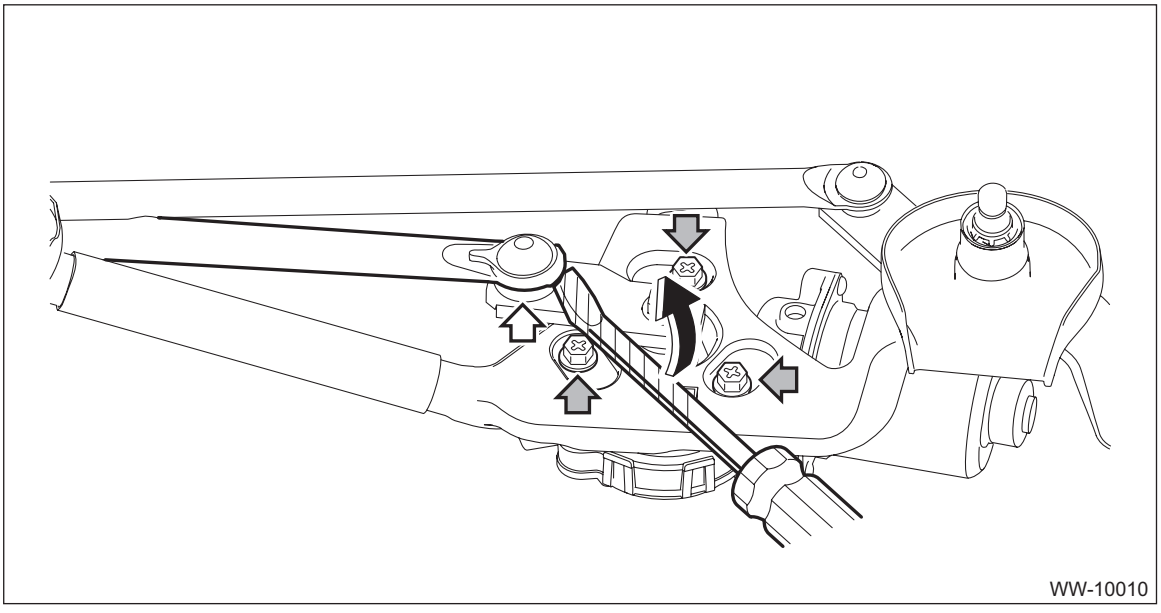

B: INSTALLATION

CAUTION:
Before installing the windshield glass and cowl panel, make sure there are no gravel in the installing area.

1) Connect the ground terminal to battery sensor. <Ref. to RC-4, BATTERY, NOTE, Repair Contents.>
2) Check that the motor assembly - windshield wiper is at the auto stop position.

CAUTION:
During motor operation, do not touch the movable part.

(1) Connect the harness of front wiper to the motor assembly - windshield wiper.
(2) Switch the wiper switch to ON/OFF once.

3) Disconnect the ground terminal from battery sensor again. <Ref. to RC-4, BATTERY, NOTE, Repair Contents.>
4) Install the motor assembly - windshield wiper.

Tightening torque:
5.5 N·m (0.6 kgf-m, 4.1 ft-lb)

5) Install the link assembly - windshield wiper.

CAUTION:
Set the component where the rod (b) and link plate (a) are aligned in a straight line.

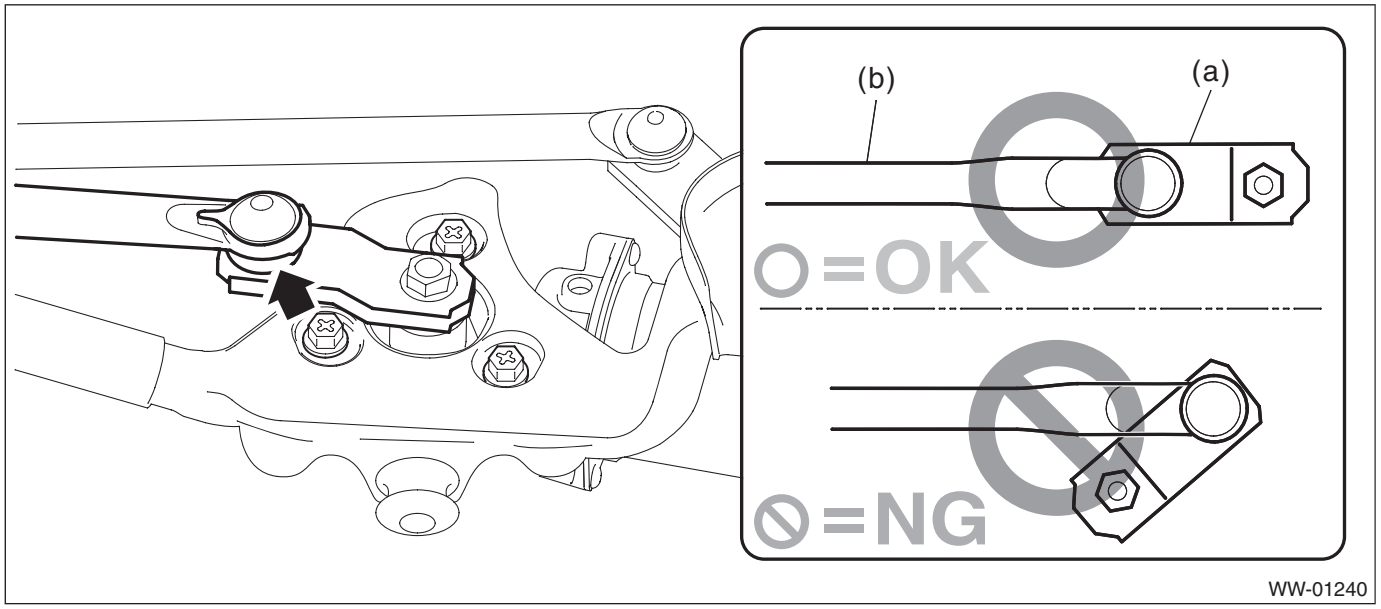

6) Install the cowl panel - side and the cowl panel assembly. <Ref. to EI-53, INSTALLATION, Cowl Panel.>
7) Remove the arm assembly - windshield wiper. <Ref. to WW-30, REMOVAL, Front Wiper Arm.>
8) Connect the ground terminal to battery sensor. <Ref. to RC-4, BATTERY, NOTE, Repair Contents.>
9) Check the position of windshield wiper. <Ref. to WW-31, ADJUSTMENT, Front Wiper Arm.>

C: INSPECTION

1) Check that the following operations perform normally.

CAUTION:
Fix the motor to prevent the motor from being shorted by moving during operation.

(1) When the battery is connected to the terminal of connectors, confirm that the motor operates at low speed.

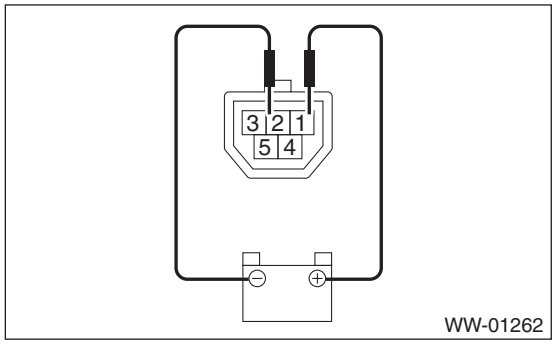

(2) When the battery is connected to the terminal of connectors, confirm that the motor operates at high speed.

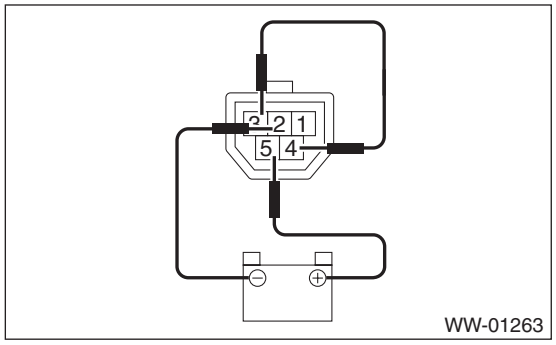

(3) Connect the battery to terminals of the connector, and remove the terminal connection with motor rotating at low speed, and stop the motor assembly - windshield wiper in mid-operation.

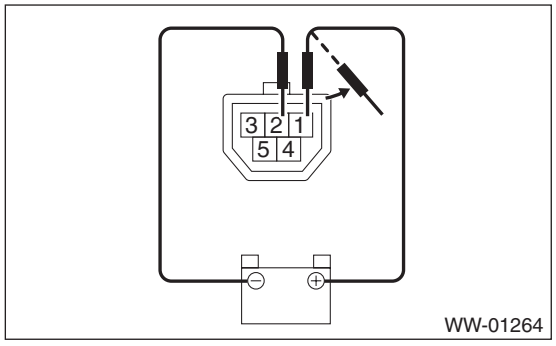

(4) Connect the battery and check that the motor stops at the automatic stop position after the motor operates at low speed again.

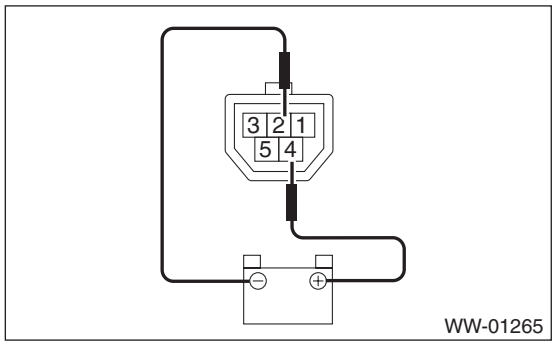

NOTE:
Replace the motor assembly - windshield wiper if the inspection result is not within the standard.
2) Install the motor assembly - windshield wiper. <Ref. to WW-33, INSTALLATION, Front Wiper Motor and Link.>

9. Front Washer Nozzle

A: REMOVAL

1) Disconnect the ground terminal from battery sensor. <Ref. to RC-4, BATTERY, NOTE, Repair Contents.>
2) Remove the arm assembly - windshield wiper. <Ref. to WW-30, REMOVAL, Front Wiper Arm.>
3) Remove the cowl panel - side and the cowl panel assembly. <Ref. to EI-51, REMOVAL, Cowl Panel.>

CAUTION:
Before removing the cowl panel, use an air blower and nylon brush to sweep gravel from the lower area of the front side of the glass.

4) Disconnect the hose - windshield washer.

- Models without EyeSight

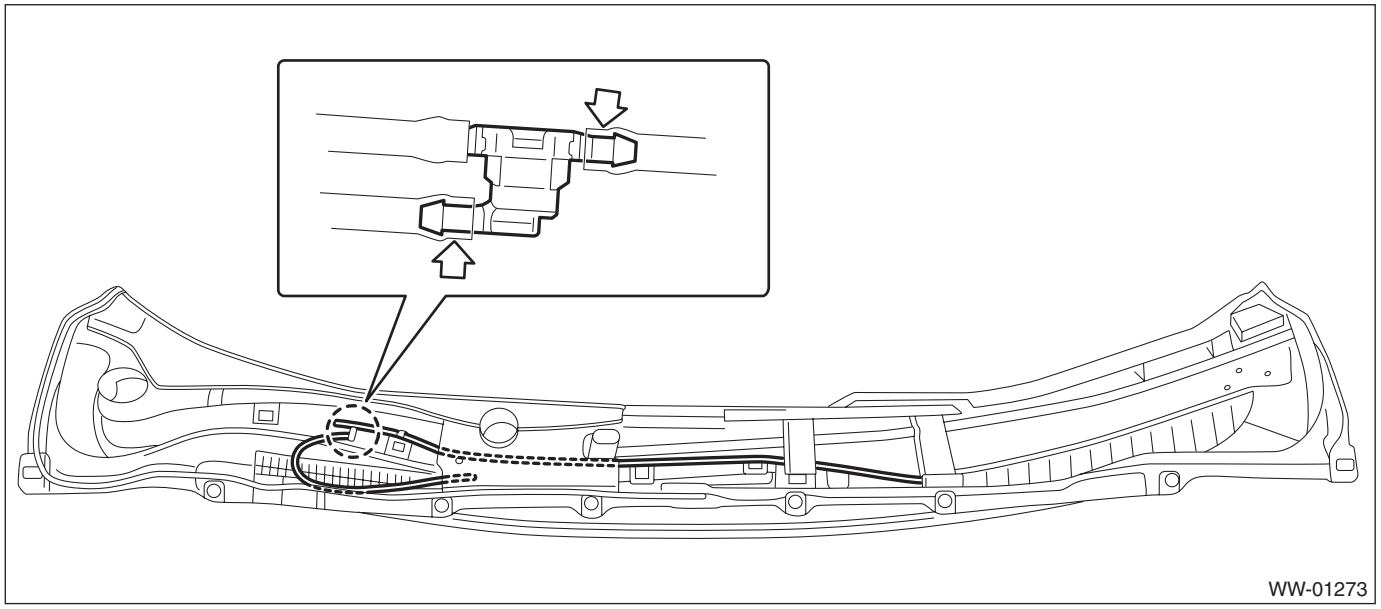

- Models with EyeSight

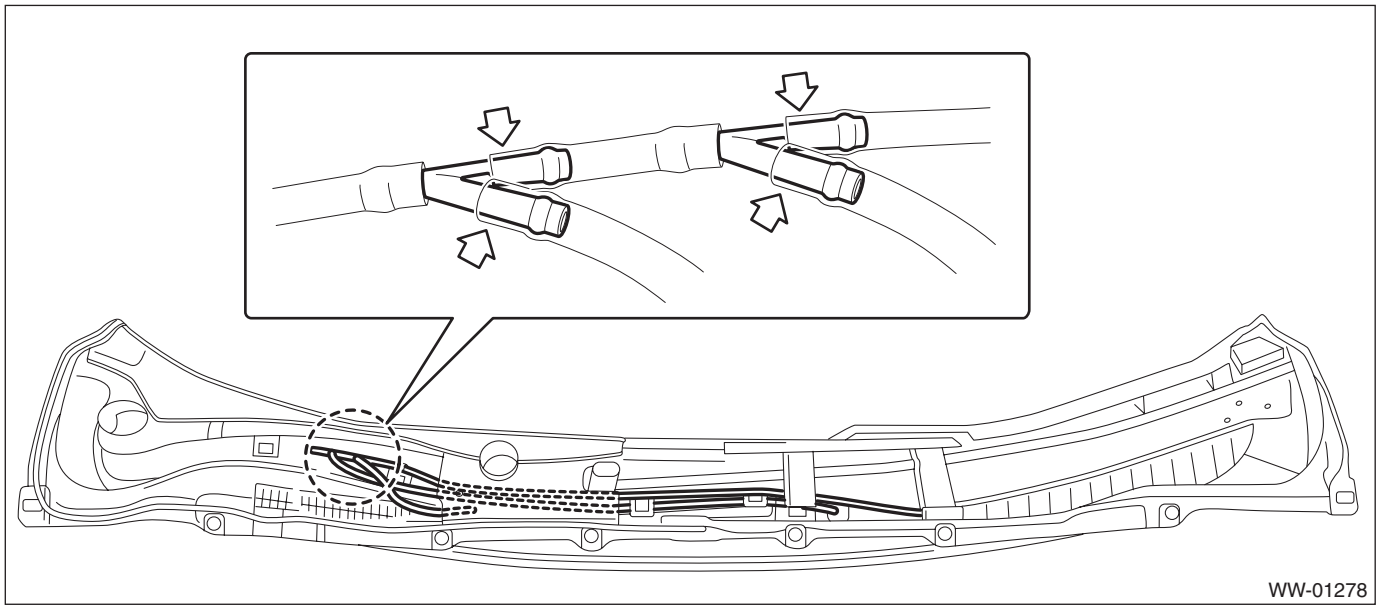

5) Remove the nozzle - windshield washer.
(1) Push the claw using a flat tip screwdriver, etc.
(2) When the nozzle - windshield washer lifts up, pull out the nozzle - windshield washer using a clip remover, etc.
(3) Disconnect the hose - windshield washer, and remove the nozzle - windshield washer.

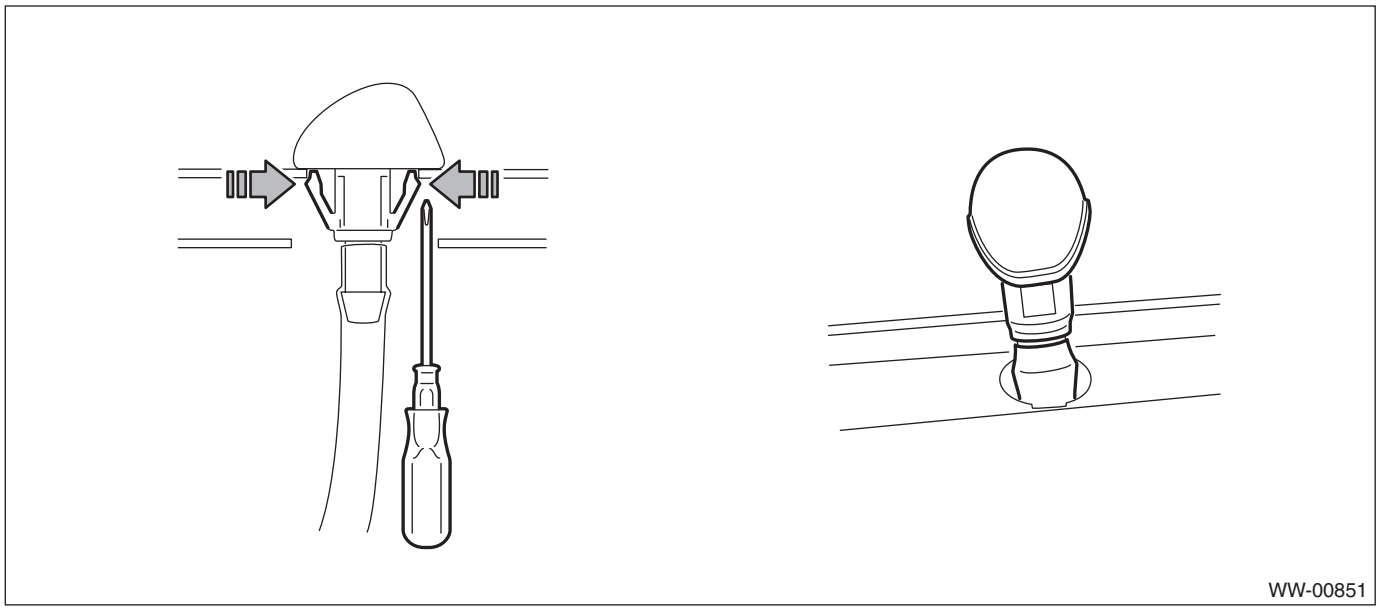

B: INSTALLATION

CAUTION:
Before installing the windshield glass and cowl panel, make sure there are no gravel in the installing area.

1) Install the nozzle - windshield washer.
(1) Install the nozzle - windshield washer.
(2) Install the hose - windshield washer.
2) Install the cowl panel - side and the cowl panel assembly. <Ref. to EI-53, INSTALLATION, Cowl Panel.>
3) Install the arm assembly - windshield wiper. <Ref. to WW-30, INSTALLATION, Front Wiper Arm.>
4) Connect the ground terminal to battery sensor. <Ref. to RC-4, BATTERY, NOTE, Repair Contents.>
5) Adjust the position of the nozzle - windshield washer. <Ref. to WW-38, ADJUSTMENT, Front Washer Nozzle.>

C: INSPECTION

- Make sure the nozzle - windshield washer and the hose - windshield washer are not clogged.
- Make sure the hose - windshield washer is not bent.
- Check the position of the nozzle - windshield washer. <Ref. to WW-38, ADJUSTMENT, Front Washer Nozzle.>

D: ADJUSTMENT

1. NOZZLE - WINDSHIELD WASHER

1) Turn the wiper switch to OFF position.
2) While the vehicle is at a standstill, insert the washer nozzle adjustment tool (a) into upper side (b) and lower side (c) of the nozzle - windshield washer to perform necessary adjustment.

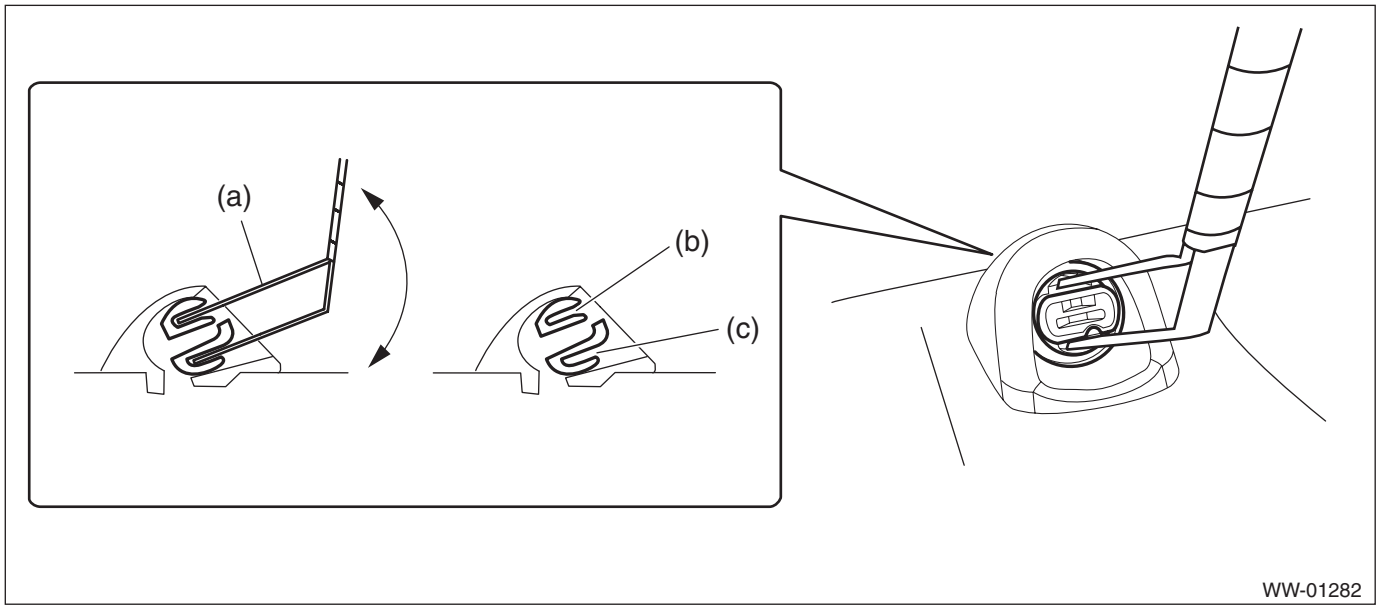

CAUTION:
Washer nozzle is made of resin. If precision screwdriver (a) or equivalent is inserted into discharge port for adjustment, the discharge port can be deformed, and washer fluid cannot be sprayed.

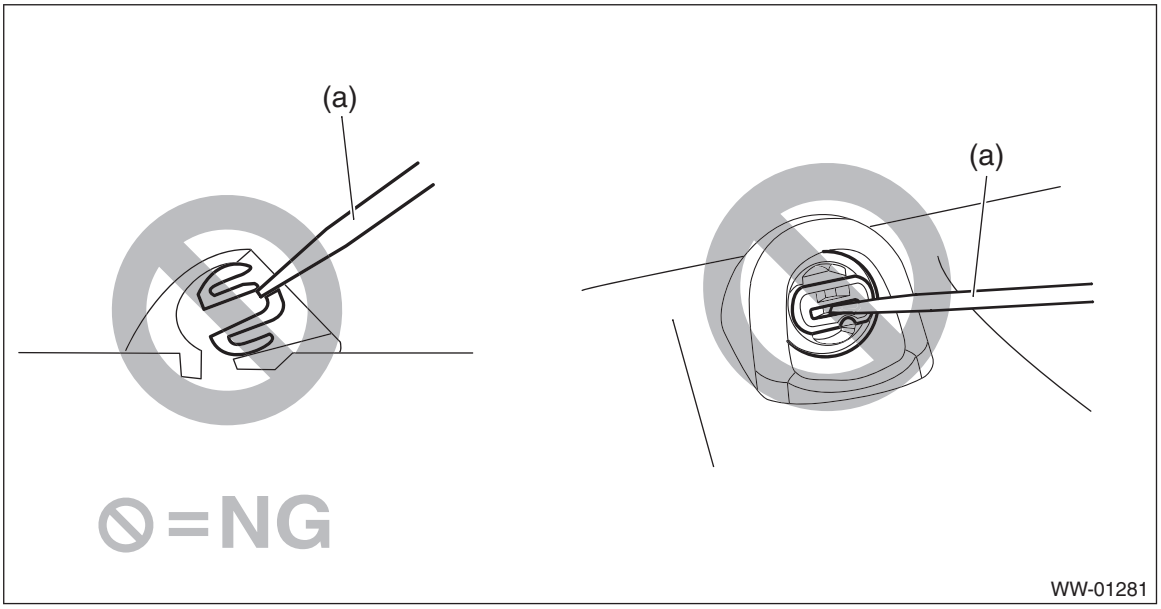

3) Adjust the washer injection position as shown in the figure.

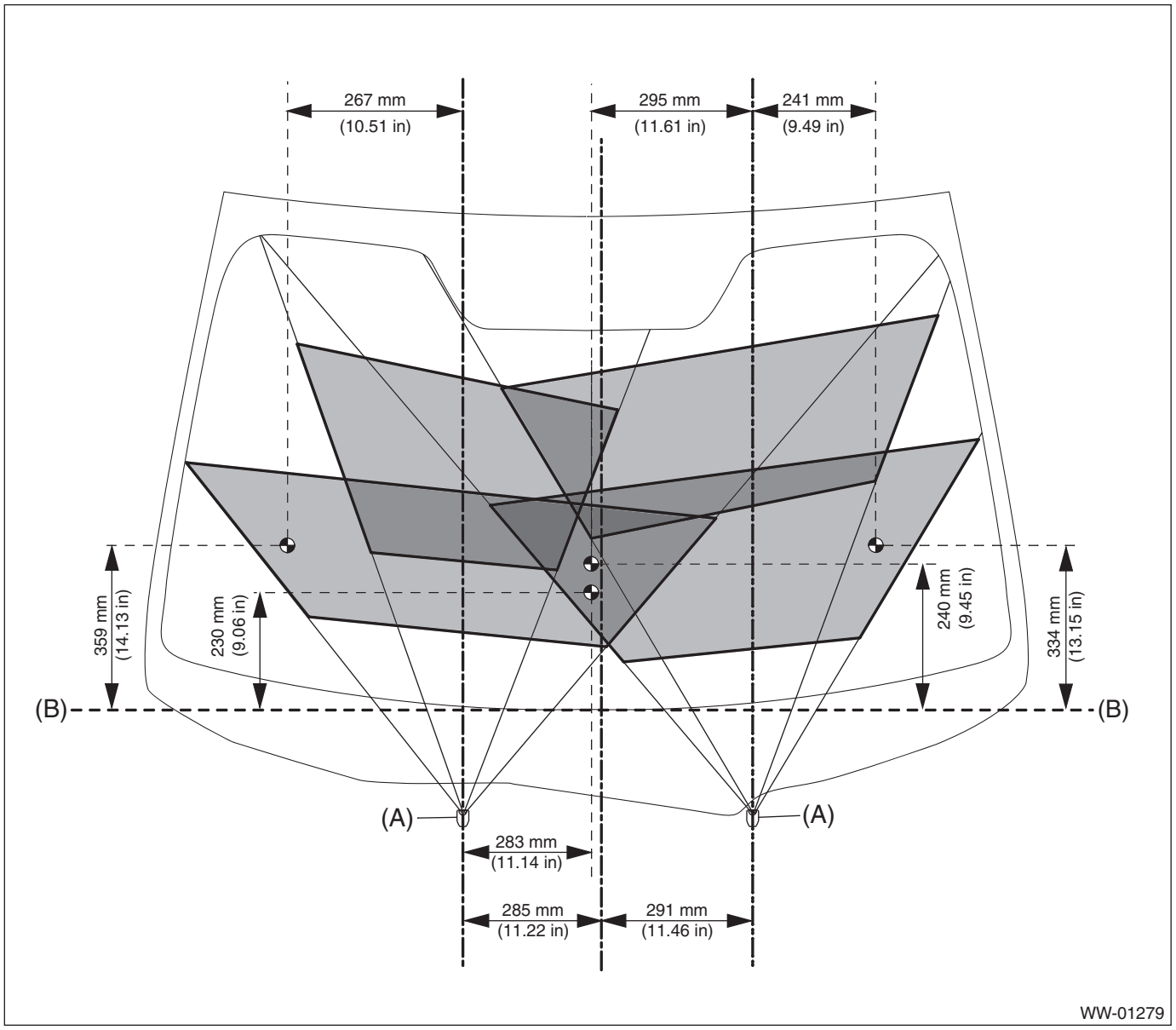

(A) Nozzle - windshield washer (B) Ceramic line

2. NOZZLE - WINDSHIELD WASHER EyeSight (MODEL WITH EyeSight ONLY)

1) Turn the wiper switch to OFF position.
2) Adjust the washer injection position as shown in the figure.

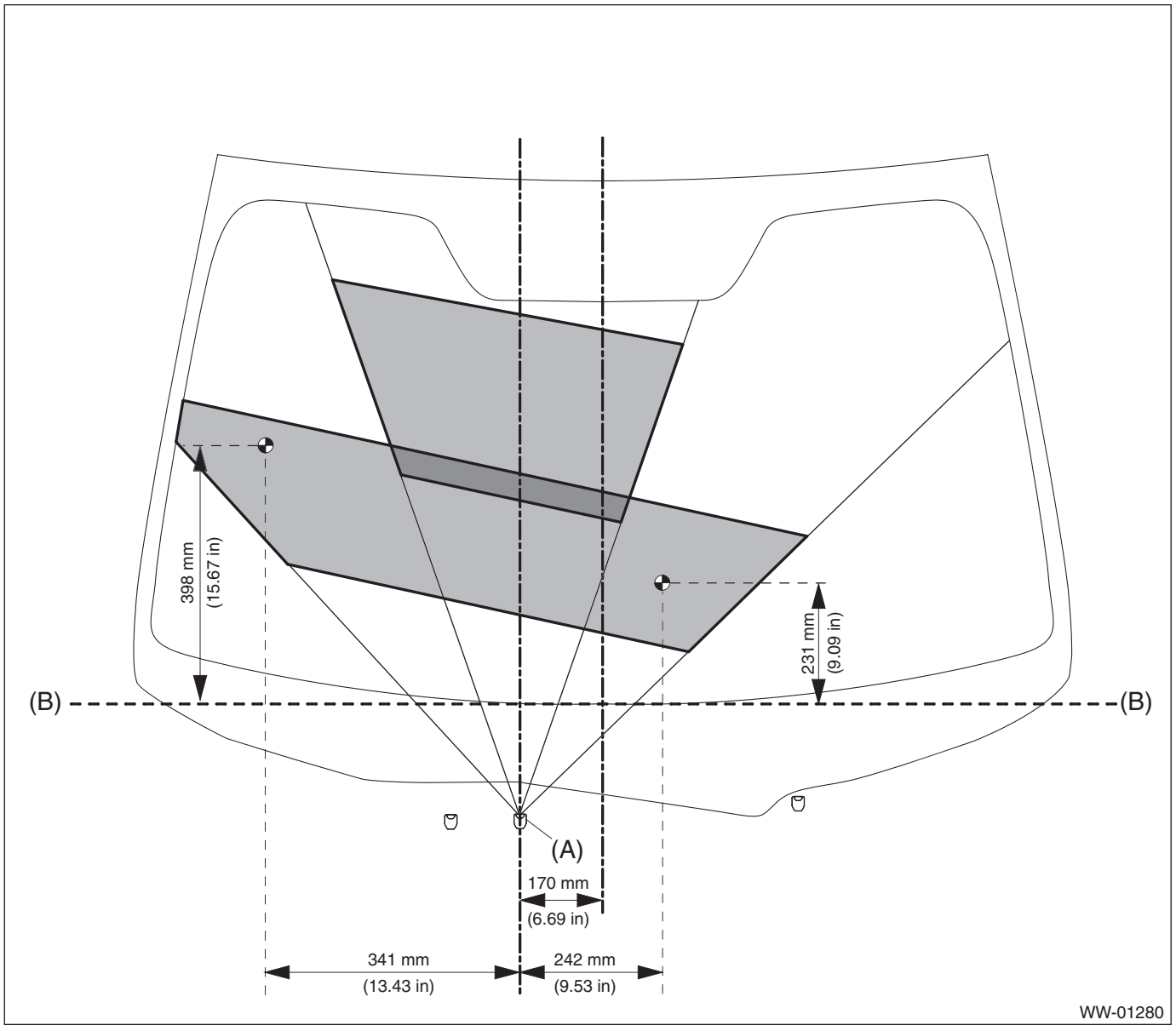

(A) Nozzle - windshield washer EyeSight
(B) Ceramic line

10.Rear Wiper Arm

A: REMOVAL

1) Pull up the cover - rear wiper arm.
2) Remove the nut, and remove the arm assembly - rear wiper.

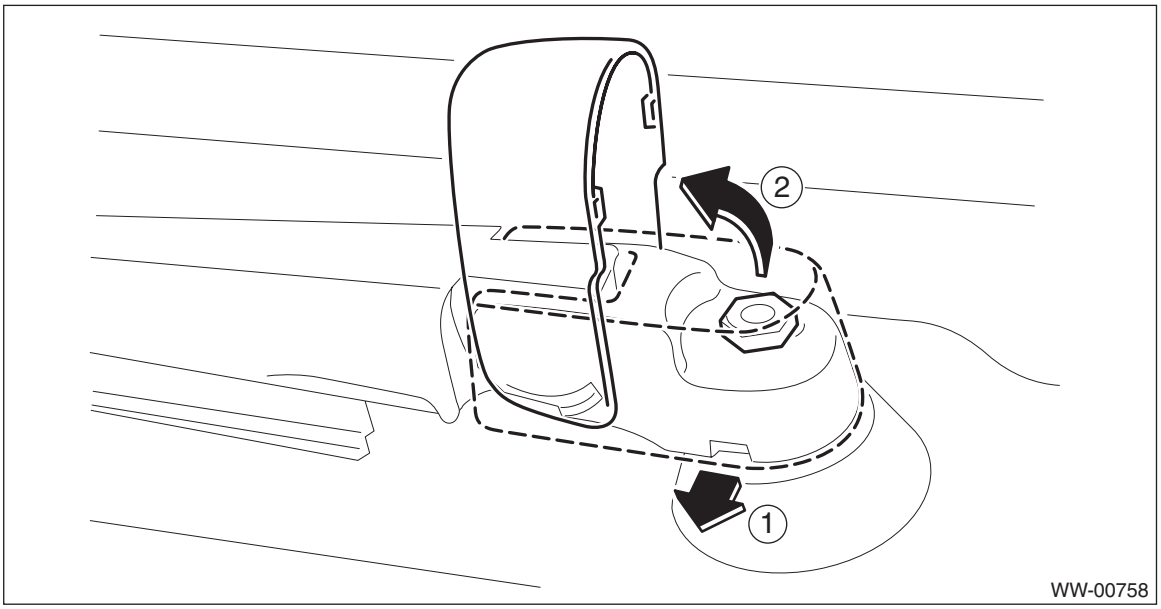

B: INSTALLATION

1) Install the arm assembly - rear wiper.
   (1) Assemble the blade assembly - rear wiper aligning it with the marking on the glass.

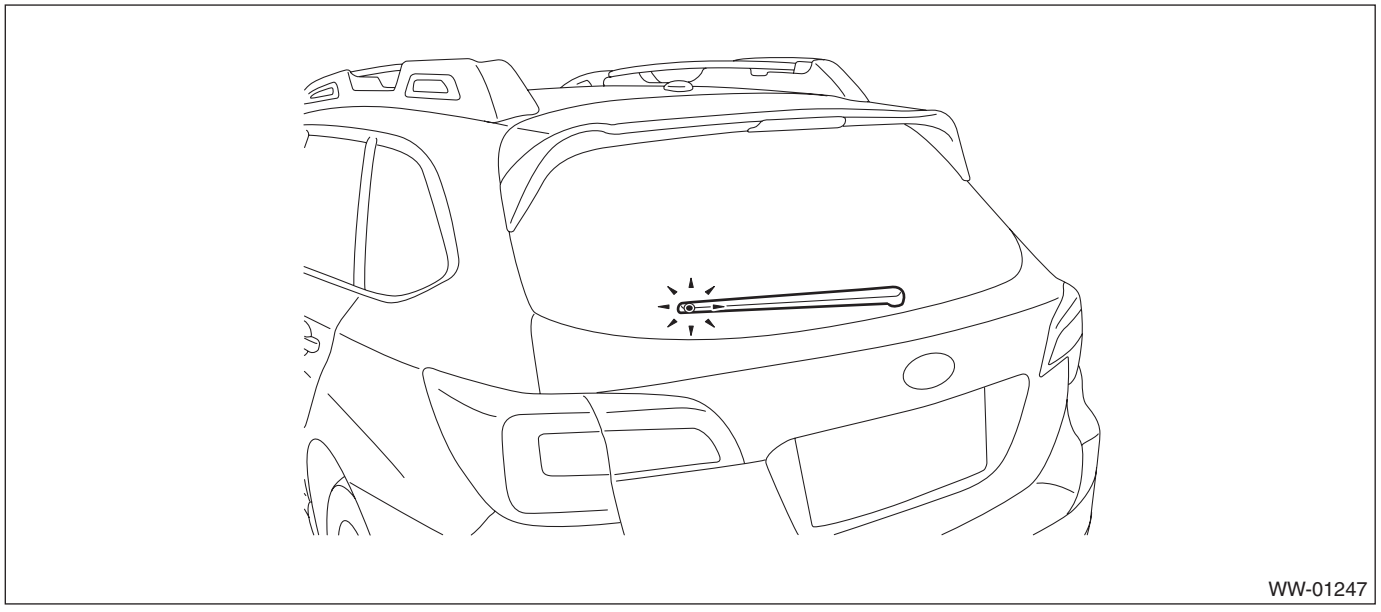

   (2) Tighten the arm assembly - rear wiper to the specified torque, and install the cover - rear wiper arm.

Tightening torque:
8 N·m (0.8 kgf-m, 5.9 ft-lb)

2) Check the position of rear wiper. <Ref. to WW-42, ADJUSTMENT, Rear Wiper Arm.>

C: ADJUSTMENT

1) Operate the rear wiper once.
2) Check that the wiper blade is aligned with the point mark.

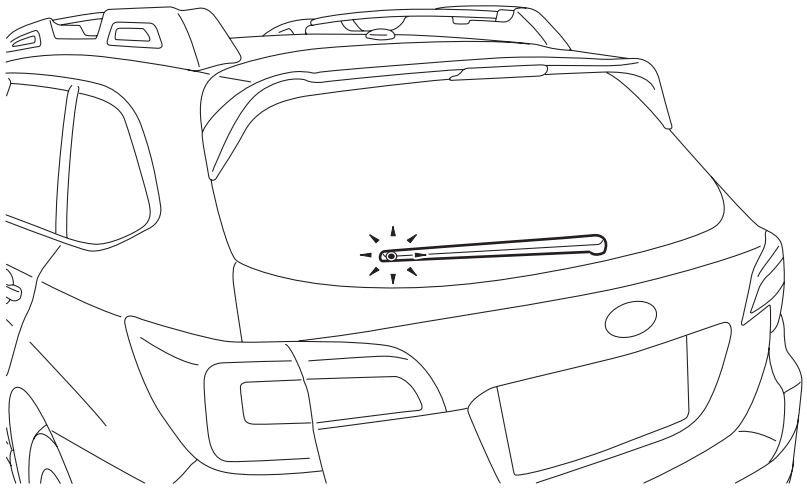

3) If the wiper blade is not aligned with the point mark, perform the removal and installation of the rear wiper. <Ref. to WW-41, REMOVAL, Rear Wiper Arm.>

11.Rear Wiper Motor

A: REMOVAL

1) Disconnect the ground terminal from battery sensor. <Ref. to RC-4, BATTERY, NOTE, Repair Contents.>
2) Remove the rear gate trim. <Ref. to EI-121, REMOVAL, Rear Gate Trim.>
3) Remove the arm assembly - rear wiper.
   (1) Remove the cover - rear wiper arm.
   (2) Remove the nut, and remove the arm assembly - rear wiper.

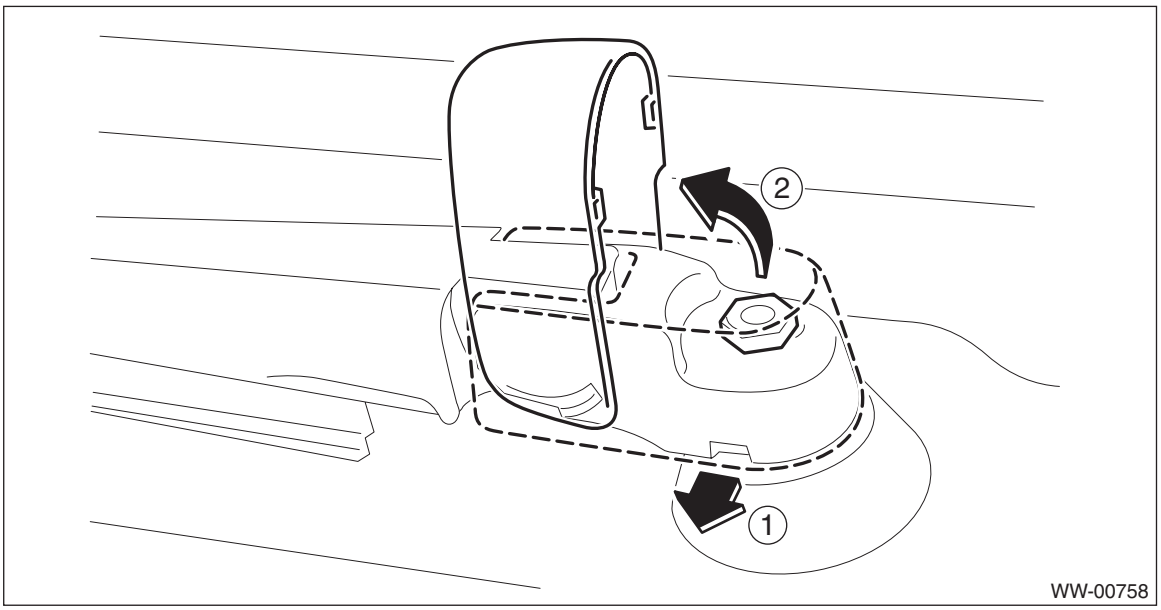

4) Remove the motor assembly - rear wiper.
   (1) Disconnect the harness connector of the motor assembly - rear wiper.
   (2) Remove the bolts, and remove the motor assembly - rear wiper.

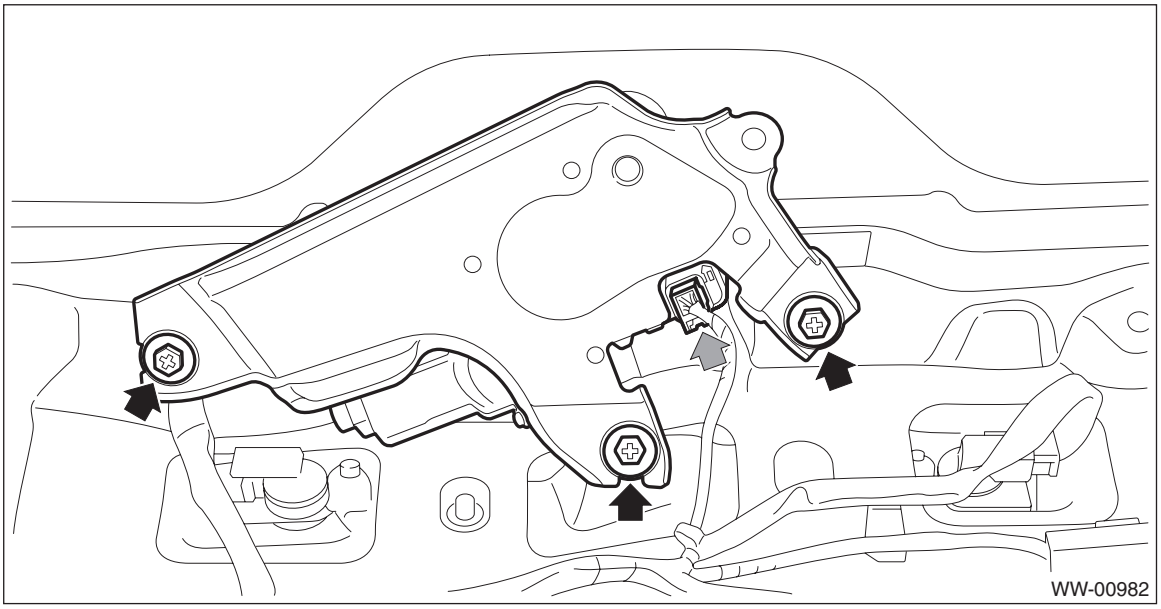

B: INSTALLATION

1) Check that the mark on the cap - pivot wiper faces up.

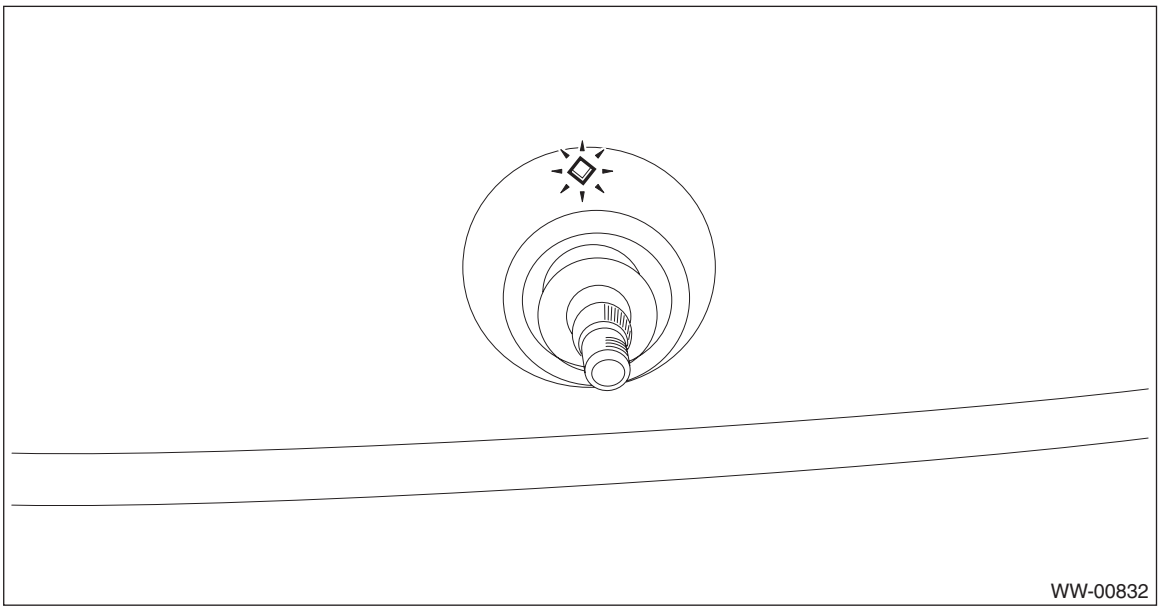

2) Install the motor assembly - rear wiper.
   (1) Install the bolts, and install the motor assembly - rear wiper.

Tightening torque:
6 N·m (0.6 kgf-m, 4.4 ft-lb)

   (2) Install the harness connector of the motor assembly - rear wiper.
3) Install the arm assembly - rear wiper.
   (1) Install the nuts, and install the arm assembly - rear wiper.

Tightening torque:
8 N·m (0.8 kgf-m, 5.9 ft-lb)

   (2) Install the cover - rear wiper arm.
4) Install the rear gate trim. <Ref. to EI-122, INSTALLATION, Rear Gate Trim.>
5) Connect the ground terminal to battery sensor. <Ref. to RC-4, BATTERY, NOTE, Repair Contents.>

C: INSPECTION

CAUTION:
Fix the motor to prevent the motor from being shorted by moving during operation.

1) Connect the battery to the motor assembly - rear wiper connector, and check that the motor assembly - rear wiper operates.

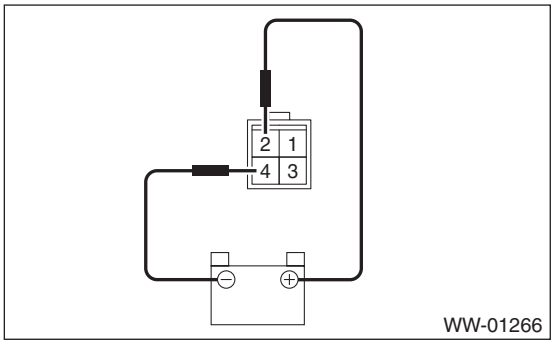

2) Connect the battery to terminals of the connector, and remove the terminal connection with motor rotating, and stop the motor in mid-operation.

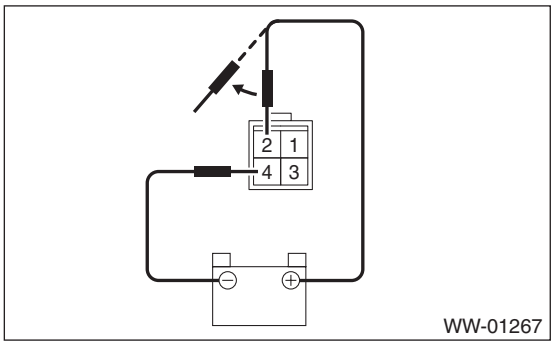

3) Connect the battery and check that the motor stops at the automatic stop position after the motor operates at low speed again.

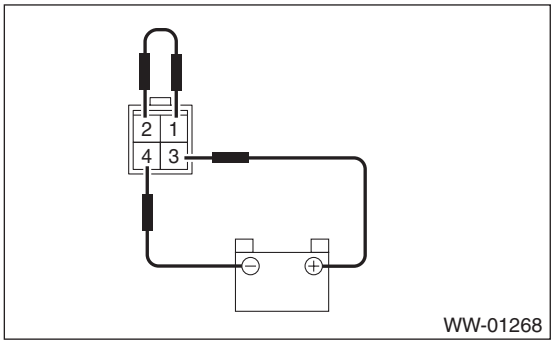

12.Rear Washer

A: REMOVAL

1) Disconnect the ground terminal from battery sensor. <Ref. to RC-4, BATTERY, NOTE, Repair Contents.>
2) Remove the roof spoiler. <Ref. to EI-67, REMOVAL, Roof Spoiler.>
3) Remove the nozzle - rear washer.

CAUTION:
Before removing, apply protective tape to the body panel and used tools not to damage the panel - rear gate.

(1) Push the claw using a precision screwdriver, etc.
(2) When the nozzle - rear washer lifts up, pull out the nozzle - rear washer using a clip remover, etc.
(3) Disconnect the hose assembly - rear washer, and remove the nozzle - rear washer.

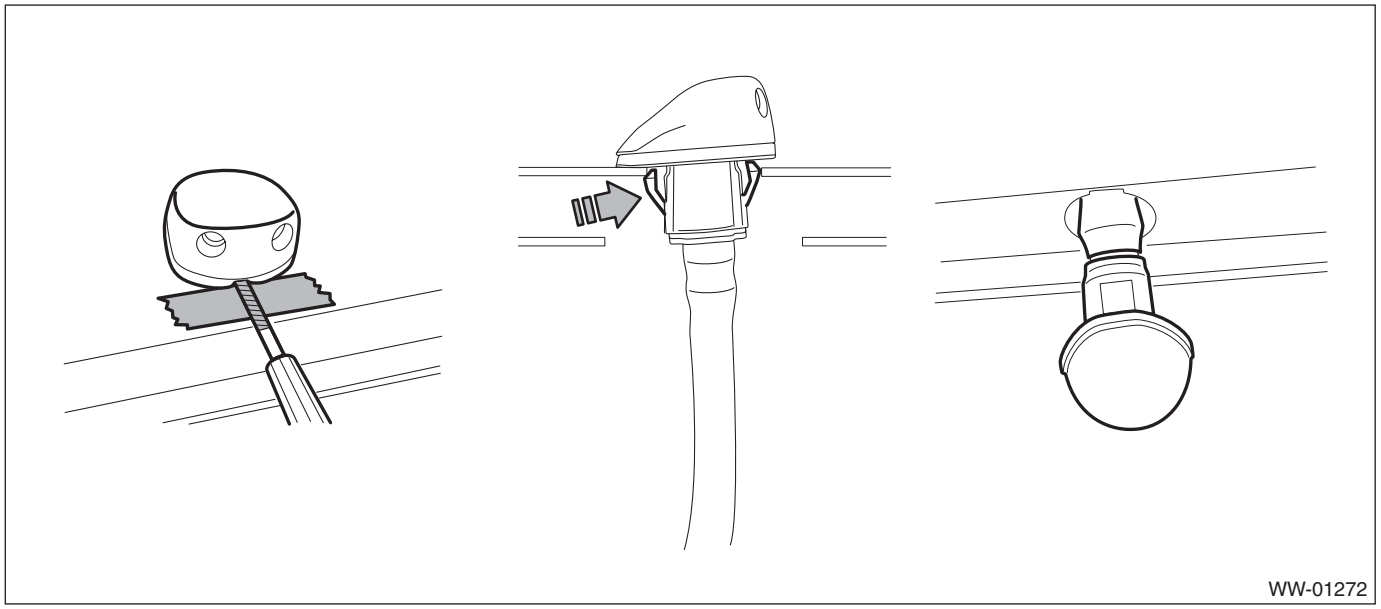

B: INSTALLATION

1) Connect the hose assembly - rear washer, and install the nozzle - rear washer.
2) Install the roof spoiler. <Ref. to EI-67, INSTALLATION, Roof Spoiler.>
3) Connect the ground terminal to battery sensor. <Ref. to RC-4, BATTERY, NOTE, Repair Contents.>

C: INSPECTION

1. VISUAL INSPECTION

Check for the following items, and if any malfunction is found, replace the corresponding part.
- Make sure the nozzle - rear washer and the hose - rear washer are not clogged.
- Make sure the hose - rear washer is not bent.

2. INSPECTING THE SPRAY POSITION

1) Turn the wiper switch to OFF position.
2) While the vehicle is stopped, check that the washer spray position is as shown in the figure.
3) After inspection, if the spray position is significantly out of the specified range, replace the nozzle - rear washer with a new part.

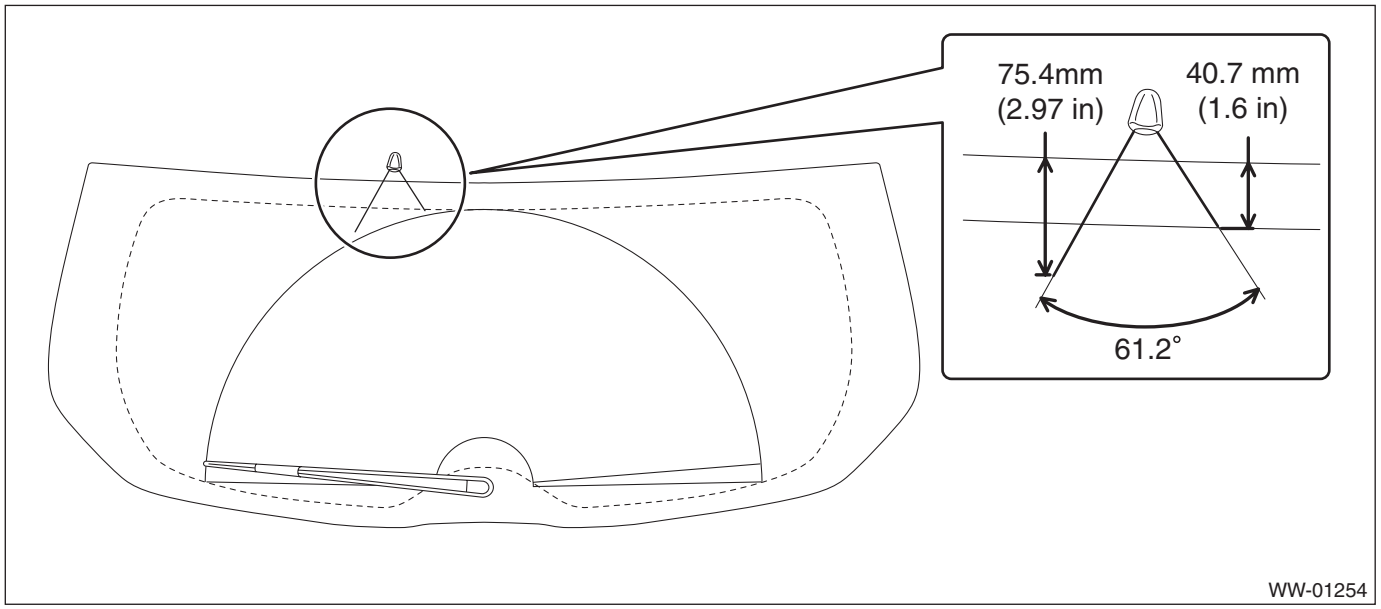

ENTERTAINMENT

ET

		Page
1.	General Description	2
2.	Check List for Interview	5
3.	Relay and Fuse	7
4.	Audio System	8
5.	Navigation System	17
6.	Telematics System	22
7.	Audio	23
8.	Front Speaker	24
9.	Rear Speaker	27
10.	Woofer	28
11.	Power Amplifier	30
12.	Antenna	31
13.	Noise Suppressor	41
14.	Switches and Harness	43
15.	Microphone	46
16.	Navigation Body	47
17.	GPS Antenna	48
18.	Data Communication Module	50
19.	Rearview Camera System	53
20.	Front Accessory Power Supply Socket	56
21.	Rear Accessory Power Supply Socket	58
22.	External Connection Terminal	60
23.	Service Diagnostics Mode	62

1. General Description

A: LOCATION

1. AUDIO AND NAVIGATION SYSTEM

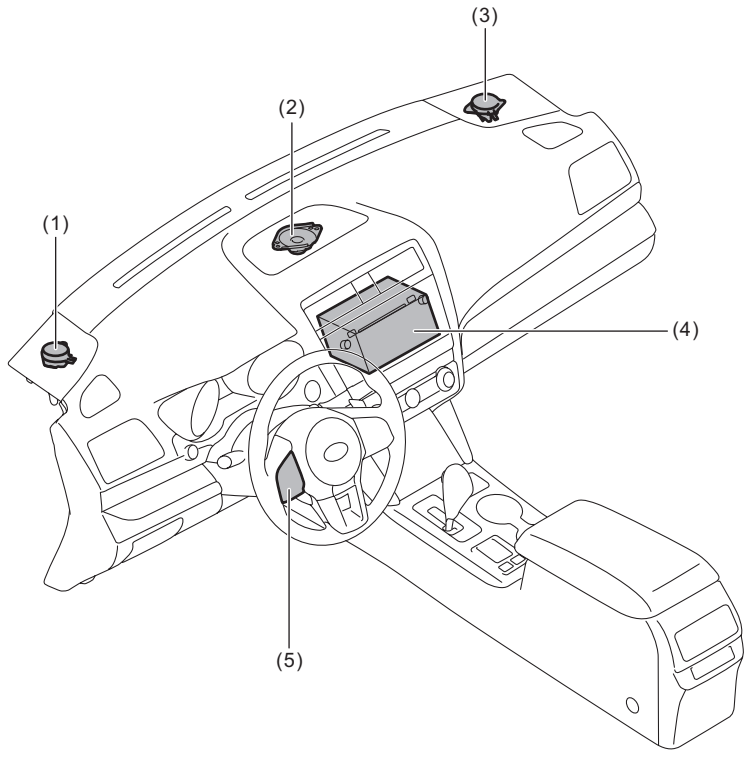

(1) Speaker ASSY - tweeter LH
(2) Speaker ASSY - center
(3) Speaker ASSY - tweeter RH
(4) Audio ASSY or navigation ASSY
(5) Satellite switch assembly

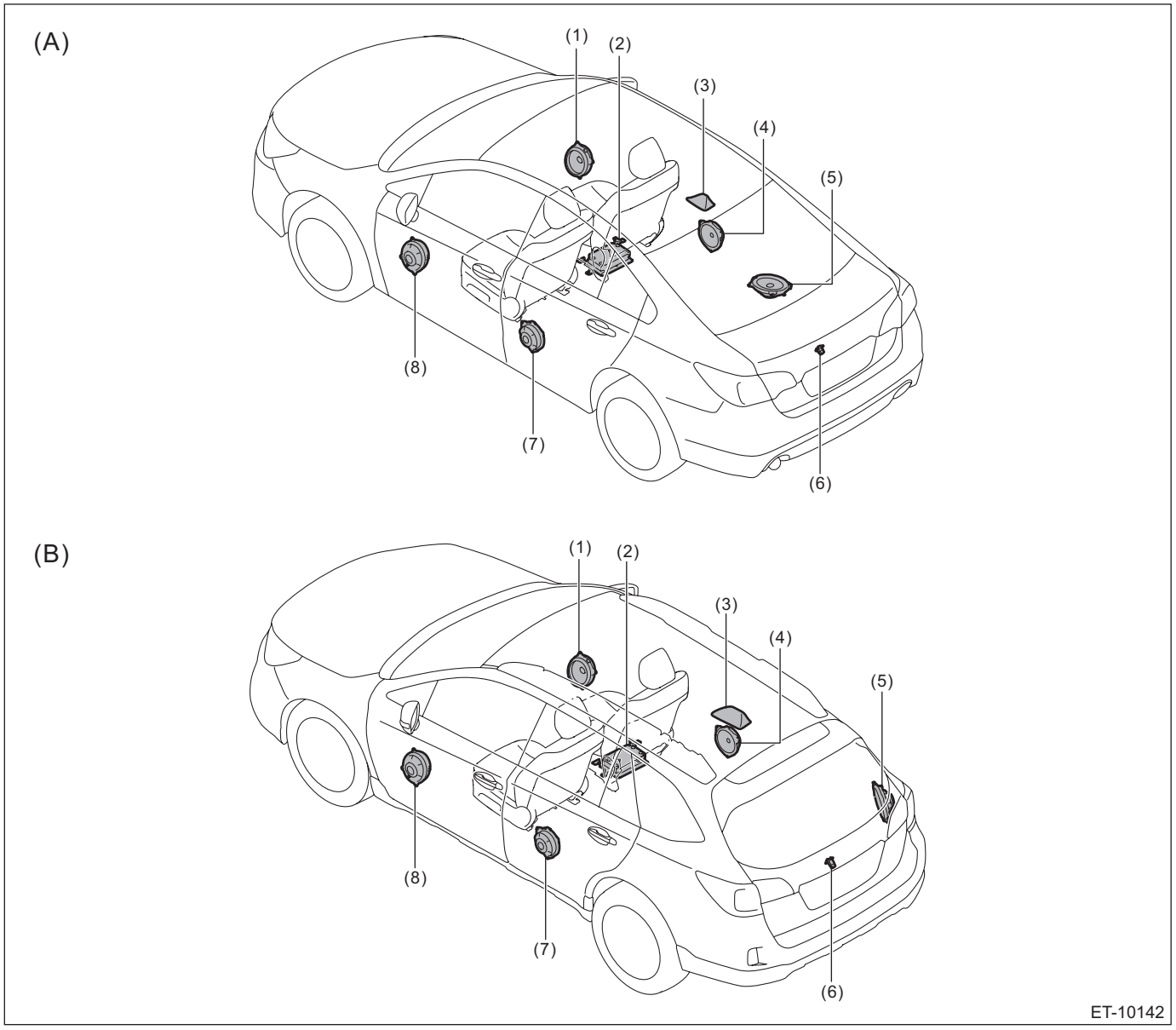

(A) Sedan model
(B) OUTBACK model

(1) Front door speaker ASSY RH
(2) Power amplifier - ASSY
(3) Antenna ASSY - roof
(4) Rear door speaker ASSY RH
(5) Woofer ASSY
(6) Rearview camera ASSY
(7) Rear door speaker ASSY LH
(8) Front door speaker ASSY LH

2. TELEMATICS SYSTEM

Refer to “LOCATION” of “TELEMATICS SYSTEM (DIAGNOSTICS)” section. <Ref. to TEL(diag)-6, LOCATION, Electrical Component Location.>

B: COMPONENT

1. DATA COMMUNICATION MODULE

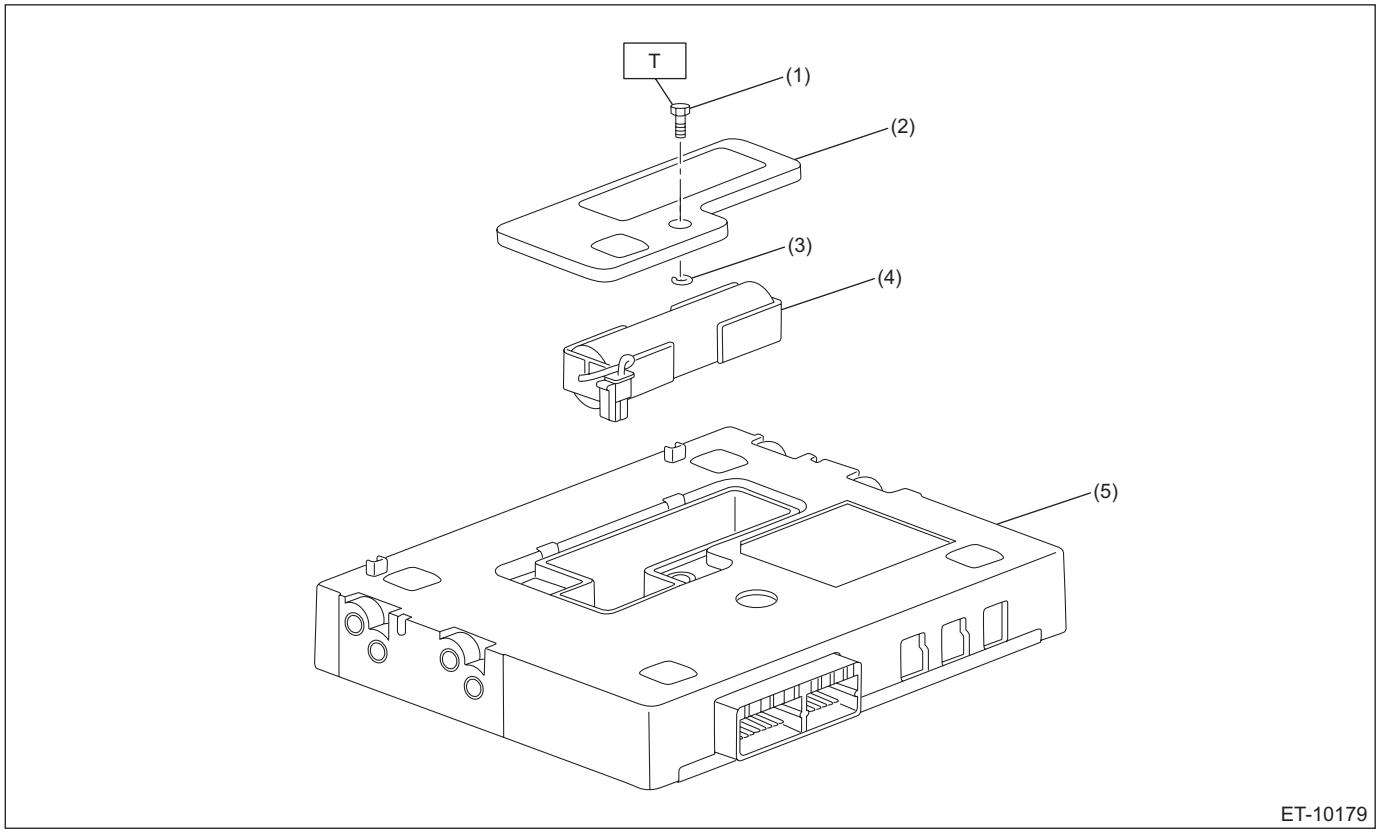

(1) Cap screw
(2) Backup battery cover
(3) Circlip
(4) Backup battery
(5) Data communication module

Tightening torque: N·m (kgf-m, ft-lb)
T: 0.3 (0.03, 0.2)

C: CAUTION

• Before disconnecting connectors of sensors or units, be sure to disconnect the ground cable from battery. When replacing the electrical parts provided with memory functions that store contents specified by a customer, record the memory contents before disconnecting the battery ground cable.
• Be careful of the following items. Failing to do so may cause the airbag system malfunction.
  – Yellow connectors and harnesses with yellow tapes around them are the connectors and harnesses for the airbag system. When using a tester on these circuits, follow the cautions of “AIRBAG SYSTEM”. <Ref. to AB-10, CAUTION, General Description.>
  – Be careful not to damage the airbag system wiring harness when servicing the electrical parts around the steering column.
• When removing, installing or replacing the VDCCM&H/U, VDCCM&H/U bracket, steering wheel or steering angle sensor (steering roll connector), perform “VDC sensor midpoint setting mode” of the VDC. <Ref. to VDC-15, VDC SENSOR MIDPOINT SETTING MODE, ADJUSTMENT, VDC Control Module and Hydraulic Control Unit (VDCCM&H/U).>

D: PREPARATION TOOL

1. GENERAL TOOL

TOOL NAME	REMARKS
Circuit tester	Used for measuring resistance, voltage and current.

2. Check List for Interview

A: CHECK

- Inspect the following items regarding the vehicle's state.
- Print out this page for interviewing customers.

1. MODEL WITH 6.2 INCH DISPLAY

<table>
<tr><td colspan="2">Check List for Interview</td><td>Date of Vehicle Bring-in</td><td>Year Month Date</td></tr>
<tr><td colspan="2" rowspan="2">Customer's name</td><td>Registration No.</td><td>Initial year of registration
Year Month Date</td></tr>
<tr><td>Vehicle model</td><td>Frame number</td></tr>
<tr><td>Interviewer</td><td>Inspector</td><td>Engine type</td><td>Odometer reading</td></tr>
<tr><td colspan="4">Customer specified content
•
•
•
•</td></tr>
<tr><td rowspan="3">Product information</td><td>Part No.</td><td>Manufacturer model number</td><td>Serial No.</td></tr>
<tr><td colspan="3">Software version*1</td></tr>
<tr><td colspan="3">Connected device (example: iPod connected via USB cable)</td></tr>
<tr><td>SUBARU STARLINK connection ID*1</td><td colspan="3"></td></tr>
<tr><td>SUBARU STARLINK app version</td><td colspan="3"></td></tr>
<tr><td rowspan="3">Mobile phone</td><td colspan="3">Mobile phone carrier (example: AT&T)</td></tr>
<tr><td colspan="3">Mobile phone model (example: Apple iPhone 6)</td></tr>
<tr><td colspan="3">Mobile phone OS version (example: software version information)</td></tr>
<tr><td>Date when problem occurred</td><td colspan="3">Year Month Date</td></tr>
<tr><td rowspan="3">Conditions at event</td><td colspan="3">Weather
❑ Fine ❑ Cloudy ❑ Rainy ❑ Snowy ❑ Others ( )</td></tr>
<tr><td colspan="3">Temperature
°C (°F)</td></tr>
<tr><td colspan="3">How often
❑ Always (Check here if reproduced.) ❑ Once in the past
❑ Sometimes (times a day / times a week / times a month)</td></tr>
<tr><td>When</td><td colspan="3">Example: It occurs about 30 minutes after driving.</td></tr>
<tr><td>Occurrence condition 1 (In what situations did it occur?)</td><td colspan="3">❑ Fast Driving ❑ Rough Roads ❑ Parked ❑ Unknown ❑ Others</td></tr>
<tr><td>Occurrence condition 2 (In what operations did it occur?)</td><td colspan="3">❑ ACC On ❑ Insert Disc ❑ Press Specific Button or Mode
❑ Press Specific Button or Mode ❑ Unknown ❑ Others</td></tr>
<tr><td>Recovering condition (What helped the status return to normal?)</td><td colspan="3">❑ Recover on its own ❑ ACC Off and On ❑ Does not recover ❑ Others</td></tr>
</table>

Occurrence location	❑ Unknown ❑ Any Place ❑ Driving around open areas like in the country ❑ Driving around hills or mountains ❑ Driving around cities with large buildings ❑ Driving around residential areas or no large buildings ❑ Driving around areas with power
Error message content (error message displayed)	
Display trouble	❑ Black screen ❑ White screen ❑ Blue screen ❑ Dim ❑ Vertical/horizontal noise (lines) ❑ Poor color tone ❑ Unclear ❑ Display corruption ❑ No picture ❑ Others
Occurrence conditions (screen display related problems)	❑ CD ❑ Radio ❑ External devices ❑ Others ( )
Operating problems	❑ Display does not switch ❑ Display changes unexpectedly ❑ Response is dull/slow ❑ Does not respond to key entry ❑ Does not respond to steering switch entry ❑ Does not change to night mode screen ❑ Discs cannot be inserted or ejected ❑ Others
Display/touch switch malfunction	❑ Brightness / Contrast ❑ Discoloration ❑ No rear camera ❑ Partial Display ❑ Lines in screen ❑ No Audio Control Screen ❑ No Navi Map on Screen ❑ Others
Voice recognition malfunction	❑ Voice recognition is not ready ❑ Not recognize commands ❑ Others
BEEP on operation entry	❑ Present ❑ None
Radio malfunction	❑ AM: Station (Hz) ❑ FM: Station (Hz) ❑ SXM: Station (channel) (only for North America) ❑ HD: Station (channel) (only for North America) ❑ No Sound ❑ No / Poor Sound ❑ Noise / Static ❑ Sound cuts in / out ❑ Others
SW color change at operation	❑ Present ❑ None
Audio malfunction	❑ Does not sound ❑ Front (❑ R ❑ L)❑ Rear (❑ R ❑ L) ❑ Others ( ) ❑ Operation related problems ❑ Cannot adjust volume level ❑ Cannot use tone control or adjust tone range ❑ Cannot record ❑ Sound skipping ❑ CD ❑ DVD ❑ Others ( ) • Specific mode/disc ( )
CD/USB/SD/iPod malfunction	❑ Will not accept ❑ Will not eject (CD) ❑ Will not play ❑ Skips / Jump Chapter ❑ No Sound ❑ Noise / Static ❑ Sound cuts in / out ❑ Shows Error ❑ Others
Bluetooth Audio related malfunction	❑ Will Not Pair ❑ Will Not Play ❑ No Sound ❑ Noise / Static ❑ Disconnect on its own ❑ Others
Bluetooth handsfree related malfunction	❑ Will Not Pair ❑ Cannot Hear (Receiver) ❑ Cannot Hear (Caller) ❑ Sounds Garbled ❑ Address Book Will Not Transfer ❑ Disconnect on its own
SUBARU STARLINK malfunction	❑ Bluetooth connection not established ❑ SUBARU STARLINK app disabled ❑ SUBARU STARLINK app disabled ❑ Communication gets out of service ❑ Pandora disabled ❑ MirrorLink disabled ❑ AHA disabled ❑ USB connection not established ❑ Others
Check result	Reproductivity ❑ Reproduced ❑ Always ❑ Sometimes ❑ Cannot be reproduced ❑ Others
	Condition ❑ Cold ❑ Warm ❑ At starting ❑ Immediately after starting ❑ During warm-up ❑ At idling ❑ When start driving ❑ While driving ❑ At acceleration ❑ At deceleration ❑ When applying brake

*1: For confirmation procedure, refer to Audio System. <Ref. to ET-8, OPERATION, Audio System.>

2. MODEL WITH 7 INCH DISPLAY

Refer to “Check List for Interview” in “INFOTAINMENT SYSTEM (DIAGNOSTICS)”. <Ref. to INF(diag)-3, Check List for Interview.>

3. Relay and Fuse

A: LOCATION

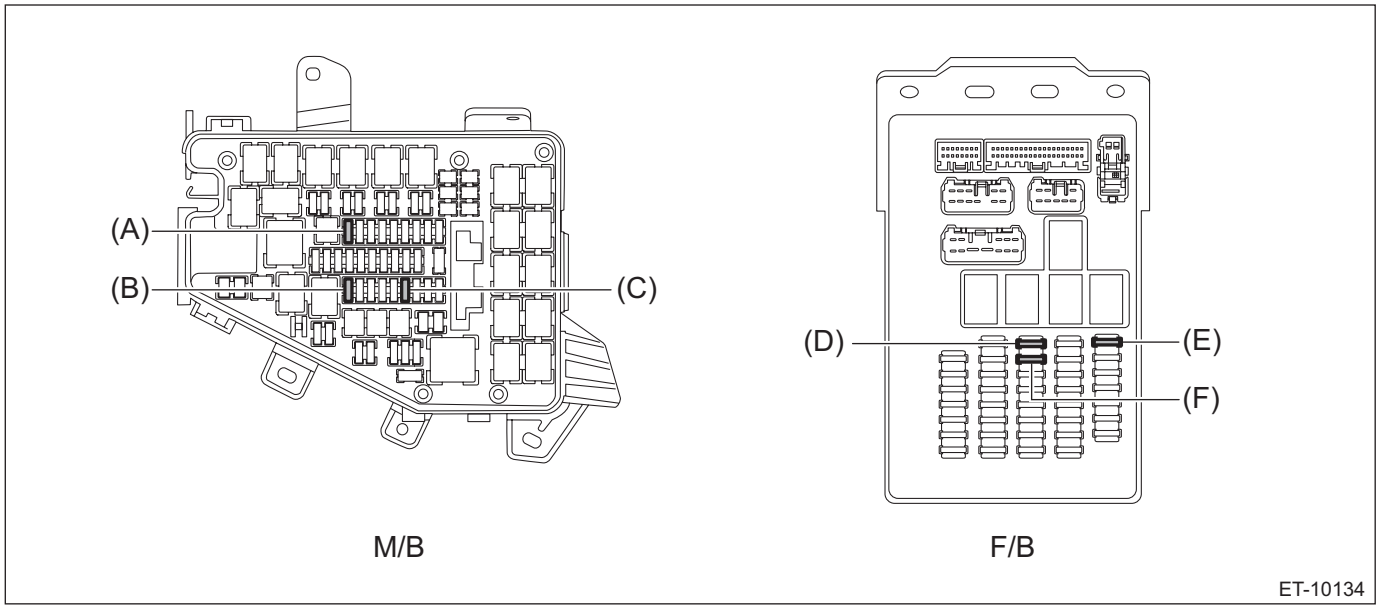

Main fuse box (M/B)	Fuse 7.5 A (data communication module)*1	(A)
	Fuse 30 A (audio, navigation unit)	(B)
	Fuse 20 A (audio amplifier)	(C)
Fuse & relay box (F/B)	Fuse 20 A (rear accessory power supply socket)	(D)
	Fuse 15 A (audio, navigation unit, audio amplifier, external connection terminal, data communication module*1)	(E)
	Fuse 10 A (front accessory power supply socket)	(F)

*1: Model with telematics

NOTE:
For other related fuses, refer to the wiring diagram. <Ref. to WI-21, Power Supply Circuit.>

B: INSPECTION

1. CHECK FUSE

1) Remove the fuse and inspect visually.
2) If the fuse is blown out, replace the fuse.

NOTE:
If the fuse is blown again, check the system wiring harness.

4. Audio System

A: WIRING DIAGRAM

1. MODEL WITH 6.2 INCH DISPLAY

Refer to “Audio System” in the wiring diagram. <Ref. to WI-102, 6.2 INCH DISPLAY, WIRING DIAGRAM, Audio System.>

2. MODEL WITH 7 INCH DISPLAY

Refer to “Audio System” in the wiring diagram.

- Without audio amplifier: <Ref. to WI-107, 7 INCH DISPLAY (WITHOUT AUDIO AMPLIFIER), WIRING DIAGRAM, Audio System.>
- With audio amplifier: <Ref. to WI-113, 7 INCH DISPLAY (WITH AUDIO AMPLIFIER), WIRING DIAGRAM, Audio System.>

B: OPERATION

1. SUBARU STARLINK CONNECTION ID DISPLAY

Model with 6.2 inch display

1) Turn the ignition switch to ACC.
2) Press the HOME button (a) to display the {HOME} screen.
3) Touch the {SETTINGS} (b) to display the {SETTINGS} screen.
4) Touch the {Settings General} (c) to display the {Settings General} screen.
5) Touch the {Version} (d) in {System Software}.

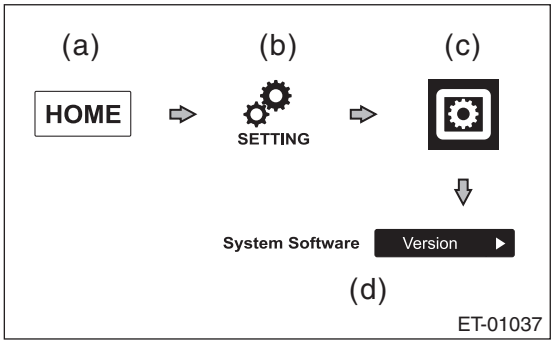

6) Confirm the Serial Number (8 digits).

Model with 7 inch display

Operation is the same as that of navigation assembly, therefore, refer to “Navigation System”. <Ref. to ET-17, SUBARU STARLINK CONNECTION ID DISPLAY, OPERATION, Navigation System.>

2. SOFTWARE VERSION DISPLAY

Model with 6.2 inch display

1) Perform the same procedure as for the SUBARU STARLINK connection ID display. <Ref. to ET-8, SUBARU STARLINK CONNECTION ID DISPLAY, OPERATION, Audio System.>
2) Confirm the Software Ver.

Model with 7 inch display

Operation is the same as that of navigation assembly, therefore, refer to “Navigation System”. <Ref. to ET-17, SOFTWARE VERSION DISPLAY, OPERATION, Navigation System.>

3. INITIALIZATION (FACTORY DEFAULT)

Model with 6.2 inch display

1) Turn the ignition switch to ACC.
2) Press the HOME button (a) to display the {HOME} screen.
3) Touch the {SETTINGS} (b) to display the {SETTINGS} screen.
4) Touch the {Settings General} (c) to display the {Settings General} screen.
5) Touch the {Restore} (d) in {Reset to Factory Settings}.

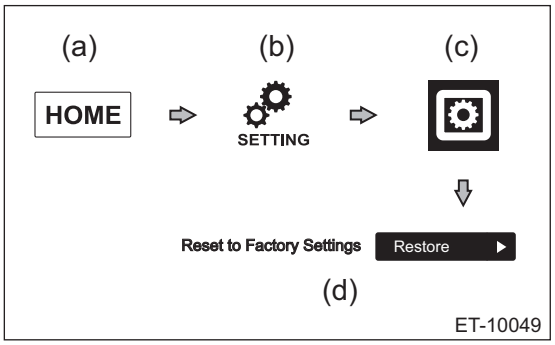

6) Touch {OK} after {Are you sure you want to delete All Data?} is displayed.
7) {DO NOT OPERATE. Initializing now.} is displayed, and all data deletion is initiated.
8) When all data is deleted, {All date has been deleted. Start up the engine to reboot.} is displayed.

Model with 7 inch display

Operation is the same as that of navigation assembly, therefore, refer to “Navigation System”. <Ref. to ET-17, INITIALIZATION (FACTORY DEFAULT), OPERATION, Navigation System.>

4. CHECK CONNECTIONS WITH LINE DIAG MODE

Model with 6.2 inch display

1) Turn the ignition switch to ACC.
2) Press the button (a) to display the Audio OFF screen.
3) Touch the screen in order from (b) to (e).

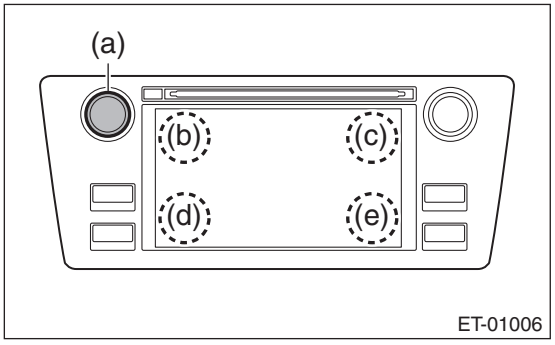

NOTE:
Pressing the button (a) or turning the ignition switch from the OFF to ACC position can exit the Line Diag mode.
4) {Line Diag} screen is displayed.

5) Check the connection status with the {Connectivity Check} in the {Line Diag} screen.

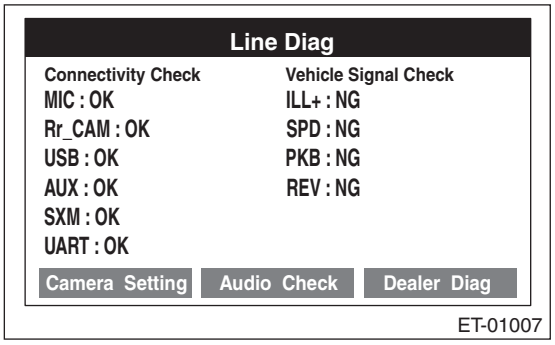

OK: Each connection device is connected properly.
NG: No connection or abnormal connection is detected.

NOTE:
Check the external connection terminals (USB 1, 2 and AUX) by connecting a memory for check or a pin jack.

Model with 7 inch display

Operation is the same as that of navigation assembly, therefore, refer to “Navigation System”. <Ref. to ET-18, CHECK CONNECTIONS WITH LINE DIAG MODE, OPERATION, Navigation System.>

5. CHECK VEHICLE SIGNALS WITH LINE DIAG MODE

Model with 6.2 inch display

1) Turn the ignition switch to ACC.
2) Press the button (a) to display the Audio OFF screen.
3) Touch the screen in order from (b) to (e).

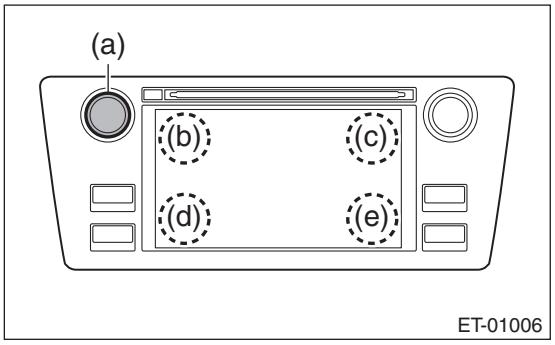

NOTE:
Pressing the button (a) or turning the ignition switch from the OFF to ACC position can exit the diagnostic mode.
4) {Line Diag} screen is displayed.
5) Check the connection status with the {Vehicle Signal Check} in the {Line Diag} screen.

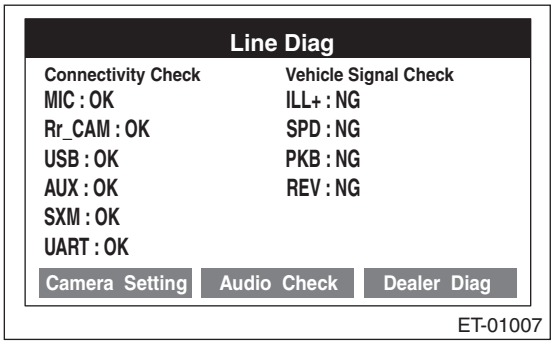

- Check illumination

NOTE:
Make sure that the auto dimmer cancel is OFF and the bright switch is not turned ON.

1. Set the lighting switch to the parking position.
2. Make sure that {OK} lights in ILL+ and then the screen becomes dim.

OK: Normal.
NG: Abnormal. Check the signal line connector. If there are no problems, the unit could be faulty.

- Check speed sensor

NOTE:
– Before starting inspections, check the safety around the vehicle.
– Lift up the vehicle as necessary.
– When the diagnostic trouble code is input in the VDC CM, perform the Clear Memory operation.

1. Drive the vehicle at 8 km/h (5 MPH) or more.
2. Check that {OK} is displayed in SPD.

OK: Normal.
NG: Vehicle speed is less than 8 km/h (5 MPH), or malfunction is detected in the signal line. Check the signal line connector. If there are no problems, the unit could be faulty.

- Check parking brake signal

1. Pull the parking brake switch.
2. Check that {OK} is displayed in PKB.

OK: Normal.
NG: Abnormal. Check the signal line connector. If there are no problems, the unit could be faulty.

- Check back sensor

NOTE:
Before starting inspections, check the safety behind the vehicle.

1. Turn the ignition to ON.
2. Pull the parking brake switch and depress the brake pedal, then place the select lever or gear shift lever in reverse.
3. Make sure that {OK} is displayed in REV.

OK: Normal.
NG: Abnormal. Check the signal line connector. If there are no problems, the unit could be faulty.

Model with 7 inch display

Operation is the same as that of navigation assembly, therefore, refer to “Navigation System”. <Ref. to ET-19, CHECK VEHICLE SIGNALS WITH LINE DIAG MODE, OPERATION, Navigation System.>

6. CHECK SPEAKER OUTPUT WITH LINE DIAG MODE

Model with 6.2 inch display

1) Turn the ignition switch to ACC.
2) Press the button (a) to display the Audio OFF screen.
3) Touch the screen in order from (b) to (e).

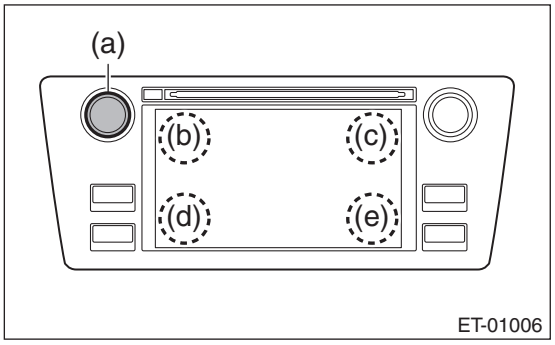

NOTE:
Pressing the button (a) or turning the ignition switch from the OFF to ACC position can exit the Line Diag mode.
4) {Line Diag} screen is displayed.

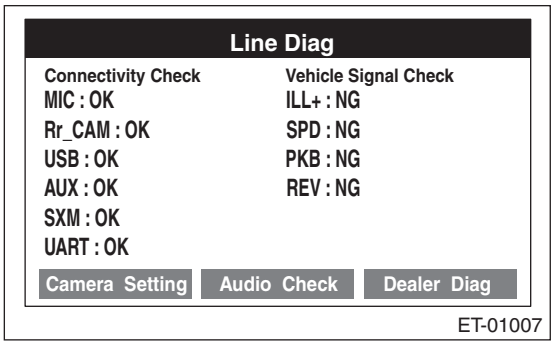

5) Touch {Audio Check} on the {Line Diag} screen.
6) {Audio Check} screen is displayed.

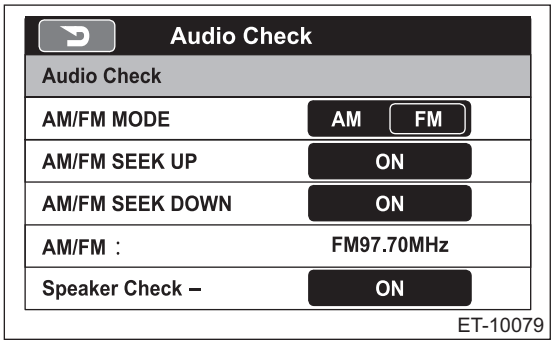

7) Touch the {ON} key of {Speaker Check} to check speaker output.

NOTE:
- The speaker front left → front right → rear right → rear left will sound in order for 2 seconds each.
- The speaker sounds at the maximum volume during speaker check.
- Press the {BACK} key to return to the {Line Diag} screen.

Model with 7 inch display

Operation is the same as that of navigation assembly, therefore, refer to “Navigation System”. <Ref. to ET-20, CHECK SPEAKER OUTPUT WITH LINE DIAG MODE, OPERATION, Navigation System.>

C: INSPECTION

1. BASIC INSPECTION

Model with 6.2 inch display

1) Using the Check List for Interview, ask the customer the condition of how the trouble occurred. <Ref. to ET-5, MODEL WITH 6.2 INCH DISPLAY, CHECK, Check List for Interview.>
2) Check the battery.
- H4 model: <Ref. to SC(H4DO)-65, INSPECTION, Battery.>
- H6 model: <Ref. to SC(H4DO)-65, INSPECTION, Battery.>

3) Refer to “Diagnostics with Phenomenon” in “INFOTAINMENT SYSTEM (DIAGNOSTICS)”. <Ref. to INF(diag)-37, AUDIO SYSTEM, LIST, Diagnostics with Phenomenon.>

Model with 7 inch display

Refer to “Basic Diagnostic Procedure” in “INFOTAINMENT SYSTEM (DIAGNOSTICS)”. <Ref. to INF(diag)-2, Basic Diagnostic Procedure.>

2. SYSTEM BLOCK DIAGRAM

Model with 6.2 inch display

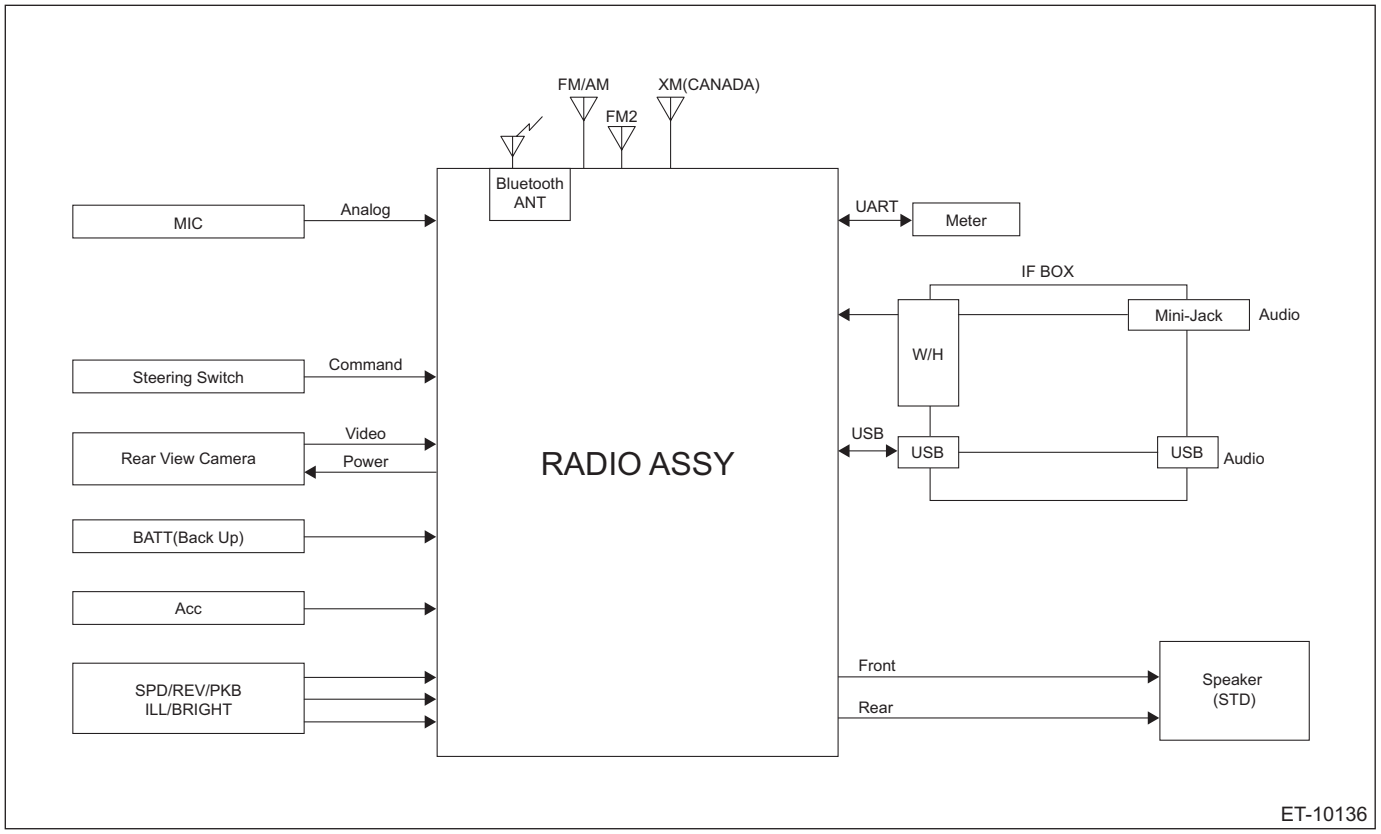

Model with 7 inch display

Refer to “System Block Diagram” in “INFOTAINMENT SYSTEM (DIAGNOSTICS)”. <Ref. to INF(diag)-14, SYSTEM BLOCK DIAGRAM, Control Module I/O Signal.>

3. MODULE I/O SIGNAL

Model with 6.2 inch display

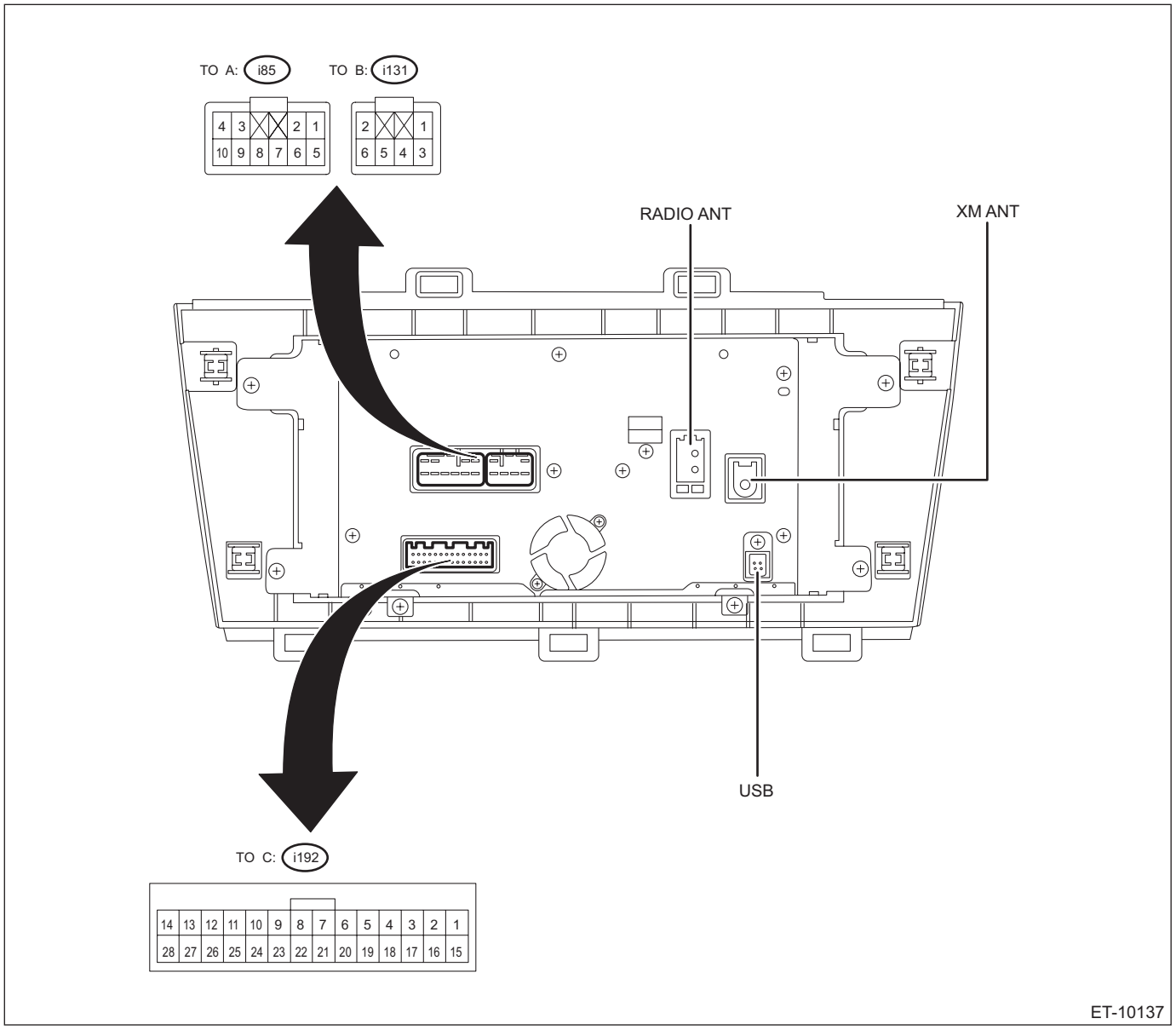

- Power supply and speaker output terminal

Terminal No.	Content	Measuring condition	Measurement value	Note
(i85) No. 1	FRONT-RH (+)	—	—	—
(i85) No. 2	FRONT-LH (+)	—	—	—
(i85) No. 3 ←→ Chassis ground	ACC	ACC ON	11 — 15 V	—
(i85) No. 4 ←→ Chassis ground	+B	Always	11 — 15 V	—
(i85) No. 5	FRONT-RH (–)	—	—	—
(i85) No. 6	FRONT-LH (–)	—	—	—
(i85) No. 7 ←→ Chassis ground	GND	Always	0 V	—
(i85) No. 8	ANTENNA-ON	—	—	—
(i85) No. 9	N.C.	—	—	—
(i85) No. 10	ILLUMI (+)	—	—	—

Terminal No.	Content	Measuring condition	Measurement value	Note
(i131) No. 1	REAR-RH (+)	—	—	—
(i131) No. 2	REAR-LH (+)	—	—	—
(i131) No. 3	REAR-RH (–)	—	—	—
(i131) No. 4	N.C.	—	—	—
(i131) No. 5	ILLUMI (–)	—	—	—
(i131) No. 6	REAR-LH (–)	—	—	—

- Steering switch and AUX input terminal for microphone etc.

Terminal No.	Content	Measuring condition	Measurement value	Note
(i192) No. 1	URAT	—	—	—
(i192) No. 2	REV	—	—	—
(i192) No. 3	BRIGHT	—	—	—
(i192) No. 4	MAC+B	—	—	—
(i192) No. 5	MIC (+)	—	—	—
(i192) No. 6	MIC-DET	—	—	—
(i192) No. 7	N.C.	—	—	—
(i192) No. 8	N.C.	—	—	—
(i192) No. 9	N.C.	—	—	—
(i192) No. 10	N.C.	—	—	—
(i192) No. 11	CAM + 6V	—	—	—
(i192) No. 12	CV (+)	—	—	—
(i192) No. 13	CV (–) (SHIELD)	—	—	—
(i192) No. 14	SHIELD-GND (AUX)	—	—	—
(i192) No. 15 ←→ Chassis ground	PKB	At parking ON	1 V or less	—
(i192) No. 16	N.C.	—	—	—
(i192) No. 17 ←→ Chassis ground	SPD	When the tire is rotating	Pulse signal	—
(i192) No. 18	SHIELD-GND (MIC)	—	—	—
(i192) No. 19	MIC (–)	—	—	—
(i192) No. 20	GND (CAMERA)	—	—	—
(i192) No. 21	SW1 (+)	—	—	—
(i192) No. 22	SW2 (+)	—	—	—
(i192) No. 23	SW-GND	—	—	—
(i192) No. 24	N.C.	—	—	—
(i192) No. 25	AUX-ON	—	—	—
(i192) No. 26	AUX-R (+)	—	—	—
(i192) No. 27	AUX-LR (–)	—	—	—
(i192) No. 28	AUX-L (+)	—	—	—

Model with 7 inch display

Refer to “Control Module I/O Signal” of “INFOTAINMENT SYSTEM (DIAGNOSTICS)”. <Ref. to INF(diag)-8, ELECTRICAL SPECIFICATION, Control Module I/O Signal.>

D: NOTE

For procedure of each component in the audio system, refer to the respective sections.

- Audio unit: <Ref. to ET-23, Audio.>
- Front speaker
  - Tweeter (instrument panel): <Ref. to ET-24, TWEETER, REMOVAL, Front Speaker.>
  - Door speaker: <Ref. to ET-25, DOOR SPEAKER, REMOVAL, Front Speaker.>
- Rear speaker: <Ref. to ET-27, Rear Speaker.>
- Woofer: <Ref. to ET-28, Woofer.>
- Power amplifier: <Ref. to ET-30, Power Amplifier.>
- Antenna: <Ref. to ET-31, Antenna.>
- Noise suppressor: <Ref. to ET-41, Noise Suppressor.>
- Switches and harness: <Ref. to ET-43, Switches and Harness.>
- External connection terminal: <Ref. to ET-60, External Connection Terminal.>
- Rearview camera: <Ref. to ET-53, Rearview Camera System.>

5. Navigation System

A: WIRING DIAGRAM

Refer to “Navigation System” in the wiring diagram.

- Without audio amplifier: <Ref. to WI-276, WITHOUT AUDIO AMPLIFIER, WIRING DIAGRAM, Navigation System.>
- With audio amplifier: <Ref. to WI-282, WITH AUDIO AMPLIFIER, WIRING DIAGRAM, Navigation System.>

B: OPERATION

1. SUBARU STARLINK CONNECTION ID DISPLAY

1) Turn the ignition switch to ACC.
2) Press the AUDIO/TUNE knob (b) five times with the HOME button (a) pressed to display the {Service Menu} screen.
3) Touch the {Product Information} (c) to display the {Product Information} screen.

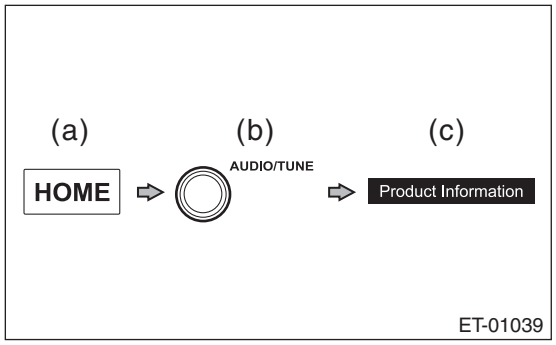

4) Confirm the connectivity ID (16 digits).

2. SOFTWARE VERSION DISPLAY

1) Turn the ignition switch to ACC.
2) Press the AUDIO/TUNE knob (b) five times with the HOME button (a) pressed to display the {Service Menu} screen.
3) Touch the {Service Information} (c).
4) Touch the {Version Information} (d) to display the {Version Information} screen.
5) Touch the {AVN or DA} (e) to display the {Unit Version Information} screen.

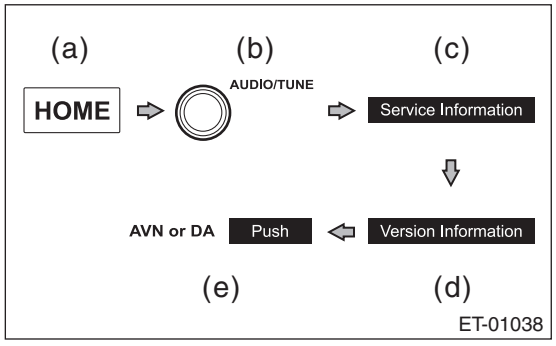

6) Confirm the version.

3. INITIALIZATION (FACTORY DEFAULT)

1) Turn the ignition switch to ACC.
2) Press the HOME button to display the {HOME} screen.
3) Touch the {SETTINGS} to display the {SETTINGS} screen.
4) Touch the {General} to display the {General Setting} screen.
5) Touch the {Delete Personal Data}, and touch the {Delete}.
6) {Deleting personal date. Please do not turn the vehicle off.} is displayed, and all data deletion is initiated.
7) When all data is deleted, {Initialization Complete.} is displayed.

4. CHECK CONNECTIONS WITH LINE DIAG MODE

1) Turn the ignition switch to ACC.
2) Press the button (b) twice with the button (a) pressed.

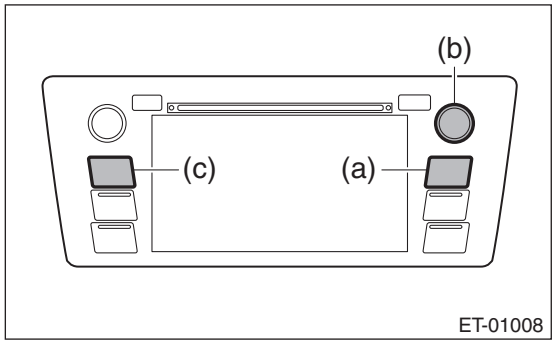

NOTE:
Pressing the button (c) for 3 seconds or more, or turning the ignition switch from the OFF to ACC position can exit the diagnostic mode.
3) {Line Diag} screen is displayed.
4) Check the connection status with the {Connectivity Check} in the {Line Diag} screen.

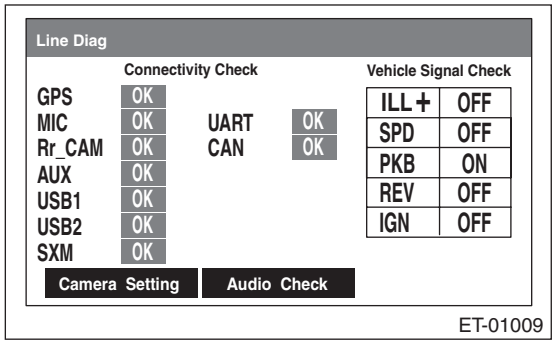

NOTE:
GPS is displayed only for the navigation system.
OK: Each connection device is connected properly.
NG: No connection or abnormal connection is detected.

NOTE:
Check the external connection terminals (USB 1, 2 and AUX) by connecting a memory for check or a pin jack.

5. CHECK VEHICLE SIGNALS WITH LINE DIAG MODE

1) Turn the ignition switch to ACC.
2) Press the button (b) twice with the button (a) pressed.

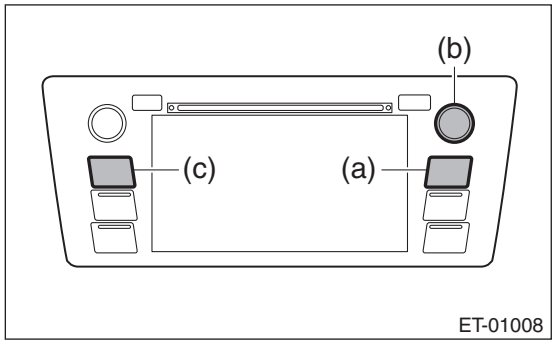

NOTE:
Pressing the button (c) for 3 seconds or more, or turning the ignition switch from the OFF to ACC position can exit the diagnostic mode.
3) {Line Diag} screen is displayed.
4) Check the connection status with the {Vehicle Signal Check} in the {Line Diag} screen.

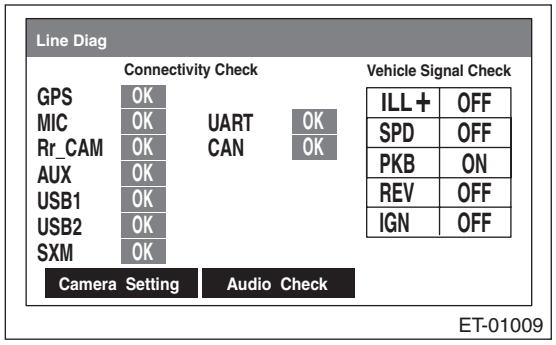

NOTE:
GPS is displayed only for the navigation system.

- Check illumination

NOTE:
Make sure that the bright switch is not ON.

1. Turn the ignition to ON.
2. Set the lighting switch to the parking position.
3. Make sure that {ON} lights in ILL+ and then the screen becomes dim.

ON: Normal
OFF: Abnormal Check the signal line connector. If there are no problems, the unit could be faulty.

- Check speed sensor

NOTE:

– Before starting inspections, check the safety around the vehicle.
– Lift up the vehicle as necessary.
– When the diagnostic trouble code is input in the VDC CM, perform the Clear Memory operation.

1. Drive the vehicle at 9 km/h (6 MPH) or more.
2. Check that {ON} is displayed in SPD.

ON: Normal
OFF: Vehicle speed is less than 7 km/h (4 MPH), or malfunction is detected in the signal line. Check the signal line connector. If there are no problems, the unit could be faulty.

- Check parking brake signal
  1. Pull the parking brake switch.
  2. Check that {ON} is displayed in PKB.
  ON: Normal
  OFF: Abnormal Check the signal line connector. If there are no problems, the unit could be faulty.
- Check back sensor

NOTE:
Before starting inspections, check the safety behind the vehicle.
  1. Turn the ignition to ON.
  2. Pull the parking brake switch and depress the brake pedal, then place the select lever or gear shift lever in reverse.
  3. Make sure that {OK} is displayed in REV.
  ON: Normal
  OFF: Abnormal Check the signal line connector. If there are no problems, the unit could be faulty.

6. CHECK SPEAKER OUTPUT WITH LINE DIAG MODE

1) Turn the ignition switch to ACC.
2) Press the button (b) twice with the button (a) pressed.

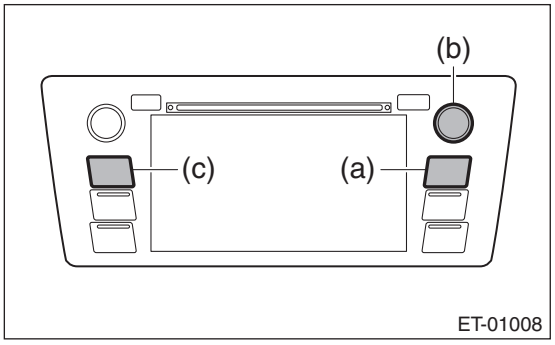

NOTE:
Pressing the button (c) for 3 seconds or more, or turning the ignition switch from the OFF to ACC position can exit the diagnostic mode.
3) {Line Diag} screen is displayed.

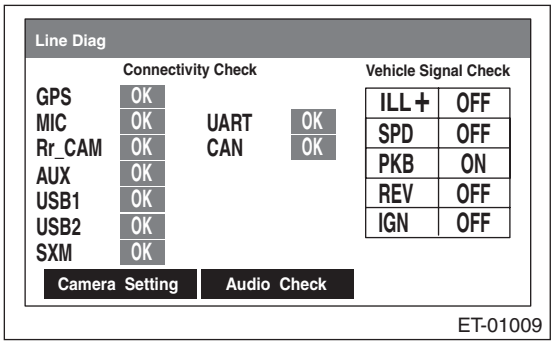

4) Touch {Audio Check} on the {Line Diag} screen.
5) {Audio Check} screen is displayed.

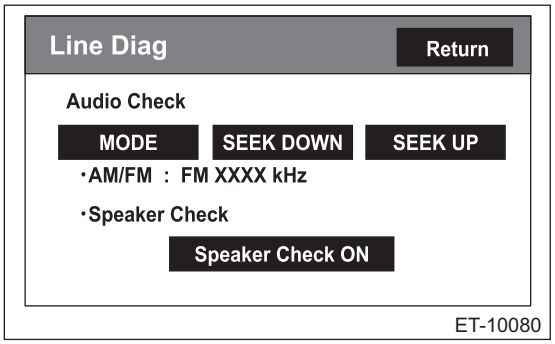

6) Touch the {ON} key of {Speaker Check} to check speaker output.

NOTE:
- The speaker front left → front right → rear right → rear left will sound in order for 2 seconds each.
- The speaker sounds at the maximum volume during speaker check.
- Press the {BACK} key to return to the {Line Diag} screen.

C: INSPECTION

1. BASIC INSPECTION

Refer to “Basic Diagnostic Procedure” in “INFOTAINMENT SYSTEM (DIAGNOSTICS)”. <Ref. to INF(diag)-2, Basic Diagnostic Procedure.>

2. SYSTEM BLOCK DIAGRAM

Refer to “System Block Diagram” in “INFOTAINMENT SYSTEM (DIAGNOSTICS)”. <Ref. to INF(diag)-14, SYSTEM BLOCK DIAGRAM, Control Module I/O Signal.>

3. MODULE I/O SIGNAL

Refer to “Control Module I/O Signal” of “INFOTAINMENT SYSTEM (DIAGNOSTICS)”. <Ref. to INF(diag)-8, ELECTRICAL SPECIFICATION, Control Module I/O Signal.>

D: NOTE

For procedure of each component in the navigation system, refer to the respective section.
- Navigation unit: <Ref. to ET-47, Navigation Body.>
- GPS antenna: <Ref. to ET-48, GPS Antenna.>

6. Telematics System

A: WIRING DIAGRAM

Refer to “Telematics System” in the wiring diagram.

- Without audio amplifier: <Ref. to WI-349, WITHOUT AUDIO AMPLIFIER, WIRING DIAGRAM, Telematics System.>
- With audio amplifier: <Ref. to WI-352, WITH AUDIO AMPLIFIER, WIRING DIAGRAM, Telematics System.>

B: OPERATION

1. REGISTRATION (COMM CHECK)

CAUTION:
Because it will go back to Factory mode when the signal is weak, that you do not press the i button more than 2 seconds during a communication check. If it had returned to Factory mode, carrying out the CommCheck again. Each mode state can be confirmed in the “Subscription Status” in the current data display of SSM.

1) Replace the data communication module with a new part.
2) Check the LED of overhead console or stereo camera cover assembly illuminates in green.
3) Press and hold the i-button for 2 seconds or more.

NOTE:
When the subscription is completed, the telematics system will automatically activate.

C: INSPECTION

Refer to “Basic Diagnostic Procedure” in “TELEMATICS SYSTEM (DIAGNOSTICS)”. <Ref. to TEL(diag)-2, Basic Diagnostic Procedure.>

D: NOTE

For procedure of each component in the telematics system, refer to the respective section.

- Data communication module: <Ref. to ET-47, Navigation Body.>
- Antenna: <Ref. to ET-31, Antenna.>
- GPS antenna: <Ref. to ET-48, GPS Antenna.>
- Switches and harness: <Ref. to ET-43, Switches and Harness.>

7. Audio

A: REMOVAL

1) Disconnect the ground terminal from battery sensor. <Ref. to RC-4, BATTERY, NOTE, Repair Contents.>
2) Remove the center grille assembly. <Ref. to AC-92, CENTER GRILLE ASSEMBLY, REMOVAL, Air Vent Grille.>
3) Remove the heater control assembly. <Ref. to AC-47, REMOVAL, Control Panel.>
4) Remove the audio assembly.
   (1) Remove the screws and clips.
   (2) Disconnect the connector and remove the audio assembly.

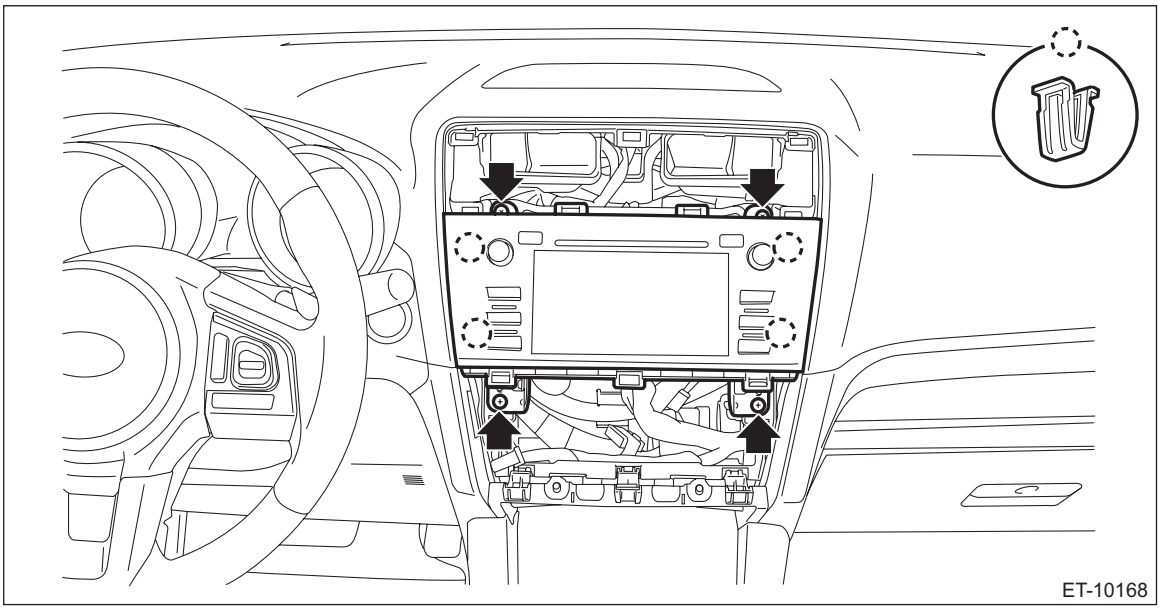

NOTE:
The model with telematics is equipped with the data communication module under the audio assembly.

B: INSTALLATION

CAUTION:
After installing the center grille assembly, check that the air vent grille of the center grille assembly is inserted correctly into the air vent duct.
1) Install the audio assembly.
2) Install the heater control assembly.
3) Install the center grille assembly.
4) Connect the ground terminal to battery sensor. <Ref. to RC-4, BATTERY, NOTE, Repair Contents.>

8. Front Speaker

A: REMOVAL

1. TWEETER

1) Disconnect the ground terminal from battery sensor. <Ref. to RC-4, BATTERY, NOTE, Repair Contents.>
2) Remove the trim panel - front pillar UPR. <Ref. to EI-96, REMOVAL, Upper Inner Trim.>
3) Remove the speaker assembly - tweeter.
   (1) Release the clips and claws, then detach the grille speaker side.
   (2) Remove the screws.

Preparation tool:
Stubby screwdriver

   (3) Disconnect the connector and remove the speaker assembly - tweeter.

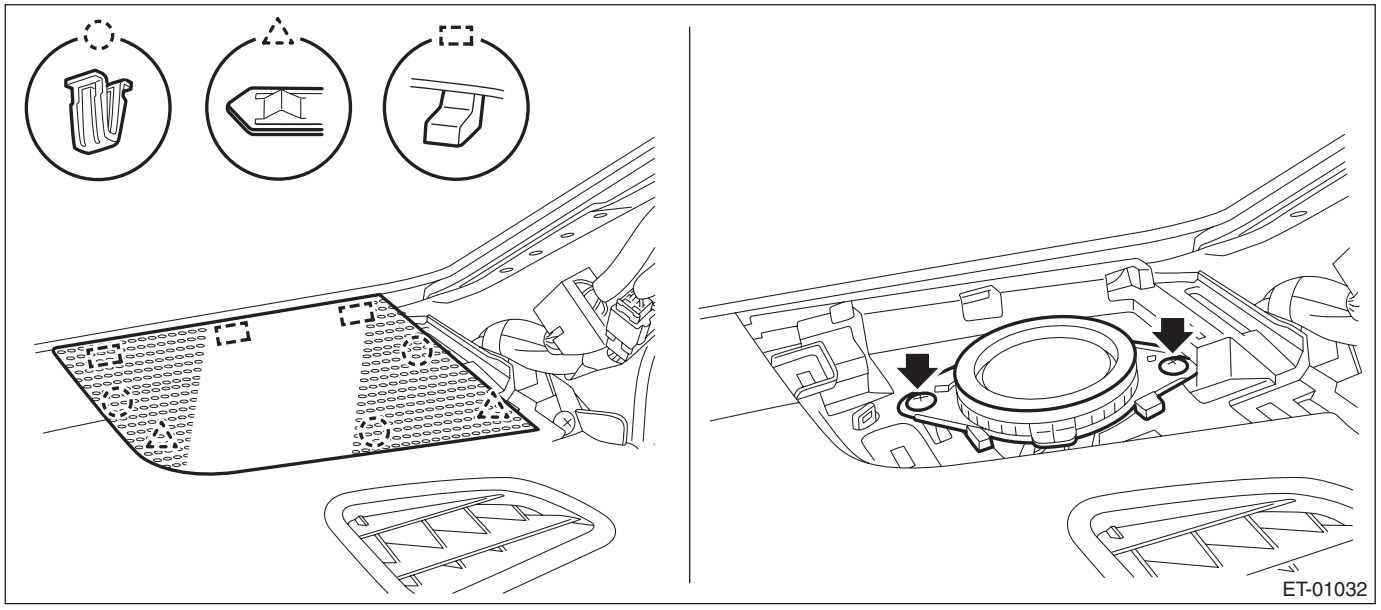

2. CENTER SPEAKER

1) Disconnect the ground terminal from battery sensor. <Ref. to RC-4, BATTERY, NOTE, Repair Contents.>
2) Remove the speaker assembly - center.
   (1) Release the clips and claws, then detach the grille speaker center.

NOTE:
Remove the grille speaker center by using a plastic remover.

   (2) Remove the screws.

Preparation tool:
Stubby screwdriver

   (3) Disconnect the connector and remove the speaker assembly - center.

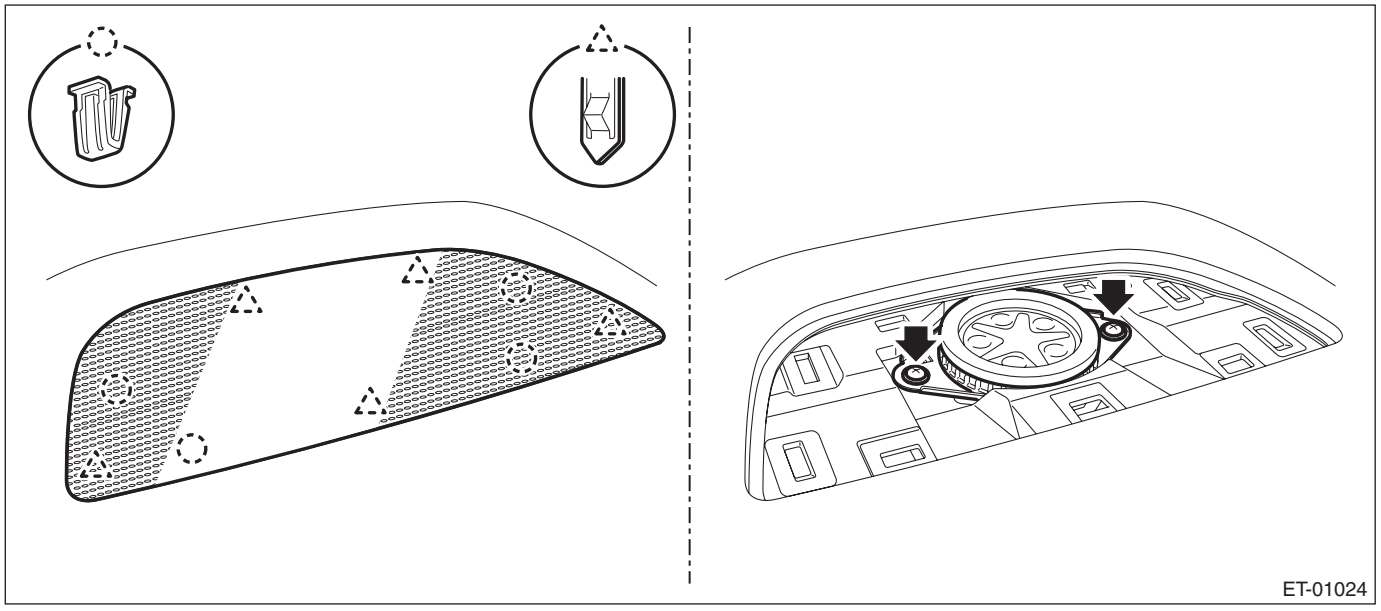

3. DOOR SPEAKER

1) Disconnect the ground terminal from the battery sensor, and wait for at least 60 seconds before starting work. <Ref. to RC-4, BATTERY, NOTE, Repair Contents.>
2) Remove the trim panel - front door. <Ref. to EI-71, FRONT DOOR, REMOVAL, Door Trim.>
3) Remove the speaker assembly - front door.
   (1) Disconnect the connector.
   (2) Remove the screws and remove the speaker assembly - front door.

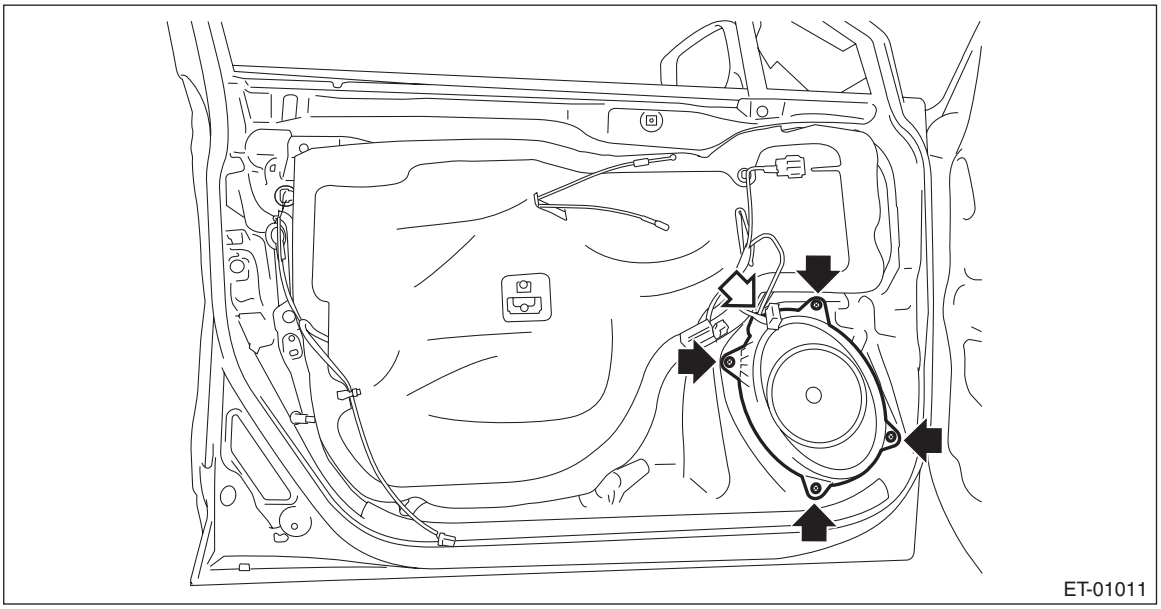

B: INSTALLATION

1. TWEETER

1) Install the speaker assembly - tweeter.
2) Install the grille speaker side.
3) Install the trim panel - front pillar UPR. <Ref. to EI-97, INSTALLATION, Upper Inner Trim.>
4) Connect the ground terminal to battery sensor. <Ref. to RC-4, BATTERY, NOTE, Repair Contents.>

2. CENTER SPEAKER

1) Install the speaker assembly - center.
2) Install the grille speaker center.
3) Connect the ground terminal to battery sensor. <Ref. to RC-4, BATTERY, NOTE, Repair Contents.>

3. DOOR SPEAKER

1) Install the speaker assembly - front door.
2) Install the trim panel - front door. <Ref. to EI-73, INSTALLATION, Door Trim.>
3) Connect the ground terminal to battery sensor. <Ref. to RC-4, BATTERY, NOTE, Repair Contents.>

9. Rear Speaker

A: REMOVAL

1) Disconnect the ground terminal from battery sensor. <Ref. to RC-4, BATTERY, NOTE, Repair Contents.>
2) Remove the trim panel - rear door. <Ref. to EI-72, REAR DOOR, REMOVAL, Door Trim.>
3) Remove the speaker assembly - rear door.
   (1) Disconnect the connector.
   (2) Remove the screws and remove the speaker assembly - rear door.

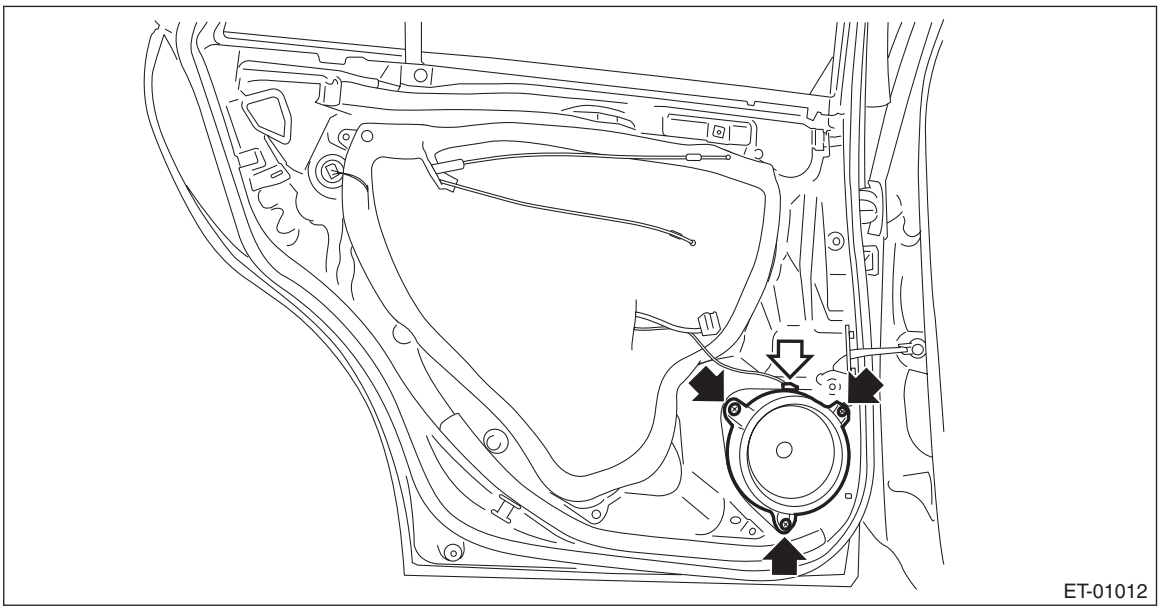

B: INSTALLATION

1) Install the speaker assembly - rear door.
2) Install the trim panel - rear door. <Ref. to EI-73, INSTALLATION, Door Trim.>
3) Connect the ground terminal to battery sensor. <Ref. to RC-4, BATTERY, NOTE, Repair Contents.>

10.Woofer

A: REMOVAL

1. SEDAN MODEL

1) Disconnect the ground terminal from the battery sensor, and wait for at least 60 seconds before starting work. <Ref. to RC-4, BATTERY, NOTE, Repair Contents.>
2) Remove the trim panel assembly - rear shelf. <Ref. to EI-105, REMOVAL, Rear Shelf Trim.>
3) Remove the woofer assembly.
   (1) Disconnect the connector.
   (2) Remove the bolts, then remove the woofer assembly.

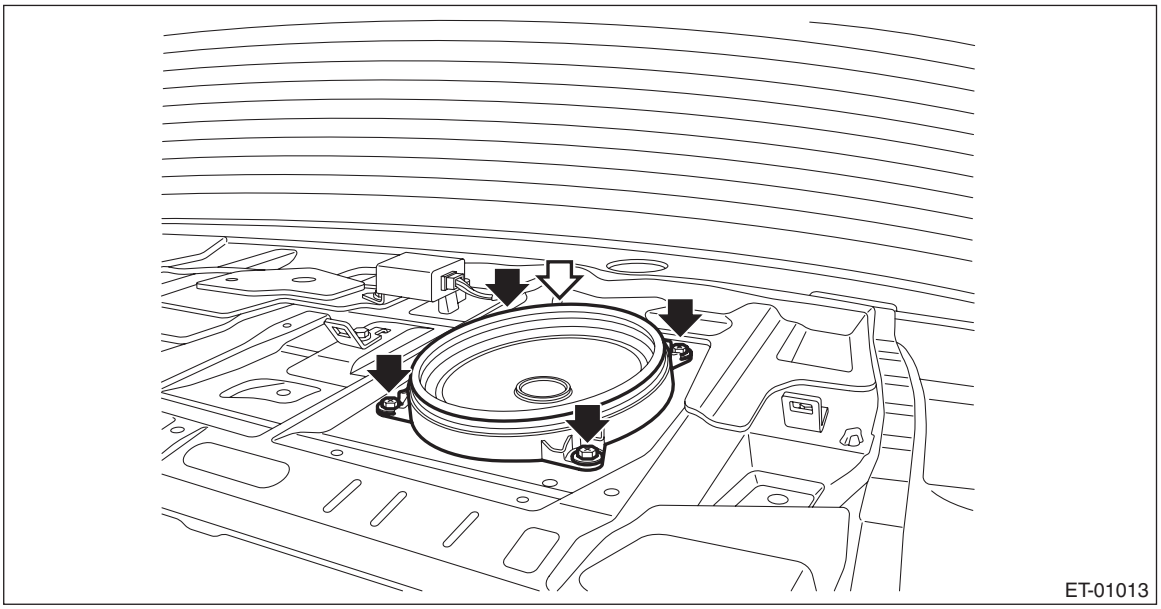

2. OUTBACK MODEL

1) Disconnect the ground terminal from the battery sensor, and wait for at least 60 seconds before starting work. <Ref. to RC-4, BATTERY, NOTE, Repair Contents.>
2) Remove the trim panel - rear apron RH. <Ref. to EI-100, OUTBACK MODEL, REMOVAL, Rear Quarter Trim.>
3) Remove the woofer assembly.
   (1) Disconnect the connector.
   (2) Remove the bolts, then remove the woofer assembly.

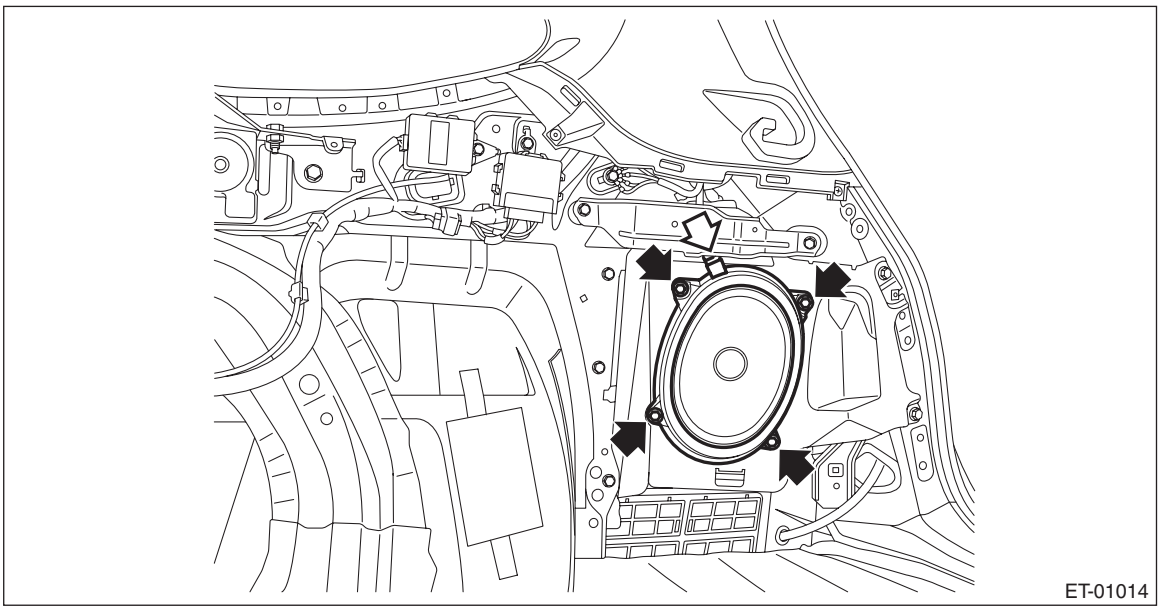

B: INSTALLATION

1. SEDAN MODEL

1) Install the woofer assembly.

Tightening torque:
7.5 N·m (0.8 kgf-m, 5.5 ft-lb)
2) Install the trim panel assembly - rear shelf. <Ref. to EI-107, INSTALLATION, Rear Shelf Trim.>
3) Connect the ground terminal to battery sensor. <Ref. to RC-4, BATTERY, NOTE, Repair Contents.>

2. OUTBACK MODEL

1) Install the woofer assembly.

Tightening torque:
7.5 N·m (0.8 kgf-m, 5.5 ft-lb)
2) Install the trim panel - rear apron RH.

Tightening torque:
7.5 N·m (0.8 kgf-m, 5.5 ft-lb)
3) Connect the ground terminal to battery sensor. <Ref. to RC-4, BATTERY, NOTE, Repair Contents.>

11.Power Amplifier

A: REMOVAL

NOTE:
Remove the power amplifier assembly after sliding the passenger's seat back and forth as necessary.
1) Disconnect the ground terminal from battery sensor. <Ref. to RC-4, BATTERY, NOTE, Repair Contents.>
2) Remove the power amplifier - assembly.
   (1) Remove the harness clip, and disconnect each connector.
   (2) Remove the nut and remove the power amplifier - assembly.

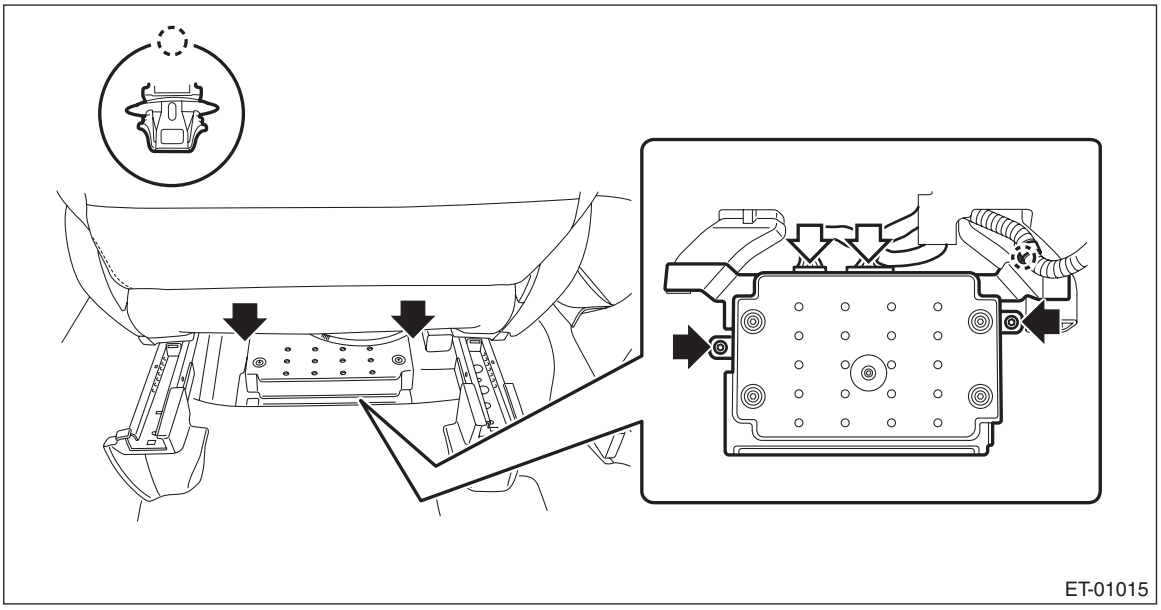

B: INSTALLATION

1) Install the power amplifier - assembly.

Tightening torque:
7.5 N·m (0.8 kgf-m, 5.5 ft-lb)
2) Connect the ground terminal to battery sensor. <Ref. to RC-4, BATTERY, NOTE, Repair Contents.>

12.Antenna

A: REMOVAL

1. RADIO ANTENNA AMPLIFIER

• Sedan model

1) Disconnect the ground terminal from the battery sensor, and wait for at least 60 seconds before starting work. <Ref. to RC-4, BATTERY, NOTE, Repair Contents.>
2) Remove the trim panel - rear pillar UPR LH. <Ref. to EI-99, SEDAN MODEL, REMOVAL, Rear Quarter Trim.>
3) Remove the amplifier assembly - antenna.
(1) Disconnect the connector.
(2) Remove the bolts, and remove the amplifier assembly - antenna.

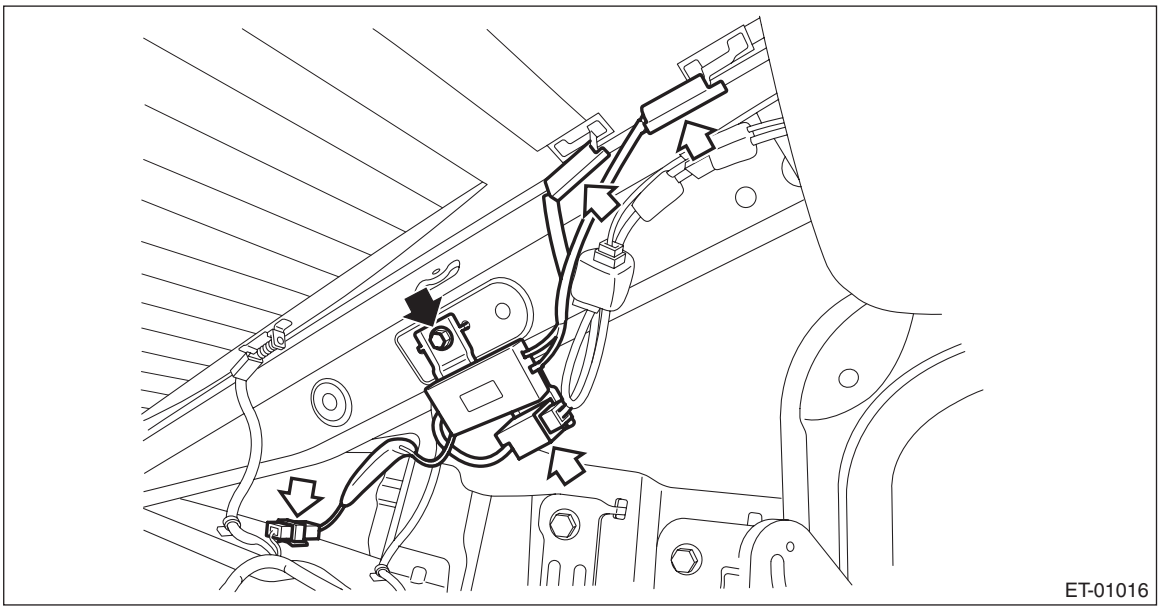

• **OUTBACK model**

1) Disconnect the ground terminal from battery sensor. <Ref. to RC-4, BATTERY, NOTE, Repair Contents.>
2) Remove the trim panel - rear gate UPR. <Ref. to EI-121, REMOVAL, Rear Gate Trim.>
3) Remove the amplifier assembly - antenna.
   (1) Disconnect the connector.
   (2) Remove the bolts, and remove the amplifier assembly - antenna.

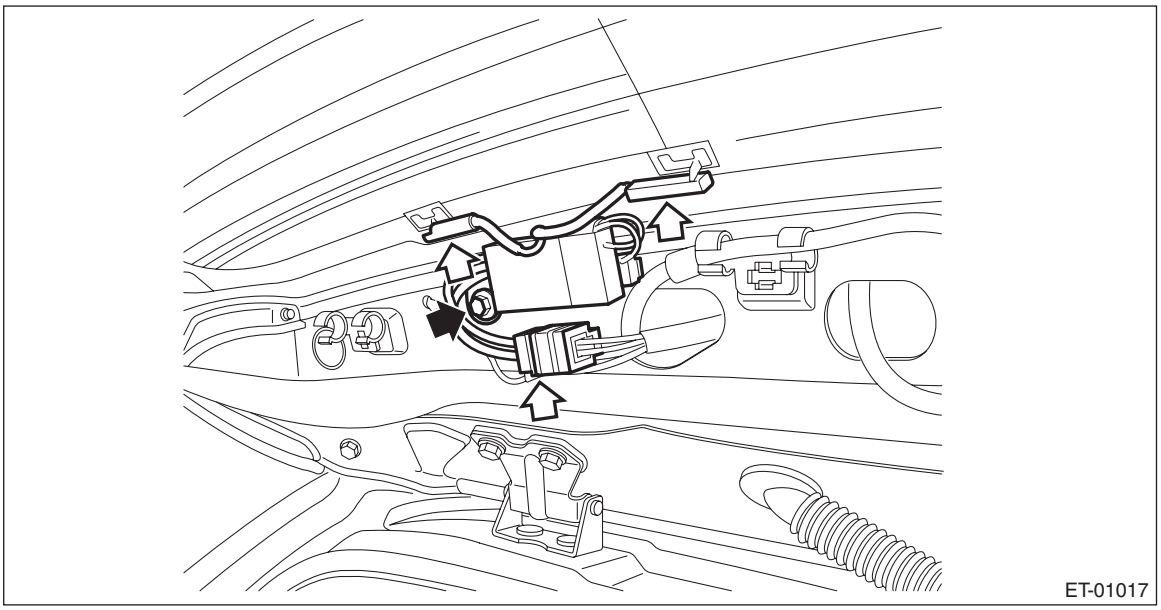

2. XM SATELLITE RADIO/TELEMATICS ANTENNA

1) Disconnect the ground terminal from the battery sensor, and wait for at least 60 seconds before starting work. <Ref. to RC-4, BATTERY, NOTE, Repair Contents.>
2) Lower the trim panel - roof assembly.
- Sedan model: <Ref. to EI-113, SEDAN MODEL, REMOVAL, Roof Trim.>
- OUTBACK model: <Ref. to EI-116, OUTBACK MODEL, REMOVAL, Roof Trim.>

NOTE:
Procedures for the trim panel - roof assembly is performed inside the vehicle.
3) Remove the antenna assembly - roof.
   (1) Disconnect the connector.

NOTE:
For sedan model with telematics, disconnect the two connectors.

(2) Remove the nut, and remove the antenna assembly - roof.

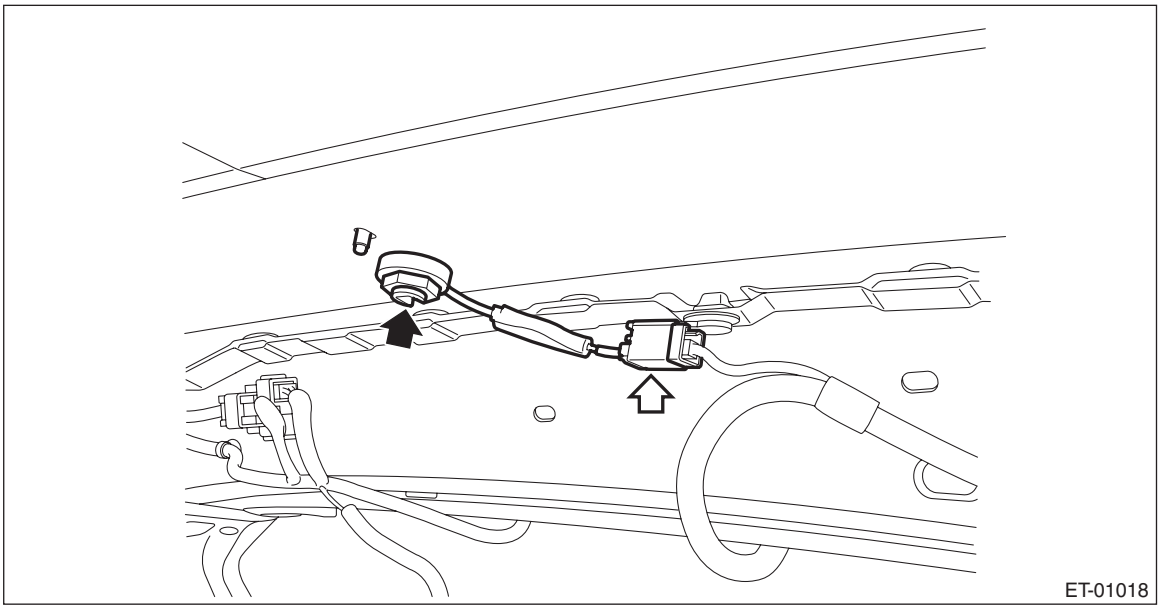

3. ANTENNA FEEDER CORD

1) Disconnect the ground terminal from the battery sensor, and wait for at least 60 seconds before starting work. <Ref. to RC-4, BATTERY, NOTE, Repair Contents.>
2) Remove the audio assembly or navigation assembly. <Ref. to ET-23, REMOVAL, Audio.>
3) Remove the cover assembly - front and the console box assembly. <Ref. to EI-79, REMOVAL, Center Console.>
4) Remove the passenger's seat. <Ref. to SE-11, REMOVAL, Front Seat.>
5) Remove the front cover - side sill and the cover side sill - front.
6) Lower the trim panel - roof assembly in the same manner as the removal procedure of XM satellite radio antenna.
- Sedan model: <Ref. to EI-113, SEDAN MODEL, REMOVAL, Roof Trim.>
- OUTBACK model: <Ref. to EI-116, OUTBACK MODEL, REMOVAL, Roof Trim.>

7) Turn over the floor mat, and remove the cord assembly - antenna feeder.

4. TELEMATICS SUB ANTENNA

1) Disconnect the ground terminal from battery sensor. <Ref. to RC-4, BATTERY, NOTE, Repair Contents.>
2) Remove the combination meter assembly. <Ref. to IDI-11, REMOVAL, Combination Meter.>
3) Remove the center grille assembly. <Ref. to EI-79, REMOVAL, Center Console.>
4) Remove the heater control assembly. <Ref. to EI-79, REMOVAL, Center Console.>
5) Remove the audio assembly or navigation assembly. <Ref. to ET-23, REMOVAL, Audio.>
6) Remove the telematics sub antenna.
   (1) Disconnect the telematics sub antenna connector on the data communication module side, and tie a string to the connector.

NOTE:
A string makes operation easier during installation.

(2) Remove the screw and harness clamp, and pull out the telematics sub antenna from the combination meter side.

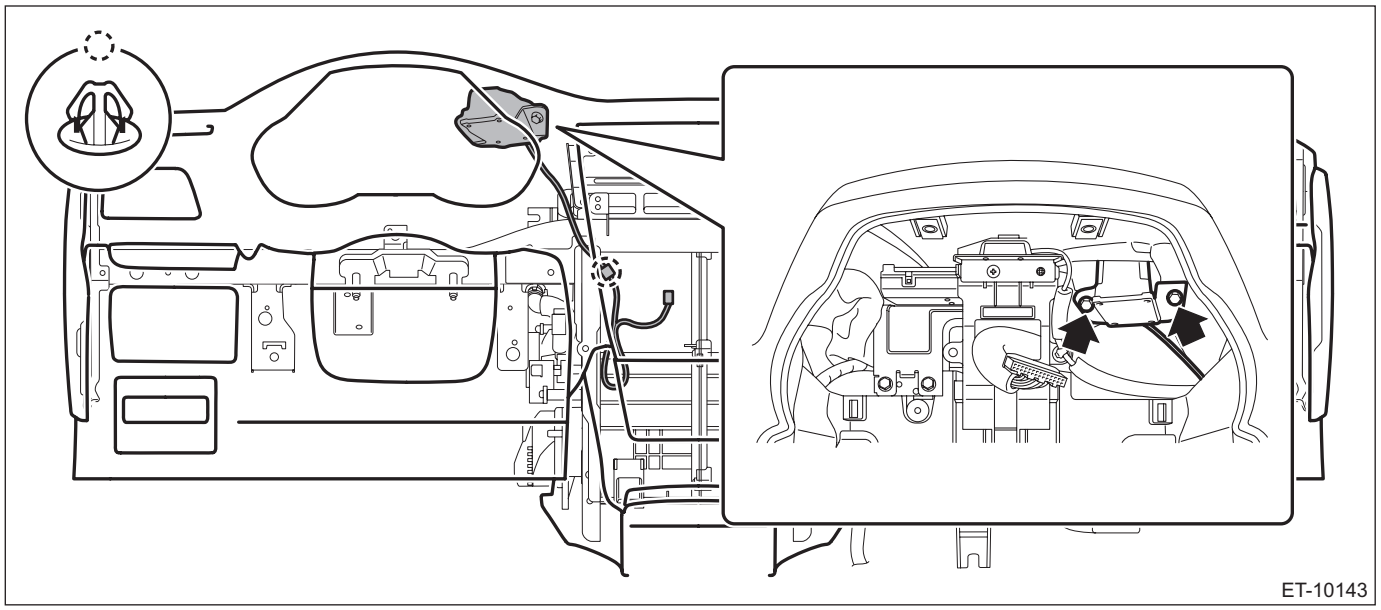

(3) After the telematics sub antenna has been pulled out, remove the string attached to the connector in step (1).

B: INSTALLATION

1. RADIO ANTENNA AMPLIFIER

1) Install the amplifier assembly - antenna.

Tightening torque:
12±3 N·m (1.2±0.3 kgf-m, 8.9±2.2 ft-lb)

2) Install the trim panel - rear pillar UPR LH. (Sedan model)
3) Install the trim panel - rear gate UPR. (OUTBACK model)
4) Connect the ground terminal to battery sensor. <Ref. to RC-4, BATTERY, NOTE, Repair Contents.>

2. XM SATELLITE RADIO/TELEMATICS ANTENNA

1) Install the antenna assembly - roof.

Tightening torque:
4.5±1.0 N·m (0.5±0.1 kgf-m, 3.3±0.7 ft-lb)

2) Install the trim panel - roof assembly. <Ref. to EI-118, INSTALLATION, Roof Trim.>
3) Connect the ground terminal to battery sensor. <Ref. to RC-4, BATTERY, NOTE, Repair Contents.>

3. ANTENNA FEEDER CORD

1) Install the cord assembly - antenna feeder and the trim panel - roof assembly. <Ref. to EI-118, INSTALLATION, Roof Trim.>
2) Install the floor mat.
3) Install the front cover - side sill and the cover side sill - front.
4) Install the passenger's seat. <Ref. to SE-12, INSTALLATION, Front Seat.>
5) Install the cover assembly - front and the console box assembly.

Tightening torque:
6.5 N·m (0.6 kgf-m, 4.8 ft-lb)

6) Install the audio assembly or navigation assembly. <Ref. to ET-23, INSTALLATION, Audio.>
7) Connect the ground terminal to battery sensor. <Ref. to RC-4, BATTERY, NOTE, Repair Contents.>

4. TELEMATICS SUB ANTENNA

CAUTION:
After installing the center grille assembly, check that the air vent grille of the center grille assembly is inserted correctly into the air vent duct.

1) Install the telematics sub antenna.
2) Install the audio assembly or navigation assembly.
3) Install the heater control assembly.
4) Install the center grille assembly.
5) Install the combination meter assembly.

Tightening torque:
7 N·m (0.7 kgf-m, 5.2 ft-lb)

6) Connect the ground terminal to battery sensor. <Ref. to RC-4, BATTERY, NOTE, Repair Contents.>

C: INSPECTION

CAUTION:
When wiping dirt off of the glass to avoid heat wire damage, be careful of the following.

- **Use a dry and soft cloth.**
- **Move the cloth along the heat wire.**

Inspection method of antenna, it is different from printing pattern of antenna.

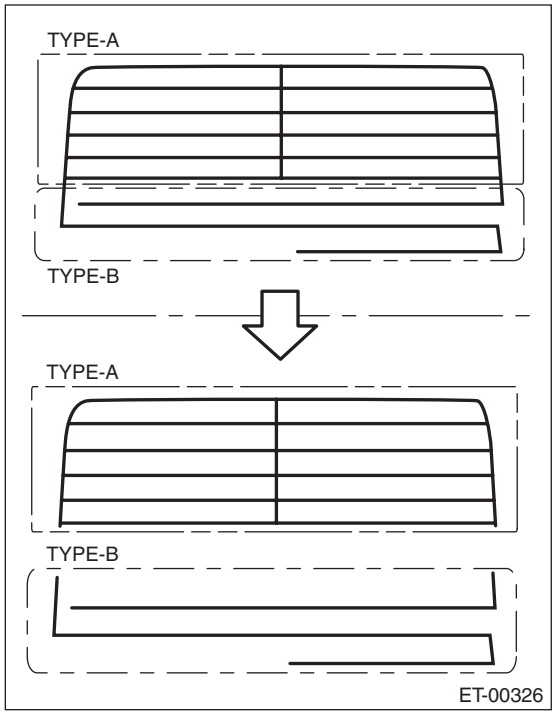

TYPE-A Printing pattern of grid
TYPE-B Printing pattern of straight

1. TYPE-A

1) Prepare the extension harness (A), (B).

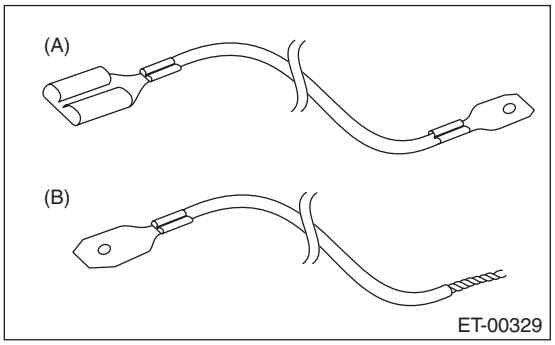

(A) Attach the flat terminals (male and female) to both ends of the harness of approx. 2 m (6.56 ft) length (electrical wire unit dimensions: approx. 2.0 mm^2 (0.0032 sq in)).

(B) Attach the flat terminal (female) to one side of the harness, another side to twist the harness of approx. 2 m (6.56 ft) length (electrical wire unit dimensions: approx. 2.0 mm^2 (0.0032 sq in)).

2) Disconnect the ground terminal from battery sensor. <Ref. to RC-4, BATTERY, NOTE, Repair Contents.>
3) Connect the extension harness (A) to rear defogger harness (power supply side) terminal and antenna terminal.

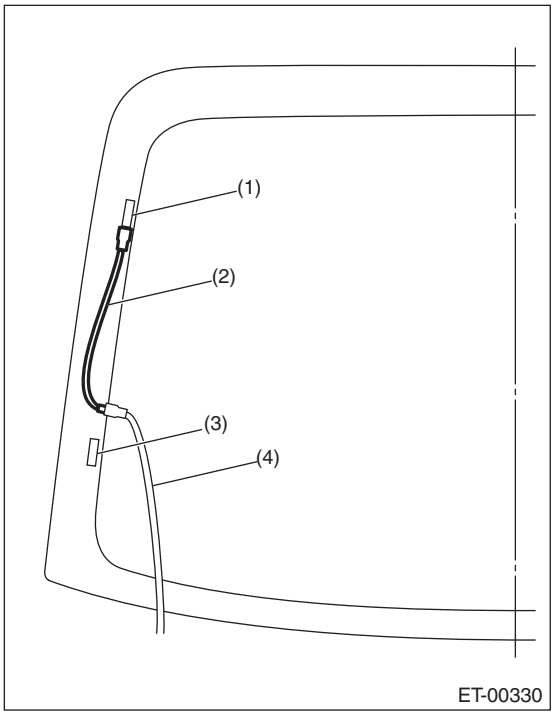

(1) Antenna terminal
(2) Extension harness (A)
(3) Rear defogger terminal
(4) Rear defogger harness (power supply side - red blue)

4) Connect the extension harness (B) to rear defogger harness (ground side) terminal.

5) Fasten the another side of extension harness (B) to end of antenna pattern of grid with tape.

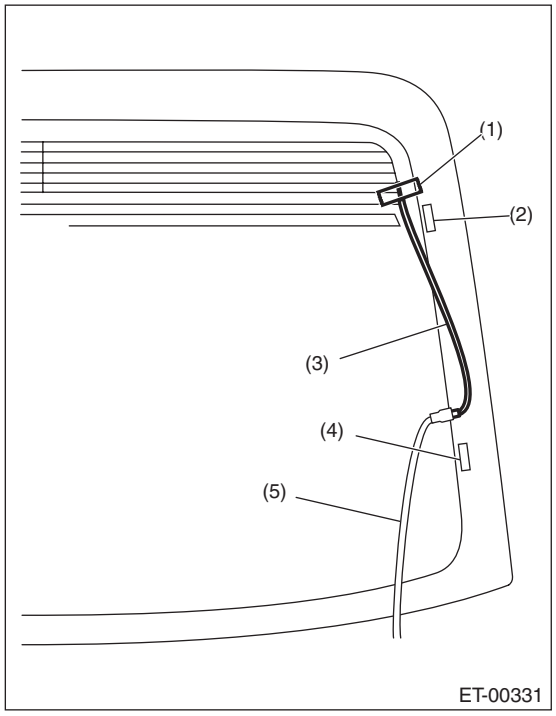

(1) Tape
(2) Antenna terminal
(3) Extension harness (B)
(4) Rear defogger terminal
(5) Rear defogger harness (ground side - black)

6) Connect the ground terminal to battery sensor. <Ref. to RC-4, BATTERY, NOTE, Repair Contents.>
7) Turn the ignition to ON.
8) Turn the rear defogger switch to ON.
9) Wrap a piece of aluminum foil around the tip of tester probe and press foil against antenna wire with your finger.

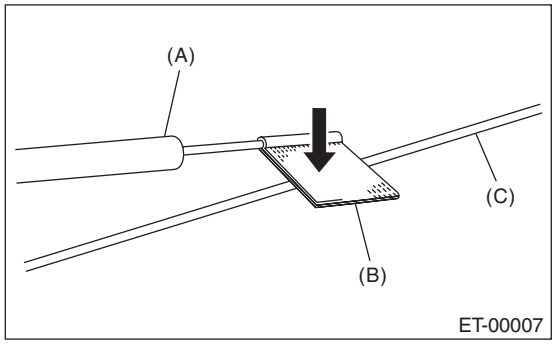

(A) Tester probe
(B) Aluminum foil
(C) Antenna wire

10) Measure the voltage around an antenna wire (a) and (b).

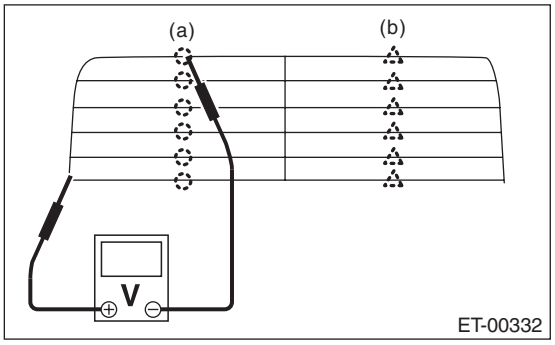

	Measured voltage value	Criteria
(a)	Approx. 3 V (standard value)	Normal
	Approx. 6 V or 0 V	Open
(b)	Approx. 9 V (standard value)	Normal
	Approx. 12 V or 6 V	Open

NOTE:
Measuring point (a)
- If the measured value is 6 V, heat wire is open between antenna wire center and positive (+) side of probe.
- If it is 0 V, the circuit is open between antenna wire center and ground.

Measuring point (b)
- If the measured value is 12 V, heat wire is open between antenna wire center and positive (+) side of probe.
- If it is 6 V, the circuit is open between antenna wire center and ground.

11) Fasten the voltmeter positive (+) side and negative (–) side to end of open harness positive side of step 12).
12) Search a point the voltage changes from 0 V, and move the negative (–) probe along antenna wire slowly.

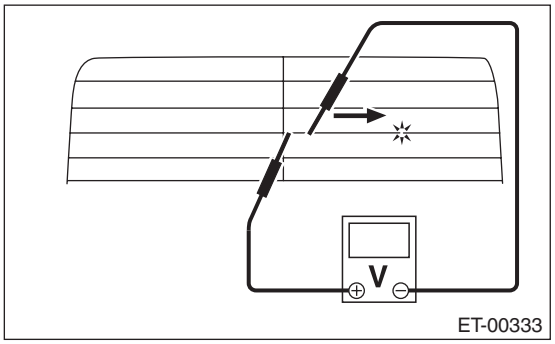

13) Repair the antenna wire if the place of the open circuit is identified. <Ref. to ET-40, REPAIR, Antenna.>

2. TYPE-B

Measure the resistance between the antenna terminal and each antenna wire.

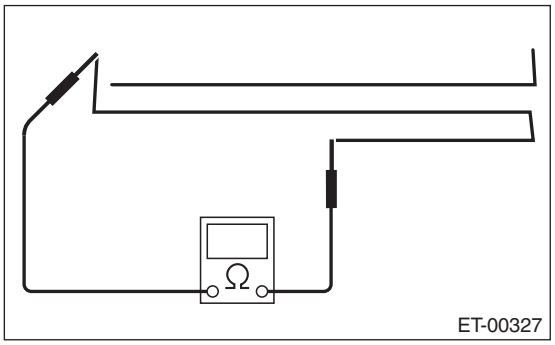

1) Disconnect the ground terminal from battery sensor. <Ref. to RC-4, BATTERY, NOTE, Repair Contents.>
2) Wrap a piece of aluminum foil around the tip of probe and press foil against antenna wire with your finger.

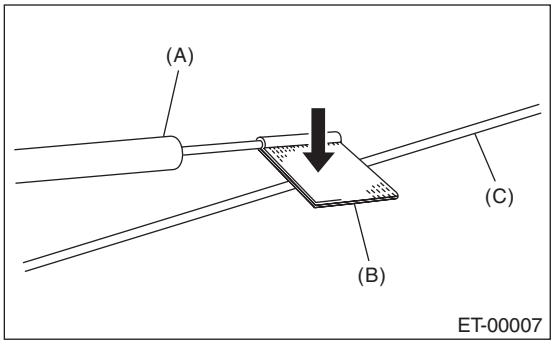

(A) Tester probe
(B) Aluminum foil
(C) Antenna wire

3) To locate the broken point, move the probe along antenna wire.

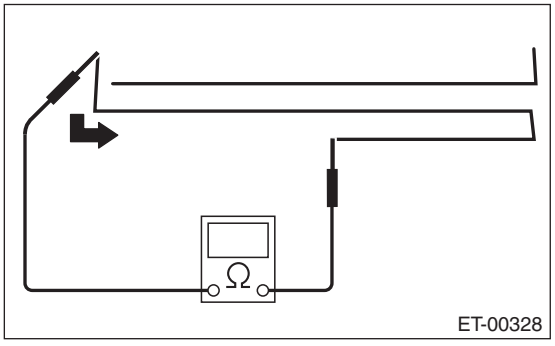

NOTE:
If an antenna wire is OK, resistance will be less than 20 Ω.
If an antenna wire is broken, resistance will be more than 1 MΩ.
4) Connect the ground terminal to battery sensor. <Ref. to RC-4, BATTERY, NOTE, Repair Contents.>
5) Repair the antenna wire if the place of the open circuit is identified. <Ref. to ET-40, REPAIR, Antenna.>

D: REPAIR

1) Clean the external circumference of antenna wire and around with alcohol or appropriate cleaning solvent.
2) Paste a thin masking film on the glass along broken wire.
3) Apply the conductive silver composition on the broken portion with a drawing pen.

Conductive silver composition:
DUPONT No. 4817 or equivalent

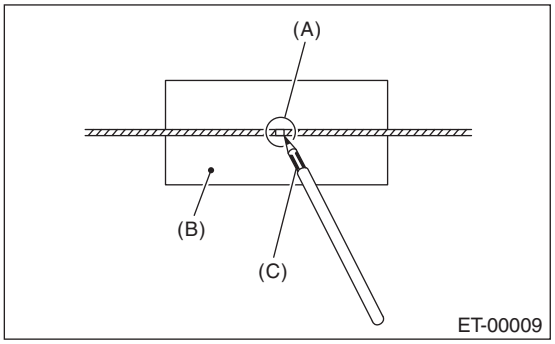

(A) Broken portion
(B) Masking film
(C) Conductive silver composition

4) Dry out the deposited portion.
5) After repair has been completed, measure the resistance in repaired wire and check that it is normal.

13.Noise Suppressor

A: REMOVAL

1. SEDAN MODEL

1) Disconnect the ground terminal from the battery sensor, and wait for at least 60 seconds before starting work. <Ref. to RC-4, BATTERY, NOTE, Repair Contents.>
2) Remove the trim panel - rear pillar UPR. <Ref. to EI-99, REMOVAL, Rear Quarter Trim.>
3) Remove the noise suppressor assembly.
   (1) Remove the connector and harness clip.
   (2) Remove the bolts, then remove the noise suppressor assembly.

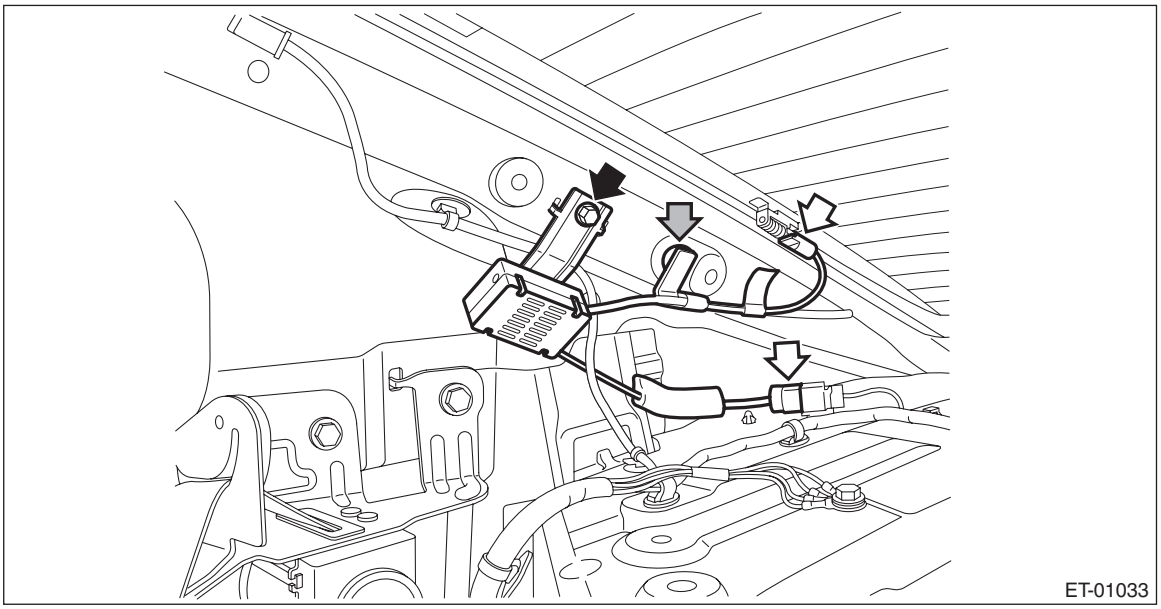

2. OUTBACK MODEL

1) Disconnect the ground terminal from battery sensor. <Ref. to RC-4, BATTERY, NOTE, Repair Contents.>
2) Remove the trim panel - rear gate. <Ref. to EI-121, REMOVAL, Rear Gate Trim.>
3) Remove the noise suppressor assembly.
   (1) Remove the connector and harness clip.
   (2) Remove the bolts, then remove the noise suppressor assembly.

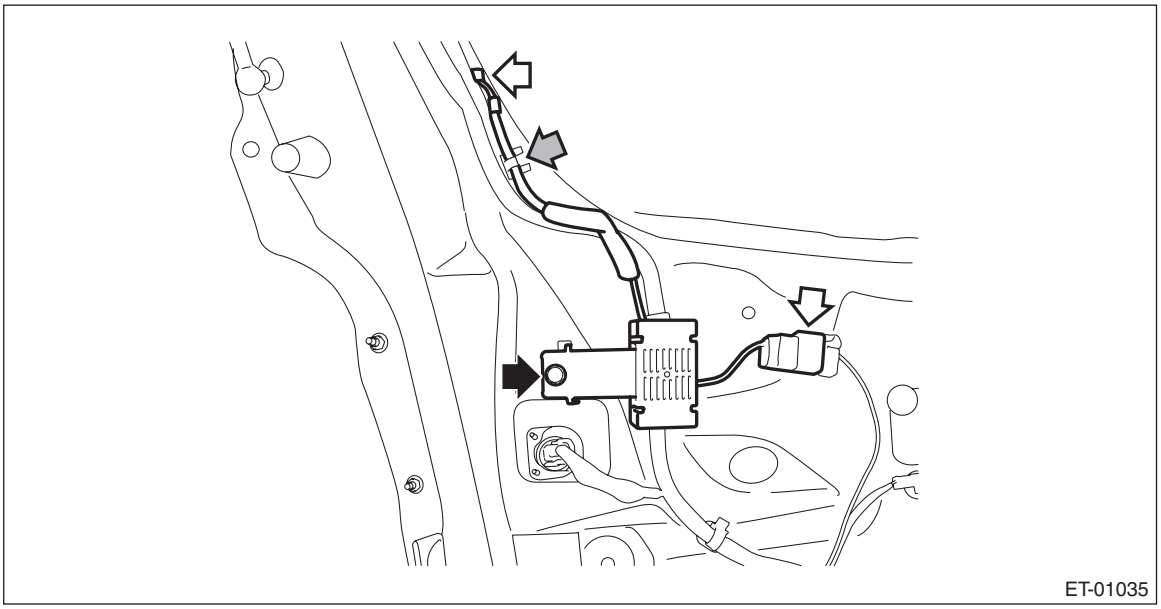

B: INSTALLATION

1) Install the noise suppressor assembly.

Tightening torque:
12±3 N·m (1.2±0.3 kgf-m, 8.9±2.2 ft-lb)

2) Install the trim panel - rear pillar UPR. (Sedan model) <Ref. to EI-103, INSTALLATION, Rear Quarter Trim.>
3) Install the trim panel - rear gate. (OUTBACK model) <Ref. to EI-122, INSTALLATION, Rear Gate Trim.>
4) Connect the ground terminal to battery sensor. <Ref. to RC-4, BATTERY, NOTE, Repair Contents.>

14.Switches and Harness

A: REMOVAL

1. SATELLITE SWITCH ASSEMBLY

CAUTION:
Before handling the airbag system components, refer to "CAUTION" of "General Description" in "AIRBAG SYSTEM". <Ref. to AB-10, CAUTION, General Description.>
1) Set the tire to the straight-ahead position.
2) Disconnect the ground terminal from the battery sensor, and wait for at least 60 seconds before starting work. <Ref. to RC-4, BATTERY, NOTE, Repair Contents.>
3) Remove the driver's airbag module. <Ref. to AB-32, REMOVAL, Driver's Airbag Module.>
4) Remove the steering wheel. <Ref. to PS-9, REMOVAL, Steering Wheel.>
5) Remove the satellite switch assembly. <Ref. to PS-10, DISASSEMBLY, Steering Wheel.>

2. TELEMATICS BUTTON

The telematics button is a single unit with the overhead console or stereo camera cover assembly. For operation procedures, refer to "LIGHTING SYSTEM" section. <Ref. to LI-66, REMOVAL, Spot Map Light.>

B: INSTALLATION

1. SATELLITE SWITCH ASSEMBLY

CAUTION:
• Before handling the airbag system components, refer to "CAUTION" of "General Description" in "AIRBAG SYSTEM". <Ref. to AB-10, CAUTION, General Description.>
• Do not allow harness and connectors to interfere or get tangled up with other parts.
• If the steering wheel has been removed, make sure that the steering roll connector is not turned from the original position.
• If the steering wheel and steering angle sensor (steering roll connector) are removed, perform "VSC(VDC) Centering Mode" of the VDC. <Ref. to VDC-15, VDC SENSOR MIDPOINT SETTING MODE, ADJUSTMENT, VDC Control Module and Hydraulic Control Unit (VDCCM&H/U).>
• Securely install the switch. Improper insertion of the pin or claw of the switch may cause improper installation.
1) Install the satellite switch assembly.
2) Align the center position of the steering roll connector. <Ref. to AB-63, ADJUSTMENT, Roll Connector.>
3) Install the steering wheel.

Tightening torque:
39 N·m (4.0 kgf-m, 28.8 ft-lb)

Clearance:
Between cover assembly - column and steering wheel: 4 — 6 mm (0.16 — 0.24 in)
4) Install the driver's airbag module. <Ref. to AB-33, INSTALLATION, Driver's Airbag Module.>
5) Connect the ground terminal to battery sensor. <Ref. to RC-4, BATTERY, NOTE, Repair Contents.>

2. TELEMATICS BUTTON

The telematics button is a single unit with the overhead console or stereo camera cover assembly. For operation procedures, refer to "LIGHTING SYSTEM" section. <Ref. to LI-67, INSTALLATION, Spot Map Light.>

C: INSPECTION

1. SATELLITE SWITCH ASSEMBLY

1) Measure the resistance between connector terminals.

Preparation tool:
Circuit tester

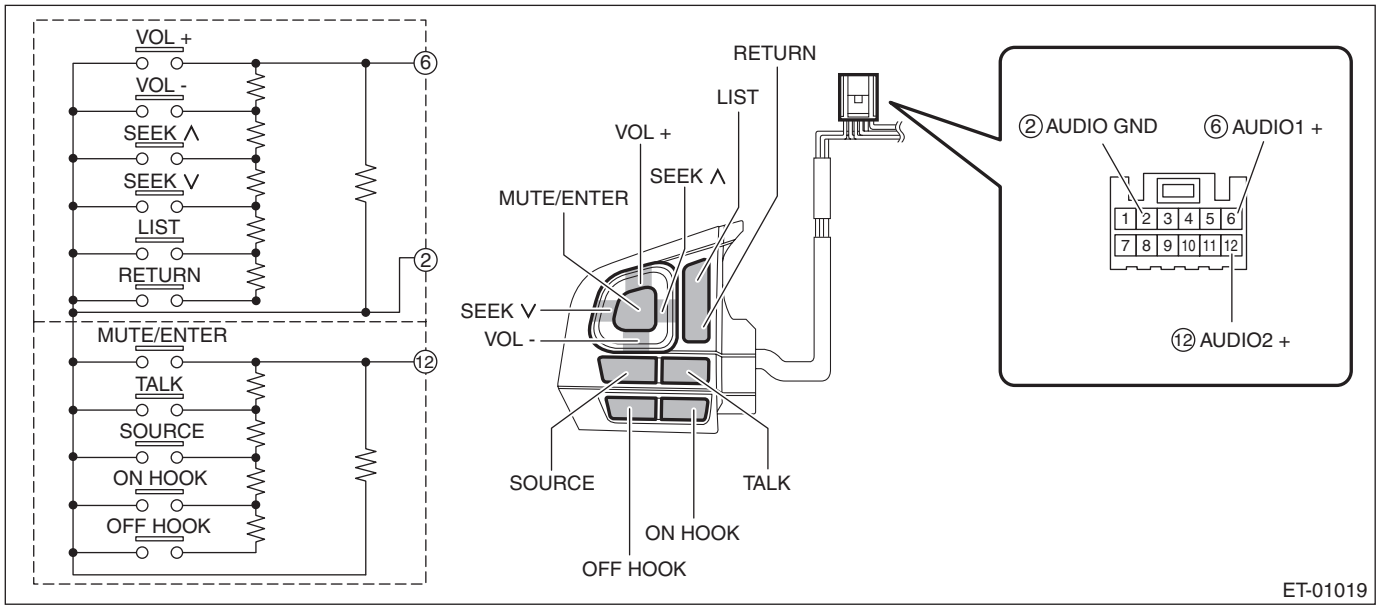

Terminal No.	Inspection conditions		Standard
6 — 2	VOL (+) VOL (–) SEEK (∧) SEEK (∨) LIST RETURN	A circuit is all OFF.	Approx. 100 kΩ
	VOL (+)	ON	Less than 1 Ω
	VOL (–)	ON	Approx. 50 Ω
	Preset CH UP/SEEK (∧)	ON	Approx. 120 Ω
	Preset CH DOWN/SEEK (∨)	ON	Approx. 230 Ω
	LIST	ON	Approx. 430 Ω
	RETURN	ON	Approx. 1,000 Ω
12 — 2	MUTE/ENTER TALK SOURCE ON HOOK OFF HOOK	B circuit is all OFF.	Approx. 100 kΩ
	MUTE/ENTER	ON	Less than 1 Ω
	TALK	ON	Approx. 50 Ω
	SOURCE	ON	Approx. 120 Ω
	ON HOOK	ON	Approx. 230 Ω
	OFF HOOK	ON	Approx. 430 Ω

2) Apply battery voltage between the connector terminals to check lighting condition of illumination inside the switch.

Terminal No.	Inspection conditions	Specification
10 (+) — 11 (–)	Apply battery voltage.	Light ON

3) If the result of the measurement is not at the standard, replace the satellite switch assembly.

2. TELEMATICS BUTTON

1) Check the button.
(1) Measure the resistance between connector terminals.

Preparation tool:
Circuit tester

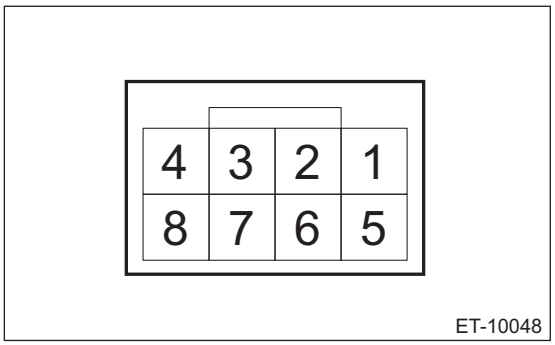

- SOS button

Terminal No.	Inspection conditions	Standard
6 — 1	OFF	Approx. 1.6 kΩ
	ON	Less than 1 Ω

- i-button

Terminal No.	Inspection conditions	Standard
3 — 1	OFF	Approx. 1.6 kΩ
	ON	Less than 1 Ω

(2) Apply battery voltage between the connector terminals to check lighting condition of illumination inside the switch.

Terminal No.	Inspection conditions	Specification
8 (+) — 2 (–)	Apply battery voltage.	Light ON

2) Check the indicator.
(1) Check the continuity between the connectors.

Terminal No.	Indicator	Specification
4 — 1	Green	Continuity exists
7 — 1	Red	Continuity exists

3) Replace the overhead console or stereo camera cover assembly if the inspection result is not within the standard value.

15.Microphone

A: NOTE

The microphone is a single unit with the spot map light.
For the operation procedures for spot map light, refer to “LIGHTING SYSTEM” section. <Ref. to LI-66, Spot Map Light.>

16.Navigation Body

A: NOTE

For the operation procedures for navigation assembly, refer to “Audio”. <Ref. to ET-23, Audio.>

17.GPS Antenna

A: REMOVAL

1) Disconnect the ground terminal from battery sensor. <Ref. to RC-4, BATTERY, NOTE, Repair Contents.>
2) Remove the combination meter assembly. <Ref. to IDI-11, REMOVAL, Combination Meter.>
3) Remove the center grille assembly. <Ref. to EI-79, REMOVAL, Center Console.>
4) Remove the heater control assembly. <Ref. to EI-79, REMOVAL, Center Console.>
5) Remove the audio assembly or navigation assembly. <Ref. to ET-23, REMOVAL, Audio.>
6) Remove the GPS antenna assembly.
   (1) Disconnect the GPS antenna assembly connector on the audio unit or navigation unit side, and tie a string to the connector.

NOTE:
- A string makes operation easier during installation.
- For the model with telematics, also tie a string to the connector on the data communication module side.

   (2) Remove the screw and harness clamp, and pull out the GPS antenna assembly from the combination meter side.
   - Model without telematics

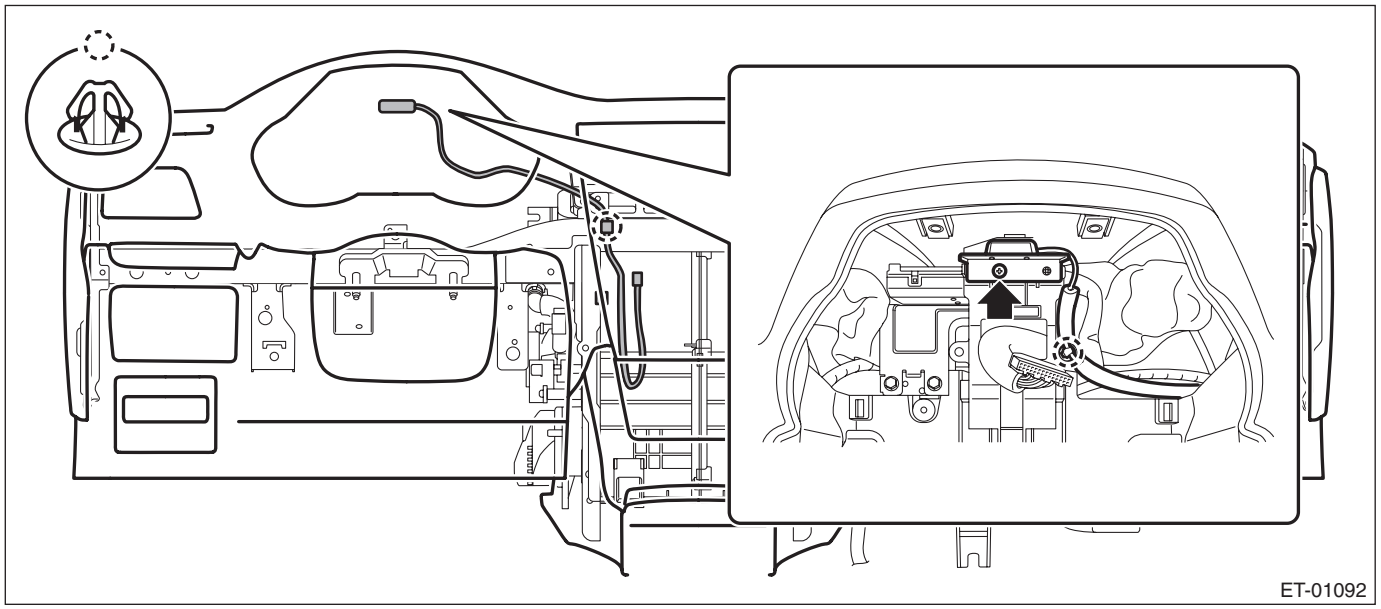

   - Model with telematics

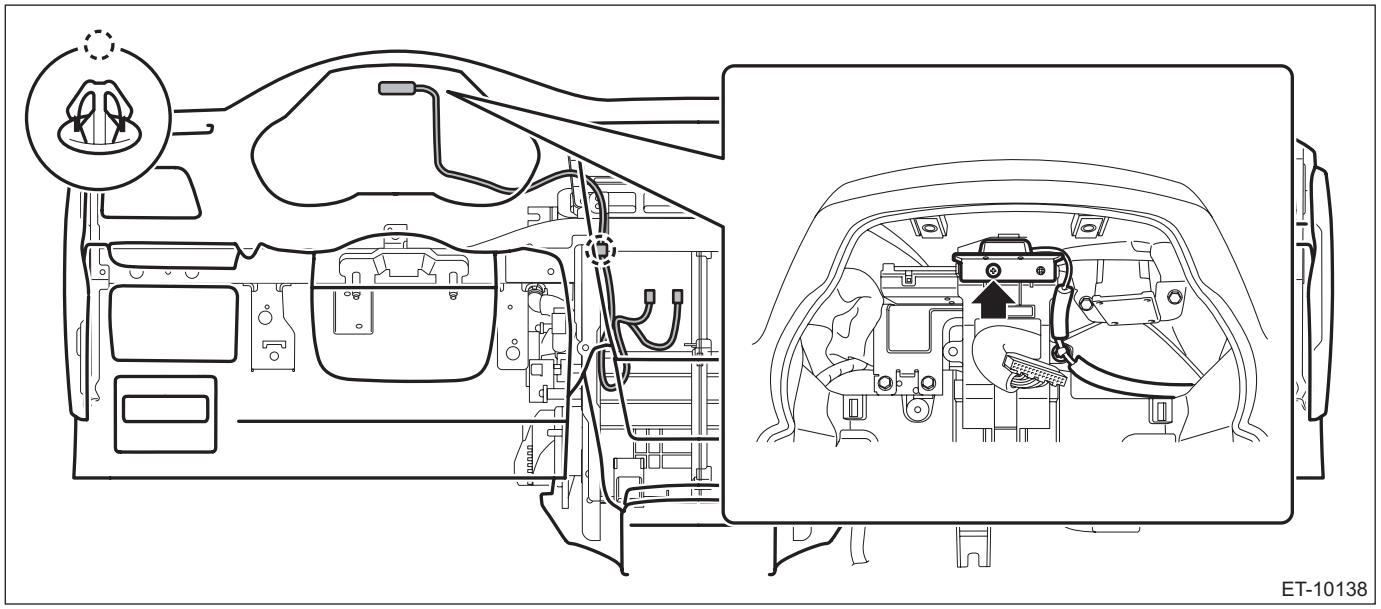

(3) When the GPS antenna assembly is pulled out, remove the string attached to the connector in step (1).

B: INSTALLATION

CAUTION:
After installing the center grille assembly, check that the air vent grille of the center grille assembly is inserted correctly into the air vent duct.

1) Install the GPS antenna assembly.
2) Install the audio assembly or navigation assembly.
3) Install the heater control assembly.
4) Install the center grille assembly.
5) Install the combination meter assembly.

Tightening torque:
7 N·m (0.7 kgf-m, 5.2 ft-lb)

6) Connect the ground terminal to battery sensor. <Ref. to RC-4, BATTERY, NOTE, Repair Contents.>

18.Data Communication Module

A: REMOVAL

1. DATA COMMUNICATION MODULE

1) Disconnect the ground terminal from battery sensor. <Ref. to RC-4, BATTERY, NOTE, Repair Contents.>
2) Remove the center grille assembly. <Ref. to AC-92, CENTER GRILLE ASSEMBLY, REMOVAL, Air Vent Grille.>
3) Remove the heater control assembly. <Ref. to AC-47, REMOVAL, Control Panel.>
4) Remove the audio assembly or navigation assembly. <Ref. to ET-23, REMOVAL, Audio.>
5) Remove the data communication module.
   (1) Remove the screws.
   (2) Remove the audio bracket or navigation bracket, and then remove the data communication module.

CAUTION:
Do not drop or apply any impact to the data communication module.

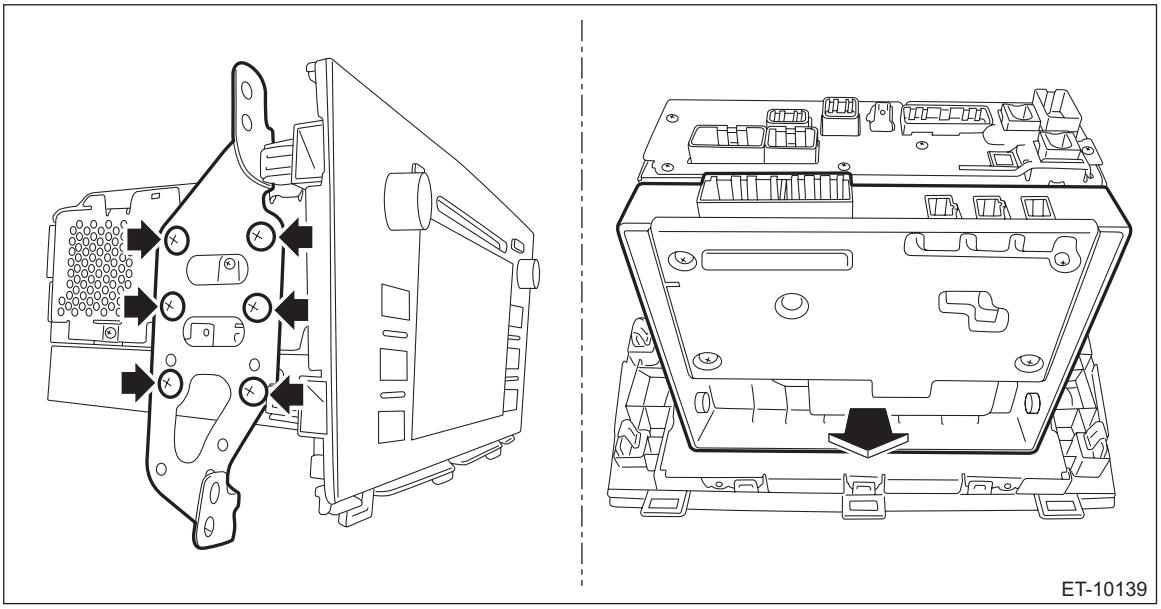

2. BACKUP BATTERY

1) Disconnect the ground terminal from battery sensor. <Ref. to RC-4, BATTERY, NOTE, Repair Contents.>
2) Remove the data communication module. <Ref. to ET-50, DATA COMMUNICATION MODULE, REMOVAL, Data Communication Module.>
3) Remove the backup battery.
(1) Remove the screws, and then remove the battery cover.

Preparation tool:
TORX® T10

(2) Disconnect the connector and remove the backup battery.

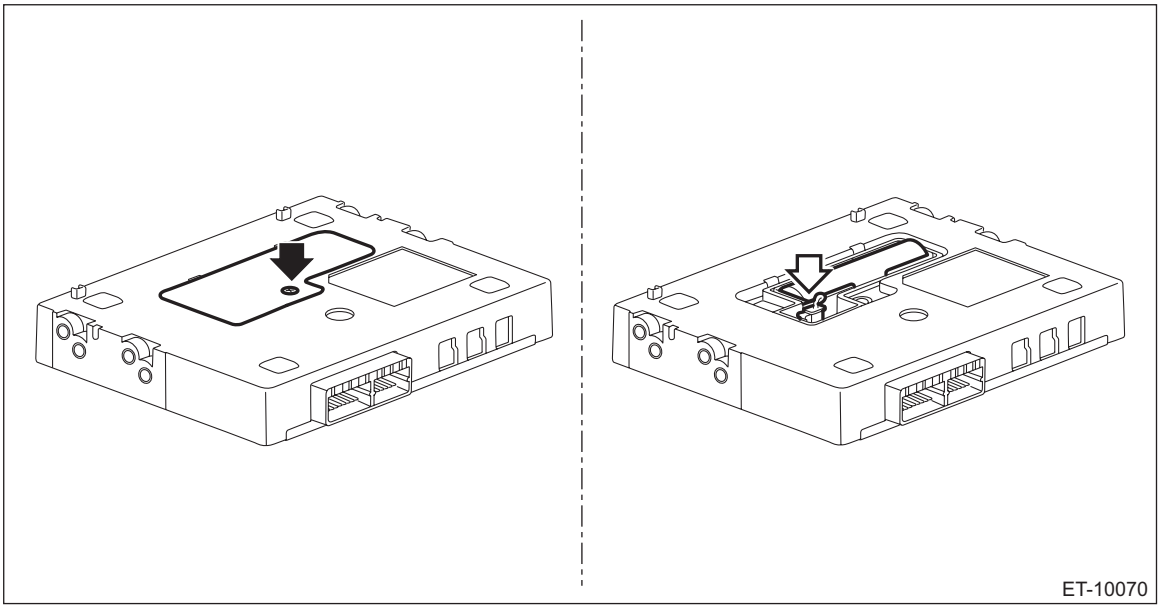

B: INSTALLATION

1. DATA COMMUNICATION MODULE

CAUTION:
After installing the center grille assembly, check that the air vent grille of the center grille assembly is inserted correctly into the air vent duct.

1) Install the data communication module, and then install the audio bracket or navigation bracket.

NOTE:
Align the positioning pin (a) of the data communication module with the positioning hole of the audio assembly or navigation assembly.

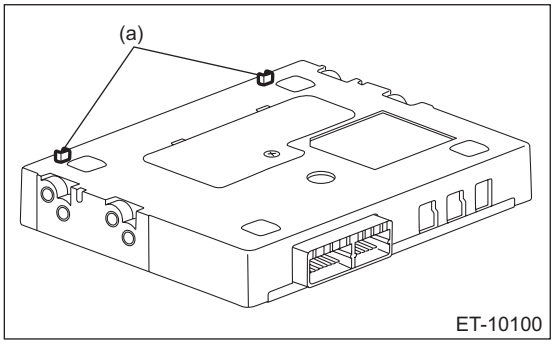

2) Install the audio assembly or navigation assembly.
3) Install the heater control assembly.
4) Install the center grille assembly.
5) Connect the ground terminal to battery sensor. <Ref. to RC-4, BATTERY, NOTE, Repair Contents.>

6) Perform the registration if the data communication module is replaced with a new part. <Ref. to ET-22, OPERATION, Telematics System.>
7) Check LED lighting status of overhead console or stereo camera cover assembly. <Ref. to TEL(diag)-4, LED ILLUMINATION STATUS LIST, CHECK, Check List for Interview.>

2. BACKUP BATTERY

1) Install the backup battery.

Tightening torque:
0.3 N·m (0.03 kgf-m, 0.2 ft-lb)

2) Install the data communication module. <Ref. to ET-51, DATA COMMUNICATION MODULE, INSTALLATION, Data Communication Module.>
3) Connect the ground terminal to battery sensor. <Ref. to RC-4, BATTERY, NOTE, Repair Contents.>

19.Rearview Camera System

A: WIRING DIAGRAM

1. MODEL WITH 6.2 INCH DISPLAY

Refer to “Rearview Camera System” in the wiring diagram.

• Sedan model: <Ref. to WI-316, SEDAN MODEL (6.2 INCH DISPLAY), WIRING DIAGRAM, Rearview Camera System.>

• OUTBACK model: <Ref. to WI-319, OUTBACK MODEL (6.2 INCH DISPLAY), WIRING DIAGRAM, Rearview Camera System.>

2. MODEL WITH 7 INCH DISPLAY

Refer to “Rearview Camera System” in the wiring diagram.

- Sedan model
  – Without audio amplifier: <Ref. to WI-317, SEDAN MODEL (7 INCH DISPLAY WITHOUT AUDIO AMPLIFIER), WIRING DIAGRAM, Rearview Camera System.>
  – With audio amplifier: <Ref. to WI-318, SEDAN MODEL (7 INCH DISPLAY WITH AUDIO AMPLIFIER), WIRING DIAGRAM, Rearview Camera System.>
- OUTBACK model
  – Without audio amplifier: <Ref. to WI-320, OUTBACK MODEL (7 INCH DISPLAY WITHOUT AUDIO AMPLIFIER), WIRING DIAGRAM, Rearview Camera System.>
  – With audio amplifier: <Ref. to WI-321, OUTBACK MODEL (7 INCH DISPLAY WITH AUDIO AMPLIFIER), WIRING DIAGRAM, Rearview Camera System.>

B: REMOVAL

1. SEDAN MODEL

1) Disconnect the ground terminal from battery sensor. <Ref. to RC-4, BATTERY, NOTE, Repair Contents.>
2) Remove the trim panel - trunk lid. <Ref. to EI-109, REMOVAL, Trunk Room Trim.>
3) Remove the garnish - trunk. <Ref. to EI-61, REMOVAL, Trunk Lid Garnish.>
4) Remove the rearview camera assembly.

CAUTION:
Do not drop or apply any impact to the rearview camera because it is a precision equipment.

(1) Disconnect the connector.
(2) Release the claw and hook, and then remove the rearview camera assembly.

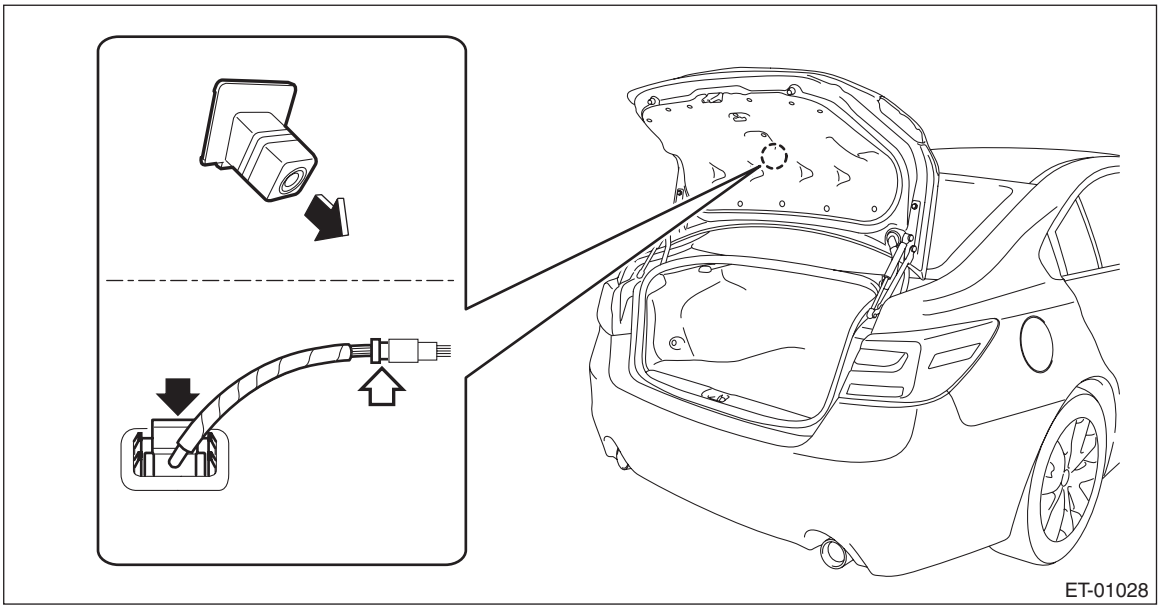

2. OUTBACK MODEL

1) Disconnect the ground terminal from battery sensor. <Ref. to RC-4, BATTERY, NOTE, Repair Contents.>
2) Remove the trim panel - rear gate. <Ref. to EI-121, REMOVAL, Rear Gate Trim.>
3) Remove the garnish assembly - rear gate. <Ref. to EI-62, REMOVAL, Rear Gate Garnish.>
4) Remove the rearview camera assembly.

CAUTION:
Do not drop or apply any impact to the rearview camera because it is a precision equipment.

(1) Disconnect the connector.
(2) Release the claw and hook, and then remove the rearview camera assembly.

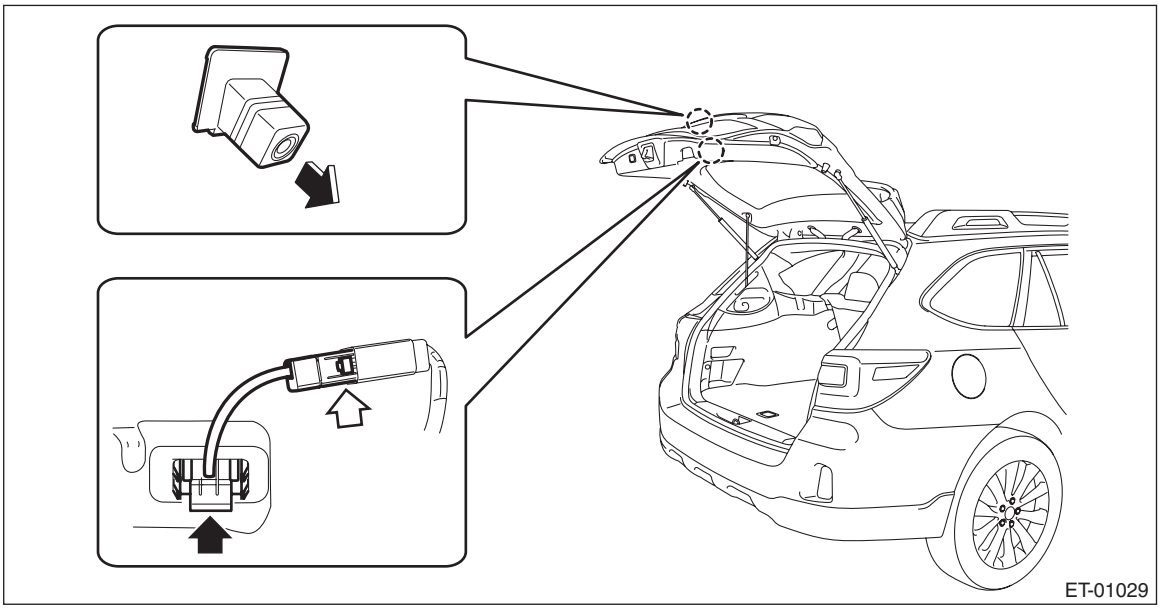

C: INSTALLATION

1. SEDAN MODEL

1) Install the rearview camera assembly.
2) Install the garnish - trunk.

Tightening torque:
4.5 N·m (0.5 kgf-m, 3.3 ft-lb)

3) Install the trim panel - trunk lid.
4) Connect the ground terminal to battery sensor. <Ref. to RC-4, BATTERY, NOTE, Repair Contents.>
5) Confirm the marker position. <Ref. to ET-55, INSPECTION, Rearview Camera System.>

2. OUTBACK MODEL

1) Install the rearview camera assembly.
2) Install the garnish assembly - rear gate.

Tightening torque:
4.5 N·m (0.5 kgf-m, 3.3 ft-lb)

3) Install the trim panel - rear gate.
4) Connect the ground terminal to battery sensor. <Ref. to RC-4, BATTERY, NOTE, Repair Contents.>
5) Confirm the marker position. <Ref. to ET-55, INSPECTION, Rearview Camera System.>

D: INSPECTION

1) Park the vehicle at a level place where there are enough area at the rear of the vehicle.
2) Attach the tape as the target point for standard at the floor rearward of the vehicle as shown in the figure below.

NOTE:
Standard tape width is about 30 — 50 mm (1.18 — 1.97 in) and brilliant color shall be used.

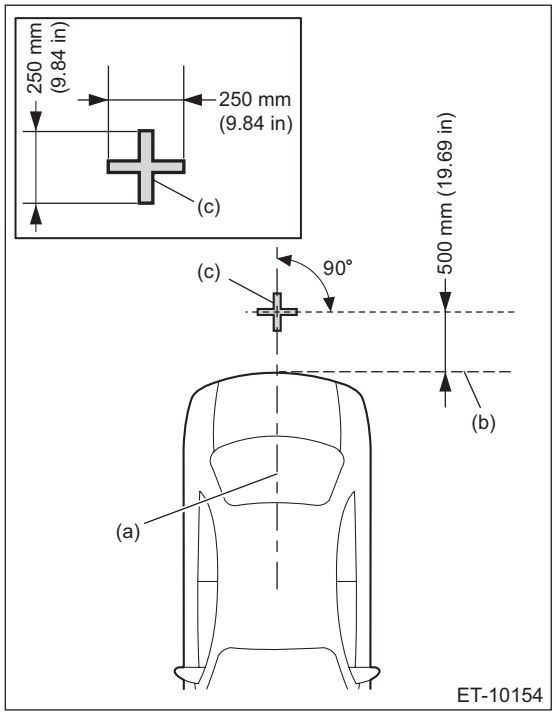

(A) Vehicle body center line
(B) Rear edge of bumper
(C) Target point

3) Confirm the following before checking the corresponding items.
(1) Rearview camera image is not displayed. (Audio and navigation screens are displayed normally.)
1. Check the condition of back sensor connection.
• Audio system: <Ref. to ET-10, CHECK VEHICLE SIGNALS WITH LINE DIAG MODE, OPERATION, Audio System.>
• Navigation system: <Ref. to ET-19, CHECK VEHICLE SIGNALS WITH LINE DIAG MODE, OPERATION, Navigation System.>
2. Check the condition of rearview camera connection.
• Audio system: <Ref. to ET-9, CHECK CONNECTIONS WITH LINE DIAG MODE, OPERATION, Audio System.>
• Navigation system: <Ref. to ET-18, CHECK CONNECTIONS WITH LINE DIAG MODE, OPERATION, Navigation System.>
(2) Marker position is not aligned or displayed.
The rearview camera or its installation location on the vehicle may be deformed. Check the rearview camera and its installation location on the vehicle, and repair or replace if necessary.

20.Front Accessory Power Supply Socket

A: WIRING DIAGRAM

Refer to “Front Accessory Power Supply Socket System” in the wiring diagram. <Ref. to WI-236, WIRING DIAGRAM, Front Accessory Power Supply Socket System.>

B: REMOVAL

1) Disconnect the ground terminal from the battery sensor, and wait for at least 60 seconds before starting work. <Ref. to RC-4, BATTERY, NOTE, Repair Contents.>
2) Remove the heater control assembly. <Ref. to AC-47, REMOVAL, Control Panel.>
3) Remove the cover assembly - front and the console box assembly. <Ref. to EI-80, REMOVAL, Console Box.>
4) Release the claws, and then remove the panel center LWR.

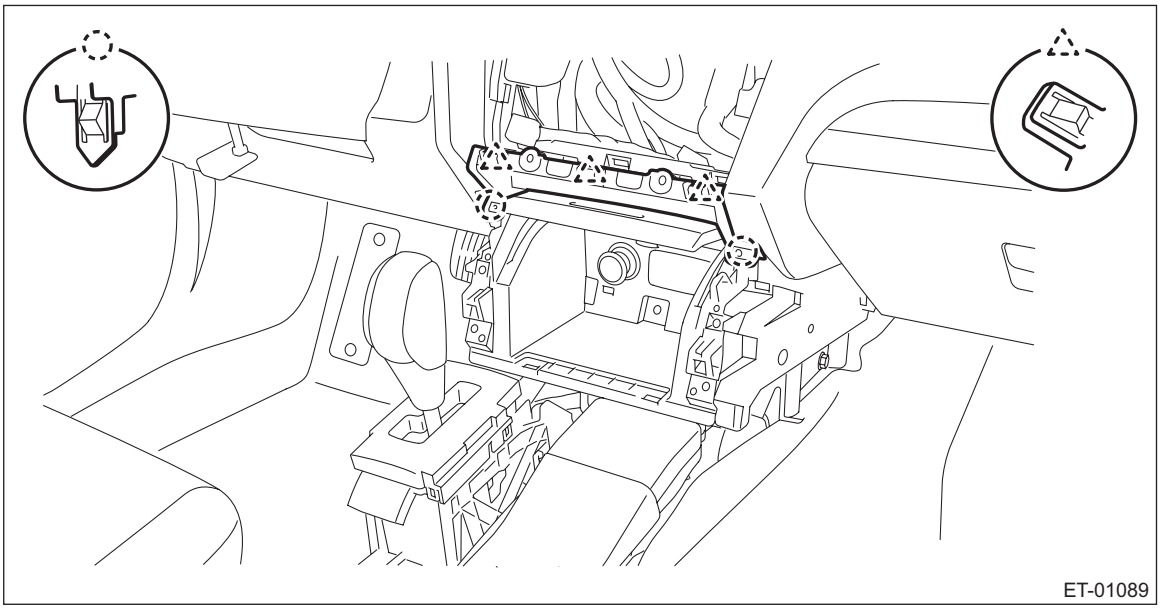
ET-01089

5) Remove the screws and remove the pocket assembly - CTR.

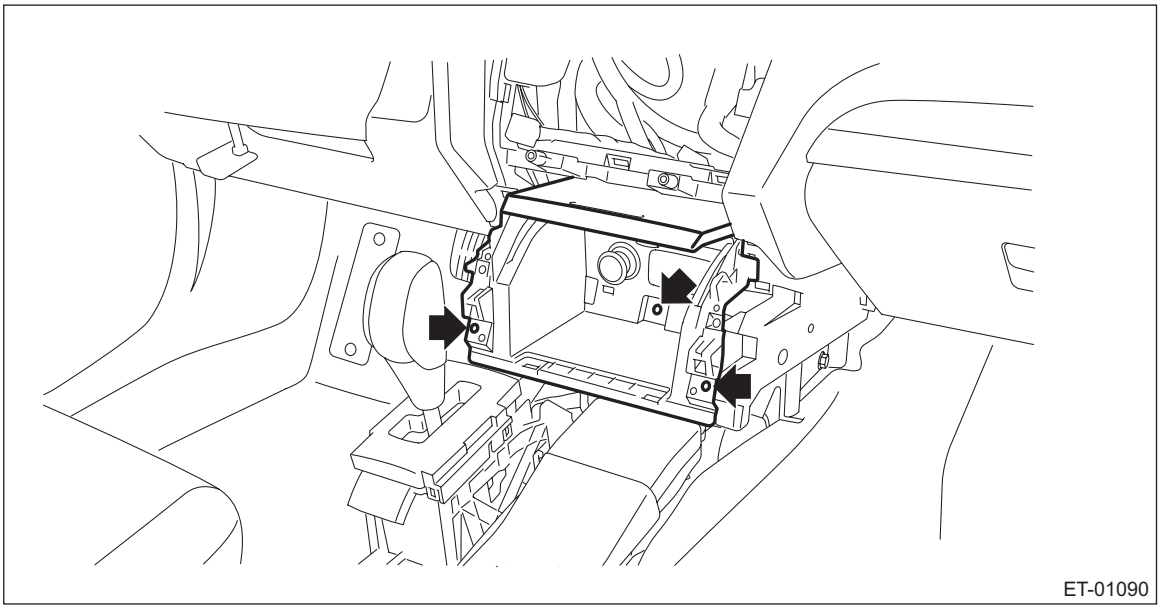
ET-01090

6) While releasing the claw, press it in from the rear to remove the socket assembly.

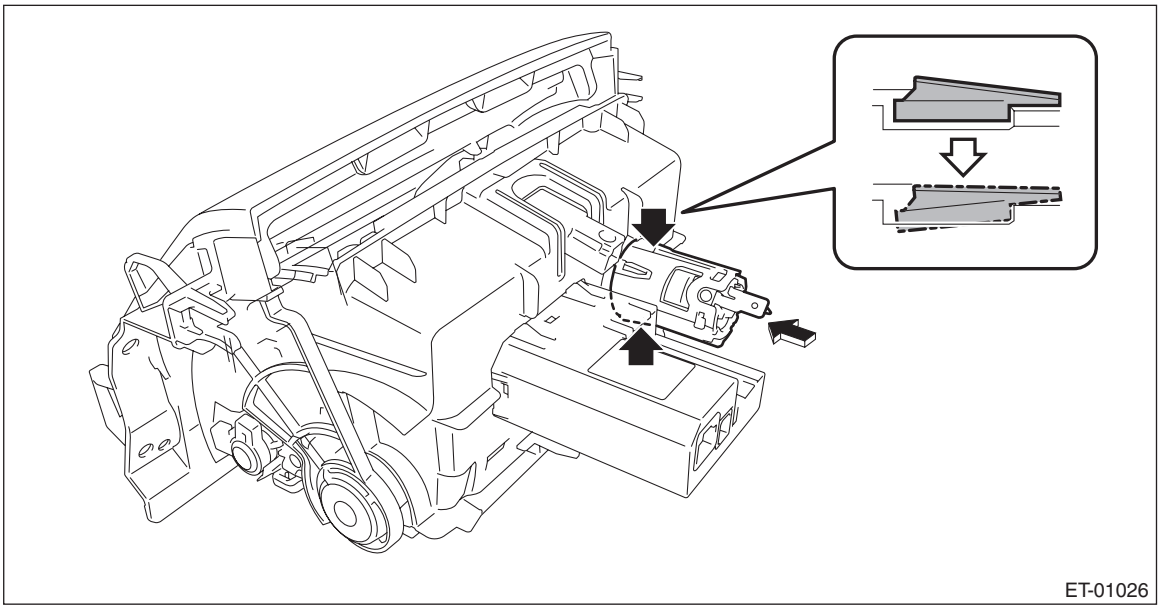

C: INSTALLATION

1) Install the socket assembly.

NOTE:
Align the groove of the pocket assembly - CTR with the claw of the socket assembly.

2) Install the pocket assembly - CTR.
3) Install the panel center LWR.
4) Install the cover assembly - front and the console box assembly.

Tightening torque:
6.5 N·m (0.6 kgf-m, 4.8 ft-lb)

5) Install the heater control assembly.
6) Connect the ground terminal to battery sensor. <Ref. to RC-4, BATTERY, NOTE, Repair Contents.>

21.Rear Accessory Power Supply Socket

A: WIRING DIAGRAM

Refer to “Rear Accessory Power Supply Socket System” in the wiring diagram. <Ref. to WI-314, WIRING DIAGRAM, Rear Accessory Power Supply Socket System.>

B: REMOVAL

1. CONSOLE

1) Disconnect the ground terminal from the battery sensor, and wait for at least 60 seconds before starting work. <Ref. to RC-4, BATTERY, NOTE, Repair Contents.>
2) Remove the cover assembly - front and the console box assembly. <Ref. to EI-80, REMOVAL, Console Box.>
3) While releasing the claw inside, press it in from the rear to remove the socket assembly.

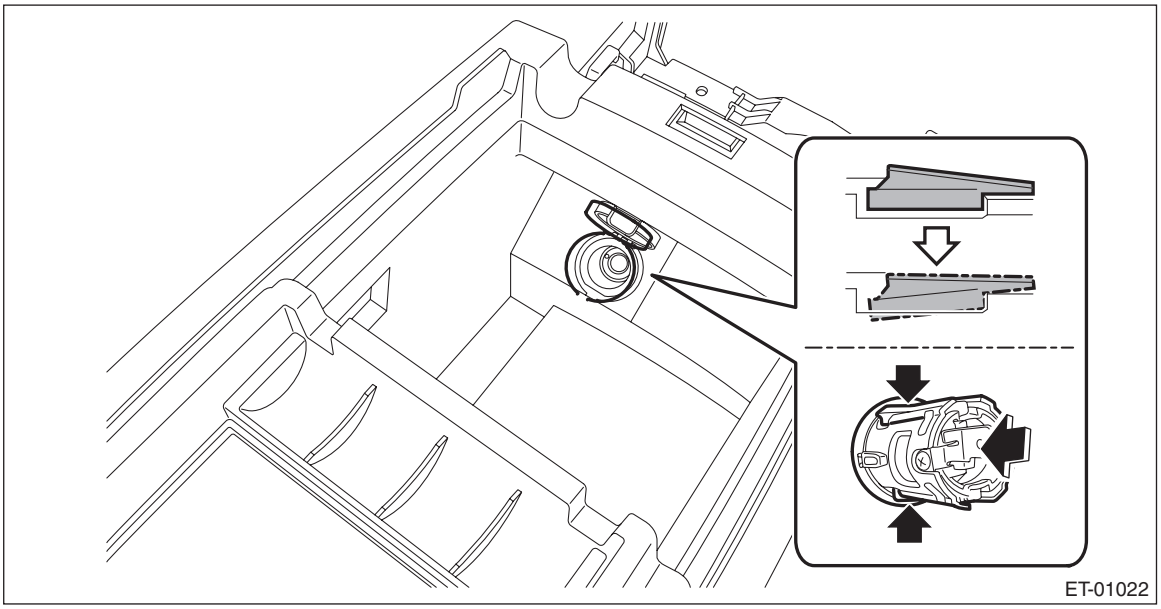

2. LUGGAGE ROOM

1) Disconnect the ground terminal from battery sensor. <Ref. to RC-4, BATTERY, NOTE, Repair Contents.>
2) Remove the trim panel - rear apron LH. <Ref. to EI-100, OUTBACK MODEL, REMOVAL, Rear Quarter Trim.>
3) While releasing the claw inside, press it in from the rear to remove the socket assembly.

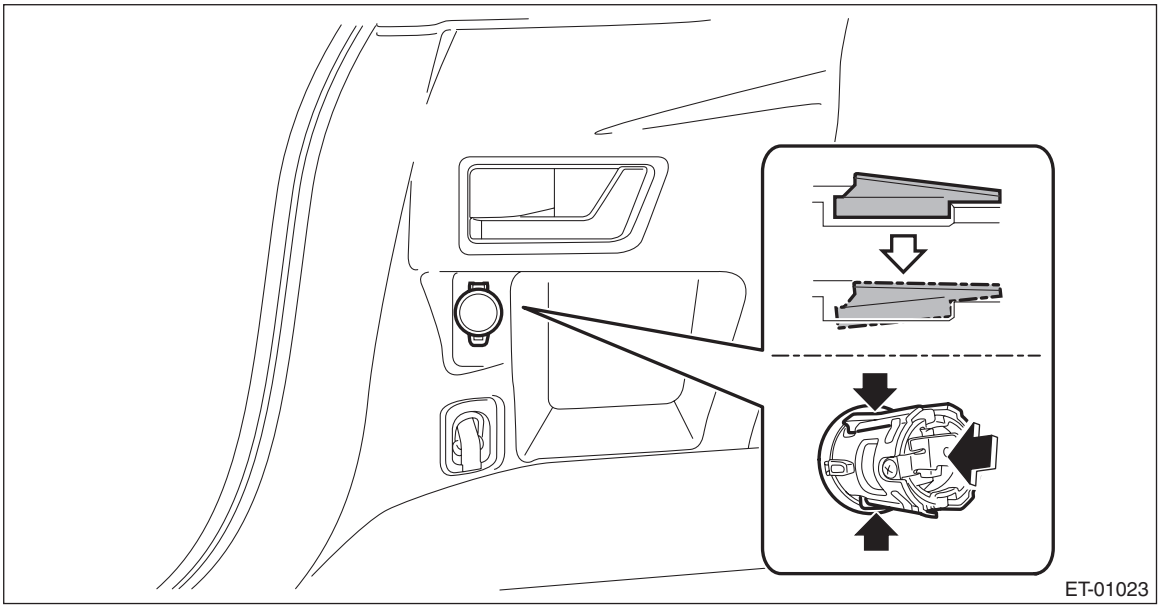

C: INSTALLATION

1) Install the socket assembly.

NOTE:
Align the groove of the console box assembly or the trim panel - rear apron LH with the claw of the socket assembly.
2) Install the cover assembly - front console box assembly. (Console type)

Tightening torque:
6.5 N·m (0.6 kgf-m, 4.8 ft-lb)
3) Install the trim panel - rear apron LH. (Luggage room type)
4) Connect the ground terminal to battery sensor. <Ref. to RC-4, BATTERY, NOTE, Repair Contents.>

22.External Connection Terminal

A: REMOVAL

1) Disconnect the ground terminal from the battery sensor, and wait for at least 60 seconds before starting work. <Ref. to RC-4, BATTERY, NOTE, Repair Contents.>
2) Remove the heater control assembly. <Ref. to AC-47, REMOVAL, Control Panel.>
3) Remove the cover assembly - front and the console box assembly. <Ref. to EI-80, REMOVAL, Console Box.>
4) Release the claws, and then remove the panel center LWR.

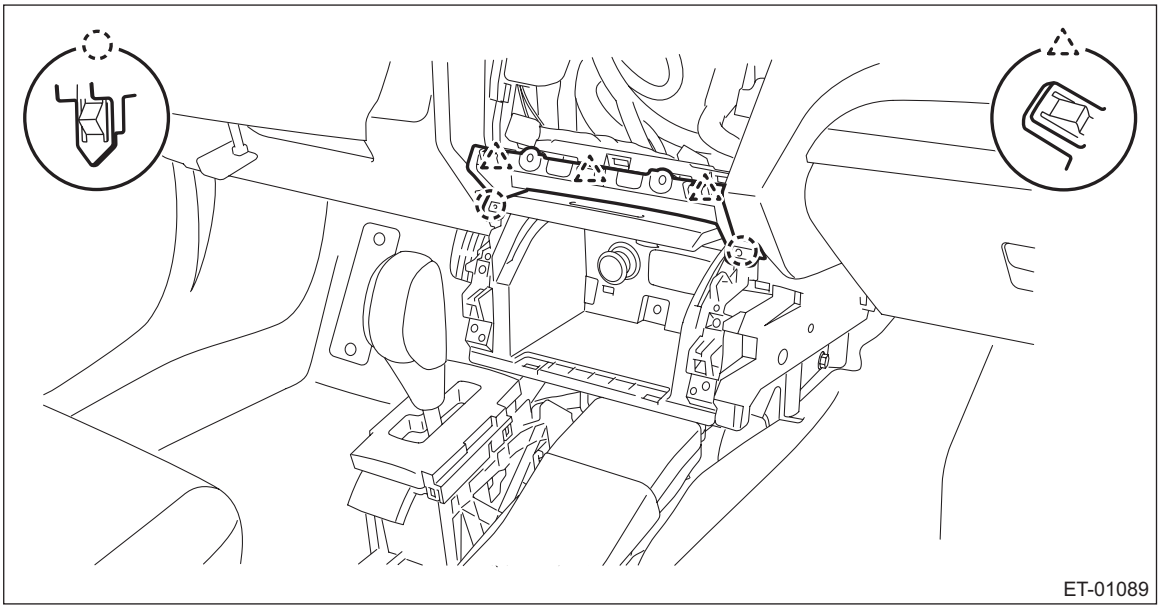

5) Remove the screws and remove the pocket assembly - CTR.

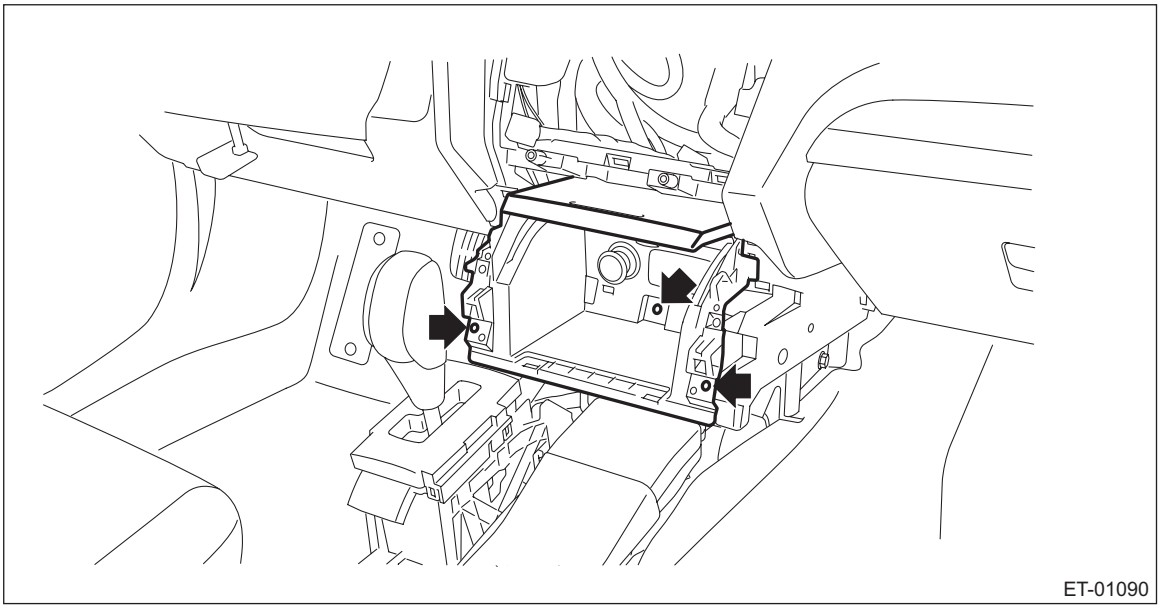

6) While pressing the claw, press it in from the rear to remove the unit assembly - AUX.

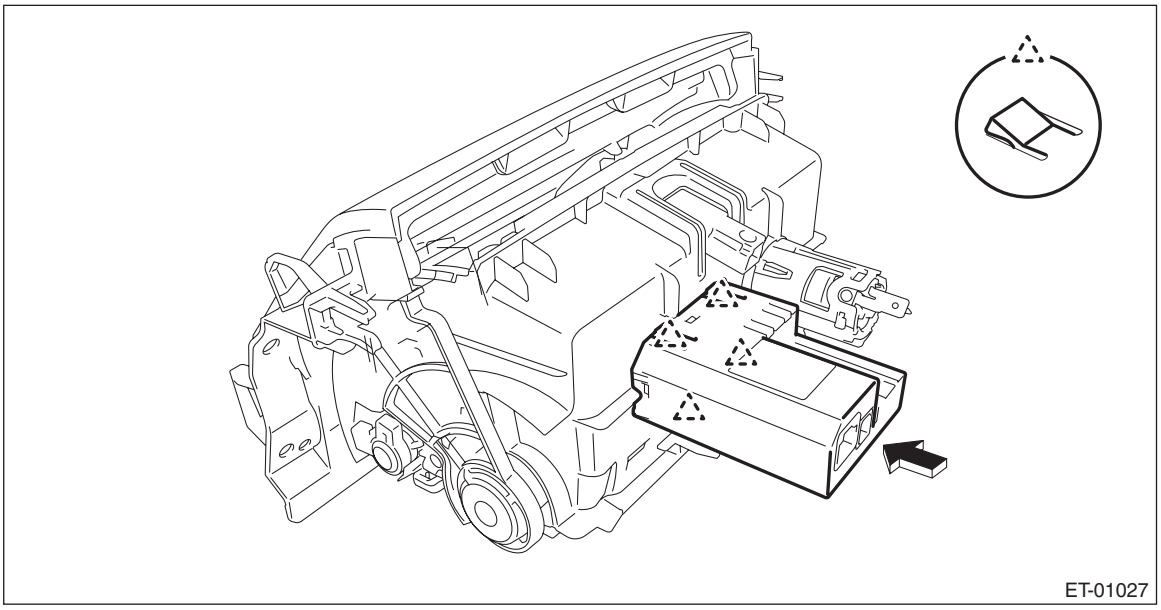

B: INSTALLATION

1) Install the unit assembly - AUX.
2) Install the pocket assembly - CTR.
3) Install the panel center LWR.
4) Install the cover assembly - front and the console box assembly.

Tightening torque:
6.5 N·m (0.6 kgf-m, 4.8 ft-lb)

5) Install the heater control assembly.
6) Connect the ground terminal to battery sensor. <Ref. to RC-4, BATTERY, NOTE, Repair Contents.>

23.Service Diagnostics Mode

A: NOTE

For the service diagnostic mode, refer to the “INFOTAINMENT SYSTEM (DIAGNOSTICS)” section. <Ref. to INF(diag)-57, Service Diagnostics Mode.>

INFOTAINMENT SYSTEM (DIAGNOSTICS)

INF(diag)

		Page
1.	Basic Diagnostic Procedure	2
2.	Check List for Interview	3
3.	General Description	6
4.	Electrical Component Location	7
5.	Control Module I/O Signal	8
6.	Subaru Select Monitor	15
7.	Read Diagnostic Trouble Code (DTC)	18
8.	Clear Memory Mode	19
9.	Inspection Mode	20
10.	Read Current Data	21
11.	List of Diagnostic Trouble Code (DTC)	22
12.	Diagnostic Procedure with Diagnostic Trouble Code (DTC)	23
13.	Diagnostics with Phenomenon	37
14.	Service Diagnostics Mode	57

1. Basic Diagnostic Procedure

A: PROCEDURE

	Step	Check	Yes	No
1	**PERFORM CUSTOMER INTERVIEW.** Using the Check List for Interview, ask the customer the condition of how trouble occurs.	Did you interview the customer?	Go to step **2**.	Interview the customer. <Ref. to INF(diag)-3, CHECK, Check List for Interview.>
2	**CHECK SUBARU SELECT MONITOR COMMUNICATION.** Check for communication with the infotainment system. NOTE: If the communication function of the Subaru Select Monitor cannot be executed properly, check the communication circuit. <Ref. to INF(diag)-16, INSPECTION, Subaru Select Monitor.>	Is communication possible?	Go to step **3**.	Check the communication circuit.
3	**CHECK DTC.** Using the Subaru Select Monitor, read DTC of the infotainment system. <Ref. to INF(diag)-18, Read Diagnostic Trouble Code (DTC).>	Is DTC displayed?	Perform the diagnosis according to DTC. <Ref. to INF(diag)-22, List of Diagnostic Trouble Code (DTC).> After diagnosis, Go to step **6**.	Go to step **4**.
4	**PERFORM DIAGNOSTICS WITH PHENOMENON.** Check the list of Diagnostics with Phenomenon. <Ref. to INF(diag)-37, Diagnostics with Phenomenon.>	Does the symptom apply?	Perform diagnosis according to the procedures in the diagnostics with phenomenon.	Go to step **5**.
5	**CHECK TROUBLE PHENOMENON.** 1) Perform the basic inspection. <Ref. to INF(diag)-6, INSPECTION, General Description.> 2) Check the control module I/O signal. <Ref. to INF(diag)-8, ELECTRICAL SPECIFICATION, Control Module I/O Signal.> 3) Perform check of current data. <Ref. to INF(diag)-21, Read Current Data.>	Was the trouble cause found?	Perform the Clear Memory after repairing or replacing the cause of trouble. <Ref. to INF(diag)-19, Clear Memory Mode.>	System is normal.
6	**PERFORM DIAGNOSIS.** 1) Perform the Clear Memory Mode. <Ref. to INF(diag)-19, Clear Memory Mode.> 2) Perform the Inspection Mode. <Ref. to INF(diag)-20, Inspection Mode.>	Is DTC displayed?	Perform the diagnosis according to DTC. <Ref. to INF(diag)-22, List of Diagnostic Trouble Code (DTC).>	Finish the diagnosis.

2. Check List for Interview

A: CHECK

- Inspect the following items regarding the vehicle's state.
- Print out this page for interviewing customers.

1. MODEL WITH 7 INCH DISPLAY

NOTE:
For models with 6.2 inch display, refer to Audio System. <Ref. to ET-8, OPERATION, Audio System.>

<table>
<tr><td colspan="2">Check List for Interview</td><td colspan="2">Date of Vehicle Bring-in Year Month Date</td></tr>
<tr><td colspan="2" rowspan="2">Customer's name</td><td>Registration No.</td><td>Initial year of registration
Year Month Date</td></tr>
<tr><td>Vehicle model</td><td>Frame number</td></tr>
<tr><td>Interviewer</td><td>Inspector</td><td>Engine type</td><td>Odometer reading</td></tr>
<tr><td colspan="4">Customer specified content
•
•
•
•</td></tr>
<tr><td rowspan="3">Product information</td><td>Part No.</td><td>Manufacturer model number</td><td>Serial No.</td></tr>
<tr><td colspan="3">Software version*1</td></tr>
<tr><td colspan="3">Connected device (example: iPod connected via USB cable)</td></tr>
<tr><td>SUBARU STARLINK connection ID*1</td><td colspan="3"></td></tr>
<tr><td>SUBARU STARLINK app version</td><td colspan="3"></td></tr>
<tr><td rowspan="3">Mobile phone</td><td colspan="3">Mobile phone carrier (example: AT&T)</td></tr>
<tr><td colspan="3">Mobile phone model (example: Apple iPhone 6)</td></tr>
<tr><td colspan="3">Mobile phone OS version (example: software version information)</td></tr>
<tr><td>Date when problem occurred</td><td colspan="3">Year Month Date</td></tr>
<tr><td rowspan="3">Conditions at event</td><td colspan="3">Weather
❑ Fine ❑ Cloudy ❑ Rainy ❑ Snowy ❑ Others ( )</td></tr>
<tr><td colspan="3">Temperature
°C (°F)</td></tr>
<tr><td colspan="3">How often
❑ Always (Check here if reproduced.) ❑ Once in the past
❑ Sometimes (times a day / times a week / times a month)</td></tr>
<tr><td>When</td><td colspan="3">Example: It occurs about 30 minutes after driving.</td></tr>
<tr><td>Occurrence condition 1 (In what situations did it occur?)</td><td colspan="3">❑ Fast Driving ❑ Rough Roads ❑ Parked ❑ Unknown ❑ Others</td></tr>
<tr><td>Occurrence condition 2 (In what operations did it occur?)</td><td colspan="3">❑ ACC On ❑ Insert Disc ❑ Press Specific Button or Mode ❑ Press Specific Button or Mode
❑ Unknown ❑ Others</td></tr>
</table>

Check List for Interview

INFOTAINMENT SYSTEM (DIAGNOSTICS)

Recovering condition (What helped the status return to normal?)	❑ Recover on its own ❑ ACC Off and On ❑ Does not recover ❑ Others
Occurrence location	❑ Unknown ❑ Any Place ❑ Driving around open areas like in the country ❑ Driving around hills or mountains ❑ Driving around cities with large buildings ❑ Driving around residential areas or no large buildings ❑ Driving around areas with power
Error message content (error message displayed)	
Display trouble	❑ Black screen ❑ White screen ❑ Blue screen ❑ Dim ❑ Vertical/horizontal noise (lines) ❑ Poor color tone ❑ Unclear ❑ Display corruption ❑ No picture ❑ Others
Occurrence conditions (screen display related problems)	❑Navigation ❑CD ❑Radio ❑External devices ❑Others ( )
Operating problems	❑ Display does not switch ❑ Display changes unexpectedly ❑ Response is dull/slow ❑ Does not respond to key entry ❑ Does not respond to steering switch entry ❑ Does not change to night mode screen ❑ Discs cannot be inserted or ejected ❑ Others
Display/touch switch malfunction	❑ Brightness / Contrast ❑ Discoloration ❑ No rear camera ❑ Partial Display ❑ Lines in screen ❑ No Audio Control Screen ❑ No Navi Map on Screen ❑ Others
Voice recognition malfunction	❑ Voice recognition is not ready ❑ Not recognize commands ❑ Others
BEEP on operation entry	❑ Present ❑ None
Radio malfunction	❑ AM: Station (Hz) ❑ FM: Station (Hz) ❑ SXM: Station (channel) (only for North America) ❑ HD: Station (channel) (only for North America) ❑ No Sound ❑ No / Poor Sound ❑ Noise / Static ❑ Sound cuts in / out ❑ Others
SW color change at operation	❑ Present ❑ None
Audio malfunction	❑ Does not sound ❑ Front (❑ R ❑ L) ❑ Rear (❑ R ❑ L) ❑ Others ( ) ❑ Operation related problems ❑ Cannot adjust volume level ❑ Cannot use tone control or adjust tone range ❑ Cannot record ❑ Sound skipping ❑ CD ❑ DVD ❑ Others ( ) • Specific mode/disc ( )
CD/USB/SD/iPod malfunction	❑ Will not accept ❑ Will not eject (CD) ❑ Will not play ❑ Skips / Jump Chapter ❑ No Sound ❑ Noise / Static ❑ Sound cuts in / out ❑ Shows Error ❑ Others
Fault in navigation system	❑ Cursor or map rotating ❑ Wrong location of vehicle ❑ Cursor hopping during driving ❑ Map image incomplete ❑ No GPS marks displayed ❑ Incorrect time display ❑ Guide not initiated ❑ No route search ❑ Caution remains on navigation screen ❑ Unexpected return back to opening screen ❑ No Voice Guidance ❑ Guidance Volume too Low ❑ Will Not Read Data ❑ Will Not Update ❑ Destination / Route Problem ❑ Display Does Not Change (Frozen) ❑ Overall Navi Operation Slow ❑ No GPS reception ❑ Others
Bluetooth Audio related malfunction	❑ Will Not Pair ❑ Will Not Play ❑ No Sound ❑ Noise / Static ❑ Disconnect on its own ❑ Others
Bluetooth handsfree related malfunction	❑ Will Not Pair ❑ Cannot Hear (Receiver) ❑ Cannot Hear (Caller) ❑ Sounds Garbled ❑ Address Book Will Not Transfer ❑ Disconnect on its own
SUBARU STARLINK malfunction	❑ Bluetooth connection not established ❑ SUBARU STARLINK app disabled ❑ SUBARU STARLINK app disabled ❑ Communication gets out of service ❑ Pandora disabled ❑ MirrorLink disabled ❑ AHA disabled ❑ USB connection not established ❑ Others

Check result	Reproductivity ❑ Reproduced ❑ Always ❑ Sometimes ❑ Cannot be reproduced ❑ Others
	Condition ❑ Cold ❑ Warm ❑ At starting ❑ Immediately after starting ❑ During warm-up ❑ At idling ❑ When start driving ❑ While driving ❑ At acceleration ❑ At deceleration ❑ When applying brake

*1: For each confirmation procedure, refer to Audio System or Navigation System. <Ref. to ET-8, OPERATION, Audio System.> <Ref. to ET-17, OPERATION, Navigation System.>

3. General Description

A: CAUTION

1. AIRBAG SYSTEM

Refer to “CAUTION” in “General Description” in AIRBAG SYSTEM. <Ref. to AB-10, CAUTION, General Description.>

2. INFOTAINMENT SYSTEM

Refer to “CAUTION” in “General Description” in ENTERTAINMENT. <Ref. to ET-4, CAUTION, General Description.>

B: INSPECTION

1. BASIC INSPECTION

Before performing diagnosis, check the following items which might affect the problems related to infotainment system.
1) Check the battery. <Ref. to SC(H4DO)-65, INSPECTION, Battery.> <Ref. to SC(H6DO)-59, INSPECTION, Battery.>
2) Check the relay and fuse condition. <Ref. to ET-7, Relay and Fuse.>
3) Check the connecting condition of harness and harness connector.

C: PREPARATION TOOL

1. SPECIAL TOOL

ILLUSTRATION	TOOL NUMBER	DESCRIPTION	REMARKS
 STSSM4	— (Newly adopted tool)	SUBARU SELECT MONITOR 4	Used for setting of each function and trouble-shooting for electrical system. NOTE: For detailed operation procedures of Subaru Select Monitor 4, refer to “Application help”.

2. GENERAL TOOL

TOOL NAME	REMARKS
Circuit tester	Used for measuring resistance, voltage and current.
DST-i	Used together with Subaru Select Monitor 4.

4. Electrical Component Location

A: LOCATION

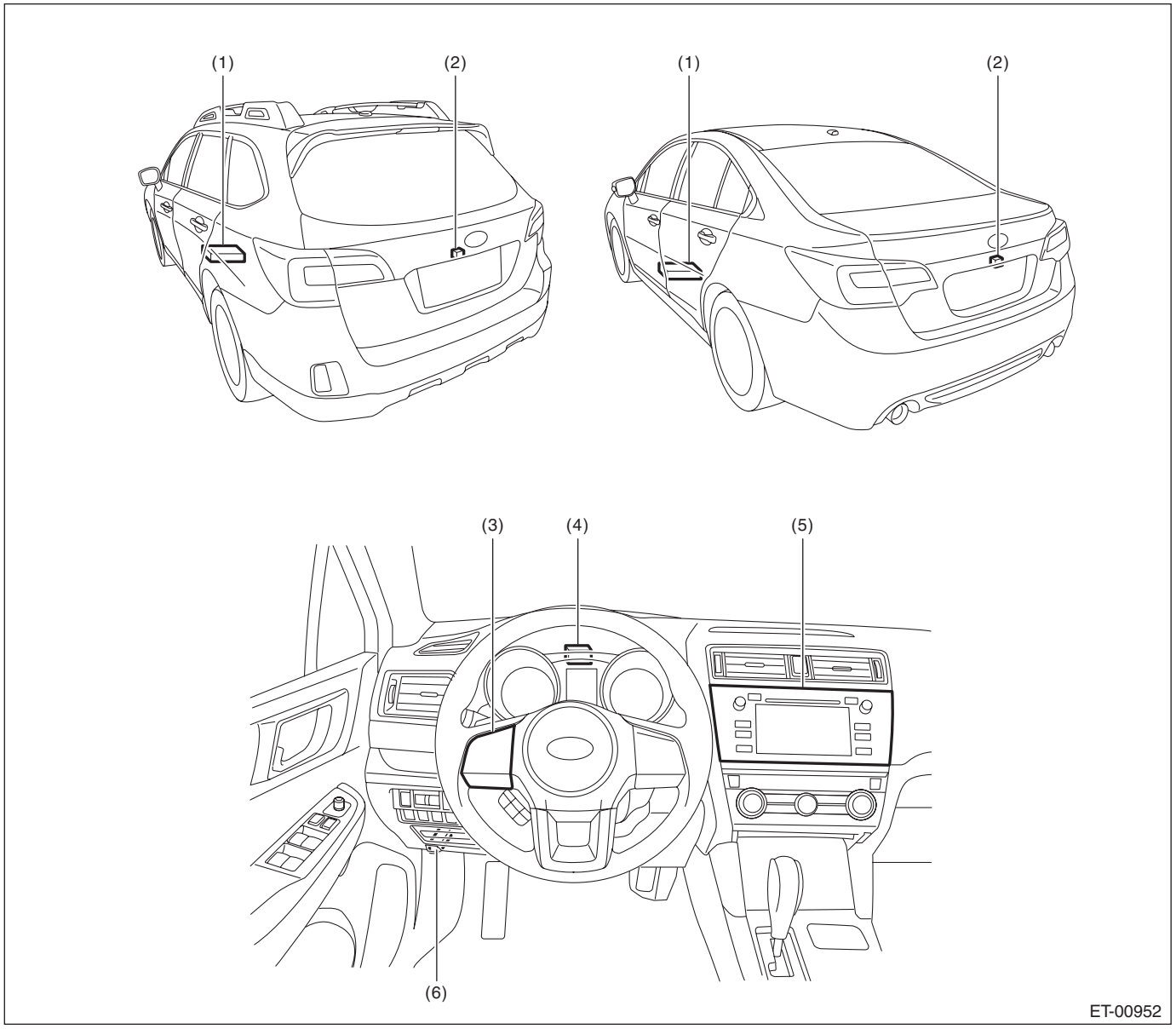

(1) Audio amplifier (if equipped)
(2) Rearview camera (if equipped)
(3) Satellite switch
(4) GPS antenna (if equipped)
(5) Audio (7-inch display) or navigation unit
(6) Data link connector

5. Control Module I/O Signal

A: ELECTRICAL SPECIFICATION

1. NAVIGATION UNIT OR AUDIO (7-INCH DISPLAY)

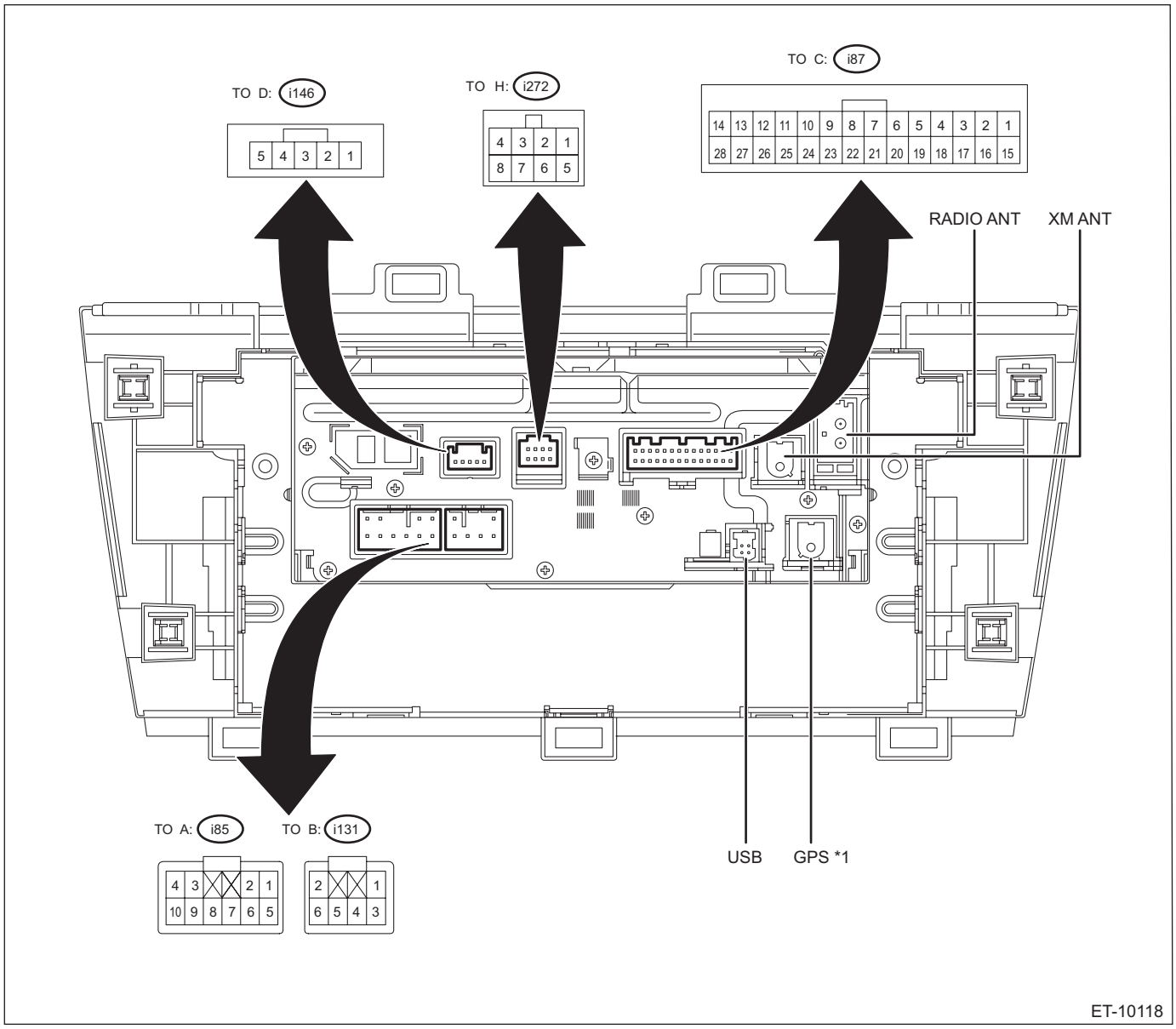

*1: Models with navigation system

- Power supply and speaker output terminal

Terminal No.	Contents	Measuring condition	Measurement value	Note
(i35) or (i85) No. 1	FRONT-RH (+)	—	—	—
(i35) or (i85) No. 2	FRONT-LH (+)	—	—	—
(i35) or (i85) No. 3 ←→ Chassis ground	ACC	ACC ON	11 — 15 V	—
(i35) or (i85) No. 4 ←→ Chassis ground	+B	Always	11 — 15 V	—
(i35) or (i85) No. 5	FRONT-RH (–)	—	—	—
(i35) or (i85) No. 6	FRONT-LH (–)	—	—	—
(i35) or (i85) No. 7 ←→ Chassis ground	GND	Always	0 V	—
(i35) or (i85) No. 8	ANTENNA-ON	—	—	—
(i35) or (i85) No. 9	N.C.	—	—	—
(i35) or (i85) No. 10	ILLUMI (+)	—	—	—
(i36) or (i131) No. 1	REAR-RH (+) / N.C.*1	—	—	—
(i36) or (i131) No. 2	REAR-LH (+) / INT+*1	—	—	—
(i36) or (i131) No. 3	REAR-RH (–) / N.C.*1	—	—	—
(i36) or (i131) No. 4	N.C. / SLD2*1	—	—	—
(i36) or (i131) No. 5	ILLUMI (–)	—	—	—
(i36) or (i131) No. 6	REAR-LH (–) / INT (–)*1	—	—	—

*1: Model with power amplifier

- Steering switch and AUX input terminal for microphone etc.

Terminal No.	Contents	Measuring condition	Measurement value	Note
(i87) No. 1 ←→ Chassis ground	IGN	IGN ON	11 — 15 V	—
(i87) No. 2	REV	—	—	—
(i87) No. 3	BRIGHT	—	—	—
(i87) No. 4	MACC	—	—	—
(i87) No. 5	MIC+	—	—	—
(i87) No. 6	MIC DET	—	—	—
(i87) No. 7	N.C. /TX1+ (for brand AMP communication)*1	—	—	—
(i87) No. 8	N.C. /TX1– (for brand AMP communication)*1	—	—	—
(i87) No. 9	CAN+	—	—	CAN communication line
(i87) No. 10	CAN–	—	—	CAN communication line
(i87) No. 11	AC-UART (+)	—	—	UART communication line
(i87) No. 12	AC-UART (–)	—	—	UART communication line
(i87) No. 13	NC	—	—	—
(i87) No. 14	SHIELD-GND (AUX)	—	—	—
(i87) No. 15 ←→ Chassis ground	PKB	At parking ON	1 V or less	—
(i87) No. 16	MUTE	—	—	—
(i87) No. 17 ←→ Chassis ground	SPD	When the tire is rotating	Pulse signal	—
(i87) No. 18	SHIELD-GND (MIC)	—	—	—
(i87) No. 19	MIC-	—	—	—
(i87) No. 20	NC	—	—	—
(i87) No. 21	SW1	—	—	—
(i87) No. 22	SW2	—	—	—
(i87) No. 23	SWG	—	—	—
(i87) No. 24	N.C.	—	—	—
(i87) No. 25	AUX-DET	—	—	—
(i87) No. 26	AUX-R (+)	—	—	—
(i87) No. 27	AUX-LR (–)	—	—	—
(i87) No. 28	AUX-L (+)	—	—	—

*1: Model with power amplifier

- Rearview camera

Terminal No.	Contents	Measuring condition	Measurement value	Note
(i146) No. 1 ←→ Chassis ground	CGND	Always	0 V	—
(i146) No. 2	CB+	—	—	—
(i146) No. 3	CV+	—	—	—
(i146) No. 4	CV–	—	—	—
(i146) No. 5	NC	—	—	—

- RSE

Terminal No.	Contents	Measuring condition	Measurement value	Note
(i272) No. 1 ←→ Chassis ground	VV+(VTR-COMP)	—	—	—
(i272) No. 2	VV–(VTR-GND)	—	—	—
(i272) No. 3	NC	—	—	—
(i272) No. 4	NC	—	—	—
(i272) No. 5	VV-(VTR-GND)	—	—	—
(i272) No. 6	VV+(VTR-COMP)	—	—	—
(i272) No. 7	SHIELD-GND	—	—	—
(i272) No. 8	MUTE*1/NC	—	—	—

*1: Model with telematics

2. POWER AMPLIFIER

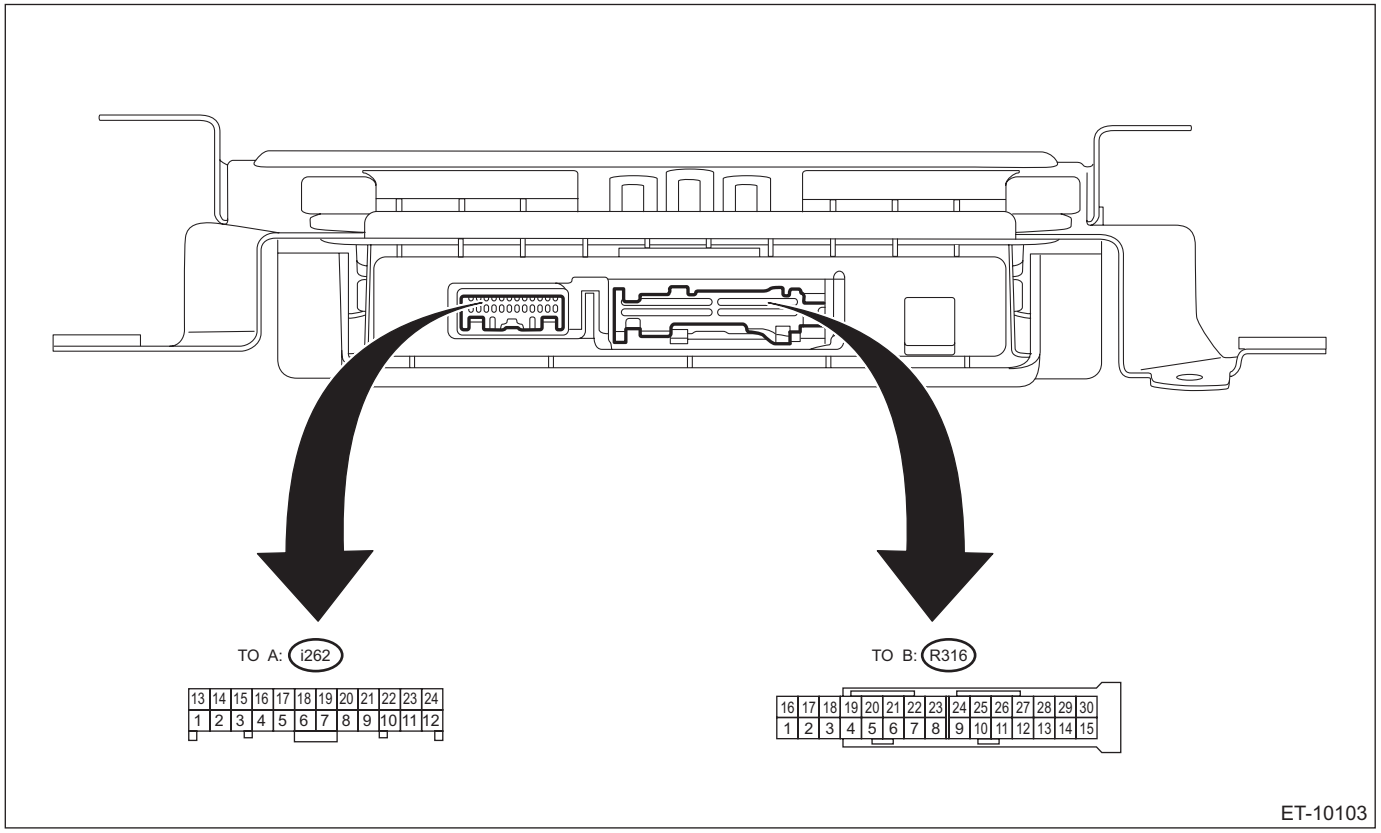

Terminal No.	Contents	Details
(B316) No. 1	+B	Battery power supply
(B316) No. 2	NC	Not connected
(B316) No. 3	NC	Not connected
(B316) No. 4	NC	Not connected
(B316) No. 5	NC	Not connected
(B316) No. 6	NC	Not connected
(B316) No. 7	NC	Not connected
(B316) No. 8	WF+	Sub woofer positive
(B316) No. 9	TWR+	Instrument panel right side speaker positive
(B316) No. 10	CTR+	Instrument panel center speaker positive
(B316) No. 11	FL+	Left side front door speaker positive
(B316) No. 12	FR+	Right side front door speaker positive
(B316) No. 13	TWL+	Instrument panel left side speaker positive
(B316) No. 14	RL+	Left side rear door speaker positive
(B316) No. 15	RR+	Right side rear door speaker positive
(B316) No. 16	+B2	Battery power supply
(B316) No. 17	NC	Not connected
(B316) No. 18	GND2	Ground
(B316) No. 19	NC	Not connected
(B316) No. 20	NC	Not connected
(B316) No. 21	NC	Not connected
(B316) No. 22	NC	Not connected
(B316) No. 23	WF–	Sub woofer negative
(B316) No. 24	TWR–	Instrument panel right side speaker negative
(B316) No. 25	CTR–	Instrument panel center speaker negative

Terminal No.	Contents	Details
(B316) No. 26	FL–	Left side front door speaker negative
(B316) No. 25	FR–	Right side front door speaker negative
(B316) No. 28	TWL–	Instrument panel left side speaker negative
(B316) No. 29	RL–	Left side rear door speaker negative
(B316) No. 30	RR–	Right side rear door speaker negative
(i262) No. 1	MUTE	MUTE
(i262) No. 2	L–	Left channel negative input
(i262) No. 3	L+	Left channel positive input
(i262) No. 4	R–	Right channel negative input
(i262) No. 5	R+	Right channel positive input
(i262) No. 6	SLD	Shield
(i262) No. 7	TX–	Transmitter negative
(i262) No. 8	TX+	Transmitter positive
(i262) No. 9	EQ CHG	Equalizer select (change)*1
(i262) No. 10	L/RHD-SEL	Equalizer select (change)*2
(i262) No. 11	SPEED	Vehicle speed pulse
(i262) No. 12	ACC	ACC power supply
(i262) No. 13	NC	Not connected
(i262) No. 14	II1–	Interrupt information negative
(i262) No. 15	II1+	Interrupt information positive
(i262) No. 16	NC	Not connected
(i262) No. 17	NC	Not connected
(i262) No. 18	SLD2	Shield
(i262) No. 19	NC	Not connected
(i262) No. 20	NC	Not connected
(i262) No. 21	NMUTE	Navigation mute (not used)
(i262) No. 22	NC	Not connected
(i262) No. 23	NC	Not connected
(i262) No. 24	TMUTE	Telephone mute (not used)

NOTE:
*1: Different audio tunings are used on SDN model and OUTBACK model. Therefore, connection is selectively established as follows: For the sedan model, connection is established to GND. For the OUTBACK model, connection is not established.
*2: Different audio tunings are used on RHD model and LHD model. Therefore, connection is selectively established as follows: For the RHD model, connection is established to GND. For the LHD model, connection is not established.

B: WIRING DIAGRAM

Refer to “Audio System” in the wiring diagram. <Ref. to WI-102, WIRING DIAGRAM, Audio System.>
Refer to “Navigation System” in the wiring diagram. <Ref. to WI-276, WIRING DIAGRAM, Navigation System.>
Refer to “Rearview Camera System” in the wiring diagram. <Ref. to WI-316, WIRING DIAGRAM, Rearview Camera System.>

C: SYSTEM BLOCK DIAGRAM

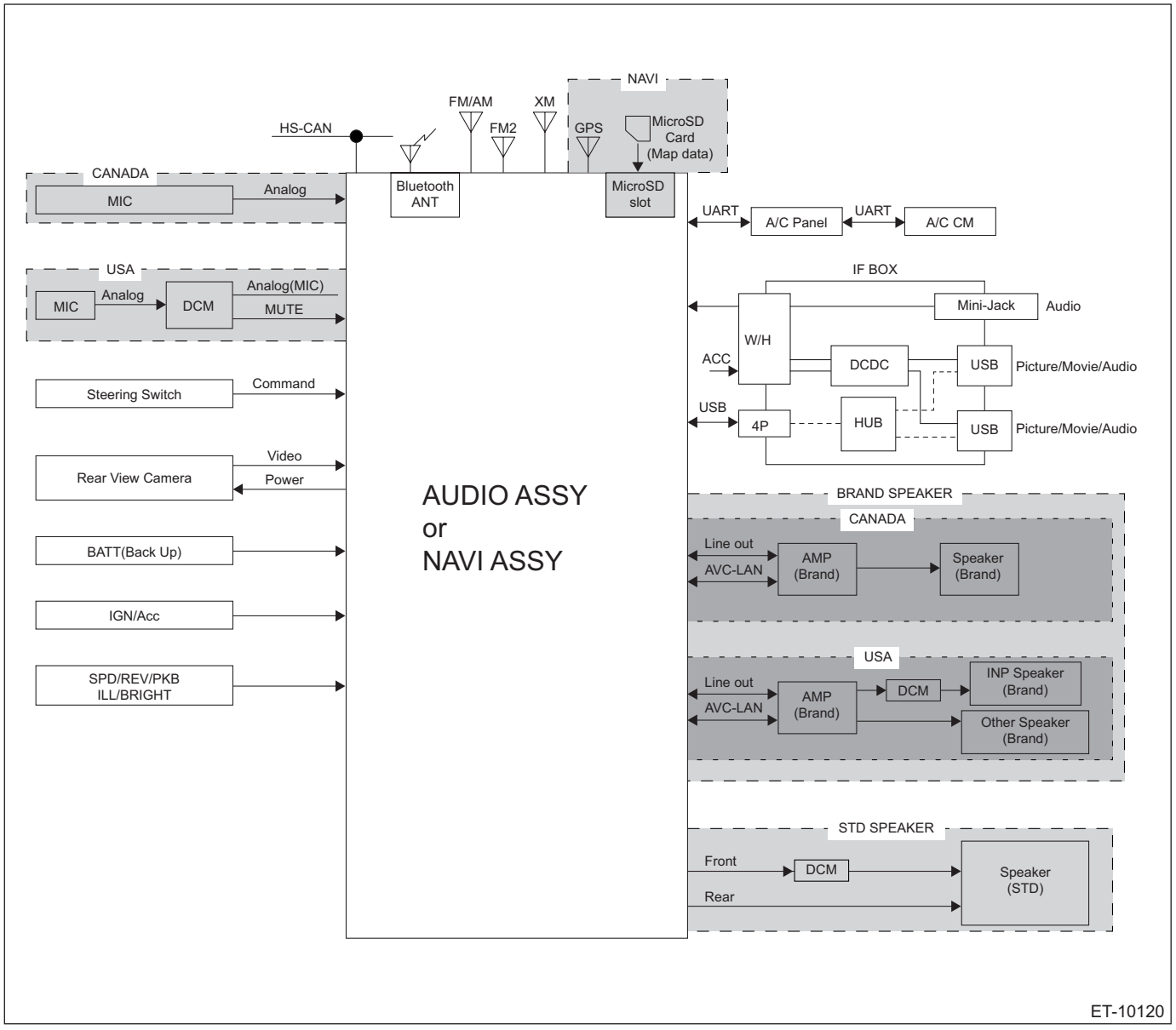

6. Subaru Select Monitor

A: OPERATION

- For detailed operation procedures, refer to “Application help”.
- When the infotainment cannot communicate with Subaru Select Monitor, perform “COMMUNICATION FOR INITIALIZING IMPOSSIBLE”.

B: INSPECTION

1. COMMUNICATION FOR INITIALIZING IMPOSSIBLE

When communication with the navigation unit is impossible

DETECTING CONDITION:

- Defective harness connector
- Power supply circuit malfunction
- Infotainment system module malfunction
- Defective CAN communication circuit
- Defective Subaru Select Monitor

TROUBLE SYMPTOM:

Communication is impossible between the infotainment system module and Subaru Select Monitor.

WIRING DIAGRAM:

NOTE:
For the coupling connector, refer to “WIRING SYSTEM”.

- Audio system <Ref. to WI-102, WIRING DIAGRAM, Audio System.>
- Navigation system <Ref. to WI-276, WIRING DIAGRAM, Navigation System.>

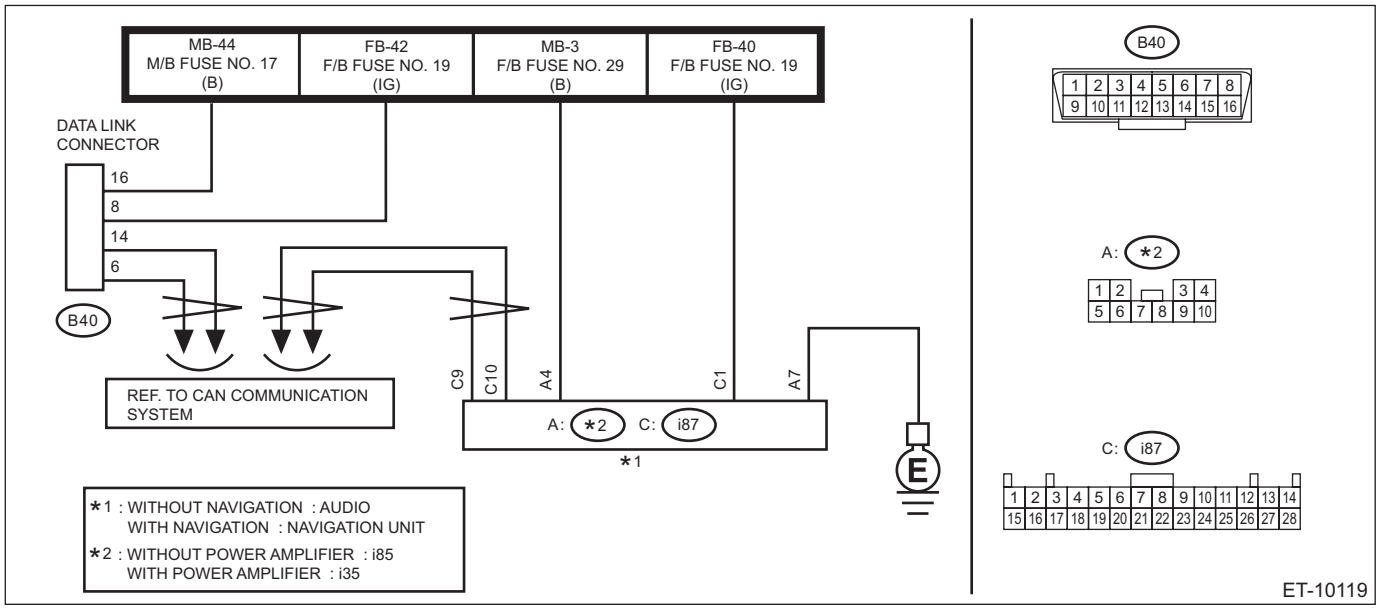

	Step	Check	Yes	No
1	**CHECK OTHER COMMUNICATION.** Communicate with the system other than the infotainment system using the Subaru Select Monitor.	Is the communication to other control module possible?	Go to step **2**.	Perform the “Communication for Initializing Impossible” of LAN system.
2	**CHECK LAN SYSTEM.** Inspect LAN system. <Ref. to LAN(diag)-2, PROCEDURE, Basic Diagnostic Procedure.>	Is there any fault?	Perform the inspection according to the diagnosis for LAN system.	Go to step **3**.

Step		Check	Yes	No
3	**CHECK FUSE.** Check the fuse of the infotainment system. <Ref. to ET-7, LOCATION, Relay and Fuse.>	Is it normal?	Go to step **4**.	Replace the fuse. If the replaced fuse blows out easily, repair the ground short circuit of the harness between the battery and audio (7-inch display) connector, or between the navigation unit connector.
4	**CHECK HARNESS.** 1) Turn off the audio (7-inch display) or navigation unit. 2) Disconnect the audio (7-inch display) connector or navigation unit connector. 3) Turn the ignition switch to ON. 4) Using the tester, measure the voltage between audio (7-inch display) connector or navigation unit connector and chassis ground. ***Connector & terminal*** ***(i85) No. 4 (+) — Chassis ground (–): (without power amplifier)*** ***(i35) No. 4 (+) — Chassis ground (–): (with power amplifier)*** ***(i87) No. 1 (+) — Chassis ground (–):***	Is the voltage 10 — 13 V?	Go to step **5**.	Repair the open circuit of harness between audio (7-inch display) connector or navigation unit connector and fuse.
5	**CHECK INFOTAINMENT SYSTEM MODULE.** 1) Turn the ignition switch to OFF. 2) Connect the audio (7-inch display) connector or navigation unit connector. 3) Perform the communication with the infotainment system.	Is communication possible?	It is possible that temporary poor communication occurs.	Replace the audio (7-inch display) or navigation unit. <Ref. to ET-23, Audio.> <Ref. to ET-47, Navigation Body.>

7. Read Diagnostic Trouble Code (DTC)

A: OPERATION

1) On «Start» display, select «Diagnosis».
2) On «Vehicle selection» display, input the target vehicle information and select «Confirmed».
3) On «Main Menu» display, select «Each System».
4) On «Select System» display, select «Infotainment» and select «Enter».
5) On «Select Function» display, select «DTC».

NOTE:
- For detailed operation procedures, refer to “Application help”.
- For details concerning DTC, refer to List of Diagnostic Trouble Code (DTC). <Ref. to INF(diag)-22, List of Diagnostic Trouble Code (DTC).>

8. Clear Memory Mode

A: OPERATION

1) On «Start» display, select «Diagnosis».
2) On «Vehicle selection» display, input the target vehicle information and select «Confirmed».
3) On «Main Menu» display, select «Each System».
4) On «Select System» display, select «Infotainment» and select «Enter».
5) On «Select Function» display, select «DTC».
6) On «DTC» display, select «Clear Memory».

NOTE:
For detailed operation procedures, refer to “Application help”.

9. Inspection Mode

A: OPERATION

DTC can be diagnosed by executing the Inspection Mode. After correcting the DTC, perform a necessary inspection mode and make sure that the function is resumed correctly and the DTC is recorded.
1) Perform the Clear Memory Mode. <Ref. to INF(diag)-19, Clear Memory Mode.>
2) Read the DTC and check that the DTC is not displayed. <Ref. to INF(diag)-18, Read Diagnostic Trouble Code (DTC).>

NOTE:
If the DTC is displayed on the screen, the trouble is still present. Perform the diagnosis according to DTC. After solving the DTC, repeat from step 1).
3) After the ignition switch is ON, wait for one minute or more.
4) Read the DTC and check that the DTC is not displayed. <Ref. to INF(diag)-18, Read Diagnostic Trouble Code (DTC).>

NOTE:
If the DTC is displayed on the screen, the trouble is still present. Perform the diagnosis according to DTC.

10.Read Current Data

A: OPERATION

1) On «Start» display, select «Diagnosis».
2) On «Vehicle selection» display, input the target vehicle information and select «Confirmed».
3) On «Main Menu» display, select «Each System».
4) On «Select System» display, select «Infotainment» and select «Enter».
5) On «Select Function» display, select «Data Monitor».

NOTE:
For detailed operation procedures, refer to “Application help”.

B: LIST

Display	Contents	Reference value	Unit of measure
Trip Count	Number of IG ON judged by the body integrated unit (CAN communication data)	—	—
Count	Number of IG ON, synchronous/asynchronous identification information of the elapsed time after IG ON	—	—
Time Count	Elapsed time (detail) after IG ON calculated by the infotainment system	—	—
ACC Power connection state	ACC power supply connection status	ON: when connected OFF: when not connected	—
IGN Power connection state	IGN power supply connection status	ON: when connected OFF: when not connected	—
Reverse connection state	Reverse signal connection status	ON: when connected OFF: when not connected	—
SPEED signal connection state	Vehicle speed signal open circuit status	ON: when connected OFF: when not connected	—
PKB connection state	Parking brake signal connection status	ON: when connected OFF: when not connected	—
Illumi connection state	Illumination signal connection status	ON: when connected OFF: when not connected	—
RADIO ant connection state	Antenna (radio) connection status	ON: when connected OFF: when not connected	—
DAB ant connection state	Antenna (DAB) connection status	ON: when connected OFF: when not connected	For EU model only
XM ant connection state	Antenna (XM) connection status	ON: when connected OFF: when not connected	For US model only
GPS ant connection state	Antenna (GPS) connection status	ON: when connected OFF: when not connected	Only for models with navigation
MIC connection state	Microphone connection status	ON: when connected OFF: when not connected	—
Steering switch connection state	Steering switch connection status	ON: when connected OFF: when not connected	—
Rear camera connection state	Rear camera connection status	ON: when connected OFF: when not connected	—
AUX connection state	AUX connection status	ON: when connected OFF: when not connected	—
USB1 connection state	USB1 connection status	ON: when connected OFF: when not connected	—
USB2 connection state	USB2 connection status	ON: when connected OFF: when not connected	—
CAN connection state	CAN connection status	ON: when connected OFF: when not connected	—
UART connection state	UART connection status	ON: when connected OFF: when not connected	—

11.List of Diagnostic Trouble Code (DTC)

A: LIST

DTC	Item	Note
B2240	CAN COMMUNICATION (AUDIO) STUCK	<Ref. to INF(diag)-23, DTC B2240 CAN COMMUNICATION (AUDIO) STUCK, Diagnostic Procedure with Diagnostic Trouble Code (DTC).>
B2241	CAN COMMUNICATION	<Ref. to INF(diag)-24, DTC B2241 CAN COMMUNICATION, Diagnostic Procedure with Diagnostic Trouble Code (DTC).>
B2242	UART COMMUNICATION	<Ref. to INF(diag)-25, DTC B2242 UART COMMUNICATION, Diagnostic Procedure with Diagnostic Trouble Code (DTC).>
B2243	SD CARD COMMUNICATION	<Ref. to INF(diag)-27, DTC B2243 SD CARD COMMUNICATION, Diagnostic Procedure with Diagnostic Trouble Code (DTC).>
B2244	AMPLIFIER COMMUNICATION	<Ref. to INF(diag)-28, DTC B2244 AMPLIFIER COMMUNICATION, Diagnostic Procedure with Diagnostic Trouble Code (DTC).>
B2247	CD MECHANICAL	<Ref. to INF(diag)-30, DTC B2247 CD MECHANICAL, Diagnostic Procedure with Diagnostic Trouble Code (DTC).>
B2249	BLUETOOTH MODULE	<Ref. to INF(diag)-31, DTC B2249 BLUETOOTH MODULE, Diagnostic Procedure with Diagnostic Trouble Code (DTC).>
B224A	BACKUP CAMERA	<Ref. to INF(diag)-32, DTC B224A BACKUP CAMERA, Diagnostic Procedure with Diagnostic Trouble Code (DTC).>
U0074	CONTROL MODULE COMMUNICATION BUS "BODY-CAN" OFF	<Ref. to INF(diag)-35, DTC U0074 CONTROL MODULE COMMUNICATION BUS "BODY-CAN" OFF, Diagnostic Procedure with Diagnostic Trouble Code (DTC).>
U0100	LOST COMMUNICATION WITH ECM/PCM "A"	<Ref. to INF(diag)-35, DTC U0100 LOST COMMUNICATION WITH ECM/PCM "A", Diagnostic Procedure with Diagnostic Trouble Code (DTC).>
U0101	LOST COMMUNICATION WITH TCM	<Ref. to INF(diag)-35, DTC U0101 LOST COMMUNICATION WITH TCM, Diagnostic Procedure with Diagnostic Trouble Code (DTC).>
U0122	LOST COMMUNICATION WITH VEHICLE DYNAMICS CONTROL MODULE	<Ref. to INF(diag)-35, DTC U0122 LOST COMMUNICATION WITH VEHICLE DYNAMICS CONTROL MODULE, Diagnostic Procedure with Diagnostic Trouble Code (DTC).>
U0128	LOST COMMUNICATION WITH PARK BRAKE CONTROL MODULE	<Ref. to INF(diag)-35, DTC U0128 LOST COMMUNICATION WITH PARK BRAKE CONTROL MODULE, Diagnostic Procedure with Diagnostic Trouble Code (DTC).>
U0155	LOST COMMUNICATION WITH INSTRUMENT PANEL CLUSTER (IPC) CONTROL MODULE	<Ref. to INF(diag)-35, DTC U0155 LOST COMMUNICATION WITH INSTRUMENT PANEL CLUSTER (IPC) CONTROL MODULE, Diagnostic Procedure with Diagnostic Trouble Code (DTC).>
U0164	LOST COMMUNICATION WITH HVAC CONTROL MODULE	<Ref. to INF(diag)-36, DTC U0164 LOST COMMUNICATION WITH HVAC CONTROL MODULE, Diagnostic Procedure with Diagnostic Trouble Code (DTC).>
U0167	LOST COMMUNICATION WITH IMMOBILIZER CONTROL MODULE	<Ref. to INF(diag)-36, DTC U0167 LOST COMMUNICATION WITH IMMOBILIZER CONTROL MODULE, Diagnostic Procedure with Diagnostic Trouble Code (DTC).>
U0327	SOFTWARE INCOMPATIBILITY WITH VEHICLE SECURITY CONTROL MODULE	<Ref. to INF(diag)-36, DTC U0327 SOFTWARE INCOMPATIBILITY WITH VEHICLE SECURITY CONTROL MODULE, Diagnostic Procedure with Diagnostic Trouble Code (DTC).>
U1140	LOST COMMUNICATION WITH BODY CONTROL MODULE BODY-CAN	<Ref. to INF(diag)-36, DTC U1140 LOST COMMUNICATION WITH BODY CONTROL MODULE BODY-CAN, Diagnostic Procedure with Diagnostic Trouble Code (DTC).>
U1232	LOST COMMUNICATION WITH REAR/SIDE RADAR CONTROL MODULE	<Ref. to INF(diag)-36, DTC U1232 LOST COMMUNICATION WITH REAR/SIDE RADAR CONTROL MODULE, Diagnostic Procedure with Diagnostic Trouble Code (DTC).>

12.Diagnostic Procedure with Diagnostic Trouble Code (DTC)

A: DTC B2240 CAN COMMUNICATION (AUDIO) STUCK

DTC DETECTING CONDITION:
Detected when the resistor is stuck during the CAN bus communication process.
TROUBLE SYMPTOM:
Screen display does not link with combination meter or vehicle.

	Step	Check	Yes	No
1	**CHECK DTC.** Inspect LAN system. <Ref. to LAN(diag)-2, PROCEDURE, Basic Diagnostic Procedure.>	Is there any fault?	Perform the diagnosis according to diagnosis for LAN system.	Go to step **2**.
2	**CHECK NAVIGATION UNIT.** 1) Perform the Clear Memory Mode. <Ref. to INF(diag)-19, Clear Memory Mode.> 2) Turn the ignition switch to OFF → ON. 3) Read the DTC again. <Ref. to INF(diag)-18, Read Diagnostic Trouble Code (DTC).>	Is DTC B2240 displayed? (Current malfunction)	Replace the audio (7-inch display) or navigation unit. <Ref. to ET-23, Audio.> <Ref. to ET-47, Navigation Body.>	Even if DTC is displayed, the circuit has returned to a normal condition at this time. Reproduce the failure, and then perform the diagnosis again. NOTE: In this case, temporary poor contact of connector, temporary open or short circuit of harness may be the cause.

B: DTC B2241 CAN COMMUNICATION

DTC DETECTING CONDITION:

Detected when there has been no proper communication in 10 seconds with the driver control of serial communication between CAN microcomputer and main microcomputer.

TROUBLE SYMPTOM:

Screen display does not link with combination meter or vehicle.

	Step	Check	Yes	No
1	**CHECK AUDIO (7-INCH DISPLAY) OR NAVIGATION UNIT.** 1) Turn the ignition switch to OFF. 2) Turn the ignition switch to ACC.	Is the audio (7-inch display) or navigation unit activated?	Even if DTC is displayed, the circuit has returned to a normal condition at this time. Reproduce the failure, and then perform the diagnosis again. NOTE: In this case, temporary poor contact of connector, temporary open or short circuit of harness may be the cause.	Go to step **2**.
2	**CHECK DTC.** Inspect LAN system. <Ref. to LAN(diag)-2, PROCEDURE, Basic Diagnostic Procedure.>	Is there any fault?	Perform the diagnosis according to diagnosis for LAN system.	Go to step **3**.
3	**CHECK AUDIO (7-INCH DISPLAY) OR NAVIGATION UNIT.** 1) Perform the Clear Memory Mode. <Ref. to INF(diag)-19, Clear Memory Mode.> 2) Turn the ignition switch to OFF → ON. 3) Read the DTC again. <Ref. to INF(diag)-18, Read Diagnostic Trouble Code (DTC).>	Is DTC B2241 displayed? (Current malfunction)	Replace the audio (7-inch display) or navigation unit. <Ref. to ET-23, Audio.> <Ref. to ET-47, Navigation Body.>	Even if DTC is displayed, the circuit has returned to a normal condition at this time. Reproduce the failure, and then perform the diagnosis again. NOTE: In this case, temporary poor contact of connector, temporary open or short circuit of harness may be the cause.

C: DTC B2242 UART COMMUNICATION

DTC DETECTING CONDITION:
Regular communication with A/C panel (20 ms) cannot be established for 10 seconds.
TROUBLE SYMPTOM:
- A/C operation cannot be activated using the voice control.
- Time displayed on the A/C panel cannot be corrected.

WIRING DIAGRAM:
Audio system <Ref. to WI-102, WIRING DIAGRAM, Audio System.>
Navigation system <Ref. to WI-276, WIRING DIAGRAM, Navigation System.>

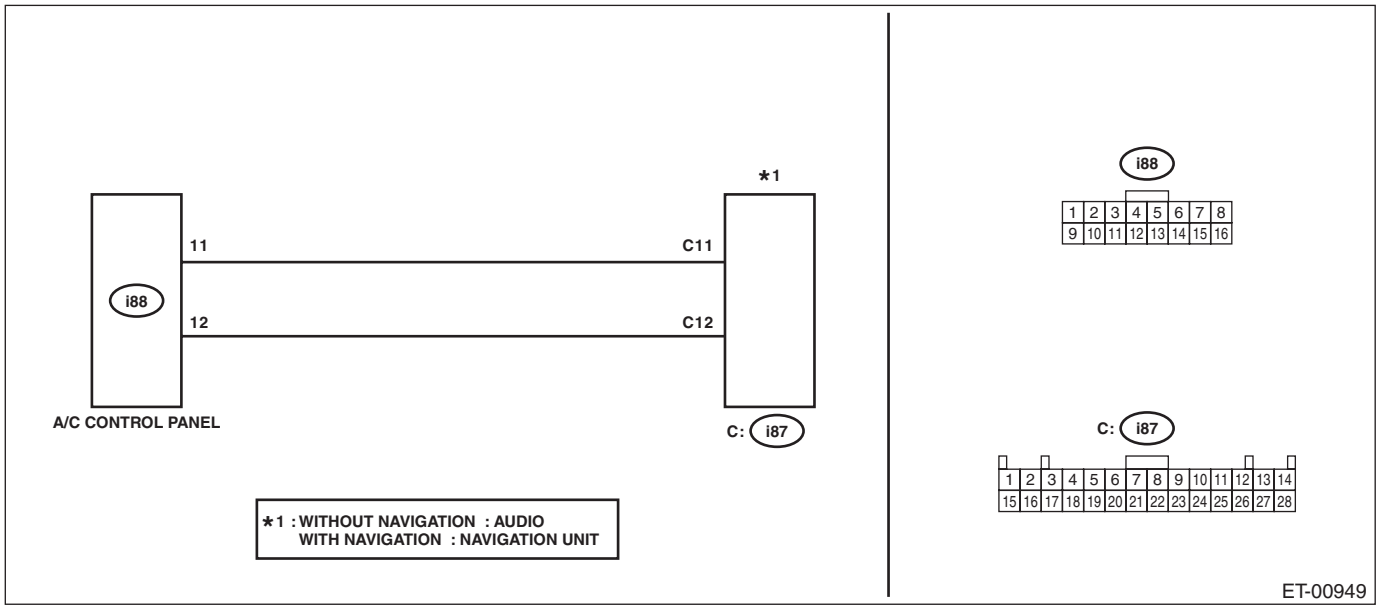

	Step	Check	Yes	No
1	**CHECK A/C SYSTEM.** Check the A/C system. <Ref. to AC(diag)-2, PROCEDURE, Basic Diagnostic Procedure.>	Is there any fault?	Perform the diagnosis according to diagnosis for A/C system.	Go to step **2**.
2	**CHECK HARNESS (OPEN CIRCUIT).** 1) Disconnect the audio (7-inch display) connector or navigation unit connector. 2) Disconnect the A/C panel connector. 3) Using the tester, measure the resistance of harness between audio (7-inch display) connector or navigation unit connector and A/C panel connector. ***Connector & terminal*** ***(i88) No. 11 — (i87) No. 11:*** ***(i88) No. 12 — (i87) No. 12:***	Is the resistance less than 1 Ω?	Go to step **3**.	Repair the open circuit of harness between audio (7-inch display) connector or navigation unit connector and A/C panel connector.
3	**CHECK HARNESS (GROUND SHORT CIRCUIT).** Using the tester, measure the resistance between audio (7-inch display) connector or navigation unit connector and chassis ground. ***Connector & terminal*** ***(i87) No. 11 — Chassis ground:*** ***(i87) No. 12 — Chassis ground:***	Is the resistance 1 MΩ or more?	Go to step **4**.	Repair the short to ground in harness between audio (7-inch display) connector or navigation unit connector and A/C panel connector.

	Step	Check	Yes	No
4	**CHECK HARNESS (SHORT CIRCUIT TO POWER SUPPLY).** 1) Turn the ignition switch to ON. 2) Using the tester, measure the voltage between audio (7-inch display) connector or navigation unit connector and chassis ground. (With each connector disconnected) ***Connector & terminal*** ***(i87) No. 11 (+) — Chassis ground (–):*** ***(i87) No. 12 (+) — Chassis ground (–):***	Is the voltage less than 1 V?	Go to step **5**.	Repair the short to power supply in harness between audio (7-inch display) connector or navigation unit connector and A/C panel connector.
5	**CHECK DTC.** 1) Connect all the disconnected connectors. 2) Perform the Clear Memory Mode. <Ref. to INF(diag)-19, Clear Memory Mode.> 3) Turn the ignition switch to OFF → ON. 4) Read the DTC again. <Ref. to INF(diag)-18, Read Diagnostic Trouble Code (DTC).>	Is DTC B2242 displayed? (Current malfunction)	Replace the A/C panel.	Even if DTC is displayed, the circuit has returned to a normal condition at this time. Reproduce the failure, and then perform the diagnosis again. NOTE: In this case, temporary poor contact of connector, temporary open or short circuit of harness may be the cause.

D: DTC B2243 SD CARD COMMUNICATION

DTC DETECTING CONDITION:
Driver has detected a malfunction of SD card.
TROUBLE SYMPTOM:
Map is not displayed.

	Step	Check	Yes	No
1	**CHECK SD CARD.** Check the SD card. NOTE: Supported card type: microSDHC (SD High Capacity) Storage capacity: Max 32 GB	Is an authorized SD card used? Can the SD card be used in another media device?	Go to step **2**.	Replace the SD card with an authorized one.
2	**CHECK NAVIGATION UNIT.** Check the navigation unit.	Is there any defect in the card slot of the navigation unit? (Foreign matter such as dust, or deformation)	If it does not return to a normal condition after cleaning, replace the navigation unit. <Ref. to ET-47, Navigation Body.>	Go to step **3**.
3	**CHECK SD CARD.** 1) Replace the SD card. 2) Perform the Clear Memory Mode. <Ref. to INF(diag)-19, Clear Memory Mode.> 3) Turn the ignition switch to OFF → ON. 4) Read the DTC again. <Ref. to INF(diag)-18, Read Diagnostic Trouble Code (DTC).>	Is DTC B2243 displayed? (Current malfunction)	Replace the navigation unit. <Ref. to ET-47, Navigation Body.>	There was a defect in the SD card.

E: DTC B2244 AMPLIFIER COMMUNICATION

DTC DETECTING CONDITION:
Detected when no connection is established because there is no communication with the audio amplifier after the ACC is ON.

TROUBLE SYMPTOM:
Sound does not come out from the speaker.

WIRING DIAGRAM:
Audio system <Ref. to WI-102, WIRING DIAGRAM, Audio System.>
Navigation system <Ref. to WI-276, WIRING DIAGRAM, Navigation System.>

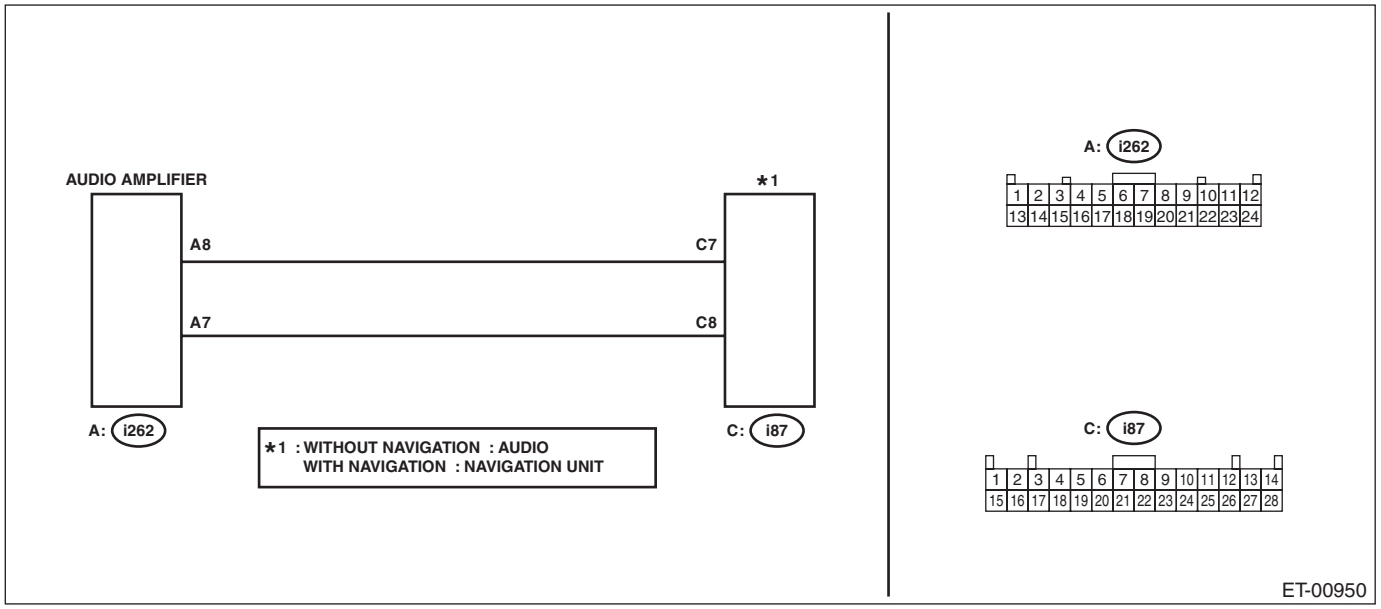

	Step	Check	Yes	No
1	**CHECK FUSE.** Check the fuse. <Ref. to ET-7, Relay and Fuse.>	Is there any fault?	Replace the fuse. If the replaced fuse blows out easily, repair the ground short circuit in the harness between the battery and audio amplifier.	Go to step **2**.
2	**CHECK HARNESS (OPEN CIRCUIT).** 1) Disconnect the audio (7-inch display) connector or navigation unit connector. 2) Disconnect the amplifier connector. 3) Using the tester, measure the resistance of harness between audio (7-inch display) connector or navigation unit connector and audio amplifier connector. ***Connector & terminal*** ***(i87) No. 7 — (i262) No. 8:*** ***(i87) No. 8 — (i262) No. 7:***	Is the resistance less than 1 Ω?	Go to step **3**.	Repair the open circuit of harness between audio (7-inch display) connector or navigation unit connector and audio amplifier connector.
3	**CHECK HARNESS (GROUND SHORT CIRCUIT).** Using the tester, measure the resistance between audio (7-inch display) connector or navigation unit connector and chassis ground. ***Connector & terminal*** ***(i87) No. 7 — Chassis ground:*** ***(i87) No. 8 — Chassis ground:***	Is the resistance 1 MΩ or more?	Go to step **4**.	Repair the short to ground in harness between audio (7-inch display) connector or navigation unit connector and audio amplifier connector.

	Step	Check	Yes	No
4	**CHECK HARNESS (SHORT CIRCUIT TO POWER SUPPLY).** 1) Turn the ignition switch to ON. 2) Using the tester, measure the voltage between audio (7-inch display) connector or navigation unit connector and chassis ground. (With each connector disconnected) ***Connector & terminal*** ***(i87) No. 7 (+) — Chassis ground (–):*** ***(i87) No. 8 (+) — Chassis ground (–):***	Is the voltage less than 1 V?	Go to step **5**.	Repair the short to power supply in harness between audio (7-inch display) connector or navigation unit connector and audio amplifier connector.
5	**CHECK DTC.** 1) Connect all the disconnected connectors. 2) Perform the Clear Memory Mode. <Ref. to INF(diag)-19, Clear Memory Mode.> 3) Turn the ignition switch to OFF → ON. 4) Read the DTC again. <Ref. to INF(diag)-18, Read Diagnostic Trouble Code (DTC).>	Is DTC B2244 displayed? (Current malfunction)	Replace the audio amplifier.	Even if DTC is displayed, the circuit has returned to a normal condition at this time. Reproduce the failure, and then perform the diagnosis again. NOTE: In this case, temporary poor contact of connector, temporary open or short circuit of harness may be the cause.

F: DTC B2247 CD MECHANICAL

DTC DETECTING CONDITION:

- If EJECT error is detected
- If over-current is detected
- If DSP error is detected
- If playback failure is detected

TROUBLE SYMPTOM:

- CD and DVD cannot be played back.
- Cannot be inserted or ejected.

	Step	Check	Yes	No
1	**CHECK MEDIA.** 1) Check for dirt on the disc surface of the media, and clean the disc softly using soft and dry cloth such as a plastic eyeglasses cleaning cloth. When cleaning, make sure that wiping direction is from the center to the edge of the disc. **CAUTION:** **To avoid any scratch on the surface, do not apply excessive force with hand or do not use a rough cloth. Do not use solvent such as alcohol, benzene, thinner, etc. as well as chemical cloth to avoid damaging the disc.** 2) Insert the media and make sure that it can be played back.	Can it be played back?	There were some problems with the media.	Go to step **2**.
2	**CHECK MEDIA.** Insert another media which is properly functioning. NOTE: Supported media type: Audio CD, CD-R, CD-RW	Can it be played back?	There were some problems with the media.	Replace the audio (7-inch display) or navigation unit. <Ref. to ET-23, Audio.> <Ref. to ET-47, Navigation Body.>

G: DTC B2249 BLUETOOTH MODULE

DTC DETECTING CONDITION:

• Detected when a connection between the Bluetooth module is lost (or there has already been no connection) and the connection cannot be established even after trying to reset the Bluetooth module hardware three times.

• Detected when the connection with the Bluetooth module has established but the module does not respond to the initialization request, and there is no response from the module even after trying to reset the Bluetooth module three times.

TROUBLE SYMPTOM:

Cannot connect with the Bluetooth device.

	Step	Check	Yes	No
1	**CHECK DTC.** 1) Perform the Clear Memory Mode. <Ref. to INF(diag)-19, Clear Memory Mode.> 2) Turn the ignition switch to OFF → ON. 3) Read the DTC again. <Ref. to INF(diag)-18, Read Diagnostic Trouble Code (DTC).>	Is DTC B2249 displayed? (Current malfunction)	Go to step **2**.	Even if DTC is displayed, the circuit has returned to a normal condition at this time. Reproduce the failure, and then perform the diagnosis again. NOTE: In this case, temporary poor contact of connector, temporary open or short circuit of harness may be the cause.
2	**CHECK BLUETOOTH DEVICE.** 1) Restart the Bluetooth device, and connect again. 2) Perform the Clear Memory Mode. <Ref. to INF(diag)-19, Clear Memory Mode.> 3) Turn the ignition switch to OFF → ON. 4) Read the DTC again. <Ref. to INF(diag)-18, Read Diagnostic Trouble Code (DTC).>	Is DTC B2249 displayed? (Current malfunction)	Go to step **3**.	Bluetooth device was faulty.
3	**CHECK BLUETOOTH DEVICE.** 1) Connect another Bluetooth device. NOTE: Supported network type: Ver. 3.0 +EDR compatible • Bluetooth Phone Profile – HFP: Ver. 1.6 – OPP: Ver. 1.2 – PBAP: Ver. 1.1 – MAP: Ver. 1.0 – SPP: Ver. 1.1 • Bluetooth Audio Device Profile – A2DP: Ver. 1.2 – AVRCP: Ver. 1.4 2) Perform the Clear Memory Mode. <Ref. to INF(diag)-19, Clear Memory Mode.> 3) Turn the ignition switch to OFF → ON. 4) Read the DTC again. <Ref. to INF(diag)-18, Read Diagnostic Trouble Code (DTC).>	Is DTC B2249 displayed? (Current malfunction)	Replace the audio (7-inch display) or navigation unit. <Ref. to ET-23, Audio.> <Ref. to ET-47, Navigation Body.>	Bluetooth device was faulty.

H: DTC B224A BACKUP CAMERA

DTC DETECTING CONDITION:
Detected when the synchronization error occurs in the condition of the picture input.
TROUBLE SYMPTOM:
Camera image does not appear.
WIRING DIAGRAM:
Rearview camera system <Ref. to WI-316, WIRING DIAGRAM, Rearview Camera System.>
Navigation system <Ref. to WI-276, WIRING DIAGRAM, Navigation System.>
Audio system <Ref. to WI-102, WIRING DIAGRAM, Audio System.>
Back-up light system <Ref. to WI-122, WIRING DIAGRAM, Back-up Light System.>

- Sedan model

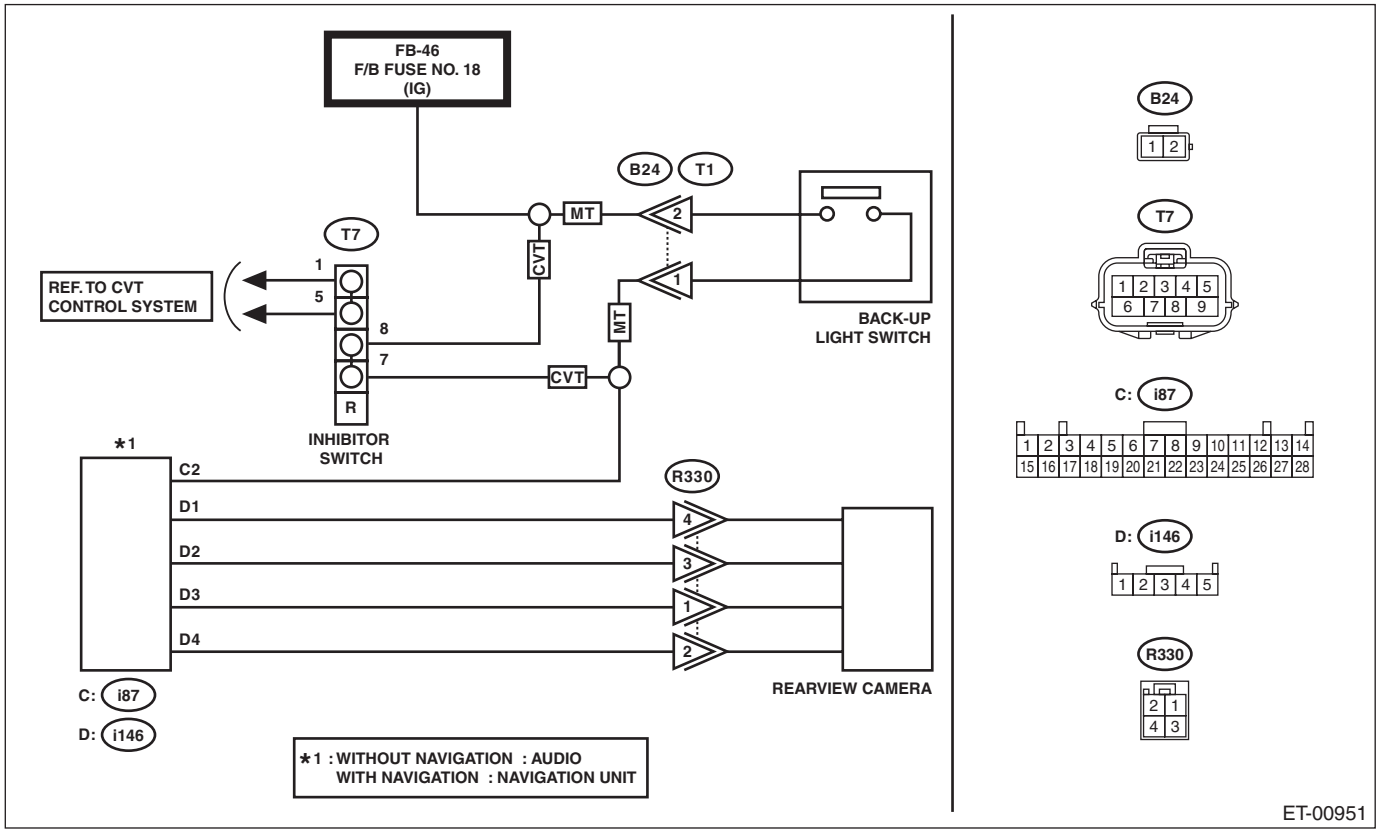

- OUTBACK model

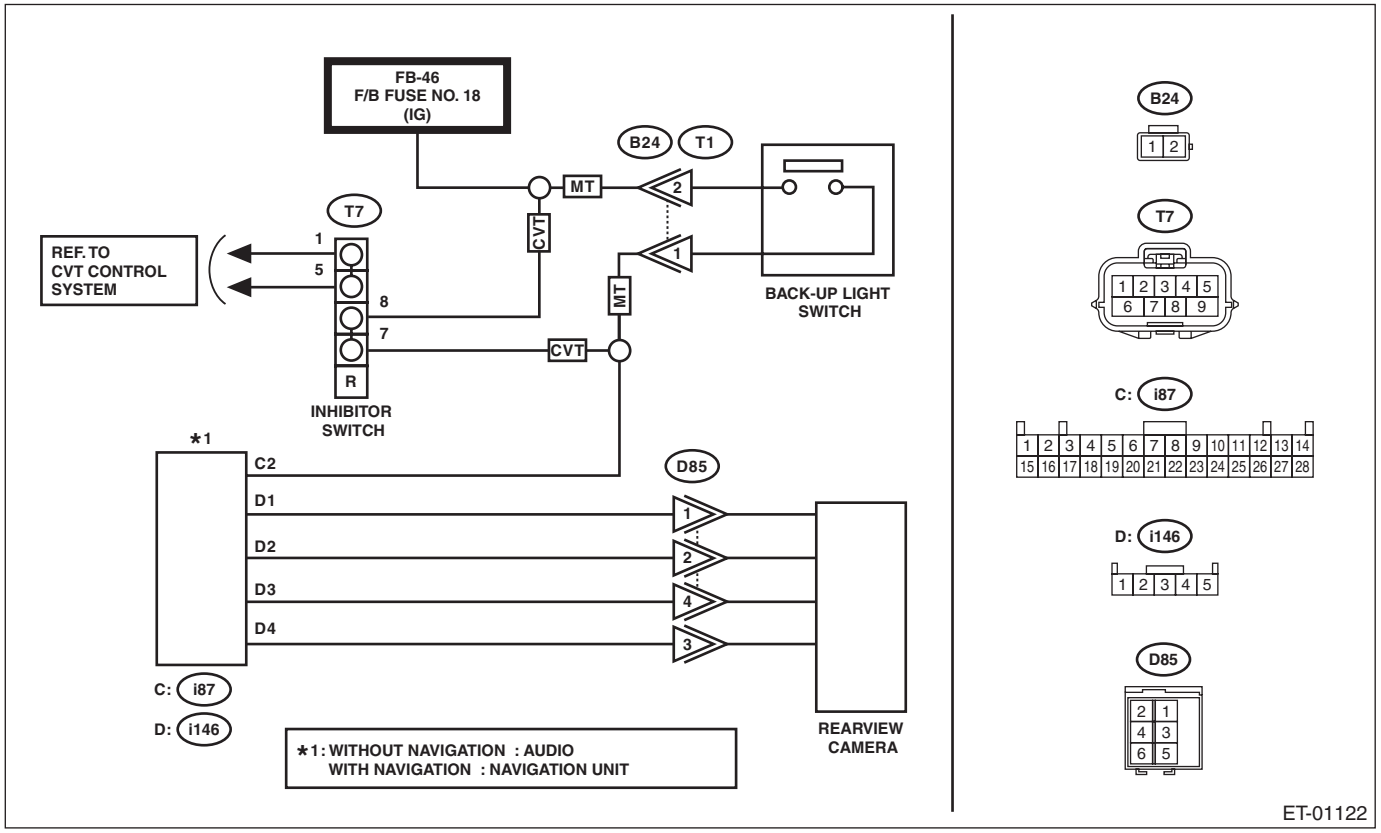

	Step	Check	Yes	No
1	**CHECK CURRENT DATA.** Confirm the current data «Rear camera connection state» of the infotainment system. <Ref. to INF(diag)-21, Read Current Data.>	Is «ON» displayed?	Go to step **2**.	Go to step **3**.
2	**CHECK CURRENT DATA.** Confirm the current data «Reverse connection state» of the infotainment system. <Ref. to INF(diag)-21, Read Current Data.>	Is «ON» displayed when the shift lever is set to the reverse range?	Go to step **3**.	Go to step **6**.
3	**CHECK HARNESS (OPEN CIRCUIT).** 1) Disconnect the audio (7-inch display) connector or navigation unit connector. 2) Disconnect the rearview camera connector. 3) Using the tester, measure the resistance of harness between rearview camera connector and audio (7-inch display) connector or navigation unit connector. ***Connector & terminal*** ***Sedan model*** ***(i146) No. 1 — (R330) No. 4:*** ***(i146) No. 2 — (R330) No. 3:*** ***(i146) No. 3 — (R330) No. 1:*** ***(i146) No. 4 — (R330) No. 2:*** ***OUTBACK model*** ***(i146) No. 1 — (D85) No. 1:*** ***(i146) No. 2 — (D85) No. 2:*** ***(i146) No. 3 — (D85) No. 4:*** ***(i146) No. 4 — (D85) No. 3:***	Is the resistance less than 1 Ω?	Go to step **4**.	Repair the open circuit of harness between audio (7-inch display) connector or navigation unit connector and rearview camera.

Step		Check	Yes	No
4	**CHECK HARNESS (GROUND SHORT CIRCUIT).** Using the tester, measure the resistance of harness between audio (7-inch display) connector or navigation unit connector and chassis ground. ***Connector & terminal*** ***Sedan model*** ***(i146) No. 1 — Chassis ground:*** ***(i146) No. 2 — Chassis ground:*** ***(i146) No. 3 — Chassis ground:*** ***(i146) No. 4 — Chassis ground:*** ***OUTBACK model*** ***(i146) No. 1 — Chassis ground:*** ***(i146) No. 2 — Chassis ground:*** ***(i146) No. 3 — Chassis ground:*** ***(i146) No. 4 — Chassis ground:***	Is the resistance 1 MΩ or more?	Go to step **5**.	Repair the short to ground in harness between audio (7-inch display) connector or navigation unit connector and rearview camera.
5	**CHECK HARNESS (SHORT CIRCUIT TO POWER SUPPLY).** 1) Turn the ignition switch to ON. 2) Using the tester, measure the voltage between audio (7-inch display) connector or navigation unit connector and chassis ground. (With each connector disconnected) ***Connector & terminal*** ***Sedan model*** ***(i146) No. 1 (+) — Chassis ground (–):*** ***(i146) No. 2 (+) — Chassis ground (–):*** ***(i146) No. 3 (+) — Chassis ground (–):*** ***(i146) No. 4 (+) — Chassis ground (–):*** ***OUTBACK model*** ***(i146) No. 1 (+) — Chassis ground (–):*** ***(i146) No. 2 (+) — Chassis ground (–):*** ***(i146) No. 3 (+) — Chassis ground (–):***	Is the voltage less than 1 V?	Go to step **6**.	Repair the short to power supply in harness between audio (7-inch display) connector or navigation unit connector and rearview camera.
6	**CHECK HARNESS (OPEN CIRCUIT).** 1) Disconnect the audio (7-inch display) connector or navigation unit connector. 2) Disconnect the inhibitor switch connector. 3) Using the tester, measure the resistance of harness between inhibitor switch connector or back-up light switch connector and audio (7-inch display) connector or navigation unit connector. ***Connector & terminal*** ***CVT model*** ***(i87) No. 2 — (T7) No. 7:*** ***MT model*** ***(i87) No. 2 — (B24) No. 1:***	Is the resistance less than 1 Ω?	Go to step **7**.	Repair the open circuit of harness between audio (7-inch display) connector or navigation unit connector and inhibitor switch connector or back-up light switch connector.
7	**CHECK HARNESS (GROUND SHORT CIRCUIT).** Using the tester, measure the resistance of harness between audio (7-inch display) connector or navigation unit connector and chassis ground. ***Connector & terminal*** ***(i87) No. 2 — Chassis ground:***	Is the resistance 1 MΩ or more?	Go to step **8**.	Repair the short to ground in harness between audio (7-inch display) connector or navigation unit connector and inhibitor switch connector or back-up light switch connector.

	Step	Check	Yes	No
8	**CHECK HARNESS (SHORT CIRCUIT TO POWER SUPPLY).** 1) Turn the ignition switch to ON. 2) Using the tester, measure the voltage between audio (7-inch display) connector or navigation unit connector and chassis ground. (With each connector disconnected) ***Connector & terminal*** ***(i87) No. 2 (+) — Chassis ground (–):***	Is the voltage less than 1 V?	Go to step **9**.	Repair the short to power supply in harness between audio (7-inch display) connector or navigation unit connector and inhibitor switch connector or back-up light switch connector.
9	**CHECK REARVIEW CAMERA.** Check the rearview camera according to the instructions of rearview camera operation manual.	Is there any fault?	Replace the rearview camera. <Ref. to ET-53, Rearview Camera System.>	Replace the audio (7-inch display) or navigation unit. <Ref. to ET-23, Audio.> <Ref. to ET-47, Navigation Body.>

I: DTC U0074 CONTROL MODULE COMMUNICATION BUS "BODY-CAN" OFF

Detected when CAN line abnormality is detected.

NOTE:
Perform the diagnosis for LAN system. <Ref. to LAN(diag)-2, PROCEDURE, Basic Diagnostic Procedure.>

J: DTC U0100 LOST COMMUNICATION WITH ECM/PCM "A"

Detected when CAN data from ECM does not arrive.

NOTE:
Perform the diagnosis for LAN system. <Ref. to LAN(diag)-2, PROCEDURE, Basic Diagnostic Procedure.>

K: DTC U0101 LOST COMMUNICATION WITH TCM

Detected when CAN data from TCM does not arrive.

NOTE:
Perform the diagnosis for LAN system. <Ref. to LAN(diag)-2, PROCEDURE, Basic Diagnostic Procedure.>

L: DTC U0122 LOST COMMUNICATION WITH VEHICLE DYNAMICS CONTROL MODULE

Detected when CAN data from VDC CM does not arrive.

NOTE:
Perform the diagnosis for LAN system. <Ref. to LAN(diag)-2, PROCEDURE, Basic Diagnostic Procedure.>

M: DTC U0128 LOST COMMUNICATION WITH PARK BRAKE CONTROL MODULE

Detected when CAN data from VDC CM does not arrive.

NOTE:
Perform the diagnosis for LAN system. <Ref. to LAN(diag)-2, PROCEDURE, Basic Diagnostic Procedure.>

N: DTC U0155 LOST COMMUNICATION WITH INSTRUMENT PANEL CLUSTER (IPC) CONTROL MODULE

Detected when CAN data from combination meter does not arrive.

NOTE:
Perform the diagnosis for LAN system. <Ref. to LAN(diag)-2, PROCEDURE, Basic Diagnostic Procedure.>

O: DTC U0164 LOST COMMUNICATION WITH HVAC CONTROL MODULE

Detected when CAN data from A/C CM does not arrive.

NOTE:
Perform the diagnosis for LAN system. <Ref. to LAN(diag)-2, PROCEDURE, Basic Diagnostic Procedure.>

P: DTC U0167 LOST COMMUNICATION WITH IMMOBILIZER CONTROL MODULE

Detected when CAN data from immobilizer CM does not arrive.

NOTE:
Perform the diagnosis for LAN system. <Ref. to LAN(diag)-2, PROCEDURE, Basic Diagnostic Procedure.>

Q: DTC U0327 SOFTWARE INCOMPATIBILITY WITH VEHICLE SECURITY CONTROL MODULE

Detected when CAN data is not received from keyless access CM.

NOTE:
Perform the diagnosis for LAN system. <Ref. to LAN(diag)-2, PROCEDURE, Basic Diagnostic Procedure.>

R: DTC U1140 LOST COMMUNICATION WITH BODY CONTROL MODULE BODY-CAN

Detected when CAN data is not received from body integrated unit.

NOTE:
Perform the diagnosis for LAN system. <Ref. to LAN(diag)-2, PROCEDURE, Basic Diagnostic Procedure.>

S: DTC U1232 LOST COMMUNICATION WITH REAR/SIDE RADAR CONTROL MODULE

Detected when CAN data from the radar sensor does not arrive.

NOTE:
Perform the diagnosis for LAN system. <Ref. to LAN(diag)-2, PROCEDURE, Basic Diagnostic Procedure.>

13.Diagnostics with Phenomenon

A: LIST

1. AUDIO SYSTEM

Symptoms	Reference
Power will not turn ON.	<Ref. to INF(diag)-43, POWER WILL NOT TURN ON, INSPECTION, Diagnostics with Phenomenon.>
The screen freezes and does not accept any operation entry.	<Ref. to INF(diag)-45, THE SCREEN FREEZES AND DOES NOT ACCEPT ANY OPERATION ENTRY, INSPECTION, Diagnostics with Phenomenon.>
The screen is blacked out, or the screen is not displayed.	<Ref. to INF(diag)-46, THE SCREEN IS BLACKED OUT, OR THE SCREEN IS NOT DISPLAYED, INSPECTION, Diagnostics with Phenomenon.>
System is reset.	<Ref. to INF(diag)-47, SYSTEM IS RESET, INSPECTION, Diagnostics with Phenomenon.>
CDs cannot be played back.	<Ref. to INF(diag)-48, CDS CANNOT BE PLAYED BACK, INSPECTION, Diagnostics with Phenomenon.>
Sound does not come out from the speaker.	<Ref. to INF(diag)-49, SOUND DOES NOT COME OUT FROM THE SPEAKER, INSPECTION, Diagnostics with Phenomenon.>
Bluetooth connection cannot be established.	<Ref. to INF(diag)-51, BLUETOOTH CONNECTION CANNOT BE ESTABLISHED, INSPECTION, Diagnostics with Phenomenon.>
Bluetooth does not operate.	<Ref. to INF(diag)-52, BLUETOOTH DOES NOT OPERATE, INSPECTION, Diagnostics with Phenomenon.>
Radio volume is low or interference noise occurs.	<Ref. to INF(diag)-53, RADIO VOLUME IS LOW OR INTERFERENCE NOISE OCCURS, INSPECTION, Diagnostics with Phenomenon.>
Error message is displayed.	<Ref. to INF(diag)-41, ERROR MESSAGE IS DISPLAYED, LIST, Diagnostics with Phenomenon.>
SUBARU STARLINK is faulty.	<Ref. to INF(diag)-38, CHECK ABNORMALITY OF SUBARU STARLINK, LIST, Diagnostics with Phenomenon.>

2. NAVIGATION SYSTEM

Symptoms	Reference
Power will not turn ON.	<Ref. to INF(diag)-43, POWER WILL NOT TURN ON, INSPECTION, Diagnostics with Phenomenon.>
The screen freezes and does not accept any operation entry.	<Ref. to INF(diag)-45, THE SCREEN FREEZES AND DOES NOT ACCEPT ANY OPERATION ENTRY, INSPECTION, Diagnostics with Phenomenon.>
The screen is blacked out, or the screen is not displayed.	<Ref. to INF(diag)-46, THE SCREEN IS BLACKED OUT, OR THE SCREEN IS NOT DISPLAYED, INSPECTION, Diagnostics with Phenomenon.>
System is reset.	<Ref. to INF(diag)-47, SYSTEM IS RESET, INSPECTION, Diagnostics with Phenomenon.>
CDs cannot be played back.	<Ref. to INF(diag)-48, CDS CANNOT BE PLAYED BACK, INSPECTION, Diagnostics with Phenomenon.>
Sound does not come out from the speaker.	<Ref. to INF(diag)-49, SOUND DOES NOT COME OUT FROM THE SPEAKER, INSPECTION, Diagnostics with Phenomenon.>
Bluetooth connection cannot be established.	<Ref. to INF(diag)-51, BLUETOOTH CONNECTION CANNOT BE ESTABLISHED, INSPECTION, Diagnostics with Phenomenon.>
Bluetooth does not operate.	<Ref. to INF(diag)-52, BLUETOOTH DOES NOT OPERATE, INSPECTION, Diagnostics with Phenomenon.>
Radio volume is low or interference noise occurs.	<Ref. to INF(diag)-53, RADIO VOLUME IS LOW OR INTERFERENCE NOISE OCCURS, INSPECTION, Diagnostics with Phenomenon.>
Wrong location of vehicle, or no GPS reception.	<Ref. to INF(diag)-54, WRONG LOCATION OF VEHICLE, NO GPS RECEPTION, INSPECTION, Diagnostics with Phenomenon.>
Error message is displayed.	<Ref. to INF(diag)-41, ERROR MESSAGE IS DISPLAYED, LIST, Diagnostics with Phenomenon.>
SUBARU STARLINK is faulty.	<Ref. to INF(diag)-38, CHECK ABNORMALITY OF SUBARU STARLINK, LIST, Diagnostics with Phenomenon.>

3. CHECK ABNORMALITY OF SUBARU STARLINK

Symptoms	Counter-measure
SUBARU STARLINK app was terminated.	Perform the procedures described on “Check connection between smartphone and unit”. <Ref. to INF(diag)-55, CHECK CONNECTION BETWEEN SMARTPHONE AND UNIT, INSPECTION, Diagnostics with Phenomenon.>
Smartphone was powered off while connecting via the SUBARU STARLINK.	
Bluetooth connection stops while connecting via the SUBARU STARLINK.	
Communication gets out of service while connecting via the SUBARU STARLINK.	
Radio wave reception becomes worse while connecting via the SUBARU STARLINK.	

NOTE:
Possible error messages with relation to the above symptoms. When the message below is displayed, perform inspection according to “Inspection when an error message is displayed (SUBARU STARLINK)”. <Ref. to INF(diag)-39, INSPECTION WHEN AN ERROR MESSAGE IS DISPLAYED (SUBARU STARLINK), LIST, Diagnostics with Phenomenon.>

Details of message
Please disconnect mobile device and install the STARLINK application on your mobile device and try again. Bluetooth disconnected, please reconnect and try again. Smartphone data connection is poor, please try to connect again.

4. INSPECTION WHEN AN ERROR MESSAGE IS DISPLAYED (SUBARU STARLINK)

No.	Inspection	Possible cause	Action 1	Action 2
1	Check internet connection of smartphone	Check that the Internet sites can be viewed with a web browser of the smartphone. NOTE: Make sure that the displayed contents are not from previously loaded screen (cache) and that new contents can be reloaded.	When connection to the Internet fails, confirm that connection can be established where the radio wave condition is good, and go to No. 2.	Check that the smartphone can perform communication.
2	Activate SUBARU STARLINK application for the smartphone	Activate the “SUBARU STARLINK” application for the smartphone.	Check that the SUBARU STARLINK application is activated, and go to No. 5.	If the SUBARU STARLINK application is not installed, go to No. 3 and 4.
3	Install the SUBARU STARLINK application (Android)	Search the SUBARU STARLINK on Google Play, and install the application.	After installation, go to No. 2.	When installation cannot be completed, check the setting of the smartphone. (Communication environment, account, etc.)
4	Install the SUBARU STARLINK application (iPhone)	Search the SUBARU STARLINK on APP Store, and install the app.	After installation, go to No. 2.	When installation cannot be completed, check the setting of the smartphone. (Communication environment, account, etc.)
5	Check connection to the SUBARU STARLINK server	Select “SETTING” tab from the SUBARU STARLINK application for the smartphone, and select “Press to check network status”.	When “The network connection is good” is displayed, go to No. 8.	For the case other than shown on the left, go to No. 6 or No. 7.
6		When “NETWORK PROBLEMS” is displayed.	Move to a location where the radio wave condition is good, and go to No. 5.	—
7		When “SERVER MAINTENANCE” is displayed.	Wait until the server maintenance completes, and go to No. 5.	—
8	Check the smartphone type	Check the phone type (iPhone or Android).	For iPhone, go to No. 12.	For Android, go to No. 10.
9	Check Bluetooth connection between smartphone — on-vehicle device	On the on-vehicle device, select [HOME]-[SETTINGS]-Bluetooth tab-“BT devices Connection”, and check that Bluetooth setting at the upper right is ON.	When the setting is OFF, switch to ON and go to No. 10.	When the setting is ON, switch to OFF once and to ON again, then go to No. 10.
10		From the Setting app for the smartphone, select Bluetooth and check that it is set to ON. (Note that procedures vary depending on a device.)	When the setting is OFF, switch to ON and go to No. 11.	When the setting is ON, switch to OFF once and to ON again, then go to No. 11.
11		Check that Bluetooth pairing is established between the smartphone and on-vehicle device. • The selected smartphone icon is displayed on the on-vehicle device. • The smartphone BT is connected to the on-vehicle device.	If the connection cannot be confirmed, go to No. 9.	—
12	Check USB connection between smartphone — on-vehicle device (with iPhone)	Check that the smartphone and on-vehicle device are connected via USB.	After connecting via USB, go to No. 13.	—

No.	Inspection	Possible cause	Action 1	Action 2
13	Check the SUBARU STARLINK initial screen	On the on-vehicle device, press down [APPS] - [SUBARU STARLINK], and check that the SUBARU STARLINK initial screen is displayed.	If the activation cannot be confirmed, go to 14.	—
14	Delete the SUBARU STARLINK connection information inside the on-vehicle device.	Clear the Browser cache on the on-vehicle device. (Select the tool tab from the SETTING menu, select Browser cache “Delete”, and select “OK”. Then, press [SETTINGS] from the APPS screen. From SETTING, select the Bluetooth-tab, and select BT Devices Connection. Select the “Trash can” icon of the registered device. Select “OK” on the confirmation pop-up screen.)	For Android, go to No. 15. For iPhone, go to No. 17.	—
15		Clear the Bluetooth connection information inside the on-vehicle device.	Go to No. 16.	—
16		Turn OFF the power supply of the on-vehicle device, and wait for 30 seconds or more before turning ON the power supply again.	Go to No. 17.	—
17	Delete the SUBARU STARLINK connection information inside the smartphone.	Delete data in the SUBARU STARLINK app. (Click the “SETTING” icon of the “SUBARU STARLINK” application. Then, press [CONFIG] from the APPS list screen. Select “Delete the SUBARU STARLINK application data” to delete the data in the application. Activate the Setting app for the smartphone. From SETTING, select the Bluetooth-tab, and select BT Devices Connection. Select the Bluetooth setting item. Select the connection information. Select the “Trash can” icon of the registered device. Select “Forget This Device” to delete the connection information.	Go to No. 18.	—
18		Delete the Bluetooth connection information.	Go to No. 19.	—
19		Turn OFF the power of the smartphone, then turn it ON again.	Go to No. 20.	—
20	Re-connect SUBARU STARLINK	Establish connection according to the SUBARU STARLINK connection procedure.	—	—

5. ERROR MESSAGE IS DISPLAYED

- 6.2-inch display

Mode	Message	Cause	Action
aha	Please reconnect your mobile device or restart the Aha app. Press VOLUME knob twice to retry, or press AUDIO/TUNE knob to exit.	Displayed when Aha Application needs to be rebooted.	Reboot Aha Application.
	Please login to Aha on your mobile device before accessing in the vehicle.	Displayed when selecting the Aha mode while being log-out.	Log in to Aha on the device that is disconnected from the on-vehicle device, re-connect this device to the on-vehicle device, and select the Aha mode.
	Please update to the latest version of the Aha app on your mobile device.	Displayed when Aha Application needs to be updated.	Update Aha Application.
	Please reconnect mobile device to continue using Aha.	Displayed when the smartphone is disconnected.	Recovers when the connection is established.
	Aha is temporarily unavailable. Please try again later.	Displayed when the connected network is invalid.	Recovers when connection is established again and the network is valid.
	Aha is temporarily unavailable. Please try again later.	When an error occurred during the Start session.	Recovers when the communication between the device and server is normalized.
Pandora	Please reconnect your mobile device or restart the Pandora App. Press VOLUME knob twice to retry, or press AUDIO/TUNE knob to exit.	Displayed when connection is not established, and when Pandora Application needs to be rebooted.	Reboot Pandora Application.
	No saved stations. Please create one on the Pandora mobile app. Press VOLUME knob twice to retry, or press AUDIO/TUNE knob to exit.	Displayed when no Station is set up with Pandora Application.	Recovers when at least one Station is set up on the device side.
	Pandora is temporarily unavailable. Please try again later.	Displayed when Pandora Server is under Maintenance.	Recovers when Maintenance of Pandora Server is completed and Server is resumed.
	Please update the Pandora app on your mobile device.	Displayed when Pandora Application needs to be updated.	Update Pandora Application.
	You have reached the maximum number of saved stations. Please delete a station before creating a new one.	Displayed when the number of Station has already reached the upper limit.	Displays for five seconds.
	Pandora is not available in the current region.	Displayed when connection to Pandora is attempted from outside of the U.S.	Re-connect from inside the U.S.
	Pandora user not logged in. Please login to Pandora on your mobile device. Press VOLUME knob twice to retry, or press AUDIO/TUNE knob to exit.	Displayed when selecting the Pandora mode while being log-out.	Log in and select the Pandora mode.
	Insufficient network connectivity to play Pandora. Waiting to regain connectivity.	Displayed when the connected network is invalid.	Re-connect with valid network.

- 7-inch display

Mode	Message	Cause	Action
aha	“Information acquisition error. (Information acquisition error.)”	When not able to get the requested information.	Please try again (Refresh etc.) later or reconnect it.
	“Poor wireless reception. (Poor wireless reception.)”	When a communication error has been detected.	Please try again in a better communications environment.
	“Entry not recognized. (Entry not recognized.)”	When an invalid operation has been executed.	Please try again (Refresh etc.) later or reconnect it.
	“The station list cannot be acquired. (The station list cannot be acquired.)”	When not able to get the station information.	Please try again (Refresh etc.) later or reconnect it.
	“The content cannot be acquired. (The content cannot be acquired.)”	• • When not able to get the content information. • • When not able to switch to the Top content when touching.	• Please try again (Refresh etc.) later or reconnect it. • Select the desired station again when the station list appears.
	“Action not available. (Action not available.)”	When content-specific operations such as “fast forward” or “reverse” are not available.	Please try again (Refresh etc.) later or reconnect it.
	“Failed. (Failed.)”	When data transmission failed when touching.	Please try again later.
	“aha communication error - Please check Owner's Manual. (aha communication error - Please check Owner's Manual.)”	• When invalid data is received from the aha application or there is no response. • When the connection to the aha application via Bluetooth is not available. • When the data reception from this unit is rejected.	Please try again (Refresh etc.) later or reconnect it. If it is still not improved, restart the aha application.
	“Please select the type of connection in “aha Settings”. (Please select the type of connection in “aha Settings”.)”	When aha radio setting is set to (USB) when the Android device is going to be paired via Bluetooth.	When you want to connect to the aha application with the Android device, select (Bluetooth) in the aha radio setting from the setting screen.
Pandora	“No stations have been added to your list. (No stations have been added to your list.)”	When no stations have been registered.	Please register stations.
	“Your ratings information was not saved. (Your ratings information was not saved.)”	When ratings information has not been updated to the Pandora server.	Please try again later.
	“Bookmark not saved. (Bookmark not saved.)”	When bookmark registration information has not been updated to the Pandora server.	Please try again later.
	“Pandora is not available at your current location. (Pandora is not available at your current location.)”	When Pandora is used in an area where it is not available.	Please try again at a different location.
	“The selected Pandora station is no longer available. (The selected Pandora station is no longer available.)”	When the selected station has been deleted, or has expired.	Please select another station.
	“Pandora Error. (Pandora Error.)”	When the Pandora server is undergoing maintenance, or another error has occurred.	Please try again later.

B: INSPECTION

1. POWER WILL NOT TURN ON

WIRING DIAGRAM:

- Audio system <Ref. to WI-102, WIRING DIAGRAM, Audio System.>
- Navigation system <Ref. to WI-276, WIRING DIAGRAM, Navigation System.>

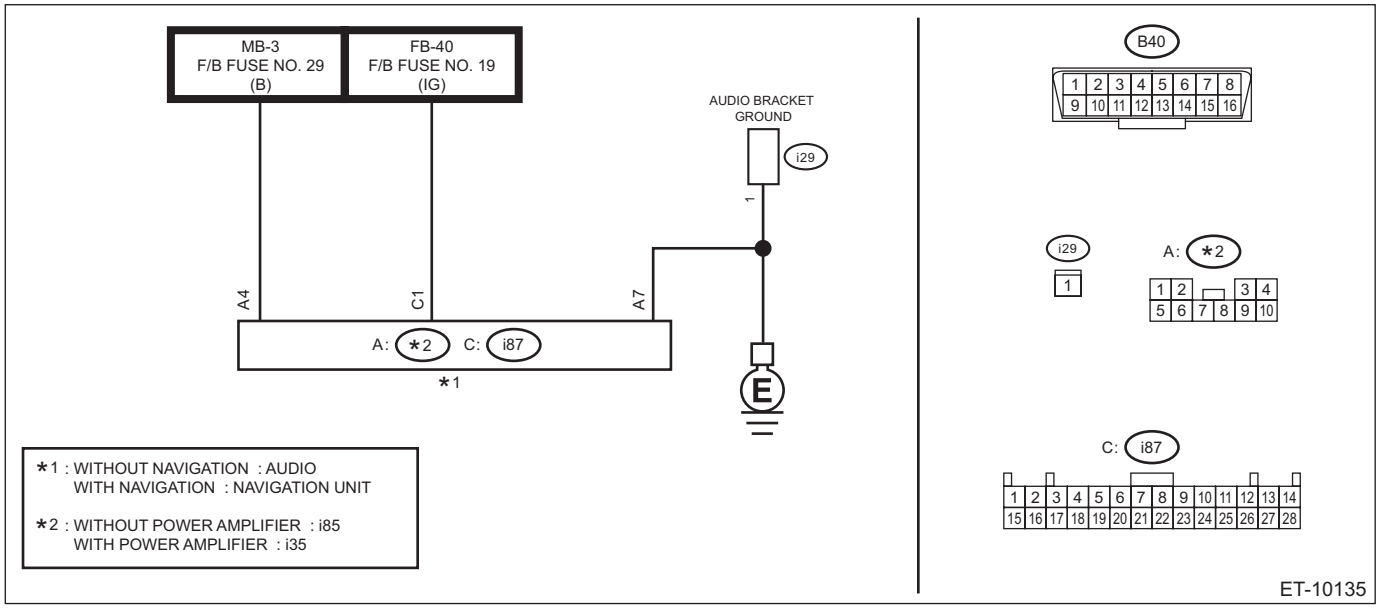

	Step	Check	Yes	No
1	**CHECK CONNECTOR CONNECTION.** Check that the connector is connected to the unit.	Is the connector connected?	Go to step **2**.	Connect the connector.
2	**CHECK CONNECTOR.** Check for poor contact of connectors or terminals.	Is the connector OK?	Go to step **3**.	Repair or replace the harness.
3	**CHECK POWER SUPPLY VOLTAGE.** 1) Disconnect the connector. 2) Turn the ignition switch to ACC. 3) Using a tester, measure the voltage between connector and chassis ground. NOTE: Turn the electrical parts to OFF. ***Connector & terminal*** ***(i85) No. 4 (+) — Chassis ground (–): (without power amplifier)*** ***(i35) No. 4 (+) — Chassis ground (–): (with power amplifier)***	Is the voltage 12 V or more?	Go to step **8**.	Go to step **4**.
4	**CHECK FUSE.** 1) Turn the ignition to OFF. 2) Check the fuse No. 8 inside the main fuse box.	Is the fuse OK?	Go to step **5**.	Replace the fuse. If the fuse is blown again, check or replace the short circuit of the power supply harness.
5	**CHECK HARNESS (POWER SUPPLY).** Measure the resistance between main fuse box and connector. ***Connector & terminal*** ***F/B fuse No. 29 — (i85) No. 4: (without power amplifier)*** ***F/B fuse No. 29 — (i35) No. 4: (with power amplifier)***	Is the resistance 1 Ω or less?	Go to step **6**.	Repair or replace the open circuit of harness.

	Step	Check	Yes	No
6	**CHECK HARNESS (GROUND).** Measure the resistance between connector and chassis ground. ***Connector & terminal*** ***(i85) No. 7 — Chassis ground: (without power amplifier)*** ***(i35) No. 7 — Chassis ground: (with power amplifier)***	Is the resistance 1 Ω or less?	Go to step **7**.	Repair or replace the open circuit of harness.
7	**CHECK BATTERY.** Check the battery. <Ref. to SC(H4DO)-63, Battery.> <Ref. to SC(H6DO)-57, Battery.>	Is the battery OK?	Go to step **8**.	Charge or replace the battery.
8	**CHECK OPERATION.** 1) Connect all connectors. 2) Turn the ignition switch to ACC and the power supply switch of the unit to ON.	Does the power turn ON?	Currently no failure is found.	Replace the unit. <Ref. to ET-23, Audio.>

2. THE SCREEN FREEZES AND DOES NOT ACCEPT ANY OPERATION ENTRY

	Step	Check	Yes	No
1	**CHECK RESTARTING DISPLAY.** Turn the ignition switch OFF → ACC.	Is the screen freeze eliminated?	Go to step **5**.	Go to step **2**.
2	**REMOVE OTHER MEDIA OR EXTERNAL DEVICES.** Remove the CD, SD card (model with SD card slot) or external devices connected to USB. Also, remove the external devices with Bluetooth.	Is the screen freeze eliminated?	Go to step **3**.	Go to step **6**.
3	**CHECK OTHER EXTERNAL DEVICE CONNECTION.** When screen freeze is eliminated, connect external devices one by one to identify the device that causes screen freeze.	Is the device that reproduces screen freeze identified?	Go to step **4**.	Go to step **5**.
4	**CHECK OTHER EXTERNAL DEVICE CONNECTION.** 1) Replace the identified device with the one that has the same performance. 2) Turn the ignition switch to ACC.	Does the screen freeze occur?	Replace the unit. <Ref. to ET-23, Audio.>	The external device may be defective.
5	**CHECK OPERATION PROCEDURE.** Ask how the user operates when screen freeze occurs, and perform using the same procedure.	Are the operation and screen normal?	Currently no failure is found.	Go to step **6**.
6	**CHECK ENVIRONMENTAL CONDITION.** Check if any external devices which emit strong electromagnetic waves and noises, such as a radio antenna, is installed inside the vehicle.	Is an external device installed?	Remove the external device and perform the inspection from step 2 again. If the fault is not fixed: Go to step **7**.	Go to step **7**.
7	**PERFORM INITIALIZATION PROCEDURE.** Perform the initialization procedure for the unit. **CAUTION:** **When the initialization procedure is performed, the data, telephone directory, etc. recorded in the unit body will be deleted. Before initialization, obtain permission from the user.** • Audio system: <Ref. to ET-9, INITIALIZATION (FACTORY DEFAULT), OPERATION, Audio System.> • Navigation system: <Ref. to ET-17, INITIALIZATION (FACTORY DEFAULT), OPERATION, Navigation System.>	Is the screen freeze eliminated?	Go to step **5**. If the screen freeze occurs again, replace the unit. <Ref. to ET-23, Audio.>	Replace the unit. <Ref. to ET-23, Audio.>

3. THE SCREEN IS BLACKED OUT, OR THE SCREEN IS NOT DISPLAYED

	Step	Check	Yes	No
1	**CHECK RESTARTING DISPLAY.** Turn the ignition switch OFF → ACC.	Is the screen properly displayed?	Currently no failure is found.	Go to step **2**.
2	**CHECK POWER SUPPLY BUTTON.** Check if the screen OFF mode is turned on by pressing the power supply button of the unit body.	Is the screen properly displayed?	The screen OFF mode might be activated. Currently no failure is found.	Go to step **3**.
3	**CHECK BUTTON ILLUMINATION.** Turn the ignition switch to ACC.	Do the buttons located beside the screen illuminate?	Go to step **4**.	Perform "Power will not turn ON" in Diagnostics with Phenomenon. <Ref. to INF(diag)-43, POWER WILL NOT TURN ON, INSPECTION, Diagnostics with Phenomenon.>
4	**CHECK INDICATION WITH ILLUMINATION ON.** Turn the lighting switch to ON.	Does the screen brightness change?	Go to step **7**.	Go to step **5**.
5	**CHECK HARNESS.** Check for poor contact of the harnesses, connectors and terminals that are connected to the unit body.	Is harness normal?	Go to step **6**.	Repair or replace the harness.
6	**CHECK INTEGRATED UNIT.** Display the data of «Lighting I Switch input» using Subaru Select Monitor. NOTE: For detailed procedures, refer to “PC application help for Subaru Select Monitor”.	Is the input signal normal?	Go to step **7**.	Replace the integrated unit. <Ref. to SL-83, Body Integrated Unit.>
7	**CHECK UNDER OVERLOAD CONDITION.** 1) Turn the ignition to OFF. 2) Leave as is for 10 minutes (cooling down), and then turn the ignition to ACC to check the operation.	Is the screen properly displayed?	Go to step **8**.	Replace the unit. <Ref. to ET-23, Audio.>
8	**OPERATIONAL CHECK.** Obtain the information about the audio device that the user used (SD, Bluetooth, CD, etc.), and connect the same device. Then play the device for 10 minutes or more.	Is the screen properly displayed?	Currently no failure is found.	Go to step **9**.
9	**CHECK EXTERNAL DEVICE.** 1) Replace the external device that might cause trouble with another device. (If trouble occurs while using a CD, replace the CD with another one. If trouble occurs while using an external device that is connected via USB, replace the external device with another device.) 2) Operate for 10 minutes or more.	Is the screen properly displayed?	The external device might have trouble, resulting in the overload state.	Replace the unit. <Ref. to ET-23, Audio.>

4. SYSTEM IS RESET

WIRING DIAGRAM:

- Audio system <Ref. to WI-102, WIRING DIAGRAM, Audio System.>
- Navigation system <Ref. to WI-276, WIRING DIAGRAM, Navigation System.>

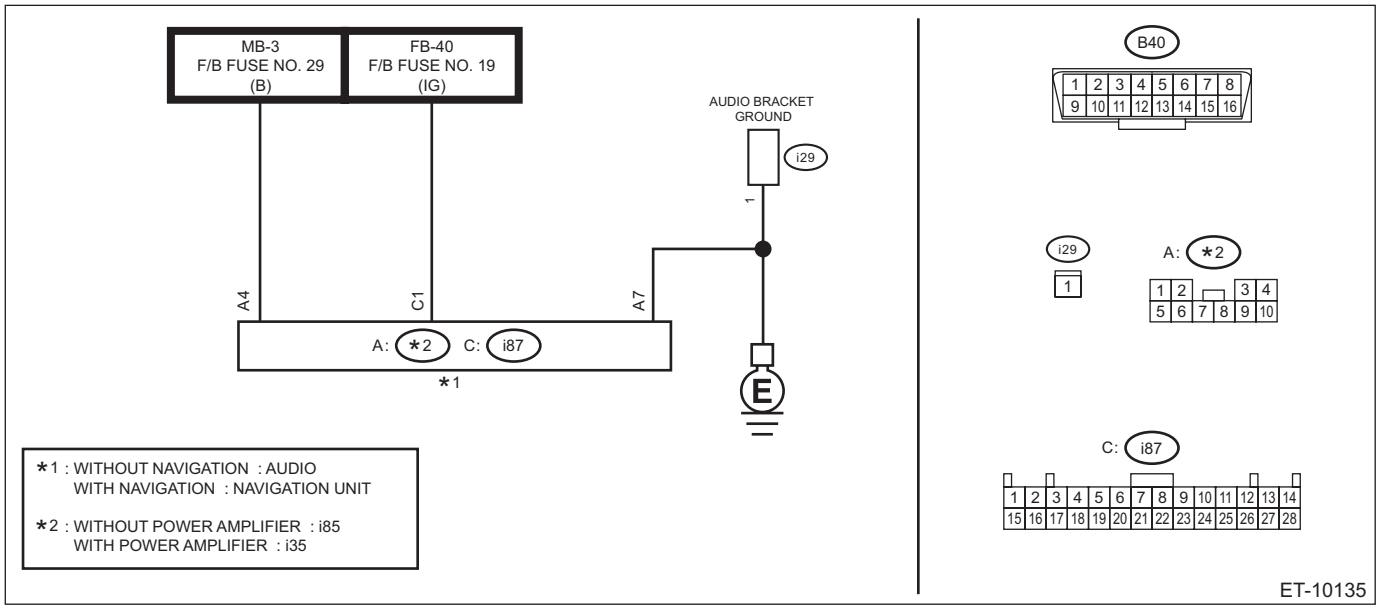

	Step	Check	Yes	No
1	**CHECK ENVIRONMENTAL CONDITION.** Check if any external devices which emit strong electromagnetic waves and noises, such as a radio antenna, is installed inside the vehicle.	Is an external device installed?	Remove the external device to check the operation. If the fault is not fixed: Go to step **2**.	Go to step **2**.
2	**CHECK CONNECTOR CONNECTION.** Check that the connector is connected to the unit.	Is the connector connected?	Go to step **3**.	Connect the connector.
3	**CHECK CONNECTOR.** Check for poor contact of connectors or terminals.	Is the connector OK?	Go to step **4**.	Repair or replace the harness.
4	**CHECK POWER SUPPLY VOLTAGE.** 1) Turn the ignition switch to ACC. 2) Using a tester, measure the voltage between connector and chassis ground. NOTE: Turn the electrical parts to OFF. ***Connector & terminal*** ***(i85) No. 4 (+) — Chassis ground (–): (without power amplifier)*** ***(i35) No. 4 (+) — Chassis ground (–): (with power amplifier)***	Is the voltage 12 V or more?	Go to step **8**.	Go to step **5**.
5	**CHECK OPEN CIRCUIT IN HARNESS (POWER SUPPLY).** Using the tester, measure the resistance between connector and chassis ground while shaking the harness. ***Connector & terminal*** ***(i85) No. 4 — Chassis ground: (without power amplifier)*** ***(i85) No. 3 — Chassis ground: (with power amplifier)***	Is the resistance 1 Ω or less?	Go to step **6**.	Repair or replace the open circuit of harness.

	Step	Check	Yes	No
6	**CHECK OPEN CIRCUIT IN HARNESS (GROUND).** Using the tester, measure the resistance between connector and chassis ground while shaking the harness. Connector & terminal ***(i85) No. 7 — Chassis ground: (without power amplifier)*** ***(i35) No. 7 — Chassis ground: (with power amplifier)***	Is the resistance 1 Ω or less?	Go to step **7**.	Repair or replace the open circuit of harness.
7	**CHECK BATTERY.** Check the battery. <Ref. to SC(H4DO)-65, INSPECTION, Battery.>	Is the battery OK?	Go to step **8**.	Replace the unit. <Ref. to ET-23, Audio.>
8	**CHECK UNIT OPERATION.** 1) Connect all connectors. 2) Turn the ignition switch to ACC and the power supply switch of the unit to ON.	Is the reset eliminated?	Currently no failure is found.	Replace the unit. <Ref. to ET-23, Audio.>

5. CDS CANNOT BE PLAYED BACK

	Step	Check	Yes	No
1	**CONFIRM CD INSERTION CONDITION.** Check that the CD is inserted properly.	Is the CD normal?	Go to step **2**.	Insert the CD properly.
2	**CHECK CD.** Check the CD surfaces are free from scratches or dirt.	Is the CD normal?	Go to step **3**.	The CD is defective.
3	**CHECK CD.** Replace the CD with another one. (Use a playable CD. Refer to owner's manual for details.)	Is the CD played back?	The CD is defective.	Go to step **4**.
4	**CHECK DEW CONDENSATION IN UNIT.** 1) After starting the engine, turn ON the air conditioner and dry inside the vehicle for 10 minutes or more. 2) Check the CD operation.	Is the CD played back?	Dew condensation occurred inside the unit.	Replace the unit. <Ref. to ET-23, Audio.>

6. SOUND DOES NOT COME OUT FROM THE SPEAKER

	Step	Check	Yes	No
1	**CHECK AUDIO SPECIFICATION.** Check the audio specification.	Is the audio display 6.2-inch?	Go to step **2**.	Go to step **3**.
2	**CHECK DTC.** 1) Turn the ignition switch to OFF → ON. 2) Read the DTC. <Ref. to INF(diag)-18, Read Diagnostic Trouble Code (DTC).>	Is DTC B2244 displayed? (Current malfunction) <Ref. to INF(diag)-28, DTC B2244 AMPLIFIER COMMUNICATION, Diagnostic Procedure with Diagnostic Trouble Code (DTC).>	Perform the diagnosis according to DTC.	Go to step **3**.
3	**CHECK THE MODE IN WHICH NO SOUND COME OUT.** Check if sound comes out in each mode such as CD, radio, etc.	Dose it have no sound in all modes?	Go to step **4**.	Check each mode in which no sound come out. For CD: <Ref. to INF(diag)-48, CDS CANNOT BE PLAYED BACK, INSPECTION, Diagnostics with Phenomenon.> For radio: <Ref. to INF(diag)-53, RADIO VOLUME IS LOW OR INTERFERENCE NOISE OCCURS, INSPECTION, Diagnostics with Phenomenon.> For Bluetooth audio: <Ref. to INF(diag)-51, BLUETOOTH CONNECTION CANNOT BE ESTABLISHED, INSPECTION, Diagnostics with Phenomenon.>

	Step	Check	Yes	No
4	**CHECK DIAGNOSTIC MODE.** Perform {Audio Check} on the {Line Diag} screen. • Audio system: <Ref. to ET-12, CHECK SPEAKER OUTPUT WITH LINE DIAG MODE, OPERATION, Audio System.> • Navigation system: <Ref. to ET-20, CHECK SPEAKER OUTPUT WITH LINE DIAG MODE, OPERATION, Navigation System.>	Dose it have no sound in all speakers?	Go to step **5**.	Model with power amplifier: Check the harnesses between the unit and power amplifier and between power amplifier and speaker for open circuit or short circuit. If no fault is found, replace the speaker. Model without power amplifier: Check the harness between the unit and speaker for open circuit or short circuit. If no fault is found, replace the speaker.
5	**CHECK MUTE MODE.** Check if the MUTE mode is turned on when the MUTE button is installed.	Is the volume level set to the minimum?	Since the MUTE mode is on or the volume level is set to the minimum, sound does not come out.	Go to step **6**.
6	**CHECK DTC (MODEL WITH TELEMATICS).** Read DTC of telematics. <Ref. to TEL(diag)-16, Diagnostic Code(s) Display.>	Are B2A0E (mute line circuit), B2A05 (left speaker/audio circuit) and B2A06 (right speaker/audio circuit) displayed?	Perform the diagnosis according to DTC. <Ref. to TEL(diag)-49, DTC B2A0E MUTE LINE CIRCUIT, Diagnostic Procedure with Diagnostic Trouble Code (DTC).>	Go to step **7**.
7	**CHECK CONNECTOR.** Check for poor contact in the connector of the unit and the connector of each speaker. Check for poor contact in the amplifier connector for models with amplifier.	Are the connectors and terminals normal?	Replace the unit. <Ref. to ET-23, Audio.>	Repair or replace the harness.

7. BLUETOOTH CONNECTION CANNOT BE ESTABLISHED

	Step	Check	Yes	No
1	**CHECK BLUETOOTH DEVICE.** Restart the Bluetooth device, and connect again.	Does it start properly?	Currently no failure is found.	Go to step **2**.
2	**CHECK BLUETOOTH DEVICE.** Re-register the Bluetooth device, and connect again.	Is communication successful?	Currently no failure is found.	• For model with 7-inch display, Go to step **3**. • For model with 6.2-inch display, Go to step **4**.
3	**CHECK BLUETOOTH DEVICE.** 1) Connect another Bluetooth device. NOTE: For Bluetooth supported standard, refer to the Notes in the margin.	Is connection established?	Bluetooth device which cannot be connected might be faulty.	Go to step **4**.
4	**CHECK ENVIRONMENTAL CONDITION.** Check if any external devices which emit strong electromagnetic waves and noises, such as a radio antenna, is installed inside the vehicle.	Is an external device installed?	Remove the external device and perform the inspection from step 1 again.	Replace the unit. <Ref. to ET-23, Audio.>

NOTE:
Supported standard
Supported standard for model with 7-inch display: Ver. 3.0 +EDR supported
- Bluetooth Phone

Profile
  - HFP: Ver. 1.6
  - OPP: Ver. 1.2
  - PBAP: Ver. 1.1
  - MAP: Ver. 1.0
  - SPP: Ver. 1.1

- Bluetooth Audio Device

Profile
  - A2DP: Ver. 1.2
  - AVRCP: Ver. 1.4

Supported standard for model with 6.2-inch display: Ver. 2.1 +EDR supported
- Bluetooth Phone

Profile
  - HFP: Ver. 1.5
  - OPP: Ver. 1.1
  - PBAP: Ver. 1.0
  - MAP: Ver. 1.0
  - SPP: Ver. 1.0

- Bluetooth Audio Device

Profile
  - A2DP: Ver. 1.2
  - AVRCP: Ver. 1.4

8. BLUETOOTH DOES NOT OPERATE

	Step	Check	Yes	No
1	**CHECK BLUETOOTH DEVICE.** Restart the Bluetooth device, and connect again.	Does it start properly?	Currently no failure is found.	Go to step **2**.
2	**CHECK BLUETOOTH DEVICE.** Re-register the Bluetooth device, and connect again.	Is communication successful?	Currently no failure is found.	Go to step **3**.
3	**CHECK BLUETOOTH DEVICE.** 1) Connect another Bluetooth device. NOTE: For Bluetooth supported standard, refer to the Notes in the margin.	Is connection established?	Bluetooth device which cannot be connected might be faulty.	Go to step **4**.
4	**CHECK ENVIRONMENTAL CONDITION.** Check if any external devices which emit strong electromagnetic waves and noises, such as a radio antenna, is installed inside the vehicle.	Is an external device installed?	Remove the external device and perform the inspection from step 1 again.	Replace the unit. <Ref. to ET-23, Audio.>

NOTE:
Supported standard
Supported standard for model with 7-inch display: Ver. 3.0 +EDR supported
- Bluetooth Phone

Profile
  - HFP: Ver. 1.6
  - OPP: Ver. 1.2
  - PBAP: Ver. 1.1
  - MAP: Ver. 1.0
  - SPP: Ver. 1.1
- Bluetooth Audio Device

Profile
  - A2DP: Ver. 1.2
  - AVRCP: Ver. 1.4

Supported standard for model with 6.2-inch display: Ver. 2.1 +EDR supported
- Bluetooth Phone

Profile
  - HFP: Ver. 1.5
  - OPP: Ver. 1.1
  - PBAP: Ver. 1.0
  - MAP: Ver. 1.0
  - SPP: Ver. 1.0
- Bluetooth Audio Device

Profile
  - A2DP: Ver. 1.2
  - AVRCP: Ver. 1.4

9. RADIO VOLUME IS LOW OR INTERFERENCE NOISE OCCURS

CAUTION:
- **If non-genuine electrical parts are installed, they may cause interference noise.**
- **Refer to the following diagnostic procedure if equipped with the digital radio using the Internet connection.**
  - **– Check SUBARU STARLINK service: <Ref. to INF(diag)-56, CHECK SUBARU STARLINK SERVICE, INSPECTION, Diagnostics with Phenomenon.>**
  - **– Bluetooth connection cannot be established: <Ref. to INF(diag)-51, BLUETOOTH CONNECTION CANNOT BE ESTABLISHED, INSPECTION, Diagnostics with Phenomenon.>**
  - **– Check connection between smartphone and unit: <Ref. to INF(diag)-55, CHECK CONNECTION BETWEEN SMARTPHONE AND UNIT, INSPECTION, Diagnostics with Phenomenon.>**

WIRING DIAGRAM:
- Audio system <Ref. to WI-102, WIRING DIAGRAM, Audio System.>
- Navigation system <Ref. to WI-276, WIRING DIAGRAM, Navigation System.>

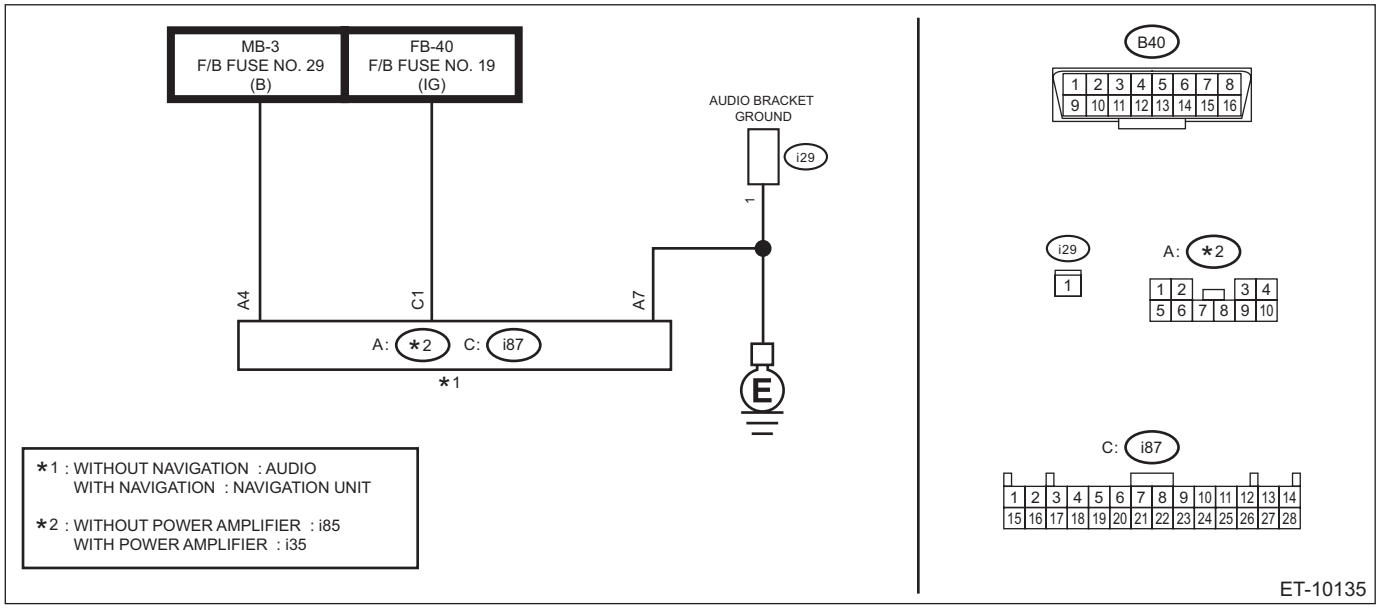

Step		Check	Yes	No
1	**CHECK SYMPTOM.** Check in which condition (place) the noise occurs.	Does it occur in any places?	Go to step **2**.	Radio wave reception condition is poor. (In tunnel, buildings, etc.) There is no failure on the vehicle.
2	**CHECK ANTENNA.** Check for poor contact of connectors or terminals.	Is the connector OK?	Go to step **3**.	Repair or replace the harness.
3	**CHECK HARNESS.** Check the antenna harness for an open or short circuit, and check the booster.	Is harness normal?	Go to step **4**.	Repair or replace the harness.
4	**CHECK UNIT GROUND CIRCUIT.** Check the unit ground connector (1P on back side).	Is the engine ground circuit normal?	Go to step **5**.	Repair or replace the ground circuit.
5	**CHECK ENVIRONMENTAL CONDITION.** Check if any external devices which emit strong electromagnetic waves and noises, such as a radio antenna, is installed inside the vehicle.	Is an external device installed?	Remove the external device. There is no failure if it returns to normal. If the fault is not fixed: Go to step **6**.	Go to step **6**.

	Step	Check	Yes	No
6	**CHECK NOISE OCCURRENCE CONDITION.** Stop the engine, and turn the ignition switch to ON to check for noise occurrence.	Does the noise occur while the engine stops?	Replace the unit. <Ref. to ET-23, Audio.>	Check that the engine ignition system, generator, engine ground circuit and chassis ground circuit are connected securely.

NOTE:
When the volume of AHA and Pandora is low, connect the smartphone to the Internet, and check that AHA and Pandora is audible on the smartphone itself. When it is inaudible, or the volume is too low, there is a problem with the smartphone, Internet connection or service provider. When it is audible with the smartphone without any troubles, there is a problem with connection to the vehicle (USB connection or Bluetooth connection).

10.WRONG LOCATION OF VEHICLE, NO GPS RECEPTION

	Step	Check	Yes	No
1	**CHECK SYMPTOM.** Check in which condition (place) the vehicle is located out of position.	Does it occur in any places?	Go to step **2**.	Go to step **4**.
2	**CHECK EXTERNAL DEVICE INSTALLATION.** Check if an external device is installed near the GPS antenna or unit.	Is an external device installed?	Remove the external device. There is no failure if it returns to normal. If the fault is not fixed: Go to step **3**.	Go to step **3**.
3	**CHECK DIAGNOSTIC MODE.** Check the GPS item on the {Line Diag} screen.	Is the display OK?	Go to step **5**.	Go to step **4**.
4	**CHECK GPS ANTENNA.** Check that the GPS antenna connector is connected.	Is the connector connected?	Replace the navigation assembly. <Ref. to ET-47, Navigation Body.>	Replace the GPS antenna. <Ref. to ET-48, GPS Antenna.>
5	**INSPECTION OF VEHICLE SPEED SENSOR.** Read the DTC of VDC CM using Subaru Select Monitor. NOTE: For detailed procedures, refer to “PC application help for Subaru Select Monitor”.	Is DTC displayed?	Perform the diagnosis according to DTC. <Ref. to VDC(diag)-40, LIST, List of Diagnostic Trouble Code (DTC).>	Go to step **6**.
6	**CHECK VEHICLE SPEED SIGNAL.** Check the vehicle speed pulse using an oscilloscope.	Is the pulse normal?	Replace the navigation assembly. <Ref. to ET-47, Navigation Body.>	Go to step **7**.
7	**CHECK VEHICLE SPEED PULSE SIGNAL HARNESS.** 1) Disconnect the VDC CM connector. 2) Check the vehicle speed pulse with VDC CM connector using an oscilloscope.	Is there any noise while the vehicle stops?	Replace the VDC CM. <Ref. to VDC-8, VDC Control Module and Hydraulic Control Unit (VDCCM&H/U).>	Repair or replace the harness.

11.CHECK CONNECTION BETWEEN SMARTPHONE AND UNIT

	Step	Check	Yes	No
1	**CHECK COMPATIBILITY OF SMARTPHONE.** Check that the customer's smartphone is compatible with the system. • iPhone: iOS 4.3.5 or later • Android: Android 4.0 or later	Is it compatible?	Go to step **2**.	The smartphone is not compatible; therefore, it does not work with the system.
2	**ACTIVATION OF APP.** Check the SUBARU STARLINK app of the smartphone.	Is it installed?	Go to step **4**.	Go to step **3**.
3	**INSTALLATION OF APP.** Install SUBARU STARLINK app to smartphone.	Is installation successful?	Go to step **4**.	Reboot the smartphone, and install the SUBARU STARLINK.
4	**ACTIVATION OF APP.** Activate SUBARU STARLINK app.	Is SUBARU STARLINK app activated?	Go to step **5**.	Reinstall the app and activate it. If you still fail to activate it, the smartphone may be defective.
5	**CHECK BLUETOOTH CONNECTION.** NOTE: For model with 6.2-inch display and iPhone (with USB connection): Go to step **6**. Confirm the Bluetooth connection with the unit.	Is Bluetooth connection established?	Go to step **7**.	Check that the unit can connect with other smartphones. If successful, the smartphone may be defective. If the unit cannot communicate with other smartphones, replace the unit. <Ref. to ET-23, Audio.>
6	**CHECK USB (FOR MODEL WITH 6.2-INCH DISPLAY AND IPHONE).** Check that the USB cable is connected to the unit.	Is USB connection successful?	Go to step **7**.	Check that the unit can connect with other smartphones. If successful, the smartphone may be defective. If the unit cannot communicate with other smartphones, replace the unit. <Ref. to ET-23, Audio.>
7	**REBOOT THE SMARTPHONE.** 1) Reboot the smartphone. 2) Reinstall the SUBARU STARLINK app.	Is it operating normally?	The system has returned to a normal condition at this time. Reproduce the failure, and then perform the diagnosis again.	Go to step **8**.

	Step	Check	Yes	No
8	**CHECK POWER SUPPLY.** Turn the ignition to OFF → ACC ON.	Is it operating normally?	The system has returned to a normal condition at this time. Reproduce the failure, and then perform the diagnosis again.	Go to step **9**.
9	**DELETE CACHE INFORMATION OF THE UNIT.** Delete cache information of the unit. Refer to the Notes in the margin.	Is it operating normally?	Cache information temporary stored in the unit was corrupted. Currently, it is normal.	Perform the procedures described on "Check SUBARU STARLINK service". <Ref. to INF(diag)-56, CHECK SUBARU STARLINK SERVICE, INSPECTION, Diagnostics with Phenomenon.>

NOTE:
- 7-inch display
  1. Select SUBARU STARLINK from the APPS screen.
  2. On the SUBARU STARLINK display (including an error message screen), press and hold the right bottom corner of the screen for 30 seconds or more.
  3. Lift your finger off the screen. If the message [Select Audio Source] appears when you lift your finger off the screen, the cache information is successfully deleted.
- 6.2-inch display
  1. Press the HOME button to display the HOME screen.
  2. Press the SETTINGS key to display the SETTINGS screen. (The most recent set entry is displayed.)
  3. Press the Settings General key to display the Settings General screen.
  4. Press the System Software key to display the System Software screen.
  5. Press the Delete key, and press OK on the confirmation message display. Then the cache information is successfully deleted.

12.CHECK SUBARU STARLINK SERVICE

	Step	Check	Yes	No
1	**CHECK SMARTPHONE.** Check the smartphone connection.	Can the smartphone connect the Internet?	Go to step **4**.	Go to step **2**.
2	**CHECK RADIO WAVE CONDITION.** Move to a location where the radio wave condition is good, and confirm the connection.	Can the smartphone connect the Internet?	Go to step **4**.	Go to step **3**.
3	**CHECK RADIO WAVE CONDITION.** Communication network gets busy at times even in a good radio wave location. In this case, wait for some time and then try again.	Can the smartphone connect the Internet?	Go to step **4**.	The smartphone may be defective.
4	**CHECK SUBARU STARLINK.** Check service provision status with SUBARU STARLINK.	Is there any problem in the service provision status?	Try to connect after the problem in service provision is solved.	Replace the unit. <Ref. to ET-23, Audio.>

14.Service Diagnostics Mode

A: OPERATION

NOTE:
Contents indicated in this section generally describe inspection procedures to be performed when Subaru Select Monitor cannot be used. However, some of the inspections described here cannot be performed with Subaru Select Monitor.
For the items that Subaru Select Monitor is not supporting, perform the inspections by referring to information indicated in this section.

1. PROCEDURE TO SWITCH TO SERVICE DIAGNOSTICS MODE

1) Turn the ignition switch to ACC.
2) After turning the ignition switch to ACC and wait for 20 seconds or more, press the button (d) five times with the button (a) pressed.

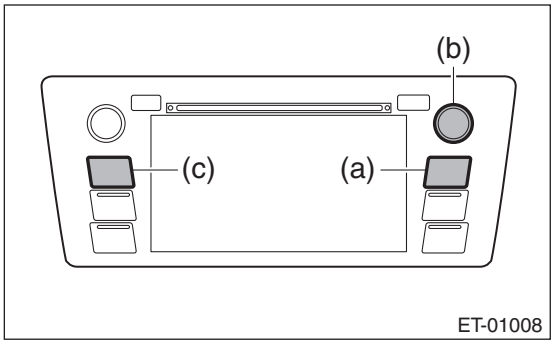

NOTE:
Pressing the button (c) for 3 seconds or more, or turning the ignition switch from the OFF to ACC position can exit the diagnostic mode.

2. SERVICE INSPECTION

Upon entering the service diagnostics mode, the following screen is displayed.

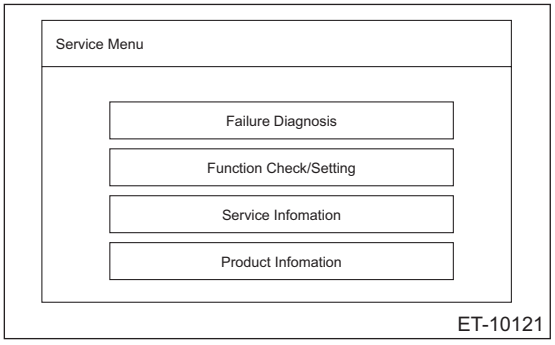

Failure Diagnosis menu

On Service Menu, click Failure Diagnosis to display the following screen.

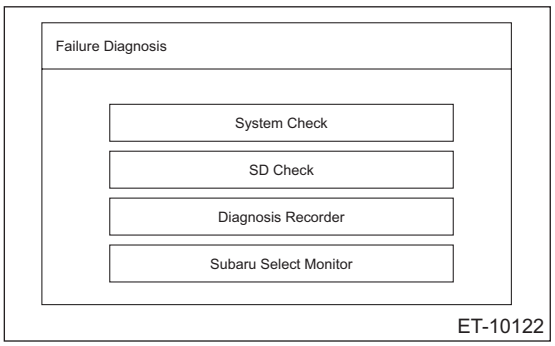

1) System Check
On the Failure Diagnosis screen, click System Check to display the following screen.

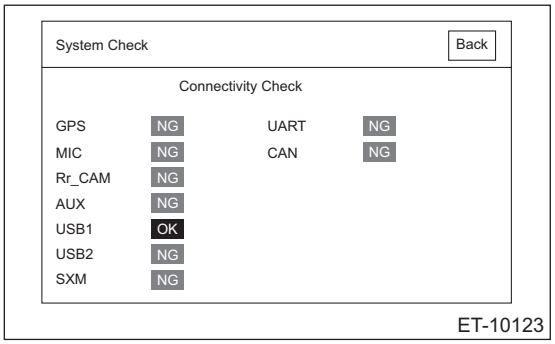

OK: Each connection device is connected properly.
NG: Connection is not established, or connection status (including harness) is faulty.

NOTE:
Check the external connection terminals (USB 1, USB 2 and AUX) by connecting memory or a pin jack for inspection.
Check the connection status of the connector and harness. If there are no problems, the connection device or unit could be faulty.
The following shows information to be displayed and its description.

Item	Item detection method	OK judgment condition	Note
GPS	Direct line	GPS antenna is connected. (NG is displayed when short circuit is detected.)	With navigation only
MIC	Direct line	(i87) No. 6 falls to GND level.	—
Rr_CAM	Direct line	Synchronized signals from the camera are input to (i146) No. 3.	—
AUX	Direct line	(i87) No. 25 falls to GND level.	—
USB1	Communication	USB device is connected to USB-HUB to obtain USB device information properly. (Should be recognizable as a supported USB device.)	—
USB2	Communication	USB device is connected to USB-HUB to obtain USB device information properly. (Should be recognizable as a supported USB device.)	—
SXM	Direct line	XM-ANT is connected. (NG is displayed when short circuit is detected.)	It takes approx. 30 seconds to become recognizable.
UART	Communication	A/C control panel: UART communication is completed properly. A/C CM: A/C CM connection notice is received through UART communication from the A/C control panel.	—
CAN	Communication	CAN communication is completed properly.	—
VICS	Communication	UART communication is completed properly.	—
ETC	Communication	ETC device registration is completed through E-BUS communication.	—

2) SD Check
On the Failure Diagnosis screen, click SD Check to display the following screen.

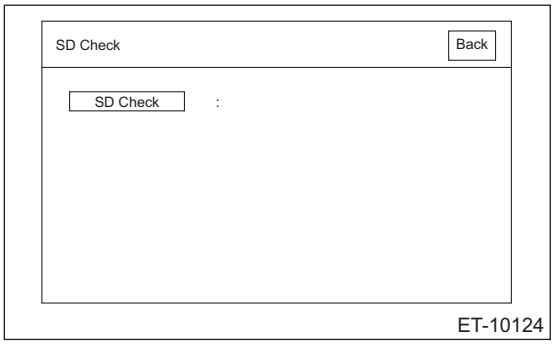

On the SD Check screen, click SD Check to display a diagnostic result.
OK: There is no defect on the SD card.
NG: There is defect on the SD card. Refer to DTC B2243 to perform the diagnosis. <Ref. to INF(diag)-27, DTC B2243 SD CARD COMMUNICATION, Diagnostic Procedure with Diagnostic Trouble Code (DTC).>

NOTE:
The following shows information to be displayed and its description.

Item	Content
OK	SD card diagnosis is completed. Diagnostic result is OK.
NG	SD card diagnosis is completed. Diagnostic result is NG.
During diagnosis	SD card diagnosis is in progress.

3) Subaru Select Monitor
On the Failure Diagnosis screen, click Subaru Select Monitor. A DTC code is displayed when a DTC code is stored.
When a DTC code is displayed, perform the diagnosis according to the DTC code. <Ref. to INF(diag)-22, List of Diagnostic Trouble Code (DTC).>

Function Check/Setting

On Service Menu, click Function Check/Setting to display the following screen.

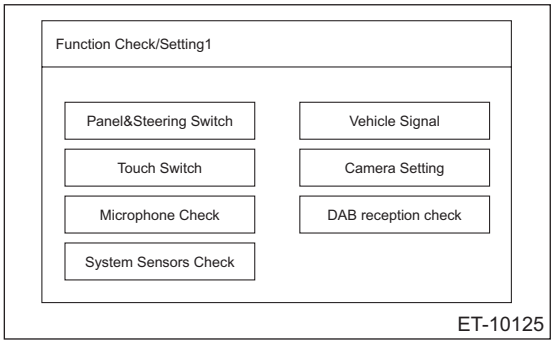

1) Panel & Steering Switch Check Mode
On the Function Check/Setting screen, click Panel & Steering Switch to display the following screen.

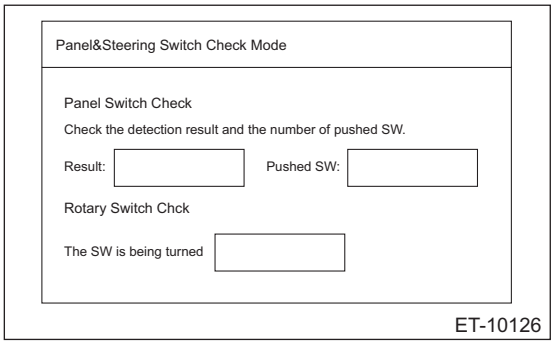

Once the screen is displayed, press the push switches to check that the number of pushed switches matches the number shown in Pushed SW.
If the number of SW does not match, SW conditions are not properly recognized. Therefore, perform inspection for unrecognized switches.
In addition, turn the rotary switch clockwise or counterclockwise to check that the screen indicates correct status according to the operation. If the screen display does not match the actual operation, the rotary SW may be faulty. Perform inspection for the rotary SW.

NOTE:
The following shows information to be displayed and its description.

Item	Display	Content
Result	Pressed	Pressing of switch is detected.
Pushed SW	1	One pressed switch is detected.
	2	Two pressed switches are detected.
	3	Three pressed switches are detected.
	4	Four pressed switches are detected.
The SW is being turned	Clockwise	The rotary switch is turned clockwise.
	Counterclockwise	The rotary switch is turned counterclockwise.

2) Touch Switch Check

NOTE:
The Subaru Select Monitor does not have the Touch Switch Check function.
On the Function Check/Setting screen, click Touch Switch to display the following screen.

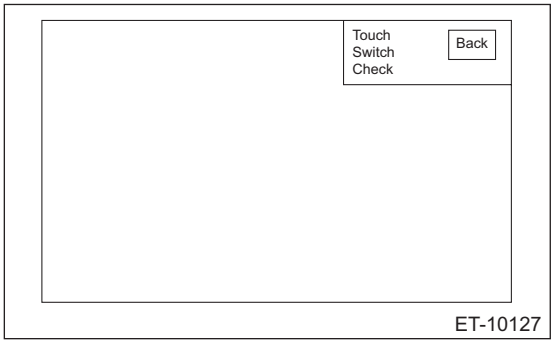

Once the screen appears, touch the screen. + (cursor) appears where you touched.

NOTE:
The following shows information to be displayed and its description.

Item	Content
+ (Cursor)	Appears when the screen is touched. The displayed white-outlined + (cursor) stays on, even when a touching finger is removed, until the screen is switched.

3) Microphone Check
On the Function Check/Setting screen, click Microphone Check to perform inspection for microphone.
With the microphone input level screen displayed, make sound toward the microphone.
Fluctuate the sound volume to check that the microphone input level changes accordingly.
If the input level does not become green or the input level does not change even when the sound volume is fluctuated, the microphone may be faulty.

NOTE:
The microphone input function is enabled while this screen is displayed.
- The sound volume is indicated in eight levels.

The maximum input volume of microphone is equally divided into eight levels from level 0 to level 7.
- The microphone input level is sampled every 100 ms, and the result is indicated in eight levels.

Display of the input level is also updated every 100 ms.
The microphone input level gauge is updated even during recording.
Example of display:

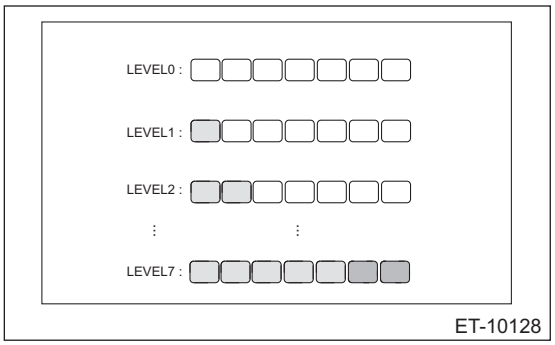

4) System Sensors Check

NOTE:
The Subaru Select Monitor does not have the System Sensor Check function.
On the Function Check/Setting screen, click Touch Switch to display the following screen.

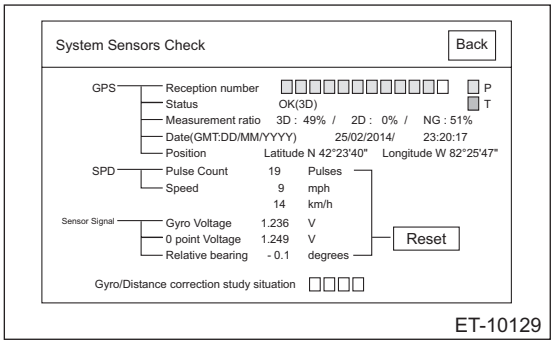

GPS related check: Status of the GPS signal reception can be checked. When there is faulty in reception status, position detection or date indication, re-check the reception status at a location with a fine view and no obstacles around that will interrupt the signal reception. When normal condition is still not obtained, the GPS antenna may be faulty.
- GPS/Reception number: Normal when it is indicated in blue.
- GPS/Status: Normal when OK is indicated.
- GPS/Measurement ratio 3D:
- GPS/Measurement ratio 2D:
- GPS/Date: Normal when current time is indicated. When current date/time is not indicated, click the Date Setting button to set the current date on the displayed date setting screen.
- GPS/Position: Normal when longitude and latitude of the current position are indicated.

SPD check: Status of the vehicle speed sensor signal can be checked.
1. Before starting inspections, check the safety around the vehicle. (Lift up the vehicle as necessary.)
2. When VDC CM detected DTC, clear the DTC.
3. Drive the vehicle at 9 km/h (6 MPH) or more.

4. Check that SPD indicates vehicle speed that is almost equivalent to the figure displayed on the combination meter.
5. When the vehicle speed is not indicated, or different vehicle speed is indicated, check if CAN system DTC is stored. If so, perform the diagnosis according to the DTC. When CAN system DTC is not stored, check if the DTC related to the vehicle sensor is stored for the VDC system, and perform inspection according to the procedure. If no fault is found with the CAN system and vehicle speed sensor, and the vehicle speed is displayed on the combination meter, the unit itself may be faulty.
Gyro sensor related check: Status of the Gyro sensor signal can be checked. If fault is found with the Gyro sensor related indications, the main unit could be faulty.
- Gyro sensor/Gyro Voltage: Shake the vehicle to the left and right to check that the voltage changes.
- Gyro sensor/Relative bearing: Normal when the value changes when direction of the vehicle is changed.
- Inclined angle sensor/relative angle: Park the vehicle on uphill or downhill surface. Normal when the value changes.
- Gyro/Distance correction study situation: Study situation can be checked.
- Reset: Press and hold the Reset button for three seconds to reset the pulse count of SPD, relative bearing of Gyro sensor, relative angle of inclined angle sensor.

NOTE:
The following shows information to be displayed and its description.

Item	Display	Content
GPS/Reception number	Blue	When notification of “Positioning with collected data is used” is received from the GPS reception device. (Status: In-use)
	Yellow	When notification of “Tracking in progress” is received from the GPS reception device. (Status: Reception in progress)
	Transparent	When notification of “Positioning with collected data is not used” or “Searching in progress” is received from the GPS reception device. (Status: Not used)
GPS/Status	OK (H3D)	When three-dimensional positioning (Hyper 3D positioning) using satellites with less accuracy degradation is used.
	OK (H2D)	When two-dimensional positioning (Hyper 2D positioning) using satellites with less accuracy degradation is used.
	OK (3D)	When three-dimensional positioning is used.
	OK (2D)	When two-dimensional positioning is used.
	NG	When the positioning data is not available.
	error	When a reception error occurred.
	—	For cases other than above.
GPS/Measurement ratio 3D		Displays ratio of three-dimensional positioning satellites.
GPS/Measurement ratio 2D		Displays ratio of two-dimensional positioning satellites.
GPS/Measurement ratio NG		Displays ratio of non-positioning satellites.
GPS/Date	Current date and time	Displays date information obtained from GPS in four digits for year and 24-hour clock for time. Date information is displayed as [Y/M/D].
GPS/Position (latitude)	Current position, latitude information.	Displays latitude information of the current position in “degree”, “minute” and “second”. When positioning information is not obtained, it appears as 00° 00’ 00”.
GPS/Position (longitude)	Current position, longitude information.	Displays longitude information of the current position in “degree”, “minute” and “second”. When positioning information is not obtained, it appears as 00° 00’ 00”.

Item	Display	Content
SPD/Pulse Count	Pulse count.	Displays SPD signal status in the following format. • The number of input pulses accumulated since this screen is displayed. (Indicated in four-digit DEC code.) • The number returns to 0 after 9999. • Reset with ACC OFF/ON.
SPD/Speed	Speed.	Displays SPD signal status in the following format. • LSB: Displays in km-per-hour as 1 [km/h]. • Displays 255 [km/h] for MAX value or more, and 0 [km/h] for MIN value or less.
Gyro sensor/Gyro Voltage	Voltage value.	Voltage value (unit: V, LSB: 1 mV).
Gyro sensor/0 point Voltage	Unit: 0 point voltage.	Displays 0 point voltage of the Gyro sensor used by each company.
Gyro sensor/Relative bearing	Relative bearing.	–360.0° — +360.0°
Inclined angle sensor/relative angle	Relative angle.	Displays longitudinal inclination angle of the vehicle in the relative angle (unit: °, LSB: 1°, no sign for elevation angle, negative sign for depression angle: –), while the position when this screen appears is set as [0°].
Gyro/Distance correction study situation	Gyro/Distance correction study situation.	
Reset	Reset the following display items to [0]. • SPD pulse count • Relative bearing of Gyro sensor • Relative angle of inclined angle sensor	Press and hold the Reset button for three seconds or more.

5) Vehicle Signal Check

On the Function Check/Setting screen, click Vehicle Signal to display the following screen.

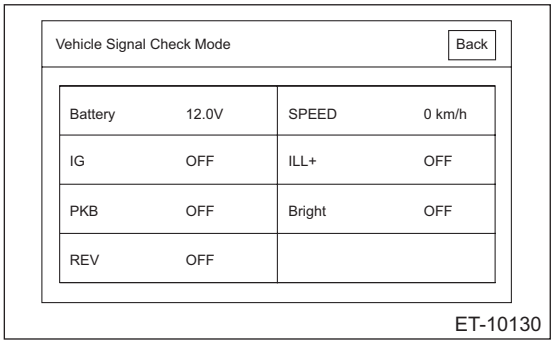

• Battery: Status of the battery voltage signal input can be checked.

Measure the battery voltage using a tester. System is normal when the indicated voltage is almost equivalent to the tester value. When the indicated voltage is different from the tester value, perform inspection for the power supply circuit of main unit.

- Vehicle speed: Status of the vehicle speed signal input can be checked.
  1. Before starting inspections, check the safety around the vehicle. (Lift up the vehicle as necessary.)
  2. When VDC CM detected DTC, clear the DTC.
  3. Drive the vehicle at 9 km/h (6 MPH) or more.
  4. Check that SPD indicates vehicle speed that is almost equivalent to the figure displayed on the combination meter.
  5. When the vehicle speed is not indicated, or different vehicle speed is indicated, check if CAN system DTC is stored. If so, perform the diagnosis according to the DTC. When CAN system DTC is not stored, check if the DTC related to the vehicle sensor is stored for the VDC system, and perform inspection according to the procedure. If no fault is found with the CAN system and vehicle speed sensor, and the vehicle speed is displayed on the combination meter, the unit itself may be faulty.
- IG: Status of the IG signal input can be checked.

Turn the ignition switch to ON, and check that the IG indication appears as ON. If the indication does not appear as ON, check the IG signal line.

- ILL+: Status of the illumination signal input can be checked.
  1. Before starting inspections, turn the ignition switch to ON.
  2. Set the lighting switch to TAIL (small) position.
  Make sure that the bright switch is not turned ON at this time.
  3. Check that ON lights in ILL+ and then the screen becomes dim.
  ON: Normal
  OFF: Abnormal Check the signal line and connector. If no faulty is found, the unit itself may be faulty.
- PKB: Status of the parking brake signal input can be checked.
- GPS/Position: Normal when longitude and latitude of the current position are indicated.

Pull the parking brake switch. Check that ON is displayed in PKB.
ON: Normal
OFF: Abnormal Check the signal line and connector. If no faulty is found, the unit itself may be faulty.

- Bright: Status of the Bright signal input can be checked.

Operate the dial-type bright switch next to the wheel steering. System is normal when the signal indicates ON.
If the signal does not indicate ON, check the bright switch.

- REV: Status of the reverse range signal input can be checked.
  1. Before starting inspections, check the safety around the rear end of the vehicle and then turn the ignition switch to ON.
  2. Pull the parking brake switch and depress the brake pedal, then place the select lever in reverse.
  3. Check that ON is displayed in REV.
  ON: Normal
  OFF: Abnormal Check the signal line and connector. If no faulty is found, the unit itself may be faulty.

NOTE:
The following shows information to be displayed and its description.

Item	Display	Content
Battery voltage	Status of battery voltage	0 [V] — 24.0 [V] (Minimum unit: 0.1 [V])
Vehicle speed	Status of vehicle speed	0 [km/h] — 255 [km/h] (Minimum unit 1 [km/h])
IG	ON	IG power supply ON
	OFF	IG power supply OFF
ILL+	ON	ILL+ signal ON
	OFF	ILL+ signal OFF
PKB	ON	PKB signal ON
	OFF	PKB signal OFF
Bright	ON	Bright with dimmer
	OFF	Bright without dimmer
REV	ON	REV signal ON
	OFF	REV signal OFF

6) Camera Setting

NOTE:
The Subaru Select Monitor does not have the Camera Setting function.
On the Function Check/Setting screen, click Camera Setting to display the following screen.

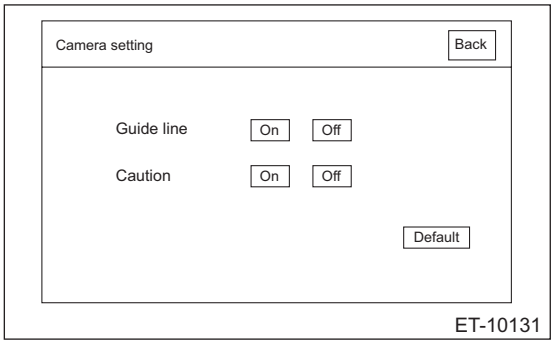

Setting of the rearview camera adjustment is possible.
- Guide line display: Turn ON the guide line display to show the guide lines.
- Caution display: Turn ON the caution display to enable caution display during the rearview camera display.
- Default: Click the Default button to return the Guide line display and Caution display settings to the initial settings.

NOTE:
The following shows information to be displayed and its description.

Item	Content
Guide line display	Guide line display setting switch • Turns on/off the guide line display for the rearview camera display screen. • When On is selected, guide lines will appear on the rearview camera display screen.
Caution display	Caution display setting switch • Turns on/off the caution display for the rearview camera display screen. • When On is selected, the caution will appear on the rearview camera display screen.
Default	Default setting switch • Returns the Guide line display setting and Caution display setting to the default settings.

Service Information

On Service Menu, click Service Information to display the following screen.

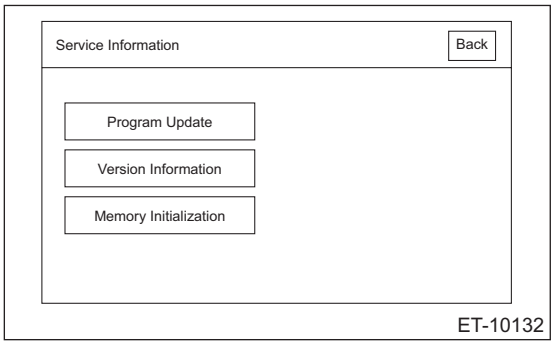

- Program Update: This function is used when the main unit program is updated, and not used as troubleshooting.
- Version Information: This function is used to view version of the main unit, and not used as troubleshooting.
- Memory Initialization: This function is used to initialize information stored in the main unit memory.

CAUTION:
When this function is used, music information and navigation setting information saved in the main unit will be deleted. Therefore, obtain permission from the user before using this function.
When initializing the memory, perform procedures by following the indicated messages. Also, when clicking the OK button, press and hold it.

Product information

On Service Menu, click Product Information to display the following screen.

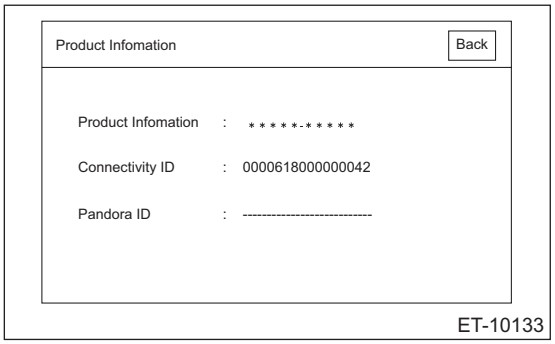

- Product Information: Displays the product number of the main unit.
- Connectivity ID: ID that is required upon using the STARLINK functions. When this ID is not indicated, the STARLINK functions are not accessible.
- Pandora ID: ID that is required upon using Pandora. When this ID is not indicated, Pandora is not accessible.

COMMUNICATION SYSTEM

COM

Page

1. General Description 2
2. Relay and Fuse 3
3. Horn System 4
4. Horn 5
5. Horn Switch 8

1. General Description

A: COMPONENT

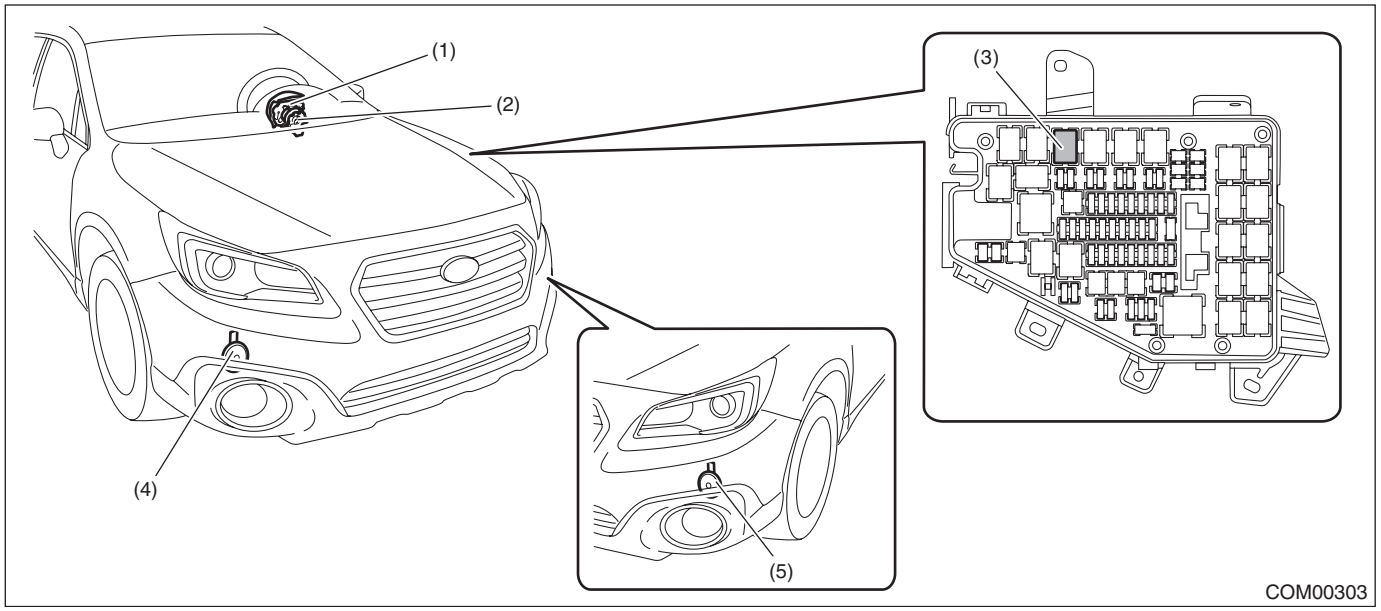

(1) Horn switch (driver's airbag module ASSY)
(2) Roll connector
(3) Horn relay
(4) Horn ASSY - Hi
(5) Horn ASSY - Lo

B: CAUTION

- Before disconnecting connectors of sensors or units, be sure to disconnect the ground cable from battery.
- When replacing the parts provided with memory functions such as audio, record the memory contents before disconnecting the battery ground cable.
- Be careful of the following items. Failing to do so may cause the airbag system malfunction.
  – Yellow connectors and harnesses with yellow tapes around them are the connectors and harnesses for the airbag system. When using a tester on these circuits, follow the cautions of "AIRBAG SYSTEM". <Ref. to AB-10, CAUTION, General Description.>
  – Be careful not to damage the airbag system wiring harness when servicing the electrical parts around the steering column.
- When removing, installing or replacing the VDCCM&H/U, VDCCM&H/U bracket, steering wheel or steering angle sensor (steering roll connector), perform "VDC sensor midpoint setting mode" of the VDC. <Ref. to VDC-15, ADJUSTMENT, VDC Control Module and Hydraulic Control Unit (VDCCM&H/U).>

C: PREPARATION TOOL

1. GENERAL TOOL

TOOL NAME	REMARKS
Circuit tester	Used for measuring resistance, voltage and current.

2. Relay and Fuse

A: LOCATION

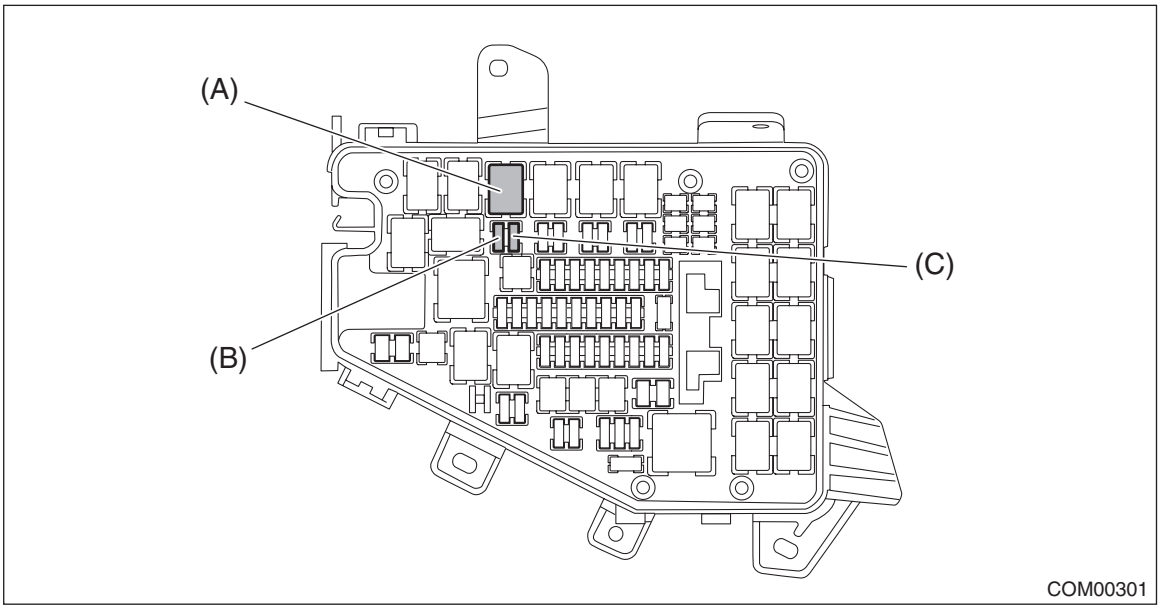

Main fuse box (M/B)	Horn relay	(A)
	Fuse 7.5 A (horn assembly - Hi)	(B)
	Fuse 7.5 A (horn assembly - Lo)	(C)

NOTE:
For other related fuses, refer to the wiring diagram. <Ref. to WI-21, Power Supply Circuit.>

B: INSPECTION

1. CHECK FUSE

1) Remove the fuse and inspect visually.
2) If the fuse is blown out, replace the fuse.

2. CHECK RELAY

1) Measure the resistance between relay terminals.

Terminal No.	Inspection conditions	Standard	Circuit
1 — 2	Always	1 MΩ or more	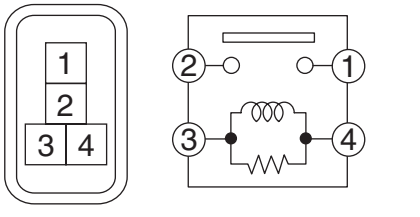
1 — 2	Apply battery voltage between terminals 4 and 3.	Less than 1 Ω	

2) Replace the relay if the inspection result is not within the standard value.

3. Horn System

A: WIRING DIAGRAM

Refer to “Horn System” in the wiring diagram. <Ref. to WI-250, WIRING DIAGRAM, Horn System.>

B: INSPECTION

Symptoms	Inspection steps
Horn does not sound	1. Check the fuse.
	2. Check the horn relay.
	3. Check the roll connector.
	4. Check the horn switch.
	5. Check the horn assembly.
	6. Check the harness.

C: NOTE

For procedure of each component in the horn system, refer to the respective section.

- Horn assembly: <Ref. to COM-5, Horn.>
- Horn switch: <Ref. to COM-8, Horn Switch.>

4. Horn

A: REMOVAL

CAUTION:
When removing the horn, do not remove the bumper face – front. Bracket connection portion of the bumper face may become damaged.

1) Disconnect the ground terminal from battery sensor. <Ref. to RC-4, BATTERY, NOTE, Repair Contents.>
2) Lift up the vehicle.
3) Remove the clips, and turn over the mud guard - front.

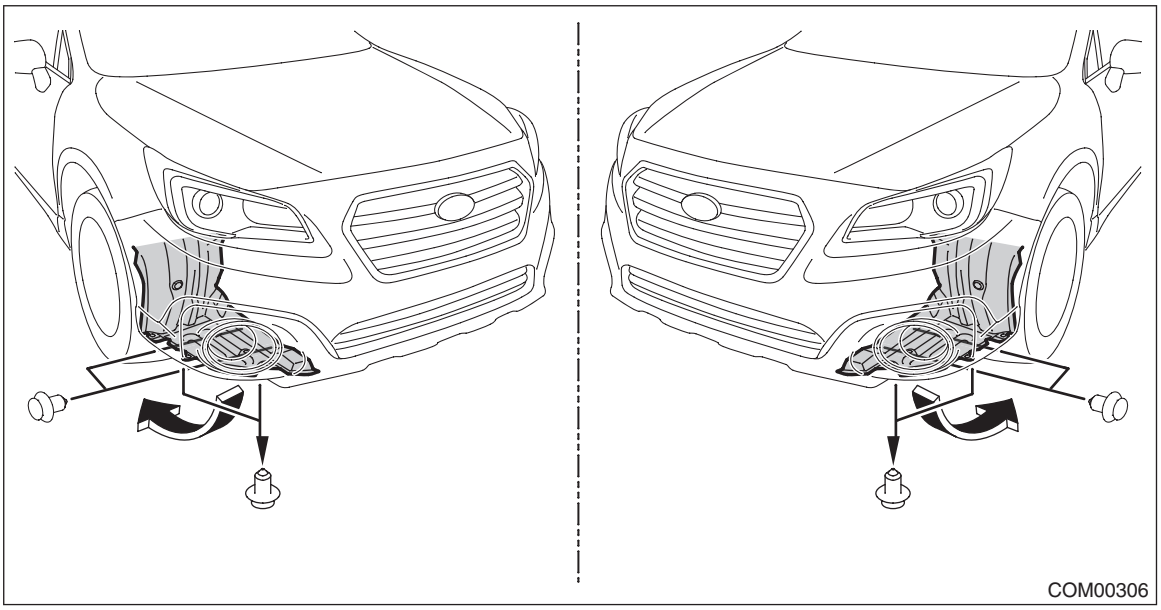

NOTE:
- Hi side: Turn over the mud guard - front RH.
- Lo side: Turn over the mud guard - front LH.

4) Remove the horn assembly - Hi.
   (1) Disconnect the connector.
   (2) Remove the horn bracket mounting bolt, and remove the horn assembly - Hi.

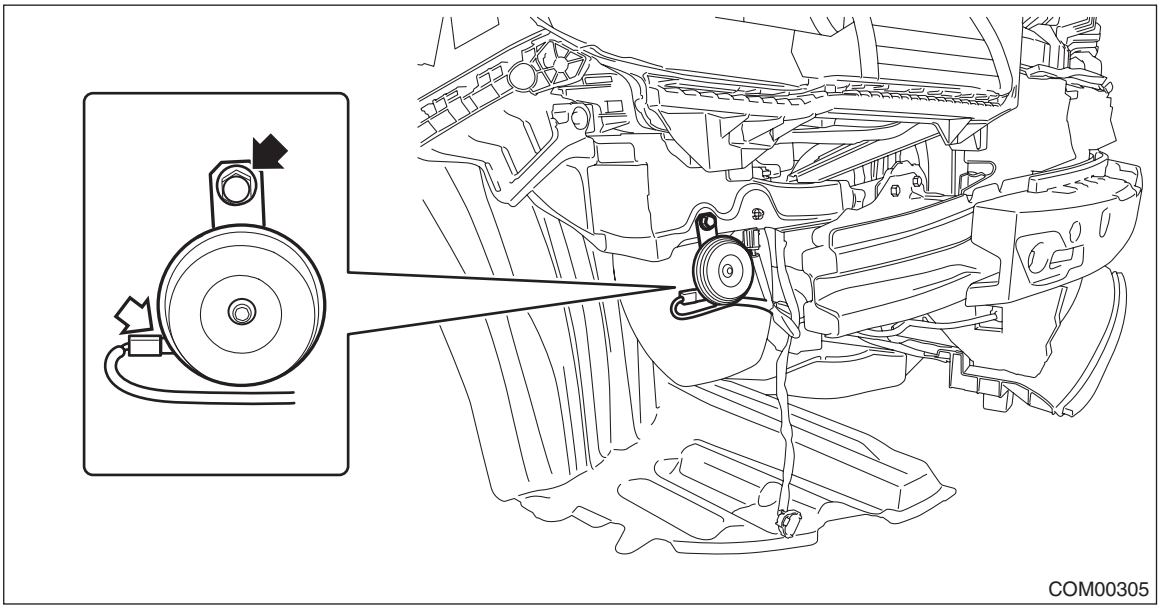

5) Remove the horn assembly - Lo.
   (1) Disconnect the connector.
   (2) Remove the horn bracket mounting bolt, and remove the horn assembly - Lo.

CAUTION:
The resistor may become hot. Be careful not to burn yourself.

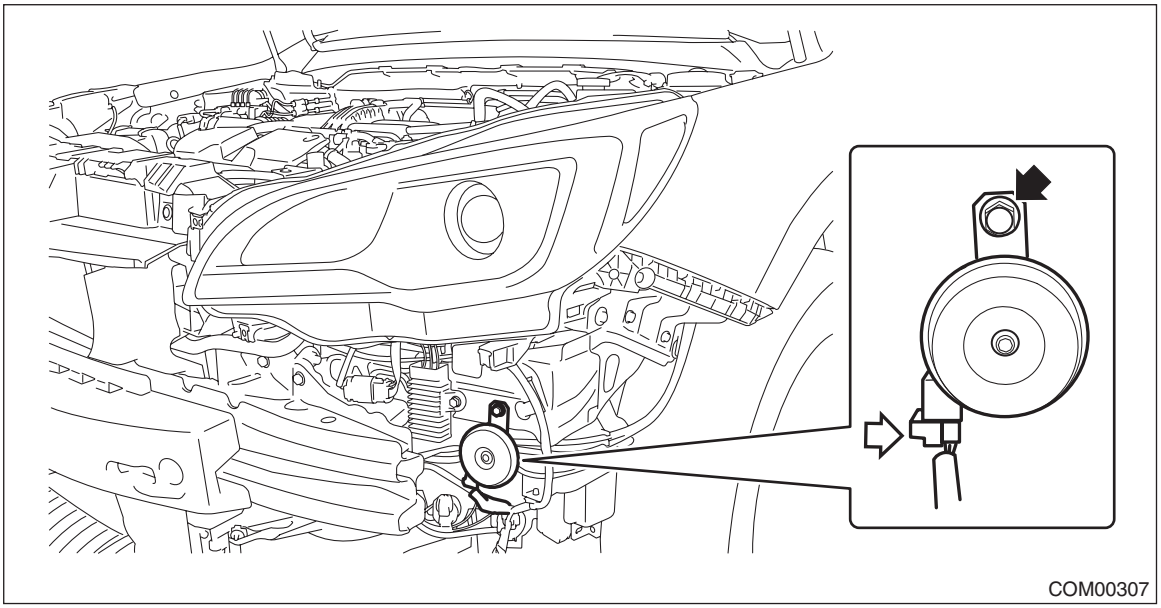

B: INSTALLATION

CAUTION:
Install so that the front end of the under cover (b) comes inside the bumper face - front (a), and the front end of the mud guard (c) comes outside the bumper face - front (a).

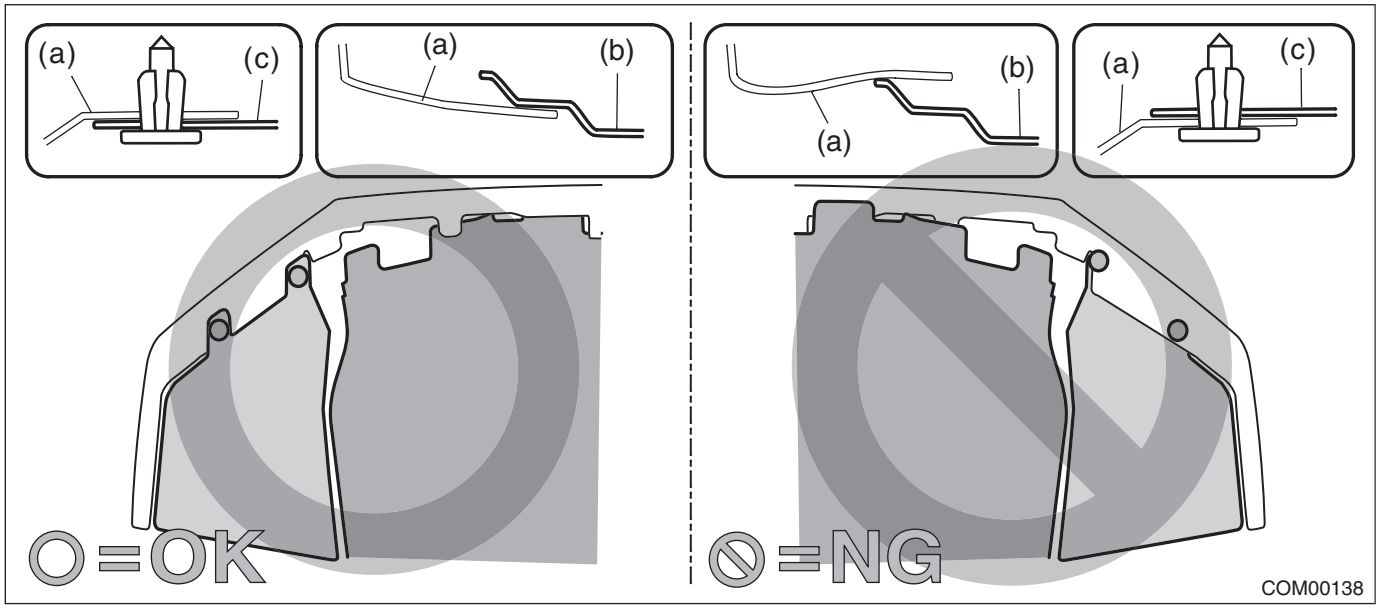

1) Install the horn assembly.

Tightening torque:
18 N·m (1.8 kgf-m, 13.3 ft-lb)
2) Install the mud guard - front.
3) Lower the vehicle.
4) Connect the ground terminal to battery sensor. <Ref. to RC-4, BATTERY, NOTE, Repair Contents.>

C: INSPECTION

1) Remove the horn assembly (Hi side & Lo side). <Ref. to COM-5, REMOVAL, Horn.>
2) Check the horn sounds when applying the battery voltage to the horn assembly.

- Horn assembly - Lo side

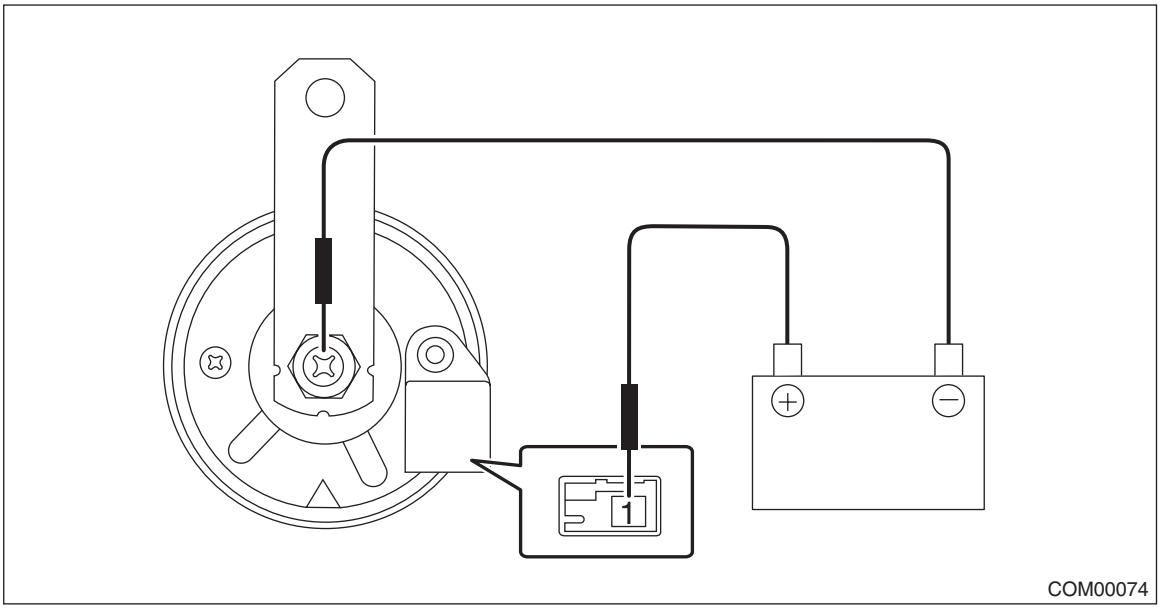

Terminal No.	Inspection conditions	Specification
1 (+) — Horn case (–)	Connect battery to the terminals	Sounds

- Horn assembly - Hi side

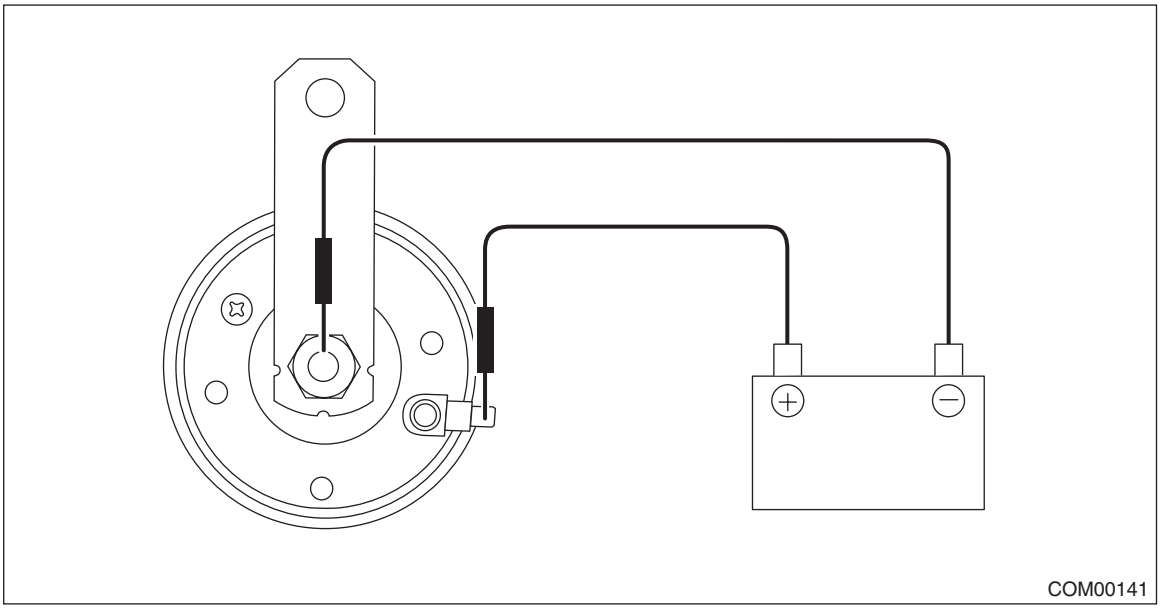

Terminal No.	Inspection conditions	Specification
1 (+) — Horn case (–)	Connect battery to the terminals	Sounds

3) If it does not operate normally, replace the horn assembly.

5. Horn Switch

A: NOTE

- Horn switch is a unit with the driver's airbag module.
- Refer to "Airbag System" for removal and installation procedures of the driver's airbag module. <Ref. to AB-32, Driver's Airbag Module.>

B: INSPECTION

1. CHECK HORN SWITCH

CAUTION:
Refer to "CAUTION" of "General Description" before handling the airbag system components. <Ref. to AB-10, CAUTION, General Description.>
1) Disconnect the ground terminal from the battery sensor, and wait for at least 60 seconds before starting work. <Ref. to RC-4, BATTERY, NOTE, Repair Contents.>
2) Remove the driver's airbag module. <Ref. to AB-32, REMOVAL, Driver's Airbag Module.>
3) Check that the connection of the horn switch harness connector is correct.
4) Measure the resistance between connectors.

Preparation tool:
Circuit tester

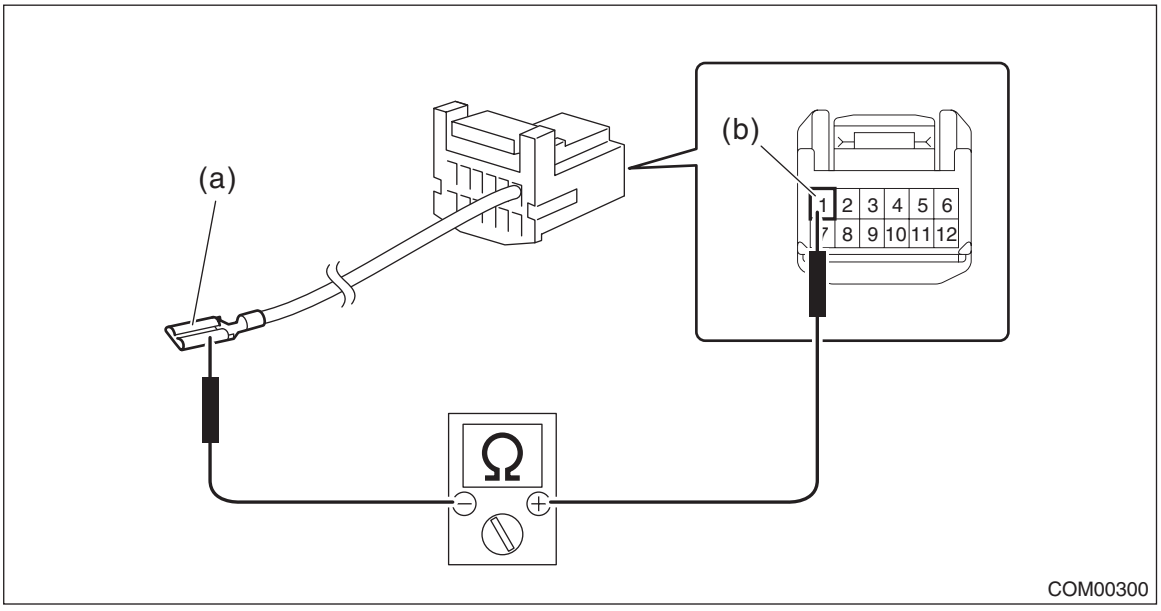

(a) Ground terminal (b) Horn switch terminal

Terminal No.	Standard
Horn switch terminal — ground terminal	Less than 1 Ω

5) Replace the driver's airbag module if the inspection result is not within the standard value.

2. CHECK ROLL CONNECTOR

CAUTION:
If the steering wheel and steering angle sensor (steering roll connector) are removed, perform "VDC sensor midpoint setting mode" of the VDC. <Ref. to VDC-15, VDC SENSOR MIDPOINT SETTING MODE, ADJUSTMENT, VDC Control Module and Hydraulic Control Unit (VDCCM&H/U).>

1) Remove the roll connector. <Ref. to AB-60, REMOVAL, Roll Connector.>
2) Measure the resistance between connector terminals.

Preparation tool:
Circuit tester

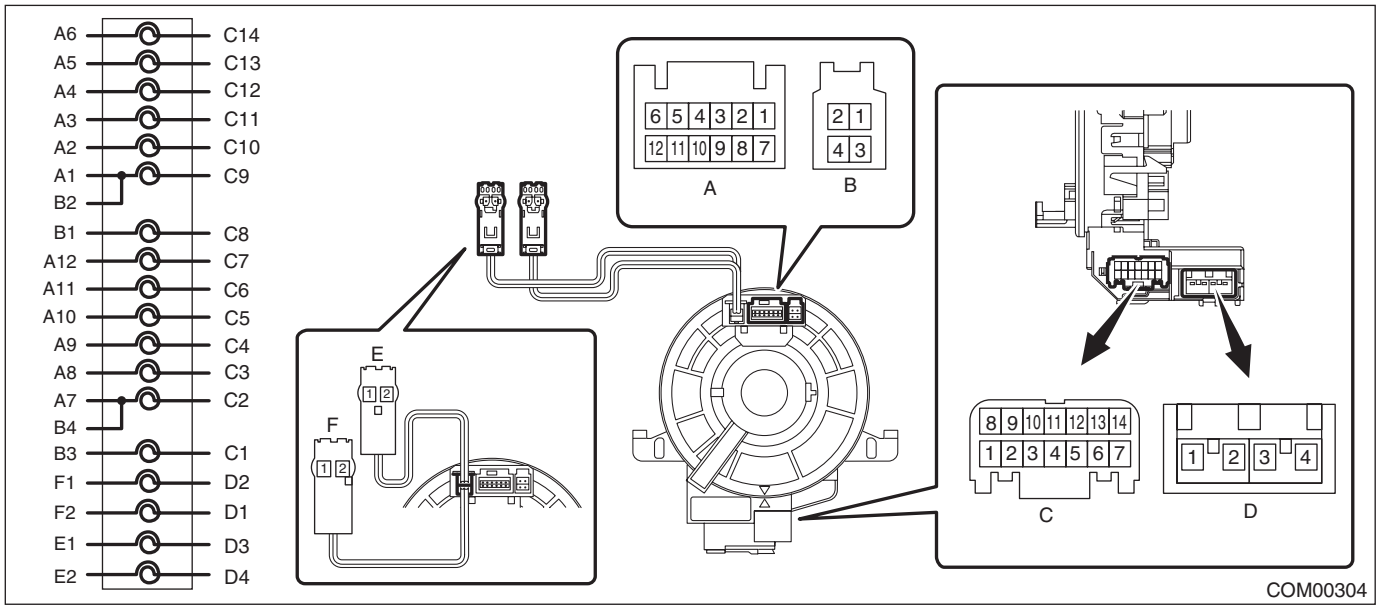

Terminal No.	Inspection conditions	Standard
A1 — C9	Always	Less than 1 Ω

3) Replace the roll connector if the inspection result is not within the standard value.

GLASS/WINDOWS/MIRRORS

GW

		Page
1.	General Description	2
2.	Relay and Fuse	8
3.	Power Window System	10
4.	Power Window Control Switch	12
5.	Front Door Glass	20
6.	Front Regulator and Motor Assembly	24
7.	Remote Control Mirror System	26
8.	Outer Mirror Assembly	27
9.	Remote Control Mirror Switch	33
10.	Rear Door Glass	35
11.	Rear Regulator and Motor Assembly	38
12.	Windshield Glass	40
13.	Rear Gate Glass	49
14.	Rear Window Glass	53
15.	Rear Window Defogger System	56
16.	Rear Quarter Glass	59
17.	Rearview Mirror	62
18.	Wiper Deicer System	68

1. General Description

A: COMPONENT

1. FIXED GLASS (SEDAN MODEL)

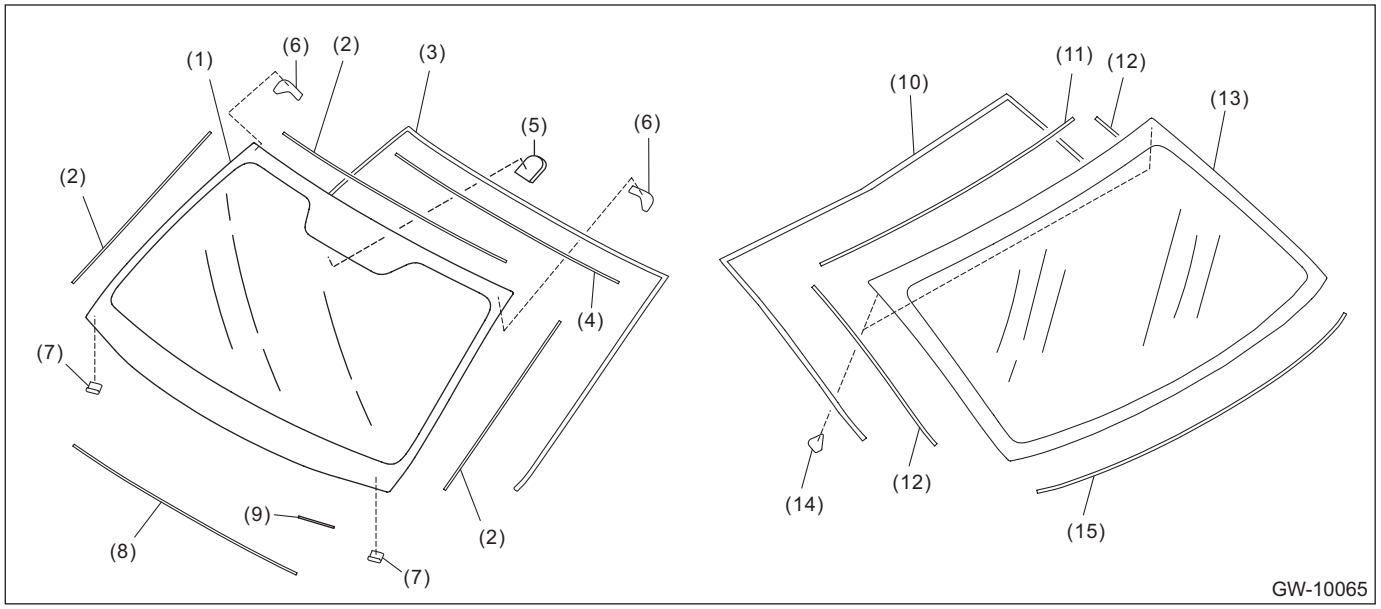

(1) Glass - front window
(2) Dam rubber - front UPR
(3) Molding - front window
(4) Seal - front window UPR
(5) Base - inner mirror
(6) Locating pin - front window
(7) Seal - LWR
(8) Dam rubber - front LWR
(9) Dam rubber - front VIN
(10) Molding - rear window
(11) Dam rubber - rear UPR
(12) Dam rubber - rear side
(13) Glass - rear window
(14) Locating pin - rear window
(15) Dam rubber - rear LWR

2. FIXED GLASS (OUTBACK MODEL)

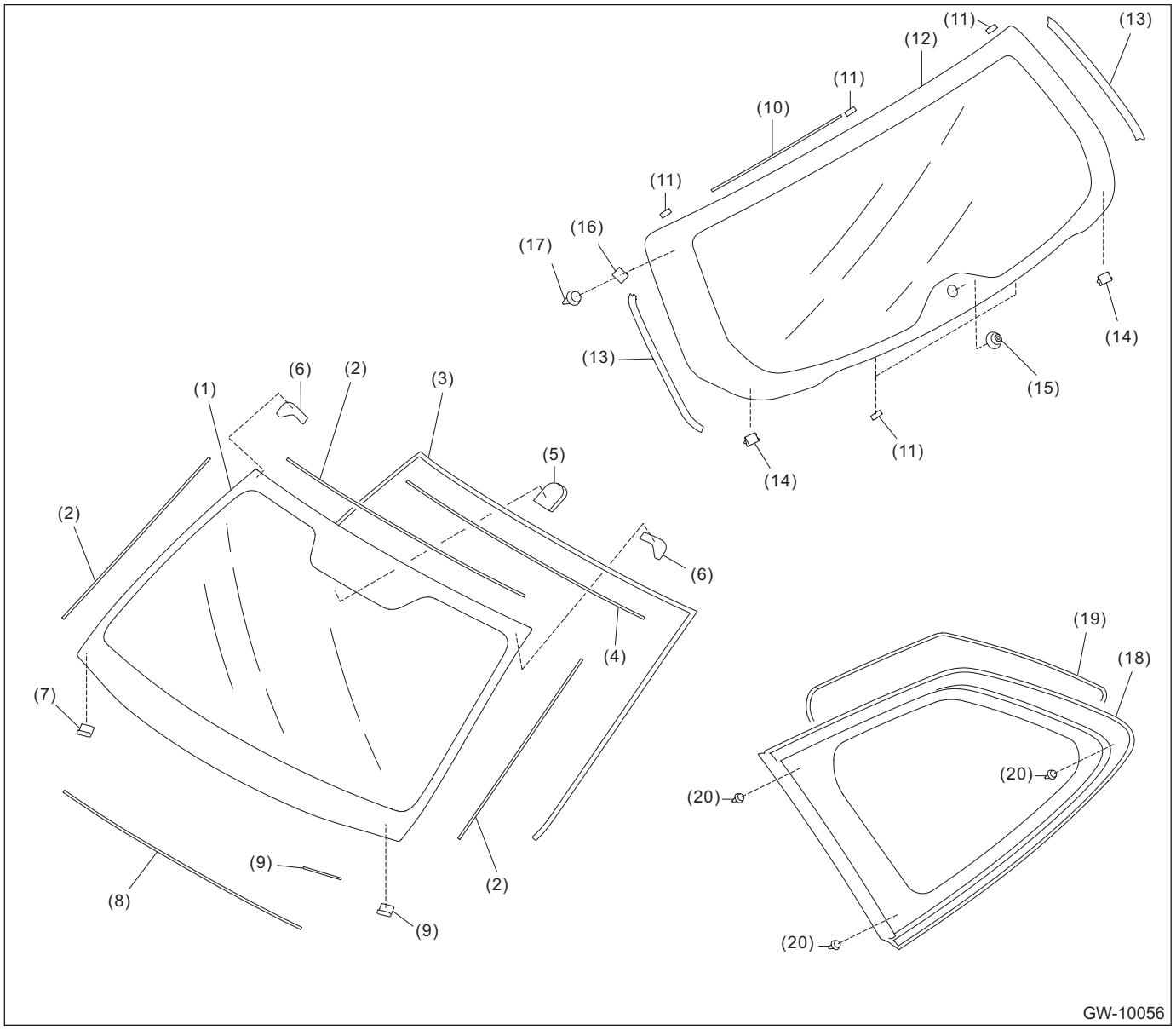

(1)	Glass - front window	(8)	Dam rubber - front LWR	(15)	Cap - pivot
(2)	Dam rubber - front UPR	(9)	Dam rubber - front VIN	(16)	Holder - rear gate upper
(3)	Molding - front window	(10)	Dam rubber - rear gate	(17)	Holder - clip rear gate
(4)	Seal - front window UPR	(11)	Spacer - rear gate	(18)	Glass - rear quarter
(5)	Base - inner mirror	(12)	Glass - rear gate	(19)	Dam rubber - rear quarter
(6)	Locating pin - front window	(13)	Molding - rear gate side (model without power rear gate)	(20)	Clip
(7)	Seal - LWR	(14)	Locating pin - rear gate		

3. FRONT DOOR GLASS

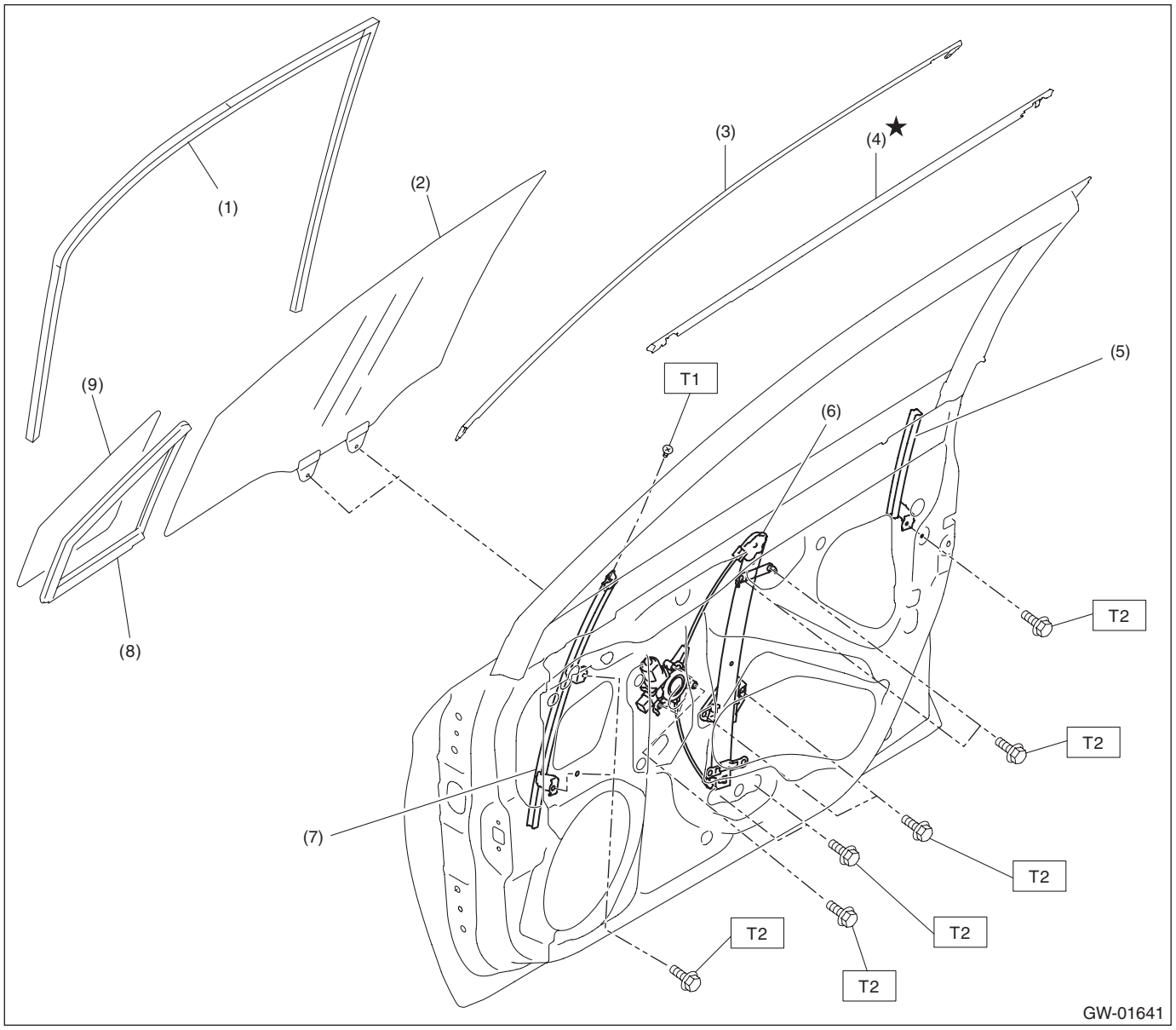

(1) Running channel - front door
(2) Glass ASSY - front door
(3) Molding - door sash front
(4) Weather strip outer - front door
(5) Sash ASSY - lower
(6) Regulator & motor ASSY - front
(7) Sash ASSY - partition
(8) Weather strip - front door partition
(9) Glass - front door partition

Tightening torque: N·m (kgf-m, ft-lb)
T1: 2.2 (0.2, 1.6)
T2: 7.5 (0.8, 5.5)

4. REAR DOOR GLASS

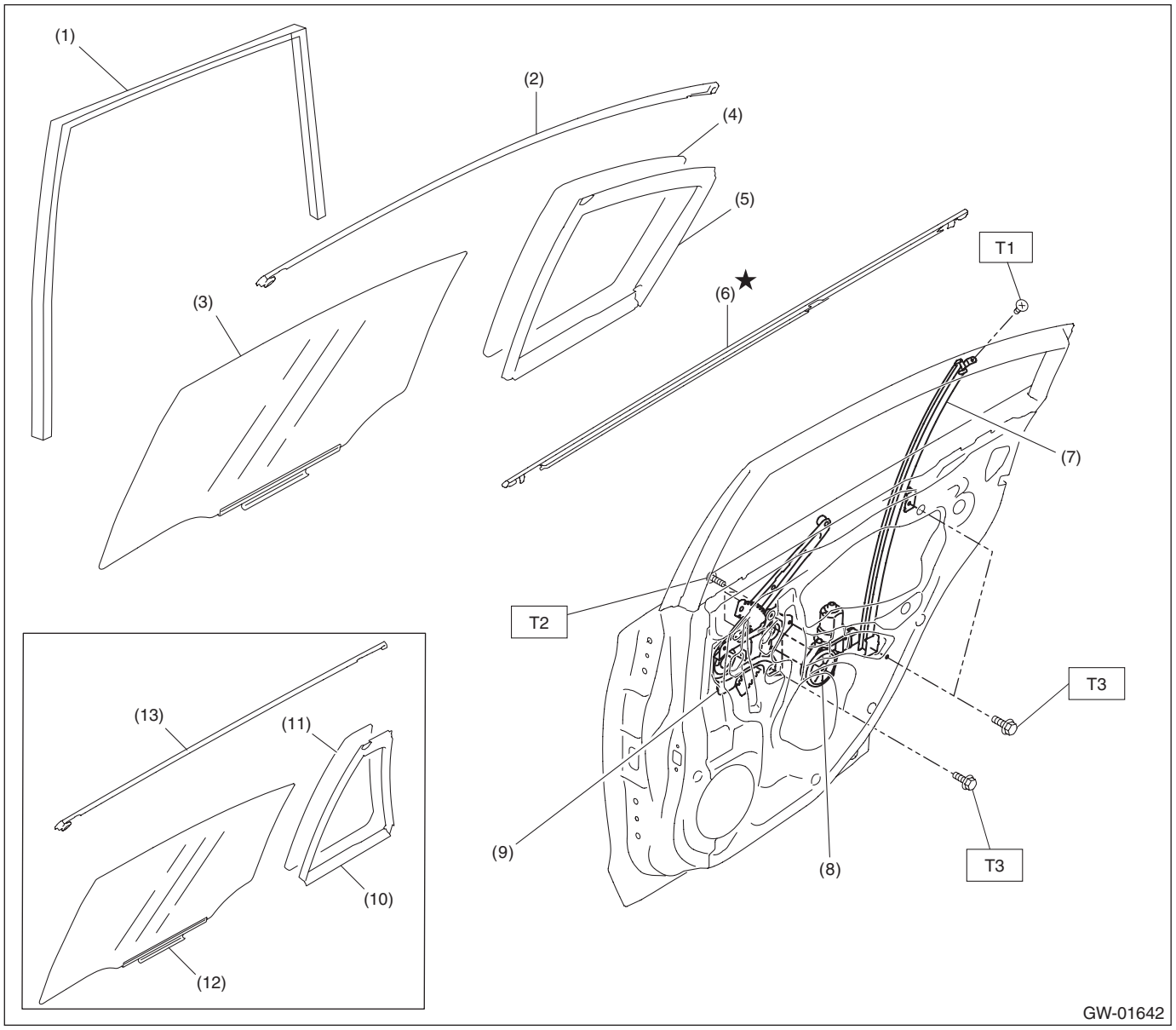

(1)	Running channel - rear door	(8)	Motor - rear
(2)	Molding - door sash rear (sedan model)	(9)	Regulator - rear
(3)	Glass ASSY - rear door (sedan model)	(10)	Weather strip - rear door partition (OUTBACK model)
(4)	Glass - rear door partition (sedan model)	(11)	Glass - rear door partition (OUTBACK model)
(5)	Weather strip - rear door partition (sedan model)	(12)	Glass ASSY - rear door (OUTBACK model)
(6)	Weather strip outer - rear door	(13)	Molding - door sash rear (OUTBACK model)
(7)	Sash ASSY - rear partition		

Tightening torque: N·m (kgf-m, ft-lb)

T1: 2.2 (0.2, 1.6)

T2: 5.9 (0.6, 4.4)

T3: 7.5 (0.8, 5.5)

5. MIRROR

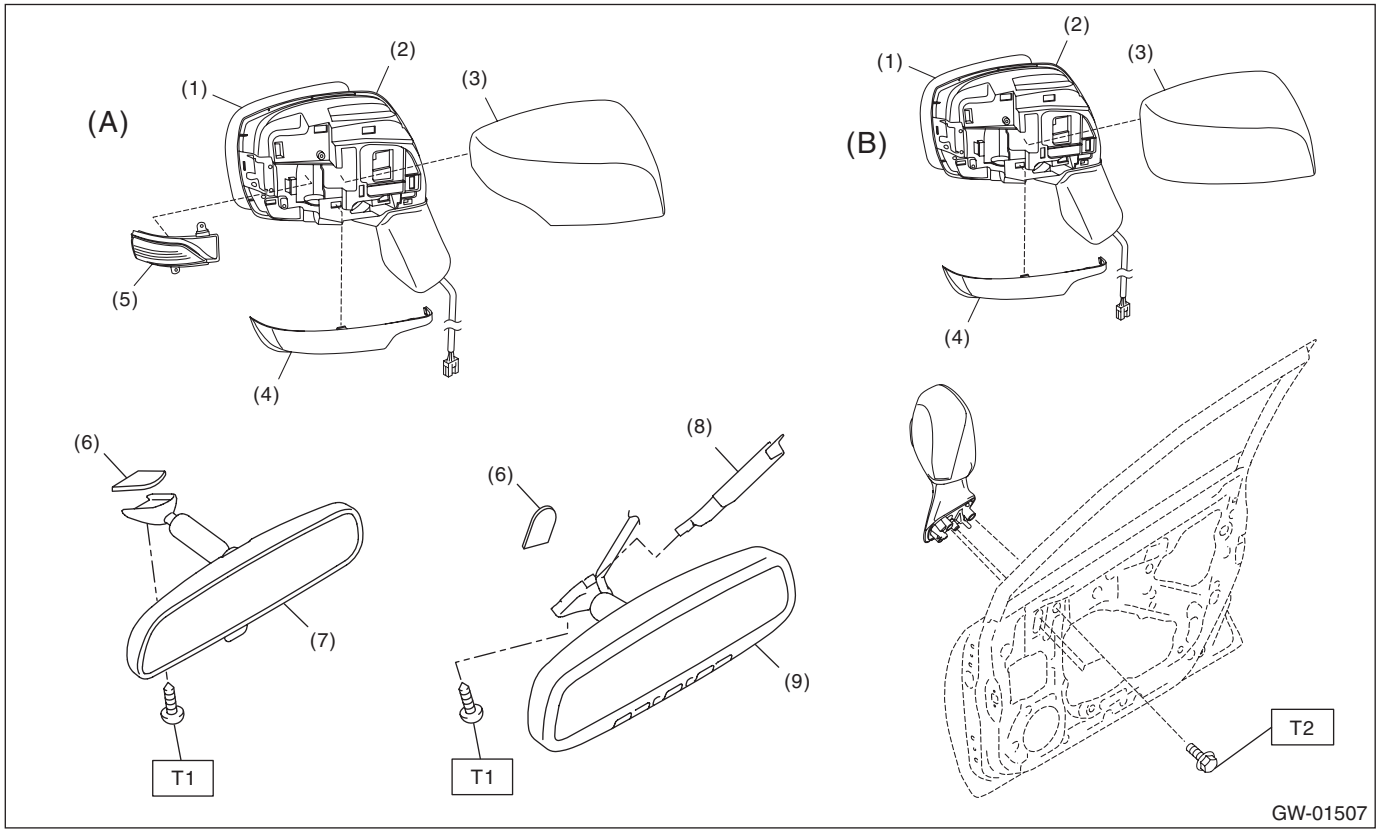

(A) Model with side turn
(B) Model without side turn

(1) Mirror - repair
(2) Mirror unit - door
(3) Cover - cap outer mirror
(4) Cover - cap outer mirror lower
(5) Light ASSY - side turn mirror
(6) Base - inner mirror
(7) Mirror ASSY - inner rearview (normal type)
(8) Harness cover
(9) Mirror ASSY - inner rearview (home link type)

Tightening torque: N·m (kgf-m, ft-lb)
T1: 2.0 (0.2, 1.5)
T2: 7.5 (0.8, 5.5)

B: CAUTION

• Before disconnecting connectors of sensors or units, be sure to disconnect the ground cable from battery. When replacing the electrical parts provided with memory functions that store contents specified by a customer, record the memory contents before disconnecting the battery ground cable.
• Avoid impact and damage to the glass.

C: PREPARATION TOOL

1. SPECIAL TOOL

ILLUSTRATION	TOOL NUMBER	DESCRIPTION	REMARKS
 STSSM4	— (Newly adopted tool)	SUBARU SELECT MONITOR 4	Used for setting of each function and trouble-shooting for electrical system. NOTE: For detailed operation procedures of Subaru Select Monitor 4, refer to “Application help”.

2. GENERAL TOOL

TOOL NAME	REMARKS
Circuit tester	Used for measuring resistance, voltage and current.
DST-i	Used together with Subaru Select Monitor 4.
Piano wire	Used for removing the window glass.
Cutter knife	Used for removing the window glass.
Windshield glass knife	Used for removing the window glass.
Carpenter's square	Used for measuring the installation size of the dam rubber - front LWR.

2. Relay and Fuse

A: LOCATION

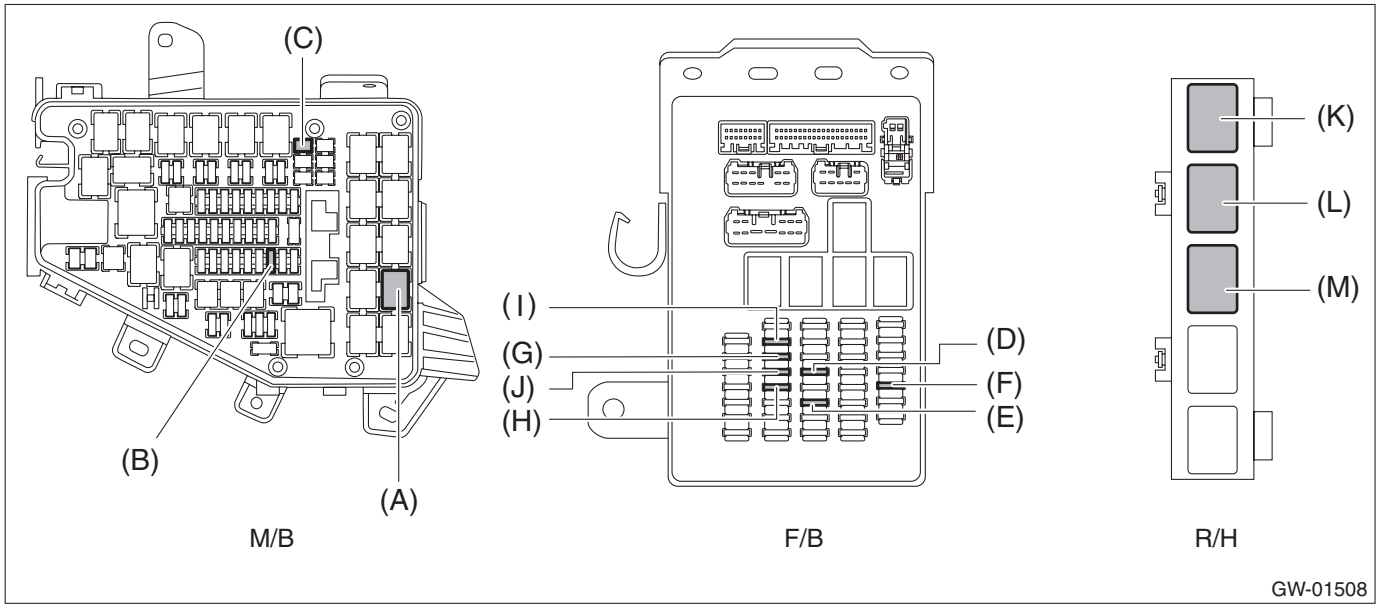

Main fuse box (M/B)	Rear defogger relay	(A)
	Fuse 25 A (rear defogger)	(B)
	Slow blow fuse (power window)	(C)
Fuse & relay box (F/B)	Fuse 7.5 A (remote control mirror)	(D)
	Fuse 15 A (mirror heater, wiper deicer)	(E)
	Fuse 20 A (power window main switch)	(F)
	Fuse 30 A (power window main switch)	(G)
	Fuse 20 A (power window sub switch)	(H)
	Fuse 20 A (power window sub switch)	(I)
	Fuse 20 A (power window sub switch)	(J)
Relay holder (R/H)	Power window relay	(K)
	Wiper deicer relay	(L)
	Mirror heater relay	(M)

NOTE:
For other related fuses, refer to the wiring diagram. <Ref. to WI-21, Power Supply Circuit.>

B: INSPECTION

1. CHECK FUSE

1) Remove the fuse and inspect visually.
2) If the fuse is blown out, replace the fuse.

2. CHECK RELAY

1) Check the resistance between relay terminals.

Terminal No.	Inspection conditions	Standard	Circuit
1 — 2	Always	1 MΩ or more	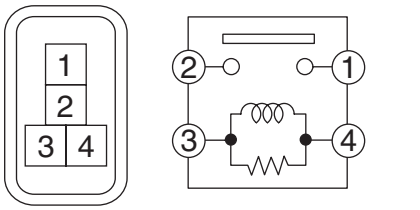 SR-00180
1 — 2	Apply battery voltage between terminals 4 and 3.	Less than 1 Ω	

2) Replace the relay if the inspection result is not within the standard value.

3. Power Window System

A: WIRING DIAGRAM

Refer to “Power Window System” in the wiring diagram. <Ref. to WI-304, WIRING DIAGRAM, Power Window System.>

B: INSPECTION

Symptoms	Inspection order
All power windows do not operate.	1. Check the fuse. 2. Check the power window relay. 3. Check the wiring harness.
Particular window does not operate.	1. Check the fuse. 2. Check the switch - power window main. 3. Check the switch - power window sub. 4. Check the power window motor. 5. Check the wiring harness.
“Window Lock” does not operate.	Check the switch - power window main.
Driver’s side window moves slightly (approx. 20 mm (0.79 in)).	1. Check the motor - front. 2. Check the switch - power window main. 3. Check the wiring harness.
Driver’s side window moves slightly (approx. 50 mm (1.97 in)). (This status is not a failure.)	Perform reset operation A. <Ref. to GW-10, RESET OPERATION A, OPERATION, Power Window System.>
Driver’s side window does not close completely. (Using AUTO UP allows the window to fully close first and then move in reverse resulting in slightly opening.)	Perform reset operation B. <Ref. to GW-10, RESET OPERATION B, OPERATION, Power Window System.>

C: OPERATION

1. RESET OPERATION A

1) Sit in the driver’s seat and close the door.
2) Turn the ignition switch to ON.
3) Operate the switch - power window main to open the glass assembly - front door halfway.
4) Operate the switch - power window main in “UP” direction to fully close the glass assembly - front door on the driver’s side.
5) While the glass assembly - front door is fully closed, hold down the switch - power window main in “UP” direction for one second.
6) Operate the switch - power window main in “AUTO DOWN” direction to check whether the window fully opens properly.

NOTE:
If the window does not fully open properly, repeat steps 1) to 6).

2. RESET OPERATION B

1) Sit in the driver’s seat and close the door.
2) Turn the ignition switch to ON.
3) On the glass assembly - front door of the driver’s side, operate the “AUTO UP” function (fully pull up the switch) using the switch - power window main, and perform auto-reverse operations 10 times in a row (after the window fully closes, it slightly opens).
4) Check that the “AUTO UP” function no longer operates.
5) Perform reset operation A.
6) Check that the window operates properly by operating the “AUTO UP” and “AUTO DOWN” switch.

NOTE:
If the window does not fully open/close properly, repeat steps 1) to 6).

D: NOTE

For procedure of each component in the power window system, refer to the respective section.

- Power window control switch: <Ref. to GW-12, Power Window Control Switch.>
- Front door glass: <Ref. to GW-20, Front Door Glass.>
- Front regulator and motor assembly: <Ref. to GW-24, Front Regulator and Motor Assembly.>
- Rear door glass: <Ref. to GW-35, Rear Door Glass.>
- Rear regulator and motor assembly: <Ref. to GW-38, Rear Regulator and Motor Assembly.>

4. Power Window Control Switch

A: REMOVAL

1. MAIN SWITCH

1) Disconnect the ground terminal from the battery sensor, and wait for at least 60 seconds before starting work. <Ref. to RC-4, BATTERY, NOTE, Repair Contents.>
2) Remove the trim panel - front door. <Ref. to EI-71, FRONT DOOR, REMOVAL, Door Trim.>
3) Remove the panel - power window main switch.

CAUTION:
Be careful not to damage the trim panel - front door with the panel - power window main switch.

(1) Insert a sheet of protective paper (a) between panel - power window main switch and trim panel - front door.
(2) Remove the screws.

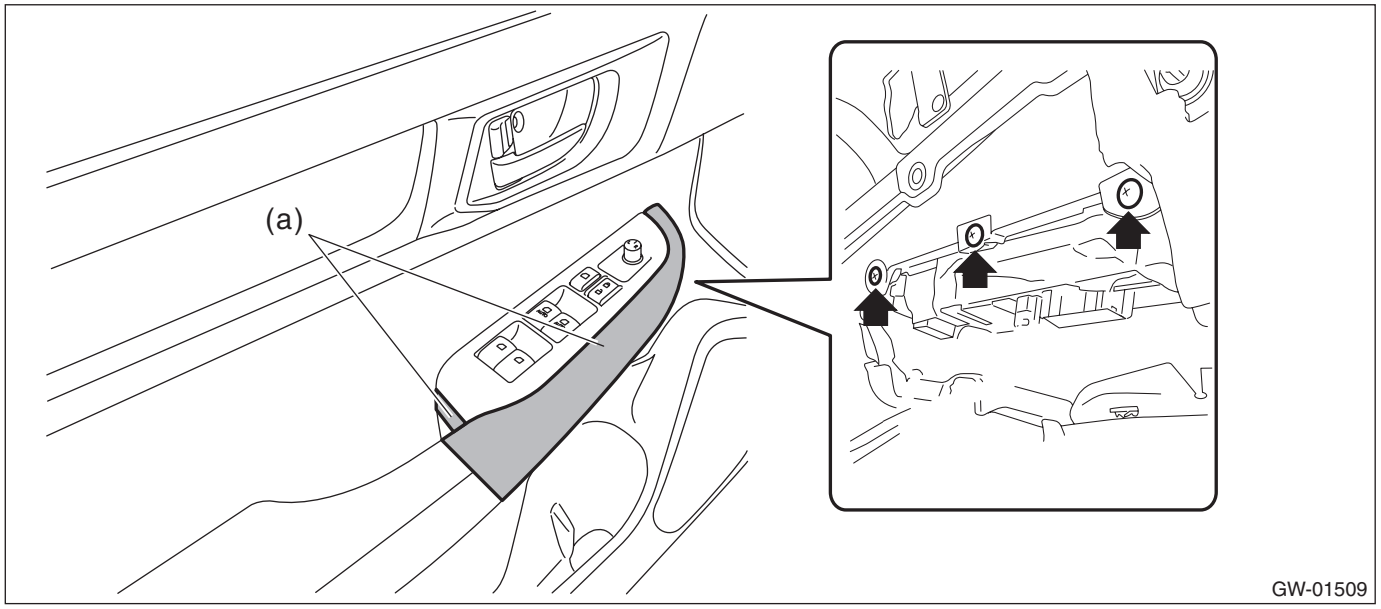

(3) Release the claws, and then remove the panel - power window main switch.

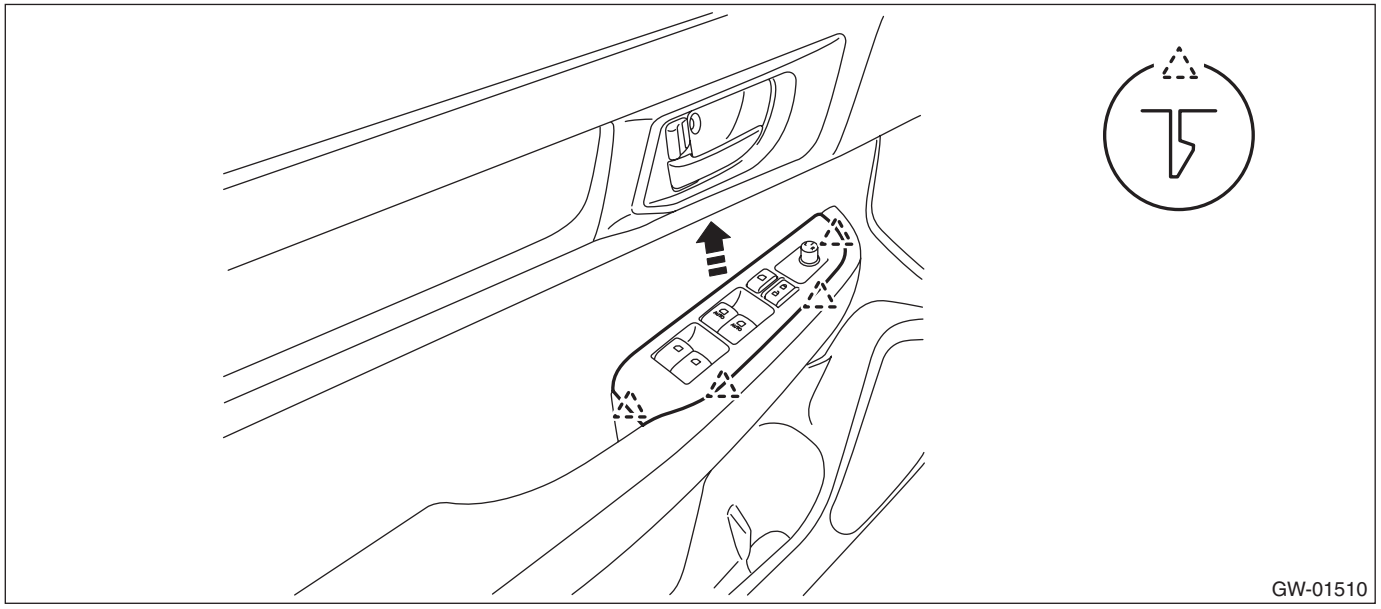

(4) Release the claws, and then remove the switch - power window main.

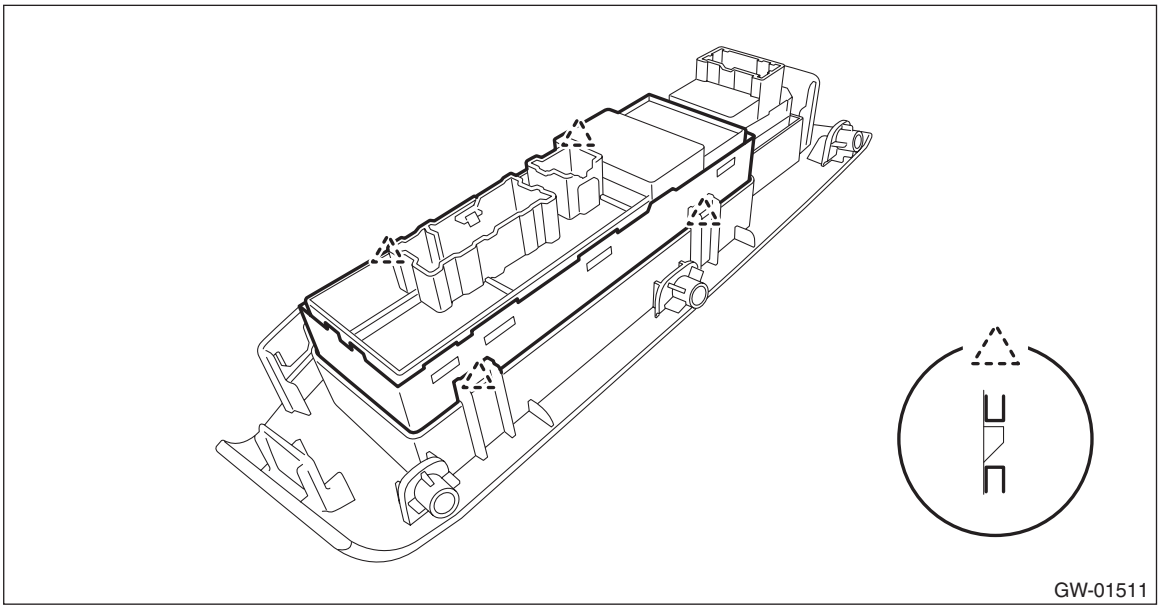

2. SUB-SWITCH

Switch - power window sub front

For removal of the switch - power window sub front on the passenger's seat, refer to the removal procedure of the switch - power window main. <Ref. to GW-12, MAIN SWITCH, REMOVAL, Power Window Control Switch.>

Switch - power window sub rear

1) Disconnect the ground terminal from battery sensor. <Ref. to RC-4, BATTERY, NOTE, Repair Contents.>
2) Remove the trim panel - rear door. <Ref. to EI-72, REAR DOOR, REMOVAL, Door Trim.>
3) Remove the panel - power window sub switch rear.

CAUTION:
Be careful not to damage the trim panel - rear door with the panel - power window sub switch rear.

(1) Insert a sheet of protective paper (a) between panel - power window sub switch rear and trim panel - rear door.
(2) Remove the screws.

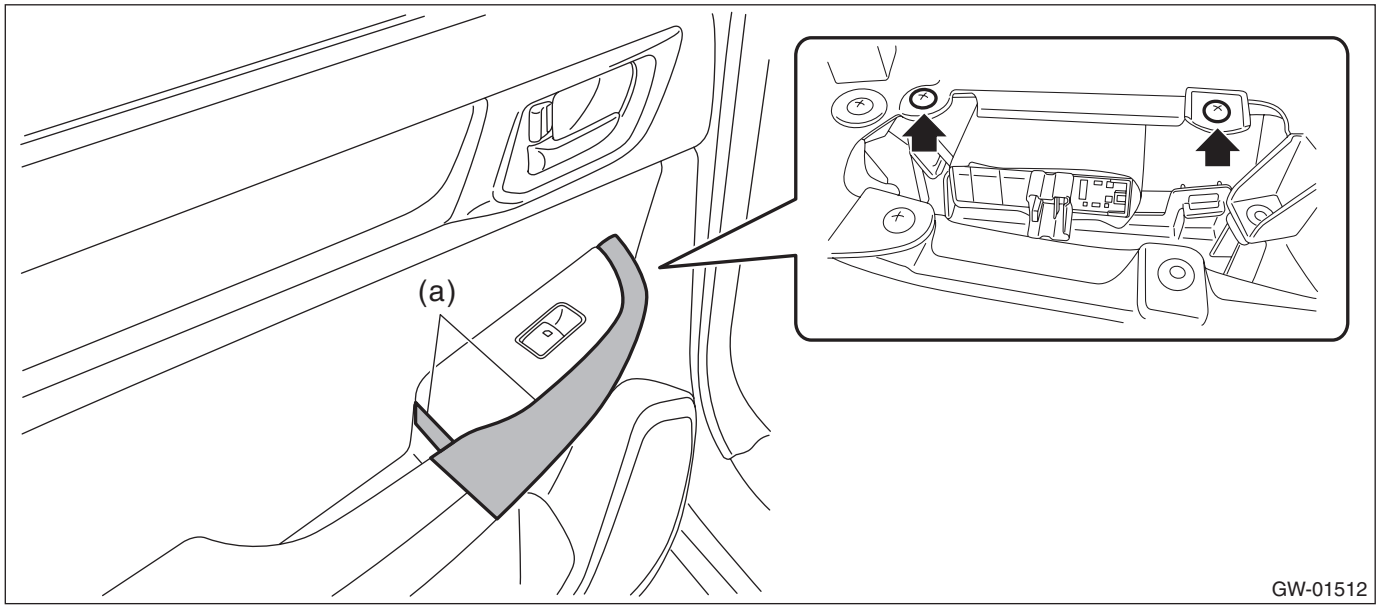

(3) Release the claws, and then remove the panel - power window sub switch rear.

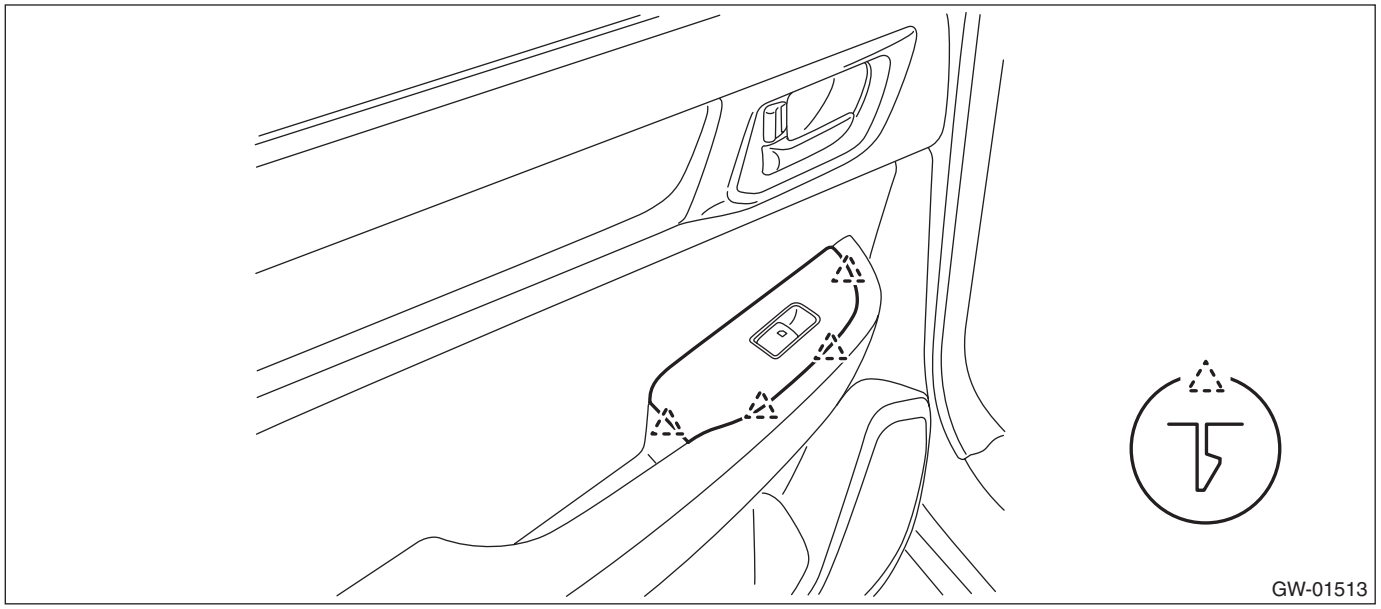

4) Release the claws, and then remove the switch - power window sub rear.

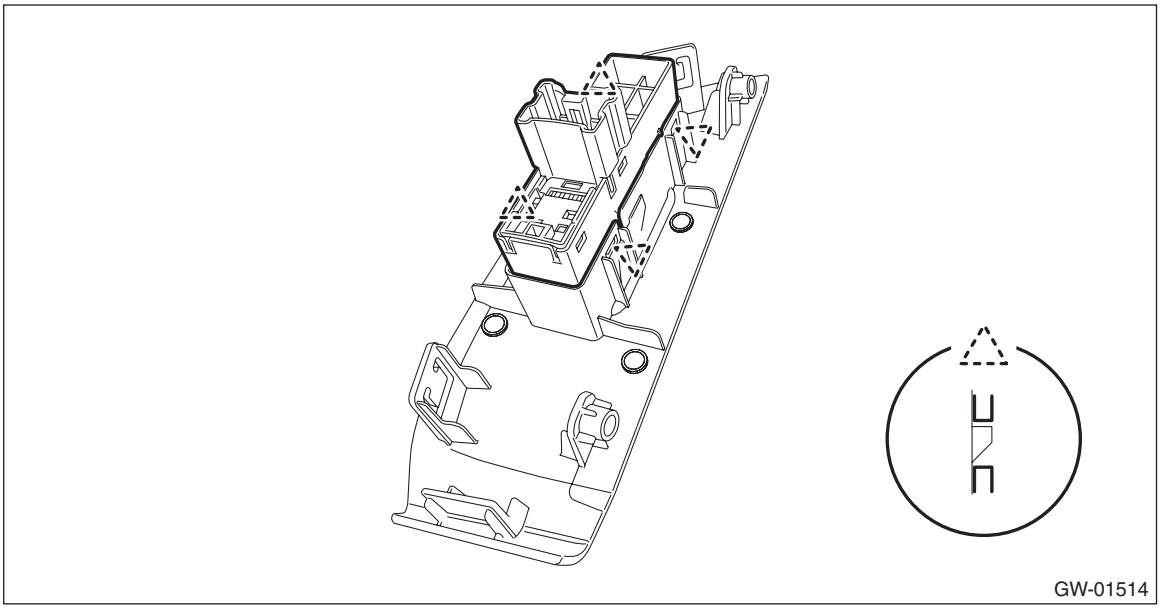

B: INSTALLATION

1. MAIN SWITCH

CAUTION:
• After installing the switch - power window main, always perform the initial setting.
Failure to do so may cause the improper activation of auto-reverse operation for pinching hazard prevention.
• Use protective paper to avoid damage to the trim panel.
1) Install the panel - power window main switch to the trim panel - front door.
2) Install the trim panel - front door. <Ref. to EI-73, INSTALLATION, Door Trim.>
3) Connect the ground terminal to battery sensor. <Ref. to RC-4, BATTERY, NOTE, Repair Contents.>
4) Perform initial setting operation (reset operation A). <Ref. to GW-10, RESET OPERATION A, OPERATION, Power Window System.>

2. SUB-SWITCH

CAUTION:
Use protective paper to avoid damage to the trim panel.

Switch - power window sub front

For installation of the switch - power window sub front on the passenger's seat, refer to the installation procedure of the switch - power window main. <Ref. to GW-15, MAIN SWITCH, INSTALLATION, Power Window Control Switch.>

Switch - power window sub rear

1) Install the panel - power window sub switch rear to the trim panel - rear door.
2) Install the trim panel - rear door. <Ref. to EI-73, INSTALLATION, Door Trim.>
3) Connect the ground terminal to battery sensor. <Ref. to RC-4, BATTERY, NOTE, Repair Contents.>

C: INSPECTION

1. MAIN SWITCH

• Driver's seat (model with AUTO)

CAUTION:
• Since the switch - power window main is controlled by CPU, do not check continuity for switch alone with the circuit tester. Performing continuity check with circuit tester can damage the switch - power window main circuit.
• Since the passenger's seat switch cannot be checked by using the switch - power window main, use the switch - power window sub.
Check output from the switch - power window main to the driver's side motor using the oscilloscope function in the Subaru Select Monitor.
1) Remove the switch - power window main.

2) Connect the battery and the Subaru Select Monitor to the switch - power window main terminal.

CAUTION:
Never mix up the terminals when connecting the harness connector of the switch - power window main and the battery. If the connection is wrong, the switch - power window main may be damaged.

NOTE:
• When the battery is connected to the switch - power window main terminal, the letters “AUTO” on the driver’s side knob illuminates.
• For detailed procedures, refer to “Subaru Select Monitor Operation Manual”.

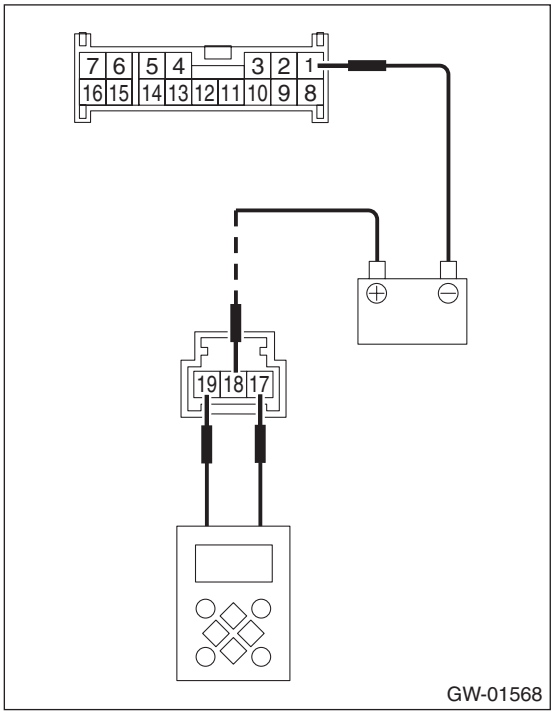

3) Operate the switch - power window main and check the output.

NOTE:
Since output time during window UP operation is extremely short, it cannot be checked without using a measuring instrument such as oscilloscope. Output is constantly produced while the switch is operated for window DOWN operation.

Inspection conditions	Output time	Standard
AUTO UP	Approx. 130 ms	Battery voltage
UP		
OFF	—	0 V
DOWN	During switch operation	Battery voltage
AUTO DOWN	Approx. 300 ms	

4) If the inspection result is not within the standard, replace the switch - power window main.

• **Passenger's seat and rear seat**

1) Check the resistance between connector terminals.

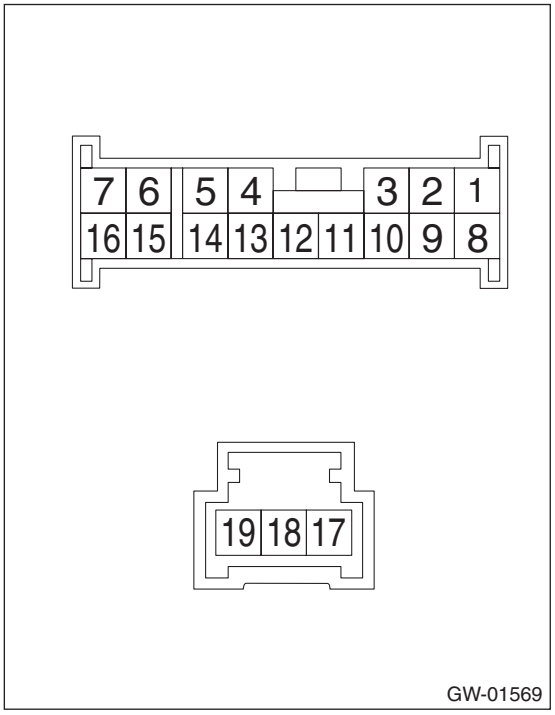

	Terminal No.	Inspection conditions	Standard
Passenger's seat (Model without AUTO)	14 — 8 2 — 1	UP	Less than 1 Ω
	14 — 2 14 — 8	OFF	1 MΩ or more
	1 — 2 1 — 8 2 — 8		Less than 1 Ω
	14 — 2 1 — 8	DOWN	Less than 1 Ω
Rear LH	14 — 15 1 — 16	UP	Less than 1 Ω
	14 — 15 14 — 16	OFF	1 MΩ or more
	1 — 15 1 — 16 15 — 16		Less than 1 Ω
	14 — 16 1 — 15	DOWN	Less than 1 Ω
Rear RH	14 — 7 1 — 6	UP	Less than 1 Ω
	14 — 6 14 — 7	OFF	1 MΩ or more
	1 — 6 1 — 7 6 — 7		Less than 1 Ω
	14 — 6 7 — 1	DOWN	Less than 1 Ω

2) If the inspection result is not within the standard, replace the switch - power window main.

2. SUB-SWITCH

Passenger's seat (model with AUTO)

CAUTION:
Since the switch - power window main is controlled by CPU, do not check continuity for switch alone with the circuit tester. Performing continuity check with circuit tester can damage the switch - power window main circuit.

Check output from the switch - power window sub to the passenger's side motor using the oscilloscope function in the Subaru Select Monitor.

1) Remove the switch - power window sub.
2) Connect the battery and the Subaru Select Monitor to the switch - power window sub terminal.

CAUTION:
Never mix up the terminals when connecting the harness connector of the switch - power window sub and the battery. If the connection is wrong, the switch - power window sub may be damaged.

NOTE:
- When the battery is connected to the switch - power window sub terminal, the letters "AUTO" on the passenger's side knob illuminates.
- For detailed procedures, refer to "Subaru Select Monitor Operation Manual".

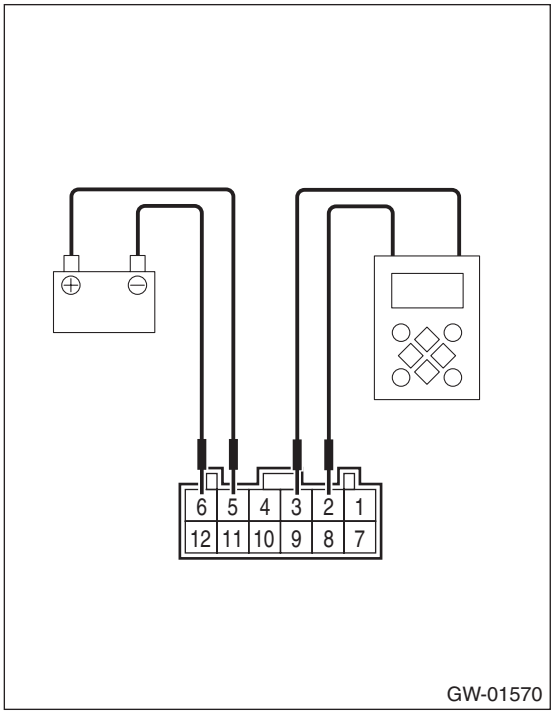

3) Operate the switch - power window sub and check the output.

NOTE:
Since output time during window UP operation is extremely short, it cannot be checked without using a measuring instrument such as oscilloscope. Output is constantly produced while the switch is operated for window DOWN operation.

Inspection conditions	Output time	Standard
AUTO UP	Approx. 130 ms	Battery voltage
UP		
OFF	—	0 V
DOWN	During switch operation	Battery voltage
AUTO DOWN	Approx. 300 ms	

4) If the inspection result is not within the standard, replace the switch - power window sub.

Passenger's seat and rear seat (model without AUTO)

1) Remove the switch - power window sub.
2) Check the resistance between connector terminals.

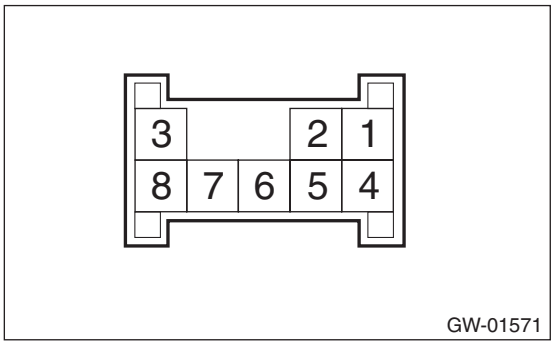

	Terminal No.	Inspection conditions	Standard
Passenger seat, rear	4 — 5 7 — 8	OFF	Less than 1 Ω
	5 — 6 6 — 8		1 MΩ or more
	5 — 6 7 — 8	UP	Less than 1 Ω
	4 — 5 4 — 8		1 MΩ or more
	4 — 5 6 — 8	DOWN	Less than 1 Ω
	4 — 6 7 — 8		1 MΩ or more

3) Check the switch light illumination condition.

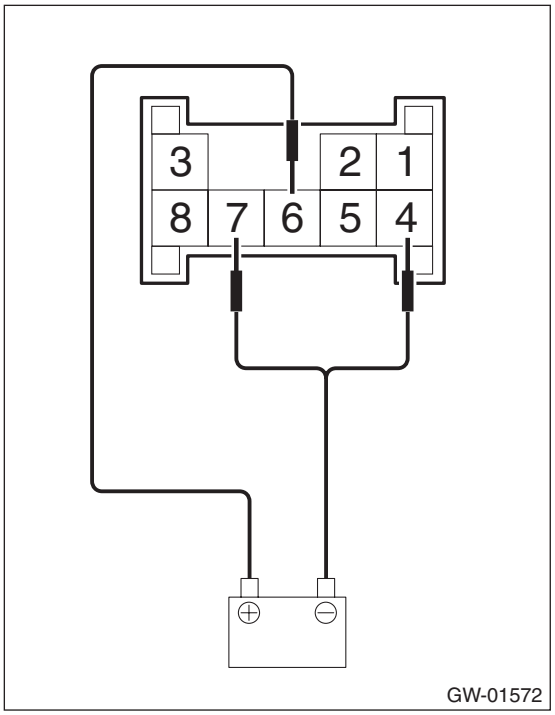

	Terminal No.	Inspection conditions	Specification
Passenger seat, rear	6 — 7, 4	Battery connection between terminals	Light ON

4) If the inspection result is not within the standard, replace the switch - power window sub.

5. Front Door Glass

A: REMOVAL

1) Disconnect the ground terminal from the battery sensor, and wait for at least 60 seconds before starting work. <Ref. to RC-4, BATTERY, NOTE, Repair Contents.>
2) Remove the trim panel - front door. <Ref. to EI-71, FRONT DOOR, REMOVAL, Door Trim.>
3) Remove the sealing cover - front door. <Ref. to EB-30, REMOVAL, Front Sealing Cover.>
4) Remove the front door inner pad (a).

CAUTION:
If it is removed with an excessive force, the panel assembly - front door may be deformed. Also, if the clip is damaged, replace it with a new clip.

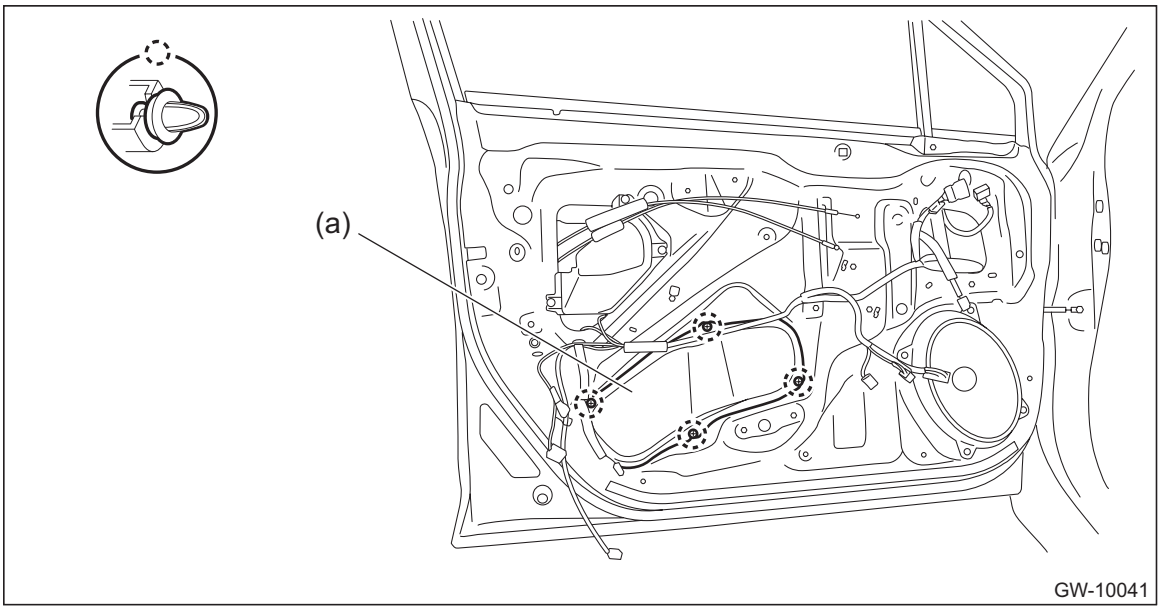

5) Connect the ground terminal to battery sensor. <Ref. to RC-4, BATTERY, NOTE, Repair Contents.>
6) Remove the glass assembly - front door.
   (1) Connect the switch - power window and then turn the ignition switch to ON.
   (2) Operate the switch - power window to move the glass assembly - front door to the position where the mounting bolts can be seen.
   (3) Remove the mounting bolts from the glass assembly - front door.

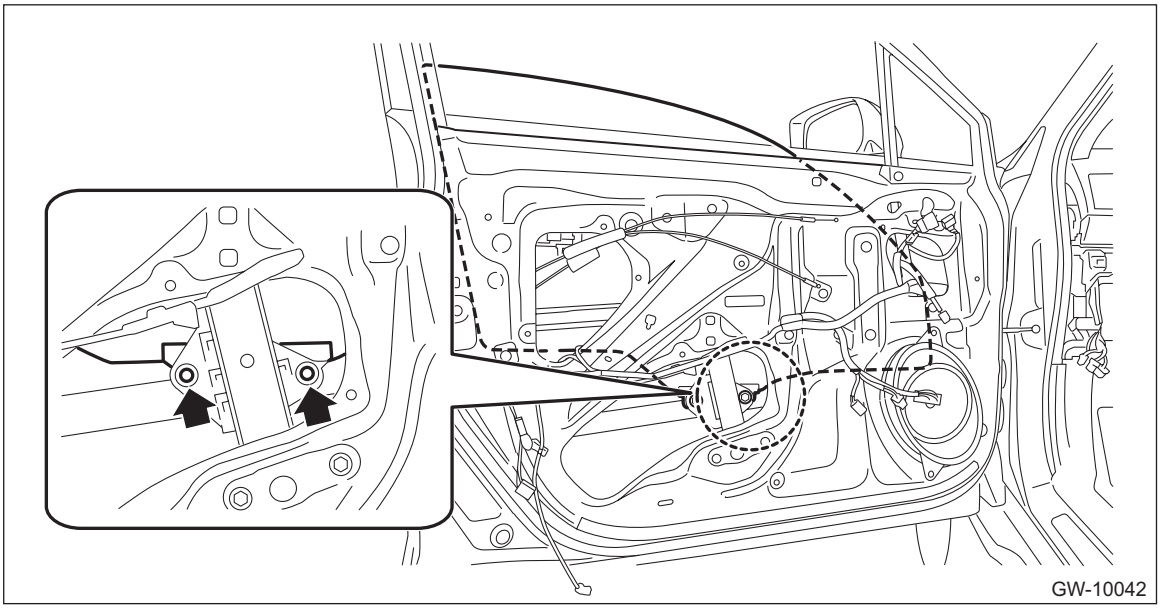

(4) While tilting the glass, remove the glass assembly - front door.

CAUTION:
Avoid impact and damage to the glass assembly - front door.

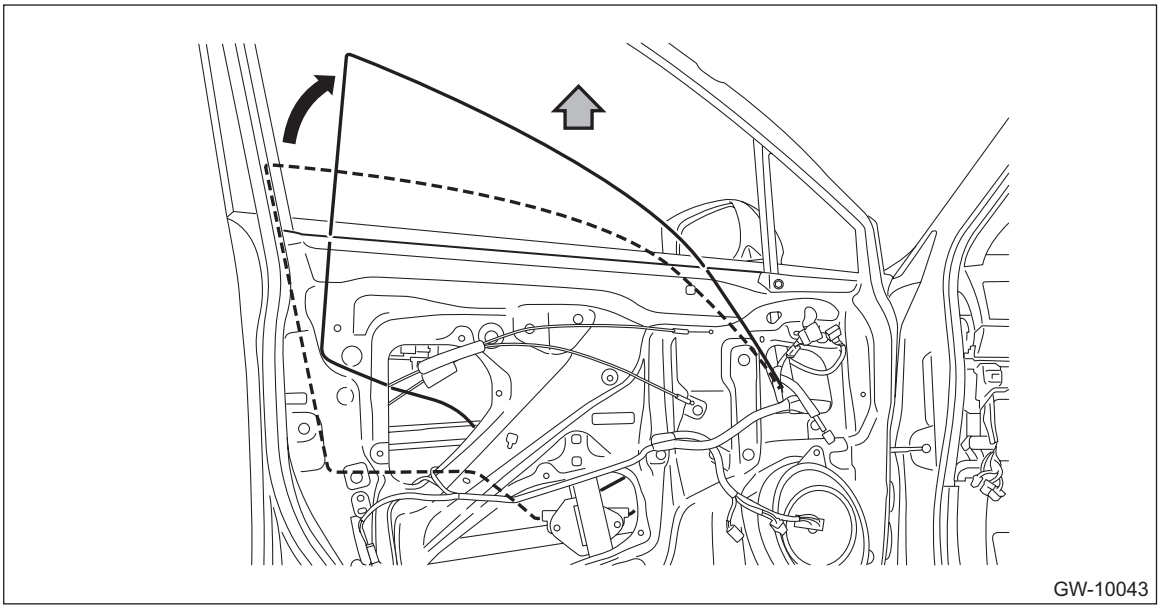
GW-10043

7) Remove the glass - front door partition.
(1) Remove the bolts and screws, and then remove the running channel - front door and the sash assembly - partition.

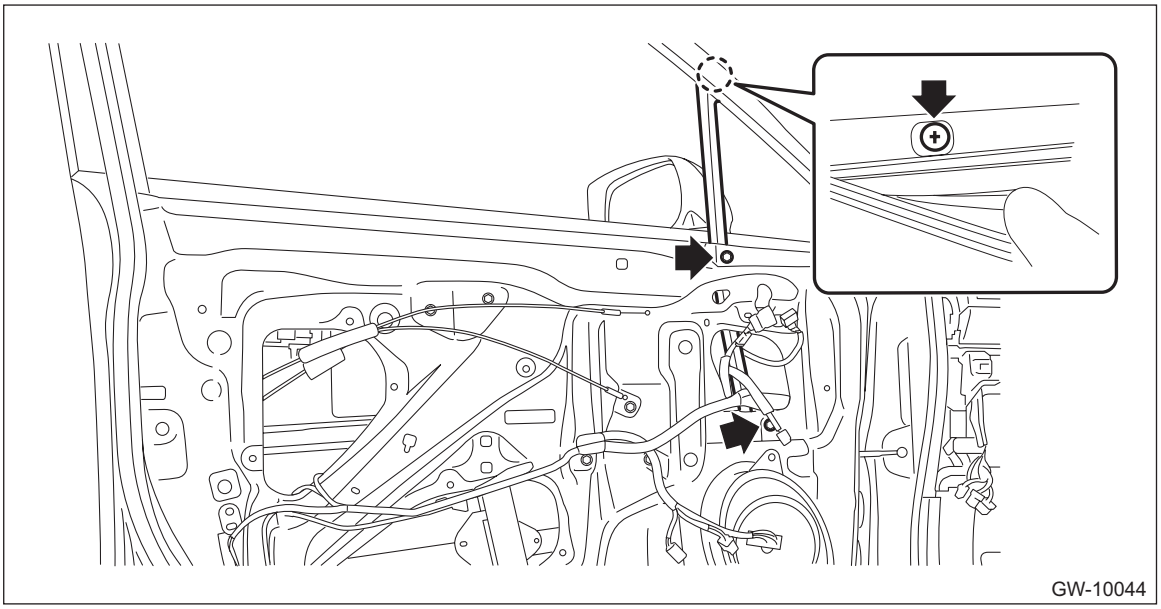
GW-10044

(2) Remove the glass - front door partition.

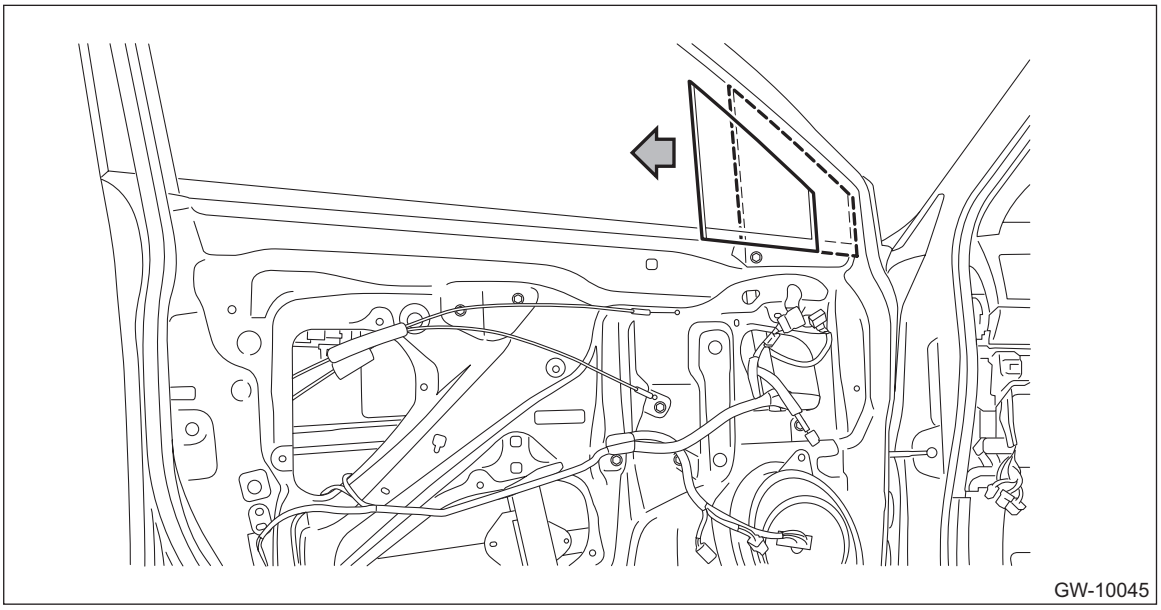
GW-10045

B: INSTALLATION

1) Install the glass - front door partition.
2) Install the running channel - front door and the sash assembly - partition.

CAUTION:
Check that the running channel - front door is securely fixed to the panel assembly - front door and to the sash assembly - partition.

Tightening torque:
Refer to "COMPONENT" of "General Description". <Ref. to GW-4, FRONT DOOR GLASS, COMPONENT, General Description.>

NOTE:
Tighten the sash assembly - partition in the following order.

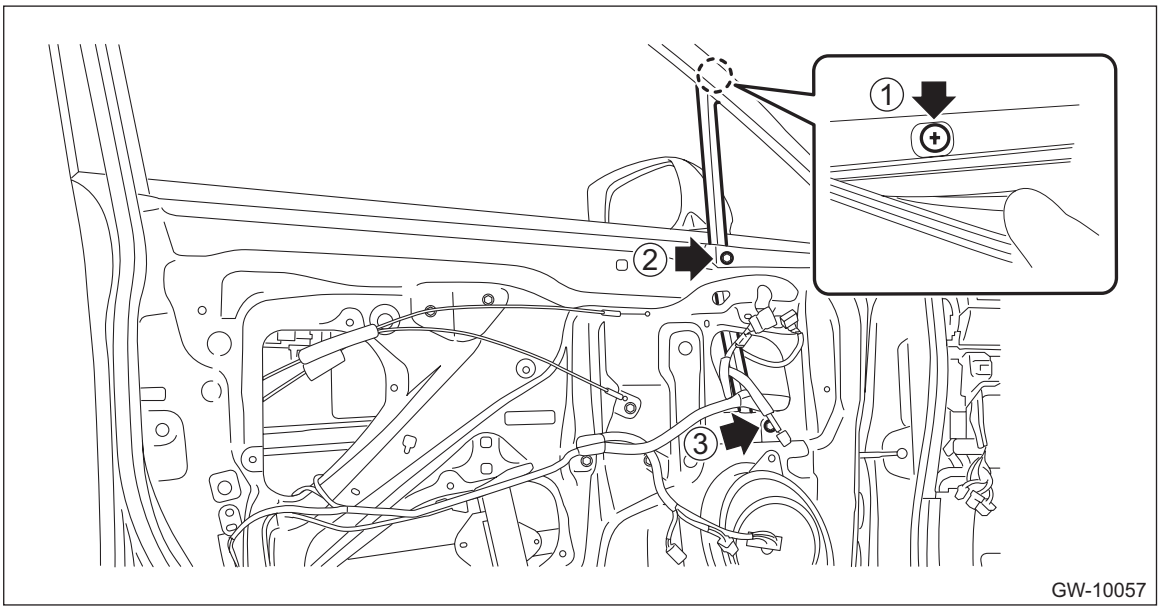

GW-10057

3) Install the glass assembly - front door.

Tightening torque:
7.5 N·m (0.8 kgf-m, 5.5 ft-lb)
4) Install the front door inner pad.

5) Install the sealing cover - front door.
6) Install the trim panel - front door. <Ref. to EI-73, INSTALLATION, Door Trim.>
7) Connect the ground terminal to battery sensor. <Ref. to RC-4, BATTERY, NOTE, Repair Contents.>

6. Front Regulator and Motor Assembly

A: REMOVAL

1) Disconnect the ground terminal from the battery sensor, and wait for at least 60 seconds before starting work. <Ref. to RC-4, BATTERY, NOTE, Repair Contents.>
2) Remove the trim panel - front door. <Ref. to EI-71, FRONT DOOR, REMOVAL, Door Trim.>
3) Remove the sealing cover - front door. <Ref. to EB-30, REMOVAL, Front Sealing Cover.>
4) Remove the glass assembly - front door. <Ref. to GW-20, REMOVAL, Front Door Glass.>
5) Remove the regulator and motor assembly - front.
   (1) Disconnect the motor - front connector.
   (2) Remove the bolts, and then remove the regulator and motor assembly - front.

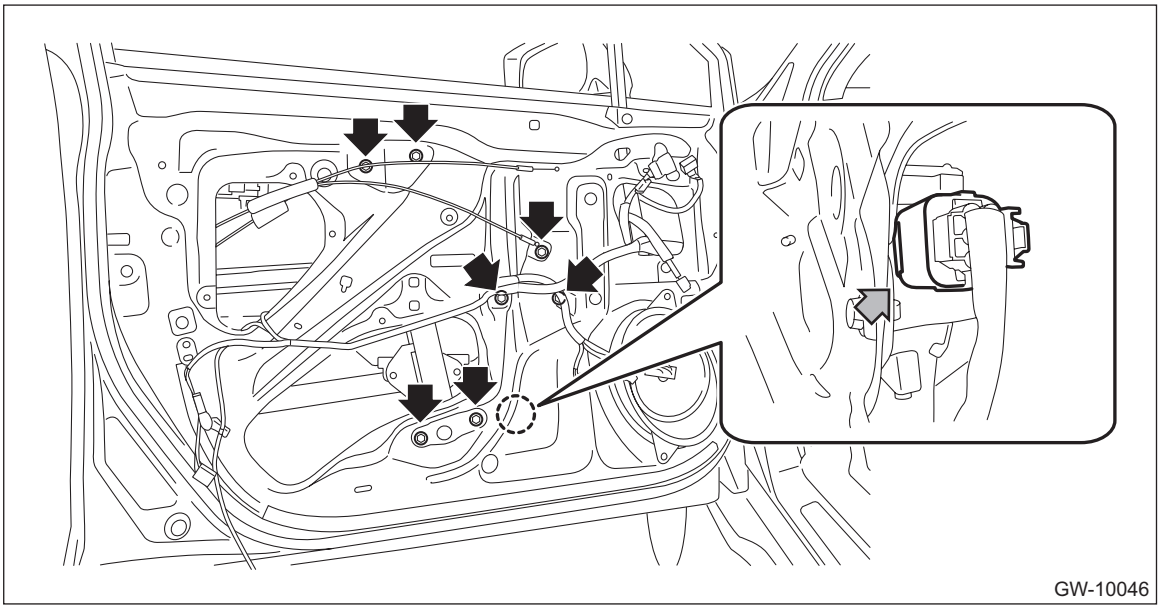

B: INSTALLATION

1) Install the regulator and motor assembly - front.

Tightening torque:
7.5 N·m (0.8 kgf-m, 5.5 ft-lb)

2) Install the glass assembly - front door. <Ref. to GW-22, INSTALLATION, Front Door Glass.>
3) Install the sealing cover - front door.
4) Install the trim panel - front door. <Ref. to EI-73, INSTALLATION, Door Trim.>
5) Connect the ground terminal to battery sensor. <Ref. to RC-4, BATTERY, NOTE, Repair Contents.>

C: INSPECTION

1) Check the motor operation when battery voltage is applied between the connector terminals.

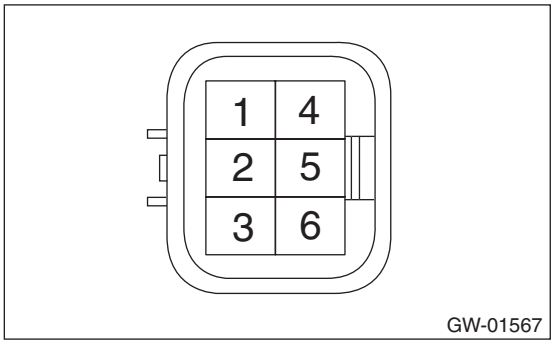

- LH side

Terminal No.	Inspection conditions	Standard
6 (+) — 3 (–)	Apply battery voltage between terminals.	Increase
3 (+) — 6 (–)	Apply battery voltage between terminals.	Decrease

- RH side

Terminal No.	Inspection conditions	Standard
1 (+) — 4 (–)	Apply battery voltage between terminals.	Increase
4 (+) — 1 (–)	Apply battery voltage between terminals.	Decrease

2) If it does not operate properly as a result of inspection, replace the regulator and motor assembly - front.

7. Remote Control Mirror System

A: WIRING DIAGRAM

Refer to “Remote Control Mirror System” in the wiring diagram. <Ref. to WI-326, WIRING DIAGRAM, Remote Control Mirror System.>

B: INSPECTION

1. SYMPTOM CHART

Symptoms	Inspection order
All function does not operate.	1. Check the fuse. 2. Check the remote control mirror switch. 3. Check the wiring harness.
One side of the mirror motor does not operate.	1. Check the remote control mirror switch. 2. Check the mirror motor. 3. Check the wiring harness.
Mirror heater does not operate.	1. Check the rear defogger switch. 2. Check the rear defogger relay. 3. Check the mirror heater. 4. Check the wiring harness. 5. Check body integrated unit.

NOTE:
The mirror heater operates with the rear window defogger at the same time. Refer to “INSPECTION” of “Rear Window Defogger System” for details. <Ref. to GW-56, INSPECTION, Rear Window Defogger System.>

C: NOTE

For procedure of each component in the remote control mirror system, refer to the respective section.

- Outer mirror assembly: <Ref. to GW-27, Outer Mirror Assembly.>
- Remote control mirror switch: <Ref. to GW-33, Remote Control Mirror Switch.>

8. Outer Mirror Assembly

A: REMOVAL

Refer to “DISASSEMBLY” for removal procedures of scalp cap and mirror face. <Ref. to GW-29, DISASSEMBLY, Outer Mirror Assembly.>

1) Disconnect the ground terminal from the battery sensor, and wait for at least 60 seconds before starting work. <Ref. to RC-4, BATTERY, NOTE, Repair Contents.>

2) Remove the trim panel - front door. <Ref. to EI-71, FRONT DOOR, REMOVAL, Door Trim.>

3) Turn over the sealing cover - front door.

CAUTION:

- **Carefully remove the butyl tape. Excessive force will easily break the sealing cover - front door.**
- **If the sealing cover - front door gets broken, replace it with a new part.**
- **Be careful not to allow the butyl tape to contact any trims and seats because the butyl tape, which has a strong adhesive force, is difficult to remove once it adhered.**

(1) Remove the connector clip that is installed on the panel assembly - front door, and disconnect the connector.

(2) Carefully remove and turn over the sealing cover - front door within the area where the operation can be performed.

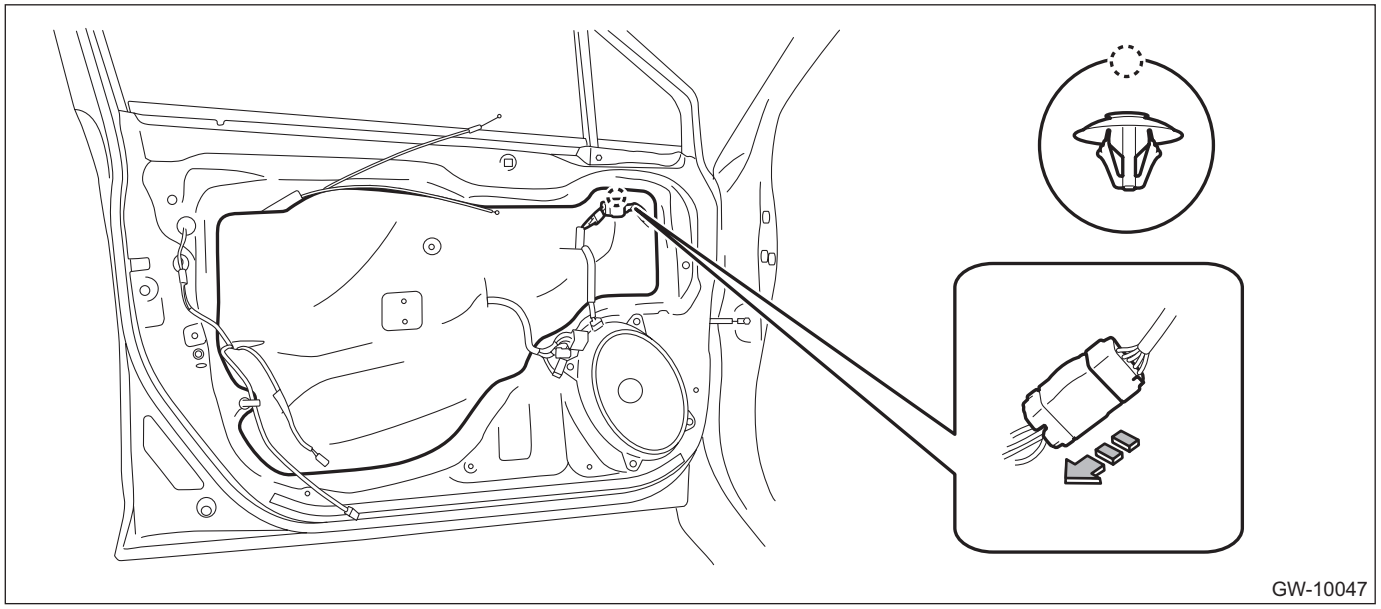

4) Remove the bolts to remove outer mirror assembly.

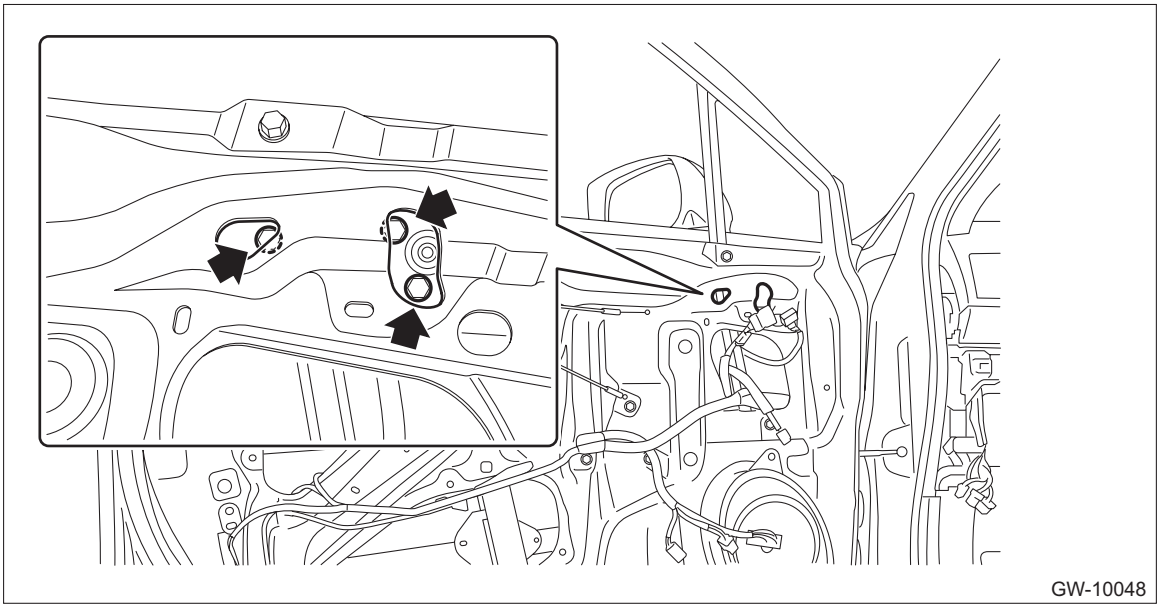

B: INSTALLATION

CAUTION:
Be careful not to catch the harness in between the parts.

1) Install the outer mirror assembly.

Tightening torque:
7.5 N·m (0.8 kgf-m, 5.5 ft-lb)

2) Install the sealing cover - front door.
3) Install the trim panel - front door. <Ref. to EI-73, INSTALLATION, Door Trim.>
4) Connect the ground terminal to battery sensor. <Ref. to RC-4, BATTERY, NOTE, Repair Contents.>

C: DISASSEMBLY

CAUTION:
• When removing the mirror - repair, be careful not to damage the back surface of mirror - repair with a flat tip screwdriver.
• When removing the mirror - repair, insert the connector and clip securely.

1) Operate the remote control mirror switch to face the mirror - repair upward.
2) Disconnect the ground terminal from the battery sensor, and wait for at least 60 seconds before starting work. <Ref. to RC-4, BATTERY, NOTE, Repair Contents.>
3) Remove the mirror - repair.
   (1) Using a flat tip screwdriver or similar tool, release the engagement shown in the figure, and slide the mirror - repair downward to remove.

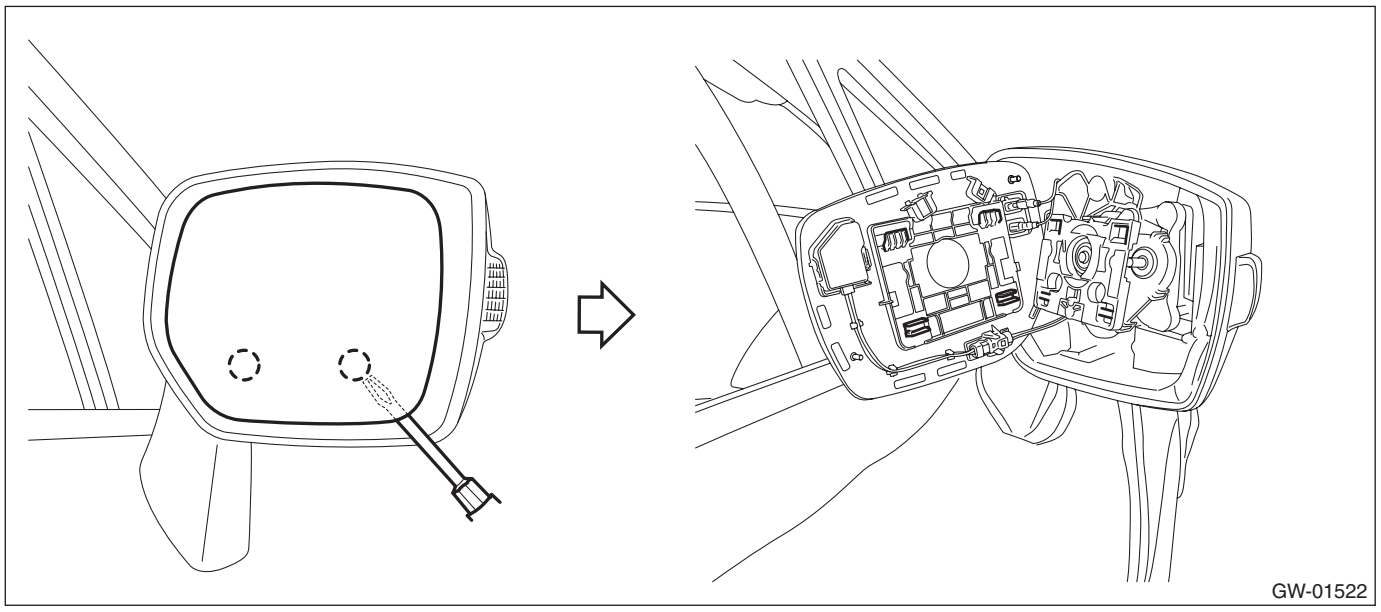
GW-01522

(2) Disconnect connectors. (Model with mirror heater and Subaru Rear Vehicle Detection system)

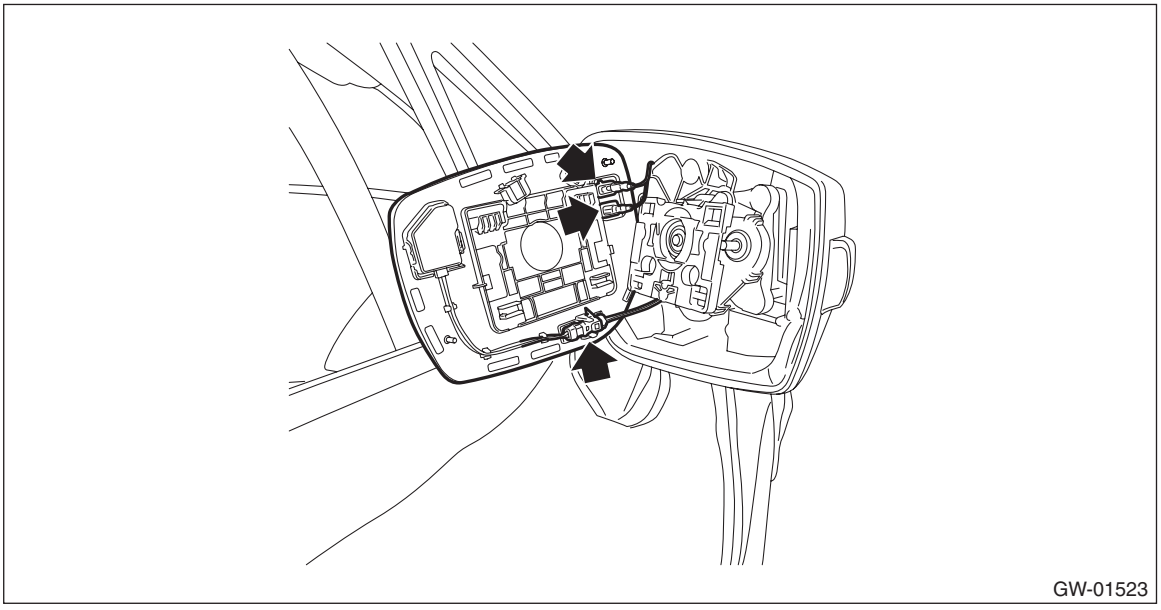
GW-01523

4) Release the claws, and then remove the cover - cap outer mirror lower.

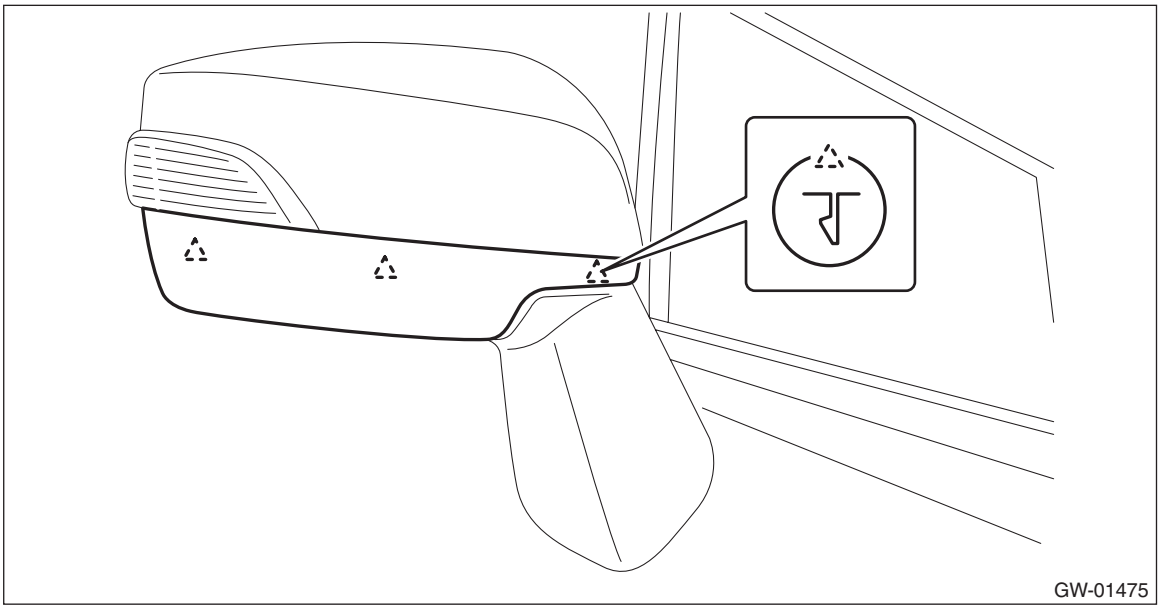

5) Release the claws, and then remove the cover - cap outer mirror.

CAUTION:
Be careful not to apply excessive force when removing the cover - cap outer mirror, as the lower hooks may become damaged.

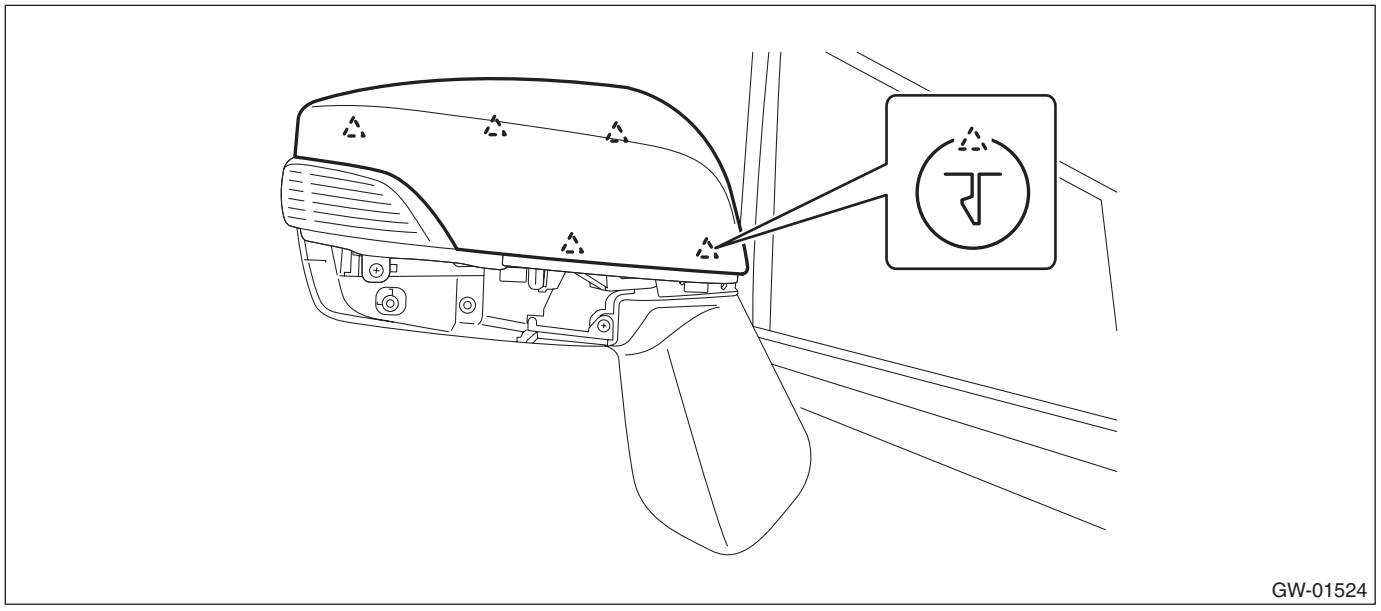

6) Remove the light assembly - side turn mirror. (Model with side turn signal light)
   (1) Remove the screws and pull out the light assembly - side turn mirror to the front of the vehicle.
   (2) Disconnect the connector and remove the light assembly - side turn mirror.

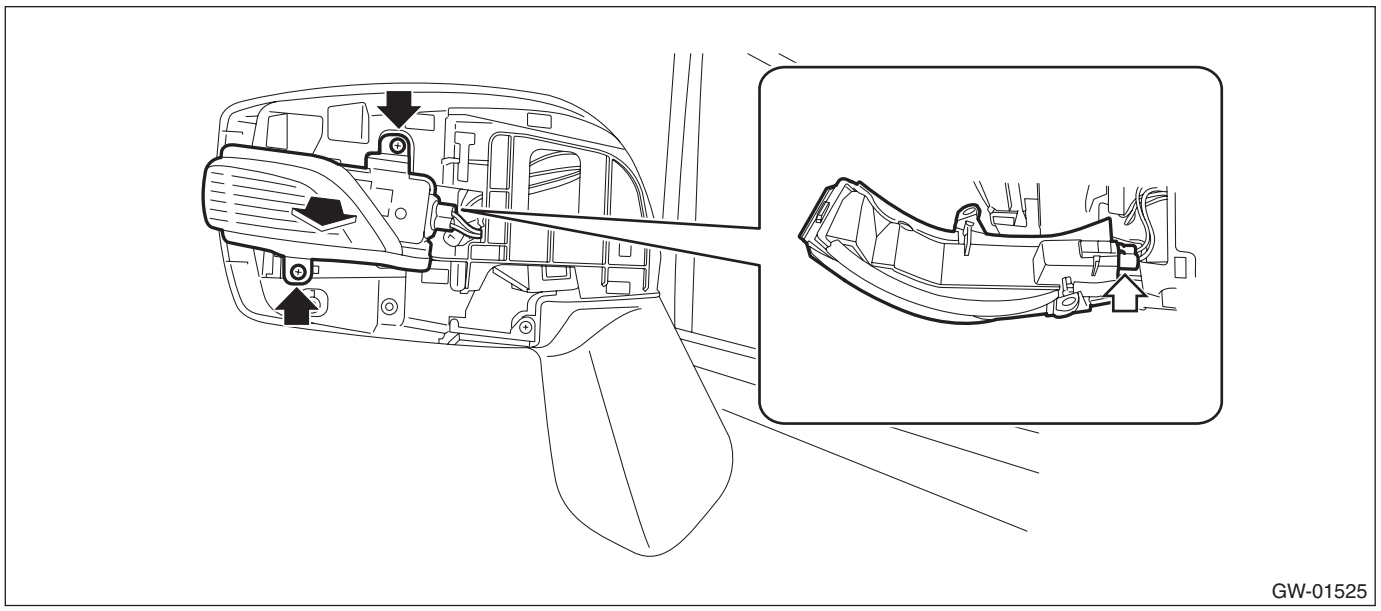

D: ASSEMBLY

CAUTION:
Be careful not to catch the harness in between the parts.
1) Install the light assembly - side turn mirror.
2) Install the cover - cap outer mirror.
3) Install the cover - cap outer mirror lower.
4) Check that all the claws are securely engaged.
5) Install the mirror - repair.

E: INSPECTION

1. CHECK OPERATION

1) Check the mirror operation when battery voltage is applied between the connector terminals.

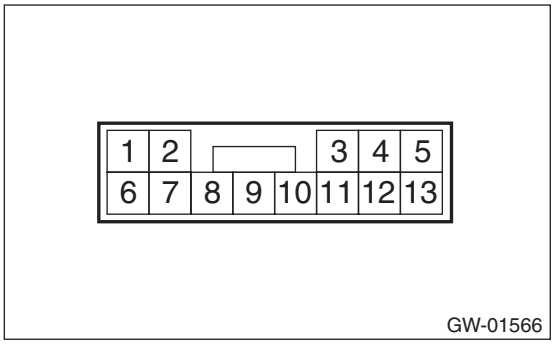

Terminal No.	Inspection conditions	Switch position
—	—	OFF
4 (+) — 3 (–)	Apply battery voltage between terminals.	UP
3 (+) — 4 (–)	Apply battery voltage between terminals.	DOWN
5 (+) — 4 (–)	Apply battery voltage between terminals.	LEFT
4 (+) — 5 (–)	Apply battery voltage between terminals.	RIGHT

2) If it does not operate normally, replace the outer mirror assembly.

2. CHECK OPERATION OF Subaru Rear Vehicle Detection INDICATOR

1) Check the Subaru Rear Vehicle Detection system. <Ref. to RVD(diag)-2, Basic Diagnostic Procedure.>
2) Check the outer mirror assembly.
   (1) Check that it illuminates normally when the BSD/RCTA OFF switch is turned ON while it is installed to the vehicle.
   (2) If it does not illuminate normally, replace the mirror - repair.
   (3) Check that it illuminates normally again. If it does not illuminate normally, replace the outer mirror assembly.

9. Remote Control Mirror Switch

A: REMOVAL

1) Disconnect the ground terminal from the battery sensor, and wait for at least 60 seconds before starting work. <Ref. to RC-4, BATTERY, NOTE, Repair Contents.>
2) Remove the trim panel - front door. <Ref. to EI-71, FRONT DOOR, REMOVAL, Door Trim.>
3) Remove the panel - power window main switch. <Ref. to GW-12, REMOVAL, Power Window Control Switch.>
4) Release the claws, and then remove the switch - door mirror from the panel - power window main switch.

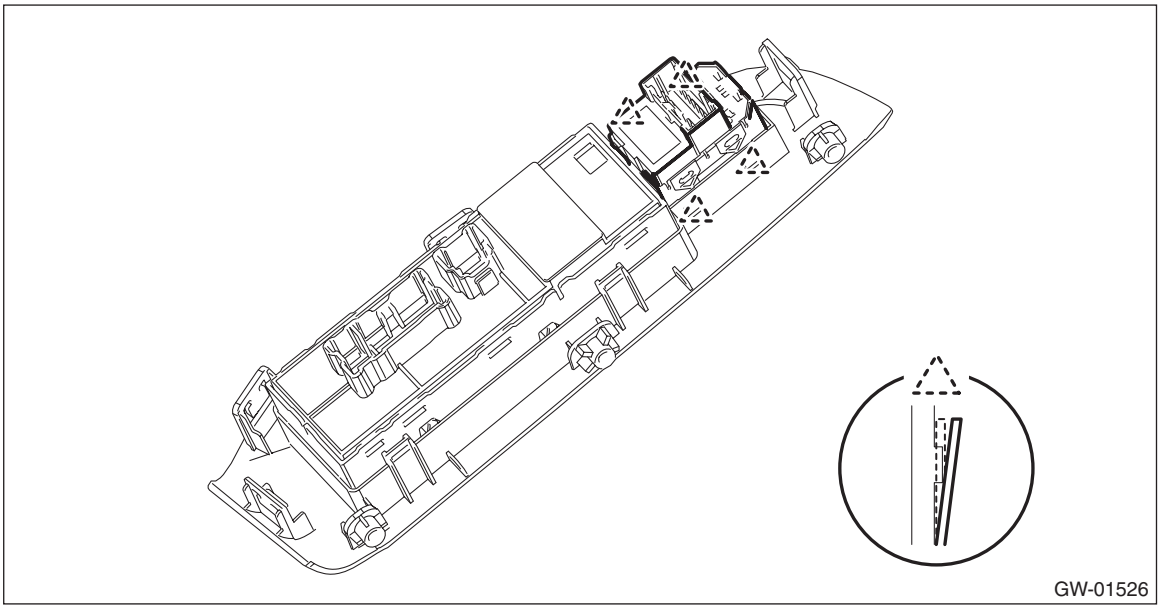

B: INSTALLATION

1) Install the switch - door mirror to the panel - power window main switch.
2) Install the panel - power window main switch to the trim panel - front door.
3) Install the trim panel - front door. <Ref. to EI-73, INSTALLATION, Door Trim.>
4) Connect the ground terminal to battery sensor. <Ref. to RC-4, BATTERY, NOTE, Repair Contents.>

C: INSPECTION

1) Check the resistance between connector terminals.

Preparation tool:
Circuit tester

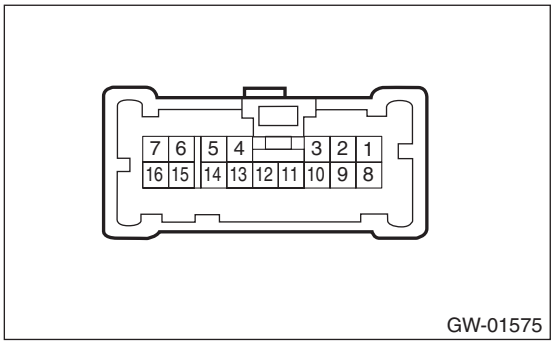

- Changeover switch RH

Terminal No.	Inspection conditions	Standard
—	OFF	1 MΩ or more
1 — 12 9 — 7	UP	Less than 1 Ω
1 — 9 12 — 7	DOWN	Less than 1 Ω
1 — 11 12 — 7	LEFT	Less than 1 Ω
1 — 12 11 — 7	RIGHT	Less than 1 Ω

- Changeover switch LH

Terminal No.	Inspection conditions	Standard
—	OFF	1 MΩ or more
1 — 14 8 — 7	UP	Less than 1 Ω
1 — 8 14 — 7	DOWN	Less than 1 Ω
1 — 10 14 — 7	LEFT	Less than 1 Ω
1 — 14 10 — 7	RIGHT	Less than 1 Ω

2) If the inspection result is not within the standard, replace the switch - door mirror.

10.Rear Door Glass

A: REMOVAL

1) Disconnect the ground terminal from battery sensor. <Ref. to RC-4, BATTERY, NOTE, Repair Contents.>
2) Remove the trim panel - rear door. <Ref. to EI-72, REAR DOOR, REMOVAL, Door Trim.>
3) Remove the sealing cover - rear door. <Ref. to EB-40, REMOVAL, Rear Sealing Cover.>
4) Connect the ground terminal to battery sensor. <Ref. to RC-4, BATTERY, NOTE, Repair Contents.>
5) Remove the glass assembly - rear door.
   (1) Install the switch - power window and then turn the ignition switch to ON.
   (2) Operate the switch - power window sub rear to move the glass assembly - rear door to the lowest position.
   (3) Remove the running channel - rear door.
   (4) Remove the screws and bolts, and then remove the sash assembly - rear partition.

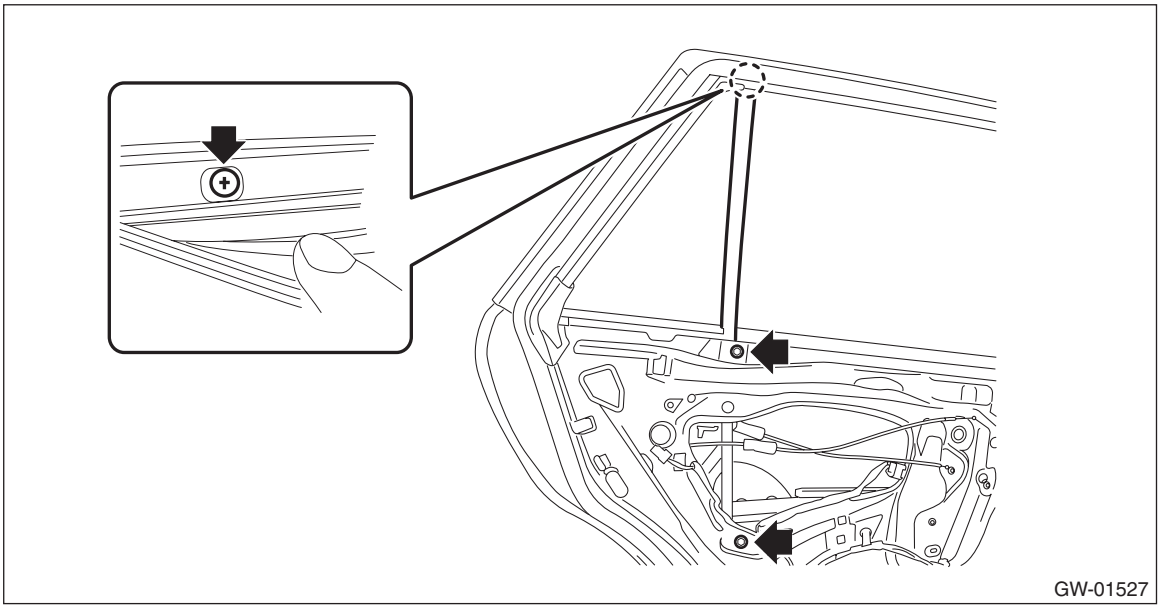
GW-01527

   (5) Remove the glass - rear door partition.

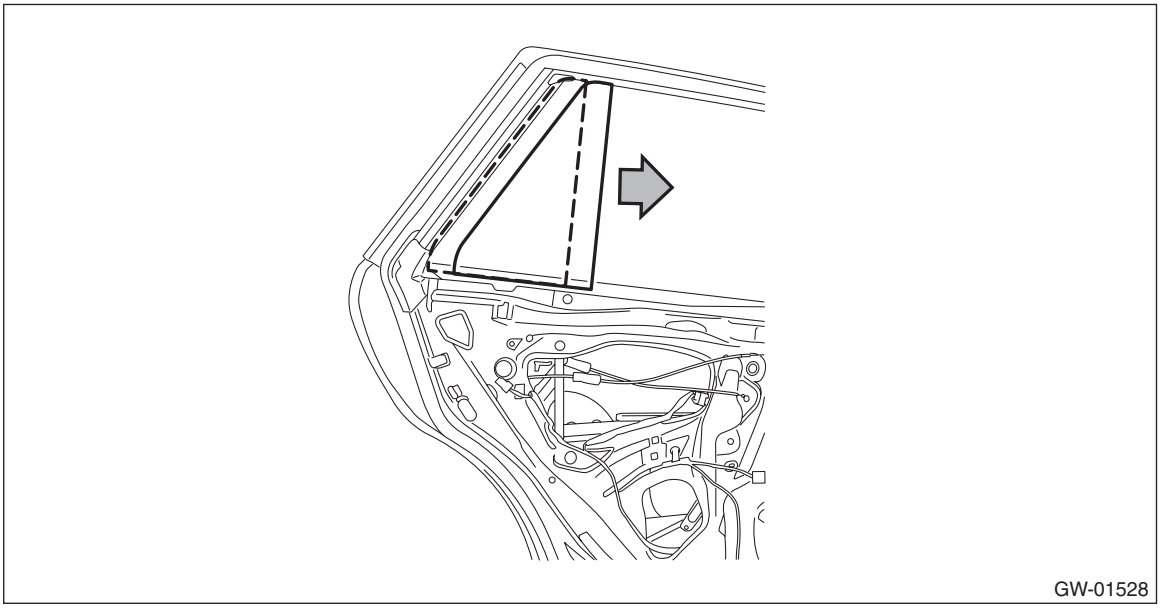
GW-01528

(6) While tilting the glass assembly - rear door, remove the guide from the roller of the regulator and motor assembly - rear, then remove the glass assembly - rear door.

CAUTION:
Avoid impact and damage to the glass assembly - rear door.

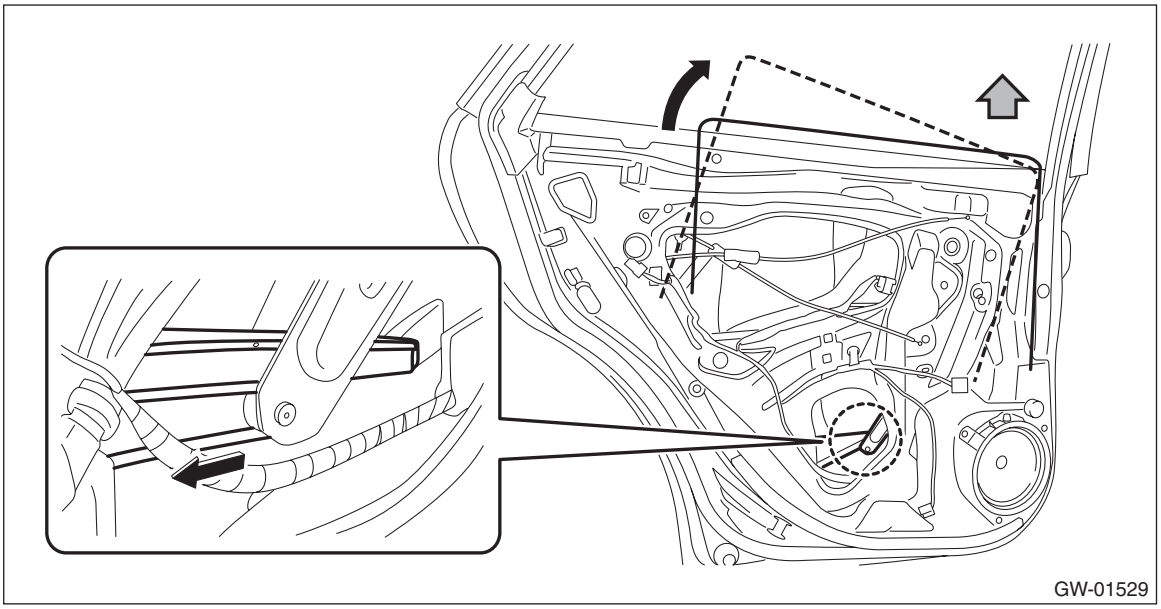

B: INSTALLATION

1) Install the running channel - rear door to the panel assembly - rear door.

CAUTION:
Check that the running channel - rear door is securely fixed to the panel assembly - rear door and to the sash assembly - rear partition.

2) Install the glass assembly - rear door.

CAUTION:
Avoid impact and damage to the glass assembly - rear door.

3) Install the glass - rear door partition and the sash assembly - rear partition.

NOTE:
- Tighten the sash assembly - rear partition in the following order.
- Install the running channel - rear door before installing the sash assembly - rear partition, and then install to the panel assembly - rear door.

Tightening torque:
Refer to "COMPONENT" of "General Description". <Ref. to GW-5, REAR DOOR GLASS, COMPONENT, General Description.>

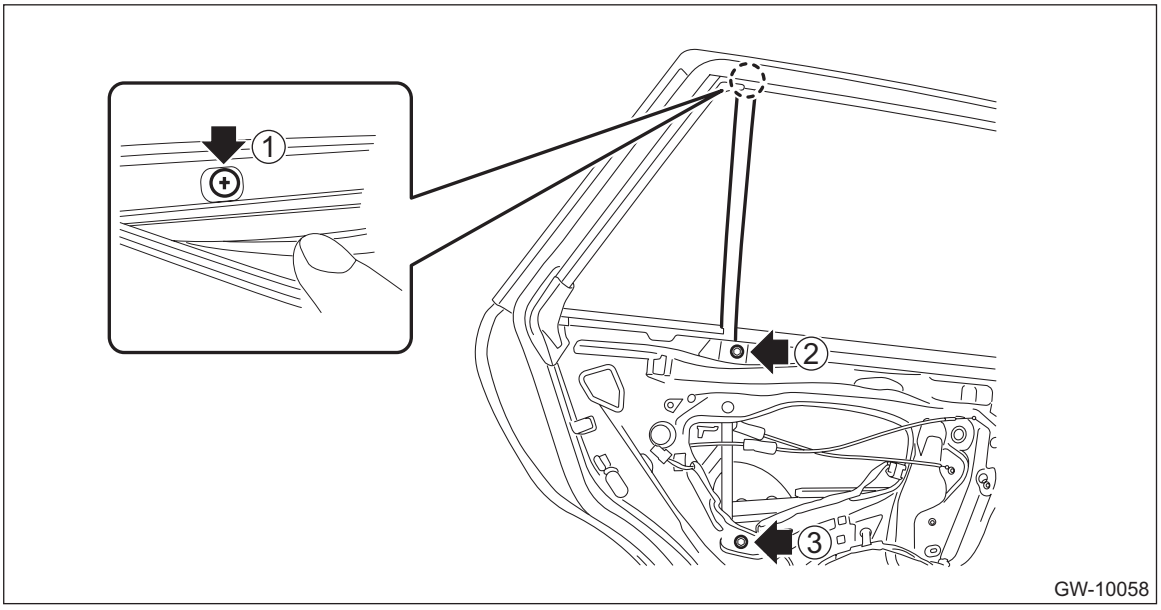

4) Install the sealing cover - rear door. <Ref. to EB-40, INSTALLATION, Rear Sealing Cover.>
5) Install the trim panel - rear door. <Ref. to EI-73, INSTALLATION, Door Trim.>
6) Connect the ground terminal to battery sensor. <Ref. to RC-4, BATTERY, NOTE, Repair Contents.>

11.Rear Regulator and Motor Assembly

A: REMOVAL

1) Disconnect the ground terminal from battery sensor. <Ref. to RC-4, BATTERY, NOTE, Repair Contents.>
2) Remove the trim panel - rear door. <Ref. to EI-72, REAR DOOR, REMOVAL, Door Trim.>
3) Remove the sealing cover - rear door.
4) Remove the glass assembly - rear door. <Ref. to GW-35, REMOVAL, Rear Door Glass.>
5) Remove the rear regulator and motor assembly.
   (1) Disconnect the connector of the motor - rear.

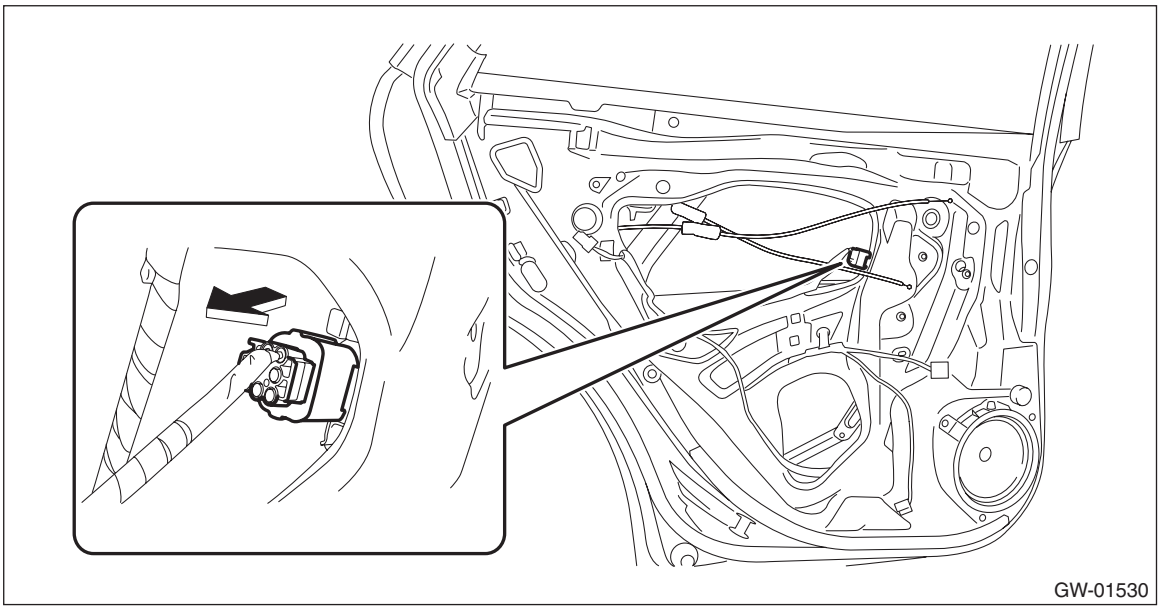
GW-01530

   (2) Remove the bolts, and then remove the regulator and motor assembly - rear.

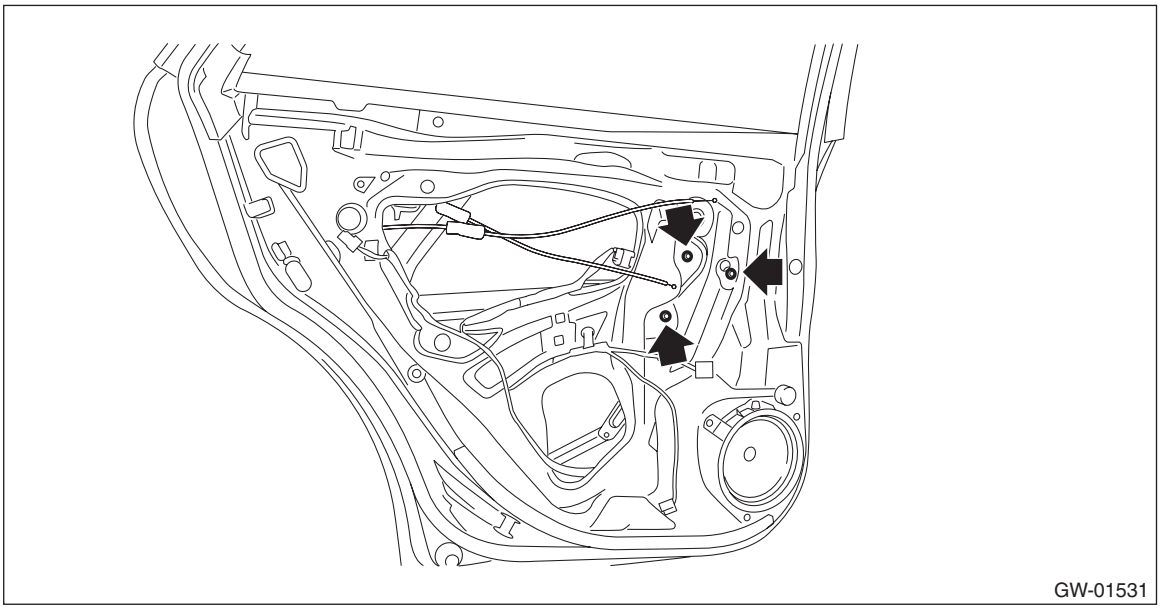
GW-01531

B: INSTALLATION

1) Install the regulator and motor assembly rear.

Tightening torque:
7.5 N·m (0.8 kgf-m, 5.5 ft-lb)

2) Install the glass assembly - rear door. <Ref. to GW-37, INSTALLATION, Rear Door Glass.>
3) Install the sealing cover - rear door.
4) Install the trim panel - rear door. <Ref. to EI-73, INSTALLATION, Door Trim.>
5) Connect the ground terminal to battery sensor. <Ref. to RC-4, BATTERY, NOTE, Repair Contents.>

C: INSPECTION

1) Check the motor operation when battery voltage is applied between the connector terminals.

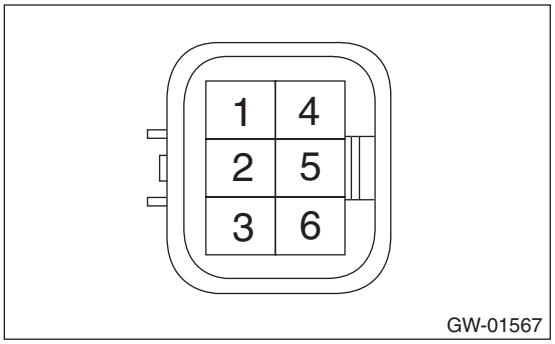

- LH side

Terminal No.	Inspection conditions	Standard
4 (+) — 1(–)	Apply battery voltage between terminals.	Increase
1 (+) — 4(–)	Apply battery voltage between terminals.	Decrease

- RH side

Terminal No.	Inspection conditions	Standard
3 (+) — 6(–)	Apply battery voltage between terminals.	Increase
6 (+) — 3(–)	Apply battery voltage between terminals.	Decrease

2) If it does not operate properly as a result of inspection, replace the regulator and motor assembly - rear.

12.Windshield Glass

A: REMOVAL

CAUTION:
• For model with EyeSight, always remove the glass - front window after the stereo camera is removed.
• For model with EyeSight, always use Subaru genuine windshield glass specially designed for EyeSight. (If the windshield glass other than the glass specially designed for EyeSight is used, the visibility of the camera is blocked or the distortion of the glass prevents the correct measurement of the object, resulting in the EyeSight abnormal operation.)
• For model with EyeSight, if the windshield glass is installed after removal or replaced, always perform the "Inspection" and "Adjustment and check" of the stereo camera.
Inspection: <Ref. to ES(diag)-8, INSPECTION, General Description.>
Adjustment and check: <Ref. to ES-12, Camera Adjustment, Inspection.>
• For model with EyeSight, if the damage is found in the glass repair prohibited area, always replace the glass. Damage in the prohibited area can affect the recognition of the stereo camera even if it is repaired, and thereby EyeSight function may not operate properly.

1. WHEN USING WINDSHIELD GLASS KNIFE

1) Disconnect the ground terminal from battery sensor. (Models with wiper deicer) <Ref. to RC-4, BATTERY, NOTE, Repair Contents.>
2) Remove the trim panel - front pillar UPR. <Ref. to EI-96, REMOVAL, Upper Inner Trim.>
3) Remove the cowl panel assembly. <Ref. to EI-51, REMOVAL, Cowl Panel.>
4) Remove the stereo camera cover and stereo camera. (Models with EyeSight) <Ref. to ES-8, REMOVAL, Stereo Camera.>
5) Disconnect the wiper deicer connector. (Models with wiper deicer)
6) Remove the molding - front window from the glass - front window, and attach protective tape on the body side of the circumference of the glass - front window.

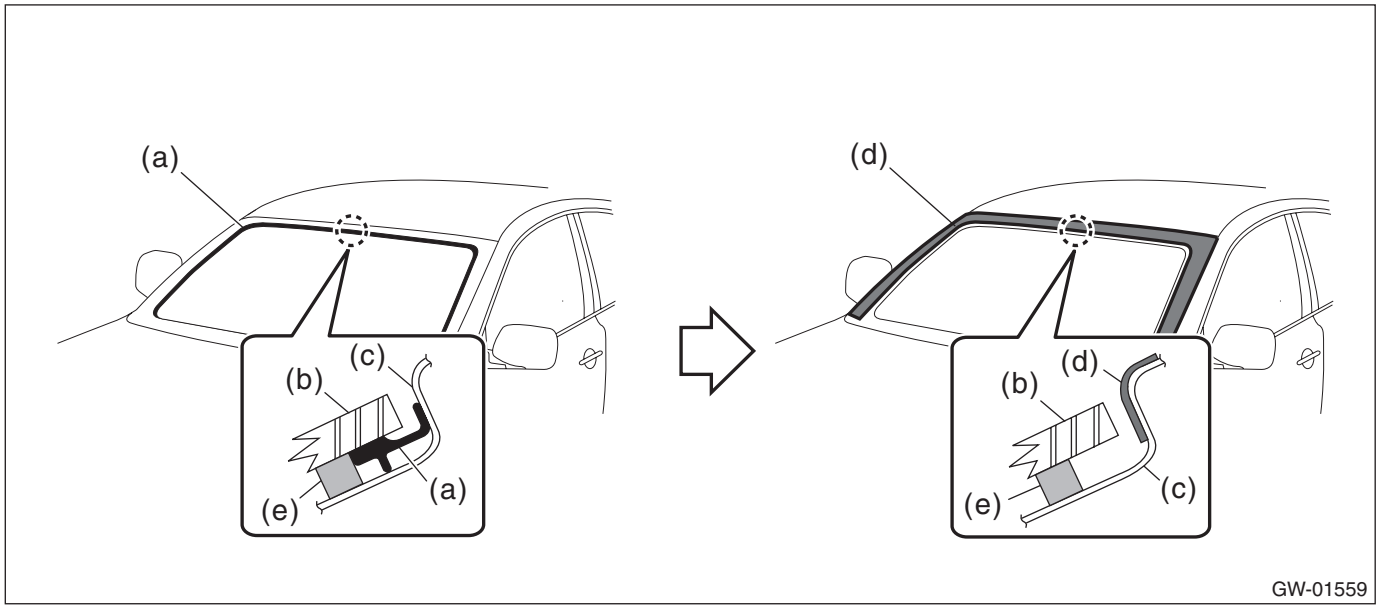

(a) Molding - front window
(b) Glass - front window
(c) Body panel
(d) Protective tape
(e) Adhesive

7) Remove the glass - front window.
(1) Apply sufficient amount of soapy water to the adhesive part and insert the windshield glass knife.
(2) While holding the edges of the knife and the glass - front window at a right angle, move the windshield glass knife parallel to the edge of the glass - front window, and cut the adhesive along the surface and the edge of the glass - front window.

CAUTION:
• Cutting of adhesive part should be started from an area with wider gap between the glass - front window and the body.
• Never twist the windshield glass knife.

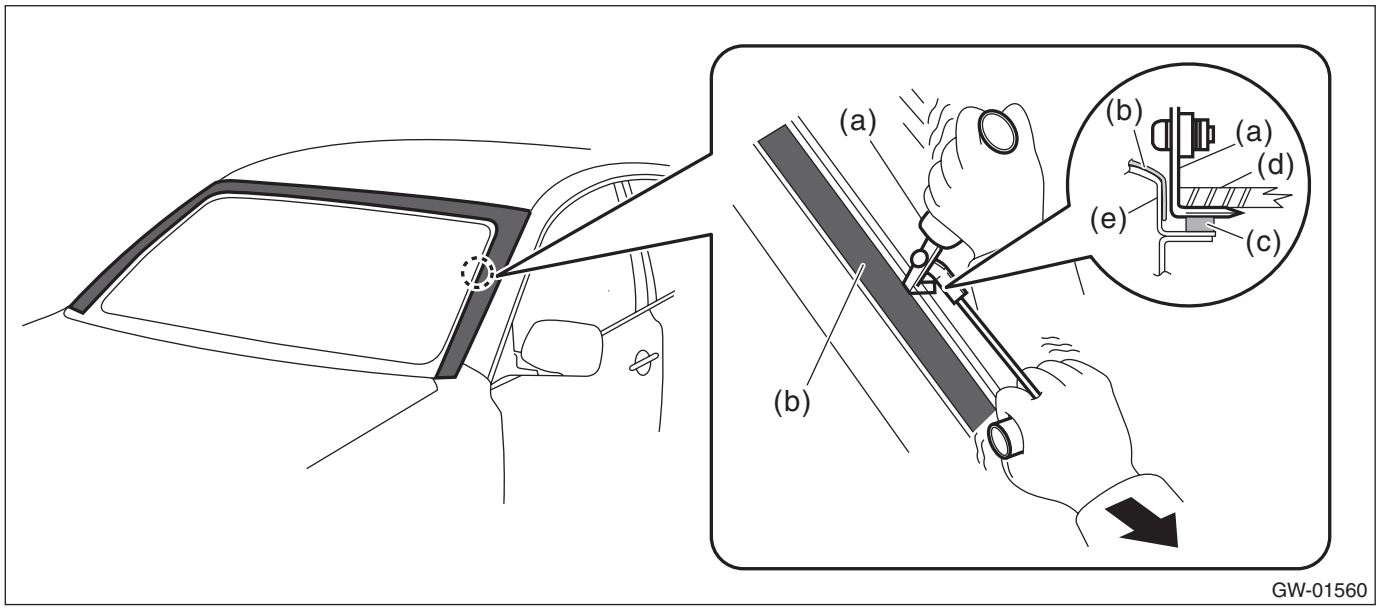

(a) Windshield glass knife
(b) Protective tape
(c) Adhesive
(d) Glass - front window
(e) Body panel

(3) Disconnect the locating pin - front window, and remove the glass - front window.

NOTE:
The locating pin - front window are bonded to the corners of the glass - front window. Use piano wire to disconnect the pins.

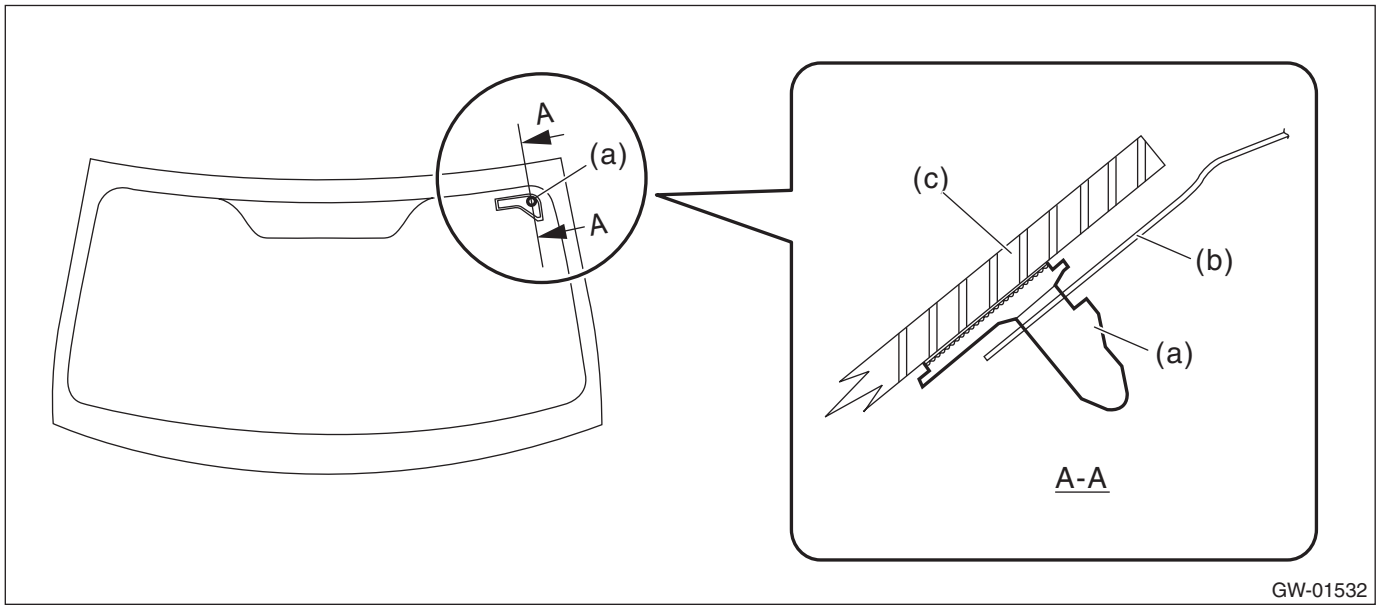

(a) Locating pin - front window
(b) Body panel
(c) Glass - front window

2. WHEN USING PIANO WIRE

CAUTION:
- **Do not tightly pull the piano wire against the glass - front window edge.**
- **Apply protective tape, etc, and be careful that the inner and outer components of the vehicle are not damaged.**
- **Do not cross piano wires. Otherwise they may be cut.**

1) Disconnect the ground terminal from battery sensor. (Models with wiper deicer) <Ref. to RC-4, BATTERY, NOTE, Repair Contents.>
2) Remove the trim panel - front pillar UPR. <Ref. to EI-96, REMOVAL, Upper Inner Trim.>
3) Remove the cowl panel assembly. <Ref. to EI-51, REMOVAL, Cowl Panel.>
4) Disconnect the wiper deicer connector. (Models with wiper deicer)
5) Remove the stereo camera cover and stereo camera. (Models with EyeSight) <Ref. to ES-8, REMOVAL, Stereo Camera.>
6) Remove the molding - front window from the glass - front window, and attach protective tape on the body side of the circumference of the glass - front window.

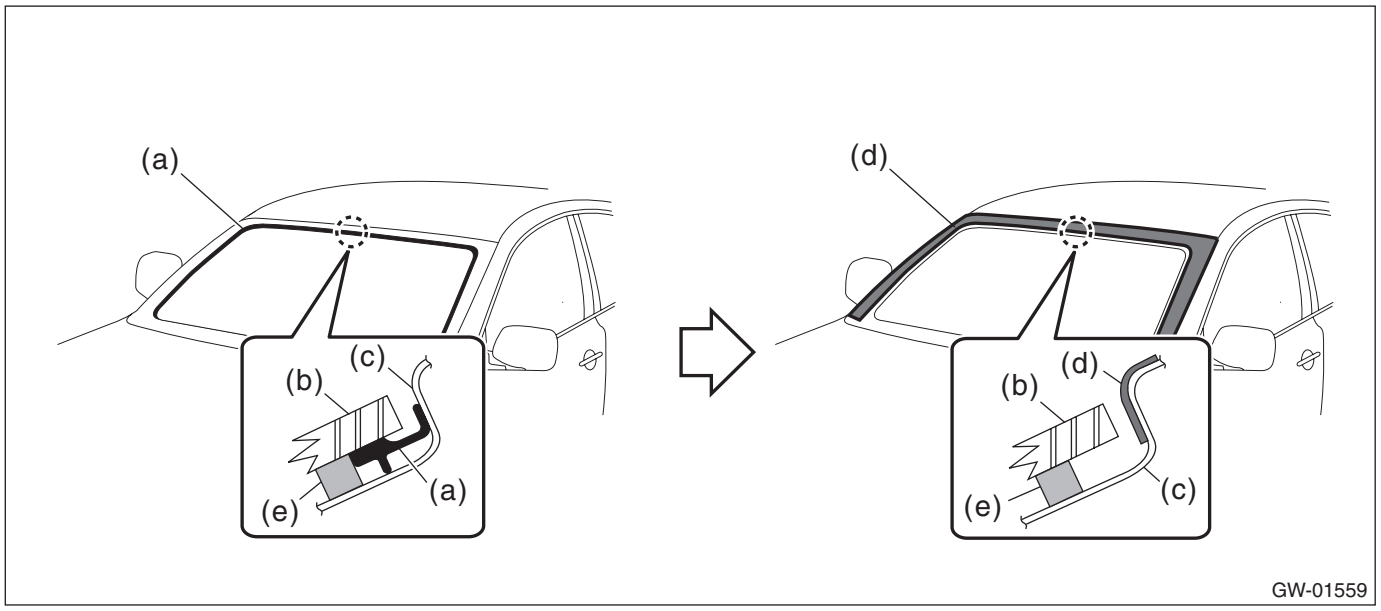

(a) Molding - front window
(b) Glass - front window
(c) Body panel
(d) Protective tape
(e) Adhesive

7) Remove the glass - front window.
   (1) Using a drill, make a hole in the adhesive part.
   (2) Pass the piano wire through the hole, and pull the wire ends alternately to cut off the adhesive part and the locating pin - front window.

CAUTION:
Attach a piece of wood to both piano wire ends.

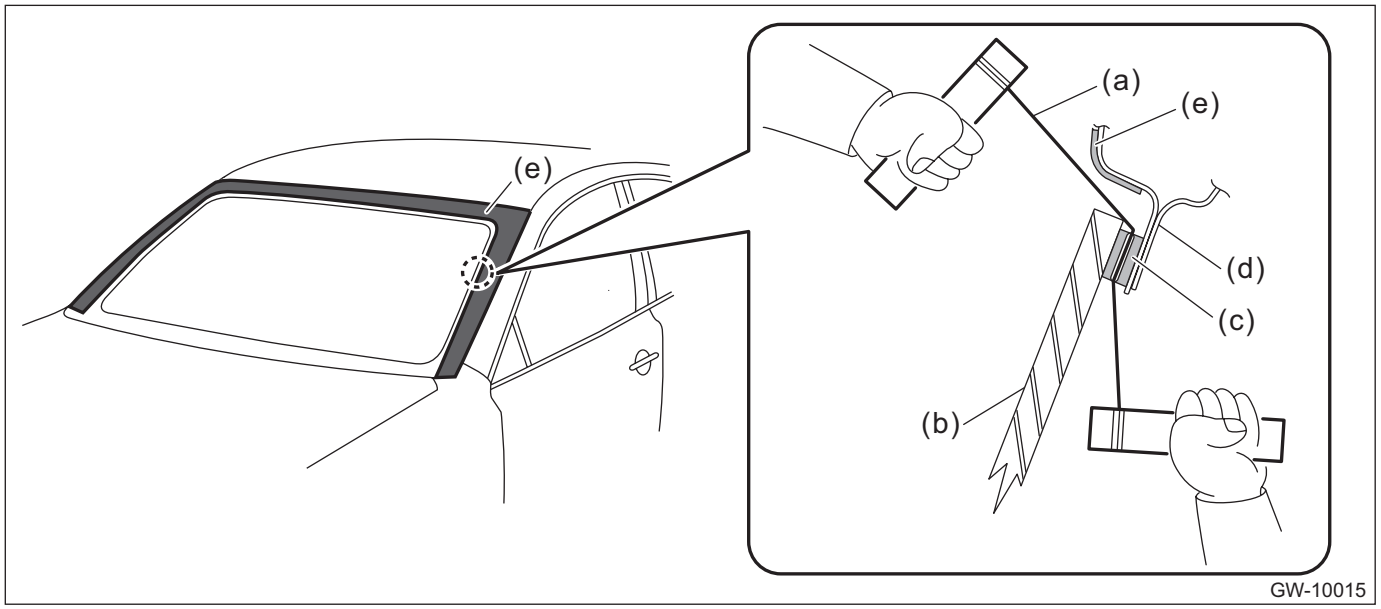

(a) Piano wire
(b) Glass - front window
(c) Adhesive
(d) Body panel
(e) Protective tape

B: INSTALLATION

CAUTION:
• For model with EyeSight, always use Subaru genuine windshield glass specially designed for EyeSight. (If the windshield glass other than the glass specially designed for EyeSight is used, the visibility of the camera is blocked or the distortion of the glass prevents the correct measurement of the object, resulting in the EyeSight abnormal operation.)
• For model with EyeSight, if the windshield glass is installed after removal or replaced, always perform the "Inspection" and "Adjustment and check" of the stereo camera.
Inspection: <Ref. to ES(diag)-8, INSPECTION, General Description.>
Adjustment and check: <Ref. to ES-12, Camera Adjustment, Inspection.>
• For model with EyeSight, if the damage is found in the glass repair prohibited area, always replace the glass. Damage in the prohibited area can affect the recognition of the stereo camera even if it is repaired, and thereby EyeSight function may not operate properly.
1) Fabricate the cartridge nozzle tip as shown and set the sealant gun with the adhesive.

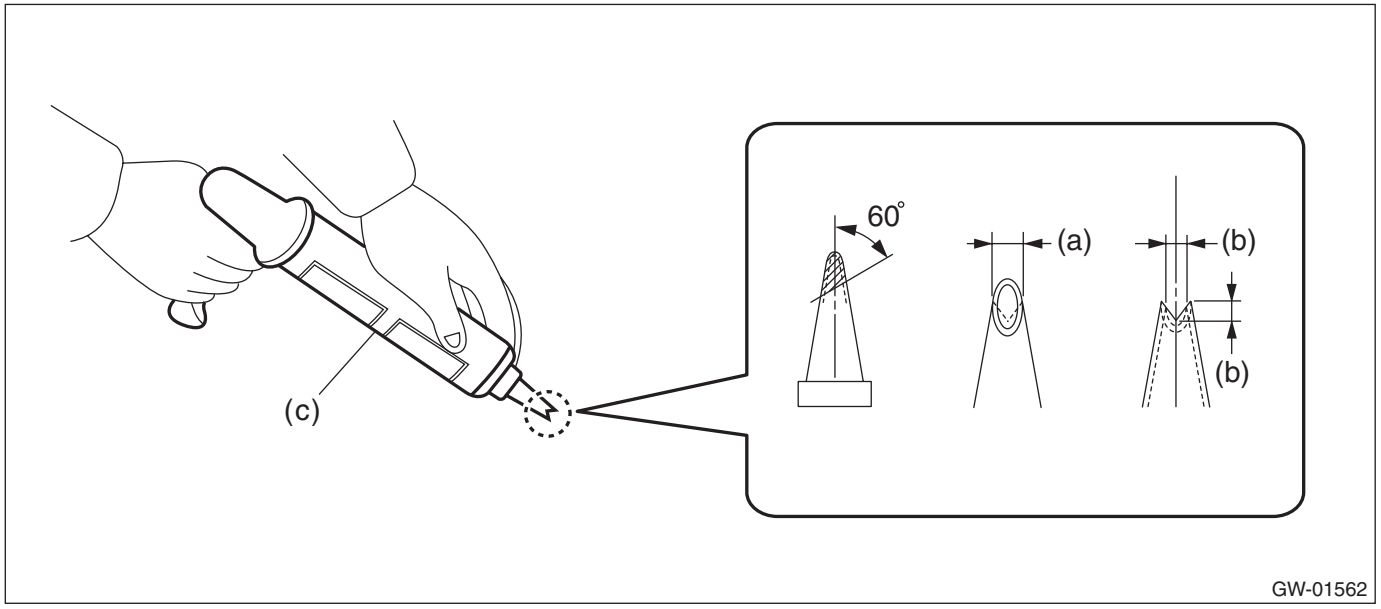

(a) 10 mm (0.39 in) (b) 8 mm (0.31 in) (c) Sealant gun

2) Remove the adhesive layer on the body using cutter knife to obtain smooth face of 2 mm (0.08 in) thick.

CAUTION:
- **Be careful not to damage the body and paint surface.**
- **Be sure to keep some amount of old adhesive.**

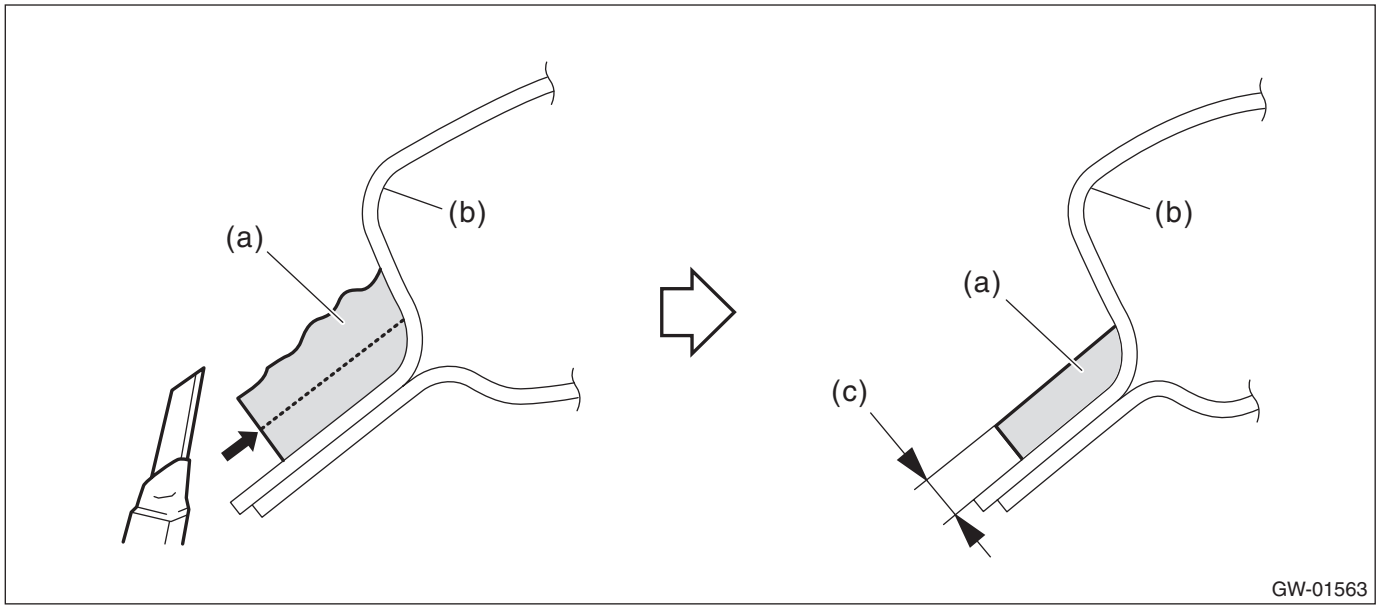

(a) Adhesive (b) Body panel (c) 2 mm (0.08 in)

3) Clean the glass - front window and the body with alcohol or appropriate cleaning solvent to completely eliminate cutting powder, dust and dirt.
4) Attach the dam rubber - front to the glass - front window.

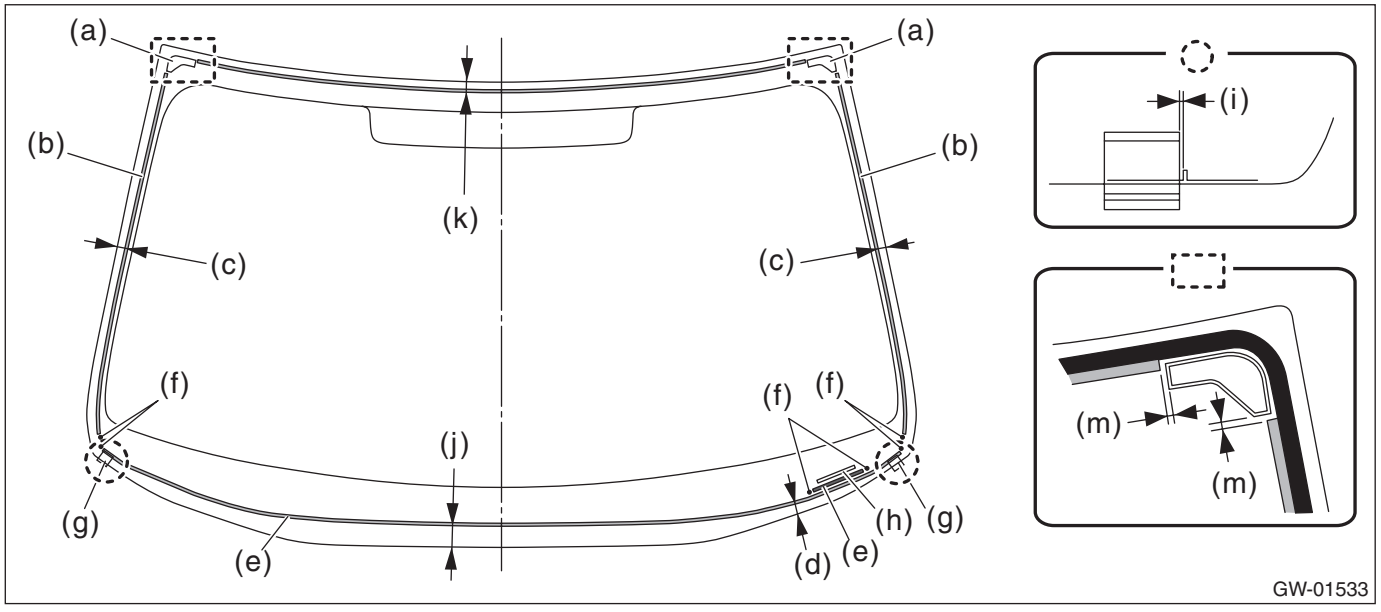

(a) Locating pin - front window
(b) Dam rubber - front UPR
(c) 19.8 mm (0.78 in)
(d) 26.2 mm (1.03 in)
(e) Dam rubber - front LWR
(f) Dam rubber set mark
(g) Seal - LWR
(h) VIN plate confirmation window
(i) 0 + 5 mm (0 + 0.2 in)
(j) 44.7 mm (1.76 in)
(k) 20.3 mm (0.8 in)
(m) 0+3 mm (0+0.12 in)

5) Attach the molding - front window to the glass - front window.
(1) Align the molding - front window (a) to the upper ends (d) of the glass - front window (c).
(2) Install the molding - front window from both corners of the upper edge toward the center. (e)
(3) Install the molding - front window from both corners of the upper edge toward the bottom. (f)
(4) Firmly apply the double sided tape (b) of the molding - front window evenly to the surface of the glass - front window.

CAUTION:
Be careful to attach the molding - front window so that the molding has no loose or undulating part.

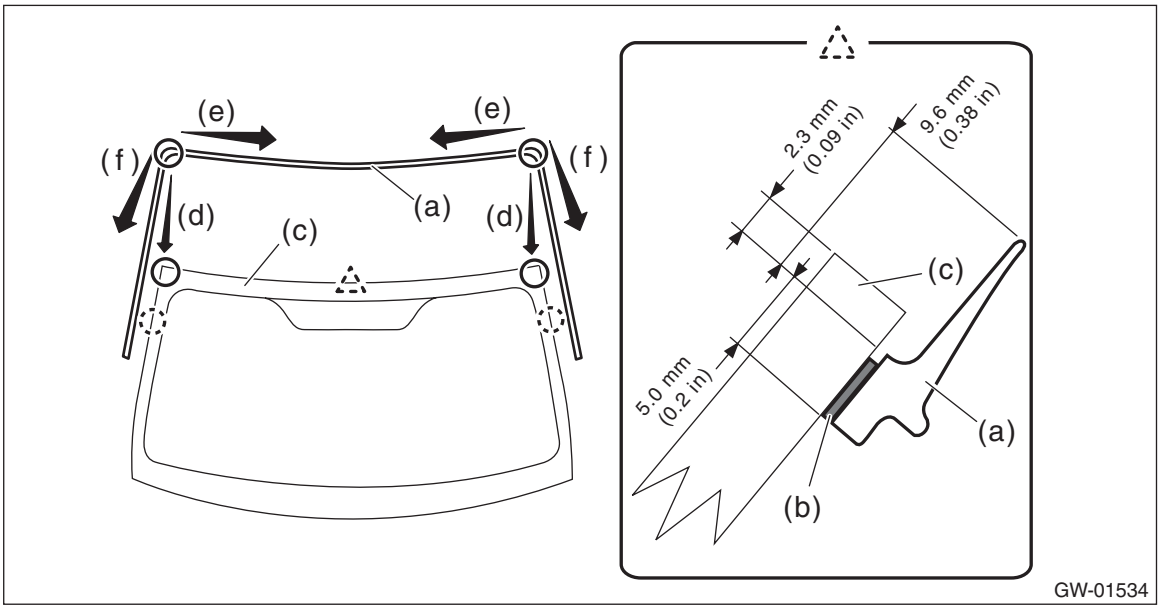

6) Attach the seal - front window UPR to the molding - front window.

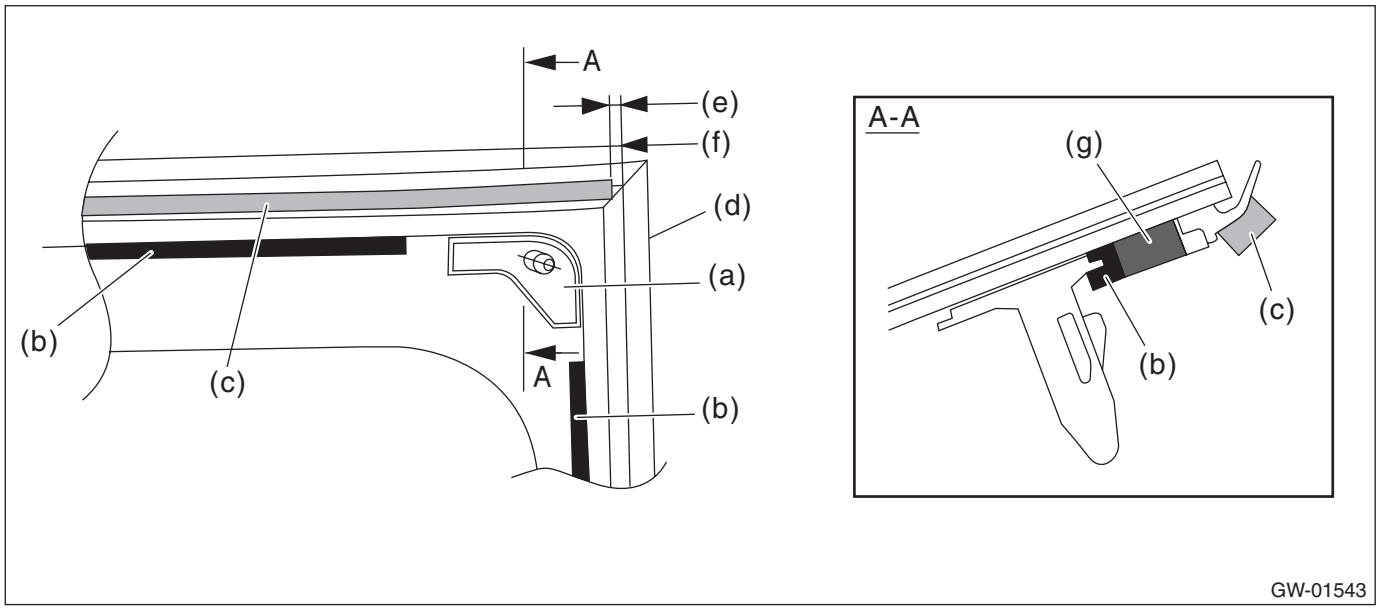

(a) Locating pin - front window
(b) Dam rubber - front UPR
(c) Seal - front window UPR
(d) Molding - front window
(e) 0 + 3 mm (0 + 0.12 in)
(f) 165 mm (6.50 in)
(g) Adhesive

7) Install the glass - front window.
(1) Apply the primer to the adhesive surface of glass - front window side and body side using sponge.

CAUTION:
Do not apply primer to adhesive remaining on the body side.

Glass primer:
Dow Automotive ESSEX U-401, U-402 or equivalent

Painted surface primer:
Dow Automotive ESSEX U-413 or equivalent

NOTE:
- Primer once attached to the painted surface of the body and internal trim is hard to wipe off. Mask the circumference of such area.
- Let primer dry for about ten minutes before installing the glass - front window.
- Do not touch the surface coated with primer.

(2) Apply adhesive to the end back surface of the glass - front window.

Adhesive:
Dow Automotive ESSEX U-400HV or equivalent

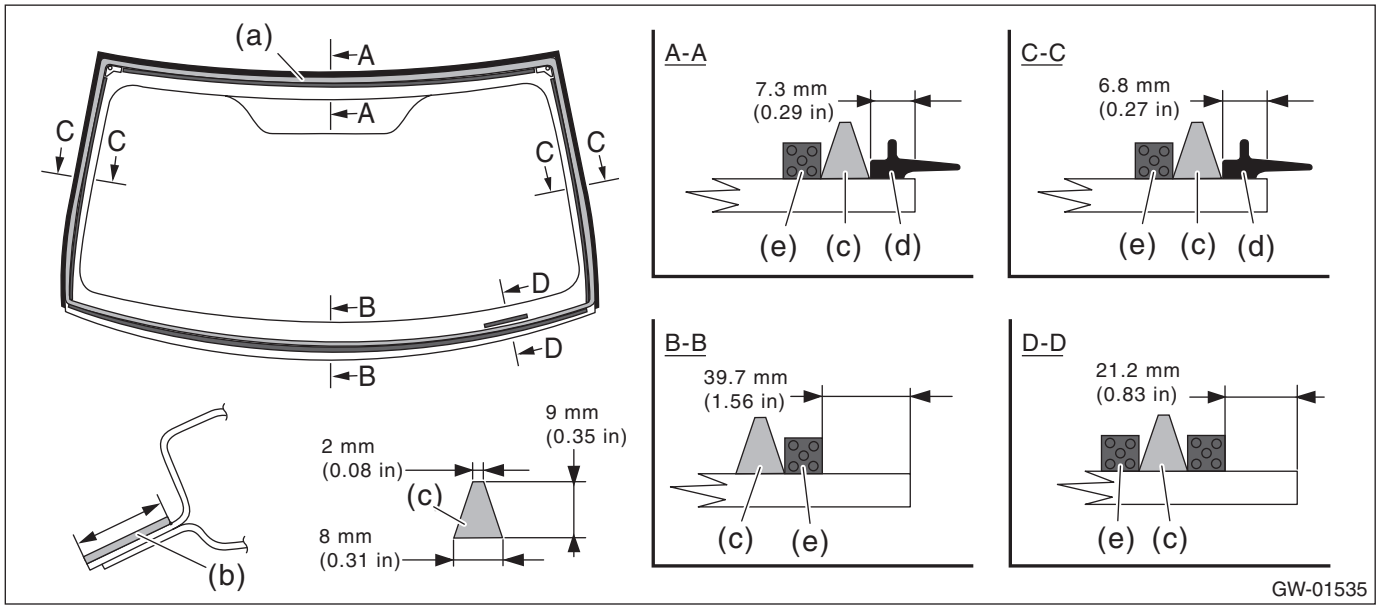

(a) Application of primer (glass side)
(b) Application of primer (body side)
(c) Adhesive
(d) Molding - front window
(e) Dam rubber - front

(3) Fit the locating pins - front window to the vehicle body using suction rubber cups to install the windshield glass.

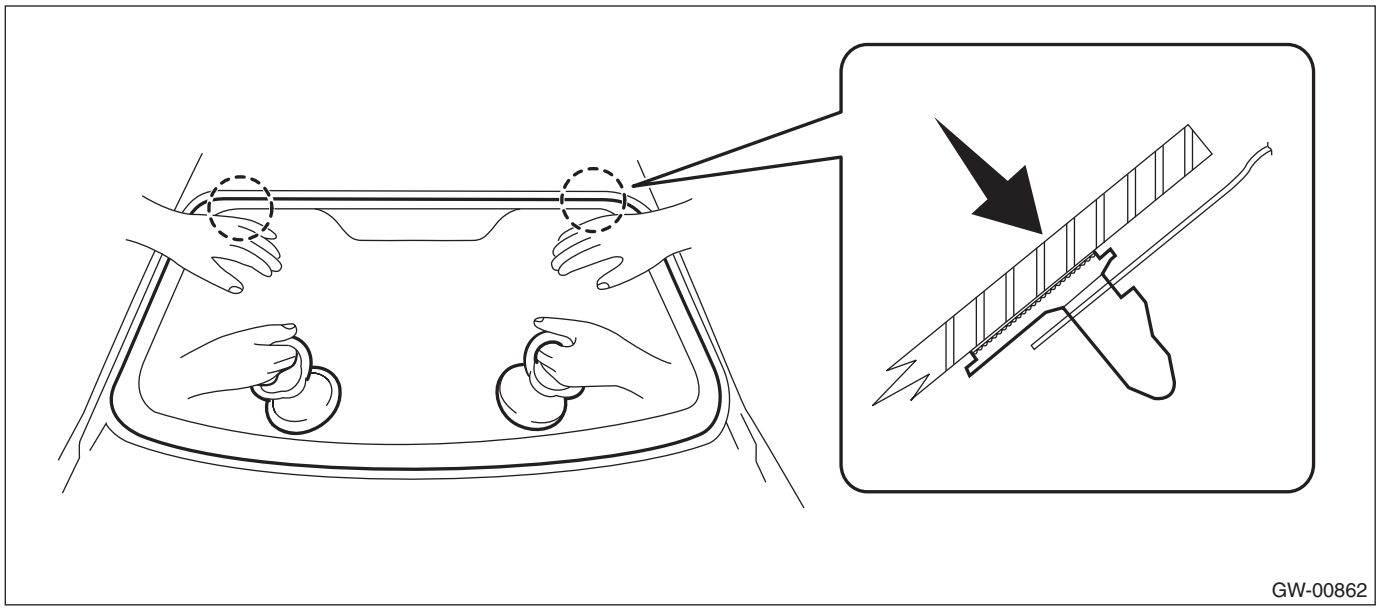

(4) Lightly press the entire perimeter of the glass - front window for tight fit.
(5) Make flush the adhesive surface jutted out using spatula.

8) After completion of all work, allow the vehicle to stand for about 24 hours.

NOTE:
• When opening/closing the door after the glass - front window was bonded, always lower the glass assembly - door first, and then open/close it carefully.
• Move the vehicle slowly.
• For minimum drying time and vehicle standing time before driving after bonding, follow instructions or instruction manual from the adhesive manufacturer.

9) Connect the wiper deicer connector. (Models with wiper deicer)
10) Install the cowl panel assembly. <Ref. to EI-53, INSTALLATION, Cowl Panel.>
11) Install the stereo camera cover and stereo camera. (Models with EyeSight) <Ref. to ES-11, INSTALLATION, Stereo Camera.>
12) Install the trim panel - front pillar UPR. <Ref. to EI-97, INSTALLATION, Upper Inner Trim.>
13) Connect the ground terminal to battery sensor. (Models with wiper deicer) <Ref. to RC-4, BATTERY, NOTE, Repair Contents.>
14) After curing of adhesive, pour the water on external surface of vehicle to check that there are no water leaks.

NOTE:
When a vehicle is returned to the user, tell him or her that the vehicle should not be subjected to heavy impact for at least three days.

13.Rear Gate Glass

A: REMOVAL

1) Disconnect the ground terminal from battery sensor. <Ref. to RC-4, BATTERY, NOTE, Repair Contents.>
2) Remove the roof spoiler. <Ref. to EI-67, REMOVAL, Roof Spoiler.>
3) Remove the trim panel - rear gate and the motor assembly - rear wiper. <Ref. to WW-43, REMOVAL, Rear Wiper Motor.>
4) Disconnect the rear defogger connector.
5) Remove the touch sensor LWR. (Model with power rear gate) <Ref. to PRG-15, TOUCH SENSOR LWR, REMOVAL, Power Rear Gate Touch Sensor.>
6) Remove the glass - rear gate in the same procedure as for the glass - front window. <Ref. to GW-40, REMOVAL, Windshield Glass.>

B: INSTALLATION

NOTE:
Use the markings on the glass to apply adhesive and primer, and to install the dam rubber - rear gate and the spacer - rear gate.

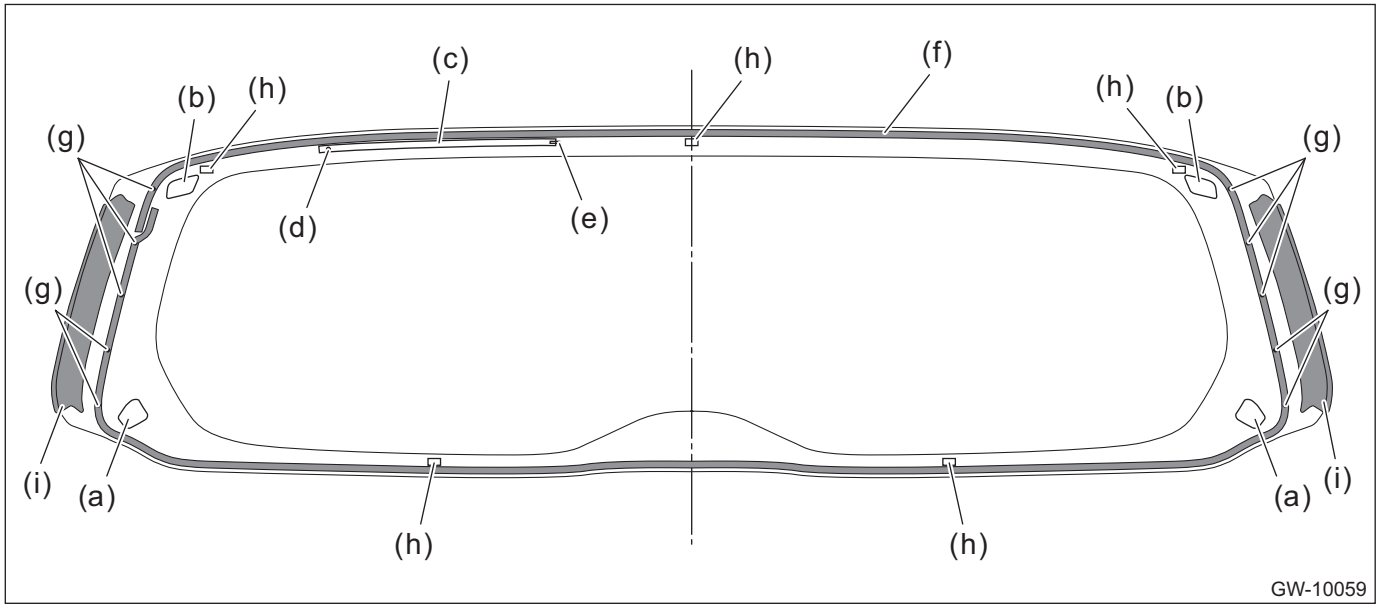

(a)	Locating pin - rear gate	(d)	Marking for dam rubber - rear gate application (Ag print)	(g)	Adhesive application area
(b)	Holder - rear gate upper	(e)	Origin of attachment	(h)	Spacer - rear gate
(c)	Dam rubber - rear gate	(f)	Adhesive line	(i)	Molding - rear gate side (model without power rear gate)

1) Fabricate the cartridge nozzle tip as shown and set the sealant gun with the adhesive.

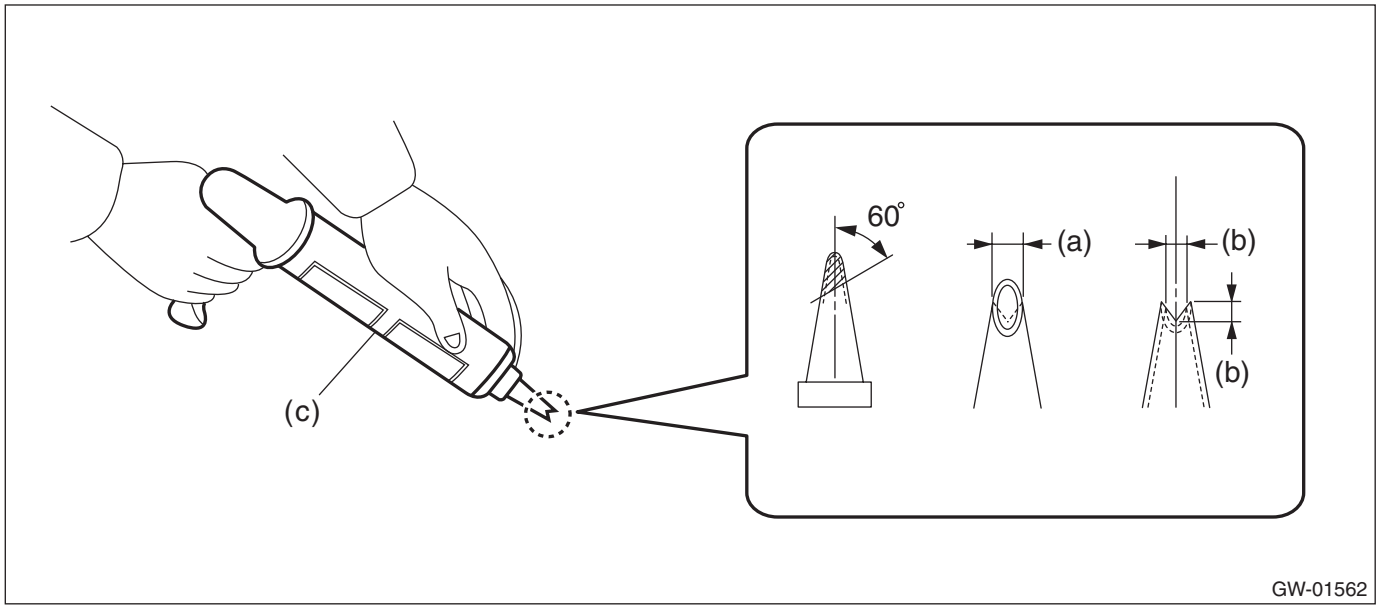

(a) 10 mm (0.39 in)
(b) 8 mm (0.31 in)
(c) Sealant gun

2) Smoothen and clean the adhesive surfaces of the glass - rear gate and body using the same procedures as for the glass - front window. <Ref. to GW-44, INSTALLATION, Windshield Glass.>
3) Attach the dam rubber - rear gate to the glass - rear gate.

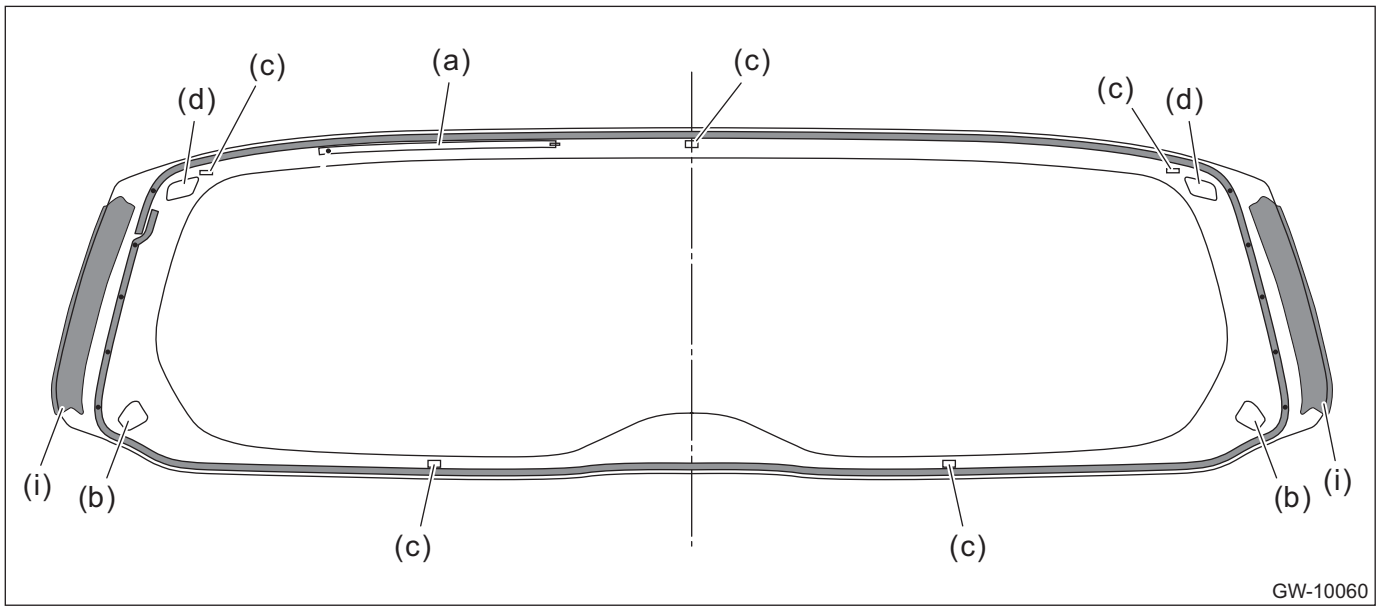

(a) Dam rubber - rear gate
(b) Locating pin - rear gate
(c) Spacer - rear gate
(d) Holder - rear gate upper
(e) Molding - rear gate side (model without power rear gate)

4) Attach the molding - rear gate side to the glass - rear gate. (Model without power rear gate)

CAUTION:
Be careful to attach the molding - rear gate side so that the molding has no loose or undulating part.

NOTE:
- Install the molding - rear gate side so that its upper end is within (b).
- Use the Ag print as a reference when installing the molding - rear gate side.

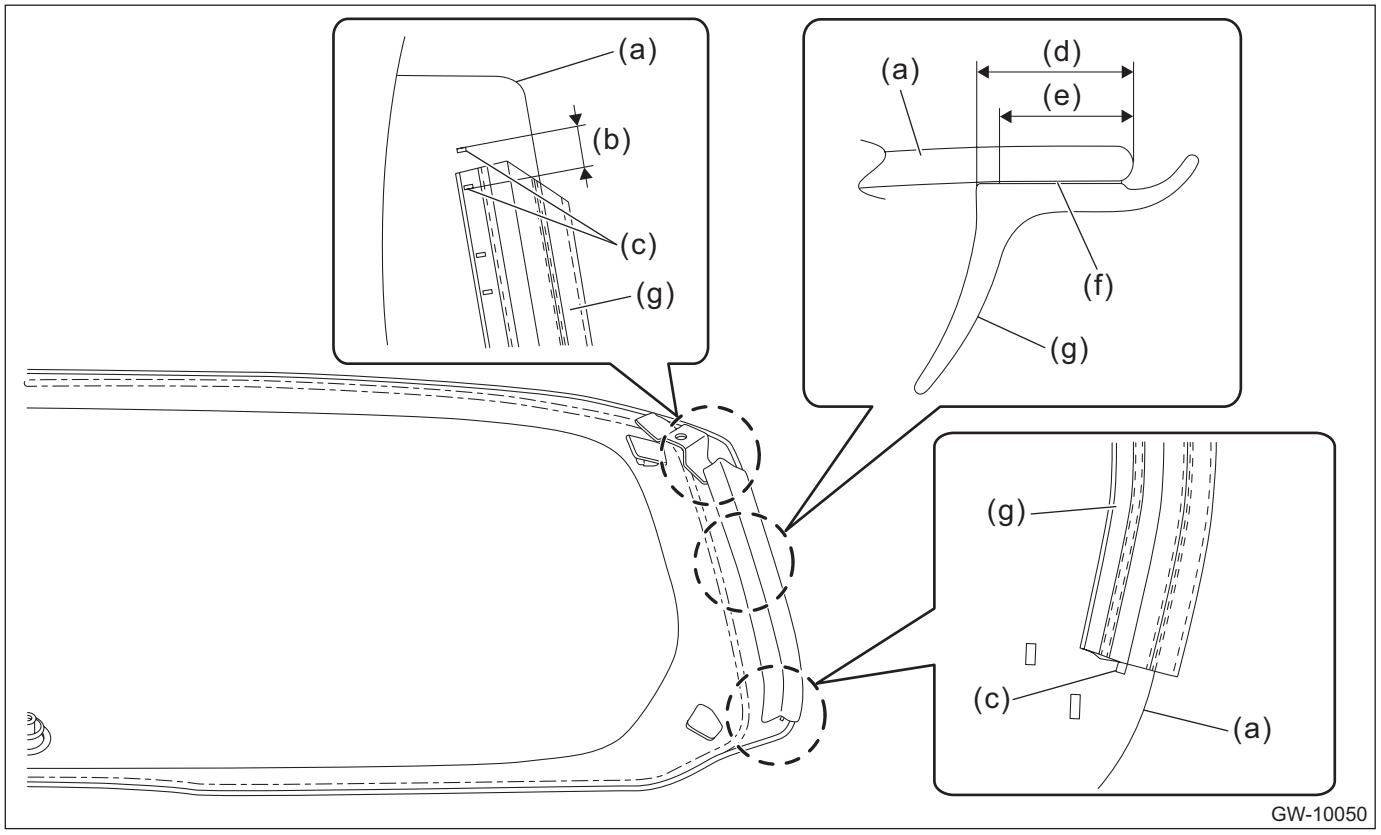

(a) Glass - rear gate
(b) 10 mm (0.39 in)
(c) Marking for molding - rear gate side application (Ag print)
(d) 13.7 mm (0.54 in)
(e) 11.7 mm (0.46 in)
(f) Double-sided tape
(g) Molding - rear gate side

5) Install the glass - rear gate.
(1) Apply the primer to the adhesive surface of glass - rear gate side and body side using sponge.
(2) Apply adhesive to the glass - rear gate end back surface.

CAUTION:
Do not apply primer to adhesive.

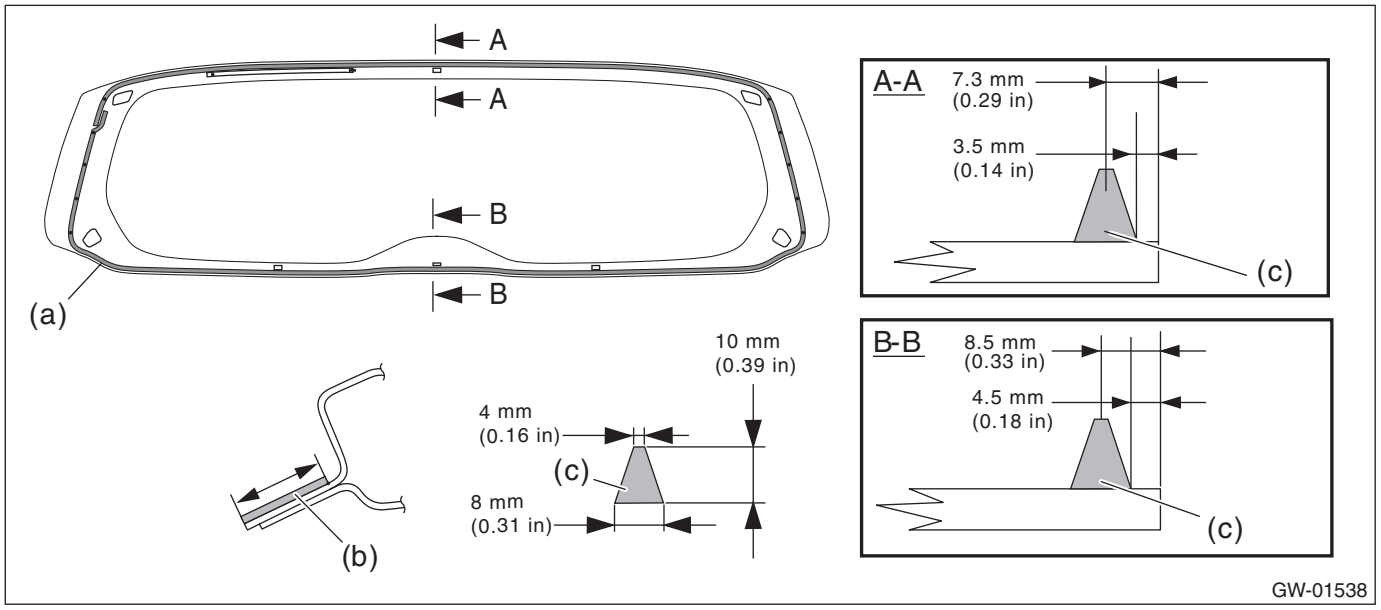

(a) Application of primer (glass side) (b) Application of primer (body side) (c) Adhesive

(3) Attach the holder - clip rear gate to the holder - rear gate upper of the glass - rear gate.
(4) Insert the locating pins - rear gate into the rear gate panel holes, and install the glass - rear gate.
(5) Lightly press the entire perimeter of the glass - rear gate for tight fit.
(6) Make flush the adhesive surface jutted out using spatula.

6) After completion of all work, allow the vehicle to stand for about 24 hours.

NOTE:
• When opening/closing the door after the glass - rear gate was bonded, always lower the glass assembly - door first, and then open/close it carefully.
• Move the vehicle slowly.
• For minimum drying time and vehicle standing time before driving after bonding, follow instructions or instruction manual from the adhesive manufacturer.

7) Connect the rear defogger connector.
8) Install the motor assembly - rear wiper and the arm assembly - rear wiper. <Ref. to WW-44, INSTALLATION, Rear Wiper Motor.>

Tightening torque:
Motor assembly - rear wiper and arm assembly - rear wiper: <Ref. to WW-3, REAR WIPER, COMPONENT, General Description.>

9) Install the roof spoiler. <Ref. to EI-63, INSTALLATION, Rear Gate Garnish.>

Tightening torque:
7.5 N·m (0.8 kgf-m, 5.5 ft-lb)

10) Install the touch sensor LWR. <Ref. to PRG-16, TOUCH SENSOR LWR, INSTALLATION, Power Rear Gate Touch Sensor.>
11) Install the trim panel - rear gate. <Ref. to EI-122, INSTALLATION, Rear Gate Trim.>
12) Connect the ground terminal to battery sensor. <Ref. to RC-4, BATTERY, NOTE, Repair Contents.>
13) After curing of adhesive, pour the water on external surface of vehicle to check that there are no water leaks.

NOTE:
When a vehicle is returned to the user, tell him or her that the vehicle should not be subjected to heavy impact for at least three days.

14.Rear Window Glass

A: REMOVAL

1) Disconnect the ground terminal from battery sensor. <Ref. to RC-4, BATTERY, NOTE, Repair Contents.>
2) Disconnect the rear defogger connector.
3) Remove the glass - rear window in the same procedure as for the glass - front window. <Ref. to GW-40, REMOVAL, Windshield Glass.>

B: INSTALLATION

1) Fabricate the cartridge nozzle tip as shown and set the sealant gun with the adhesive.

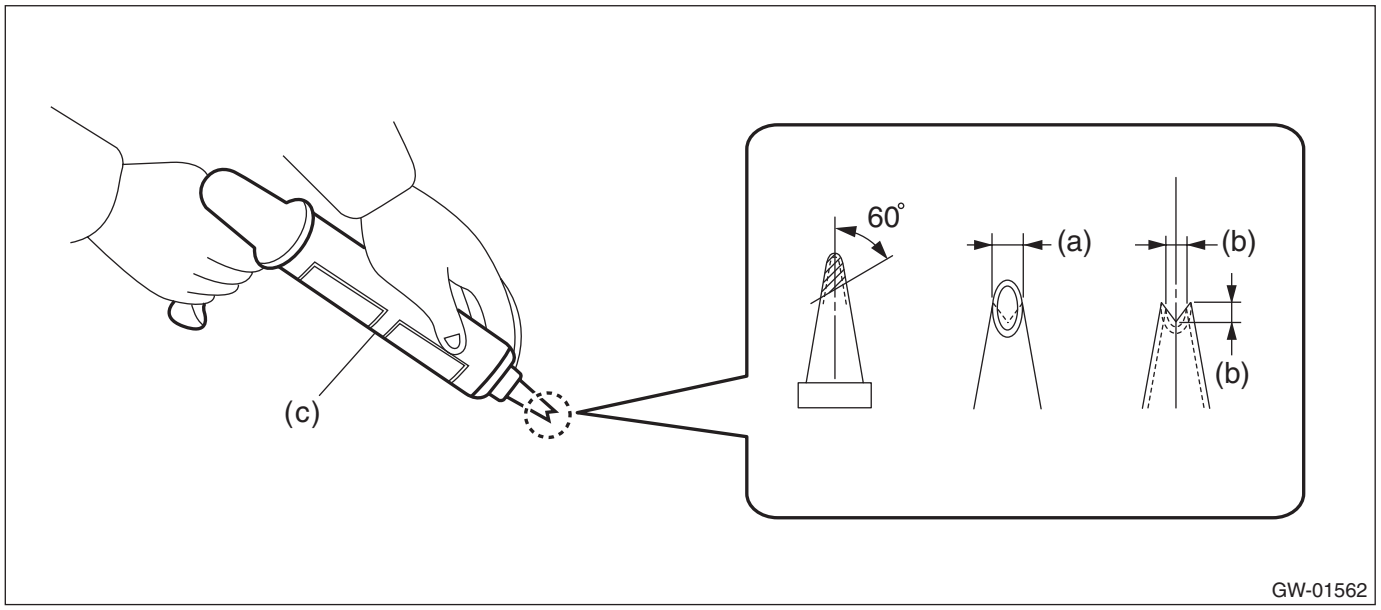

(a) 10 mm (0.39 in) (b) 8 mm (0.31 in) (c) Sealant gun

2) Smoothen and clean the adhesive surfaces of the glass - rear window and body using the same procedures as for the glass - front window. <Ref. to GW-44, INSTALLATION, Windshield Glass.>

3) Attach the dam rubber - rear to the glass - rear window.

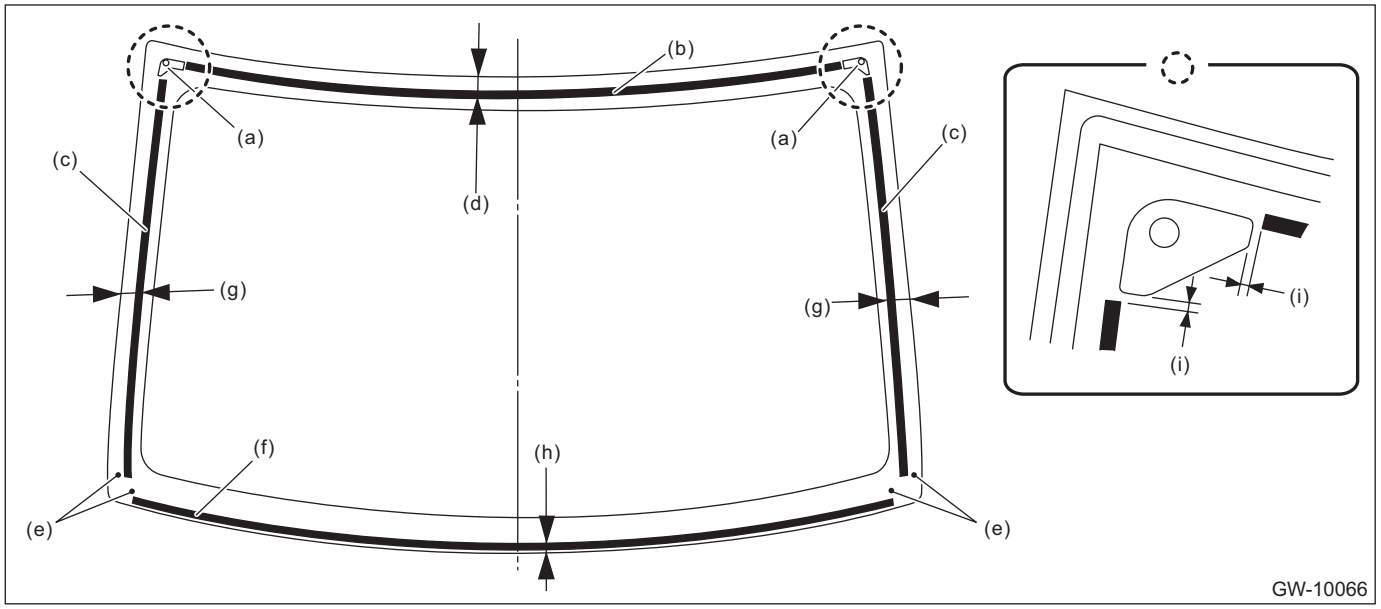

(a)	Locating pin - rear window	(d)	23.5 mm (0.93 in)	(g)	22 mm (0.87 in)
(b)	Dam rubber - rear UPR	(e)	Dam rubber set mark	(h)	7.5 mm (0.3 in)
(c)	Dam rubber - rear side	(f)	Dam rubber - rear LWR	(i)	3 mm (0.12 in)

4) Attach the molding - rear window to the glass - rear window.

CAUTION:
Be careful to attach the molding - rear window so that the molding has no loose or undulating part.

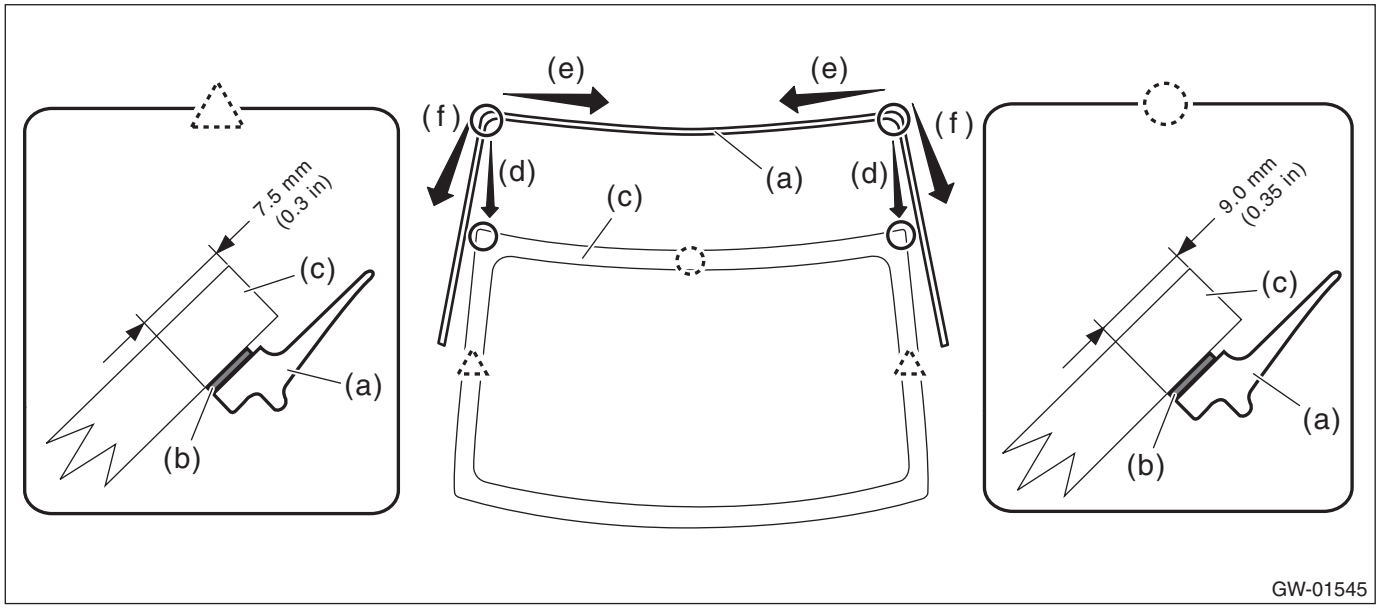

(1) Align the molding - rear window (a) to the upper ends (d) of the glass - rear window (c).
(2) Install the molding - rear window from both corners of the upper edge toward the center. (e)
(3) Install the molding - rear window from both corners of the upper edge toward the bottom. (f)
(4) Firmly apply the double sided tape (b) of the molding - rear window evenly to the surface of the glass - rear window.

5) Install the glass - rear window in the same procedure as for the glass - front window. <Ref. to GW-44, INSTALLATION, Windshield Glass.>
(1) Apply the primer to the adhesive surface of glass - rear window side and body side using sponge.
(2) Apply adhesive to the end back surface of the glass - rear window.

CAUTION:
Do not apply primer to adhesive remaining on the body side.

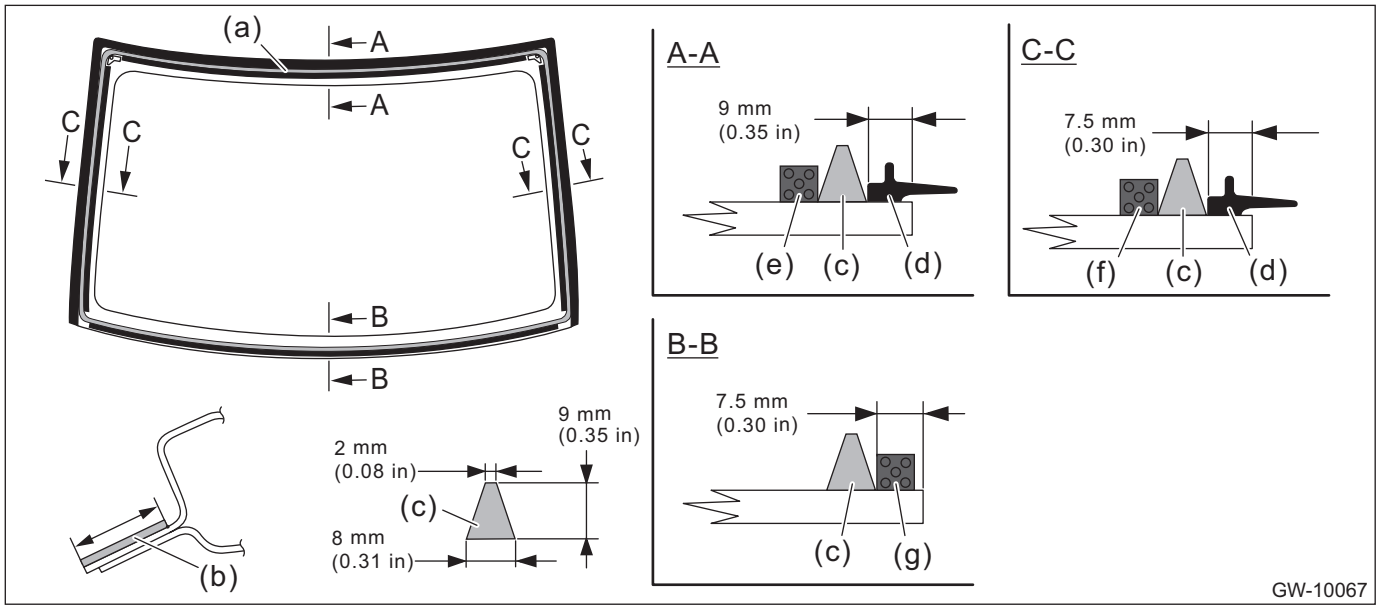

(a) Application of primer (glass side)
(b) Application of primer (body side)
(c) Adhesive
(d) Molding - rear window
(e) Dam rubber - rear UPR
(f) Dam rubber - rear side
(g) Dam rubber - rear LWR

(3) Insert the locating pins - rear window into the rear panel holes, and install the glass - rear window.
(4) Lightly press the entire perimeter of the glass - rear window for tight fit.
(5) Make flush the adhesive surface jutted out using spatula.
6) After completion of all work, allow the vehicle to stand for about 24 hours.

NOTE:
• When opening/closing the door after the glass - rear window was bonded, always lower the glass assembly - door first, and then open/close it carefully.
• Move the vehicle slowly.
• For minimum drying time and vehicle standing time before driving after bonding, follow instructions or instruction manual from the adhesive manufacturer.
7) Connect the rear defogger connector.
8) Install the terminal. <Ref. to RC-4, BATTERY, NOTE, Repair Contents.>
9) After curing of adhesive, pour the water on external surface of vehicle to check that there are no water leaks.

NOTE:
When a vehicle is returned to the user, tell him or her that the vehicle should not be subjected to heavy impact for at least three days.

15.Rear Window Defogger System

A: WIRING DIAGRAM

Refer to “Rear Defogger System” in the wiring diagram. <Ref. to WI-315, WIRING DIAGRAM, Rear Defogger System.>

B: INSPECTION

1. SYSTEM INSPECTION

Symptoms	Inspection order
Rear window defogger does not operate.	1. Check the fuse. 2. Check the rear defogger relay. 3. Check the rear window defogger switch. 4. Check the heat wire. 5. Check the wiring harness. 6. Check body integrated unit.

NOTE:
Rear window defogger system can be customized using the Subaru Select Monitor, when the customize setting {Auto A/C Setting} of the body integrated unit is set to {support}.

System name	Initial setting	Customize setting
Rear defogger operation mode	Normal	Continuous*

* When the battery voltage remains at 10 V or less for 30 seconds, the continuous operation is suspended and turned to the normal operation.

2. CHECK WITH SUBARU SELECT MONITOR

CAUTION:
Check whether the Rr Defogger op. mode setting is in initial setting or customize setting before performing inspection.

1) Check the input signal when the rear window defogger switch is operated using Subaru Select Monitor.
   (1) Connect the Subaru Select Monitor to data link connector.

NOTE:
For detailed operation procedures, refer to “Application help”.

   (2) Turn the ignition switch to ON.
   (3) On «Start» display, select «Diagnosis».
   (4) On «Vehicle selection» display, input the target vehicle information and select «Confirmed».
   (5) On «Main Menu» display, select «Each System».
   (6) On «Select System» display, select «Integ. Unit Mode» and select «Enter».
   (7) On «Select Function» display, select «Data Monitor».
   (8) From the data monitor item list, select «Auto A/C Setting».
   (9) Check the vehicle equipment and the settings of body integrated unit.
   If correct, go to (10).
   If not correct, go to (13).
   (10) From the data monitor item list, select «Rr Defogger output».
   (11) Check the displayed data (ON/OFF) by operating the rear window defogger switch.
   (12) On «Select Function» display, select «Customize».
   (13) From the Customize item list, select «Auto A/C Setting» and match the auto A/C ECM setting to the actual vehicle equipment.

2) Check the operation with rear window defogger switch ON.
• When customize setting is set as “Continuous”, it is normal if the 15-minute operation and 2-minute stop repeats.
• When customize setting is “Normal”, it is normal if the operation lasts for 15 minutes and then turns OFF.
3) When the operation in 2) above fails, replace the body integrated unit.

3. HEAT WIRE INSPECTION

CAUTION:
Use a dry soft cloth to wipe off dirt on the glass along the heat wires with care not to damage the heat wires.

1) Prepare the following checking items.
- Liquid crystal thermograph sheet (approximate Size: 300 × 300 mm (11.8 × 11.8 in) and thermal temperature: 35 — 40°C (95 — 104°F))
- Aluminum foil

2) Turn the ignition switch to ON.
3) Turn the defogger switch to ON.
4) Push the liquid crystal thermograph sheet from the outside of the glass.

NOTE:
Use the liquid crystal thermograph sheet every range it is separated with the separate line.

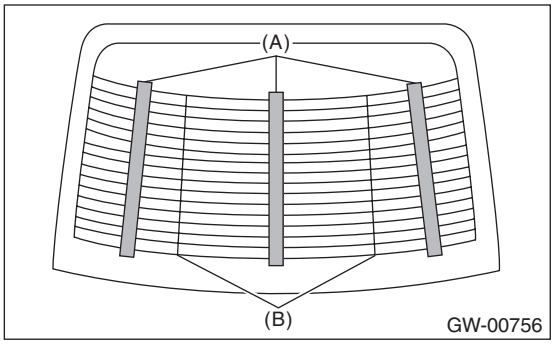

(A) Liquid crystal thermograph sheet
(B) Separate line

5) Determine the faulty heat wire by checking the color of the liquid crystal thermograph sheet.

Liquid crystal thermograph sheet	Criteria
Change occurred (red → blue)	Normal
No change (black)	Open

NOTE:
- Check from the inside of the glass - rear window if the liquid crystal thermograph sheet does not change.
- The time for the color change may differ depends on the surface temperature of the glass.

6) Wrap a piece of aluminum foil around the tip of tester probe and press it against the heat wire with your finger.

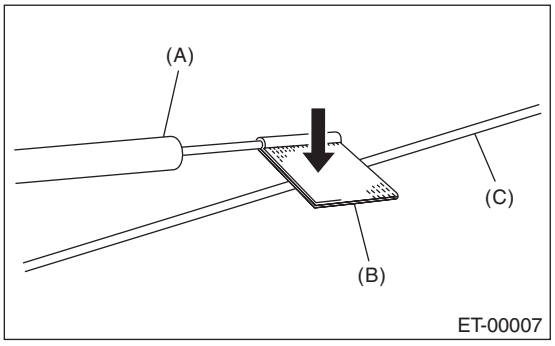

(A) Tester probe
(B) Aluminum foil
(C) Heat wire

7) To both ends of the section that has been found to include an open in the step 5), apply the tester positive (+) probe and the negative (–) probe.

8) Move the tester probe on the negative (–) side slowly along the heat wire. If voltage changes from zero while moving the tester probe, heat wire is open at the voltage change point.

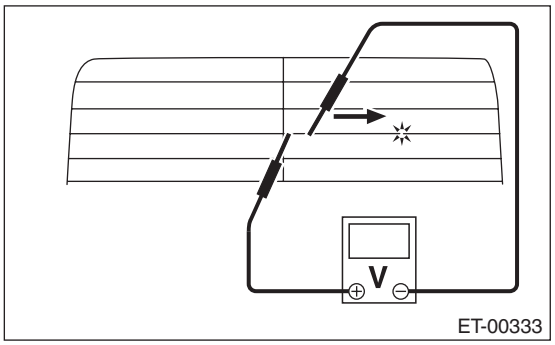

9) Repair the heat wire that determines the place of the open circuit. <Ref. to GW-58, REPAIR, Rear Window Defogger System.>

C: REPAIR

1) Clean the broken portion with alcohol or appropriate cleaning solvent.
2) Mask both side of wire with masking tape.
3) Apply the conductive silver composition to the broken portion.

Conductive silver composition:
Permatex QUICK GRID

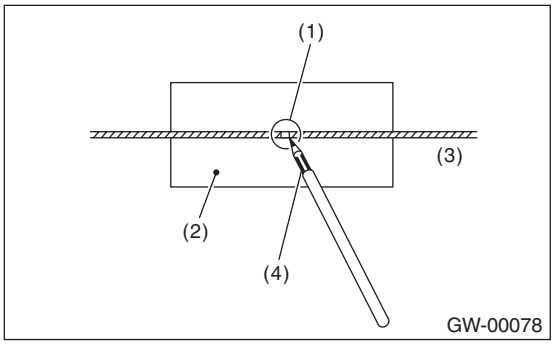

(1) Broken portion
(2) Masking tape
(3) Broken wire
(4) Conductive silver composition

4) Dry using a dryer after applying the composition.
5) After repair, check the wire.

16.Rear Quarter Glass

A: REMOVAL

1) Disconnect the ground terminal from battery sensor. <Ref. to RC-4, BATTERY, NOTE, Repair Contents.>
2) Remove the trim panel - rear pillar UPR. <Ref. to EI-100, OUTBACK MODEL, REMOVAL, Rear Quarter Trim.>
3) Remove the glass - rear quarter in the same procedure as for the glass - front window. <Ref. to GW-40, REMOVAL, Windshield Glass.>

B: INSTALLATION

1) Fabricate the cartridge nozzle tip as shown and set the sealant gun with the adhesive.

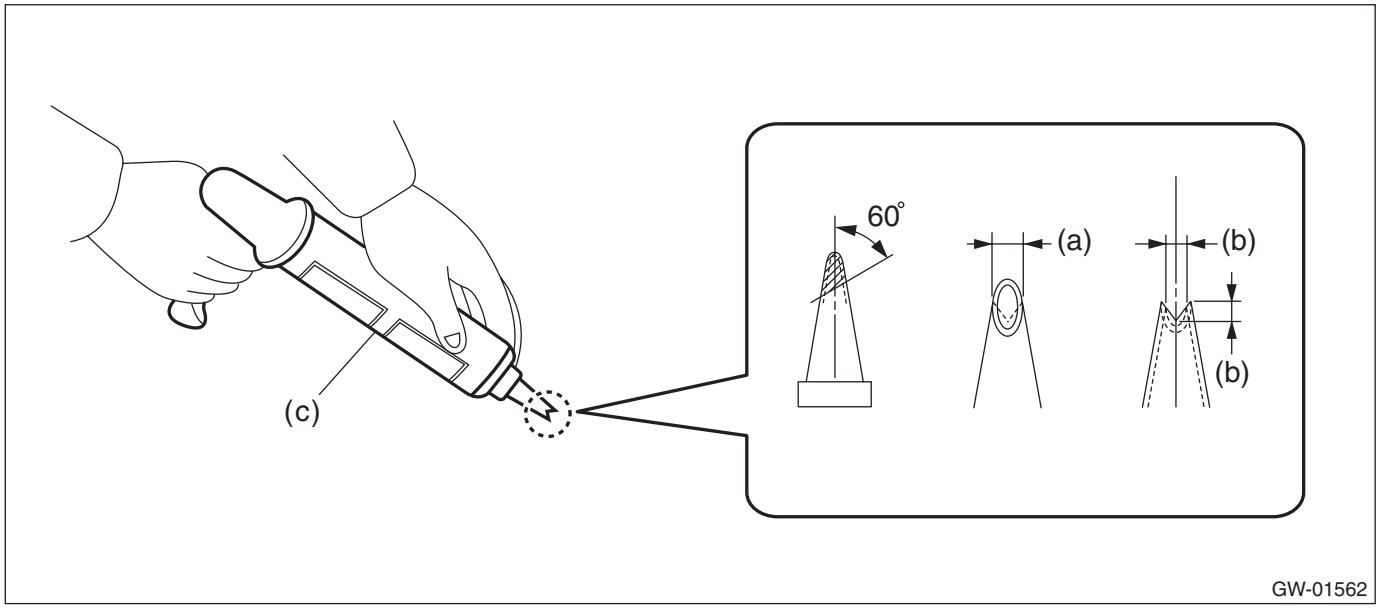

(a) 10 mm (0.39 in) (b) 8 mm (0.31 in) (c) Sealant gun

2) Smoothen and clean the adhesive surfaces of the glass - rear quarter and body using the same procedures as for the glass - front window. <Ref. to GW-44, INSTALLATION, Windshield Glass.>

3) Attach the dam rubber - rear to the glass - rear quarter.

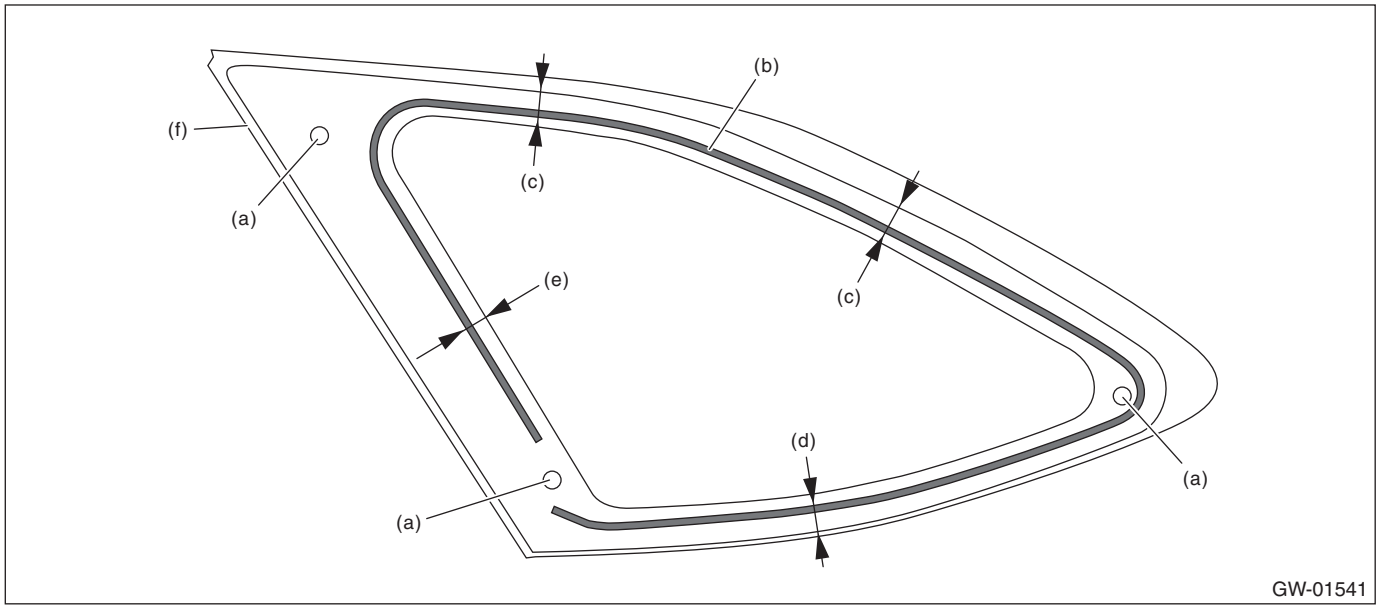

(a) Clip
(b) Dam rubber - rear quarter
(c) 18 mm (0.71 in)
(d) 16.2 mm (0.64 in)
(e) 17 mm (0.67 in)
(f) Molding

4) Install the glass - rear quarter in the same procedure as for the glass - front window. <Ref. to GW-44, INSTALLATION, Windshield Glass.>

(1) Apply the primer to the adhesive surface of glass - rear quarter side and body side using sponge.
(2) Apply adhesive to the glass - rear quarter end back surface.

CAUTION:
Do not apply primer to adhesive remaining on the body side.

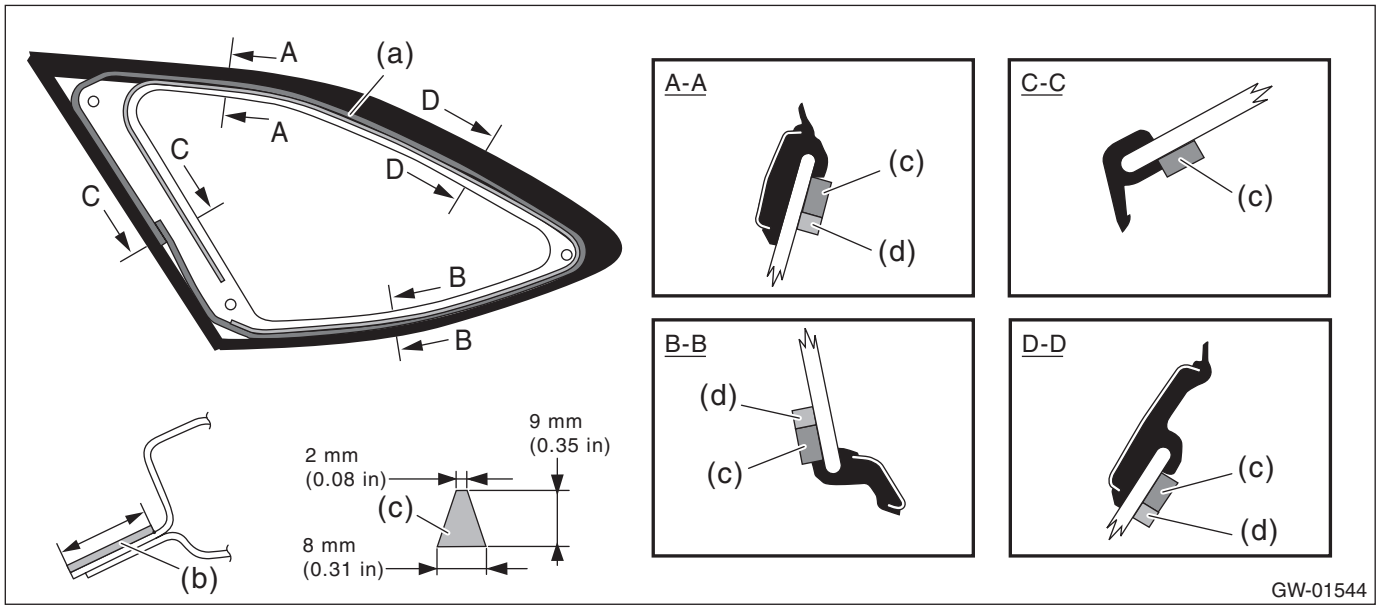

(a) Application of primer (glass side)
(b) Application of primer (body side)
(c) Adhesive
(d) Dam rubber - rear quarter

(3) Insert the clips in the side panel holes and install the glass - rear quarter.
(4) Lightly press the entire perimeter of the glass - rear quarter for tight fit.
(5) Make flush the adhesive surface jutted out using spatula.

5) After completion of all work, allow the vehicle to stand for about 24 hours.

NOTE:
• When opening/closing the door after the glass - rear quarter was bonded, always lower the glass assembly - door first, and then open/close it carefully.
• Move the vehicle slowly.
• For minimum drying time and vehicle standing time before driving after bonding, follow instructions or instruction manual from the adhesive manufacturer.

6) Install the trim panel - rear pillar UPR. <Ref. to EI-103, INSTALLATION, Rear Quarter Trim.>
7) Connect the ground terminal to battery sensor. <Ref. to RC-4, BATTERY, NOTE, Repair Contents.>
8) After curing of adhesive, pour the water on external surface of vehicle to check that there are no water leaks.

NOTE:
When a vehicle is returned to the user, tell him or her that the vehicle should not be subjected to heavy impact for at least three days.

17.Rearview Mirror

A: REMOVAL

1. NORMAL MIRROR TYPE

CAUTION:
Be careful not to damage the mirror surface and windshield glass.
1) Remove the TORX® bolt, and slide the mirror assembly - inner rearview to remove.

Preparation tool:
TORX® T20

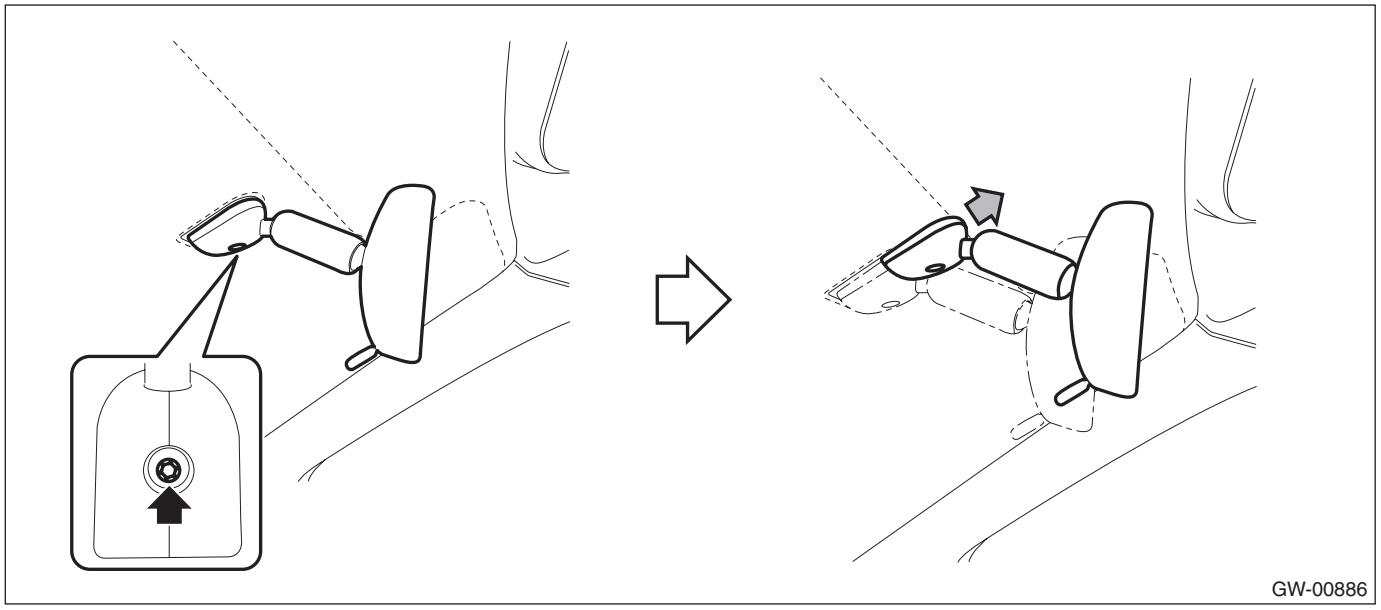

2) If the mirror mounting is damaged, replace the windshield glass.

2. HOME LINK TYPE

CAUTION:
Be careful not to damage the mirror surface and windshield glass.

1) Disconnect the ground terminal from battery sensor. <Ref. to RC-4, BATTERY, NOTE, Repair Contents.>
2) Remove the rearview mirror.
   (1) Slide the upper section of the cover, and release the claws in the lower section, then remove the harness cover (a).
   (2) Disconnect the rearview mirror connector (b).

CAUTION:
Be careful not to pull the harness.

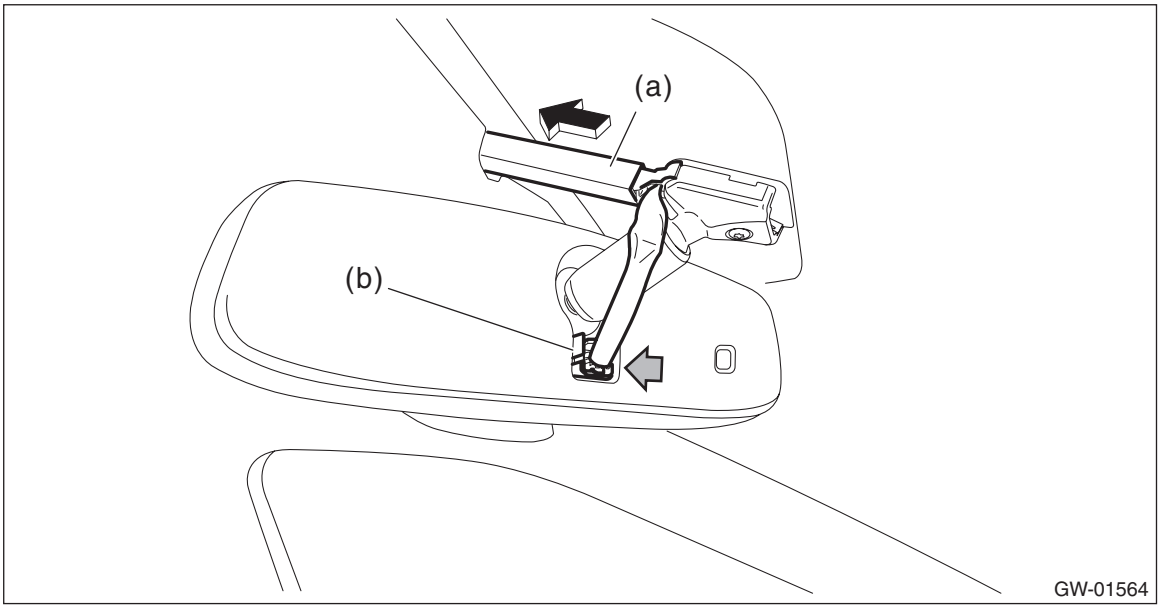

(3) Remove the TORX® bolt, and then slide the rear view mirror to remove.

Preparation tool:
TORX® T20

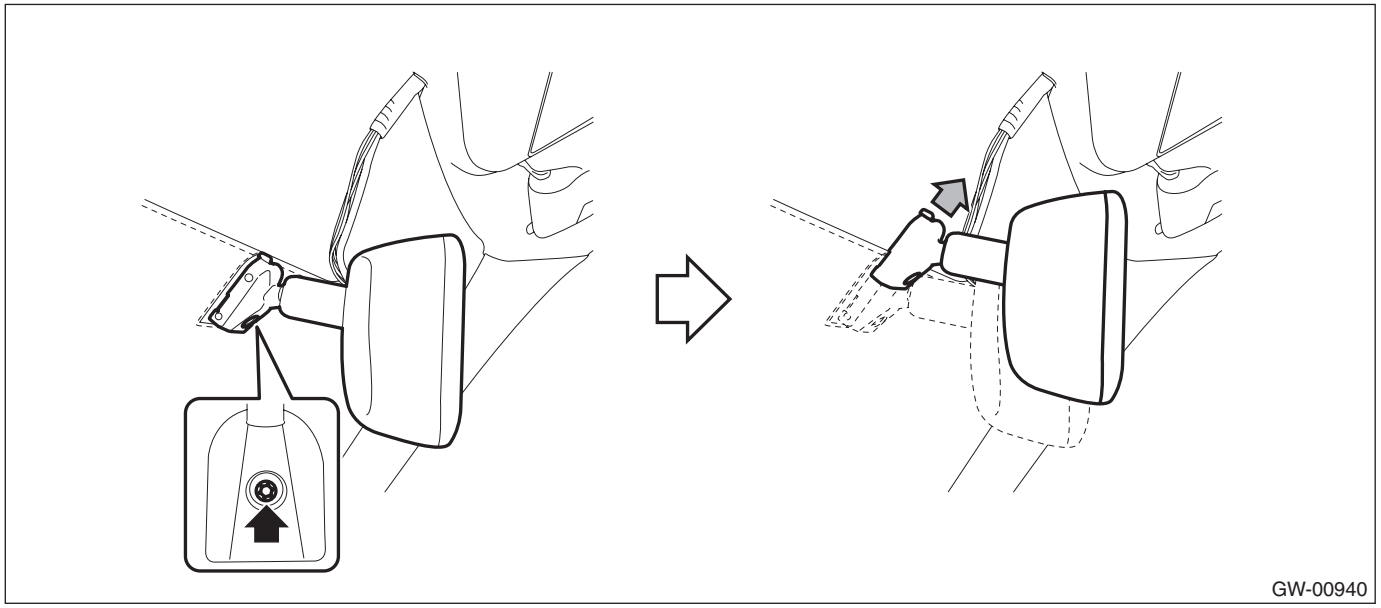

3) If the mirror mounting is damaged, replace the windshield glass.

B: INSTALLATION

CAUTION:
When tightening the mounting TORX® screw, be sure to observe the tightening torque. Otherwise, the mount may be damaged in over-torque conditions.

1. NORMAL MIRROR TYPE

1) Slide the mirror assembly - inner rearview to the mirror mount to install.

NOTE:
If the mirror mounting is damaged, replace the windshield glass.

Tightening torque:
Refer to "COMPONENT" of "General Description". <Ref. to GW-6, MIRROR, COMPONENT, General Description.>

2. HOME LINK TYPE

1) Slide the mirror assembly - inner rearview to the mirror mount to install.

NOTE:
If the mirror mounting is damaged, replace the windshield glass.

Tightening torque:
Refer to "COMPONENT" of "General Description". <Ref. to GW-6, MIRROR, COMPONENT, General Description.>

2) Attach the harness cover (a).
3) Connect the ground terminal to battery sensor. <Ref. to RC-4, BATTERY, NOTE, Repair Contents.>
4) Perform calibration and zone setting of the rearview mirror. (With compass)
- CALIBRATION <Ref. to GW-65, CALIBRATION, ADJUSTMENT, Rearview Mirror.>
- ZONE SETTING <Ref. to GW-66, ZONE SETTING, ADJUSTMENT, Rearview Mirror.>

C: INSPECTION

Check the mirror and mirror mount for damage.

D: ADJUSTMENT

CAUTION:
• When the rearview mirror with compass and home link is removed or replaced, perform calibration and zone setting by following the procedures below.
• The zone setting of the vehicle is set to zone "8" at factory setting.

1. CALIBRATION

1) Before performing calibration, check the following items.
• There is a sufficient distance from a big metal object or a building.
• Vehicle is parked on a level surface.
• The switch of unnecessary accessories (A/C system, audio system and lighting system) is turned to "OFF".
• All doors are closed.
2) Start the engine.
3) Hold down the multi-function button (a) for six to nine seconds. Once calibration mode starts, "C" is displayed on the screen (b).

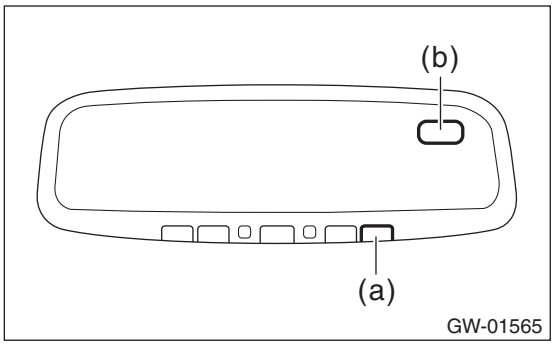

4) Drive the vehicle in a circle until the display of "C" on the screen goes off. (Approx. two or three times)
5) Display the compass to check the operation.

CAUTION:
The mirror may not be able to perform the reading correctly. Therefore, when the compass operates only to the specific direction, repeat steps 3) to 5).

2. ZONE SETTING

1) Refer to the compass zone map to check the zone number of area you use the vehicle.

Compass zone map

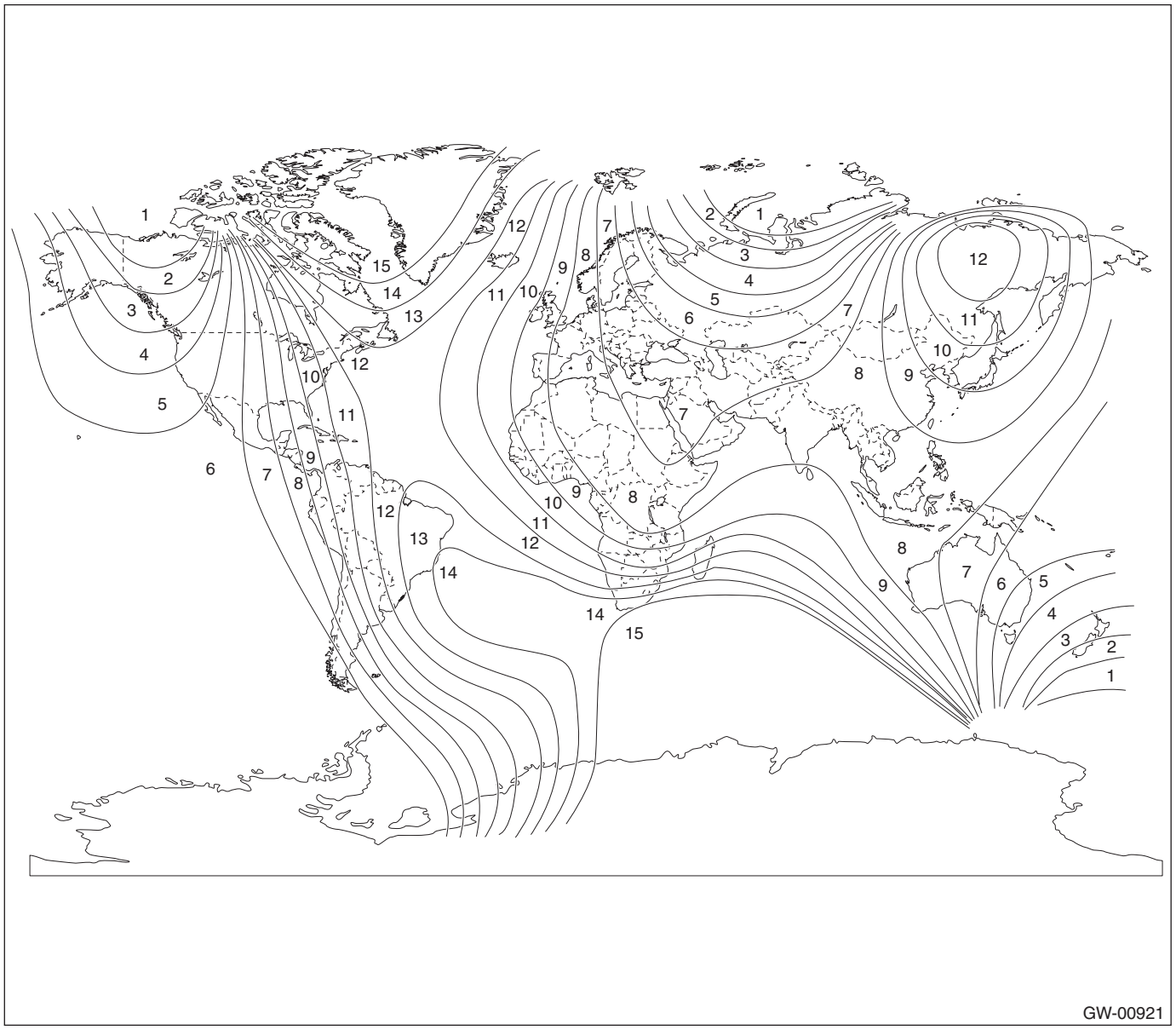

2) Turn the ignition switch to ON.
3) Hold down the multi-function button (a) for three to six seconds. Once zone setting mode starts, the zone number that is already set is displayed on the screen (b).

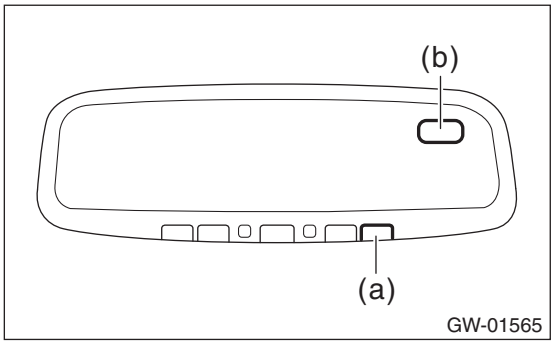

4) Push the multi-function button repeatedly until the zone number you want to set is displayed.

NOTE:
If you leave the multi-function button for three seconds, the zone setting mode is completed.

18.Wiper Deicer System

A: WIRING DIAGRAM

Refer to “Wiper Deicer System” in the wiring diagram. <Ref. to WI-364, Wiper Deicer System.>

B: INSPECTION

1. SYSTEM INSPECTION

NOTE:
- The wiper deicer does not operate when the ambient temperature becomes 5°C (41°F) or more.
- The wiper deicer operates with the rear window defogger at the same time.
- It is possible to perform a forced operation if you keep holding the rear window defogger switch for 3 seconds or more.

Symptoms	Inspection order
Wiper deicer does not operate.	1. Check the fuse. 2. Check the wiper deicer relay. 3. Check the wiper deicer switch. 4. Check the heat wire. 5. Check the wiring harness. 6. Check body integrated unit.

NOTE:
- Wiper deicer system can be customized using the Subaru Select Monitor, when the customize setting «Auto A/C ECU Setting» of the body integrated unit is set to {support}.
- Set the system using the Rr Defogger op. mode, and setting will be the same as rear defogger system setting.

System name	Initial setting	Customize setting
Rear defogger operation mode	Normal	Continuous operation*

*: When one of the following conditions occurs, the continuous operation is suspended and turned to the normal operation.
- Ambient temperature at 5°C (41°F) or more continues for 10 seconds.
- Malfunction occurs on ambient sensor.
- Vehicle speed of 15 km/h (9 MPH) or less continues 15 minutes (OFF when conditions are met)
- Malfunction occurs in CAN communication.
- Battery voltage remains at 10 V or less for 30 seconds.

2. CHECK WITH SUBARU SELECT MONITOR

CAUTION:
Before performing the inspection, check the following settings.
- **Wiper deicer setting → "support". If "no support", set to "support" using customize setting.**
- **Rr Defogger op. mode setting → Initial setting or customize setting.**

1) Check the input signal when the rear window defogger switch is operated using Subaru Select Monitor.
   (1) Connect the Subaru Select Monitor to data link connector.

NOTE:
For detailed operation procedures, refer to "Application help".
   (2) Turn the ignition switch to ON.
   (3) On «Start» display, select «Diagnosis».
   (4) On «Vehicle selection» display, input the target vehicle information and select «Confirmed».
   (5) On «Main Menu» display, select «Each System».
   (6) On «Select System» display, select «Integ. Unit Mode» and select «Enter».
   (7) On «Select Function» display, select «Data Monitor».
   (8) From the data monitor item list, select «Auto A/C Setting».
   (9) Check the vehicle equipment and the settings of body integrated unit.
   If correct, go to (10).
   If not correct, go to (13).
   (10) From the data monitor item list, select «Rr Defogger output».
   (11) Check the displayed data (ON/OFF) by operating the rear window defogger switch.
   (12) On «Select Function» display, select «Customize».
   (13) From the Customize item list, select «Auto A/C Setting» and match the auto A/C ECM setting to the actual vehicle equipment.

2) Check the operation with rear window defogger switch ON.
- When customize setting is set as "Continuous", it is normal if the 15-minute operation and 2-minute stop repeats.
- When customize setting is "Normal", it is normal if the operation lasts for 15 minutes and then turns OFF.

3) When the operation in 2) above fails, replace the body integrated unit.

3. HEAT WIRE INSPECTION

Refer to "HEAT WIRE INSPECTION" of "Rear Window Defogger System". <Ref. to GW-57, HEAT WIRE INSPECTION, INSPECTION, Rear Window Defogger System.>

NOTE:
Heat wire inspection needs removing/installing procedure of instrument panel assembly.

C: REPAIR

Refer to "REPAIR" of "Rear Window Defogger System". <Ref. to GW-58, REPAIR, Rear Window Defogger System.>

NOTE:
Heat wire repair needs removing/installing procedure of instrument panel assembly.

BODY STRUCTURE

BS

Page
1. General Description 2

1. General Description

A: SPECIFICATION

Refer to “Body Repair Manual” for general description of body structure, reference points and reference dimensions.

INSTRUMENTATION/DRIVER INFO

IDI

		Page
1.	General Description	2
2.	Relay and Fuse	5
3.	Combination Meter System	6
4.	Combination Meter	11
5.	Speedometer	14
6.	Tachometer	15
7.	Fuel Gauge	16
8.	Engine Coolant Temperature Gauge	17
9.	Switches and Harness	18
10.	Warning Box	24

1. General Description

A: SPECIFICATION

1. COMBINATION METER ASSEMBLY

NOTE:
Specifications of the combination meter vary depending on the market and the grade.

<table>
<tr><th>Meter, display</th><th>Operation method, display method</th><th>Drive control</th><th>When checking the indicator needle operation/needle reading operation</th></tr>
<tr><td>Speedometer</td><td rowspan="4">Stepping motor type</td><td rowspan="4">Combination meter</td><td rowspan="4">—</td></tr>
<tr><td>Tachometer</td></tr>
<tr><td>Engine coolant temperature gauge</td></tr>
<tr><td>Fuel gauge</td></tr>
<tr><td>ABS warning light</td><td rowspan="28">LED</td><td rowspan="24">Combination meter</td><td rowspan="20">On/Off</td></tr>
<tr><td>STEERING warning light</td></tr>
<tr><td>AT oil temperature warning light</td></tr>
<tr><td>Driver's seat belt warning light</td></tr>
<tr><td>Tire pressure warning light</td></tr>
<tr><td>AWD warning light</td></tr>
<tr><td>Hill hold ON indicator light</td></tr>
<tr><td>VDC warning light / VDC operation indicator light</td></tr>
<tr><td>VDC OFF indicator light</td></tr>
<tr><td>High beam indicator light</td></tr>
<tr><td>Front fog light indicator light</td></tr>
<tr><td>Lighting indicator light</td></tr>
<tr><td>Malfunction indicator light</td></tr>
<tr><td>Airbag warning light</td></tr>
<tr><td>Lane departure warning OFF indicator light</td></tr>
<tr><td>Pre-collision brake OFF indicator light</td></tr>
<tr><td>Parking brake operation indicator light</td></tr>
<tr><td>Meter illumination back light</td><td rowspan="2">Light ON</td></tr>
<tr><td>TFT back-up light</td></tr>
<tr><td>Fuel level warning light</td><td>On/Off (area near the E mark is illuminated)</td></tr>
<tr><td>Oil pressure warning light</td><td>Oil pressure switch</td><td rowspan="5">Turns on or off according to module control</td></tr>
<tr><td>Charge warning light</td><td>Generator</td></tr>
<tr><td>Turn signal indicator light</td><td rowspan="2">Body integrated unit</td></tr>
<tr><td>Security/immobilizer indicator light</td></tr>
<tr><td>Auto leveler warning light</td><td>Auto headlight beam leveler CM</td></tr>
<tr><td>EPB warning light/brake fluid level warning light</td><td>Combination meter/ brake fluid level switch</td><td>On/Off</td></tr>
</table>

Meter, display	Operation method, display method	Drive control	When checking the indicator needle operation/needle reading operation
ODO indicator	TFT	Combination meter	—
Trip indicator			
ECO gauge			
Select lever / shift position indicator			
Information (intervention) display			
Warning and indicator display • Door partially latched • Engine oil level • BSD/RCTA • BSD/RCTA OFF • SRF OFF • Washer fluid level • Hill descent control • Low ambient temperature			
Cruise control system indicator • Constant speed cruise • SET • Set speed			
EyeSight system indicator • Adaptive cruise • SET • READY • EyeSight warning • EyeSight temporary stop • OFF • HOLD • Preceding vehicle • Following distance setting • Set speed • Lane keep			

2. WARNING BOX

Display	Display method
Passenger's airbag ON indicator light	LED
Passenger's airbag OFF indicator light	
Passenger's seat belt warning light	

B: LOCATION

Refer to "LOCATION" of "INSTRUMENTATION/DRIVER INFO (DIAGNOSTICS)" section. <Ref. to MET(diag)-5, LOCATION, Electrical Component Location.>

C: CAUTION

• Before disconnecting connectors of sensors or units, be sure to disconnect the ground cable from battery. When replacing the electrical parts provided with memory functions that store contents specified by a customer, record the memory contents before disconnecting the battery ground cable.
• Use gloves to avoid damage to and get fingerprints on the glass surface. Wipe off using a soft cloth, if the part is contaminated.
• When the combination meter assembly of the model without keyless access with push button start has been replaced, perform the registration of immobilizer. (Except for C0 and C5 models)
For the relevant procedures, refer to the “REGISTRATION MANUAL FOR IMMOBILIZER”.
• Be careful of the following items. Failing to do so may cause the airbag system malfunction.
  – Yellow connectors and harnesses with yellow tapes around them are the connectors and harnesses for the airbag system. When using a tester on these circuits, follow the cautions of “AIRBAG SYSTEM”. <Ref. to AB-10, CAUTION, General Description.>
  – Be careful not to damage the airbag system wiring harness when servicing the electrical parts around the steering column.
• When removing, installing or replacing the VDCCM&H/U, VDCCM&H/U bracket, steering wheel or steering angle sensor (steering roll connector), perform “VDC sensor midpoint setting mode” of the VDC. <Ref. to VDC-15, VDC SENSOR MIDPOINT SETTING MODE, ADJUSTMENT, VDC Control Module and Hydraulic Control Unit (VDCCM&H/U).>

D: PREPARATION TOOL

1. SPECIAL TOOL

ILLUSTRATION	TOOL NUMBER	DESCRIPTION	REMARKS
 STSSM4	— (Newly adopted tool)	SUBARU SELECT MONITOR 4	Used for setting of each function and trouble-shooting for electrical system. NOTE: For detailed operation procedures of Subaru Select Monitor 4, refer to “Application help”.

2. GENERAL TOOL

TOOL NAME	REMARKS
Circuit tester	Used for measuring resistance, voltage and current.
DST-i	Used together with Subaru Select Monitor 4.

2. Relay and Fuse

A: LOCATION

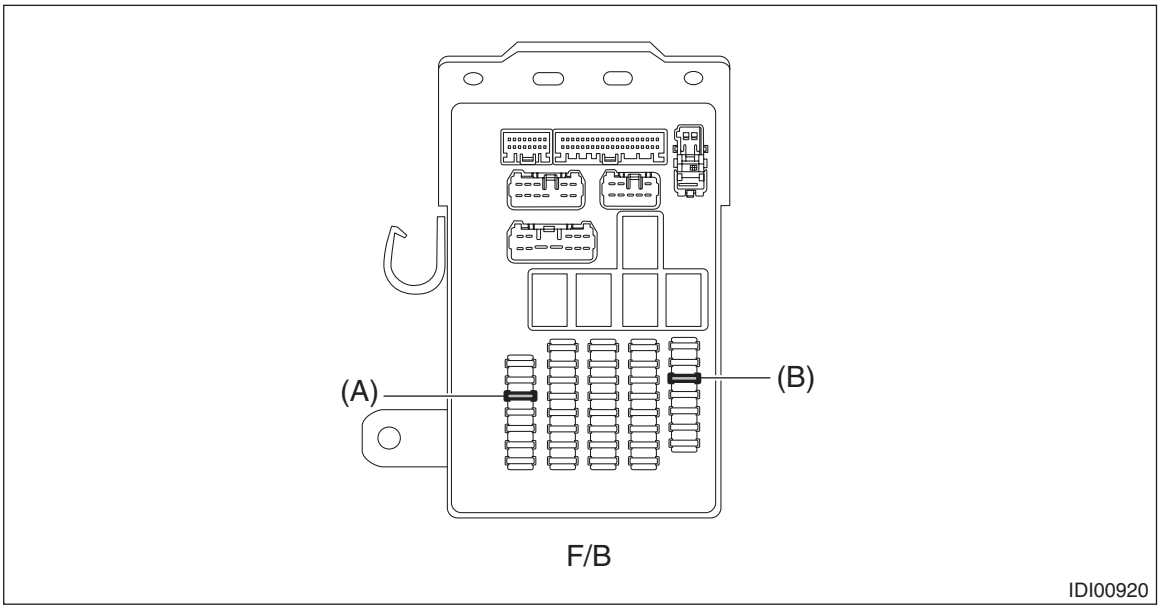

Fuse & relay box (F/B)	Fuse 7.5 A (combination meter)	(A)
	Fuse 7.5 A (combination meter)	(B)

NOTE:
For other related fuses, refer to the wiring diagram. <Ref. to WI-21, Power Supply Circuit.>

B: INSPECTION

1. CHECK FUSE

1) Remove the fuse and inspect visually.
2) If the fuse is blown out, replace the fuse.

NOTE:
If the fuse is blown again, check the system wiring harness.

3. Combination Meter System

A: WIRING DIAGRAM

Refer to “Combination Meter System” in the wiring diagram. <Ref. to WI-144, WIRING DIAGRAM, Combination Meter System.>

B: ELECTRICAL SPECIFICATION

1. COMBINATION METER ASSEMBLY

Refer to “Control Module I/O Signal” of “INSTRUMENTATION/DRIVER INFO (DIAGNOSTICS)” section. <Ref. to MET(diag)-6, ELECTRICAL SPECIFICATION, Control Module I/O Signal.>

C: OPERATION

1. SELF-DIAGNOSIS DISPLAY MODE

The combination meter self-diagnosis can be performed as a single unit according to the following procedure.
When the self-diagnosis display mode operates, it switches in the order of [1. Meter pointer operation check] → [2. Meter pointer indication check] → [3. TFT display check].
1) Procedure

CAUTION:
Perform the steps described in (1) through (4) within 10 seconds.

(1)	Within 3 seconds after turning the ignition switch to ON, set the parking light switch or the headlight switch to ON.
(2)	While the switch is in ON, press the trip reset switch three times.
(3)	Turn the parking light switch or the headlight switch to OFF, and press the trip reset switch three times.
(4)	Turn the parking light switch or the headlight switch to ON, and press the trip reset switch three times.

2) Go to the self-diagnosis display mode.

CAUTION:
If the procedure is not performed properly, turn the ignition switch from ON to OFF to stop the operation halfway, and then proceed from step (1) to (4).

NOTE:
• Turn the ignition switch to OFF (ACC OFF) to cancel the self-diagnosis function.
• When the engine starts during diagnosis, the self-diagnosis function is not cancelled, however, once the vehicle starts driving, the self-diagnosis function is deactivated automatically.
• If the self-diagnosis function is not deactivated, the check items in operation are displayed. After the check items 1 to 3 are displayed, the check item 1 is displayed repeatedly.
• The buzzer sounds when the check item is switched, to indicate that the item is switched and make sure that the buzzer sounds.

1. Meter pointer operation check

In meter pointer operation check, the meter operation, warning /indicator light, illumination and TFT are checked.
1) After a buzzer sounds for 0.5 seconds and “STEP1” is displayed on TFT, the meter pointer operation check mode is initiated.

Time (sec)	Meter indicator	TFT display, illumination	Warning/indicator light
6	MIN indication ↓ MAX indication	ILL1 (Min. brightness) ↓*3 ILL6 (Max. brightness)	*1, *2
6	MAX indication ↓ MIN indication	ILL6 (Max. brightness) ↓*3 ILL1 (Min. brightness)	

*1: Warning lights and indicator lights controlled by the meter drive circuit are illuminated. <Ref. to IDI-2, SPECIFICATION, General Description.>
*2: Warning lights and indicator lights controlled by other module are turned on/off according to the module control. <Ref. to IDI-2, SPECIFICATION, General Description.>
*3: Displays each level for one second.

2. Meter pointer indication check

In meter pointer indication check, the meter operation, warning /indicator light and fuel level warning light are checked.

NOTE:
ILL indication illuminates at the same brightness as immediately before entering “Meter pointer indication check”.
1) Press the trip reset switch.
2) After a buzzer sounds for 0.5 seconds and “STEP2” is displayed on TFT, the meter pointer indication check mode is initiated.

Time (sec)	Speedometer (km/h)	Tachometer (r/min)	Fuel gauge	Engine coolant temperature gauge	Fuel level warning light	Warning/indicator light
1.5	0	0	Lowest point	Lowest point	Light ON	*1, *2
1.5	40	1,000	E	C	Light ON	
1.5	100	4,000	1/2	Starting point of the red line	Light OFF	
1.5	140	8,000	F	H	Light OFF	
1.5	100	4,000	1/2	Starting point of the red line	Light OFF	
1.5	40	1,000	E	C	Light ON	

*1: Warning lights and indicator lights controlled by the meter drive circuit go off. <Ref. to IDI-2, SPECIFICATION, General Description.>
*2: Warning lights and indicator lights controlled by other module are turned on/off according to the module control. <Ref. to IDI-2, SPECIFICATION, General Description.>

3. TFT display check

Check the TFT display.

NOTE:
- The meter needle indicate 0 or the lowest position.
- ILL indication illuminates at the same brightness as immediately before entering “TFT display check”.
- After No. 6 is displayed in the illumination order, display is repeated from No. 1 again.
- The version display contents of the illumination order No. 1 varies depending on the vehicle.

1) Press the trip reset switch.
2) After a buzzer sounds for 0.5 seconds and “STEP3” is displayed on TFT, the TFT display check mode is initiated.

Order	TFT display	Warning/indicator light	Time (sec)
1	Version display & black	Light OFF	10
2	Red	Light OFF	10
3	Green	Light OFF	10
4	Blue	Light OFF	10
5	White	Light OFF	10
6	Color gradation	Light OFF	10

2. DEMONSTRATION MODE

The demonstration mode screen of the combination meter can be displayed according to the following procedure.

CAUTION:
- **To avoid battery discharge, perform the operation under the following condition.**
  - **– Perform the operation while the battery is being charged.**
  - **– While performing the operation and displaying the demonstration mode, close all doors and do not operate any electrical parts.**
- **If the battery voltage is low, the demonstration mode is not initiated.**
- **To display the demonstration mode, set the Demonstration mode permission / fault permission of the user customize mode to permission. For operation procedures, refer to “Application help”.**
- **When the demonstration mode display is completed, make sure to set “Demonstration mode permission / fault permission” of the user customize mode to “fault permission”. Do not deliver the vehicle to the customer with “Demonstration mode permission / fault permission” set to “permission”.**
- **Even if the backup fuse is removed, the demonstration mode can be initiated.**

1) Procedure

CAUTION:
While the ignition switch is OFF (ACC OFF) and the odo/trip meter is not displayed, perform the steps described in 1) through 4) within 10 seconds.

(1)	Press the trip reset switch once.
(2)	Press the i/SET switch three times within three seconds after the operation (1) above is performed.
(3)	Press the trip reset switch once, and press the i/SET switch three times.
(4)	Press the trip reset switch once, and press the i/SET switch three times.

2) The demonstration mode is initiated.

CAUTION:
If the procedure is not performed properly, turn the ignition switch from ON to OFF to stop the operation halfway, and then proceed from step (1) to (4).

NOTE:
The demonstration mode will be cancelled in the following condition.
When resuming the operation after cancellation, the demonstration mode is displayed. However, the resuming can only be accepted after approx. 1 minute.

• At the completion of the “goodbye screen” display that is shown 60 minutes after the demonstration mode is initiated
• When the ignition switch is turned to ON
• When the i/SET switch is turned to ON for two seconds
• When the battery voltage is low
• When the push button ignition switch is pressed with the access key out of the passenger room
• When any request switch is pressed with the access key in the passenger room

3. VARIANT WORK

Perform when replacing the combination meter assembly.
• When communication with Subaru Select Monitor is possible («Read Control module setting information» is workable): Perform the operation procedure A.
• When communication with Subaru Select Monitor is not possible («Read Control module setting information» is not workable): Perform the operation procedure B.

CAUTION:
• Subaru Select Monitor is required for variant work.
• If an error is displayed during the work, click the «OK» button and perform the variant work again.

Operation procedure A

1) Connect the Subaru Select Monitor.
2) On «Start» display, select «Diagnosis».
3) On «Vehicle selection» display, enter vehicle information and select «Confirmed».
4) On «Main Menu» display, select «Each System».
5) On «Select System» display, select «Combination Meter» and then select «Enter».
6) On «Select Function» display, select «Work Support».
7) From the work support list, select «Read Control module setting information».
8) Save and close the file.
9) Replace the combination meter assembly with a new part.
10) On «Main Menu» display, select «Each System».
11) On «Select System» display, select «Combination Meter» and then select «Enter».
12) On «Select Function» display, select «Work Support».
13) Select «Write ECU setting save data», and open the file stored in «Read Control module setting information».
14) When the confirmation screen indicating the vehicle information appears, check that the correct information is displayed and click the «OK» button.
15) Confirm that «Write operation was completed.» is displayed, and click the «OK» button.

Operation procedure B

1) Replace the combination meter assembly with a new part.
2) Connect the Subaru Select Monitor.
3) On «Start» display, select «Diagnosis».
4) On «Vehicle selection» display, enter vehicle information and select «Confirmed».
5) On «Main Menu» display, select «Each System».
6) On «Select System» display, select «Combination Meter» and then select «Enter».
7) On «Select Function» display, select «Work Support».
8) From the work support list, select «Write ECU setting 12 columns of models». Enter the applied model and click the «OK» button. <Ref. to ID-2, IDENTIFICATION NUMBER & LABEL LOCATIONS, IDENTIFICATION, Identification.>
9) Enter the option code and click the «OK» button. <Ref. to ID-2, IDENTIFICATION NUMBER & LABEL LOCATIONS, IDENTIFICATION, Identification.>
10) Confirm the vehicle information on «Write ECU setting 12 columns of models» display and click the «OK» button.
11) When «Write?» is shown on the screen, click the «Yes» button.
12) Confirm that «Write operation was completed.» is displayed, and click the «OK» button.

D: INSPECTION

1. COMBINATION METER

Refer to “Basic Diagnostic Procedure” of “INSTRUMENTATION/DRIVER INFO (DIAGNOSTICS)” section. <Ref. to MET(diag)-2, Basic Diagnostic Procedure.>

2. SWITCH

Illumination intensity does not change even when the illumination control switch is operated.

	Step	Check	Yes	No
1	**CHECK CURRENT DATA.** Display the data of «Bright switch input state» and «Illumination control switch input state» using the Subaru Select Monitor. NOTE: For detailed procedures, refer to “Application help”.	Do the display switch between OFF ←→ ON and the value range from 0 to 100 when the bright switch and illumination control switch are operated?	Replace the combination meter.	Go to step **2**.
2	**CHECK ILLUMINATION CONTROL SWITCH UNIT.** Check the illumination control switch. <Ref. to IDI-22, ILLUMINATION CONTROL SWITCH, INSPECTION, Switches and Harness.>	Is the switch normal?	Go to step **3**.	Replace the illumination control switch.
3	**CHECK HARNESS.** 1) Disconnect the connectors of combination meter assembly and illumination control switch. 2) Measure the resistance between the combination meter assembly and the illumination control switch. ***Connector & terminal*** ***(i10) No. 29 — (i79) No. 6:*** ***(i10) No. 30 — (i79) No. 5:*** ***(i10) No. 31 — (i79) No. 4:*** ***(i10) No. 32 — (i79) No. 1:***	Is the resistance less than 1 Ω?	Replace the combination meter.	Repair or replace the harness.

E: NOTE

For procedure of each component in the combination meter system, refer to the respective section.

- Combination meter assembly: <Ref. to IDI-11, Combination Meter.>
- Speedometer: <Ref. to IDI-14, Speedometer.>
- Tachometer: <Ref. to IDI-15, Tachometer.>
- Fuel gauge: <Ref. to IDI-16, Fuel Gauge.>
- Engine coolant temperature gauge: <Ref. to IDI-17, Engine Coolant Temperature Gauge.>
- Switches and harness: <Ref. to IDI-18, Switches and Harness.>
- Warning box: <Ref. to IDI-24, Warning Box.>

4. Combination Meter

A: REMOVAL

CAUTION:
When the combination meter is replaced, perform the variant work. <Ref. to IDI-9, VARIANT WORK, OPERATION, Combination Meter System.>

1) Disconnect the ground terminal from battery sensor. <Ref. to RC-4, BATTERY, NOTE, Repair Contents.>
2) Release the lock, tilt the steering column to the lowest end and fully extend the column by the telescopic system.
3) Remove the cover assembly - instrument panel LWR driver. <Ref. to EI-75, REMOVAL, Instrument Panel Lower Cover.>
4) Remove the visor assembly - lower.
   (1) Release the clips and claws.
   (2) Disconnect the connector and remove the visor assembly - lower.

CAUTION:
- **Being careful not to damage the visor assembly - lower, slowly remove the clips and claws one by one from the right and left edges of visor assembly - lower.**
- **When using a clip remover, wrap it with protective tape or cloth.**

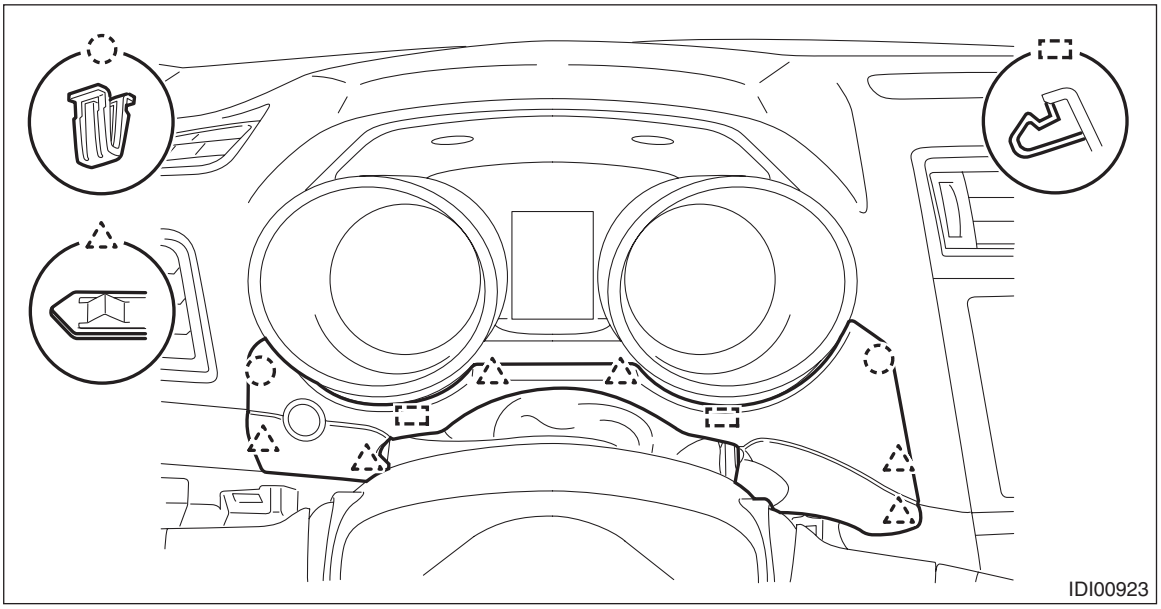

5) Remove the combination meter assembly.

CAUTION:
Be careful not to damage the combination meter assembly, lens or instrument panel.

(1) Release the claws and remove the cover - column (a).
(2) Remove the screws and clips.

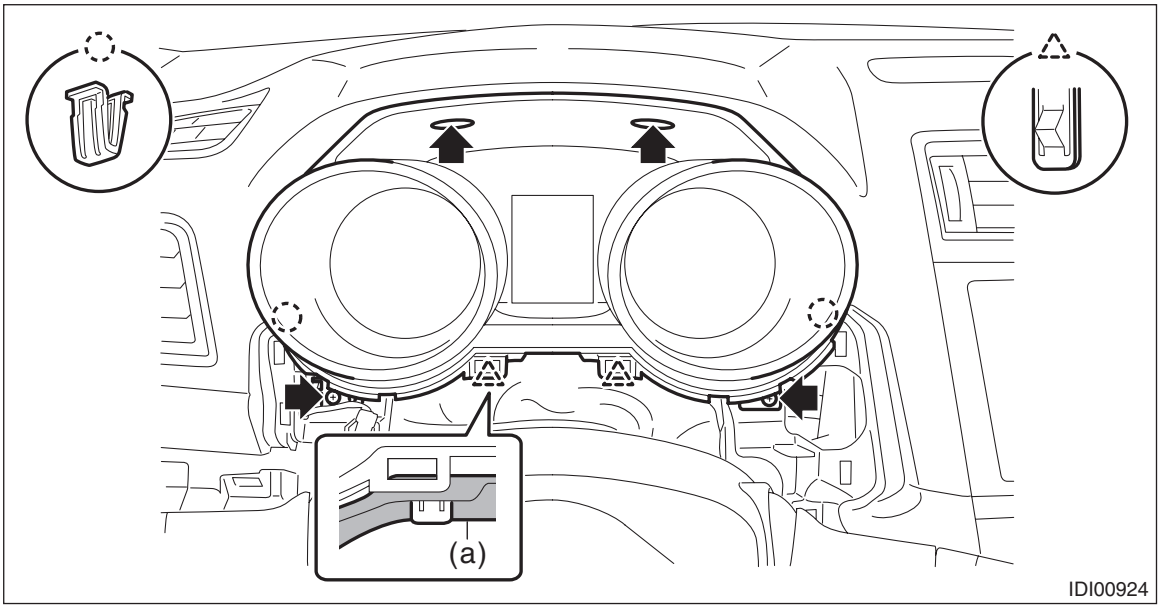

(3) Pull the combination meter assembly toward you and disconnect the connector.
(4) Remove the combination meter assembly as shown in the figure.

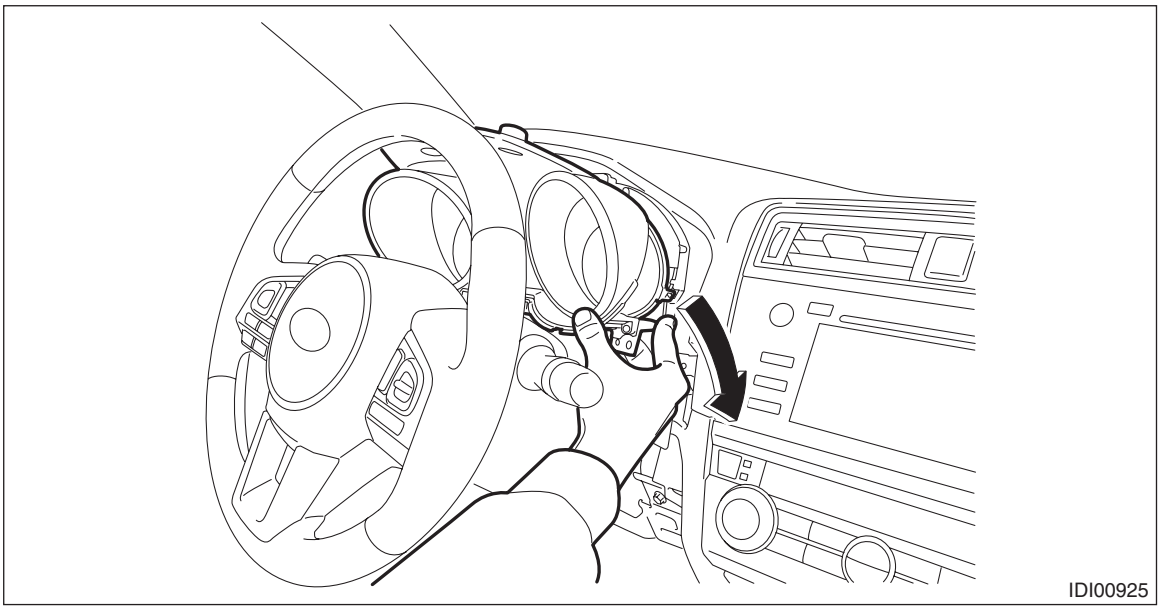

B: INSTALLATION

CAUTION:
- **Make sure the electrical connector is connected securely.**
- **Make sure that each meter operates normally.**
- **When the combination meter assembly of the model without keyless access with push button start has been replaced, perform the registration of immobilizer. (Except for C0 and C5 models)**
For the relevant procedures, refer to the "REGISTRATION MANUAL FOR IMMOBILIZER".
- **When the combination meter is replaced, perform the variant work. <Ref. to IDI-9, VARIANT WORK, OPERATION, Combination Meter System.>**

1) Install the combination meter assembly.

Tightening torque:
7 N·m (0.7 kgf-m, 5.2 ft-lb)
2) Install the visor assembly - lower.
3) Install the cover assembly - instrument panel LWR driver.
4) Connect the ground terminal to battery sensor. <Ref. to RC-4, BATTERY, NOTE, Repair Contents.>

C: DISASSEMBLY

CAUTION:
- **Use gloves to avoid damage and putting fingerprints on the lens surface and meter surfaces.**
- **Be sure not to touch the meter indicator needle.**
- **Because LEDs are used for all of warning lights and indicator lights, they are not removable from the meter - main assembly.**

1) Remove the screws, and then remove the outer mask.

Preparation tool:
TORX® T10

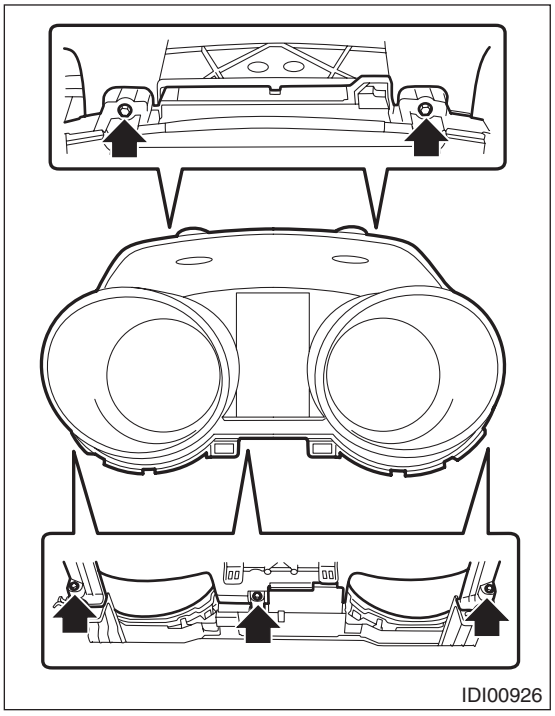
IDI00926

2) Release the claws and remove the lens.

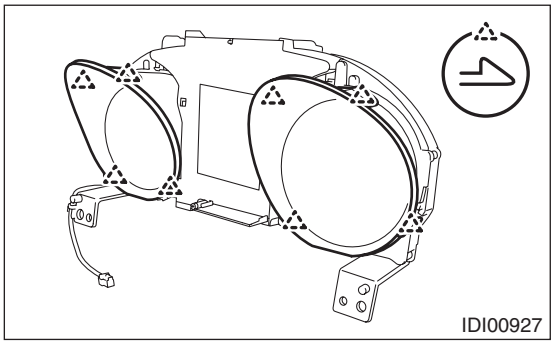
IDI00927

D: ASSEMBLY

1) Install the lens.
2) Install the outer mask.

5. Speedometer

A: SPECIFICATION

Since the meter - main assembly cannot be disassembled, do not remove or inspect the speedometer alone. (Do not remove the cover on the back surface.)

6. Tachometer

A: SPECIFICATION

Since the meter - main assembly cannot be disassembled, do not remove or inspect the tachometer alone. (Do not remove the cover on the back surface.)

7. Fuel Gauge

A: SPECIFICATION

Since the meter - main assembly cannot be disassembled, do not remove or inspect the fuel gauge alone. (Do not remove the cover on the back surface.)

8. Engine Coolant Temperature Gauge

A: SPECIFICATION

Since the meter case assembly cannot be disassembled, do not remove or inspect the engine coolant temperature gauge alone. (Do not remove the cover on the back surface.)

9. Switches and Harness

A: REMOVAL

1. MID SWITCH

CAUTION:
Before handling the airbag system components, refer to "CAUTION" of "General Description" in "AIRBAG SYSTEM". <Ref. to AB-10, CAUTION, General Description.>
1) Set the tire to the straight-ahead position.
2) Disconnect the ground terminal from the battery sensor, and wait for at least 60 seconds before starting work. <Ref. to RC-4, BATTERY, NOTE, Repair Contents.>
3) Remove the driver's airbag module. <Ref. to AB-32, REMOVAL, Driver's Airbag Module.>
4) Remove the steering wheel. <Ref. to PS-9, REMOVAL, Steering Wheel.>
5) Remove the MID switch. <Ref. to PS-10, DISASSEMBLY, Steering Wheel.>

2. TRIP RESET SWITCH

1) Disconnect the ground terminal from battery sensor. <Ref. to RC-4, BATTERY, NOTE, Repair Contents.>
2) Remove the cover assembly - instrument panel LWR driver. <Ref. to EI-75, REMOVAL, Instrument Panel Lower Cover.>
3) Remove the visor assembly - lower.
   (1) Release the clips and claws.
   (2) Disconnect the connector and remove the visor assembly - lower.

CAUTION:
• Being careful not to damage the visor assembly - lower, slowly remove the clips and claws one by one from the right and left edges of visor assembly - lower.
• When using a clip remover, wrap it with protective tape or cloth.

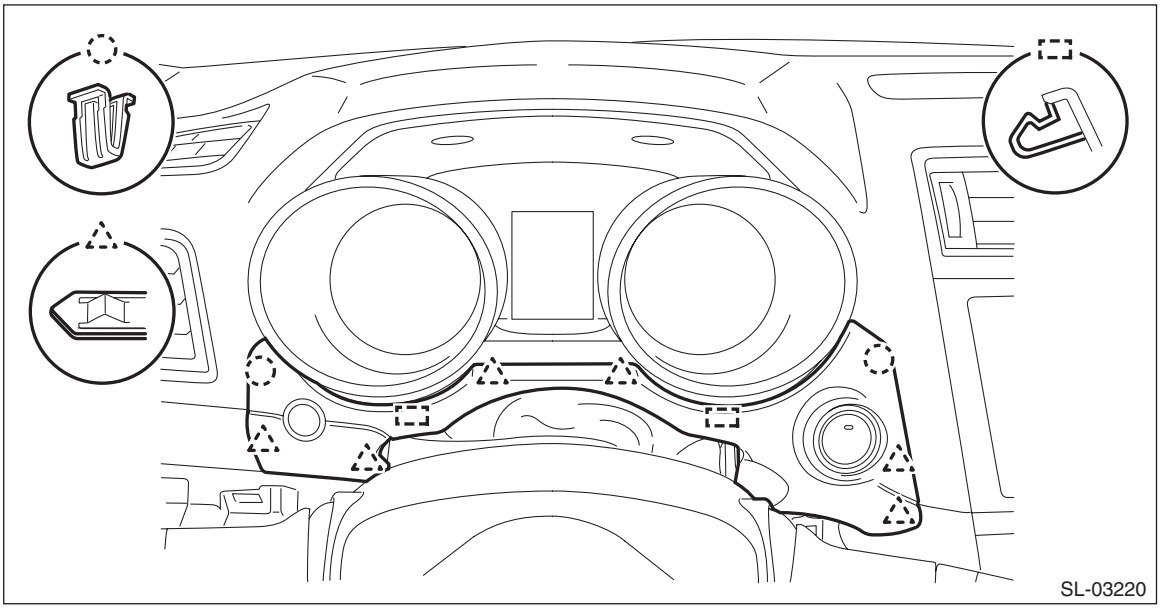

4) Release the claws, and remove the switch assembly - trip reset.

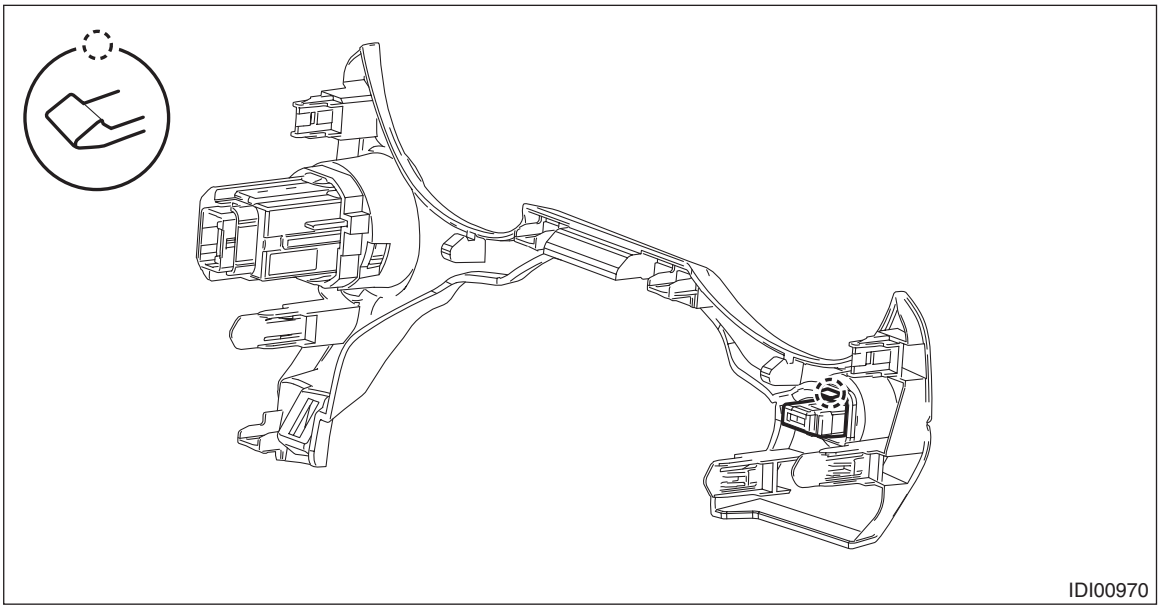

3. ILLUMINATION CONTROL SWITCH

1) Disconnect the ground terminal from battery sensor. <Ref. to RC-4, BATTERY, NOTE, Repair Contents.>
2) Remove the cover assembly - instrument panel LWR driver. <Ref. to EI-75, REMOVAL, Instrument Panel Lower Cover.>
3) Release the claws and remove the illumination control switch.

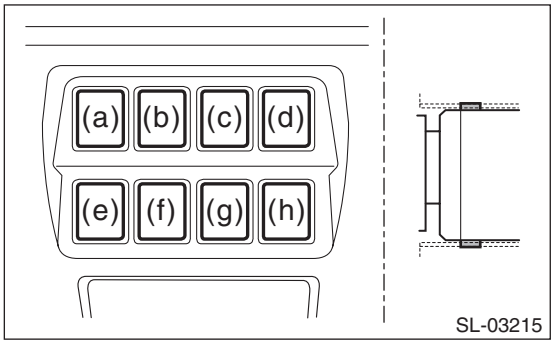

(b) Model without SRF
(d) Model with SRF

B: INSTALLATION

1. MID SWITCH

CAUTION:
• Before handling the airbag system components, refer to "CAUTION" of "General Description" in "AIRBAG SYSTEM". <Ref. to AB-10, CAUTION, General Description.>
• Do not allow harness and connectors to interfere or get tangled up with other parts.
• If the steering wheel has been removed, make sure that the steering roll connector is not turned from the original position.
• If the steering wheel and steering angle sensor (steering roll connector) are removed, perform "VSC(VDC) Centering Mode" of the VDC. <Ref. to VDC-15, VDC SENSOR MIDPOINT SETTING MODE, ADJUSTMENT, VDC Control Module and Hydraulic Control Unit (VDCCM&H/U).>
• Securely install the switch. Improper insertion of the pin or claw of the switch may cause improper installation.
1) Install the MID switch.
2) Align the center position of the steering roll connector. <Ref. to AB-63, ADJUSTMENT, Roll Connector.>
3) Install the steering wheel.

Tightening torque:
39 N·m (4.0 kgf-m, 28.8 ft-lb)

Clearance:
Between cover assembly - column and steering wheel: 4 — 6 mm (0.16 — 0.24 in)
4) Install the driver's airbag module. <Ref. to AB-33, INSTALLATION, Driver's Airbag Module.>
5) Connect the ground terminal to battery sensor. <Ref. to RC-4, BATTERY, NOTE, Repair Contents.>

2. TRIP RESET SWITCH

1) Install the switch assembly - trip reset.
2) Install the visor assembly - lower.
3) Install the cover assembly - instrument panel LWR driver.
4) Connect the ground terminal to battery sensor. <Ref. to RC-4, BATTERY, NOTE, Repair Contents.>

3. ILLUMINATION CONTROL SWITCH

1) Install the illumination control switch.
2) Install the cover assembly - instrument panel LWR driver.
3) Connect the ground terminal to battery sensor. <Ref. to RC-2, NOTE, Repair Contents.>

C: INSPECTION

1. MID SWITCH

1) Measure the resistance between connector terminals.

Preparation tool:
Circuit tester

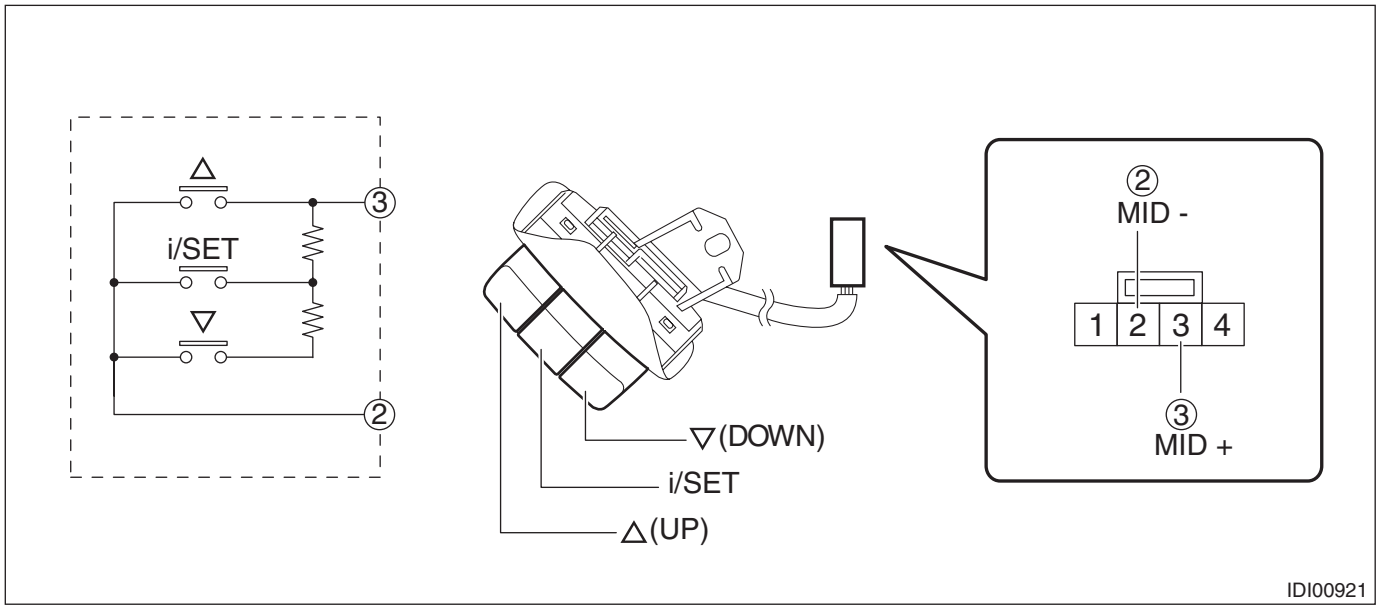

Terminal No.	Inspection conditions		Standard
3 — 2	△ (UP) i/SET ▽ (DOWN)	All OFF	Approx. 1 MΩ or more
	△ (UP)	ON	Less than 1 Ω
	i/SET	ON	Approx. 1,000 Ω
	▽ (DOWN)	ON	Approx. 3,700 Ω

2) Apply battery voltage between the connector terminals to check lighting condition of illumination inside the switch.

Terminal No.	Inspection conditions	Specification
4 (+) — 1 (–)	Apply battery voltage.	Light ON

3) Replace the MID switch if the inspection result is not within the standard value.

2. TRIP RESET SWITCH

1) Measure the resistance between connector terminals.

Preparation tool:
Circuit tester

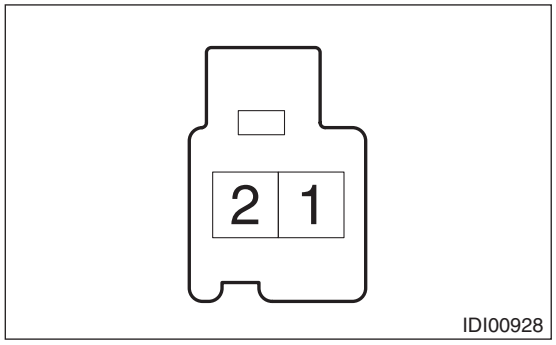

Terminal No.	Inspection conditions	Standard
1 — 2	Switch OFF	1 MΩ or more
	Switch ON	Less than 1 Ω

2) Replace the switch assembly - trip reset if the inspection result is not within the standard.

3. ILLUMINATION CONTROL SWITCH

1) Measure the resistance between connector terminals.

Preparation tool:
Circuit tester

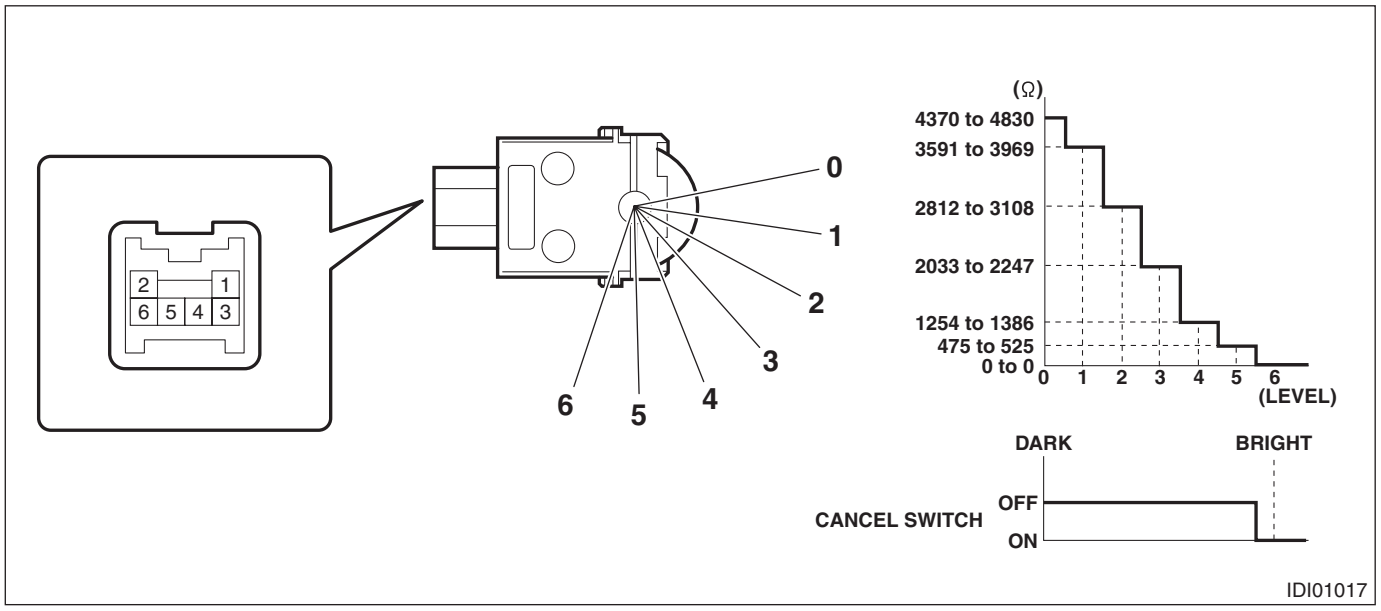

Terminal No.	Inspection conditions	Standard
1 — 6	Bright switch OFF	10 kΩ or more
	Bright switch ON	Less than 1 Ω
4 — 6	Always	4,465 to 4,935 Ω
5 — 6	Illumination control switch upward fully open	475 to 525 Ω
	Illumination control switch downward fully open	4,370 to 4,830 Ω

2) Apply battery voltage between the connector terminals to check lighting condition of illumination inside the switch.

Terminal No.	Inspection conditions	Specification
2 (+) — 3 (–)	Apply battery voltage.	Light ON

3) Replace the illumination control switch if the inspection result is not within the standard value.

10.Warning Box

A: REMOVAL

1. MODELS WITHOUT EyeSight

1) Disconnect the ground terminal from battery sensor. <Ref. to RC-4, BATTERY, NOTE, Repair Contents.>
2) Remove the overhead console.
   (1) Release the clips and claws.
   (2) Disconnect the connector, and remove the overhead console.

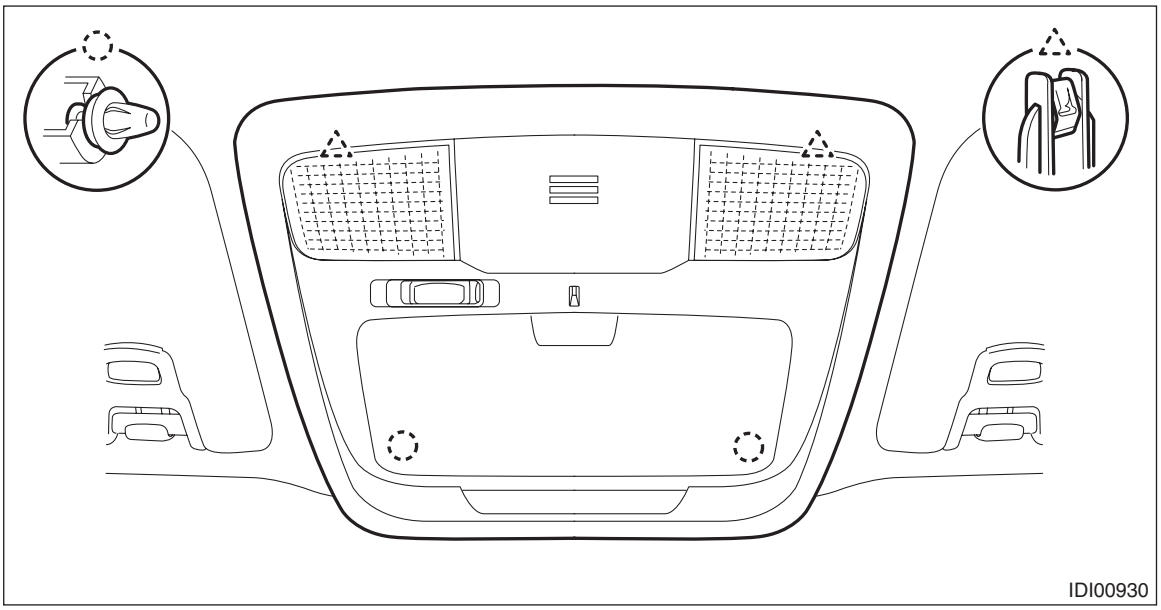

3) Remove connector and screw, and remove the warning box.

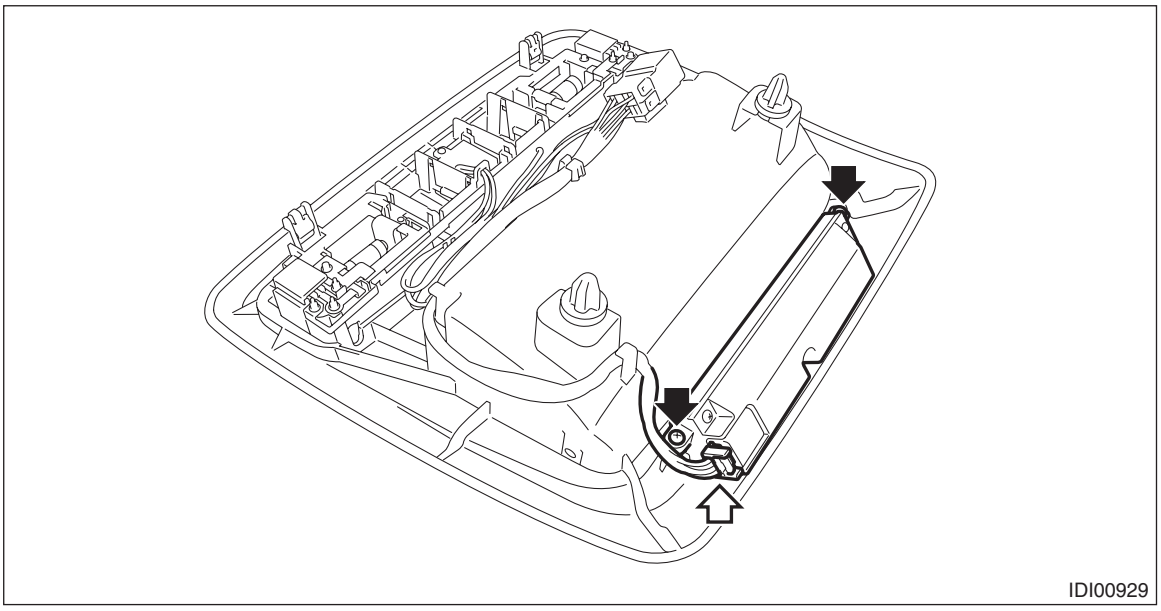

2. MODELS WITH EyeSight

1) Disconnect the ground terminal from battery sensor. <Ref. to RC-4, BATTERY, NOTE, Repair Contents.>
2) Remove the stereo camera cover assembly. <Ref. to ES-8, REMOVAL, Stereo Camera.>
3) Remove connector and screw, and remove the warning box.

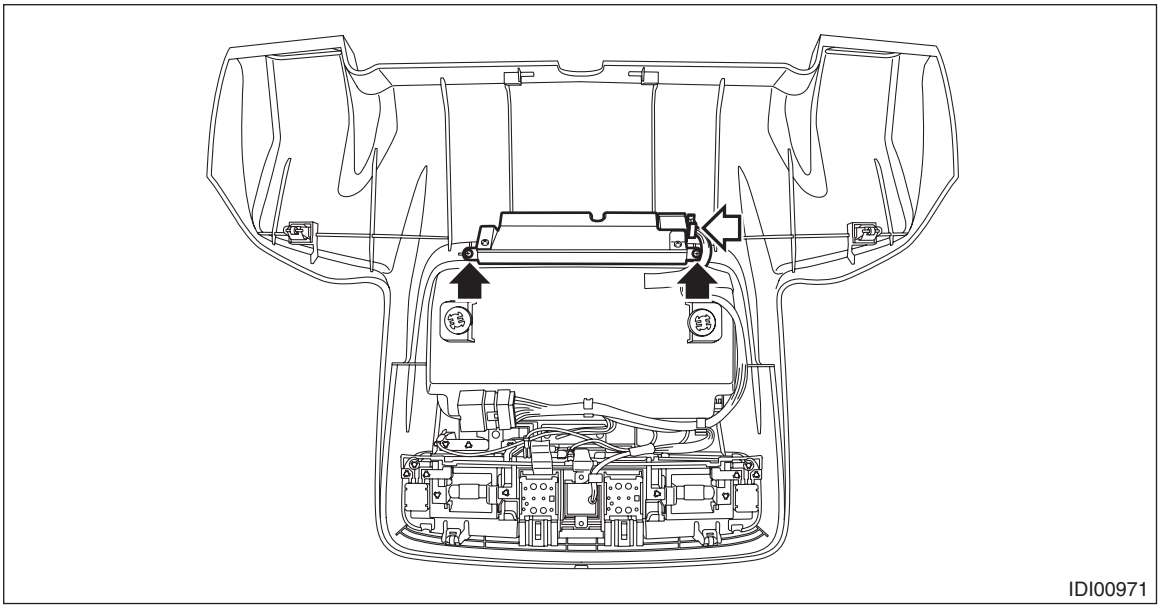

B: INSTALLATION

CAUTION:
- **Make sure the electrical connector is connected securely.**
- **Make sure that each indicator operates normally.**

1) Install the warning box.
2) Install the overhead console. (Models without EyeSight)
3) Install the stereo camera cover assembly. (Models with EyeSight) <Ref. to ES-11, INSTALLATION, Stereo Camera.>
4) Connect the ground terminal to battery sensor. <Ref. to RC-4, BATTERY, NOTE, Repair Contents.>

COMBINATION METER (DIAGNOSTICS)

MET(diag)

		Page
1.	Basic Diagnostic Procedure	2
2.	Check List for Interview	3
3.	General Description	4
4.	Electrical Component Location	5
5.	Control Module I/O Signal	6
6.	Subaru Select Monitor	8
7.	Read Diagnostic Trouble Code (DTC)	10
8.	Clear Memory Mode	11
9.	Inspection Mode	12
10.	Read Current Data	13
11.	System Operation Check Mode	15
12.	User Customizing	19
13.	List of Diagnostic Trouble Code (DTC)	20
14.	Diagnostic Procedure with Diagnostic Trouble Code (DTC)	21

1. Basic Diagnostic Procedure

A: PROCEDURE

	Step	Check	Yes	No
1	**PERFORM CUSTOMER INTERVIEW.** Using the Check List for Interview, ask the customer the condition of how trouble occurs. <Ref. to MET(diag)-3, CHECK, Check List for Interview.>	Did you interview the customer?	Go to step **2**.	Interview the customer. <Ref. to MET(diag)-3, CHECK, Check List for Interview.>
2	**CHECK CAN COMMUNICATION.** Read the DTC of the CAN system using the Subaru Select Monitor. <Ref. to LAN(diag)-33, OPERATION, Read Diagnostic Trouble Code (DTC).>	Is DTC displayed?	Perform the diagnosis according to DTC. <Ref. to LAN(diag)-86, LIST, List of Diagnostic Trouble Code (DTC).>	Go to step **3**.
3	**CHECK COMBINATION METER.** Using the Subaru Select Monitor, read DTC of combination meter. <Ref. to MET(diag)-10, Read Diagnostic Trouble Code (DTC).>	Is DTC displayed?	Record DTC and time stamp, and perform the diagnosis according to DTC. <Ref. to MET(diag)-20, LIST, List of Diagnostic Trouble Code (DTC).> For time stamp, refer to “LAN SYSTEM”. <Ref. to LAN(diag)-6, TIME STAMP, CAUTION, General Description.> Go to step **5**.	Go to step **4**.
4	**CHECK COMBINATION METER.** Check the operation of combination meter. <Ref. to MET(diag)-15, System Operation Check Mode.>	Is it operating normally?	System is normal.	Replace the combination meter. <Ref. to IDI-11, Combination Meter.>
5	**PERFORM DIAGNOSIS.** 1) Perform the Clear Memory Mode. <Ref. to MET(diag)-11, Clear Memory Mode.> 2) Perform the Inspection Mode. <Ref. to MET(diag)-12, Inspection Mode.> 3) Using the Subaru Select Monitor, read DTC of combination meter. <Ref. to MET(diag)-10, Read Diagnostic Trouble Code (DTC).>	Is DTC displayed?	Perform diagnosis according to the DTC.	Finish the diagnosis.

2. Check List for Interview

A: CHECK

- Inspect the following items regarding the vehicle's state.
- Print out this page for interviewing customers.

<table>
<tr><td colspan="4">Combination Meter Check List for Interview
Date the Vehicle is Received Year Month Day</td></tr>
<tr><td colspan="2" rowspan="2">Customer's name</td><td>Registration No.</td><td>Initial year of registration
Year Month Date</td></tr>
<tr><td>Vehicle model</td><td>Frame number</td></tr>
<tr><td>Interviewer</td><td>Inspector</td><td>Engine type</td><td>Odometer reading</td></tr>
<tr><td colspan="4">Customer specified content
•
•
•</td></tr>
<tr><td>Date and time when the trouble occurred</td><td></td><td>Frequency of trouble occurrence</td><td>Always occurs
Sometimes occurs (times per day, times per month)</td></tr>
<tr><td rowspan="2">Condition of trouble occurrence (How the trouble occurs)</td><td rowspan="2"></td><td>Weather</td><td>Fine • Cloudy • Rainy • Snowy •
Others ( )</td></tr>
<tr><td>Temperature</td><td>°C (°F) — °C (°F)</td></tr>
<tr><td>Road conditions</td><td></td><td>Occurrence location</td><td></td></tr>
<tr><td>Accessory installation condition</td><td colspan="3"></td></tr>
<tr><td colspan="4">Confirmation of trouble condition</td></tr>
<tr><td rowspan="3">❑ Combination meter</td><td colspan="3"></td></tr>
<tr><td colspan="3"></td></tr>
<tr><td colspan="3"></td></tr>
<tr><td>❑ Diagnostic code</td><td colspan="3"></td></tr>
</table>

3. General Description

A: CAUTION

1. AIRBAG SYSTEM

CAUTION:
• Do not use the electrical test equipment on the airbag system wiring harnesses and connector circuits.
• Be careful not to damage the airbag system wiring harness.

B: INSPECTION

Before performing the diagnosis, check the following items which may cause problems relating the wiper or light.
1) Check the battery. <Ref. to SC(H4DO)-65, INSPECTION, Battery.> <Ref. to SC(H6DO)-59, INSPECTION, Battery.>
2) Check the fuse condition.
3) Check the connecting condition of harness and harness connector.

C: PREPARATION TOOL

1. SPECIAL TOOL

ILLUSTRATION	TOOL NUMBER	DESCRIPTION	REMARKS
 STSSM4	— (Newly adopted tool)	SUBARU SELECT MONITOR 4	Used for setting of each function and trouble-shooting for electrical system. NOTE: For detailed operation procedures of Subaru Select Monitor 4, refer to “Application help”.

2. GENERAL TOOL

TOOL NAME	REMARKS
Circuit tester	Used for measuring resistance, voltage and current.
DST-i	Used together with Subaru Select Monitor 4.

4. Electrical Component Location

A: LOCATION

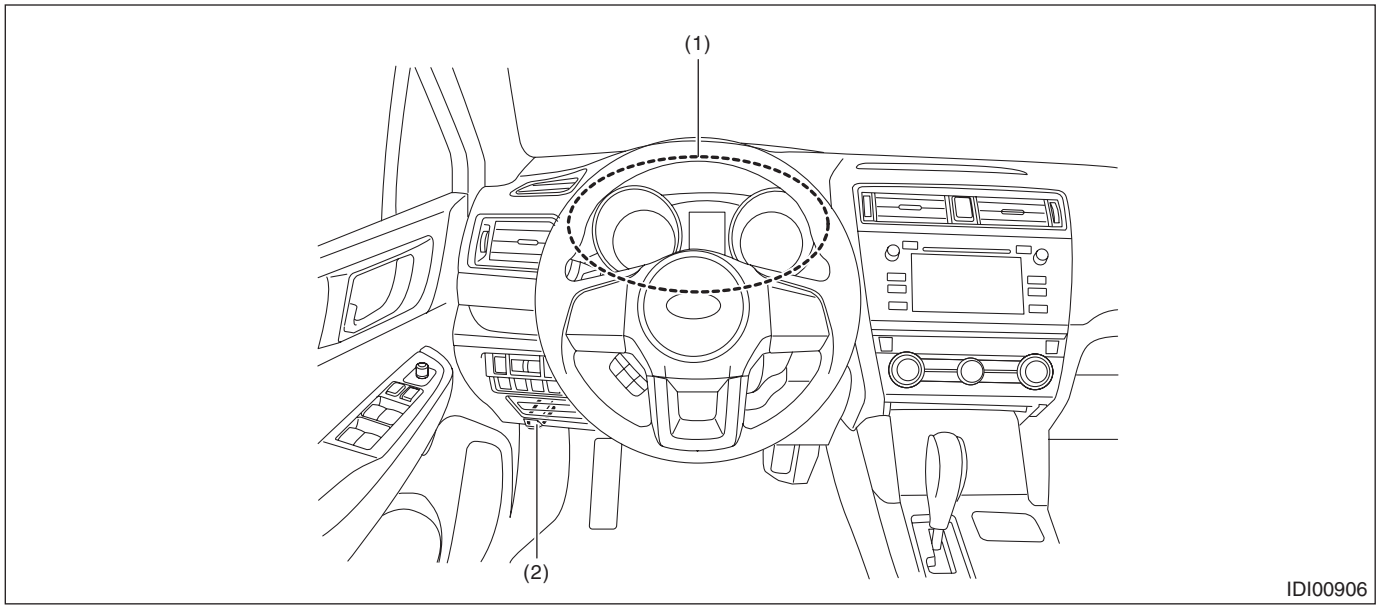

(1) Combination meter
(2) Data link connector

5. Control Module I/O Signal

A: ELECTRICAL SPECIFICATION

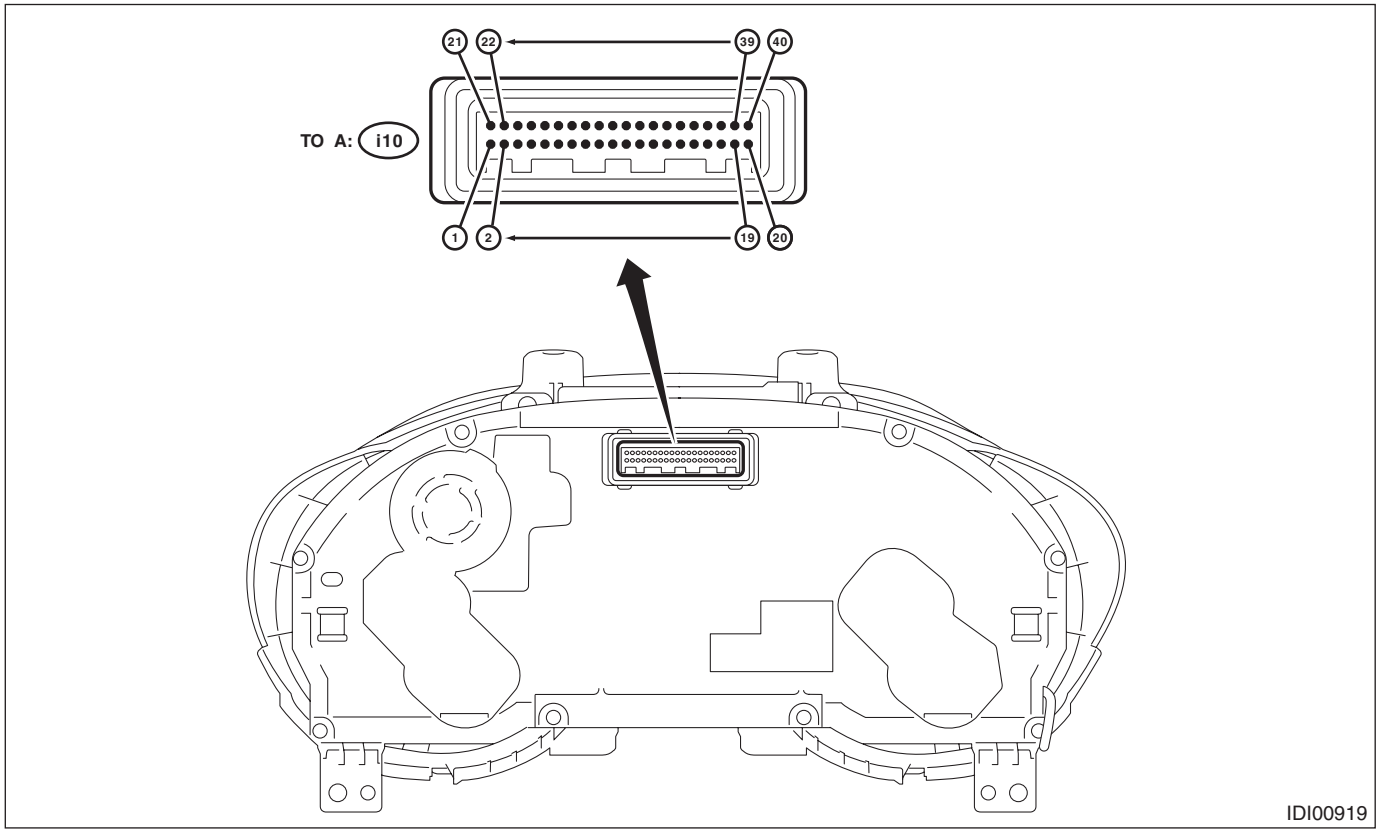

Terminal No.	Contents	Measuring condition	Standard
1 ←→ Chassis ground	Battery power supply	Always	8 — 16 V
2 ←→ Chassis ground	Ignition power supply (main)	Ignition switch ON	8 — 16 V
3	—	—	—
4	—	—	—
5	—	—	—
6	CAN H (CAN communication line)	—	—
7	CAN L (CAN communication line)	—	—
8	—	—	—
9	—	—	—
10	—	—	—
11	AUDIO (UART communication line)	—	—
12	WARNING BOX (UART communication line)	—	—
13	Auto headlight beam leveler	—	—
14	Washer fluid level sensor	—	—
15	—	—	—
16	—	—	—
17	Charge warning light	—	—
18	Oil pressure warning light	—	—
19	Immobilizer/security indicator light	—	—
20 ←→ Chassis ground	GND	Always	Less than 1 Ω
21	RH turn indicator	—	—
22	LH turn indicator	—	—
23 ←→ 24	Ambient sensor (+)	Always	1 — 35 Ω

Terminal No.	Contents	Measuring condition	Standard
24	Ambient sensor (–)	—	—
25 ←→ 26	Fuel level sensor (+)	Always	10 — 600 Ω
26	Fuel level sensor (–)		
27	—	—	—
28	—	—	—
29	Illumination control switch (GND)	—	—
30	Illumination control switch (VR)	—	—
31	Illumination control switch (+)	—	—
32	Bright switch signal input	—	—
33	Bright switch signal output	—	—
34	Illumi. (–) PWM	—	—
35	—	—	—
36	—	—	—
37 ←→ Chassis ground	SI-X switch	Switch ON	Continuity exists
38 ←→ Chassis ground	TFT switch	Switch ON	Continuity exists
39	—	—	—
40	GND	Always	Less than 1 Ω

6. Subaru Select Monitor

A: OPERATION

- For detailed operation procedures, refer to “Application help”.
- When the combination meter cannot communicate with Subaru Select Monitor, perform “COMMUNICATION FOR INITIALIZING IMPOSSIBLE”. <Ref. to MET(diag)-8, INSPECTION, Subaru Select Monitor.>

If the DTCs related to the LAN system are not displayed, perform the inspection by connecting the Subaru Select Monitor to another vehicle which is operating properly and by establishing the communication.

B: INSPECTION

1. COMMUNICATION FOR INITIALIZING IMPOSSIBLE

DETECTING CONDITION:

- Defective harness connector
- Power supply circuit malfunction
- Defective combination meter
- Defective CAN communication circuit
- Defective Subaru Select Monitor

TROUBLE SYMPTOM:

Communication is impossible between combination meter and Subaru Select Monitor.

WIRING DIAGRAM:

NOTE:
For the coupling connector, refer to “WIRING SYSTEM”.

- Combination meter system <Ref. to WI-144, WIRING DIAGRAM, Combination Meter System.>
- CAN communication system <Ref. to WI-132, WIRING DIAGRAM, CAN Communication System.>

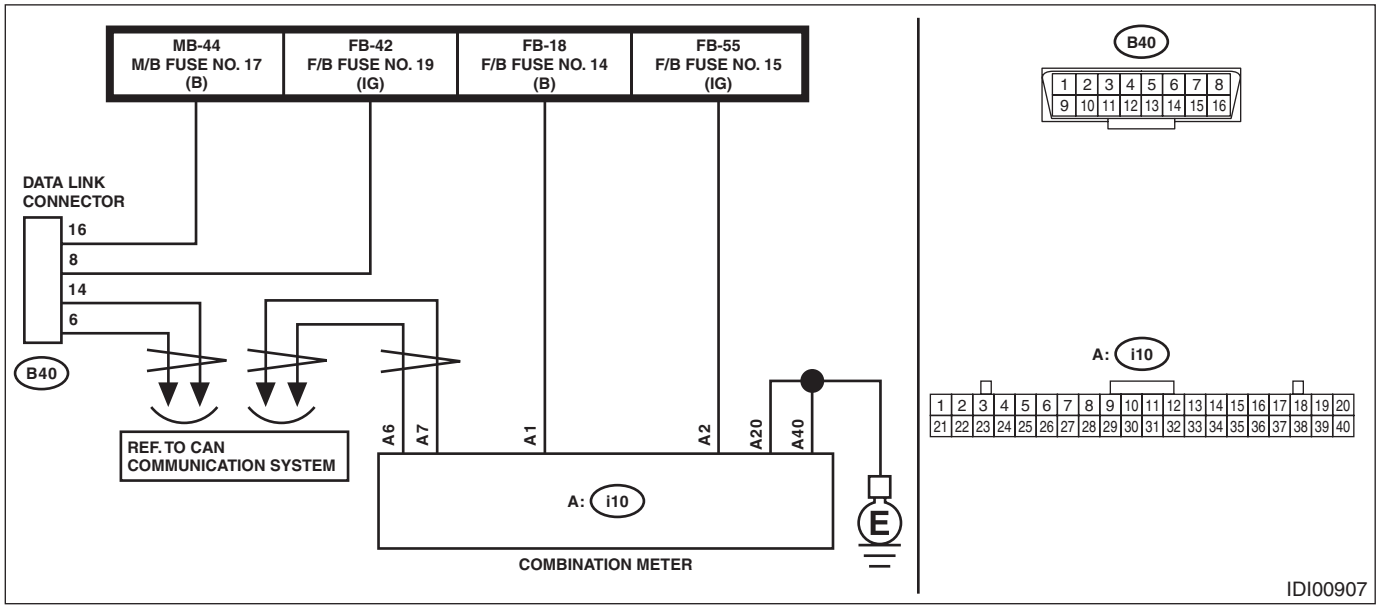

Step		Check	Yes	No
1	**CHECK FUSE.** Check the fuse.	Is there any fault?	Go to step **2**.	Replace the fuse. If the replaced fuse blows out easily, repair the ground short circuit in the harness between the battery and combination meter.

	Step	Check	Yes	No
2	**CHECK HARNESS.** 1) Turn the ignition switch to OFF. 2) Disconnect the connector of combination meter. 3) Turn the ignition switch to ON. 4) Use a tester to measure the voltage between the combination meter connector and chassis ground. ***Connector & terminal*** ***(i10) No. 1 (+) — Chassis ground (–):*** ***(i10) No. 2 (+) — Chassis ground (–):***	Is the voltage 10 — 13 V?	Go to step **3**.	Repair the open circuit of harness between combination meter connector and fuse.
3	**CHECK HARNESS.** Use a tester to measure the resistance between the combination meter connector and chassis ground. ***Connector & terminal*** ***(i10) No. 20 — Chassis ground:*** ***(i10) No. 40 — Chassis ground:***	Is the resistance less than 1 Ω?	Go to step **4**.	Repair the open circuit of harness between combination meter connector and chassis ground.
4	**CHECK LAN SYSTEM.** Inspect LAN system. <Ref. to LAN(diag)-2, Basic Diagnostic Procedure.>	Is there any fault?	Perform the inspection according to the diagnosis for LAN system.	Go to step **5**.
5	**CHECK COMBINATION METER.** 1) Turn the ignition switch to OFF. 2) Connect the combination meter connector. 3) Communicate with the combination meter using the Subaru Select Monitor.	Is communication possible?	The circuit has returned to a normal condition at this time. Reproduce the failure, and then perform the diagnosis again. NOTE: In this case, temporary poor contact of connector, temporary open or short circuit of harness may be the cause.	Replace the combination meter. <Ref. to IDI-11, Combination Meter.>

7. Read Diagnostic Trouble Code (DTC)

A: OPERATION

1) On «Start» display, select «Diagnosis».
2) On «Vehicle selection» display, input the target vehicle information and select «Confirmed».
3) On «Main Menu» display, select «Each System».
4) On «Select System» display, select «Combination Meter» and then select «Enter».
5) On «Select Function» display, select «DTC».

NOTE:
- For detailed operation procedures, refer to “Application help”.
- For details concerning DTC, refer to “List of Diagnostic Trouble Code (DTC)”. <Ref. to MET(diag)-20, List of Diagnostic Trouble Code (DTC).>

8. Clear Memory Mode

A: OPERATION

1) On «Start» display, select «Diagnosis».
2) On «Vehicle selection» display, input the target vehicle information and select «Confirmed».
3) On «Main Menu» display, select «Each System».
4) On «Select System» display, select «Combination Meter» and then select «Enter».
5) On «Select Function» display, select «DTC».
6) On «DTC» display, select «Clear Memory».

NOTE:
For detailed operation procedures, refer to “Application help”.

9. Inspection Mode

A: OPERATION

After the ignition switch is ON, wait for 10 seconds.

10.Read Current Data

A: OPERATION

1) On «Start» display, select «Diagnosis».
2) On «Vehicle selection» display, input the target vehicle information and select «Confirmed».
3) On «Main Menu» display, select «Each System».
4) On «Select System» display, select «Combination Meter» and then select «Enter».
5) On «Select Function» display, select «Data Monitor».

NOTE:
For detailed operation procedures, refer to “Application help”.

B: LIST

Item	Content / display range	Standard	Note
IG on trip number	Time stamp information	—	—
IG on supply system	Time stamp information	—	—
past time after IG on	Time stamp information	—	—
+B voltage	Battery voltage value	Display range: 0 — 25 V	—
IGN voltage	Ignition power supply voltage value	Display range: 0 — 25 V	—
Vehicle speed data	Vehicle speed value detected by meter	Display range: 0 — 255 km/h	—
Engine revolution data	Engine speed value detected by meter	Display range: 0 — 12750	—
Engine coolant water temperature	Engine coolant temperature detected by meter	Display range: 0 — 127.5	—
Fuel level resistance [Ω]	Fuel sensor value display	Display range: 0 — 511.5 Ω	—
Fuel residual quantity indication value [L]	Remaining fuel quantity value display	Display range: 0 — 80 L	—
External air temperature sensing value	External temperature sensor value display	Display range: -40 — 80°C	—
External air temperature indication value	Correction value for displaying ambient temperature	Display range: -40 — 80°C	—
Outside temperature for diagnosis	External temperature sensor value display	Display range: -400 — 419.1°C	—
ODO/TRIP switch input state	Input condition of ODO/TRIP switch is displayed	Switch OFF status: when switch OFF Switch ON status: when switch ON	—
TFT display reshuffling switch input state	Input condition of TFT display change switch is displayed	Switch OFF status: when switch OFF △Switch ON status: when switch ON i/SET Switch ON status: when switch ON ▽Switch ON status: when switch ON	—
Illumination control switch input state	Input condition of illumination control switch is displayed	Display range: 0 — 100%	—
Bright switch input state	Input condition of bright switch is displayed	Bright OFF status: when switch OFF Bright ON status: when switch ON	—
X mode switch input state	Input condition of X mode switch is displayed	Switch OFF status: when switch OFF Switch ON status: when switch ON	—
Act place information	Destination information is displayed	Displays destination	—
Fuel tank volume	Fuel tank capacity is displayed	Display range: 50L/52L/55L/60L/65L/70L	—

Item	Content / display range	Standard	Note
Tire diameter information	Tire diameter information is displayed	Normal: when normal tires attached large Tire: when normal tires not attached	—
Eyesight presence information	EyeSight information is displayed	No function: when not equipped Function effective: when equipped	—
RADAR ASSY B&S presence information	SRVD function information is displayed.	No function: when not equipped Function effective: when equipped	—
SI-X presence information	X mode information is displayed	No function: when not equipped Function effective: when equipped	—
Autoleveler presence information	Auto headlight beam leveling function information is displayed	No function: when not equipped Function effective: when equipped	—
AVN presence information	AVN information is displayed	No function: when not equipped Function effective: when equipped	—
LED headlamp presence information	LED headlight equipment information is displayed	No function: when not equipped Function effective: when equipped	—
SRF OFF information	SRF OFF light equipment information is displayed	No function: when not equipped Function effective: when equipped	—

11.System Operation Check Mode

A: OPERATION

1) On «Start» display, select «Diagnosis».
2) On «Vehicle selection» display, input the target vehicle information and select «Confirmed».
3) On «Main Menu» display, select «Each System».
4) On «Select System» display, select «Combination Meter» and then select «Enter».
5) On «Select Function» display, select «Active Test».
6) On «Active Test» display, select an item to be checked.

NOTE:
- For detailed operation procedures, refer to “Application help”.
- If not equipped (depending on destination area or vehicle equipment condition), process will not go on.

CAUTION:
After executing the system operation check mode, execute the Clear Memory Mode. <Ref. to MET(diag)-11, Clear Memory Mode.>

B: LIST

Meter & Gauge Operation Check Mode	Speedometer	0 km/h(MPH)
		40 km/h(MPH)
		80 km/h(MPH)
		120 km/h(MPH)
		160 km/h(MPH)
		200 km/h(MPH)
		240 km/h(MPH)
		Back
	Tacho meter	0 rpm
		1000 rpm
		2000 rpm
		3000 rpm
		4000 rpm
		5000 rpm
		6000 rpm
		7000 rpm
		Back
	Temp gauge	H-Lock
		H Point
		Z Point
		Dial 2 instructions
		Intermediate stability indication
		Dial 1 instructions
		C Point
		Back
	Fuel gauge	Fuel sender F-point command
		Meter F-scale command
		Meter 3/4 scale command
		Meter 1/2 scale command
		Meter 1/4 scale command
		Fuel warning lit position command
		Meter E scale command
		Fuel sender E-point command
		Back
	Eco gauge	+ side MAX
		+ side middle
		±0
		- side middle
		- side MAX
		Back
	Back	

Display Operation Check Mode	Color check	White indication
		Black indication
		Red indication
		Green indication
		Blue indication
		Gradation indication
		Back
	Odo Trip meter	Display "9"
		Display "8"
		Display "7"
		Display "6"
		Display "5"
		Display "4"
		Display "3"
		Display "2
		Display "1"
		Display "0"
		Back
	Shift Display	Display "P"
		Display "R"
		Display "N"
		Display "D"
		Display "L"
		Display "8"
		Display "7"
		Display "6"
		Display "5"
		Display "4"
		Display "3"
		Display "2
		Display "1"
		Back
	Back	

Lamp check	All lamps lighted	
	High-beam	
	Front fog light	
	Rear fog light	
	Position light	
	HID auto leveler	
	LED LO beam	
	BRAKE	
	ABS	
	VDC operation/failure	
	VDC OFF	
	EPB Operation	
	EPB hill hold	
	Hill start assist OFF/failure	
	Hill descent assist	
	EPS	
	Check E/G	
	Oil pressure	
	Charge	
	AWD	
	AT (CVT) oil temperature	
	EYESIGHT failure	
	LANE OFF	
	P-CR OFF	
	All seats door	
	Driver side door	
	Passenger side door	
	Rear side (right) door	
	Rear side (left) door	
	Reargate open	
	Trunk open	
	No-key warning	
	Driver side seat belt	
	Airbag	
	TPMS	
	Remaining fuel	
	Back	
Illumination check	Brightness check	
Buzzer Check		
Other ECU Output Check	Warning Lamp Box	
Back		

12.User Customizing

A: OPERATION

1) On «Start» display, select «Diagnosis».
2) On «Vehicle selection» display, input the target vehicle information and select «Confirmed».
3) On «Main Menu» display, select «Each System».
4) On «Select System» display, select «Combination Meter» and then select «Enter».
5) On «Select Function» display, select «Customize».
6) On «Customize» display, select an item to be customized.

NOTE:
- For detailed operation procedures, refer to “Application help”.
- If not equipped (depending on destination area or vehicle equipment condition), some items are not displayed.

B: LIST

Items to be displayed	Initial setting value	Customize setting	Note
Air temperature correction	±0°C	–5°C — +5°C	Temperature compensation can only be performed by 1°C (1°C change = 1.8°F) interval.
Mean fuel efficiency correction	±0°%	+10% — –10%	—
Demonstration mode permission / fault permission	OFF	Demonstration mode permission / fault permission	Demonstration mode must not be permitted when used by a customer.

13.List of Diagnostic Trouble Code (DTC)

A: LIST

DTC	Item	Reference
U0073	CAN FAILURE, BUS 'OFF' DETECTION	<Ref. to MET(diag)-21, DTC U0073 CONTROL MODULE COMMUNICATION BUS OFF, Diagnostic Procedure with Diagnostic Trouble Code (DTC).>
U0100	LOST COMMUNICATION WITH ECM/PCM "A"	<Ref. to MET(diag)-21, DTC U0100 LOST COMMUNICATION WITH ECM/PCM "A", Diagnostic Procedure with Diagnostic Trouble Code (DTC).>
U0101	LOST COMMUNICATION WITH TCM	<Ref. to MET(diag)-21, DTC U0101 LOST COMMUNICATION WITH TCM, Diagnostic Procedure with Diagnostic Trouble Code (DTC).>
U0122	LOST COMMUNICATION WITH VEHICLE DYNAMICS CONTROL MODULE	<Ref. to MET(diag)-21, DTC U0122 LOST COMMUNICATION WITH VEHICLE DYNAMICS CONTROL MODULE, Diagnostic Procedure with Diagnostic Trouble Code (DTC).>
U0128	LOST COMMUNICATION WITH PARK BRAKE CONTROL MODULE	<Ref. to MET(diag)-21, DTC U0128 LOST COMMUNICATION WITH PARK BRAKE CONTROL MODULE, Diagnostic Procedure with Diagnostic Trouble Code (DTC).>
U0131	LOST COMMUNICATION WITH POWER STEERING CONTROL MODULE	<Ref. to MET(diag)-21, DTC U0131 LOST COMMUNICATION WITH POWER STEERING CONTROL MODULE, Diagnostic Procedure with Diagnostic Trouble Code (DTC).>
U0140	LOST COMMUNICATION WITH BODY CONTROL MODULE	<Ref. to MET(diag)-21, DTC U0140 LOST COMMUNICATION WITH BODY CONTROL MODULE, Diagnostic Procedure with Diagnostic Trouble Code (DTC).>
U0151	LOST COMMUNICATION WITH RESTRAINTS CONTROL MODULE	<Ref. to MET(diag)-21, DTC U0151 LOST COMMUNICATION WITH RESTRAINTS CONTROL MODULE, Diagnostic Procedure with Diagnostic Trouble Code (DTC).>
U0162	LOST COMMUNICATION WITH AUDIO VISUAL NAVIGATION DISPLAY MODULE	<Ref. to MET(diag)-21, DTC U0162 LOST COMMUNICATION WITH AUDIO VISUAL NAVIGATION DISPLAY MODULE, Diagnostic Procedure with Diagnostic Trouble Code (DTC).>
U0181	LOST COMMUNICATION WITH HEADLAMP LEVELING CONTROL MODULE	<Ref. to MET(diag)-22, DTC U0181 LOST COMMUNICATION WITH HEADLAMP LEVELING CONTROL MODULE, Diagnostic Procedure with Diagnostic Trouble Code (DTC).>
U0327	SOFTWARE INCOMPATIBILITY WITH VEHICLE SECURITY CONTROL MODULE	<Ref. to MET(diag)-22, DTC U0327 SOFTWARE INCOMPATIBILITY WITH VEHICLE SECURITY CONTROL MODULE, Diagnostic Procedure with Diagnostic Trouble Code (DTC).>
U1232	LOST COMMUNICATION WITH REAR/SIDE RADAR CONTROL MODULE	<Ref. to MET(diag)-22, DTC U1232 LOST COMMUNICATION WITH REAR/SIDE RADAR CONTROL MODULE, Diagnostic Procedure with Diagnostic Trouble Code (DTC).>
U1235	LOST COMMUNICATION WITH EyeSight	<Ref. to MET(diag)-22, DTC U1235 LOST COMMUNICATION WITH EyeSight, Diagnostic Procedure with Diagnostic Trouble Code (DTC).>
U1433	INVALID DATA RECEIVED FROM EyeSight	<Ref. to MET(diag)-22, DTC U1433 INVALID DATA RECEIVED FROM EyeSight, Diagnostic Procedure with Diagnostic Trouble Code (DTC).>
B1500	FUEL SENDER OPEN/SHORT-CIRCUIT DETECTION	<Ref. to MET(diag)-23, DTC B1500 FUEL SENDER OPEN/SHORT-CIRCUIT DETECTION, Diagnostic Procedure with Diagnostic Trouble Code (DTC).>
B1502	WARNING BOX COMMUNICATION MALFUNCTION	<Ref. to MET(diag)-25, DTC B1502 WARNING BOX COMMUNICATION MALFUNCTION, Diagnostic Procedure with Diagnostic Trouble Code (DTC).>
B1507	EXTERNAL AIR TEMPERATURE OPEN/SHORT-CIRCUIT DETECTION	<Ref. to MET(diag)-27, DTC B1507 EXTERNAL AIR TEMPERATURE OPEN/SHORT-CIRCUIT DETECTION, Diagnostic Procedure with Diagnostic Trouble Code (DTC).>

14.Diagnostic Procedure with Diagnostic Trouble Code (DTC)

A: DTC U0073 CONTROL MODULE COMMUNICATION BUS OFF

Detected when CAN line abnormality is detected.

NOTE:
Perform the diagnosis for LAN system. <Ref. to LAN(diag)-2, PROCEDURE, Basic Diagnostic Procedure.>

B: DTC U0100 LOST COMMUNICATION WITH ECM/PCM "A"

Detected when CAN data from the engine control module (ECM) does not arrive.

NOTE:
Perform the diagnosis for LAN system. <Ref. to LAN(diag)-2, PROCEDURE, Basic Diagnostic Procedure.>

C: DTC U0101 LOST COMMUNICATION WITH TCM

Detected when CAN data from TCM does not arrive.

NOTE:
Perform the diagnosis for LAN system. <Ref. to LAN(diag)-2, PROCEDURE, Basic Diagnostic Procedure.>

D: DTC U0122 LOST COMMUNICATION WITH VEHICLE DYNAMICS CONTROL MODULE

Detected when CAN data from VDC does not arrive.

NOTE:
Perform the diagnosis for LAN system. <Ref. to LAN(diag)-2, PROCEDURE, Basic Diagnostic Procedure.>

E: DTC U0128 LOST COMMUNICATION WITH PARK BRAKE CONTROL MODULE

Detected when CAN data from VDC CM does not arrive.

NOTE:
Perform the diagnosis for LAN system. <Ref. to LAN(diag)-2, PROCEDURE, Basic Diagnostic Procedure.>

F: DTC U0131 LOST COMMUNICATION WITH POWER STEERING CONTROL MODULE

Detected when CAN data is not received from electric power steering CM.

NOTE:
Perform the diagnosis for LAN system. <Ref. to LAN(diag)-2, PROCEDURE, Basic Diagnostic Procedure.>

G: DTC U0140 LOST COMMUNICATION WITH BODY CONTROL MODULE

Detected when CAN data is not received from body integrated unit.

NOTE:
Perform the diagnosis for LAN system. <Ref. to LAN(diag)-2, PROCEDURE, Basic Diagnostic Procedure.>

H: DTC U0151 LOST COMMUNICATION WITH RESTRAINTS CONTROL MODULE

Detected when CAN data is not received from airbag CM.

NOTE:
Perform the diagnosis for LAN system. <Ref. to LAN(diag)-2, PROCEDURE, Basic Diagnostic Procedure.>

I: DTC U0162 LOST COMMUNICATION WITH AUDIO VISUAL NAVIGATION DISPLAY MODULE

Detected when CAN data from AVN does not arrive.

NOTE:
Perform the diagnosis for LAN system. <Ref. to LAN(diag)-2, PROCEDURE, Basic Diagnostic Procedure.>

J: DTC U0181 LOST COMMUNICATION WITH HEADLAMP LEVELING CONTROL MODULE

Detected when CAN data is not received from auto headlight beam leveler CM.

NOTE:
Perform the diagnosis for LAN system. <Ref. to LAN(diag)-2, PROCEDURE, Basic Diagnostic Procedure.>

K: DTC U0327 SOFTWARE INCOMPATIBILITY WITH VEHICLE SECURITY CONTROL MODULE

Detected when CAN data is not received from keyless access CM.

NOTE:
Perform the diagnosis for LAN system. <Ref. to LAN(diag)-2, PROCEDURE, Basic Diagnostic Procedure.>

L: DTC U1232 LOST COMMUNICATION WITH REAR/SIDE RADAR CONTROL MODULE

Detected when CAN data from the radar sensor does not arrive.

NOTE:
Perform the diagnosis for LAN system. <Ref. to LAN(diag)-2, PROCEDURE, Basic Diagnostic Procedure.>

M: DTC U1235 LOST COMMUNICATION WITH EyeSight

Detected when CAN data from the stereo camera does not arrive.

NOTE:
Perform the diagnosis for LAN system. <Ref. to LAN(diag)-2, PROCEDURE, Basic Diagnostic Procedure.>

N: DTC U1433 INVALID DATA RECEIVED FROM EyeSight

Detected when CAN data from the stereo camera does not arrive.

NOTE:
Perform the diagnosis for LAN system. <Ref. to LAN(diag)-2, PROCEDURE, Basic Diagnostic Procedure.>

O: DTC B1500 FUEL SENDER OPEN/SHORT-CIRCUIT DETECTION

DTC DETECTING CONDITION:
The fuel gauge circuit is open or shorted.
TROUBLE SYMPTOM:
- Defective fuel gauge.
- Fuel level warning light blinks.

WIRING DIAGRAM:

NOTE:
For the coupling connector, refer to “WIRING SYSTEM”.
Fuel gauge system <Ref. to WI-241, WIRING DIAGRAM, Fuel Gauge System.>

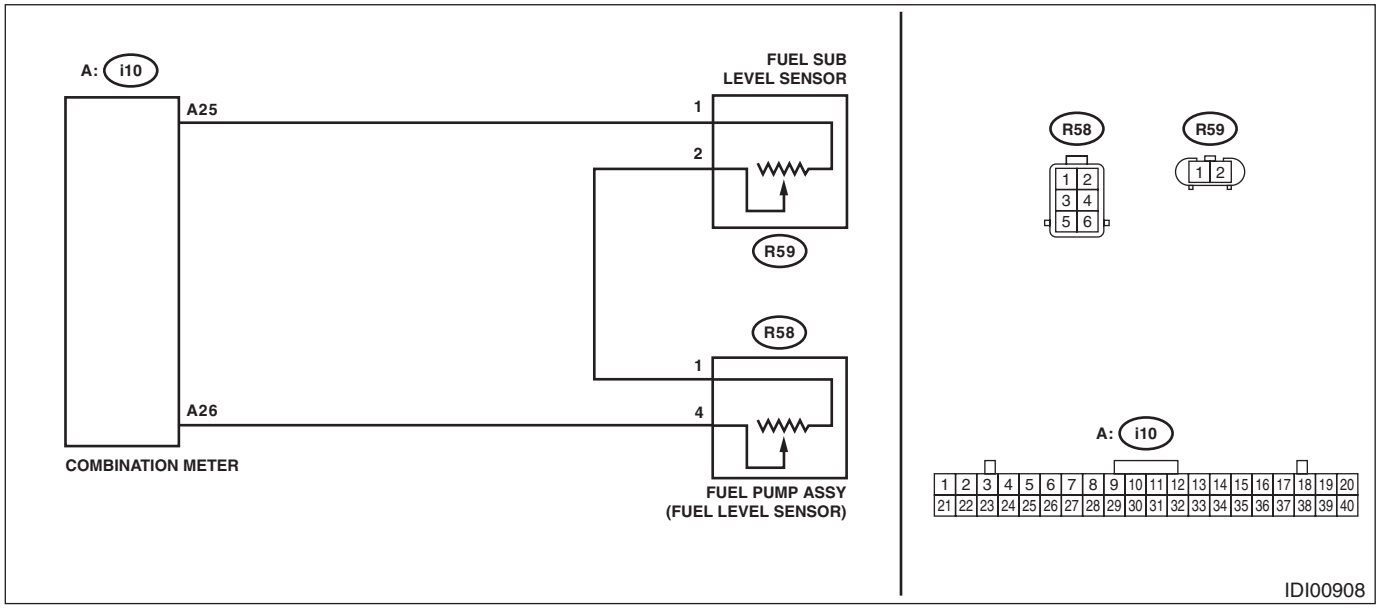

	Step	Check	Yes	No
1	**CHECK DTC.** Read the DTC of the combination meter using the Subaru Select Monitor. <Ref. to MET(diag)-10, Read Diagnostic Trouble Code (DTC).>	Is DTC B1500 displayed? (Current malfunction)	Go to step **2**.	Go to step **7**.
2	**CHECK COMBINATION METER.** 1) Check the operation of combination meter using Subaru Select Monitor. 2) From the «System Operation Check Mode», select «Fuel Meter Operation» and «Remaining fuel warning». <Ref. to MET(diag)-15, System Operation Check Mode.>	Is the operation of combination meter OK?	Go to step **3**.	Replace the combination meter. <Ref. to IDI-11, Combination Meter.>
3	**CHECK HARNESS (OPEN CIRCUIT).** 1) Turn the ignition switch to OFF. 2) Disconnect the meter connector and the fuel sub level sensor connector and the fuel level sensor connector. 3) Using the tester, measure the resistance between terminals. ***Connector & terminal*** ***(i10) No. 25 — (R59) No. 1:*** ***(i10) No. 26 — (R58) No. 4:*** ***(R59) No. 2 — (R58) No. 1:***	Is the resistance 10 Ω or less?	Go to step **4**.	Repair the open circuit of harness or replace harness.

	Step	Check	Yes	No
4	**CHECK HARNESS (GROUND SHORT CIRCUIT).** Using the tester, measure the resistance between terminals. ***Connector & terminal*** ***(i10) No. 25 — Chassis ground:*** ***(i10) No. 26 — Chassis ground:***	Is the resistance 10 Ω or less?	Repair the short circuit of harness or replace harness.	Go to step **5**.
5	**CHECK FUEL SUB LEVEL SENSOR.** Check the fuel sub level sensor as a single part. <Ref. to FU(H4DO)-125, Fuel Sub Level Sensor.> <Ref. to FU(H6DO)-128, Fuel Sub Level Sensor.>	Is the sensor normal?	Go to step **6**.	Replace the sensor. <Ref. to FU(H4DO)-125, Fuel Sub Level Sensor.> <Ref. to FU(H6DO)-128, Fuel Sub Level Sensor.>
6	**CHECK FUEL LEVEL SENSOR.** Check the fuel level sensor as a single part. <Ref. to FU(H4DO)-122, Fuel Level Sensor.> <Ref. to FU(H6DO)-125, Fuel Level Sensor.>	Is the sensor normal?	Go to step **7**.	Replace the sensor. <Ref. to FU(H4DO)-122, Fuel Level Sensor.> <Ref. to FU(H6DO)-125, Fuel Level Sensor.>
7	**CHECK CONNECTOR.** 1) Turn the ignition switch to OFF. 2) Disconnect connectors.	Is there poor contact of connector?	Repair or replace the poor contact of connector.	Go to step **8**.
8	**CHECK CURRENT DATA.** Using the Subaru Select Monitor, display «Fuel level resistance» from «Data monitor». <Ref. to MET(diag)-13, Read Current Data.>	Does the data display 10 — 570 Ω?	Even if DTC is displayed, the circuit has returned to a normal condition at this time. Reproduce the failure, and then perform the diagnosis again. NOTE: In this case, temporary poor contact of connector, temporary open or short circuit of harness may be the cause.	Replace the combination meter. <Ref. to IDI-11, Combination Meter.>

P: DTC B1502 WARNING BOX COMMUNICATION MALFUNCTION

DTC DETECTING CONDITION:
Communication error between combination meter and spot map light
TROUBLE SYMPTOM:
Malfunction of the warning light inside the spot map light
WIRING DIAGRAM:

NOTE:
For the coupling connector, refer to “WIRING SYSTEM”.
Combination meter system <Ref. to WI-144, WIRING DIAGRAM, Combination Meter System.>

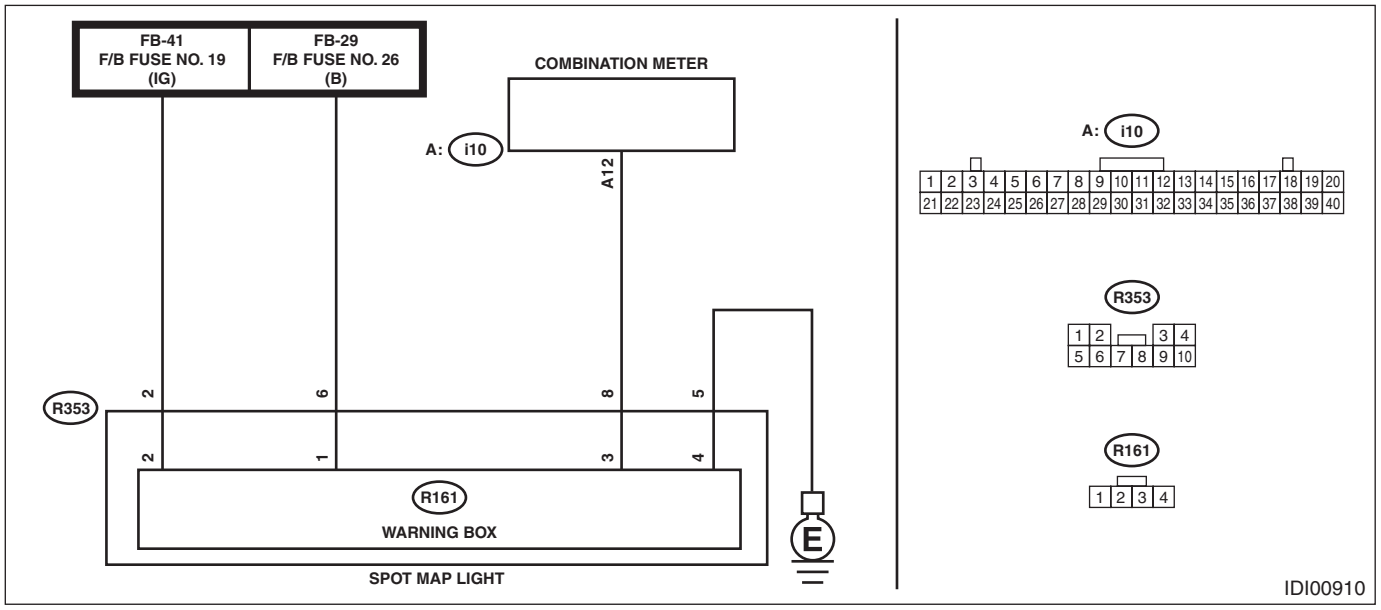

Step		Check	Yes	No
1	**CHECK POWER SUPPLY CIRCUIT.** Turn the ignition switch to ON, and make sure that the combination meter operates properly.	Does it operate properly?	Go to step **2**.	Check the combination meter power supply circuit.
2	**CHECK DTC.** Read the DTC. <Ref. to MET(diag)-10, Read Diagnostic Trouble Code (DTC).>	Is DTC B1502 displayed? (Current malfunction)	Go to step **3**.	Go to step **4**.
3	**CHECK COMMUNICATION CIRCUIT (HARNESS) (OPEN CIRCUIT).** 1) Turn the ignition switch to OFF. 2) Disconnect the combination meter connector. 3) Disconnect the warning box connector. 4) Measure the resistance between combination meter connector and warning box connector. ***Connector & terminal*** ***(i10) No. 12 — (R161) No. 3:***	Is the resistance less than 10 Ω?	Replace the warning box. <Ref. to IDI-24, Warning Box.>	Repair the open circuit of harness between combination meter connector and warning box connector.

	Step	Check	Yes	No
4	**CHECK CONNECTOR.** 1) Turn the ignition switch to OFF. 2) Disconnect the combination meter connector. 3) Disconnect the warning box connector.	Is there any fault in the connector?	Repair or replace the connector.	Even if DTC is displayed, the circuit has returned to a normal condition at this time. Reproduce the failure, and then perform the diagnosis again. NOTE: In this case, temporary poor contact of connector, temporary open or short circuit of harness may be the cause.

Q: DTC B1507 EXTERNAL AIR TEMPERATURE OPEN/SHORT-CIRCUIT DETECTION

DTC DETECTING CONDITION:
Open or short circuit in ambient sensor
TROUBLE SYMPTOM:
- Defective ambient temperature display
- Defective air conditioner operation

WIRING DIAGRAM:

NOTE:
For the coupling connector, refer to “WIRING SYSTEM”.
Air conditioning system <Ref. to WI-94, WIRING DIAGRAM, Air Conditioning System.>

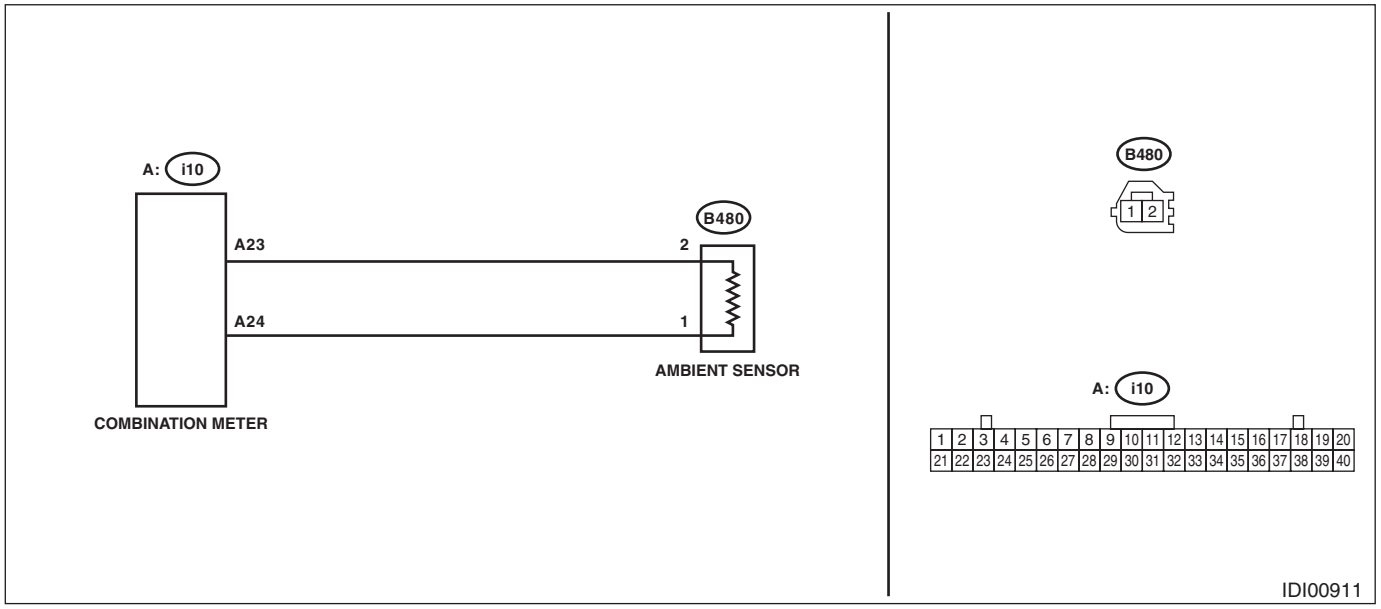

Step		Check	Yes	No
1	**CHECK DTC.** Read the DTC of the meter using the Subaru Select Monitor. <Ref. to MET(diag)-10, Read Diagnostic Trouble Code (DTC).>	Is DTC B1507 a current malfunction?	Go to step **2**.	Go to step **6**.
2	**CHECK CURRENT DATA.** Using the Subaru Select Monitor, display «Ambient air temperature» from «Data monitor». <Ref. to MET(diag)-13, Read Current Data.>	Is data displayed?	Even if DTC is displayed, the circuit has returned to a normal condition at this time. Reproduce the failure, and then perform the diagnosis again. NOTE: In this case, temporary poor contact of connector, temporary open or short circuit of harness may be the cause.	Go to step **3**.

	Step	Check	Yes	No
3	**CHECK HARNESS (OPEN CIRCUIT).** 1) Turn the ignition switch to OFF. 2) Disconnect the meter connector and ambient sensor connector. 3) Using the tester, measure the resistance between terminals. ***Connector & terminal*** ***(i10) No. 23 — (B480) No. 2:*** ***(i10) No. 24 — (B480) No. 1:***	Is the resistance 10 Ω or less?	Go to step **4**.	Repair the open circuit of harness or replace harness.
4	**CHECK HARNESS (GROUND SHORT CIRCUIT).** Using the tester, measure the resistance between terminals. ***Connector & terminal*** ***(i10) No. 23 — Chassis ground:*** ***(i10) No. 24 — Chassis ground:***	Is the resistance 10 Ω or less?	Repair the short circuit of harness or replace harness.	Go to step **5**.
5	**CHECK AMBIENT SENSOR.** Perform the inspection of ambient sensor unit. <Ref. to AC-71, Ambient Sensor.>	Is the sensor normal?	Go to step **6**.	Replace the sensor. <Ref. to AC-71, Ambient Sensor.>
6	**CHECK CONNECTOR.** 1) Turn the ignition switch to OFF. 2) Disconnect connectors.	Is there poor contact of connector?	Repair or replace the poor contact of connector.	Even if DTC is displayed, the circuit has returned to a normal condition at this time. Reproduce the failure, and then perform the diagnosis again. NOTE: In this case, temporary poor contact of connector, temporary open or short circuit of harness may be the cause.

SEATS

SE

Page

1. General Description 2
2. Front Seat 11
3. Rear Seat 33
4. Power Seat System 52
5. Seat Heater System 75

1. General Description

A: COMPONENT

1. FRONT SEAT

- Manual seat - driver's seat

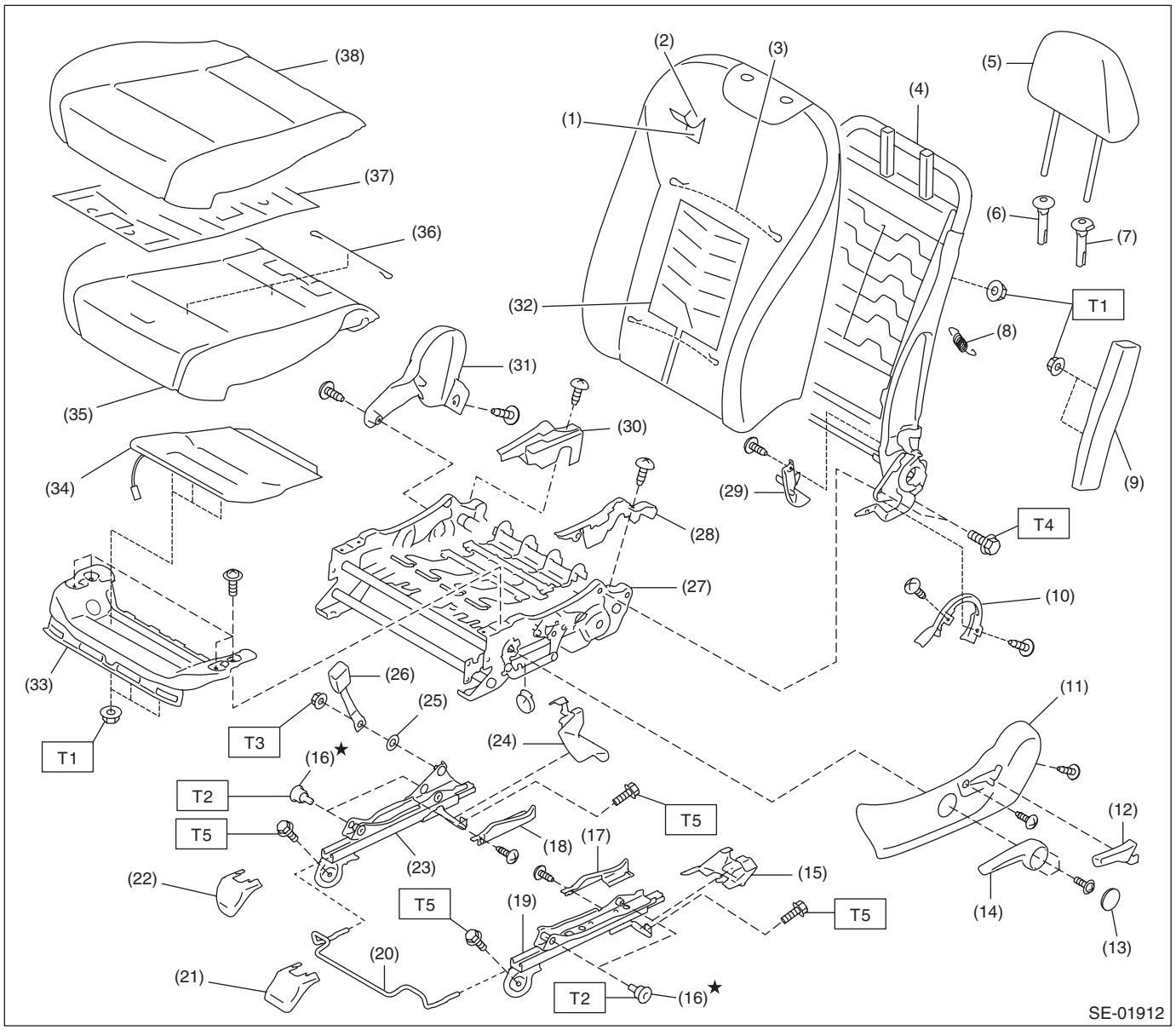

(1) Pad ASSY - front seat backrest
(2) Cover COMPL - front backrest
(3) Wire set - front seat backrest
(4) Frame ASSY - front backrest
(5) Headrest ASSY - front
(6) Bushing - free headrest
(7) Bushing - lock headrest
(8) Hook spring - backrest front
(9) Side airbag module
(10) Cover - hinge base front seat
(11) Cover - hinge front seat OUT
(12) Lever - reclining
(13) Cap - lifter lever
(14) Knob - lifter
(15) Cover - bolt rear OUT
(16) TORX® bolt
(17) Inner cover - slide rail OUT
(18) Inner cover - slide rail INN
(19) Slide rail ASSY - OUT
(20) Lever - towel bar
(21) Cover - bolt front OUT
(22) Cover - bolt front INN
(23) Slide rail ASSY - INN
(24) Cover - bolt rear INN
(25) Wave washer
(26) Seat belt inner - front
(27) Frame ASSY - front seat cushion
(28) Cover - frame front seat cushion OUT
(29) Cover inner - front
(30) Cover - frame front seat cushion INN
(31) Cover - hinge front seat INN
(32) Heater module - front seat backrest
(33) Panel - front seat
(34) Seat cushion airbag module
(35) Pad ASSY - front seat cushion
(36) Wire set - front seat cushion
(37) Heater module - front seat cushion
(38) Cover COMPL - front seat cushion

Tightening torque: N·m (kgf-m, ft-lb)

T1: 6 (0.6, 4.4)
T2: 15 (1.5, 11.1)
T3: 38 (3.9, 28.0)
T4: 52 (5.3, 38.4)
T5: 53 (5.4, 39.1)

- Manual seat - passenger's seat

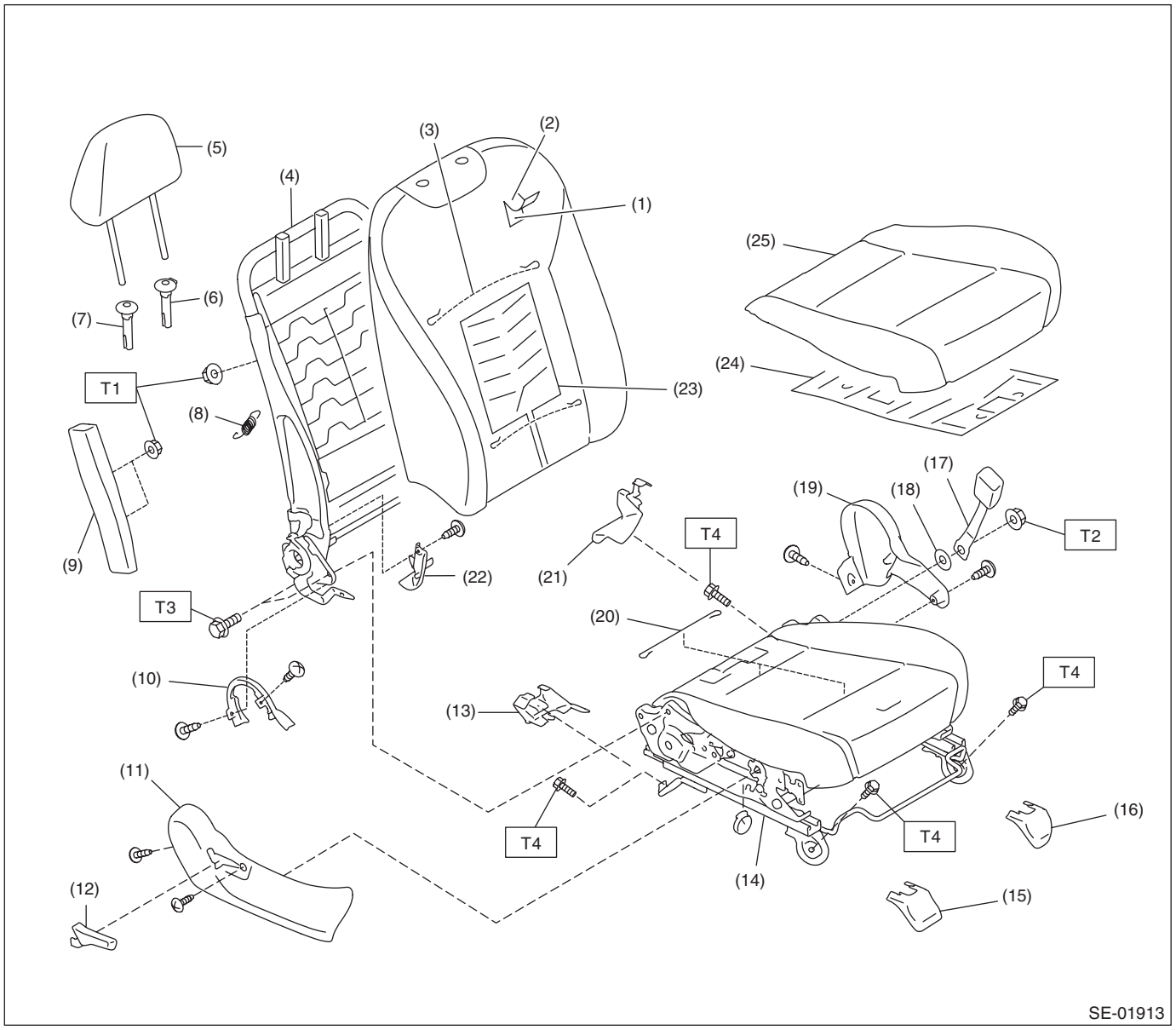

(1) Pad ASSY - front seat backrest
(2) Cover COMPL - front backrest
(3) Wire set - front seat backrest
(4) Frame ASSY - front backrest
(5) Headrest ASSY - front
(6) Bushing - lock headrest
(7) Bushing - free headrest
(8) Hook spring - backrest front
(9) Side airbag module
(10) Cover - hinge base front seat
(11) Cover - hinge front seat OUT
(12) Lever - reclining
(13) Cover - bolt rear OUT
(14) Seat cushion pad and frame ASSY
(15) Cover - bolt front OUT
(16) Cover - bolt front INN
(17) Seat belt inner - front
(18) Wave washer
(19) Cover - hinge front seat INN
(20) Wire set - front seat cushion
(21) Cover - bolt rear INN
(22) Cover - inner front
(23) Seat heater module - front seat backrest
(24) Seat heater module - front seat cushion
(25) Cover COMPL - front seat cushion

Tightening torque: N·m (kgf-m, ft-lb)	
T1:	*6 (0.6, 4.4)*
T2:	*38 (3.9, 28.0)*
T3:	*52 (5.3, 38.4)*
T4:	*53 (5.4, 39.1)*

- Power seat - driver's seat

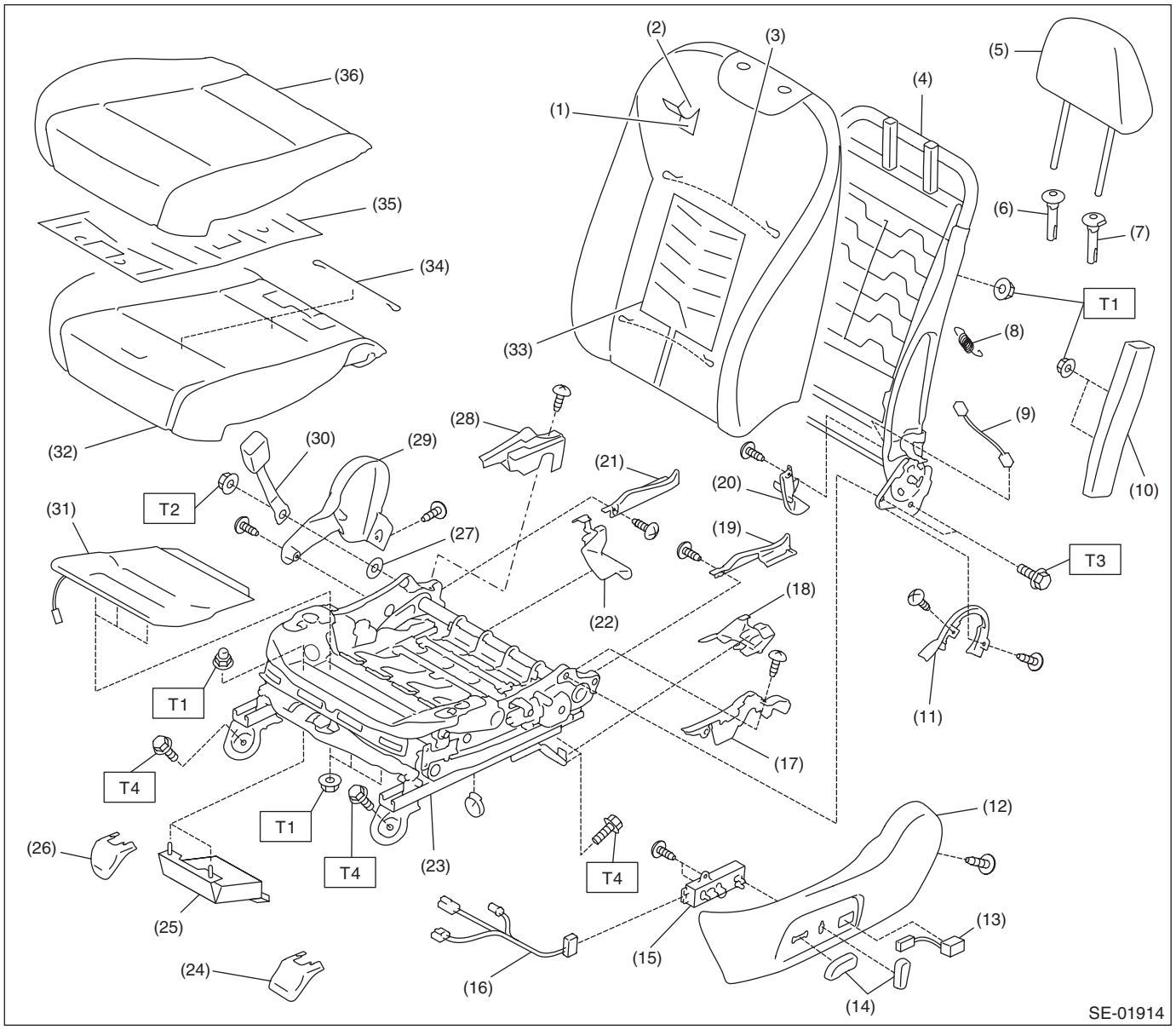

(1) Pad ASSY - front seat backrest
(2) Cover COMPL - front backrest
(3) Wire set - front seat backrest
(4) Frame ASSY - front backrest
(5) Headrest ASSY - front
(6) Bushing - lock headrest
(7) Bushing - free headrest
(8) Hook spring - backrest front
(9) Harness ASSY - reclining
(10) Side airbag module
(11) Cover - hinge base front seat
(12) Cover - hinge front seat OUT
(13) Switch ASSY - lumbar
(14) Knob - power seat
(15) Switch ASSY - power seat
(16) Harness ASSY - power seat
(17) Cover - frame front seat cushion OUT
(18) Cover - bolt rear OUT
(19) Cover - slide rail OUT
(20) Cover - inner front
(21) Cover - slide rail INN
(22) Cover - bolt rear INN
(23) Frame ASSY - front seat cushion
(24) Cover - bolt front OUT
(25) Seat memory unit
(26) Cover - bolt front INN
(27) Wave washer
(28) Cover - frame front seat cushion INN
(29) Cover - hinge front seat INN
(30) Seat belt inner - front
(31) Seat cushion airbag module
(32) Pad ASSY - front seat cushion
(33) Seat heater module - front seat backrest
(34) Wire set - front seat cushion
(35) Seat heater module - front seat cushion
(36) Cover COMPL - front seat cushion

Tightening torque: N·m (kgf-m, ft-lb)

T1: 6 (0.6, 4.4)
T2: 38 (3.9, 28.0)
T3: 52 (5.3, 38.4)
T4: 53 (5.4, 39.1)

- Power seat - passenger's seat

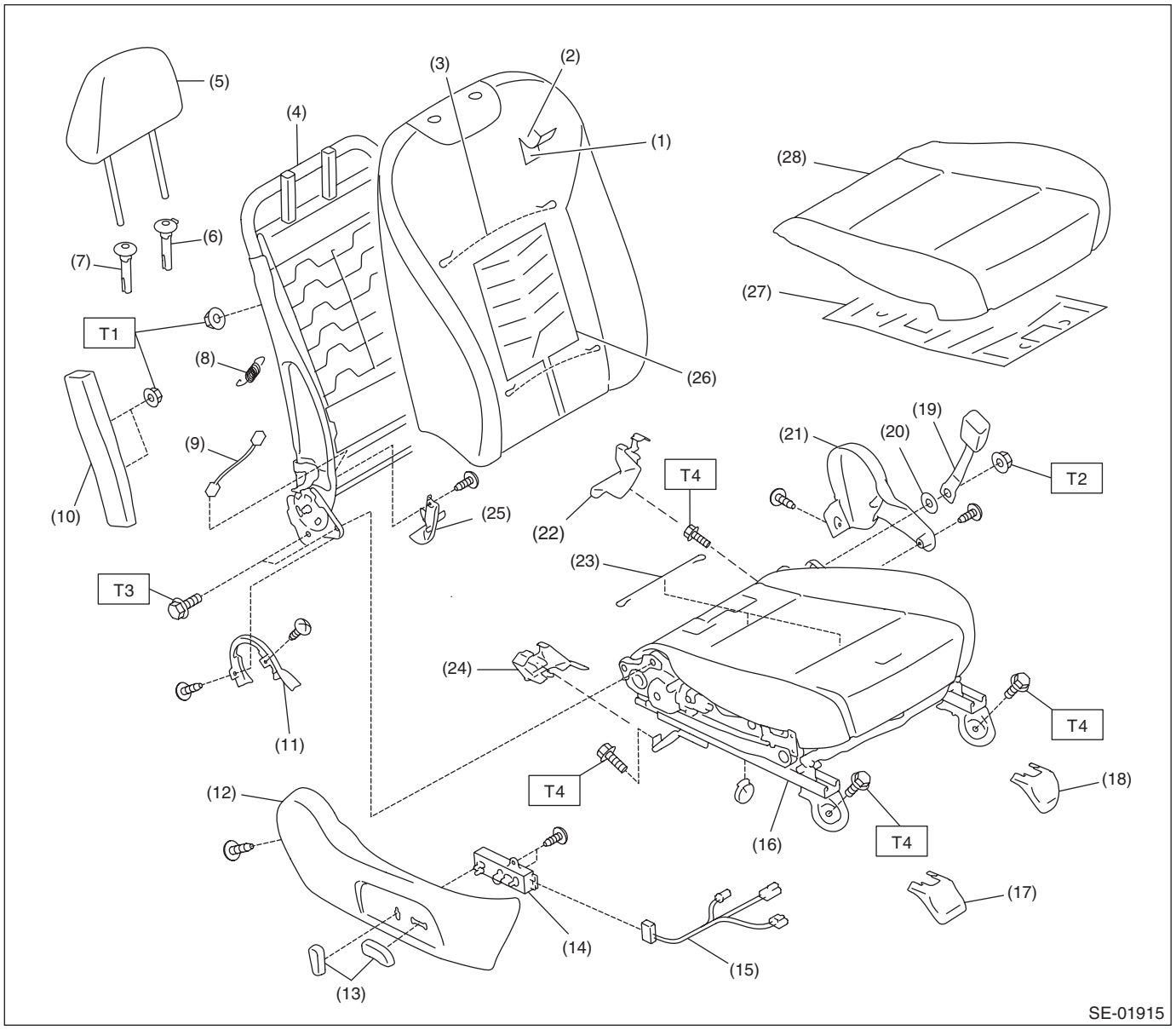

(1) Pad ASSY - front seat backrest
(2) Cover COMPL - front backrest
(3) Wire set - front seat backrest
(4) Frame ASSY - front backrest
(5) Headrest ASSY - front
(6) Bushing - lock headrest
(7) Bushing - free headrest
(8) Hook spring - backrest front
(9) Harness ASSY - reclining
(10) Side airbag module
(11) Cover - hinge base front seat
(12) Cover - hinge front seat OUT
(13) Knob - power seat
(14) Switch ASSY - power seat
(15) Harness ASSY - power seat
(16) Seat cushion pad and frame ASSY
(17) Cover - bolt front OUT
(18) Cover - bolt front INN
(19) Seat belt inner - front
(20) Wave washer
(21) Cover - hinge front seat INN
(22) Cover - bolt rear INN
(23) Wire set - front seat cushion
(24) Cover - bolt rear OUT
(25) Cover - inner front
(26) Seat heater module - front seat backrest
(27) Seat heater module - front seat cushion
(28) Cover COMPL - front seat cushion

Tightening torque: N·m (kgf-m, ft-lb)

T1: 6 (0.6, 4.4)
T2: 38 (3.9, 28.0)
T3: 52 (5.3, 38.4)
T4: 53 (5.4, 39.1)

2. REAR SEAT

- Sedan model

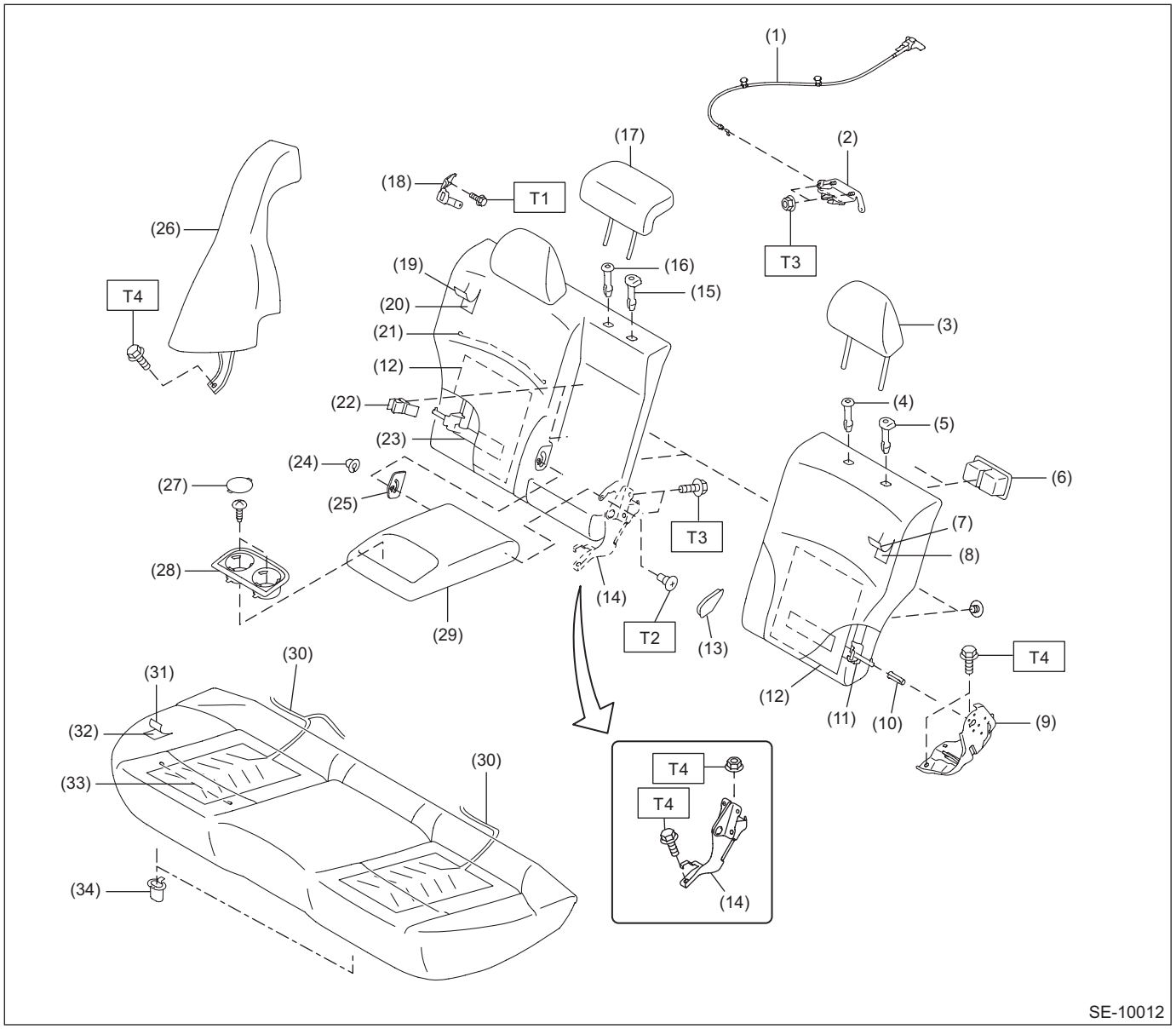

(1) Release lever ASSY
(2) Backrest lock ASSY
(3) Headrest ASSY - rear
(4) Bushing - free headrest rear
(5) Bushing - lock headrest rear
(6) Striker cover
(7) Cover COMPL - backrest LH
(8) Pad ASSY - backrest LH
(9) Hinge ASSY - LH/RH
(10) Bushing - backrest
(11) Frame ASSY - backrest LH
(12) Seat heater module - backrest
(13) Cover - armrest hinge OUT
(14) Hinge ASSY - CTR
(15) Bushing - lock headrest rear CTR
(16) Bushing - free headrest rear CTR
(17) Headrest ASSY - rear CTR
(18) Side pad BRKT
(19) Cover COMPL - backrest RH
(20) Pad ASSY - backrest RH
(21) Wire set - rear backrest
(22) Hook
(23) Frame ASSY - backrest RH
(24) Bushing - armrest
(25) Cover - armrest hinge INN
(26) Side pad ASSY - backrest
(27) Rubber - cup holder
(28) Cup holder ASSY
(29) Armrest ASSY
(30) Seat heater module - seat cushion
(31) Cover COMPL - seat cushion
(32) Pad ASSY - seat cushion
(33) Wire set - rear cushion
(34) Hook - rear seat

Tightening torque: N·m (kgf-m, ft-lb)
T1: 7.5 (0.8, 5.5)
T2: 9.8 (1.0, 7.2)
T3: 24.5 (2.5, 18.1)
T4: 53 (5.4, 39.1)

- OUTBACK model

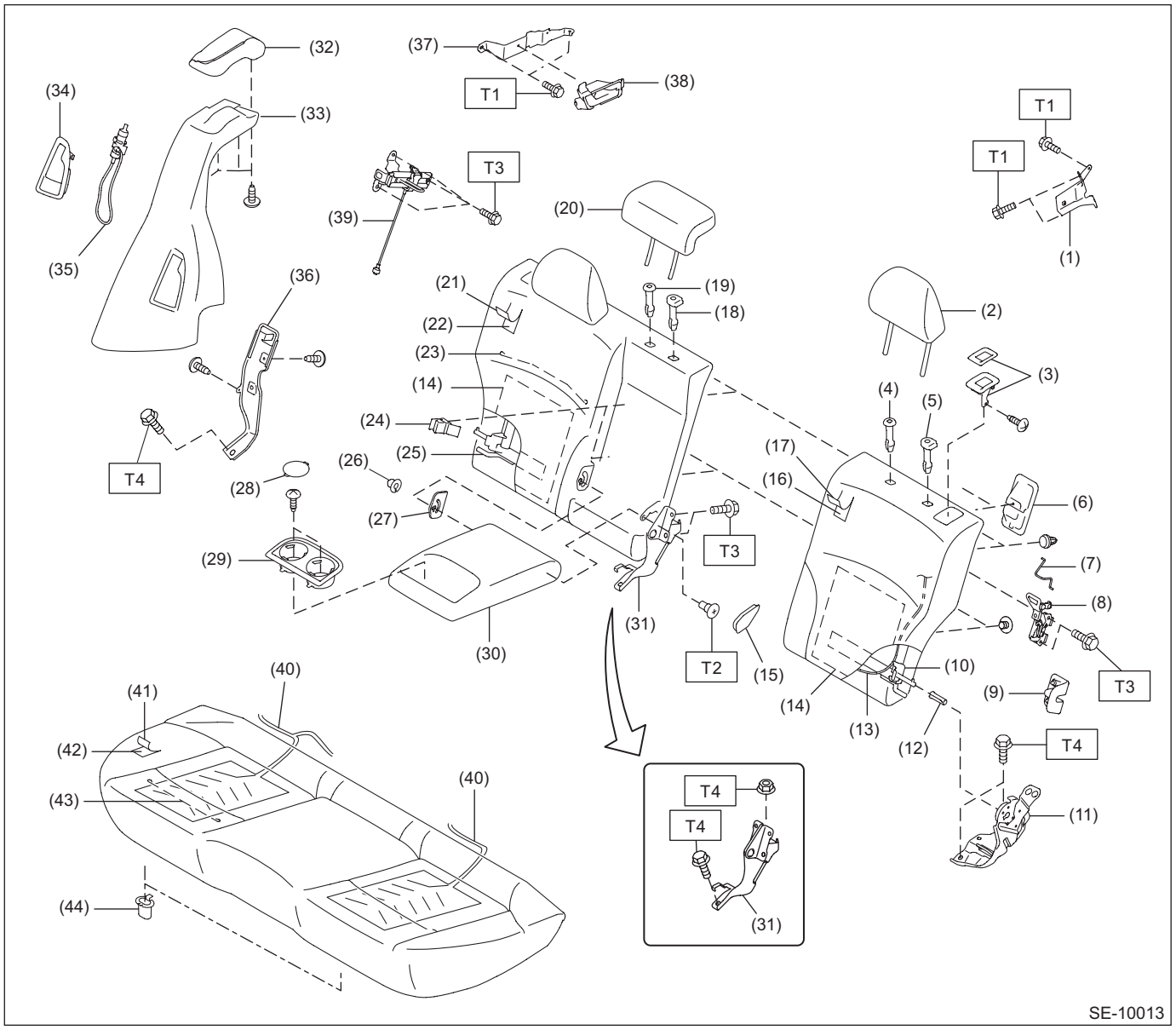

(1)	Remote lever BRKT LH	(18)	Bushing - lock headrest rear CTR	(35)	Reclining cable
(2)	Headrest ASSY - rear	(19)	Bushing - free headrest rear CTR	(36)	Side pad BRKT

(3) Lock button
(4) Bushing - free headrest rear
(5) Bushing - lock headrest rear
(6) Anchor cover
(7) Wire
(8) Lock ASSY - rear backrest
(9) Cover ASSY - lock
(10) Frame ASSY - backrest LH
(11) Hinge ASSY - LH/RH
(12) Bushing - backrest
(13) Backrest cable
(14) Seat heater module - backrest
(15) Cover - armrest hinge OUT
(16) Pad ASSY - backrest LH
(17) Cover COMPL - backrest LH
(20) Headrest ASSY - rear CTR
(21) Cover COMPL - backrest RH
(22) Pad ASSY - backrest RH
(23) Wire set - rear backrest
(24) Hook
(25) Frame ASSY - backrest RH
(26) Bushing - armrest
(27) Cover - armrest hinge INN
(28) Rubber - cup holder
(29) Cup holder ASSY
(30) Armrest ASSY
(31) Hinge ASSY - CTR
(32) Belt guide
(33) Side pad ASSY - backrest
(34) Lever ASSY - reclining
(37) Remote lever BRKT RH
(38) Lever ASSY - rear backrest
(39) Striker - backrest rear
(40) Seat heater module - seat cushion
(41) Cover COMPL - seat cushion
(42) Pad ASSY - seat cushion
(43) Wire set - rear cushion
(44) Hook - rear seat

Tightening torque: N·m (kgf-m, ft-lb)
T1: 7.5 (0.8, 5.5)
T2: 24.5 (2.5, 18.1)
T3: 33 (3.4, 24.3)
T4: 53 (5.4, 39.1)

B: CAUTION

When removing the front seat from the vehicle, refer to “CAUTION” of “General Description” in “AIRBAG SYSTEM” section. <Ref. to AB-10, CAUTION, General Description.>

C: PREPARATION TOOL

1. SPECIAL TOOL

Subaru Select Monitor

ILLUSTRATION	TOOL NUMBER	DESCRIPTION	REMARKS
 STSSM4	— (Newly adopted tool)	SUBARU SELECT MONITOR 4	Used for setting of each function and trouble-shooting for electrical system. NOTE: For detailed operation procedures of Subaru Select Monitor 4, refer to “Application help”.

2. GENERAL TOOL

TOOL NAME	REMARKS
Long nose pliers	Used for removing the hog ring.
Hog ring pliers	Used for installing the hog ring.
Circuit tester	Used for measuring resistance, voltage and current.
DST-i	Used together with Subaru Select Monitor 4.

2. Front Seat

A: REMOVAL

CAUTION:
Refer to "CAUTION" of "General Description" before handling the airbag system components. <Ref. to AB-10, CAUTION, General Description.>

1) Remove the headrest assembly - front.
2) Disconnect the ground terminal from the battery sensor, and wait for at least 60 seconds before starting work. <Ref. to RC-4, BATTERY, NOTE, Repair Contents.>

NOTE:
For models with power seat, remove the slide rail installing bolt before disconnecting the ground terminal from the battery sensor.

3) Remove the slide rail assembly installing bolt.
   (1) Tilt the backrest assembly forward.
   (2) Press the bolt cover claw (a) to remove the bolt cover.
   (3) Remove the slide rail installing bolt.

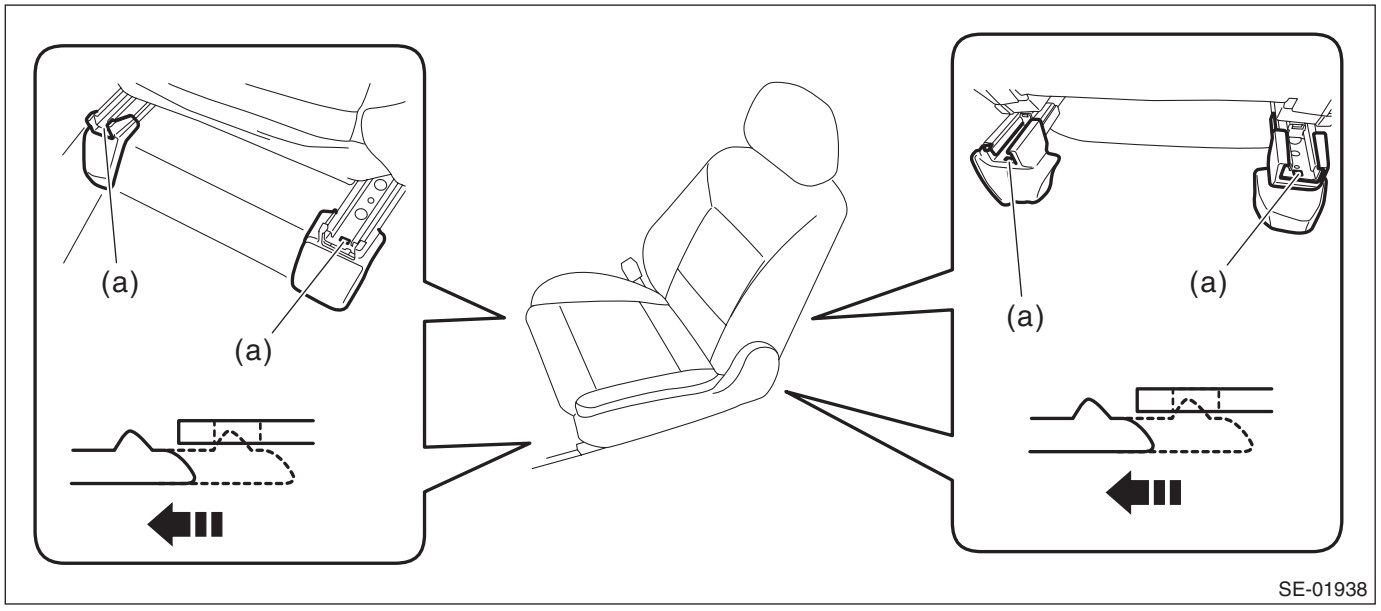

4) Disconnect the connector under the front seat.
- Seat belt warning light connector (driver's seat)
- Occupant detection system harness connector (passenger's seat) <Ref. to OD(diag)-15, OCCUPANT DETECTION SYSTEM (BETWEEN AIRBAG REAR HARNESS AND SEAT HARNESS), PROCEDURE, Airbag Connector.>
- Side airbag connector <Ref. to AB-24, SIDE AIRBAG MODULE, PROCEDURE, Airbag Connector.>
- Seat cushion airbag connector <Ref. to AB-24, SEAT CUSHION AIRBAG MODULE AND BUCKLE SWITCH RH, PROCEDURE, Airbag Connector.>
- Seat heater connector (model with seat heater)
- Buckle switch RH connector (passenger's seat) <Ref. to AB-24, SEAT CUSHION AIRBAG MODULE AND BUCKLE SWITCH RH, PROCEDURE, Airbag Connector.>

5) Take out the front seat from the vehicle.

CAUTION:
Be careful not to damage the body.

B: INSTALLATION

1) Bring the front seat inside the vehicle.

CAUTION:
Be careful not to damage the body.
2) Connect the connectors located under the front seat.
3) Install the seat assembly.

CAUTION:
Tighten the slide rail assembly installing bolts in the order as shown in the figure, in several steps by gradually increasing the torque until they reach the specified torque.

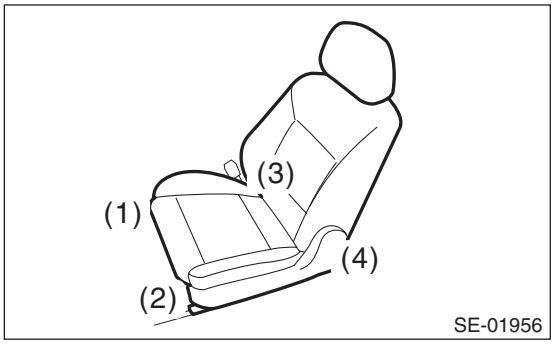

Tightening torque:
Front seat assembly: 53 N·m (5.4 kgf-m, 39.1 ft-lb)
4) Connect the ground terminal to battery sensor. <Ref. to RC-4, BATTERY, NOTE, Repair Contents.>
5) Install the headrest assembly - front.

C: DISASSEMBLY

1. MANUAL SEAT (DRIVER'S SEAT)

CAUTION:
• Before assembling, make sure how the harnesses are routed behind the seat cushion in order to avoid misarranging. Assembling with harnesses improperly routed may cause the harness to get caught and short out.
• Do not reuse hog rings.
• Refer to "CAUTION" of "General Description" before handling the airbag system components. <Ref. to AB-10, CAUTION, General Description.>
1) Turn the ignition switch to OFF.
2) Disconnect the ground terminal from the battery sensor, and wait for at least 60 seconds before starting work. <Ref. to RC-4, BATTERY, NOTE, Repair Contents.>

NOTE:
• Before removing the seat, raise the seating face.
• For models with power seat, remove the slide rail installing bolt before disconnecting the ground terminal from the battery sensor.
3) Remove the front seat from vehicle. <Ref. to SE-11, REMOVAL, Front Seat.>

4) Remove the knob - lifter.
(1) Remove the cap - lifter lever (a).

NOTE:
Insert a flat tip screwdriver or similar tool wrapped with protective tape into the gap (shown with arrow) between the cap - lifter lever and the knob - lifter.

(2) Remove the screws and remove the knob - lifter.

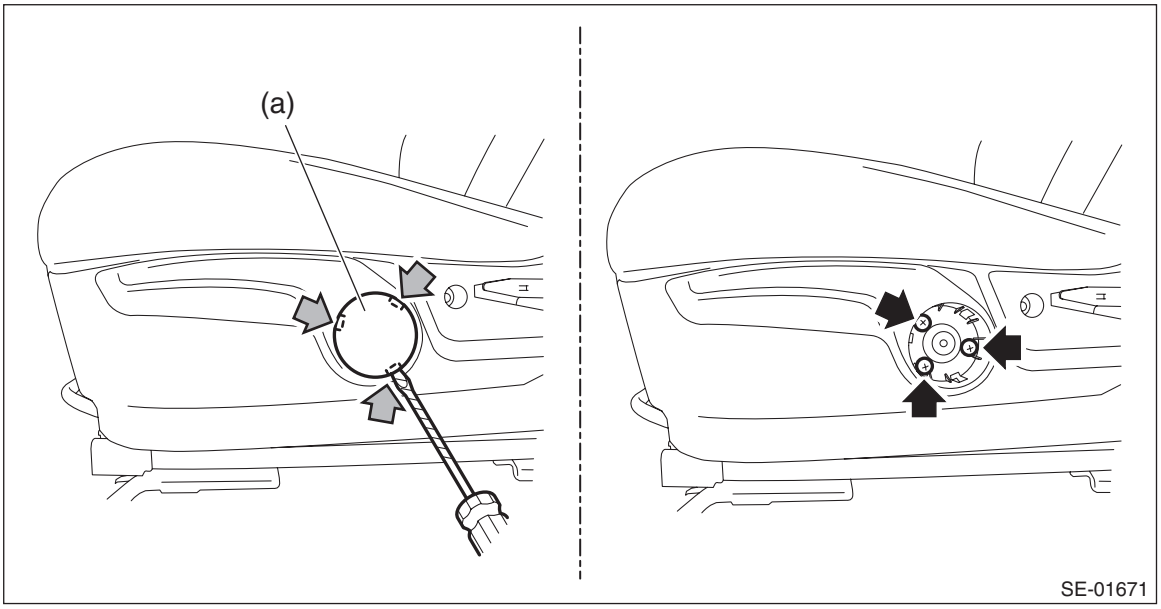

5) Remove the lever - reclining.
(1) Pull up the lever - reclining and release the claws on the back.
(2) Pull out the lever - reclining.

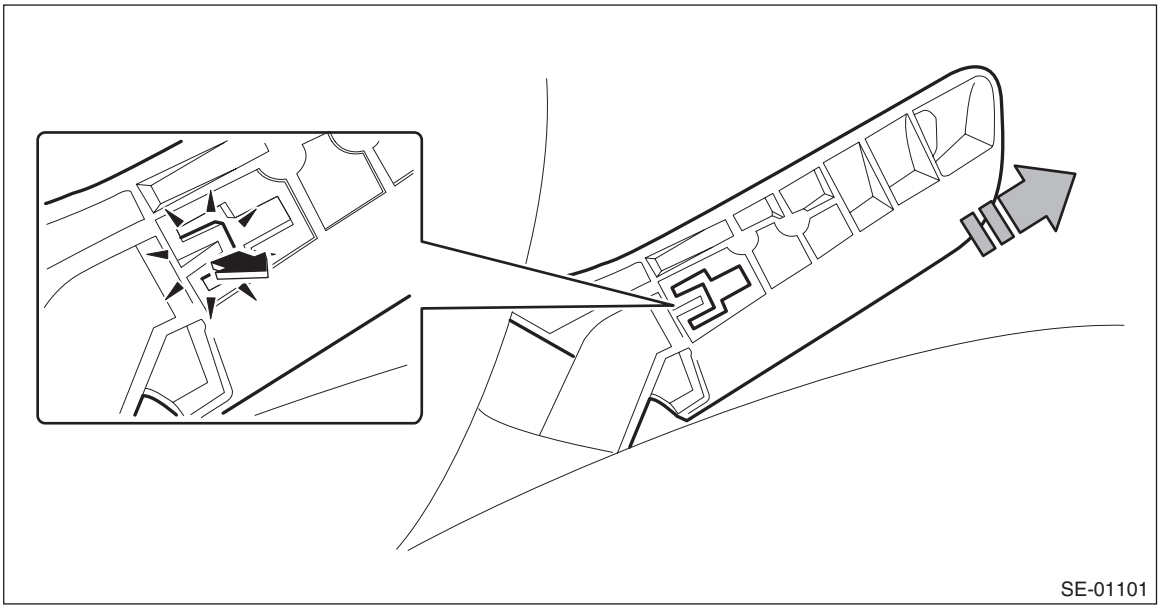

6) Remove the cover - hinge front seat OUT.
(1) Remove the screws.
(2) Release the claw in the upper section of the cover - hinge front seat OUT.
(3) Release the claw in the rear section of the cover - hinge front seat OUT.
(4) Release the claw in the front section of the cover - hinge front seat OUT, then remove the cover - hinge front seat OUT.

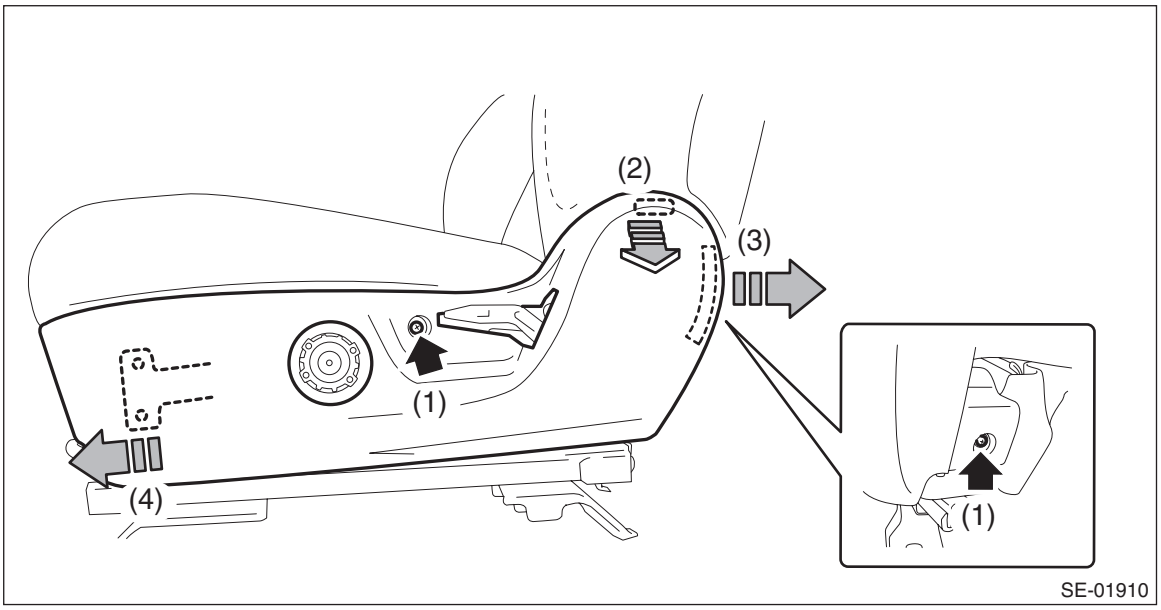

7) Remove the seat belt inner - front. <Ref. to SB-21, SEAT BELT INNER - FRONT, REMOVAL, Front Seat Belt.>
8) Remove the cover - hinge front seat INN.
(1) Remove the screws.
(2) Release the claw in the upper section of the cover - hinge front seat INN.
(3) Release the claw in the rear section of the cover - hinge front seat INN, then remove the cover - hinge front seat INN.

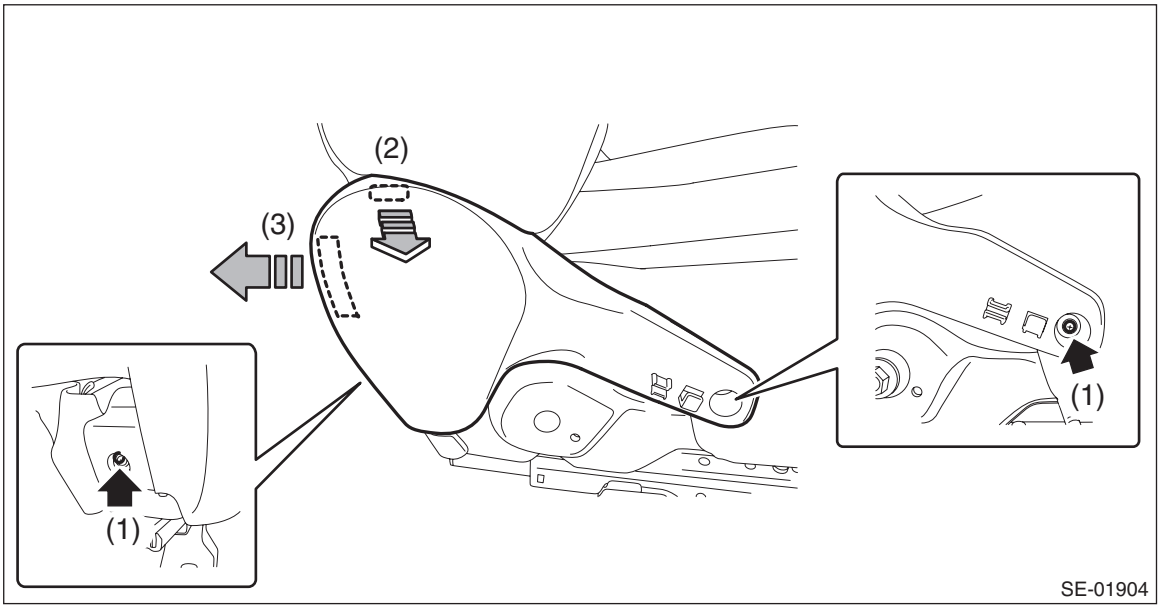

9) Separate the backrest assembly and the seat cushion assembly.
(1) Remove the following harnesses and connector clamps from the reverse side of the seat cushion assembly.
- Side airbag harness
- Seat cushion airbag harness
- Seat heater harness (with seat heater)

(2) Remove the bolts from reclining hinge of both sides.
(3) While taking care not to damage the airbag harness, separate the backrest assembly and the seat cushion assembly.

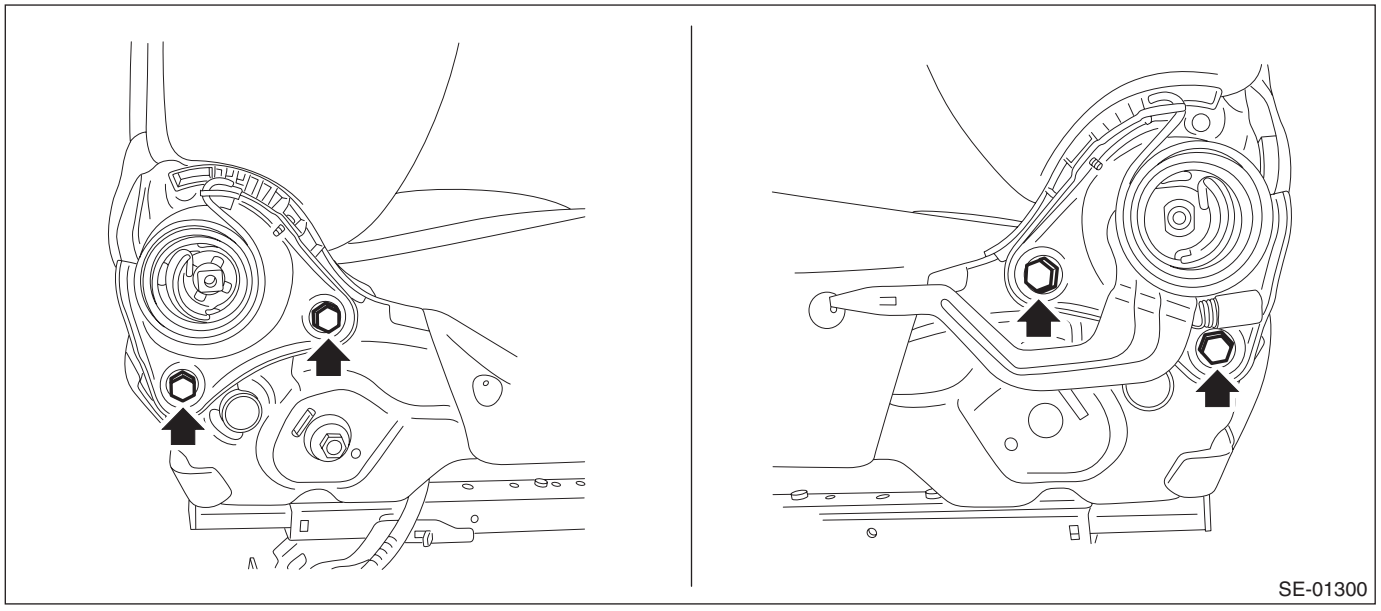

10) Release the hook and detach the touch fastener on the lower front side, and then remove the pad assembly - front seat cushion and the cover - front seat cushion.

NOTE:
Turn over the rear side of the seat, and remove the hook on the front side of the seat cushion frame.
11) Remove the nuts and then remove the seat cushion airbag module.

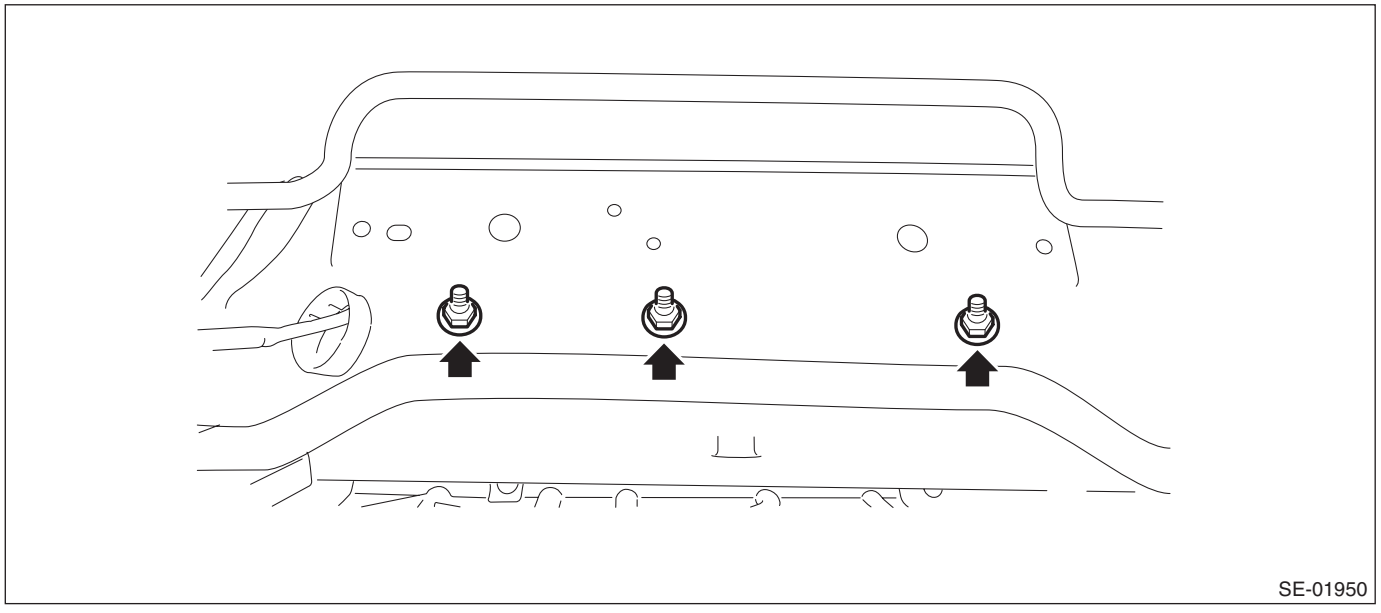

12) Remove the cover - front cushion.
(1) Remove the hog ring (a).

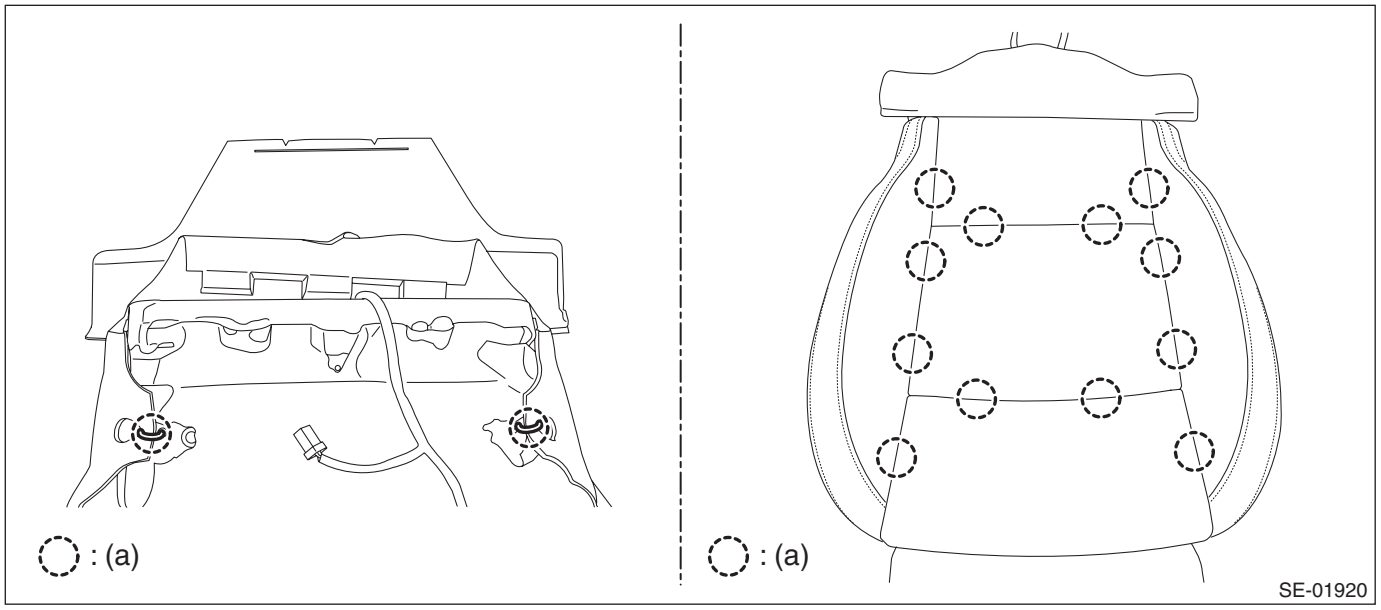

(2) Pull out the pad assembly - front seat cushion from the cover - front cushion.
(3) Remove the seat heater module from the pad assembly as necessary.

CAUTION:
- **If the seat heater module is removed, replace the pad assembly with a new part.**
- **If the seat heater module is reused, remove the polyurethane section from the reverse side completely.**

13) Remove the pad assembly - front seat backrest and the cover COMPL - front backrest.
(1) Remove the plastic fastener at the back side (bottom) of backrest assembly.
(2) Open the fastener at the rear side of backrest assembly.

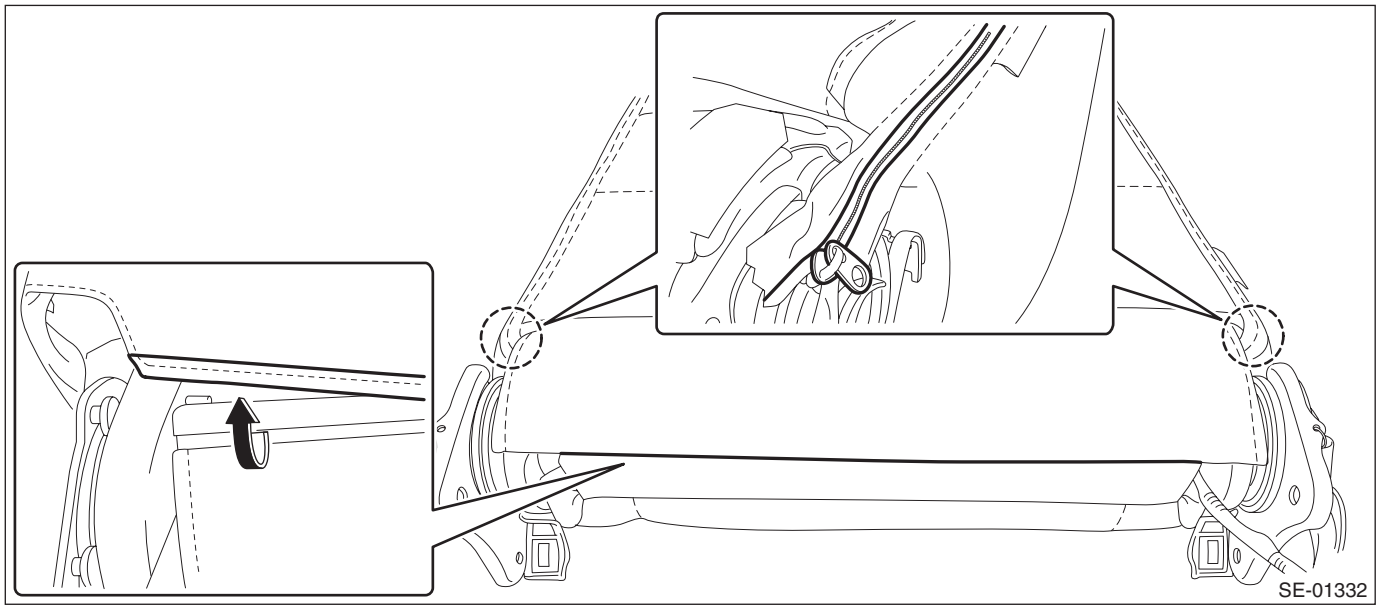

(3) Remove the hog ring. (4 pieces)

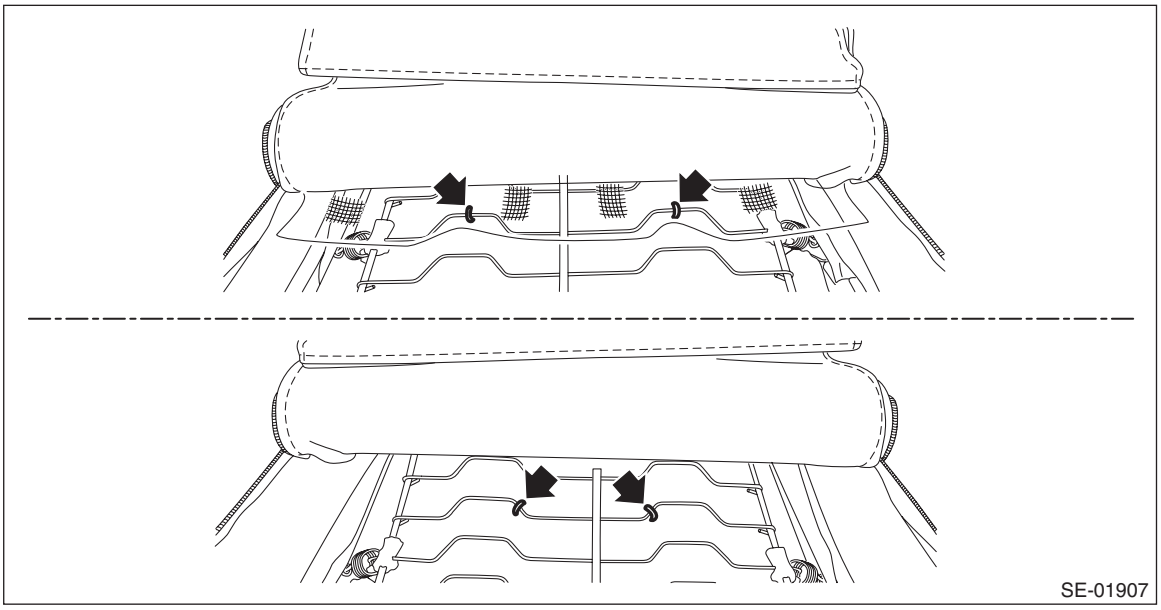

(4) Remove the pad assembly - front seat backrest and the cover COMPL - front backrest from the backrest assembly.

14) Remove the side airbag module.

CAUTION:
Do not open the protective cover of the side airbag. If any damage is present in the protective cover or the cloth of side airbag module comes out from the protective cover slit, replace the side airbag module with a new part.

(1) Remove the hexagon cap nut and nuts.
(2) While taking care not to damage the airbag protective cover, remove the side airbag module.

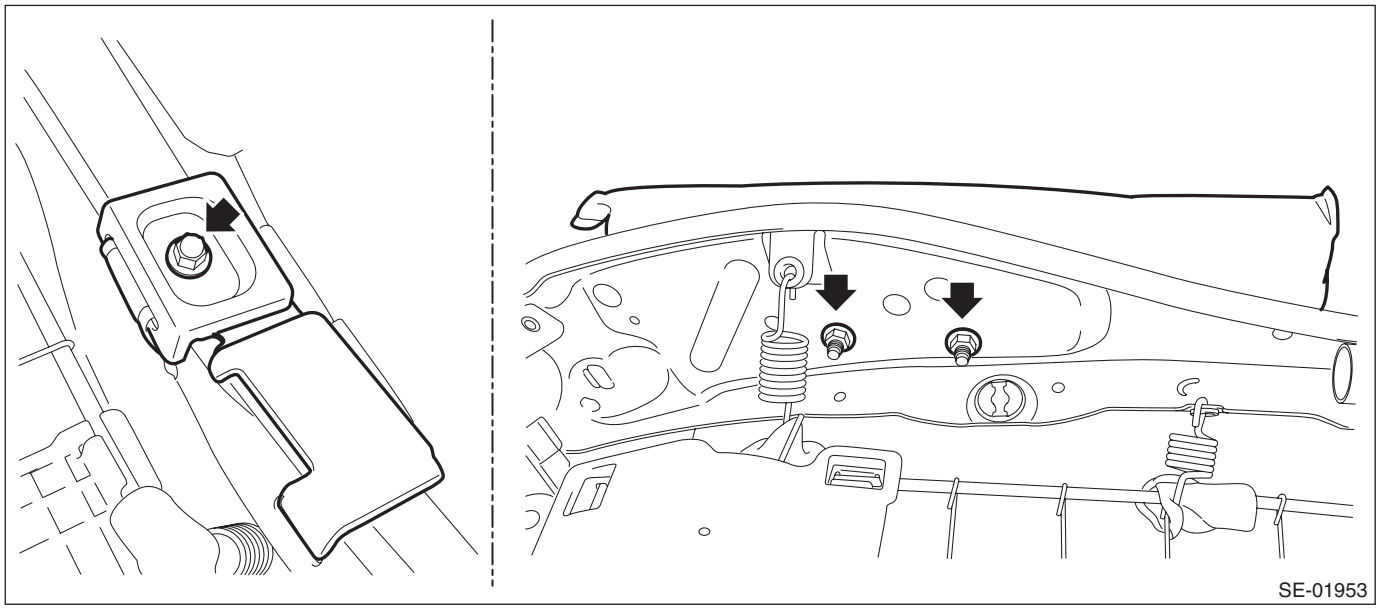

15) Remove the bushing - headrest.

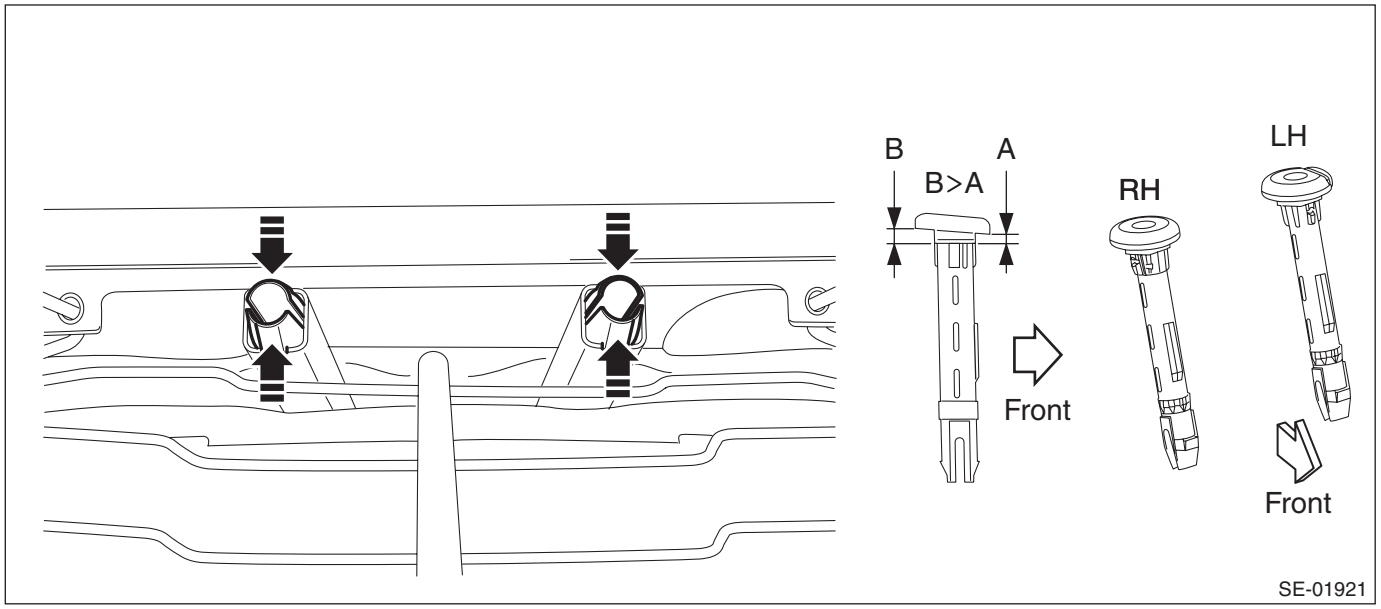

NOTE:
Catch the tip of the bushing - headrest with pliers and push it outward from the inside of seat to remove it.

16) Pull out the frame assembly - front backrest.

17) Remove the cover COMPL - front backrest.

(1) Remove the hog ring (a).

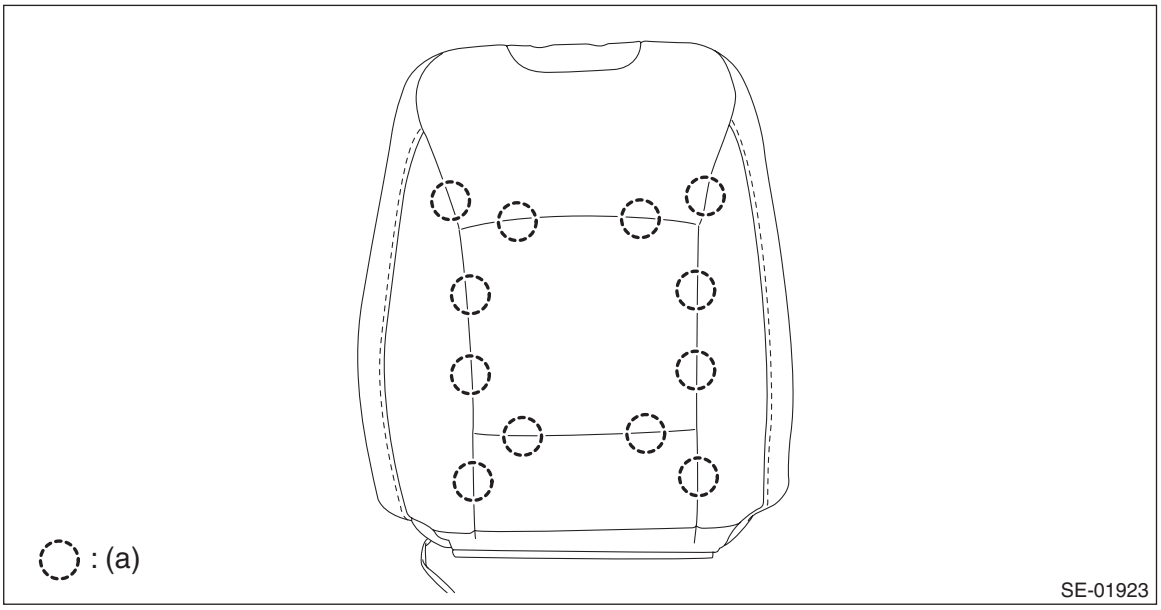

(2) Pull out the pad assembly - front seat backrest from the cover COMPL - front backrest.

(3) Remove the seat heater module from the pad assembly as necessary.

CAUTION:

- **If the seat heater module is removed, replace the pad assembly with a new part.**
- **If the seat heater module is reused, remove the polyurethane section from the reverse side completely.**

2. POWER SEAT (DRIVER'S SEAT)

CAUTION:
• Before assembling, make sure how the harnesses are routed behind the seat cushion in order to avoid misarranging. Assembling with harnesses improperly routed may cause the harness to get caught and short out.
• Do not reuse hog rings.
• Do not disassemble the backrest frame assembly and seat cushion frame and slide rail assembly.
• Refer to "CAUTION" of "General Description" before handling the airbag system components. <Ref. to AB-10, CAUTION, General Description.>

1) Turn the ignition switch to OFF.
2) Disconnect the ground terminal from the battery sensor, and wait for at least 60 seconds before starting work. <Ref. to RC-4, BATTERY, NOTE, Repair Contents.>

NOTE:
• Before removing the seat, raise the seating face.
• For models with power seat, remove the slide rail installing bolt before disconnecting the ground terminal from the battery sensor.

3) Remove the seat from vehicle. <Ref. to SE-11, REMOVAL, Front Seat.>
4) Remove the following harnesses and connector clamps from the reverse side of the seat cushion.
• Seat belt inner - front connector
• Side airbag module connector
• Seat cushion airbag module connector
• Seat heater harness (with seat heater)
• Power seat connector (with power seat)
• Reclining motor (with power seat)
• Lumbar support motor (with lumbar support)
5) Remove the cover - hinge front seat OUT.
(1) Remove the screws in the rear section of the cover - hinge front seat OUT.
(2) Release the claw in the upper section of the cover - hinge front seat OUT.

NOTE:
Use a plastic clip remover.
(3) Remove the clip in the center of the cover - hinge front seat OUT.
(4) Release the claw in the front section of the cover - hinge front seat OUT.

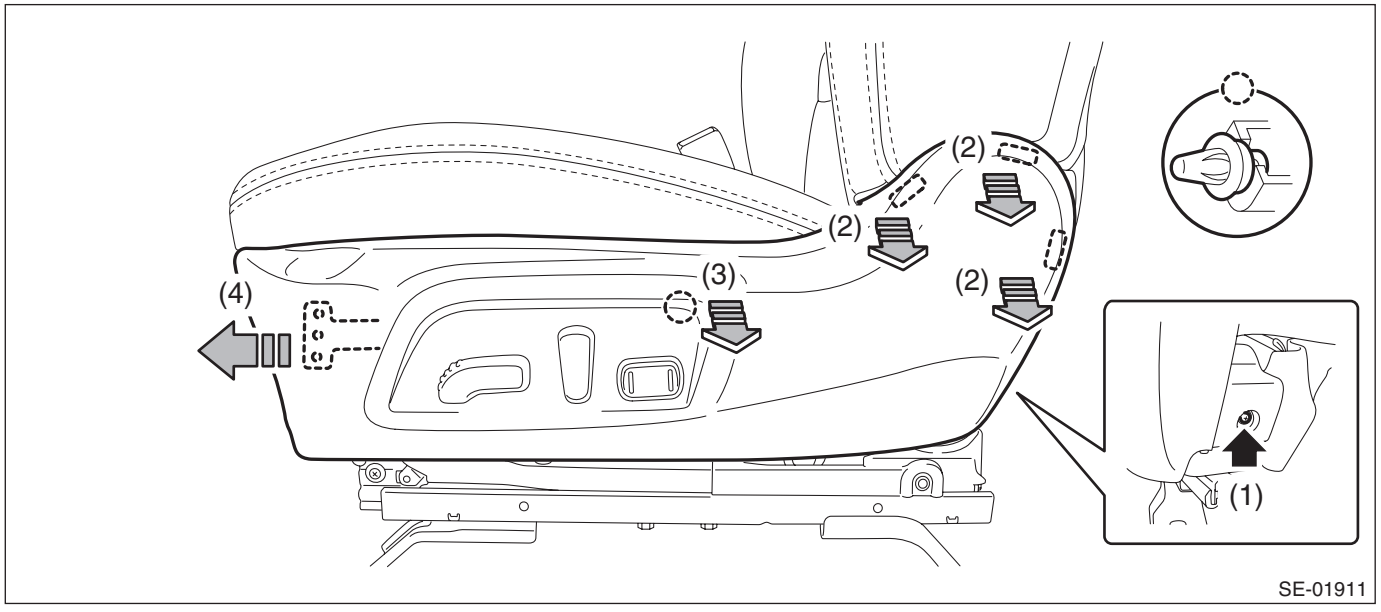

(5) Disconnect the power seat switch and lumbar switch connector and remove the cover - hinge front seat OUT.
6) Remove the seat belt inner - front. <Ref. to SB-21, SEAT BELT INNER - FRONT, REMOVAL, Front Seat Belt.>

7) Remove the cover - hinge front seat INN.
(1) Remove the screws.
(2) Release the claw in the upper section of the cover - hinge front seat INN.
(3) Remove the cover - hinge front seat INN by pulling it backward.

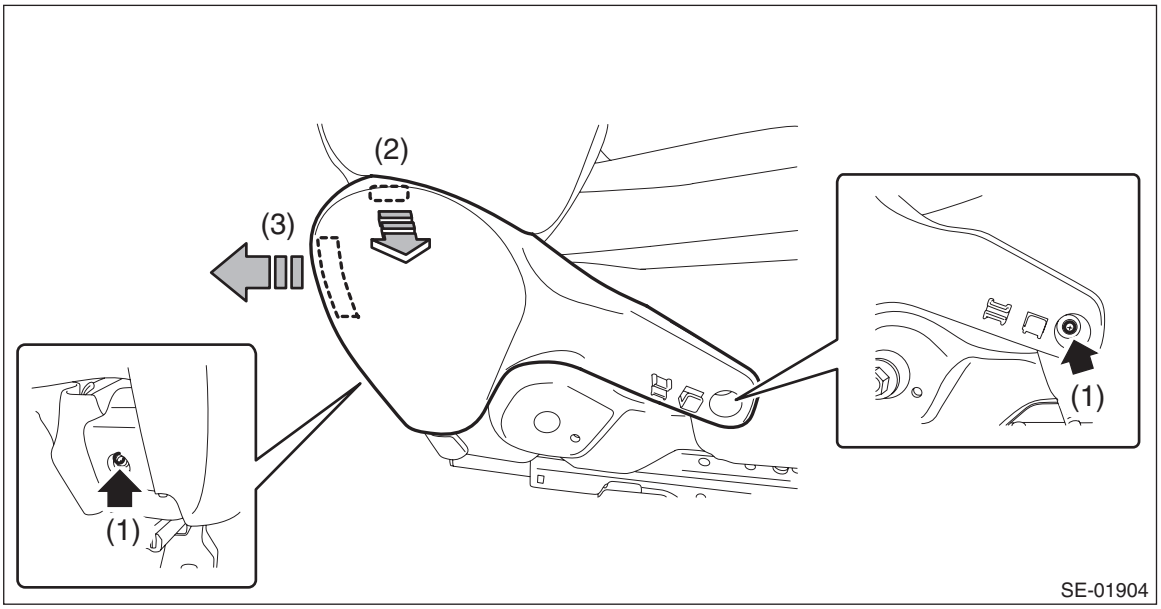

8) Separate the backrest assembly and the seat cushion assembly.
(1) Remove the bolts from reclining hinge of both sides.
(2) While taking care not to damage the airbag harness, separate the backrest assembly and the seat cushion assembly.

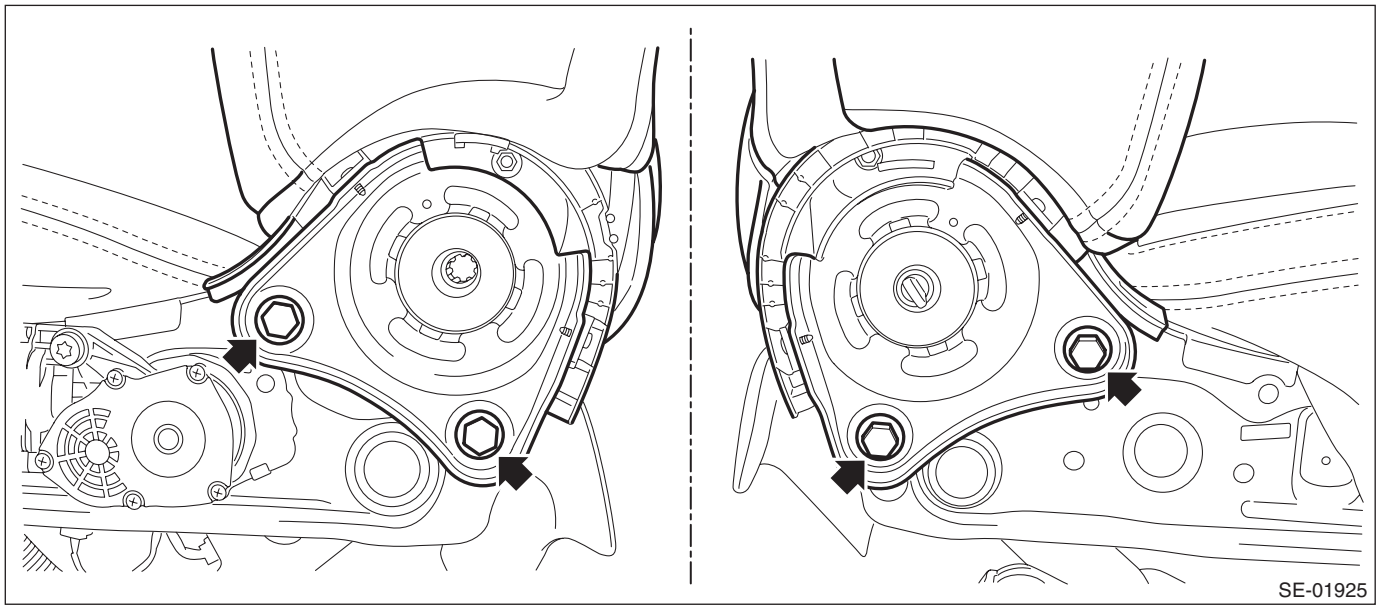

9) Remove the hook, and remove the pad assembly - front seat cushion and the cover - front cushion.

NOTE:
Turn over the rear side of the seat, and remove the hook on the front side of the seat cushion frame.

10) Remove the hexagon cap nuts, and remove the power seat control module. (Model with power seats with memory function)

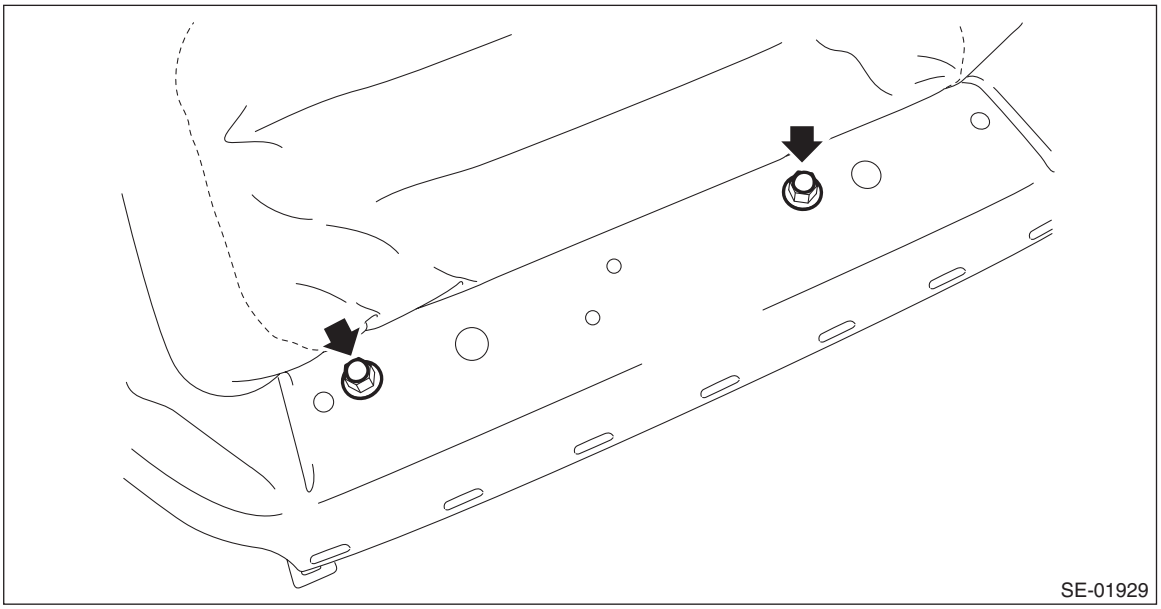

11) Remove the nuts and then remove the seat cushion airbag module.

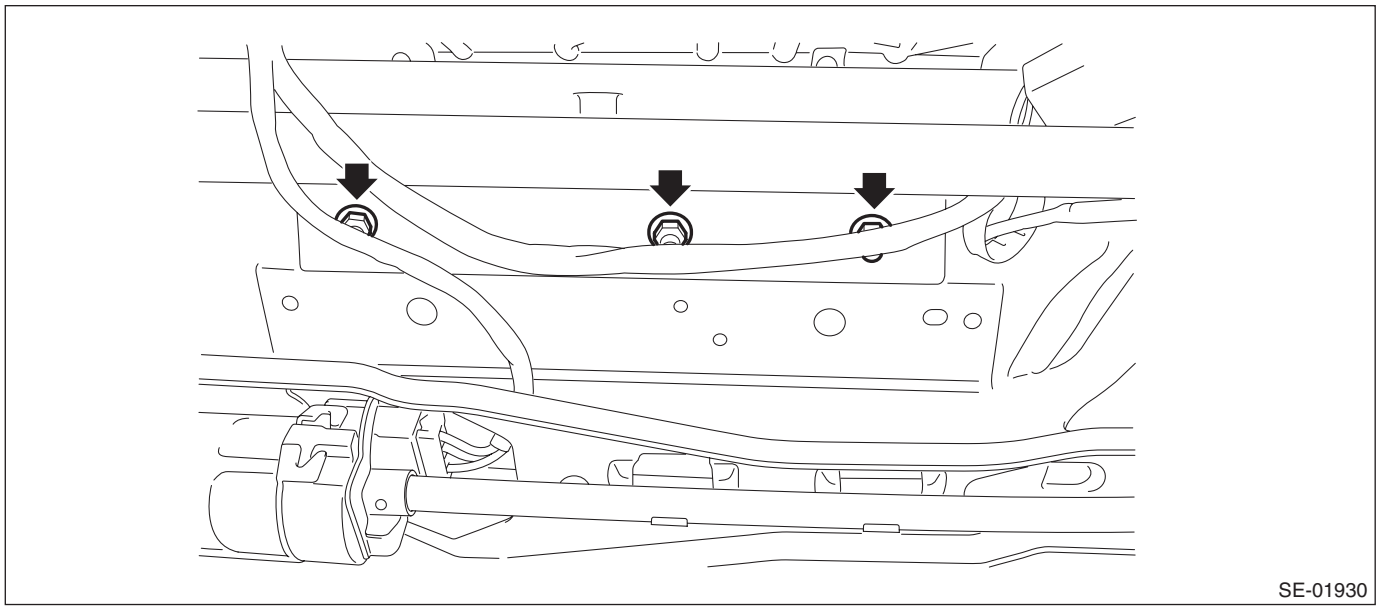

12) Remove the cover - front cushion.
(1) Remove the hog ring (a).

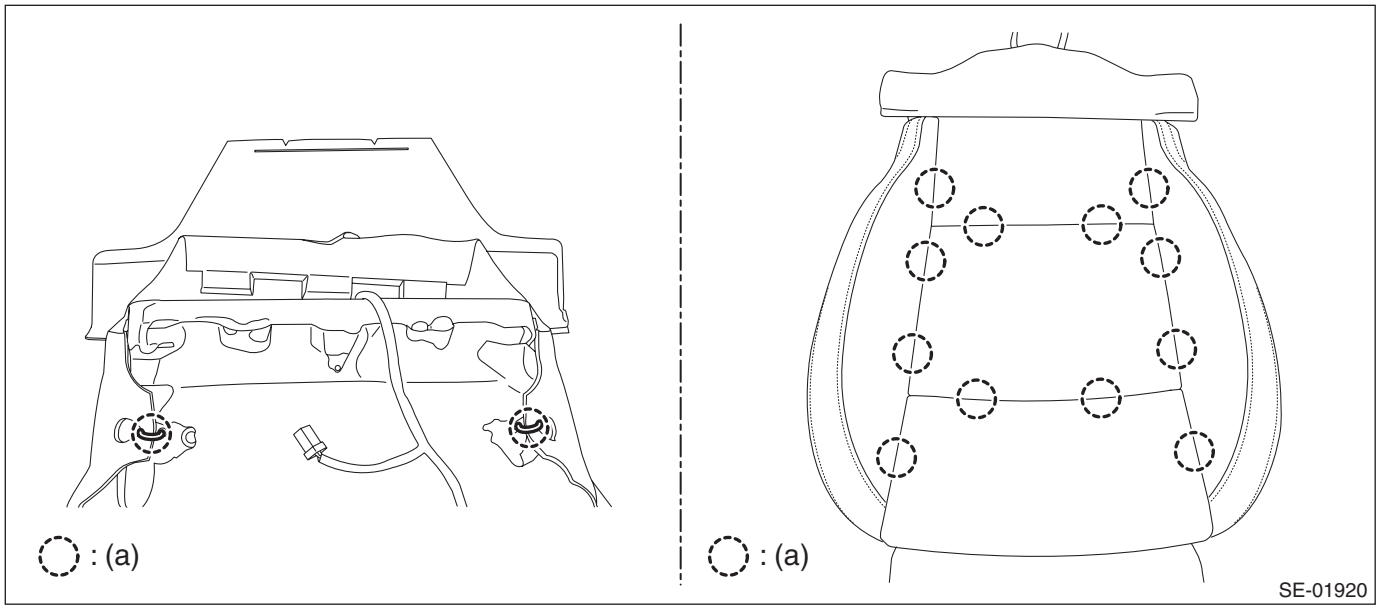

(2) Pull out the pad assembly - front seat cushion from the cover - front cushion.
(3) Remove the seat heater module from the pad assembly as necessary.

CAUTION:
- **If the seat heater module is removed, replace the pad assembly with a new part.**
- **If the seat heater module is reused, remove the polyurethane section from the reverse side completely.**

13) Remove the pad assembly - front seat backrest and the cover COMPL - front backrest.
(1) Remove the plastic fastener at the back side (bottom) of backrest assembly.
(2) Open the fastener at the rear side of backrest assembly.

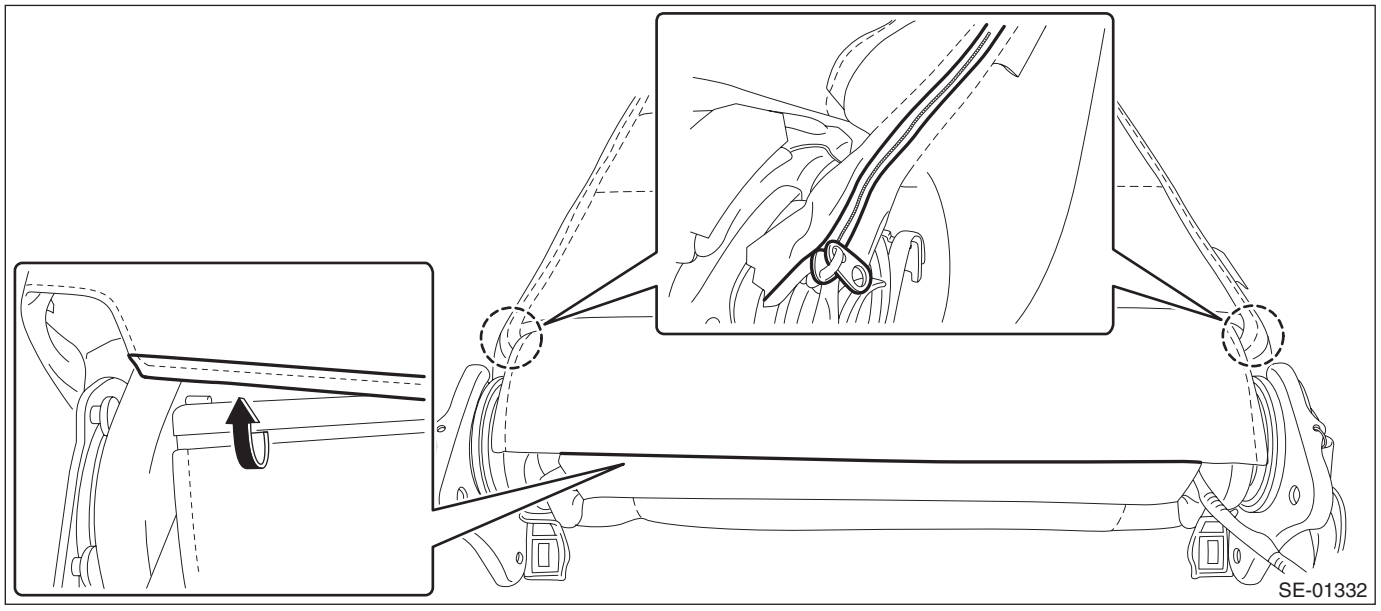

(3) Remove the hog ring. (4 pieces)

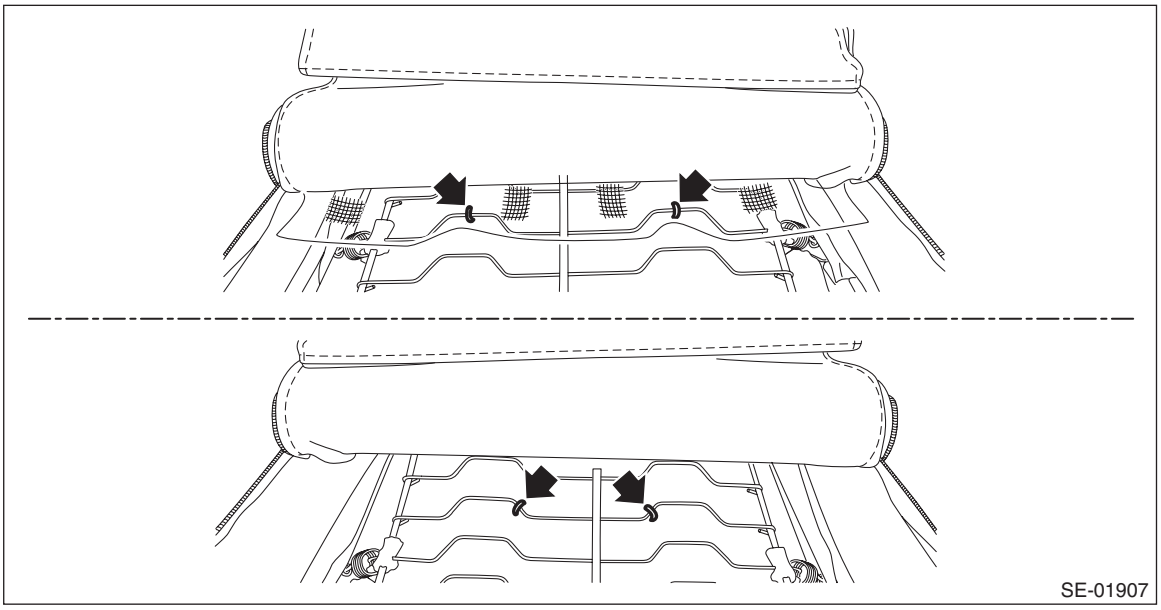

(4) Remove the backrest pad & cover from backrest assembly.

14) Remove the side airbag module.

CAUTION:
Do not open the protective cover of the side airbag. If any damage is present in the protective cover or the cloth of side airbag module comes out from the protective cover slit, replace the side airbag module with a new part.

(1) Remove the hexagon cap nut and nuts.

(2) While taking care not to damage the airbag protective cover, remove the side airbag module.

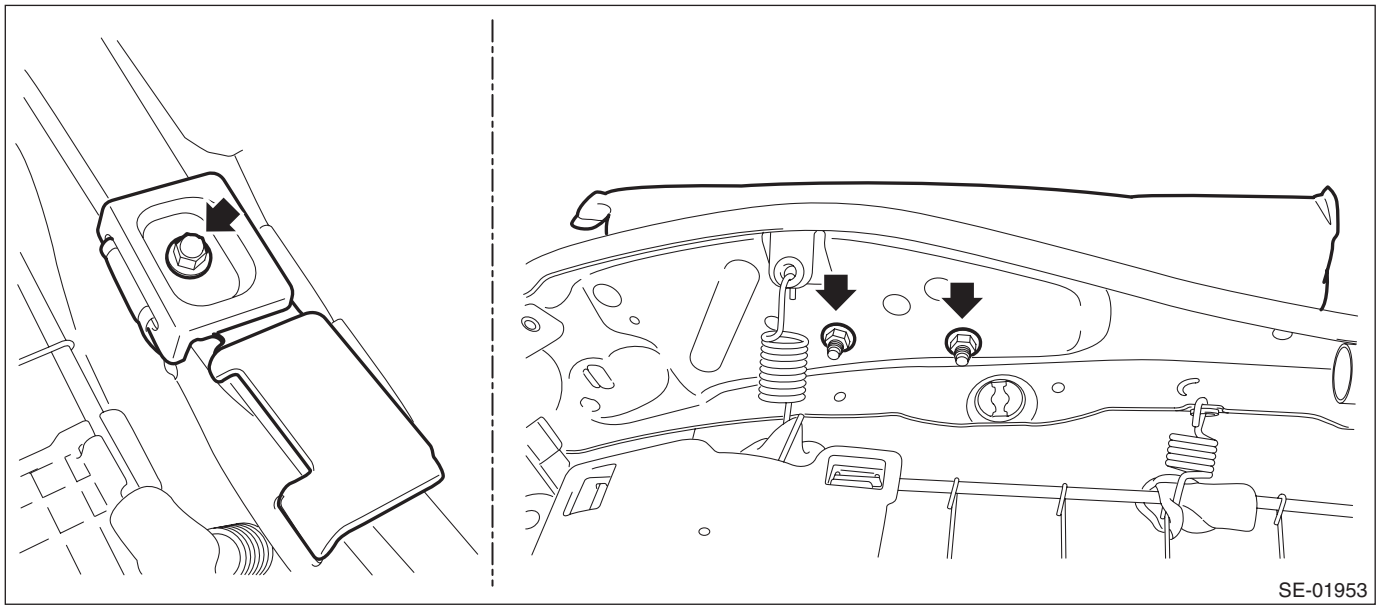

15) Remove the headrest bushing.

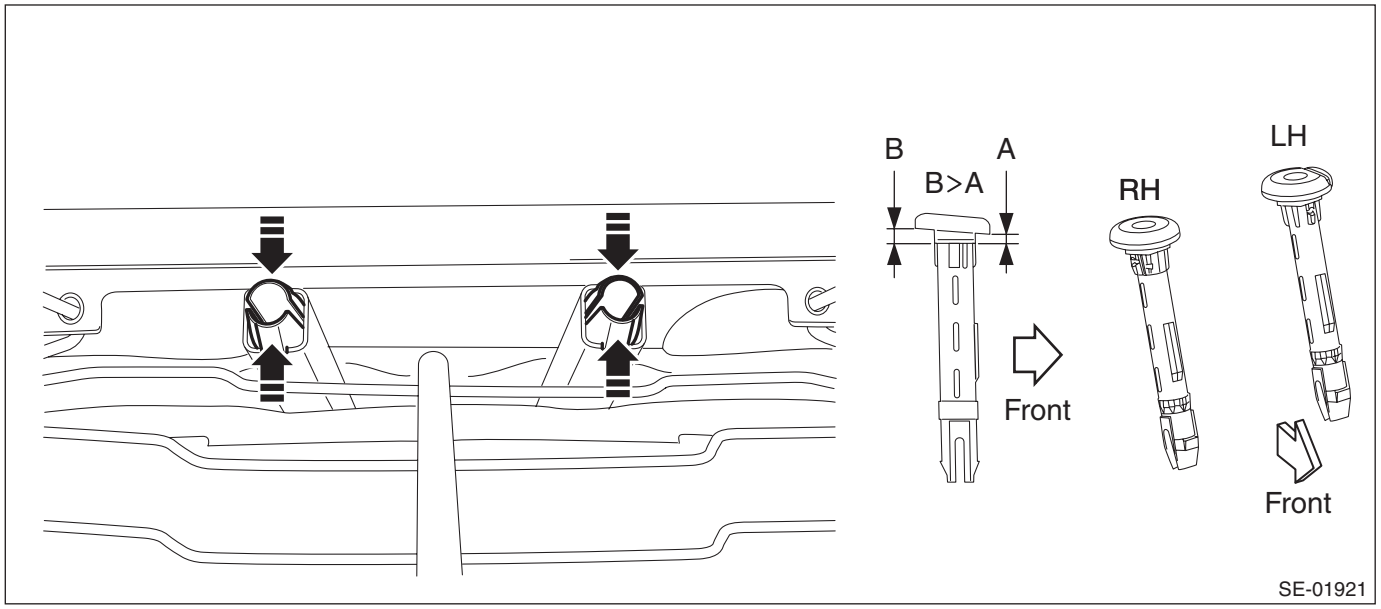

NOTE:
Catch the tip of headrest bushing with pliers and push it from inside seat to outside to remove it.
16) Pull out the frame assembly - front backrest.
17) Remove the cover COMPL - front backrest.
(1) Remove the hog ring (a).

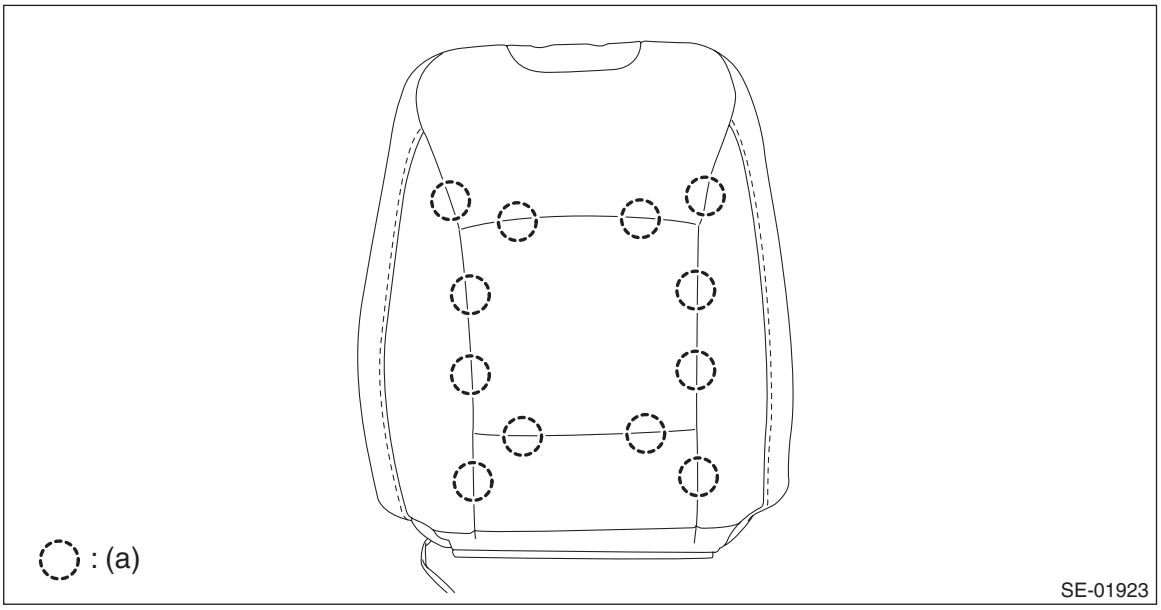

(2) Pull out the pad assembly - front seat backrest from the cover COMPL - front backrest.
(3) Remove the seat heater module from the pad assembly as necessary.

CAUTION:
- **If the seat heater module is removed, replace the pad assembly with a new part.**
- **If the seat heater module is reused, remove the polyurethane section from the reverse side completely.**

3. PASSENGER'S SEAT

CAUTION:
• The occupant detection system (passenger's seat only) control module, the occupant detection sensor, the seat cushion airbag module, the pad assembly - front seat cushion and the frame assembly - front cushion are considered as a single seat cushion pad & frame assembly. Never remove the occupant detection control module or the occupant detection sensor from the frame assembly - front cushion.
• If the cover - front cushion is removed, make sure to replace the hang wire on the cover - front cushion side with a new wire.
• Never remove the occupant detection sensor connector from the occupant detection control module.
• Refer to "CAUTION" of "General Description" before handling the airbag system components. <Ref. to AB-10, CAUTION, General Description.>
• When replacing the seat cover, be careful not to damage the occupant detection sensor while installing the hog ring.
• When removing or replacing the seat cover, perform "Occupant Detection System Inspection" after installing the seat to check if the occupant detection system operates normally. <Ref. to PI-21, SEAT, PRE-DELIVERY INSPECTION (PDI) PROCEDURE, Pre-delivery Inspection.>
• If the seat heater module is removed, replace the seat cushion pad & frame assembly with a new part.
• If the seat heater module is reused, remove the polyurethane section from the reverse side completely.
1) Remove the front seat (passenger's side) from vehicle. <Ref. to SE-11, REMOVAL, Front Seat.>
2) Refer to the disassembly procedures for the driver's seat.
- Manual seat: <Ref. to SE-12, MANUAL SEAT (DRIVER'S SEAT), DISASSEMBLY, Front Seat.>
- Power seat: <Ref. to SE-19, POWER SEAT (DRIVER'S SEAT), DISASSEMBLY, Front Seat.>

D: ASSEMBLY

CAUTION:
• Do not confuse the harness routing in the reverse side of the seat cushion. Assembling with harnesses improperly routed may cause the harness to get caught and short out.
• If the hook - spring of the frame assembly - front backrest is deformed or comes off due to the deformation, replace the hook - spring with a new part.

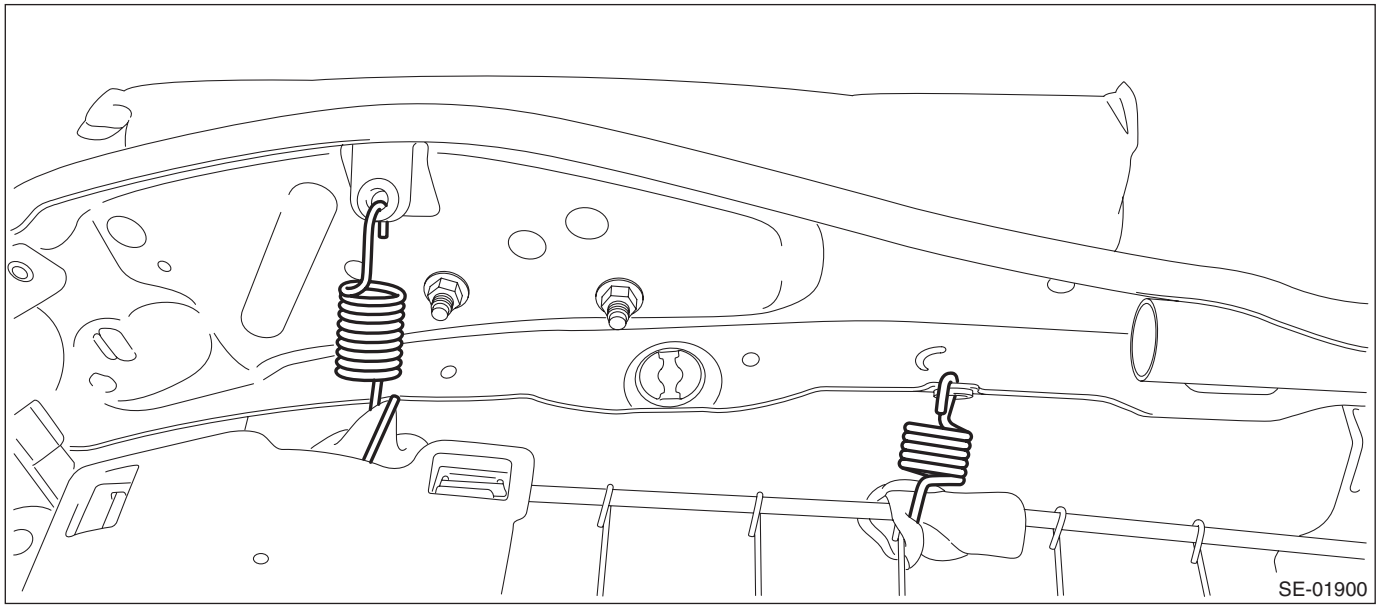

- **Make sure that the side airbag module is installed as shown in the figure.**

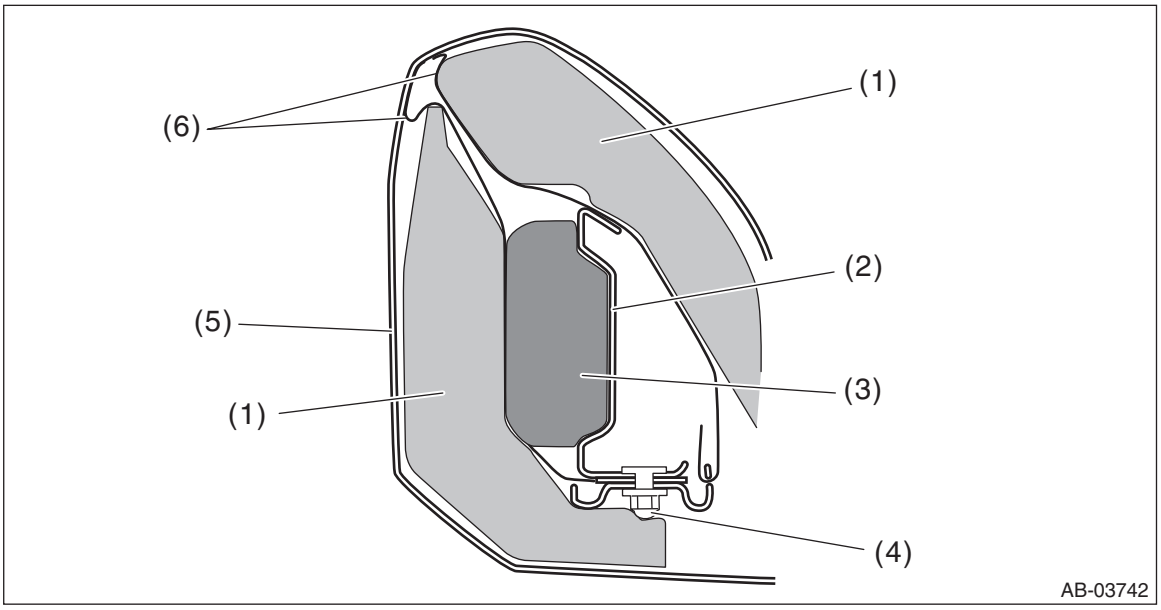

(1) Pad ASSY - front seat backrest
(2) Frame ASSY - front backrest
(3) Side airbag module
(4) Hexagon cap nut
(5) Cover COMPL - front backrest
(6) Side airbag guide cloth

Besides, if the cover COMPL - front backrest is not installed securely, the side airbag may not be activated properly, therefore keep strictly to the following procedures.
- **Be careful not to stain or damage the cover COMPL - front backrest during assembly.**
- **Do not reuse hog rings.**
- **Secure the hog ring using hog ring pliers.**
- **Install the hog rings to the specified points securely and make sure that there is no wrinkle or twisting on the cover COMPL - front backrest.**

1) Install the seat heater module.

CAUTION:
- **If the seat heater module is removed, replace the pad assembly with a new part. (Driver's seat)**
- **If the seat heater module is removed, replace the seat cushion pad & frame assembly with a new part. (Passenger's seat)**
- **If the seat heater module is reused, remove the polyurethane section from the reverse side completely and attach a new pad assembly with a double-sided tape.**

Double-sided tape:
NITTO DENKO 501L or equivalent

2) Make sure that there is no foreign matter on airbag module.
3) Assemble the seat cover.
   (1) Adjust so that the left and right clearances between wire and seat pad become equal, and mark the seat pad.

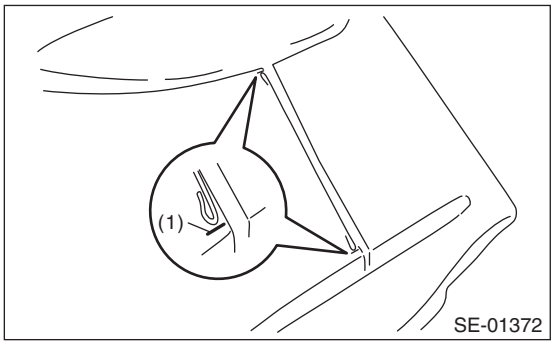

(1) Marking

(2) Mark the center of the wire on the pad side to which the hog ring is attached.

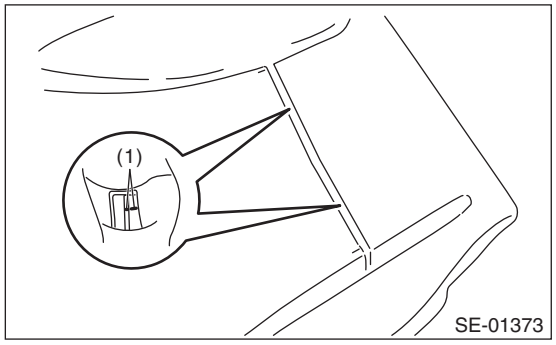

(1) Marking

(3) Insert the wire into the seat cover, and align the wire with the position marked in step 1).

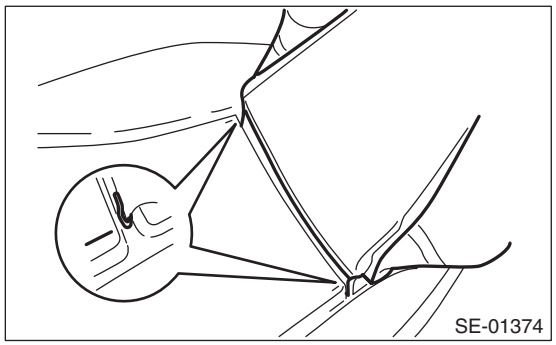

(4) Mark the wire on the seat cover side according to the markings on the seat pad.

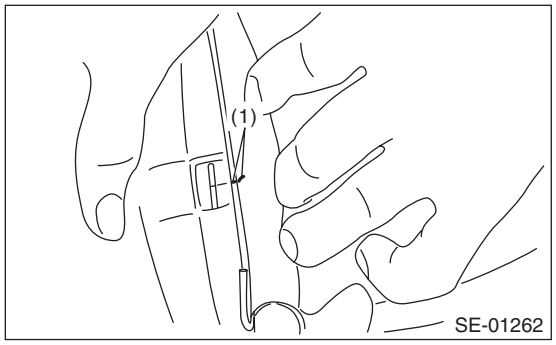

(1) Marking

(5) Perform steps 1) — 4) to all sections to which the hog rings are attached.
(6) Make sure that all hog rings (a) are attached securely.

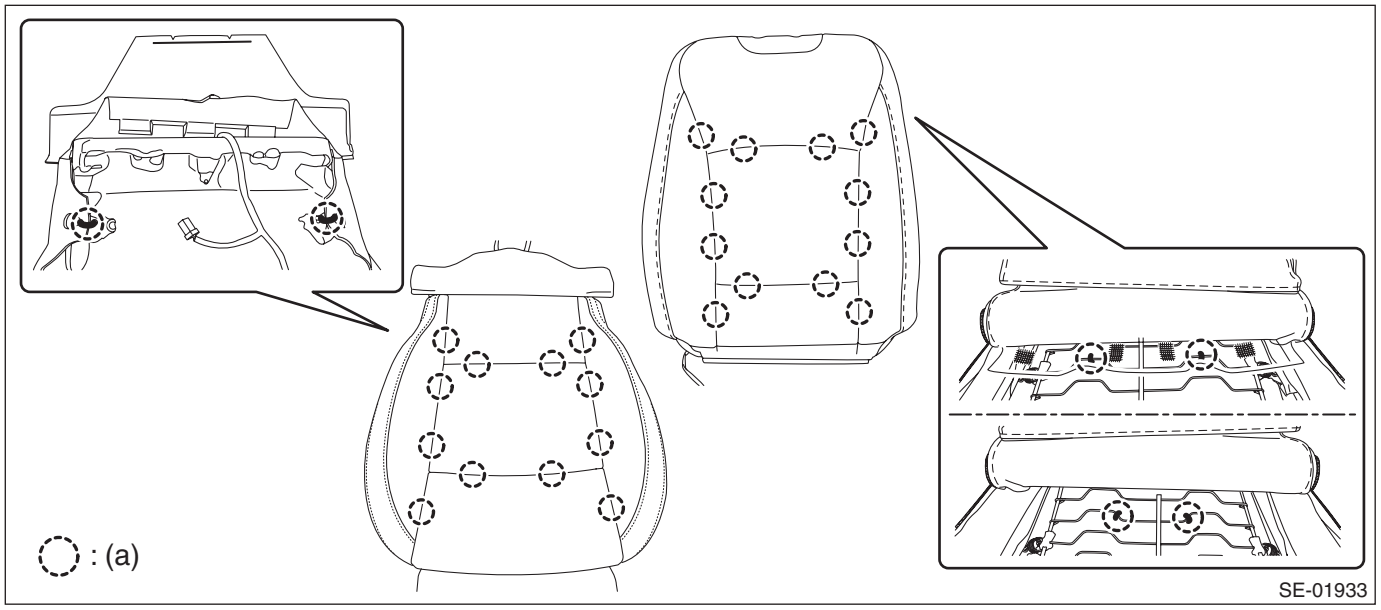

4) Assemble remaining parts in the reverse order of disassemble.

NOTE:
• When installing the seat belt inner - front, follow the procedures described in the “SEAT BELT SYSTEM” section. <Ref. to SB-22, INSTALLATION, Front Seat Belt.>
• When installing the seat cushion airbag module, follow the procedures described in the “AIRBAG SYSTEM” section. <Ref. to AB-38, INSTALLATION, Seat Cushion Airbag Module.>
• Install the backrest assembly and seat cushion assembly in the following procedure.
1. Temporarily tighten the four reclining hinge bolts.
2. Place the backrest in the most upright position.
3. Tighten the reclining hinge bolts in order from (1) to (4) two or three times, until they reach the specified torque.

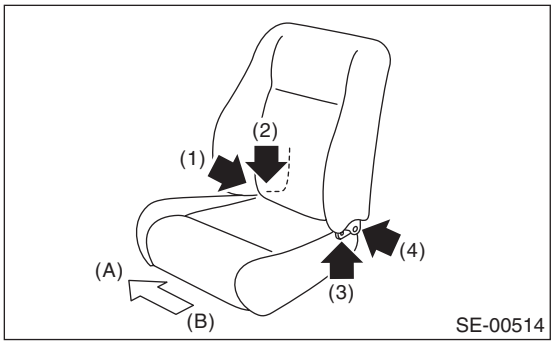

(A) Vehicle inside
(B) Vehicle outside

Tightening torque:
Refer to “COMPONENT” of “General Description”. <Ref. to SE-2, FRONT SEAT, COMPONENT, General Description.>

5) If any wrinkles are found after the assembly of the seat cover, finish the seat cover with iron.
(1) Place the wet towel on wrinkles.



(2) Touch up with warm iron.

CAUTION:
Keep moving the iron, otherwise the seat cover surface can be damaged.

NOTE:
This method is available for genuine leather, synthetic leather, cloth, etc.

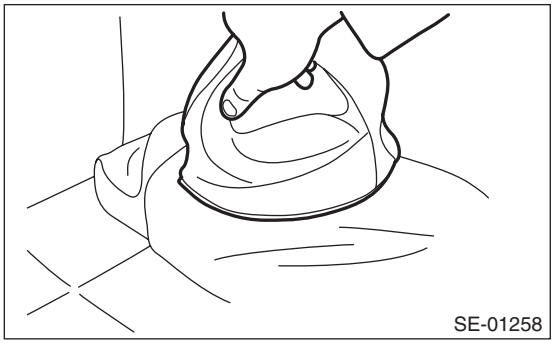

6) Install connectors located under the front seat.
• Manual seat

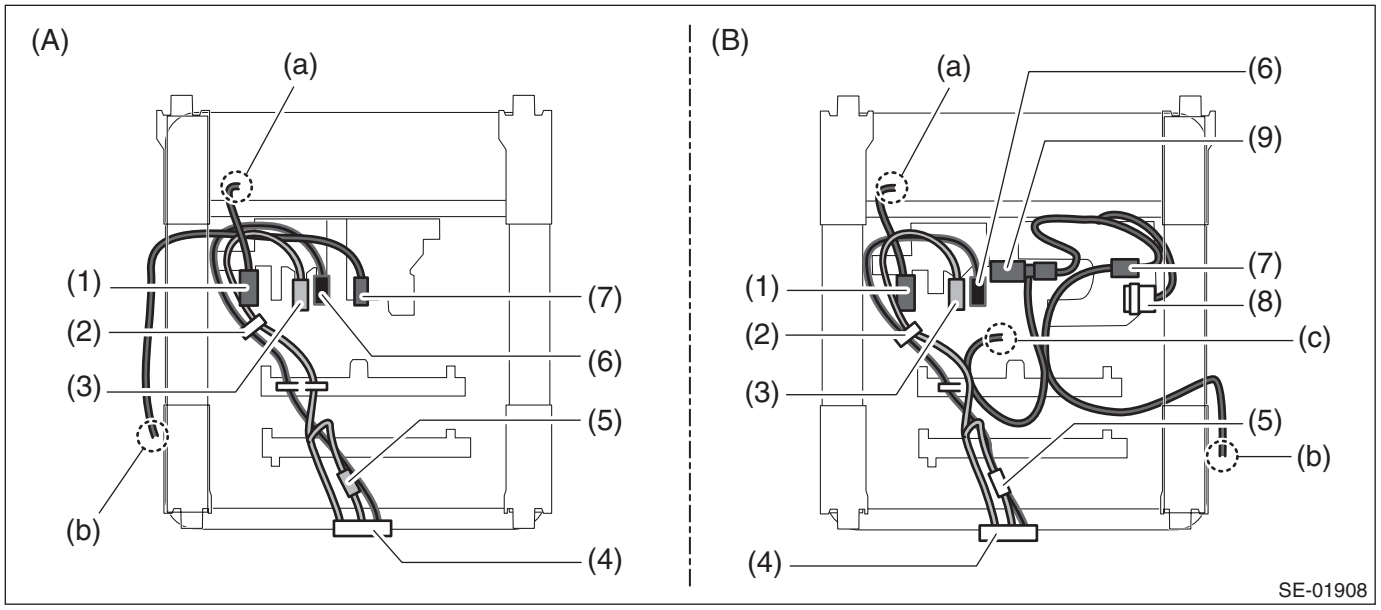

(A)	Driver's seat	(B)	Passenger's seat		
(1)	Seat cushion airbag connector & harness	(4)	Touch fastener	(7)	Seat belt INN - front connector & harness
(2)	Band A	(5)	Backrest heater connector & harness	(8)	Occupant detection connector & harness
(3)	Seat heater harness connector & seat cushion heater harness	(6)	Side airbag connector & harness	(9)	Occupant detection control module
(a)	Seat cushion airbag module	(b)	Seat belt INN - front	(c)	Occupant detection sensor

- Power seat

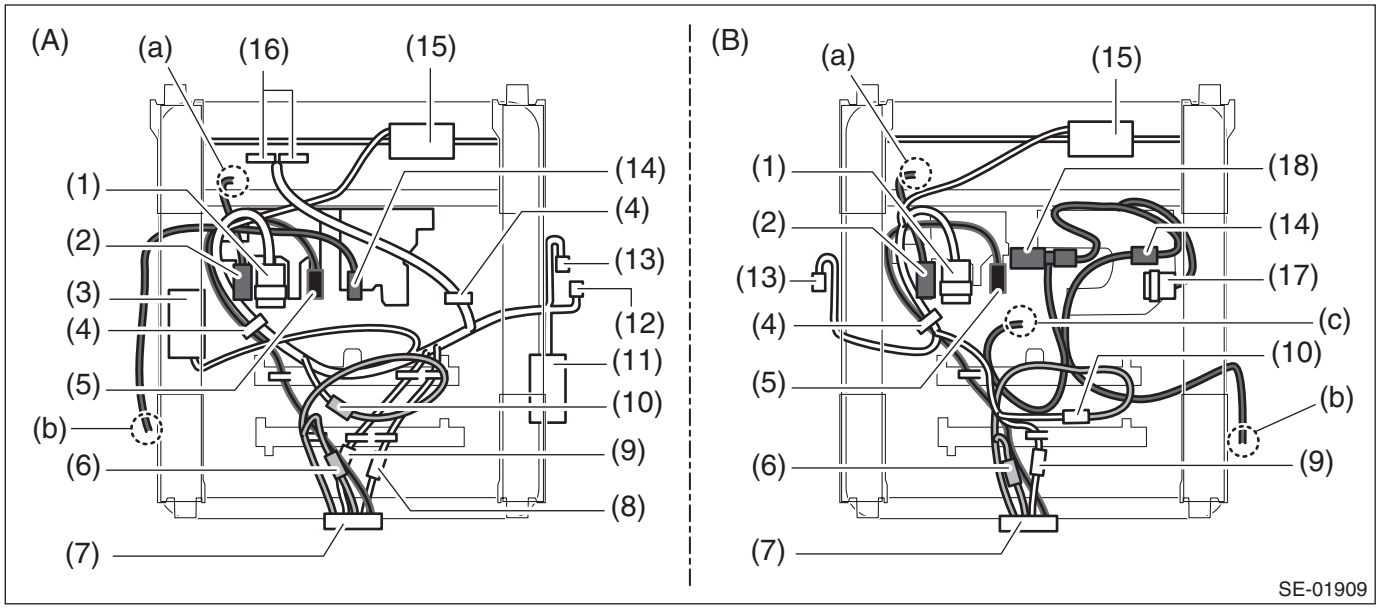

(A)	Driver's seat	(B)	Passenger's seat		
(1)	Power seat switch connector	(7)	Touch fastener seat cushion - heater harness	(13)	Power seat switch connector
(2)	Seat cushion airbag connector & harness	(8)	Lumbar motor connector & harness (model with lumbar only)	(14)	Seat belt INN - front connector & harness
(3)	Tilt motor	(9)	Reclining motor connector & harness	(15)	Slide motor
(4)	Band A	(10)	Seat heater harness connector & seat cushion heater harness	(16)	Memory seat unit connector
(5)	Side airbag connector & harness	(11)	Lifter motor	(17)	Occupant detection connector & harness
(6)	Backrest heater connector & harness	(12)	Lumbar switch connector (model with lumbar only)	(18)	Occupant detection control module
(a)	Seat cushion airbag module	(b)	Seat belt INN - front	(c)	Occupant detection sensor

7) Install the seat assembly. <Ref. to SE-12, INSTALLATION, Front Seat.>

E: INSPECTION

1. SEAT COVER

Check that there is no tear or fray on the cover COMPL - front backrest and the cover - front seat cushion.

NOTE:
• If the door side of the cover COMPL - front backrest is torn or frayed, the side airbag may not be deployed properly. In this case, replace the cover COMPL - front backrest with a new part.
• If there are tears or loosening in the cover - front seat cushion, it may interfere with the proper operation of the seat cushion airbag. Replace the cover - front seat cushion with a new part.

2. CHECK ILLUMINATION OF PASSENGER'S SEAT BELT WARNING LIGHT

Check that the passenger's seat belt warning light illuminates when the passenger's seat is occupied.

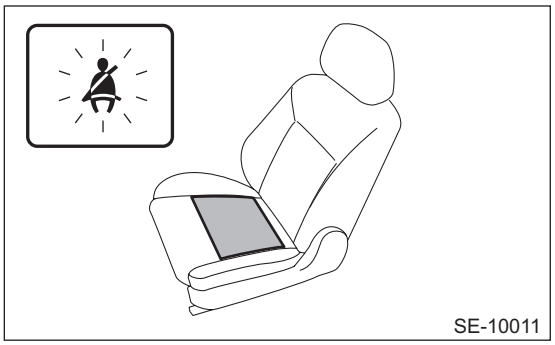

If it does not illuminate, check the seat belt warning system and the occupant detection system.
• Seat belt warning system: <Ref. to SB-16, Seat Belt Warning System.>
• Occupant detection system: <Ref. to OD(diag)-2, Basic Diagnostic Procedure.>

3. HOOK - SPRING

Check the hook - spring by applying weight to the backrest assembly.

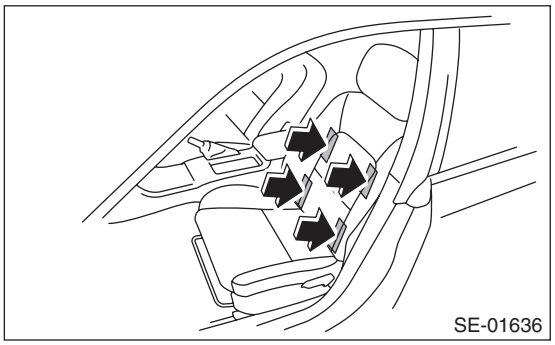

NOTE:
If the appropriate stiffness is not obtained by applying weight to the backrest assembly, the hook - spring may be disengaged.
If it is due to the deformation of the hook - spring, replace the hook - spring with a new part.

3. Rear Seat

A: REMOVAL

1. SEDAN MODEL

1) Disconnect the ground terminal from the battery sensor, and wait for at least 60 seconds before starting work. <Ref. to RC-4, BATTERY, NOTE, Repair Contents.>
2) Remove the rear seat cushion.

CAUTION:
If the hook - rear seat (a) is disconnected from the vehicle body, make sure to replace the hook - rear seat with a new part to prevent the decline of the fixed force of the seat.

(1) Pull up the seat cushion and release the hook - rear seat (a).

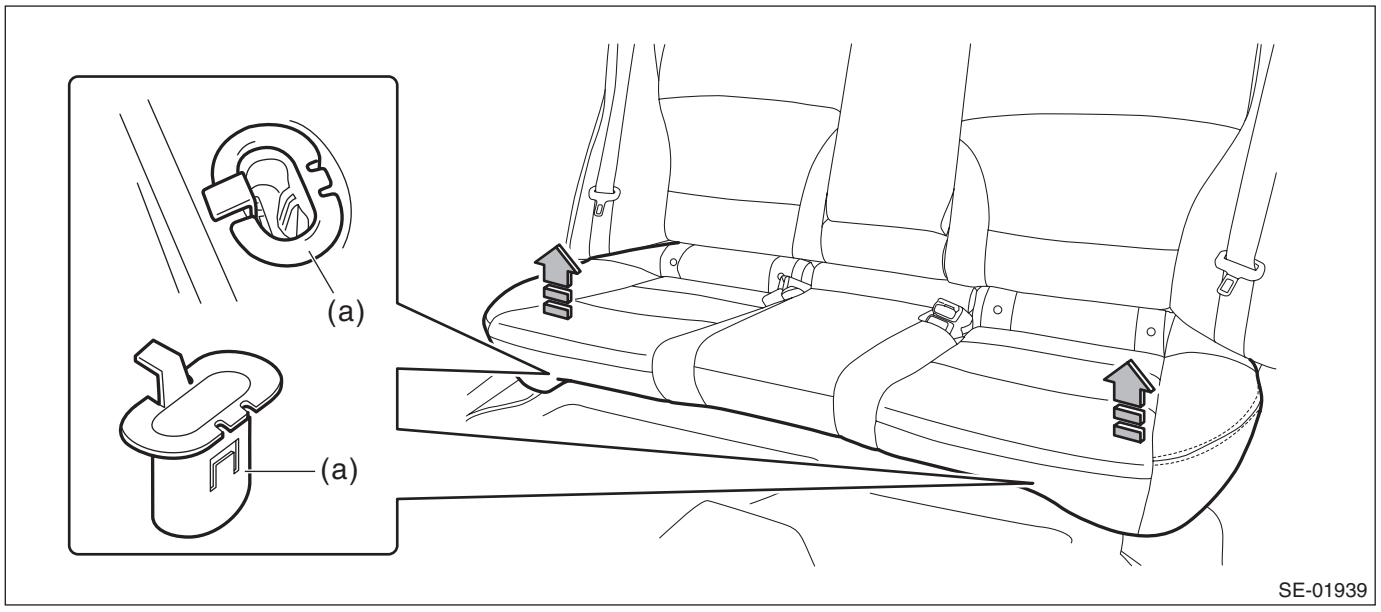

(2) Remove the hook (b) of the hinge assembly CTR by pushing it back while lifting the front side of the seat cushion, and remove the seat cushion.

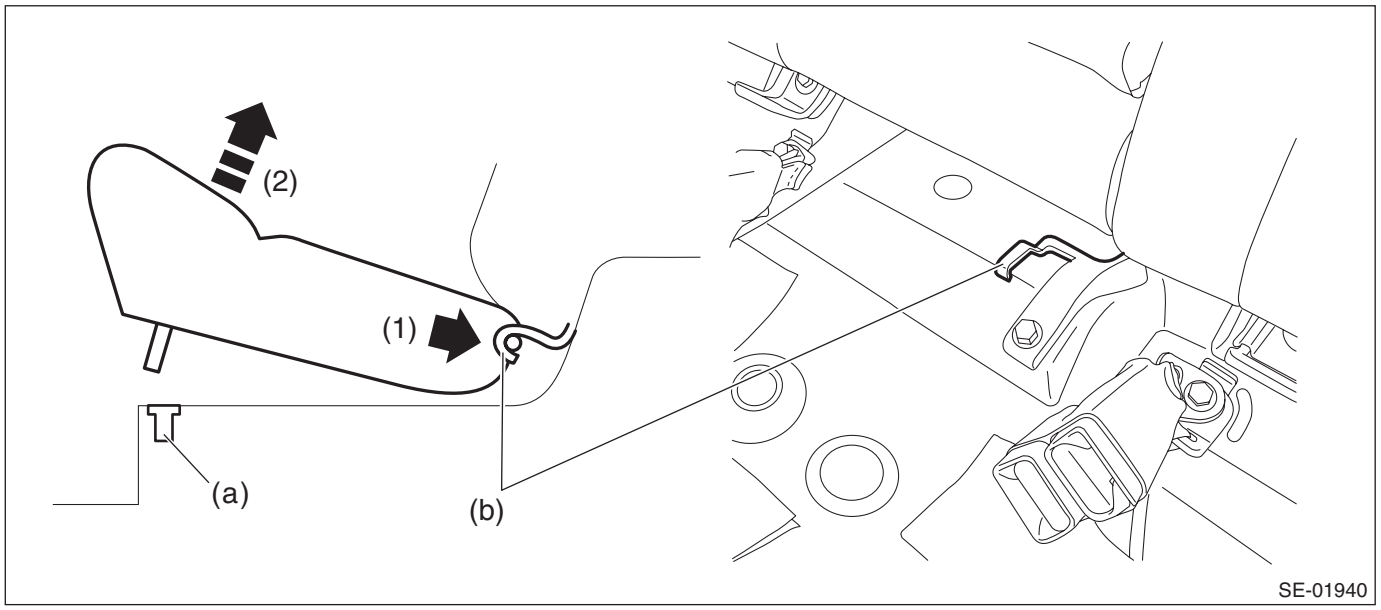

NOTE:
For models with seat heater, disconnect the connector.

3) Remove the bolts, and pull up the side pad assembly - backrest to remove.

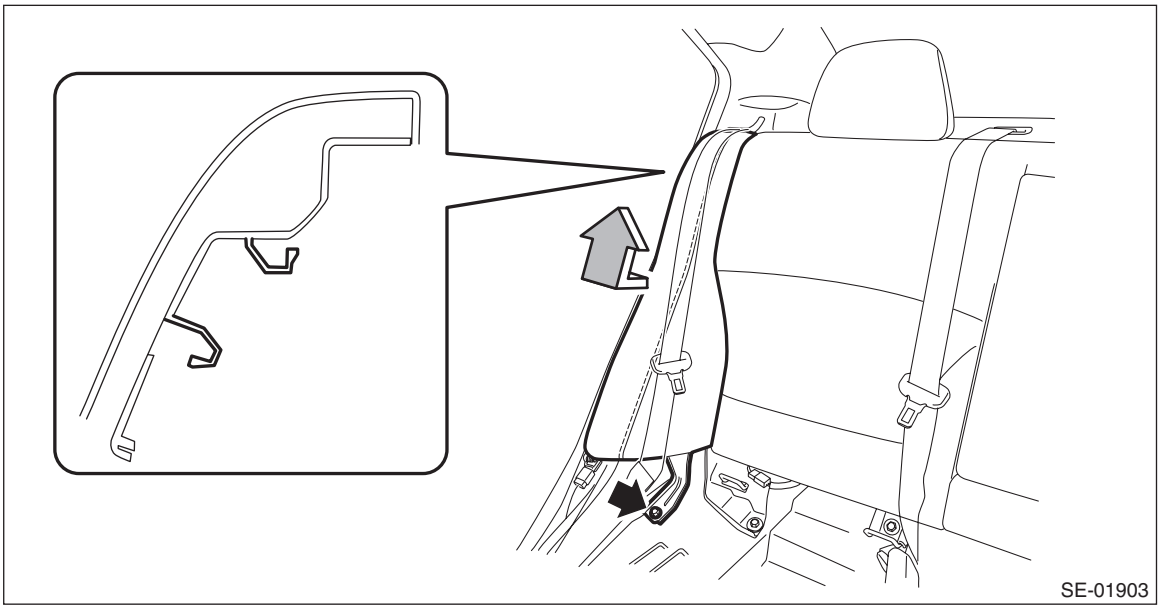

4) Remove the backrest assembly.

NOTE:
The backrest assembly can be removed without removing the side pad assembly - backrest.

(1) Pull the release lever in the trunk room, and then tilt the backrest forward.

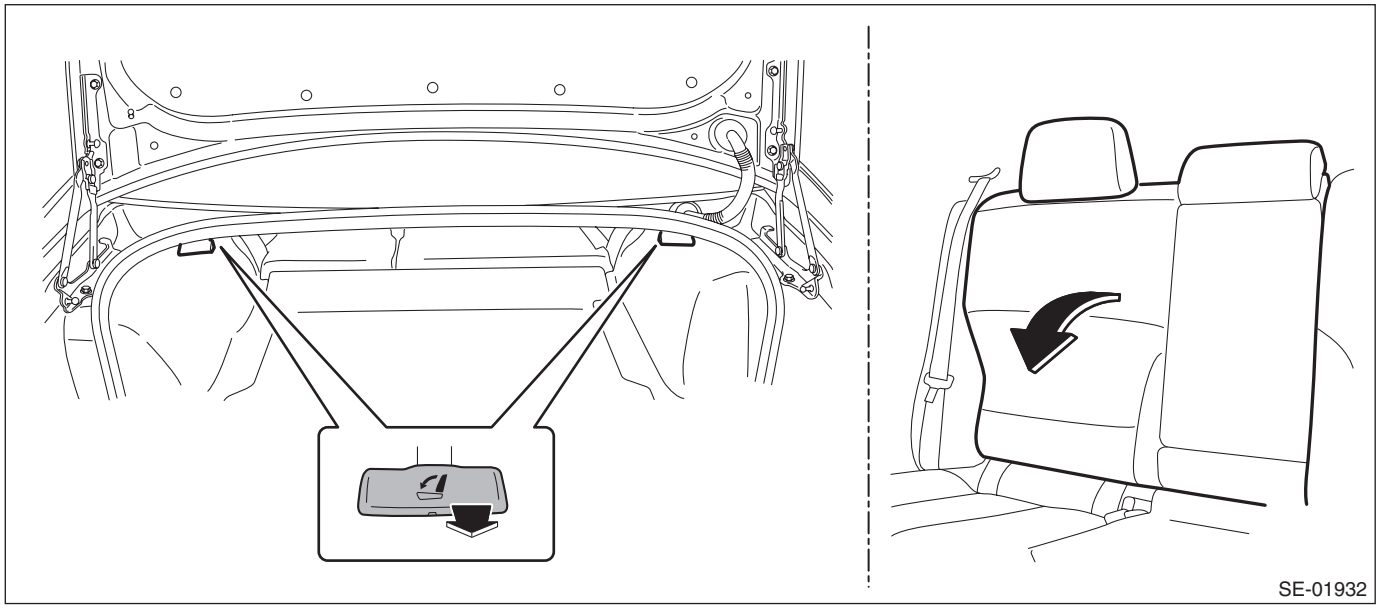

(2) Turn over the backrest mat, and remove the bolts on the rear side of the hinge assembly CTR.

(3) Remove the backrest assembly from the hinge assembly.

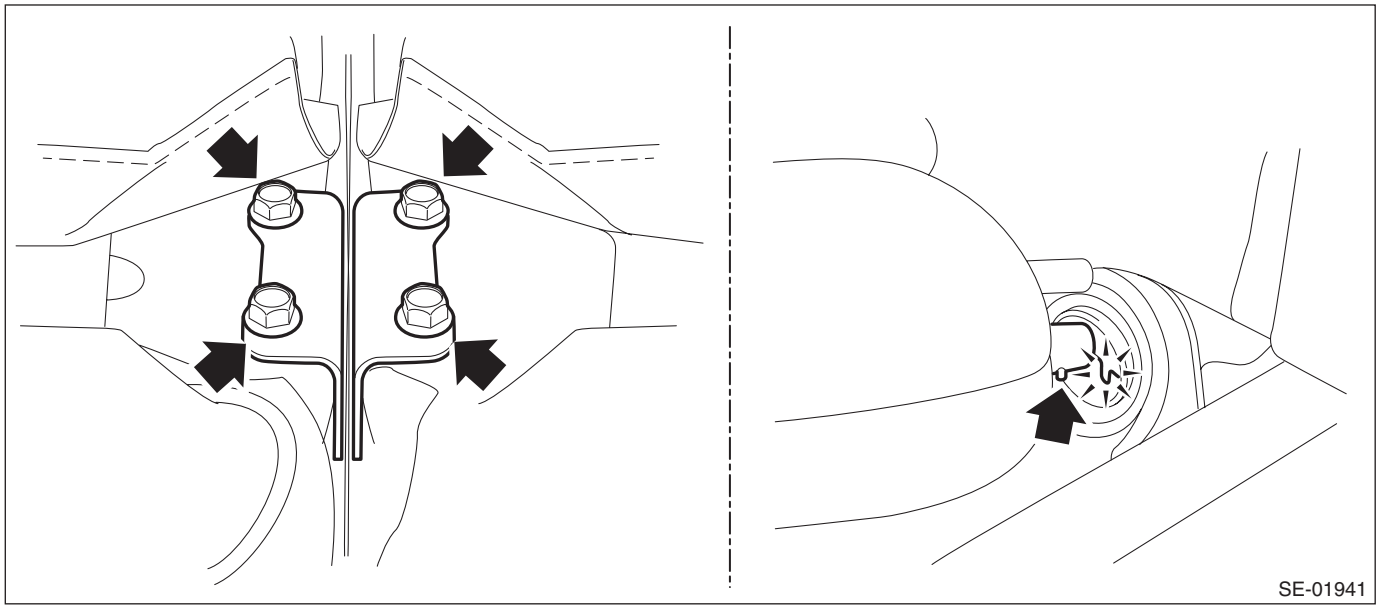

NOTE:
The backrests cannot be detached while pin positions of the hinge assembly and backrests are not aligned.
5) Remove the bolts, and then remove each hinge assembly.

2. OUTBACK MODEL

1) Disconnect the ground terminal from the battery sensor, and wait for at least 60 seconds before starting work. <Ref. to RC-4, BATTERY, NOTE, Repair Contents.>
2) Remove the rear seat cushion.

CAUTION:
If the hook - rear seat (a) is disconnected from the vehicle body, make sure to replace the hook - rear seat with a new part to prevent the decline of the fixed force of the seat.

(1) Pull up the seat cushion and release the hook - rear seat (a).

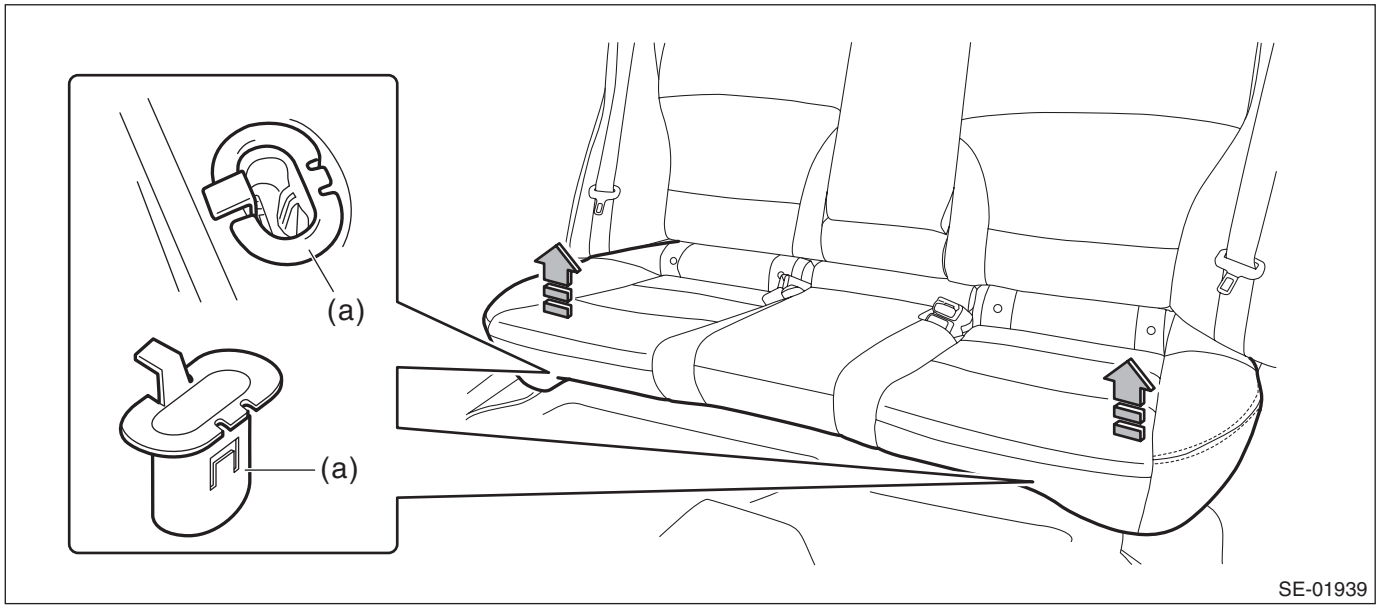

(2) Release the hook (b) of the hinge assembly CTR by lifting the front side of the seat cushion while pushing it backward, and remove the seat cushion.

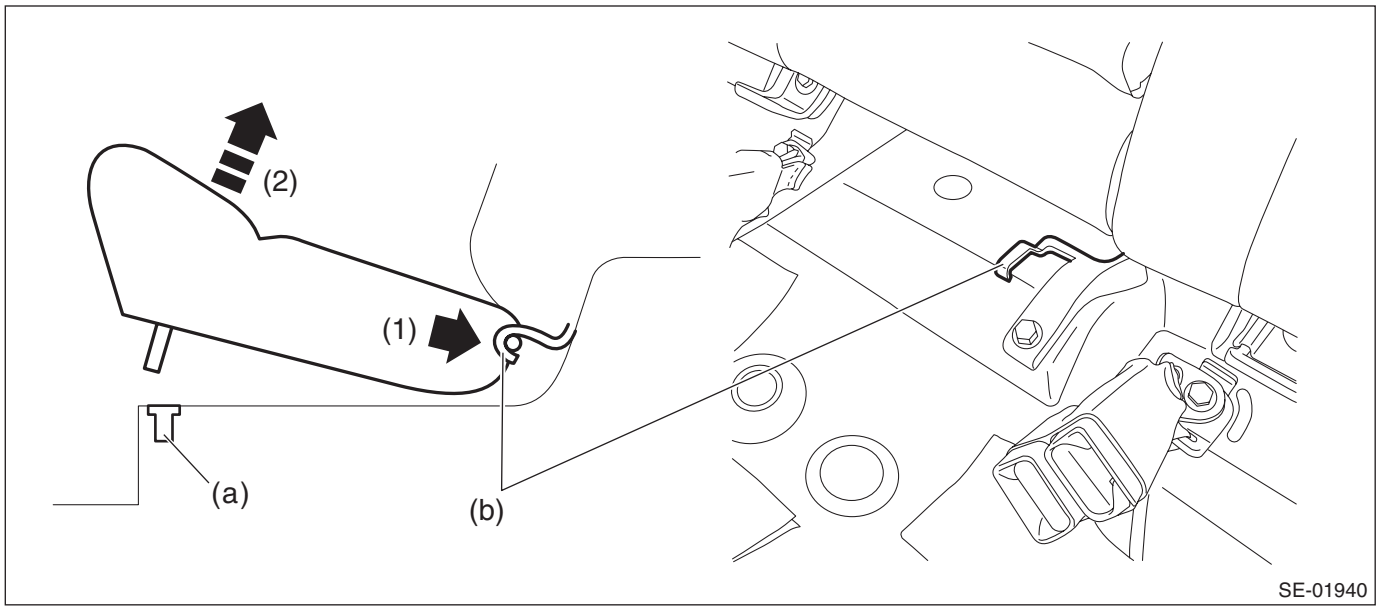

NOTE:
For models with seat heater, disconnect the connector.

3) Remove the side pad assembly - backrest.
(1) Remove the bolts, and pull up the side pad assembly - backrest to remove.
(2) Disconnect the reclining, and remove the side pad assembly - backrest.

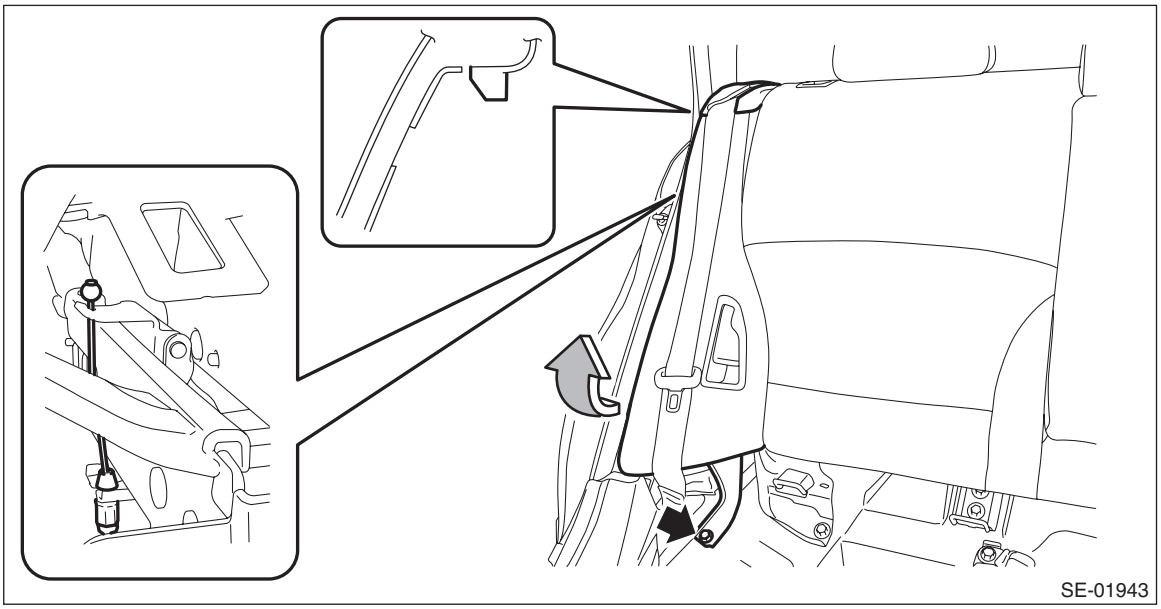

4) Remove the backrest assembly.

NOTE:
The backrest assembly can be removed without removing the side pad assembly - backrest.

(1) Tilt the backrest forward, and then turn over the backrest backside mat.
(2) Disconnect the backrest cable and the hold down cable.

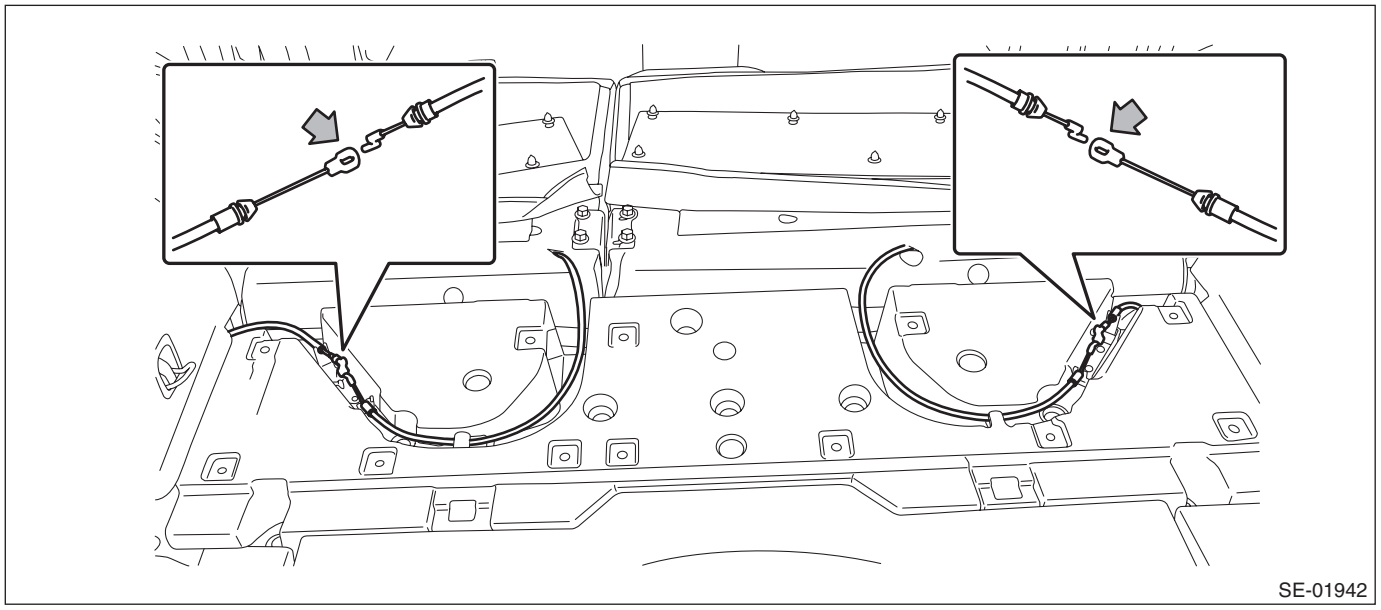
SE-01942

(3) Remove the bolts at the rear of backrest hinge.
(4) Remove the backrest assembly from the hinge assembly.

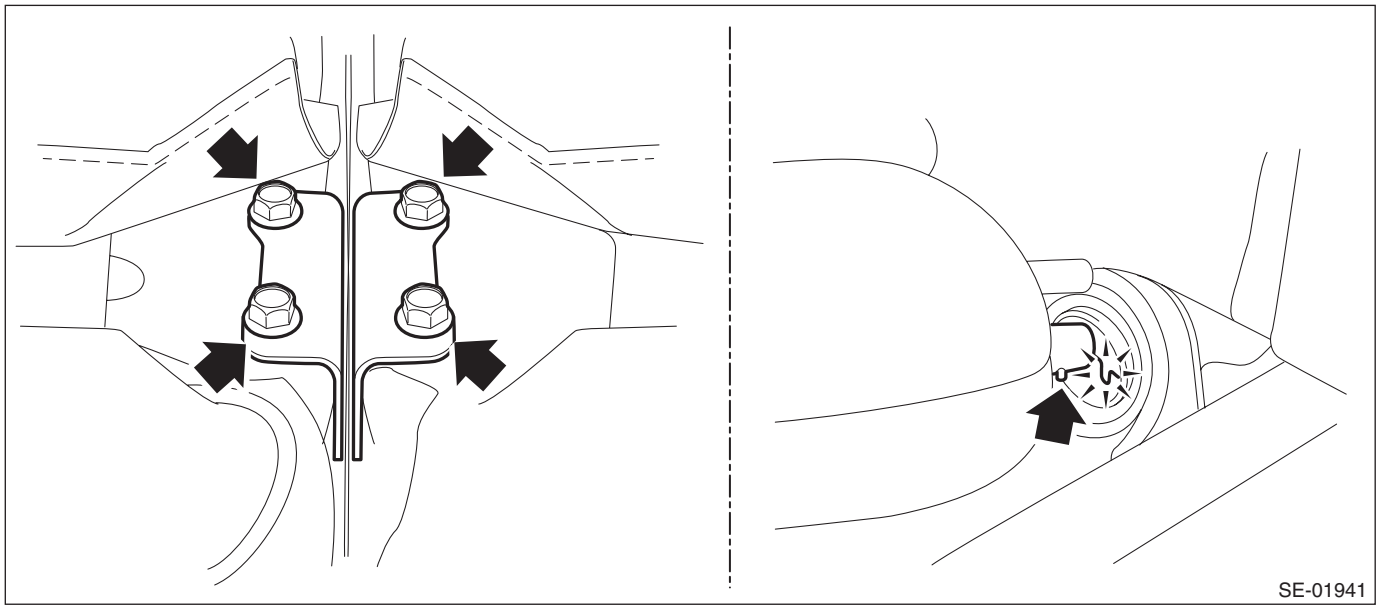
SE-01941

NOTE:
The backrests cannot be detached while pin positions of the hinge assembly and backrests are not aligned.

5) Remove the bolts, and then remove each hinge assembly.

3. BACKREST TILT MECHANISM (SEDAN MODEL)

1) Pull the release lever in the trunk room, and then tilt the backrest forward.

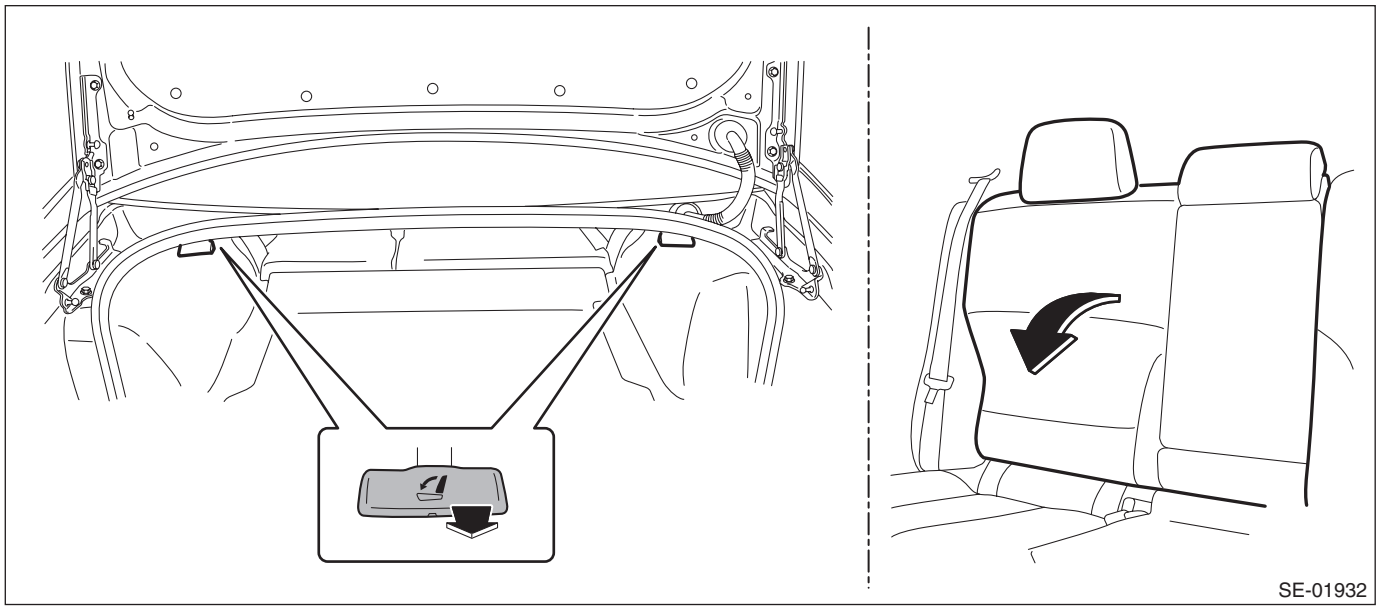

2) Remove the release lever assembly and the lock assembly - backrest.
   (1) Disconnect the wire cable from the lock assembly - backrest.
   (2) Remove the nuts, and then remove the lock assembly - backrest.
   (3) Remove the wire cable holder.

(4) Press the stopper portion (a), and remove the release lever assembly while sliding it forward.

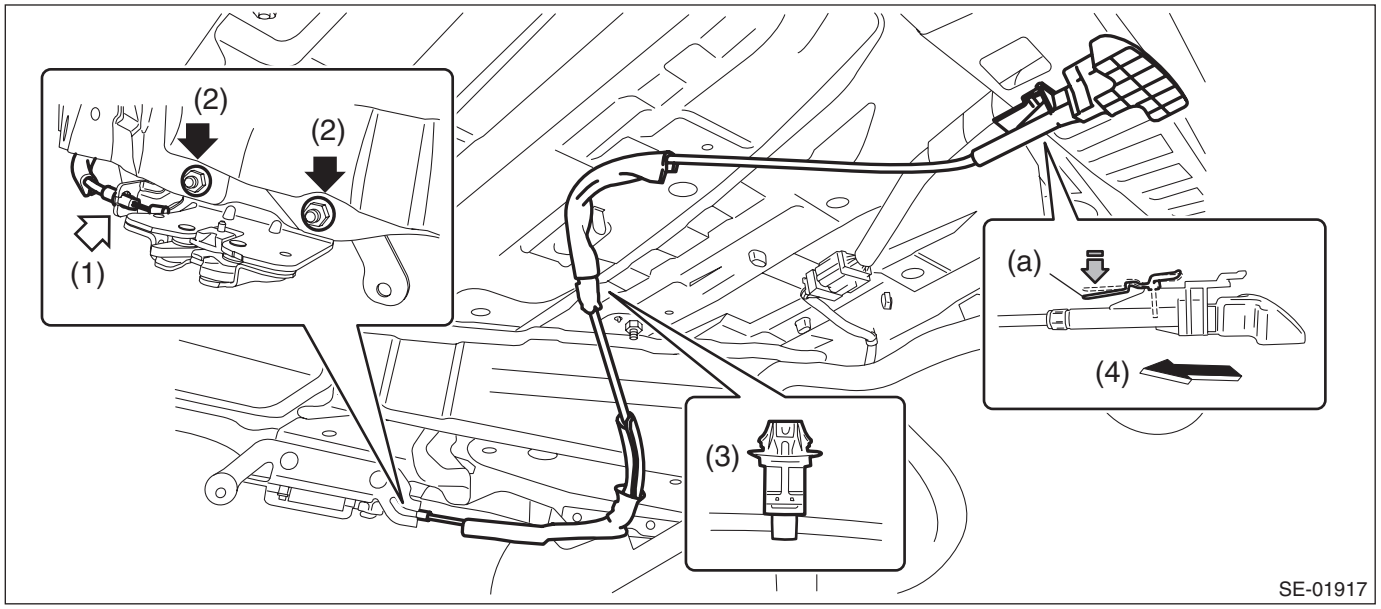

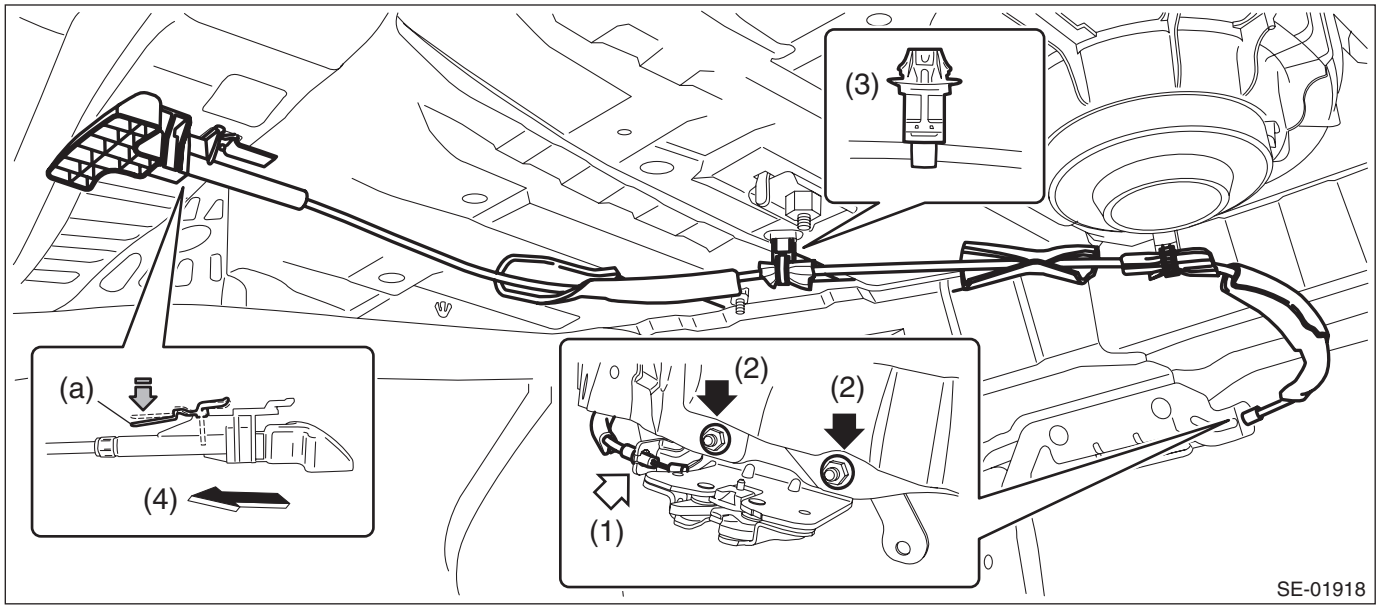

4. BACKREST TILT MECHANISM (OUTBACK MODEL)

1) Disconnect the ground terminal from the battery sensor, and wait for at least 60 seconds before starting work. <Ref. to RC-4, BATTERY, NOTE, Repair Contents.>
2) Remove the rear seat cushion. <Ref. to SE-35, OUTBACK MODEL, REMOVAL, Rear Seat.>

CAUTION:
If the hook - rear seat is disconnected from the vehicle body, make sure to replace the hook - rear seat with a new part to prevent the decline of the fixed force of the seat.

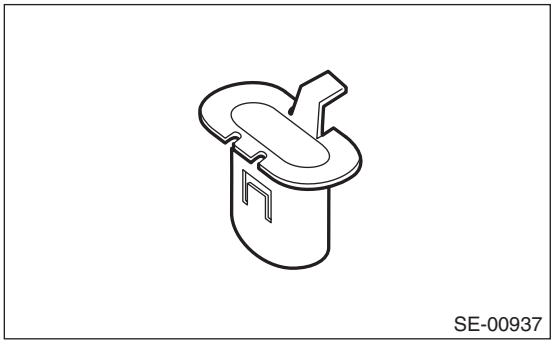
SE-00937

3) Remove the side pad assembly - backrest.
   (1) Remove the bolts, and pull up the side pad assembly - backrest to remove.
   (2) Disconnect the reclining cable, and remove the side pad assembly - backrest.

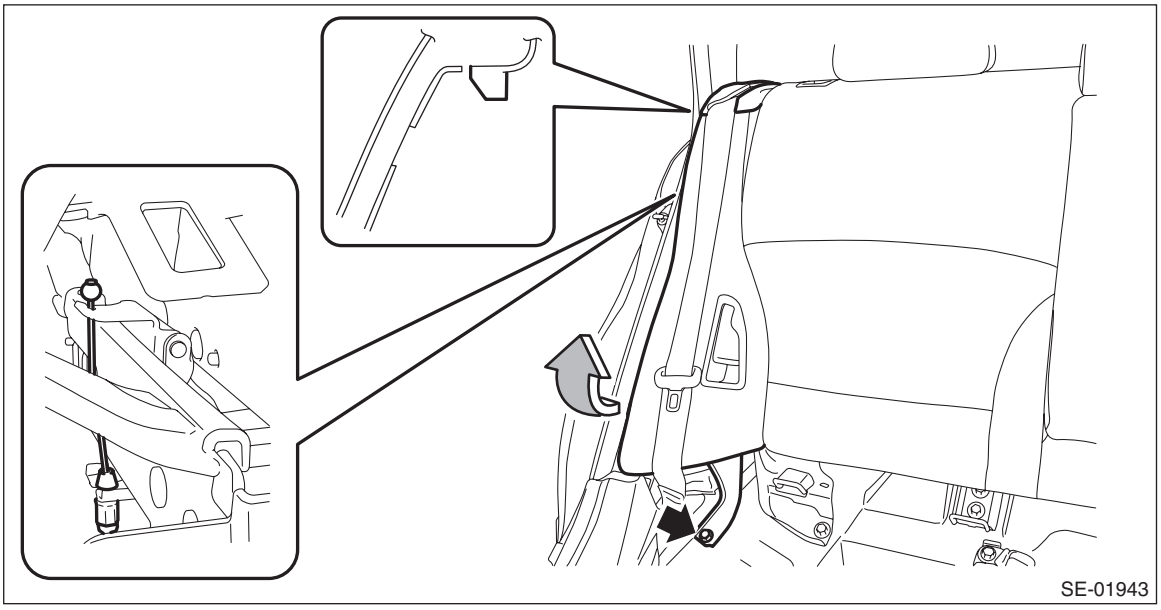
SE-01943

4) Remove the trim panel - rear apron. <Ref. to EI-100, OUTBACK MODEL, REMOVAL, Rear Quarter Trim.>

5) Remove the screw, and remove the lever assembly - rear backrest.

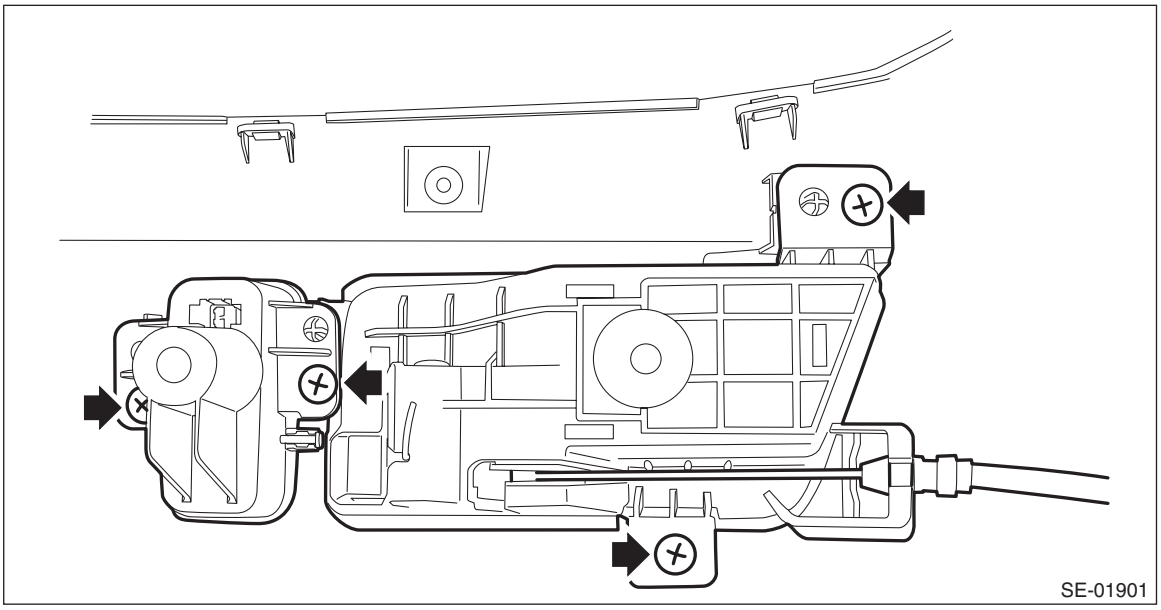

6) Remove the rear backrest assembly, and remove the release button - rear backrest and the remote lever cable. <Ref. to SE-47, DISASSEMBLY, Rear Seat.>

5. RECLINING MECHANISM (OUTBACK MODEL)

1) Disconnect the ground terminal from the battery sensor, and wait for at least 60 seconds before starting work. <Ref. to RC-4, BATTERY, NOTE, Repair Contents.>
2) Remove the rear seat cushion. <Ref. to SE-35, OUTBACK MODEL, REMOVAL, Rear Seat.>

CAUTION:
If the hook - rear seat is disconnected from the vehicle body, make sure to replace the hook - rear seat with a new part to prevent the decline of the fixed force of the seat.

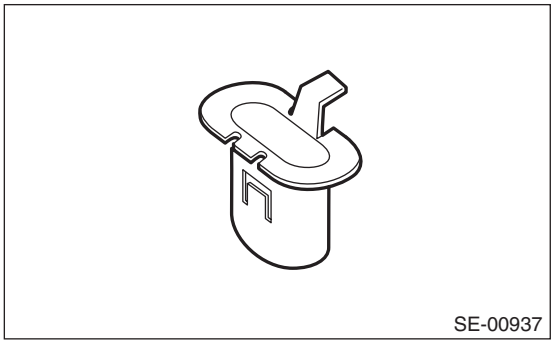

3) Remove the side pad assembly - backrest.
   (1) Remove the bolts, and pull up the side pad assembly - backrest to remove.
   (2) Disconnect the reclining cable, and remove the side pad assembly - backrest.

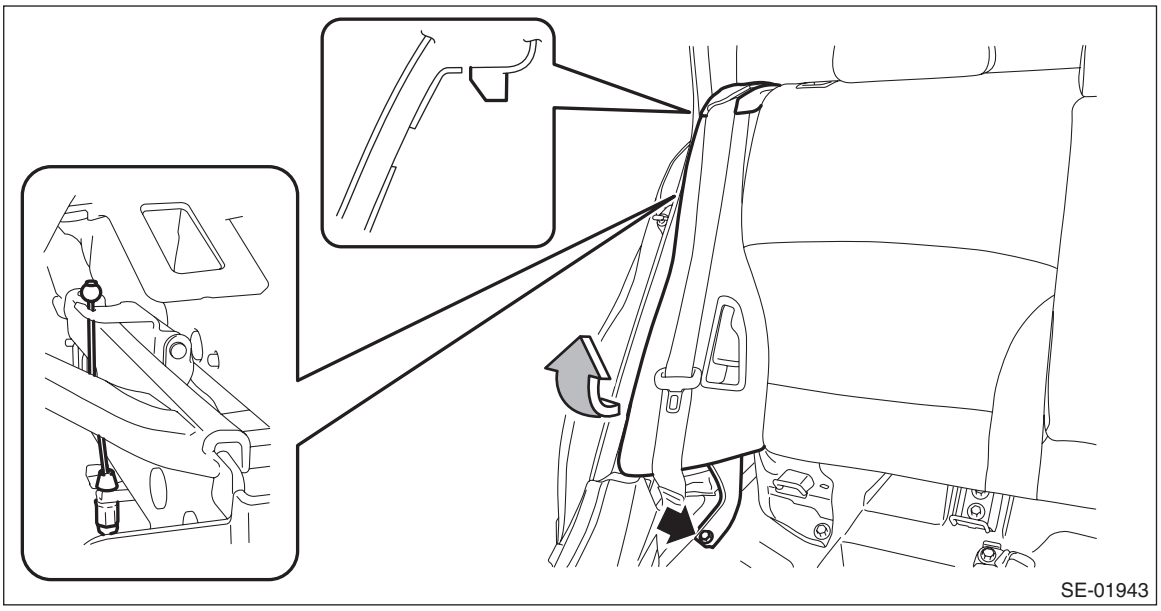

4) Remove the lever assembly - rear reclining.
   (1) Remove the screw and clamp, and remove the cable connector bracket.

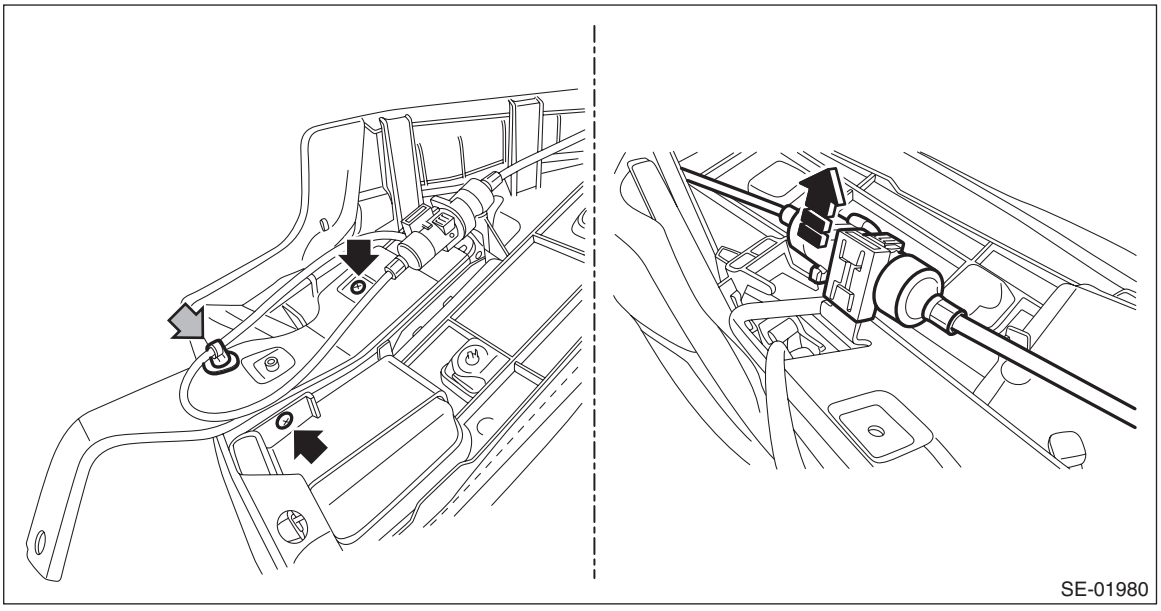

(2) Release the bracket and lever, then remove the lever assembly - rear reclining.

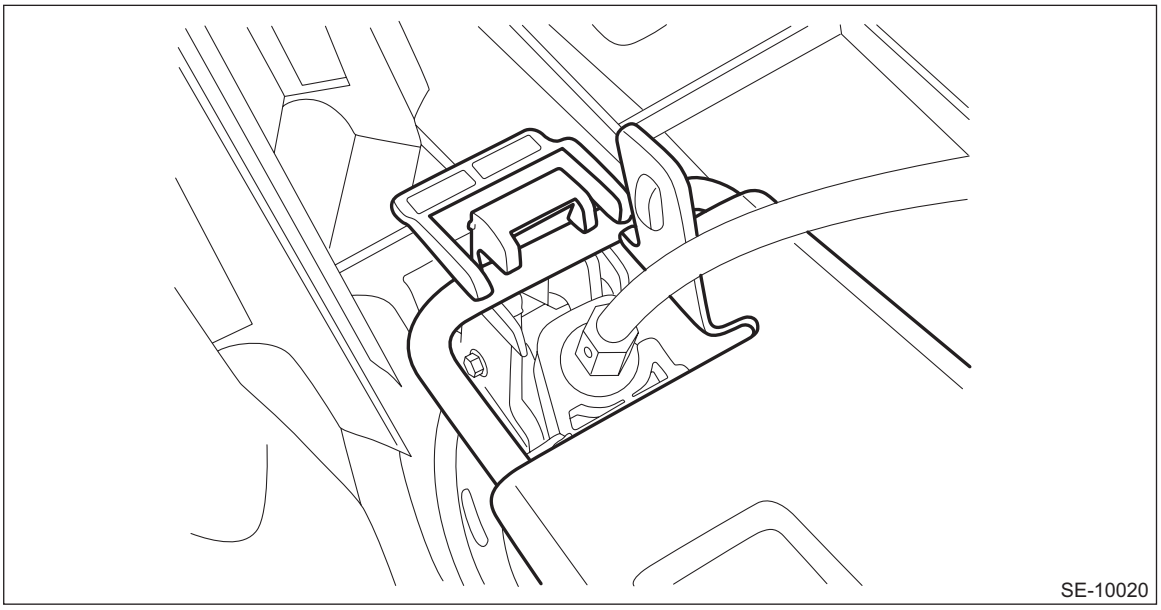

(3) Disconnect the reclining cable.
1. Remove the outer case (a).
2. Disconnect the striker cable through the cutout.

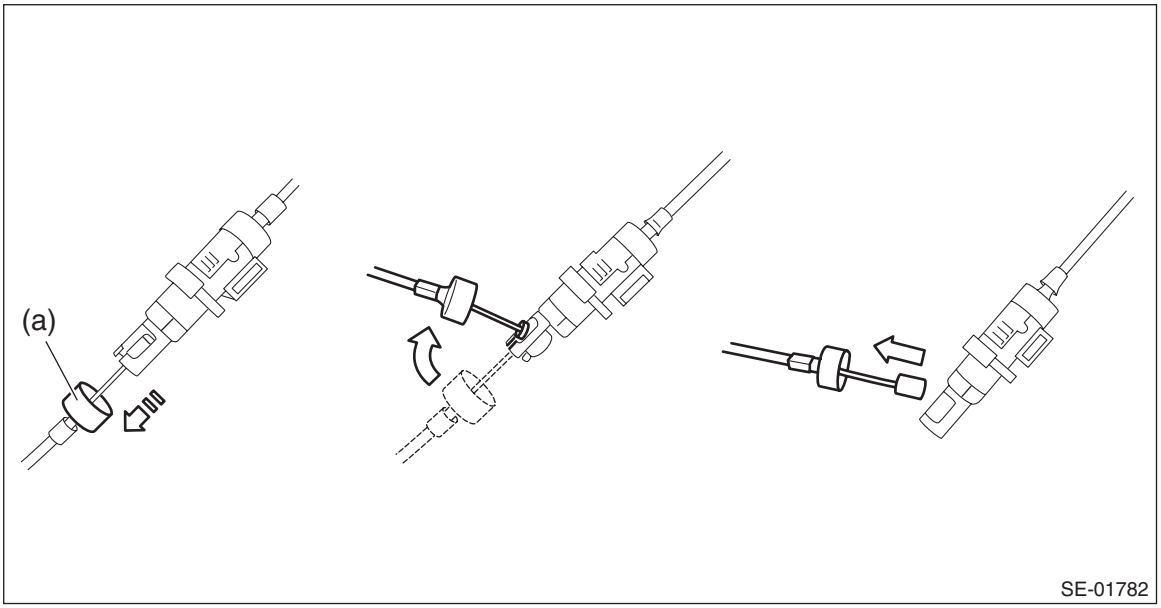

5) Remove the trim panel - rear apron. <Ref. to EI-100, OUTBACK MODEL, REMOVAL, Rear Quarter Trim.>

6) Remove the bolts, and then remove the striker - backrest rear.

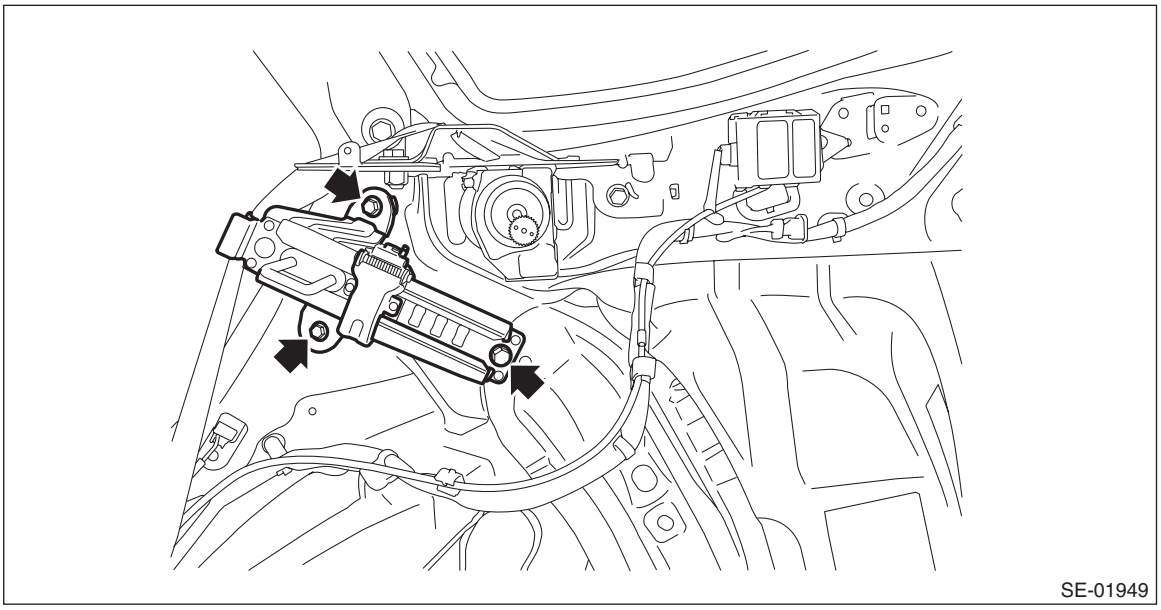

B: INSTALLATION

1. SEDAN MODEL

CAUTION:
If the hook - rear seat is disconnected from the vehicle body, make sure to replace the hook - rear seat with a new part to prevent the decline of the fixed force of the seat.

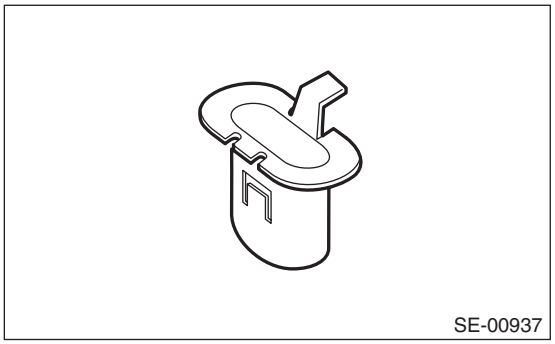

1) Install the backrest assembly - rear seat.

Tightening torque:
53 N·m (5.4 kgf-m, 39.1 ft-lb)

2) Install the side pad assembly - backrest.

Tightening torque:
53 N·m (5.4 kgf-m, 39.1 ft-lb)

3) Install the rear seat cushion.
4) Connect the ground terminal to battery sensor. <Ref. to RC-4, BATTERY, NOTE, Repair Contents.>

2. OUTBACK MODEL

CAUTION:
If the hook - rear seat is disconnected from the vehicle body, make sure to replace the hook - rear seat with a new part to prevent the decline of the fixed force of the seat.

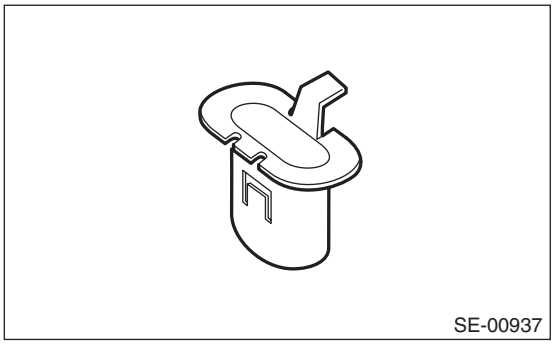
SE-00937

1) Install the backrest assembly - rear seat.

Tightening torque:
53 N·m (5.4 kgf-m, 39.1 ft-lb)
2) Install the backrest side pad.

Tightening torque:
53 N·m (5.4 kgf-m, 39.1 ft-lb)
3) Install the rear seat cushion.
4) Connect the ground terminal to battery sensor. <Ref. to RC-4, BATTERY, NOTE, Repair Contents.>

3. BACKREST TILT MECHANISM (SEDAN MODEL)

1) Install the lock assembly - backrest.

Tightening torque:
24.5 N·m (2.5 kgf-m, 18.1 ft-lb)
2) Install the release lever assembly.
3) Return the backrest to the original position, and move the release lever to check the operation.

4. BACKREST TILT MECHANISM (OUTBACK MODEL)

CAUTION:
If the hook - rear seat is disconnected from the vehicle body, make sure to replace the hook - rear seat with a new part to prevent the decline of the fixed force of the seat.

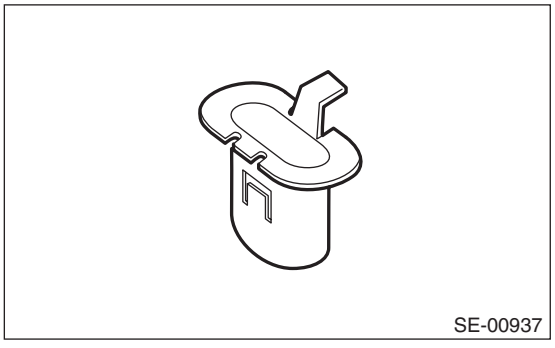
SE-00937

1) Install the release button - rear backrest and the remote lever cable.
2) Install the backrest assembly - rear seat.

Tightening torque:
53 N·m (5.4 kgf-m, 39.1 ft-lb)
3) Install the lever assembly - rear backrest.
4) Install the trim panel - rear apron.

5) Install the side pad assembly - backrest.

Tightening torque:
53 N·m (5.4 kgf-m, 39.1 ft-lb)

6) Install the rear seat cushion.
7) Connect the ground terminal to battery sensor. <Ref. to RC-4, BATTERY, NOTE, Repair Contents.>

5. RECLINING MECHANISM (OUTBACK MODEL)

CAUTION:
If the hook - rear seat is disconnected from the vehicle body, make sure to replace the hook - rear seat with a new part to prevent the decline of the fixed force of the seat.

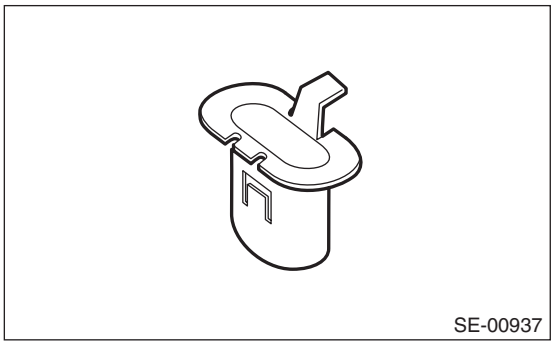

1) Install the striker - backrest rear.

Tightening torque:
33 N·m (3.4 kgf-m, 24.3 ft-lb)

2) Install the trim panel - rear apron.
3) Install the lever assembly - reclining.
(1) Connect the reclining cable.
1. With the lock (b) down, pull out the connecting portion (a).
2. With the connecting portion (a) pulled out, pull up the lock (b).

NOTE:
The connection cannot be completed, even if the lock (b) is pulled up while the connecting portion (a) is in the case.

3. Connect the cables, attach the case (c), and push down the lock (b).

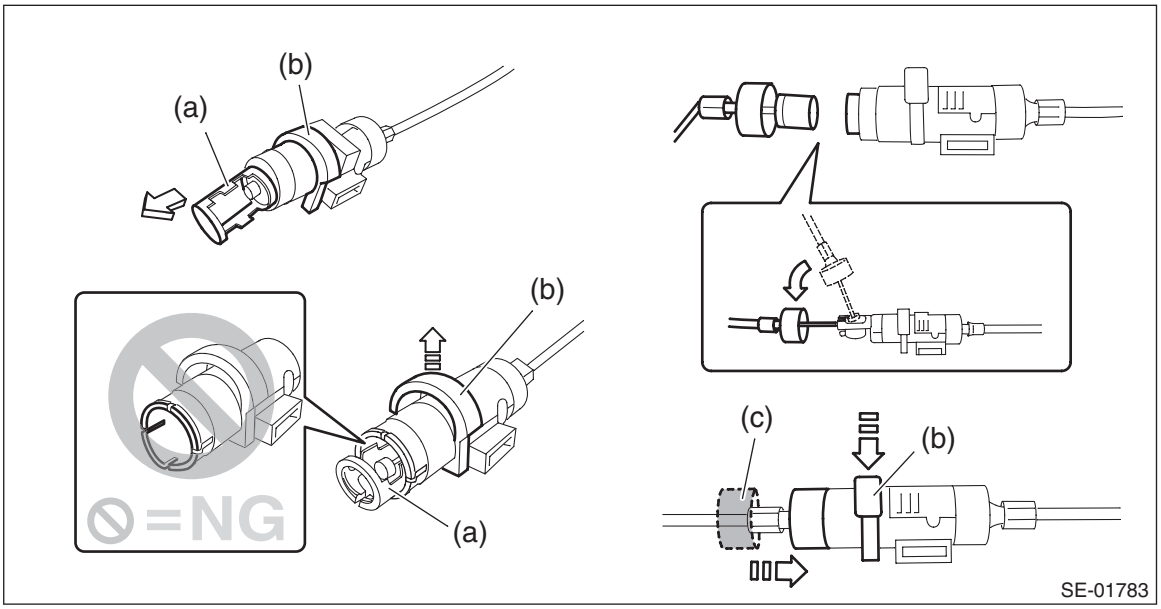

4) Install the side pad assembly - backrest.

Tightening torque:
53 N·m (5.4 kgf-m, 39.1 ft-lb)

5) Install the rear seat cushion.
6) Connect the ground terminal to battery sensor. <Ref. to RC-4, BATTERY, NOTE, Repair Contents.>

C: DISASSEMBLY

1) Remove the rear seat. <Ref. to SE-33, REMOVAL, Rear Seat.>
2) Remove the headrest assembly - rear.
3) Remove the resin fasteners on the lower of the backrest assembly, and remove the clip.
4) Release the clips to remove the lock cover. (OUTBACK model)
5) Open the fastener and turn over the cover COMPL - rear backrest.

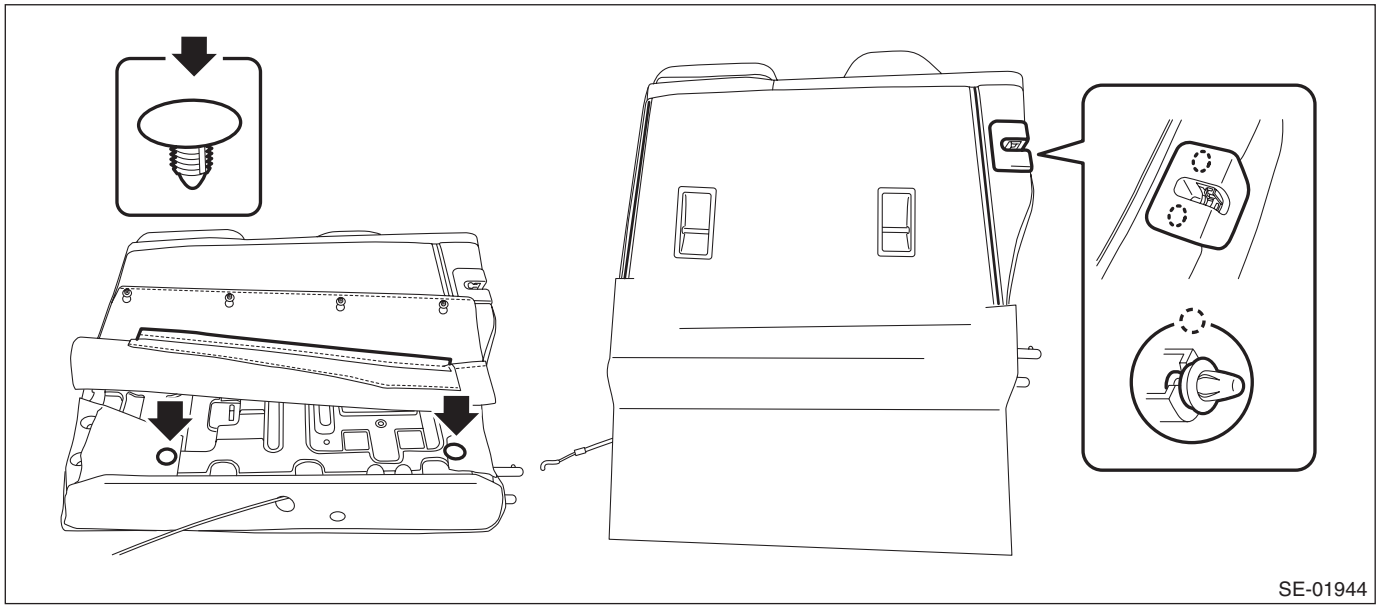
SE-01944

6) Pull up the pad and cover, and remove the tether anchor cover from the inside of back board. (OUTBACK model)

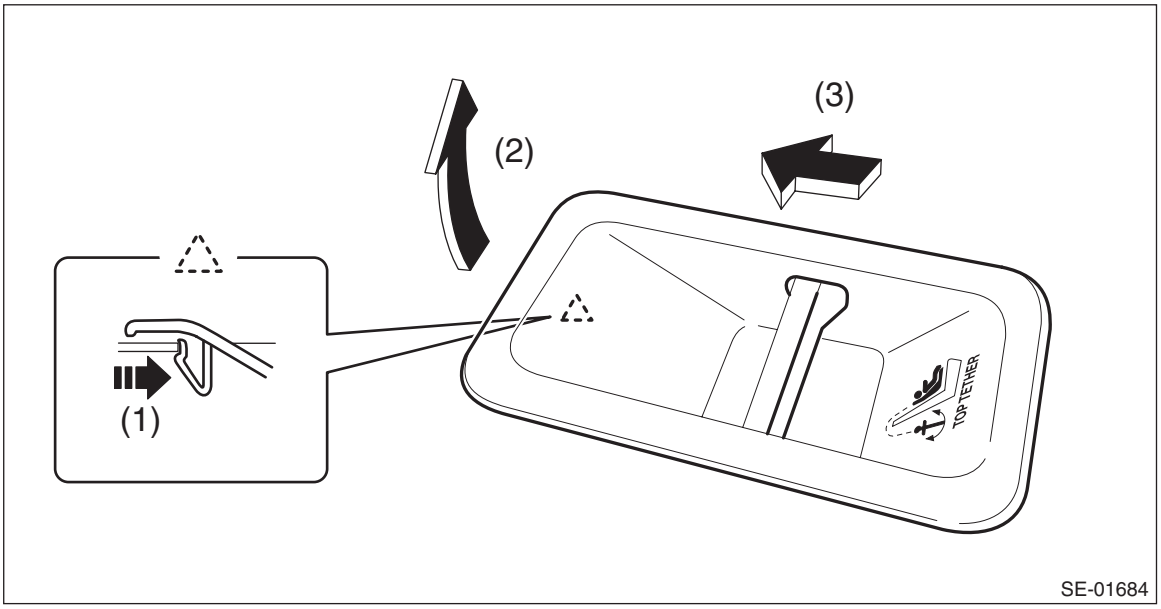

SE-01684

7) Remove the armrest assembly.
(1) Remove the cover - armrest hinge OUT.
(2) Remove the screws, and remove the armrest.

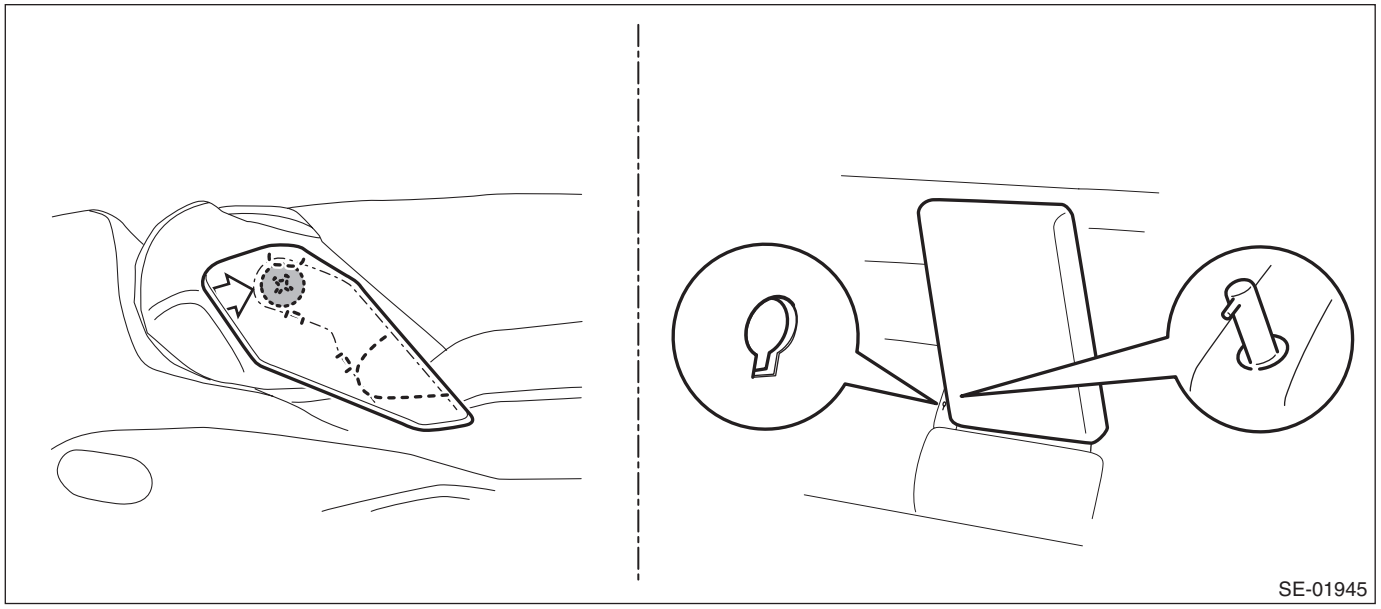

NOTE:
The armrests cannot be detached while the backrest assembly RH and armrest side pin positions are not aligned.

8) Remove the wire clamp (a) and the hog rings (b) and (c).

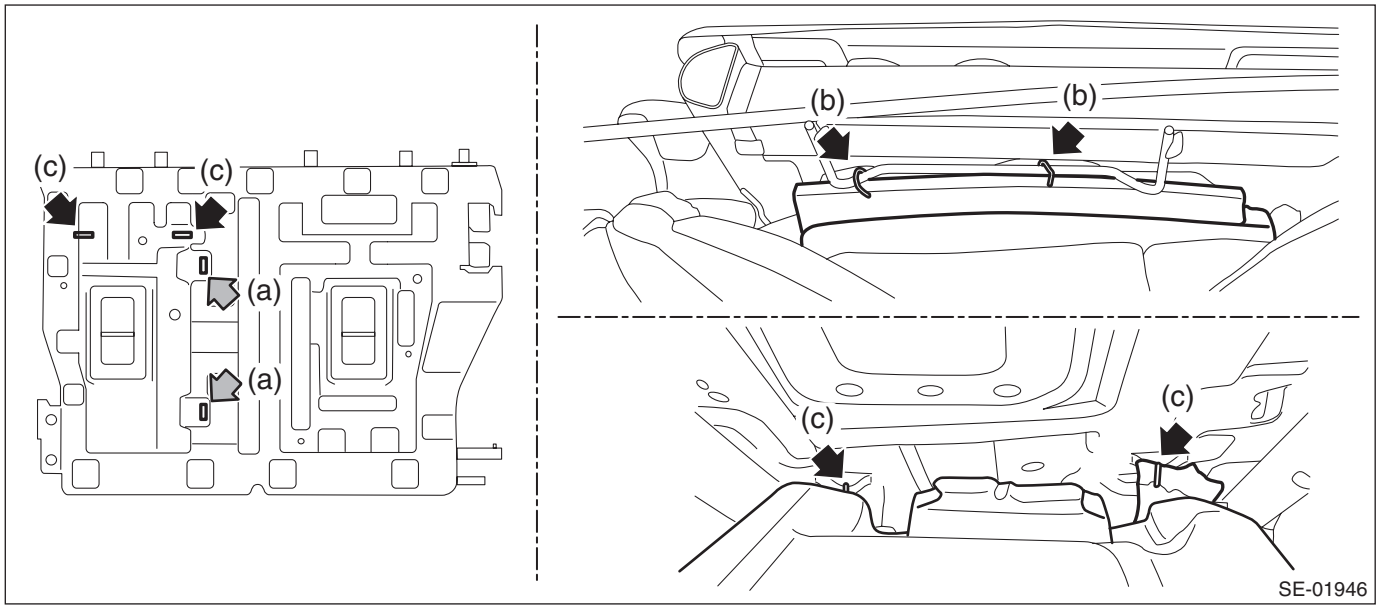

9) Remove the bushing - headrest.

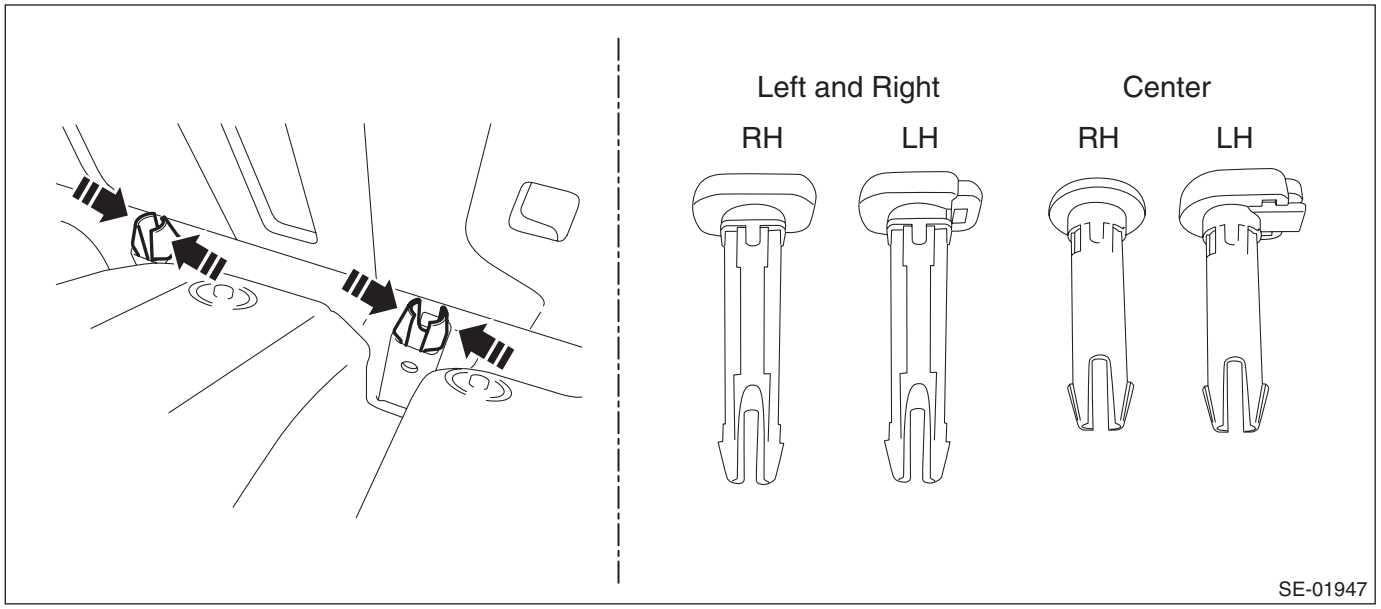

10) Remove the lock button. (OUTBACK model)
    (1) Remove the cover - lock button.
    (2) Remove the screw, disconnect the rod and the wire, and remove the cover - lock button.
11) Remove the lock assembly - rear backrest rear LH.

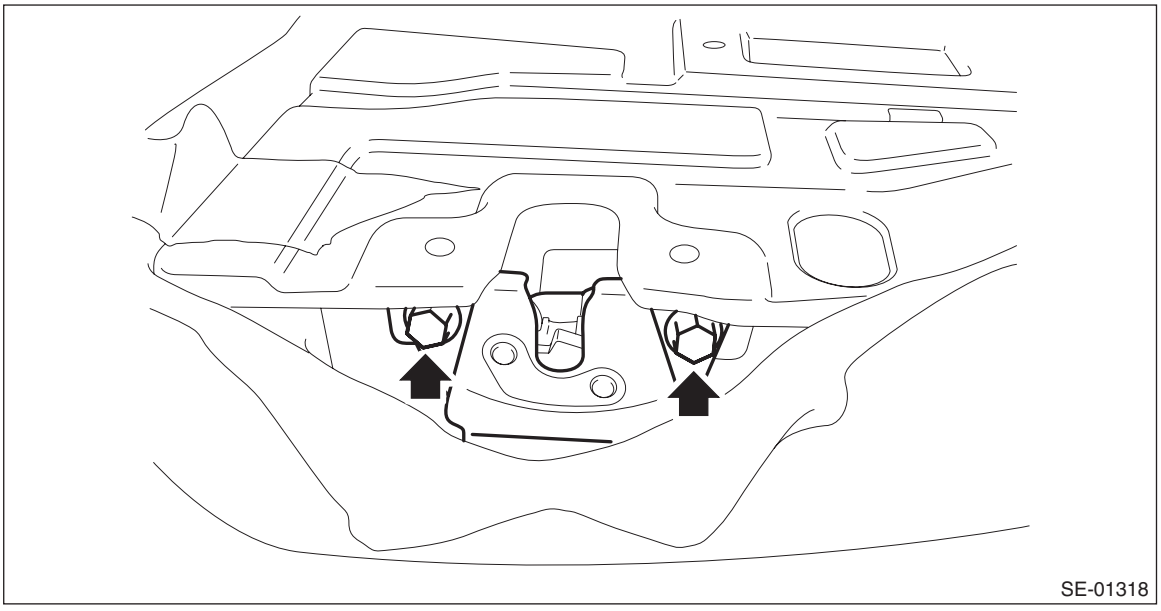

12) Remove the pad assembly - main from the frame assembly - rear backrest.
13) Remove the seat heater module from the pad assembly as necessary.

CAUTION:
- **If the seat heater module is removed, replace the pad assembly with a new part.**
- **If the seat heater module is reused, remove the polyurethane section from the reverse side completely.**

14) Referring to the above steps, disassemble the backrest assembly RH.

15) Remove the hog rings (a) on the back side of the rear seat cushion assembly.

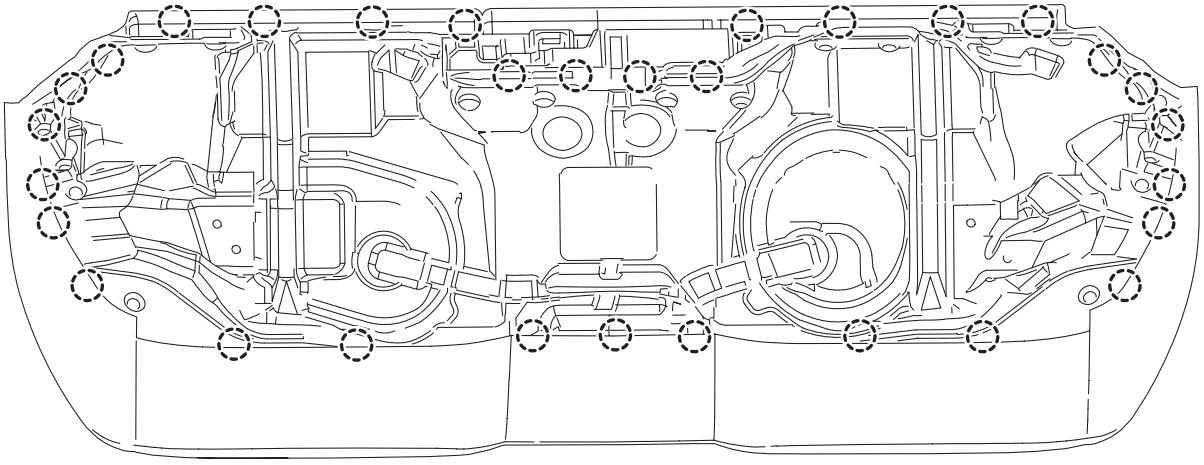

◯: (a)

SE-01951

16) Remove the hog rings (a), then remove the cover - rear cushion.

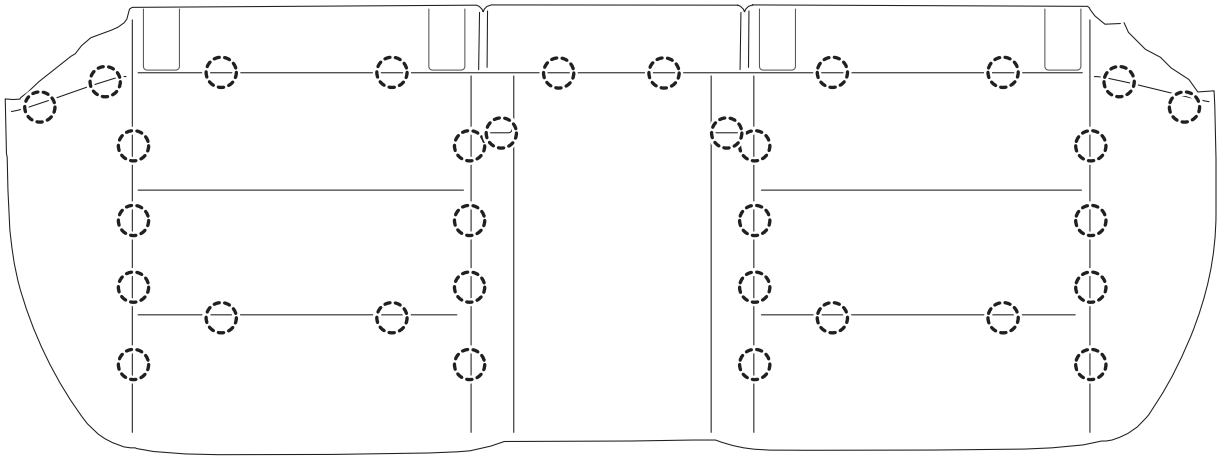

◯: (a)

SE-01952

17) Remove the seat heater module from the pad assembly as necessary.

CAUTION:
- **If the seat heater module is removed, replace the pad assembly with a new part.**
- **If the seat heater module is reused, remove the polyurethane section from the reverse side completely.**

D: ASSEMBLY

CAUTION:
- **Do not reuse hog rings.**
- **Secure the hog ring using hog ring pliers.**
- **Install the hog rings to the specified points securely and make sure that there is no wrinkle or twisting on the cover COMPL - rear backrest.**

1) Install the seat heater module.

CAUTION:
- **If the seat heater module and seating sensor are removed, replace the pad assembly with a new part.**
- **If the seat heater module is reused, remove the polyurethane section from the reverse side completely and attach a new pad assembly with a double-sided tape.**

Double-sided tape:
NITTO DENKO 501L or equivalent

2) Assemble the cover COMPL - rear backrest and the cover - rear cushion in the same manner as for the front seat. <Ref. to SE-25, ASSEMBLY, Front Seat.>
3) Install the hog rings (A) on the back side of the rear seat cushion assembly.
4) Install the hog rings and wire clip, then install the cover COMPL - rear backrest LH.

NOTE:
- Do not contaminate or damage the cover COMPL - rear backrest and the cover - rear cushion.
- While installing the hog rings, prevent the cover COMPL - rear backrest and the cover - rear cushion from getting wrinkled.

5) Install the plastic fastener and hog ring, and then install the headrest cover.
6) Install the pad assembly - main LH.
7) Install the bushing - headrest and the bushing - lock assembly.
8) Install the lock assembly - rear backrest rear LH.

Tightening torque:
22.5 N·m (2.3 kgf-m, 16.6 ft-lb)

9) Install the plastic hooks on the back side of the backrest assembly LH.
10) Install the tether anchor cover.
11) Install the clips on the backside of the cover COMPL - rear backrest LH.
12) Install the knob - backrest. (Screw-in type)
13) Referring to the above steps, install the pad assembly - main RH.

Tightening torque:
Refer to "COMPONENT" of "General Description". <Ref. to SE-8, REAR SEAT, COMPONENT, General Description.>

14) Install the headrest assembly - rear.
15) Before installation, check the following items.
- No tear and fray on the cover COMPL - rear backrest and the cover - rear cushion.
- No fray or deformation on each wire cable.

16) Install the rear seat. <Ref. to SE-44, INSTALLATION, Rear Seat.>

4. Power Seat System

A: REMOVAL

CAUTION:
When removing the front seat, disconnect the ground cable from the battery before disconnecting the airbag system and the occupant detection system harness connector, and wait for 60 seconds before starting the operation.

1. POWER SEAT SWITCH

1) Remove the seat from vehicle. <Ref. to SE-11, REMOVAL, Front Seat.>
2) Remove the cover - hinge front seat OUT.
   (1) Remove the screws in the rear section of the cover - hinge front seat OUT.
   (2) Release the claw in the upper section of the cover - hinge front seat OUT.

NOTE:
Use a plastic clip remover.

   (3) Remove the clip in the center of the cover - hinge front seat OUT.
   (4) Release the claw in the front section of the cover - hinge front seat OUT, then remove the cover - hinge front seat OUT.

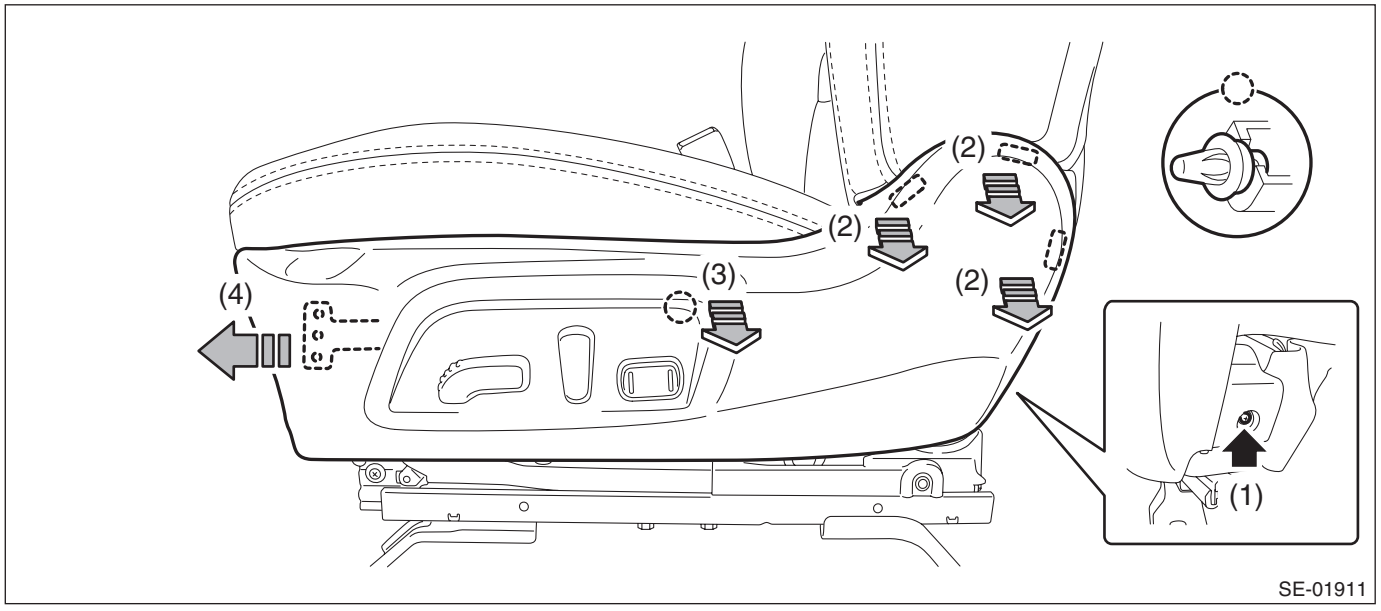

   (5) Disconnect the power seat switch and lumber switch connector and remove the cover - hinge front seat OUT.
3) Remove the switch assembly - power seat.
   (1) Disconnect the connectors for power seat switch and lumbar switch.
   (2) Remove the knob - power seat.
   (3) Remove the screws to remove the switch assembly - power seat.

(4) Remove the switch assembly - lumber. (Model with lumber support)

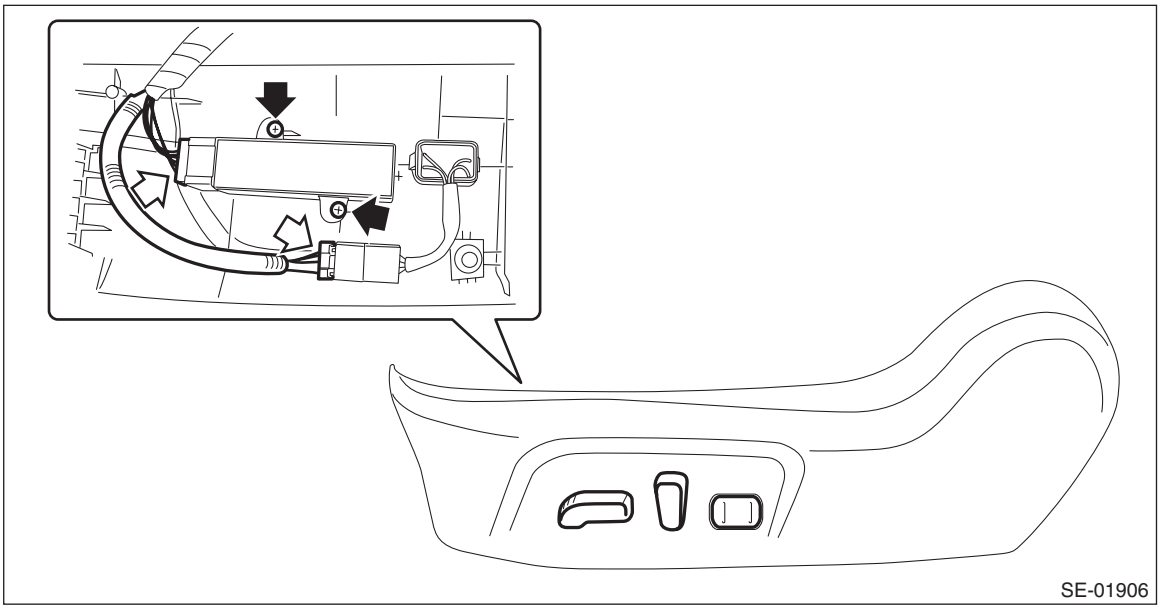

2. SEAT MEMORY SWITCH

1) Disconnect the ground terminal from the battery sensor, and wait for at least 60 seconds before starting work. <Ref. to RC-4, BATTERY, NOTE, Repair Contents.>
2) Remove the trim panel - front door. <Ref. to EI-71, FRONT DOOR, REMOVAL, Door Trim.>
3) Release the claws, and remove the seat memory switch assembly.

3. POWER SEAT CONTROL MODULE (SEAT WITH MEMORY FUNCTION)

1) Raise the seat cushion by operating the switch.
2) Remove the front seat from the vehicle.
3) Remove the power seat control module.
   (1) Release the hooks on seat front and turn over the cushion cover.
   (2) Remove the nuts, and remove the power seat control module.

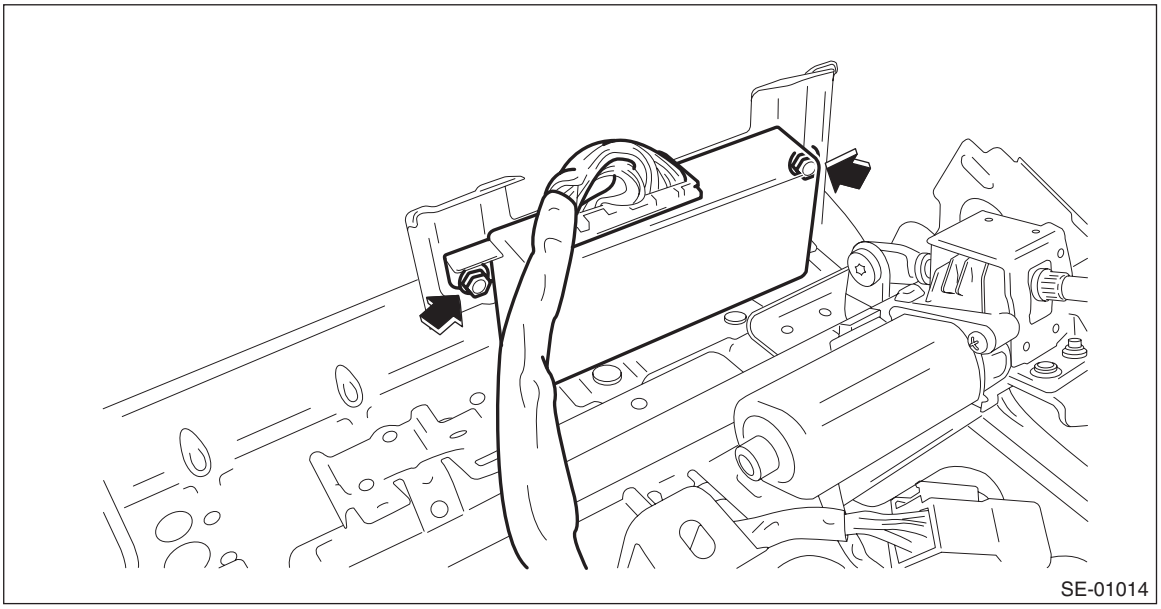

B: INSTALLATION

1. POWER SEAT SWITCH

1) Install the switch assembly - power seat.
2) Install the switch assembly - lumber. (Model with lumber support)
3) Install the knob - power seat.
4) Install the cover - hinge front seat OUT.
5) Install the seat assembly. <Ref. to SE-12, INSTALLATION, Front Seat.>

2. SEAT MEMORY SWITCH

1) Release the claws, and install the seat memory switch assembly.
2) Install the trim panel - front door. <Ref. to EI-73, INSTALLATION, Door Trim.>
3) Connect the ground terminal to battery sensor. <Ref. to RC-4, BATTERY, NOTE, Repair Contents.>

3. POWER SEAT CONTROL MODULE (SEAT WITH MEMORY FUNCTION)

1) Install the power seat control module.

Tightening torque:
5.9 N·m (0.6 kgf-m, 4.4 ft-lb)
2) Install the seat assembly. <Ref. to SE-12, INSTALLATION, Front Seat.>
3) Raise the seat cushion by operating the switch.
4) Install the seat assembly. <Ref. to SE-12, INSTALLATION, Front Seat.>

NOTE:
• The seat with memory function must be initialized after installed. <Ref. to SE-74, ADJUSTMENT, Power Seat System.>
• After replacing a seat with memory function and the power seat control module, check the following items.
1. Memory is reloaded by pressing the seat memory switch, when the ignition is ON and the select lever is set to the “P” range.
2. Memory is not reloaded even if the seat memory switch is pressed, when the ignition is ON and the select lever is set to other than “P” range.
3. Memory is reloaded when the ignition is OFF and the seat memory switch located inside the driver’s door is pressed within 45 seconds after the door is opened.
4. Memory is reloaded automatically when the ignition is OFF and the driver’s door is opened after unlocked by access key. (Model with smart key interlock function)

C: INSPECTION

1. WIRING DIAGRAM

Refer to “Power Seat” in WI section.
• Driver’s seat (without memory): <Ref. to WI-299, DRIVER'S SEAT (WITHOUT MEMORY), WIRING DIAGRAM, Power Seat System.>
• Driver’s seat (with memory): <Ref. to WI-300, DRIVER'S SEAT (WITH MEMORY), WIRING DIAGRAM, Power Seat System.>
• Passenger’s seat: <Ref. to WI-299, WIRING DIAGRAM, Power Seat System.>

2. NOTE

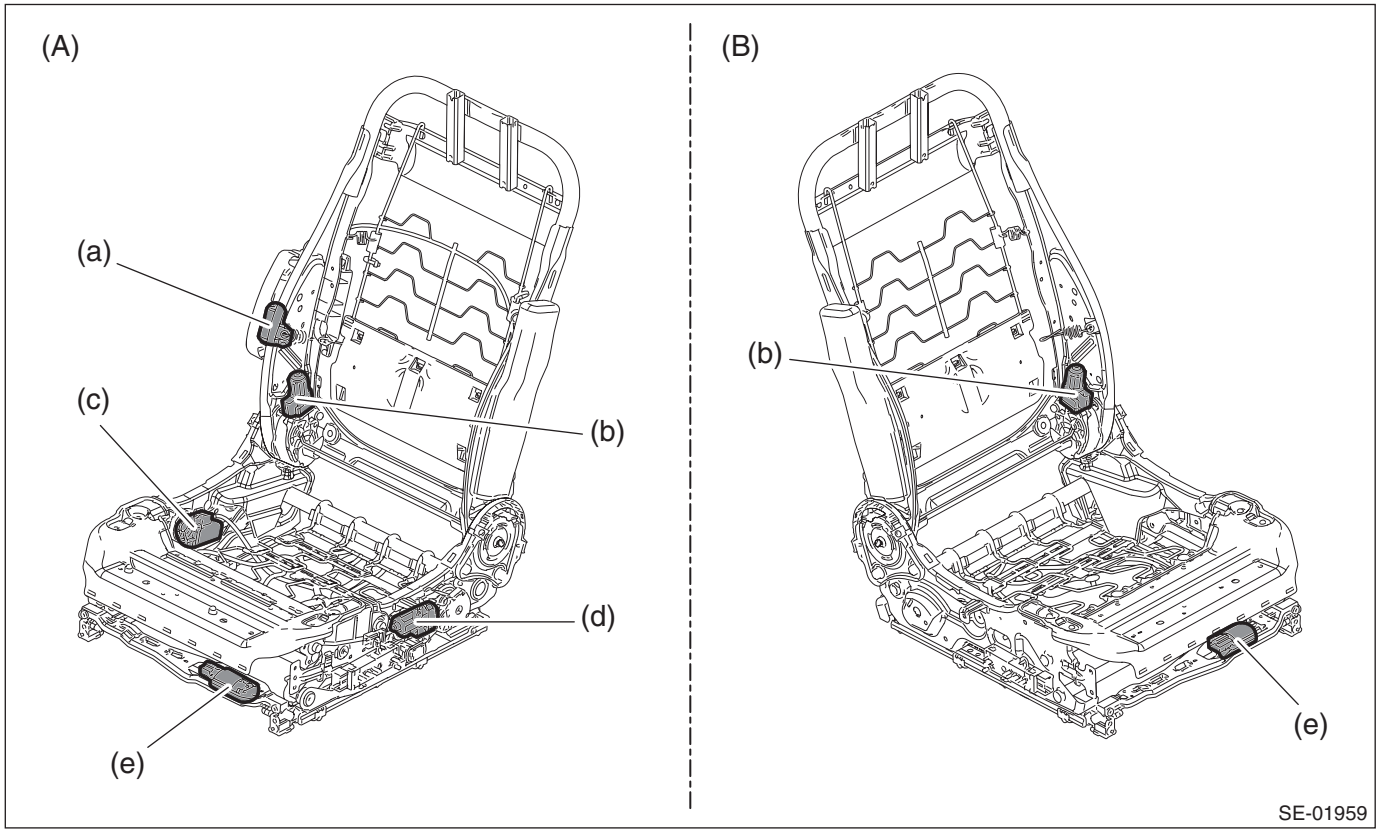

(A) Driver's seat
(B) Passenger's seat

(a) Lumber motor
(b) Reclining motor
(c) Tilt motor
(d) Lifter motor
(e) Slide motor

3. TROUBLE SYMPTOM

- Without memory function

Symptoms	Criteria
All functions do not operate. <Ref. to SE-60, ALL FUNCTIONS DO NOT OPERATE. (WITHOUT MEMORY), INSPECTION, Power Seat System.>	• Power seat switch • Lumbar switch • Power seat harness • Body harness
A part of function does not operate. <Ref. to SE-61, SOME MOTORS DO NOT OPERATE. (WITHOUT MEMORY), INSPECTION, Power Seat System.>	• Power seat switch • Lumbar switch • Power seat harness • Relevant motor

- With memory function

Symptoms	Criteria
Does not operate by manual operation. <Ref. to SE-64, IT DOES NOT FUNCTION WITH MANUAL OPERATION. (WITH MEMORY), INSPECTION, Power Seat System.>	• Power seat switch • Lumbar switch • Power seat harness • Body harness • Relevant motor and encoder
A part of function does not operate. <Ref. to SE-65, SOME MOTORS DO NOT OPERATE. (WITH MEMORY), INSPECTION, Power Seat System.>	• Power seat switch • Lumbar switch • Power seat harness • Relevant motor and encoder • Power seat control module
Fails to store the location to the memory <Ref. to SE-71, UNABLE TO SET POSITIONS INTO MEMORY (WITH MEMORY), INSPECTION, Power Seat System.>	• Memory switch • Power seat harness • Power seat control module
Restoring operation is impossible <Ref. to SE-72, UNABLE TO PERFORM THE RELOADING OPERATION (DRIVER'S SEAT WITH MEMORY), INSPECTION, Power Seat System.>	• Memory switch • Power seat control module • Motor and encoder • Power seat harness
No interlock with smart keyless <Ref. to SE-73, NO INTERLOCK WITH SMART KEYLESS, INSPECTION, Power Seat System.>	• Body integrated unit • Power seat control module • Motor and encoder • Power seat harness
Initial setting is impossible <Ref. to SE-73, UNABLE TO PERFORM INITIALIZATION, INSPECTION, Power Seat System.>	• Power seat harness • Power seat control module

4. CHECK POWER SEAT SWITCH

• Without memory function

Measure resistance between terminals while operating each switch.

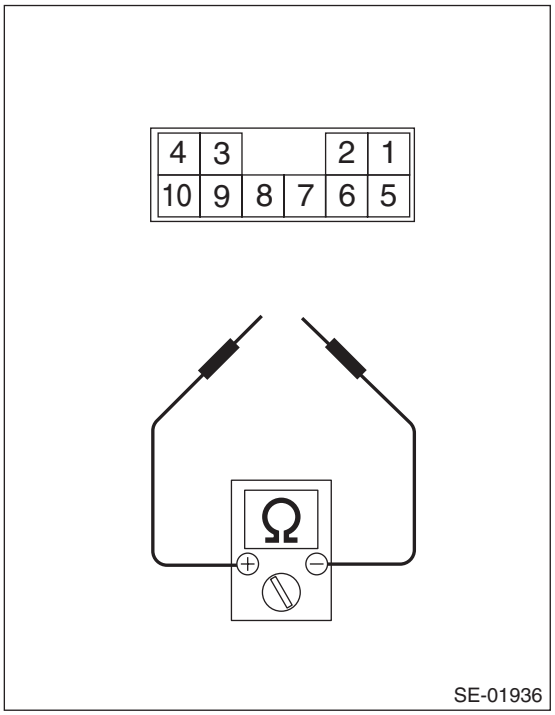

• Driver's seat

Switch position	Terminal No.	Standard
Slide forward	1 and 8 4 and 7	Less than 10 Ω
Slide rearward	1 and 7 4 and 8	Less than 10 Ω
Tilt up	1 and 3 4 and 2	Less than 10 Ω
Tilt down	1 and 2 4 and 3	Less than 10 Ω
Lifter up	1 and 6 4 and 9	Less than 10 Ω
Lifter down	1 and 9 4 and 6	Less than 10 Ω
Reclining forward	1 and 10 4 and 5	Less than 10 Ω
Reclining rearward	1 and 5 4 and 10	Less than 10 Ω

• Passenger's seat

Switch position	Terminal No.	Standard
Slide forward	1 and 8 4 and 7	Less than 10 Ω
Slide rearward	1 and 7 4 and 8	Less than 10 Ω
Reclining forward	1 and 10 4 and 5	Less than 10 Ω
Reclining rearward	1 and 5 4 and 10	Less than 10 Ω

Replace the power seat switch if the inspection result is not within the standard value.

- **With memory function**

Measure resistance between terminals while operating each switch.

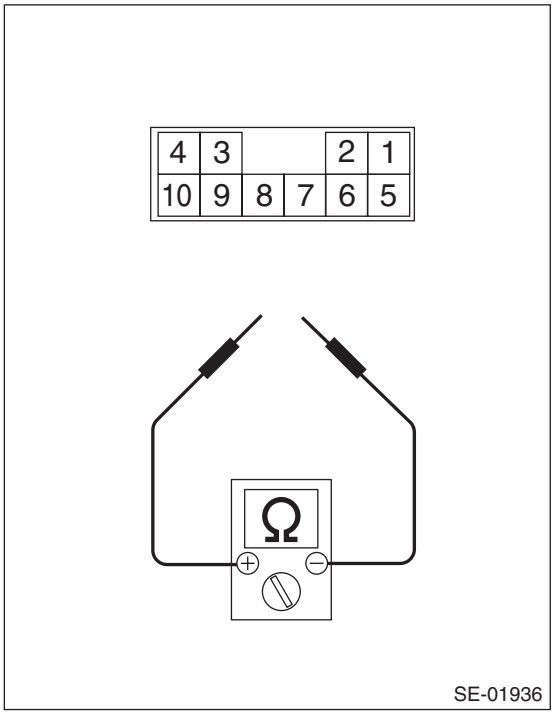

Switch position	Terminal No.	Standard
Slide forward	8 and 1	Less than 10 Ω
Slide rearward	7 and 1	Less than 10 Ω
Tilt up	3 and 1	Less than 10 Ω
Tilt down	2 and 1	Less than 10 Ω
Lifter up	6 and 1	Less than 10 Ω
Lifter down	9 and 1	Less than 10 Ω
Reclining forward	10 and 1	Less than 10 Ω
Reclining rearward	5 and 1	Less than 10 Ω

Replace the power seat switch if the inspection result is not within the standard value.

5. CHECK LUMBAR SWITCH

Measure resistance between terminals while operating each switch.

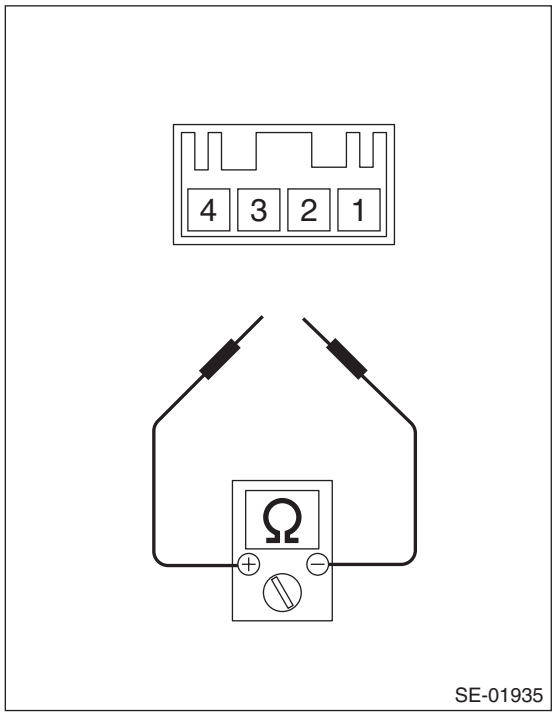

Switch position	Terminal No.	Standard
Lumbar forward	1 and 4 2 and 3	Less than 10 Ω
Lumbar backward	1 and 3 2 and 4	Less than 10 Ω

Replace the lumbar switch if the inspection result is not within the standard value.

6. CHECK MEMORY SWITCH (WITH MEMORY FUNCTION)

Measure resistance between terminals while operating each switch.

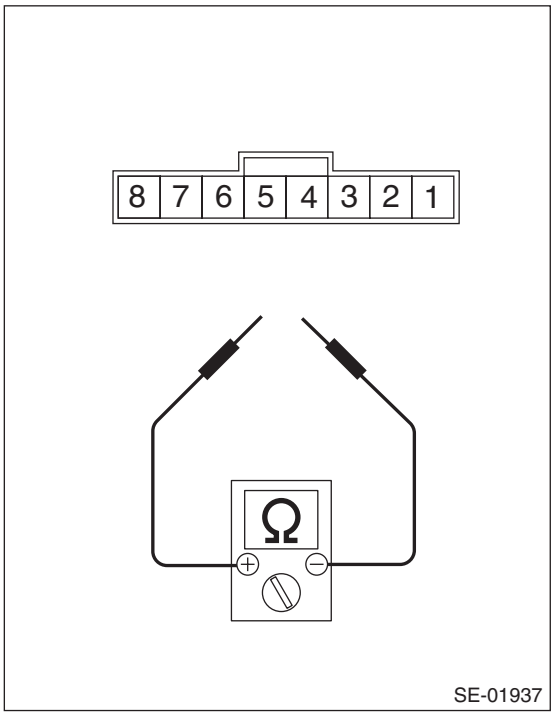

Switch position	Terminal No.	Standard
Memory 1	2 and 1	Less than 10 Ω
Memory 2	3 and 1	Less than 10 Ω
Set	8 and 1	Less than 10 Ω

Replace the memory switch if the inspection result is not within the standard value.

7. ALL FUNCTIONS DO NOT OPERATE. (WITHOUT MEMORY)

	Step	Check	Yes	No
1	**CHECK SEAT FUNCTIONS.** Operate each power seat switch and check that each power seat function operates normally.	Does all function fail to operate?	Go to step **2**.	Check the motor which does not operate. <Ref. to SE-61, SOME MOTORS DO NOT OPERATE. (WITHOUT MEMORY), INSPECTION, Power Seat System.>
2	**CHECK FUSE.** Check the power seat fuse inside the fuse box.	Is the fuse blown out?	Replace the appropriate fuse.	Go to step **3**.
3	**CHECK POWER SUPPLY CIRCUIT.** 1) Disconnect the connector of power seat switch assembly. 2) Measure the voltage between harness connector and chassis ground. ***Connector & terminal*** ***Driver's seat*** ***(R200) No. 1 (+) — Chassis ground (–):*** ***Passenger's seat*** ***(R190) No. 1 (+) — Chassis ground (–):***	Is the voltage 10 V or more?	Go to step **4**.	Check body harness.

	Step	Check	Yes	No
4	**CHECK POWER SUPPLY CIRCUIT.** Measure the resistance between power seat switch harness connector and chassis ground. ***Connector & terminal*** ***Driver's seat*** ***(R200) No. 4 — Chassis ground:*** ***Passenger's seat*** ***(R190) No. 4 — Chassis ground:***	Is the resistance less than 10 Ω?	Replace the power seat switch assembly.	Check body harness.

8. SOME MOTORS DO NOT OPERATE. (WITHOUT MEMORY)

- Slide operation failure

	Step	Check	Yes	No
1	**CHECK SWITCH.** 1) Disconnect the connector of power seat switch assembly. 2) Measure the resistance between connector terminals when moving the switch to slide forward and slide backward. <Ref. to SE-57, CHECK POWER SEAT SWITCH, INSPECTION, Power Seat System.>	Is the inspection result normal?	Go to step **2**.	Replace the power seat switch assembly.
2	**CHECK HARNESS.** 1) Disconnect the power seat switch connector and slide motor connector. 2) Measure the resistance between power seat switch connector and slide motor connector. ***Connector & terminal*** ***Driver's seat*** ***(R202) No. 5 — (R200) No. 8:*** ***(R202) No. 1 — (R200) No. 7:*** ***Passenger's seat*** ***(R192) No. 5 — (R190) No. 8:*** ***(R192) No. 1 — (R190) No. 7:***	Is the resistance less than 10 Ω?	Go to step **3**.	Check power seat harness.
3	**CHECK SLIDE MOTOR.** 1) Connect the power seat switch connector and slide motor connector. 2) Apply 12 V to the slide motor and check the motor rotation. ***Connector & terminal*** ***Driver's seat*** ***(R202) No. 5 (+) — (R202) No. 1 (–):*** ***(R202) No. 1 (+) — (R202) No. 5 (–):*** ***Passenger's seat*** ***(R192) No. 5 (+) — (R192) No. 1 (–):*** ***(R192) No. 1 (+) — (R192) No. 5 (–):***	Does the motor rotate normally?	Check for temporary poor contact or mechanical trouble in slide rail.	Slide motor problem. Replace the seat cushion frame assembly.

- Malfunction of tilt operation

	Step	Check	Yes	No
1	**CHECK SWITCH.** 1) Disconnect the connector of power seat switch assembly. 2) Measure the resistance between connector terminals when moving the switch to tilt up and tilt down. <Ref. to SE-57, CHECK POWER SEAT SWITCH, INSPECTION, Power Seat System.>	Is the inspection result normal?	Go to step **2**.	Replace the power seat switch assembly.
2	**CHECK HARNESS.** 1) Disconnect the power seat switch connector and tilt motor connector. 2) Measure the resistance between power seat switch connector and tilt motor connector. ***Connector & terminal*** ***Driver's seat*** ***(R203) No. 4 — (R200) No. 2:*** ***(R203) No. 6 — (R200) No. 3:***	Is the resistance less than 10 Ω?	Go to step **3**.	Check power seat harness.
3	**CHECK TILT MOTOR.** 1) Connect the power seat switch connector and tilt motor connector. 2) Apply 12 V to the tilt motor and check the motor rotation. ***Connector & terminal*** ***Driver's seat*** ***(R203) No. 4 (+) — (R203) No. 6 (–):*** ***(R203) No. 6 (+) — (R203) No. 4 (–):***	Does the motor rotate normally?	Check for temporary poor contact or mechanical trouble in tilt mechanism.	Tilt motor problem. Replace the seat cushion frame assembly.

- Malfunction of lifter operation

	Step	Check	Yes	No
1	**CHECK SWITCH.** 1) Disconnect the connector of power seat switch assembly. 2) Measure the resistance between connector terminals when moving the switch to lifter up and lifter down. <Ref. to SE-57, CHECK POWER SEAT SWITCH, INSPECTION, Power Seat System.>	Is the inspection result normal?	Go to step **2**.	Replace the power seat switch assembly.
2	**CHECK HARNESS.** 1) Disconnect the power seat switch connector and lifter motor connector. 2) Measure the resistance between power seat switch connector and lifter motor connector. ***Connector & terminal*** ***Driver's seat*** ***(R204) No. 6 — (R200) No. 6:*** ***(R204) No. 4 — (R200) No. 9:***	Is the resistance less than 10 Ω?	Go to step **3**.	Check power seat harness.
3	**CHECK LIFTER MOTOR.** 1) Connect the power seat switch connector and lifter motor connector. 2) Apply 12 V to the lifter motor and check the motor rotation. ***Connector & terminal*** ***Driver's seat*** ***(R204) No. 6 (+) — (R204) No. 4 (–):*** ***(R204) No. 4 (+) — (R204) No. 6 (–):***	Does the motor rotate normally?	Check for temporary poor contact or mechanical trouble in lifter mechanism.	Lifter motor problem. Replace the seat cushion frame assembly.

• Malfunction of reclining operation

	Step	Check	Yes	No
1	**CHECK SWITCH.** 1) Disconnect the connector of power seat switch assembly. 2) Measure the resistance between connector terminals when moving the switch to reclining forward and reclining backward. <Ref. to SE-57, CHECK POWER SEAT SWITCH, INSPECTION, Power Seat System.>	Is the inspection result normal?	Go to step **2**.	Replace the power seat switch assembly.
2	**CHECK HARNESS.** 1) Disconnect the power seat switch connector and reclining motor connector. 2) Measure the resistance between power seat switch connector and reclining motor connector. ***Connector & terminal*** ***Driver's seat*** ***(R201) No. 6 — (R200) No. 10:*** ***(R201) No. 4 — (R200) No. 5:*** ***Passenger's seat*** ***(R191) No. 6 — (R190) No. 10:*** ***(R191) No. 4 — (R190) No. 5:***	Is the resistance less than 10 Ω?	Go to step **3**.	Check power seat harness.
3	**CHECK RECLINING MOTOR.** 1) Connect the power seat switch connector and reclining motor connector. 2) Apply 12 V to the reclining motor and check the motor rotation. ***Connector & terminal*** ***Driver's seat*** ***(R201) No. 6 (+) — (R201) No. 4 (–):*** ***(R201) No. 4 (+) — (R201) No. 6 (–):*** ***Passenger's seat*** ***(R191) No. 6 (+) — (R191) No. 4 (–):*** ***(R191) No. 4 (+) — (R191) No. 6 (–):***	Does the motor rotate normally?	Check for temporary poor contact or mechanical trouble in reclining hinge.	Reclining motor problem. Replace the backrest frame assembly.

• Malfunction of lumbar operation

	Step	Check	Yes	No
1	**CHECK SWITCH.** 1) Disconnect the connector of lumbar switch assembly. 2) Measure the resistance between connector terminals when moving the switch to lumbar forward and lumbar backward. <Ref. to SE-59, CHECK LUMBAR SWITCH, INSPECTION, Power Seat System.>	Is the inspection result normal?	Go to step **2**.	Replace the lumbar switch assembly.
2	**CHECK HARNESS.** 1) Disconnect the lumbar switch connector and lumbar motor connector. 2) Measure the resistance between lumbar switch connector and lumbar motor connector. ***Connector & terminal*** ***Driver's seat*** ***(R198) No. 1 — (R195) No. 4:*** ***(R198) No. 2 — (R195) No. 3:***	Is the resistance less than 10 Ω?	Go to step **3**.	Check power seat harness.

	Step	Check	Yes	No
3	**CHECK LUMBAR MOTOR.** 1) Connect the lumbar switch connector and lumbar motor connector. 2) Apply 12 V to the lumbar motor and check the motor rotation. ***Connector & terminal*** ***Driver's seat*** ***(R198) No. 1 (+) — (R198) No. 2 (–):*** ***(R198) No. 2 (+) — (R198) No. 1 (–):***	Does the motor rotate normally?	Check for temporary poor contact or mechanical trouble in lumbar mechanism.	Lumbar motor problem. Replace the backrest frame assembly.

9. IT DOES NOT FUNCTION WITH MANUAL OPERATION. (WITH MEMORY)

	Step	Check	Yes	No
1	**CHECK SEAT FUNCTIONS.** Operate each power seat switch and check that each power seat function operates normally.	Does all function fail to operate?	Go to step **2**.	Check the motor which does not operate. <Ref. to SE-65, SOME MOTORS DO NOT OPERATE. (WITH MEMORY), INSPECTION, Power Seat System.>
2	**CHECK FUSE.** Check the power seat fuse inside the fuse box.	Is the fuse blown out?	Replace the appropriate fuse.	Go to step **3**.
3	**CHECK POWER SEAT CONTROL MODULE.** 1) Turn the ignition switch to ON. 2) Check the DTC of the power seat control module using the Subaru Select Monitor.	Is DTC detected?	Perform the diagnosis according to the "POWER SEAT MEMORY SYSTEM (DIAGNOSTICS)" section.	Go to step **4**.
4	**CHECK POWER SEAT CONTROL MODULE.** 1) Turn the ignition switch to ON. 2) Display «Battery Terminal Voltage» on «Data monitor» of the power seat control module using Subaru Select Monitor.	Is the voltage 10 V or more?	Go to step **7**.	Go to step **5**.
5	**CHECK POWER SUPPLY CIRCUIT.** 1) Disconnect the power seat control module connector. 2) Measure the voltage between harness connector and chassis ground. ***Connector & terminal*** ***(R155) No. 10 (+) — Chassis ground (–):*** ***(R156) No. 8 (+) — Chassis ground (–):*** ***(R156) No. 3 (+) — Chassis ground (–):***	Is the voltage 10 V or more?	Go to step **6**.	Check body harness.
6	**CHECK POWER SUPPLY CIRCUIT.** Measure the resistance between power seat control module harness connector and chassis ground. ***Connector & terminal*** ***(R156) No. 14 — Chassis ground:*** ***(R156) No. 12 — Chassis ground:***	Is the resistance less than 10 Ω?	Go to step **7**.	Check body harness.

Step		Check	Yes	No
7	**CHECK HARNESS.** 1) Disconnect the power seat control module connector. 2) Measure the resistance of the following harnesses. ***Connector & terminal*** ***Slide:*** ***(R156) No. 15 — Chassis ground:*** ***(R156) No. 16 — Chassis ground:*** ***Tilt:*** ***(R156) No. 5 — Chassis ground:*** ***(R156) No. 4 — Chassis ground:*** ***Lifter:*** ***(R156) No. 2 — Chassis ground:*** ***(R156) No. 1 — Chassis ground:*** ***Reclining:*** ***(R156) No. 7 — Chassis ground:*** ***(R156) No. 6 — Chassis ground:***	Is the resistance value 10 kΩ or more?	Replace the power seat control module.	Check the harnesses between power seat motor and each motor and between power seat control module connector and each motor.

10.SOME MOTORS DO NOT OPERATE. (WITH MEMORY)

- Slide operation failure

Step		Check	Yes	No
1	**CHECK OPERATION.** Check the slide motor rotation while moving the switch to slide forward and slide backward.	Does the motor operate when the switch is operated?	Go to step **2**.	Go to step **3**.
2	**CHECK OPERATION.** Check the slide motor rotation while moving the switch to slide forward and slide backward.	Does the motor operate at least 1 second when the switch is operated?	Temporary improper operation.	Go to step **8**.
3	**CHECK POWER SEAT CONTROL MODULE.** 1) Turn the ignition switch to ON. 2) Display «Slide SW» on «Data monitor» of the power seat control module using Subaru Select Monitor. NOTE: Perform the inspection after an item is selected in the data select display.	Does the display change corresponding to the switch operation?	Go to step **2**.	Go to step **4**.
4	**CHECK SWITCH.** 1) Disconnect the harness connector of power seat switch assembly. 2) Measure the resistance between connector terminals when moving the switch to slide forward and slide backward. <Ref. to SE-57, CHECK POWER SEAT SWITCH, INSPECTION, Power Seat System.>	Is the resistance less than 10 Ω?	Go to step **5**.	Replace the power seat switch assembly.
5	**CHECK POWER SEAT CONTROL MODULE.** 1) Turn the ignition switch to ON. 2) Display «Slide SW» on «Data monitor» of the power seat control module using Subaru Select Monitor. NOTE: Perform the inspection after an item is selected in the data select display.	Does the display change corresponding to the switch operation?	Go to step **6**.	Replace the power seat control module.

	Step	Check	Yes	No
6	**CHECK HARNESS.** 1) Disconnect the power seat switch connector and slide motor connector. 2) Measure the resistance between the power seat control module connector and power seat switch connector. ***Connector & terminal*** ***(R155) No. 6 — (R200) No. 8:*** ***(R155) No. 7 — (R200) No. 7:***	Is the resistance less than 10 Ω?	Go to step **7**.	Check power seat harness.
7	**CHECK SLIDE MOTOR.** 1) Connect the slide motor connector. 2) Apply battery voltage to the slide motor connector and check the motor rotation. ***Connector & terminal*** ***(R202) No. 1 (+) — (R202) No. 5 (–):*** ***(R202) No. 5 (+) — (R202) No. 1 (–):***	Does the motor rotate normally?	Replace the power seat control module.	Slide motor problem. Replace the seat cushion frame assembly.
8	**CHECK HARNESS.** 1) Disconnect the power seat switch connector and slide motor connector. 2) Disconnect the connector of power seat control module and slide motor. ***Connector & terminal*** ***(R202) No. 2 — (R155) No. 19:***	Is the resistance less than 10 Ω?	Go to step **9**.	Check power seat harness.
9	**CHECK HARNESS.** Measure the resistance between the power seat control module connector and chassis ground. ***Connector & terminal*** ***(R156) No. 15 — Chassis ground:*** ***(R156) No. 16 — Chassis ground:***	Is the resistance value 10 kΩ or more?	Go to step **10**.	Check power seat harness.
10	**CHECK HARNESS.** 1) Connect the power seat control module connector. 2) Measure the voltage between power seat control module connector and chassis ground when the slide switch is operated. ***Connector & terminal*** ***(R156) No. 15 (+) — Chassis ground (–):*** ***(R156) No. 16 (+) — Chassis ground (–):***	Is the voltage between 5 — 16 V?	Replace the power seat control module.	Slide motor problem. Replace the seat cushion frame assembly.

- Malfunction of tilt operation

	Step	Check	Yes	No
1	**CHECK OPERATION.** Check the tilt motor rotation while moving the switch to tilt up and tilt down.	Does the motor operate when the switch is operated?	Go to step **2**.	Go to step **3**.
2	**CHECK OPERATION.** Check the tilt motor rotation while moving the switch to tilt up and tilt down.	Does the motor operate at least 1 second when the switch is operated?	Temporary improper operation.	Go to step **8**.
3	**CHECK POWER SEAT CONTROL MODULE.** 1) Turn the ignition switch to ON. 2) Display «Tilt SW» on «Data monitor» of the power seat control module using Subaru Select Monitor. NOTE: Perform the inspection after an item is selected in the data select display.	Does the display change corresponding to the switch operation?	Go to step **2**.	Go to step **4**.

	Step	Check	Yes	No
4	**CHECK SWITCH.** 1) Disconnect the harness connector of power seat switch assembly. 2) Measure the resistance between connector terminals when moving the switch to tilt up and tilt down. <Ref. to SE-57, CHECK POWER SEAT SWITCH, INSPECTION, Power Seat System.>	Is the resistance less than 10 Ω?	Go to step **5**.	Replace the power seat switch assembly.
5	**CHECK POWER SEAT CONTROL MODULE.** 1) Turn the ignition switch to ON. 2) Display «Tilt SW» on «Data monitor» of the power seat control module using Subaru Select Monitor. NOTE: Perform the inspection after an item is selected in the data select display.	Does the display change corresponding to the switch operation?	Go to step **6**.	Replace the power seat control module.
6	**CHECK HARNESS.** 1) Disconnect the power seat switch connector and tilt motor connector. 2) Measure the resistance between the power seat control module connector and power seat switch connector. ***Connector & terminal*** ***(R155) No. 5 — (R200) No. 3:*** ***(R155) No. 4 — (R200) No. 2:***	Is the resistance less than 10 Ω?	Go to step **7**.	Check power seat harness.
7	**CHECK TILT MOTOR.** 1) Connect the tilt motor connector. 2) Apply battery voltage to the tilt motor connector and check the motor rotation. ***Connector & terminal*** ***(R203) No. 6 (+) — (R203) No. 4 (–):*** ***(R203) No. 4 (+) — (R203) No. 6 (–):***	Does the motor rotate normally?	Replace the power seat control module.	Tilt motor problem. Replace the seat cushion frame assembly.
8	**CHECK HARNESS.** 1) Disconnect the power seat switch connector and tilt motor connector. 2) Disconnect the connector of power seat control module and tilt motor. ***Connector & terminal*** ***(R203) No. 1 — (R155) No. 18:***	Is the resistance less than 10 Ω?	Go to step **9**.	Check power seat harness.
9	**CHECK HARNESS.** Measure the resistance between the power seat control module connector and chassis ground. ***Connector & terminal*** ***(R156) No. 5 — Chassis ground:*** ***(R156) No. 4 — Chassis ground:***	Is the resistance value 10 kΩ or more?	Go to step **10**.	Check power seat harness.
10	**CHECK HARNESS.** 1) Connect the power seat control module connector. 2) Measure the voltage between power seat control module connector and chassis ground when the tilt switch is operated. ***Connector & terminal*** ***(R156) No. 5 (+) — Chassis ground (–):*** ***(R156) No. 4 (+) — Chassis ground (–):***	Is the voltage between 5 — 16 V?	Replace the power seat control module.	Tilt motor problem. Replace the seat cushion frame assembly.

- Malfunction of lifter operation

	Step	Check	Yes	No
1	**CHECK OPERATION.** Check the lifter motor rotation while turning the switch to lifter up and lifter down.	Does the motor operate when the switch is operated?	Go to step **2**.	Go to step **3**.
2	**CHECK OPERATION.** Check the lifter motor rotation while turning the switch to lifter up and lifter down.	Does the motor operate at least 1 second when the switch is operated?	Temporary improper operation.	Go to step **8**.
3	**CHECK POWER SEAT CONTROL MODULE.** 1) Turn the ignition switch to ON. 2) Display «Lifter SW» on «Data monitor» of the power seat control module using Subaru Select Monitor. NOTE: Perform the inspection after an item is selected in the data select display.	Does the display change corresponding to the switch operation?	Go to step **2**.	Go to step **4**.
4	**CHECK SWITCH.** 1) Disconnect the harness connector of power seat switch assembly. 2) Measure the resistance between connector terminals when moving the switch to lifter up and lifter down. <Ref. to SE-57, CHECK POWER SEAT SWITCH, INSPECTION, Power Seat System.>	Is the resistance less than 10 Ω?	Go to step **5**.	Replace the power seat switch assembly.
5	**CHECK POWER SEAT CONTROL MODULE.** 1) Turn the ignition switch to ON. 2) Display «Lifter SW» on «Data monitor» of the power seat control module using Subaru Select Monitor. NOTE: Perform the inspection after an item is selected in the data select display.	Does the display change corresponding to the switch operation?	Go to step **6**.	Replace the power seat control module.
6	**CHECK HARNESS.** 1) Disconnect the power seat switch connector and lifter motor connector. 2) Measure the resistance between the power seat control module connector and power seat switch connector. ***Connector & terminal*** ***(R155) No. 3 — (R200) No. 6:*** ***(R155) No. 2 — (R200) No. 9:***	Is the resistance less than 10 Ω?	Go to step **7**.	Check power seat harness.
7	**CHECK LIFTER MOTOR.** 1) Connect the lifter motor connector. 2) Apply battery voltage to the lifter motor connector and check the motor rotation. ***Connector & terminal*** ***(R204) No. 4 (+) — (R204) No. 6 (–):*** ***(R204) No. 6 (+) — (R204) No. 4 (–):***	Does the motor rotate normally?	Replace the power seat control module.	Lifter motor problem. Replace the seat cushion frame assembly.
8	**CHECK HARNESS.** 1) Disconnect the power seat switch connector and lifter motor connector. 2) Disconnect the connector of power seat control module and lifter motor. ***Connector & terminal*** ***(R204) No. 1 — (R155) No. 16:***	Is the resistance less than 10 Ω?	Go to step **9**.	Check power seat harness.

	Step	Check	Yes	No
9	**CHECK HARNESS.** Measure the resistance between the power seat control module connector and chassis ground. ***Connector & terminal*** ***(R156) No. 2 — Chassis ground:*** ***(R156) No. 1 — Chassis ground:***	Is the resistance value 10 kΩ or more?	Go to step **10**.	Check power seat harness.
10	**CHECK HARNESS.** 1) Connect the power seat control module connector. 2) Measure the voltage between power seat control module connector and chassis ground when the lifter switch is operated. ***Connector & terminal*** ***(R156) No. 2 (+) — Chassis ground (–):*** ***(R156) No. 1 (+) — Chassis ground (–):***	Is the voltage between 5 — 16 V?	Replace the power seat control module.	Lifter motor problem. Replace the seat cushion frame assembly.

- Malfunction of reclining operation

	Step	Check	Yes	No
1	**CHECK OPERATION.** Check the reclining motor rotation while moving the switch to reclining forward and reclining backward.	Does the motor operate when the switch is operated?	Go to step **2**.	Go to step **3**.
2	**CHECK OPERATION.** Check the reclining motor rotation while moving the switch to reclining forward and reclining backward.	Does the motor operate at least 1 second when the switch is operated?	Temporary improper operation.	Go to step **8**.
3	**CHECK POWER SEAT CONTROL MODULE.** 1) Turn the ignition switch to ON. 2) Display «Reclining SW» on «Data monitor» of the power seat control module using Subaru Select Monitor. NOTE: Perform the inspection after an item is selected in the data select display.	Does the display change corresponding to the switch operation?	Go to step **2**.	Go to step **4**.
4	**CHECK SWITCH.** 1) Disconnect the harness connector of power seat switch assembly. 2) Measure the resistance between connector terminals when moving the switch to reclining forward and reclining backward. <Ref. to SE-57, CHECK POWER SEAT SWITCH, INSPECTION, Power Seat System.>	Is the resistance less than 10 Ω?	Go to step **5**.	Replace the power seat switch assembly.
5	**CHECK POWER SEAT CONTROL MODULE.** 1) Turn the ignition switch to ON. 2) Display «Reclining SW» on «Data monitor» of the power seat control module using Subaru Select Monitor. NOTE: Perform the inspection after an item is selected in the data select display.	Does the display change corresponding to the switch operation?	Go to step **6**.	Replace the power seat control module.

	Step	Check	Yes	No
6	**CHECK HARNESS.** 1) Disconnect the power seat switch connector and reclining motor connector. 2) Measure the resistance between the power seat control module connector and power seat switch connector. ***Connector & terminal*** ***(R155) No. 8 — (R200) No. 10:*** ***(R155) No. 9 — (R200) No. 5:***	Is the resistance less than 10 Ω?	Go to step **7**.	Check power seat harness.
7	**CHECK RECLINING MOTOR.** 1) Connect the reclining motor connector. 2) Apply battery voltage to the reclining motor connector and check the motor rotation. ***Connector & terminal*** ***(R201) No. 4 (+) — (R201) No. 6 (–):*** ***(R201) No. 6 (+) — (R201) No. 4 (–):***	Does the motor rotate normally?	Replace the power seat control module.	Reclining motor problem. Replace the seat cushion frame assembly.
8	**CHECK HARNESS.** 1) Disconnect the power seat switch connector and reclining motor connector. 2) Disconnect the connector of power seat control module and reclining motor. ***Connector & terminal*** ***(R201) No. 1 — (R155) No. 17:***	Is the resistance less than 10 Ω?	Go to step **9**.	Check power seat harness.
9	**CHECK HARNESS.** Measure the resistance between the power seat control module connector and chassis ground. ***Connector & terminal*** ***(R156) No. 7 — Chassis ground:*** ***(R156) No. 6 — Chassis ground:***	Is the resistance value 10 kΩ or more?	Go to step **10**.	Check power seat harness.
10	**CHECK HARNESS.** 1) Connect the power seat control module connector. 2) Measure the voltage between power seat control module connector and chassis ground when the reclining switch is operated. ***Connector & terminal*** ***(R156) No. 7 (+) — Chassis ground (–):*** ***(R156) No. 6 (+) — Chassis ground (–):***	Is the voltage between 5 — 16 V?	Replace the power seat control module.	Reclining motor problem. Replace the backrest frame assembly.

- Malfunction of lumbar operation

	Step	Check	Yes	No
1	**CHECK SWITCH.** 1) Disconnect the connector of lumbar switch assembly. 2) Measure the resistance between connector terminals when moving the switch to lumbar forward and lumbar backward. <Ref. to SE-59, CHECK LUMBAR SWITCH, INSPECTION, Power Seat System.>	Is the inspection result normal?	Go to step **2**.	Replace the lumbar switch assembly.
2	**CHECK HARNESS.** 1) Disconnect the lumbar switch connector and lumbar motor connector. 2) Measure the resistance between lumbar switch connector and lumbar motor connector. ***Connector & terminal*** ***(R195) No. 4 — (R198) No. 1:*** ***(R195) No. 3 — (R198) No. 2:***	Is the resistance less than 10 Ω?	Go to step **3**.	Check power seat harness.

	Step	Check	Yes	No
3	**CHECK LUMBAR MOTOR.** 1) Connect the lumbar switch connector and lumbar motor connector. 2) Apply 12 V voltage to the lumbar motor and check the motor rotation. ***Connector & terminal*** ***(R198) No. 1 (+) — (R198) No. 2 (–):*** ***(R198) No. 2 (+) — (R198) No. 1 (–):***	Does the motor rotate normally?	Check for temporary poor contact or mechanical trouble in lumbar mechanism.	Lumbar motor problem. Replace the backrest frame assembly.

11.UNABLE TO SET POSITIONS INTO MEMORY (WITH MEMORY)

	Step	Check	Yes	No
1	**CHECK POWER SEAT CONTROL MODULE.** 1) Turn the ignition switch to ON. 2) Display «Set SW» «MEM SW1» «MEM SW2» on «Data monitor» of the power seat control module using Subaru Select Monitor. NOTE: Perform the inspection after an item is selected in the data select display.	Does the display change corresponding to the switch operation?	Go to step **5**.	Go to step **2**.
2	**CHECK SWITCH.** 1) Disconnect the harness connector of memory switch assembly. 2) Check memory switch. <Ref. to SE-60, CHECK MEMORY SWITCH (WITH MEMORY FUNCTION), INSPECTION, Power Seat System.>	Is the inspection result normal?	Go to step **3**.	Replace the memory switch assembly.
3	**CHECK HARNESS.** Measure the resistance between the memory switch connector and power seat control module connector. ***Connector & terminal*** ***(R155) No. 13 — (D143) No. 3:*** ***(R155) No. 14 — (D143) No. 2:*** ***(R155) No. 29 — (D143) No. 8:***	Is the resistance less than 10 Ω?	Go to step **4**.	Check power seat harness.
4	**CHECK GROUND CIRCUIT.** Measure the resistance between memory switch harness connector and chassis ground. ***Connector & terminal*** ***(R143) No. 1 — Chassis ground:***	Is the resistance less than 10 Ω?	Go to step **5**.	Check body harness.
5	**SYSTEM INITIALIZATION.** Initialize memory seat system. <Ref. to SE-74, ADJUSTMENT, Power Seat System.>	Is the initialization completed successfully?	Replace the power seat control module.	<Ref. to SE-73, UNABLE TO PERFORM INITIALIZATION, INSPECTION, Power Seat System.>

12.UNABLE TO PERFORM THE RELOADING OPERATION (DRIVER'S SEAT WITH MEMORY)

	Step	Check	Yes	No
1	**CHECK MEMORY FUNCTIONS.** Perform the memory operation of the seat position, and check the memory replay operation.	Does the seat position memory replay correctly?	Memory function is normal. It is considered that the memory was cleared because the voltage falls below the operation-ensured voltage temporarily during memory restoration or manual operation. It operates normally by registering a memory.	Go to step **2**.
2	**CHECK MEMORY FUNCTIONS.** At the memory operation of step 1, check the beep sound (once).	Was it possible to confirm the beep sound?	Go to step **3**.	<Ref. to SE-71, UNABLE TO SET POSITIONS INTO MEMORY (WITH MEMORY), INSPECTION, Power Seat System.>
3	**CHECK OPERATION.** Operate all power seat switches to check operation of each motor.	Does each motor rotate for one second or more when operating each switch?	Replace the power seat control module.	Check the motor which does not operate.

13.NO INTERLOCK WITH SMART KEYLESS

	Step	Check	Yes	No
1	**CHECK DTC.** Read the DTC of body integrated unit using Subaru Select Monitor.	Is a DTC detected?	Perform a check according to the DTC.	Go to step **2**.
2	**CHECK POWER SEAT CONTROL MODULE.** 1) Turn the ignition switch to ON. 2) Check «Keyless Access Key Information» on «Data monitor» of the power seat control module using Subaru Select Monitor. 3) Check the status of key No. shown in «Keyless Access Key Information» using «Keyless Access & Start Link * Memorized». NOTE: Perform the inspection after an item is selected in the data select display.	Is “Yes” displayed for the status of registered key No.?	Go to step **3**.	If “No” displayed, register the keyless access key again.
3	**CHECK MEMORY FUNCTIONS.** Perform the memory operation of the seat position, and check the memory replay operation.	Does the seat position memory replay correctly?	Function is normal. It is considered that the memory was cleared because the voltage falls below the operation-ensured voltage temporarily during memory restoration or manual operation. It operates normally by registering a memory.	Perform the check item for “UNABLE TO PERFORM THE RELOADING OPERATION (DRIVER’S SEAT WITH MEMORY)”.

14.UNABLE TO PERFORM INITIALIZATION

	Step	Check	Yes	No
1	**CHECK OPERATION.** Operate all power seat switches to check operation of each motor.	Does each motor rotate for one second or more when operating each switch?	Go to step **2**.	Check the motor which does not operate.
2	**CHECK SWITCH.** 1) Disconnect the harness connector of power seat switch assembly. 2) Measure resistance between all terminals of power seat switch assembly. <Ref. to SE-57, CHECK POWER SEAT SWITCH, INSPECTION, Power Seat System.>	Does the inspection result show normal status with no problem?	Replace the power seat control module.	Replace the power seat switch assembly.

D: ADJUSTMENT

NOTE:
System calibration is necessary for driver's side seat with memory function only.

1. CONDITIONS FOR INITIALIZATION

The power seat control module must be initialized if the following conditions are met.
- The seat is removed from vehicle.
- Power seat control module is replaced.
- Slide rail assembly or backrest frame assembly is removed or replaced.
- Pulse generated when seat is moved do not match with the amount of actual travel. (When memory is not correctly reloaded.)

2. INITIALIZATION PROCEDURES

NOTE:
- Initialize the records inside the module by performing all the following steps regardless the item order.
- With each seat locked*, operating switches for 3 seconds make the buzzer sound once.
- If initialization is done after completing all items, the buzzer sounds three times when the last operation is completed and the switch is turned on then off.

1) Move the seat rearward using the slide switch, and keep the seat lock* status for three seconds or more.
2) Move the seat downward using tilt switch, and keep the seat lock* status for three seconds or more.
3) Move the seat downward using lifter switch, and keep the seat lock* status for three seconds or more.
4) Move the seat forward using reclining switch, and keep the seat lock* status for three seconds or more.

*: Seat lock is the status that there is no pulse output from the encoder within the specified period of time with the switch operated though the seat reaches the movable position end.

NOTE:
When the following conditions are met, the initializing operation is cancelled even though the procedure is carried out halfway.
- Interval between each initialization procedure of 1) to 4) exceeds 10 seconds.
- If any of initialization procedures 1) to 4) are not performed.
- The battery runs out or the voltage to the power seat control module falls out of the operation range during initialization.

5. Seat Heater System

A: REMOVAL

1. SEAT HEATER MODULE - FRONT

1) Remove the front seats. <Ref. to SE-11, REMOVAL, Front Seat.>
2) Remove the backrest cover of front seat and seat cushion cover. <Ref. to SE-12, DISASSEMBLY, Front Seat.>
3) Remove the seat heater module - front from the pad assembly.

CAUTION:
If the seat heater module is removed, replace the pad assembly with a new part.

2. SEAT HEATER SWITCH - FRONT

Remove the heater control assembly. <Ref. to AC-47, REMOVAL, Control Panel.>

3. SEAT HEATER MODULE - REAR

1) Remove the rear seat cushion assembly. <Ref. to SE-11, REMOVAL, Front Seat.>
2) Remove the seat cushion cover from the rear seat. <Ref. to SE-47, DISASSEMBLY, Rear Seat.>
3) Remove the seat heater module - front from the pad assembly.

CAUTION:
If the seat heater module is removed, replace the pad assembly with a new part.

4. SEAT HEATER SWITCH - REAR

1) Disconnect the ground terminal from the battery sensor, and wait for at least 60 seconds before starting work. <Ref. to RC-4, BATTERY, NOTE, Repair Contents.>
2) Remove the end cover - console box.
3) Remove the seat heater switch - rear.
   (1) Remove the heater duct - rear. (Model with rear seat heater)
   (2) Release the claws, and remove the seat heater switch - rear.

5. SEAT HEATER UNIT - REAR

Sedan model

1) Remove the trim panel - rear pillar UPR RH. <Ref. to EI-99, SEDAN MODEL, REMOVAL, Rear Quarter Trim.>
2) Remove the bolt, disconnect the connector and remove the seat heater unit - rear.

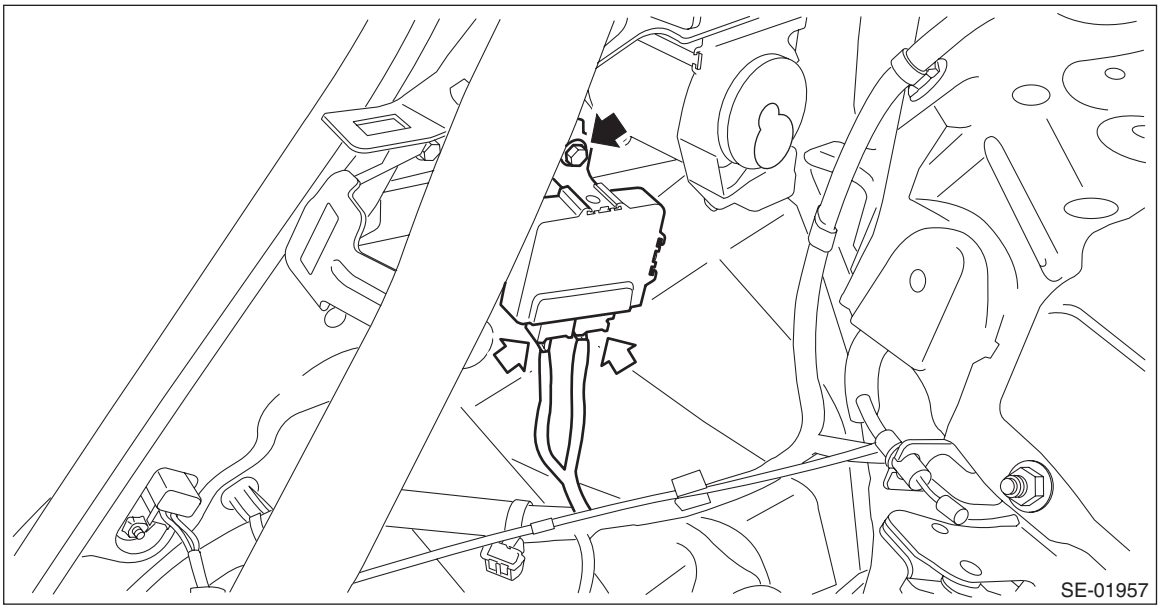

OUTBACK model

1) Remove the trim panel - rear apron RH. <Ref. to EI-100, OUTBACK MODEL, REMOVAL, Rear Quarter Trim.>
2) Remove the bolt, disconnect the connector and remove the seat heater unit - rear.

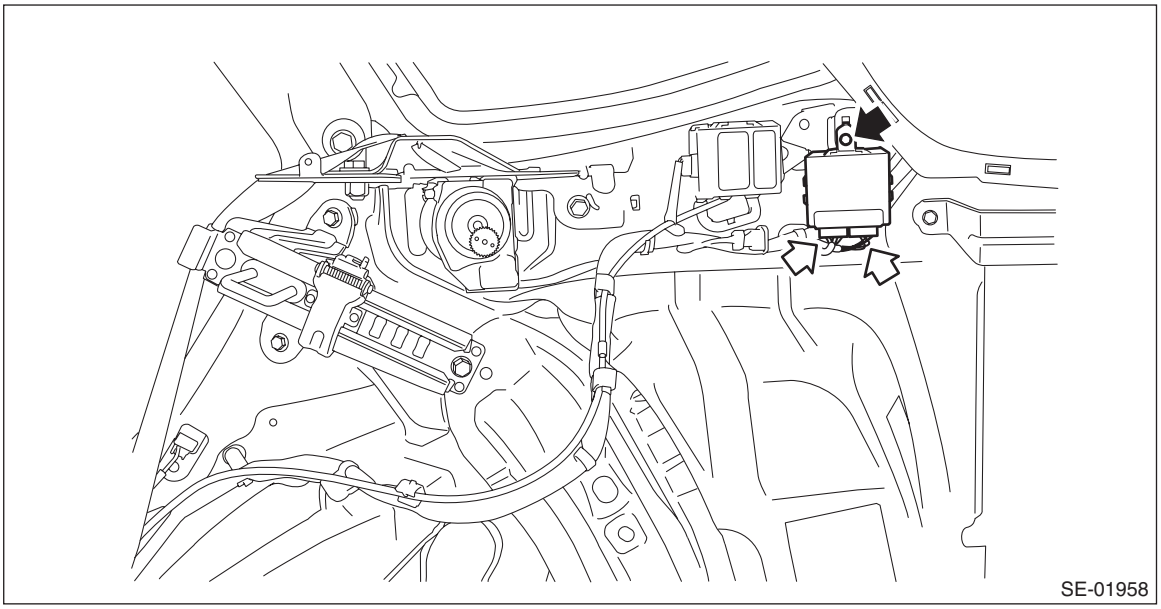

6. SEAT HEATER RELAY AND FUSE

1) Disconnect the ground terminal from the battery sensor, and wait for at least 60 seconds before starting work. <Ref. to RC-4, BATTERY, NOTE, Repair Contents.>
2) Remove the cover assembly - instrument panel LWR driver. <Ref. to EI-75, REMOVAL, Instrument Panel Lower Cover.>
3) Remove the seat heater relay and fuse.
   (1) Remove the relay & fuse box bolts.
   (2) Remove the seat heater relay from the relay holder.

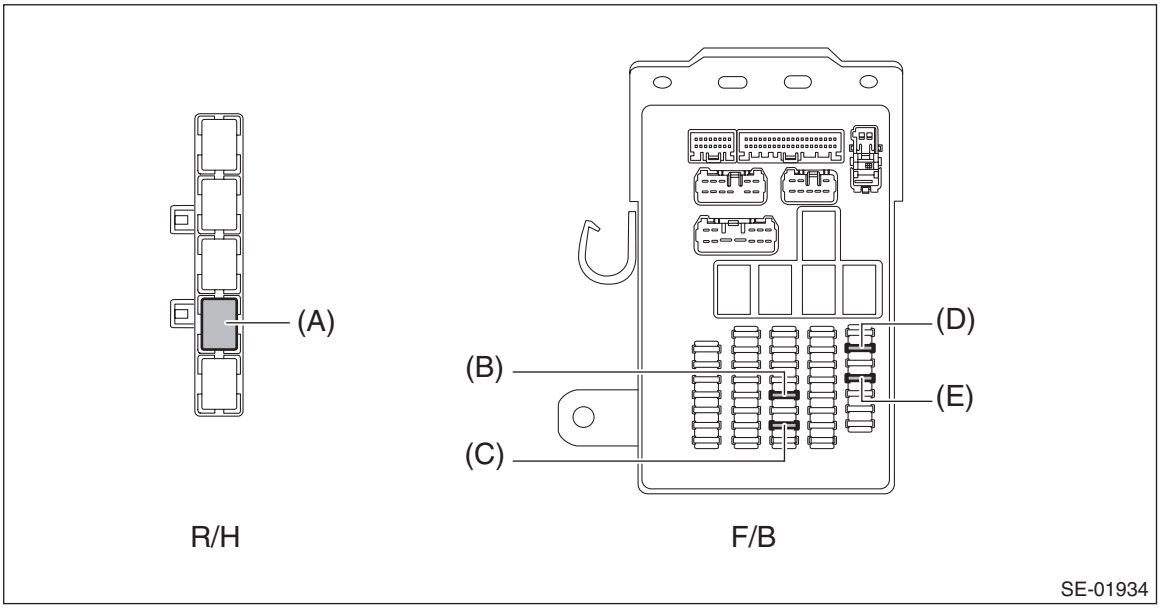

Relay holder (R/H)	Seat heater relay (seat heater - front)	(A)
Relay & fuse box (F/B)	Fuse 15A (seat heater - rear)	(B)
	Fuse 15A (seat heater - front)	(C)
	Fuse 7.5A (ACC)	(D)
	Fuse 7.5A (IG)	(E)

B: INSTALLATION

1. SEAT HEATER MODULE - FRONT

1) Affix the seat heater module - front to the pad assembly.

CAUTION:
• If the cover - front cushion is removed, make sure to replace the hang wire on the cover - front cushion side with a new wire.
• When replacing the seat cover, be careful not to damage the occupant detection sensor while installing the hog ring.
• When removing or replacing the seat cover, perform "Occupant Detection System Inspection" after installing the seat to check if the occupant detection system operates normally. <Ref. to PI-21, SEAT, PRE-DELIVERY INSPECTION (PDI) PROCEDURE, Pre-delivery Inspection.>
• If the seat heater module is removed, replace the seat cushion pad & frame assembly with a new part.
• If the seat heater module is reused, remove the polyurethane section from the reverse side completely.

Double-sided tape:
NITTO DENKO 501L or equivalent
2) Assemble the front seat. <Ref. to SE-25, ASSEMBLY, Front Seat.>
3) Install the front seat.

Tightening torque:
53 N·m (5.4 kgf-m, 39.1 ft-lb)

2. SEAT HEATER SWITCH - FRONT

Install the heater control assembly. <Ref. to AC-47, INSTALLATION, Control Panel.>

3. SEAT HEATER MODULE - REAR

1) Affix the seat heater module - rear to the pad assembly.

Double-sided tape:
NITTO DENKO 501L or equivalent
2) Assemble the rear seat. <Ref. to SE-51, ASSEMBLY, Rear Seat.>
3) Install the rear seat. <Ref. to SE-44, INSTALLATION, Rear Seat.>

4. SEAT HEATER SWITCH - REAR

1) Install the seat heater switch - rear.
2) Install the end cover - console box.
3) Install the battery sensor to the ground terminal. <Ref. to RC-4, BATTERY, NOTE, Repair Contents.>

5. SEAT HEATER UNIT - REAR

Sedan model

1) Install the seat heater module - rear.

Tightening torque:
7.5 N·m (0.8 kgf-m, 5.5 ft-lb)
2) Install the trim panel - rear pillar UPR RH. <Ref. to EI-103, SEDAN MODEL, INSTALLATION, Rear Quarter Trim.>

OUTBACK model

1) Install the seat heater module - rear.

Tightening torque:
7.5 N·m (0.8 kgf-m, 5.5 ft-lb)
2) Install the trim panel - rear apron RH. <Ref. to EI-104, OUTBACK MODEL, INSTALLATION, Rear Quarter Trim.>

6. SEAT HEATER RELAY AND FUSE

1) Install the seat heater relay & fuse.

Tightening torque:
7.5 N·m (0.8 kgf-m, 5.5 ft-lb)
2) Install the cover assembly - instrument panel LWR driver.
3) Connect the ground terminal to battery sensor. <Ref. to RC-4, BATTERY, NOTE, Repair Contents.>

C: INSPECTION

1. WIRING DIAGRAM

Refer to “Seat Heater System” in the wiring diagram.
- Front: <Ref. to WI-331, FRONT SEAT, WIRING DIAGRAM, Seat Heater System.>
- Rear: <Ref. to WI-332, REAR SEAT, WIRING DIAGRAM, Seat Heater System.>

2. DIAGNOSTIC CHART

Symptoms	Repair order
Front seat heater does not operate.	Refer to “HVAC SYSTEM (DIAGNOSTICS)”. <Ref. to AC(diag)-2, PROCEDURE, Basic Diagnostic Procedure.>
Rear seat heater does not operate.	1. Check the fuse. <Ref. to SE-79, CHECK SEAT HEATER FUSE, INSPECTION, Seat Heater System.>
	2. Check the seat heater system power supply and ground circuit. <Ref. to SE-79, CHECK POWER SUPPLY AND GROUND CIRCUIT, INSPECTION, Seat Heater System.>
	3. Check the seat heater module. <Ref. to SE-80, SEAT HEATER MODULE (REAR), INSPECTION, Seat Heater System.>
	4. Check the rear seat heater switch. <Ref. to SE-80, CHECK REAR SEAT HEATER SWITCH, INSPECTION, Seat Heater System.>
	5. Check the rear seat heater control module. <Ref. to SE-81, CHECK REAR SEAT HEATER CONTROL MODULE, INSPECTION, Seat Heater System.>

3. CHECK SEAT HEATER FUSE

Remove the seat heater fuse, and then visually check.
Is the fuse blown out?
- **Yes** → Replace the fuse.
- **No** → Check the power supply and ground circuits.

4. CHECK POWER SUPPLY AND GROUND CIRCUIT

1) Check power supply circuit
   (1) Disconnect the seat heater control module harness connector.
   (2) Measure the voltage between harness connector terminal and chassis ground.

Connector & terminal
(R49) No. 14 (+) — Chassis ground (–):
Is the voltage 10 V or more?
- **Yes** → Go to step 2.
- **No** → Repair or replace the harness.

2) Check power supply circuit
   (1) Turn the ignition switch to ON.
   (2) Measure the voltage between harness connector terminal and chassis ground.

Connector & terminal
(R49) No. 5 (+) — Chassis ground (–):
Is the voltage 10 V or more?
- **Yes** → Go to step 3.
- Repair or replace the harness.

3) Check ground circuit
Measure the resistance between harness connector terminal and chassis ground.

Connector & terminal
(R49) No. 7 — Chassis ground:
(R138) No. 9 — Chassis ground:
Is the resistance less than 10 Ω?
- **Yes** → Go to step 4.
- **No** → Repair the harness.

4) Check harness
Measure the resistance between seat heater control module terminal and seat heater switch - rear terminal.

Connector & terminal
(R53) No. 14 — (R138) No. 1:
(R53) No. 16 — (R138) No. 6:
(R53) No. 6 — (R138) No. 2:
(R53) No. 4 — (R138) No. 5:
(R53) No. 2 — (R138) No. 13:
(R53) No. 8 — (R138) No. 4:
Is the resistance less than 10 Ω?
- **Yes** → Go to step 5.
- **No** → Repair the harness.

5) Check seat heater module (rear)
Check the seat heater module (rear) as a single part.

Connector & terminal
(R49) No. 7 — Chassis ground:
(R138) No. 9 — Chassis ground:
Is the inspection result normal?
- **Yes** → Replace the seat heater switch - rear or seat heater control module.
- **No** → Replace the seat heater module (rear).

5. SEAT HEATER MODULE (REAR)

1) Disconnect the seat heater unit connector, and check the continuity between terminals of connector.

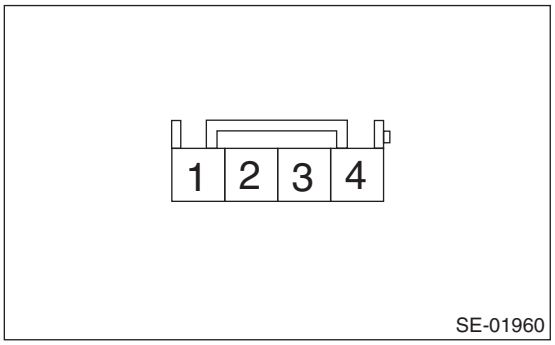

Connector & terminal
Seat cushion:
LH side No. 4 — No. 3:
RH side No. 2 — No. 1:
Backrest LH:
No. 4 — No. 3:
Backrest RH:
No. 4 — No. 3:

Inspection conditions	Standard	
Heater temperature 20°C (68°F)	Seat cushion	Approx. 4.7 Ω
	Backrest	Approx. 7.46 Ω

2) If no continuity exists, replace the seat heater module with a new part.

6. CHECK REAR SEAT HEATER SWITCH

1) Remove the rear seat heater switch and measure the resistance between switch terminals.

Preparation tool:
Circuit tester

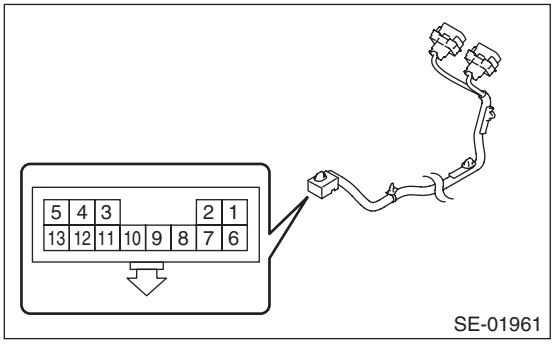

Terminal No.	Inspection conditions	Standard
4-9	Switch OFF	1 MΩ or more
	Switch ON	Less than 1 Ω
2-9	Switch OFF	1 MΩ or more
	Switch ON	Less than 1 Ω

NOTE:
If the light does not illuminate properly even though the continuity check result is normal, replace the switch.
2) Apply battery voltage between the connector terminals to check lighting condition of illumination inside the switch.

Terminal No.	Inspection conditions	Standard
11 (+) — 10 (–)	Apply battery voltage.	Light ON

3) Replace the rear seat heater switch if the inspection result is not within the standard value.

7. CHECK REAR SEAT HEATER CONTROL MODULE

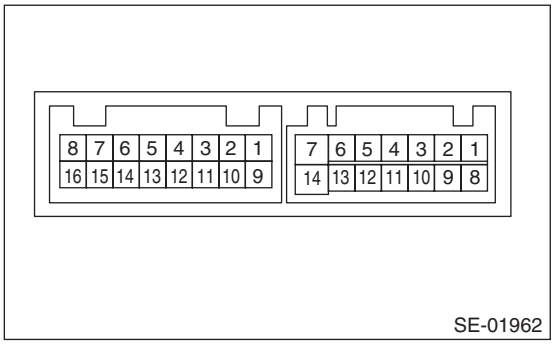

1) Disconnect the connector of rear seat heater control module.
2) Check the continuity between the connectors.

Connector & terminal

5 — 7

14 — 7

Is there continuity?

- **Yes** → Repair or replace the harness.
- **No** → Replace the rear seat heater control module.

POWER SEAT MEMORY SYSTEM (DIAGNOSTICS)

PSM(diag)

		Page
1.	Basic Diagnostic Procedure	2
2.	Check List for Interview	3
3.	General Description	4
4.	Electrical Component Location	5
5.	Control Module I/O Signal	7
6.	Subaru Select Monitor	9
7.	Read Diagnostic Trouble Code (DTC)	11
8.	Clear Memory Mode	12
9.	Inspection Mode	13
10.	Read Current Data	15
11.	Freeze Frame Data Display	17
12.	List of Diagnostic Trouble Code (DTC)	18
13.	Diagnostic Procedure with Diagnostic Trouble Code (DTC)	19
14.	Diagnostics with Phenomenon	29

1. Basic Diagnostic Procedure

A: PROCEDURE

	Step	Check	Yes	No
1	**PERFORM CUSTOMER INTERVIEW.** Using the Check List for Interview, ask the customer the condition of how the trouble occurred.	Did you interview the customer?	Go to step **2**.	Interview the customer. <Ref. to PSM(diag)-3, CHECK, Check List for Interview.>
2	**CHECK LAN SYSTEM.** Inspect LAN system. <Ref. to LAN(diag)-2, PROCEDURE, Basic Diagnostic Procedure.>	Is there any fault?	Perform the inspection according to the diagnosis for LAN system.	Go to step **3**.
3	**CHECK POWER SEAT MEMORY SYSTEM.** Using the Subaru Select Monitor, read DTC of power seat memory system. <Ref. to PSM(diag)-11, OPERATION, Read Diagnostic Trouble Code (DTC).>	Is DTC displayed?	Perform the diagnosis according to DTC. <Ref. to PSM(diag)-18, LIST, List of Diagnostic Trouble Code (DTC).> After the repair, Go to step **5**.	Go to step **4**.
4	**CHECK THE LIST OF TROUBLE SYMPTOMS.** Check “TROUBLE SYMPTOM” for the power seat system. <Ref. to SE-56, TROUBLE SYMPTOM, INSPECTION, Power Seat System.>	Does the symptom apply?	Perform the diagnosis according to the inspection procedures.	Currently, system is normal. The circuit has returned to a normal condition at this time. Reproduce the failure, and then perform the diagnosis again. NOTE: In this case, temporary poor contact of connector, temporary open or short circuit of harness may be the cause.
5	**PERFORM INSPECTION MODE.** Perform the Inspection Mode. <Ref. to PSM(diag)-13, Inspection Mode.>	Is DTC displayed?	Perform the diagnosis according to DTC. <Ref. to PSM(diag)-18, LIST, List of Diagnostic Trouble Code (DTC).>	Finish the diagnosis.

2. Check List for Interview

A: CHECK

- Inspect the following items regarding the vehicle's state.
- Print out this page for interviewing customers.

<table>
<tr><td colspan="4">Power Seat Memory System Check List for Interview
Date the Vehicle is Received Year Month Day</td></tr>
<tr><td colspan="2" rowspan="2">Customer's name</td><td>Registration No.</td><td>Initial year of registration
Year Month Date</td></tr>
<tr><td>Vehicle model</td><td>Frame number</td></tr>
<tr><td>Interviewer</td><td>Inspector</td><td>Engine type</td><td>Odometer reading</td></tr>
<tr><td colspan="4">Customer specified content
•
•
•</td></tr>
<tr><td>Date when problem occurred</td><td>Year Month Date</td><td>Frequency of trouble occurrence</td><td>Always occurs
Sometimes occurs
(times per day, times per month)</td></tr>
<tr><td rowspan="2">Condition of trouble occurrence
(How the trouble occurs)</td><td rowspan="2"></td><td>Weather</td><td>Fine • Cloudy • Rainy • Snowy • Others ( )</td></tr>
<tr><td>Temperature</td><td>°C (°F) — °C (°F)</td></tr>
<tr><td>Road conditions</td><td></td><td>Occurrence location</td><td></td></tr>
<tr><td>Accessory installation condition</td><td colspan="3"></td></tr>
<tr><td>Confirmation of trouble condition</td><td colspan="3"></td></tr>
<tr><td>Diagnostic code</td><td colspan="3"></td></tr>
</table>

3. General Description

A: CAUTION

1. AIRBAG SYSTEM

CAUTION:
• Do not use the electrical test equipment on the airbag system wiring harnesses and connector circuits.
• Be careful not to damage the airbag system wiring harness.

2. POWER SEAT MEMORY SYSTEM

CAUTION:
• During inspection of the power seat memory system, be careful not to catch objects in.
• Perform communication with Subaru Select Monitor with IG ON.
(With IG OFF, communication cannot be established between the body integrated unit and seat memory CM.)

B: INSPECTION

1. BASIC INSPECTION

Before performing diagnosis, check the following items which might affect the problems related to power seat memory system.
1) Check the battery. <Ref. to SC(H4DO)-65, INSPECTION, Battery.> <Ref. to SC(H6DO)-59, INSPECTION, Battery.>
2) Check the relay and fuse condition.
3) Check the connecting condition of harness and harness connector.

C: PREPARATION TOOL

1. SPECIAL TOOL

ILLUSTRATION	TOOL NUMBER	DESCRIPTION	REMARKS
 STSSM4	— (Newly adopted tool)	SUBARU SELECT MONITOR 4	Used for setting of each function and trouble-shooting for electrical system. NOTE: For detailed operation procedures of Subaru Select Monitor 4, refer to “Application help”.

2. GENERAL TOOL

TOOL NAME	REMARKS
Circuit tester	Used for measuring resistance, voltage and current.
DST-i	Used together with Subaru Select Monitor 4.

4. Electrical Component Location

A: LOCATION

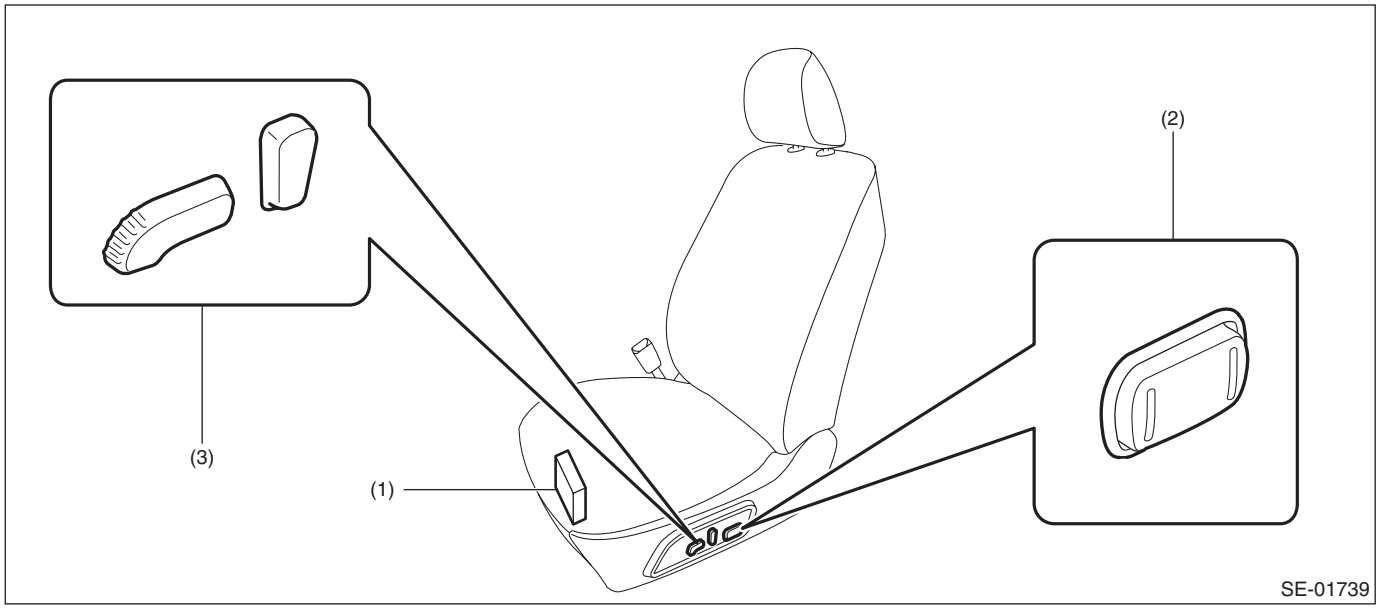

(1) Power seat control module (2) Lumbar switch (3) Power seat switch

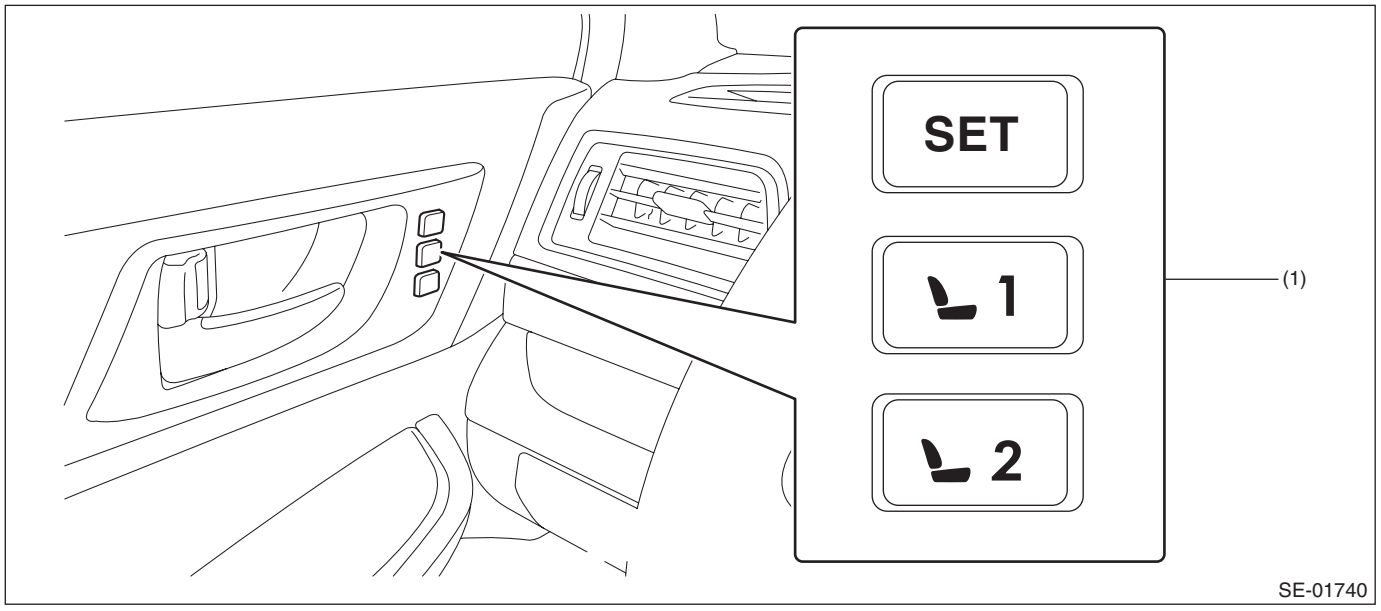

(1) Seat memory switch

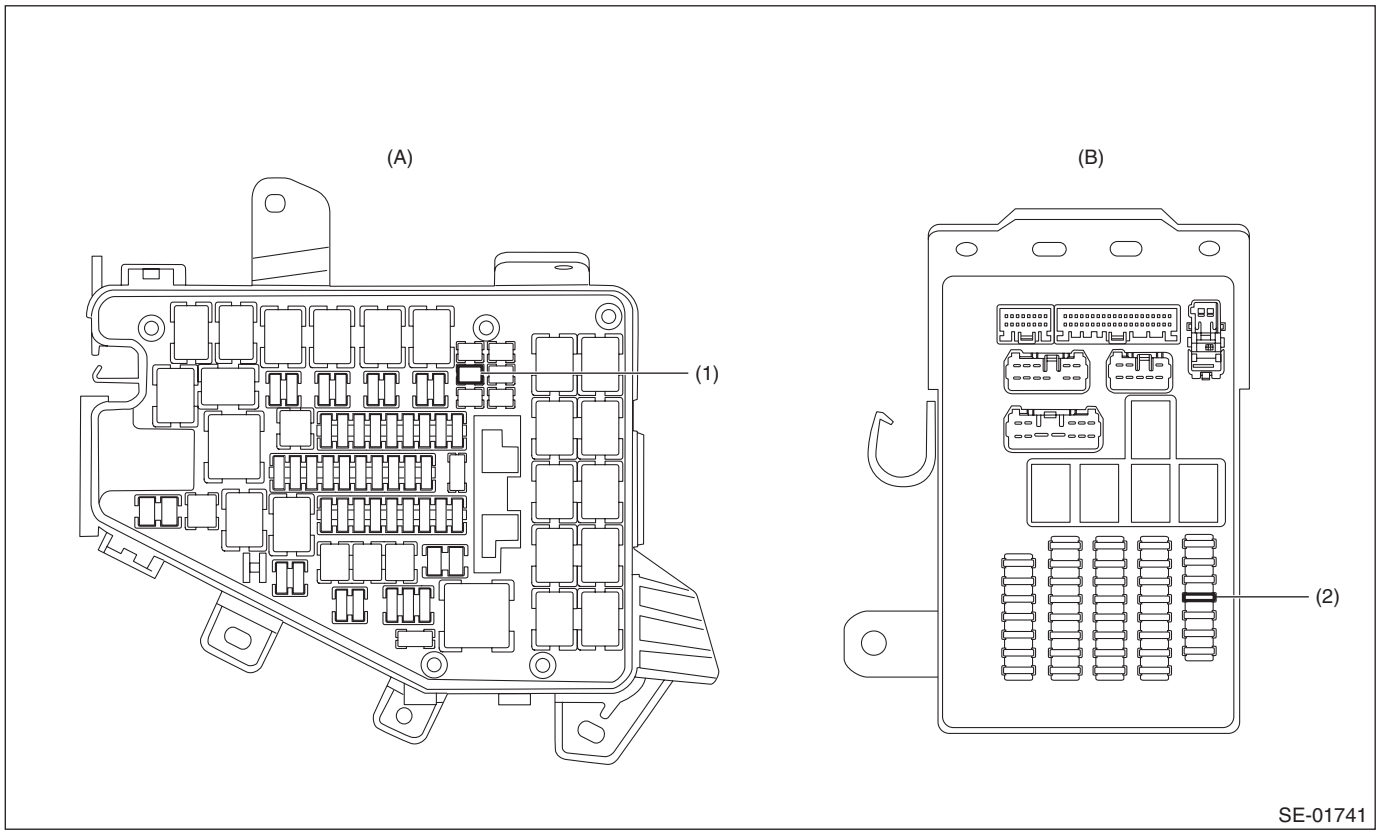

(A) Engine compartment fuse box
(B) Interior fuse & relay box
(1) Fuse (30 A)
(2) Fuse (7.5 A)

5. Control Module I/O Signal

A: ELECTRICAL SPECIFICATION

1. POWER SEAT CONTROL MODULE

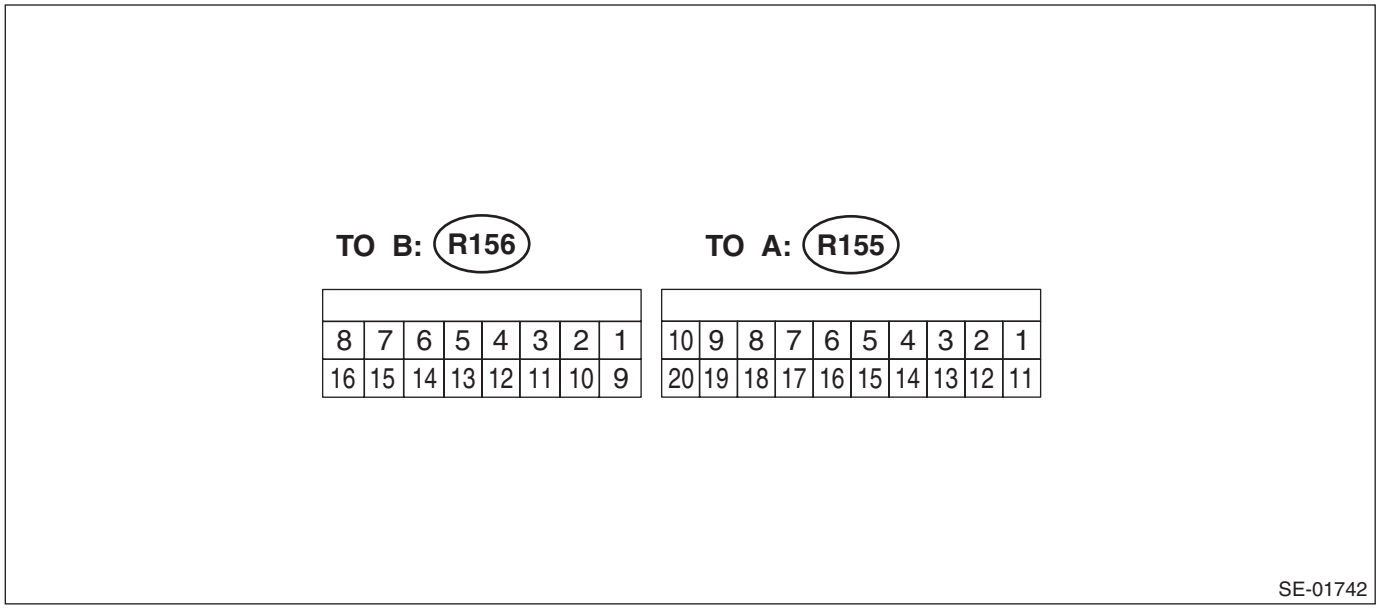

Terminal No.	Contents	Measuring condition	Standard
(R155) No. 1	—	—	—
(R155) No. 2 ←→ Chassis ground	Lifter switch (down)	Switch ON	1.5 V or less
(R155) No. 3 ←→ Chassis ground	Lifter switch (up)	Switch ON	1.5 V or less
(R155) No. 4 ←→ Chassis ground	Tilt switch (down)	Switch ON	1.5 V or less
(R155) No. 5 ←→ Chassis ground	Tilt switch (up)	Switch ON	1.5 V or less
(R155) No. 6 ←→ Chassis ground	Slide switch (forward)	Switch ON	1.5 V or less
(R155) No. 7 ←→ Chassis ground	Slide switch (rearward)	Switch ON	1.5 V or less
(R155) No. 8 ←→ Chassis ground	Reclining switch (forward)	Switch ON	1.5 V or less
(R155) No. 9 ←→ Chassis ground	Reclining switch (backward)	Switch ON	1.5 V or less
(R155) No. 10 ←→ Chassis ground	Battery power supply	Always	10 — 16 V
(R155) No. 11 ←→ Chassis ground	Ignition power supply	When ignition switch is ON	10 — 16 V
(R155) No. 12	LIN communication line	Unmeasurable	—
(R155) No. 13 ←→ Chassis ground	Memory switch 1	Switch ON	1 V or less
(R155) No. 14 ←→ Chassis ground	Memory switch 2	Switch ON	1 V or less
(R155) No. 15 ←→ Chassis ground	SET switch	Switch ON	1 V or less
(R155) No. 16 ←→ (R155) No. 20	Reclining pulse signal	When the motor is in operation	Pulse output
(R155) No. 17 ←→ (R155) No. 20	Tilt pulse signal	When the motor is in operation	Pulse output
(R155) No. 18 ←→ (R155) No. 20	Lifter pulse signal	When the motor is in operation	Pulse output
(R155) No. 19 ←→ (R155) No. 20	Slide pulse signal	When the motor is in operation	Pulse output
(R155) No. 20 ←→ Chassis ground	Pulse signal GND	Always	1 Ω or less
(R156) No. 1 ←→ Chassis ground	Lifter motor up	When the motor is in operation	9.5 — 16 V
(R156) No. 2 ←→ Chassis ground	Lifter motor down	When the motor is in operation	9.5 — 16 V
(R156) No. 3 ←→ Chassis ground	Battery power supply	Always	10 — 16 V
(R156) No. 4 ←→ Chassis ground	Tilt motor up	When the motor is in operation	9.5 — 16 V
(R156) No. 5 ←→ Chassis ground	Tilt motor down	When the motor is in operation	9.5 — 16 V
(R156) No. 6 ←→ Chassis ground	Reclining motor forward	When the motor is in operation	9.5 — 16 V
(R156) No. 7 ←→ Chassis ground	Reclining motor backward	When the motor is in operation	9.5 — 16 V
(R156) No. 8 ←→ Chassis ground	Battery power supply	Always	10 — 16 V

Terminal No.	Contents	Measuring condition	Standard
(R156) No. 9 ←→ Chassis ground	Encoder power supply output	Always	1 MΩ or more
(R156) No. 10	—	—	—
(R156) No. 11	—	—	—
(R156) No. 12 ←→ Chassis ground	GND	Always	1 Ω or less
(R156) No. 13	—	—	—
(R156) No. 14 ←→ Chassis ground	GND	Always	1 Ω or less
(R156) No. 15 ←→ Chassis ground	Slide motor rearward	When the motor is in operation	9.5 — 16 V
(R156) No. 16 ←→ Chassis ground	Slide motor forward	When the motor is in operation	9.5 — 16 V

B: WIRING DIAGRAM

Refer to “Power Seat System” in the wiring diagram. <Ref. to WI-299, WIRING DIAGRAM, Power Seat System.>

6. Subaru Select Monitor

A: OPERATION

- For detailed operation procedures, refer to “Application help”.
- When communication with Subaru Select Monitor is not possible, perform “COMMUNICATION FOR INITIALIZING IMPOSSIBLE”. <Ref. to PSM(diag)-9, COMMUNICATION FOR INITIALIZING IMPOSSIBLE, Subaru Select Monitor.>

B: COMMUNICATION FOR INITIALIZING IMPOSSIBLE

NOTE:
If the communication with the body integrated unit is not possible either, refer to BODY CONTROL SYSTEM (DIAGNOSTICS). <Ref. to LAN(diag)-11, COMMUNICATION FOR INITIALIZING IMPOSSIBLE, Subaru Select Monitor.>

DETECTING CONDITION:

- Defective harness
- Power supply circuit malfunction
- Defective power seat control module
- Body integrated unit malfunctioning
- Defective LIN communication circuit
- Defective Subaru Select Monitor

TROUBLE SYMPTOM:

Not communicable with Subaru Select Monitor.

WIRING DIAGRAM:

NOTE:
For the coupling connector, refer to “WIRING SYSTEM”.
Power seat system <Ref. to WI-299, WIRING DIAGRAM, Power Seat System.>

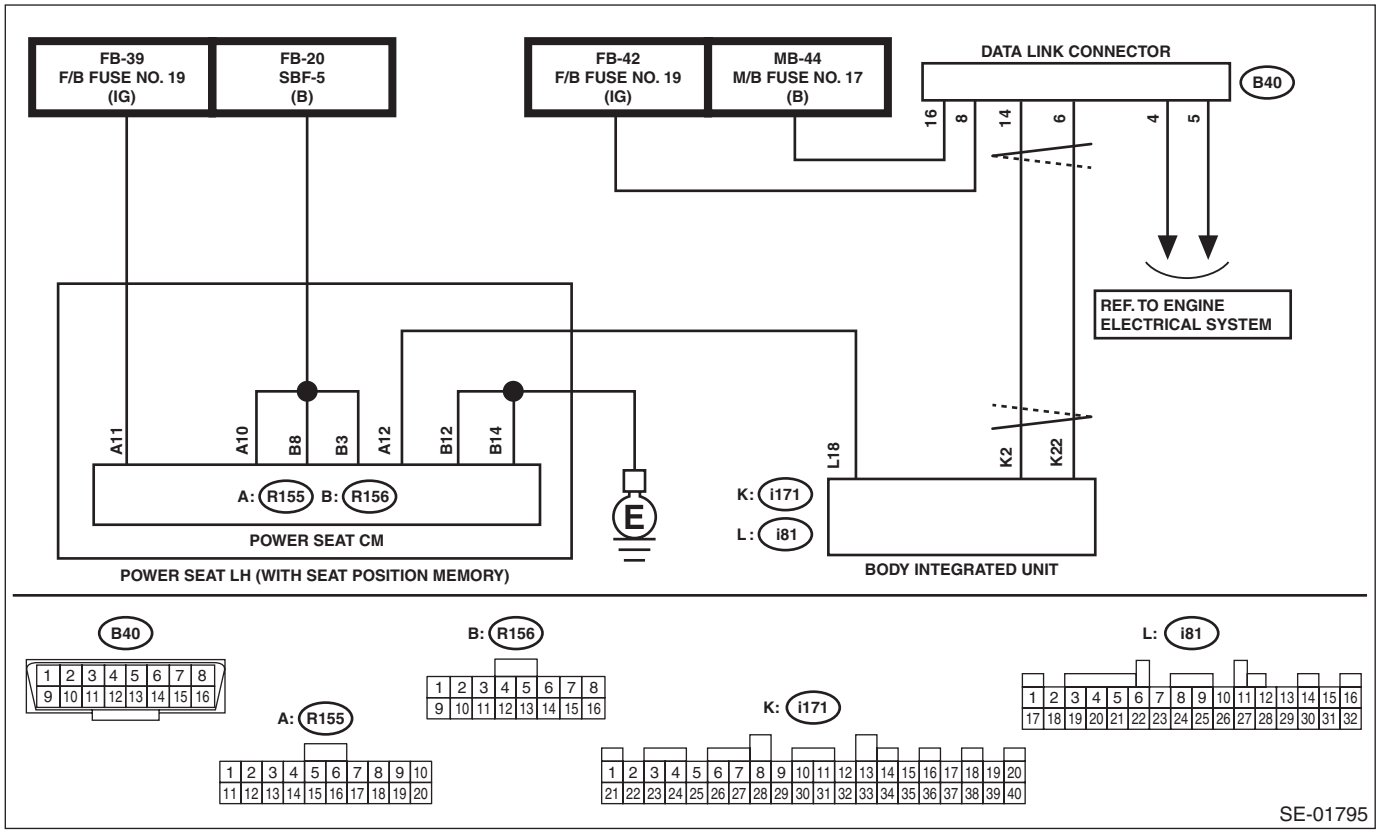

	Step	Check	Yes	No
1	**CHECK OTHER COMMUNICATION.** Perform communication with the system other than the power seat control module using the Subaru Select Monitor.	Is the communication to other control module possible?	Go to step **2**.	Perform the "Communication for Initializing Impossible" of LAN system. <Ref. to LAN(diag)-2, PROCEDURE, Basic Diagnostic Procedure.>
2	**CHECK LAN SYSTEM.** Perform the inspection for LAN system. <Ref. to LAN(diag)-2, PROCEDURE, Basic Diagnostic Procedure.>	Is there any fault?	Perform the diagnosis according to the inspection for LAN system.	Go to step **3**.
3	**CHECK FOR POOR CONTACT.** 1) Turn the ignition switch to OFF. 2) Disconnect the connector of power seat control module. 3) Disconnect the connector of body integrated unit. 4) Connect the disconnected connectors. 5) Turn the ignition switch to ON. 6) Perform communication with the power seat control module using the Subaru Select Monitor.	Is communication possible?	The circuit has returned to a normal condition at this time. Reproduce the failure, and then perform the diagnosis again. NOTE: In this case, temporary poor contact of connector, temporary open or short circuit of harness may be the cause.	Replace the power seat control module. <Ref. to SE-53, POWER SEAT CONTROL MODULE (SEAT WITH MEMORY FUNCTION), REMOVAL, Power Seat System.>

7. Read Diagnostic Trouble Code (DTC)

A: OPERATION

1) On «Start» display, select «Diagnosis».
2) On «Vehicle selection» display, input the target vehicle information and select «Confirmed».
3) On «Main Menu» display, select «Each System».
4) On «Select System» display, select «Power Seat Memory» and then select «Enter».
5) On «Select Function» display, select «DTC».

NOTE:
- For detailed operation procedures, refer to “Application help”.
- For details concerning DTC, refer to the List of Diagnostic Trouble Codes (DTC). <Ref. to PSM(diag)-18, List of Diagnostic Trouble Code (DTC).>

8. Clear Memory Mode

A: OPERATION

1) On «Start» display, select «Diagnosis».
2) On «Vehicle selection» display, input the target vehicle information and select «Confirmed».
3) On «Main Menu» display, select «Each System».
4) On «Select System» display, select «Power Seat Memory» and then select «Enter».
5) On «Select Function» display, select «DTC».
6) On «DTC» display, select «Clear Memory».

NOTE:
For detailed operation procedures, refer to “Application help”.

9. Inspection Mode

A: PROCEDURE

It is possible to diagnose the DTC by performing the indicated inspection mode. After correcting the DTC, perform a necessary inspection mode and make sure that the function is resumed correctly and the DTC is recorded.

1. INSPECTION MODE 1

DTC	Item	Note
B2600	LIN COMMUNICATION	—
B2601	LIN CIRCUIT LOW	—
B2602	VEHICLE SPEED CONTROL	—
B2603	EPB CONTROL	—
B2605	BATTERY CONTROL LOW	—

Diagnostic procedure:
1) Perform the Clear Memory Mode. <Ref. to PSM(diag)-12, Clear Memory Mode.>
2) Read the DTC and check that the DTC is not displayed. <Ref. to PSM(diag)-11, Read Diagnostic Trouble Code (DTC).>
3) Turn the ignition switch ON → OFF, and wait for 45 seconds or more.
4) Turn the ignition switch OFF → ON, and wait for 5 seconds or more.
5) Read the DTC and check that the DTC is not displayed. <Ref. to PSM(diag)-11, Read Diagnostic Trouble Code (DTC).>

NOTE:
If the DTC is displayed on the screen, the trouble is still present. Perform the diagnosis according to DTC.

2. INSPECTION MODE 2

DTC	Item	Note
B2604	POWER SEAT MEMORY EEPROM	—

Diagnostic procedure:
1) Perform the Clear Memory Mode. <Ref. to PSM(diag)-12, Clear Memory Mode.>
2) Read the DTC and check that the DTC is not displayed. <Ref. to PSM(diag)-11, Read Diagnostic Trouble Code (DTC).>
3) Initialize the power seat system. <Ref. to SE-74, INITIALIZATION PROCEDURES, ADJUSTMENT, Power Seat System.>
4) Turn the ignition switch ON → OFF, and wait for 45 seconds or more.
5) Turn the ignition switch OFF → ON, and wait for 5 seconds or more.
6) Read the DTC and check that the DTC is not displayed. <Ref. to PSM(diag)-11, Read Diagnostic Trouble Code (DTC).>

NOTE:
If the DTC is displayed on the screen, the trouble is still present. Perform the diagnosis according to DTC.

3. INSPECTION MODE 3

DTC	Item	Note
B2606	POWER SEAT POSITION SENSOR CIRCUIT LOW	—

Diagnostic procedure:
1) Perform the Clear Memory Mode. <Ref. to PSM(diag)-12, Clear Memory Mode.>
2) Read the DTC and check that the DTC is not displayed. <Ref. to PSM(diag)-11, Read Diagnostic Trouble Code (DTC).>
3) Operate the power seat switch. (Any of slide/reclining/lifter/tilt)
4) Turn the ignition switch ON → OFF, and wait for 45 seconds or more.
5) Turn the ignition switch OFF → ON, and wait for 5 seconds or more.
6) Read the DTC and check that the DTC is not displayed. <Ref. to PSM(diag)-11, Read Diagnostic Trouble Code (DTC).>

NOTE:
If the DTC is displayed on the screen, the trouble is still present. Perform the diagnosis according to DTC.

10.Read Current Data

A: OPERATION

1) On «Start» display, select «Diagnosis».
2) On «Vehicle selection» display, input the target vehicle information and select «Confirmed».
3) On «Main Menu» display, select «Each System».
4) On «Select System» display, select «Power Seat Memory» and then select «Enter».
5) On «Select Function» display, select «Data Monitor».

NOTE:
For detailed operation procedures, refer to “Application help”.

B: LIST

Display	Description	Standard	Note
Battery Terminal Voltage	Battery voltage is displayed.	0 — 25.5 V	—
Ignition switch	Ignition switch status is displayed.	ON: when ignition switch is ON OFF: when ignition switch is OFF	—
Set SW	Status of the set switch in seat memory switch is displayed.	ON: when set switch is ON OFF: when set switch is OFF	—
Memory SW1	Status of the memory switch 1 in seat memory switch is displayed.	ON: when memory switch 1 is ON OFF: when memory switch 1 is OFF	—
Memory SW2	Status of the memory switch 2 in seat memory switch is displayed.	ON: when memory switch 2 is ON OFF: when memory switch 2 is OFF	—
Slide SW	Status of the slide switch in power seat switch is displayed.	OFF: when slide switch is OFF FRONT: when slide switch (forward) is ON REAR: when slide switch (rearward) is ON	—
Reclining SW	Status of the reclining switch in power seat switch is displayed.	OFF: when reclining switch is OFF FRONT: when reclining switch (forward) is ON REAR: when reclining switch (rearward) is ON	—
Lifter SW	Status of the lifter switch in power seat switch is displayed.	OFF: when lifter switch is OFF UP: when lifter switch (upward) is ON DOWN: when lifter switch (downward) is ON	—
Tilt SW	Status of the tilt switch in power seat switch is displayed.	OFF: when tilt switch is OFF UP: when tilt switch (upward) is ON DOWN: when tilt switch (downward) is ON	—
Pulse Power Circuit	Motor pulse sensor power supply circuit status is displayed.	Normal: when normal Abnormal: when abnormal	—
Slide Output	Power seat control module output status is displayed. (Slide motor)	OFF: when OFF FRONT: when moved in the front direction REAR: when moved in the rear direction	—
Reclining Output	Power seat control module output status is displayed. (Reclining motor)	OFF: when OFF FRONT: when moved in the front direction REAR: when moved in the rear direction	—
Lifter Output	Power seat control module output status is displayed. (Lifter motor)	OFF: when OFF UP: when moved in the upper direction DOWN: when moved in the lower direction	—
Tilt Output	Power seat control module output status is displayed. (Tilt motor)	OFF: when OFF UP: when moved in the upper direction DOWN: when moved in the lower direction	—
Memory SW1 Memorized	Registration status of the memory switch 1 in seat memory switch	ON: when registered OFF: when not registered	—
Memory SW2 Memorized	Registration status of the memory switch 2 in seat memory switch	ON: when registered OFF: when not registered	

Display	Description	Standard	Note
Keyless Access & Start Link 1 Memorized	Registration status of keyless access key	ON: when registered OFF: when not registered	Seat memory operates when the key No. displayed in the «Keyless Access Key Information» is ON in the item shown on the left.
Keyless Access & Start Link 2 Memorized	Registration status of keyless access key	ON: when registered OFF: when not registered	
Keyless Access & Start Link 3 Memorized	Registration status of keyless access key	ON: when registered OFF: when not registered	
Keyless Access & Start Link 4 Memorized	Registration status of keyless access key	ON: when registered OFF: when not registered	
Keyless Access & Start Link 5 Memorized	Registration status of keyless access key	ON: when registered OFF: when not registered	
Keyless Access & Start Link 6 Memorized	Registration status of keyless access key	ON: when registered OFF: when not registered	
Keyless Access & Start Link 7 Memorized	Registration status of keyless access key	ON: when registered OFF: when not registered	
Keyless Access Key Information	Key No. currently identified by the vehicle is displayed.	OFF: when no key is registered Keyless Access & Start Link 1: Keyless Access & Start Link 2: Keyless Access & Start Link 3: Keyless Access & Start Link 4: Keyless Access & Start Link 5: Keyless Access & Start Link 6: Keyless Access & Start Link 7:	—
Slide Position	Slide motor position is displayed.	-32768 — 32767	—
Reclining Position	Reclining motor position is displayed.	-32768 — 32767	—
Lifter Position	Lifter motor position is displayed.	-32768 — 32767	—
Tilt Position	Tilt motor position is displayed.	-32768 — 32767	—

11.Freeze Frame Data Display

A: OPERATION

1) On «Start» display, select «Diagnosis».
2) On «Vehicle selection» display, input the target vehicle information and select «Confirmed».
3) On «Main Menu» display, select «Each System».
4) On «Select System» display, select «Power Seat Memory» and then select «Enter».
5) On «Select Function» display, select «DTC».
6) On «DTC» display, select «FFD».

NOTE:
For detailed operation procedures, refer to “Application help”.

B: LIST

Display	Content	Note
Battery Terminal Voltage	Battery voltage is displayed.	—
Slide Output	Power seat control module output status is displayed. (Slide motor)	—
Reclining Output	Power seat control module output status is displayed. (Reclining motor)	—
Lifter Output	Power seat control module output status is displayed. (Lifter motor)	—
Tilt Output	Power seat control module output status is displayed. (Tilt motor)	—

12.List of Diagnostic Trouble Code (DTC)

A: LIST

DTC	Item	Reference
B2600	LIN COMMUNICATION	<Ref. to PSM(diag)-19, DTC B2600 LIN COMMUNICATION, Diagnostic Procedure with Diagnostic Trouble Code (DTC).>
B2601	LIN CIRCUIT LOW	<Ref. to PSM(diag)-20, DTC B2601 LIN CIRCUIT LOW, Diagnostic Procedure with Diagnostic Trouble Code (DTC).>
B2602	VEHICLE SPEED CONTROL	<Ref. to PSM(diag)-21, DTC B2602 VEHICLE SPEED CONTROL, Diagnostic Procedure with Diagnostic Trouble Code (DTC).>
B2603	EPB CONTROL	<Ref. to PSM(diag)-22, DTC B2603 EPB CONTROL, Diagnostic Procedure with Diagnostic Trouble Code (DTC).>
B2604	POWER SEAT MEMORY EEPROM	<Ref. to PSM(diag)-23, DTC B2604 POWER SEAT MEMORY EEPROM, Diagnostic Procedure with Diagnostic Trouble Code (DTC).>
B2605	BATTERY CONTROL LOW	<Ref. to PSM(diag)-24, DTC B2605 BATTERY CONTROL LOW, Diagnostic Procedure with Diagnostic Trouble Code (DTC).>
B2606	POWER SEAT POSITION SENSOR CIRCUIT LOW	<Ref. to PSM(diag)-26, DTC B2606 POWER SEAT POSITION SENSOR CIRCUIT LOW, Diagnostic Procedure with Diagnostic Trouble Code (DTC).>

13.Diagnostic Procedure with Diagnostic Trouble Code (DTC)

A: DTC B2600 LIN COMMUNICATION

DTC DETECTING CONDITION:

No signal is received from body integrated unit for a certain period of time (2100 ms) or more. Or, transmission from the power seat control module is not possible for a certain period of time (2100 ms) or more.

TROUBLE SYMPTOM:

- Seat operation is possible with manual operation, but not with memory function.
- Registration is possible with memory switch, but not with keyless access push button start system.

	Step	Check	Yes	No
1	**CHECK DTC.** 1) Turn the ignition switch to ON. 2) Read the DTC of the power seat control module using the Subaru Select Monitor. <Ref. to PSM(diag)-11, Read Diagnostic Trouble Code (DTC).>	Is DTC B2600 displayed? (Current malfunction)	Go to step **2**.	Even if DTC is displayed, the circuit has returned to a normal condition at this time. Reproduce the failure, and perform the diagnosis again. NOTE: In this case, temporary poor contact of connector, temporary open or short circuit of harness may be the cause.
2	**CHECK DTC.** Read the DTC of body integrated unit using Subaru Select Monitor. <Ref. to PSM(diag)-11, Read Diagnostic Trouble Code (DTC).>	Is DTC U0208 displayed? (Current malfunction)	Perform inspection according to DTC. <Ref. to BC(diag)-58, DTC U0208 LOST COMMUNICATION WITH SEAT MEMORY, Diagnostic Procedure with Diagnostic Trouble Code (DTC).>	Go to step **3**.
3	**CHECK BODY INTEGRATED UNIT.** 1) Turn the ignition switch to OFF. 2) Replace with a power seat control module working properly. <Ref. to SE-53, POWER SEAT CONTROL MODULE (SEAT WITH MEMORY FUNCTION), REMOVAL, Power Seat System.> 3) Turn the ignition switch to ON. 4) Read the DTC of the power seat control module using the Subaru Select Monitor. <Ref. to PSM(diag)-11, Read Diagnostic Trouble Code (DTC).>	Is DTC B2600 displayed? (Current malfunction)	Replace the body integrated unit. <Ref. to SL-83, Body Integrated Unit.>	There was an abnormality in power seat control module.

B: DTC B2601 LIN CIRCUIT LOW

DTC DETECTING CONDITION:

LIN communication circuit with the body integrated unit is shorted for a certain period of time (4000 ms) or more.

TROUBLE SYMPTOM:

Seat operation is possible with manual operation, but not with memory function.
Registration is possible with memory switch, but not with keyless access push button start system.

Step		Check	Yes	No
1	**CHECK DTC.** 1) Turn the ignition switch to ON. 2) Read the DTC of the power seat control module using the Subaru Select Monitor. <Ref. to PSM(diag)-11, Read Diagnostic Trouble Code (DTC).>	Is DTC B2601 displayed? (Current malfunction)	Go to step **2**.	Even if DTC is displayed, the circuit has returned to a normal condition at this time. Reproduce the failure, and perform the diagnosis again. NOTE: In this case, temporary poor contact of connector, temporary open or short circuit of harness may be the cause.
2	**CHECK DTC.** Read the DTC of body integrated unit using Subaru Select Monitor. <Ref. to PSM(diag)-11, Read Diagnostic Trouble Code (DTC).>	Is DTC U0208 displayed? (Current malfunction)	Perform inspection according to DTC. <Ref. to BC(diag)-58, DTC U0208 LOST COMMUNICATION WITH SEAT MEMORY, Diagnostic Procedure with Diagnostic Trouble Code (DTC).>	Go to step **3**.
3	**CHECK BODY INTEGRATED UNIT.** 1) Turn the ignition switch to OFF. 2) Replace with a power seat control module working properly. <Ref. to SE-53, POWER SEAT CONTROL MODULE (SEAT WITH MEMORY FUNCTION), REMOVAL, Power Seat System.> 3) Turn the ignition switch to ON. 4) Read the DTC of the power seat control module using the Subaru Select Monitor. <Ref. to PSM(diag)-11, Read Diagnostic Trouble Code (DTC).>	Is DTC B2601 displayed? (Current malfunction)	Replace the body integrated unit. <Ref. to SL-83, Body Integrated Unit.>	There was an abnormality in power seat control module.

C: DTC B2602 VEHICLE SPEED CONTROL

DTC DETECTING CONDITION:
Detection of 300 km/h or more continued for a certain period of time (2100 ms) or more.
TROUBLE SYMPTOM:
Seat operation is possible with manual operation, but not with memory function.
(Memory registration is possible.)

	Step	Check	Yes	No
1	**CHECK DTC.** 1) Turn the ignition switch to ON. 2) Read the DTC of the power seat control module using the Subaru Select Monitor. <Ref. to PSM(diag)-11, Read Diagnostic Trouble Code (DTC).>	Is DTC B2602 displayed? (Current malfunction)	Go to step **2**.	Even if DTC is displayed, the circuit has returned to a normal condition at this time. Reproduce the failure, and perform the diagnosis again. NOTE: In this case, temporary poor contact of connector, temporary open or short circuit of harness may be the cause.
2	**CHECK DTC.** Perform the inspection for LAN system. <Ref. to LAN(diag)-2, PROCEDURE, Basic Diagnostic Procedure.>	Is there any fault?	Perform the inspection according to the diagnosis for LAN system.	Go to step **3**.
3	**CHECK VEHICLE SPEED SIGNAL OF VDC MODULE.** Stop the vehicle, and read the current data values «FR Wheel Speed» «FL Wheel Speed» «RR Wheel Speed» «RL Wheel Speed» of VDC module using Subaru Select Monitor. <Ref. to VDC(diag)-19, READ CURRENT DATA, OPERATION, Subaru Select Monitor.>	Is the displayed value abnormal?	Replace the VDC module, or inspect the vehicle speed sensor harness circuit.	Go to step **4**.
4	**CHECK BODY INTEGRATED UNIT VEHICLE SPEED SIGNAL.** Stop the vehicle, and read the current data «Front Wheel Speed» of body integrated unit using Subaru Select Monitor. <Ref. to BC(diag)-20, Read Current Data.>	Is the displayed value abnormal?	Replace the body integrated unit. <Ref. to SL-83, Body Integrated Unit.>	Go to step **5**.
5	**CHECK POWER SEAT CONTROL MODULE.** 1) Turn the ignition switch to OFF. 2) Replace with a power seat control module working properly. <Ref. to SE-53, POWER SEAT CONTROL MODULE (SEAT WITH MEMORY FUNCTION), REMOVAL, Power Seat System.> 3) Turn the ignition switch to ON. 4) Read the DTC of the power seat control module using the Subaru Select Monitor. <Ref. to PSM(diag)-11, Read Diagnostic Trouble Code (DTC).>	Is DTC B2602 displayed? (Current malfunction)	Replace the body integrated unit. <Ref. to SL-83, Body Integrated Unit.>	There was an abnormality in power seat control module.

D: DTC B2603 EPB CONTROL

DTC DETECTING CONDITION:
Detection of EPB abnormal signal continued for a certain period of time (2100 ms) or more.
TROUBLE SYMPTOM:
Seat operation is possible with manual operation, but not with memory function.
(Memory registration is possible.)

	Step	Check	Yes	No
1	**CHECK DTC.** 1) Turn the ignition switch to ON. 2) Read the DTC of the power seat control module using the Subaru Select Monitor. <Ref. to PSM(diag)-11, Read Diagnostic Trouble Code (DTC).>	Is DTC B2603 displayed? (Current malfunction)	Go to step **2**.	Even if DTC is displayed, the circuit has returned to a normal condition at this time. Reproduce the failure, and perform the diagnosis again. NOTE: In this case, temporary poor contact of connector, temporary open or short circuit of harness may be the cause.
2	**CHECK DTC.** Perform the inspection for LAN system. <Ref. to LAN(diag)-2, PROCEDURE, Basic Diagnostic Procedure.>	Is there any fault?	Perform the inspection according to the diagnosis for LAN system.	Go to step **3**.
3	**CHECK BODY INTEGRATED UNIT.** 1) Turn the ignition switch to OFF. 2) Replace with a power seat control module working properly. <Ref. to SE-53, POWER SEAT CONTROL MODULE (SEAT WITH MEMORY FUNCTION), REMOVAL, Power Seat System.> 3) Turn the ignition switch to ON. 4) Read the DTC of the power seat control module using the Subaru Select Monitor. <Ref. to PSM(diag)-11, Read Diagnostic Trouble Code (DTC).>	Is DTC B2603 displayed? (Current malfunction)	Replace the body integrated unit. <Ref. to SL-83, Body Integrated Unit.>	There was an abnormality in power seat control module.

E: DTC B2604 POWER SEAT MEMORY EEPROM

DTC DETECTING CONDITION:
There is a difference between writing value and reading value of power seat control module EEPROM.
TROUBLE SYMPTOM:
Seat operation is possible with manual operation, but not with memory function.

Step		Check	Yes	No
1	**CHECK DTC.** 1) Turn the ignition switch to ON. 2) Read the DTC of the power seat control module using the Subaru Select Monitor. <Ref. to PSM(diag)-11, Read Diagnostic Trouble Code (DTC).>	Is DTC B2604 displayed? (Current malfunction)	Replace the power seat control module. <Ref. to SE-53, POWER SEAT CONTROL MODULE (SEAT WITH MEMORY FUNCTION), REMOVAL, Power Seat System.>	Even if DTC is displayed, the circuit has returned to a normal condition at this time. Reproduce the failure, and perform the diagnosis again. NOTE: In this case, temporary poor contact of connector, temporary open or short circuit of harness may be the cause.

F: DTC B2605 BATTERY CONTROL LOW

DTC DETECTING CONDITION:
During the motor operation, voltage for power seat control module drops for a moment. (7.5 V or less)
TROUBLE SYMPTOM:
- Seat positions cannot be memorized.
- Seat operation is possible with manual operation, but not with memory function.

WIRING DIAGRAM:

NOTE:
For the coupling connector, refer to “WIRING SYSTEM”.
Power seat system <Ref. to WI-300, DRIVER'S SEAT (WITH MEMORY), WIRING DIAGRAM, Power Seat System.>

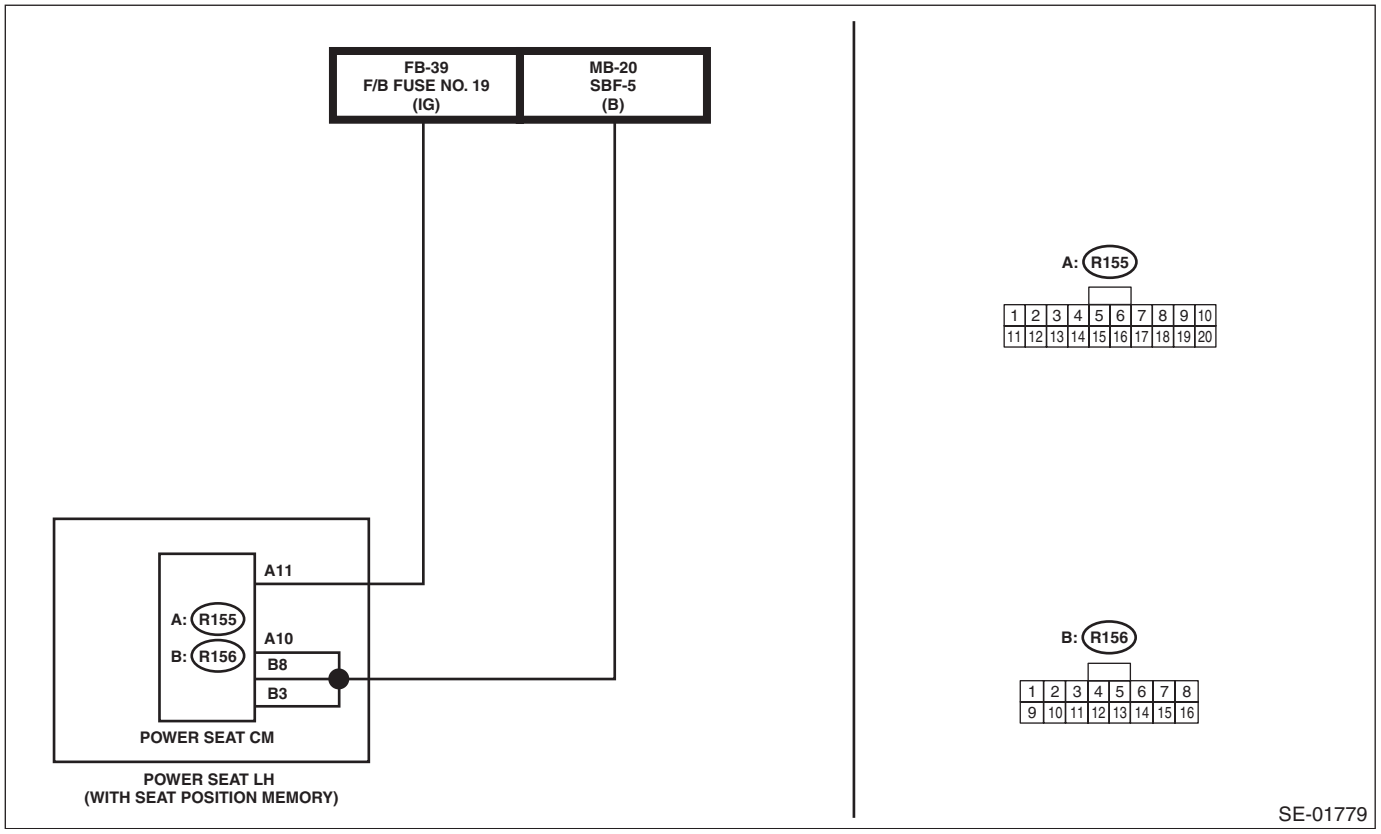

Step		Check	Yes	No
1	**CHECK DTC.** 1) Turn the ignition switch to ON. 2) Read the DTC of the power seat control module using the Subaru Select Monitor. <Ref. to PSM(diag)-11, Read Diagnostic Trouble Code (DTC).>	Is DTC B2605 displayed? (Current malfunction)	Go to step **2**.	Even if DTC is displayed, the circuit has returned to a normal condition at this time. Reproduce the failure, and perform the diagnosis again. NOTE: In this case, temporary poor contact of connector, temporary open or short circuit of harness may be the cause.

	Step	Check	Yes	No
2	**CHECK DTC.** 1) Perform the clear memory operation. <Ref. to PSM(diag)-12, OPERATION, Clear Memory Mode.> 2) Turn the ignition switch to OFF. 3) Disconnect, and then connect the power seat control module connector. 4) Turn the ignition switch to ON. 5) Move the power seat. 6) Read the DTC of the power seat control module using the Subaru Select Monitor. <Ref. to PSM(diag)-11, Read Diagnostic Trouble Code (DTC).>	Is DTC B2605 displayed? (Current malfunction)	Go to step **3**.	Repair or replace the poor contact of connector.
3	**CHECK POWER SEAT CONTROL MODULE.** Using Subaru Select Monitor, check the display of power seat control module current data «Battery Terminal Voltage». <Ref. to PSM(diag)-15, OPERATION, Read Current Data.>	Is the voltage 8.5 — 16.5 V?	Go to step **5**.	Go to step **4**.
4	**CHECK HARNESS.** 1) Turn the ignition switch to OFF. 2) Disconnect the power seat control module connector. 3) Turn the ignition switch to ON. 4) Using the tester, measure the voltage between power seat control module connector and chassis ground. ***Connector & terminal*** ***(R155) No. 10 (+) — Chassis ground (–):*** ***(R155) No. 11 (+) — Chassis ground (–):*** ***(R156) No. 3 (+) — Chassis ground (–):*** ***(R156) No. 8 (+) — Chassis ground (–):***	Is the voltage 8.5 — 16.5 V?	Replace the power seat control module. <Ref. to SE-53, POWER SEAT CONTROL MODULE (SEAT WITH MEMORY FUNCTION), REMOVAL, Power Seat System.>	Repair the open circuit in harness between power seat control module connector and fuse.
5	**CHECK BATTERY VOLTAGE.** Measure the battery voltage while the power seat is in operation.	Is the voltage 8.5 — 16.5 V?	Ask the user if the power window or passenger's power seat was operated or cranking was performed while the driver's power seat is in operation. NOTE: Even when the battery voltage is normal under ordinary circumstance, the voltage may drop to 7.5 V or less in some cases, for example at cranking.	Check the battery. <Ref. to SC(H4DO)-63, Battery.> <Ref. to SC(H6DO)-57, Battery.>

G: DTC B2606 POWER SEAT POSITION SENSOR CIRCUIT LOW

DTC DETECTING CONDITION:

Short circuit in the pulse sensor is detected during the motor operation for a certain period of time (12 ms) or more.

TROUBLE SYMPTOM:

- Seat memory does not operate.
- Seat operation stops immediately after manual operation is performed.

WIRING DIAGRAM:

NOTE:
For the coupling connector, refer to “WIRING SYSTEM”.
Power seat system <Ref. to WI-300, DRIVER'S SEAT (WITH MEMORY), WIRING DIAGRAM, Power Seat System.>

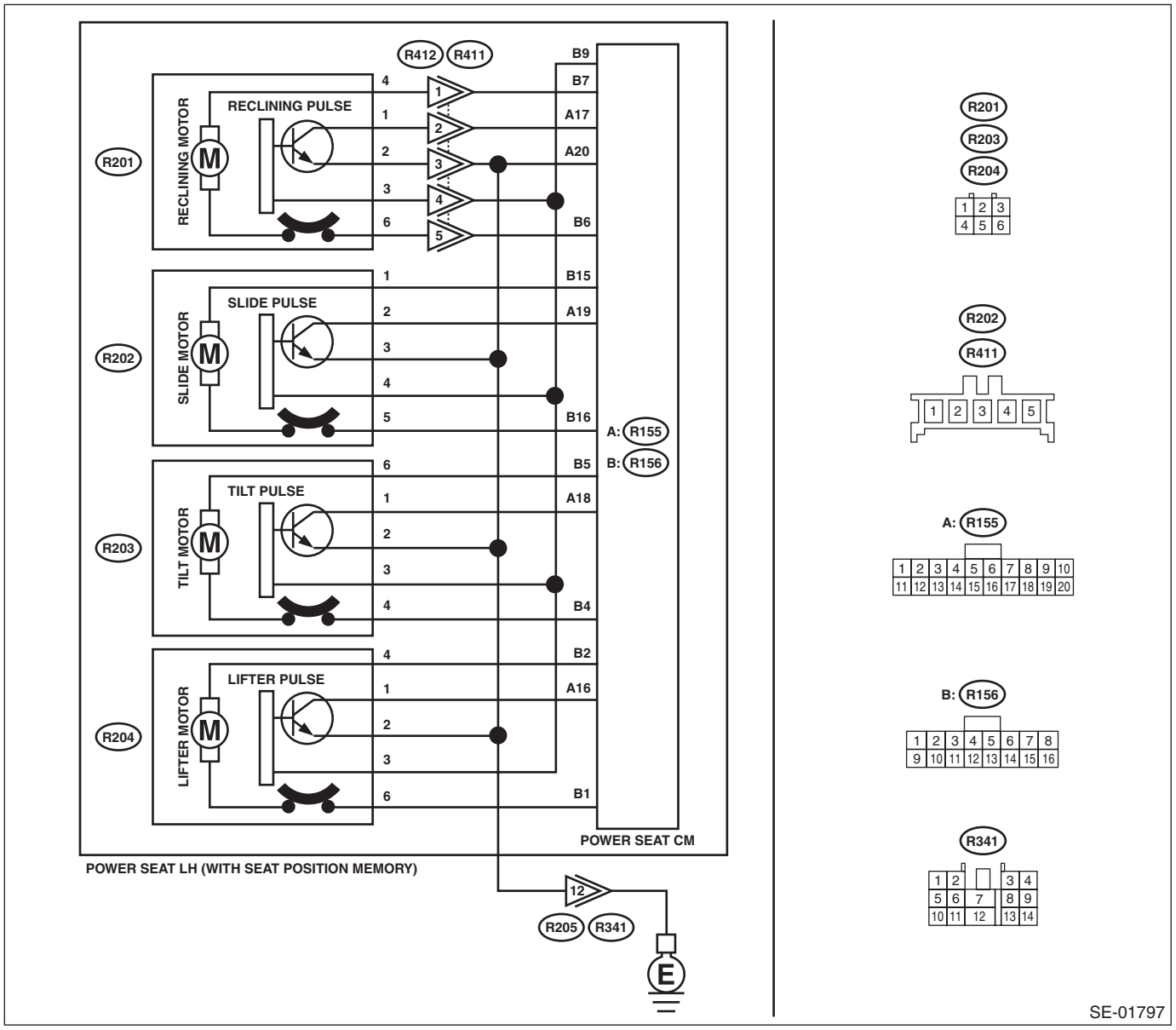

	Step	Check	Yes	No
1	**CHECK DTC.** 1) Perform the clear memory operation. <Ref. to PSM(diag)-12, OPERATION, Clear Memory Mode.> 2) Turn the ignition switch to OFF. 3) Disconnect, and then connect the power seat control module connector. 4) Turn the ignition switch to ON. 5) Move the power seat. 6) Read the DTC of the power seat control module using the Subaru Select Monitor. <Ref. to PSM(diag)-11, Read Diagnostic Trouble Code (DTC).>	Is DTC B2606 displayed? (Current malfunction)	Go to step **2**.	Even if DTC is displayed, the circuit has returned to a normal condition at this time. Reproduce the failure, and perform the diagnosis again. NOTE: In this case, temporary poor contact of connector, temporary open or short circuit of harness may be the cause.
2	**CHECK HARNESS (GROUND SHORT CIRCUIT).** 1) Turn the ignition switch to OFF. 2) Disconnect the power seat control module connector. 3) Disconnect the connectors of all motors (slide/tilt/lifter/reclining). 4) Using the tester, measure the resistance between power seat control module connector and chassis ground. ***Connector & terminal*** ***(R156) No. 9 — Chassis ground:***	Is the resistance 1 MΩ or more?	Go to step **3**.	Repair or replace the short circuit to ground in harness between power seat control module connector and motor connector.
3	**CHECK SLIDE MOTOR.** 1) Connect the slide motor connector. 2) Using the tester, measure the resistance between power seat control module connector and chassis ground. ***Connector & terminal*** ***(R156) No. 9 — Chassis ground:***	Is the resistance 1 MΩ or more?	Go to step **4**.	Replace the seat cushion frame assembly. <Ref. to SE-19, POWER SEAT (DRIVER'S SEAT), DISASSEMBLY, Front Seat.>
4	**CHECK TILT MOTOR.** 1) Disconnect the slide motor connector. 2) Connect the tilt motor connector. 3) Using the tester, measure the resistance between power seat control module connector and chassis ground. ***Connector & terminal*** ***(R156) No. 9 — Chassis ground:***	Is the resistance 1 MΩ or more?	Go to step **5**.	Replace the seat cushion frame assembly. <Ref. to SE-19, POWER SEAT (DRIVER'S SEAT), DISASSEMBLY, Front Seat.>
5	**CHECK LIFTER MOTOR.** 1) Disconnect the tilt motor connector. 2) Connect the lifter motor connector. 3) Using the tester, measure the resistance between power seat control module connector and chassis ground. ***Connector & terminal*** ***(R156) No. 9 — Chassis ground:***	Is the resistance 1 MΩ or more?	Go to step **6**.	Replace the seat cushion frame assembly. <Ref. to SE-19, POWER SEAT (DRIVER'S SEAT), DISASSEMBLY, Front Seat.>

Step		Check	Yes	No
6	**CHECK RECLINING MOTOR.** 1) Disconnect the lifter motor connector. 2) Connect the reclining motor connector. 3) Using the tester, measure the resistance between power seat control module connector and chassis ground. ***Connector & terminal*** ***(R156) No. 9 — Chassis ground:***	Is the resistance 1 MΩ or more?	Replace the power seat control module. <Ref. to SE-53, POWER SEAT CONTROL MODULE (SEAT WITH MEMORY FUNCTION), REMOVAL, Power Seat System.>	Replace the backrest frame assembly. <Ref. to SE-19, POWER SEAT (DRIVER'S SEAT), DISASSEMBLY, Front Seat.>

14.Diagnostics with Phenomenon

A: INSPECTION

Refer to “TROUBLE SYMPTOM” for the power seat system. <Ref. to SE-56, TROUBLE SYMPTOM, INSPECTION, Power Seat System.>

SECURITY AND LOCKS

SL

		Page
1.	General Description	2
2.	Relay and Fuse	9
3.	Door Lock Control System	11
4.	Keyless Entry System	17
5.	Keyless Access With Push Button Start System	26
6.	Security System	28
7.	Front Inner Remote	33
8.	Front Outer Handle	34
9.	Front Door Latch and Door Lock Actuator Assembly	38
10.	Rear Inner Remote	41
11.	Rear Outer Handle	42
12.	Rear Door Latch and Door Lock Actuator Assembly	46
13.	Rear Gate Opener Button	48
14.	Rear Gate Latch and Actuator Assembly	50
15.	Trunk Opener Switch	52
16.	Trunk Lid Latch and Actuator Assembly	53
17.	Front Hood Lock Assembly	55
18.	Remote Openers	59
19.	Ignition Key Lock	68
20.	Key Lock Cylinders	70
21.	Impact Sensor	77
22.	Keyless Entry Control Module	79
23.	Keyless Buzzer	81
24.	Body Integrated Unit	83
25.	Keyless Transmitter	86
26.	Access Key	88
27.	Immobilizer Control Module	90
28.	Immobilizer Antenna	91
29.	Keyless Access Indoor Antenna	93
30.	Keyless Access Outdoor Antenna	97
31.	Trunk Opener Button	100
32.	Rear Lock Button	101
33.	Keyless Access CM	102
34.	ID Code Box	103
35.	Steering Lock CM	104
36.	Push Button Ignition Switch	106
37.	Access Buzzer	108
38.	Function Setting (Customize)	110
39.	Diagnostics with Phenomenon	111

1. General Description

A: COMPONENT

1. DOOR LOCK ASSEMBLY

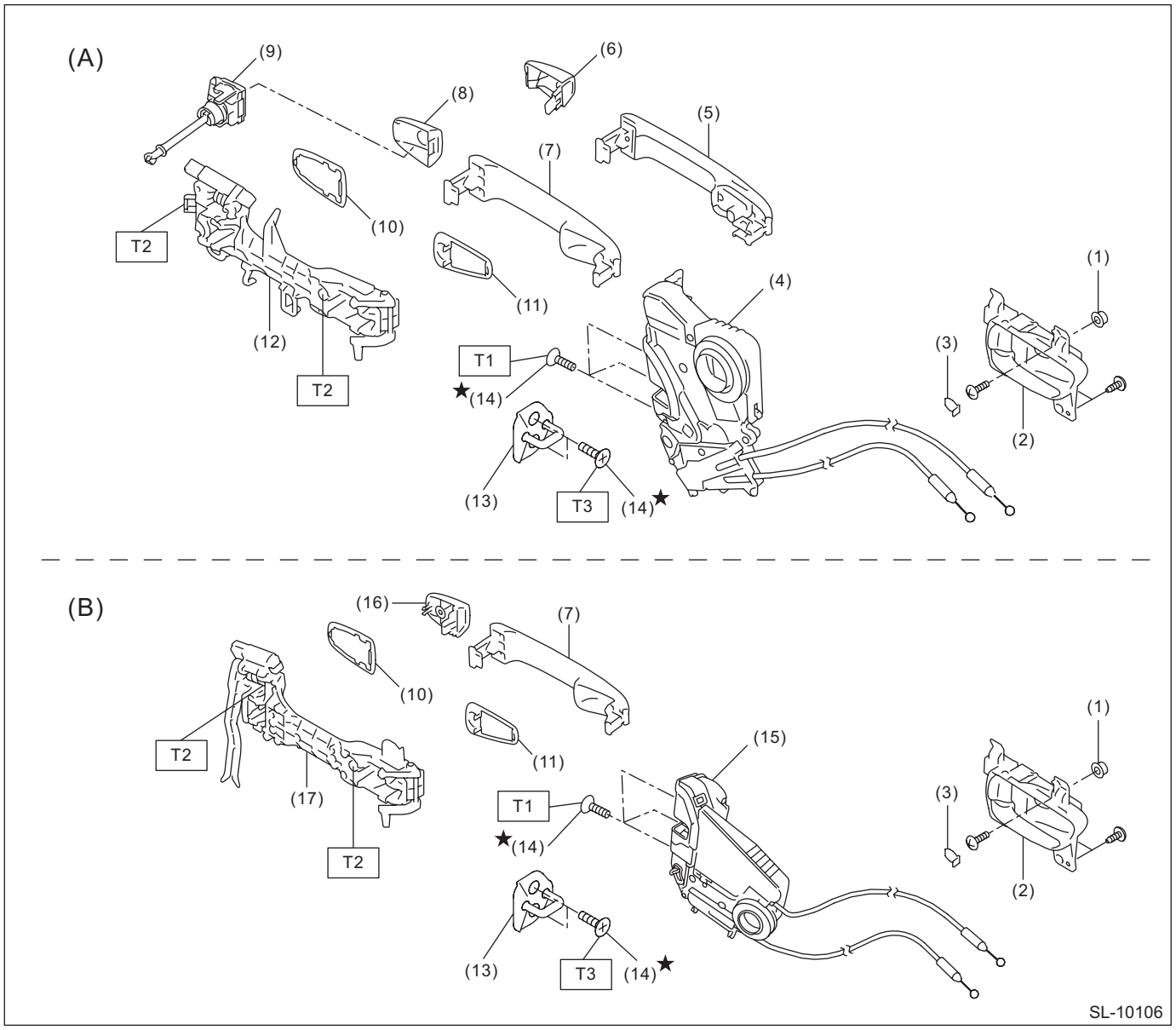

(A) Front
(B) Rear

(1) Grommet - screw
(2) Remote ASSY - door
(3) Cap remote
(4) Latch & actuator ASSY - front
(5) Handle - door outer (model with keyless access with push button start)
(6) Cover - handle front outer (passenger's seat)
(7) Handle - door outer (model without keyless access with push button start)
(8) Cover - handle front outer (driver's seat)
(9) Key lock - door (driver's seat only)
(10) Spacer - door handle outer B
(11) Spacer - door handle outer A
(12) Frame ASSY - front door outer
(13) Striker - door
(14) Screw
(15) Latch & actuator ASSY - rear
(16) Cover - handle rear outer
(17) Frame ASSY - rear door outer

Tightening torque: N·m (kgf-m, ft-lb)
T1: 6.5 (0.7, 4.8)
T2: 7.5 (0.8, 5.5)
T3: 18 (1.8, 13.3)

2. REAR GATE LOCK AND TRUNK LID LOCK

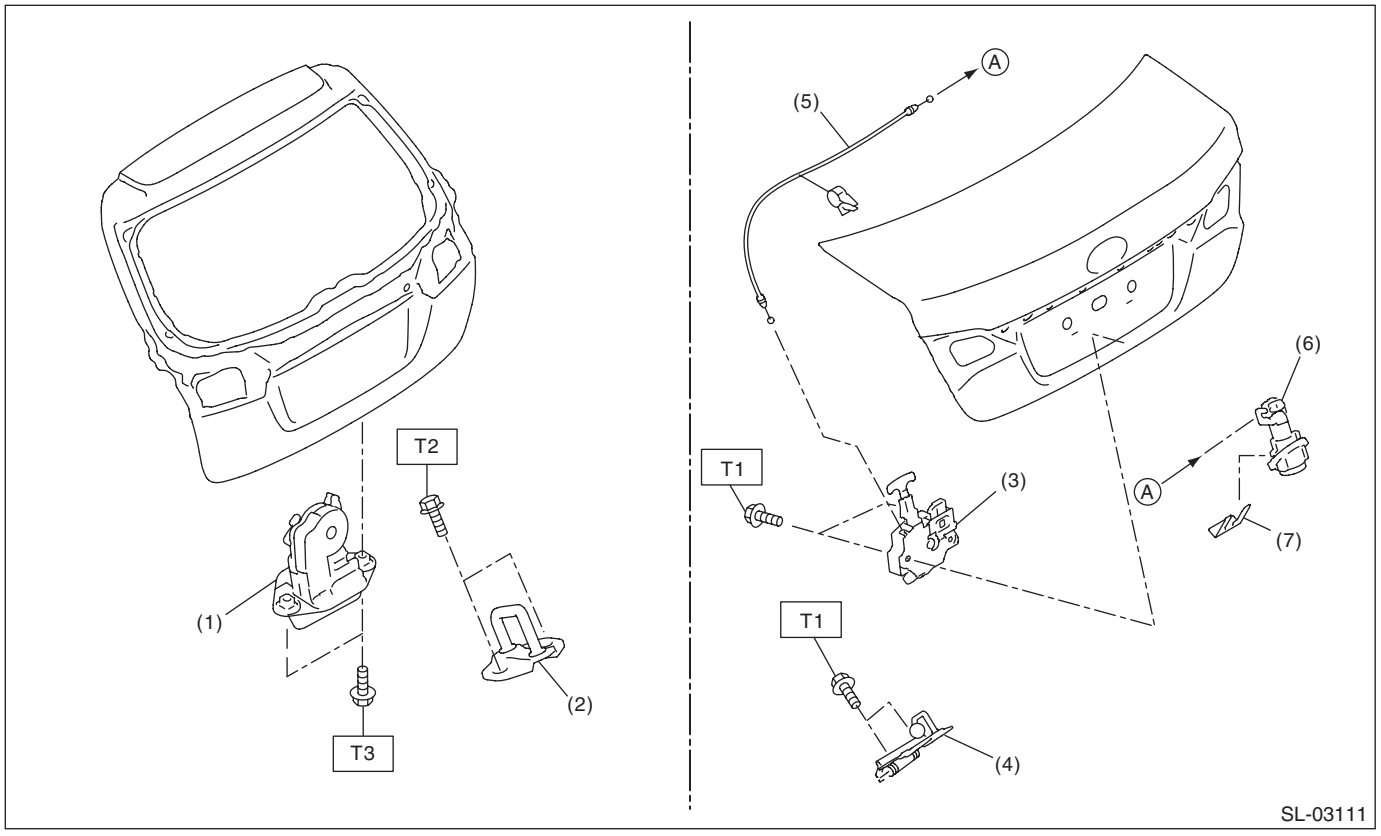

(1) Latch & actuator - rear gate
(2) Striker - rear gate
(3) Lock ASSY - trunk lid
(4) Striker - trunk lid
(5) Cable ASSY - trunk lid
(6) Key cylinder (trunk lid only)
(7) Clamp - key trunk lid

Tightening torque: N·m (kgf-m, ft-lb)
T1: 7.5 (0.8, 5.5)
T2: 25 (2.5, 18.4)
T3: 28 (2.9, 20.7)

3. FRONT HOOD LOCK

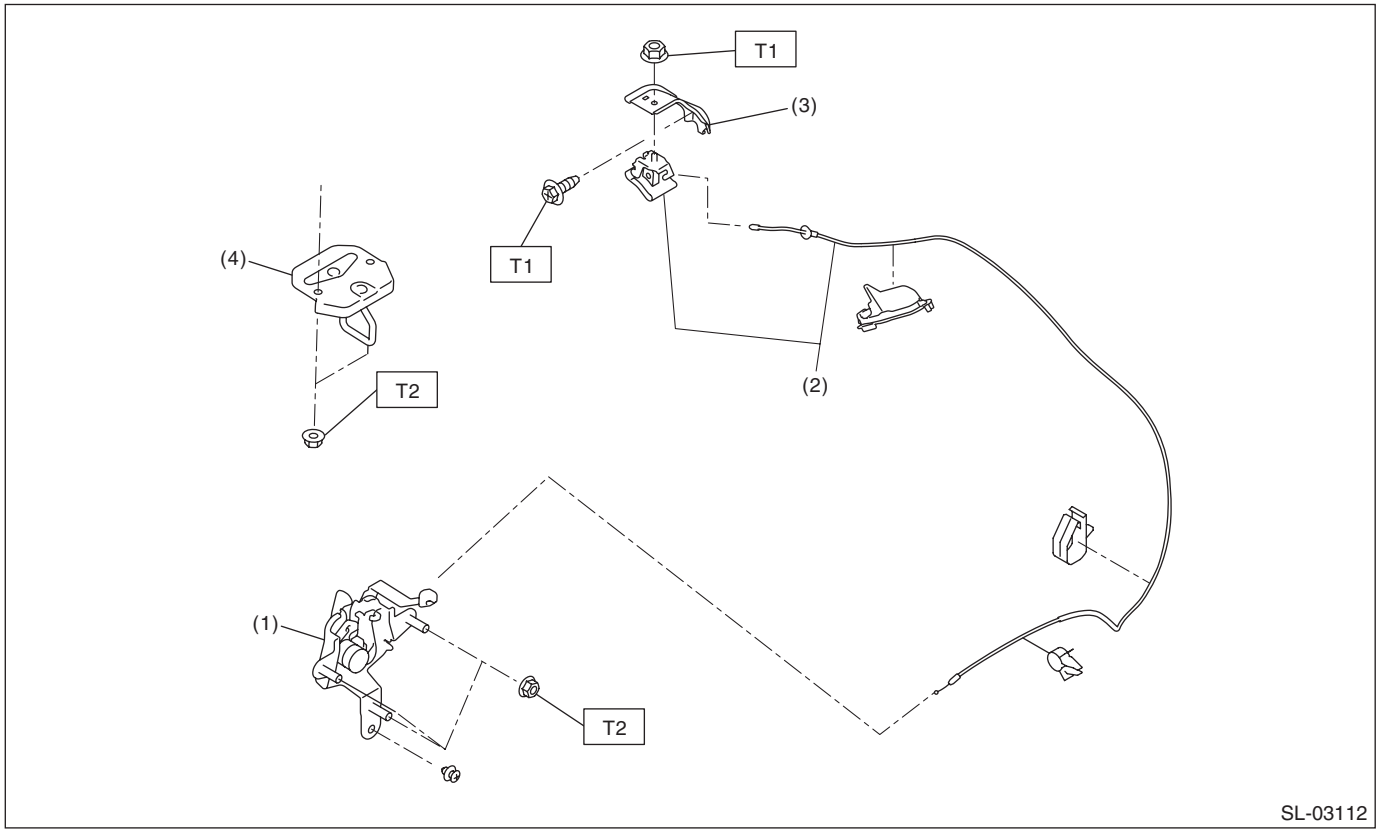

(1) Lock ASSY - front hood
(2) Cable - front hood
(3) Bracket - opener handle
(4) Striker - front hood

Tightening torque: N·m (kgf-m, ft-lb)
T1: 7.5 (0.8, 5.5)
T2: 33 (3.4, 24.3)

4. REMOTE OPENER

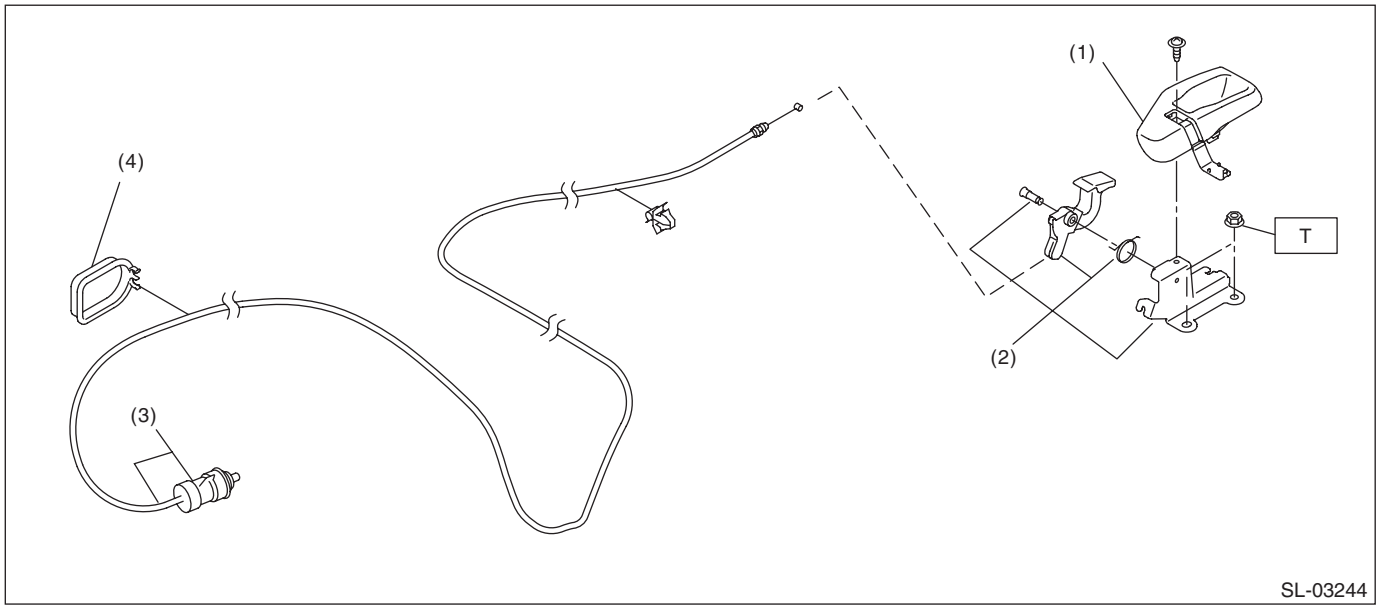

(1) Cover - handle
(2) Pull handle - opener
(3) Cable ASSY - fuel
(4) Protector - cable (OUTBACK model)

Tightening torque: N·m (kgf-m, ft-lb)
T: 7.5 (0.8, 5.5)

5. FUEL FLAP

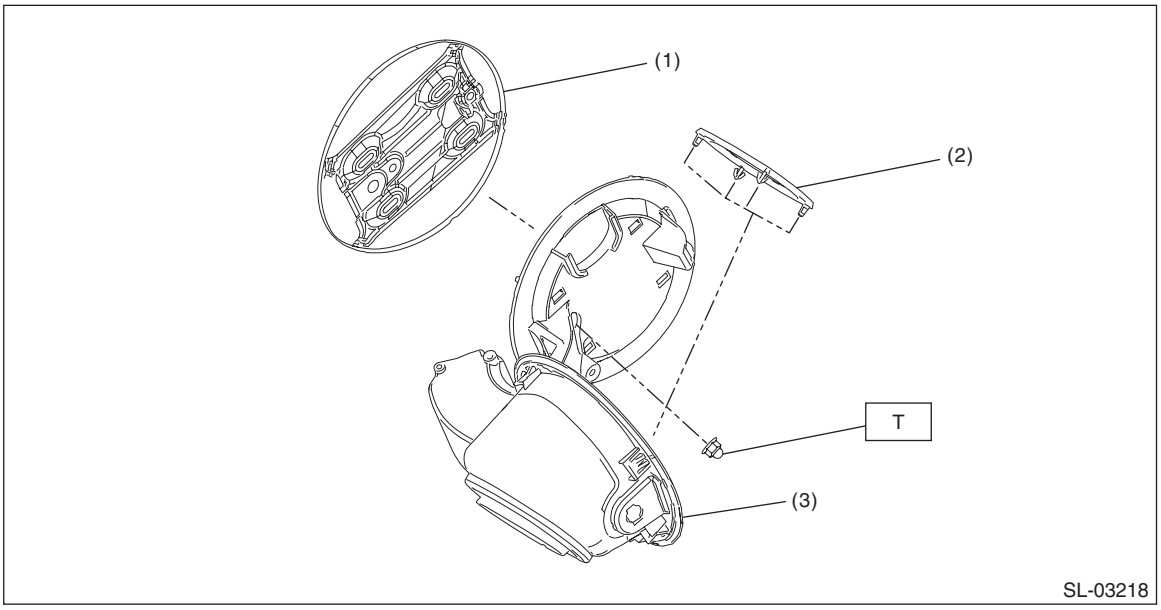

(1) Flap - COMPL fuel
(2) Ring clip
(3) Saucer - COMPL

Tightening torque: N·m (kgf-m, ft-lb)
T: 7.5 (0.8, 5.5)

6. KEYLESS ENTRY SYSTEM

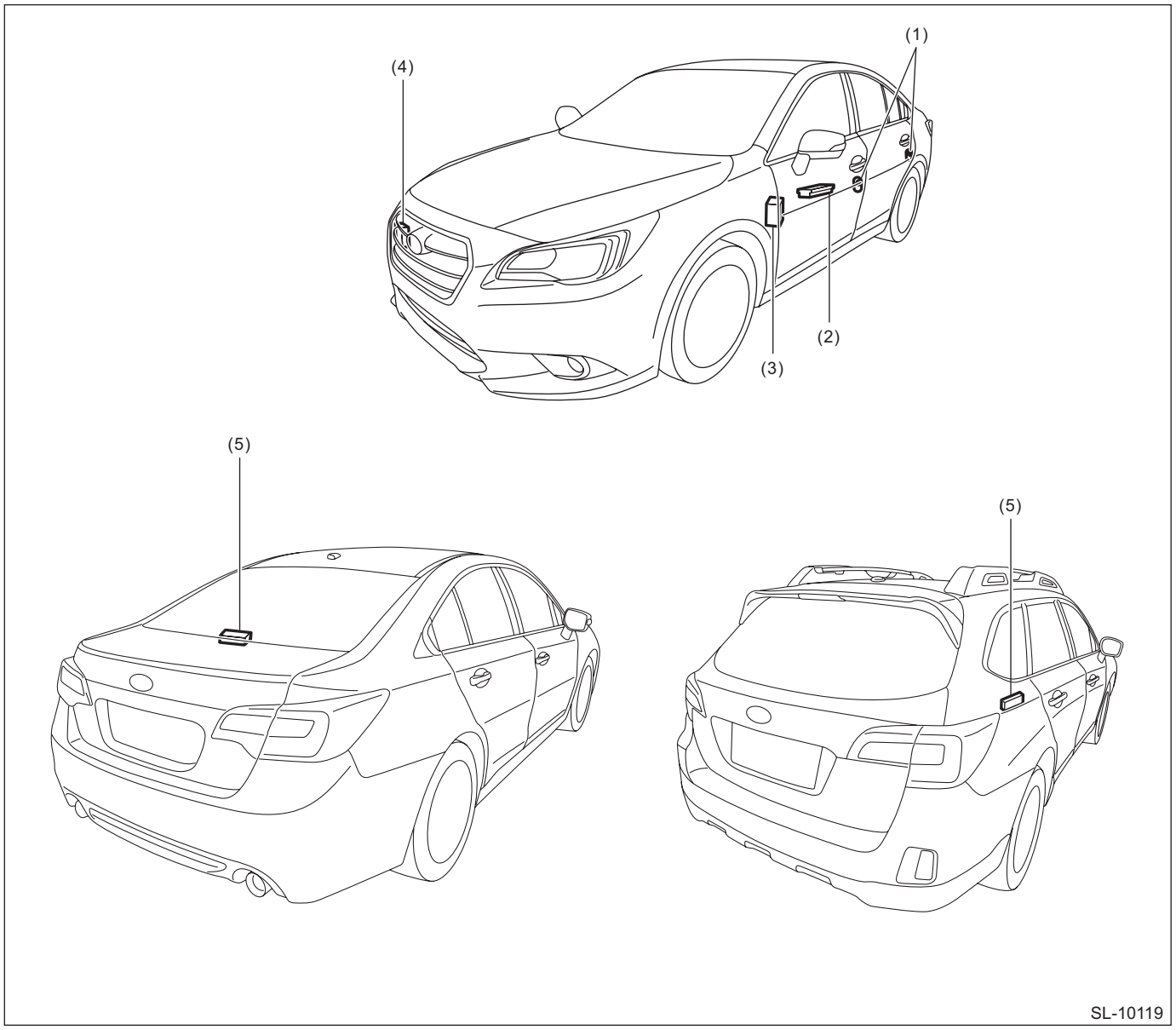

(1) Door switch
(2) Power window main switch
(3) Body integrated unit
(4) Keyless buzzer
(5) Keyless entry control module

7. SECURITY SYSTEM

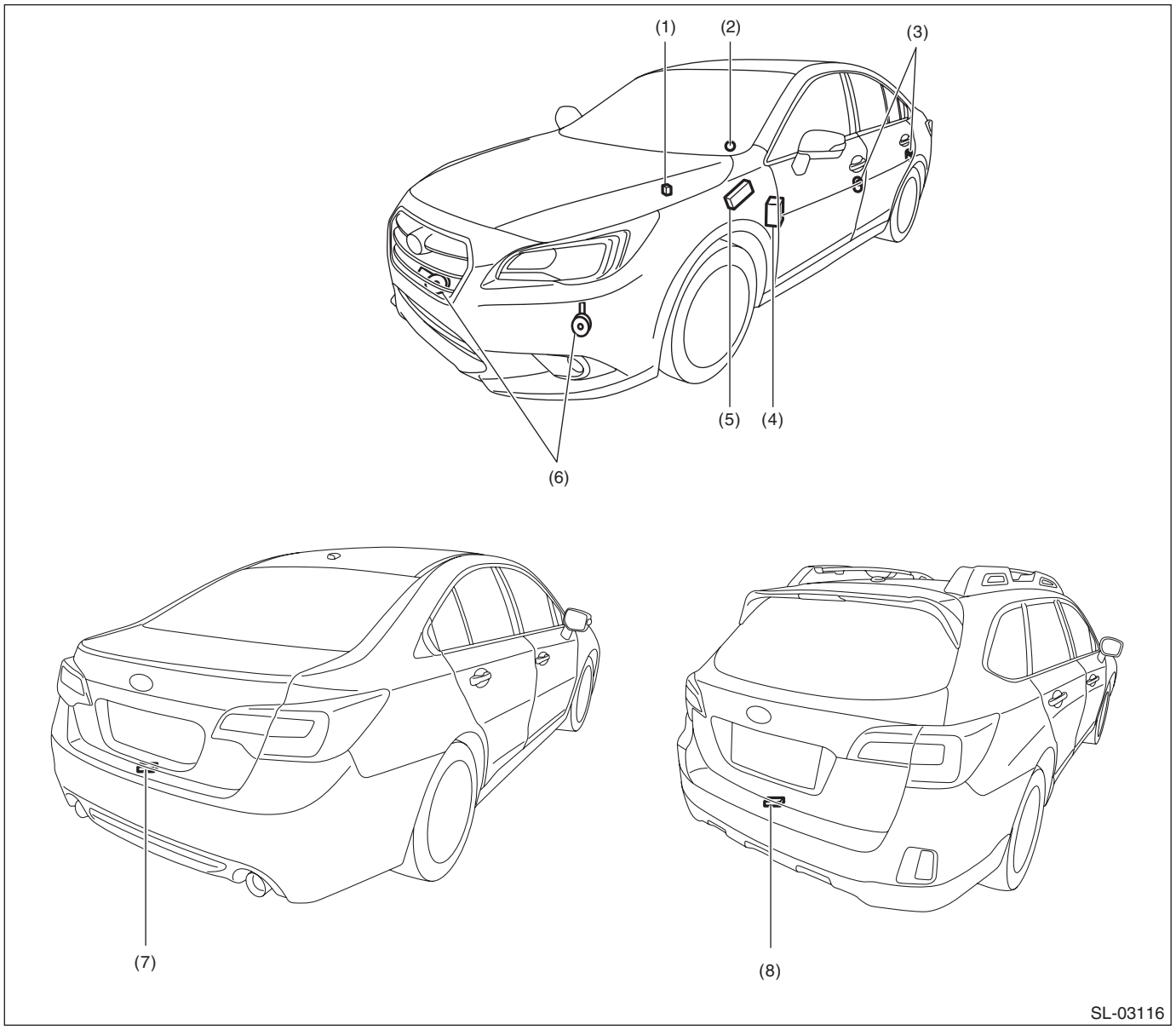

(1)	Horn relay (in main fuse box)	(4)	Body integrated unit	(7)	Trunk lid latch switch (sedan model)
(2)	Security indicator light (in combination meter)	(5)	Impact sensor (driver's seat instrument panel side) (dealer option)	(8)	Rear gate latch switch (OUTBACK model)
(3)	Door switch	(6)	Horn		

8. KEYLESS ACCESS WITH PUSH BUTTON START SYSTEM

NOTE:
- Except for model without keyless access with push button start
- Refer to "Electrical Component Location" of "KEYLESS ACCESS WITH PUSH BUTTON START SYSTEM (DIAGNOSTICS)" section. <Ref. to KPS(diag)-12, Electrical Component Location.>

B: CAUTION

• Before disconnecting connectors of sensors or units, be sure to disconnect the ground cable from battery. When replacing the electrical parts provided with memory functions that store contents specified by a customer, record the memory contents before disconnecting the battery ground cable.
• If any immobilizer related part has been replaced, make sure to register the immobilizer.
• Be careful of the following items. Failing to do so may cause the airbag system malfunction.
  – Yellow connectors and harnesses with yellow tapes around them are the connectors and harnesses for the airbag system. When using a tester on these circuits, follow the cautions of “AIRBAG SYSTEM”. <Ref. to AB-10, CAUTION, General Description.>
  – Be careful not to damage the airbag system wiring harness when servicing the electrical parts around the steering column.
• When removing, installing or replacing the VDCCM&H/U, VDCCM&H/U bracket, steering wheel or steering angle sensor (steering roll connector), perform “VDC sensor midpoint setting mode” of the VDC. <Ref. to VDC-15, VDC SENSOR MIDPOINT SETTING MODE, ADJUSTMENT, VDC Control Module and Hydraulic Control Unit (VDCCM&H/U).>

C: PREPARATION TOOL

1. SPECIAL TOOL

ILLUSTRATION	TOOL NUMBER	DESCRIPTION	REMARKS
 STSSM4	— (Newly adopted tool)	SUBARU SELECT MONITOR 4	Used for setting of each function and troubleshooting for electrical system. NOTE: For detailed operation procedures of Subaru Select Monitor 4, refer to “Application help”.

2. GENERAL TOOL

TOOL NAME	REMARKS
Circuit tester	Used for measuring resistance, voltage and current.
DST-i	Used together with Subaru Select Monitor 4.
Drill	Used for replacing ignition key lock.
Reverse tap	Used for replacing ignition key lock.
TORX® T30	Used for removing and installing door outer handle cover and frame assembly.
Clip remover	Used for removing trim clip.

2. Relay and Fuse

A: LOCATION

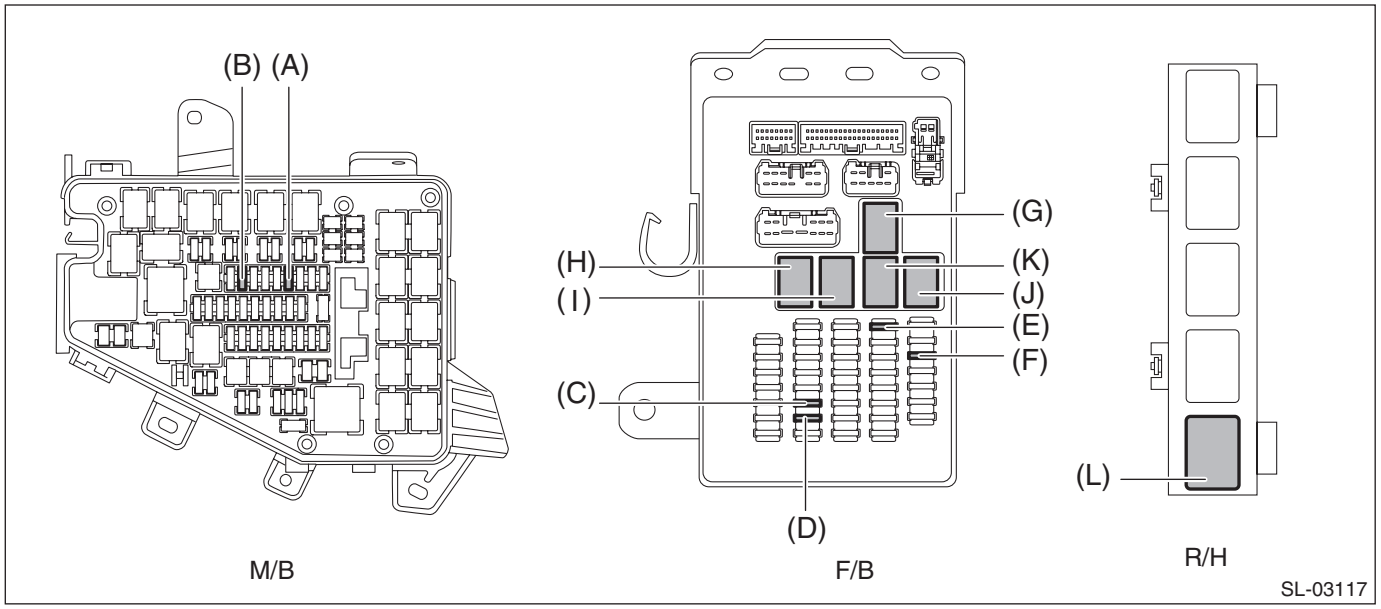

Main fuse box (M/B)	Fuse 15 A (body integrated unit)	(A)
	Fuse 15 A (body integrated unit)	(B)
Fuse & relay box (F/B)	Fuse 10 A (body integrated unit, immobilizer antenna)	(C)
	Fuse 7.5 A (keyless access CM)	(D)
	Fuse 7.5 A (immobilizer control module)	(E)
	Fuse 7.5 A (body integrated unit)	(F)
	IG relay 1	(G)
	IG relay 2	(H)
	Starter relay	(I)
	Accessory relay 1	(J)
	Accessory relay 2	(K)
Relay holder (R/H)	Starter cut relay	(L)

NOTE:
For other related fuses, refer to the wiring diagram. <Ref. to WI-21, Power Supply Circuit.>

B: INSPECTION

1. CHECK FUSE

1) Remove the fuse and inspect visually.
2) If the fuse is blown out, replace the fuse.

NOTE:
If the fuse is blown again, check the system wiring harness.

2. CHECK RELAY

1) Measure the resistance between relay terminals.

Terminal No.	Inspection conditions	Standard	Circuit
1 — 2	Always	1 MΩ or more	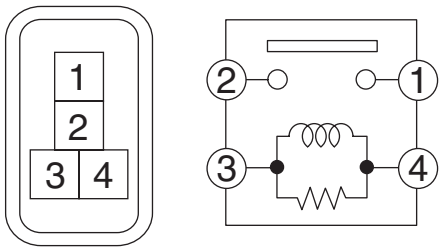 LI-01273
1 — 2	Apply battery voltage between terminals 4 and 3.	Less than 1 Ω	

Terminal No.	Inspection conditions	Standard	Circuit
1 — 4	Always	1 MΩ or more	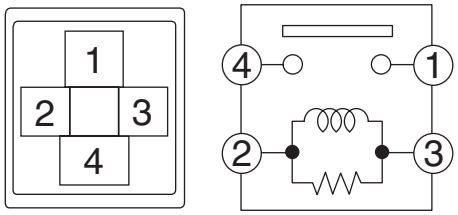 AC-02796
1 — 4	Apply battery voltage between terminals 2 and 3.	Less than 1 Ω	

Terminal No.	Inspection conditions	Standard	Circuit
1 — 2	Always	1 MΩ or more	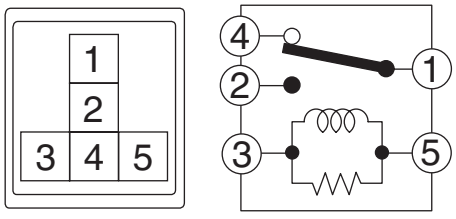 SL-01566
1 — 4	Always	Less than 1 Ω	
1 — 2	Apply battery voltage between terminals 3 and 5.	Less than 1 Ω	

2) Replace the relay if the inspection result is not within the standard value.

3. Door Lock Control System

A: WIRING DIAGRAM

Refer to “Keyless Entry System” in the wiring diagram. <Ref. to WI-271, WIRING DIAGRAM, Keyless Entry System.>

B: ELECTRICAL SPECIFICATION

1. BODY INTEGRATED UNIT

Refer to “Control Module I/O Signal” of “BODY CONTROL SYSTEM (DIAGNOSTICS)” section. <Ref. to BC(diag)-8, ELECTRICAL SPECIFICATION, Control Module I/O Signal.>

C: INSPECTION

1. SYMPTOM CHART

Symptoms	Repair order	Reference
The door lock control system does not operate.	1. Remove and visually inspect the following fuses. • No. 14 (in fuse & relay box) • No. 26 (in fuse & relay box) • No. 14 (in main fuse box)	If the fuse is blown out, replace the fuse with a new part. When there is no defective with the fuse, check the power supply and ground circuit. <Ref. to SL-12, CHECK POWER SUPPLY AND GROUND CIRCUIT, INSPECTION, Door Lock Control System.>
	2. Check the power supply and ground circuit for body integrated unit.	<Ref. to SL-12, CHECK POWER SUPPLY AND GROUND CIRCUIT, INSPECTION, Door Lock Control System.>
	3. Check the door lock switch and the circuit.	<Ref. to SL-12, CHECK DOOR LOCK SWITCH, INSPECTION, Door Lock Control System.>
	4. Check the rear gate/trunk opener button and the circuit.	<Ref. to SL-15, CHECK REAR GATE OPENER BUTTON CIRCUIT, INSPECTION, Door Lock Control System.>
	5. Check the door lock actuator and the circuit.	<Ref. to SL-13, CHECK DOOR LOCK ACTUATOR AND CIRCUIT, INSPECTION, Door Lock Control System.>
A specific door lock actuator does not operate.	Check the door lock actuator and circuit.	<Ref. to SL-13, CHECK DOOR LOCK ACTUATOR AND CIRCUIT, INSPECTION, Door Lock Control System.>

2. CHECK POWER SUPPLY AND GROUND CIRCUIT

	Step	Check	Yes	No
1	**CHECK POWER SUPPLY.** 1) Disconnect the connector of body integrated unit. 2) Measure the voltage between the body integrated unit connector and chassis ground. ***Connector & terminal*** ***(B280) No. 4 (+) — Chassis ground (–):*** ***(B280) No. 7 (+) — Chassis ground (–):*** ***(B281) No. 32 (+) — Chassis ground (–):***	Is the voltage 9 V or more?	Go to step **2**.	Check the harness for open or short circuit between body integrated unit and fuse.
2	**CHECK GROUND CIRCUIT.** Measure the resistance between the body integrated unit connector and chassis ground. ***Connector & terminal*** ***(i84) No. 4 — Chassis ground:*** ***(B280) No. 2 — Chassis ground:***	Is the resistance less than 10 Ω?	The power supply and ground circuit are OK.	Repair or replace the harness.

3. CHECK DOOR LOCK SWITCH

	Step	Check	Yes	No
1	**CHECK DATA MONITOR.** Using the Subaru Select Monitor, display the data of «Manual lock SW input». NOTE: For detailed operation procedures, refer to "Application help".	Does the display change to OFF ←→ ON, when the door lock switch is moved to LOCK?	Go to step **2**.	Go to step **3**.
2	**CHECK DOOR LOCK SWITCH.** From the condition in step 1), operate the door lock switch (driver's and passenger's) in the UNLOCK direction.	Does the display switch between OFF ←→ ON?	The door lock switch is OK.	Go to step **4**.
3	**CHECK POWER WINDOW MAIN SWITCH.** 1) Disconnect the power window main switch connector. 2) Measure the resistance between terminals when moving the power window switch (door lock switch) to LOCK direction. ***Connector & terminal*** ***Driver's side*** ***(D7) No. 3 — (D7) No. 1:*** ***Passenger's side*** ***(D125) No. 4 — (D125) No. 5:***	Does the resistance change from 1 MΩ or more to less than 10 Ω?	Go to step **4**.	Replace the power window main switch. <Ref. to GW-12, Power Window Control Switch.>
4	**CHECK POWER WINDOW MAIN SWITCH.** Measure the resistance between terminals when moving the power window switch (door lock switch) to UNLOCK direction. ***Connector & terminal*** ***Driver's side*** ***(D7) No. 9 — (D7) No. 1:*** ***Passenger's side*** ***(D125) No. 2 — (D125) No. 5:***	Does the resistance change from 1 MΩ or more to less than 10 Ω?	Go to step **5**.	Replace the power window main switch. <Ref. to GW-12, Power Window Control Switch.>

	Step	Check	Yes	No
5	**CHECK HARNESS.** Measure the resistance between the power window main switch connector and chassis ground. ***Connector & terminal*** ***Driver's side*** ***(D7) No. 3 — Chassis ground:*** ***Passenger's side*** ***(D125) No. 4 — Chassis ground:***	Is the resistance less than 10 Ω?	Go to step **6**.	Repair or replace the harness.
6	**CHECK HARNESS.** 1) Disconnect the connector of body integrated unit. 2) Check the harness between body integrated unit and power window main switch. ***Connector & terminal*** ***Driver's side*** ***(D7) No. 3 — (i171) No. 32:*** ***(D7) No. 9 — (i171) No. 12:*** ***Passenger's side*** ***(D125) No. 4 — (i171) No. 32:*** ***(D125) No. 2 — (i171) No. 12:***	Is harness normal?	Replace the body integrated unit. <Ref. to SL-83, Body Integrated Unit.>	Repair or replace the harness.

4. CHECK DOOR LOCK ACTUATOR AND CIRCUIT

	Step	Check	Yes	No
1	**CHECK HARNESS (DOOR LOCK).** 1) Disconnect the body integrated unit and each door lock actuator connector. 2) Check the harness between body integrated unit and each door lock actuator. ***Connector & terminal*** ***Front door LH*** ***(i265) No. 6 — (D72) No. 4:*** ***Front door RH*** ***(i265) No. 7 — (D18) No. 4:*** ***Rear door LH*** ***(i266) No. 5 — (D26) No. 4:*** ***Rear door RH*** ***(i266) No. 4 — (D32) No. 4:***	Is harness normal?	Go to step **2**.	Repair or replace the harness.
2	**CHECK HARNESS (DOOR UNLOCK).** Check the harness between body integrated unit and each door lock actuator. ***Connector & terminal*** ***Front door LH*** ***(i84) No. 6 — (D72) No. 1:*** ***Front door RH*** ***(i265) No. 2 — (D18) No. 1:*** ***Rear door LH*** ***(i266) No. 9 — (D26) No. 1:*** ***Rear door RH*** ***(i266) No. 3 — (D32) No. 1:***	Is harness normal?	Sedan model: Go to step **5**. OUTBACK model: Go to step **3**.	Repair or replace the harness.
3	**CHECK HARNESS (REAR GATE UNLOCK).** Check the harness between the body integrated unit and rear gate lock actuator. ***Connector & terminal*** ***(i266) No. 7 — (D46) No. 1:***	Is harness normal?	Go to step **4**.	Repair or replace the harness.

	Step	Check	Yes	No
4	**CHECK HARNESS (REAR GATE UNLOCK).** Measure the resistance between the rear gate lock actuator connector and chassis ground. ***Connector & terminal*** ***(D46) No. 2 — Chassis ground:***	Is the resistance less than 10 Ω?	Go to step **7**.	Repair or replace the harness.
5	**CHECK HARNESS (TRUNK UNLOCK).** Check the harness between the body integrated unit and trunk lid lock actuator. ***Connector & terminal*** ***(i266) No. 7 — (R186) No. 1:***	Is harness normal?	Go to step **6**.	Repair or replace the harness.
6	**CHECK HARNESS (TRUNK UNLOCK).** Measure the resistance between the trunk lid lock actuator connector and chassis ground. ***Connector & terminal*** ***(R186) No. 2 — Chassis ground:***	Is the resistance less than 10 Ω?	Go to step **7**.	Repair or replace the harness.
7	**CHECK BODY INTEGRATED UNIT OUTPUT SIGNAL.** 1) Connect the body integrated unit connector. 2) Measure the voltage between terminals of the body integrated unit when operating the door lock switch to LOCK direction. ***Connector & terminal*** ***Except for front door LH*** ***(i265) No. 7 (+) — (i265) No. 2 (–):*** ***Front door LH*** ***(i265) No. 6 (+) — (i84) No. 6 (–):***	Does the voltage change from less than 1 V → 9 V or more? (During lock output)	Go to step **8**.	Replace the body integrated unit. <Ref. to SL-83, Body Integrated Unit.>
8	**CHECK BODY INTEGRATED UNIT OUTPUT SIGNAL.** Measure the voltage between terminals of the body integrated unit when operating the door lock switch to UNLOCK direction. ***Connector & terminal*** ***Except for front door LH*** ***(i265) No. 2 (+) — (i265) No. 7 (–):*** ***Front door LH*** ***(i84) No. 6 (+) — (i265) No. 6 (–):***	Does the voltage change from less than 1 V → 9 V or more? (During unlock output)	Go to step **9**.	Replace the body integrated unit. <Ref. to SL-83, Body Integrated Unit.>
9	**CHECK BODY INTEGRATED UNIT OUTPUT SIGNAL.** Measure the voltage between body integrated unit and chassis ground when operating the rear gate opener button. ***Connector & terminal*** ***(i266) No. 7 (+) — Chassis ground (–):***	Does the voltage change from less than 1 V → 9 V or more? (During unlock output)	Go to step **10**.	Replace the body integrated unit. <Ref. to SL-83, Body Integrated Unit.>
10	**CHECK DOOR LOCK ACTUATOR.** Check the door lock actuator. • Front door lock actuator: <Ref. to SL-40, INSPECTION, Front Door Latch and Door Lock Actuator Assembly.> • Rear door lock actuator: <Ref. to SL-47, INSPECTION, Rear Door Latch and Door Lock Actuator Assembly.>	Is the door lock actuator OK?	• Sedan model: Go to step **12**. • OUTBACK model: Go to step **11**.	Replace the door latch and door lock actuator assembly.
11	**CHECK REAR GATE LOCK ACTUATOR.** Check the rear gate lock actuator. <Ref. to SL-50, Rear Gate Latch and Actuator Assembly.>	Is the rear gate lock actuator normal?	Check the connection status of the harness and connector that may have a temporary poor contact.	Replace the rear gate latch and actuator assembly.

Step		Check	Yes	No
12	**CHECK TRUNK LID LOCK ACTUATOR.** Check the trunk lid lock actuator. <Ref. to SL-53, Trunk Lid Latch and Actuator Assembly.>	Is trunk lid lock actuator normal?	Check the connection status of the harness and connector that may have a temporary poor contact.	Replace the trunk lid latch & actuator assembly.

5. CHECK REAR GATE OPENER BUTTON CIRCUIT

Step		Check	Yes	No
1	**CHECK DATA MONITOR.** Using the Subaru Select Monitor, display the data of «R Gate Release SW input». <Ref. to BC(diag)-20, OPERATION, Read Current Data.> NOTE: For detailed operation procedures, refer to "Application help".	Does the display change to OFF ←→ ON, when the rear gate opener button is operated?	Rear gate opener button is normal.	Go to step **2**.
2	**CHECK HARNESS.** 1) Disconnect the connectors of body integrated unit and rear gate opener button. 2) Check the harness between the body integrated unit connector and rear gate opener button. ***Connector & terminal*** ***Model without keyless access with push button start*** ***(i171) No. 6 (+) — (D47) No. 1 (–):*** ***Model with keyless access with push button start*** ***(i171) No. 6 (+) — (D77) No. 1 (–):***	Is harness normal?	Go to step **3**.	Repair or replace the harness.
3	**CHECK HARNESS.** Measure the resistance between the rear gate opener button connector and chassis ground. ***Connector & terminal*** ***Model without keyless access with push button start*** ***(D47) No. 2 (+) — Chassis ground:*** ***Model with keyless access with push button start*** ***(D77) No. 1 (+) — Chassis ground:***	Is the resistance less than 10 Ω?	Go to step **4**.	Repair or replace the harness.
4	**CHECK REAR GATE OPENER BUTTON.** Measure the resistance between terminals both when the rear gate opener button is pressed and when not pressed. ***Terminals*** ***Model without keyless access with push button start*** ***No. 1 (+) — No. 2 (–):*** ***Model with keyless access with push button start*** ***No. 1 (+) — No. 2 (–):***	Is the resistance less than 10 Ω when the switch is pressed and 1 MΩ or more when not pressed?	Replace the body integrated unit. <Ref. to SL-83, Body Integrated Unit.>	Replace the rear gate opener button.

6. CHECK TRUNK OPENER SWITCH CIRCUIT

	Step	Check	Yes	No
1	**CHECK DATA MONITOR.** Using the Subaru Select Monitor, display the data of «R Gate Release SW input». <Ref. to BC(diag)-20, OPERATION, Read Current Data.> NOTE: For detailed operation procedures, refer to "Application help".	Does the display switch between OFF ←→ ON when the trunk opener switch is operated?	The trunk opener switch is normal.	Go to step **2**.
2	**CHECK HARNESS.** 1) Disconnect the connectors of body integrated unit and trunk opener switch. 2) Check the harness between the body integrated unit connector and trunk opener switch. ***Connector & terminal*** ***(i171) No. 6 — (i258) No. 1:***	Is harness normal?	Go to step **3**.	Repair or replace the harness.
3	**CHECK HARNESS.** Measure the resistance between the trunk opener switch connector and chassis ground. ***Connector & terminal*** ***(i258) No. 4 — Chassis ground:***	Is the resistance less than 10 Ω?	Go to step **4**.	Repair or replace the harness.
4	**CHECK TRUNK OPENER SWITCH.** Measure the resistance between terminals both when trunk opener switch is pressed and when not pressed. ***Terminals*** ***No. 1 — No. 4:***	Is the resistance less than 10 Ω when the switch is pressed and 1 MΩ or more when not pressed?	Replace the body integrated unit. <Ref. to SL-83, Body Integrated Unit.>	Replace the trunk opener switch.

4. Keyless Entry System

A: WIRING DIAGRAM

Refer to “Keyless Entry System” in the wiring diagram. <Ref. to WI-271, WIRING DIAGRAM, Keyless Entry System.>

B: ELECTRICAL SPECIFICATION

1. KEYLESS ENTRY CONTROL MODULE

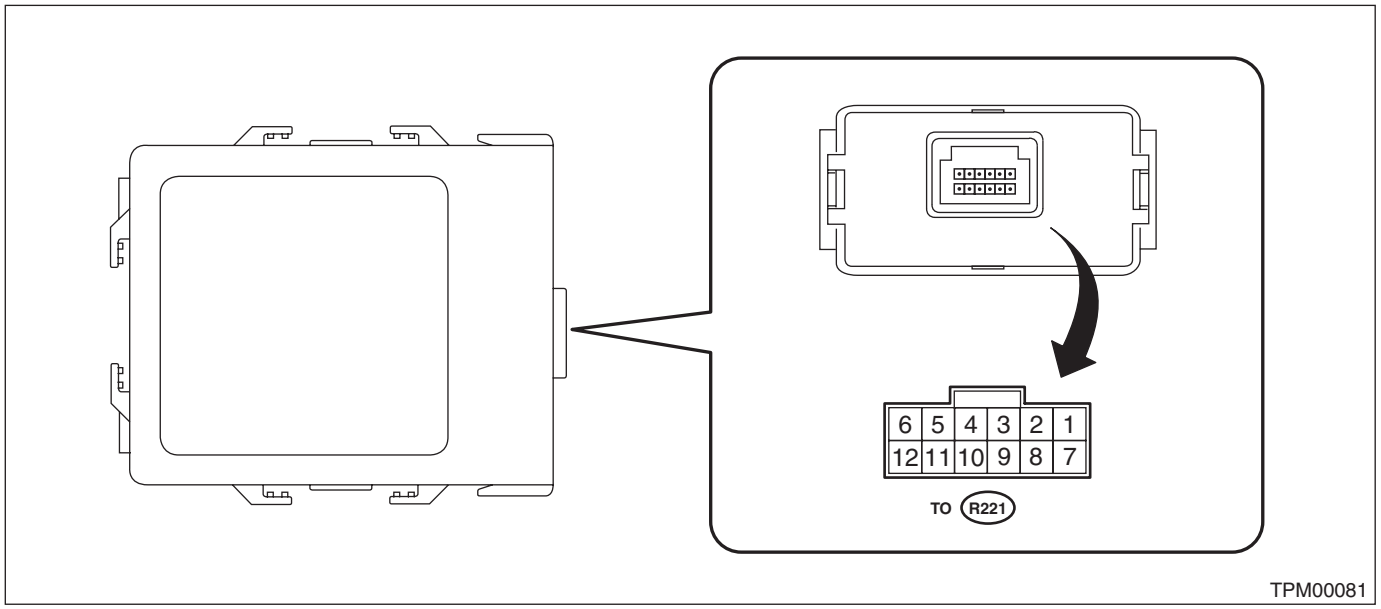

Terminal No.	Item	Measuring condition	Standard
4 (IG) ←→ Chassis ground	Resistance	IG OFF → ON	0 V → 10 — 14 V
5 (GND) ←→ Chassis ground	Resistance	Always	Less than 1 Ω
6 (+B) ←→ Chassis ground	Voltage	Always	10 — 14 V
11 (U-ART com.)	—	Cannot be measured	—

2. BODY INTEGRATED UNIT

Refer to “Control Module I/O Signal” of “BODY CONTROL SYSTEM (DIAGNOSTICS)” section. <Ref. to BC(diag)-8, ELECTRICAL SPECIFICATION, Control Module I/O Signal.>

C: INSPECTION

1. SYMPTOM CHART

Symptoms	Repair order	Reference
None of the functions of the keyless entry system operate.	1. Check the keyless transmitter battery.	<Ref. to SL-19, CHECK KEYLESS TRANSMITTER BATTERY AND FUNCTION, INSPECTION, Keyless Entry System.>
	2. Remove and visually inspect the following fuses. • No. 14 (in fuse & relay box) • No. 26 (in fuse & relay box) • No. 14 (in main fuse box)	If the fuse is blown out, replace the fuse with a new part. When there is no defective with the fuse, check the power supply and ground circuit. <Ref. to SL-12, CHECK DOOR LOCK SWITCH, INSPECTION, Door Lock Control System.>
	3. Check the keyless entry control module.	<Ref. to SL-19, CHECK KEYLESS ENTRY CONTROL MODULE, INSPECTION, Keyless Entry System.>
	4. Check the power supply and ground circuit for body integrated unit.	<Ref. to SL-20, CHECK BODY INTEGRATED UNIT POWER SUPPLY AND GROUND CIRCUIT, INSPECTION, Keyless Entry System.>
	5. Check the key warning switch.	<Ref. to SL-22, CHECK KEY WARNING SWITCH, INSPECTION, Keyless Entry System.>
	6. Check the body integrated unit.	<Ref. to BC(diag)-2, Basic Diagnostic Procedure.>
The keyless transmitter cannot be registered.	1. Check the keyless transmitter battery.	<Ref. to SL-19, CHECK KEYLESS TRANSMITTER BATTERY AND FUNCTION, INSPECTION, Keyless Entry System.>
	2. Check the key warning switch.	<Ref. to SL-22, CHECK KEY WARNING SWITCH, INSPECTION, Keyless Entry System.>
	3. Check the keyless entry control module.	<Ref. to SL-19, CHECK KEYLESS ENTRY CONTROL MODULE, INSPECTION, Keyless Entry System.>
	4. Check the body integrated unit.	<Ref. to BC(diag)-2, Basic Diagnostic Procedure.>
Door lock or unlock does not operate. NOTE: If the door lock control system does not operate when using the door lock switch, check the door lock control system. <Ref. to SL-11, INSPECTION, Door Lock Control System.>	1. Check the keyless transmitter battery.	<Ref. to SL-19, CHECK KEYLESS TRANSMITTER BATTERY AND FUNCTION, INSPECTION, Keyless Entry System.>
	2. Check the key warning switch.	<Ref. to SL-22, CHECK KEY WARNING SWITCH, INSPECTION, Keyless Entry System.>
	3. Check the door switch signal.	<Ref. to SL-20, CHECK DOOR SWITCH, INSPECTION, Keyless Entry System.>
	4. Check the keyless entry control module.	<Ref. to SL-19, CHECK KEYLESS ENTRY CONTROL MODULE, INSPECTION, Keyless Entry System.>
	5. Check the body integrated unit.	<Ref. to BC(diag)-2, Basic Diagnostic Procedure.>
The keyless buzzer and hazard light do not operate.	1. Check the keyless buzzer operation.	<Ref. to SL-23, CHECK HAZARD LIGHT OPERATION, INSPECTION, Keyless Entry System.>
	2. Check the hazard light operation.	<Ref. to SL-23, CHECK HAZARD LIGHT OPERATION, INSPECTION, Keyless Entry System.>
	3. Check the body integrated unit.	<Ref. to BC(diag)-2, Basic Diagnostic Procedure.>
Room light does not operate.	1. Check the room light operation.	<Ref. to SL-23, CHECK ROOM LIGHT OPERATION, INSPECTION, Keyless Entry System.>
	2. Check the body integrated unit.	<Ref. to BC(diag)-2, Basic Diagnostic Procedure.>
Ignition switch illumination does not operate.	1. Check the ignition switch illumination.	<Ref. to SL-25, CHECK IGNITION SWITCH ILLUMINATION, INSPECTION, Keyless Entry System.>
	2. Check the body integrated unit.	<Ref. to BC(diag)-2, Basic Diagnostic Procedure.>

2. CHECK KEYLESS TRANSMITTER BATTERY AND FUNCTION

CAUTION:
Be sure to reset keyless transmitter of other vehicles registered to the inspection target vehicle, and vehicles to which keyless transmitters were registered for inspection, to the condition before performing the inspection. (Re-register the keyless transmitters.)

	Step	Check	Yes	No
1	**CHECK KEYLESS TRANSMITTER BATTERY.** 1) Remove the battery from the keyless transmitter. <Ref. to SL-86, REMOVAL, Keyless Transmitter.> 2) Check the battery voltage. <Ref. to SL-87, INSPECTION, Keyless Transmitter.>	Is the voltage 2.5 V or more?	Go to step **2**.	Replace the keyless transmitter battery.
2	**CHECK KEYLESS TRANSMITTER.** Register the keyless transmitter which operates normally on other vehicles to the inspection target vehicle. <Ref. to SL-87, REGISTRATION OF KEYLESS TRANSMITTER WITH SUBARU SELECT MONITOR, REPLACEMENT, Keyless Transmitter.> 1) Close all doors and rear gate or trunk lid of inspection target vehicle. 2) Using the keyless transmitter, lock and unlock the doors and rear gate, or unlock the trunk lid.	Can lock and unlock of the doors and rear gate, or unlock of the trunk lid be performed properly on the inspection target vehicle?	Go to step **3**.	Due to vehicle malfunction, continue the keyless entry system diagnosis.
3	**CHECK KEYLESS TRANSMITTER.** Register the keyless transmitter of the inspected vehicle to another vehicle whose keyless system operates normally. <Ref. to SL-87, REGISTRATION OF KEYLESS TRANSMITTER WITH SUBARU SELECT MONITOR, REPLACEMENT, Keyless Transmitter.>	Is the keyless transmitter registered correctly?	Go to step **4**.	Replace the keyless transmitter and perform registration.
4	**CHECK KEYLESS TRANSMITTER.** Check the registered keyless transmitter. 1) Close all doors and rear gate or trunk lid of the vehicle on which keyless system operates normally. 2) Using the keyless transmitter, lock and unlock the doors and rear gate, or unlock the trunk lid.	Can lock, unlock of doors and unlock of the trunk lid be performed properly on the vehicle?	Keyless transmitter is OK.	Replace the keyless transmitter and perform registration.

3. CHECK KEYLESS ENTRY CONTROL MODULE

	Step	Check	Yes	No
1	**CHECK BODY INTEGRATED UNIT.** Read the DTC using Subaru Select Monitor. NOTE: For detailed operation procedures, refer to “Application help”.	Is DTC U1500 “KEYLESS UART COM. MALFUNCTION” displayed?	Go to step **2**.	Keyless entry control module is normal.
2	**CHECK POWER SUPPLY.** 1) Disconnect the keyless entry control module connector. 2) Measure the voltage between keyless entry control module connector and chassis ground. ***Connector & terminal*** ***(R221) No. 6 (+) — Chassis ground (–):***	Is the voltage 10 V or more?	Go to step **3**.	Check the harness for open or short circuits between the keyless entry control module and the fuse.

	Step	Check	Yes	No
3	**CHECK GROUND CIRCUIT.** Measure the resistance between keyless entry control module connector and chassis ground. ***Connector & terminal*** ***(R221) No. 5 — Chassis ground:*** ***(R221) No. 4 — Chassis ground:***	Is the resistance less than 10 Ω?	Go to step **4**.	Repair or replace the harness.
4	**CHECK KEYLESS ENTRY CONTROL MODULE CIRCUIT.** 1) Disconnect the body integrated unit connector. 2) Check the harness between keyless entry control module and body integrated unit. ***Connector & terminal*** ***(i81) No. 11 — (R221) No. 11:***	Is harness normal?	Replace the keyless entry control module.	Repair or replace the harness.

4. CHECK BODY INTEGRATED UNIT POWER SUPPLY AND GROUND CIRCUIT

Refer to the “CHECK POWER SUPPLY AND GROUND LINE” of “Door Lock Control System” for detailed procedures. <Ref. to SL-12, CHECK DOOR LOCK SWITCH, INSPECTION, Door Lock Control System.>

5. CHECK DOOR SWITCH

	Step	Check	Yes	No
1	**CHECK DATA MONITOR.** Display the following items using Subaru Select Monitor. • «Driver’s door SW input» • «P-door SW input» • «Rear right door SW input» • «Rear left door SW input» • «R Gate SW input» NOTE: For detailed operation procedures, refer to “Application help”.	Does the display switch between OFF ←→ ON when each door, trunk lid, or rear gate is opened/closed?	The door switches, trunk lid latch switch or rear gate latch switch are normal.	Go to step **2**.
2	**CHECK HARNESS.** 1) Disconnect the connector of body integrated unit. 2) Disconnect the connector of the door switch, trunk lid latch switch or rear gate latch switch that the display does not change. 3) Check the harness between body integrated unit and defective switch. ***Connector & terminal*** ***Front door LH*** ***(i171) No. 33 — (R9) No. 2:*** ***Front door RH*** ***(i171) No. 13 — (R12) No. 4:*** ***Rear door LH*** ***(i171) No. 14 — (R22) No. 4:*** ***Rear door RH*** ***(i171) No. 34 — (R16) No. 4:*** ***Trunk lid*** ***(i171) No. 15 — (R186) No. 3:*** ***Rear gate (model without power rear gate)*** ***(i171) No. 15 — (D46) No. 3:*** ***Rear gate (model with power rear gate)*** ***(i171) No. 15 — (D153) No. 3:***	Is harness normal?	Go to step **3**.	Repair or replace the harness.

Step		Check	Yes	No
3	**CHECK HARNESS.** Measure the resistance between the faulty switch connector and chassis ground. ***Connector & terminal*** ***Front door LH*** ***(R9) No. 1 — Chassis ground:*** ***Front door RH*** ***(R12) No. 1 — Chassis ground:*** ***Rear door LH*** ***(R22) No. 1 — Chassis ground:*** ***Rear door RH*** ***(R16) No. 1 — Chassis ground:*** ***Trunk lid*** ***(R186) No. 2 — Chassis ground:*** ***Rear gate (model without power rear gate)*** ***(D46) No. 4 — Chassis ground:*** ***Rear gate (model with power rear gate)*** ***(D153) No. 4 — Chassis ground:***	Is the resistance less than 10 Ω?	Go to step **4**.	Repair or replace the harness.
4	**CHECK DOOR SWITCH.** Measure the resistance between faulty switch terminals. ***Terminals*** ***Front LH door switch*** ***No. 2 — No. 1:*** ***Front RH door switch*** ***No. 4 — No. 1:*** ***Rear LH door switch*** ***No. 4 — No. 1:*** ***Rear RH door switch*** ***No. 4 — No. 1:*** ***Trunk lid latch switch*** ***No. 3 — No. 2:*** ***Rear gate (model without power rear gate)*** ***No. 3 — No. 4:*** ***Rear gate (model with power rear gate)*** ***No. 3 — No. 4:***	Is the resistance 1 MΩ or more when the door switch is pushed and the trunk lid is closed?	Replace the body integrated unit. <Ref. to SL-83, Body Integrated Unit.>	Replace the faulty parts. • Door switches • Trunk lid latch and actuator assembly • Rear gate latch and actuator assembly

6. CHECK KEY WARNING SWITCH

	Step	Check	Yes	No
1	**CHECK DATA MONITOR.** Using the Subaru Select Monitor, display the data of «key-lock warning SW». NOTE: For detailed operation procedures, refer to "Application help".	Is the normal input signal displayed when the key is inserted in/removed from the ignition switch?	The key warning switch is OK.	Go to step **2**.
2	**CHECK FUSE.** Remove and visually check fuse No. 14 (in the main fuse box).	Is the fuse blown out?	Replace the fuse with a new part.	Go to step **3**.
3	**CHECK KEY WARNING SWITCH CIRCUIT.** 1) Disconnect the connector of body integrated unit. 2) Insert the key into ignition switch. (LOCK position) 3) Measure the voltage between the body integrated unit connector and chassis ground. ***Connector & terminal*** ***(i84) No. 10 (+) — Chassis ground (–):***	Is the voltage 9 V or more?	Go to step **4**.	Go to step **5**.
4	**CHECK KEY WARNING SWITCH CIRCUIT.** 1) Remove the key from ignition switch. 2) Measure the voltage between the body integrated unit connector and chassis ground. ***Connector & terminal*** ***(i84) No. 10 (+) — Chassis ground (–):***	Is the voltage less than 1.5 V?	The key warning switch is OK.	Go to step **5**.
5	**CHECK KEY WARNING SWITCH.** 1) Disconnect the connector of key warning switch. 2) Insert the key into ignition switch. (LOCK position) 3) Measure the resistance between key warning switch terminals. ***Terminals*** ***No. 1 — No. 2:***	Is the resistance less than 1 Ω?	Go to step **6**.	Replace the key warning switch.
6	**CHECK KEY WARNING SWITCH.** 1) Remove the key from ignition switch. 2) Measure the resistance between key warning switch terminals. ***Terminals*** ***No. 1 — No. 2:***	Is the resistance 1 MΩ or more?	Check the following: • Harness for open circuits and shorts between the key warning switch and fuse. • Harness for open or short between the body integrated unit and key warning switch.	Replace the key warning switch.

7. CHECK ROOM LIGHT OPERATION

	Step	Check	Yes	No
1	**CHECK ROOM LIGHT OPERATION.** Make sure the room light illuminates when the room light switch is ON, and goes off when the switch is OFF.	Does the room light illuminate or go off?	Go to step **2**.	Check the room light circuit. <Ref. to LI-69, INSPECTION, Room Light.>
2	**CHECK ROOM LIGHT OPERATION.** 1) Turn the room light switch to the “DOOR” position. 2) Open and close any door.	Does the room light illuminate ←→ go off (including off delay) when the door is opened and closed?	Go to step **3**.	Go to step **4**.
3	**CHECK KEYLESS ENTRY OPERATION.** Press the LOCK/UNLOCK button of the keyless transmitter.	Does it operate properly?	Room light is normal.	Check keyless entry system. <Ref. to SL-18, SYMPTOM CHART, INSPECTION, Keyless Entry System.>
4	**CHECK ROOM LIGHT.** Check the room light. <Ref. to LI-69, INSPECTION, Room Light.>	Is room light normal?	Go to step **5**.	Replace the bulb or room light assembly.
5	**CHECK HARNESS.** 1) Disconnect the connectors of body integrated unit and room light. 2) Check the harness between body integrated unit and room light. ***Connector & terminal*** ***(i84) No. 9 — (R52) No. 2:***	Is harness normal?	Go to step **6**.	Repair or replace the harness.
6	**CHECK HARNESS.** Measure the voltage between the room light connector and chassis ground. ***Connector & terminal*** ***(R52) No. 3 (+) — Chassis ground (–):***	Is the voltage 10 V or more?	Replace the body integrated unit. <Ref. to SL-83, Body Integrated Unit.>	Repair or replace the harness.

8. CHECK HAZARD LIGHT OPERATION

	Step	Check	Yes	No
1	**CHECK HAZARD LIGHT OPERATION.** Make sure the hazard light blinks when hazard switch is turned to ON.	Does the hazard light blink?	Go to step **2**.	Check the hazard light circuit.
2	**CHECK BODY INTEGRATED UNIT SETTING.** Display the data of «Abnormal warning lamp flashing setting» using Subaru Select Monitor. NOTE: For detailed operation procedures, refer to “Application help”.	Is the setting ON?	Go to step **3**.	Turn the setting to ON.
3	**CHECK DATA MONITOR.** Display the data of «Left turn signal output» and «Right turn signal output» using Subaru Select Monitor.	Is output signal present when operating the transmitter LOCK/UNLOCK button?	Go to step **4**.	Check body integrated unit. <Ref. to BC(diag)-2, Basic Diagnostic Procedure.>
4	**CHECK KEYLESS ENTRY OPERATION.** Press the LOCK/UNLOCK button of the keyless transmitter.	Does it operate properly?	Replace the body integrated unit. <Ref. to SL-83, Body Integrated Unit.>	Check keyless entry system. <Ref. to SL-18, SYMPTOM CHART, INSPECTION, Keyless Entry System.>

9. CHECK KEYLESS BUZZER

	Step	Check	Yes	No
1	**CHECK BODY INTEGRATED UNIT SETTING.** Display the data of «Answer-back buzzer setup» using Subaru Select Monitor. NOTE: For detailed operation procedures, refer to "Application help".	Is the setting ON?	Go to step **2**.	Turn the setting to ON.
2	**CHECK BODY INTEGRATED UNIT SETTING.** Display the data of «Keyless Buzzer Volume» using Subaru Select Monitor. Turn the setting to "7".	Does the keyless buzzer sound?	Set to the volume that the customer requested.	Go to step **3**.
3	**CHECK BODY INTEGRATED UNIT.** Select and perform the «Keyless Buzzer Output» using Subaru Select Monitor.	Does the keyless buzzer sound?	Check the keyless control module.	Go to step **4**.
4	**CHECK KEYLESS BUZZER CIRCUIT.** 1) Turn the ignition switch to OFF. 2) Disconnect the connectors of the body integrated unit and keyless buzzer. 3) Check the harness between body integrated unit and keyless buzzer. ***Connector & terminal*** ***(B281) No. 10 — (B490) No. 1:***	Is harness normal?	Go to step **5**.	Repair or replace the harness.
5	**CHECK HARNESS.** Measure the resistance between keyless buzzer connector and chassis ground. ***Connector & terminal*** ***(B490) No. 1 — Chassis ground:***	Is the resistance value 10 kΩ or more?	Go to step **6**.	Repair or replace the short circuit of the harness.
6	**CHECK KEYLESS BUZZER CIRCUIT.** Measure the resistance between the keyless buzzer connector and chassis ground. ***Connector & terminal*** ***(B490) No. 2 — Chassis ground:***	Is the resistance less than 10 Ω?	Go to step **7**.	Repair or replace the harness.
7	**CHECK BODY INTEGRATED UNIT.** 1) Connect the connector of body integrated unit. 2) Select and perform the «Keyless Buzzer Output» using Subaru Select Monitor. 3) Measure the voltage between body integrated unit connector and chassis ground using an oscilloscope. ***Connector & terminal*** ***(B281) No. 10 (+) — Chassis ground (–):***	Is the frequency 2 kHz or the voltage 9 V or more?	Replace the keyless buzzer.	Replace the body integrated unit. <Ref. to SL-83, Body Integrated Unit.>

10.CHECK DOOR LOCK SWITCH

For procedures, refer to the “INSPECTION OF DOOR LOCK SWITCH” of the “Door Lock Control System”. <Ref. to SL-13, CHECK DOOR LOCK ACTUATOR AND CIRCUIT, INSPECTION, Door Lock Control System.>

11.CHECK IGNITION SWITCH ILLUMINATION

	Step	Check	Yes	No
1	**CHECK IGNITION CIRCUIT.** Check the ignition circuit. <Ref. to SL-32, CHECK IGNITION SWITCH CIRCUIT, INSPECTION, Security System.>	Is the switch circuit normal?	Go to step **2**.	Repair or replace.
2	**CHECK DOOR SWITCH CIRCUIT.** Inspect door switch circuit. <Ref. to SL-20, CHECK DOOR SWITCH, INSPECTION, Keyless Entry System.>	Is the switch circuit normal?	Go to step **3**.	Repair or replace.
3	**CHECK FUSE.** Remove and visually check fuse No. 14 (in the main fuse box).	Is the fuse blown out?	Replace the fuse with a new part.	Go to step **4**.
4	**CHECK HARNESS.** 1) Disconnect the ignition switch illumination connector. NOTE: The ignition switch illumination is integrated into the immobilizer antenna. 2) Measure the voltage between ignition switch illumination connector and chassis ground. ***Connector & terminal*** ***(i60) No. 2 (+) — Chassis ground (–):***	Is the voltage 10 V or more?	Go to step **5**.	Check the harness for open or short circuits between the ignition switch illumination and fuse.
5	**CHECK IGNITION SWITCH ILLUMINATION CIRCUIT.** 1) Disconnect the connector of body integrated unit. 2) Check the harness between body integrated unit and ignition switch illumination. ***Connector & terminal*** ***(i171) No. 9 — (i60) No. 6:***	Is harness normal?	Go to step **6**.	Check the harness for open circuits and shorts between the body integrated unit and ignition switch illumination.
6	**CHECK IGNITION SWITCH ILLUMINATION BULB.** Apply battery voltage between terminals of the bulb. ***Terminals*** ***No. 2 (+) — No. 6 (–):***	Does the bulb illuminate?	Replace the body integrated unit. <Ref. to SL-83, Body Integrated Unit.>	Replace the immobilizer antenna. <Ref. to SL-91, REMOVAL, Immobilizer Antenna.>

5. Keyless Access With Push Button Start System

A: WIRING DIAGRAM

Refer to “Keyless Access With Push Button Start System” in WI section. <Ref. to WI-260, WIRING DIAGRAM, Keyless Access With Push Button Start System.>

B: ELECTRICAL SPECIFICATION

Refer to “Control Module I/O Signal” of “KEYLESS ACCESS WITH PUSH BUTTON START SYSTEM (DIAGNOSTICS)” section. <Ref. to KPS(diag)-14, ELECTRICAL SPECIFICATION, Control Module I/O Signal.>

C: INSPECTION

1. KEYLESS ACCESS WITH PUSH BUTTON START SYSTEM

Refer to “Basic Diagnostic Procedure” of “KEYLESS ACCESS WITH PUSH BUTTON START SYSTEM (DIAGNOSTICS)” section. <Ref. to KPS(diag)-2, Basic Diagnostic Procedure.>

2. PUSH BUTTON START SYSTEM

Ignition/ACC change function check

1) Check push button ignition switch function

(1) Check the change control through push button ignition switch, brake pedal operation, and shift position.

Shift lever position	Brake pedal operation	Push button ignition switch operation
P	Released	Repeat Ignition switch OFF → ACC ON → Ignition switch ON → Ignition switch OFF
P	Released	Engine running → Ignition switch OFF
P	Depressed	Ignition switch OFF → Engine started
P	Depressed	ACC ON → Engine started
P	Depressed	Ignition switch ON → Engine started
P	Depressed	Engine running → Ignition switch OFF
N	Released	Repeat Ignition switch OFF → ACC ON → Ignition switch ON → ACC ON
N	Released	Engine running → ACC ON
N	Depressed	Ignition switch OFF → Engine started
N	Depressed	ACC ON → Engine started
N	Depressed	Ignition switch ON → Engine started
N	Depressed	Engine running → ACC ON
Other than P or N	Released	Repeat Ignition switch OFF → ACC ON → Ignition switch ON → ACC ON
Other than P or N	Released	Engine running → ACC ON
Other than P or N	Depressed	Ignition switch OFF → Ignition switch ON
Other than P or N	Depressed	ACC ON → Ignition switch ON
Other than P or N	Depressed	Engine running → ACC ON

(2) Check the changeover functions other than push button ignition switch operation.
With ACC ON or the ignition switch ON, and the shift lever in “P” position, check that ACC is ON or Ignition switch is ON → Ignition switch is OFF when the vehicle is left for 1 hour or more.

(3) If the inspection result indicates an improper operation, check the push button start system. <Ref. to KPS(diag)-108, POWER SUPPLY SWITCHING SYSTEM, INSPECTION, General Diagnostic Table.>

2) Check power status display
(1) Check the power indicator display of the push button ignition switch.

NOTE:
*1: Key collation is normal, and the stop light switch (AT) is ON.
Indicator display

Push button ignition switch status	Indicator lighting status
Ignition switch OFF (except for condition *1)	Light OFF
ACC ON (except for condition *1)	Orange light
Ignition switch ON (except for condition *1)	Orange light
Engine start standby (*1)	Green light
After engine is started	Light OFF

(2) If the inspection result indicates an improper operation, check the push button start system. <Ref. to KPS(diag)-108, POWER SUPPLY SWITCHING SYSTEM, INSPECTION, General Diagnostic Table.>

NOTE:
The indicator blinks if any of the following malfunctions are detected.

Detected malfunction	Indicator lighting status
Steering lock stuck	Green blinking
Steering lock CM internal malfunction	Orange blinking
Keyless access CM internal malfunction	Orange blinking
Vehicle speed signal malfunction	Orange blinking

6. Security System

A: WIRING DIAGRAM

Refer to “Security System” in the wiring diagram. <Ref. to WI-334, WIRING DIAGRAM, Security System.>

B: ELECTRICAL SPECIFICATION

Refer to “Control Module I/O Signal” of “BODY CONTROL SYSTEM (DIAGNOSTICS)” section. <Ref. to BC(diag)-8, ELECTRICAL SPECIFICATION, Control Module I/O Signal.>

C: INSPECTION

1. BASIC DIAGNOSTIC PROCEDURE

	Step	Check	Yes	No
1	**INITIAL CHECK.** Check the keyless entry system or keyless access system operation.	Does the keyless entry system or keyless access system operate normally?	Go to step **2**.	Check the keyless entry system or keyless access system. • Keyless entry system: <Ref. to SL-18, INSPECTION, Keyless Entry System.> • Keyless access system: <Ref. to KPS(diag)-5, KEYLESS ACCESS WITH PUSH BUTTON START SYSTEM, CAUTION, General Description.>
2	**CHECK SECURITY ON/OFF SETTING.** 1) Remove the key from ignition switch or turn the ignition switch to OFF, and close all doors. 2) Check the status of security indicator light. 3) Press the LOCK button of the keyless transmitter or access key. 4) Check the security indicator light blinking patterns.	Is the security indicator light blinking patterns as follows? • Before pressing the LOCK button: Blinks once every three seconds. • After pressing the LOCK button: When monitoring lag is set to 0 seconds: Blinks twice every 0.5 seconds at 2 second intervals. When monitoring lag is set to 30 seconds: Blinks once every 0.4 seconds continuously for 30 seconds, then blinks twice every 0.5 seconds at 2 second intervals.	Go to step **4**.	Go to step **3**.
3	**CHANGE SETTING OF SECURITY SYSTEM.** Change the setting of security system to ON using Subaru Select Monitor. <Ref. to SL-31, SECURITY SYSTEM ON/OFF SETTING, INSPECTION, Security System.>	Is setting change completed correctly?	Go to step **4**.	Replace the body integrated unit. <Ref. to SL-83, Body Integrated Unit.>

	Step	Check	Yes	No
4	**CHECK SECURITY SYSTEM OPERATION.** 1) Remove the key from ignition switch or turn the ignition switch to OFF, and close all doors. 2) Press the LOCK button on the keyless transmitter or access key, then wait for 30 seconds. 3) Check the security indicator light blinking patterns.	Does the security indicator light blink twice within 0.5 seconds in 2 second intervals?	Go to step **5**.	Check the security indicator light. <Ref. to SL-31, CHECK SECURITY INDICATOR LIGHT CIRCUIT, INSPECTION, Security System.>
5	**CHECK SECURITY ALARM OPERATION.** 1) Operate the driver's door lock switch to the UNLOCK side. 2) Open any door, trunk lid or rear gate.	Does the security alarm operate when opening any door, trunk lid, or rear gate?	Go to step **6**.	Check the following parts. <Ref. to SL-20, CHECK DOOR SWITCH, INSPECTION, Keyless Entry System.> • Door switches • Trunk lid latch switch • Rear gate latch switch
6	**CHECK SECURITY ALARM OPERATION.** Check the security alarm operation status.	During the operation, does the horn keep sounding and the hazard light blink?	Go to step **7**.	Check the following parts. <Ref. to SL-20, CHECK DOOR SWITCH, INSPECTION, Keyless Entry System.> • Horn: <Ref. to SL-31, CHECK HORN, INSPECTION, Security System.> • Hazard light: <Ref. to SL-31, CHECK HAZARD LIGHT OPERATION, INSPECTION, Security System.>
7	**CHECK SECURITY ALARM CANCEL OPERATION.** Press any button of the transmitter or access key while the security alarm is operating.	Do the horn sound and the blinking of the hazard light stop?	Go to step **8**.	Replace the body integrated unit. <Ref. to SL-83, Body Integrated Unit.>
8	**CHECK IMPACT SENSOR (DEALER OPTION).** Check the sensibility of impact sensor. <Ref. to SL-78, CHECK IMPACT SENSOR, ADJUSTMENT, Impact Sensor.> * For models not equipped: Go to step **9**.	Is the sensibility set properly?	Go to step **9**.	Adjust the sensitivity. <Ref. to SL-78, IMPACT SENSITIVITY ADJUSTMENT, ADJUSTMENT, Impact Sensor.>

	Step	Check	Yes	No
9	**CHECK SECURITY SYSTEM CONDITION MEMORY.** 1) Remove the key from ignition switch or turn the ignition switch to OFF, and close all doors. 2) Open the front hood. 3) Press the LOCK button on the keyless transmitter or access key, then wait for 30 seconds. 4) Disconnect the ground terminal from battery sensor. <Ref. to RC-4, BATTERY, NOTE, Repair Contents.> 5) Connect the ground terminal to battery sensor. <Ref. to RC-4, BATTERY, NOTE, Repair Contents.> 6) Check the status of security indicator light.	Does the security indicator light blinks twice within 0.5 seconds at 2 second intervals?	Go to step **10**.	Replace the body integrated unit. <Ref. to SL-83, Body Integrated Unit.>
10	**CHECK SECURITY SYSTEM MANUAL ON/OFF SETTING.** 1) Press the UNLOCK button of the keyless transmitter or access key. 2) Change the setting of security system. <Ref. to SL-31, SECURITY SYSTEM ON/OFF SETTING, INSPECTION, Security System.>	Is setting change completed correctly?	Restore the security system settings to those before the diagnosis and finish the diagnosis.	Check the following parts. • Ignition switch circuit: <Ref. to SL-69, INSPECTION, Ignition Key Lock.> • Door lock switch circuit: <Ref. to SL-13, CHECK DOOR LOCK ACTUATOR AND CIRCUIT, INSPECTION, Door Lock Control System.>

NOTE:
If the horn sounds when the security is turned on (monitor condition) using the keyless transmitter or access key, check the function setting of the body integrated unit. As a cause, it is possible that the impact sensor present (ON) / not present (OFF) setting is set to ON in the customization function though there is no impact sensor. <Ref. to BC(diag)-30, User Customizing.>

2. CHECK SECURITY SYSTEM CONDITION MEMORY

1) Pull out the key from the ignition switch, or turn the ignition switch to OFF.
2) Close all the doors, trunk lid or rear gate.
3) Open the front hood.
4) Press the LOCK button of the keyless transmitter or access key.

NOTE:
Wait until the security indicator light blinks twice within 0.5 seconds at 2 second intervals.
If the 30 second monitoring lag has been set, wait for 30 seconds.
5) Disconnect the ground terminal from battery sensor. <Ref. to RC-4, BATTERY, NOTE, Repair Contents.>
6) Connect the ground terminal to battery sensor. <Ref. to RC-4, BATTERY, NOTE, Repair Contents.>
7) Check that the security indicator light blinks twice within 0.5 seconds at 2 second intervals. When it does not blink, replace the body integrated unit.

3. SECURITY SYSTEM ON/OFF SETTING

NOTE:
It can be set by «Security Alarm Setup» in unit customizing using Subaru Select Monitor.
For detailed operation procedures, refer to “Application help”.
1) Close all doors, trunk lid or rear gate, and sit down on the driver seat. Press the UNLOCK button of the keyless transmitter or access key.
2) Turn the ignition switch to ON.
3) Press the central door unlock switch and open the driver’s door simultaneously. (Keep the central door unlock switch pressed down.)
4) When the condition in step 3) continues for 10 seconds, the system switches to a mode reverse to the current mode.

Setting	Horn activation	Meter display
ON → OFF	Twice	[AL_OF]
OFF → ON	Once	[AL_ON]

4. CHECK DOOR SWITCH

For operation procedure, refer to “CHECK DOOR SWITCH” of “Keyless Entry System”. <Ref. to SL-20, CHECK DOOR SWITCH, INSPECTION, Keyless Entry System.>

5. CHECK SECURITY INDICATOR LIGHT CIRCUIT

For operation procedures, refer to “CHECK SECURITY INDICATOR LIGHT CIRCUIT” of “IMMOBILIZER (DIAGNOSTICS)” section. <Ref. to IM(diag)-16, CHECK SECURITY INDICATOR LIGHT CIRCUIT, INSPECTION, Diagnostics Chart for Security Indicator Light.>

6. CHECK HORN

	Step	Check	Yes	No
1	**CHECK HORN OPERATION.** Check the horn sounds when the horn switch is pushed.	Does the horn sound?	Go to step **2**.	Check the horn circuit.
2	**CHECK BODY INTEGRATED UNIT.** Select and perform the «Horn Output» using Subaru Select Monitor. NOTE: For detailed operation procedures, refer to “Application help”.	Does the horn sound?	Horn circuit is OK.	Go to step **3**.
3	**CHECK HORN RELAY CIRCUIT.** 1) Turn the ignition switch to OFF. 2) Disconnect the connector of body integrated unit. 3) Remove the horn relay. 4) Check the harness between body integrated unit and horn relay. ***Connector & terminal*** ***(B281) No. 20 — Horn relay No. 4:***	Is harness normal?	Check body integrated unit. <Ref. to BC(diag)-2, Basic Diagnostic Procedure.>	Repair or replace the harness.

7. CHECK HAZARD LIGHT OPERATION

For operation procedure, refer to “CHECK HAZARD LIGHT OPERATION” of “Keyless Entry System”. <Ref. to SL-23, CHECK HAZARD LIGHT OPERATION, INSPECTION, Keyless Entry System.>

8. CHECK IGNITION SWITCH CIRCUIT

	Step	Check	Yes	No
1	**CHECK DATA MONITOR.** Display the data of «BATT voltage» and «IG power supply voltage» using the Subaru Select Monitor. NOTE: For detailed operation procedures, refer to “Application help”.	Does the «IG power supply voltage» indicate 0 V when the ignition switch is OFF, and fall within a range of ±1 V from the «BATT voltage» when the ignition switch is ON?	The ignition switch input circuit is OK.	Go to step **2**.
2	**CHECK IGNITION SWITCH CIRCUIT.** 1) Turn the ignition switch to OFF. 2) Disconnect the connector of body integrated unit. 3) Turn the ignition switch to ON. 4) Measure the voltage between the body integrated unit connector and chassis ground. ***Connector & terminal*** ***(i84) No. 10 (+) — Chassis ground (–):***	Is the voltage 10 V or more?	Check body integrated unit. <Ref. to BC(diag)-2, Basic Diagnostic Procedure.>	Check the harness for open or short circuit between body integrated unit and fuse.

7. Front Inner Remote

A: REMOVAL

1) Disconnect the ground terminal from the battery sensor, and wait for at least 60 seconds before starting work. <Ref. to RC-4, BATTERY, NOTE, Repair Contents.>
2) Remove the trim panel - front door. <Ref. to EI-71, FRONT DOOR, REMOVAL, Door Trim.>
3) Remove the screw, and remove the remote assembly - door.

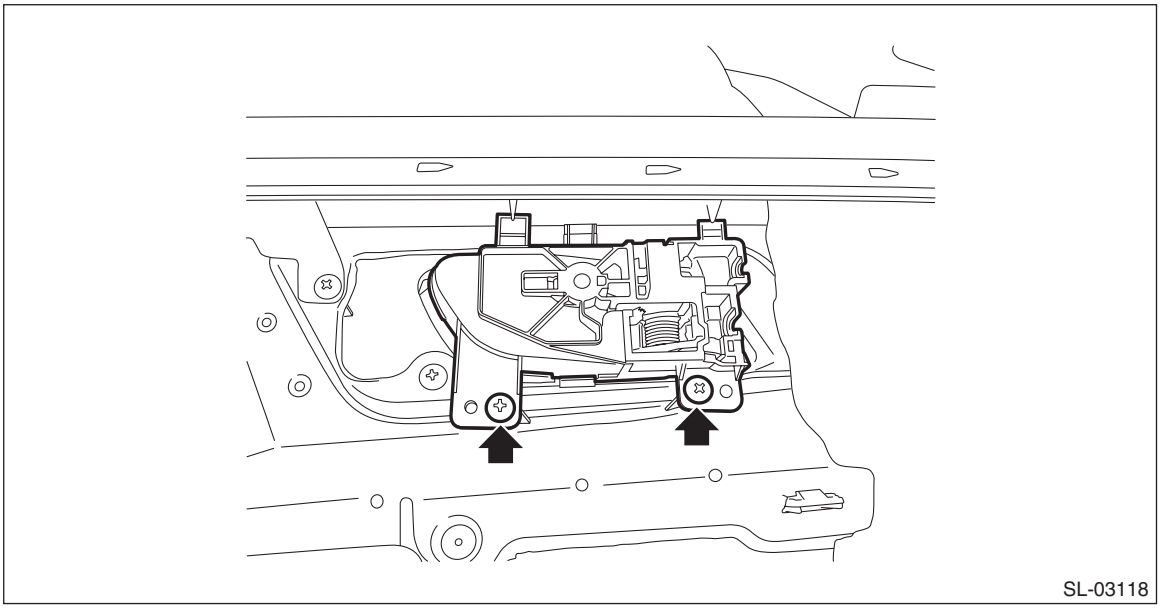

B: INSTALLATION

1) Before installation, check the following items.
- Cable is free from deformation such as fray.
- Grease is applied sufficiently to cable joints.

If grease is insufficient, add it as necessary before assembling the cable.
2) Install the remote assembly - door.
3) Install the trim panel - front door. <Ref. to EI-73, INSTALLATION, Door Trim.>
4) Connect the ground terminal to battery sensor. <Ref. to RC-4, BATTERY, NOTE, Repair Contents.>

C: INSPECTION

Check if the remote handle operates normally.
- If the lever is faulty, replace the remote handle.
- If the cable is deformed, replace the latch & actuator assembly - front.

8. Front Outer Handle

A: REMOVAL

1) Raise the glass assembly - front door to the top position.
2) Disconnect the ground terminal from the battery sensor, and wait for at least 60 seconds before starting work. <Ref. to RC-4, BATTERY, NOTE, Repair Contents.>
3) Remove the trim panel - front door. <Ref. to EI-71, FRONT DOOR, REMOVAL, Door Trim.>
4) Remove the sealing cover - front door. <Ref. to EB-30, REMOVAL, Front Sealing Cover.>
5) Remove the cover - handle front outer.

Preparation tool:
TORX® T30

(1) Remove the plug at the rear end of the panel assembly - front door.
(2) Loosen the TORX® bolt and remove the cover - handle front outer.

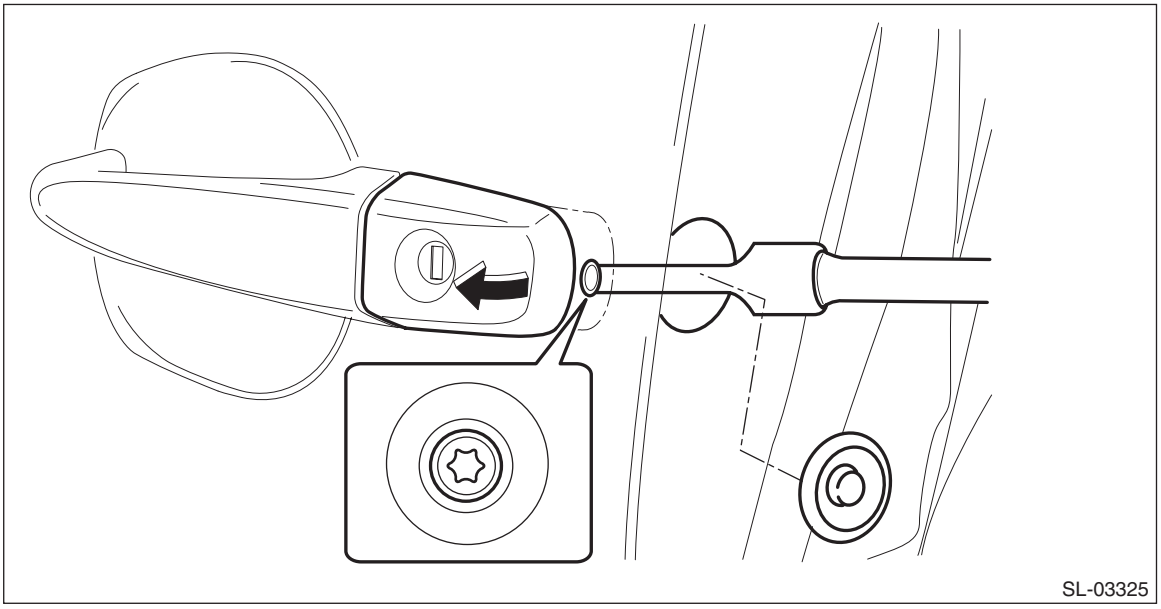
SL-03325

6) Remove the holder of the frame assembly - front door outer.

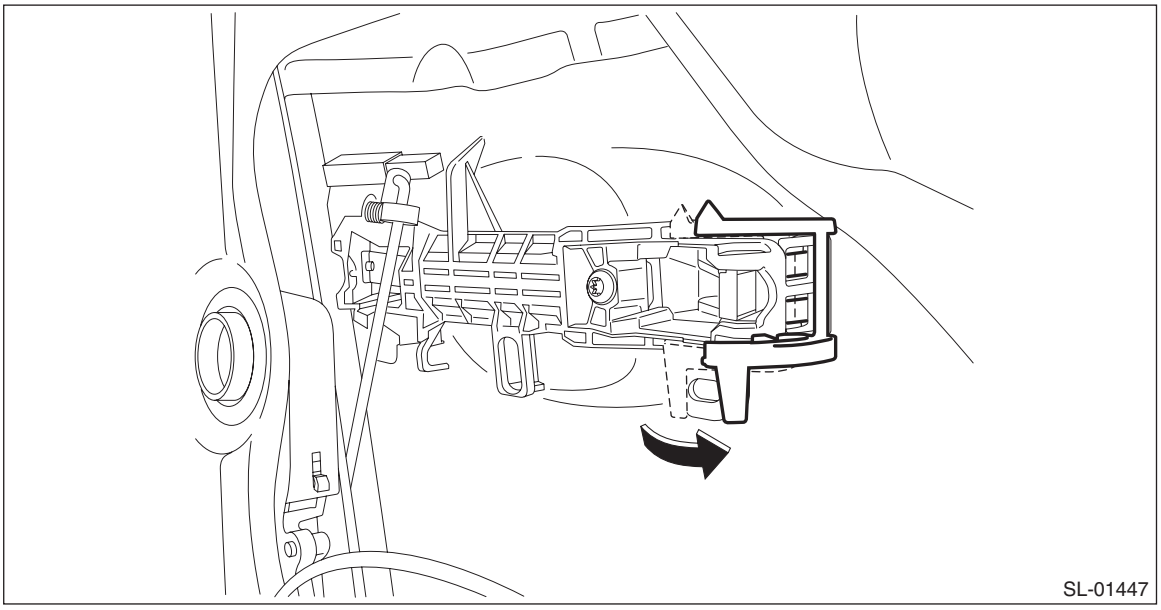
SL-01447

NOTE:
• For model with keyless access with push button start, disconnect the harness clip and exterior antenna (touch sensor) connector.
• Using (a) shown in the figure as a supporting point, pry it with a flat tip screwdriver to remove.

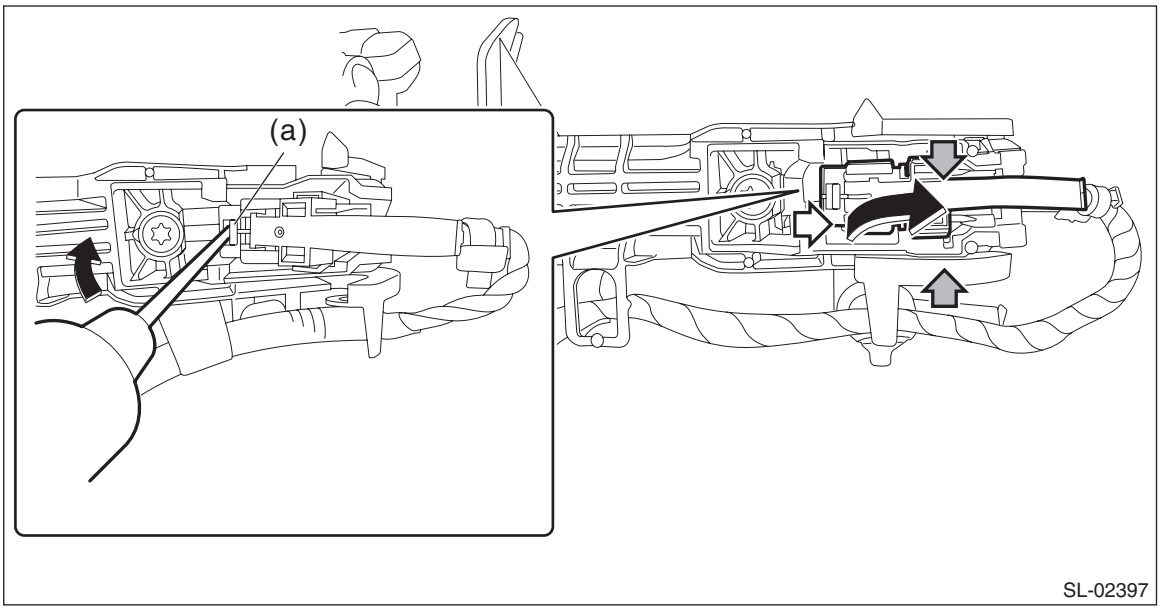

7) Remove the handle - door outer.

CAUTION:
Do not apply excessive force to remove the handle - door outer from the frame assembly - front door.
(1) Pull the handle - door outer rearward to release engagement of the frame assembly - front door outer.
(2) Pull the handle - door outer towards yourself to remove the handle - door outer.

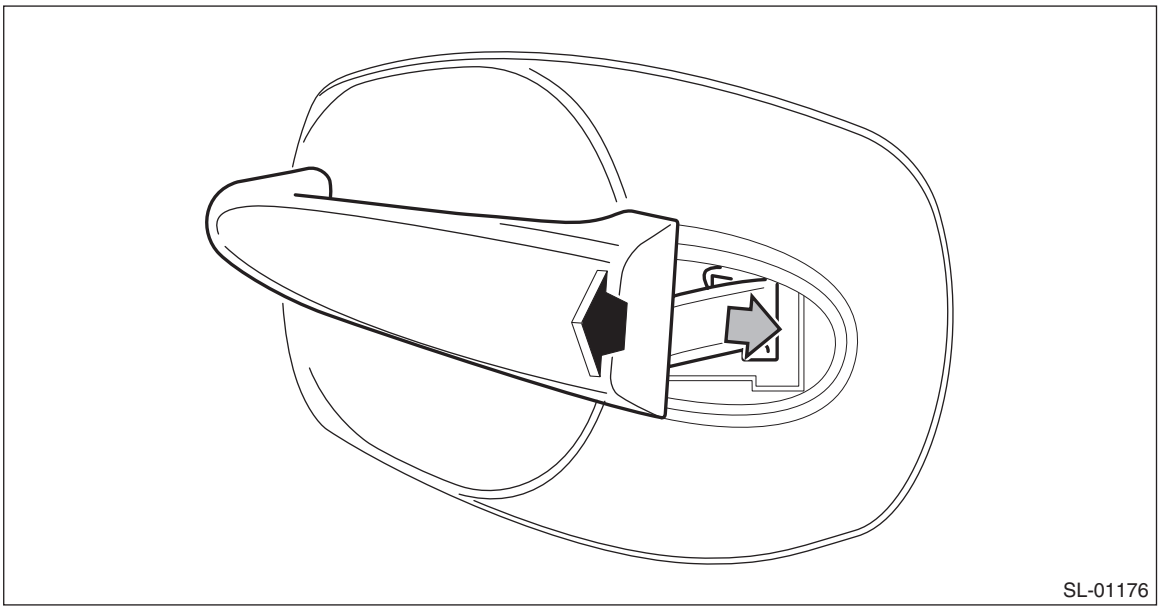

8) Remove the frame assembly - front door outer.

Preparation tool:
TORX® T30

(1) Remove the spacer - door handle outer.

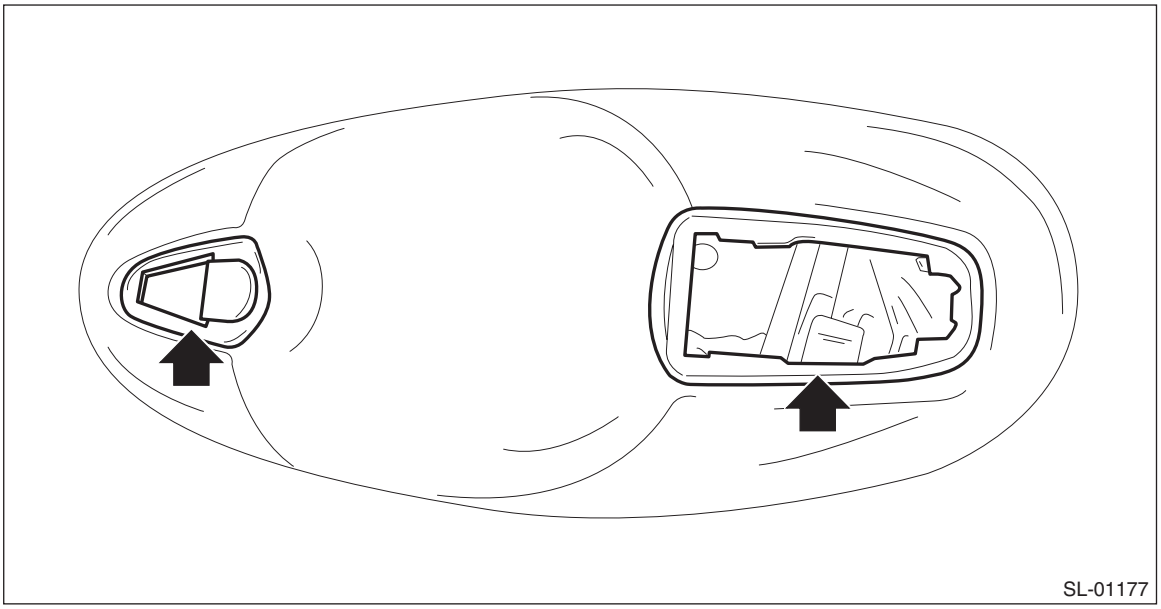

(2) Remove the rod clamp and remove the rod.
(3) Loosen the TORX® bolt and remove the frame assembly - front door outer.

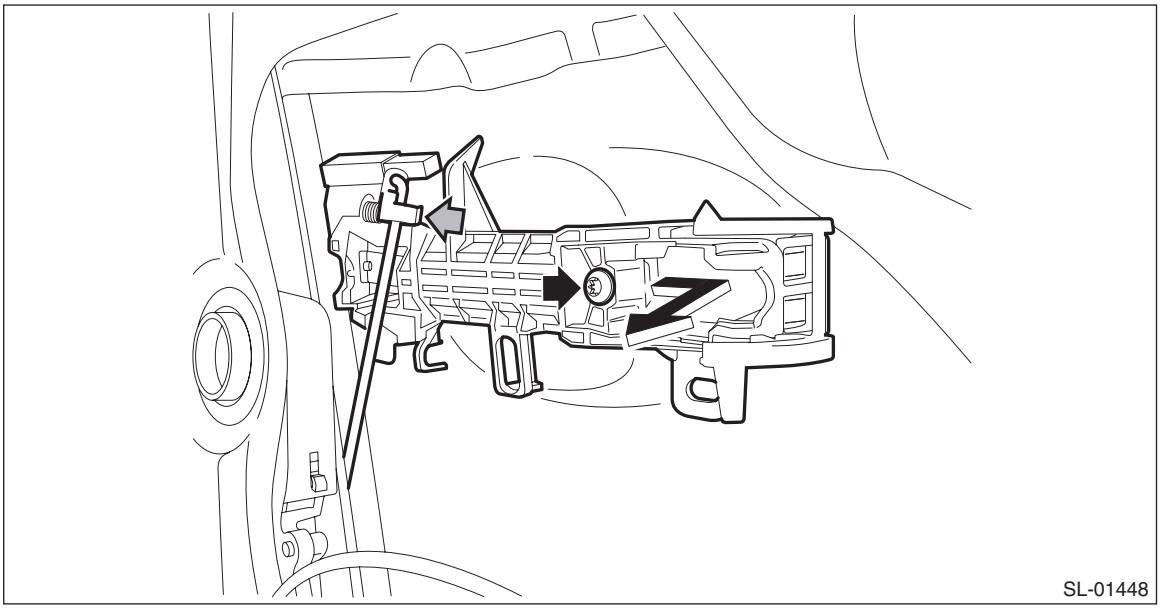

B: INSTALLATION

1) Before installation, check the following items.
- Rod is free from deformation.
- Grease is applied sufficiently to rod joints.

If grease is insufficient, add it as necessary before assembling the rod.
2) Install the frame assembly - front door outer.

Preparation tool:
TORX® T30

Tightening torque:
7.5 N·m (0.8 kgf-m, 5.5 ft-lb)

Tightening torque:
Refer to "COMPONENT" of "General Description". <Ref. to SL-2, DOOR LOCK ASSEMBLY, COMPONENT, General Description.>

3) Install the spacer - door handle outer.
4) Install the handle - door outer.

NOTE:
For model with keyless access with push button start, connect the harness clip and exterior antenna (touch sensor) connector.

(1) Insert the end of the handle - door outer to the frame assembly - front door outer.
(2) Push forward while inserting the rear end of the handle - door outer to the frame assembly - front door outer.

5) Install the cover - handle front outer.

CAUTION:
When installing the cover - handle front outer on driver's side, make sure that the key cylinder shaft is correctly inserted into the latch & actuator assembly - front.

Preparation tool:
TORX® T30

Tightening torque:
7.5 N·m (0.8 kgf-m, 5.5 ft-lb)

6) Install the sealing cover - front door.
7) Install the trim panel - front door. <Ref. to EI-73, INSTALLATION, Door Trim.>
8) Connect the ground terminal to battery sensor. <Ref. to RC-4, BATTERY, NOTE, Repair Contents.>

C: INSPECTION

Check if the outer handle operates normally.
- If the lever is faulty, replace the handle - door outer.
- If the rod is deformed, replace the door latch & actuator assembly - front.

9. Front Door Latch and Door Lock Actuator Assembly

A: REMOVAL

1) Raise the glass assembly - front door to the top position.
2) Disconnect the ground terminal from the battery sensor, and wait for at least 60 seconds before starting work. <Ref. to RC-4, BATTERY, NOTE, Repair Contents.>
3) Remove the trim panel - front door. <Ref. to EI-71, FRONT DOOR, REMOVAL, Door Trim.>
4) Remove the sealing cover - front door. <Ref. to EB-30, REMOVAL, Front Sealing Cover.>
5) Remove the rod clamp and remove the rod.

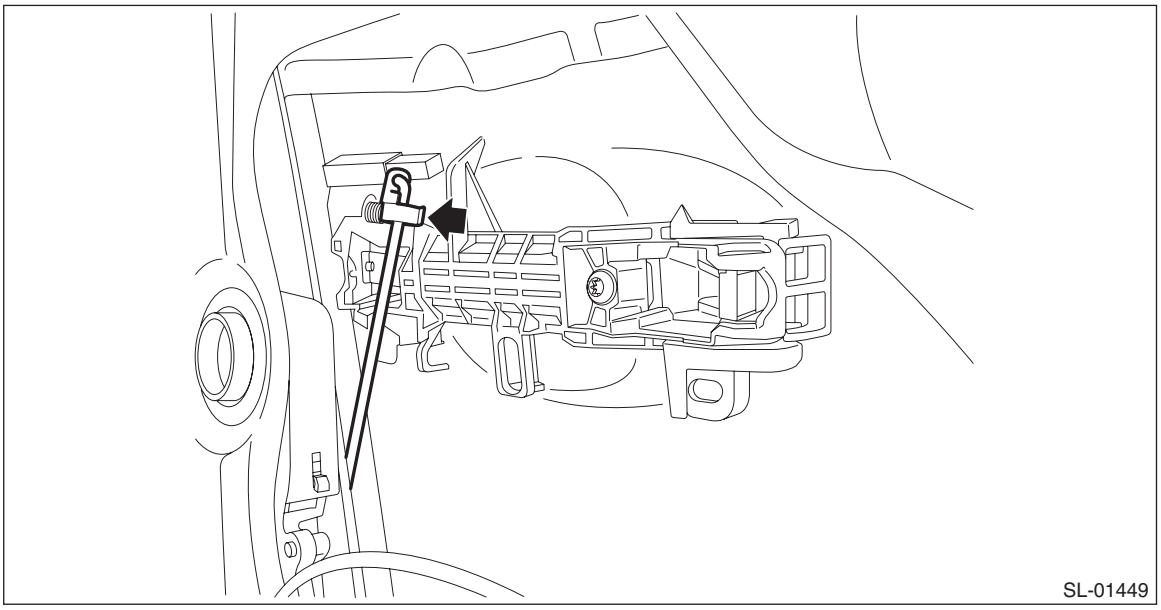

6) Remove the sash COMPL - lower.
   (1) Remove the lower side of the running channel - front door.
   (2) Remove the bolts, and remove the sash COMPL - lower.

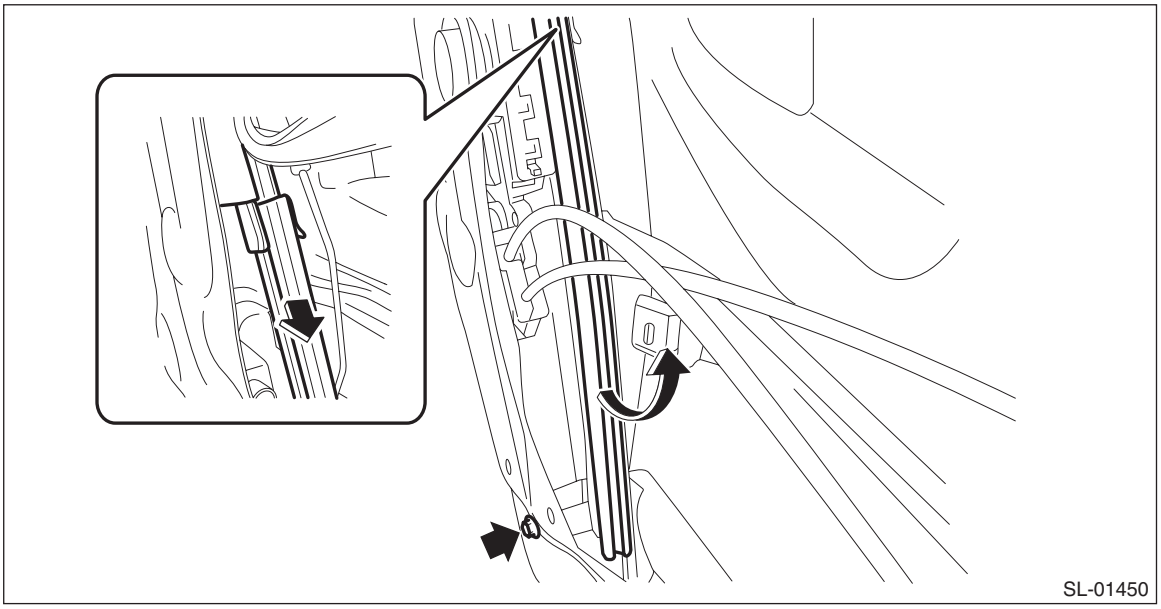

7) Remove the screws to remove the latch & actuator assembly - front.

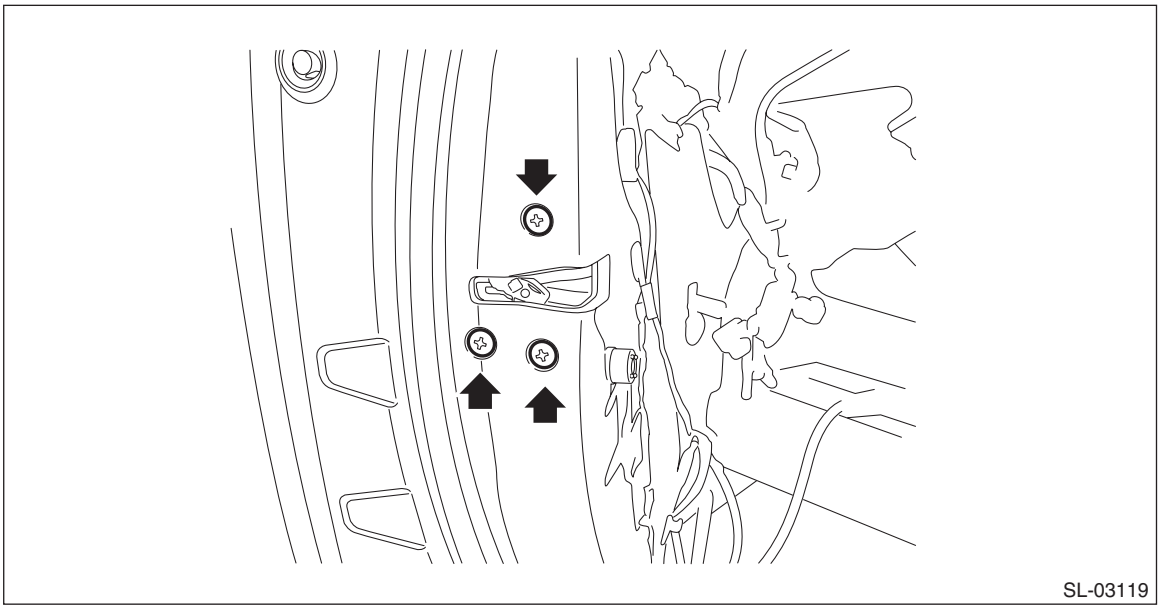

B: INSTALLATION

1) Before installation, check the following items.
- Cable and rod are free from deformation.
- Grease is applied sufficiently to rod joints.

If grease is insufficient, add it as necessary before assembling the rod.
2) Install the latch and actuator assembly - front.

CAUTION:
Do not re-use the screws. Always replace with a new part.

Tightening torque:
6.5 N·m (0.7 kgf-m, 5.2 ft-lb)
3) Install the rod clamp to the frame assembly - front door outer.
4) Install the sash COMPL - lower.

Tightening torque:
7.5 N·m (0.8 kgf-m, 5.5 ft-lb)
5) Install the sealing cover - front door.
6) Install the trim panel - front door. <Ref. to EI-73, INSTALLATION, Door Trim.>
7) Connect the ground terminal to battery sensor. <Ref. to RC-4, BATTERY, NOTE, Repair Contents.>

C: INSPECTION

1. LATCH

Check if the latch operates normally.
If the cable or rod is faulty, replace the latch & actuator assembly - front.

2. LOCK ACTUATOR

1) Check door lock operation
Check the door lock operation when battery voltage is applied between the connectors.

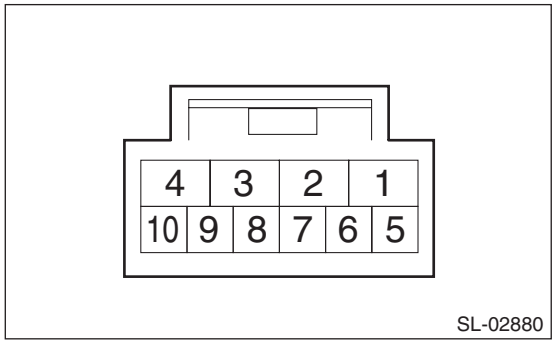

Terminal No.	Inspection conditions	Standard
4 (+) — 1 (–)	Apply battery voltage.	LOCK
1 (+) — 4 (–)		UNLOCK

2) Check position switch
Measure the resistance between connector terminals.

Preparation tool:
Circuit tester

Terminal No.	Inspection conditions	Standard
8 — 7	LOCK	1 MΩ or more
	UNLOCK	Less than 1 Ω

3) Replace the latch & actuator assembly - front if it is found defective.

10.Rear Inner Remote

A: REMOVAL

1) Disconnect the ground terminal from battery sensor. <Ref. to RC-4, BATTERY, NOTE, Repair Contents.>
2) Remove the trim panel - rear door. <Ref. to EI-72, REAR DOOR, REMOVAL, Door Trim.>
3) Remove the screw, and remove the remote assembly - door.

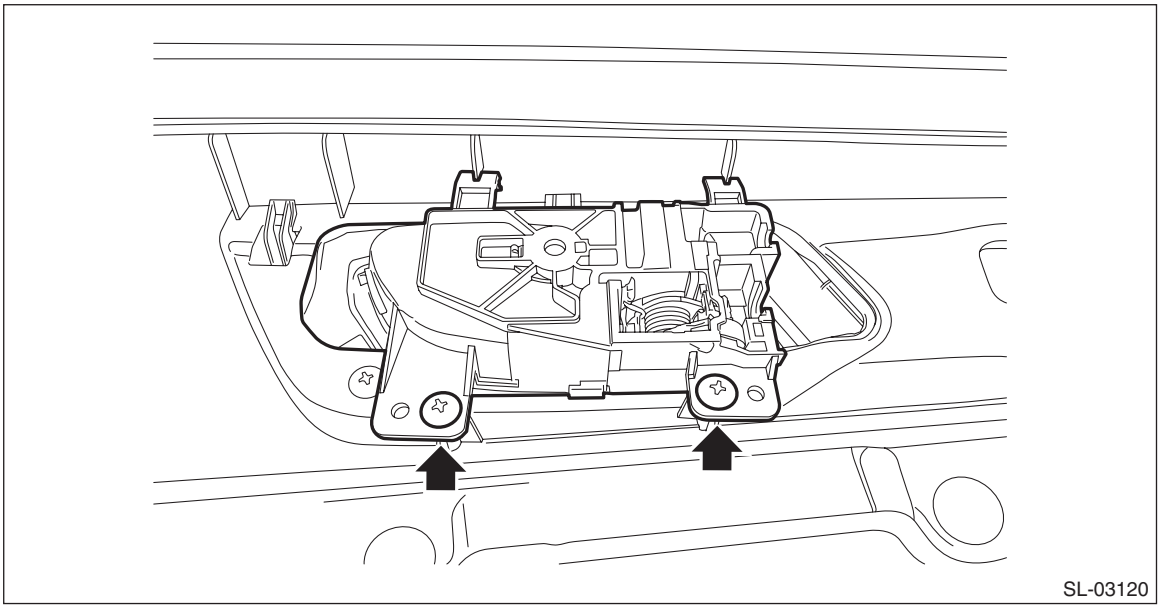

B: INSTALLATION

1) Before installation, check the following items.
- Cable is free from deformation such as fray.
- Grease is applied sufficiently to cable joints.

If grease is insufficient, add it as necessary before assembling the cable.
2) Install the remote assembly - door.
3) Install the trim panel - rear door. <Ref. to EI-73, INSTALLATION, Door Trim.>
4) Connect the ground terminal to battery sensor. <Ref. to RC-4, BATTERY, NOTE, Repair Contents.>

C: INSPECTION

Check if the remote handle operates normally.
- If the lever is faulty, replace the remote handle.
- If the cable is deformed, replace the latch & actuator assembly - rear.

11.Rear Outer Handle

A: REMOVAL

1) Raise the glass assembly - rear door to the top position.
2) Disconnect the ground terminal from battery sensor. <Ref. to RC-4, BATTERY, NOTE, Repair Contents.>
3) Remove the trim panel - rear door. <Ref. to EI-72, REAR DOOR, REMOVAL, Door Trim.>
4) Remove the sealing cover - rear door. <Ref. to EB-40, REMOVAL, Rear Sealing Cover.>
5) Remove the screws and move downward the latch & actuator assembly - rear.

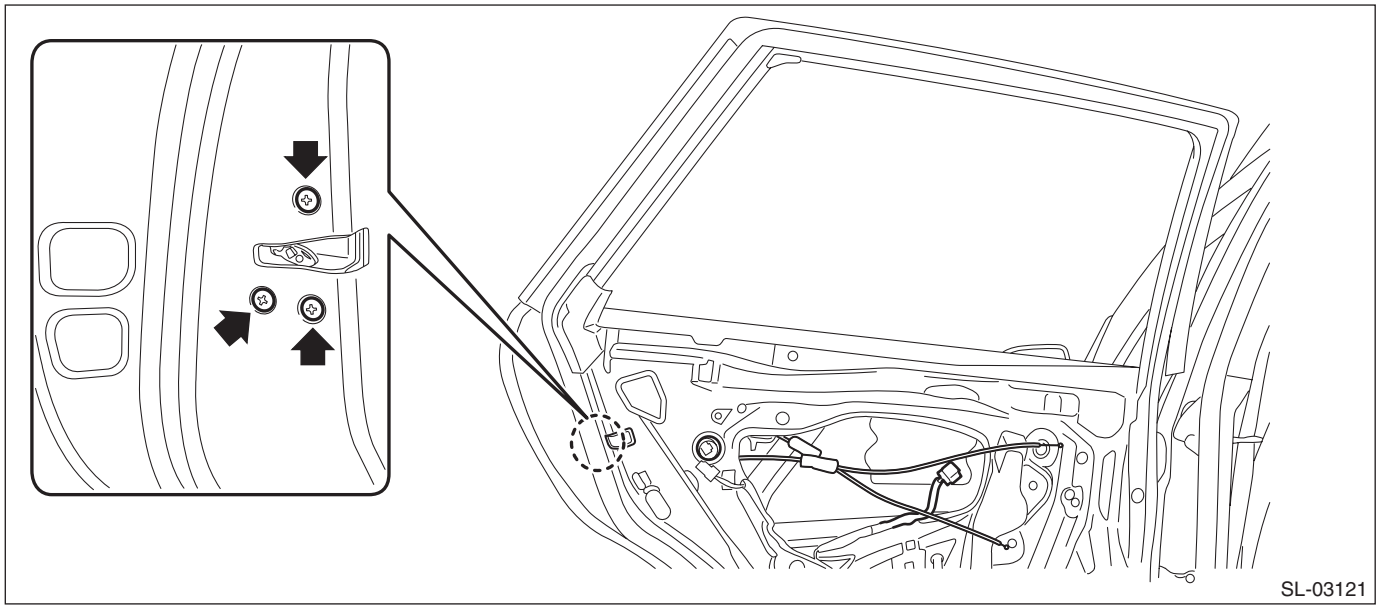
SL-03121

6) Remove the cover - handle rear outer.

Preparation tool:
TORX® T30
(1) Loosen the TORX® bolt.
(2) Release the claws, and then remove the cover - handle rear outer.

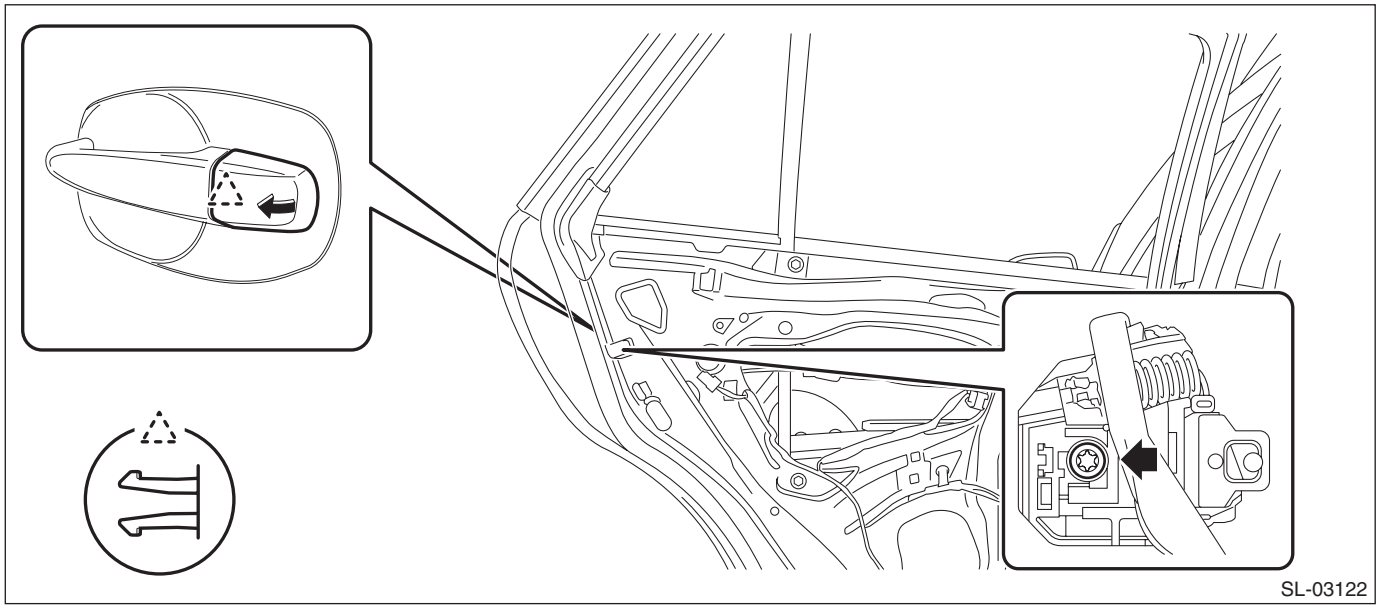
SL-03122

7) Remove the holder of the frame assembly - rear door outer.

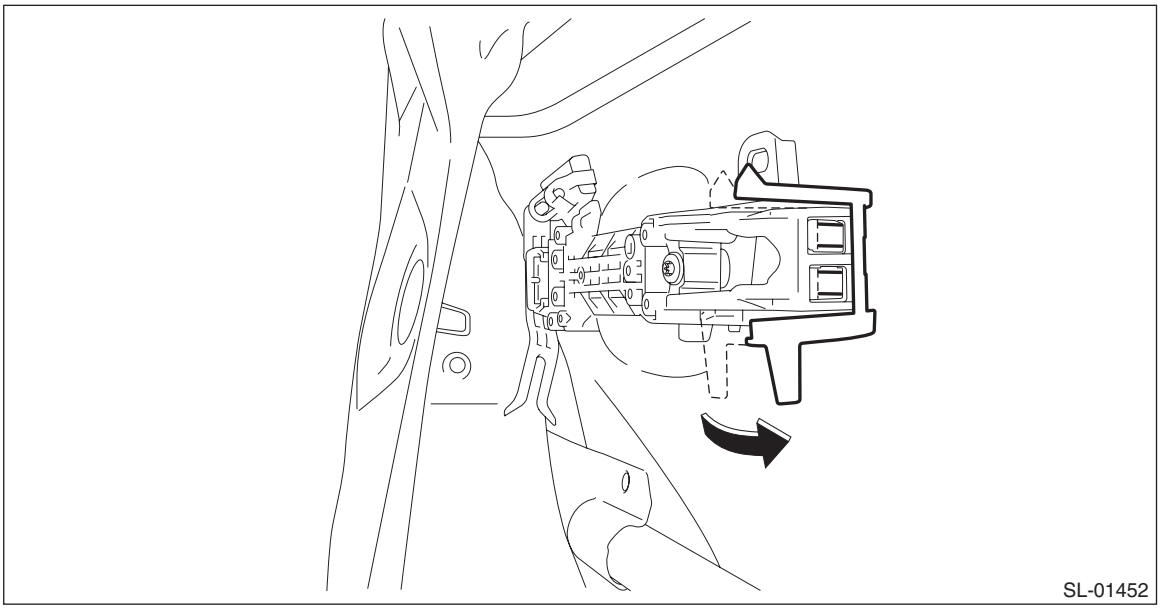

8) Remove the handle - door outer.

CAUTION:
Do not apply excessive force to remove the handle - door outer from the frame assembly - rear door.

(1) Pull the handle - door outer rearward to release engagement of the frame assembly - rear door outer.
(2) Pull the handle - door outer towards yourself to remove the handle - door outer.

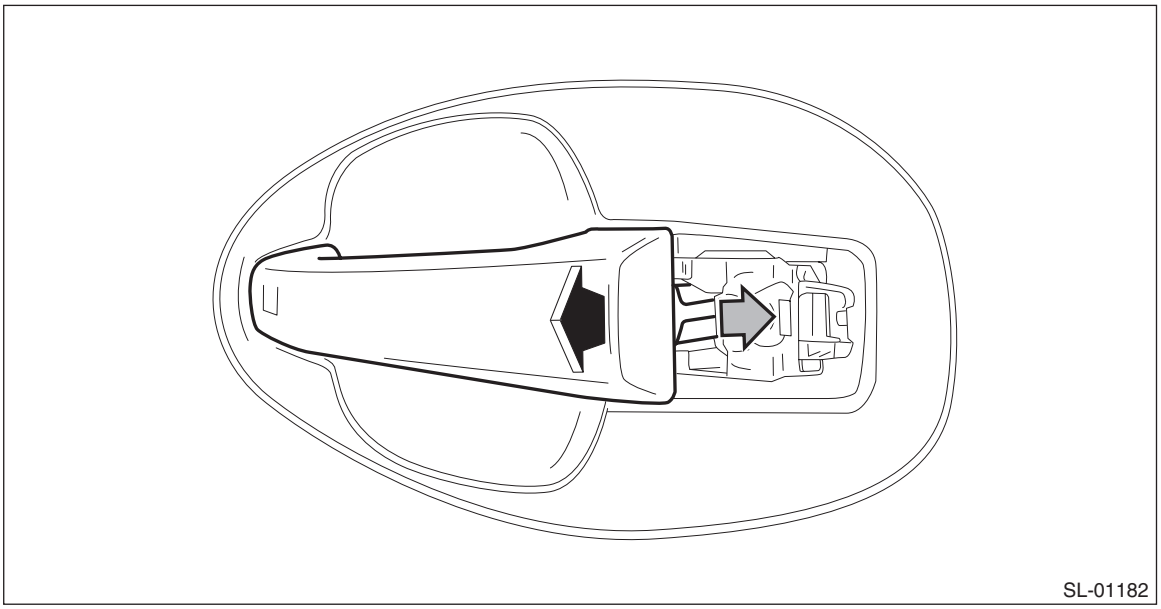

9) Remove the frame assembly - rear door outer.

Preparation tool:
TORX® T30

(1) Remove the spacer - door handle outer.

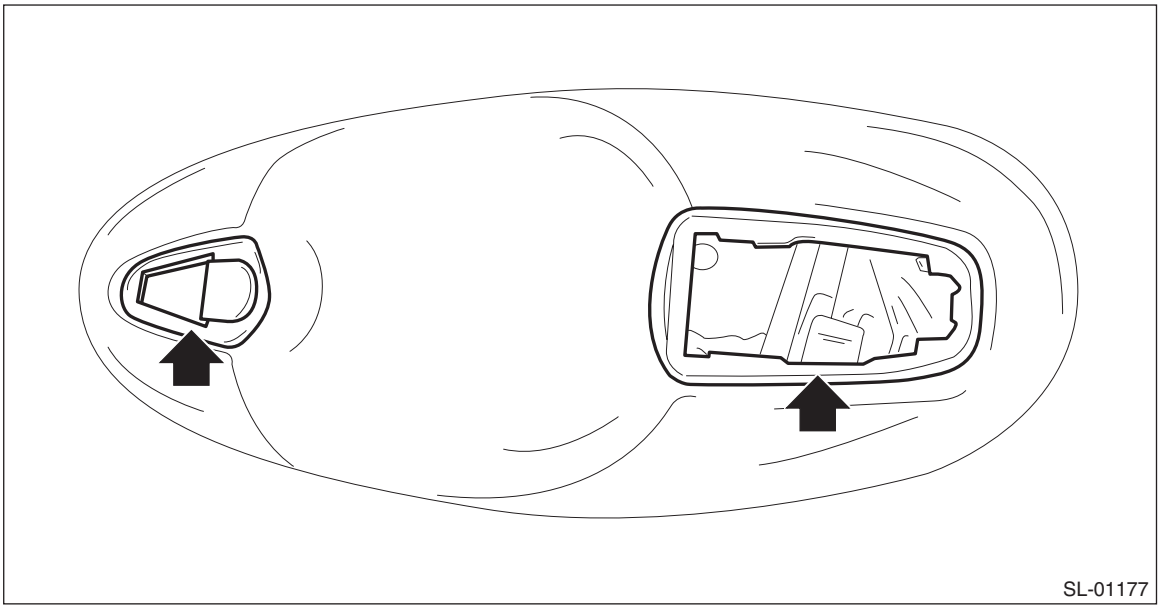

(2) Loosen the TORX® bolt and remove the frame assembly - rear door outer.

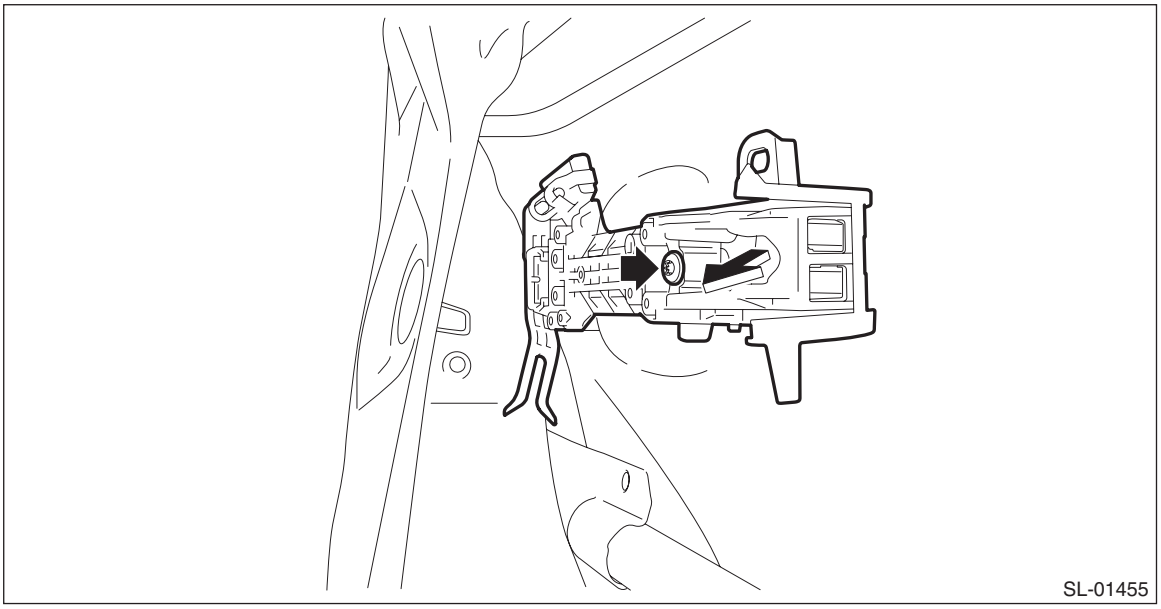

B: INSTALLATION

1) Before installation, check the following items.
- Lever is free from deformation.
- Grease is applied sufficiently to lever joints.

If grease is insufficient, add it as necessary before assembling.
2) Install the frame assembly - rear door outer.

Preparation tool:
TORX® T30

Tightening torque:
7.5 N·m (0.8 kgf-m, 5.5 ft-lb)
3) Install the spacer - door handle outer.
4) Install the handle - door outer.
(1) Insert the end of the handle - door outer to the frame assembly - rear door outer.
(2) Push forward while inserting the rear end of the handle - door outer to the frame assembly - rear door outer.
5) Install the cover - handle rear outer.

Preparation tool:
TORX® T30

Tightening torque:
7.5 N·m (0.8 kgf-m, 5.5 ft-lb)
6) Install the latch and actuator assembly - rear.

CAUTION:
Do not re-use the screws. Always replace with a new part.

Tightening torque:
6.5 N·m (0.7 kgf-m, 5.2 ft-lb)
7) Install the sealing cover - rear door.
8) Install the trim panel - rear door. <Ref. to EI-73, INSTALLATION, Door Trim.>
9) Connect the ground terminal to battery sensor. <Ref. to RC-4, BATTERY, NOTE, Repair Contents.>

C: INSPECTION

Check if the outer handle operates normally.
If the lever is faulty, replace the handle - door outer.

12.Rear Door Latch and Door Lock Actuator Assembly

A: REMOVAL

1) Raise the glass assembly - rear door to the top position.
2) Disconnect the ground terminal from battery sensor. <Ref. to RC-4, BATTERY, NOTE, Repair Contents.>
3) Remove the trim panel - rear door. <Ref. to EI-72, REAR DOOR, REMOVAL, Door Trim.>
4) Remove the sealing cover - rear door. <Ref. to EB-40, REMOVAL, Rear Sealing Cover.>
5) Remove the glass assembly - rear door. <Ref. to GW-35, REMOVAL, Rear Door Glass.>
6) Remove the screws to remove the latch & actuator assembly - rear.

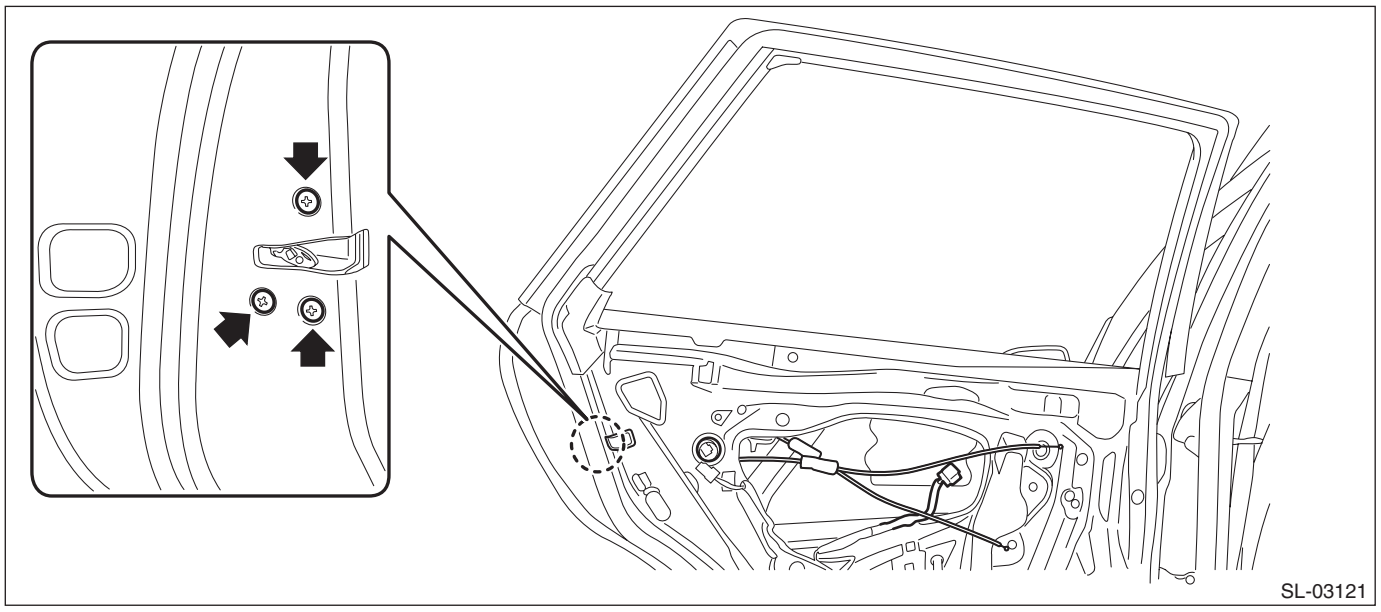

B: INSTALLATION

NOTE:
Make sure the child safety lock works correctly after installation.
1) Before installation, check the following items.
- Cable is free from deformation.
- Grease is applied sufficiently to lever joints.

If grease is insufficient, add it as necessary before assembling.
2) Install the latch and actuator assembly - rear.

CAUTION:
Do not re-use the screws. Always replace with a new part.

Tightening torque:
6.5 N·m (0.7 kgf-m, 5.2 ft-lb)
3) Install the glass assembly - rear door. <Ref. to GW-37, INSTALLATION, Rear Door Glass.>
4) Install the sealing cover - rear door.
5) Install the trim panel - rear door. <Ref. to EI-73, INSTALLATION, Door Trim.>
6) Connect the ground terminal to battery sensor. <Ref. to RC-4, BATTERY, NOTE, Repair Contents.>

C: INSPECTION

1. LATCH

Check if the latch operates normally.
If the cable is faulty, replace the latch & actuator assembly - rear.

2. ACTUATOR

1) Check door lock operation
Check the door lock operation when battery voltage is applied between the connectors.

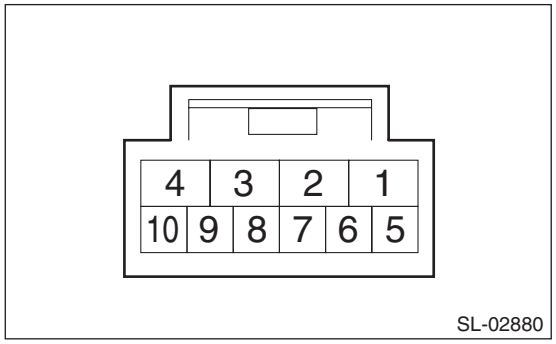

Terminal No.	Inspection conditions	Standard
4 (+) — 1 (–)	Apply battery voltage.	LOCK
1 (+) — 4 (–)		UNLOCK

2) If it does not operate properly as a result of inspection, replace the latch & actuator assembly - rear.

13.Rear Gate Opener Button

A: REMOVAL

NOTE:
- The button - opener rear gate is integrated with the rear lock button.
- Open the panel - rear gate before disconnecting the ground terminal from battery sensor.

1) Disconnect the ground terminal from battery sensor. <Ref. to RC-4, BATTERY, NOTE, Repair Contents.>
2) Remove the trim panel - rear gate. <Ref. to EI-121, REMOVAL, Rear Gate Trim.>
3) Remove the garnish assembly - rear gate. <Ref. to EI-62, REMOVAL, Rear Gate Garnish.>
4) Remove the button - opener rear gate.
   (1) Remove the garnish switch bracket from the garnish assembly - rear gate.
   (2) While pushing the locks at both ends of the button - opener rear gate with a flat tip screwdriver, remove the button - opener rear gate together with the rear lock button.

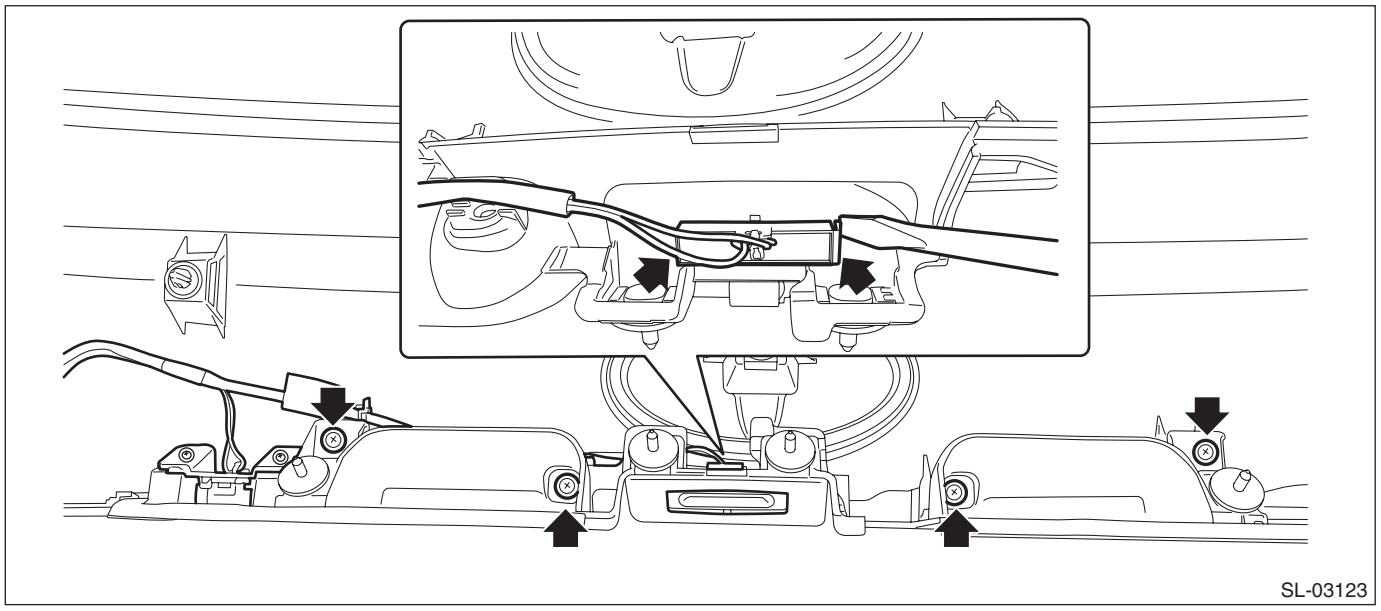
SL-03123

B: INSTALLATION

CAUTION:
Make sure that the harness grommet is securely installed.
If not properly installed, this may cause leaks.

1) Install the button - opener rear gate and rear lock button.
2) Install the garnish switch bracket to the garnish assembly - rear gate.
3) Install the garnish assembly - rear gate. <Ref. to EI-63, INSTALLATION, Rear Gate Garnish.>

Tightening torque
4.5 N·m (0.4 kgf-m, 3.3 ft-lb)

4) Install the trim panel - rear gate. <Ref. to EI-122, INSTALLATION, Rear Gate Trim.>
5) Connect the ground terminal to battery sensor. <Ref. to RC-4, BATTERY, NOTE, Repair Contents.>

C: INSPECTION

Unit inspection

Preparation tool:
Circuit tester

1) Check the resistance between connector terminals.

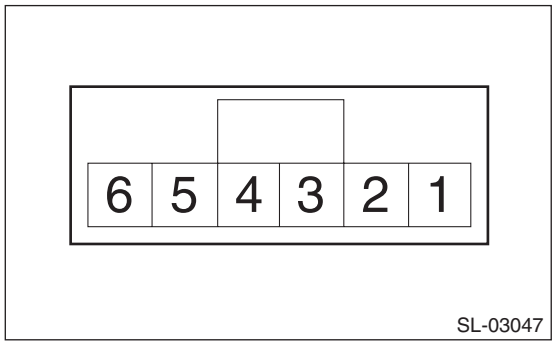

Terminal No.	Inspection conditions	Standard
1 — 2	OPEN	Less than 5 Ω
	CLOSE	1 MΩ or more

2) If the inspection result is not within the standard, replace the button - opener rear gate.

14.Rear Gate Latch and Actuator Assembly

A: REMOVAL

1) Disconnect the ground terminal from battery sensor. <Ref. to RC-4, BATTERY, NOTE, Repair Contents.>
2) Remove the trim panel - rear gate. <Ref. to EI-121, REMOVAL, Rear Gate Trim.>
3) Remove the latch and actuator - rear gate.
   (1) Disconnect the connector.
   (2) Remove the bolts, and remove the latch and actuator - rear gate.

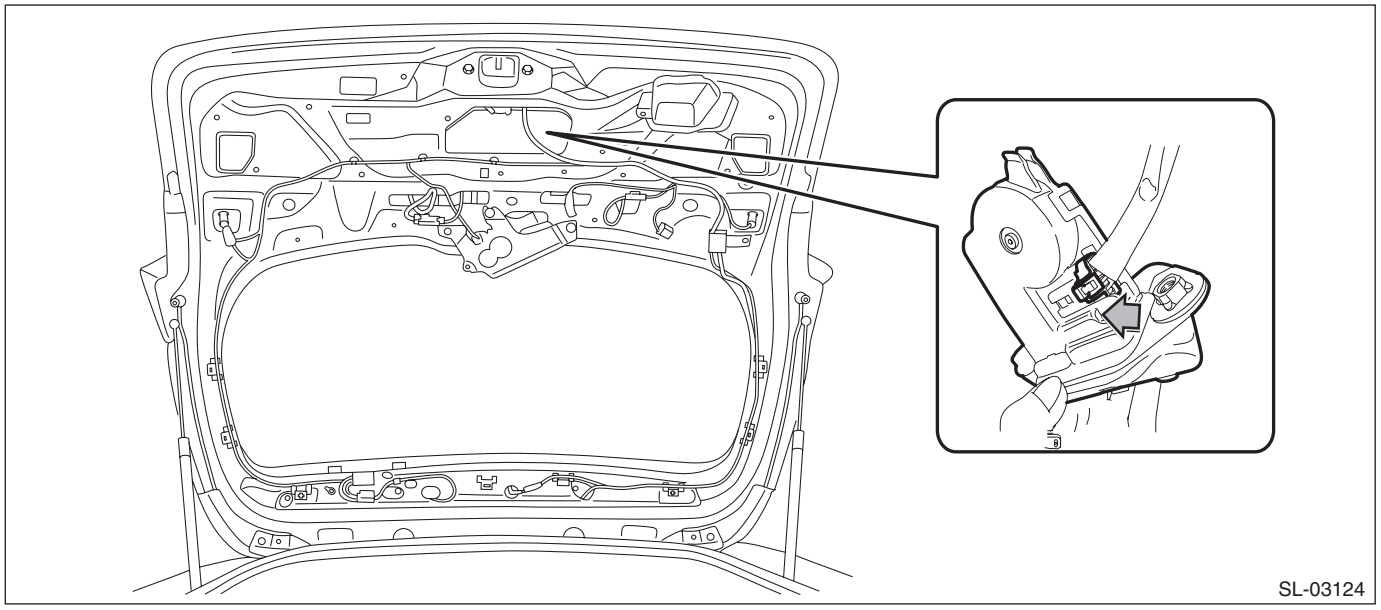

B: INSTALLATION

1) Install the latch and actuator - rear gate.

Tightening torque
25 N·m (2.5 kgf-m, 18.4 ft-lb)

2) Install the trim panel - rear gate. <Ref. to EI-121, REMOVAL, Rear Gate Trim.>
3) Connect the ground terminal to battery sensor. <Ref. to RC-4, BATTERY, NOTE, Repair Contents.>

C: INSPECTION

1. LATCH

Check if the latch operates normally.
If latch deformation, abnormal wear, or unsmooth lock operation is observed, replace the latch and actuator - rear gate.

2. ACTUATOR

Unit inspection

Preparation tool:
Circuit tester

1) Check door lock operation
Check the door lock operation when battery voltage is applied between the connectors.

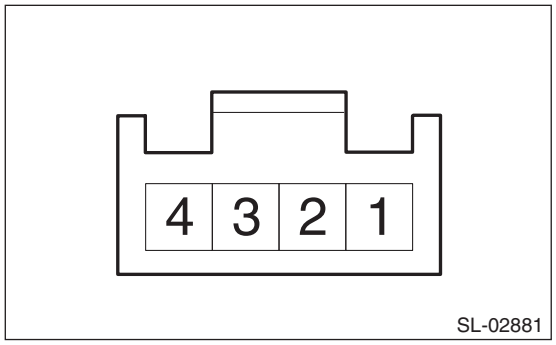

Terminal No.	Inspection conditions	Specification
1 (+) — 2 (–)	Connect battery to the terminals	OPEN

2) Check switch
Check the resistance between connector terminals.

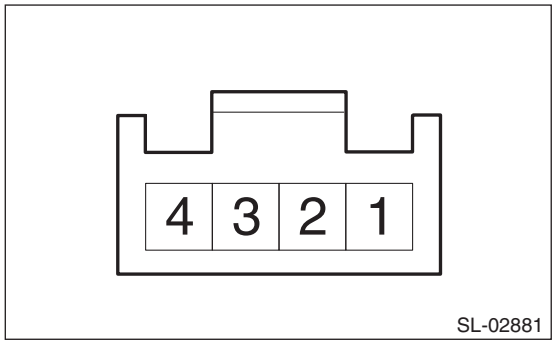

Terminal No.	Inspection conditions	Standard
3 — 4	OPEN	Less than 1.5 Ω
	CLOSE	1 MΩ or more

3) If it does not operate properly as a result of inspection, replace the latch and actuator - rear gate.

15.Trunk Opener Switch

A: REMOVAL

1) Disconnect the ground terminal from the battery sensor, and wait for at least 60 seconds before starting work. <Ref. to RC-4, BATTERY, NOTE, Repair Contents.>
2) Remove the cover assembly - instrument panel LWR driver. <Ref. to EI-75, REMOVAL, Instrument Panel Lower Cover.>
3) Remove the trunk opener switch.
(1) Release the claws and remove the trunk opener button (a).

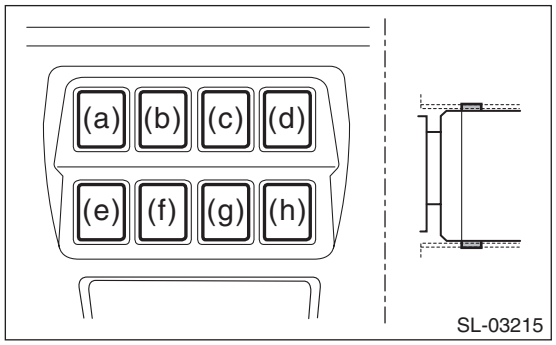

B: INSTALLATION

1) Install the switch - trunk opener.
2) Install the cover assembly - instrument panel LWR driver. <Ref. to EI-76, INSTALLATION, Instrument Panel Lower Cover.>
3) Connect the ground terminal to battery sensor. <Ref. to RC-4, BATTERY, NOTE, Repair Contents.>

C: INSPECTION

1) Measure the resistance between connector terminals.

Preparation tool:
Circuit tester

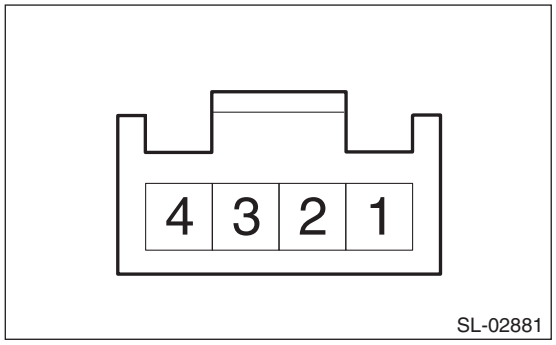

Terminal No.	Inspection conditions	Standard
1 — 4	Switch OFF	1 MΩ or more
	Switch ON	Less than 1 Ω

2) Apply battery voltage between the connector terminals to check lighting condition of illumination inside the switch.

Terminal No.	Inspection conditions	Specification
2 (+) — 3 (–)	Apply battery voltage.	Light ON

3) If the inspection result is not within the standard, replace the switch - trunk opener.

16.Trunk Lid Latch and Actuator Assembly

A: REMOVAL

1) Open the trunk lid COMPL.
2) Disconnect the ground terminal from battery sensor. <Ref. to RC-4, BATTERY, NOTE, Repair Contents.>
3) Remove the trim panel - trunk lid. <Ref. to EI-109, REMOVAL, Trunk Room Trim.>
4) Remove the lock assembly - trunk lid.
   (1) Disconnect the connector.
   (2) Remove the bolts, then remove the lock assembly - trunk lid.

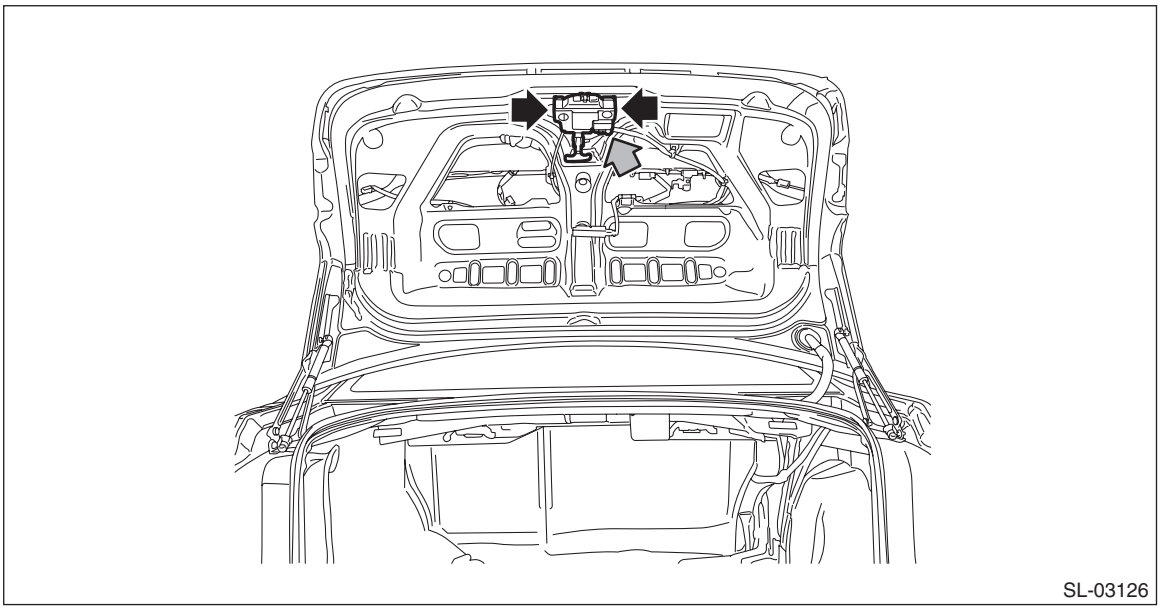

B: INSTALLATION

1) Install the lock assembly - trunk lid.

Tightening torque:
7.5 N·m (0.8 kgf-m, 5.5 ft-lb)

2) Connect the ground terminal to battery sensor. <Ref. to RC-4, BATTERY, NOTE, Repair Contents.>
3) Install the trim panel - trunk lid. <Ref. to EI-110, INSTALLATION, Trunk Room Trim.>

C: INSPECTION

1. LATCH

Check if the latch operates normally.
If latch deformation, abnormal wear, or unsmooth lock operation is observed, replace the lock assembly - trunk lid.

2. ACTUATOR

1) Check door lock operation
Check the door lock operation when battery voltage is applied between the connectors.

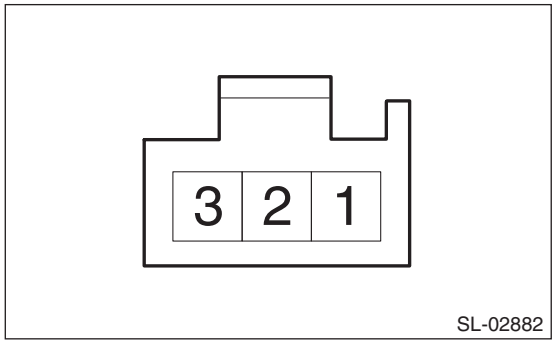

Terminal No.	Inspection conditions	Standard
1 (+) — 2 (–)	Connect battery to the terminals	LOCK → UNLOCK

2) Check switch
Measure the resistance between connector terminals.

Preparation tool:
Circuit tester

Terminal No.	Inspection conditions	Standard
2 — 3	LOCK	1 MΩ or more
	UNLOCK	Less than 1 Ω

3) If it does not operate normally, replace the lock assembly - trunk lid.

17.Front Hood Lock Assembly

A: REMOVAL

1) Open the front hood.
2) Remove the air intake duct. <Ref. to IN(H4DO)-12, REMOVAL, Air Intake Duct.>
3) Remove the bumper face - front. <Ref. to EI-34, REMOVAL, Front Bumper.>
4) Remove the bracket - grille.

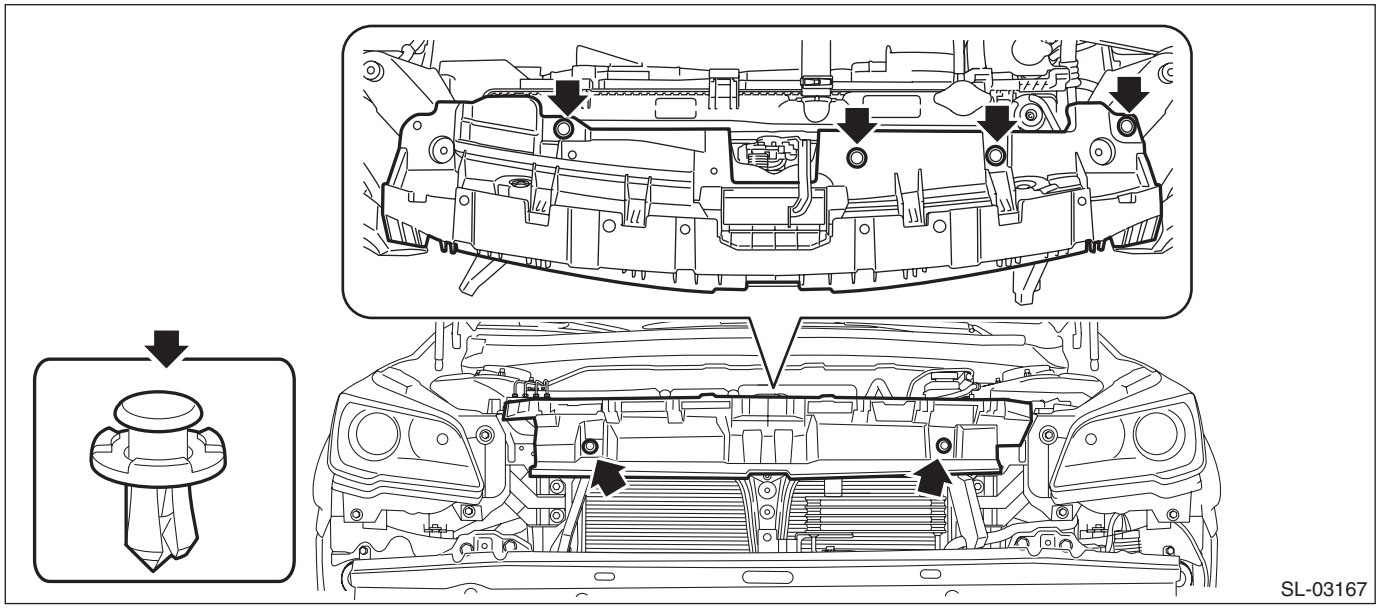

5) Remove the radiator upper brackets.

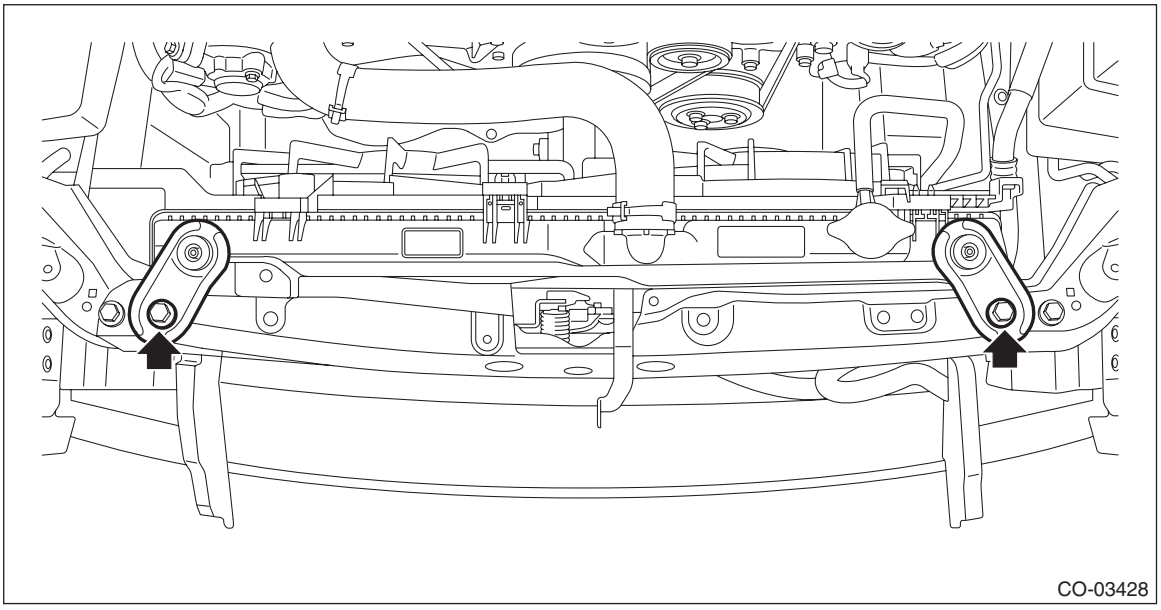

6) Remove the lock assembly - front hood.
(1) Remove the nuts and clips, and push the radiator to the rear to pull out the lock assembly - front hood through the clearance.

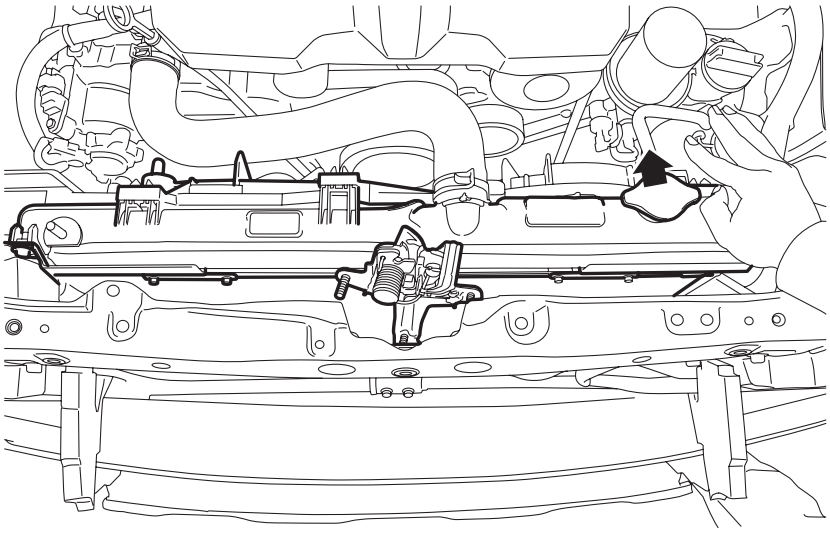
SL-03127

(2) Disconnect the release cable, and detach the lock assembly - front hood.

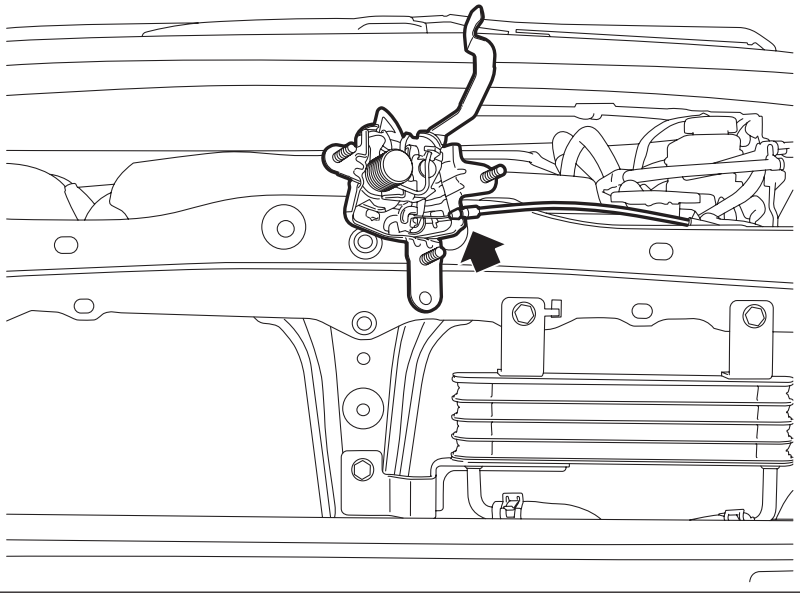
SL-03128

NOTE:
When disconnecting the release cable, refer to “FRONT HOOD OPENER” of “Remote Openers”. <Ref. to SL-59, FRONT HOOD OPENER, REMOVAL, Remote Openers.>

B: INSTALLATION

CAUTION:
• Install the bumper face - front so that the front end of the under cover (b) comes inside the bumper face - front (a).

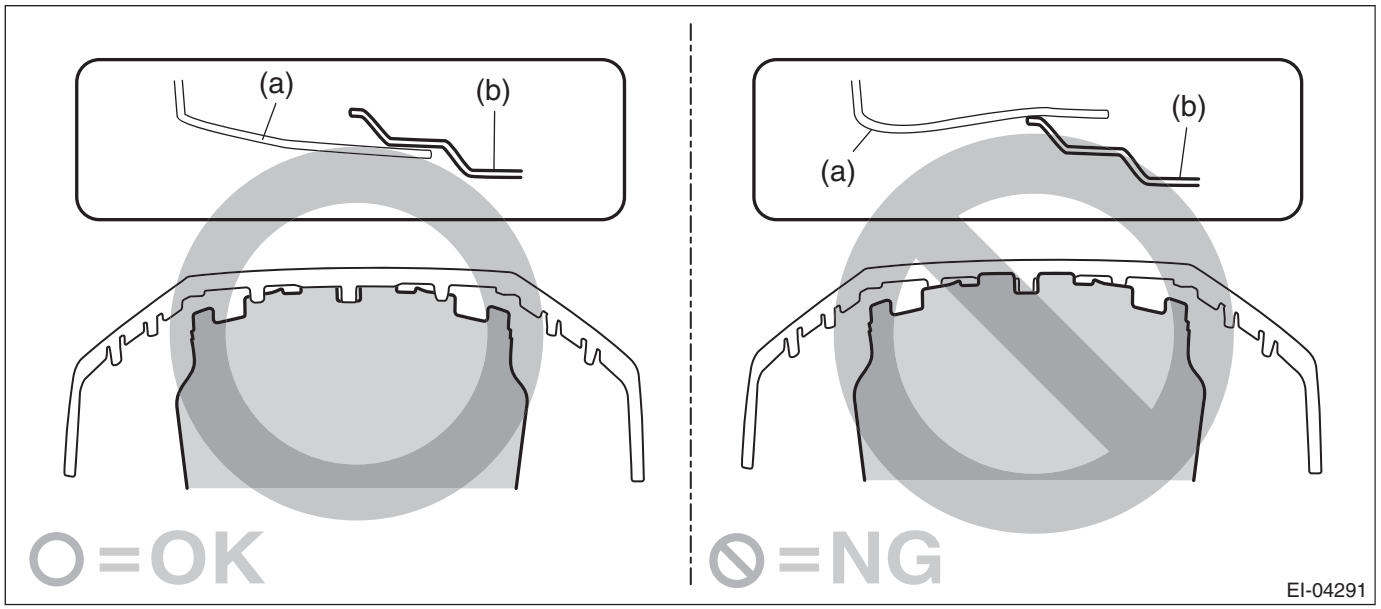

• Before installing the bumper face, match the claws on the bracket - front bumper with the engaging position of flange section on the bumper face side. If the engaging position is not correct, the flange section may be broken or the clearance between fender panel and bumper face may not be uniform.
1) Before installation, check the following items.
- Is the cable deformed?
- Grease is applied sufficiently to cable joints.

If grease is insufficient, add it as necessary before assembling the cable.
2) Adjust and install the lock assembly - front hood.

NOTE:
Refer to “ADJUSTMENT” for adjustment of the lock assembly - front hood. <Ref. to SL-58, ADJUSTMENT, Front Hood Lock Assembly.>

Tightening torque:
33 N·m (3.4 kgf-m, 24.3 ft-lb)
3) Install the radiator upper brackets.

Tightening torque:
12 N·m (1.2 kgf-m, 8.9 ft-lb)
4) Attach the bracket - grille.
5) Install the bumper face - front. <Ref. to EI-38, INSTALLATION, Front Bumper.>
6) Install the air intake duct. <Ref. to IN(H4DO)-12, INSTALLATION, Air Intake Duct.>

C: ADJUSTMENT

1) Remove the bumper face - front. <Ref. to EI-34, REMOVAL, Front Bumper.>

NOTE:
Remove the bumper face - front only at the first adjustment.
2) Remove the center ring clip from the lock assembly - front hood.

NOTE:
Remove the center ring clip only at the first adjustment.
After adjusting the lock assembly - front hood, dispose the clips since they are no longer needed.
The clips cannot be inserted because the clip holes become smaller due to adjustment.
3) Loosen the nuts through the adjustment window (a) of the lock assembly - front hood, and adjust the lock assembly - front hood while moving it up and down.

CAUTION:
After adjustment, tighten the bolts securely.

Tightening torque:
33 N·m (3.4 kgf-m, 24.3 ft-lb)

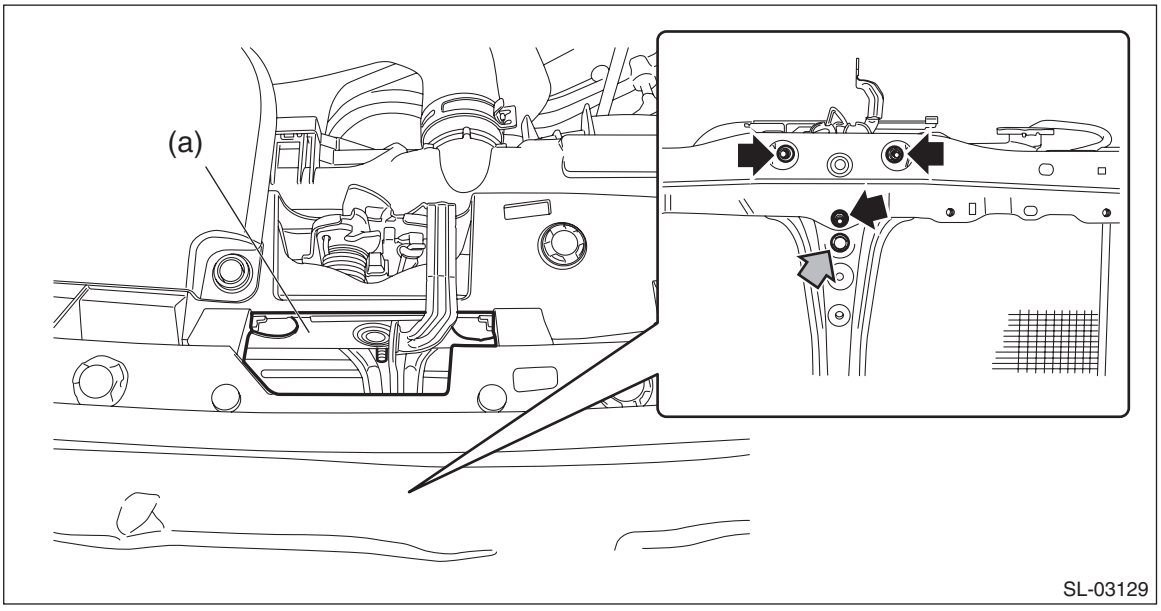

D: INSPECTION

Check if the lock assembly operates normally.
If lever deformation, abnormal wear, or unsmooth lock operation is observed, replace the lock assembly - front hood.

18.Remote Openers

A: REMOVAL

1. FRONT HOOD OPENER

1) Remove the cover assembly - instrument panel LWR driver. <Ref. to EI-75, REMOVAL, Instrument Panel Lower Cover.>
2) Remove the cover side sill - front LH and front cover - side sill LH. <Ref. to EI-92, REMOVAL, Lower Inner Trim.>
3) Remove the opener handle.
   (1) Remove the cable - front hood.
   (2) Remove the bolt, and remove the opener handle.

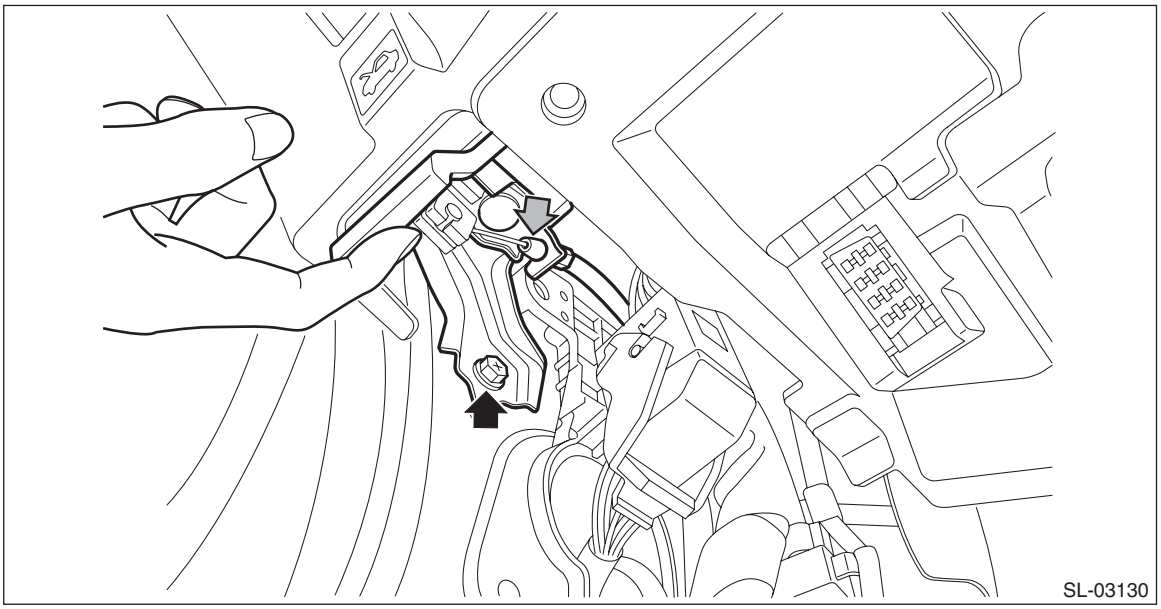

4) Remove the mud guard - front LH. <Ref. to EI-29, REMOVAL, Mud Guard.>
5) Remove the lock assembly - front hood. <Ref. to SL-55, REMOVAL, Front Hood Lock Assembly.>
6) Attach a string to the end of cable - front hood, and remove the cable clip and cable - front hood.

NOTE:
Leave the string attached to the body, and use it during installation.

2. FUEL FLAP OPENER

1) Remove the lower inner trim. <Ref. to EI-92, REMOVAL, Lower Inner Trim.>
2) Remove the cover - handle.
   (1) Open the cover by using a flat tip screwdriver.
   (2) Remove the screws and detach the cover - handle.

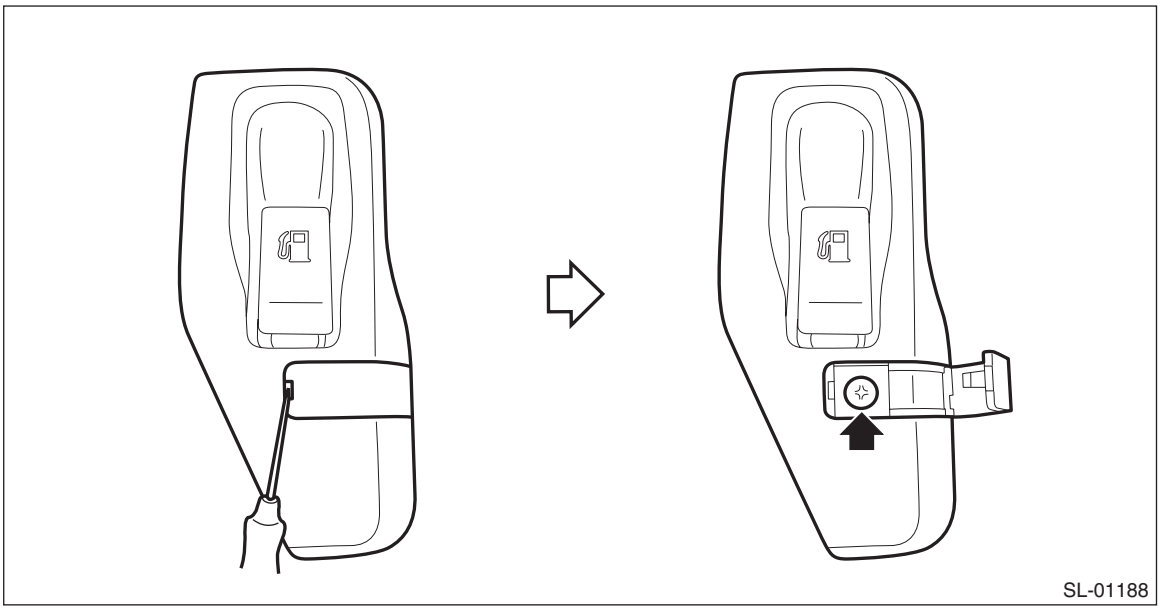
SL-01188

3) Remove the pull handle - opener.
   (1) Remove the nut.
   (2) Remove the cable from pull handle - opener.

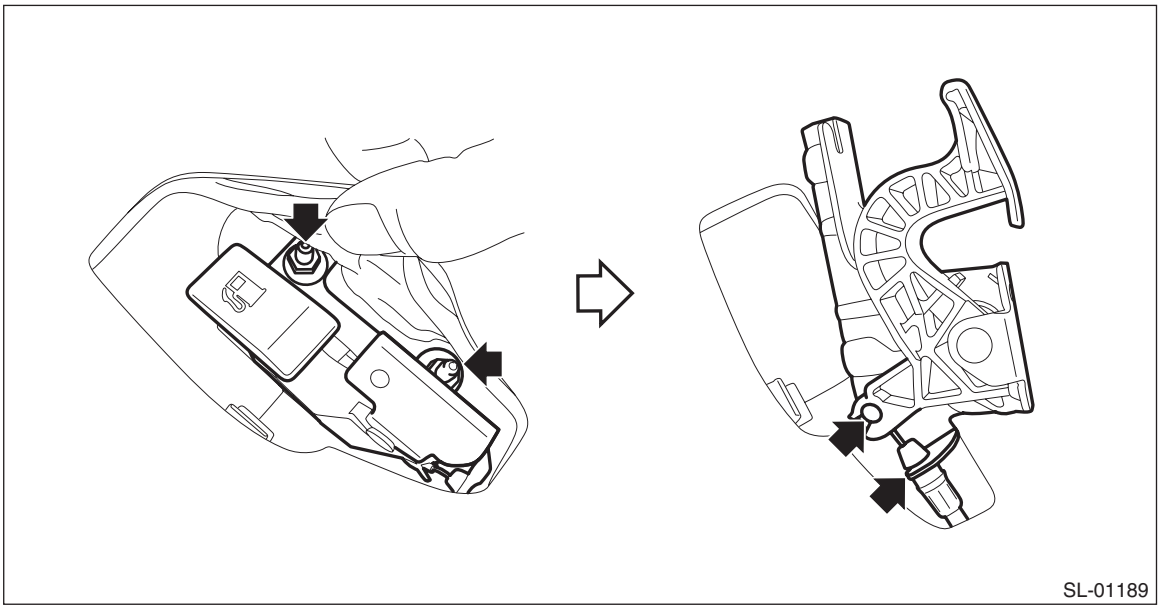
SL-01189

4) Remove the trim panel - rear apron RH. (OUTBACK model) <Ref. to EI-100, OUTBACK MODEL, REMOVAL, Rear Quarter Trim.>
5) Remove the trim panel - trunk side RH. (Sedan model) <Ref. to EI-109, REMOVAL, Trunk Room Trim.>

6) Remove the cable assembly - fuel inside the quarter panel.
(1) Turn the cable assembly - fuel counterclockwise and pull toward vehicle rear.

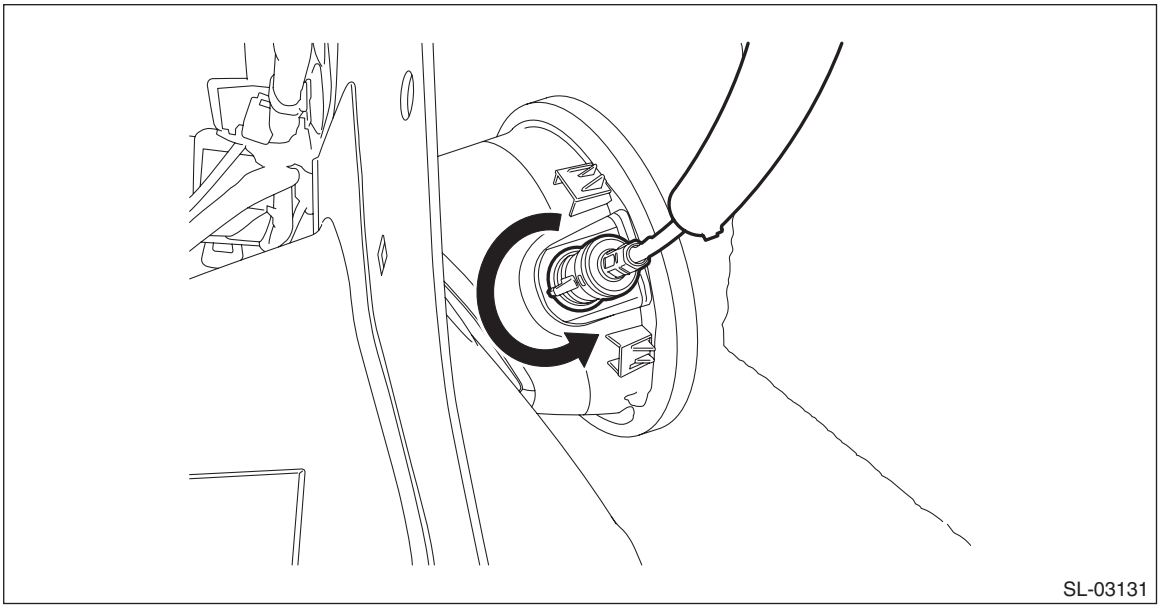

7) Remove the cable clip, and remove the cable.
- Sedan model

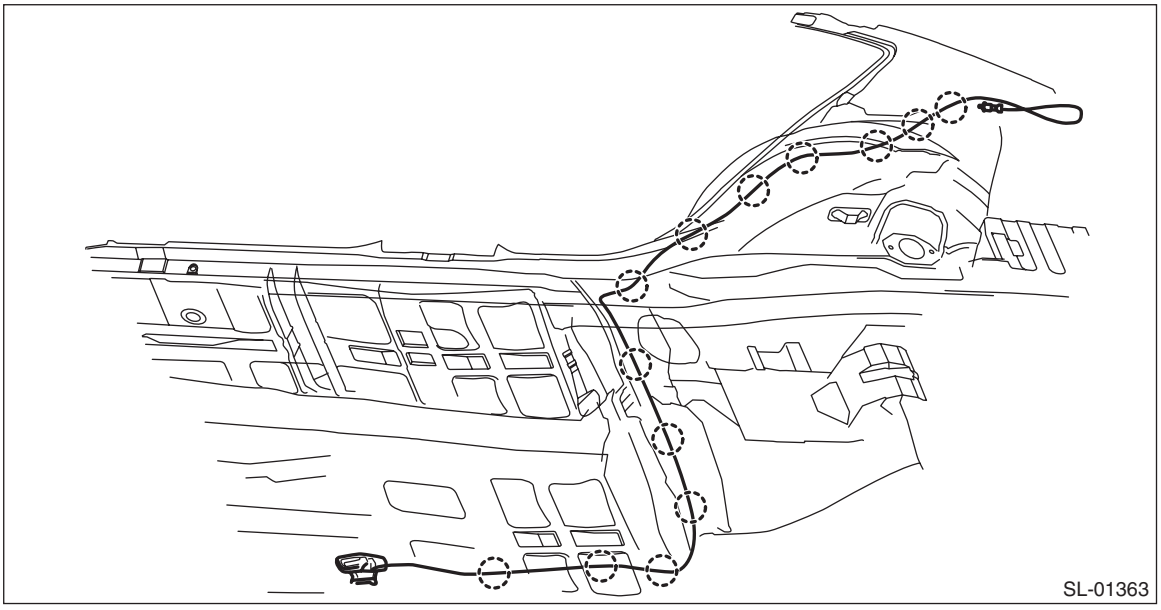

- OUTBACK model

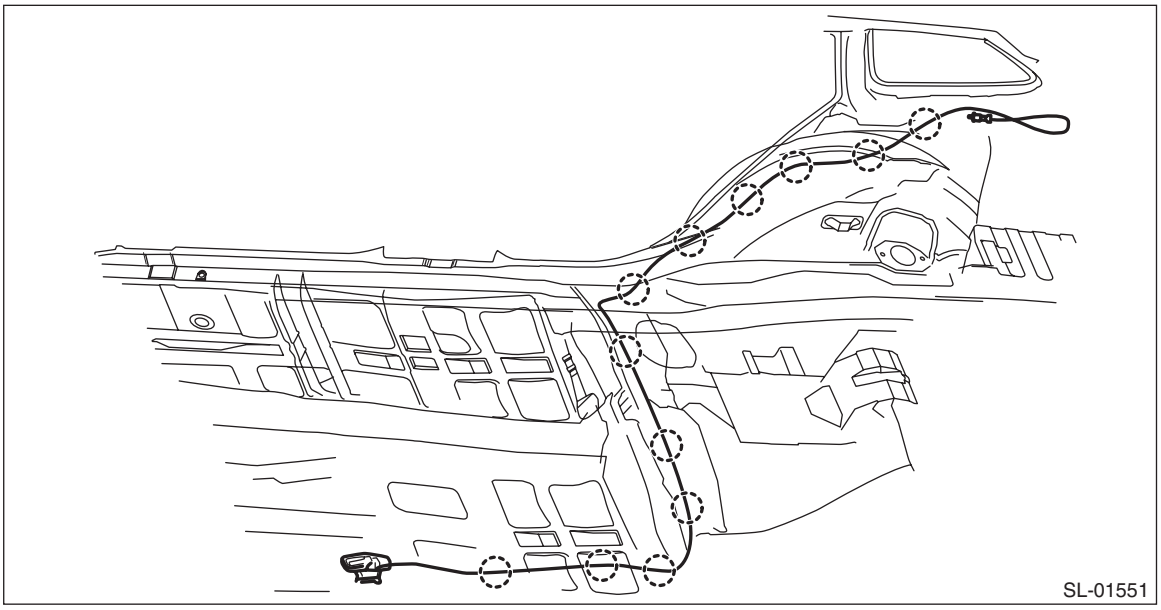

3. FUEL FLAP

1) Open the fuel flap and remove the fuel filler cap.
2) Turn the fuel filler pipe protector in the direction of the arrow to unlock and remove it.

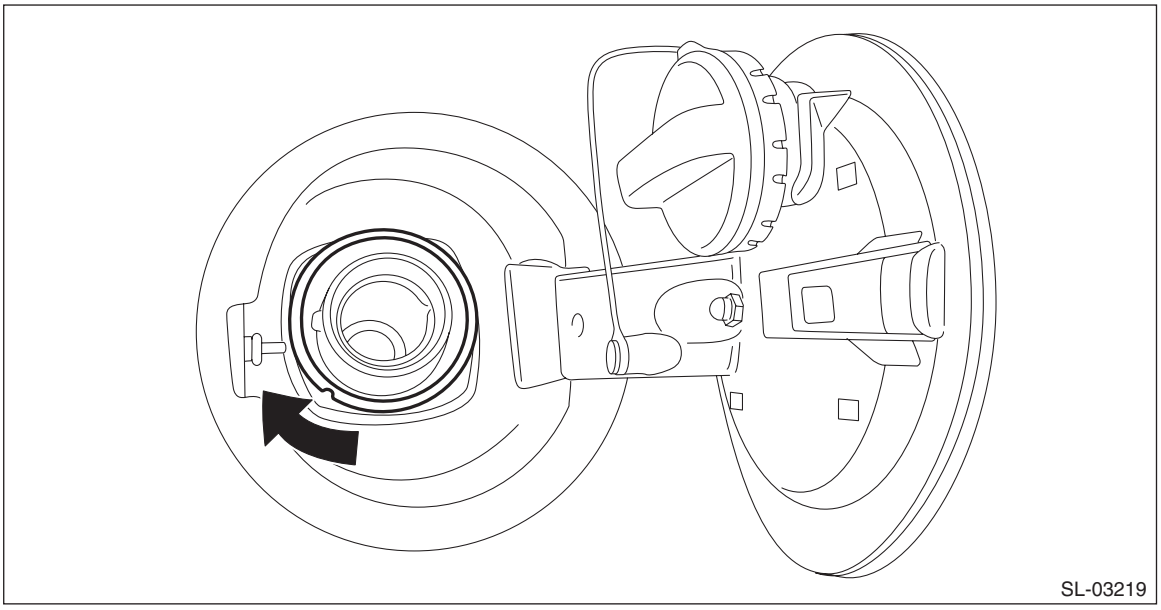

3) Remove the trim panel - rear apron RH. (OUTBACK model) <Ref. to EI-100, OUTBACK MODEL, REMOVAL, Rear Quarter Trim.>
4) Remove the trim panel - trunk side RH. (Sedan model) <Ref. to EI-109, REMOVAL, Trunk Room Trim.>

5) Remove the cable assembly - fuel inside the quarter panel.
(1) Turn the cable assembly - fuel counterclockwise and pull toward vehicle rear.

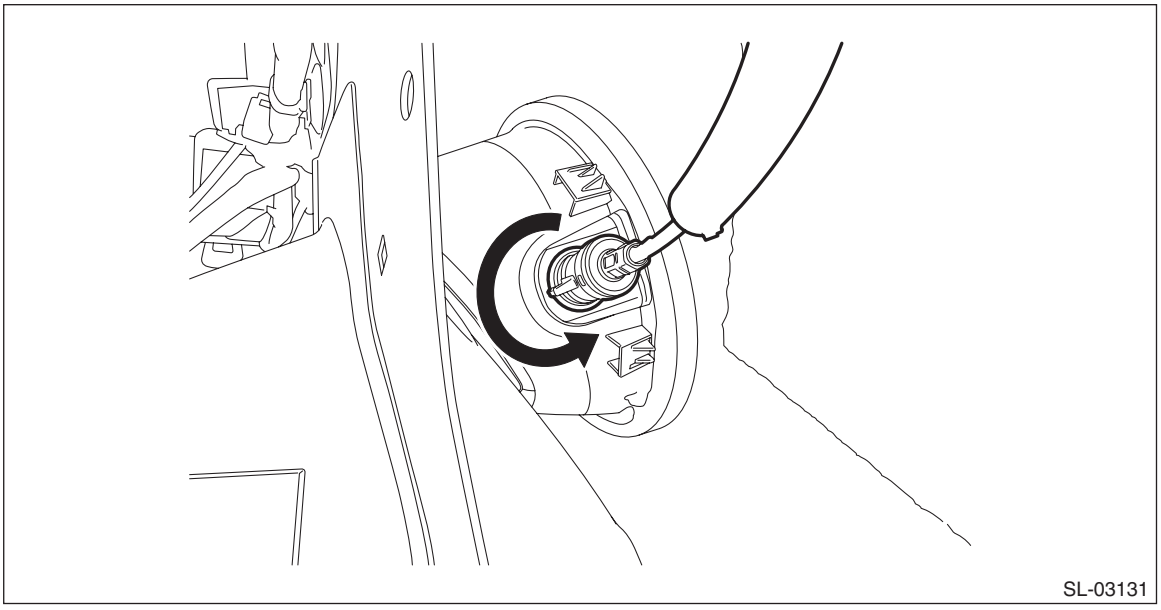

6) Disconnect the ring clips.

CAUTION:
Always replace with a new part, because engagement of the claw weakens.

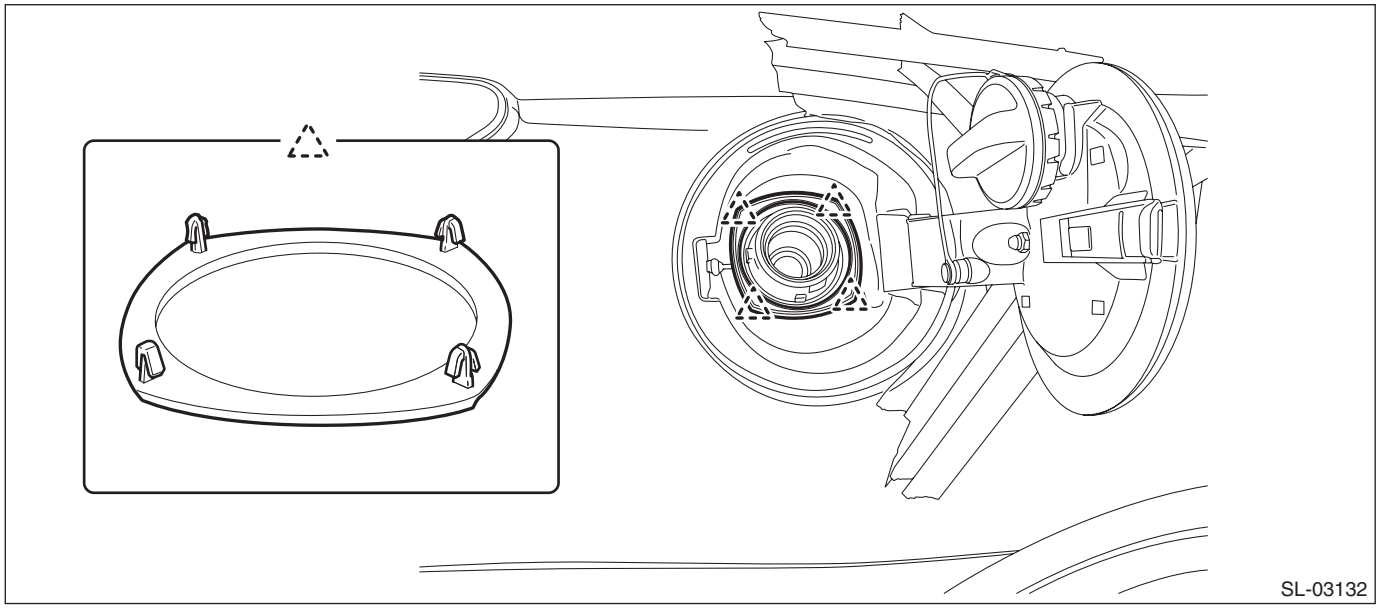

7) Remove the saucer - COMPL.

CAUTION:
Be careful not to damage by forcibly prying at the rubber portion with a flat tip screwdriver or similar tool.

(1) Attach the protective tape (a) to the panel side outer.
(2) Hold the position shown in the figure with your hands, push the claw from vehicle inside and pull out toward yourself.

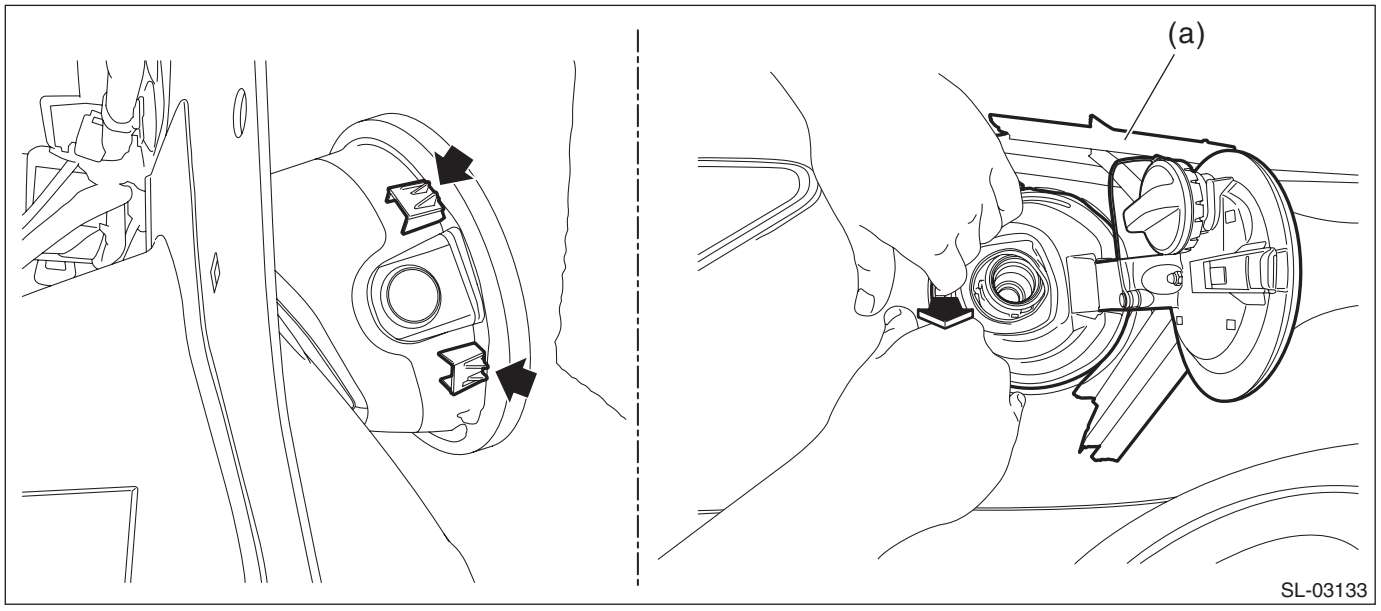

(3) While pulling out toward yourself, remove the rubber portion from the fuel filler pipe using a flat tip screwdriver or similar tool wrapped with a protection tape.

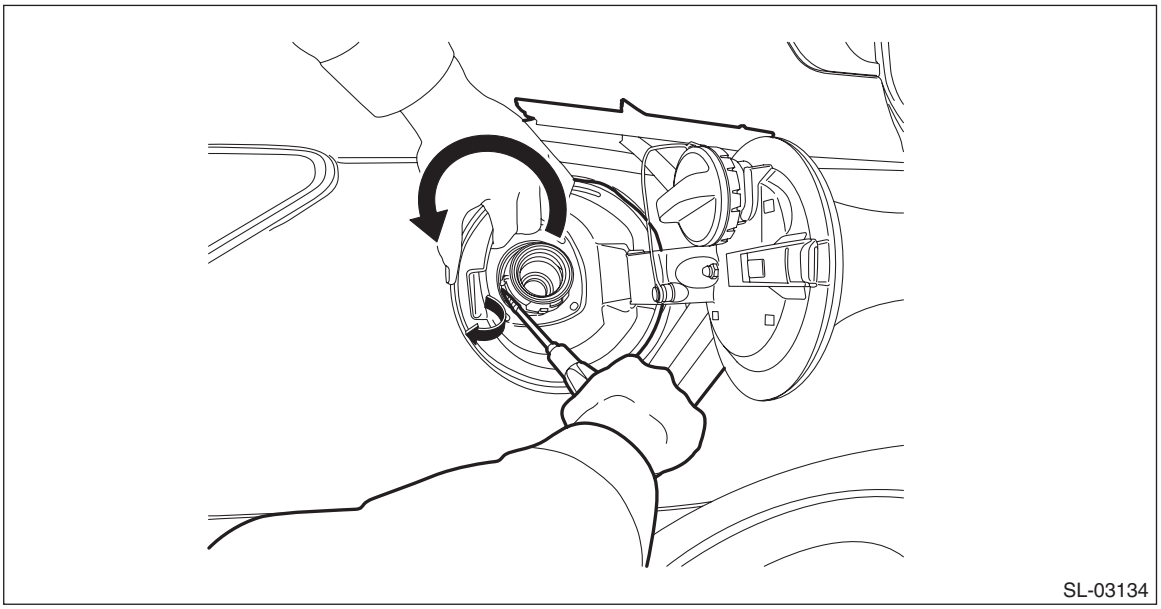

(4) Pull out while tilting toward the front of vehicle.

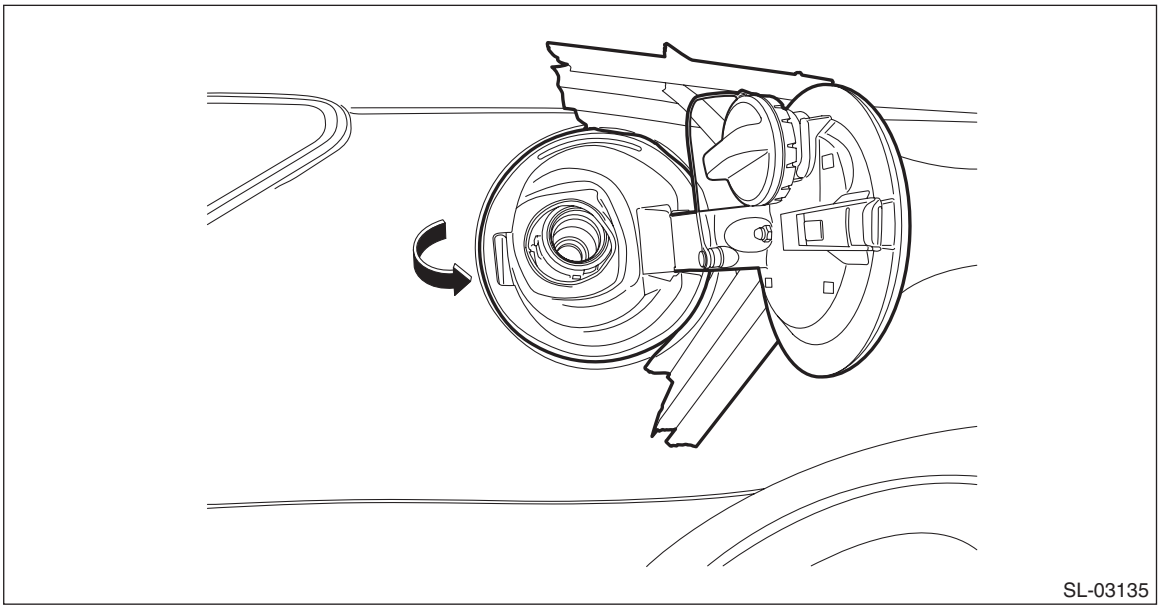

8) Remove the flap - COMPL fuel from the saucer - COMPL.

(1) Remove the nut and release the claws using a flat tip screwdriver or similar tool wrapped with protection tape.

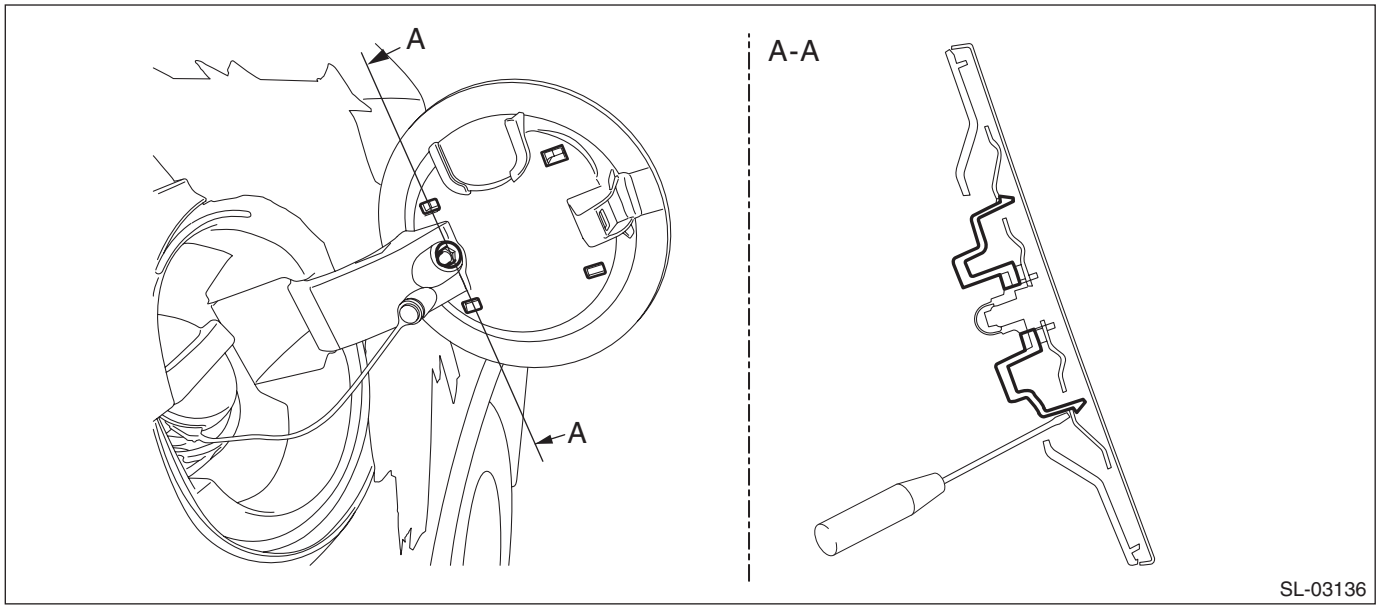

9) Remove the clips, and remove the fuel filler cap from the saucer - COMPL.

CAUTION:
Always replace with a new clip, because engagement of the claw weakens.

B: INSTALLATION

1. FRONT HOOD OPENER

CAUTION:
• Install the bumper face - front so that the front end of the under cover (b) comes inside the bumper face - front (a), and the front end of the mud guard (c) comes outside the bumper face - front (a).

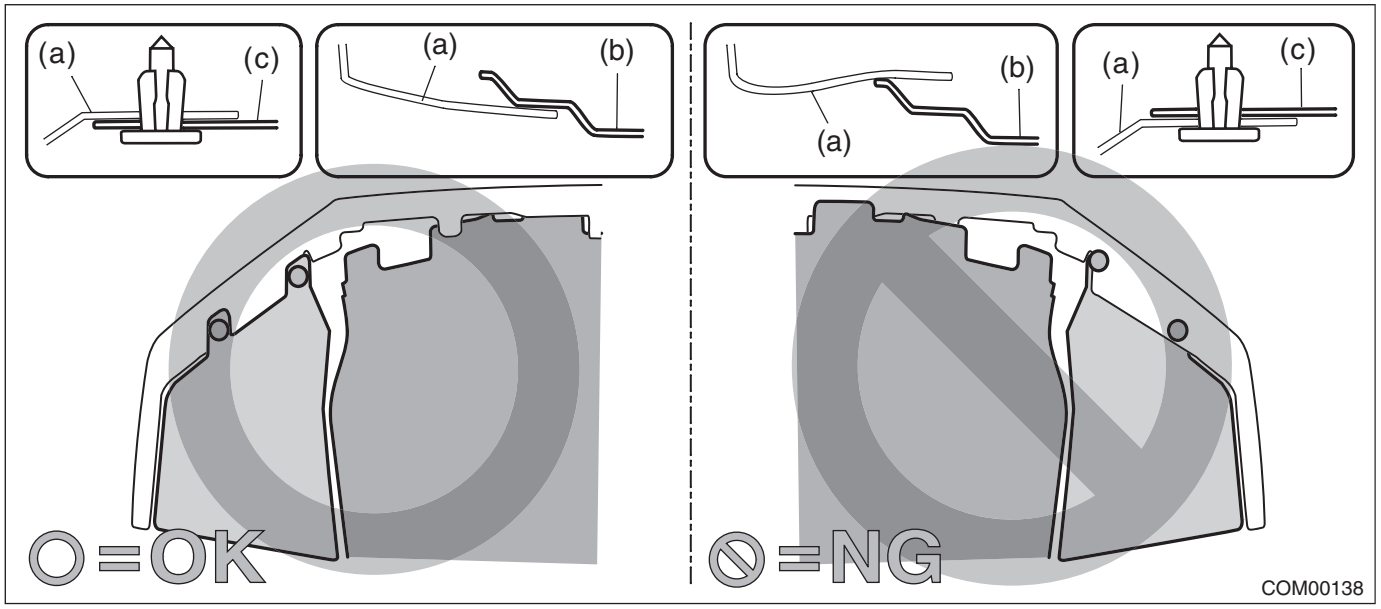

• Before installing the bumper face, match the claws on the bracket - front bumper with the engaging position of flange section on the bumper face side. If the engaging position is not correct, the flange section may be broken or the clearance between fender panel and bumper face may not be uniform.
1) Before installation, check the following items.
• Cable is free from deformation such as fray.
2) Pull the string attached to the cable - front hood into the vehicle, and install the cable clip and cable - front hood.
3) Install the lock assembly - front hood. <Ref. to SL-57, INSTALLATION, Front Hood Lock Assembly.>
4) Install the opener handle.

Tightening torque:
7.5 N·m (0.8 kgf-m, 5.5 ft-lb)
5) Install the cover side sill - front and the front cover - side sill.
6) Install the cover assembly - instrument panel LWR driver.
7) Install the mud guard - front LH.

2. FUEL FLAP OPENER

1) Install the cable assembly - fuel.
2) Install the pull handle - opener and cover - handle.

Tightening torque:
7.5 N·m (0.8 kgf-m, 5.5 ft-lb)
3) Install the trim panel - trunk side RH. (Sedan model)
4) Install the trim panel - rear apron RH. (OUTBACK model)
5) Install the lower inner trim.

3. FUEL FLAP

1) Install the flap - COMPL fuel to the saucer - COMPL.

Tightening torque:
7.5 N·m (0.8 kgf-m, 5.5 ft-lb)

2) Install the saucer - COMPL.

NOTE:
Securely install the rubber portion of the saucer - COMPL to the fuel filler pipe assembly.

3) Install the fuel filler cap to the saucer - COMPL.

CAUTION:
Always replace with a new clip, because engagement of the claw weakens.

4) Attach the ring clips.

CAUTION:
Always replace with a new part, because engagement of the claw weakens.

5) Install the fuel filler pipe protector.
6) Install the cable assembly - fuel.
7) Install the trim panel - trunk side RH. (Sedan model)
8) Install the trim panel - rear apron RH. (OUTBACK model)

C: INSPECTION

Check if the front hood and fuel flap operate normally.

19.Ignition Key Lock

A: REPLACEMENT

CAUTION:
• Before handling the airbag system components, refer to "CAUTION" of "General Description" in "AIRBAG SYSTEM". <Ref. to AB-10, CAUTION, General Description.>
• Do not allow harness and connectors to interfere or get tangled up with other parts.
• If the steering wheel and steering angle sensor (steering roll connector) are removed, perform "VSC(VDC) Centering Mode" of the VDC. <Ref. to VDC-15, VDC SENSOR MIDPOINT SETTING MODE, ADJUSTMENT, VDC Control Module and Hydraulic Control Unit (VDCCM&H/U).>

1) Disconnect the ground terminal from the battery sensor, and wait for at least 60 seconds before starting work. <Ref. to RC-4, BATTERY, NOTE, Repair Contents.>
2) Remove the column assembly - steering. <Ref. to PS-20, REMOVAL, Steering Column.>
3) Remove the ignition key lock.
   (1) Secure the column assembly - steering in a vise.
   (2) Use the reverse tap and drill to remove the set bolt and remove the ignition key lock.

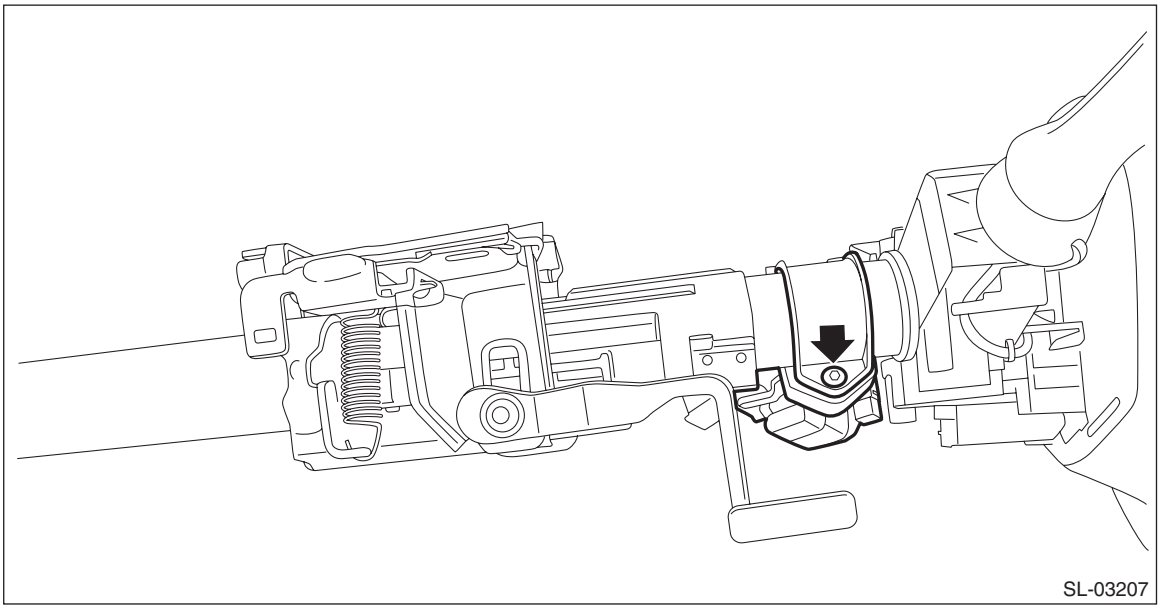

4) Install the ignition key lock.
   (1) Secure the ignition key lock to the column assembly - steering.
   (2) Use new set bolts. Tighten the bolt until the bolt head is broken (bolt head wrenched off).
5) Install the column assembly - steering. <Ref. to PS-22, INSTALLATION, Steering Column.>
6) Connect the ground terminal to battery sensor. <Ref. to RC-4, BATTERY, NOTE, Repair Contents.>

B: DISASSEMBLY

NOTE:
Refer to "Key Lock Cylinders" for disassembly of the ignition key lock. <Ref. to SL-70, STEERING LOCK, REMOVAL, Key Lock Cylinders.>

C: INSPECTION

1) Measure the resistance between connector terminals.

Preparation tool:
Circuit tester

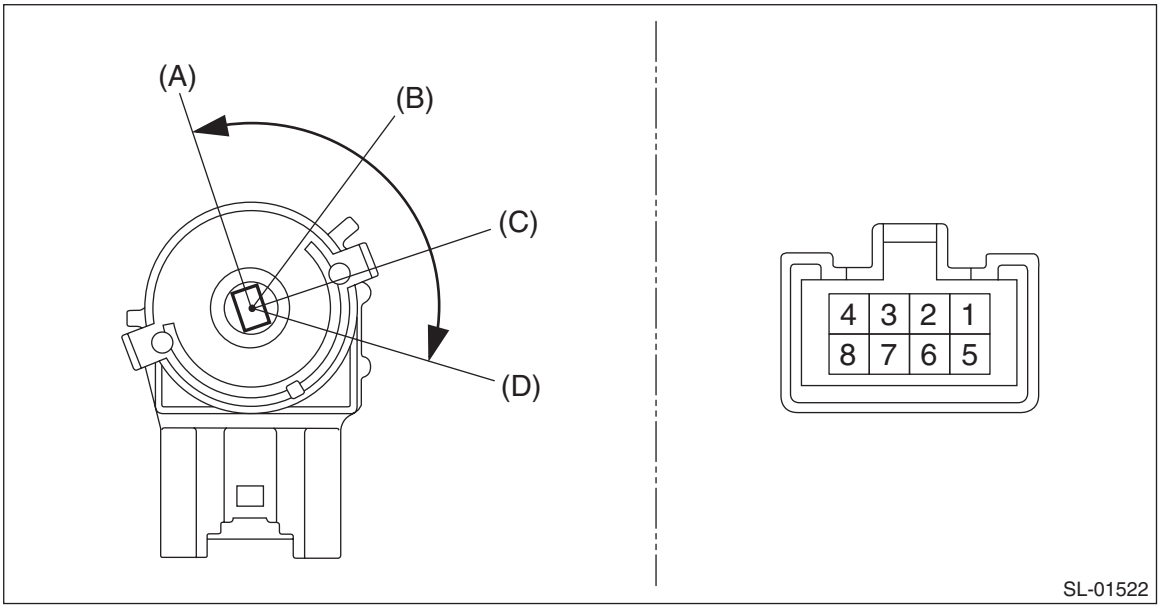

Terminal No.	Inspection conditions		Standard
Between all terminals	(A)	LOCK	1 MΩ or more
2 — 4	(B)	ACC	Less than 1 Ω
1 — 2 — 4 5 — 6	(C)	ON	Less than 1 Ω
1 — 3 — 4 5 — 6 — 7	(D)	ST	Less than 1 Ω

2) Replace the ignition switch assembly if the inspection result is not within the standard.

20.Key Lock Cylinders

A: REMOVAL

1. STEERING LOCK

1) Disconnect the ground terminal from the battery sensor, and wait for at least 60 seconds before starting work. <Ref. to RC-4, BATTERY, NOTE, Repair Contents.>
2) Remove the cover assembly - column.
   (1) Remove the clips, and remove the cover - column (a).
   (2) Remove the screws.
   (3) Release the claws, and remove the cover assembly - column UPR (b) and the cover assembly - column LWR (c).

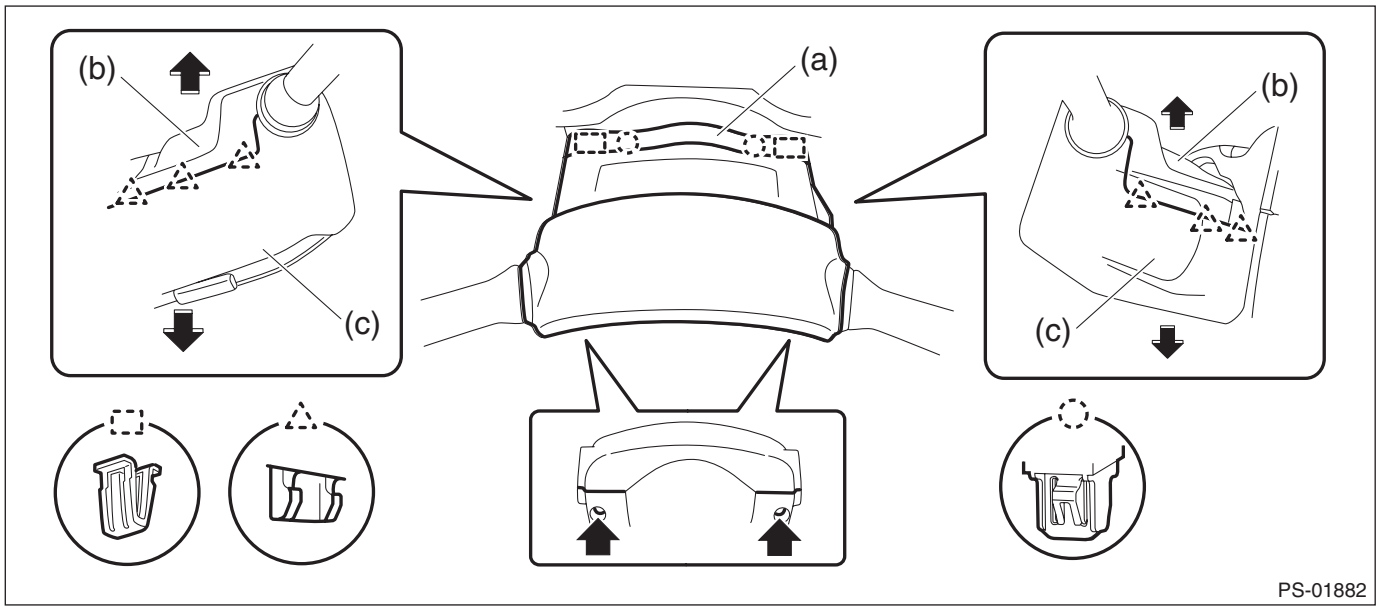

3) Remove the immobilizer antenna assembly. <Ref. to SL-91, REMOVAL, Immobilizer Antenna.>
4) Release the claws, and pull the key warning switch downwards to remove.

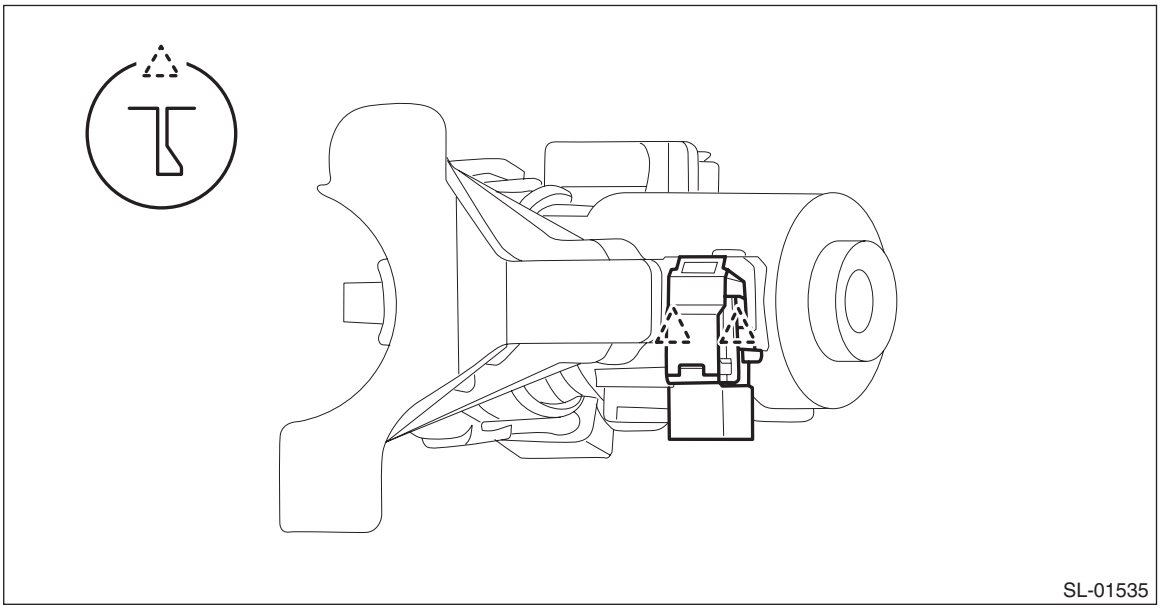

5) Remove the screws and remove the key lock solenoid.

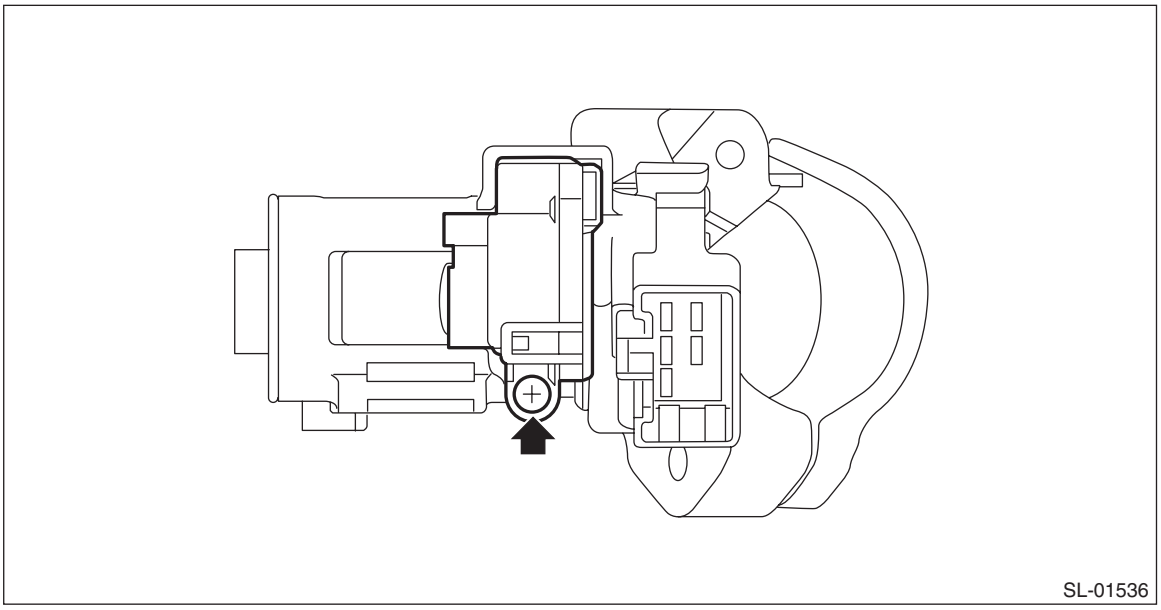

6) Remove the key lock solenoid.
   (1) Disconnect the connector.
   (2) Remove the screws and remove the key lock solenoid.

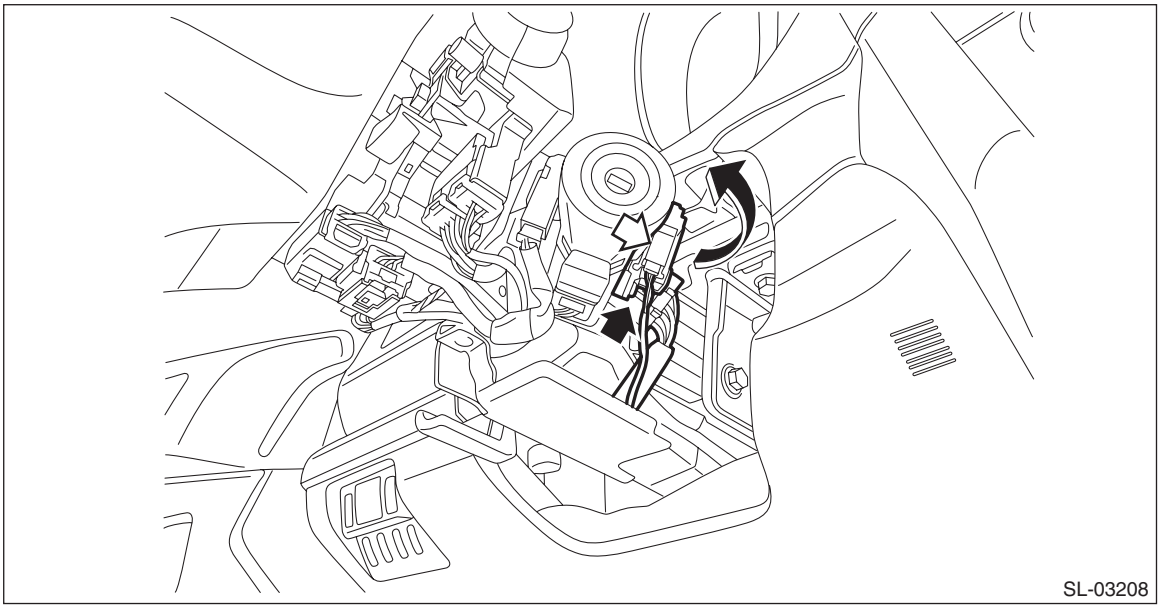

7) Replace the key cylinder.
(1) Insert the key into the key cylinder, and turn the key to the ACC position.
(2) Insert a flat tip screwdriver from the steering lock frame hole (A), and pull the key cylinder until the key cylinder claws touch the steering lock frame stopper (B).

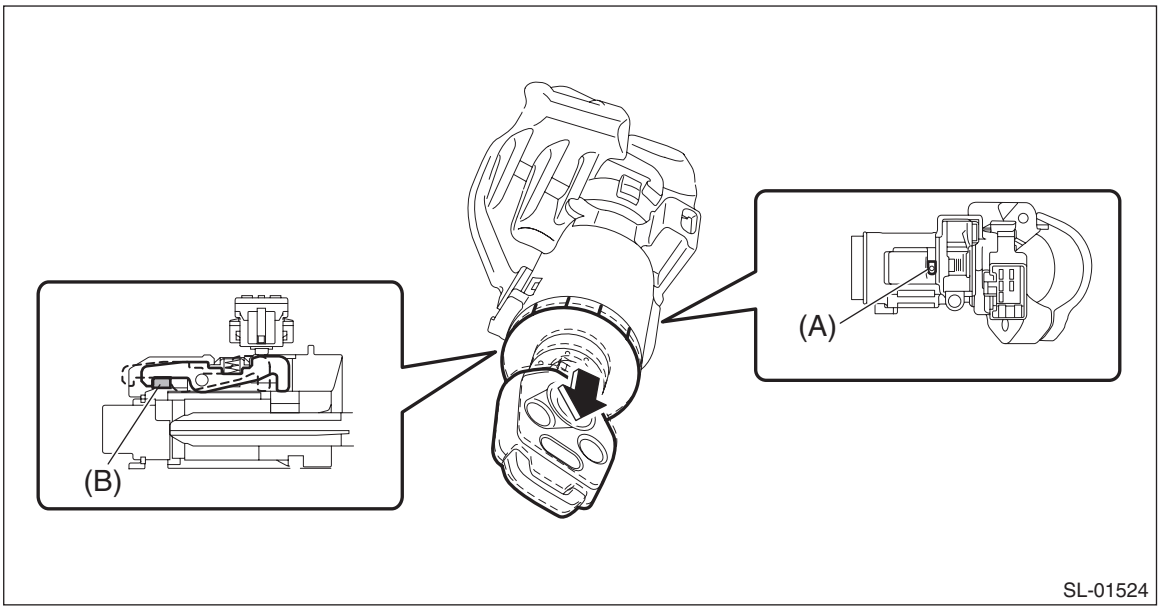

(3) Insert a flat tip screwdriver from the steering lock frame hole (A), and release the claws to pull out the key cylinder.

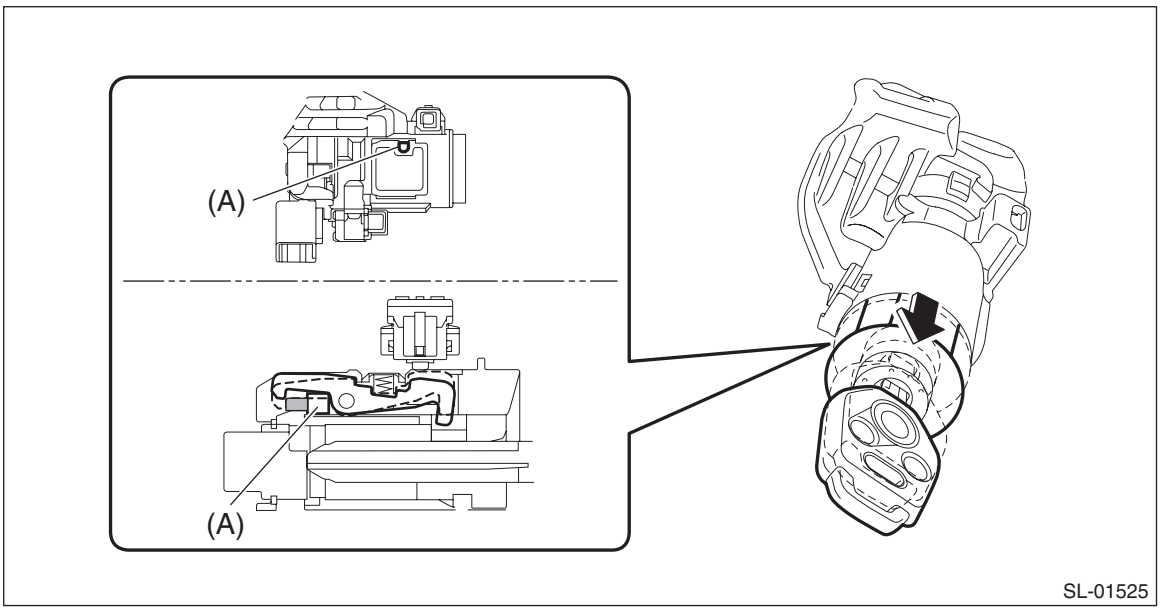

2. FRONT DOOR

1) Raise the glass assembly - front door to the top position.
2) Remove the cover - handle front outer.

Preparation tool:
TORX® T30

(1) Remove the plug at the rear end of the panel assembly - front door.
(2) Loosen the TORX® bolt and remove the cover - handle front outer.

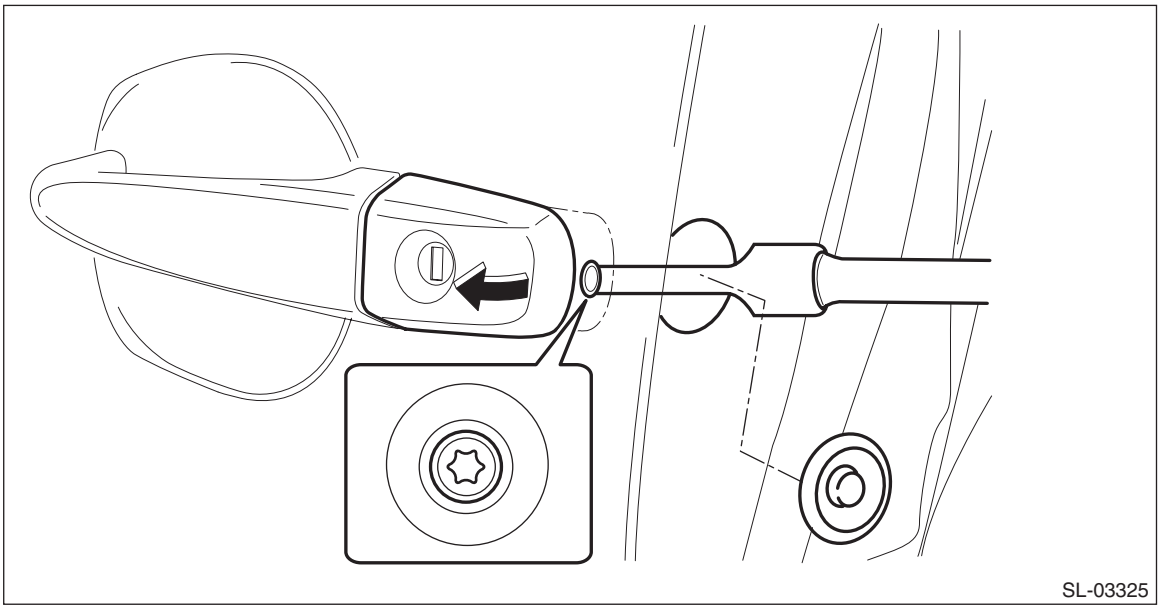

3) Remove the key cylinder (B) from the cover - handle front outer (A), and replace the key cylinder.

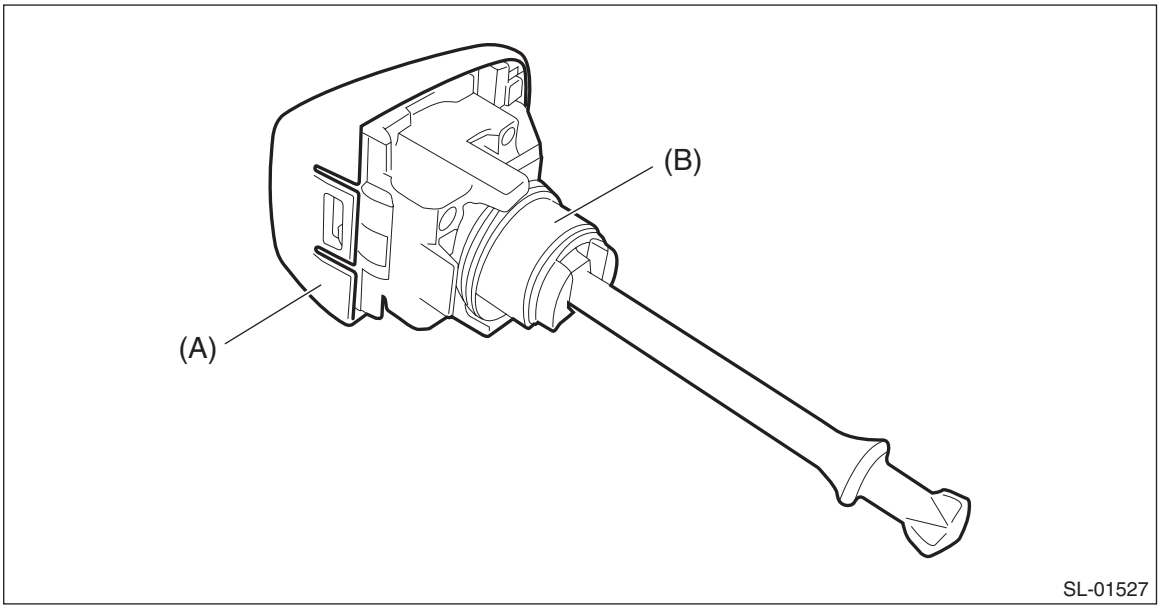

3. TRUNK LID

1) Remove the garnish assembly - trunk. <Ref. to EI-61, REMOVAL, Trunk Lid Garnish.>
2) Remove the key cylinder.
   (1) Remove the cable (a) and clip (b).

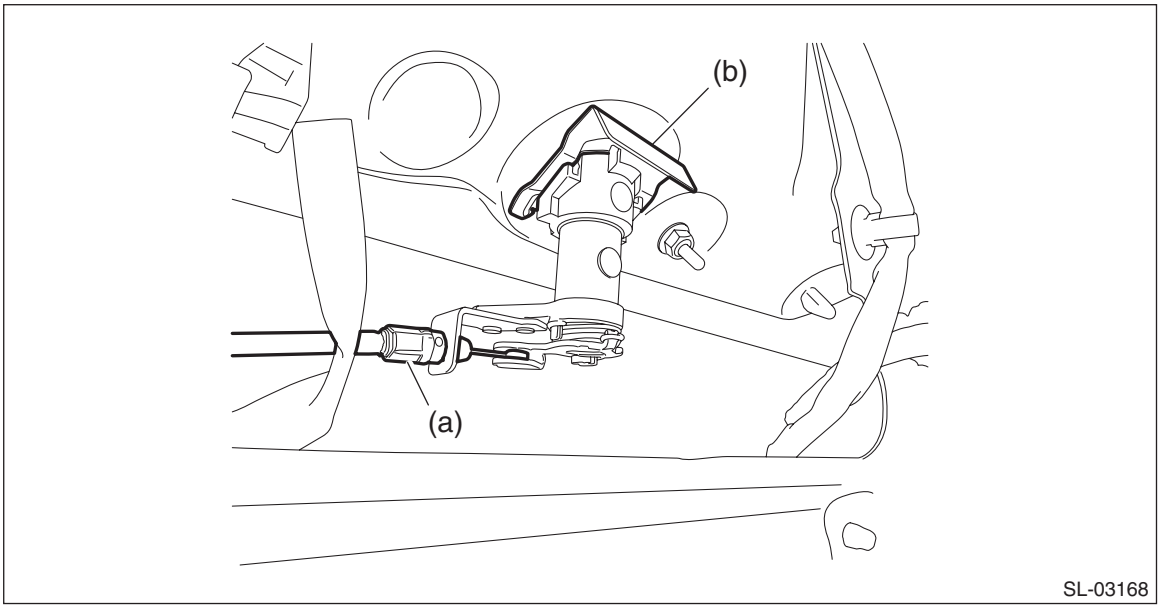

   (2) Remove the key cylinder from the trunk lid, and replace the key cylinder.

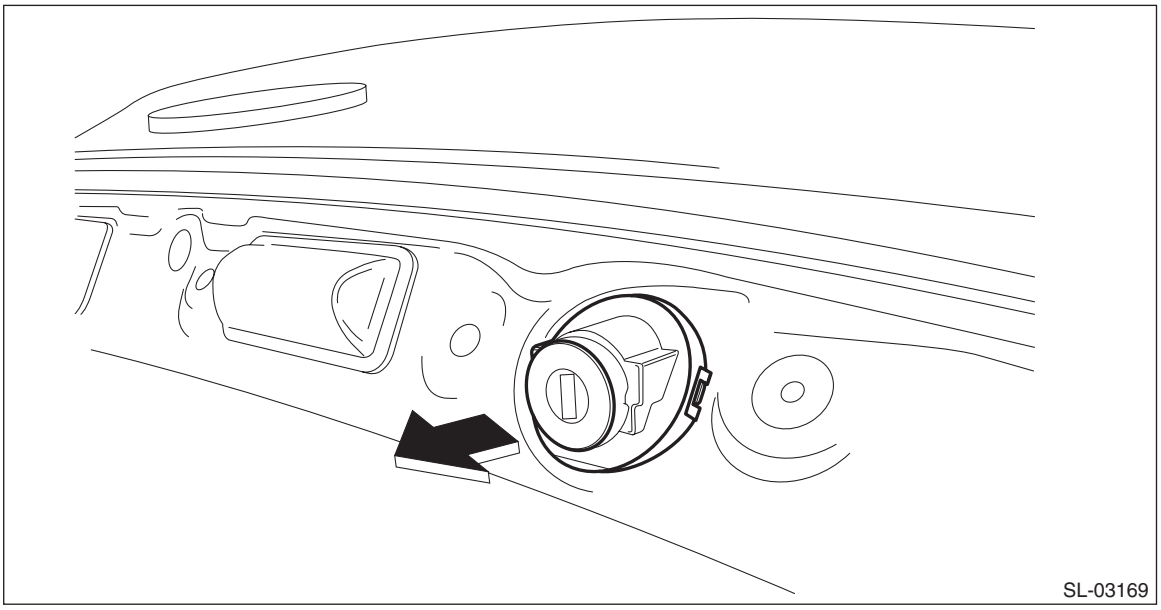

4. GLOVE BOX LID

1) Remove the pocket assembly.
   (1) Remove the damper COMPL - pocket.
   (2) Release the stoppers and remove the pocket assembly by pulling it toward you.

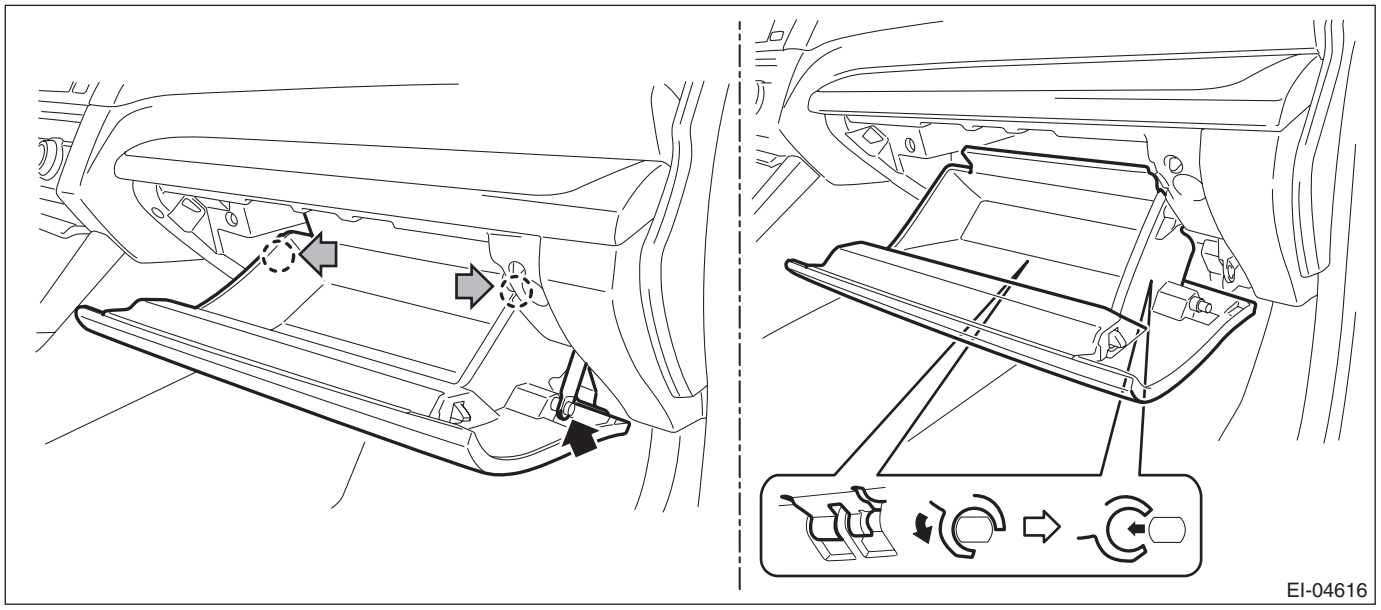

2) Replace the key cylinder.
   (1) Pull up the lock knob.
   (2) Push out the key cylinder from the pocket assembly while pressing in the metal plate.

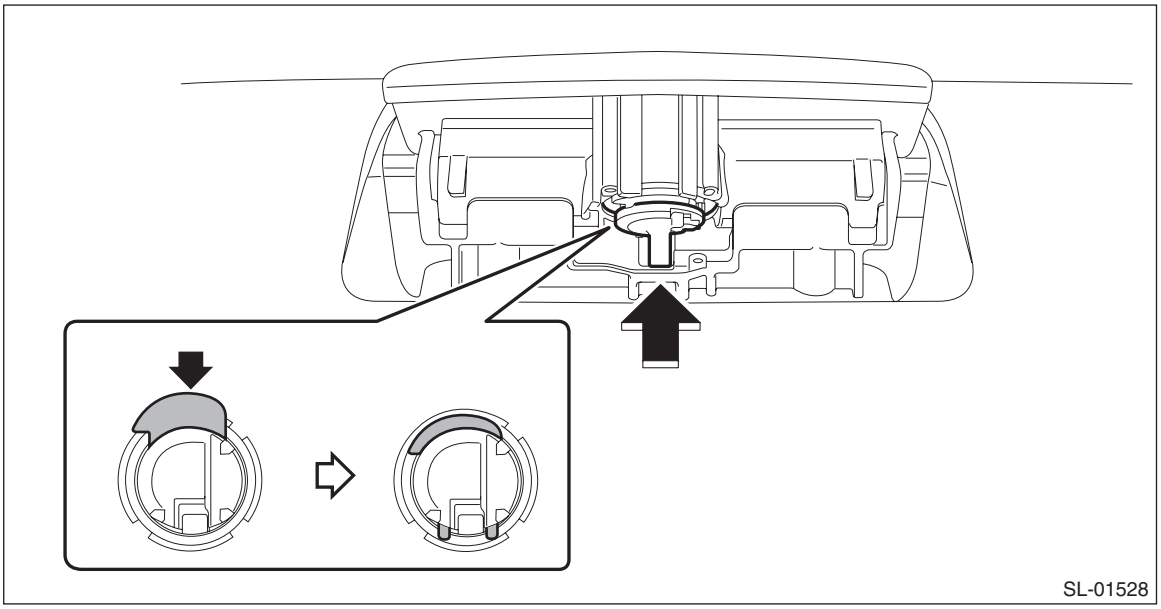

B: INSTALLATION

1. STEERING LOCK

1) Install the key cylinder.
2) Install the key lock solenoid and immobilizer antenna assembly.
3) Install the cover assembly - column.
4) Connect the ground terminal to battery sensor. <Ref. to RC-4, BATTERY, NOTE, Repair Contents.>

2. FRONT DOOR

1) Install the key cylinder.
2) Install the cover - handle front outer.

CAUTION:
When installing the cover - handle front outer on driver's side, make sure that the key cylinder shaft is correctly inserted into the latch & actuator assembly - front.

Preparation tool:
TORX® T30

Tightening torque:
7.5 N·m (0.8 kgf-m, 5.5 ft-lb)

3. TRUNK LID

1) Install the key cylinder.
2) Install the trunk lid garnish. <Ref. to EI-61, INSTALLATION, Trunk Lid Garnish.>

4. GLOVE BOX LID

1) Install the key cylinder.
2) Install the pocket assembly.

21.Impact Sensor

A: REMOVAL

1) Pull out the key from the ignition switch, or turn the ignition switch to OFF.
2) Close all the doors, trunk lid and rear gate.
3) Press the UNLOCK button of the keyless transmitter or access key.
4) Disconnect the ground terminal from battery sensor. <Ref. to RC-4, BATTERY, NOTE, Repair Contents.>
5) Remove the impact sensor.
6) Change the setting of impact sensor using Subaru Select Monitor.

B: INSTALLATION

1) Pull out the key from the ignition switch, or turn the ignition switch to OFF.
2) Close all the doors, trunk lid and rear gate.
3) Press the UNLOCK button of the keyless transmitter or access key.
4) Connect the ground terminal to battery sensor. <Ref. to RC-4, BATTERY, NOTE, Repair Contents.>
5) Install the impact sensor.
6) Change the setting of impact sensor using Subaru Select Monitor.

C: OPERATION

1. IMPACT SENSOR SETTING USING SUBARU SELECT MONITOR

1) Make an impact monitor setting.
   (1) Connect the Subaru Select Monitor to data link connector.

NOTE:
For detailed operation procedures, refer to “Application help”.

   (2) Turn the ignition switch to ON.
   (3) On «Start» display, select «Diagnosis».
   (4) On «Vehicle selection» display, input the target vehicle information and select «Confirmed».
   (5) On «Main Menu» display, select «Each System».
   (6) On «Select System» display, select «Body Control» and then select «Enter».
   (7) On «Select Function» display, select «Customize».
   (8) From the Customize item list, select «Impact sensor» or «Impact Sensor Setup».
   (9) Make an impact monitor setting.
   - When installing: ON
   - When removing: OFF

   (10) Make an impact monitor ON/OFF setting.
   - When installing: ON
   - When removing: OFF

   (11) Turn the ignition switch to OFF, and then remove the Subaru Select Monitor.

D: ADJUSTMENT

1. CHECK IMPACT SENSOR

1) Pull out the key from the ignition switch, or turn the ignition switch to OFF.
2) Close all the windows.
3) Close all the doors, trunk lid and rear gate. Leave open the front hood.
4) Press the LOCK button of the keyless transmitter or access key from outside of vehicle.
5) Check that the security indicator light blinks twice within 0.5 seconds in 2 second cycles immediately after door lock or after 30 seconds.
6) Hit all windows with the palm with force repeatedly, to check for whether the security alarm operates. Lift up the front hood approx. 12 cm (4.7 in) or more, and then drop it off to check the operation of security alarm.
7) If NG, adjust the impact sensitivity.

2. IMPACT SENSITIVITY ADJUSTMENT

1) Adjust the impact sensitivity.
   (1) Connect the Subaru Select Monitor to data link connector.

NOTE:
For detailed operation procedures, refer to “Application help”.

   (2) Turn the ignition switch to ON.
   (3) On «Start» display, select «Diagnosis».
   (4) On «Vehicle selection» display, input the target vehicle information and select «Confirmed».
   (5) On «Main Menu» display, select «Each System».
   (6) On «Select System» display, select «Impact Sensor» and then «Enter».
   (7) On «Select Function» display, select «Work Support».
   (8) From the work support item list, select «Sensitivity Adjustment Mode».
   (9) Make a «Sensitivity Adjustment».
   - Sensitivity can be adjusted in 11 levels (0 to 10).
   - Initial setting is 5.
   - Smaller number means more sensitive.
   - Larger number means less sensitive.

   (10) Turn the ignition switch to OFF, and then remove the Subaru Select Monitor.

NOTE:
- Set the sensor so that it is not triggered by normal vibrations (someone reclining on the door, hit by a ball, etc.).
- Set the sensor to operate the alarm when the windshield glass or door is hit hard repeatedly, etc, where it can be assumed that there is an attempt to damage the car by a burglar, etc.
- Even if there is no burglary attempt, if there is vibration (road construction, elevated parking lots, passage of trains or boarding of ferries), the alarm can be triggered. Because of this, ask the customer about their parking conditions, and set an appropriate sensitivity level after discussion.
- If the sensitivity setting was not performed properly, a buzzer will sound four times. In this case, check that there is no error in CAN communication.

22.Keyless Entry Control Module

A: REMOVAL

1. SEDAN MODEL

1) Disconnect the ground terminal from battery sensor. <Ref. to RC-4, BATTERY, NOTE, Repair Contents.>
2) Remove the trim panel assembly - rear shelf. <Ref. to EI-105, REMOVAL, Rear Shelf Trim.>
3) Remove the keyless entry control module.
   (1) Disconnect the connector.
   (2) Remove the bolt and then remove the keyless entry control module.

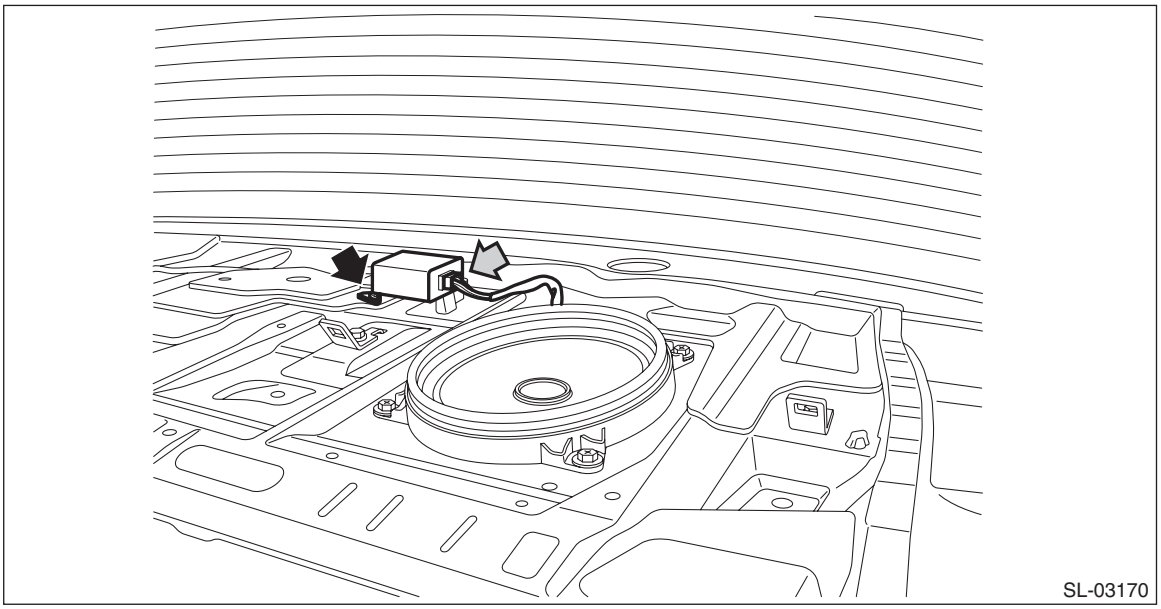

2. OUTBACK MODEL

1) Disconnect the ground terminal from battery sensor. <Ref. to RC-4, BATTERY, NOTE, Repair Contents.>
2) Remove the trim panel - rear apron RH. <Ref. to EI-100, OUTBACK MODEL, REMOVAL, Rear Quarter Trim.>
3) Remove the keyless entry control module.
   (1) Disconnect the connector.
   (2) Remove the bolt and then remove the keyless entry control module.

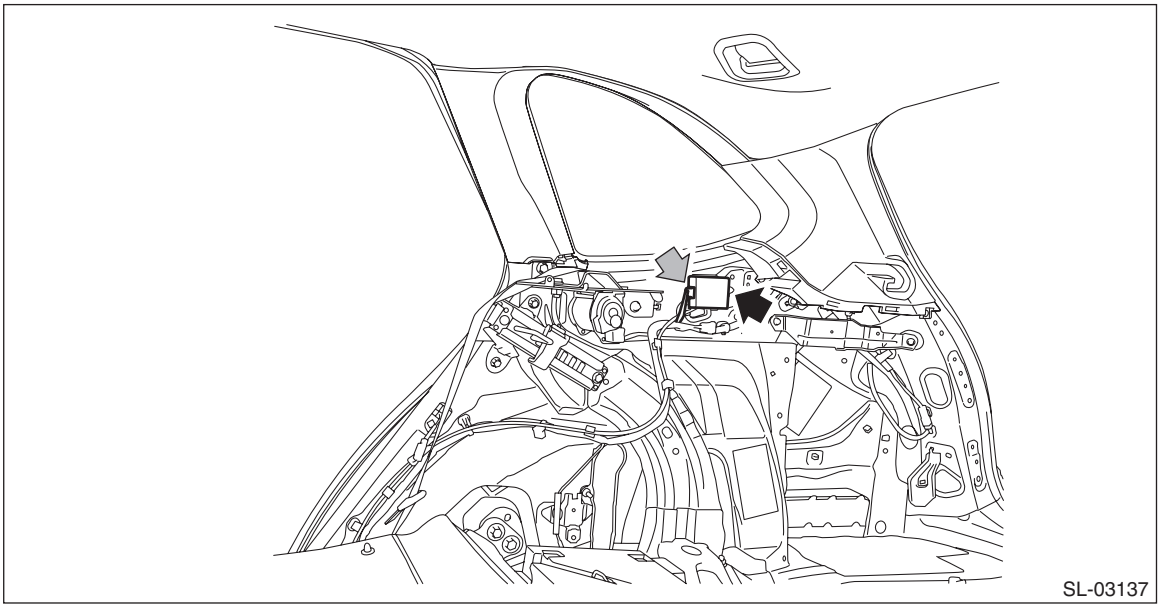

B: INSTALLATION

1. SEDAN MODEL

1) Install the keyless entry control module.

Tightening torque:
7.5 N·m (0.8 kgf-m, 5.5 ft-lb)

2) Install the trim panel assembly - rear shelf. <Ref. to EI-107, INSTALLATION, Rear Shelf Trim.>
3) Connect the ground terminal to battery sensor. <Ref. to RC-4, BATTERY, NOTE, Repair Contents.>

2. OUTBACK MODEL

1) Install the keyless entry control module.

Tightening torque:
7.5 N·m (0.8 kgf-m, 5.5 ft-lb)

2) Install the trim panel - rear apron RH. <Ref. to EI-104, OUTBACK MODEL, INSTALLATION, Rear Quarter Trim.>
3) Connect the ground terminal to battery sensor. <Ref. to RC-4, BATTERY, NOTE, Repair Contents.>

23.Keyless Buzzer

A: REMOVAL

1) Disconnect the ground terminal from battery sensor. <Ref. to RC-4, BATTERY, NOTE, Repair Contents.>
2) Remove the keyless buzzer.
   (1) Remove the clips, and turn over the mud guard - front.
   (2) Disconnect the connector.
   (3) Remove the clip and detach the keyless buzzer.

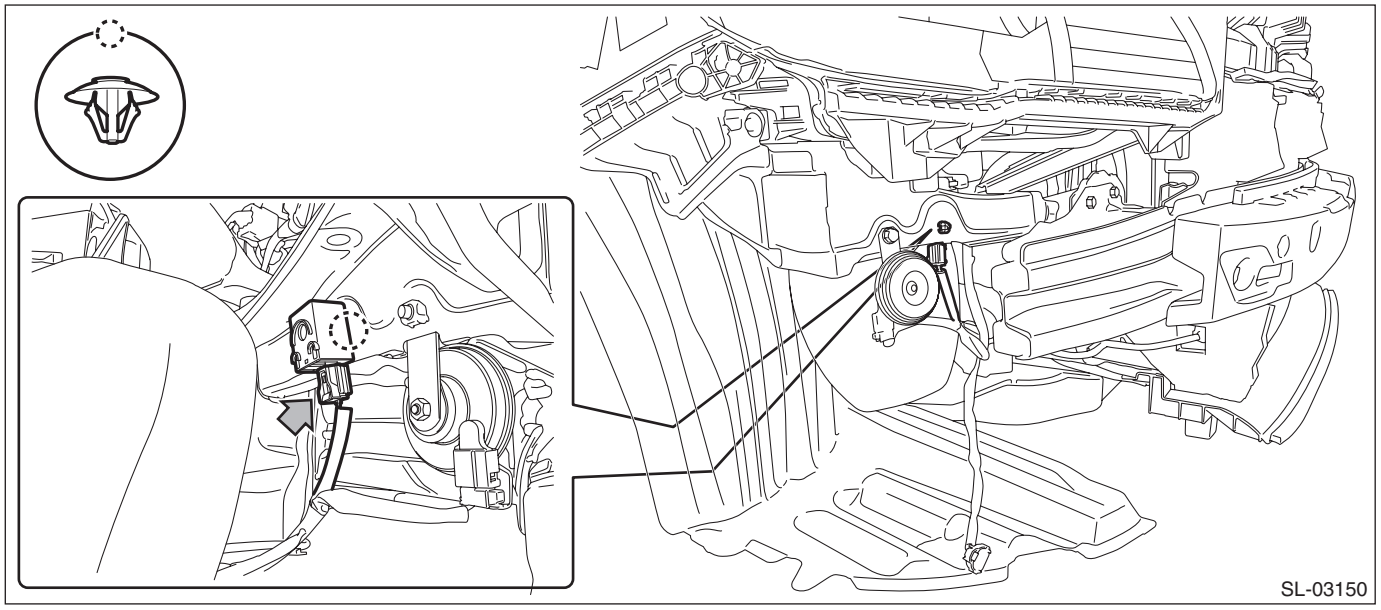

B: INSTALLATION

CAUTION:
Install the mud guard - front so that the front end of the mud guard (b) comes outside the bumper face - front (a).

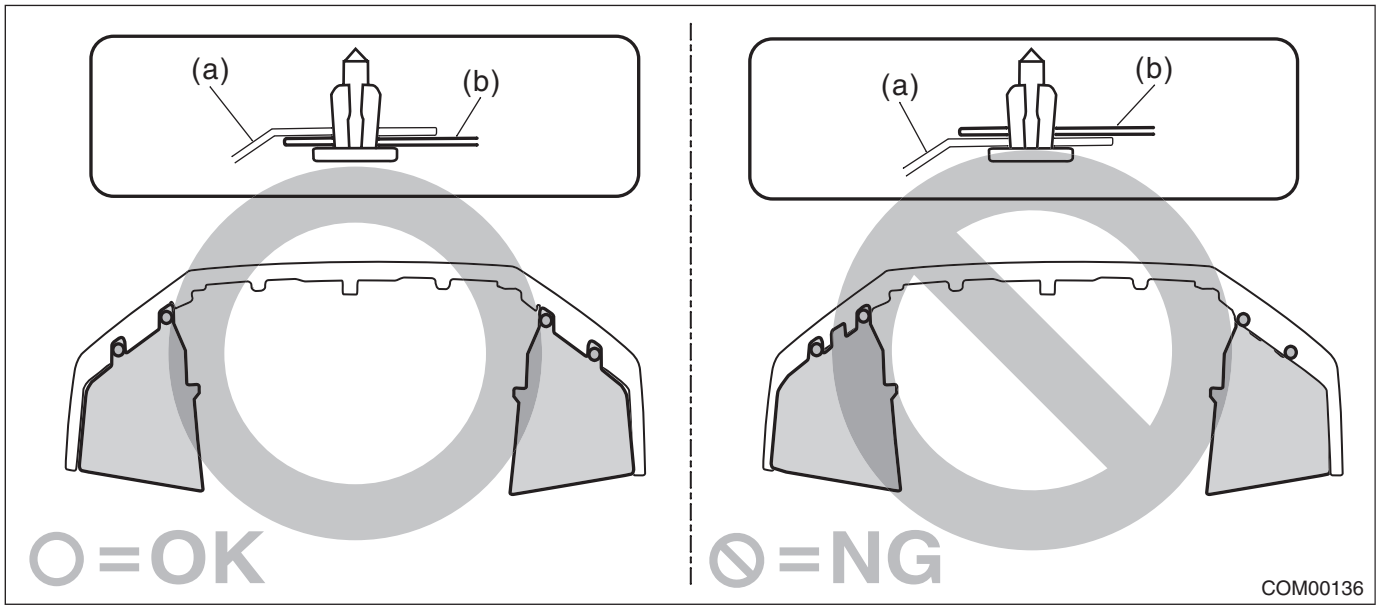

1) Install the keyless buzzer.
2) Connect the ground terminal to battery sensor. <Ref. to RC-4, BATTERY, NOTE, Repair Contents.>

C: INSPECTION

• Using the Subaru Select Monitor, set the volume of the keyless buzzer. <Ref. to BC(diag)-30, User Customizing.>
• Using the Subaru Select Monitor, perform forced operation of the keyless buzzer. <Ref. to BC(diag)-30, OPERATION, User Customizing.>
If the buzzer does not sound, replace the keyless buzzer.

24.Body Integrated Unit

A: NOTE

1. WHEN REPLACING THE BODY INTEGRATED UNIT

1) Check and record the current setting. <Ref. to BC(diag)-33, CONFIRM CURRENT SETTING, OPERATION, Registration Body Integrated Unit.>

CAUTION:
- **When the body integrated unit is replaced, registration of the immobilizer is required.**

For detailed operation procedure, refer to the "REGISTRATION MANUAL FOR IMMOBILIZER". (Models without the keyless access with push button start)
- **When replacing the body integrated unit, install the starter relay (a) to the relay holder.**

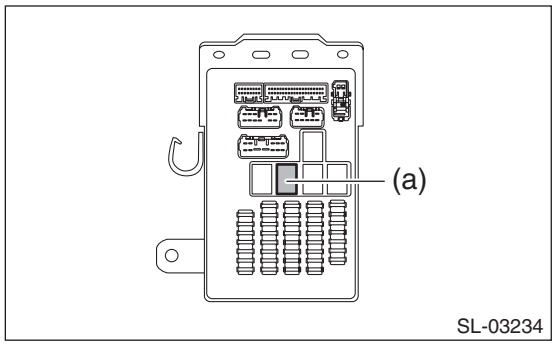

NOTE:
The fuse & relay box is a single unit with the body integrated unit.

2. AFTER REPLACING THE BODY INTEGRATED UNIT

1) Set the current settings as recorded.
2) Register the immobilizer. (Models without the keyless access with push button start, and except for C0 and C5 models)

NOTE:
For detailed operation procedure, refer to the "REGISTRATION MANUAL FOR IMMOBILIZER".

B: REMOVAL

1) Disconnect the ground terminal from the battery sensor, and wait for at least 60 seconds before starting work. <Ref. to RC-4, BATTERY, NOTE, Repair Contents.>
2) Remove the cover assembly - instrument panel LWR driver. <Ref. to EI-75, REMOVAL, Instrument Panel Lower Cover.>
3) Remove the panel - knee guard.

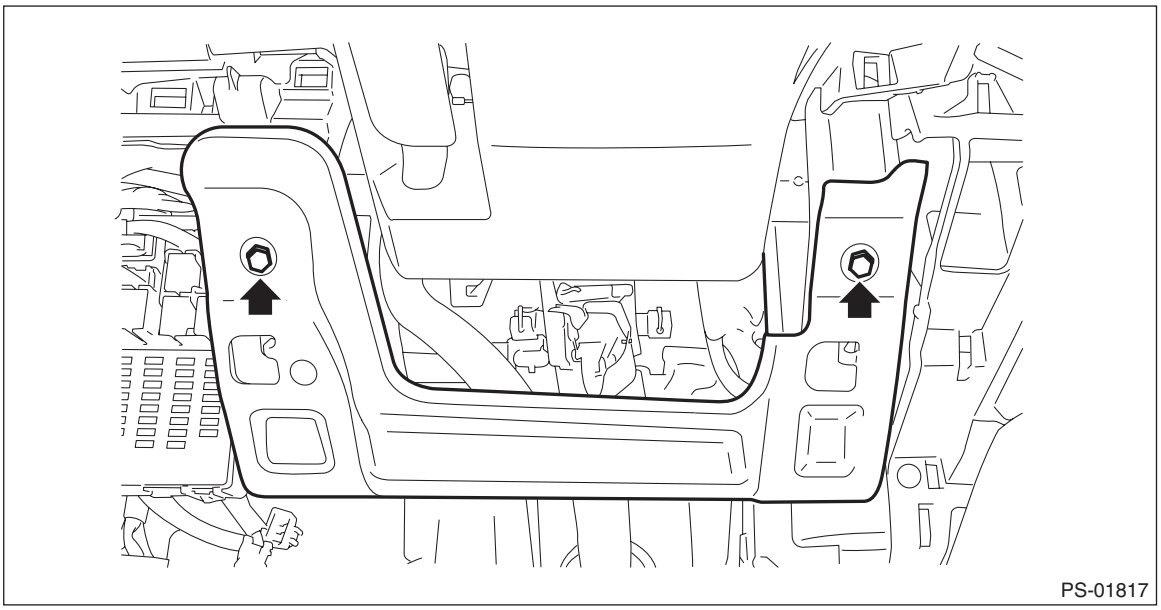
PS-01817

4) Disconnect the body integrated unit (fuse & relay box).
   (1) Disconnect the connector.
   (2) Remove the bolts and nuts, and remove the body integrated unit (fuse & relay box).

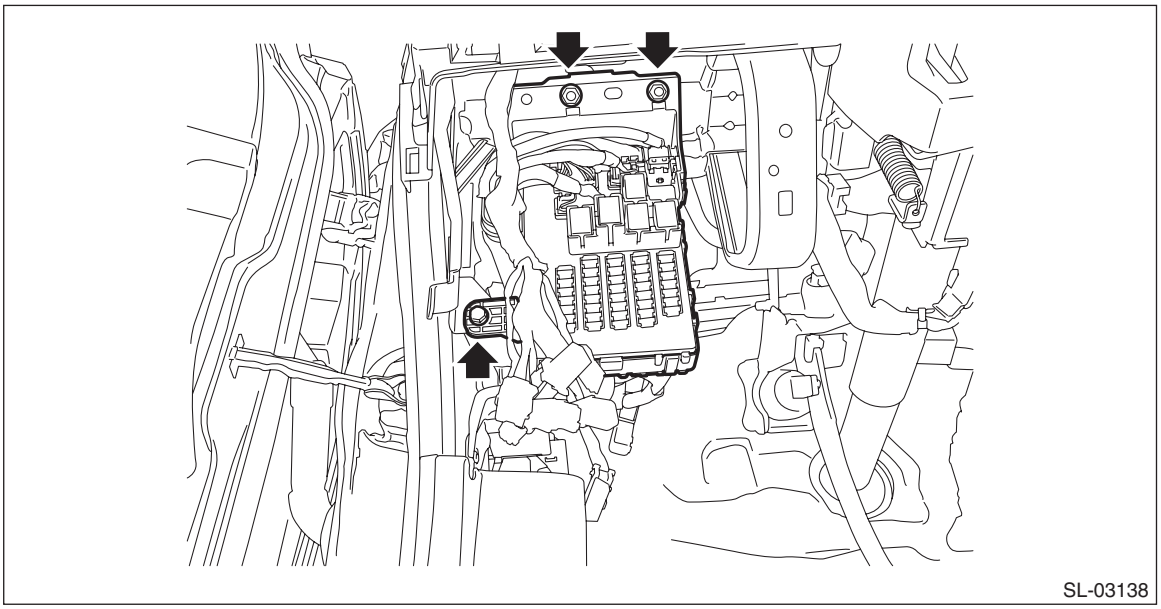
SL-03138

C: INSTALLATION

CAUTION:
• Before handling the airbag system components, refer to "CAUTION" of "General Description" in "AIRBAG SYSTEM". <Ref. to AB-10, CAUTION, General Description.>
• When replacing the body integrated unit, install the starter relay (a) to the relay holder.

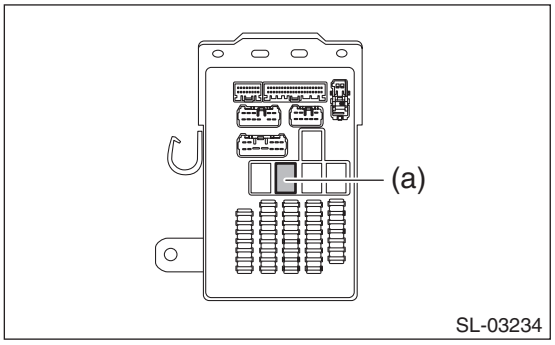

NOTE:
Make sure that there are no differences from the contents of the current settings after installation. <Ref. to BC(diag)-20, LIST, Read Current Data.>
1) Install the body integrated unit (fuse & relay box).

Tightening torque:
Relay & fuse box: 7.5 N·m (0.8 kgf-m, 5.5 ft-lb)
2) Install the panel - knee guard.

Tightening torque:
7 N·m (0.7 kgf-m, 5.2 ft-lb)
3) Install the cover assembly - instrument panel LWR driver.
4) Connect the ground terminal to battery sensor. <Ref. to RC-4, BATTERY, NOTE, Repair Contents.>

25.Keyless Transmitter

A: REMOVAL

1. KEYLESS TRANSMITTER BATTERY

CAUTION:
To prevent static electricity damage to the keyless transmitter printed circuit board, touch the steel area of building with hand to discharge static electricity carried on body or clothes before disassembling the keyless transmitter.

1) Remove the keyless transmitter cover, and take out the transmitter case (A).

NOTE:
Use a flat tip screwdriver with protective tape or cloth in order not to damage the components.

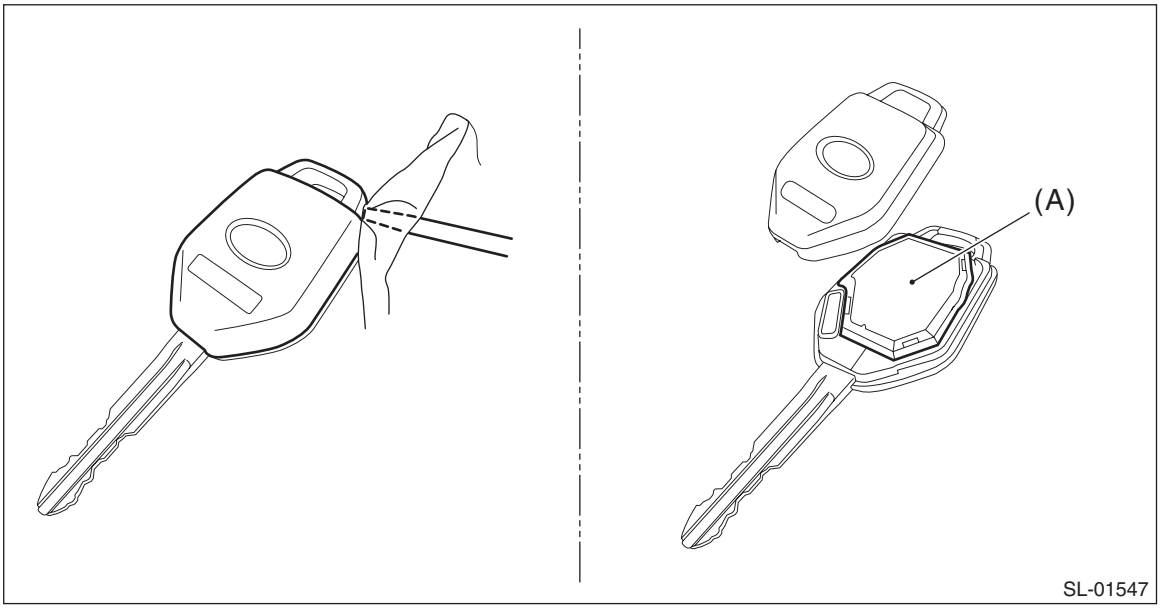

2) Release the claws to open the transmitter case, then remove the battery (A).

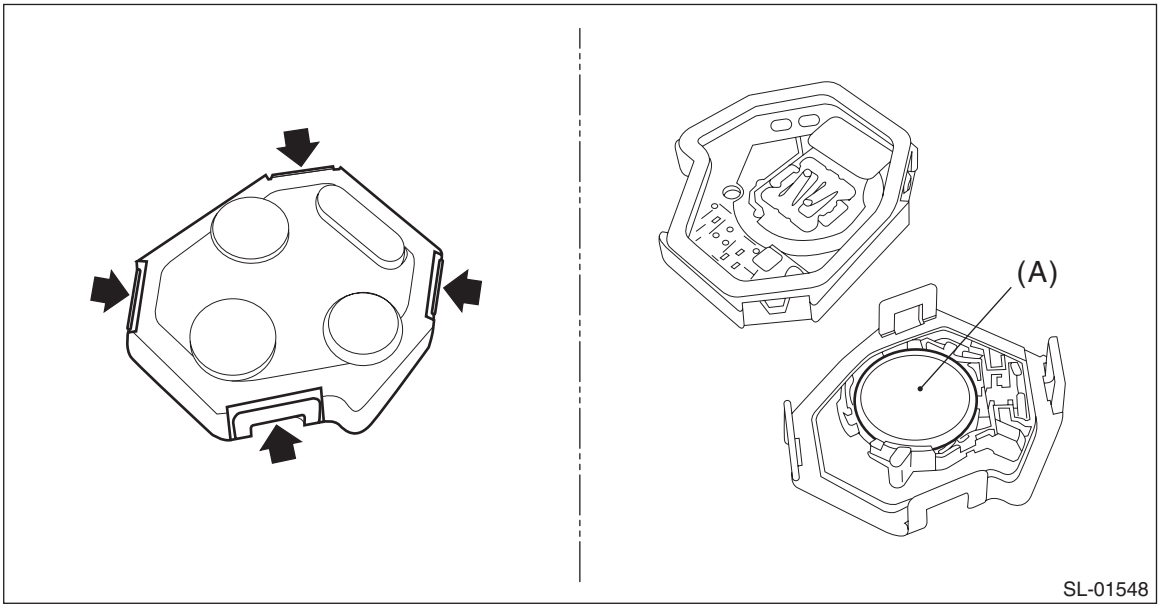

B: INSTALLATION

1. KEYLESS TRANSMITTER BATTERY

Install each part in the reverse order of removal.

C: INSPECTION

1. KEYLESS TRANSMITTER BATTERY

1) Measure the keyless transmitter battery voltage.

Preparation tool:
Circuit tester

NOTE:
Complete the measurement within 5 seconds because the battery discharges during measurement.

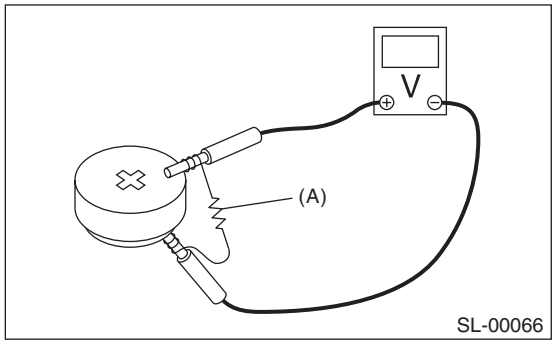

Battery terminal	Inspection Conditions	Standard
(+) — (–)	Connect resistor (A) 47 Ω	2.5 — 3.0 V

2) Replace the battery if the inspection result is not within the standard value. (Use CR1620 or equivalent.)

D: REPLACEMENT

1. REGISTRATION OF KEYLESS TRANSMITTER WITH SUBARU SELECT MONITOR

NOTE:
- A maximum of four keyless transmitters can be registered for each individual vehicle.
- When replacing or adding the keyless transmitter, new registration of transmitter is necessary.

1) Register the transmitter.
(1) Connect the Subaru Select Monitor to data link connector.

NOTE:
For detailed operation procedures, refer to “Application help”.
(2) Turn the ignition switch to ON.
(3) On «Start» display, select «Diagnosis».
(4) On «Vehicle selection» display, input the target vehicle information and select «Confirmed».
(5) On «Main Menu» display, select «Each System».
(6) On «Select System» display, select «Integ. Unit Mode» and select «Enter».
(7) On «Select Function» display, select «Work Support».
(8) On «Work Support» display, select «Keyless ID registration».
(9) According to the directions on the screen, press the button of the transmitter to be registered in the LOCK → UNLOCK order. «When registration completed, external buzzer sound once.» Repeat the registration as many times as desired.
(10) Press the [Exit] button to finish the operations.

NOTE:
When attempting to register a key that has already been registered, the external buzzer sounds twice.

26.Access Key

A: REMOVAL

NOTE:
Refer to keyless transmitter for model without keyless access with push button start. <Ref. to SL-86, KEYLESS TRANSMITTER BATTERY, REMOVAL, Keyless Transmitter.>

1. ACCESS KEY BATTERY

CAUTION:
To prevent static electricity damage to the access key printed circuit board, touch the steel area of building with hand to discharge static electricity carried on body or clothes before disassembling the access key.
1) Push the lock button and remove the mechanical key from the access key.
2) Insert a flat tip screwdriver end wrapped with insulating tape etc. into the slit (a) of the access key to open the case.

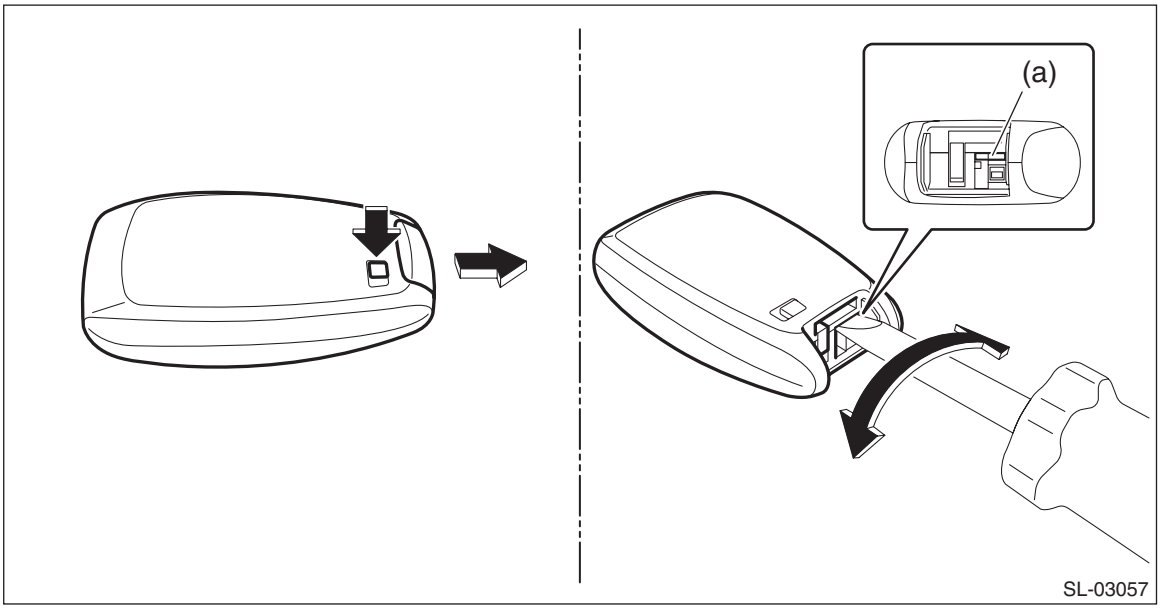

3) Insert a flat tip screwdriver wrapped with insulating tape, and while holding the upper side of the battery (a), remove the battery (a) from the case.

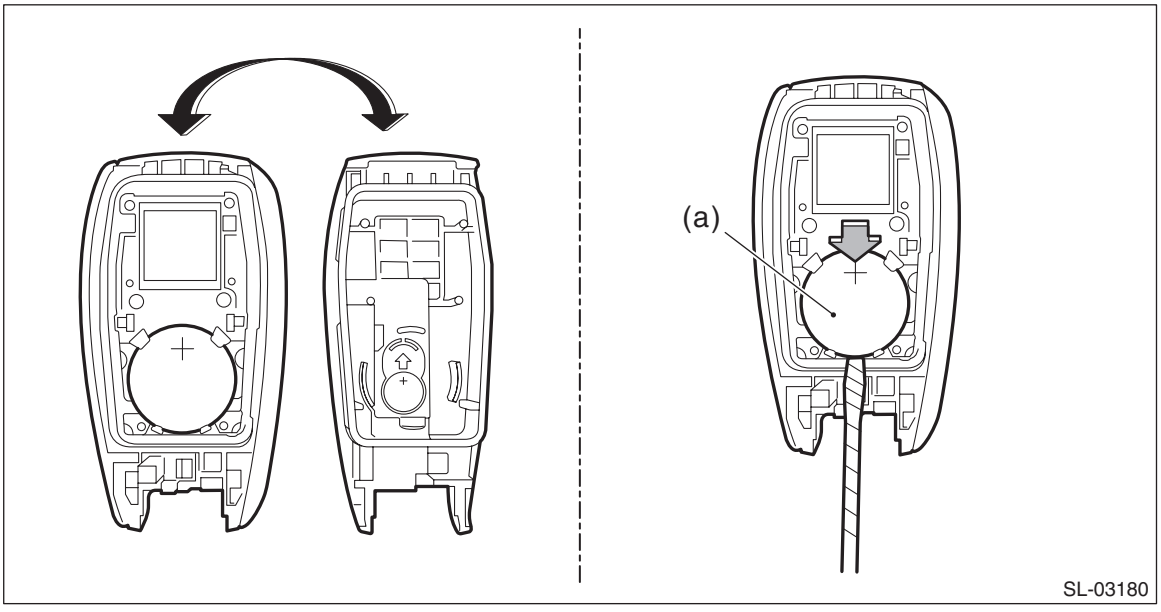

B: INSTALLATION

1. ACCESS KEY BATTERY

Install each part in the reverse order of removal.

C: INSPECTION

1. ACCESS KEY BATTERY

Measure the access key battery voltage.

Preparation tool:
Circuit tester

NOTE:
Complete the measurement within 5 seconds because the battery discharges during measurement.

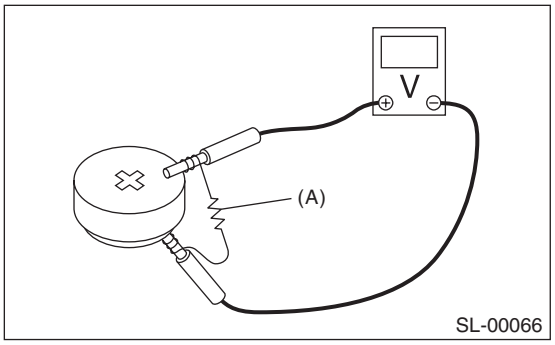

Battery terminal	Inspection conditions	Standard
(+) — (–)	Connect resistor (A) 47 Ω	2.5 — 3.0 V

Replace the battery if the inspection result is not within the standard value. (Use CR2032 V or equivalent.)

D: REPLACEMENT

1. ACCESS KEY REGISTRATION

NOTE:
- A maximum of seven access keys can be registered for each individual vehicle.
- When replacing or adding an access key, new registration of the access key is necessary.
- When the access key has been newly added, it is registered to the immobilizer system at the same time.

2. CLEARING ACCESS KEY REGISTRATION

Refer to the “REGISTRATION MANUAL FOR IMMOBILIZER” for clearing access key registration.

27.Immobilizer Control Module

A: NOTE

For removal/installation procedures of immobilizer control module, refer to the “REGISTRATION MANUAL FOR IMMOBILIZER”.

28.Immobilizer Antenna

A: REMOVAL

1. MODEL WITHOUT KEYLESS ACCESS WITH PUSH BUTTON START

1) Disconnect the ground terminal from the battery sensor, and wait for at least 60 seconds before starting work. <Ref. to RC-4, BATTERY, NOTE, Repair Contents.>
2) Remove the cover assembly - column.
   (1) Remove the clips, and remove the cover - column (a).
   (2) Remove the screws.
   (3) Release the claws, and remove the cover assembly - column UPR (b) and the cover assembly - column LWR (c).

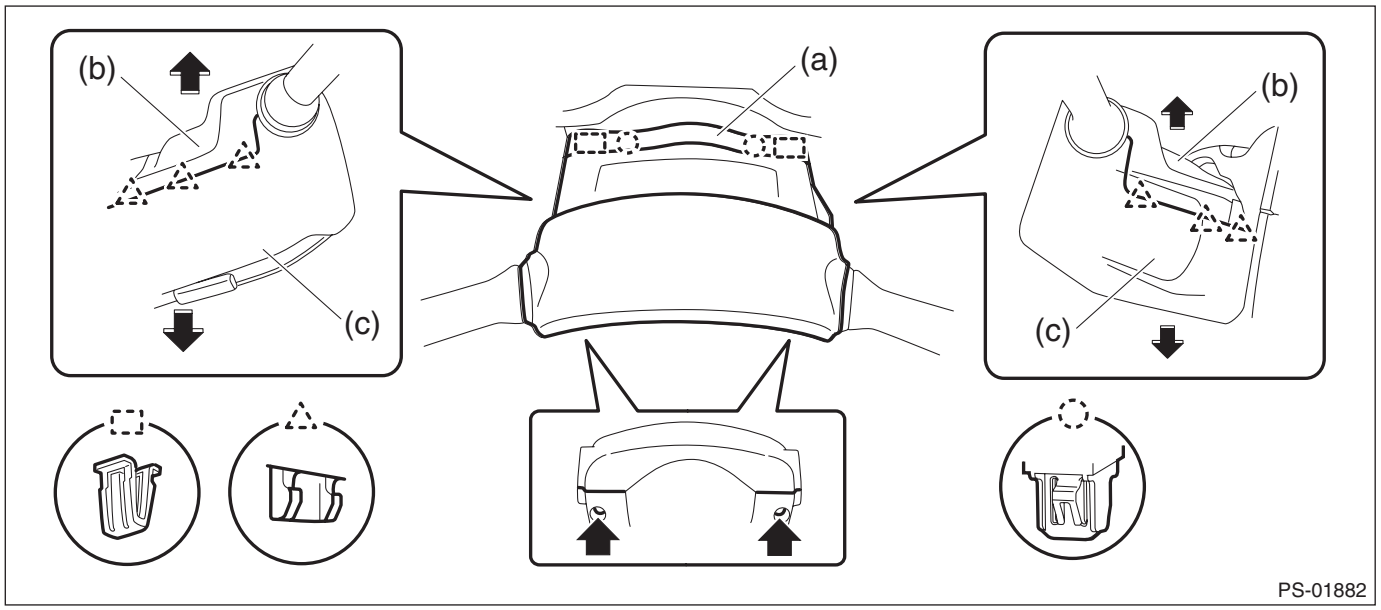

3) Remove the immobilizer antenna assembly.
   (1) Disconnect the connector.
   (2) Release two claws using a flat tip screwdriver or similar tool wrapped with a protection tape, and remove the immobilizer antenna assembly.

CAUTION:
Do not apply excessive force to disengage the lock of immobilizer antenna assembly. Otherwise they may be broken because those parts are the products made of a plastic.

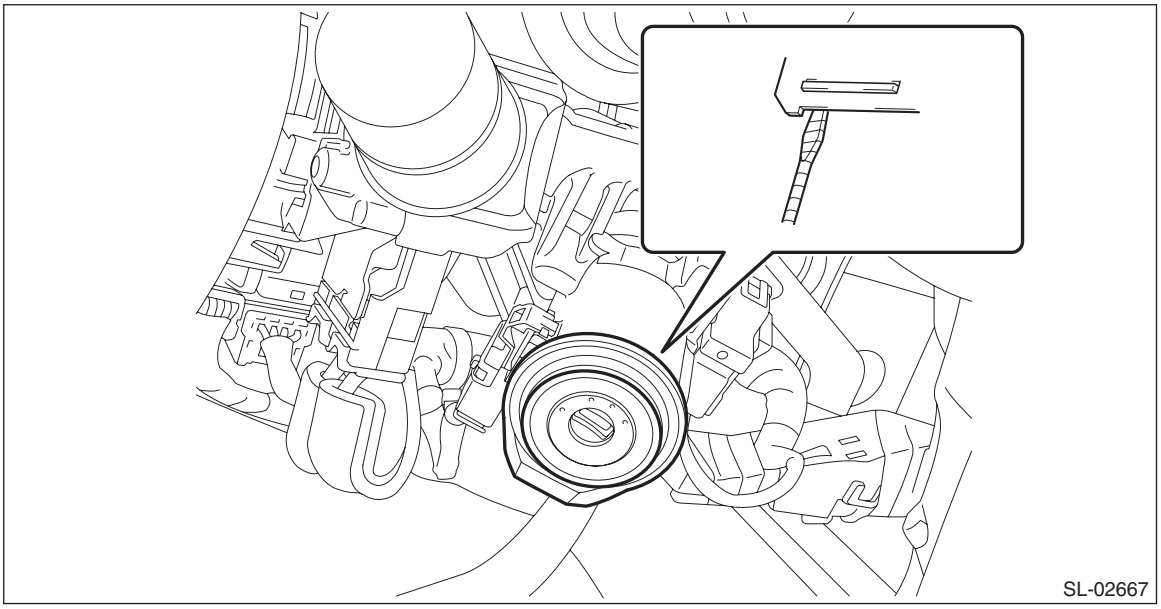

2. MODEL WITH KEYLESS ACCESS WITH PUSH BUTTON START

NOTE:
- Immobilizer antenna is integrated with the push button ignition switch.
- For removal of immobilizer antenna, refer to the push button ignition switch. <Ref. to SL-106, REMOVAL, Push Button Ignition Switch.>

B: INSTALLATION

1. MODEL WITHOUT KEYLESS ACCESS WITH PUSH BUTTON START

1) Install the immobilizer antenna assembly.
2) Install the cover assembly - column.
3) Connect the ground terminal to battery sensor. <Ref. to RC-4, BATTERY, NOTE, Repair Contents.>

2. MODEL WITH KEYLESS ACCESS WITH PUSH BUTTON START

NOTE:
For installation of immobilizer antenna, refer to the push button ignition switch. <Ref. to SL-107, INSTALLATION, Push Button Ignition Switch.>

29.Keyless Access Indoor Antenna

A: REMOVAL

1. FRONT ANTENNA

1) Disconnect the ground terminal from the battery sensor, and wait for at least 60 seconds before starting work. <Ref. to RC-4, BATTERY, NOTE, Repair Contents.>
2) Remove the cover assembly - front and the console box assembly. <Ref. to EI-80, REMOVAL, Console Box.>
3) Remove the panel center assembly. <Ref. to EI-79, REMOVAL, Center Console.>
4) Remove the console front duct. <Ref. to AC-95, REMOVAL, Heater Duct.>
5) Disconnect the connector and remove the front antenna assembly - interior.

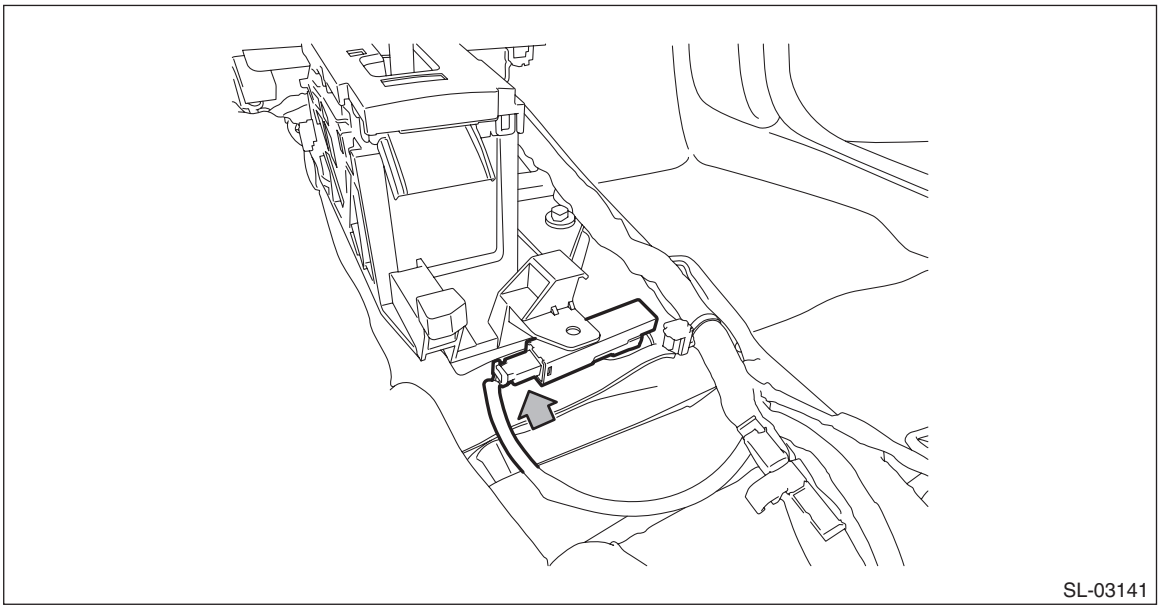

2. CENTER ANTENNA

1) Disconnect the ground terminal from battery sensor. <Ref. to RC-4, BATTERY, NOTE, Repair Contents.>
2) Remove the rear seat cushion assembly. <Ref. to SE-33, REMOVAL, Rear Seat.>
3) Remove the center antenna assembly - interior.

NOTE:
Do not remove the antenna assembly from the cover. If removed, the antenna assembly and cover mounting becomes loose, causing abnormal noises.

(1) Disconnect the connector.
(2) Turn over the floor mat, and remove the center antenna assembly - interior.

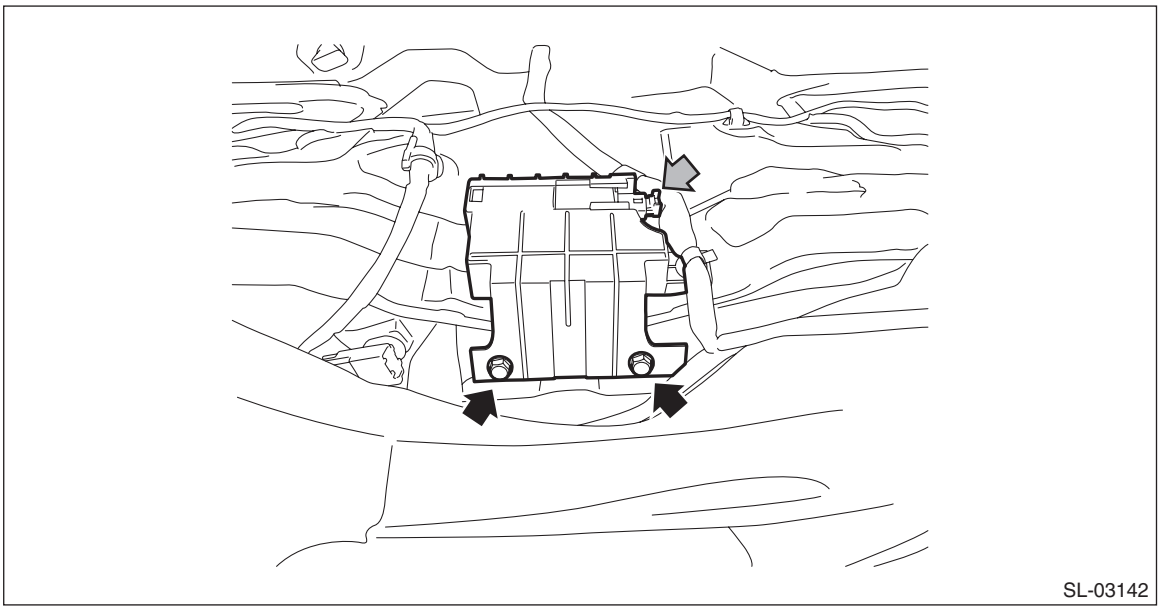
SL-03142

3. REAR ANTENNA (SEDAN MODEL)

1) Disconnect the ground terminal from battery sensor. <Ref. to RC-4, BATTERY, NOTE, Repair Contents.>
2) Remove the mat - trunk.
3) Disconnect the connector and remove the rear antenna assembly - interior.

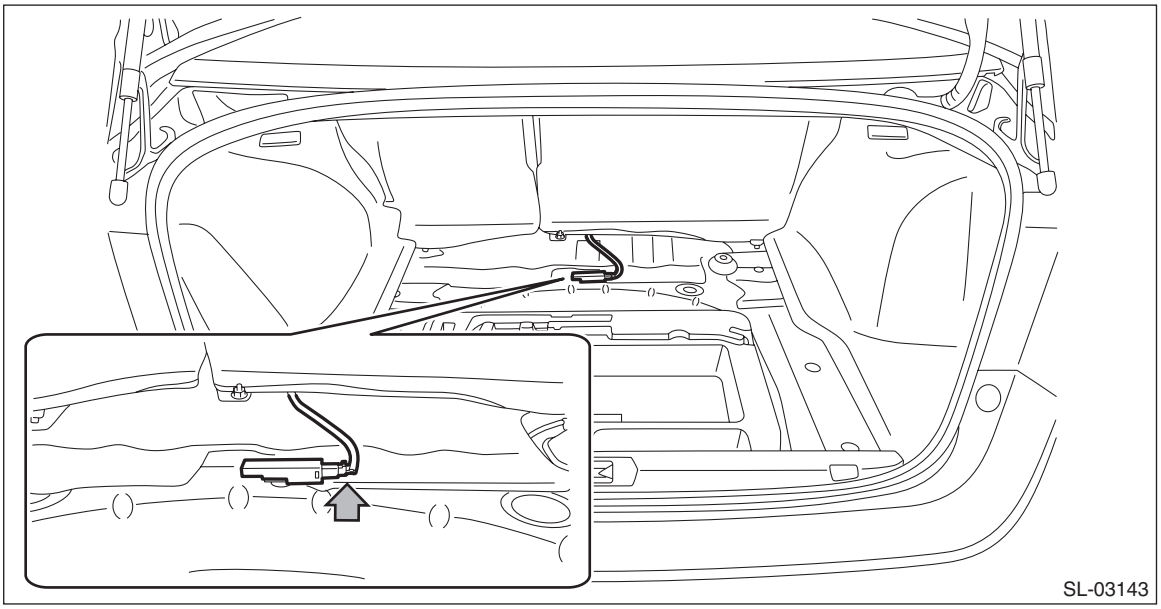
SL-03143

4. REAR ANTENNA (OUTBACK MODEL)

1) Disconnect the ground terminal from battery sensor. <Ref. to RC-4, BATTERY, NOTE, Repair Contents.>
2) Remove the spacer - rear floor front.
   (1) Remove the mat - rear floor RH, mat - rear floor LH, and mat - rear floor CTR.
   (2) Remove the spacer - rear floor side RH, spacer - rear floor side LH, and sub trunk assembly.
   (3) Tilt the backrest assembly forward, and remove the clips located at the bottom of the cover COMPL - rear backrest LH and RH.

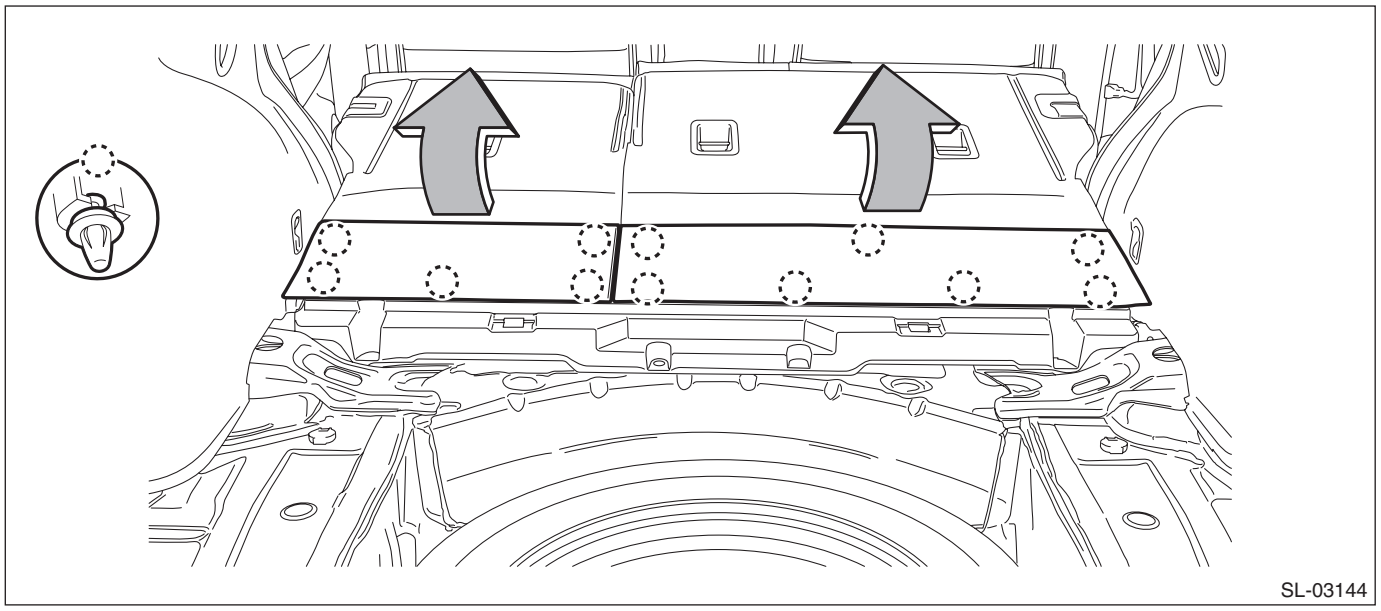
SL-03144

   (4) Remove the reclining cable, and remove the spacer - rear floor front.

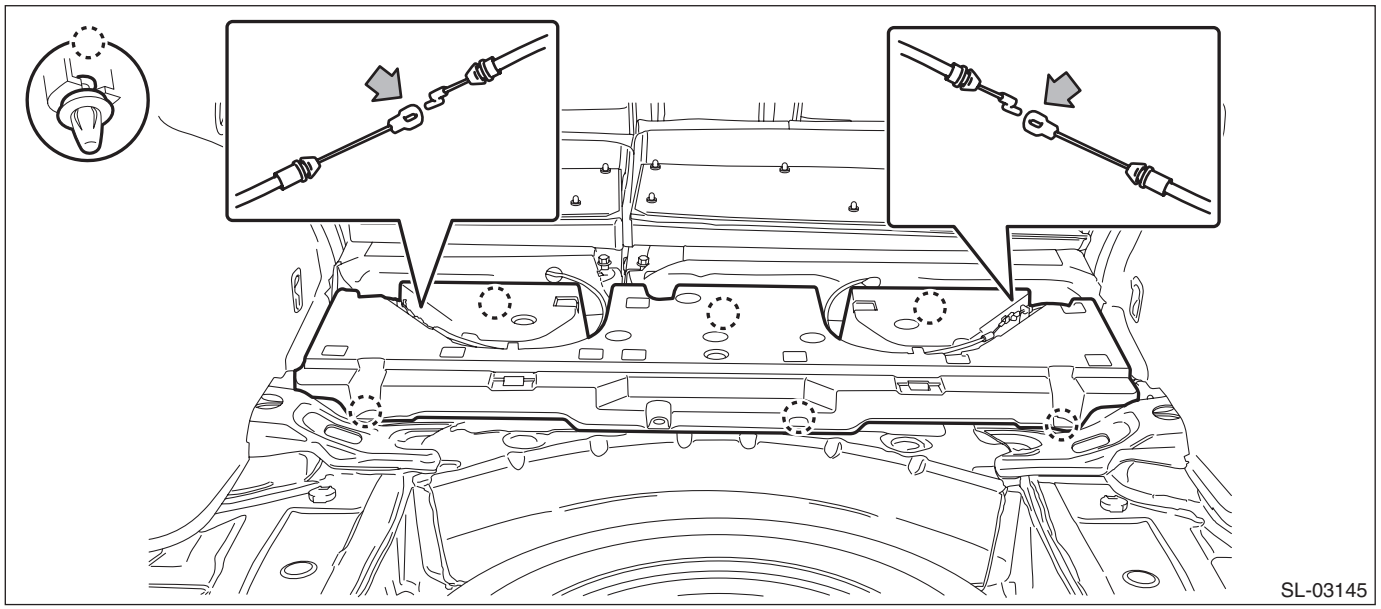
SL-03145

3) Disconnect the connector and remove the rear antenna assembly - interior.

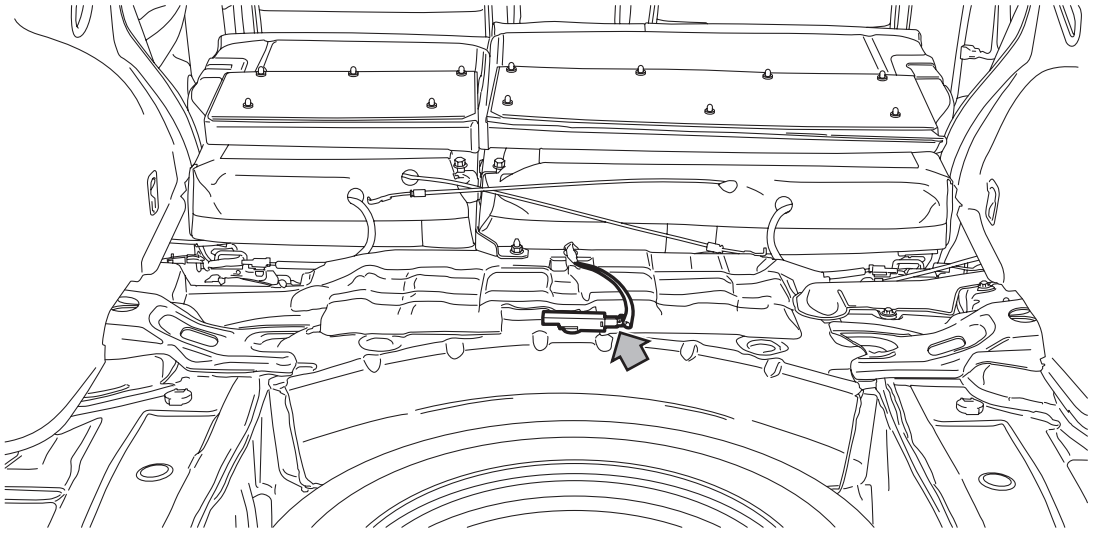
SL-03146

B: INSTALLATION

1. FRONT ANTENNA

1) Install the front antenna assembly - interior.
2) Install the console front duct.
3) Install the pocket assembly - CTR. <Ref. to ET-60, REMOVAL, External Connection Terminal.>
4) Install the console box assembly.
5) Connect the ground terminal to battery sensor. <Ref. to RC-4, BATTERY, NOTE, Repair Contents.>

2. CENTER ANTENNA

1) Install the center antenna assembly - interior.
2) Install the rear seat cushion assembly. <Ref. to SE-44, INSTALLATION, Rear Seat.>
3) Connect the ground terminal to battery sensor. <Ref. to RC-4, BATTERY, NOTE, Repair Contents.>

3. REAR ANTENNA (SEDAN MODEL)

1) Install the rear antenna assembly - interior.
2) Install the mat - trunk.
3) Connect the ground terminal to battery sensor. <Ref. to RC-4, BATTERY, NOTE, Repair Contents.>

4. REAR ANTENNA (OUTBACK MODEL)

1) Install the rear antenna assembly - interior.
2) Install the spacer - rear floor front.
3) Install the spacer - rear floor side RH, spacer - rear floor side LH, and sub trunk assembly.
4) Install the mat - rear floor RH, mat - rear floor LH, and mat - rear floor CTR.
5) Connect the ground terminal to battery sensor. <Ref. to RC-4, BATTERY, NOTE, Repair Contents.>

C: INSPECTION

1) Check the setting by performing Keyless access system check using the Subaru Select Monitor. <Ref. to KPS(diag)-35, OPERATION, Keyless Access System Check.>
2) Disconnect the Subaru Select Monitor. After placing the access key near the changed antenna, operate the push button ignition switch to check that the power can be switched.
3) If the system does not operate normally as the result of inspection, refer to “General Diagnostic Table” of the “KEYLESS ACCESS WITH PUSH BUTTON START SYSTEM (DIAGNOSTICS)” section. <Ref. to KPS(diag)-108, KEYLESS ACCESS SYSTEM, INSPECTION, General Diagnostic Table.>

30.Keyless Access Outdoor Antenna

A: REMOVAL

1. FRONT ANTENNA

CAUTION:
Do not detach the antenna from the front door outer handle.
If replacement is required, replace the front outer handle assembly as a whole.

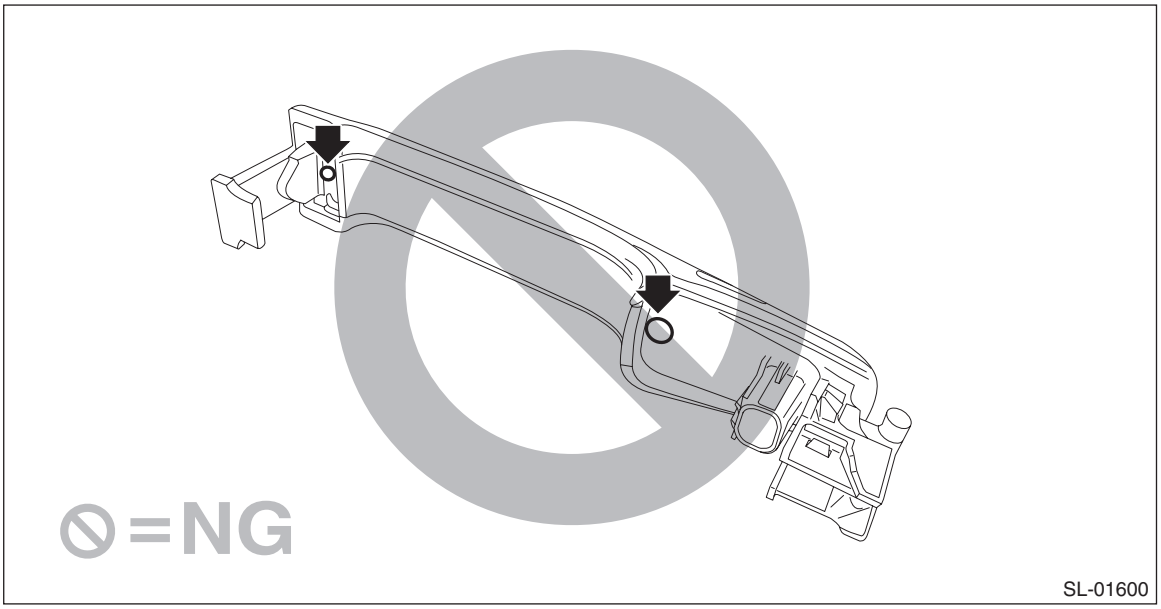

1) Disconnect the ground terminal from battery sensor. <Ref. to RC-4, BATTERY, NOTE, Repair Contents.>
2) Remove the handle - door outer. <Ref. to SL-34, REMOVAL, Front Outer Handle.>

2. REAR ANTENNA (SEDAN MODEL)

CAUTION:
Do not detach the antenna except when replacing it. Detaching unnecessarily will lead to insecure attachment of the antenna.
1) Disconnect the ground terminal from battery sensor. <Ref. to RC-4, BATTERY, NOTE, Repair Contents.>
2) Remove the trim panel - trunk lid. <Ref. to EI-109, REMOVAL, Trunk Room Trim.>
3) Disconnect the connector and remove the rear antenna assembly - exterior.

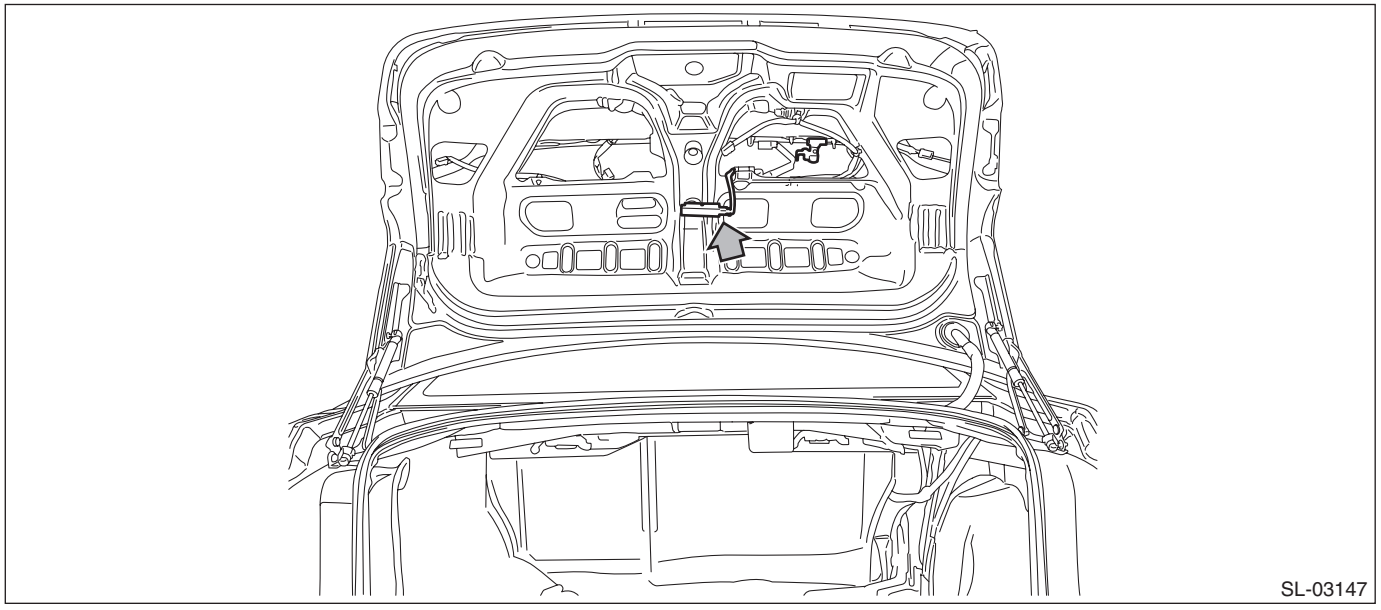

3. REAR ANTENNA (OUTBACK MODEL)

CAUTION:
Do not detach the antenna except when replacing it. Detaching unnecessarily will lead to insecure attachment of the antenna.

1) Disconnect the ground terminal from battery sensor. <Ref. to RC-4, BATTERY, NOTE, Repair Contents.>
2) Remove the trim panel - rear gate. <Ref. to EI-121, REMOVAL, Rear Gate Trim.>
3) Disconnect the connector and remove the rear antenna assembly - exterior.

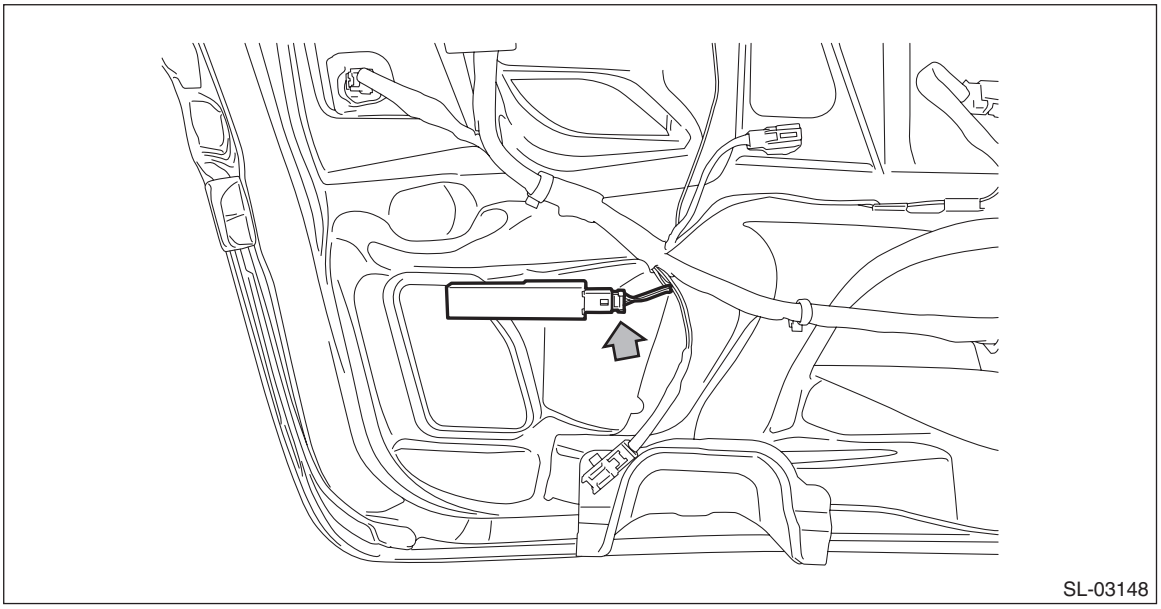
SL-03148

B: INSTALLATION

1. FRONT ANTENNA

CAUTION:
Do not detach the antenna from the front door outer handle.
If replacement is required, replace the front outer handle assembly as a whole.

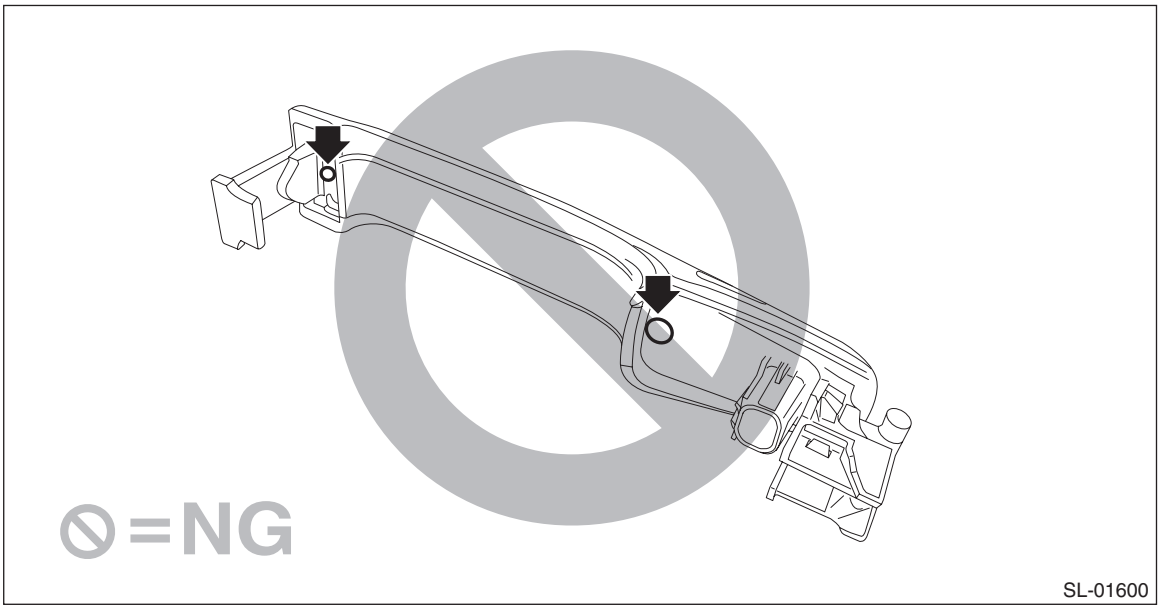

SL-01600

1) Install the handle - door outer. <Ref. to SL-37, INSTALLATION, Front Outer Handle.>
2) Connect the ground terminal to battery sensor. <Ref. to RC-4, BATTERY, NOTE, Repair Contents.>

2. REAR ANTENNA (SEDAN MODEL)

1) Install the rear antenna assembly - exterior.
2) Install the trim panel - trunk lid. <Ref. to EI-110, INSTALLATION, Trunk Room Trim.>
3) Connect the ground terminal to battery sensor. <Ref. to RC-4, BATTERY, NOTE, Repair Contents.>

3. REAR ANTENNA (OUTBACK MODEL)

1) Install the rear antenna assembly - exterior.
2) Install the trim panel - rear gate. <Ref. to EI-121, REMOVAL, Rear Gate Trim.>
3) Connect the ground terminal to battery sensor. <Ref. to RC-4, BATTERY, NOTE, Repair Contents.>

C: INSPECTION

1) Check the setting by performing Keyless access system check using the Subaru Select Monitor. <Ref. to KPS(diag)-35, OPERATION, Keyless Access System Check.>
2) Disconnect the Subaru Select Monitor. While bringing the access key, operate the touch sensor on door handle to check if door lock or unlock operates.
3) Disconnect the Subaru Select Monitor. While bringing the access key, operate the opener switch on the rear gate and the lock request switch to check if the door lock or lock operates. (OUTBACK model)
4) Disconnect the Subaru Select Monitor. While bringing the access key, operate the trunk opener button to check if the trunk is opened. (Sedan model)
5) If the system does not operate normally as the result of inspection, refer to “General Diagnostic Table” of the “KEYLESS ACCESS WITH PUSH BUTTON START SYSTEM (DIAGNOSTICS)” section. <Ref. to KPS(diag)-108, KEYLESS ACCESS SYSTEM, INSPECTION, General Diagnostic Table.>

31.Trunk Opener Button

A: REMOVAL

1) Disconnect the ground terminal from battery sensor. <Ref. to RC-4, BATTERY, NOTE, Repair Contents.>
2) Remove the garnish - trunk. <Ref. to EI-61, REMOVAL, Trunk Lid Garnish.>
3) Release the locks at both ends of the trunk opener button by pushing them with a flat tip screwdriver.

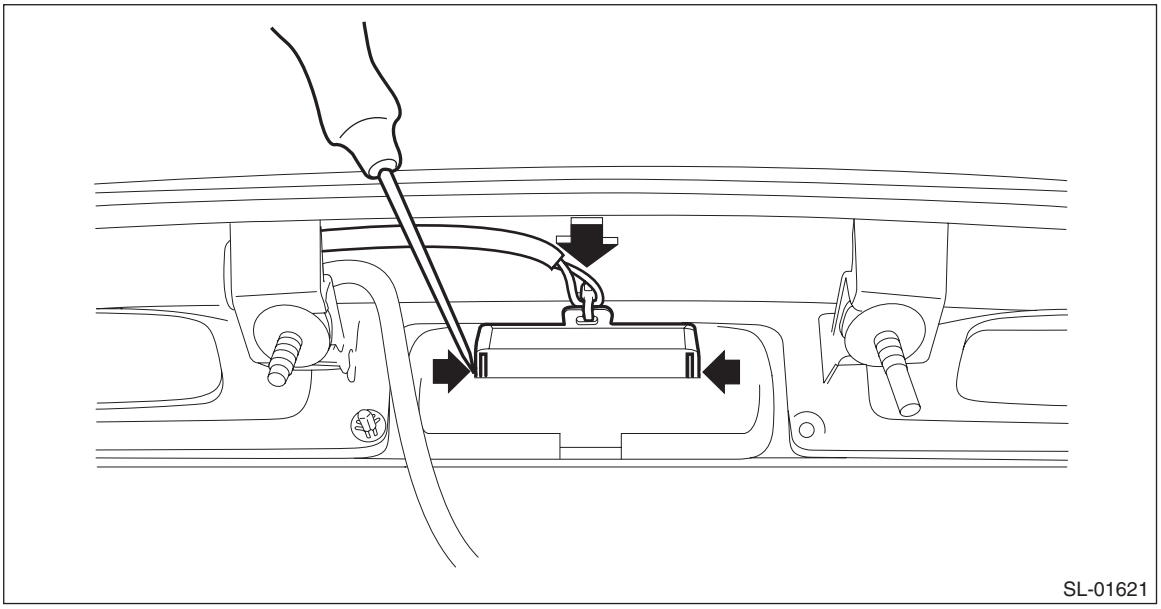

B: INSTALLATION

1) Install the trunk opener button to the garnish - trunk.
2) Install the garnish - trunk.
3) Connect the ground terminal to battery sensor. <Ref. to RC-4, BATTERY, NOTE, Repair Contents.>

C: INSPECTION

1) Using the Subaru Select Monitor, display «Rear gate/Trunk UNLOCK output» from «Data monitor».
2) Check that the display changes when the trunk opener button is operated.
3) If the display is not correct as the result of inspection, refer to “General Diagnostic Table” of the “KEYLESS ACCESS WITH PUSH BUTTON START SYSTEM (DIAGNOSTICS)” section. <Ref. to KPS(diag)-108, KEYLESS ACCESS SYSTEM, INSPECTION, General Diagnostic Table.>

32.Rear Lock Button

A: REMOVAL

NOTE:
- The rear lock button is integrated with the switch - opener rear gate.
- Open the panel - rear gate before disconnecting the ground terminal from battery sensor.

1) Disconnect the ground terminal from battery sensor. <Ref. to RC-4, BATTERY, NOTE, Repair Contents.>
2) Remove the trim panel - rear gate. <Ref. to EI-121, REMOVAL, Rear Gate Trim.>
3) Remove the garnish assembly - rear gate. <Ref. to EI-62, REMOVAL, Rear Gate Garnish.>
4) Remove the rear lock button.
   (1) Remove the garnish switch bracket from the garnish assembly - rear gate.
   (2) Release the locks at both ends of the button - opener rear gate by pushing them with a flat tip screwdriver, and remove the button - opener rear gate.
   (3) Remove the screws and detach the rear lock button.

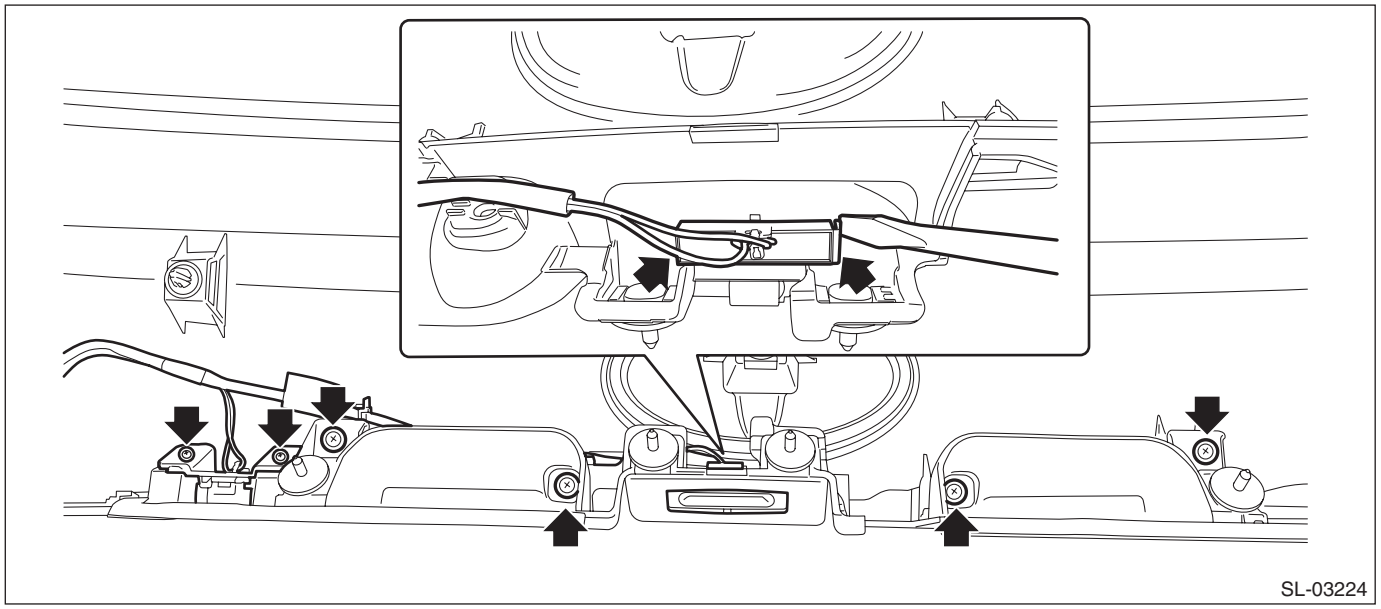

B: INSTALLATION

CAUTION:
Make sure that the harness grommet is securely installed.
If not properly installed, this may cause leaks.

1) Install the rear lock button and the switch - opener rear gate.
2) Install the garnish assembly - rear gate. <Ref. to EI-63, INSTALLATION, Rear Gate Garnish.>

Tightening torque
4.5 N·m (0.4 kgf-m, 3.3 ft-lb)

3) Install the trim panel - rear gate. <Ref. to EI-122, INSTALLATION, Rear Gate Trim.>
4) Connect the ground terminal to battery sensor. <Ref. to RC-4, BATTERY, NOTE, Repair Contents.>

C: INSPECTION

1) Using the Subaru Select Monitor, display «Rear gate/Trunk UNLOCK output» from «Data monitor».
2) Check if the display changes when the rear lock button is operated.
3) If the display is not correct as the result of inspection, refer to “General Diagnostic Table” of the “KEYLESS ACCESS WITH PUSH BUTTON START SYSTEM (DIAGNOSTICS)” section. <Ref. to KPS(diag)-108, KEYLESS ACCESS SYSTEM, INSPECTION, General Diagnostic Table.>

33.Keyless Access CM

A: REMOVAL

1) Disconnect the ground terminal from battery sensor. <Ref. to RC-4, BATTERY, NOTE, Repair Contents.>
2) Remove the combination meter assembly. <Ref. to IDI-11, REMOVAL, Combination Meter.>
3) Remove the keyless access CM.
    (1) Remove the reinforcement - combination meter.

NOTE:
For model with navigation and model with telematics, remove the GPS antenna assembly. <Ref. to ET-48, REMOVAL, GPS Antenna.>

    (2) Disconnect the connector and remove the bolt.

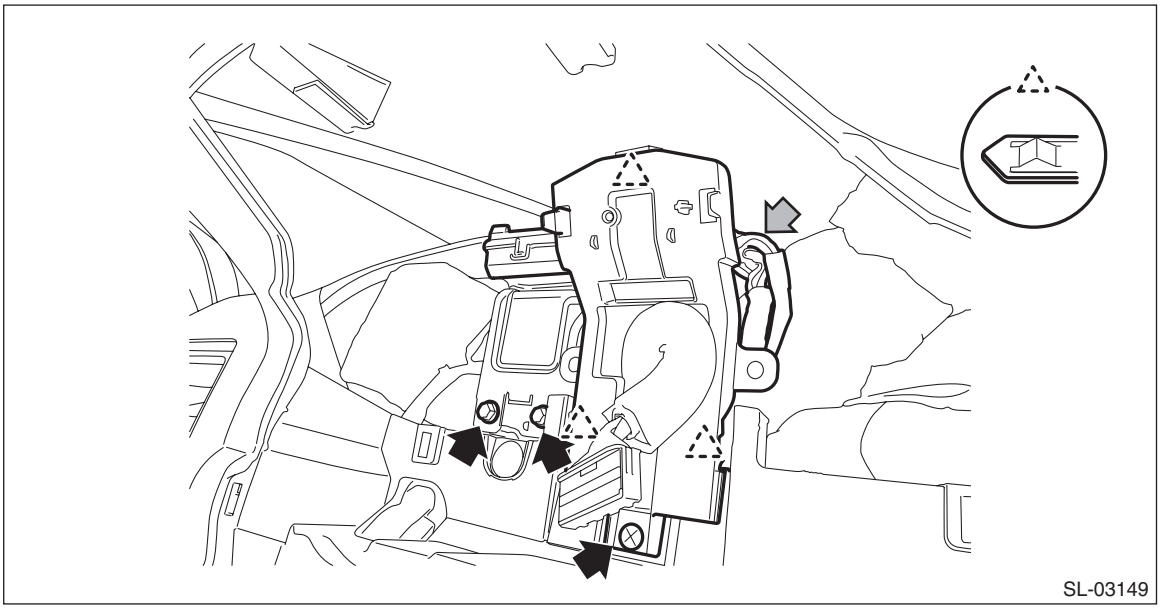

B: INSTALLATION

NOTE:
Make sure that there are no differences from the contents of the current settings after installation. <Ref. to BC(diag)-20, LIST, Read Current Data.>

1) Install the reinforcement - combination meter and keyless access CM.

NOTE:
For model with navigation, install the GPS antenna assembly. <Ref. to ET-49, INSTALLATION, GPS Antenna.>

Tightening torque:
7.5 N·m (0.8 kgf-m, 5.5 ft-lb)

2) Install the combination meter assembly. <Ref. to IDI-12, INSTALLATION, Combination Meter.>
3) Connect the ground terminal to battery sensor. <Ref. to RC-4, BATTERY, NOTE, Repair Contents.>

34.ID Code Box

A: NOTE

For removal/installation procedures of ID code box, refer to the “REGISTRATION MANUAL FOR IMMOBILIZER”.

35.Steering Lock CM

A: REMOVAL

CAUTION:
• Before handling the airbag system components, refer to "CAUTION" of "General Description" in "AIRBAG SYSTEM". <Ref. to AB-10, CAUTION, General Description.>
• Do not allow harness and connectors to interfere or get tangled up with other parts.
• If the steering wheel and steering angle sensor (steering roll connector) are removed, perform "VSC(VDC) Centering Mode" of the VDC. <Ref. to VDC-15, VDC SENSOR MIDPOINT SETTING MODE, ADJUSTMENT, VDC Control Module and Hydraulic Control Unit (VDCCM&H/U).>
1) Disconnect the ground terminal from the battery sensor, and wait for at least 60 seconds before starting work. <Ref. to RC-4, BATTERY, NOTE, Repair Contents.>
2) Remove the column assembly - steering. <Ref. to PS-20, REMOVAL, Steering Column.>
3) Remove the steering lock CM.
(1) Secure the column assembly - steering in a vise.
(2) Use the reverse tap or drill to remove the set bolt and remove the steering lock CM.

CAUTION:
Do not apply any impact to the set bolt by a chisel or punch. Doing so may damage the CM.

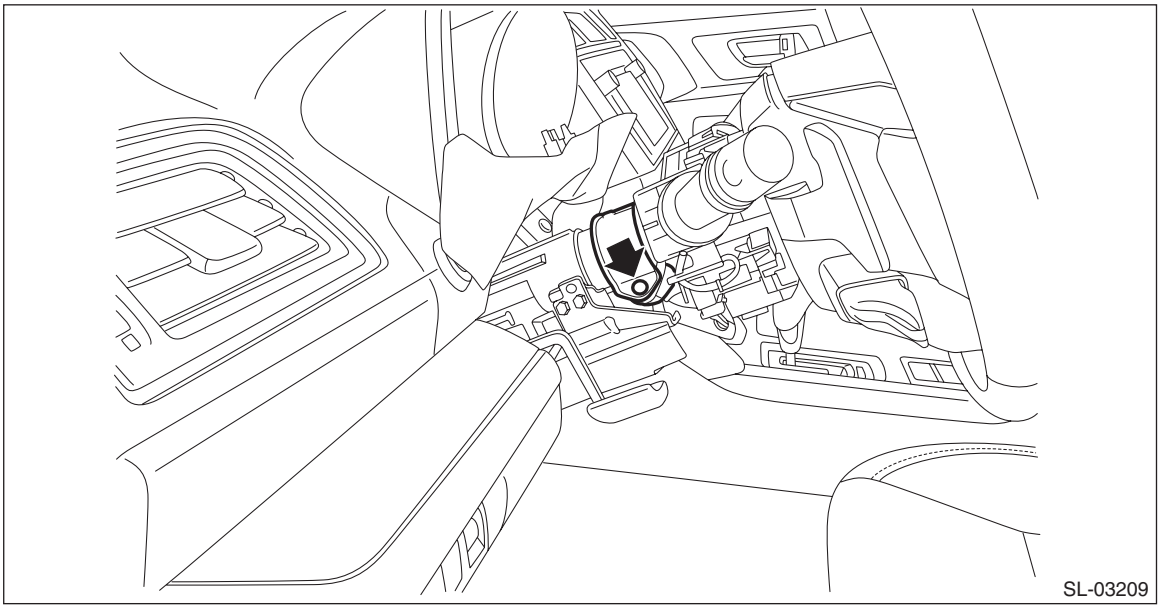

B: INSTALLATION

CAUTION:
• Registration of the immobilizer is necessary when a immobilizer-related control module has been replaced. For the relevant procedures, refer to the "REGISTRATION MANUAL FOR IMMOBILIZER".
• Before handling the airbag system components, refer to "CAUTION" of "General Description" in "AIRBAG SYSTEM". <Ref. to AB-10, CAUTION, General Description.>
• Do not allow harness and connectors to interfere or get tangled up with other parts.
• If the steering wheel and steering angle sensor (steering roll connector) are removed, perform "VSC(VDC) Centering Mode" of the VDC. <Ref. to VDC-15, VDC SENSOR MIDPOINT SETTING MODE, ADJUSTMENT, VDC Control Module and Hydraulic Control Unit (VDCCM&H/U).>
1) Secure the steering lock CM to the steering column.
2) Use new set bolts. Tighten the bolt until the bolt head is broken (bolt head wrenched off).
3) Install the column assembly - steering.
4) Connect the ground terminal to battery sensor. <Ref. to RC-4, BATTERY, NOTE, Repair Contents.>

C: INSPECTION

1) Check if the steering lock is released when you start the engine using the push button ignition switch.
2) If the system does not operate normally as the result of inspection, refer to "General Diagnostic Table" of the "KEYLESS ACCESS WITH PUSH BUTTON START SYSTEM (DIAGNOSTICS)" section. <Ref. to KPS(diag)-108, STEERING LOCK SYSTEM, INSPECTION, General Diagnostic Table.>

36.Push Button Ignition Switch

A: REMOVAL

1) Disconnect the ground terminal from battery sensor. <Ref. to RC-4, BATTERY, NOTE, Repair Contents.>
2) Remove the cover assembly - instrument panel LWR driver. <Ref. to EI-75, REMOVAL, Instrument Panel Lower Cover.>
3) Remove the visor assembly - lower.
   (1) Release the clips and claws.
   (2) Disconnect the connector and remove the visor assembly - lower.

CAUTION:
• Being careful not to damage the visor assembly - lower, slowly remove the clips and claws one by one from the right and left edges of visor assembly - lower.
• When using a clip remover, wrap it with protective tape or cloth.

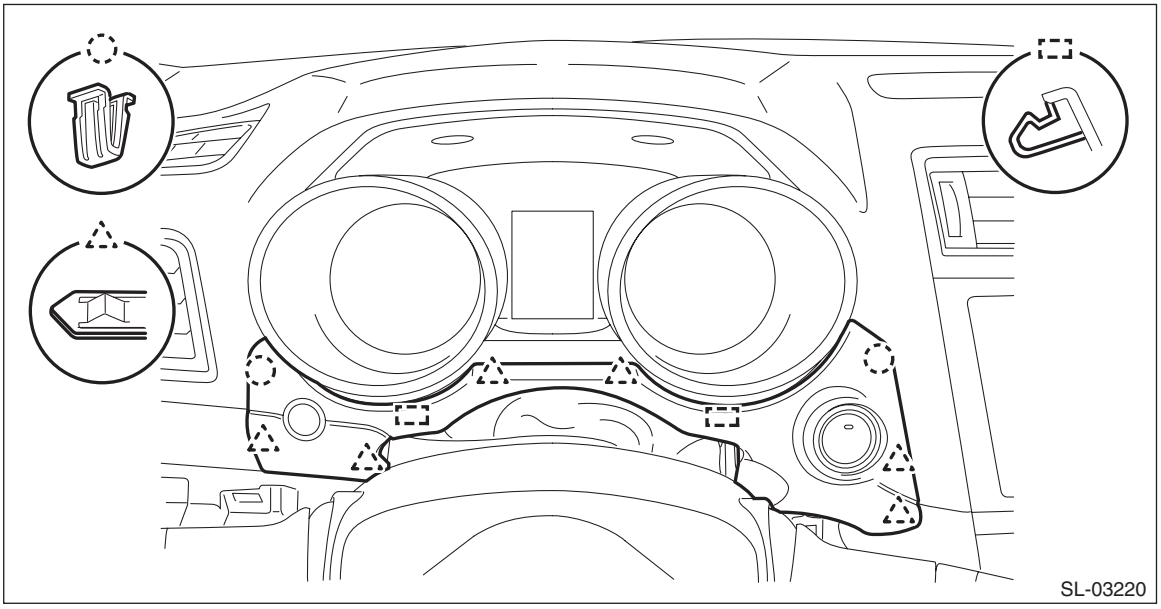
SL-03220

4) Remove the push button ignition switch.
   (1) Release the claws and remove the push button ignition switch from the visor assembly - lower.

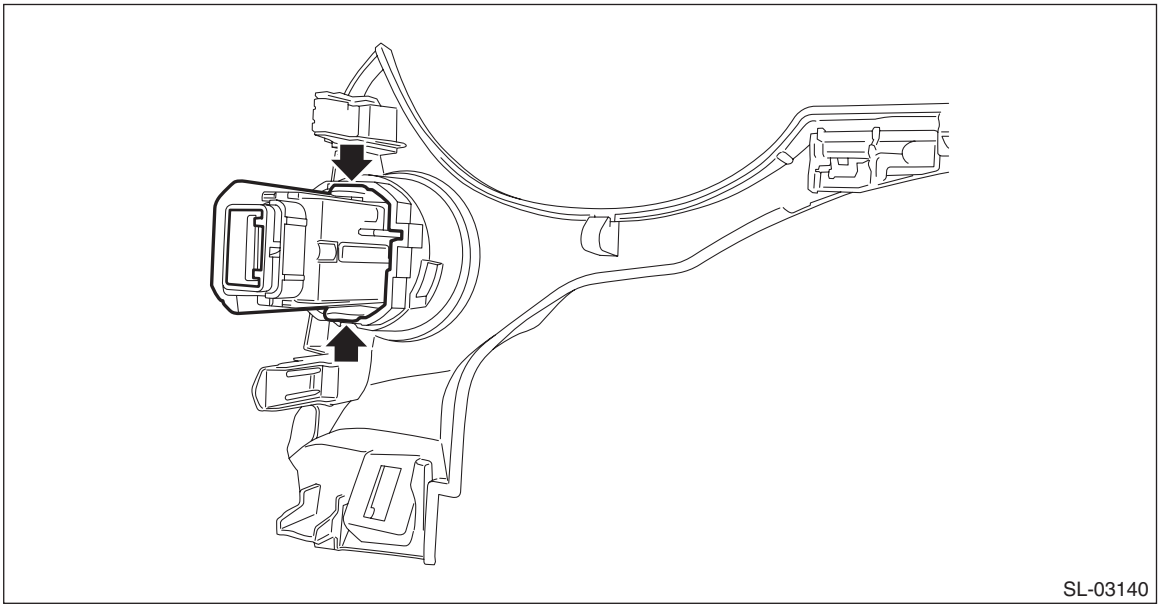
SL-03140

B: INSTALLATION

1) Install the push button ignition switch to the visor assembly - lower.
2) Install the visor assembly - lower.
3) Install the cover assembly - instrument panel LWR driver.
4) Connect the ground terminal to battery sensor. <Ref. to RC-4, BATTERY, NOTE, Repair Contents.>

C: INSPECTION

1) Check the continuity between the connectors.

Preparation tool:
Circuit tester

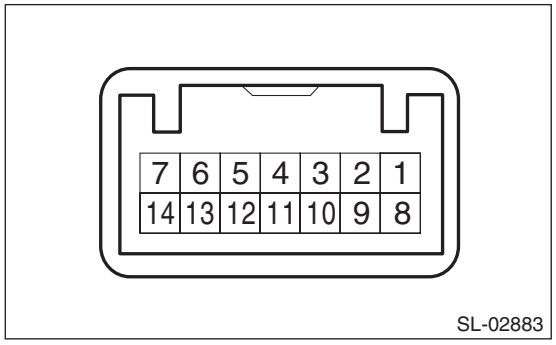

Terminal No.	Inspection conditions	Specification
4 (COM) — 5 (GND)	Always	Continuity exists
7 (SSW1) — 5 (GND)	Push button ignition switch released → pressed	Continuity exists
2 (SSW2) — 5 (GND)	Push button ignition switch released → pressed	Continuity exists

2) Check the push button ignition switch operation when battery voltage is applied between the connectors.

Terminal No.	Inspection conditions	Specification
11 (SWIL) — 5 (GND)	Connect battery to the terminals	Goes off → Red switch illumination light
12 (INDS) — 5 (GND)		Turns off → Switch indicator lights in green
13 (INDW) — 5 (GND)		Turns off → Switch indicator lights in orange

3) Replace the push button ignition switch if the inspection result is not within the standard value.

37.Access Buzzer

A: REMOVAL

1) Disconnect the ground terminal from battery sensor. <Ref. to RC-4, BATTERY, NOTE, Repair Contents.>
2) Remove the access buzzer.
   (1) Remove the clips, and turn over the mud guard - front.
   (2) Disconnect the connector.
   (3) Remove the clip and detach the access buzzer.

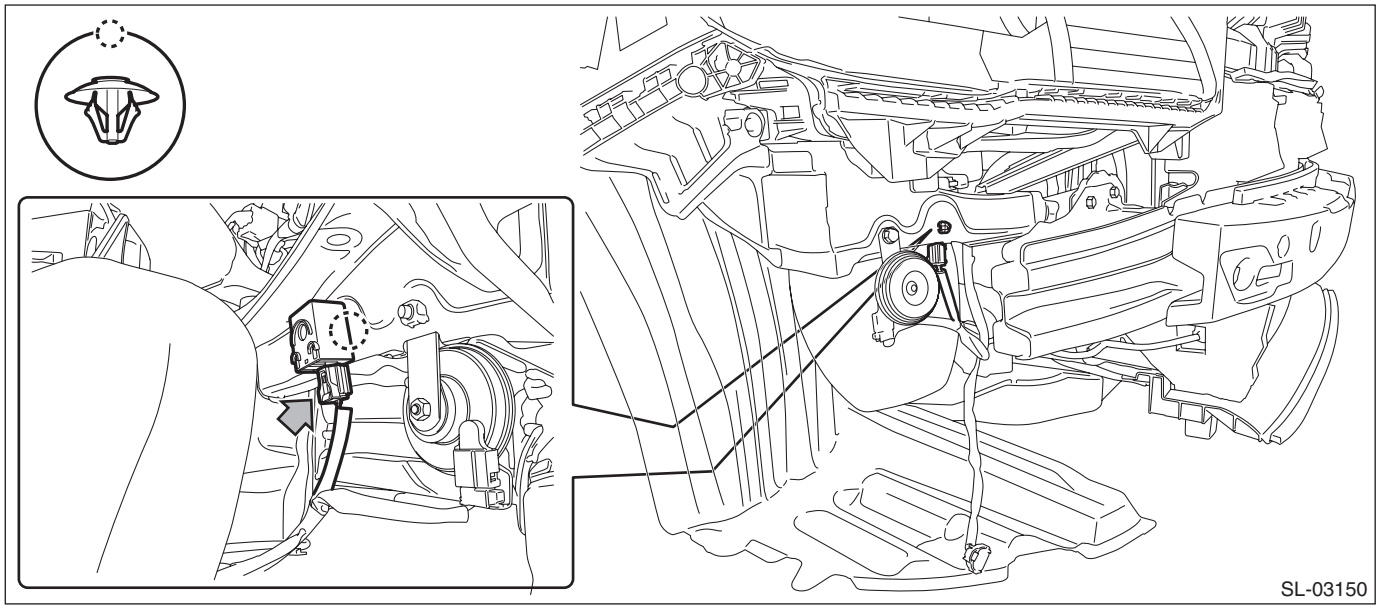

B: INSTALLATION

CAUTION:
Install the mud guard - front so that the front end of the mud guard (b) comes outside the bumper face - front (a).

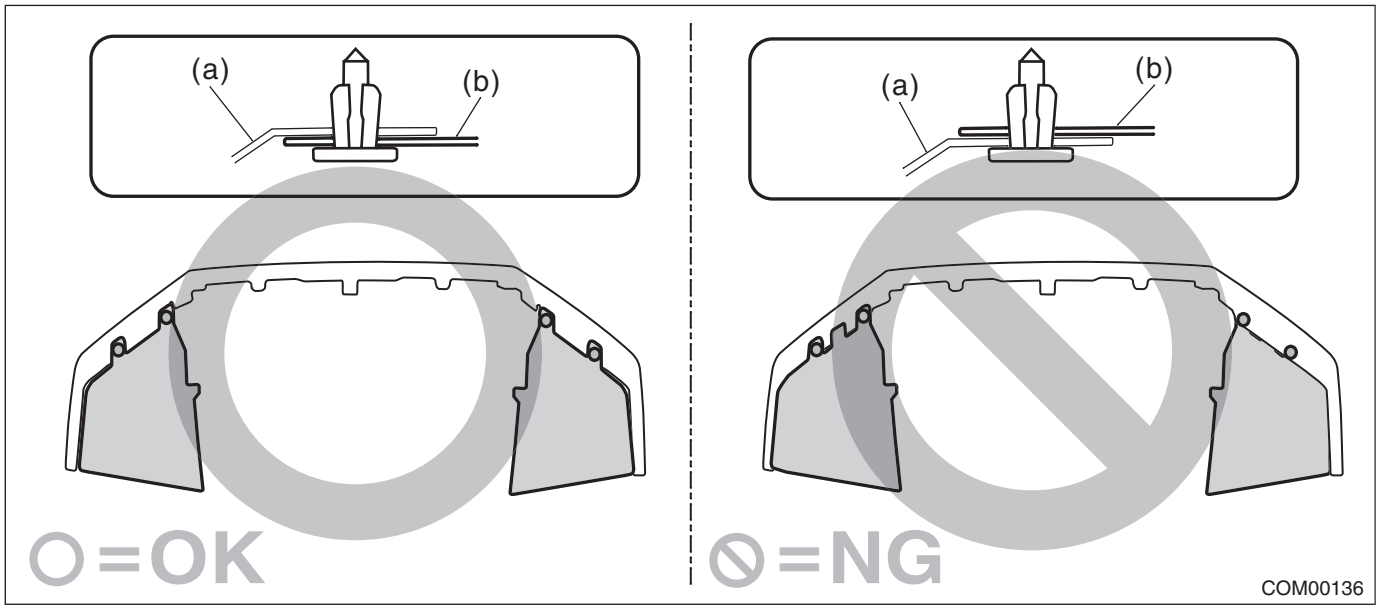

1) Install the access buzzer.
2) Connect the ground terminal to battery sensor. <Ref. to RC-4, BATTERY, NOTE, Repair Contents.>

C: INSPECTION

Using the Subaru Select Monitor, perform forced operation of the access buzzer. <Ref. to BC(diag)-30, OPERATION, User Customizing.>
If the buzzer does not sound, replace the access buzzer.

38.Function Setting (Customize)

A: OPERATION

Disabling/Activating the keyless access system

The following functions are disabled when the keyless access system functions are disabled:
- LOCK function performed by the operation of touch sensor on the door outer handle
- UNLOCK function by the door touch sensor
- Trunk lid open function by trunk opener button operation in the trunk lid lock condition
- Lockout prevention feature
- Warning function
- Engine starting control using keyless access collation

B: PROCEDURE

1. STOPPING KEYLESS ACCESS SYSTEM FUNCTION BY DOOR OPEN/CLOSE PROCEDURE

1) Check that the vehicle status is as follows:
- Ignition switch OFF
- One window is completely open
- Keyless access system is activated (or disabled if re-activating)

2) Sit in the driver's seat with the door closed and press the door lock switch to UNLOCK once.
3) Open the driver's door within five seconds.
4) Within 5 seconds, with the driver's door opened, slowly press the door lock switch to UNLOCK twice.
5) Within 10 seconds after finishing step 4), perform the closing → opening operation of the driver's door twice.
6) Within 10 seconds after finishing step 5), with the driver's door opened, slowly press the door lock switch to UNLOCK twice.
7) Within 10 seconds after finishing step 6), perform the closing → opening operation of the driver's door once.
8) Within five seconds, close the driver's door.

NOTE:
- Perform the same procedures to re-activate the keyless access system from the disabled condition.
- If the driver's door is opened or closed in step 4) and step 6), the cancel operation is disabled.

2. STOPPING KEYLESS ACCESS SYSTEM FUNCTION BY USING ACCESS KEY

1) Open the driver's door, and then push the door lock knob forward (LOCK direction).
2) Press the lock button of access key and trunk/rear gate button simultaneously for five seconds or more.
3) The buzzer sounds for two seconds, and the function stops.

NOTE:
Perform the same procedures to re-activate the keyless access system from the disabled condition.

39.Diagnostics with Phenomenon

A: INSPECTION

Refer to “Diagnostics with Phenomenon” of “KEYLESS ACCESS WITH PUSH BUTTON START SYSTEM (DIAGNOSTICS)” section. <Ref. to KPS(diag)-109, Diagnostics with Phenomenon.>

SUNROOF/T-TOP/CONVERTIBLE TOP (SUNROOF)

SR

		Page
1.	General Description	2
2.	Relay and Fuse	4
3.	Sunroof Control System	5
4.	Glass Lid	7
5.	Sunroof Assembly	12
6.	Sunroof Motor	20
7.	Sunroof Switch	22
8.	Sunshade	24

1. General Description

A: COMPONENT

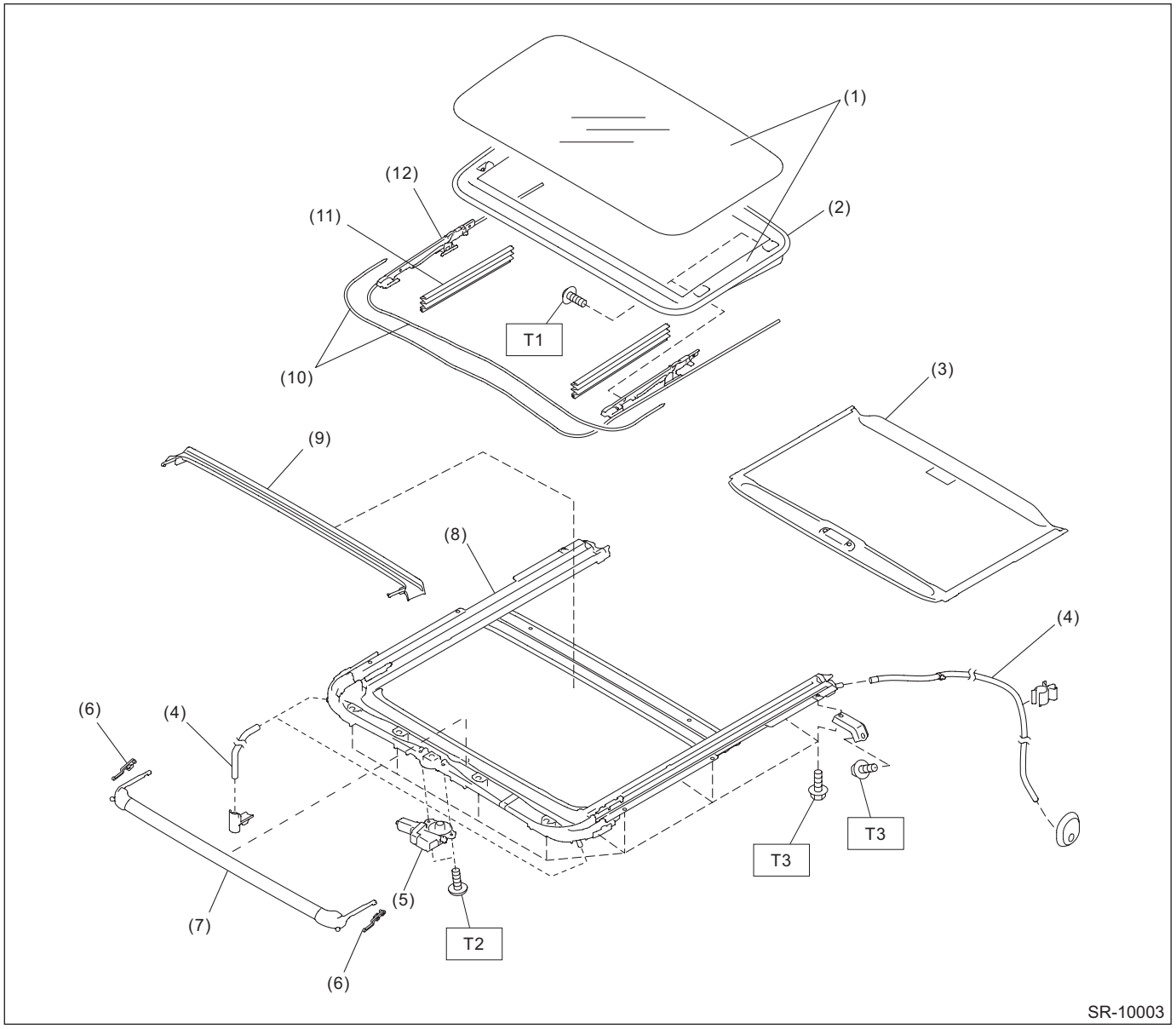

(1) Lid ASSY - sunroof
(2) Weather strip
(3) Sunshade ASSY
(4) Drain tube - sunroof
(5) Motor ASSY - sunroof
(6) Hook
(7) Deflector ASSY - sunroof
(8) Rail ASSY - sunroof
(9) Drain ASSY - sunroof
(10) Cable ASSY
(11) Lid cover
(12) Link - drain sunroof

Tightening torque: N·m (kgf-m, ft-lb)
T1: 4.5 (0.5, 3.3)
T2: 5.4 (0.6, 4.0)
T3: 6 (0.6, 4.4)

B: CAUTION

Before disconnecting connectors of sensors or units, be sure to disconnect the ground cable from battery. When replacing the electrical parts provided with memory functions that store contents specified by a customer, record the memory contents before disconnecting the battery ground cable.

C: PREPARATION TOOL

1. GENERAL TOOL

TOOL NAME	REMARKS
Circuit tester	Used for measuring resistance, voltage and current.
TORX® T25	Used for removing and installing the lid assembly - sunroof.

2. Relay and Fuse

A: LOCATION

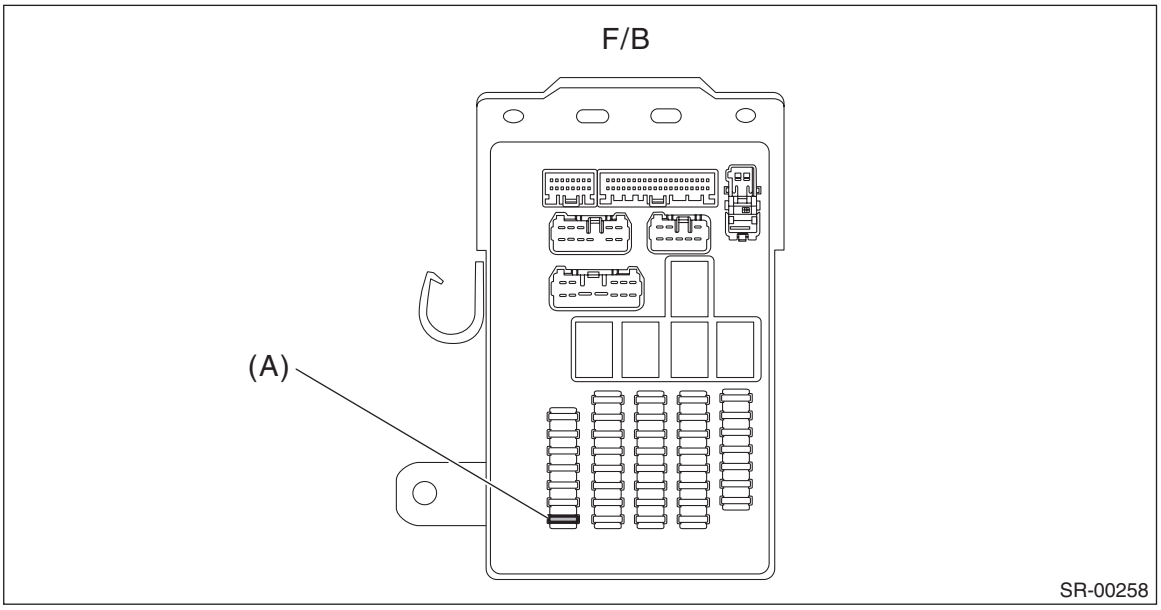

Fuse & relay box (F/B)	Fuse 20A	(A)

NOTE:
For details concerning other fuses and relays, refer to the wiring diagram. <Ref. to WI-21, Power Supply Circuit.>

B: INSPECTION

1. CHECK FUSE

1) Remove the fuse and inspect visually.
2) If the fuse is blown out, replace the fuse.

3. Sunroof Control System

A: WIRING DIAGRAM

Refer to “Sunroof Control System” in the wiring diagram. <Ref. to WI-348, WIRING DIAGRAM, Sunroof Control System.>

B: INSPECTION

Symptoms	Inspection steps
Water leakage	1. Check the roof panel and the lid assembly - sunroof for improper or poor sealing. 2. Check the drain tube - sunroof for clogging. 3. Check the joints of the rail assembly - sunroof for improper sealing and for proper installation to the body.
Booming noise, wind noise and other noise	1. Check the lid assembly - sunroof and the roof panel for improper clearance. 2. Check the sunshade assembly and the trim panel - roof assembly for improper clearance.
Abnormal motor noise	1. Check installing part of motor for looseness. 2. Check gears and bearings for wear. 3. Check cable assembly for wear. 4. Check cable pipe for deformities.
Failure of sunroof (Motor operates properly.)	1. Check guide rail for foreign particles. 2. Check guide rail for improper installation. 3. Check parts for mutual interference. 4. Check cable slider for improper clinching. 5. Check cable assembly for improper installation.
Motor does not rotate or it does not rotate normally.	1. Check fuse for blown out. 2. Check switch for improper function. 3. Check motor assembly for incorrect terminal voltage. 4. Check the relay for improper operation. 5. Check harness for open or short and terminals for poor connections.
Incorrect reverse operation of the lid assembly - sunroof	Check guide rail for foreign particles.

Incorrect reverse operation of the lid assembly - sunroof while driving on rough road

The lid assembly - sunroof has auto-reverse function. When the lid assembly - sunroof is pushed in the opening direction with a force of 110±10 N (11.2 kgf, 24.7 lbf±1.0 kgf, 2.2 lbf), the glass lid moves in reverse and stops.

Therefore, if you operate (open or close) the lid assembly - sunroof while driving on rough road, the vibration may be judged as a force and the lid may incorrectly move in the reverse direction.

When the incorrect reverse operation is occurred repeatedly, perform inspection around the sunroof frame. If there are no problems, perform the initialization operation with following procedure.

C: OPERATION

1. INITIALIZE OPERATION

CAUTION:
If the switch is released during initialization operation, perform the procedure over again.
1) Turn the ignition switch to ON.
2) Completely tilt open the lid assembly - sunroof.
3) Release the switch once, and press and hold the tilt up switch or close switch again for approx. 3 minutes.
4) Initial learning mode will start to operate until the fully tilt closed position. The lid assembly - sunroof moves to the fully closed position, fully open position, and the fully closed position successively, and stops at the fully closed position.
5) Release the tilt up switch or the close switch, and turn the ignition switch to OFF.
6) Initial learning is completed.

D: NOTE

For procedure of each component in the sunroof control system, refer to the respective section.
- Glass lid: <Ref. to SR-7, Glass Lid.>
- Sunroof assembly: <Ref. to SR-12, Sunroof Assembly.>
- Sunroof motor: <Ref. to SR-20, Sunroof Motor.>
- Sunroof switch: <Ref. to SR-22, Sunroof Switch.>
- Sunshade: <Ref. to SR-24, Sunshade.>

4. Glass Lid

A: REMOVAL

1. GLASS LID

CAUTION:
Be careful not to damage the lid assembly - sunroof.

1) Completely close the lid assembly - sunroof, and open the sunshade assembly.
2) Disconnect the claws and then remove the lid cover.

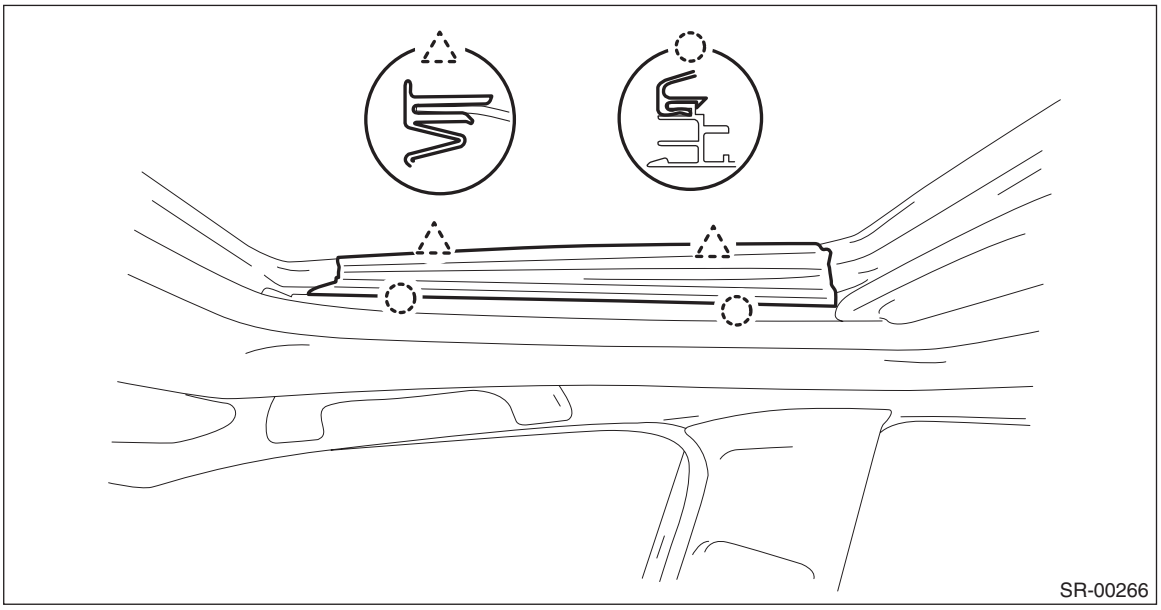

3) Remove the lid assembly - sunroof.

Preparation tool:
TORX® T25

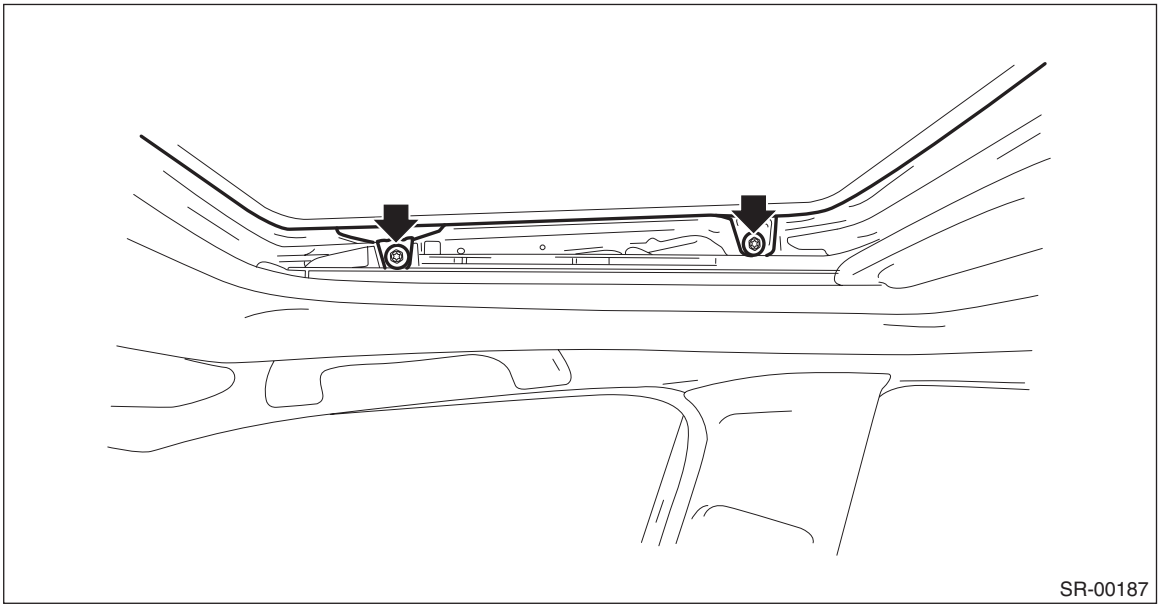

2. DEFLECTOR ASSEMBLY

1) Open the lid assembly - sunroof and the sunshade assembly.
2) Remove the deflector assembly - sunroof.
   (1) Remove the spring from the rail assembly - sunroof.

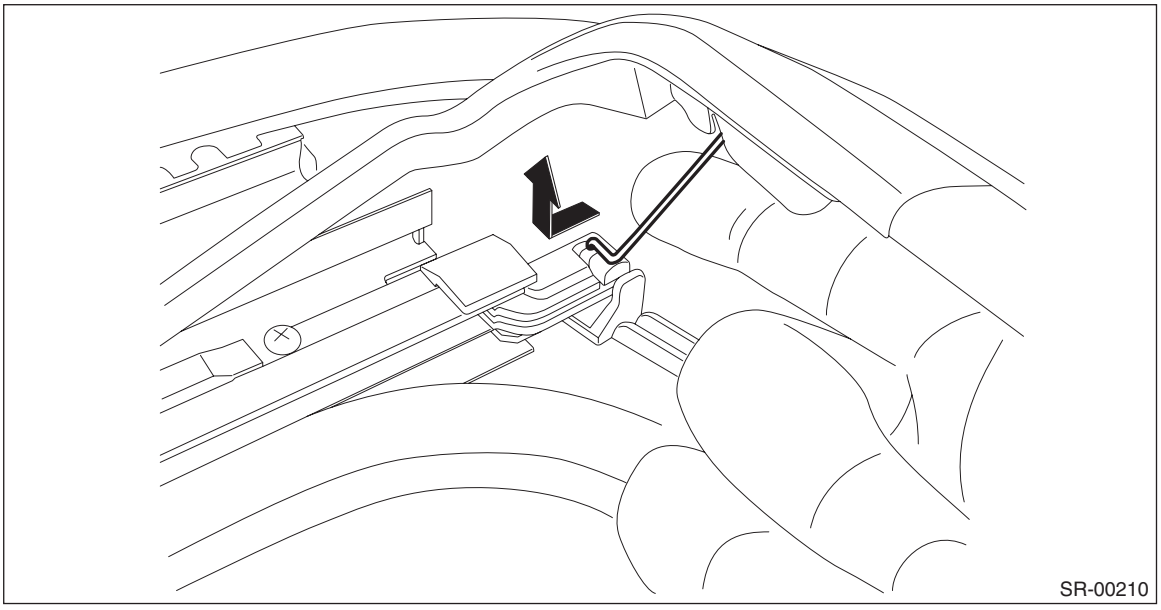

   (2) While pressing down the hook (a) of rail assembly - sunroof, slide it to the rail rear direction to remove.

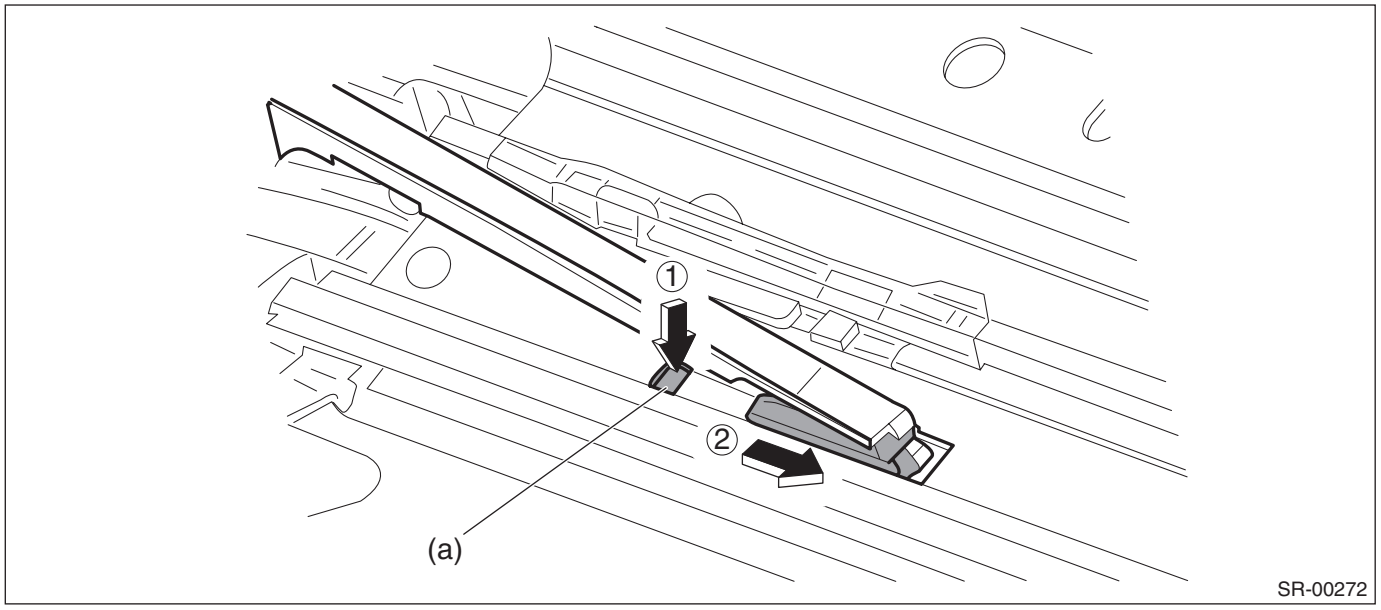

(3) Remove the deflector assembly - sunroof from the hook of rail assembly - sunroof.

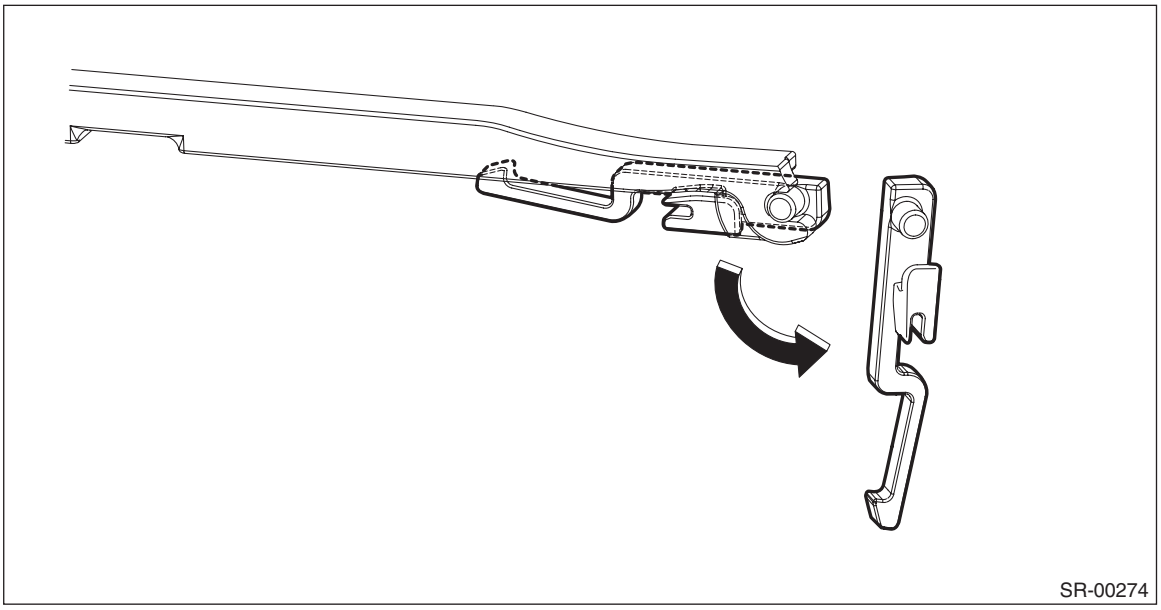

B: INSTALLATION

1. GLASS LID

1) Install the lid assembly - sunroof.

Tightening torque:
4.5 N·m (0.5 kgf-m, 3.3 ft-lb)

2) Perform the open/close operation checks for the glass lid.
3) Check the height of the lid assembly - sunroof and the roof panel, and perform adjustment when there is a difference between up and down, and left and right. <Ref. to SR-11, ADJUSTMENT, Glass Lid.>
4) Install the lid cover.

2. DEFLECTOR ASSEMBLY

1) Install the deflector assembly - sunroof.

CAUTION:
When the hook is removed, be careful of the hook direction.

2) After installation, measure the height from the roof panel when deflector assembly - sunroof is activated.

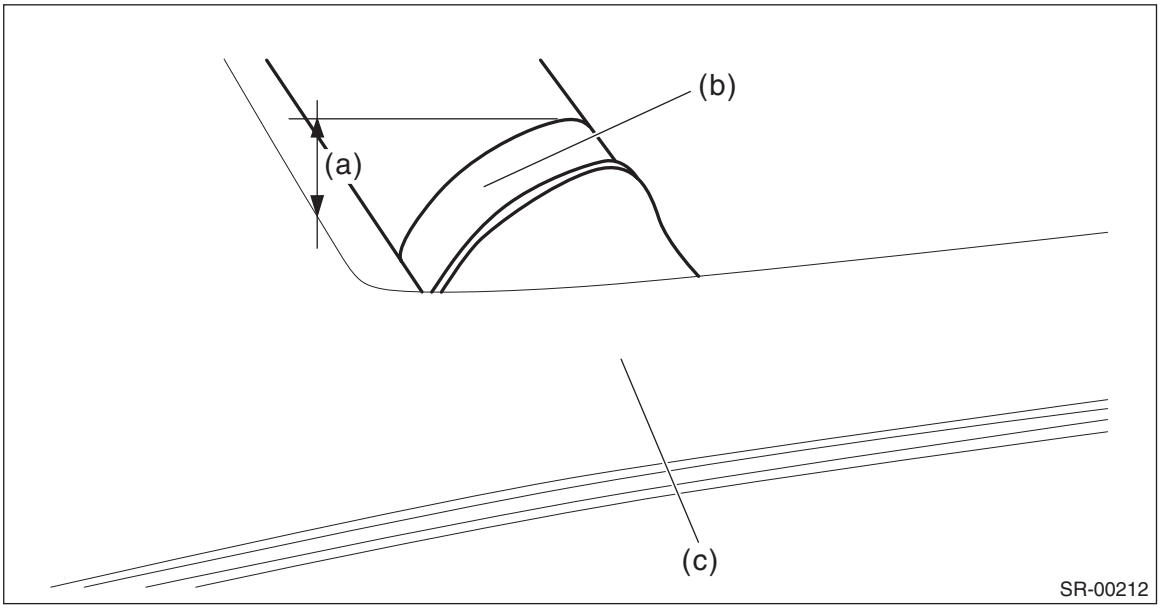

(a) 14 mm (0.55 in)
(b) Deflector ASSY - sunroof
(c) Roof panel

C: ADJUSTMENT

1) Adjust the height of the lid assembly - sunroof and the roof panel.
2) Loosen the lid assembly - sunroof mounting bolts, and then adjust the height by moving the lid assembly - sunroof side.

Lid assembly - sunroof height difference L:
Lid assembly - sunroof to Roof panel: 0±1.0 mm (0±0.04 in)

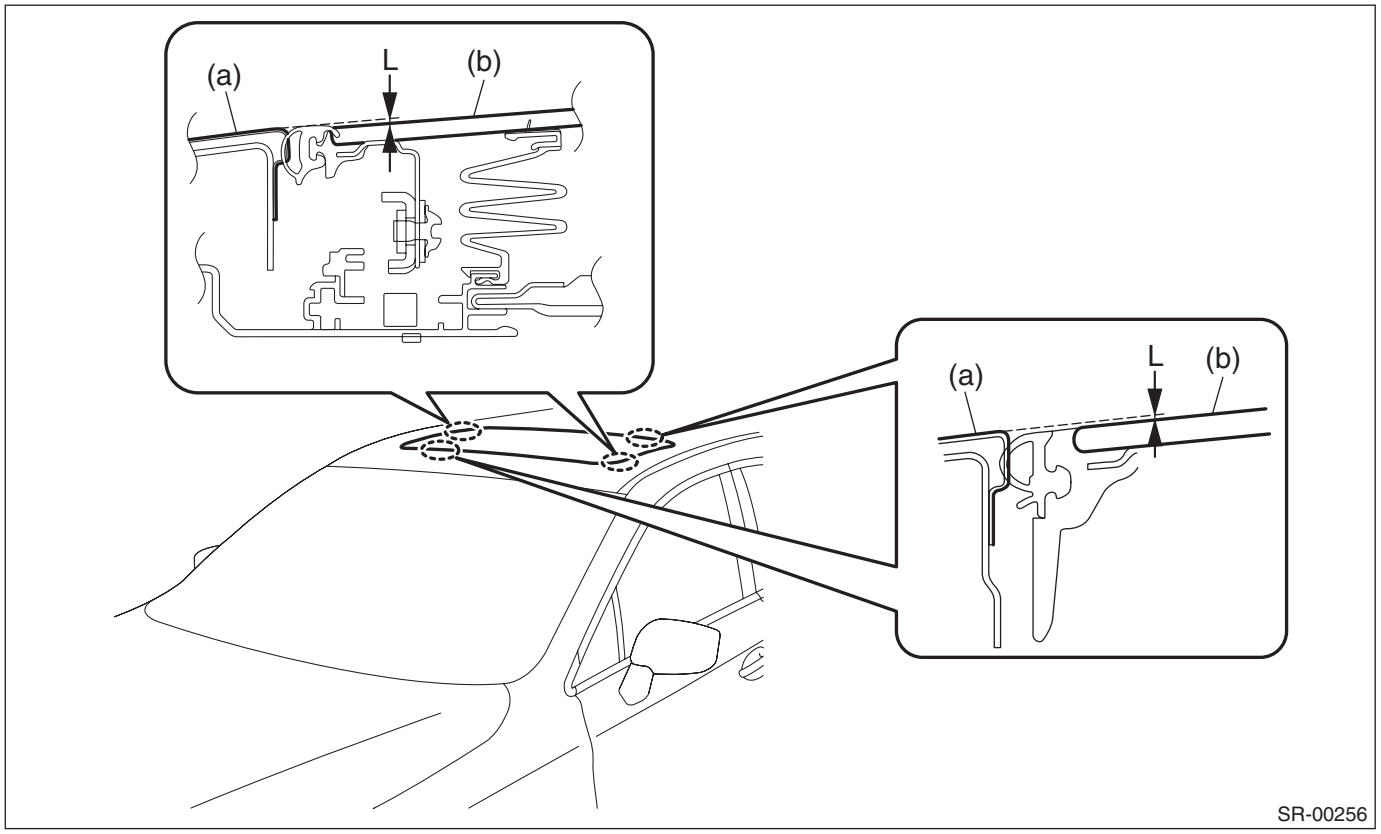

(a) Roof panel (b) Lid ASSY - sunroof

Tightening torque:
4.5 N·m (0.5 kgf-m, 3.3 ft-lb)

D: FORCED DRIVE

CAUTION:
After a forced operation, make sure to perform an initialize operation. <Ref. to SR-6, INITIALIZE OPERATION, OPERATION, Sunroof Control System.>
If the lid assembly - sunroof does not operate or the motor assembly is not supplied with power, remove the motor assembly to move the lid assembly - sunroof manually.
1) Remove the overhead console. (Models without EyeSight) <Ref. to LI-66, REMOVAL, Spot Map Light.>
2) Remove the stereo camera cover assembly. (Models with EyeSight) <Ref. to ES-8, REMOVAL, Stereo Camera.>
3) Remove the connector and bolt to remove the motor assembly.
4) Move the lid assembly - sunroof by hand.
5) Install the connector and bolt.
6) Install the overhead console. (Models without EyeSight) <Ref. to LI-67, INSTALLATION, Spot Map Light.>
7) Install the stereo camera cover assembly. (Models with EyeSight) <Ref. to ES-11, INSTALLATION, Stereo Camera.>

5. Sunroof Assembly

A: REMOVAL

CAUTION:
Refer to "CAUTION" of "General Description" before handling the airbag system components. <Ref. to AB-10, CAUTION, General Description.>
1) Disconnect the ground terminal from the battery sensor, and wait for at least 60 seconds before starting work. <Ref. to RC-4, BATTERY, NOTE, Repair Contents.>

NOTE:
Completely close the lid assembly - sunroof, then disconnect the ground terminal from battery sensor.
2) Remove the lid assembly - sunroof.

CAUTION:
Be careful not to damage the lid assembly - sunroof.
(1) Completely close the lid assembly - sunroof, and open the sunshade assembly.
(2) Disconnect the claws and then remove the lid cover.

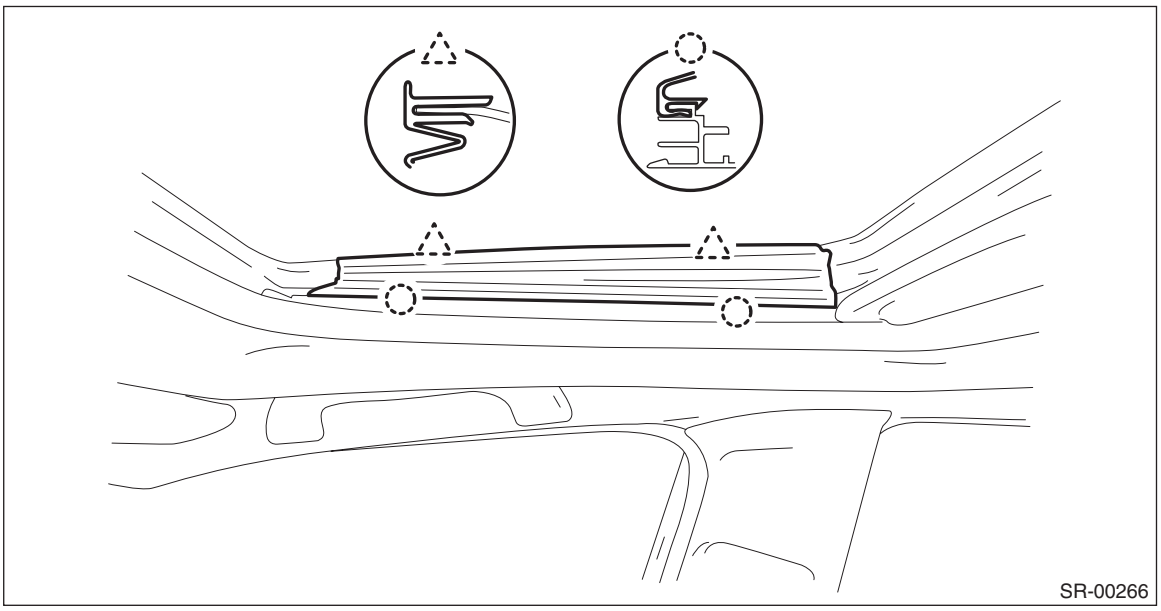

(3) Remove the lid assembly - sunroof.

Preparation tool:
TORX® T25

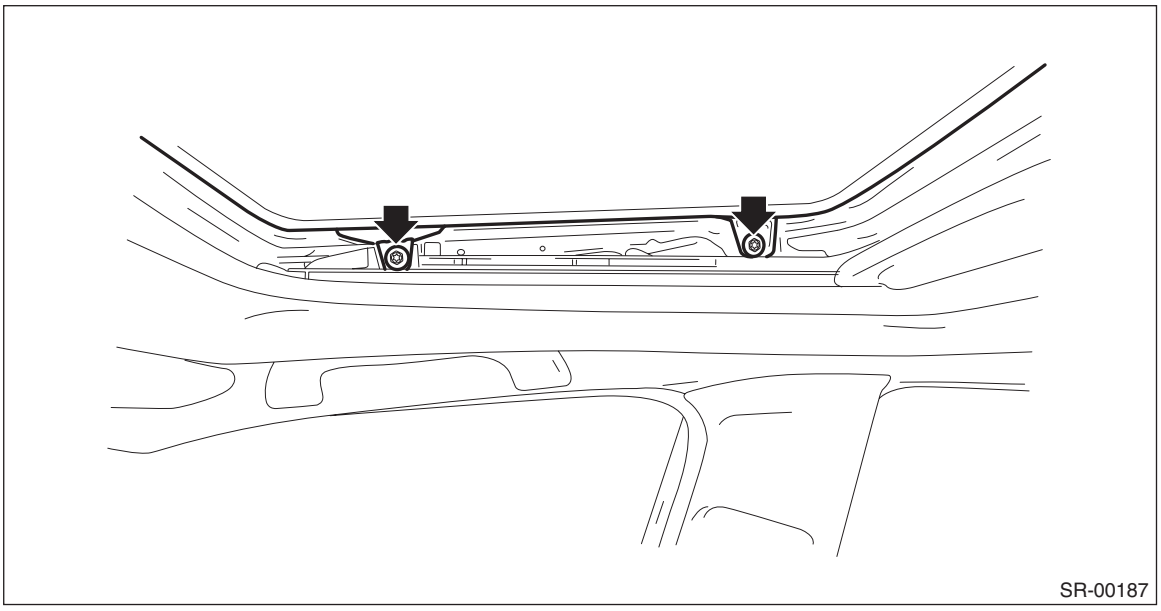

3) Remove the trim panel - roof assembly. <Ref. to EI-113, REMOVAL, Roof Trim.>
4) Disconnect the connector of the motor assembly - sunroof.
5) Remove the rail assembly - sunroof.

NOTE:
When removing the drain tube - sunroof completely, perform the step 7) or 8).

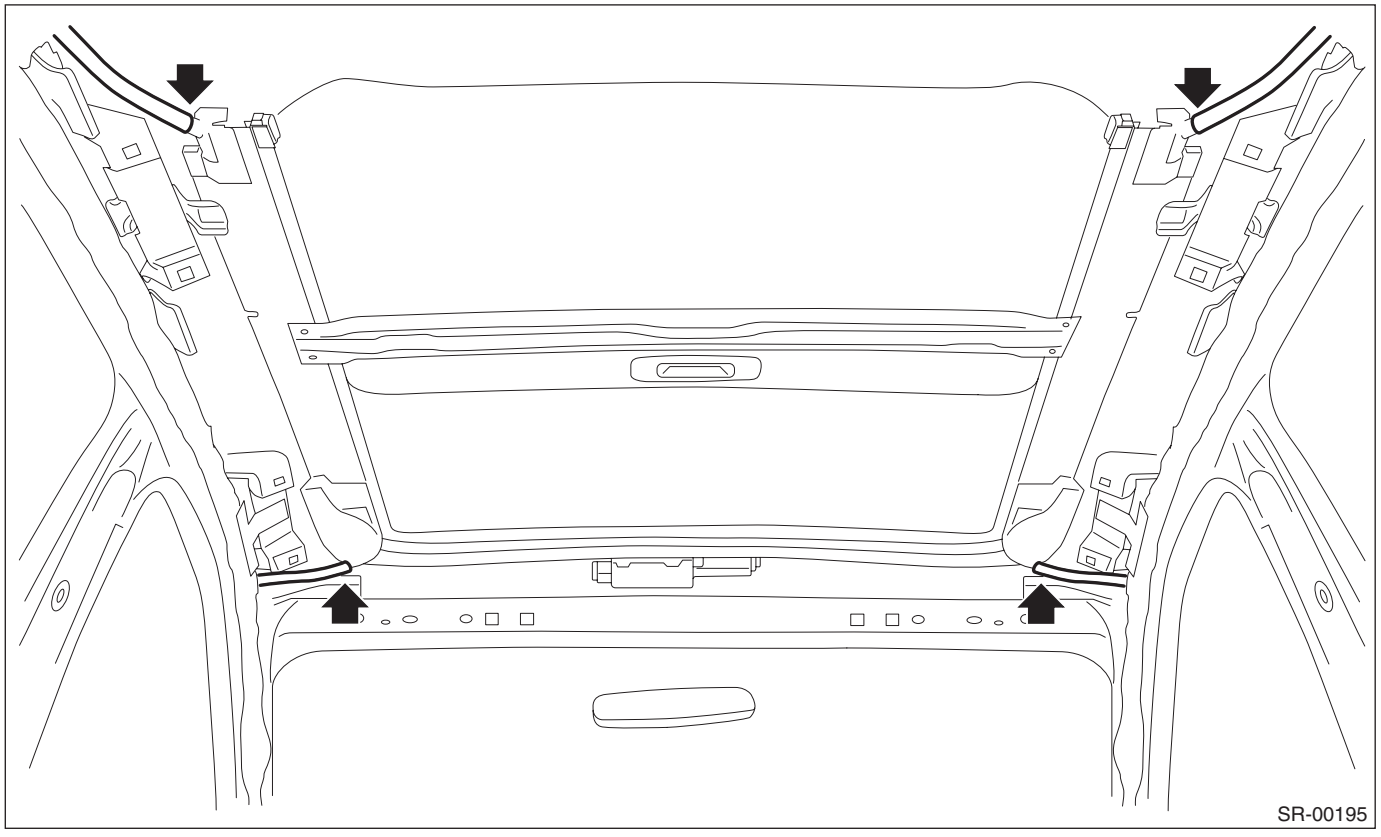

6) Remove the rail assembly - sunroof.
(1) Remove the curtain airbag module. <Ref. to AB-43, REMOVAL, Curtain Airbag Module.>
(2) Remove the bolts and then remove the sunroof bracket.

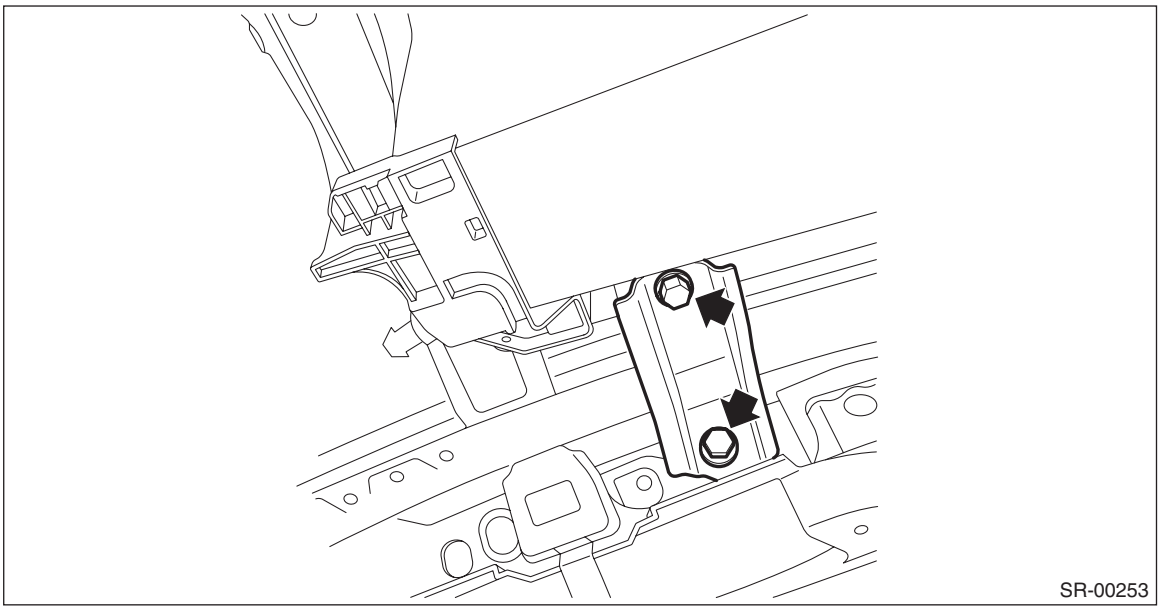
SR-00253

(3) Remove the bolts, then remove the rail assembly.

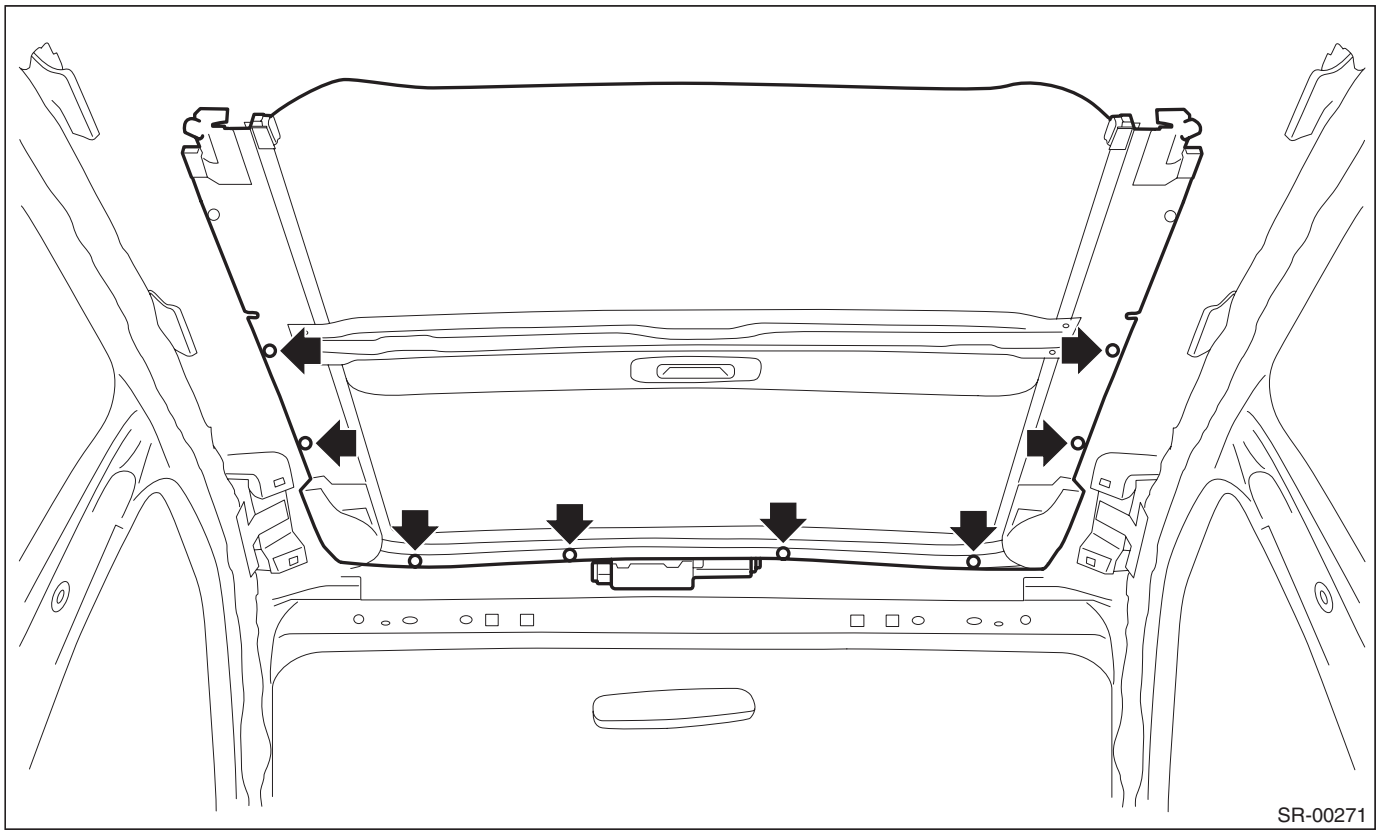
SR-00271

7) Remove the front side of drain tube - sunroof.

NOTE:
For easy replacement work, attach a string when pulling the drain tube - sunroof.

(1) Remove the cover side sill - front and the front cover - side sill. <Ref. to EI-92, REMOVAL, Lower Inner Trim.>

(2) Disconnect each connector, and remove the bolt and clip.

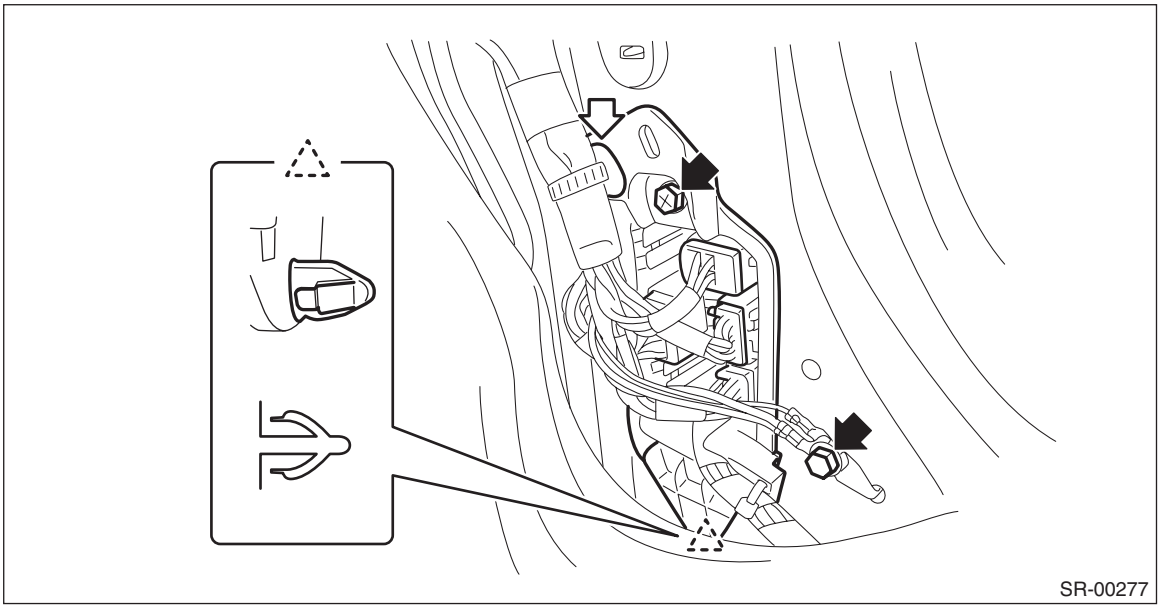

(3) Remove the front side of drain tube - sunroof.

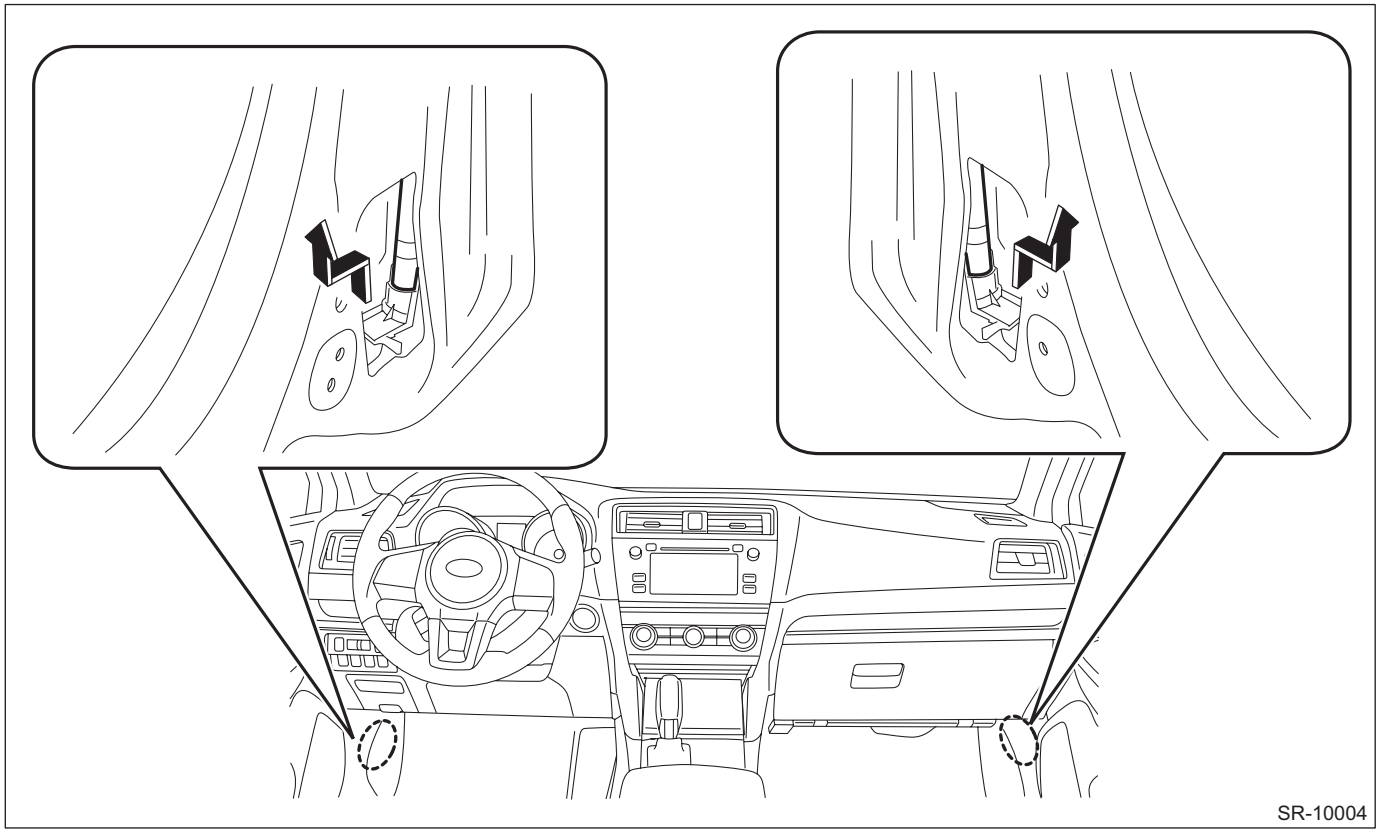

8) Remove the rear side of drain tube - sunroof.
   (1) Remove the mat - rear floor and the spacer - rear floor.
   (2) Remove the drain tube - sunroof.

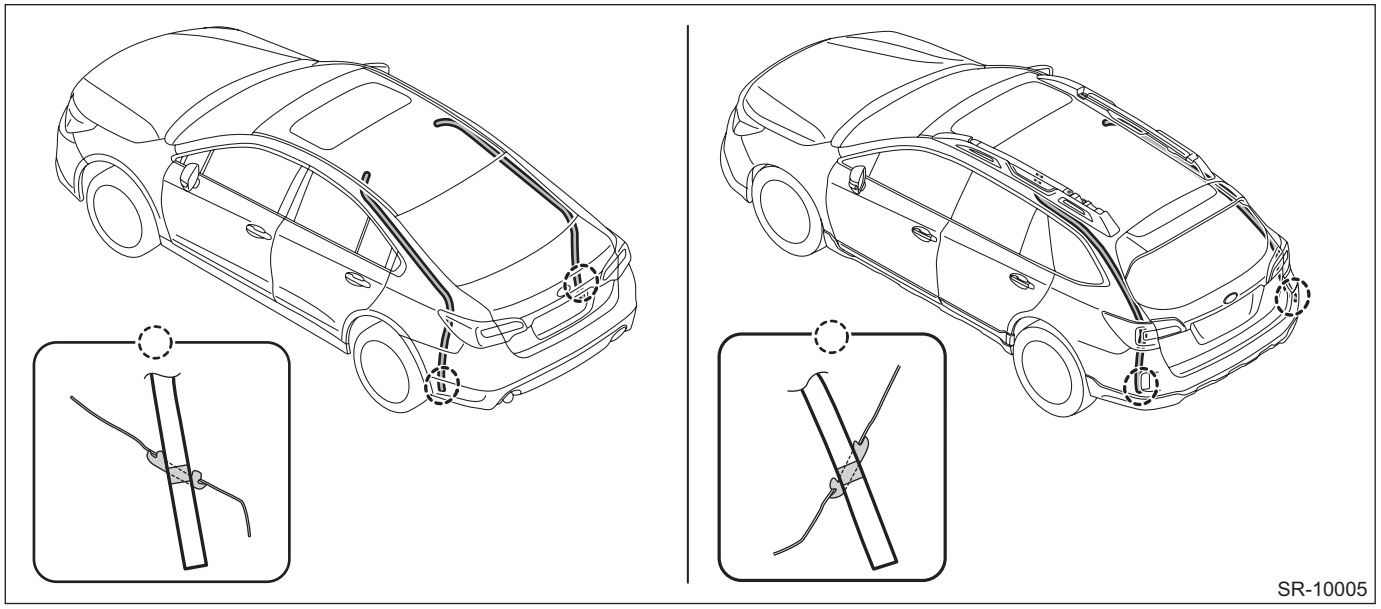

B: INSTALLATION

CAUTION:
Be careful not to snag the harness.
1) Install each connector and the drain tube - sunroof.

Tightening torque:
Connector holder: 7.5 N·m (0.8 kgf-m, 5.5 ft-lb)
Ground bolt: 13 N·m (1.3 kgf-m, 9.6 ft-lb)
2) Install the cover side sill - front and the front cover - side sill.
3) Install the rail assembly - sunroof.

Tightening torque:
6 N·m (0.6 kgf-m, 4.4 ft-lb)
4) Install the curtain airbag module. <Ref. to AB-48, INSTALLATION, Curtain Airbag Module.>

5) Connect the harness connector of the drain tube - sunroof and the motor assembly.

CAUTION:
Insert the four drain tubes 15 mm (0.59 in) or more into the drain pipes (a).

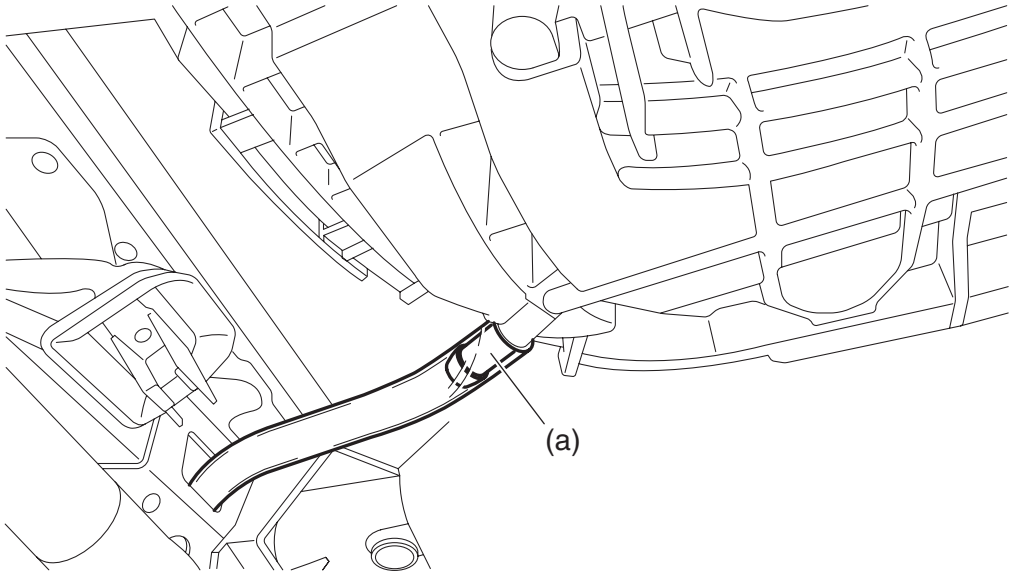

SR-00259

6) Install the trim panel - roof assembly. <Ref. to EI-118, INSTALLATION, Roof Trim.>
7) Install the lid assembly - sunroof.

Tightening torque:
4.5 N·m (0.5 kgf-m, 3.3 ft-lb)
8) Connect the ground terminal to battery sensor. <Ref. to RC-4, BATTERY, NOTE, Repair Contents.>

C: DISASSEMBLY

1) Remove the bolt, and then remove the motor assembly - sunroof.

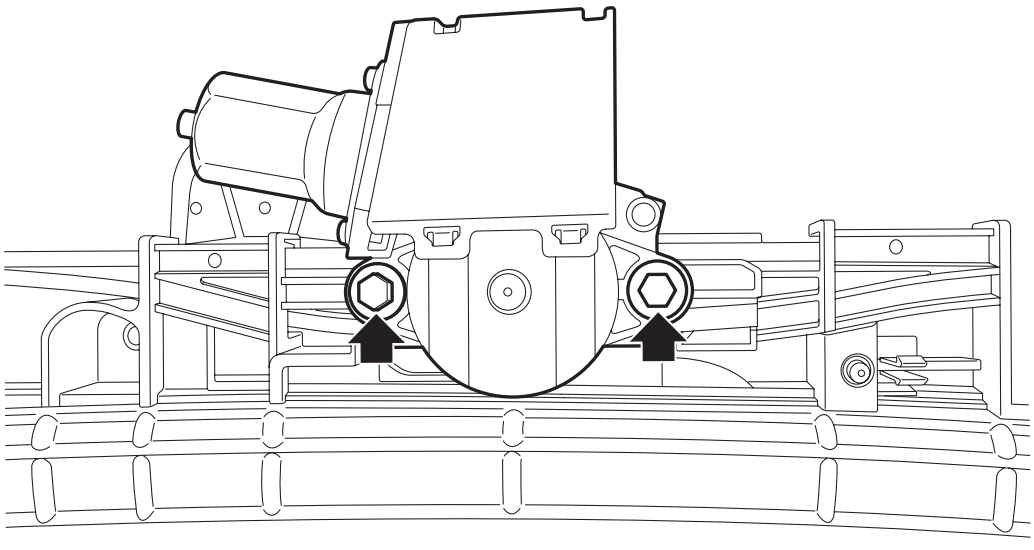
SR-00254

2) Remove the screws and release the claws, then detach the drain holder.

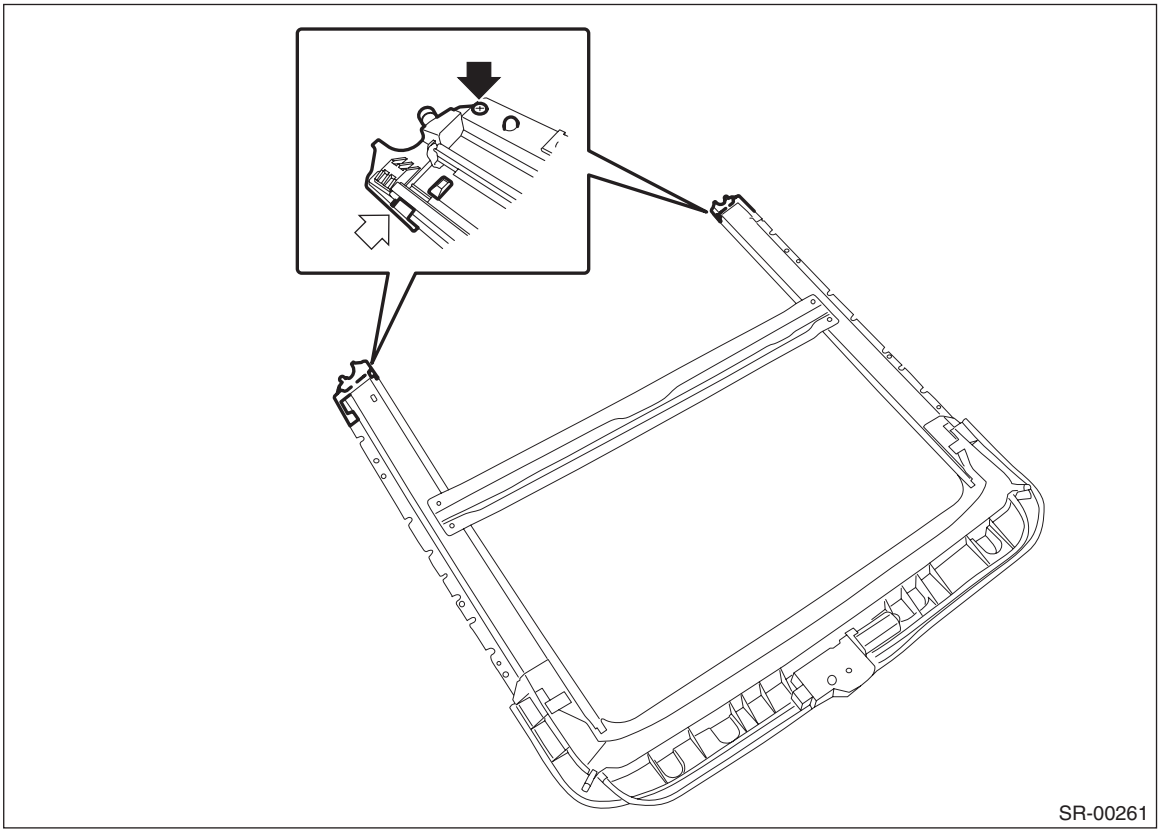

3) Remove the sunshade assembly together with the cable assembly from the rail assembly - sunroof.

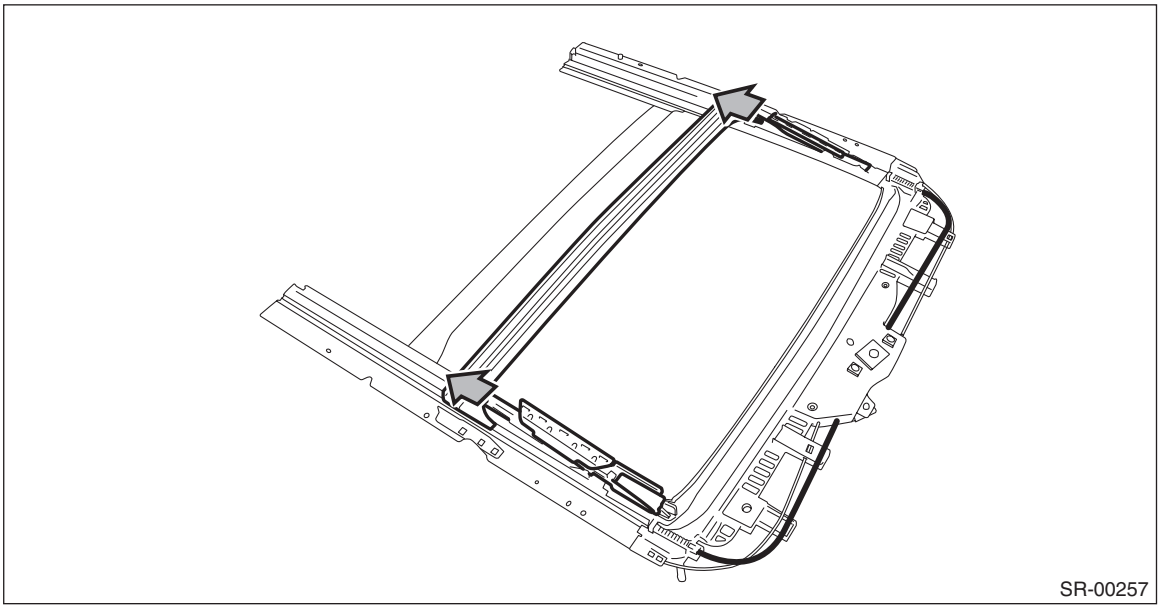

D: ASSEMBLY

1) Insert the cable assembly and sunshade assembly into the rail assembly - sunroof.
2) Install the drain holder.
3) Using a flat tip screwdriver wrapped with protective tape, move the link - drain sunroof to the foremost position of the lid assembly - sunroof.

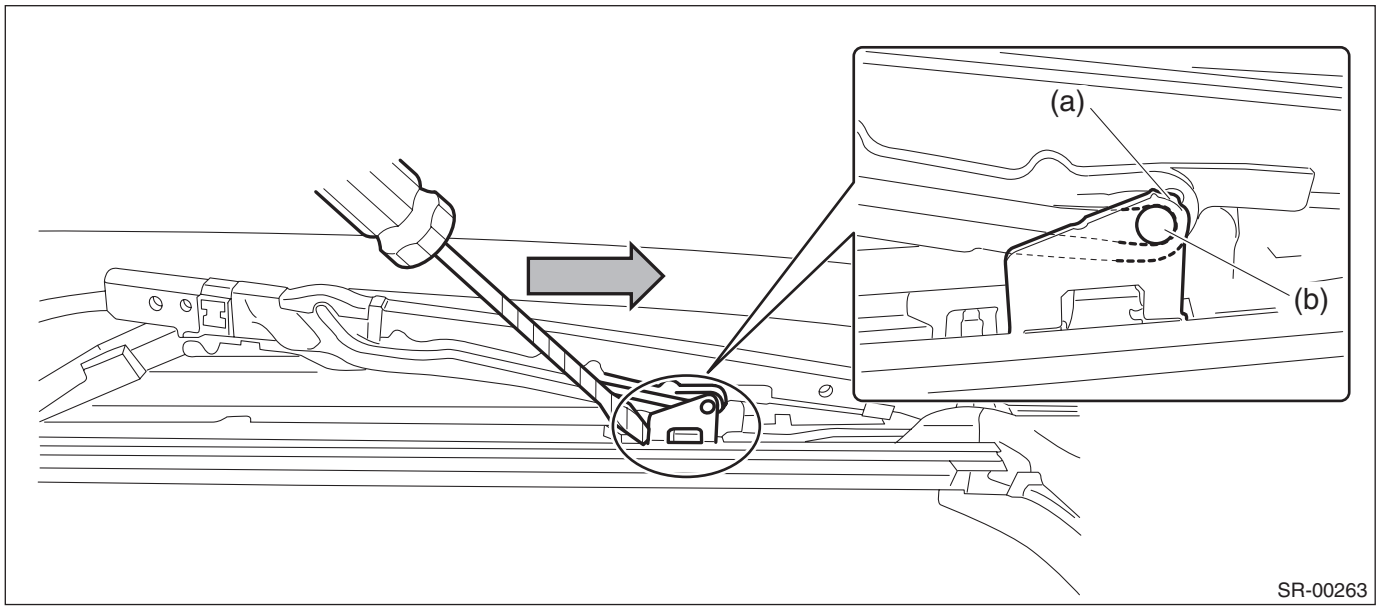

(a) Lid ASSY - sunroof side (b) Link - drain sunroof side

4) Install the motor assembly - sunroof.

Tightening torque:
5.4 N·m (0.6 kgf-m, 4.0 ft-lb)

6. Sunroof Motor

A: REMOVAL

1) Disconnect the ground terminal from battery sensor. <Ref. to RC-4, BATTERY, NOTE, Repair Contents.>
2) Remove the overhead console. (Models without EyeSight) <Ref. to LI-66, REMOVAL, Spot Map Light.>
3) Remove the stereo camera cover assembly. (Models with EyeSight) <Ref. to ES-8, REMOVAL, Stereo Camera.>
4) Remove the motor assembly - sunroof.
   (1) Disconnect the harness connector.
   (2) Remove the bolt, and then remove the motor assembly - sunroof.

CAUTION:
When removing the motor assembly - sunroof, do not allow the cable assembly to move.

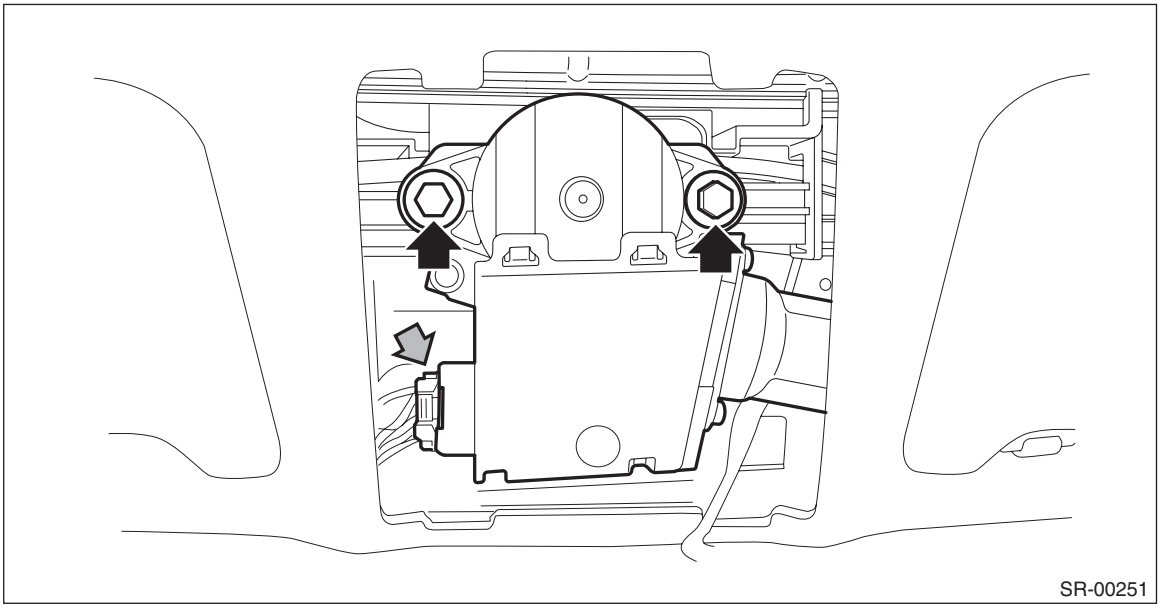

B: INSTALLATION

CAUTION:
- **When installing the motor assembly - sunroof, do not allow the cable assembly to move.**
- **For installation of the stereo camera cover, refer to "INSTALLATION", "Stereo Camera" in the "EyeSight" section and observe the precautions for installation. <Ref. to ES-11, INSTALLATION, Stereo Camera.>**

1) Install the motor assembly - sunroof.

Tightening torque:
5.4 N·m (0.6 kgf-m, 4.4 ft-lb)

2) Install the overhead console. (Models without EyeSight) <Ref. to LI-67, INSTALLATION, Spot Map Light.>
3) Install the stereo camera cover assembly. (Models with EyeSight) <Ref. to ES-11, INSTALLATION, Stereo Camera.>
4) Connect the ground terminal to battery sensor. <Ref. to RC-4, BATTERY, NOTE, Repair Contents.>
5) Perform the initialize operation. <Ref. to SR-6, INITIALIZE OPERATION, OPERATION, Sunroof Control System.>
6) Check the operation of sunroof by following the table below.

Operation	Switch position
(1) Lid assembly - sunroof closes completely.	Close
(2) Lid assembly - sunroof is tilted up to the top position.	Tilt up
(3) Lid assembly - sunroof closes completely.	Tilt down
(4) Lid assembly - sunroof opens 368 mm (14.49 in) away from completely closed position.	Open
(5) Lid assembly - sunroof opens completely.	Open
(6) Lid assembly - sunroof closes completely.	Close

C: INSPECTION

Check the auto-reverse mechanism.

CAUTION:
Do not place objects in the way to check the auto-reverse mechanism.

1) Open the lid assembly - sunroof.
2) Push the lid assembly - sunroof in the opening direction with a force of 110±10 N (11.2 kgf, 24.7 lbf±1.0 kgf, 2.2 lbf) during the auto-closing operation, and check whether the window auto-reverse mechanism functions.

NOTE:
If the auto function is cancelled, perform the initialize operation. <Ref. to SR-6, INITIALIZE OPERATION, OPERATION, Sunroof Control System.>

7. Sunroof Switch

A: REMOVAL

1) Disconnect the ground terminal from battery sensor. <Ref. to RC-4, BATTERY, NOTE, Repair Contents.>
2) Remove the overhead console. (Models without EyeSight) <Ref. to LI-66, REMOVAL, Spot Map Light.>
3) Remove the stereo camera cover assembly. (Models with EyeSight) <Ref. to ES-8, REMOVAL, Stereo Camera.>
4) Release the claws and remove the sunroof switch from the light assembly - map.

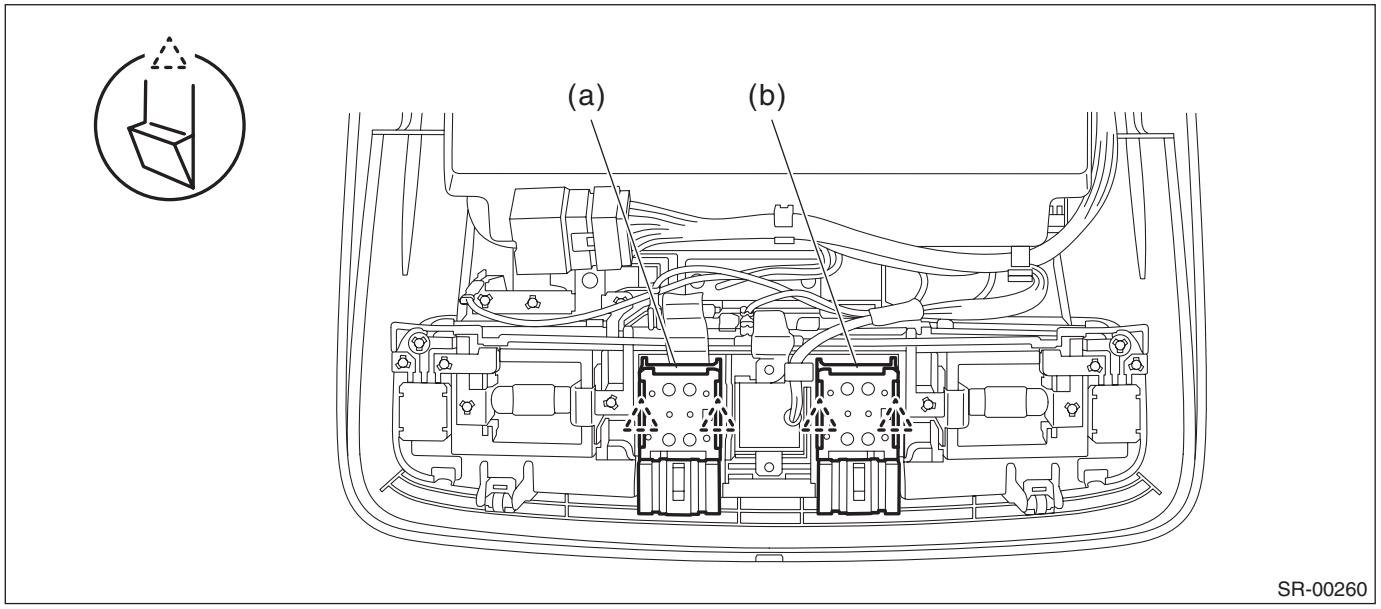

(a) Sunroof switch (tilt) (b) Sunroof switch (slide)

B: INSTALLATION

CAUTION:
For installation of the stereo camera cover, refer to "INSTALLATION", "Stereo Camera" in the "EyeSight" section and observe the precautions for installation. <Ref. to ES-11, INSTALLATION, Stereo Camera.>
1) Install the sunroof switch.
2) Install the overhead console. (Models without EyeSight) <Ref. to LI-67, INSTALLATION, Spot Map Light.>
3) Install the stereo camera cover assembly. (Models with EyeSight) <Ref. to ES-11, INSTALLATION, Stereo Camera.>
4) Connect the ground terminal to battery sensor. <Ref. to RC-4, BATTERY, NOTE, Repair Contents.>

C: INSPECTION

1) Measure the resistance between connector terminals.

Preparation tool:
Circuit tester

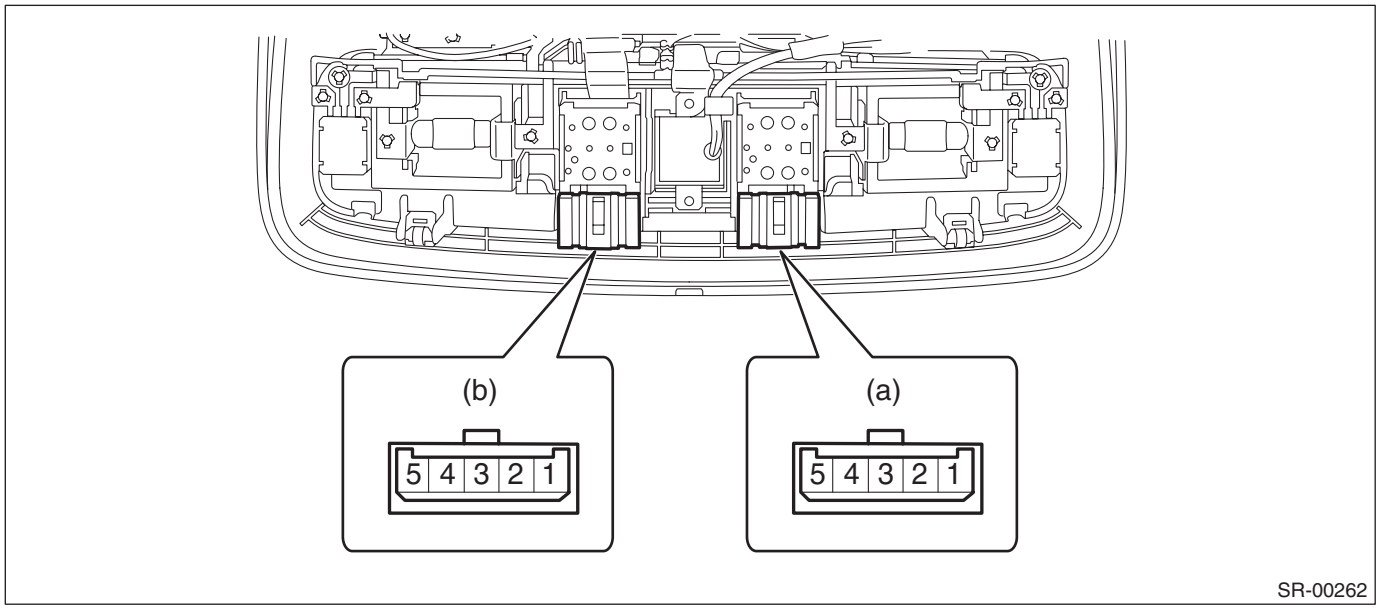

Connector	Terminal No.	Inspection conditions	Standard
(a)	1 — 3	Open	Less than 1 Ω
	4 — 3	Close	Less than 1 Ω
(b)	1 — 3	Tilt down	Less than 1 Ω
	4 — 3	Tilt up	Less than 1 Ω

2) Replace the sunroof switch if the inspection result is not within the standard value.

8. Sunshade

A: REMOVAL

1) Remove the lid assembly - sunroof. <Ref. to SR-7, REMOVAL, Glass Lid.>
2) Operate the sunroof switch with the sunshade fully closed to open the sunshade to the position (a) indicated below.

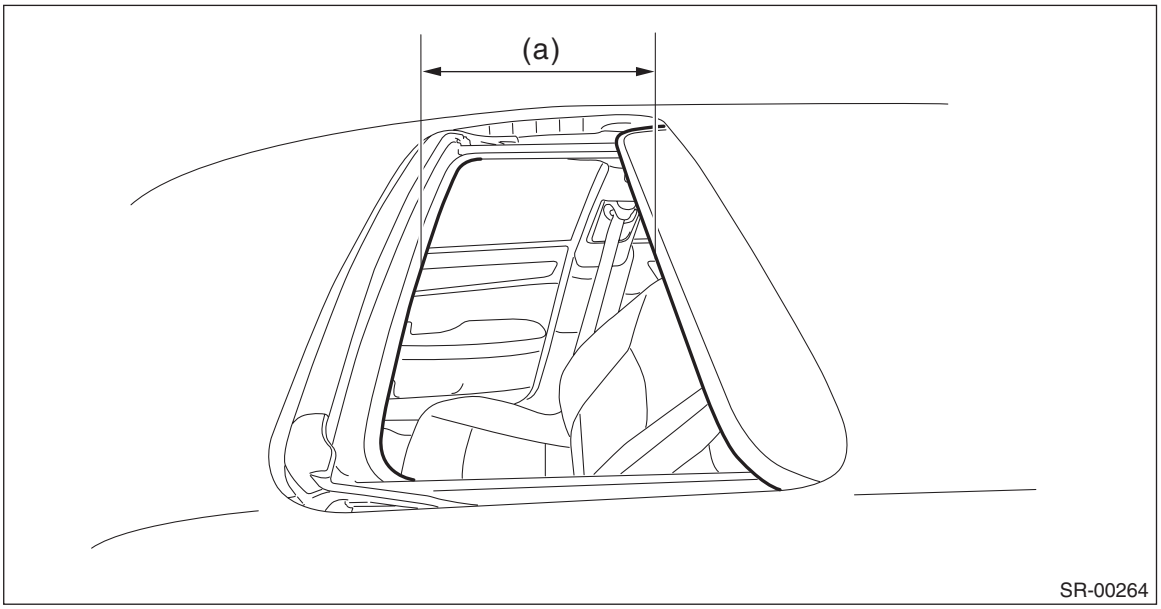

(a) 170 mm (6.69 in): Clearance between sunroof opening and front edge of sunshade

3) Disconnect the ground terminal from battery sensor. <Ref. to RC-4, BATTERY, NOTE, Repair Contents.>
4) Remove the trim panel - roof assembly. <Ref. to EI-113, REMOVAL, Roof Trim.>
5) Remove the rail assembly - sunroof. <Ref. to SR-12, REMOVAL, Sunroof Assembly.>

6) Remove the sunshade assembly.

CAUTION:
Be careful not to damage the sunshade assembly.

(1) Remove the screws and release the claws, then detach the drain holder.

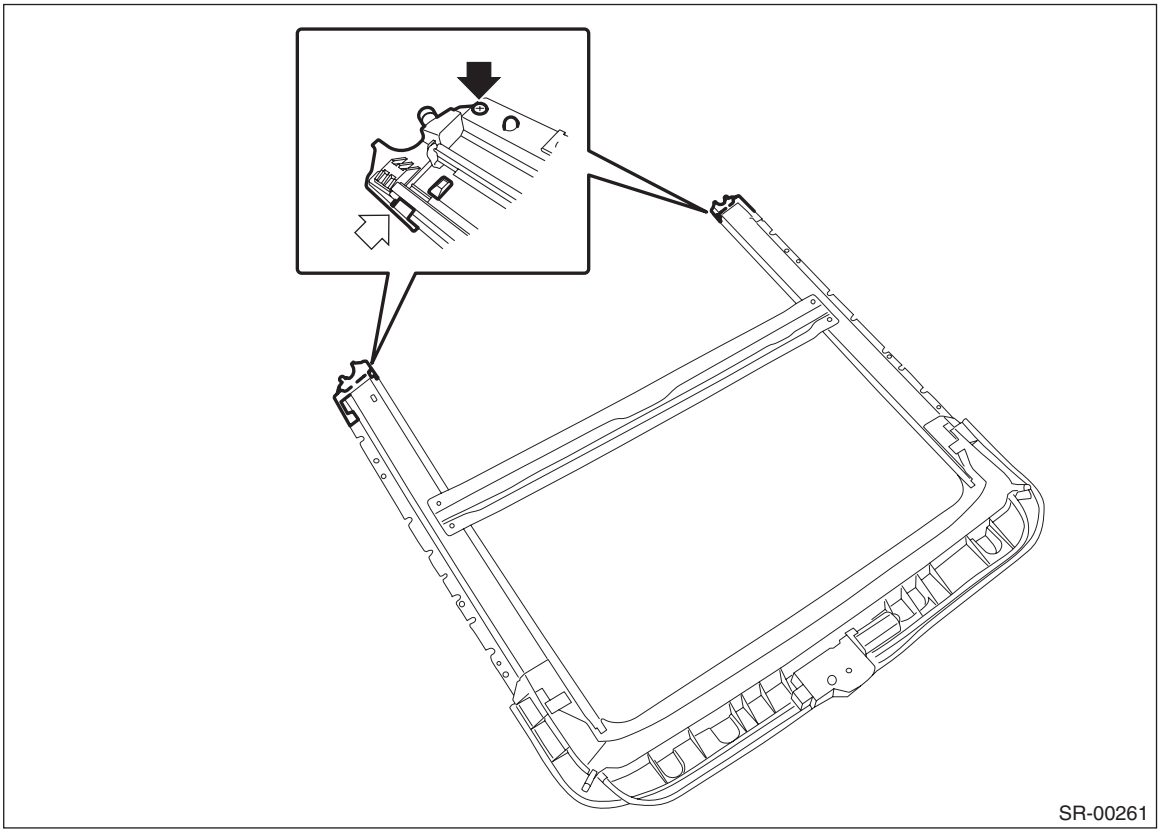

(2) Attach protective tape (a) on the handle and the edge surface of the sunshade assembly.
(3) At the center of the brace, remove the sunshade assembly while pushing it downward slightly.

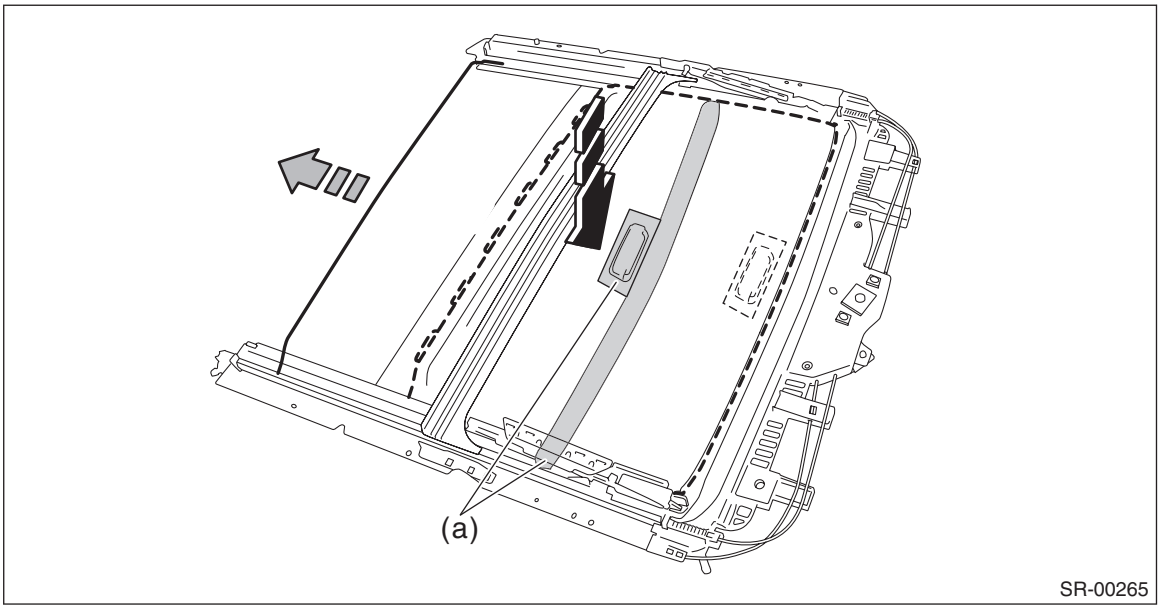

B: INSTALLATION

1) Attach protective tape on the handle and the edge surface of the sunshade assembly, and install the sunshade assembly.
2) Install the drain holder.
3) Install the rail assembly - sunroof. <Ref. to SR-16, INSTALLATION, Sunroof Assembly.>
4) Install the trim panel - roof assembly. <Ref. to EI-118, INSTALLATION, Roof Trim.>
5) Install the lid assembly - sunroof. <Ref. to SR-10, INSTALLATION, Glass Lid.>
6) Connect the ground terminal to battery sensor. <Ref. to RC-4, BATTERY, NOTE, Repair Contents.>

C: INSPECTION

1. MOVING LOAD OF SUNSHADE ASSEMBLY

1) Attach a spring scale together with a cloth to the edge of sunshade assembly.
2) Pull the spring scale to check the moving load of the sunshade assembly.

Moving load of sunshade assembly:
17±8.5 N (1.73 kgf, 3.8 lbf±0.87 kgf, 1.9 lbf)

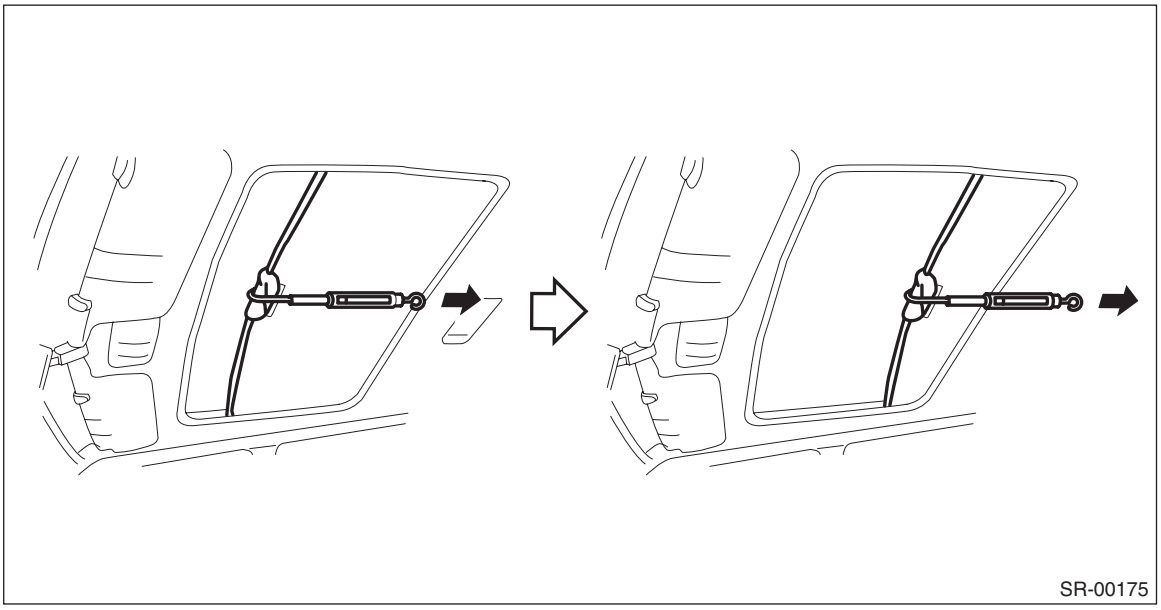

NOTE:
Moving load is larger at the beginning of pulling a spring scale, so take a spring scale reading while the sunshade assembly is sliding smoothly.
3) If the inspection result exceeds the standard, check that the sunshade assembly or the rail assembly - sunroof is installed properly. If necessary, replace the sunshade assembly or the rail assembly - sunroof.

EXTERIOR/INTERIOR TRIM

EI

		Page
1.	General Description	2
2.	Front Under Cover	28
3.	Mud Guard	29
4.	Floor Under Protector	30
5.	Fuel Tank Protector	31
6.	Front Grille	32
7.	Front Bumper	34
8.	Rear Bumper	44
9.	Cowl Panel	51
10.	Roof Molding	54
11.	Roof Rail	57
12.	Side Garnish	59
13.	Trunk Lid Garnish	61
14.	Rear Gate Garnish	62
15.	Roof Spoiler	67
16.	Heat Shield Cover	68
17.	Ornament	69
18.	Door Trim	71
19.	Instrument Panel Lower Cover	75
20.	Glove Box	77
21.	Center Console	79
22.	Console Box	80
23.	Instrument Panel Assembly	83
24.	Lower Inner Trim	92
25.	Upper Inner Trim	96
26.	Rear Quarter Trim	99
27.	Rear Shelf Trim	105
28.	Trunk Room Trim	109
29.	Sun Visor	111
30.	Assist Grip	112
31.	Roof Trim	113
32.	Rear Gate Trim	121
33.	Floor Mat	123

1. General Description

A: COMPONENT

1. FRONT UNDER COVER

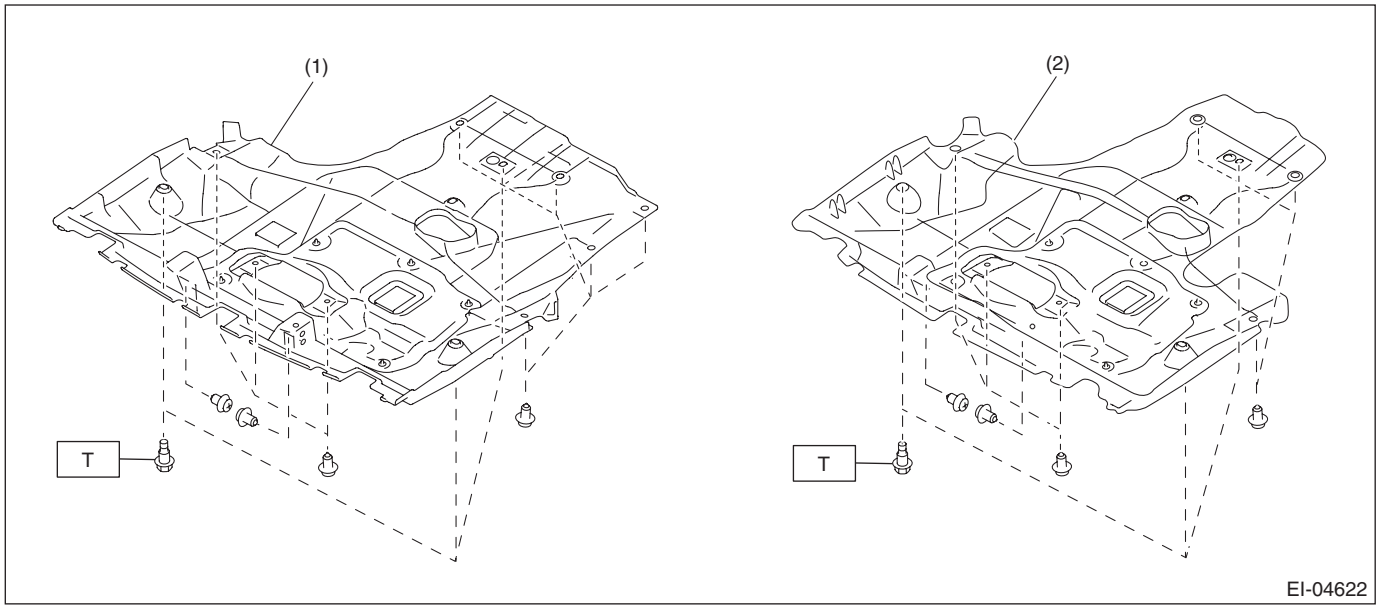

(1) Under cover - front (2.5 L model)
(2) Under cover - front (3.6 L model)

Tightening torque: N·m (kgf-m, ft-lb)
T: 18 (1.8, 13.3)

2. MUD GUARD

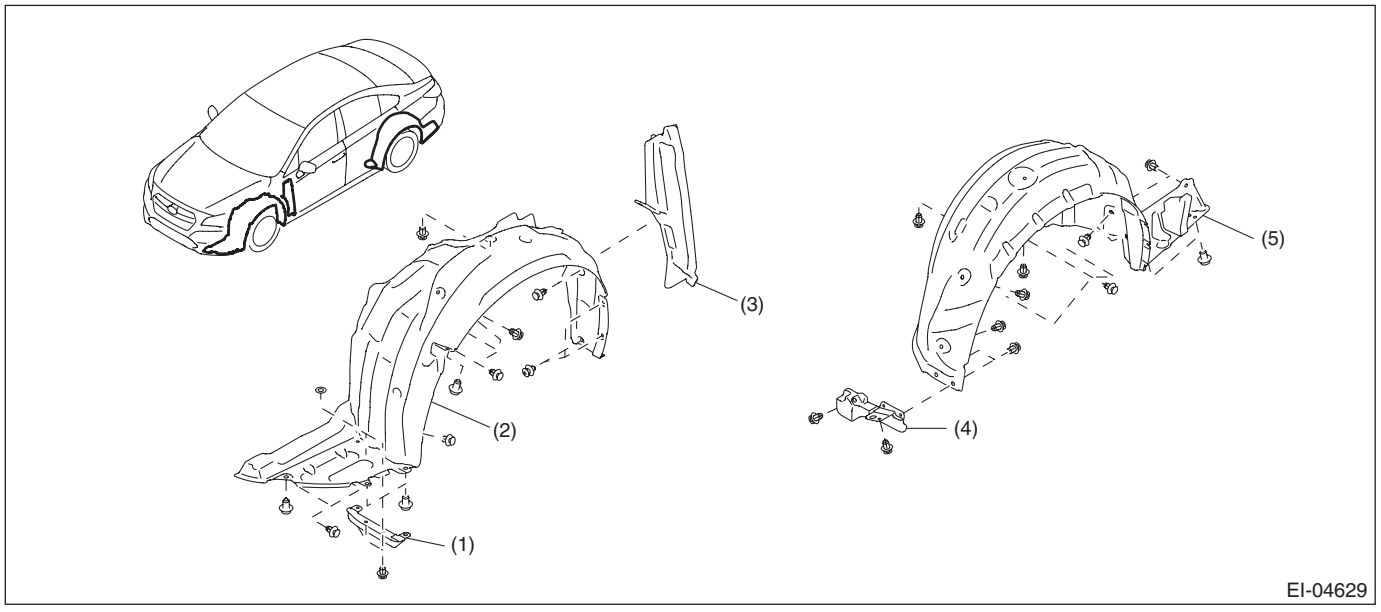

(1) Air flap - front
(2) Mud guard - front
(3) Cover - fender LWR
(4) Air flap - rear
(5) Mud guard - rear

3. FLOOR UNDER PROTECTOR

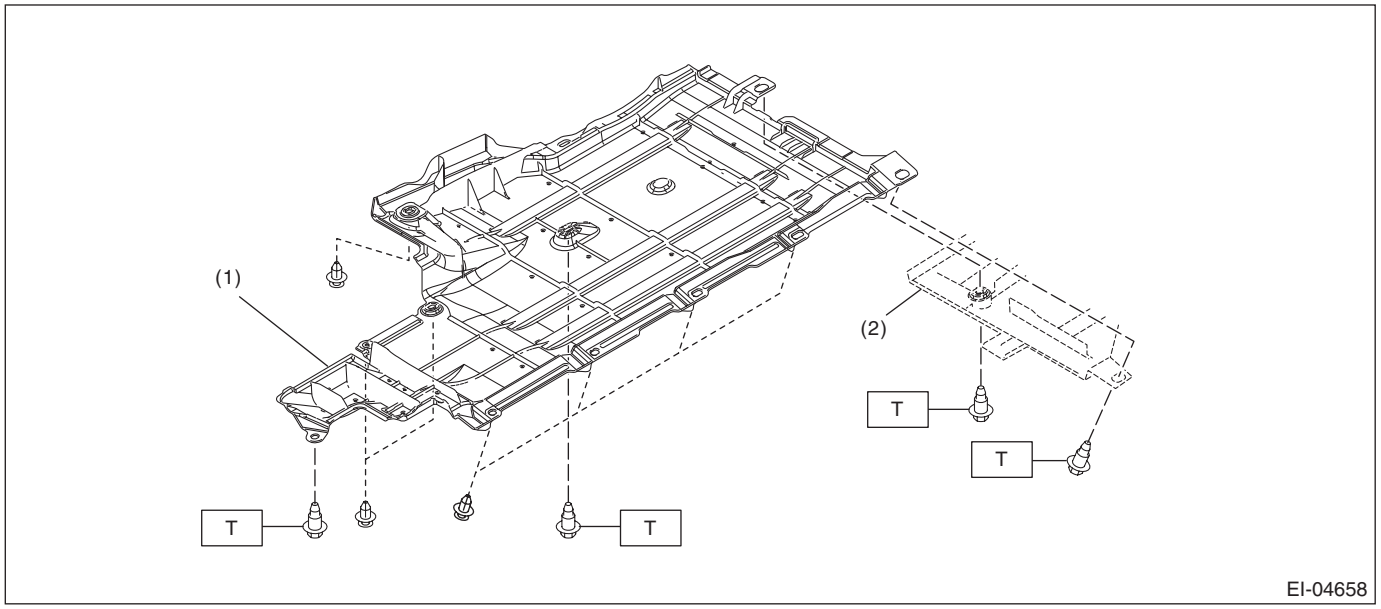

(1) Floor under protector
(2) Fuel tank protector

Tightening torque: N·m (kgf-m, ft-lb)
T: 7.5 (0.8, 5.5)

4. FUEL TANK PROTECTOR

For exploded view of the fuel tank protector, refer to “FUEL TANK” of “FUEL INJECTION” section.
- H4 model: <Ref. to FU(H4DO)-96, REMOVAL, Fuel Tank Protector.>
- H6 model: <Ref. to FU(H6DO)-98, REMOVAL, Fuel Tank Protector.>

5. FRONT BUMPER

- Sedan model

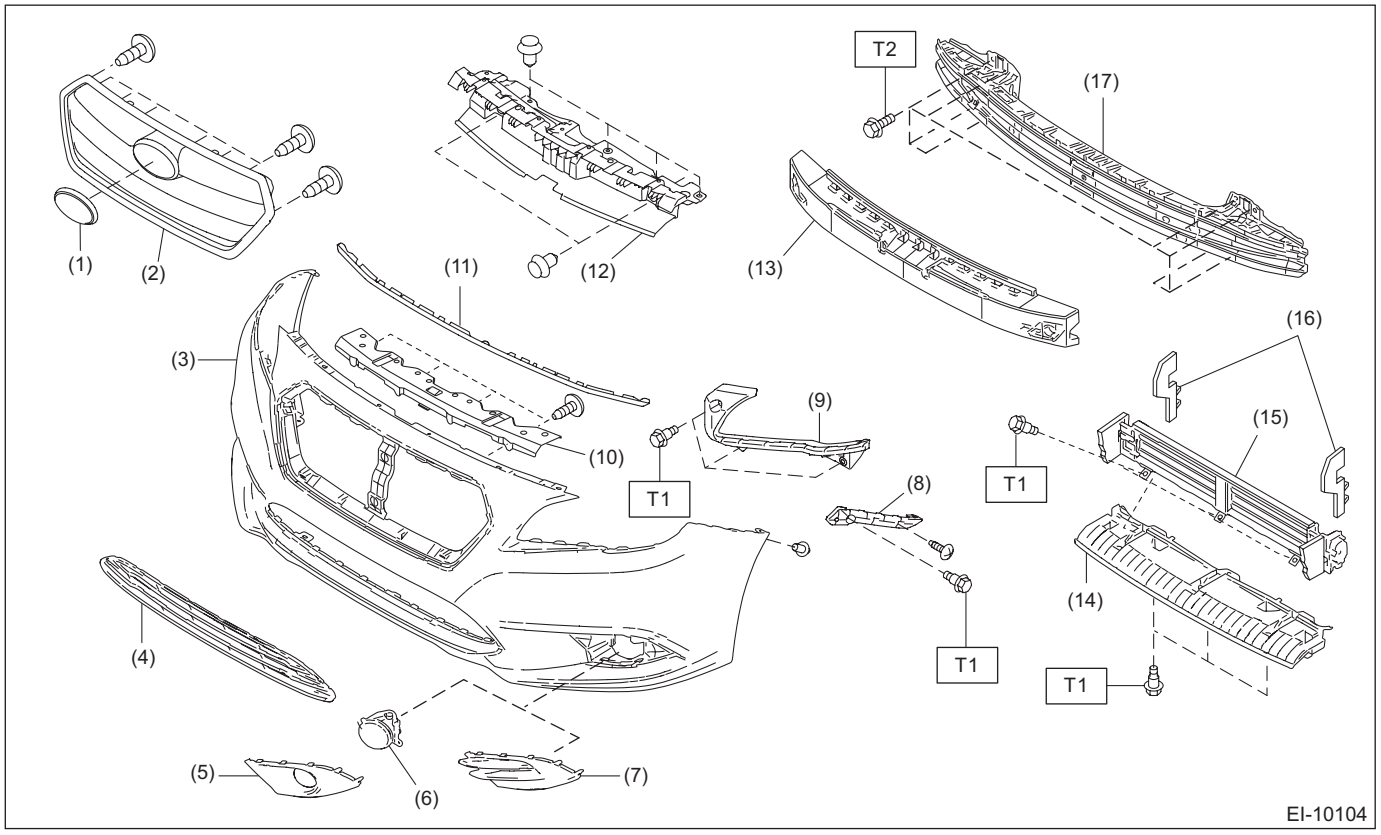

(1) Ornament
(2) Grille ASSY - front
(3) Bumper face - front
(4) Cover intake - front
(5) Cover - fog light (model with fog light)
(6) Light ASSY - fog (model with fog light)
(7) Cover - fog light (model without fog light)
(8) Bracket - front bumper side
(9) Bracket - front bumper corner
(10) Energy absorber plate UPR front
(11) Sealing bumper - front
(12) Bracket - grille
(13) Energy absorber foam
(14) Bracket center lower - front
(15) Active grille shutter (H4 model)
(16) Gasket - radiator panel
(17) Bumper beam COMPL - front

Tightening torque: N·m (kgf-m, ft-lb)

T1: 7.5 (0.8, 5.5)

T2: 33 (3.4, 24.3)

- OUTBACK model

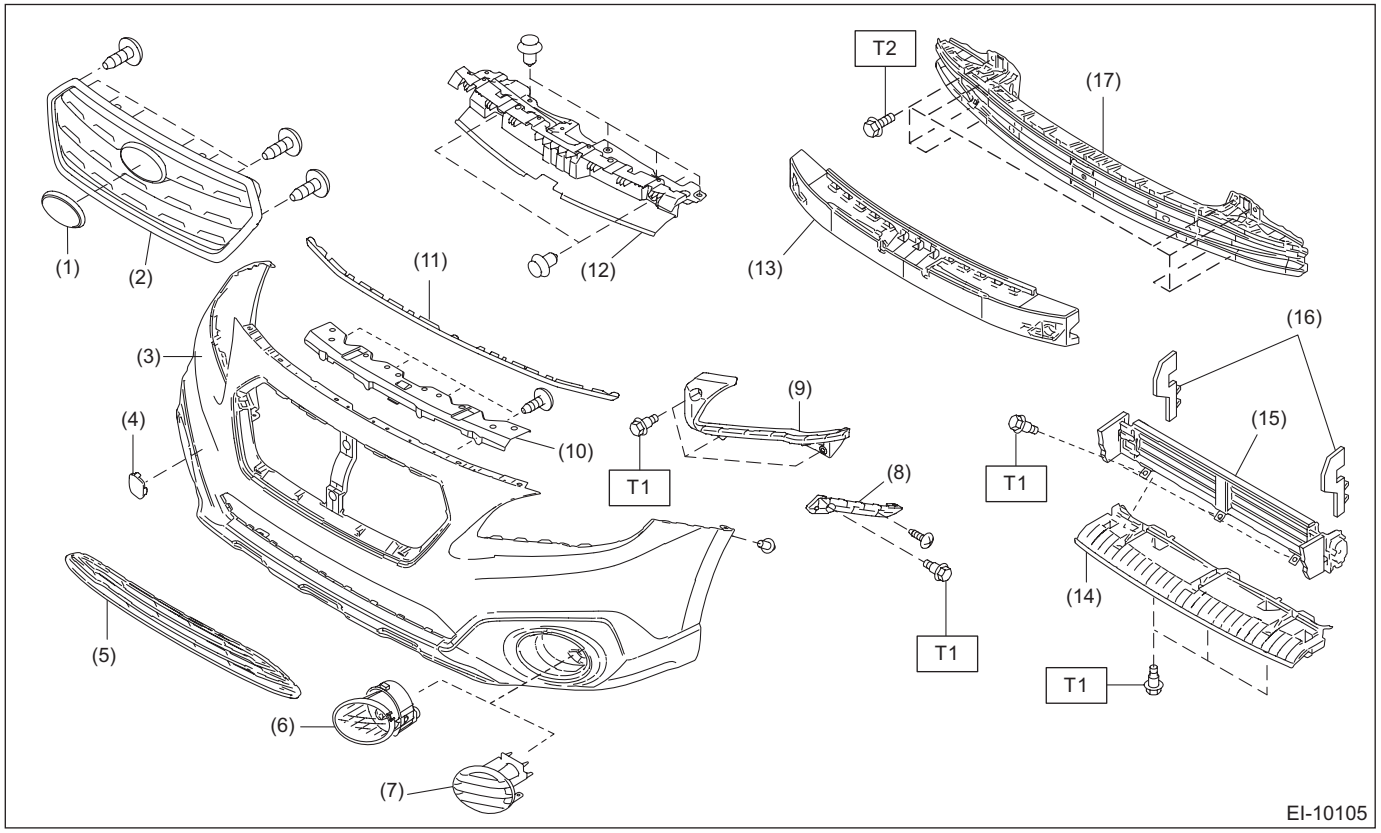

(1)	Ornament	(8)	Bracket - front bumper side	(15)	Active grille shutter (H4 model)
(2)	Grille ASSY - front	(9)	Bracket - front bumper corner	(16)	Gasket - radiator panel
(3)	Bumper face - front	(10)	Energy absorber plate UPR front	(17)	Bumper beam COMPL - front
(4)	Cover - hook	(11)	Sealing bumper - front		
(5)	Cover intake - front	(12)	Bracket - grille	***Tightening torque: N·m (kgf-m, ft-lb)***	
(6)	Light ASSY - fog (model with fog light)	(13)	Energy absorber foam	***T1:***	***7.5 (0.8, 5.5)***
(7)	Cover - fog light (model without fog light)	(14)	Bracket center lower - front	***T2:***	***33 (3.4, 24.3)***

6. REAR BUMPER

- Sedan model

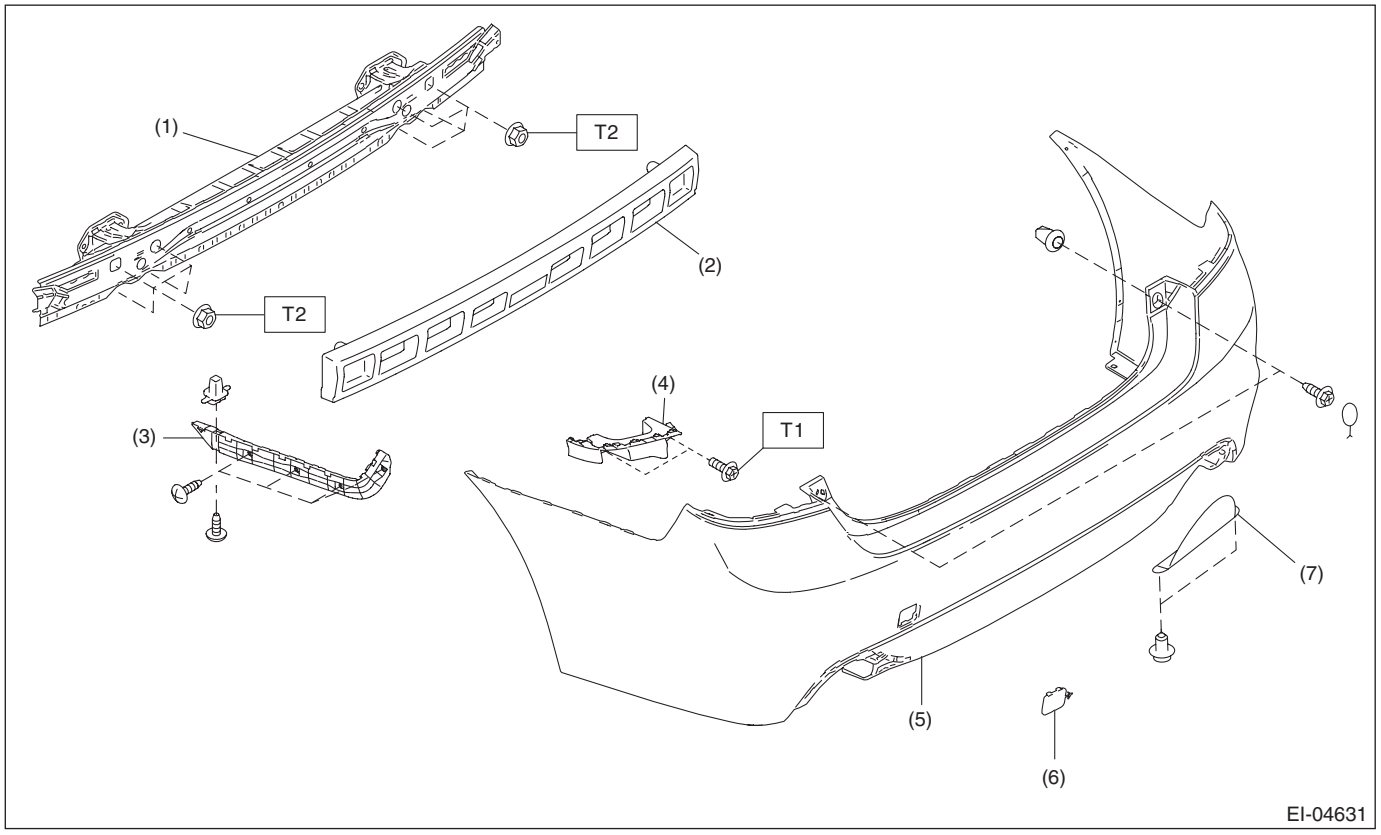

(1) Bumper beam COMPL - rear
(2) Energy absorber foam
(3) Bracket - rear bumper side
(4) Bracket - rear bumper corner
(5) Bumper face - rear
(6) Cover - rear bumper
(7) Cover - bumper (H4 model)

Tightening torque: N·m (kgf-m, ft-lb)
T1: 7.5 (0.8, 5.5)
T2: 53 (5.4, 39.1)

- OUTBACK model

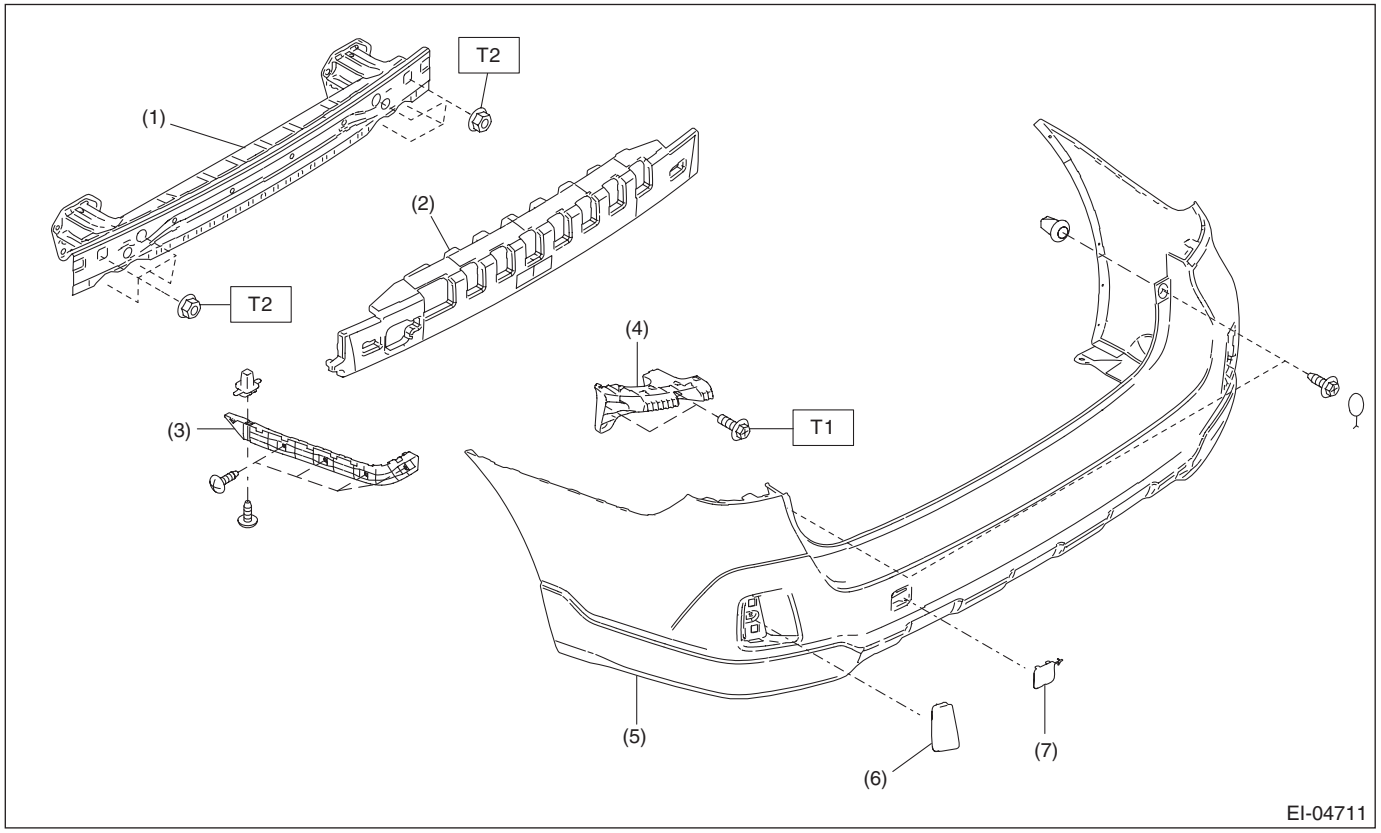

(1) Bumper beam COMPL - rear
(2) Energy absorber foam
(3) Bracket - rear bumper side
(4) Bracket - rear bumper corner
(5) Bumper face - rear
(6) Reflex reflector
(7) Cover - rear bumper

Tightening torque: N·m (kgf-m, ft-lb)
T1: 7.5 (0.8, 5.5)
T2: 53 (5.4, 39.1)

7. COWL PANEL

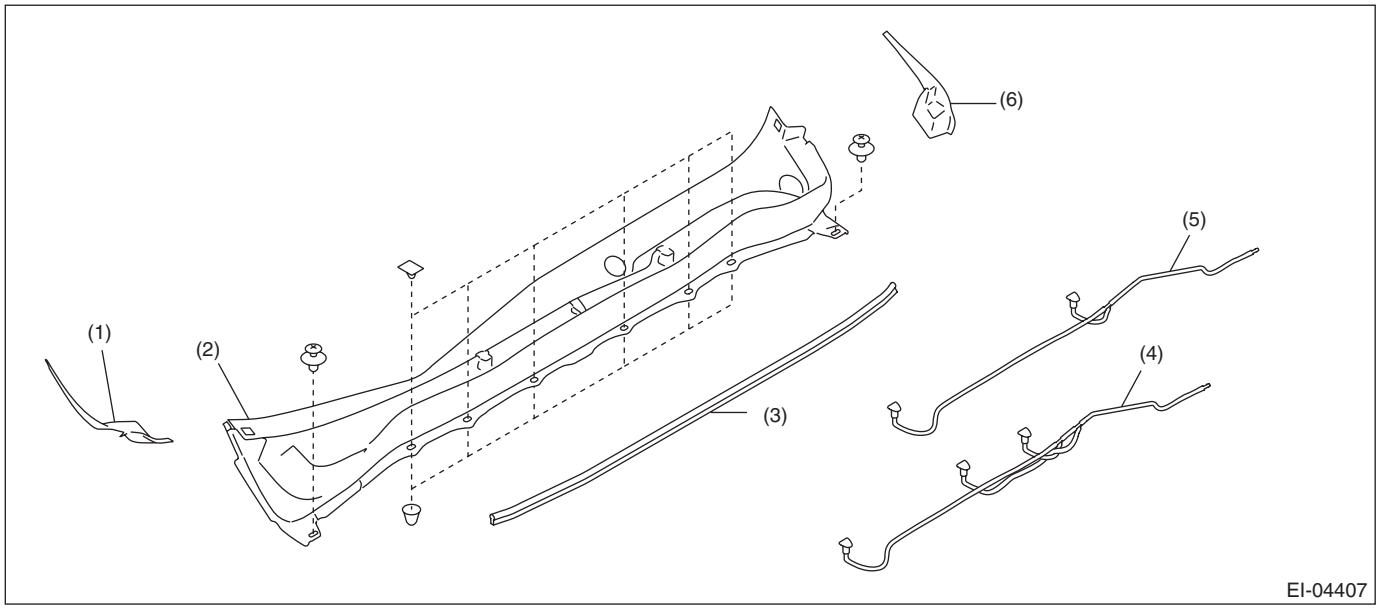

(1) Cowl panel - side RH
(2) Cowl panel ASSY
(3) Seal - cowl panel
(4) Hose ASSY - washer (model with EyeSight)
(5) Hose assembly - washer
(6) Cowl panel - side LH

8. ROOF MOLDING

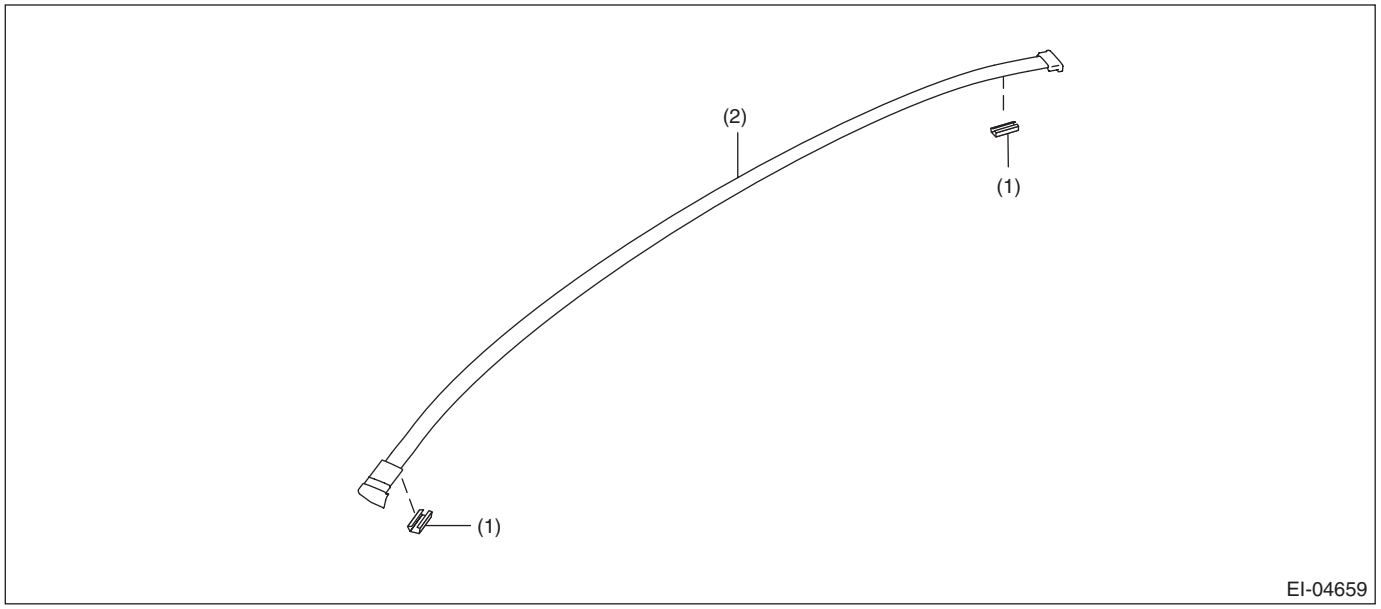

(1) Clip - roof molding
(2) Molding - roof

9. ROOF RAIL

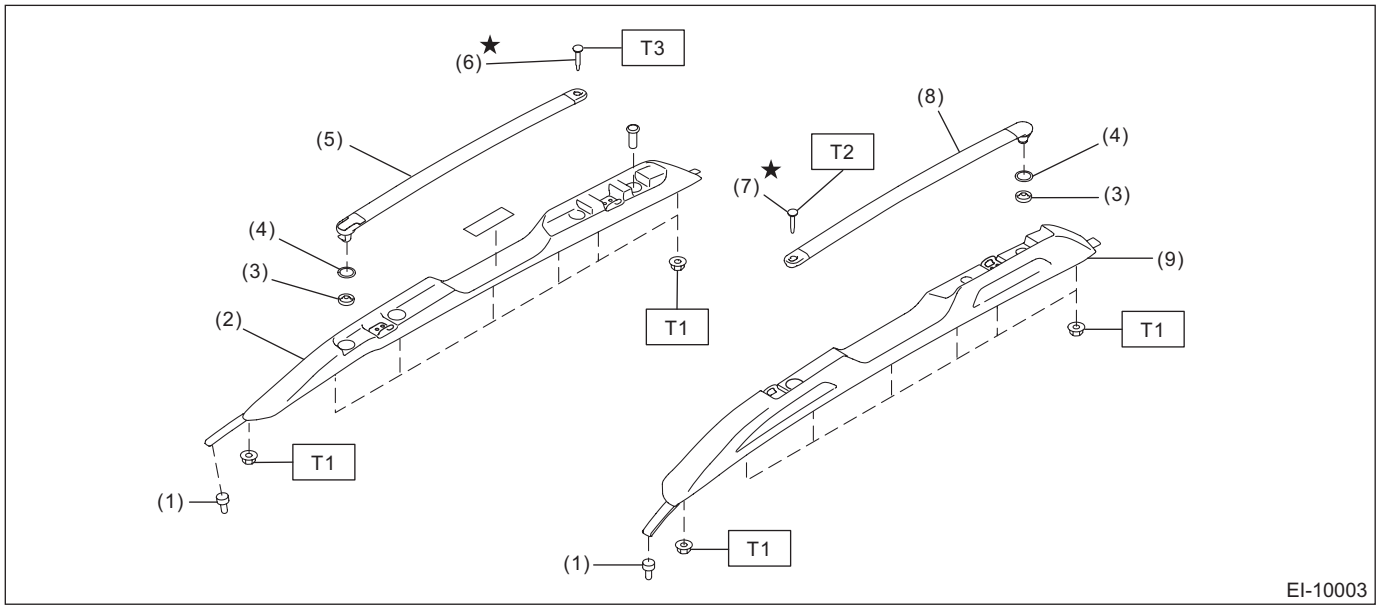

(1) Rivet
(2) Roof rail ASSY RH
(3) Support - bump rubber
(4) Spacer - latch
(5) Crossbar ASSY RH
(6) Stopper bolt M8
(7) Stopper bolt M6
(8) Crossbar ASSY LH
(9) Roof rail ASSY LH

Tightening torque: N·m (kgf-m, ft-lb)
T1: 7.5 (0.8, 5.5)
T2: 8 (0.8, 5.9)
T3: 10 (1.0, 7.4)

10.SIDE GARNISH

- Sedan model

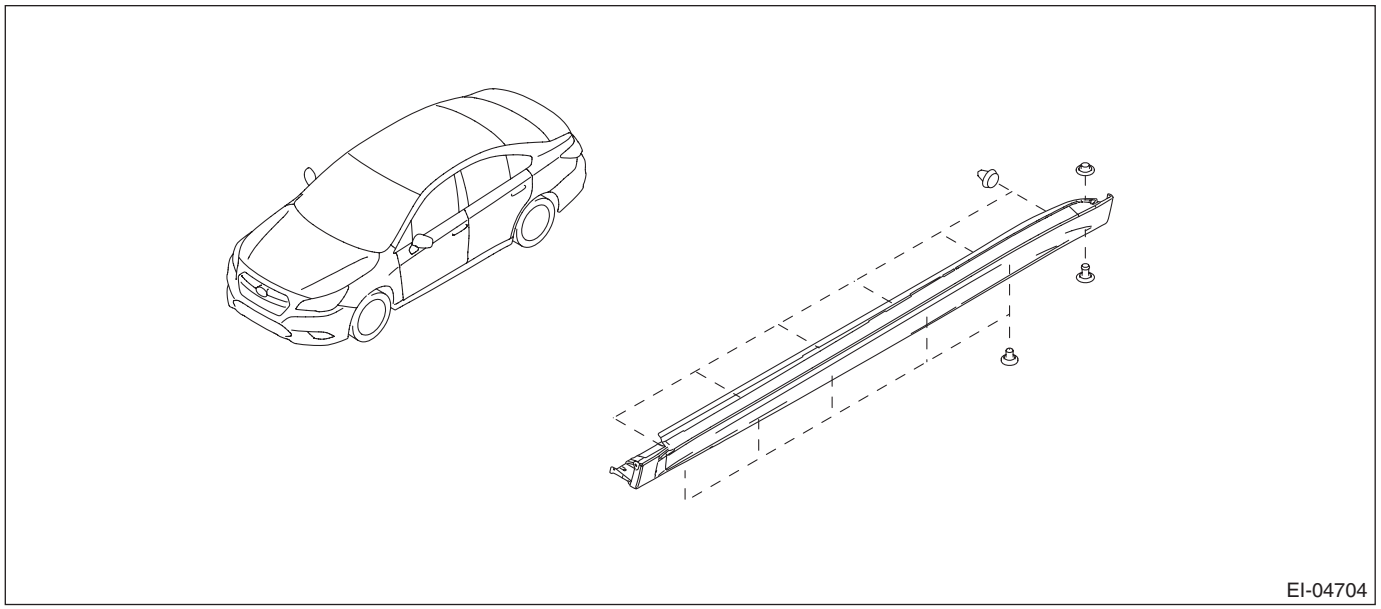

- OUTBACK model

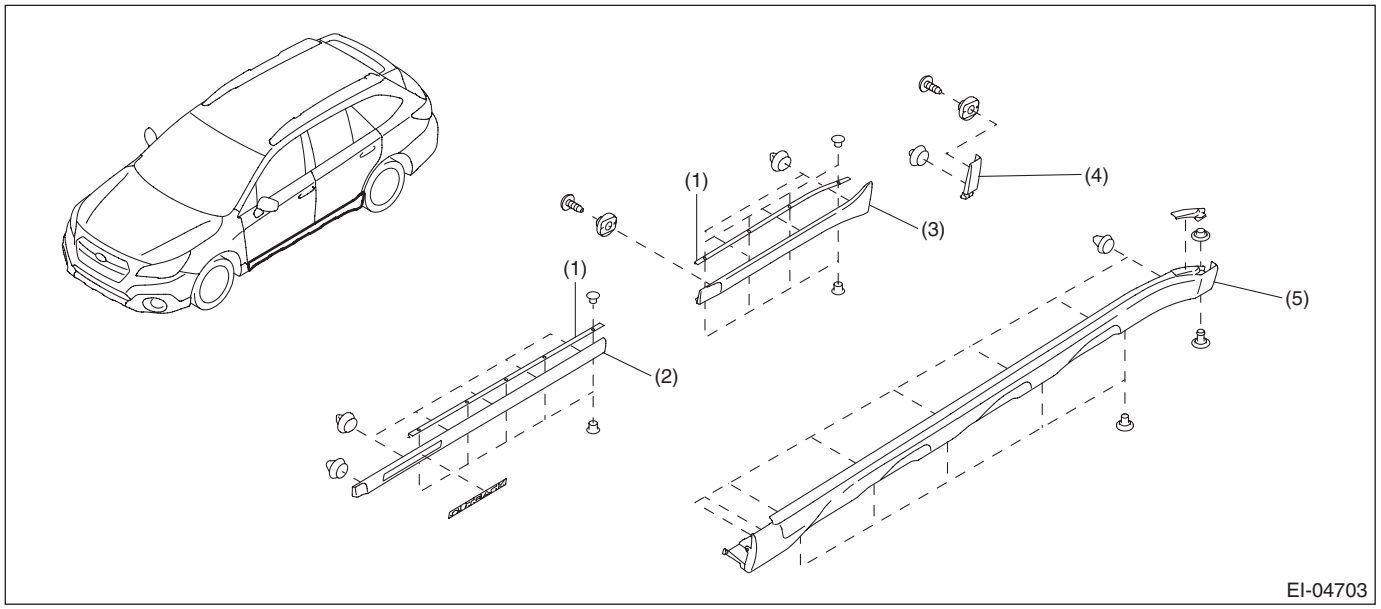

(1) Double-sided tape
(2) Garnish ASSY front door
(3) Garnish ASSY rear door
(4) Garnish ASSY rear quarter
(5) Side sill garnish ASSY

11.TRUNK LID GARNISH

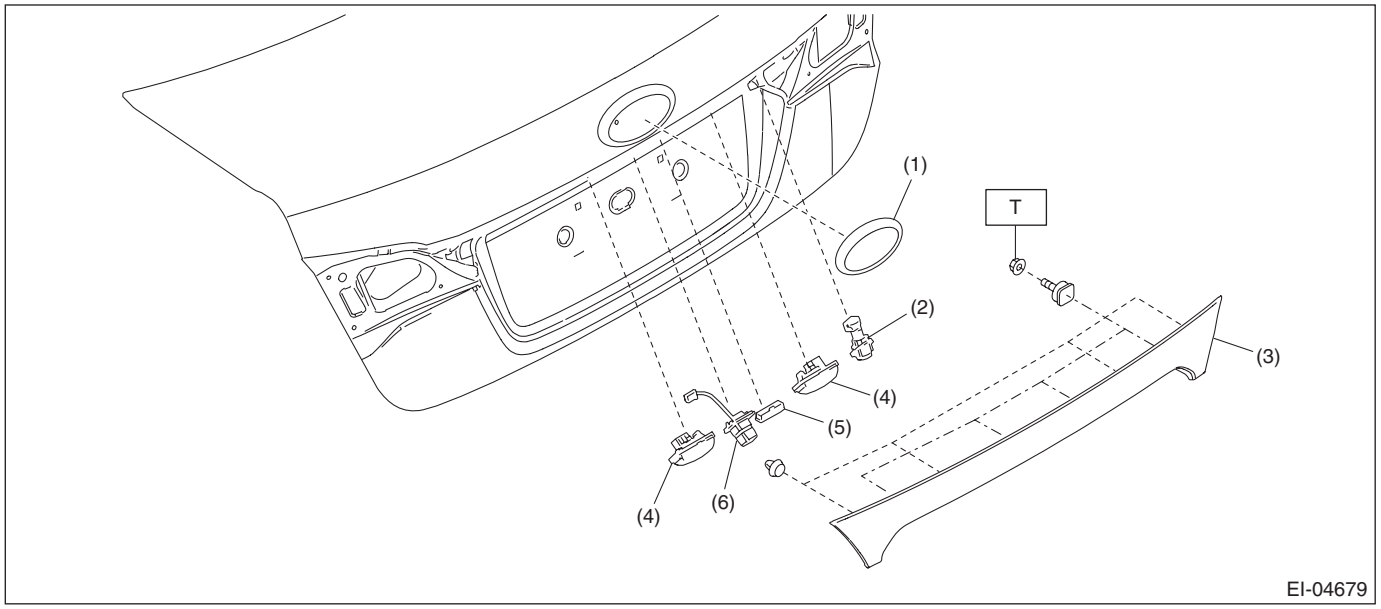

(1) Ornament
(2) Key cylinder
(3) Garnish ASSY - trunk
(4) License plate light
(5) Trunk opener button
(6) Rearview camera ASSY

Tightening torque: N·m (kgf-m, ft-lb)
T: 4.5 (0.5, 3.3)

12.REAR GATE GARNISH

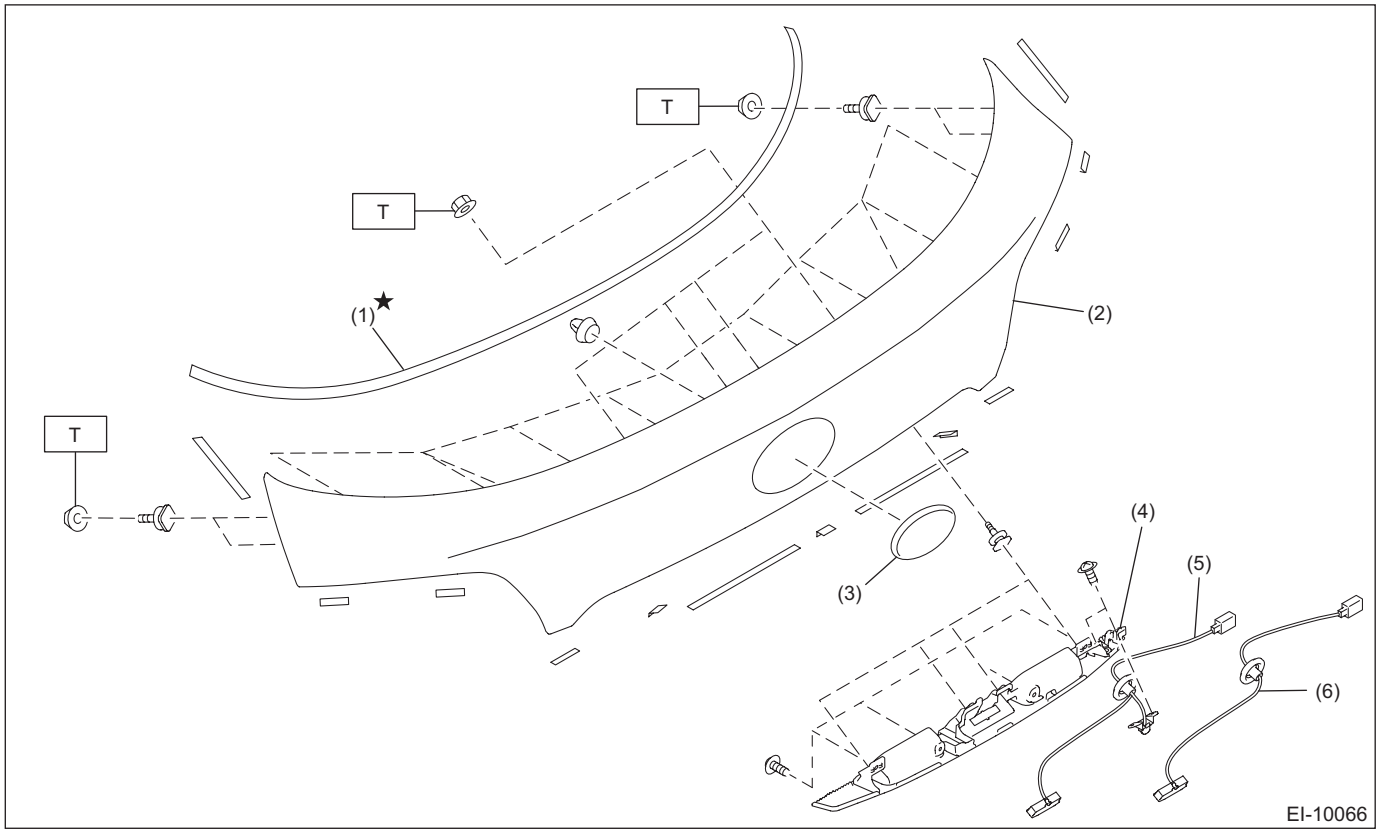

(1) Protector UPR
(2) Rear gate garnish
(3) Ornament
(4) Garnish LWR
(5) Rear gate opener ASSY harness (with rearview camera)
(6) Rear gate opener ASSY harness

Tightening torque: N·m (kgf-m, ft-lb)
T: 4.5 (0.5, 3.3)

13.ROOF SPOILER

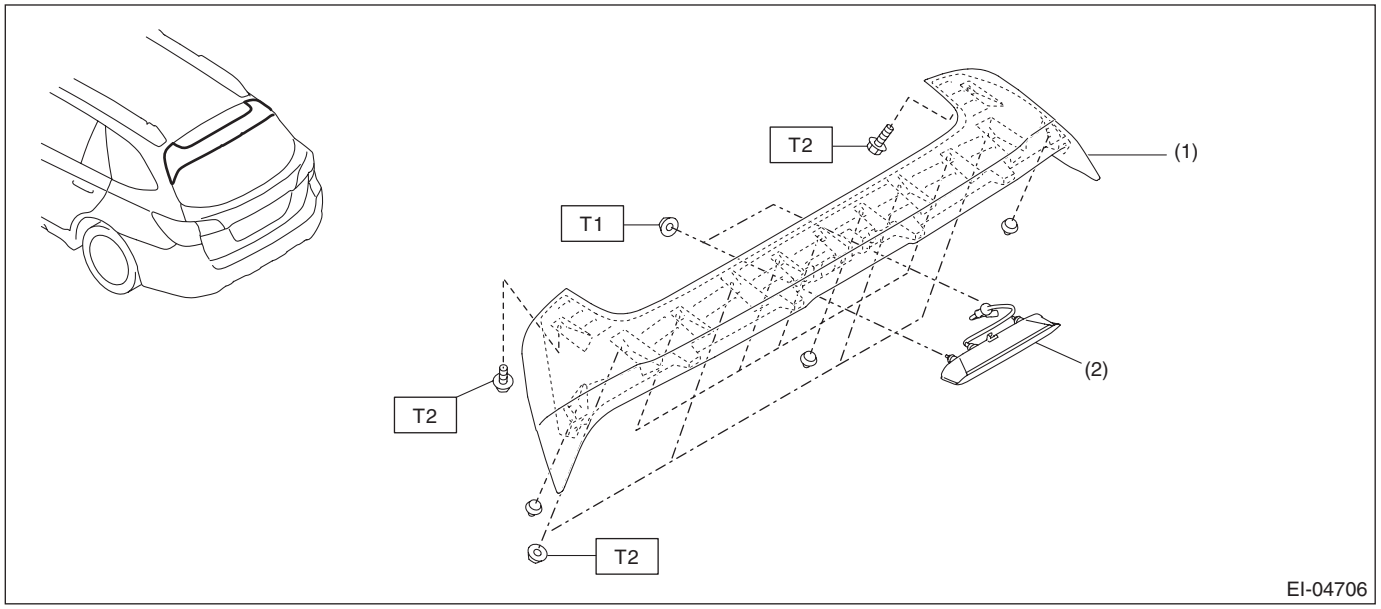

(1) Roof spoiler
(2) Light ASSY - high-mounted

Tightening torque: N·m (kgf-m, ft-lb)
T1: 4.5 (0.5, 3.3)
T2: 7.5 (0.8, 5.5)

14.DOOR TRIM

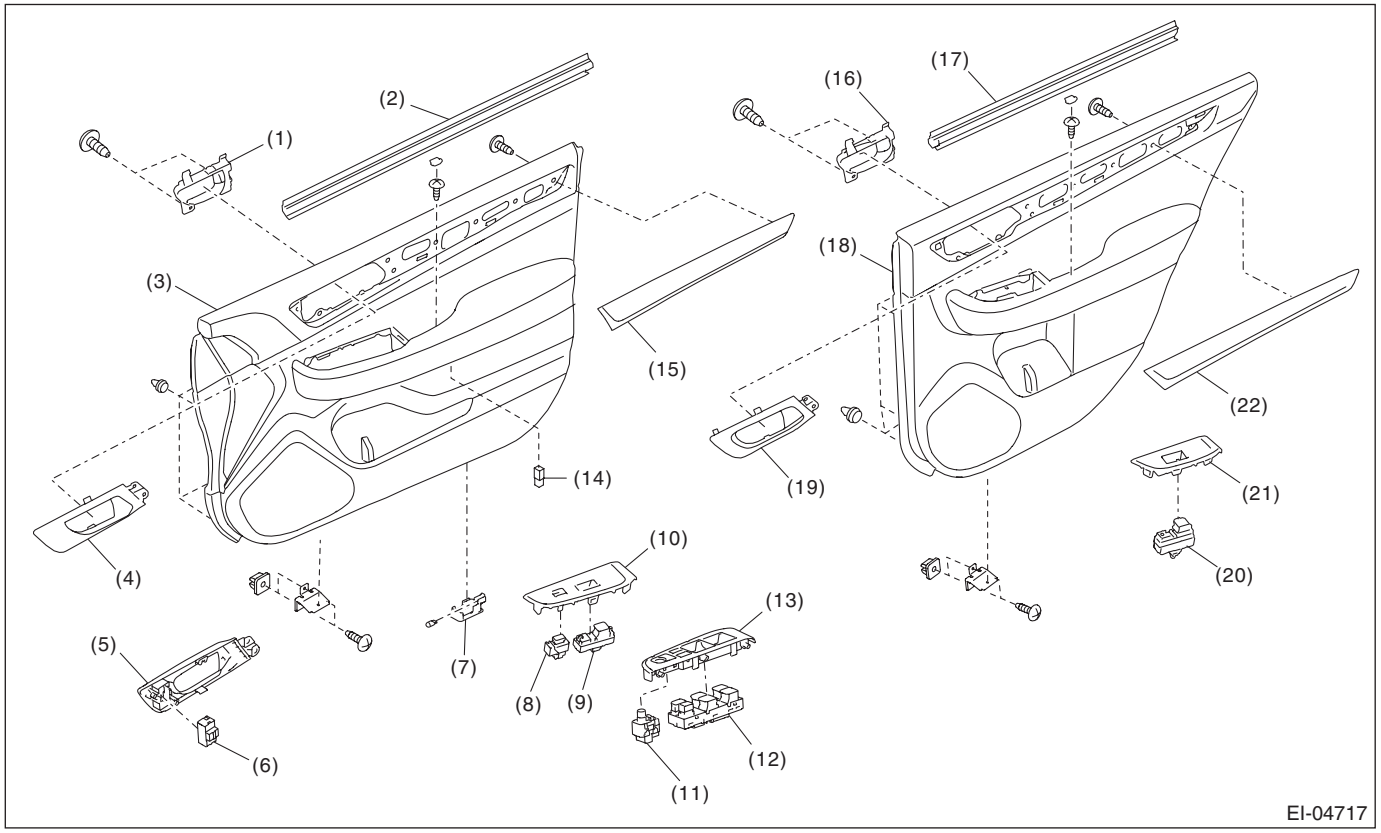

(1)	Remote ASSY - front door	(9)	Switch ASSY - power window sub front	(17)	Weather strip - door rear INN
(2)	Weather strip - door front INN	(10)	Panel - power window sub-switch front	(18)	Trim panel - rear door
(3)	Trim panel - front door	(11)	Switch - remote control mirror	(19)	Cover - remote rear door
(4)	Cover - remote front door RH	(12)	Switch - power window main	(20)	Switch - power window sub rear
(5)	Cover - remote front door LH	(13)	Panel - power window main switch	(21)	Panel - power window sub-switch rear
(6)	Switch ASSY - seat memory	(14)	Light ASSY - door pocket	(22)	Ornament panel - rear door
(7)	Light ASSY - door step	(15)	Ornament panel - front door		
(8)	Switch ASSY - door lock RH	(16)	Remote ASSY - rear door		

15.CONSOLE BOX

Console - front

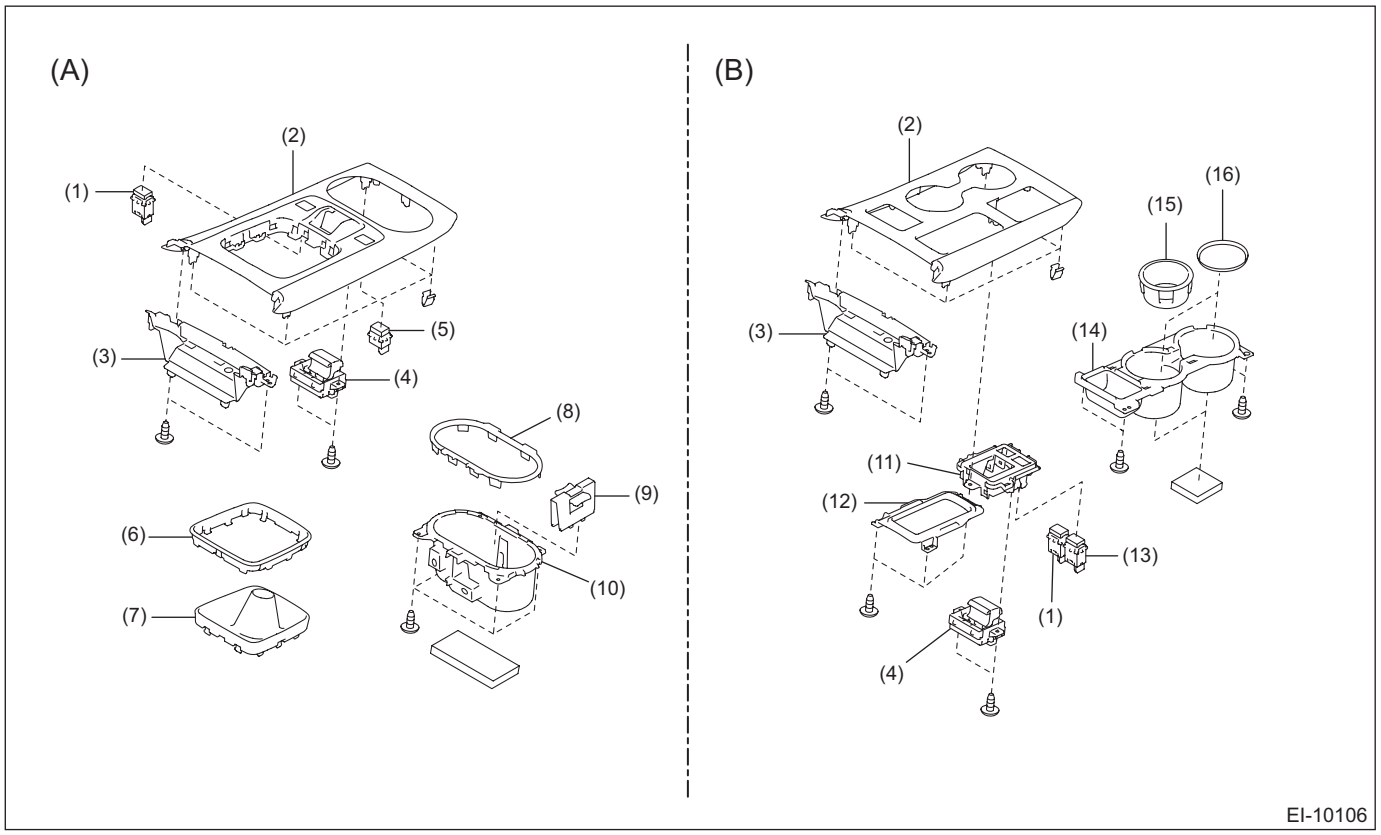

(A) MT model
(B) CVT model

(1) Switch ASSY - hill hold
(2) Cover ASSY - front
(3) Tray - cover front
(4) Switch ASSY - parking
(5) Cap
(6) Ring - shift boot
(7) Shift boot
(8) Ring - cup holder
(9) Plate - cup holder
(10) End cover - console box
(11) Holder - parking switch
(12) Ring - selector lever
(13) Switch ASSY - X mode
(14) Cup holder ASSY
(15) Adapter - cup holder
(16) Mat - cup holder

Console - rear (CVT model)

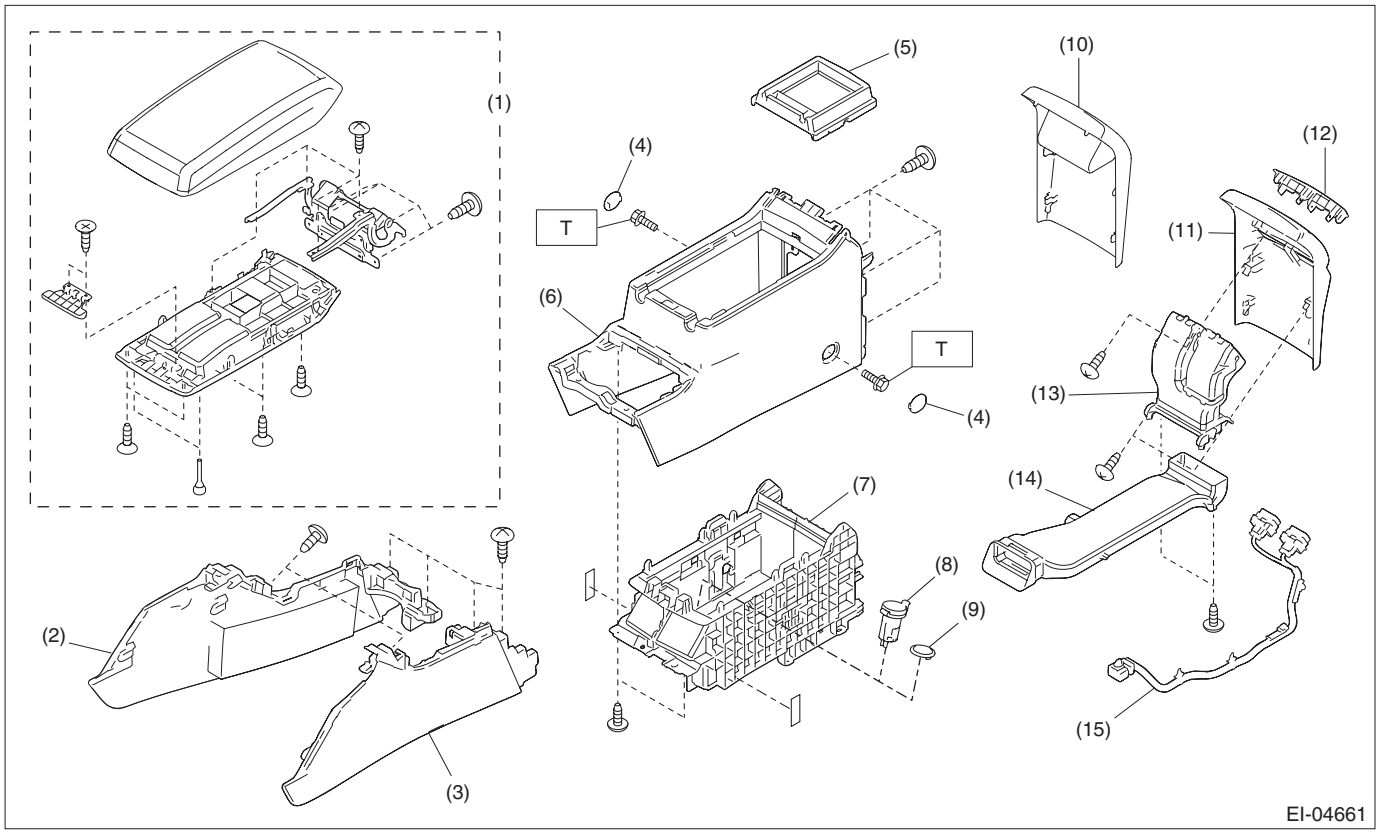

(1)	Lid ASSY - console	(7)	Pocket - console	(13)	Grille ASSY - rear heater
(2)	Panel center LWR RH	(8)	Accessory socket	(14)	Duct - console rear
(3)	Panel center LWR LH	(9)	Cap	(15)	Harness ASSY - console
(4)	Cap - console box	(10)	End cover - console box		
(5)	Tray	(11)	End cover - console box (with rear heater)	***Tightening torque: N·m (kgf-m, ft-lb)***	
(6)	Console box outer	(12)	Panel ASSY - rear seat heater	***T: 6.5 (0.7, 4.8)***	

Console - rear (MT model)

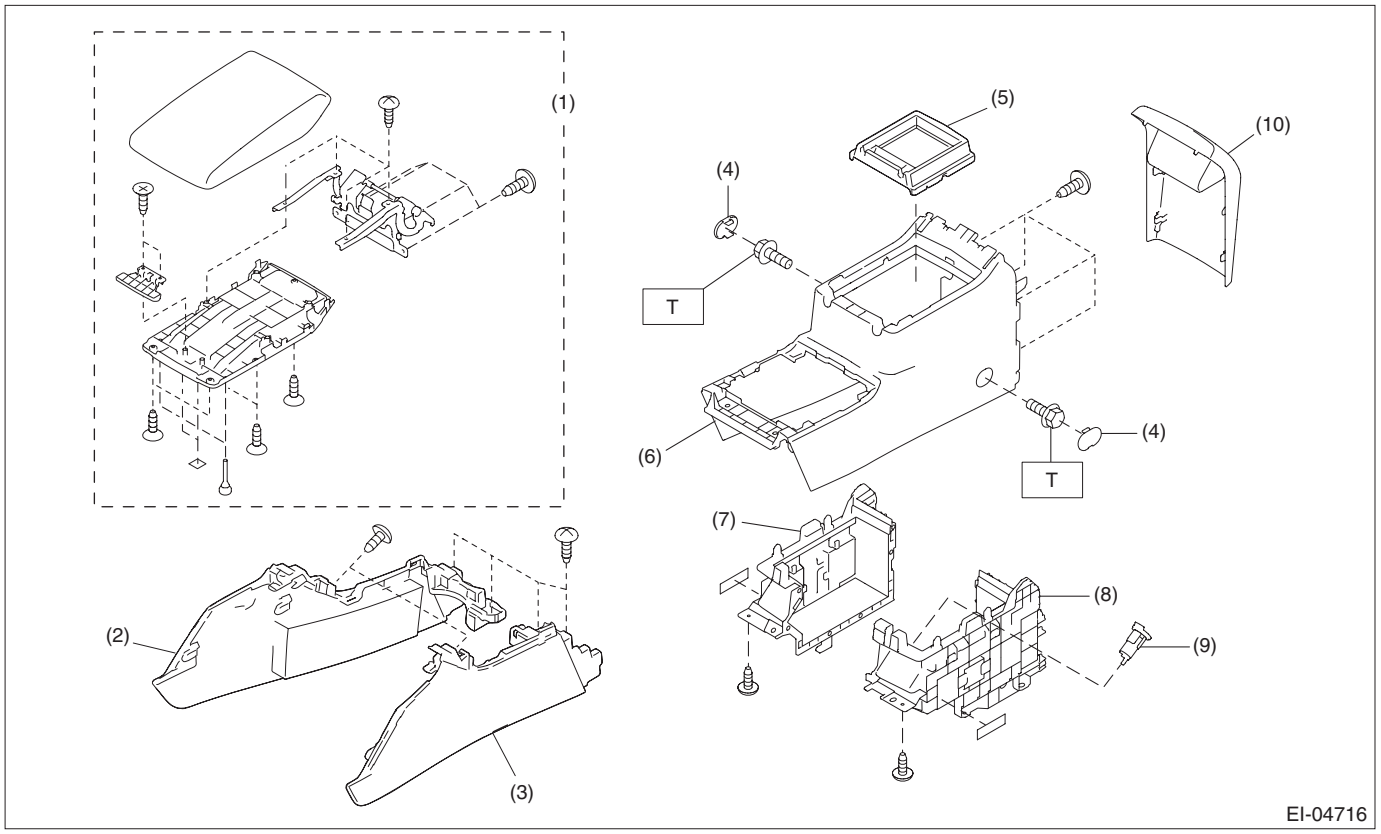

(1) Lid ASSY - console
(2) Panel center LWR RH
(3) Panel center LWR LH
(4) Cap - console box
(5) Tray
(6) Console box outer
(7) Pocket - console RH
(8) Pocket - console LH
(9) Accessory socket
(10) End cover - console box

Tightening torque: N·m (kgf-m, ft-lb)
T: 6.5 (0.7, 4.8)

16.INSTRUMENT PANEL

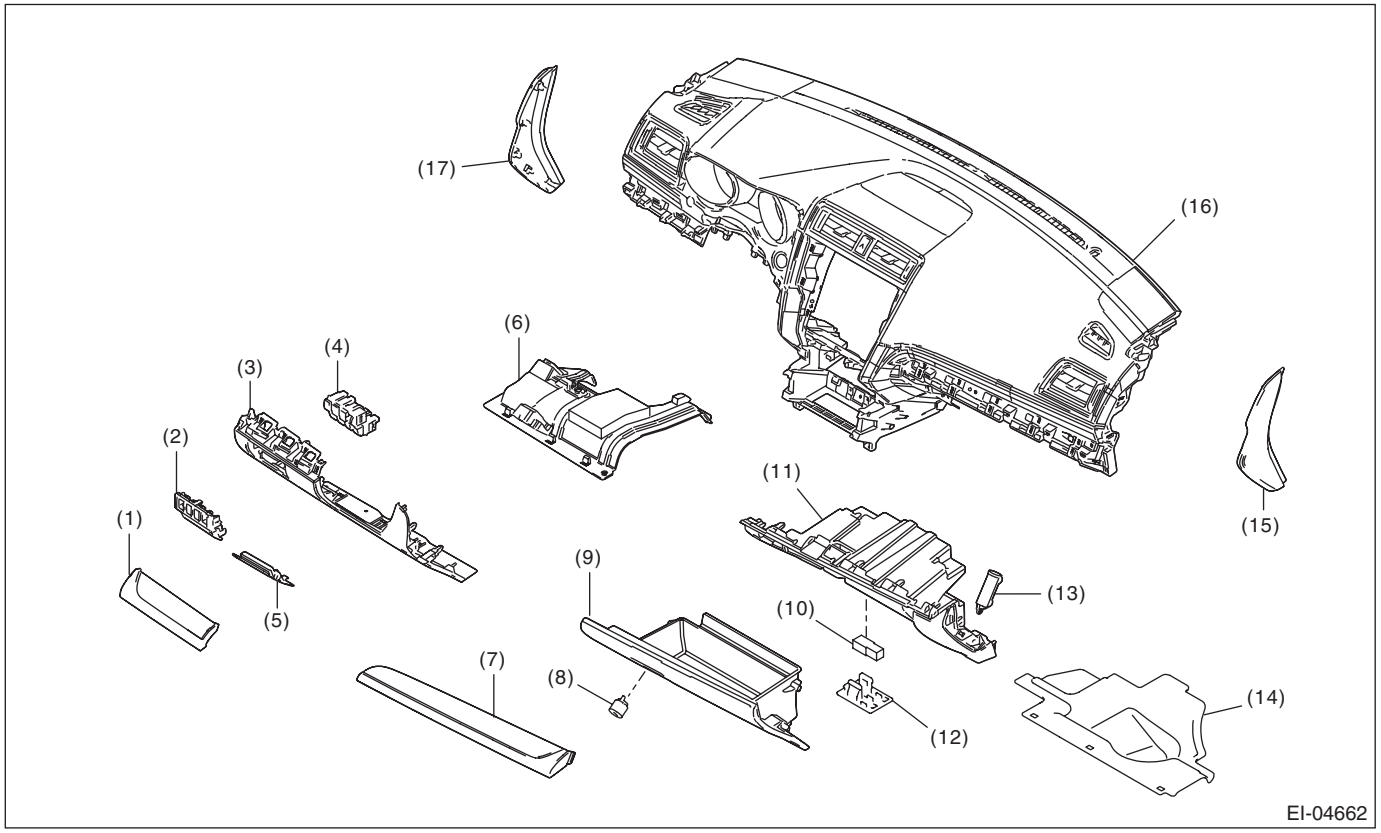

(1)	Ornament panel ASSY - driver	(7)	Ornament panel ASSY - passenger	(13)	Damper COMPL - pocket
(2)	Panel - switch	(8)	Key cylinder - pocket	(14)	Under cover ASSY - passenger
(3)	Cover ASSY - instrument panel LWR driver	(9)	Pocket ASSY	(15)	Cover - instrument panel side RH
(4)	Switch holder	(10)	Light - pocket	(16)	Panel COMPL - instrument
(5)	Lid ASSY - fuse box	(11)	Back panel - pocket	(17)	Cover - instrument panel side LH
(6)	Under cover ASSY - driver	(12)	Holder		

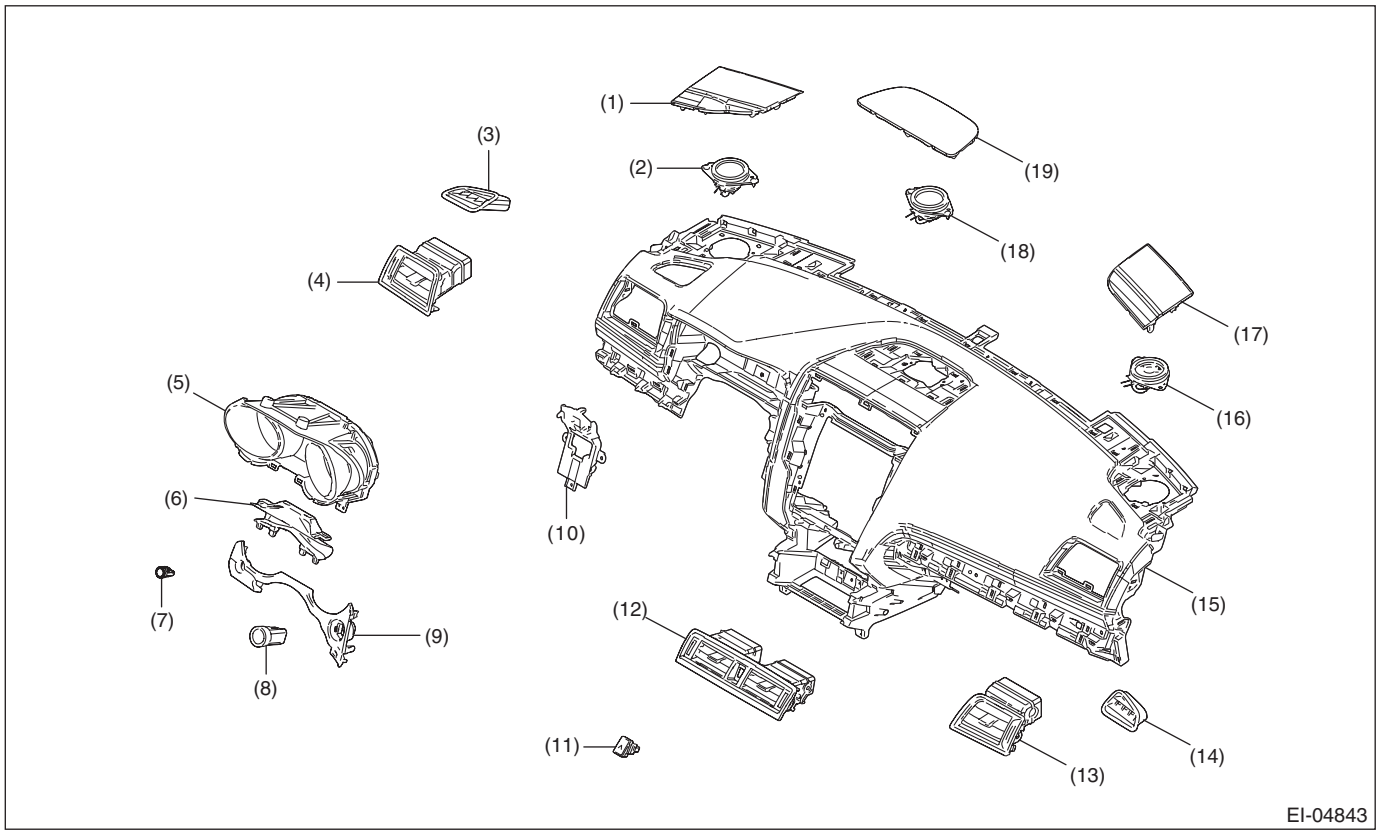

(1) Grille speaker side LH
(2) Speaker ASSY - tweeter LH
(3) Grille defroster - front LH
(4) Grille ASSY - ventilation LH
(5) Combination meter ASSY
(6) Cover - column
(7) Switch ASSY - trip reset
(8) Push button ignition switch
(9) Visor ASSY - lower
(10) Reinforcement - combination meter
(11) Switch - hazard
(12) Grille ASSY - CTR ventilation
(13) Grille ASSY - ventilation RH
(14) Grille defroster - front RH
(15) Panel COMPL - instrument
(16) Speaker ASSY - tweeter RH
(17) Grille speaker side RH
(18) Speaker ASSY - center
(19) Grille speaker center

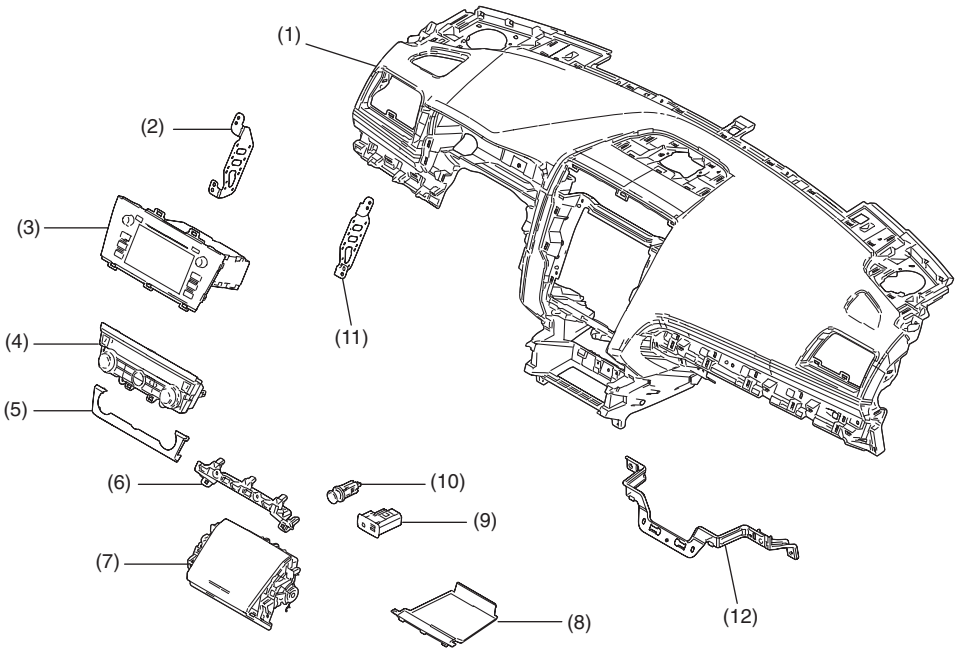

EI-04854

(1) Panel COMPL - instrument
(2) Bracket - audio LH
(3) Audio ASSY/Navigation ASSY
(4) Heater control ASSY
(5) Control module cover
(6) Panel center LWR
(7) Pocket ASSY - CTR
(8) Mat
(9) AUX UNIT
(10) Socket ASSY
(11) Bracket - audio RH
(12) Reinforcement CTR - COMPL

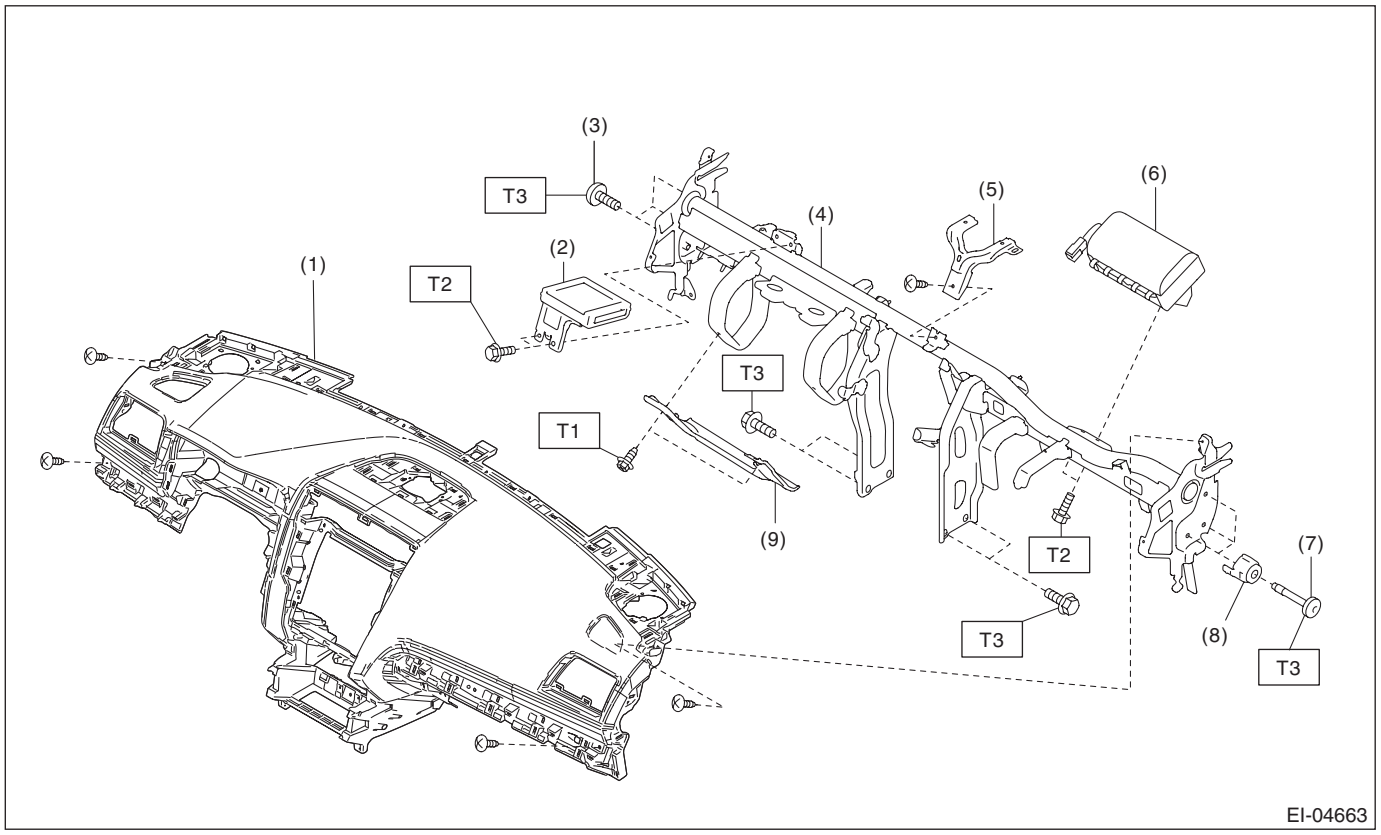

(1) Panel COMPL - instrument
(2) Keyless access CM
(3) TORX® bolt (M8 × 37)
(4) Beam COMPL - steering
(5) Bracket - center UPR
(6) Passenger's airbag module
(7) TORX® bolt (M8 × 57)
(8) Adjuster - clip space
(9) Panel - knee guard

Tightening torque: N·m (kgf-m, ft-lb)
T1: 7 (0.7, 5.2)
T2: 7.5 (0.8, 5.5)
T3: 25 (2.5, 18.4)

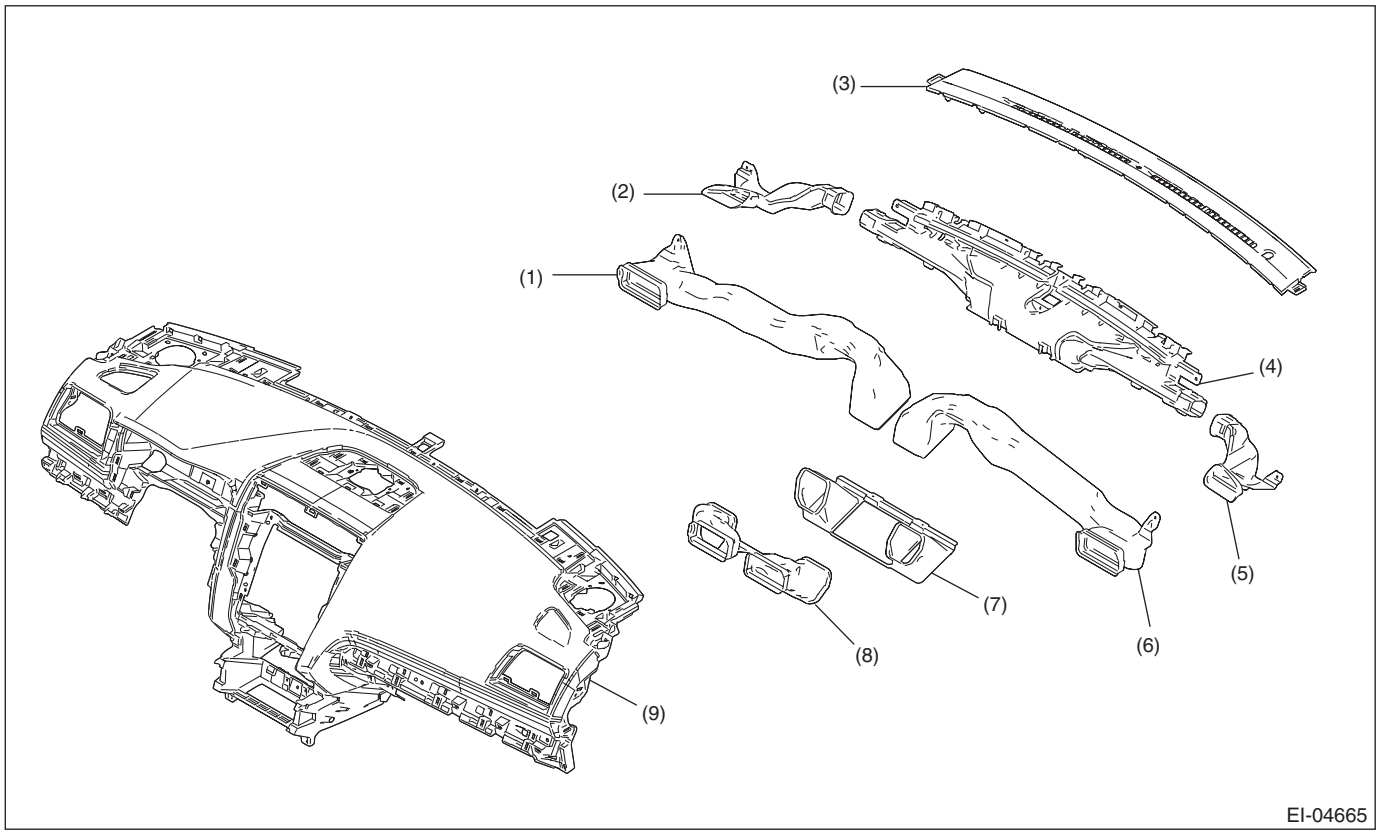

(1) Duct - side ventilation LH
(2) Duct - side defroster LH
(3) Grille - front defroster
(4) Nozzle - front defroster
(5) Duct - side defroster RH
(6) Duct - side ventilation RH
(7) Duct - center vent
(8) Duct - center vent front
(9) Panel COMPL - instrument

17.INNER TRIM

- Sedan model

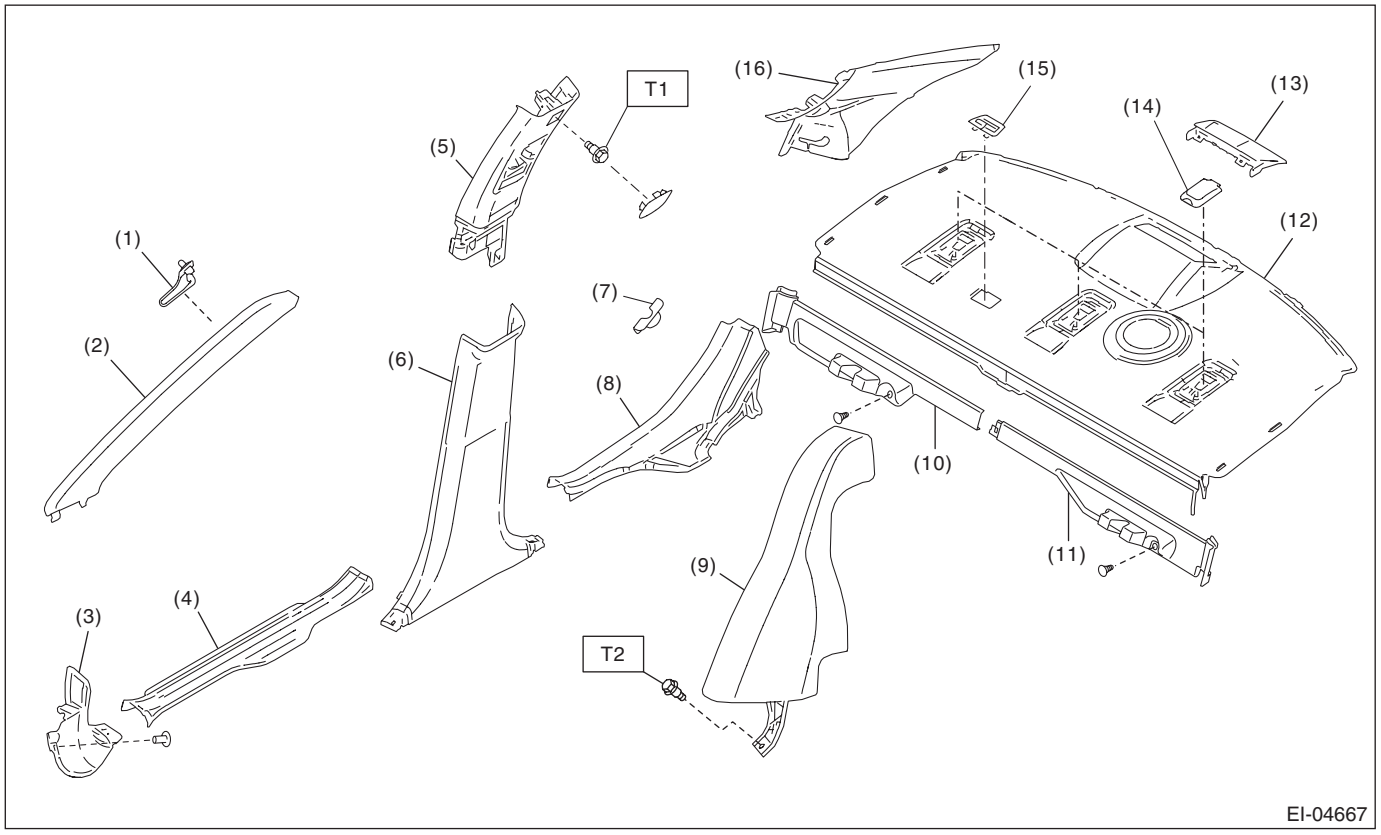

(1) Tether clip
(2) Trim panel - front pillar UPR
(3) Front cover - side sill
(4) Cover side sill - front
(5) Trim panel - center pillar UPR
(6) Trim panel - center pillar LWR
(7) Cover - catcher
(8) Cover side sill - rear
(9) Side pad ASSY - backrest
(10) Trim panel ASSY - trunk front RH
(11) Trim panel ASSY - trunk front LH
(12) Trim panel ASSY - rear shelf
(13) Cover - high-mounted
(14) Cover - tether anchor
(15) Belt guide
(16) Trim panel - rear pillar UPR

Tightening torque: N·m (kgf-m, ft-lb)
T1: 7.5 (0.8, 5.5)
T2: 53 (5.4, 39.1)

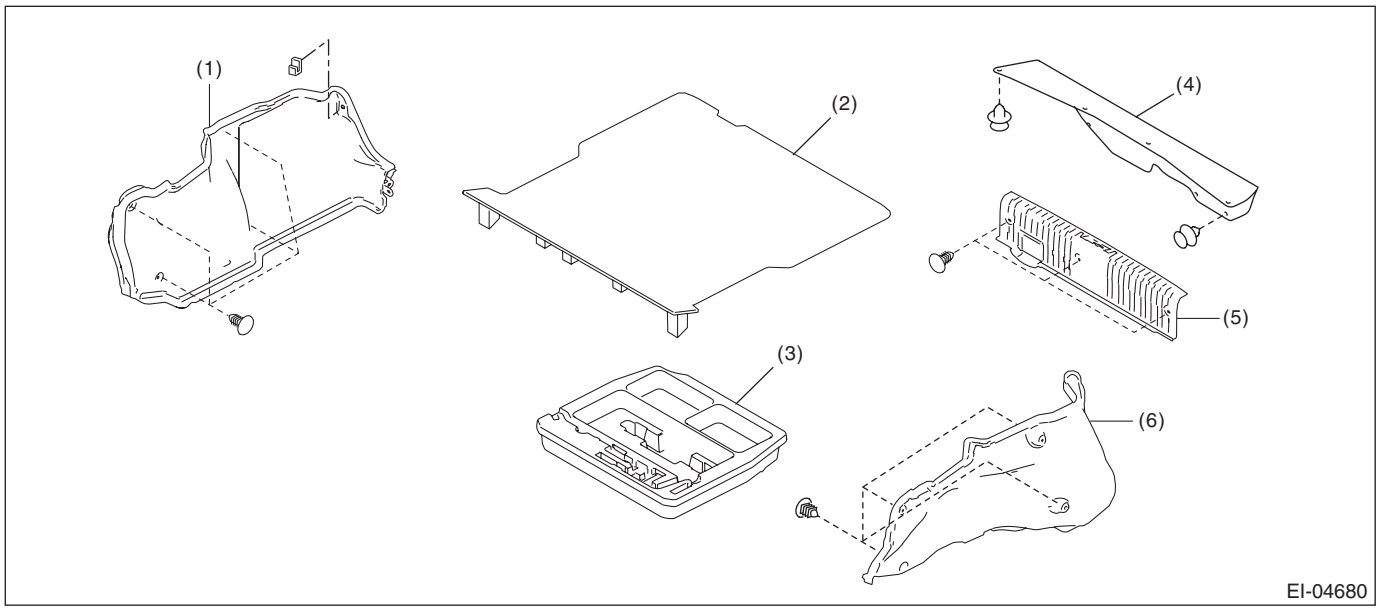

(1) Trim panel - trunk side RH
(2) Mat - trunk
(3) Box - sub trunk
(4) Trim panel - trunk lid
(5) Trim panel - trunk rear
(6) Trim panel - trunk side LH

- OUTBACK model

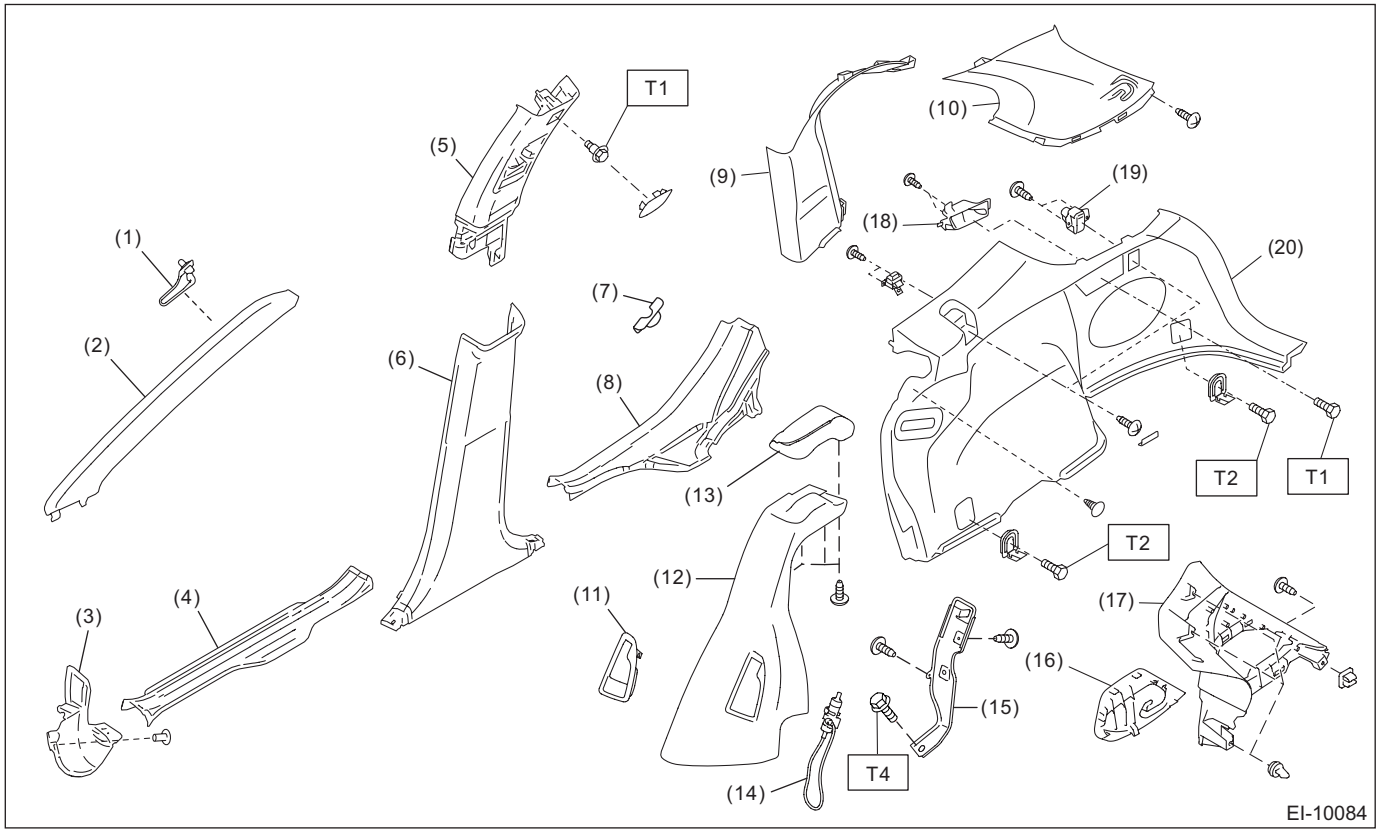

(1) Tether clip
(2) Trim panel - front pillar UPR
(3) Front cover - side sill
(4) Cover side sill - front
(5) Trim panel - center pillar UPR
(6) Trim panel - center pillar LWR
(7) Cover - catcher
(8) Cover side sill - rear
(9) Trim panel - rear quarter pillar UPR front
(10) Trim panel - rear quarter pillar UPR rear RH
(11) Lever ASSY - reclining
(12) Side pad ASSY - backrest
(13) Cover - backrest side pad
(14) Reclining cable
(15) Cable connector bracket
(16) Cover - rear quarter pillar PRG
(17) Trim panel - rear quarter pillar UPR rear LH PRG
(18) Lever ASSY - rear backrest
(19) Hook - rear apron
(20) Trim panel - rear apron

Tightening torque: N·m (kgf-m, ft-lb)
T1: 4.5 (0.5, 3.3)
T2: 7.5 (0.8, 5.5)
T3: 53 (5.4, 39.1)

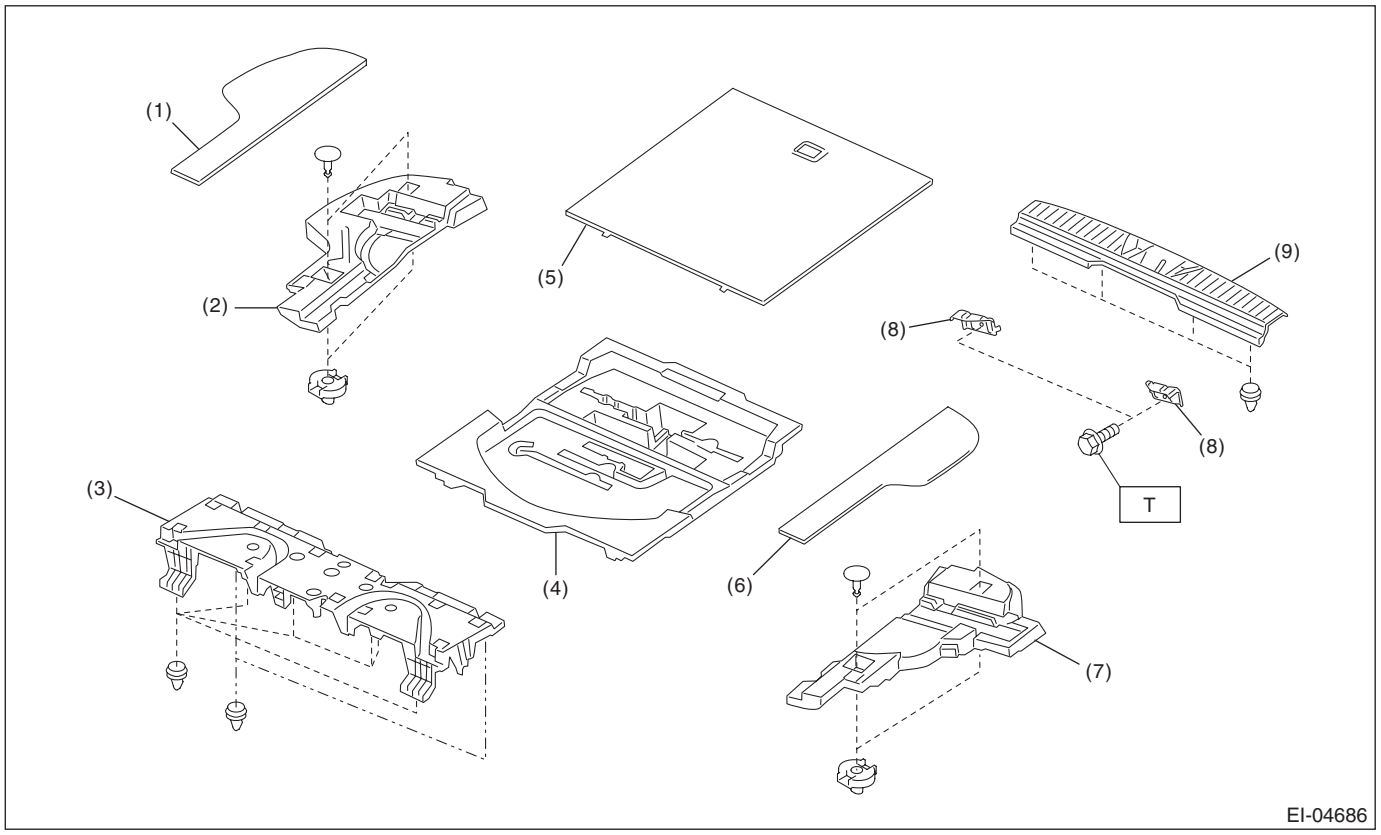

(1) Mat floor - rear RH
(2) Spacer - rear floor side RH
(3) Spacer - rear floor front
(4) Box - sub trunk
(5) Mat floor - rear CTR
(6) Mat floor - rear LH
(7) Spacer - rear floor side LH
(8) Bracket - rear skirt
(9) Trim panel - rear skirt

Tightening torque: N·m (kgf-m, ft-lb)
T: 18 (1.8, 13.3)

18.ROOF TRIM

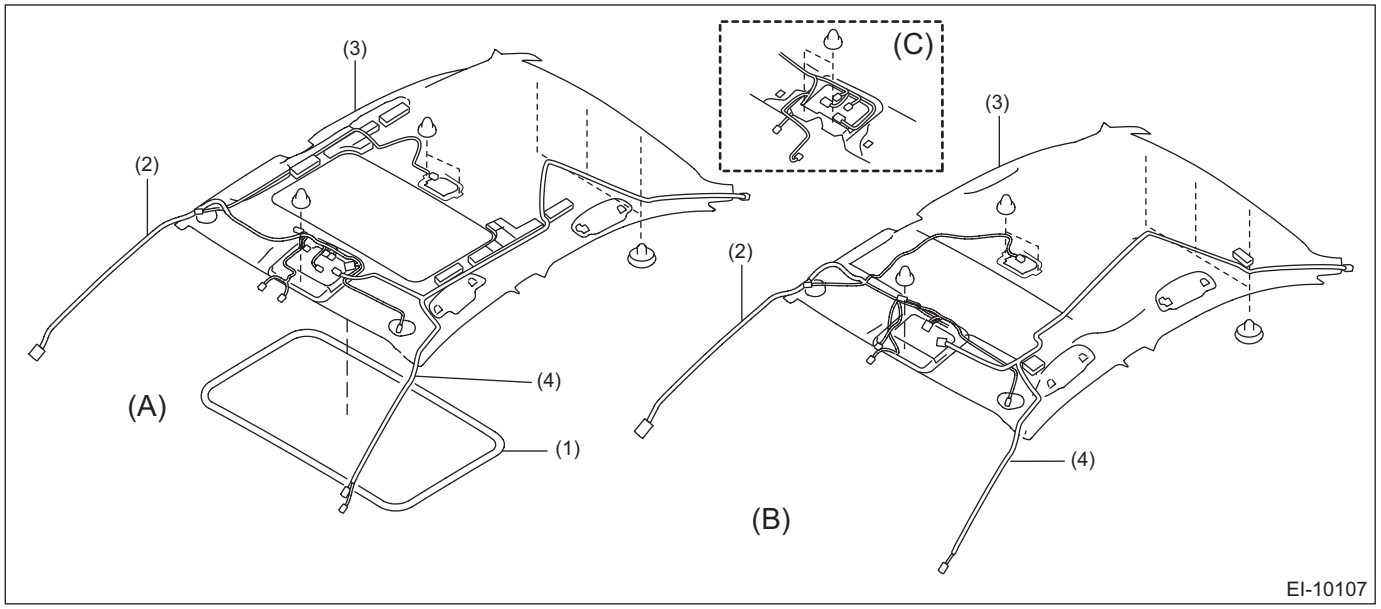

EI-10107

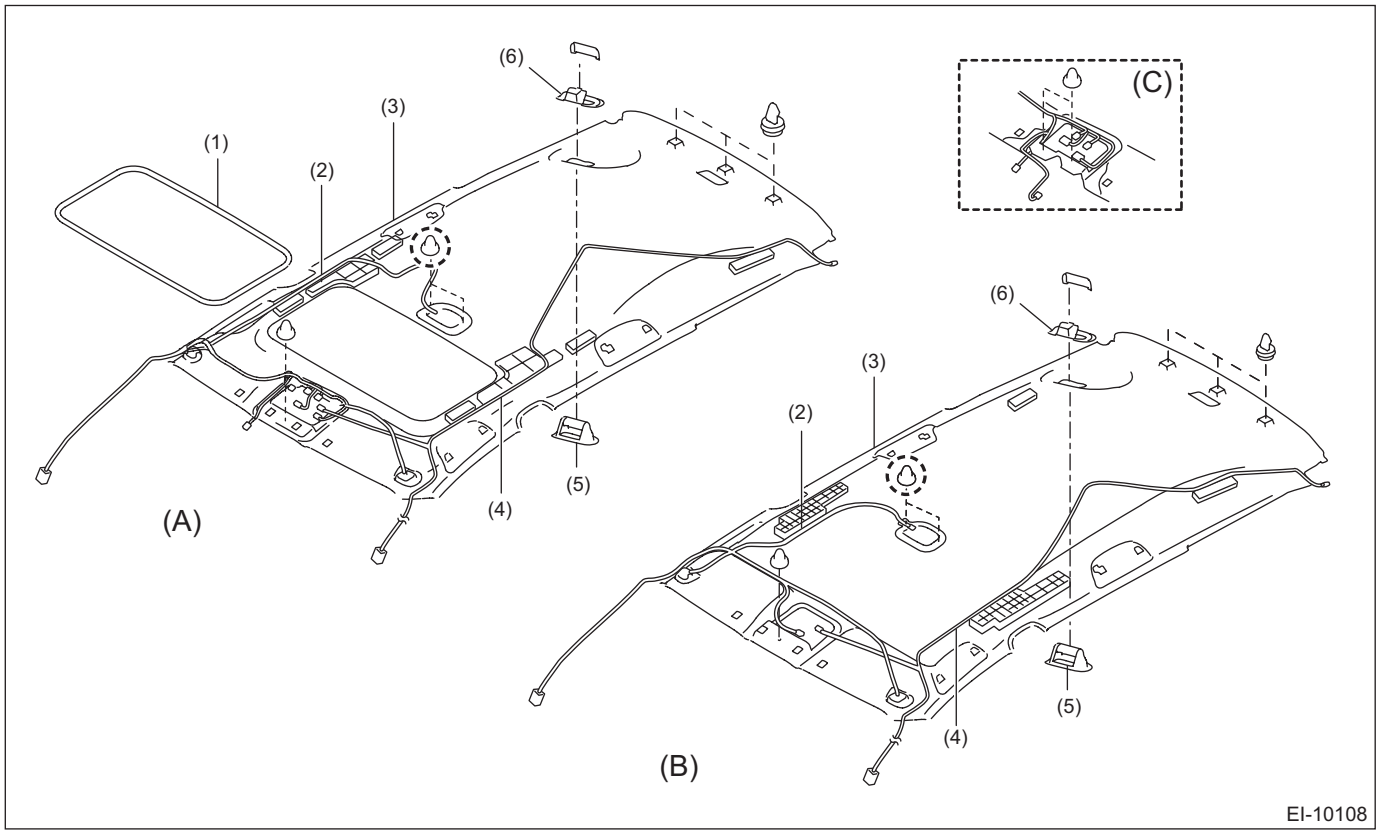

EI-10108

(A)	Sunroof type	(B)	Normal roof type	(C)	Models with EyeSight
(1)	Garnish - roof	(3)	Trim panel - roof ASSY	(5)	Cover - seat belt holder
(2)	Cord - roof	(4)	Cord ASSY - antenna feeder	(6)	Base - seat belt holder

19.ROOM INNER PARTS

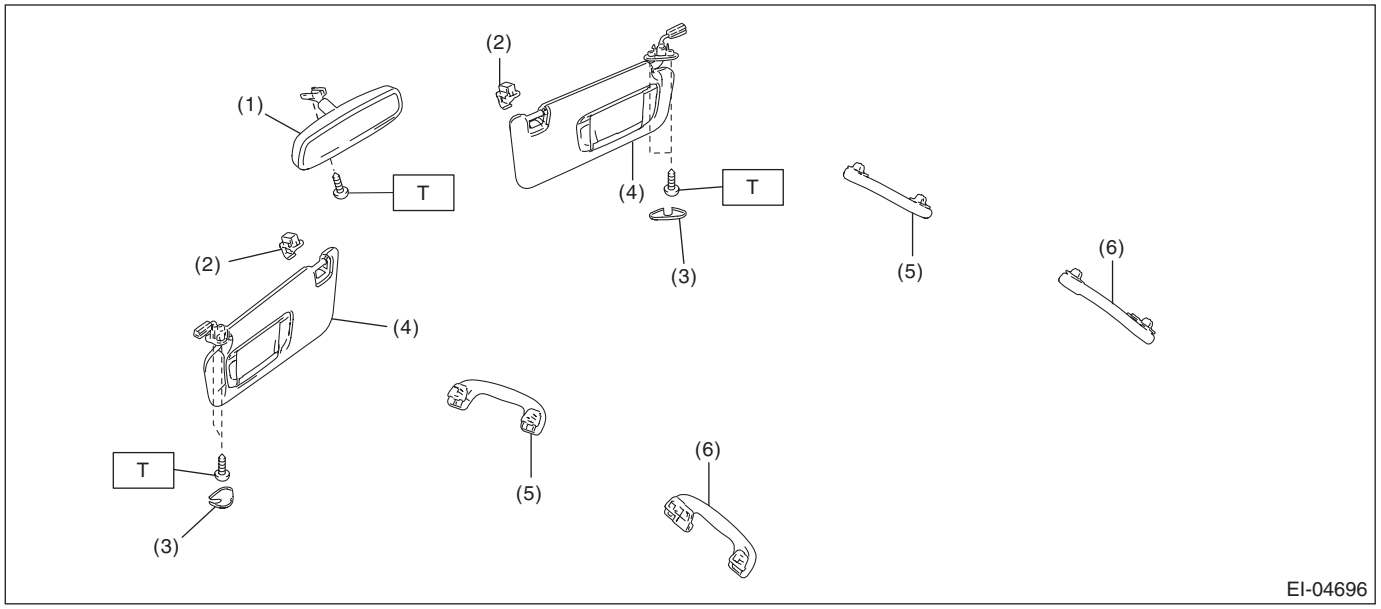

(1) Mirror ASSY - inner rearview
(2) Hook - sun visor
(3) Cover - sun visor
(4) Sun visor ASSY
(5) Assist rail - front
(6) Assist rail - rear

Tightening torque: N·m (kgf-m, ft-lb)
T: 2 (0.2, 1.5)

20.REAR GATE TRIM

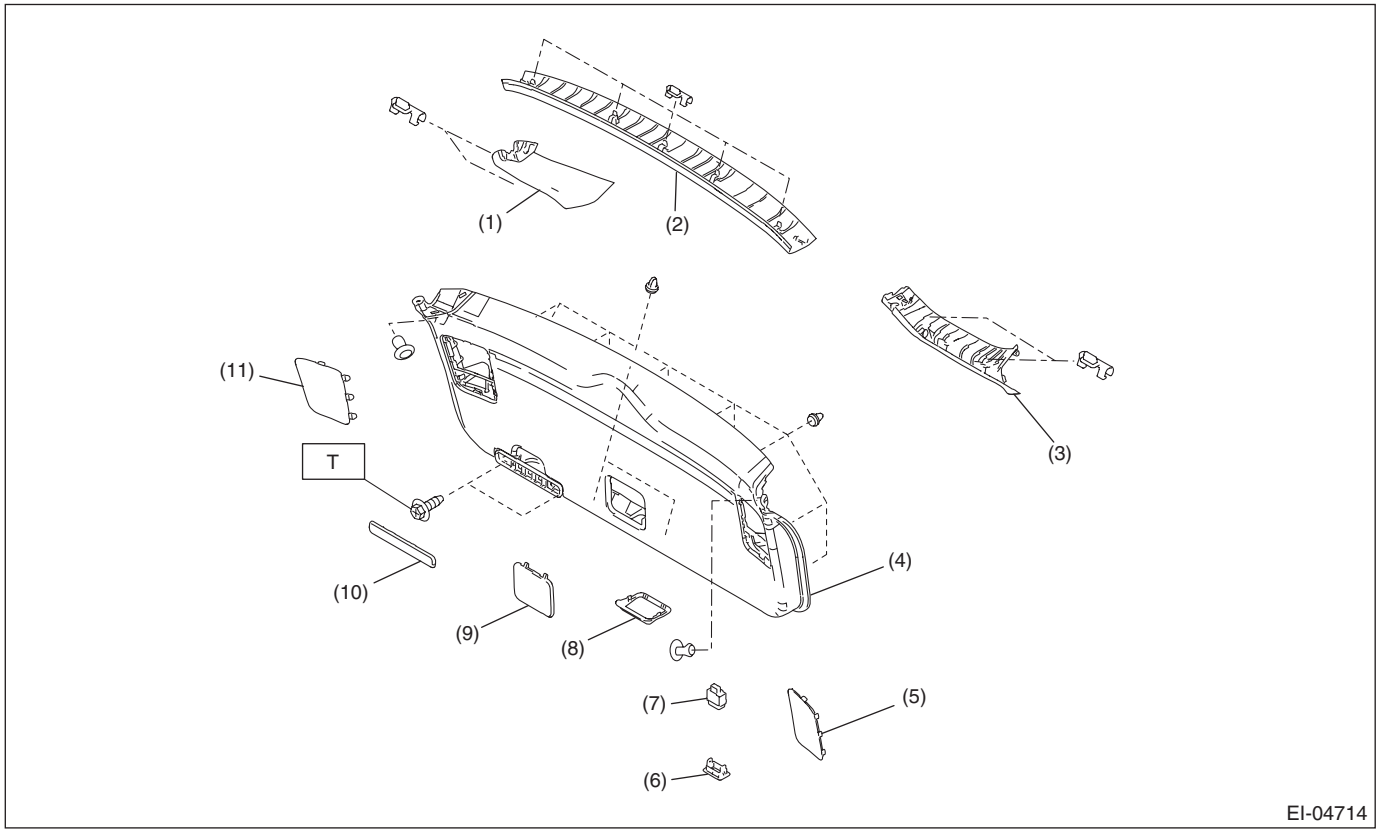

(1) Trim panel - rear gate pillar RH
(2) Trim panel - rear gate UPR
(3) Trim panel - rear gate pillar LH
(4) Trim panel - rear gate LWR
(5) Cap ASSY - rear gate LWR LH
(6) Holder - power rear gate inner switch
(7) Power rear gate inner switch
(8) Cover - rear gate latch
(9) Cap - rear gate LWR
(10) Cover - rear gate grip
(11) Cap ASSY - rear gate LWR RH

Tightening torque: N·m (kgf-m, ft-lb)
T: 7.5 (0.8, 5.5)

B: PREPARATION TOOL

TOOL NAME	REMARKS
Clip remover	Used for removing trim. • KTC AP201-10A • KTC AP201-CN • KTC AP201-CF • KTC AP201-HF • KTC AP201-HN • KTC AP201-HS • KTC AP203-10A • KTC AP20L-10B Or equivalent.
Clip clamp pliers	Used for removal of various clips and clamps. • KTC CCP-190 • KTC AP202A • KTC AP202B Or equivalent.

2. Front Under Cover

A: REMOVAL

1) Lift up the vehicle.
2) Remove the bolts and clips, and remove the under cover - front.

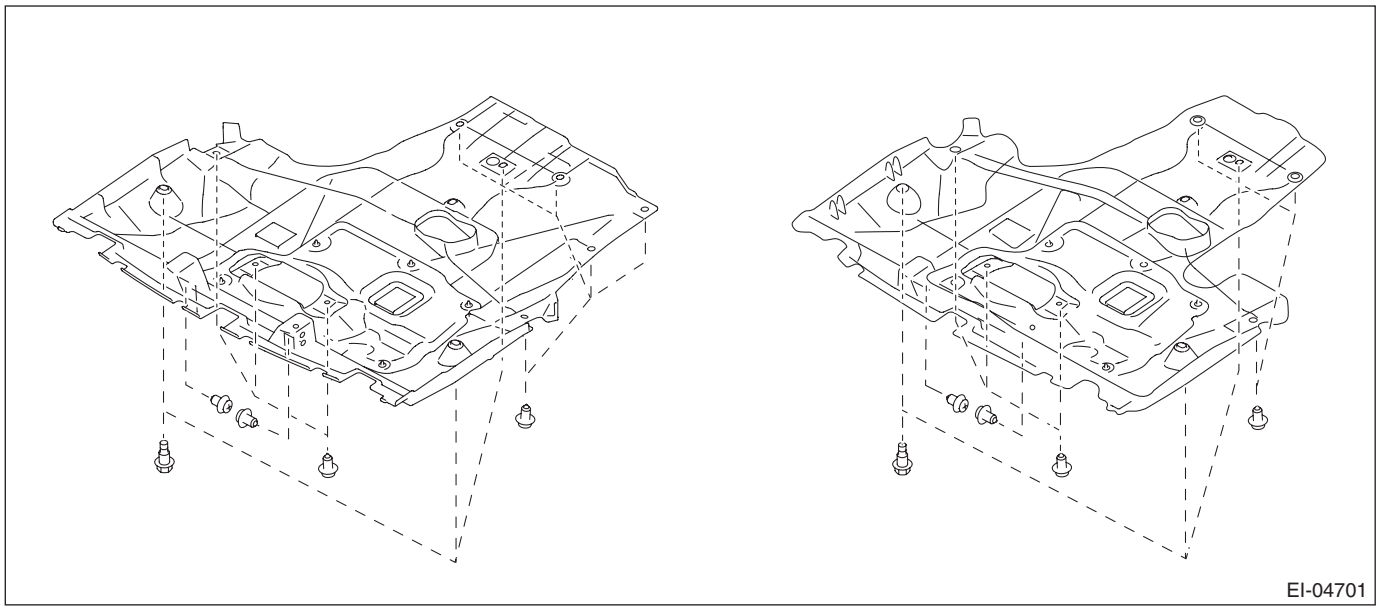

B: INSTALLATION

CAUTION:
Install the under cover so that the under cover front end (b) comes inside of the bumper face - front (a).

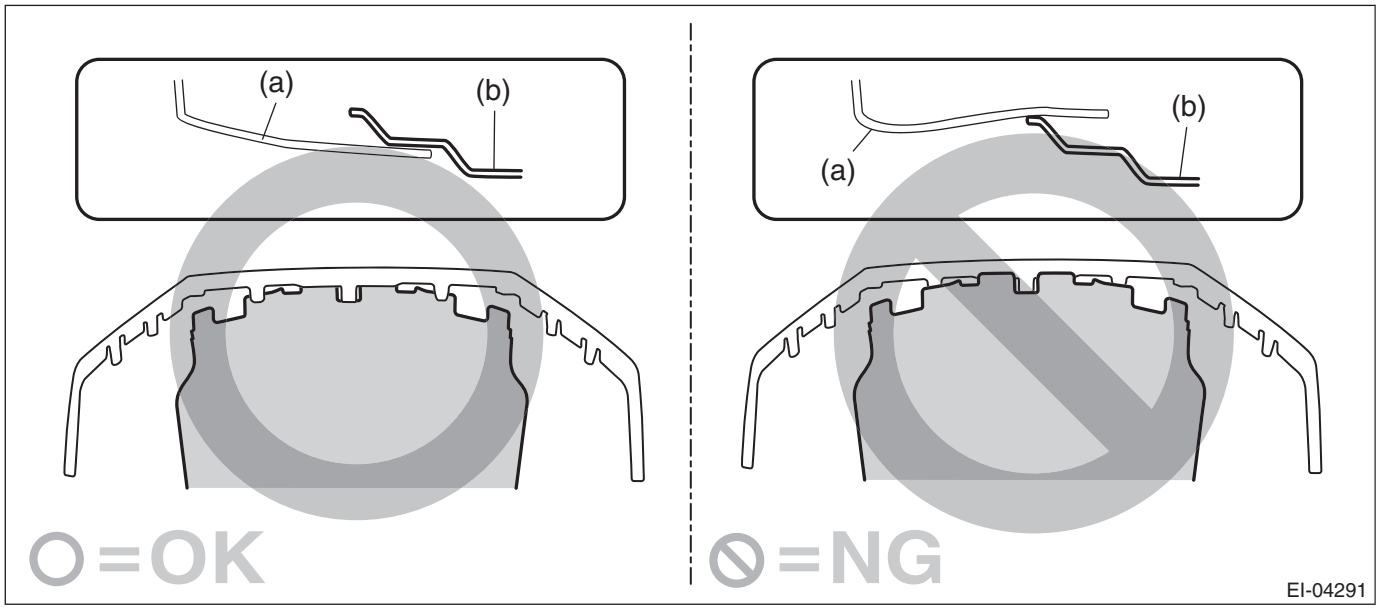

1) Install the under cover - front.

Tightening torque:
Refer to "COMPONENT" of "General Description". <Ref. to EI-2, FRONT UNDER COVER, COMPONENT, General Description.>
2) Lower the vehicle.

3. Mud Guard

A: REMOVAL

1) Lift up the vehicle.
2) Remove the wheels.
3) Remove the clips, then remove the mud guard.

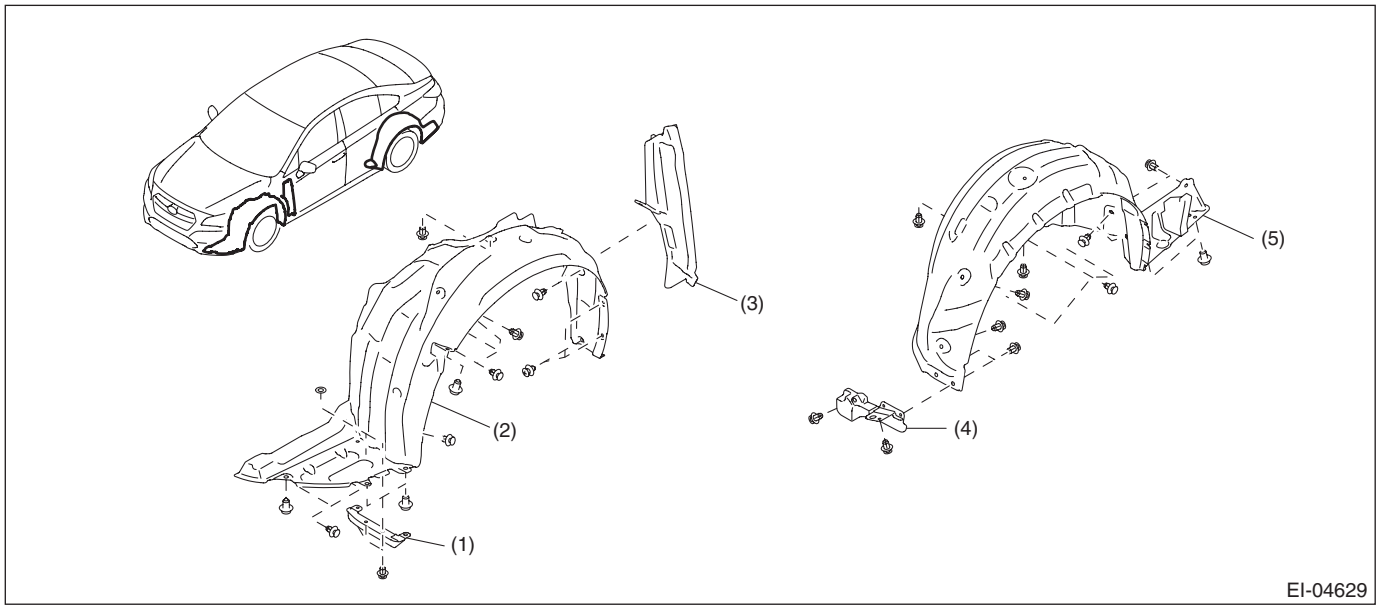

(1) Air flap - front
(2) Mud guard - front
(3) Cover - fender LWR
(4) Air flap - rear
(5) Mud guard - rear

B: INSTALLATION

1) Install the mud guard.
2) Install the wheel.

Tightening torque:
Wheel nut: 120 N·m (12.2 kgf-m, 88.5 ft-lb)
3) Lower the vehicle.

4. Floor Under Protector

A: REMOVAL

1) Lift up the vehicle.

NOTE:
A plate type lift cannot be used.

2) Remove the fuel tank protector.
- H4 model: <Ref. to FU(H4DO)-96, REMOVAL, Fuel Tank Protector.>
- H6 model: <Ref. to FU(H6DO)-98, REMOVAL, Fuel Tank Protector.>

3) Remove the bolts and clips, and remove the floor under protector.

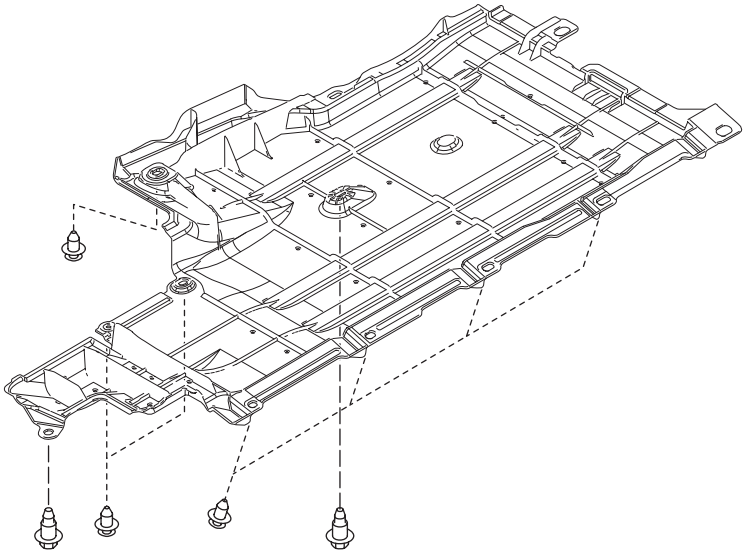

EI-04705

B: INSTALLATION

1) Install the floor under protector.

Tightening torque:
7.5 N·m (0.8 kgf-m, 5.5 ft-lb)

2) Install the fuel tank protector.
- H4 model: <Ref. to FU(H4DO)-96, INSTALLATION, Fuel Tank Protector.>
- H6 model: <Ref. to FU(H6DO)-98, INSTALLATION, Fuel Tank Protector.>

3) Lower the vehicle.

5. Fuel Tank Protector

A: NOTE

Refer to “FUEL INJECTION” section for removal and installation procedure of the fuel tank protector.

- H4 model: <Ref. to FU(H4DO)-96, REMOVAL, Fuel Tank Protector.>
- H6 model: <Ref. to FU(H6DO)-98, REMOVAL, Fuel Tank Protector.>

6. Front Grille

A: REMOVAL

1) Disconnect the ground terminal from battery sensor. <Ref. to RC-4, BATTERY, NOTE, Repair Contents.>
2) Remove the bumper face - front. <Ref. to EI-34, REMOVAL, Front Bumper.>
3) Remove the front grille assembly.
   (1) Remove the screws on the back side.
   (2) Release the claws, and remove the front grille assembly and the cover intake - front.

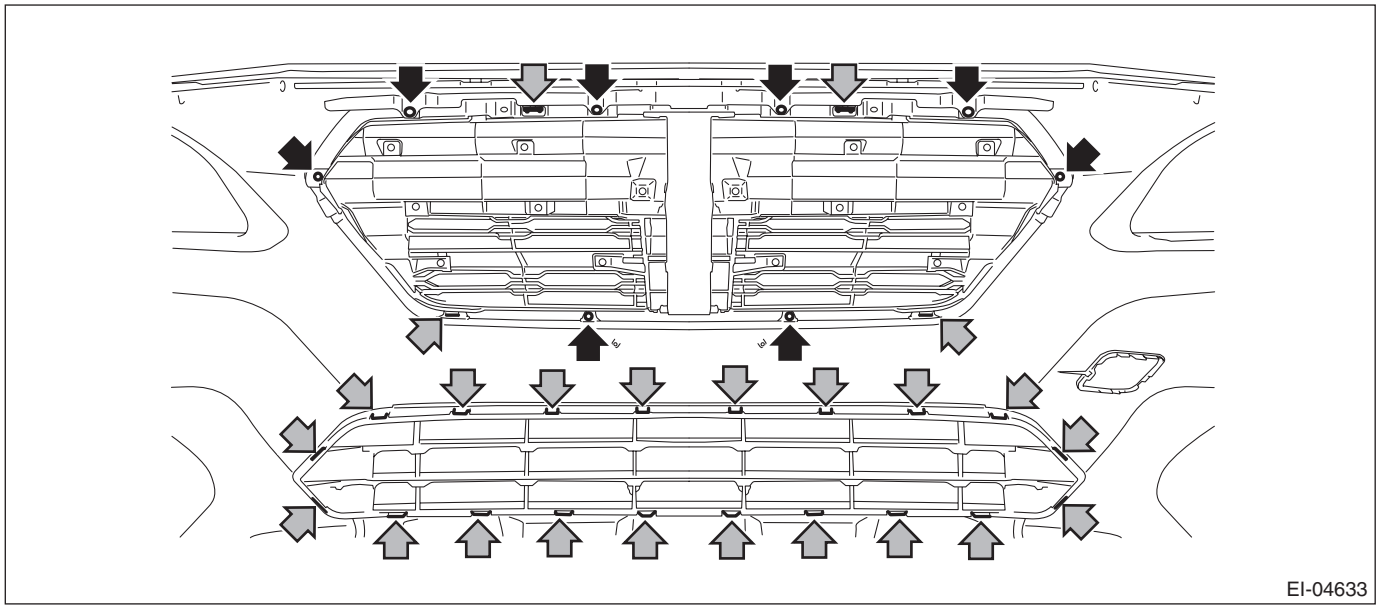

B: INSTALLATION

CAUTION:
• Install the bumper face - front so that the front end of the under cover (b) comes inside the bumper face - front (a).

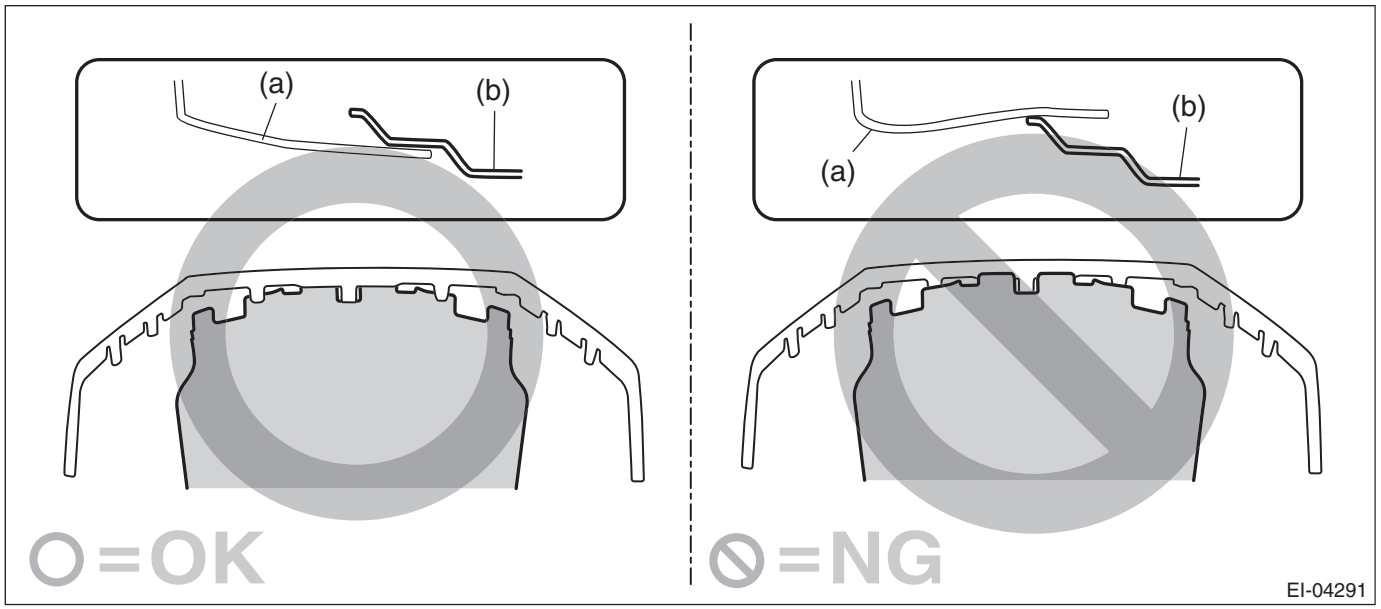

• Before installing the bumper face, match the claws on the bracket - front bumper with the engaging position of flange section on the bumper face side. If the engaging position is not correct, the flange section may be broken or the clearance between fender panel and bumper face may not be uniform.
1) Install the front grille assembly.
2) Install the bumper face - front. <Ref. to EI-38, INSTALLATION, Front Bumper.>
3) Connect the ground terminal to battery sensor. <Ref. to RC-4, BATTERY, NOTE, Repair Contents.>
4) Adjust the fog light beam. (Model with fog light) <Ref. to LI-44, FOG LIGHT AIMING, ADJUSTMENT, Front Fog Light Assembly.>

7. Front Bumper

A: REMOVAL

1) Disconnect the ground terminal from battery sensor. <Ref. to RC-4, BATTERY, NOTE, Repair Contents.>
2) Remove the bumper face - front.
   (1) Remove the clips at the upper side of the bumper face - front.
   (2) Remove the clips from the fender.
   (3) Remove the clips at the lower side of the bumper face - front.

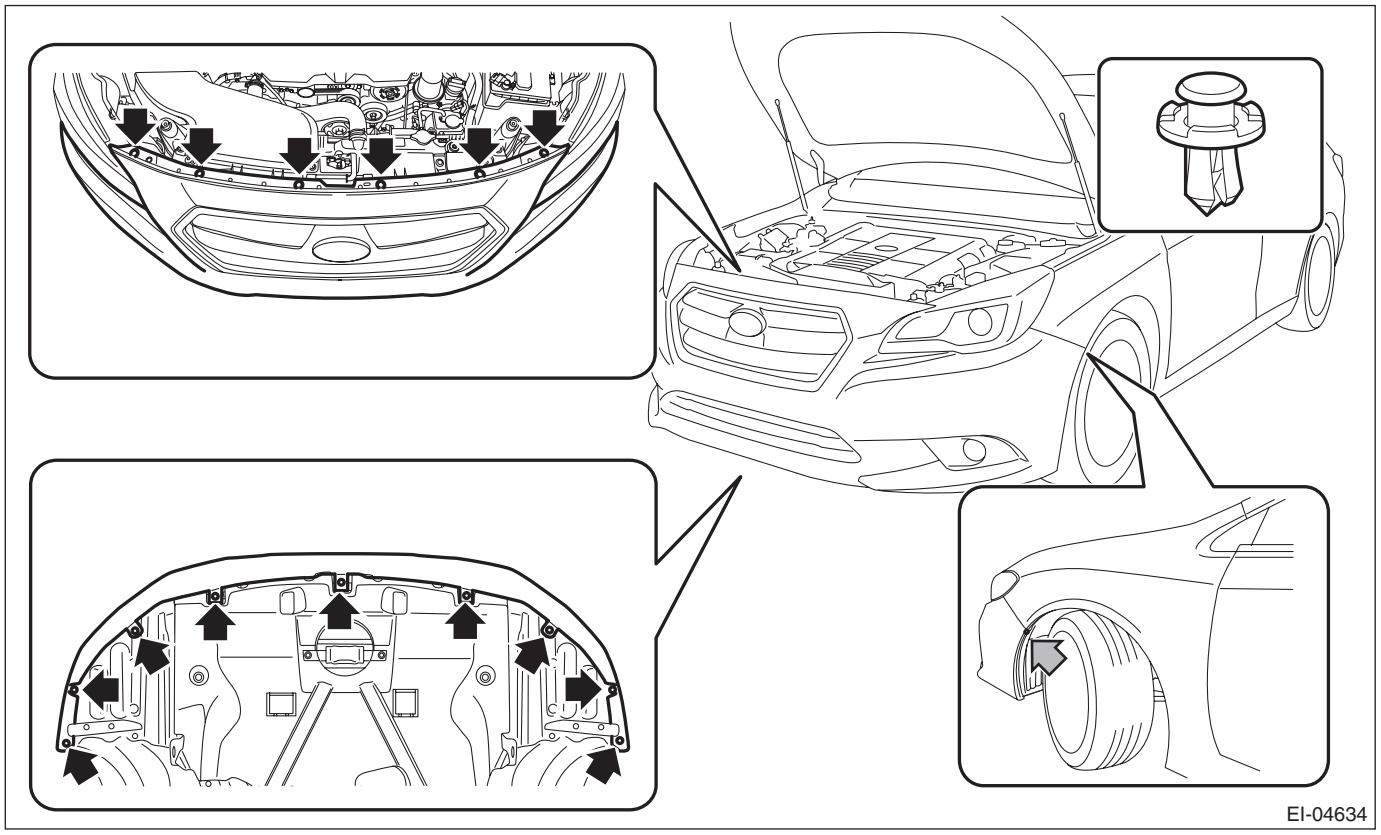

(4) Disconnect the fog light assembly connector.
(5) While pushing up the lower side (a) of the bumper face - front, release the engagement in the order from (b) to (i).

CAUTION:
Do not pull forcibly. It may damage the flange section on the bumper face - front side when it comes off from the claws of the bracket - front bumper.

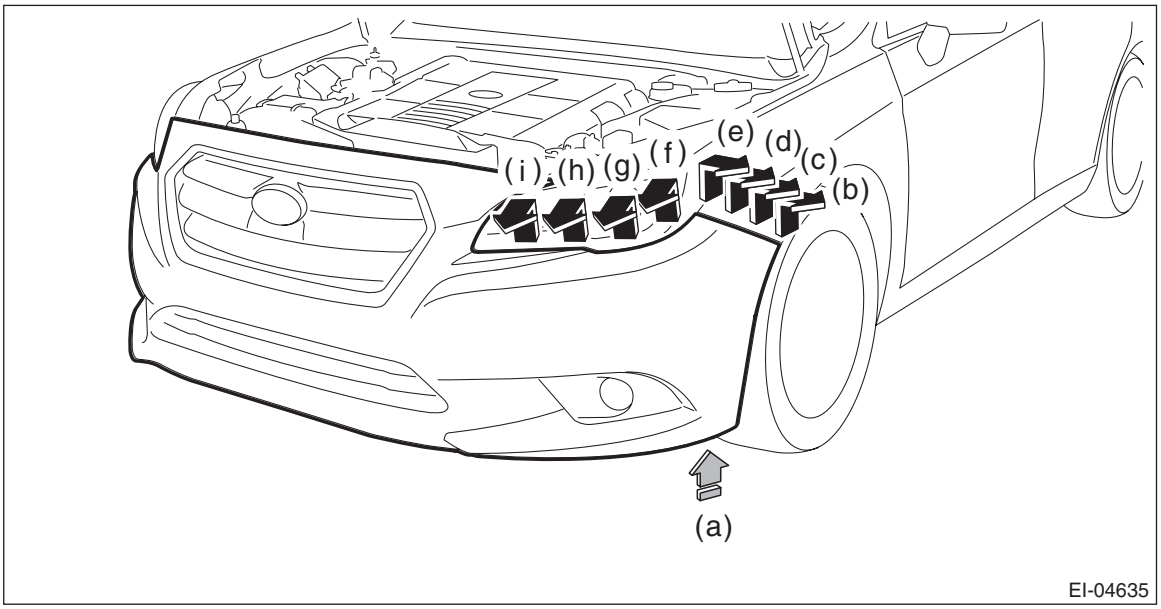

NOTE:
Detach the opposite side in the same manner.
3) Remove the energy absorber foam - front.

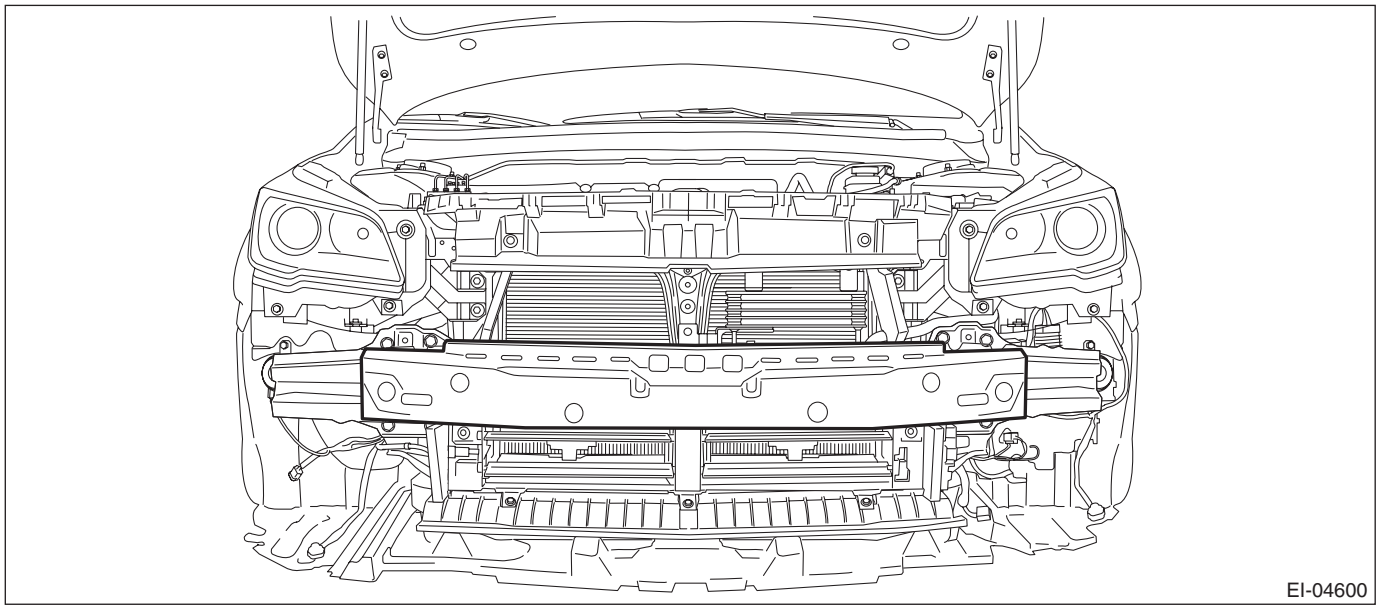

4) Remove the bolts and clips, disconnect the connector and remove the active grille shutter. (H4 model)

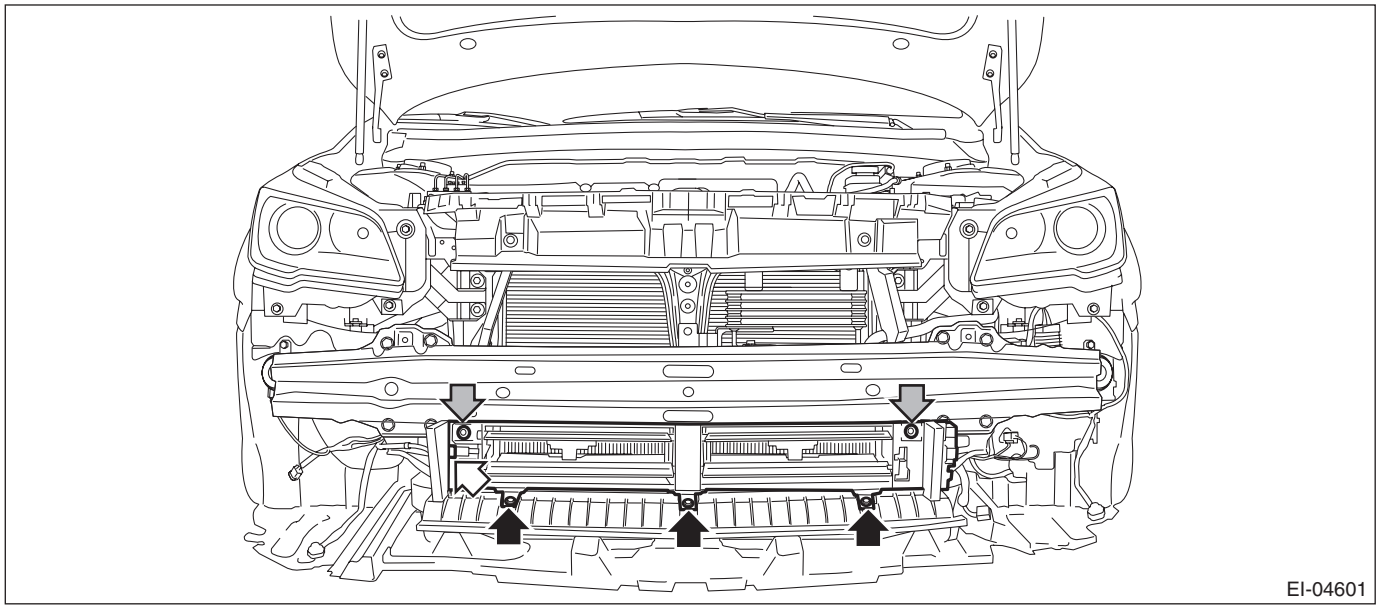

5) Remove the bolts, and remove the bumper beam COMPL - front.

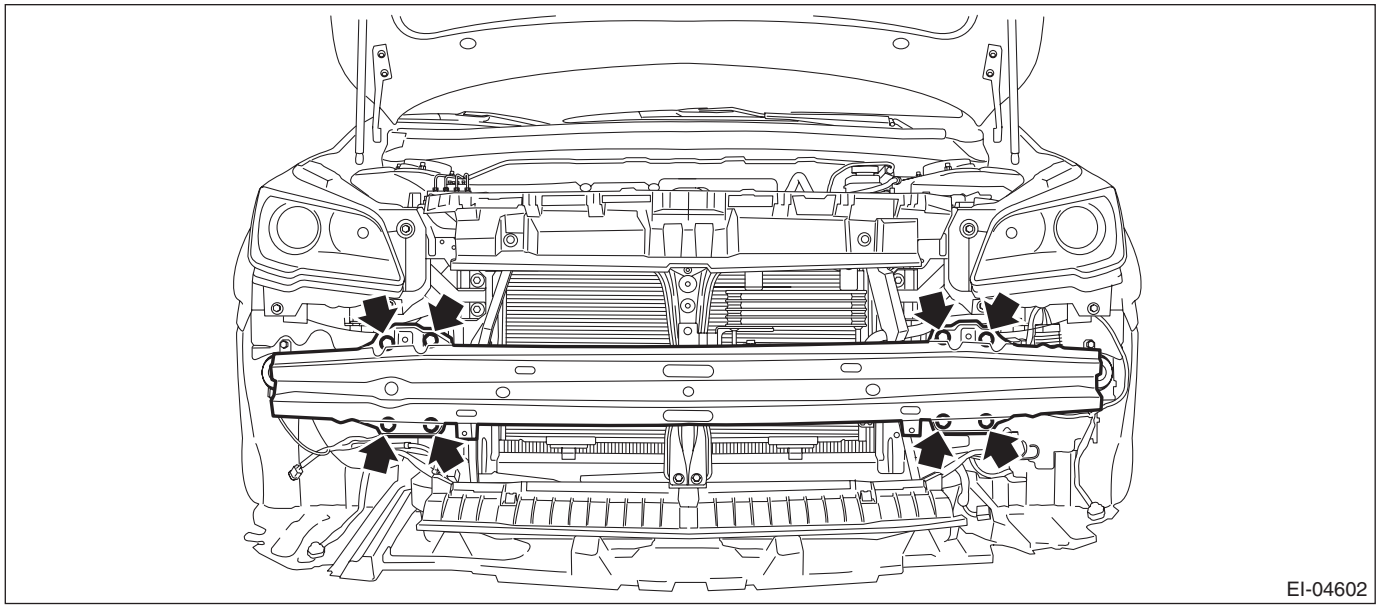

NOTE:
After the bolts are removed, raise the bumper beam COMPL - front a little to remove it from vehicle body.

6) Remove the under cover - front. <Ref. to EI-28, REMOVAL, Front Under Cover.>

7) Remove the bolts, and pull the bracket - front center LWR to remove.

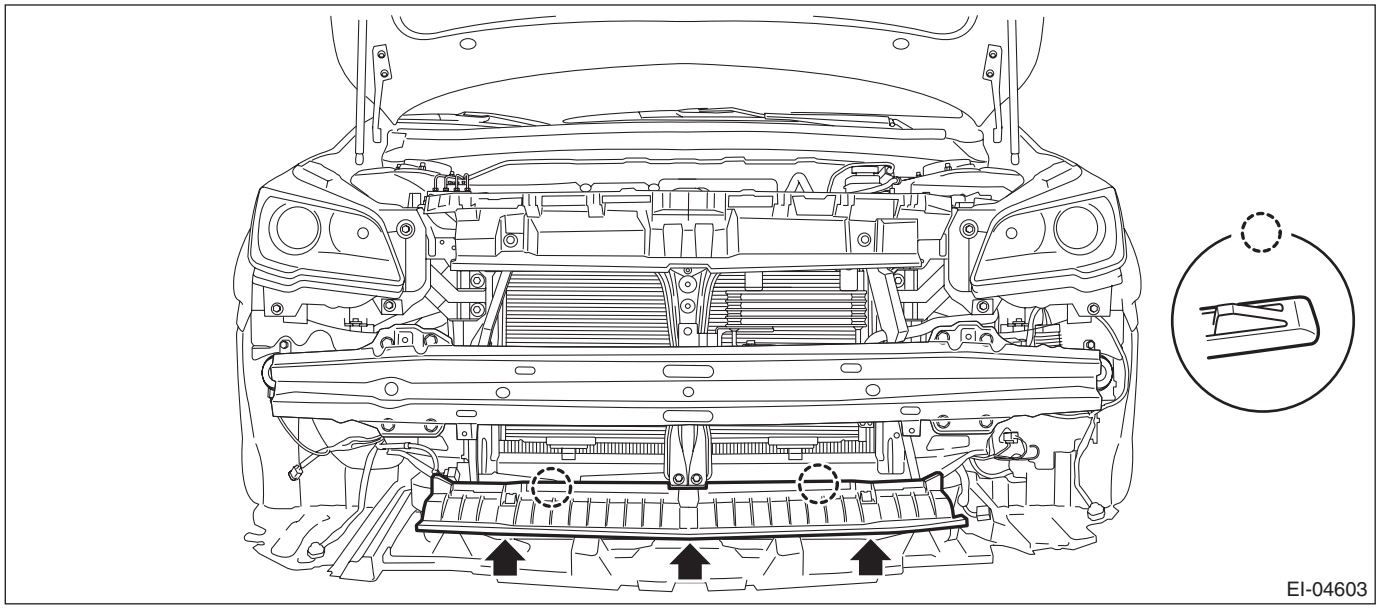

8) Remove the bolts and clips, and remove the bracket - front bumper corner.

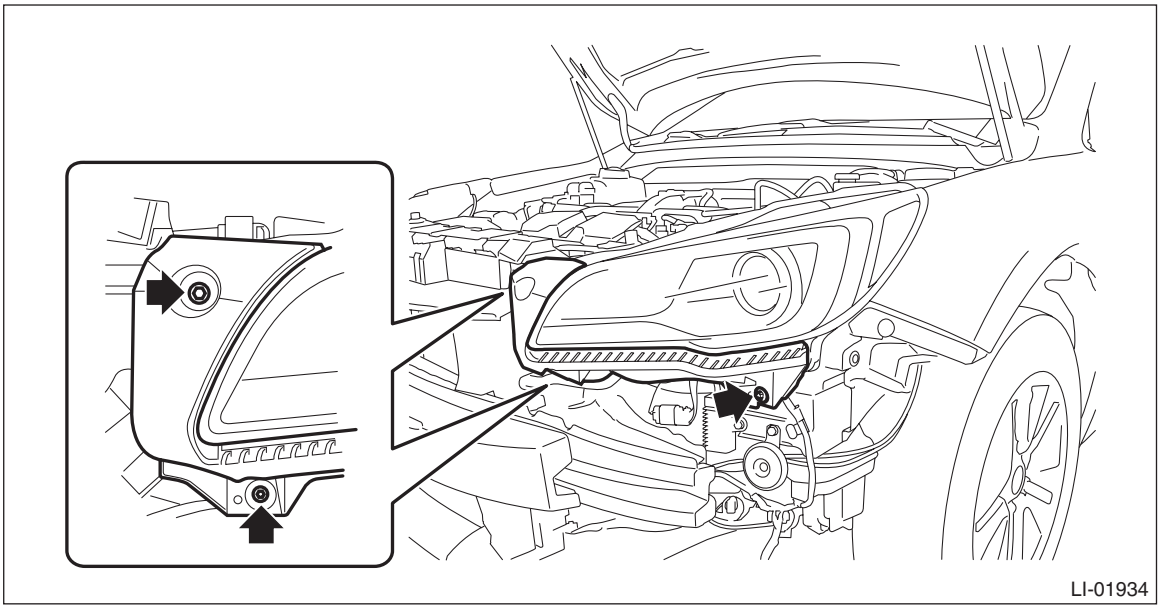

9) Remove the bracket - front bumper side.
(1) Remove the bolts and screws.
(2) Remove the claws from behind the fender COMPL - front, and remove the bracket - front bumper side.

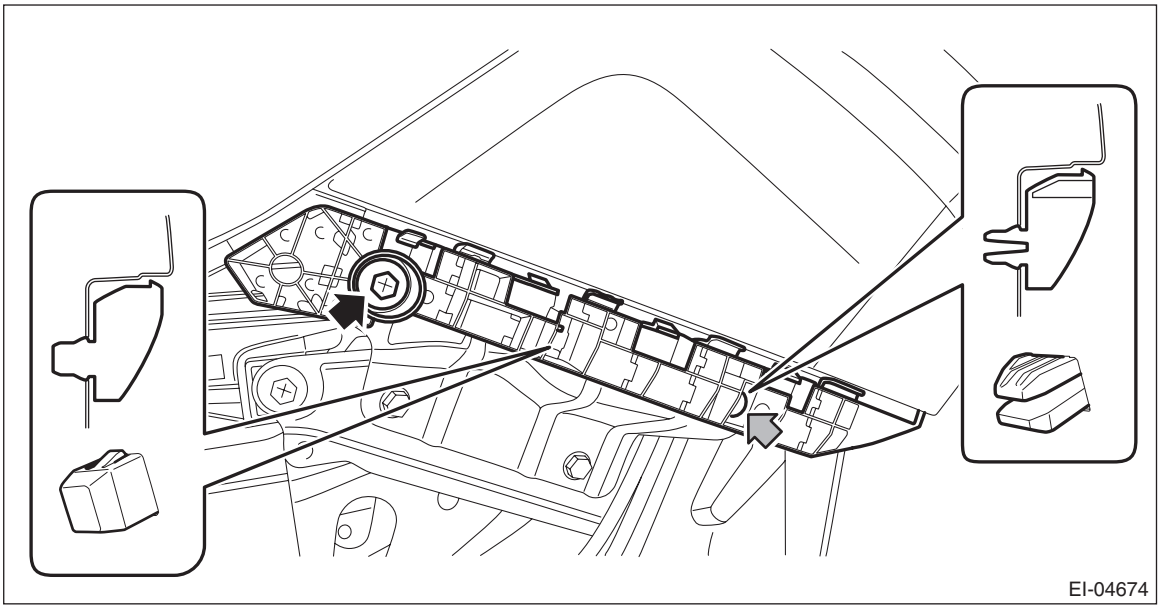

10) Remove the fog light assembly - front. <Ref. to LI-42, REMOVAL, Front Fog Light Assembly.>

B: INSTALLATION

CAUTION:
• Install the bumper face - front so that the front end of the under cover (b) comes inside the bumper face - front (a).

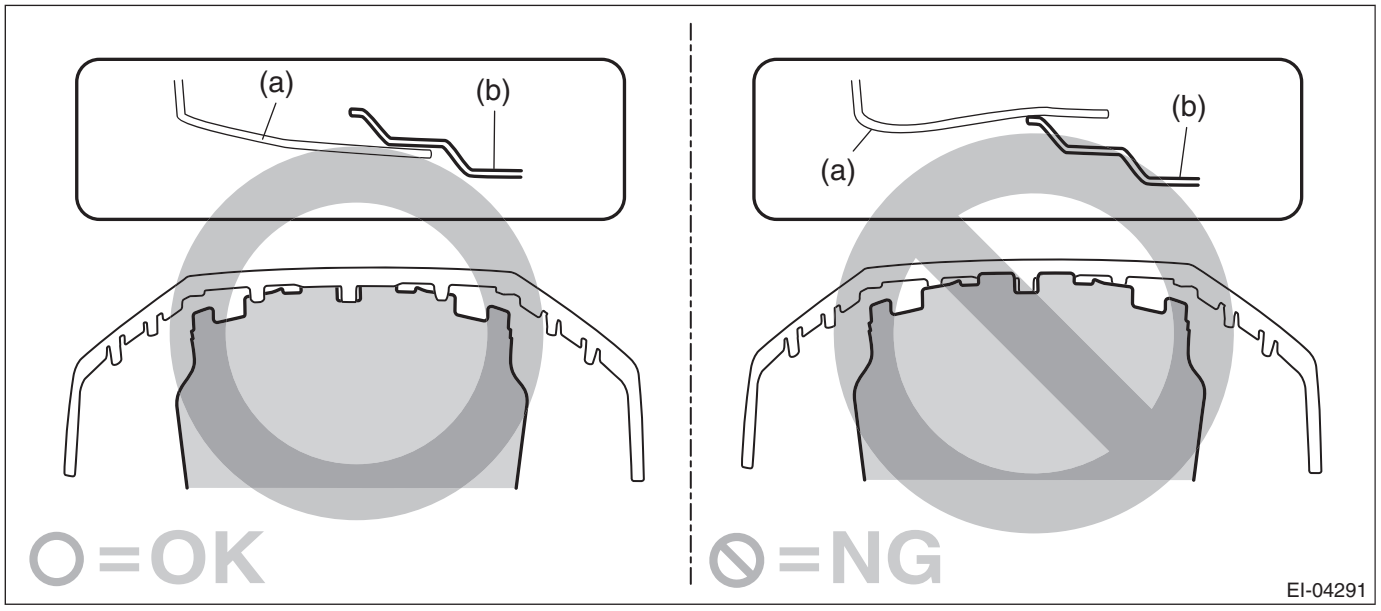

• Before installing the bumper face, match the claws on the bracket - front bumper with the engaging position of flange section on the bumper face side. If the engaging position is not correct, the flange section may be broken or the clearance between fender panel and bumper face may not be uniform.

1) Install the fog light assembly - front.
2) Install the bracket - front bumper side.

Tightening torque:
7.5 N·m (0.8 kgf-m, 5.5 ft-lb)
3) Install the bracket - front bumper corner.

Tightening torque:
7.5 N·m (0.8 kgf-m, 5.5 ft-lb)
4) Install the bracket - front center LWR.

Tightening torque:
7.5 N·m (0.8 kgf-m, 5.5 ft-lb)
5) Install the under cover - front. <Ref. to EI-28, REMOVAL, Front Under Cover.>
6) Install the bumper beam COMPL - front.

Tightening torque:
33 N·m (3.4 kgf-m, 24.3 ft-lb)
7) Install the active grille shutter. (H4 model)

Tightening torque:
7.5 N·m (0.8 kgf-m, 5.5 ft-lb)
8) Install the energy absorber foam - front.
9) Install the bumper face - front.

NOTE:
Secure the flange section of the bumper face - front to the bracket - front bumper side.
10) Connect the ground terminal to battery sensor. <Ref. to RC-4, BATTERY, NOTE, Repair Contents.>
11) Adjust the fog light beam. <Ref. to LI-44, FOG LIGHT AIMING, ADJUSTMENT, Front Fog Light Assembly.>

C: REPAIR

1. COATING METHOD FOR PP BUMPER

Process No.	Process name	Job contents	
1	Bumper installation	Place the bumper on a paint worktable as required. Use the paint worktable conforming to inner shape of bumper if possible.	Cross section of bumper 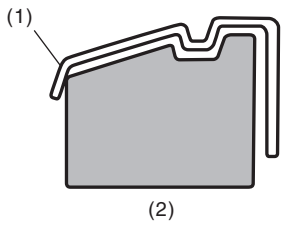 EI-00234 (1) Bumper (2) Paint worktable
2	Masking	Mask specified part (black base) with masking tape. Use masking tape for PP.	
3	Degreasing/cleaning	Clean all parts to be painted with appropriate cleaning solvent, normal alcohol, etc. to remove dirt, oil, grease, etc.	
4	Primer paint	Apply primer to all parts to be painted, using spray gun. Use primer (clear).	
5	Drying	Dry at normal temperature. [10 — 15 min. at 20°C (68°F)] In half-dried condition, PP primer paint is dissolved by solvent, e.g. thinner, etc. Therefore, if dust or dirt must be removed, use ordinary alcohol etc.	

Process No.	Process name	Job contents	
6	Top coat paint (I)	Non-colored	Metallic paint
		Use section (block) paint for top coat. For paint/hardener mixture, observe the specifications recommended by the manufacturers. • Viscosity: 10 — 13 sec./20°C (68°F) • Film thickness: 35 — 45 μ • Spraying pressure: 245 — 343 kPa (2.5 — 3.5 kgf/cm^2, 36 — 50 psi)	Use section (block) paint for top coat. For paint/hardener mixture, observe the specifications recommended by the manufacturers. • Viscosity: 10 — 13 sec./20°C (68°F) • Film thickness: 15 — 20 μ • Spraying pressure: 245 — 343 kPa (2.5 — 3.5 kgf/cm^2, 36 — 50 psi)
7	Drying	Not required.	Dry at normal temperature [at least 10 min. at 20°C (68°F)]. In half-dried condition, avoid dust, dirt.
8	Top coat paint (II)	Not required.	Apply a clear coat to parts with top coat paint (I), three times at 5 — 7 minute intervals. For paint/hardener mixture, observe the specifications recommended by the manufacturers. • Viscosity: 14 — 16 sec./20°C (68°F) • Film thickness: 25 — 30 μ • Spraying pressure: 245 — 343 kPa (2.5 — 3.5 kgf/cm^2, 36 — 50 psi)
9	Drying	60°C (140°F), 60 min. or 80°C (176°F), 30 min. If the temperature is higher than 80°C (176°F), PP may be deformed. Keep maximum temperature at 80°C (176°F) or less.	
10	Inspection	Check paint.	
11	Removal of masking	Remove the masking tape applied in procedure 2.	

2. REPAIR INSTRUCTIONS FOR COLORED PP BUMPER

NOTE:
All PP bumpers are provided with a grained surface, and if the surface is damaged, it cannot normally be restored to its former condition. Damages limited to the shallow scratches that cause only a change in the luster of the base material or coating, can be almost fully restored. Before repairing a damaged area, explain this point to the customer and obtain an understanding about the matter.
Repair methods are outlined below, based on a classification of the extent of damage.
1) Minor damage causing only a change in the luster of the bumper due to a light touch
Almost restorable.

Process No.	Process name	Job contents	
1	Cleaning	Clean the area to be repaired using water.	
2	Sanding	Grind the repairing area with #500 sand paper in a “feathering” motion.	
3	Finish	Resin section	Coated section
		Repeatedly apply wax to the affected area using soft cloth (such as flannel). Recommended wax: Tire wax or equivalent	Perform either the same procedures as for the resin section or process No. 18 and subsequent in section 3), depending on the degree and nature of damage.
		Polish the waxed area with clean cloth after 5 — 10 minutes.	

2) Deep damage caused by scratching with fences etc.
A dent cannot be repaired but a whitened or swelled part can be removed.

Process No.	Process name	Job contents	
1	Cleaning	Clean the damaged area with water.	
2	Removal of damaged area	Cut off protruding area, if any, due to collision, using a putty knife.	
3	Sanding	Grind the affected area with #100 — #500 sand paper.	
4	Finish	Resin section	Coated section
		Same as process No. 3 in section “1)”.	Perform process No. 12 and subsequent operations in section “3)”.

3) Deep damage such as a break or hole that requires filling
Much of the peripheral grained surface must be sacrificed for repair. The degree of restoration is not really worth the expense. (The surface, however, will become almost flush with adjacent areas.)

Process No.	Process name	Job contents	
1	Bumper removal	Remove the bumper as required.	
2	Removal of parts	Remove the parts built into bumper as required.	
3	Bumper placement	Place the bumper on a paint worktable as required. It is recommended to use the paint worktable conforming to internal shape of bumper.	Cross section of bumper 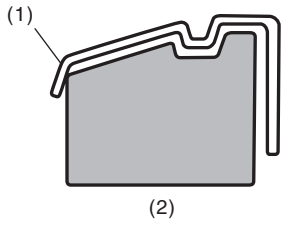 EI-00234 (1) Bumper (2) Paint worktable
4	Surface preparation	Remove dust, oil, etc. from areas to be repaired and surrounding areas, using an appropriate solvent (appropriate cleaning solvent or alcohol, etc.).	
5	Cutting	If the damage is a crack or a hole, cut a guide slit of 20 to 30 mm (0.79 to 1.18 in) in length along the crack or hole up to the bumper base surface. Next, use a knife or grinder to carve a V-shaped groove in the area for repair.	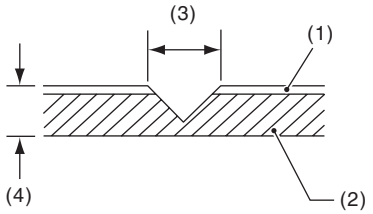 EI-00235 (1) Paint surface (2) PP base surface (3) 20 — 30 mm (0.79 — 1.18 in) (4) 3 mm (0.12 in)
6	Sanding (I)	Grind beveled surface with sand paper (#40 — #60) to smooth finish.	
7	Cleaning	Clean the sanded surface with the same solvent as used in process No. 4.	

Process No.	Process name	Job contents
8	Temporary welding	Grind the side just opposite the beveled area with sand paper (#40 — #60) and clean using a solvent. Temporarily spot-weld the side, using PP welding rod and heater gun.
		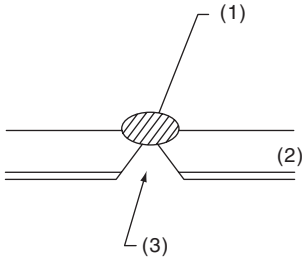 EI-00236 (1) Welded point (Use heater gun and PP welding rod) (2) PP base surface (3) Beveled section NOTE: • Do not melt welding rod until it flows out. This results in reduced strength. • Leave the welded spot unattended until it cools completely.
9	Welding	Using a heater gun and PP welding rod, weld the beveled spot while melting both the rod and damaged area.
		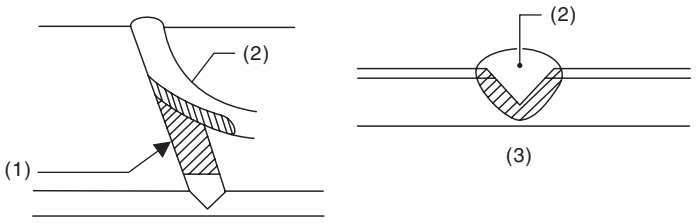 EI-00237 (1) Welding rod (2) Melt hatched area (3) Section NOTE: • Melt the sections indicated by hatched area. • Do not melt the welding rod until it flows out, in order to provide strength. • Always keep the heater gun 1 to 2 cm (0.4 to 0.8 in) away from the welding spot. • Leave the welded spot unattended until it cools completely.
10	Sanding (II)	Remove excess part of weld with a putty knife. If a drill or disc wheel is used instead of the knife, operate it at less than 1,500 r/min and grind the excess part little by little. A higher rpm will cause the PP substrate to melt from the heat.
		 EI-00042
		Sand the welded spot smooth with #240 sand paper.
11	Masking	Mask the black substrate section using masking tape.
12	Cleaning/degreasing	Completely clean the entire coated area, using solvent similar to that used in process No. 4.

Process No.	Process name	Job contents	
13	Primer coating	Apply a coat of primer for bumpers to the repaired surface and its surrounding areas. Mask these areas, if necessary. NOTE: Be sure to apply a coat of primer using a spray gun at a pressure of 245 — 343 kPa (2.5 — 3.5 kgf/cm^2, 36 — 50 psi).	
14	Leave unattended	Leave the repaired area unattended at 20°C (68°F) for 10 to 15 minutes until primer is half-dry. NOTE: If dirt or dust comes in contact with the coated area, wipe it off with a cloth dampened with alcohol. (Do not use thinner since it could melt the coated area.)	
15	Surfacer coating	Apply a coat of surfacer for PP bumpers to the repaired area two or three times at an interval of 3 — 5 minutes. For surfacer/hardener mixture, viscosity and paint thickness, observe the specifications of the surfacers to be used.	
16	Drying	Allow the coated surface to dry for 20 minutes at 20°C (68°F) [or 30 minutes at 60°C (140°F)].	
17	Sanding (III)	Sand the coated surface and its surrounding areas using #400 sand paper and water.	
18	Cleaning/degreasing	Same as process No. 12.	
19	Top coat (I)	Non-colored	Metallic paint
		Use a “block” coating method. For paint/hardener mixture, observe the specifications recommended by the manufacturers. • Viscosity: 11 — 13 sec./20°C (68°F) • Coating film thickness: 40 — 50 µ • Spraying pressure: 245 — 343 kPa (2.5 — 3.5 kgf/cm^2, 36 — 50 psi)	Use a “block” coating method. For paint/hardener mixture, observe the specifications recommended by the manufacturers. • Viscosity: 11 — 13 sec./20°C (68°F) • Coating film thickness: 20 — 30 µ • Spraying pressure: 245 — 343 kPa (2.5 — 3.5 kgf/cm^2, 36 — 50 psi)
20	Leave unattended	Not required.	Leave unattended at 20°C (68°F) for at least 10 minutes until the topcoated area is half-dry. NOTE: Be careful to keep dust or dirt from coming in contact with the affected area.
21	Top coat (II)	Not required.	Apply a clear coat three times at an interval of 3 to 5 minutes. For paint/hardener mixture, observe the specifications recommended by the manufacturers. • Viscosity: 10 — 13 sec./20°C (68°F) • Coating film thickness: 20 — 30 µ • Spraying pressure: 245 — 343 kPa (2.5 — 3.5 kgf/cm^2, 36 — 50 psi)
22	Drying	Allow the coated surface to dry for two hours at 20°C (68°F) or 30 minutes at 60°C (140°F). NOTE: Do not allow the temperature to exceed 80°C (176°F) since this will deform the PP substrate.	
23	Inspection	Carefully check the condition of the repaired area.	
24	Removal of masking	Remove the masking tape applied in process No. 11 and 13.	
25	Parts installation	Install parts on the bumper in reverse order of removal.	
26	Bumper installation	Install the bumper.	

8. Rear Bumper

A: REMOVAL

1. SEDAN MODEL

1) Disconnect the ground terminal from battery sensor. <Ref. to RC-4, BATTERY, NOTE, Repair Contents.>
2) Remove the trunk room mat.
3) Remove the light assembly - rear combination. <Ref. to LI-49, REMOVAL, Rear Combination Light Assembly.>
4) Remove the bumper face - rear.
   (1) Remove the clips inside the wheel housing.
   (2) Remove the screws from trunk opening.
   (3) Remove the clips at the lower side of the bumper face - rear.

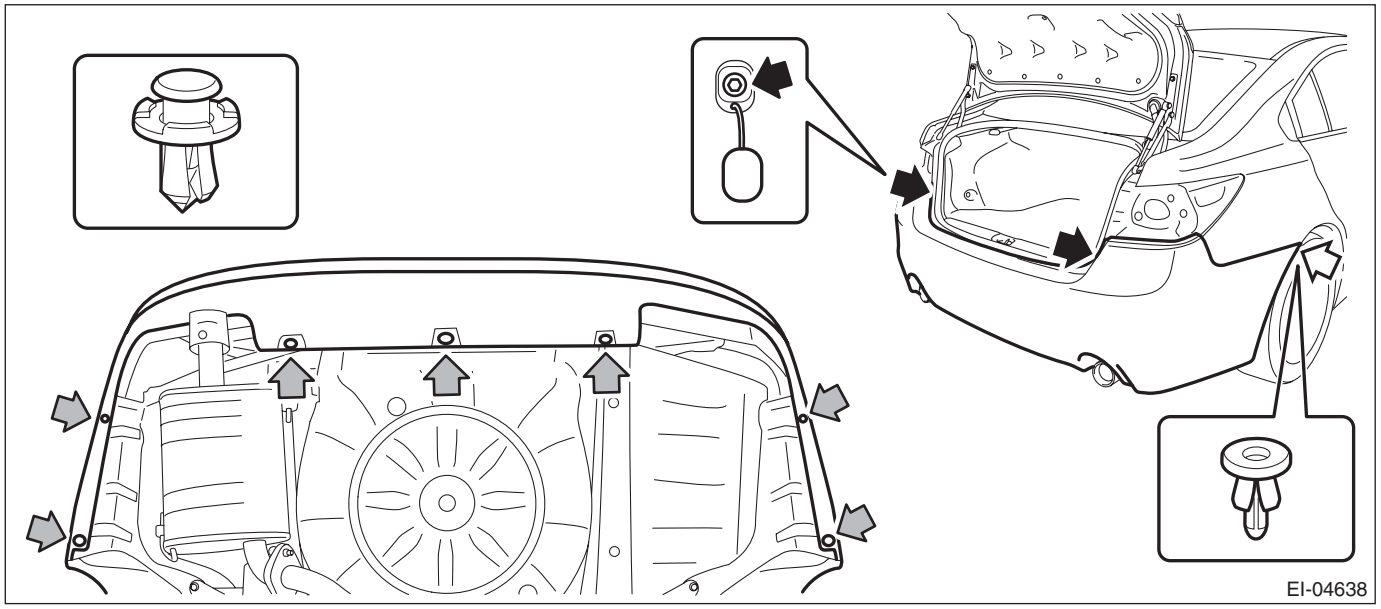

(4) Detach (b) and (c) while pulling up (a) of the bumper face - rear.
(5) Detach (e) while pulling up (d) of the bumper face - rear.
(6) Detach the opposite side in the same manner.
(7) Detach in order from (f) to (h) while pulling up the center part of the bumper face - rear.

CAUTION:
Do not pull forcibly. It may damage the flange section on the bumper face - rear side when it comes off from the claws of the bracket - rear bumper.

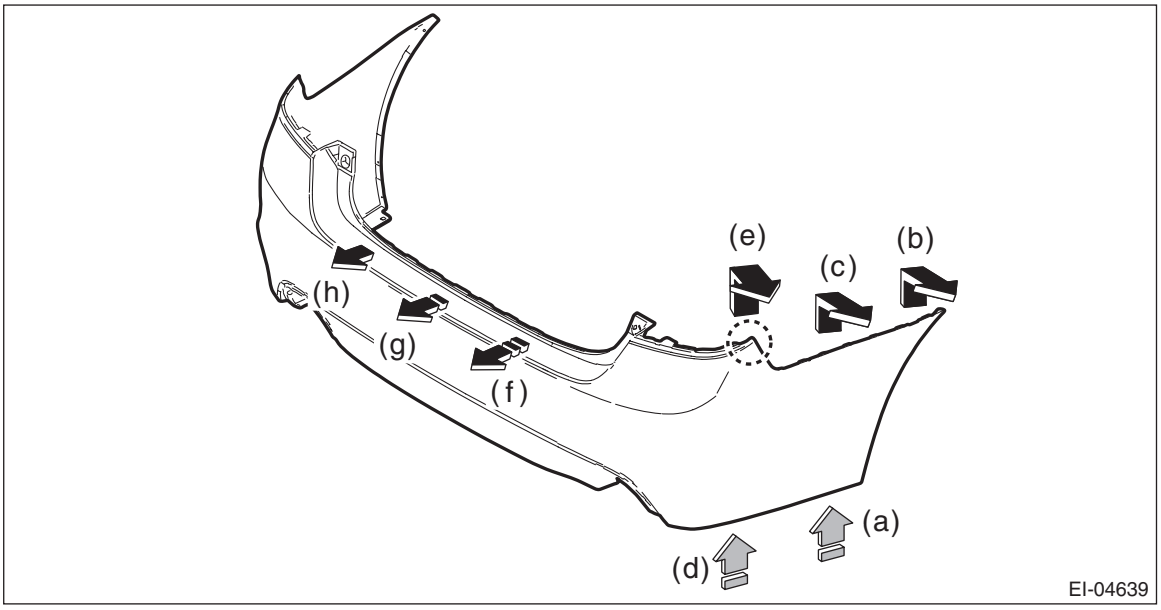

5) Remove the energy absorber foam - rear.

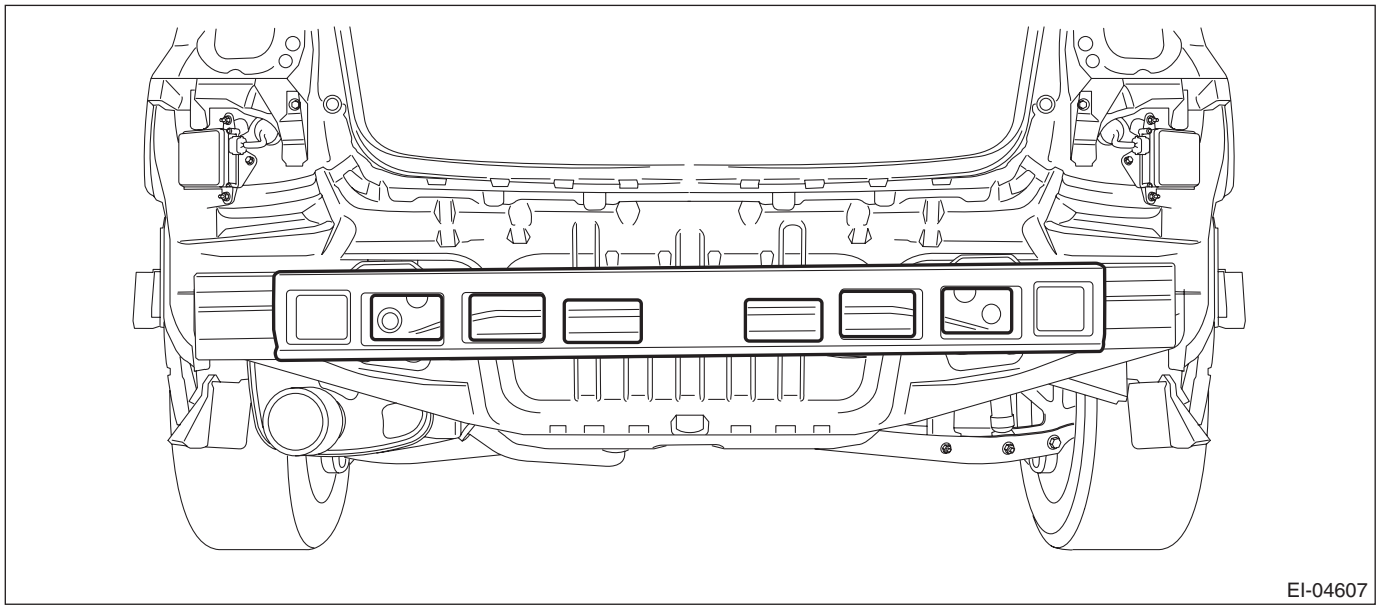

6) Remove the nuts, and remove the bumper beam COMPL - rear.

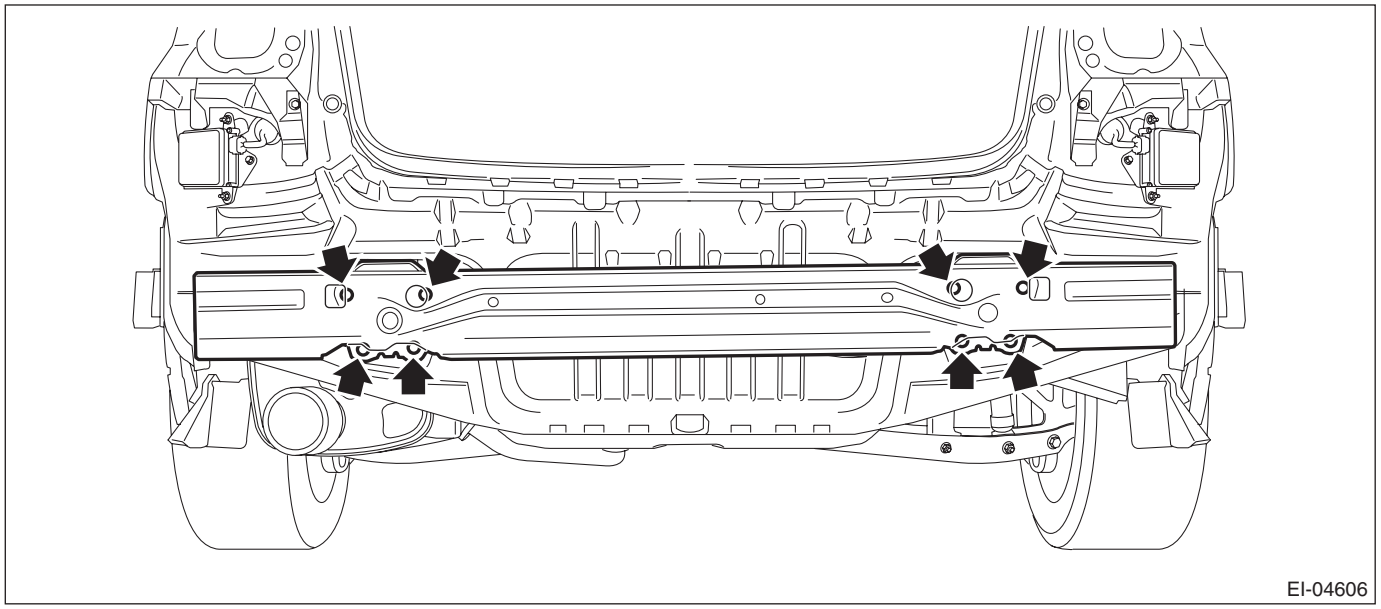

7) Remove bumper brackets.
   (1) Remove the bolts and screws.
   (2) Turn over the trim panel - trunk side, and detach the claw of the clip from the back side.

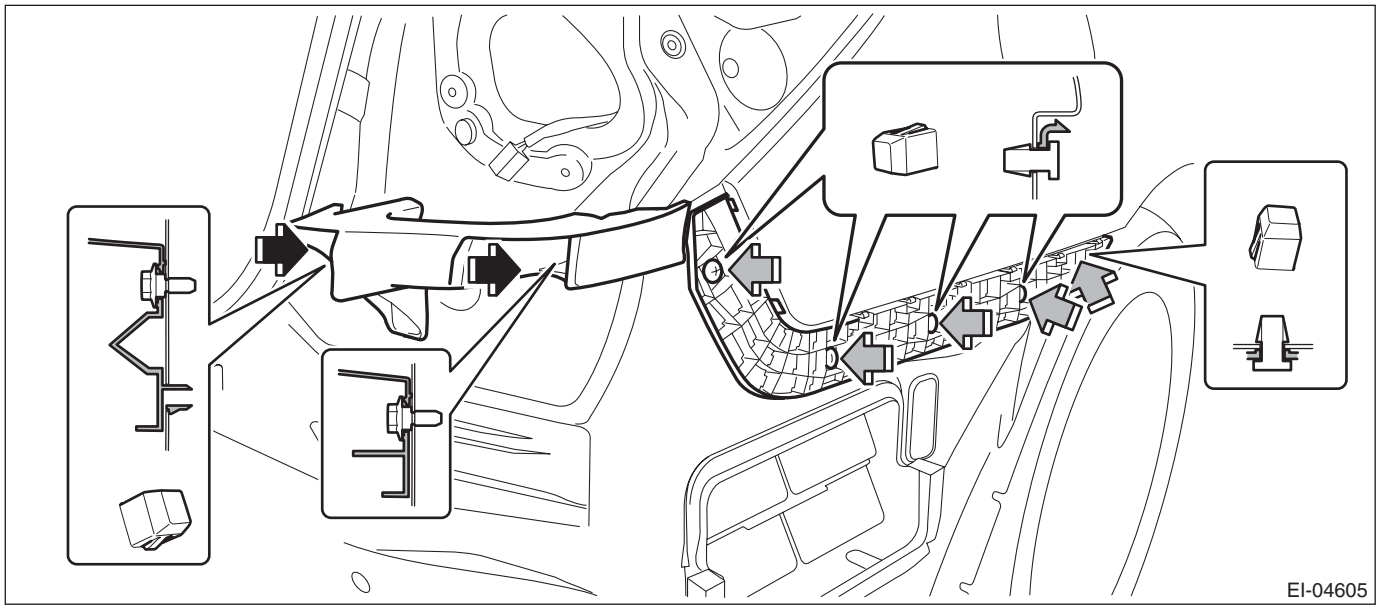

2. OUTBACK MODEL

1) Disconnect the ground terminal from battery sensor. <Ref. to RC-4, BATTERY, NOTE, Repair Contents.>
2) Remove the light assembly - rear combination. <Ref. to LI-49, REMOVAL, Rear Combination Light Assembly.>
3) Remove the bumper face - rear.
   (1) Remove the clips inside the wheel housing.
   (2) Remove the screws from rear gate opening.
   (3) Remove the clips at the lower side of the bumper face - rear.

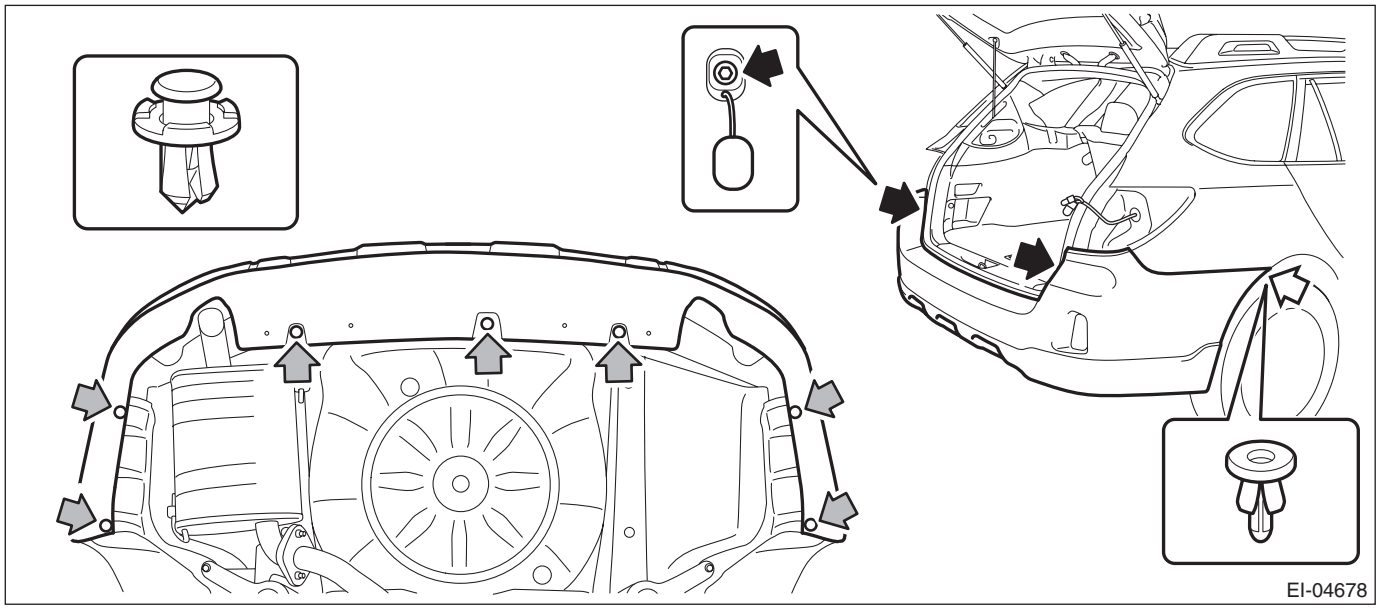
EI-04678

   (4) Detach (b) and (c) while pulling up (a) of the bumper face - rear.
   (5) Detach (e) while pulling up (d) of the bumper face - rear.
   (6) Detach the opposite side in the same manner.
   (7) Detach in order from (f) to (h) while pulling up the center part of the bumper face - rear.

CAUTION:
Do not pull forcibly. It may damage the flange section on the bumper face - rear side when it comes off from the claws of the bracket - rear bumper.

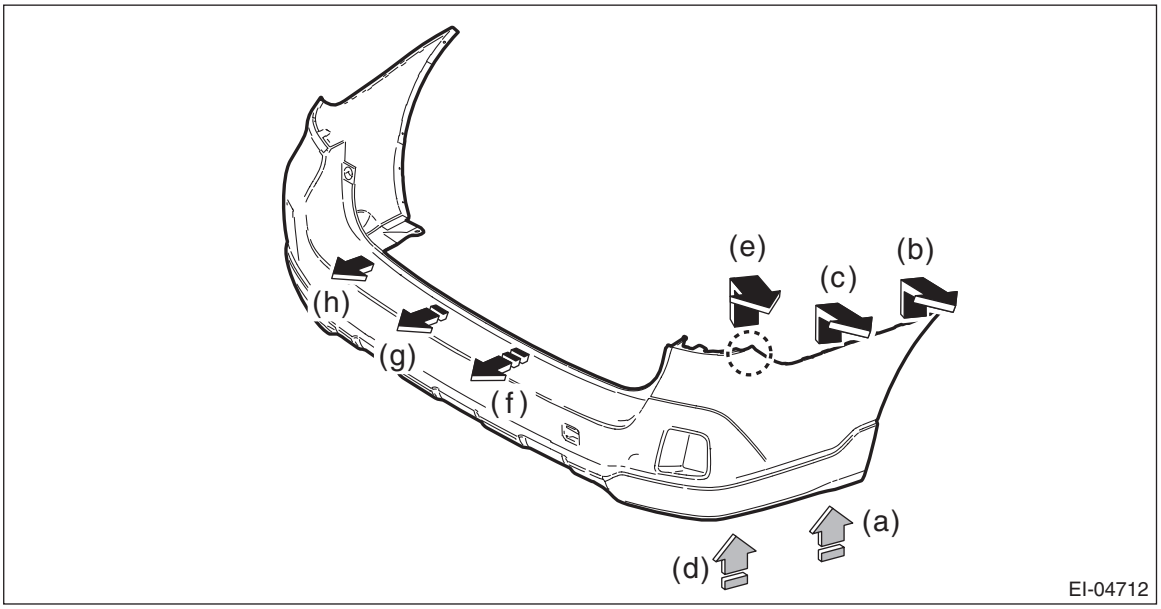

EI-04712

4) Remove the energy absorber foam - rear.

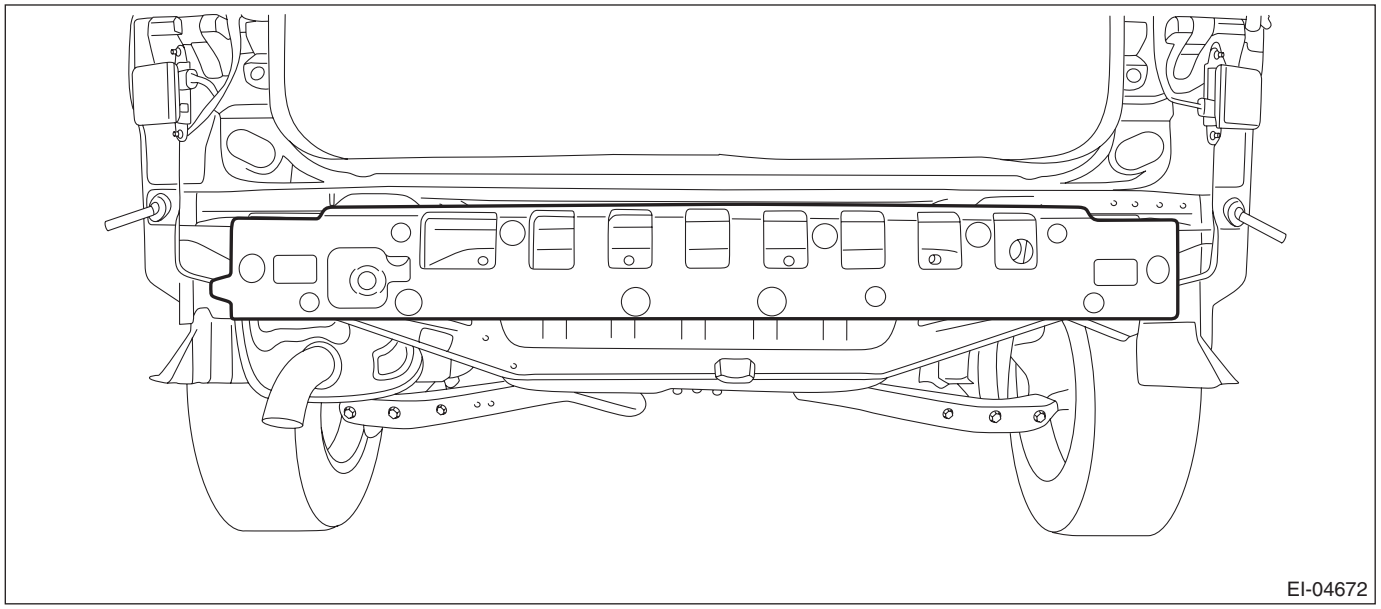

5) Remove the nuts, and remove the bumper beam COMPL - rear.

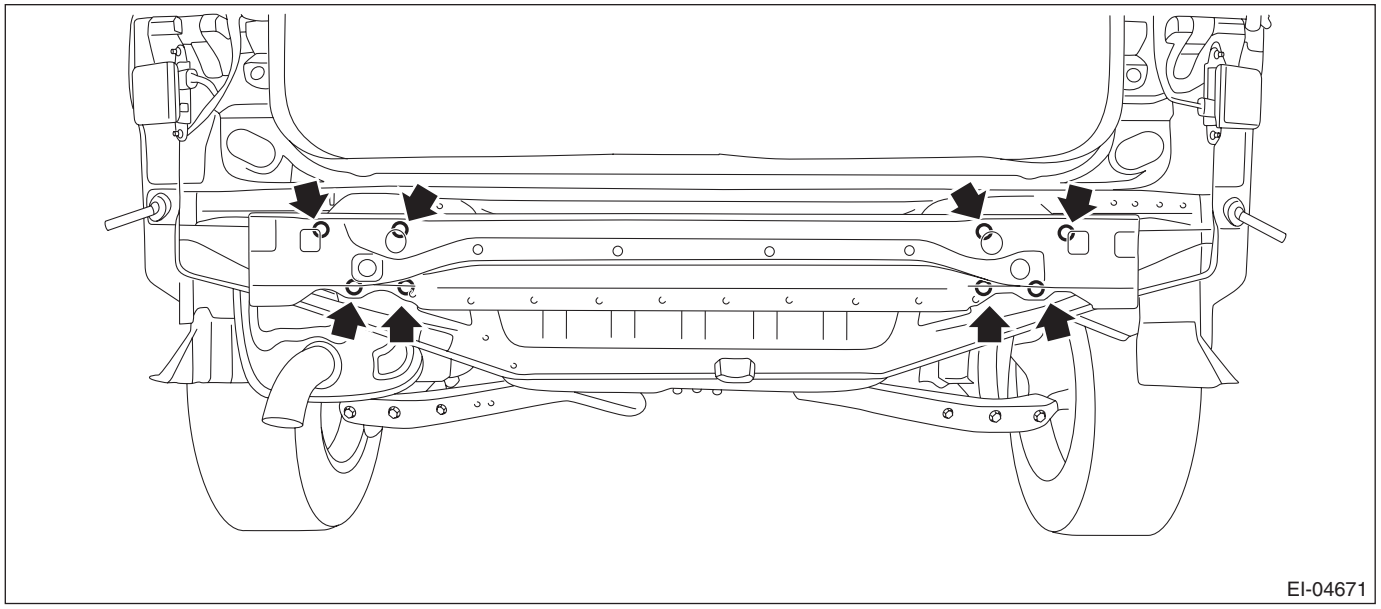

6) Remove bumper brackets.
(1) Remove the mat floor - rear, and remove the trim panel - rear skirt.

CAUTION:
- **Do not lift the trim panel - rear skirt from the edge. Doing so may damage the part.**
- **Do not reuse the clips. Once the clip is removed, its holding force is reduced. Be sure to replace it with a new clip.**

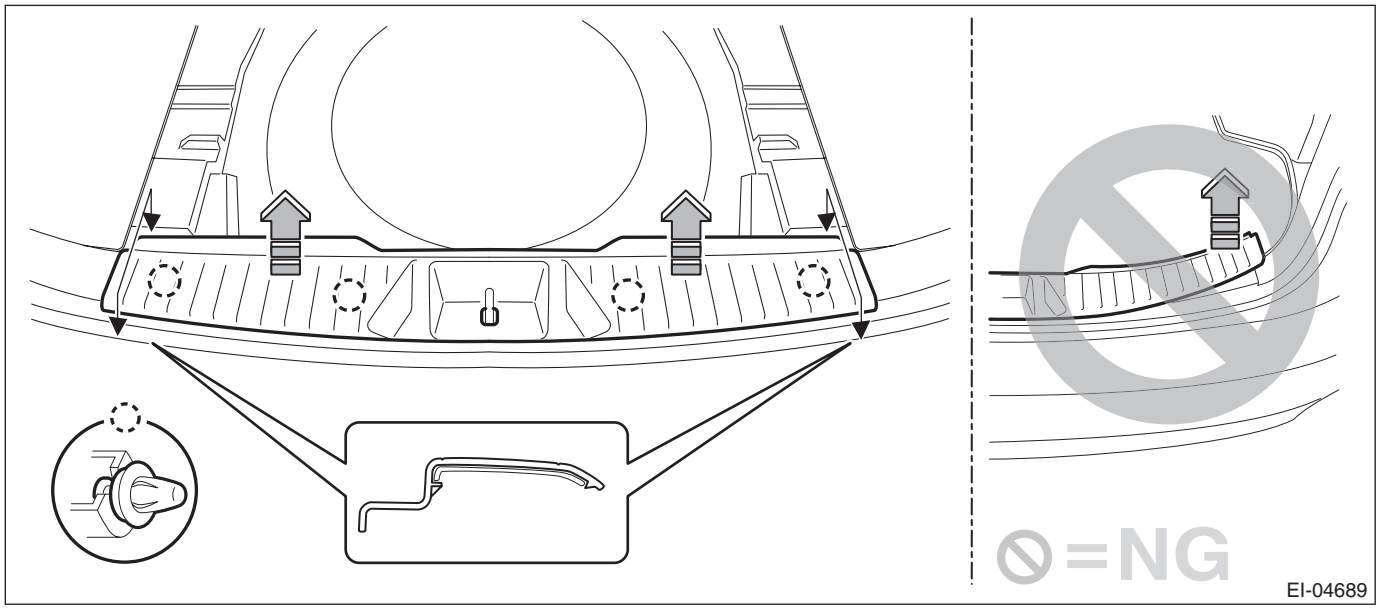

(2) Remove the trim panel - rear apron. <Ref. to EI-100, OUTBACK MODEL, REMOVAL, Rear Quarter Trim.>
(3) Remove the bolts and screws.
(4) Detach the claw of the clip from the back side.

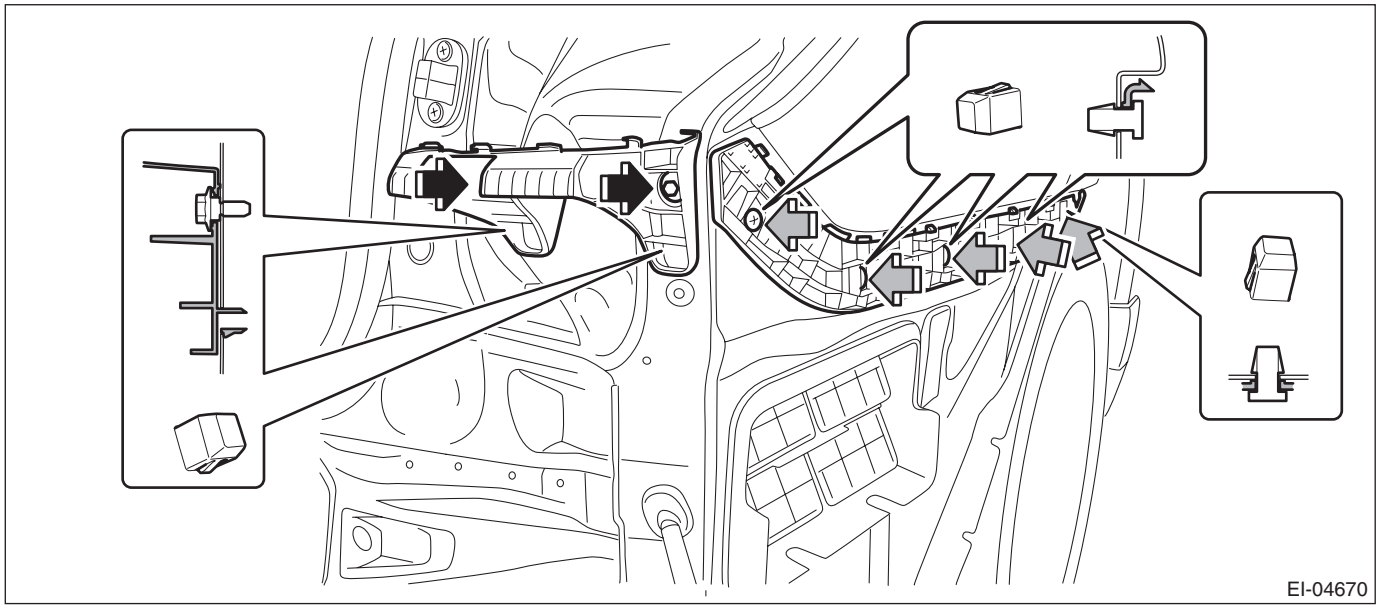

B: INSTALLATION

1. SEDAN MODEL

CAUTION:
Before installing the bumper face, match the claws on the bracket - rear bumper with the engaging position of flange section on the bumper face side. If the engaging position is not correct, the flange section may be broken or the clearance between fender panel and bumper face may not be uniform.
1) Install each bumper bracket.
2) Install the bumper beam COMPL - rear.

Tightening torque:
53 N·m (5.4 kgf-m, 39.1 ft-lb)
3) Install the bumper face - rear.

NOTE:
If the bumper face - rear comes off too easily, adjust the hook of the center bracket side.
4) Replace the light assembly gasket with a new part.
5) Install the light assembly - rear combination.

Tightening torque:
7.5 N·m (0.8 kgf-m, 5.5 ft-lb)
6) Install the trim panel - trunk rear and trunk room mat.
7) Connect the ground terminal to battery sensor. <Ref. to RC-4, BATTERY, NOTE, Repair Contents.>

2. OUTBACK MODEL

CAUTION:
Before installing the bumper face, match the claws on the bracket - rear bumper with the engaging position of flange section on the bumper face side. If the engaging position is not correct, the flange section may be broken or the clearance between fender panel and bumper face may not be uniform.
1) Install each bumper bracket.
2) Install the bumper beam COMPL - rear.

Tightening torque:
53 N·m (5.4 kgf-m, 39.1 ft-lb)
3) Install the bumper face - rear.

NOTE:
If the bumper face - rear comes off too easily, adjust the hook of the center bracket side.
4) Install the light assembly - rear combination.

Tightening torque:
7.5 N·m (0.8 kgf-m, 5.5 ft-lb)
5) Install the trim panel - rear skirt, mat floor - rear and the trim panel - rear apron.
6) Connect the ground terminal to battery sensor. <Ref. to RC-4, BATTERY, NOTE, Repair Contents.>

C: REPAIR

Refer to the description concerning repair in “Front Bumper” section. <Ref. to EI-39, REPAIR, Front Bumper.>

9. Cowl Panel

A: REMOVAL

1) Remove the arm assembly - windshield wiper. <Ref. to WW-30, REMOVAL, Front Wiper Arm.>
2) Remove the cover - front fender UPR.
   (1) Remove the clip.
   (2) Release the claws by pulling them forward, and remove the cover - front fender UPR.

CAUTION:
Forcibly removing the part may cause creases.

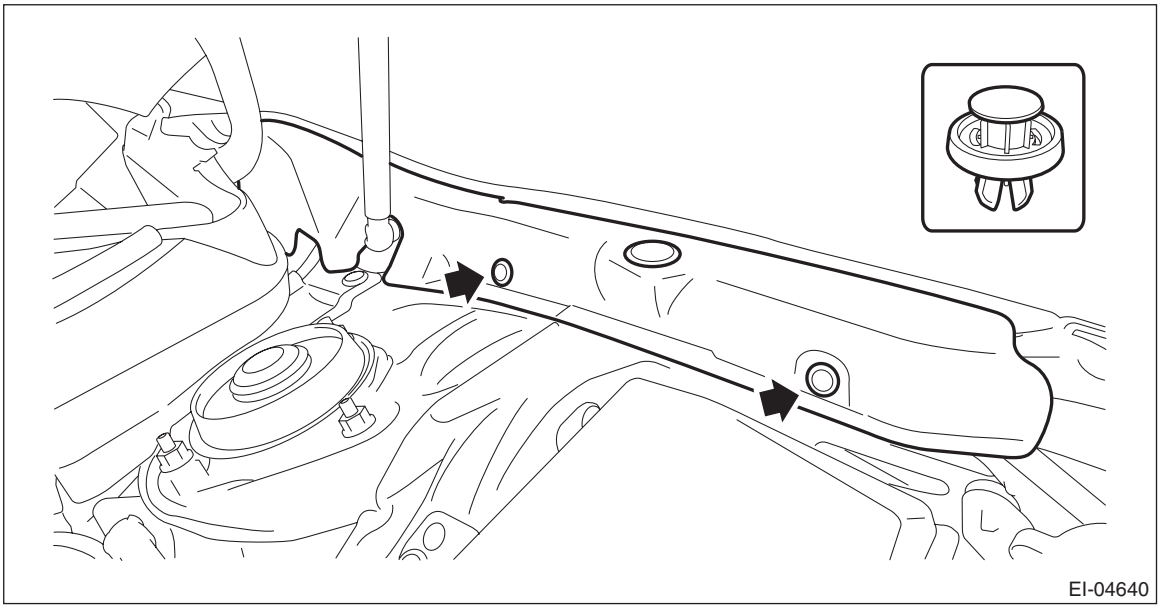

3) Remove the cowl panel - side.
   (1) Remove the clips.
   (2) Release the claws, and then remove the cowl panel - side.

CAUTION:
Pulling with excessive force may damage the cowl panel - side. If it is difficult to remove, use a plastic remover or equivalent tool.

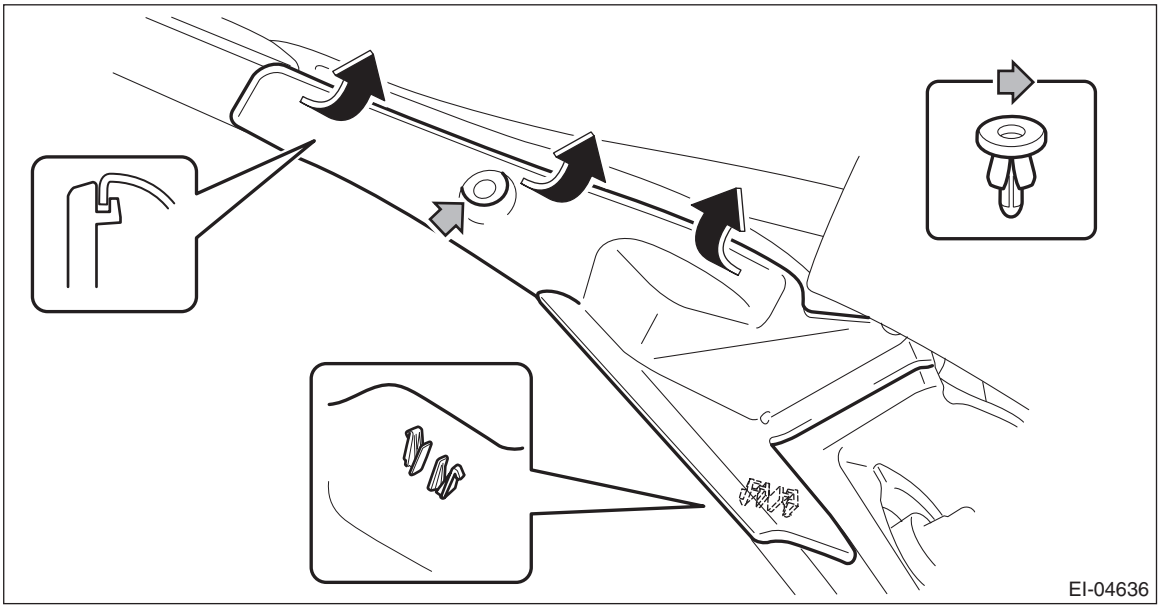

4) Remove the cowl panel assembly.

CAUTION:
• Before removing the cowl panel, use an air blower and nylon brush to sweep gravel from the lower area of the front side of the glass.
• When removing the clip (b), push the claws of the clip first.
Be careful not to apply excessive force when pulling the clip (b), as the clip may become damaged.

(1) Remove the clips (a).
(2) Check the direction of the clip (b), and push the claws from both sides to remove it.
(3) Remove the cowl panel assembly by pulling it out towards the front of the vehicle.
(4) Disconnect the washer hose.

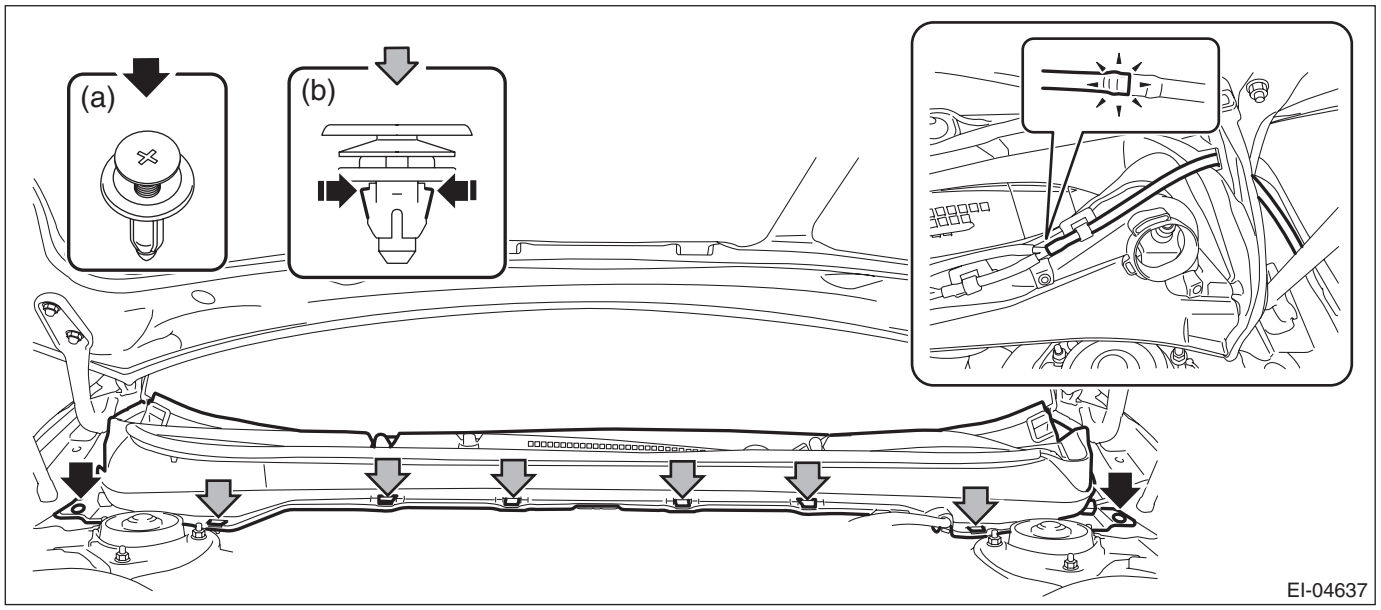

B: INSTALLATION

CAUTION:
Before installing the windshield glass and cowl panel, make sure there are no gravel in the installing area.

1) Install the cowl panel assembly.

CAUTION:
If the cowl panel assembly cannot be installed properly, do not hit or set it forcibly. The claws of the cowl panel or the windshield glass may be damaged.

(1) Hook the claw of the cowl panel on the lower end (1) of the windshield glass.

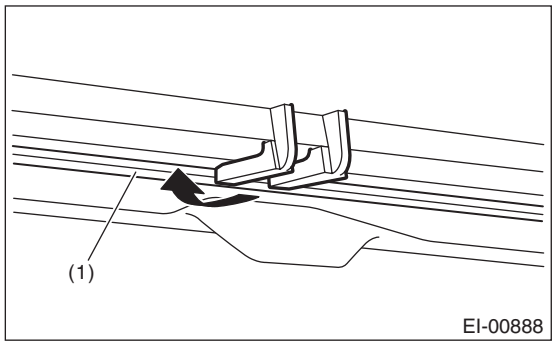

(2) Align the center protrusion of the cowl panel assembly to the cutout portion of the vehicle side, then install the cowl panel assembly.

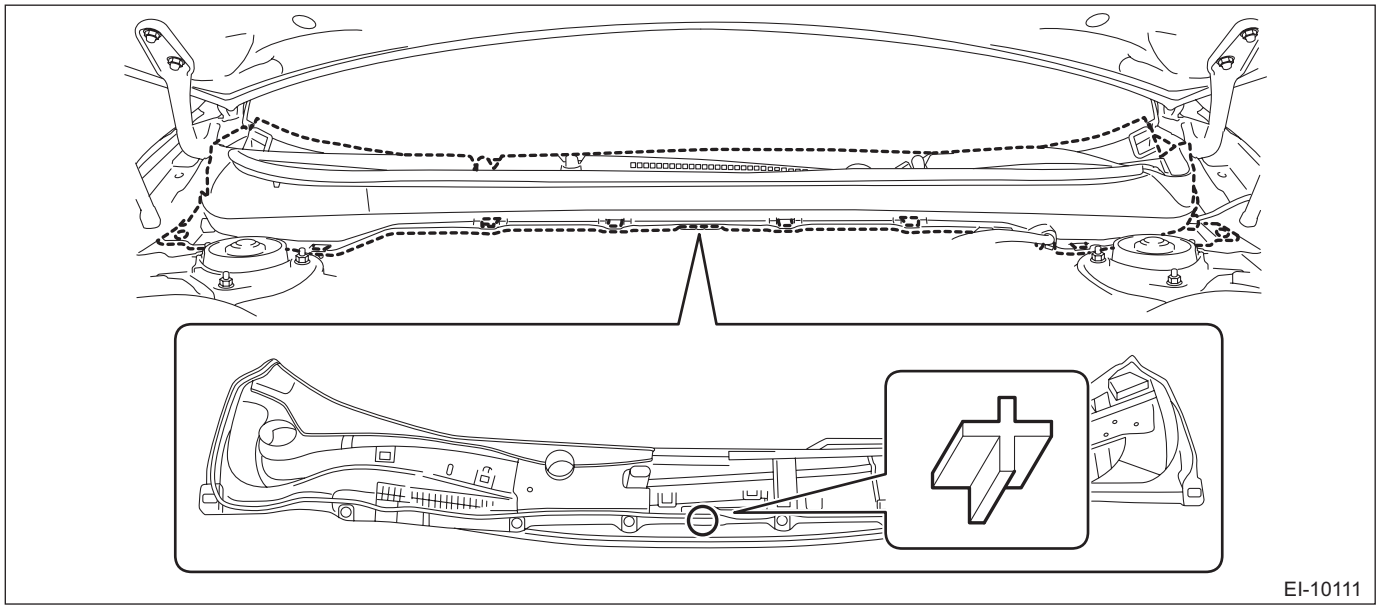

(3) Attach the clip and connect the washer hose.

2) Install the cowl panel - side.

3) Install the cover - front fender.

4) Install the arm assembly - windshield wiper. <Ref. to WW-30, INSTALLATION, Front Wiper Arm.>

5) If the washer nozzles have been removed from the cowl panel assembly, adjust the washer spray positions. <Ref. to WW-38, ADJUSTMENT, Front Washer Nozzle.>

10.Roof Molding

A: REMOVAL

CAUTION:
- **Be careful not to damage the body.**
- **Do not remove the clip - roof molding.**
- **If the clip - roof molding is damaged, replace it with a new clip.**

Release the clips, and remove the molding - roof.

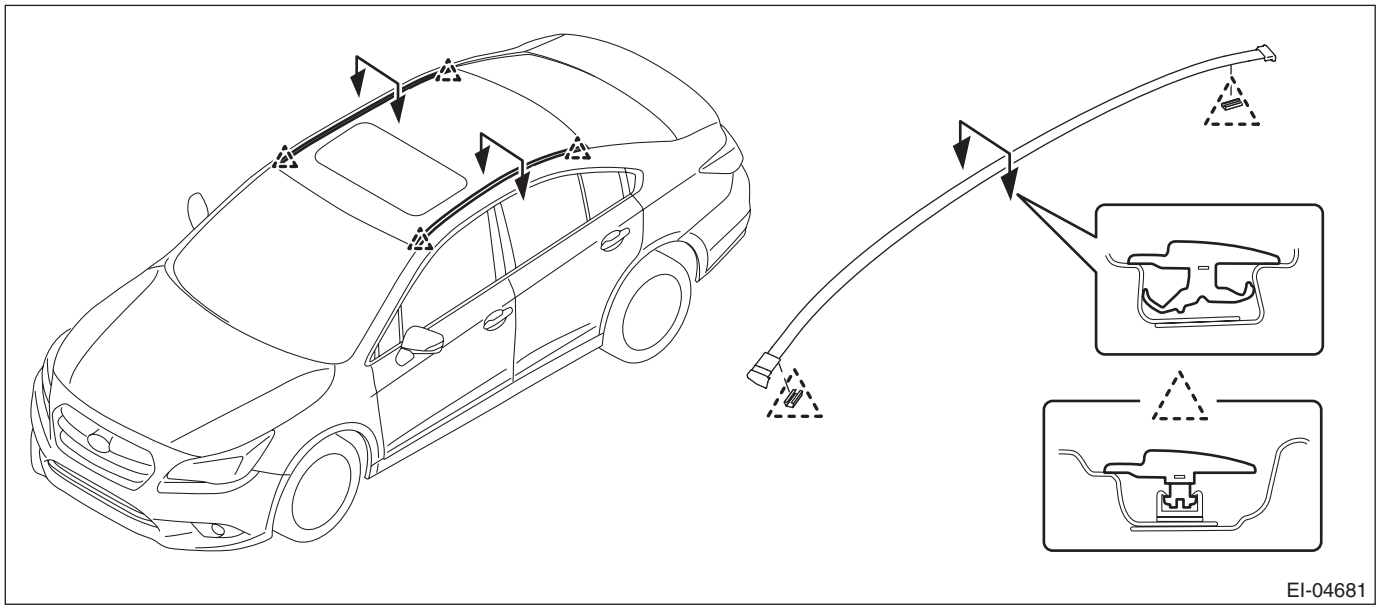

B: INSTALLATION

CAUTION:
- **Always replace the clips that were damaged during removal of the molding - roof with new parts.**
- **While installing the molding - roof, be careful not to catch the glass molding with the tip of the front side and rear side.**

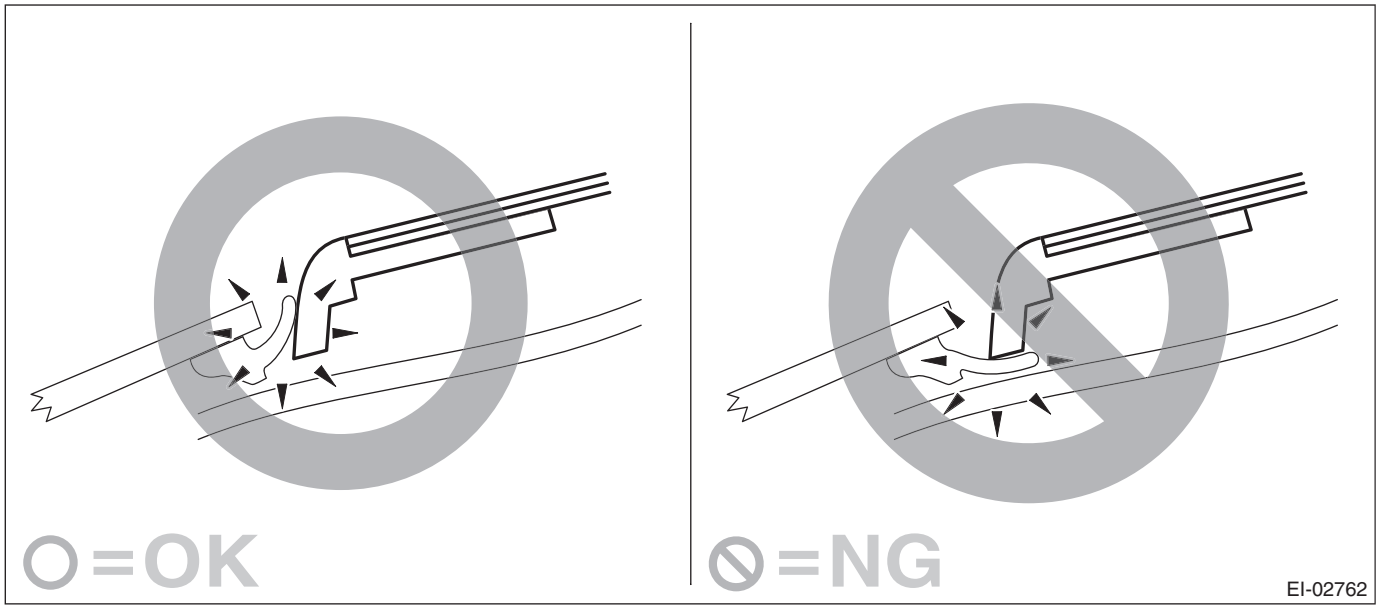

- **When installing the clip - roof molding, remove adhesive remaining on the installation surface of vehicle body side, then clean the body side.**
- **Use the primer provided with the adhesive. (Do not allow the primer to dry. It is two-liquid type adhesive though it is named as such.)**

1) Loosen the clip - roof molding by applying hot air, and let the thermal adhesive tape become hard to eliminate adhesive force.

CAUTION:
If it is possible that hot air from the dryer may cause paint surface discoloration, use the dryer with a narrow nozzle.

Preparation tool:
Industrial dryer

2) Remove the clip - roof molding with a longnose pliers.

CAUTION:
Be careful not to scratch the paint surface with the edge of clip - roof molding.

NOTE:
If it is hard to remove, soften the clip - roof molding again.

3) Remove adhesive remaining on the vehicle body side by scraping it with a plastic spatula while applying hot air using a dryer, and clean the area where adhesive has been removed.

4) Install the clip - roof molding.
(1) Apply approx. 0.5 mm (0.02 in) thickness of adhesive evenly on the clip - roof molding.

CAUTION:
If sealant has been applied when the body was repaired, smoothen the sealant on the clip installation area.

Adhesive:
3M DP-100 or equivalent
(2) Apply primer to the body side of the clip - roof molding installation area.

CAUTION:
Do not allow primer to dry.

Primer:
Primer provided with 3M DP-100 or equivalent
(3) After primer is applied, affix the clip according to the position shown in the figure.

CAUTION:
Install the molding - roof when 40 minutes or more have passed after the clip - roof molding was press-fit.
1. Gently rub the clip - roof molding to make adhesive and primer fit in.
2. Press-fit the clip - roof molding firmly.

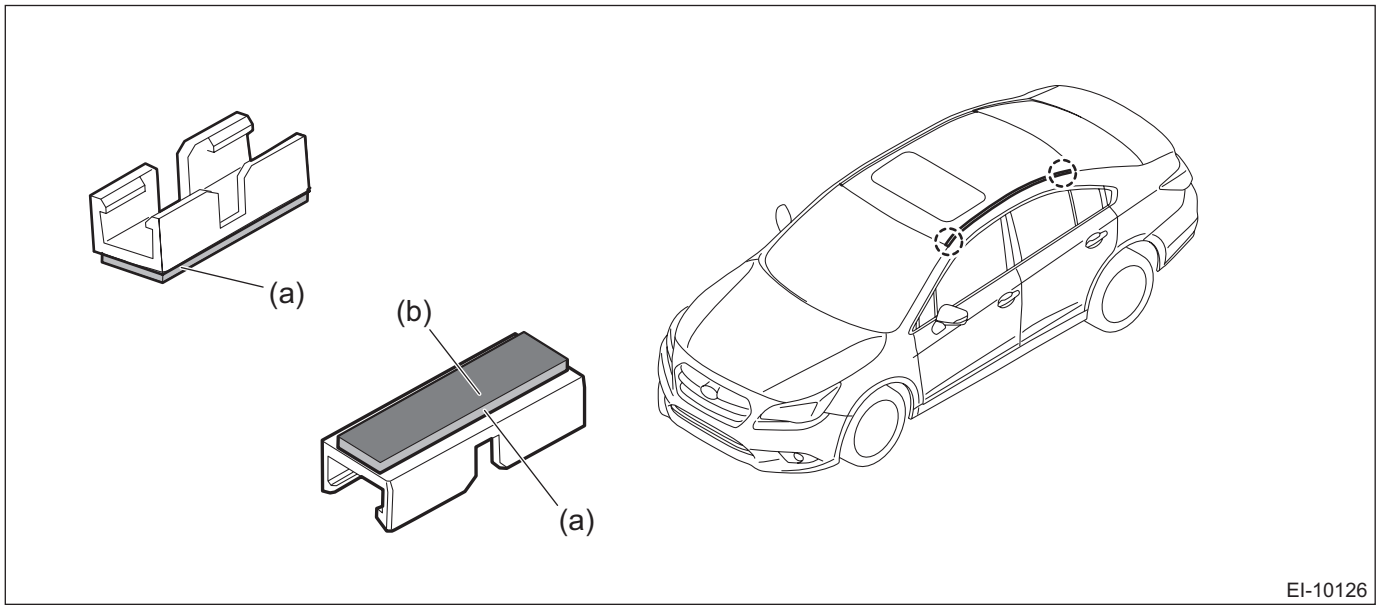

(a) Thermal adhesive tape
(b) Adhesive: Apply approx. 0.5 mm (0.02 in) thickness of adhesive evenly.

5) Install the molding - roof.
(1) Fit the molding - roof in the clip on the front side.
(2) While pressing the center of the molding - roof to the body side, fit the clip on the rear side.

11.Roof Rail

A: REMOVAL

NOTE:
Remove the stopper bolt first when removing the crossbar assembly only.

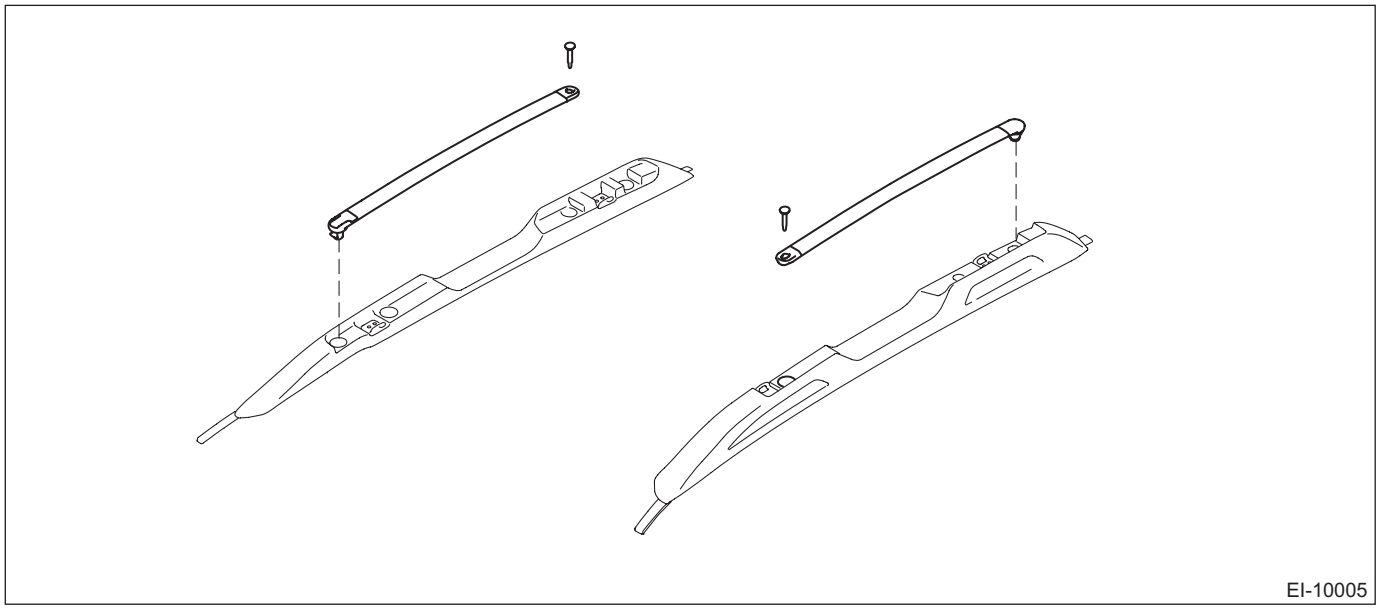

CAUTION:
Refer to "CAUTION" of "General Description" before handling the airbag system components. <Ref. to AB-10, CAUTION, General Description.>
1) Disconnect the ground terminal from the battery sensor, and wait for at least 60 seconds before starting work. <Ref. to RC-4, BATTERY, NOTE, Repair Contents.>
2) Remove the roof trim. <Ref. to EI-116, OUTBACK MODEL, REMOVAL, Roof Trim.>
3) Remove the curtain airbag module. <Ref. to AB-45, OUTBACK MODEL, REMOVAL, Curtain Airbag Module.>

CAUTION:
- **When removing and installing the curtain airbag module, observe the operation procedures in the "AIRBAG SYSTEM" section.**
- **Be careful not to damage the curtain airbag module during removal and installation.**

4) Remove the roof rail assembly.
   (1) Remove the nut.
   (2) Release the rivet on the tip portion, and remove the roof rail assembly.

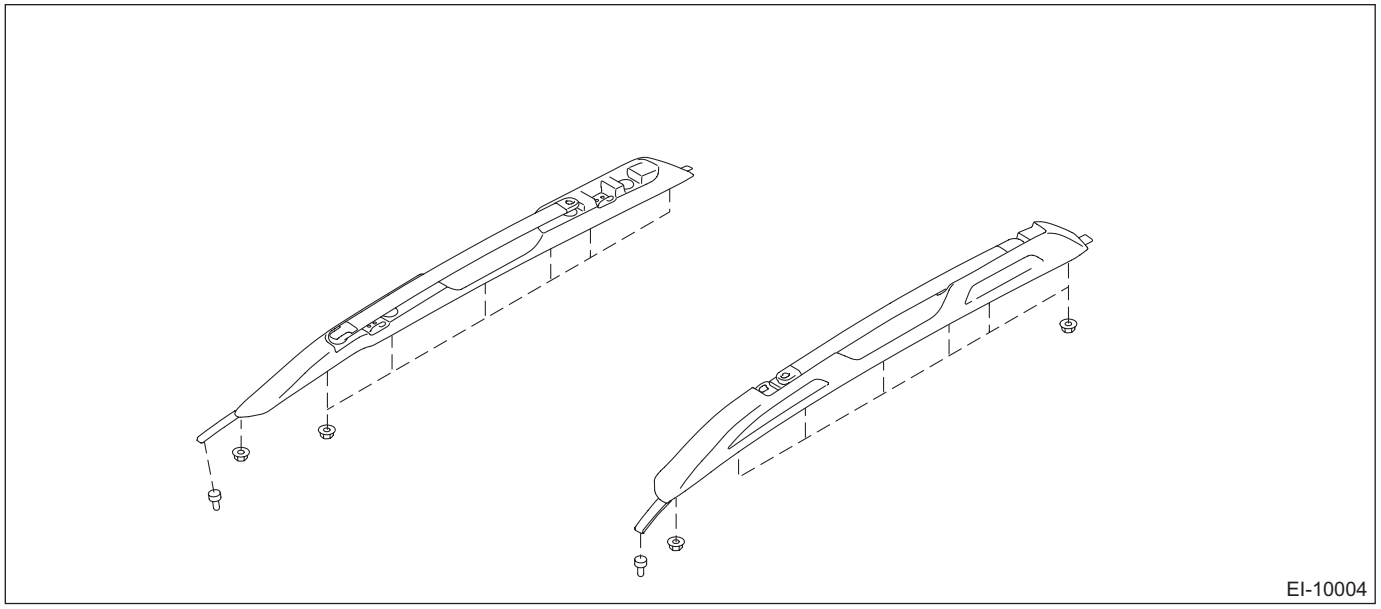

B: INSTALLATION

CAUTION:
• When removing or installing the roof rail, be careful not to scratch the body panel with the stud bolt of roof rail.
• Refer to "CAUTION" of "General Description" before handling the airbag system components. <Ref. to AB-10, CAUTION, General Description.>
• When removing and installing the curtain airbag module, observe the operation procedures in the "AIRBAG SYSTEM" section.
• Do not reuse the clip securing the curtain airbag module.
• Be careful not to damage the curtain airbag module during removal and installation.
1) Install the roof rail assembly.

Tightening torque:
Flange nut: 7.5 N·m (0.8 kgf-m, 5.5 ft-lb)
Stopper bolt M6: 8 N·m (0.8 kgf-m, 5.9 ft-lb)
Stopper bolt M8: 10 N·m (1.0 kgf-m, 7.4 ft-lb)
2) Install the curtain airbag module. <Ref. to AB-48, INSTALLATION, Curtain Airbag Module.>
3) Install the roof trim. <Ref. to EI-118, INSTALLATION, Roof Trim.>
4) Connect the ground terminal to battery sensor. <Ref. to RC-4, BATTERY, NOTE, Repair Contents.>

12.Side Garnish

A: REMOVAL

1. SEDAN MODEL

Remove the clips and detach the side garnish assembly.

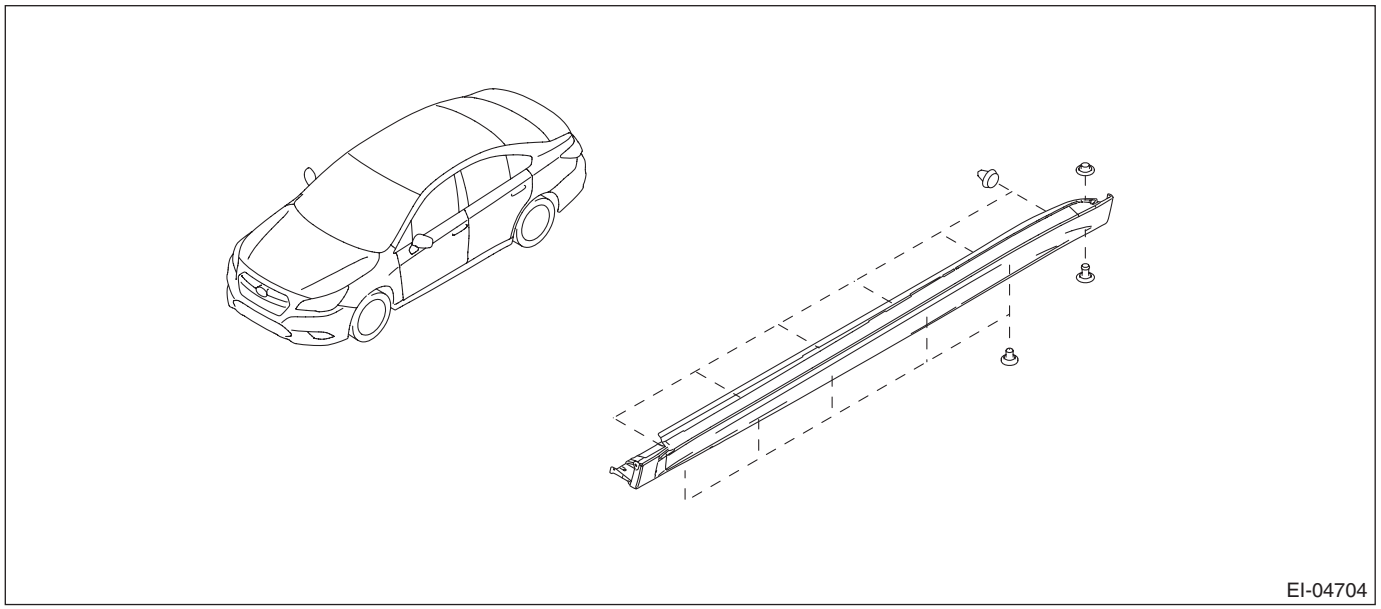

2. OUTBACK MODEL

1) Remove the clips and detach the side garnish assembly.

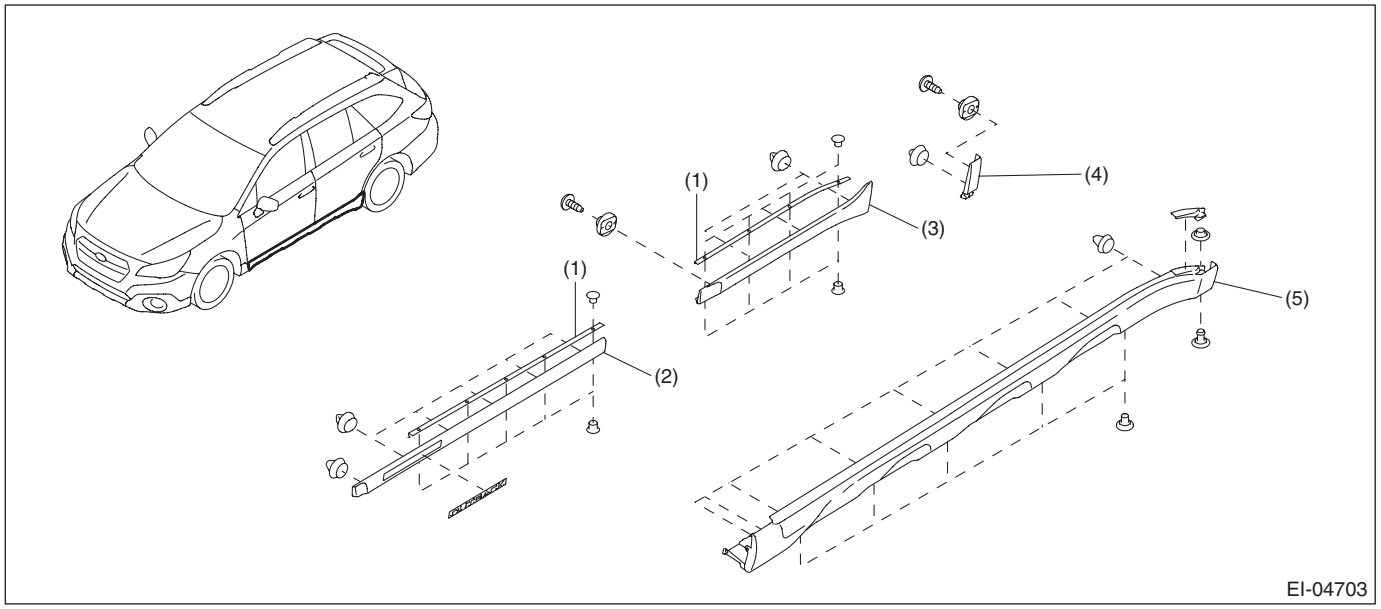

(1) Double-sided tape
(2) Garnish ASSY front door
(3) Garnish ASSY rear door
(4) Garnish ASSY rear quarter
(5) Side sill garnish ASSY

2) Remove the garnish assembly - door and the garnish assembly - rear quarter.
(1) Attach the protective tape to the periphery of the garnish.
(2) Heat the garnish section for 3 — 5 minutes at 40°C — 60°C (104°F — 140°F) using a heat light or a drier.

CAUTION:
Be careful not to burn yourself.
(3) Separate the bonded part of double sided tape with a nylon cord or equivalent.
(4) Release the clips, and remove the garnish assembly.

B: INSTALLATION

1. SEDAN MODEL

CAUTION:
Make sure that there is a gasket attached on the clip of the garnish assembly. If a gasket is not attached, water leakage may occur.
Install the side garnish assembly.

2. OUTBACK MODEL

CAUTION:
Make sure that there is a gasket attached on the clip of the garnish assembly. If a gasket is not attached, water leakage may occur.
1) Install the side garnish assembly.
2) Install the garnish assembly - door and the garnish assembly - rear quarter.
(1) Remove the double-sided tape remaining on the vehicle body, then clean the adhesive surface.

CAUTION:
If even a slight amount of double-sided tape remains on the adhesive surface, it may lead to improper adhesion.
(2) Heat the vehicle body and the garnish for 1 — 3 minutes using a heat light or a drier.

CAUTION:
Be careful not to burn yourself.
(3) Apply primer to the installation surfaces of garnish, and wait till the primer dries.
(4) Attach new double-sided tape on garnish.
(5) Peel off the backing papers, engage the clips, and adhere the garnish assembly to the vehicle body.

CAUTION:
Press-fit the garnish assembly to adhere securely.

13.Trunk Lid Garnish

A: REMOVAL

1) Disconnect the ground terminal from battery sensor. <Ref. to RC-4, BATTERY, NOTE, Repair Contents.>
2) Remove the trim panel - trunk lid. <Ref. to EI-109, REMOVAL, Trunk Room Trim.>
3) Remove the garnish - trunk.
   (1) Remove the nut.
   (2) Disconnect the clips and connectors, and remove the garnish - trunk.

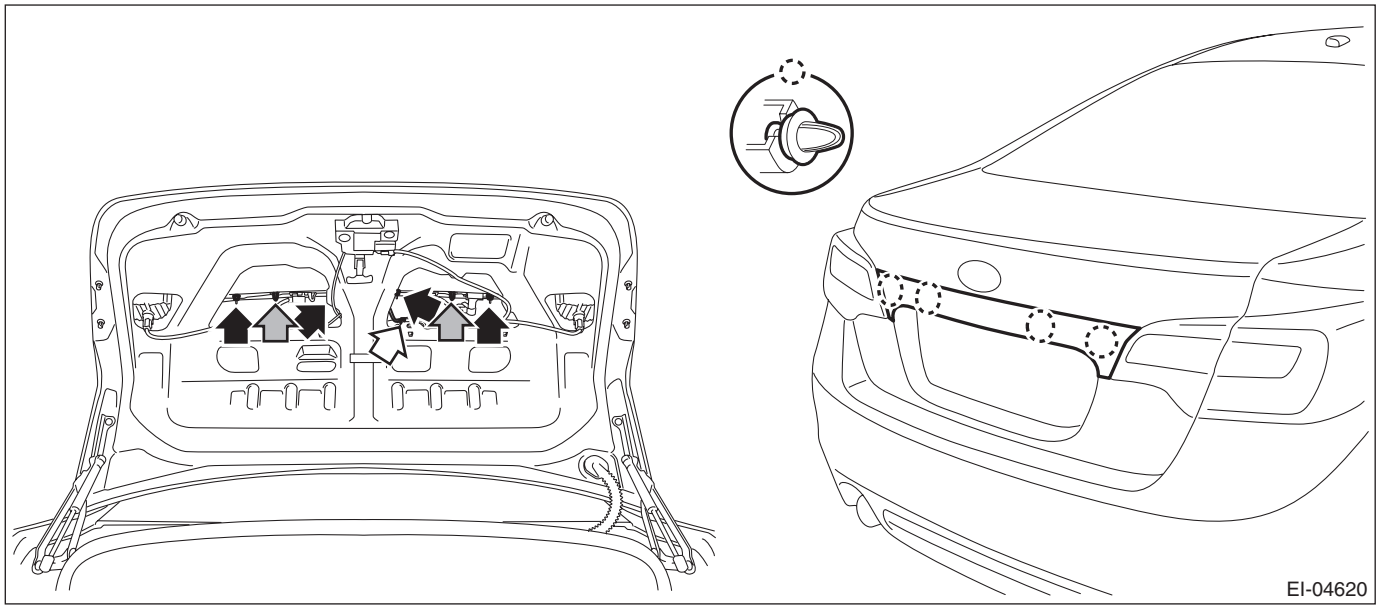

B: INSTALLATION

CAUTION:
Make sure that there is a gasket attached on the clip of the garnish assembly. If a gasket is not attached, water leakage may occur.
1) Install the garnish - trunk.

Tightening torque:
4.5 N·m (0.5 kgf-m, 3.3 ft-lb)
2) Install the trim panel - trunk lid.
3) Connect the ground terminal to battery sensor. <Ref. to RC-4, BATTERY, NOTE, Repair Contents.>

14.Rear Gate Garnish

A: REMOVAL

1) Disconnect the ground terminal from battery sensor. <Ref. to RC-4, BATTERY, NOTE, Repair Contents.>
2) Remove the rear gate trim. <Ref. to EI-121, REMOVAL, Rear Gate Trim.>
3) Remove the garnish assembly - rear gate.
   (1) Remove the bolts and clips, and remove the cover - rear gate RH and LH.

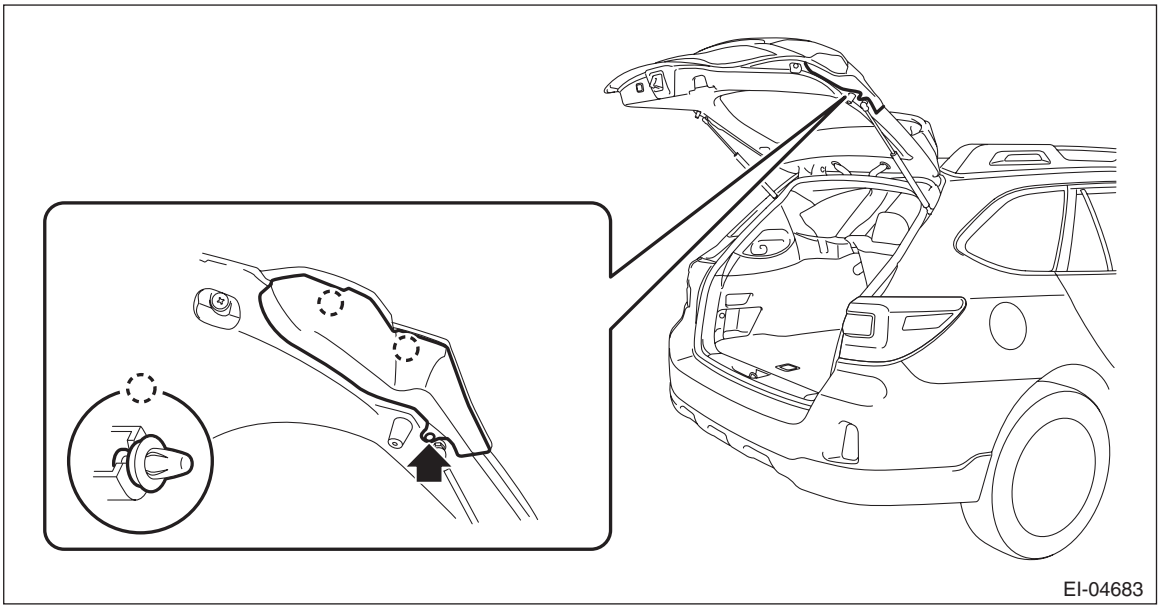
EI-04683

   (2) Remove the power rear gate touch sensor LWR. (Model with power rear gate) <Ref. to PRG-15, REMOVAL, Power Rear Gate Touch Sensor.>
   (3) Disconnect the request switch harness connector.
   (4) Remove the nuts.
   (5) Remove the clips and remove the garnish assembly - rear gate.

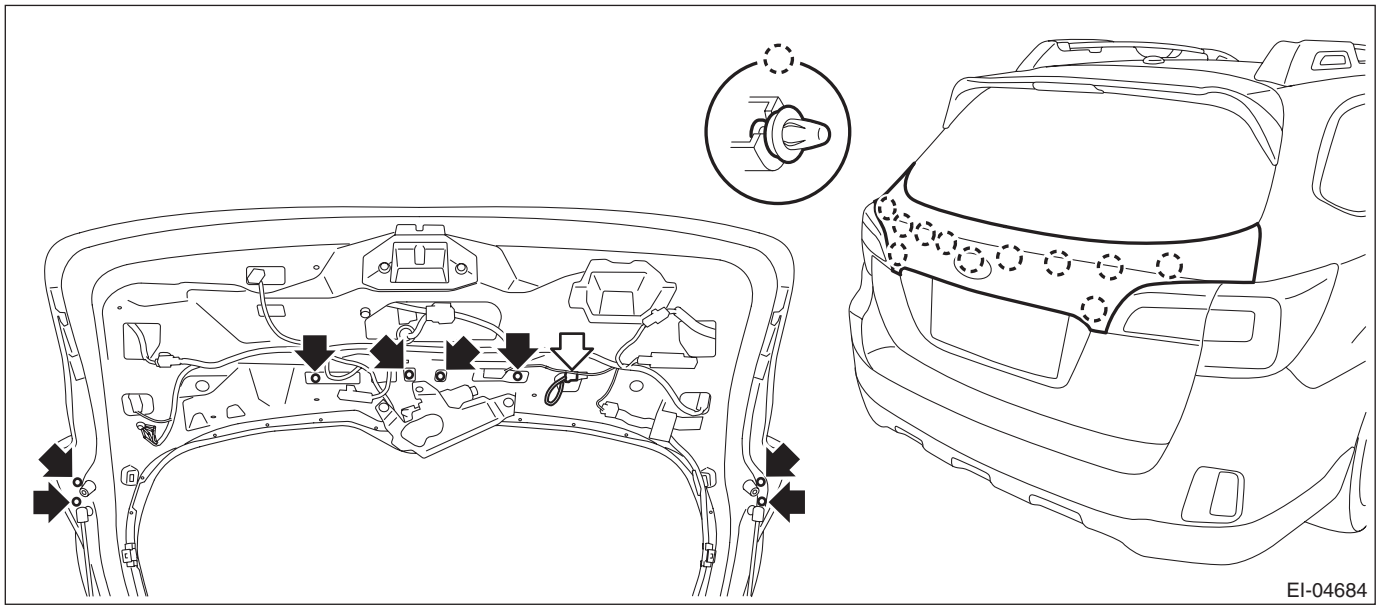
EI-04684

B: INSTALLATION

CAUTION:
Make sure that there is a gasket attached on the clip of the garnish assembly. If a gasket is not attached, water leakage may occur.

1) Install the garnish assembly - rear gate.

Tightening torque:
4.5 N·m (0.5 kgf-m, 3.3 ft-lb)

2) Install the cover - rear gate.

Tightening torque:
1.5 N·m (0.2 kgf-m, 1.1 ft-lb)

3) Install the power rear gate touch sensor LWR. (Model with power rear gate) <Ref. to PRG-16, INSTALLATION, Power Rear Gate Touch Sensor.>
4) Install the rear gate trim.
5) Connect the ground terminal to battery sensor. <Ref. to RC-4, BATTERY, NOTE, Repair Contents.>

C: DISASSEMBLY

1) Remove the protector UPR. <Ref. to EI-63, REPLACEMENT, Rear Gate Garnish.>
2) Remove the button - opener rear gate. <Ref. to SL-48, REMOVAL, Rear Gate Opener Button.>
3) Remove the garnish LWR as required.

D: ASSEMBLY

1) Install the garnish LWR.
2) Install the switch - opener rear gate. <Ref. to SL-48, INSTALLATION, Rear Gate Opener Button.>
3) Install the protector UPR.

E: REPLACEMENT

1) Slowly remove the protector UPR from the end of right and left protectors.

CAUTION:
- **Be careful not to damage the surface of garnish assembly during operation.**
- **Do not reuse the protector UPR.**

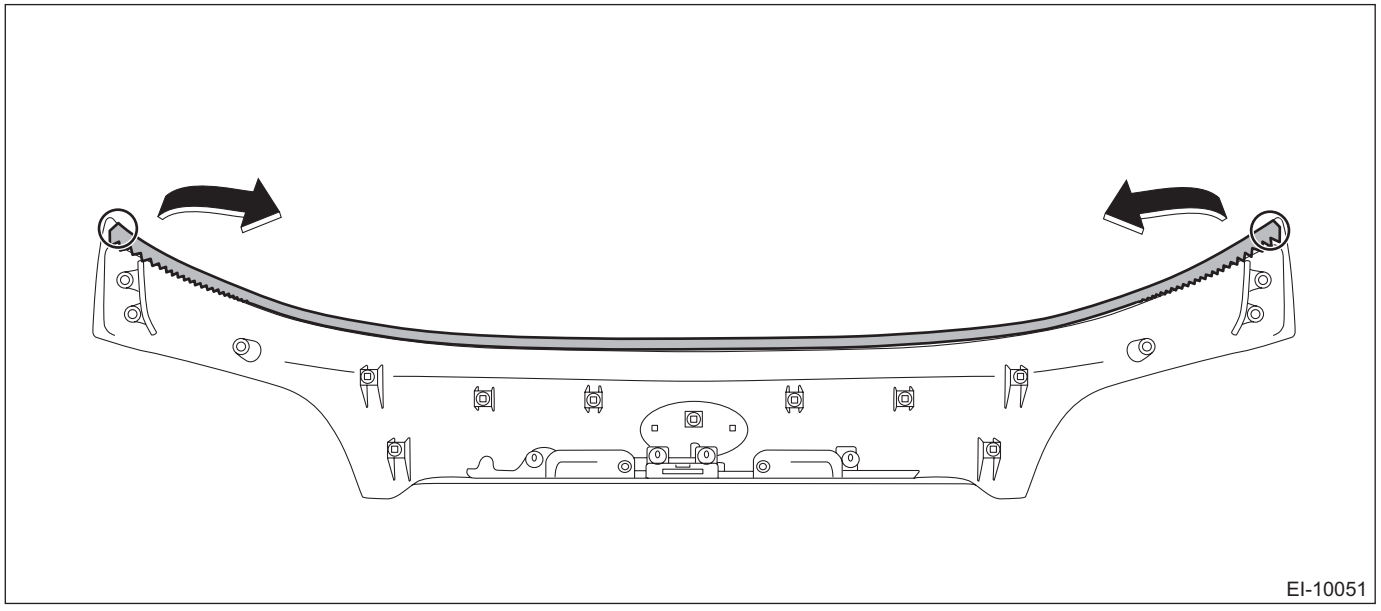
EI-10051

2) Remove the double-sided tape remaining on the garnish side, then clean the adhesive surface.

CAUTION:
• If even a slight amount of double-sided tape remains on the adhesive surface, it may lead to improper adhesion.
Completely remove the double-sided tape from the overlapped portion with the end of inner garnish, where the double-sided tape easily remains.
• Do not use any solvents that may damage the garnish coating.

3) Degrease the mounting surface of protector with appropriate cleaning solvent or alcohol.
4) Apply primer to the mounting surfaces of garnish.

Primer:
Manufactured by 3M
K-520, K-500 or equivalent

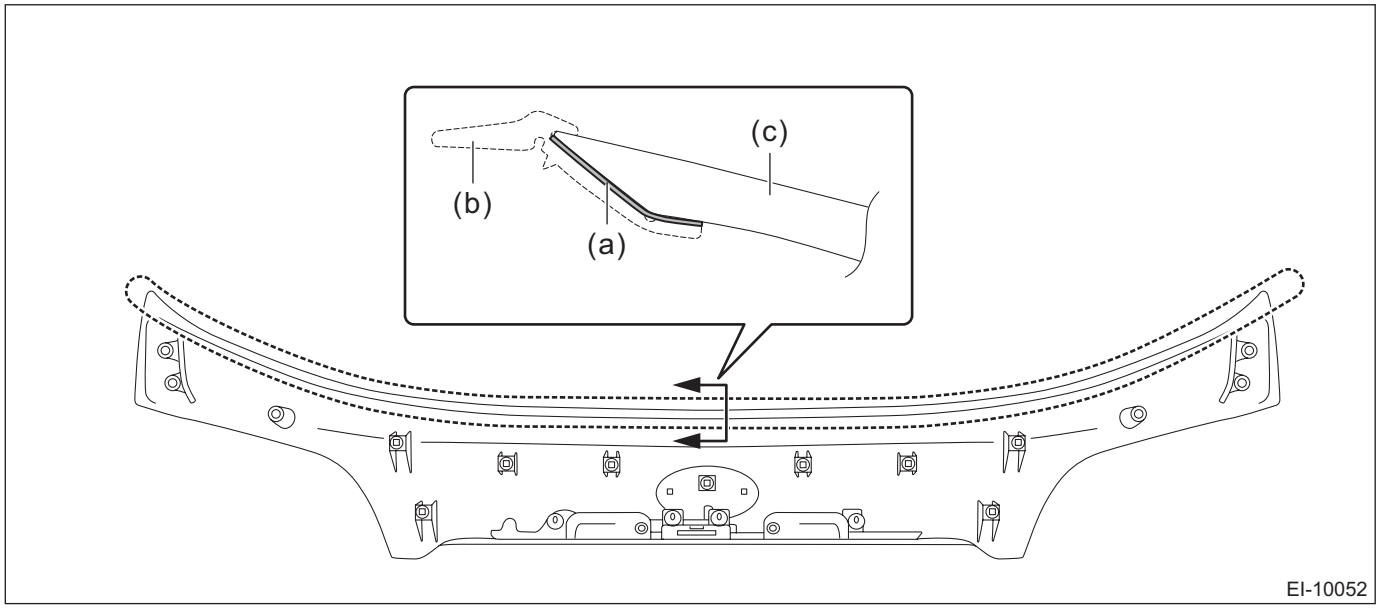

(a) Application of primer (b) Protector UPR (c) Garnish ASSY

5) Affix the protector UPR.

CAUTION:
Affix so that there should be no gap (d) between garnish assembly and protector UPR.

(1) Confirm that primer is dried, and check the protector UPR installation conditions.

(2) Remove a part of backing sheet (e) from the right end of protector UPR (left side viewing from garnish assembly reverse side), and affix by aligning the both ends of protector and garnish.

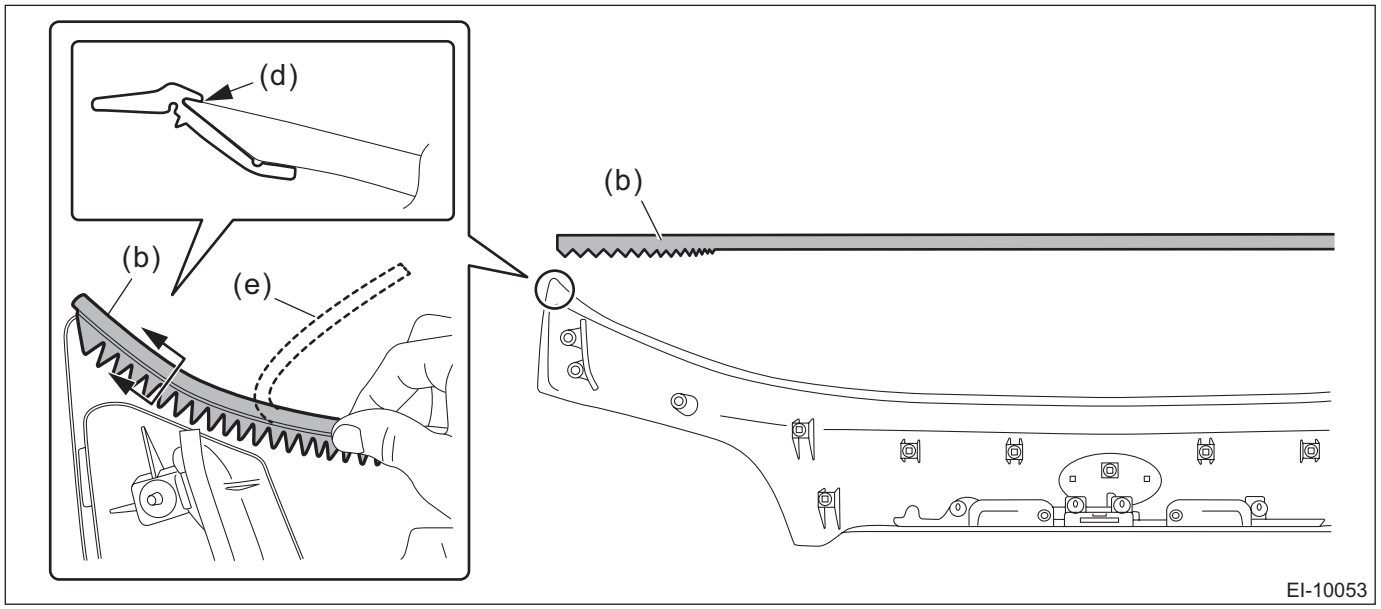

(b) Protector UPR
(d) Gap between garnish assembly and protector UPR
(e) Backing sheet

(3) After this, affix the protector UPR securely while peeling it away from the backing sheet.

NOTE:
If there is an extra end of protector, cut the extra portion projecting from the garnish assembly after aligning the cutting positions and angles at both sides with the end shape.

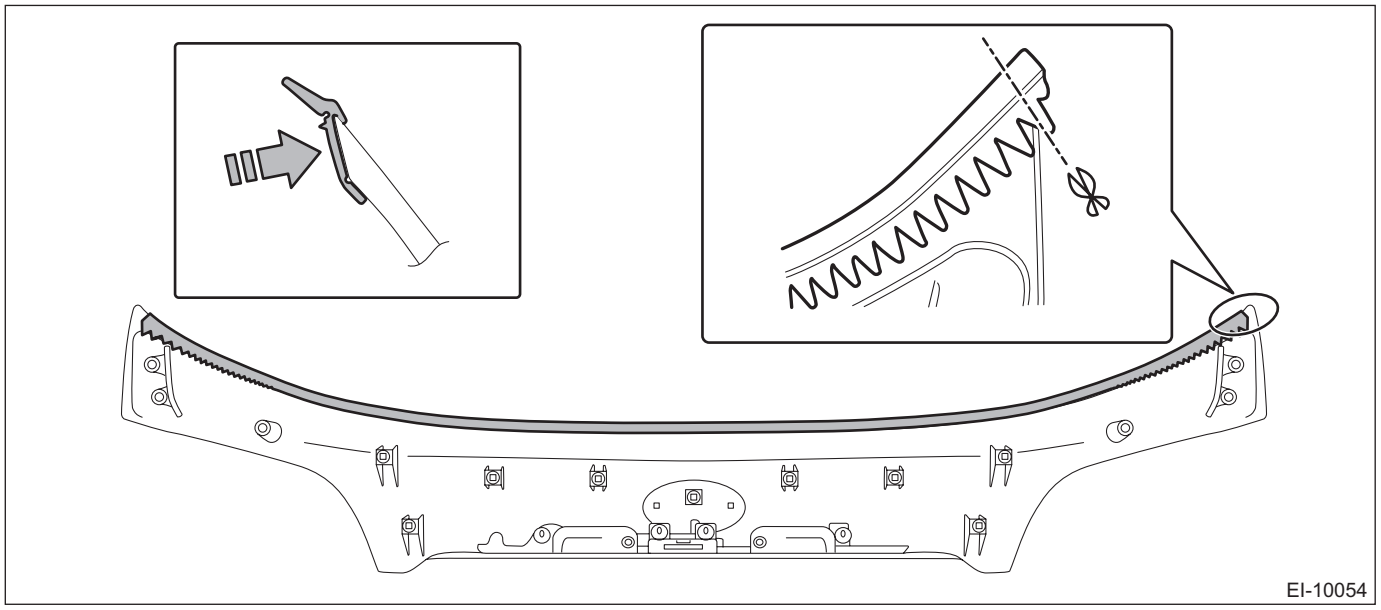

(4) Press-fit the protector UPR, and then apply instant glue to both ends of protector UPR to affix.

CAUTION:
Be careful not to spread instant glue over the design face.

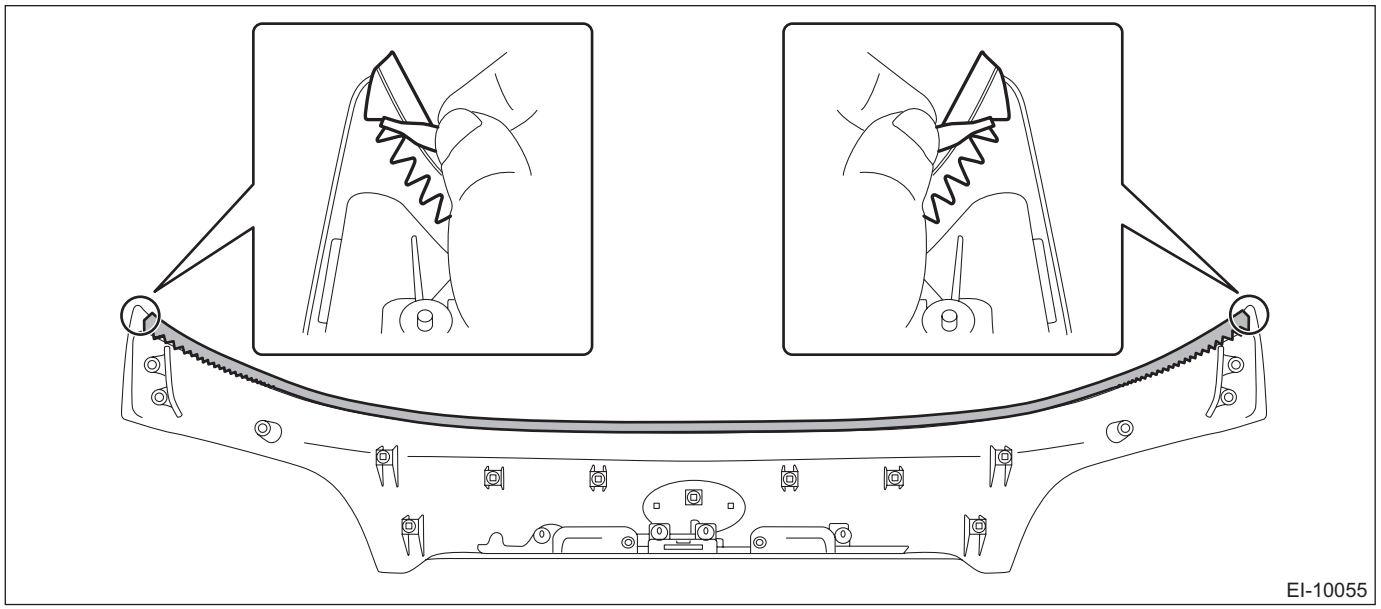

15.Roof Spoiler

A: REMOVAL

1) Disconnect the ground terminal from battery sensor. <Ref. to RC-4, BATTERY, NOTE, Repair Contents.>
2) Remove the trim panel - rear gate UPR and the trim panel - rear gate pillar side. <Ref. to EI-121, REMOVAL, Rear Gate Trim.>
3) Remove the drip - rear gate. (Except for model with power rear gate)
4) Remove the roof spoiler.
   (1) Disconnect the connector of high-mounted stop light.
   (2) Remove the bolts and nuts.
   (3) Remove the clips, and remove the roof spoiler.

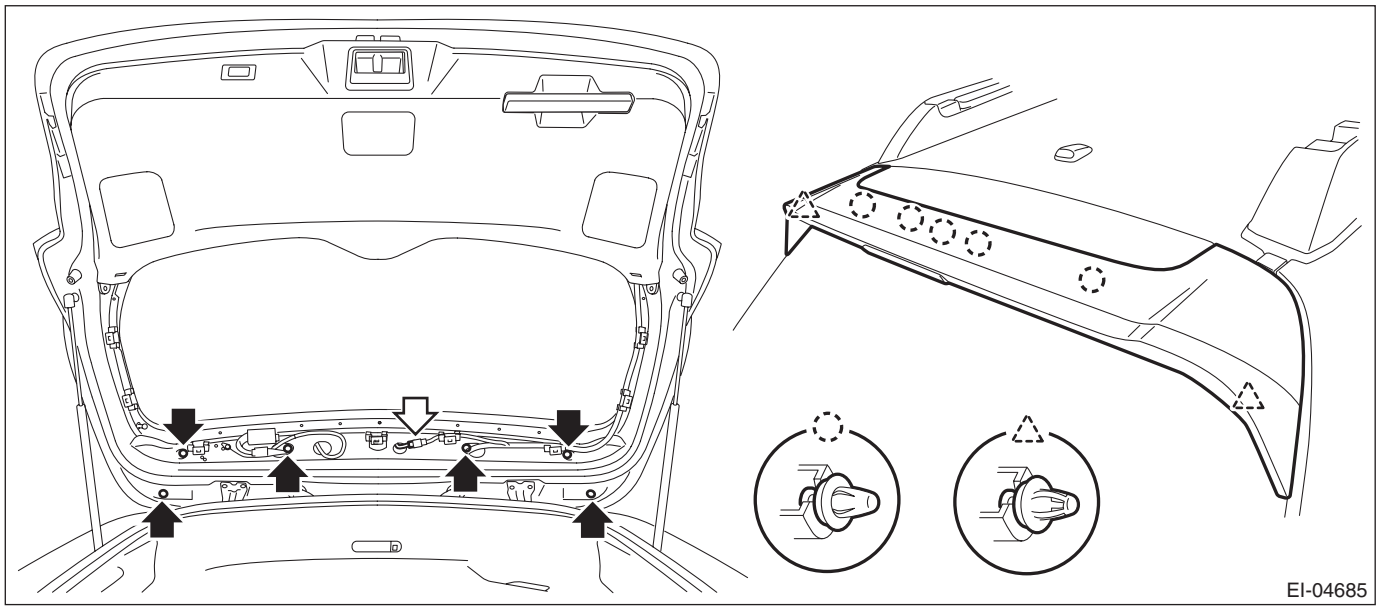

B: INSTALLATION

CAUTION:
• Make sure that packings are attached on the clips of the roof spoiler assembly. If a gasket is not attached, water leakage may occur.
• Connect the connector of the light assembly - high-mounted securely.
1) Install the roof spoiler.

Tightening torque:
7.5 N·m (0.8 kgf-m, 5.5 ft-lb)
2) Install the drip - rear gate. (Except for model with power rear gate)
3) Install the trim panel - rear gate UPR and the trim panel - rear gate pillar side. <Ref. to EI-122, INSTALLATION, Rear Gate Trim.>
4) Connect the ground terminal to battery sensor. <Ref. to RC-4, BATTERY, NOTE, Repair Contents.>

16.Heat Shield Cover

A: NOTE

Refer to “EXHAUST” section for removal and installation procedure of the heat shield cover.

17.Ornament

A: INSTALLATION

1. LETTER MARK

Align the application tape to the following position, and adhere the letter mark.

- Sedan model

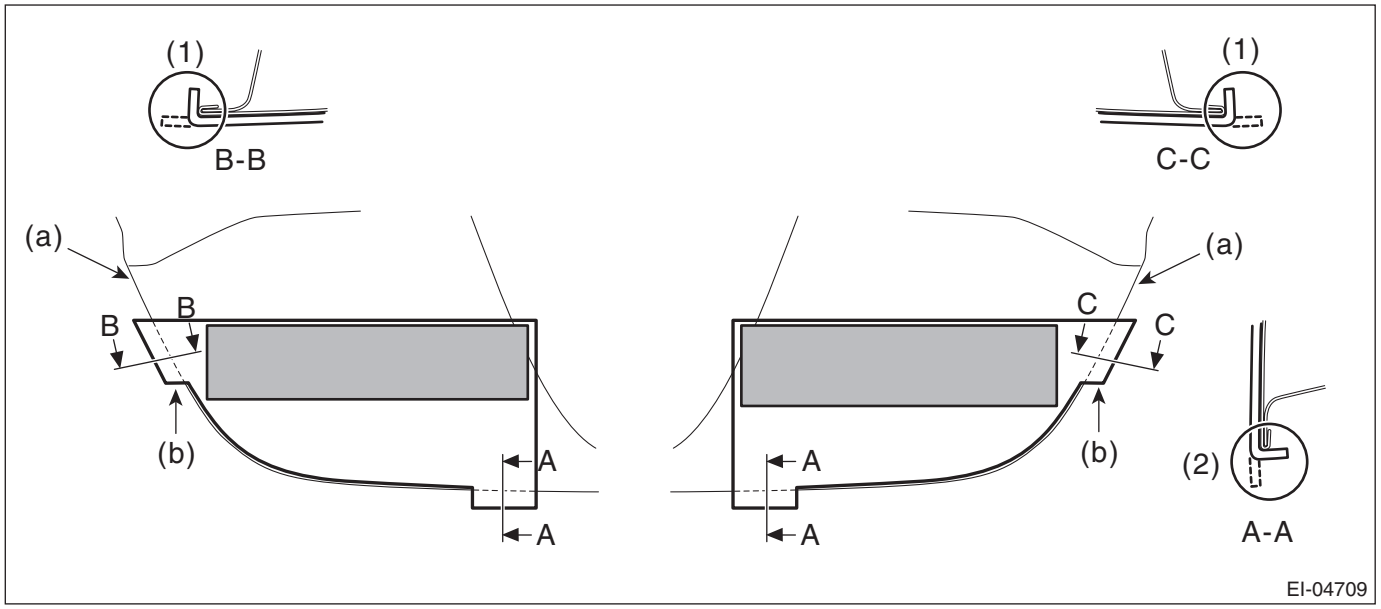

(a) Trunk lid panel end

(b) Application tape end

(1) Bend the end of the application tape to fit along the end of the trunk lid panel.

(2) Bend the end of the application tape to fit along the end of the trunk lid panel.

- OUTBACK model

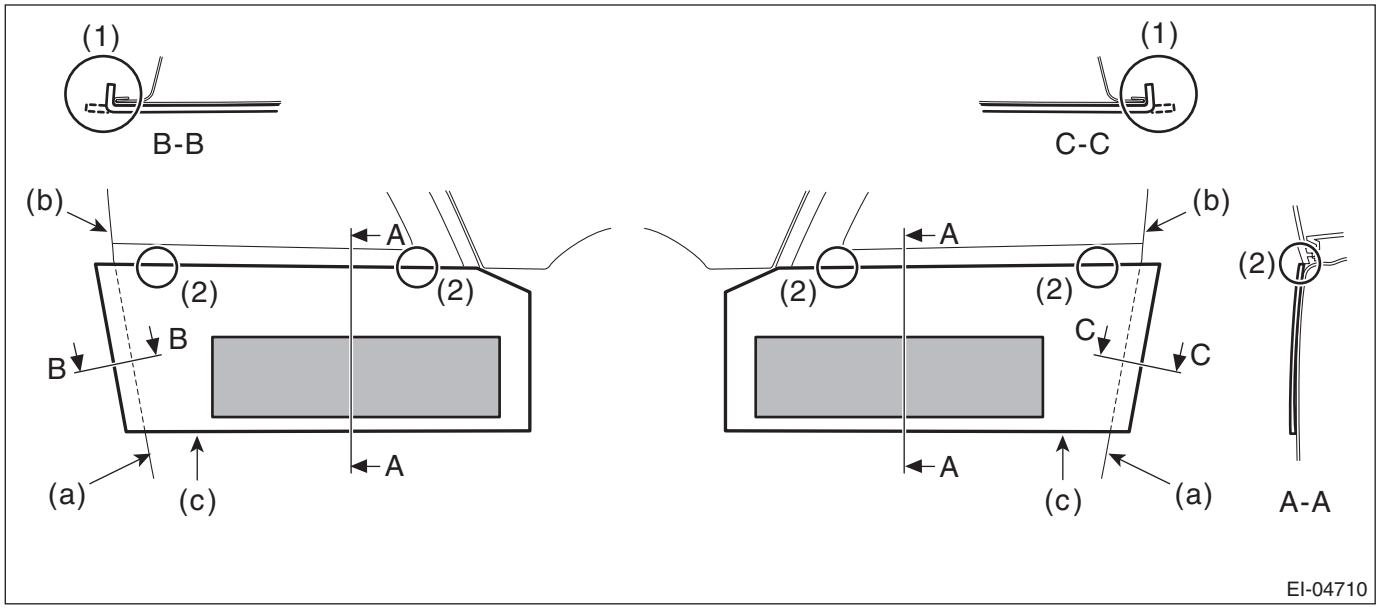

(a) End of rear gate panel

(b) End of rear finisher light

(c) Application tape end

(1) Bend the end of the application tape to fit along the end of the rear gate panel.

(2) Align the top end of application tape to the bottom of the rear finisher light.

18. Door Trim

A: REMOVAL

1. FRONT DOOR

CAUTION:
Refer to "CAUTION" of "General Description" before handling the airbag system components. <Ref. to AB-10, CAUTION, General Description.>

1) Disconnect the ground terminal from the battery sensor, and wait for at least 60 seconds before starting work. <Ref. to RC-4, BATTERY, NOTE, Repair Contents.>
2) Remove the trim panel - front door.
   (1) Attach the protective tape (a).
   (2) Open the cover and remove the screw.
   (3) Remove the clips, and remove the trim panel - front door from the panel assembly - front door.

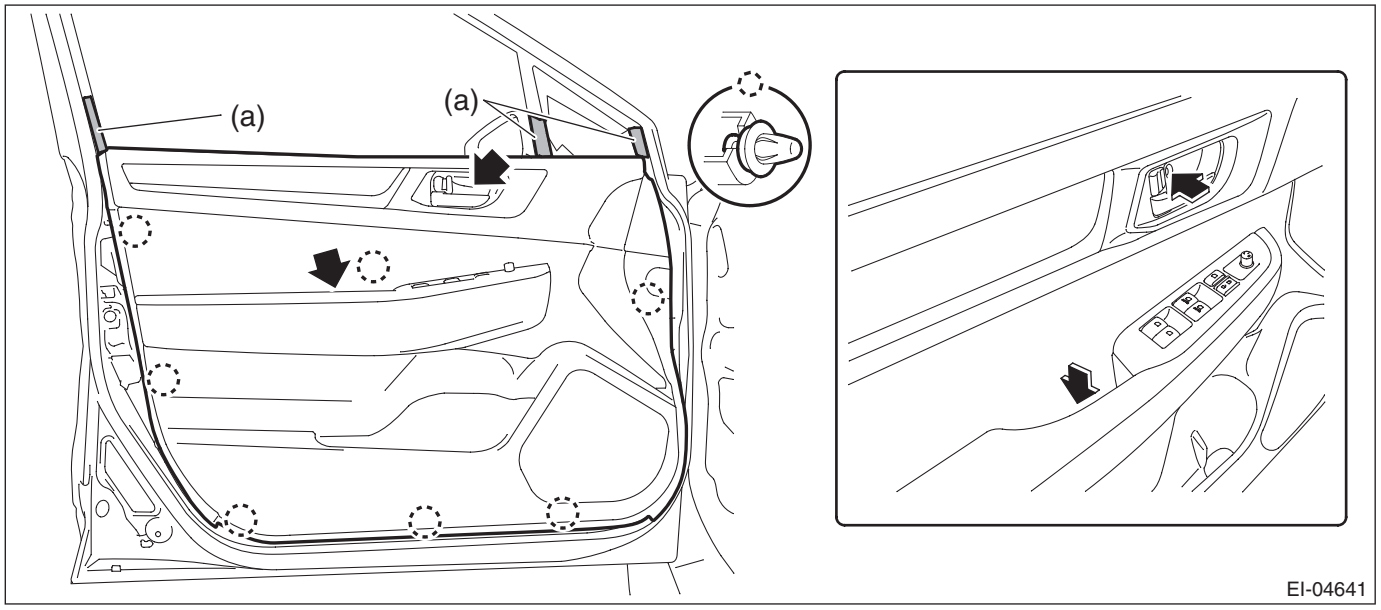

(4) Detach the door lock cable (a) and door open cable (b) from the remote assembly - door.

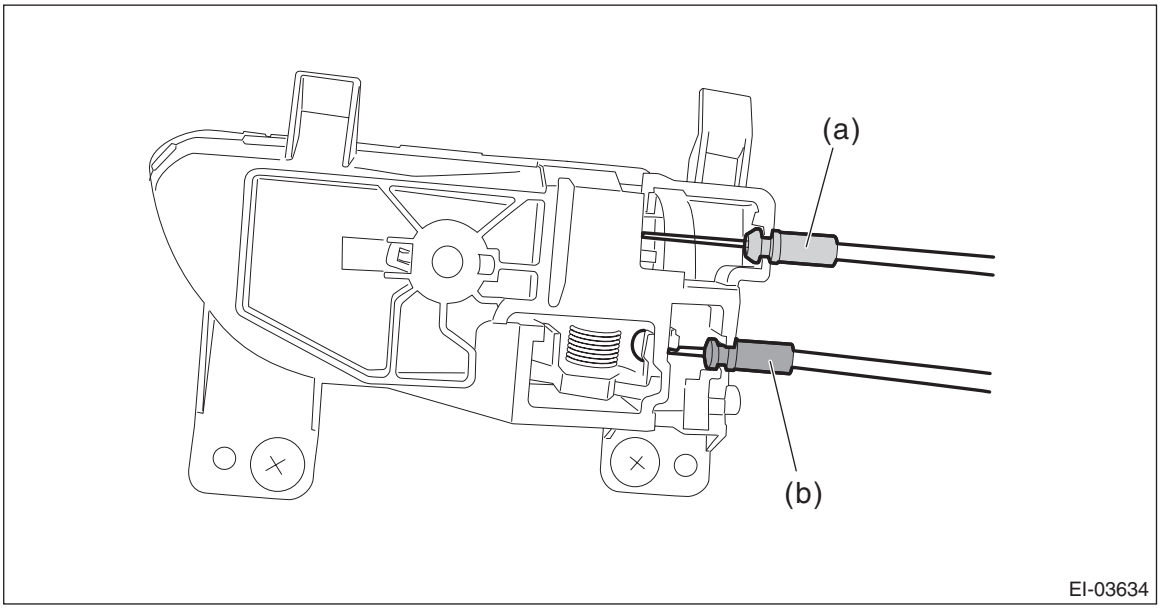

(5) Disconnect the harness connector and remove the trim panel - front door.

3) Remove each part as required.
- Remote assembly - door: <Ref. to SL-33, REMOVAL, Front Inner Remote.>
- Switch - power window main: <Ref. to GW-12, MAIN SWITCH, REMOVAL, Power Window Control Switch.>
- Weather strip - door INN: <Ref. to EI-73, DISASSEMBLY, Door Trim.>

2. REAR DOOR

1) Disconnect the ground terminal from battery sensor. <Ref. to RC-4, BATTERY, NOTE, Repair Contents.>
2) Remove the trim panel - rear door.
   (1) Attach the protective tape (a).
   (2) Open the cover and remove the screw.
   (3) Remove the clips, and remove the trim panel - rear door from the panel assembly - rear door.

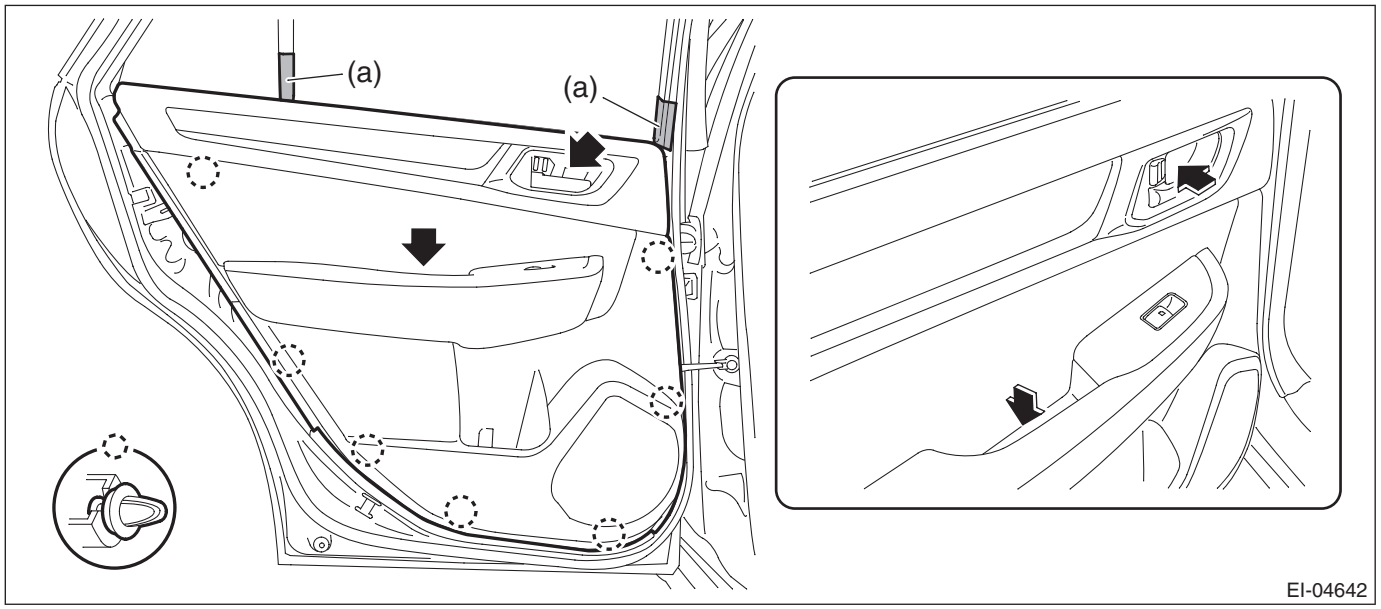

   (4) Detach the door lock cable (a) and door open cable (b) from the remote assembly - door.

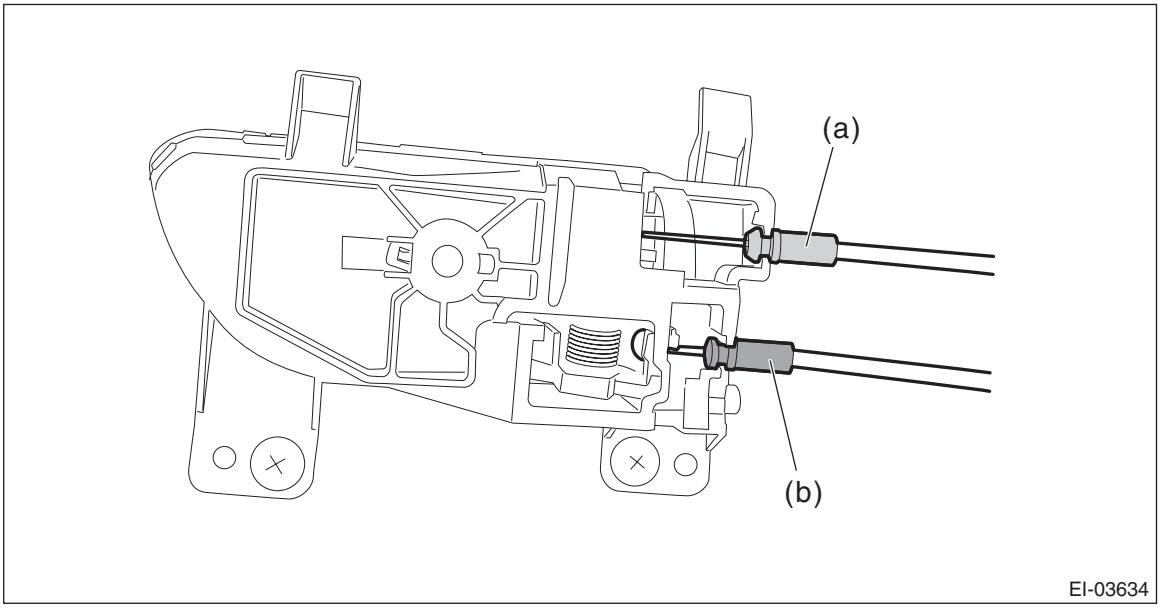

   (5) Disconnect the harness connector and remove the trim panel - rear door.
3) Remove each part as required.
- Remote assembly - door: <Ref. to SL-41, REMOVAL, Rear Inner Remote.>
- Switch - power window sub: <Ref. to GW-13, SUB-SWITCH, REMOVAL, Power Window Control Switch.>
- Weather strip - door INN: <Ref. to EI-73, DISASSEMBLY, Door Trim.>

B: INSTALLATION

1) Before installation, check the following items.
- Cable is free from deformation such as fray.
- Grease is applied sufficiently to cable joints.

If grease is insufficient, add it as necessary before assembling the cable.
2) Install the removed parts to the trim panel - door.
3) Install the trim panel - door.

NOTE:
Attach the door lock cable (a - end ball: small) to the upper side, and attach the door open cable (b - end ball: large) to the lower side.

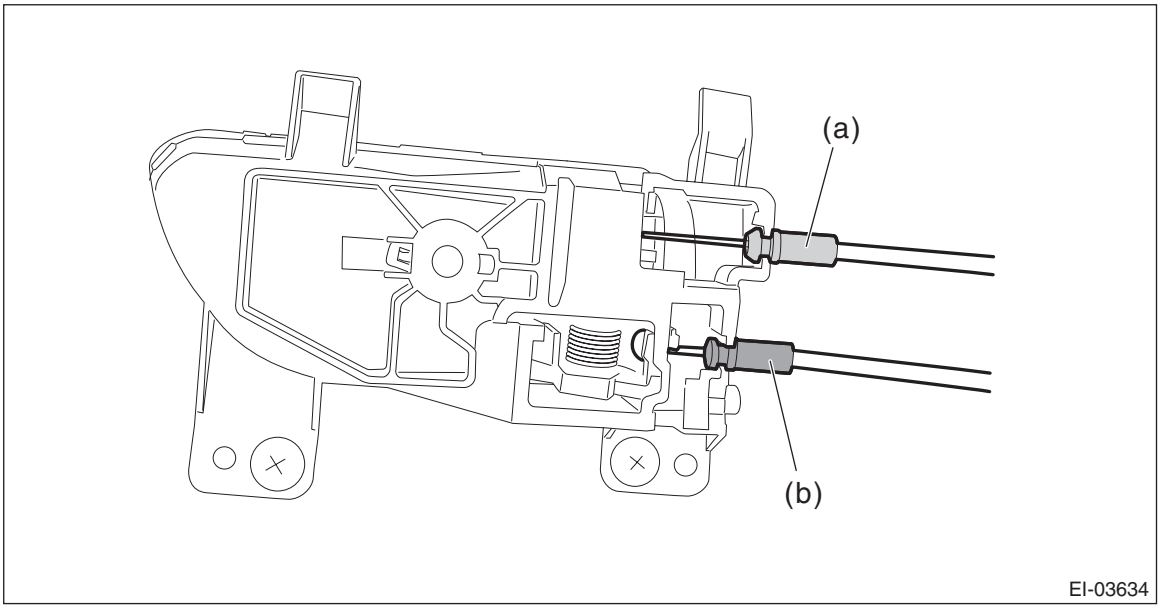

4) Connect the ground terminal to battery sensor. <Ref. to RC-4, BATTERY, NOTE, Repair Contents.>

C: DISASSEMBLY

1) Remove the trim panel - door.
2) Disengage the rivets and claws, and remove the weather strip - door INN from the trim panel - door.

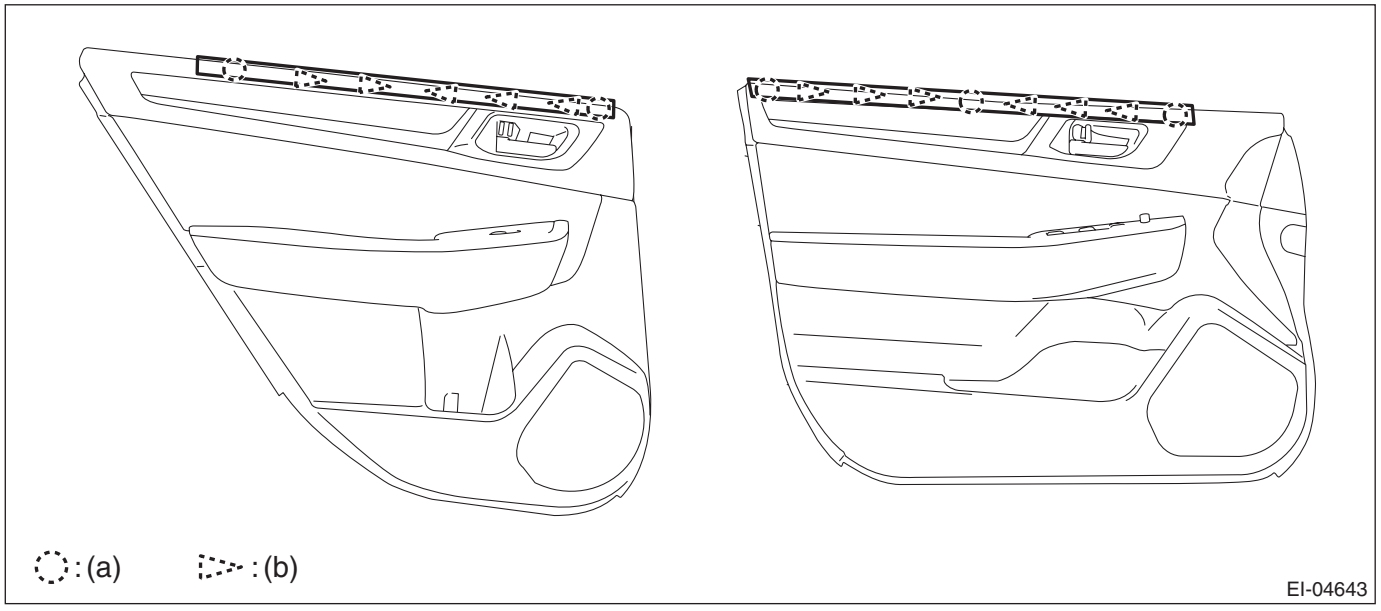

(a) Rivet (b) Claw

NOTE:
Remove the rivets with a rivet cutter or nipper, etc.

D: ASSEMBLY

1) Bend the claws while pushing the weather strip - door INN against the trim panel - door so that there is no gap.

CAUTION:
Beware of the direction of folding the claws.

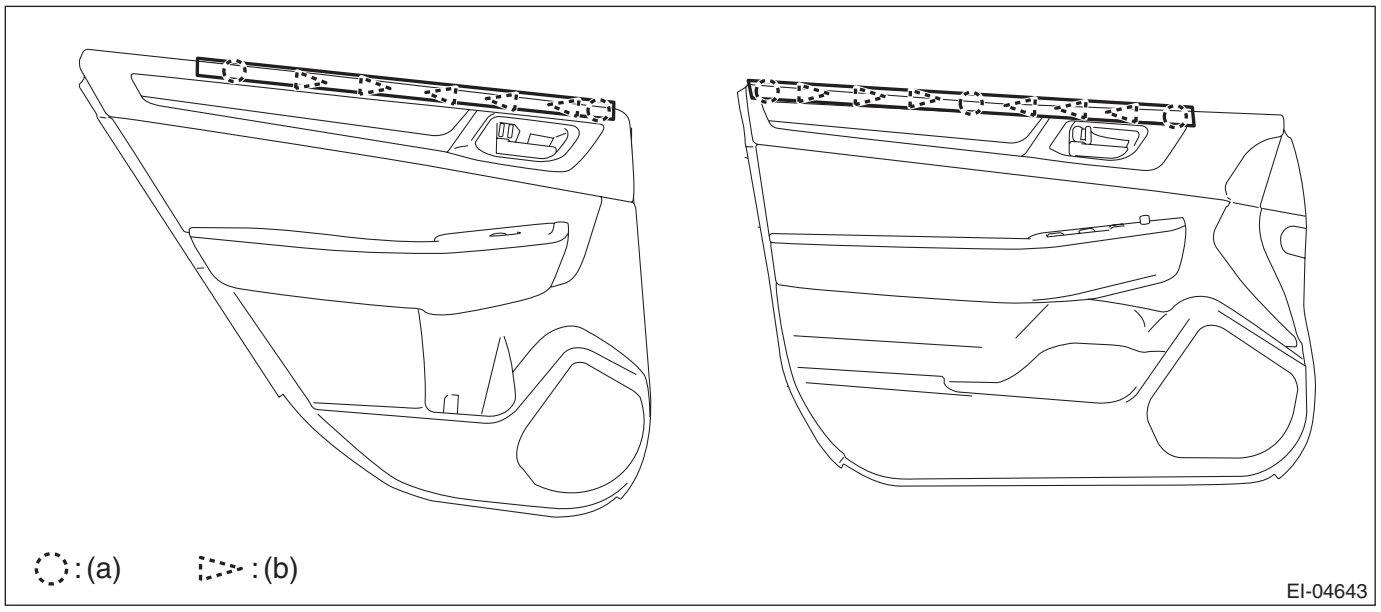

(a) Rivet (b) Direction of folding claws

2) Install the rivet, and apply unwoven cloth tape over the rivet crimped section.

CAUTION:
• Set the height of rivet crimped section as 3 mm (0.12 in). If the crimp is not sufficient, press it with pliers, etc. in order not to interfere the trim panel - door.
• Apply unwoven cloth tape so that the rivet crimped section is covered. If unwoven cloth tape is not applied, a knocking noise may occur when the door panel contacts the rivet crimped section.

Preparation tool and item:
Hand riveter (corresponding to ϕ3.2 mm (0.13 in))
Rivet
Unwoven cloth (cut into 15 x 15 mm (0.59 x 0.59 in))

3) After installing the weather strip - door INN, perform the following checks.
• Make sure there are no gaps between the weather strip - door INN and the trim panel - door.
• Make sure there are no looseness when pulling the weather strip - door INN lightly.

19.Instrument Panel Lower Cover

A: REMOVAL

1) Disconnect the ground terminal from the battery sensor, and wait for at least 60 seconds before starting work. <Ref. to RC-4, BATTERY, NOTE, Repair Contents.>
2) Remove the clips, and remove the cover - instrument panel side LH.

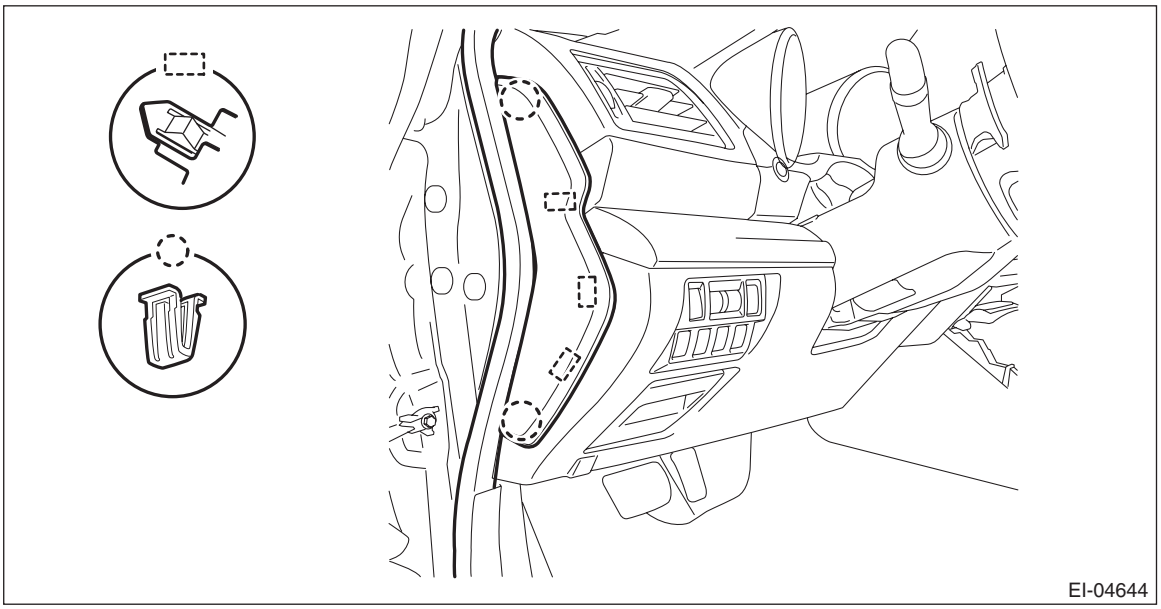

NOTE:
Remove the weather strip - body side flange to facilitate the work.
3) Remove the data link connector and release the hook, and then remove the under cover assembly - driver.

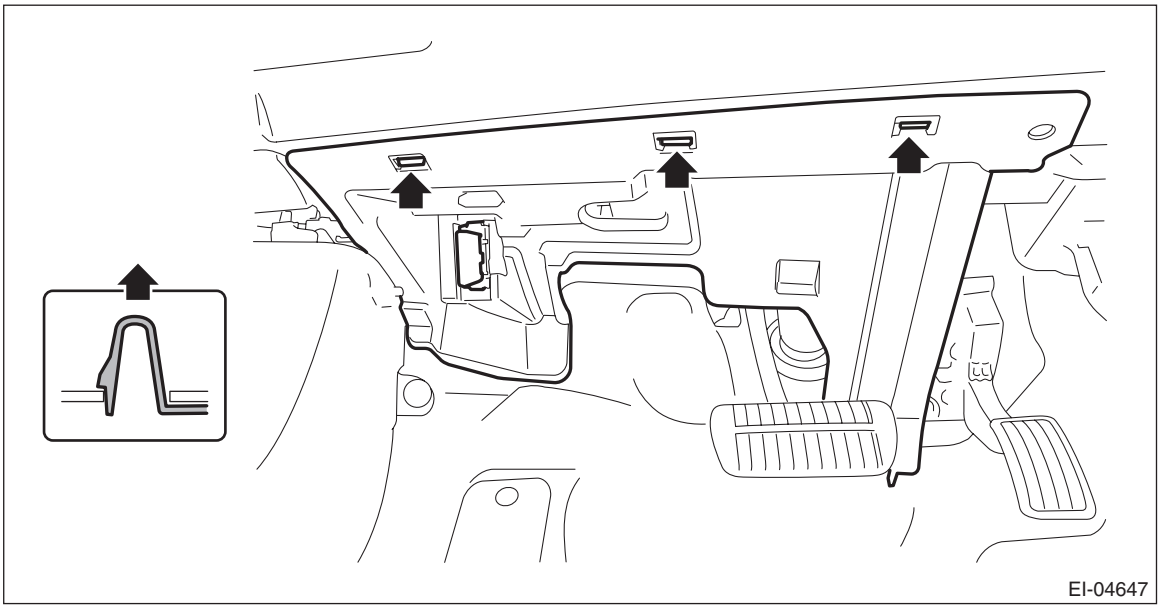

4) Remove the cover assembly - instrument panel LWR driver.

CAUTION:
When removing the cover assembly - instrument panel LWR driver, be sure to pull it toward you. If attempting to remove by turning it upward, the claws may be damaged.

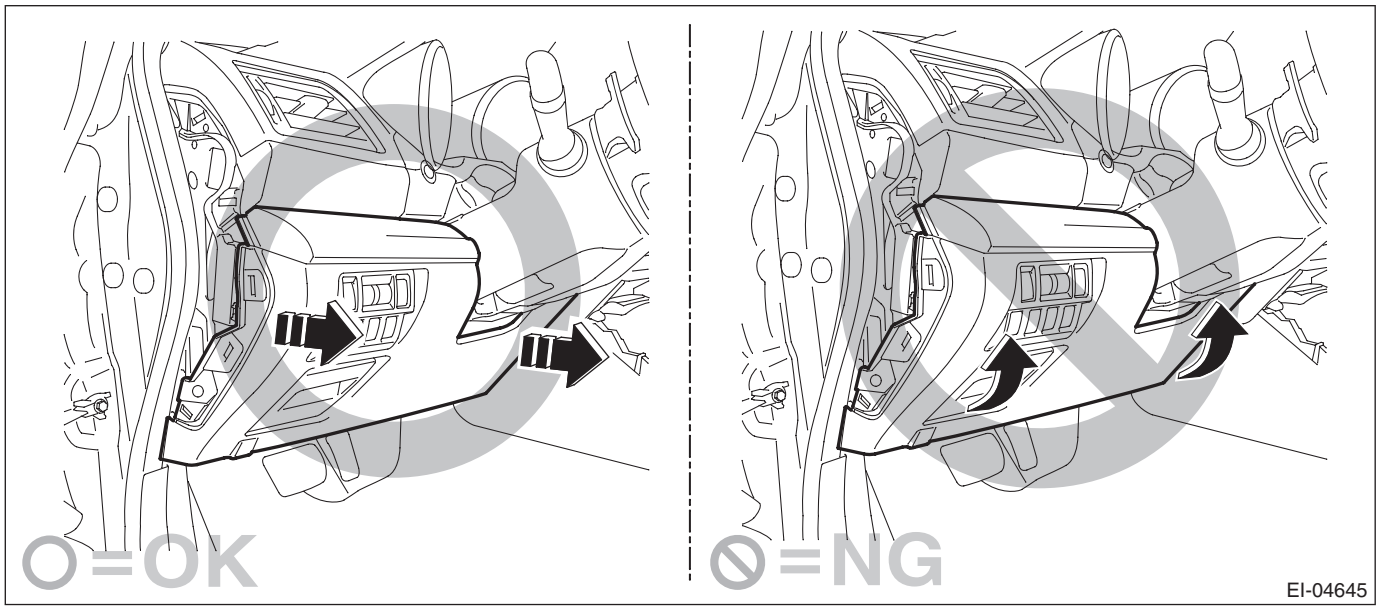

(1) Remove the screws and release the clips and claws.
(2) Disconnect the harness connectors, and remove the cover assembly - instrument panel LWR driver.

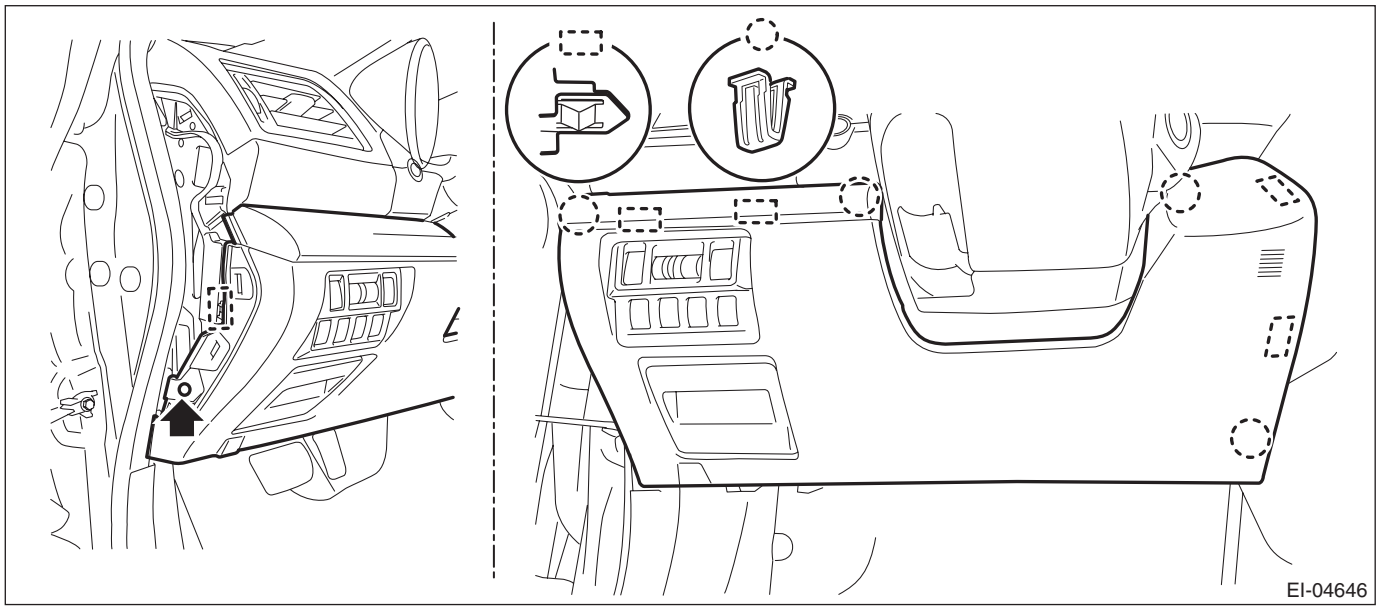

B: INSTALLATION

1) Install the cover assembly - instrument panel LWR driver.
2) Install the data link connector, and install the under cover assembly - driver.
3) Install the cover - instrument panel side LH.
4) Connect the ground terminal to battery sensor. <Ref. to RC-4, BATTERY, NOTE, Repair Contents.>

20.Glove Box

A: REMOVAL

NOTE:
Refer to “Security and Locks” section for key cylinder replacement. <Ref. to SL-75, GLOVE BOX LID, REMOVAL, Key Lock Cylinders.>
1) Disconnect the ground terminal from battery sensor. <Ref. to RC-4, BATTERY, NOTE, Repair Contents.>
2) Remove the pocket assembly.
   (1) Remove the damper COMPL - pocket.
   (2) Release the stoppers and remove the pocket assembly by pulling it toward you.

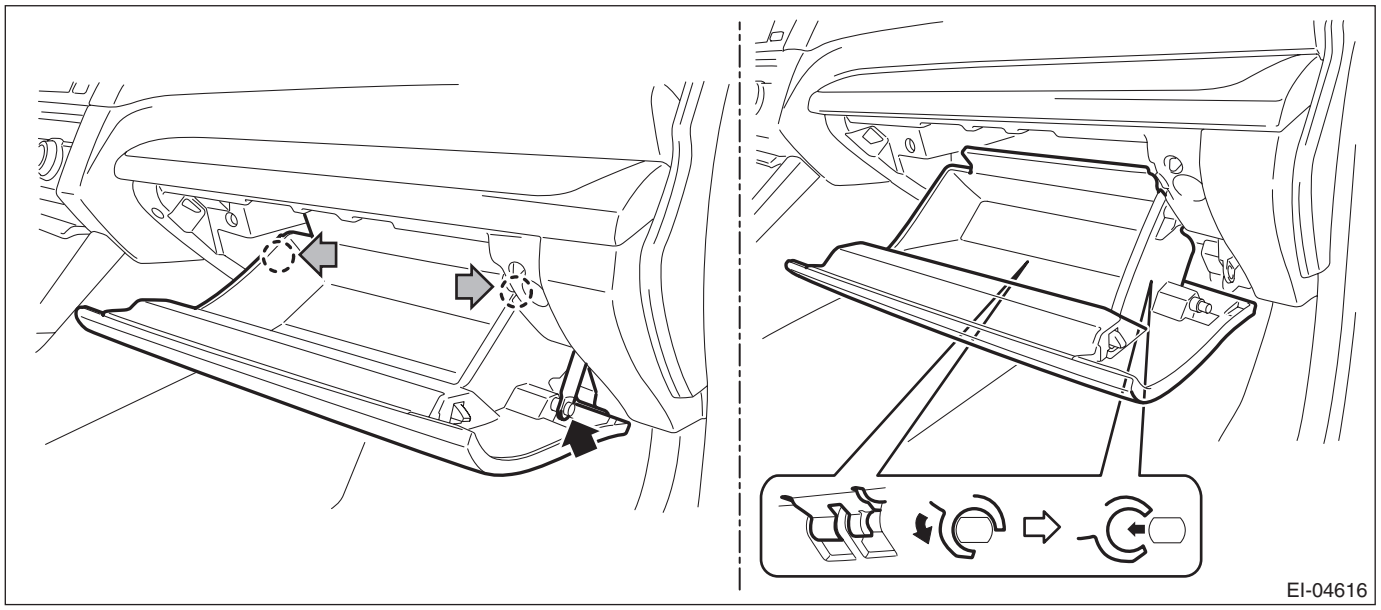

3) Remove the cover side sill - front and the front cover - side sill. <Ref. to EI-92, REMOVAL, Lower Inner Trim.>
4) Remove the back panel - pocket.
   (1) Release the hook, and remove the under cover assembly - passenger.

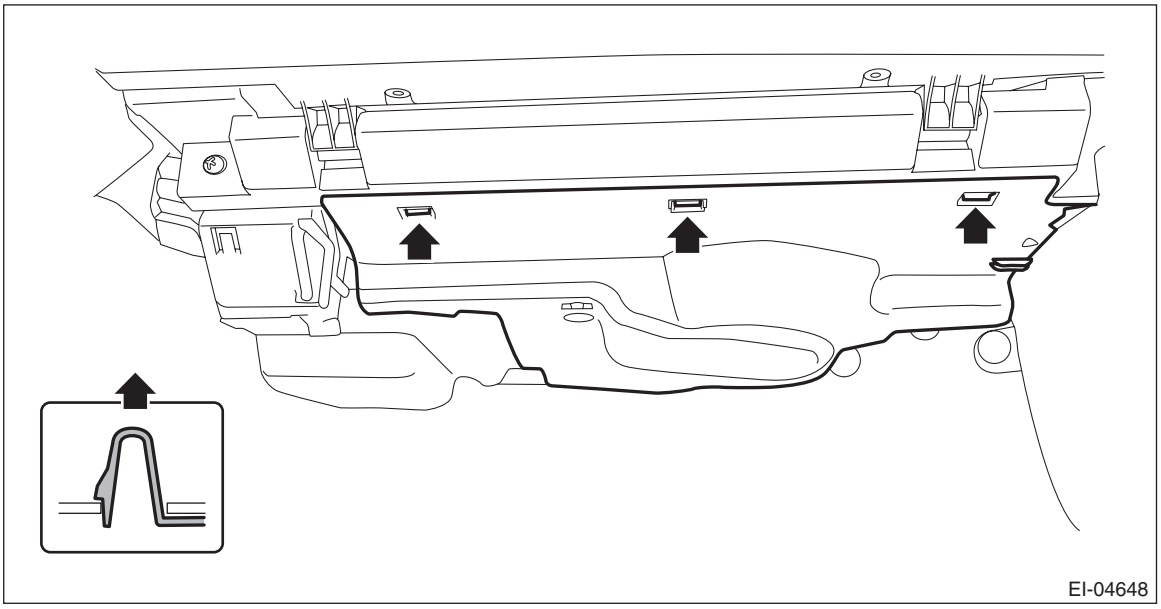

(2) Remove the clips, and remove the cover - instrument panel side RH.
(3) Release the clips, and remove the ornament - panel assembly passenger.

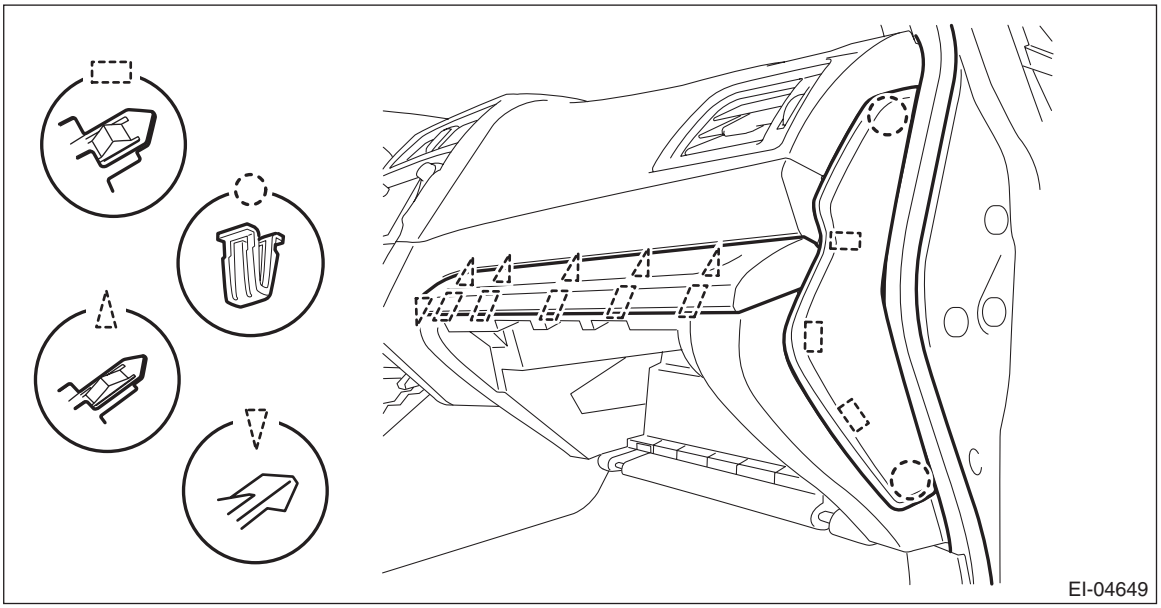
EI-04649

(4) Disconnect the glove box light LED connector.
(5) Remove the screws, claws and harness clamp, then remove the back panel - pocket.

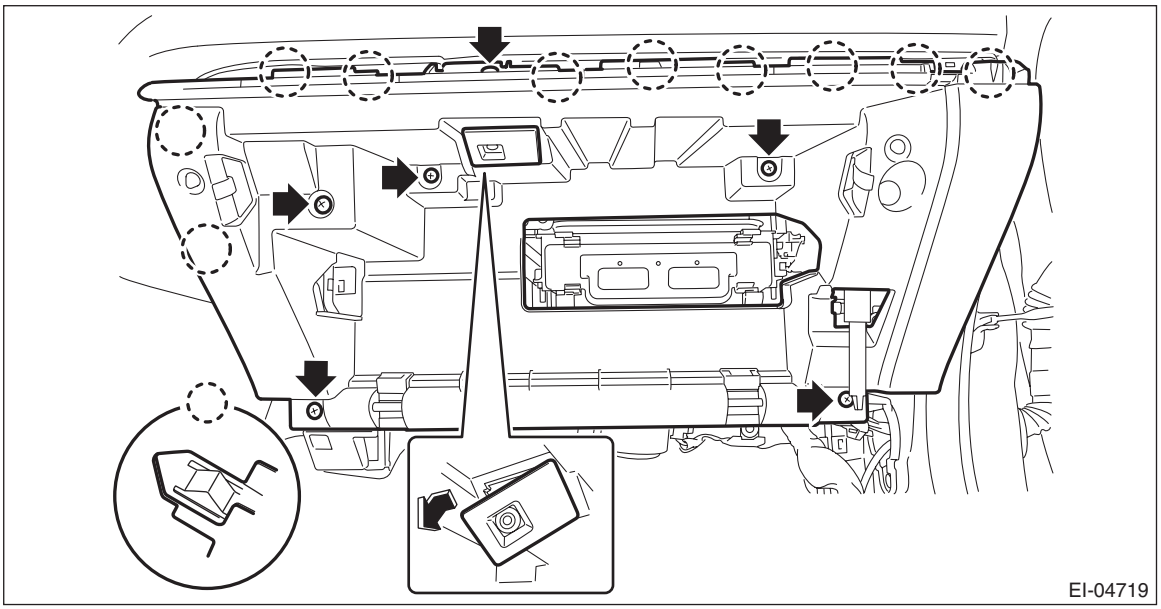
EI-04719

B: INSTALLATION

1) Install the back panel - pocket.
2) Connect the glove box light LED connector.
3) Install the ornament - panel assembly passenger.
4) Install the under cover assembly - passenger.
5) Install the cover side sill - front and the front cover - side sill.
6) Install the pocket assembly.
7) Install the cover - instrument panel side RH.
8) Connect the ground terminal to battery sensor. <Ref. to RC-4, BATTERY, NOTE, Repair Contents.>

21.Center Console

A: REMOVAL

1) Disconnect the ground terminal from battery sensor. <Ref. to RC-4, BATTERY, NOTE, Repair Contents.>
2) Remove the center grille assembly. <Ref. to AC-92, CENTER GRILLE ASSEMBLY, REMOVAL, Air Vent Grille.>
3) Remove the heater control assembly. <Ref. to AC-47, REMOVAL, Control Panel.>
4) Remove the audio assembly or navigation assembly. <Ref. to ET-23, REMOVAL, Audio.>

B: INSTALLATION

CAUTION:
Make sure that the center grille assembly is inserted into the air vent duct correctly.
1) Install the audio assembly or navigation assembly.
2) Install the heater control assembly.
3) Install the center grille assembly.
4) Connect the ground terminal to battery sensor. <Ref. to RC-4, BATTERY, NOTE, Repair Contents.>

22.Console Box

A: REMOVAL

CAUTION:
Refer to "CAUTION" of "General Description" before handling the airbag system components. <Ref. to AB-10, CAUTION, General Description.>
1) Disconnect the ground terminal from the battery sensor, and wait for at least 60 seconds before starting work. <Ref. to RC-4, BATTERY, NOTE, Repair Contents.>

NOTE:
- On CVT models, shift the select lever into "N" before disconnecting the battery ground cable.
- On power seat models, move the front seat all the way forward before disconnecting the battery ground cable.

2) Release the clips, and remove the ornament panel - console.

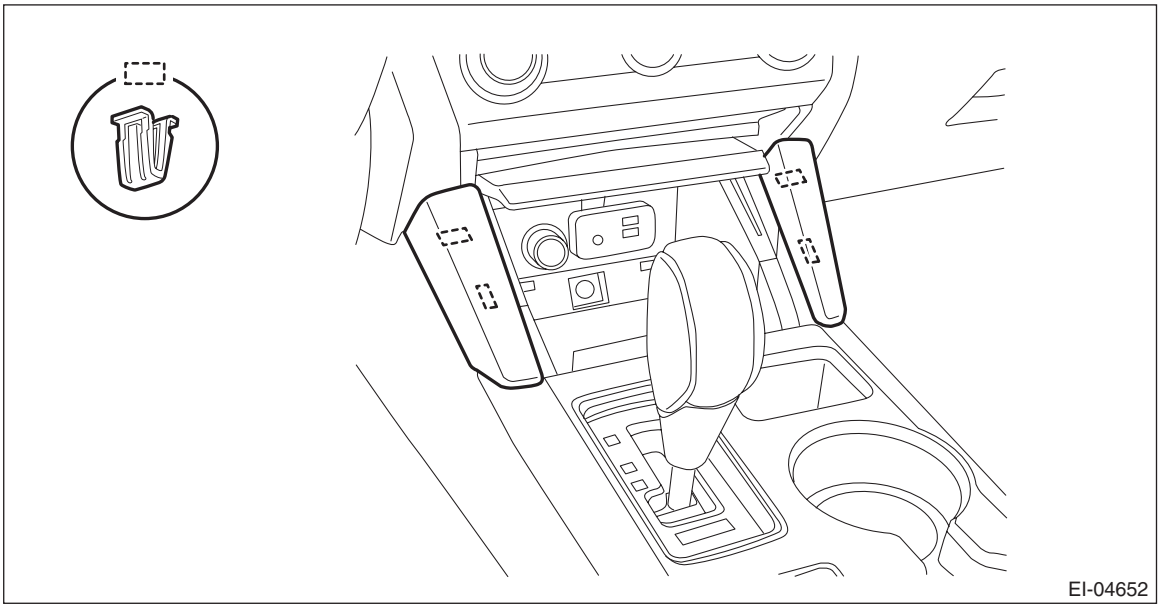

3) Remove the cover assembly - front.
   (1) Remove the shift knob. (MT model)
   (2) Pull up the cover assembly - front, and release the clips.
   (3) Disconnect the connectors, and remove the cover assembly - front.

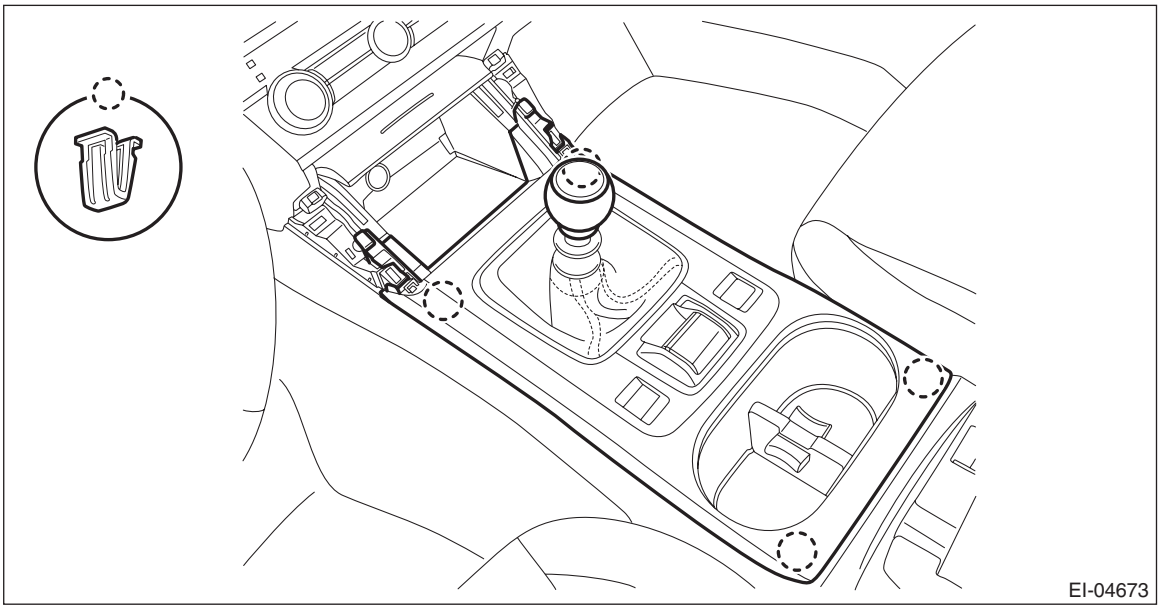

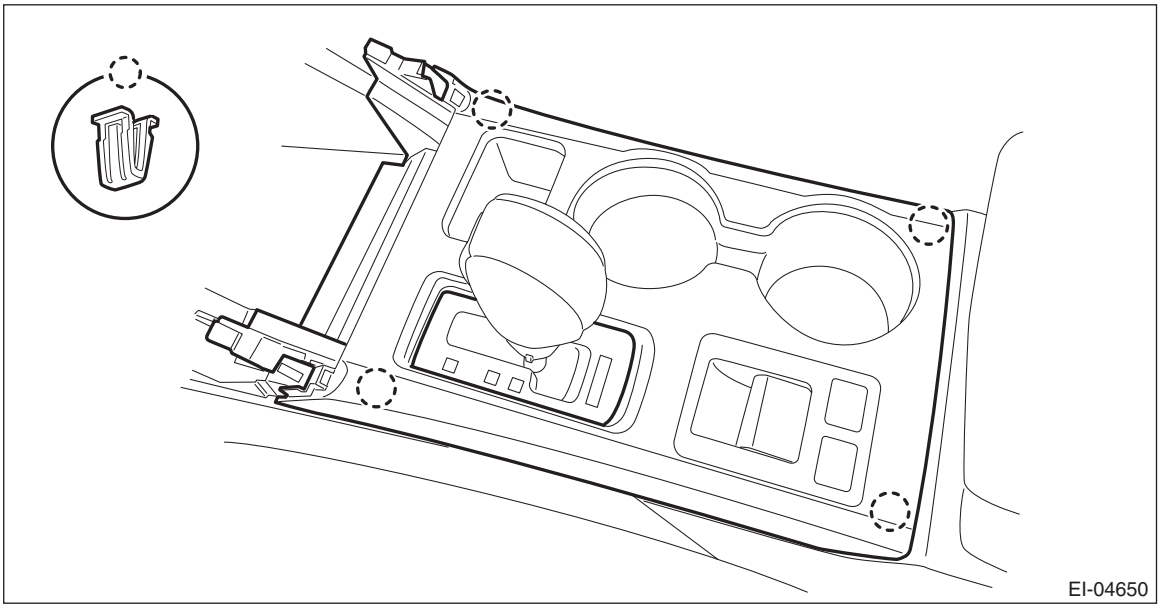

4) Remove the console box assembly.
   (1) Remove the caps, and remove the bolts.
   (2) Remove the screws, disconnect the harness connector and remove the console box assembly.

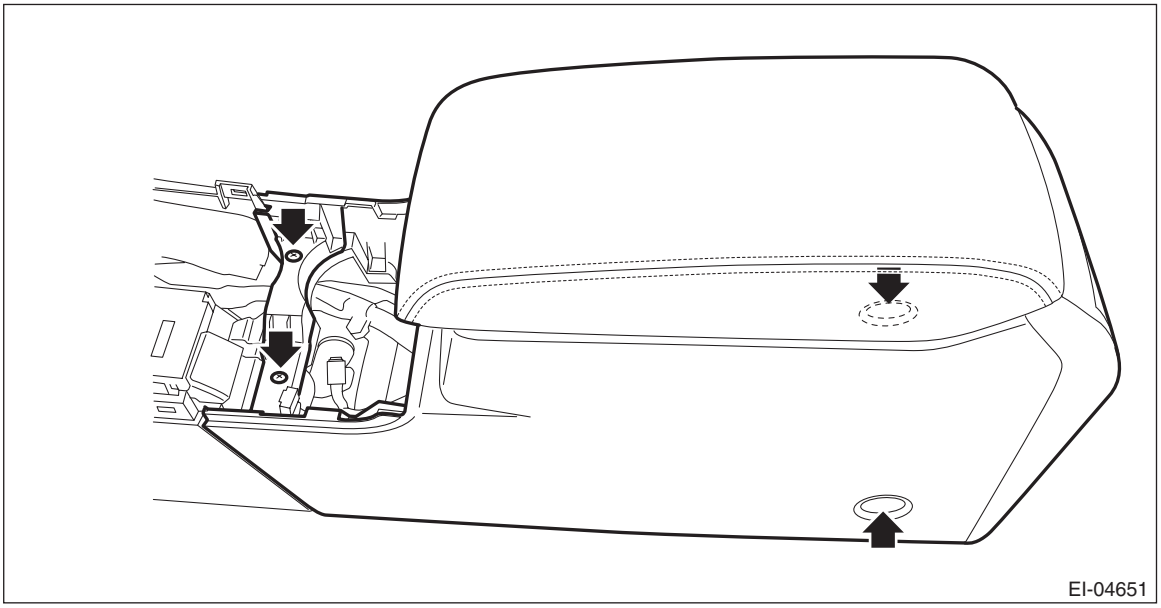

5) Remove the left and right panel center LWR.
   (1) Remove the screws and clips.
   (2) Release the claws, and then pull the panel center LWR to remove.

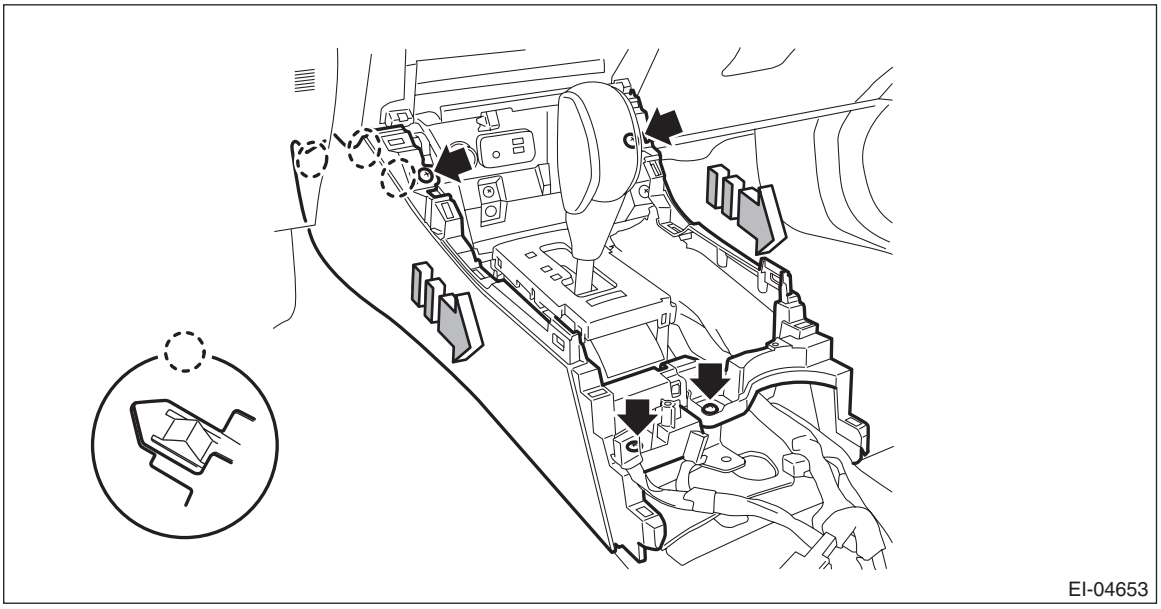

B: INSTALLATION

1) Install the panel center LWR.
2) Install the console box assembly.
3) Install the cover assembly - front.
4) Install the shift knob. (MT model)

NOTE:
For 6MT model, refer to “MT GEAR SHIFT LEVER” in “CS” section. <Ref. to CS-59, INSTALLATION, MT Gear Shift Lever.>

5) Install the ornament panel - console.
6) Connect the ground terminal to battery sensor. <Ref. to RC-4, BATTERY, NOTE, Repair Contents.>

23.Instrument Panel Assembly

A: REMOVAL

CAUTION:
• Refer to "CAUTION" of "General Description" before handling the airbag system components. <Ref. to AB-10, CAUTION, General Description.>
• Be careful not to damage the airbag system harness when servicing the instrument panel. Damage may cause the system to malfunction.
1) Disconnect the ground terminal from the battery sensor, and wait for at least 60 seconds before starting work. <Ref. to RC-4, BATTERY, NOTE, Repair Contents.>

NOTE:
• On CVT models, shift the select lever into "N" before disconnecting the battery ground cable.
• For models with power seat, remove the slide rail installing bolt before disconnecting the ground terminal from the battery sensor.
2) Remove the front seats. <Ref. to SE-11, REMOVAL, Front Seat.>
3) Remove the ornament panel - console, cover assembly - front, console box assembly and the panel center LWR. <Ref. to EI-80, REMOVAL, Console Box.>
4) Remove the cover assembly - instrument panel LWR driver. <Ref. to EI-75, REMOVAL, Instrument Panel Lower Cover.>
5) Remove the visor assembly - lower. <Ref. to IDI-18, TRIP RESET SWITCH, REMOVAL, Switches and Harness.>
6) Remove the combination meter assembly. <Ref. to IDI-11, REMOVAL, Combination Meter.>
7) Remove the keyless access CM. <Ref. to SL-102, REMOVAL, Keyless Access CM.>
8) Remove the trim panel - front pillar UPR on the left and right sides. <Ref. to EI-96, REMOVAL, Upper Inner Trim.>
9) Release the clips and claws, then detach the left and right grille speaker side.

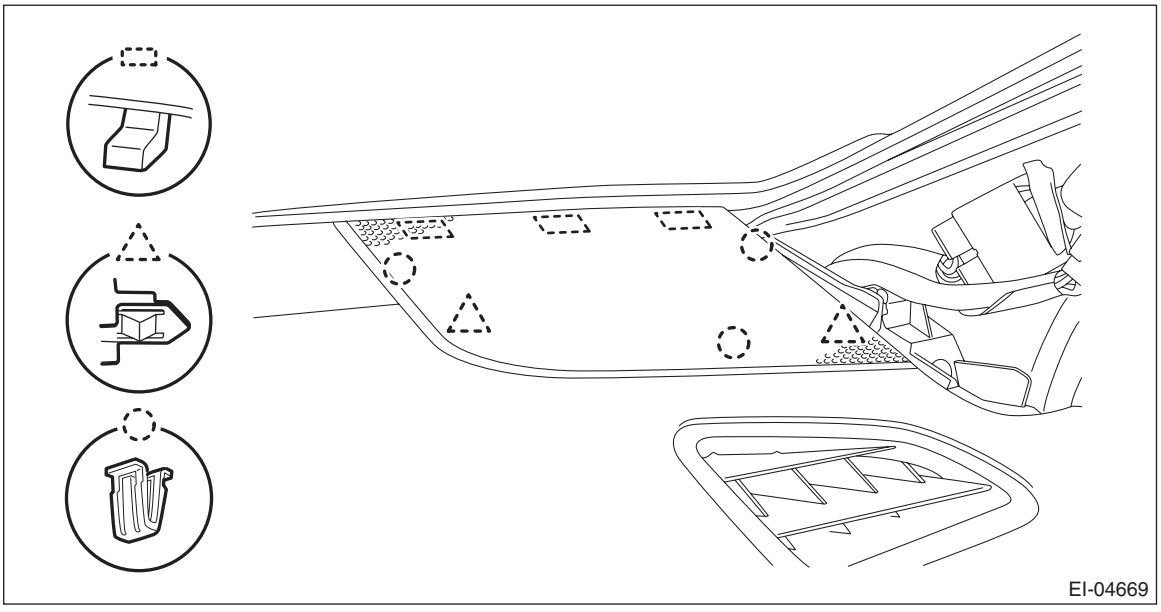

NOTE:
Remove the grille speaker side by using a plastic remover.

10) Remove the glove box assembly. <Ref. to EI-77, REMOVAL, Glove Box.>
11) Remove the center grille assembly. <Ref. to AC-92, CENTER GRILLE ASSEMBLY, REMOVAL, Air Vent Grille.>
12) Remove the heater control assembly. <Ref. to AC-47, REMOVAL, Control Panel.>
13) Remove the audio assembly or navigation assembly. <Ref. to ET-23, REMOVAL, Audio.>
14) Remove the pocket assembly - CTR. <Ref. to ET-60, REMOVAL, External Connection Terminal.>
15) Remove the speaker assembly. <Ref. to ET-23, REMOVAL, Audio.>
- Tweeter: <Ref. to ET-24, TWEETER, REMOVAL, Front Speaker.>
- Center speaker: <Ref. to ET-25, CENTER SPEAKER, REMOVAL, Front Speaker.>

16) Disconnect the passenger's airbag module connector. <Ref. to AB-19, PASSENGER'S AIRBAG MODULE, PROCEDURE, Airbag Connector.>
17) Remove the column assembly - steering. <Ref. to PS-20, REMOVAL, Steering Column.>
18) Remove the cover side sill - front and the front cover - side sill on the left and right sides. <Ref. to EI-92, REMOVAL, Lower Inner Trim.>
19) Remove the body side weather strip - flange front.
20) Remove the screws, and release the telematics sub antenna lock.

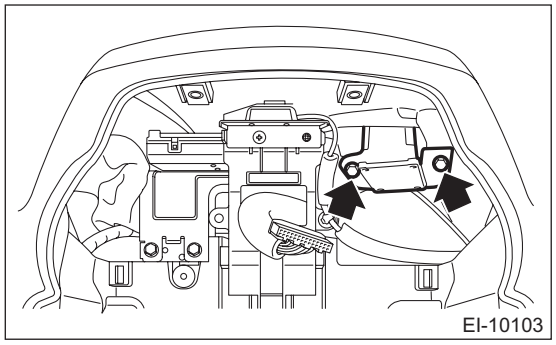

21) Secure the released telematics sub antenna to the beam COMPL - steering with a tape.

NOTE:
When removing the instrument panel assembly, do not remove the telematics sub antenna harness clamp from the beam COMPL - steering.

22) Remove the instrument panel assembly.

CAUTION:
• When taking the instrument panel assembly out of the vehicle, be careful not to allow the telematics sub antenna harness to be caught.
• Always work in a team of two persons when removing the instrument panel assembly from the vehicle, so as not to damage the vehicle interior.

(1) Remove the screws.

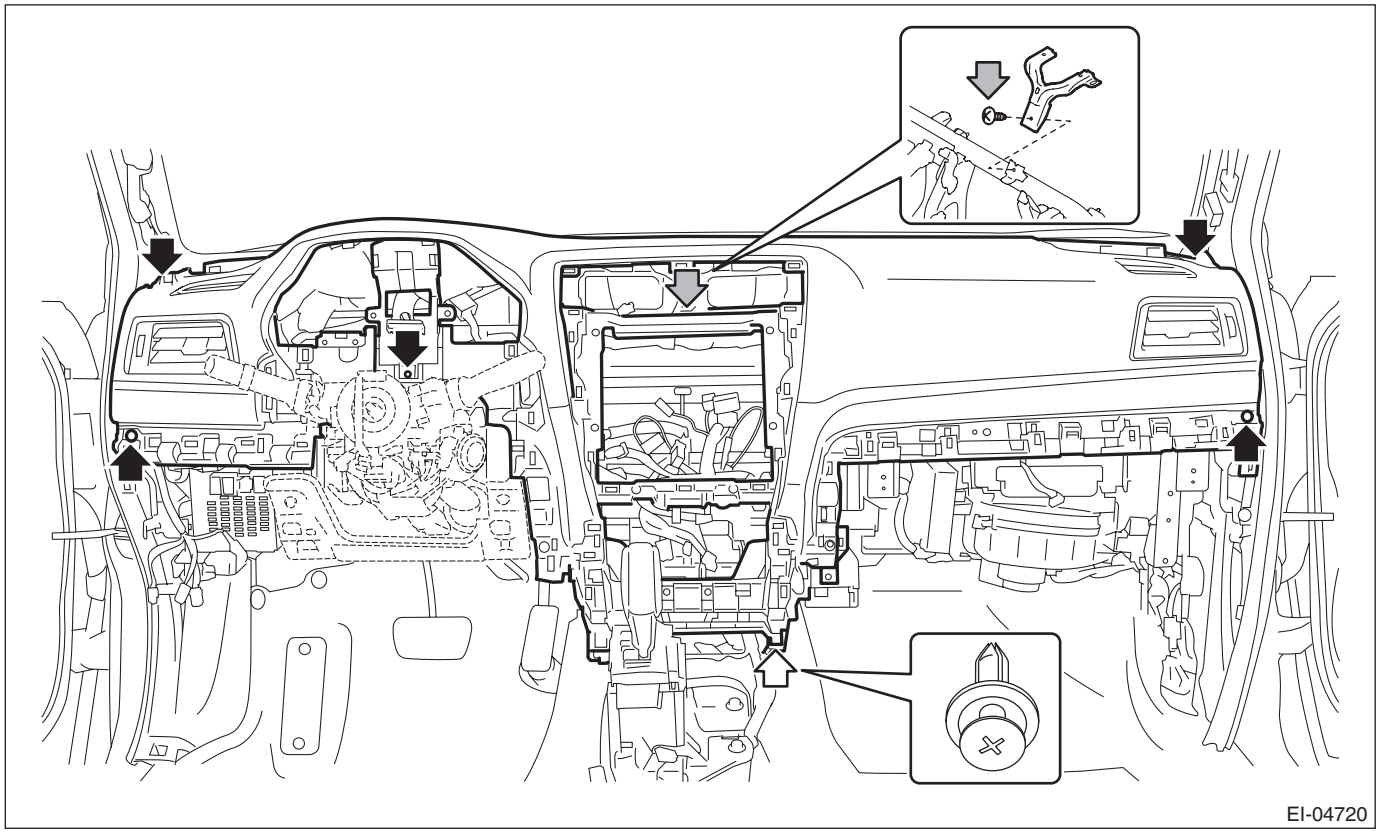

NOTE:
• Remove the screw indicated with a gray arrow after removing the harness clamp, and remove the bracket - center UPR.
• For models with rear heater, remove the clip indicated with white arrow.

(2) Prepare two strings of 2 m (78.7 in).
(3) Remove the sunload sensor and sensor - auto light.
- Sunload sensor: <Ref. to AC-73, REMOVAL, Sunload Sensor (Auto A/C Model).>
- Sensor - automatic light: <Ref. to LI-28, REMOVAL, Light Control Sensor.>

(4) Tie a string to the connector harness side, and remove the harness clamp.

(5) When the sensor connectors are pulled out to the lower side of the instrument panel by pulling the string, remove the string.

NOTE:
If the string falls out, the assembling work becomes very difficult. Therefore, secure the string on the instrument panel with an adhesive tape to prevent it from falling out.

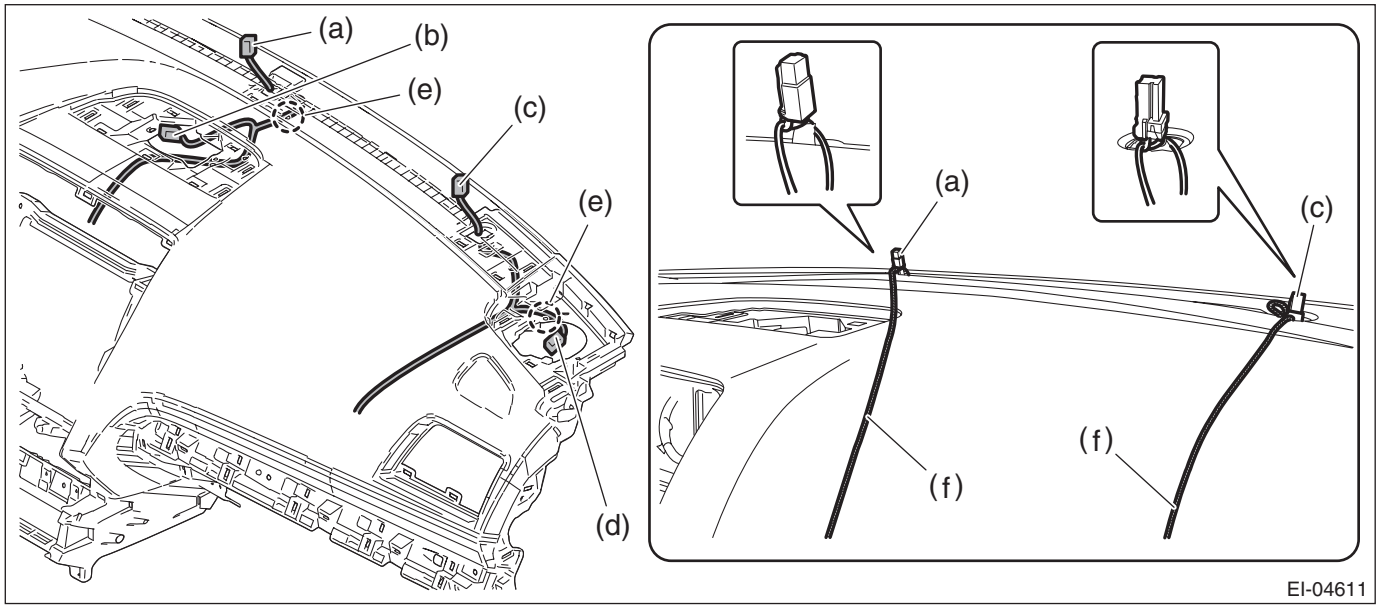

(a) Sunload sensor connector
(b) Center speaker connector
(c) Sensor - auto light connector
(d) Tweeter connector
(e) Harness clamp
(f) String

(6) After confirming that all harness clamps and connectors of the instrument panel harness are disconnected, take it out of the vehicle.

23) Remove the bolts, and then remove the panel - knee guard.

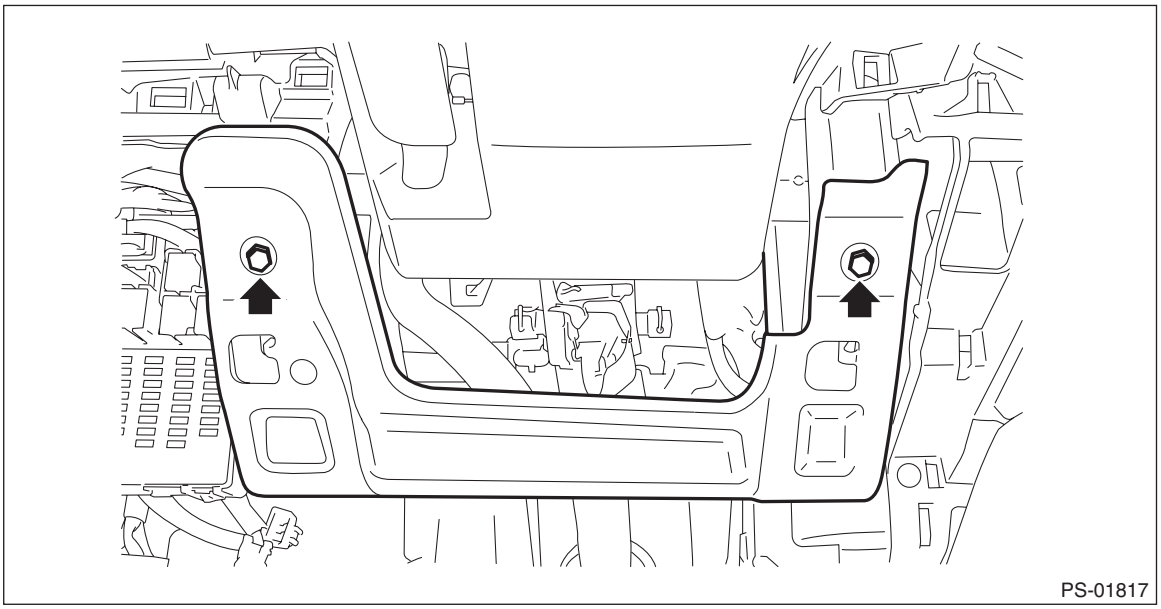

24) Remove the beam COMPL - steering.
(1) Remove the fuse box and relay box.
(2) Disconnect all harness clamps and connectors of the instrument panel harness.
(3) Remove the cap - bolt and remove the TORX® bolt. (a), (b)

Preparation tool:
TORX® T40

(4) Remove the bolts at the floor center. (c), (d)
(5) Remove the bolts and nuts, and disconnect the heater & cooling unit assembly. (e), (f)
(6) Loosen the adjuster portion (g) of the adjuster - clip space. (Only RH side of the beam COMPL - steering)

Preparation tool:
Hexagon wrench: 8 mm (0.31 in)

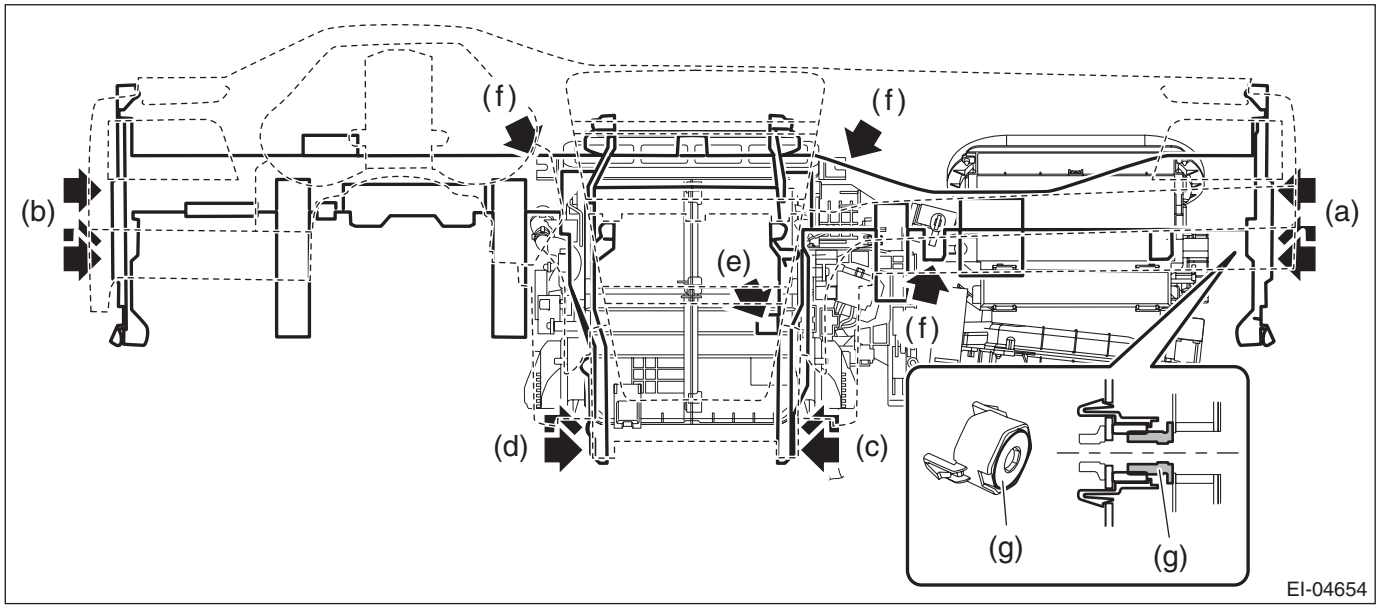

(7) Slightly lift the beam COMPL - steering to detach the left and right pins. Then pull it toward you to remove.

CAUTION:
• Check that all harness clamps and connectors are detached.
• When taking the beam COMPL - steering out of the vehicle, be careful not to damage the vehicle interior.

25) Remove the grille front defroster.
26) Remove the screws, and then remove each vent duct.

27) Remove the claws, and remove the passenger's airbag module.

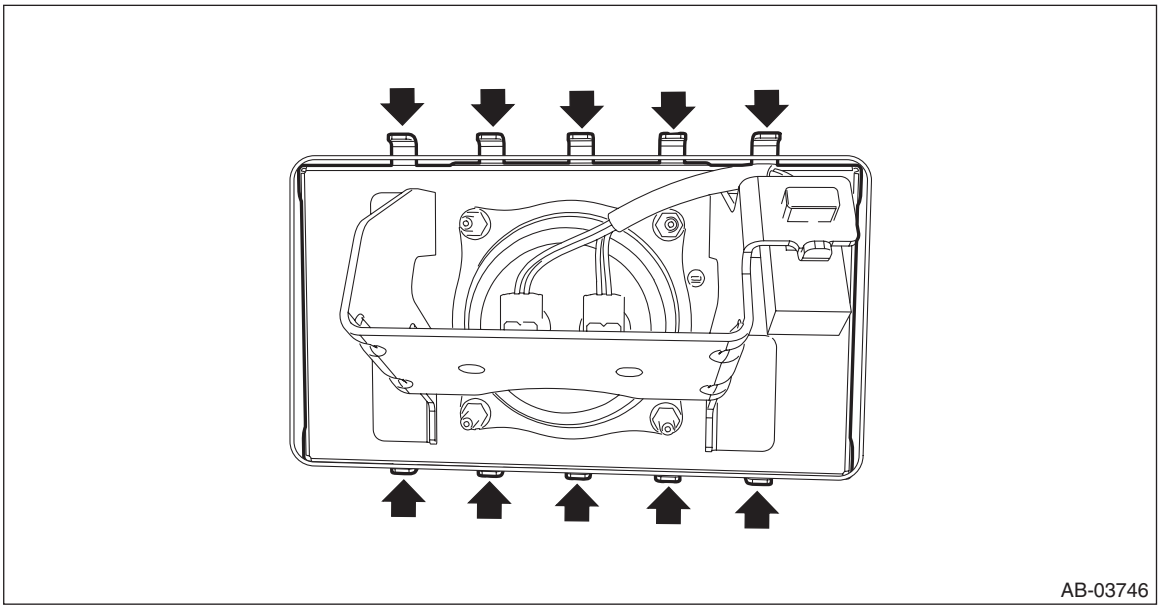

B: INSTALLATION

CAUTION:
• Refer to "CAUTION" of "General Description" before handling the airbag system components. <Ref. to AB-10, CAUTION, General Description.>
• After installing the panel center assembly, check that the air vent grille of the panel center assembly is inserted correctly into the air vent duct.
• When installing the cover - instrument panel side (a), make sure that the body side weather strip - flange front does not come inside the panel COMPL - instrument (b).

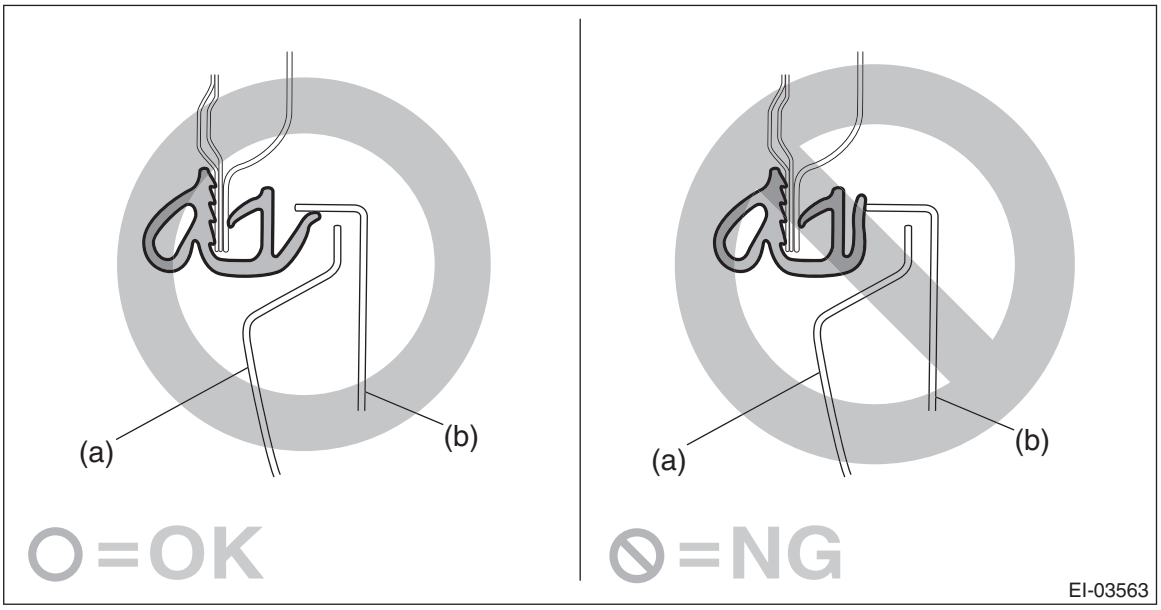

• When reusing the tether clip on the upper part of the trim panel - front pillar UPR, check that there is no damage to the tether clip. If the tether clip is damaged, always replace it with a new tether clip. If the tether clip is damaged, its holding force is reduced and the trim panel - front pillar UPR may come off.
• Do not reuse the tether clip removed from the upper part of the trim panel - front pillar UPR. Always replace with a new part.

1) Attach components until the instrument panel assembly is formed, in the reverse order of removal.

NOTE:
Method of installing insulator
- Adhesive

Use polyurethane adhesive. When assembling the instrument panel assembly, wait until the adhesive has evaporated to prevent filling of the smell in the compartment.
- Double-sided tape

Use commercial double-sided tape. (Use strong double-sided adhesive tape.)

2) Install the beam COMPL - steering.
   (1) Place the beam COMPL - steering on the vehicle, and check that the pins on both sides are inserted securely and the harness is routed properly. Connect each connector.
   (2) Secure the beam COMPL - steering to the heater and cooling unit assembly. (e), (f)

Tightening torque:
7.5 N·m (0.8 kgf-m, 5.5 ft-lb)

   (3) Temporarily tighten the bolts (c) and (d) of the beam COMPL - steering.
   (4) Tighten the adjuster portion (g) of the adjuster - clip space. (Only RH side of the beam COMPL - steering)

Preparation tool:
Hexagon wrench: 8 mm (0.31 in)

NOTE:
When the TORX® bolt is tightened after setting the adjuster portion (g) of the adjuster - clip space to the free position, the adjuster is secured at the position where there is no gap to the body, and then the TORX® bolt is tightened.

Tightening torque:
Adjuster - clip space: 0.8 — 4 N·m (0.08 — 0.4 kgf-m, 0.6 — 3 ft-lb)

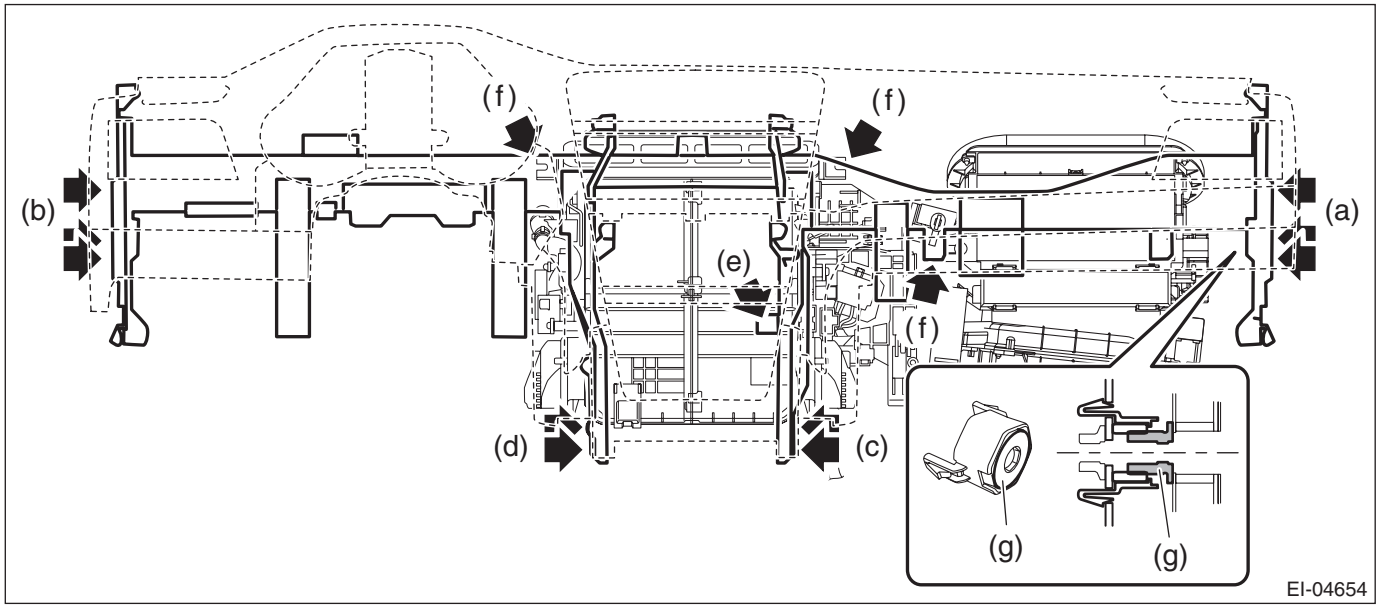

   (5) Tighten the beam COMPL - steering in the order from (a) to (d) to the specified torque.

Tightening torque:
25 N·m (2.5 kgf-m, 18.4 ft-lb)

3) Install the instrument panel assembly.

CAUTION:
Be careful not to allow the harness to be caught.

(1) Tie a string to the connector of sunload sensor - auto light, and then pull the string so that each connector is placed at the specified position.
(2) Secure the harness clamp.

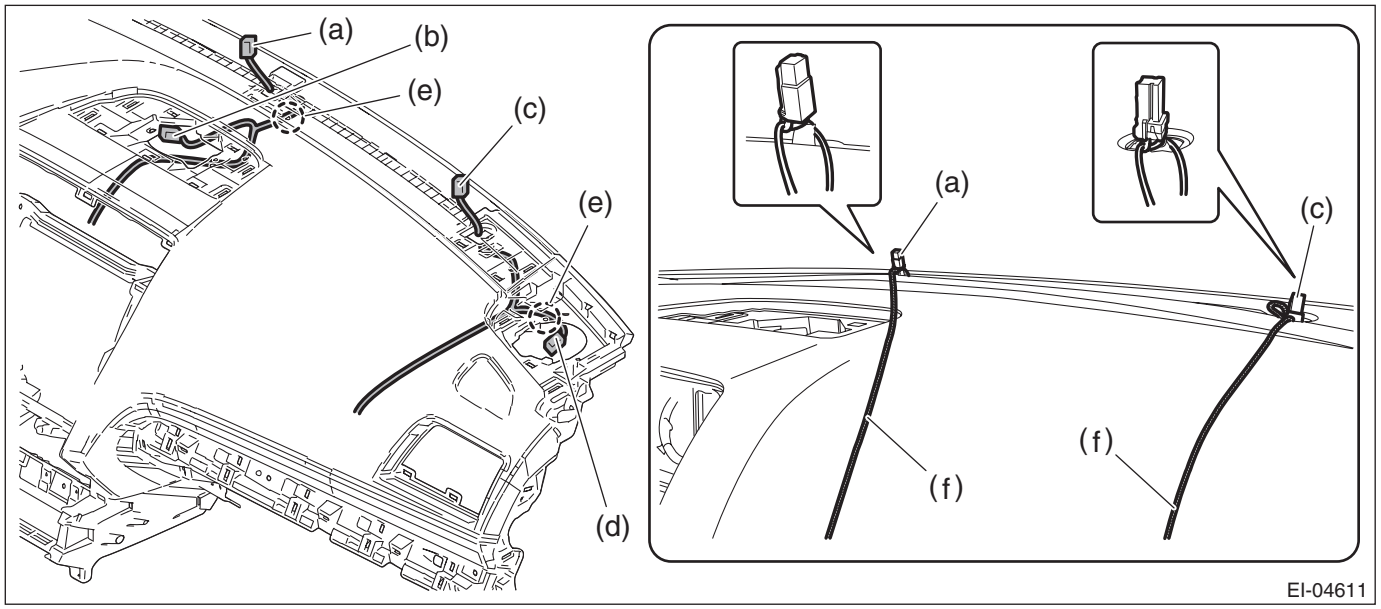

(a)	Sunload sensor connector	(c)	Sensor - auto light connector	(e)	Harness clamp
(b)	Center speaker connector	(d)	Tweeter connector	(f)	String

(3) Install the sunload sensor and the sensor - auto light.
(4) Insert the matching pins on the body side (three locations - one in the center and the remaining two on both sides) into the instrument panel assembly and the beam COMPL - steering.
(5) Install the duct - center vent front, and secure the instrument panel assembly to the beam COMPL - steering with screws.

4) Insert the matching pins on the body side (three locations - one in the center and the remaining two on both sides) into the instrument panel assembly and the beam COMPL - steering.
5) Install the telematics sub antenna.

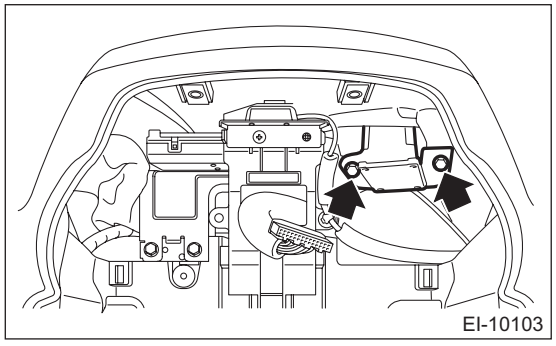

6) Install the passenger's airbag module.

Tightening torque:
7.5 N·m (0.8 kgf-m, 5.5 ft-lb)

7) Install the column assembly - steering.

Tightening torque:
Column assembly - steering: <Ref. to PS-3, STEERING WHEEL AND COLUMN, COMPONENT, General Description.>

8) Install the cover side sill - front and the front cover - side sill on the left and right sides.
9) Install the speaker assembly.
10) Install the keyless access CM.

Tightening torque:
7.5 N·m (0.8 kgf-m, 5.5 ft-lb)

11) Install the combination meter assembly.

Tightening torque:
7 N·m (0.7 kgf-m, 5.2 ft-lb)

12) Install the visor assembly - lower.
13) Install the audio assembly or navigation assembly.
14) Install the heater control assembly.
15) Install the center grille assembly.
16) Install the glove box assembly.
17) Install the trim panel - front pillar UPR on the RH and LH sides.
18) Install the grille speaker side on the RH and LH sides.
19) Install the panel - knee guard.

Tightening torque:
7 N·m (0.7 kgf-m, 5.2 ft-lb)

20) Install the cover assembly - instrument panel LWR driver.
21) Install the body side weather strip - flange front.
22) Install the ornament panel - console, cover assembly - front, console box assembly and the panel center LWR.

Tightening torque:
Console box assembly: 6.5 N·m (0.6 kgf-m, 4.8 ft-lb)

23) Install the front seat assembly to the body. <Ref. to SE-12, INSTALLATION, Front Seat.>
24) Connect the ground terminal to battery sensor. <Ref. to RC-4, BATTERY, NOTE, Repair Contents.>

24.Lower Inner Trim

A: REMOVAL

CAUTION:
• Refer to "CAUTION" of "General Description" before handling the airbag system components. <Ref. to AB-10, CAUTION, General Description.>
• If the hook - rear seat is disconnected from the vehicle body, make sure to replace the hook - rear seat with a new part to prevent the decline of the fixed force of the seat.

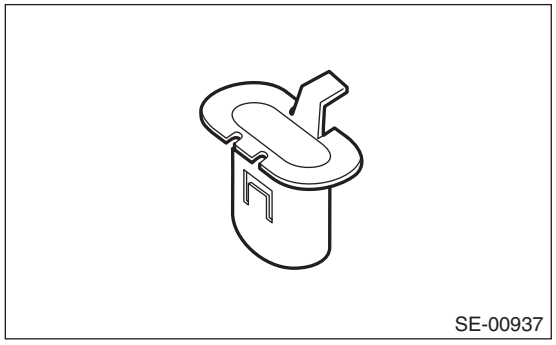

1) Disconnect the ground terminal from the battery sensor, and wait for at least 60 seconds before starting work. <Ref. to RC-4, BATTERY, NOTE, Repair Contents.>
2) Release the claws, and then remove the cover side sill - front.

CAUTION:
Do not pull with excessive force. Doing so may damage the claws of the cover side sill - front.

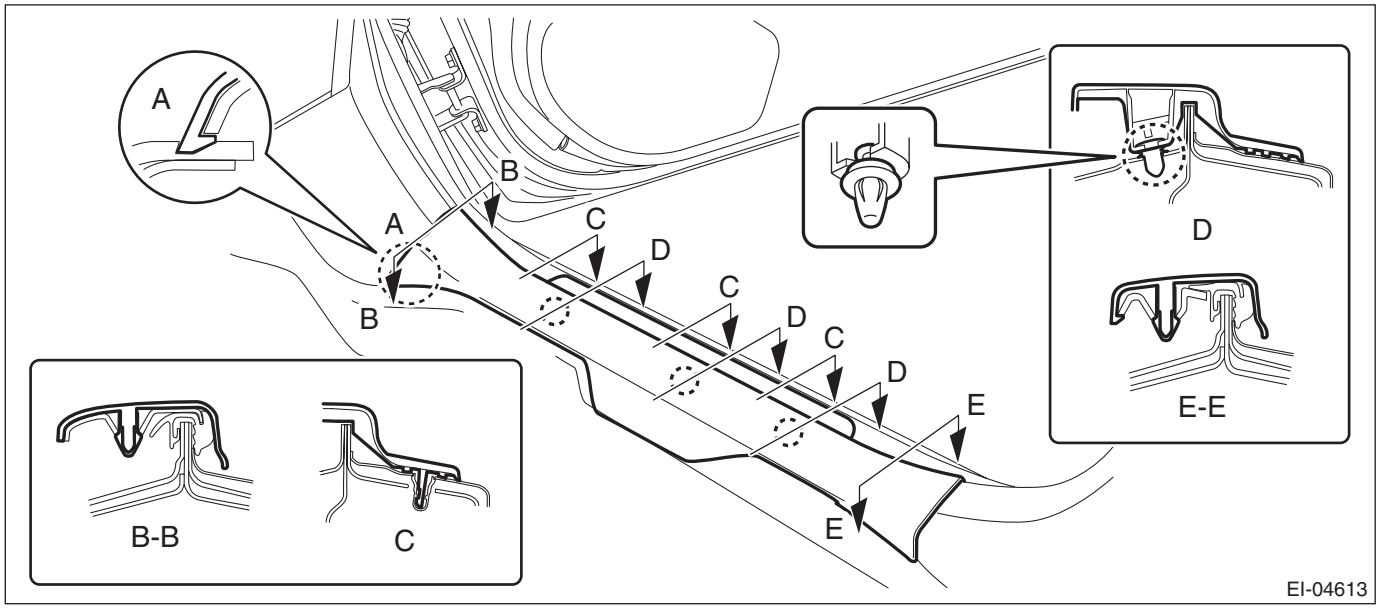

3) Remove the clips, and remove the front cover - side sill.

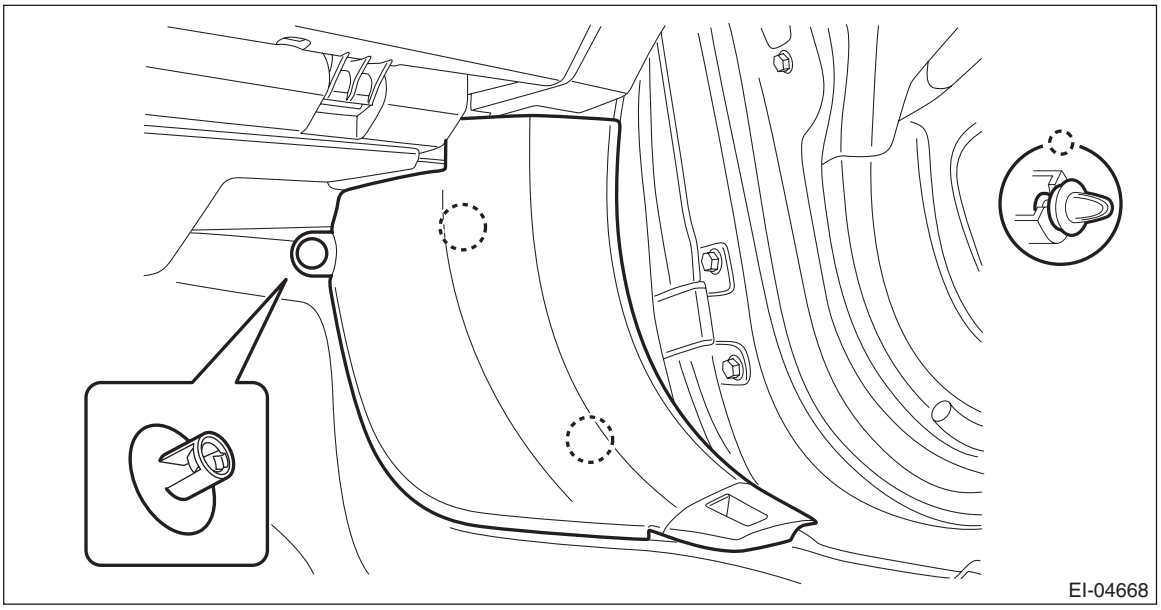

4) Remove the rear seat cushion assembly. <Ref. to SE-33, REMOVAL, Rear Seat.>
5) Release the clips and claws, and then remove the cover side sill - rear.

CAUTION:
Do not pull with excessive force. Doing so may damage the claws of the cover side sill - rear.

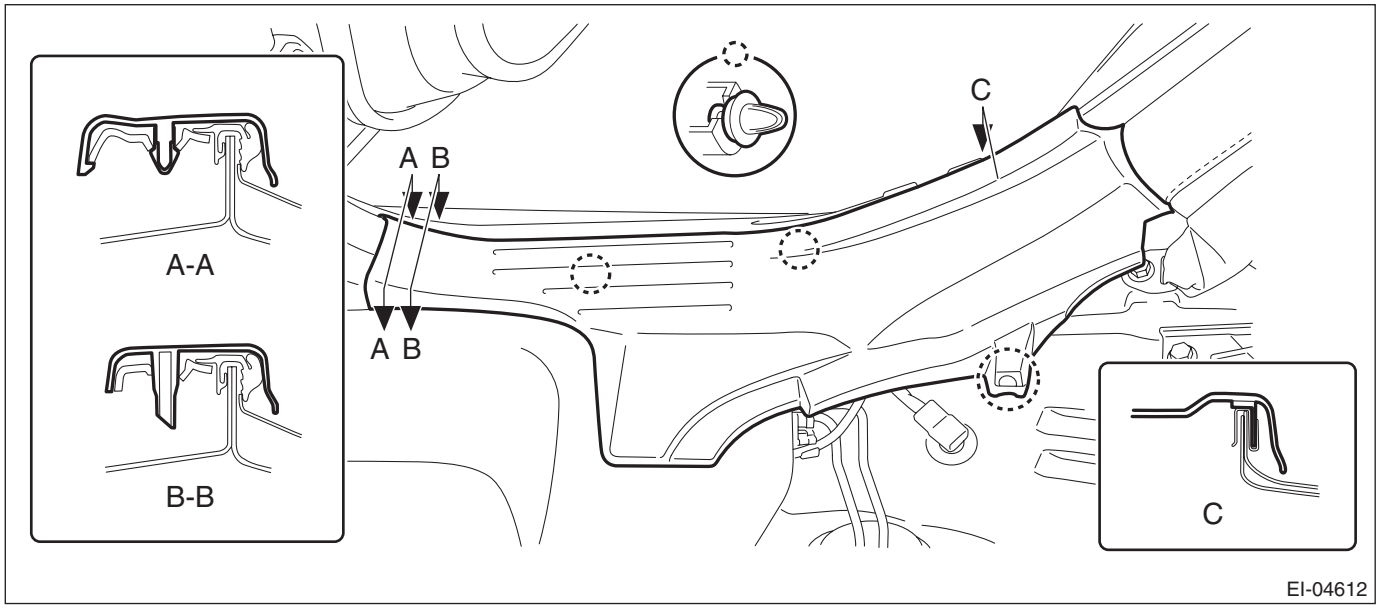

6) Remove the trim panel - center pillar LWR.
(1) Release the clip by pulling the trim panel - center pillar LWR toward you.
(2) Expand the claws of the trim panel - center pillar LWR outward, and remove it from the trim panel - center pillar UPR.

CAUTION:
- **Do not expand the trim panel - center pillar LWR excessively. Doing so may damage the trim.**
- **If the claw is damaged, always replace the trim panel - center pillar LWR with a new part, because the damaged claw cannot hold the part sufficiently.**

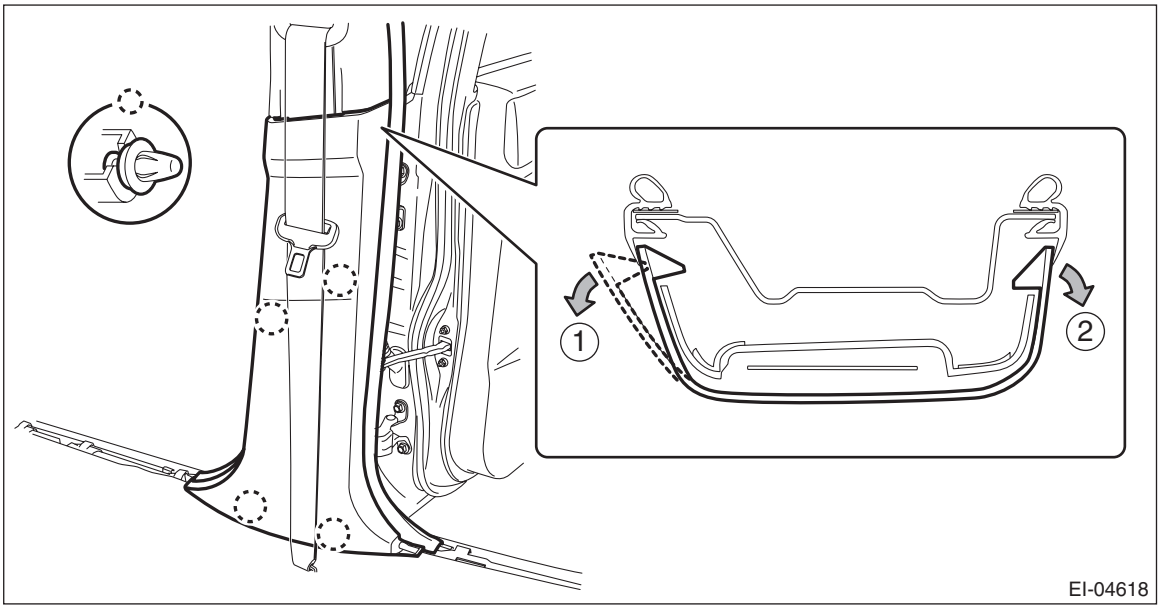

NOTE:
First release the claw located to the front of the vehicle.
7) Disconnect the claws and remove the cover - catcher.

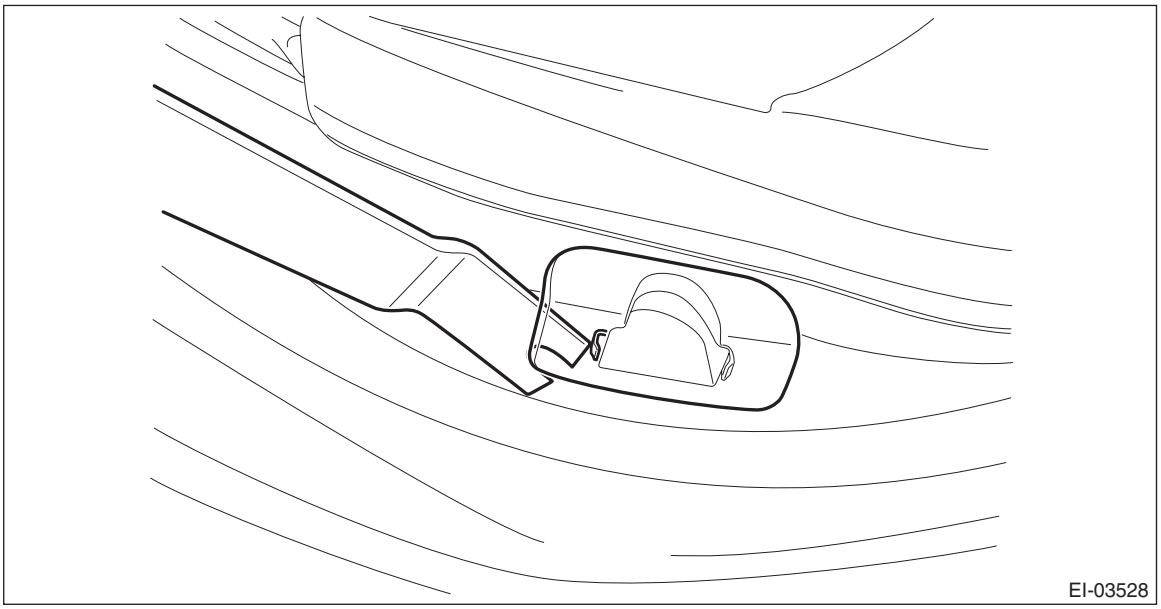

NOTE:
Remove the cover - catcher by using a plastic remover.

B: INSTALLATION

CAUTION:
If the hook - rear seat is disconnected from the vehicle body, make sure to replace the hook - rear seat with a new part to prevent the decline of the fixed force of the seat.

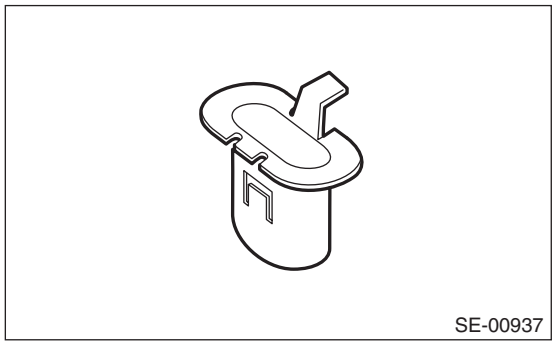

1) Install the cover - catcher.
2) Install the trim panel - center pillar LWR.

NOTE:
Assemble the trim panel - center pillar LWR to the trim panel - center pillar UPR securely.

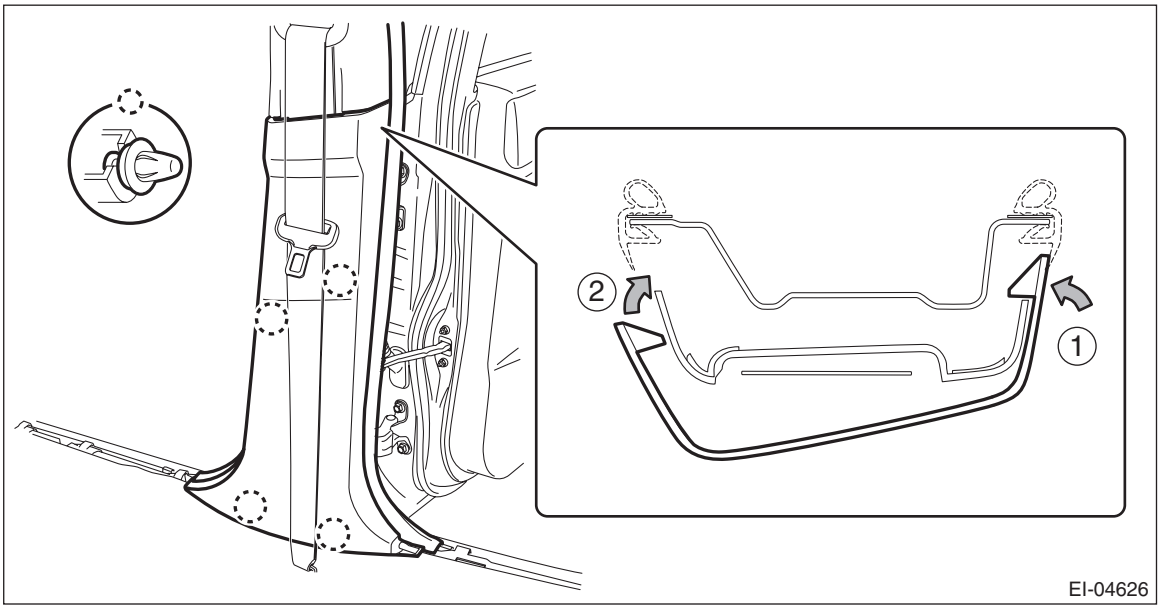

3) Install the cover side sill - rear.
4) Install the rear seat cushion assembly.
5) Install the front cover - side sill.
6) Install the cover side sill - front.

25.Upper Inner Trim

A: REMOVAL

CAUTION:
• Refer to "CAUTION" of "General Description" before handling the airbag system components. <Ref. to AB-10, CAUTION, General Description.>
• If the hook - rear seat is disconnected from the vehicle body, make sure to replace the hook - rear seat with a new part to prevent the decline of the fixed force of the seat.

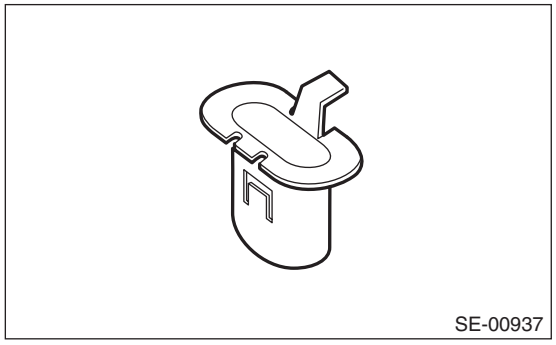
SE-00937

1) Disconnect the ground terminal from the battery sensor, and wait for at least 60 seconds before starting work. <Ref. to RC-4, BATTERY, NOTE, Repair Contents.>
2) Remove the trim panel - front pillar UPR.
(1) Pull the trim panel - front pillar UPR towards the center of the vehicle to release the clips.
(2) Rotate the trim panel - front pillar UPR in the arrow direction.
(3) Release the hook at the end of the tether clip, and remove the trim panel - front pillar UPR.

CAUTION:
• Do not use any tool when releasing the hook at the end of the trim panel - front pillar UPR.
• Be careful not to damage the surface of the trim panel - front pillar UPR and the curtain airbag module.

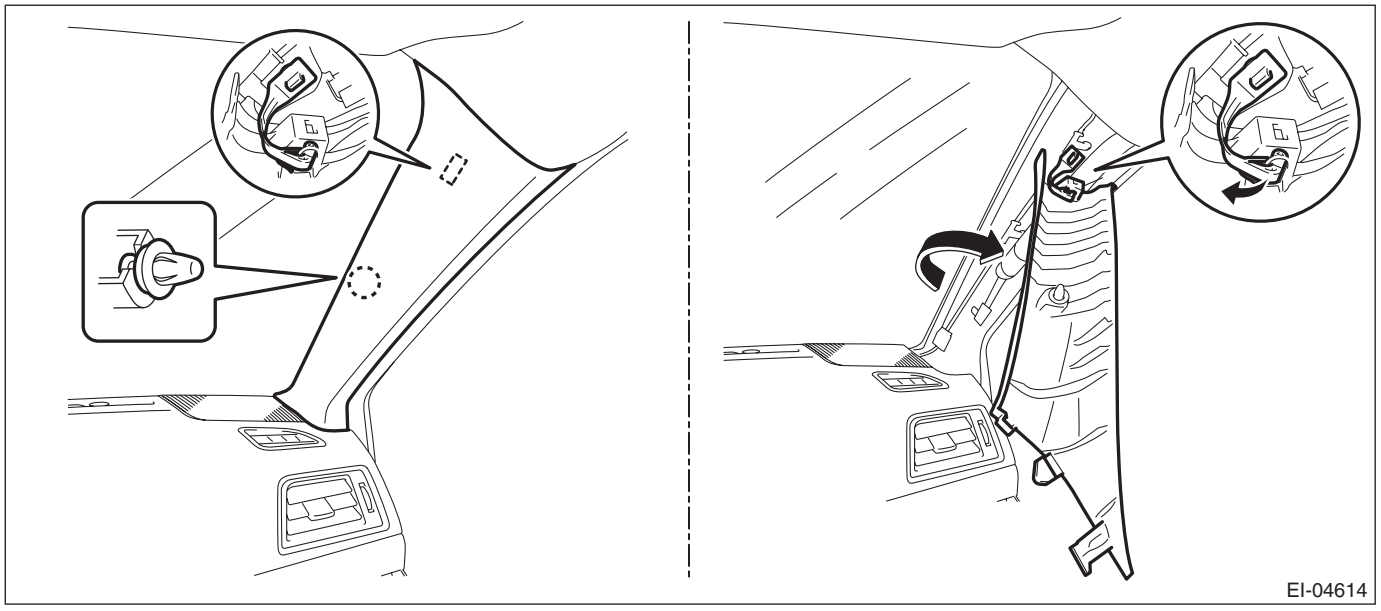
EI-04614

3) Remove the rear seat cushion assembly. <Ref. to SE-33, REMOVAL, Rear Seat.>
4) Remove the cover side sill - front, cover side sill - rear, and the trim panel - center pillar LWR. <Ref. to EI-92, REMOVAL, Lower Inner Trim.>

5) Remove the trim panel - center pillar UPR.
(1) Remove the cap (a), and remove the bolts.
(2) Remove the lower anchor bolt of the seat belt outer - front.

NOTE:
On passenger's side, disconnect the connector of the seat belt tension sensor. <Ref. to AB-25, BELT TENSION SENSOR, PROCEDURE, Airbag Connector.>

(3) Release the clip by pulling the lower part of the trim toward you.
(4) Expand the claws outward, and remove the trim panel - center pillar UPR.

CAUTION:
• Do not expand the trim panel - center pillar UPR excessively. Doing so may damage the trim.
• If the claw is damaged, always replace the trim panel - center pillar UPR with a new part, because the damaged claw cannot hold the part sufficiently.

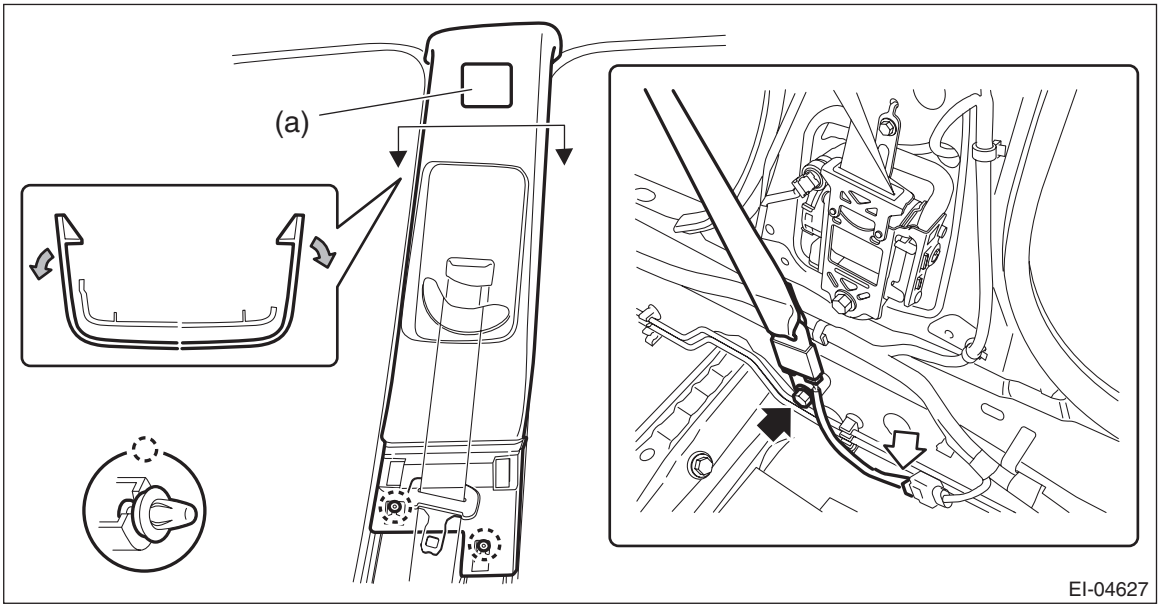

B: INSTALLATION

CAUTION:
• When reusing the tether clip on the upper part of the trim panel - front pillar UPR, check that there is no damage to the tether clip. If the tether clip is damaged, always replace it with a new tether clip. If the tether clip is damaged, its holding force is reduced and the trim panel - front pillar UPR may come off.
• Do not reuse the tether clip removed from the upper part of the trim panel - front pillar UPR. Always replace with a new part.
• Before installing the trim panel - front pillar UPR, check the condition of protective non-woven fabric (white) of the curtain airbag. If it is damaged (airbag module cloth is exposed), replace the curtain airbag module assembly with a new part.
• If the hook - rear seat is disconnected from the vehicle body, make sure to replace the hook - rear seat with a new part to prevent the decline of the fixed force of the seat.

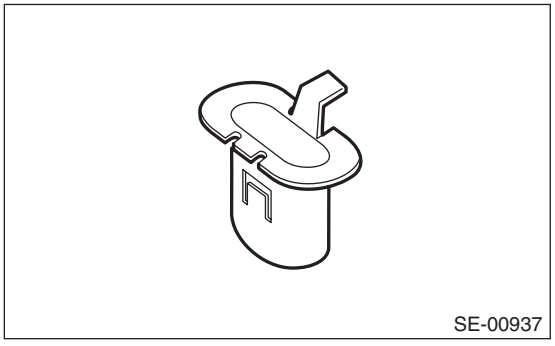

1) Remove the remaining tether clips from the vehicle body.
2) Install the trim panel - front pillar UPR.
   (1) Hook the tip of the tether clip on the trim panel - front pillar UPR.
   (2) Rotate the trim panel - front pillar UPR in the arrow direction as shown in the figure.
   (3) Insert the claw at the end of the trim panel - front pillar UPR, and engage the clip.

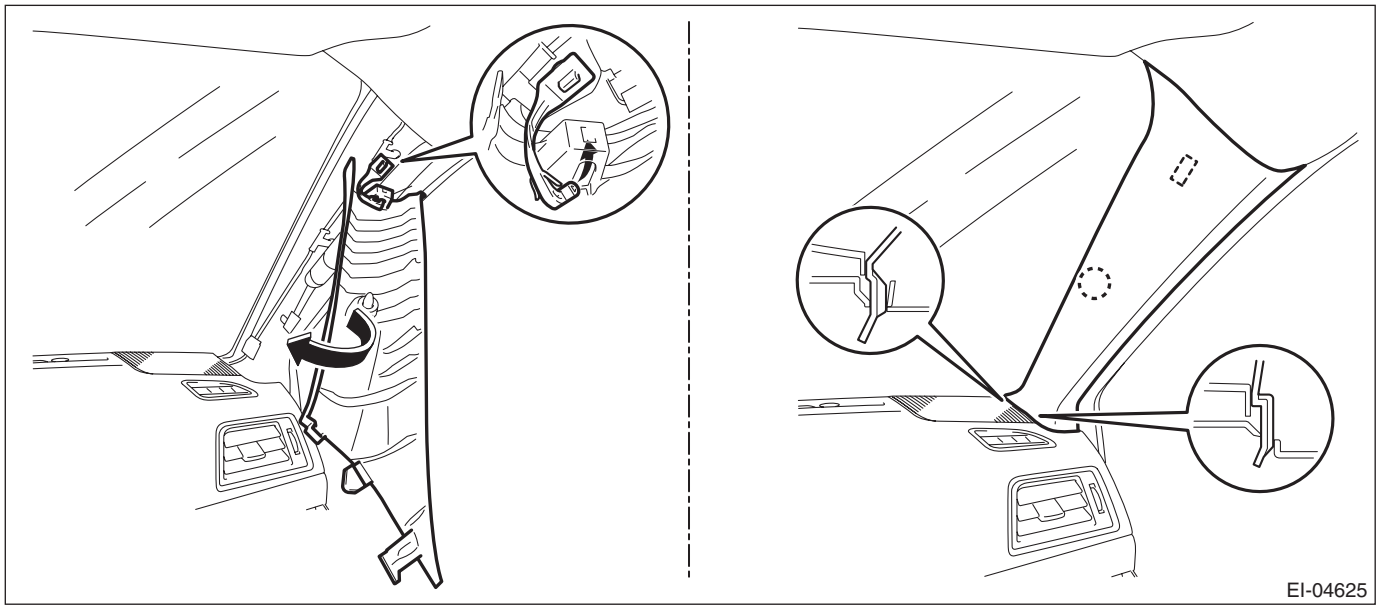

3) Install the trim panel - center pillar UPR.

Tightening torque:
Trim panel - center pillar UPR: 7.5 N·m (0.8 kgf-m, 5.5 ft-lb)
Front seat belt anchor: 30 N·m (3.1 kgf-m, 22.1 ft-lb)

4) Install the trim panel - center pillar LWR, cover side sill - front, and cover side sill - rear.

NOTE:
Assemble the trim panel - center pillar LWR to the trim panel - center pillar UPR securely.

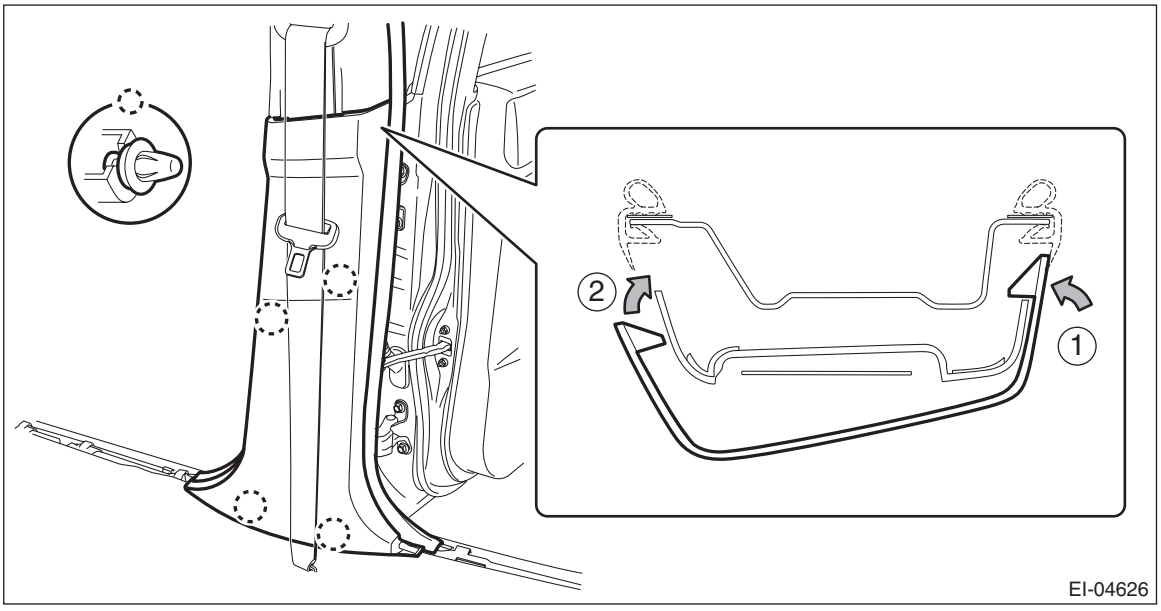

5) Install the rear seat cushion assembly.

26.Rear Quarter Trim

A: REMOVAL

1. SEDAN MODEL

CAUTION:
• Refer to "CAUTION" of "General Description" before handling the airbag system components. <Ref. to AB-10, CAUTION, General Description.>
• If the hook - rear seat is disconnected from the vehicle body, make sure to replace the hook - rear seat with a new part to prevent the decline of the fixed force of the seat.

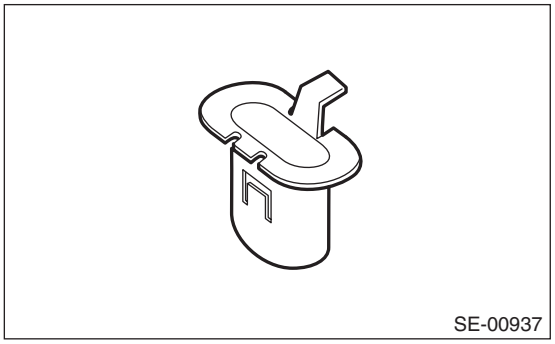
SE-00937

1) Disconnect the ground terminal from the battery sensor, and wait for at least 60 seconds before starting work. <Ref. to RC-4, BATTERY, NOTE, Repair Contents.>
2) Remove the rear seat cushion assembly. <Ref. to SE-33, REMOVAL, Rear Seat.>
3) Remove the bolts, and pull up the side pad assembly - backrest to remove.

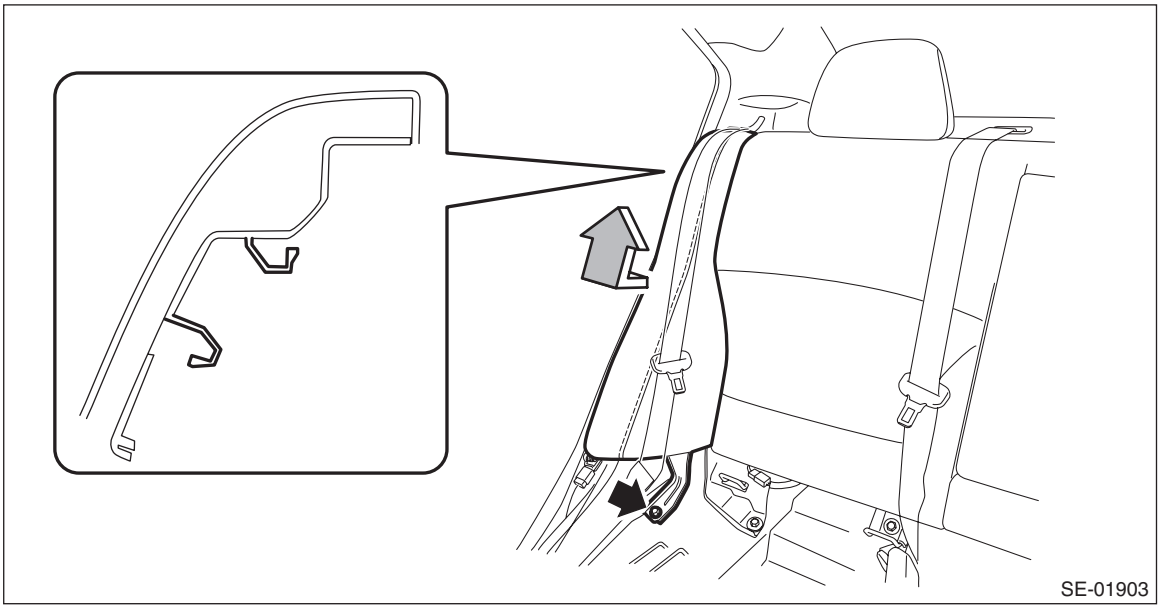
SE-01903

4) Remove the clips, and remove the trim panel - rear pillar UPR.

NOTE:
Remove the seat belt from the opening.

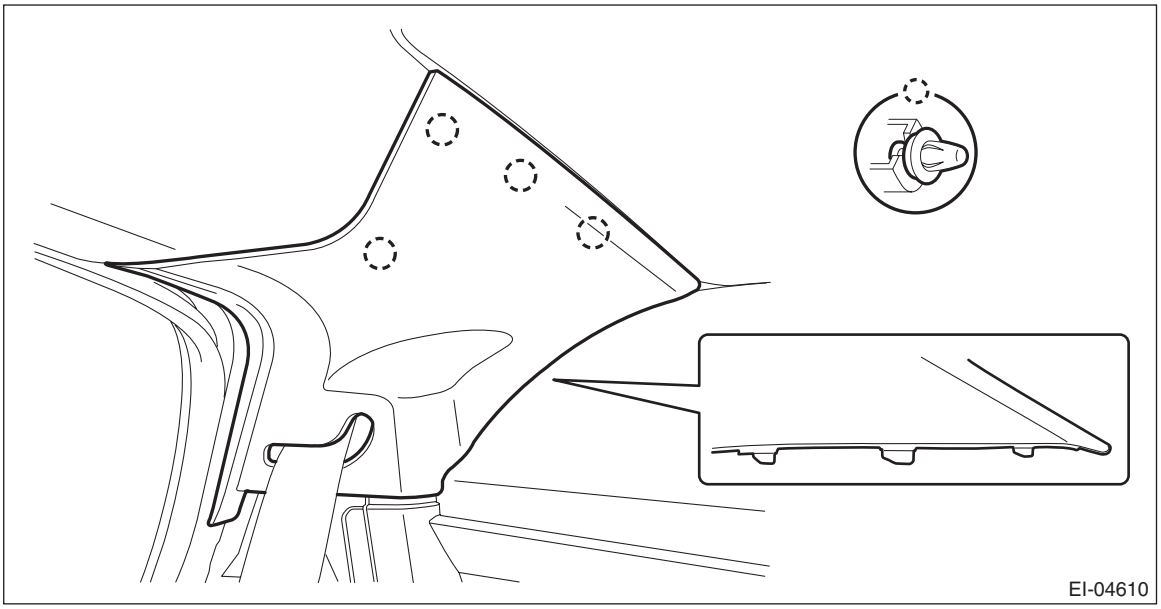

2. OUTBACK MODEL

CAUTION:
• Refer to "CAUTION" of "General Description" before handling the airbag system components. <Ref. to AB-10, CAUTION, General Description.>
• If the hook - rear seat is disconnected from the vehicle body, make sure to replace the hook - rear seat with a new part to prevent the decline of the fixed force of the seat.

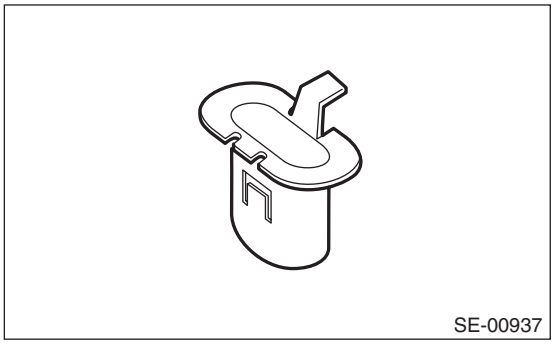

1) Disconnect the ground terminal from the battery sensor, and wait for at least 60 seconds before starting work. <Ref. to RC-4, BATTERY, NOTE, Repair Contents.>
2) Remove the rear seat cushion assembly and side pad assembly - backrest. <Ref. to SE-35, OUTBACK MODEL, REMOVAL, Rear Seat.>

3) Remove the mat - rear floor, box - sub trunk, and spacer - rear floor.

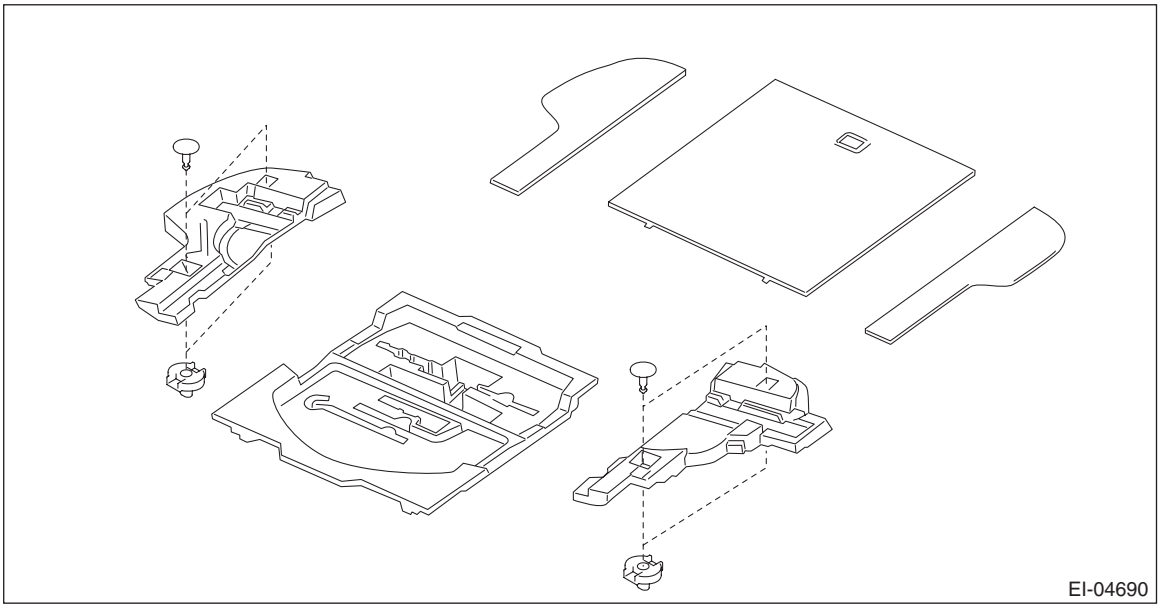

4) Remove the clips, and remove the trim panel - rear skirt.

CAUTION:
- **Do not lift the trim panel - rear skirt from the edge. Doing so may damage the part.**
- **Do not reuse the clips. Once the clip is removed, its holding force is reduced. Be sure to replace it with a new clip.**

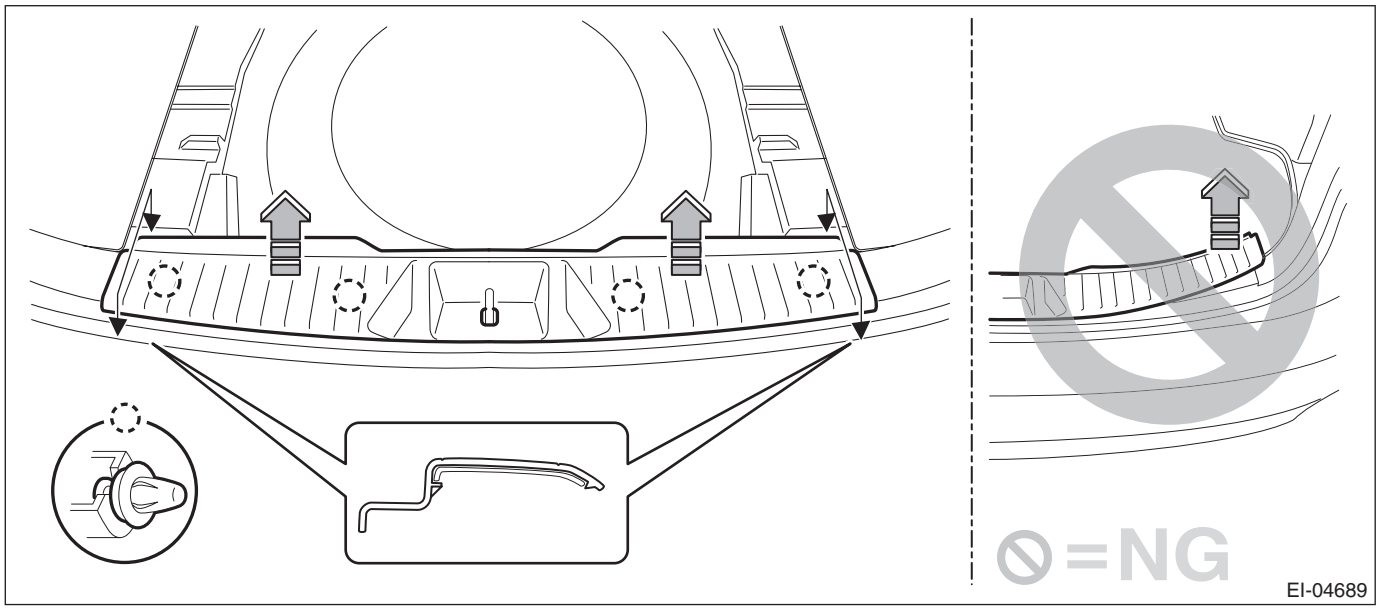

5) Remove the trim panel - rear apron.
(1) Remove the covers, screws, and bolts. (a), (c), (d)
(2) Take out the hook and remove the screw inside. (b)
(3) Remove the clips, and remove the trim panel - rear apron.

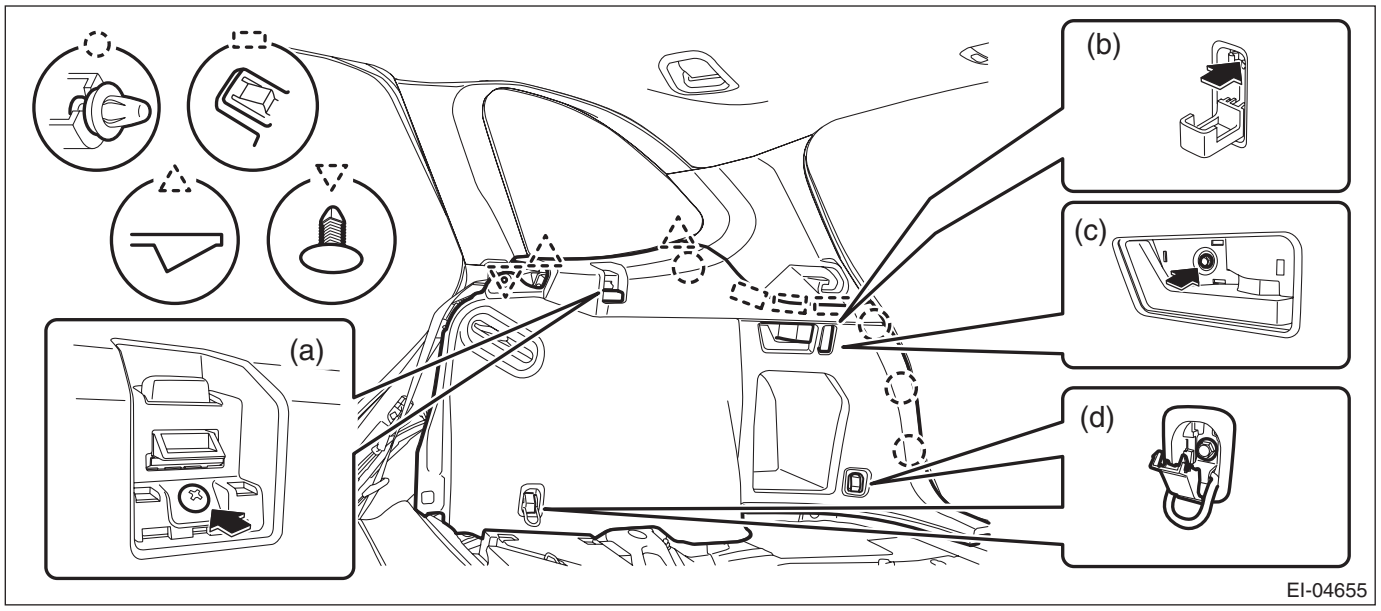

NOTE:
For LH side, disconnect the accessory socket connector.
6) Remove the rear quarter trim UPR.
(1) Remove the screws and clips, and remove the rear quarter trim UPR - rear.

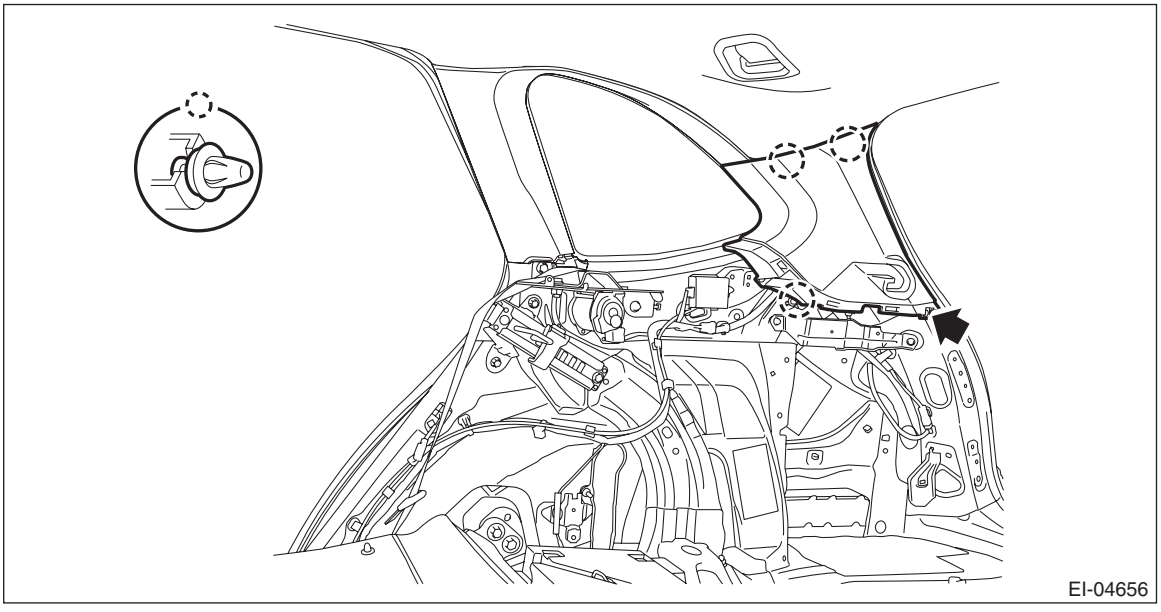

(2) Remove the clips, and remove the rear quarter trim UPR - front.

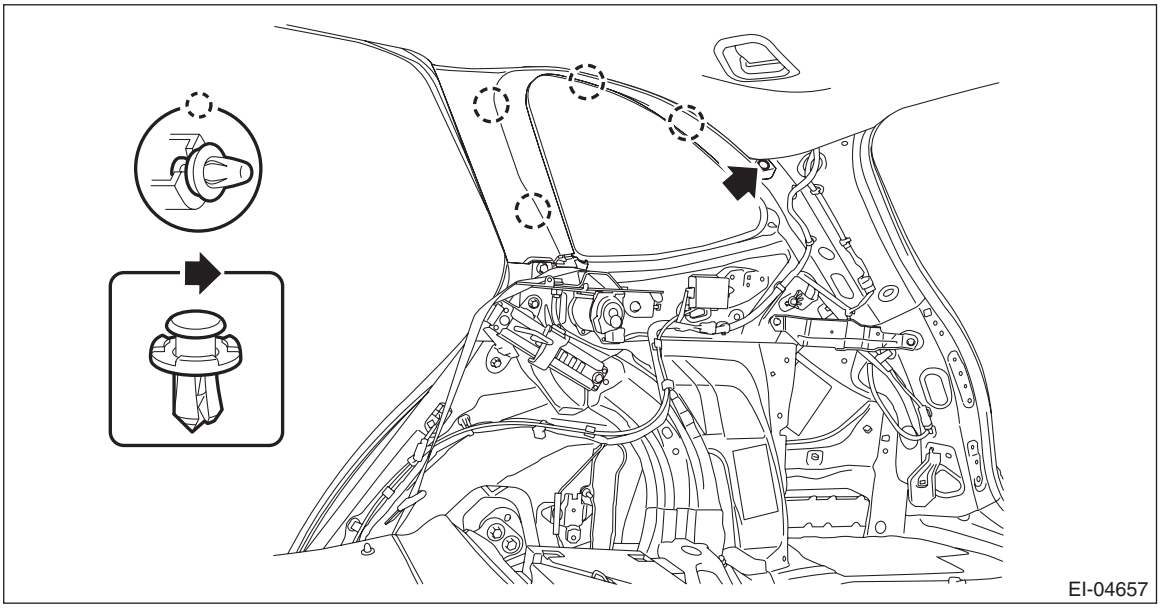

B: INSTALLATION

1. SEDAN MODEL

CAUTION:
If the hook - rear seat is disconnected from the vehicle body, make sure to replace the hook - rear seat with a new part to prevent the decline of the fixed force of the seat.

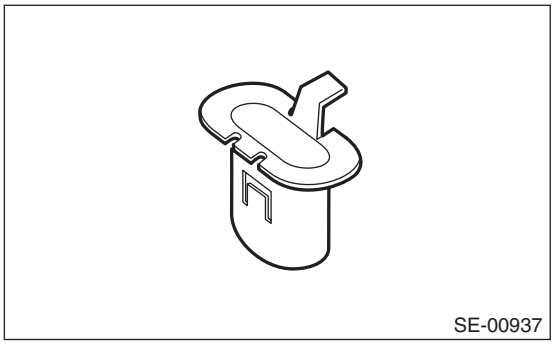

1) Install the trim panel - rear pillar UPR.
2) Install the side pad assembly - backrest.

Tightening torque:
53 N·m (5.4 kgf-m, 39.1 ft-lb)

3) Install the rear seat cushion assembly.
4) Connect the ground terminal to battery sensor. <Ref. to RC-4, BATTERY, NOTE, Repair Contents.>

2. OUTBACK MODEL

CAUTION:
If the hook - rear seat is disconnected from the vehicle body, make sure to replace the hook - rear seat with a new part to prevent the decline of the fixed force of the seat.

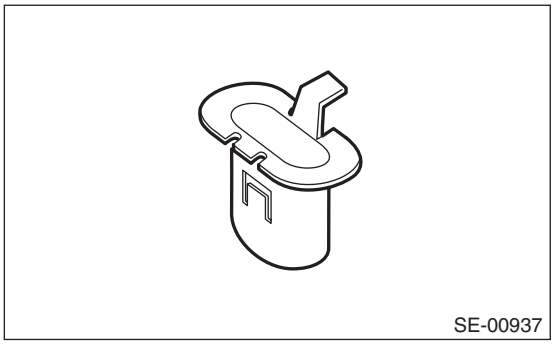
SE-00937

1) Install the rear quarter trim UPR.

NOTE:
Insert the claw of the rear quarter trim UPR - rear into the rear quarter trim UPR - front.

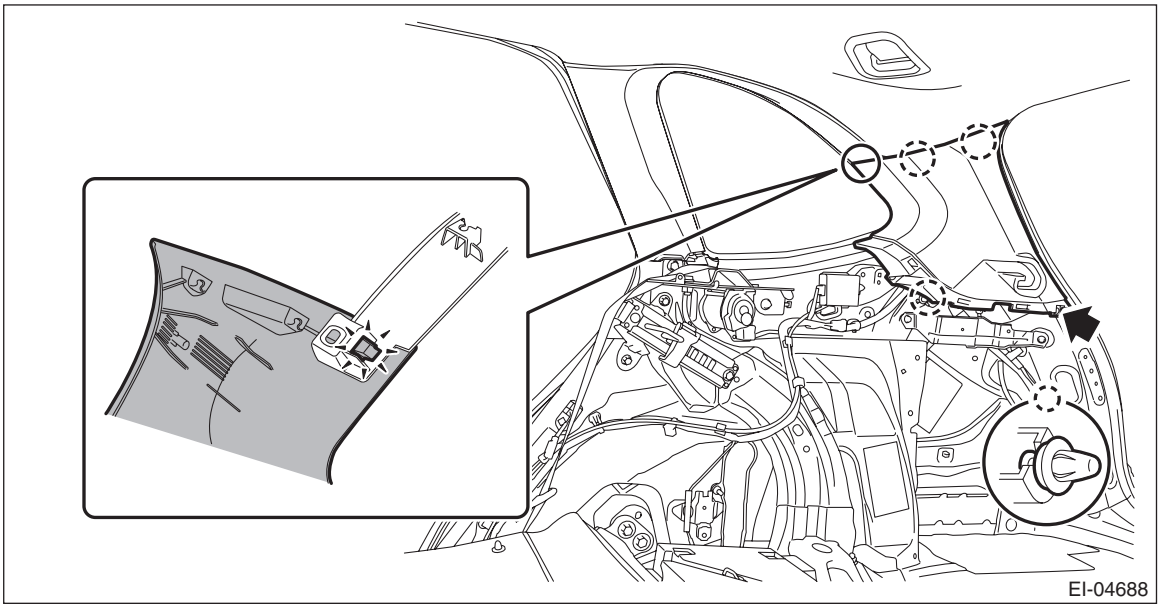
EI-04688

2) Install the trim panel - rear apron.
3) Install the mat - rear floor, box - sub trunk, and spacer - rear floor.
4) Remove the clips, and install the trim panel - rear skirt.
5) Install the side pad assembly - backrest.

Tightening torque:
53 N·m (5.4 kgf-m, 39.1 ft-lb)
6) Install the rear seat cushion assembly.
7) Connect the ground terminal to battery sensor. <Ref. to RC-4, BATTERY, NOTE, Repair Contents.>

27.Rear Shelf Trim

A: REMOVAL

CAUTION:
• Refer to "CAUTION" of "General Description" before handling the airbag system components. <Ref. to AB-10, CAUTION, General Description.>
• If the hook - rear seat is disconnected from the vehicle body, make sure to replace the hook - rear seat with a new part to prevent the decline of the fixed force of the seat.

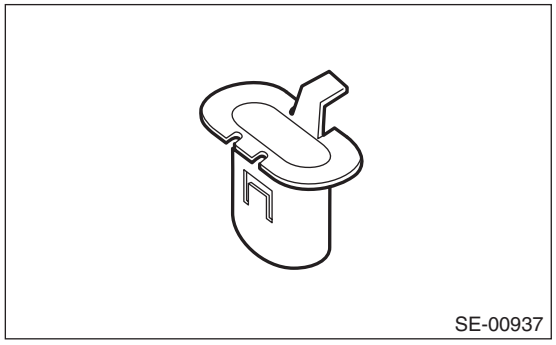
SE-00937

1) Disconnect the ground terminal from the battery sensor, and wait for at least 60 seconds before starting work. <Ref. to RC-4, BATTERY, NOTE, Repair Contents.>
2) Remove the rear seat cushion assembly. <Ref. to SE-33, REMOVAL, Rear Seat.>
3) Remove the side pad assembly - backrest and the trim panel - rear pillar UPR on the left and right sides. <Ref. to EI-99, SEDAN MODEL, REMOVAL, Rear Quarter Trim.>
4) Remove the bolts, and remove the lower anchor of the seat belt - rear shoulder CTR.

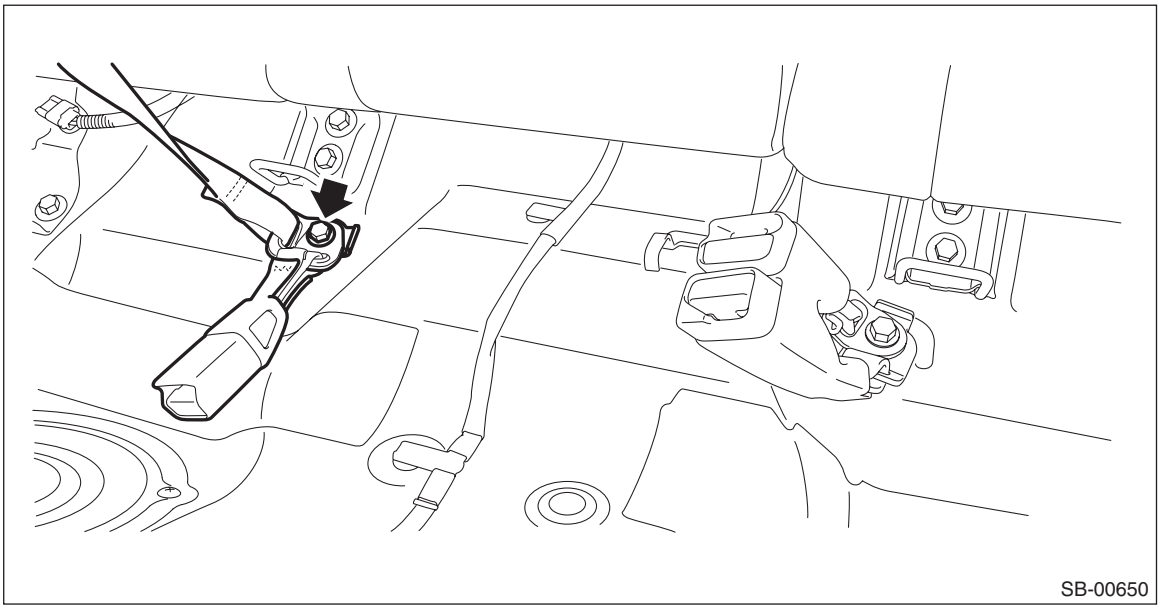
SB-00650

5) Pull the release lever in the trunk room, and then tilt the backrest forward.

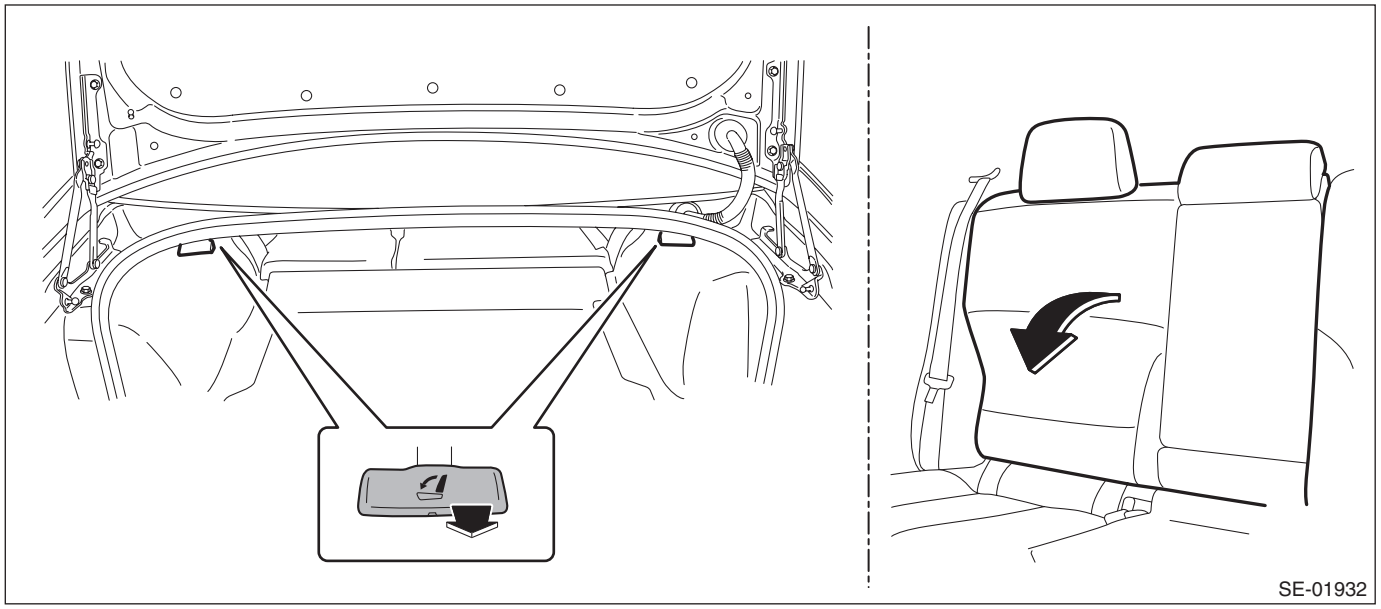

6) Release the clips and remove the trunk trim panel assembly - front on the left and right sides.

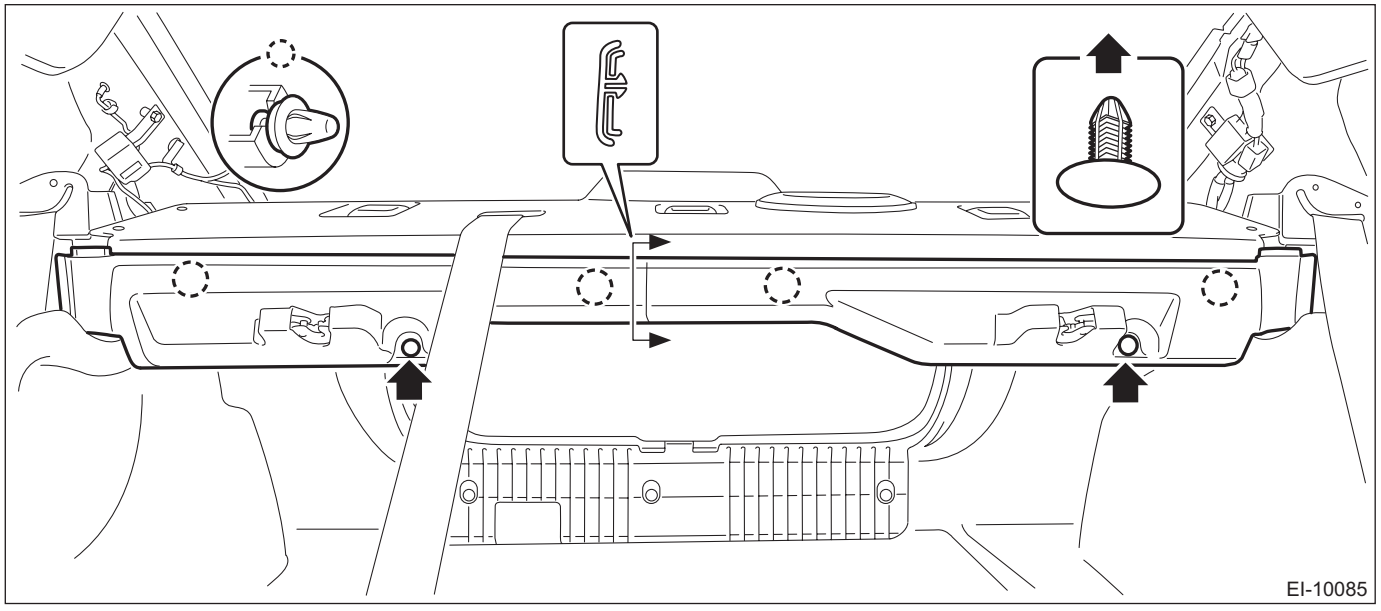

7) Remove the trim panel assembly - rear shelf.
(1) Release the clips to float the trim panel assembly - rear shelf.
(2) Release the belt guide, and guide the anchor of the seat belt - rear shoulder CTR to behind the trim panel - rear shelf assembly.
(3) Disconnect the connector of the light assembly - high-mounted.
(4) Remove the trim panel assembly - rear shelf.

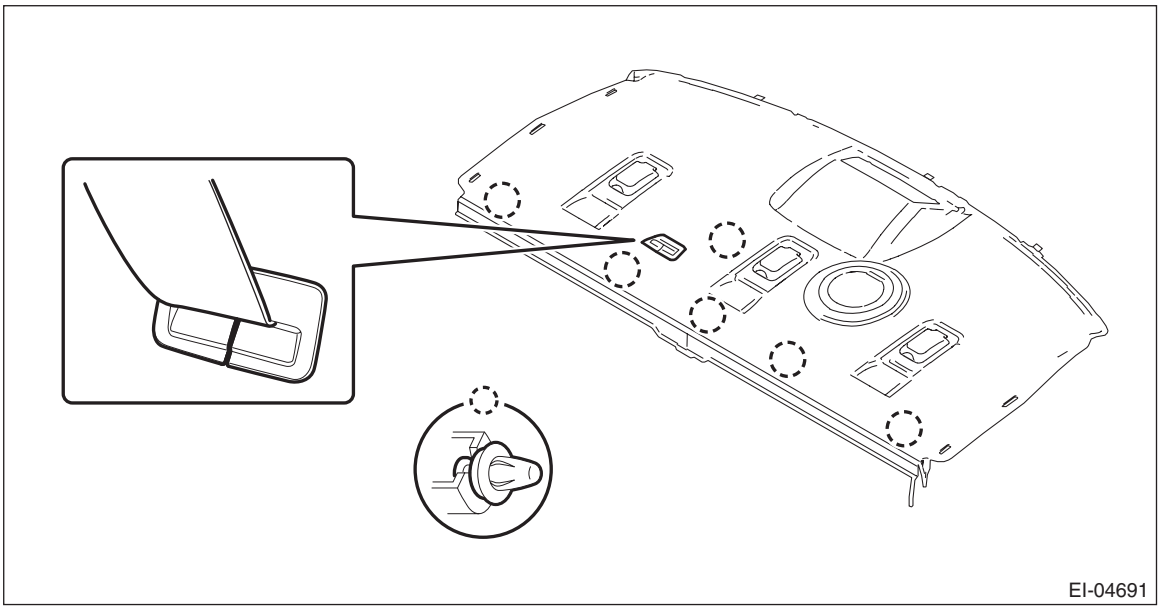
EI-04691

B: INSTALLATION

CAUTION:
• Make sure that the claw behind the trim panel assembly - rear shelf is securely attached to the hole of vehicle body.

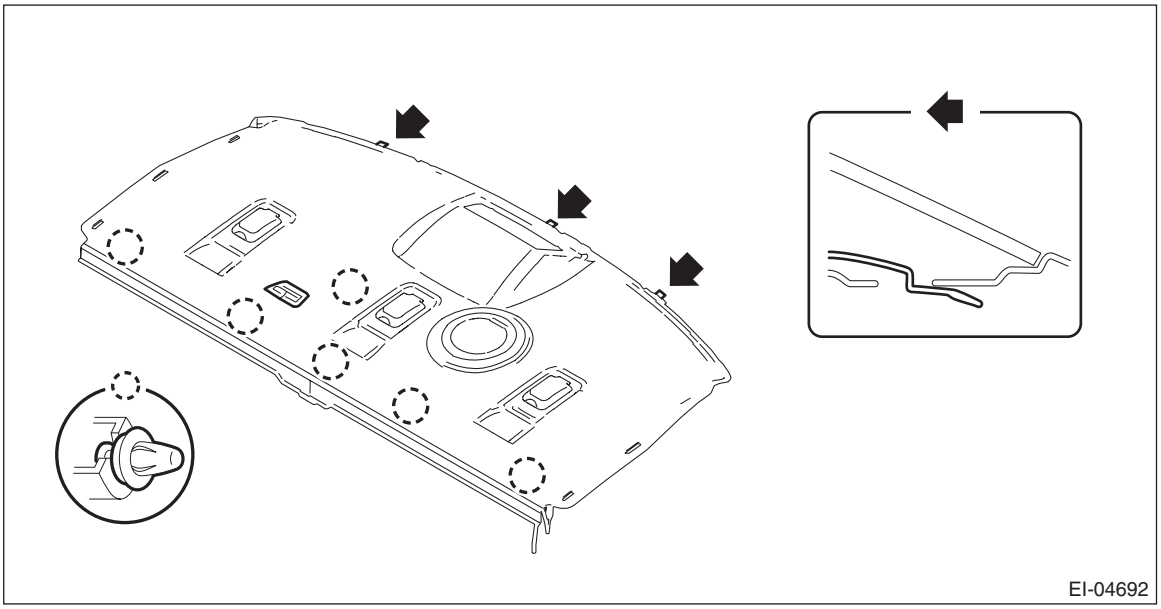
EI-04692

• If the hook - rear seat is disconnected from the vehicle body, make sure to replace the hook - rear seat with a new part to prevent the decline of the fixed force of the seat.

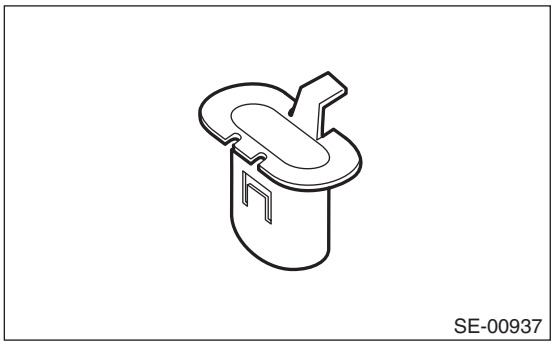
SE-00937

1) Install the trim panel assembly - rear shelf.
2) Install the high-mounted stop light.

CAUTION:
Make sure that the claw behind the light assembly - high-mounted is securely attached to the trim panel assembly - rear shelf.
3) Install the lower anchor of seat belt - rear shoulder CTR.

Tightening torque:
30 N·m (3.1 kgf-m, 22.1 ft-lb)
4) Install the trim panel - rear pillar UPR.
5) Install the side pad assembly - backrest.

Tightening torque:
53 N·m (5.4 kgf-m, 39.1 ft-lb)
6) Install the rear seat cushion assembly.
7) Connect the ground terminal to battery sensor. <Ref. to RC-4, BATTERY, NOTE, Repair Contents.>

28. Trunk Room Trim

A: REMOVAL

1) Remove the clips, and remove the trim panel - trunk lid.

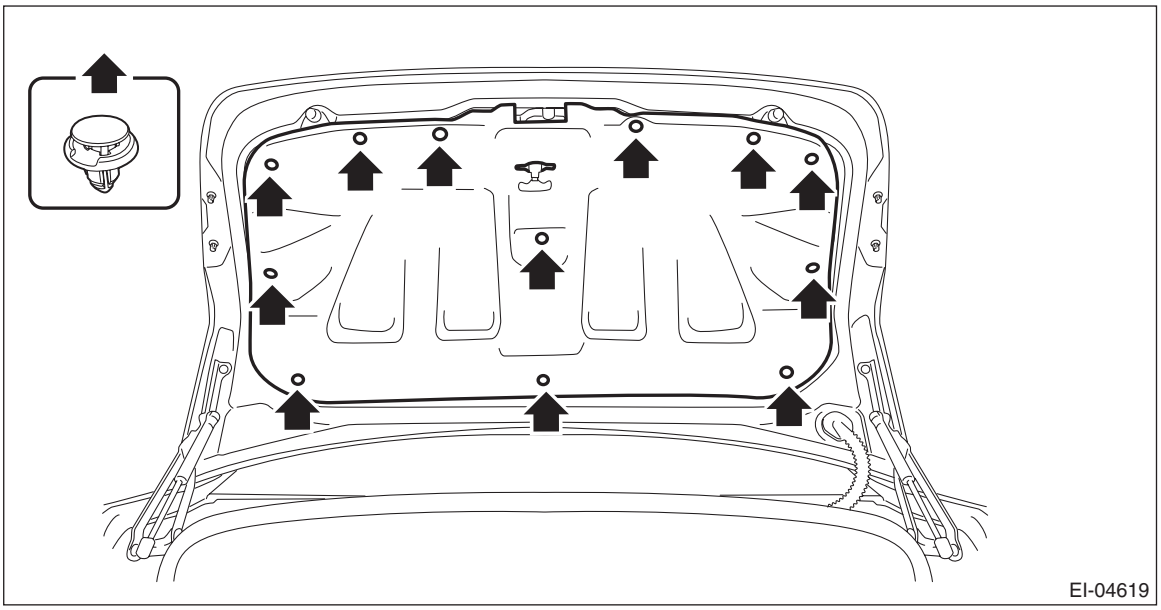

2) Pull the release lever in the trunk room, and then tilt the backrest forward.

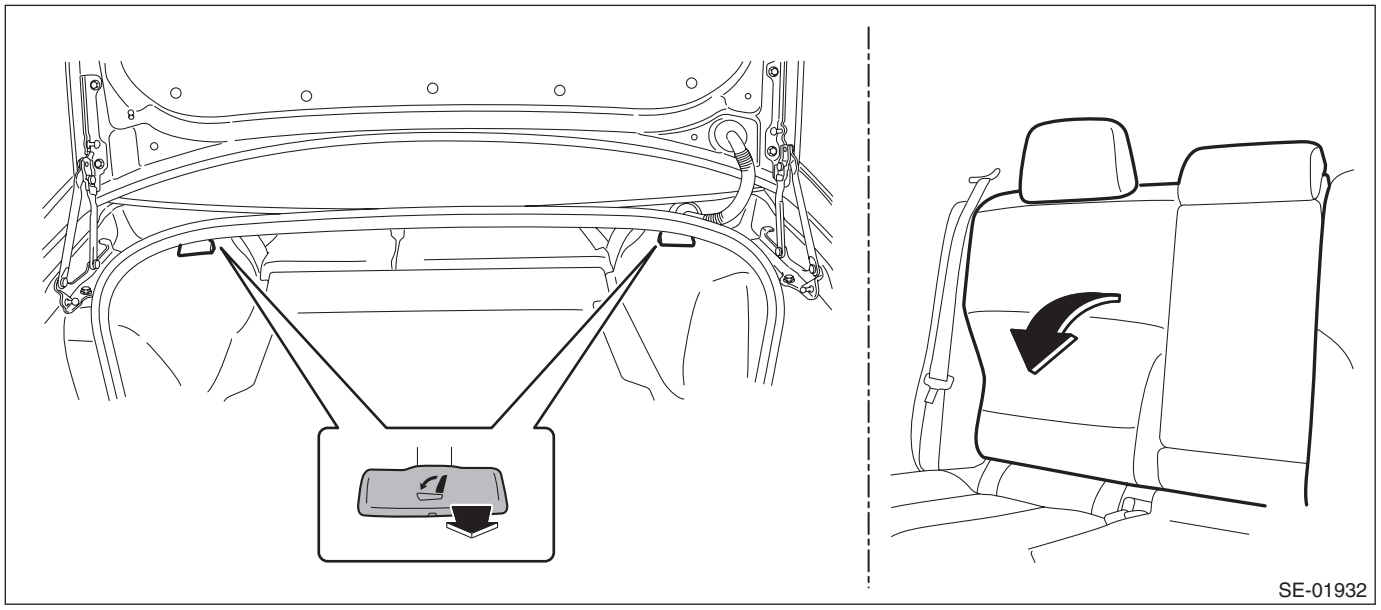

3) Remove the mat - trunk.

4) Remove the trim panel - trunk rear.
   (1) Remove the clip.
   (2) Release the claws, and remove the trim panel - trunk rear.

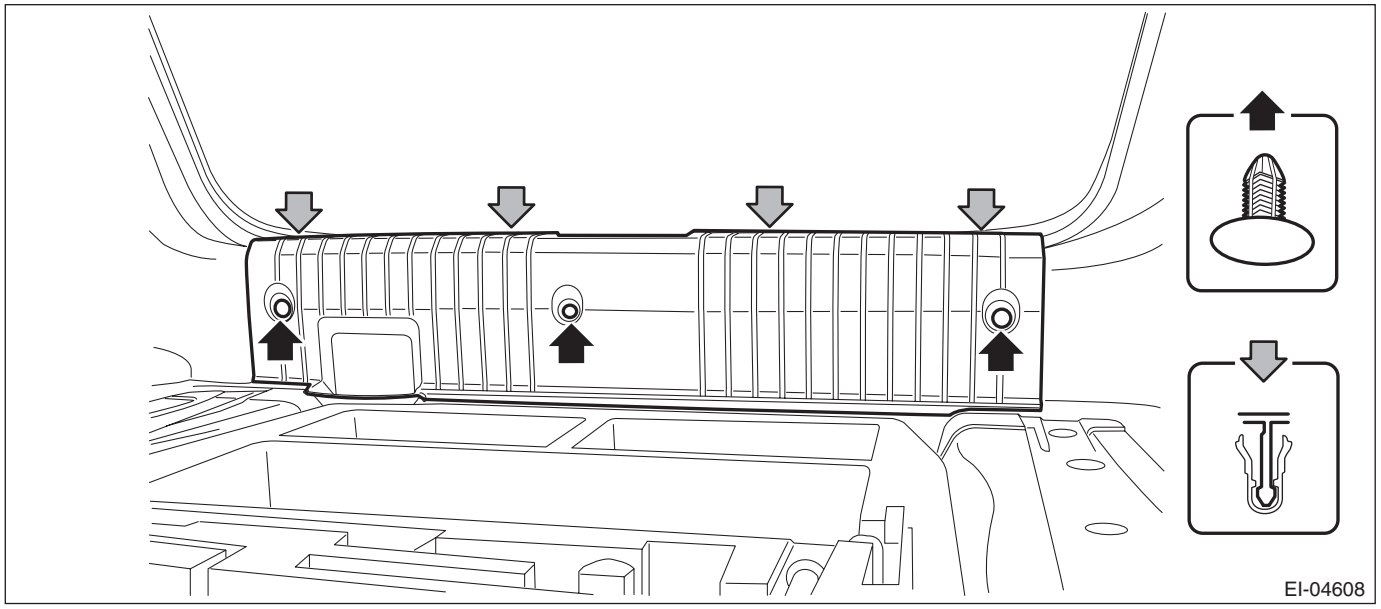

5) Remove the trunk trim panel - side.
   (1) Remove the hook.
   1. Turn the hook to 90°.
   2. Press the claw using a screwdriver to detach the hook.
   (2) Release the clips and remove the trunk trim panel - side.

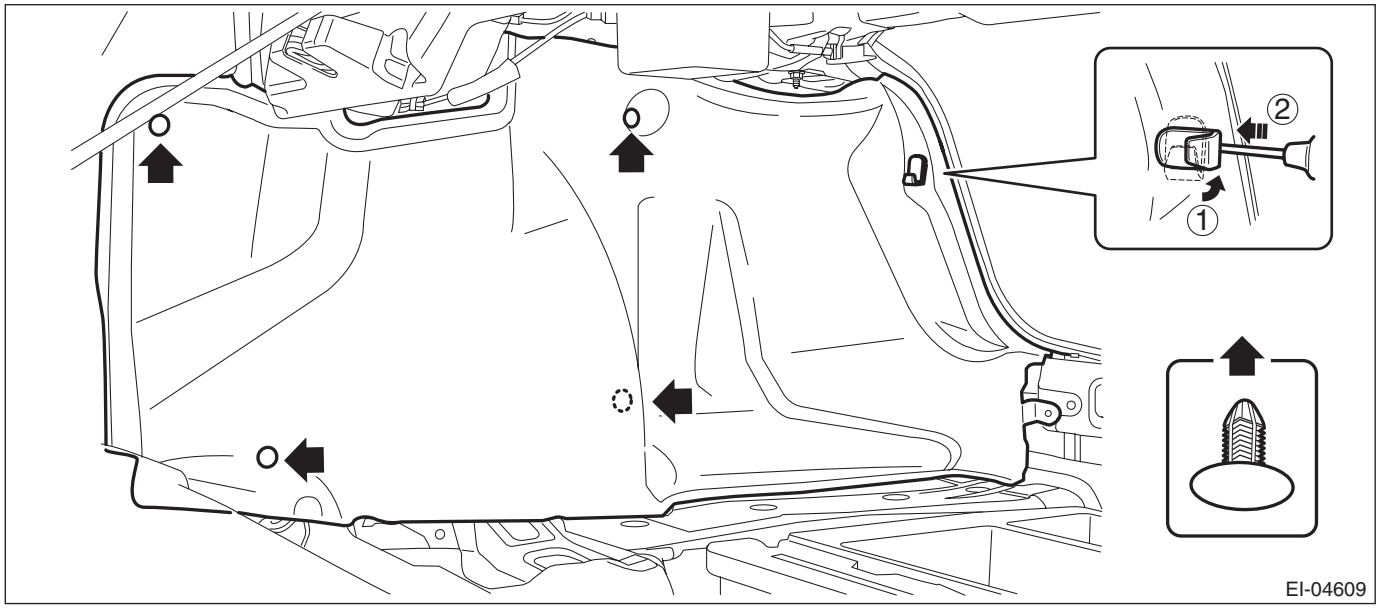

B: INSTALLATION

1) Install the trim panel - trunk lid.
2) Install the trunk room mat.
3) Install the trim panel - trunk rear.

29.Sun Visor

A: REMOVAL

1) Remove the sun visor assembly.
   (1) Detach the cover, and remove the screws.
   (2) Disconnect the connector, and remove the sun visor assembly.
2) Remove the hook - sun visor.
   (1) Press both sides using a flat tip screwdriver.
   (2) Remove the hook - sun visor by pulling it toward you.

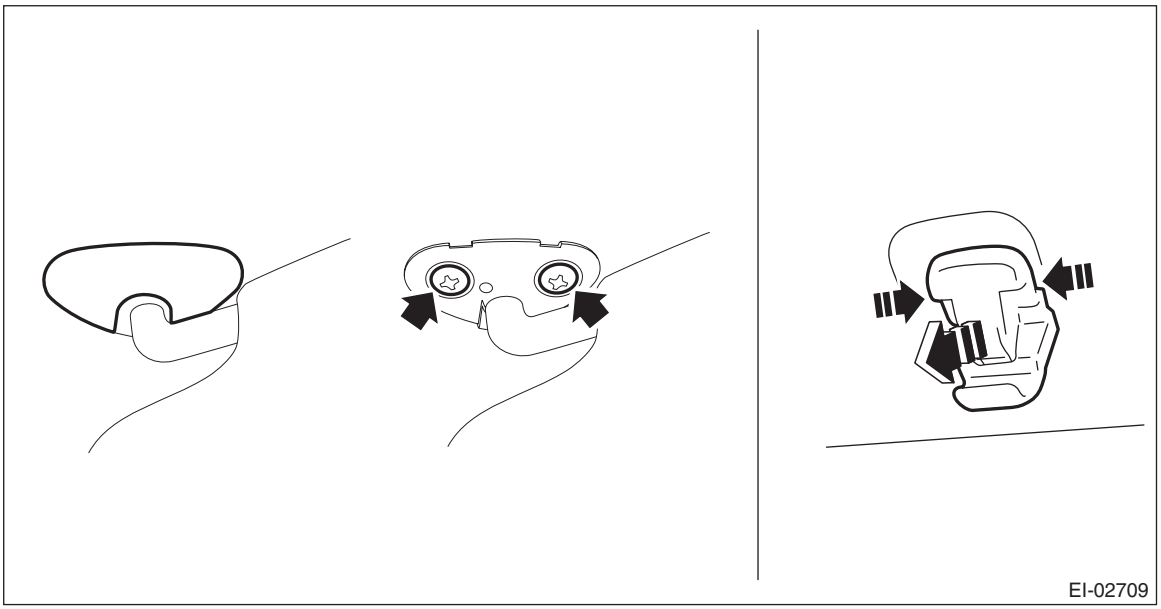

B: INSTALLATION

1) Install the hook - sun visor.
2) Install the sun visor assembly.

CAUTION:
Do not rotate the sun visor assembly when it is temporarily installed. The claw for temporary installation may be damaged.

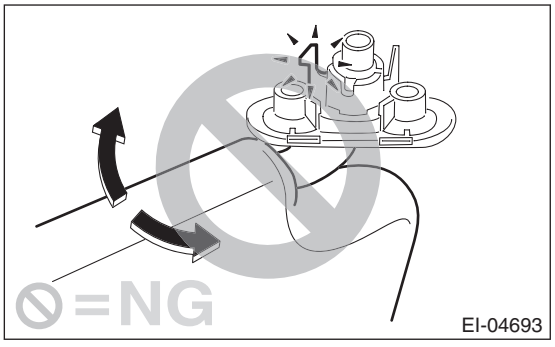

Tightening torque:
2 N·m (0.2 kgf-m, 1.5 ft-lb)

30.Assist Grip

A: REMOVAL

1) Pull up the cap (b) while pulling the knob (a) toward you with a flat tip screwdriver or similar tool wrapped with a protection tape.
2) Pull the assist grip toward yourself (toward the vehicle center) to remove.

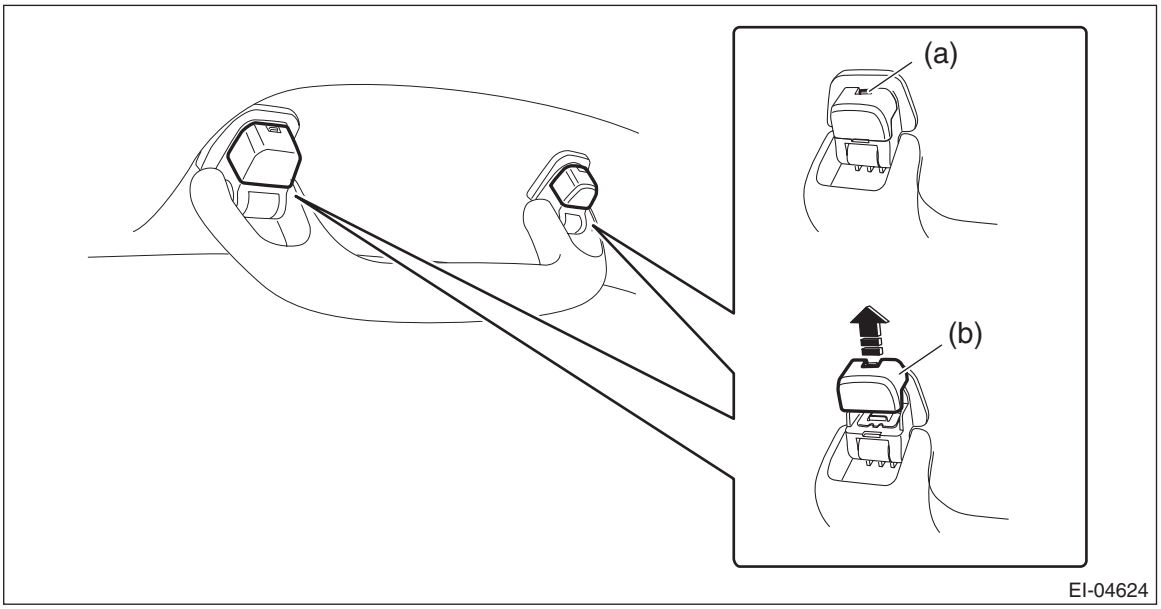

B: INSTALLATION

1) Pinch the metal clip with pliers, and remove it from the assist grip BRKT.
2) Install the metal clip to the assist grip side.
3) Install the cap to the assist grip.

NOTE:
If the metal clip is not inserted to the end, the cap cannot be installed.
4) Install the assist grip to the vehicle.

31.Roof Trim

A: REMOVAL

1. SEDAN MODEL

CAUTION:
• Refer to "CAUTION" of "General Description" before handling the airbag system components. <Ref. to AB-10, CAUTION, General Description.>
• If the hook - rear seat is disconnected from the vehicle body, make sure to replace the hook - rear seat with a new part to prevent the decline of the fixed force of the seat.

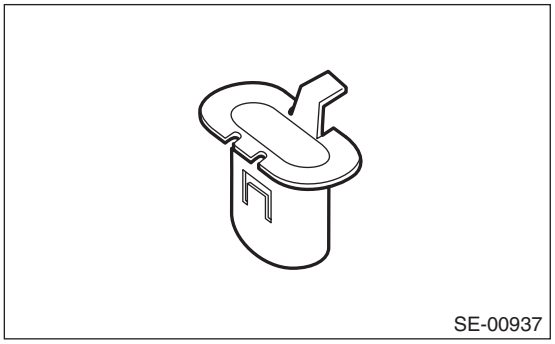
SE-00937

1) Disconnect the ground terminal from the battery sensor, and wait for at least 60 seconds before starting work.

NOTE:
• On CVT models, shift the select lever into "N" before disconnecting the battery ground cable.
• For models with power seat, remove the slide rail installing bolt before disconnecting the ground terminal from the battery sensor.
2) Remove the front seats. <Ref. to SE-11, REMOVAL, Front Seat.>
3) Remove the rear seat cushion assembly. <Ref. to SE-33, REMOVAL, Rear Seat.>
4) Remove the console box assembly and the cover - shift lever. <Ref. to EI-80, REMOVAL, Console Box.>
5) Cover the following areas to protect from damage.
• Steering wheel
• Instrument panel surface
• Glove box surface
6) Remove the lower inner trim on the RH and LH sides. <Ref. to EI-92, REMOVAL, Lower Inner Trim.>
7) Remove the upper inner trim on the RH and LH sides. <Ref. to EI-96, REMOVAL, Upper Inner Trim.>

8) Remove the clips, and remove the trim panel - rear pillar UPR on the left and right sides.

NOTE:
Remove the seat belt from the opening.

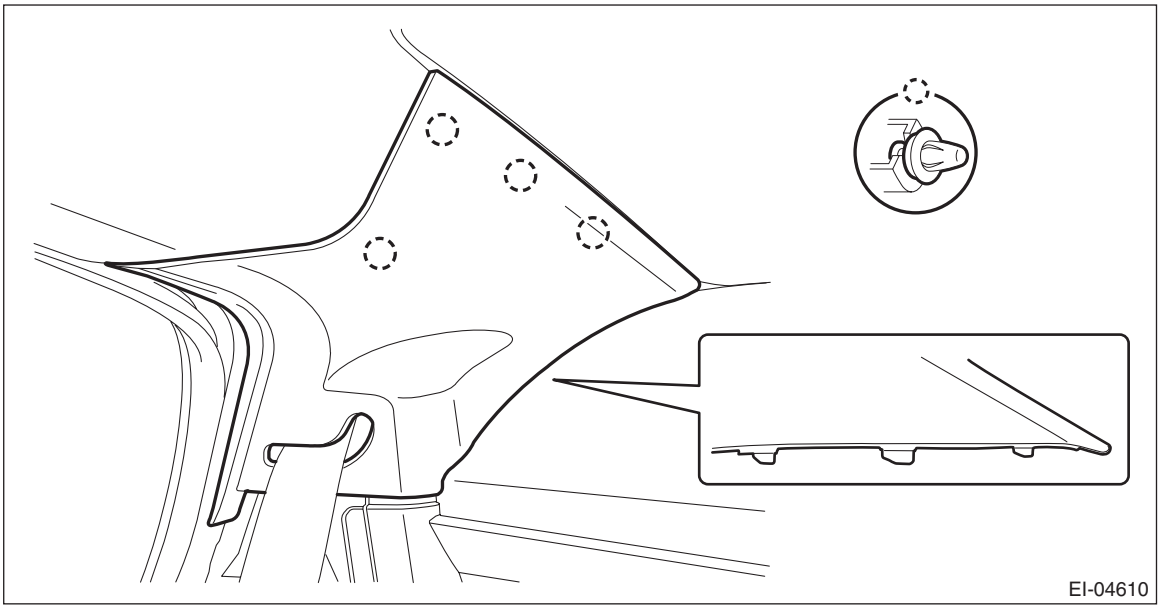

9) Remove the following parts from the passenger's side rear door.
- Rear door trim assembly: <Ref. to EI-72, REAR DOOR, REMOVAL, Door Trim.>
- Rear speaker assembly: <Ref. to ET-27, REMOVAL, Rear Speaker.>
- Checker assembly - rear door: <Ref. to EB-31, REAR DOOR PANEL, REMOVAL, Rear Door.>

10) Remove the overhead console assembly. (Models without EyeSight) <Ref. to LI-66, REMOVAL, Spot Map Light.>
11) Remove the stereo camera cover. (Models with EyeSight) <Ref. to ES-8, REMOVAL, Stereo Camera.>
12) Remove the left and right sun visor assembly. <Ref. to EI-111, REMOVAL, Sun Visor.>
13) Remove the light assembly - room. <Ref. to LI-68, REMOVAL, Room Light.>
14) Remove all assist grip assembly. <Ref. to EI-112, REMOVAL, Assist Grip.>
15) Remove the sunroof garnish. (Model with sunroof)

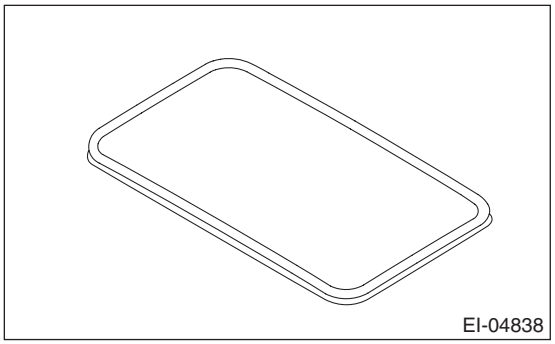

16) Remove the trim panel - roof assembly.
(1) Remove the harness clamp of the cord assembly - antenna feeder and the cord - roof, and disconnect the connectors.
(2) Remove the clip and the weather strip - body side flange from the front/rear and left/right doors, and remove the trim panel - roof assembly.

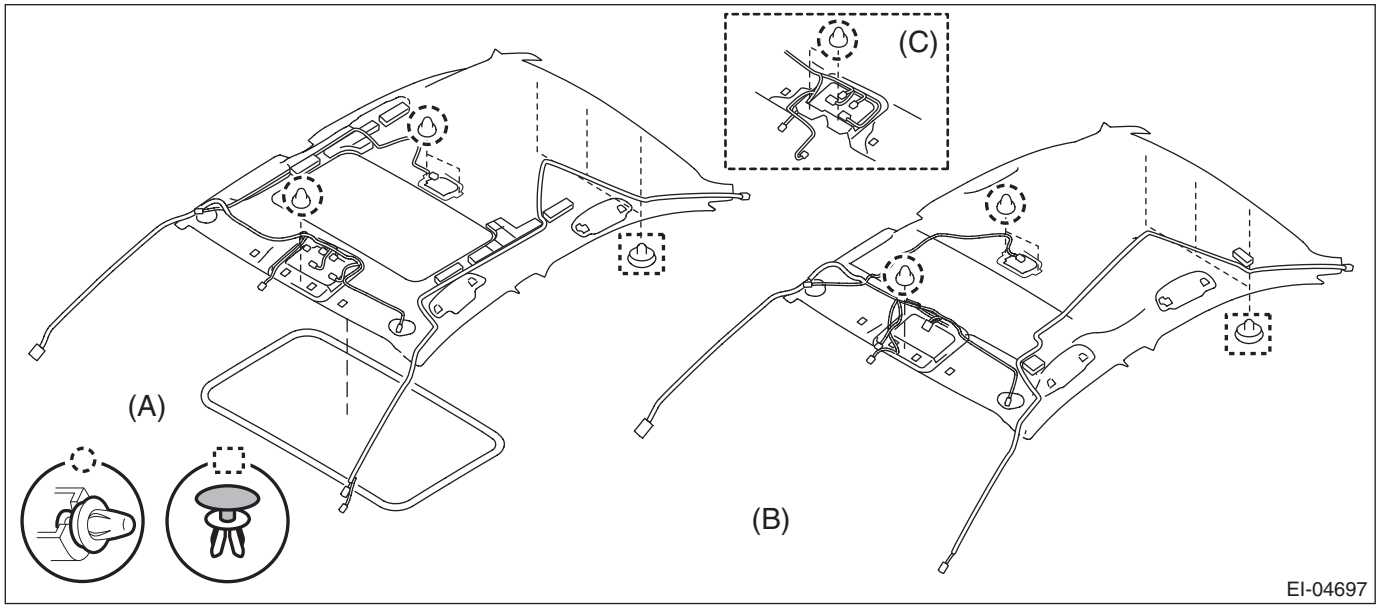

(A) Model with sunroof (B) Model without sunroof (C) Models with EyeSight

(3) Slightly bend the rear end of the trim panel - roof assembly along the character line, and take it out of the vehicle from the passenger's side rear door opening.

CAUTION:
Be careful of the bending direction. If the direction is wrong, the trim panel - roof assembly may be wrinkled.

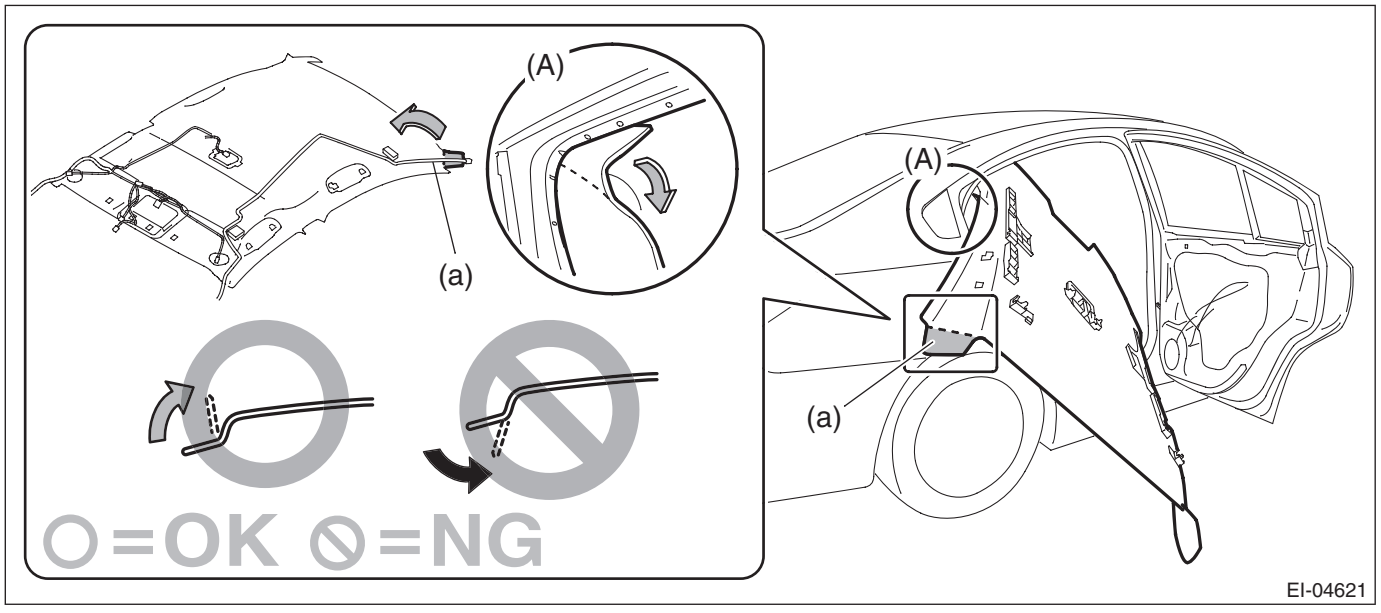

2. OUTBACK MODEL

CAUTION:
• Refer to "CAUTION" of "General Description" before handling the airbag system components. <Ref. to AB-10, CAUTION, General Description.>
• If the hook - rear seat is disconnected from the vehicle body, make sure to replace the hook - rear seat with a new part to prevent the decline of the fixed force of the seat.

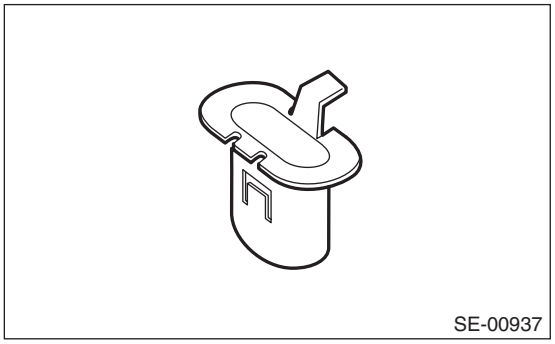
SE-00937

1) Disconnect the ground terminal from the battery sensor, and wait for at least 60 seconds before starting work.
2) Remove the rear seat cushion assembly. <Ref. to SE-33, REMOVAL, Rear Seat.>
3) Remove the lower inner trim on the RH and LH sides. <Ref. to EI-92, REMOVAL, Lower Inner Trim.>
4) Remove the upper inner trim on the RH and LH sides. <Ref. to EI-96, REMOVAL, Upper Inner Trim.>
5) Remove the side pad assembly - backrest, trim panel - rear apron and rear quarter trim UPR. <Ref. to EI-100, OUTBACK MODEL, REMOVAL, Rear Quarter Trim.>
6) Remove the overhead console assembly. (Models without EyeSight) <Ref. to LI-66, REMOVAL, Spot Map Light.>
7) Remove the stereo camera cover. (Models with EyeSight) <Ref. to ES-8, REMOVAL, Stereo Camera.>
8) Remove the left and right sun visor assembly. <Ref. to EI-111, REMOVAL, Sun Visor.>
9) Remove the light assembly - room. <Ref. to LI-68, REMOVAL, Room Light.>
10) Remove all assist grip assembly. <Ref. to EI-112, REMOVAL, Assist Grip.>
11) Remove the sunroof garnish. (Model with sunroof)

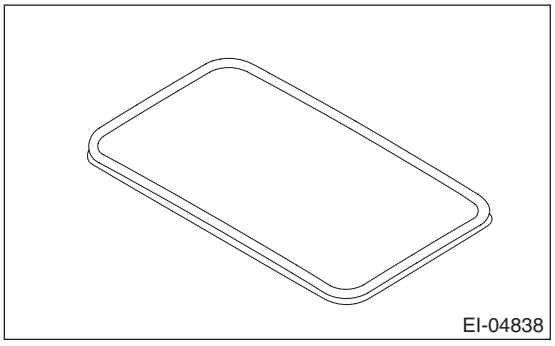
EI-04838

12) Remove the trim panel - roof assembly.
(1) Remove the harness clamp of the cord assembly - antenna feeder and the cord - roof, and disconnect the connectors.
(2) Remove the clip and the weather strip - body side flange from the front/rear and left/right doors, and remove the trim panel - roof assembly.

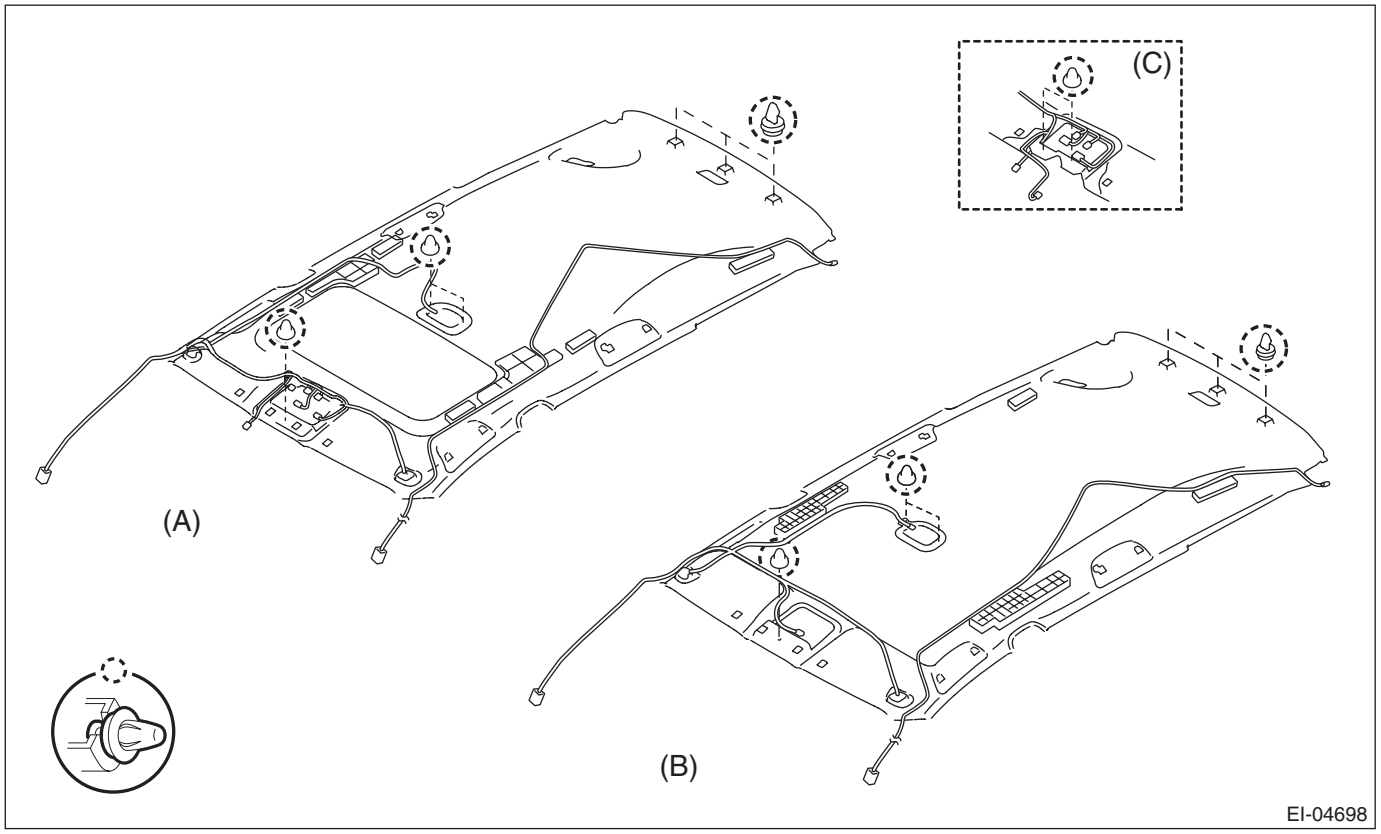

(A) Model with sunroof
(B) Model without sunroof
(C) Models with EyeSight

B: INSTALLATION

CAUTION:
• For installation of the stereo camera cover, refer to "INSTALLATION", "Stereo Camera" in the "EyeSight" section and observe the precautions for installation. <Ref. to ES-11, INSTALLATION, Stereo Camera.>
• When reusing the tether clip on the upper part of the trim panel - front pillar UPR, check that there is no damage to the tether clip. If the tether clip is damaged, always replace it with a new tether clip. If the tether clip is damaged, its holding force is reduced and the trim panel - front pillar UPR may come off.
• Do not reuse the tether clip removed from the upper part of the trim panel - front pillar UPR. Always replace with a new part.
• Before installing the trim panel - front pillar UPR, check the condition of protective non-woven fabric (white) of the curtain airbag. If it is damaged (airbag module cloth is exposed), replace the curtain airbag module assembly with a new part.
• If the hook - rear seat is disconnected from the vehicle body, make sure to replace the hook - rear seat with a new part to prevent the decline of the fixed force of the seat.

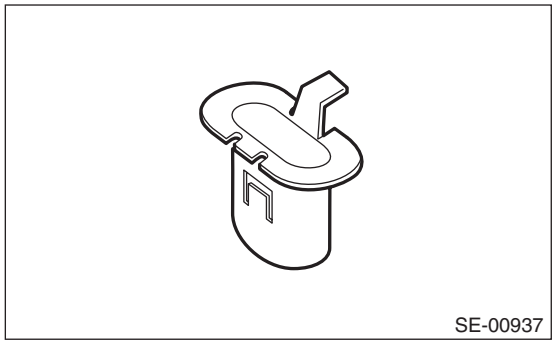
SE-00937

1) Install the trim panel - roof assembly.
   (1) Bring the trim panel - roof assembly inside the vehicle.
   (2) Attach the feeder cord and roof cord to the roof trim.

CAUTION:
Route each cord carefully. The cord may interfere, thus preventing normal deployment of the curtain airbag when necessary.

Tape:
Item number: 86359SC000/TAPE

NOTE:
Use the tape (service parts) by cutting into 80 mm × 50 mm (3.1 in × 2.0 in).

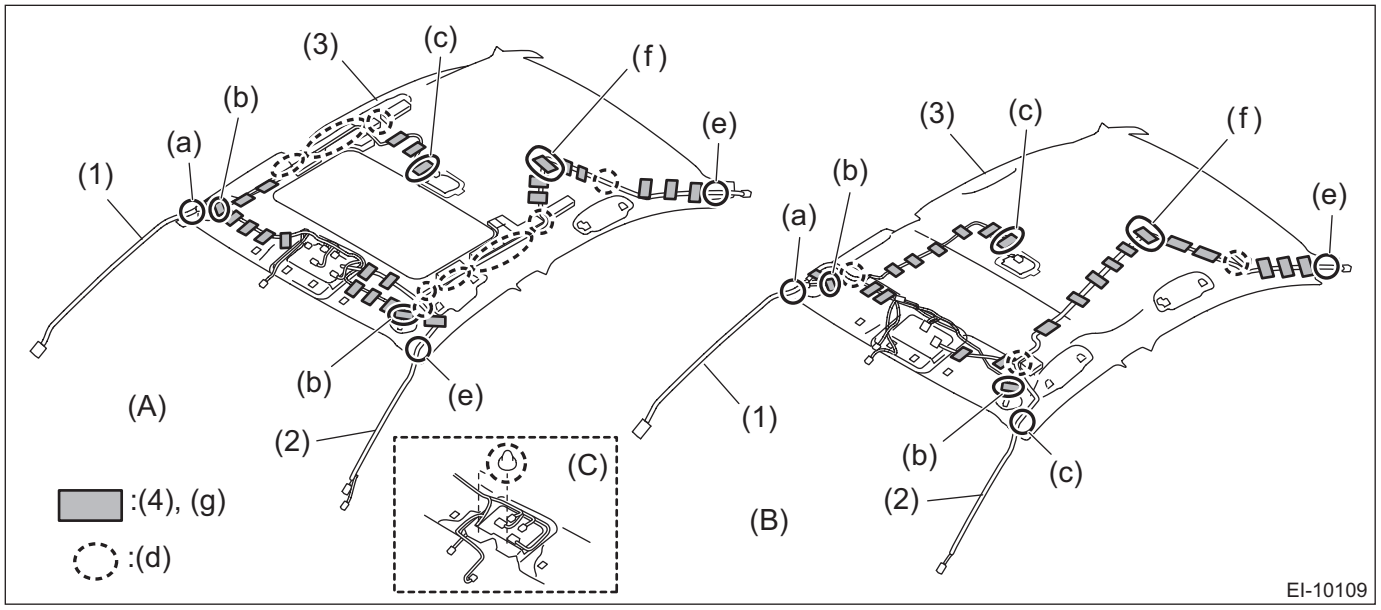

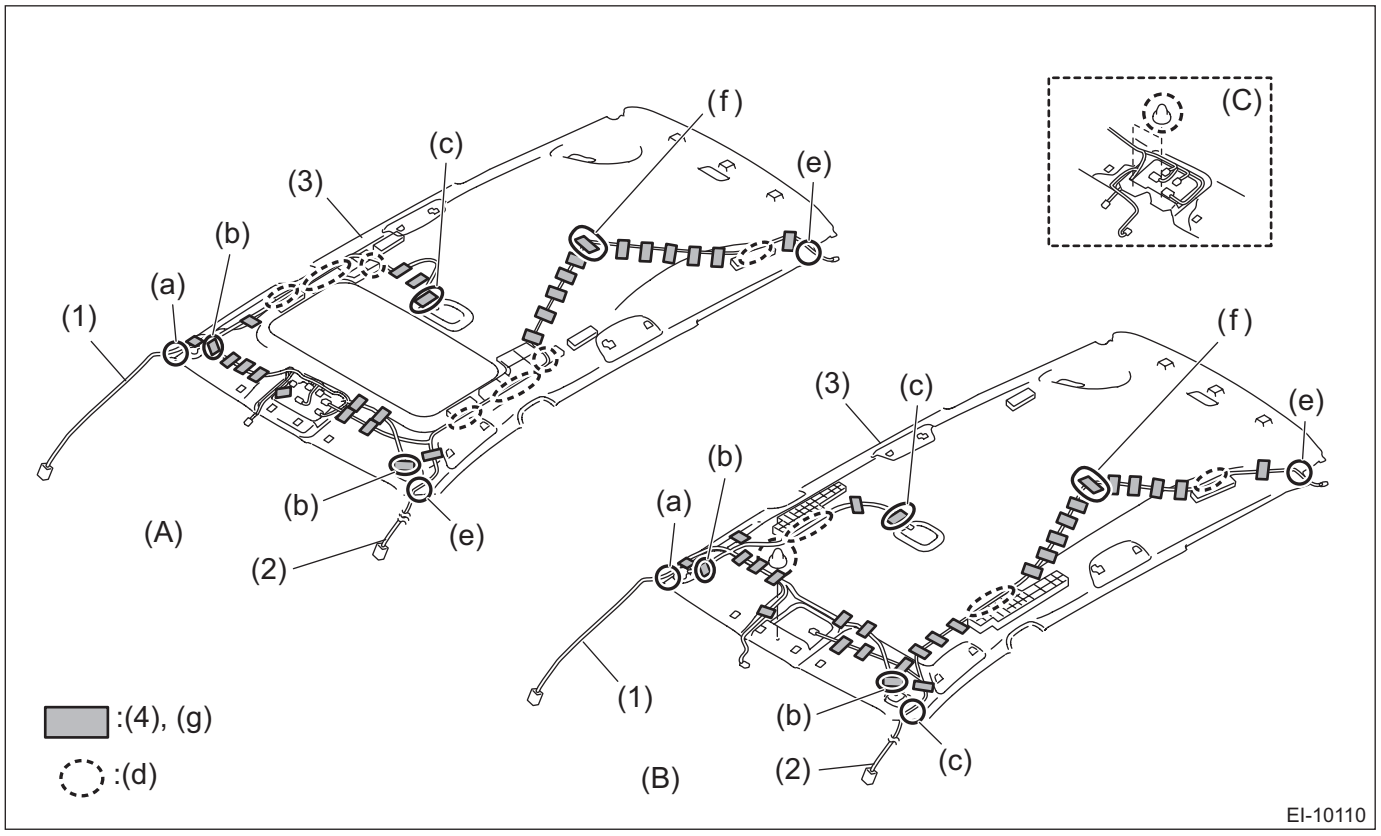

(A)	Model with sunroof	(B)	Model without sunroof	(C)	Models with EyeSight
(1)	Roof cord	(3)	Trim panel - roof	(4)	Tape
(2)	Feeder cord				
(a)	Secure the cord to the clamp.	(d)	Secure it to the roof pad clamp.	(g)	Secure the cord with tape while avoiding any raised part.
(b)	Secure the end of the spacer SV base with tape while aligning it with the mark-off line of the roof trim.	(e)	Secure the polyurethane section to the clamp.		
(c)	Secure the end of the polyurethane section with tape while aligning it with the mark-off line of the roof trim.	(f)	Fix with the tape by adjusting the excess portion of cord at the (f) position.		

(3) Secure the trim panel - roof assembly with the clips.

2) Install the garnish - roof. (Model with sunroof)
3) Install the assist rail.
4) Install the light assembly - room.
5) Install the sun visor assembly.

Tightening torque:
2 N·m (0.2 kgf-m, 1.5 ft-lb)

6) Install the overhead console. (Models without EyeSight)
7) Install the stereo camera cover assembly. (Models with EyeSight) <Ref. to ES-11, INSTALLATION, Stereo Camera.>
8) Install the trim panel - rear pillar UPR.
9) Install the upper inner trim.

Tightening torque:
Trim panel - center pillar UPR: 7.5 N·m (0.8 kgf-m, 5.5 ft-lb)
Front seat belt anchor: 30 N·m (3.1 kgf-m, 22.1 ft-lb)

10) Install the lower inner trim.
11) Install the side pad assembly - backrest.

Tightening torque:
53 N·m (5.4 kgf-m, 39.1 ft-lb)

12) Install the rear seat cushion assembly.
13) Install the console box assembly and cover - shift lever. (Sedan model)

Tightening torque:
6.5 N·m (0.7 kgf-m, 4.8 ft-lb)

14) Install the front seat. (Sedan model) <Ref. to SE-12, INSTALLATION, Front Seat.>
15) Install each part of rear doors. (Sedan model)

- Checker ASSY - rear door

Tightening torque:
33 N·m (3.4 kgf-m, 24.3 ft-lb)

- Rear door trim assembly
- Rear speaker assembly

16) Connect the ground terminal to battery sensor. <Ref. to RC-4, BATTERY, NOTE, Repair Contents.>

32.Rear Gate Trim

A: REMOVAL

1) Remove the trim panel - rear gate UPR.
   (1) Remove the claws on the trim edge.
   (2) Release the claws in the center of trim, and remove the trim panel - rear gate UPR.

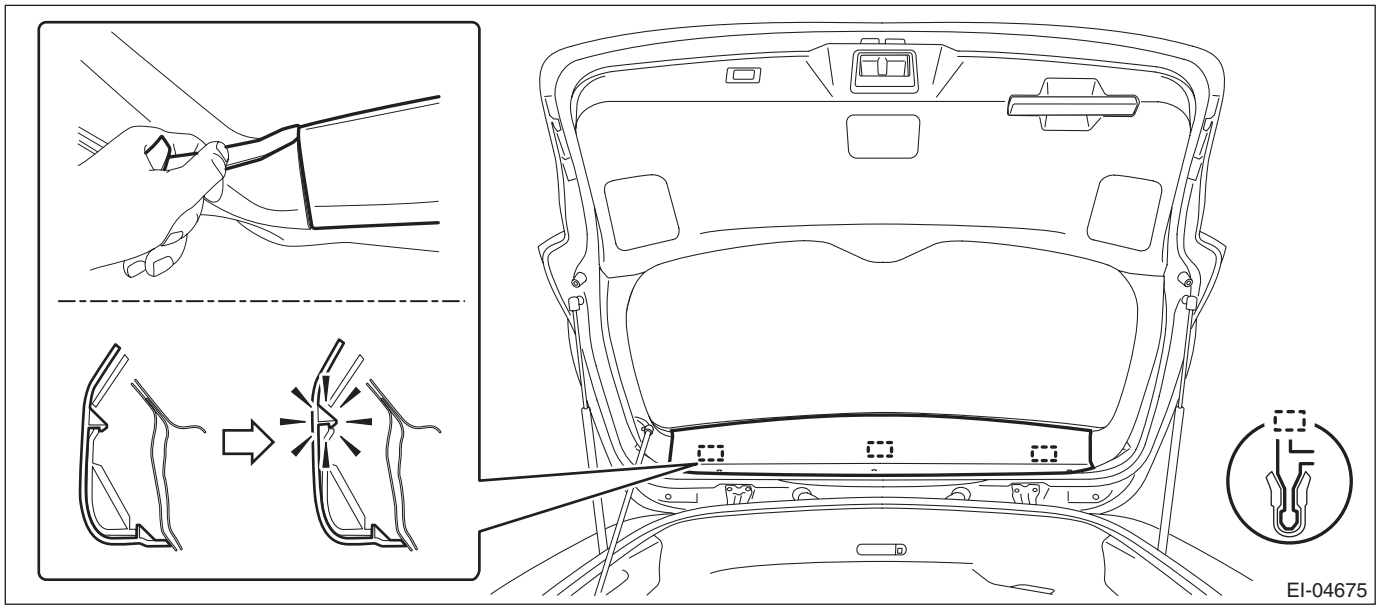

2) Remove the trim panel - rear gate pillar side.
   (1) Disconnect the rod - power rear gate before removing the trim panel - rear gate pillar side LH. (Only for models with power rear gate)

CAUTION:
For the disconnection procedure of the rod - power rear gate, refer to "REMOVAL", "Power Rear Gate Rod" in the "POWER REAR GATE" section and observe the precautions for removal. <Ref. to PRG-9, REMOVAL, Power Rear Gate Rod.>

   (2) Release the claws.
   (3) Remove the claws on the bottom of trim, and remove the trim panel - rear gate pillar side.

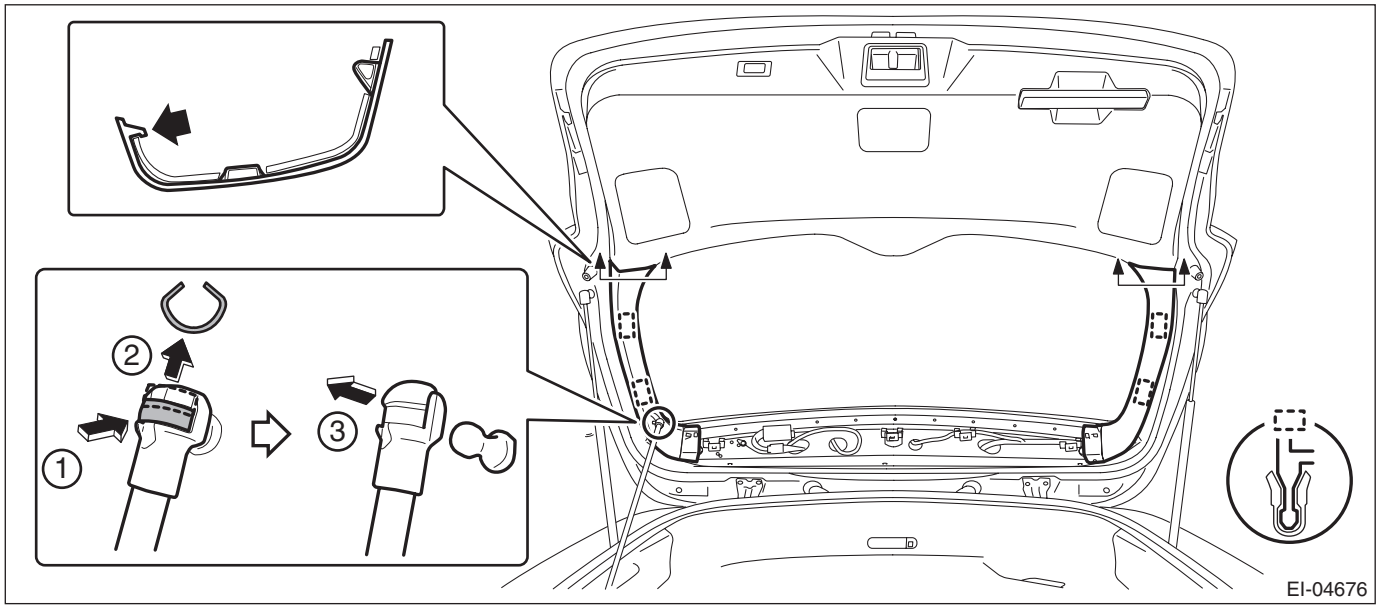

3) Remove the trim panel - rear gate LWR.
   (1) Remove the power rear gate inner switch and disconnect the connector. (Only for models with power rear gate)

NOTE:
Insert a flat tip screwdriver wrapped with protective tape into the slit on the left.
   (2) Remove the cover - grip, and remove the bolts.

NOTE:
Insert a flat tip screwdriver wrapped with protective tape into the side slit.
   (3) Remove the clips, and remove the trim panel - rear gate LWR.

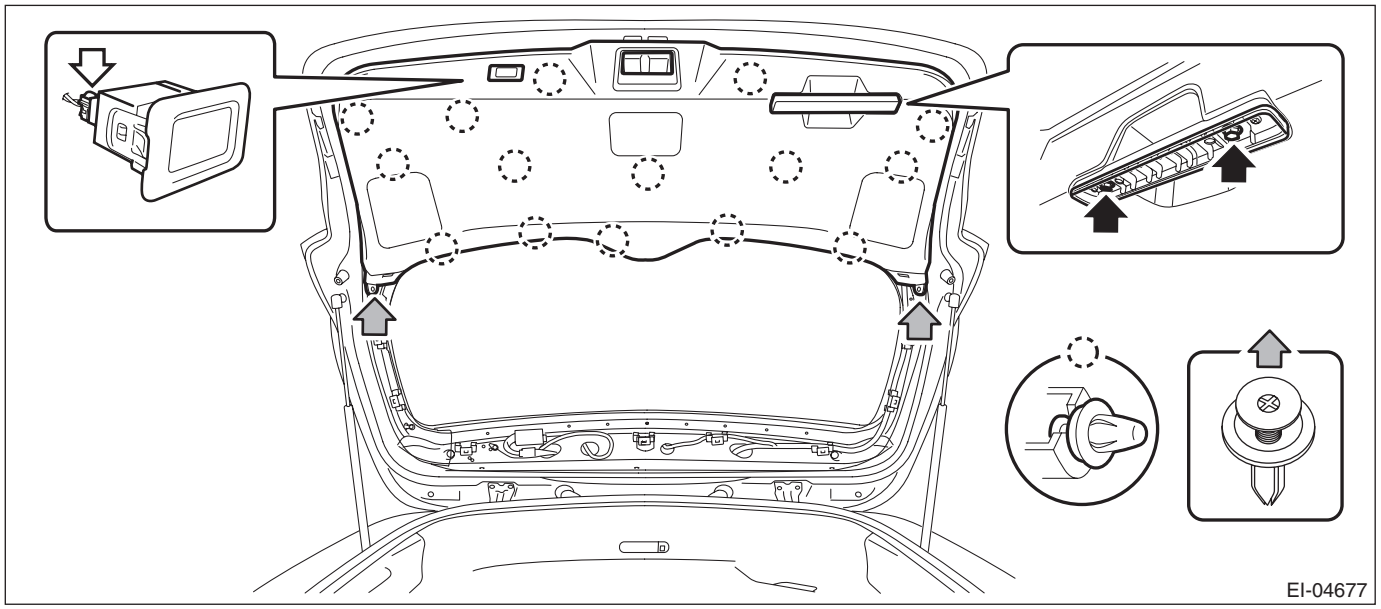

B: INSTALLATION

CAUTION:
For installation of the rod - power rear gate, refer to "INSTALLATION", "Power Rear Gate Rod" in the "POWER REAR GATE" section and observe the precautions for installation. <Ref. to PRG-10, INSTALLATION, Power Rear Gate Rod.>

1) Install the trim panel - rear gate LWR.
   (1) Install the power rear gate inner switch.
   (2) Install the hand grip.

Tightening torque:
7.5 N·m (0.8 kgf-m, 5.5 ft-lb)

2) Install the trim panel - rear gate pillar side.
3) Install the trim panel - rear gate pillar UPR.

33.Floor Mat

A: REMOVAL

CAUTION:
• Refer to "CAUTION" of "General Description" before handling the airbag system components. <Ref. to AB-10, CAUTION, General Description.>
• If the hook - rear seat is disconnected from the vehicle body, make sure to replace the hook - rear seat with a new part to prevent the decline of the fixed force of the seat.

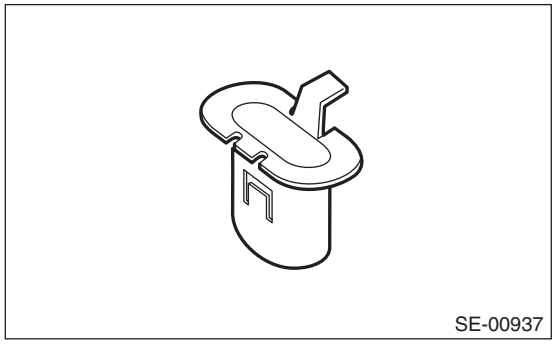
SE-00937

1) Disconnect the ground terminal from battery sensor. <Ref. to RC-4, BATTERY, NOTE, Repair Contents.>

NOTE:
• On CVT models, shift the select lever into "N" before disconnecting the battery ground cable.
• For models with power seat, remove the slide rail installing bolt before disconnecting the ground terminal from the battery sensor.

2) Remove the front seat assembly. <Ref. to SE-11, REMOVAL, Front Seat.>
3) Remove the rear seat cushion assembly. <Ref. to SE-33, REMOVAL, Rear Seat.>
4) Remove the console box assembly, the cover - shift lever and the panel center LWR. <Ref. to EI-80, REMOVAL, Console Box.>
5) Remove the lower inner trim on the RH and LH sides. <Ref. to EI-92, REMOVAL, Lower Inner Trim.>
6) Remove the pull handle cover. <Ref. to SL-62, FUEL FLAP, REMOVAL, Remote Openers.>
7) Take out the floor mat from the vehicle.
   (1) Remove the clips from the floor mat using the remover.
   (2) Remove the mat hook on both sides.
   (3) Take out the floor mat after folding down.

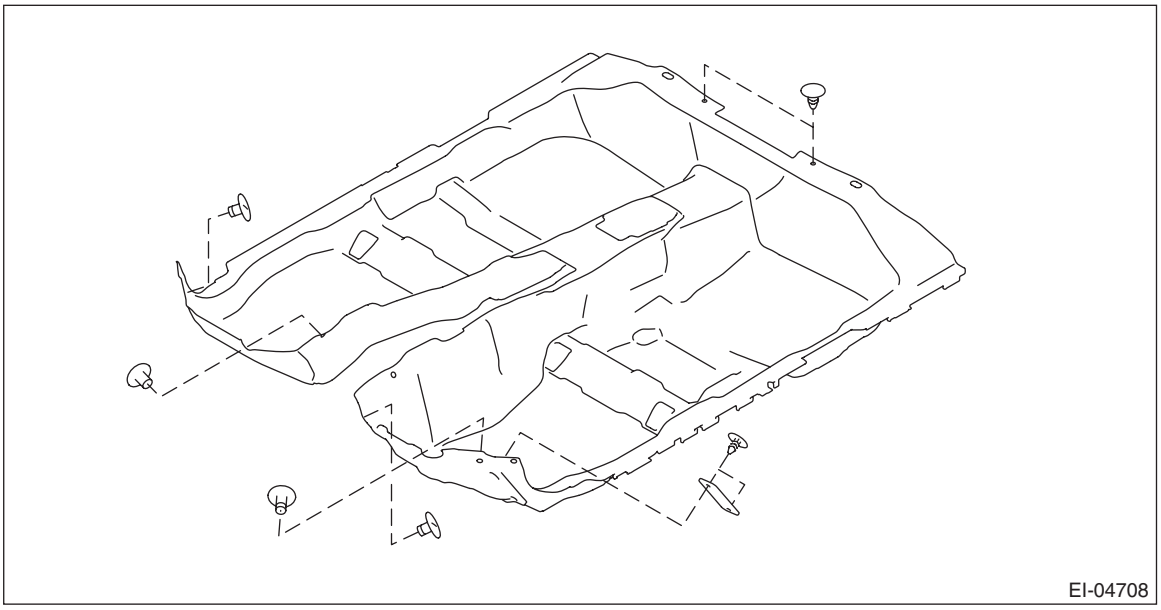
EI-04708

B: INSTALLATION

1) Install the floor mat.

CAUTION:
If the hook - rear seat is disconnected from the vehicle body, make sure to replace the hook - rear seat with a new part to prevent the decline of the fixed force of the seat.

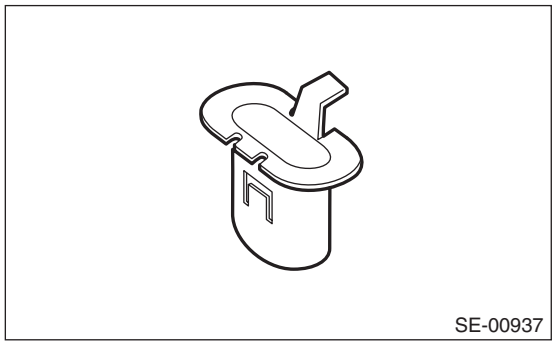

NOTE:
Secure the mat firmly with clips.
2) Install the pull handle cover.
3) Install the lower inner trim.
4) Install the console box assembly, the cover - shift lever and the panel center LWR.

Tightening torque:
Console box assembly: 6.5 N·m (0.7 kgf-m, 4.8 ft-lb)
5) Install the rear seat cushion assembly.
6) Install the front seat. <Ref. to SE-12, INSTALLATION, Front Seat.>
7) Connect the ground terminal to battery sensor. <Ref. to RC-4, BATTERY, NOTE, Repair Contents.>

EXTERIOR BODY PANELS

EB

		Page
1.	General Description	2
2.	Front Hood	11
3.	Front Fender	18
4.	Front Door	21
5.	Front Sealing Cover	30
6.	Rear Door	31
7.	Rear Sealing Cover	40
8.	Door Sash Tape	41
9.	Trunk Lid	51
10.	Rear Gate	56
11.	Weather Strip	67
12.	Protector Tape	70

1. General Description

A: COMPONENT

1. FRONT HOOD

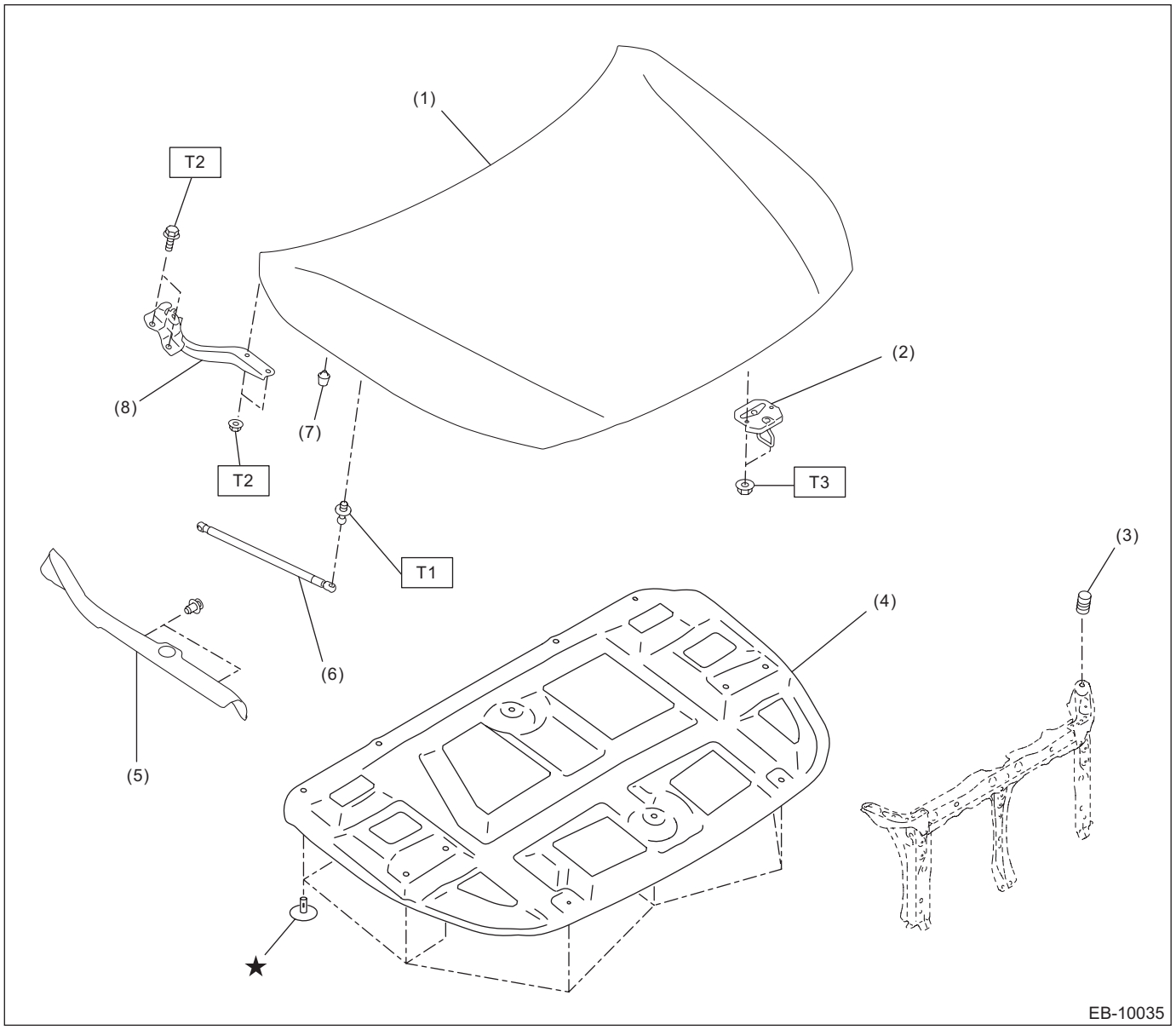

(1)	Hood COMPL - front	(5)	Cover - front fender UPR
(2)	Striker - front hood	(6)	Stay ASSY - front hood
(3)	Buffer - front hood	(7)	Stopper - front hood
(4)	Insulator - front hood	(8)	Hinge COMPL - front hood

Tightening torque: N·m (kgf-m, ft-lb)
T1: 20 (2.0, 14.8)
T2: 25 (2.5, 18.4)
T3: 33 (3.4, 24.3)

2. FRONT FENDER

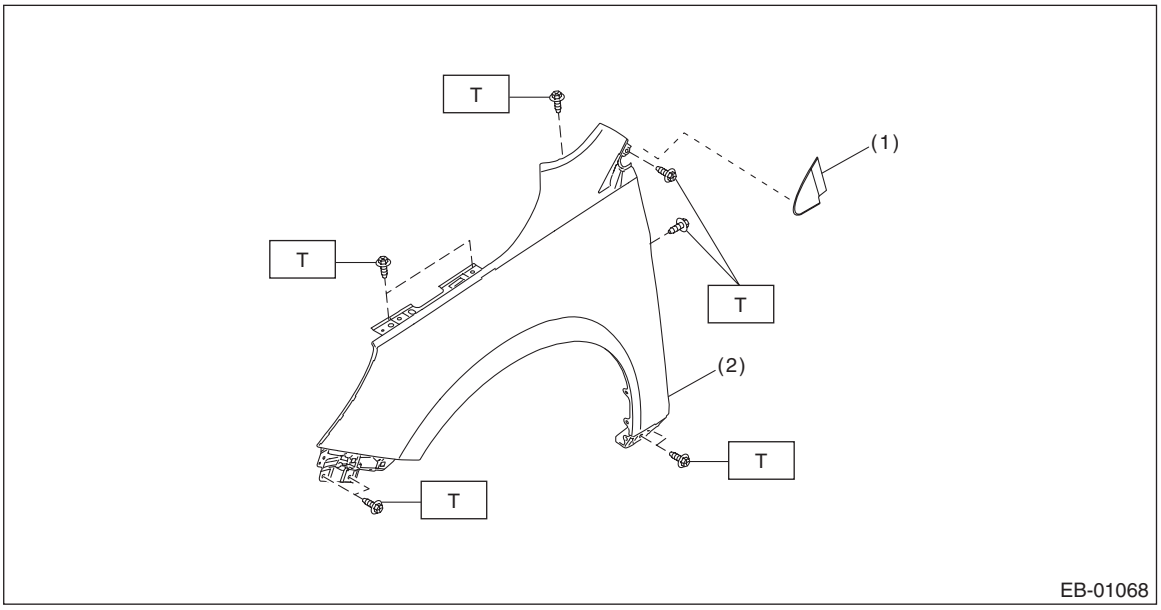

(1) Cover - A pillar ASSY
(2) Fender COMPL - front

Tightening torque: N·m (kgf-m, ft-lb)
T: 7.5 (0.8, 5.5)

3. FRONT DOOR

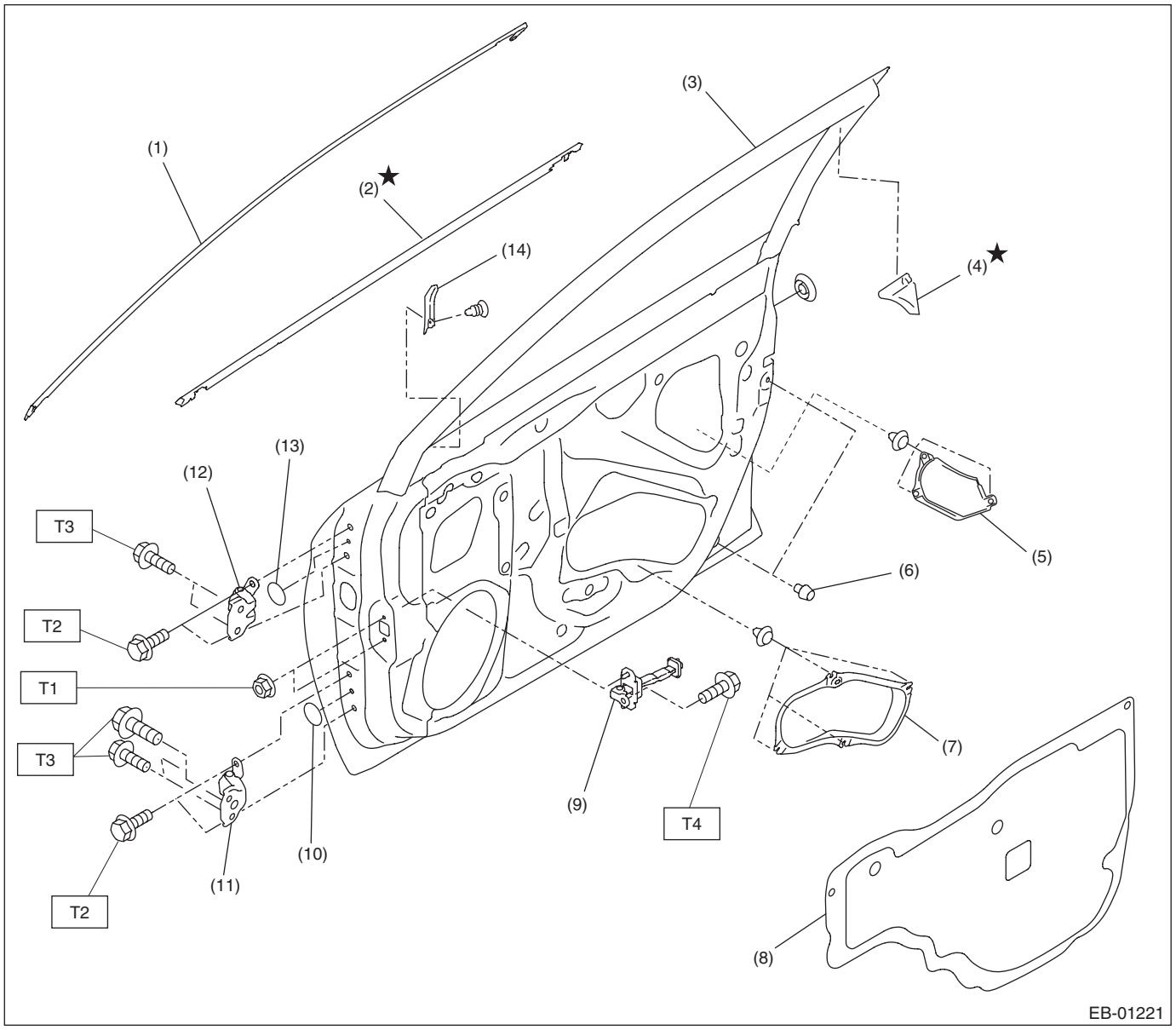

(1)	Molding - door sash front	(8)	Sealing cover - front door
(2)	Weather strip outer - front door	(9)	Checker ASSY - front door
(3)	Panel ASSY - front door	(10)	Grommet - lower
(4)	Cover B pillar - front door INN	(11)	Lower hinge - front door
(5)	Plate - door	(12)	Upper hinge - front door
(6)	Stopper - rubber	(13)	Grommet - upper
(7)	Front door inner pad	(14)	Cover sash - inner front

Tightening torque: N·m (kgf-m, ft-lb)
T1: 7.5 (0.8, 5.5)
T2: 25 (2.5, 18.4)
T3: 30 (3.1, 22.1)
T4: 33 (3.4, 24.3)

4. REAR DOOR

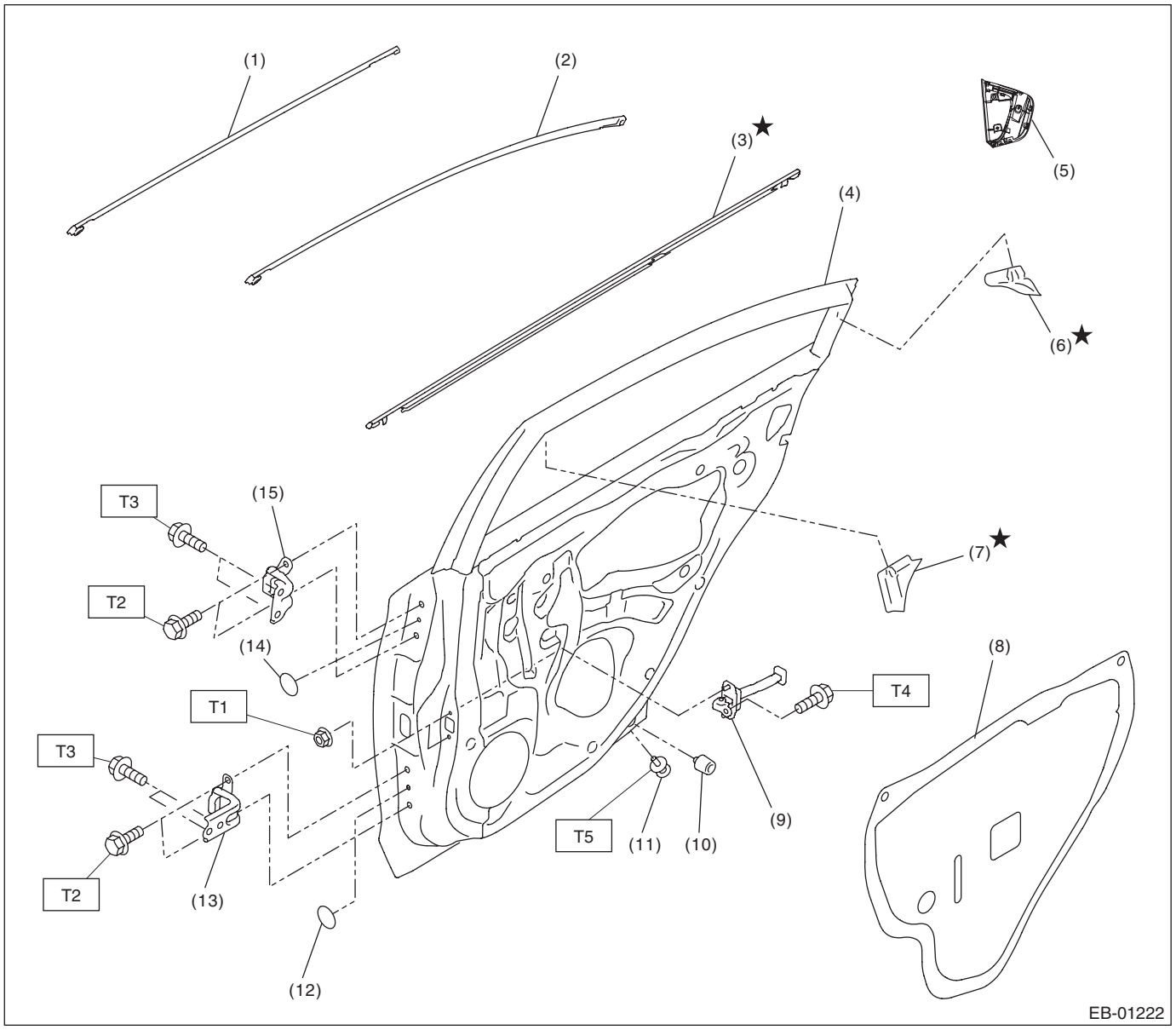

(1)	Molding - door sash rear (OUTBACK model)	(9)	Checker ASSY - rear door	***Tightening torque: N·m (kgf-m, ft-lb)***
(2)	Molding - door sash rear (sedan model)	(10)	Stopper - rubber	***T1: 7.5 (0.8, 5.5)***
(3)	Weather strip outer - rear door	(11)	Catcher - rear door	***T2: 25 (2.5, 18.4)***
(4)	Panel ASSY - rear door	(12)	Grommet - lower	***T3: 30 (3.1, 22.1)***
(5)	Cover - C pillar ASSY (sedan model)	(13)	Lower hinge - rear door	***T4: 33 (3.4, 24.3)***
(6)	Cover C pillar - rear door INN	(14)	Grommet - upper	***T5: 38 (3.9, 28.0)***
(7)	Cover B pillar - rear door INN	(15)	Upper hinge - rear door	
(8)	Sealing cover - rear door			

5. TRUNK LID PANEL

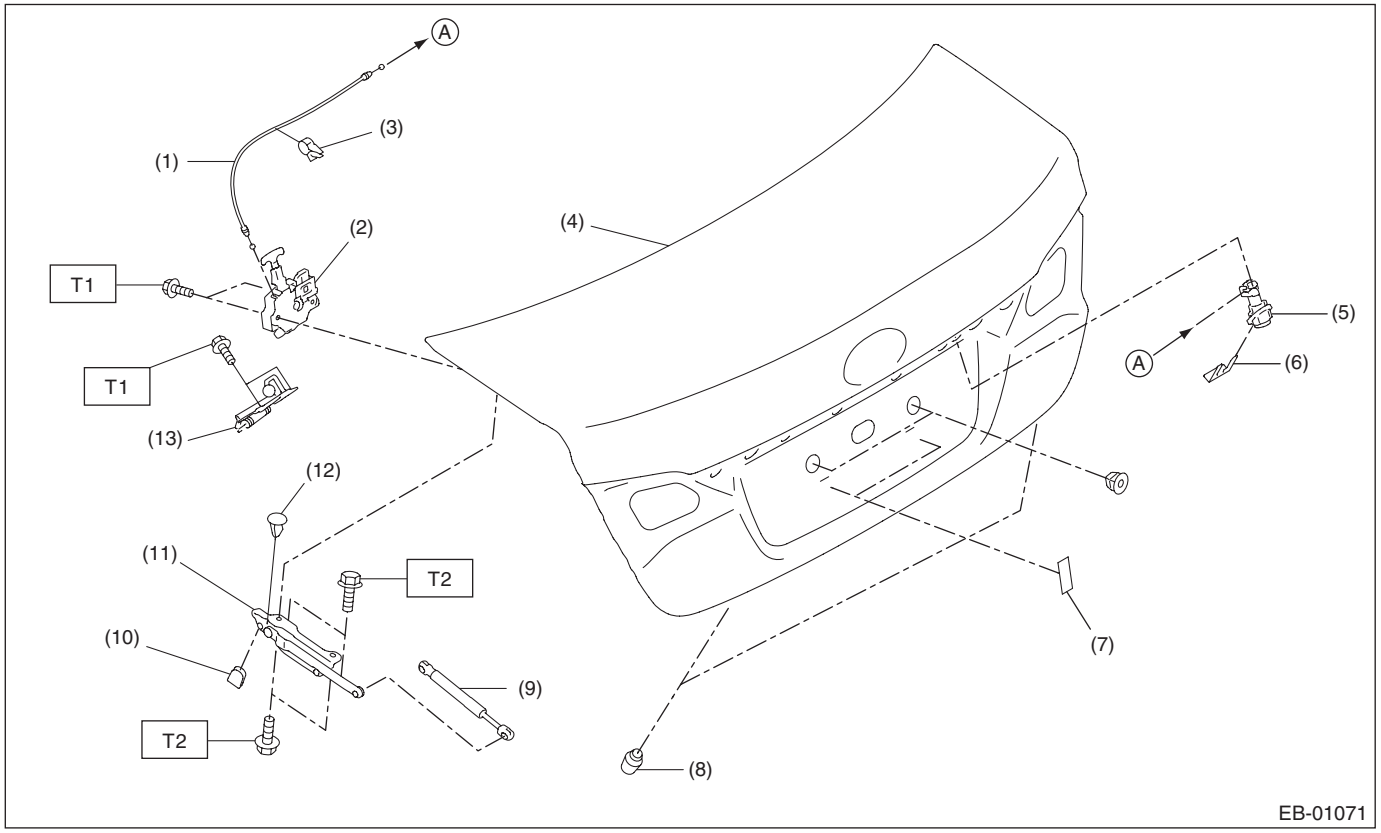

(1) Cable ASSY - trunk lid
(2) Lock ASSY - trunk lid
(3) Clip
(4) Trunk lid COMPL
(5) Key lock - trunk lid
(6) Clamp - key trunk lid
(7) Cushion - license
(8) Stopper - trunk lid LWR
(9) Stay ASSY - trunk lid
(10) Stopper - hinge
(11) Hinge ASSY - trunk lid
(12) Clip
(13) Striker - trunk lid

Tightening torque: N·m (kgf-m, ft-lb)
T1: 7.5 (0.8, 5.5)
T2: 25 (2.5, 18.4)

6. REAR GATE

NOTE:
For the components of power rear gate, refer to the power rear gate system. <Ref. to PRG-2, UNIT AND REAR GATE, COMPONENT, General Description.>

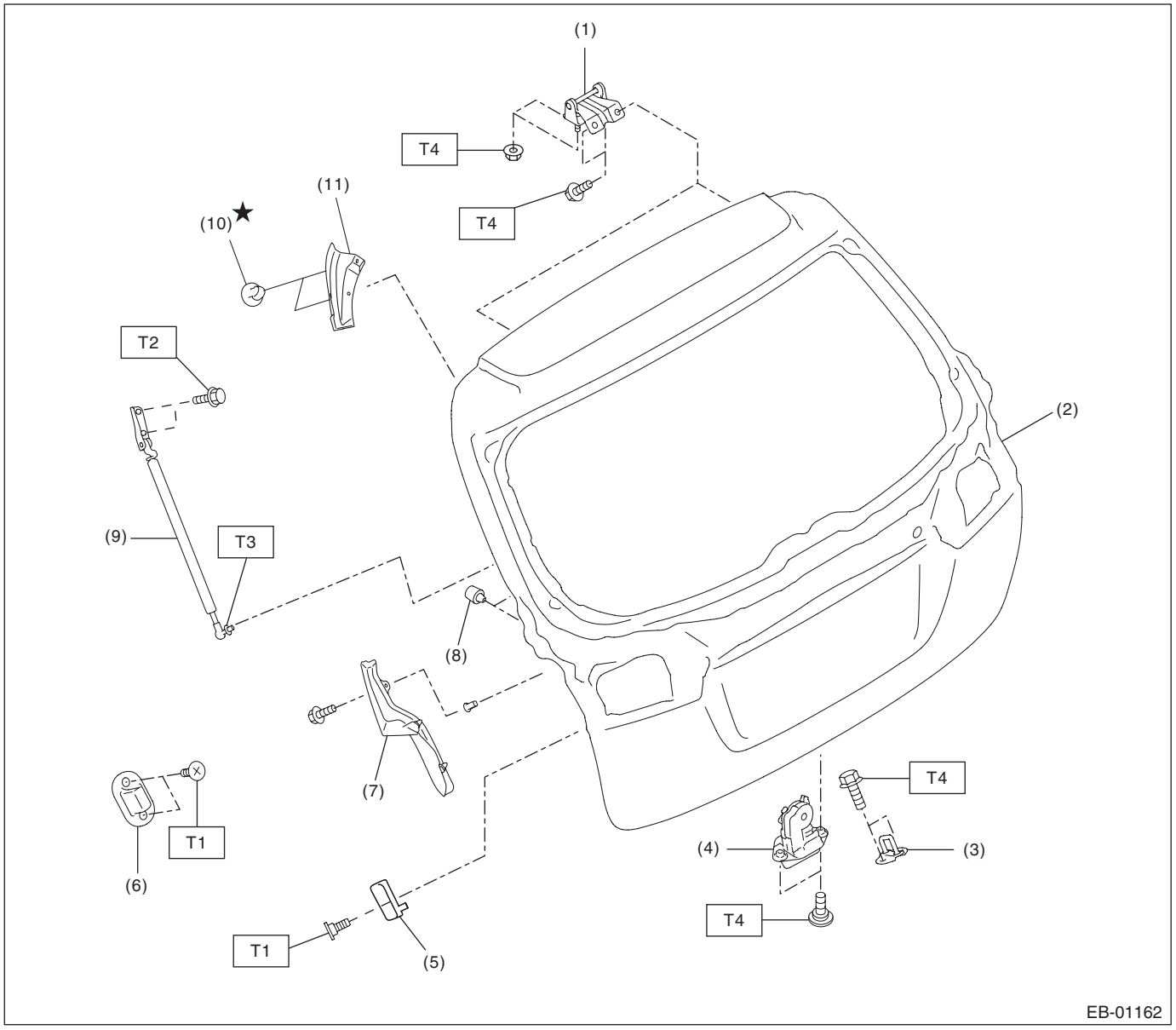

(1) Hinge - rear gate
(2) Panel - rear gate
(3) Striker - rear gate
(4) Latch & actuator - rear gate
(5) Buffer - rear gate (panel - rear gate side)
(6) Buffer - rear gate (body side)
(7) Cover - rear gate
(8) Stopper rubber
(9) Stay ASSY - rear gate
(10) Clip
(11) Drip - rear gate

Tightening torque: N·m (kgf-m, ft-lb)
T1: 7.5 (0.8, 5.5)
T2: 16 (1.6, 11.8)
T3: 20 (2.0, 14.8)
T4: 25 (2.5, 18.4)

7. WEATHER STRIP

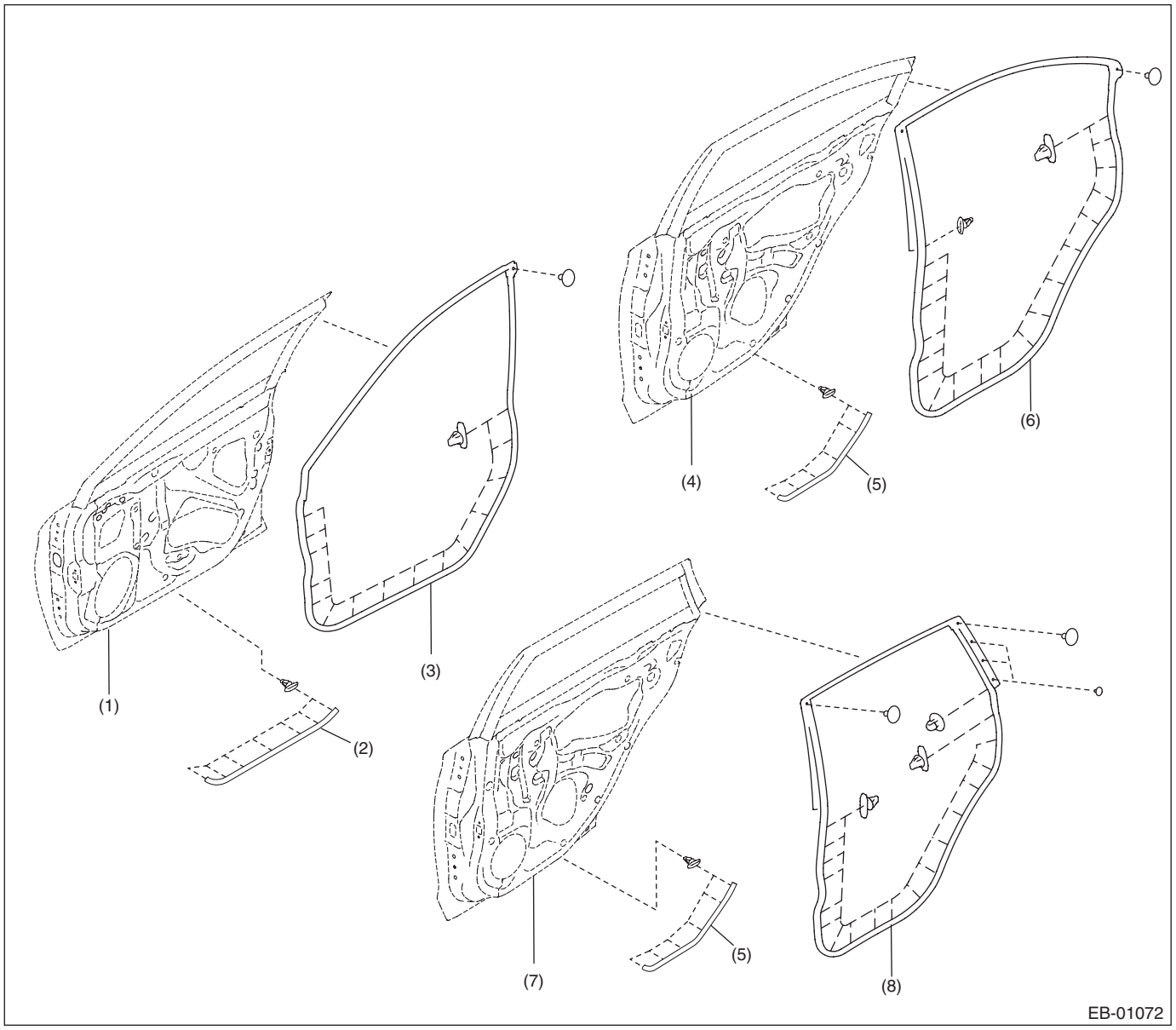

(1) Panel ASSY - front door
(2) Weather strip - front door LWR
(3) Weather strip - front door
(4) Panel ASSY - rear door (sedan model)
(5) Weather strip - rear door LWR
(6) Weather strip - rear door (sedan model)
(7) Panel ASSY - rear door (OUTBACK model)
(8) Weather strip - rear door (OUTBACK model)

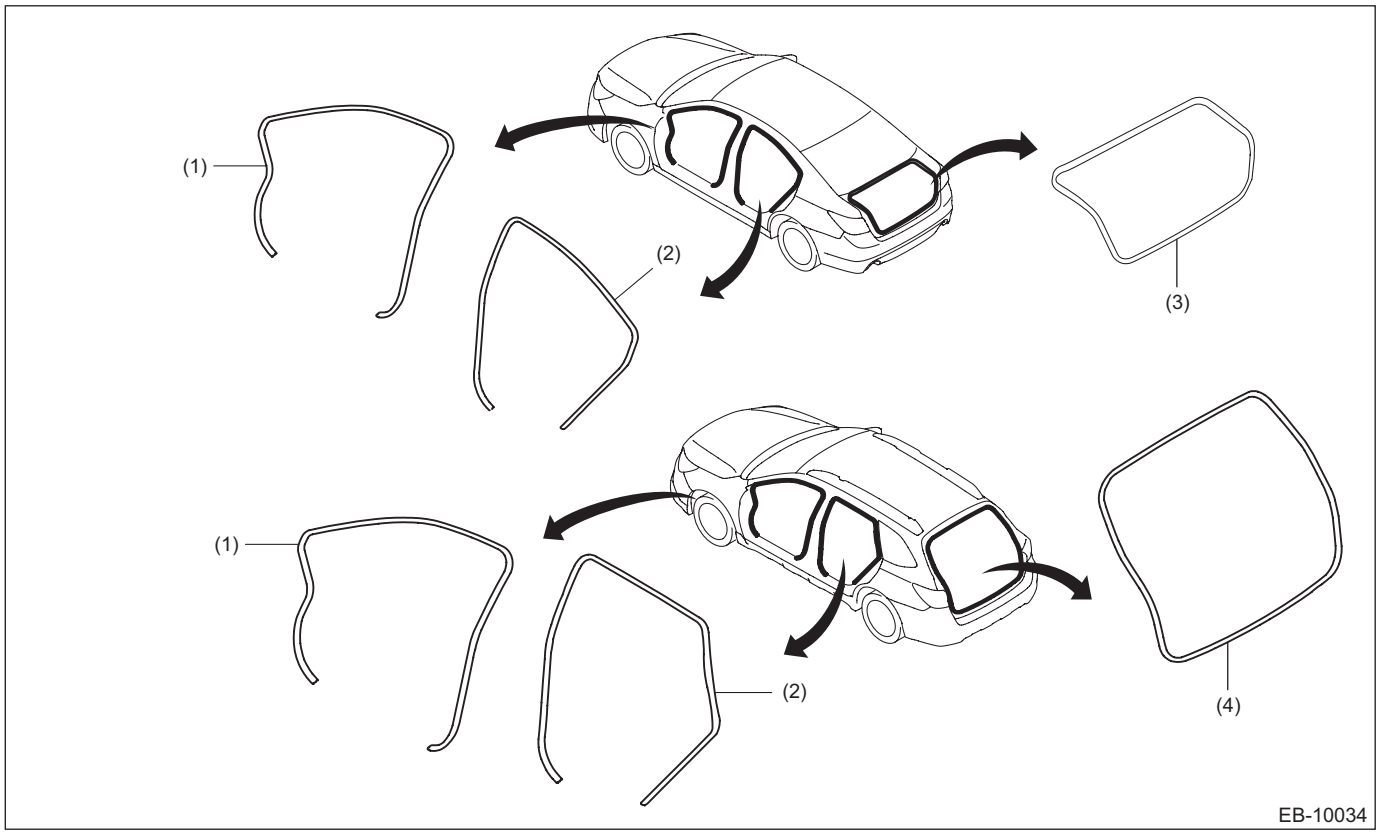

(1) Weather strip - body side flange front
(2) Weather strip - body side flange rear
(3) Weather strip - trunk lid (sedan model)
(4) Weather strip - rear gate (OUTBACK model)

B: CAUTION

Exterior body panels are heavy. When removing or installing, do not drop and damage the panels. Do not damage the panel painting surface.

C: PREPARATION TOOL

1. SPECIAL TOOL

ILLUSTRATION	TOOL NUMBER	DESCRIPTION	REMARKS
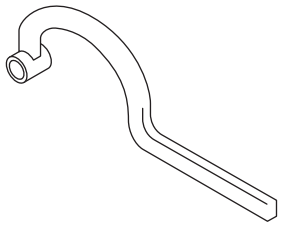 ST-925610000	925610000	WRENCH	Used for removing and installing door hinge.

2. GENERAL TOOL

TOOL NAME	REMARKS
Support jack	Used for supporting door panel.
Clip remover	Used for removing various types of clips.

2. Front Hood

A: REMOVAL

CAUTION:
The hood COMPL - front is heavy. When removing and installing it, always work in a team of two or more persons.

1) Open the hood COMPL - front.
2) Remove the stay assembly - front hood.

CAUTION:
Do not remove the stop ring completely. Raise it to the position enough to remove the ball stud.

(1) Gently push the stop ring against the ball stud to be raised with a flat tip screwdriver.
(2) Pull the stay assembly - front hood toward you, and remove the stay assembly - front hood from the ball stud.

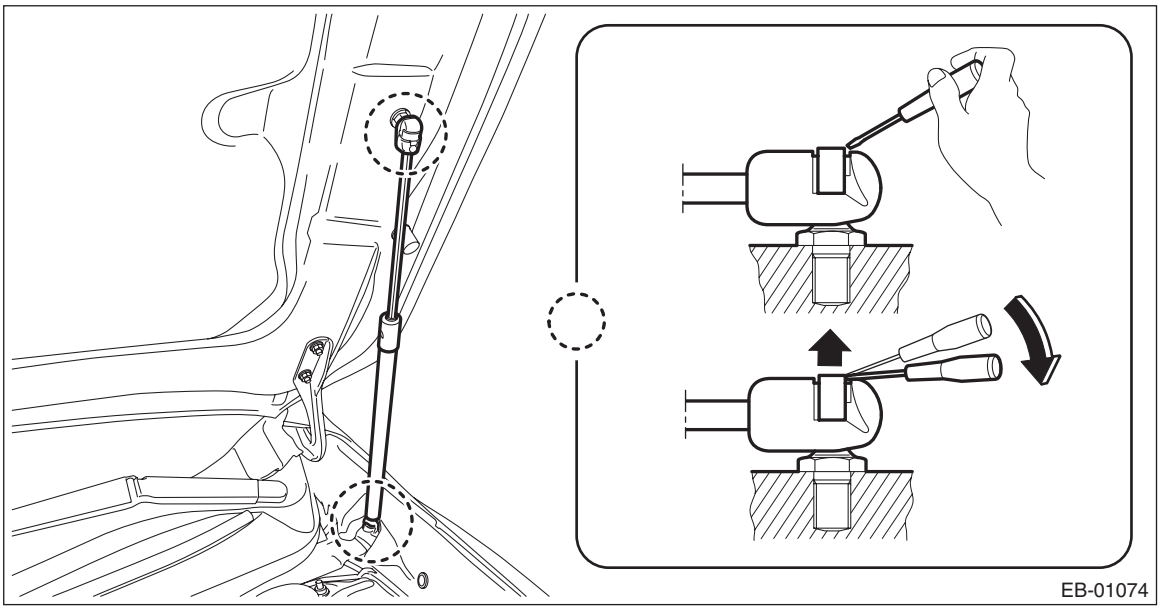

3) Remove the nut on the hood COMPL - front side, and remove the hood COMPL - front.

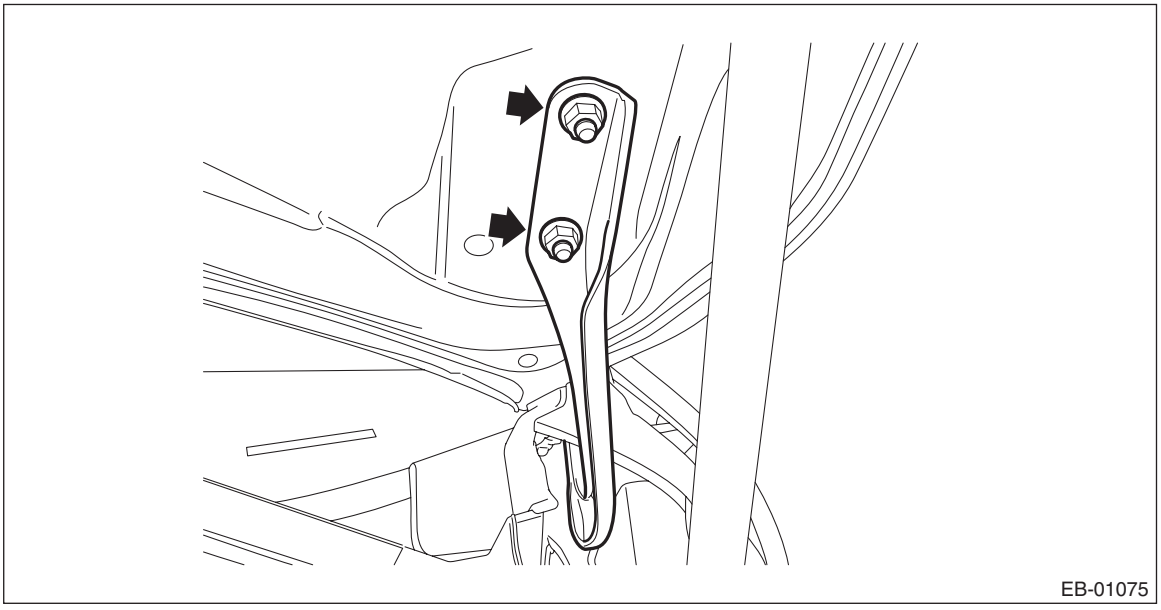

4) Remove the hinge COMPL - front hood from the body.

NOTE:
The hinge COMPL - front hood cannot be removed with the fender COMPL - front attached. Therefore, remove the fender COMPL - front beforehand.

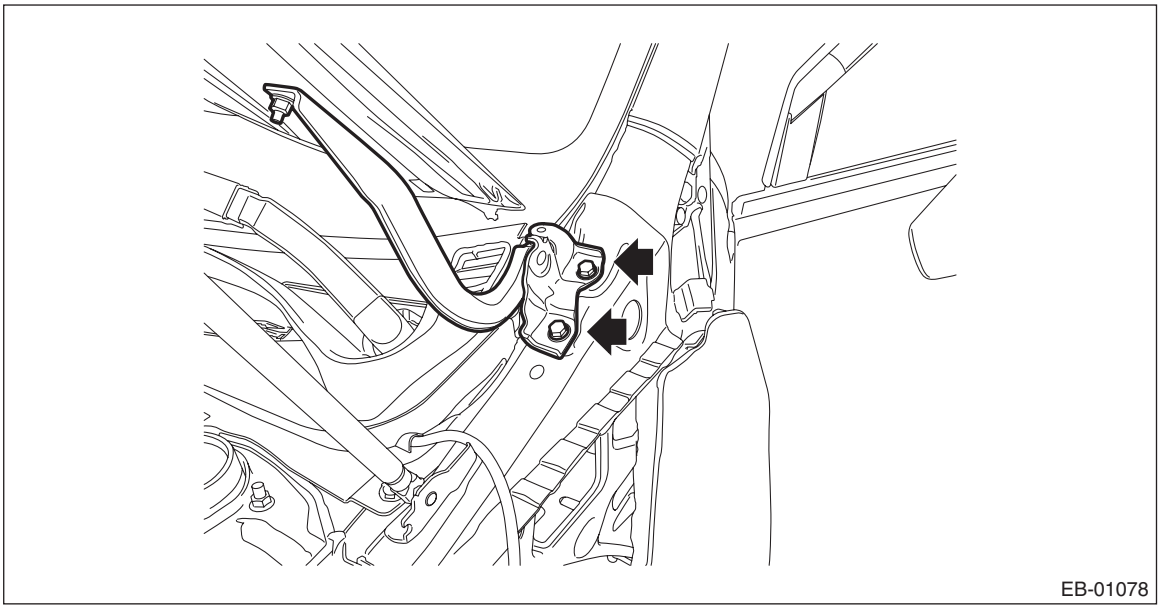

B: INSTALLATION

1) Temporarily fit the hinge COMPL - front hood around the original position on the vehicle body.
2) Install the hood COMPL - front to the hinge COMPL - front hood.

Tightening torque:
25 N·m (2.5 kgf-m, 18.4 ft-lb)

3) Install the stay assembly - front hood.
4) When temporarily fitting the fender COMPL - front and adjusting the clearance, make sure that a uniform clearance is created around the hood COMPL - front.

NOTE:
When installing the fender COMPL - front, make sure that a uniform clearance is created around it.
- Fender COMPL - front to Hood COMPL - front: <Ref. to EB-16, ADJUSTMENT, Front Hood.>
- Fender COMPL - front to Panel assembly - front door: <Ref. to EB-28, ADJUSTMENT, Front Door.>

5) Install the hinge COMPL - front hood.
   (1) Tighten the bolts at the front side, and temporarily fit the bolts at the rear side.
   (2) Remove the fender COMPL - front.
   (3) Tighten the hinge COMPL - front hood to the specified torque.

Tightening torque:
25 N·m (2.5 kgf-m, 18.4 ft-lb)

6) Readjust the fender COMPL - front to install.

NOTE:
When installing the fender COMPL - front, make sure that a uniform clearance is created around it.
- Fender COMPL - front to Hood COMPL - front: <Ref. to EB-16, ADJUSTMENT, Front Hood.>
- Fender COMPL - front to Panel assembly - front door: <Ref. to EB-28, ADJUSTMENT, Front Door.>

C: DISASSEMBLY

CAUTION:
- **Do not damage the piston rods and oil seals of stay assembly - front hood.**
- **Never disassemble the stay assembly - front hood: They contain gas.**
- **The hood COMPL - front is heavy. When removing or installing the hood COMPL - front, stay assembly - front hood, and hinge COMPL - front hood, be sure to work in a team of two or more persons.**
- **Do not reuse any clips damaged during removal. The damaged clip cannot fix the insulator securely. Therefore, always replace with a new part.**

1) Remove the clips, and remove the insulator - front hood.

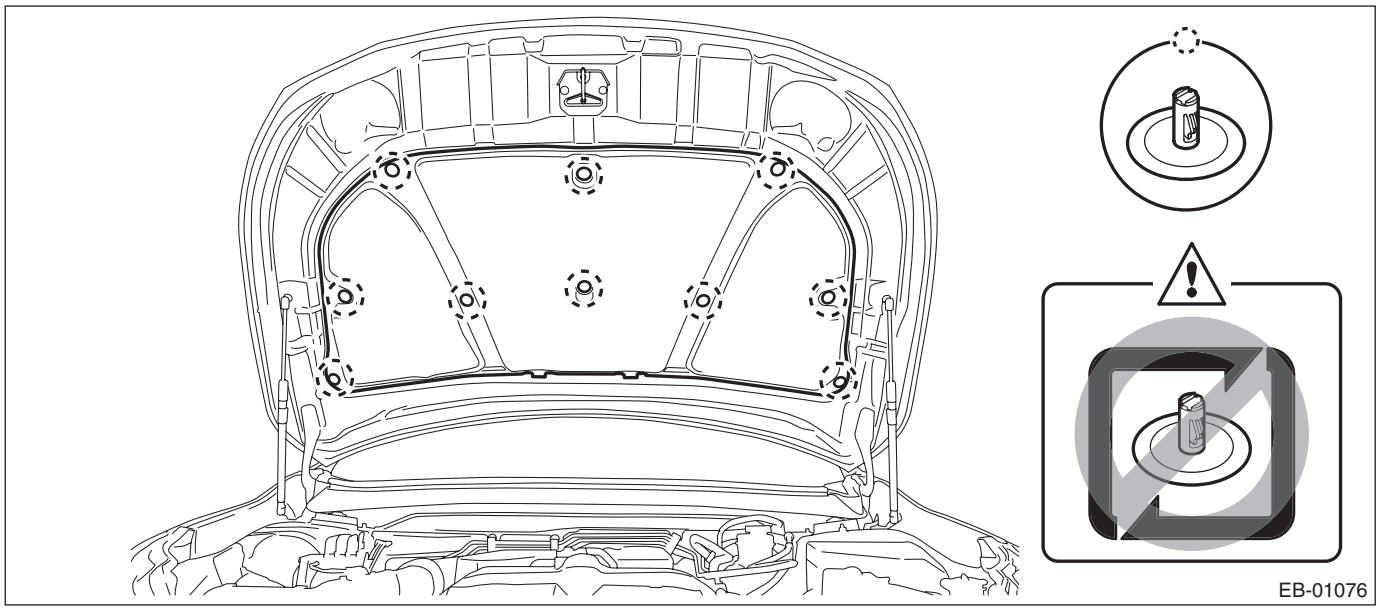

2) Make alignment marks (a), and remove the striker - front hood from the hood COMPL - front.

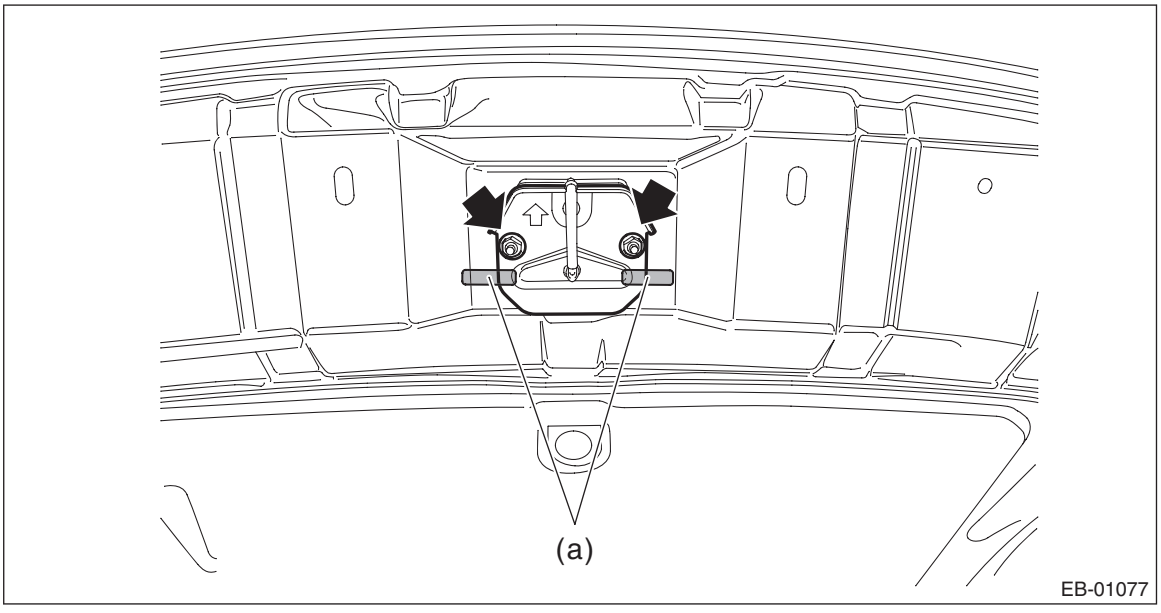

3) Remove the stay assembly - front hood.

CAUTION:
Do not remove the stop ring completely. Raise it to the position enough to remove the ball stud.

(1) Gently push the stop ring against the ball stud to be raised with a flat tip screwdriver.
(2) Pull the stay assembly - front hood toward you, and remove the stay assembly - front hood from the ball stud.

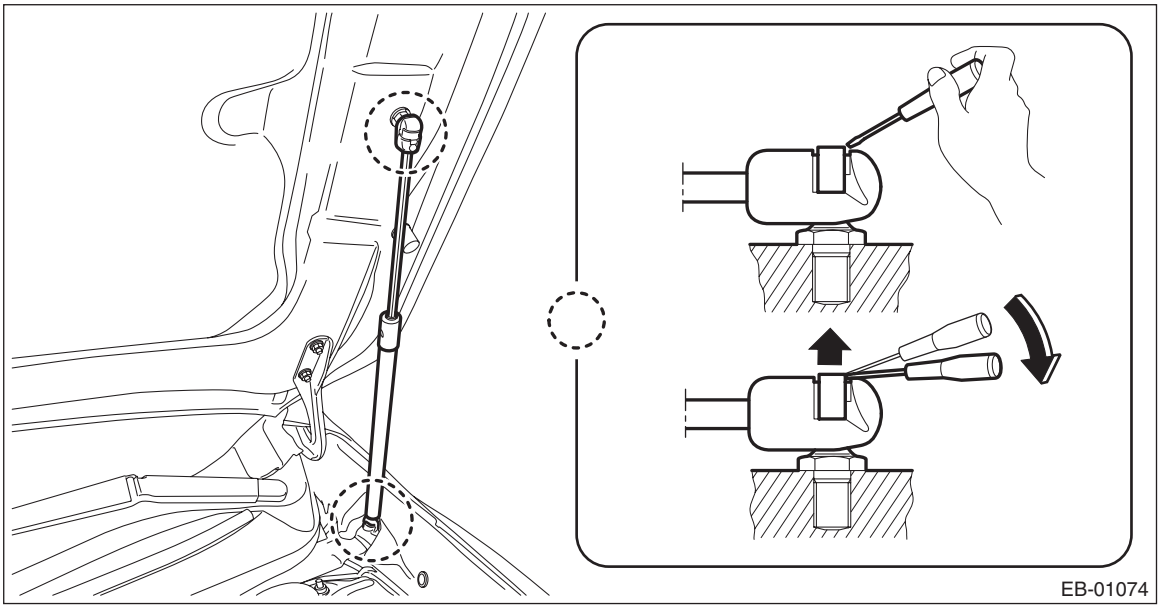

4) Remove the hinge COMPL - front hood from the body.

NOTE:
The hinge COMPL - front hood cannot be removed with the fender COMPL - front attached. Therefore, remove the fender COMPL - front beforehand.

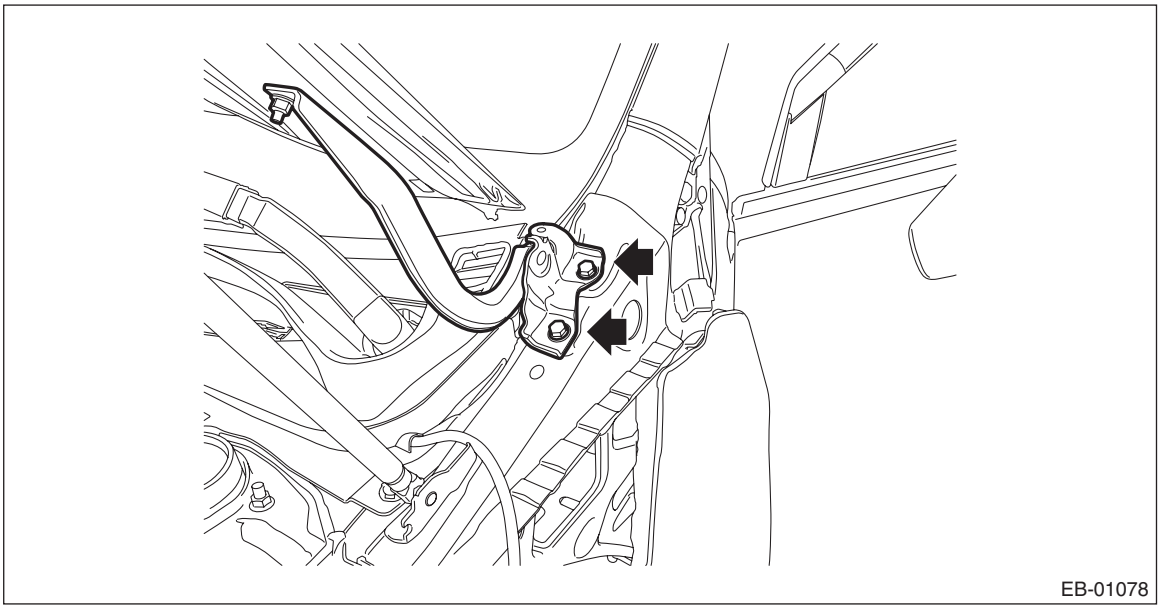

D: ASSEMBLY

1) Install the hinge COMPL - front hood.

Tightening torque:
25 N·m (2.5 kgf-m, 18.4 ft-lb)

2) Install the stay assembly - front hood.

Tightening torque:
20 N·m (2.0 kgf-m, 14.8 ft-lb)

3) Install the insulator - front hood.

NOTE:
Securely insert the claws of the insulator - front hood.

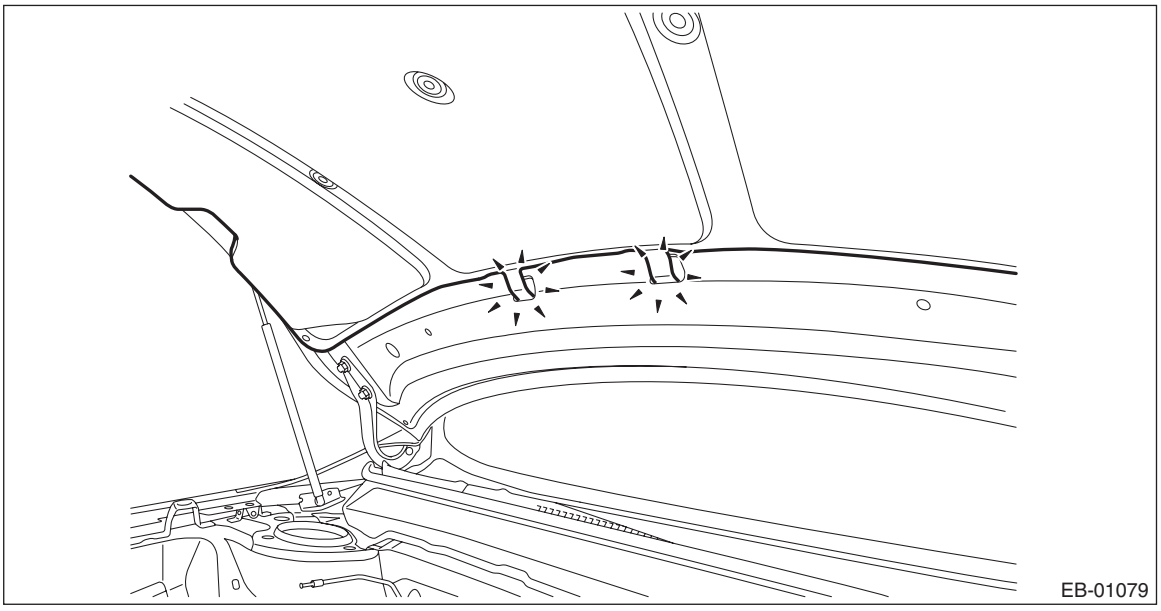

4) Align the alignment marks (a), and install the striker - front hood to the hood COMPL - front.

CAUTION:
When installing the striker - front hood, make sure that the front and rear sides are positioned in a correct direction.

Tightening torque:
33 N·m (3.4 kgf-m, 24.3 ft-lb)

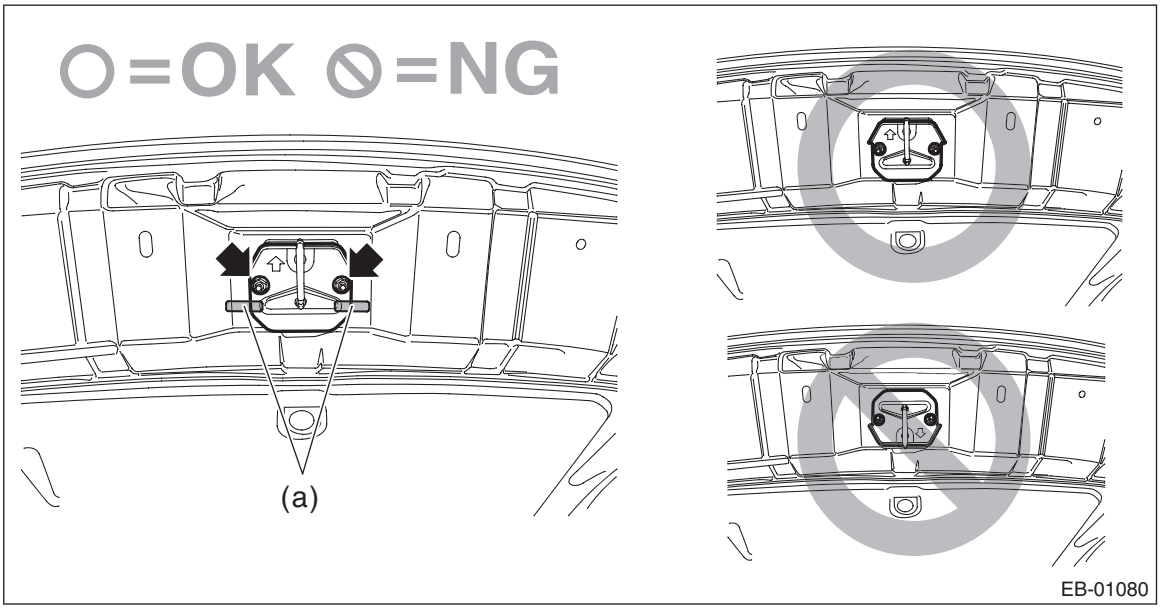

NOTE:
It is not necessary to adjust the striker - front hood because there is no span of adjustable range.

E: ADJUSTMENT

NOTE:
Adjustment should be performed on the fender COMPL - front, lock assembly - front hood and buffer - front hood, because adjustment cannot be performed on the hinge COMPL - front hood.
Adjust the clearance around the hood COMPL - front as follows.

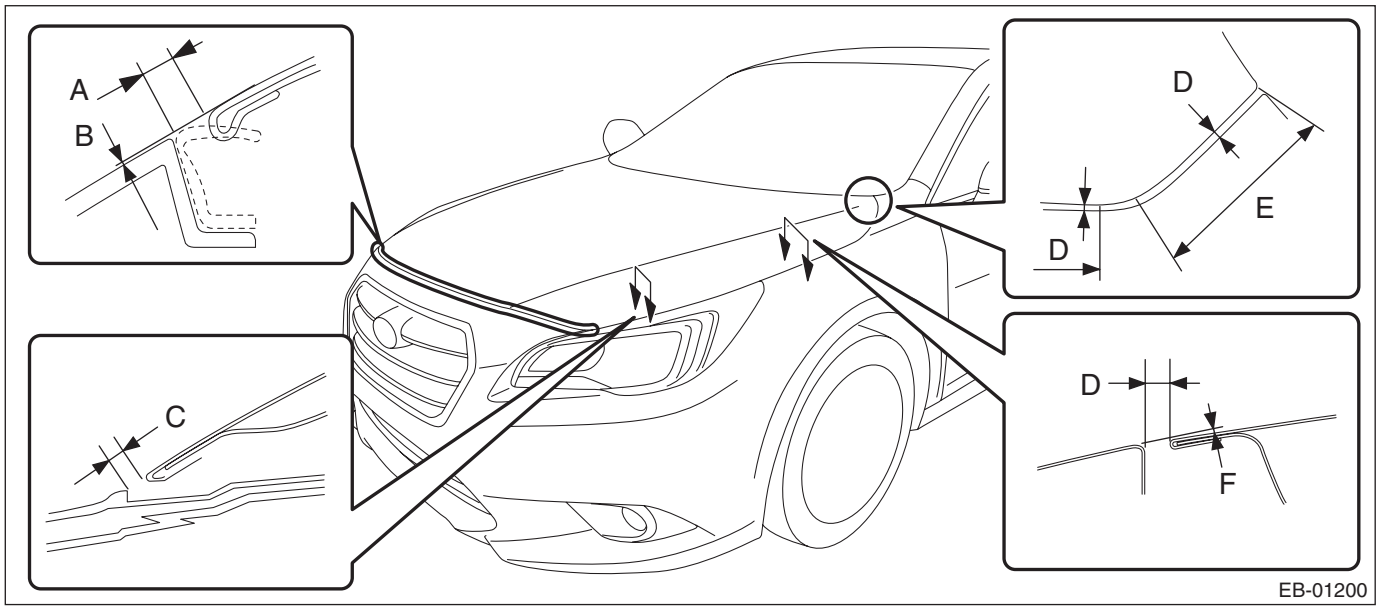

	Part	Standard
A	Hood COMPL - front to Bumper face front	4.2±1.7 mm (0.17±0.07 in)
B	Surface level gap between Hood COMPL - front and Bumper face front	-0.2+1.7, –1.2 mm (0.01+0.07, –0.05 in)
C	Hood COMPL - front to Light assembly - head	4.0±1.8 mm (0.16±0.07 in)
D	Hood COMPL - front to Fender COMPL - front (from front end to just before curved portion)	4.0±1.5 mm (0.16±0.06 in)
E	Hood COMPL - front to Fender COMPL - front (from rear end to just before curved portion)	4.0±1.0 mm (0.16±0.04 in)
F	Surface level gap: Hood COMPL - front to Fender COMPL - front	0.5±1.0 mm (0.02±0.04 in)

1) Adjust the front end height of the hood COMPL - front. <Ref. to SL-58, ADJUSTMENT, Front Hood Lock Assembly.>
2) Rotate the buffer - front hood of the hood COMPL - front to adjust the height.

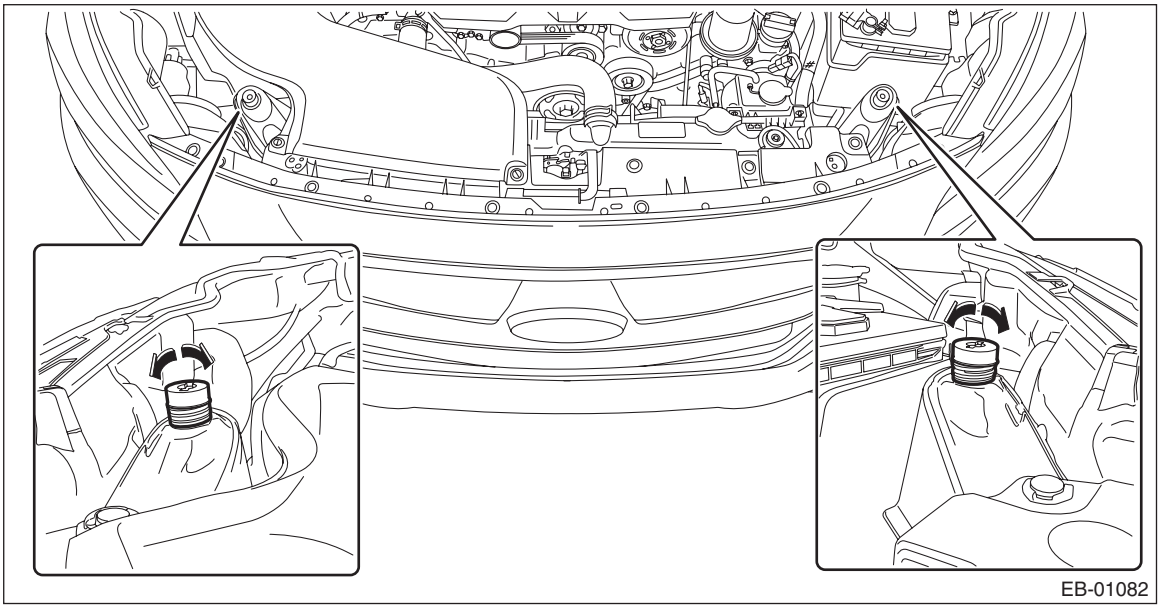

3. Front Fender

A: REMOVAL

1. FENDER PANEL

1) Disconnect the ground terminal from battery sensor. <Ref. to RC-4, BATTERY, NOTE, Repair Contents.>
2) Remove the bumper face - front. <Ref. to EI-34, REMOVAL, Front Bumper.>
3) Remove the light assembly - head. <Ref. to LI-30, REMOVAL, Headlight Assembly.>
4) Remove the cover - front fender UPR.
   (1) Remove the clip.
   (2) Release the claws by pulling them forward, and remove the cover - front fender UPR.

CAUTION:
Forcibly removing the part may cause creases.

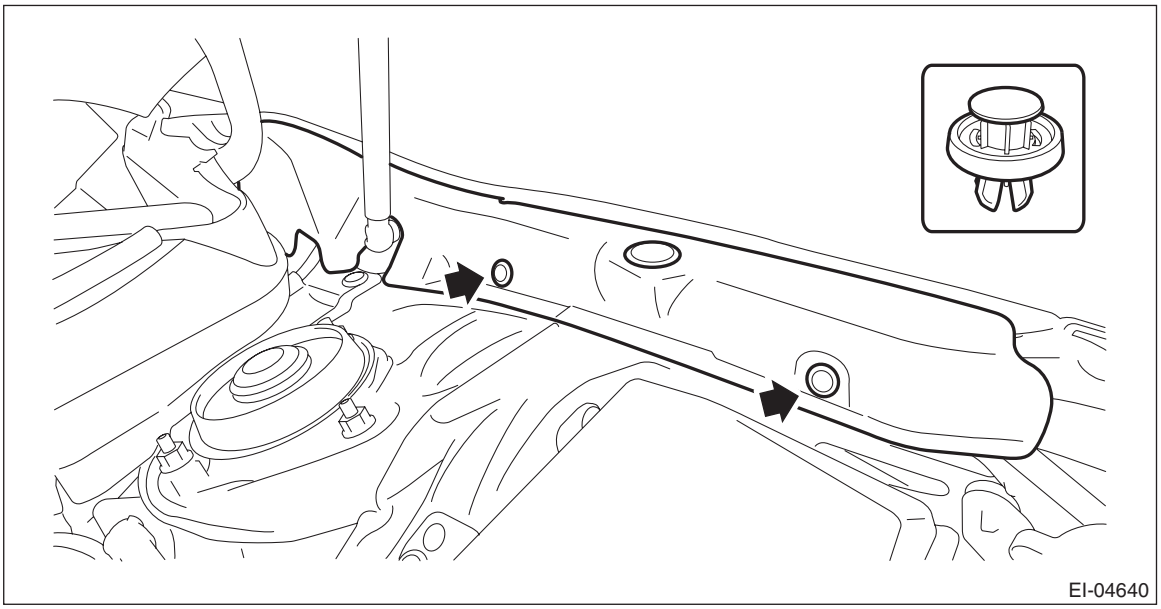
EI-04640

5) Remove the mud guard - front. <Ref. to EI-29, REMOVAL, Mud Guard.>
6) Remove the side garnish assembly. <Ref. to EI-59, REMOVAL, Side Garnish.>
7) Remove the cover - fender LWR.

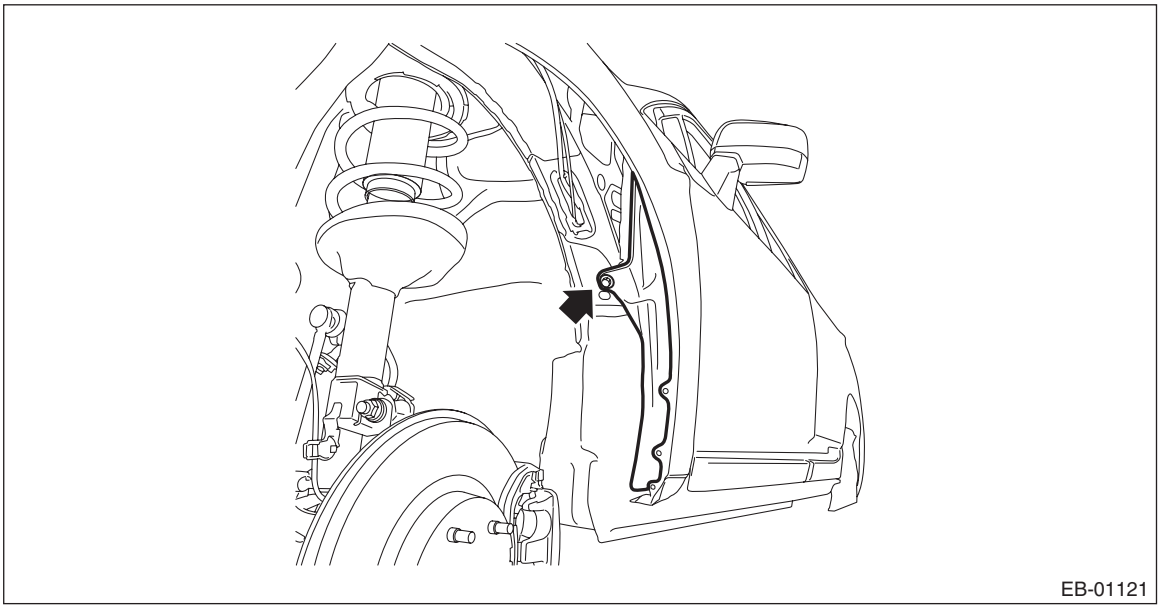
EB-01121

8) Remove the cover - A pillar assembly.

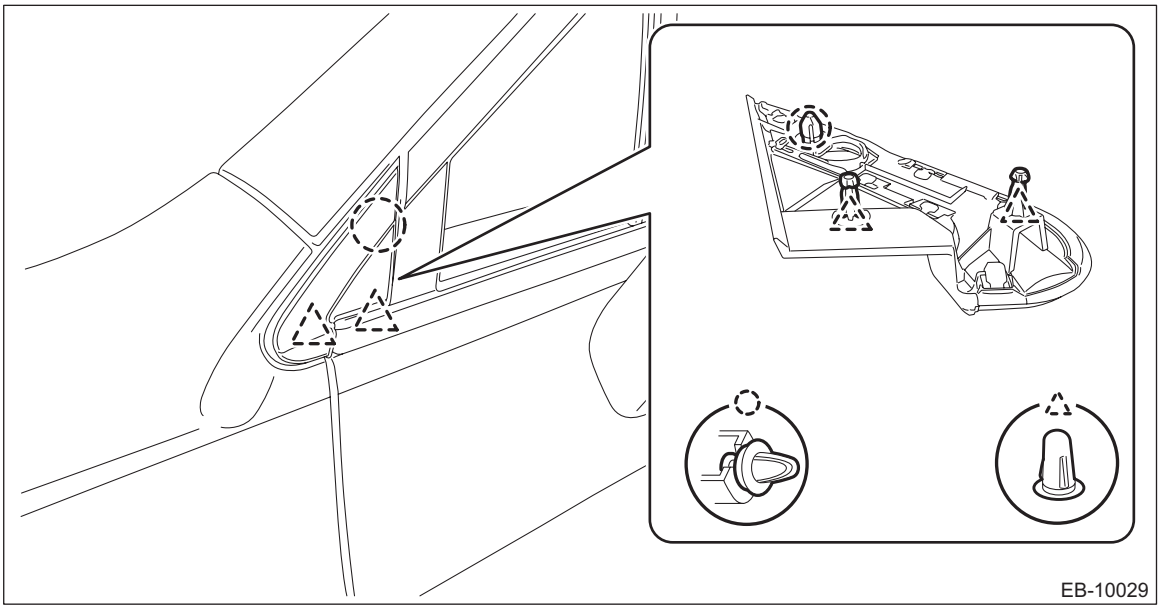

9) Remove the fender COMPL - front.

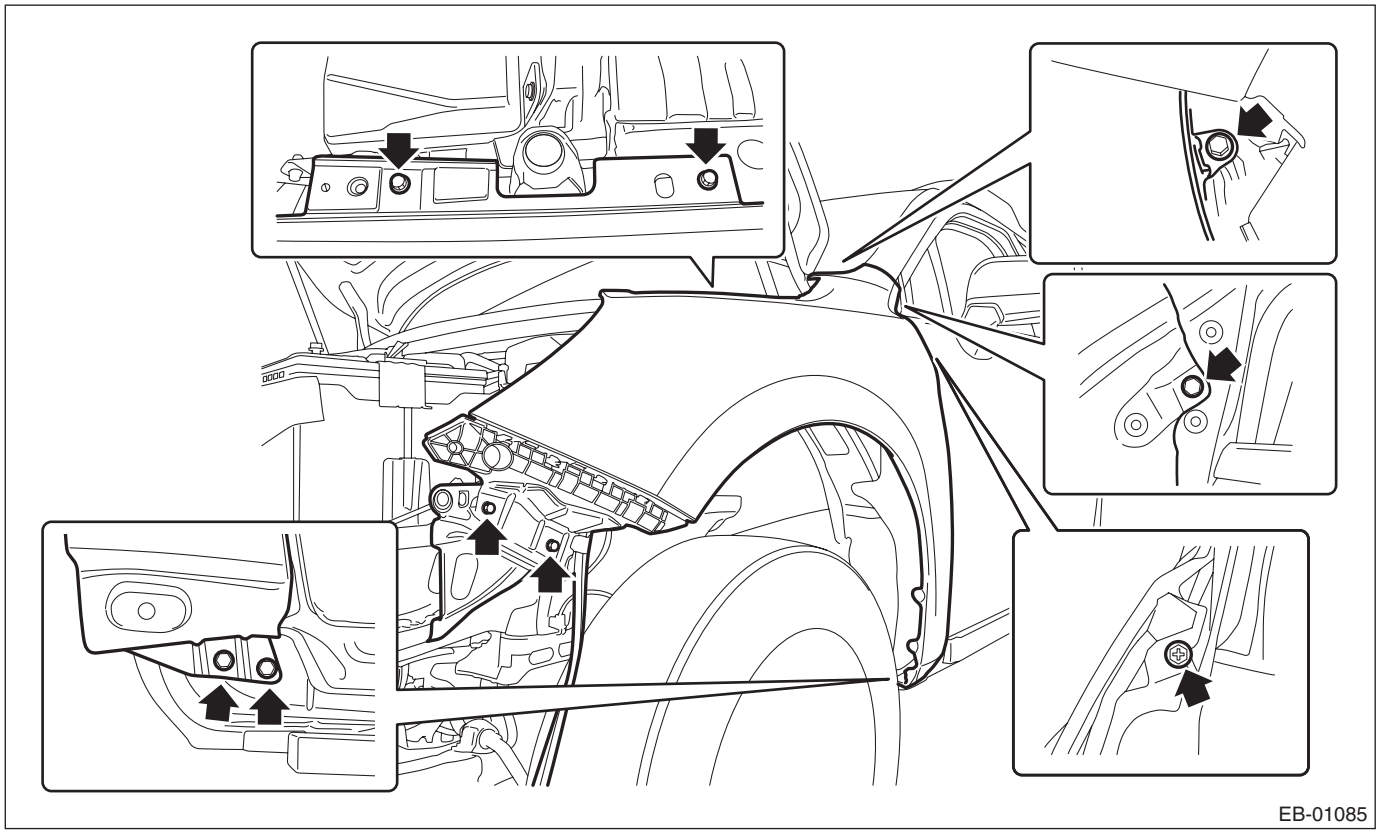

B: INSTALLATION

1. FENDER PANEL

CAUTION:
- **After installing the fender COMPL - front, be sure to perform headlight beam adjustment.**
- **Install the bumper face - front so that the front end of the under cover (b) comes inside the bumper face - front (a).**

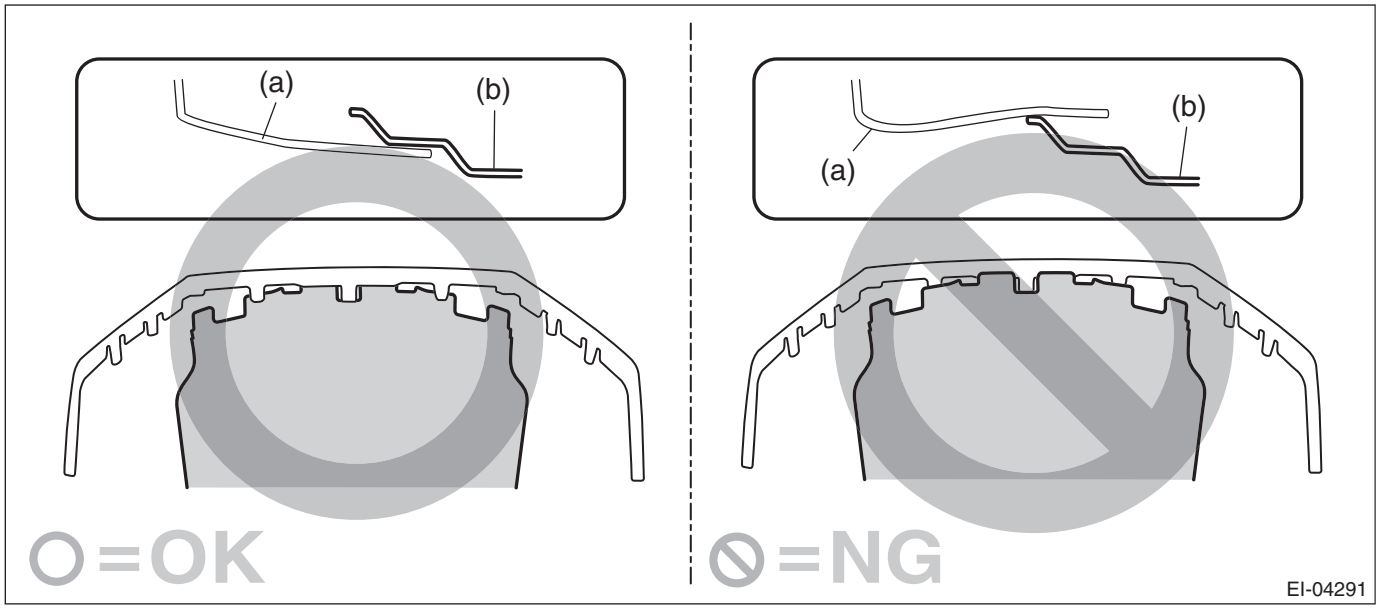

- **Before installing the bumper face, match the claws on the bracket - front bumper with the engaging position of flange section on the bumper face side. If the engaging position is not correct, the flange section may be broken or the clearance between fender panel and bumper face may not be uniform.**

1) Install the fender COMPL - front.

Tightening torque:
7.5 N·m (0.8 kgf-m, 5.5 ft-lb)

NOTE:
When installing the fender COMPL - front, make sure that a uniform clearance is created around it.
- Fender COMPL - front to Hood COMPL - front: <Ref. to EB-16, ADJUSTMENT, Front Hood.>
- Fender COMPL - front to Panel assembly - front door: <Ref. to EB-28, ADJUSTMENT, Front Door.>

2) Install the cover - A pillar assembly.
3) Install the spoiler assembly - side. <Ref. to EI-60, INSTALLATION, Side Garnish.>
4) Install the mud guard - front.
5) Install the light assembly - head.

Tightening torque:
7.5 N·m (0.8 kgf-m, 5.5 ft-lb)

6) Install the bumper face - front. <Ref. to EI-38, INSTALLATION, Front Bumper.>
7) Connect the ground terminal to battery sensor. <Ref. to RC-4, BATTERY, NOTE, Repair Contents.>
8) Adjust the headlight beam and fog light beam.
- Adjust the headlight beam. <Ref. to LI-34, HEADLIGHT BEAM ADJUSTMENT, ADJUSTMENT, Headlight Assembly.>
- Adjust the fog light beam. (Model with fog light) <Ref. to LI-44, FOG LIGHT AIMING, ADJUSTMENT, Front Fog Light Assembly.>

4. Front Door

A: REMOVAL

1. FRONT DOOR PANEL

1) Disconnect the ground terminal from the battery sensor, and wait for at least 60 seconds before starting work. <Ref. to RC-4, BATTERY, NOTE, Repair Contents.>
2) Remove the garnish assembly - door. (OUTBACK model) <Ref. to EI-59, OUTBACK MODEL, REMOVAL, Side Garnish.>
3) Remove the trim panel - front door. <Ref. to EI-71, FRONT DOOR, REMOVAL, Door Trim.>
4) Remove the sealing cover - front door. <Ref. to EB-30, REMOVAL, Front Sealing Cover.>
5) Remove the outer mirror assembly. <Ref. to GW-27, REMOVAL, Outer Mirror Assembly.>
6) Remove the front door speaker assembly. <Ref. to ET-25, DOOR SPEAKER, REMOVAL, Front Speaker.>
7) Remove the cover B pillar - front door INN.

CAUTION:
Always replace with a new part, because engagement of the claw weakens.

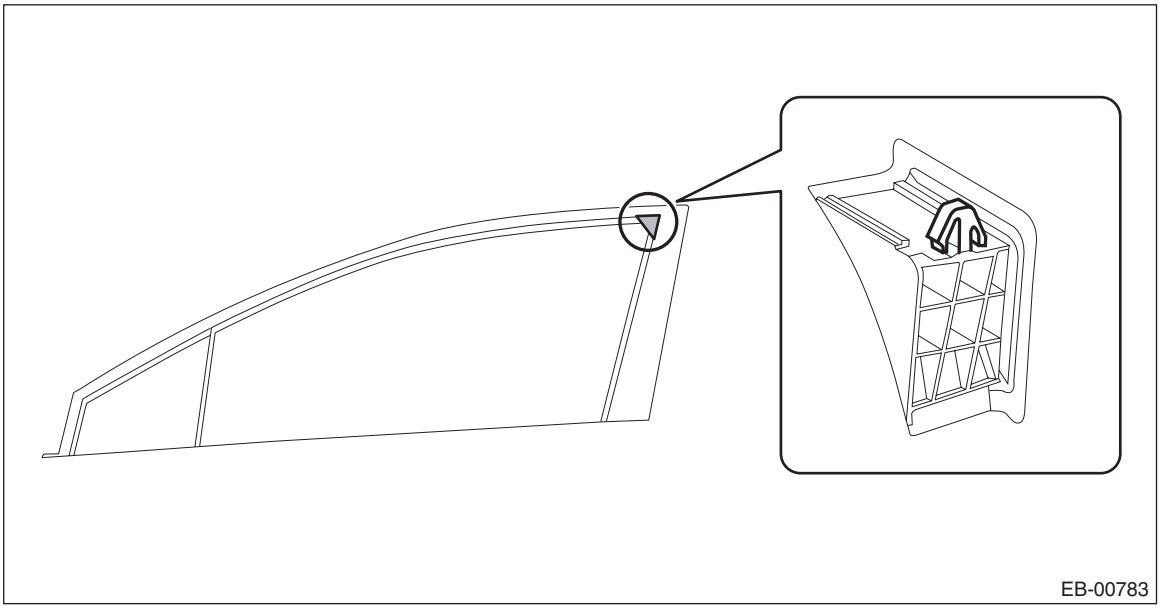

8) Remove the front door impact sensor assembly. <Ref. to AB-54, REMOVAL, Front Door Impact Sensor.>
9) Remove the glass assembly - front door and the glass - front door partition. <Ref. to GW-20, REMOVAL, Front Door Glass.>
10) Remove the regulator & motor assembly - front of the front door. <Ref. to GW-24, REMOVAL, Front Regulator and Motor Assembly.>
11) Remove the door sash tape. <Ref. to EB-41, FRONT DOOR, REMOVAL, Door Sash Tape.>
12) Remove the latch and actuator assembly - front. <Ref. to SL-38, REMOVAL, Front Door Latch and Door Lock Actuator Assembly.>
13) Remove the handle - door outer. <Ref. to SL-34, REMOVAL, Front Outer Handle.>
14) Remove the strip - front door. <Ref. to EB-67, REPLACEMENT, Weather Strip.>
15) Remove the clips and the upper hooks, and remove the cover sash - inner front.

CAUTION:
Do not forcibly pull the cover sash - inner front. Otherwise, the hook section of the cover sash - inner front may be damaged.

16) Remove the bolts and nuts, and then detach the checker assembly - front door.

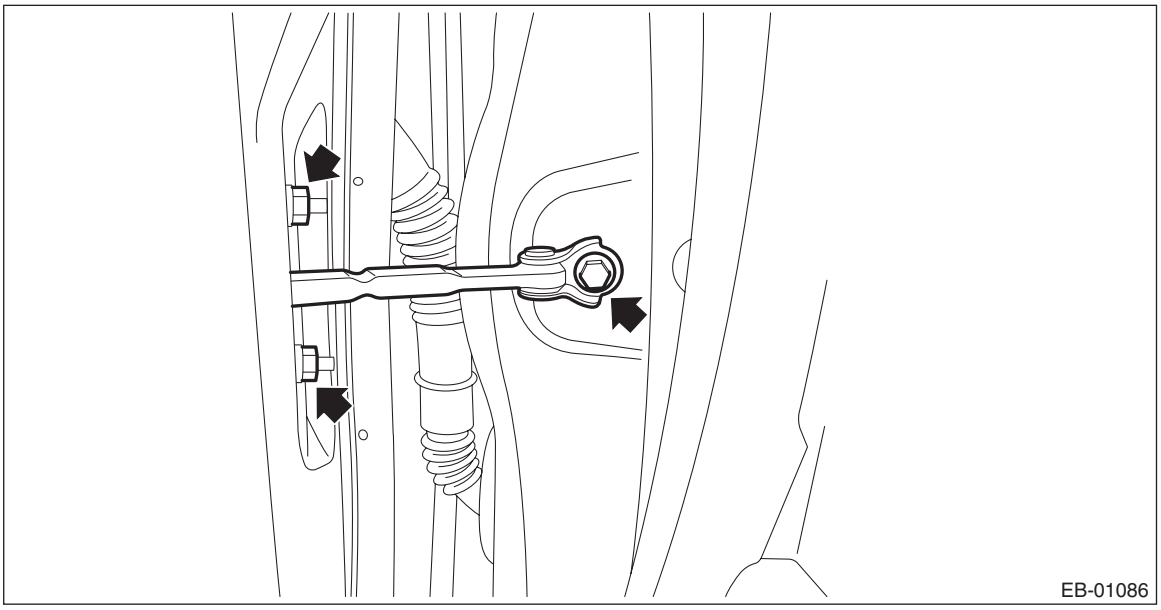

17) Remove the cover side sill - front and the front cover - side sill. <Ref. to EI-92, REMOVAL, Lower Inner Trim.>

18) Disconnect the front door harness connectors.

(1) Disconnect the connector of door harness from body harness.

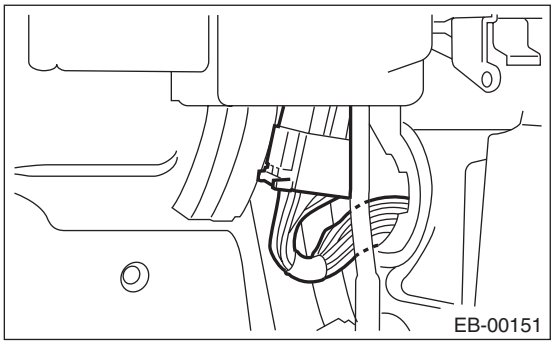

(2) Push in the claws to remove the grommet, and pull out the door harness connector.

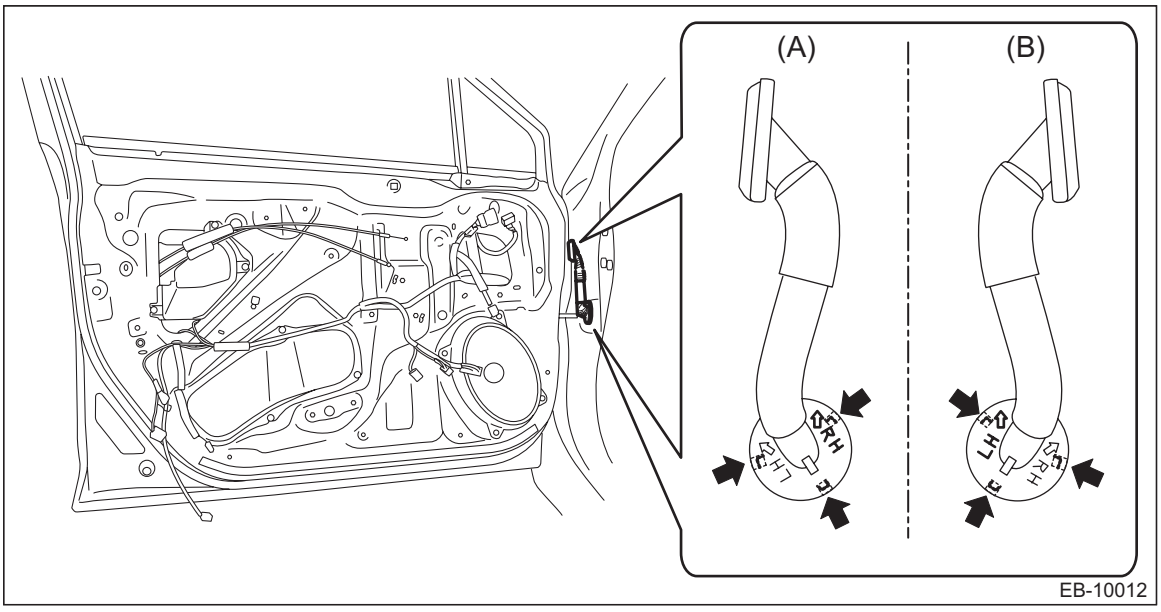

(A) Driver's side (B) Passenger's side

19) Before removing the panel assembly - front door, make the following preparations.

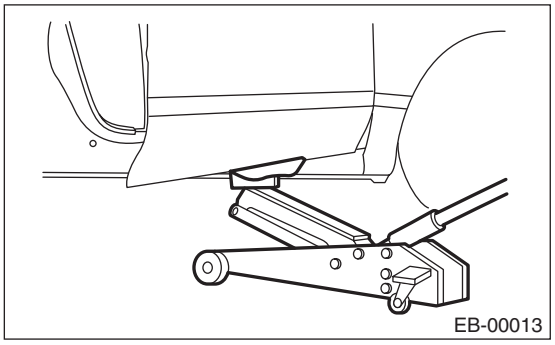

(1) Put a wooden block on a floor jack and place the jack under the panel assembly - front door.
(2) Support the panel assembly - front door with the jack to protect it from damage.

CAUTION:
• Do not excessively lift the panel assembly - front door with the floor jack. The door hinges may be damaged.
• While removing or installing, do not use a jack, etc. on the garnish section.

20) Remove the bolts on the side of the panel assembly - front door of the upper hinge - front door and the lower hinge - front door to remove the panel assembly - front door.

CAUTION:
The panel assembly - front door is heavy. When removing and installing it, always work in a team of two or more persons.

2. FRONT DOOR HINGE

1) Disconnect the ground terminal from the battery sensor, and wait for at least 60 seconds before starting work. <Ref. to RC-4, BATTERY, NOTE, Repair Contents.>
2) Remove the garnish assembly - door. (OUTBACK model) <Ref. to EI-59, OUTBACK MODEL, REMOVAL, Side Garnish.>
3) Remove the cover side sill - front and the front cover - side sill. <Ref. to EI-92, REMOVAL, Lower Inner Trim.>
4) Disconnect the front door harness connectors.
(1) Disconnect the connector of door harness from body harness.

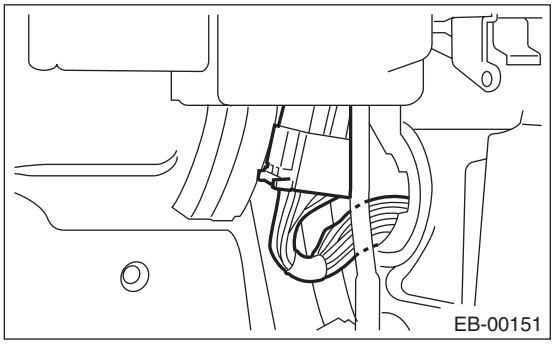

(2) Push in the claws to remove the grommet, and pull out the door harness connector.

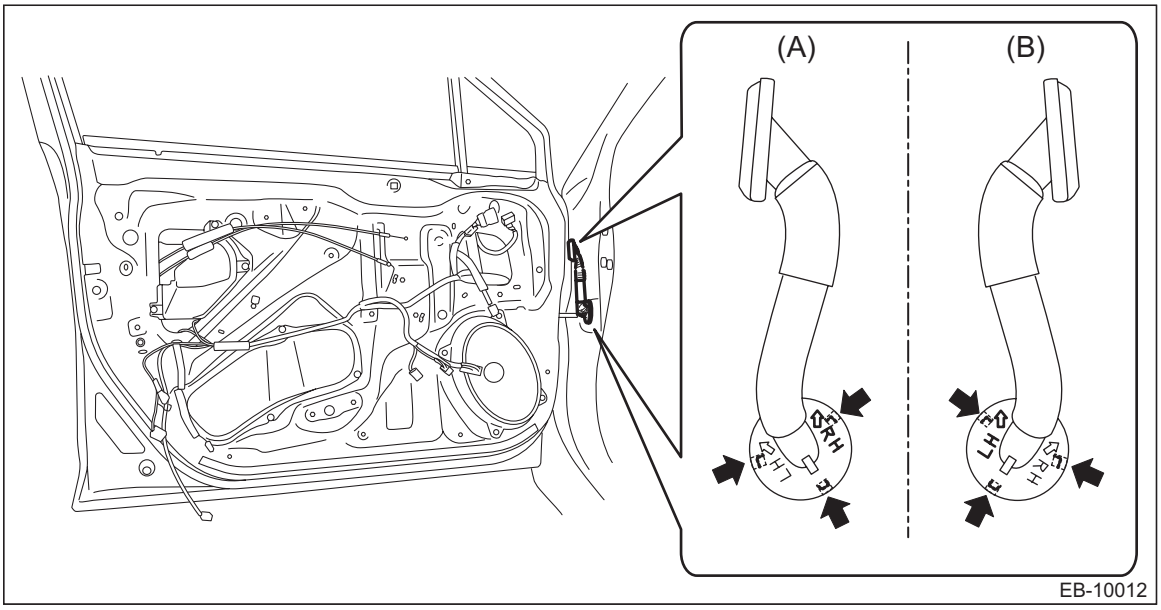

(A) Driver's side (B) Passenger's side

5) Remove the bolts on the vehicle side to disconnect the checker assembly - front door.

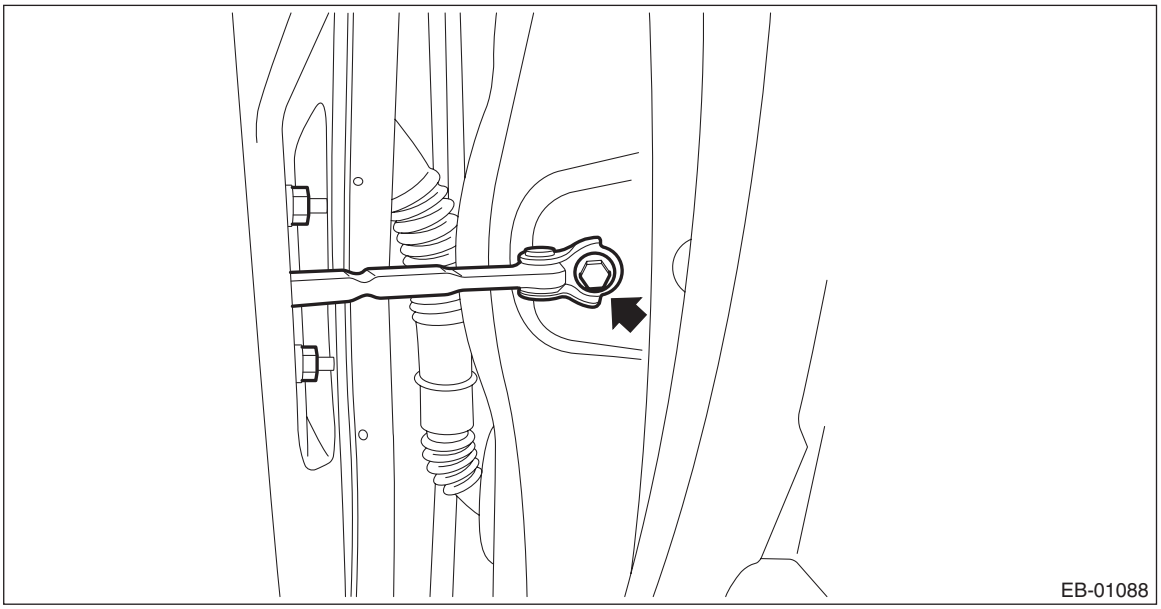

6) Before removing the door hinge, make the following preparations.

CAUTION:
• The panel assembly - front door is heavy. When removing and installing it, always work in a team of two or more persons.
• Do not excessively lift the panel assembly - front door with the floor jack. The door hinges may be damaged.
• While removing or installing, do not use a jack, etc. on the garnish section.
(1) Put a wooden block on a floor jack and place the jack under the panel assembly - front door.
(2) Support the panel assembly - front door with the jack to protect it from damage.

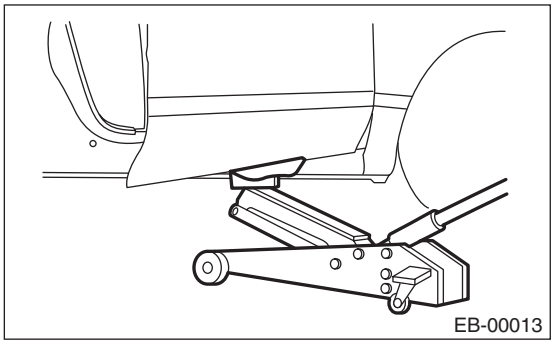

7) Remove the bolts on the side of the panel assembly - front door of the upper hinge - front door or the lower hinge - front door.

CAUTION:
Do not remove the upper hinge - front door and the lower hinge - front door at the same time.
8) Remove the hinge - front door from the vehicle.

B: INSTALLATION

1. FRONT DOOR PANEL

1) Put a wooden block and the like on a jack and place the panel assembly - front door on it.

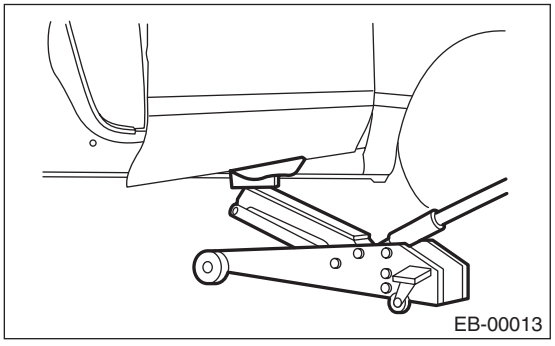

2) Adjust the height by the jack, and temporarily install the panel assembly - front door to the upper hinge - front door and the lower hinge - front door.

NOTE:
• When installing the panel assembly - front door, make sure that a uniform clearance is created around the panel.
• Perform installation while paying attention to the assembly direction of the grommet.
3) Adjust the clearance around the panel assembly - front door. <Ref. to EB-28, ADJUSTMENT, Front Door.>
4) Tighten the mounting bolts of the panel assembly - front door to the specified torque.

Tightening torque:
25 N·m (2.5 kgf-m, 18.4 ft-lb)

5) Tighten the bolts and nuts of the checker assembly - front door.

Tightening torque:
Refer to "COMPONENT" of "General Description". <Ref. to EB-4, FRONT DOOR, COMPONENT, General Description.>

6) Connect door harness connector, and install the cover side sill - front and the front cover - side sill. <Ref. to EI-95, INSTALLATION, Lower Inner Trim.>
7) Attach the door sash tape. <Ref. to EB-45, FRONT DOOR, INSTALLATION, Door Sash Tape.>
8) Before installing each part, check the following items.
- Rod of the latch and actuator assembly - front is free from deformation.
- Grease is applied sufficiently to the rod joints of the latch and actuator assembly - front.
- Cable of the latch and actuator assembly - front is free from deformation such as fray.
- Grease is applied sufficiently to the cable joints of the latch and actuator assembly - front.

9) Install door internal parts in the reverse order of removal.
- Weather strip - front door
- Handle - door outer

Tightening torque:
7.5 N·m (0.8 kgf-m, 5.5 ft-lb)
- Latch & actuator assembly - front

Tightening torque:
7.5 N·m (0.8 kgf-m, 5.5 ft-lb)
- Regulator & motor assembly - front for the front door

Tightening torque:
7.5 N·m (0.8 kgf-m, 5.5 ft-lb)
- Running channel - front door

CAUTION:
Check that the running channel - front door is securely fixed to the panel assembly - front door and to the sash COMPL - partition.
- Glass assembly - front door, and glass - front door partition

Tightening torque:
7.5 N·m (0.8 kgf-m, 5.5 ft-lb)

10) Install the front door impact sensor.

CAUTION:
- **Do not reuse the bolt and nut.**

Always replace with the specified new bolts and nuts.
- **Thoroughly clean the sensor mounting area before installing the front door impact sensor.**
- **When installing the sensor, insert the set pin on the backside of the sensor into the hole on the body side securely.**

Tightening torque:
7.5 N·m (0.8 kgf-m, 5.5 ft-lb)

11) Install the cover B pillar - front door INN.

CAUTION:
Always replace with a new part, because engagement of the claw weakens.
12) Install the front door speaker assembly.
13) Install the outer mirror assembly. <Ref. to GW-28, INSTALLATION, Outer Mirror Assembly.>

Tightening torque:
7.5 N·m (0.8 kgf-m, 5.5 ft-lb)

14) Install the sealing cover. <Ref. to EB-30, INSTALLATION, Front Sealing Cover.>
15) Install the trim panel - front door. <Ref. to EI-73, INSTALLATION, Door Trim.>
16) Install the garnish assembly - door. (OUTBACK model) <Ref. to EI-60, OUTBACK MODEL, INSTALLATION, Side Garnish.>
17) Connect the ground terminal to battery sensor. <Ref. to RC-4, BATTERY, NOTE, Repair Contents.>

2. FRONT DOOR HINGE

1) Apply grease to the sliding area of door hinges, and install the door hinge to vehicle.

Tightening torque:
30 N·m (3.1 kgf-m, 22.1 ft-lb)

2) Adjust the height by the jack, and temporarily install the panel assembly - front door to the upper hinge - front door and the lower hinge - front door.

NOTE:
When installing the panel assembly - front door, make sure that a uniform clearance is created around the panel.

3) Adjust the clearance around the panel assembly - front door. <Ref. to EB-28, ADJUSTMENT, Front Door.>

4) Tighten the bolts of the panel assembly - front door to the specified torque.

Tightening torque:
25 N·m (2.5 kgf-m, 18.4 ft-lb)

5) Connect door harness connector, and install the cover side sill - front and the front cover - side sill. <Ref. to EI-95, INSTALLATION, Lower Inner Trim.>

6) Tighten the bolts on the vehicle side of the checker assembly - front door.

Tightening torque:
Refer to "COMPONENT" of "General Description". <Ref. to EB-4, FRONT DOOR, COMPONENT, General Description.>

7) Install the garnish assembly - door. (OUTBACK model) <Ref. to EI-60, OUTBACK MODEL, INSTALLATION, Side Garnish.>

8) Connect the ground terminal to battery sensor. <Ref. to RC-4, BATTERY, NOTE, Repair Contents.>

C: ADJUSTMENT

Adjust the clearance around the panel assembly - front door as follows.

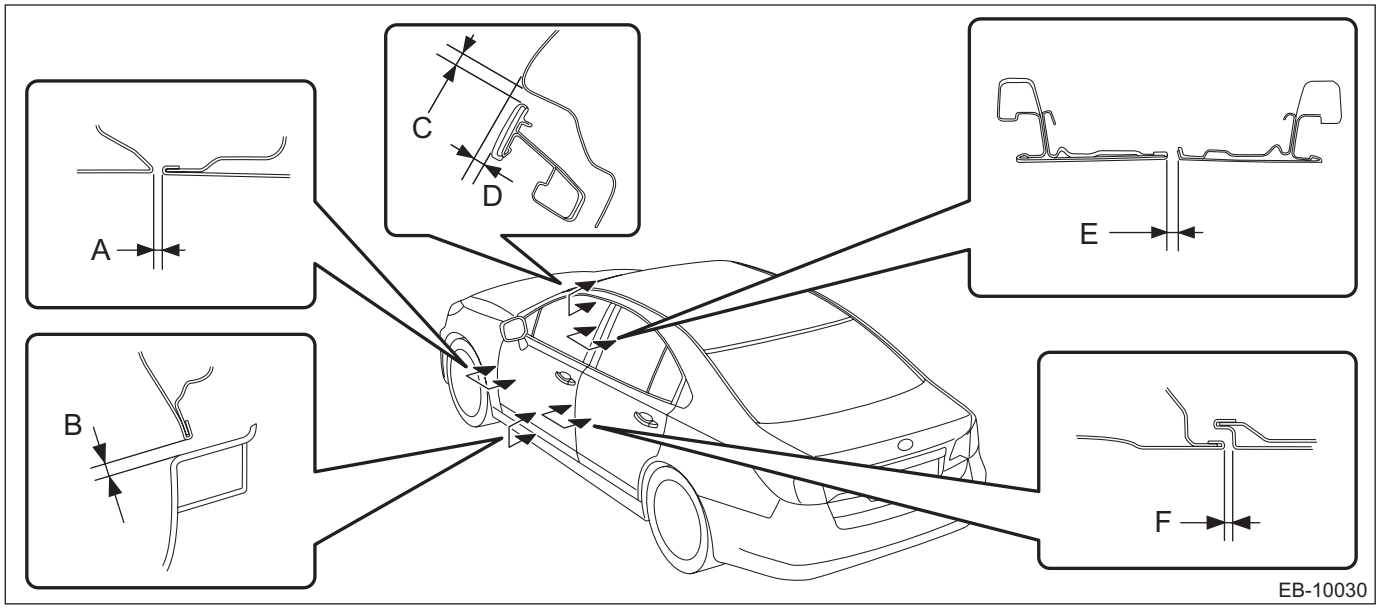

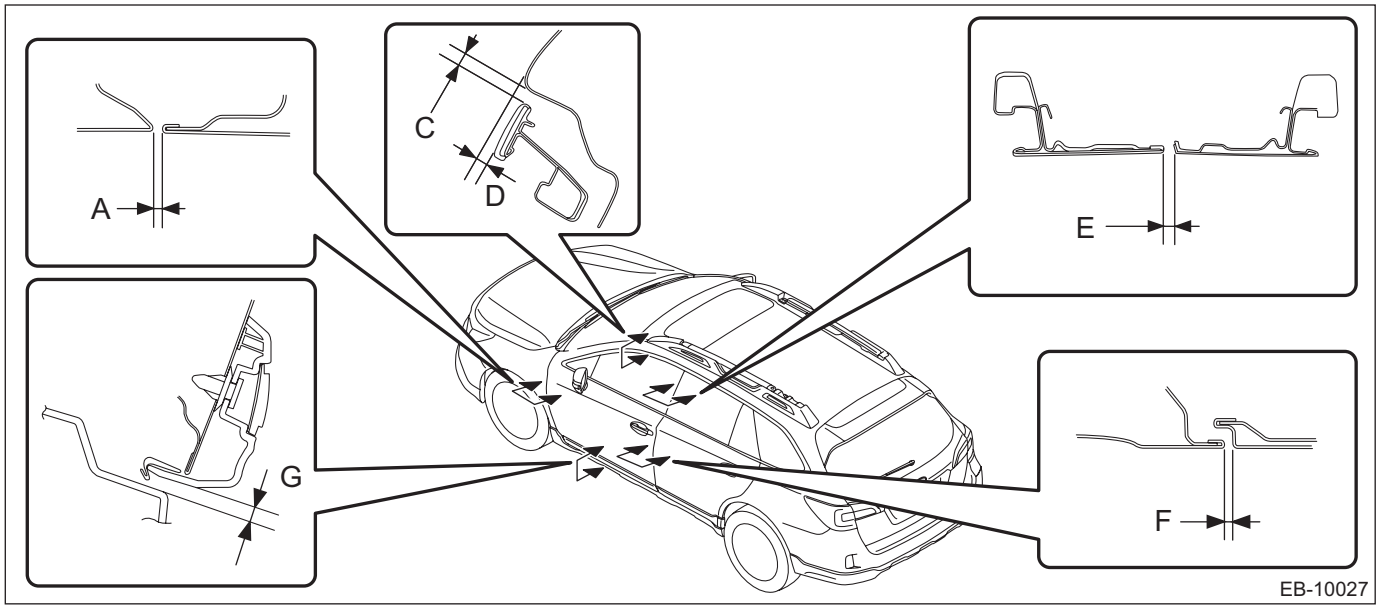

	Part	Standard
A	Fender COMPL - front to Panel assembly - front door	4.2±1.25 mm (0.17±0.05 in)
B	Panel assembly - front door to Side sill garnish assembly (sedan model)	5.4±1.8 mm (0.21±0.07 in)
C	Panel side outer to Front door sash	5.2+1.5, –1.0 mm (0.2+0.06, –0.04 in)
D	Surface level gap between panel side outer and front door sash	4.9±1.5 mm (0.19±0.06 in)
E	Front door sash to Rear door sash	4.4+1.5 — 1.0 mm (0.17+0.06 — 0.04 in)
F	Panel assembly - front door to Panel assembly - rear door	4.2±1.25 mm (0.17±0.05 in)
G	Garnish assembly front door to Side sill garnish assembly (OUTBACK model)	4.4±1.8 mm (0.17±0.07 in)

1) Adjust the vertical and horizontal positions of the panel assembly - front door.

Preparation tool:
ST: WRENCH (925610000)

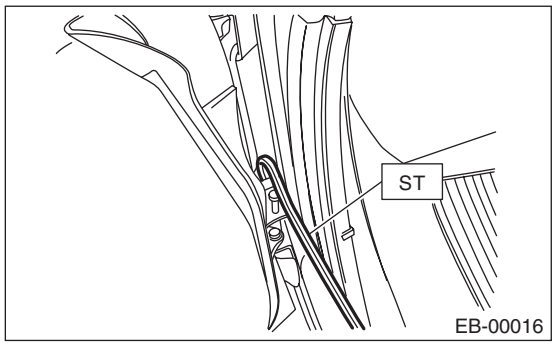

(1) Using ST, loosen the vehicle side bolts of the upper hinge - front door and the lower hinge - front door.
(2) Adjust the vertical and horizontal clearance of the panel assembly - front door.

2) Adjust the surface level gap between the panel assembly - front door and the panel assembly - rear door.

CAUTION:
Do not use an impact wrench. Welding area on the striker nut plate is easily broken.

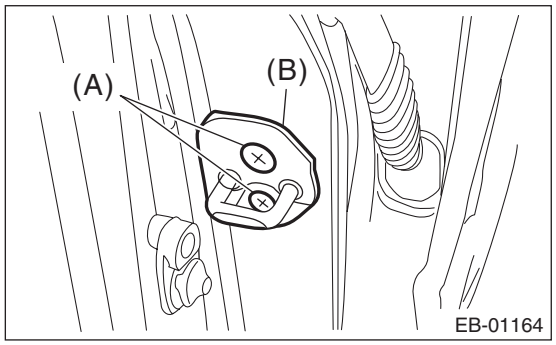

(1) Loosen the screws (A).
(2) Tap the striker - front door (B) using a plastic hammer to adjust the surface level gap between the rear end of the panel assembly - front door and the front end of the panel assembly - rear door.

5. Front Sealing Cover

A: REMOVAL

1) Disconnect the ground terminal from the battery sensor, and wait for at least 60 seconds before starting work. <Ref. to RC-4, BATTERY, NOTE, Repair Contents.>
2) Remove the trim panel - front door. <Ref. to EI-71, FRONT DOOR, REMOVAL, Door Trim.>
3) Remove the sealing cover - front door.

CAUTION:
- **Carefully remove the butyl tape. Excessive force will easily break the cover.**
- **If the sealing cover - front door gets broken, replace it with a new part.**
- **Be careful not to allow the butyl tape to contact any trims and seats because the butyl tape, which has a strong adhesive force, is difficult to remove once it adhered.**

(1) Remove the screw to remove the bracket - door trim front.
(2) Disconnect connectors.
(3) Carefully remove the butyl tape to remove the sealing cover - front door.

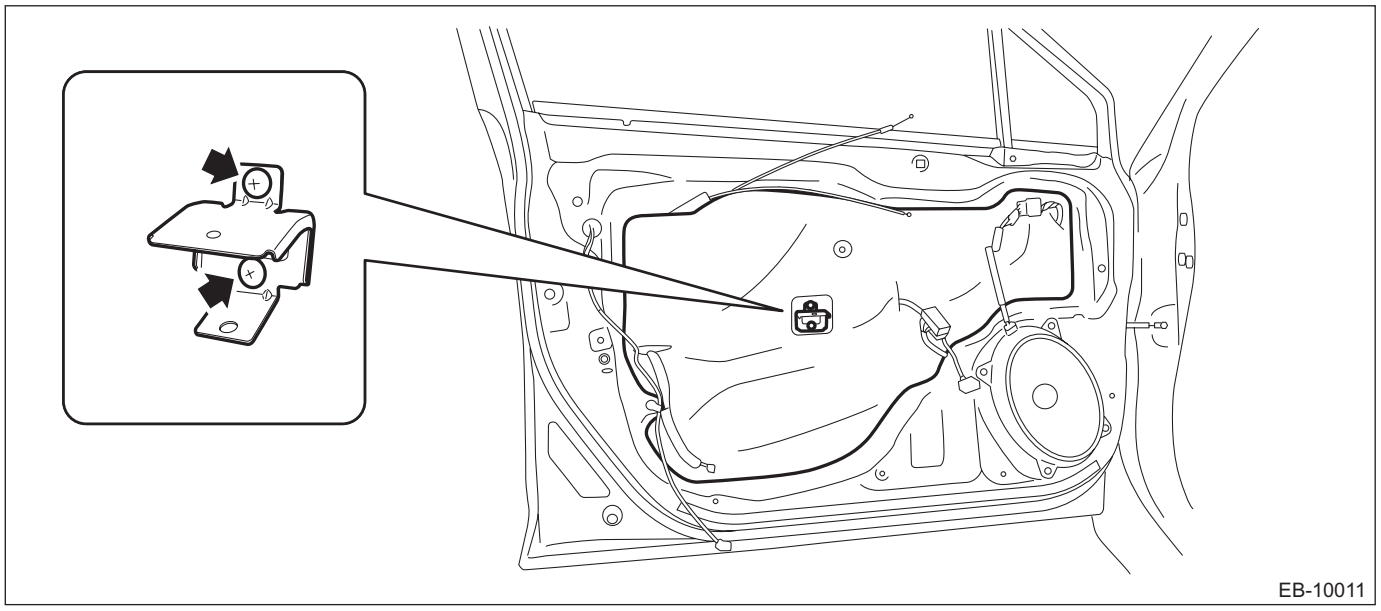

B: INSTALLATION

CAUTION:
- **If the sealing cover - front door gets broken, replace it with a new part.**
- **Apply a uniform bead of butyl tape.**
- **Attach the sealing cover - front door, keeping it from becoming wrinkled.**
- **Breaks in the bead will allow water leakage and contamination.**

1) Install the sealing cover - front door.
(1) Forcefully push the butyl tape portion to prevent any floating on surface.
(2) When replacing the sealing cover, use the butyl tape.

Butyl tape:
3M Butyl Tape 8626 or equivalent

2) Install the trim panel - front door. <Ref. to EI-73, INSTALLATION, Door Trim.>
3) Connect the ground terminal to battery sensor. <Ref. to RC-4, BATTERY, NOTE, Repair Contents.>

C: INSPECTION

If the sealing cover - front door is broken, replace it with a new part.

6. Rear Door

A: REMOVAL

1. REAR DOOR PANEL

1) Disconnect the ground terminal from battery sensor. <Ref. to RC-4, BATTERY, NOTE, Repair Contents.>
2) Remove the garnish assembly - door. (OUTBACK model) <Ref. to EI-59, OUTBACK MODEL, REMOVAL, Side Garnish.>
3) Remove the trim panel - rear door. <Ref. to EI-72, REAR DOOR, REMOVAL, Door Trim.>
4) Remove the sealing cover - rear door. <Ref. to EB-40, REMOVAL, Rear Sealing Cover.>
5) Remove the cover B pillar - rear door INN and the cover C pillar - rear door INN.

CAUTION:
Always replace with a new part, because engagement of the claw weakens.

- Sedan model

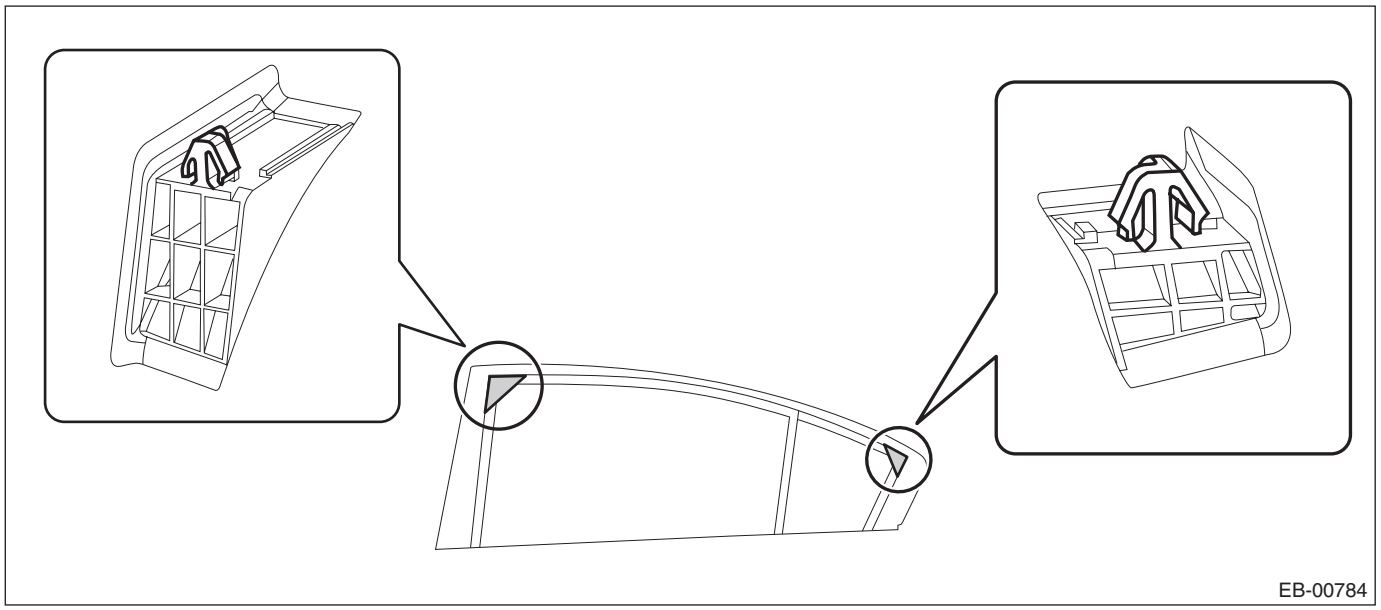

- OUTBACK model

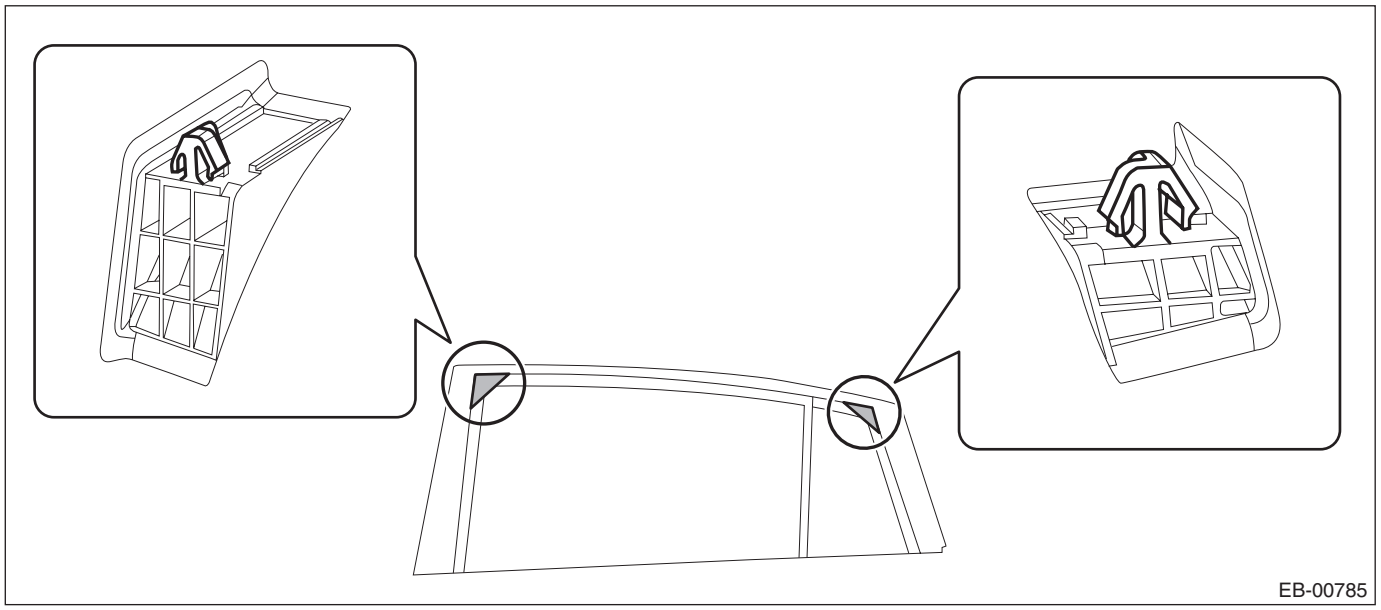

6) Remove the rear door speaker assembly. <Ref. to ET-27, REMOVAL, Rear Speaker.>
7) Remove the sash COMPL - rear partition and the glass assembly - rear door. <Ref. to GW-35, REMOVAL, Rear Door Glass.>

8) Remove the regulator - rear. <Ref. to GW-38, REMOVAL, Rear Regulator and Motor Assembly.>
9) Remove the door sash tape. <Ref. to EB-42, REAR DOOR, REMOVAL, Door Sash Tape.>
10) Remove the latch and actuator assembly - rear. <Ref. to SL-46, REMOVAL, Rear Door Latch and Door Lock Actuator Assembly.>
11) Remove the cover - handle rear outer. <Ref. to SL-42, REMOVAL, Rear Outer Handle.>
12) Remove the weather strip - rear door. <Ref. to EB-67, REPLACEMENT, Weather Strip.>
13) Remove the bolts and nuts, and then detach the checker assembly - rear door.

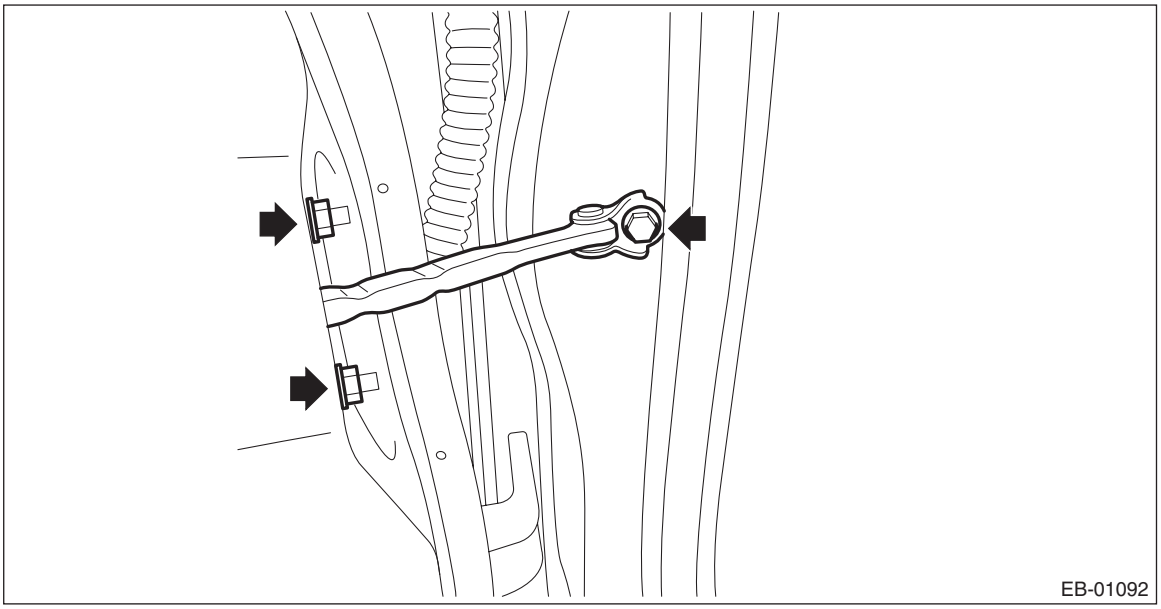
EB-01092

14) Disconnect the rear door harness connectors.
(1) Remove the grommet and pull out the rear door harness connector from inside the center pillar.
(2) Disconnect the rear door harness connectors.

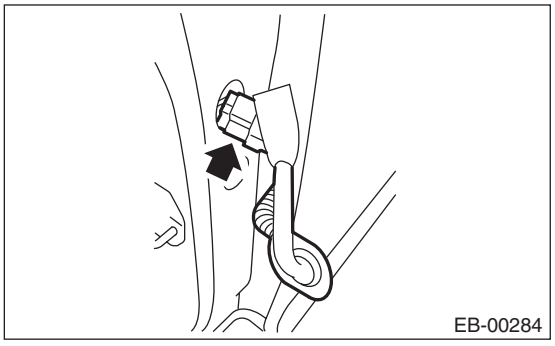
EB-00284

15) Before removing the panel assembly - rear door, make the following preparations.

CAUTION:
• Do not excessively lift the panel assembly - rear door with the floor jack. The door hinges may be damaged.
• While removing or installing, do not use a jack, etc. on the garnish section.
(1) Put a wooden block on a floor jack and place the jack under the panel assembly - rear door.
(2) Support the panel assembly - rear door with the jack to protect it from damage.

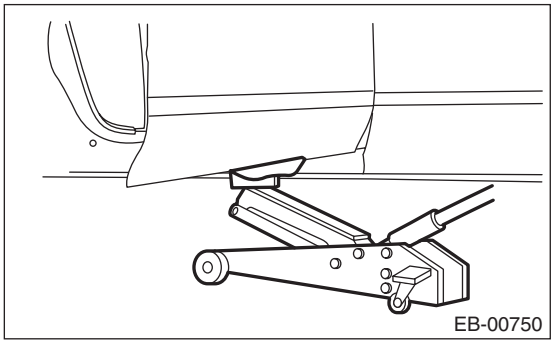
EB-00750

16) Remove the door-side bolts for the upper hinge - rear door and the lower hinge - rear door to remove the panel assembly - rear door.

CAUTION:
The panel assembly - rear door is heavy. When removing and installing it, always work in a team of two or more persons.
17) Remove the cover - C pillar assembly. (Sedan model)

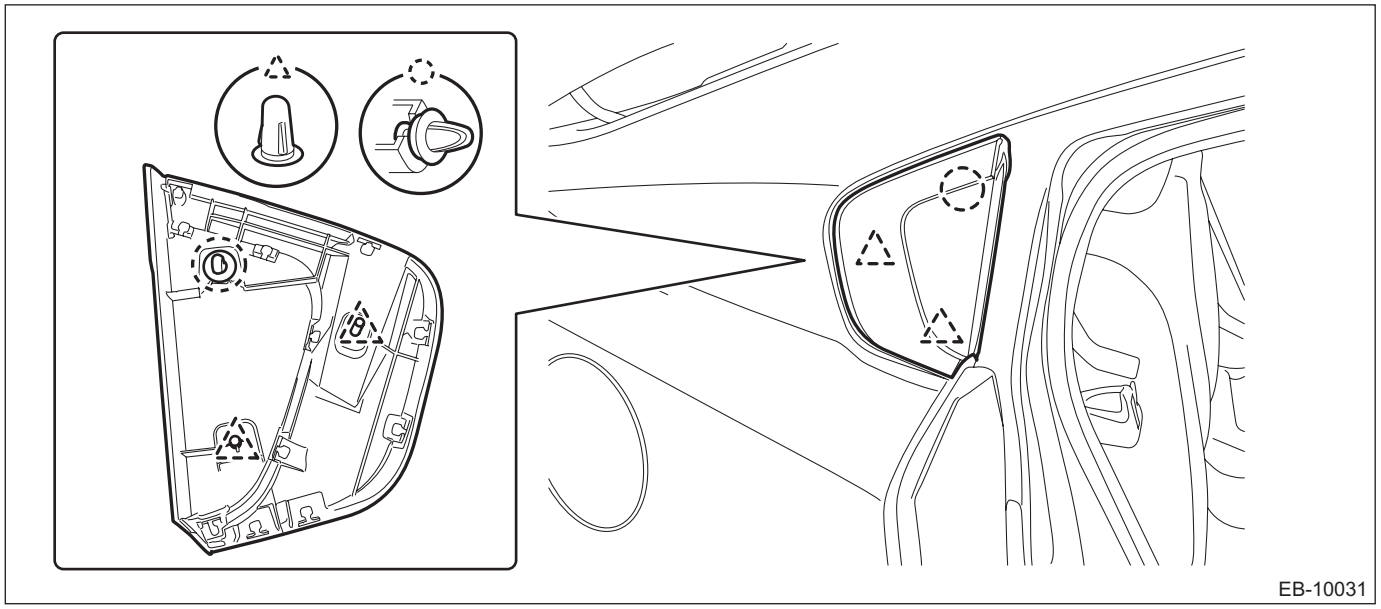
EB-10031

2. REAR DOOR HINGE

1) Disconnect the ground terminal from battery sensor. <Ref. to RC-4, BATTERY, NOTE, Repair Contents.>
2) Remove the garnish assembly - door. (OUTBACK model) <Ref. to EI-59, OUTBACK MODEL, REMOVAL, Side Garnish.>
3) Disconnect the rear door harness connectors.
   (1) Remove the grommet and pull out the rear door harness connector from inside the center pillar.
   (2) Disconnect the rear door harness connectors.

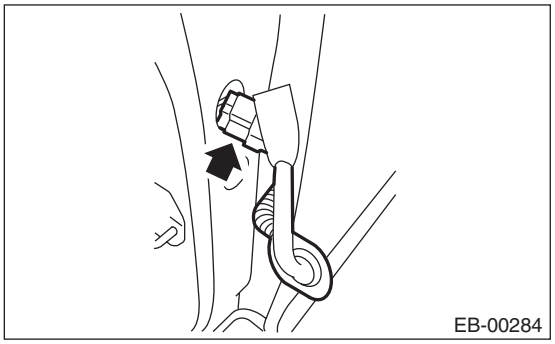

4) Remove the bolt on the vehicle side to disconnect the checker assembly - rear door.

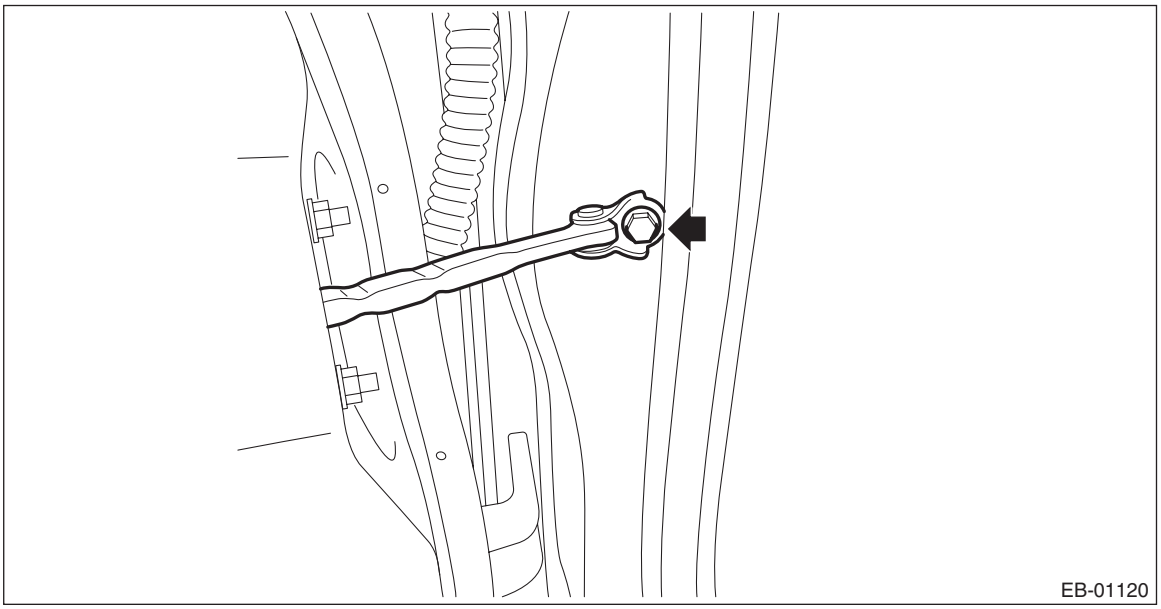

5) Before removing the panel assembly - rear door, make the following preparations.

CAUTION:
• The panel assembly - rear door is heavy. When removing and installing it, always work in a team of two or more persons.
• Do not excessively lift the panel assembly - rear door with the floor jack. The door hinges may be damaged.
• While removing or installing, do not use a jack, etc. on the garnish section.

(1) Put a wooden block on a floor jack and place the jack under the panel assembly - rear door.
(2) Support the panel assembly - rear door with the jack to protect it from damage.

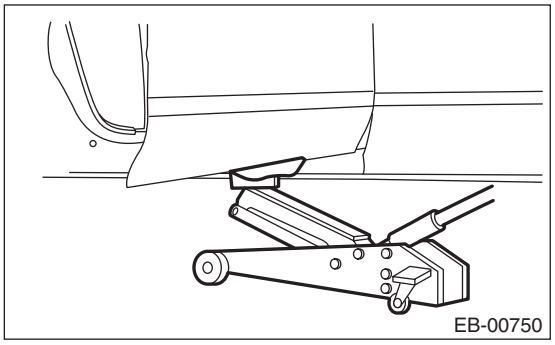
EB-00750

6) Remove the bolts on the side of the panel assembly - rear door of the upper hinge - rear door or the lower hinge - rear door.

CAUTION:
Do not remove the upper hinge - rear door and the lower hinge - rear door at the same time.

7) Remove the hinge - rear door from the vehicle.

B: INSTALLATION

1. REAR DOOR PANEL

1) Put a wooden block and the like on a jack and place the panel assembly - rear door on it.

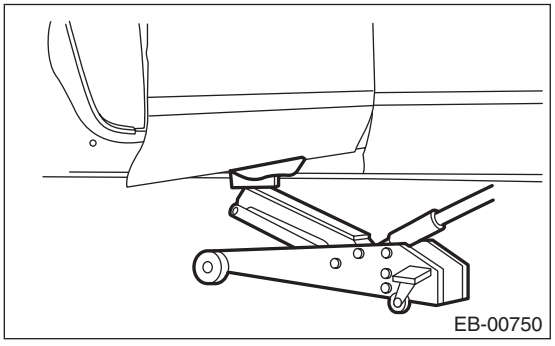
EB-00750

2) Adjust the height by the jack, and temporarily install the panel assembly - rear door to the upper hinge - rear door and the lower hinge - rear door.

NOTE:
• When installing the panel assembly - rear door, make sure that a uniform clearance is created around the panel.
• Perform installation while paying attention to the assembly direction of the grommet.

3) Adjust the clearance around the panel assembly - rear door. <Ref. to EB-38, ADJUSTMENT, Rear Door.>
4) Tighten the mounting bolts of the panel assembly - rear door to the specified torque.

Tightening torque:
25 N·m (2.5 kgf-m, 18.4 ft-lb)

5) Tighten the bolts and nuts of the checker assembly - rear door.

Tightening torque:
Refer to "COMPONENT" of "General Description". <Ref. to EB-5, REAR DOOR, COMPONENT, General Description.>

6) Connect the door harness connector, and install the harness grommet.
7) Attach the door sash tape. <Ref. to EB-47, REAR DOOR, INSTALLATION, Door Sash Tape.>
8) Before installing each part, check the following items.
- Is the lever of the frame assembly - rear door outer is free from deformation?
- Is grease applied sufficiently to the lever joints of the latch and actuator assembly - rear.
- Is the cable of the latch and actuator assembly - rear free from deformation such as fray.
- Is grease applied sufficiently to the cable joints of the latch and actuator assembly - rear?

9) Install door internal parts in the reverse order of removal.
- Weather strip - rear door
- Handle - door outer

Tightening torque:
7.5 N·m (0.8 kgf-m, 5.5 ft-lb)
- Latch & actuator assembly - rear

Tightening torque:
7.5 N·m (0.8 kgf-m, 5.5 ft-lb)

NOTE:
Make sure the child safety lock works correctly after installation.
- Regulator & motor assembly - rear for the rear door

Tightening torque:
7.5 N·m (0.8 kgf-m, 5.5 ft-lb)
- Sash COMPL - rear partition, and glass assembly - rear door

Tightening torque:
7.5 N·m (0.8 kgf-m, 5.5 ft-lb)
- Running channel - rear door

CAUTION:
Check that the running channel - rear door is securely fixed to the panel assembly - rear door and to the sash COMPL - partition.
10) Install the cover B pillar - rear door INN and the cover C pillar - rear door INN.

CAUTION:
Always replace with a new part, because engagement of the claw weakens.
11) Install the rear door speaker assembly.
12) Install the sealing cover. <Ref. to EB-40, INSTALLATION, Rear Sealing Cover.>
13) Install the trim panel - rear door. <Ref. to EI-73, INSTALLATION, Door Trim.>
14) Install the garnish assembly - door. (OUTBACK model) <Ref. to EI-60, OUTBACK MODEL, INSTALLATION, Side Garnish.>
15) Connect the ground terminal to battery sensor. <Ref. to RC-4, BATTERY, NOTE, Repair Contents.>

2. REAR DOOR HINGE

1) Apply grease to the sliding area of door hinges, and install to vehicle.

Tightening torque:
30 N·m (3.1 kgf-m, 22.1 ft-lb)

2) Adjust the height by the jack, and temporarily install the panel assembly - rear door to the upper hinge - rear door and the lower hinge - rear door.

NOTE:
When installing the panel assembly - rear door, make sure that a uniform clearance is created around the panel.

3) Adjust the clearance around the panel assembly - rear door. <Ref. to EB-38, ADJUSTMENT, Rear Door.>

NOTE:
When installing the panel assembly - rear door, make sure that a uniform clearance is created around the panel.

4) Tighten the bolts of the panel assembly - rear door to the specified torque.

Tightening torque:
25 N·m (2.5 kgf-m, 18.4 ft-lb)

5) Connect the door harness connector, and install the harness grommet.
6) Tighten the bolts on the vehicle side of the checker assembly - rear door.

Tightening torque:
Refer to "COMPONENT" of "General Description". <Ref. to EB-5, REAR DOOR, COMPONENT, General Description.>

7) Install the garnish assembly - door. (OUTBACK model) <Ref. to EI-60, OUTBACK MODEL, INSTALLATION, Side Garnish.>
8) Connect the ground terminal to battery sensor. <Ref. to RC-4, BATTERY, NOTE, Repair Contents.>

C: ADJUSTMENT

Adjust the clearance around the panel assembly - rear door as follows.

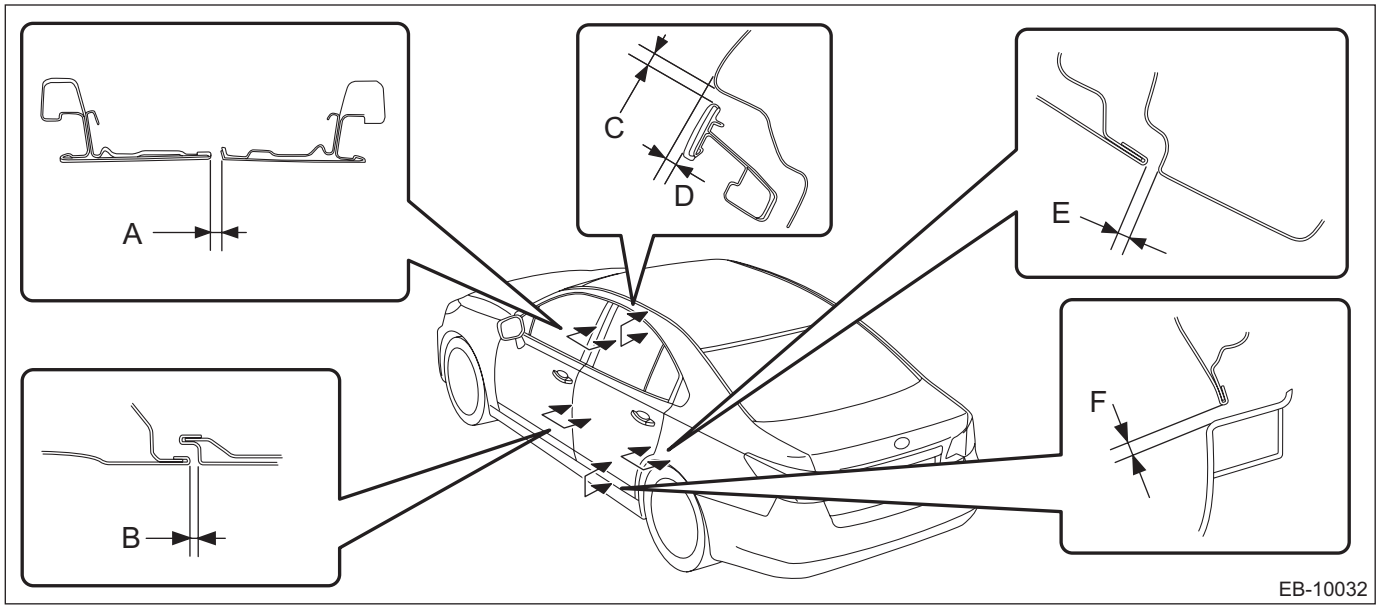

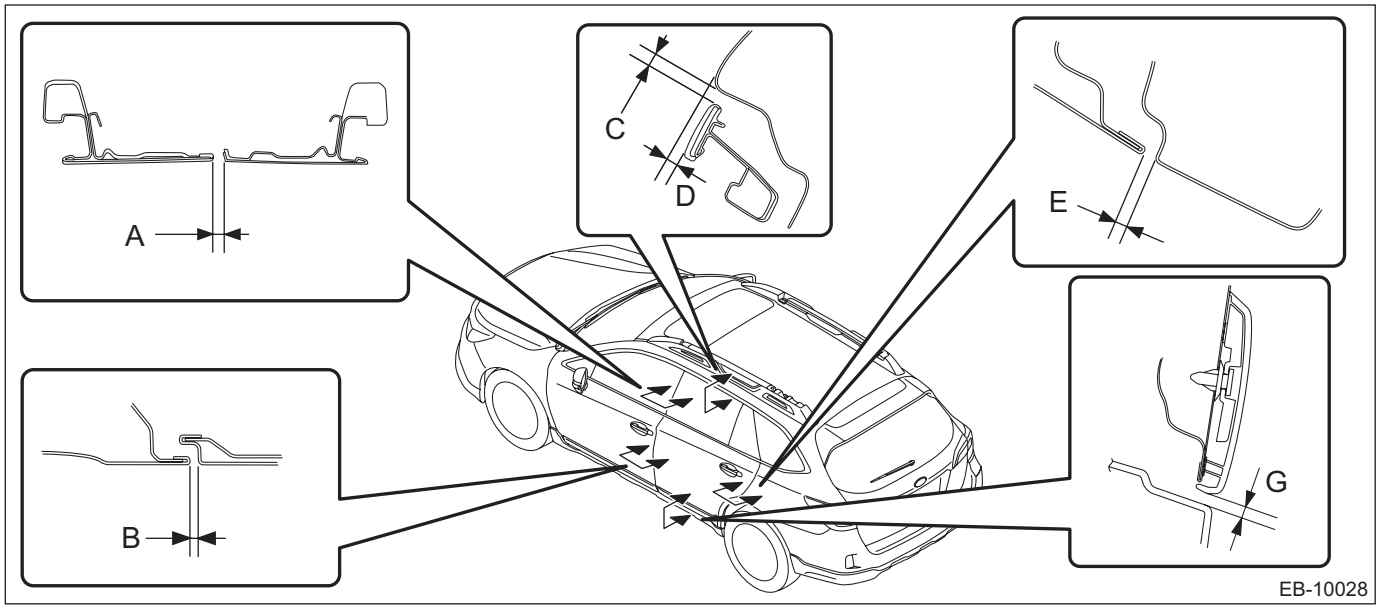

Part		Standard
A	Panel assembly - front door to Panel assembly - rear door	4.4+1.5, –1.0 mm (0.17+0.06, –0.04 in)
B	Front door sash to Rear door sash	4.2±1.25 mm (0.17±0.05 in)
C	Panel side outer to Rear door sash	5.2+1.5, –1.0 mm (0.2+0.06, –0.04 in)
D	Surface level gap between panel side outer and rear door sash	4.1±1.5 mm (0.16±0.06 in)
E	Panel assembly - rear door to Panel side outer	3.7±1.25 mm (0.15±0.05 in)
F	Panel assembly - rear door to Side sill garnish assembly (sedan model)	5.4±1.8 mm (0.21±0.07 in)
G	Panel assembly - rear door to Side sill garnish assembly (OUTBACK model)	4.4±1.8 mm (0.179±0.07 in)

1) Adjust the vertical and horizontal positions of the panel assembly - rear door.
   (1) Loosen the body side bolts of the upper hinge - rear door and the lower hinge - rear door.
   (2) Adjust the vertical and horizontal clearance of the panel assembly - rear door.

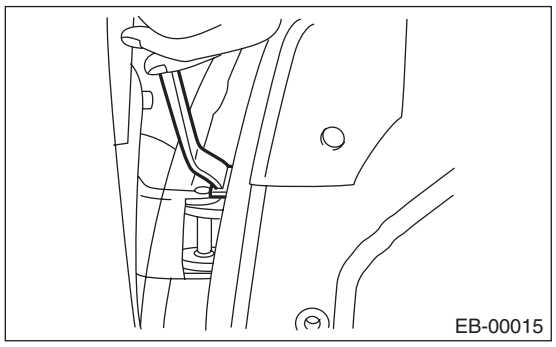

2) Adjust the surface level gap between the panel assembly - rear door and the body.

CAUTION:
Do not use an impact wrench. Welding area on the striker nut plate is easily broken.
   (1) Loosen the screws (A).
   (2) Tap the striker - rear door (B) using a plastic hammer to adjust the surface level gap between the rear end of the panel assembly - rear door and the rear quarter.

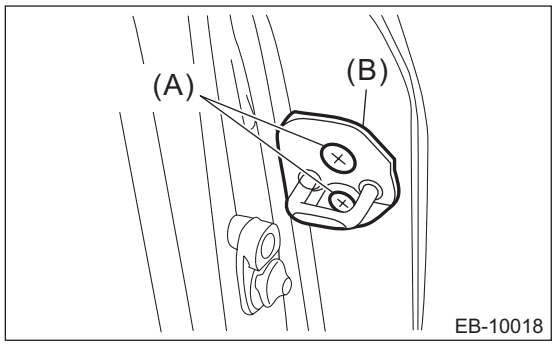

7. Rear Sealing Cover

A: REMOVAL

1) Disconnect the ground terminal from battery sensor. <Ref. to RC-4, BATTERY, NOTE, Repair Contents.>
2) Remove the trim panel - rear door. <Ref. to EI-72, REAR DOOR, REMOVAL, Door Trim.>
3) Remove the sealing cover - rear door.

CAUTION:
- **Carefully remove the butyl tape. Excessive force will easily break the cover.**
- **If the sealing cover - rear door gets broken, replace it with a new part.**
- **Be careful not to allow the butyl tape to contact any trims and seats because the butyl tape, which has a strong adhesive force, is difficult to remove once it adhered.**

(1) Remove the screw to remove the bracket - door trim rear.
(2) Disconnect connectors.
(3) Carefully remove the butyl tape to remove the sealing cover - rear door.

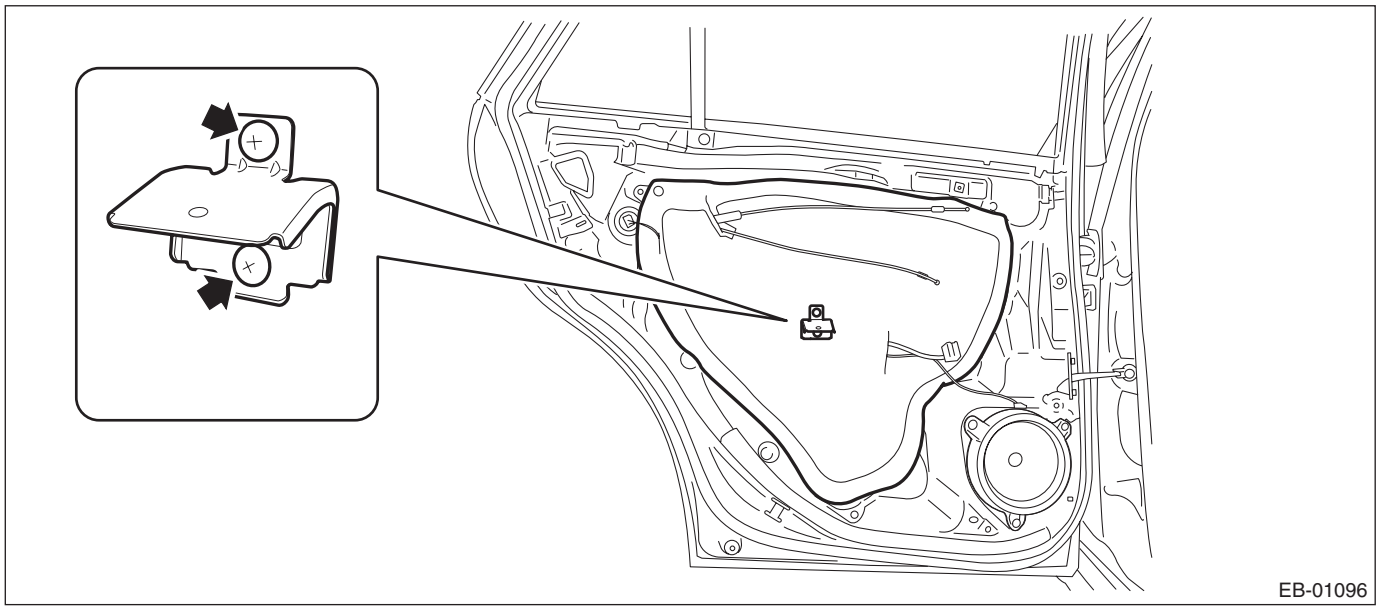

B: INSTALLATION

CAUTION:
- **If the sealing cover - rear door gets broken, replace it with a new part.**
- **Apply a butyl tape evenly.**
- **Attach the sealing cover - rear door, keeping it from becoming wrinkled.**
- **Breaks in the bead will allow water leakage and contamination.**

1) Install the sealing cover.
(1) Forcefully push the butyl tape portion to prevent any floating on surface.
(2) When replacing the sealing cover, use the butyl tape.

Butyl tape:
3M Butyl Tape 8626 or equivalent

2) Install the trim panel - rear door. <Ref. to EI-73, INSTALLATION, Door Trim.>
3) Connect the ground terminal to battery sensor. <Ref. to RC-4, BATTERY, NOTE, Repair Contents.>

C: INSPECTION

If the sealing cover - rear door is broken, replace it with a new part.

8. Door Sash Tape

A: REMOVAL

1. FRONT DOOR

1) Disconnect the ground terminal from the battery sensor, and wait for at least 60 seconds before starting work. <Ref. to RC-4, BATTERY, NOTE, Repair Contents.>
2) Remove the trim panel - front door. <Ref. to EI-71, FRONT DOOR, REMOVAL, Door Trim.>
3) Remove the outer mirror assembly. <Ref. to GW-27, REMOVAL, Outer Mirror Assembly.>
4) Remove the sealing cover - front door. <Ref. to EB-30, REMOVAL, Front Sealing Cover.>
5) Remove the glass assembly - front door. <Ref. to GW-20, REMOVAL, Front Door Glass.>
6) Remove the running channel - front door.
7) Remove the clip, and remove the weather strip - door upper side. <Ref. to EB-68, DOOR, REPLACEMENT, Weather Strip.>
8) Remove the molding - door sash front (a) by disengaging the bottom part (c) from the specified position (b) toward the front side of the vehicle.

CAUTION:
- **When removing the molding - door sash, take special care to avoid the distortion.**
- **When distortion occurred to the molding - door sash, always replace it with a new part.**

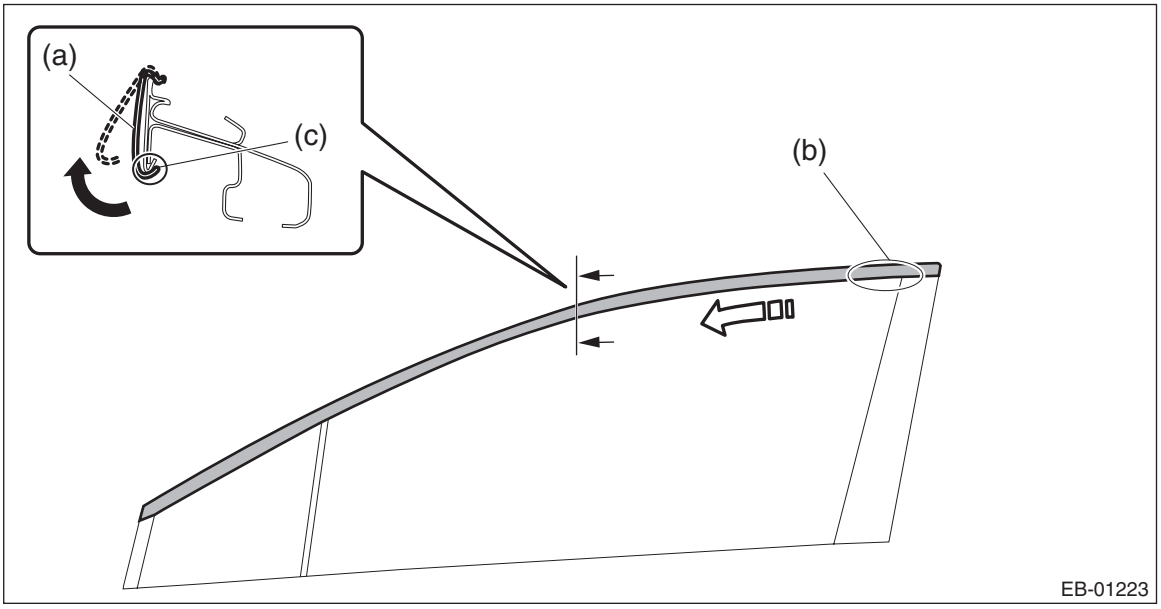

9) Remove the weather strip outer - front door.

CAUTION:
- **When removing the weather strip outer, be careful not to damage the vehicle.**
- **Do not reuse the weather strip outer. Always replace with a new part.**

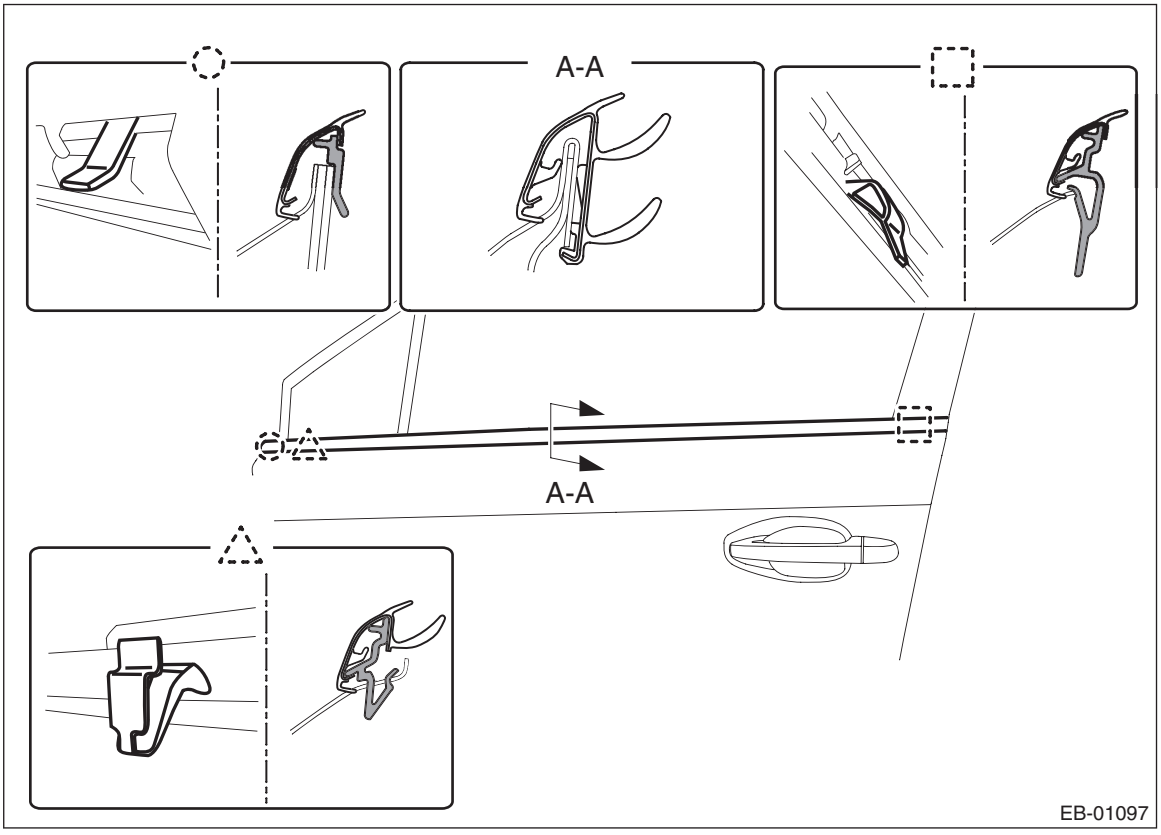

10) Peel the door sash tape from the door sash.

NOTE:
- If the tape is difficult to remove, warm the tape with a hairdryer, etc. to make the removal easier. Use a household hairdryer. Do not use industrial dryers.
- If tape residue is remaining on the door sash, wipe clean.

2. REAR DOOR

1) Disconnect the ground terminal from battery sensor. <Ref. to RC-4, BATTERY, NOTE, Repair Contents.>
2) Remove the trim panel - rear door. <Ref. to EI-72, REAR DOOR, REMOVAL, Door Trim.>
3) Remove the sealing cover - rear door. <Ref. to EB-40, REMOVAL, Rear Sealing Cover.>
4) Remove the glass assembly - rear door. <Ref. to GW-35, REMOVAL, Rear Door Glass.>
5) Remove the running channel - rear door.
6) Remove the clip, and remove the weather strip - door upper side. <Ref. to EB-68, DOOR, REPLACEMENT, Weather Strip.>

7) Remove the molding - door sash rear (a) by disengaging the bottom part (c) from the specified position (b) toward the rear side of the vehicle.

CAUTION:
- **When removing the molding - door sash, take special care to avoid the distortion.**
- **When distortion occurred to the molding - door sash, always replace it with a new part.**

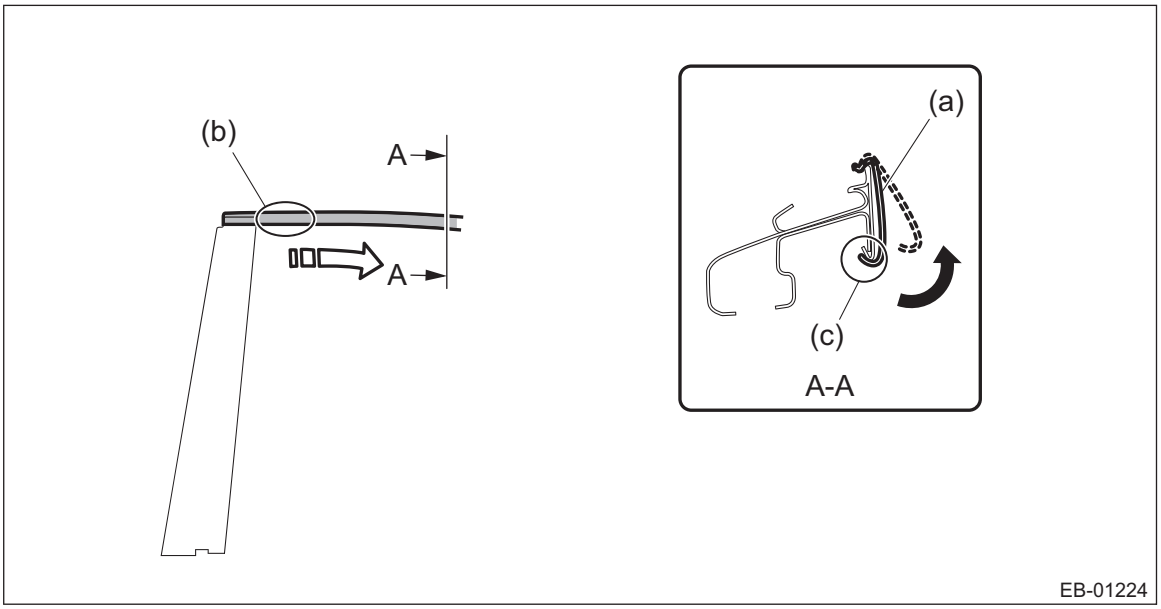

8) Remove the weather strip outer - rear door.

CAUTION:
- **When removing the weather strip outer, be careful not to damage the vehicle.**
- **Do not reuse the weather strip outer. Always replace with a new part.**

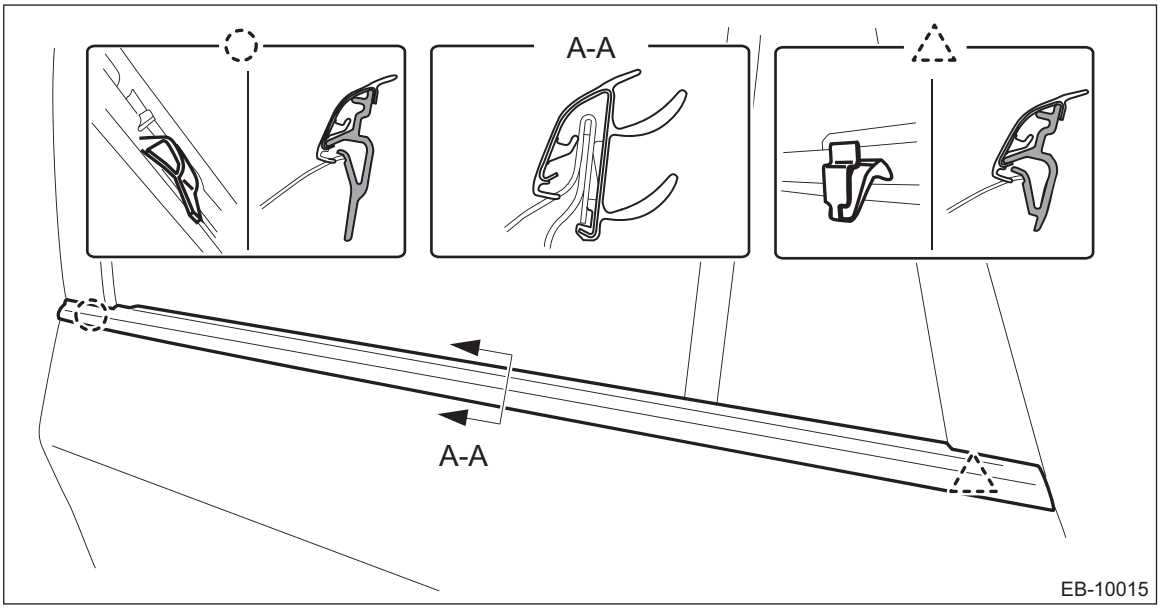

9) Peel the door sash tape from the door sash.

NOTE:
- If the tape is difficult to remove, warm the tape with a hairdryer, etc. to make the removal easier. Use a household hairdryer. Do not use industrial dryers.
- If tape residue is remaining on the door sash, wipe clean.

B: INSTALLATION

CAUTION:
- **Do not reuse the removed door sash tape. Replace it with a new tape.**
- **When applying tape, use a spatula, etc. to apply evenly, pushing it against the sash to make sure that no air bubbles are formed.**

If air bubbles are formed, reapply the tape.
- **If the tape is wrinkled, etc. during application, replace the tape.**
- **Turning points and ends of the tape will be a cause for peeling if the pressure is insufficient during application, so make sure to push down on the tape firmly when applying.**
- **There are locations where the tape ends will overlap each other. When applying the tape, be careful of the order of their application.**
  - **Front**

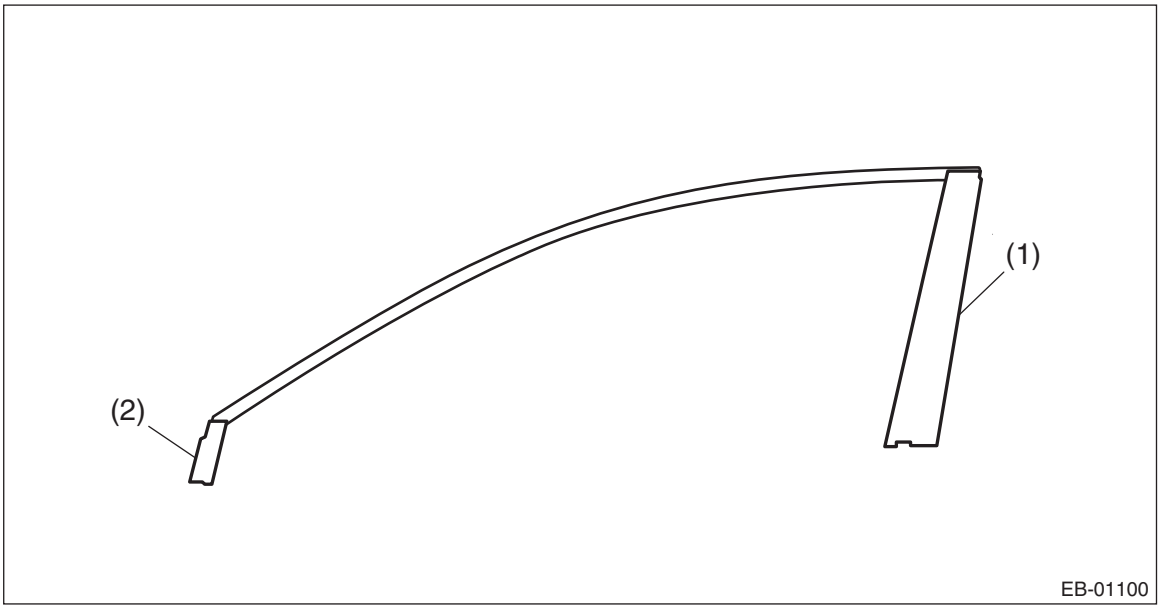

  - **Rear**

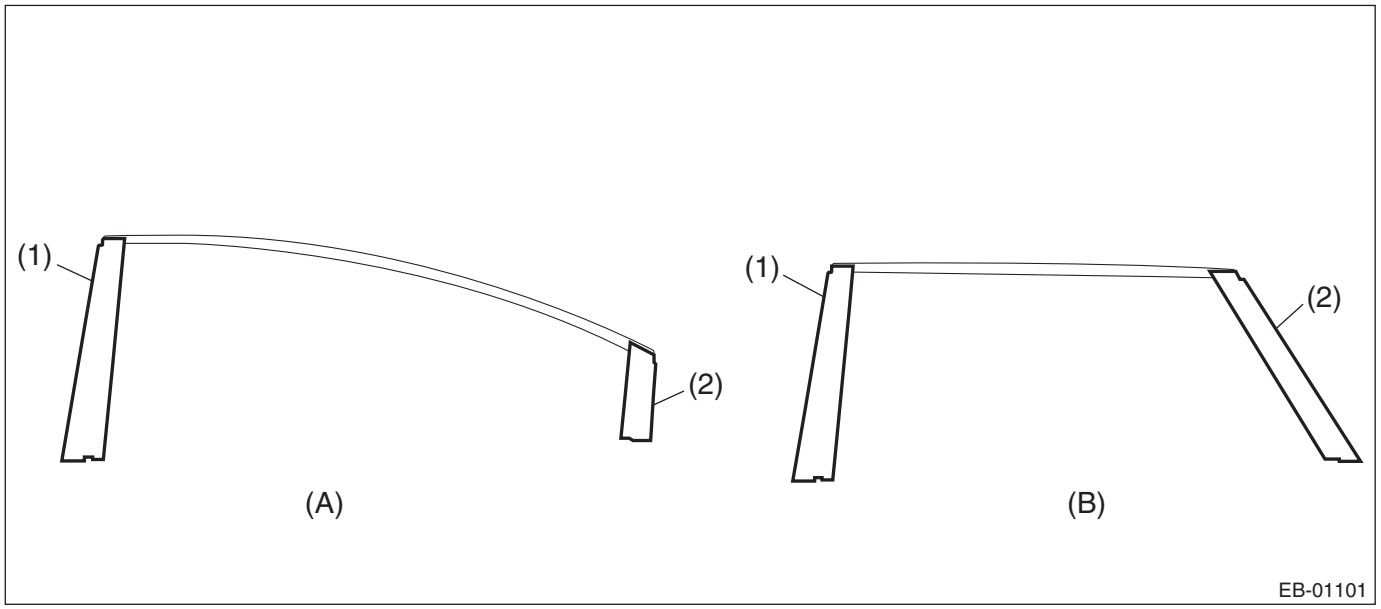

(A) Sedan model (B) OUTBACK model

- **Do not reuse the weather strip outer. Always replace with a new part.**

1. FRONT DOOR

1) Apply the front door sash tape - rear from the top of the vehicle towards the bottom as shown in the figure (a).

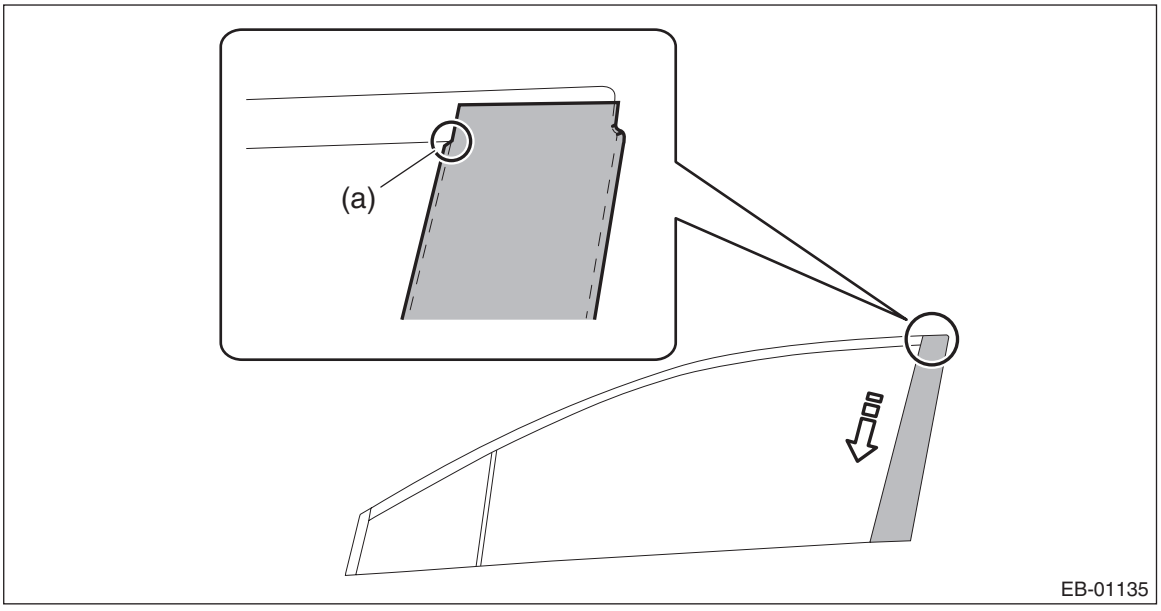

2) Fold the corners at the door upper end area in the order of (1) — (3).

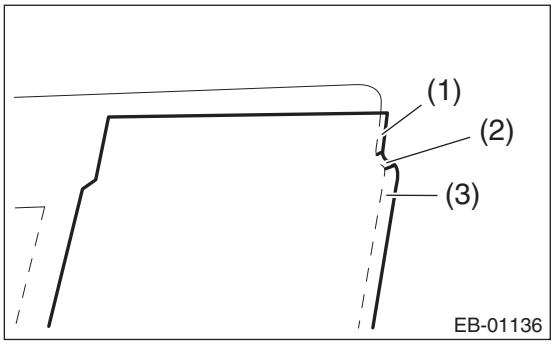

3) Apply the front door sash tape - front from the top of the vehicle towards the bottom as shown in the figure (b).

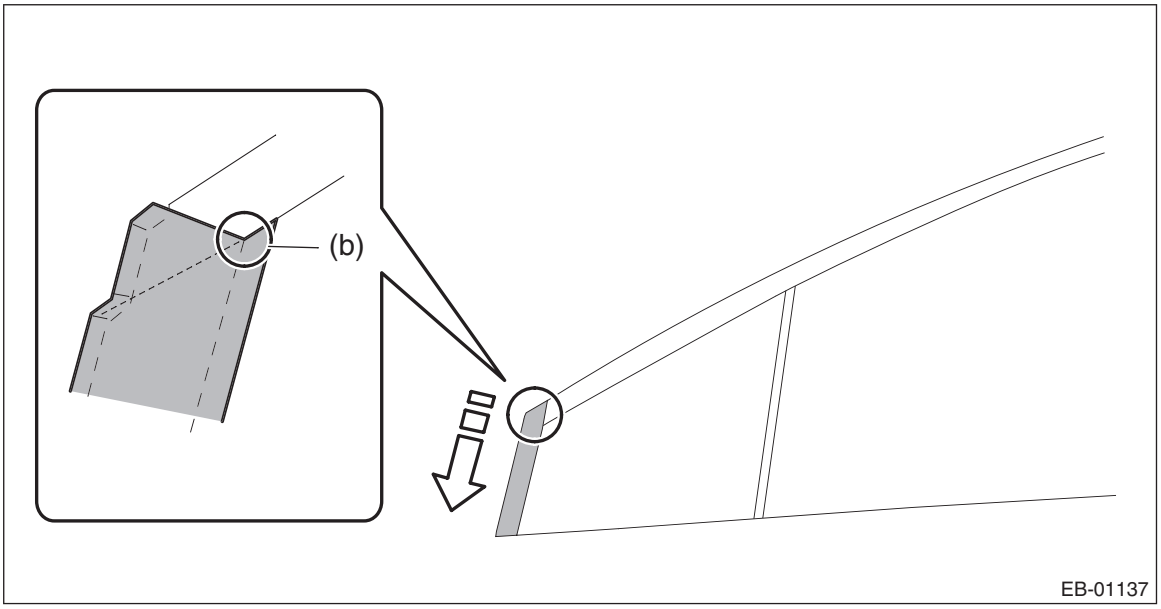

4) Fold the corners at the door upper end area in the order of (1) — (4).

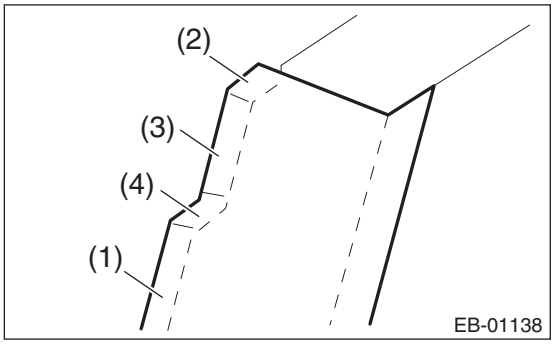

5) Install the molding - door sash front.
   (1) Align the molding - door sash front (a) with the end of the sash (b), then temporarily install by hooking it on the upper edge (c) of the sash.
   (2) Fit the lower edge of the sash (d) from the rear side of vehicle toward the front side of the vehicle.

CAUTION:
• Do not apply a concentrated load to any location of the molding - door sash, because such a load may bend the parts.
• When distortion occurred to the molding - door sash, always replace it with a new part.

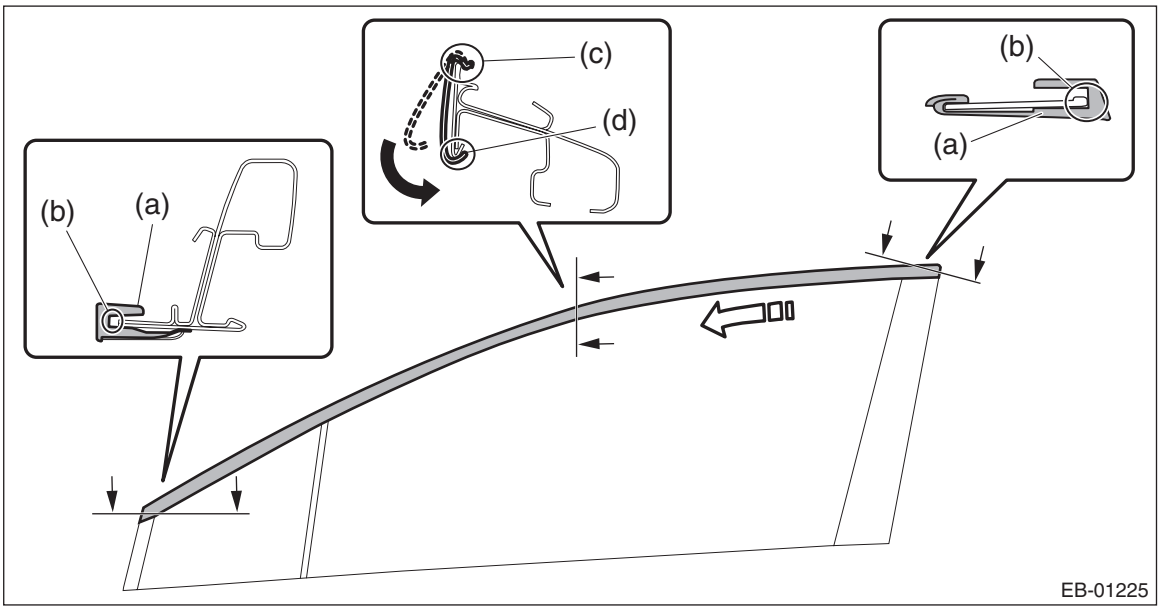

6) Install the weather strip outer - front door.
7) Install the running channel - front door.
8) Install the glass assembly - front door.

Tightening torque:
7.5 N·m (0.8 kgf-m, 5.5 ft-lb)
9) Install the weather strip - front door.
10) Install the sealing cover - front door.
11) Install the outer mirror assembly.

Tightening torque:
7.5 N·m (0.8 kgf-m, 5.5 ft-lb)
12) Install the trim panel - front door. <Ref. to EI-73, INSTALLATION, Door Trim.>
13) Connect the ground terminal to the battery sensor. <Ref. to RC-4, BATTERY, NOTE, Repair Contents.>

2. REAR DOOR

Sedan model

1) Apply the rear door sash tape - front from the top of the vehicle towards the bottom as shown in the figure (c).

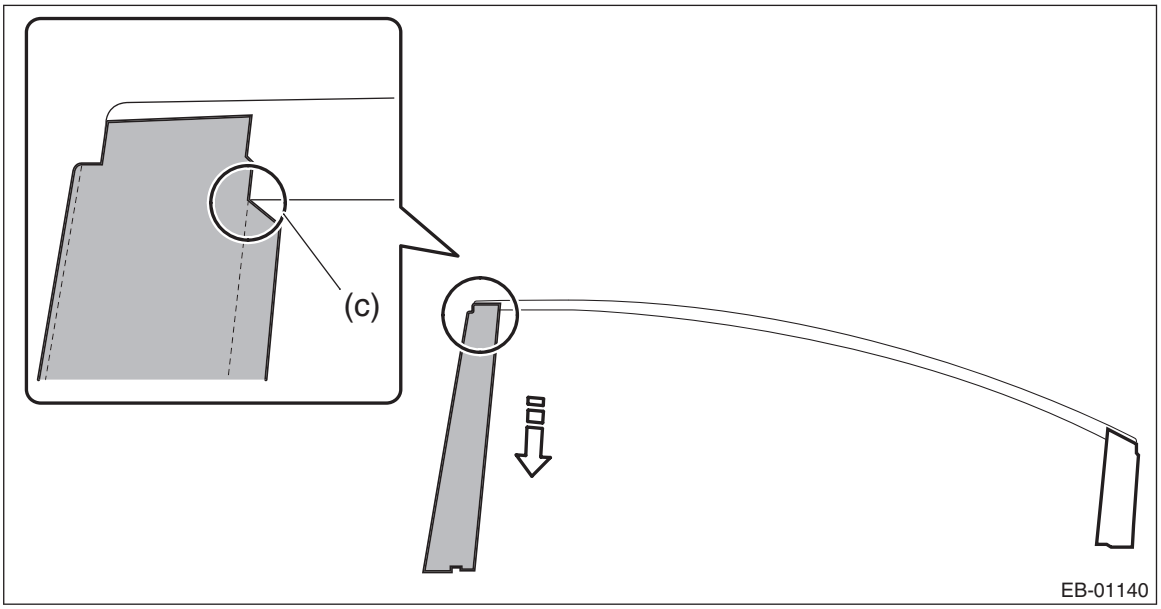

2) Fold the corners at the door upper end area in the order of (1) — (2).

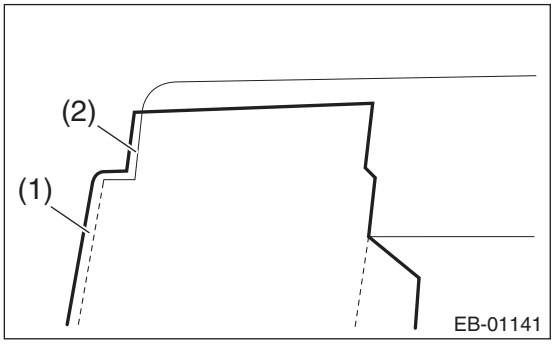

3) Apply the rear door sash tape - rear from the top of the vehicle towards the bottom as shown in the figure (d).

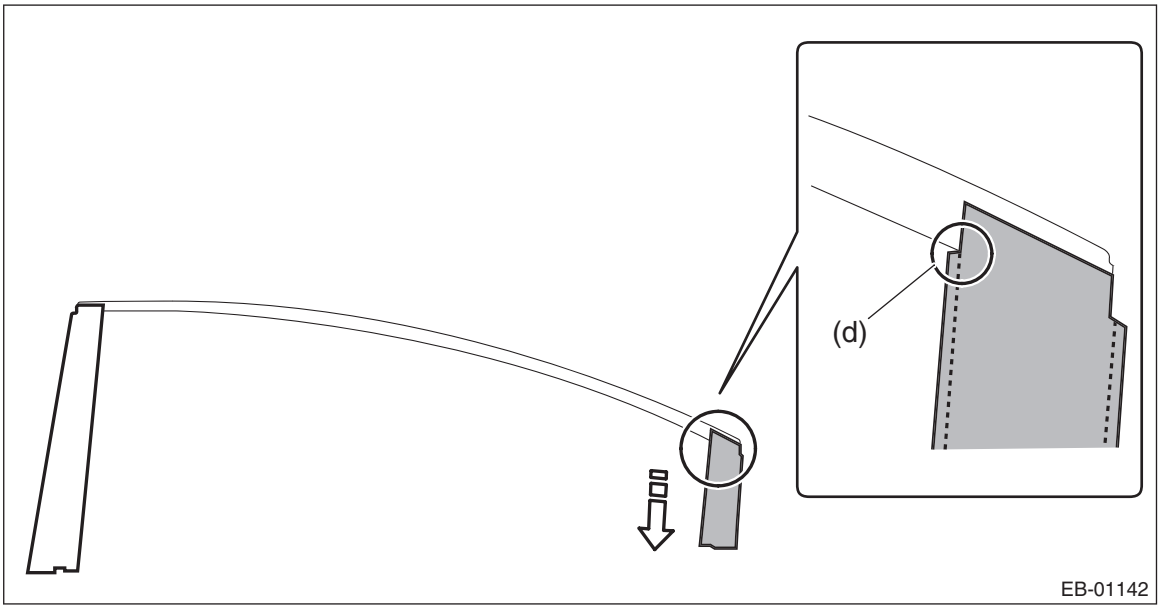

4) Fold the corners at the door upper end area in the order of (1) — (3).

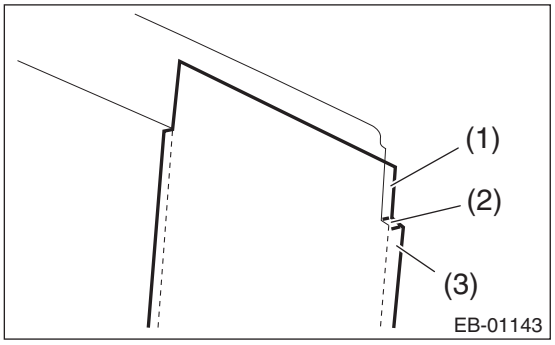

5) Install the molding - door sash rear.
   (1) Align the molding - door sash rear (a) with the end of the sash (b), then temporarily install by hooking it on the upper edge (c) of the sash.
   (2) Fit the lower edge of the sash (d) from the front side of vehicle toward the rear side of the vehicle.

CAUTION:
• Do not apply a concentrated load to any location of the molding - door sash, because such a load may bend the parts.
• When distortion occurred to the molding - door sash, always replace it with a new part.

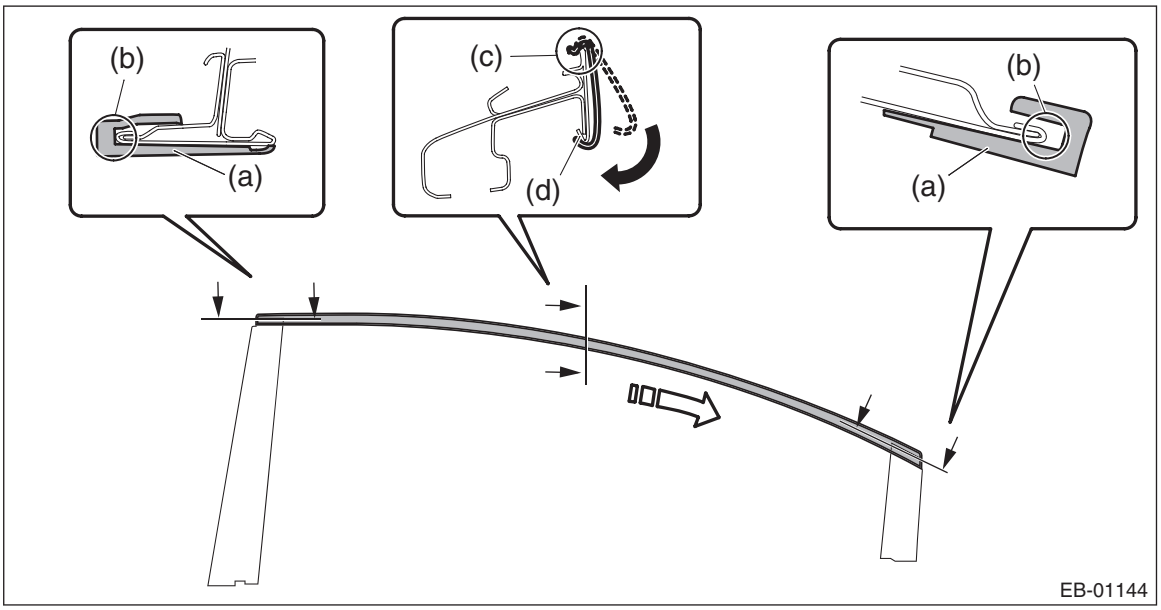

6) Install the weather strip outer - rear door.
7) Install the running channel - rear door.
8) Install the glass assembly - rear door.

Tightening torque:
7.5 N·m (0.8 kgf-m, 5.5 ft-lb)

9) Install the weather strip - rear door.
10) Install the sealing cover - rear door.
11) Install the trim panel - rear door. <Ref. to EI-73, INSTALLATION, Door Trim.>
12) Connect the ground terminal to battery sensor. <Ref. to RC-4, BATTERY, NOTE, Repair Contents.>

3. REAR DOOR

OUTBACK model

1) Apply the rear door sash tape - front from the top of the vehicle towards the bottom as shown in the figure (e).

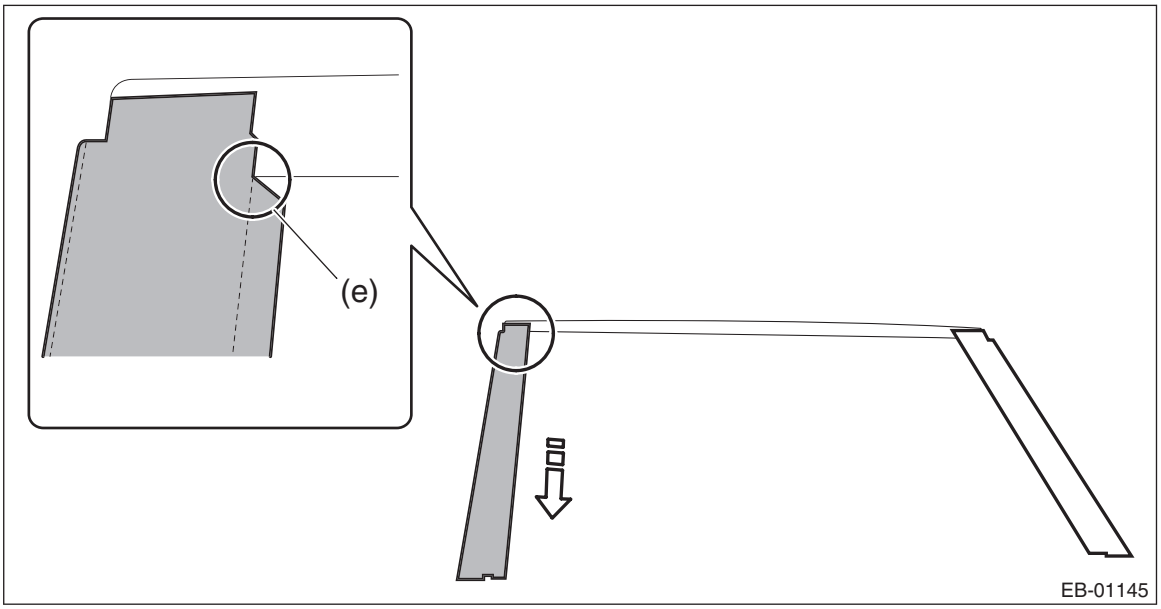

2) Fold the corners at the door upper end area in the order of (1) — (2).

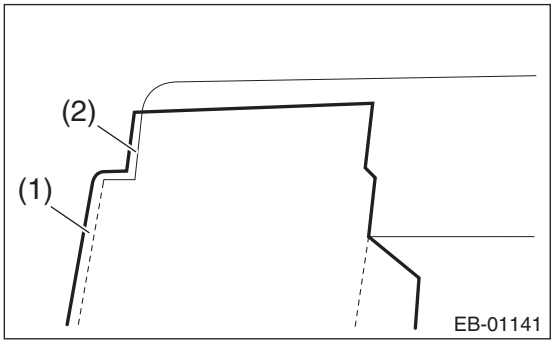

3) Apply the rear door sash tape - rear from the top of the vehicle towards the bottom as shown in the figure (f).

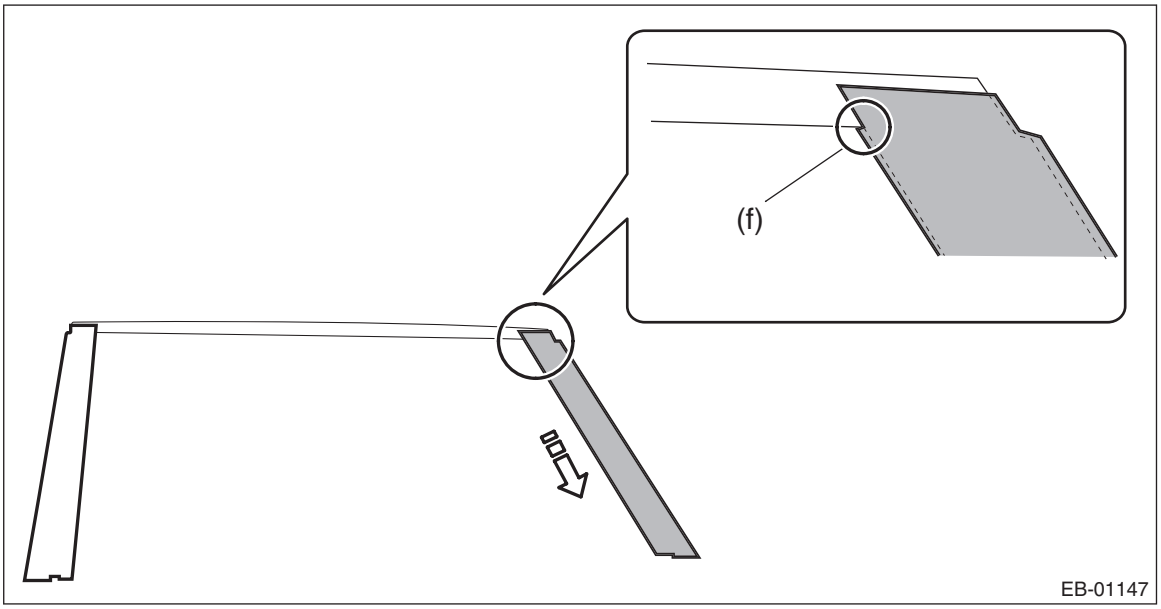

4) Fold the corners at the door upper end area in the order of (1) — (3).

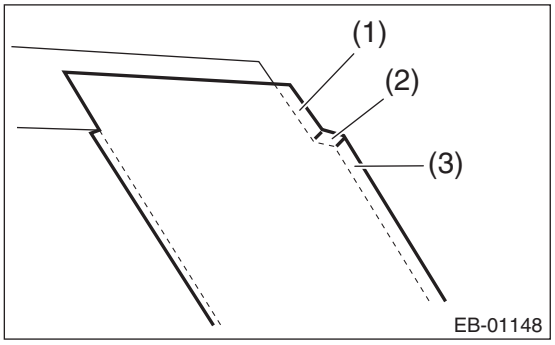

5) Install the molding - door sash rear.
   (1) Align the molding - door sash rear (a) with the end of the sash (b), then temporarily install by hooking it on the upper edge (c) of the sash.
   (2) Fit the lower edge of the sash (d) from the front side of vehicle toward the rear side of the vehicle.

CAUTION:
• Do not apply a concentrated load to any location of the molding - door sash, because such a load may bend the parts.
• When distortion occurred to the molding - door sash, always replace it with a new part.

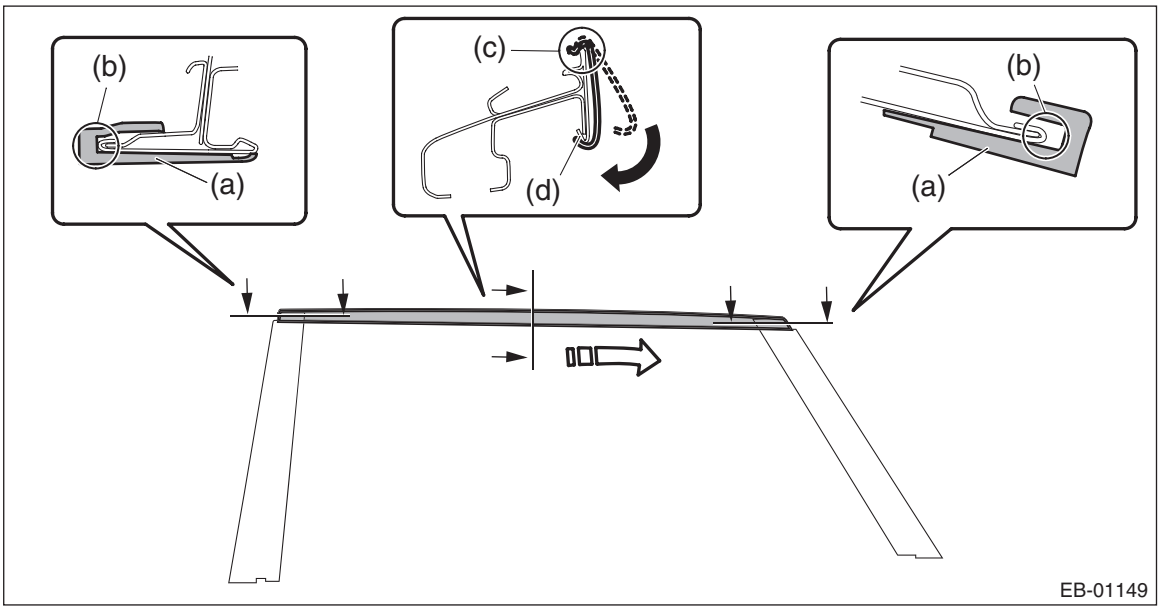

6) Install the weather strip outer - rear door.
7) Install the running channel - rear door.
8) Install the glass assembly - rear door.

Tightening torque:
7.5 N·m (0.8 kgf-m, 5.5 ft-lb)
9) Install the weather strip - rear door.
10) Install the sealing cover - rear door.
11) Install the trim panel - rear door. <Ref. to EI-73, INSTALLATION, Door Trim.>
12) Connect the ground terminal to battery sensor. <Ref. to RC-4, BATTERY, NOTE, Repair Contents.>

9. Trunk Lid

A: REMOVAL

CAUTION:
Trunk lid COMPL is heavy. When removing and installing it, always work in a team of two or more persons.

1. TRUNK LID DAMPER STAY

1) Open the trunk lid COMPL.
2) Remove the stay assembly - trunk lid.

CAUTION:
Do not remove the stop ring completely. Raise it to the position enough to remove the ball stud.

(1) Remove the stopper - hinge.
(2) Gently push the stop ring against the ball stud to be raised with a flat tip screwdriver.
(3) Pull the stay assembly - trunk lid toward you, and remove the stay assembly - trunk lid from the ball stud.

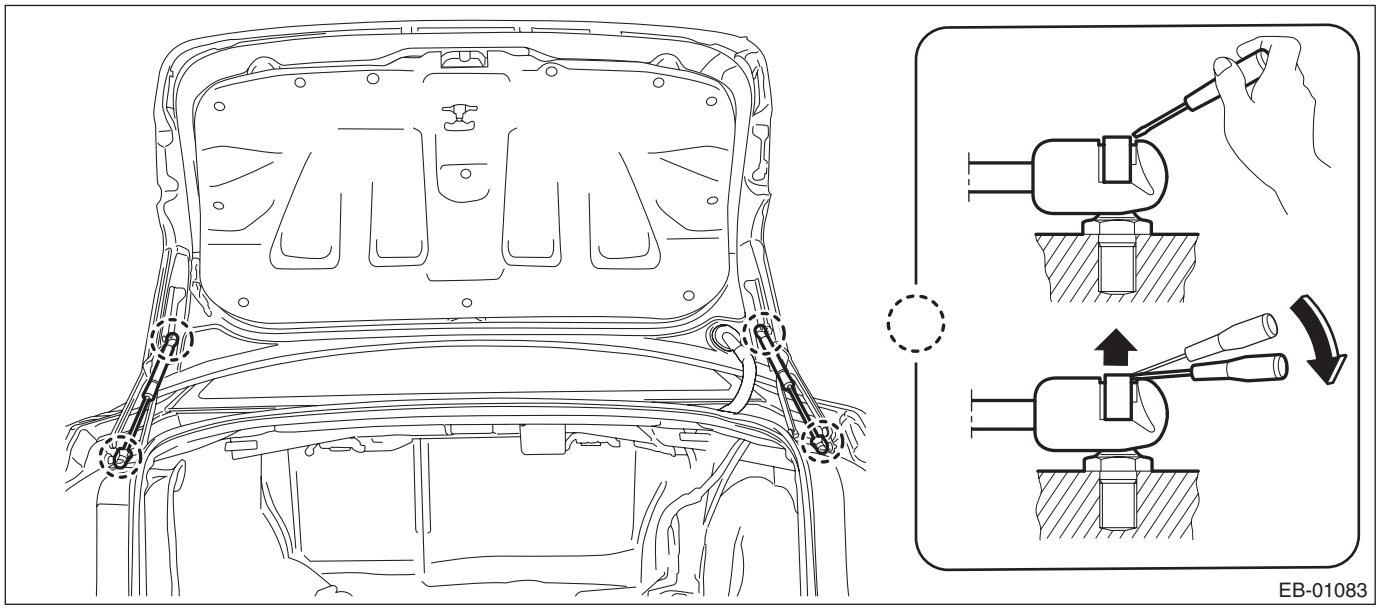

2. TRUNK LID HINGE

1) Open the trunk lid COMPL.
2) Remove the stay assembly - trunk lid. <Ref. to EB-51, TRUNK LID DAMPER STAY, REMOVAL, Trunk Lid.>

3) Remove the hinge assembly - trunk lid.

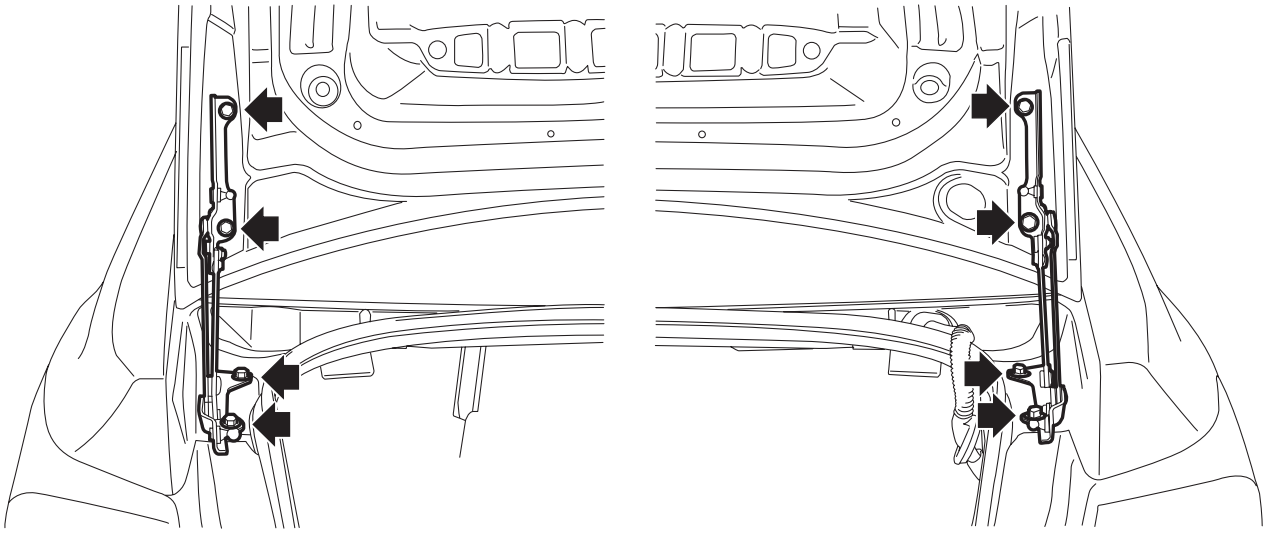
EB-01104

3. TRUNK LID PANEL

1) Disconnect the ground terminal from battery sensor. <Ref. to RC-4, BATTERY, NOTE, Repair Contents.>
2) Remove the trim panel - trunk lid. <Ref. to EI-109, REMOVAL, Trunk Room Trim.>
3) Remove the garnish - trunk. <Ref. to EI-61, REMOVAL, Trunk Lid Garnish.>
4) Remove the key lock - trunk lid. <Ref. to SL-74, TRUNK LID, REMOVAL, Key Lock Cylinders.>
5) Remove the light assembly - rear finisher. <Ref. to LI-57, SEDAN MODEL, REMOVAL, Rear Finisher Light Assembly.>
6) Remove the license plate light. <Ref. to LI-61, SEDAN MODEL, REMOVAL, License Plate Light.>
7) Remove the rearview camera assembly. <Ref. to ET-53, SEDAN MODEL, REMOVAL, Rearview Camera System.>
8) Remove the rear antenna assembly - exterior. (Model with keyless access with push button start) <Ref. to SL-97, REAR ANTENNA (SEDAN MODEL), REMOVAL, Keyless Access Outdoor Antenna.>
9) Remove the lock assembly - trunk lid. <Ref. to SL-53, REMOVAL, Trunk Lid Latch and Actuator Assembly.>
10) Remove the stopper - trunk lid LWR.
11) Disconnect the harness clip, and then pull out the harness as shown in the figure (a).

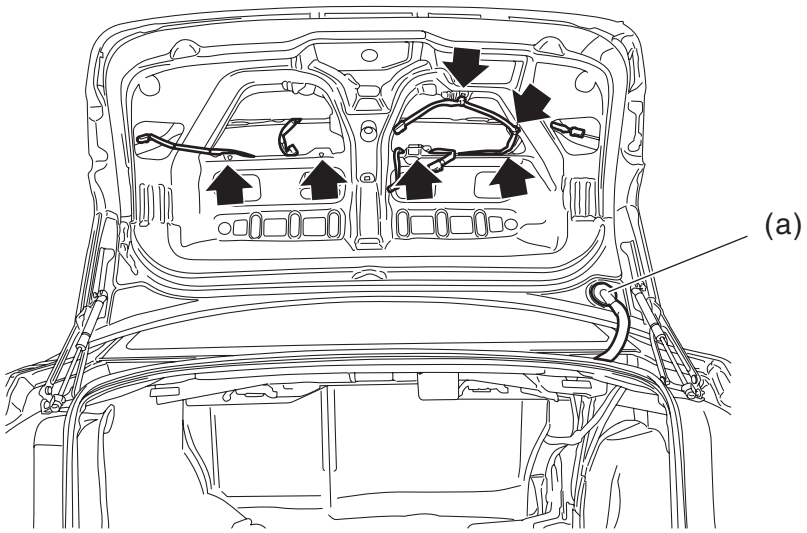

EB-01105

12) Remove the stay assembly - trunk lid.

CAUTION:
Do not remove the stop ring completely. Raise it to the position enough to remove the ball stud.

(1) Remove the stopper - hinge.
(2) Gently push the stop ring against the ball stud to be raised with a flat tip screwdriver.
(3) Pull the stay assembly - trunk lid toward you, and remove the stay assembly - trunk lid from the ball stud.

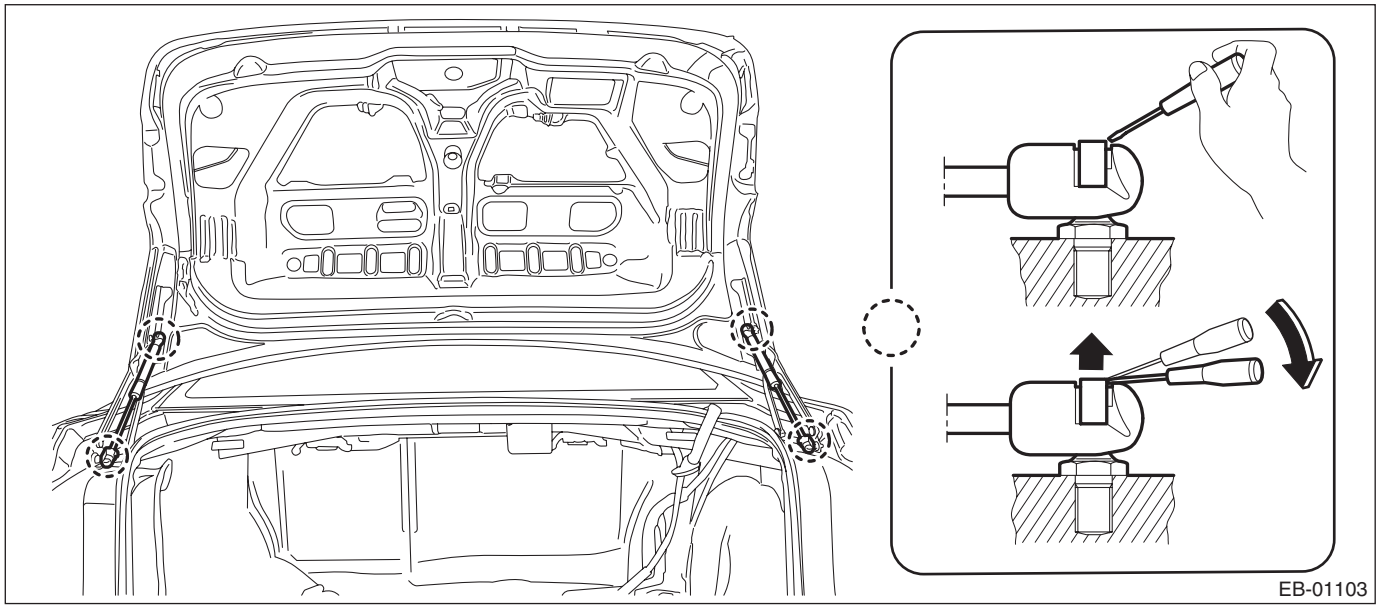

13) Remove the trunk lid COMPL.

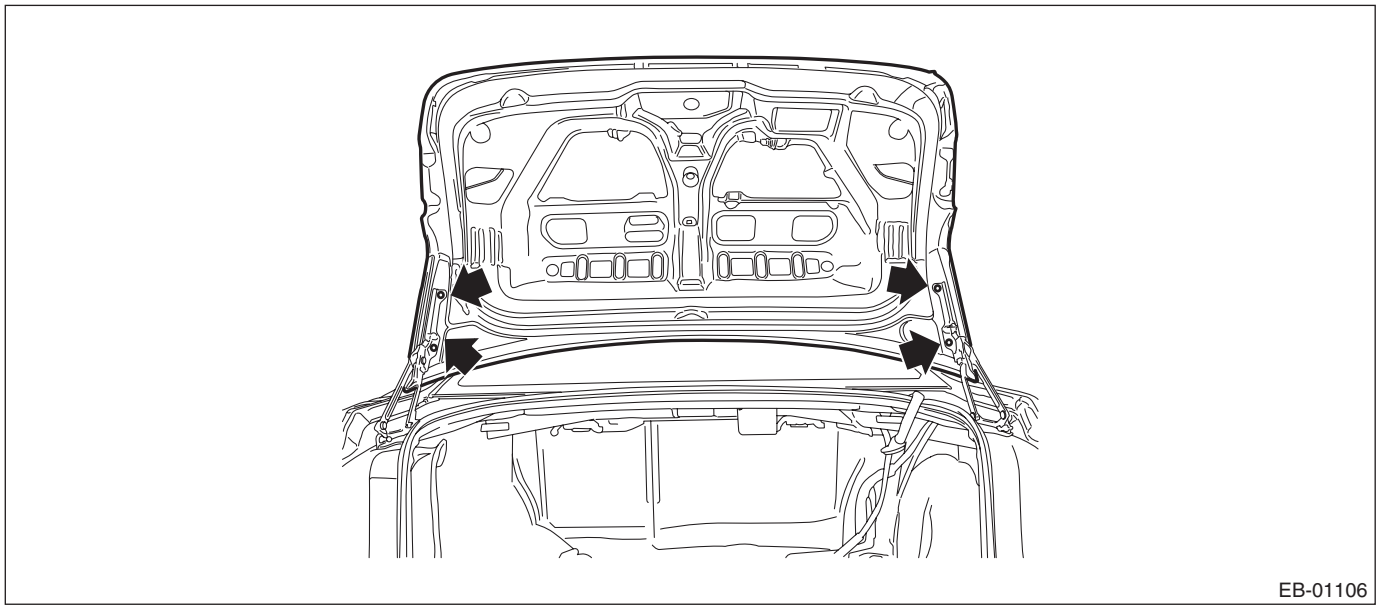

14) Remove the hinge assembly - trunk lid from the body.

B: INSTALLATION

1) Install the hinge assembly - trunk lid.

Tightening torque:
25 N·m (2.5 kgf-m, 18.4 ft-lb)

2) Install the trunk lid COMPL.

Tightening torque:
25 N·m (2.5 kgf-m, 18.4 ft-lb)

3) Install the stopper - trunk lid LWR.
4) Adjust while paying attention to make a uniform clearance around the trunk lid COMPL. <Ref. to EB-54, ADJUSTMENT, Trunk Lid.>
5) Install the stay assembly - trunk lid.

Tightening torque:
Refer to "COMPONENT" of "General Description". <Ref. to EB-6, TRUNK LID PANEL, COMPONENT, General Description.>

6) Install the stopper - hinge.
7) Install the harness clip and the harness.
8) Install the light assembly - rear finisher. <Ref. to LI-58, SEDAN MODEL, INSTALLATION, Rear Finisher Light Assembly.>

Tightening torque:
4.5 N·m (0.5 kgf-m, 3.3 ft-lb)

9) Install the license plate light. <Ref. to LI-63, SEDAN MODEL, INSTALLATION, License Plate Light.>
10) Install the key lock - trunk lid.
11) Install the rearview camera assembly. <Ref. to ET-54, SEDAN MODEL, INSTALLATION, Rearview Camera System.>
12) Install the garnish - trunk. <Ref. to EI-61, INSTALLATION, Trunk Lid Garnish.>

Tightening torque:
4.5 N·m (0.5 kgf-m, 3.3 ft-lb)

13) Install the rear antenna assembly - exterior.
14) Install the lock assembly - trunk lid.

Tightening torque
7.5 N·m (0.8 kgf-m, 5.5 ft-lb)

15) Install the trim panel - trunk lid. <Ref. to EI-110, INSTALLATION, Trunk Room Trim.>
16) Connect the ground terminal to battery sensor. <Ref. to RC-4, BATTERY, NOTE, Repair Contents.>

C: ADJUSTMENT

Adjust the clearance around the trunk lid COMPL as follows.

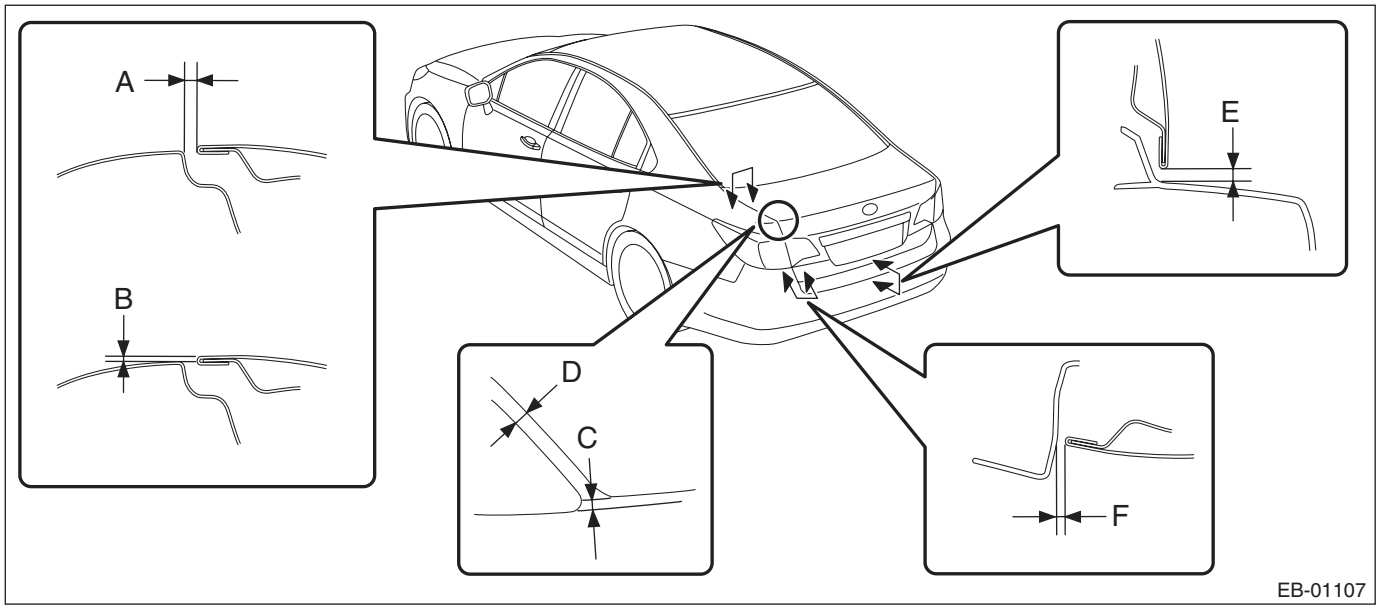

Part		Standard
A	Trunk lid COMPL and Panel - side outer	3.5±1.0 mm (0.14±0.04 in)
B	Surface level gap between Trunk lid COMPL and Panel - side outer	0±1.0 mm (0±0.04 in)
C	Surface level gap between Trunk lid COMPL and Panel - side outer	–0.5±1.0 mm (–0.02±0.04 in)
D	Trunk lid COMPL and Panel - side outer	4.5±1.0 mm (0.18±0.04 in)
E	Trunk lid COMPL to Bumper face - rear	6.8±1.5 mm (0.27±0.06 in)
F	Trunk lid COMPL to Bumper face - rear	5±1.5 mm (0.2±0.06 in)

1) Adjust the horizontal position of the trunk lid COMPL.
   (1) Loosen the mounting bolt.
   (2) Adjust the horizontal clearance of the trunk lid COMPL.

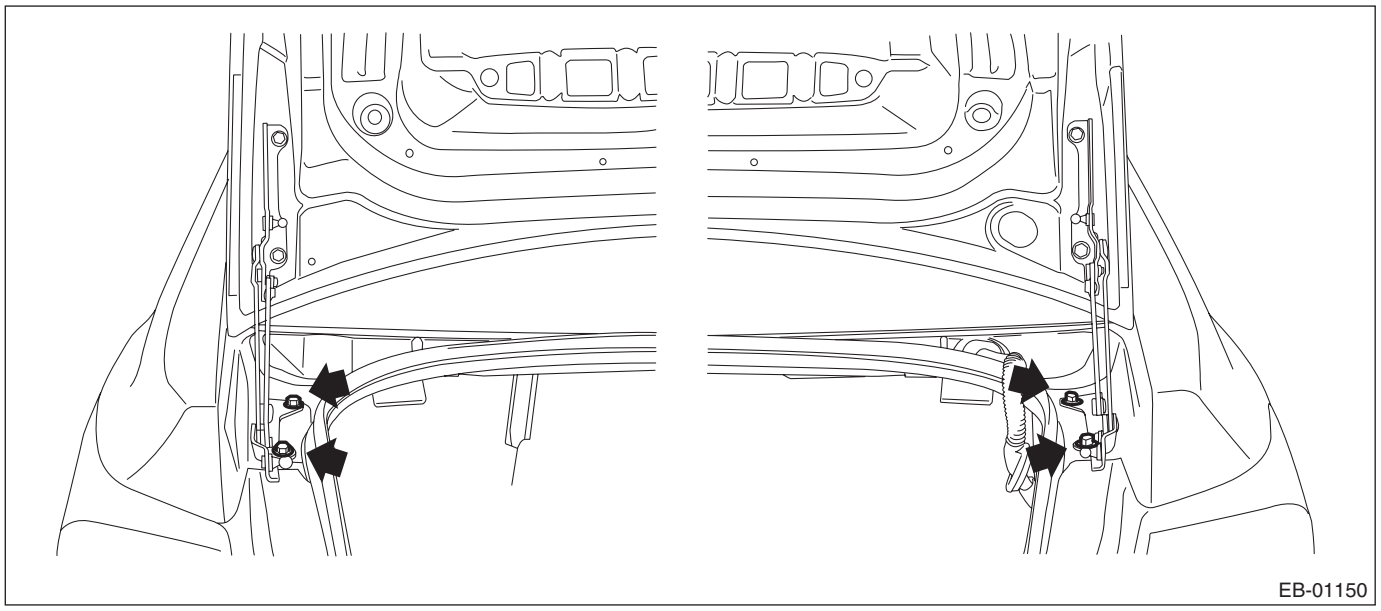

2) Adjust the surface level gap between the trunk lid COMPL and the body.
   (1) Remove the trim panel - trunk rear.
   (2) Loosen the bolt.
   (3) Tap the striker - trunk using a plastic hammer to adjust the surface level gap between the trunk lid COMPL and the body.

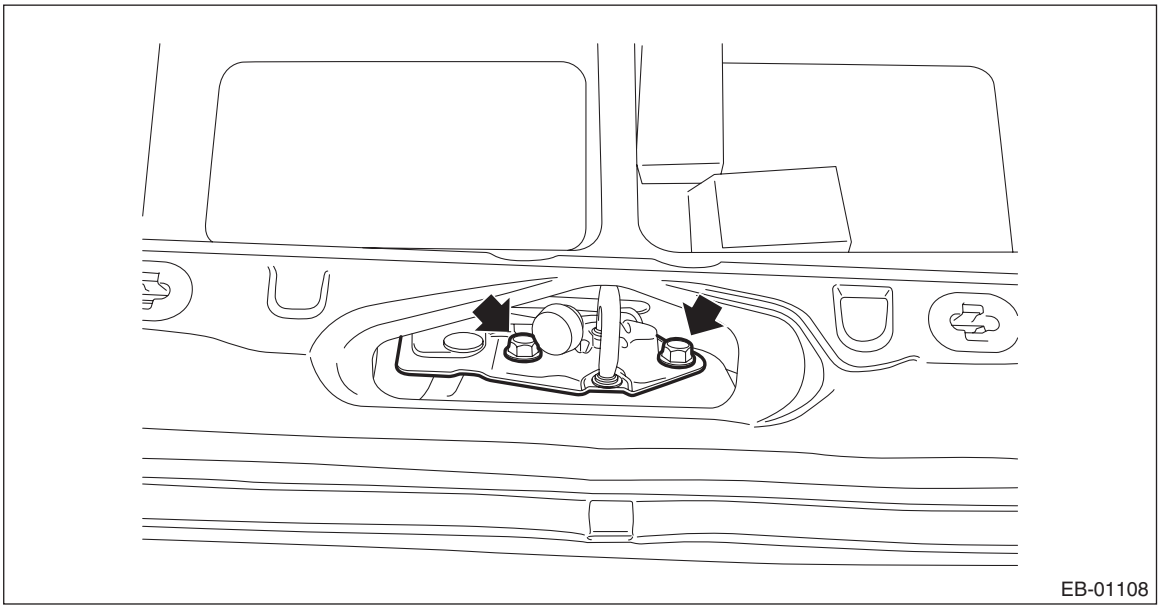

10.Rear Gate

A: REMOVAL

1. REAR GATE PANEL

1) Disconnect the ground terminal from battery sensor. <Ref. to RC-4, BATTERY, NOTE, Repair Contents.>
2) Remove the rod - power rear gate. (Model with power rear gate) <Ref. to PRG-9, REMOVAL, Power Rear Gate Rod.>
3) Remove the trim panel - rear gate. <Ref. to EI-121, REMOVAL, Rear Gate Trim.>
4) Remove the garnish assembly - rear gate. <Ref. to EI-62, REMOVAL, Rear Gate Garnish.>
5) Remove the power rear gate touch sensor. (Model with power rear gate) <Ref. to PRG-15, REMOVAL, Power Rear Gate Touch Sensor.>
6) Remove the light assembly - rear finisher. <Ref. to LI-57, OUTBACK MODEL, REMOVAL, Rear Finisher Light Assembly.>
7) Remove the license plate light. <Ref. to LI-62, OUTBACK MODEL, REMOVAL, License Plate Light.>
8) Remove the rearview camera assembly. <Ref. to ET-54, OUTBACK MODEL, REMOVAL, Rearview Camera System.>
9) Remove the antenna assembly - radio. <Ref. to ET-31, RADIO ANTENNA AMPLIFIER, REMOVAL, Antenna.>
10) Remove the arm assembly - rear wiper and the motor assembly - rear wiper. <Ref. to WW-43, REMOVAL, Rear Wiper Motor.>
11) Remove the rear antenna assembly - exterior. (Model with keyless access with push button start) <Ref. to SL-98, REAR ANTENNA (OUTBACK MODEL), REMOVAL, Keyless Access Outdoor Antenna.>
12) Remove the rear gate latch and actuator - rear gate. <Ref. to SL-50, REMOVAL, Rear Gate Latch and Actuator Assembly.>
13) Remove the buffer - rear gate.

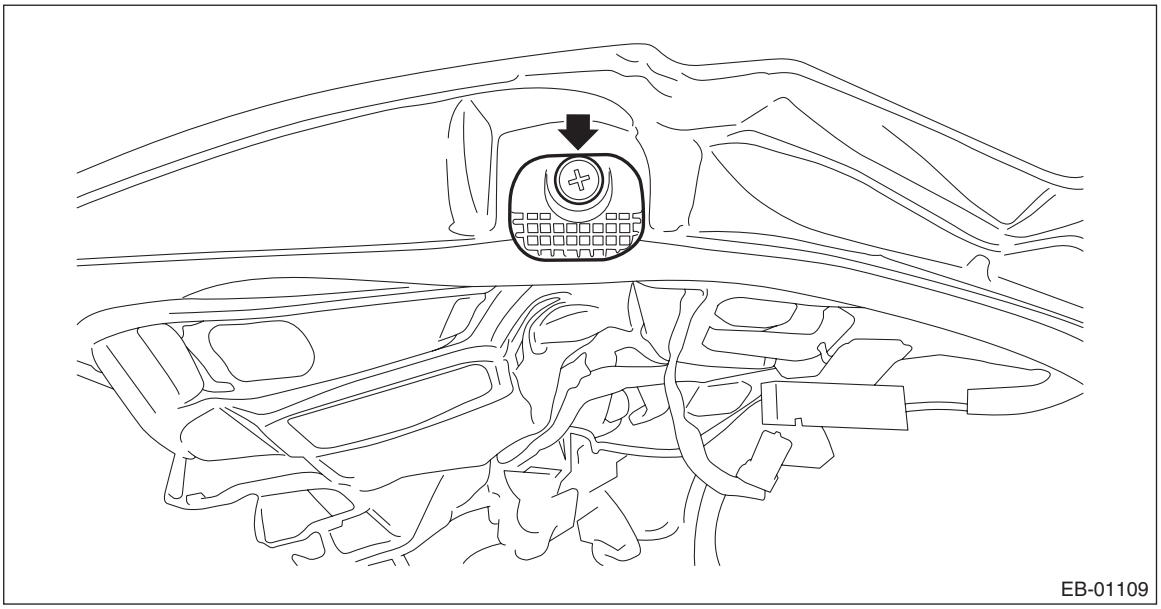
EB-01109

14) Remove the roof spoiler. <Ref. to EI-67, REMOVAL, Roof Spoiler.>

15) Disconnect the hose assembly - rear washer.
(1) Disconnect the joint portion of the hose assembly - rear washer.
(2) Remove the clip.

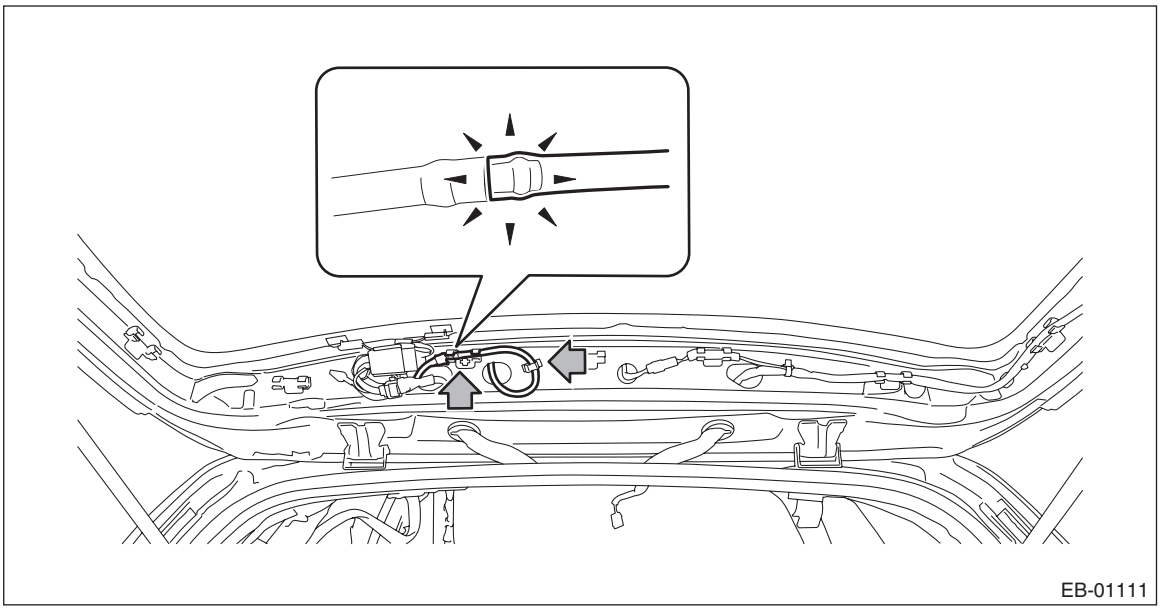
EB-01111

16) Remove the nozzle - rear washer. <Ref. to WW-46, REMOVAL, Rear Washer.>
17) Remove the rubber duct connection.

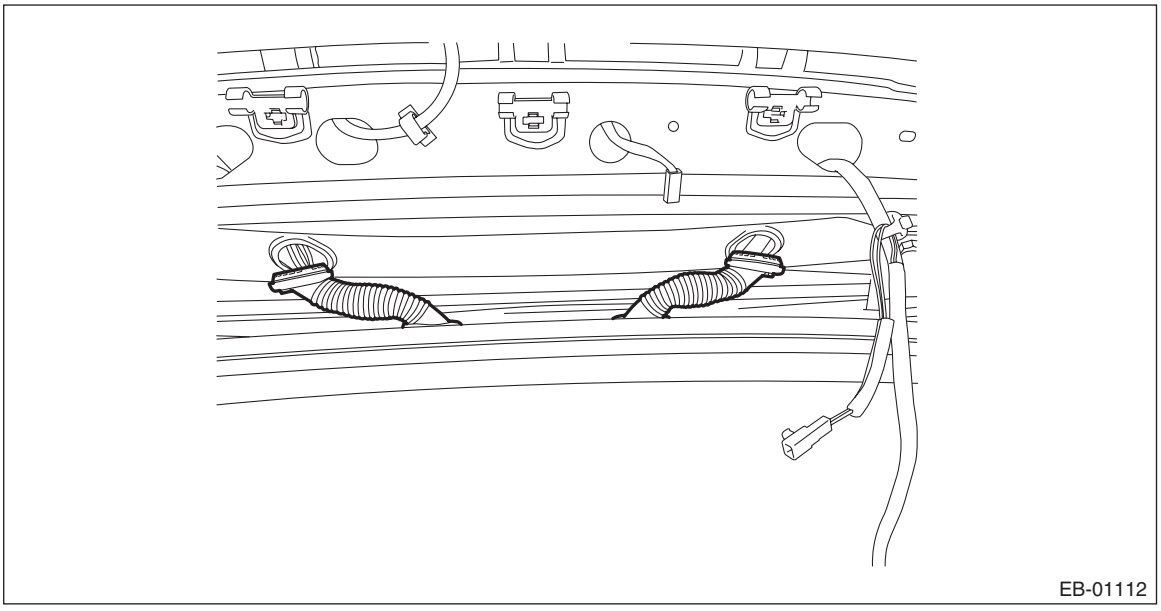
EB-01112

18) Disconnect the connector, and then pull out the harness from the panel - rear gate shown in the figure (a).

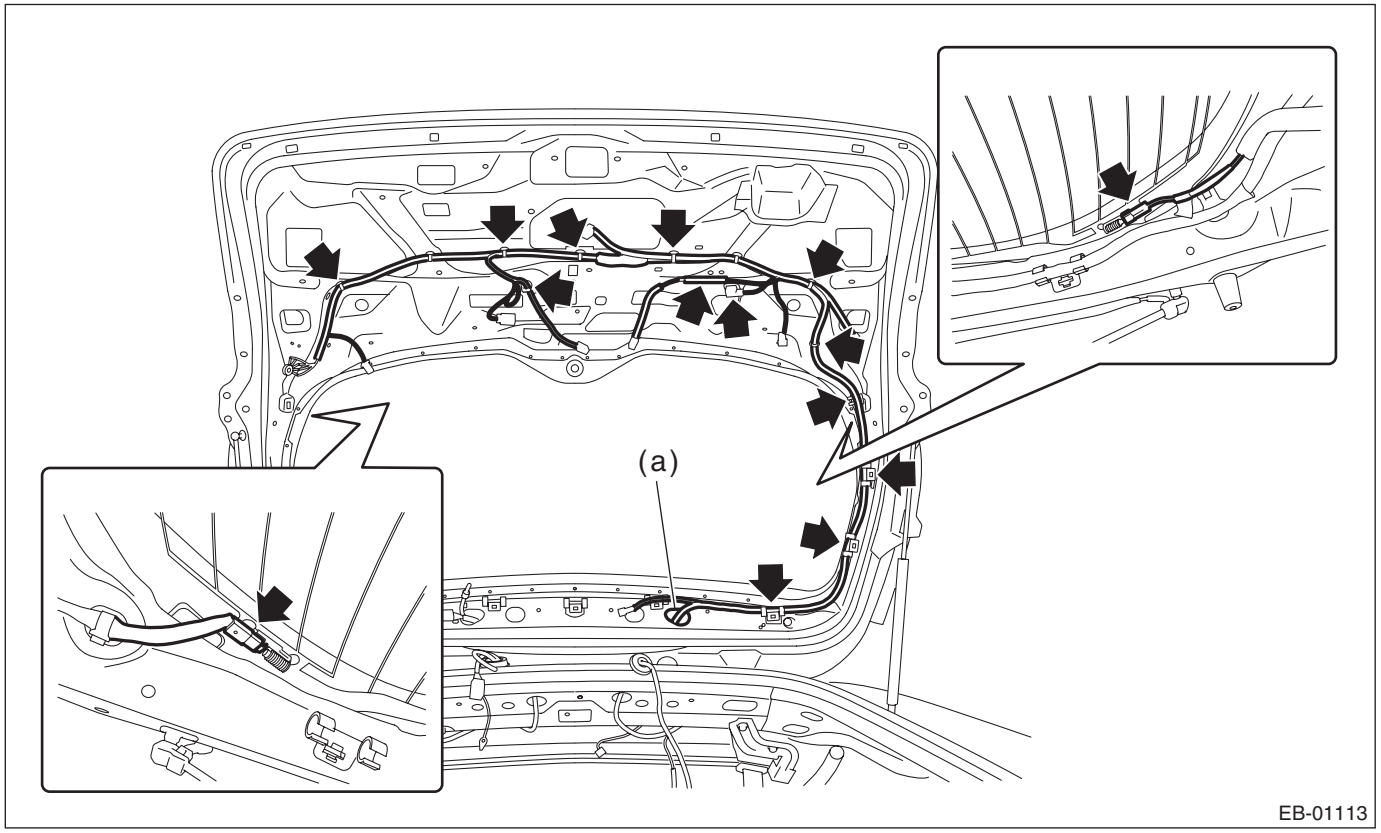

19) Remove the harness clip from the panel - rear gate.
20) Before removing the stay assembly - rear gate, prevent the panel - rear gate from closing by using a prop or the like.

CAUTION:
If the prop comes off, operators may get injured and vehicle may get damaged. Make sure to support the panel - rear gate with secure material to prevent injury or damage.

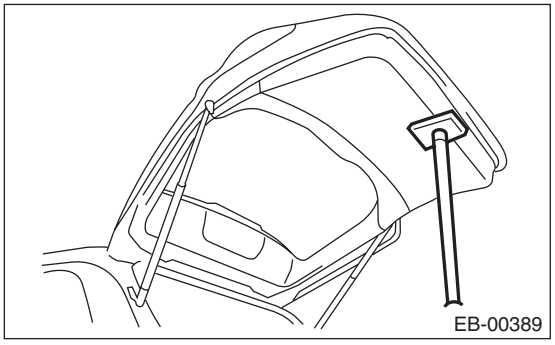

21) Remove the stay assembly - rear gate.

- Model without power rear gate
  1. Remove the stopper - rear gate and remove the attachment section on the side of the stay assembly - rear gate.
  2. Remove the mounting bolts on the body side.

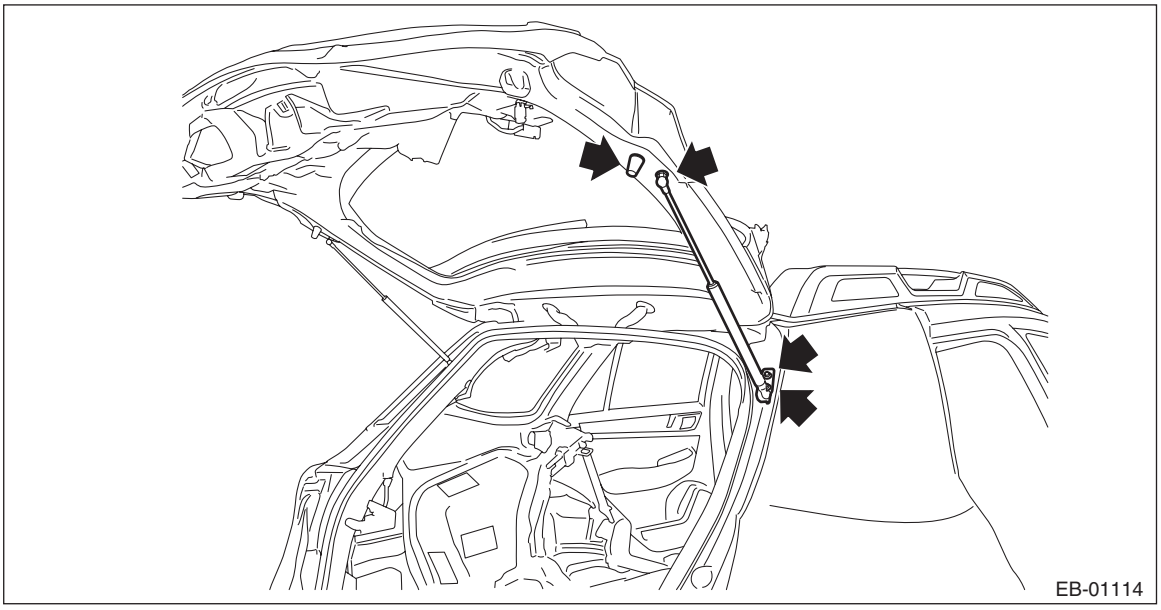

- Model with power rear gate

CAUTION:
Do not remove the stop ring completely. Raise it to the position enough to remove the ball stud.

1. Gently push the stop ring against the ball stud to be raised with a flat tip screwdriver.
2. Pull the stay assembly - rear gate toward you, and remove the stay assembly - rear gate from the ball stud.

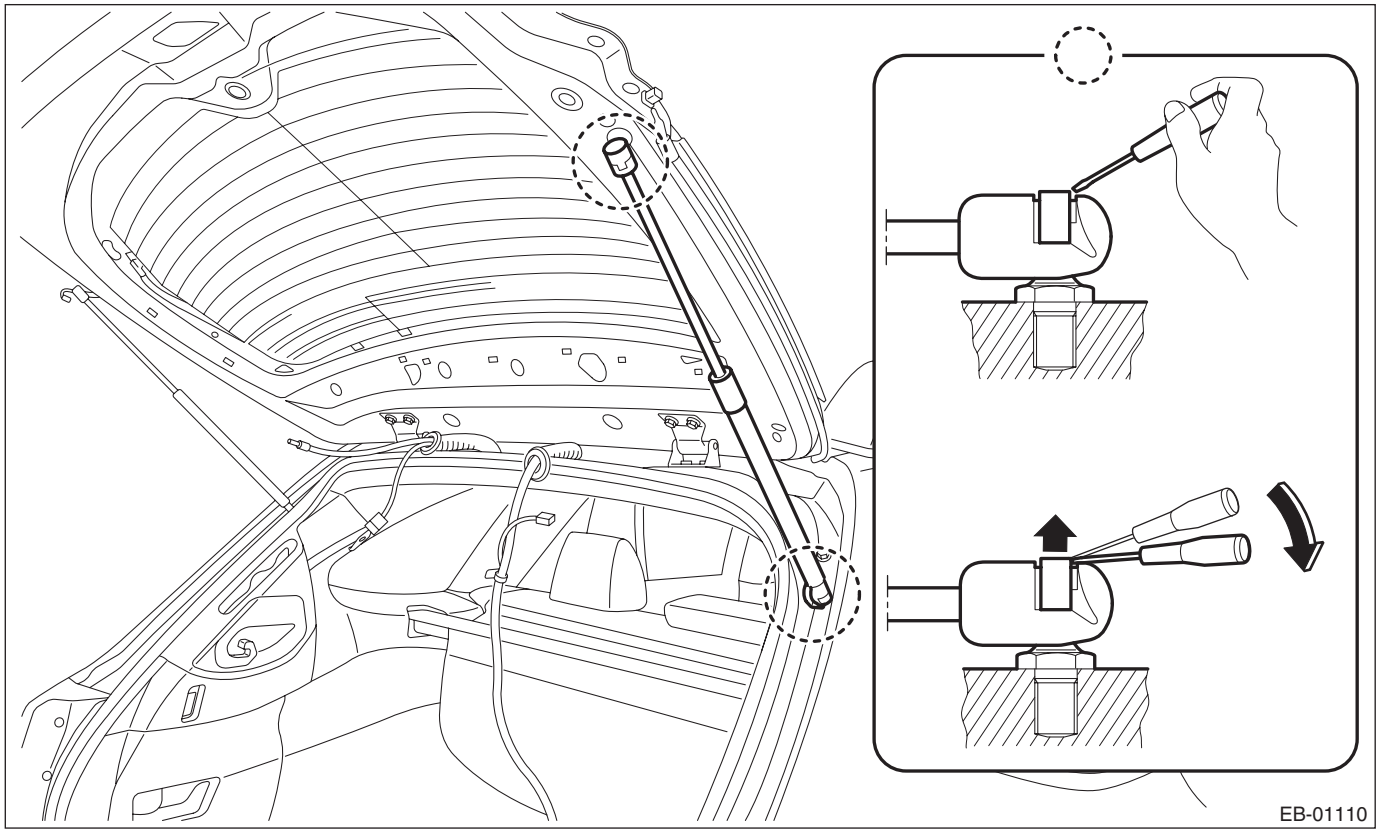

22) Remove the bolts of the hinge - rear gate, and remove the panel - rear gate.

CAUTION:
The panel - rear gate is heavy. When removing and installing it, always work in a team of two or more persons.

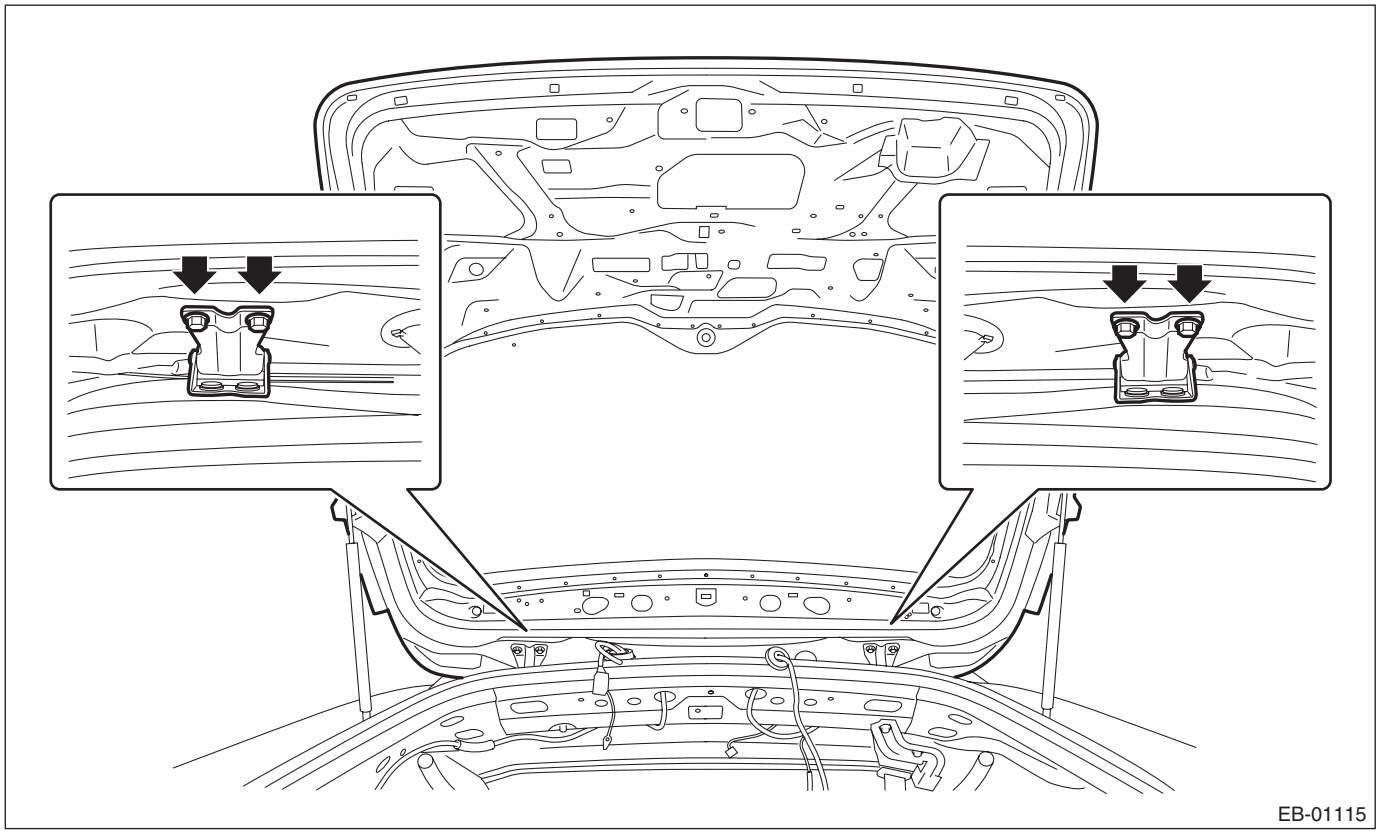

23) Remove the hinge - rear gate from the vehicle.

2. REAR GATE DAMPER STAY

CAUTION:
- **Do not damage piston rods and oil seals.**
- **Never disassemble cylinders: They contain gas.**
- **The panel - rear gate is heavy. When removing and installing it, always work in a team of two or more persons.**

1) Before removing the stay assembly - rear gate, prevent the panel - rear gate from closing by using a prop or the like.

CAUTION:
If the prop comes off, operators may get injured and vehicle may get damaged. Make sure to support the panel - rear gate with secure material to prevent injury or damage.

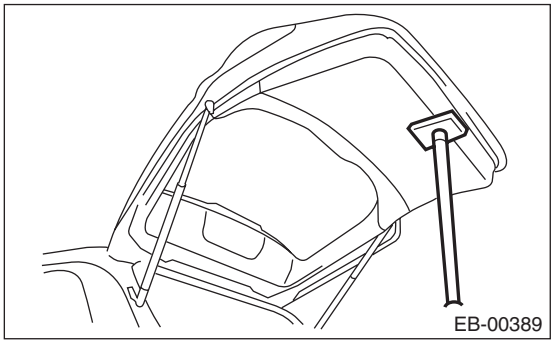

2) Remove the stay assembly - rear gate.
- Model without power rear gate

1. Remove the mounting portion on the stay assembly - rear gate.
2. Remove the mounting bolts on the body side.

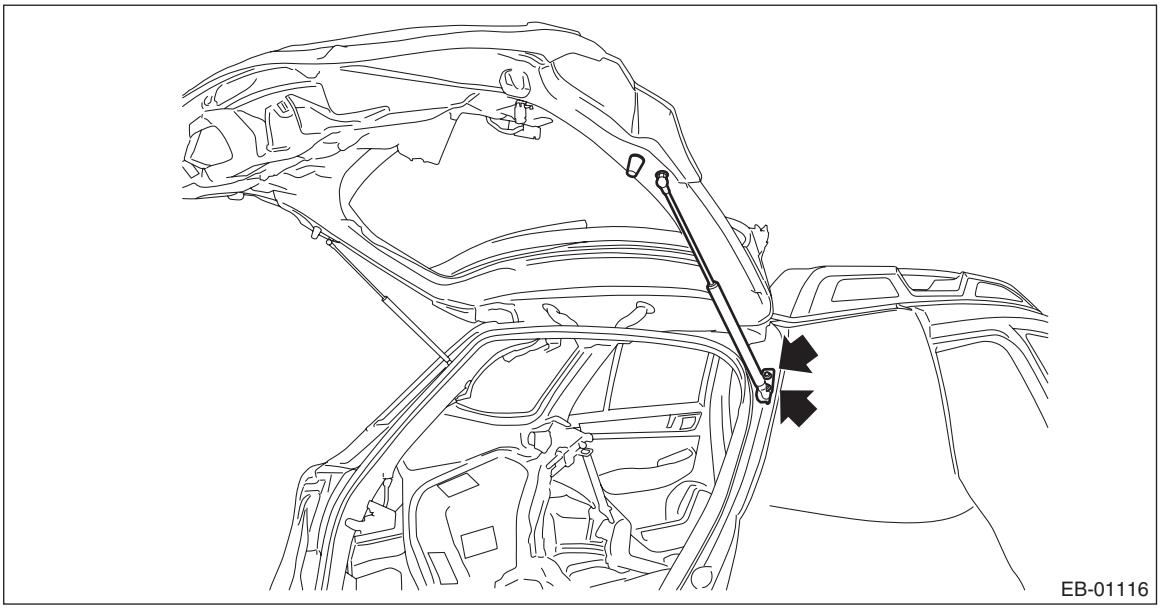

- Model with power rear gate

CAUTION:
Do not remove the stop ring completely. Raise it to the position enough to remove the ball stud.

1. Gently push the stop ring against the ball stud to be raised with a flat tip screwdriver.
2. Pull the stay assembly - rear gate toward you, and remove the stay assembly - rear gate from the ball stud.

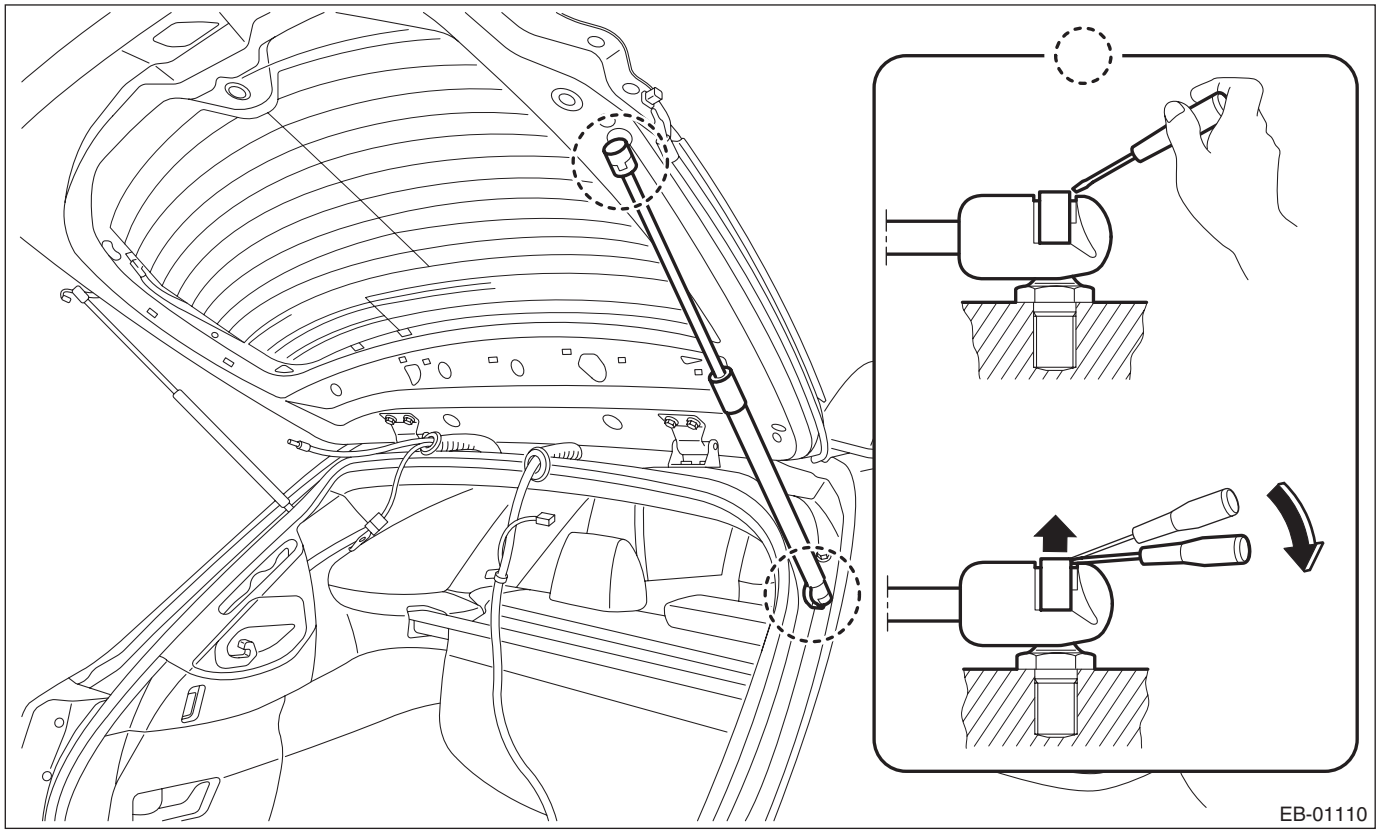

B: INSTALLATION

1. REAR GATE PANEL

CAUTION:
The panel - rear gate is heavy. When removing and installing it, always work in a team of two or more persons.

1) Install the hinge - rear gate to the vehicle body.
2) Temporarily install the panel - rear gate to the hinge - rear gate.

NOTE:
When installing, make sure that a uniform clearance is created around the panel - rear gate.

3) Adjust the clearance around the panel - rear gate. <Ref. to EB-64, ADJUSTMENT, Rear Gate.>
4) Tighten the bolts of the hinge - rear gate.

Tightening torque:
25 N·m (2.5 kgf-m, 18.4 ft-lb)

5) Install the stay assembly - rear gate.

Tightening torque:
Refer to "COMPONENT" of "General Description". <Ref. to EB-7, REAR GATE, COMPONENT, General Description.>

6) Install the harness clip and the harness.
7) Install the light assembly - rear finisher. <Ref. to LI-58, OUTBACK MODEL, INSTALLATION, Rear Finisher Light Assembly.>

Tightening torque:
4.5 N·m (0.5 kgf-m, 3.3 ft-lb)

8) Install the license plate light. <Ref. to LI-63, OUTBACK MODEL, INSTALLATION, License Plate Light.>
9) Install the rearview camera assembly. <Ref. to ET-54, OUTBACK MODEL, INSTALLATION, Rearview Camera System.>
10) Install the rear gate garnish. <Ref. to EI-63, INSTALLATION, Rear Gate Garnish.>

Tightening torque:
4.5 N·m (0.5 kgf-m, 3.3 ft-lb)

11) Install the nozzle - rear washer.
12) Install the roof spoiler. <Ref. to EI-63, INSTALLATION, Rear Gate Garnish.>

Tightening torque:
7.5 N·m (0.8 kgf-m, 5.5 ft-lb)

13) Install the antenna assembly - radio.

Tightening torque:
4.5 N·m (0.5 kgf-m, 3.3 ft-lb)

14) Install the power rear gate touch sensor. (Model with power rear gate) <Ref. to PRG-16, INSTALLATION, Power Rear Gate Touch Sensor.>
15) Install the motor assembly - rear wiper and the arm assembly - rear wiper. <Ref. to WW-44, INSTALLATION, Rear Wiper Motor.>

Tightening torque:
Motor assembly - rear wiper and arm assembly - rear wiper: <Ref. to WW-3, REAR WIPER, COMPONENT, General Description.>

16) Install the rear antenna assembly - exterior. (Model with keyless access with push button start)
17) Attach the buffer - rear gate and the stopper - rear gate.

Tightening torque:
Refer to "COMPONENT" of "General Description". <Ref. to EB-7, REAR GATE, COMPONENT, General Description.>

18) Install the latch and actuator - rear gate. <Ref. to SL-50, INSTALLATION, Rear Gate Latch and Actuator Assembly.>

Tightening torque
25 N·m (2.5 kgf-m, 18.4 ft-lb)
19) Install the trim panel - rear gate. <Ref. to EI-122, INSTALLATION, Rear Gate Trim.>
20) Install the rod - power rear gate. <Ref. to PRG-10, INSTALLATION, Power Rear Gate Rod.>
21) Connect the ground terminal to battery sensor. <Ref. to RC-4, BATTERY, NOTE, Repair Contents.>

2. REAR GATE DAMPER STAY

CAUTION:
The panel - rear gate is heavy. When removing and installing it, always work in a team of two or more persons.
1) Prevent the panel - rear gate from closing using prop or the like.

CAUTION:
If the prop comes off, operators may get injured and vehicle may get damaged. Make sure to support the panel - rear gate with secure material to prevent injury or damage.

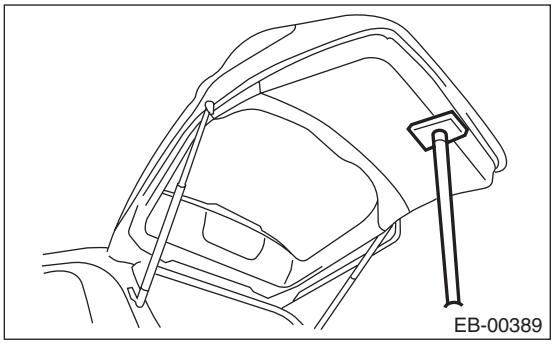

2) Install the stay assembly - rear gate.

Tightening torque:
Refer to "COMPONENT" of "General Description". <Ref. to EB-7, REAR GATE, COMPONENT, General Description.>

C: ADJUSTMENT

Adjust the clearance around the panel - rear gate as follows.

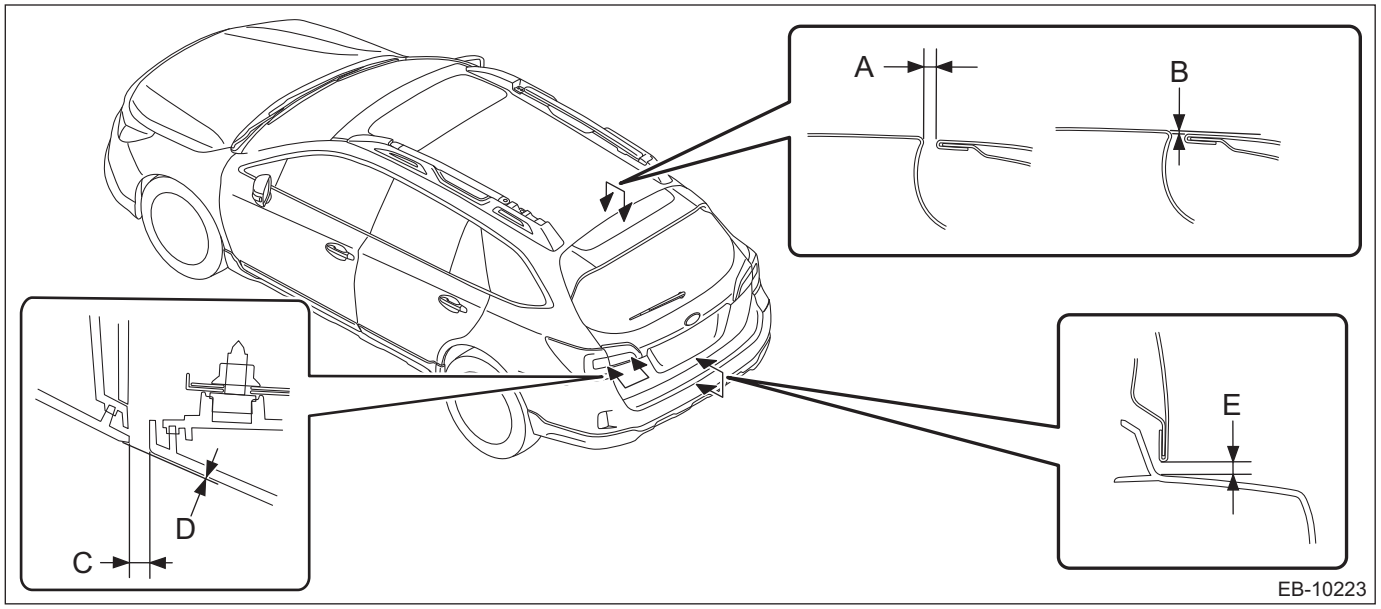

Part		Standard
A	Panel - rear gate to Roof panel	6.6+1.5, –1.0 mm (0.26+0.06, –0.04 in)
B	Surface level gap: Panel - rear gate to Roof panel	0.5+0.5, –1.5 mm (0.02+0.02, –0.06 in)
C	Finisher - light to Rear combination light	4.8±2 mm (0.19±0.08 in)
D	Surface level gap: Finisher - light to Rear combination light	0±1.6 mm (0±0.06 in)
E	Panel - rear gate to Bumper face - rear	8.0±1.5 mm (0.31±0.06 in)

1) Adjust the vertical and horizontal positions of the panel - rear gate.

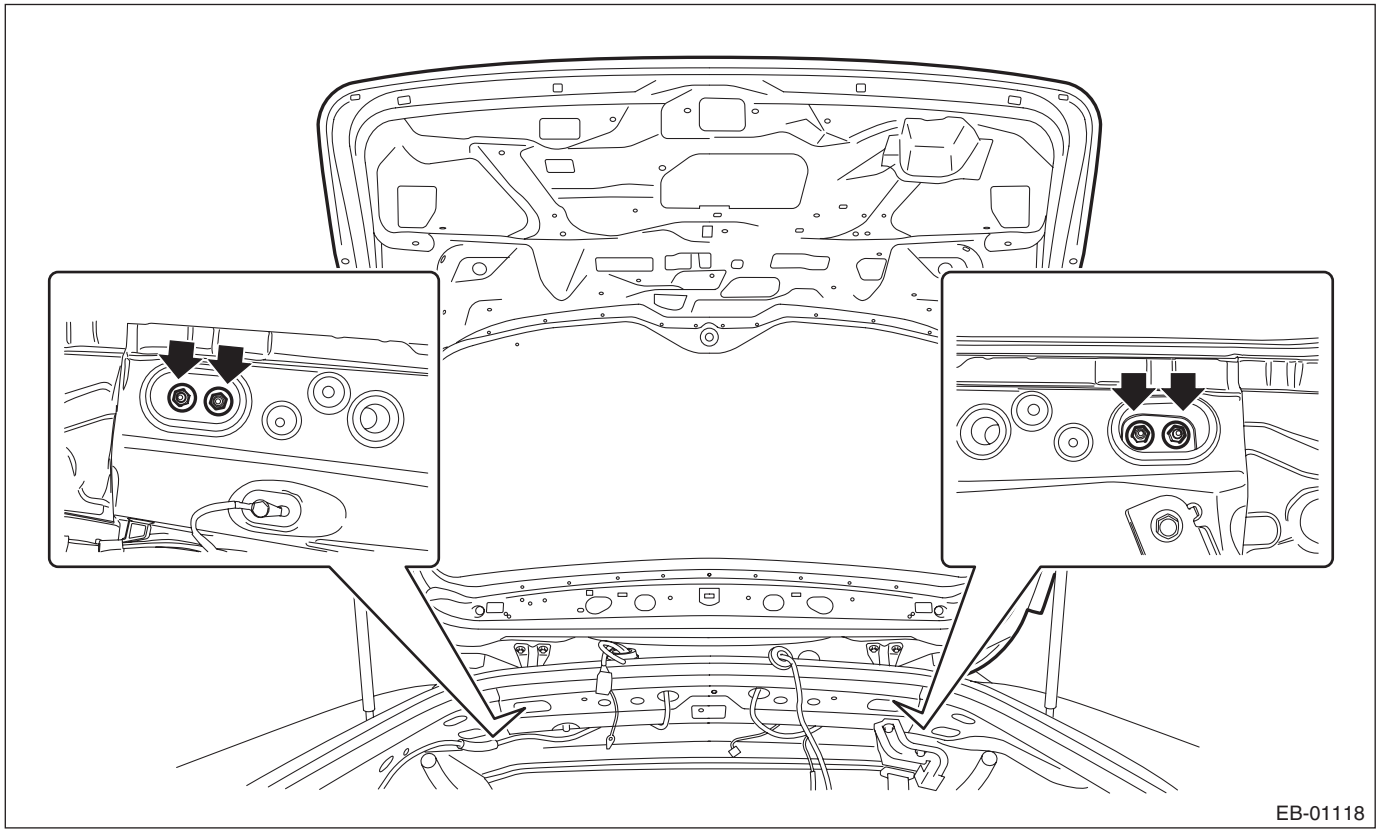

(1) Loosen the mounting bolts of the hinge - rear gate.
(2) Adjust the vertical and horizontal clearance of the panel - rear gate.

Tightening torque:
25 N·m (2.5 kgf-m, 18.4 ft-lb)

2) Adjust the surface level gap between the panel - rear gate and the body.

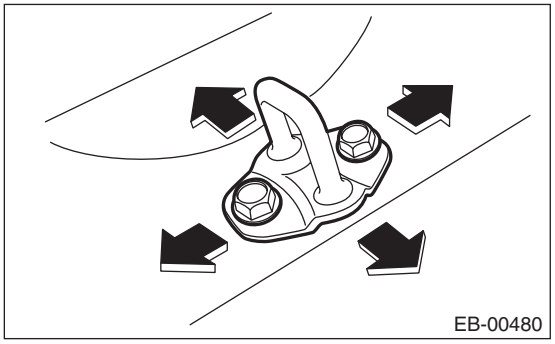

(1) Remove the trim panel - rear skirt.
(2) Loosen the bolt.
(3) Tap the striker - rear gate using a plastic hammer to adjust the surface level gap between the panel - rear gate and the body.

Tightening torque:
25 N·m (2.5 kgf-m, 18.4 ft-lb)

D: DISPOSAL

1. REAR GATE DAMPER STAY

CAUTION:
Gas is colorless, odorless, and harmless. However, gas pressure may spray cutting powder or oil. Be sure to wear dust-resistant goggles.

1) Cover with a vinyl sack as shown in the figure.

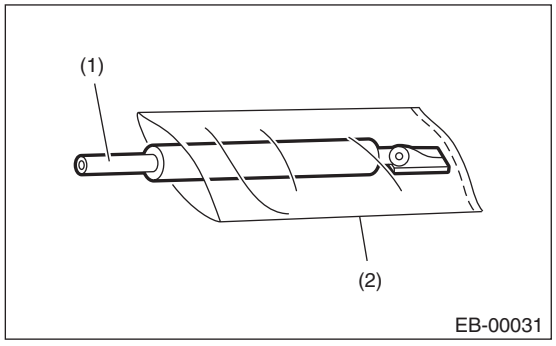

(1) Stay ASSY - rear gate
(2) Vinyl sack

NOTE:
Prevent the vinyl sack from being caught by drill cutting edge.

2) Lift the body side slightly with piston rods fully extended, and secure the body side with vise.
Drill a hole of 2 to 3 mm (0.08 to 0.12 in) diameter at a point 6 to 196 mm (0.24 to 7.72 in) from the body side, and bleed the gas in the rear gate damper stay completely.

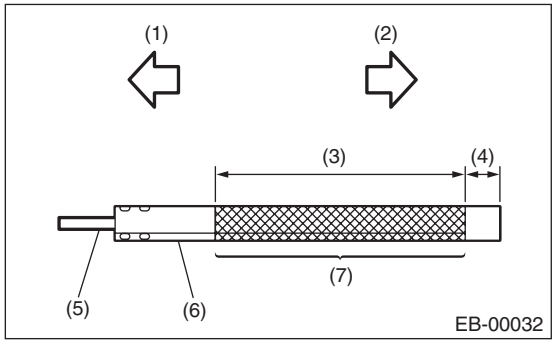

(1) Door side
(2) Body side
(3) 196 mm (7.72 in)
(4) 6 mm (0.24 in)
(5) Piston rod
(6) Cylinder
(7) Portion to be drilled

11.Weather Strip

A: REPLACEMENT

1. FLANGE

1) Remove the weather strip - body side flange while pulling the rubber. Be careful not to tear the rubber.
2) Replace the weather strip - trunk lid while pulling the rubber. Be careful not to tear the rubber.

NOTE:
While removing the weather strip - trunk lid, be careful not to allow adhesive to contact the trim panel - roof assembly and trim panel - trunk side.

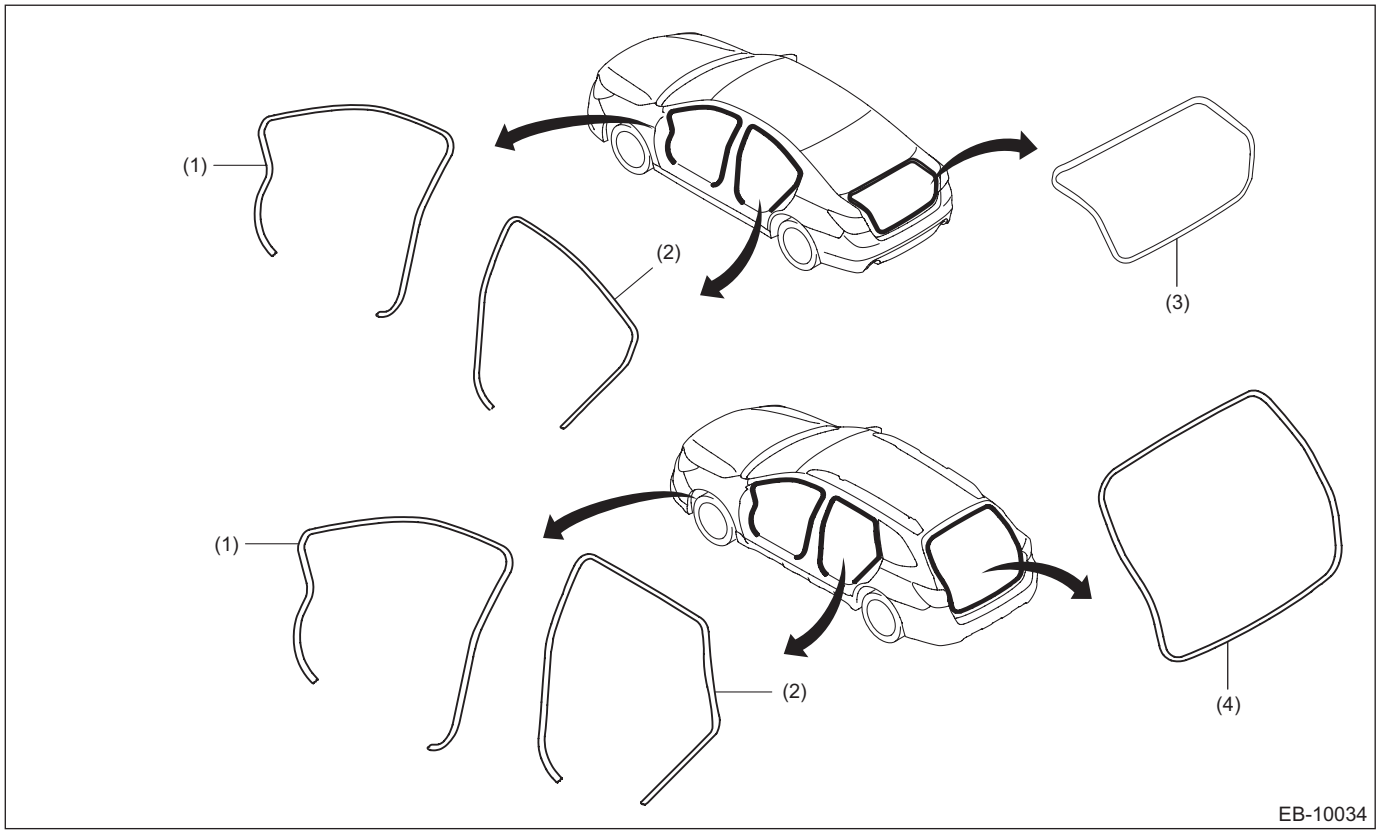

(1) Weather strip - body side flange front
(2) Weather strip - body side flange rear
(3) Weather strip - trunk lid (sedan model)
(4) Weather strip - rear gate (OUTBACK model)

2. DOOR

1) Remove the weather strip after removing the clip. Be careful not to tear the rubber.

CAUTION:
If the weather strip clip is removed with excessive force, the weather strip may be damaged. Be sure to use clip remover to remove.

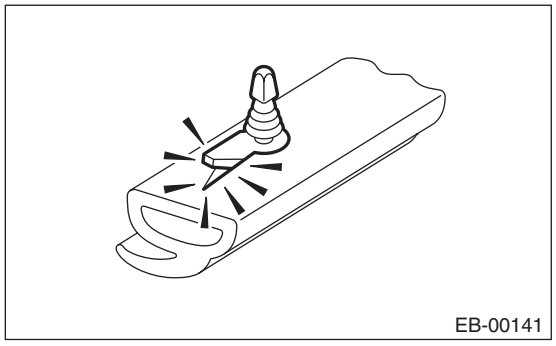

Weather Strip

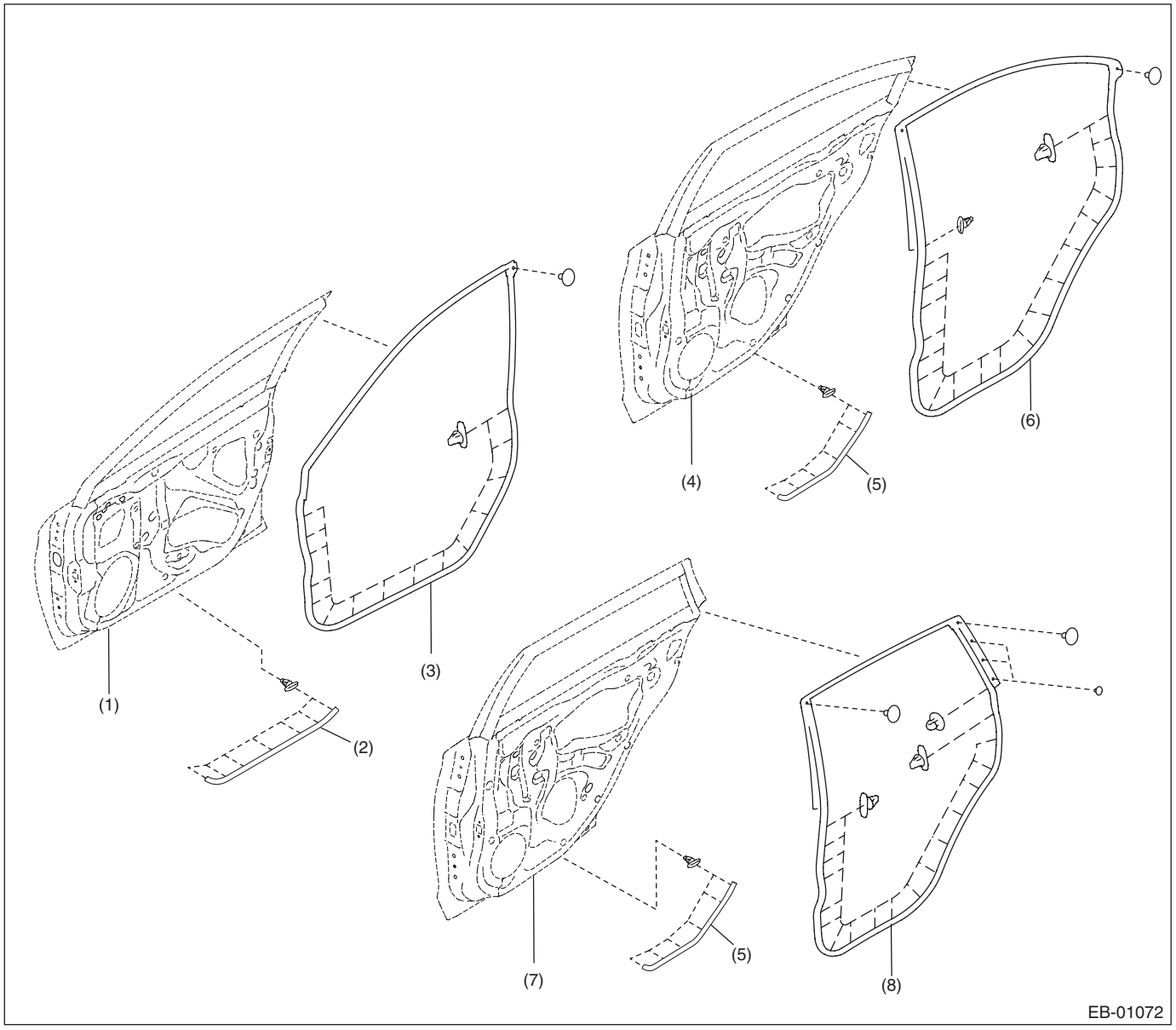

(1) Panel ASSY - front door
(2) Weather strip - front door LWR
(3) Weather strip - front door
(4) Panel ASSY - rear door (sedan model)
(5) Weather strip - rear door LWR
(6) Weather strip - rear door (sedan model)
(7) Panel ASSY - rear door (OUTBACK model)
(8) Weather strip - rear door (OUTBACK model)

12.Protector Tape

A: INSTALLATION

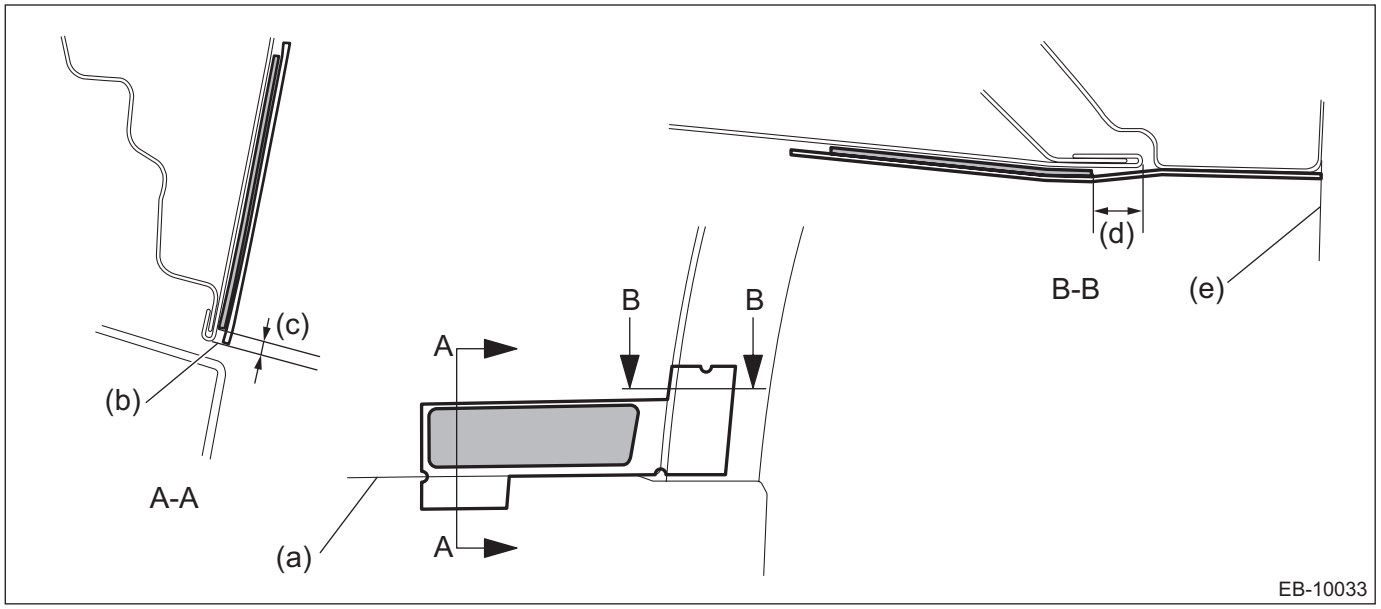

(a) Panel ASSY - rear door end

(b) Push the application tape end against the panel assembly - rear door end.

(c) 4 $mm^{+0\ mm}_{-4\ mm}$ ($0.16\ in^{+0\ in}_{-0.16\ in}$)

(d) 14.4±4 mm (0.57±0.16 in)

(e) Push the application tape end against the panel assembly - rear door end.

1) Clean the area around applying position to remove any foreign objects on body.
2) Detach the backing papers from the protector tape and moisten the attaching area and protector tape backside by spraying liquid (mild detergent solution at 3% concentration).
3) Apply the protector tape to the vehicle body.

CAUTION:
Remove the water or air bubbles out of the protector tape by using the plastic or rubber spatula.
4) Detach the application tape and temporary retention tape.

POWER REAR GATE SYSTEM

PRG

		Page
1.	General Description	2
2.	Relay and Fuse	4
3.	Power Rear Gate System	5
4.	Power Rear Gate Control Module	6
5.	Power Rear Gate Drive Unit	8
6.	Power Rear Gate Rod	9
7.	Power Rear Gate Auto Closer	11
8.	Power Rear Gate Touch Sensor	15
9.	Power Rear Gate Buzzer	17
10.	Power Rear Gate Inner Switch	18
11.	Power Rear Gate Driver's Switch	19
12.	Memory Height Switch	20
13.	Rear Gate Opener Button	21
14.	Body Integrated Unit	22
15.	Diagnostics with Phenomenon	23

1. General Description

A: LOCATION

Refer to “LOCATION” in the “POWER REAR GATE SYSTEM (DIAGNOSTICS)” section. <Ref. to PRG(diag)-5, LOCATION, Electrical Component Location.>

B: COMPONENT

1. UNIT AND REAR GATE

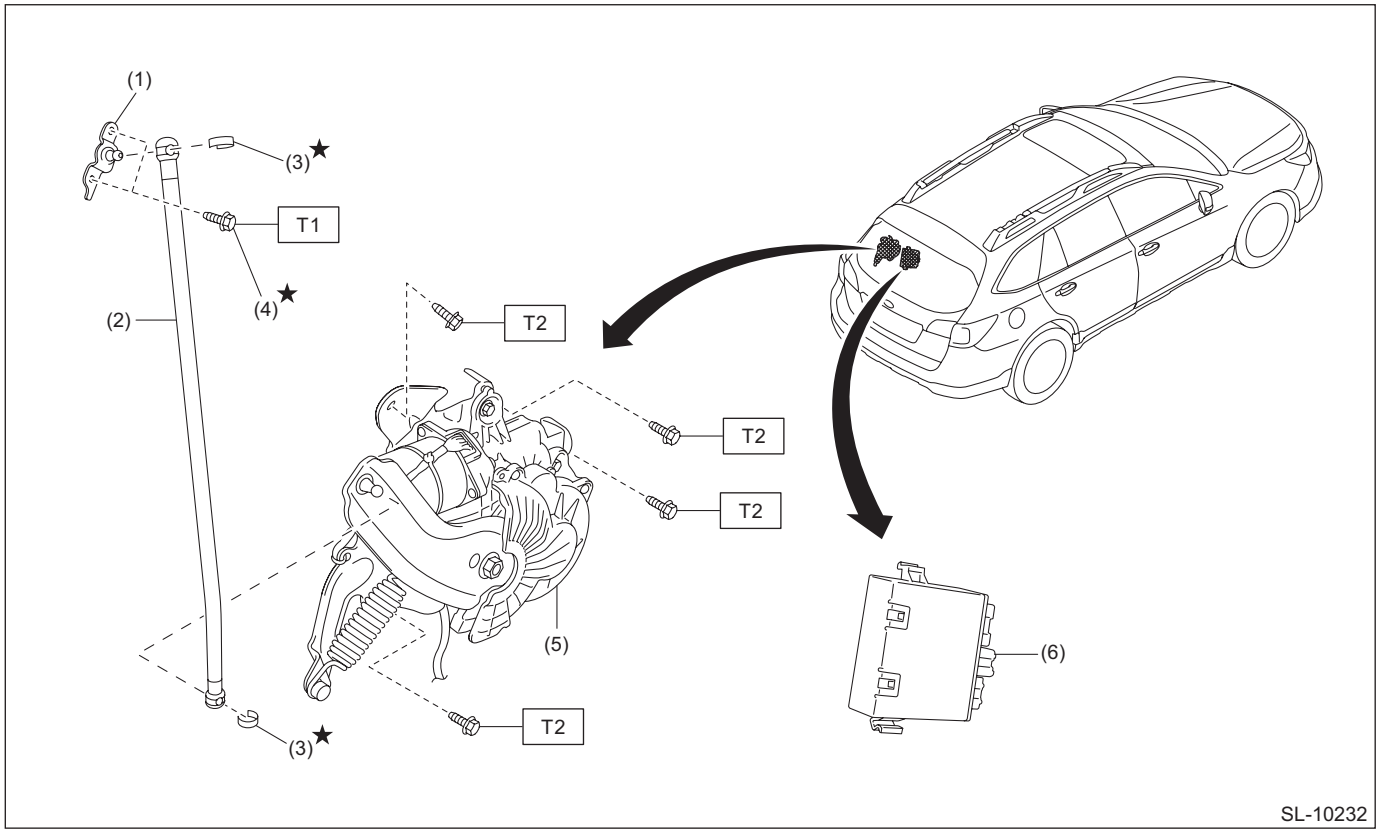

(1)	Bracket rod - power rear gate	(4)	Flange bolt	***Tightening torque: N·m (kgf-m, ft-lb)***
(2)	Rod - power rear gate	(5)	Power rear gate drive unit (PRG D/U)	***T1: 16 (1.6, 11.4)***
(3)	Stop ring	(6)	Power rear gate control module (PRG CM)	***T2: 25 (2.5, 18.4)***

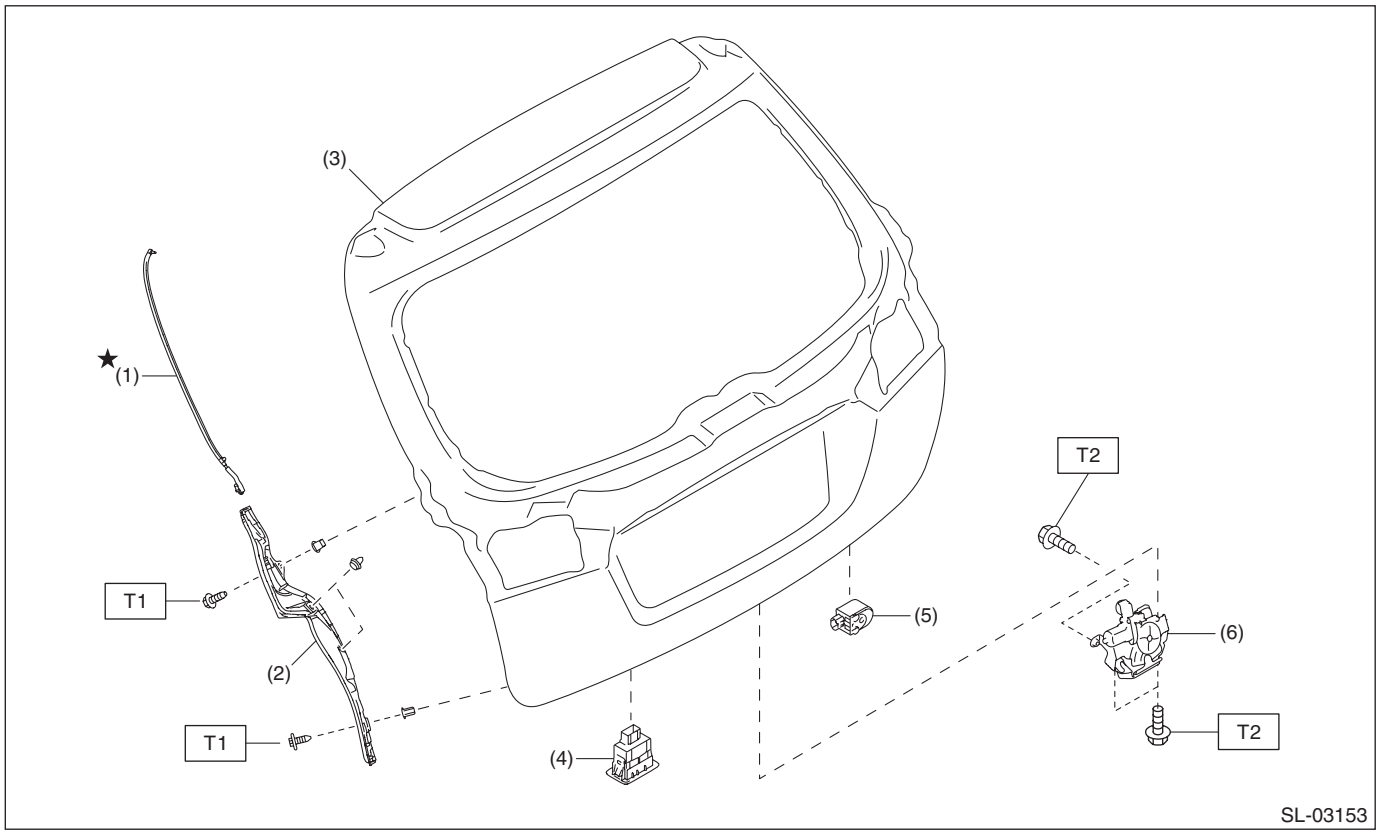

(1)	Power rear gate touch sensor UPR	(4)	Power rear gate inner switch	***Tightening torque: N·m (kgf-m, ft-lb)***
(2)	Power rear gate touch sensor LWR	(5)	Power rear gate buzzer	***T1: 1.5 (0.2, 1.1)***
(3)	Panel - rear gate	(6)	Power rear gate auto closer	***T2: 25 (2.5, 18.4)***

C: CAUTION

• Before disconnecting connectors of sensors or units, be sure to disconnect the ground cable from battery. When replacing the electrical parts provided with memory functions that store contents specified by a customer, record the memory contents before disconnecting the battery ground cable.
• After reassembly, close the rear gate and then connect the battery ground cable. Initialization of the power rear gate auto closer is necessary, when connection is performed with the rear gate open. <Ref. to PRG-5, INITIALIZATION, PROCEDURE, Power Rear Gate System.>

D: PREPARATION TOOL

TOOL NAME	REMARKS
Circuit tester	Used for measuring resistance, voltage and current.

2. Relay and Fuse

A: LOCATION

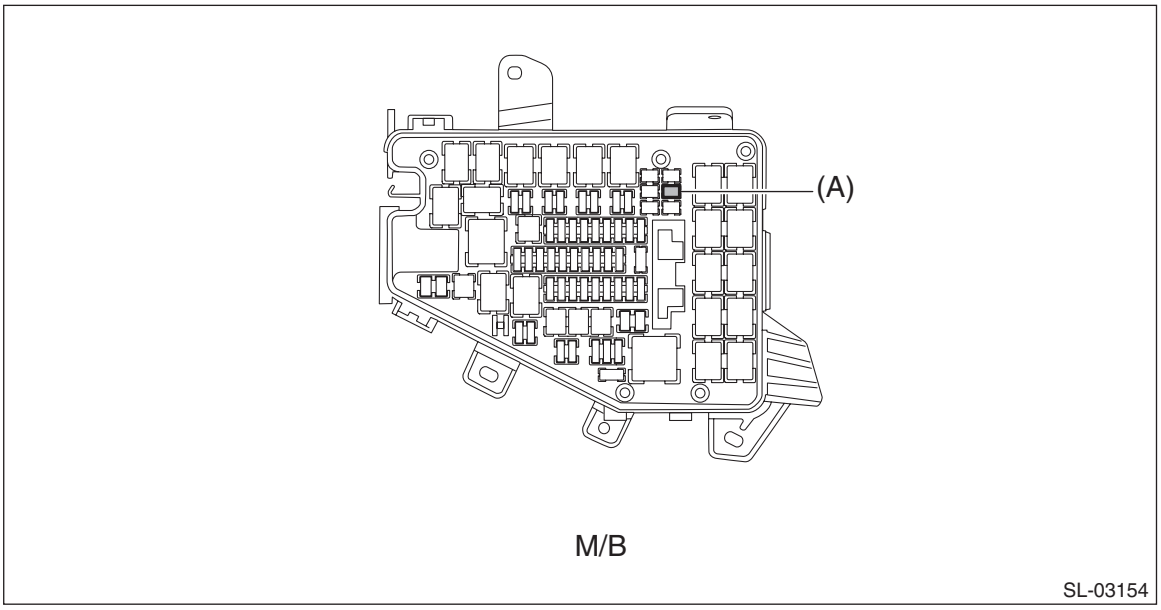

Main fuse box (M/B)	Fuse 30 A (power rear gate control module)	(A)

NOTE:
For other related fuses, refer to the wiring diagram. <Ref. to WI-21, Power Supply Circuit.>

B: INSPECTION

1. CHECK FUSE

1) Remove the fuse and inspect visually.
2) If the fuse is blown out, replace the fuse.

NOTE:
If the fuse is blown again, check the system wiring harness.

3. Power Rear Gate System

A: WIRING DIAGRAM

Refer to “Power Rear Gate System” in the wiring diagram. <Ref. to WI-296, WIRING DIAGRAM, Power Rear Gate System.>

B: INSPECTION

Refer to “Basic Diagnostic Procedure” of “POWER REAR GATE SYSTEM (DIAGNOSTICS)”. <Ref. to PRG(diag)-2, Basic Diagnostic Procedure.>

C: PROCEDURE

1. INITIALIZATION

NOTE:
Perform the initialization of the power rear gate auto closer, if the battery ground cable is connected with the rear gate open. Initialization is not required when the battery ground cable is connected with the rear gate closed.
1) Turn the ignition switch to OFF.
2) Close the rear gate slowly, and release the hold of rear gate after a clicking sound is heard when the latch is engaged halfway.
3) The auto closer function then operates and pulls the rear gate to engage fully.
4) Operate the power rear gate switches after the rear gate is closed fully to check that automatic open/close of the power rear gate operates normally. If the power rear gate still does not operate properly, perform the following diagnostic procedures. <Ref. to PRG(diag)-2, Basic Diagnostic Procedure.>

D: NOTE

For procedure of each component in the power rear gate system, refer to the respective section.
- Power rear gate control module (PRG CM): <Ref. to PRG-6, Power Rear Gate Control Module.>
- Power rear gate drive unit (PRG D/U): <Ref. to PRG-8, Power Rear Gate Drive Unit.>
- Power rear gate rod: <Ref. to PRG-9, Power Rear Gate Rod.>
- Power rear gate auto closer: <Ref. to PRG-11, Power Rear Gate Auto Closer.>
- Power rear gate touch sensor: <Ref. to PRG-15, Power Rear Gate Touch Sensor.>
- Power rear gate buzzer: <Ref. to PRG-17, Power Rear Gate Buzzer.>
- Power rear gate inner switch: <Ref. to PRG-18, Power Rear Gate Inner Switch.>
- Power rear gate driver’s switch: <Ref. to PRG-19, Power Rear Gate Driver’s Switch.>
- Memory height switch: <Ref. to PRG-20, Memory Height Switch.>
- Power rear gate opener button (PRG): <Ref. to PRG-21, Rear Gate Opener Button.>
- Body integrated unit: <Ref. to PRG-22, Body Integrated Unit.>

4. Power Rear Gate Control Module

A: REMOVAL

1) Disconnect the ground terminal from the battery sensor, and wait for at least 60 seconds before starting work. <Ref. to RC-4, BATTERY, NOTE, Repair Contents.>
2) Remove the trim panel - rear apron LH. <Ref. to EI-99, REMOVAL, Rear Quarter Trim.>
3) Remove the power rear gate control module (PRG CM).
   (1) Disconnect the connectors in the following order.
   1: Disconnect the connector (b).
   2: Pull the slide lock in the arrowed direction, and disconnect the connector (a) by pressing in the lock.
   3: Disconnect the connector (c).

NOTE:
When the connectors are not disconnected in the sequence, a diagnosis code (DTC) may be detected.

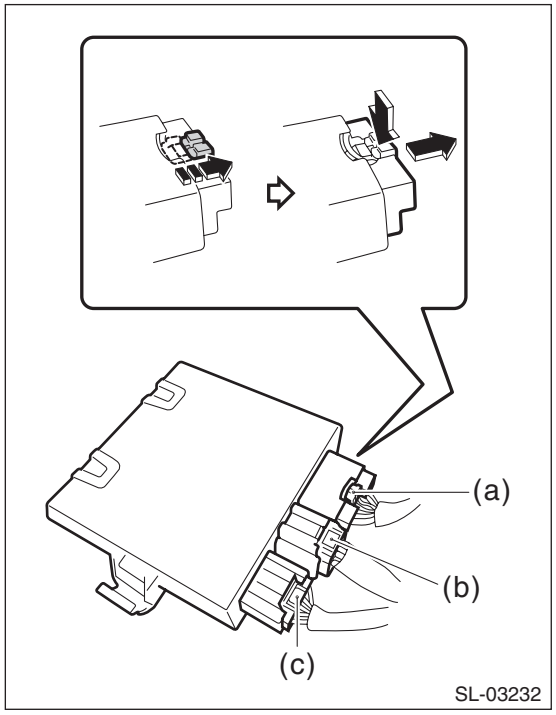

(2) Release the lock and hook, and remove the power rear gate control module (PRG CM).

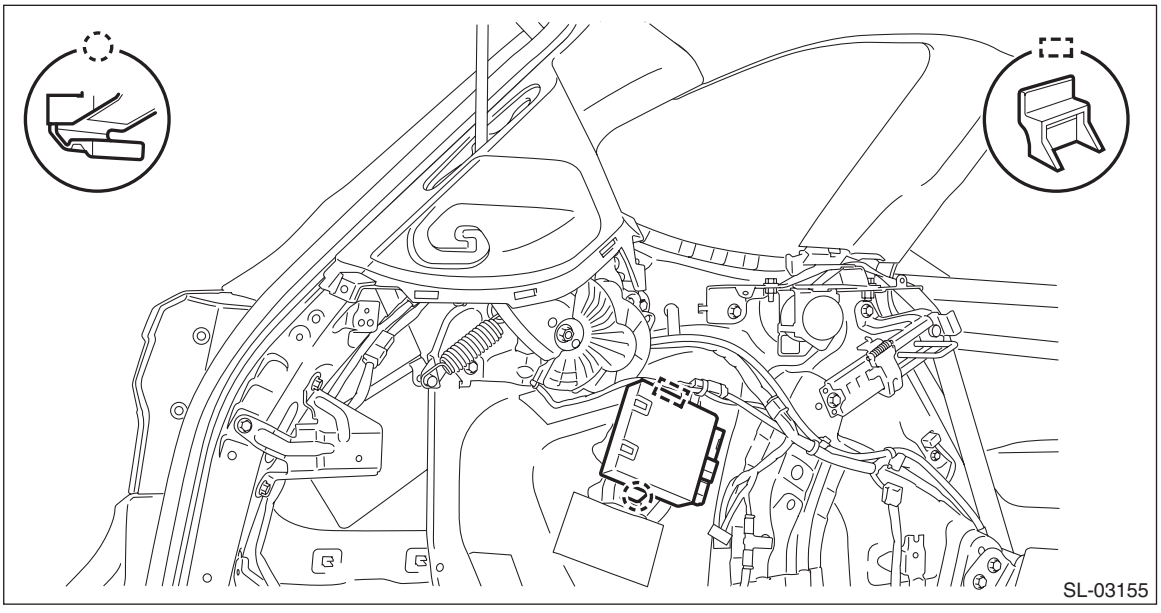

B: INSTALLATION

1) Install the power rear gate control module (PRG CM).

NOTE:
Connect the connectors in reverse order of removal.

2) Install the trim panel - rear apron LH.
3) Connect the ground terminal to battery sensor. <Ref. to RC-4, BATTERY, NOTE, Repair Contents.>

5. Power Rear Gate Drive Unit

A: REMOVAL

1) Disconnect the ground terminal from the battery sensor, and wait for at least 60 seconds before starting work. <Ref. to RC-4, BATTERY, NOTE, Repair Contents.>
2) Remove the rod - power rear gate. <Ref. to PRG-9, REMOVAL, Power Rear Gate Rod.>
3) Remove the trim panel - rear apron LH and trim panel - rear quarter trim UPR rear LH. <Ref. to EI-99, REMOVAL, Rear Quarter Trim.>
4) Remove the power rear gate drive unit (PRG D/U).
   (1) Remove the harness clip, and disconnect the connector.

NOTE:
Pull the slide lock in the arrowed direction, and disconnect the PRG CM connector by pressing in the lock.

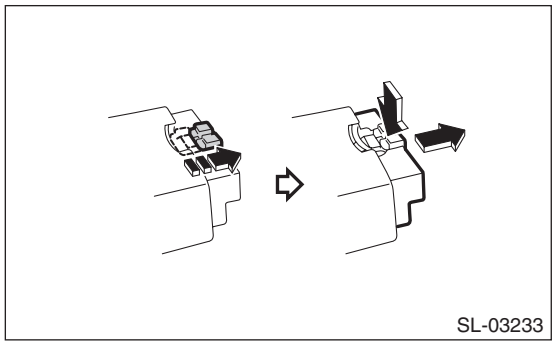
SL-03233

(2) Remove the bolts, and then remove the power rear gate drive unit (PRG D/U).

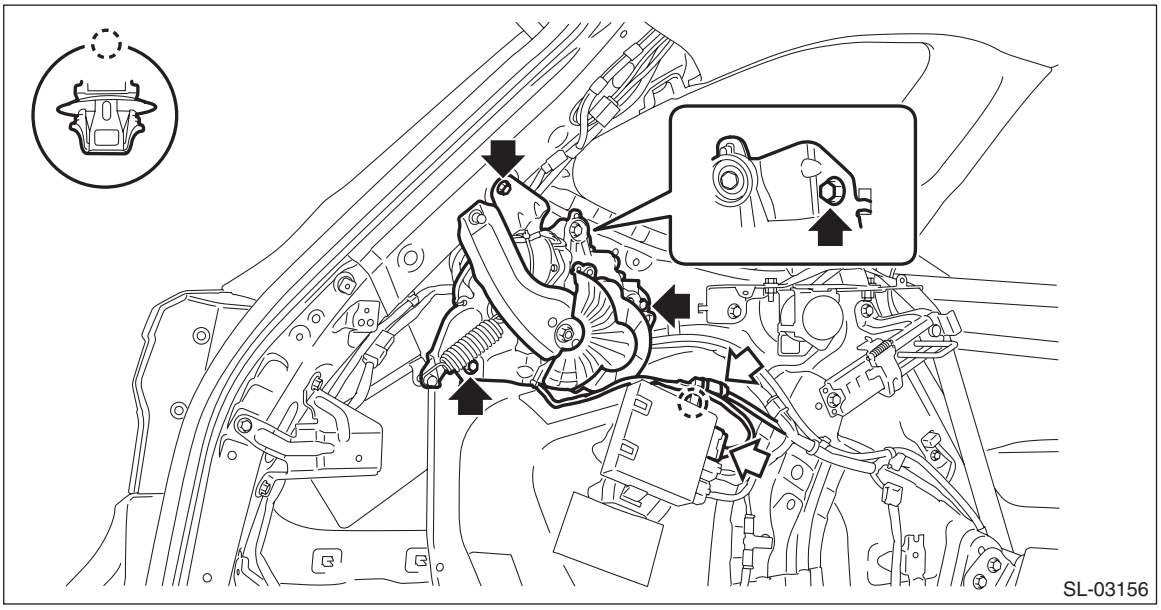
SL-03156

B: INSTALLATION

1) Install the power rear gate drive unit (PRG D/U).

Tightening torque:
25 N·m (2.5 kgf-m, 18.4 ft-lb)

2) Install the trim panel - rear apron LH and trim panel - rear quarter trim UPR rear LH.
3) Install the rod - power rear gate. <Ref. to PRG-10, INSTALLATION, Power Rear Gate Rod.>
4) Connect the ground terminal to battery sensor. <Ref. to RC-4, BATTERY, NOTE, Repair Contents.>

6. Power Rear Gate Rod

A: REMOVAL

1) Hold the rear gate to the fully open position.
2) Disconnect the ground terminal from battery sensor. <Ref. to RC-4, BATTERY, NOTE, Repair Contents.>
3) Release the claws and then remove the cap - rear quarter pillar UPR LH.

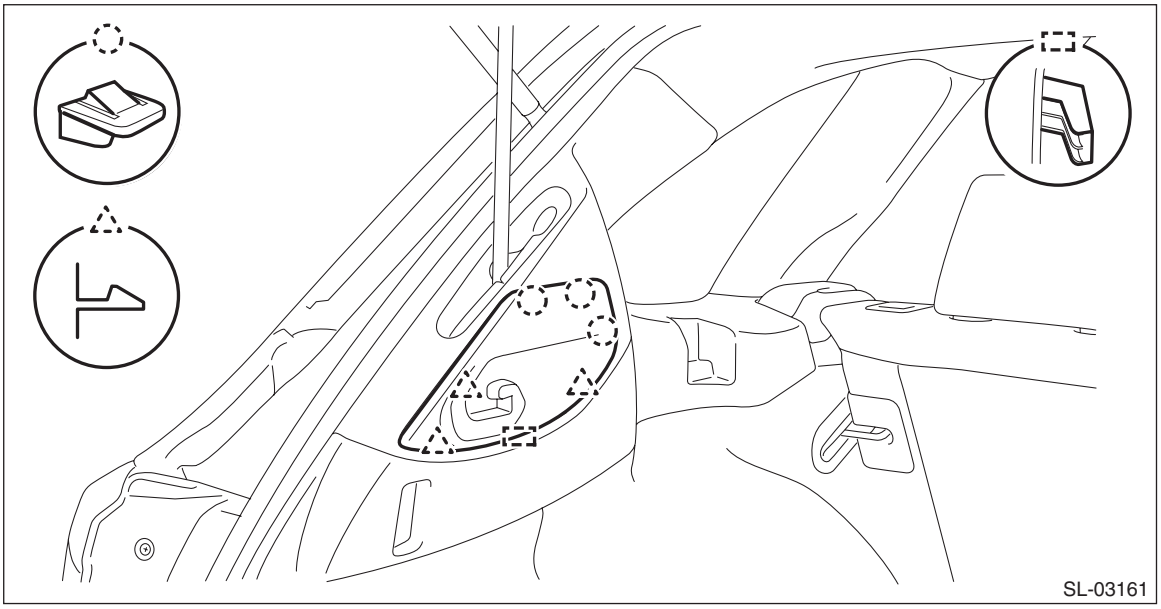

4) Remove the rod - power rear gate.

CAUTION:
• Using a small flat tip screwdriver wrapped with protective tape, remove the part by gradually applying force.
• When the rod - power rear gate is removed, it could lead to abnormal play or noise. Therefore, always replace the stop ring with a new part. Also, be sure to check the clearance of the stop ring before installing. <Ref. to PRG-10, INSTALLATION, Power Rear Gate Rod.>

(1) Press down the rod - power rear gate to the ball stud (bracket rod - power rear gate).
(2) With the rod pressed, remove the stop ring while sliding along the ball housing groove.
(3) Disconnect the rod - power rear gate from the ball stud (bracket rod - power rear gate).

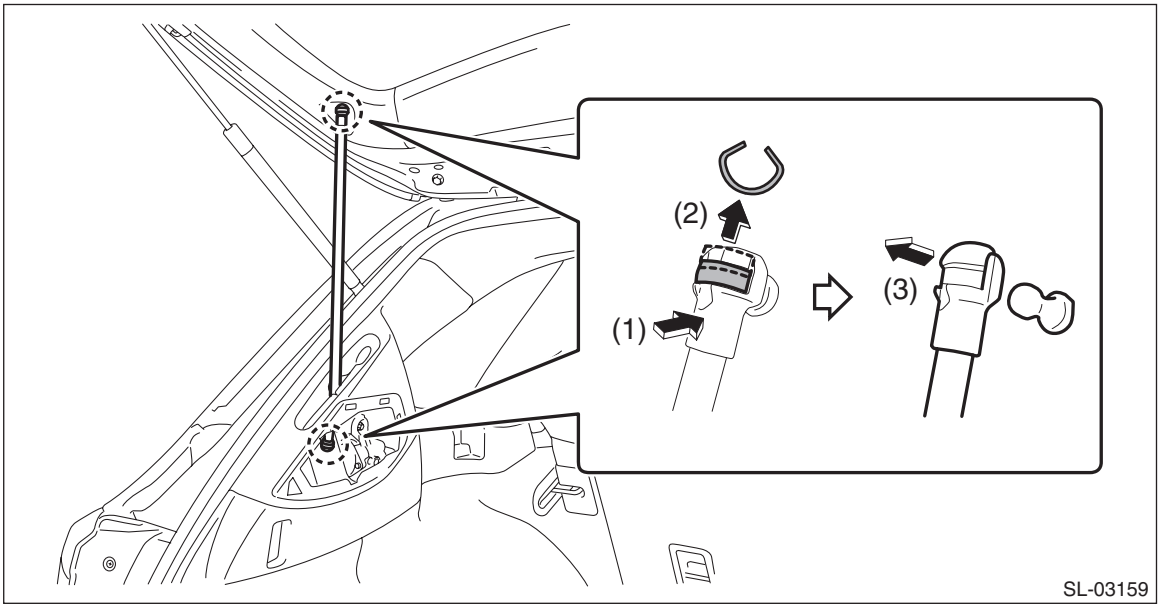

B: INSTALLATION

1) Install the new stop ring to the rod - power rear gate.

CAUTION:
- **Do not reuse the stop ring.**
- **Align the stop ring to the ball housing groove, and attach the ring by gradually applying force, while paying attention not to deform it.**

2) Check the clearance (a) of the stop ring.

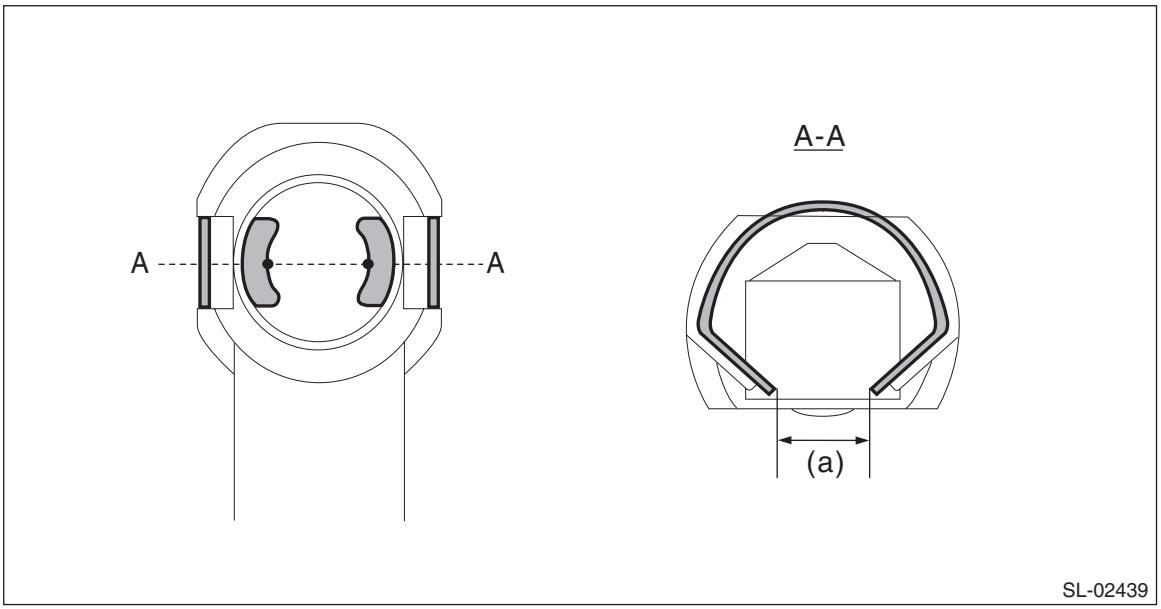

Specification:
6.4 — 7.2 mm (0.25 — 0.28 in)

Replace the stop ring if the inspection result is not within the standard value.

3) Install the rod - power rear gate.

CAUTION:
- **Do not install the battery sensor ground terminal before installing the rod. If the power rear gate drive unit moves by wrong operation of the switch, the installation of the rod may be no longer possible.**
- **Check that the stop ring and ball stud are vertically placed, and then slowly press in the rod.**
- **Install the rod with its angular end facing downward.**

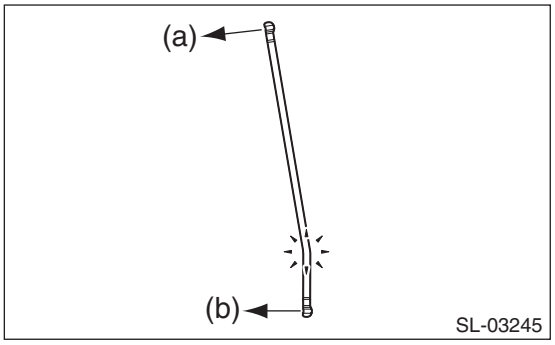

(a) Rear gate side
(b) PRG D/U side

4) Install the cap - rear quarter pillar UPR LH.
5) Connect the ground terminal to battery sensor. <Ref. to RC-4, BATTERY, NOTE, Repair Contents.>

C: INSPECTION

Check the ball housing and ball stud (bracket rod - power rear gate) of the rod - power rear gate for excessive play, wear or bent. Replace the rod - power rear gate if defective.

7. Power Rear Gate Auto Closer

A: REMOVAL

1) Disconnect the ground terminal from battery sensor. <Ref. to RC-4, BATTERY, NOTE, Repair Contents.>
2) Remove the trim panel - rear gate. <Ref. to EI-121, REMOVAL, Rear Gate Trim.>
3) Remove the power rear gate auto closer.
   (1) Disconnect the connector.
   (2) Remove the bolts, and then remove the power rear gate auto closer.

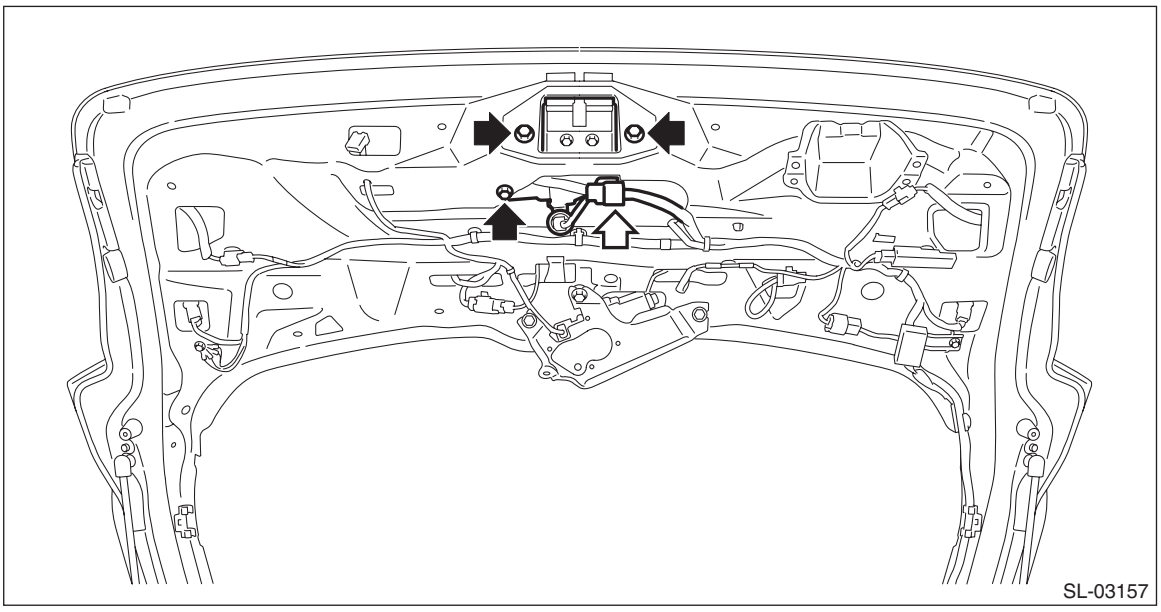

B: INSTALLATION

1) Install the power rear gate auto closer.

Tightening torque:
25 N·m (2.5 kgf-m, 18.4 ft-lb)

2) Install the trim panel - rear gate.
3) Connect the ground terminal to battery sensor. <Ref. to RC-4, BATTERY, NOTE, Repair Contents.>

C: INSPECTION

1. LATCH

Pull the emergency lever to check that the latch operates properly.
If latch deformation, abnormal wear, or unsmooth lock operation is observed, replace the power rear gate auto closer.

2. ACTUATOR

Preparation tool:
Circuit tester

1) Check motor operation
(1) Check the motor operation when battery voltage is applied between the terminals of motor.

Terminal No.	Inspection conditions	Specification	Connection diagram
1 (+) — 2 (–)	Connect battery to the terminals	CLOSE rotation	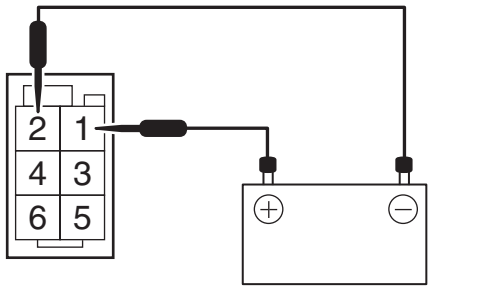 SL-02432
2 (+) — 1 (–)		OPEN rotation	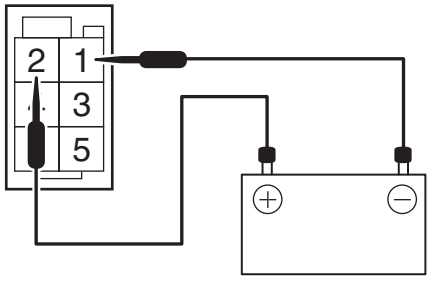 SL-02431

(2) After the motor operation check is completed, perform initialization of the sector switch in the following procedures.
1. Operate the motor in the OPEN direction for approximately 2 seconds.
2. Connect the connector of power rear gate auto closer.
3. Connect the ground terminal to the battery sensor with the rear gate fully open.

2) Check switch
(1) Check the resistance between switch terminals.
• Latch switch

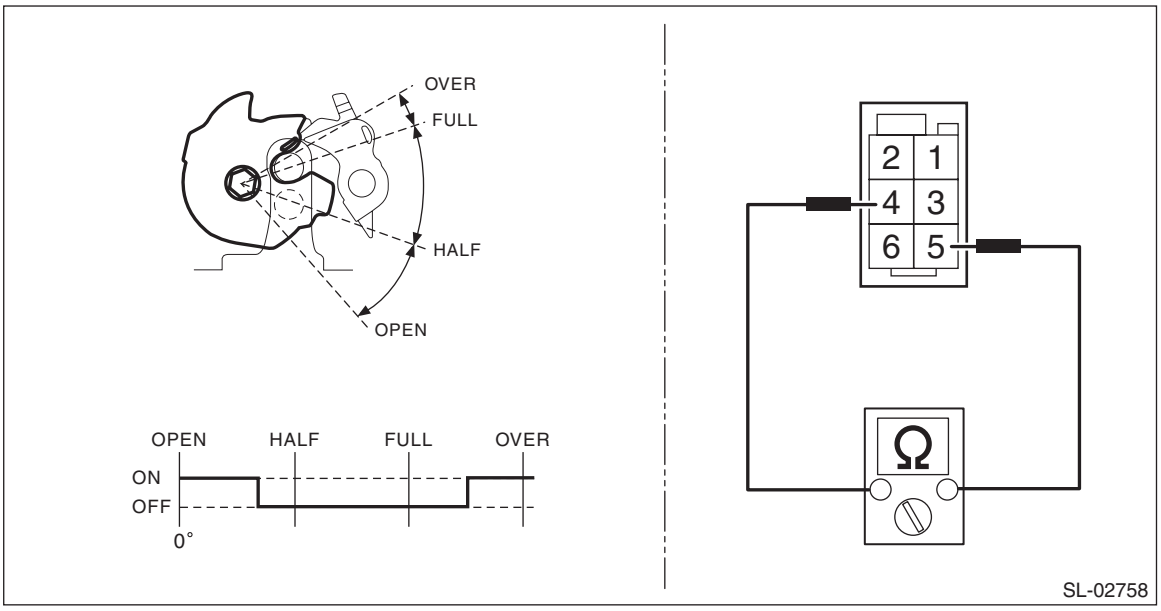

Terminal No.	Inspection conditions	Standard
5 — 4	OPEN	Less than 1 Ω
	HALF	10 kΩ or more
	FULL	10 kΩ or more
	OVER	Less than 1 Ω

• Courtesy switch

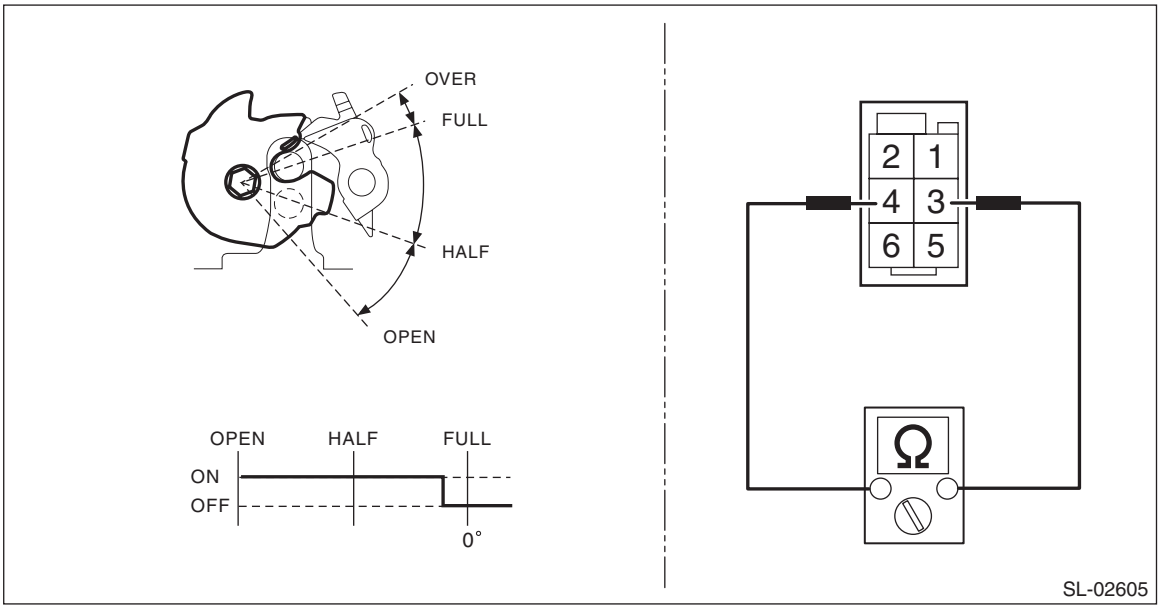

Terminal No.	Inspection conditions	Standard
3 — 4	OPEN	Less than 1 Ω
	HALF	Less than 1 Ω
	FULL	10 kΩ or more

- Sector switch

CAUTION:
Perform the check while operating the motor in the OPEN direction with the battery voltage applied between the terminals of motor. For detailed procedures, refer to 1) Check motor operation.

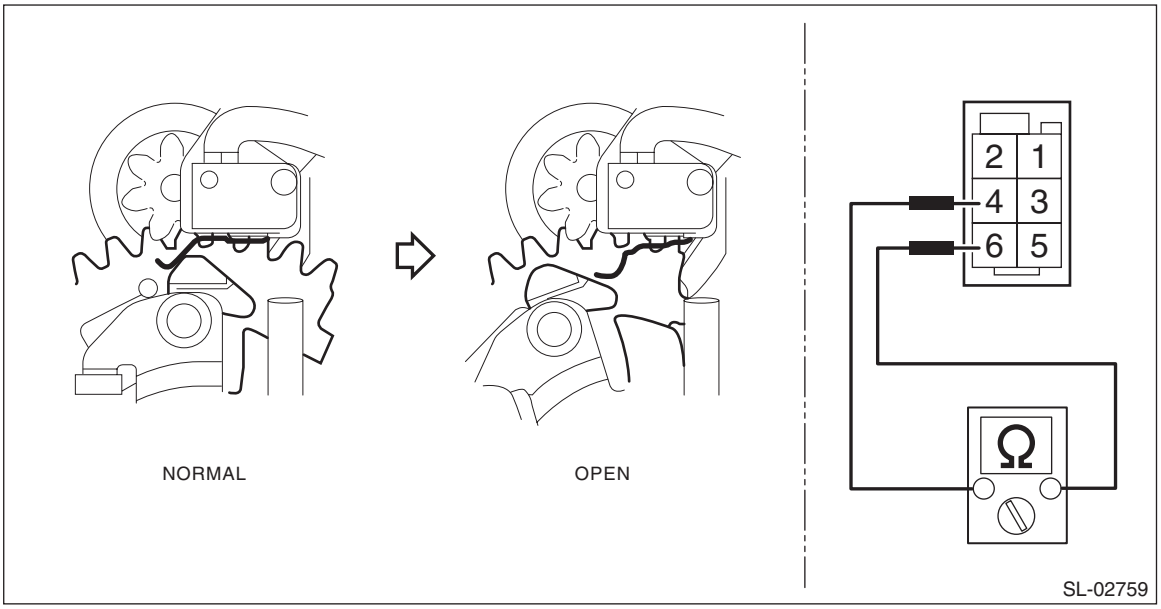

Terminal No.	Inspection conditions	Standard
4 — 6	Switch ON (NORMAL)	Less than 1 Ω
	Switch OFF (OPEN)	10 kΩ or more

(2) After the switch check is completed, perform initialization of the sector switch in the following procedures.
1. Operate the motor in the OPEN direction for approximately 2 seconds.
2. Connect the connector of power rear gate auto closer.
3. Connect the ground terminal to the battery sensor with the rear gate fully open.

3) Replace the power rear gate auto closer if it is found defective.

8. Power Rear Gate Touch Sensor

A: REMOVAL

1. TOUCH SENSOR UPR

1) Disconnect the ground terminal from battery sensor. <Ref. to RC-4, BATTERY, NOTE, Repair Contents.>
2) Remove the touch sensor LWR. <Ref. to PRG-15, TOUCH SENSOR LWR, REMOVAL, Power Rear Gate Touch Sensor.>
3) Remove the power rear gate touch sensor UPR.

CAUTION:
• The touch sensor UPR can be removed only when it is defective because it is secured with double-sided tape.
• When removing the touch sensor UPR, be careful not to deform the touch sensor UPR bracket.
• Always replace the touch sensor UPR with a new part after removal.

(1) Affix masking tape on the touch sensor UPR bracket so that the tape runs along the touch sensor UPR.
(2) Remove the rubber clip and remove the power rear gate touch sensor UPR.

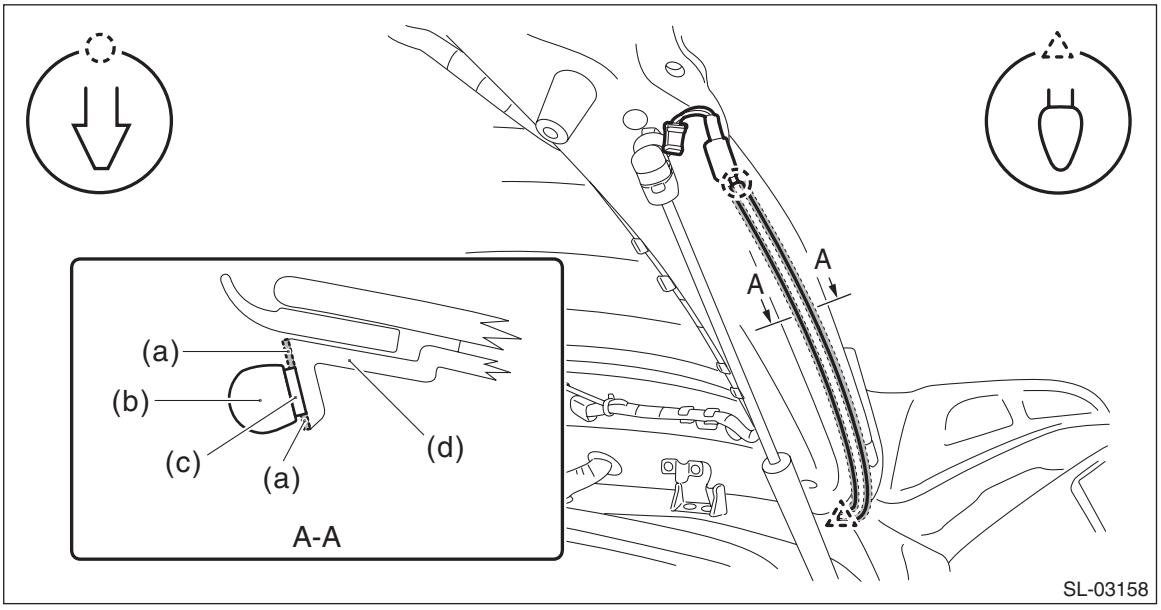

(a) Masking tape (area covered with tape)
(b) Touch sensor UPR
(c) Double-sided tape
(d) Touch sensor UPR bracket

2. TOUCH SENSOR LWR

1) Disconnect the ground terminal from battery sensor. <Ref. to RC-4, BATTERY, NOTE, Repair Contents.>
2) Remove the trim panel - rear gate. <Ref. to EI-121, REMOVAL, Rear Gate Trim.>
3) Remove the power rear gate touch sensor LWR.
(1) Remove the screws and clips.

(2) Disconnect the connector and remove the power rear gate touch sensor LWR.

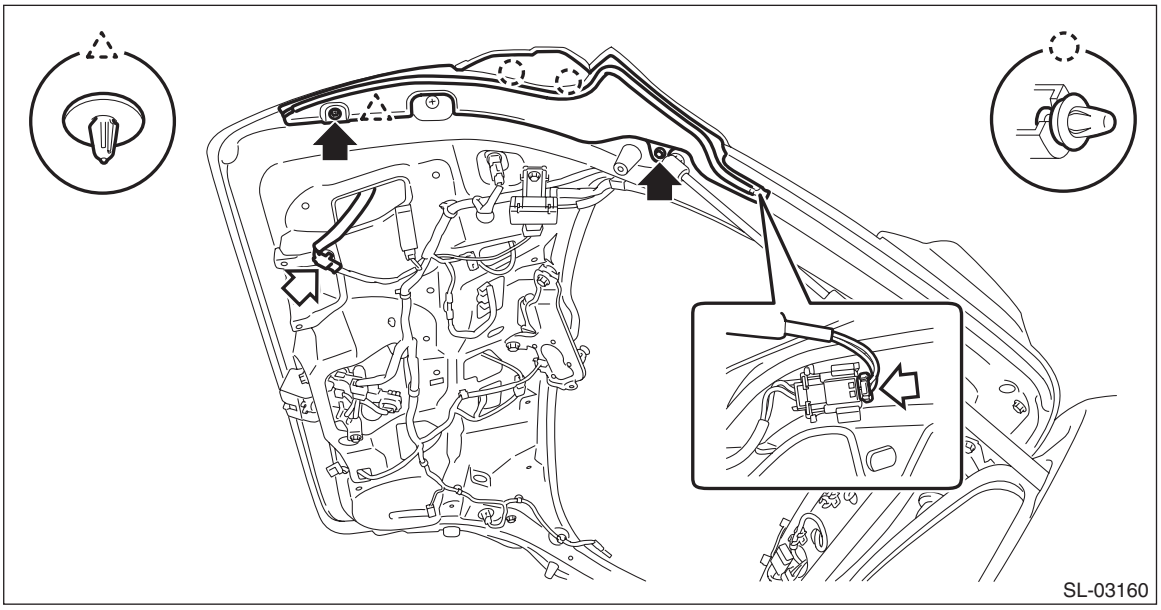

B: INSTALLATION

1. TOUCH SENSOR UPR

1) Install the power rear gate touch sensor UPR.
(1) Clean the bracket surface of the touch sensor UPR to remove dust and dirt fully.
(2) Using a sponge, apply primer to the bracket surface of the touch sensor UPR that is not covered with masking tape.

CAUTION:
- **Do not apply primer beyond masking tape. This may cause discolored touch sensor UPR bracket.**
- **Dry the primered surface for approx. 10 minutes without touching it.**

Primer:
3M 4298-UV or equivalent
(3) Install the touch sensor UPR.

CAUTION:
When affix the touch sensor UPR, do not use tools.
1. Affix a new touch sensor UPR along the masking tape.
2. Press-fit the touch sensor UPR securely and remove the masking tape.

2) Install the power rear gate touch sensor LWR. <Ref. to PRG-16, TOUCH SENSOR LWR, INSTALLATION, Power Rear Gate Touch Sensor.>
3) Connect the ground terminal to battery sensor. <Ref. to RC-4, BATTERY, NOTE, Repair Contents.>

2. TOUCH SENSOR LWR

1) Install the power rear gate touch sensor LWR.

CAUTION:
- **Make sure the electrical connector is connected securely.**
- **When installing the touch sensor LWR, be careful not to get the connector or harness crimped or deformed.**

Tightening torque:
1.5 N·m (0.2 kgf-m, 1.1 ft-lb)
2) Install the trim panel - rear gate.
3) Connect the ground terminal to battery sensor. <Ref. to RC-4, BATTERY, NOTE, Repair Contents.>

9. Power Rear Gate Buzzer

A: REMOVAL

1) Disconnect the ground terminal from battery sensor. <Ref. to RC-4, BATTERY, NOTE, Repair Contents.>
2) Remove the trim panel - rear gate. <Ref. to EI-121, REMOVAL, Rear Gate Trim.>
3) Remove the power rear gate buzzer.
   (1) Disconnect the connector.
   (2) Release the claws, and then remove the power rear gate buzzer.

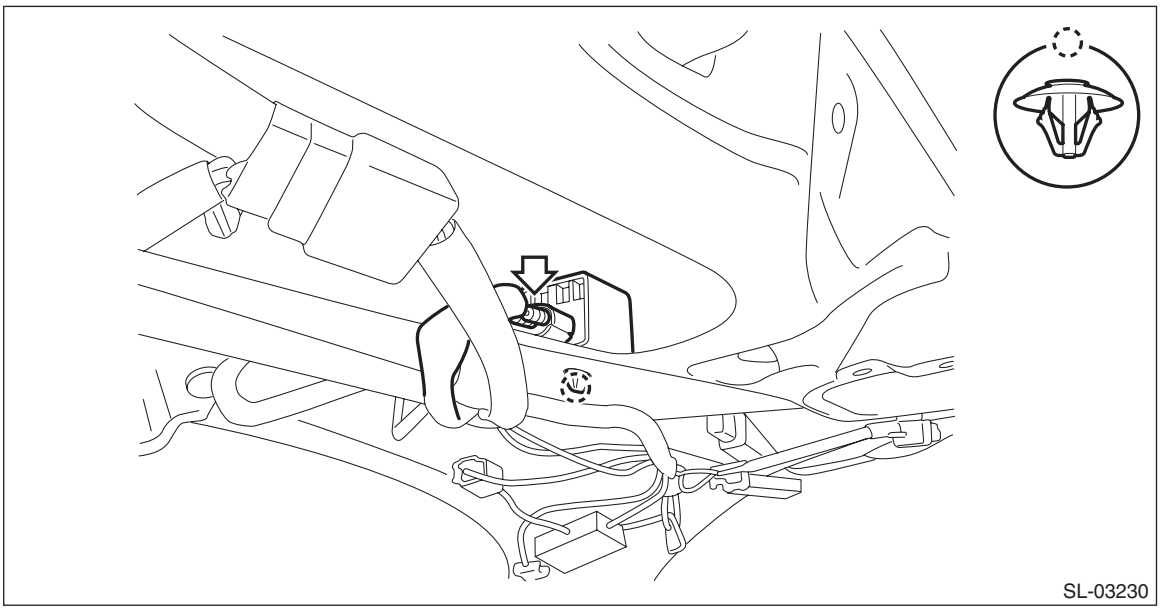

B: INSTALLATION

1) Install the power rear gate buzzer.
2) Install the trim panel - rear gate.
3) Connect the ground terminal to battery sensor. <Ref. to RC-4, BATTERY, NOTE, Repair Contents.>

C: INSPECTION

Refer to “Basic Diagnostic Procedure” of “POWER REAR GATE SYSTEM (DIAGNOSTICS)”. <Ref. to PRG(diag)-50, THE BUZZER DOES NOT SOUND, INSPECTION, Diagnostics with Phenomenon.>

10.Power Rear Gate Inner Switch

A: REMOVAL

1) Disconnect the ground terminal from battery sensor. <Ref. to RC-4, BATTERY, NOTE, Repair Contents.>
2) Remove the power rear gate inner switch.
   (1) Release the claws and pull out the power rear gate inner switch rearward.

NOTE:
Insert a flat tip screwdriver wrapped with protective tape into the slit on the left.

   (2) Disconnect the connector and remove the power rear gate inner switch.

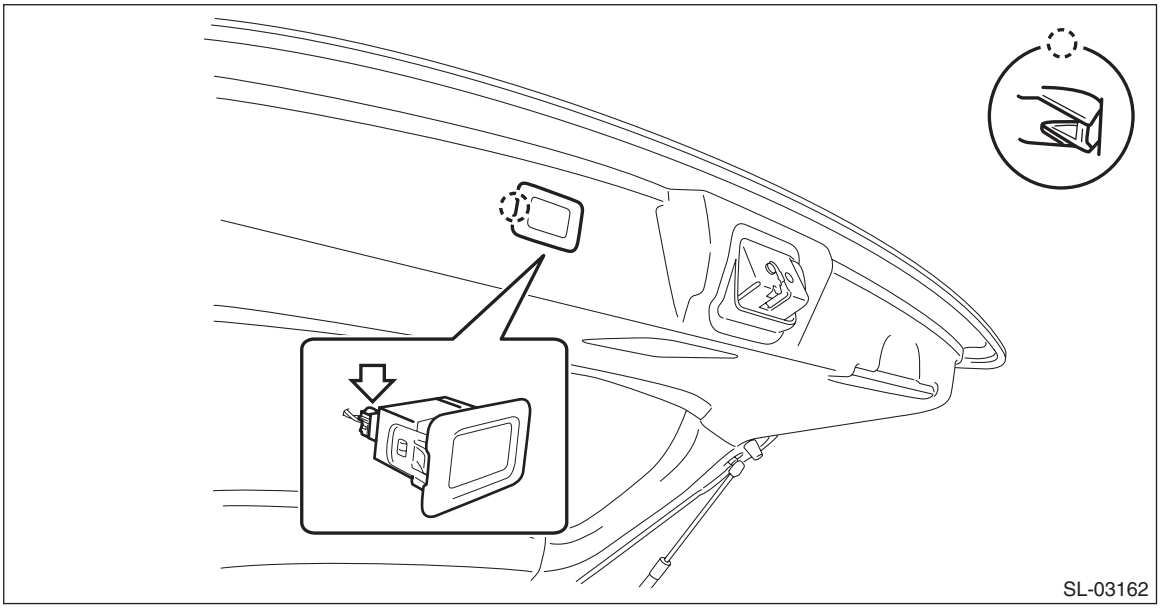

B: INSTALLATION

1) Install the power rear gate inner switch.
2) Connect the ground terminal to battery sensor. <Ref. to RC-4, BATTERY, NOTE, Repair Contents.>

C: INSPECTION

1) Measure the resistance between connector terminals.

Preparation tool:
Circuit tester

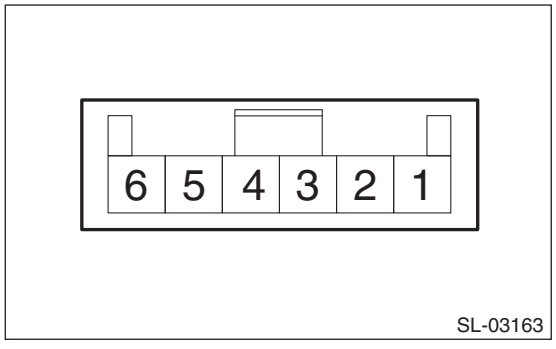

Terminal No.	Inspection conditions	Standard
1 — 2	Switch OFF	1 MΩ or more
	Switch ON	Less than 1 Ω

2) Replace the power rear gate inner switch, if the inspection result is not within the standard value.

11.Power Rear Gate Driver's Switch

A: REMOVAL

1) Disconnect the ground terminal from battery sensor. <Ref. to RC-4, BATTERY, NOTE, Repair Contents.>
2) Remove the cover assembly - instrument panel LWR driver. <Ref. to EI-75, REMOVAL, Instrument Panel Lower Cover.>
3) Release the claws, and then remove the power rear gate driver's switch (a).

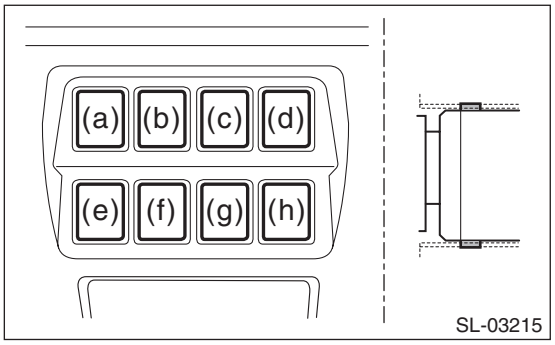

B: INSTALLATION

1) Install the power rear gate driver's switch.
2) Install the cover assembly - instrument panel LWR driver.
3) Connect the ground terminal to battery sensor. <Ref. to RC-4, BATTERY, NOTE, Repair Contents.>

C: INSPECTION

1) Measure the resistance between connector terminals.

Preparation tool:
Circuit tester

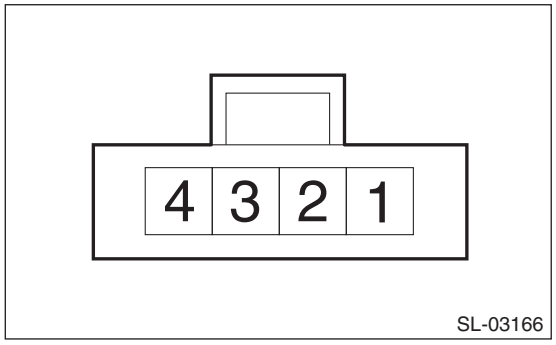

Terminal No.	Inspection conditions	Standard
1 — 4	Switch OFF	1 MΩ or more
	Switch ON	Less than 1 Ω

2) Apply battery voltage between the connector terminals to check lighting condition of illumination inside the switch.

Terminal No.	Inspection conditions	Specification
2 (+) — 3 (–)	Apply battery voltage.	Light ON

3) Replace the power rear gate driver's switch if the inspection result is not within the standard value.

12.Memory Height Switch

A: REMOVAL

1) Disconnect the ground terminal from battery sensor. <Ref. to RC-4, BATTERY, NOTE, Repair Contents.>
2) Remove the cover assembly - instrument panel LWR driver. <Ref. to EI-75, REMOVAL, Instrument Panel Lower Cover.>
3) Release the claws and remove the memory height switch.

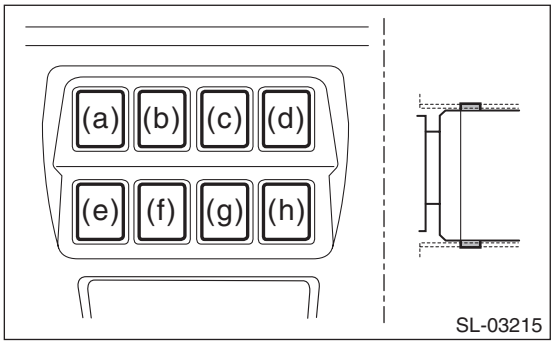

(c) Model with SRF
(d) Model without SRF

B: INSTALLATION

1) Install the memory height switch.
2) Install the cover assembly - instrument panel LWR driver.
3) Connect the ground terminal to battery sensor. <Ref. to RC-4, BATTERY, NOTE, Repair Contents.>

C: INSPECTION

1) Measure the resistance between switch terminals.

Preparation tool:
Circuit tester

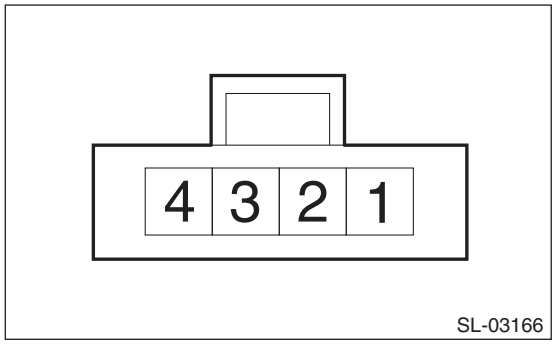

Terminal No.	Inspection conditions	Standard
1 — 4	Switch OFF	1 MΩ or more
	Switch ON	Less than 1 Ω

2) Apply battery voltage between the connector terminals to check lighting condition of illumination inside the switch.

Terminal No.	Inspection conditions	Specification
2 (+) — 3 (–)	Apply battery voltage.	Light ON

3) Replace the memory height switch, if the inspection result is not within the standard value.

13.Rear Gate Opener Button

A: NOTE

Refer to the “SECURITY AND LOCKS” section for operation procedures of the rear gate opener button (PRG). <Ref. to SL-48, Rear Gate Opener Button.>

14.Body Integrated Unit

A: NOTE

Refer to the “SECURITY AND LOCKS” section for operation procedures of the body integrated unit. <Ref. to SL-83, Body Integrated Unit.>

15.Diagnostics with Phenomenon

A: INSPECTION

Refer to “Diagnostics with Phenomenon” in the “POWER REAR GATE SYSTEM (DIAGNOSTICS)” section. <Ref. to PRG(diag)-49, Diagnostics with Phenomenon.>

POWER REAR GATE SYSTEM (DIAGNOSTICS)

PRG(diag)

		Page
1.	Basic Diagnostic Procedure	2
2.	Check List for Interview	3
3.	General Description	4
4.	Electrical Component Location	5
5.	Control Module I/O Signal	7
6.	Subaru Select Monitor	9
7.	Read Diagnostic Trouble Code (DTC)	11
8.	Clear Memory Mode	12
9.	Read Current Data	13
10.	List of Diagnostic Trouble Code (DTC)	15
11.	Diagnostic Procedure with Diagnostic Trouble Code (DTC)	16
12.	General Diagnostic Table	48
13.	Diagnostics with Phenomenon	49

1. Basic Diagnostic Procedure

A: PROCEDURE

	Step	Check	Yes	No
1	**PERFORM CUSTOMER INTERVIEW.** Using the Check List for Interview, ask the customer the condition of how the trouble occurred. <Ref. to PRG(diag)-3, CHECK, Check List for Interview.>	Did you interview the customer?	Go to step **2**.	Interview the customer. <Ref. to PRG(diag)-3, CHECK, Check List for Interview.>
2	**INITIALIZATION OF PRG SYS.** 1) Open the PRG manually. 2) Manually close PRG to the partially latched position, and operate the auto closer to fully close PRG. 3) Press any of the PRG operation switches to perform the automatic operation of PRG. <Ref. to PRG-5, INITIALIZATION, PROCEDURE, Power Rear Gate System.>	Is the initialization operation possible?	Go to step **4**.	Go to step **3**.
3	**CHECK LAN SYSTEM.** Inspect LAN system. <Ref. to LAN(diag)-2, PROCEDURE, Basic Diagnostic Procedure.>	Is there any fault?	Perform the inspection according to the diagnosis for LAN system.	Go to step **4**.
4	**CHECK POWER REAR GATE SYSTEM.** Using the Subaru Select Monitor, read DTC of power rear gate system. <Ref. to PRG(diag)-11, Read Diagnostic Trouble Code (DTC).> NOTE: If the communication function of the Subaru Select Monitor cannot be executed properly, check the communication circuit. <Ref. to PRG(diag)-9, COMMUNICATION FOR INITIALIZING IMPOSSIBLE, Subaru Select Monitor.>	Is DTC displayed?	Record DTC and perform the diagnosis according to the DTC. <Ref. to PRG(diag)-15, LIST, List of Diagnostic Trouble Code (DTC).>	Go to step **5**.
5	**CHECK DIAGNOSTICS WITH PHENOMENON.** Check “Diagnostics with Phenomenon”. <Ref. to PRG(diag)-49, Diagnostics with Phenomenon.>	Does the symptom apply?	Perform diagnosis according to the procedures in the diagnostics with phenomenon.	Currently, system is normal. A temporary poor contact may be a possible cause. Therefore, check the harness connector.

2. Check List for Interview

A: CHECK

- Inspect the following items regarding the vehicle's state.
- Print out this page for interviewing customers.

<table>
<tr><td colspan="4">Power Rear Gate System Check List for Interview
Date the Vehicle is Received Year Month Day</td></tr>
<tr><td colspan="2" rowspan="2">Customer's name</td><td>Registration No.</td><td>Initial year of registration
Year Month Date</td></tr>
<tr><td>Vehicle model</td><td>Frame number</td></tr>
<tr><td>Interviewer</td><td>Inspector</td><td>Engine type</td><td>Odometer reading</td></tr>
<tr><td colspan="4">Customer specified content
•
•
•</td></tr>
<tr><td>Date and time when the trouble occurred</td><td></td><td>Frequency of trouble occurrence</td><td>Always occurs
Sometimes occurs
(times per day, times per month)</td></tr>
<tr><td rowspan="2">Condition of trouble occurrence
(How the trouble occurs)</td><td rowspan="2"></td><td>Weather</td><td>Fine • Cloudy • Rainy •
Snowy • Others ( )</td></tr>
<tr><td>Temperature</td><td>°C (°F) — °C (°F)</td></tr>
<tr><td>Road conditions</td><td></td><td>Occurrence location</td><td></td></tr>
<tr><td>Accessory installation condition</td><td colspan="3"></td></tr>
<tr><td rowspan="2">Confirmation of trouble condition</td><td colspan="3">Power rear gate control module system</td></tr>
<tr><td colspan="3">Drive unit system</td></tr>
<tr><td>❑ Diagnostic code</td><td colspan="3"></td></tr>
</table>

3. General Description

A: CAUTION

1. AIRBAG SYSTEM

CAUTION:
• Do not use the electrical test equipment on the airbag system wiring harnesses and connector circuits.
• Be careful not to damage the airbag system wiring harness.

B: INSPECTION

1. BASIC INSPECTION

Before performing diagnosis, check the following items which might affect power rear gate related problems.
1) Check the battery. <Ref. to SC(H4DO)-65, INSPECTION, Battery.> <Ref. to SC(H6DO)-59, INSPECTION, Battery.>
2) Check the relay and fuse condition. <Ref. to PRG-4, Relay and Fuse.>
3) Check the connecting condition of harness and harness connector.

C: PREPARATION TOOL

1. SPECIAL TOOL

ILLUSTRATION	TOOL NUMBER	DESCRIPTION	REMARKS
 STSSM4	— (Newly adopted tool)	SUBARU SELECT MONITOR 4	Used for setting of each function and trouble-shooting for electrical system. NOTE: For detailed operation procedures of Subaru Select Monitor 4, refer to “Application help”.

2. GENERAL TOOL

TOOL NAME	REMARKS
Circuit tester	Used for measuring resistance, voltage and current.
DST-i	Used together with Subaru Select Monitor 4.

4. Electrical Component Location

A: LOCATION

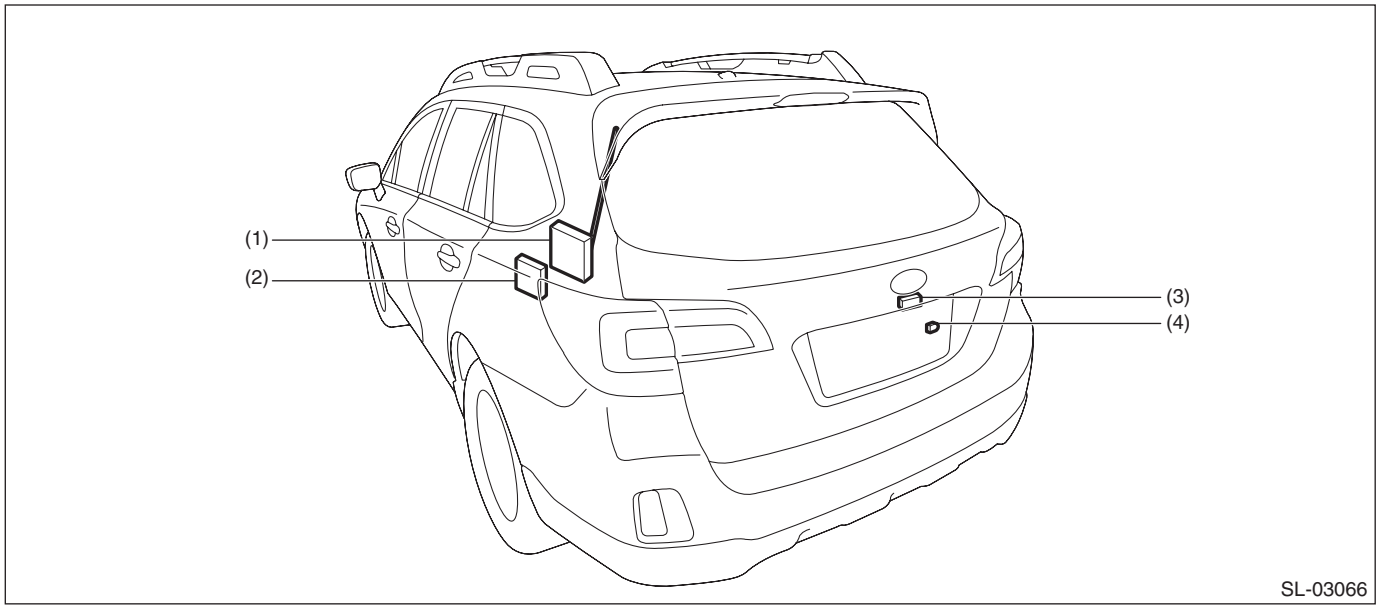

(1) Power rear gate drive unit (PRG DU)
(2) Power rear gate control module (PRG CM)
(3) Rear gate opener button
(4) Power rear gate buzzer

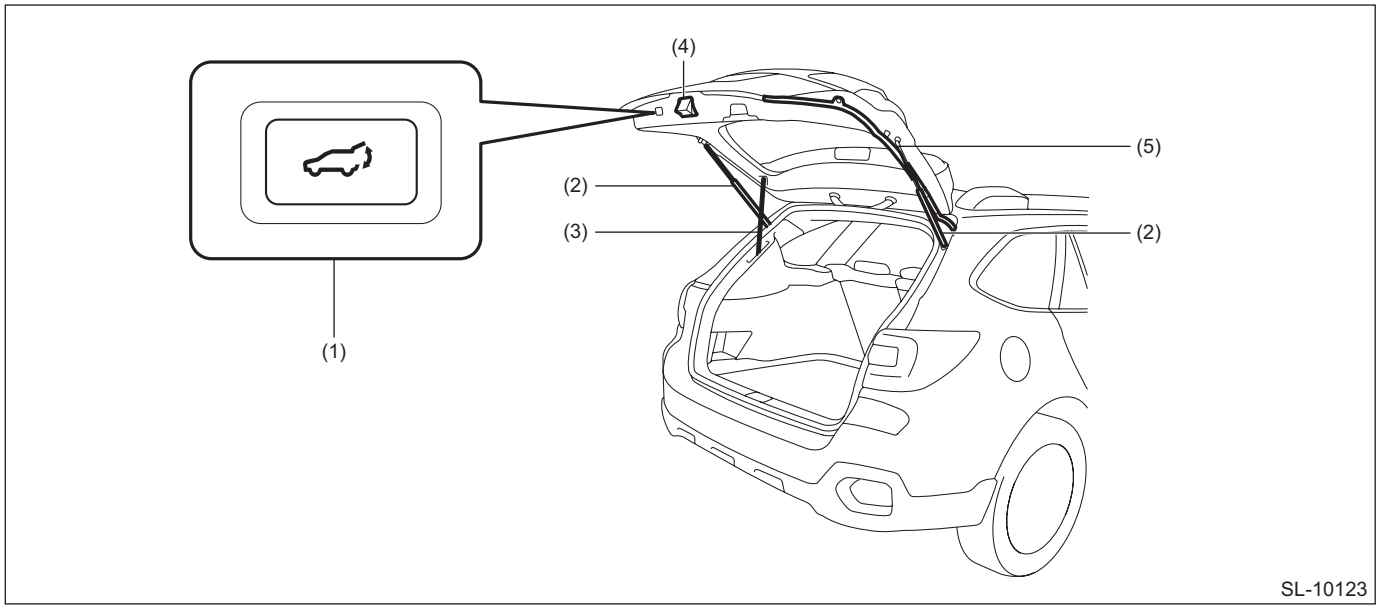

(1) Power rear gate inner switch
(2) Gas damper
(3) Rod - power rear gate
(4) Power rear gate auto closer
(5) Power rear gate touch sensor

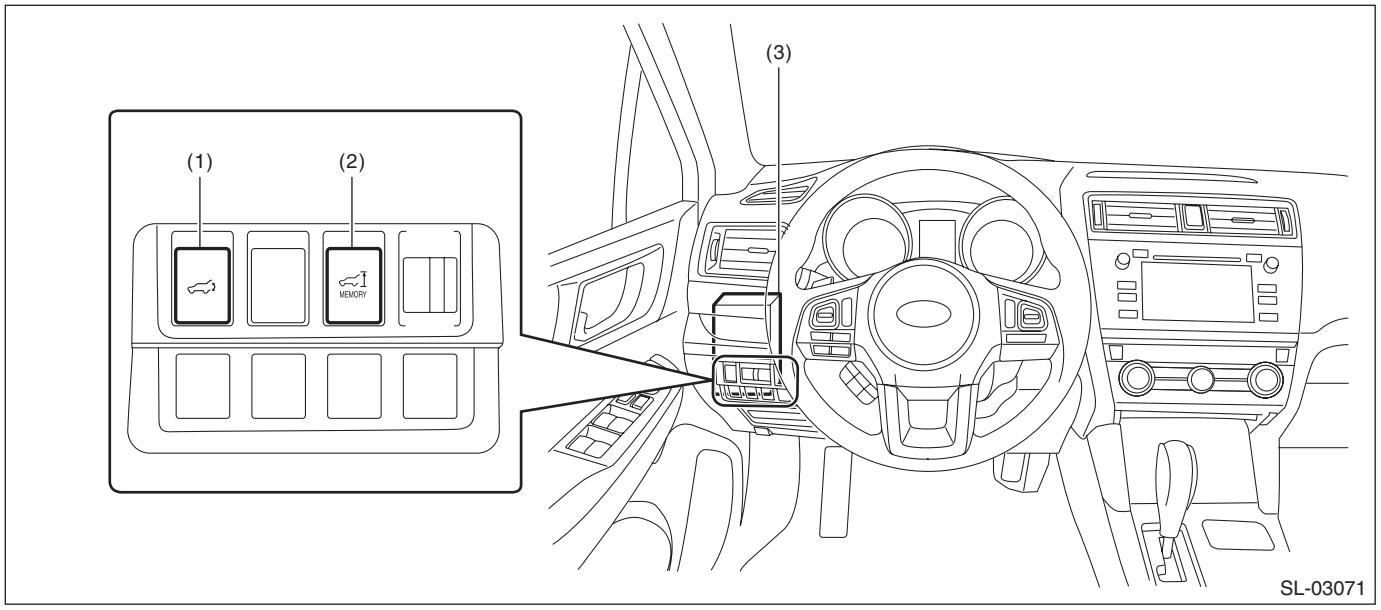

(1) Power rear gate driver's switch (2) Memory height switch (3) Body integrated unit

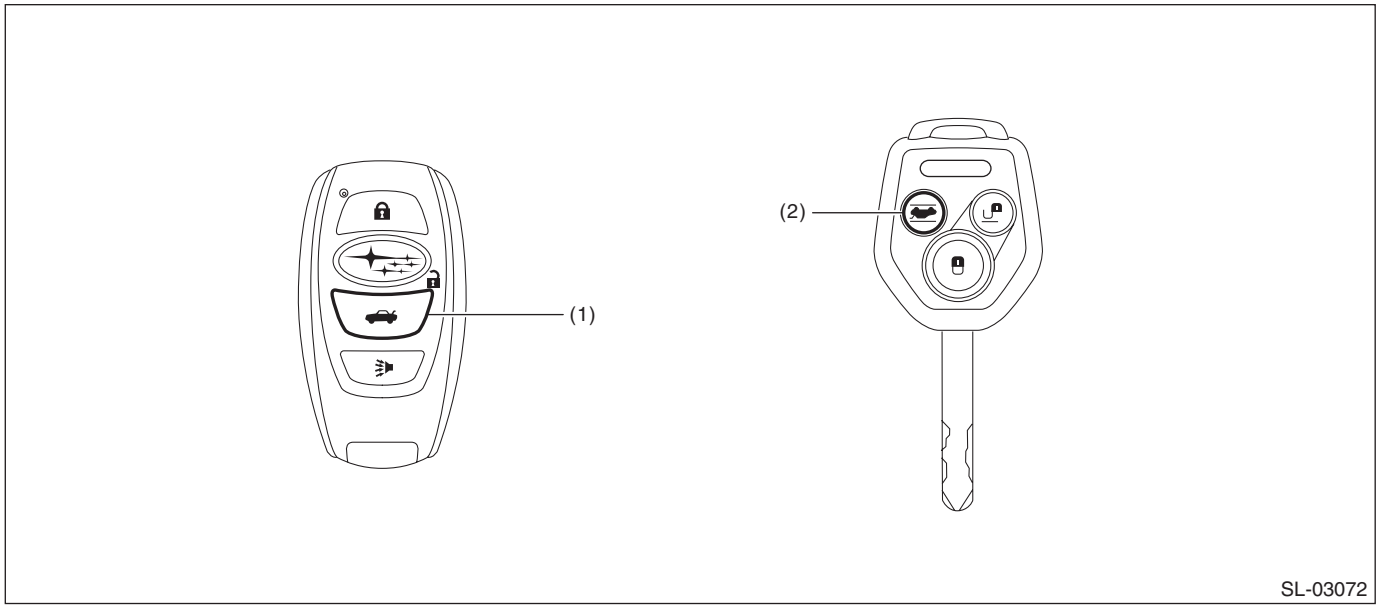

(1) Rear gate/trunk SW (access key) (with keyless access with push button start system)

(2) Rear gate/trunk SW (keyless transmitter) (without keyless access with push button start system)

5. Control Module I/O Signal

A: ELECTRICAL SPECIFICATION

1. POWER REAR GATE CONTROL MODULE

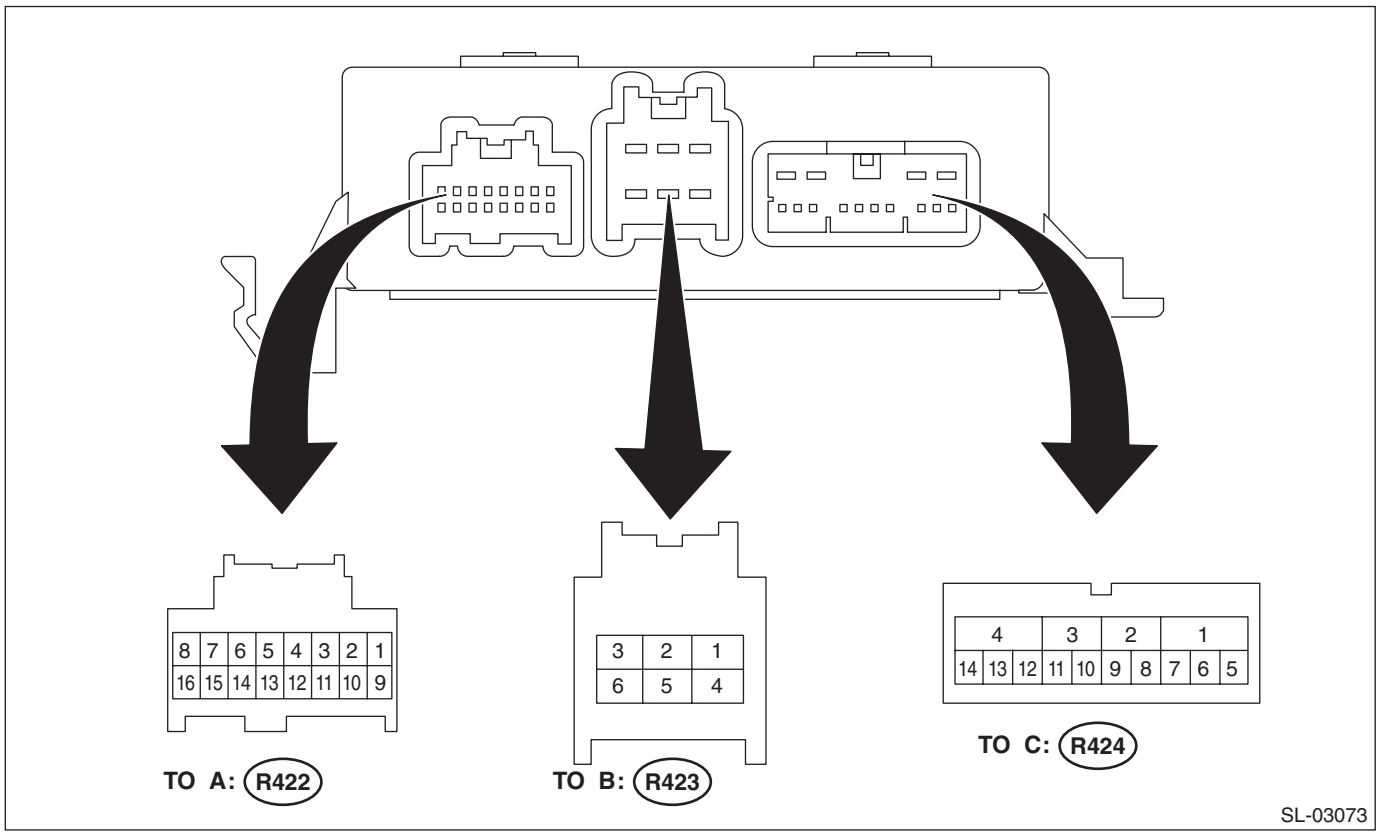

Terminal No.	Description	Measuring condition	Standard
(R422) No. 1 ←→ (R422) No. 9	Touch sensor	When sensor is ON	2.7 V or less
(R422) No. 2 ←→ Chassis ground	—	—	—
(R422) No. 3 ←→ (R422) No. 9	Latch switch	When rear gate is fully closed	9 — 16 V
(R422) No. 4 ←→ (R422) No. 9	Courtesy switch	When rear gate is fully closed	9 — 16 V
(R422) No. 5 ←→ (R422) No. 9	Sector switch	When rear gate is fully closed	Less than 1 V
(R422) No. 6 ←→ (R422) No. 9	PRG inner SW	When power rear gate inner switch is ON	Less than 1 V
(R422) No. 7	—	—	—
(R422) No. 8 ←→ Chassis ground	Memory height switch	When memory height switch is ON	Less than 1 V
(R422) No. 9	Switch GND	—	—
(R422) No. 10	LIN communication line	—	—
(R422) No. 11	—	—	—
(R422) No. 12 ←→ Chassis ground	Ignition SW	When ignition switch is ON	—
(R422) No. 13 ←→ Chassis ground	Power rear gate driver's switch	When driver's switch is ON	Less than 1 V
(R422) No. 14 ←→ Chassis ground	—	—	—
(R422) No. 15 ←→ Chassis ground	Hazard output	When hazard is not operating	Less than 1 V
(R422) No. 16 ←→ Chassis ground	—	—	—

Terminal No.	Description	Measuring condition	Standard
(R423) No. 1 ←→ Chassis ground	Battery power supply (+POWER B)	Always	9 — 16 V
(R423) No. 2 ←→ Chassis ground	Closer (CLOSE)	When the power rear gate auto closer is performing the pull-in operation	9 — 16 V
(R423) No. 3 ←→ Chassis ground	Closer (OPEN)	When power rear gate auto closer is performing the release operation	9 — 16 V
(R423) No. 4 ←→ Chassis ground	GND	Always	Less than 1 Ω
(R423) No. 5 ←→ Chassis ground	—	—	—
(R423) No. 6 ←→ Chassis ground	Battery power supply (+B)	Always	9 — 16 V
(R424) No. 1 ←→ Chassis ground	—	—	—
(R424) No. 2 ←→ Chassis ground	—	—	—
(R424) No. 3 ←→ Chassis ground	Motor (CLOSE)	When auto-closing is in operation	Pulse
(R424) No. 4 ←→ Chassis ground	Motor (OPEN)	When auto-open is in operation	Pulse
(R424) No. 5	Buzzer (–)	—	—
(R424) No. 6 ←→ (R424) No. 5	Buzzer (+)	When buzzer sounds	Pulse
(R424) No. 7 ←→ Chassis ground	—	—	—
(R424) No. 8 ←→ Chassis ground	HALL RETURN	—	—
(R424) No. 9 ←→ (R424) No. 8	HALL2	—	—
(R424) No. 10 ←→ (R424) No. 8	HALL1	—	—
(R424) No. 11 ←→ Chassis ground	HALL FEED	—	—
(R424) No. 12 ←→ Chassis ground	—	—	—
(R424) No. 13 ←→ Chassis ground	—	—	—
(R424) No. 14 ←→ Chassis ground	—	—	—

B: WIRING DIAGRAM

Refer to “Power Rear Gate System” in the wiring diagram. <Ref. to WI-296, WIRING DIAGRAM, Power Rear Gate System.>

6. Subaru Select Monitor

A: OPERATION

- For detailed operation procedures, refer to “Application help”.
- When communication with Subaru Select Monitor is not possible, perform “COMMUNICATION FOR INITIALIZING IMPOSSIBLE”. <Ref. to PRG(diag)-9, COMMUNICATION FOR INITIALIZING IMPOSSIBLE, Subaru Select Monitor.>

B: COMMUNICATION FOR INITIALIZING IMPOSSIBLE

NOTE:
If the communication with the body integrated unit is not possible either, refer to LAN SYSTEM (DIAGNOSTICS). <Ref. to LAN(diag)-11, COMMUNICATION FOR INITIALIZING IMPOSSIBLE, Subaru Select Monitor.>

DETECTING CONDITION:

- Defective harness
- Power supply circuit malfunction
- Body integrated unit malfunctioning
- Defective LIN communication circuit
- Defective Subaru Select Monitor

TROUBLE SYMPTOM:

Not communicable with Subaru Select Monitor.

WIRING DIAGRAM:

Power rear gate system <Ref. to WI-296, WIRING DIAGRAM, Power Rear Gate System.>

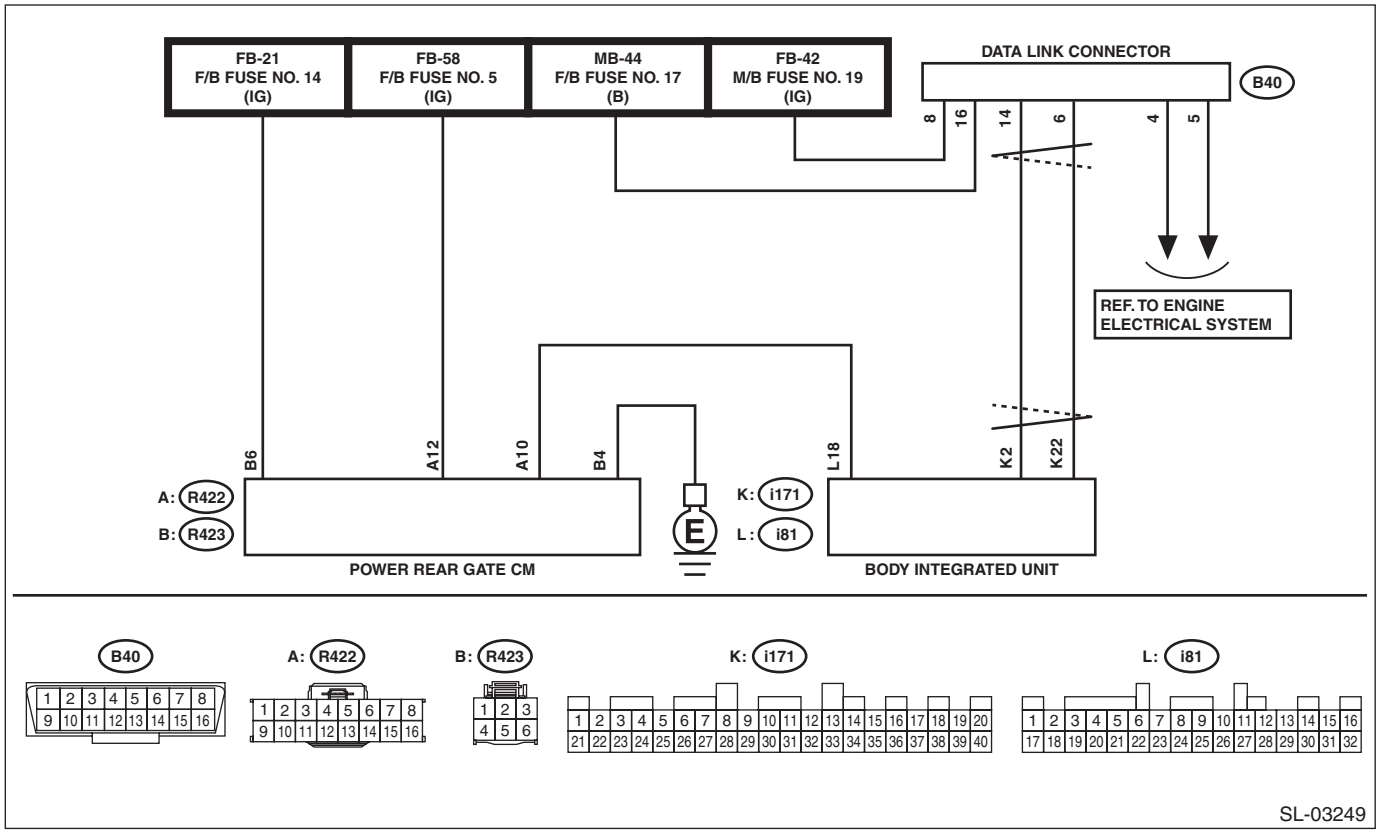

	Step	Check	Yes	No
1	**CHECK FUSE.** Check the fuse.	Is there any fault?	Replace the fuse. If the replaced fuse blows out easily, repair the ground short circuit in the harness between the battery and power rear gate CM.	Go to step **2**.
2	**CHECK HARNESS.** 1) Turn the ignition switch to OFF. 2) Disconnect the power rear gate CM connector in the order of (R423) → (R422). 3) Turn the ignition switch to ON. 4) Using a tester, measure the voltage between the power rear gate CM connector and chassis ground. ***Connector & terminal*** ***(R422) No. 12 (+) — Chassis ground (–):*** ***(R423) No. 6 (+) — Chassis ground (–):***	Is the voltage 10 — 13 V?	Go to step **3**.	Repair the open circuit of harness between the power rear gate CM connector and fuse.
3	**CHECK HARNESS.** Using a tester, measure the resistance between the power rear gate CM connector and chassis ground. ***Connector & terminal*** ***(R423) No. 4 — Chassis ground:***	Is the resistance less than 1 Ω?	Go to step **4**.	Repair the open circuit of harness between the power rear gate CM connector and chassis ground.
4	**CHECK BODY INTEGRATED UNIT.** Check the body control system. <Ref. to BC(diag)-2, Basic Diagnostic Procedure.>	Is there any fault?	Perform the inspection according to the diagnosis for body control system.	Go to step **5**.
5	**CHECK POWER REAR GATE CM.** 1) Turn the ignition switch to OFF. 2) Connect the power rear gate CM connector in the order of (R422) → (R423). 3) Communicate with the power rear gate CM using the Subaru Select Monitor.	Is communication possible?	The circuit has returned to a normal condition at this time. Reproduce the failure, and then perform the diagnosis again. NOTE: In this case, temporary poor contact of connector, temporary open or short circuit of harness may be the cause.	Replace the power rear gate CM. <Ref. to PRG-6, Power Rear Gate Control Module.>

7. Read Diagnostic Trouble Code (DTC)

A: OPERATION

1) On «Start» display, select «Diagnosis».
2) On «Vehicle selection» display, input the target vehicle information and select «Confirmed».
3) On «Main Menu» display, select «Each System».
4) On «Select System» display, select «Power Rear Gate» and then select «Enter».
5) On «Select Function» display, select «DTC».

NOTE:
- For detailed operation procedures, refer to “Application help”.
- For details concerning DTC, refer to “List of Diagnostic Trouble Code (DTC)”. <Ref. to PRG(diag)-15, List of Diagnostic Trouble Code (DTC).>

8. Clear Memory Mode

A: OPERATION

1) On «Start» display, select «Diagnosis».
2) On «Vehicle selection» display, input the target vehicle information and select «Confirmed».
3) On «Main Menu» display, select «Each System».
4) On «Select System» display, select «Power Rear Gate» and then select «Enter».
5) On «Select Function» display, select «DTC».
6) On «DTC» display, select «Clear Memory».

NOTE:
- For detailed operation procedures, refer to “Application help”.
- For details concerning DTC, refer to “List of Diagnostic Trouble Code (DTC)”. <Ref. to PRG(diag)-15, List of Diagnostic Trouble Code (DTC).>

9. Read Current Data

A: OPERATION

1) On «Start» display, select «Diagnosis».
2) On «Vehicle selection» display, input the target vehicle information and select «Confirmed».
3) On «Main Menu» display, select «Each System».
4) On «Select System» display, select «Power Rear Gate» and then select «Enter».
5) On «Select Function» display, select «Data Monitor».

NOTE:
- For detailed operation procedures, refer to “Application help”.
- Communication with PRG CM and Subaru Select Monitor takes time. It takes time to show all the items, and the status cannot be reflected on the display. Therefore, select items only that need to be checked or up to two to three items, when checking the status. (When displaying selected items only, place a check mark for the item to be displayed and press the “Select” button.)

B: LIST

Item Name	Description	Standard	Note
+POWER B	Power supply voltage value	9 — 16 V	—
+ B	PRG CM power supply voltage value	9 — 16 V	—
IGN SW	Ignition switch status	ON: IGN ON OFF: IGN OFF	—
Memory stop SW	Memorized height switch status	ON: switch ON OFF switch OFF	—
D SW	Driver’s seat switch status	ON: switch ON OFF switch OFF	—
R/G inner SW	PRG inner switch status	ON: switch ON OFF switch OFF	—
COURTESY SW	Courtesy switch status	ON: switch ON OFF switch OFF	—
LATCH SW	Latch switch status	ON: switch ON OFF switch OFF	—
SECTOR SW	Sector switch status	ON: switch ON OFF switch OFF	—
PRG MOTOR (OPEN)	Output status of rear gate motor open signal	OPEN: when operating rear gate open OFF: OFF	—
PRG MOTOR (CLOSE)	Output status of rear gate motor close signal	CLOSE: when operating rear gate close OFF: OFF	—
CLOSER (OPEN)	Output status of auto power rear gate closer motor open signal	OPEN: when open output OFF: OFF	—
CLOSER (CLOSE)	Output status of auto power rear gate closer motor close signal	CLOSE: when close output OFF: OFF	—
Buzzer output	Buzzer output status	ON: when buzzer sounding OFF: when buzzer stopping	—
HAZARD	Hazard output status	ON: when hazard ON OFF: when hazard OFF	—
Connection Continuing Flag	Communication continuation request status	Flag: when communication continuation is requested not Flag: when no communication continuation is requested	—
Idle Stop Cancel Flag	Auto Start Stop cancel request status	Flag: when Auto Start Stop cancellation not Flag: when Auto Start Stop	—
IGN	Ignition switch status (body integrated unit)	ON: IGN ON OFF: IGN OFF	—

Item Name	Description	Standard	Note
R/G Open SW	PRG opener switch status	OFF: when OFF Short Push: when operating Short Push Long Push: when operating Long Push	—
Front Wheel Speed	Vehicle speed condition	Show vehicle speed	—
Normal Keyless R/G SW	Status of normal keyless R/G switch	OFF: when OFF Short Push: when operating Short Push Long Push: when operating Long Push	—
Smart Keyless R/G SW	Status of keyless access key R/G switch	OFF: when OFF Short Push: when operating Short Push Long Push: when operating Long Push	—
Idle Stop Control	Status of Auto Start Stop control	Idle Stop Control: when Idle Stop Control Idle Stop Uncontrol: other than Idle Stop Control	—
P range SW	Status of shift lever P	ON: when in P range OFF: when other than in P range	—
MT/AT	Vehicle information (body integrated unit)	MT: MT model AT: AT model	—
R/G Open Authorized State	Status of PRG permission	Authorized State: PRG Open Authorized State Unauthorized State: PRG Open Unauthorized State	—
Answer-Back Buzzer Information	Body integrated unit customizing information	ON: when buzzer sounding ON OFF: when buzzer sounding OFF	—
EPB Status	Electronic parking brake status	Error: when EPB error Release: when EPB is released Operate: when EPB is operated In operation: when EPB is in operation Releasing: when EPB is releasing Dynamic parking: When dynamic parking is operating	—
TOUCH SENSOR	Touch sensor status	ON: sensor ON OFF: sensor OFF	—
Rear Gate Target Speed	Rear gate target speed	Displays rear gate open/close target speed	—
Rear Gate Speed	Rear gate actual speed	Displays rear gate open/close speed	—
PRG MOTOR Duty	Rear gate motor DUTY output value	Displays rear gate motor DUTY output	—
Pulse-count 2	Rear gate motor pulse count output	Displays rear gate position	—
Rear Gate Pos Init Flag	Rear gate position initialization status	ON: when pulse-count is recognized (when initialization is complete) OFF: when no pulse-count is recognized	—
PRG State 2	PRG status	Fully open: when pulse-count is more than fully open stop position Half Stop: when pulse-count is less than fully open stop position In operation: when PRG motor or closer motor is in operation Full Close: fully latched status	—

10.List of Diagnostic Trouble Code (DTC)

A: LIST

DTC	Item	Reference
B2500	BATTERY POWER SUPPLY	<Ref. to PRG(diag)-16, DTC B2500 BATTERY POWER SUPPLY, Diagnostic Procedure with Diagnostic Trouble Code (DTC).>
B2507	PRG MOTOR CIRCUIT OPEN	<Ref. to PRG(diag)-18, DTC B2507 PRG MOTOR CIRCUIT OPEN, Diagnostic Procedure with Diagnostic Trouble Code (DTC).>
B2508	PRG MOTOR CIRCUIT LOW	<Ref. to PRG(diag)-20, DTC B2508 PRG MOTOR CIRCUIT LOW, Diagnostic Procedure with Diagnostic Trouble Code (DTC).>
B250B	ROTATION SENSOR A STUCK	<Ref. to PRG(diag)-22, DTC B250B ROTATION SENSOR A STUCK, Diagnostic Procedure with Diagnostic Trouble Code (DTC).>
B250D	ROTATION SENSOR B STUCK	<Ref. to PRG(diag)-24, DTC B250D ROTATION SENSOR B STUCK, Diagnostic Procedure with Diagnostic Trouble Code (DTC).>
B250F	ROTATION SENSOR PULSE/ COUNT	<Ref. to PRG(diag)-25, DTC B250F ROTATION SENSOR PULSE/COUNT, Diagnostic Procedure with Diagnostic Trouble Code (DTC).>
B2511	ROTATION SENSOR PULSE/ REVERSE DIRECTION	<Ref. to PRG(diag)-28, DTC B2511 ROTATION SENSOR PULSE/REVERSE DIRECTION, Diagnostic Procedure with Diagnostic Trouble Code (DTC).>
B2512	DAMPER BREAKAGE	<Ref. to PRG(diag)-31, DTC B2512 DAMPER BREAKAGE, Diagnostic Procedure with Diagnostic Trouble Code (DTC).>
B2513	LATCH CONDITION	<Ref. to PRG(diag)-32, DTC B2513 LATCH CONDITION, Diagnostic Procedure with Diagnostic Trouble Code (DTC).>
B2514	IGNITION	<Ref. to PRG(diag)-34, DTC B2514 IGNITION, Diagnostic Procedure with Diagnostic Trouble Code (DTC).>
B2515	LATCH SW	<Ref. to PRG(diag)-36, DTC B2515 LATCH SW, Diagnostic Procedure with Diagnostic Trouble Code (DTC).>
B2516	SECTOR SW	<Ref. to PRG(diag)-37, DTC B2516 SECTOR SW, Diagnostic Procedure with Diagnostic Trouble Code (DTC).>
B2517	COURTESY SW	<Ref. to PRG(diag)-38, DTC B2517 COURTESY SW, Diagnostic Procedure with Diagnostic Trouble Code (DTC).>
B2519	POWER +B OPEN	<Ref. to PRG(diag)-39, DTC B2519 POWER +B OPEN, Diagnostic Procedure with Diagnostic Trouble Code (DTC).>
B251A	LIN CONNECTION NO-RECEIVE DATA	<Ref. to PRG(diag)-41, DTC B251A LIN CONNECTION NO-RECEIVE DATA, Diagnostic Procedure with Diagnostic Trouble Code (DTC).>
B251B	LIN CONNECTION BUS PHYSICAL	<Ref. to PRG(diag)-41, DTC B251B LIN CONNECTION BUS PHYSICAL, Diagnostic Procedure with Diagnostic Trouble Code (DTC).>
B2522	EEPROM	<Ref. to PRG(diag)-42, DTC B2522 EEPROM, Diagnostic Procedure with Diagnostic Trouble Code (DTC).>
B2524	TOUCH SENSOR CIRCUIT/OPEN	<Ref. to PRG(diag)-43, DTC B2524 TOUCH SENSOR CIRCUIT/OPEN, Diagnostic Procedure with Diagnostic Trouble Code (DTC).>
B2525	ROTATION SENSOR POWER SUPPLY	<Ref. to PRG(diag)-45, DTC B2525 ROTATION SENSOR POWER SUPPLY, Diagnostic Procedure with Diagnostic Trouble Code (DTC).>
B2526	AUTO CLOSER MOTOR CIRCUIT OPEN	<Ref. to PRG(diag)-46, DTC B2526 AUTO CLOSER MOTOR CIRCUIT OPEN, Diagnostic Procedure with Diagnostic Trouble Code (DTC).>
B2527	AUTO CLOSER MOTOR CIRCUIT LAW	<Ref. to PRG(diag)-47, DTC B2527 AUTO CLOSER MOTOR CIRCUIT LAW, Diagnostic Procedure with Diagnostic Trouble Code (DTC).>

11.Diagnostic Procedure with Diagnostic Trouble Code (DTC)

A: DTC B2500 BATTERY POWER SUPPLY

DTC DETECTING CONDITION:

Detected when the power supply voltage is less than 9 V or 16 V or more at starting PRG operation (when SW is operated).

TROUBLE SYMPTOM:

The power rear gate does not operate.

WIRING DIAGRAM:

Power rear gate system <Ref. to WI-296, WIRING DIAGRAM, Power Rear Gate System.>

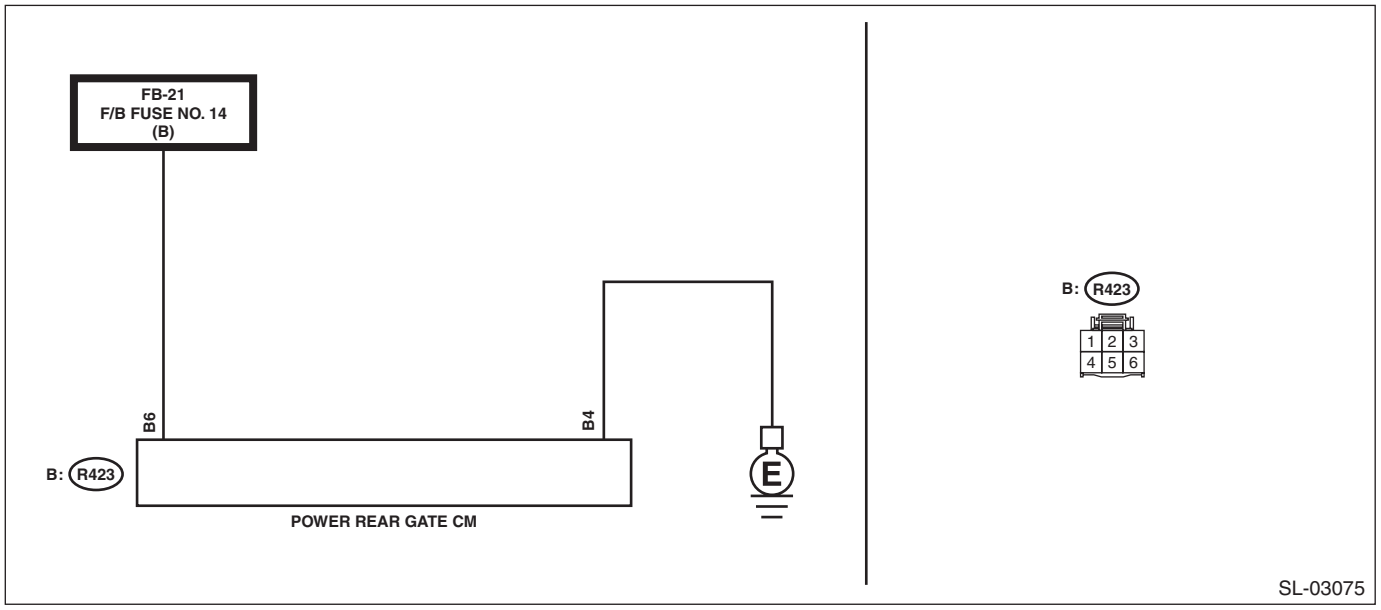

Step		Check	Yes	No
1	**CHECK AUTO OPERATION.** 1) Turn the ignition switch to OFF. 2) Using operation switch, perform power rear gate auto open/close operation from full close position or full open position.	Is auto operation activated?	Even if DTC is displayed, the circuit has returned to a normal condition at this time. Reproduce the failure, and then perform the diagnosis again. NOTE: In this case, temporary poor contact of connector, temporary open or short circuit of harness may be the cause.	Go to step **2**.

	Step	Check	Yes	No
2	**CHECK DTC.** 1) Turn the ignition switch to ON. 2) Using the Subaru Select Monitor, read DTC of PRG CM. <Ref. to PRG(diag)-11, Read Diagnostic Trouble Code (DTC).>	Is DTC B2500 displayed? (Current malfunction)	Go to step **3**.	Even if DTC is displayed, the circuit has returned to a normal condition at this time. Reproduce the failure, and then perform the diagnosis again. NOTE: In this case, temporary poor contact of connector, temporary open or short circuit of harness may be the cause.
3	**CHECK FUSE.** 1) Turn the ignition switch to OFF. 2) Check the fuse. <Ref. to PRG-4, Relay and Fuse.>	Is the fuse OK?	Go to step **4**.	Replace the defective fuse. When the fuse is blown immediately, repair the short circuit.
4	**CHECK HARNESS.** 1) Disconnect the PRG CM connector (R423). 2) Using a tester, measure the voltage between the PRG CM connector and chassis ground. ***Connector & terminal*** ***(R423) No. 6 (+) — Chassis ground (–):***	Is the voltage 9 V or more?	Go to step **5**.	Repair or replace the open circuit of harness.
5	**CHECK HARNESS.** Using a tester, measure the resistance between the PRG CM connector and chassis ground. ***Connector & terminal*** ***(R423) No. 4 — Chassis ground:***	Is the resistance less than 10 Ω?	Go to step **6**.	Repair or replace the open circuit of harness.
6	**CHECK CONNECTOR.** Disconnect the PRG CM connector (R423).	Is there poor contact of connector?	Repair or replace the poor contact of connector.	Replace the PRG CM. <Ref. to PRG-6, Power Rear Gate Control Module.>

B: DTC B2507 PRG MOTOR CIRCUIT OPEN

DTC DETECTING CONDITION:
When the open circuit in motor is detected during the motor operation.
TROUBLE SYMPTOM:
The power rear gate does not operate.
WIRING DIAGRAM:
Power rear gate system <Ref. to WI-296, WIRING DIAGRAM, Power Rear Gate System.>

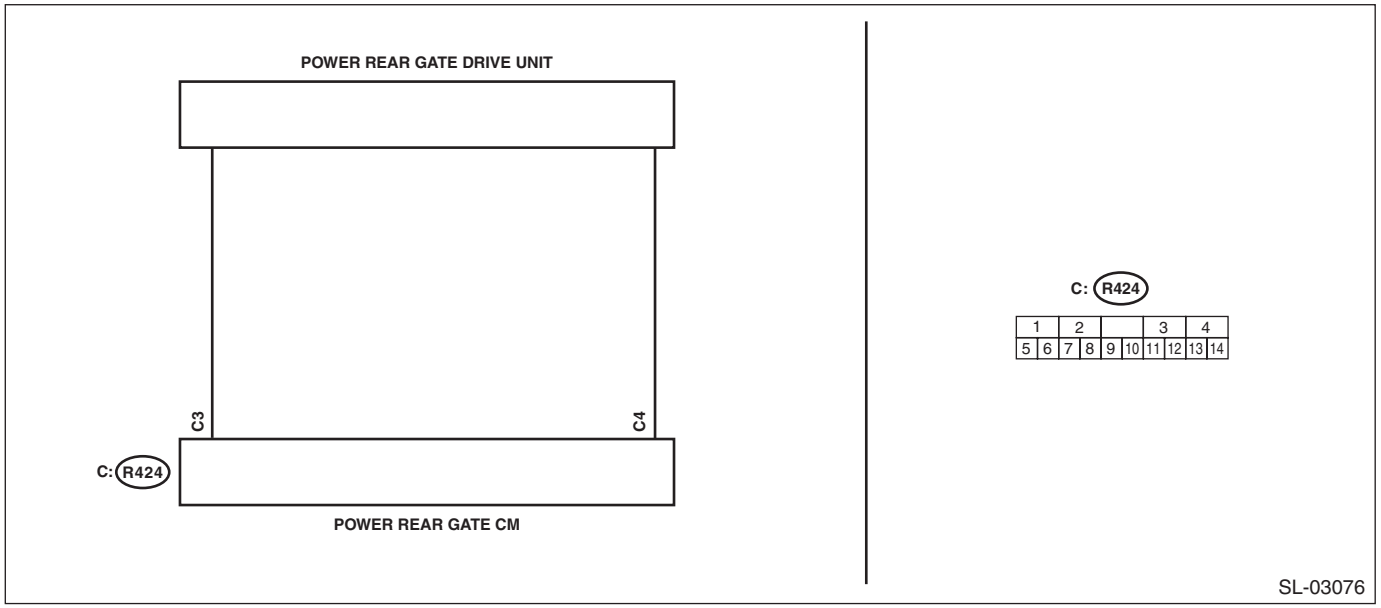

Step		Check	Yes	No
1	**CHECK AUTO OPERATION.** 1) Turn the ignition switch to OFF. 2) Using operation switch, perform power rear gate auto open/close operation from full close position or full open position.	Is auto operation activated?	Even if DTC is displayed, the circuit has returned to a normal condition at this time. Reproduce the failure, and then perform the diagnosis again. NOTE: In this case, temporary poor contact of connector, temporary open or short circuit of harness may be the cause.	Go to step **2**.

	Step	Check	Yes	No
2	**CHECK DTC.** 1) Turn the ignition switch to ON. 2) Using the Subaru Select Monitor, read DTC of PRG CM. <Ref. to PRG(diag)-11, Read Diagnostic Trouble Code (DTC).>	Is DTC B2507 displayed? (Current malfunction)	Go to step **3**.	Even if DTC is displayed, the circuit has returned to a normal condition at this time. Reproduce the failure, and then perform the diagnosis again. NOTE: In this case, temporary poor contact of connector, temporary open or short circuit of harness may be the cause.
3	**CHECK POWER REAR GATE DRIVE UNIT (OPEN CIRCUIT).** 1) Turn the ignition switch to OFF. 2) Disconnect the PRG CM connector in the order of (R423) → (R424). 3) Measure the resistance between PRG CM connectors. ***Connector & terminal*** ***(R424) No. 3 — (R424) No. 4:***	Is the resistance less than 1 Ω?	Go to step **4**.	Replace the PRG DU. <Ref. to PRG-8, Power Rear Gate Drive Unit.>
4	**CHECK CONNECTOR.** Check the PRG CM connector (R424).	Is there poor contact of connector?	Repair or replace the poor contact of connector.	Replace the PRG DU. <Ref. to PRG-8, Power Rear Gate Drive Unit.>

C: DTC B2508 PRG MOTOR CIRCUIT LOW

DTC DETECTING CONDITION:
When the short to ground in motor circuit is detected.
TROUBLE SYMPTOM:
The power rear gate does not operate.
WIRING DIAGRAM:
Power rear gate system <Ref. to WI-296, WIRING DIAGRAM, Power Rear Gate System.>

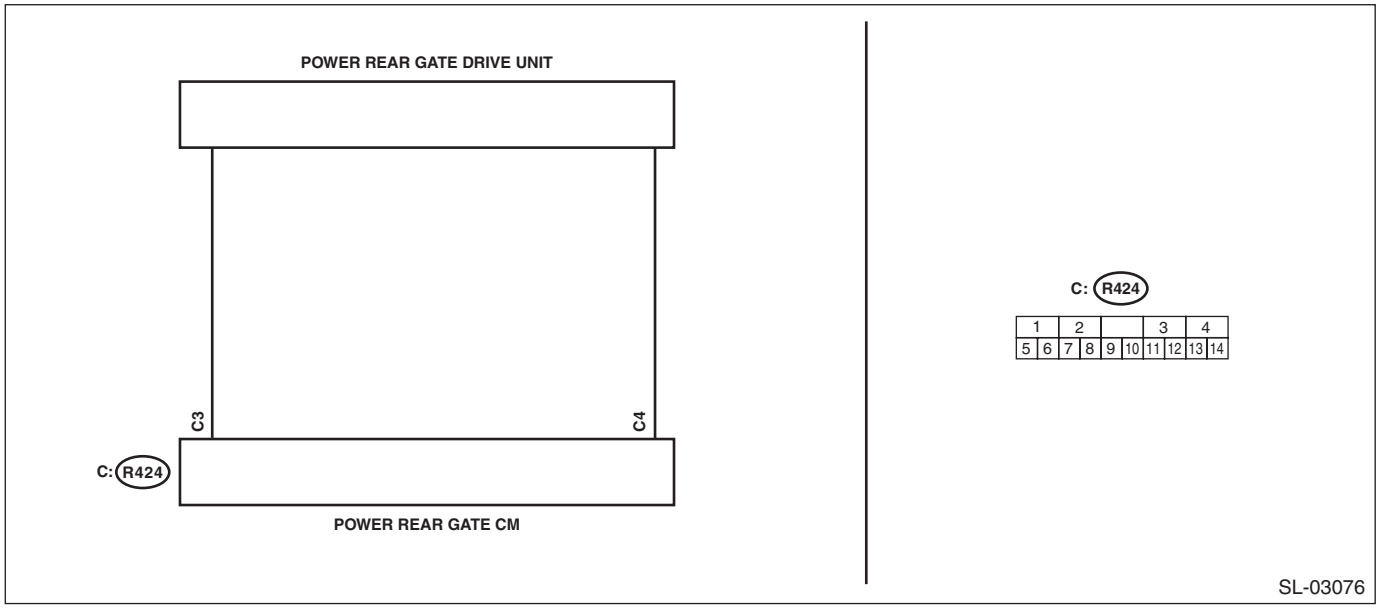

Step		Check	Yes	No
1	**CHECK AUTO OPERATION.** 1) Turn the ignition switch to OFF. 2) Using operation switch, perform power rear gate auto open/close operation from full close position or full open position.	Is auto operation activated?	Even if DTC is displayed, the circuit has returned to a normal condition at this time. Reproduce the failure, and then perform the diagnosis again. NOTE: In this case, temporary poor contact of connector, temporary open or short circuit of harness may be the cause.	Go to step **2**.

	Step	Check	Yes	No
2	**CHECK DTC.** 1) Turn the ignition switch to ON. 2) Using the Subaru Select Monitor, read DTC of PRG CM. <Ref. to PRG(diag)-11, Read Diagnostic Trouble Code (DTC).>	Is DTC B2508 displayed? (Current malfunction)	Go to step **3**.	Even if DTC is displayed, the circuit has returned to a normal condition at this time. Reproduce the failure, and then perform the diagnosis again. NOTE: In this case, temporary poor contact of connector, temporary open or short circuit of harness may be the cause.
3	**CHECK HARNESS (GROUND SHORT CIRCUIT).** 1) Turn the ignition switch to OFF. 2) Disconnect the PRG CM connector in the order of (R423) → (R424). 3) Using a tester, measure the resistance between the PRG CM connector and chassis ground. ***Connector & terminal*** ***(R424) No. 3 — Chassis ground:*** ***(R424) No. 4 — Chassis ground:***	Is the resistance 1 MΩ or more?	Go to step **4**.	Replace the PRG DU. <Ref. to PRG-8, Power Rear Gate Drive Unit.>
4	**CHECK HARNESS (OPEN CIRCUIT).** Using a tester, measure the resistance between the PRG CM connectors. ***Connector & terminal*** ***(R424) No. 3 — (R424) No. 4:***	Is the resistance 0.1 Ω or more?	Go to step **5**.	Replace the PRG DU. <Ref. to PRG-8, Power Rear Gate Drive Unit.>
5	**CHECK CONNECTOR.** Check the PRG CM connector (R424).	Is there poor contact of connector?	Repair or replace the poor contact of connector.	Replace the PRG CM. <Ref. to PRG-6, Power Rear Gate Control Module.>

D: DTC B250B ROTATION SENSOR A STUCK

DTC DETECTING CONDITION:
When output of drive unit rotation sensor does not last for 1 sec during the auto-operation.
TROUBLE SYMPTOM:
The power rear gate does not operate.
WIRING DIAGRAM:
Power rear gate system <Ref. to WI-296, WIRING DIAGRAM, Power Rear Gate System.>

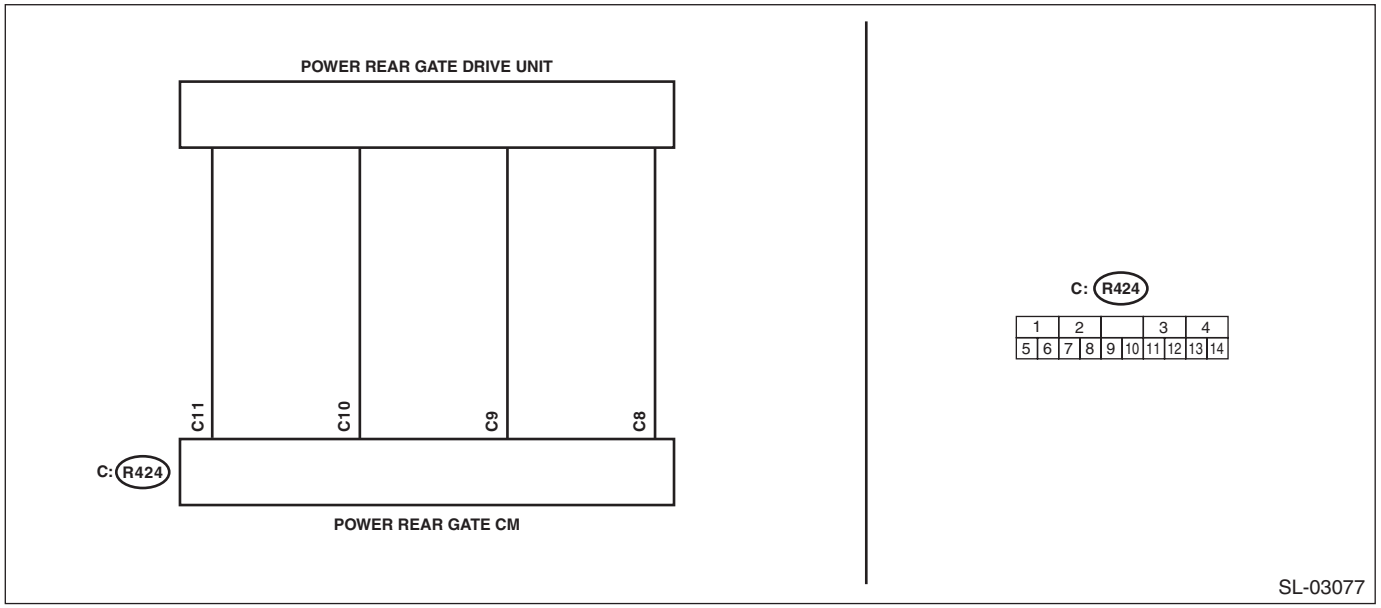

Step		Check	Yes	No
1	**CHECK AUTO OPERATION.** 1) Turn the ignition switch to OFF. 2) Using operation switch, perform power rear gate auto open/close operation from full close position or full open position.	Does it work as fully open → fully close and fully close → fully open?	Even if DTC is displayed, the circuit has returned to a normal condition at this time. Reproduce the failure, and then perform the diagnosis again. NOTE: In this case, temporary poor contact of connector, temporary open or short circuit of harness may be the cause.	Go to step **2**.

	Step	Check	Yes	No
2	**CHECK DTC.** 1) Turn the ignition switch to ON. 2) Using the Subaru Select Monitor, read DTC of PRG CM. <Ref. to PRG(diag)-11, Read Diagnostic Trouble Code (DTC).>	Is DTC B250B, B250D, or B2525 displayed? (Current malfunction)	Go to step **3**.	Even if DTC is displayed, the circuit has returned to a normal condition at this time. Reproduce the failure, and then perform the diagnosis again. NOTE: In this case, temporary poor contact of connector, temporary open or short circuit of harness may be the cause.
3	**CHECK ROTATION SENSOR SIGNAL.** Using an oscilloscope, measure the waveform between PRG CM connectors. ***Connector & terminal*** ***(R424) No. 9 — (R424) No. 8:*** ***(R424) No. 10 — (R424) No. 8:***	Does the voltage change (approx. 0 V ←→ 12 V), when the power rear gate is manually opened/closed?	Go to step **4**.	Replace the PRG DU. <Ref. to PRG-8, Power Rear Gate Drive Unit.>
4	**CHECK PRG CM.** Using an oscilloscope, measure the waveform between PRG CM connectors. ***Connector & terminal*** ***(R424) No. 9 (+) — (R424) No. 11 (–):*** ***(R424) No. 10 (+) — (R424) No. 11 (–):***	Does the waveform change as noted in the margin when the power rear gate is manually opened/closed?	Replace the PRG CM. <Ref. to PRG-6, Power Rear Gate Control Module.>	Replace the PRG DU. <Ref. to PRG-8, Power Rear Gate Drive Unit.>

NOTE:
- When the power rear gate is open

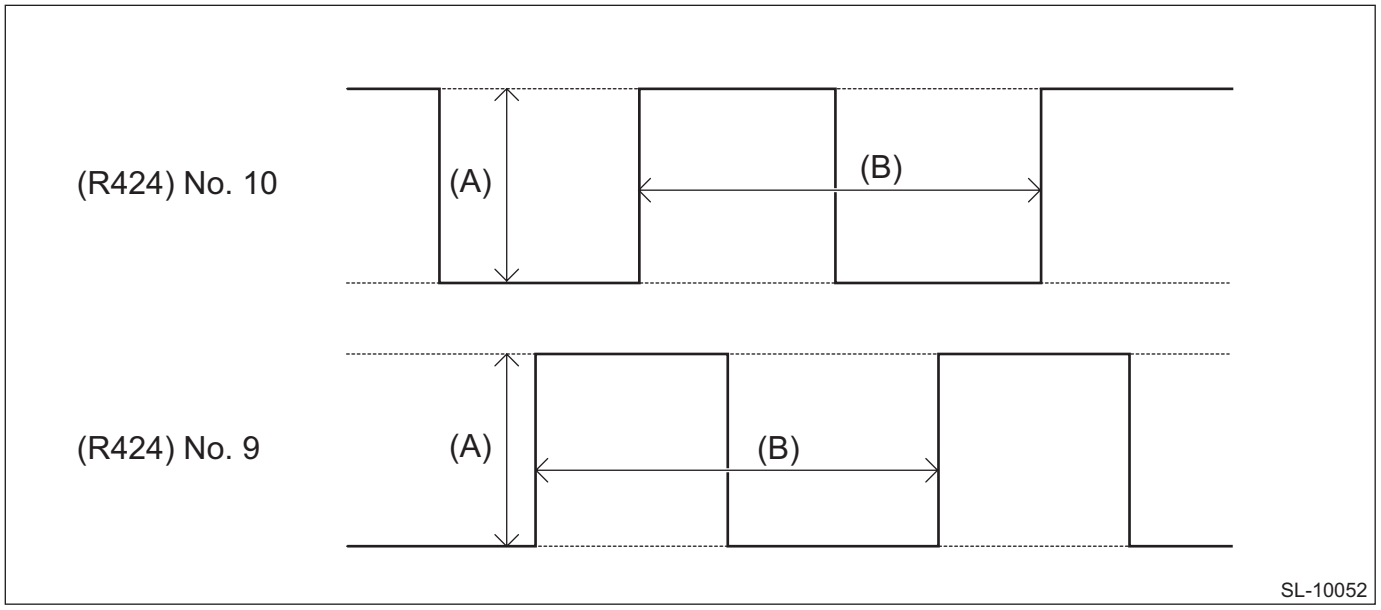

(A) Approx. 10 V

(B) Cycles change according to the time the power rear gate is opened/closed.

- When the power rear gate is closed

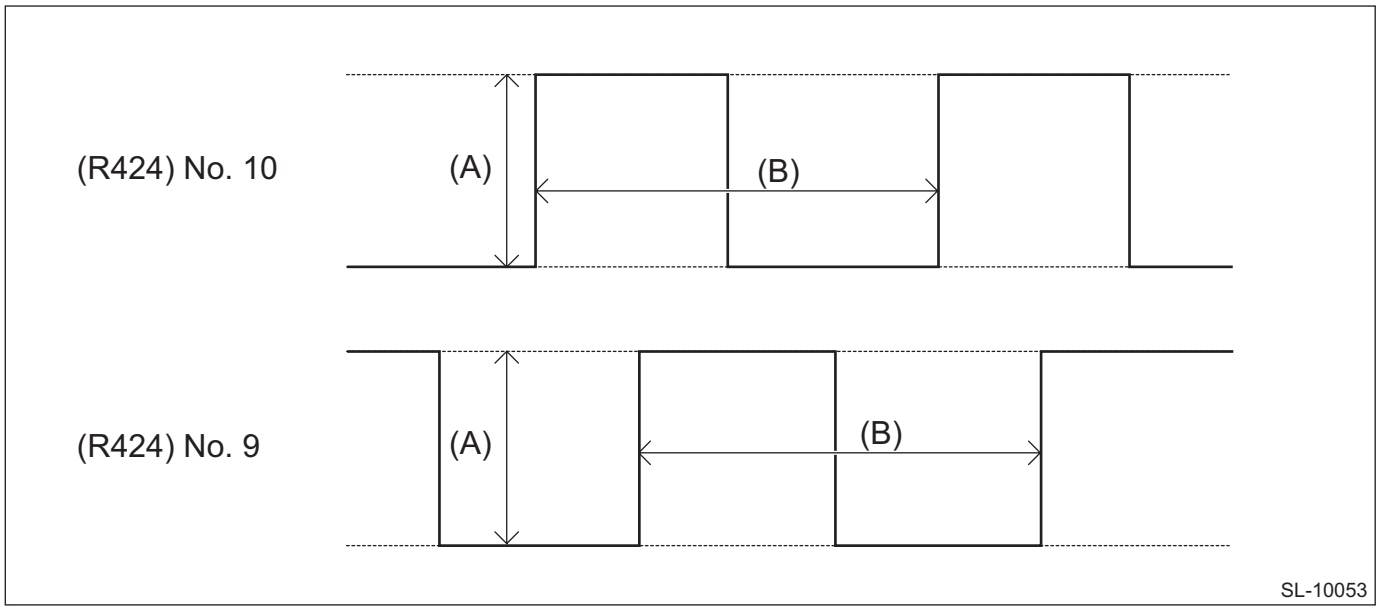

(A) Approx. 10 V

(B) Cycles change according to the time the power rear gate is opened/closed.

E: DTC B250D ROTATION SENSOR B STUCK

NOTE:
For the diagnostic procedure, refer to DTC B250B. <Ref. to PRG(diag)-22, DTC B250B ROTATION SENSOR A STUCK, Diagnostic Procedure with Diagnostic Trouble Code (DTC).>

F: DTC B250F ROTATION SENSOR PULSE/COUNT

DTC DETECTING CONDITION:
Output of the power rear gate drive unit rotation sensor is out of specified range.
TROUBLE SYMPTOM:
Auto operation stops halfway.
WIRING DIAGRAM:
Power rear gate system <Ref. to WI-296, WIRING DIAGRAM, Power Rear Gate System.>

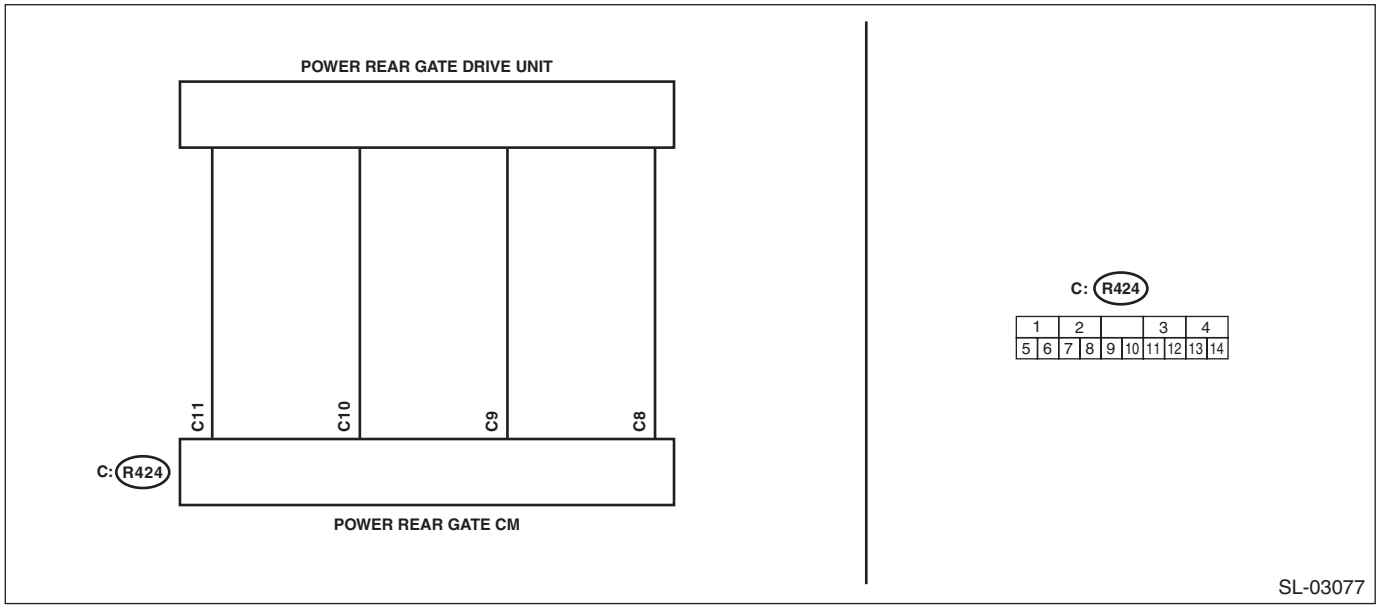

Step		Check	Yes	No
1	**CHECK AUTO OPERATION.** 1) Turn the ignition switch to OFF. 2) Using operation switch, perform power rear gate auto open/close operation from full close position or full open position.	Does it work as fully open → fully close and fully close → fully open?	Even if DTC is displayed, the circuit has returned to a normal condition at this time. Reproduce the failure, and then perform the diagnosis again. NOTE: In this case, temporary poor contact of connector, temporary open or short circuit of harness may be the cause.	Go to step **2**.

	Step	Check	Yes	No
2	**CHECK DTC.** 1) Turn the ignition switch to ON. 2) Using the Subaru Select Monitor, read DTC of PRG CM. <Ref. to PRG(diag)-11, Read Diagnostic Trouble Code (DTC).>	Is DTC B250F displayed? (Current malfunction)	Go to step **3**.	Even if DTC is displayed, the circuit has returned to a normal condition at this time. Reproduce the failure, and then perform the diagnosis again. NOTE: In this case, temporary poor contact of connector, temporary open or short circuit of harness may be the cause.
3	**CHECK CURRENT DATA.** 1) Activate the auto closer to a fully closed position. 2) Using the Subaru Select Monitor, confirm the «Pulse-count 2» when fully closed and fully open. <Ref. to PRG(diag)-13, Read Current Data.> NOTE: When confirming the current data, display only one item to be checked at a time. When the displayed items are too many, changes in the pulses will not be retrieved.	Does the value show six pulses when fully closed, and 1800 pulses when fully open?	Even if DTC is displayed, the circuit has returned to a normal condition at this time. Reproduce the failure, and then perform the diagnosis again. NOTE: In this case, temporary poor contact of connector, temporary open or short circuit of harness may be the cause.	Go to step **4**.
4	**CHECK PRG CM.** Using an oscilloscope, measure the waveform between PRG CM connectors. ***Connector & terminal*** ***(R424) No. 9 (+) — (R424) No. 11 (–):*** ***(R424) No. 10 (+) — (R424) No. 11 (–):***	Does the waveform change as noted in the margin when the power rear gate is manually opened/closed?	Replace the PRG CM. <Ref. to PRG-6, Power Rear Gate Control Module.>	Replace the PRG DU. <Ref. to PRG-8, Power Rear Gate Drive Unit.>

NOTE:
- When the power rear gate is open

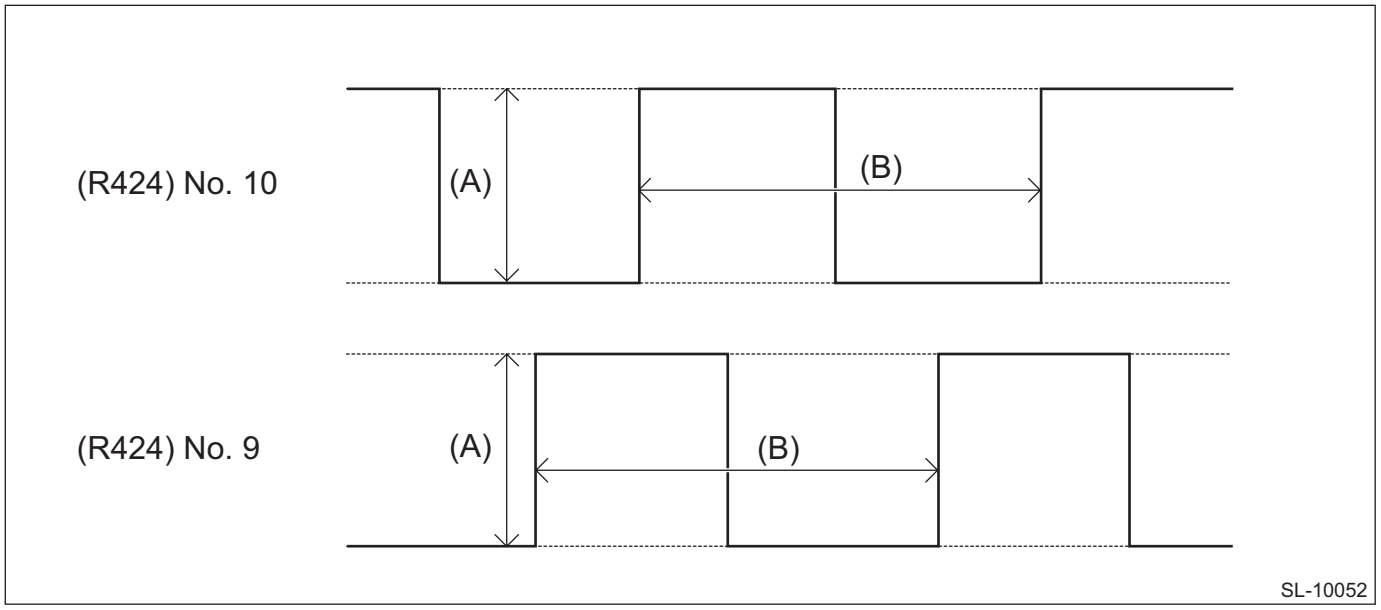

(A) Approx. 10 V

(B) Cycles change according to the time the power rear gate is opened/closed.

- When the power rear gate is closed

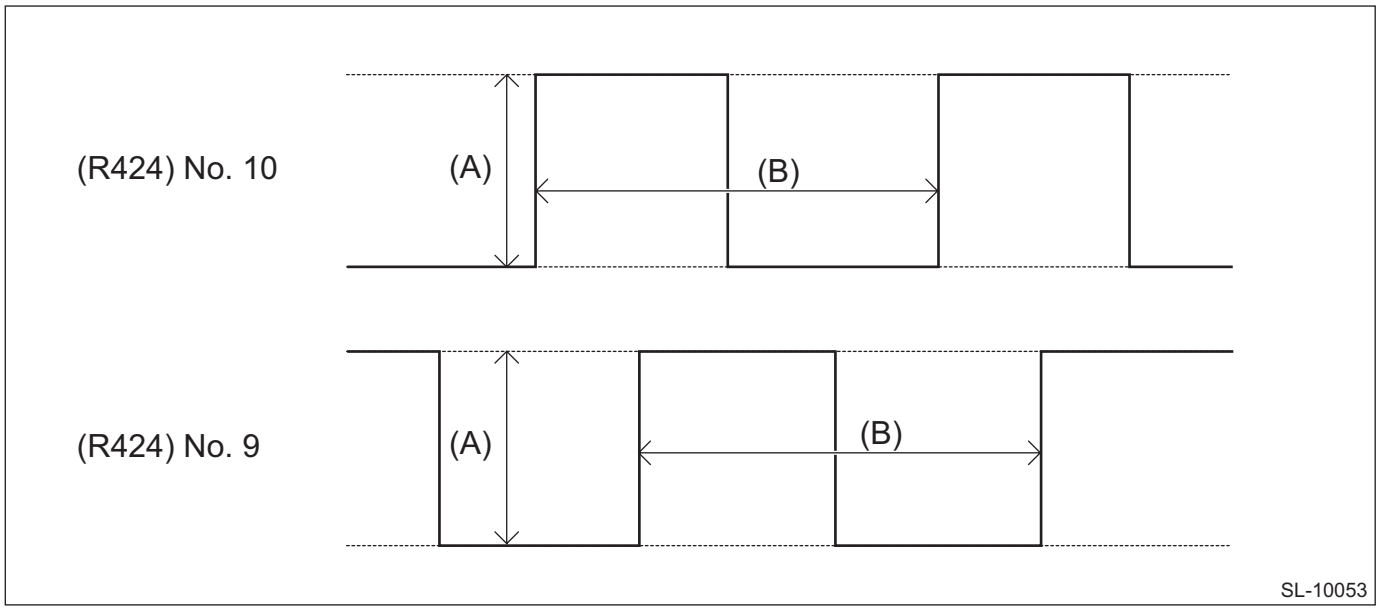

(A) Approx. 10 V

(B) Cycles change according to the time the power rear gate is opened/closed.

G: DTC B2511 ROTATION SENSOR PULSE/REVERSE DIRECTION

DTC DETECTING CONDITION:
When output of the power rear gate drive unit rotation sensor is different from the direction that it should be.
TROUBLE SYMPTOM:
Auto-operation does not function.
WIRING DIAGRAM:
Power rear gate system <Ref. to WI-296, WIRING DIAGRAM, Power Rear Gate System.>

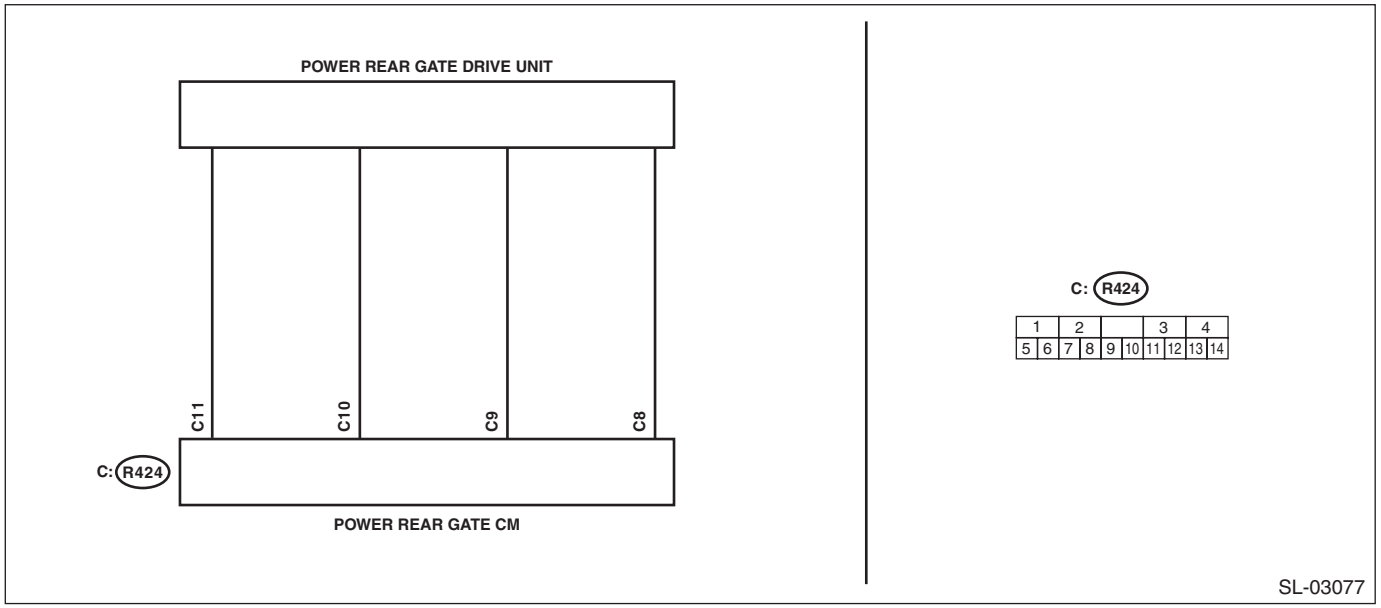

Step		Check	Yes	No
1	**CHECK AUTO OPERATION.** 1) Turn the ignition switch to OFF. 2) Using operation switch, perform power rear gate auto open/close operation from full close position or full open position.	Does it work as fully open → fully close and fully close → fully open?	Even if DTC is displayed, the circuit has returned to a normal condition at this time. Reproduce the failure, and then perform the diagnosis again. NOTE: In this case, temporary poor contact of connector, temporary open or short circuit of harness may be the cause.	Go to step **2**.

	Step	Check	Yes	No
2	**CHECK DTC.** 1) Turn the ignition switch to ON. 2) Using the Subaru Select Monitor, read DTC of PRG CM. <Ref. to PRG(diag)-11, Read Diagnostic Trouble Code (DTC).>	Is DTC B2511 displayed? (Current malfunction)	Go to step **3**.	Even if DTC is displayed, the circuit has returned to a normal condition at this time. Reproduce the failure, and then perform the diagnosis again. NOTE: In this case, temporary poor contact of connector, temporary open or short circuit of harness may be the cause.
3	**CHECK CURRENT DATA.** 1) Activate the auto closer to a fully closed position. 2) Press the operation switch to perform the auto-open/close operation. 3) Using the Subaru Select Monitor, confirm the «Pulse-count 2» when fully closed and fully open. <Ref. to PRG(diag)-13, Read Current Data.> NOTE: When confirming the current data, display only one item to be checked at a time. When the displayed items are too many, changes in the pulses will not be retrieved.	Does the pulse count increase during the open operation? And does the pulse count decrease during the close operation?	Even if DTC is displayed, the circuit has returned to a normal condition at this time. Reproduce the failure, and then perform the diagnosis again. NOTE: In this case, temporary poor contact of connector, temporary open or short circuit of harness may be the cause.	Go to step **4**.
4	**CHECK PRG CM.** Using an oscilloscope, measure the waveform between PRG CM connectors. ***Connector & terminal*** ***(R424) No. 9 (+) — (R424) No. 11 (–):*** ***(R424) No. 10 (+) — (R424) No. 11 (–):***	Does the waveform change as noted in the margin when the power rear gate is manually opened/closed?	Replace the PRG CM. <Ref. to PRG-6, Power Rear Gate Control Module.>	Replace the PRG DU. <Ref. to PRG-8, Power Rear Gate Drive Unit.>

NOTE:
- When the power rear gate is open

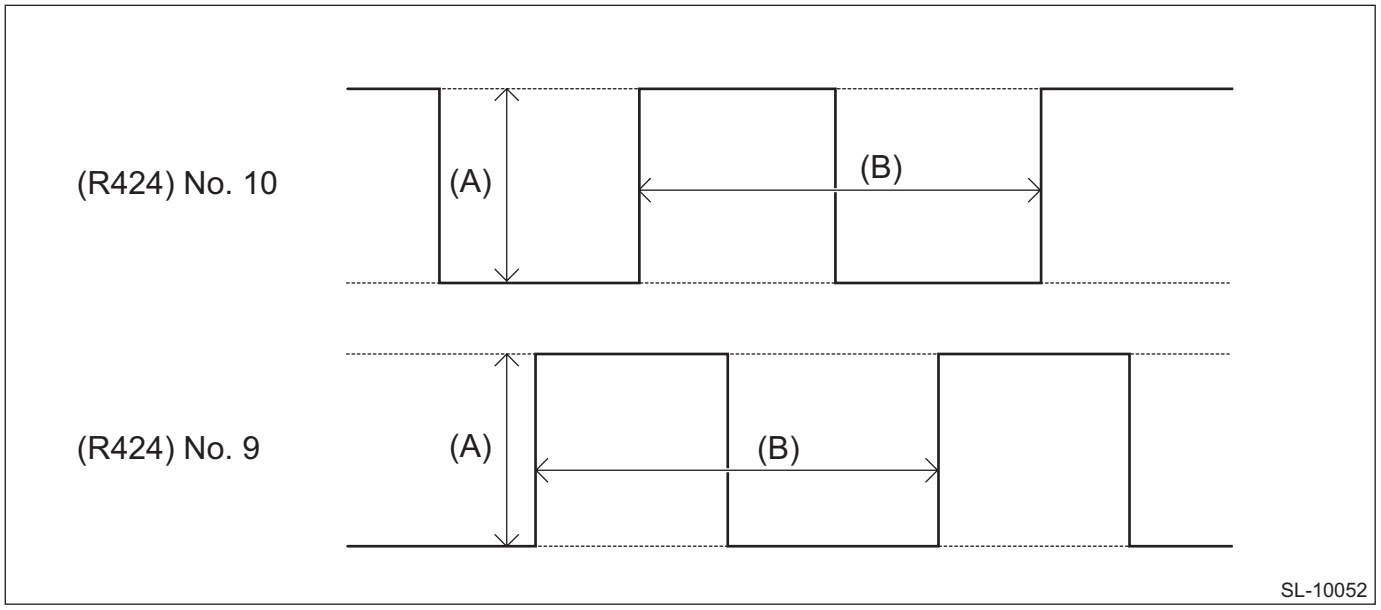

(A) Approx. 10 V

(B) Cycles change according to the time the power rear gate is opened/closed.

- When the power rear gate is closed

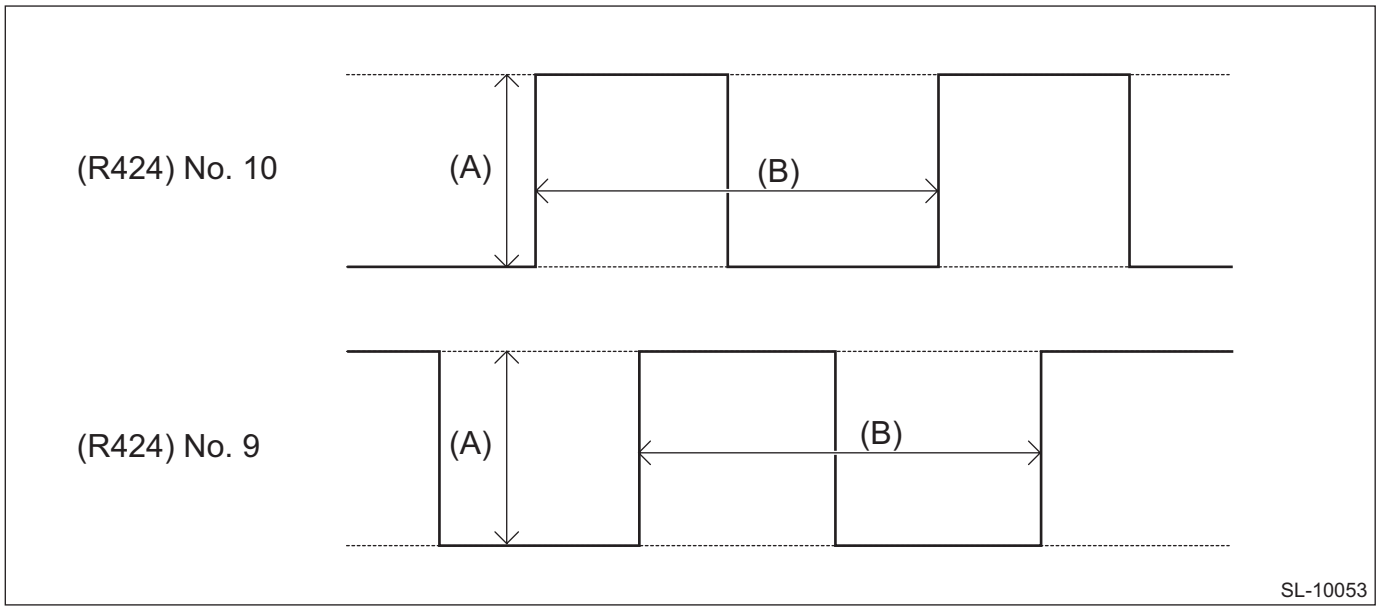

(A) Approx. 10 V

(B) Cycles change according to the time the power rear gate is opened/closed.

H: DTC B2512 DAMPER BREAKAGE

DTC DETECTING CONDITION:
Abrupt drop in the rear gate has been detected after PRG operation stopped.
TROUBLE SYMPTOM:
Does not hold at the full-open position.

	Step	Check	Yes	No
1	**CHECK REAR GATE CONDITION.** Check the rear gate.	Is there any non genuine parts equipped to the rear gate? Or does it have foreign objects such as snow?	Remove non genuine parts or foreign objects. Go to step **2**.	Go to step **2**.
2	**CHECK REAR GATE.** Hold the rear gate at the fully open position.	Does it hold at the fully open position?	Go to step **3**.	Replace the rear gate damper stay. <Ref. to EB-60, REAR GATE DAMPER STAY, REMOVAL, Rear Gate.>
3	**CHECK PRG CM.** 1) Close the rear gate fully. 2) Press the operation switch to perform the auto-open operation to a full open position. 3) Repeat the auto-open operation at least three times. 4) Turn the ignition switch to ON. 5) Using the Subaru Select Monitor, read DTC of PRG CM. <Ref. to PRG(diag)-11, Read Diagnostic Trouble Code (DTC).>	Is DTC B2512 displayed? (Current malfunction)	Replace the PRG CM. <Ref. to PRG-6, Power Rear Gate Control Module.>	Even if DTC is displayed, the circuit has returned to a normal condition at this time. Reproduce the failure, and then perform the diagnosis again. NOTE: In this case, temporary poor contact of connector, temporary open or short circuit of harness may be the cause.

I: DTC B2513 LATCH CONDITION

DTC DETECTING CONDITION:
When the status of power rear gate auto closer changes differently from normal condition.
TROUBLE SYMPTOM:
Auto-operation does not function.
WIRING DIAGRAM:
Power rear gate system <Ref. to WI-296, WIRING DIAGRAM, Power Rear Gate System.>

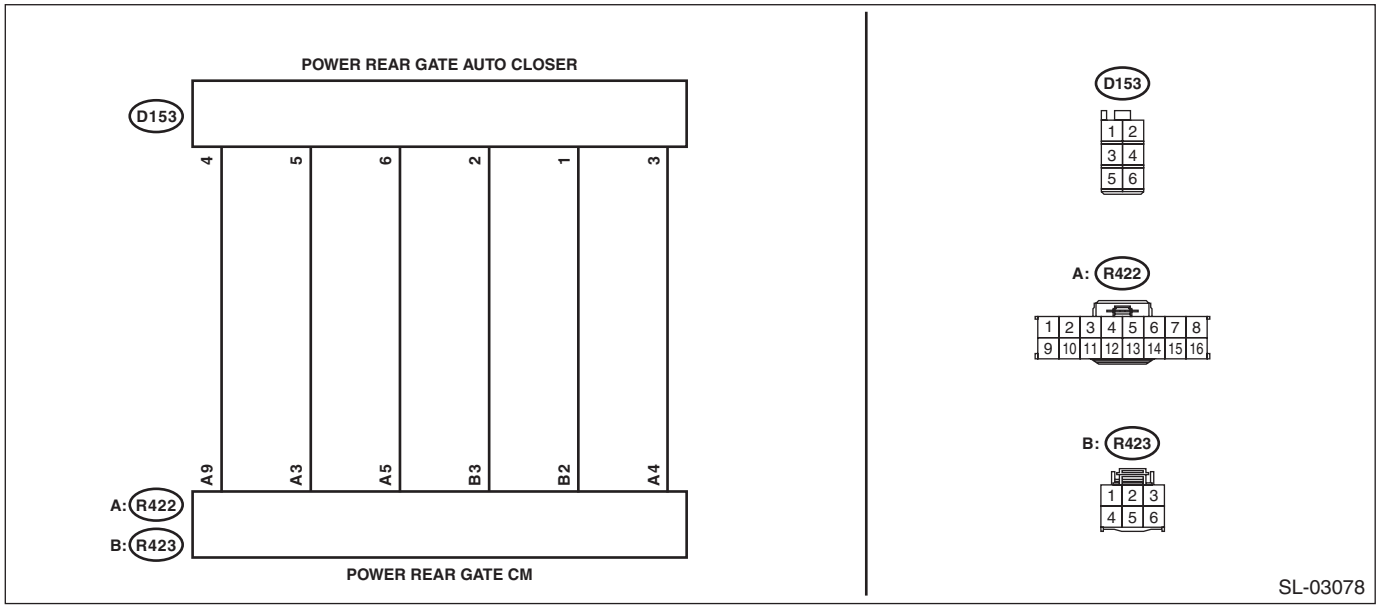

	Step	Check	Yes	No
1	**CHECK REAR GATE.** Visually inspect the rear gate.	Is it free from any foreign matters caught in and installed without misalignment?	Go to step **2**.	Remove the foreign matters. Adjust the alignment.
2	**CHECK PRG AUTO CLOSER.** 1) Close the rear gate fully. 2) Disconnect the PRG CM connector in the order of (R423) → (R422). 3) Disconnect the PRG auto closer connector. 4) Check the continuity between PRG auto closer connectors. ***Connector & terminal*** ***(D153) No. 5 — (D153) No. 4 (latch switch)*** ***(D153) No. 3 — (D153) No. 4 (courtesy switch):*** ***(D153) No. 6 — (D153) No. 4 (sector switch):***	Is the continuity condition as follows? Latch switch: No continuity Courtesy switch: No continuity Sector switch: Continuity present	Go to step **3**.	Replace the PRG auto closer. <Ref. to PRG-11, Power Rear Gate Auto Closer.>

	Step	Check	Yes	No
3	**CHECK PRG AUTO CLOSER.** 1) Connect the disconnected connectors. Connect the PRG CM connector in the order of (R422) → (R423). 2) Press the operation switch to perform the auto-open operation to a full open position. 3) Disconnect the PRG CM connector in the order of (R423) → (R422). 4) Disconnect the PRG auto closer connector. 5) Check the continuity between PRG auto closer connectors. ***Connector & terminal*** ***(D153) No. 5 — (D153) No. 4 (latch switch)*** ***(D153) No. 3 — (D153) No. 4 (courtesy switch):*** ***(D153) No. 6 — (D153) No. 4 (sector switch):***	Is the continuity condition as follows? Latch switch: Continuity present Courtesy switch: Continuity present Sector switch: Continuity present	Go to step **4**.	Replace the PRG auto closer. <Ref. to PRG-11, Power Rear Gate Auto Closer.>
4	**CHECK HARNESS (GROUND SHORT CIRCUIT).** Measure the resistance between PRG CM connector and chassis ground. ***Connector & terminal*** ***(R422) No. 3 — Chassis ground:*** ***(R422) No. 4 — Chassis ground:*** ***(R422) No. 5 — Chassis ground:***	Is the resistance 1 MΩ or more?	Go to step **5**.	Repair or replace the short circuit of the harness.
5	**CHECK HARNESS (OPEN CIRCUIT).** Measure the resistance between PRG CM connector and PRG auto closer connector. ***Connector & terminal*** ***(R422) No. 3 — (D153) No. 5:*** ***(R422) No. 4 — (D153) No. 3:*** ***(R422) No. 5 — (D153) No. 6:***	Is the resistance 10 Ω or less?	Replace the PRG CM. <Ref. to PRG-6, Power Rear Gate Control Module.>	Repair or replace the open circuit of harness.

J: DTC B2514 IGNITION

DTC DETECTING CONDITION:
When the LIN communication signal and direct line signal do not match.
TROUBLE SYMPTOM:
The power rear gate does not operate.
WIRING DIAGRAM:

NOTE:
For the coupling connector, refer to “WIRING SYSTEM”.
Power rear gate system <Ref. to WI-296, WIRING DIAGRAM, Power Rear Gate System.>

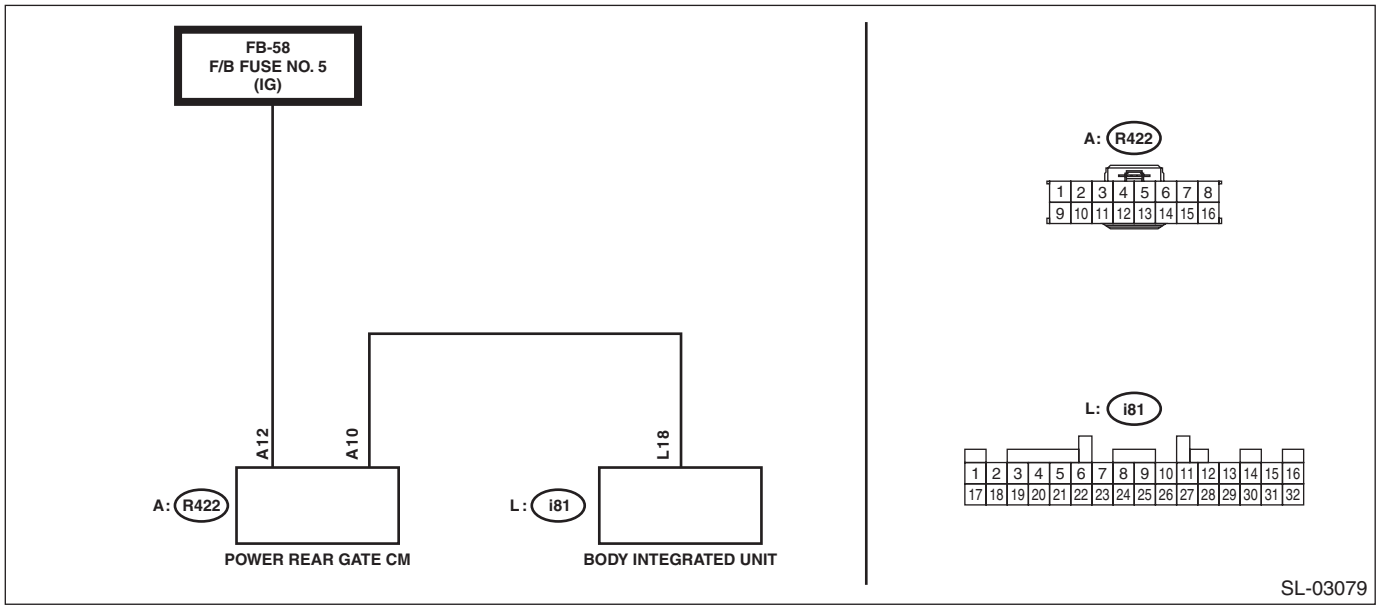

Step		Check	Yes	No
1	**CHECK DTC.** 1) Fully open the rear gate. 2) Turn the ignition switch to OFF. 3) Wait for five seconds or more. 4) Turn the ignition switch to ON. 5) Wait for five seconds or more. 6) Using the Subaru Select Monitor, read DTC of PRG CM. <Ref. to PRG(diag)-11, Read Diagnostic Trouble Code (DTC).>	Is DTC B2514 displayed? (Current malfunction)	Go to step **2**.	Even if DTC is displayed, the circuit has returned to a normal condition at this time. Reproduce the failure, and then perform the diagnosis again. NOTE: In this case, temporary poor contact of connector, temporary open or short circuit of harness may be the cause.
2	**CHECK CURRENT DATA.** Check «Ignition Signal» and «IGN SW» using the Subaru Select Monitor. <Ref. to PRG(diag)-13, Read Current Data.> NOTE: When confirming the current data, display only 2 items to be checked at a time.	When the ignition switch is turned to ON/OFF, are these two data synchronized?	Go to step **3**.	When «Ignition Signal» is not synchronized: Go to step **4**. When «IGN SW» is not synchronized: Go to step **8**.

	Step	Check	Yes	No
3	**CHECK CONNECTOR.** 1) Turn the ignition switch to OFF. 2) Disconnect the PRG CM connector in the order of (R423) → (R422).	Is there poor contact of connector?	Repair or replace the poor contact of connector.	Even if DTC is displayed, the circuit has returned to a normal condition at this time. Reproduce the failure, and then perform the diagnosis again. NOTE: In this case, temporary poor contact of connector, temporary open or short circuit of harness may be the cause.
4	**CHECK CURRENT DATA.** Check the current data «Voltage of IGN» of body integrated unit using Subaru Select Monitor. <Ref. to BC(diag)-20, Read Current Data.>	When the ignition switch is turned to ON/OFF, does the value change? (At ON: 10 — 15 V)	Go to step **5**.	Check the body control system. <Ref. to BC(diag)-2, PROCEDURE, Basic Diagnostic Procedure.>
5	**CHECK HARNESS (OPEN CIRCUIT).** 1) Disconnect the PRG CM connector in the order of (R423) → (R422). 2) Disconnect the body integrated unit connector. 3) Measure the resistance between PRG CM connector and body integrated unit. ***Connector & terminal*** ***(i81) No. 18 — (R422) No. 10:***	Is the resistance less than 10 Ω?	Go to step **6**.	Repair or replace the open circuit of harness.
6	**CHECK HARNESS (GROUND SHORT CIRCUIT).** Measure the resistance between PRG CM connector and chassis ground. ***Connector & terminal*** ***(R422) No. 10 — Chassis ground:***	Is the resistance 1 MΩ or more?	Go to step **7**.	Repair or replace the short circuit of the harness.
7	**CHECK HARNESS (SHORT CIRCUIT IN LIN COMMUNICATION LINE).** 1) Turn the ignition switch to ON. 2) Measure the voltage between PRG CM connector and chassis ground. ***Connector & terminal*** ***(R422) No. 10 (+) — Chassis ground (–):***	Is the voltage less than 1 V?	Go to step **8**.	Repair or replace the short circuit of the harness.
8	**CHECK HARNESS.** 1) Turn the ignition switch to ON. 2) Measure the voltage between PRG CM connector and chassis ground. ***Connector & terminal*** ***(R422) No. 12 (+) — Chassis ground (–):***	Is the voltage 9 V or more?	Go to step **9**.	Repair or replace the open circuit of harness.
9	**CHECK CONNECTOR.** 1) Turn the ignition switch to OFF. 2) Disconnect the PRG CM connector in the order of (R423) → (R422).	Is there poor contact of connector?	Repair or replace the poor contact of connector.	Replace the PRG CM. <Ref. to PRG-6, Power Rear Gate Control Module.>

K: DTC B2515 LATCH SW

NOTE:
For the diagnostic procedure, refer to DTC B2513. <Ref. to PRG(diag)-32, DTC B2513 LATCH CONDITION, Diagnostic Procedure with Diagnostic Trouble Code (DTC).>

L: DTC B2516 SECTOR SW

DTC DETECTING CONDITION:
Change of sector SW cannot be detected.
TROUBLE SYMPTOM:
Auto-operation does not function.
WIRING DIAGRAM:
Power rear gate system <Ref. to WI-296, WIRING DIAGRAM, Power Rear Gate System.>

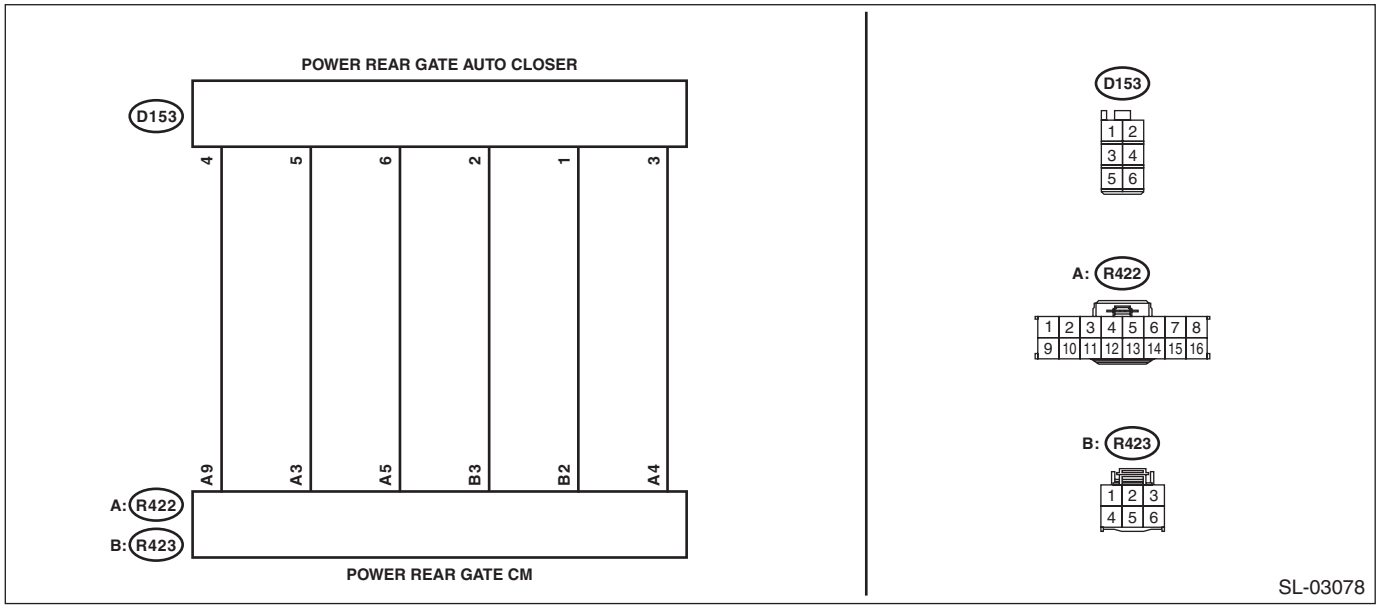

	Step	Check	Yes	No
1	**CHECK CURRENT DATA.** 1) Using the operation switch, fully open the power rear gate. 2) Turn the ignition switch to ON. 3) Check «SECTOR SW» using the Subaru Select Monitor. <Ref. to PRG(diag)-13, Read Current Data.>	Does the «SECTOR SW» indicate ON?	Even if DTC is displayed, the circuit has returned to a normal condition at this time. Reproduce the failure, and then perform the diagnosis again. NOTE: In this case, temporary poor contact of connector, temporary open or short circuit of harness may be the cause.	Go to step **2**.
2	**CHECK SECTOR SW.** 1) Turn the ignition switch to OFF. 2) Disconnect the PRG CM connector in the order of (R423) → (R422). 3) Disconnect the PRG auto closer connector. 4) Check the sector SW. <Ref. to PRG-12, INSPECTION, Power Rear Gate Auto Closer.>	Is the sector switch normal?	Go to step **3**.	Replace the PRG auto closer. <Ref. to PRG-11, Power Rear Gate Auto Closer.>
3	**CHECK HARNESS (GROUND SHORT CIRCUIT).** Measure the resistance between PRG CM connector and chassis ground. ***Connector & terminal*** ***(R422) No. 5 — Chassis ground:*** ***(R422) No. 9 — Chassis ground:***	Is the resistance 1 MΩ or more?	Go to step **4**.	Repair or replace the short circuit of the harness.

	Step	Check	Yes	No
4	**CHECK PRG CM (OPEN CIRCUIT).** Measure the resistance between PRG CM connector and PRG auto closer connector. ***Connector & terminal*** ***(R422) No. 5 — (D153) No. 6:***	Is the resistance 10 Ω or less?	Replace the PRG CM. <Ref. to PRG-6, Power Rear Gate Control Module.>	Repair or replace the open circuit of harness.

M: DTC B2517 COURTESY SW

NOTE:
For the diagnostic procedure, refer to DTC B2513. <Ref. to PRG(diag)-32, DTC B2513 LATCH CONDITION, Diagnostic Procedure with Diagnostic Trouble Code (DTC).>

N: DTC B2519 POWER +B OPEN

DTC DETECTING CONDITION:
When power supply malfunction is detected in power system.
TROUBLE SYMPTOM:
When SW is operated, buzzer sounds and PRG auto-operation does not function.
WIRING DIAGRAM:

NOTE:
For the coupling connector, refer to “WIRING SYSTEM”.
Power rear gate system <Ref. to WI-296, WIRING DIAGRAM, Power Rear Gate System.>

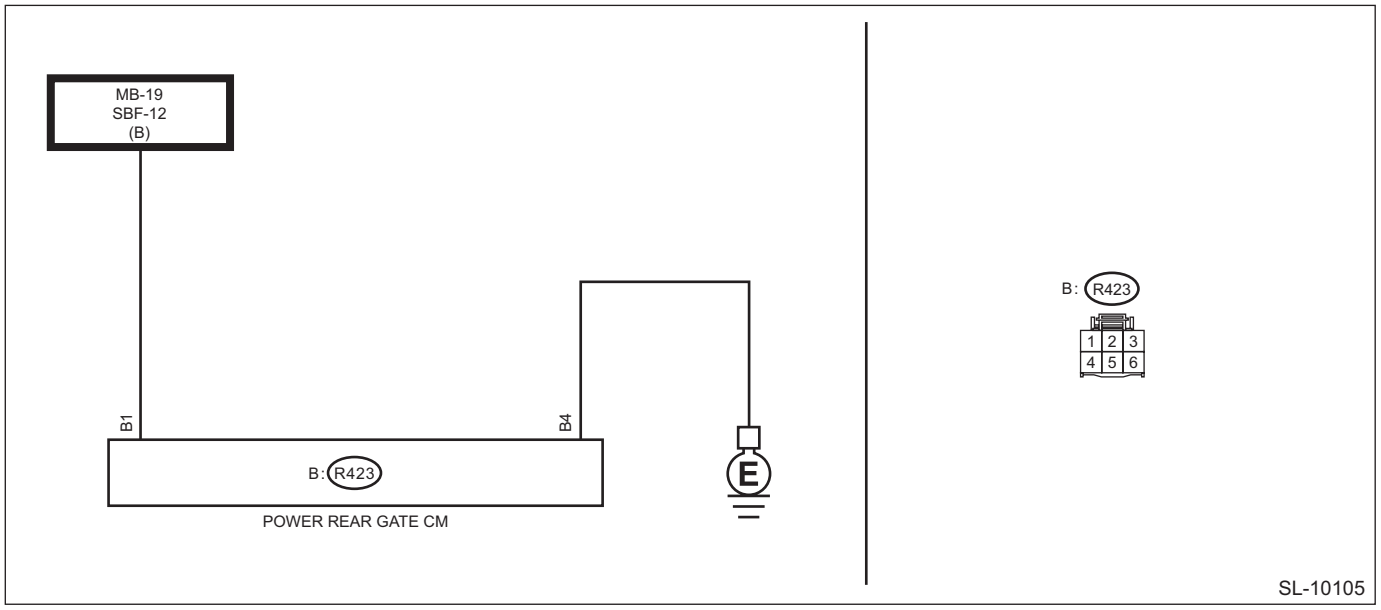

Step		Check	Yes	No
1	**CHECK AUTO OPERATION.** 1) Turn the ignition switch to OFF. 2) Using operation switch, perform power rear gate auto open/close operation from full close position or full open position.	Is auto operation activated?	Even if DTC is displayed, the circuit has returned to a normal condition at this time. Reproduce the failure, and then perform the diagnosis again. NOTE: In this case, temporary poor contact of connector, temporary open or short circuit of harness may be the cause.	Go to step **2**.

	Step	Check	Yes	No
2	**CHECK DTC.** 1) Turn the ignition switch to ON. 2) Using the Subaru Select Monitor, read DTC of PRG CM. <Ref. to PRG(diag)-11, Read Diagnostic Trouble Code (DTC).>	Is DTC B2519 displayed? (Current malfunction)	Go to step **3**.	Even if DTC is displayed, the circuit has returned to a normal condition at this time. Reproduce the failure, and then perform the diagnosis again. NOTE: In this case, temporary poor contact of connector, temporary open or short circuit of harness may be the cause.
3	**CHECK FUSE.** 1) Turn the ignition switch to OFF. 2) Check the fuse. <Ref. to PRG-4, Relay and Fuse.>	Is the fuse OK?	Go to step **4**.	Replace the defective fuse. When the fuse is blown immediately, repair the short circuit.
4	**CHECK HARNESS.** 1) Disconnect the PRG CM connector (R423). 2) Using a tester, measure the voltage between the PRG CM connector and chassis ground. ***Connector & terminal*** ***(R423) No. 1 (+) — Chassis ground (–):***	Is the voltage 9 V or more?	Go to step **5**.	Repair or replace the open circuit of harness.
5	**CHECK HARNESS (OPEN CIRCUIT).** Using a tester, measure the resistance between the PRG CM connector and chassis ground. ***Connector & terminal*** ***(R423) No. 4 — Chassis ground:***	Is the resistance less than 10 Ω?	Go to step **6**.	Repair or replace the open circuit of harness.
6	**CHECK CONNECTOR.** 1) Turn the ignition switch to OFF. 2) Disconnect the PRG CM connector (R423).	Is there poor contact of connector?	Repair or replace the poor contact of connector.	Replace the PRG CM. <Ref. to PRG-6, Power Rear Gate Control Module.>

O: DTC B251A LIN CONNECTION NO-RECEIVE DATA

DTC DETECTING CONDITION:
When LIN communication failure is detected for two seconds or more.
TROUBLE SYMPTOM:
The power rear gate does not operate.

NOTE:
For diagnostic procedures, refer to DTC U0230 in BODY CONTROL SYSTEM (DIAGNOSTICS). <Ref. to BC(diag)-61, DTC U0230 LOST COMMUNICATION WITH POWER REAR GATE CONTROL MODULE, Diagnostic Procedure with Diagnostic Trouble Code (DTC).>

P: DTC B251B LIN CONNECTION BUS PHYSICAL

DTC DETECTING CONDITION:
When LIN communication failure is detected.
TROUBLE SYMPTOM:
The power rear gate does not operate.

NOTE:
For diagnostic procedures, refer to DTC U1673 in BODY CONTROL SYSTEM (DIAGNOSTICS). <Ref. to BC(diag)-68, DTC U1673 LIN COMMUNICATION BUS ERROR BODY CONTROL MODULE, Diagnostic Procedure with Diagnostic Trouble Code (DTC).>

Q: DTC B2522 EEPROM

DTC DETECTING CONDITION:
When failure in PRG CM is detected.
TROUBLE SYMPTOM:
The memorized half-stop position is reset, and returned to the default setting.

Step		Check	Yes	No
1	**CHECK DTC.** 1) Close all doors of the vehicle. 2) Turn the ignition switch to OFF. 3) Wait for one minute or more. 4) Turn the ignition switch to ON. 5) Repeat procedures from 1) to 4) at least three times. 6) Using the Subaru Select Monitor, read DTC of PRG CM. <Ref. to PRG(diag)-11, Read Diagnostic Trouble Code (DTC).>	Is DTC B2522 displayed? (Current malfunction)	Replace the PRG CM. <Ref. to PRG-6, Power Rear Gate Control Module.>	Even if DTC is displayed, the circuit has returned to a normal condition at this time. Reproduce the failure, and then perform the diagnosis again. NOTE: In this case, temporary poor contact of connector, temporary open or short circuit of harness may be the cause.

R: DTC B2524 TOUCH SENSOR CIRCUIT/OPEN

DTC DETECTING CONDITION:
When malfunction in the touch sensor is detected.
TROUBLE SYMPTOM:
The power rear gate does not operate.
WIRING DIAGRAM:

NOTE:
For the coupling connector, refer to “WIRING SYSTEM”.
Power rear gate system <Ref. to WI-296, WIRING DIAGRAM, Power Rear Gate System.>

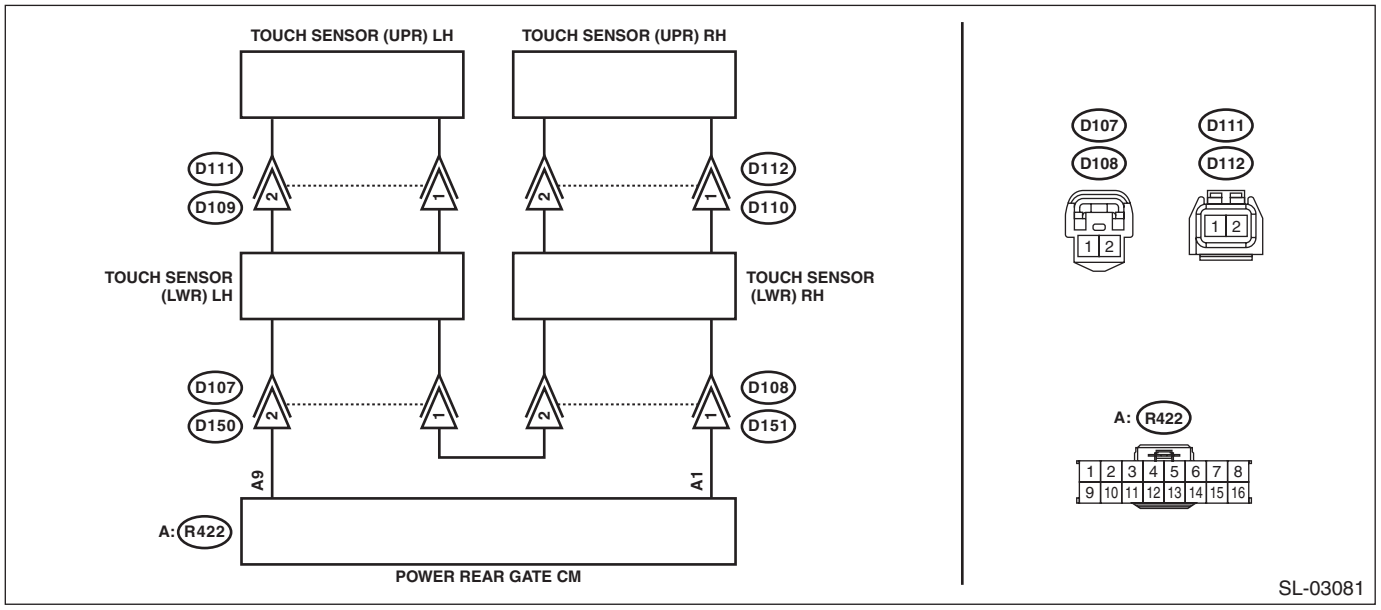

Step		Check	Yes	No
1	**CHECK TOUCH SENSOR.** 1) Turn the ignition switch to OFF. 2) Disconnect the touch sensor (LWR) RH / (LWR) LH connectors. 3) Measure the resistance between the touch sensor (LWR) RH / (LWR) LH connectors. ***Connector & terminal*** ***(D108) No. 1 — (D108) No. 2:*** ***(D107) No. 1 — (D107) No. 2:***	Is the resistance 2 kΩ or less while the sensor is touched, and approx. 10 kΩ when not touched?	Go to step **6**.	Go to step **2**.
2	**CHECK TOUCH SENSOR (UPR).** 1) Disconnect the touch sensor (UPR) RH / (UPR) LH connectors. 2) Measure the resistance between the touch sensor (UPR) RH / (UPR) LH connectors. ***Connector & terminal*** ***(D112) No. 1 — (D112) No. 2:*** ***(D111) No. 1 — (D111) No. 2:***	Is the resistance 2 kΩ or less while the sensor is touched, and approx. 10 kΩ when not touched?	Go to step **3**.	Replace the touch sensor (UPR) RH / (UPR) LH. <Ref. to PRG-15, Power Rear Gate Touch Sensor.>
3	**CHECK TOUCH SENSOR (LWR).** Measure the resistance between the touch sensor (LWR) RH / (LWR) LH connectors. ***Connector & terminal*** ***(D110) No. 1 — (D108) No. 1:*** ***(D110) No. 2 — (D108) No. 2:*** ***(D109) No. 1 — (D107) No. 1:*** ***(D109) No. 2 — (D107) No. 2:***	Is the resistance less than 10 Ω?	Go to step **4**.	Replace the open sensor. <Ref. to PRG-15, Power Rear Gate Touch Sensor.>

	Step	Check	Yes	No
4	**CHECK TOUCH SENSOR (LWR).** Measure the resistance between the touch sensor (LWR) RH / (LWR) LH connectors. ***Connector & terminal*** ***(D109) No. 1 — (D107) No. 2:*** ***(D109) No. 2 — (D107) No. 1:*** ***(D110) No. 1 — (D108) No. 2:*** ***(D110) No. 2 — (D108) No. 1:*** ***(D109) No. 1 — Chassis ground:*** ***(D109) No. 2 — Chassis ground:*** ***(D110) No. 1 — Chassis ground:*** ***(D110) No. 2 — Chassis ground:***	Is the resistance 1 MΩ or more?	Go to step **5**.	Repair or replace the short circuit to power supply of the harness.
5	**CHECK CONNECTOR.** Check the connector of each sensor.	Is there poor contact of connector?	Replace the defective sensor. <Ref. to PRG-15, Power Rear Gate Touch Sensor.>	Even if DTC is displayed, the circuit has returned to a normal condition at this time. Reproduce the failure, and then perform the diagnosis again. NOTE: In this case, temporary poor contact of connector, temporary open or short circuit of harness may be the cause.
6	**CHECK HARNESS.** 1) Disconnect the PRG CM connector in the order of (R423) → (R422). 2) Measure the resistance between PRG CM connector and touch sensor connector. ***Connector & terminal*** ***(R422) No. 1 — (D151) No. 1:*** ***(R422) No. 9 — (D150) No. 2:*** ***(D150) No. 1 — (D151) No. 2:***	Is the resistance less than 10 Ω?	Go to step **7**.	Repair or replace the open circuit of harness.
7	**CHECK HARNESS (OPEN CIRCUIT).** Measure the resistance between PRG CM connector and touch sensor connector or chassis ground. ***Connector & terminal*** ***(R422) No. 1 — (D151) No. 2:*** ***(R422) No. 9 — (D151) No. 2:*** ***(R422) No. 1 — (R422) No. 9:*** ***(R422) No. 1 — Chassis ground:*** ***(R422) No. 9 — Chassis ground:*** ***(D150) No. 1 — Chassis ground:***	Is the resistance 1 MΩ or more?	Go to step **8**.	Repair or replace the short circuit of the harness.

Step		Check	Yes	No
8	**CHECK CONNECTOR.** Check each connector.	Is there poor contact of connector?	Replace the defective sensor or module.	Even if DTC is displayed, the circuit has returned to a normal condition at this time. Reproduce the failure, and then perform the diagnosis again. NOTE: In this case, temporary poor contact of connector, temporary open or short circuit of harness may be the cause.

S: DTC B2525 ROTATION SENSOR POWER SUPPLY

NOTE:
For the diagnostic procedure, refer to DTC B250B. <Ref. to PRG(diag)-22, DTC B250B ROTATION SENSOR A STUCK, Diagnostic Procedure with Diagnostic Trouble Code (DTC).>

T: DTC B2526 AUTO CLOSER MOTOR CIRCUIT OPEN

DTC DETECTING CONDITION:
When malfunction in the power rear gate auto closer is detected.
TROUBLE SYMPTOM:
The pull-in/release operation of closer is not possible.
WIRING DIAGRAM:

NOTE:
For the coupling connector, refer to “WIRING SYSTEM”.
Power rear gate system <Ref. to WI-296, WIRING DIAGRAM, Power Rear Gate System.>

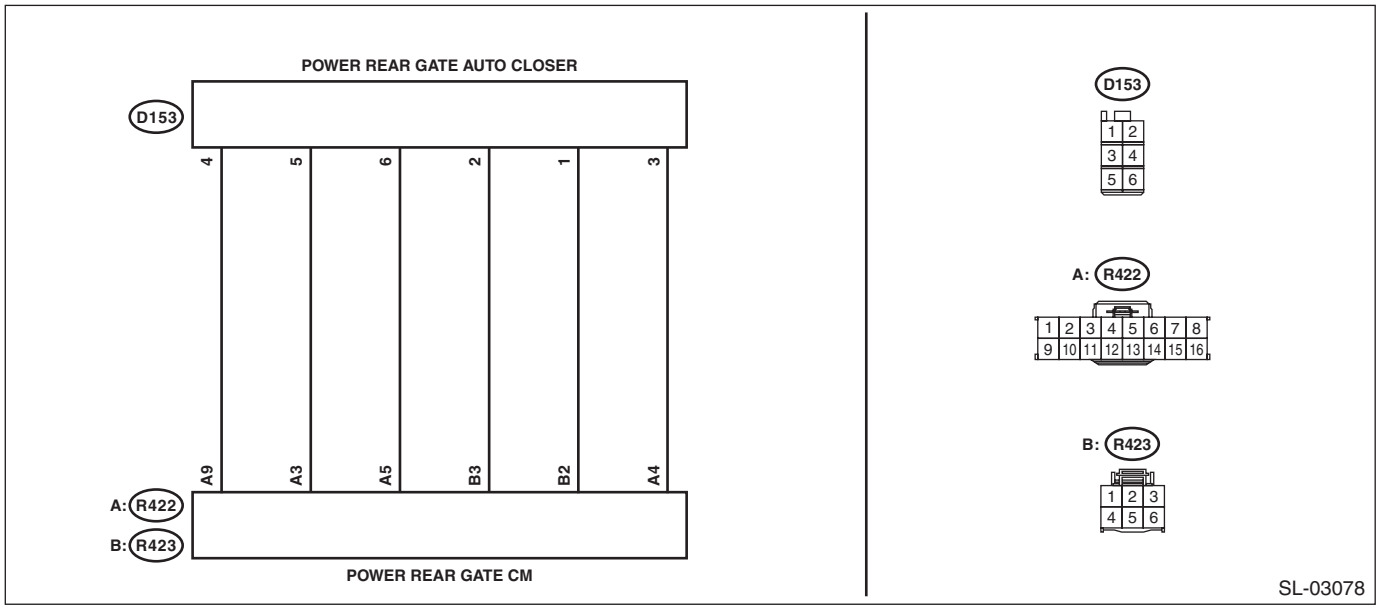

Step		Check	Yes	No
1	**CHECK CLOSER UNIT.** 1) Turn the ignition switch to OFF. 2) Disconnect the PRG CM connector in the order of (R423) → (R422). 3) Disconnect the PRG auto closer connector. 4) Perform the operation check for the PRG auto closer motor. <Ref. to PRG-12, INSPECTION, Power Rear Gate Auto Closer.>	Does it operate properly?	Even if DTC is displayed, the circuit has returned to a normal condition at this time. Reproduce the failure, and then perform the diagnosis again. NOTE: In this case, temporary poor contact of connector, temporary open or short circuit of harness may be the cause.	Go to step **2**.
2	**CHECK HARNESS (OPEN CIRCUIT).** Using a tester, measure the resistance between the PRG CM connector and PRG auto closer connector. ***Connector & terminal*** ***(R423) No. 2 — (D153) No. 1:*** ***(R423) No. 3 — (D153) No. 2:*** ***(R422) No. 9 — (D153) No. 4:***	Is the resistance less than 10 Ω?	Go to step **3**.	Repair or replace the open circuit of harness.

	Step	Check	Yes	No
3	**CHECK HARNESS (GROUND SHORT CIRCUIT).** Using a tester, measure the resistance between the PRG CM connector and chassis ground. ***Connector & terminal*** ***(R423) No. 2 — Chassis ground:*** ***(R423) No. 3 — Chassis ground:***	Is the resistance 1 MΩ or more?	Replace the PRG CM. <Ref. to PRG-6, Power Rear Gate Control Module.>	Repair or replace the short circuit of the harness.

U: DTC B2527 AUTO CLOSER MOTOR CIRCUIT LAW

DTC DETECTING CONDITION:

When malfunction in the power rear gate auto closer is detected.

TROUBLE SYMPTOM:

The pull-in/release operation of closer is not possible.

NOTE:

For the diagnostic procedure, refer to DTC B2526. <Ref. to PRG(diag)-46, DTC B2526 AUTO CLOSER MOTOR CIRCUIT OPEN, Diagnostic Procedure with Diagnostic Trouble Code (DTC).>

12.General Diagnostic Table

A: INSPECTION

Symptoms	Note
Turn hazard lights do not illuminate	<Ref. to PRG(diag)-49, TURN HAZARD LIGHTS DO NOT ILLUMINATE, INSPECTION, Diagnostics with Phenomenon.>
The buzzer does not sound	<Ref. to PRG(diag)-50, THE BUZZER DOES NOT SOUND, INSPECTION, Diagnostics with Phenomenon.>
Operation by the PRG driver's SW is not possible	<Ref. to PRG(diag)-55, OPERATION BY THE PRG DRIVER'S SW IS NOT POSSIBLE, INSPECTION, Diagnostics with Phenomenon.>
Memory height SW does not function.	<Ref. to PRG(diag)-52, CHECK MEMORY HEIGHT SW INPUT CIRCUIT, INSPECTION, Diagnostics with Phenomenon.>
PRG inner SW does not function	<Ref. to PRG(diag)-56, PRG INNER SW DOES NOT FUNCTION, INSPECTION, Diagnostics with Phenomenon.>
PRG position cannot be memorized. Does not stop at a height registered in memory.	<Ref. to PRG(diag)-53, PRG POSITION CANNOT BE MEMORIZED, INSPECTION, Diagnostics with Phenomenon.>
PRG opener button does not function	<Ref. to PRG(diag)-53, PRG OPENER BUTTON DOES NOT FUNCTION, INSPECTION, Diagnostics with Phenomenon.>
Operation from keyless/keyless access mobile key is not possible.	<Ref. to PRG(diag)-54, OPERATION FROM KEYLESS/KEYLESS ACCESS MOBILE KEY IS NOT POSSIBLE, INSPECTION, Diagnostics with Phenomenon.>
PRG does not operate. Only operate in either auto-open or close operation.	<Ref. to PRG(diag)-57, PRG DOES NOT OPERATE, INSPECTION, Diagnostics with Phenomenon.>

13.Diagnostics with Phenomenon

A: INSPECTION

1. TURN HAZARD LIGHTS DO NOT ILLUMINATE

WIRING DIAGRAM:

NOTE:
For the coupling connector, refer to “WIRING SYSTEM”.
Power rear gate system <Ref. to WI-296, WIRING DIAGRAM, Power Rear Gate System.>

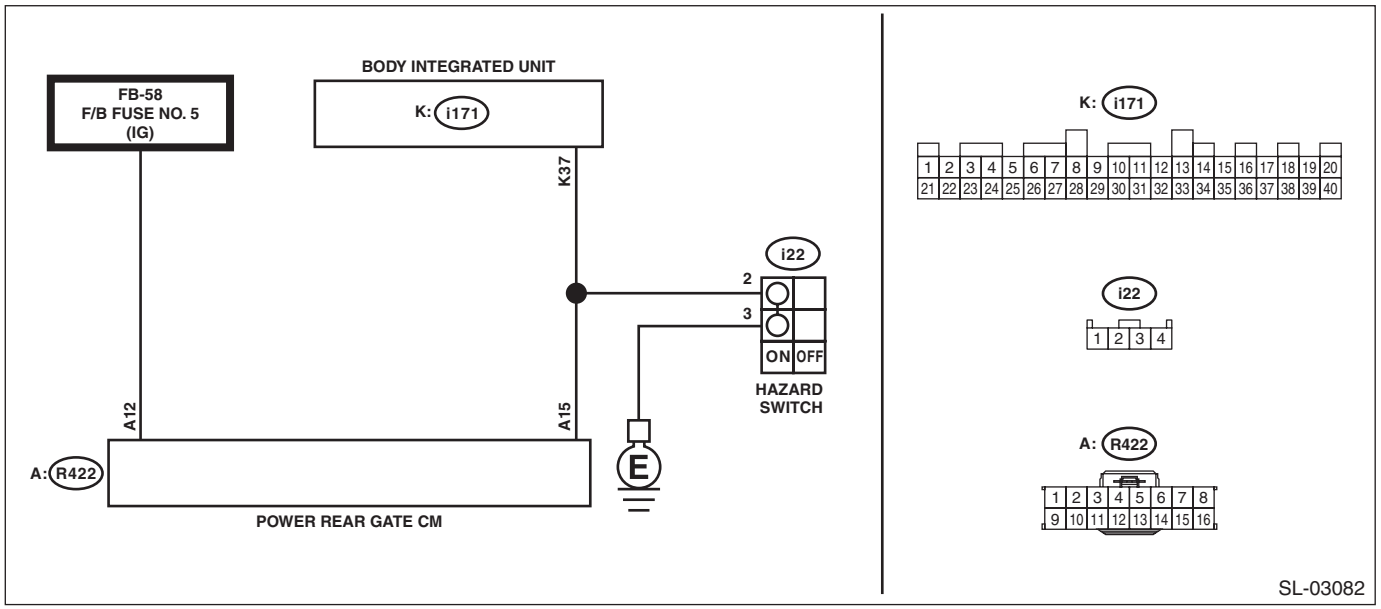

Step		Check	Yes	No
1	**CHECK BODY INTEGRATED UNIT.** Check the hazard light illumination using the following procedures. • Turn the hazard switch to ON. • Perform lock/unlock operation using keyless key / access key.	Does the hazard light illuminate?	Go to step **2**.	Perform diagnosis for the body integrated unit. <Ref. to BC(diag)-2, PROCEDURE, Basic Diagnostic Procedure.>
2	**CHECK PRG CM.** 1) Unlock the vehicle. 2) Turn the ignition switch to ON. 3) Press and hold the power rear gate driver’s switch to activate the power rear gate auto operation.	Does the hazard light illuminate during the power rear gate operation?	The circuit has returned to a normal condition at this time. Reproduce the failure, and then perform the diagnosis again. NOTE: In this case, temporary poor contact of connector, temporary open or short circuit of harness may be the cause.	Go to step **3**.

	Step	Check	Yes	No
3	**CHECK HARNESS.** 1) Turn the ignition switch to OFF. 2) Disconnect the body integrated unit connector. 3) Disconnect the PRG CM connector in the order of (R423) → (R422). 4) Measure the resistance between body integrated unit connector and PRG CM connector. ***Connector & terminal*** ***(R422) No. 15 — (i171) No. 37:***	Is the resistance less than 10 Ω?	Go to step **4**.	Repair or replace the open circuit of harness.
4	**CHECK HARNESS.** Measure the resistance between PRG CM connector and chassis ground. ***Connector & terminal*** ***(R422) No. 15 — Chassis ground:***	Is the resistance 1 MΩ or more?	Replace the PRG CM. <Ref. to PRG-6, Power Rear Gate Control Module.>	Repair or replace the short circuit of the harness.

2. THE BUZZER DOES NOT SOUND

WIRING DIAGRAM:

NOTE:
For the coupling connector, refer to “WIRING SYSTEM”.
Power rear gate system <Ref. to WI-296, WIRING DIAGRAM, Power Rear Gate System.>

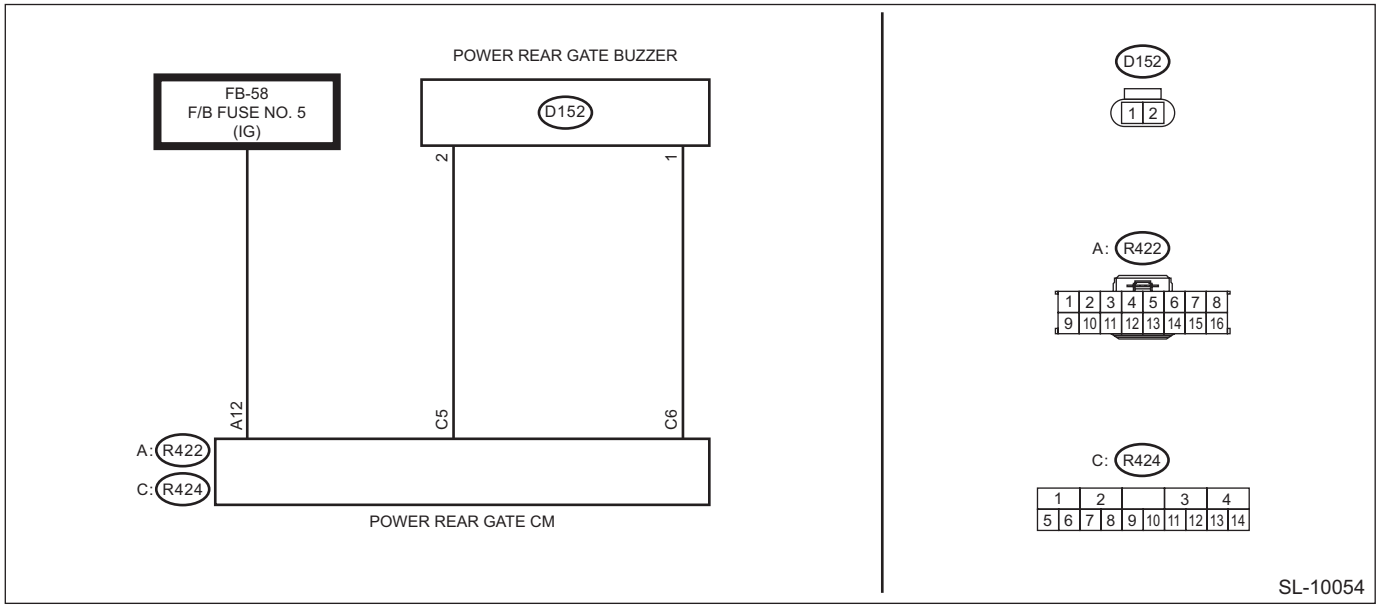

	Step	Check	Yes	No
1	**CHECK CUSTOMIZATION SETTINGS.** Check the current data «Answer-Back Buzzer Information» of power rear gate using Subaru Select Monitor. <Ref. to PRG(diag)-13, Read Current Data.>	Is it ON?	Go to step **2**. (Buzzer sounds)	Go to step **3**. (Buzzer stops)
2	**CHECK AUTO OPERATION.** 1) Turn the ignition switch to OFF. 2) From full close position or full open position, press and hold the power rear gate driver’s switch to open/close the power rear gate.	Does the buzzer sound during the auto operation?	System is normal.	Go to step **3**.

	Step	Check	Yes	No
3	**CHECK FUNCTION.** 1) From the full open position, push the rear gate inner switch to perform the power rear gate auto close operation. 2) During the power rear gate auto close operation, press the sensor unit of the touch sensor to perform the reverse operation. NOTE: During the power rear gate reverse operation, beeping sound (warning sound) is made.	Does the buzzer sound?	System is normal.	Go to step **4**.
4	**CHECK CURRENT DATA.** 1) Check the current data «Buzzer output» of power rear gate using Subaru Select Monitor. <Ref. to PRG(diag)-13, Read Current Data.> 2) From the full open position, push the rear gate inner switch to perform the power rear gate auto close operation. 3) During the power rear gate auto close operation, press the sensor unit of the touch sensor to perform the reverse operation.	Is the change of ON ←→ OFF detected?	Go to step **5**.	Replace the PRG CM. <Ref. to PRG-6, Power Rear Gate Control Module.>
5	**CHECK HARNESS.** 1) Disconnect the power rear gate buzzer connector. 2) Using an oscilloscope, measure the voltage between power rear gate buzzer connector and chassis ground. 3) From the full open position, push the rear gate inner switch to perform the power rear gate auto close operation. 4) During the power rear gate auto close operation, press the sensor unit of the touch sensor to perform the reverse operation. ***Connector & terminal*** ***(D152) No. 1 (+) — Chassis ground (–):***	Does the voltage waveform temporarily change between ON and OFF during the power rear gate reverse operation?	Replace the power rear gate buzzer. <Ref. to PRG-17, Power Rear Gate Buzzer.>	Go to step **6**.
6	**CHECK HARNESS.** 1) Disconnect the PRG CM connector in the order of (R423) → (R424). 2) Measure the resistance between PRG CM connector and power rear gate buzzer connector. ***Connector & terminal*** ***(R424) No. 5 — (D152) No. 2:*** ***(R424) No. 6 — (D152) No. 1:***	Is the resistance less than 10 Ω?	Go to step **7**.	Repair or replace the open circuit of harness.
7	**CHECK HARNESS.** 1) Connect the power rear gate buzzer connector. 2) Measure the resistance between PRG CM connector and chassis ground. ***Connector & terminal*** ***(R424) No. 5 — Chassis ground:*** ***(R424) No. 6 — Chassis ground:***	Is the resistance 1 MΩ or more?	Replace the PRG CM. <Ref. to PRG-6, Power Rear Gate Control Module.>	Repair or replace the short circuit of the harness.

3. CHECK MEMORY HEIGHT SW INPUT CIRCUIT

NOTE:
Before performing diagnosis, initialize PRG SYS by opening PRG in manual operation, and then operating the power rear gate auto closer from the partially latched state.

WIRING DIAGRAM:

NOTE:
For the coupling connector, refer to “WIRING SYSTEM”.
Power rear gate system <Ref. to WI-296, WIRING DIAGRAM, Power Rear Gate System.>

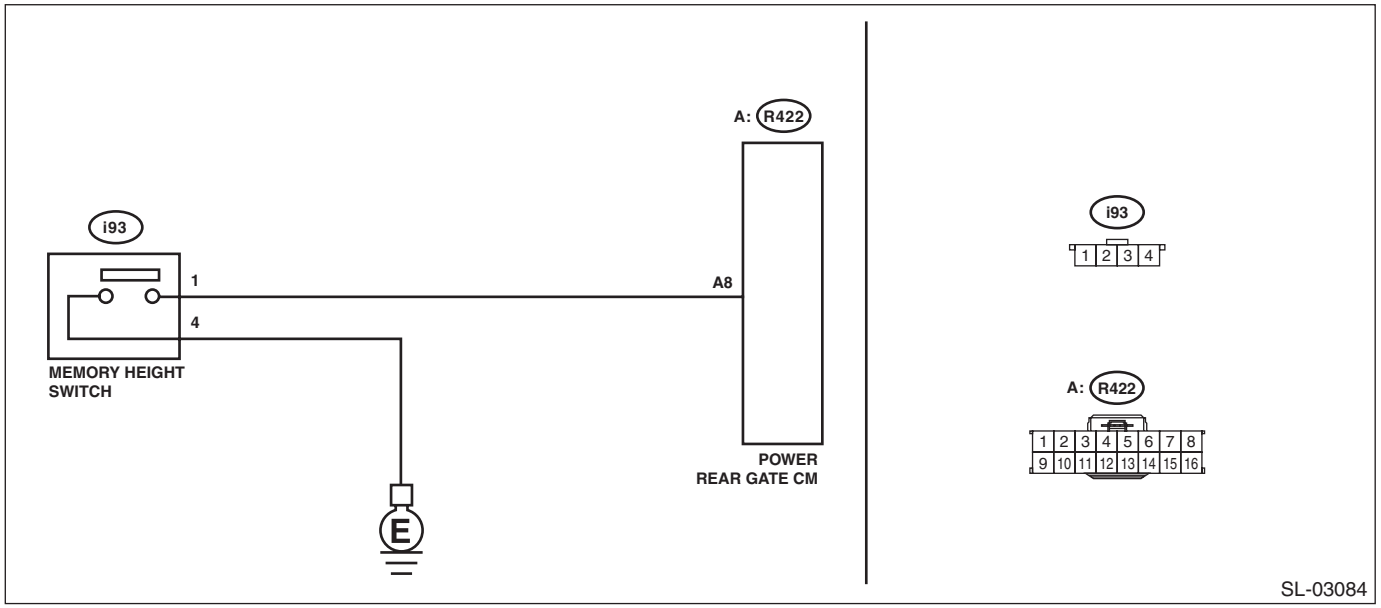

	Step	Check	Yes	No
1	**CHECK CURRENT DATA.** Check «Memory stop SW» using the Subaru Select Monitor. <Ref. to PRG(diag)-13, Read Current Data.>	Does the display switch between OFF ←→ ON according to memory height SW operation?	Input circuit is normal.	Go to step **2**.
2	**CHECK HARNESS.** 1) Disconnect the PRG CM connector in the order of (R423) → (R422). 2) Disconnect the memory height SW connector. 3) Measure the resistance between PRG CM connector and memory height SW connector. ***Connector & terminal*** ***(R422) No. 8 — (i93) No. 1:***	Is the resistance less than 10 Ω?	Go to step **3**.	Repair or replace the open circuit of harness.
3	**CHECK HARNESS.** Measure the resistance between memory height SW connector and chassis ground. ***Connector & terminal*** ***(R422) No. 8 — Chassis ground:***	Is the resistance 1 MΩ or more?	Go to step **4**.	Repair or replace the short circuit of the harness.
4	**CHECK HARNESS.** Measure the resistance between memory height SW connector and chassis ground. ***Connector & terminal*** ***(i93) No. 4 — Chassis ground:***	Is the resistance less than 10 Ω?	Go to step **5**.	Repair or replace the open circuit of harness.
5	**CHECK MEMORY HEIGHT SW.** Measure the resistance between switch terminals. ***Connector & terminal*** ***(i93) No. 1 — (i93) No. 4:***	Is the resistance 1 MΩ or more at OFF, and less than 1 Ω at ON?	Go to step **6**.	Replace the memory height SW. <Ref. to PRG-20, Memory Height Switch.>

Step		Check	Yes	No
6	**CHECK CONNECTOR.**	Is there poor contact of connector?	Repair or replace the poor contact of connector.	Replace the PRG CM. <Ref. to PRG-6, Power Rear Gate Control Module.>

4. PRG POSITION CANNOT BE MEMORIZED

NOTE:
Before performing diagnosis, initialize PRG SYS by opening PRG in manual operation, and then operating the power rear gate auto closer from the partially latched state.

Step		Check	Yes	No
1	**CHECK DTC.** Using the Subaru Select Monitor, read DTC of PRG CM. <Ref. to PRG(diag)-11, Read Diagnostic Trouble Code (DTC).>	Is DTC stored in current malfunction?	Refer to the DTC diagnosis.	Go to step **2**.
2	**CHECK MEMORY HEIGHT SW.**	Is the memory height SW ON?	Go to step **3**.	Set the memory height SW to ON.
3	**CHECK EACH SW.** Perform inspections described in "PRG INNER SW DOES NOT FUNCTION" and "CHECK MEMORY HEIGHT SW INPUT CIRCUIT". <Ref. to PRG(diag)-56, PRG INNER SW DOES NOT FUNCTION, INSPECTION, Diagnostics with Phenomenon.> <Ref. to PRG(diag)-52, CHECK MEMORY HEIGHT SW INPUT CIRCUIT, INSPECTION, Diagnostics with Phenomenon.>	Is there any fault?	Repair it according to each inspection.	Replace the PRG CM. <Ref. to PRG-6, Power Rear Gate Control Module.>

5. PRG OPENER BUTTON DOES NOT FUNCTION

NOTE:
Before performing diagnosis, initialize PRG SYS by opening PRG in manual operation, and then operating the power rear gate auto closer from the partially latched state.

Step		Check	Yes	No
1	**CHECK DTC.** Using the Subaru Select Monitor, read DTC of PRG CM. <Ref. to PRG(diag)-11, Read Diagnostic Trouble Code (DTC).>	Is DTC stored in current malfunction?	Refer to the DTC diagnosis.	Go to step **2**.
2	**CHECK CURRENT DATA.** Check «R/G Open SW» using the Subaru Select Monitor. <Ref. to PRG(diag)-13, Read Current Data.>	Does the display switch between "OFF""tap""press and hold" according to PRG opener button operation?	Switch input signal is normal.	Go to step **3**.
3	**CHECK BODY INTEGRATED UNIT.** • For models with keyless access Perform STEP 6 and subsequent procedures in "CANNOT UNLOCK WITH THE REAR GATE OPENER BUTTON" in KPS (DIAGNOSTICS). <Ref. to KPS(diag)-124, REAR GATE CANNOT BE UNLOCKED WITH THE REAR GATE OPENER BUTTON, INSPECTION, Diagnostics with Phenomenon.> • For models without keyless access Perform "CHECK REAR GATE OPENER BUTTON CIRCUIT" in Door Lock Control System. <Ref. to SL-15, CHECK REAR GATE OPENER BUTTON CIRCUIT, INSPECTION, Door Lock Control System.>	Is there any fault?	Repair it according to each inspection.	Replace the PRG CM. <Ref. to PRG-6, Power Rear Gate Control Module.>

6. OPERATION FROM KEYLESS/KEYLESS ACCESS MOBILE KEY IS NOT POSSIBLE

NOTE:
Before performing diagnosis, initialize PRG SYS by opening PRG in manual operation, and then operating the power rear gate auto closer from the partially latched state.

Step		Check	Yes	No
1	**CHECK DTC.** Using the Subaru Select Monitor, read DTC of PRG CM. <Ref. to PRG(diag)-11, Read Diagnostic Trouble Code (DTC).>	Is DTC stored in current malfunction?	Refer to the DTC diagnosis.	Go to step **2**.
2	**CHECK CURRENT DATA.** Check «Normal Keyless R/G SW» or «Smart Keyless R/G SW» using the Subaru Select Monitor. <Ref. to PRG(diag)-13, Read Current Data.>	Does the display switch between "OFF""tap""press and hold" according to mobile key SW operation?	Switch input signal is normal.	Go to step **3**.
3	**CHECK BODY INTEGRATED UNIT.** • For models with keyless access Perform "KEYLESS ACCESS LOCK/UNLOCK CANNOT BE PERFORMED FROM ANY OF THE DOORS" in KPS (DIAGNOSTICS). <Ref. to KPS(diag)-109, KEYLESS ACCESS LOCK/UNLOCK CANNOT BE PERFORMED FROM ANY OF THE DOORS, INSPECTION, Diagnostics with Phenomenon.> • For models without keyless access Perform "NONE OF THE FUNCTIONS OF THE KEYLESS ENTRY SYSTEM OPERATE" in Door Lock Control System. <Ref. to SL-18, SYMPTOM CHART, INSPECTION, Keyless Entry System.>	Is there any fault?	Repair it according to each inspection.	Replace the PRG CM. <Ref. to PRG-6, Power Rear Gate Control Module.>

7. OPERATION BY THE PRG DRIVER'S SW IS NOT POSSIBLE

NOTE:
Before performing diagnosis, initialize PRG SYS by opening PRG in manual operation, and then operating the power rear gate auto closer from the partially latched state.

WIRING DIAGRAM:

NOTE:
For the coupling connector, refer to "WIRING SYSTEM".
Power rear gate system <Ref. to WI-296, WIRING DIAGRAM, Power Rear Gate System.>

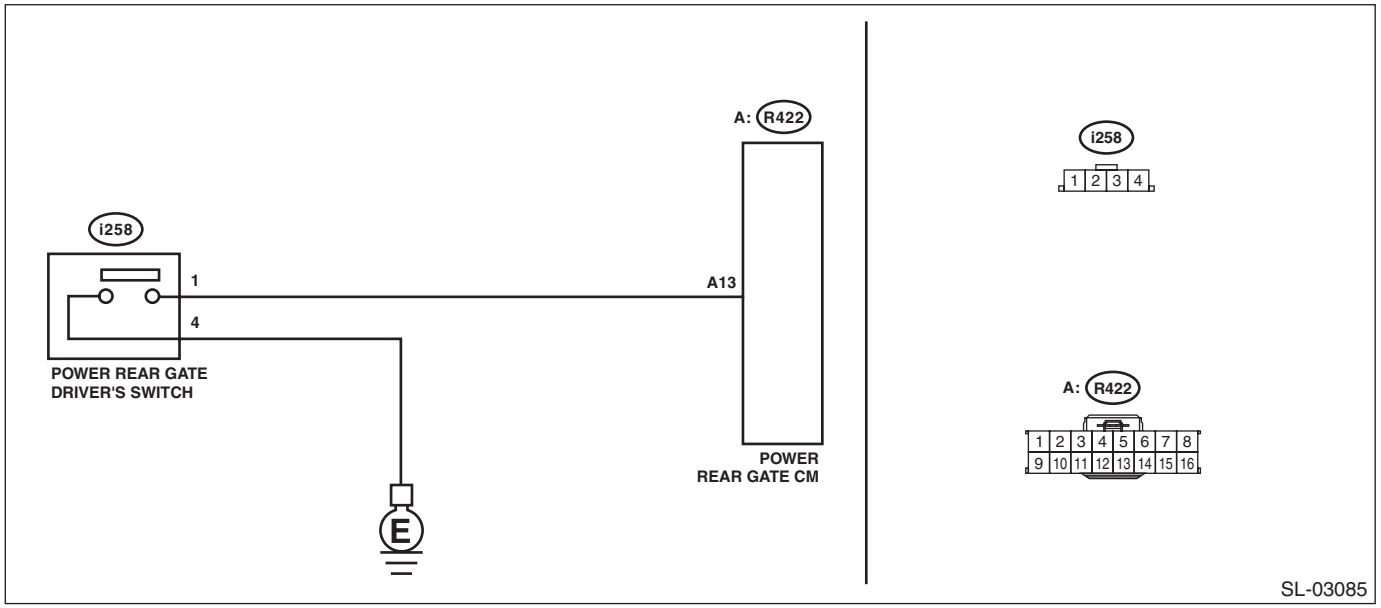

	Step	Check	Yes	No
1	**CHECK CURRENT DATA.** Check «D SW» using the Subaru Select Monitor. <Ref. to PRG(diag)-13, Read Current Data.>	Does the display switch between OFF ←→ ON according to PRG driver's SW operation?	Input circuit is normal.	Go to step **2**.
2	**CHECK HARNESS.** 1) Disconnect the PRG CM connector in the order of (R423) → (R422). 2) Disconnect the power rear gate driver's SW connector. 3) Measure the resistance between PRG CM connector and power rear gate driver's SW connector. ***Connector & terminal*** ***(R422) No. 13 — (i258) No. 1:***	Is the resistance less than 10 Ω?	Go to step **3**.	Repair or replace the open circuit of harness.
3	**CHECK HARNESS.** Measure the resistance between PRG CM connector and chassis ground. ***Connector & terminal*** ***(R422) No. 13 — Chassis ground:***	Is the resistance 1 MΩ or more?	Go to step **4**.	Repair or replace the short circuit of the harness.
4	**CHECK HARNESS.** Measure the resistance between power rear gate driver's SW connector and chassis ground. ***Connector & terminal*** ***(i258) No. 4 — Chassis ground:***	Is the resistance less than 10 Ω?	Go to step **5**.	Repair or replace the open circuit of harness.
5	**CHECK POWER REAR GATE DRIVER'S SW.** Measure the resistance between switch terminals. ***Connector & terminal*** ***(i258) No. 1 — (i258) No. 4:***	Is the resistance 1 MΩ or more at OFF, and less than 1 Ω at ON?	Go to step **6**.	Replace the memory height SW. <Ref. to PRG-20, Memory Height Switch.>

Step		Check	Yes	No
6	**CHECK CONNECTOR.**	Is there poor contact of connector?	Repair or replace the poor contact of connector.	Replace the PRG CM. <Ref. to PRG-6, Power Rear Gate Control Module.>

8. PRG INNER SW DOES NOT FUNCTION

NOTE:
Before performing diagnosis, initialize PRG SYS by opening PRG in manual operation, and then operating the power rear gate auto closer from the partially latched state.

WIRING DIAGRAM:

NOTE:
For the coupling connector, refer to “WIRING SYSTEM”.
Power rear gate system <Ref. to WI-296, WIRING DIAGRAM, Power Rear Gate System.>

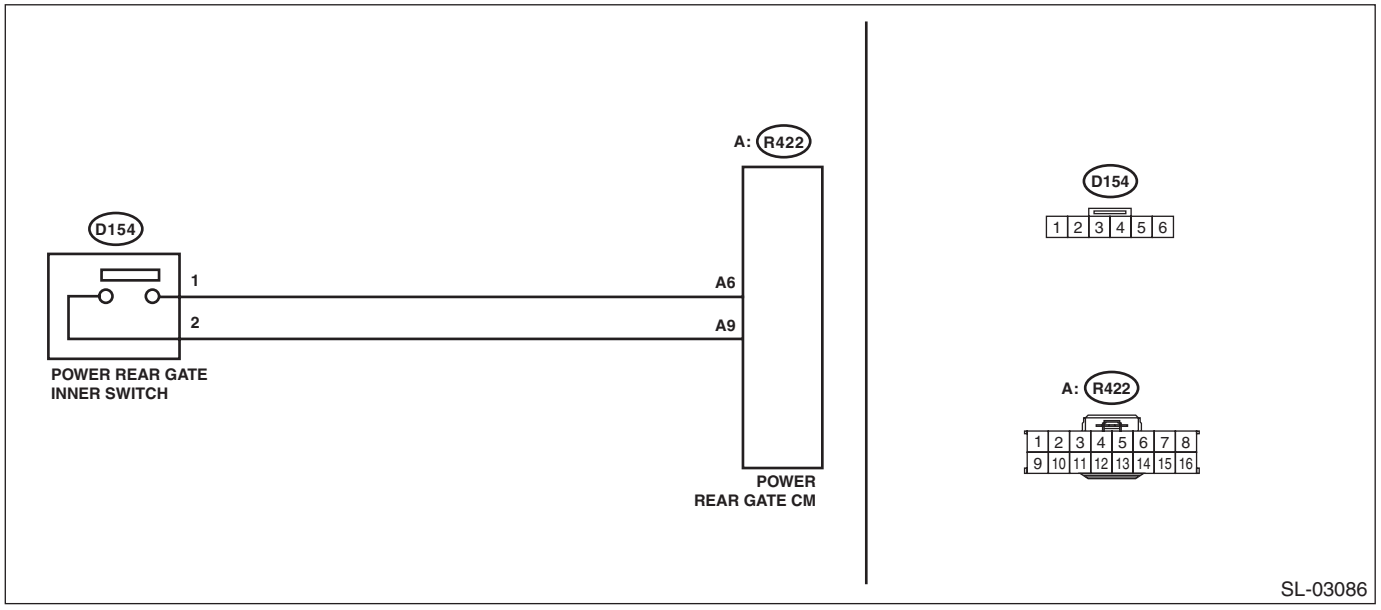

Step		Check	Yes	No
1	**CHECK CURRENT DATA.** Check «R/G inner SW» using the Subaru Select Monitor. <Ref. to PRG(diag)-13, Read Current Data.>	Does the display switch between OFF ←→ ON according to PRG inner SW operation?	Input circuit is normal.	Go to step **2**.
2	**CHECK HARNESS.** 1) Disconnect the PRG CM connector in the order of (R423) → (R422). 2) Disconnect the PRG inner SW connector. 3) Measure the resistance between PRG CM connector and PRG inner SW connector. ***Connector & terminal*** ***(R422) No. 6 — (D154) No. 1:*** ***(R422) No. 9 — (D154) No. 2:***	Is the resistance less than 10 Ω?	Go to step **3**.	Repair or replace the open circuit of harness.
3	**CHECK HARNESS.** Measure the resistance between PRG CM connector and chassis ground. ***Connector & terminal*** ***(R422) No. 6 — Chassis ground:***	Is the resistance 1 MΩ or more?	Go to step **4**.	Repair or replace the short circuit of the harness.

	Step	Check	Yes	No
4	**CHECK PRG INNER SW.** Measure the resistance between switch terminals. ***Connector & terminal (D154) No. 1 — (D154) No. 2:***	Is the resistance 1 MΩ or more at OFF, and less than 1 Ω at ON?	Go to step **5**.	Replace the PRG inner SW. <Ref. to PRG-18, Power Rear Gate Inner Switch.>
5	**CHECK CONNECTOR.**	Is there poor contact of connector?	Repair or replace the poor contact of connector.	Replace the PRG CM. <Ref. to PRG-6, Power Rear Gate Control Module.>

9. PRG DOES NOT OPERATE

NOTE:
When confirming the current data, display only the affected items to be checked. When the display items are too many, changes in the signals will not be reflected.

	Step	Check	Yes	No
1	**CHECK VEHICLE SPEED.** 1) Turn the ignition switch to ON. 2) Check «Front Wheel Speed» of the PRG CM using the Subaru Select Monitor. <Ref. to PRG(diag)-13, Read Current Data.>	Is the reading 0 km/h?	For CVT model: Go to step **2**. For MT model: Go to step **3**.	VDC <Ref. to VDC(diag)-2, Basic Diagnostic Procedure.>, and the body integrated unit <Ref. to BC(diag)-2, Basic Diagnostic Procedure.> must be checked, and if no fault is found, replace the PRG CM. <Ref. to PRG-6, Power Rear Gate Control Module.>
2	**CHECK PARKING CONDITION.** Check «P range SW» of the PRG CM using the Subaru Select Monitor. <Ref. to PRG(diag)-13, Read Current Data.>	For CVT models, does «P range SW» indicate «ON» when the shift lever is in P position?	Go to step **4**.	VDC <Ref. to VDC(diag)-2, Basic Diagnostic Procedure.>, and the body integrated unit <Ref. to BC(diag)-2, Basic Diagnostic Procedure.> must be checked, and if no fault is found, replace the PRG CM. <Ref. to PRG-6, Power Rear Gate Control Module.>

	Step	Check	Yes	No
3	**CHECK PARKING CONDITION.** 1) Apply the electronic parking brake. 2) Check «EPB Operation Status» of the body integrated unit using Subaru Select Monitor. <Ref. to BC(diag)-20, Read Current Data.>	Does «EPB Operating status» indicate «Operate»?	Go to step **4**.	VDC <Ref. to VDC(diag)-2, Basic Diagnostic Procedure.>, and the body integrated unit <Ref. to BC(diag)-2, Basic Diagnostic Procedure.> must be checked, and if no fault is found, replace the PRG CM. <Ref. to PRG-6, Power Rear Gate Control Module.>
4	**CHECK R/G OPEN PERMISSION CONDITIONS.** Using the Subaru Select Monitor, check «R/G Open Authorized State» for the PRG CM. <Ref. to PRG(diag)-13, Read Current Data.> When the vehicle is in locked state: No permission When the vehicle is in unlocked state: Permission	Does display show as described on left at vehicle locked/unlocked state?	Go to step **5**.	Body integrated unit <Ref. to BC(diag)-2, Basic Diagnostic Procedure.> must be checked, and if no fault is found, replace the PRG CM. <Ref. to PRG-6, Power Rear Gate Control Module.>
5	**CHECK Auto Start Stop STATUS.** Using the Subaru Select Monitor, check «Idle Stop Control» for the PRG CM. <Ref. to PRG(diag)-13, Read Current Data.>	Is «Idle Stop Uncontrol» displayed while not controlling the idling stop?	Go to step **6**.	Replace the PRG CM. <Ref. to PRG-6, Power Rear Gate Control Module.>
6	**CHECK TOUCH SENSOR CONDITIONS.** Check «TOUCH SENSOR» for the PRG CM using the Subaru Select Monitor. <Ref. to PRG(diag)-13, Read Current Data.>	Does the display change as ON ←→ OFF along with the ON/OFF operation of the touch sensor?	Go to step **7**.	Check the touch sensor with reference to DTC B2524. <Ref. to PRG(diag)-43, DTC B2524 TOUCH SENSOR CIRCUIT/OPEN, Diagnostic Procedure with Diagnostic Trouble Code (DTC).>
7	**CHECK LATCH CONDITIONS.** Using the Subaru Select Monitor, check «COURTESY SW» «LATCH SW» «SECTOR SW» for PRG CM. <Ref. to PRG(diag)-13, Read Current Data.> • Rear gate open state «COURTESY SW»: ON «LATCH SW»: ON «SECTOR SW»: ON • Rear gate closed state «COURTESY SW»: OFF «LATCH SW»: OFF «SECTOR SW»: ON	In a rear gate open/closed state, does the display indicate each combination of values described on the left?	Go to step **8**.	Check the closer with reference to DTC B2513. <Ref. to PRG(diag)-32, DTC B2513 LATCH CONDITION, Diagnostic Procedure with Diagnostic Trouble Code (DTC).>

	Step	Check	Yes	No
8	**CHECK PRG CM POWER SUPPLY.** Check «+ B» for the PRG CM using the Subaru Select Monitor. <Ref. to PRG(diag)-13, Read Current Data.>	Is the voltage 9 — 16 V?	Go to step **9**.	Check the power supply with reference to DTC B2500. <Ref. to PRG(diag)-16, DTC B2500 BATTERY POWER SUPPLY, Diagnostic Procedure with Diagnostic Trouble Code (DTC).>
9	**CHECK SW INPUT.** From a rear gate fully closed or fully open state, perform auto operation using the following operation switches. • Power rear gate driver's switch • Rear gate opener button • Power rear gate inner switch • Rear gate / trunk SW (keyless transmitter or access key)	Is auto operation activated?	Currently, system is normal. Operation conditions are not met temporarily.	Perform inspection with reference to "OPERATION BY THE PRG DRIVER'S SW IS NOT POSSIBLE", "PRG INNER SW DOES NOT FUNCTION", "PRG OPENER BUTTON DOES NOT FUNCTION", "OPERATION FROM KEYLESS/ KEYLESS ACCESS MOBILE KEY IS NOT POSSIBLE". <Ref. to PRG(diag)-55, OPERATION BY THE PRG DRIVER'S SW IS NOT POSSIBLE, INSPECTION, Diagnostics with Phenomenon.> <Ref. to PRG(diag)-56, PRG INNER SW DOES NOT FUNCTION, INSPECTION, Diagnostics with Phenomenon.> <Ref. to PRG(diag)-53, PRG OPENER BUTTON DOES NOT FUNCTION, INSPECTION, Diagnostics with Phenomenon.> <Ref. to PRG(diag)-54, OPERATION FROM KEYLESS/ KEYLESS ACCESS MOBILE KEY IS NOT POSSIBLE, INSPECTION, Diagnostics with Phenomenon.>

CRUISE CONTROL SYSTEM

CC

		Page
1.	General Description	2
2.	Relay and Fuse	3
3.	Cruise Control System	4
4.	Cruise Control Module	5
5.	Cruise Control Command Switch	6
6.	Combination Meter	8
7.	Stop Light & Brake Switch	9
8.	Clutch Switch	10
9.	Inhibitor Switch	11
10.	Transmission Control Module (TCM)	12
11.	Neutral Position Switch	13
12.	Diagnostics with Phenomenon	14

1. General Description

A: LOCATION

Refer to “LOCATION” of “CRUISE CONTROL SYSTEM (DIAGNOSTICS)” section. <Ref. to CC(diag)-6, LOCATION, Electrical Component Location.>

B: CAUTION

• Before disconnecting connectors of sensors or units, be sure to disconnect the ground cable from battery. When replacing the electrical parts provided with memory functions that store contents specified by a customer, record the memory contents before disconnecting the battery ground cable.
• Be careful of the following items. Failing to do so may cause the airbag system malfunction.
  – Yellow connectors and harnesses with yellow tapes around them are the connectors and harnesses for the airbag system. When using a tester on these circuits, follow the cautions of “AIRBAG SYSTEM”. <Ref. to AB-10, CAUTION, General Description.>
  – Be careful not to damage the airbag system wiring harness when servicing the electrical parts around the steering column.
• When removing, installing or replacing the VDCCM&H/U, VDCCM&H/U bracket, steering wheel or steering angle sensor (steering roll connector), perform “VDC sensor midpoint setting mode” of the VDC. <Ref. to VDC-15, VDC SENSOR MIDPOINT SETTING MODE, ADJUSTMENT, VDC Control Module and Hydraulic Control Unit (VDCCM&H/U).>

C: PREPARATION TOOL

TOOL NAME	REMARKS
Circuit tester	Used for measuring resistance, voltage and current.

2. Relay and Fuse

A: LOCATION

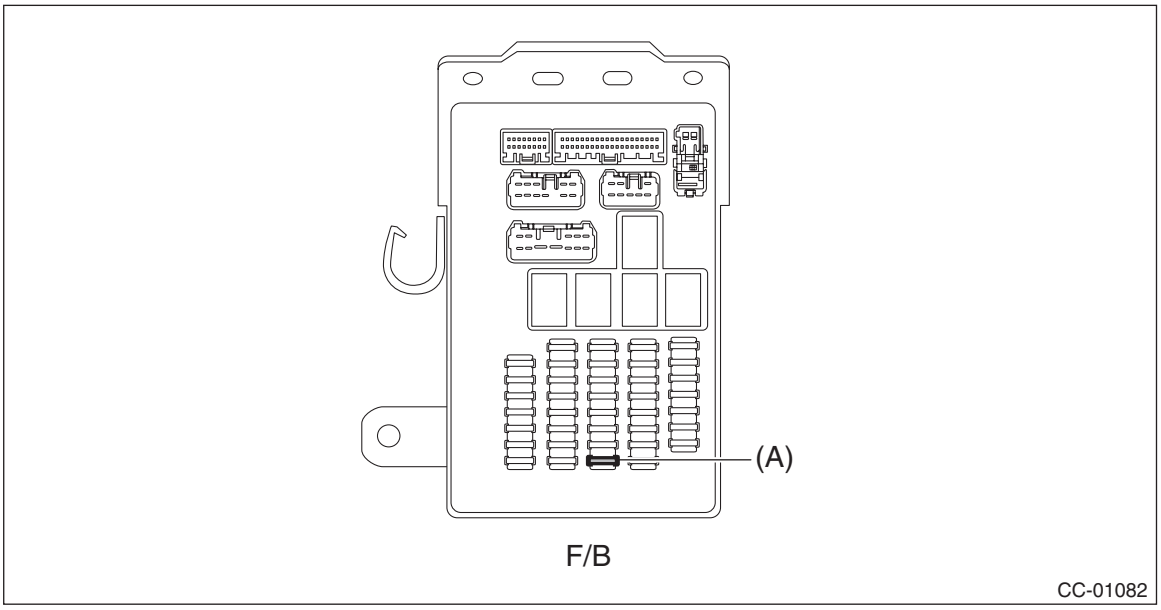

Fuse & relay box (F/B)	Fuse 7.5 A (stop light and brake switch)	(A)

NOTE:
For other related fuses, refer to the wiring diagram. <Ref. to WI-21, Power Supply Circuit.>

B: INSPECTION

1. CHECK FUSE

1) Remove the fuse and inspect visually.
2) If the fuse is blown out, replace the fuse.

NOTE:
If the fuse is blown again, check the system wiring harness.

3. Cruise Control System

A: WIRING DIAGRAM

Refer to “Cruise Control System” in the wiring diagram. <Ref. to WI-151, WIRING DIAGRAM, Cruise Control System.>

B: INSPECTION

Refer to “Basic Diagnostic Procedure” of “CRUISE CONTROL SYSTEM (DIAGNOSTICS)”. <Ref. to CC(diag)-2, Basic Diagnostic Procedure.>

C: NOTE

For operation procedures of each component of the cruise control system, refer to the respective section.

- Cruise control module: <Ref. to CC-5, Cruise Control Module.>
- Cruise control command switch: <Ref. to CC-6, Cruise Control Command Switch.>
- Combination meter: <Ref. to CC-8, Combination Meter.>
- Stop light and brake switch: <Ref. to CC-9, Stop Light & Brake Switch.>
- Clutch switch: <Ref. to CC-10, Clutch Switch.>
- Inhibitor switch: <Ref. to CC-11, Inhibitor Switch.>
- Transmission control module (TCM): <Ref. to CC-12, Transmission Control Module (TCM).>
- Neutral position switch: <Ref. to CC-13, Neutral Position Switch.>

4. Cruise Control Module

A: NOTE

The control of cruise control system is carried out in engine control module (ECM). For operation procedures, refer to “FUEL INJECTION (FUEL SYSTEMS)” section.

- H4 model: <Ref. to FU(H4DO)-82, Engine Control Module (ECM).>
- H6 model: <Ref. to FU(H6DO)-83, Engine Control Module (ECM).>

5. Cruise Control Command Switch

A: REMOVAL

CAUTION:
Before handling the airbag system components, refer to "CAUTION" of "General Description" in "AIRBAG SYSTEM". <Ref. to AB-10, CAUTION, General Description.>
1) Set the tire to the straight-ahead position.
2) Disconnect the ground terminal from the battery sensor, and wait for at least 60 seconds before starting work. <Ref. to RC-4, BATTERY, NOTE, Repair Contents.>
3) Remove the driver's airbag module. <Ref. to AB-32, REMOVAL, Driver's Airbag Module.>
4) Remove the steering wheel. <Ref. to PS-9, REMOVAL, Steering Wheel.>
5) Remove the cruise control command switch assembly. <Ref. to PS-10, DISASSEMBLY, Steering Wheel.>

B: INSTALLATION

CAUTION:
• Before handling the airbag system components, refer to "CAUTION" of "General Description" in "AIRBAG SYSTEM". <Ref. to AB-10, CAUTION, General Description.>
• Do not allow harness and connectors to interfere or get tangled up with other parts.
• If the steering wheel has been removed, make sure that the steering roll connector is not turned from the original position.
• If the steering wheel and steering angle sensor (steering roll connector) are removed, perform "VSC(VDC) Centering Mode" of the VDC. <Ref. to VDC-15, VDC SENSOR MIDPOINT SETTING MODE, ADJUSTMENT, VDC Control Module and Hydraulic Control Unit (VDCCM&H/U).>
• Securely install the switch. Improper insertion of the pin or claw of the switch may cause improper installation.
1) Install the cruise control command switch assembly.
2) Align the center position of the steering roll connector. <Ref. to AB-63, ADJUSTMENT, Roll Connector.>
3) Install the steering wheel.

Tightening torque:
39 N·m (4.0 kgf-m, 28.8 ft-lb)

Clearance:
Between cover assembly - column and steering wheel: 4 — 6 mm (0.16 — 0.24 in)
4) Install the driver's airbag module. <Ref. to AB-33, INSTALLATION, Driver's Airbag Module.>
5) Connect the ground terminal to battery sensor. <Ref. to RC-4, BATTERY, NOTE, Repair Contents.>

C: INSPECTION

1) Measure the resistance between connector terminals.

Preparation tool:
Circuit tester

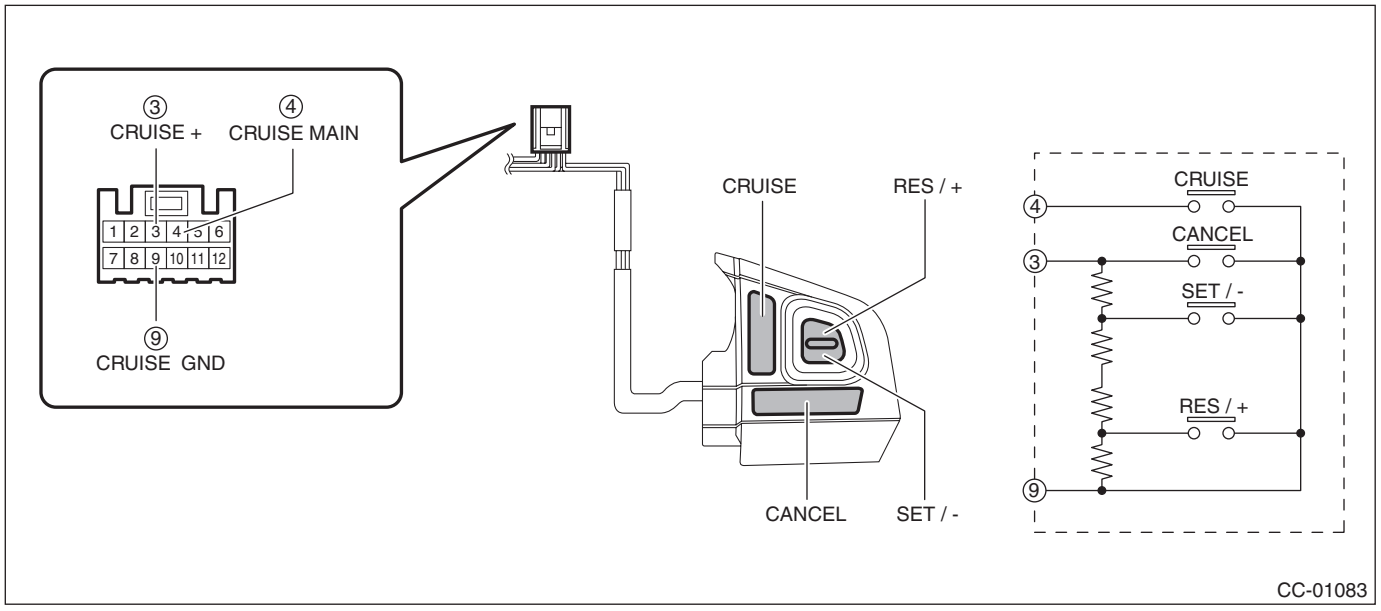

Terminal No.	Inspection conditions		Standard
3 — 9	CANCEL SET/– RES/+	All OFF	Approx. 4,020 Ω
	CANCEL	ON	Less than 1 Ω
	SET/–	ON	Approx. 250 Ω
	RES/+	ON	Approx. 1,470 Ω
4 — 9	CRUISE (MAIN)	OFF	1 MΩ or more
		ON	Less than 1 Ω

2) Apply battery voltage between the connector terminals to check lighting condition of illumination inside the switch.

Terminal No.	Inspection conditions	Specification
10 (+) — 11 (–)	Apply battery voltage.	Light ON

3) Replace the cruise control command switch assembly if the inspection result is not within the standard.

6. Combination Meter

A: NOTE

For the operation procedures for combination meter, refer to “INSTRUMENTATION/DRIVER INFO” section. <Ref. to IDI-11, Combination Meter.>

7. Stop Light & Brake Switch

A: NOTE

For the operation procedures for stop light and brake switch, refer to “BRAKE” section. <Ref. to BR-81, Stop Light Switch.>

8. Clutch Switch

A: NOTE

For the operation procedures for clutch switch, refer to “CLUTCH SYSTEM” section. <Ref. to CL-31, Clutch Switch.>

9. Inhibitor Switch

A: NOTE

For the operation procedures for inhibitor switch, refer to “CONTINUOUSLY VARIABLE TRANSMISSION” section.

- H4 model: <Ref. to CVT(TR580)-104, Inhibitor Switch.>
- H6 model: <Ref. to CVT(TR690)-102, Inhibitor Switch.>

10.Transmission Control Module (TCM)

A: NOTE

For the operation procedures for transmission control module (TCM), refer to “CONTINUOUSLY VARIABLE TRANSMISSION” section.

- H4 model: <Ref. to CVT(TR580)-159, Transmission Control Module (TCM).>
- H6 model: <Ref. to CVT(TR690)-142, Transmission Control Module (TCM).>

11.Neutral Position Switch

A: NOTE

For the operation procedures for neutral position switch, refer to “MANUAL TRANSMISSION AND DIFFERENTIAL” section. <Ref. to 6MT-55, Switches and Harness.>

12.Diagnostics with Phenomenon

A: INSPECTION

Refer to “Diagnostics with Phenomenon” of “CRUISE CONTROL SYSTEM (DIAGNOSTICS)” section. <Ref. to CC(diag)-11, Diagnostics with Phenomenon.>

CRUISE CONTROL SYSTEM (DIAGNOSTICS)

CC(diag)

		Page
1.	Basic Diagnostic Procedure	2
2.	General Description	5
3.	Electrical Component Location	6
4.	Engine Control Module (ECM) I/O Signal	7
5.	Subaru Select Monitor	8
6.	Read Cancel Code	9
7.	Real-time Diagnosis	10
8.	Diagnostics with Phenomenon	11
9.	List of Cancel Code	13
10.	Diagnostic Procedure with Cancel Code	15

1. Basic Diagnostic Procedure

A: PROCEDURE

CAUTION:
• When performing diagnosis, observe the legal speed limit on the road.
• The cancel code will also appear when the cruise control is cancelled by the driver's operation. Do not confuse them.
• Be sure to get an assistant to support the diagnosis while driving, and have him/her operate the select monitor.

	Step	Check	Yes	No
1	**CHECK MALFUNCTION INDICATOR LIGHT.** Make sure the malfunction indicator light illuminates.	Does the malfunction indicator light illuminate?	Go to step **5**.	Go to step **2**.
2	**CHECK CRUISE INDICATOR LIGHT.** Make sure the cruise indicator light blinks.	Does the cruise indicator light blink?	Go to step **7**.	Go to step **3**.
3	**CHECK CRUISE SWITCH OPERATION.** Check the CRUISE switch operation. (Check the illumination of the CRUISE indicator.)	Is the CRUISE switch turned on? (Does the CRUISE indicator illuminate?)	Go to step **4**.	Go to phenomenon 1. <Ref. to CC(diag)-11, DIAGNOSTIC PROCEDURE WITH PHENOMENON, Diagnostics with Phenomenon.>
4	**CHECK CRUISE CONTROL SET OPERATION.** Check the cruise control setting operation.	Can the cruise control be set while driving at 40 km/h (25 MPH) or more?	Go to step **8**.	Go to step **7**.
5	**CHECK DTC.** Read all DTCs using the Subaru Select Monitor.	Is an engine or ABS/VDC related DTC displayed?	Record the DTC. Go to step **6**.	Go to phenomenon 2. <Ref. to CC(diag)-11, DIAGNOSTIC PROCEDURE WITH PHENOMENON, Diagnostics with Phenomenon.>
6	**CHECK FREEZE FRAME DATA.** Using the Subaru Select Monitor, check the Freeze Frame Data or Information in Trouble State.	Was the Freeze Frame Data or Information in Trouble State recorded?	Record the data. Perform the diagnosis according to the engine or ABS/VDC related DTC.	Perform the diagnosis according to the engine or ABS/VDC related DTC.
7	**CHECK CANCEL CODE.** Using the Subaru Select Monitor, read the cancel codes. NOTE: • Do not turn the ignition switch to OFF after the cruise control is deactivated. • Do not operate the cruise control command switch after the cruise control is deactivated. If the above is performed, the cancel code will be cleared.	Is it possible to read the cancel codes?	Perform the diagnosis according to the cancel code. <Ref. to CC(diag)-13, LIST, List of Cancel Code.>	Go to step **8**.

	Step	Check	Yes	No
8	**CHECK SET INDICATOR.** Check the illumination of the SET indicator.	Does the SET indicator illuminate?	Go to step **9**.	Go to phenomenon 3. <Ref. to CC(diag)-11, DIAGNOSTIC PROCEDURE WITH PHENOMENON, Diagnostics with Phenomenon.>
9	**CHECK VEHICLE SPEED IS HELD WITHIN SET SPEED.** Make sure the vehicle speed is held within set speed.	Is the vehicle speed kept within setting speed ±3 km/h (±2 MPH)? (Make sure that on a level road.)	Go to step **10**.	Go to phenomenon 4. <Ref. to CC(diag)-11, DIAGNOSTIC PROCEDURE WITH PHENOMENON, Diagnostics with Phenomenon.>
10	**CHECK RES/+ OPERATION.** Check the RES/+ switch operation.	Does the vehicle speed increase or return to set speed after RES/+ switch has been pressed?	Go to step **11**.	Go to phenomenon 5. <Ref. to CC(diag)-11, DIAGNOSTIC PROCEDURE WITH PHENOMENON, Diagnostics with Phenomenon.>
11	**CHECK SET/– OPERATION.** Check the SET/– switch operation.	Does the vehicle speed decrease after SET/– switch has been pressed?	Go to step **12**.	Go to phenomenon 6. <Ref. to CC(diag)-11, DIAGNOSTIC PROCEDURE WITH PHENOMENON, Diagnostics with Phenomenon.>
12	**CANCEL OPERATION CHECK.** Check the CANCEL switch operation.	Is the cruise control released after CANCEL switch has been pressed?	Go to step **13**.	Go to phenomenon 7. <Ref. to CC(diag)-11, DIAGNOSTIC PROCEDURE WITH PHENOMENON, Diagnostics with Phenomenon.>
13	**CHECK CRUISE CONTROL RELEASE OPERATION.** Check the cruise control release operation.	Is the cruise control released after brake pedal has been depressed?	Go to step **14**.	Go to phenomenon 8. <Ref. to CC(diag)-11, DIAGNOSTIC PROCEDURE WITH PHENOMENON, Diagnostics with Phenomenon.>

	Step	Check	Yes	No
14	**CHECK CRUISE CONTROL RELEASE OPERATION.** Check the cruise control release operation.	Is the cruise control released after shifting to the neutral position?	Go to step **15**.	Go to phenomenon 9. <Ref. to CC(diag)-11, DIAGNOSTIC PROCEDURE WITH PHENOMENON, Diagnostics with Phenomenon.>
15	**CHECK CRUISE CONTROL RELEASE OPERATION.** Check the cruise control release operation.	Is the cruise control released after depressing the clutch pedal?	Finish the diagnosis.	Go to phenomenon 10. <Ref. to CC(diag)-11, DIAGNOSTIC PROCEDURE WITH PHENOMENON, Diagnostics with Phenomenon.>

2. General Description

A: CAUTION

Airbag system wiring harness is routed near the cruise control command switch.

CAUTION:
• Do not use the electrical test equipment on the airbag system wiring harnesses and connector circuits.
• Be careful not to damage the airbag system wiring harness when servicing the cruise control command switch. Airbag system wiring harness is routed near the cruise control command switch.

B: PREPARATION TOOL

1. SPECIAL TOOL

ILLUSTRATION	TOOL NUMBER	DESCRIPTION	REMARKS
 STSSM4	—	SUBARU SELECT MONITOR 4	Used for setting of each function and trouble-shooting for electrical system. NOTE: For detailed operation procedures of Subaru Select Monitor 4, refer to “Application help”.

2. GENERAL TOOL

TOOL NAME	REMARKS
Circuit tester	Used for measuring resistance, voltage and current.
DST-i	Used for Subaru Select Monitor 4.

C: INSPECTION

Check the battery. <Ref. to SC(H4DO)-65, INSPECTION, Battery.> <Ref. to SC(H6DO)-59, INSPECTION, Battery.>

3. Electrical Component Location

A: LOCATION

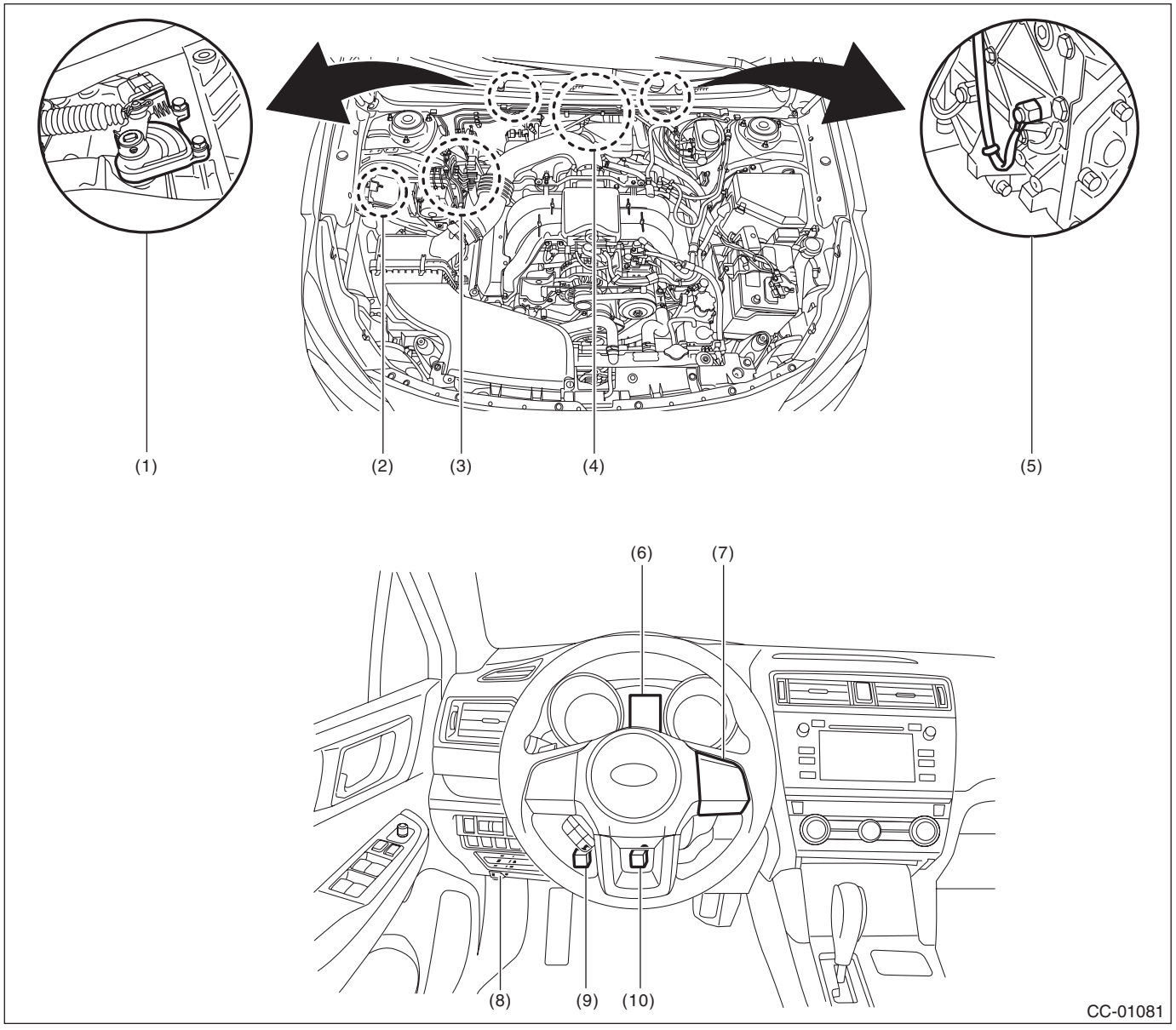

(1) Inhibitor switch (CVT model)
(2) TCM (engine type: EZ)
(3) ECM
(4) TCM (engine type: FB) (on the transmission)
(5) Neutral position switch (MT model)
(6) Cruise indicator light and cruise set indicator light
(7) Cruise control command switch
(8) Data link connector
(9) Clutch switch (MT model)
(10) Stop light and brake switch

4. Engine Control Module (ECM) I/O Signal

A: ELECTRICAL SPECIFICATION

For details on the input/output signals for the engine control module, refer to ENGINE (DIAGNOSTICS). <Ref. to EN(H6DO)(diag)-20, ELECTRICAL SPECIFICATION, Engine Control Module (ECM) I/O Signal.> <Ref. to EN(H4DO)(diag)-20, ELECTRICAL SPECIFICATION, Engine Control Module (ECM) I/O Signal.>

B: WIRING DIAGRAM

Refer to “Cruise Control System” in the wiring diagram. <Ref. to WI-151, WIRING DIAGRAM, Cruise Control System.>

5. Subaru Select Monitor

A: OPERATION

1. GENERAL DESCRIPTION

The on-board diagnosis function of the cruise control system uses Subaru Select Monitor.
The on-board diagnosis function operates in two categories, which are used depending on the type of problems;
1) Cruise Control Cancel Conditions Diagnosis:
(1) This category of diagnosis requires actual vehicle driving in order to determine the cause, as when cruise speed is cancelled during driving although cruise cancel condition is not entered.
(2) Cruise control memory in ECM stores the cancel code which occurred during driving. When there are multiple cancel code, they are shown on the Subaru Select Monitor.

CAUTION:
• In the cruise control memory, not only the cruise control "cancel" occurred (although the "cancel" operation is not entered by the driver), but also the "cancel" condition input by the driver is stored.
• The latest memory content (latest code) is cleared when ignition switch is turned to OFF. However, memory contents set by the diagnosis of faulty switches related to the system and cruise control will remain as trouble history (memory code) after the ignition switch is turned to OFF.
2) Real-time Diagnosis:
Real-time diagnosis function is used to determine whether or not the input signal system is in good order, according to signal emitted from switches, sensors, etc.
(1) Vehicle cannot be driven at cruise speed when the problem occurs in the cruise control system or relevant circuits.
(2) Monitor the signal conditions from switches and sensors.

2. BASIC OPERATION

For operation procedures, refer to the "PC application help for Subaru Select Monitor".

6. Read Cancel Code

A: OPERATION

1) On «Start» display, select «Diagnosis».
2) On «Vehicle selection» display, input the target vehicle information and select «Confirmed».
3) On «Main Menu» display, select «Each System».
4) On «Select System» display, select «Engine Control System».
5) Drive vehicle at 40 km/h (25 MPH) or more and set the cruise control.

CAUTION:
- **When performing diagnosis, observe the legal speed limit on the road.**
- **The cancel code will also appear when the cruise control is cancelled by the driver's operation. Do not confuse them.**
- **Be sure to get an assistant to support the diagnosis while driving, and have him/her operate the select monitor.**

6) When the set speed is cancelled by itself (when cancelled without a cancel operation such as applying the brake) or if the cruise control could not be set by performing the setting operation, selecting the «Cancel Code» on the engine malfunction diagnosis screen will display the cancel code on the select monitor display.

NOTE:
The «Current» and «The past» are contained in the cancel code. The latest code recognized during current test drive is displayed in «Current». Cancel codes resulting from fault diagnosis of switches relating to the system and cruise control are also displayed in «The past».
7) Perform Engine DTC Clear Memory operation. <Ref. to EN(H6DO)(diag)-85, Clear Memory Mode.> <Ref. to EN(H4DO)(diag)-78, Clear Memory Mode.>
Cancel codes for switches relating to the system and cruise control are deleted by clearing memory on the engine side.

NOTE:
- The latest code will be cleared by turning ignition switch to OFF.
- For detailed operation procedures, refer to “Application help”.
- For details on cancel codes, refer to List of Cancel Code. <Ref. to CC(diag)-13, List of Cancel Code.>

7. Real-time Diagnosis

A: OPERATION

1) On «Start» display, select «Diagnosis».
2) On «Vehicle selection» display, input the target vehicle information and select «Confirmed».
3) On «Main Menu» display, select «Each System».
4) On «Select System» display, select «Engine Control System» and then «Enter».
5) On «Select Function» display, select «Data Monitor».
6) Make sure that normal display is shown when operated as follows:

- Depress and release the brake pedal. (Stop light switch and brake switch are turned ON.)
- Turn the “CRUISE” switch to ON.
- Turn the “CANCEL” switch to ON.
- Turn the “SET/–” switch to ON.
- Turn the “RES/+” switch to ON.
- Depress or release the clutch switch.
- Place the shift lever in any position other than neutral.

NOTE:
For detailed operation procedures, refer to “Application help”.

8. Diagnostics with Phenomenon

A: DIAGNOSTIC PROCEDURE WITH PHENOMENON

Phenomenon		Check Item	Note
1	CRUISE switch is not turned ON. (CRUISE indicator does not illuminate.) Or the cruise control is cancelled without CRUISE switch operation.	(1) Perform cruise cancel conditions diagnosis.	Perform the diagnosis according to displayed cancel code.
		(2) Perform the real-time diagnosis.	Check the input signal of cruise control system.
		(3) Check the cruise control command switch.	<Ref. to CC(diag)-15, 11, Diagnostic Procedure with Cancel Code.>
		(4) Check the CRUISE indicator.	<Ref. to CC(diag)-12, CHECK CRUISE INDICATOR LIGHT AND CRUISE SET INDICATOR LIGHT, Diagnostics with Phenomenon.>
2	Cruise control cannot be set. Or cruise control is cancelled without releasing operation.	(1) Perform cruise cancel conditions diagnosis.	Perform the diagnosis according to displayed cancel code.
		(2) Perform the real-time diagnosis.	Check the input signal of cruise control system.
		(3) Check the cruise control command switch.	<Ref. to CC(diag)-15, 11, Diagnostic Procedure with Cancel Code.>
		(4) Check stop light switch and brake switch.	<Ref. to BR-81, Stop Light Switch.> <Ref. to CC(diag)-17, 12, Diagnostic Procedure with Cancel Code.>
		(5) Check clutch switch.	<Ref. to CL-31, Clutch Switch.> <Ref. to CC(diag)-19, 13, Diagnostic Procedure with Cancel Code.>
		(6) Check the neutral position switch.	<Ref. to CC(diag)-20, 14, Diagnostic Procedure with Cancel Code.> <Ref. to CC(diag)-24, 62, Diagnostic Procedure with Cancel Code.>
		(7) Check vehicle speed sensor.	<Ref. to CC(diag)-23, 22, Diagnostic Procedure with Cancel Code.>
3	SET indicator does not illuminate.	Check the SET indicator.	<Ref. to CC(diag)-12, CHECK CRUISE INDICATOR LIGHT AND CRUISE SET INDICATOR LIGHT, Diagnostics with Phenomenon.>
4	Vehicle speed is not held within set speed ±3 km/h (±2 MPH).	Check the vehicle speed sensor.	<Ref. to CC(diag)-23, 22, Diagnostic Procedure with Cancel Code.>
5	Vehicle speed does not increase or does not return to set speed after RES/+ switch has been pressed.	(1) Perform the real-time diagnosis.	Check the input signal of cruise control system.
		(2) Check the RES/+ switch.	<Ref. to CC(diag)-15, 11, Diagnostic Procedure with Cancel Code.>
6	Vehicle speed does not decrease after SET/– switch has been pressed.	(1) Perform the real-time diagnosis.	Check the input signal of cruise control system.
		(2) Check the SET/– switch.	<Ref. to CC(diag)-15, 11, Diagnostic Procedure with Cancel Code.>
7	Cruise control is not released after CANCEL switch has been pressed.	(1) Perform the real-time diagnosis.	Check the input signal of cruise control system.
		(2) Check the CANCEL switch.	<Ref. to CC(diag)-15, 11, Diagnostic Procedure with Cancel Code.>
8	Cruise control is not released after brake pedal has been depressed.	(1) Perform the real-time diagnosis.	Check the input signal of cruise control system.
		(2) Check stop light switch and brake switch.	<Ref. to CC(diag)-17, 12, Diagnostic Procedure with Cancel Code.> <Ref. to BR-81, INSTALLATION, Stop Light Switch.>
9	Cruise control is not released after shifting to the neutral position.	(1) Perform the real-time diagnosis.	Check the input signal of cruise control system.
		(2) Check the neutral position switch.	<Ref. to CC(diag)-20, 14, Diagnostic Procedure with Cancel Code.> <Ref. to CC-13, Neutral Position Switch.>
10	Cruise control is not released after clutch pedal has been depressed.	(1) Perform the real-time diagnosis.	Check the input signal of cruise control system.
		(2) Check clutch switch.	<Ref. to CC(diag)-19, 13, Diagnostic Procedure with Cancel Code.> <Ref. to CL-31, CLUTCH SWITCH, INSTALLATION, Clutch Switch.>

B: CHECK CRUISE INDICATOR LIGHT AND CRUISE SET INDICATOR LIGHT

TROUBLE SYMPTOM:

Cruise control can be set, but the CRUISE indicator and SET indicator do not illuminate.

	Step	Check	Yes	No
1	**CHECK CRUISE INDICATOR LIGHT AND CRUISE SET INDICATOR LIGHT.** Perform the combination meter operation check. <Ref. to MET(diag)-15, System Operation Check Mode.>	Do the CRUISE & SET indicators illuminate?	Go to step **2**.	Replace the meter case assembly. <Ref. to IDI-11, Combination Meter.>
2	**CHECK LAN SYSTEM.** Perform the diagnosis for LAN system. <Ref. to LAN(diag)-2, Basic Diagnostic Procedure.>	Is there any fault?	Perform the diagnosis according to the diagnosis for LAN system.	Replace the ECM. <Ref. to FU(H6DO)-83, Engine Control Module (ECM).> <Ref. to FU(H4DO)-82, Engine Control Module (ECM).>

9. List of Cancel Code

A: LIST

NOTE:
• The cancel code is registered even when cancel is performed intentionally by the driver.
• Cancel codes are cleared if the ignition switch is turned to OFF.
• If a different cancel code is input after a cancel code (latest code) has been input, the latest code is overwritten.
• If the cruise indicator light is flashing, a malfunction is occurring in the system or cruise control related switch. The cancel code at this time is saved even after ignition switch is OFF as a memory code of a past malfunction.
• To display a cancel code, use the Subaru Select Monitor to read the code after the cruise control is deactivated during a driving test.

Cancel code	Item	Contents of diagnosis	Note
11	Main Switch	CRUISE switch of cruise control command switch is turned to OFF, and then the cruise control is released.	This code is displayed without operating the CRUISE switch. <Ref. to CC(diag)-15, 11, Diagnostic Procedure with Cancel Code.>
12	Stop & Brake switch	Stop light switch or brake switch is turned to ON, and then the cruise control is released.	This code is displayed without depressing the brake pedal. <Ref. to CC(diag)-17, 12, Diagnostic Procedure with Cancel Code.>
13	Clutch Switch	Clutch switch is turned to ON, and then the cruise control is released.	This code is displayed without depressing the clutch pedal. <Ref. to CC(diag)-19, 13, Diagnostic Procedure with Cancel Code.>
14	Neutral	Neutral position switch is turned to ON, and then the cruise control is released.	This code is displayed without shifting to neutral position. <Ref. to CC(diag)-20, 14, Diagnostic Procedure with Cancel Code.>
15	Cancel switch	Cancel switch is turned to ON, and then the cruise control is released.	This code is displayed without operating the cancel switch. <Ref. to CC(diag)-21, 15, Diagnostic Procedure with Cancel Code.>
16	Ignition switch	Ignition switch is turned to OFF, and then the cruise control is released.	This code is displayed without operating the ignition switch. <Ref. to CC(diag)-22, 16, Diagnostic Procedure with Cancel Code.>
21	Abnormality of switches when Ignition switch on	When the ignition switch is turned to ON, each switch of cruise control command switch is already turned to ON.	This code is displayed when the ignition switch is turned to ON without operating the cruise control command switch. <Ref. to CC(diag)-22, 21, Diagnostic Procedure with Cancel Code.>
22	Abnormality of change in vehicle speed	Malfunction of vehicle speed signal variation is detected.	<Ref. to CC(diag)-23, 22, Diagnostic Procedure with Cancel Code.>
24	Abnormality of switches related to cruise control	Open circuit of the cruise control switch is detected during cruise driving. (The system is judged as model without cruise control.)	This code is displayed with normal operation. <Ref. to CC(diag)-23, 24, Diagnostic Procedure with Cancel Code.>
31	Abnormal engine speed Signal	• Abnormal increase of engine speed is detected. • Gear is placed in Neutral, 1st (MT model only) or Reverse position.	Cruise in 2nd shift position or more. <Ref. to CC(diag)-23, 31, Diagnostic Procedure with Cancel Code.>
32	Cruse Control out of Range	• Controlled vehicle speed decreased under the limit during cruising. • Set operation was performed at vehicle speed unavailable for setting. • RESUME operation was performed without memorized vehicle speed.	This code is displayed, though the vehicle speed is increased to the speed available for cruise set and set operation was performed again. <Ref. to CC(diag)-23, 32, Diagnostic Procedure with Cancel Code.>

List of Cancel Code

Cancel code	Item	Contents of diagnosis	Note
34	Prohibition of cruise control at continuing big Accel. angle	The vehicle has been driven at higher speed than set vehicle speed for an abnormally long time (approximately 10 minutes) during cruise driving.	This code is displayed when driving for a long period of time at higher speed than appropriate cruise set vehicle speed by operating accelerator pedal. In this case, the cruise setting is deactivated. <Ref. to CC(diag)-23, 34, Diagnostic Procedure with Cancel Code.>
35	Prohibition of cruise control at vehicle speed F/B malfunction	Set vehicle speed cannot be kept because of some reasons (steep uphill, parking brake, abnormal decrease of engine output, etc.) during cruise driving.	This code is displayed when driving condition is not suitable for cruise control. Perform cruise set operation again after clearing the possible cause. <Ref. to CC(diag)-24, 35, Diagnostic Procedure with Cancel Code.>
41	VDC/TCS Operating	Vehicle dynamics control (VDC), TCS or EPB is operated during cruise driving or cruise setting.	This code is displayed when driving condition is not suitable for cruise control. Perform cruise set operation again after clearing the possible cause. <Ref. to CC(diag)-24, 41, Diagnostic Procedure with Cancel Code.>
43	ABS/VDC Failure	ABS or Vehicle dynamics control (VDC) system malfunction is detected during cruise driving or cruise setting.	<Ref. to CC(diag)-24, 43, Diagnostic Procedure with Cancel Code.>
44	Body Integrated unit Failure	Body integrated unit system malfunction is detected during cruise driving or cruise setting.	<Ref. to CC(diag)-24, 44, Diagnostic Procedure with Cancel Code.>
45	Meter Failure	Combination meter malfunction is detected during cruise driving or cruise setting.	<Ref. to CC(diag)-24, 45, Diagnostic Procedure with Cancel Code.>
49	TCM Failure	Transmission control module (TCM) malfunction is detected during cruise driving or cruise setting.	<Ref. to CC(diag)-24, 49, Diagnostic Procedure with Cancel Code.>
61	Brake switch abnormal	Malfunction in the stop light & brake switch is detected.	<Ref. to CC(diag)-24, 61, Diagnostic Procedure with Cancel Code.>
62	Neutral Switch Failure	Neutral position switch malfunction is detected.	<Ref. to CC(diag)-24, 62, Diagnostic Procedure with Cancel Code.>
63	Abnormality 1 of change in vehicle speed	Malfunction of vehicle speed signal variation is detected.	<Ref. to CC(diag)-25, 63, Diagnostic Procedure with Cancel Code.>
64	Engine Sensor Failure 1	Malfunction related to engine is detected.	<Ref. to CC(diag)-25, 64, Diagnostic Procedure with Cancel Code.>
65	Abnormality 1 of switches related to cruise control	Cruise control command switch malfunction is detected. (When the switch is pressed ON for a long time (approximately two minutes), stuck ON condition is detected.)	<Ref. to CC(diag)-25, 65, Diagnostic Procedure with Cancel Code.>
66	Cruise Control Calculation Error	Malfunction of the cruise control calculation (microcomputer) is detected.	<Ref. to CC(diag)-25, 66, Diagnostic Procedure with Cancel Code.>

10.Diagnostic Procedure with Cancel Code

A: 11

When CRUISE switch is pressed, or a malfunction related to CRUISE switch occurs, this is detected.

TROUBLE SYMPTOM:

- Cruise control cannot be set. (Cancelled immediately.)
- Cruise control cannot be released.

WIRING DIAGRAM:

NOTE:
For the coupling connector, refer to “WIRING SYSTEM”.
Cruise control system <Ref. to WI-151, WIRING DIAGRAM, Cruise Control System.>

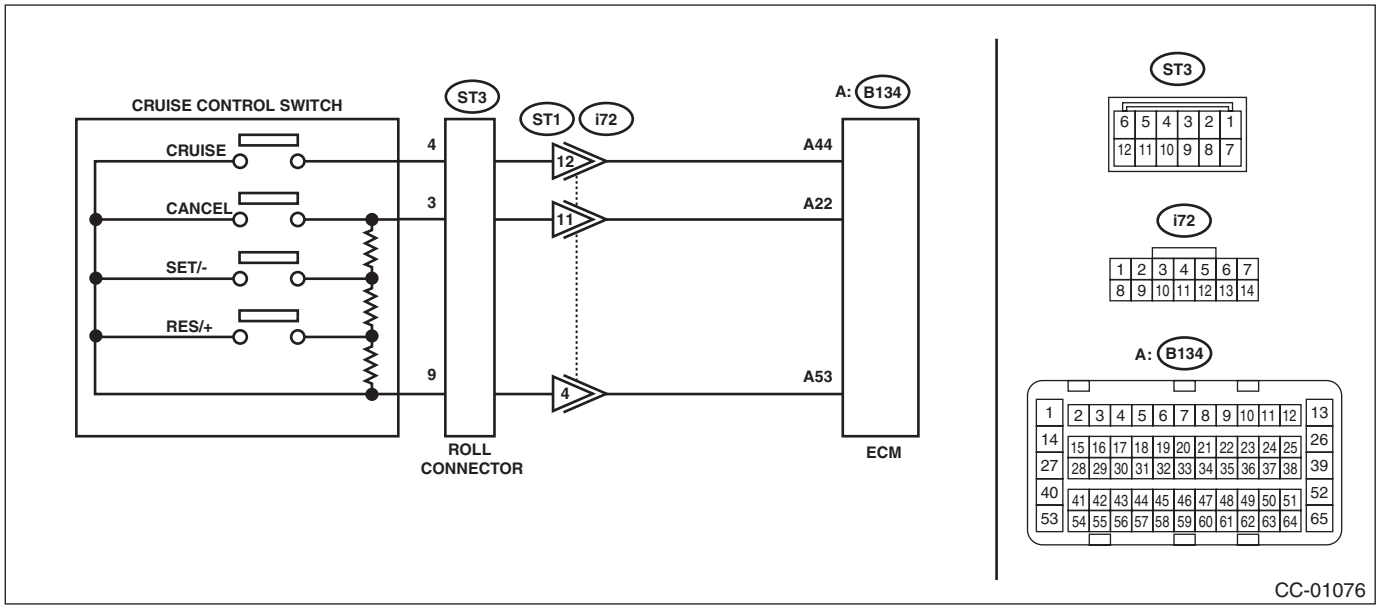

	Step	Check	Yes	No
1	**CHECK CRUISE CONTROL COMMAND SWITCH CIRCUIT.** 1) Remove the driver’s airbag module. <Ref. to AB-32, REMOVAL, Driver’s Airbag Module.> 2) Disconnect the harness connector of cruise control command switch. 3) Turn the ignition switch to ON. 4) Measure the voltage between harness connector terminal and chassis ground. ***Connector & terminal*** ***(ST3) No. 4 (+) — Chassis ground (–):*** ***(ST3) No. 3 (+) — Chassis ground (–):***	Is the voltage 5 V or more?	Go to step **2**.	Check the harness between cruise control command switch and ECM, and the steering roll connector for open or short circuit, or for poor contact.
2	**CHECK CRUISE CONTROL COMMAND SWITCH CIRCUIT.** 1) Turn the ignition switch to OFF. 2) Remove the cruise control command switch. <Ref. to CC-6, REMOVAL, Cruise Control Command Switch.> 3) Measure the resistance between harness connector terminal and chassis ground. ***Connector & terminal*** ***(ST3) No. 9 — Chassis ground:***	Is the resistance less than 10 Ω?	Go to step **3**.	Check for open circuit between cruise control command switch, ECM, and chassis ground and check the ECM.

	Step	Check	Yes	No
3	**CHECK CRUISE CONTROL COMMAND SWITCH.** Measure the resistance between switch terminals when the cruise control command switch is not depressed. ***Terminals*** ***No. 3 — No. 9:***	Is the resistance approx. 4 kΩ?	Go to step **4**.	Replace the cruise control command switch. <Ref. to CC-6, Cruise Control Command Switch.>
4	**CHECK CANCEL SWITCH.** 1) Turn the ignition switch to OFF. 2) Remove the cruise control command switch. <Ref. to CC-6, REMOVAL, Cruise Control Command Switch.> 3) Measure the resistance between switch terminals with the CANCEL switch pressed. ***Terminals*** ***No. 3 — No. 9:***	Is the resistance approx. less than 1 Ω when the CANCEL switch is pressed?	Go to step **5**.	Replace the cruise control command switch. <Ref. to CC-6, Cruise Control Command Switch.>
5	**CHECK SET/– SWITCH.** Measure the resistance between the switch terminals with the SET/– switch pressed. ***Terminals*** ***No. 3 — No. 9:***	Is the resistance approx. 250 Ω when the SET/– switch is pressed?	Go to step **6**.	Replace the cruise control command switch. <Ref. to CC-6, Cruise Control Command Switch.>
6	**CHECK RES/+ SWITCH.** Measure the resistance between the switch terminals with the RES/+ switch pressed. ***Terminals*** ***No. 3 — No. 9:***	Is the resistance approx. 1,500 Ω when the RES/+ switch is pressed?	Replace the ECM. <Ref. to FU(H6DO)-83, Engine Control Module (ECM).> <Ref. to FU(H4DO)-82, Engine Control Module (ECM).>	Replace the cruise control command switch. <Ref. to CC-6, Cruise Control Command Switch.>

B: 12

Detected when brake pedal is depressed or malfunction related to stop light & brake switch occurs.

TROUBLE SYMPTOM:

- Cruise control cannot be set.
- Cruise control cannot be released.

WIRING DIAGRAM:

Cruise control system <Ref. to WI-151, WIRING DIAGRAM, Cruise Control System.>

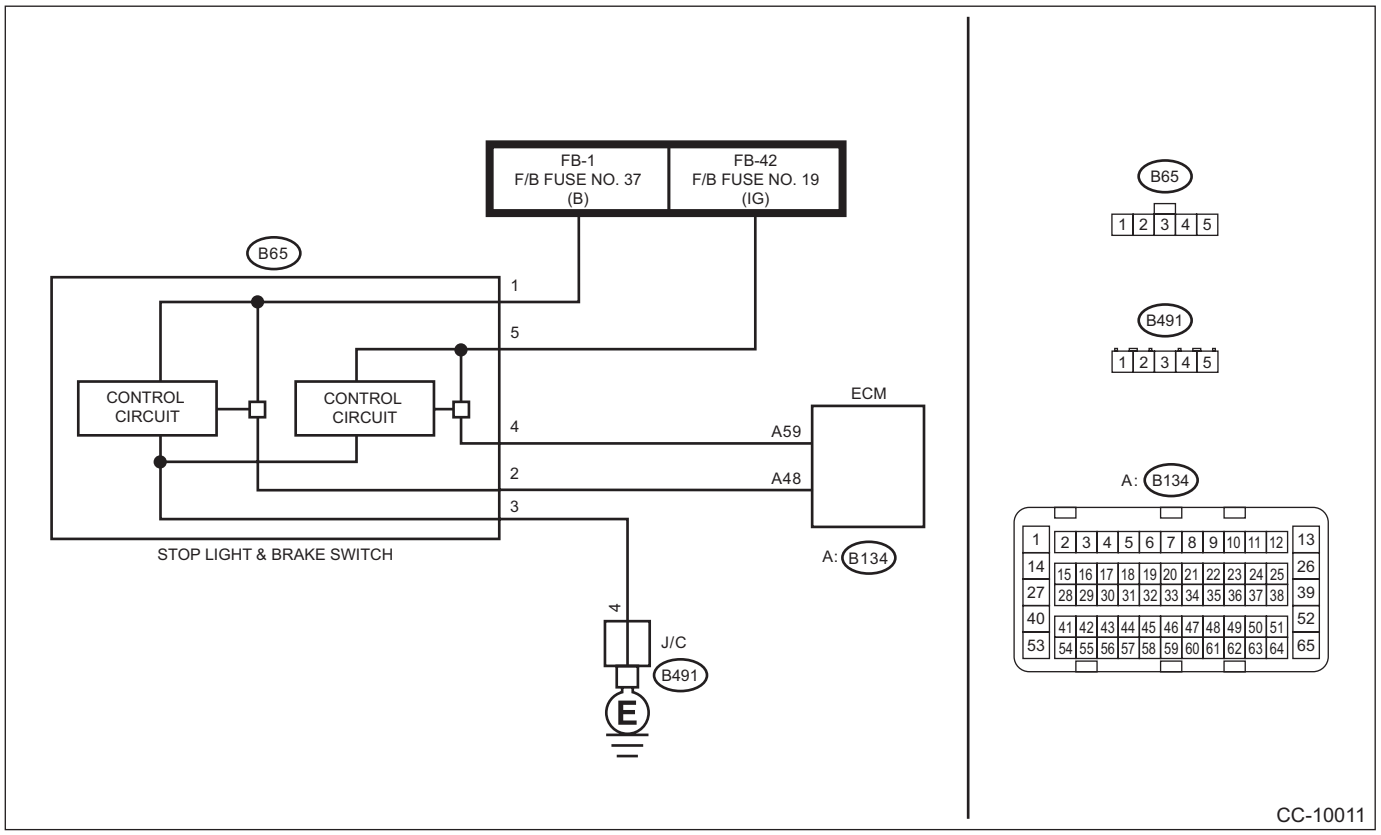

	Step	Check	Yes	No
1	**CHECK STOP LIGHT & BRAKE SWITCH.** Check the stop light & brake switch. <Ref. to CC-9, Stop Light & Brake Switch.>	Is the installation position of the stop light & brake switch correct?	Go to step **2**.	Replace the stop light & brake switch. Or adjust the installation position.
2	**CHECK STOP LIGHT & BRAKE SWITCH CIRCUIT.** 1) Turn the ignition switch to OFF. 2) Disconnect the stop light & brake switch harness connector. 3) Turn the ignition switch to ON. 4) Measure the voltage between harness connector terminal and chassis ground. ***Connector & terminal*** ***(B65) No. 1 (+) — Chassis ground (–):***	Is the voltage 10 V or more?	Go to step **3**.	• Check fuse No. 37 (in fuse & relay box). • Check for open or short in the harness between stop light & brake switch and fuse & relay box.

	Step	Check	Yes	No
3	**CHECK STOP LIGHT & BRAKE SWITCH CIRCUIT.** Measure the voltage between harness connector terminal and chassis ground. ***Connector & terminal*** ***(B65) No. 5 (+) — Chassis ground (–):***	Is the voltage 10 V or more?	Go to step **4**.	• Check fuse No. 19 (in fuse & relay box). • Check for open or short in the harness between stop light & brake switch and fuse & relay box.
4	**CHECK STOP LIGHT & BRAKE SWITCH CIRCUIT.** 1) Turn the ignition switch to OFF. 2) Disconnect the harness connector of ECM. 3) Measure the resistance between ECM harness connector terminal and stop light & brake switch harness connector terminal. ***Connector & terminal*** ***(B65) No. 4 — (B134) No. 59:*** ***(B65) No. 2 — (B134) No. 48:***	Is the resistance less than 10 Ω?	Go to step **5**.	Repair the harness.
5	**CHECK STOP LIGHT & BRAKE SWITCH CIRCUIT.** 1) Connect the stop light & brake switch harness connector. 2) Turn the ignition switch to ON. 3) Measure the voltage between ECM harness connector and chassis ground both when the brake pedal is depressed and when not depressed. ***Connector & terminal*** ***(B134) No. 59 (+) — Chassis ground (–):*** ***(B134) No. 48 (+) — Chassis ground (–):***	Does the voltage appear in (B134) No. 59 when the brake pedal is depressed? (0 V when the brake pedal is not depressed) Does the voltage appear in (B134) No. 48 when the brake pedal is not depressed? (0 V when the brake pedal is depressed)	Replace the ECM. <Ref. to FU(H6DO)-83, Engine Control Module (ECM).> <Ref. to FU(H4DO)-82, Engine Control Module (ECM).>	Replace the stop light & brake switch. <Ref. to CC-9, Stop Light & Brake Switch.>

C: 13

Detected when clutch pedal is depressed or malfunction related to clutch switch occurs.

TROUBLE SYMPTOM:

- Cruise control cannot be set.
- Cruise control cannot be released.

WIRING DIAGRAM:

Cruise control system <Ref. to WI-151, WIRING DIAGRAM, Cruise Control System.>

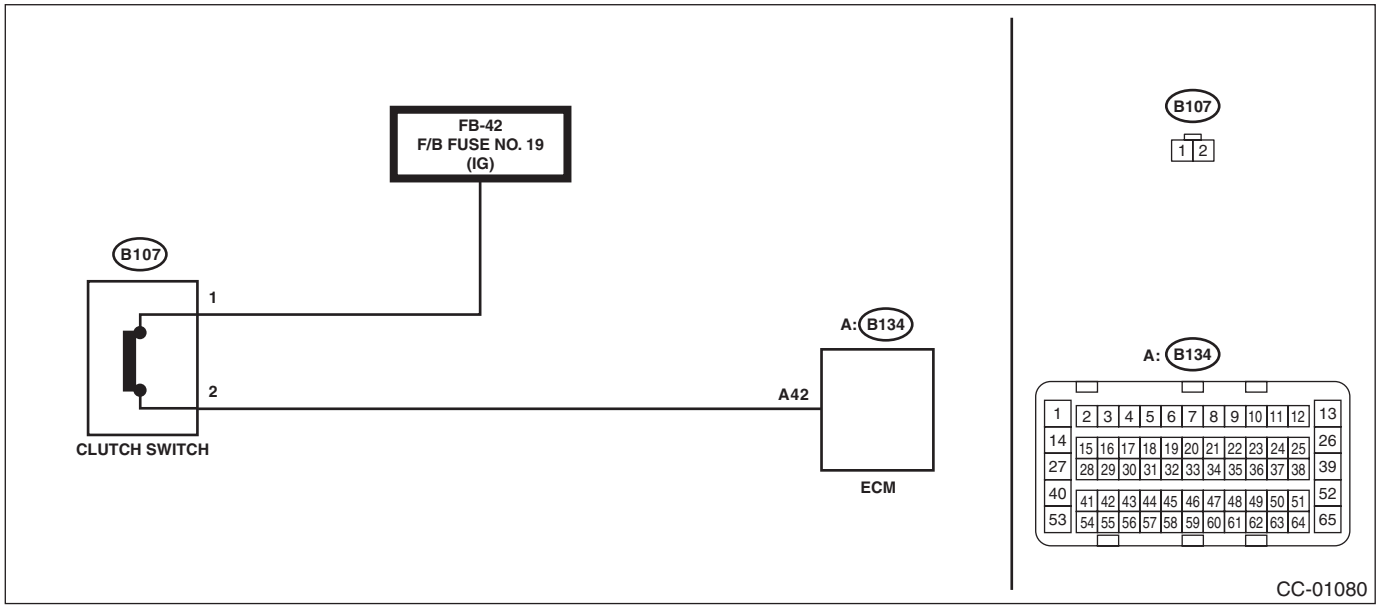

Step		Check	Yes	No
1	**CHECK CLUTCH SWITCH.** Check the clutch switch. <Ref. to CC-10, Clutch Switch.>	Is the clutch switch and installation position OK?	Go to step **2**.	Replace the clutch switch. Or adjust the installation position.
2	**CHECK CLUTCH SWITCH CIRCUIT.** 1) Turn the ignition switch to OFF. 2) Disconnect the clutch switch harness connector. 3) Turn the ignition switch to ON. 4) Measure the voltage between harness connector terminal and chassis ground. ***Connector & terminal*** ***(B107) No. 1 (+) — Chassis ground (–):***	Is the voltage 10 V or more?	Go to step **3**.	• Check fuse No. 19 (in fuse & relay box). • Check open or shorted circuit of harness between clutch switch and fuse & relay box.
3	**CHECK CLUTCH SWITCH CIRCUIT.** 1) Turn the ignition switch to OFF. 2) Disconnect the harness connector of ECM. 3) Measure the resistance between clutch switch harness connector terminal and ECM harness connector terminal. ***Connector & terminal*** ***(B107) No. 2 — (B137) No. 15:***	Is the resistance less than 10 Ω?	Replace the ECM. <Ref. to FU(H6DO)-83, Engine Control Module (ECM).> <Ref. to FU(H4DO)-82, Engine Control Module (ECM).>	Repair the harness.

D: 14

Detected when select lever is set in the neutral position, or when malfunction related to neutral position switch occurs.

TROUBLE SYMPTOM:

Cruise control cannot be set.

WIRING DIAGRAM:

NOTE:
For the coupling connector, refer to “WIRING SYSTEM”.
Cruise control system <Ref. to WI-151, WIRING DIAGRAM, Cruise Control System.>

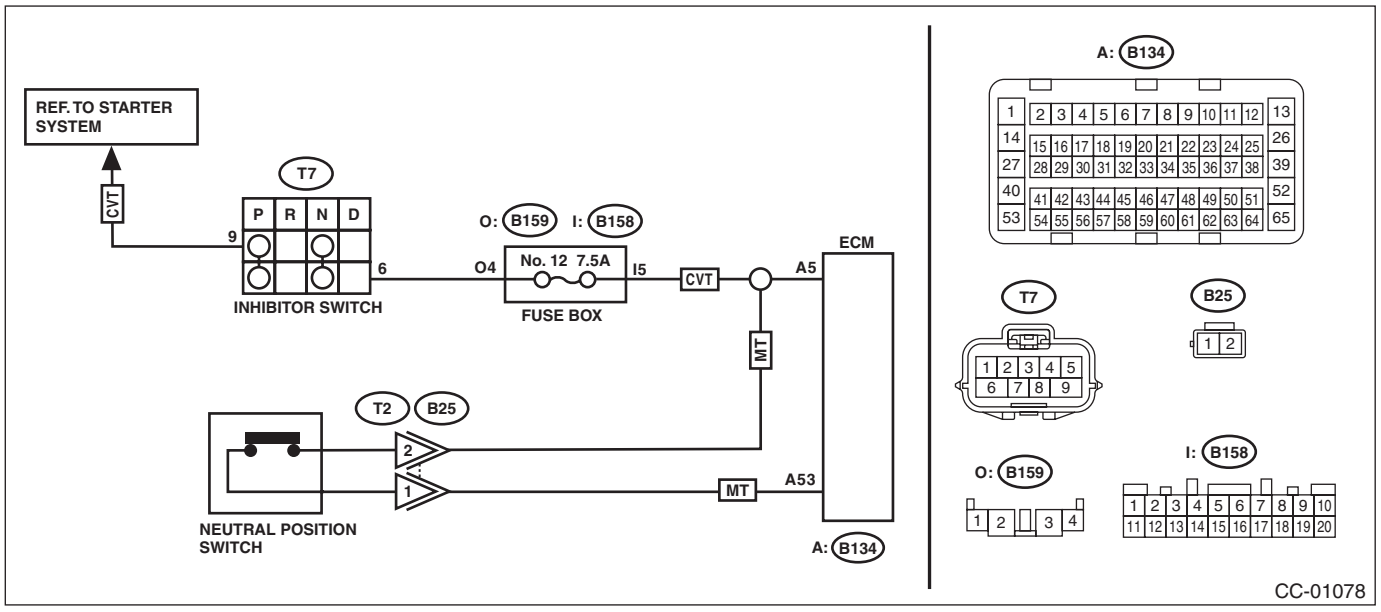

Step		Check	Yes	No
1	**CHECK TRANSMISSION TYPE.**	Is the transmission type CVT?	Go to step **2**.	Go to step **5**. (MT model)
2	**CHECK INHIBITOR SWITCH CIRCUIT.** 1) Turn the ignition switch to OFF. 2) Disconnect the inhibitor switch harness connector. 3) Turn the ignition switch to ON. 4) Measure the voltage between harness connector terminal and chassis ground. ***Connector & terminal*** ***(T7) No. 6 (+) — Chassis ground (–):***	Is the voltage 10 V or more?	Go to step **3**.	• Check the fuse. • Check for open or short in the harness between inhibitor switch and ECM.
3	**CHECK INHIBITOR SWITCH CIRCUIT.** 1) Turn the ignition switch to OFF. 2) Disconnect the starter motor harness connector. 3) Measure the resistance between inhibitor switch harness connector terminal and starter motor. ***Connector & terminal*** ***(T7) No. 9 — Starter motor:***	Is the resistance less than 10 Ω?	Go to step **4**.	Repair the harness.

	Step	Check	Yes	No
4	**CHECK INHIBITOR SWITCH.** Remove and check the inhibitor switch. <Ref. to CC-11, Inhibitor Switch.>	Is the inhibitor switch working normal?	Replace the ECM. <Ref. to FU(H6DO)-83, Engine Control Module (ECM).> <Ref. to FU(H4DO)-82, Engine Control Module (ECM).>	Replace the inhibitor switch.
5	**CHECK NEUTRAL POSITION SWITCH CIRCUIT.** 1) Turn the ignition switch to OFF. 2) Disconnect the neutral position switch harness connector. 3) Turn the ignition switch to ON. 4) Measure the voltage between harness connector terminal and chassis ground. ***Connector & terminal*** ***(B25) No. 2 (+) — Chassis ground (–):***	Is the voltage 10 V or more?	Go to step **6**.	Check for open or short in the harness between neutral position switch and ECM.
6	**CHECK NEUTRAL POSITION SWITCH CIRCUIT.** 1) Turn the ignition switch to OFF. 2) Measure resistance between harness connector terminal of neutral position switch and chassis ground. ***Connector & terminal*** ***(B25) No. 1 — Chassis ground:***	Is the resistance less than 10 Ω?	Go to step **7**.	Repair the harness.
7	**CHECK NEUTRAL POSITION SWITCH.** Remove and check the neutral position switch. <Ref. to CC-13, Neutral Position Switch.>	Is the neutral position switch OK?	Replace the ECM. Replace the ECM. <Ref. to FU(H6DO)-83, Engine Control Module (ECM).> <Ref. to FU(H4DO)-82, Engine Control Module (ECM).>	Replace the neutral position switch.

E: 15

Detected when CANCEL switch is pressed or malfunction related to CRUISE switch occurs.
TROUBLE SYMPTOM:
- Cruise control cannot be set. (Cancelled immediately.)
- Cruise control cannot be released.

Refer to DTC 11 for diagnostic procedure.
<Ref. to CC(diag)-15, 11, Diagnostic Procedure with Cancel Code.>

F: 16

Detected when ignition switch is turned to OFF or malfunction related to the ignition switch occurs.
TROUBLE SYMPTOM:
Cruise control cannot be set.
WIRING DIAGRAM:
Cruise control system <Ref. to WI-151, WIRING DIAGRAM, Cruise Control System.>

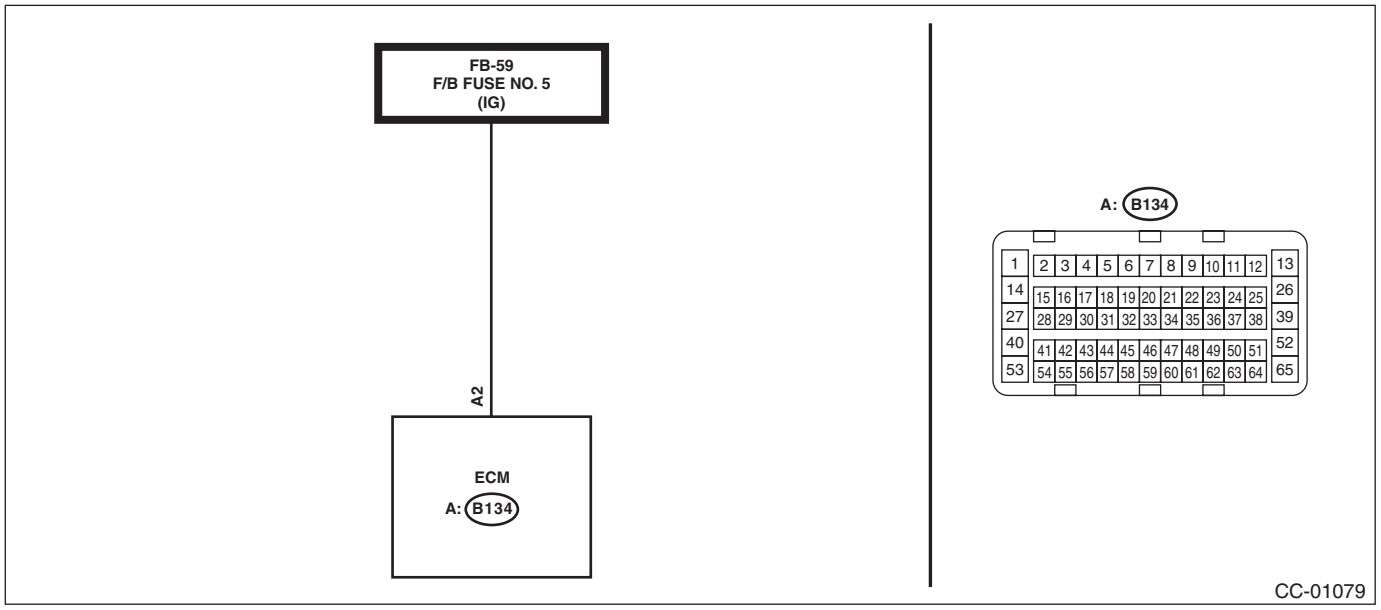

Step		Check	Yes	No
1	**CHECK IGNITION SWITCH CIRCUIT.** 1) Turn the ignition switch to OFF. 2) Disconnect the ECM harness connector. 3) Turn the ignition switch to ON. 4) Measure the voltage between harness connector terminal and chassis ground. ***Connector & terminal*** ***(B134) No. A2 (+) — Chassis ground (–):***	Is the voltage 10 V or more?	Check for poor contact of ECM connector.	• Check fuse No. 5 (in fuse & relay box). • Check the harness for open or short circuit between ignition switch and ECM.

G: 21

Cruise control command switch malfunction is detected.
TROUBLE SYMPTOM:
- Cruise control cannot be set. (Cancelled immediately.)
- Cruise control cannot be released.

Refer to DTC 11 for diagnostic procedure.
<Ref. to CC(diag)-15, 11, Diagnostic Procedure with Cancel Code.>

H: 22

Malfunction related to vehicle speed sensor is detected.
DIAGNOSIS:
Open or shorted circuit in vehicle speed sensor system.
TROUBLE SYMPTOM:
Cruise control cannot be set. (Cancelled immediately.)

	Step	Check	Yes	No
1	**CHECK ABS OR VDC WARNING LIGHT.** 1) Turn the ignition switch to ON. 2) After the initial operation of combination meter is completed, check if ABS or VDC warning light continues to illuminate.	Does the warning light continue to illuminate?	Check the VDCCM. <Ref. to VDC(diag)-2, Basic Diagnostic Procedure.>	Go to step **2**.
2	**CHECK DTC OF LAN COMMUNICATION CIRCUIT.** Read the DTC of body integrated unit using Subaru Select Monitor. <Ref. to BC(diag)-14, Read Diagnostic Trouble Code (DTC).>	Is DTC displayed?	Perform inspection according to DTC.	Replace the ECM. <Ref. to FU(H6DO)-83, Engine Control Module (ECM).> <Ref. to FU(H4DO)-82, Engine Control Module (ECM).>

I: 24

Malfunction in cruise control-related switch is detected.
TROUBLE SYMPTOM:
- Cruise control cannot be set. (Cancelled immediately.)
- Cruise control cannot be released.

Refer to DTC 11 for diagnostic procedure.
<Ref. to CC(diag)-15, 11, Diagnostic Procedure with Cancel Code.>

J: 31

Engine speed signal malfunction is detected.
Abnormal increase of engine speed is detected.
Gear is placed in 1st (only for MT vehicles) or Reverse position.
After driving at the 2nd gear position or higher, perform the cruise setting again. If a cancel code is not detected, it is normal.

K: 32

Detected when the vehicle speed is out of the system controllable range.
Increase vehicle speed high enough to allow the cruise control to function, and then perform setting operation again.
If cancel code is still detected after setting cruise again, perform the diagnosis for DTC 22.
Refer to DTC 22 for diagnostic procedure.
<Ref. to CC(diag)-23, 22, Diagnostic Procedure with Cancel Code.>

L: 34

The vehicle has been driven at a speed higher than set speed for a long time (approximately 10 minutes) during cruise driving.
This cancel code is detected when driving for a long period of time at a speed higher than appropriate for cruise control setting by operating the accelerator pedal.
Perform the cruise control setting operation again. If the cancel code is not detected, it is normal.

M: 35

Detected when it is impossible to perform the vehicle speed feedback.
Set vehicle speed cannot be kept for some reasons (steep uphill, unreleased parking brake, etc.) during cruise driving.
Cancel code is detected when driving condition is not suitable for cruise control.
Perform cruise set operation again after clearing the possible cause.

N: 41

VDC/TCS/EPB is operated.
Vehicle dynamics control (VDC) or TCS/EPB is operated during cruise driving or cruise setting.
<Ref. to VDC(diag)-2, PROCEDURE, Basic Diagnostic Procedure.>

O: 43

ABS/VDC malfunction is detected.
VDC malfunction is detected during cruise driving or cruise setting.
<Ref. to VDC(diag)-2, PROCEDURE, Basic Diagnostic Procedure.>

P: 44

Body integrated unit malfunction is detected.
Body integrated unit system malfunction is detected during cruise driving or cruise setting.
<Ref. to LAN(diag)-2, PROCEDURE, Basic Diagnostic Procedure.>

Q: 45

Combination meter malfunction is detected.
Combination meter malfunction is detected during cruise driving or cruise setting.
<Ref. to LAN(diag)-2, PROCEDURE, Basic Diagnostic Procedure.>

R: 49

Automatic transmission malfunction is detected.
Automatic transmission malfunction is detected during cruise driving or cruise control setting.
<Ref. to CVT(diag)-2, PROCEDURE, Basic Diagnostic Procedure.>

S: 61

Malfunction in the stop light & brake switch is detected.
TROUBLE SYMPTOM:
- Cruise control cannot be set.
- Cruise control cannot be released.

Refer to DTC 12 for diagnostic procedure.
<Ref. to CC(diag)-17, 12, Diagnostic Procedure with Cancel Code.>

T: 62

Neutral position switch malfunction is detected.
TROUBLE SYMPTOM:
Cruise control cannot be set.
Refer to DTC 14 for diagnostic procedure.
<Ref. to CC(diag)-20, 14, Diagnostic Procedure with Cancel Code.>

U: 63

Malfunction of vehicle speed signal variation is detected.
TROUBLE SYMPTOM:
Cruise control cannot be set. (Cancelled immediately.)
Refer to DTC 22 for diagnostic procedure.
<Ref. to CC(diag)-23, 22, Diagnostic Procedure with Cancel Code.>

NOTE:
When the vehicle was suddenly accelerated on low μ road surface while VDC is OFF, this cancel code may be stored. In this case, restart the engine and perform the cruise control setting operation again. If the cancel code is not detected, it is normal.

V: 64

Malfunction related to engine is detected.
Refer to the Engine Diagnostic Procedure for diagnostic procedure.
<Ref. to EN(H6DO)(diag)-2, PROCEDURE, Basic Diagnostic Procedure.>
<Ref. to EN(H4DO)(diag)-2, PROCEDURE, Basic Diagnostic Procedure.>

W: 65

Cruise control command switch malfunction is detected.
While the command switch is pressed ON for a long time (approximately two minutes), stuck ON condition is detected.
TROUBLE SYMPTOM:
- Cruise control cannot be set. (Cancelled immediately.)
- Cruise control cannot be released.

Refer to DTC 11 for diagnostic procedure.
<Ref. to CC(diag)-15, 11, Diagnostic Procedure with Cancel Code.>

X: 66

Cruise control calculation malfunction is detected.
Refer to the Engine Diagnostic Procedure for diagnostic procedure.
<Ref. to EN(H6DO)(diag)-2, PROCEDURE, Basic Diagnostic Procedure.>
<Ref. to EN(H4DO)(diag)-2, PROCEDURE, Basic Diagnostic Procedure.>

IMMOBILIZER (DIAGNOSTICS)

IM(diag)

Page

1. Basic Diagnostic Procedure 2
2. General Description 4
3. Electrical Component Location 6
4. Immobilizer Control Module I/O Signal 7
5. Subaru Select Monitor 8
6. Read Diagnostic Trouble Code (DTC) 10
7. Clear Memory Mode 11
8. Inspection Mode 12
9. Read Current Data 14
10. Freeze Frame Data Display 15
11. Diagnostics Chart for Security Indicator Light 16
12. List of Diagnostic Trouble Code (DTC) 21
13. Diagnostic Procedure with Diagnostic Trouble Code (DTC) 23

1. Basic Diagnostic Procedure

A: PROCEDURE

1. WITHOUT KEYLESS ACCESS WITH PUSH BUTTON START SYSTEM

CAUTION:
When the body integrated unit (except for C0 and C5 models) or the immobilizer CM (C0 and C5 models) is replaced, registration of the immobilizer system is required. For details, refer to the "REGISTRATION MANUAL FOR IMMOBILIZER" provided as a separate volume.

	Step	Check	Yes	No
1	**CONFIRM NUMBER OF REGISTERED IMMOBILIZER KEY.** Confirm the number of registered immobilizer key. For details, refer to the "REGISTRATION MANUAL FOR IMMOBILIZER" provided as a separate volume.	Is the number of registration 0?	Register the immobilizer system.	Go to step **2**.
2	**CHECK SECURITY INDICATOR LIGHT.** 1) Remove the ignition key from ignition switch. 2) Wait at least 60 seconds.	Does the security indicator light blink?	Go to step **3**.	Check the security indicator light circuit. <Ref. to IM(diag)-16, CHECK SECURITY INDICATOR LIGHT CIRCUIT, INSPECTION, Diagnostics Chart for Security Indicator Light.>
3	**CHECK KEY SWITCH.** Insert the ignition key in the ignition switch. (OFF or ACC)	Does the security indicator light remain blinking?	Check the key switch circuit. <Ref. to IM(diag)-19, CHECK KEY SWITCH CIRCUIT, INSPECTION, Diagnostics Chart for Security Indicator Light.>	Go to step **4**.
4	**CHECK SECURITY INDICATOR LIGHT.** Check the security indicator light status in the condition of step 3.	Does the security indicator light go off?	Go to step **7**.	Go to step **5**.
5	**CHECK SECURITY INDICATOR LIGHT.** Turn the ignition switch to ON.	Does the security indicator light go off?	Go to step **7**.	Go to step **6**.
6	**CHECK ENGINE START.** Turn the ignition switch to START.	Does the starter operate?	Check the LAN communication system. <Ref. to LAN(diag)-2, Basic Diagnostic Procedure.>	Go to step **8**.
7	**CHECK ENGINE START.** Turn the ignition switch to START.	Does the engine start?	Immobilizer system is normal.	Go to step **9**.

Step		Check	Yes	No
8	**CHECK DTC.** Read the DTC and time stamp of the system(s) below. <Ref. to IM(diag)-10, Read Diagnostic Trouble Code (DTC).> NOTE: For time stamp, refer to "LAN SYSTEM". <Ref. to LAN(diag)-6, TIME STAMP, CAUTION, General Description.> • Body integrated unit (except for C0 and C5 models) • Immobilizer CM (C0 and C5 models)	Is the DTC displayed on screen?	Go to step **10**.	Replace the body integrated unit (except for C0 and C5 models) or the immobilizer CM (C0 and C5 models). <Ref. to SL-83, Body Integrated Unit.>
9	**CHECK DTC.** Read the DTC and time stamp of the system(s) below. <Ref. to IM(diag)-10, Read Diagnostic Trouble Code (DTC).> NOTE: For time stamp, refer to "LAN SYSTEM". <Ref. to LAN(diag)-6, TIME STAMP, CAUTION, General Description.> • ECM	Is the DTC displayed on screen?	Go to step **10**.	Perform the diagnosis for engine system. <Ref. to EN(H4DO)(diag)-2, PROCEDURE, Basic Diagnostic Procedure.> <Ref. to EN(H6DO)(diag)-2, PROCEDURE, Basic Diagnostic Procedure.>
10	**CHECK FREEZE FRAME DATA.** Check the freeze frame data.	Are the data recorded?	Record the data. Go to step **11**.	Go to step **11**.
11	**CHECK DTC.** Check the displayed DTC.	Are DTCs irrelevant to the immobilizer displayed?	Perform the diagnosis according to DTCs irrelevant to the immobilizer first.	Go to step **12**.
12	**PERFORM DIAGNOSIS.** 1) Inspect using the "Diagnostic Procedure with Diagnostic Trouble Code (DTC)". <Ref. to IM(diag)-23, Diagnostic Procedure with Diagnostic Trouble Code (DTC).> 2) Repair the trouble cause. 3) Perform the Clear Memory Mode. <Ref. to IM(diag)-11, Clear Memory Mode.> 4) Read DTCs again. <Ref. to IM(diag)-10, Read Diagnostic Trouble Code (DTC).>	Is the DTC displayed on screen?	Inspect using the "Diagnostic Procedure with Diagnostic Trouble Code (DTC)". <Ref. to IM(diag)-23, Diagnostic Procedure with Diagnostic Trouble Code (DTC).>	Finish the diagnosis.

2. WITH KEYLESS ACCESS WITH PUSH BUTTON START SYSTEM

NOTE:
For immobilizer diagnosis of model with the keyless access with push button start system, refer to "Keyless Access with Push Button Start System". <Ref. to KPS(diag)-2, Basic Diagnostic Procedure.>

2. General Description

A: CAUTION

CAUTION:
• Do not use the electrical test equipment on the airbag system wiring harnesses and connector circuits.
• Be careful not to damage the airbag system wiring harness.
• While diagnostic items are being checked, do not operate radios, portable telephones, etc. which emit electromagnetic waves near or inside the vehicle.

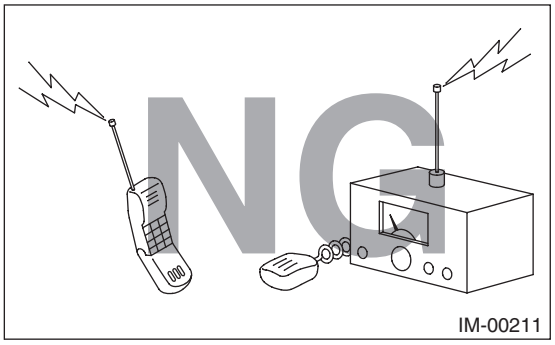

• When turning the ignition switch to ON or OFF while diagnostic items are being checked, do not allow keys with different ID codes close to the ignition switch. If the ignition key is on a key holder, remove it from the key holder before performing diagnoses.

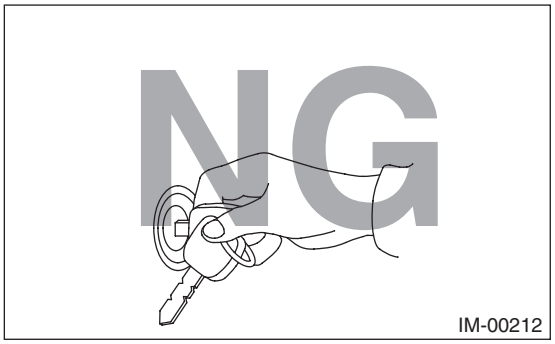

• When repeatedly turning the ignition switch to ON or OFF while diagnostic items are being checked, it should be switched in cycles of "ON" for at least 5 seconds → "OFF" for at least 8 seconds.

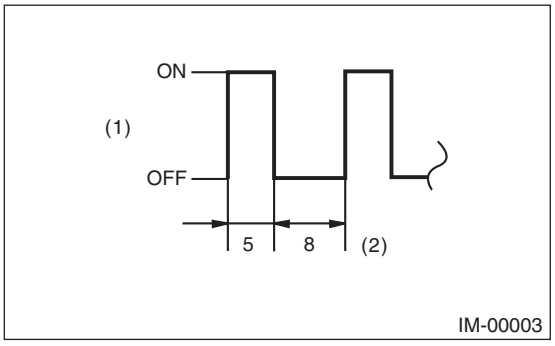

(1) Ignition switch position
(2) Sec.

• If the engine fails to start with a registered ignition key, detach the ignition key from ignition switch and wait for approx. 1 second until security indicator light begins to flash. And then start the engine again.
• Before performing the diagnostics, obtain all keys for the vehicle from the owner.

• Do not register a body integrated unit already registered to another vehicle to diagnose failures or inspect functions.

B: PREPARATION TOOL

1. SPECIAL TOOL

ILLUSTRATION	TOOL NUMBER	DESCRIPTION	REMARKS
 STSSM4	— (Newly adopted tool)	SUBARU SELECT MONITOR 4	Used for setting of each function and trouble-shooting for electrical system. NOTE: For detailed operation procedures of Subaru Select Monitor 4, refer to “Application help”.

2. GENERAL TOOL

TOOL NAME	REMARKS
Circuit tester	Used for measuring resistance, voltage and current.
DST-i	Used together with Subaru Select Monitor 4.

3. Electrical Component Location

A: LOCATION

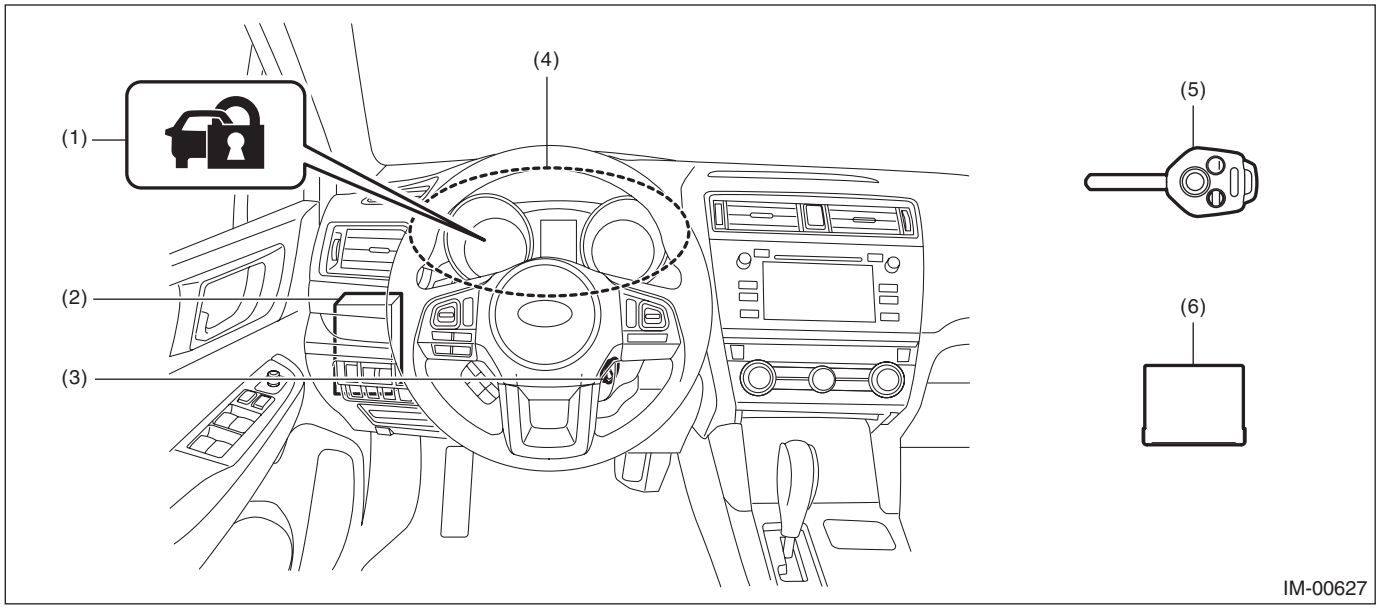

(1) Security indicator light
(2) Body integrated unit
(3) Immobilizer antenna
(4) Combination meter
(5) Ignition key
(6) Immobilizer control module (C0 and C5 models)

4. Immobilizer Control Module I/O Signal

A: WIRING DIAGRAM

1. IMMOBILIZER

Refer to “Immobilizer System” in the wiring diagram. <Ref. to WI-251, WIRING DIAGRAM, Immobilizer System.>

5. Subaru Select Monitor

A: OPERATION

For operation procedures, refer to “Application help”.

B: COMMUNICATION FOR INITIALIZING IMPOSSIBLE

1. ECM

If the communication with ECM is not possible, refer to ENGINE (DIAGNOSTICS). <Ref. to EN(H4DO)(diag)-2, PROCEDURE, Basic Diagnostic Procedure.> <Ref. to EN(H6DO)(diag)-2, PROCEDURE, Basic Diagnostic Procedure.>

2. BODY INTEGRATED UNIT

If the communication with the body integrated unit is not possible, refer to BODY CONTROL SYSTEM (DIAGNOSTICS). <Ref. to BC(diag)-2, PROCEDURE, Basic Diagnostic Procedure.>

3. IMMOBILIZER CM

DETECTING CONDITION:

- Defective harness
- Power supply circuit malfunction
- Defective immobilizer CM
- Body integrated unit malfunctioning
- Defective CAN communication circuit
- Defective Subaru Select Monitor

TROUBLE SYMPTOM:

Not communicable with Subaru Select Monitor.

WIRING DIAGRAM:

NOTE:
For the coupling connector, refer to “WIRING SYSTEM”.
Immobilizer system <Ref. to WI-251, WIRING DIAGRAM, Immobilizer System.>

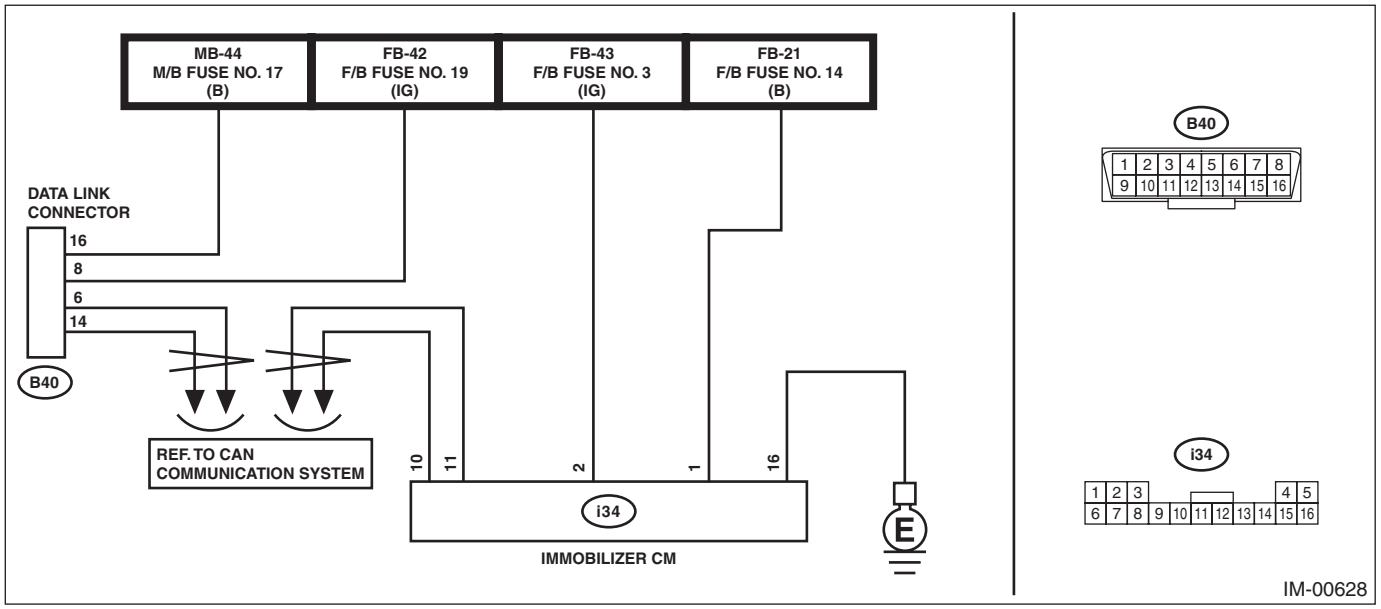

	Step	Check	Yes	No
1	**CHECK FUSE.** Check the fuse.	Is there any fault?	Replace the fuse. If the replaced fuse blows out easily, repair the ground short circuit in the harness between the battery and immobilizer CM.	Go to step **2**.
2	**CHECK LAN SYSTEM.** Inspect LAN system. <Ref. to LAN(diag)-2, Basic Diagnostic Procedure.>	Is there any fault?	Perform the inspection according to the diagnosis for LAN system.	Go to step **3**.
3	**CHECK HARNESS.** 1) Turn the ignition switch to OFF. 2) Disconnect the immobilizer CM connector. 3) Turn the ignition switch to ON. 4) Using a tester, measure the voltage between the immobilizer CM connector and chassis ground. ***Connector & terminal*** ***(i34) No. 2 (+) — Chassis ground (–):*** ***(i34) No. 1 (+) — Chassis ground (–):***	Is the voltage 10 — 13 V?	Go to step **4**.	Repair the open circuit of harness between the immobilizer CM connector and fuse.
4	**CHECK HARNESS.** Using a tester, measure the resistance between the immobilizer CM connector and chassis ground. ***Connector & terminal*** ***(i34) No. 16 — Chassis ground:***	Is the resistance less than 1 Ω?	Go to step **5**.	Repair the open circuit of harness between the immobilizer CM connector and chassis ground.
5	**CHECK IMMOBILIZER CM.** 1) Turn the ignition switch to OFF. 2) Connect the immobilizer CM connector. 3) Perform communication with the immobilizer CM.	Is communication possible?	The circuit has returned to a normal condition at this time. Reproduce the failure, and then perform the diagnosis again. NOTE: In this case, temporary poor contact of connector, temporary open or short circuit of harness may be the cause.	Replace the immobilizer CM. <Ref. to SL-90, Immobilizer Control Module.>

6. Read Diagnostic Trouble Code (DTC)

A: OPERATION

NOTE:
- For detailed operation procedures, refer to “Application help”.
- For details concerning DTC, refer to List of Diagnostic Trouble Code (DTC). <Ref. to BC(diag)-37, List of Diagnostic Trouble Code (DTC).>

1. ECM

1) On «Start» display, select «Diagnosis».
2) On «Vehicle selection» display, input the target vehicle information and select «Confirmed».
3) On «Main Menu» display, select «Each System».
4) On «Select System» display, select «Engine Control System» and then select «Enter».
5) On «Engine Control System» display, select «DTC».

2. BODY INTEGRATED UNIT

NOTE:
Except for C0 and C5 models
1) On «Start» display, select «Diagnosis».
2) On «Vehicle selection» display, input the target vehicle information and select «Confirmed».
3) On «Main Menu» display, select «Each System».
4) On «Select System» display, select «Body Control» and then select «Enter».
5) On «Body Control» display, select «DTC».

3. IMMOBILIZER CM

NOTE:
For C0 and C5 models
1) On «Start» display, select «Diagnosis».
2) On «Vehicle selection» display, input the target vehicle information and select «Confirmed».
3) On «Main Menu» display, select «Each System».
4) On «Select System» display, select «Immobilizer» and then select «Enter».
5) On «Immobilizer» display, select «DTC».

7. Clear Memory Mode

A: OPERATION

NOTE:
For detailed operation procedures, refer to “Application help”.

1. ECM

1) On «Start» display, select «Diagnosis».
2) On «Vehicle selection» display, input the target vehicle information and select «Confirmed».
3) On «Main Menu» display, select «Each System».
4) On «Select System» display, select «Engine Control System» and then select «Enter».
5) On «Engine Control System» display, select «DTC».
6) On «DTC» display, select «Clear Memory».

NOTE:
Initial diagnosis of electronic throttle control is performed after memory clearance. Wait for 10 seconds or more after turning the ignition switch to ON, and then start the engine.

2. BODY INTEGRATED UNIT

NOTE:
Except for C0 and C5 models
1) On «Start» display, select «Diagnosis».
2) On «Vehicle selection» display, input the target vehicle information and select «Confirmed».
3) On «Main Menu» display, select «Each System».
4) On «Select System» display, select «Body Control» and then select «Enter».
5) On «Body Control» display, select «DTC».
6) On «DTC» display, select «Clear Memory».

3. IMMOBILIZER CM

NOTE:
For C0 and C5 models
1) On «Start» display, select «Diagnosis».
2) On «Vehicle selection» display, input the target vehicle information and select «Confirmed».
3) On «Main Menu» display, select «Each System».
4) On «Select System» display, select «Immobilizer» and then select «Enter».
5) On «Immobilizer» display, select «DTC».
6) On «DTC» display, select «Clear Memory».

8. Inspection Mode

A: PROCEDURE

It is possible to diagnose the DTC by performing the indicated inspection mode. After correcting the DTC, perform a necessary inspection mode and make sure that the function is resumed correctly and the DTC is recorded.

1. INSPECTION MODE 1

DTC	Item	Note
B1401	METER COLLATION	—
B1402	IMMOBILIZER KEY COLLATION	—
B1407	MET COMMUNICATION	—
B1408	METER NON-VOLATILE MEMORY	—
B1410	TRANSPONDER COMMUNICATION	—
B1411	IMMOBILIZER ANTENNA	—
B1413	IMMOBILIZER CONTROL MODULE BATTERY POWER SUPPLY	—

Diagnostic procedure:
1) Perform the Clear Memory Mode. <Ref. to IM(diag)-11, Clear Memory Mode.>
2) Read the DTC and check that the DTC is not displayed. <Ref. to IM(diag)-10, Read Diagnostic Trouble Code (DTC).>

NOTE:
If the DTC is displayed on the screen, the trouble is still present. Perform the diagnosis according to DTC. After solving the DTC, repeat from step 1).
3) Remove the ignition key from the ignition switch, and insert again.
4) Turn the ignition switch OFF → ON, and wait for 10 seconds or more.
5) Read the DTC and check that the DTC is not displayed. <Ref. to IM(diag)-10, Read Diagnostic Trouble Code (DTC).>

NOTE:
If the DTC is displayed on the screen, the trouble is still present. Perform the diagnosis according to DTC.

2. INSPECTION MODE 2

DTC	Item	Note
B1412	IMMOBILIZER CONTROL MODULE CAN REGISTER STUCK	—
B1414	IMMOBILIZER CONTROL MODULE NON-VOLATILE MEMORY	—

Diagnostic procedure:
1) Perform the Clear Memory Mode. <Ref. to IM(diag)-11, Clear Memory Mode.>
2) Read the DTC and check that the DTC is not displayed. <Ref. to IM(diag)-10, Read Diagnostic Trouble Code (DTC).>

NOTE:
If the DTC is displayed on the screen, the trouble is still present. Perform the diagnosis according to DTC. After solving the DTC, repeat from step 1).
3) Disconnect and reconnect the battery, and then wait for one minute or more.
4) Turn the ignition switch to ON.
5) Read the DTC and check that the DTC is not displayed. <Ref. to IM(diag)-10, Read Diagnostic Trouble Code (DTC).>

NOTE:
If the DTC is displayed on the screen, the trouble is still present. Perform the diagnosis according to DTC.

3. INSPECTION MODE 3

DTC	Item	Note
B1570	ANTENNA	—
B1571	REFERENCE CODE INCOMPATIBILITY (IMMOBILIZER CM TO ECM)	—
B1572	IMM CIRCUIT EXCEPT ANTENNA CIRCUIT	—
B1574	KEY COMMUNICATION	—
B1575	INCORRECT IMMOBILIZER KEY	—
B1576	EGI CONTROL MODULE EEPROM	—
B1577	IMM CONTROL MODULE EEPROM	—
B1578	METER	—

Diagnostic procedure:
1) Perform the Clear Memory Mode. <Ref. to IM(diag)-11, Clear Memory Mode.>
2) Read the DTC and check that the DTC is not displayed. <Ref. to IM(diag)-10, Read Diagnostic Trouble Code (DTC).>

NOTE:
If the DTC is displayed on the screen, the trouble is still present. Perform the diagnosis according to DTC. After solving the DTC, repeat from step 1).
3) Start the engine, and then run the engine at idle for 10 seconds or more. Or, disconnect and reconnect the battery, then turn the ignition switch OFF → ON, and wait for 10 seconds or more.
4) Read the DTC and check that the DTC is not displayed. <Ref. to IM(diag)-10, Read Diagnostic Trouble Code (DTC).>

NOTE:
If the DTC is displayed on the screen, the trouble is still present. Perform the diagnosis according to DTC.

9. Read Current Data

A: OPERATION

NOTE:
For detailed operation procedures, refer to “Application help”.

1. ECM

For current data of ECM, refer to ENGINE (DIAGNOSTICS). <Ref. to EN(H4DO)(diag)-45, Subaru Select Monitor.>

2. BODY INTEGRATED UNIT

NOTE:
Except for C0 and C5 models
Refer to the BODY CONTROL SYSTEM (DIAGNOSTICS) for the current data of the body integrated unit. <Ref. to BC(diag)-20, Read Current Data.>

3. IMMOBILIZER CM

NOTE:
For C0 and C5 models
1) On «Start» display, select «Diagnosis».
2) On «Vehicle selection» display, input the target vehicle information and select «Confirmed».
3) On «Main Menu» display, select «Each System».
4) On «Select System» display, select «Immobilizer» and then select «Enter».
5) On «Immobilizer» display, select «Data Monitor».

B: LIST

1. ECM

For current data of ECM, refer to ENGINE (DIAGNOSTICS). <Ref. to EN(H4DO)(diag)-45, Subaru Select Monitor.>

2. BODY INTEGRATED UNIT

NOTE:
Except for C0 and C5 models
Refer to the BODY CONTROL SYSTEM (DIAGNOSTICS) for the current data of the body integrated unit. <Ref. to BC(diag)-20, Read Current Data.>

3. IMMOBILIZER CM

NOTE:
For C0 and C5 models

Item	Content / display range	Standard	Note
Trip Count	Time stamp information	—	—
Count	Time stamp information	—	—
Time Count	Time stamp information	—	—
BATT voltage	Immobilizer CM battery voltage	6 — 16 V	—
Ignition SW input	Ignition switch status	ON: switch ON OFF switch OFF	—
key-lock warning SW Input	Key warning switch status	ON: switch ON OFF switch OFF	—
Immobilizer indicator output	Security indicator output status	OFF: When indicator OFF Blink: When indicator blinks ON: When indicator ON blink (one): When one ignition key is registered blink (two): When two ignition keys are registered blink (three): When three ignition keys are registered blink (four): When four ignition keys are registered	—

10.Freeze Frame Data Display

A: OPERATION

NOTE:
Displays for models with immobilizer CM only.
1) On «Start» display, select «Diagnosis».
2) On «Vehicle selection» display, input the target vehicle information and select «Confirmed».
3) On «Main Menu» display, select «Each System».
4) On «Select System» display, select «Immobilizer» and then select «Enter».
5) On «Immobilizer» display, select «DTC».
6) On «DTC» display, select «FFD».

NOTE:
For detailed operation procedures, refer to “Application help”.

B: LIST

Item	Content / display range
Trip Count	Time stamp information <Ref. to LAN(diag)-6, TIME STAMP, CAUTION, General Description.>
Count	
Time Count	
BATT voltage	Immobilizer CM battery voltage
Ignition SW input	Ignition switch status
key-lock warning SW Input	Key warning switch status
Immobilizer indicator output	Security indicator output status
Immobilizer SET/ UNSET status	Immobilizer SET/UNSET status

11.Diagnostics Chart for Security Indicator Light

A: INSPECTION

1. CHECK SECURITY INDICATOR LIGHT CIRCUIT

CAUTION:
When the body integrated unit (except for C0 and C5 models) or the immobilizer CM (C0 and C5 models) is replaced, registration of the immobilizer system is required. For details, refer to the "REGISTRATION MANUAL FOR IMMOBILIZER" provided as a separate volume.

NOTE:
For the coupling connector, refer to "WIRING SYSTEM".
WIRING DIAGRAM:
Immobilizer system <Ref. to WI-251, WIRING DIAGRAM, Immobilizer System.>

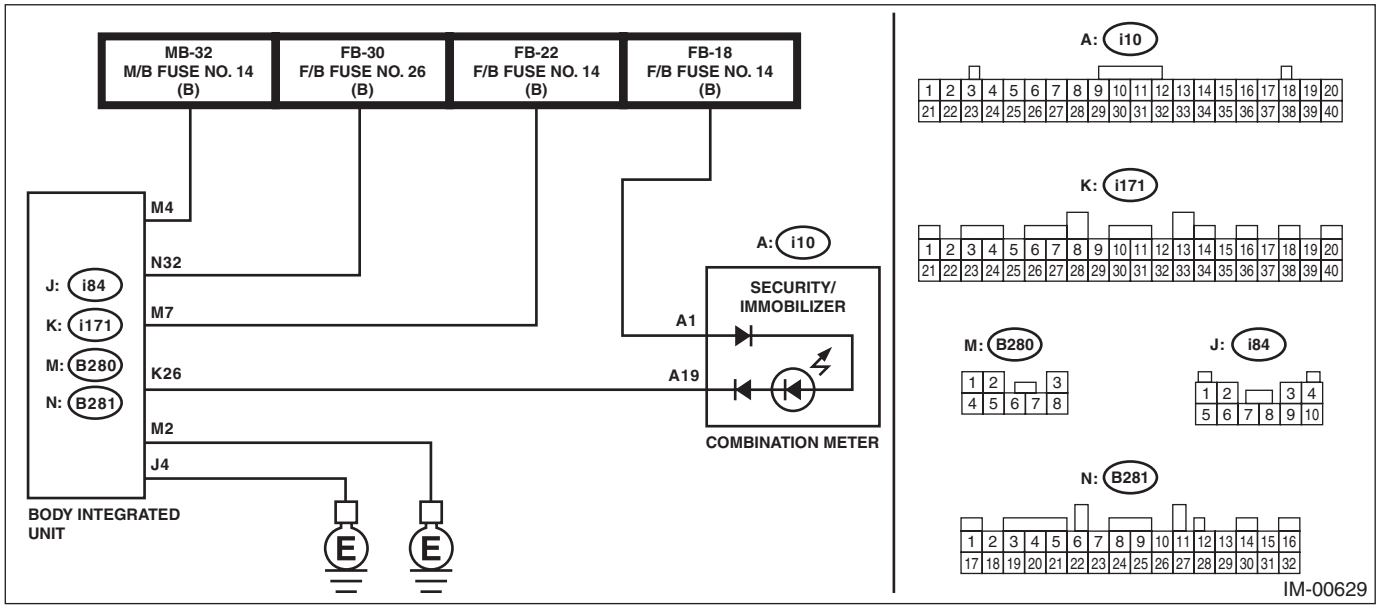

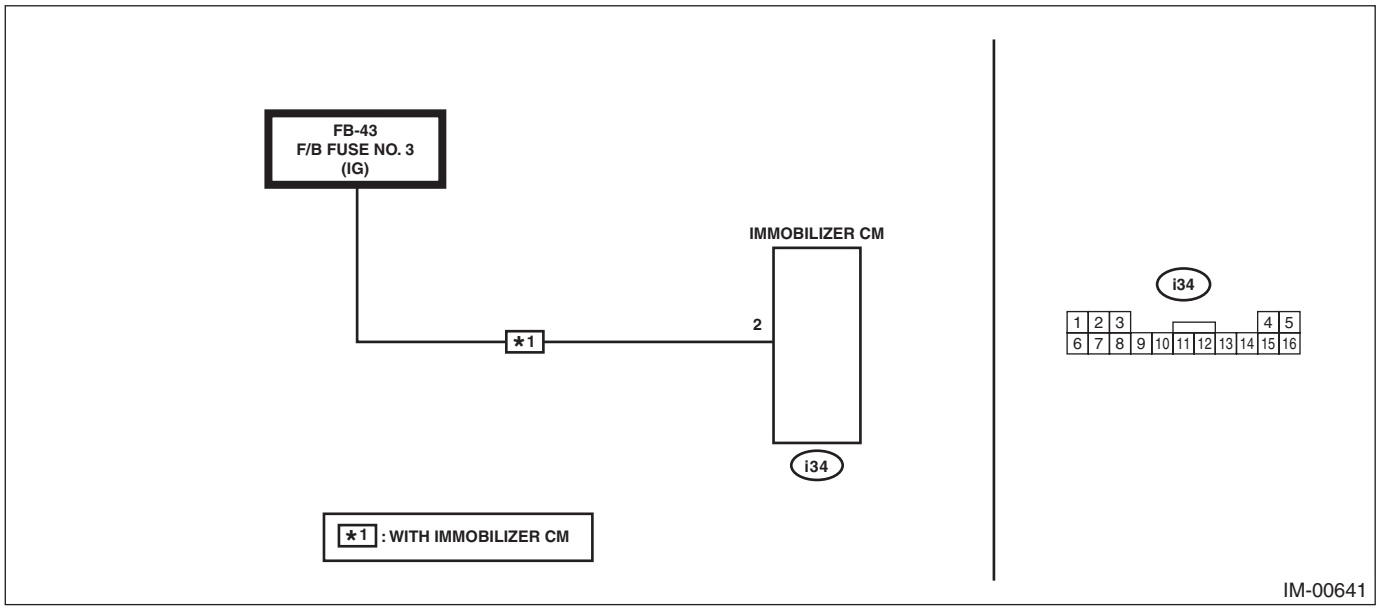

	Step	Check	Yes	No
1	**CHECK FUSE.** 1) Remove the ignition key from ignition switch. Or, turn off the power. 2) Check the fuse.	Is the fuse OK?	Go to step **2**.	Replace the fuse. If the replaced fuse blows out easily, repair the short circuit in the harness between the fuse and body integrated unit.
2	**CONFIRM DESTINATION.** Verify the destination of the vehicle.	Is destination for C0 or C5?	Go to step **3**.	Go to step **9**.
3	**CHECK IMMOBILIZER CM.** Check the current data «Ignition SW input» of immobilizer CM. <Ref. to IM(diag)-14, Read Current Data.>	Does the display change in accordance with the ignition switch OFF ←→ ON?	Go to step **7**.	Go to step **4**.
4	**CHECK IGNITION SWITCH CIRCUIT.** 1) Turn the ignition switch to OFF. 2) Remove the F/B fuse No. 3. 3) Measure the voltage between F/B fuse No. 3 (lower stream side) and chassis ground. ***Connector & terminal*** ***F/B fuse No. 3 (lower stream side) (+) — Chassis ground (–):***	Is the voltage 6 V or more?	Repair the short circuit to power supply in harness between the immobilizer CM and fuse.	Go to step **5**.
5	**CHECK IGNITION SWITCH CIRCUIT.** Check the current data «Ignition SW input» of immobilizer CM. <Ref. to IM(diag)-14, Read Current Data.>	Is «ON» displayed?	Replace the immobilizer CM. <Ref. to SL-90, Immobilizer Control Module.>	Go to step **6**.
6	**CHECK IGNITION SWITCH CIRCUIT.** 1) Disconnect the connector from immobilizer CM. 2) Measure the resistance between immobilizer CM connector terminal and fuse. ***Connector & terminal*** ***(i34) No. 2 — F/B fuse No. 3 (lower stream side):***	Is the resistance less than 10 Ω?	Replace the immobilizer CM. <Ref. to SL-90, Immobilizer Control Module.>	Replace the open circuit of harness between the immobilizer CM and fuse.
7	**CHECK IMMOBILIZER CM.** Check the current data «key-lock warning SW» of immobilizer CM. <Ref. to IM(diag)-14, Read Current Data.>	Does the display change in accordance with the ignition key removal/insertion?	Go to step **8**.	Check the key switch circuit. <Ref. to IM(diag)-19, CHECK KEY SWITCH CIRCUIT, INSPECTION, Diagnostics Chart for Security Indicator Light.>
8	**CHECK IMMOBILIZER CM.** 1) Check the current data «Immobilizer indicator output» of immobilizer CM. <Ref. to IM(diag)-14, Read Current Data.> 2) Remove the ignition key from ignition switch. 3) Wait at least 60 seconds.	Is «Blink» displayed?	Go to step **9**.	Replace the immobilizer CM. <Ref. to SL-90, Immobilizer Control Module.>
9	**CHECK SECURITY INDICATOR LIGHT.** 1) Disconnect the connector from body integrated unit. 2) Connect the resistor (100 Ω) between the body integrated unit connector terminal (i171) No. 26 and chassis ground.	Does the security indicator light illuminate?	Go to step **10**.	Go to step **12**.

	Step	Check	Yes	No
10	**CHECK BODY INTEGRATED UNIT GROUND CIRCUIT.** Measure the resistance between the body integrated unit connector terminal and chassis ground. ***Connector & terminal*** ***(B280) No. 2 — Chassis ground:*** ***(i84) No. 4 — Chassis ground:***	Is the resistance less than 10 Ω?	Go to step **11**.	Repair the open circuit of the body integrated unit ground circuit.
11	**CHECK BODY INTEGRATED UNIT POWER SUPPLY CIRCUIT.** Measure the voltage between the body integrated unit connector terminal and chassis ground. ***Connector & terminal*** ***(B280) No. 4 (+) — Chassis ground (–):*** ***(B280) No. 7 (+) — Chassis ground (–):*** ***(B281) No. 32 (+) — Chassis ground (–):***	Is the voltage 10 V or more?	Replace the body integrated unit. <Ref. to SL-83, Body Integrated Unit.>	Check the harness for open or short circuit between body integrated unit and fuse.
12	**CHECK COMBINATION METER CIRCUIT.** 1) Remove the combination meter. <Ref. to IDI-11, Combination Meter.> 2) Measure the voltage between combination meter connector terminal and chassis ground. ***Connector & terminal*** ***(i10) No. 1 (+) — Chassis ground (–):***	Is the voltage 1 V or more?	Go to step **13**.	Check for an open or short circuit in the harness between the combination meter and fuse.
13	**CHECK COMBINATION METER CIRCUIT.** Measure the resistance between the body integrated unit connector terminal and combination meter connector terminal. ***Connector & terminal*** ***(i171) No. 26 — (i10) No. 19:***	Is the resistance less than 10 Ω?	LED bulb is defective. Replace the combination meter case assembly. <Ref. to IDI-13, DISASSEMBLY, Combination Meter.>	Repair the harness or connector.

2. CHECK KEY SWITCH CIRCUIT

CAUTION:
When the body integrated unit (except for C0 and C5 models) or the immobilizer CM (C0 and C5 models) is replaced, registration of the immobilizer system is required. For details, refer to the "REGISTRATION MANUAL FOR IMMOBILIZER" provided as a separate volume.
WIRING DIAGRAM:
Immobilizer system <Ref. to WI-251, WIRING DIAGRAM, Immobilizer System.>

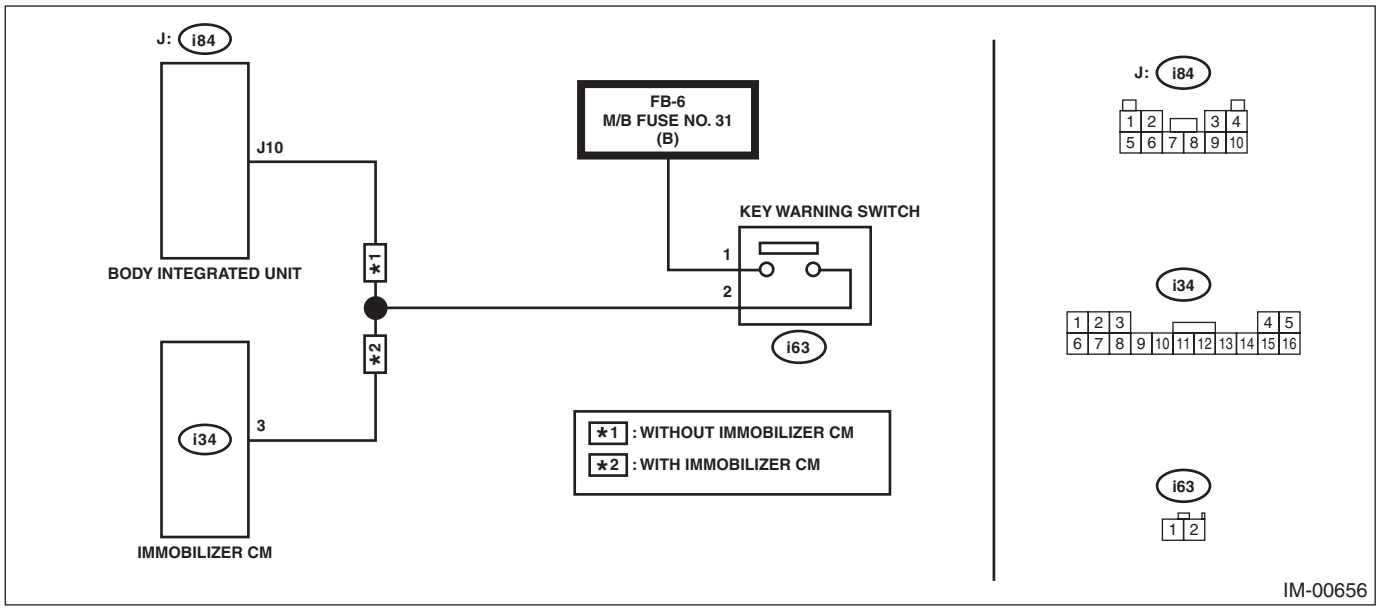

Step		Check	Yes	No
1	**CHECK POWER SUPPLY CIRCUIT.** 1) Disconnect the connector from key warning switch. 2) Measure the voltage between key warning switch connector terminal and chassis ground. ***Connector & terminal*** ***(i63) No. 1 (+) — Chassis ground (–):***	Is the voltage 10 V or more?	Go to step **2**.	Check the harness for an open or short between the key warning switch and fuse.
2	**CHECK KEY WARNING SWITCH.** 1) Insert the ignition key in the ignition switch. (OFF or ACC) 2) Measure the resistance between key warning switch connector terminals. ***Connector & terminal*** ***No. 1 — No. 2:***	Is the resistance less than 1 Ω?	Go to step **3**.	Replace the key warning switch. <Ref. to SL-70, Key Lock Cylinders.>
3	**CHECK KEY WARNING SWITCH.** 1) Remove the ignition key from ignition switch. 2) Measure the resistance between key warning switch connector terminals. ***Connector & terminal*** ***No. 1 — No. 2:***	Is the resistance 1 MΩ or more?	Go to step **4**.	Replace the key warning switch. <Ref. to SL-70, Key Lock Cylinders.>

	Step	Check	Yes	No
4	**CHECK HARNESS BETWEEN KEY WARNING SWITCH AND BODY INTEGRATED UNIT (EXCEPT FOR C0 AND C5 MODELS) OR IMMOBILIZER CM (C0 AND C5 MODELS).** 1) Disconnect the connector from the body integrated unit (except for C0 and C5 models) or the immobilizer CM (C0 and C5 models). 2) Measure the resistance between key warning switch connector terminal and body integrated unit (except for C0 and C5 models) or immobilizer CM (C0 and C5 models) connector terminal. ***Connector & terminal*** ***Body integrated unit (except for C0 and C5 models)*** ***(i63) No. 2 — (i84) No. 10:*** ***Immobilizer CM (C0 and C5 models)*** ***(i63) No. 2 — (i34) No. 3:***	Is the resistance less than 10 Ω?	Replace the body integrated unit (except for C0 and C5 models) <Ref. to SL-83, Body Integrated Unit.> or immobilizer CM (C0 and C5 models) <Ref. to SL-90, Immobilizer Control Module.>.	Repair harness between key warning switch and body integrated unit (except for C0 and C5 models) or immobilizer CM (C0 and C5 models).

12.List of Diagnostic Trouble Code (DTC)

A: LIST

NOTE:
If DTCs irrelevant to the immobilizer are detected, perform diagnosis according to the DTCs irrelevant to the immobilizer first.

1. ECM

DTC	Item	Note
B1570	ANTENNA	<Ref. to IM(diag)-30, DTC B1570 ANTENNA, Diagnostic Procedure with Diagnostic Trouble Code (DTC).>
B1571	REFERENCE CODE INCOMPATIBILITY (IMMOBILIZER CM TO ECM)	<Ref. to IM(diag)-34, DTC B1571 REFERENCE CODE INCOMPATIBILITY (IMMOBILIZER CM TO ECM), Diagnostic Procedure with Diagnostic Trouble Code (DTC).>
B1572	IMM CIRCUIT EXCEPT ANTENNA CIRCUIT	<Ref. to IM(diag)-36, DTC B1572 IMM CIRCUIT EXCEPT ANTENNA CIRCUIT, Diagnostic Procedure with Diagnostic Trouble Code (DTC).>
B1574	KEY COMMUNICATION	<Ref. to IM(diag)-42, DTC B1574 KEY COMMUNICATION, Diagnostic Procedure with Diagnostic Trouble Code (DTC).>
B1575	INCORRECT IMMOBILIZER KEY	<Ref. to IM(diag)-44, DTC B1575 INCORRECT IMMOBILIZER KEY, Diagnostic Procedure with Diagnostic Trouble Code (DTC).>
B1576	EGI CONTROL MODULE EEPROM	<Ref. to IM(diag)-46, DTC B1576 EGI CONTROL MODULE EEPROM, Diagnostic Procedure with Diagnostic Trouble Code (DTC).>
B1577	IMM CONTROL MODULE EEPROM	<Ref. to IM(diag)-47, DTC B1577 IMM CONTROL MODULE EEPROM, Diagnostic Procedure with Diagnostic Trouble Code (DTC).>
B1578	METER	<Ref. to IM(diag)-48, DTC B1578 METER, Diagnostic Procedure with Diagnostic Trouble Code (DTC).>

2. BODY INTEGRATED UNIT

NOTE:
Except for C0 and C5 models

DTC	Item	Note	Relation between ECM and DTC
B1401	METER COLLATION	<Ref. to IM(diag)-23, DTC B1401 METER COLLATION, Diagnostic Procedure with Diagnostic Trouble Code (DTC).>	B1578
B1402	IMMOBILIZER KEY COLLATION	<Ref. to IM(diag)-23, DTC B1402 IMMOBILIZER KEY COLLATION, Diagnostic Procedure with Diagnostic Trouble Code (DTC).>	B1575
B1407	MET COMMUNICATION	<Ref. to IM(diag)-24, DTC B1407 MET COMMUNICATION, Diagnostic Procedure with Diagnostic Trouble Code (DTC).>	B1578
B1408	METER NON-VOLATILE MEMORY	<Ref. to IM(diag)-24, DTC B1408 METER NON-VOLATILE MEMORY, Diagnostic Procedure with Diagnostic Trouble Code (DTC).>	B1578
B1410	TRANSPONDER COMMUNICATION	<Ref. to IM(diag)-25, DTC B1410 TRANSPONDER COMMUNICATION, Diagnostic Procedure with Diagnostic Trouble Code (DTC).>	B1574
B1411	IMMOBILIZER ANTENNA	<Ref. to IM(diag)-25, DTC B1411 IMMOBILIZER ANTENNA, Diagnostic Procedure with Diagnostic Trouble Code (DTC).>	B1570

NOTE:
The starter relay control is performed in immobilizer system. When the body integrated unit detects a nonconformity of reference code, it immediately outputs a starter relay cut signal to ECM, and then ECM stops the starter relay operation. In this case, engine does not start, and DTC is not recorded in ECM. Check that the engine does not start on the DTC of body integrated unit.

3. IMMOBILIZER CM

NOTE:
For C0 and C5 models

DTC	Item	Note	Relation between ECM and DTC
B1402	IMMOBILIZER KEY COLLATION	<Ref. to IM(diag)-23, DTC B1402 IMMOBILIZER KEY COLLATION, Diagnostic Procedure with Diagnostic Trouble Code (DTC).>	B1575
B1410	TRANSPONDER COMMUNICATION	<Ref. to IM(diag)-25, DTC B1410 TRANSPONDER COMMUNICATION, Diagnostic Procedure with Diagnostic Trouble Code (DTC).>	B1574
B1411	IMMOBILIZER ANTENNA	<Ref. to IM(diag)-25, DTC B1411 IMMOBILIZER ANTENNA, Diagnostic Procedure with Diagnostic Trouble Code (DTC).>	B1570
B1412	IMMOBILIZER CONTROL MODULE CAN REGISTER STUCK	<Ref. to IM(diag)-26, DTC B1412 IMMOBILIZER CONTROL MODULE CAN REGISTER STUCK, Diagnostic Procedure with Diagnostic Trouble Code (DTC).>	—
B1413	IMMOBILIZER CONTROL MODULE BATTERY POWER SUPPLY	<Ref. to IM(diag)-27, DTC B1413 IMMOBILIZER CONTROL MODULE BATTERY POWER SUPPLY, Diagnostic Procedure with Diagnostic Trouble Code (DTC).>	—
B1414	IMMOBILIZER CONTROL MODULE NON-VOLATILE MEMORY	<Ref. to IM(diag)-29, DTC B1414 IMMOBILIZER CONTROL MODULE NON-VOLATILE MEMORY, Diagnostic Procedure with Diagnostic Trouble Code (DTC).>	B1577

NOTE:
The starter relay control is performed in immobilizer system. When the immobilizer CM detects a nonconformity of reference code, it immediately outputs a starter relay cut signal to ECM, and then ECM stops the starter relay operation. In this case, engine does not start, and DTC is not recorded in ECM. Therefore, check DTC for the immobilizer CM to identify the cause of the engine not starting.

13.Diagnostic Procedure with Diagnostic Trouble Code (DTC)

A: DTC B1401 METER COLLATION

DIAGNOSIS START CONDITION:
- Battery voltage is 10 V or more.
- The remote engine starter was not used to start the engine.

DTC DETECTING CONDITION:
Reference code incompatibility between combination meter and body integrated unit

TROUBLE SYMPTOM:
- Engine will not start.
- The security indicator illuminates.

CAUTION:
When the combination meter is replaced, registration of the immobilizer system is required. For details, refer to the "REGISTRATION MANUAL FOR IMMOBILIZER" provided as a separate volume.

	Step	Check	Yes	No
1	**CHECK COMBINATION METER REGISTRATION.** Perform registration of combination meter. Refer to the "REGISTRATION MANUAL FOR IMMOBILIZER" provided as a separate volume.	Is registration complete?	Currently, it is normal. (Combination meter registration is not complete.)	Refer to "Correspondence table when registration is not possible" in the "REGISTRATION MANUAL FOR IMMOBILIZER" provided as a separate volume. If the registration still does not work properly, replace the combination meter. <Ref. to IDI-11, Combination Meter.>

B: DTC B1402 IMMOBILIZER KEY COLLATION

NOTE:
Refer to DTC B1575 for diagnostic procedure. <Ref. to IM(diag)-44, DTC B1575 INCORRECT IMMOBILIZER KEY, Diagnostic Procedure with Diagnostic Trouble Code (DTC).>

C: DTC B1407 MET COMMUNICATION

DIAGNOSIS START CONDITION:
- Battery voltage is 10 V or more.
- The remote engine starter was not used to start the engine.

DTC DETECTING CONDITION:
Communication failure between body integrated unit and combination meter

TROUBLE SYMPTOM:
- Engine will not start.
- The security indicator illuminates.

CAUTION:
When the combination meter is replaced, registration of the immobilizer system is required. For details, refer to the "REGISTRATION MANUAL FOR IMMOBILIZER" provided as a separate volume.

	Step	Check	Yes	No
1	**CHECK DTC.** Read the DTC of the body integrated unit. <Ref. to IM(diag)-10, Read Diagnostic Trouble Code (DTC).>	Is DTC of the body integrated unit except for DTC B1407 displayed?	Perform the diagnosis according to the DTC.	Check the combination meter. <Ref. to MET(diag)-2, PROCEDURE, Basic Diagnostic Procedure.>

D: DTC B1408 METER NON-VOLATILE MEMORY

DIAGNOSIS START CONDITION:
- Battery voltage is 10 V or more.
- The remote engine starter was not used to start the engine.

DTC DETECTING CONDITION:
Defective combination meter

TROUBLE SYMPTOM:
- Engine will not start.
- The security indicator illuminates.

CAUTION:
When the combination meter is replaced, registration of the immobilizer system is required. For details, refer to the "REGISTRATION MANUAL FOR IMMOBILIZER" provided as a separate volume.

	Step	Check	Yes	No
1	**CHECK COMBINATION METER REGISTRATION.** 1) Perform the Clear Memory Mode. (Combination meter and body integrated unit) <Ref. to MET(diag)-11, Clear Memory Mode.> <Ref. to IM(diag)-11, Clear Memory Mode.> 2) Perform registration of combination meter. Refer to the "REGISTRATION MANUAL FOR IMMOBILIZER" provided as a separate volume. 3) Read the DTC of the body integrated unit. <Ref. to IM(diag)-10, Read Diagnostic Trouble Code (DTC).>	Is DTC B1408 displayed?	Replace the combination meter. <Ref. to IDI-11, Combination Meter.>	Even if DTC is displayed, the circuit has returned to a normal condition at this time. Reproduce the failure, and then perform the diagnosis again. NOTE: In this case, temporary poor contact of connector, temporary open or short circuit of harness may be the cause.

E: DTC B1410 TRANSPONDER COMMUNICATION

NOTE:
Refer to DTC B1574 for diagnostic procedure. <Ref. to IM(diag)-42, DTC B1574 KEY COMMUNICATION, Diagnostic Procedure with Diagnostic Trouble Code (DTC).>

F: DTC B1411 IMMOBILIZER ANTENNA

NOTE:
Refer to DTC B1570 for diagnostic procedure. <Ref. to IM(diag)-30, DTC B1570 ANTENNA, Diagnostic Procedure with Diagnostic Trouble Code (DTC).>

G: DTC B1412 IMMOBILIZER CONTROL MODULE CAN REGISTER STUCK

DIAGNOSIS START CONDITION:
- Battery voltage is 10 V or more.
- The remote engine starter was not used to start the engine.

DTC DETECTING CONDITION:
- Defective immobilizer CM
- Failed to access the ROM of immobilizer CM.

TROUBLE SYMPTOM:
- The security indicator does not blink after the ignition key is turned to OFF.
- The security indicator remains off.

CAUTION:
When the immobilizer CM is replaced, registration of the immobilizer system is required. For details, refer to the "REGISTRATION MANUAL FOR IMMOBILIZER" provided as a separate volume.

	Step	Check	Yes	No
1	**CHECK DTC.** 1) Disconnect the ground cable from battery. 2) Wait for at least 10 seconds. 3) Connect the ground cable to battery. 4) Perform the Clear Memory Mode. <Ref. to IM(diag)-11, Clear Memory Mode.> 5) Read the DTC of the immobilizer CM. <Ref. to IM(diag)-10, Read Diagnostic Trouble Code (DTC).>	Is DTC B1412 displayed?	Go to step **2**.	Currently, it is normal.
2	**CHECK DTC.** 1) Disconnect the ground cable from battery. 2) Wait for at least 10 seconds. 3) Connect the ground cable to battery. 4) Perform the Clear Memory Mode. <Ref. to IM(diag)-11, Clear Memory Mode.> 5) Read the DTC of the immobilizer CM. <Ref. to IM(diag)-10, Read Diagnostic Trouble Code (DTC).>	Is DTC B1412 displayed?	Go to step **3**.	Currently, it is normal.
3	**CHECK DTC.** 1) Disconnect the ground cable from battery. 2) Wait for at least 10 seconds. 3) Connect the ground cable to battery. 4) Perform the Clear Memory Mode. <Ref. to IM(diag)-11, Clear Memory Mode.> 5) Read the DTC of the immobilizer CM. <Ref. to IM(diag)-10, Read Diagnostic Trouble Code (DTC).>	Is DTC B1412 displayed?	Replace the immobilizer CM. <Ref. to SL-90, Immobilizer Control Module.>	Currently, it is normal.

H: DTC B1413 IMMOBILIZER CONTROL MODULE BATTERY POWER SUPPLY

DIAGNOSIS START CONDITION:
- Battery voltage is 10 V or more.
- The remote engine starter was not used to start the engine.

DTC DETECTING CONDITION:
Battery voltage for the immobilizer CM was outside the specification for a certain period of time.

TROUBLE SYMPTOM:
The security indicator does not blink after the ignition key is turned to OFF.

CAUTION:
When the immobilizer CM is replaced, registration of the immobilizer system is required. For details, refer to the "REGISTRATION MANUAL FOR IMMOBILIZER" provided as a separate volume.

WIRING DIAGRAM:
Immobilizer system <Ref. to WI-251, WIRING DIAGRAM, Immobilizer System.>

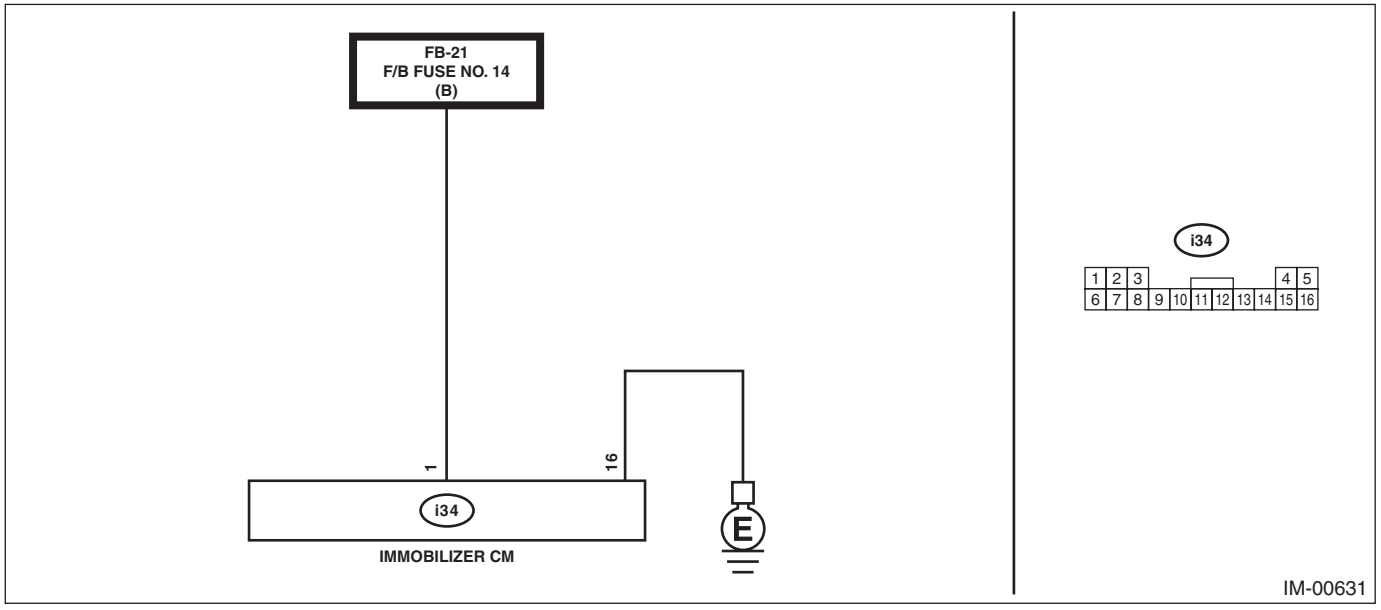

Step		Check	Yes	No
1	**CHECK FUSE.** 1) Turn the ignition switch to OFF. 2) Check the fuse.	Is there any fault?	Replace the fuse. If the fuse blows out easily, repair the short circuit to power supply in harness between the battery and immobilizer CM.	Go to step **2**.
2	**CHECK CURRENT DATA.** Confirm the current data «BATT voltage» display of immobilizer CM. <Ref. to IM(diag)-14, Read Current Data.>	Is the voltage 10 V or more?	Go to step **3**.	Go to step **5**.
3	**CHECK CURRENT DATA.** 1) Disconnect the ground cable from battery. 2) Wait for at least 10 seconds. 3) Connect the ground cable to battery. 4) Confirm the current data «BATT voltage» display of immobilizer CM. <Ref. to IM(diag)-14, Read Current Data.>	Is the voltage 10 V or more?	Go to step **4**.	Go to step **5**.

	Step	Check	Yes	No
4	**CHECK DTC.** Read the DTC of the immobilizer CM. <Ref. to IM(diag)-10, Read Diagnostic Trouble Code (DTC).>	Is DTC B1413 displayed?	Replace the immobilizer CM. <Ref. to SL-90, Immobilizer Control Module.>	Even if DTC is displayed, the circuit has returned to a normal condition at this time. Reproduce the failure, and then perform the diagnosis again. NOTE: In this case, temporary poor contact of connector, temporary open or short circuit of harness may be the cause.
5	**CHECK IMMOBILIZER CM POWER SUPPLY CIRCUIT.** 1) Turn the ignition switch to OFF. 2) Disconnect the connector from immobilizer CM. 3) Measure the voltage between immobilizer CM connector and chassis ground. ***Connector & terminal*** ***(i34) No. 1 (+) — Chassis ground (–):***	Is the voltage 10 V or more?	Go to step **6**.	Repair the open circuit of harness between the immobilizer CM and fuse.
6	**CHECK IMMOBILIZER CM GROUND CIRCUIT.** Measure the resistance between immobilizer CM connector and chassis ground. ***Connector & terminal*** ***(i34) No. 16 — Chassis ground:***	Is the resistance less than 10 Ω?	Replace the immobilizer CM. <Ref. to SL-90, Immobilizer Control Module.>	Repair the open circuit of harness between the immobilizer CM connector and chassis ground.

I: DTC B1414 IMMOBILIZER CONTROL MODULE NON-VOLATILE MEMORY

DIAGNOSIS START CONDITION:
- Battery voltage is 10 V or more.
- The remote engine starter was not used to start the engine.

DTC DETECTING CONDITION:
- Defective immobilizer CM
- Failed to access the ROM in immobilizer CM.

TROUBLE SYMPTOM:
Engine will not start.

CAUTION:
When the immobilizer CM is replaced, registration of the immobilizer system is required. For details, refer to the "REGISTRATION MANUAL FOR IMMOBILIZER" provided as a separate volume.

	Step	Check	Yes	No
1	**CHECK DTC.** 1) Disconnect the ground cable from battery. 2) Wait for at least 10 seconds. 3) Connect the ground cable to battery. 4) Read the DTC of the immobilizer CM. <Ref. to IM(diag)-10, Read Diagnostic Trouble Code (DTC).>	Is DTC B1414 displayed?	Go to step **2**.	The system has returned to a normal condition at this time. Finish the diagnosis.
2	**CHECK DTC.** 1) Perform the Clear Memory Mode. <Ref. to IM(diag)-11, Clear Memory Mode.> 2) Disconnect the ground cable from battery. 3) Wait for at least 10 seconds. 4) Connect the ground cable to battery. 5) Read the DTC of the immobilizer CM. <Ref. to IM(diag)-10, Read Diagnostic Trouble Code (DTC).>	Is DTC B1414 displayed?	Replace the immobilizer CM. <Ref. to SL-90, Immobilizer Control Module.>	The system has returned to a normal condition at this time. Finish the diagnosis.

J: DTC B1570 ANTENNA

1. EXCEPT FOR C0 AND C5 MODELS

DIAGNOSIS START CONDITION:
- Battery voltage is 10 V or more.
- The remote engine starter was not used to start the engine.

DTC DETECTING CONDITION:
Received an immobilizer antenna malfunction signal during unit collation

TROUBLE SYMPTOM:
- Engine will not start.
- The security indicator illuminates.

CAUTION:
When the body integrated unit is replaced, registration of the immobilizer system is required. For details, refer to the "REGISTRATION MANUAL FOR IMMOBILIZER" provided as a separate volume.

WIRING DIAGRAM:
Immobilizer system <Ref. to WI-251, WIRING DIAGRAM, Immobilizer System.>

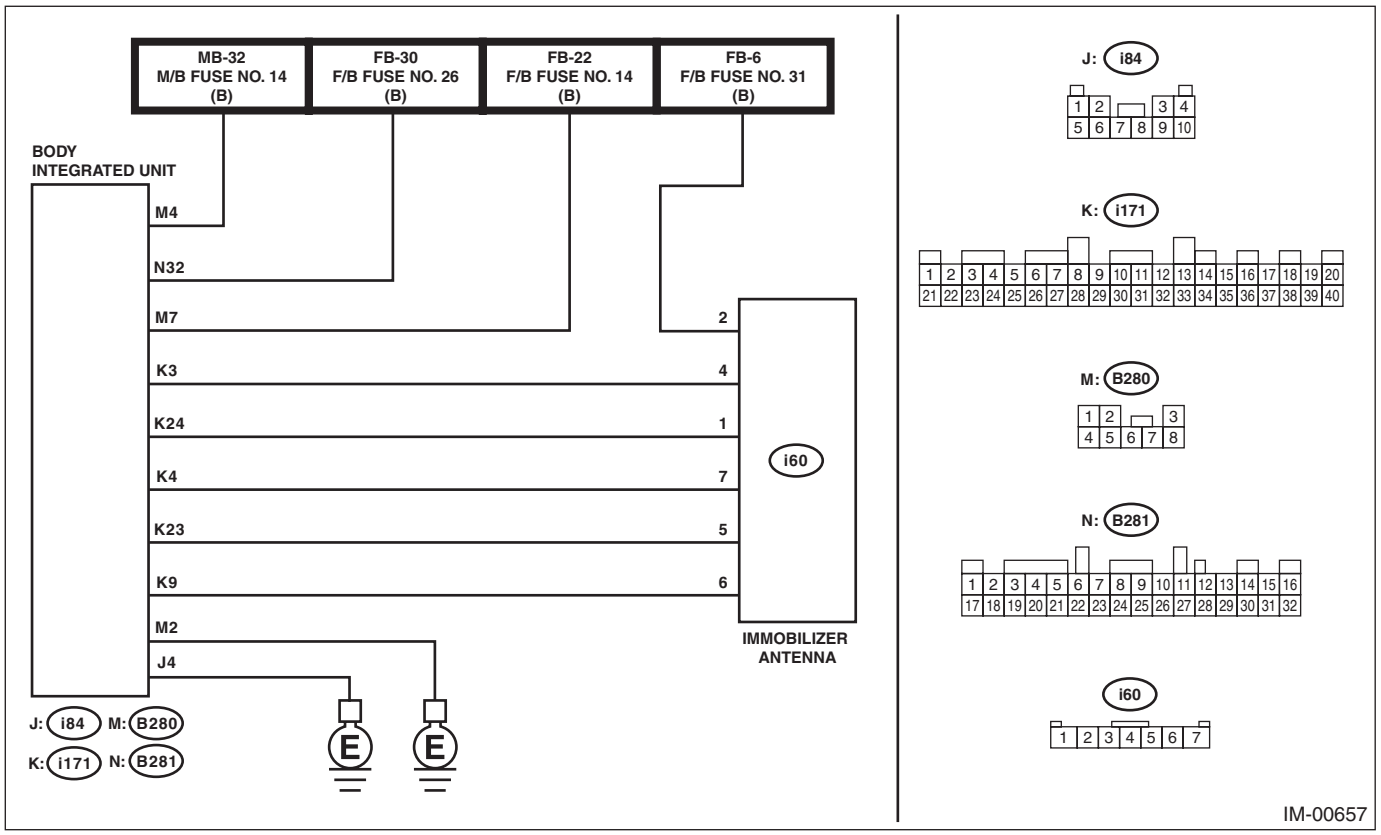

Step		Check	Yes	No
1	**CHECK FUSE.** 1) Turn the ignition switch to OFF. 2) Check the fuse.	Is there any fault?	Replace the fuse. If the fuse blows out easily, repair the short circuit to power supply in harness between the battery and body integrated unit.	Go to step **2**.
2	**CHECK CURRENT DATA.** Confirm the current data «BATT voltage (control)» display of body integrated unit. <Ref. to BC(diag)-20, Read Current Data.>	Is the voltage 10 V or more?	Go to step **3**.	Go to step **5**.

	Step	Check	Yes	No
3	**CHECK POWER SUPPLY CIRCUIT FOR IMMOBILIZER ANTENNA.** 1) Turn the ignition switch to OFF. 2) Disconnect the connector from immobilizer antenna. 3) Insert the ignition key into the key cylinder, then measure the voltage between the immobilizer antenna connector and the chassis ground using an oscilloscope. ***Connector & terminal*** ***(i60) No. 1 (+) — Chassis ground (–):***	Is the voltage 5±0.5 V approx. 200 ms after inserting the ignition key into the key cylinder? And then, does the voltage return to 0 V within 2 s?	Go to step **4**.	Repair the open or short circuit of harness between the body integrated unit connector and immobilizer antenna connector.
4	**CHECK IMMOBILIZER ANTENNA GROUND CIRCUIT (OPEN CIRCUIT).** Measure the resistance between immobilizer antenna connector and chassis ground. ***Connector & terminal*** ***(i60) No. 7 — Chassis ground:*** ***(i171) No. 4 — (i60) No. 7:***	Is the resistance less than 10 Ω?	Go to step **5**.	Repair the open circuit in harnesses between the body integrated unit connector and the immobilizer antenna connector, and between the body integrated unit connector and the chassis ground.
5	**CHECK IMMOBILIZER ANTENNA COMMUNICATION CIRCUIT (OPEN CIRCUIT).** Measure the resistance between the body integrated unit connector and immobilizer antenna connector. ***Connector & terminal*** ***(i171) No. 23 — (i60) No. 5:*** ***(i171) No. 3 — (i60) No. 4:***	Is the resistance less than 10 Ω?	Go to step **6**.	Repair or replace the open circuit of harness between the body integrated unit connector and immobilizer antenna connector.
6	**CHECK IMMOBILIZER ANTENNA.** 1) Connect all connectors. 2) Insert the ignition key in the ignition switch. (OFF or ACC) 3) Read the DTC of the body integrated unit. <Ref. to IM(diag)-10, Read Diagnostic Trouble Code (DTC).>	Is DTC B1411 displayed?	Replace the immobilizer antenna. <Ref. to SL-91, Immobilizer Antenna.> Go to step **7**.	Go to step **7**.
7	**CHECK IMMOBILIZER ANTENNA.** 1) Insert the ignition key in the ignition switch. (OFF or ACC) 2) Read the DTC of the body integrated unit. <Ref. to IM(diag)-10, Read Diagnostic Trouble Code (DTC).>	Is DTC B1411 displayed?	Replace the body integrated unit. <Ref. to SL-83, Body Integrated Unit.>	Malfunction occurred in the immobilizer antenna.

2. FOR C0 AND C5 MODELS

DIAGNOSIS START CONDITION:
- Battery voltage is 10 V or more.
- The remote engine starter was not used to start the engine.

DTC DETECTING CONDITION:
Immobilizer antenna is faulty.

TROUBLE SYMPTOM:
- Engine will not start.
- The security indicator illuminates.

CAUTION:
When the immobilizer CM is replaced, registration of the immobilizer system is required. For details, refer to the "REGISTRATION MANUAL FOR IMMOBILIZER" provided as a separate volume.

WIRING DIAGRAM:
Immobilizer system <Ref. to WI-251, WIRING DIAGRAM, Immobilizer System.>

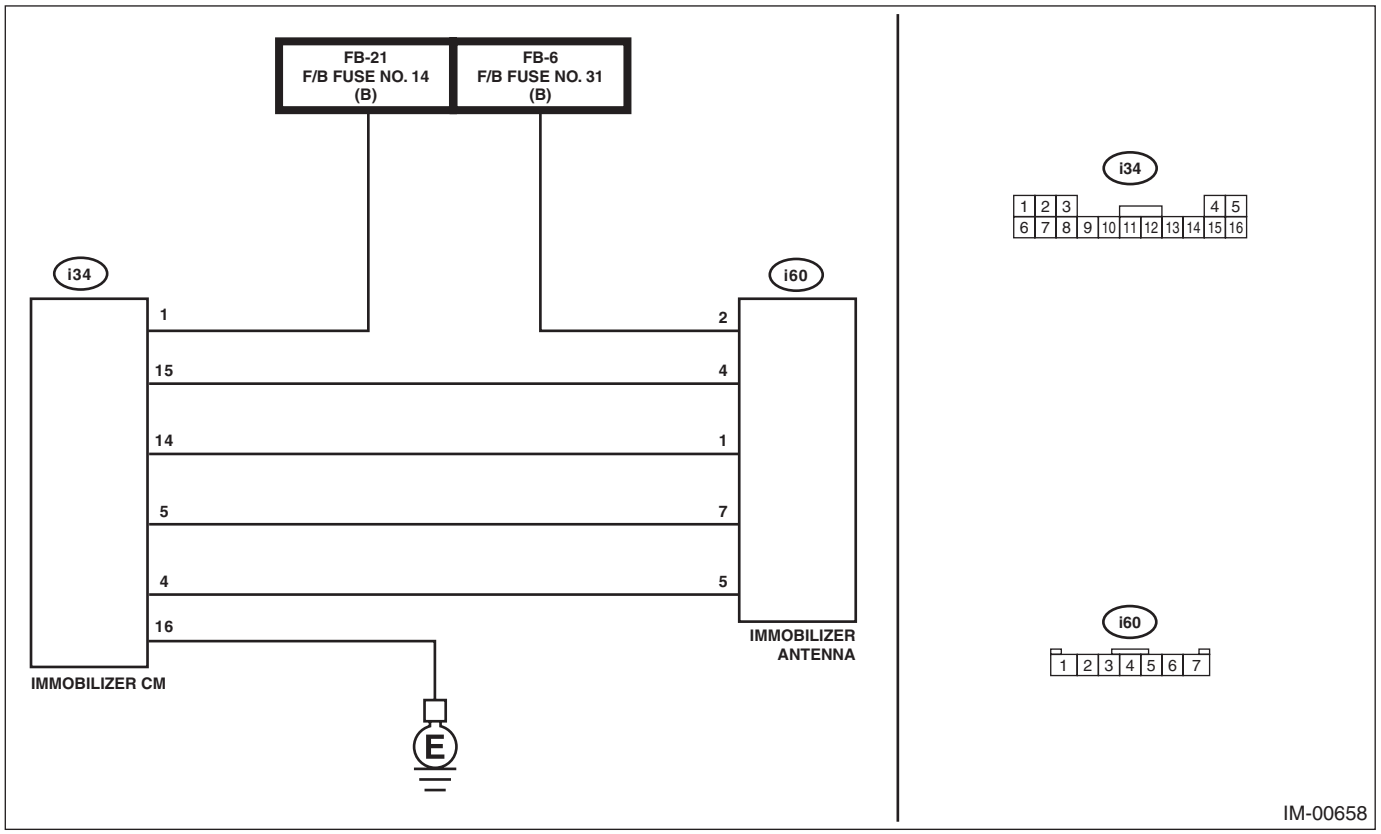

Step		Check	Yes	No
1	**CHECK FUSE.** 1) Turn the ignition switch to OFF. 2) Check the fuse.	Is there any fault?	Replace the fuse. If the fuse blows out easily, repair the short circuit to power supply in harness between the battery and immobilizer CM.	Go to step **2**.
2	**CHECK CURRENT DATA.** Confirm the current data «BATT voltage» display of immobilizer CM. <Ref. to IM(diag)-14, Read Current Data.>	Is the voltage 10 V or more?	Go to step **3**.	Go to step **5**.

	Step	Check	Yes	No
3	**CHECK POWER SUPPLY CIRCUIT FOR IMMOBILIZER ANTENNA.** 1) Turn the ignition switch to OFF. 2) Disconnect the connector from immobilizer antenna. 3) Insert the ignition key into the key cylinder, then measure the voltage between the immobilizer antenna connector and the chassis ground using an oscilloscope. ***Connector & terminal*** ***(i60) No. 1 (+) — Chassis ground (–):***	Is the voltage 5±0.5 V approx. 200 ms after inserting the ignition key into the key cylinder? And then, does the voltage return to 0 V within 2 s?	Go to step **4**.	Repair the open or short circuit of harness between the immobilizer CM connector and immobilizer antenna connector.
4	**CHECK IMMOBILIZER ANTENNA GROUND CIRCUIT (OPEN CIRCUIT).** Measure the resistance between immobilizer antenna connector and chassis ground. ***Connector & terminal*** ***(i60) No. 7 — Chassis ground:*** ***(i34) No. 5 — (i60) No. 7:*** ***(i34) No. 16 — Chassis ground:***	Is the resistance less than 10 Ω?	Go to step **5**.	Repair the open circuit in harnesses between the immobilizer CM connector and the immobilizer antenna connector, and between the immobilizer CM connector and the chassis ground.
5	**CHECK IMMOBILIZER ANTENNA COMMUNICATION CIRCUIT (OPEN CIRCUIT).** Measure the resistance between immobilizer CM connector and immobilizer antenna connector. ***Connector & terminal*** ***(i34) No. 4 — (i60) No. 5:*** ***(i34) No. 15 — (i60) No. 4:***	Is the resistance less than 10 Ω?	Go to step **6**.	Repair the open circuit of harness between the immobilizer CM connector and immobilizer antenna connector.
6	**CHECK IMMOBILIZER ANTENNA.** 1) Connect all connectors. 2) Insert the ignition key in the ignition switch. (OFF or ACC) 3) Read the DTC of the immobilizer CM. <Ref. to IM(diag)-10, Read Diagnostic Trouble Code (DTC).>	Is DTC B1411 displayed?	Replace the immobilizer antenna. <Ref. to SL-91, Immobilizer Antenna.> Go to step **7**.	Go to step **7**.
7	**CHECK IMMOBILIZER ANTENNA.** 1) Insert the ignition key in the ignition switch. (OFF or ACC) 2) Read the DTC of the immobilizer CM. <Ref. to IM(diag)-10, Read Diagnostic Trouble Code (DTC).>	Is DTC B1411 displayed?	Replace the immobilizer CM. <Ref. to SL-90, Immobilizer Control Module.>	Malfunction occurred in the immobilizer antenna.

K: DTC B1571 REFERENCE CODE INCOMPATIBILITY (IMMOBILIZER CM TO ECM)

1. EXCEPT FOR C0 AND C5 MODELS

DIAGNOSIS START CONDITION:
- Battery voltage is 10 V or more.
- The remote engine starter was not used to start the engine.

DTC DETECTING CONDITION:
Reference code incompatibility between body integrated unit and ECM

TROUBLE SYMPTOM:
- Engine will not start.
- The security indicator illuminates.

CAUTION:
When the body integrated unit is replaced, registration of the immobilizer system is required. For details, refer to the "REGISTRATION MANUAL FOR IMMOBILIZER" provided as a separate volume.

	Step	Check	Yes	No
1	**CONFIRM NUMBER OF REGISTERED IMMOBILIZER KEY.** Confirm the number of registered immobilizer key. Refer to the "REGISTRATION MANUAL FOR IMMOBILIZER" provided as a separate volume.	Is the number of registration 0?	Go to step **2**.	Go to step **3**.
2	**PERFORM IMMOBILIZER SYSTEM REGISTRATION.** Register the immobilizer system. Refer to the "REGISTRATION MANUAL FOR IMMOBILIZER" provided as a separate volume.	Is registration complete?	Finish the diagnosis.	Go to step **3**.
3	**PERFORM ECM REGISTRATION.** Perform ECM registration. Refer to the "REGISTRATION MANUAL FOR IMMOBILIZER" provided as a separate volume.	Is registration complete?	Finish the diagnosis.	Go to step **4**.
4	**CHECK DTC.** 1) Perform the Clear Memory Mode. <Ref. to IM(diag)-11, Clear Memory Mode.> 2) Read the DTC of the ECM. <Ref. to IM(diag)-10, Read Diagnostic Trouble Code (DTC).>	Is DTC other than DTC B1571 displayed?	Perform the diagnosis according to DTC.	Go to step **5**.
5	**PERFORM ECM REGISTRATION.** 1) Replace the ECM. <Ref. to FU(H4DO)-82, Engine Control Module (ECM).> <Ref. to FU(H6DO)-83, Engine Control Module (ECM).> 2) Perform ECM registration. Refer to the "REGISTRATION MANUAL FOR IMMOBILIZER" provided as a separate volume.	Is registration complete?	Finish the diagnosis.	Refer to "Correspondence table when registration is not possible" in the "REGISTRATION MANUAL FOR IMMOBILIZER" provided as a separate volume. If the registration still does not work properly, replace the body integrated unit. <Ref. to SL-83, Body Integrated Unit.>

2. FOR C0 AND C5 MODELS

DIAGNOSIS START CONDITION:

- Battery voltage is 10 V or more.
- The remote engine starter was not used to start the engine.

DTC DETECTING CONDITION:

Reference code incompatibility between immobilizer CM and ECM

TROUBLE SYMPTOM:

- Engine will not start.
- The security indicator illuminates.

CAUTION:

When the immobilizer CM is replaced, registration of the immobilizer system is required. For details, refer to the "REGISTRATION MANUAL FOR IMMOBILIZER" provided as a separate volume.

	Step	Check	Yes	No
1	**CONFIRM NUMBER OF REGISTERED IMMOBILIZER KEY.** Confirm the number of registered immobilizer key. Refer to the "REGISTRATION MANUAL FOR IMMOBILIZER" provided as a separate volume.	Is the number of registration 0?	Go to step **2**.	Go to step **3**.
2	**PERFORM IMMOBILIZER SYSTEM REGISTRATION.** Register the immobilizer system. Refer to the "REGISTRATION MANUAL FOR IMMOBILIZER" provided as a separate volume.	Is registration complete?	Finish the diagnosis.	Go to step **3**.
3	**PERFORM ECM REGISTRATION.** Perform ECM registration. Refer to the "REGISTRATION MANUAL FOR IMMOBILIZER" provided as a separate volume.	Is registration complete?	Finish the diagnosis.	Go to step **4**.
4	**CHECK DTC.** 1) Perform the Clear Memory Mode. <Ref. to IM(diag)-11, Clear Memory Mode.> 2) Read the DTC of the ECM. <Ref. to IM(diag)-10, Read Diagnostic Trouble Code (DTC).>	Is DTC other than DTC B1571 displayed?	Perform the diagnosis according to DTC.	Go to step **5**.
5	**PERFORM ECM REGISTRATION.** 1) Replace the ECM. <Ref. to FU(H4DO)-82, Engine Control Module (ECM).> <Ref. to FU(H6DO)-83, Engine Control Module (ECM).> 2) Perform ECM registration. Refer to the "REGISTRATION MANUAL FOR IMMOBILIZER" provided as a separate volume.	Is registration complete?	Finish the diagnosis.	Refer to "Correspondence table when registration is not possible" in the "REGISTRATION MANUAL FOR IMMOBILIZER" provided as a separate volume. If the registration still does not work properly, replace the immobilizer CM. <Ref. to SL-83, Body Integrated Unit.>

L: DTC B1572 IMM CIRCUIT EXCEPT ANTENNA CIRCUIT

1. EXCEPT FOR C0 AND C5 MODELS

DIAGNOSIS START CONDITION:
- Battery voltage is 10 V or more.
- The remote engine starter was not used to start the engine.

DTC DETECTING CONDITION:
Communication failure between body integrated unit and ECM

TROUBLE SYMPTOM:
- Engine will not start.
- The security indicator illuminates.

CAUTION:
When the body integrated unit or ECM is replaced, registration of the immobilizer system is required. For details, refer to the "REGISTRATION MANUAL FOR IMMOBILIZER" provided as a separate volume.

WIRING DIAGRAM:
Immobilizer system <Ref. to WI-251, WIRING DIAGRAM, Immobilizer System.>

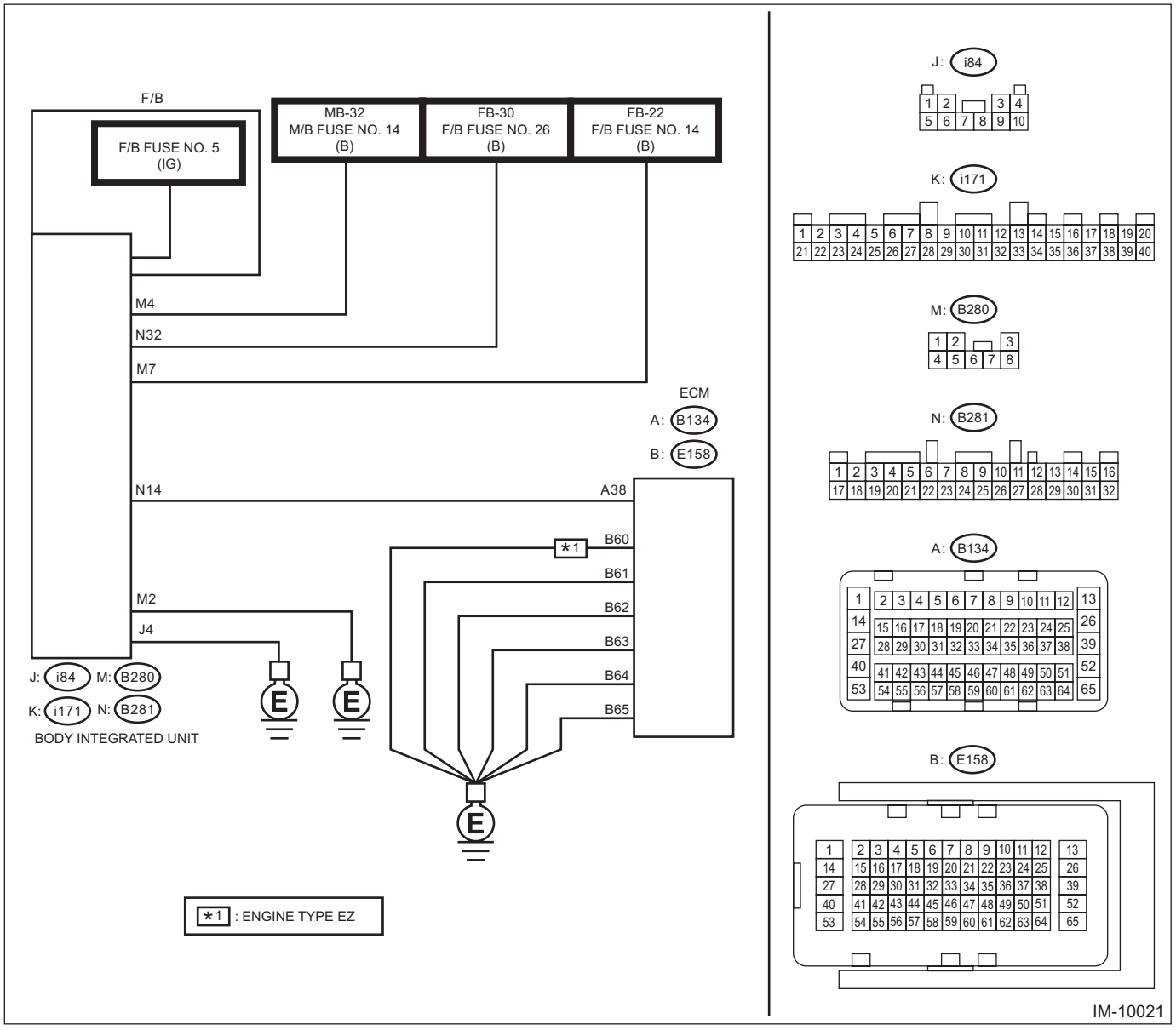

	Step	Check	Yes	No
1	**CHECK GROUNDING POINT.** Check the grounding point of the engine ground and chassis ground.	Are there any loose connections, any foreign objects caught in the ground lines or contact surface, or any fluid stains?	Remove the foreign matters, and tighten to the specified torque. Then start the engine, and check that the fault was removed. Check DTC <Ref. to IM(diag)-10, Read Diagnostic Trouble Code (DTC).>, and when DTC B1572 is still displayed, Go to step **2**.	Go to step **2**.
2	**CHECK FUSE.** 1) Turn the ignition switch to OFF. 2) Check the fuse.	Is there any fault?	Replace the fuse. If the fuse blows out easily, repair the short circuit to power supply in harness between the battery and body integrated unit.	Go to step **3**.
3	**CHECK CURRENT DATA.** Confirm the current data «BATT voltage (control)» display of body integrated unit. <Ref. to IM(diag)-14, Read Current Data.>	Is the voltage 10 V or more?	Go to step **4**.	Go to step **5**.
4	**CHECK CURRENT DATA.** Check the current data «Voltage of IGN» display of body integrated unit. <Ref. to IM(diag)-14, Read Current Data.>	Is the voltage 10 V or more?	Go to step **7**.	Go to step **6**.
5	**CHECK BODY INTEGRATED UNIT BATTERY POWER SUPPLY CIRCUIT.** 1) Turn the ignition switch to OFF. 2) Disconnect the body integrated unit connector. 3) Measure the voltage between body integrated unit connector and chassis ground. ***Connector & terminal*** ***(B280) No. 4 (+) — Chassis ground (–):*** ***(B280) No. 7 (+) — Chassis ground (–):*** ***(B281) No. 32 (+) — Chassis ground (–):***	Is the voltage 10 V or more?	Go to step **6**.	Repair the open or short circuit of harness between the body integrated unit connector and fuse.
6	**CHECK BODY INTEGRATED UNIT IGN POWER SUPPLY CIRCUIT.** 1) Turn the ignition switch to ON. 2) Measure the voltage between F/B fuse No. 5 and chassis ground. ***Connector & terminal*** ***F/B fuse No. 5 (+) — Chassis ground (–):***	Is the voltage 10 V or more?	Go to step **7**.	Repair the open or short circuit of harness between the body integrated unit connector and ignition switch.
7	**CHECK BODY INTEGRATED UNIT GROUND CIRCUIT (OPEN CIRCUIT).** 1) Turn the ignition switch to OFF. 2) Measure the resistance between body integrated unit connector and chassis ground. ***Connector & terminal*** ***(B280) No. 2 — Chassis ground:*** ***(i84) No. 4 — Chassis ground:***	Is the resistance less than 10 Ω?	Go to step **8**.	Repair the open circuit of harness between the body integrated unit connector and chassis ground.

	Step	Check	Yes	No
8	**CHECK GROUND CIRCUIT FOR ECM (OPEN CIRCUIT).** 1) Disconnect the ECM connector. 2) Measure the resistance between the ECM connector and engine ground. ***Connector & terminal*** ***(E158) No. 60 — Engine ground (engine type EZ only):*** ***(E158) No. 61 — Engine ground:*** ***(E158) No. 62 — Engine ground:*** ***(E158) No. 63 — Engine ground:*** ***(E158) No. 64 — Engine ground:*** ***(E158) No. 65 — Engine ground:***	Is the resistance less than 10 Ω?	Go to step **9**.	Repair the open circuit in harness between ECM connector and chassis ground.
9	**CHECK HARNESS (OPEN CIRCUIT) BETWEEN BODY INTEGRATED UNIT AND ECM.** 1) Disconnect the ECM connector. 2) Measure the resistance between the body integrated unit connector and ECM. ***Connector & terminal*** ***(B281) No. 14 — (B134) No. 38:***	Is the resistance less than 10 Ω?	Go to step **10**.	Repair the open circuit of harness between the body integrated unit connector and ECM.
10	**CHECK COMMUNICATION LINE HARNESS (SHORT CIRCUIT TO POWER SUPPLY).** 1) Disconnect the body integrated unit connector. 2) Turn the ignition switch to ON. 3) Measure the voltage between ECM connector and engine ground. ***Connector & terminal*** ***(B134) No. 38 (+) — Chassis ground (–):***	Is the voltage 6 V or more?	Repair the short circuit to power supply in harness between body integrated unit connector and ECM connector.	Go to step **11**.
11	**CHECK COMMUNICATION CIRCUIT HARNESS (SHORT CIRCUIT TO GROUND).** 1) Turn the ignition switch to OFF. 2) Measure the resistance between the ECM connector and each ground. ***Connector & terminal*** ***(B134) No. 38 — Chassis ground:*** ***(B134) No. 38 — Engine ground:***	Is the resistance less than 10 Ω?	Repair the ground short circuit of harness between body integrated unit connector and ECM connector.	Go to step **12**.
12	**CHECK ECM.** 1) Replace the ECM. (Do not perform ECM registration.) <Ref. to FU(H4DO)-82, Engine Control Module (ECM).> <Ref. to FU(H6DO)-83, Engine Control Module (ECM).> 2) Connect all connectors. 3) Turn the ignition switch to ON. 4) Wait for 5 seconds. 5) Read DTC of engine. <Ref. to IM(diag)-10, Read Diagnostic Trouble Code (DTC).>	Is DTC B1572 displayed?	Replace the body integrated unit. <Ref. to SL-83, Body Integrated Unit.>	Register the ECM. Refer to the "REGISTRATION MANUAL FOR IMMOBILIZER" provided as a separate volume.

2. FOR C0 AND C5 MODELS

DIAGNOSIS START CONDITION:

- Battery voltage is 10 V or more.
- The remote engine starter was not used to start the engine.

DTC DETECTING CONDITION:

Communication failure between immobilizer CM and ECM

TROUBLE SYMPTOM:

- Engine will not start.
- The security indicator illuminates.

CAUTION:

When the immobilizer CM or ECM is replaced, registration of the immobilizer system is required. For details, refer to the "REGISTRATION MANUAL FOR IMMOBILIZER" provided as a separate volume.

WIRING DIAGRAM:

NOTE:
For the coupling connector, refer to "WIRING SYSTEM".
Immobilizer system <Ref. to WI-251, WIRING DIAGRAM, Immobilizer System.>

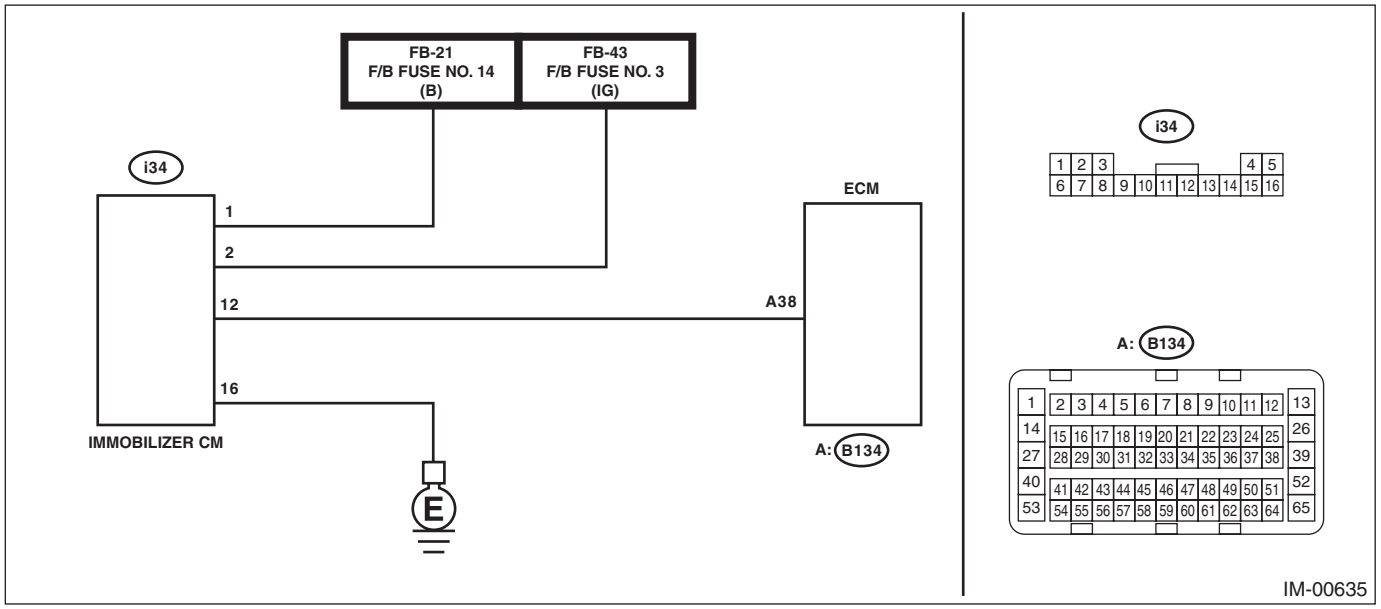

Step		Check	Yes	No
1	**CHECK GROUNDING POINT.** Check the grounding point of the engine ground and chassis ground.	Are there any loose connections, any foreign objects caught in the ground lines or contact surface, or any fluid stains?	Remove the foreign matters, and tighten to the specified torque. Then start the engine, and check that the fault was removed. Check DTC <Ref. to IM(diag)-10, Read Diagnostic Trouble Code (DTC).>, and when DTC B1572 is still displayed, Go to step **2**.	Go to step **2**.

	Step	Check	Yes	No
2	**CHECK FUSE.** 1) Turn the ignition switch to OFF. 2) Check the fuse.	Is there any fault?	Replace the fuse. If the fuse blows out easily, repair the short circuit to power supply in harness between the battery and immobilizer CM.	Go to step **3**.
3	**CHECK CURRENT DATA.** Confirm the current data «BATT voltage» display of immobilizer system. <Ref. to BC(diag)-20, OPERATION, Read Current Data.>	Is the voltage 10 V or more?	Go to step **6**.	Go to step **4**.
4	**CHECK GROUND CIRCUIT FOR ECM (OPEN CIRCUIT).** 1) Disconnect the ECM connector. 2) Measure the resistance between the ECM connector and engine ground. ***Connector & terminal*** ***(E158) No. 60 — Engine ground (engine type EZ only):*** ***(E158) No. 61 — Engine ground:*** ***(E158) No. 62 — Engine ground:*** ***(E158) No. 63 — Engine ground:*** ***(E158) No. 64 — Engine ground:*** ***(E158) No. 65 — Engine ground:***	Is the resistance less than 10 Ω?	Go to step **5**.	Repair the open circuit in harness between ECM connector and chassis ground.
5	**CHECK IMMOBILIZER CM BATTERY POWER SUPPLY CIRCUIT.** 1) Turn the ignition switch to OFF. 2) Disconnect the immobilizer CM connector. 3) Measure the voltage between immobilizer CM connector and chassis ground. ***Connector & terminal*** ***(i34) No. 1 (+) — Chassis ground (–):***	Is the voltage 10 V or more?	Go to step **6**.	Repair the open or short circuit of harness between the immobilizer CM connector and fuse.
6	**CHECK IMMOBILIZER CM IGN POWER SUPPLY CIRCUIT.** 1) Turn the ignition switch to ON. 2) Measure the voltage between immobilizer CM connector and chassis ground. ***Connector & terminal*** ***(i34) No. 2 (+) — Chassis ground (–):***	Is the voltage 10 V or more?	Go to step **7**.	Repair the open or short circuit of harness between the immobilizer CM connector and ignition switch.
7	**CHECK IMMOBILIZER CM GROUND CIRCUIT (OPEN CIRCUIT).** 1) Turn the ignition switch to OFF. 2) Measure the resistance between immobilizer CM connector and chassis ground. ***Connector & terminal*** ***(i34) No. 16 — Chassis ground:***	Is the resistance less than 10 Ω?	Go to step **8**.	Repair the open circuit of harness between the immobilizer CM connector and chassis ground.
8	**CHECK HARNESS BETWEEN IMMOBILIZER CM AND ECM (OPEN CIRCUIT).** Measure the resistance between immobilizer CM connector and ECM connector. ***Connector & terminal*** ***(i34) No. 12 — (B134) No. 38:***	Is the resistance less than 10 Ω?	Go to step **9**.	Repair the open circuit of harness between the immobilizer CM connector and ECM.
9	**CHECK COMMUNICATION LINE HARNESS (SHORT CIRCUIT TO POWER SUPPLY).** 1) Turn the ignition switch to ON. 2) Measure the voltage between ECM connector and engine ground. ***Connector & terminal*** ***(B134) No. 38 (+) — Engine ground (–):***	Is the voltage 6 V or more?	Repair the short circuit to power supply in harness between immobilizer CM connector and ECM connector.	Go to step **10**.

	Step	Check	Yes	No
10	**CHECK COMMUNICATION CIRCUIT HARNESS (SHORT CIRCUIT TO GROUND).** 1) Turn the ignition switch to OFF. 2) Measure the resistance between immobilizer CM connector and each ground. ***Connector & terminal*** ***(i34) No. 12 — Chassis ground:*** ***(i34) No. 12 — Engine ground:***	Is the resistance less than 10 Ω?	Repair the short circuit to ground in harness between immobilizer CM connector and ECM connector.	Go to step **11**.
11	**CHECK ECM.** 1) Replace the ECM. (Do not perform ECM registration.) <Ref. to FU(H4DO)-82, Engine Control Module (ECM).> <Ref. to FU(H6DO)-83, Engine Control Module (ECM).> 2) Connect all connectors. 3) Turn the ignition switch to ON. 4) Wait for 5 seconds. 5) Read DTC of engine. <Ref. to IM(diag)-10, Read Diagnostic Trouble Code (DTC).>	Is DTC B1572 displayed?	Replace the immobilizer CM. <Ref. to SL-90, Immobilizer Control Module.>	Malfunction occurred in ECM. Register the ECM. Refer to the “REGISTRATION MANUAL FOR IMMOBILIZER” provided as a separate volume.

M: DTC B1574 KEY COMMUNICATION

1. EXCEPT FOR C0 AND C5 MODELS

DIAGNOSIS START CONDITION:
- Battery voltage is 10 V or more.
- The remote engine starter was not used to start the engine.

DTC DETECTING CONDITION:
Communication failure between ignition key and body integrated unit

TROUBLE SYMPTOM:
- Engine will not start.
- The security indicator illuminates.

CAUTION:
When the body integrated unit is replaced, registration of the immobilizer system is required. For details, refer to the "REGISTRATION MANUAL FOR IMMOBILIZER" provided as a separate volume.

	Step	Check	Yes	No
1	**CHECK IGNITION KEY.** 1) Remove the ignition key from the ignition switch. 2) Insert the ignition key into the ignition switch, and then turn the ignition switch to ON. 3) Perform the Clear Memory Mode. <Ref. to IM(diag)-11, Clear Memory Mode.> 4) Read the DTC of the body integrated unit. <Ref. to IM(diag)-10, Read Diagnostic Trouble Code (DTC).>	Is DTC B1410 displayed?	Go to step **2**.	Even if DTC is displayed, the circuit has returned to a normal condition at this time. Reproduce the failure, and then perform the diagnosis again. NOTE: It is possible that the surrounding radio wave environment was poor.
2	**CHECK IGNITION KEY.** 1) Prepare a spare ignition key that is already registered. 2) Insert the ignition key into the ignition switch, and then turn the ignition switch to ON. 3) Read the DTC of the body integrated unit. <Ref. to IM(diag)-10, Read Diagnostic Trouble Code (DTC).>	Is DTC B1410 displayed?	Go to step **3**.	Malfunction occurred in ignition key.
3	**CHECK DTC.** Read the DTC of body integrated unit using Subaru Select Monitor. <Ref. to IM(diag)-10, Read Diagnostic Trouble Code (DTC).>	Is DTC B1411 displayed?	Perform the diagnosis of DTC B1411. <Ref. to IM(diag)-25, DTC B1411 IMMOBILIZER ANTENNA, Diagnostic Procedure with Diagnostic Trouble Code (DTC).> Go to step **4**.	Go to step **4**.
4	**CHECK IMMOBILIZER ANTENNA.** 1) Insert the ignition key into the ignition switch, and then turn the ignition switch to ON. 2) Perform the Clear Memory Mode. <Ref. to IM(diag)-11, Clear Memory Mode.> 3) Read the DTC of the body integrated unit. <Ref. to IM(diag)-10, Read Diagnostic Trouble Code (DTC).>	Is DTC B1410 displayed?	Replace the body integrated unit. <Ref. to SL-83, Body Integrated Unit.>	Malfunction occurred in the immobilizer antenna.

2. FOR C0 AND C5 MODELS

DIAGNOSIS START CONDITION:

- Battery voltage is 10 V or more.
- The remote engine starter was not used to start the engine.

DTC DETECTING CONDITION:

Communication failure between ignition key and immobilizer CM

TROUBLE SYMPTOM:

- Engine will not start.
- The security indicator illuminates.

CAUTION:

When the immobilizer CM is replaced, registration of the immobilizer system is required. For details, refer to the "REGISTRATION MANUAL FOR IMMOBILIZER" provided as a separate volume.

	Step	Check	Yes	No
1	**CHECK IGNITION KEY.** 1) Remove the ignition key from the ignition switch. 2) Insert the ignition key into the ignition switch, and then turn the ignition switch to ON. 3) Perform the Clear Memory Mode. <Ref. to IM(diag)-11, Clear Memory Mode.> 4) Read the DTC of the immobilizer CM. <Ref. to IM(diag)-10, Read Diagnostic Trouble Code (DTC).>	Is DTC B1410 displayed?	Go to step **2**.	Even if DTC is displayed, the circuit has returned to a normal condition at this time. Reproduce the failure, and then perform the diagnosis again. NOTE: It is possible that the surrounding radio wave environment was poor.
2	**CHECK IGNITION KEY.** 1) Prepare a spare ignition key that is already registered. 2) Insert the ignition key into the ignition switch, and then turn the ignition switch to ON. 3) Read the DTC of the immobilizer CM. <Ref. to IM(diag)-10, Read Diagnostic Trouble Code (DTC).>	Is DTC B1410 displayed?	Go to step **3**.	Malfunction occurred in ignition key.
3	**CHECK DTC.** Using the Subaru Select Monitor, read DTC of immobilizer CM. <Ref. to IM(diag)-10, Read Diagnostic Trouble Code (DTC).>	Is DTC B1411 displayed?	Perform the diagnosis of DTC B1411. <Ref. to IM(diag)-25, DTC B1411 IMMOBILIZER ANTENNA, Diagnostic Procedure with Diagnostic Trouble Code (DTC).> Go to step **4**.	Go to step **4**.
4	**CHECK IMMOBILIZER ANTENNA.** 1) Insert the ignition key into the ignition switch, and then turn the ignition switch to ON. 2) Perform the Clear Memory Mode. <Ref. to IM(diag)-11, Clear Memory Mode.> 3) Read the DTC of the immobilizer CM. <Ref. to IM(diag)-10, Read Diagnostic Trouble Code (DTC).>	Is DTC B1410 displayed?	Replace the immobilizer CM. <Ref. to SL-90, Immobilizer Control Module.>	Malfunction occurred in the immobilizer antenna.

N: DTC B1575 INCORRECT IMMOBILIZER KEY

1. EXCEPT FOR C0 AND C5 MODELS

DIAGNOSIS START CONDITION:
- Battery voltage is 10 V or more.
- The remote engine starter was not used to start the engine.

DTC DETECTING CONDITION:
Use of unregistered key in body integrated unit.

TROUBLE SYMPTOM:
- Engine will not start.
- The security indicator illuminates, when the ignition key is inserted into the ignition switch or when the ignition switch is turned to ON.

CAUTION:
When the body integrated unit or combination meter is replaced, registration of the immobilizer system is required. For details, refer to the "REGISTRATION MANUAL FOR IMMOBILIZER" provided as a separate volume.

	Step	Check	Yes	No
1	**CONFIRM NUMBER OF REGISTERED IGNITION KEY.** Using the Subaru Select Monitor, check the number of registered ignition keys. Refer to the "REGISTRATION MANUAL FOR IMMOBILIZER" provided as a separate volume.	Is one or more ignition key(s) registered?	Go to step **2**.	Register the immobilizer.
2	**CHECK IGNITION KEY.** 1) Prepare all the pre-registered ignition keys. 2) Insert the ignition key in the ignition switch. 3) Turn the ignition switch to ON. 4) Read the DTC of the body integrated unit. <Ref. to IM(diag)-10, Read Diagnostic Trouble Code (DTC).> 5) Perform step 2) to 4) with another registered ignition key.	Is DTC B1402 displayed for all ignition keys?	Refer to "REGISTRATION MANUAL FOR IMMOBILIZER" provided as a separate volume, and perform the actions for the case that all keys are faulty/lost.	Ignition key unit was defective, or ignition key was not registered.

2. FOR C0 AND C5 MODELS

DIAGNOSIS START CONDITION:

- Battery voltage is 10 V or more.
- The remote engine starter was not used to start the engine.

DTC DETECTING CONDITION:

Use of unregistered key in immobilizer CM.

TROUBLE SYMPTOM:

- Engine will not start.
- The security indicator illuminates, when the ignition key is inserted into the ignition switch or when the ignition switch is turned to ON.

CAUTION:

When the immobilizer CM is replaced, registration of the immobilizer system is required. For details, refer to the "REGISTRATION MANUAL FOR IMMOBILIZER" provided as a separate volume.

	Step	Check	Yes	No
1	**CONFIRM NUMBER OF REGISTERED IGNITION KEY.** Using the Subaru Select Monitor, check the number of registered ignition keys. Refer to the "REGISTRATION MANUAL FOR IMMOBILIZER" provided as a separate volume.	Is one or more ignition key(s) registered?	Go to step **2**.	Register the immobilizer.
2	**CHECK IGNITION KEY.** 1) Prepare all the pre-registered ignition keys. 2) Insert the ignition key in the ignition switch. 3) Turn the ignition switch to ON. 4) Read the DTC of the immobilizer CM. <Ref. to IM(diag)-10, Read Diagnostic Trouble Code (DTC).> 5) Perform step 2) to 4) with another registered ignition key.	Is DTC B1402 displayed for all ignition keys?	Refer to "REGISTRATION MANUAL FOR IMMOBILIZER" provided as a separate volume, and perform the actions for the case that all keys are faulty/lost.	Ignition key unit was defective, or ignition key was not registered.

O: DTC B1576 EGI CONTROL MODULE EEPROM

DIAGNOSIS START CONDITION:
- Battery voltage is 10 V or more.
- The remote engine starter was not used to start the engine.

DTC DETECTING CONDITION:
- ECM malfunctioning
- Failed to access ROM in ECM during key registration.

TROUBLE SYMPTOM:
- Engine will not start.
- The security indicator illuminates.

CAUTION:
When the ECM is replaced, registration of the immobilizer system is required. For details, refer to the "REGISTRATION MANUAL FOR IMMOBILIZER" provided as a separate volume.

	Step	Check	Yes	No
1	**PERFORM ECM REGISTRATION.** Perform ECM registration. Refer to the "REGISTRATION MANUAL FOR IMMOBILIZER" provided as a separate volume.	Is registration complete?	Finish the diagnosis.	Go to step **2**.
2	**PERFORM ECM REGISTRATION.** Perform ECM registration. Refer to the "REGISTRATION MANUAL FOR IMMOBILIZER" provided as a separate volume.	Is registration complete?	Finish the diagnosis.	Go to step **3**.
3	**PERFORM ECM REGISTRATION.** Perform ECM registration. Refer to the "REGISTRATION MANUAL FOR IMMOBILIZER" provided as a separate volume.	Is registration complete?	Finish the diagnosis.	Refer to "Correspondence table when registration is not possible" in the "REGISTRATION MANUAL FOR IMMOBILIZER" provided as a separate volume. If the registration still does not work properly, replace the ECM. <Ref. to FU(H4DO)-82, Engine Control Module (ECM).> <Ref. to FU(H6DO)-83, Engine Control Module (ECM).>

P: DTC B1577 IMM CONTROL MODULE EEPROM

DIAGNOSIS START CONDITION:
- Battery voltage is 10 V or more.
- The remote engine starter was not used to start the engine.

DTC DETECTING CONDITION:
- Defective body integrated unit (except for C0 and C5 models) or immobilizer CM (C0 and C5 models)
- Failed to access ROM in the body integrated unit (except for C0 and C5 models) or the immobilizer CM (C0 and C5 models)

TROUBLE SYMPTOM:
- Engine will not start.
- The security indicator illuminates.

CAUTION:
When the body integrated unit (except for C0 and C5 models) or the immobilizer CM (C0 and C5 models) is replaced, registration of the immobilizer system is required. For details, refer to the "REGISTRATION MANUAL FOR IMMOBILIZER" provided as a separate volume.

	Step	Check	Yes	No
1	**PERFORM ECM REGISTRATION.** Perform ECM registration. Refer to the "REGISTRATION MANUAL FOR IMMOBILIZER" provided as a separate volume.	Is registration complete?	Finish the diagnosis.	Go to step **2**.
2	**PERFORM ECM REGISTRATION.** 1) Perform the Clear Memory Mode. (ECM and immobilizer CM) <Ref. to IM(diag)-11, Clear Memory Mode.> 2) Perform ECM registration. Refer to the "REGISTRATION MANUAL FOR IMMOBILIZER" provided as a separate volume.	Is registration complete?	Even if DTC is displayed, the circuit has returned to a normal condition at this time. Reproduce the failure, and then perform the diagnosis again. NOTE: In this case, temporary poor contact of connector, temporary open or short circuit of harness may be the cause.	Refer to "Correspondence table when registration is not possible" in the "REGISTRATION MANUAL FOR IMMOBILIZER" provided as a separate volume. If the registration still does not work properly, replace the following parts. Body integrated unit (except for C0 and C5 models) <Ref. to SL-83, Body Integrated Unit.> Immobilizer CM (C0 and C5 models) <Ref. to SL-90, Immobilizer Control Module.>

Q: DTC B1578 METER

DIAGNOSIS START CONDITION:
- Battery voltage is 10 V or more.
- The remote engine starter was not used to start the engine.

DTC DETECTING CONDITION:
Reference code incompatibility between combination meter and body integrated unit or communication failure between body integrated unit and ECM

TROUBLE SYMPTOM:
- Engine will not start.
- The security indicator illuminates.

	Step	Check	Yes	No
1	**CHECK DTC.** Read the DTC of the body integrated unit. <Ref. to IM(diag)-10, Read Diagnostic Trouble Code (DTC).>	Is either DTC B1401, B1407 or B1408 displayed?	Perform the diagnosis according to the DTC.	Perform the diagnosis of DTC B1572. <Ref. to IM(diag)-36, DTC B1572 IMM CIRCUIT EXCEPT ANTENNA CIRCUIT, Diagnostic Procedure with Diagnostic Trouble Code (DTC).>

LAN SYSTEM (DIAGNOSTICS)

LAN(diag)

		Page
1.	Basic Diagnostic Procedure	2
2.	Check List for Interview	4
3.	General Description	5
4.	Electrical Component Location	9
5.	Control Module I/O Signal	10
6.	Subaru Select Monitor	11
7.	Read Diagnostic Trouble Code (DTC)	33
8.	Clear Memory Mode	34
9.	CAN BUS ECU Communication Check	35
10.	CAN Communication Circuit Check	36
11.	List of Diagnostic Trouble Code (DTC)	86
12.	Diagnostic Procedure with Diagnostic Trouble Code (DTC)	92
13.	General Diagnostic Table	126

1. Basic Diagnostic Procedure

A: PROCEDURE

CAUTION:
• Remove foreign matter (dust, water, oil, etc.) from each control module connector during removal and installation.
• Registration of immobilizer may be needed after the replacement of control modules, etc. For detailed procedure, refer to the "REGISTRATION MANUAL FOR IMMOBILIZER".

NOTE:
- To check harness for open or short circuits, shake the suspected trouble spot or connector.
- Check List for Interview <Ref. to LAN(diag)-4, Check List for Interview.>

	Step	Check	Yes	No
1	**CHECK PRE-INSPECTION.** Ask the customer when and how the trouble occurred using the interview check list. <Ref. to LAN(diag)-4, Check List for Interview.>	Did you interview the customer?	Go to step **2**.	Interview the customer.
2	**BASIC INSPECTION (CAN DIAGNOSTIC IS NOT USED).** Check components which might affect CAN communication problem. <Ref. to LAN(diag)-7, INSPECTION WITHOUT USING CAN DIAGNOSTIC, INSPECTION, General Description.>	Is the component that might affect CAN communication problem normal?	Go to step **3**.	Repair or replace each component.
3	**CHECK COMMUNICATION FOR INITIALIZING.** Communicate with the all systems by connecting the Subaru Select Monitor.	Is the communication for initializing finished for all modules?	Go to step **4**.	Check the error of communication for initializing. <Ref. to LAN(diag)-11, COMMUNICATION FOR INITIALIZING IMPOSSIBLE, Subaru Select Monitor.>
4	**BASIC INSPECTION (CAN DIAGNOSTIC IS USED).** Check components which might affect CAN communication problem. <Ref. to LAN(diag)-7, INSPECTION USING CAN DIAGNOSTIC, INSPECTION, General Description.>	Is the component that might affect CAN communication problem normal?	Go to step **5**.	Repair or replace each component.
5	**CHECK DTC.** 1) Start the engine and read all DTCs. NOTE: When the engine does not start, perform the diagnosis for the engine start malfunction. <Ref. to EN(H4DO)(diag)-83, Diagnostics for Engine Starting Failure.> <Ref. to EN(H6DO)(diag)-92, Diagnostics for Engine Starting Failure.> 2) Record all DTCs, time stamp and freeze frame data. NOTE: For time stamp, refer to "TIME STAMP" of General Description. <Ref. to LAN(diag)-6, TIME STAMP, CAUTION, General Description.>	Is DTC U**** displayed?	Go to step **6**.	Go to step **7**.

Step		Check	Yes	No
6	**CHECK DTC.** 1) Perform the inspection using the DTC check sheet. <Ref. to LAN(diag)-88, CHECK USING THE DTC CHECK SHEET, LIST, List of Diagnostic Trouble Code (DTC).> 2) Using the Subaru Select Monitor, read all DTCs.	Is DTC U**** displayed?	Go to step **8**.	Go to step **7**.
7	**PERFORM GENERAL DIAGNOSTICS.** Inspect using the “General Diagnostic Table”. <Ref. to LAN(diag)-126, General Diagnostic Table.>	Is result of inspection OK?	LAN system is normal.	Go to step **8**.
8	**PERFORM DIAGNOSIS.** 1) Correct the cause of trouble. 2) Perform the Clear Memory Mode. <Ref. to LAN(diag)-34, OPERATION, Clear Memory Mode.> 3) Read the DTC. <Ref. to LAN(diag)-33, OPERATION, Read Diagnostic Trouble Code (DTC).>	Is DTC displayed?	Repeat step 8 until DTC is not shown.	Finish the diagnosis.

2. Check List for Interview

A: CHECK

Inspect the following items regarding the vehicle's state.

1. DISPLAY STATUS IN THE COMBINATION METER

Display status in the combination meter	Engine coolant temperature gauge display	❑ OK / ❑ NG
	Fuel gauge display	❑ OK / ❑ NG
	Tachometer display	❑ OK / ❑ NG (0 rpm at idling etc.)
Display of other indicators	Malfunction indicator light	❑ ON / ❑ Blink / ❑ OFF
	SPORT indicator light (AT warning light)	❑ ON / ❑ Blink / ❑ OFF
	ABS warning light	❑ ON / ❑ Blink / ❑ OFF
	VDC warning light	❑ ON / ❑ Blink / ❑ OFF
	Immobilizer indicator light	❑ ON / ❑ Blink / ❑ OFF
	AT OIL TEMP warning light	❑ ON / ❑ Blink / ❑ OFF
	Tire pressure warning light	❑ ON / ❑ Blink / ❑ OFF
	Engine coolant temperature warning light	❑ Blue light ON / ❑ Red light ON / ❑ Red light blinks / ❑ Blue and red lights blink
	CRUISE indicator	❑ ON / ❑ Blink / ❑ OFF
	Shift indicator	❑ OK / ❑ NG
	Fuel level warning light	❑ ON / ❑ Blink / ❑ OFF
	Airbag warning light	❑ ON / ❑ OFF
	VDC OFF indicator	❑ ON / ❑ OFF
	Brake warning light	❑ ON / ❑ OFF
	EyeSight warning light	❑ ON / ❑ Blink / ❑ OFF
	Lane departure warning OFF indicator light	❑ ON / ❑ OFF
	Pre-collision brake OFF indicator light	❑ ON / ❑ OFF
	Headlight beam leveler indicator	❑ ON / ❑ OFF

2. CONDITIONS UNDER WHICH TROUBLE OCCURS

Driving condition	❑ At standstill (while idling) ❑ When the vehicle is running Vehicle speed km/h (MPH) ❑ While accelerating Acceleration km/h (MPH) to km/h (MPH) ❑ Decelerating (with braking) Deceleration km/h (MPH) to km/h (MPH) ❑ Decelerating (without braking) Deceleration km/h (MPH) to km/h (MPH)
	❑ Flat road ❑ Uphill ❑ Downhill ❑ Gravel road ❑ Bumpy road ❑ Snowy road
	Does it occur when operating any part? Operated part: **TROUBLE SYMPTOM:**
	Are there any other troubles occurred? From where: **TROUBLE SYMPTOM:**

3. General Description

A: CAUTION

1. SRS AIRBAG SYSTEM

Airbag system wiring harness is routed near the body integrated unit and twisted pair line.

CAUTION:
- **Do not use the electrical test equipment on all airbag system wiring harnesses and connectors.**
- **Be careful not to damage the airbag system wiring harness when servicing the body integrated unit and LAN system.**

2. LAN SYSTEM

- Bus line of LAN system is twisted pair line. Be careful not to by-pass or partly unbind the twisted pair line.
- Do not make clearance between bus lines (CAN High, CAN Low).
- Difference of bus line length should be within 10 cm (3.94 in).
- Fray near the connector should be within 8 cm (3.14 in).

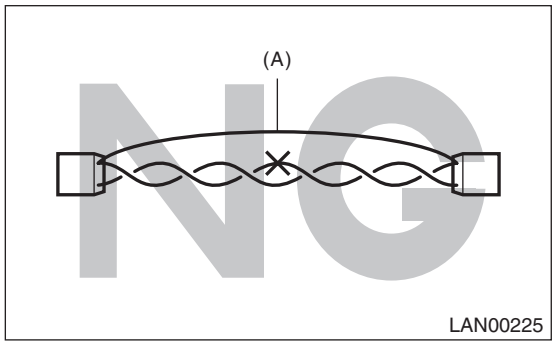

(A) Bypass wire connection

- If the characteristics of the twisted pair line are changed, it may extremely weaken against noise.
- When repairing the harness, connect the wires using soldering and protect it with electrical tape etc.

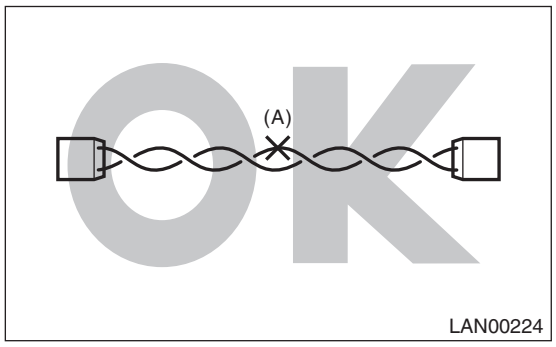

(A) Soldering and protection with electrical tape

3. TIME STAMP

There are three types of record data for the information of time stamp, and they are stored together with diagnostic codes.

NOTE:
Depending on DTCs, time stamp may not be stored.

a. **Trip Count**

This indicates the number of times that the ignition has been turned to ON since the vehicle was manufactured. The ignition ON count of when the diagnostic code is stored is displayed on the diagnostic code check screen.

NOTE:
Subaru Select Monitor 4 screen (A/C system diagnostic code and time stamp)

Code	Description & trouble position	Trouble occurrence record	**Trip Count**	Time Count	Category
B14E1	Air mix door actuator stepping motor circuit wire break (driver's seat)	Detected on the first time	**983**	18000	Common
B14E7	Heater core rear sensor circuit wire break	Detected on the 2nd time	**984**	117800	Common

The current Trip Count can be checked at "Current Data Display & Save" in "Integ. unit mode".
By comparing the current Trip Count and the Trip Count of when the diagnostic code was stored, it is possible to determine that it is how many ignition-ON operations ago that DTC was stored.

b. **Time Count**

The elapsed time from when the ignition is turned to ON to when the diagnostic code is stored is displayed on the diagnostic code check screen. It is possible to determine the length of time that passed between when the user started driving and when the diagnostic code was stored. Therefore, if Trip Count until the vehicle-received-date is determined by interviewing the user, it is possible to estimate where the user was driving when the diagnostic code was stored, using the information such as Trip Count and Time Count. This estimate is useful information to perform diagnosis including checking of repeatability.

NOTE:
Subaru Select Monitor 4 screen (A/C system diagnostic code and time stamp)

Code	Description & trouble position	Trouble occurrence record	Trip Count	**Time Count**	Category
B14E1	Air mix door actuator stepping motor circuit wire break (driver's seat)	Detected on the first time	983	**18000**	Common
B14E7	Heater core rear sensor circuit wire break	Detected on the 2nd time	984	**117800**	Common

When multiple diagnostic codes are recorded for one trouble, it is extremely important to determine the diagnostic code that was stored first. (It is important to perform the diagnosis for the first recorded diagnostic code.) In this case, it is also possible to immediately determine which diagnostic code was recorded first, using the information such as Trip Count and Time Count.

c. **Category**
Each unit individually counts the elapsed time since the ignition is turned to ON. However, these time counts may have some errors, and therefore, the control modules need to be adjusted to the time carried by the master-time unit (the body integrated unit). When the count is set as common, it means that each control module is already adjusted to the master time, and the display for the master integrated unit is always indicated as “Common”. When the count is indicated as “Originally”, it means that the time is not synchronized with the master time. In this case, check the communication between the corresponding control module and integrated unit. When all controls other than the body integrated unit is indicated as “Originally”, perform the basic inspection for the body integrated unit. <Ref. to BC(diag)-2, PROCEDURE, Basic Diagnostic Procedure.>

NOTE:
Subaru Select Monitor 4 screen (A/C system diagnostic code and time stamp)

Code	Description & trouble position	Trouble occurrence record	Trip Count	Time Count	**Category**
B14E1	Air mix door actuator stepping motor circuit wire break (driver’s seat)	Detected on the first time	983	18000	**Common**
B14E7	Heater core rear sensor circuit wire break	Detected on the 2nd time	984	117800	**Common**

Even when multiple diagnostic codes are stored in multiple control modules, it is possible to determine the code stored first through the categorizing feature.

NOTE:
Troubleshooting for CAN system U-code occurrence
When the first stored diagnostic code is a U-code for CAN system, perform the troubleshooting as a U code combination, instead of a U code alone. In addition, when CAN open circuit occurs, communication of the diagnostic device itself becomes impossible beyond the particular areas. However, trouble positions can also be determined by the combination of initial communication success/failure. Thus, by performing the basic diagnostic procedure in LAN system, trouble positions can be determined efficiently on the principle above. <Ref. to LAN(diag)-2, PROCEDURE, Basic Diagnostic Procedure.>

B: INSPECTION

1. INSPECTION WITHOUT USING CAN DIAGNOSTIC

Before performing diagnosis, check the following items that might affect troubles of each module.
1) Check the battery. <Ref. to SC(H4DO)-65, INSPECTION, Battery.> <Ref. to SC(H6DO)-59, INSPECTION, Battery.>
2) Check the fuse condition.
Make sure that ampere of the fuse is setting value, and it is not blown out.
3) Check the connecting condition of harness and harness connector.

2. INSPECTION USING CAN DIAGNOSTIC

Before performing diagnostics, check the following item which might affect body integrated unit malfunctions.
1) Confirm settings of body integrated unit are corresponded to vehicle equipment. <Ref. to BC(diag)-33, OPERATION, Registration Body Integrated Unit.>
2) Make sure that the User Customizing of the body integrated unit matches the vehicle equipment. <Ref. to BC(diag)-30, OPERATION, User Customizing.>
3) Confirm “Factory initial setting” of body integrated unit registrations is set to “Market”.

C: PREPARATION TOOL

1. SPECIAL TOOL

ILLUSTRATION	TOOL NUMBER	DESCRIPTION	REMARKS
 STSSM4	— (Newly adopted tool)	SUBARU SELECT MONITOR 4	Used for setting of each function and trouble-shooting for electrical system. NOTE: For detailed operation procedures of Subaru Select Monitor 4, refer to “Application help”.

2. GENERAL TOOL

TOOL NAME	REMARKS
Circuit tester	Used for measuring resistance, voltage and current.
DST-i	Used together with Subaru Select Monitor 4.

3. PREPARATION ITEMS

ITEM NAME	REMARKS
120 Ω resistance element (1/4 W or more)	Used as an alternative to end resistance.

4. Electrical Component Location

A: LOCATION

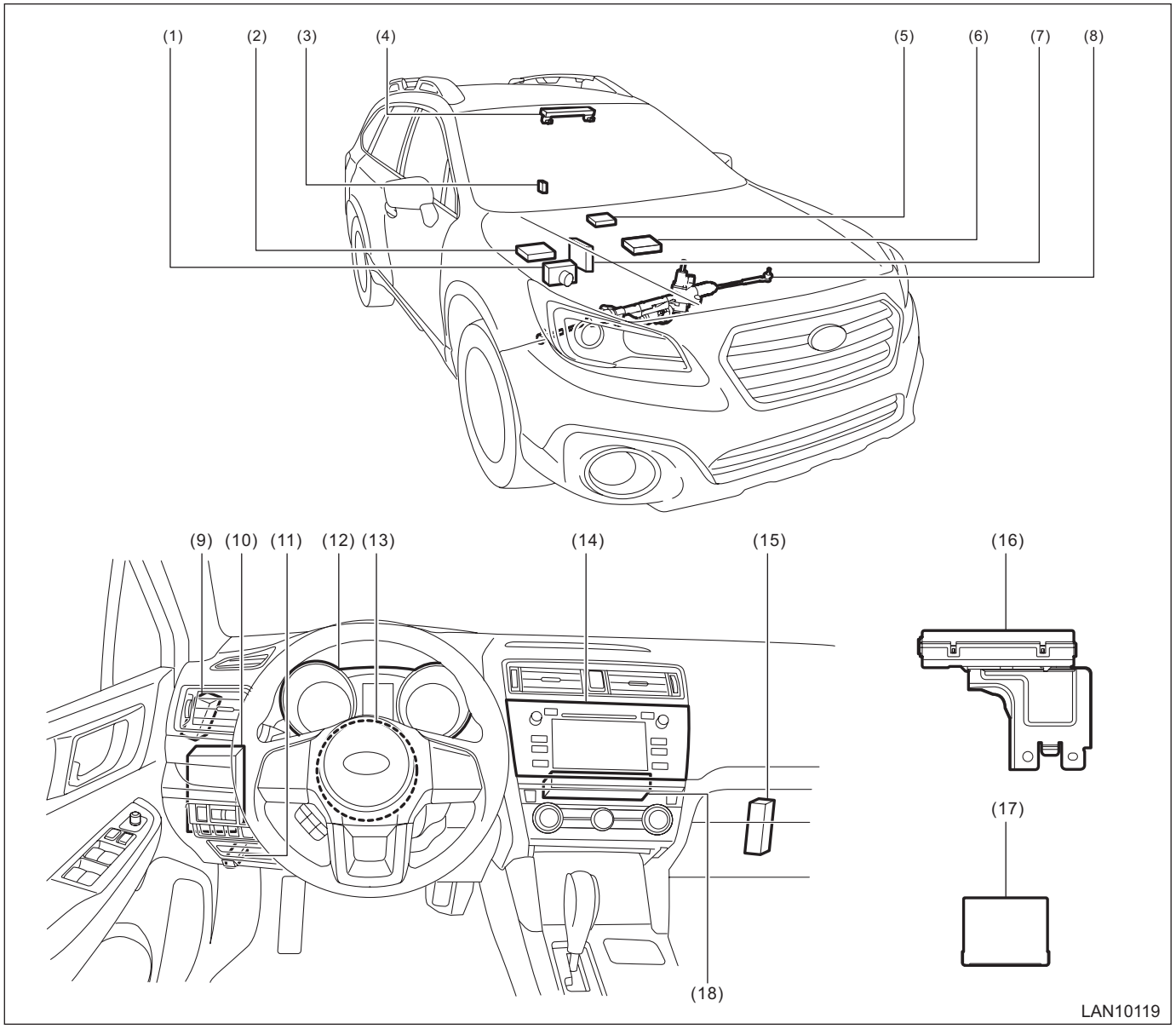

(1)	VDC CM	(7)	Engine CM	(13)	Steering angle sensor
(2)	Transmission CM (engine type: EZ)	(8)	Power steering CM	(14)	Audio or navigation
(3)	Radar sensor LH	(9)	Auto headlight beam leveler CM (AHL CM) or steering responsive fog light CM (SRF CM)	(15)	A/C CM
(4)	Stereo camera	(10)	Body integrated unit	(16)	Keyless access CM
(5)	Airbag CM (in console box)	(11)	Data link connector	(17)	Immobilizer CM (For C0 and C5 models)
(6)	Transmission CM (engine type: FB)	(12)	Combination meter	(18)	Data communication module (DCM)

5. Control Module I/O Signal

A: ELECTRICAL SPECIFICATION

- Body integrated unit

For I/O signals of the body integrated unit, refer to BODY CONTROL SYSTEM (DIAGNOSTICS). <Ref. to BC(diag)-8, Control Module I/O Signal.>

- Engine CM

For I/O signals of ECM, refer to ENGINE (DIAGNOSTICS). <Ref. to EN(H4DO)(diag)-20, Engine Control Module (ECM) I/O Signal.> <Ref. to EN(H6DO)(diag)-20, Engine Control Module (ECM) I/O Signal.>

- Transmission CM

For I/O signals of TCM, refer to AUTOMATIC TRANSMISSION (DIAGNOSTICS). <Ref. to CVT(diag)-12, Transmission Control Module (TCM) I/O Signal.>

- VDC CM

For I/O signals of VDC CM, refer to VEHICLE DYNAMICS CONTROL (VDC) (DIAGNOSTICS). <Ref. to VDC(diag)-17, Control Module I/O Signal.>

- Power steering CM

For unit I/O signals of power steering CM, refer to POWER ASSISTED SYSTEM (POWER STEERING) (DIAGNOSTICS). <Ref. to PS(diag)-9, Control Module I/O Signal.>

- A/C CM

For unit I/O signals of A/C CM, refer to HVAC SYSTEM (DIAGNOSTICS). <Ref. to AC(diag)-6, Control Module I/O Signal.>

- Combination meter

For I/O signals of combination meter, refer to COMBINATION METER (DIAGNOSTICS). <Ref. to MET(diag)-6, Control Module I/O Signal.>

- Airbag CM

For I/O signals of the airbag CM, refer to AIRBAG SYSTEM (DIAGNOSTICS). <Ref. to AB(diag)-24, Airbag Control Module I/O Signal.>

- Keyless access CM

For I/O signals of keyless access CM, refer to KEYLESS ACCESS WITH PUSH BUTTON START SYSTEM (DIAGNOSTICS). <Ref. to KPS(diag)-14, Control Module I/O Signal.>

- Auto headlight beam leveler CM

For I/O signals of auto headlight beam leveler CM, refer to AUTO HEADLIGHT BEAM LEVELER SYSTEM (DIAGNOSTICS). <Ref. to AL(diag)-6, Control Module I/O Signal.>

- Steering responsive fog light CM

For I/O signals of the steering responsive fog light CM, refer to STEERING RESPONSIVE FOG LIGHTS (DIAGNOSTICS). <Ref. to SRF(diag)-7, Control Module I/O Signal.>

- Radar sensor

For I/O signals of the radar sensor, refer to BSD/RCTA (DIAGNOSTICS). <Ref. to RVD(diag)-9, Control Module I/O Signal.>

- Immobilizer CM

For I/O signals of the immobilizer CM, refer to IMMOBILIZER (DIAGNOSTICS). <Ref. to IM(diag)-7, Immobilizer Control Module I/O Signal.>

- Audio or navigation

For I/O signals of the audio or navigation, refer to INFOTAINMENT SYSTEM (DIAGNOSTICS). <Ref. to INF(diag)-8, Control Module I/O Signal.>

- Data communication module (DCM)

For I/O signals of DCM, refer to TELEMATICS (DIAGNOSTICS). <Ref. to TEL(diag)-8, Control Module I/O Signal.>

- Data link connector

For I/O signals of data link connector, refer to ENGINE (DIAGNOSTICS). <Ref. to EN(H4DO)(diag)-20, Engine Control Module (ECM) I/O Signal.> <Ref. to EN(H6DO)(diag)-20, Engine Control Module (ECM) I/O Signal.>

B: WIRING DIAGRAM

Refer to “CAN Communication System” in the wiring diagram. <Ref. to WI-132, WIRING DIAGRAM, CAN Communication System.>

6. Subaru Select Monitor

A: OPERATION

For details of basic operations, refer to “Application help”.

B: COMMUNICATION FOR INITIALIZING IMPOSSIBLE

DIAGNOSIS:
Subaru Select Monitor communication line is open or shorted.
TROUBLE SYMPTOM:
Not communicable with Subaru Select Monitor.
WIRING DIAGRAM:
CAN communication system <Ref. to WI-132, WIRING DIAGRAM, CAN Communication System.>

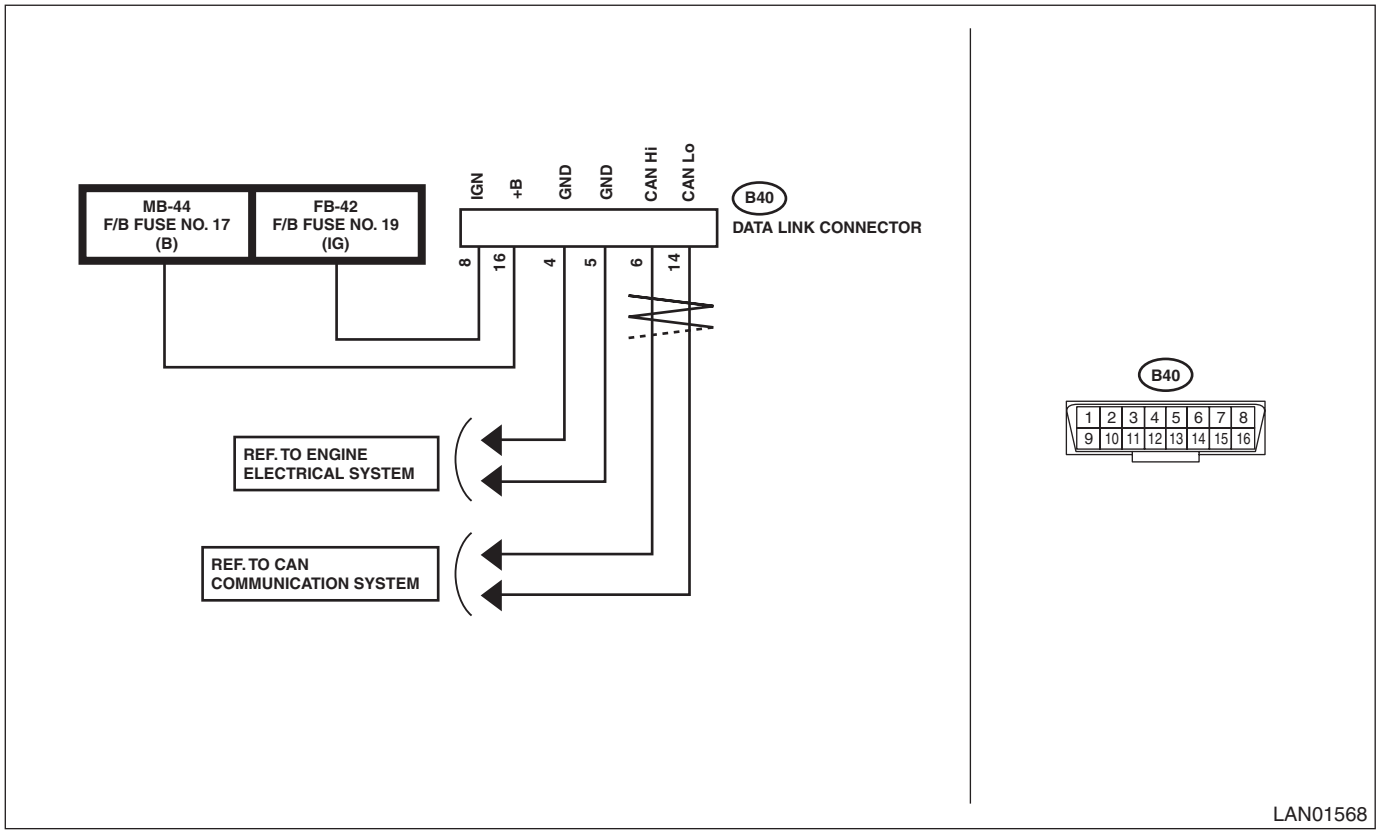

Step		Check	Yes	No
1	**CHECK SUBARU SELECT MONITOR.** 1) Connect the Subaru Select Monitor to another vehicle. 2) Check communication condition between Subaru Select Monitor and vehicle.	Is communication performed normally?	Go to step **2**.	Subaru Select Monitor unit or diagnosis cable is faulty. Or check the fuse on the vehicle side.

	Step	Check	Yes	No
2	**CHECK COMMUNICATION FOR INITIALIZING ERROR.** Perform the communication for initializing with each module by connecting the Subaru Select Monitor. (For systems whose module can communicate with diagnostic devices) NOTE: By performing «Confirmation of CAN bus connection to ECU(MainBus)», confirmation of minimal connection modules is possible. <Ref. to LAN(diag)-35, CAN BUS ECU Communication Check.>	Is the communication possible with all modules?	Go to step **3**.	Perform the inspection using the check sheet of communication for initializing. <Ref. to LAN(diag)-13, CHECK USING THE CHECK SHEET OF COMMUNICATION FOR INITIALIZING, COMMUNICATION FOR INITIALIZING IMPOSSIBLE, Subaru Select Monitor.>
3	**CHECK DATA LINK CONNECTOR.** Use a tester to check for continuity in the ground circuit. ***Connector & terminal*** ***(B40) No. 4 — Chassis ground:*** ***(B40) No. 5 — (B134) No. 53:***	Is there continuity?	Go to step **4**.	Repair or replace the open circuit.
4	**CHECK DATA LINK CONNECTOR.** 1) Turn the ignition switch to ON. 2) Using a tester, check the power supply of data link connector. ***Connector & terminal*** ***(B40) No. 8 (+) — Chassis ground (–):*** ***(B40) No. 16 (+) — Chassis ground (–):***	Is the voltage 10 V or more?	The circuit has returned to a normal condition at this time. Reproduce the failure, and then perform the diagnosis again. NOTE: In this case, temporary poor contact of connector, temporary open or short circuit of harness may be the cause.	Check the power supply circuits to the data link connector.

1. CHECK USING THE CHECK SHEET OF COMMUNICATION FOR INITIALIZING

- **Network diagram**

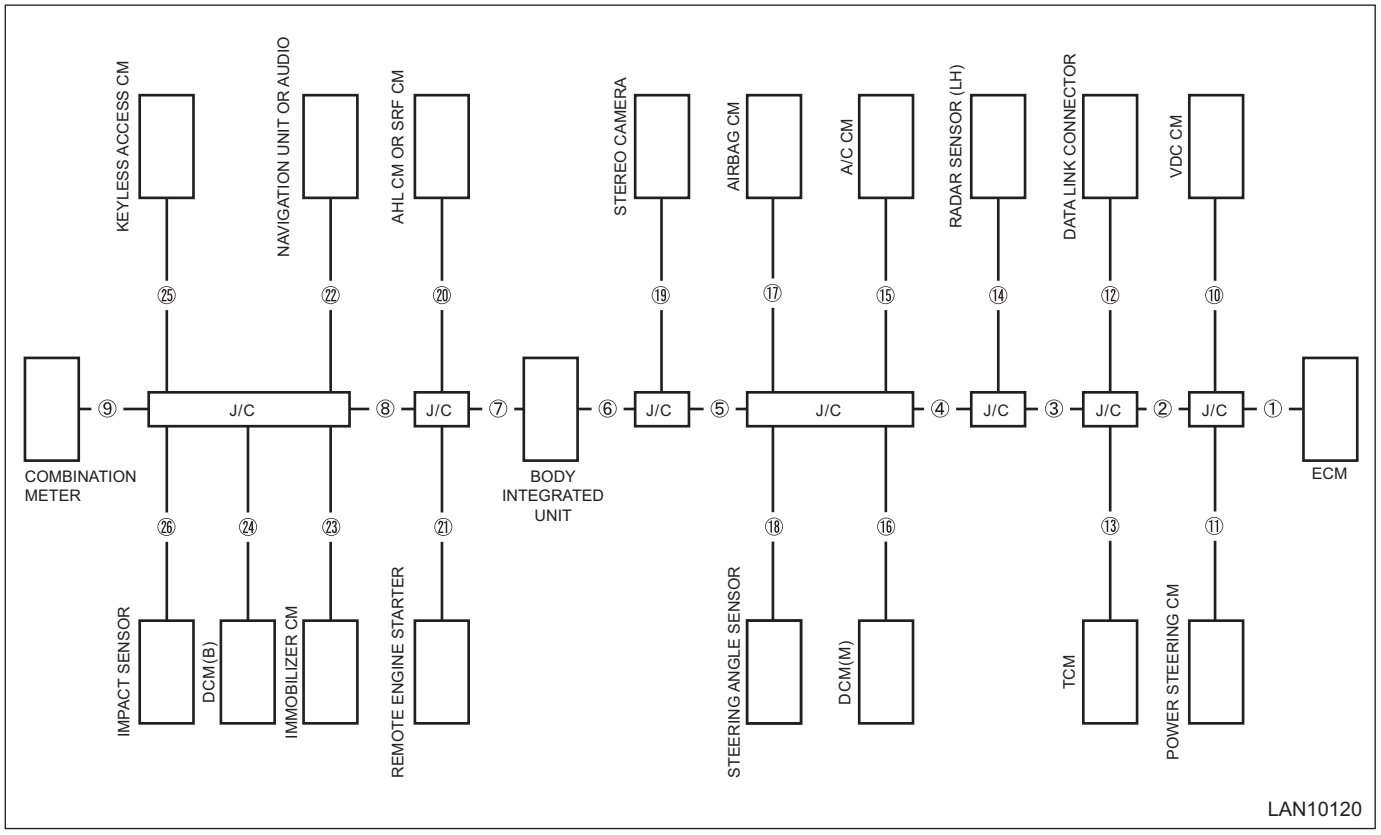

- **Check sheet of communication for initializing**

	(A)	(B)	(C)																										
			1	2	3	4	5	6	7	8	9	10	11	12	13	14	15	16	17	18	19	20	21	22	23	24	25	26	
																				-			-			-		-	
ECM					-	-	-	-	-	-	-	-	-		-	-	-	-	-	-	-	-	-	-	-	-	-	-	
VDC			-		-	-	-	-	-	-	-		-		-	-	-	-	-	-	-	-	-	-	-	-	-	-	
EPS			-		-	-	-	-	-	-	-	-			-	-	-	-	-	-	-	-	-	-	-	-	-	-	
TCM			-	-	-	-	-	-	-	-	-	-	-			-	-	-	-	-	-	-	-	-	-	-	-	-	
RDR			-	-		-	-	-	-	-	-	-	-		-		-	-	-	-	-	-	-	-	-	-	-	-	
A/C			-	-			-	-	-	-	-	-	-		-	-		-	-	-	-	-	-	-	-	-	-	-	
DCM(M)			-	-			-	-	-	-	-	-	-		-	-	-		-	-	-	-	-	-	-	-	-	-	
A/B			-	-			-	-	-	-	-	-	-		-	-	-	-		-	-	-	-	-	-	-	-	-	
STA		-	-	-	-	-	-	-	-	-	-	-	-	-	-	-	-	-	-	-	-	-	-	-	-	-	-	-	
EYE			-	-				-	-	-	-	-	-		-	-	-	-	-	-		-	-	-	-	-	-	-	
BIU			-	-					-	-	-	-	-		-	-	-	-	-	-	-	-	-	-	-	-	-	-	
AHL			-	-						-	-	-	-		-	-	-	-	-	-	-		-	-	-	-	-	-	
RES		-	-	-	-	-	-	-	-	-	-	-	-	-	-	-	-	-	-	-	-	-	-	-	-	-	-	-	
AVN			-	-							-	-	-		-	-	-	-	-	-	-	-	-		-	-	-	-	
IMB			-	-							-	-	-		-	-	-	-	-	-	-	-	-	-		-	-	-	
DCM(B)		-	-	-	-	-	-	-	-	-	-	-	-	-	-	-	-	-	-	-	-	-	-	-	-	-	-	-	
KPS			-	-							-	-	-		-	-	-	-	-	-	-	-	-	-	-	-		-	
IMP		-	-	-	-	-	-	-	-	-	-	-	-	-	-	-	-	-	-	-	-	-	-	-	-	-	-	-	
MET			-	-								-	-		-	-	-	-	-	-	-	-	-	-	-	-	-	-	

LAN10121

(A) Installation check

(B) Communication initialization

(C) Wiring location

ECM: Engine CM

VDC: VDC CM

EPS: Power steering CM

TCM: Transmission CM

RDR: Radar sensor

A/C: Air conditioner CM

A/B: Airbag CM

STA: Steering angle sensor

EYE: Stereo camera

BIU: Body integrated unit

AHL: Auto headlight beam leveler CM or steering responsive fog light CM

RES: Remote engine starter CM

AVN: Audio or navigation unit

IMB: Immobilizer CM

KPS: Keyless access CM

IMP: Impact sensor

MET: Combination meter

DCM(M): Data communication module (MAIN CAN)

DCM(B): Data communication module (BODY CAN)

1) Module installation check
(1) Write "-" marks in the field for installation check if the vehicle to be inspected does not have relevant module.
(2) Write "-" marks in all blank fields on the same row that the "-" mark has filled in.

NOTE:
Example of writing <Ref. to LAN(diag)-16, EXAMPLE OF WRITING FOR THE CHECK SHEET OF COMMUNICATION FOR INITIALIZING, COMMUNICATION FOR INITIALIZING IMPOSSIBLE, Subaru Select Monitor.>

2) Subaru Select Monitor communication initialization check
(1) Write "○" marks in the field for communication initialization if the module succeeded in the communication for initializing with Select Monitor.
If the communication with all modules is not possible, go to 3).
(2) Write "○" marks in all blank fields on the same row that the "○" mark has filled in.
(3) When at least one field in a column of wiring location is filled with the "○" mark, then the wiring for that location is normal. Write "○" marks in all blank fields on the same column that the "○" mark has filled in under the circled number.
(4) Check the open circuit of the modules which have no "○" mark in their columns of the wiring location in ascending order. (only for installed modules)
(5) If the communication is not possible after checking all harnesses, check the module power supply line.
(6) Replace the module if the power supply line is normal.

NOTE:
• Example of writing <Ref. to LAN(diag)-16, EXAMPLE OF WRITING FOR THE CHECK SHEET OF COMMUNICATION FOR INITIALIZING, COMMUNICATION FOR INITIALIZING IMPOSSIBLE, Subaru Select Monitor.>
• Inspection using the communication for initializing of Subaru Select Monitor cannot be used to diagnose the wiring location marked with "-". Example of DTC data not received <Ref. to LAN(diag)-90, EXAMPLE OF DTC DATA NOT RECEIVED, LIST, List of Diagnostic Trouble Code (DTC).> should be used to identify the faulty portion.

3) Subaru Select Monitor communication initialization check (impossible to communicate with all modules)

NOTE:
If at least one module becomes possible to communicate, return to 2).
(1) Check for the short circuit to ground. <Ref. to LAN(diag)-43, GROUND SHORT INSPECTION, INSPECTION, CAN Communication Circuit Check.> If it is normal, go to the next.
(2) Check for the short circuit to battery. <Ref. to LAN(diag)-47, BATTERY SHORT INSPECTION, INSPECTION, CAN Communication Circuit Check.> If it is normal, go to the next.
(3) Perform the inspection for the resistance of 52 Ω or less (short between wires). <Ref. to LAN(diag)-55, 52 Ω OR LESS, INSPECTION, CAN Communication Circuit Check.> If it is normal, go to the next.
(4) Check for the open circuit of network diagram No. 12 (data link connector).

2. EXAMPLE OF WRITING FOR THE CHECK SHEET OF COMMUNICATION FOR INITIALIZING

- When No. 1 is open

	(A)	(B)	(C)																										
			1	2	3	4	5	6	7	8	9	10	11	12	13	14	15	16	17	18	19	20	21	22	23	24	25	26
				○	○	○	○	○	○	○	○	○	○	○	○	○	○	○	○	-	○	○	-	○	○	-	○	-
ECM	○	×		○	-	-	-	-	-	-	-	-	-	○	-	-	-	-	-	-	-	-	-	-	-	-	-	-
VDC	○	○	-	○	-	-	-	-	-	-	-	○	-	○	-	-	-	-	-	-	-	-	-	-	-	-	-	-
EPS	○	○	-	○	-	-	-	-	-	-	-	-	○	○	-	-	-	-	-	-	-	-	-	-	-	-	-	-
TCM	○	○	-	-	-	-	-	-	-	-	-	-	-	○	○	-	-	-	-	-	-	-	-	-	-	-	-	-
RDR	○	○	-	-	○	-	-	-	-	-	-	-	-	○	-	○	-	-	-	-	-	-	-	-	-	-	-	-
A/C	○	○	-	-	○	○	-	-	-	-	-	-	-	○	-	-	○	-	-	-	-	-	-	-	-	-	-	-
DCM(M)	○	○	-	-	○	○	-	-	-	-	-	-	-	○	-	-	-	○	-	-	-	-	-	-	-	-	-	-
A/B	○	○	-	-	○	○	-	-	-	-	-	-	-	○	-	-	-	-	○	-	-	-	-	-	-	-	-	-
STA	○	-	-	-	-	-	-	-	-	-	-	-	-	-	-	-	-	-	-	-	-	-	-	-	-	-	-	-
EYE	○	○	-	-	○	○	○	-	-	-	-	-	-	○	-	-	-	-	-	-	○	-	-	-	-	-	-	-
BIU	○	○	-	-	○	○	○	○	-	-	-	-	-	○	-	-	-	-	-	-	-	-	-	-	-	-	-	-
AHL	○	○	-	-	○	○	○	○	○	-	-	-	-	○	-	-	-	-	-	-	-	○	-	-	-	-	-	-
RES	○	-	-	-	-	-	-	-	-	-	-	-	-	-	-	-	-	-	-	-	-	-	-	-	-	-	-	-
AVN	○	○	-	-	○	○	○	○	○	○	-	-	-	○	-	-	-	-	-	-	-	-	-	○	-	-	-	-
IMB	○	○	-	-	○	○	○	○	○	○	-	-	-	○	-	-	-	-	-	-	-	-	-	-	○	-	-	-
DCM(B)	○	-	-	-	-	-	-	-	-	-	-	-	-	-	-	-	-	-	-	-	-	-	-	-	-	-	-	-
KPS	○	○	-	-	○	○	○	○	○	○	-	-	-	○	-	-	-	-	-	-	-	-	-	-	-	-	○	-
IMP	○	-	-	-	-	-	-	-	-	-	-	-	-	-	-	-	-	-	-	-	-	-	-	-	-	-	-	-
MET	○	○	-	-	○	○	○	○	○	○	○	-	-	○	-	-	-	-	-	-	-	-	-	-	-	-	-	-

LAN10122

- When No. 2 is open

	(A)	(B)	(C)																										
			1	2	3	4	5	6	7	8	9	10	11	12	13	14	15	16	17	18	19	20	21	22	23	24	25	26
					○	○	○	○	○	○	○			○	○	○	○	○	○	-	○	○	-	○	○	-	○	-
ECM	○	×			-	-	-	-	-	-	-	-	-	○	-	-	-	-	-	-	-	-	-	-	-	-	-	-
VDC	○	×	-		-	-	-	-	-	-	-		-	○	-	-	-	-	-	-	-	-	-	-	-	-	-	-
EPS	○	×	-		-	-	-	-	-	-	-	-		○	-	-	-	-	-	-	-	-	-	-	-	-	-	-
TCM	○	○	-	-	-	-	-	-	-	-	-	-	-	○	○	-	-	-	-	-	-	-	-	-	-	-	-	-
RDR	○	○	-	-	○	-	-	-	-	-	-	-	-	○	-	○	-	-	-	-	-	-	-	-	-	-	-	-
A/C	○	○	-	-	○	○	-	-	-	-	-	-	-	○	-	-	○	-	-	-	-	-	-	-	-	-	-	-
DCM(M)	○	○	-	-	○	○	-	-	-	-	-	-	-	○	-	-	-	○	-	-	-	-	-	-	-	-	-	-
A/B	○	○	-	-	○	○	-	-	-	-	-	-	-	○	-	-	-	-	○	-	-	-	-	-	-	-	-	-
STA	○	-	-	-	-	-	-	-	-	-	-	-	-	-	-	-	-	-	-	-	-	-	-	-	-	-	-	-
EYE	○	○	-	-	○	○	○	-	-	-	-	-	-	○	-	-	-	-	-	-	○	-	-	-	-	-	-	-
BIU	○	○	-	-	○	○	○	○	-	-	-	-	-	○	-	-	-	-	-	-	-	-	-	-	-	-	-	-
AHL	○	○	-	-	○	○	○	○	○	-	-	-	-	○	-	-	-	-	-	-	-	○	-	-	-	-	-	-
RES	○	-	-	-	-	-	-	-	-	-	-	-	-	-	-	-	-	-	-	-	-	-	-	-	-	-	-	-
AVN	○	○	-	-	○	○	○	○	○	○	-	-	-	○	-	-	-	-	-	-	-	-	-	○	-	-	-	-
IMB	○	○	-	-	○	○	○	○	○	○	-	-	-	○	-	-	-	-	-	-	-	-	-	-	○	-	-	-
DCM(B)	○	-	-	-	-	-	-	-	-	-	-	-	-	-	-	-	-	-	-	-	-	-	-	-	-	-	-	-
KPS	○	○	-	-	○	○	○	○	○	○	-	-	-	○	-	-	-	-	-	-	-	-	-	-	-	-	○	-
IMP	○	-	-	-	-	-	-	-	-	-	-	-	-	-	-	-	-	-	-	-	-	-	-	-	-	-	-	-
MET	○	○	-	-	○	○	○	○	○	○	○	-	-	○	-	-	-	-	-	-	-	-	-	-	-	-	-	-

LAN10123

- When No. 3 is open

	(A)	(B)	(C)																										
			1	2	3	4	5	6	7	8	9	10	11	12	13	14	15	16	17	18	19	20	21	22	23	24	25	26	
			○	○								○	○	○	○					-			-			-		-	
ECM	○	○	○	○	-	-	-	-	-	-	-	-	-	○	-	-	-	-	-	-	-	-	-	-	-	-	-	-	-
VDC	○	○	-	○	-	-	-	-	-	-	-	○	-	○	-	-	-	-	-	-	-	-	-	-	-	-	-	-	-
EPS	○	○	-	○	-	-	-	-	-	-	-	-	○	○	-	-	-	-	-	-	-	-	-	-	-	-	-	-	-
TCM	○	○	-	-	-	-	-	-	-	-	-	-	-	○	○	-	-	-	-	-	-	-	-	-	-	-	-	-	-
RDR	○	×	-	-		-	-	-	-	-	-	-	-	○	-		-	-	-	-	-	-	-	-	-	-	-	-	-
A/C	○	×	-	-			-	-	-	-	-	-	-	○	-	-		-	-	-	-	-	-	-	-	-	-	-	-
DCM(M)	○	×	-	-			-	-	-	-	-	-	-	○	-	-	-		-	-	-	-	-	-	-	-	-	-	-
A/B	○	×	-	-			-	-	-	-	-	-	-	○	-	-	-	-		-	-	-	-	-	-	-	-	-	-
STA	○	-	-	-	-	-	-	-	-	-	-	-	-	-	-	-	-	-	-	-	-	-	-	-	-	-	-	-	-
EYE	○	×	-	-				-	-	-	-	-	-	○	-	-	-	-	-	-		-	-	-	-	-	-	-	-
BIU	○	×	-	-					-	-	-	-	-	○	-	-	-	-	-	-	-	-	-	-	-	-	-	-	-
AHL	○	×	-	-						-	-	-	-	○	-	-	-	-	-	-	-		-	-	-	-	-	-	-
RES	○	-	-	-	-	-	-	-	-	-	-	-	-	-	-	-	-	-	-	-	-	-	-	-	-	-	-	-	-
AVN	○	×	-	-							-	-	-	○	-	-	-	-	-	-	-	-	-		-	-	-	-	-
IMB	○	×	-	-							-	-	-	○	-	-	-	-	-	-	-	-	-	-		-	-	-	-
DCM(B)	○	-	-	-	-	-	-	-	-	-	-	-	-	-	-	-	-	-	-	-	-	-	-	-	-	-	-	-	-
KPS	○	×	-	-							-	-	-	○	-	-	-	-	-	-	-	-	-	-	-	-		-	-
IMP	○	-	-	-	-	-	-	-	-	-	-	-	-	-	-	-	-	-	-	-	-	-	-	-	-	-	-	-	-
MET	○	×	-	-								-	-	○	-	-	-	-	-	-	-	-	-	-	-	-	-	-	-

LAN10124

- When No. 4 is open

	(A)	(B)	(C)																										
			1	2	3	4	5	6	7	8	9	10	11	12	13	14	15	16	17	18	19	20	21	22	23	24	25	26	
			○	○	○							○	○	○	○	○				-			-			-		-	
ECM	○	○	○	○	-	-	-	-	-	-	-	-	-	○	-	-	-	-	-	-	-	-	-	-	-	-	-	-	-
VDC	○	○	-	○	-	-	-	-	-	-	-	○	-	○	-	-	-	-	-	-	-	-	-	-	-	-	-	-	-
EPS	○	○	-	○	-	-	-	-	-	-	-	-	○	○	-	-	-	-	-	-	-	-	-	-	-	-	-	-	-
TCM	○	○	-	-	-	-	-	-	-	-	-	-	-	○	○	-	-	-	-	-	-	-	-	-	-	-	-	-	-
RDR	○	○	-	-	○	-	-	-	-	-	-	-	-	○	-	○	-	-	-	-	-	-	-	-	-	-	-	-	-
A/C	○	×	-	-	○		-	-	-	-	-	-	-	○	-	-		-	-	-	-	-	-	-	-	-	-	-	-
DCM(M)	○	×	-	-	○		-	-	-	-	-	-	-	○	-	-	-		-	-	-	-	-	-	-	-	-	-	-
A/B	○	×	-	-	○		-	-	-	-	-	-	-	○	-	-	-	-		-	-	-	-	-	-	-	-	-	-
STA	○	-	-	-	-	-	-	-	-	-	-	-	-	-	-	-	-	-	-	-	-	-	-	-	-	-	-	-	-
EYE	○	×	-	-	○			-	-	-	-	-	-	○	-	-	-	-	-	-		-	-	-	-	-	-	-	-
BIU	○	×	-	-	○				-	-	-	-	-	○	-	-	-	-	-	-	-	-	-	-	-	-	-	-	-
AHL	○	×	-	-	○					-	-	-	-	○	-	-	-	-	-	-	-		-	-	-	-	-	-	-
RES	○	-	-	-	-	-	-	-	-	-	-	-	-	-	-	-	-	-	-	-	-	-	-	-	-	-	-	-	-
AVN	○	×	-	-	○						-	-	-	○	-	-	-	-	-	-	-	-	-		-	-	-	-	-
IMB	○	×	-	-	○						-	-	-	○	-	-	-	-	-	-	-	-	-	-		-	-	-	-
DCM(B)	○	-	-	-	-	-	-	-	-	-	-	-	-	-	-	-	-	-	-	-	-	-	-	-	-	-	-	-	-
KPS	○	×	-	-	○						-	-	-	○	-	-	-	-	-	-	-	-	-	-	-	-		-	-
IMP	○	-	-	-	-	-	-	-	-	-	-	-	-	-	-	-	-	-	-	-	-	-	-	-	-	-	-	-	-
MET	○	×	-	-	○							-	-	○	-	-	-	-	-	-	-	-	-	-	-	-	-	-	-

LAN10125

- When No. 5 is open

	(A)	(B)	(C)																										
			1	2	3	4	5	6	7	8	9	10	11	12	13	14	15	16	17	18	19	20	21	22	23	24	25	26	
			○	○	○	○						○	○	○	○	○	○	○	○	-			-			-		-	
ECM	○	○	○	○	-	-	-	-	-	-	-	-	-	○	-	-	-	-	-	-	-	-	-	-	-	-	-	-	-
VDC	○	○	-	○	-	-	-	-	-	-	-	○	-	○	-	-	-	-	-	-	-	-	-	-	-	-	-	-	-
EPS	○	○	-	○	-	-	-	-	-	-	-	-	○	○	-	-	-	-	-	-	-	-	-	-	-	-	-	-	-
TCM	○	○	-	-	-	-	-	-	-	-	-	-	-	○	○	-	-	-	-	-	-	-	-	-	-	-	-	-	-
RDR	○	○	-	-	○	-	-	-	-	-	-	-	-	○	-	○	-	-	-	-	-	-	-	-	-	-	-	-	-
A/C	○	○	-	-	○	○	-	-	-	-	-	-	-	○	-	-	○	-	-	-	-	-	-	-	-	-	-	-	-
DCM(M)	○	○	-	-	○	○	-	-	-	-	-	-	-	○	-	-	-	○	-	-	-	-	-	-	-	-	-	-	-
A/B	○	○	-	-	○	○	-	-	-	-	-	-	-	○	-	-	-	-	○	-	-	-	-	-	-	-	-	-	-
STA	○	-	-	-	-	-	-	-	-	-	-	-	-	-	-	-	-	-	-	-	-	-	-	-	-	-	-	-	-
EYE	○	×	-	-	○	○		-	-	-	-	-	-	○	-	-	-	-	-	-		-	-	-	-	-	-	-	-
BIU	○	×	-	-	○	○			-	-	-	-	-	○	-	-	-	-	-	-	-	-	-	-	-	-	-	-	-
AHL	○	×	-	-	○	○				-	-	-	-	○	-	-	-	-	-	-	-		-	-	-	-	-	-	-
RES	○	-	-	-	-	-	-	-	-	-	-	-	-	-	-	-	-	-	-	-	-	-	-	-	-	-	-	-	-
AVN	○	×	-	-	○	○					-	-	-	○	-	-	-	-	-	-	-	-	-		-	-	-	-	-
IMB	○	×	-	-	○	○					-	-	-	○	-	-	-	-	-	-	-	-	-	-		-	-	-	-
DCM(B)	○	-	-	-	-	-	-	-	-	-	-	-	-	-	-	-	-	-	-	-	-	-	-	-	-	-	-	-	-
KPS	○	×	-	-	○	○					-	-	-	○	-	-	-	-	-	-	-	-	-	-	-	-		-	-
IMP	○	-	-	-	-	-	-	-	-	-	-	-	-	-	-	-	-	-	-	-	-	-	-	-	-	-	-	-	-
MET	○	×	-	-	○	○						-	-	○	-	-	-	-	-	-	-	-	-	-	-	-	-	-	-

LAN10126

- When No. 6 is open

	(A)	(B)	(C)																										
			1	2	3	4	5	6	7	8	9	10	11	12	13	14	15	16	17	18	19	20	21	22	23	24	25	26	
			○	○	○	○	○					○	○	○	○	○	○	○	○	-	○		-			-		-	
ECM	○	○	○	○	-	-	-	-	-	-	-	-	-	○	-	-	-	-	-	-	-	-	-	-	-	-	-	-	-
VDC	○	○	-	○	-	-	-	-	-	-	-	○	-	○	-	-	-	-	-	-	-	-	-	-	-	-	-	-	-
EPS	○	○	-	○	-	-	-	-	-	-	-	-	○	○	-	-	-	-	-	-	-	-	-	-	-	-	-	-	-
TCM	○	○	-	-	-	-	-	-	-	-	-	-	-	○	○	-	-	-	-	-	-	-	-	-	-	-	-	-	-
RDR	○	○	-	-	○	-	-	-	-	-	-	-	-	○	-	○	-	-	-	-	-	-	-	-	-	-	-	-	-
A/C	○	○	-	-	○	○	-	-	-	-	-	-	-	○	-	-	○	-	-	-	-	-	-	-	-	-	-	-	-
DCM(M)	○	○	-	-	○	○	-	-	-	-	-	-	-	○	-	-	-	○	-	-	-	-	-	-	-	-	-	-	-
A/B	○	○	-	-	○	○	-	-	-	-	-	-	-	○	-	-	-	-	○	-	-	-	-	-	-	-	-	-	-
STA	○	-	-	-	-	-	-	-	-	-	-	-	-	-	-	-	-	-	-	-	-	-	-	-	-	-	-	-	-
EYE	○	○	-	-	○	○	○	-	-	-	-	-	-	○	-	-	-	-	-	-	○	-	-	-	-	-	-	-	-
BIU	○	×	-	-	○	○	○		-	-	-	-	-	○	-	-	-	-	-	-	-	-	-	-	-	-	-	-	-
AHL	○	×	-	-	○	○	○			-	-	-	-	○	-	-	-	-	-	-	-		-	-	-	-	-	-	-
RES	○	-	-	-	-	-	-	-	-	-	-	-	-	-	-	-	-	-	-	-	-	-	-	-	-	-	-	-	-
AVN	○	×	-	-	○	○	○				-	-	-	○	-	-	-	-	-	-	-	-	-		-	-	-	-	-
IMB	○	×	-	-	○	○	○				-	-	-	○	-	-	-	-	-	-	-	-	-	-		-	-	-	-
DCM(B)	○	-	-	-	-	-	-	-	-	-	-	-	-	-	-	-	-	-	-	-	-	-	-	-	-	-	-	-	-
KPS	○	×	-	-	○	○	○				-	-	-	○	-	-	-	-	-	-	-	-	-	-	-	-		-	-
IMP	○	-	-	-	-	-	-	-	-	-	-	-	-	-	-	-	-	-	-	-	-	-	-	-	-	-	-	-	-
MET	○	×	-	-	○	○	○					-	-	○	-	-	-	-	-	-	-	-	-	-	-	-	-	-	-

LAN10127

- When No. 7 is open

	(A)	(B)	(C)																										
			1	2	3	4	5	6	7	8	9	10	11	12	13	14	15	16	17	18	19	20	21	22	23	24	25	26	
			○	○	○	○	○	○				○	○	○	○	○	○	○	○	-	○		-			-		-	
ECM	○	○	○	○	-	-	-	-	-	-	-	-	-	○	-	-	-	-	-	-	-	-	-	-	-	-	-	-	-
VDC	○	○	-	○	-	-	-	-	-	-	-	○	-	○	-	-	-	-	-	-	-	-	-	-	-	-	-	-	-
EPS	○	○	-	○	-	-	-	-	-	-	-	-	○	○	-	-	-	-	-	-	-	-	-	-	-	-	-	-	-
TCM	○	○	-	-	-	-	-	-	-	-	-	-	-	○	○	-	-	-	-	-	-	-	-	-	-	-	-	-	-
RDR	○	○	-	-	○	-	-	-	-	-	-	-	-	○	-	○	-	-	-	-	-	-	-	-	-	-	-	-	-
A/C	○	○	-	-	○	○	-	-	-	-	-	-	-	○	-	-	○	-	-	-	-	-	-	-	-	-	-	-	-
DCM(M)	○	○	-	-	○	○	-	-	-	-	-	-	-	○	-	-	-	○	-	-	-	-	-	-	-	-	-	-	-
A/B	○	○	-	-	○	○	-	-	-	-	-	-	-	○	-	-	-	-	○	-	-	-	-	-	-	-	-	-	-
STA	○	-	-	-	-	-	-	-	-	-	-	-	-	-	-	-	-	-	-	-	-	-	-	-	-	-	-	-	-
EYE	○	○	-	-	○	○	○	-	-	-	-	-	-	○	-	-	-	-	-	-	○	-	-	-	-	-	-	-	-
BIU	○	○	-	-	○	○	○	○	-	-	-	-	-	○	-	-	-	-	-	-	-	-	-	-	-	-	-	-	-
AHL	○	×	-	-	○	○	○	○		-	-	-	-	○	-	-	-	-	-	-	-		-	-	-	-	-	-	-
RES	○	-	-	-	-	-	-	-	-	-	-	-	-	-	-	-	-	-	-	-	-	-	-	-	-	-	-	-	-
AVN	○	×	-	-	○	○	○	○			-	-	-	○	-	-	-	-	-	-	-	-	-		-	-	-	-	-
IMB	○	×	-	-	○	○	○	○			-	-	-	○	-	-	-	-	-	-	-	-	-	-		-	-	-	-
DCM(B)	○	-	-	-	-	-	-	-	-	-	-	-	-	-	-	-	-	-	-	-	-	-	-	-	-	-	-	-	-
KPS	○	×	-	-	○	○	○	○			-	-	-	○	-	-	-	-	-	-	-	-	-	-	-	-		-	-
IMP	○	-	-	-	-	-	-	-	-	-	-	-	-	-	-	-	-	-	-	-	-	-	-	-	-	-	-	-	-
MET	○	×	-	-	○	○	○	○				-	-	○	-	-	-	-	-	-	-	-	-	-	-	-	-	-	-

LAN10128

- When No. 8 is open

	(A)	(B)	(C)																										
			1	2	3	4	5	6	7	8	9	10	11	12	13	14	15	16	17	18	19	20	21	22	23	24	25	26	
			○	○	○	○	○	○	○			○	○	○	○	○	○	○	○	-	○	○	-			-		-	
ECM	○	○	○	○	-	-	-	-	-	-	-	-	-	○	-	-	-	-	-	-	-	-	-	-	-	-	-	-	-
VDC	○	○	-	○	-	-	-	-	-	-	-	○	-	○	-	-	-	-	-	-	-	-	-	-	-	-	-	-	-
EPS	○	○	-	○	-	-	-	-	-	-	-	-	○	○	-	-	-	-	-	-	-	-	-	-	-	-	-	-	-
TCM	○	○	-	-	-	-	-	-	-	-	-	-	-	○	○	-	-	-	-	-	-	-	-	-	-	-	-	-	-
RDR	○	○	-	-	○	-	-	-	-	-	-	-	-	○	-	○	-	-	-	-	-	-	-	-	-	-	-	-	-
A/C	○	○	-	-	○	○	-	-	-	-	-	-	-	○	-	-	○	-	-	-	-	-	-	-	-	-	-	-	-
DCM(M)	○	○	-	-	○	○	-	-	-	-	-	-	-	○	-	-	-	○	-	-	-	-	-	-	-	-	-	-	-
A/B	○	○	-	-	○	○	-	-	-	-	-	-	-	○	-	-	-	-	○	-	-	-	-	-	-	-	-	-	-
STA	○	-	-	-	-	-	-	-	-	-	-	-	-	-	-	-	-	-	-	-	-	-	-	-	-	-	-	-	-
EYE	○	○	-	-	○	○	○	-	-	-	-	-	-	○	-	-	-	-	-	-	○	-	-	-	-	-	-	-	-
BIU	○	○	-	-	○	○	○	○	-	-	-	-	-	○	-	-	-	-	-	-	-	-	-	-	-	-	-	-	-
AHL	○	○	-	-	○	○	○	○	○	-	-	-	-	○	-	-	-	-	-	-	-	○	-	-	-	-	-	-	-
RES	○	-	-	-	-	-	-	-	-	-	-	-	-	-	-	-	-	-	-	-	-	-	-	-	-	-	-	-	-
AVN	○	×	-	-	○	○	○	○	○		-	-	-	○	-	-	-	-	-	-	-	-	-		-	-	-	-	-
IMB	○	×	-	-	○	○	○	○	○		-	-	-	○	-	-	-	-	-	-	-	-	-	-		-	-	-	-
DCM(B)	○	-	-	-	-	-	-	-	-	-	-	-	-	-	-	-	-	-	-	-	-	-	-	-	-	-	-	-	-
KPS	○	×	-	-	○	○	○	○	○		-	-	-	○	-	-	-	-	-	-	-	-	-	-	-	-		-	-
IMP	○	-	-	-	-	-	-	-	-	-	-	-	-	-	-	-	-	-	-	-	-	-	-	-	-	-	-	-	-
MET	○	×	-	-	○	○	○	○	○			-	-	○	-	-	-	-	-	-	-	-	-	-	-	-	-	-	-

LAN10129

- When No. 9 is open

	(A)	(B)	(C)																										
			1	2	3	4	5	6	7	8	9	10	11	12	13	14	15	16	17	18	19	20	21	22	23	24	25	26
			○	○	○	○	○	○	○	○		○	○	○	○	○	○	○	○	-	○	○	-	○	○	-	○	-
ECM	○	○	○	○	-	-	-	-	-	-	-	-	-	○	-	-	-	-	-	-	-	-	-	-	-	-	-	-
VDC	○	○	-	○	-	-	-	-	-	-	-	○	-	○	-	-	-	-	-	-	-	-	-	-	-	-	-	-
EPS	○	○	-	○	-	-	-	-	-	-	-	-	○	○	-	-	-	-	-	-	-	-	-	-	-	-	-	-
TCM	○	○	-	-	-	-	-	-	-	-	-	-	-	○	○	-	-	-	-	-	-	-	-	-	-	-	-	-
RDR	○	○	-	-	○	-	-	-	-	-	-	-	-	○	-	○	-	-	-	-	-	-	-	-	-	-	-	-
A/C	○	○	-	-	○	○	-	-	-	-	-	-	-	○	-	-	○	-	-	-	-	-	-	-	-	-	-	-
DCM(M)	○	○	-	-	○	○	-	-	-	-	-	-	-	○	-	-	-	○	-	-	-	-	-	-	-	-	-	-
A/B	○	○	-	-	○	○	-	-	-	-	-	-	-	○	-	-	-	-	○	-	-	-	-	-	-	-	-	-
STA	○	-	-	-	-	-	-	-	-	-	-	-	-	-	-	-	-	-	-	-	-	-	-	-	-	-	-	-
EYE	○	○	-	-	○	○	○	-	-	-	-	-	-	○	-	-	-	-	-	-	○	-	-	-	-	-	-	-
BIU	○	○	-	-	○	○	○	○	-	-	-	-	-	○	-	-	-	-	-	-	-	-	-	-	-	-	-	-
AHL	○	○	-	-	○	○	○	○	○	-	-	-	-	○	-	-	-	-	-	-	-	○	-	-	-	-	-	-
RES	○	-	-	-	-	-	-	-	-	-	-	-	-	-	-	-	-	-	-	-	-	-	-	-	-	-	-	-
AVN	○	○	-	-	○	○	○	○	○	○	-	-	-	○	-	-	-	-	-	-	-	-	-	○	-	-	-	-
IMB	○	○	-	-	○	○	○	○	○	○	-	-	-	○	-	-	-	-	-	-	-	-	-	-	○	-	-	-
DCM(B)	○	-	-	-	-	-	-	-	-	-	-	-	-	-	-	-	-	-	-	-	-	-	-	-	-	-	-	-
KPS	○	○	-	-	○	○	○	○	○	○	-	-	-	○	-	-	-	-	-	-	-	-	-	-	-	-	○	-
IMP	○	-	-	-	-	-	-	-	-	-	-	-	-	-	-	-	-	-	-	-	-	-	-	-	-	-	-	-
MET	○	×	-	-	○	○	○	○	○	○		-	-	○	-	-	-	-	-	-	-	-	-	-	-	-	-	-

LAN10130

- When No. 10 is open

	(A)	(B)	(C)																										
			1	2	3	4	5	6	7	8	9	10	11	12	13	14	15	16	17	18	19	20	21	22	23	24	25	26
			○	○	○	○	○	○	○	○	○		○	○	○	○	○	○	○	-	○	○	-	○	○	-	○	-
ECM	○	○	○	○	-	-	-	-	-	-	-	-	-	○	-	-	-	-	-	-	-	-	-	-	-	-	-	-
VDC	○	×	-	○	-	-	-	-	-	-	-		-	○	-	-	-	-	-	-	-	-	-	-	-	-	-	-
EPS	○	○	-	○	-	-	-	-	-	-	-	-	○	○	-	-	-	-	-	-	-	-	-	-	-	-	-	-
TCM	○	○	-	-	-	-	-	-	-	-	-	-	-	○	○	-	-	-	-	-	-	-	-	-	-	-	-	-
RDR	○	○	-	-	○	-	-	-	-	-	-	-	-	○	-	○	-	-	-	-	-	-	-	-	-	-	-	-
A/C	○	○	-	-	○	○	-	-	-	-	-	-	-	○	-	-	○	-	-	-	-	-	-	-	-	-	-	-
DCM(M)	○	○	-	-	○	○	-	-	-	-	-	-	-	○	-	-	-	○	-	-	-	-	-	-	-	-	-	-
A/B	○	○	-	-	○	○	-	-	-	-	-	-	-	○	-	-	-	-	○	-	-	-	-	-	-	-	-	-
STA	○	-	-	-	-	-	-	-	-	-	-	-	-	-	-	-	-	-	-	-	-	-	-	-	-	-	-	-
EYE	○	○	-	-	○	○	○	-	-	-	-	-	-	○	-	-	-	-	-	-	○	-	-	-	-	-	-	-
BIU	○	○	-	-	○	○	○	○	-	-	-	-	-	○	-	-	-	-	-	-	-	-	-	-	-	-	-	-
AHL	○	○	-	-	○	○	○	○	○	-	-	-	-	○	-	-	-	-	-	-	-	○	-	-	-	-	-	-
RES	○	-	-	-	-	-	-	-	-	-	-	-	-	-	-	-	-	-	-	-	-	-	-	-	-	-	-	-
AVN	○	○	-	-	○	○	○	○	○	○	-	-	-	○	-	-	-	-	-	-	-	-	-	○	-	-	-	-
IMB	○	○	-	-	○	○	○	○	○	○	-	-	-	○	-	-	-	-	-	-	-	-	-	-	○	-	-	-
DCM(B)	○	-	-	-	-	-	-	-	-	-	-	-	-	-	-	-	-	-	-	-	-	-	-	-	-	-	-	-
KPS	○	○	-	-	○	○	○	○	○	○	-	-	-	○	-	-	-	-	-	-	-	-	-	-	-	-	○	-
IMP	○	-	-	-	-	-	-	-	-	-	-	-	-	-	-	-	-	-	-	-	-	-	-	-	-	-	-	-
MET	○	○	-	-	○	○	○	○	○	○	○	-	-	○	-	-	-	-	-	-	-	-	-	-	-	-	-	-

LAN10131

- When No. 11 is open

	(A)	(B)	(C)																									
			1	2	3	4	5	6	7	8	9	10	11	12	13	14	15	16	17	18	19	20	21	22	23	24	25	26
			○	○	○	○	○	○	○	○	○	○		○	○	○	○	○	○	-	○	○	-	○	○	-	○	-
ECM	○	○	○	○	-	-	-	-	-	-	-	-	-	○	-	-	-	-	-	-	-	-	-	-	-	-	-	-
VDC	○	○	-	○	-	-	-	-	-	-	-	○	-	○	-	-	-	-	-	-	-	-	-	-	-	-	-	-
EPS	○	×	-	○	-	-	-	-	-	-	-	-		○	-	-	-	-	-	-	-	-	-	-	-	-	-	-
TCM	○	○	-	-	-	-	-	-	-	-	-	-	-	○	○	-	-	-	-	-	-	-	-	-	-	-	-	-
RDR	○	○	-	-	○	-	-	-	-	-	-	-	-	○	-	○	-	-	-	-	-	-	-	-	-	-	-	-
A/C	○	○	-	-	○	○	-	-	-	-	-	-	-	○	-	-	○	-	-	-	-	-	-	-	-	-	-	-
DCM(M)	○	○	-	-	○	○	-	-	-	-	-	-	-	○	-	-	-	○	-	-	-	-	-	-	-	-	-	-
A/B	○	○	-	-	○	○	-	-	-	-	-	-	-	○	-	-	-	-	○	-	-	-	-	-	-	-	-	-
STA	○	-	-	-	-	-	-	-	-	-	-	-	-	-	-	-	-	-	-	-	-	-	-	-	-	-	-	-
EYE	○	○	-	-	○	○	○	-	-	-	-	-	-	○	-	-	-	-	-	-	○	-	-	-	-	-	-	-
BIU	○	○	-	-	○	○	○	○	-	-	-	-	-	○	-	-	-	-	-	-	-	-	-	-	-	-	-	-
AHL	○	○	-	-	○	○	○	○	○	-	-	-	-	○	-	-	-	-	-	-	-	○	-	-	-	-	-	-
RES	○	-	-	-	-	-	-	-	-	-	-	-	-	-	-	-	-	-	-	-	-	-	-	-	-	-	-	-
AVN	○	○	-	-	○	○	○	○	○	○	-	-	-	○	-	-	-	-	-	-	-	-	-	○	-	-	-	-
IMB	○	○	-	-	○	○	○	○	○	○	-	-	-	○	-	-	-	-	-	-	-	-	-	-	○	-	-	-
DCM(B)	○	-	-	-	-	-	-	-	-	-	-	-	-	-	-	-	-	-	-	-	-	-	-	-	-	-	-	-
KPS	○	○	-	-	○	○	○	○	○	○	-	-	-	○	-	-	-	-	-	-	-	-	-	-	-	-	○	-
IMP	○	-	-	-	-	-	-	-	-	-	-	-	-	-	-	-	-	-	-	-	-	-	-	-	-	-	-	-
MET	○	○	-	-	○	○	○	○	○	○	○	-	-	○	-	-	-	-	-	-	-	-	-	-	-	-	-	-

LAN10132

- When No. 12 is open

NOTE:
Perform inspection by referring to 3) communication initialization check (impossible to communicate with all modules). (There may be a malfunction other than open circuit)

	(A)	(B)	(C)																										
			1	2	3	4	5	6	7	8	9	10	11	12	13	14	15	16	17	18	19	20	21	22	23	24	25	26	
																				-			-			-		-	
ECM	○	×			-	-	-	-	-	-	-	-	-		-	-	-	-	-	-	-	-	-	-	-	-	-	-	
VDC	○	×	-		-	-	-	-	-	-	-		-		-	-	-	-	-	-	-	-	-	-	-	-	-	-	
EPS	○	×	-		-	-	-	-	-	-	-	-			-	-	-	-	-	-	-	-	-	-	-	-	-	-	
TCM	○	×	-	-	-	-	-	-	-	-	-	-	-			-	-	-	-	-	-	-	-	-	-	-	-	-	
RDR	○	×	-	-		-	-	-	-	-	-	-	-		-		-	-	-	-	-	-	-	-	-	-	-	-	
A/C	○	×	-	-			-	-	-	-	-	-	-		-	-		-	-	-	-	-	-	-	-	-	-	-	
DCM(M)	○	×	-	-			-	-	-	-	-	-	-		-	-	-		-	-	-	-	-	-	-	-	-	-	
A/B	○	×	-	-			-	-	-	-	-	-	-		-	-	-	-		-	-	-	-	-	-	-	-	-	
STA	○	-	-	-	-	-	-	-	-	-	-	-	-	-	-	-	-	-	-	-	-	-	-	-	-	-	-	-	
EYE	○	×	-	-				-	-	-	-	-	-		-	-	-	-	-	-		-	-	-	-	-	-	-	
BIU	○	×	-	-					-	-	-	-	-		-	-	-	-	-	-	-	-	-	-	-	-	-	-	
AHL	○	×	-	-						-	-	-	-		-	-	-	-	-	-	-		-	-	-	-	-	-	
RES	○	-	-	-	-	-	-	-	-	-	-	-	-	-	-	-	-	-	-	-	-	-	-	-	-	-	-	-	
AVN	○	×	-	-							-	-	-		-	-	-	-	-	-	-	-	-		-	-	-	-	
IMB	○	×	-	-							-	-	-		-	-	-	-	-	-	-	-	-	-		-	-	-	
DCM(B)	○	-	-	-	-	-	-	-	-	-	-	-	-	-	-	-	-	-	-	-	-	-	-	-	-	-	-	-	
KPS	○	×	-	-							-	-	-		-	-	-	-	-	-	-	-	-	-	-	-		-	
IMP	○	-	-	-	-	-	-	-	-	-	-	-	-	-	-	-	-	-	-	-	-	-	-	-	-	-	-	-	
MET	○	×	-	-								-	-		-	-	-	-	-	-	-	-	-	-	-	-	-	-	

LAN10133

- When No. 13 is open

	(A)	(B)	(C)																										
			1	2	3	4	5	6	7	8	9	10	11	12	13	14	15	16	17	18	19	20	21	22	23	24	25	26
			○	○	○	○	○	○	○	○	○	○	○	○		○	○	○	○	-	○	○	-	○	○	-	○	-
ECM	○	○	○	○	-	-	-	-	-	-	-	-	-	○	-	-	-	-	-	-	-	-	-	-	-	-	-	-
VDC	○	○	-	○	-	-	-	-	-	-	-	○	-	○	-	-	-	-	-	-	-	-	-	-	-	-	-	-
EPS	○	○	-	○	-	-	-	-	-	-	-	-	○	○	-	-	-	-	-	-	-	-	-	-	-	-	-	-
TCM	○	×	-	-	-	-	-	-	-	-	-	-	-	○		-	-	-	-	-	-	-	-	-	-	-	-	-
RDR	○	○	-	-	○	-	-	-	-	-	-	-	-	○	-	○	-	-	-	-	-	-	-	-	-	-	-	-
A/C	○	○	-	-	○	○	-	-	-	-	-	-	-	○	-	-	○	-	-	-	-	-	-	-	-	-	-	-
DCM(M)	○	○	-	-	○	○	-	-	-	-	-	-	-	○	-	-	-	○	-	-	-	-	-	-	-	-	-	-
A/B	○	○	-	-	○	○	-	-	-	-	-	-	-	○	-	-	-	-	○	-	-	-	-	-	-	-	-	-
STA	○	-	-	-	-	-	-	-	-	-	-	-	-	-	-	-	-	-	-	-	-	-	-	-	-	-	-	-
EYE	○	○	-	-	○	○	○	-	-	-	-	-	-	○	-	-	-	-	-	-	○	-	-	-	-	-	-	-
BIU	○	○	-	-	○	○	○	○	-	-	-	-	-	○	-	-	-	-	-	-	-	-	-	-	-	-	-	-
AHL	○	○	-	-	○	○	○	○	○	-	-	-	-	○	-	-	-	-	-	-	-	○	-	-	-	-	-	-
RES	○	-	-	-	-	-	-	-	-	-	-	-	-	-	-	-	-	-	-	-	-	-	-	-	-	-	-	-
AVN	○	○	-	-	○	○	○	○	○	○	-	-	-	○	-	-	-	-	-	-	-	-	-	○	-	-	-	-
IMB	○	○	-	-	○	○	○	○	○	○	-	-	-	○	-	-	-	-	-	-	-	-	-	-	○	-	-	-
DCM(B)	○	-	-	-	-	-	-	-	-	-	-	-	-	-	-	-	-	-	-	-	-	-	-	-	-	-	-	-
KPS	○	○	-	-	○	○	○	○	○	○	-	-	-	○	-	-	-	-	-	-	-	-	-	-	-	-	○	-
IMP	○	-	-	-	-	-	-	-	-	-	-	-	-	-	-	-	-	-	-	-	-	-	-	-	-	-	-	-
MET	○	○	-	-	○	○	○	○	○	○	○	-	-	○	-	-	-	-	-	-	-	-	-	-	-	-	-	-

LAN10134

- When No. 14 is open

	(A)	(B)	(C)																										
			1	2	3	4	5	6	7	8	9	10	11	12	13	14	15	16	17	18	19	20	21	22	23	24	25	26
			○	○	○	○	○	○	○	○	○	○	○	○	○		○	○	○	-	○	○	-	○	○	-	○	-
ECM	○	○	○	○	-	-	-	-	-	-	-	-	-	○	-	-	-	-	-	-	-	-	-	-	-	-	-	-
VDC	○	○	-	○	-	-	-	-	-	-	-	○	-	○	-	-	-	-	-	-	-	-	-	-	-	-	-	-
EPS	○	○	-	○	-	-	-	-	-	-	-	-	○	○	-	-	-	-	-	-	-	-	-	-	-	-	-	-
TCM	○	○	-	-	-	-	-	-	-	-	-	-	-	○	○	-	-	-	-	-	-	-	-	-	-	-	-	-
RDR	○	×	-	-	○	-	-	-	-	-	-	-	-	○	-		-	-	-	-	-	-	-	-	-	-	-	-
A/C	○	○	-	-	○	○	-	-	-	-	-	-	-	○	-	-	○	-	-	-	-	-	-	-	-	-	-	-
DCM(M)	○	○	-	-	○	○	-	-	-	-	-	-	-	○	-	-	-	○	-	-	-	-	-	-	-	-	-	-
A/B	○	○	-	-	○	○	-	-	-	-	-	-	-	○	-	-	-	-	○	-	-	-	-	-	-	-	-	-
STA	○	-	-	-	-	-	-	-	-	-	-	-	-	-	-	-	-	-	-	-	-	-	-	-	-	-	-	-
EYE	○	○	-	-	○	○	○	-	-	-	-	-	-	○	-	-	-	-	-	-	○	-	-	-	-	-	-	-
BIU	○	○	-	-	○	○	○	○	-	-	-	-	-	○	-	-	-	-	-	-	-	-	-	-	-	-	-	-
AHL	○	○	-	-	○	○	○	○	○	-	-	-	-	○	-	-	-	-	-	-	-	○	-	-	-	-	-	-
RES	○	-	-	-	-	-	-	-	-	-	-	-	-	-	-	-	-	-	-	-	-	-	-	-	-	-	-	-
AVN	○	○	-	-	○	○	○	○	○	○	-	-	-	○	-	-	-	-	-	-	-	-	-	○	-	-	-	-
IMB	○	○	-	-	○	○	○	○	○	○	-	-	-	○	-	-	-	-	-	-	-	-	-	-	○	-	-	-
DCM(B)	○	-	-	-	-	-	-	-	-	-	-	-	-	-	-	-	-	-	-	-	-	-	-	-	-	-	-	-
KPS	○	○	-	-	○	○	○	○	○	○	-	-	-	○	-	-	-	-	-	-	-	-	-	-	-	-	○	-
IMP	○	-	-	-	-	-	-	-	-	-	-	-	-	-	-	-	-	-	-	-	-	-	-	-	-	-	-	-
MET	○	○	-	-	○	○	○	○	○	○	○	-	-	○	-	-	-	-	-	-	-	-	-	-	-	-	-	-

LAN10135

- When No. 15 is open

	(A)	(B)	(C)																										
			1	2	3	4	5	6	7	8	9	10	11	12	13	14	15	16	17	18	19	20	21	22	23	24	25	26
			○	○	○	○	○	○	○	○	○	○	○	○	○	○		○	○	-	○	○	-	○	○	-	○	-
ECM	○	○	○	○	-	-	-	-	-	-	-	-	-	○	-	-	-	-	-	-	-	-	-	-	-	-	-	-
VDC	○	○	-	○	-	-	-	-	-	-	-	○	-	○	-	-	-	-	-	-	-	-	-	-	-	-	-	-
EPS	○	○	-	○	-	-	-	-	-	-	-	-	○	○	-	-	-	-	-	-	-	-	-	-	-	-	-	-
TCM	○	○	-	-	-	-	-	-	-	-	-	-	-	○	○	-	-	-	-	-	-	-	-	-	-	-	-	-
RDR	○	○	-	-	○	-	-	-	-	-	-	-	-	○	-	○	-	-	-	-	-	-	-	-	-	-	-	-
A/C	○	×	-	-	○	○	-	-	-	-	-	-	-	○	-	-		-	-	-	-	-	-	-	-	-	-	-
DCM(M)	○	○	-	-	○	○	-	-	-	-	-	-	-	○	-	-	-	○	-	-	-	-	-	-	-	-	-	-
A/B	○	○	-	-	○	○	-	-	-	-	-	-	-	○	-	-	-	-	○	-	-	-	-	-	-	-	-	-
STA	○	-	-	-	-	-	-	-	-	-	-	-	-	-	-	-	-	-	-	-	-	-	-	-	-	-	-	-
EYE	○	○	-	-	○	○	○	-	-	-	-	-	-	○	-	-	-	-	-	-	○	-	-	-	-	-	-	-
BIU	○	○	-	-	○	○	○	○	-	-	-	-	-	○	-	-	-	-	-	-	-	-	-	-	-	-	-	-
AHL	○	○	-	-	○	○	○	○	○	-	-	-	-	○	-	-	-	-	-	-	-	○	-	-	-	-	-	-
RES	○	-	-	-	-	-	-	-	-	-	-	-	-	-	-	-	-	-	-	-	-	-	-	-	-	-	-	-
AVN	○	○	-	-	○	○	○	○	○	○	-	-	-	○	-	-	-	-	-	-	-	-	-	○	-	-	-	-
IMB	○	○	-	-	○	○	○	○	○	○	-	-	-	○	-	-	-	-	-	-	-	-	-	-	○	-	-	-
DCM(B)	○	-	-	-	-	-	-	-	-	-	-	-	-	-	-	-	-	-	-	-	-	-	-	-	-	-	-	-
KPS	○	○	-	-	○	○	○	○	○	○	-	-	-	○	-	-	-	-	-	-	-	-	-	-	-	-	○	-
IMP	○	-	-	-	-	-	-	-	-	-	-	-	-	-	-	-	-	-	-	-	-	-	-	-	-	-	-	-
MET	○	○	-	-	○	○	○	○	○	○	○	-	-	○	-	-	-	-	-	-	-	-	-	-	-	-	-	-

LAN10136

- When No. 16 is open

	(A)	(B)	(C)																										
			1	2	3	4	5	6	7	8	9	10	11	12	13	14	15	16	17	18	19	20	21	22	23	24	25	26
			○	○	○	○	○	○	○	○	○	○	○	○	○	○	○		○	-	○	○	-	○	○	-	○	-
ECM	○	○	○	○	-	-	-	-	-	-	-	-	-	○	-	-	-	-	-	-	-	-	-	-	-	-	-	-
VDC	○	○	-	○	-	-	-	-	-	-	-	○	-	○	-	-	-	-	-	-	-	-	-	-	-	-	-	-
EPS	○	○	-	○	-	-	-	-	-	-	-	-	○	○	-	-	-	-	-	-	-	-	-	-	-	-	-	-
TCM	○	○	-	-	-	-	-	-	-	-	-	-	-	○	○	-	-	-	-	-	-	-	-	-	-	-	-	-
RDR	○	○	-	-	○	-	-	-	-	-	-	-	-	○	-	○	-	-	-	-	-	-	-	-	-	-	-	-
A/C	○	○	-	-	○	○	-	-	-	-	-	-	-	○	-	-	○	-	-	-	-	-	-	-	-	-	-	-
DCM(M)	○	×	-	-	○	○	-	-	-	-	-	-	-	○	-	-	-		-	-	-	-	-	-	-	-	-	-
A/B	○	○	-	-	○	○	-	-	-	-	-	-	-	○	-	-	-	-	○	-	-	-	-	-	-	-	-	-
STA	○	-	-	-	-	-	-	-	-	-	-	-	-	-	-	-	-	-	-	-	-	-	-	-	-	-	-	-
EYE	○	○	-	-	○	○	○	-	-	-	-	-	-	○	-	-	-	-	-	-	○	-	-	-	-	-	-	-
BIU	○	○	-	-	○	○	○	○	-	-	-	-	-	○	-	-	-	-	-	-	-	-	-	-	-	-	-	-
AHL	○	○	-	-	○	○	○	○	○	-	-	-	-	○	-	-	-	-	-	-	-	○	-	-	-	-	-	-
RES	○	-	-	-	-	-	-	-	-	-	-	-	-	-	-	-	-	-	-	-	-	-	-	-	-	-	-	-
AVN	○	○	-	-	○	○	○	○	○	○	-	-	-	○	-	-	-	-	-	-	-	-	-	○	-	-	-	-
IMB	○	○	-	-	○	○	○	○	○	○	-	-	-	○	-	-	-	-	-	-	-	-	-	-	○	-	-	-
DCM(B)	○	-	-	-	-	-	-	-	-	-	-	-	-	-	-	-	-	-	-	-	-	-	-	-	-	-	-	-
KPS	○	○	-	-	○	○	○	○	○	○	-	-	-	○	-	-	-	-	-	-	-	-	-	-	-	-	○	-
IMP	○	-	-	-	-	-	-	-	-	-	-	-	-	-	-	-	-	-	-	-	-	-	-	-	-	-	-	-
MET	○	○	-	-	○	○	○	○	○	○	○	-	-	○	-	-	-	-	-	-	-	-	-	-	-	-	-	-

LAN10137

- When No. 17 is open

	(A)	(B)	(C)																										
			1	2	3	4	5	6	7	8	9	10	11	12	13	14	15	16	17	18	19	20	21	22	23	24	25	26	
			○	○	○	○	○	○	○	○	○	○	○	○	○	○	○	○		-	○	○	-	○	○	-	○	-	
ECM	○	○	○	○	-	-	-	-	-	-	-	-	-	○	-	-	-	-	-	-	-	-	-	-	-	-	-	-	
VDC	○	○	-	○	-	-	-	-	-	-	-	○	-	○	-	-	-	-	-	-	-	-	-	-	-	-	-	-	
EPS	○	○	-	○	-	-	-	-	-	-	-	-	○	○	-	-	-	-	-	-	-	-	-	-	-	-	-	-	
TCM	○	○	-	-	-	-	-	-	-	-	-	-	-	○	○	-	-	-	-	-	-	-	-	-	-	-	-	-	
RDR	○	○	-	-	○	-	-	-	-	-	-	-	-	○	-	○	-	-	-	-	-	-	-	-	-	-	-	-	
A/C	○	○	-	-	○	○	-	-	-	-	-	-	-	○	-	-	○	-	-	-	-	-	-	-	-	-	-	-	
DCM(M)	○	○	-	-	○	○	-	-	-	-	-	-	-	○	-	-	-	○	-	-	-	-	-	-	-	-	-	-	
A/B	○	×	-	-	○	○	-	-	-	-	-	-	-	○	-	-	-	-		-	-	-	-	-	-	-	-	-	
STA	○	-	-	-	-	-	-	-	-	-	-	-	-	-	-	-	-	-	-	-	-	-	-	-	-	-	-	-	
EYE	○	○	-	-	○	○	○	-	-	-	-	-	-	○	-	-	-	-	-	-	○	-	-	-	-	-	-	-	
BIU	○	○	-	-	○	○	○	○	-	-	-	-	-	○	-	-	-	-	-	-	-	-	-	-	-	-	-	-	
AHL	○	○	-	-	○	○	○	○	○	-	-	-	-	○	-	-	-	-	-	-	-	○	-	-	-	-	-	-	
RES	○	-	-	-	-	-	-	-	-	-	-	-	-	-	-	-	-	-	-	-	-	-	-	-	-	-	-	-	
AVN	○	○	-	-	○	○	○	○	○	○	-	-	-	○	-	-	-	-	-	-	-	-	-	○	-	-	-	-	
IMB	○	○	-	-	○	○	○	○	○	○	-	-	-	○	-	-	-	-	-	-	-	-	-	-	○	-	-	-	
DCM(B)	○	-	-	-	-	-	-	-	-	-	-	-	-	-	-	-	-	-	-	-	-	-	-	-	-	-	-	-	
KPS	○	○	-	-	○	○	○	○	○	○	-	-	-	○	-	-	-	-	-	-	-	-	-	-	-	-	○	-	
IMP	○	-	-	-	-	-	-	-	-	-	-	-	-	-	-	-	-	-	-	-	-	-	-	-	-	-	-	-	
MET	○	○	-	-	○	○	○	○	○	○	○	-	-	○	-	-	-	-	-	-	-	-	-	-	-	-	-	-	

LAN10138

- When No. 18 is open

NOTE:
This is the same as No. 21, No. 24 and No. 26, but it is possible to diagnose using examples of lost communication detection in each module. <Ref. to LAN(diag)-90, EXAMPLE OF DTC DATA NOT RECEIVED, LIST, List of Diagnostic Trouble Code (DTC).>

	(A)	(B)	(C)																										
			1	2	3	4	5	6	7	8	9	10	11	12	13	14	15	16	17	18	19	20	21	22	23	24	25	26	
			○	○	○	○	○	○	○	○	○	○	○	○	○	○	○	○	○	-	○	○	-	○	○	-	○	-	
ECM	○	○	○	○	-	-	-	-	-	-	-	-	-	○	-	-	-	-	-	-	-	-	-	-	-	-	-	-	
VDC	○	○	-	○	-	-	-	-	-	-	-	○	-	○	-	-	-	-	-	-	-	-	-	-	-	-	-	-	
EPS	○	○	-	○	-	-	-	-	-	-	-	-	○	○	-	-	-	-	-	-	-	-	-	-	-	-	-	-	
TCM	○	○	-	-	-	-	-	-	-	-	-	-	-	○	○	-	-	-	-	-	-	-	-	-	-	-	-	-	
RDR	○	○	-	-	○	-	-	-	-	-	-	-	-	○	-	○	-	-	-	-	-	-	-	-	-	-	-	-	
A/C	○	○	-	-	○	○	-	-	-	-	-	-	-	○	-	-	○	-	-	-	-	-	-	-	-	-	-	-	
DCM(M)	○	○	-	-	○	○	-	-	-	-	-	-	-	○	-	-	-	○	-	-	-	-	-	-	-	-	-	-	
A/B	○	○	-	-	○	○	-	-	-	-	-	-	-	○	-	-	-	-	○	-	-	-	-	-	-	-	-	-	
STA	○	-	-	-	-	-	-	-	-	-	-	-	-	-	-	-	-	-	-	-	-	-	-	-	-	-	-	-	
EYE	○	○	-	-	○	○	○	-	-	-	-	-	-	○	-	-	-	-	-	-	○	-	-	-	-	-	-	-	
BIU	○	○	-	-	○	○	○	○	-	-	-	-	-	○	-	-	-	-	-	-	-	-	-	-	-	-	-	-	
AHL	○	○	-	-	○	○	○	○	○	-	-	-	-	○	-	-	-	-	-	-	-	○	-	-	-	-	-	-	
RES	○	-	-	-	-	-	-	-	-	-	-	-	-	-	-	-	-	-	-	-	-	-	-	-	-	-	-	-	
AVN	○	○	-	-	○	○	○	○	○	○	-	-	-	○	-	-	-	-	-	-	-	-	-	○	-	-	-	-	
IMB	○	○	-	-	○	○	○	○	○	○	-	-	-	○	-	-	-	-	-	-	-	-	-	-	○	-	-	-	
DCM(B)	○	-	-	-	-	-	-	-	-	-	-	-	-	-	-	-	-	-	-	-	-	-	-	-	-	-	-	-	
KPS	○	○	-	-	○	○	○	○	○	○	-	-	-	○	-	-	-	-	-	-	-	-	-	-	-	-	○	-	
IMP	○	-	-	-	-	-	-	-	-	-	-	-	-	-	-	-	-	-	-	-	-	-	-	-	-	-	-	-	
MET	○	○	-	-	○	○	○	○	○	○	○	-	-	○	-	-	-	-	-	-	-	-	-	-	-	-	-	-	

LAN10139

- When No. 19 is open

	(A)	(B)	(C)																										
			1	2	3	4	5	6	7	8	9	10	11	12	13	14	15	16	17	18	19	20	21	22	23	24	25	26
			○	○	○	○	○	○	○	○	○	○	○	○	○	○	○	○	○	-		○	-	○	○	-	○	-
ECM	○	○	○	○	-	-	-	-	-	-	-	-	-	○	-	-	-	-	-	-	-	-	-	-	-	-	-	-
VDC	○	○	-	○	-	-	-	-	-	-	-	○	-	○	-	-	-	-	-	-	-	-	-	-	-	-	-	-
EPS	○	○	-	○	-	-	-	-	-	-	-	-	○	○	-	-	-	-	-	-	-	-	-	-	-	-	-	-
TCM	○	○	-	-	-	-	-	-	-	-	-	-	-	○	○	-	-	-	-	-	-	-	-	-	-	-	-	-
RDR	○	○	-	-	○	-	-	-	-	-	-	-	-	○	-	○	-	-	-	-	-	-	-	-	-	-	-	-
A/C	○	○	-	-	○	○	-	-	-	-	-	-	-	○	-	-	○	-	-	-	-	-	-	-	-	-	-	-
DCM(M)	○	○	-	-	○	○	-	-	-	-	-	-	-	○	-	-	-	○	-	-	-	-	-	-	-	-	-	-
A/B	○	○	-	-	○	○	-	-	-	-	-	-	-	○	-	-	-	-	○	-	-	-	-	-	-	-	-	-
STA	○	-	-	-	-	-	-	-	-	-	-	-	-	-	-	-	-	-	-	-	-	-	-	-	-	-	-	-
EYE	○	×	-	-	○	○	○	-	-	-	-	-	-	○	-	-	-	-	-	-		-	-	-	-	-	-	-
BIU	○	○	-	-	○	○	○	○	-	-	-	-	-	○	-	-	-	-	-	-	-	-	-	-	-	-	-	-
AHL	○	○	-	-	○	○	○	○	○	-	-	-	-	○	-	-	-	-	-	-	-	○	-	-	-	-	-	-
RES	○	-	-	-	-	-	-	-	-	-	-	-	-	-	-	-	-	-	-	-	-	-	-	-	-	-	-	-
AVN	○	○	-	-	○	○	○	○	○	○	-	-	-	○	-	-	-	-	-	-	-	-	-	○	-	-	-	-
IMB	○	○	-	-	○	○	○	○	○	○	-	-	-	○	-	-	-	-	-	-	-	-	-	-	○	-	-	-
DCM(B)	○	-	-	-	-	-	-	-	-	-	-	-	-	-	-	-	-	-	-	-	-	-	-	-	-	-	-	-
KPS	○	○	-	-	○	○	○	○	○	○	-	-	-	○	-	-	-	-	-	-	-	-	-	-	-	-	○	-
IMP	○	-	-	-	-	-	-	-	-	-	-	-	-	-	-	-	-	-	-	-	-	-	-	-	-	-	-	-
MET	○	○	-	-	○	○	○	○	○	○	○	-	-	○	-	-	-	-	-	-	-	-	-	-	-	-	-	-

LAN10140

- When No. 20 is open

	(A)	(B)	(C)																										
			1	2	3	4	5	6	7	8	9	10	11	12	13	14	15	16	17	18	19	20	21	22	23	24	25	26
			○	○	○	○	○	○	○	○	○	○	○	○	○	○	○	○	○	-	○		-	○	○	-	○	-
ECM	○	○	○	○	-	-	-	-	-	-	-	-	-	○	-	-	-	-	-	-	-	-	-	-	-	-	-	-
VDC	○	○	-	○	-	-	-	-	-	-	-	○	-	○	-	-	-	-	-	-	-	-	-	-	-	-	-	-
EPS	○	○	-	○	-	-	-	-	-	-	-	-	○	○	-	-	-	-	-	-	-	-	-	-	-	-	-	-
TCM	○	○	-	-	-	-	-	-	-	-	-	-	-	○	○	-	-	-	-	-	-	-	-	-	-	-	-	-
RDR	○	○	-	-	○	-	-	-	-	-	-	-	-	○	-	○	-	-	-	-	-	-	-	-	-	-	-	-
A/C	○	○	-	-	○	○	-	-	-	-	-	-	-	○	-	-	○	-	-	-	-	-	-	-	-	-	-	-
DCM(M)	○	○	-	-	○	○	-	-	-	-	-	-	-	○	-	-	-	○	-	-	-	-	-	-	-	-	-	-
A/B	○	○	-	-	○	○	-	-	-	-	-	-	-	○	-	-	-	-	○	-	-	-	-	-	-	-	-	-
STA	○	-	-	-	-	-	-	-	-	-	-	-	-	-	-	-	-	-	-	-	-	-	-	-	-	-	-	-
EYE	○	○	-	-	○	○	○	-	-	-	-	-	-	○	-	-	-	-	-	-	○	-	-	-	-	-	-	-
BIU	○	○	-	-	○	○	○	○	-	-	-	-	-	○	-	-	-	-	-	-	-	-	-	-	-	-	-	-
AHL	○	×	-	-	○	○	○	○	○	-	-	-	-	○	-	-	-	-	-	-	-		-	-	-	-	-	-
RES	○	-	-	-	-	-	-	-	-	-	-	-	-	-	-	-	-	-	-	-	-	-	-	-	-	-	-	-
AVN	○	○	-	-	○	○	○	○	○	○	-	-	-	○	-	-	-	-	-	-	-	-	-	○	-	-	-	-
IMB	○	○	-	-	○	○	○	○	○	○	-	-	-	○	-	-	-	-	-	-	-	-	-	-	○	-	-	-
DCM(B)	○	-	-	-	-	-	-	-	-	-	-	-	-	-	-	-	-	-	-	-	-	-	-	-	-	-	-	-
KPS	○	○	-	-	○	○	○	○	○	○	-	-	-	○	-	-	-	-	-	-	-	-	-	-	-	-	○	-
IMP	○	-	-	-	-	-	-	-	-	-	-	-	-	-	-	-	-	-	-	-	-	-	-	-	-	-	-	-
MET	○	○	-	-	○	○	○	○	○	○	○	-	-	○	-	-	-	-	-	-	-	-	-	-	-	-	-	-

LAN10141

- When No. 21 is open

NOTE:
This is the same as No. 18, No. 24 and No. 26, but the remote engine starter does not operate while no DTC is detected.

	(A)	(B)	(C)																										
			1	2	3	4	5	6	7	8	9	10	11	12	13	14	15	16	17	18	19	20	21	22	23	24	25	26	
	○	○	○	○	○	○	○	○	○	○	○	○	○	○	○	○	○	○	○	-	○	○	-	○	○	-	○	-	
ECM	○	○	○	○	-	-	-	-	-	-	-	-	-	○	-	-	-	-	-	-	-	-	-	-	-	-	-	-	
VDC	○	○	-	○	-	-	-	-	-	-	-	○	-	○	-	-	-	-	-	-	-	-	-	-	-	-	-	-	
EPS	○	○	-	○	-	-	-	-	-	-	-	-	○	○	-	-	-	-	-	-	-	-	-	-	-	-	-	-	
TCM	○	○	-	-	-	-	-	-	-	-	-	-	-	○	○	-	-	-	-	-	-	-	-	-	-	-	-	-	
RDR	○	○	-	-	○	-	-	-	-	-	-	-	-	○	-	○	-	-	-	-	-	-	-	-	-	-	-	-	
A/C	○	○	-	-	○	○	-	-	-	-	-	-	-	○	-	-	○	-	-	-	-	-	-	-	-	-	-	-	
DCM(M)	○	○	-	-	○	○	-	-	-	-	-	-	-	○	-	-	-	○	-	-	-	-	-	-	-	-	-	-	
A/B	○	○	-	-	○	○	-	-	-	-	-	-	-	○	-	-	-	-	○	-	-	-	-	-	-	-	-	-	
STA	○	-	-	-	-	-	-	-	-	-	-	-	-	-	-	-	-	-	-	-	-	-	-	-	-	-	-	-	
EYE	○	○	-	-	○	○	○	-	-	-	-	-	-	○	-	-	-	-	-	-	○	-	-	-	-	-	-	-	
BIU	○	○	-	-	○	○	○	○	-	-	-	-	-	○	-	-	-	-	-	-	-	-	-	-	-	-	-	-	
AHL	○	○	-	-	○	○	○	○	○	-	-	-	-	○	-	-	-	-	-	-	-	○	-	-	-	-	-	-	
RES	○	-	-	-	-	-	-	-	-	-	-	-	-	-	-	-	-	-	-	-	-	-	-	-	-	-	-	-	
AVN	○	○	-	-	○	○	○	○	○	○	-	-	-	○	-	-	-	-	-	-	-	-	-	○	-	-	-	-	
IMB	○	○	-	-	○	○	○	○	○	○	-	-	-	○	-	-	-	-	-	-	-	-	-	-	○	-	-	-	
DCM(B)	○	-	-	-	-	-	-	-	-	-	-	-	-	-	-	-	-	-	-	-	-	-	-	-	-	-	-	-	
KPS	○	○	-	-	○	○	○	○	○	○	-	-	-	○	-	-	-	-	-	-	-	-	-	-	-	-	○	-	
IMP	○	-	-	-	-	-	-	-	-	-	-	-	-	-	-	-	-	-	-	-	-	-	-	-	-	-	-	-	
MET	○	○	-	-	○	○	○	○	○	○	○	-	-	○	-	-	-	-	-	-	-	-	-	-	-	-	-	-	

LAN10139

- When No. 22 is open

	(A)	(B)	(C)																										
			1	2	3	4	5	6	7	8	9	10	11	12	13	14	15	16	17	18	19	20	21	22	23	24	25	26	
			○	○	○	○	○	○	○	○	○	○	○	○	○	○	○	○	○	-	○	○	-		○	-	○	-	
ECM	○	○	○	○	-	-	-	-	-	-	-	-	-	○	-	-	-	-	-	-	-	-	-	-	-	-	-	-	
VDC	○	○	-	○	-	-	-	-	-	-	-	○	-	○	-	-	-	-	-	-	-	-	-	-	-	-	-	-	
EPS	○	○	-	○	-	-	-	-	-	-	-	-	○	○	-	-	-	-	-	-	-	-	-	-	-	-	-	-	
TCM	○	○	-	-	-	-	-	-	-	-	-	-	-	○	○	-	-	-	-	-	-	-	-	-	-	-	-	-	
RDR	○	○	-	-	○	-	-	-	-	-	-	-	-	○	-	○	-	-	-	-	-	-	-	-	-	-	-	-	
A/C	○	○	-	-	○	○	-	-	-	-	-	-	-	○	-	-	○	-	-	-	-	-	-	-	-	-	-	-	
DCM(M)	○	○	-	-	○	○	-	-	-	-	-	-	-	○	-	-	-	○	-	-	-	-	-	-	-	-	-	-	
A/B	○	○	-	-	○	○	-	-	-	-	-	-	-	○	-	-	-	-	○	-	-	-	-	-	-	-	-	-	
STA	○	-	-	-	-	-	-	-	-	-	-	-	-	-	-	-	-	-	-	-	-	-	-	-	-	-	-	-	
EYE	○	○	-	-	○	○	○	-	-	-	-	-	-	○	-	-	-	-	-	-	○	-	-	-	-	-	-	-	
BIU	○	○	-	-	○	○	○	○	-	-	-	-	-	○	-	-	-	-	-	-	-	-	-	-	-	-	-	-	
AHL	○	○	-	-	○	○	○	○	○	-	-	-	-	○	-	-	-	-	-	-	-	○	-	-	-	-	-	-	
RES	○	-	-	-	-	-	-	-	-	-	-	-	-	-	-	-	-	-	-	-	-	-	-	-	-	-	-	-	
AVN	○	×	-	-	○	○	○	○	○	○	-	-	-	○	-	-	-	-	-	-	-	-	-		-	-	-	-	
IMB	○	○	-	-	○	○	○	○	○	○	-	-	-	○	-	-	-	-	-	-	-	-	-	-	○	-	-	-	
DCM(B)	○	-	-	-	-	-	-	-	-	-	-	-	-	-	-	-	-	-	-	-	-	-	-	-	-	-	-	-	
KPS	○	○	-	-	○	○	○	○	○	○	-	-	-	○	-	-	-	-	-	-	-	-	-	-	-	-	○	-	
IMP	○	-	-	-	-	-	-	-	-	-	-	-	-	-	-	-	-	-	-	-	-	-	-	-	-	-	-	-	
MET	○	○	-	-	○	○	○	○	○	○	○	-	-	○	-	-	-	-	-	-	-	-	-	-	-	-	-	-	

LAN10142

- When No. 23 is open

	(A)	(B)	(C)																										
			1	2	3	4	5	6	7	8	9	10	11	12	13	14	15	16	17	18	19	20	21	22	23	24	25	26	
			○	○	○	○	○	○	○	○	○	○	○	○	○	○	○	○	○	-	○	○	-	○		-	○	-	
ECM	○	○	○	○	-	-	-	-	-	-	-	-	-	○	-	-	-	-	-	-	-	-	-	-	-	-	-	-	
VDC	○	○	-	○	-	-	-	-	-	-	-	○	-	○	-	-	-	-	-	-	-	-	-	-	-	-	-	-	
EPS	○	○	-	○	-	-	-	-	-	-	-	-	○	○	-	-	-	-	-	-	-	-	-	-	-	-	-	-	
TCM	○	○	-	-	-	-	-	-	-	-	-	-	-	○	○	-	-	-	-	-	-	-	-	-	-	-	-	-	
RDR	○	○	-	-	○	-	-	-	-	-	-	-	-	○	-	○	-	-	-	-	-	-	-	-	-	-	-	-	
A/C	○	○	-	-	○	○	-	-	-	-	-	-	-	○	-	-	○	-	-	-	-	-	-	-	-	-	-	-	
DCM(M)	○	○	-	-	○	○	-	-	-	-	-	-	-	○	-	-	-	○	-	-	-	-	-	-	-	-	-	-	
A/B	○	○	-	-	○	○	-	-	-	-	-	-	-	○	-	-	-	-	○	-	-	-	-	-	-	-	-	-	
STA	○	-	-	-	-	-	-	-	-	-	-	-	-	-	-	-	-	-	-	-	-	-	-	-	-	-	-	-	
EYE	○	○	-	-	○	○	○	-	-	-	-	-	-	○	-	-	-	-	-	-	○	-	-	-	-	-	-	-	
BIU	○	○	-	-	○	○	○	○	-	-	-	-	-	○	-	-	-	-	-	-	-	-	-	-	-	-	-	-	
AHL	○	○	-	-	○	○	○	○	○	-	-	-	-	○	-	-	-	-	-	-	-	○	-	-	-	-	-	-	
RES	○	-	-	-	-	-	-	-	-	-	-	-	-	-	-	-	-	-	-	-	-	-	-	-	-	-	-	-	
AVN	○	○	-	-	○	○	○	○	○	○	-	-	-	○	-	-	-	-	-	-	-	-	-	○	-	-	-	-	
IMB	○	×	-	-	○	○	○	○	○	○	-	-	-	○	-	-	-	-	-	-	-	-	-	-		-	-	-	
DCM(B)	○	-	-	-	-	-	-	-	-	-	-	-	-	-	-	-	-	-	-	-	-	-	-	-	-	-	-	-	
KPS	○	○	-	-	○	○	○	○	○	○	-	-	-	○	-	-	-	-	-	-	-	-	-	-	-	-	○	-	
IMP	○	-	-	-	-	-	-	-	-	-	-	-	-	-	-	-	-	-	-	-	-	-	-	-	-	-	-	-	
MET	○	○	-	-	○	○	○	○	○	○	○	-	-	○	-	-	-	-	-	-	-	-	-	-	-	-	-	-	

LAN10143

- When No. 24 is open

NOTE:
This is the same as No. 18, No. 21 and No. 26, but it is possible to diagnose using examples of lost communication detection in each module. <Ref. to LAN(diag)-90, EXAMPLE OF DTC DATA NOT RECEIVED, LIST, List of Diagnostic Trouble Code (DTC).>

	(A)	(B)	(C)																										
			1	2	3	4	5	6	7	8	9	10	11	12	13	14	15	16	17	18	19	20	21	22	23	24	25	26	
			○	○	○	○	○	○	○	○	○	○	○	○	○	○	○	○	○	-	○	○	-	○	○	-	○	-	
ECM	○	○	○	○	-	-	-	-	-	-	-	-	-	○	-	-	-	-	-	-	-	-	-	-	-	-	-	-	
VDC	○	○	-	○	-	-	-	-	-	-	-	○	-	○	-	-	-	-	-	-	-	-	-	-	-	-	-	-	
EPS	○	○	-	○	-	-	-	-	-	-	-	-	○	○	-	-	-	-	-	-	-	-	-	-	-	-	-	-	
TCM	○	○	-	-	-	-	-	-	-	-	-	-	-	○	○	-	-	-	-	-	-	-	-	-	-	-	-	-	
RDR	○	○	-	-	○	-	-	-	-	-	-	-	-	○	-	○	-	-	-	-	-	-	-	-	-	-	-	-	
A/C	○	○	-	-	○	○	-	-	-	-	-	-	-	○	-	-	○	-	-	-	-	-	-	-	-	-	-	-	
DCM(M)	○	○	-	-	○	○	-	-	-	-	-	-	-	○	-	-	-	○	-	-	-	-	-	-	-	-	-	-	
A/B	○	○	-	-	○	○	-	-	-	-	-	-	-	○	-	-	-	-	○	-	-	-	-	-	-	-	-	-	
STA	○	-	-	-	-	-	-	-	-	-	-	-	-	-	-	-	-	-	-	-	-	-	-	-	-	-	-	-	
EYE	○	○	-	-	○	○	○	-	-	-	-	-	-	○	-	-	-	-	-	-	○	-	-	-	-	-	-	-	
BIU	○	○	-	-	○	○	○	○	-	-	-	-	-	○	-	-	-	-	-	-	-	-	-	-	-	-	-	-	
AHL	○	○	-	-	○	○	○	○	○	-	-	-	-	○	-	-	-	-	-	-	-	○	-	-	-	-	-	-	
RES	○	-	-	-	-	-	-	-	-	-	-	-	-	-	-	-	-	-	-	-	-	-	-	-	-	-	-	-	
AVN	○	○	-	-	○	○	○	○	○	○	-	-	-	○	-	-	-	-	-	-	-	-	-	○	-	-	-	-	
IMB	○	○	-	-	○	○	○	○	○	○	-	-	-	○	-	-	-	-	-	-	-	-	-	-	○	-	-	-	
DCM(B)	○	-	-	-	-	-	-	-	-	-	-	-	-	-	-	-	-	-	-	-	-	-	-	-	-	-	-	-	
KPS	○	○	-	-	○	○	○	○	○	○	-	-	-	○	-	-	-	-	-	-	-	-	-	-	-	-	○	-	
IMP	○	-	-	-	-	-	-	-	-	-	-	-	-	-	-	-	-	-	-	-	-	-	-	-	-	-	-	-	
MET	○	○	-	-	○	○	○	○	○	○	○	-	-	○	-	-	-	-	-	-	-	-	-	-	-	-	-	-	

LAN10139

- When No. 25 is open

	(A)	(B)	(C)																										
			1	2	3	4	5	6	7	8	9	10	11	12	13	14	15	16	17	18	19	20	21	22	23	24	25	26	
			○	○	○	○	○	○	○	○	○	○	○	○	○	○	○	○	○	-	○	○	-	○	○	-		-	
ECM	○	○	○	○	-	-	-	-	-	-	-	-	-	○	-	-	-	-	-	-	-	-	-	-	-	-	-	-	
VDC	○	○	-	○	-	-	-	-	-	-	-	○	-	○	-	-	-	-	-	-	-	-	-	-	-	-	-	-	
EPS	○	○	-	○	-	-	-	-	-	-	-	-	○	○	-	-	-	-	-	-	-	-	-	-	-	-	-	-	
TCM	○	○	-	-	-	-	-	-	-	-	-	-	-	○	○	-	-	-	-	-	-	-	-	-	-	-	-	-	
RDR	○	○	-	-	○	-	-	-	-	-	-	-	-	○	-	○	-	-	-	-	-	-	-	-	-	-	-	-	
A/C	○	○	-	-	○	○	-	-	-	-	-	-	-	○	-	-	○	-	-	-	-	-	-	-	-	-	-	-	
DCM(M)	○	○	-	-	○	○	-	-	-	-	-	-	-	○	-	-	-	○	-	-	-	-	-	-	-	-	-	-	
A/B	○	○	-	-	○	○	-	-	-	-	-	-	-	○	-	-	-	-	○	-	-	-	-	-	-	-	-	-	
STA	○	-	-	-	-	-	-	-	-	-	-	-	-	-	-	-	-	-	-	-	-	-	-	-	-	-	-	-	
EYE	○	○	-	-	○	○	○	-	-	-	-	-	-	○	-	-	-	-	-	-	○	-	-	-	-	-	-	-	
BIU	○	○	-	-	○	○	○	○	-	-	-	-	-	○	-	-	-	-	-	-	-	-	-	-	-	-	-	-	
AHL	○	○	-	-	○	○	○	○	○	-	-	-	-	○	-	-	-	-	-	-	-	○	-	-	-	-	-	-	
RES	○	-	-	-	-	-	-	-	-	-	-	-	-	-	-	-	-	-	-	-	-	-	-	-	-	-	-	-	
AVN	○	○	-	-	○	○	○	○	○	○	-	-	-	○	-	-	-	-	-	-	-	-	-	○	-	-	-	-	
IMB	○	○	-	-	○	○	○	○	○	○	-	-	-	○	-	-	-	-	-	-	-	-	-	-	○	-	-	-	
DCM(B)	○	-	-	-	-	-	-	-	-	-	-	-	-	-	-	-	-	-	-	-	-	-	-	-	-	-	-	-	
KPS	○	×	-	-	○	○	○	○	○	○	-	-	-	○	-	-	-	-	-	-	-	-	-	-	-	-		-	
IMP	○	-	-	-	-	-	-	-	-	-	-	-	-	-	-	-	-	-	-	-	-	-	-	-	-	-	-	-	
MET	○	○	-	-	○	○	○	○	○	○	○	-	-	○	-	-	-	-	-	-	-	-	-	-	-	-	-	-	

LAN10144

- When No. 26 is open

NOTE:
This is the same as No. 18, No. 21 and No. 24, but the impact sensor does not operate while no DTC is detected.

	(A)	(B)	(C)																										
			1	2	3	4	5	6	7	8	9	10	11	12	13	14	15	16	17	18	19	20	21	22	23	24	25	26	
	○	○	○	○	○	○	○	○	○	○	○	○	○	○	○	○	○	○	○	-	○	○	-	○	○	-	○	-	
ECM	○	○	○	○	-	-	-	-	-	-	-	-	-	○	-	-	-	-	-	-	-	-	-	-	-	-	-	-	
VDC	○	○	-	○	-	-	-	-	-	-	-	○	-	○	-	-	-	-	-	-	-	-	-	-	-	-	-	-	
EPS	○	○	-	○	-	-	-	-	-	-	-	-	○	○	-	-	-	-	-	-	-	-	-	-	-	-	-	-	
TCM	○	○	-	-	-	-	-	-	-	-	-	-	-	○	○	-	-	-	-	-	-	-	-	-	-	-	-	-	
RDR	○	○	-	-	○	-	-	-	-	-	-	-	-	○	-	○	-	-	-	-	-	-	-	-	-	-	-	-	
A/C	○	○	-	-	○	○	-	-	-	-	-	-	-	○	-	-	○	-	-	-	-	-	-	-	-	-	-	-	
DCM(M)	○	○	-	-	○	○	-	-	-	-	-	-	-	○	-	-	-	○	-	-	-	-	-	-	-	-	-	-	
A/B	○	○	-	-	○	○	-	-	-	-	-	-	-	○	-	-	-	-	○	-	-	-	-	-	-	-	-	-	
STA	○	-	-	-	-	-	-	-	-	-	-	-	-	-	-	-	-	-	-	-	-	-	-	-	-	-	-	-	
EYE	○	○	-	-	○	○	○	-	-	-	-	-	-	○	-	-	-	-	-	-	○	-	-	-	-	-	-	-	
BIU	○	○	-	-	○	○	○	○	-	-	-	-	-	○	-	-	-	-	-	-	-	-	-	-	-	-	-	-	
AHL	○	○	-	-	○	○	○	○	○	-	-	-	-	○	-	-	-	-	-	-	-	○	-	-	-	-	-	-	
RES	○	-	-	-	-	-	-	-	-	-	-	-	-	-	-	-	-	-	-	-	-	-	-	-	-	-	-	-	
AVN	○	○	-	-	○	○	○	○	○	○	-	-	-	○	-	-	-	-	-	-	-	-	-	○	-	-	-	-	
IMB	○	○	-	-	○	○	○	○	○	○	-	-	-	○	-	-	-	-	-	-	-	-	-	-	○	-	-	-	
DCM(B)	○	-	-	-	-	-	-	-	-	-	-	-	-	-	-	-	-	-	-	-	-	-	-	-	-	-	-	-	
KPS	○	○	-	-	○	○	○	○	○	○	-	-	-	○	-	-	-	-	-	-	-	-	-	-	-	-	○	-	
IMP	○	-	-	-	-	-	-	-	-	-	-	-	-	-	-	-	-	-	-	-	-	-	-	-	-	-	-	-	
MET	○	○	-	-	○	○	○	○	○	○	○	-	-	○	-	-	-	-	-	-	-	-	-	-	-	-	-	-	

LAN10139

7. Read Diagnostic Trouble Code (DTC)

A: OPERATION

1) On «Start» display, select «Diagnosis».
2) On «Vehicle selection» display, input the target vehicle information and select «Confirmed».
3) On «Main Menu» display, select «All diagnosis code».

NOTE:
- For detailed operation procedures, refer to “Application help”.
- For details concerning DTC, refer to List of Diagnostic Trouble Code (DTC). <Ref. to LAN(diag)-86, List of Diagnostic Trouble Code (DTC).>

8. Clear Memory Mode

A: OPERATION

1) On «Start» display, select «Diagnosis».
2) On «Vehicle selection» display, input the target vehicle information and select «Confirmed».
3) On «Main Menu» display, select «All diagnosis code».
On «All diagnosis code» display, select «Clear Memory».

NOTE:
For detailed operation procedures, refer to “Application help”.

9. CAN BUS ECU Communication Check

A: OPERATION

Systems connected to vehicle CAN bus and require communicating with the Subaru Select Monitor will be displayed.
List of the systems displayed does not mean the confirmation of communication. It displays presence or absence of the systems required. And, even when a system is equipped, it may not be displayed because of a communication trouble etc.
1) Turn the ignition switch to ON.
2) On «Start» display, select «Diagnosis».
3) On «Vehicle selection» display, input the target vehicle information and select «Confirmed».
4) On «Main Menu» display, select «CAN bus check».
5) After a while, systems connected to vehicle CAN bus will be displayed.
6) In communication for initializing, communication is confirmed in each control module.

NOTE:
- This function does not function normally, when the ignition switch is OFF.
- Optional control modules and control modules that are equipped differently depending on grades may not be displayed.
- For detailed operation procedures, refer to “Application help”.

10.CAN Communication Circuit Check

A: PROCEDURE

1. MAIN-CAN

NOTE:
- When measuring the resistance of CAN communication circuit, measure it in sleep status.

To enter sleep status
  – With ignition switch OFF and key or switch operation stopped, keep the doors, trunk, and rear gate all closed for one minute or more.
  – On models with keyless access function, keep the access key 2 m or more away from the vehicle.

- When the bus line is measured, combined resistance of the end resistance (120 Ω) in ECM and the end resistance (120 Ω) in body integrated unit can be measured. The combined resistance is supposed to be approximately 53 — 61 Ω with the stabilizing circuit included. If the measured resistance value becomes 52 Ω or less, main wiring harness or related lines may be shorted. Or, the combined resistance may have changed because of a resistance other than the end resistance created on the circuit. If the measured value is 62 Ω or more, there may be a malfunction such as open circuit in one of the end resistances, in the stabilizing circuit, or in the main wiring harness.

Also, even when the resistance value falls within approx. 53 — 61 Ω, related lines may be open if an error of communication for initializing or a CAN system U-code has occurred. (The resistance cannot be between approx. 53 — 61 Ω if the main wiring harness is open.)

CAN Communication Circuit Check

WIRING DIAGRAM:

- For the coupling connector, refer to “WIRING SYSTEM”.
- CAN communication system <Ref. to WI-132, WIRING DIAGRAM, CAN Communication System.>

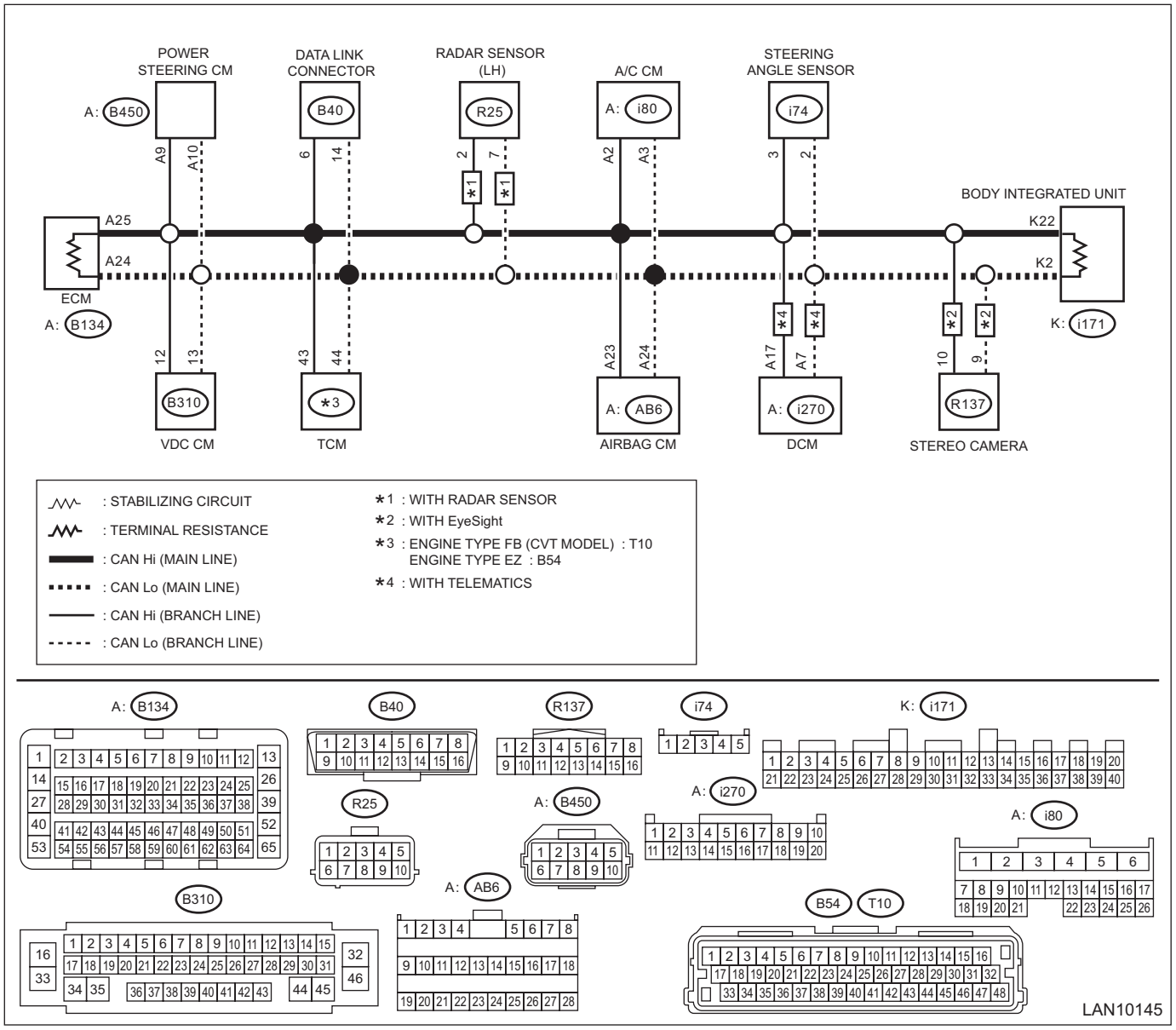

Step		Check	Yes	No
1	**CHECK BASIC DIAGNOSTIC PROCEDURE.** Check that the basic diagnosis has been performed up to STEP 3. NOTE: Possible defective parts can be narrowed easily by inspection using Subaru Select Monitor before performing “CHECK CAN COMMUNICATION CIRCUIT” using a tester.	Was the basic diagnostic procedure performed?	Go to step **2**.	Perform the basic diagnostic procedure. <Ref. to LAN(diag)-2, PROCEDURE, Basic Diagnostic Procedure.>

	Step	Check	Yes	No
2	**CHECK FROM DATA LINK CONNECTOR.** Using the tester, measure the resistance between terminals. ***Connector & terminal*** ***(B40) No. 6 — Chassis ground:*** ***(B40) No. 14 — Chassis ground:***	Is the resistance 10 Ω or less?	Check for ground short. <Ref. to LAN(diag)-43, GROUND SHORT INSPECTION, INSPECTION, CAN Communication Circuit Check.>	Go to step **3**.
3	**CHECK FROM DATA LINK CONNECTOR.** 1) Turn the ignition switch to ON. 2) Using the tester, measure the voltage between terminals. ***Connector & terminal*** ***(B40) No. 6 — Chassis ground:*** ***(B40) No. 14 — Chassis ground:***	Is the voltage 5 V or less?	Go to step **4**.	Check for battery short. <Ref. to LAN(diag)-47, BATTERY SHORT INSPECTION, INSPECTION, CAN Communication Circuit Check.>
4	**CHECK FROM DATA LINK CONNECTOR.** 1) Turn the ignition switch to OFF. 2) Using the tester, measure the resistance between terminals. ***Connector & terminal*** ***(B40) No. 6 — (B40) No. 14:***	Is the resistance 52 Ω or less?	Perform the inspection for resistance of 52 Ω or less. <Ref. to LAN(diag)-55, 52 Ω OR LESS, INSPECTION, CAN Communication Circuit Check.>	Go to step **5**.
5	**CHECK FROM DATA LINK CONNECTOR.** Using the tester, measure the resistance between terminals. ***Connector & terminal*** ***(B40) No. 6 — No. 14:***	Is the resistance 62 Ω or more?	Perform the inspection for resistance of 62 Ω or more. <Ref. to LAN(diag)-59, 62 Ω OR MORE, INSPECTION, CAN Communication Circuit Check.>	If the display of CAN system U-code disappears from the current malfunction, the CAN network is currently normal. If the U-code has detected as current malfunction, related lines may be open. Perform the inspection for the related line corresponding to the detected DTC. <Ref. to LAN(diag)-41, LIST, CAN Communication Circuit Check.>

2. BODY-CAN

NOTE:
• When measuring the resistance of CAN communication circuit, measure it in sleep status.
To enter sleep status
– With ignition switch OFF and key or switch operation stopped, keep the doors, trunk, and rear gate all closed for one minute or more.
– On models with keyless access function, keep the access key 2 m or more away from the vehicle.

• When the bus line is measured, combined resistance of the end resistance (120 Ω) in body integrated unit and the end resistance (120 Ω) in combination meter can be measured. The combined resistance is supposed to be approximately 53 — 61 Ω with the stabilizing circuit included. If the measured resistance value becomes 52 Ω or less, main wiring harness or related lines may be shorted. Or, the combined resistance may have changed because of a resistance other than the end resistance created on the circuit. If the measured value is 62 Ω or more, there may be a malfunction such as open circuit in one of the end resistances, in the stabilizing circuit, or in the main wiring harness.
Also, even when the resistance value falls within approx. 53 — 61 Ω, related lines may be open if an error of communication for initializing or a CAN system U-code has occurred. (The resistance cannot be between approx. 53 — 61 Ω if the main wiring harness is open.)

WIRING DIAGRAM:

• For the coupling connector, refer to “WIRING SYSTEM”.
• CAN communication system <Ref. to WI-132, WIRING DIAGRAM, CAN Communication System.>

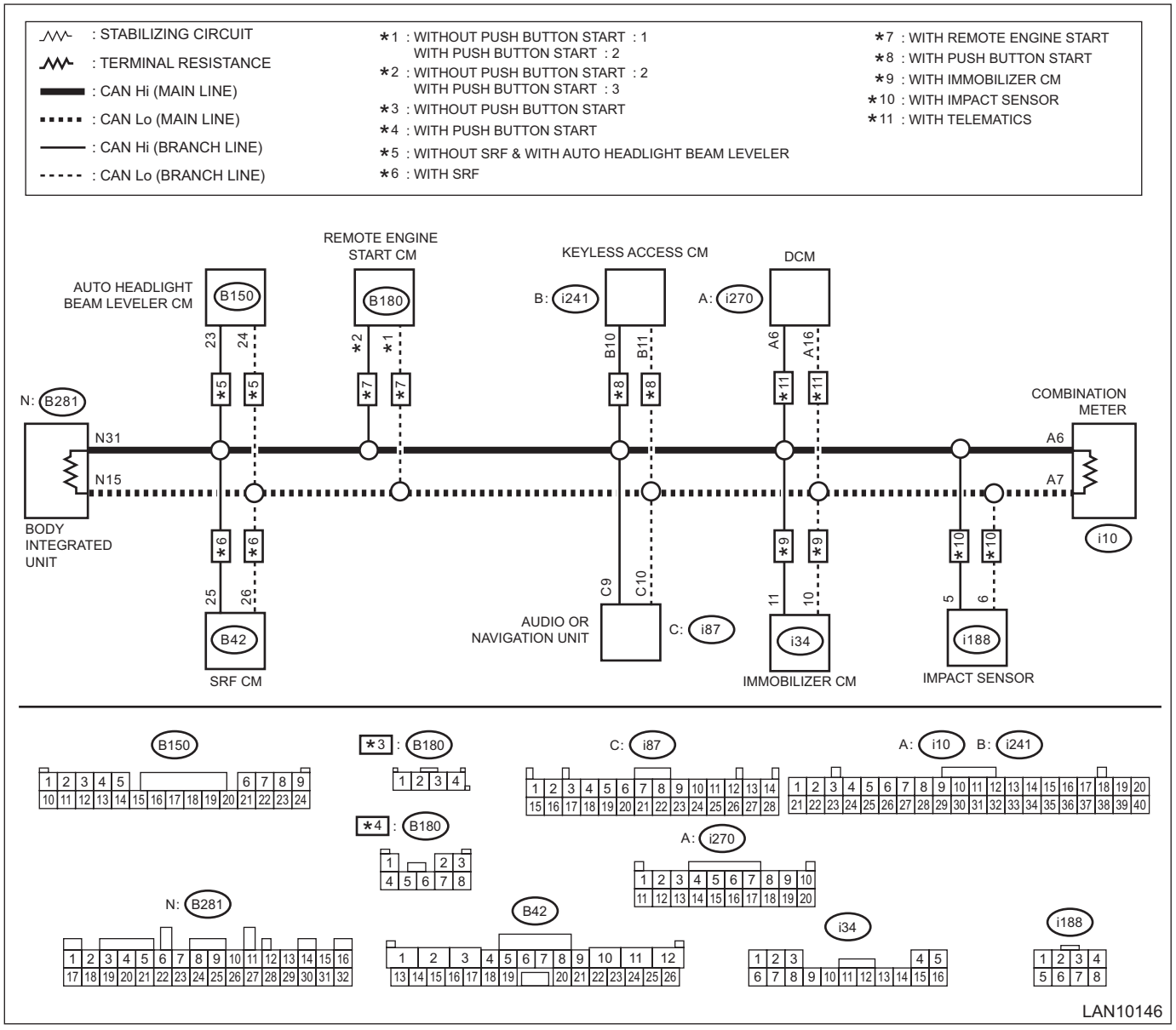

CAN Communication Circuit Check

	Step	Check	Yes	No
1	**CHECK BASIC DIAGNOSTIC PROCEDURE.** Check that the basic diagnosis has been performed up to STEP 3. NOTE: Possible defective parts can be narrowed easily by inspection using Subaru Select Monitor before performing "CHECK CAN COMMUNICATION CIRCUIT" using a tester.	Was the basic diagnostic procedure performed?	Go to step **2**.	Perform the basic diagnostic procedure. <Ref. to LAN(diag)-2, PROCEDURE, Basic Diagnostic Procedure.>
2	**CHECK FROM IMPACT SENSOR CONNECTOR.** Using the tester, measure the resistance between terminals. ***Connector & terminal*** ***(i188) No. 5 — Chassis ground:*** ***(i188) No. 6 — Chassis ground:***	Is the resistance 10 Ω or less?	Check for ground short. <Ref. to LAN(diag)-43, GROUND SHORT INSPECTION, INSPECTION, CAN Communication Circuit Check.>	Go to step **3**.
3	**CHECK FROM IMPACT SENSOR CONNECTOR.** 1) Turn the ignition switch to ON. 2) Using the tester, measure the voltage between terminals. ***Connector & terminal*** ***(i188) No. 5 — Chassis ground:*** ***(i188) No. 6 — Chassis ground:***	Is the voltage 5 V or less?	Go to step **4**.	Check for battery short. <Ref. to LAN(diag)-47, BATTERY SHORT INSPECTION, INSPECTION, CAN Communication Circuit Check.>
4	**CHECK FROM IMPACT SENSOR CONNECTOR.** 1) Turn the ignition switch to OFF. 2) Using the tester, measure the resistance between terminals. ***Connector & terminal*** ***(i188) No. 5 — (i188) No. 6:***	Is the resistance 52 Ω or less?	Perform the inspection for resistance of 52 Ω or less. <Ref. to LAN(diag)-55, 52 Ω OR LESS, INSPECTION, CAN Communication Circuit Check.>	Go to step **5**.
5	**CHECK FROM IMPACT SENSOR CONNECTOR.** Using the tester, measure the resistance between terminals. ***Connector & terminal*** ***(i188) No. 5 — (i188) No. 6:***	Is the resistance 62 Ω or more?	Perform the inspection for resistance of 62 Ω or more. <Ref. to LAN(diag)-59, 62 Ω OR MORE, INSPECTION, CAN Communication Circuit Check.>	If the display of CAN system U-code disappears from the current malfunction, the CAN network is currently normal. If the U-code has detected as current malfunction, related lines may be open. Perform the inspection for the related line corresponding to the detected DTC. <Ref. to LAN(diag)-41, LIST, CAN Communication Circuit Check.>

B: LIST

Resistance value between CAN Hi and Lo	Contents of inspection	Remarks
Ground short inspection	<Ref. to LAN(diag)-43, GROUND SHORT INSPECTION, INSPECTION, CAN Communication Circuit Check.>	Shorted to ground in the communication circuit or control module.
Battery short inspection	<Ref. to LAN(diag)-47, BATTERY SHORT INSPECTION, INSPECTION, CAN Communication Circuit Check.>	Shorted to battery power supply in the communication circuit or control module.
53 — 61 Ω	<Ref. to LAN(diag)-51, 53 — 61 Ω, INSPECTION, CAN Communication Circuit Check.>	Combined resistance of end resistance does not have malfunction; short to ground or +B short of the CAN communication circuit is possible, however.
52 Ω or less	<Ref. to LAN(diag)-55, 52 Ω OR LESS, INSPECTION, CAN Communication Circuit Check.>	Resistance is lower than combined resistance of end resistance. Short to CAN Hi and CAN Lo on the CAN communication circuit is possible.
62 Ω or more	<Ref. to LAN(diag)-59, 62 Ω OR MORE, INSPECTION, CAN Communication Circuit Check.>	Resistance is higher than combined resistance of end resistance. Open circuit of CAN communication circuit is possible.
Related lines 53 — 61 Ω (TCM)	<Ref. to LAN(diag)-63, RELATED LINES 53 — 61 Ω (TCM), INSPECTION, CAN Communication Circuit Check.>	No TCM data is received. Perform inspection when faulty is detected.
Related lines 53 — 61 Ω (steering angle sensor)	<Ref. to LAN(diag)-65, RELATED LINES 53 — 61 Ω (STEERING ANGLE SENSOR), INSPECTION, CAN Communication Circuit Check.>	No steering angle sensor data is received. Perform inspection when faulty is detected.
Related lines 53 — 61 Ω (A/C control module)	<Ref. to LAN(diag)-66, RELATED LINE 53 — 61 Ω (A/C CONTROL MODULE), INSPECTION, CAN Communication Circuit Check.>	No A/C data is received. Perform inspection when faulty is detected.
Related lines 53 — 61 Ω (power steering CM)	<Ref. to LAN(diag)-68, RELATED LINES 53 — 61 Ω (POWER STEERING CM), INSPECTION, CAN Communication Circuit Check.>	No power steering data is received. Perform inspection when faulty is detected.
Related lines 53 — 61 Ω (combination meter)	<Ref. to LAN(diag)-69, RELATED LINES 53 — 61 Ω (COMBINATION METER), INSPECTION, CAN Communication Circuit Check.>	No meter data is received. Perform inspection when faulty is detected.
Related lines 53 — 61 Ω (infotainment system)	<Ref. to LAN(diag)-71, RELATED LINES 53 — 61 Ω (INFOTAINMENT SYSTEM), INSPECTION, CAN Communication Circuit Check.>	No infotainment data is received. Perform inspection when faulty is detected.
Related lines 53 — 61 Ω (airbags)	<Ref. to LAN(diag)-72, RELATED LINES 53 — 61 Ω (AIRBAG CM SYSTEM), INSPECTION, CAN Communication Circuit Check.>	No airbag data is received. Perform inspection when faulty is detected.
Related lines 53 — 61 Ω (keyless access system)	<Ref. to LAN(diag)-74, RELATED LINES 53 — 61 Ω (KEYLESS ACCESS SYSTEM), INSPECTION, CAN Communication Circuit Check.>	No keyless access CM data is received. Perform inspection when faulty is detected.
Related lines 53 — 61 Ω (impact sensor system)	<Ref. to LAN(diag)-78, RELATED LINES 53 — 61 Ω (IMPACT SENSOR SYSTEM), INSPECTION, CAN Communication Circuit Check.>	Perform inspection when impact sensor malfunction is detected.
Related lines 53 — 61 Ω (BSD/RCTA)	<Ref. to LAN(diag)-80, RELATED LINES 53 — 61 Ω (BSD/RCTA), INSPECTION, CAN Communication Circuit Check.>	No BSD/RCTA data is received. Perform inspection when faulty is detected.
Related lines 53 — 61 Ω (headlight beam leveler or SRF)	<Ref. to LAN(diag)-75, RELATED LINES 53 — 61 Ω (HEADLIGHT BEAM LEVELER OR SRF), INSPECTION, CAN Communication Circuit Check.>	No headlight beam leveler data is received. Perform inspection when faulty is detected.
Related lines 53 — 61 Ω (remote engine starter)	<Ref. to LAN(diag)-77, RELATED LINES 53 — 61 Ω (REMOTE ENGINE STARTER), INSPECTION, CAN Communication Circuit Check.>	Perform inspection when the remote engine starter does not operate, while the mobile key side operates normally.

Resistance value between CAN Hi and Lo	Contents of inspection	Remarks
Related lines 53 — 61 Ω (stereo camera)	<Ref. to LAN(diag)-81, RELATED LINE 53 — 61 Ω (STEREO CAMERA), INSPECTION, CAN Communication Circuit Check.>	No stereo camera data is received. Perform inspection when faulty is detected.
Related lines 53 — 61 Ω (immobilizer system)	<Ref. to LAN(diag)-82, RELATED LINES 53 — 61 Ω (IMMOBILIZER SYSTEM), INSPECTION, CAN Communication Circuit Check.>	No immobilizer data is received. Perform inspection when faulty is detected.
Related lines 53 — 61 Ω (telematics)	<Ref. to LAN(diag)-84, RELATED LINES 53 — 61 Ω (TELEMATICS), INSPECTION, CAN Communication Circuit Check.>	No telematics data is received. Perform inspection when faulty is detected.

C: INSPECTION

1. GROUND SHORT INSPECTION

- MAIN-CAN

WIRING DIAGRAM:

NOTE:
For the coupling connector, refer to “WIRING SYSTEM”.
CAN communication system <Ref. to WI-132, WIRING DIAGRAM, CAN Communication System.>

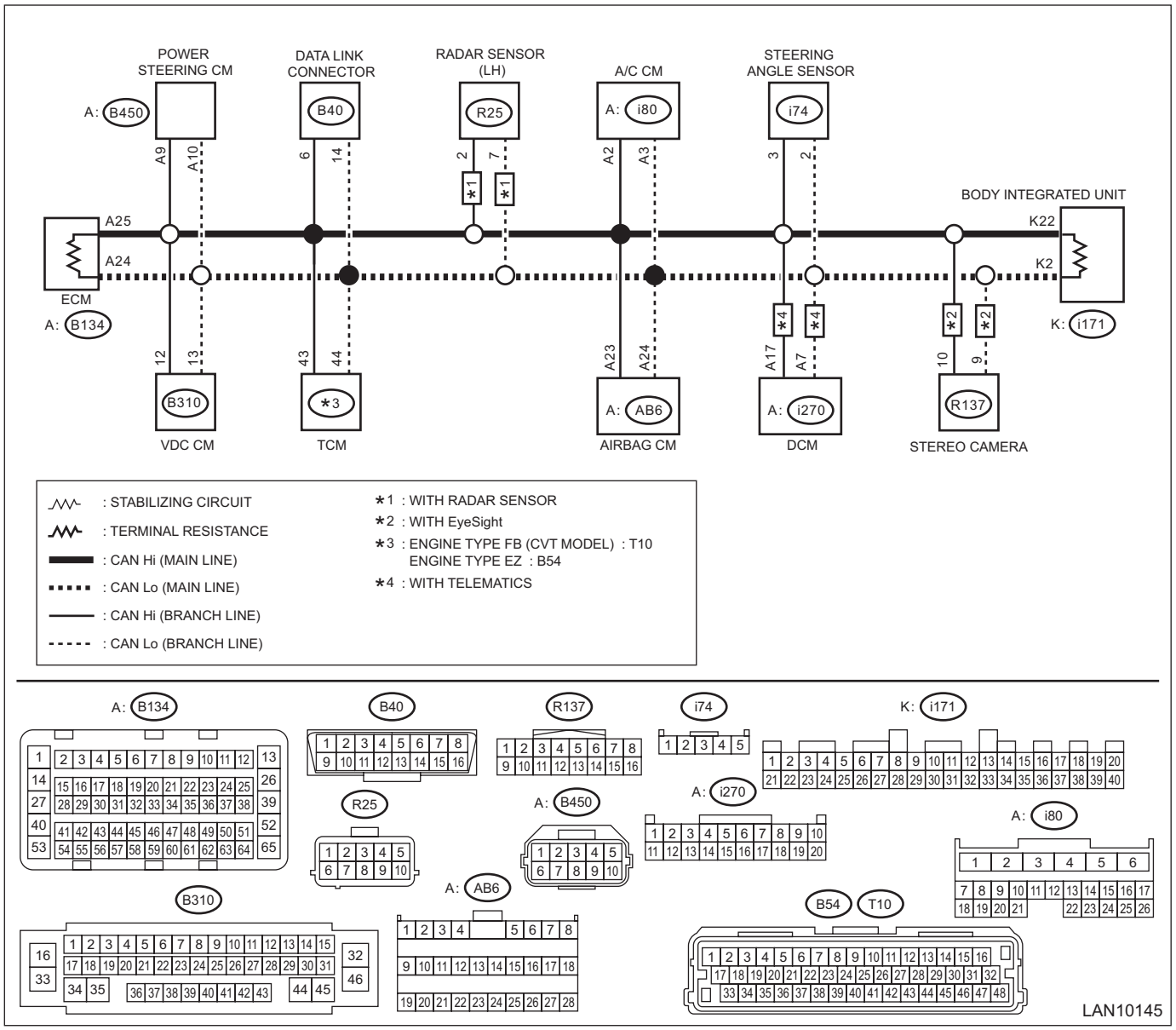

NOTE:
Main wiring harness or related lines may be shorted to ground, or shorted to ground in one of the control modules.

	Step	Check	Yes	No
1	**CHECK BETWEEN RELATED LINES AND MAIN WIRING HARNESS.** Using the tester, measure the resistance between terminals. ***Connector & terminal*** ***(B40) No. 6 — Chassis ground:*** ***(B40) No. 14 — Chassis ground:***	Is the resistance 10 Ω or less?	Go to step **2**.	Currently, it is normal.
2	**CHECK CONTROL MODULE.** With the tester connected, disconnect control module. NOTE: Disconnect the body integrated unit at the end. ***Connector & terminal*** ***(B40) No. 6 — Chassis ground:*** ***(B40) No. 14 — Chassis ground:***	Did the resistance change to 10 Ω or more?	Replace the control module whose resistance has changed. When the value changed at disconnecting the body integrated unit, Go to step **3**.	Repair or replace the short circuit of the main wiring harness and related lines between body integrated unit and ECM.
3	**CHECK BETWEEN MAIN WIRING HARNESSES.** Using the tester, measure the resistance between terminals. ***Connector & terminal*** ***(i171) No. 22 — Chassis ground:*** ***(i171) No. 2 — Chassis ground:***	Is the resistance 10 Ω or less?	Repair or replace the short circuit of the main wiring harness and related lines between ECM and body integrated unit.	Replace the body integrated unit. <Ref. to SL-84, REMOVAL, Body Integrated Unit.>

- BODY-CAN

WIRING DIAGRAM:

NOTE:
For the coupling connector, refer to “WIRING SYSTEM”.
CAN communication system <Ref. to WI-132, WIRING DIAGRAM, CAN Communication System.>

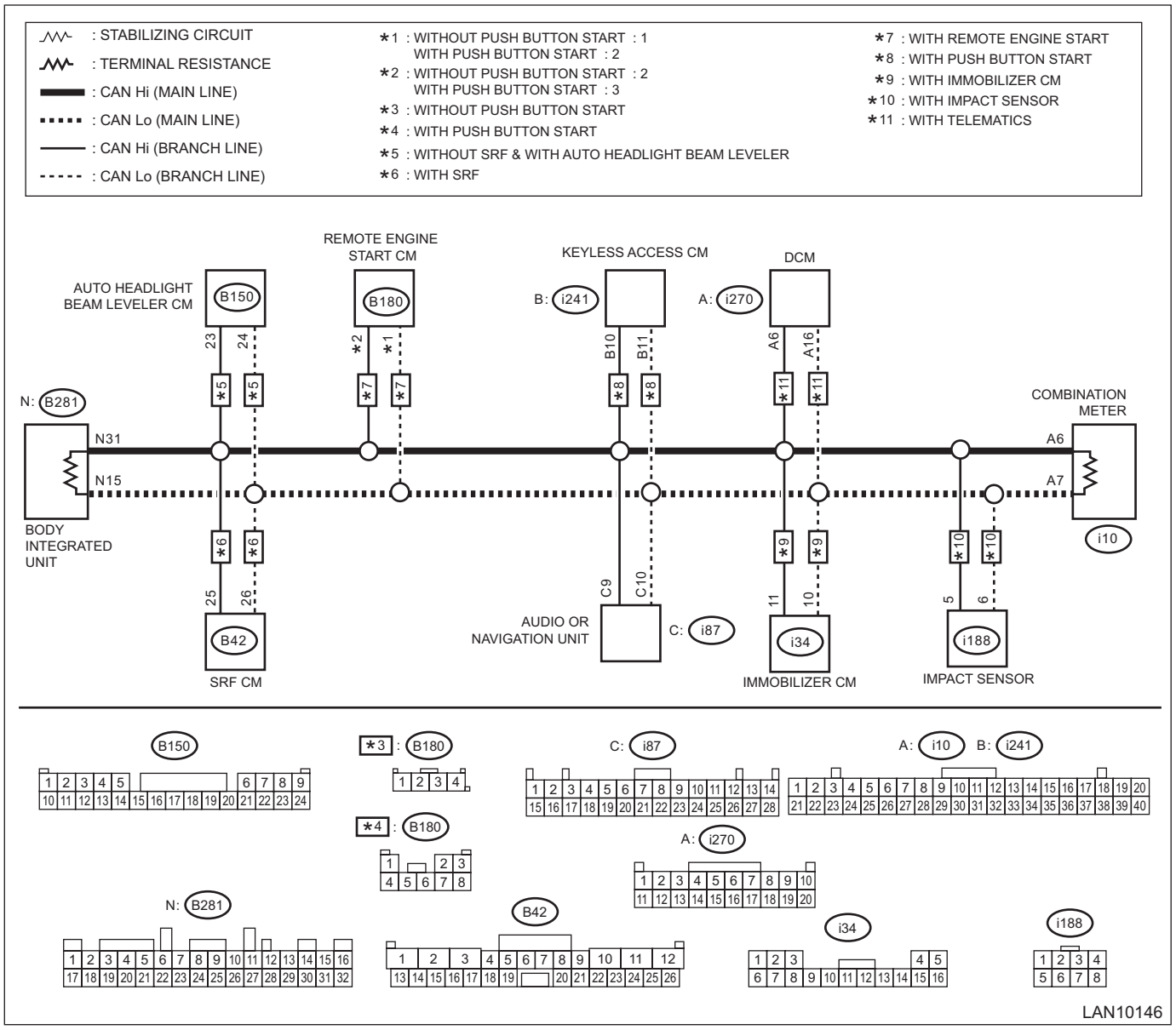

NOTE:
Main wiring harness or related lines may be shorted to ground, or shorted to ground in one of the control modules.

Step		Check	Yes	No
1	**CHECK BETWEEN RELATED LINES AND MAIN WIRING HARNESS.** Using the tester, measure the resistance between terminals. ***Connector & terminal*** ***(i188) No. 5 — Chassis ground:*** ***(i188) No. 6 — Chassis ground:***	Is the resistance 10 Ω or less?	Go to step **2**.	Currently, it is normal.

	Step	Check	Yes	No
2	**CHECK CONTROL MODULE.** With the tester connected, disconnect control module. NOTE: Disconnect the body integrated unit at the end. ***Connector & terminal*** ***(i188) No. 5 — Chassis ground:*** ***(i188) No. 6 — Chassis ground:***	Did the resistance change to 10 Ω or more?	Replace the control module whose resistance has changed. When the value changed at disconnecting the body integrated unit, Go to step **3**.	Repair or replace the short circuit of the main wiring harness or related lines between body integrated unit and impact sensor.
3	**CHECK BETWEEN MAIN WIRING HARNESSES.** Using the tester, measure the resistance between terminals. ***Connector & terminal*** ***(B281) No. 31 — Chassis ground:*** ***(B281) No. 15 — Chassis ground:***	Is the resistance 10 Ω or less?	Repair or replace the short circuit of the main wiring harness and related lines between ECM and body integrated unit.	Replace the body integrated unit. <Ref. to SL-84, REMOVAL, Body Integrated Unit.>

2. BATTERY SHORT INSPECTION

- MAIN-CAN

WIRING DIAGRAM:

NOTE:
For the coupling connector, refer to “WIRING SYSTEM”.
CAN communication system <Ref. to WI-132, WIRING DIAGRAM, CAN Communication System.>

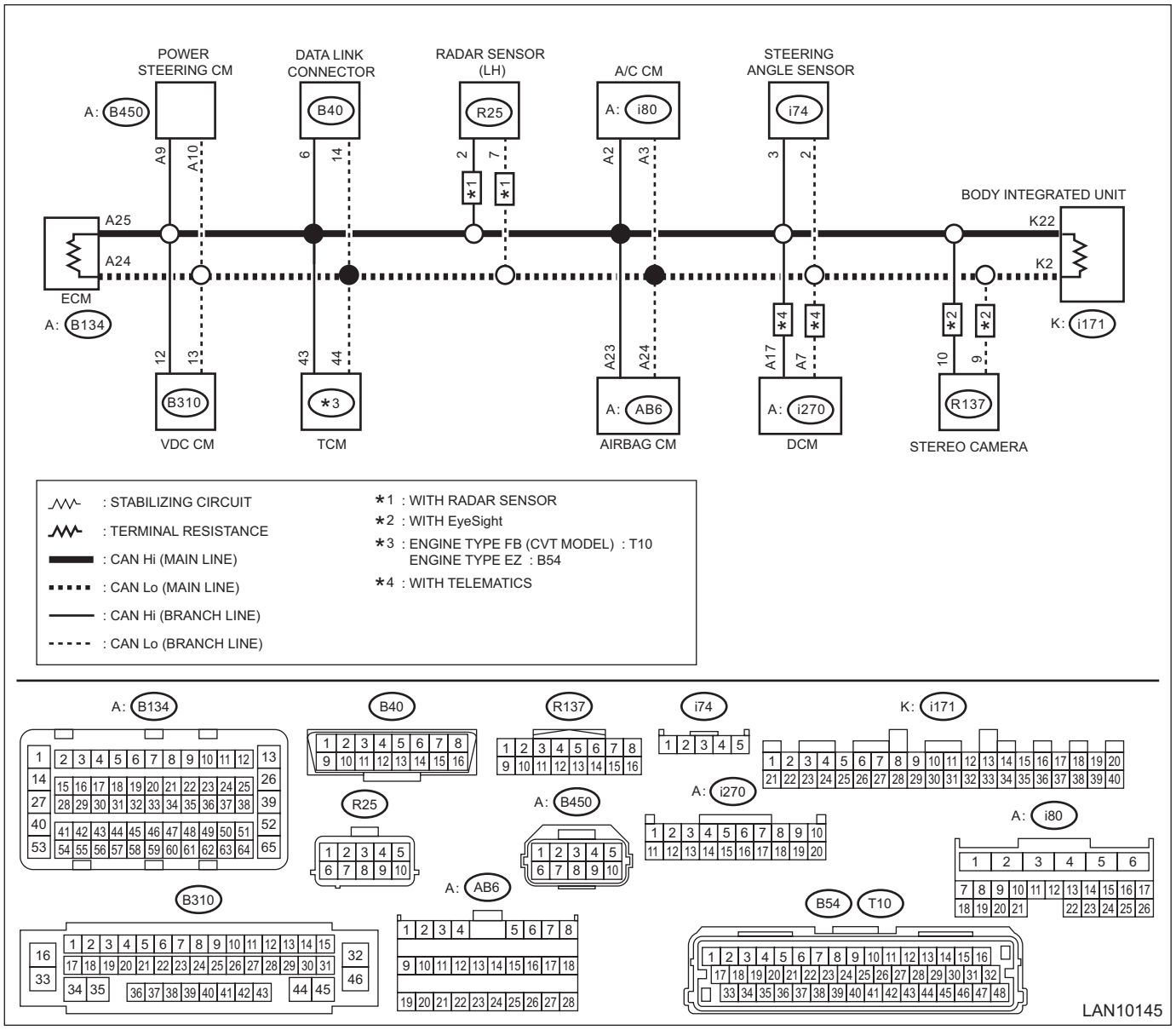

NOTE:
Main wiring harness or related lines may be shorted to battery circuit, or shorted to battery circuit in one of the control modules.

Step		Check	Yes	No
1	**CHECK BETWEEN RELATED LINES AND MAIN WIRING HARNESS.** 1) Turn the ignition switch to ON. 2) Using the tester, measure the voltage between terminals. ***Connector & terminal*** ***(B40) No. 6 — Chassis ground:*** ***(B40) No. 14 — Chassis ground:***	Is the voltage 5 V or less?	Currently, it is normal.	Go to step **2**.

	Step	Check	Yes	No
2	**CHECK CONTROL MODULE.** With the tester connected, disconnect control module. NOTE: Disconnect the body integrated unit at the end. ***Connector & terminal*** ***(B40) No. 6 — Chassis ground:*** ***(B40) No. 14 — Chassis ground:***	Did the voltage change to 5 V or less?	Replace the control module whose voltage has changed. When the value changed at disconnecting the body integrated unit, Go to step **3**.	Repair or replace the short circuit of the harness between body integrated unit and ECM.
3	**CHECK BETWEEN MAIN WIRING HARNESSES.** Using the tester, measure the voltage between terminals. ***Connector & terminal*** ***(i171) No. 22 — Chassis ground:*** ***(i171) No. 2 — Chassis ground:***	Is the voltage 5 V or less?	Replace the body integrated unit. <Ref. to SL-84, REMOVAL, Body Integrated Unit.>	Repair or replace the short circuit of the harness between ECM and body integrated unit.

- BODY-CAN

WIRING DIAGRAM:

NOTE:
For the coupling connector, refer to “WIRING SYSTEM”.
CAN communication system <Ref. to WI-132, WIRING DIAGRAM, CAN Communication System.>

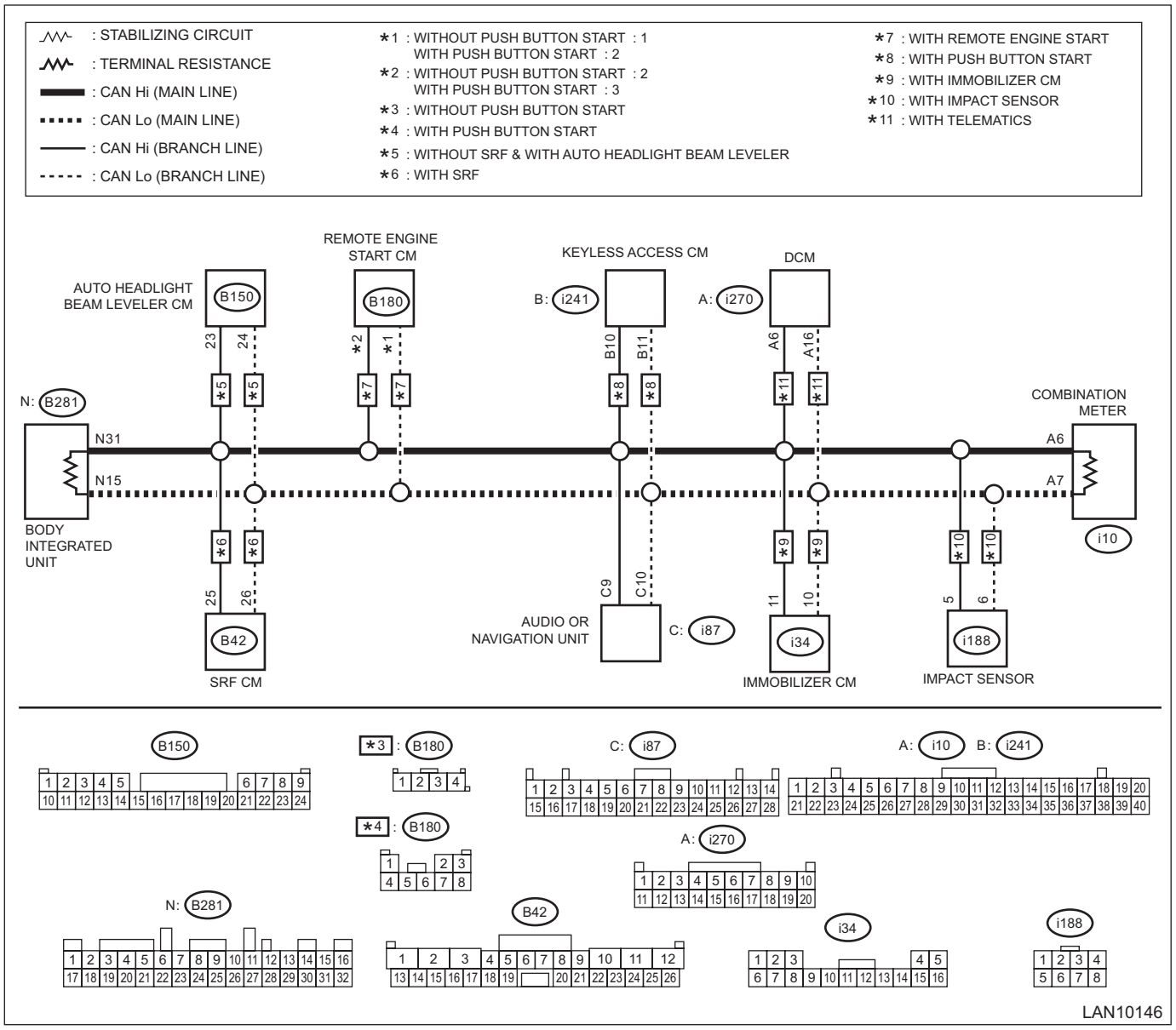

NOTE:
Main wiring harness or related lines may be shorted to battery circuit, or shorted to battery circuit in one of the control modules.

Step		Check	Yes	No
1	**CHECK BETWEEN RELATED LINES AND MAIN WIRING HARNESS.** 1) Turn the ignition switch to ON. 2) Using the tester, measure the voltage between terminals. ***Connector & terminal*** ***(i188) No. 5 — Chassis ground:*** ***(i188) No. 6 — Chassis ground:***	Is the voltage 5 V or less?	Currently, it is normal.	Go to step **2**.

	Step	Check	Yes	No
2	**CHECK CONTROL MODULE.** With the tester connected, disconnect control module. NOTE: Disconnect the body integrated unit at the end. ***Connector & terminal*** ***(i188) No. 5 — Chassis ground:*** ***(i188) No. 6 — Chassis ground:***	Did the voltage change to 5 V or less?	Replace the control module whose voltage has changed. When the value changed at disconnecting the body integrated unit, Go to step **3**.	Repair or replace the short circuit of the harness between body integrated unit and impact sensor.
3	**CHECK BETWEEN MAIN WIRING HARNESSES.** Using the tester, measure the voltage between terminals. ***Connector & terminal*** ***(B281) No. 31 — Chassis ground:*** ***(B281) No. 15 — Chassis ground:***	Is the voltage 5 V or less?	Replace the body integrated unit. <Ref. to SL-84, REMOVAL, Body Integrated Unit.>	Repair or replace the short circuit of the harness between ECM and body integrated unit.

3. 53 — 61 Ω

- MAIN-CAN

WIRING DIAGRAM:

NOTE:
For the coupling connector, refer to “WIRING SYSTEM”.
CAN communication system <Ref. to WI-132, WIRING DIAGRAM, CAN Communication System.>

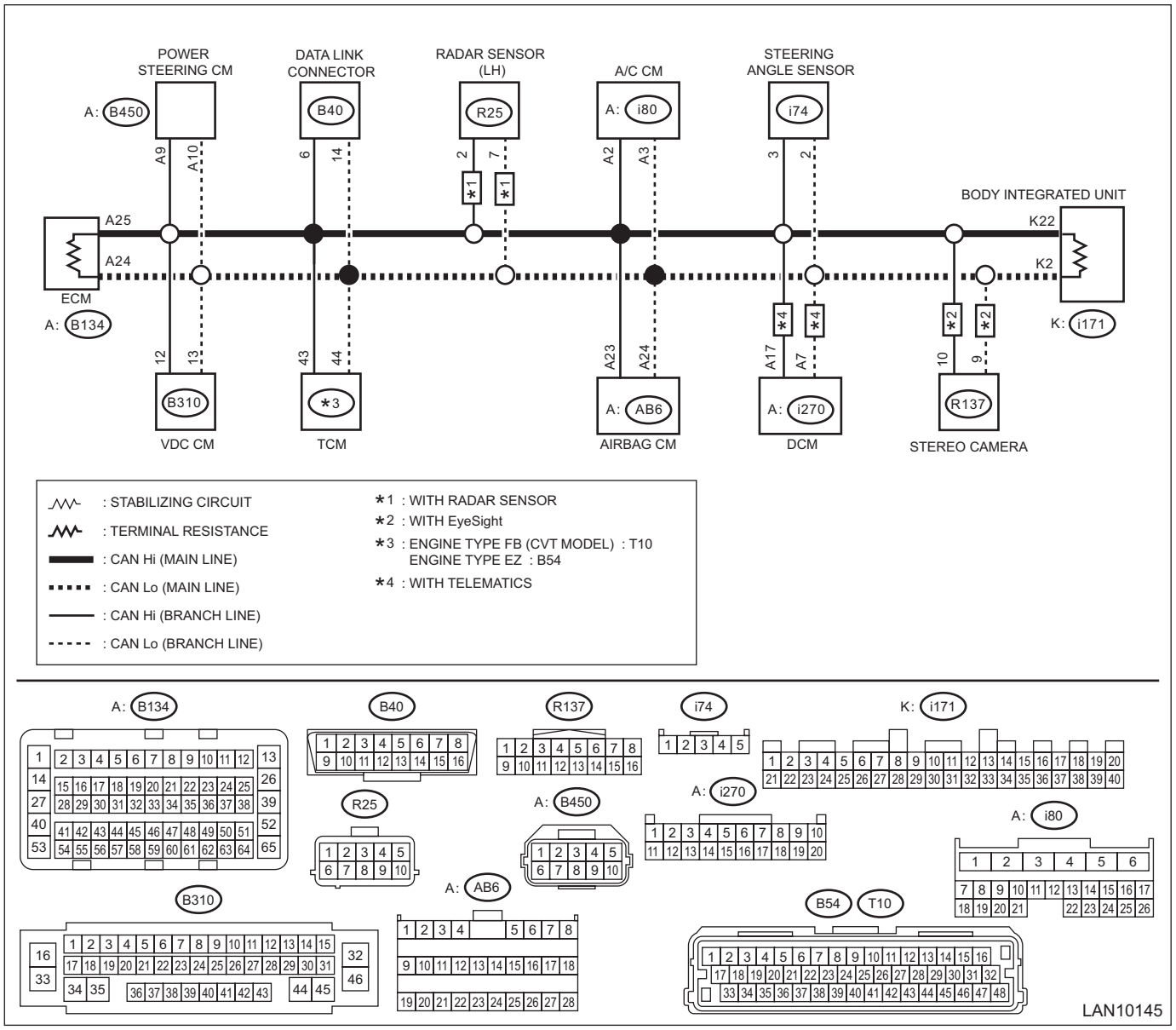

NOTE:
When the measured resistance value is 53 — 61 Ω, main wiring harness or related lines may be shorted to ground, or shorted to power supply line, or related line may be open.

Step		Check	Yes	No
1	**CHECK BETWEEN RELATED LINES AND MAIN WIRING HARNESS.** Using the tester, measure the resistance between terminals. ***Connector & terminal*** ***(B40) No. 6 — Chassis ground:*** ***(B40) No. 14 — Chassis ground:***	Is the resistance 10 Ω or less?	Go to step **2**.	Go to step **3**.

	Step	Check	Yes	No
2	**CHECK CONTROL MODULE.** With the tester connected, disconnect control module. NOTE: Disconnect the body integrated unit at the end. ***Connector & terminal*** ***(B40) No. 6 — Chassis ground:*** ***(B40) No. 14 — Chassis ground:***	Did the resistance change to 10 Ω or more?	Replace the control module whose resistance has changed. When the value changed at disconnecting the body integrated unit, replace the body integrated unit. <Ref. to SL-84, REMOVAL, Body Integrated Unit.> Go to step **3**.	Repair or replace the short circuit of the harness between body integrated unit and ECM.
3	**CHECK BETWEEN RELATED LINES AND MAIN WIRING HARNESS.** 1) Turn the ignition switch to ON. 2) Using the tester, measure the voltage between terminals. ***Connector & terminal*** ***(B40) No. 6 — Chassis ground:*** ***(B40) No. 14 — Chassis ground:***	Is the voltage 5 V or less?	CAN communication circuit is normal.	Go to step **4**.
4	**CHECK CONTROL MODULE.** With the tester connected, disconnect control module. NOTE: Disconnect the body integrated unit at the end. ***Connector & terminal*** ***(B40) No. 6 — Chassis ground:*** ***(B40) No. 14 — Chassis ground:***	Did the voltage change to 5 V or less?	Replace the control module whose voltage has changed. When the value changed at disconnecting the body integrated unit, replace the body integrated unit. <Ref. to SL-84, REMOVAL, Body Integrated Unit.> Go to step **5**.	Repair or replace the short circuit of the harness between body integrated unit and ECM.
5	**CHECK HARNESS.** Using a tester, measure the voltage between terminals and chassis ground. ***Connector & terminal*** ***(i171) No. 22 — Chassis ground:*** ***(i171) No. 2 — Chassis ground:***	Is the voltage 5 V or less?	CAN communication circuit is normal.	Repair or replace the short circuit of the harness between ECM and body integrated unit.

- BODY-CAN

WIRING DIAGRAM:

NOTE:
For the coupling connector, refer to “WIRING SYSTEM”.
CAN communication system <Ref. to WI-132, WIRING DIAGRAM, CAN Communication System.>

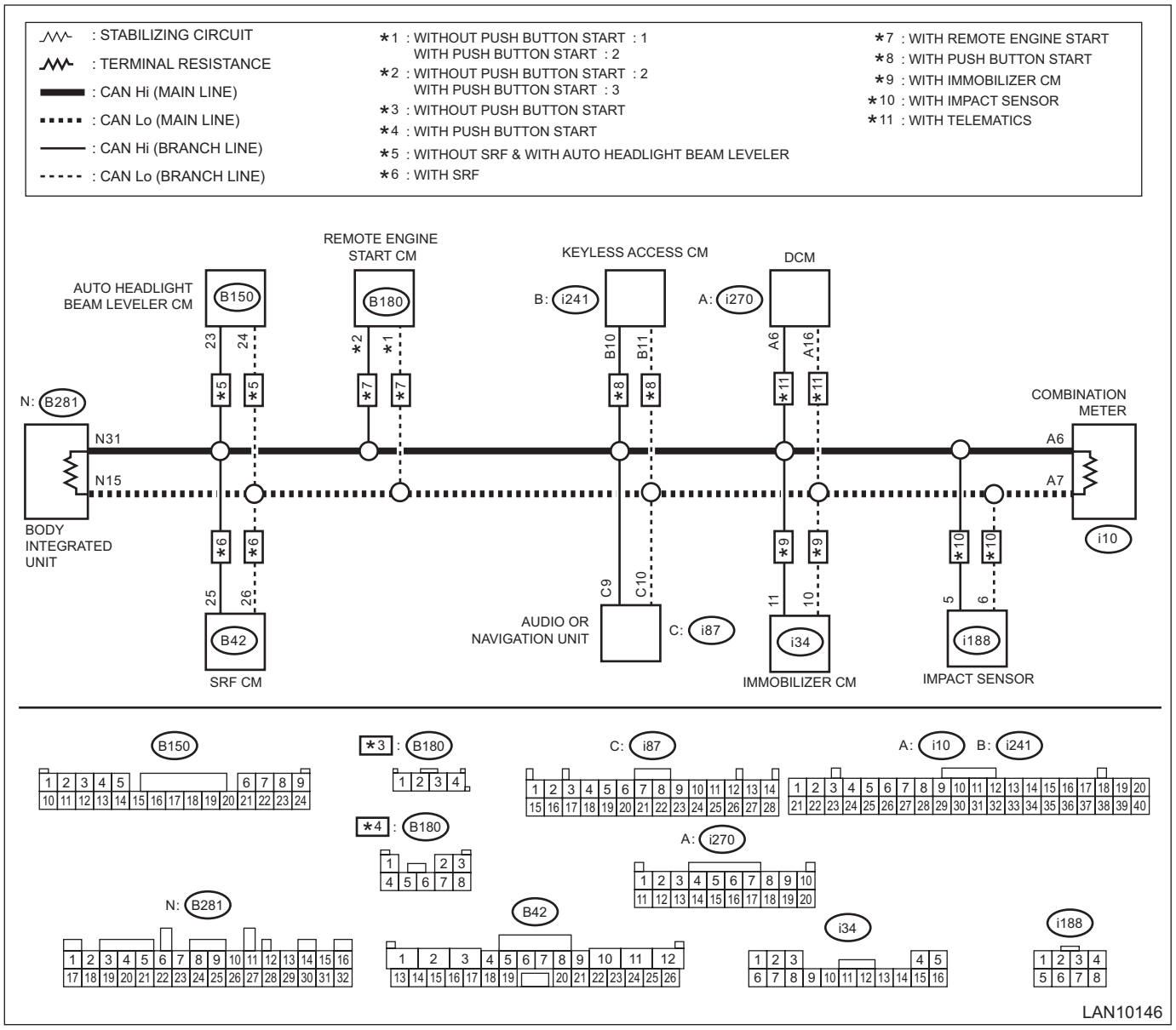

NOTE:
When the measured resistance value is 53 — 61 Ω, main wiring harness or related lines may be shorted to ground, or shorted to power supply line, or related line may be open.

Step		Check	Yes	No
1	**CHECK BETWEEN RELATED LINES AND MAIN WIRING HARNESS.** Using the tester, measure the resistance between terminals. ***Connector & terminal*** ***(i188) No. 5 — Chassis ground:*** ***(i188) No. 6 — Chassis ground:***	Is the resistance 10 Ω or less?	Go to step **2**.	Go to step **3**.

	Step	Check	Yes	No
2	**CHECK CONTROL MODULE.** With the tester connected, disconnect control module. NOTE: Disconnect the body integrated unit at the end. ***Connector & terminal*** ***(i188) No. 5 — Chassis ground:*** ***(i188) No. 6 — Chassis ground:***	Did the resistance change to 10 Ω or more?	Replace the control module whose resistance has changed. When the value changed at disconnecting the body integrated unit, replace the body integrated unit. <Ref. to SL-84, REMOVAL, Body Integrated Unit.> Go to step **3**.	Repair or replace the short circuit of the harness between body integrated unit and ECM.
3	**CHECK BETWEEN RELATED LINES AND MAIN WIRING HARNESS.** 1) Turn the ignition switch to ON. 2) Using the tester, measure the voltage between terminals. ***Connector & terminal*** ***(i188) No. 5 — Chassis ground:*** ***(i188) No. 6 — Chassis ground:***	Is the voltage 5 V or less?	CAN communication circuit is normal.	Go to step **4**.
4	**CHECK CONTROL MODULE.** With the tester connected, disconnect control module. NOTE: Disconnect the body integrated unit at the end. ***Connector & terminal*** ***(i188) No. 5 — Chassis ground:*** ***(i188) No. 6 — Chassis ground:***	Did the voltage change to 5 V or less?	Replace the control module whose voltage has changed. When the value changed at disconnecting the body integrated unit, replace the body integrated unit. <Ref. to SL-84, REMOVAL, Body Integrated Unit.> Go to step **5**.	Repair or replace the short circuit of the harness between body integrated unit and ECM.
5	**CHECK HARNESS.** Using a tester, measure the voltage between terminals and chassis ground. ***Connector & terminal*** ***(B281) No. 31 — Chassis ground:*** ***(B281) No. 15 — Chassis ground:***	Is the voltage 5 V or less?	CAN communication circuit is normal.	Repair or replace the short circuit of the harness between combination meter and body integrated unit.

4. 52 Ω OR LESS

- MAIN-CAN

WIRING DIAGRAM:

NOTE:
For the coupling connector, refer to “WIRING SYSTEM”.
CAN communication system <Ref. to WI-132, WIRING DIAGRAM, CAN Communication System.>

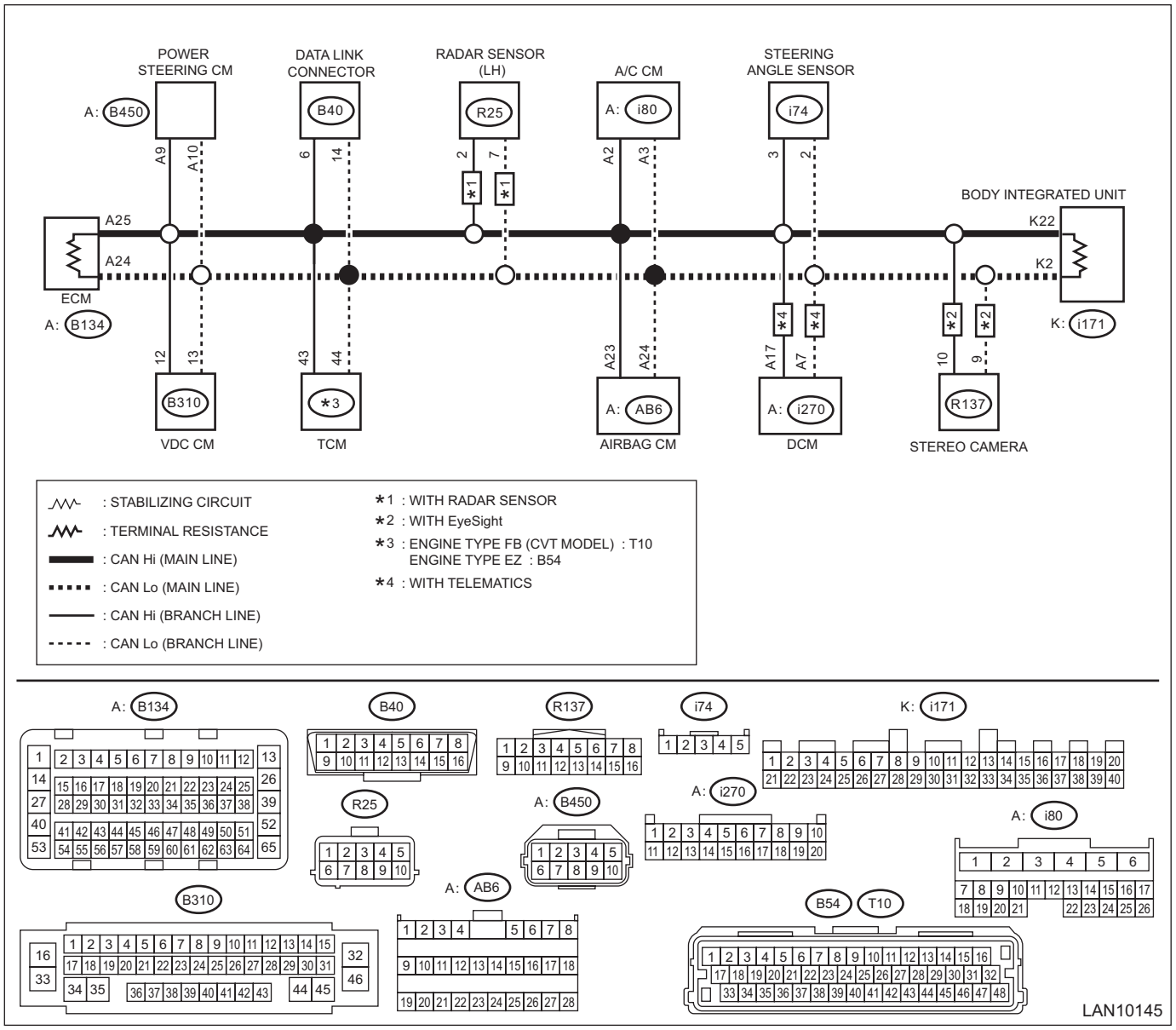

NOTE:
When the bus line is measured, combined resistance of the end resistance (120 Ω) in ECM and the end resistance (120 Ω) in body integrated unit can be measured. The combined resistance is approximately 53 — 61 Ω with the stabilizing circuit included. When the measured resistance value is 52 Ω or less, main wiring harness or related lines may be shorted, or combined resistance may have changed because resistance other than end resistance is created on the circuit.

	Step	Check	Yes	No
1	**CHECK BETWEEN RELATED LINES AND MAIN WIRING HARNESS.** Using the tester, measure the resistance between terminals. ***Connector & terminal*** ***(B40) No. 6 — No. 14:***	Is the resistance 10 Ω or less?	Go to step **2**.	Go to step **3**.
2	**CHECK MAIN WIRING HARNESS AND RELATED LINES.** With a tester connected, disconnect control module connectors in order. NOTE: Disconnect the body integrated unit at the end. ***Connector & terminal*** ***(B40) No. 6 — No. 14:***	Is there any control module whose condition has changed from short state?	Replace the control module whose resistance has changed. When the value changed at disconnecting the body integrated unit, replace the body integrated unit. <Ref. to SL-84, REMOVAL, Body Integrated Unit.> Go to step **3**.	Repair or replace the short circuit of the harness between body integrated unit and ECM.
3	**CHECK CONTROL MODULE.** 1) Disconnect the connectors of ECM and body integrated unit. 2) Using a tester, measure the resistance between control module terminals. ***Connector & terminal*** ***(B134) No. 24 — (B134) No. 25:*** ***(i171) No. 22 — (i171) No. 2:***	Is the resistance 114 — 126 Ω?	Go to step **4**.	Replace the control module whose end resistance value is out of the specified range.
4	**CHECK HARNESS.** Using the tester, check the short circuit of each harness. ***Connector & terminal*** ***(i171) No. 22 — (i171) No. 2:***	Is the resistance 1 MΩ or more?	CAN communication circuit is normal.	Go to step **5**.
5	**CHECK CONTROL MODULE.** With a tester connected, disconnect control modules in order. ***Connector & terminal*** ***(i171) No. 22 — (i171) No. 2:***	Are there any control modules whose resistance changed to 1 MΩ or more?	Replace the control module that has changed.	Repair or replace the harness part which has resistance component.

- BODY-CAN

WIRING DIAGRAM:

NOTE:
For the coupling connector, refer to “WIRING SYSTEM”.
CAN communication system <Ref. to WI-132, WIRING DIAGRAM, CAN Communication System.>

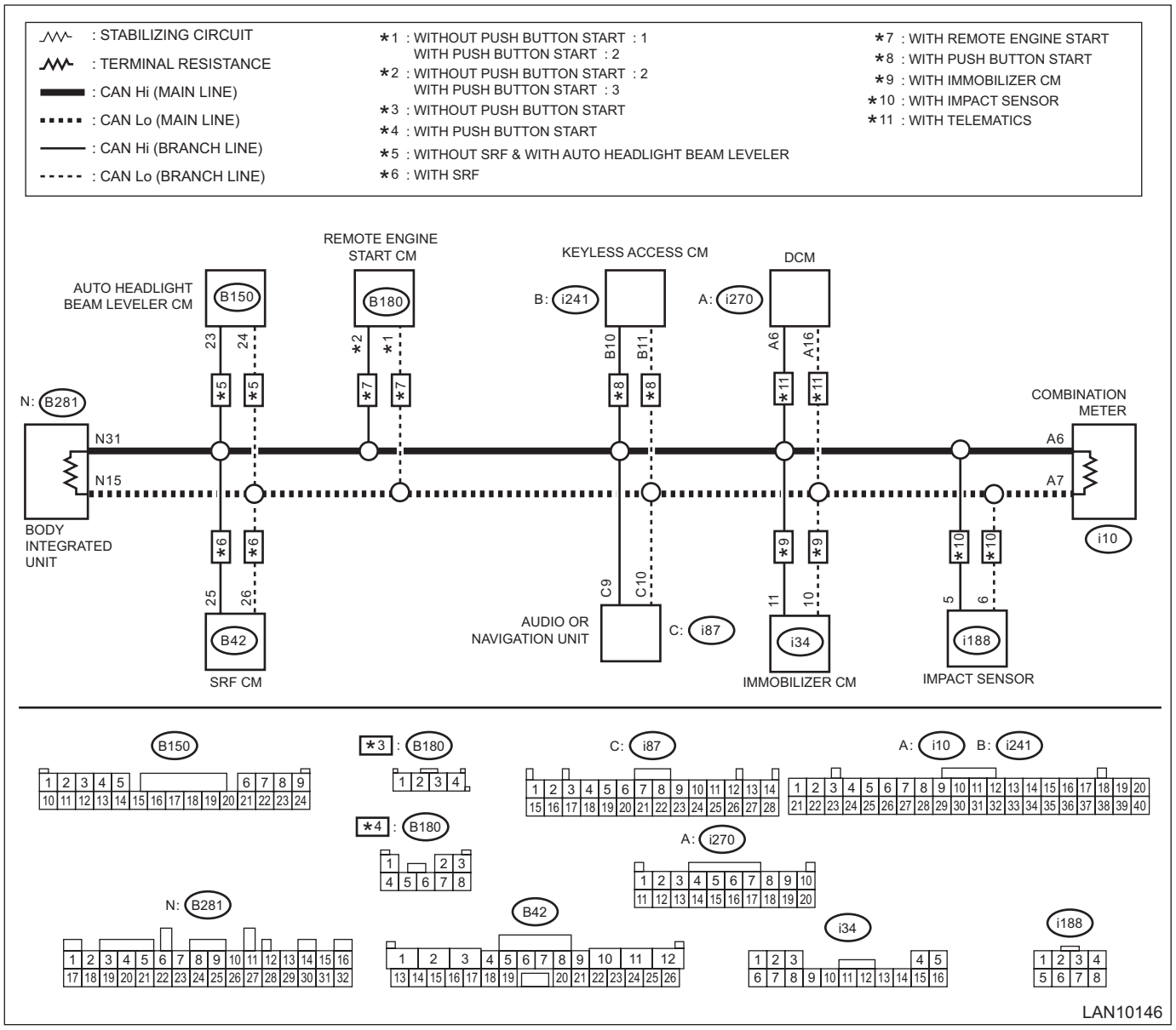

NOTE:
When the bus line is measured, combined resistance of the end resistance (120 Ω) in body integrated unit and the end resistance (120 Ω) in combination meter can be measured. The combined resistance is approximately 53 — 61 Ω with the stabilizing circuit included. When the measured resistance value is 52 Ω or less, main wiring harness or related lines may be shorted, or combined resistance may have changed because resistance other than end resistance is created on the circuit.

Step		Check	Yes	No
1	**CHECK BETWEEN RELATED LINES AND MAIN WIRING HARNESS.** Using the tester, measure the resistance between terminals. ***Connector & terminal (i188) No. 5 — (i188) No. 6:***	Is the resistance 10 Ω or less?	Go to step **2**.	Go to step **3**.

	Step	Check	Yes	No
2	**CHECK MAIN WIRING HARNESS AND RELATED LINES.** With a tester connected, disconnect control module connectors in order. NOTE: Disconnect the body integrated unit at the end. ***Connector & terminal*** ***(i188) No. 5 — (i188) No. 6:***	Is there any control module whose condition has changed from short state?	Replace the control module whose resistance has changed. When the value changed at disconnecting the body integrated unit, replace the body integrated unit. <Ref. to SL-84, REMOVAL, Body Integrated Unit.> Go to step **3**.	Repair or replace the short circuit of the harness between body integrated unit and ECM.
3	**CHECK CONTROL MODULE.** 1) Disconnect the connectors of the body integrated unit and combination meter. 2) Using a tester, measure the resistance between control module terminals. ***Connector & terminal*** ***(B281) No. 15 — (B281) No. 31:*** ***(i10) No. 6 — (i10) No. 7:***	Is the resistance 114 — 126 Ω?	Go to step **4**.	Replace the control module whose end resistance value is out of the specified range.
4	**CHECK HARNESS.** Using the tester, check the short circuit of each harness. ***Connector & terminal*** ***(i10) No. 6 — (i10) No. 7:***	Is the resistance 1 MΩ or more?	CAN communication circuit is normal.	Go to step **5**.
5	**CHECK CONTROL MODULE.** With a tester connected, disconnect control modules in order. ***Connector & terminal*** ***(i10) No. 6 — (i10) No. 7:***	Are there any control modules whose resistance changed to 1 MΩ or more?	Replace the control module that has changed.	Repair or replace the harness part which has resistance component.

5. 62 Ω OR MORE

- MAIN-CAN

WIRING DIAGRAM:

NOTE:
For the coupling connector, refer to “WIRING SYSTEM”.
CAN communication system <Ref. to WI-132, WIRING DIAGRAM, CAN Communication System.>

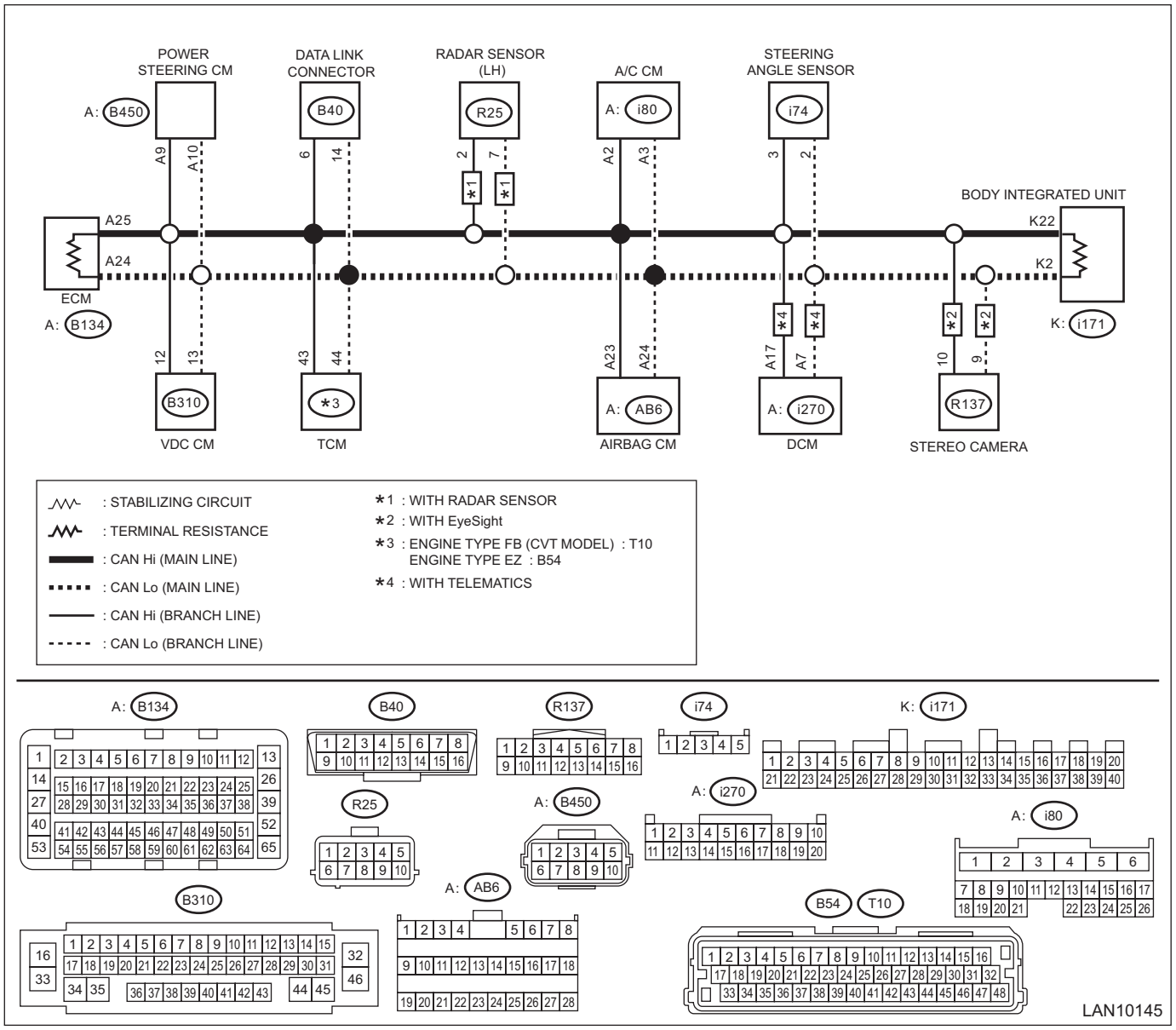

NOTE:
When the CAN communication circuit is measured, combined resistance of the end resistance (120 Ω) in ECM and the end resistance (120 Ω) in body integrated unit can be measured. The combined resistance is approximately 53 — 61 Ω with the stabilizing circuit included. When the measured resistance value is 62 Ω or more, either one of the end resistances, or stabilizing circuit, or main wiring harness may have malfunction such as open circuit.

	Step	Check	Yes	No
1	**CHECK CONTROL MODULE.** 1) Disconnect the connectors of ECM and body integrated unit. 2) Using a tester, measure the resistance between control module terminals. ***Connector & terminal*** ***(B134) No. 24 — (B134) No. 25:*** ***(i171) No. 2 — (i171) No. 22:***	Is the resistance 114 — 126 Ω?	Go to step **2**.	Replace the control module whose value is out of the specification.
2	**CHECK HARNESS.** Using a tester, check continuity between terminals. ***Connector & terminal*** ***(B40) No. 6 — (B134) No. 25:*** ***(B40) No. 14 — (B134) No. 24:*** ***(B40) No. 6 — (i171) No. 22:*** ***(B40) No. 14 — (i171) No. 2:***	Is there continuity?	Go to step **3**.	Repair or replace the open circuit of harness.
3	**CHECK HARNESS.** 1) Disconnect the combination meter connector. 2) Using a tester, check continuity between terminals. ***Connector & terminal*** ***(B281) No. 31 — (i10) No. 6:*** ***(B281) No. 15 — (i10) No. 7:***	Is there continuity?	It is possible that temporary poor communication occurs.	Repair or replace the open circuit of harness.

- BODY-CAN

WIRING DIAGRAM:

NOTE:
For the coupling connector, refer to “WIRING SYSTEM”.
CAN communication system <Ref. to WI-132, WIRING DIAGRAM, CAN Communication System.>

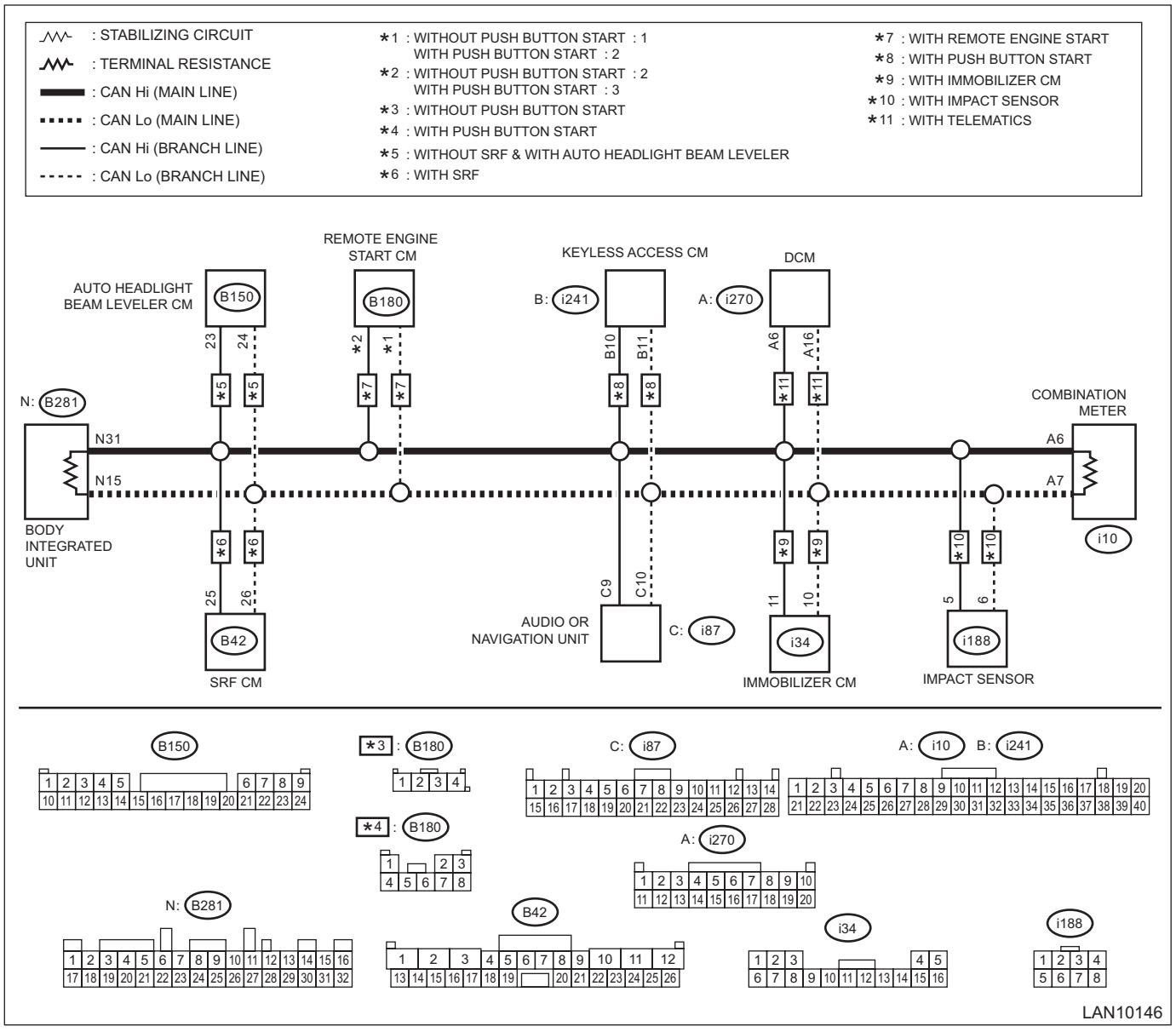

NOTE:
When the CAN communication circuit is measured, combined resistance of the end resistance (120 Ω) in body integrated unit and the end resistance (120 Ω) in combination meter can be measured. The combined resistance is approximately 53 — 61 Ω with the stabilizing circuit included. When the measured resistance value is 62 Ω or more, either one of the end resistances, or stabilizing circuit, or main wiring harness may have malfunction such as open circuit.

	Step	Check	Yes	No
1	**CHECK CONTROL MODULE.** 1) Disconnect the connectors of the body integrated unit and combination meter. 2) Using a tester, measure the resistance between control module terminals. ***Connector & terminal*** ***(B281) No. 15 — (B281) No. 31:*** ***(i10) No. 6 — (i10) No. 7:***	Is the resistance 114 — 126 Ω?	Go to step **2**.	Replace the control module whose value is out of the specification.
2	**CHECK HARNESS.** Using a tester, check continuity between terminals. ***Connector & terminal*** ***(B40) No. 6 — (B134) No. 25:*** ***(B40) No. 14 — (B134) No. 24:*** ***(B40) No. 6 — (i171) No. 22:*** ***(B40) No. 14 — (i171) No. 2:***	Is there continuity?	Go to step **3**.	Repair or replace the open circuit of harness.
3	**CHECK HARNESS.** 1) Disconnect the combination meter connector. 2) Using a tester, check continuity between terminals. ***Connector & terminal*** ***(B281) No. 31 — (i10) No. 6:*** ***(B281) No. 15 — (i10) No. 7:***	Is there continuity?	It is possible that temporary poor communication occurs.	Repair or replace the open circuit of harness.

6. RELATED LINES 53 — 61 Ω (TCM)

WIRING DIAGRAM:

NOTE:
For the coupling connector, refer to “WIRING SYSTEM”.
CAN communication system <Ref. to WI-132, WIRING DIAGRAM, CAN Communication System.>

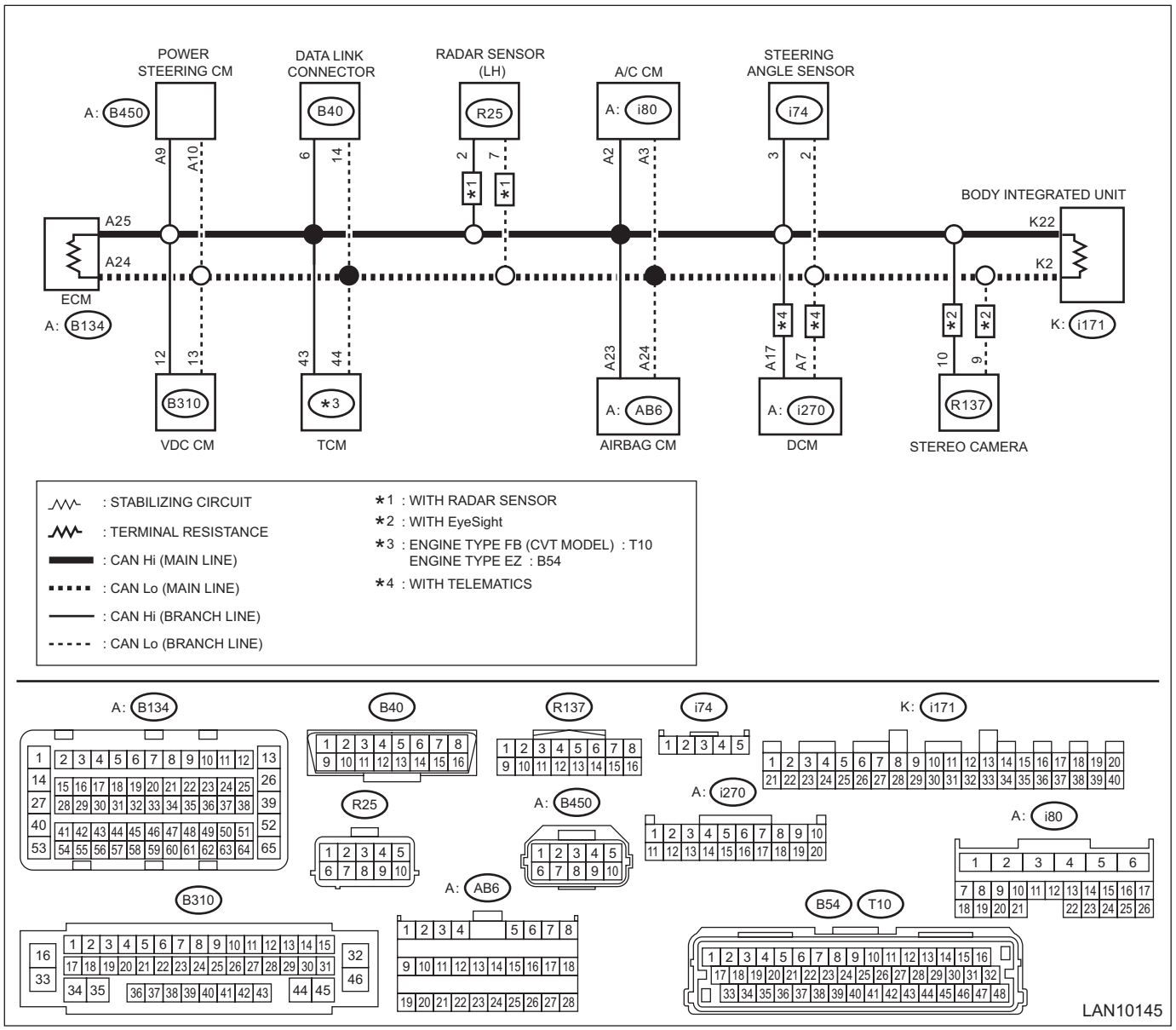

NOTE:
Perform inspection when no data is received, or faulty is detected. This is different from power supply shorted or ground shorted.

	Step	Check	Yes	No
1	**CHECK BETWEEN RELATED LINES AND MAIN WIRING HARNESS.** 1) Disconnect the TCM connector. 2) Using the tester, measure the resistance between terminals. ***Connector & terminal*** ***Engine type: EZ*** ***(B54) No. 43 — (B54) No. 44:*** ***Engine type: FB*** ***(T10) No. 43 — (T10) No. 44:***	Is the resistance 400 Ω or more?	Related lines between TCM and main wiring harness is open, or main wiring harness is open at two places or more.	Go to step **2**.
2	**CHECK RELATED LINES.** Using the tester, measure the resistance between terminals. ***Connector & terminal*** ***Engine type: EZ*** ***(B54) No. 44 — (B40) No. 14:*** ***(B54) No. 43 — (B40) No. 6:*** ***Engine type: FB*** ***(T10) No. 44 — (B40) No. 14:*** ***(T10) No. 43 — (B40) No. 6:***	Is the resistance 10 Ω or more?	Repair or replace the open circuit of TCM related lines.	Check DTC of TCM. <Ref. to CVT(diag)-25, OPERATION, Read Diagnostic Trouble Code (DTC).>

7. RELATED LINES 53 — 61 Ω (STEERING ANGLE SENSOR)

WIRING DIAGRAM:

NOTE:
For the coupling connector, refer to “WIRING SYSTEM”.
CAN communication system <Ref. to WI-132, WIRING DIAGRAM, CAN Communication System.>

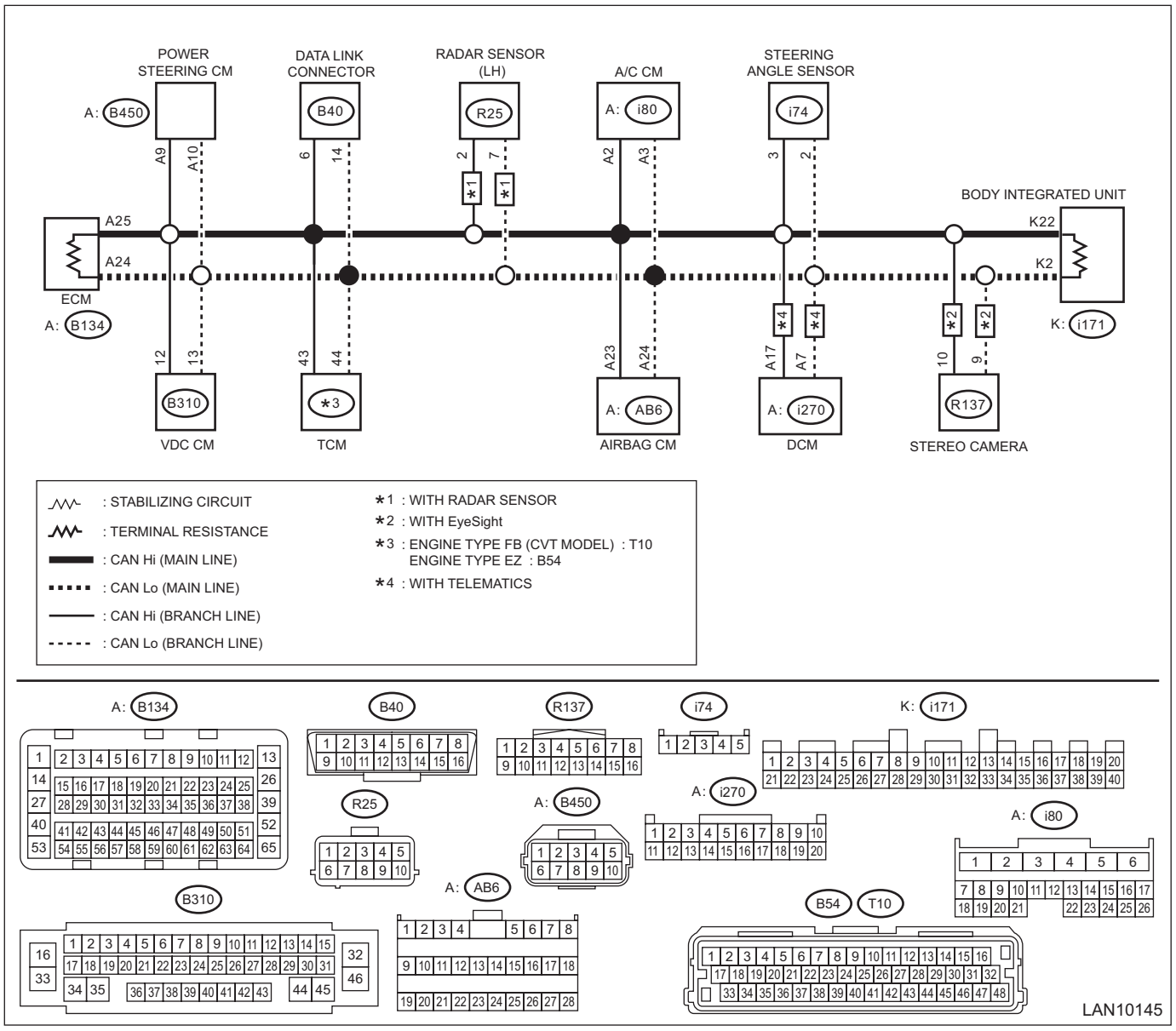

Step		Check	Yes	No
1	**CHECK BETWEEN RELATED LINES AND MAIN WIRING HARNESS.** 1) Disconnect the steering angle sensor connector. 2) Using the tester, measure the resistance between terminals. ***Connector & terminal*** ***(i74) No. 2 — No. 3:***	Is the resistance 400 Ω or more?	Related lines between steering angle sensor and main wiring harness is open, or main wiring harness is open at two places or more.	Go to step **2**.

Step		Check	Yes	No
2	**CHECK RELATED LINES.** Using the tester, measure the resistance between terminals. ***Connector & terminal*** ***(i74) No. 2 — (B40) No. 14:*** ***(i74) No. 3 — (B40) No. 6:***	Is the resistance 10 Ω or more?	Repair or replace the open circuit of steering angle sensor related lines.	Check DTC of VDC CM. <Ref. to VDC(diag)-25, OPERATION, Read Diagnostic Trouble Code (DTC).>

8. RELATED LINE 53 — 61 Ω (A/C CONTROL MODULE)

WIRING DIAGRAM:

NOTE:
For the coupling connector, refer to “WIRING SYSTEM”.
CAN communication system <Ref. to WI-132, WIRING DIAGRAM, CAN Communication System.>

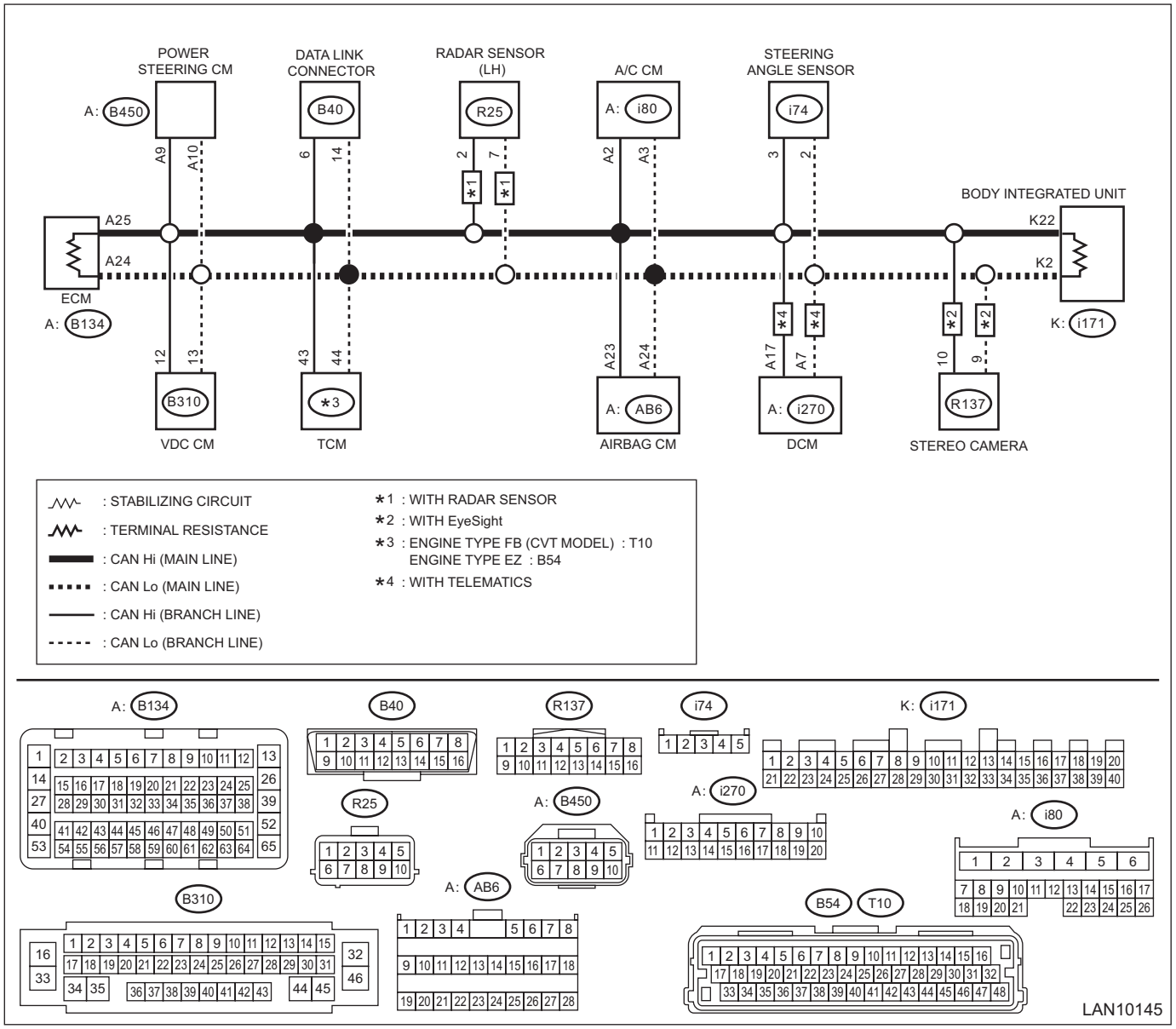

	Step	Check	Yes	No
1	**CHECK BETWEEN RELATED LINES AND MAIN WIRING HARNESS.** 1) Disconnect the A/C control module connector. 2) Using the tester, measure the resistance between terminals. ***Connector & terminal*** ***(i80) No. 2 — No. 3:***	Is the resistance 400 Ω or more?	Related lines between A/C control module and main wiring harness is open, or main wiring harness is open at two places or more.	Go to step **2**.
2	**CHECK RELATED LINES.** Using the tester, measure the resistance between terminals. ***Connector & terminal*** ***(i80) No. 2 — (B40) No. 6:*** ***(i80) No. 3 — (B40) No. 14:***	Is the resistance 10 Ω or more?	Repair or replace the open circuit of A/C control module related lines.	Check the DTC of A/C control module. <Ref. to AC(diag)-43, Read Diagnostic Trouble Code (DTC).>

9. RELATED LINES 53 — 61 Ω (POWER STEERING CM)

WIRING DIAGRAM:

NOTE:
For the coupling connector, refer to “WIRING SYSTEM”.
CAN communication system <Ref. to WI-132, WIRING DIAGRAM, CAN Communication System.>

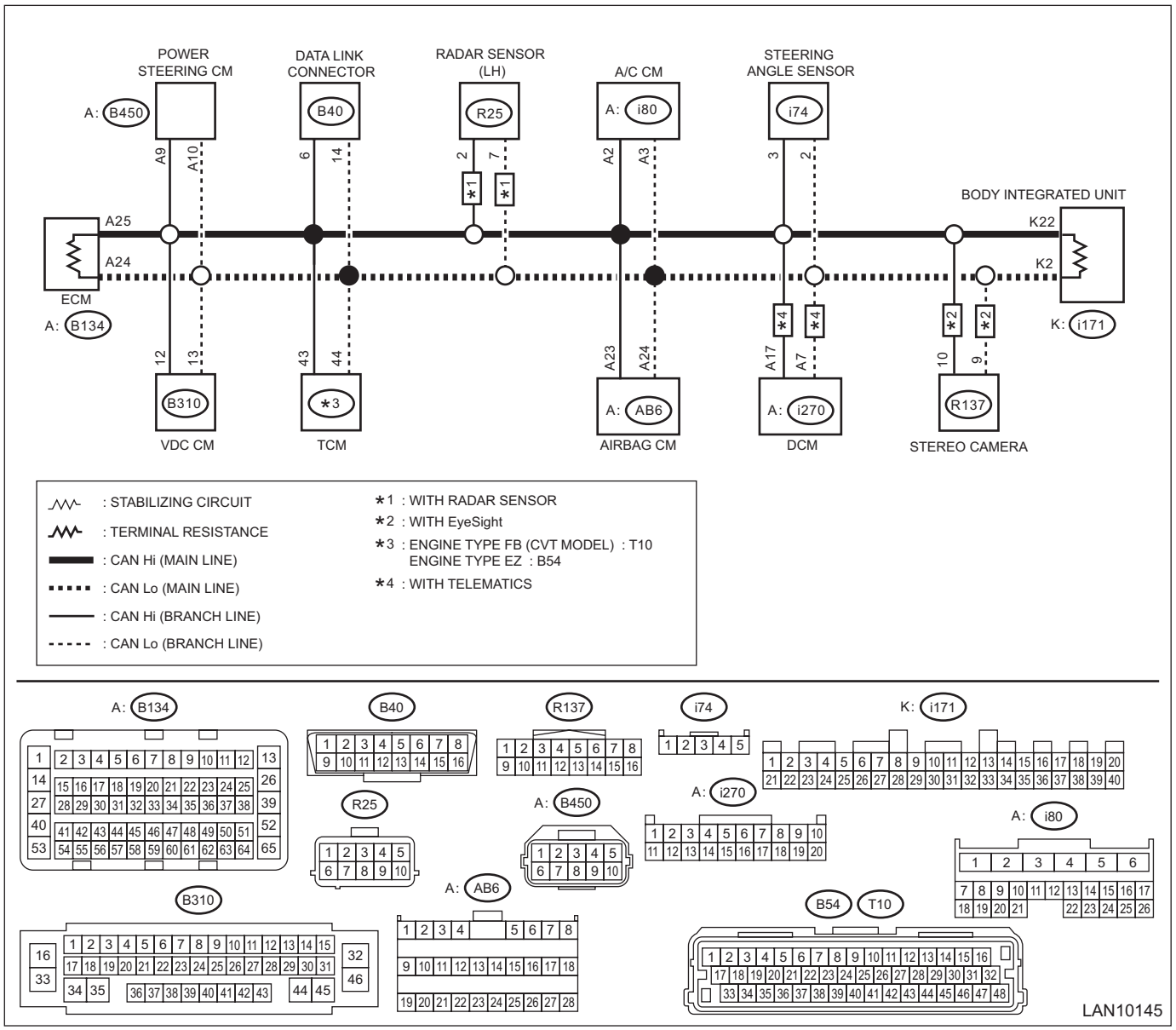

Step		Check	Yes	No
1	**CHECK BETWEEN RELATED LINES AND MAIN WIRING HARNESS.** 1) Disconnect the power steering CM connector. 2) Using the tester, measure the resistance between terminals. ***Connector & terminal (B450) No. 9 — No. 10:***	Is the resistance 400 Ω or more?	Related lines or main wiring harness between power steering CM and main wiring harness is open at two places or more.	Go to step **2**.

Step		Check	Yes	No
2	**CHECK RELATED LINES.** Using the tester, measure the resistance between terminals. ***Connector & terminal*** ***(B450) No. 9 — (B40) No. 6:*** ***(B450) No. 10 — (B40) No. 14:***	Is the resistance 10 Ω or more?	Repair or replace the open circuit portion of power steering CM related lines.	Check DTC of power steering CM. <Ref. to PS(diag)-15, OPERATION, Read Diagnostic Trouble Code (DTC).>

10.RELATED LINES 53 — 61 Ω (COMBINATION METER)

WIRING DIAGRAM:

NOTE:
For the coupling connector, refer to “WIRING SYSTEM”.
CAN communication system <Ref. to WI-132, WIRING DIAGRAM, CAN Communication System.>

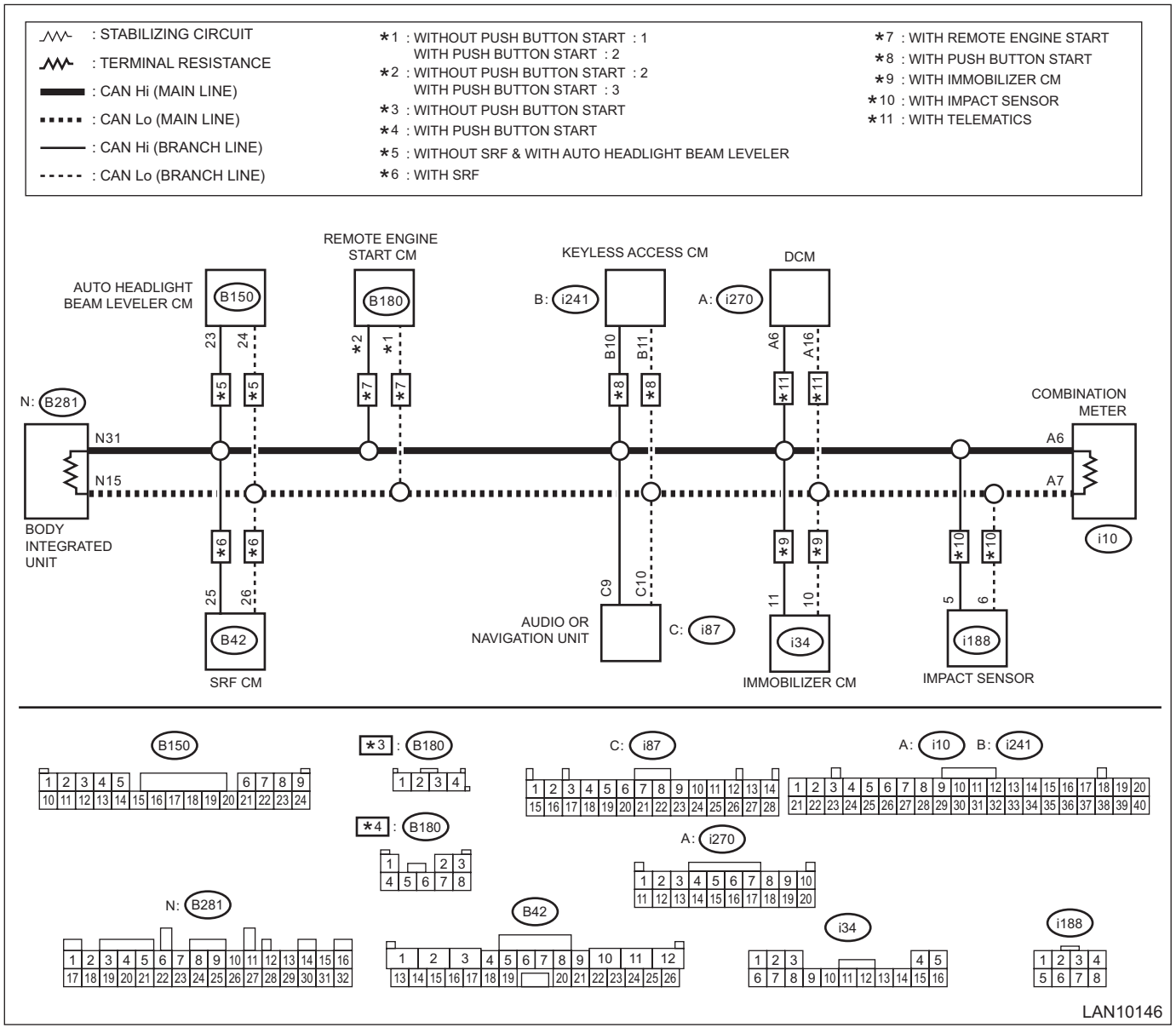

	Step	Check	Yes	No
1	**CHECK BETWEEN RELATED LINES AND MAIN WIRING HARNESS.** 1) Disconnect the combination meter connector. 2) Using the tester, measure the resistance between terminals. ***Connector & terminal*** ***(i10) No. 6 — No. 7:***	Is the resistance 400 Ω or more?	Related lines between combination meter and main wiring harness is open, or main wiring harness is open at two places or more.	Go to step **2**.
2	**CHECK RELATED LINES.** Using the tester, measure the resistance between terminals. ***Connector & terminal*** ***(i10) No. 6 — (i188) No. 5:*** ***(i10) No. 7 — (i188) No. 6:***	Is the resistance 10 Ω or more?	Repair or replace the open circuit of combination meter related lines.	Check DTC of combination meter. <Ref. to MET(diag)-10, OPERATION, Read Diagnostic Trouble Code (DTC).>

11.RELATED LINES 53 — 61 Ω (INFOTAINMENT SYSTEM)

WIRING DIAGRAM:

NOTE:
For the coupling connector, refer to “WIRING SYSTEM”.
CAN communication system <Ref. to WI-132, WIRING DIAGRAM, CAN Communication System.>

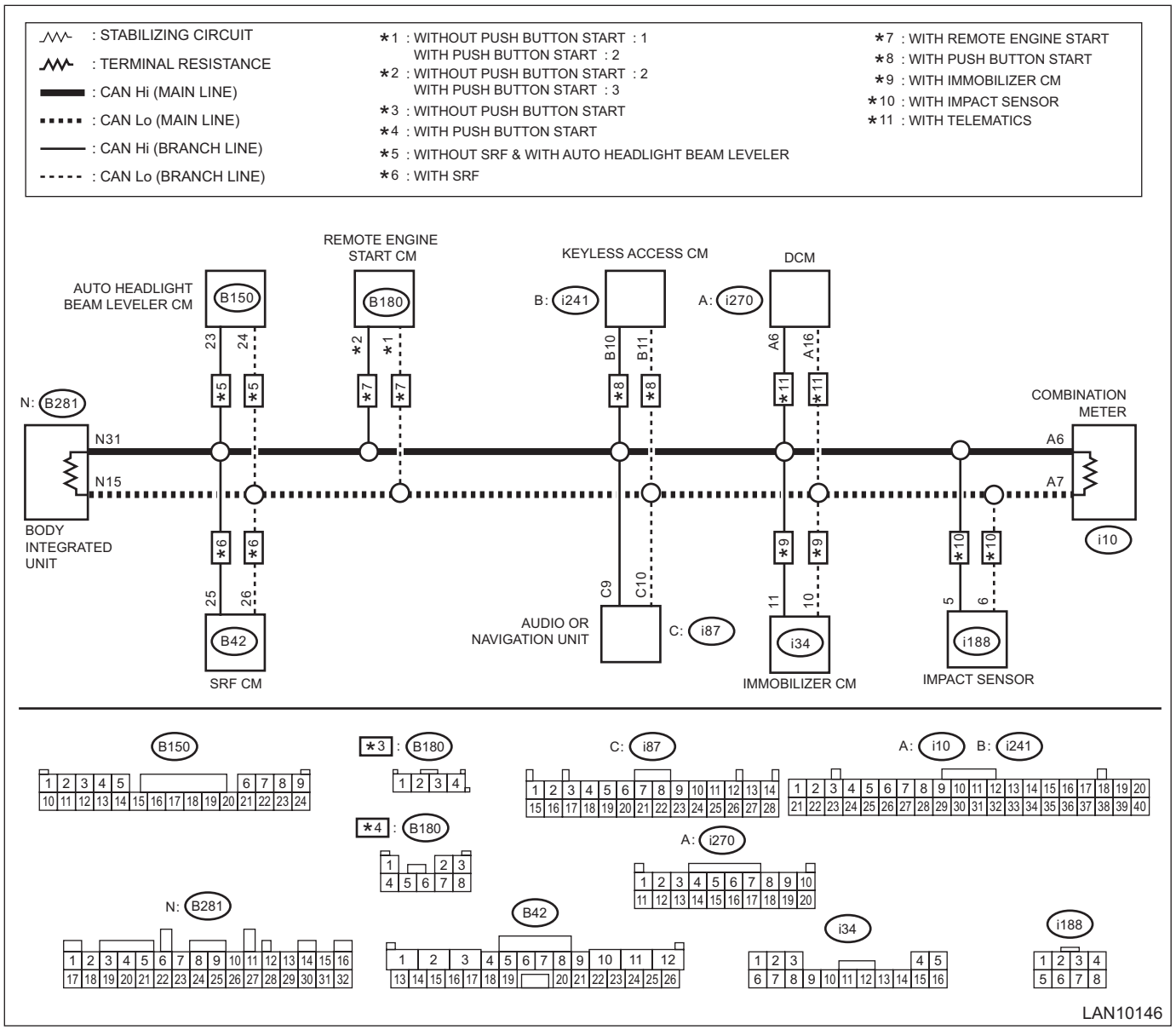

Step		Check	Yes	No
1	**CHECK BETWEEN RELATED LINES AND MAIN WIRING HARNESS.** 1) Disconnect the audio or navigation unit connector. 2) Using the tester, measure the resistance between terminals. ***Connector & terminal (i87) No. 9 — No. 10:***	Is the resistance 400 Ω or more?	Related lines between audio or navigation unit and main wiring harness is open, or main wiring harness is open at two places or more.	Go to step **2**.

Step		Check	Yes	No
2	**CHECK RELATED LINES.** Using the tester, measure the resistance between terminals. ***Connector & terminal*** ***(i87) No. 9 — (i188) No. 5:*** ***(i87) No. 10 — (i188) No. 6:***	Is the resistance 10 Ω or more?	Repair or replace the open circuit of audio or navigation unit related lines.	Check DTC of infotainment system. <Ref. to INF(diag)-18, OPERATION, Read Diagnostic Trouble Code (DTC).>

12.RELATED LINES 53 — 61 Ω (AIRBAG CM SYSTEM)

WIRING DIAGRAM:

NOTE:
For the coupling connector, refer to “WIRING SYSTEM”.
CAN communication system <Ref. to WI-132, WIRING DIAGRAM, CAN Communication System.>

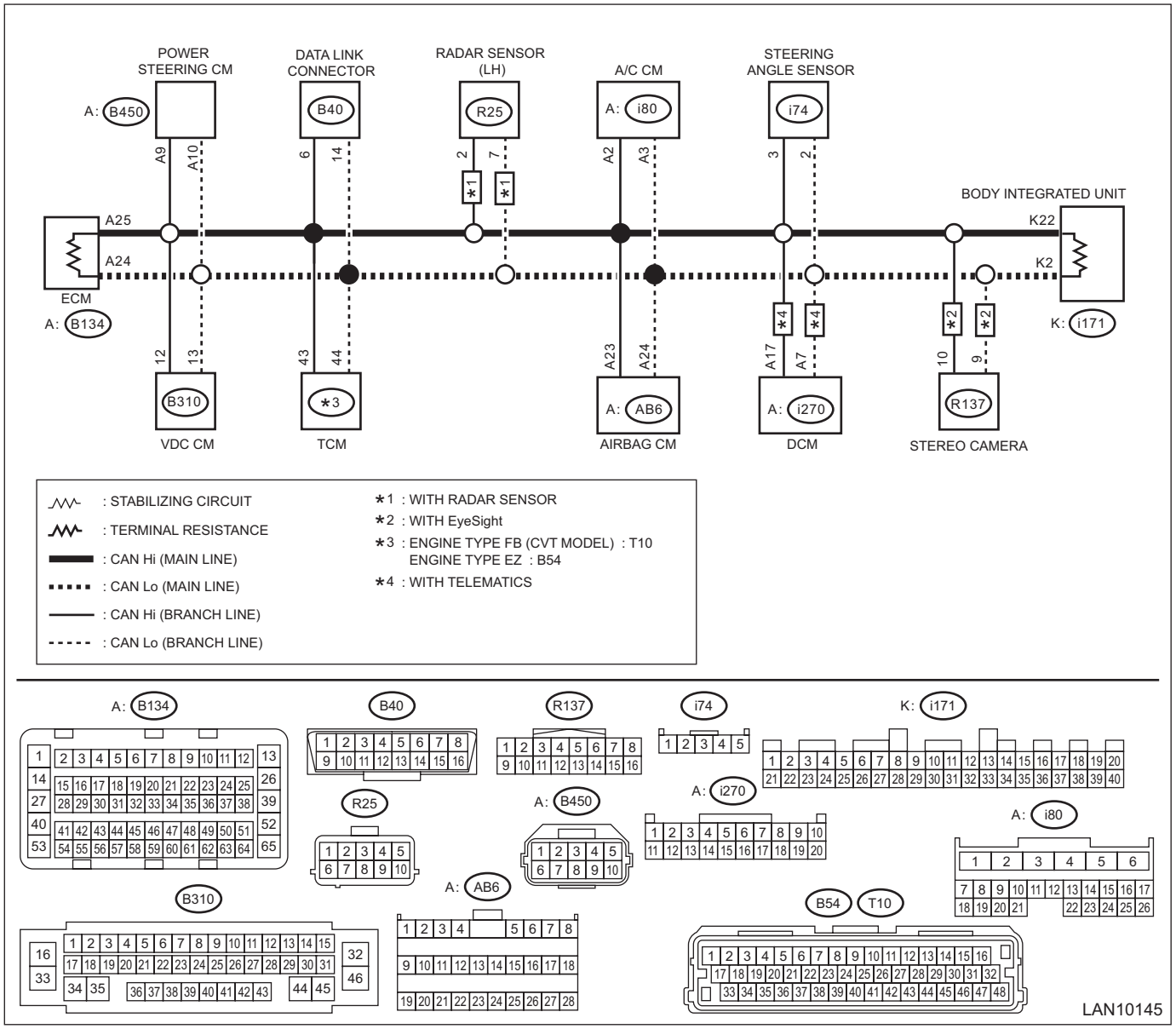

	Step	Check	Yes	No
1	**CHECK BETWEEN RELATED LINES AND MAIN WIRING HARNESS.** 1) Disconnect the airbag CM connector. 2) Using the tester, measure the resistance between terminals. ***Connector & terminal*** ***(AB6) No. 23 — No. 24:***	Is the resistance 400 Ω or more?	Related lines between airbag CM and main wiring harness is open, or main wiring harness is open at two places or more.	Go to step **2**.
2	**CHECK RELATED LINES.** Using the tester, measure the resistance between terminals. ***Connector & terminal*** ***(AB6) No. 23 — (B40) No. 6:*** ***(AB6) No. 24 — (B40) No. 14:***	Is the resistance 10 Ω or more?	Repair or replace the open circuit portion of airbag CM related lines.	Check DTC of airbag CM. <Ref. to AB(diag)-30, OPERATION, Read Diagnostic Trouble Code (DTC).>

13.RELATED LINES 53 — 61 Ω (KEYLESS ACCESS SYSTEM)

WIRING DIAGRAM:

NOTE:
For the coupling connector, refer to “WIRING SYSTEM”.
CAN communication system <Ref. to WI-132, WIRING DIAGRAM, CAN Communication System.>

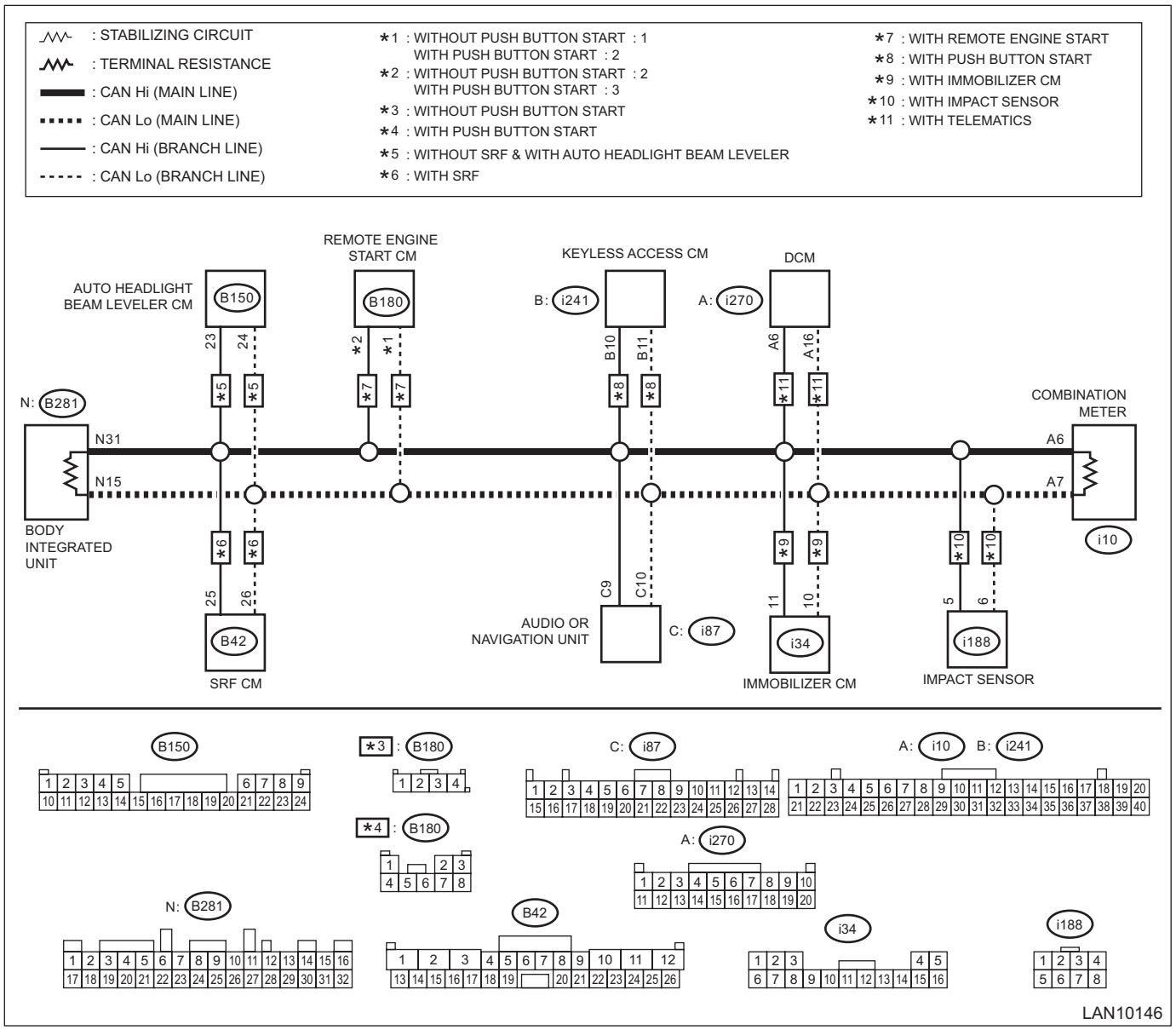

Step		Check	Yes	No
1	**CHECK BETWEEN RELATED LINES AND MAIN WIRING HARNESS.** 1) Disconnect the keyless access CM connector. 2) Using the tester, measure the resistance between terminals. ***Connector & terminal*** ***(i241) No. 10 — No. 11:***	Is the resistance 400 Ω or more?	Related lines between keyless access CM and main wiring harness is open, or main wiring harness is open at two places or more.	Go to step **2**.

Step		Check	Yes	No
2	**CHECK RELATED LINES.** Using the tester, measure the resistance between terminals. ***Connector & terminal*** ***(i241) No. 10 — (i188) No. 5:*** ***(i241) No. 11 — (i188) No. 6:***	Is the resistance 10 Ω or more?	Repair or replace the open circuit of keyless access CM related lines.	Check DTC of keyless access CM. <Ref. to KPS(diag)-24, OPERATION, Read Diagnostic Trouble Code (DTC).>

14.RELATED LINES 53 — 61 Ω (HEADLIGHT BEAM LEVELER OR SRF)

WIRING DIAGRAM:

NOTE:
For the coupling connector, refer to “WIRING SYSTEM”.
CAN communication system <Ref. to WI-132, WIRING DIAGRAM, CAN Communication System.>

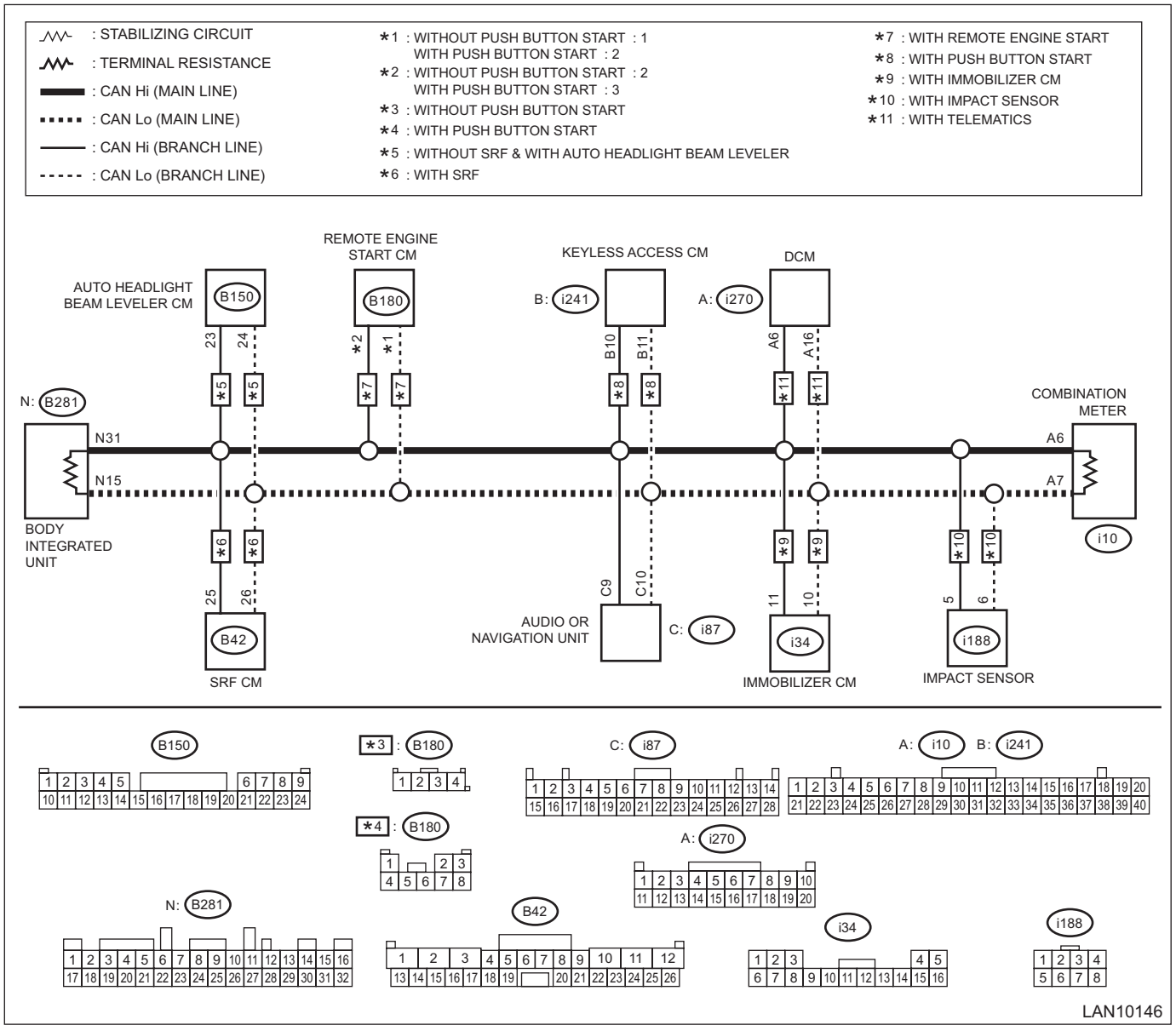

	Step	Check	Yes	No
1	**CHECK BETWEEN RELATED LINES AND MAIN WIRING HARNESS.** 1) Disconnect the headlight beam leveler CM connector or SRF CM connector. 2) Using the tester, measure the resistance between terminals. ***Connector & terminal*** ***Without SRF*** ***(B150) No. 23 — No. 24:*** ***With SRF*** ***(B42) No. 25 — No. 26:***	Is the resistance 400 Ω or more?	Related lines between headlight beam leveler CM or SRF CM and main wiring harness is open, or main wiring harness is open at two places or more.	Go to step **2**.
2	**CHECK RELATED LINES.** Using the tester, measure the resistance between terminals. ***Connector & terminal*** ***Without SRF*** ***(B150) No. 24 — (i188) No. 6:*** ***(B150) No. 23 — (i188) No. 5:*** ***With SRF*** ***(B42) No. 26 — (i188) No. 6:*** ***(B42) No. 25 — (i188) No. 5:***	Is the resistance 10 Ω or more?	Repair or replace the open circuit of headlight beam leveler or SRF related lines.	Check DTC of headlight beam leveler system. <Ref. to AL(diag)-11, OPERATION, Read Diagnostic Trouble Code (DTC).> <Ref. to SRF(diag)-11, OPERATION, Read Diagnostic Trouble Code (DTC).>

15.RELATED LINES 53 — 61 Ω (REMOTE ENGINE STARTER)

WIRING DIAGRAM:

NOTE:
For the coupling connector, refer to “WIRING SYSTEM”.
CAN communication system <Ref. to WI-132, WIRING DIAGRAM, CAN Communication System.>

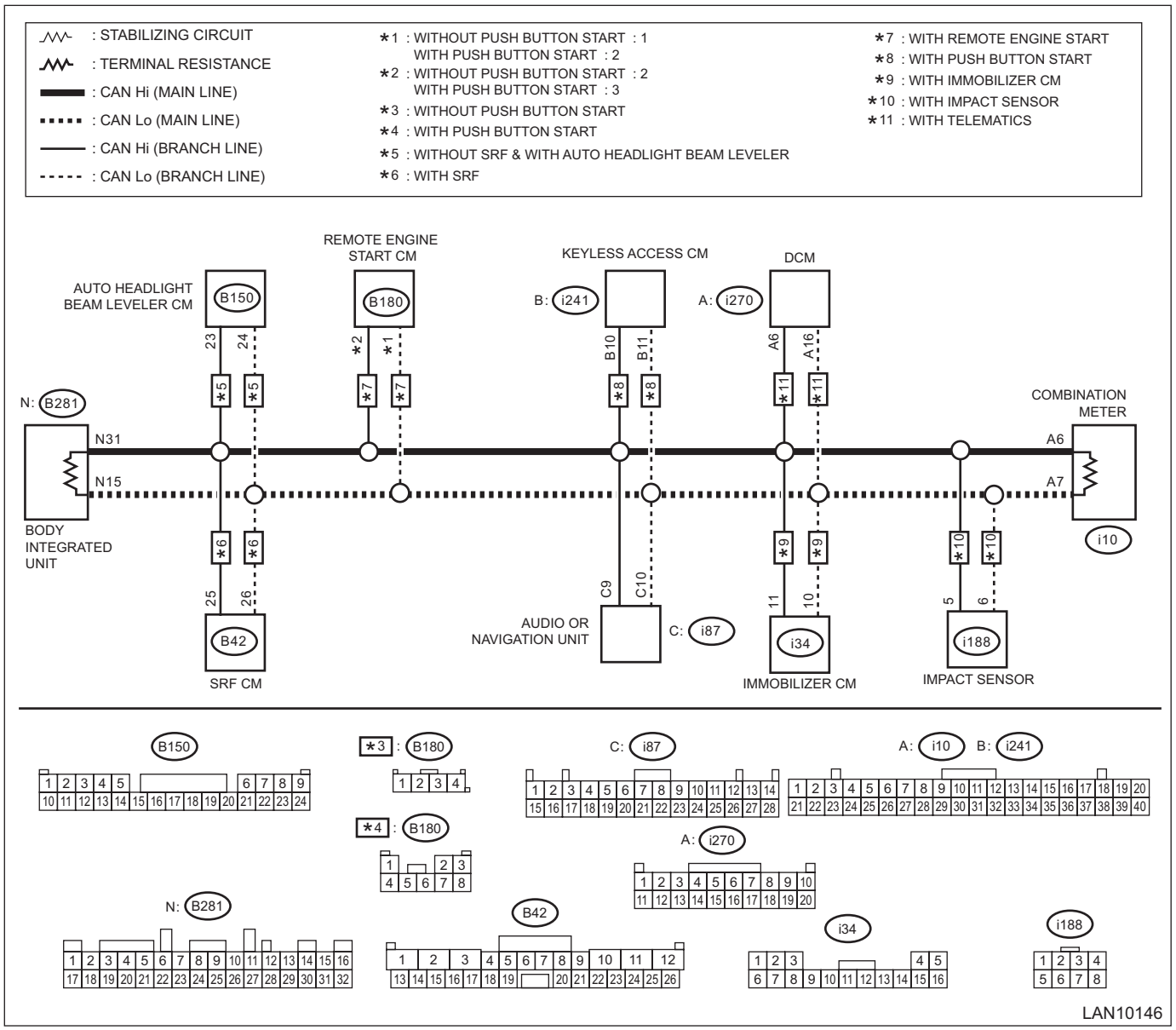

Step		Check	Yes	No
1	**CHECK BETWEEN RELATED LINES AND MAIN WIRING HARNESS.** 1) Disconnect the remote engine start CM connector. 2) Using the tester, measure the resistance between terminals. ***Connector & terminal*** ***Without push button start (B180) No. 1 — No. 2:*** ***With push button start (B180) No. 2 — No. 3:***	Is the resistance 400 Ω or more?	Related lines between remote engine start CM and main wiring harness is open, or main wiring harness is open at two places or more.	Go to step **2**.

Step		Check	Yes	No
2	**CHECK RELATED LINES.** Using the tester, measure the resistance between terminals. ***Connector & terminal*** ***Without push button start*** ***(B180) No. 1 — (i188) No. 6:*** ***(B180) No. 2 — (i188) No. 5:*** ***With push button start*** ***(B180) No. 2 — (i188) No. 6:*** ***(B180) No. 3 — (i188) No. 5:***	Is the resistance 10 Ω or more?	Repair or replace the open circuit of remote engine start CM related lines.	The communication harness is normal. Check the remote engine starter CM or the mobile key.

16.RELATED LINES 53 — 61 Ω (IMPACT SENSOR SYSTEM)

WIRING DIAGRAM:

NOTE:
For the coupling connector, refer to “WIRING SYSTEM”.
CAN communication system <Ref. to WI-132, WIRING DIAGRAM, CAN Communication System.>

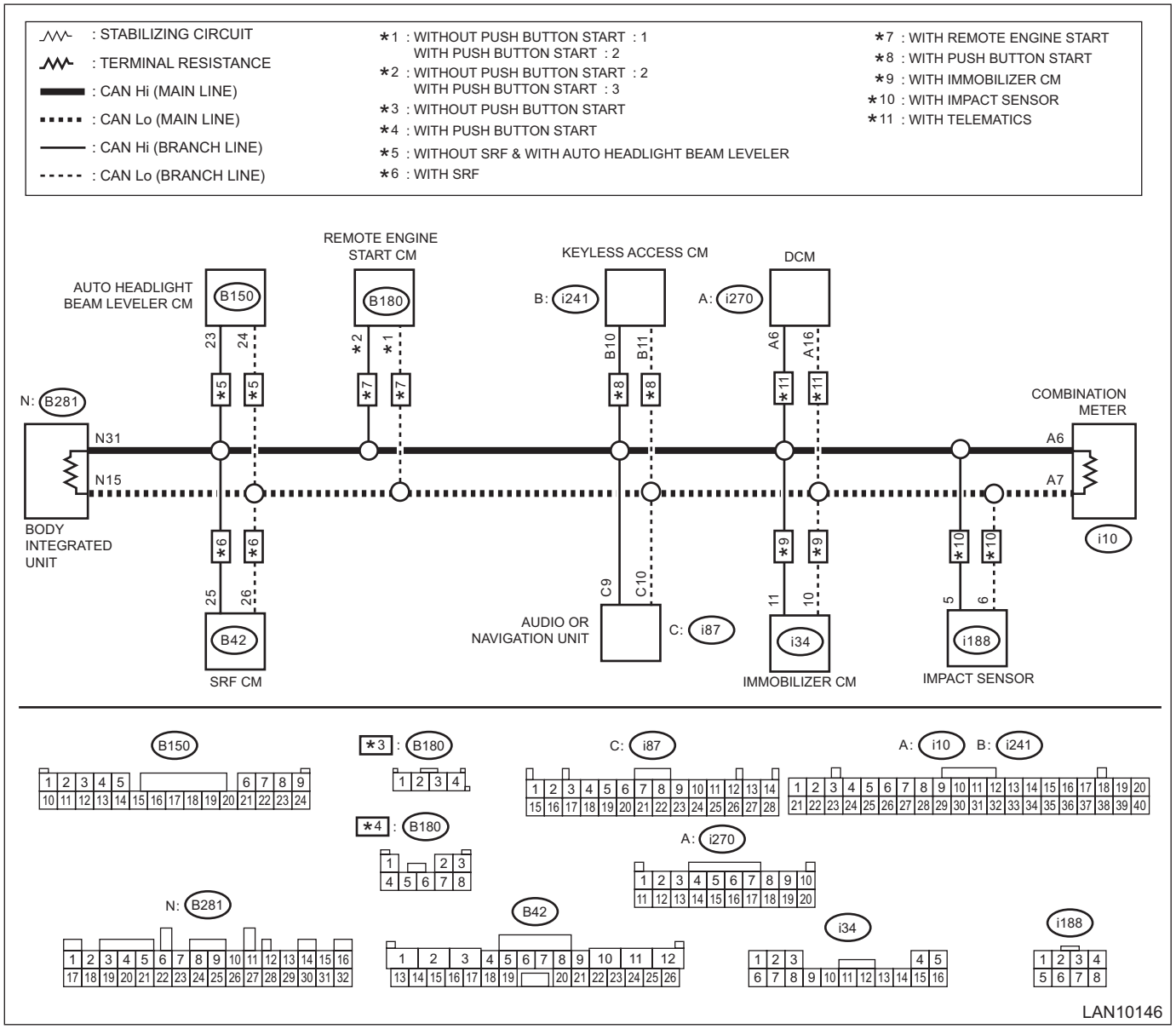

	Step	Check	Yes	No
1	**CHECK BETWEEN RELATED LINES AND MAIN WIRING HARNESS.** 1) Disconnect the impact sensor connector. 2) Using the tester, measure the resistance between terminals. ***Connector & terminal*** ***(i188) No. 5 — No. 6:***	Is the resistance 400 Ω or more?	Related lines between the impact sensor and main wiring harness is open, or main wiring harness is open at two places or more.	Go to step **2**.
2	**CHECK RELATED LINES.** Using the tester, measure the resistance between terminals. ***Connector & terminal*** ***(i188) No. 6 — (B281) No. 31:*** ***(i188) No. 5 — (B281) No. 15:***	Is the resistance 10 Ω or more?	Repair or replace the open circuit of the impact sensor system related lines.	The communication harness is normal. Check the impact sensor.

17.RELATED LINES 53 — 61 Ω (BSD/RCTA)

WIRING DIAGRAM:

NOTE:
For the coupling connector, refer to “WIRING SYSTEM”.
CAN communication system <Ref. to WI-132, WIRING DIAGRAM, CAN Communication System.>

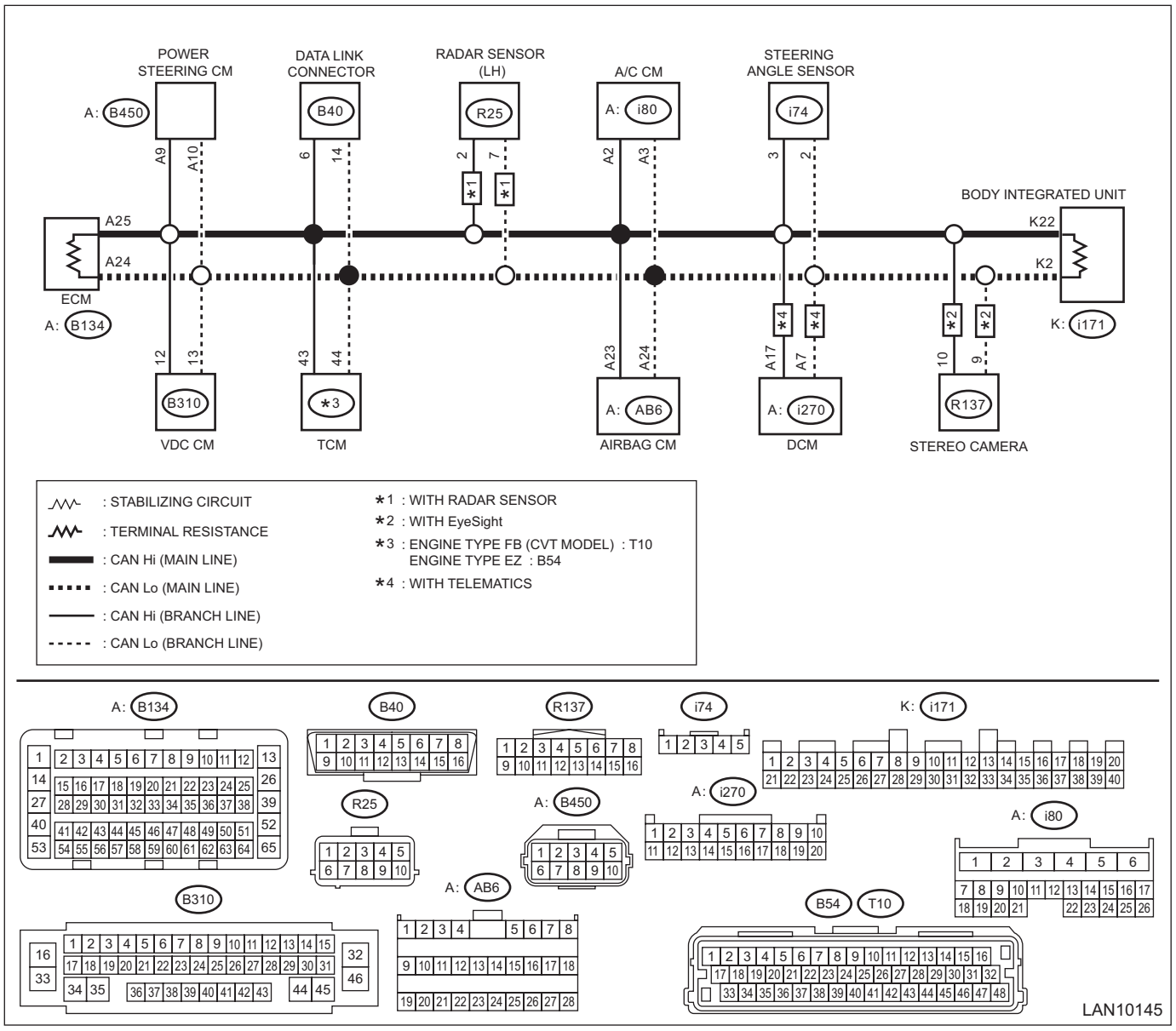

Step		Check	Yes	No
1	**CHECK BETWEEN RELATED LINES AND MAIN WIRING HARNESS.** 1) Disconnect the radar sensor LH connector. 2) Using the tester, measure the resistance between terminals. ***Connector & terminal (R25) No. 2 — No. 7:***	Is the resistance 400 Ω or more?	Related lines between radar sensor LH and main wiring harness is open, or main wiring harness is open at two places or more.	Go to step **2**.

Step		Check	Yes	No
2	**CHECK RELATED LINES.** Using the tester, measure the resistance between terminals. ***Connector & terminal*** ***(B25) No. 2 — (B40) No. 6:*** ***(R25) No. 7 — (B40) No. 14:***	Is the resistance 10 Ω or more?	Repair or replace the open circuit of the Subaru Rear Vehicle Detection related lines.	The communication harness is normal. Check DTC of radar sensor. <Ref. to RVD(diag)-13, OPERATION, Read Diagnostic Trouble Code (DTC).>

18.RELATED LINE 53 — 61 Ω (STEREO CAMERA)

WIRING DIAGRAM:

NOTE:
For the coupling connector, refer to “WIRING SYSTEM”.
CAN communication system <Ref. to WI-132, WIRING DIAGRAM, CAN Communication System.>

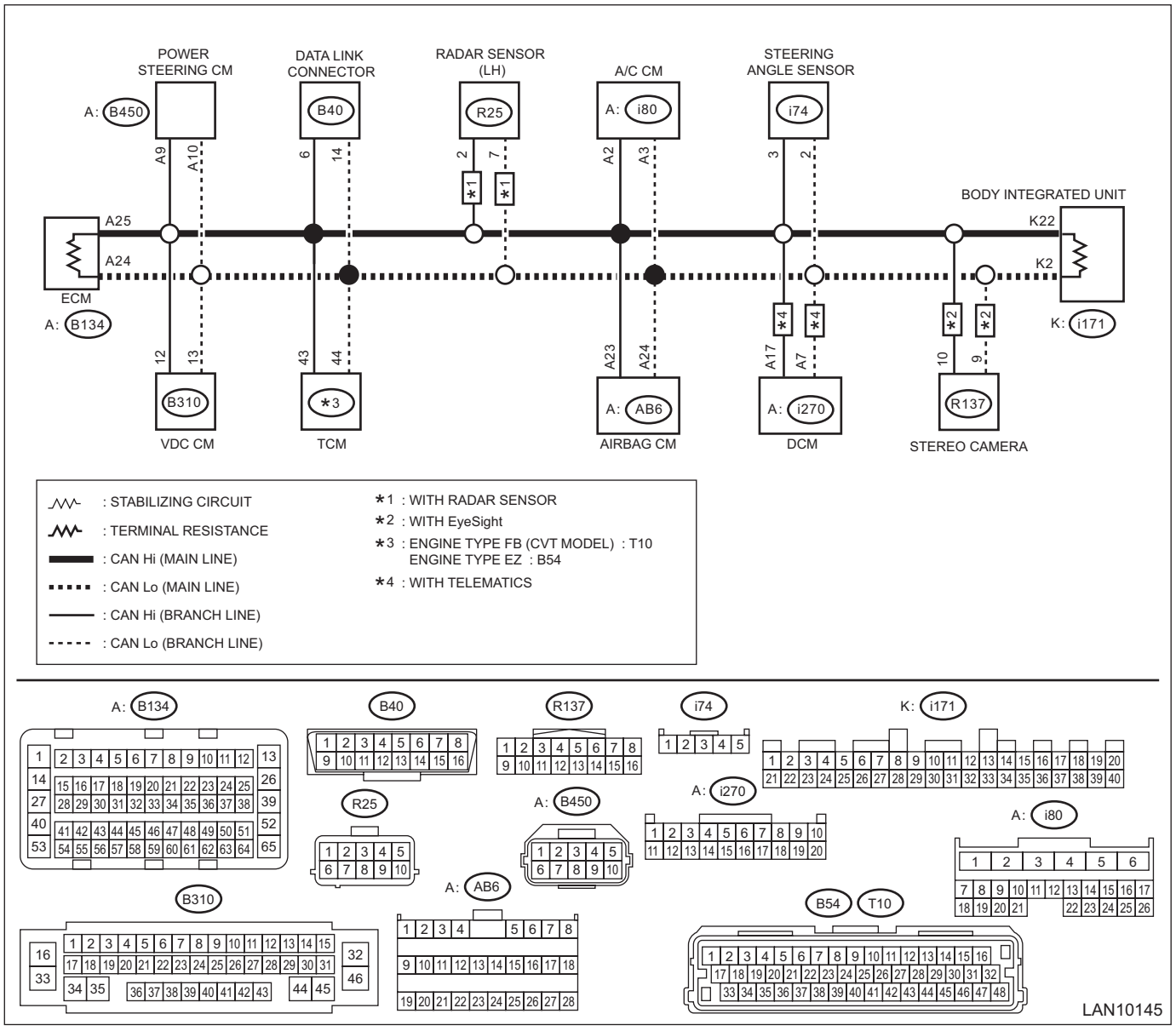

	Step	Check	Yes	No
1	**CHECK BETWEEN RELATED LINES AND MAIN WIRING HARNESS.** 1) Disconnect the stereo camera connector. 2) Using the tester, measure the resistance between terminals. ***Connector & terminal*** ***(R137) No. 10 — No. 9:***	Is the resistance 400 Ω or more?	Related lines between stereo camera and main wiring harness is open, or main wiring harness is open at two places or more.	Go to step **2**.
2	**CHECK RELATED LINES.** Using the tester, measure the resistance between terminals. ***Connector & terminal*** ***(R137) No. 9 — (B40) No. 14:*** ***(R137) No. 10 — (B40) No. 6:***	Is the resistance 10 Ω or more?	Repair or replace the open circuit of stereo camera related lines.	Check DTC of stereo camera. <Ref. to ES(diag)-42, Diagnostic Code(s) Display.>

19.RELATED LINES 53 — 61 Ω (IMMOBILIZER SYSTEM)

WIRING DIAGRAM:

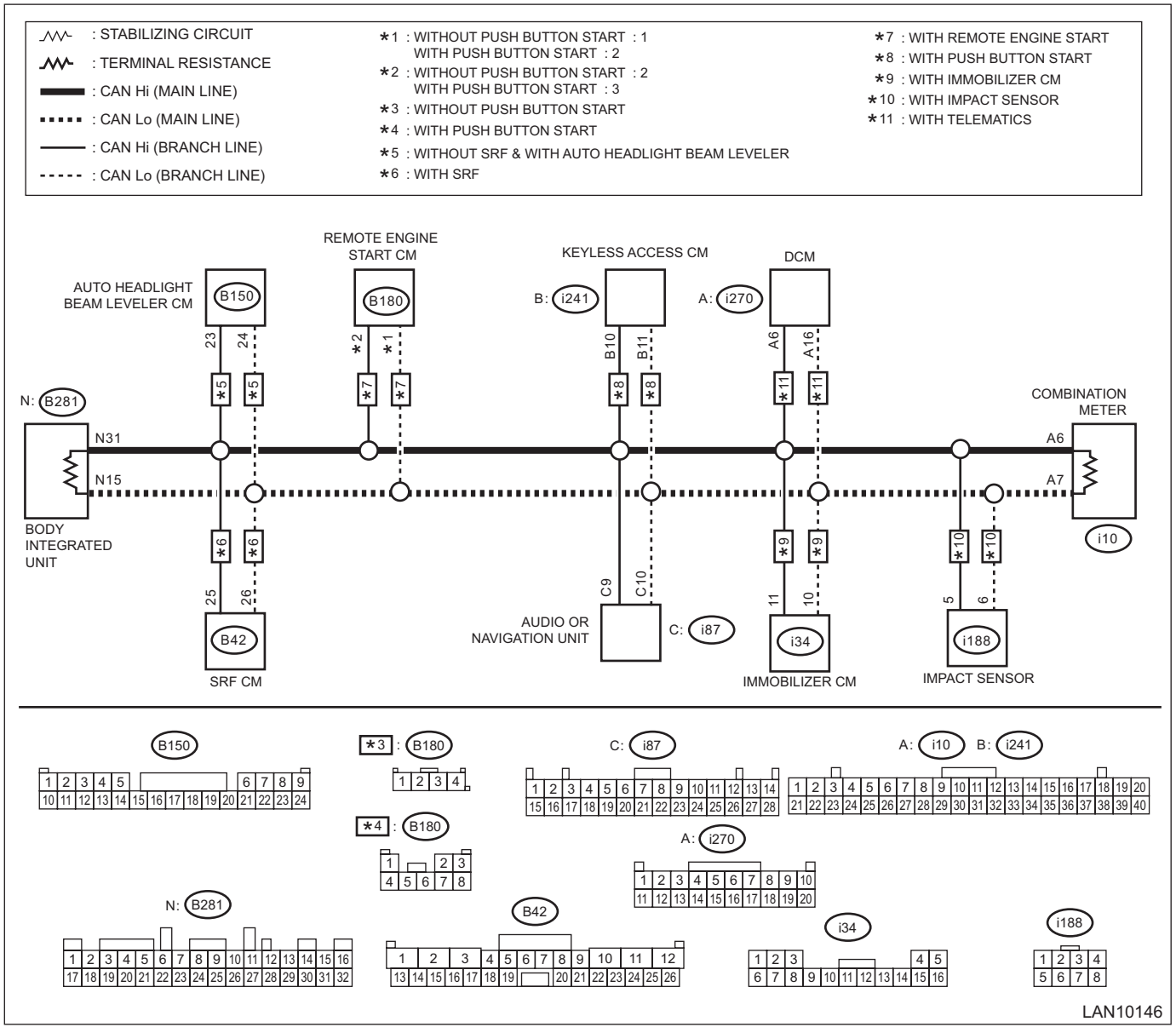

	Step	Check	Yes	No
1	**CHECK BETWEEN RELATED LINES AND MAIN WIRING HARNESS.** 1) Disconnect the immobilizer CM connector. 2) Using the tester, measure the resistance between terminals. ***Connector & terminal*** ***(i34) No. 10 — No. 11:***	Is the resistance 400 Ω or more?	Related lines between immobilizer CM and main wiring harness is open, or main wiring harness is open at two places or more.	Go to step **2**.
2	**CHECK RELATED LINES.** Using the tester, measure the resistance between terminals. ***Connector & terminal*** ***(i34) No. 11 — (i188) No. 5:*** ***(i34) No. 10 — (i188) No. 6:***	Is the resistance 10 Ω or more?	Repair or replace the open circuit of immobilizer related lines.	The communication harness is normal. Check DTC of immobilizer system. <Ref. to IM(diag)-10, IMMOBILIZER CM, OPERATION, Read Diagnostic Trouble Code (DTC).>

20.RELATED LINES 53 — 61 Ω (TELEMATICS)

WIRING DIAGRAM:

NOTE:
For the coupling connector, refer to “WIRING SYSTEM”.
CAN communication system <Ref. to WI-132, WIRING DIAGRAM, CAN Communication System.>

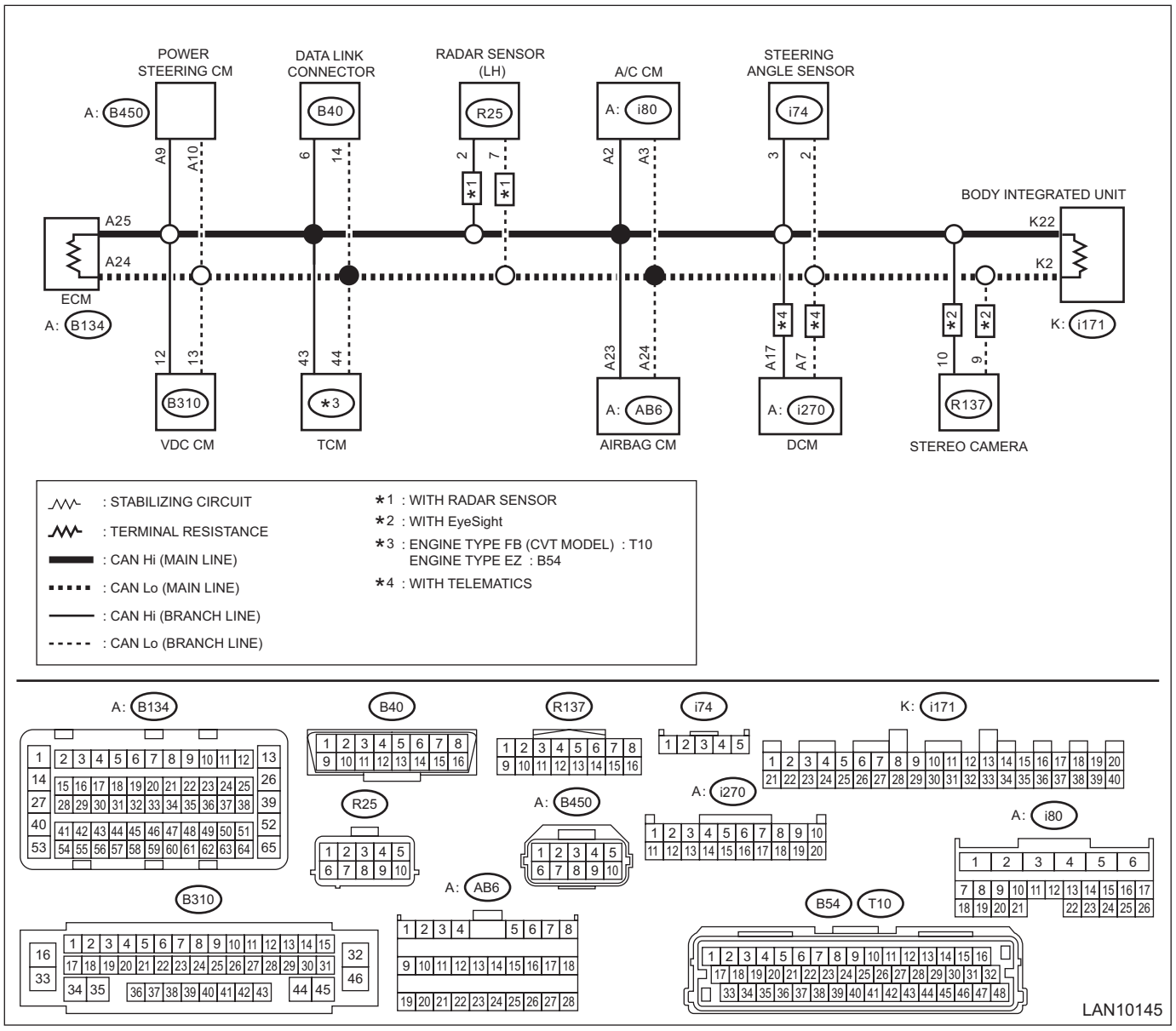

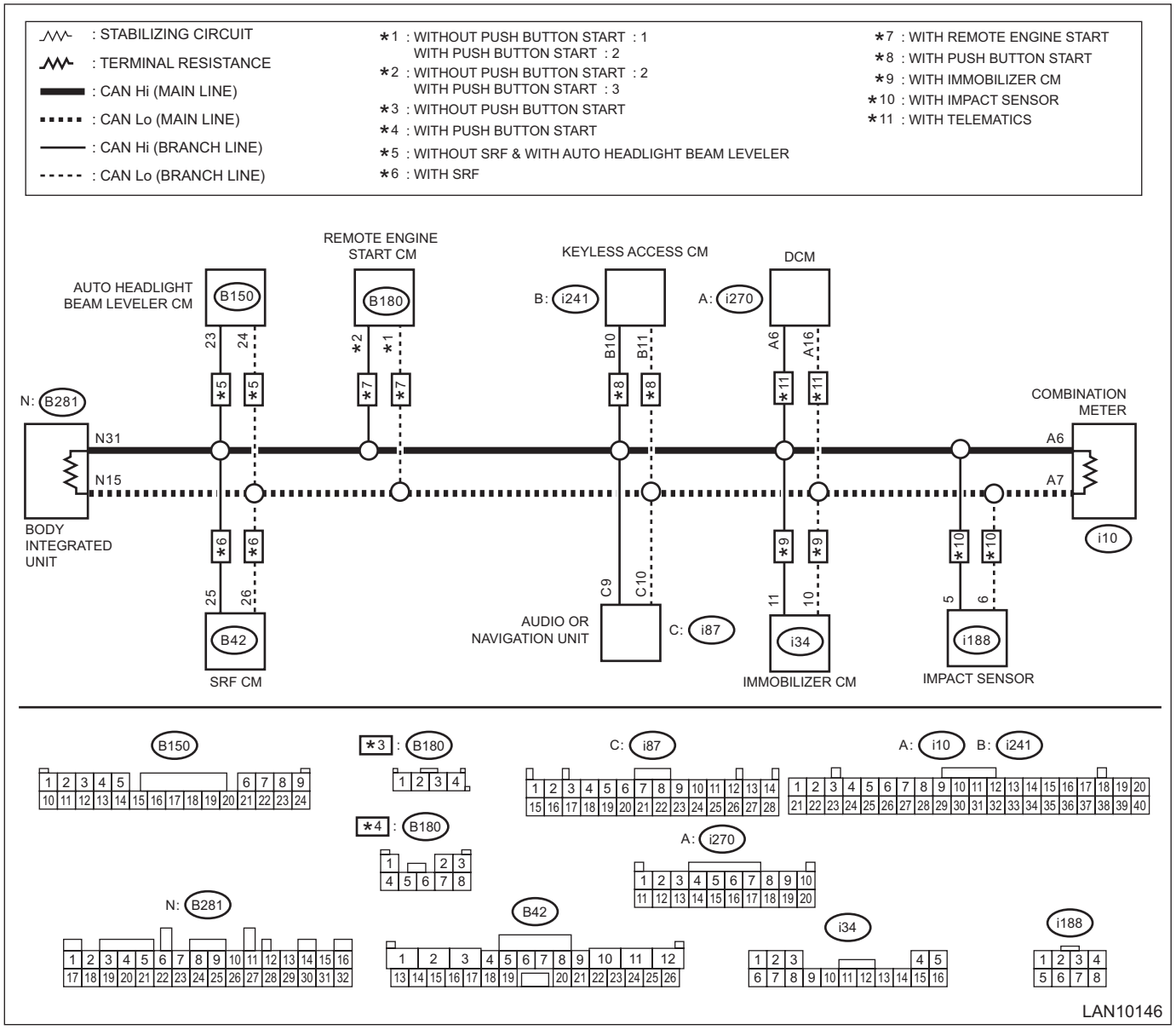

Step		Check	Yes	No
1	**CHECK BETWEEN RELATED LINES AND MAIN WIRING HARNESS.** 1) Disconnect the DCM connector. 2) Using the tester, measure the resistance between terminals. ***Connector & terminal*** ***(i270) No. 6 — No. 16:*** ***(i270) No. 7 — No. 17:***	Is the resistance 400 Ω or more?	Related lines between DCM and main wiring harness is open, or main wiring harness is open at two places or more.	Go to step **2**.
2	**CHECK RELATED LINES.** Using the tester, measure the resistance between terminals. ***Connector & terminal*** ***(i270) No. 17 — (B40) No. 6:*** ***(i270) No. 7 — (B40) No. 14:*** ***(i270) No. 6 — (i188) No. 5:*** ***(i270) No. 16 — (i188) No. 6:***	Is the resistance 10 Ω or more?	Repair or replace the open circuit of telematics system related lines.	The communication harness is normal. Check DTC of the telematics. <Ref. to TEL(diag)-16, Diagnostic Code(s) Display.>

11.List of Diagnostic Trouble Code (DTC)

A: LIST

DTC	Item	Note
U0073	CAN FAILURE, BUS 'OFF' DETECTION	<Ref. to LAN(diag)-92, DTC U0073 CONTROL MODULE COMMUNICATION BUS OFF, Diagnostic Procedure with Diagnostic Trouble Code (DTC).>
U0074	CONTROL MODULE COMMUNICATION BUS "BODY-CAN" OFF	<Ref. to LAN(diag)-93, DTC U0074 CONTROL MODULE COMMUNICATION BUS "BODY-CAN" OFF, Diagnostic Procedure with Diagnostic Trouble Code (DTC).>
U0075	CONTROL MODULE COMMUNICATION BUS "PU-CAN" OFF	<Ref. to LAN(diag)-94, DTC U0075 CONTROL MODULE COMMUNICATION BUS "PU-CAN" OFF, Diagnostic Procedure with Diagnostic Trouble Code (DTC).>
U0077	LIN COMMUNICATION BUS "ECM/PCM" OFF	<Ref. to EN(H4DO)(diag)-597, DTC U0077 LIN COMMUNICATION BUS "ECM/PCM" OFF, Diagnostic Procedure with Diagnostic Trouble Code (DTC).>
U0401	INVALID DATA RECEIVED FROM ECM/PCM "A"	<Ref. to LAN(diag)-95, DTC U0401 INVALID DATA RECEIVED FROM ECM/PCM "A", Diagnostic Procedure with Diagnostic Trouble Code (DTC).>
U0402	INVALID DATA RECEIVED FROM TCM	<Ref. to LAN(diag)-96, DTC U0402 INVALID DATA RECEIVED FROM TCM, Diagnostic Procedure with Diagnostic Trouble Code (DTC).>
U0416	INVALID DATA RECEIVED FROM VEHICLE DYNAMICS CONTROL MODULE	<Ref. to LAN(diag)-97, DTC U0416 INVALID DATA RECEIVED FROM VEHICLE DYNAMICS CONTROL MODULE, Diagnostic Procedure with Diagnostic Trouble Code (DTC).>
U0417	INVALID DATA RECEIVED FROM PARK BRAKE CONTROL MODULE	<Ref. to LAN(diag)-98, DTC U0417 INVALID DATA RECEIVED FROM PARK BRAKE CONTROL MODULE, Diagnostic Procedure with Diagnostic Trouble Code (DTC).>
U0420	INVALID DATA RECEIVED FROM POWER STEERING CONTROL MODULE	<Ref. to LAN(diag)-99, DTC U0420 INVALID DATA RECEIVED FROM POWER STEERING CONTROL MODULE, Diagnostic Procedure with Diagnostic Trouble Code (DTC).>
U0422	INVALID DATA RECEIVED FROM BODY CONTROL MODULE	<Ref. to LAN(diag)-100, DTC U0422 INVALID DATA RECEIVED FROM BODY CONTROL MODULE, Diagnostic Procedure with Diagnostic Trouble Code (DTC).>
U0423	INVALID DATA RECEIVED FROM INSTRUMENT PANEL CLUSTER CONTROL MODULE	<Ref. to LAN(diag)-101, DTC U0423 INVALID DATA RECEIVED FROM INSTRUMENT PANEL CLUSTER CONTROL MODULE, Diagnostic Procedure with Diagnostic Trouble Code (DTC).>
U0424	INVALID DATA RECEIVED FROM HVAC CONTROL MODULE	<Ref. to LAN(diag)-102, DTC U0424 INVALID DATA RECEIVED FROM HVAC CONTROL MODULE, Diagnostic Procedure with Diagnostic Trouble Code (DTC).>
U0426	INVALID DATA RECEIVED FROM IMMOBILIZER CONTROL MODULE	<Ref. to LAN(diag)-103, DTC U0426 INVALID DATA RECEIVED FROM IMMOBILIZER CONTROL MODULE, Diagnostic Procedure with Diagnostic Trouble Code (DTC).>
U0427	INVALID DATA RECEIVED FROM VEHICLE SECURITY CONTROL MODULE	<Ref. to LAN(diag)-104, DTC U0427 INVALID DATA RECEIVED FROM VEHICLE SECURITY CONTROL MODULE, Diagnostic Procedure with Diagnostic Trouble Code (DTC).>
U0428	INVALID DATA RECEIVED FROM STEERING ANGLE SENSOR MODULE	<Ref. to LAN(diag)-105, DTC U0428 INVALID DATA RECEIVED FROM STEERING ANGLE SENSOR MODULE, Diagnostic Procedure with Diagnostic Trouble Code (DTC).>
U0452	INVALID DATA RECEIVED FROM RESTRAINTS CONTROL MODULE	<Ref. to LAN(diag)-106, DTC U0452 INVALID DATA RECEIVED FROM RESTRAINTS CONTROL MODULE, Diagnostic Procedure with Diagnostic Trouble Code (DTC).>
U1422	INVALID DATA RECEIVED FROM BODY CONTROL MODULE BODY-CAN	<Ref. to LAN(diag)-107, DTC U1422 INVALID DATA RECEIVED FROM BODY CONTROL MODULE BODY-CAN, Diagnostic Procedure with Diagnostic Trouble Code (DTC).>
U1433	INVALID DATA RECEIVED FROM EyeSight	<Ref. to LAN(diag)-108, DTC U1433 INVALID DATA RECEIVED FROM EyeSight, Diagnostic Procedure with Diagnostic Trouble Code (DTC).>
U1500	KEYLESS UART COM. MALFUNCTION	<Ref. to BC(diag)-64, DTC U1500 KEYLESS UART COM. MALFUNCTION, Diagnostic Procedure with Diagnostic Trouble Code (DTC).>
U1673	LIN COMMUNICATION BUS ERROR BODY CONTROL MODULE	<Ref. to BC(diag)-68, DTC U1673 LIN COMMUNICATION BUS ERROR BODY CONTROL MODULE, Diagnostic Procedure with Diagnostic Trouble Code (DTC).>
U0100	LOST COMMUNICATION WITH ECM/PCM "A"	<Ref. to LAN(diag)-109, DTC U0100 LOST COMMUNICATION WITH ECM/PCM "A", Diagnostic Procedure with Diagnostic Trouble Code (DTC).>

DTC	Item	Note
U0101	LOST COMMUNICATION WITH TCM	<Ref. to LAN(diag)-110, DTC U0101 LOST COMMUNICATION WITH TCM, Diagnostic Procedure with Diagnostic Trouble Code (DTC).>
U0122	LOST COMMUNICATION WITH VEHICLE DYNAMICS CONTROL MODULE	<Ref. to LAN(diag)-111, DTC U0122 LOST COMMUNICATION WITH VEHICLE DYNAMICS CONTROL MODULE, Diagnostic Procedure with Diagnostic Trouble Code (DTC).>
U0126	LOST COMMUNICATION WITH STEERING ANGLE SENSOR MODULE	<Ref. to LAN(diag)-112, DTC U0126 LOST COMMUNICATION WITH STEERING ANGLE SENSOR MODULE, Diagnostic Procedure with Diagnostic Trouble Code (DTC).>
U0128	LOST COMMUNICATION WITH PARK BRAKE CONTROL MODULE	<Ref. to LAN(diag)-113, DTC U0128 LOST COMMUNICATION WITH PARK BRAKE CONTROL MODULE, Diagnostic Procedure with Diagnostic Trouble Code (DTC).>
U0131	LOST COMMUNICATION WITH POWER STEERING CONTROL MODULE	<Ref. to LAN(diag)-114, DTC U0131 LOST COMMUNICATION WITH POWER STEERING CONTROL MODULE, Diagnostic Procedure with Diagnostic Trouble Code (DTC).>
U0140	LOST COMMUNICATION WITH BODY CONTROL MODULE	<Ref. to LAN(diag)-115, DTC U0140 LOST COMMUNICATION WITH BODY CONTROL MODULE, Diagnostic Procedure with Diagnostic Trouble Code (DTC).>
U0151	LOST COMMUNICATION WITH RESTRAINTS CONTROL MODULE	<Ref. to LAN(diag)-116, DTC U0151 LOST COMMUNICATION WITH RESTRAINTS CONTROL MODULE, Diagnostic Procedure with Diagnostic Trouble Code (DTC).>
U0155	LOST COMMUNICATION WITH INSTRUMENT PANEL CLUSTER (IPC) CONTROL MODULE	<Ref. to LAN(diag)-117, DTC U0155 LOST COMMUNICATION WITH INSTRUMENT PANEL CLUSTER (IPC) CONTROL MODULE, Diagnostic Procedure with Diagnostic Trouble Code (DTC).>
U0162	LOST COMMUNICATION WITH AUDIO VISUAL NAVIGATION DISPLAY MODULE	<Ref. to LAN(diag)-118, DTC U0162 LOST COMMUNICATION WITH AUDIO VISUAL NAVIGATION DISPLAY MODULE, Diagnostic Procedure with Diagnostic Trouble Code (DTC).>
U0164	LOST COMMUNICATION WITH HVAC CONTROL MODULE	<Ref. to LAN(diag)-119, DTC U0164 LOST COMMUNICATION WITH HVAC CONTROL MODULE, Diagnostic Procedure with Diagnostic Trouble Code (DTC).>
U0167	LOST COMMUNICATION WITH IMMOBILIZER CONTROL MODULE	<Ref. to LAN(diag)-120, DTC U0167 LOST COMMUNICATION WITH IMMOBILIZER CONTROL MODULE, Diagnostic Procedure with Diagnostic Trouble Code (DTC).>
U0169	LOST COMMUNICATION WITH SUNROOF CONTROL MODULE	<Ref. to BC(diag)-55, DTC U0169 LOST COMMUNICATION WITH SUNROOF CONTROL MODULE, Diagnostic Procedure with Diagnostic Trouble Code (DTC).>
U0181	LOST COMMUNICATION WITH HEADLAMP LEVELING CONTROL MODULE	<Ref. to LAN(diag)-121, DTC U0181 LOST COMMUNICATION WITH HEADLAMP LEVELING CONTROL MODULE, Diagnostic Procedure with Diagnostic Trouble Code (DTC).>
U0208	LOST COMMUNICATION WITH SEAT MEMORY	<Ref. to BC(diag)-58, DTC U0208 LOST COMMUNICATION WITH SEAT MEMORY, Diagnostic Procedure with Diagnostic Trouble Code (DTC).>
U0230	LOST COMMUNICATION WITH POWER REAR GATE CONTROL MODULE	<Ref. to BC(diag)-61, DTC U0230 LOST COMMUNICATION WITH POWER REAR GATE CONTROL MODULE, Diagnostic Procedure with Diagnostic Trouble Code (DTC).>
U0284	LOST COMMUNICATION WITH ACTIVE GRILLE SHUTTER MODULE "A"	<Ref. to EN(H4DO)(diag)-602, DTC U0284 LOST COMMUNICATION WITH ACTIVE GRILLE SHUTTER MODULE "A", Diagnostic Procedure with Diagnostic Trouble Code (DTC).>
U0327	SOFTWARE INCOMPATIBILITY WITH VEHICLE SECURITY CONTROL MODULE	<Ref. to LAN(diag)-122, DTC U0327 SOFTWARE INCOMPATIBILITY WITH VEHICLE SECURITY CONTROL MODULE, Diagnostic Procedure with Diagnostic Trouble Code (DTC).>
U1140	LOST COMMUNICATION WITH BODY CONTROL MODULE BODY-CAN	<Ref. to LAN(diag)-123, DTC U1140 LOST COMMUNICATION WITH BODY CONTROL MODULE BODY-CAN, Diagnostic Procedure with Diagnostic Trouble Code (DTC).>
U1232	LOST COMMUNICATION WITH REAR/SIDE RADAR CONTROL MODULE	<Ref. to LAN(diag)-124, DTC U1232 LOST COMMUNICATION WITH REAR/SIDE RADAR CONTROL MODULE, Diagnostic Procedure with Diagnostic Trouble Code (DTC).>
U1235	LOST COMMUNICATION WITH EyeSight	<Ref. to LAN(diag)-125, DTC U1235 LOST COMMUNICATION WITH EyeSight, Diagnostic Procedure with Diagnostic Trouble Code (DTC).>
U1712	LOST LIN COMMUNICATION WITH BATTERY "1" MONITOR MODULE	<Ref. to EN(H4DO)(diag)-606, DTC U1712 LOST LIN COMMUNICATION WITH BATTERY "1" MONITOR MODULE, Diagnostic Procedure with Diagnostic Trouble Code (DTC).>

1. CHECK USING THE DTC CHECK SHEET

- DTC check sheet for data non-arrival detection

	(A)	(B)				ECM	TCM	VDC	STA	EPB	EPS	BIU	A/B	MET	AVN	A/C	IMB	SUN	AHL	SEAT	PRG	ACT	KPS	BIU	RDR	EYE	BAT
		U0073	U0074	U0075	U0077	U0100	U0101	U0122	U0126	U0128	U0131	U0140	U0151	U0155	U0162	U0164	U0167	U0169	U0181	U0208	U0230	U0284	U0327	U1140	U1232	U1235	U1712
ECM			–	–		–			–	–	–	–	–		–	–	–	–	–	–	–		–	–	–	–	
VDC			–	–	–			–		–	–		–		–	–	–	–	–	–	–	–	–	–	–		–
EPS			–	–	–		–			–	–	–	–		–	–	–	–	–	–	–	–	–	–	–		–
TCM			–	–	–		–		–	–	–		–		–		–	–	–	–	–	–	–	–	–		–
RDR			–	–	–	–			–	–	–		–		–	–	–	–	–	–	–	–	–	–	–	–	–
A/C			–	–	–	–	–	–	–	–	–	–	–	–	–	–	–	–	–	–	–	–	–	–	–	–	–
DCM				–	–				–	–	–				–	–	–	–	–	–	–	–	–	–	–		–
A/B			–	–	–				–	–	–		–		–	–	–	–	–	–	–	–	–	–	–	–	–
EYE			–	–	–					–			–		–	–	–	–	–	–	–	–	–	–	–	–	–
BIU				–	–				–			–			–				–			–		–	–	–	–
AHL		–		–	–	–	–		–	–	–	–	–	–	–	–	–	–	–	–	–	–	–		–	–	–
SRF		–		–	–	–			–	–	–	–	–	–	–	–	–	–	–	–	–	–	–		–	–	–
RES		–	–	–	–	–	–	–	–	–	–	–	–	–	–	–	–	–	–	–	–	–	–	–	–	–	–
AVN		–		–	–				–		–	–	–		–			–	–	–	–	–				–	–
IMB		–	–	–	–	–	–	–	–	–	–	–	–	–	–	–	–	–	–	–	–	–	–	–	–	–	–
KPS			–	–	–				–	–	–		–		–	–	–	–	–	–	–	–	–	–	–	–	–
IMP		–	–	–	–	–	–	–	–	–	–	–	–	–	–	–	–	–	–	–	–	–	–	–	–	–	–
MET			–	–	–				–					–		–	–	–		–	–	–		–			–

LAN10532

(A) Installation check
(B) Bus off detection

ECM: Engine CM
VDC: VDC CM
EPS: Power steering CM
TCM: Transmission CM
RDR: Radar sensor
A/C: Air conditioner CM
A/B: Airbag CM
STA: Steering angle sensor
EYE: Stereo camera
SUN: Sunroof
EPB: Electronic parking brake (VDC CM)
PRG: Power rear gate CM
DCM: Data communication module
BIU: Body integrated unit
AHL: Auto headlight beam leveler CM
SRF: Steering responsive fog light CM
RES: Remote engine starter CM
AVN: Audio or navigation unit
IMB: Immobilizer CM
KPS: Keyless access CM
IMP: Impact sensor
MET: Combination meter
SEAT: Power seat CM (with memory)
ACT: Active grille shutter
BAT: Battery sensor

- DTC check sheet for error detection

	(A)	ECM	TCM	VDC	EPB	EPS	BIU	MET	A/C	IMB	KPS	STA	A/B	BIU	EYE	KEY	BIU
		U0401	U0402	U0416	U0417	U0420	U0422	U0423	U0424	U0426	U0427	U0428	U0452	U1422	U1433	U1500	U1673
ECM		—			—	—	—		—	—	—	—	—	—	—	—	—
VDC				—	—	—			—	—	—		—	—		—	—
EPS			—		—	—	—	—	—	—	—	—	—	—		—	—
TCM			—		—	—				—	—	—	—	—		—	—
RDR		—			—	—			—	—	—	—	—	—	—	—	—
A/C		—	—	—	—	—	—	—	—	—	—	—	—	—	—	—	—
DCM					—	—	—	—	—	—	—	—		—	—	—	—
A/B					—	—			—	—	—	—	—	—	—	—	—
EYE					—				—	—	—		—	—	—	—	—
BIU						—	—					—	—	—	—		
AHL		—	—		—	—	—	—	—	—	—	—	—		—	—	—
SRF		—			—	—	—	—	—	—	—	—	—		—	—	—
RES		—	—	—	—	—	—	—	—	—	—	—	—	—	—	—	—
AVN		—	—	—	—	—	—	—	—	—	—	—	—	—	—	—	—
IMB		—	—	—	—	—	—	—	—	—	—	—	—	—	—	—	—
KPS			—	—	—	—		—	—	—	—	—	—	—	—	—	—
IMP		—	—	—	—	—	—	—	—	—	—	—	—	—	—	—	—
MET		—	—	—	—	—	—	—	—	—	—	—	—	—		—	—

LAN10533

(A) Installation check

ECM: Engine CM
VDC: VDC CM
EPS: Power steering CM
TCM: Transmission CM
RDR: Radar sensor
A/C: Air conditioner CM
A/B: Airbag CM
STA: Steering angle sensor
EYE: Stereo camera
EPB: Electronic parking brake (VDC CM)
DCM: Data communication module
BIU: Body integrated unit
AHL: Auto headlight beam leveler CM
SRF: Steering responsive fog light CM
RES: Remote engine starter CM
AVN: Audio or navigation unit
IMB: Immobilizer CM
KPS: Keyless access CM
IMP: Impact sensor
MET: Combination meter
KEY: Keyless entry CM

1) Module installation check
   (1) Write “-” marks in the field for installation check if the vehicle to be inspected does not have relevant module.
   (2) Write “-” marks in all blank fields on the same row that the “-” mark has filled in.
2) Bus off detection / data not received

NOTE:
It becomes impossible for CAN diagnostic module to read DTC, if there is a current malfunction of open harness (data not received). If this occurs, perform the “Check using the check sheet of communication for initializing” <Ref. to LAN(diag)-13, CHECK USING THE CHECK SHEET OF COMMUNICATION FOR INITIALIZING, COMMUNICATION FOR INITIALIZING IMPOSSIBLE, Subaru Select Monitor.>, and use this sheet to confirm that the corresponding part becomes the past malfunction.
   (1) Mark “X” in the field corresponding to the DTCs that has been detected by each module in the check sheet.
   (2) Identify and repair the faulty part by referring to the example of DTC data not received. <Ref. to LAN(diag)-90, EXAMPLE OF DTC DATA NOT RECEIVED, LIST, List of Diagnostic Trouble Code (DTC).>

3) Data abnormal detection

NOTE:
If any “BUS OFF” or “NO-RECEIVE DATA” condition is detected, perform the diagnosis for these problems first.

(1) If several modules detect the DTC for the same module, replace the detected module.
(2) If one module detects the DTC, replace the module of the detected side.
(3) If it does not return to the normal operation, re-install the module which has been replaced, and replace the module of the detected side.
(4) If it does not return to the normal operation, replace both modules.

2. EXAMPLE OF DTC DATA NOT RECEIVED

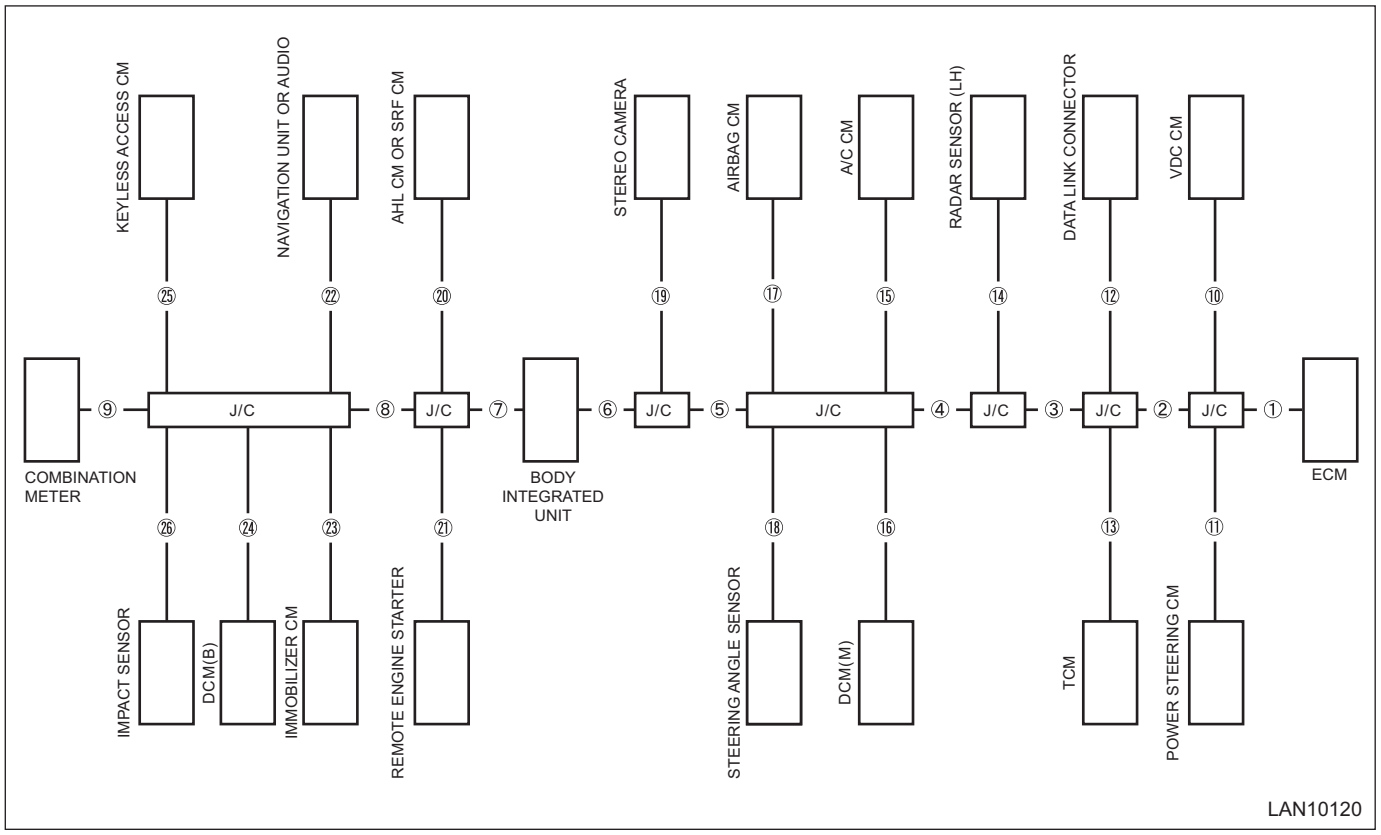

- Vicinity of No. 18 steering angle sensor

	(A)	(B)				ECM	TCM	VDC	STA	EPB	EPS	BIU	A/B	MET	AVN	A/C	IMB	SUN	AHL	SEAT	PRG	ACT	KPS	BIU	RDR	EYE	BAT
		U0073	U0074	U0075	U0077	U0100	U0101	U0122	U0126	U0128	U0131	U0140	U0151	U0155	U0162	U0164	U0167	U0169	U0181	U0208	U0230	U0284	U0327	U1140	U1232	U1235	U1712
ECM			–	–		–			–	–	–	–	–		–	–	–	–	–	–	–		–	–	–	–	
VDC			–	–	–			–	×	–	–		–		–	–	–	–	–	–	–	–	–	–	–		–
EPS			–	–	–		–		×	–	–	–	–		–	–	–	–	–	–	–	–	–	–	–		–
TCM			–	–	–		–		–	–	–		–		–		–	–	–	–	–	–	–	–	–		–
RDR			–	–	–	–			–	–	–		–		–	–	–	–	–	–	–	–	–	–	–	–	–
A/C			–	–	–	–	–	–	–	–	–	–	–	–	–	–	–	–	–	–	–	–	–	–	–	–	–
DCM				–	–				–	–	–				–	–	–	–	–	–	–	–	–	–	–		–
A/B			–	–	–				–	–	–		–		–	–	–	–	–	–	–	–	–	–	–	–	–
EYE			–	–	–				×	–			–		–	–	–	–	–	–	–	–	–	–	–	–	–
BIU				–	–				–			–			–				–			–		–	–	–	–
AHL		–		–	–	–	–		–	–	–		–	–	–	–	–	–	–	–	–	–	–		–	–	–
SRF		–		–	–	–			–	–	–	–	–	–	–	–	–	–	–	–	–	–	–		–	–	–
RES		–	–	–	–	–	–	–	–	–	–	–	–	–	–	–	–	–	–	–	–	–	–	–	–	–	–
AVN		–		–	–				–		–	–	–		–			–	–	–	–	–				–	–
IMB		–	–	–	–	–	–	–	–	–	–	–	–	–	–	–	–	–	–	–	–	–	–	–	–	–	–
KPS			–	–	–				–	–	–		–		–	–	–	–	–	–	–	–	–	–	–	–	–
IMP		–	–	–	–	–	–	–	–	–	–	–	–	–	–	–	–	–	–	–	–	–	–	–	–	–	–
MET			–	–	–				–					–		–	–	–		–	–	–		–			–

LAN10534

- Vicinity of No. 24 DCM (BODY CAN)

	(A)	(B)				ECM	TCM	VDC	STA	EPB	EPS	BIU	A/B	MET	AVN	A/C	IMB	SUN	AHL	SEAT	PRG	ACT	KPS	BIU	RDR	EYE	BAT
		U0073	U0074	U0075	U0077	U0100	U0101	U0122	U0126	U0128	U0131	U0140	U0151	U0155	U0162	U0164	U0167	U0169	U0181	U0208	U0230	U0284	U0327	U1140	U1232	U1235	U1712
ECM			–	–		–			–	–	–	–	–		–	–	–	–	–	–	–		–	–	–	–	
VDC			–	–	–			–		–	–		–		–	–	–	–	–	–	–	–	–	–	–		–
EPS			–	–	–		–			–	–	–	–		–	–	–	–	–	–	–	–	–	–	–		–
TCM			–	–	–		–		–	–	–		–		–		–	–	–	–	–	–	–	–	–		–
RDR			–	–	–	–			–	–	–		–		–	–	–	–	–	–	–	–	–	–	–	–	–
A/C			–	–	–	–	–	–	–	–	–	–	–	–	–	–	–	–	–	–	–	–	–	–	–	–	–
DCM			×	–	–				–	–	–				–	–	–	–	–	–	–	–	–	–	–		–
A/B			–	–	–				–	–	–		–		–	–	–	–	–	–	–	–	–	–	–	–	–
EYE			–	–	–					–			–		–	–	–	–	–	–	–	–	–	–	–	–	–
BIU				–	–				–			–			–				–			–		–	–	–	–
AHL		–		–	–	–	–		–	–	–		–	–	–	–	–	–	–	–	–	–	–		–	–	–
SRF		–		–	–	–			–	–	–	–	–	–	–	–	–	–	–	–	–	–	–		–	–	–
RES		–	–	–	–	–	–	–	–	–	–	–	–	–	–	–	–	–	–	–	–	–	–	–	–	–	–
AVN		–		–	–				–		–	–	–		–			–	–	–	–	–				–	–
IMB		–	–	–	–	–	–	–	–	–	–	–	–	–	–	–	–	–	–	–	–	–	–	–	–	–	–
KPS			–	–	–				–	–	–		–		–	–	–	–	–	–	–	–	–	–	–	–	–
IMP		–	–	–	–	–	–	–	–	–	–	–	–	–	–	–	–	–	–	–	–	–	–	–	–	–	–
MET			–	–	–				–					–		–	–	–		–	–	–		–			–

LAN10535

12.Diagnostic Procedure with Diagnostic Trouble Code (DTC)

A: DTC U0073 CONTROL MODULE COMMUNICATION BUS OFF

DTC DETECTING CONDITION:
Integrated unit communication is shut down because of high speed CAN error.
TROUBLE SYMPTOM:
CAN communication is not normal.

	Step	Check	Yes	No
1	**CHECK PERFORMING OF BASIC DIAGNOSTIC PROCEDURE.**	Was the basic diagnostic procedure performed up to STEP 8?	Go to step **2**.	Perform the basic diagnostic procedure. <Ref. to LAN(diag)-2, Basic Diagnostic Procedure.>
2	**CHECK DTC.** 1) Start the engine. 2) Using the Subaru Select Monitor, read DTC of CAN system.	Is U0073 a current malfunction?	Go to step **3**.	It may be a temporary poor contact. Perform the clear memory.
3	**CHECK CAN COMMUNICATION CIRCUIT.** Check CAN communication circuit. <Ref. to LAN(diag)-36, PROCEDURE, CAN Communication Circuit Check.>	Is CAN communication circuit faulty?	Repair the faulty portion, following the diagnosis procedure.	Go to step **4**.
4	**CHECK DTC.** 1) Perform the inspection using the DTC check sheet. <Ref. to LAN(diag)-88, CHECK USING THE DTC CHECK SHEET, LIST, List of Diagnostic Trouble Code (DTC).> 2) Using the Subaru Select Monitor, read DTC of CAN system.	Is U0073 a current malfunction?	Go to step **5**.	System is normal.
5	**CHECK CONTROL MODULE.** 1) Turn the ignition switch to OFF. 2) Disconnect the control modules other than body integrated unit in order. NOTE: When disconnecting ECM or combination meter, connect resistance of 120 Ω between CAN Hi and CAN Lo as an alternative of end resistance. 3) Turn the ignition switch to ON. 4) Using the Subaru Select Monitor, read DTC of CAN system.	Is there any control module that U0073 is not detected as current malfunction?	Replace the control module.	Repeat 1) to 4) in step 3 until U0073 is not detected.

B: DTC U0074 CONTROL MODULE COMMUNICATION BUS "BODY-CAN" OFF

DTC DETECTING CONDITION:
Integrated unit communication is shut down because of high speed CAN error.
TROUBLE SYMPTOM:
CAN communication is not normal.

	Step	Check	Yes	No
1	**CHECK PERFORMING OF BASIC DIAGNOSTIC PROCEDURE.**	Was the basic diagnostic procedure performed up to STEP 8?	Go to step **2**.	Perform the basic diagnostic procedure. <Ref. to LAN(diag)-2, Basic Diagnostic Procedure.>
2	**CHECK DTC.** 1) Start the engine. 2) Using the Subaru Select Monitor, read DTC of CAN system.	Is U0074 a current malfunction?	Go to step **3**.	It may be a temporary poor contact. Perform the clear memory.
3	**CHECK CAN COMMUNICATION CIRCUIT.** Check CAN communication circuit. <Ref. to LAN(diag)-36, PROCEDURE, CAN Communication Circuit Check.>	Is CAN communication circuit faulty?	Repair the faulty portion, following the diagnosis procedure.	Go to step **4**.
4	**CHECK DTC.** 1) Perform the inspection using the DTC check sheet. <Ref. to LAN(diag)-88, CHECK USING THE DTC CHECK SHEET, LIST, List of Diagnostic Trouble Code (DTC).> 2) Using the Subaru Select Monitor, read DTC of CAN system.	Is U0074 a current malfunction?	Go to step **5**.	System is normal.
5	**CHECK CONTROL MODULE.** 1) Turn the ignition switch to OFF. 2) Disconnect the control modules other than body integrated unit in order. NOTE: When disconnecting ECM or combination meter, connect resistance of 120 Ω between CAN Hi and CAN Lo as an alternative of end resistance. 3) Turn the ignition switch to ON. 4) Using the Subaru Select Monitor, read DTC of CAN system.	Is there any control module that U0074 is not detected as current malfunction?	Replace the control module.	Repeat 1) to 4) in step 3 until U0074 is not detected.

C: DTC U0075 CONTROL MODULE COMMUNICATION BUS "PU-CAN" OFF

DTC DETECTING CONDITION:
Integrated unit communication is shut down because of high speed CAN error.
TROUBLE SYMPTOM:
CAN communication is not normal.

	Step	Check	Yes	No
1	**CHECK PERFORMING OF BASIC DIAGNOSTIC PROCEDURE.**	Was the basic diagnostic procedure performed up to STEP 8?	Go to step **2**.	Perform the basic diagnostic procedure. <Ref. to LAN(diag)-2, Basic Diagnostic Procedure.>
2	**CHECK DTC.** 1) Start the engine. 2) Using the Subaru Select Monitor, read DTC of CAN system.	Is U0075 a current malfunction?	Go to step **3**.	It may be a temporary poor contact. Perform the clear memory.
3	**CHECK CAN COMMUNICATION CIRCUIT.** Check CAN communication circuit. <Ref. to LAN(diag)-36, PROCEDURE, CAN Communication Circuit Check.>	Is CAN communication circuit faulty?	Repair the faulty portion, following the diagnosis procedure.	Go to step **4**.
4	**CHECK DTC.** 1) Perform the inspection using the DTC check sheet. <Ref. to LAN(diag)-88, CHECK USING THE DTC CHECK SHEET, LIST, List of Diagnostic Trouble Code (DTC).> 2) Using the Subaru Select Monitor, read DTC of CAN system.	Is U0075 a current malfunction?	Go to step **5**.	System is normal.
5	**CHECK CONTROL MODULE.** 1) Turn the ignition switch to OFF. 2) Disconnect the control modules other than body integrated unit in order. NOTE: When disconnecting ECM or combination meter, connect resistance of 120 Ω between CAN Hi and CAN Lo as an alternative of end resistance. 3) Turn the ignition switch to ON. 4) Using the Subaru Select Monitor, read DTC of CAN system.	Is there any control module that U0075 is not detected as current malfunction?	Replace the control module.	Repeat 1) to 4) in step 3 until U0075 is not detected.

D: DTC U0401 INVALID DATA RECEIVED FROM ECM/PCM "A"

DTC DETECTING CONDITION:
Defective data from ECM.
TROUBLE SYMPTOM:
Defective data on CAN communication occurs.

	Step	Check	Yes	No
1	**CHECK PERFORMING OF BASIC DIAGNOSTIC PROCEDURE.**	Was the basic diagnostic procedure performed up to STEP 8?	Go to step **2**.	Perform the basic diagnostic procedure. <Ref. to LAN(diag)-2, Basic Diagnostic Procedure.>
2	**CHECK DTC.** Check the displayed DTC.	Are DTCs other than U*** displayed?	Perform the diagnosis according to DTC.	Go to step **3**.
3	**CHECK DTC.** Check the displayed DTC.	Is DTC for the bus off or the data no-receive displayed?	Perform the diagnosis according to DTC.	Go to step **4**.
4	**CHECK DTC.** Check the displayed DTC.	Is U0401 a current malfunction?	Go to step **5**.	Go to step **9**.
5	**CHECK DTC.** 1) Turn the ignition switch to OFF. 2) Disconnect the ECM connector. 3) Connect the disconnected connectors. 4) Read the DTC using Subaru Select Monitor.	Is U0401 a current malfunction?	Go to step **6**.	Go to step **9**.
6	**CHECK DTC.** Using the Subaru Select Monitor, read DTC of all the systems.	Is the engine data abnormal detected in several modules?	Replace the ECM. <Ref. to FU(H4DO)-82, Engine Control Module (ECM).> <Ref. to FU(H6DO)-83, Engine Control Module (ECM).>	Go to step **7**.
7	**REPLACE MODULE.** 1) Replace the ECM. <Ref. to FU(H4DO)-82, Engine Control Module (ECM).> <Ref. to FU(H6DO)-83, Engine Control Module (ECM).> 2) Read the DTC using Subaru Select Monitor.	Is U0401 a current malfunction?	Go to step **8**.	System is normal.
8	**CHECK MODULE.** 1) Reinstall the ECM. 2) Replace the module that the DTC has been detected. 3) Read the DTC using Subaru Select Monitor.	Is U0401 a current malfunction?	Replace the ECM. <Ref. to FU(H4DO)-82, Engine Control Module (ECM).> <Ref. to FU(H6DO)-83, Engine Control Module (ECM).>	System is normal.
9	**CHECK HARNESS.** 1) Shake the harness, and check for poor contact. 2) Using the Subaru Select Monitor, read DTC of CAN system.	Is U0401 a current malfunction?	Repair the poor contact of harness, or replace the harness.	Go to step **10**.
10	**CHECK CONNECTOR.** Check the connector used for high speed CAN for poor contact.	Is there poor contact of connector?	Repair the connector that has poor contact, or replace harness.	It is possible that temporary poor communication occurs. Delete the DTC.

E: DTC U0402 INVALID DATA RECEIVED FROM TCM

DTC DETECTING CONDITION:
Received error data from TCM.
TROUBLE SYMPTOM:
SPORT indicator light blinks.

	Step	Check	Yes	No
1	**CHECK PERFORMING OF BASIC DIAGNOSTIC PROCEDURE.**	Was the basic diagnostic procedure performed up to STEP 8?	Go to step **2**.	Perform the basic diagnostic procedure. <Ref. to LAN(diag)-2, Basic Diagnostic Procedure.>
2	**CHECK DTC.** Check the displayed DTC.	Are DTCs other than U*** displayed?	Perform the diagnosis according to DTC.	Go to step **3**.
3	**CHECK DTC.** Check the displayed DTC.	Is DTC for the bus off or the data no-receive displayed?	Perform the diagnosis according to DTC.	Go to step **4**.
4	**CHECK DTC.** Check the displayed DTC.	Is U0402 a current malfunction?	Go to step **5**.	Go to step **9**.
5	**CHECK DTC.** 1) Turn the ignition switch to OFF. 2) Disconnect the TCM connector. 3) Connect the disconnected connectors. 4) Read the DTC using Subaru Select Monitor.	Is U0402 a current malfunction?	Go to step **6**.	Go to step **9**.
6	**CHECK DTC.** Using the Subaru Select Monitor, read DTC of all the systems.	Is the transmission data abnormal detected in several modules?	Replace the TCM. <Ref. to CVT(TR690)-142, Transmission Control Module (TCM).>	Go to step **7**.
7	**REPLACE MODULE.** 1) Replace the TCM. 2) Read the DTC using Subaru Select Monitor.	Is U0402 a current malfunction?	Go to step **8**.	System is normal.
8	**CHECK MODULE.** 1) Reinstall the TCM. 2) Replace the module that the DTC has been detected. 3) Read the DTC using Subaru Select Monitor.	Is U0402 a current malfunction?	Replace the TCM. <Ref. to CVT(TR690)-142, Transmission Control Module (TCM).>	System is normal.
9	**CHECK HARNESS.** 1) Shake the harness, and check for poor contact. 2) Using the Subaru Select Monitor, read DTC of CAN system.	Is U0402 a current malfunction?	Repair the poor contact of harness, or replace the harness.	Go to step **10**.
10	**CHECK CONNECTOR.** Check the connector used for high speed CAN for poor contact.	Is there poor contact of connector?	Repair the connector that has poor contact, or replace harness.	It is possible that temporary poor communication occurs. Delete the DTC.

F: DTC U0416 INVALID DATA RECEIVED FROM VEHICLE DYNAMICS CONTROL MODULE

DTC DETECTING CONDITION:
Data from VDCCM is faulty.
TROUBLE SYMPTOM:
ABS warning light and VDC warning light illuminate.

	Step	Check	Yes	No
1	**CHECK PERFORMING OF BASIC DIAGNOSTIC PROCEDURE.**	Was the basic diagnostic procedure performed up to STEP 8?	Go to step **2**.	Perform the basic diagnostic procedure. <Ref. to LAN(diag)-2, Basic Diagnostic Procedure.>
2	**CHECK DTC.** Check the displayed DTC.	Are DTCs other than U*** displayed?	Perform the diagnosis according to DTC.	Go to step **3**.
3	**CHECK DTC.** Check the displayed DTC.	Is DTC for the bus off or the data no-receive displayed?	Perform the diagnosis according to DTC.	Go to step **4**.
4	**CHECK DTC.** Check the displayed DTC.	Is U0416 a current malfunction?	Go to step **5**.	Go to step **9**.
5	**CHECK DTC.** 1) Turn the ignition switch to OFF. 2) Disconnect the VDC CM connector. 3) Connect the disconnected connectors. 4) Read the DTC using Subaru Select Monitor.	Is U0416 a current malfunction?	Go to step **6**.	Go to step **9**.
6	**CHECK DTC.** Using the Subaru Select Monitor, read DTC of all the systems.	Is the VDC data abnormal detected in several modules?	Replace the VDC CM. <Ref. to VDC-8, VDC Control Module and Hydraulic Control Unit (VDCCM&H/U).>	Go to step **7**.
7	**REPLACE MODULE.** 1) Replace the VDC CM. 2) Read the DTC using Subaru Select Monitor.	Is U0416 a current malfunction?	Go to step **8**.	System is normal.
8	**CHECK MODULE.** 1) Reinstall the VDC CM. 2) Replace the module that the DTC has been detected. 3) Read the DTC using Subaru Select Monitor.	Is U0416 a current malfunction?	Replace the VDC CM. <Ref. to VDC-8, VDC Control Module and Hydraulic Control Unit (VDCCM&H/U).>	System is normal.
9	**CHECK HARNESS.** 1) Shake the harness, and check for poor contact. 2) Using the Subaru Select Monitor, read DTC of CAN system.	Is U0416 a current malfunction?	Repair the poor contact of harness, or replace the harness.	Go to step **10**.
10	**CHECK CONNECTOR.** Check the connector used for high speed CAN for poor contact.	Is there poor contact of connector?	Repair the connector that has poor contact, or replace harness.	It is possible that temporary poor communication occurs. Delete the DTC.

G: DTC U0417 INVALID DATA RECEIVED FROM PARK BRAKE CONTROL MODULE

DTC DETECTING CONDITION:
Data from VDCCM is faulty.
TROUBLE SYMPTOM:
ABS warning light and VDC warning light illuminate.

	Step	Check	Yes	No
1	**CHECK PERFORMING OF BASIC DIAGNOSTIC PROCEDURE.**	Was the basic diagnostic procedure performed up to STEP 8?	Go to step **2**.	Perform the basic diagnostic procedure. <Ref. to LAN(diag)-2, Basic Diagnostic Procedure.>
2	**CHECK DTC.** Check the displayed DTC.	Are DTCs other than U*** displayed?	Perform the diagnosis according to DTC.	Go to step **3**.
3	**CHECK DTC.** Check the displayed DTC.	Is DTC for the bus off or the data no-receive displayed?	Perform the diagnosis according to DTC.	Go to step **4**.
4	**CHECK DTC.** Check the displayed DTC.	Is U0417 a current malfunction?	Go to step **5**.	Go to step **9**.
5	**CHECK DTC.** 1) Turn the ignition switch to OFF. 2) Disconnect the VDC CM connector. 3) Connect the disconnected connectors. 4) Read the DTC using Subaru Select Monitor.	Is U0417 a current malfunction?	Go to step **6**.	Go to step **9**.
6	**CHECK DTC.** Using the Subaru Select Monitor, read DTC of all the systems.	Is the VDC data abnormal detected in several modules?	Replace the VDC CM. <Ref. to VDC-8, VDC Control Module and Hydraulic Control Unit (VDCCM&H/U).>	Go to step **7**.
7	**REPLACE MODULE.** 1) Replace the VDC CM. 2) Read the DTC using Subaru Select Monitor.	Is U0417 a current malfunction?	Go to step **8**.	System is normal.
8	**CHECK MODULE.** 1) Reinstall the VDC CM. 2) Replace the module that the DTC has been detected. 3) Read the DTC using Subaru Select Monitor.	Is U0417 a current malfunction?	Replace the VDC CM. <Ref. to VDC-8, VDC Control Module and Hydraulic Control Unit (VDCCM&H/U).>	System is normal.
9	**CHECK HARNESS.** 1) Shake the harness, and check for poor contact. 2) Using the Subaru Select Monitor, read DTC of CAN system.	Is U0417 a current malfunction?	Repair the poor contact of harness, or replace the harness.	Go to step **10**.
10	**CHECK CONNECTOR.** Check the connector used for high speed CAN for poor contact.	Is there poor contact of connector?	Repair the connector that has poor contact, or replace harness.	It is possible that temporary poor communication occurs. Delete the DTC.

H: DTC U0420 INVALID DATA RECEIVED FROM POWER STEERING CONTROL MODULE

DTC DETECTING CONDITION:
Defective data was transmitted from EPS CM.
TROUBLE SYMPTOM:
Cooperation control with EPS CM does not operate properly.

	Step	Check	Yes	No
1	**CHECK PERFORMING OF BASIC DIAGNOSTIC PROCEDURE.**	Was the basic diagnostic procedure performed up to STEP 8?	Go to step **2**.	Perform the basic diagnostic procedure. <Ref. to LAN(diag)-2, Basic Diagnostic Procedure.>
2	**CHECK DTC.** Check the displayed DTC.	Are DTCs other than U*** displayed?	Perform the diagnosis according to DTC.	Go to step **3**.
3	**CHECK DTC.** Check the displayed DTC.	Is DTC for the bus off or the data no-receive displayed?	Perform the diagnosis according to DTC.	Go to step **4**.
4	**CHECK DTC.** Check the displayed DTC.	Is U0420 a current malfunction?	Go to step **5**.	Go to step **9**.
5	**CHECK DTC.** 1) Turn the ignition switch to OFF. 2) Disconnect the power steering CM connector. 3) Connect the disconnected connectors. 4) Read the DTC using Subaru Select Monitor.	Is U0420 a current malfunction?	Go to step **6**.	Go to step **9**.
6	**CHECK DTC.** Using the Subaru Select Monitor, read DTC of all the systems.	Is the electric power steering data abnormal detected in several modules?	Replace the power steering CM. <Ref. to PS-38, Power Steering Control Module.>	Go to step **7**.
7	**REPLACE MODULE.** 1) Replace the power steering CM. 2) Read the DTC using Subaru Select Monitor.	Is U0420 a current malfunction?	Go to step **8**.	System is normal.
8	**CHECK MODULE.** 1) Reinstall the power steering CM. 2) Replace the module that the DTC has been detected. 3) Read the DTC using Subaru Select Monitor.	Is U0420 a current malfunction?	Replace the power steering CM. <Ref. to PS-38, Power Steering Control Module.>	System is normal.
9	**CHECK HARNESS.** 1) Shake the harness, and check for poor contact. 2) Using the Subaru Select Monitor, read DTC of CAN system.	Is U0420 a current malfunction?	Repair the poor contact of harness, or replace the harness.	Go to step **10**.
10	**CHECK CONNECTOR.** Check the connector used for high speed CAN for poor contact.	Is there poor contact of connector?	Repair the connector that has poor contact, or replace harness.	It is possible that temporary poor communication occurs. Delete the DTC.

I: DTC U0422 INVALID DATA RECEIVED FROM BODY CONTROL MODULE

DTC DETECTING CONDITION:
Defective data was transmitted from body integrated unit.
TROUBLE SYMPTOM:
Cooperation control with body integrated unit does not operate properly.

	Step	Check	Yes	No
1	**CHECK PERFORMING OF BASIC DIAGNOSTIC PROCEDURE.**	Was the basic diagnostic procedure performed up to STEP 8?	Go to step **2**.	Perform the basic diagnostic procedure. <Ref. to LAN(diag)-2, Basic Diagnostic Procedure.>
2	**CHECK DTC.** Check the displayed DTC.	Are DTCs other than U*** displayed?	Perform the diagnosis according to DTC.	Go to step **3**.
3	**CHECK DTC.** Check the displayed DTC.	Is DTC for the bus off or the data no-receive displayed?	Perform the diagnosis according to DTC.	Go to step **4**.
4	**CHECK DTC.** Check the displayed DTC.	Is U0422 a current malfunction?	Go to step **5**.	Go to step **9**.
5	**CHECK DTC.** 1) Turn the ignition switch to OFF. 2) Disconnect the body integrated unit connector. 3) Connect the disconnected connectors. 4) Read the DTC using Subaru Select Monitor.	Is U0422 a current malfunction?	Go to step **6**.	Go to step **9**.
6	**CHECK DTC.** Using the Subaru Select Monitor, read DTC of all the systems.	Is the body integrated data abnormal detected in several modules?	Replace the body integrated unit. <Ref. to SL-83, Body Integrated Unit.>	Go to step **7**.
7	**REPLACE MODULE.** 1) Replace the body integrated unit. 2) Read the DTC using Subaru Select Monitor.	Is U0422 a current malfunction?	Go to step **8**.	System is normal.
8	**CHECK MODULE.** 1) Reinstall the body integrated unit. 2) Replace the module that the DTC has been detected. 3) Read the DTC using Subaru Select Monitor.	Is U0422 a current malfunction?	Replace the body integrated unit. <Ref. to SL-83, Body Integrated Unit.>	System is normal.
9	**CHECK HARNESS.** 1) Shake the harness, and check for poor contact. 2) Using the Subaru Select Monitor, read DTC of CAN system.	Is U0422 a current malfunction?	Repair the poor contact of harness, or replace the harness.	Go to step **10**.
10	**CHECK CONNECTOR.** Check the connector used for high speed CAN for poor contact.	Is there poor contact of connector?	Repair the connector that has poor contact, or replace harness.	It is possible that temporary poor communication occurs. Delete the DTC.

J: DTC U0423 INVALID DATA RECEIVED FROM INSTRUMENT PANEL CLUSTER CONTROL MODULE

DTC DETECTING CONDITION:
Defective data was transmitted from combination meter.
TROUBLE SYMPTOM:
Display of combination meter does not operate properly.

	Step	Check	Yes	No
1	**CHECK PERFORMING OF BASIC DIAGNOSTIC PROCEDURE.**	Was the basic diagnostic procedure performed up to STEP 8?	Go to step **2**.	Perform the basic diagnostic procedure. <Ref. to LAN(diag)-2, Basic Diagnostic Procedure.>
2	**CHECK DTC.** Check the displayed DTC.	Are DTCs other than U*** displayed?	Perform the diagnosis according to DTC.	Go to step **3**.
3	**CHECK DTC.** Check the displayed DTC.	Is DTC for the bus off or the data no-receive displayed?	Perform the diagnosis according to DTC.	Go to step **4**.
4	**CHECK DTC.** Check the displayed DTC.	Is U0423 a current malfunction?	Go to step **5**.	Go to step **9**.
5	**CHECK DTC.** 1) Turn the ignition switch to OFF. 2) Disconnect the combination meter connector. 3) Connect the disconnected connectors. 4) Read the DTC using Subaru Select Monitor.	Is U0423 a current malfunction?	Go to step **6**.	Go to step **9**.
6	**CHECK DTC.** Using the Subaru Select Monitor, read DTC of all the systems.	Is the meter data abnormal detected in several modules?	Replace the combination meter. <Ref. to IDI-11, Combination Meter.>	Go to step **7**.
7	**REPLACE MODULE.** 1) Replace the combination meter. 2) Read the DTC using Subaru Select Monitor.	Is U0423 a current malfunction?	Go to step **8**.	System is normal.
8	**CHECK MODULE.** 1) Replace the current combination meter with the original combination meter. 2) Replace the module that the DTC has been detected. 3) Read the DTC using Subaru Select Monitor.	Is U0423 a current malfunction?	Replace the combination meter. <Ref. to IDI-11, Combination Meter.>	System is normal.
9	**CHECK HARNESS.** 1) Shake the harness, and check for poor contact. 2) Using the Subaru Select Monitor, read DTC of CAN system.	Is U0423 a current malfunction?	Repair the poor contact of harness, or replace the harness.	Go to step **10**.
10	**CHECK CONNECTOR.** Check the connector used for high speed CAN for poor contact.	Is there poor contact of connector?	Repair the connector that has poor contact, or replace harness.	It is possible that temporary poor communication occurs. Delete the DTC.

K: DTC U0424 INVALID DATA RECEIVED FROM HVAC CONTROL MODULE

DTC DETECTING CONDITION:
Defective data was transmitted from A/C CM.
TROUBLE SYMPTOM:
Cooperation control of air conditioner does not operate properly.

	Step	Check	Yes	No
1	**CHECK PERFORMING OF BASIC DIAGNOSTIC PROCEDURE.**	Was the basic diagnostic procedure performed up to STEP 8?	Go to step **2**.	Perform the basic diagnostic procedure. <Ref. to LAN(diag)-2, Basic Diagnostic Procedure.>
2	**CHECK DTC.** Check the displayed DTC.	Are DTCs other than U*** displayed?	Perform the diagnosis according to DTC.	Go to step **3**.
3	**CHECK DTC.** Check the displayed DTC.	Is DTC for the bus off or the data no-receive displayed?	Perform the diagnosis according to DTC.	Go to step **4**.
4	**CHECK DTC.** Check the displayed DTC.	Is U0424 a current malfunction?	Go to step **5**.	Go to step **9**.
5	**CHECK DTC.** 1) Turn the ignition switch to OFF. 2) Disconnect the A/C CM connector. 3) Connect the disconnected connectors. 4) Read the DTC using Subaru Select Monitor.	Is U0424 a current malfunction?	Go to step **6**.	Go to step **9**.
6	**CHECK DTC.** Using the Subaru Select Monitor, read DTC of all the systems.	Is the air conditioner data abnormal detected in several modules?	Replace the A/C CM. <Ref. to AC-49, Control Unit.>	Go to step **7**.
7	**REPLACE MODULE.** 1) Replace the A/C CM. 2) Read the DTC using Subaru Select Monitor.	Is U0424 a current malfunction?	Go to step **8**.	System is normal.
8	**CHECK MODULE.** 1) Reinstall the A/C CM. 2) Replace the module that the DTC has been detected. 3) Read the DTC using Subaru Select Monitor.	Is U0424 a current malfunction?	Replace the A/C CM. <Ref. to AC-49, Control Unit.>	System is normal.
9	**CHECK HARNESS.** 1) Shake the harness, and check for poor contact. 2) Read the DTC using Subaru Select Monitor.	Is U0424 a current malfunction?	Repair the poor contact of harness, or replace the harness.	Go to step **10**.
10	**CHECK CONNECTOR.** Check the connector used for high speed CAN for poor contact.	Is there poor contact of connector?	Repair the connector that has poor contact, or replace harness.	It is possible that temporary poor communication occurs. Delete the DTC.

L: DTC U0426 INVALID DATA RECEIVED FROM IMMOBILIZER CONTROL MODULE

DTC DETECTING CONDITION:
Invalid data was transmitted from immobilizer CM.
TROUBLE SYMPTOM:
Immobilizer does not operate normally.

	Step	Check	Yes	No
1	**CHECK PERFORMING OF BASIC DIAGNOSTIC PROCEDURE.**	Was the basic diagnostic procedure performed up to STEP 8?	Go to step **2**.	Perform the basic diagnostic procedure. <Ref. to LAN(diag)-2, Basic Diagnostic Procedure.>
2	**CHECK DTC.** Check the displayed DTC.	Are DTCs other than U*** displayed?	Perform the diagnosis according to DTC.	Go to step **3**.
3	**CHECK DTC.** Check the displayed DTC.	Is DTC for the bus off or the data no-receive displayed?	Perform the diagnosis according to DTC.	Go to step **4**.
4	**CHECK DTC.** Check the displayed DTC.	Is U0426 a current malfunction?	Go to step **5**.	Go to step **9**.
5	**CHECK DTC.** 1) Turn the ignition switch to OFF. 2) Disconnect the immobilizer CM connector. 3) Connect the disconnected connectors. 4) Read the DTC using Subaru Select Monitor.	Is U0426 a current malfunction?	Go to step **6**.	Go to step **9**.
6	**CHECK DTC.** Using the Subaru Select Monitor, read DTC of all the systems.	Is the immobilizer data abnormal detected in several modules?	Replace the immobilizer CM. <Ref. to SL-90, Immobilizer Control Module.>	Go to step **7**.
7	**REPLACE MODULE.** 1) Replace the immobilizer CM. 2) Read the DTC using Subaru Select Monitor.	Is U0426 a current malfunction?	Go to step **8**.	System is normal.
8	**CHECK MODULE.** 1) Reinstall the immobilizer CM. 2) Replace the module that the DTC has been detected. 3) Read the DTC using Subaru Select Monitor.	Is U0426 a current malfunction?	Replace the immobilizer CM. <Ref. to SL-90, Immobilizer Control Module.>	System is normal.
9	**CHECK HARNESS.** 1) Shake the harness, and check for poor contact. 2) Read the DTC using Subaru Select Monitor.	Is U0426 a current malfunction?	Repair the poor contact of harness, or replace the harness.	Go to step **10**.
10	**CHECK CONNECTOR.** Check the connector used for high speed CAN for poor contact.	Is there poor contact of connector?	Repair the connector that has poor contact, or replace harness.	It is possible that temporary poor communication occurs. Delete the DTC.

M: DTC U0427 INVALID DATA RECEIVED FROM VEHICLE SECURITY CONTROL MODULE

DTC DETECTING CONDITION:
Defective data was transmitted from keyless access CM.
TROUBLE SYMPTOM:
Cooperation control of keyless access does not operate properly.

	Step	Check	Yes	No
1	**CHECK PERFORMING OF BASIC DIAGNOSTIC PROCEDURE.**	Was the basic diagnostic procedure performed up to STEP 8?	Go to step **2**.	Perform the basic diagnostic procedure. <Ref. to LAN(diag)-2, Basic Diagnostic Procedure.>
2	**CHECK DTC.** Check the displayed DTC.	Are DTCs other than U*** displayed?	Perform the diagnosis according to DTC.	Go to step **3**.
3	**CHECK DTC.** Check the displayed DTC.	Is DTC for the bus off or the data no-receive displayed?	Perform the diagnosis according to DTC.	Go to step **4**.
4	**CHECK DTC.** Check the displayed DTC.	Is U0427 a current malfunction?	Go to step **5**.	Go to step **9**.
5	**CHECK DTC.** 1) Turn the ignition switch to OFF. 2) Disconnect the keyless access CM connector. 3) Connect the disconnected connectors. 4) Read the DTC using Subaru Select Monitor.	Is U0427 a current malfunction?	Go to step **6**.	Go to step **9**.
6	**CHECK DTC.** Using the Subaru Select Monitor, read DTC of all the systems.	Is the smart data abnormal detected in several modules?	Replace the keyless access CM. <Ref. to SL-102, Keyless Access CM.>	Go to step **7**.
7	**REPLACE MODULE.** 1) Replace the keyless access CM. NOTE: Do not register the keyless access CM. 2) Read the DTC using Subaru Select Monitor.	Is U0427 a current malfunction?	Go to step **8**.	System is normal. NOTE: Register the keyless access CM.
8	**CHECK MODULE.** 1) Reinstall the keyless access CM. 2) Replace the body integrated unit. <Ref. to SL-83, Body Integrated Unit.> 3) Read the DTC using Subaru Select Monitor.	Is U0427 a current malfunction?	Replace the keyless access CM. <Ref. to SL-102, Keyless Access CM.>	System is normal.
9	**CHECK HARNESS.** 1) Shake the harness, and check for poor contact. 2) Read the DTC using Subaru Select Monitor.	Is U0427 a current malfunction?	Repair the poor contact of harness, or replace the harness.	Go to step **10**.
10	**CHECK CONNECTOR.** Check the connector used for high speed CAN for poor contact.	Is there poor contact of connector?	Repair the connector that has poor contact, or replace harness.	It is possible that temporary poor communication occurs. Delete the DTC.

N: DTC U0428 INVALID DATA RECEIVED FROM STEERING ANGLE SENSOR MODULE

DTC DETECTING CONDITION:
Defective data was transmitted from steering angle sensor.
TROUBLE SYMPTOM:
VDC CM does not operate normally.

	Step	Check	Yes	No
1	**CHECK PERFORMING OF BASIC DIAGNOSTIC PROCEDURE.**	Was the basic diagnostic procedure performed up to STEP 8?	Go to step **2**.	Perform the basic diagnostic procedure. <Ref. to LAN(diag)-2, Basic Diagnostic Procedure.>
2	**CHECK DTC.** Check the displayed DTC.	Are DTCs other than U*** displayed?	Perform the diagnosis according to DTC.	Go to step **3**.
3	**CHECK DTC.** Check the displayed DTC.	Is DTC for the bus off or the data no-receive displayed?	Perform the diagnosis according to DTC.	Go to step **4**.
4	**CHECK DTC.** Check the displayed DTC.	Is U0428 a current malfunction?	Go to step **5**.	Go to step **9**.
5	**CHECK DTC.** 1) Turn the ignition switch to OFF. 2) Disconnect the steering angle sensor connector. 3) Connect the disconnected connectors. 4) Read the DTC using Subaru Select Monitor.	Is U0428 a current malfunction?	Go to step **6**.	Go to step **9**.
6	**CHECK DTC.** Using the Subaru Select Monitor, read DTC of all the systems.	Is the steering angle sensor data abnormal detected in several modules?	Replace the steering angle sensor. <Ref. to VDC-26, Steering Angle Sensor.>	Go to step **7**.
7	**REPLACE MODULE.** 1) Replace the steering angle sensor. 2) Read the DTC using Subaru Select Monitor.	Is U0428 a current malfunction?	Go to step **8**.	System is normal.
8	**CHECK MODULE.** 1) Reinstall the steering angle sensor. 2) Replace the module that the DTC has been detected. 3) Read the DTC using Subaru Select Monitor.	Is U0428 a current malfunction?	Replace the steering angle sensor. <Ref. to VDC-26, Steering Angle Sensor.>	System is normal.
9	**CHECK HARNESS.** 1) Shake the harness, and check for poor contact. 2) Using the Subaru Select Monitor, read DTC of CAN system.	Is U0428 a current malfunction?	Repair the poor contact of harness, or replace the harness.	Go to step **10**.
10	**CHECK CONNECTOR.** Check the connector used for high speed CAN for poor contact.	Is there poor contact of connector?	Repair the connector that has poor contact, or replace harness.	It is possible that temporary poor communication occurs. Delete the DTC.

O: DTC U0452 INVALID DATA RECEIVED FROM RESTRAINTS CONTROL MODULE

DTC DETECTING CONDITION:
Defective data was transmitted from steering angle sensor.
TROUBLE SYMPTOM:
VDC CM does not operate normally.

	Step	Check	Yes	No
1	**CHECK PERFORMING OF BASIC DIAGNOSTIC PROCEDURE.**	Was the basic diagnostic procedure performed up to STEP 8?	Go to step **2**.	Perform the basic diagnostic procedure. <Ref. to LAN(diag)-2, Basic Diagnostic Procedure.>
2	**CHECK DTC.** Check the displayed DTC.	Are DTCs other than U*** displayed?	Perform the diagnosis according to DTC.	Go to step **3**.
3	**CHECK DTC.** Check the displayed DTC.	Is DTC for the bus off or the data no-receive displayed?	Perform the diagnosis according to DTC.	Go to step **4**.
4	**CHECK DTC.** Check the displayed DTC.	Is U0452 a current malfunction?	Go to step **5**.	Go to step **9**.
5	**CHECK DTC.** 1) Turn the ignition switch to OFF. 2) Disconnect the steering angle sensor connector. 3) Connect the disconnected connectors. 4) Read the DTC using Subaru Select Monitor.	Is U0452 a current malfunction?	Go to step **6**.	Go to step **9**.
6	**CHECK DTC.** Using the Subaru Select Monitor, read DTC of all the systems.	Is the airbag data abnormal detected in several modules?	Replace the airbag CM. <Ref. to AB-50, Airbag Control Module.>	Go to step **7**.
7	**REPLACE MODULE.** 1) Replace the airbag CM. <Ref. to AB-50, Airbag Control Module.> 2) Read the DTC using Subaru Select Monitor.	Is U0452 a current malfunction?	Go to step **8**.	System is normal.
8	**CHECK MODULE.** 1) Reinstall the airbag CM. 2) Replace the module that the DTC has been detected. 3) Read the DTC using Subaru Select Monitor.	Is U0452 a current malfunction?	Replace the airbag CM. <Ref. to AB-50, Airbag Control Module.>	System is normal.
9	**CHECK HARNESS.** 1) Shake the harness, and check for poor contact. 2) Using the Subaru Select Monitor, read DTC of CAN system.	Is U0452 a current malfunction?	Repair the poor contact of harness, or replace the harness.	Go to step **10**.
10	**CHECK CONNECTOR.** Check the connector used for high speed CAN for poor contact.	Is there poor contact of connector?	Repair the connector that has poor contact, or replace harness.	It is possible that temporary poor communication occurs. Delete the DTC.

P: DTC U1422 INVALID DATA RECEIVED FROM BODY CONTROL MODULE BODY-CAN

DTC DETECTING CONDITION:
Defective data was transmitted from body integrated unit.
TROUBLE SYMPTOM:
Cooperation control with body integrated unit does not operate properly.

	Step	Check	Yes	No
1	**CHECK PERFORMING OF BASIC DIAGNOSTIC PROCEDURE.**	Was the basic diagnostic procedure performed up to STEP 8?	Go to step **2**.	Perform the basic diagnostic procedure. <Ref. to LAN(diag)-2, Basic Diagnostic Procedure.>
2	**CHECK DTC.** Check the displayed DTC.	Are DTCs other than U*** displayed?	Perform the diagnosis according to DTC.	Go to step **3**.
3	**CHECK DTC.** Check the displayed DTC.	Is DTC for the bus off or the data no-receive displayed?	Perform the diagnosis according to DTC.	Go to step **4**.
4	**CHECK DTC.** Check the displayed DTC.	Is U1422 a current malfunction?	Go to step **5**.	Go to step **9**.
5	**CHECK DTC.** 1) Turn the ignition switch to OFF. 2) Disconnect the body integrated unit connector. 3) Connect the disconnected connectors. 4) Read the DTC using Subaru Select Monitor.	Is U1422 a current malfunction?	Go to step **6**.	Go to step **9**.
6	**CHECK DTC.** Using the Subaru Select Monitor, read DTC of all the systems.	Is the body integrated data abnormal detected in several modules?	Replace the body integrated unit. <Ref. to SL-83, Body Integrated Unit.>	Go to step **7**.
7	**REPLACE MODULE.** 1) Replace the body integrated unit. 2) Read the DTC using Subaru Select Monitor.	Is U1422 a current malfunction?	Go to step **8**.	System is normal.
8	**CHECK MODULE.** 1) Reinstall the body integrated unit. 2) Replace the module that the DTC has been detected. 3) Read the DTC using Subaru Select Monitor.	Is U1422 a current malfunction?	Replace the body integrated unit. <Ref. to SL-83, Body Integrated Unit.>	System is normal.
9	**CHECK HARNESS.** 1) Shake the harness, and check for poor contact. 2) Using the Subaru Select Monitor, read DTC of CAN system.	Is U1422 a current malfunction?	Repair the poor contact of harness, or replace the harness.	Go to step **10**.
10	**CHECK CONNECTOR.** Check the connector used for high speed CAN for poor contact.	Is there poor contact of connector?	Repair the connector that has poor contact, or replace harness.	It is possible that temporary poor communication occurs. Delete the DTC.

Q: DTC U1433 INVALID DATA RECEIVED FROM EyeSight

DTC DETECTING CONDITION:
Defective data was transmitted from stereo camera.
TROUBLE SYMPTOM:
Cooperation control of EyeSight does not operate properly.

	Step	Check	Yes	No
1	**CHECK PERFORMING OF BASIC DIAGNOSTIC PROCEDURE.**	Was the basic diagnostic procedure performed up to STEP 3?	Go to step **2**.	Perform the basic diagnostic procedure. <Ref. to LAN(diag)-2, Basic Diagnostic Procedure.>
2	**CHECK DTC.** Check the displayed DTC.	Are DTCs other than U*** displayed?	Perform the diagnosis according to DTC.	Go to step **3**.
3	**CHECK DTC.** Check the displayed DTC.	Is DTC for the bus off or the data no-receive displayed?	Perform the diagnosis according to DTC.	Go to step **4**.
4	**CHECK DTC.** Check the displayed DTC.	Is U1433 a current malfunction?	Go to step **5**.	Go to step **9**.
5	**CHECK DTC.** 1) Turn the ignition switch to OFF. 2) Disconnect the stereo camera connector. 3) Connect the disconnected connectors. 4) Read the DTC using Subaru Select Monitor.	Is U1433 a current malfunction?	Go to step **6**.	Go to step **9**.
6	**CHECK DTC.** Using the Subaru Select Monitor, read DTC of all the systems.	Is the EyeSight data abnormal detected in several modules?	Replace the stereo camera. <Ref. to ES-8, Stereo Camera.>	Go to step **7**.
7	**REPLACE MODULE.** 1) Replace the stereo camera. 2) Read the DTC using Subaru Select Monitor.	Is U1433 a current malfunction?	Go to step **8**.	System is normal.
8	**CHECK MODULE.** 1) Reinstall the stereo camera. 2) Replace the module that the DTC has been detected. 3) Read the DTC using Subaru Select Monitor.	Is U1433 a current malfunction?	Replace the stereo camera. <Ref. to ES-8, Stereo Camera.>	System is normal.
9	**CHECK HARNESS.** 1) Shake the harness, and check for poor contact. 2) Using the Subaru Select Monitor, read DTC of CAN system.	Is U1433 a current malfunction?	Repair the poor contact of harness, or replace the harness.	Go to step **10**.
10	**CHECK CONNECTOR.** Check the connector used for high speed CAN for poor contact.	Is there poor contact of connector?	Repair the connector that has poor contact, or replace harness.	It is possible that temporary poor communication occurs. Delete the DTC.

R: DTC U0100 LOST COMMUNICATION WITH ECM/PCM "A"

DTC DETECTING CONDITION:
No data is received from ECM.
TROUBLE SYMPTOM:
Cooperation control of transmission may not operate properly.

	Step	Check	Yes	No
1	**CHECK PERFORMING OF BASIC DIAGNOSTIC PROCEDURE.**	Was the basic diagnostic procedure performed up to STEP 8?	Go to step **2**.	Perform the basic diagnostic procedure. <Ref. to LAN(diag)-2, Basic Diagnostic Procedure.>
2	**CHECK DTC.** Check the displayed DTC.	Are DTCs other than U*** displayed?	Perform the diagnosis according to DTC.	Go to step **3**.
3	**CHECK DTC.** Check the displayed DTC.	Is U0100 a current malfunction?	Go to step **4**.	Go to step **8**.
4	**CHECK DTC.** 1) Check CAN communication circuit. <Ref. to LAN(diag)-36, CAN Communication Circuit Check.> 2) Read the DTC using Subaru Select Monitor.	Is U0100 a current malfunction?	Go to step **5**.	Go to step **8**.
5	**CHECK DTC.** Using the Subaru Select Monitor, read DTC of all the systems.	Is the engine data no-receive detected in several modules?	Replace the ECM. <Ref. to FU(H4DO)-82, Engine Control Module (ECM).> <Ref. to FU(H6DO)-83, Engine Control Module (ECM).>	Go to step **6**.
6	**REPLACE MODULE.** 1) Replace the ECM. <Ref. to FU(H4DO)-82, Engine Control Module (ECM).> <Ref. to FU(H6DO)-83, Engine Control Module (ECM).> 2) Read the DTC using Subaru Select Monitor.	Is U0100 a current malfunction?	Go to step **7**.	System is normal.
7	**CHECK MODULE.** 1) Reinstall the ECM. 2) Replace the module that the DTC has been detected. 3) Read the DTC using Subaru Select Monitor.	Is U0100 a current malfunction?	Replace the ECM. <Ref. to FU(H4DO)-82, Engine Control Module (ECM).> <Ref. to FU(H6DO)-83, Engine Control Module (ECM).>	System is normal.
8	**CHECK HARNESS.** 1) Shake the harness, and check for poor contact. 2) Read the DTC using Subaru Select Monitor.	Is U0100 a current malfunction?	Repair the poor contact of harness, or replace the harness.	Go to step **9**.
9	**CHECK CONNECTOR.** Check the connector used for high speed CAN for poor contact.	Is there poor contact of connector?	Repair the connector that has poor contact, or replace harness.	It is possible that temporary poor communication occurs. Delete the DTC.

S: DTC U0101 LOST COMMUNICATION WITH TCM

DTC DETECTING CONDITION:
No data is received from TCM.
TROUBLE SYMPTOM:
Cooperation control with transmission is not performed.

	Step	Check	Yes	No
1	**CHECK PERFORMING OF BASIC DIAGNOSTIC PROCEDURE.**	Was the basic diagnostic procedure performed up to STEP 8?	Go to step **2**.	Perform the basic diagnostic procedure. <Ref. to LAN(diag)-2, Basic Diagnostic Procedure.>
2	**CHECK DTC.** Check the displayed DTC.	Are DTCs other than U*** displayed?	Perform the diagnosis according to DTC.	Go to step **3**.
3	**CHECK DTC.** Check the displayed DTC.	Is U0101 a current malfunction?	Go to step **4**.	Go to step **8**.
4	**CHECK DTC.** 1) Check CAN communication circuit. <Ref. to LAN(diag)-36, CAN Communication Circuit Check.> 2) Read the DTC using Subaru Select Monitor.	Is U0101 a current malfunction?	Go to step **5**.	Go to step **8**.
5	**CHECK DTC.** Using the Subaru Select Monitor, read DTC of all the systems.	Is the transmission data no-receive detected in several modules?	Replace the TCM. <Ref. to CVT(TR690)-142, Transmission Control Module (TCM).>	Go to step **6**.
6	**REPLACE MODULE.** 1) Replace the TCM. 2) Read the DTC using Subaru Select Monitor.	Is U0101 a current malfunction?	Go to step **7**.	System is normal.
7	**CHECK MODULE.** 1) Reinstall the TCM. 2) Replace the module that the DTC has been detected. 3) Read the DTC using Subaru Select Monitor.	Is U0101 a current malfunction?	Replace the TCM. <Ref. to CVT(TR690)-142, Transmission Control Module (TCM).>	System is normal.
8	**CHECK HARNESS.** 1) Shake the harness, and check for poor contact. 2) Read the DTC using Subaru Select Monitor.	Is U0101 a current malfunction?	Repair the poor contact of harness, or replace the harness.	Go to step **9**.
9	**CHECK CONNECTOR.** Check the connector used for high speed CAN for poor contact.	Is there poor contact of connector?	Repair the connector that has poor contact, or replace harness.	It is possible that temporary poor communication occurs. Delete the DTC.

T: DTC U0122 LOST COMMUNICATION WITH VEHICLE DYNAMICS CONTROL MODULE

DTC DETECTING CONDITION:
No data from VDCCM is received.
TROUBLE SYMPTOM:
ABS warning light and VDC warning light illuminate.

	Step	Check	Yes	No
1	**CHECK PERFORMING OF BASIC DIAGNOSTIC PROCEDURE.**	Was the basic diagnostic procedure performed up to STEP 8?	Go to step **2**.	Perform the basic diagnostic procedure. <Ref. to LAN(diag)-2, Basic Diagnostic Procedure.>
2	**CHECK DTC.** Check the displayed DTC.	Are DTCs other than U*** displayed?	Perform the diagnosis according to DTC.	Go to step **3**.
3	**CHECK DTC.** Check the displayed DTC.	Is U0122 a current malfunction?	Go to step **4**.	Go to step **8**.
4	**CHECK DTC.** 1) Check CAN communication circuit. <Ref. to LAN(diag)-36, CAN Communication Circuit Check.> 2) Read the DTC using Subaru Select Monitor.	Is U0122 a current malfunction?	Go to step **5**.	Go to step **8**.
5	**CHECK DTC.** Using the Subaru Select Monitor, read DTC of all the systems.	Is the VDC data no-receive detected in several modules?	Replace the VDC CM. <Ref. to VDC-8, VDC Control Module and Hydraulic Control Unit (VDCCM&H/U).>	Go to step **6**.
6	**REPLACE MODULE.** 1) Replace the VDC CM. 2) Read the DTC using Subaru Select Monitor.	Is U0122 a current malfunction?	Go to step **7**.	System is normal.
7	**CHECK MODULE.** 1) Reinstall the VDC CM. 2) Replace the module that the DTC has been detected. 3) Read the DTC using Subaru Select Monitor.	Is U0122 a current malfunction?	Replace the VDC CM. <Ref. to VDC-8, VDC Control Module and Hydraulic Control Unit (VDCCM&H/U).>	System is normal.
8	**CHECK HARNESS.** 1) Shake the harness, and check for poor contact. 2) Read the DTC using Subaru Select Monitor.	Is U0122 a current malfunction?	Repair the poor contact of harness, or replace the harness.	Go to step **9**.
9	**CHECK CONNECTOR.** Check the connector used for high speed CAN for poor contact.	Is there poor contact of connector?	Repair the connector that has poor contact, or replace harness.	It is possible that temporary poor communication occurs. Delete the DTC.

U: DTC U0126 LOST COMMUNICATION WITH STEERING ANGLE SENSOR MODULE

DTC DETECTING CONDITION:
No data is received from steering angle sensor.
TROUBLE SYMPTOM:
VDC CM does not operate normally.

	Step	Check	Yes	No
1	**CHECK PERFORMING OF BASIC DIAGNOSTIC PROCEDURE.**	Was the basic diagnostic procedure performed up to STEP 8?	Go to step **2**.	Perform the basic diagnostic procedure. <Ref. to LAN(diag)-2, Basic Diagnostic Procedure.>
2	**CHECK DTC.** Check the displayed DTC.	Are DTCs other than U*** displayed?	Perform the diagnosis according to DTC.	Go to step **3**.
3	**CHECK DTC.** Check the displayed DTC.	Is U0126 a current malfunction?	Go to step **4**.	Go to step **8**.
4	**CHECK DTC.** 1) Check CAN communication circuit. <Ref. to LAN(diag)-36, CAN Communication Circuit Check.> 2) Read the DTC using Subaru Select Monitor.	Is U0126 a current malfunction?	Go to step **5**.	Go to step **8**.
5	**CHECK DTC.** Using the Subaru Select Monitor, read DTC of all the systems.	Is the steering angle sensor data no-receive detected in several modules?	Replace the steering angle sensor. <Ref. to VDC-26, Steering Angle Sensor.>	Go to step **6**.
6	**REPLACE MODULE.** 1) Replace the steering angle sensor. 2) Read the DTC using Subaru Select Monitor.	Is U0126 a current malfunction?	Go to step **7**.	System is normal.
7	**CHECK MODULE.** 1) Reinstall the steering angle sensor. 2) Replace the module that the DTC has been detected. 3) Read the DTC using Subaru Select Monitor.	Is U0126 a current malfunction?	Replace the steering angle sensor. <Ref. to VDC-26, Steering Angle Sensor.>	System is normal.
8	**CHECK HARNESS.** 1) Shake the harness, and check for poor contact. 2) Read the DTC using Subaru Select Monitor.	Is U0126 a current malfunction?	Repair the poor contact of harness, or replace the harness.	Go to step **9**.
9	**CHECK CONNECTOR.** Check the connector used for high speed CAN for poor contact.	Is there poor contact of connector?	Repair the connector that has poor contact, or replace harness.	It is possible that temporary poor communication occurs. Delete the DTC.

V: DTC U0128 LOST COMMUNICATION WITH PARK BRAKE CONTROL MODULE

DTC DETECTING CONDITION:
No data is received from VDC CM.
TROUBLE SYMPTOM:
VDC CM does not operate normally.

	Step	Check	Yes	No
1	**CHECK PERFORMING OF BASIC DIAGNOSTIC PROCEDURE.**	Was the basic diagnostic procedure performed up to STEP 8?	Go to step **2**.	Perform the basic diagnostic procedure. <Ref. to LAN(diag)-2, Basic Diagnostic Procedure.>
2	**CHECK DTC.** Check the displayed DTC.	Are DTCs other than U*** displayed?	Perform the diagnosis according to DTC.	Go to step **3**.
3	**CHECK DTC.** Check the displayed DTC.	Is U0128 a current malfunction?	Go to step **4**.	Go to step **8**.
4	**CHECK DTC.** 1) Check CAN communication circuit. <Ref. to LAN(diag)-36, CAN Communication Circuit Check.> 2) Read the DTC using Subaru Select Monitor.	Is U0128 a current malfunction?	Go to step **5**.	Go to step **8**.
5	**CHECK DTC.** Using the Subaru Select Monitor, read DTC of all the systems.	Is the electronic parking data no-receive detected in several modules?	Replace the VDC CM. <Ref. to VDC-8, VDC Control Module and Hydraulic Control Unit (VDCCM&H/U).>	Go to step **6**.
6	**REPLACE MODULE.** 1) Replace the VDC CM. <Ref. to VDC-8, VDC Control Module and Hydraulic Control Unit (VDCCM&H/U).> 2) Read the DTC using Subaru Select Monitor.	Is U0128 a current malfunction?	Go to step **7**.	System is normal.
7	**CHECK MODULE.** 1) Reinstall the VDC CM. 2) Replace the module that the DTC has been detected. 3) Read the DTC using Subaru Select Monitor.	Is U0128 a current malfunction?	Replace the VDC CM. <Ref. to VDC-8, VDC Control Module and Hydraulic Control Unit (VDCCM&H/U).>	System is normal.
8	**CHECK HARNESS.** 1) Shake the harness, and check for poor contact. 2) Read the DTC using Subaru Select Monitor.	Is U0128 a current malfunction?	Repair the poor contact of harness, or replace the harness.	Go to step **9**.
9	**CHECK CONNECTOR.** Check the connector used for high speed CAN for poor contact.	Is there poor contact of connector?	Repair the connector that has poor contact, or replace harness.	It is possible that temporary poor communication occurs. Delete the DTC.

W: DTC U0131 LOST COMMUNICATION WITH POWER STEERING CONTROL MODULE

DTC DETECTING CONDITION:
No data is received from power steering CM.
TROUBLE SYMPTOM:
Cooperation control with power steering CM does not operate properly.

	Step	Check	Yes	No
1	**CHECK PERFORMING OF BASIC DIAGNOSTIC PROCEDURE.**	Was the basic diagnostic procedure performed up to STEP 8?	Go to step **2**.	Perform the basic diagnostic procedure. <Ref. to LAN(diag)-2, Basic Diagnostic Procedure.>
2	**CHECK DTC.** Check the displayed DTC.	Are DTCs other than U*** displayed?	Perform the diagnosis according to DTC.	Go to step **3**.
3	**CHECK DTC.** Check the displayed DTC.	Is U0131 a current malfunction?	Go to step **4**.	Go to step **8**.
4	**CHECK DTC.** 1) Check CAN communication circuit. <Ref. to LAN(diag)-36, CAN Communication Circuit Check.> 2) Read the DTC using Subaru Select Monitor.	Is U0131 a current malfunction?	Go to step **5**.	Go to step **8**.
5	**CHECK DTC.** Using the Subaru Select Monitor, read DTC of all the systems.	Is the electric power steering data no-receive detected in several modules?	Replace the power steering CM. <Ref. to PS-38, Power Steering Control Module.>	Go to step **6**.
6	**REPLACE MODULE.** 1) Replace the power steering CM. 2) Read the DTC using Subaru Select Monitor.	Is U0131 a current malfunction?	Go to step **7**.	System is normal.
7	**CHECK MODULE.** 1) Reinstall the power steering CM. 2) Replace the module that the DTC has been detected. 3) Read the DTC using Subaru Select Monitor.	Is U0131 a current malfunction?	Replace the power steering CM. <Ref. to PS-38, Power Steering Control Module.>	System is normal.
8	**CHECK HARNESS.** 1) Shake the harness, and check for poor contact. 2) Read the DTC using Subaru Select Monitor.	Is U0131 a current malfunction?	Repair the poor contact of harness, or replace the harness.	Go to step **9**.
9	**CHECK CONNECTOR.** Check the connector used for high speed CAN for poor contact.	Is there poor contact of connector?	Repair the connector that has poor contact, or replace harness.	It is possible that temporary poor communication occurs. Delete the DTC.

X: DTC U0140 LOST COMMUNICATION WITH BODY CONTROL MODULE

DTC DETECTING CONDITION:
No data is received from body integrated unit.
TROUBLE SYMPTOM:
Cooperation control with body integrated unit does not operate properly.

	Step	Check	Yes	No
1	**CHECK PERFORMING OF BASIC DIAGNOSTIC PROCEDURE.**	Was the basic diagnostic procedure performed up to STEP 8?	Go to step **2**.	Perform the basic diagnostic procedure. <Ref. to LAN(diag)-2, Basic Diagnostic Procedure.>
2	**CHECK DTC.** Check the displayed DTC.	Are DTCs other than U*** displayed?	Perform the diagnosis according to DTC.	Go to step **3**.
3	**CHECK DTC.** Check the displayed DTC.	Is U0140 a current malfunction?	Go to step **4**.	Go to step **8**.
4	**CHECK DTC.** 1) Check CAN communication circuit. <Ref. to LAN(diag)-36, CAN Communication Circuit Check.> 2) Read the DTC using Subaru Select Monitor.	Is U0140 a current malfunction?	Go to step **5**.	Go to step **8**.
5	**CHECK DTC.** Using the Subaru Select Monitor, read DTC of all the systems.	Is the body integrated data no-receive detected in several modules?	Replace the body integrated unit. <Ref. to SL-83, Body Integrated Unit.>	Go to step **6**.
6	**REPLACE MODULE.** 1) Replace the body integrated unit. 2) Read the DTC using Subaru Select Monitor.	Is U0140 a current malfunction?	Go to step **7**.	System is normal.
7	**CHECK MODULE.** 1) Reinstall the body integrated unit. 2) Replace the module that the DTC has been detected. 3) Read the DTC using Subaru Select Monitor.	Is U0140 a current malfunction?	Replace the body integrated unit. <Ref. to SL-83, Body Integrated Unit.>	System is normal.
8	**CHECK HARNESS.** 1) Shake the harness, and check for poor contact. 2) Read the DTC using Subaru Select Monitor.	Is U0140 a current malfunction?	Repair the poor contact of harness, or replace the harness.	Go to step **9**.
9	**CHECK CONNECTOR.** Check the connector used for high speed CAN for poor contact.	Is there poor contact of connector?	Repair the connector that has poor contact, or replace harness.	It is possible that temporary poor communication occurs. Delete the DTC.

Y: DTC U0151 LOST COMMUNICATION WITH RESTRAINTS CONTROL MODULE

DTC DETECTING CONDITION:
No data is received from airbag CM.
TROUBLE SYMPTOM:
Cooperation control with airbag CM does not operate properly.

	Step	Check	Yes	No
1	**CHECK PERFORMING OF BASIC DIAGNOSTIC PROCEDURE.**	Was the basic diagnostic procedure performed up to STEP 8?	Go to step **2**.	Perform the basic diagnostic procedure. <Ref. to LAN(diag)-2, Basic Diagnostic Procedure.>
2	**CHECK DTC.** Check the displayed DTC.	Are DTCs other than U*** displayed?	Perform the diagnosis according to DTC.	Go to step **3**.
3	**CHECK DTC.** Check the displayed DTC.	Is U0151 a current malfunction?	Go to step **4**.	Go to step **8**.
4	**CHECK DTC.** 1) Check CAN communication circuit. <Ref. to LAN(diag)-36, CAN Communication Circuit Check.> 2) Read the DTC using Subaru Select Monitor.	Is U0151 a current malfunction?	Go to step **5**.	Go to step **8**.
5	**CHECK DTC.** Using the Subaru Select Monitor, read DTC of all the systems.	Is the airbag data no-receive detected in several modules?	Replace the airbag CM. <Ref. to AB-50, Airbag Control Module.>	Go to step **6**.
6	**REPLACE MODULE.** 1) Replace the airbag CM. 2) Read the DTC using Subaru Select Monitor.	Is U0151 a current malfunction?	Go to step **7**.	System is normal.
7	**CHECK MODULE.** 1) Reinstall the airbag CM. 2) Replace the module that the DTC has been detected. 3) Read the DTC using Subaru Select Monitor.	Is U0151 a current malfunction?	Replace the airbag CM. <Ref. to AB-50, Airbag Control Module.>	System is normal.
8	**CHECK HARNESS.** 1) Shake the harness, and check for poor contact. 2) Read the DTC using Subaru Select Monitor.	Is U0151 a current malfunction?	Repair the poor contact of harness, or replace the harness.	Go to step **9**.
9	**CHECK CONNECTOR.** Check the connector used for high speed CAN for poor contact.	Is there poor contact of connector?	Repair the connector that has poor contact, or replace harness.	It is possible that temporary poor communication occurs. Delete the DTC.

Z: DTC U0155 LOST COMMUNICATION WITH INSTRUMENT PANEL CLUSTER (IPC) CONTROL MODULE

DTC DETECTING CONDITION:
No data is received from combination meter.
TROUBLE SYMPTOM:
Display of combination meter does not operate properly.

	Step	Check	Yes	No
1	**CHECK PERFORMING OF BASIC DIAGNOSTIC PROCEDURE.**	Was the basic diagnostic procedure performed up to STEP 8?	Go to step **2**.	Perform the basic diagnostic procedure. <Ref. to LAN(diag)-2, Basic Diagnostic Procedure.>
2	**CHECK DTC.** Check the displayed DTC.	Are DTCs other than U*** displayed?	Perform the diagnosis according to DTC.	Go to step **3**.
3	**CHECK DTC.** Check the displayed DTC.	Is U0155 a current malfunction?	Go to step **4**.	Go to step **8**.
4	**CHECK DTC.** 1) Check CAN communication circuit. <Ref. to LAN(diag)-36, CAN Communication Circuit Check.> 2) Read the DTC using Subaru Select Monitor.	Is U0155 a current malfunction?	Go to step **5**.	Go to step **8**.
5	**CHECK DTC.** Using the Subaru Select Monitor, read DTC of all the systems.	Is the meter data no-receive detected in several modules?	Replace the meter. <Ref. to IDI-11, Combination Meter.>	Go to step **6**.
6	**REPLACE MODULE.** 1) Replace the combination meter. 2) Read the DTC using Subaru Select Monitor.	Is U0155 a current malfunction?	Go to step **7**.	System is normal.
7	**CHECK MODULE.** 1) Replace the current combination meter with the original combination meter. 2) Replace the module that the DTC has been detected. 3) Read the DTC using Subaru Select Monitor.	Is U0155 a current malfunction?	Replace the combination meter. <Ref. to IDI-11, Combination Meter.>	System is normal.
8	**CHECK HARNESS.** 1) Shake the harness, and check for poor contact. 2) Read the DTC using Subaru Select Monitor.	Is U0155 a current malfunction?	Repair the poor contact of harness, or replace the harness.	Go to step **9**.
9	**CHECK CONNECTOR.** Check the connector used for high speed CAN for poor contact.	Is there poor contact of connector?	Repair the connector that has poor contact, or replace harness.	It is possible that temporary poor communication occurs. Delete the DTC.

AA:DTC U0162 LOST COMMUNICATION WITH AUDIO VISUAL NAVIGATION DISPLAY MODULE

DTC DETECTING CONDITION:
No data is received from audio or navigation.
TROUBLE SYMPTOM:
The audio or navigation does not operate normally.

	Step	Check	Yes	No
1	**CHECK PERFORMING OF BASIC DIAGNOSTIC PROCEDURE.**	Was the basic diagnostic procedure performed up to STEP 8?	Go to step **2**.	Perform the basic diagnostic procedure. <Ref. to LAN(diag)-2, Basic Diagnostic Procedure.>
2	**CHECK DTC.** Check the displayed DTC.	Are DTCs other than U*** displayed?	Perform the diagnosis according to DTC.	Go to step **3**.
3	**CHECK DTC.** Check the displayed DTC.	Is U0162 a current malfunction?	Go to step **4**.	Go to step **8**.
4	**CHECK DTC.** 1) Check CAN communication circuit. <Ref. to LAN(diag)-36, CAN Communication Circuit Check.> 2) Read the DTC using Subaru Select Monitor.	Is U0162 a current malfunction?	Go to step **5**.	Go to step **8**.
5	**CHECK DTC.** Using the Subaru Select Monitor, read DTC of all the systems.	Is the AVN data no-receive detected in several modules?	Replace the audio or navigation. <Ref. to ET-23, Audio.> <Ref. to ET-47, Navigation Body.>	Go to step **6**.
6	**REPLACE MODULE.** 1) Replace the audio or navigation. 2) Read the DTC using Subaru Select Monitor.	Is U0162 a current malfunction?	Go to step **7**.	System is normal.
7	**CHECK MODULE.** 1) Reinstall the audio or navigation. 2) Replace the module that the DTC has been detected. 3) Read the DTC using Subaru Select Monitor.	Is U0162 a current malfunction?	Replace the audio or navigation. <Ref. to ET-23, Audio.> <Ref. to ET-47, Navigation Body.>	System is normal.
8	**CHECK HARNESS.** 1) Shake the harness, and check for poor contact. 2) Read the DTC using Subaru Select Monitor.	Is U0162 a current malfunction?	Repair the poor contact of harness, or replace the harness.	Go to step **9**.
9	**CHECK CONNECTOR.** Check the connector used for high speed CAN for poor contact.	Is there poor contact of connector?	Repair the connector that has poor contact, or replace harness.	It is possible that temporary poor communication occurs. Delete the DTC.

AB:DTC U0164 LOST COMMUNICATION WITH HVAC CONTROL MODULE

DTC DETECTING CONDITION:
No data is received from A/C CM.
TROUBLE SYMPTOM:
Cooperation control of air conditioner does not operate properly.

	Step	Check	Yes	No
1	**CHECK PERFORMING OF BASIC DIAGNOSTIC PROCEDURE.**	Was the basic diagnostic procedure performed up to STEP 8?	Go to step **2**.	Perform the basic diagnostic procedure. <Ref. to LAN(diag)-2, Basic Diagnostic Procedure.>
2	**CHECK DTC.** Check the displayed DTC.	Are DTCs other than U*** displayed?	Perform the diagnosis according to DTC.	Go to step **3**.
3	**CHECK DTC.** Check the displayed DTC.	Is U0164 a current malfunction?	Go to step **4**.	Go to step **8**.
4	**CHECK DTC.** 1) Check CAN communication circuit. <Ref. to LAN(diag)-36, CAN Communication Circuit Check.> 2) Read the DTC using Subaru Select Monitor.	Is U0164 a current malfunction?	Go to step **5**.	Go to step **8**.
5	**CHECK DTC.** Using the Subaru Select Monitor, read DTC of all the systems.	Is the air conditioner data no-receive detected in several modules?	Replace the A/C CM. <Ref. to AC-49, Control Unit.>	Go to step **6**.
6	**REPLACE MODULE.** 1) Replace the A/C CM. 2) Read the DTC using Subaru Select Monitor.	Is U0164 a current malfunction?	Go to step **7**.	System is normal.
7	**CHECK MODULE.** 1) Reinstall the A/C CM. 2) Replace the module that the DTC has been detected. 3) Read the DTC using Subaru Select Monitor.	Is U0164 a current malfunction?	Replace the A/C CM. <Ref. to AC-49, Control Unit.>	System is normal.
8	**CHECK HARNESS.** 1) Shake the harness, and check for poor contact. 2) Read the DTC using Subaru Select Monitor.	Is U0164 a current malfunction?	Repair the poor contact of harness, or replace the harness.	Go to step **9**.
9	**CHECK CONNECTOR.** Check the connector used for high speed CAN for poor contact.	Is there poor contact of connector?	Repair the connector that has poor contact, or replace harness.	It is possible that temporary poor communication occurs. Delete the DTC.

AC:DTC U0167 LOST COMMUNICATION WITH IMMOBILIZER CONTROL MODULE

DTC DETECTING CONDITION:
No data is received from immobilizer.
TROUBLE SYMPTOM:
Immobilizer does not operate normally.

	Step	Check	Yes	No
1	**CHECK PERFORMING OF BASIC DIAGNOSTIC PROCEDURE.**	Was the basic diagnostic procedure performed up to STEP 8?	Go to step **2**.	Perform the basic diagnostic procedure. <Ref. to LAN(diag)-2, Basic Diagnostic Procedure.>
2	**CHECK DTC.** Check the displayed DTC.	Are DTCs other than U*** displayed?	Perform the diagnosis according to DTC.	Go to step **3**.
3	**CHECK DTC.** Check the displayed DTC.	Is U0167 a current malfunction?	Go to step **4**.	Go to step **8**.
4	**CHECK DTC.** 1) Check CAN communication circuit. <Ref. to LAN(diag)-36, CAN Communication Circuit Check.> 2) Read the DTC using Subaru Select Monitor.	Is U0167 a current malfunction?	Go to step **5**.	Go to step **8**.
5	**CHECK DTC.** Using the Subaru Select Monitor, read DTC of all the systems.	Is the immobilizer data no-receive detected in several modules?	Replace the immobilizer CM. <Ref. to SL-90, Immobilizer Control Module.>	Go to step **6**.
6	**REPLACE MODULE.** 1) Replace the immobilizer CM. 2) Read the DTC using Subaru Select Monitor.	Is U0167 a current malfunction?	Go to step **7**.	System is normal.
7	**CHECK MODULE.** 1) Reinstall the immobilizer CM. 2) Replace the module that the DTC has been detected. 3) Read the DTC using Subaru Select Monitor.	Is U0167 a current malfunction?	Replace the immobilizer CM. <Ref. to SL-90, Immobilizer Control Module.>	System is normal.
8	**CHECK HARNESS.** 1) Shake the harness, and check for poor contact. 2) Read the DTC using Subaru Select Monitor.	Is U0167 a current malfunction?	Repair the poor contact of harness, or replace the harness.	Go to step **9**.
9	**CHECK CONNECTOR.** Check the connector used for high speed CAN for poor contact.	Is there poor contact of connector?	Repair the connector that has poor contact, or replace harness.	It is possible that temporary poor communication occurs. Delete the DTC.

AD:DTC U0181 LOST COMMUNICATION WITH HEADLAMP LEVELING CONTROL MODULE

DTC DETECTING CONDITION:
No data is received from auto headlight beam leveler CM or SRF CM.
TROUBLE SYMPTOM:
The auto headlight beam leveler or SRF does not operate normally.

	Step	Check	Yes	No
1	**CHECK PERFORMING OF BASIC DIAGNOSTIC PROCEDURE.**	Was the basic diagnostic procedure performed up to STEP 8?	Go to step **2**.	Perform the basic diagnostic procedure. <Ref. to LAN(diag)-2, Basic Diagnostic Procedure.>
2	**CHECK DTC.** Check the displayed DTC.	Are DTCs other than U*** displayed?	Perform the diagnosis according to DTC.	Go to step **3**.
3	**CHECK DTC.** Check the displayed DTC.	Is U0181 a current malfunction?	Go to step **4**.	Go to step **8**.
4	**CHECK DTC.** 1) Check CAN communication circuit. <Ref. to LAN(diag)-36, CAN Communication Circuit Check.> 2) Read the DTC using Subaru Select Monitor.	Is U0181 a current malfunction?	Go to step **5**.	Go to step **8**.
5	**CHECK DTC.** Using the Subaru Select Monitor, read DTC of all the systems.	Is the auto headlight beam leveler data no-receive detected in several modules?	Replace the auto headlight beam leveler CM or SRF CM. <Ref. to LI-80, Auto Headlight Beam Leveler Control Module.> <Ref. to LI-88, Steering Responsive Fog Lights CM.>	Go to step **6**.
6	**REPLACE MODULE.** 1) Replace the auto headlight beam leveler CM or SRF CM. 2) Read the DTC using Subaru Select Monitor.	Is U0181 a current malfunction?	Go to step **7**.	System is normal.
7	**CHECK MODULE.** 1) Reinstall the auto headlight beam leveler CM or SRF CM. 2) Replace the module that the DTC has been detected. 3) Read the DTC using Subaru Select Monitor.	Is U0181 a current malfunction?	Replace the auto headlight beam leveler CM or SRF CM. <Ref. to LI-80, Auto Headlight Beam Leveler Control Module.> <Ref. to LI-88, Steering Responsive Fog Lights CM.>	System is normal.
8	**CHECK HARNESS.** 1) Shake the harness, and check for poor contact. 2) Read the DTC using Subaru Select Monitor.	Is U0181 a current malfunction?	Repair the poor contact of harness, or replace the harness.	Go to step **9**.
9	**CHECK CONNECTOR.** Check the connector used for high speed CAN for poor contact.	Is there poor contact of connector?	Repair the connector that has poor contact, or replace harness.	It is possible that temporary poor communication occurs. Delete the DTC.

AE:DTC U0327 SOFTWARE INCOMPATIBILITY WITH VEHICLE SECURITY CONTROL MODULE

DTC DETECTING CONDITION:
No data is received from keyless access CM.
TROUBLE SYMPTOM:
Cooperation control of keyless access does not operate properly.

	Step	Check	Yes	No
1	**CHECK PERFORMING OF BASIC DIAGNOSTIC PROCEDURE.**	Was the basic diagnostic procedure performed up to STEP 8?	Go to step **2**.	Perform the basic diagnostic procedure. <Ref. to LAN(diag)-2, Basic Diagnostic Procedure.>
2	**CHECK DTC.** Check the displayed DTC.	Are DTCs other than U*** displayed?	Perform the diagnosis according to DTC.	Go to step **3**.
3	**CHECK DTC.** Check the displayed DTC.	Is U0327 a current malfunction?	Go to step **4**.	Go to step **7**.
4	**CHECK DTC.** Using the Subaru Select Monitor, read DTC of all the systems.	Is the smart data no-receive detected in several modules?	Replace the keyless access CM. <Ref. to SL-102, Keyless Access CM.>	Go to step **5**.
5	**REPLACE MODULE.** 1) Replace the keyless access CM. NOTE: Do not register the keyless access CM. 2) Read the DTC using Subaru Select Monitor.	Is U0327 a current malfunction?	Go to step **6**.	System is normal. NOTE: Register the keyless access CM.
6	**CHECK MODULE.** 1) Reinstall the keyless access CM. 2) Replace the module that the DTC has been detected. 3) Read the DTC using Subaru Select Monitor.	Is U0327 a current malfunction?	Replace the keyless access CM. <Ref. to SL-102, Keyless Access CM.>	System is normal.
7	**CHECK HARNESS.** 1) Shake the harness, and check for poor contact. 2) Read the DTC using Subaru Select Monitor.	Is U0327 a current malfunction?	Repair the poor contact of harness, or replace the harness.	Go to step **8**.
8	**CHECK CONNECTOR.** Check the connector used for high speed CAN for poor contact.	Is there poor contact of connector?	Repair the connector that has poor contact, or replace harness.	It is possible that temporary poor communication occurs. Delete the DTC.

AF:DTC U1140 LOST COMMUNICATION WITH BODY CONTROL MODULE BODY-CAN

DTC DETECTING CONDITION:
No data is received from body integrated unit.
TROUBLE SYMPTOM:
Cooperation control with body integrated unit does not operate properly.

	Step	Check	Yes	No
1	**CHECK PERFORMING OF BASIC DIAGNOSTIC PROCEDURE.**	Was the basic diagnostic procedure performed up to STEP 8?	Go to step **2**.	Perform the basic diagnostic procedure. <Ref. to LAN(diag)-2, Basic Diagnostic Procedure.>
2	**CHECK DTC.** Check the displayed DTC.	Are DTCs other than U*** displayed?	Perform the diagnosis according to DTC.	Go to step **3**.
3	**CHECK DTC.** Check the displayed DTC.	Is U1140 a current malfunction?	Go to step **4**.	Go to step **8**.
4	**CHECK DTC.** 1) Check CAN communication circuit. <Ref. to LAN(diag)-36, CAN Communication Circuit Check.> 2) Read the DTC using Subaru Select Monitor.	Is U1140 a current malfunction?	Go to step **5**.	Go to step **8**.
5	**CHECK DTC.** Using the Subaru Select Monitor, read DTC of all the systems.	Is the body integrated data no-receive detected in several modules?	Replace the body integrated unit. <Ref. to SL-83, Body Integrated Unit.>	Go to step **6**.
6	**REPLACE MODULE.** 1) Replace the body integrated unit. 2) Read the DTC using Subaru Select Monitor.	Is U1140 a current malfunction?	Go to step **7**.	System is normal.
7	**CHECK MODULE.** 1) Reinstall the body integrated unit. 2) Replace the module that the DTC has been detected. 3) Read the DTC using Subaru Select Monitor.	Is U1140 a current malfunction?	Replace the body integrated unit. <Ref. to SL-83, Body Integrated Unit.>	System is normal.
8	**CHECK HARNESS.** 1) Shake the harness, and check for poor contact. 2) Read the DTC using Subaru Select Monitor.	Is U1140 a current malfunction?	Repair the poor contact of harness, or replace the harness.	Go to step **9**.
9	**CHECK CONNECTOR.** Check the connector used for high speed CAN for poor contact.	Is there poor contact of connector?	Repair the connector that has poor contact, or replace harness.	It is possible that temporary poor communication occurs. Delete the DTC.

AG:DTC U1232 LOST COMMUNICATION WITH REAR/SIDE RADAR CONTROL MODULE

DTC DETECTING CONDITION:
No data is received from radar sensor.
TROUBLE SYMPTOM:
Radar sensor does not operate normally.

	Step	Check	Yes	No
1	**CHECK PERFORMING OF BASIC DIAGNOSTIC PROCEDURE.**	Was the basic diagnostic procedure performed up to STEP 8?	Go to step **2**.	Perform the basic diagnostic procedure. <Ref. to LAN(diag)-2, Basic Diagnostic Procedure.>
2	**CHECK DTC.** Check the displayed DTC.	Are DTCs other than U*** displayed?	Perform the diagnosis according to DTC.	Go to step **3**.
3	**CHECK DTC.** Check the displayed DTC.	Is U1232 a current malfunction?	Go to step **4**.	Go to step **8**.
4	**CHECK DTC.** 1) Check CAN communication circuit. <Ref. to LAN(diag)-36, CAN Communication Circuit Check.> 2) Read the DTC using Subaru Select Monitor.	Is U1232 a current malfunction?	Go to step **5**.	Go to step **8**.
5	**CHECK DTC.** Using the Subaru Select Monitor, read DTC of all the systems.	Is the radar data no-receive detected in several modules?	Replace the radar sensor LH. <Ref. to RVD-6, Radar Sensor.>	Go to step **6**.
6	**REPLACE MODULE.** 1) Replace the radar sensor LH. 2) Read the DTC using Subaru Select Monitor.	Is U1232 a current malfunction?	Go to step **7**.	System is normal.
7	**CHECK MODULE.** 1) Reinstall the radar sensor LH. 2) Replace the module that the DTC has been detected. 3) Read the DTC using Subaru Select Monitor.	Is U1232 a current malfunction?	Replace the radar sensor LH. <Ref. to RVD-6, Radar Sensor.>	System is normal.
8	**CHECK HARNESS.** 1) Shake the harness, and check for poor contact. 2) Read the DTC using Subaru Select Monitor.	Is U1232 a current malfunction?	Repair the poor contact of harness, or replace the harness.	Go to step **9**.
9	**CHECK CONNECTOR.** Check the connector used for high speed CAN for poor contact.	Is there poor contact of connector?	Repair the connector that has poor contact, or replace harness.	It is possible that temporary poor communication occurs. Delete the DTC.

AH:DTC U1235 LOST COMMUNICATION WITH EyeSight

DTC DETECTING CONDITION:
No data from stereo camera is received.
TROUBLE SYMPTOM:
Cooperation control of EyeSight does not operate properly.

	Step	Check	Yes	No
1	**CHECK PERFORMING OF BASIC DIAGNOSTIC PROCEDURE.**	Was the basic diagnostic procedure performed up to STEP 3?	Go to step **2**.	Perform the basic diagnostic procedure. <Ref. to LAN(diag)-2, Basic Diagnostic Procedure.>
2	**CHECK DTC.** Check the displayed DTC.	Are DTCs other than U*** displayed?	Perform the diagnosis according to DTC.	Go to step **3**.
3	**CHECK DTC.** Check the displayed DTC.	Is U1235 a current malfunction?	Go to step **4**.	Go to step **8**.
4	**CHECK DTC.** 1) Check CAN communication circuit. <Ref. to LAN(diag)-36, CAN Communication Circuit Check.> 2) Read the DTC using Subaru Select Monitor.	Is U1235 a current malfunction?	Go to step **5**.	Go to step **8**.
5	**CHECK DTC.** Using the Subaru Select Monitor, read DTC of all the systems.	Is the EyeSight data no-receive detected in several modules?	Replace the stereo camera. <Ref. to ES-8, Stereo Camera.>	Go to step **6**.
6	**REPLACE MODULE.** 1) Replace the stereo camera. 2) Read the DTC using Subaru Select Monitor.	Is U1235 a current malfunction?	Go to step **7**.	System is normal.
7	**CHECK MODULE.** 1) Reinstall the stereo camera. 2) Replace the module that the DTC has been detected. 3) Read the DTC using Subaru Select Monitor.	Is U1235 a current malfunction?	Replace the stereo camera. <Ref. to ES-8, Stereo Camera.>	System is normal.
8	**CHECK HARNESS.** 1) Shake the harness, and check for poor contact. 2) Read the DTC using Subaru Select Monitor.	Is U1235 a current malfunction?	Repair the poor contact of harness, or replace the harness.	Go to step **9**.
9	**CHECK CONNECTOR.** Check the connector used for high speed CAN for poor contact.	Is there poor contact of connector?	Repair the connector that has poor contact, or replace harness.	It is possible that temporary poor communication occurs. Delete the DTC.

13.General Diagnostic Table

A: INSPECTION

Item	Operation	Specifications		Note
		YES	NO	
Diagnostic trouble code	DTC is displayed when inspecting all DTCs.	Perform the diagnosis according to DTC.	System is normal.	—
Speedometer	Faster vehicle speed than the actual speed is displayed.	VDC CM data may not be received.	System is normal.	Also, check vehicle speed pulse circuit.
Fuel gauge	Fuel is present, but displayed less than actual amount.	Communication error may be present.	System is normal.	Also, check the fuel gauge.
Fuel level warning light	Fuel is present, but the light illuminates.	Communication error may be present.	System is normal.	Also, check the fuel gauge.
Engine coolant temperature light	Engine coolant temperature light blinks in red and blue alternately.	Communication error may be present.	System is normal.	Check the engine coolant light related items.
[S], [I] or [S#] indicator	Blinking.	Communication error may be present.	System is normal.	Check the intelligent switch.
VDC indicator	Illuminating.	Communication error may be present.	System is normal.	Check that VDC is not operating.
VDC OFF indicator	Illuminating.	Communication error may be present.	System is normal.	Check that VDC is not OFF.
Brake warning, etc.	Illuminating.	Brake fluid may be low in amount, or communication error may be present.	System is normal.	Check brake related items.
Shift position	Not displayed.	Communication error may be present.	System is normal.	Also, check AT system.
AT temperature light	Blinking.	Communication error may be present.	System is normal.	Also, check AT system.
Door indicator	Not displayed.	Communication error may be present.	System is normal.	Check the door switch.
Clearance indicator	Not illuminating.	Communication error may be present.	System is normal.	Check the combination switch.
Hi beam indicator	Not illuminating.	Communication error may be present.	System is normal.	Check the combination switch.
Front fog indicator	Not illuminating.	Communication error may be present.	System is normal.	Check the combination switch.
Illumination	Illuminating at the maximum brightness.	Communication error may be present.	System is normal.	Also, check the illumination switch.
Cruise control indicator	Not illuminating.	Communication error may be present.	System is normal.	Check the cruise control system.
AWD indicator	Not illuminating.	Communication error may be present.	System is normal.	Check TCM.
Hill hold indicator	Not illuminating.	Communication error may be present.	System is normal.	Also, check VDC CM.

EyeSight

ES

		Page
1.	General Description	2
2.	Relay and Fuse	5
3.	EyeSight System	6
4.	Control Unit	7
5.	Stereo Camera	8
6.	Camera Adjustment, Inspection	12
7.	Switches and Harness	32
8.	Combination Meter	35
9.	Transmission Control Module (TCM)	36
10.	Stop Light & Brake Switch	37
11.	VDC Control Module and Hydraulic Control Unit (VDCCM&H/U)	38
12.	Power Steering Control Module	39
13.	Roll Connector	40
14.	Body Integrated Unit	41
15.	Diagnostics with Phenomenon	42

1. General Description

A: LOCATION

Refer to “LOCATION” of “EyeSight (DIAGNOSTICS)” section. <Ref. to ES(diag)-15, LOCATION, Electrical Component Location.>

B: COMPONENT

1. STEREO CAMERA

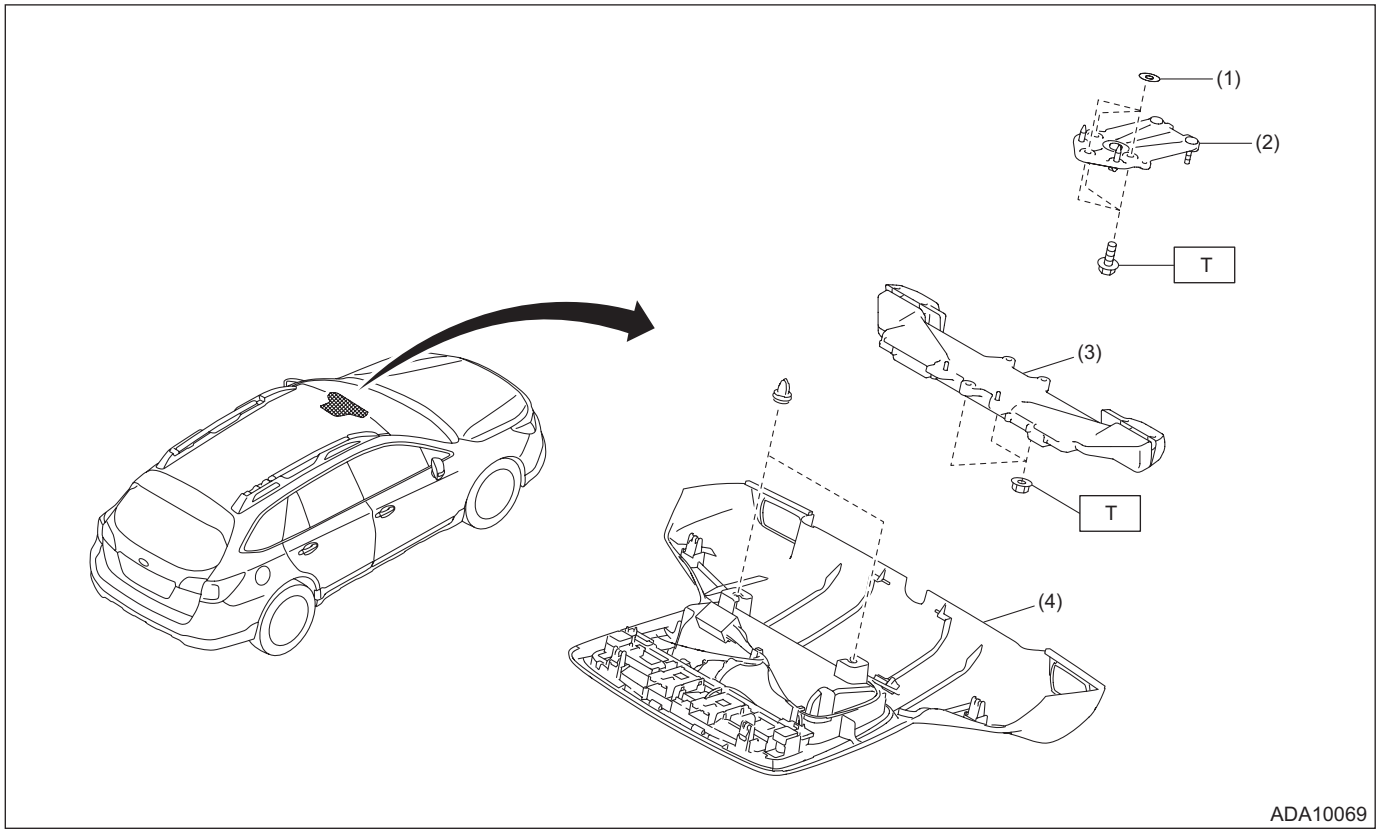

(1) Shim (washer)
(2) Camera plate
(3) Stereo camera
(4) Stereo camera cover ASSY

Tightening torque: N·m (kgf-m, ft-lb)
T: 5.5±1.0 (0.56±0.10, 4.1±0.7)

C: CAUTION

• Before disconnecting connectors of sensors or units, be sure to disconnect the ground cable from battery. When replacing the electrical parts provided with memory functions that store contents specified by a customer, record the memory contents before disconnecting the battery ground cable.
• Be careful of the following items. Failing to do so may cause the airbag system malfunction.
  – Yellow connectors and harnesses with yellow tapes around them are the connectors and harnesses for the airbag system. When using a tester on these circuits, follow the cautions of “AIRBAG SYSTEM”. <Ref. to AB-10, CAUTION, General Description.>
  – Be careful not to damage the airbag system wiring harness when servicing the electrical parts around the steering column.
• When removing, installing or replacing the VDCCM&H/U, VDCCM&H/U bracket, steering wheel or steering angle sensor (steering roll connector), perform “VSC(VDC) Centering Mode” of the VDC. <Ref. to VDC-15, VDC SENSOR MIDPOINT SETTING MODE, ADJUSTMENT, VDC Control Module and Hydraulic Control Unit (VDCCM&H/U).>
• If the damage is found in the glass repair prohibited area, always replace the glass. <Ref. to ES(diag)-8, WINDSHIELD GLASS AND DASHBOARD, INSPECTION, General Description.>
Damage in the prohibited area can affect the recognition of the stereo camera even if it is repaired, and thereby EyeSight function may not operate properly.
• When the suspension-related components have been removed, installed or replaced, or the wheel alignment is adjusted, perform “Clear Active Lane Keep System Learning Value”. <Ref. to ES(diag)-49, OPERATION, Clear Active Lane Keep System Learning Value.>

D: PREPARATION TOOL

1. SPECIAL TOOL

ILLUSTRATION	TOOL NUMBER	DESCRIPTION	REMARKS
 ST87599VA000	87599VA000	RANDOM CHART	Used for adjusting stereo camera.
 STSSM4	— (Newly adopted tool)	SUBARU SELECT MONITOR 4	Used for setting of each function and troubleshooting for electrical system. NOTE: For detailed operation procedures of Subaru Select Monitor 4, refer to “Application help”.

2. GENERAL TOOL

TOOL NAME	REMARKS
Circuit tester	Used for measuring resistance, voltage and current.
DST-i	Used together with Subaru Select Monitor 4.
Measure (5 m (16 ft) or more)	Used for adjusting stereo camera.
Leveling line	
Plumb bob	
Packing tape	

2. Relay and Fuse

A: LOCATION

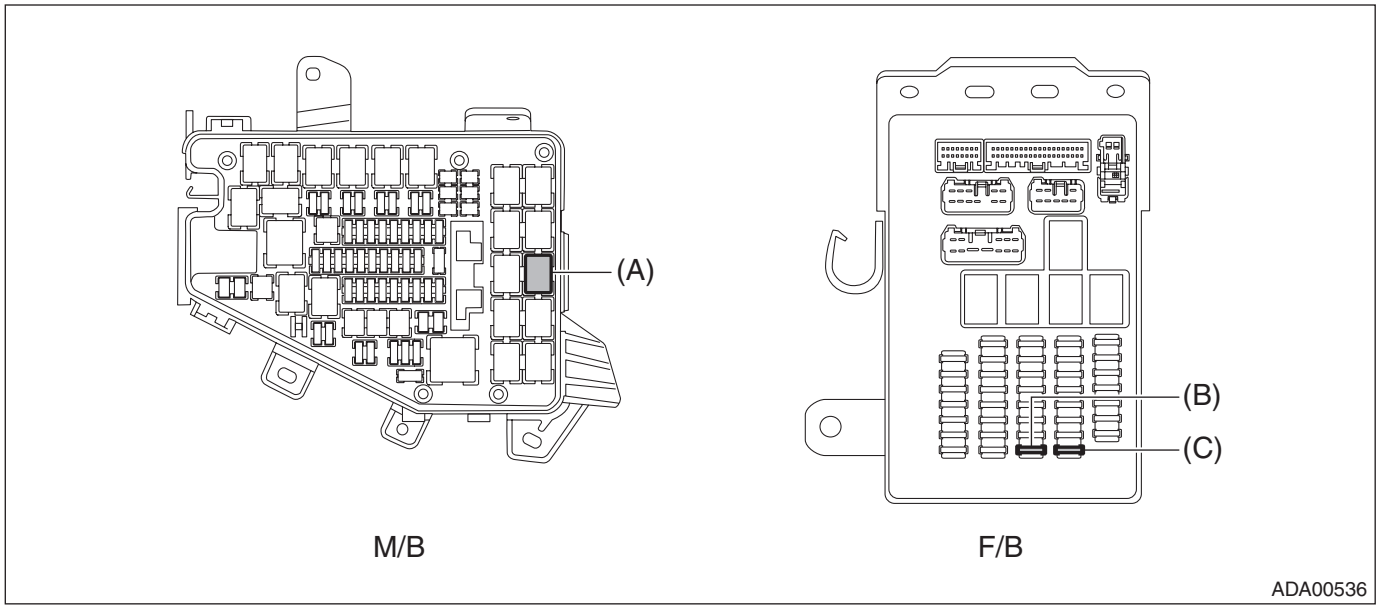

Main fuse box (M/B)	Brake light relay	(A)
Fuse & relay box (F/B)	Fuse 7.5 A (stop light and brake switch)	(B)
	Fuse 7.5 A (stereo camera)	(C)

NOTE:
For other related fuses, refer to the wiring diagram. <Ref. to WI-21, Power Supply Circuit.>

B: INSPECTION

1. CHECK FUSE

1) Remove the fuse and inspect visually.
2) If the fuse is blown out, replace the fuse.

NOTE:
If the fuse is blown again, check the system wiring harness.

2. CHECK RELAY

1) Measure the resistance between relay terminals.

Terminal No.	Inspection conditions	Standard	Circuit
1 — 2	Always	1 MΩ or more	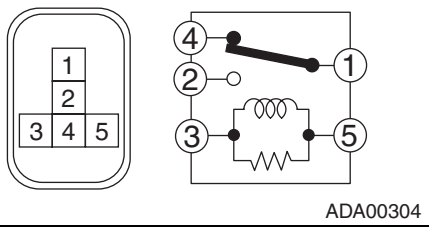
1 — 4	Always	Less than 1 Ω	
1 — 2	Apply battery voltage between terminals 3 and 5.	Less than 1 Ω	

2) Replace the relay if the inspection result is not within the standard value.

3. EyeSight System

A: WIRING DIAGRAM

Refer to “EyeSight System” in the wiring diagram. <Ref. to WI-230, WIRING DIAGRAM, EyeSight System.>

B: INSPECTION

Refer to “Basic Diagnostic Procedure” of “EyeSight (DIAGNOSTICS)” section. <Ref. to ES(diag)-2, Basic Diagnostic Procedure.>

C: NOTE

For procedure of each component in the EyeSight system, refer to the respective section.

- Control module: <Ref. to ES-7, Control Unit.>
- Stereo camera: <Ref. to ES-8, Stereo Camera.>
- Combination meter: <Ref. to ES-35, Combination Meter.>
- Transmission control module (TCM): <Ref. to ES-36, Transmission Control Module (TCM).>
- Stop light and brake switch: <Ref. to ES-37, Stop Light & Brake Switch.>
- VDC control module & hydraulic control unit (VDCCM&H/U): <Ref. to ES-38, VDC Control Module and Hydraulic Control Unit (VDCCM&H/U).>
- Switches and harness: <Ref. to ES-32, Switches and Harness.>
- Power steering control module: <Ref. to ES-39, Power Steering Control Module.>
- Roll connector (steering angle sensor): <Ref. to ES-40, Roll Connector.>
- Body integrated unit: <Ref. to ES-41, Body Integrated Unit.>

4. Control Unit

A: NOTE

System control of the EyeSight is performed by each module. For procedure, refer to the following sections.

- Engine control module (ECM)
  - H4 model: <Ref. to FU(H4DO)-82, Engine Control Module (ECM).>
  - H6 model: <Ref. to FU(H6DO)-83, Engine Control Module (ECM).>
- Transmission control module (TCM)
  - H4 model: <Ref. to CVT(TR580)-159, Transmission Control Module (TCM).>
  - H6 model: <Ref. to CVT(TR690)-142, Transmission Control Module (TCM).>
- VDC control module (VDC CM): <Ref. to VDC-8, VDC Control Module and Hydraulic Control Unit (VDC-CM&H/U).>
- Power steering control module: <Ref. to PS-38, Power Steering Control Module.>
- Stereo camera: <Ref. to ES-8, Stereo Camera.>

5. Stereo Camera

A: REMOVAL

CAUTION:
• When the stereo camera or windshield glass has been replaced, removed or installed, always perform the adjustment and inspection of the camera. (When the stereo camera has been replaced with a new part, the camera remains in a failed state until adjustment and inspection are performed.)
• Since the stereo camera is a precision equipment, install the protective cover before handling it. (New stereo camera is equipped with a protective cover as a service part.)
• During removal, do not hold at the left and right cameras.
• Do not apply any impact to the stereo camera. (Even the slightest shock will deviate the optical axis of the camera, resulting in the loss of normal operation of the camera.)
• Do not disassemble the stereo camera.
• Attach the protective cover to the replacement part, put it into the box in the same way as the other parts and return it. Cover the replaced stereo camera with a protective cover.
• Do not touch the lens filter on the stereo camera. If touched, replace the stereo camera.
• When removing the stereo camera cover assembly, cover with dust-free paper such as copy paper to avoid interference with the camera lens, and attach the paper using tape while being careful not to let the adhesive surface contact the glass surface. Be sure to remove the paper after the procedure.
1) Disconnect the ground terminal from battery sensor. <Ref. to RC-4, BATTERY, NOTE, Repair Contents.>
2) Attach dust-free paper (a) such as copy paper to the stereo camera cover assembly.

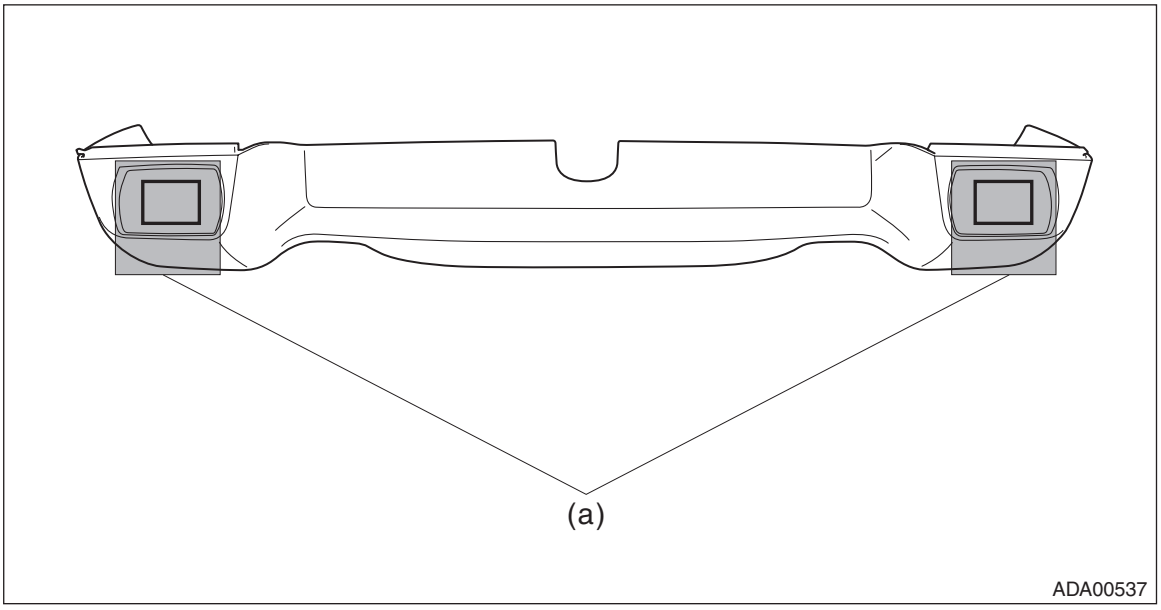

3) Remove the stereo camera cover assembly.
(1) Pull down the stereo camera cover, and then release the clips and claws.
(2) Release the hook (a) on the front side of stereo camera cover assembly.

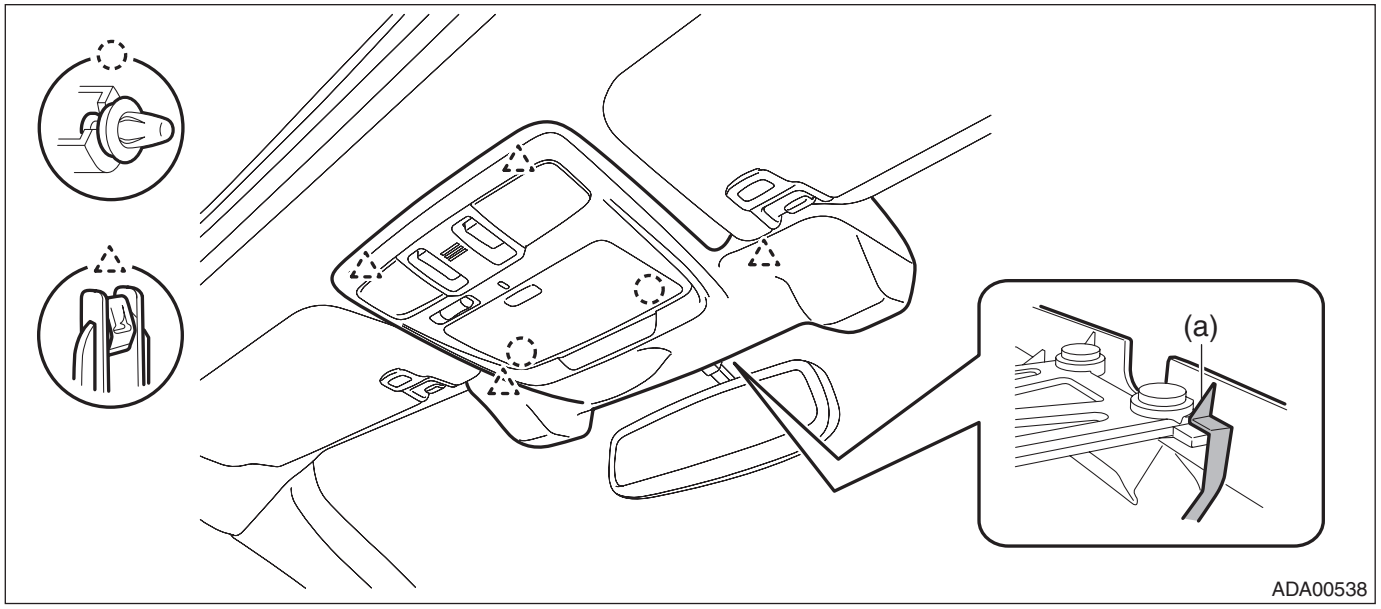

(3) Disconnect the connectors, and remove the stereo camera cover assembly.

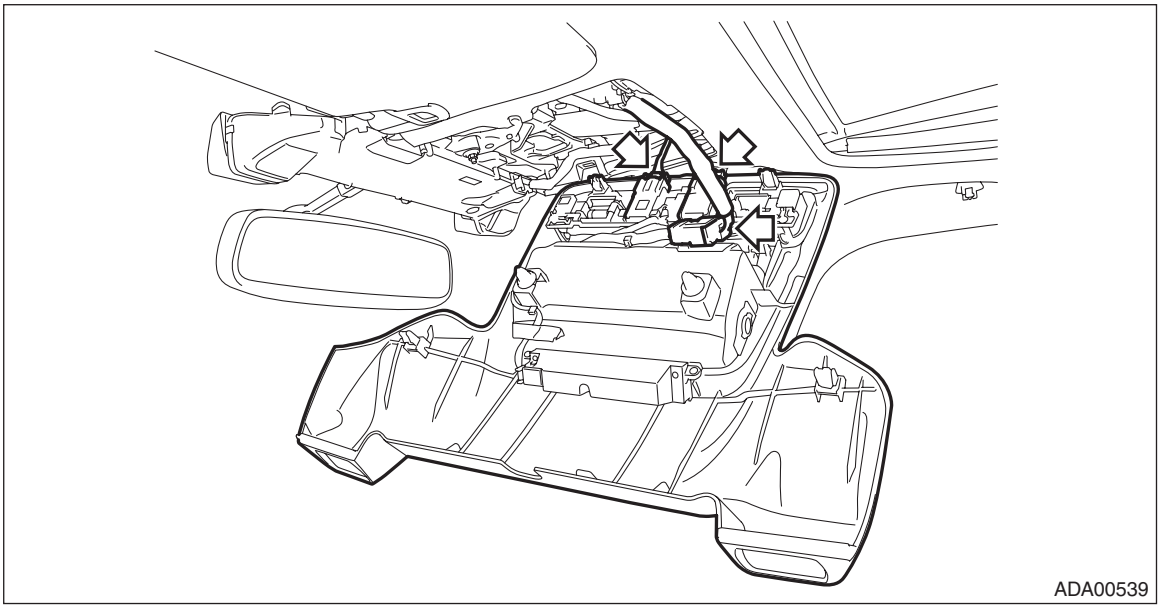

NOTE:
For models with sunroof, disconnect the sunroof switch connector.

4) Remove the stereo camera.
(1) Disconnect the connector.
(2) Remove the nuts, and then remove the stereo camera.

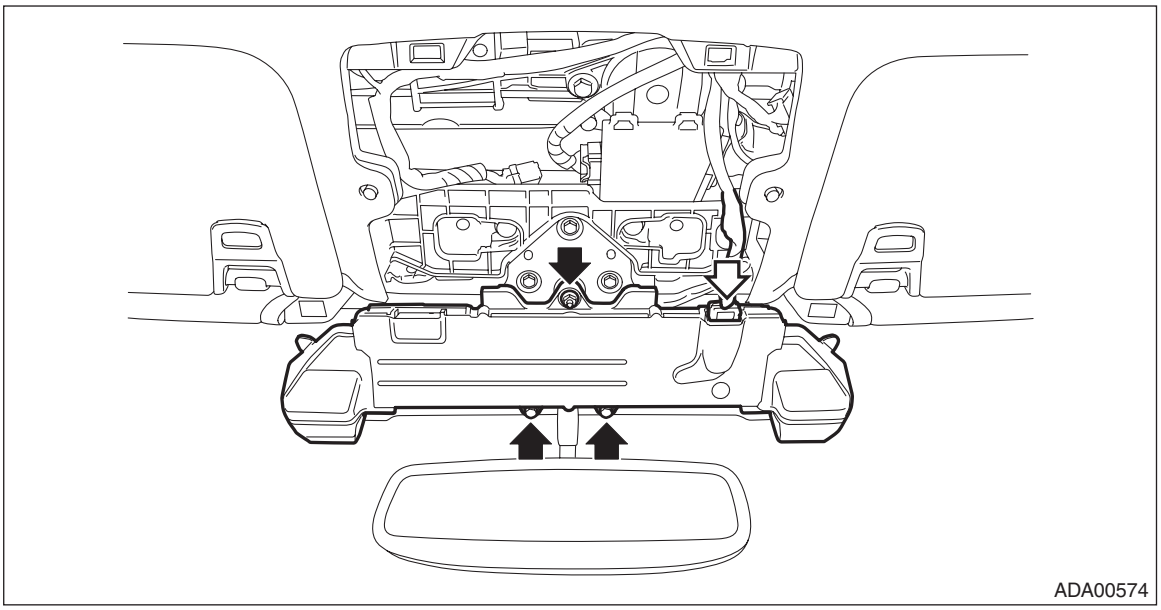
ADA00574

NOTE:
Remove the camera plate (a) as required.

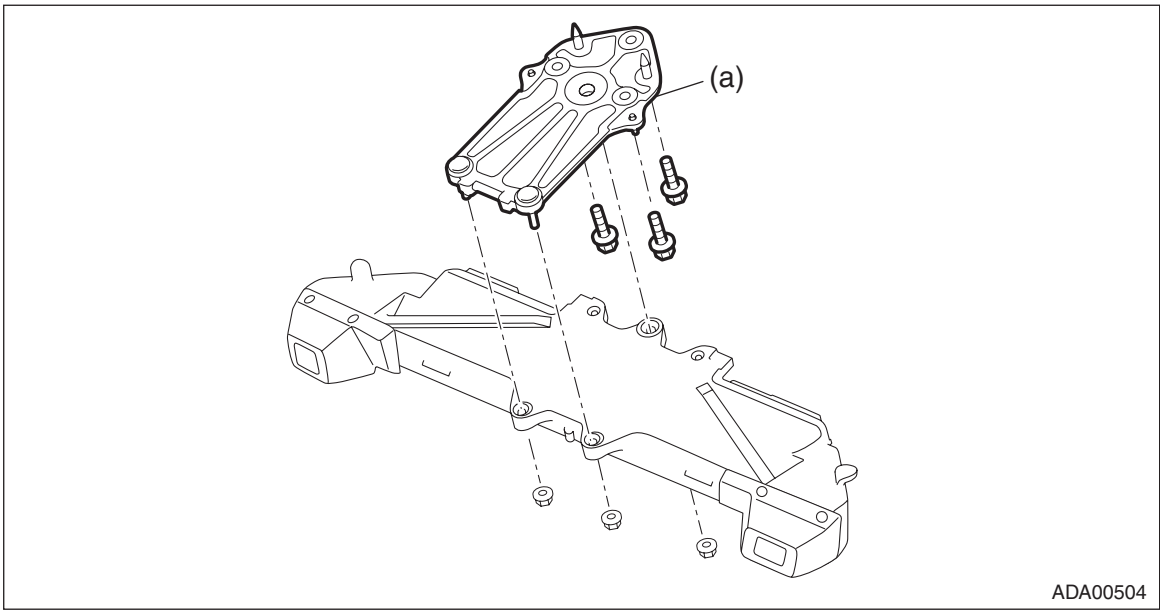

ADA00504

B: INSTALLATION

CAUTION:
• Do not remove the protective cover until just before installing the stereo camera cover assembly. Using the bolt and nut, install the stereo camera with the protective cover attached, connect the connectors, and then remove the protective cover.
• Do not apply any impact to the stereo camera. (Even the slightest shock will deviate the optical axis of the camera, resulting in the loss of normal operation of the camera.)
• During installation, do not hold at the left and right cameras.
• Do not change the installation position of the stereo camera or do not modify the surrounding structure.
• Remove the protective cover, install the stereo camera cover assembly, and then perform adjustment and inspection of the stereo camera. <Ref. to ES-12, Camera Adjustment, Inspection.>
• Do not touch the lens filter on the stereo camera. If touched, replace the stereo camera.
• When installing the stereo camera cover assembly, cover with dust-free paper such as copy paper to avoid interference with the lens filter, and attach the paper using tape while being careful not to let the adhesive surface contact the glass surface. Be sure to remove the paper after the procedure.
• When installing the stereo camera cover assembly, take care so that the harness does not interfere with the stereo camera or does not get caught.
• Do not allow the stereo camera cover assembly to come in contact with the stereo camera. Install the stereo camera cover assembly precisely so that it will not block the visibility of the camera.
• Because the stereo camera is incompatible, be sure to check the part number before installation.
1) Attach the camera plate.

NOTE:
Align the positioning pins of camera plate to the positioning holes of front rail.

Tightening torque:
5.5±1.0 N·m (0.56±0.10 kgf-m, 4.1±0.7 ft-lb)
2) Install the stereo camera.

Tightening torque:
5.5±1.0 N·m (0.56±0.10 kgf-m, 4.1±0.7 ft-lb)

NOTE:
- Align the positioning holes of stereo camera to the positioning pins of camera plate.
- When installing the stereo camera, install the nuts (a) and (b).

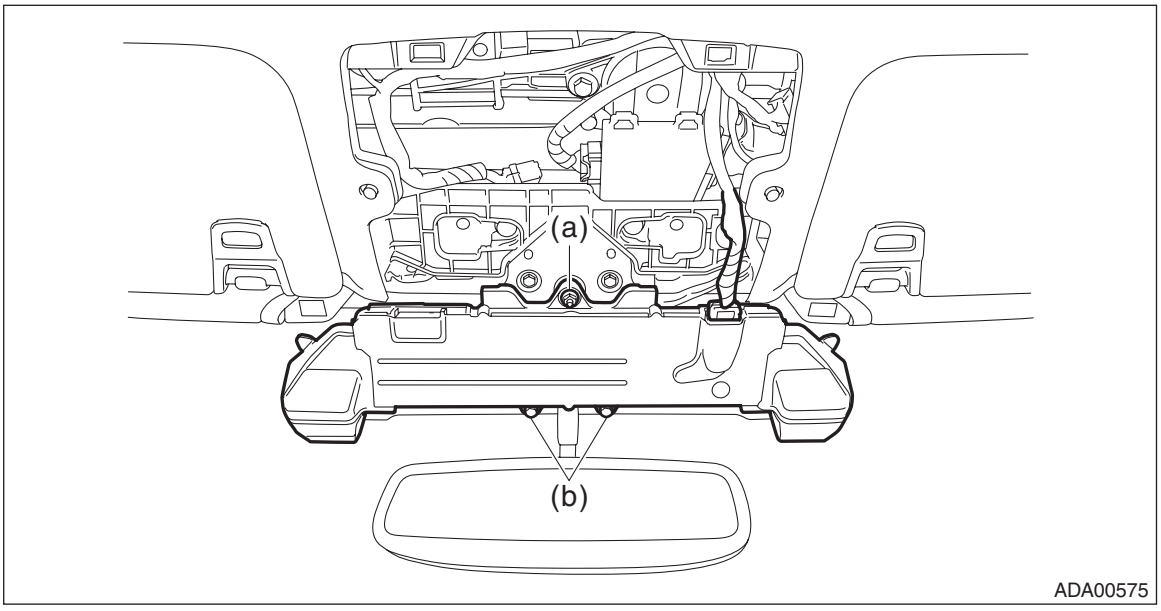

3) Install the stereo camera cover assembly.
4) Connect the ground terminal to battery sensor. <Ref. to RC-4, BATTERY, NOTE, Repair Contents.>
5) Perform the adjustment or inspection of the stereo camera. <Ref. to ES-12, Camera Adjustment, Inspection.>

6. Camera Adjustment, Inspection

A: PROCEDURE

CAUTION:
- **Perform the camera adjustment and inspection at curb weight without passengers.**
- **Handle RANDOM CHART (ST: 87599VA000) carefully so as not to break it with the adhesive force of the tape.**

Perform inspection or adjustment according to the following procedures.
- Readjustment of stereo camera

Perform the adjustment in the following order: [1. Preparations] → [3. Camera all adjustment mode (replacement/removal)] → [4. Automatic adjustment and function check by driving].
- Replacement of stereo camera

Perform the replacement in the following order: [1. Preparations] → [2. Clear adjustment value] → [3. Camera all adjustment mode (replacement/removal)] → [4. Automatic adjustment and function check by driving].

NOTE:
When the stereo camera or windshield glass has been removed or installed, always perform readjustment of the stereo camera.

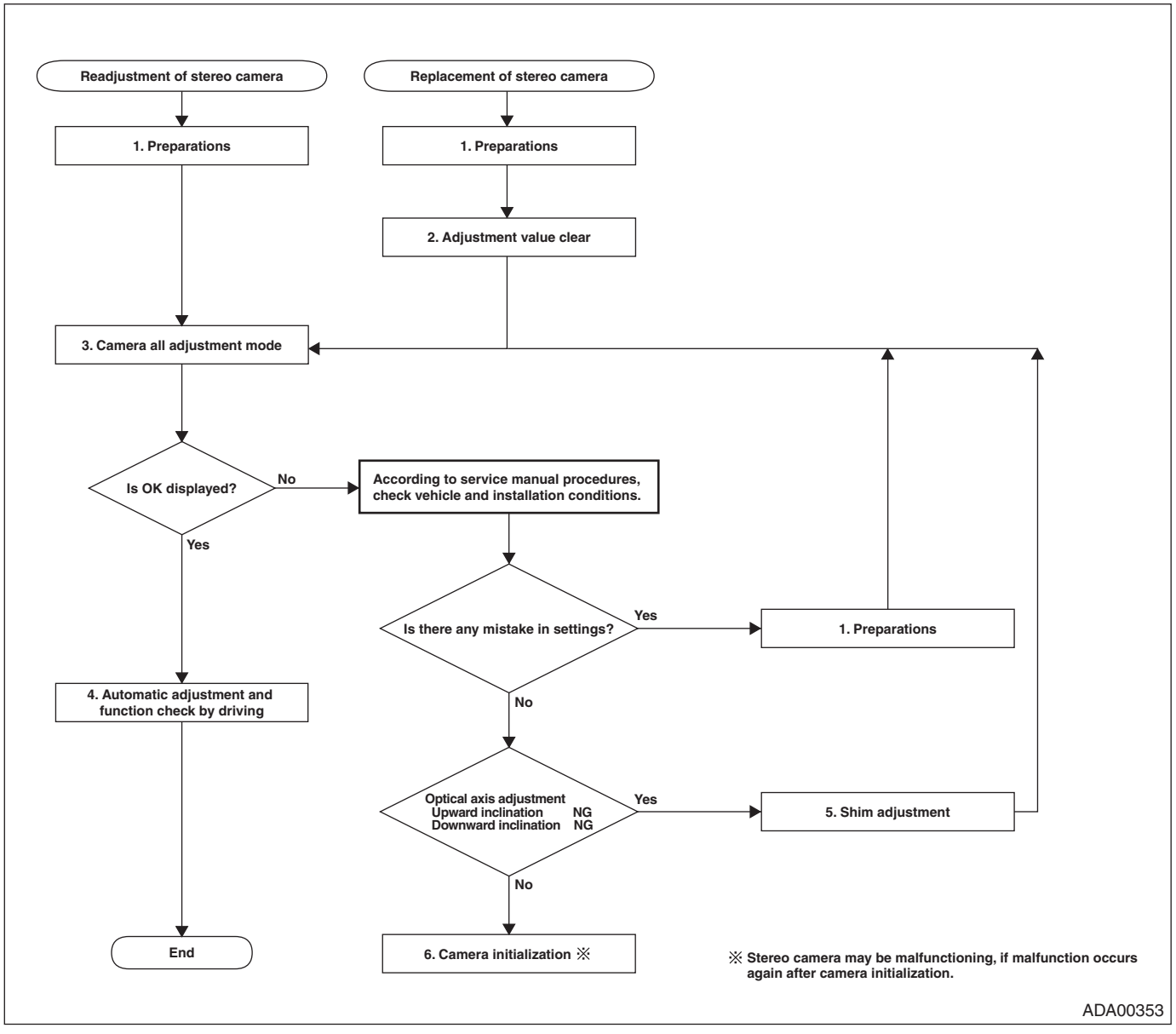

1. PREPARATIONS

Perform the preparation of the adjustment and inspection for the stereo camera.

- **When performing adjustment or inspection by affixing RANDOM CHART onto partition**

1) Before preparation, check the following items.
   (1) The headlight is off.
   (2) The vehicle is parked on a level surface.
   (3) The inflation pressure of tires is correct.
   (4) The vehicle does not have load.
   (5) The front wheels are directed to the straight ahead position, when the steering wheel is set to the center position.

NOTE:
When the front wheels are not directed to the straight ahead position, adjust the alignment. <Ref. to FS-14, ADJUSTMENT, Wheel Alignment.>

2) Prepare the Subaru Select Monitor, measure, plumb bob, leveling line and RANDOM CHART (ST).

Preparation tool:
ST: RANDOM CHART (87599VA000)

3) Stop the vehicle on a level surface where approximately 5 m (16.41 ft) space can be secured in front of the vehicle.

4) Suspend the plumb bob with leveling line from front center position of vehicle (center clip on lower side of front bumper), and mark the position where the plumb bob touches the ground. (Point A)

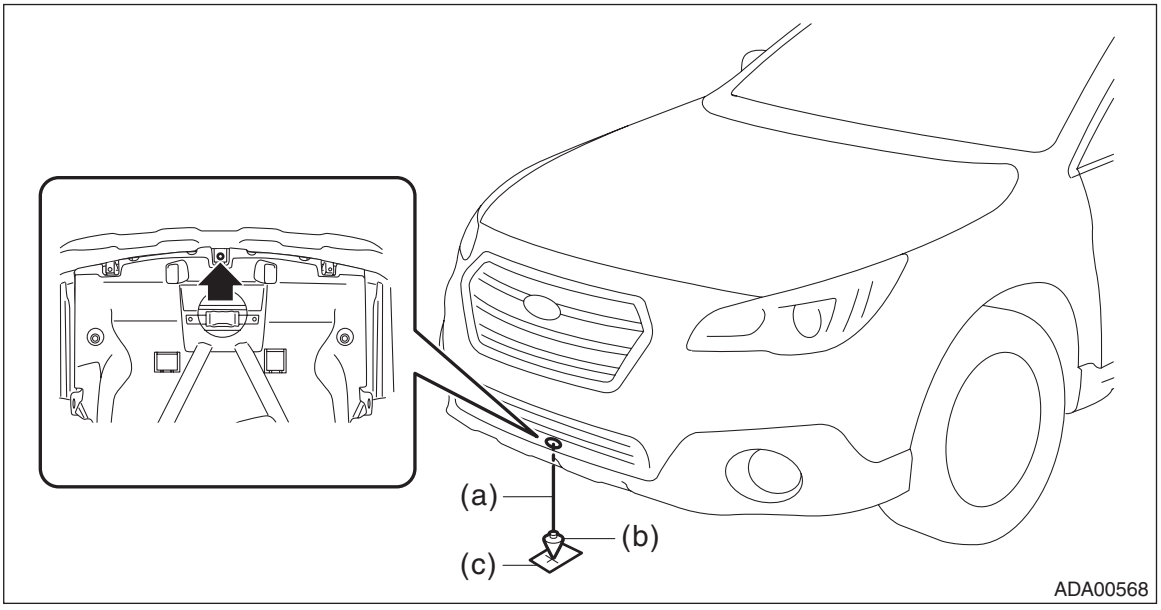

(a) Leveling line (b) Plumb bob (c) Point A

NOTE:
Stick the packing tape etc. on the floor, then make a marking on the tape.

5) Suspend the plumb bob with leveling line from rear center position of vehicle, and mark the position where the plumb bob touches the ground.

CAUTION:
Be aware that the rear center position of vehicle is different between sedan model and OUTBACK model.

- Sedan model

Suspend the plumb bob with leveling line from center clip on lower side of rear bumper, and mark the position where the plumb bob touches the ground. (Point B)

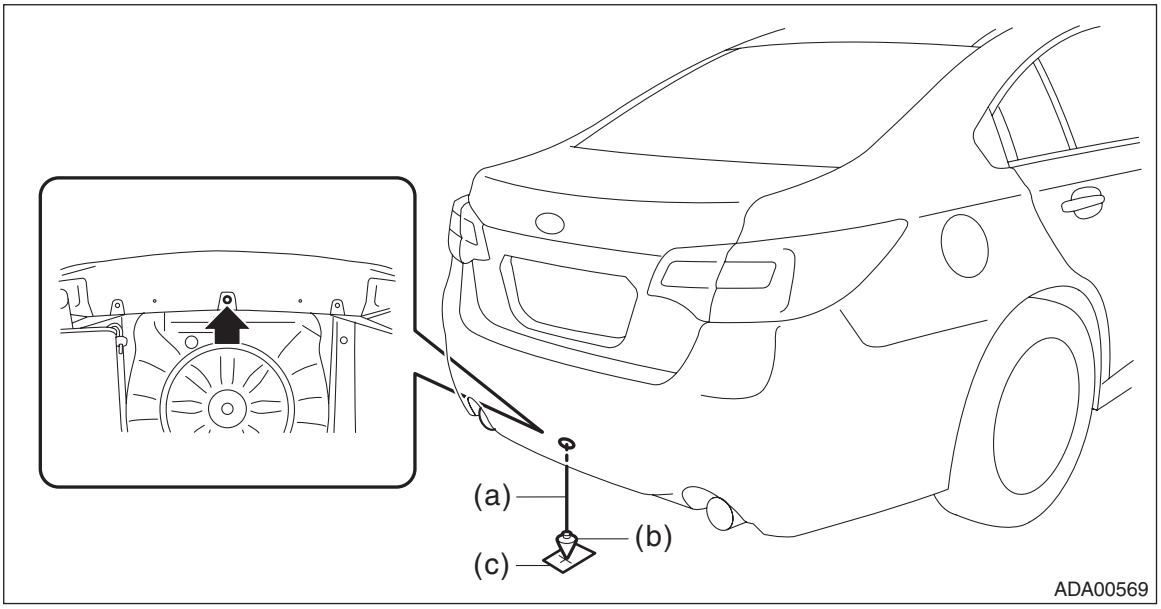

(a) Leveling line (b) Plumb bob (c) Point B

- OUTBACK model

Measure the distance between clips on lower side of rear bumper, suspend the plumb bob with leveling line at the center position, and mark the position where the plumb bob touches the ground. (Point B)

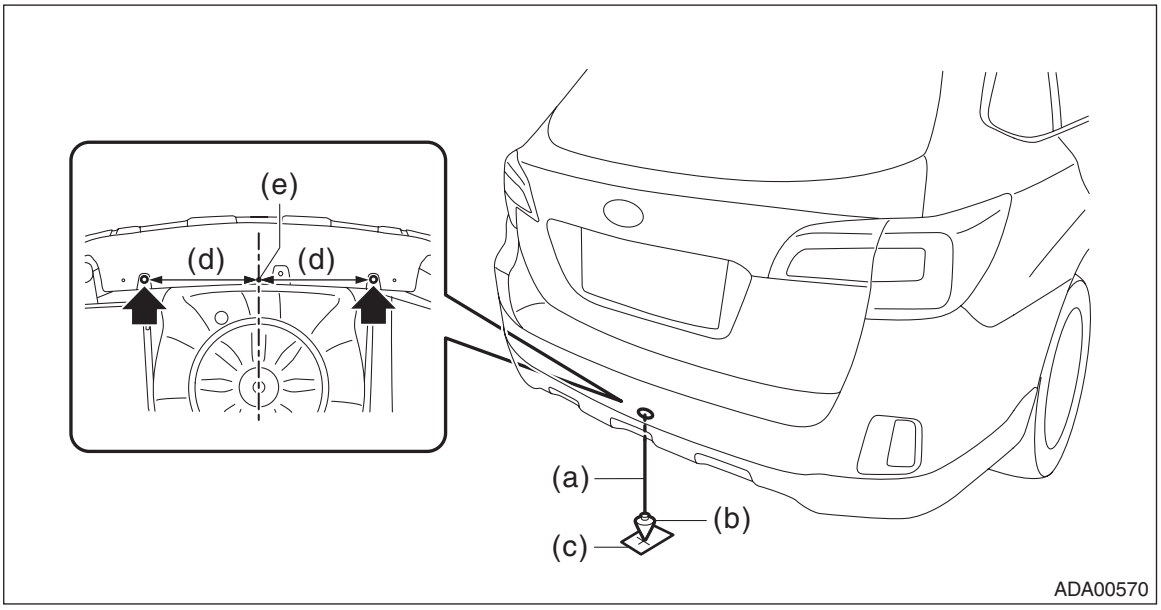

(a) Leveling line (c) Point B (e) Center position
(b) Plumb bob (d) Same distance

NOTE:
Stick the packing tape etc. on the floor, then make a marking on the tape.
6) Strain approximately 5 m (16.41 ft) leveling line from the marking point B through the marking point A toward front of the vehicle, and fix it with packing tape. (A-B line)

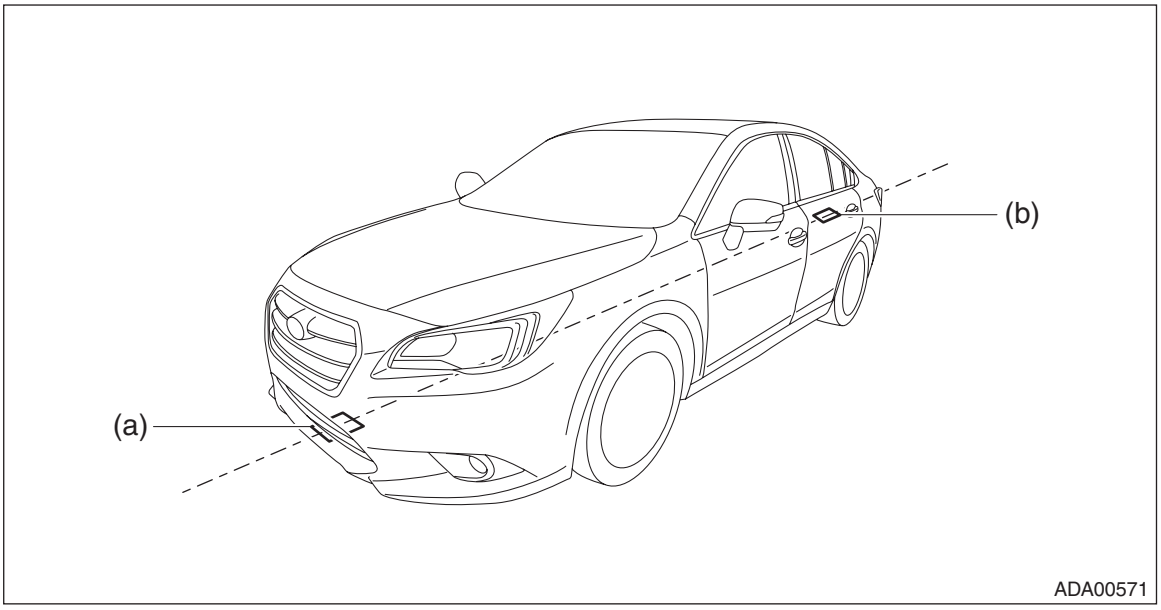

(a) Point A
(b) Point B

NOTE:
Confirm that there is no wet condition or unevenness on the floor, to strain the leveling line correctly.
7) Mark the installation position of the partition.
(1) Suspend the plumb bob from the center of each front wheel, and mark the point C and point D.
(2) Strain the leveling line from the point C and point D toward the front of vehicle parallel to the vehicle body center line (A-B line), and fix the leveling line with packing tape.
(3) Make markings at the points 4,000 mm (13 ft, 1 1/2 in) ahead of the vehicle from the point C and point D. (Point E and point F)
(4) Strain the leveling line so that it passes through the point E and point F. (E-F line)

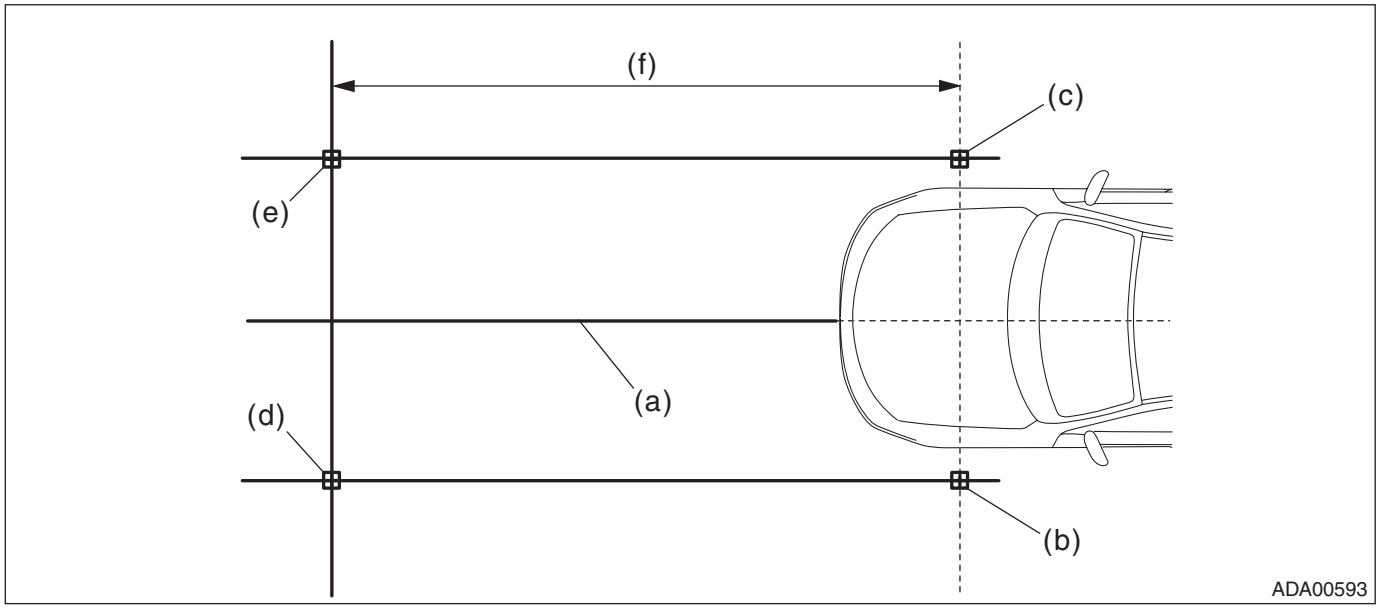

(a) Vehicle body center line (A-B line)
(b) Point C
(c) Point D
(d) Point E
(e) Point F
(f) 4,000 mm (13 ft, 1 1/2 in)

8) Place the partition and RANDOM CHART.

CAUTION:
• Affix the RANDOM CHART onto the vertical partition with flat surface.
• When affixing the RANDOM CHART using tape, place the tape within 10 mm (0.39 in) from the edge of the CHART. In this case, do not affix with lustrous tapes which may reflect the light.
• Perform the adjustment work at lighted places. If the lighting is not enough, adjustment cannot be done, and accuracy rate may not be acquired.
• The adjustment in the outdoors cannot be recommended. Note the sun position, when adjusting it in outdoor by necessity. (It is not acceptable when the sunlight comes from front or rear of the vehicle)

(1) Using the plumb bob, attach the RANDOM CHART on the partition, so that the setting reference (vertical line) center is aligned with the vehicle body center line (leveling line) and the height of the setting reference (horizontal line) center from the floor is 1,000 mm (3 ft, 3 3/8 in).
(2) Adjust the partition so that it is parallel to E-F line.

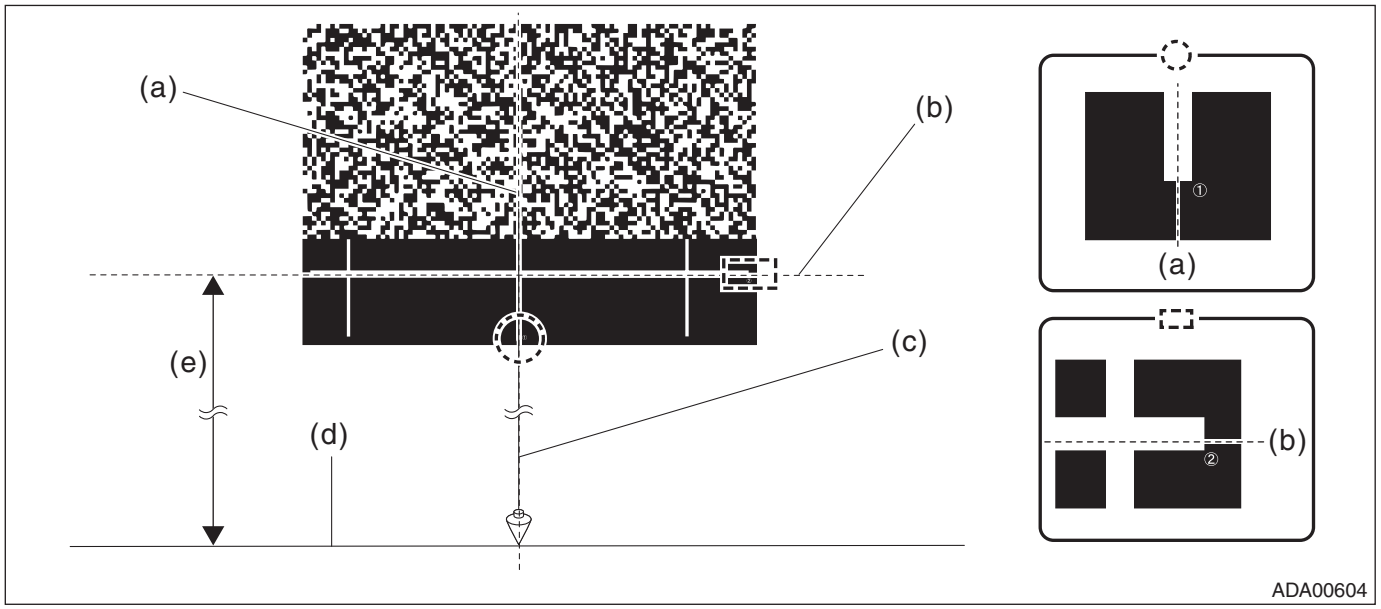

(a) ① = Setting reference (vertical line) and vehicle body center line (A-B line)
(b) ② = Setting reference (horizontal line)
(c) Plumb bob
(d) E-F line
(e) 1,000 mm (3 ft, 3 3/8 in)

CAUTION:
- **Centering accuracy of the plumb bob shall be ±4.0 mm (±0.16 in) or less.**

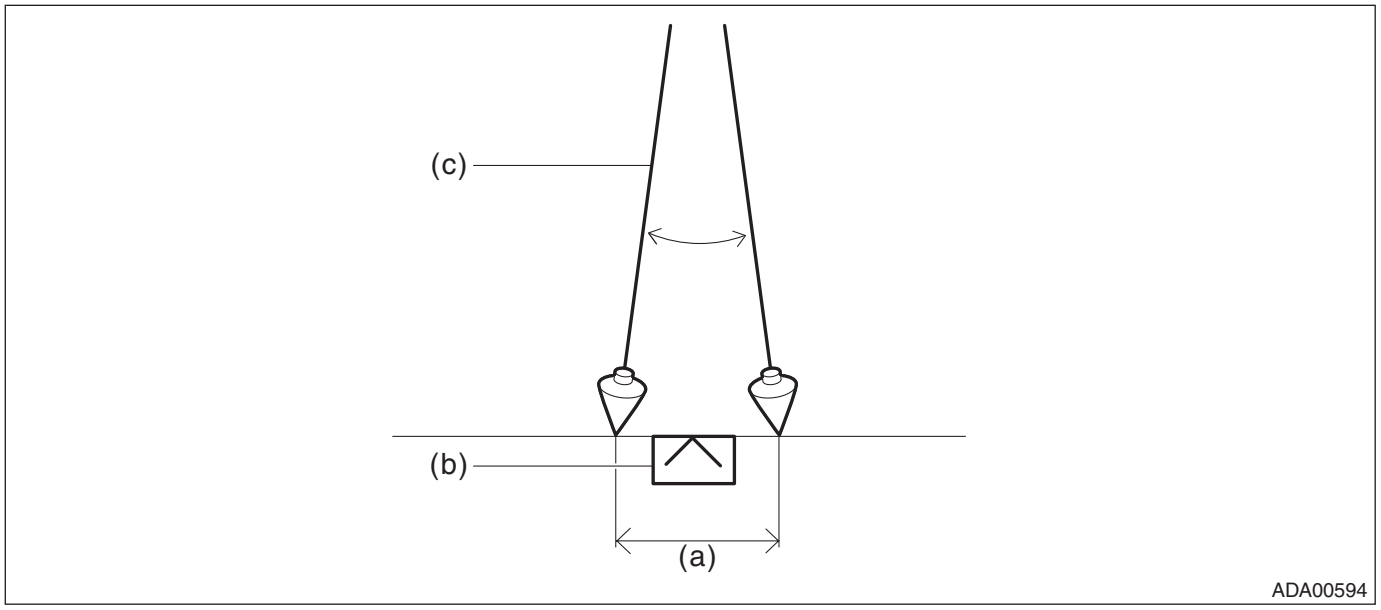

(a) ±4.0 mm (±0.16 in) (b) Marking (c) Plumb bob

- **Positioning accuracy of the measure shall be ±2.0 mm (±0.08 in) or less.**
- **Centering accuracy of the tire shall be ±4.0 mm (±0.16 in) or less.**

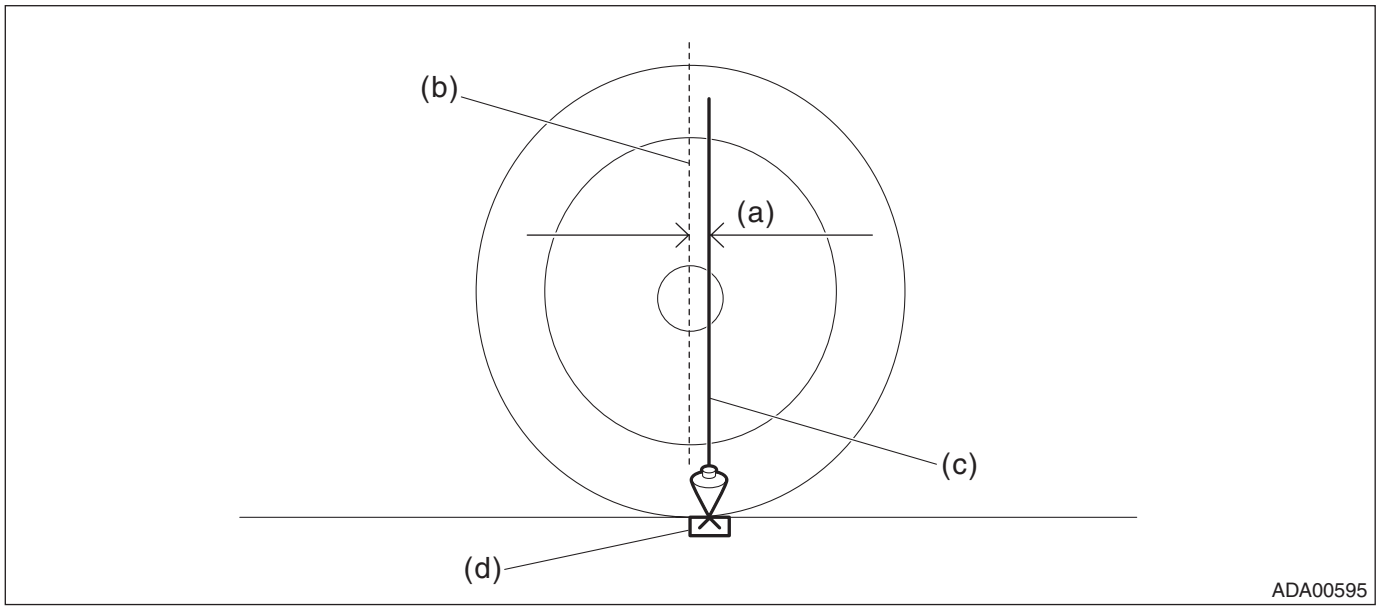

(a) ±4.0 mm (±0.16 in) (c) Plumb bob (d) Marking
(b) Tire center line

• Apply the lighting from the upper direction of RANDOM CHART, and make adjustment so that brightness is even in the CHART. (If the lighting is applied from the position where light reflects at RANDOM CHART, the adjustment cannot be done, because the reflected light enters the camera.)

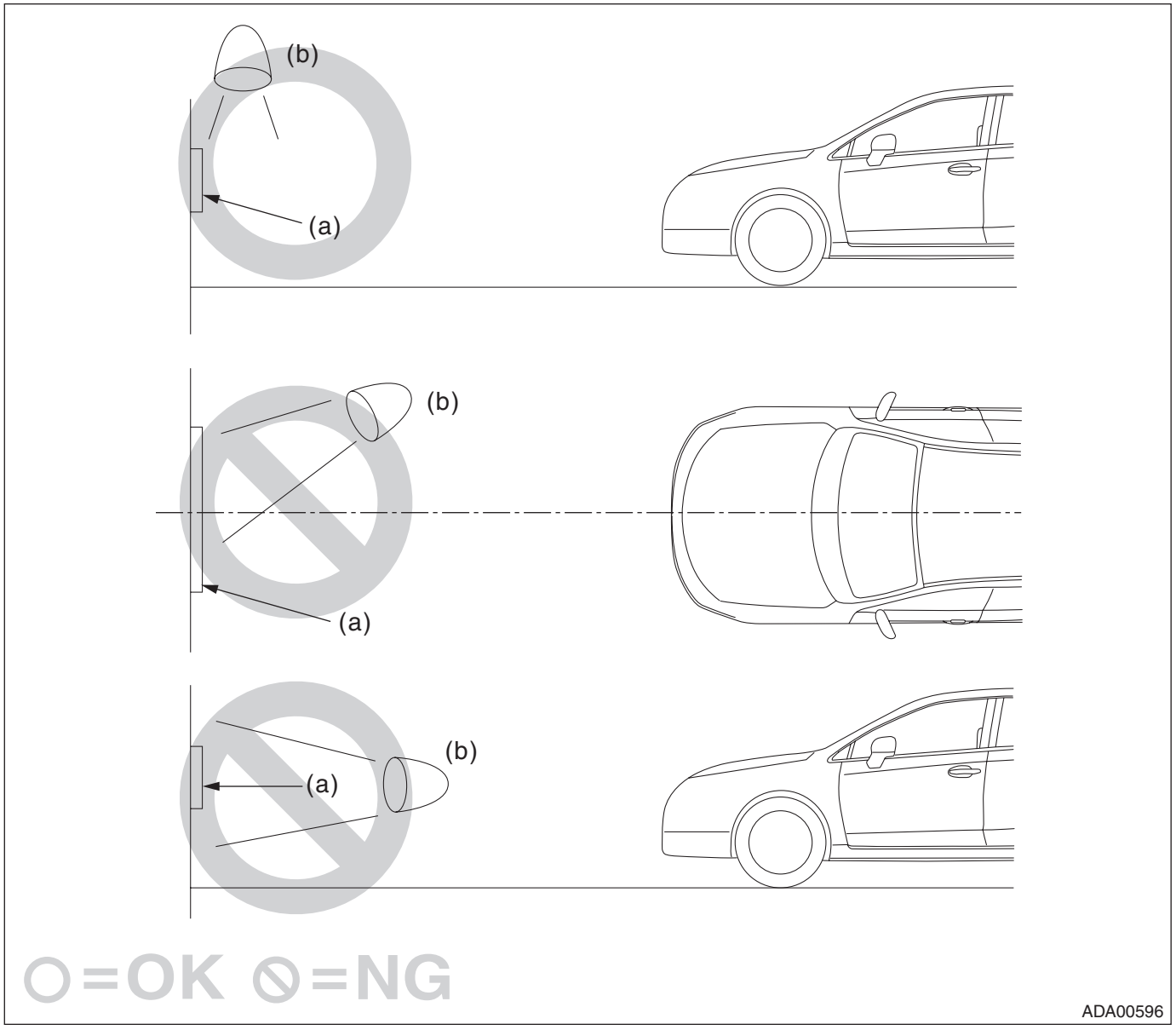

(a) RANDOM CHART (b) Lighting

• When using a white board as a partition, affix the RANDOM CHART on the flat surface without protrusion such as penholder. When suspending the plumb bob, suspend it vertically from the RANDOM CHART by avoiding protrusion.

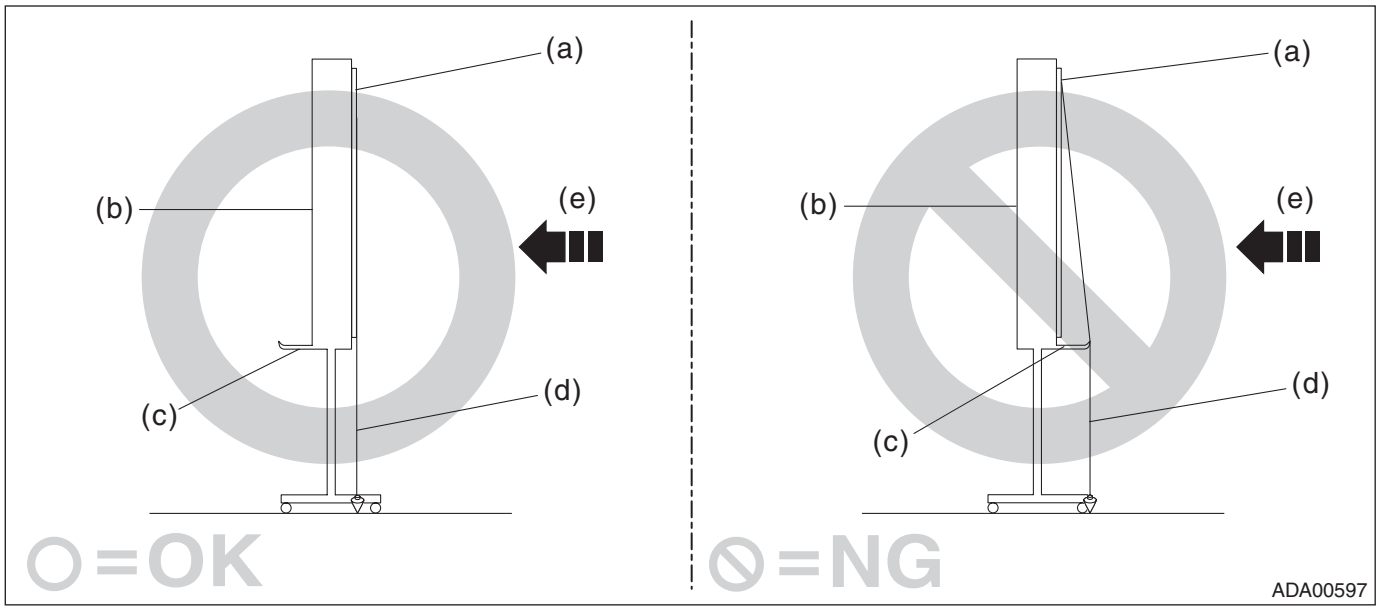

(a) RANDOM CHART
(b) White board
(c) Protrusion (penholder, etc.)
(d) Plumb bob
(e) Vehicle travel direction

9) Turn the ignition switch to OFF.
10) Check the windshield glass and the dashboard. <Ref. to ES(diag)-8, WINDSHIELD GLASS AND DASHBOARD, INSPECTION, General Description.>

CAUTION:
If there are any dirt, object or reflection from dashboard within the visibility of stereo camera, the correct adjustment and inspection can not be performed. Especially, do not put paper etc. on the dashboard.
11) Connect the Subaru Select Monitor.

NOTE:
Use the Subaru Select Monitor equipped with the latest version of the software.
12) Turn the ignition switch to ON.
13) Wait for 10 seconds.
14) On «Start» display, select «Diagnosis».
15) On «Vehicle selection» display, enter vehicle information and select «Confirmed».
16) On «Main Menu» display, select «Each System».
17) Select «EyeSight» on «Select System» display while pressing the stereo camera cover mounted pre-collision brake OFF switch and lane departure warning OFF switch at the same time.

NOTE:
If «EyeSight» is selected without pressing two switches at the same time, «Camera adjustment, inspection» is not displayed. (for preventing misoperation)
Also, the message is not displayed, when the camera does not finish the start-up (approx. 10 seconds after ignition switch ON). In this case, repeat from the selection of «EyeSight».
18) On «Select Function» display, select «Work Support».

19) From the work support item list, select and perform camera adjustment or other inspections.

NOTE:
• When performing {Camera adjustment, inspection}, pre-collision brake OFF indicator light, lane departure warning OFF indicator light in the meter will illuminate, and the normal function will be disabled.
• After camera adjustment, the function will be enabled, when the ignition switch is turned to OFF and system is restarted.

• When performing adjustment or inspection by affixing RANDOM CHART onto wall.

1) Before preparation, check the following items.
(1) The headlight is off.
(2) The vehicle is parked on a level surface.
(3) The inflation pressure of tires is correct.
(4) The vehicle does not have load.
(5) The front wheels are directed to the straight ahead position, when the steering wheel is set to the center position.

NOTE:
When the front wheels are not directed to the straight ahead position, adjust the alignment. <Ref. to FS-14, ADJUSTMENT, Wheel Alignment.>
2) Prepare the Subaru Select Monitor, measure, plumb bob, leveling line and RANDOM CHART (ST).

Preparation tool:
ST: RANDOM CHART (87599VA000)
3) Mark the park position of the vehicle.
(1) Strain the leveling line so that it is at right angles to wall on which the RANDOM CHART is affixed, and fix the leveling line with packing tape.
(2) Make a marking 4,000 mm (13 ft, 1 1/2 in) away from the wall where the leveling line is fixed. (Point A and point B)

NOTE:
Stick the packing tape etc. on the floor, then make a marking on the tape.
(3) Strain the leveling line so that it passes through the point A and point B. (A-B line)

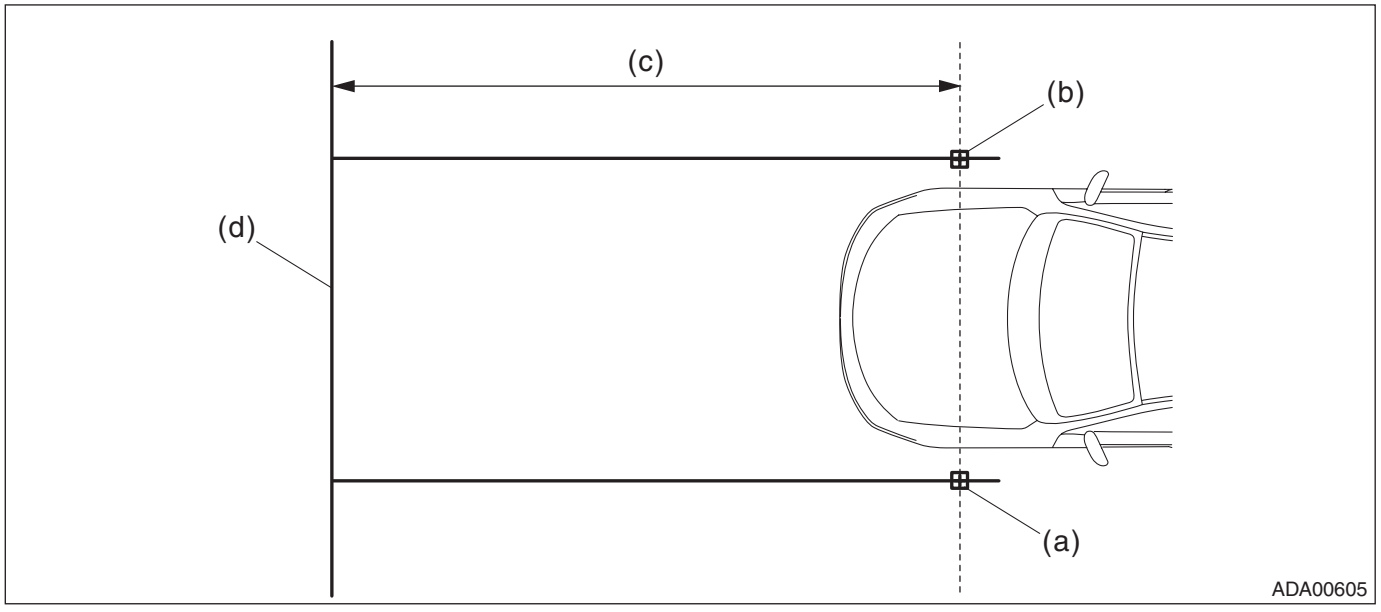

(a) Point A
(b) Point B
(c) 4,000 mm (13 ft, 1 1/2 in)
(d) Wall

4) Suspend the plumb bob from the center of each front wheel of the vehicle, and place the vehicle so that it is aligned with the leveling line (A-B line).

5) Suspend the plumb bob with leveling line from front center position of vehicle (center clip on lower side of front bumper), and mark the position where the plumb bob touches the ground. (Point C)

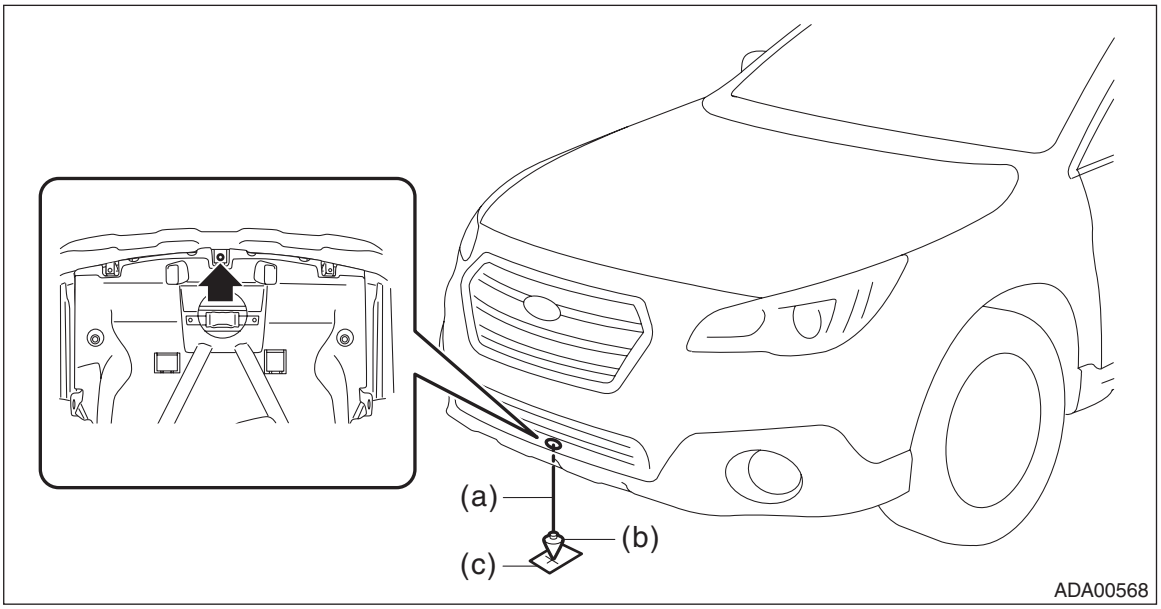

(a) Leveling line (b) Plumb bob (c) Point C

NOTE:
Stick the packing tape etc. on the floor, then make a marking on the tape.

6) Suspend the plumb bob with leveling line from rear center position of vehicle, and mark the position where the plumb bob touches the ground.

CAUTION:
Be aware that the rear center position of vehicle is different between sedan model and OUTBACK model.

- Sedan model

Suspend the plumb bob with leveling line from center clip on lower side of rear bumper, and mark the position where the plumb bob touches the ground. (Point D)

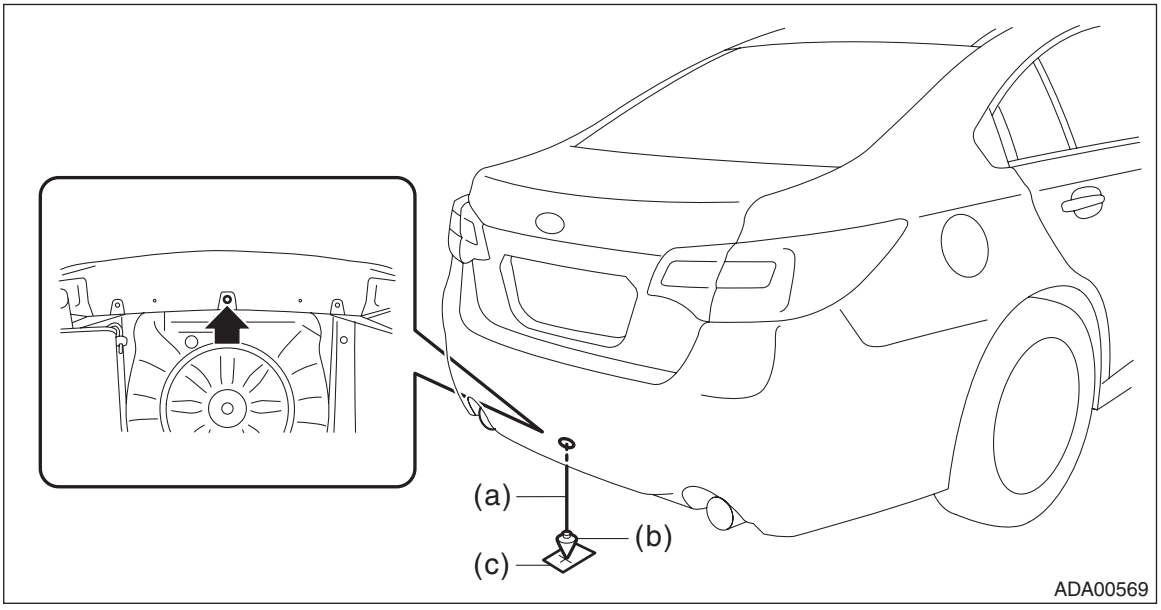

(a) Leveling line (b) Plumb bob (c) Point D

- OUTBACK model

Measure the distance between clips on lower side of rear bumper, suspend the plumb bob with leveling line at the center position, and mark the position where the plumb bob touches the ground. (Point D)

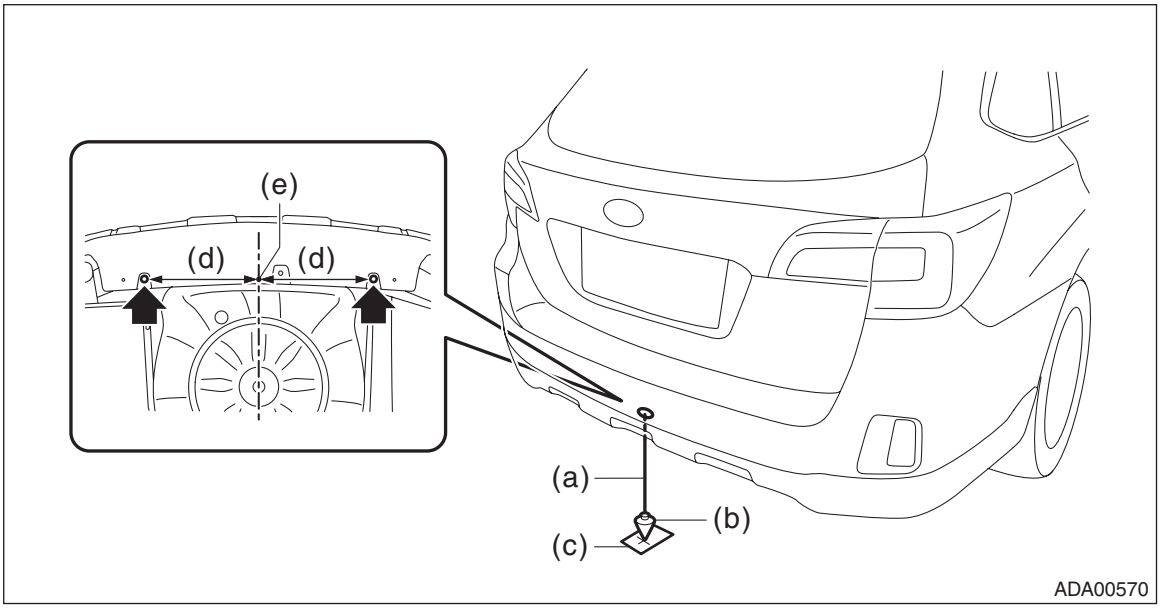

(a) Leveling line
(b) Plumb bob
(c) Point D
(d) Same distance
(e) Center position

NOTE:
Stick the packing tape etc. on the floor, then make a marking on the tape.

7) Strain the leveling line from the making point D through the marking point C to the wall, and fix it with packing tape. (C-D line)

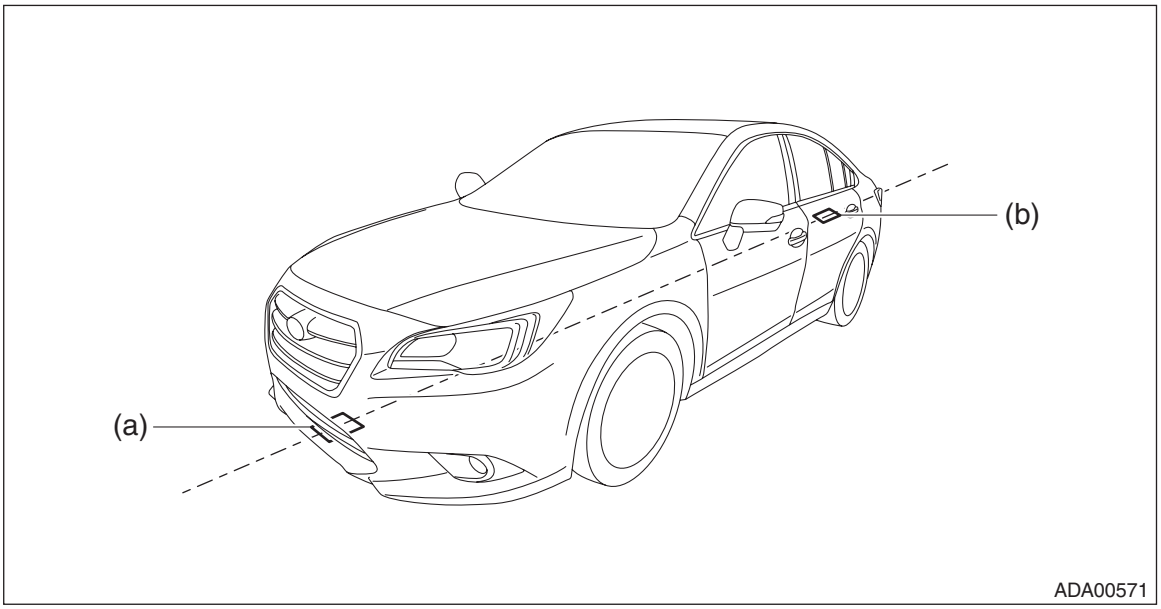

(a) Point C
(b) Point D

8) Place the RANDOM CHART.

CAUTION:

- **Affix the RANDOM CHART onto the vertical wall, etc. with flat surface.**
- **When affixing the RANDOM CHART using tape, place the tape within 10 mm (0.39 in) from the edge of the CHART. In this case, do not affix with lustrous tapes which may reflect the light.**

• Perform the adjustment work at lighted places. If the lighting is not enough, adjustment cannot be done, and accuracy rate may not be acquired.
• The adjustment in the outdoors cannot be recommended. Note the sun position, when adjusting it in outdoor by necessity. (It is not acceptable when the sunlight comes from front or rear of the vehicle)

(1) Using the plumb bob, attach the RANDOM CHART on a wall, so that the setting reference (vertical line) center is aligned with the vehicle body center line (leveling line) and the height of the setting reference (horizontal line) center from the floor is 1,000 mm (3 ft, 3 3/8 in).

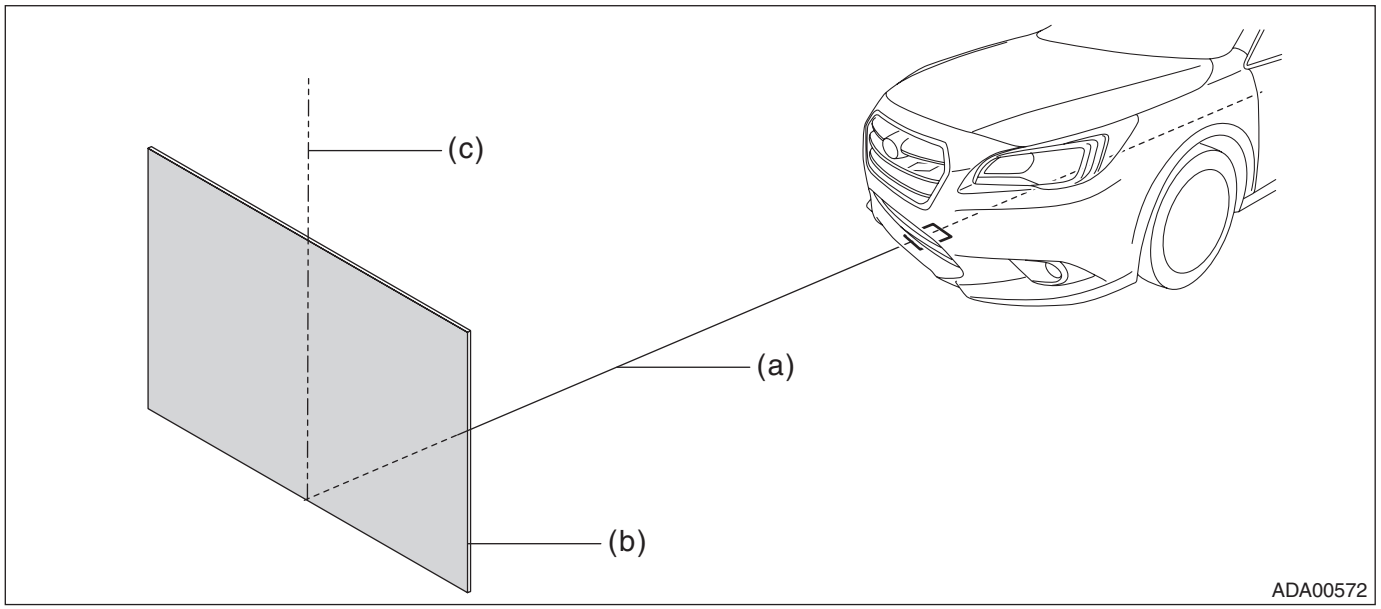

(a) Vehicle body center line (C-D line) (b) Wall (c) Setting reference (vertical line)

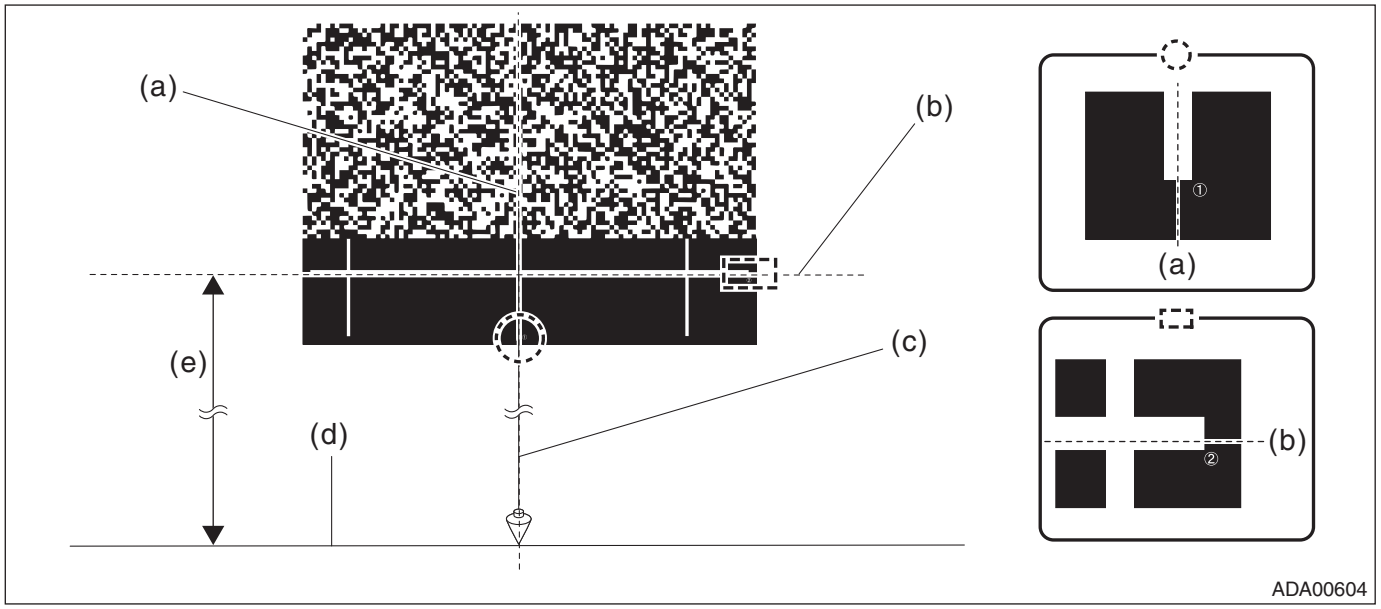

(a) ① = Setting reference (vertical line) and vehicle body center line (C-D line) (c) Plumb bob (e) 1,000 mm (3 ft, 3 3/8 in)
(b) ② = Setting reference (horizontal line) (d) Floor

CAUTION:
- **Centering accuracy of the plumb bob shall be ±4.0 mm (±0.16 in) or less.**

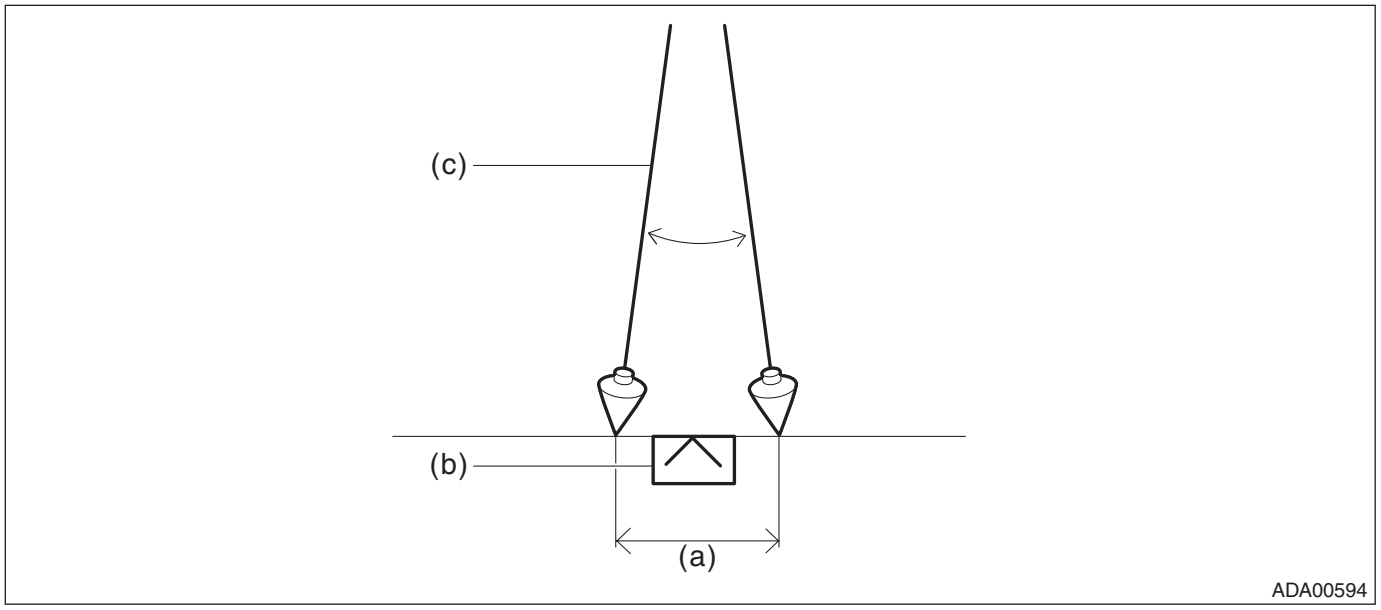

(a) ±4.0 mm (±0.16 in) (b) Marking (c) Plumb bob

- **Positioning accuracy of the measure shall be ±2.0 mm (±0.08 in) or less.**
- **Centering accuracy of the tire shall be ±4.0 mm (±0.16 in) or less.**

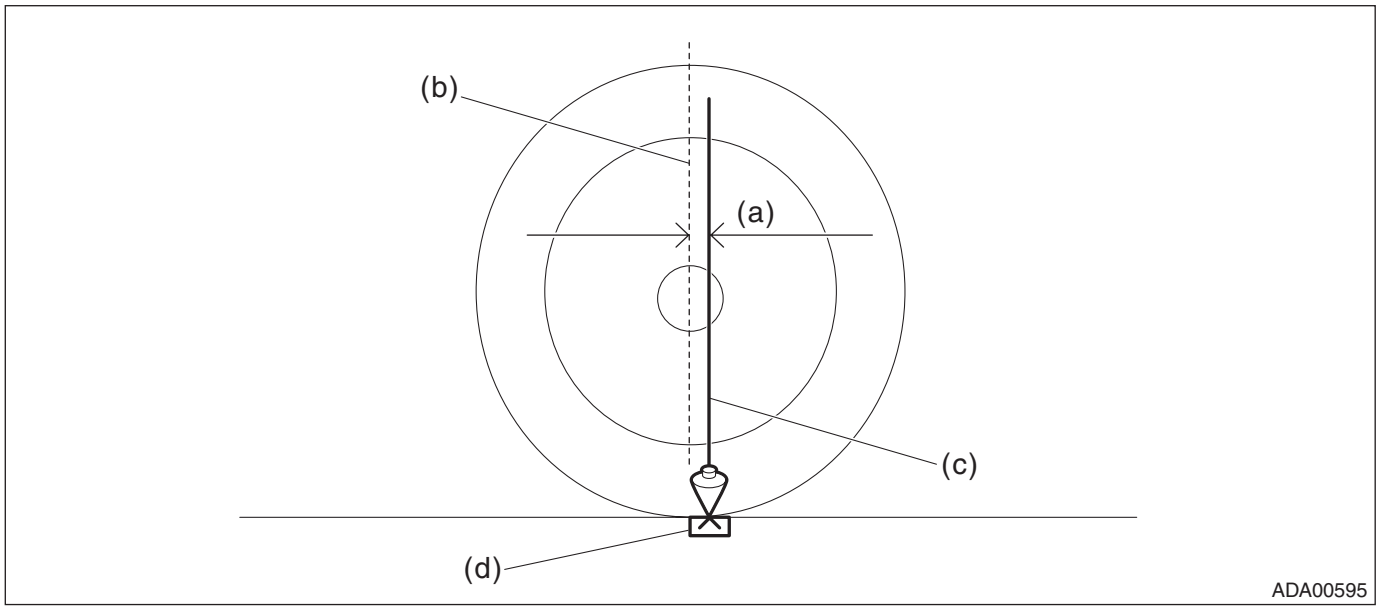

(a) ±4.0 mm (±0.16 in) (c) Plumb bob (d) Marking
(b) Tire center line

• Apply the lighting from the upper direction of RANDOM CHART, and make adjustment so that brightness is even in the CHART. (If the lighting is applied from the position where light reflects at RANDOM CHART, the adjustment cannot be done, because the reflected light enters the camera.)

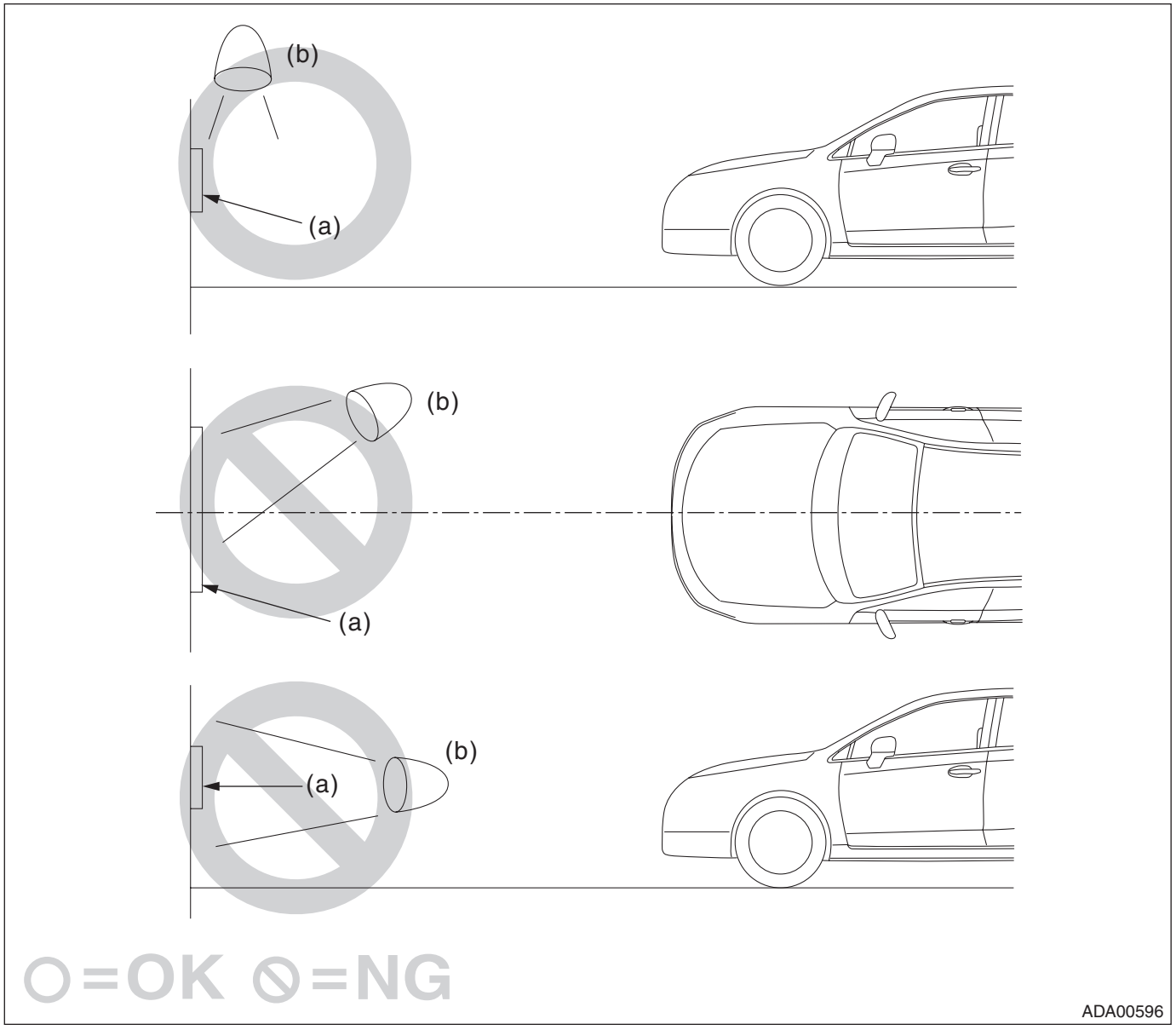

(a) RANDOM CHART (b) Lighting

9) Turn the ignition switch to OFF.
10) Check the windshield glass and the dashboard. <Ref. to ES(diag)-8, WINDSHIELD GLASS AND DASHBOARD, INSPECTION, General Description.>

CAUTION:
If there are any dirt, object or reflection from dashboard within the visibility of stereo camera, the correct adjustment and inspection can not be performed. Especially, do not put paper etc. on the dashboard.
11) Connect the Subaru Select Monitor.

NOTE:
Use the Subaru Select Monitor equipped with the latest version of the software.
12) Turn the ignition switch to ON.
13) On «Start» display, select «Diagnosis».
14) On «Vehicle selection» display, enter vehicle information and select «Confirmed».
15) On «Main Menu» display, select «Each System».
16) Select «EyeSight» on «Select System» display while pressing the pre-collision brake OFF switch and lane departure warning OFF switch at the same time.

NOTE:
If «EyeSight» is selected without pressing two switches at the same time, «Camera adjustment, inspection» is not displayed. (for preventing misoperation)
Also, the message is not displayed, when the camera does not finish the start-up (approx. 10 seconds after ignition switch ON). In this case, repeat from the selection of «EyeSight».
17) On «Select Function» display, select «Work Support».
18) From the work support item list, select and perform camera adjustment or other inspections.

NOTE:
• When performing {Camera adjustment, inspection}, pre-collision brake OFF indicator light, lane departure warning OFF indicator light in the meter will illuminate, and the normal function will be disabled.
• After camera adjustment, the function will be enabled, when the ignition switch is turned to OFF and system is restarted.

2. ADJUSTMENT VALUE CLEAR

Perform when replacing stereo camera. (Do not perform when performing stereo camera re-adjustment and inspection)
1) From the work support item list, select «Clear adjustment value».
2) When «Make the following adjustment/inspection. Please push OK if ready.» is displayed, if preparation is ready, select «OK».
3) When «Clear the adjustment value.» is displayed, select «OK».
4) When «Clearing adjustment value...» is displayed, wait until process finishes.
5) When the adjustment value clear is finished correctly, and «Adjustment value cleared OK!» is displayed, select «OK» to finish.
6) Turn the ignition switch to OFF and wait for approx. 5 seconds or more.

CAUTION:
If the ignition switch OFF period is short, the adjustment value clear can not be performed correctly.
7) Next, perform the camera all adjustment mode (replacement/removal). <Ref. to ES-27, CAMERA ALL ADJUSTMENT MODE (REPLACEMENT/REMOVAL), PROCEDURE, Camera Adjustment, Inspection.>

3. CAMERA ALL ADJUSTMENT MODE (REPLACEMENT/REMOVAL)

Perform this procedure when the stereo camera is replaced or re-adjustment is necessary (when stereo camera malfunctioning, when stereo camera reinstalled, when windshield glass replaced).

CAUTION:

- **When the stereo camera is replaced, be sure to perform the «Clear adjustment value» first. When {Clear adjustment value} was skipped, restart the procedure from {Clear adjustment value} again. <Ref. to ES-26, ADJUSTMENT VALUE CLEAR, PROCEDURE, Camera Adjustment, Inspection.>**
- **Perform the camera adjustment and inspection at curb weight without passengers.**
- **When the camera all adjustment mode is performed, if the procedures are not completed correctly to the end, the warning light illuminates, when the vehicle moves.**

1) From the work support item list, select «Camera all adjustment mode (replacement/removal)».
2) When «Make the following adjustment/inspection. Please push OK if ready.» is displayed, if preparation is ready, select «OK».
3) When «In process...» is displayed, wait until inspection finishes.
4) When the accuracy rate inspection is finished correctly, and «Accuracy rate ○○% OK!» is displayed, select «OK» to go to step 9).
5) When «Distance inspection NG!» is displayed, refer to the NOTE below.

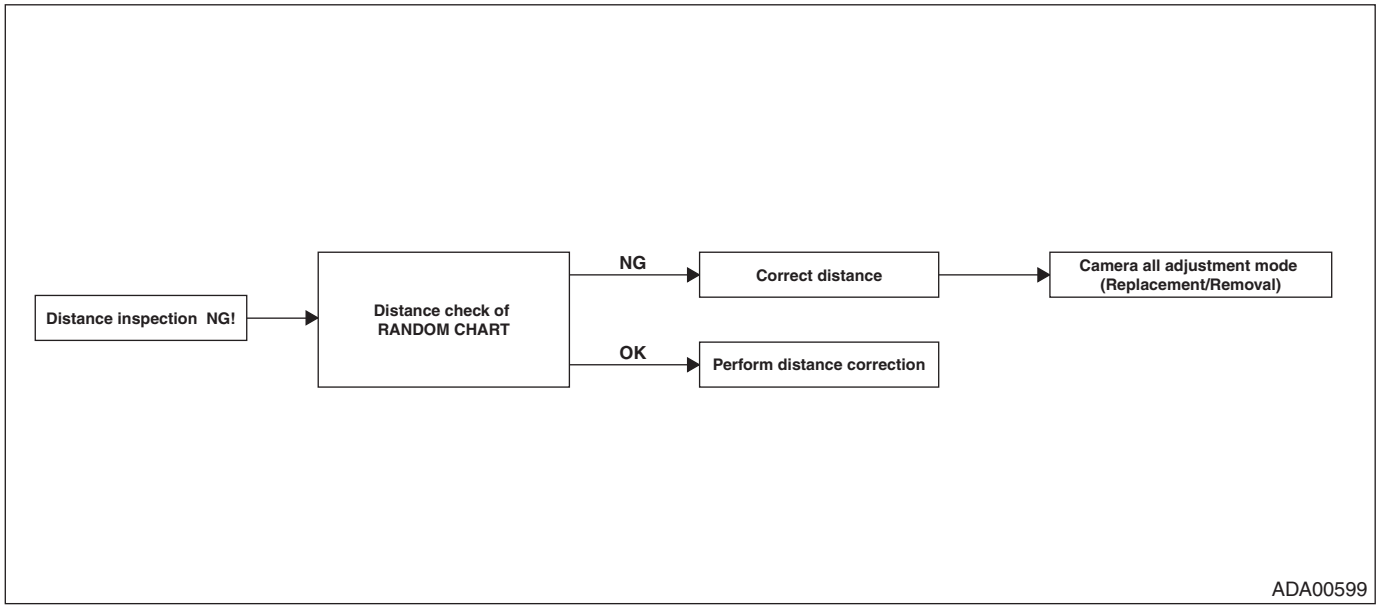

NOTE:
Distance check and adjustment of RANDOM CHART: <Ref. to ES-13, PREPARATIONS, PROCEDURE, Camera Adjustment, Inspection.>
6) When «Perform distance correction.» is displayed, select «OK». When the distance correction is finished correctly, and «Distance correction OK!» is displayed, select «OK» and proceed to the accuracy rate inspection.
7) When «Perform accuracy rate inspection.» is displayed, select «OK». When the accuracy rate inspection is finished correctly, and «Accuracy rate ○○% OK!» is displayed, select «OK» to go to next.

8) When «○○ NG!» is displayed during adjustment, refer to the NOTE below.

CAUTION:
For details on the displayed items, refer to the following list. Check the list items, and if the same NG item is displayed even when aiming is performed again, replace the stereo camera.

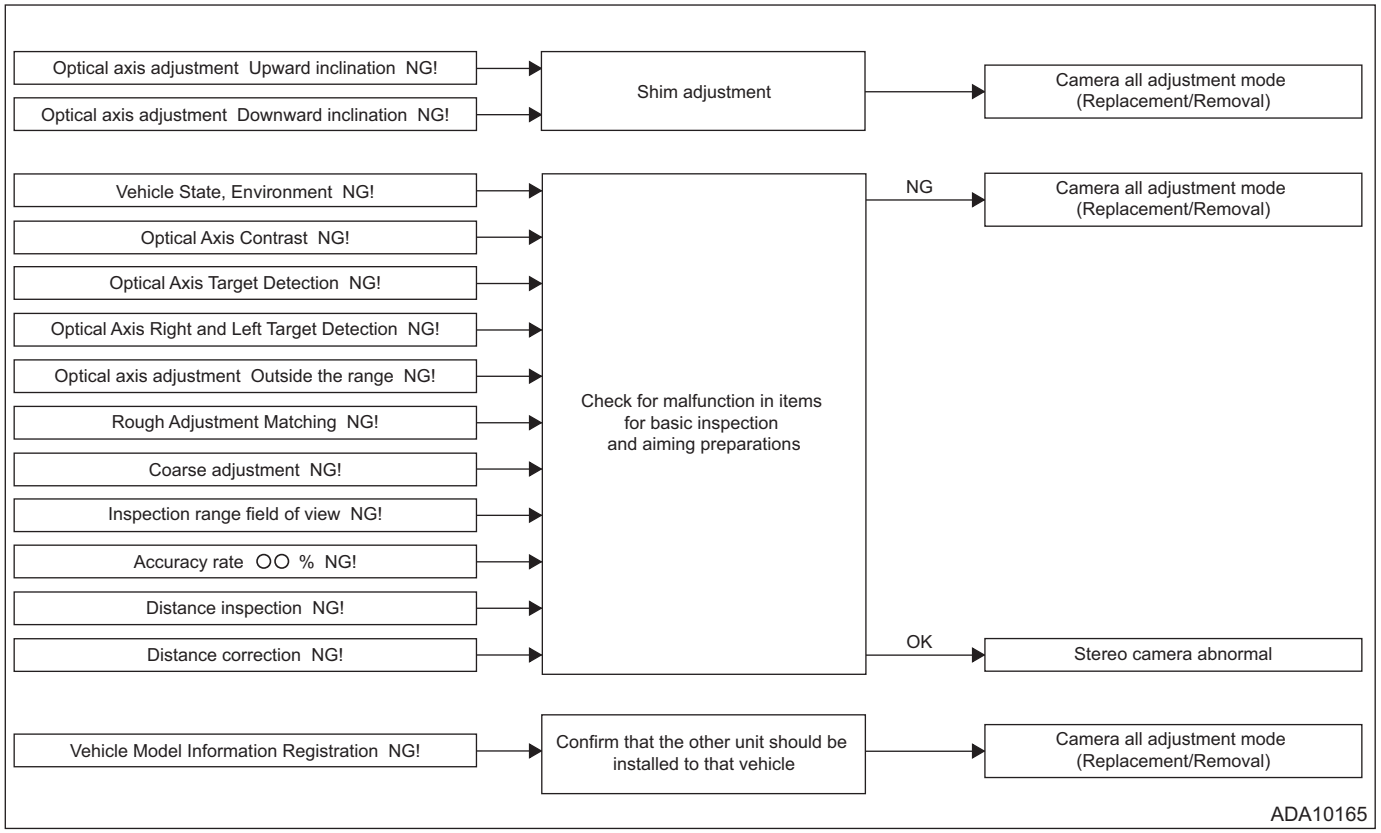

LIST

Error code	Display	Check items on error	Remarks
1401	«Vehicle State, Environment NG!»	Check body integrated unit.	—
1402	«Vehicle Model Information Registration NG!»	Confirm the part numbers of EyeSight system components, and reconfirm that the unit should be installed to that vehicle. To confirm the components, check each item.	—
1403	«Optical Axis Contrast NG!»	1. Make sure that the stereo camera cover is installed correctly. 2. There should be no obstacles that blocks the stereo camera. 3. Stereo camera and camera plate are assembled with no gap. 4. Random chart for ver. 3 must be used. 5. There should be no obstacles that blocks the random chart. 6. Random chart must be set correctly for the vehicle. 7. Grid pattern of random chart should not be dirty or damaged. 8. Lighting circumstance for random chart should be normal. 9. Make sure that the headlight is off. 10.There should be no objects (reflection) on the instrument panel. 11.Dirt should not adhere to the windshield or the lens filter of the stereo camera. 12.There should be no crack on the windshield. NOTE: Detecting measures for the error codes 1403, 1404, 1405, 1406 and 1407 are different. Check items on error with high relevance are shown in the remarks.	Highly relevant with the check items 1 to 12.
1404	«Optical Axis Target Detection NG!»		Highly relevant with the check items 4, 6, 7, 8, 9, 10, 11 and 12.
1405	«Optical Axis Target Detection NG!»		Highly relevant with the check items 4, 6, 7, 8, 9, 10, 11 and 12.
1406	«Optical Axis Right and Left Target Detection NG!»		Highly relevant with the check items 1 to 12.
1407	«Out of the Optical Axis Adjustment Range NG!»		Highly relevant with the check items 3 and 6.

Error code	Display	Check items on error	Remarks
1408	«Optical axis adjustment Upward inclination NG!»	1. Random chart must be set correctly for the vehicle. 2. Aiming is performed with the vehicle at curb weight. 3. There should be no malfunction in the suspension. If there are no problems above, perform shim adjustment so that optical axis turns downward.	—
1409	«Optical axis adjustment Downward inclination NG!»	1. Random chart must be set correctly for the vehicle. 2. Aiming is performed with the vehicle at curb weight. 3. There should be no malfunction in the suspension. If there are no problems above, perform shim adjustment so that optical axis turns upward.	—
140A	«Rough Adjustment Matching NG!»	1. Make sure that the stereo camera cover is installed correctly. 2. There should be no obstacles that blocks the stereo camera. 3. Stereo camera and camera plate are assembled with no gap. 4. There should be no obstacles that blocks the random chart. 5. Random pattern of random chart should not be dirty or damaged. 6. Lighting circumstance for random chart should be normal. 7. There should be no objects (reflection) on the instrument panel. 8. Dirt should not adhere to the windshield or the lens filter of the stereo camera. 9. There should be no crack on the windshield. NOTE: Detecting measures for the error codes 140A, 140B and 140C are different. Check items on error with high relevance are shown in the remarks.	Highly relevant with the check items 1 to 9.
140B	«Coarse adjustment NG!»		Highly relevant with the check items 3, 5, 7 and 9.
140C	«Coarse adjustment NG!»		Highly relevant with the check items 3, 5, 7 and 9.
140E	«Inspection range field of view NG!»	1. Make sure that the stereo camera cover is installed correctly. 2. There should be no obstacles that blocks the random chart. 3. Random pattern of random chart should not be dirty or damaged. 4. Lighting circumstance for random chart should be normal. 5. There should be no objects (reflection) on the instrument panel. 6. Dirt should not adhere to the windshield or the lens filter of the stereo camera. 7. There should be no crack on the windshield. 8. Windshield for EyeSight should be assembled.	—
140F	«Distance inspection NG!»	1. Distance from random chart to wheel center of the vehicle should be 4,000 mm (13.12 ft). 2. Lighting circumstance for random chart should be normal.	—
1410	«Accuracy rate 00% NG !»	1. Lighting circumstance for random chart should be normal. 2. Random pattern of random chart should not be dirty or damaged. 3. There should be no objects (reflection) on the instrument panel. 4. Dirt should not adhere to the windshield or the lens filter of the stereo camera. 5. There should be no crack on the windshield.	—
1501	«Distance correction NG!»	When «Distance inspection NG!» is displayed and distance correction is performed without inspection, check the following. 1. Distance from random chart to wheel center of the vehicle should be 4,000 mm (13.12 ft). 2. Lighting circumstance for random chart should be normal.	—

NOTE:
• Shim adjustment: <Ref. to ES-31, SHIM ADJUSTMENT, PROCEDURE, Camera Adjustment, Inspection.>
• Basic inspection items: <Ref. to ES(diag)-8, INSPECTION, General Description.>
• Aiming preparation items: <Ref. to ES-13, PREPARATIONS, PROCEDURE, Camera Adjustment, Inspection.>

9) Turn the ignition switch to OFF and wait for 5 seconds. (time necessary to save adjustment and inspection result)

CAUTION:
• If the ignition switch OFF period after adjustment and inspection finished is short, the adjustment and inspection result cannot be saved correctly. The warning is displayed on the meter LCD, when the vehicle moves.
• When aiming begins, normal recognition process stops and the warning is displayed on the meter LCD. The warning display will be cleared by turning the ignition switch OFF → ON.
10) Turn the ignition switch to ON. Make sure the «Aiming Completion Status» of «Data monitor» is «Exit» using Subaru Select Monitor.
11) Perform the {Clear Memory}, and turn the ignition switch to OFF.
12) Subsequently perform the automatic adjustment and function check by a test driving. <Ref. to ES-30, AUTOMATIC ADJUSTMENT AND FUNCTION CHECK BY DRIVING, PROCEDURE, Camera Adjustment, Inspection.>

4. AUTOMATIC ADJUSTMENT AND FUNCTION CHECK BY DRIVING

NOTE:
• Perform the automatic adjustment and function check by driving to improve the recognition accuracy of stereo camera, when the stereo camera is replaced or re-adjusted, or the EyeSight function does not operate correctly.
• The automatic adjustment and function check by driving adjust the stereo camera more in detail, based on the stereo camera adjustment using RANDOM CHART.
1) Perform this procedure after finishing stereo camera adjustment and inspection.
2) Connect the Subaru Select Monitor.
3) On «Start» display, select «Diagnosis».
4) On «Vehicle selection» display, enter vehicle information and select «Confirmed».
5) On «Main Menu» display, select «Each System».
6) On «Select System» display, select «EyeSight».
7) On «Select Function» display, select «Data Monitor».
8) From the data monitor item list, select «Automatic Adjustment Status». <Ref. to ES(diag)-23, OPERATION, Read Current Data.>
9) Drive the vehicle until «Automatic adjustment status» displays «0F» or «1F».

CAUTION:
• For the automatic adjustment, drive the vehicle on straight road with white lines on both sides at a speed of 40 km/h (25 MPH) or more for at least five minutes, while maintaining distance from the preceding vehicle 40 m (132 ft) or more.
• Maintain the following conditions until «Automatic adjustment status» displays «0F» or «1F».
– Turn the active lane keep and cruise main to OFF.
– Hold down the pre-collision brake OFF switch for two seconds to turn OFF the pre-collision brake function.

Display	Content	Unit of measure	Note (at idling)
Automatic adjustment status	Index for automatic adjustment operation performed by the driving test after the completion of the optical axis adjustment	—	«0F» or «1F» is displayed when completed.

NOTE:
• How long time will be needed until «0F» or «1F» is displayed depends on the road condition etc.
• For new vehicles, «00» may be displayed. A test-drive is not necessary before delivery because high-accuracy aiming setting has been performed at the factory.

10) On «Data monitor» display, display «Lane recognition status» to check if any of the following appears.

NOTE:
When driving did not continue until «0F» or «1F» was displayed, it may take a while before recognition completes.
- Recognizing white lines on both sides during driving at 40 km/h (25 MPH) or more: «03»
- Recognizing white lines on both sides with lane width 3 m (10 ft) or more during driving at 65 km/h (40 MPH) or more: «05»

Display	Content	Unit of measure	Note (at idling)
Lane recognition status	Display of lane recognition status	—	Recognized when vehicle lane can be seen by 20 m (66 ft) or more.

11) On «Data monitor» display, display «Distance from leading vehicle» to check if the distance from the preceding vehicle is approximately the same.

5. SHIM ADJUSTMENT

1) Turn the ignition switch to OFF.
2) Detach the stereo camera cover, and remove the stereo camera. <Ref. to ES-8, REMOVAL, Stereo Camera.>
3) Remove the stereo camera plate, and insert the shim into the vehicle body and camera plate.

Shim (washer):
Part No. 031105000

NOTE:
- Inserting the shim into the vehicle front side makes camera downward.
- Inserting the shim into the vehicle rear side makes camera upward.
- There is a case that the shim may be inserted at the production line, but it is not abnormal.

4) Install the stereo camera plate.

Tightening torque:
5.5±1.0 N·m (0.56±0.10 kgf-m, 4.1±0.7 ft-lb)
5) Install the stereo camera. <Ref. to ES-8, REMOVAL, Stereo Camera.>
6) Perform the camera all adjustment mode (replacement/removal). <Ref. to ES-27, CAMERA ALL ADJUSTMENT MODE (REPLACEMENT/REMOVAL), PROCEDURE, Camera Adjustment, Inspection.>

6. CAMERA INITIALIZATION

This is a recovery measures prepared for the data failure caused by the low battery voltage during data storage to inside the stereo camera.

CAUTION:
Do not usually perform camera initialization because it will clear the aiming data and/or DTCs.
Perform the camera initialization only when the aiming result is NG even if the vehicle is placed correctly as shown in the flowchart described in “A: Procedure”. After camera initialization, perform the aiming in the same procedure as for camera replacement.
1) Connect the Subaru Select Monitor.
2) Turn the ignition switch to ON.
3) Wait for 10 seconds.
4) On «Start» display, select «Diagnosis».
5) On «Vehicle selection» display, enter vehicle information and select «Confirmed».
6) On «Main Menu» display, select «Each System».
7) On «Select System» display, select «EyeSight».
8) On «Select Function» display, select «DTC».
9) Select «Clear Memory» while pressing the pre-collision brake OFF switch and lane departure warning OFF switch at the same time.
10) Turn the ignition switch to OFF and wait for 5 seconds.
11) Next, perform the clear adjustment value. <Ref. to ES-26, ADJUSTMENT VALUE CLEAR, PROCEDURE, Camera Adjustment, Inspection.>

7. Switches and Harness

A: REMOVAL

1. PRE-COLLISION BRAKE OFF SWITCH

1) Disconnect the ground terminal from battery sensor. <Ref. to RC-4, BATTERY, NOTE, Repair Contents.>
2) Remove the cover assembly - instrument panel LWR driver. <Ref. to EI-75, REMOVAL, Instrument Panel Lower Cover.>
3) Release the claws and remove the pre-collision brake OFF switch (h).

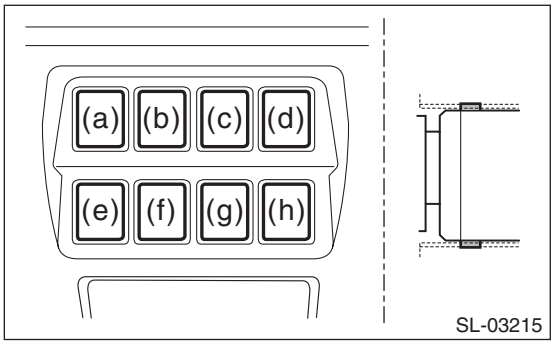

2. LANE DEPARTURE WARNING OFF SWITCH

1) Disconnect the ground terminal from battery sensor. <Ref. to RC-4, BATTERY, NOTE, Repair Contents.>
2) Remove the cover assembly - instrument panel LWR driver. <Ref. to EI-75, REMOVAL, Instrument Panel Lower Cover.>
3) Release the claws and remove the lane departure warning OFF switch (g).

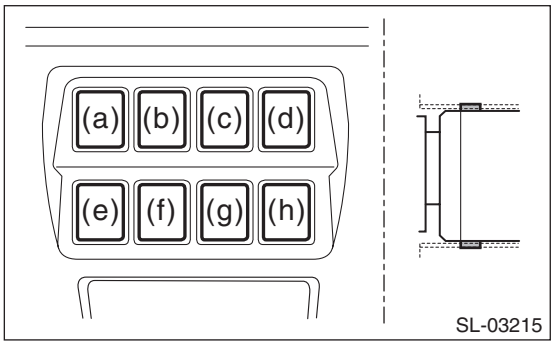

3. EyeSight STEERING SWITCH

NOTE:
For the operation procedures for the EyeSight steering switch, refer to “CRUISE CONTROL SYSTEM” section. <Ref. to CC-6, REMOVAL, Cruise Control Command Switch.>

B: INSTALLATION

1. PRE-COLLISION BRAKE OFF SWITCH/LANE DEPARTURE WARNING OFF SWITCH

1) Install the pre-collision brake OFF switch or the lane departure warning OFF switch.
2) Install the cover assembly - instrument panel LWR driver.
3) Connect the ground terminal to battery sensor. <Ref. to RC-4, BATTERY, NOTE, Repair Contents.>

2. EyeSight STEERING SWITCH

NOTE:
For the operation procedures for the EyeSight steering switch, refer to “CRUISE CONTROL SYSTEM” section. <Ref. to CC-6, INSTALLATION, Cruise Control Command Switch.>

C: INSPECTION

1. PRE-COLLISION BRAKE OFF SWITCH/LANE DEPARTURE WARNING OFF SWITCH

1) Measure the resistance between connector terminals.

Preparation tool:
Circuit tester

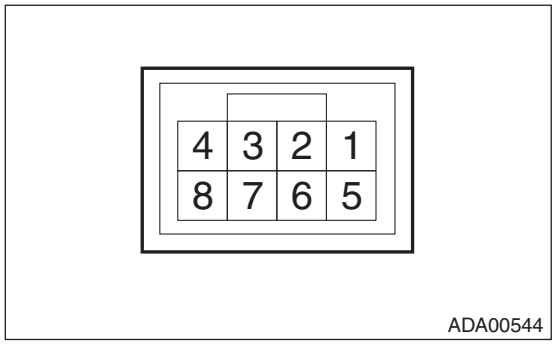

Terminal No.	Inspection conditions	Standard
6 — 8	Switch OFF	Approx. 8.2 kΩ
	Switch ON	Less than 1 Ω

2) Apply battery voltage between the connector terminals to check lighting condition of illumination inside the switch.

Terminal No.	Inspection conditions	Specification
1 (+) — 4 (–)	Apply battery voltage.	Light ON

3) Replace the pre-collision brake OFF switch or the lane departure warning OFF switch, if the inspection result is not within the standard value.

2. EyeSight STEERING SWITCH

1) Measure the resistance between connector terminals.

Preparation tool:
Circuit tester

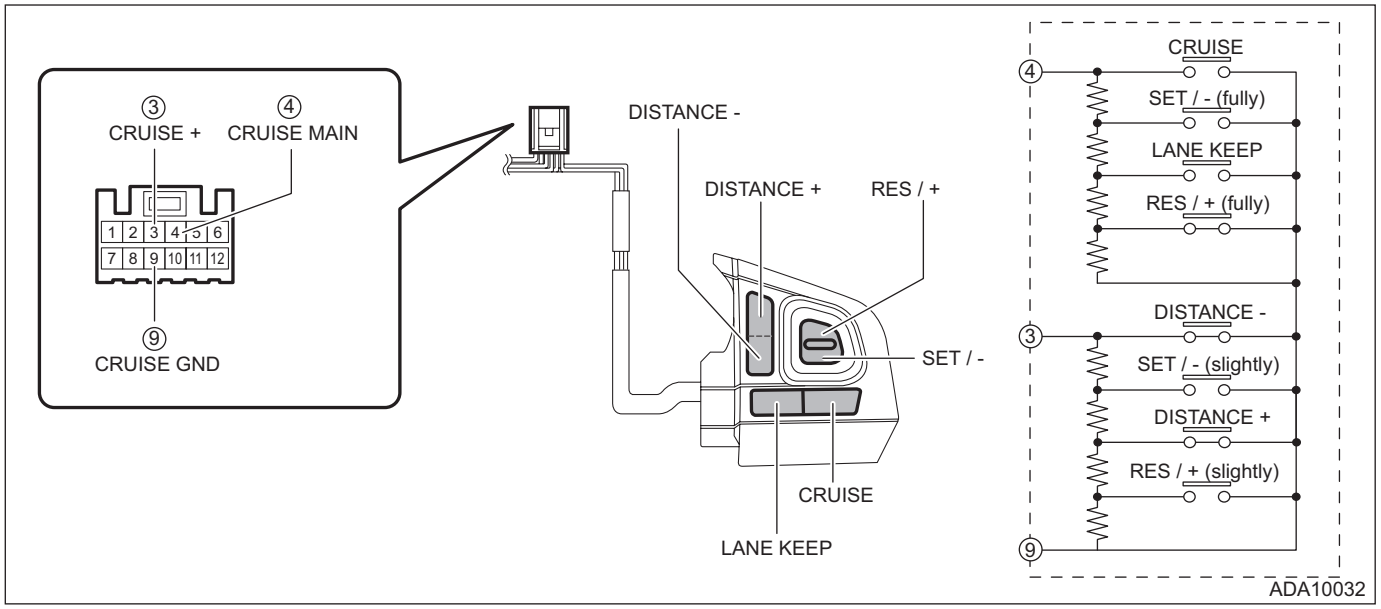

Terminal No.	Inspection conditions		Standard
3 — 9	DISTANCE– SET/– (slightly) DISTANCE+ RES/+ (slightly)	All OFF	Approx. 4,020 Ω
	DISTANCE–	ON	Less than 1 Ω
	SET/– (slightly)	ON	Approx. 250 Ω
	DISTANCE+	ON	Approx. 680 Ω
	RES/+ (slightly)	ON	Approx. 1,470 Ω
4 — 9	CRUISE (MAIN) SET/– (fully) RES/+ (fully)	All OFF	Approx. 4,020 Ω
	CRUISE (MAIN)	ON	Less than 1 Ω
	SET/– (fully)	ON	Approx. 250 Ω
	LANE KEEP	ON	Approx. 680 Ω
	RES/+ (fully)	ON	Approx. 1,470 Ω

2) Apply battery voltage between the connector terminals to check lighting condition of illumination inside the switch.

Terminal No.	Inspection conditions	Specification
10 (+) — 11 (–)	Apply battery voltage.	Light ON

3) Replace the EyeSight steering switch if the inspection result is not within the standard.

8. Combination Meter

A: NOTE

For the operation procedures for combination meter, refer to “INSTRUMENTATION/DRIVER INFO” section. <Ref. to IDI-11, Combination Meter.>

9. Transmission Control Module (TCM)

A: NOTE

For the operation procedures for transmission control module (TCM), refer to “CONTINUOUSLY VARIABLE TRANSMISSION” section.

- H4 model: <Ref. to CVT(TR580)-159, Transmission Control Module (TCM).>
- H6 model: <Ref. to CVT(TR690)-142, Transmission Control Module (TCM).>

10.Stop Light & Brake Switch

A: NOTE

For the operation procedures for stop light and brake switch, refer to “BRAKE” section. <Ref. to BR-81, Stop Light Switch.>

11.VDC Control Module and Hydraulic Control Unit (VDCCM&H/U)

A: NOTE

For the operation procedures for VDC control module & hydraulic control module (VDCCM&H/U), refer to “VEHICLE DYNAMICS CONTROL (VDC)” section. <Ref. to VDC-8, VDC Control Module and Hydraulic Control Unit (VDCCM&H/U).>

12.Power Steering Control Module

A: NOTE

For the operation procedures for power steering control module, refer to “POWER ASSISTED SYSTEM (POWER STEERING)” section. <Ref. to PS-38, Power Steering Control Module.>

13.Roll Connector

A: NOTE

For the operation procedures for roll connector (steering angle sensor), refer to “AIRBAG SYSTEM” section. <Ref. to AB-60, Roll Connector.>

14.Body Integrated Unit

A: NOTE

Refer to the “SECURITY AND LOCKS” section for operation procedures of the body integrated unit. <Ref. to SL-83, Body Integrated Unit.>

15.Diagnostics with Phenomenon

A: INSPECTION

Refer to “Diagnostics with Phenomenon” of “EyeSight (DIAGNOSTICS)” section. <Ref. to ES(diag)-50, Diagnostics with Phenomenon.>

EyeSight (DIAGNOSTICS)

ES(diag)

		Page
1.	Basic Diagnostic Procedure	2
2.	Check List for Interview	3
3.	General Description	6
4.	Electrical Component Location	15
5.	Control Module I/O Signal	18
6.	Subaru Select Monitor	20
7.	Read Current Data	23
8.	Real-time Diagnosis	41
9.	Diagnostic Code(s) Display	42
10.	Freeze Frame Data Display	47
11.	Clear Memory Mode	48
12.	Clear Active Lane Keep System Learning Value	49
13.	Diagnostics with Phenomenon	50
14.	EyeSight Temporary Code(s) Display	71
15.	ECM Cancel Code(s) Display	78
16.	ACC Cancel Code(s) Display	81
17.	Active Lane Keep System Code(s) Display	83
18.	Diagnostic Procedure with Diagnostic Trouble Code (DTC)	84

1. Basic Diagnostic Procedure

A: PROCEDURE

CAUTION:
• Start the diagnosis after the engine has started. (Cruise control main switch does not turn on even if it is pressed before the engine starts.)
• When performing diagnosis, observe the legal speed limit on the road.
• ECM cancel code, ACC cancel code and lane keep assist code are not the diagnostic trouble codes (DTCs). These codes will also appear when the cruise control or the active lane keep is cancelled by the driver's operation. Do not confuse them.
• Be sure to get an assistant to support the diagnosis while driving, and have him/her operate the select monitor.
• Be sure to record the following data before performing the Clear Memory. (Data must be obtained before inspection because the Clear Memory operation deletes previous faults and temporary stop history.)
– All diagnostic trouble codes (DTCs)
– DTC of stereo camera (current malfunction, past malfunction)
– Freeze frame data of stereo camera
– ACC cancel code of stereo camera
– Lane keep assist code of stereo camera
– EyeSight temporary stop code of stereo camera
– Current data of stereo camera
(To obtain the data concerning camera adjustment information, previous trouble or temporary stop history, all data must be measured for a few seconds after the engine has started.)
• When a temporary stop occurs, stereo camera may be affected by a small amount of dirt that would not be perceived by the driver. In this case, cleaning the windshield glass is effective. <Ref. to ES(diag)-8, WINDSHIELD GLASS AND DASHBOARD, INSPECTION, General Description.>

	Step	Check	Yes	No
1	**PREPARATION BEFORE INSPECTION.** Using the Check List for Interview, confirm the condition of the malfunction occurrence from the user. <Ref. to ES(diag)-3, CHECK, Check List for Interview.>	Is there any component that obviously seems to affect the malfunction?	Repair or replace the component that seems to affect the malfunction.	Go to step **2**.
2	**CHECK DTC.** Read the DTC using Subaru Select Monitor. NOTE: When communication with the stereo camera could not be established, check the circuit. <Ref. to ES(diag)-21, COMMUNICATION FOR INITIALIZING IMPOSSIBLE, INSPECTION, Subaru Select Monitor.>	Is DTC displayed on Subaru Select Monitor?	Perform the diagnosis according to DTC and freeze frame data. <Ref. to ES(diag)-42, Diagnostic Code(s) Display.> <Ref. to ES(diag)-47, Freeze Frame Data Display.> If the diagnostic codes other than the stereo camera are displayed, refer to the diagnosis for the relevant codes.	Go to step **3**.
3	**PERFORM DIAGNOSTICS WITH PHENOMENON.** Using the diagnostics with phenomenon, perform inspection. <Ref. to ES(diag)-50, Diagnostics with Phenomenon.>	Is the vehicle free from any problem described in the diagnostics with phenomenon? / Are indicators normal?	Finish the diagnosis.	Perform the diagnosis according to the diagnostics with phenomenon.

2. Check List for Interview

A: CHECK

Inspect the following items regarding the vehicle's state.

Writer/ Inspector	Writer's name		
	Inspector's Name		
Vehicle information	Car accessory equipment condition	Car accessory is installed to the windshield glass.	No/Yes (Position:)
		Other	No/Yes (Accessory's name:)
	Is there any modification for the following items?	Suspension?	Not changed / Changed (Specifically:)
		Headlight?	Not changed / Changed (Specifically:)
		Tire size?	Not changed / Changed (Specifically:)
		Front wiper?	Not changed / Changed (Specifically:)
	How is the condition around camera?	Is there any scratch or damage on the windshield glass?	No/Yes (Specifically:)
		Are antennas, etc. attached on the prohibited area?	No/Yes (Specifically:)
		Is wide mirror or accessory attached?	No/Yes (Specifically:)
	How is the surface condition of the windshield glass?	Presence of oil film, fogging, dirt and/or glass coating	No/Yes (Specifically:)
	How is the condition of the dashboard?	Is there anything that can be easily reflected against the windshield glass on the dashboard?	No/Yes (Specifically:)
	How is the deterioration of the wiper?	Does any streak or uneven wiping area remain in front of the camera?	No/Yes (Specifically:)
	How is the condition of the tire?	Is there any wear? Is there any excessive wear difference?	No/Yes (Specifically:)
		Is the air pressure proper?	Proper/Improper (Specifically:)
	How is the condition of the camera lens filter?	Is there finger print adhesion or cracks on the lens filter?	No/Yes (Specifically:)
Description of malfunction	What kind of malfunction has been detected?	Failure / temporary stop / faulty operation of adaptive cruise control / faulty operation of pre-collision brake / other faulty operations	
	What kind of DTC and/or cancel code is displayed?		
	How is the meter display?	EyeSight warning light	Off/On/Blink
		Pre-collision brake OFF indicator light	Off/On
		Lane departure warning OFF indicator light	Off/On
		Multi-information display	• Halt: camera view defectiveness • Halt: camera temperature range outside • Halt

Check List for Interview

Occurrence conditions	Occurrence date		Occurrence location	
	Vehicle speed at occurrence	Approx. km/h (MPH)	Occurrence timing	During driving / during stopping / continues after engine has started
	Road type	Express way / limited highway / main highway / general road	Weather	Fine/cloudy/rainy/snowy/other
	Road condition ①	Dry/slippery (Rainy • compacted snow • icy road)	Ambient temperature	Approx. ° C(°F)
	Road condition ②	Asphalt / gravel / earth and sand / other	Position of solar radiation	Described in the detailed chart when the weather is fine.
	Road shape	Uphill / downhill / bank / roll / uneven surface	Time elapsed after engine start	Immediately after engine start / within 5 minutes after engine start / more than 5 minutes after engine start
	Wiper operation status	OFF/INT/LO/HI/AUTO	Light on status	Off / LO On / HI On
	Vehicle weight	Number of passengers: ( ), Did the vehicle carry heavy load? (No/Yes (Approx. kg))		
	Detailed chart (Refer to the example of description.)			
	In case of malfunction caused by temporary stop or faulty operation, describe the details by referring to the example below so that the following conditions can be recognized. (Images taken with a digital camera, etc. are acceptable.) • Road shape (straight, curve, tunnel, number of lane, etc.) • Road grade and it's change • Presence of white line, guardrails and/or side wall (degree of clarity) • Position of the sun • Presence and shape of preceding vehicle, oncoming vehicle, vehicle running on the next lane or pedestrian • Presence and shape of surrounding building or structure • Traveled course of own vehicle and preceding vehicle			

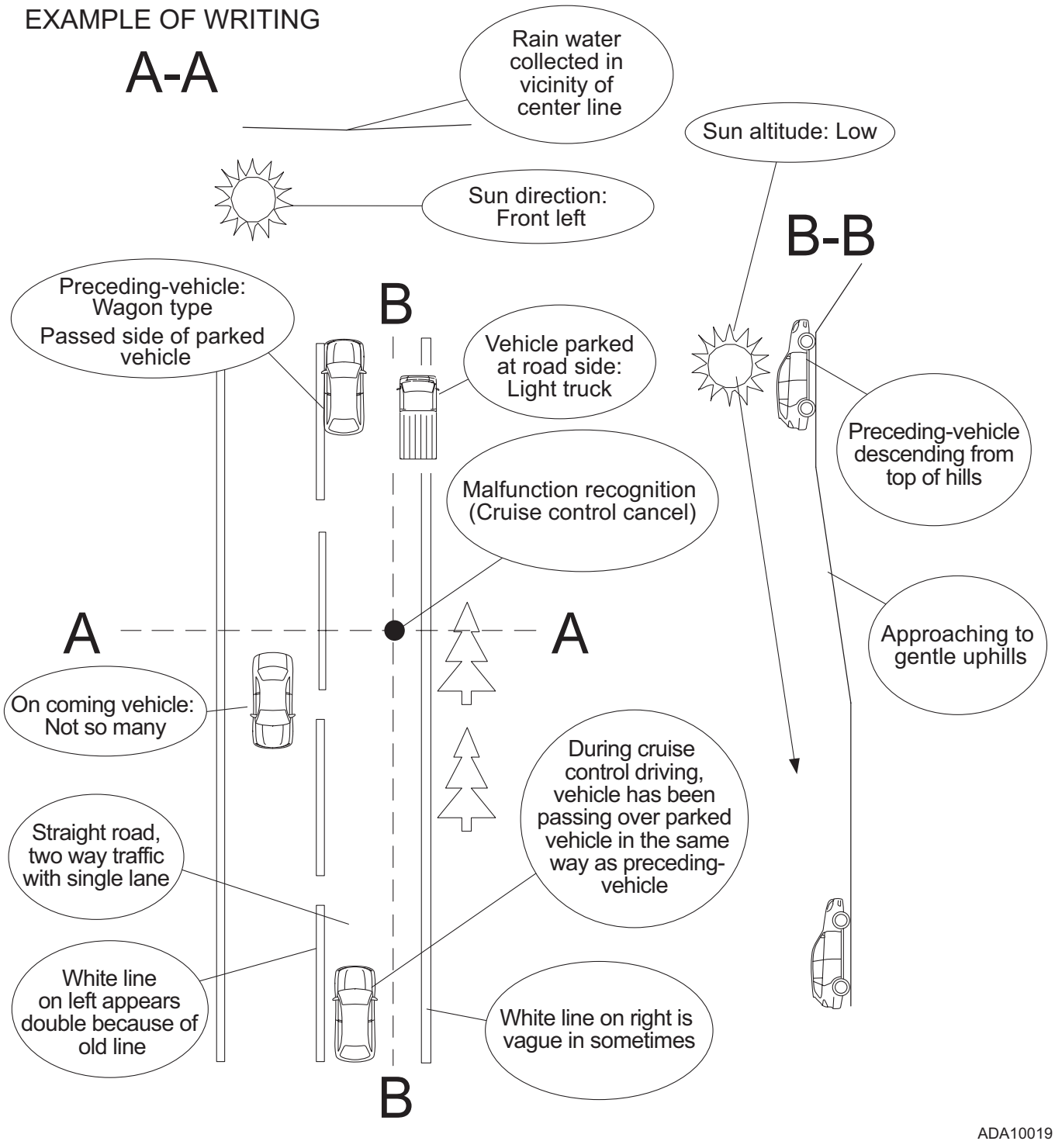
EXAMPLE OF WRITING
A-A
Rain water collected in vicinity of center line
Sun direction: Front left
Sun altitude: Low
B-B
Preceding-vehicle: Wagon type
Passed side of parked vehicle
B
Vehicle parked at road side: Light truck
Preceding-vehicle descending from top of hills
Malfunction recognition (Cruise control cancel)
A
A
Approaching to gentle uphills
On coming vehicle: Not so many
During cruise control driving, vehicle has been passing over parked vehicle in the same way as preceding-vehicle
Straight road, two way traffic with single lane
White line on left appears double because of old line
White line on right is vague in sometimes
B
ADA10019

3. General Description

A: CAUTION

1. AIRBAG SYSTEM

Airbag system wiring harness is routed near the cruise control command switch.

CAUTION:
• Do not use the electrical test equipment on the airbag system wiring harnesses and connector circuits.
• Be careful not to damage the airbag system wiring harness when servicing the cruise control command switch.

2. EyeSight

CAUTION:
• Do not hold the camera unit of the stereo camera.
• Do not touch the lens on the stereo camera.
• Do not clean the lens of the stereo camera.
• When cleaning the windshield glass, use care so that the glass cleaner, etc. does not come in contact with the lens of the stereo camera.
• Do not make an impact or apply excessive force to the stereo camera.
• Do not disassemble the stereo camera.
• Do not change the installation position of the stereo camera or do not modify the surrounding structure.
• If the stereo camera or windshield glass is removed or replaced, always adjust or check the stereo camera.
• When lifting up the vehicle to rotate the tires, turn off the pre-crash function.
• Stereo camera axis may be displaced even in a minor collision. So be sure to adjust the stereo camera even when the EyeSight warning light is not illuminated or when the "Stereo Camera Temporary Stop" is not displayed on the multi-information display.
• When removing the stereo camera cover assembly, cover it with a copy paper or similar dust-free paper to avoid any interference to the camera lens, and tape the paper while being careful not to let the adhesive surface contact the glass surface. Be sure to remove the paper after the procedure. <Ref. to ES-8, REMOVAL, Stereo Camera.>

B: PREPARATION TOOL

1. SPECIAL TOOL

ILLUSTRATION	TOOL NUMBER	DESCRIPTION	REMARKS
 STSSM4	— (Newly adopted tool)	SUBARU SELECT MONITOR 4	Used for setting of each function and trouble-shooting for electrical system. NOTE: For detailed operation procedures of Subaru Select Monitor 4, refer to “Application help”.

2. GENERAL TOOL

TOOL NAME	REMARKS
Circuit tester	Used for measuring resistance, voltage and current.
Masking tape	Used for removing and installing stereo camera cover assembly.
DST-i	Used with Subaru Select Monitor 4.

C: INSPECTION

1. BATTERY

Check the battery. <Ref. to SC(H4DO)-63, Battery.> <Ref. to SC(H6DO)-57, Battery.>

2. WINDSHIELD GLASS AND DASHBOARD

Remove the windshield glass and dashboard in front of the stereo camera.

Standard:

There must be no oil film, dirt, scratch or fogging that obstructs the forward visibility of the stereo camera.

Do not stick or attach the aftermarket parts on the prohibited area (D) shown in the figure below. Even outside the prohibited area, if the abnormal operation occurs due to the reflection of the light or the reflection on the glass, change the adhering position or installation position.

- ***Application of stickers or antennas, installation of wide-type mirror***
  - ***This will affect the visibility of the stereo camera, causing the function not to operate correctly.***
- ***Placement of navigation unit, ETC or other things on the dashboard***
  - ***These things will be reflected on the windshield glass, affecting the recognition of the stereo camera, thus causing the function not to operate correctly.***

- Front view

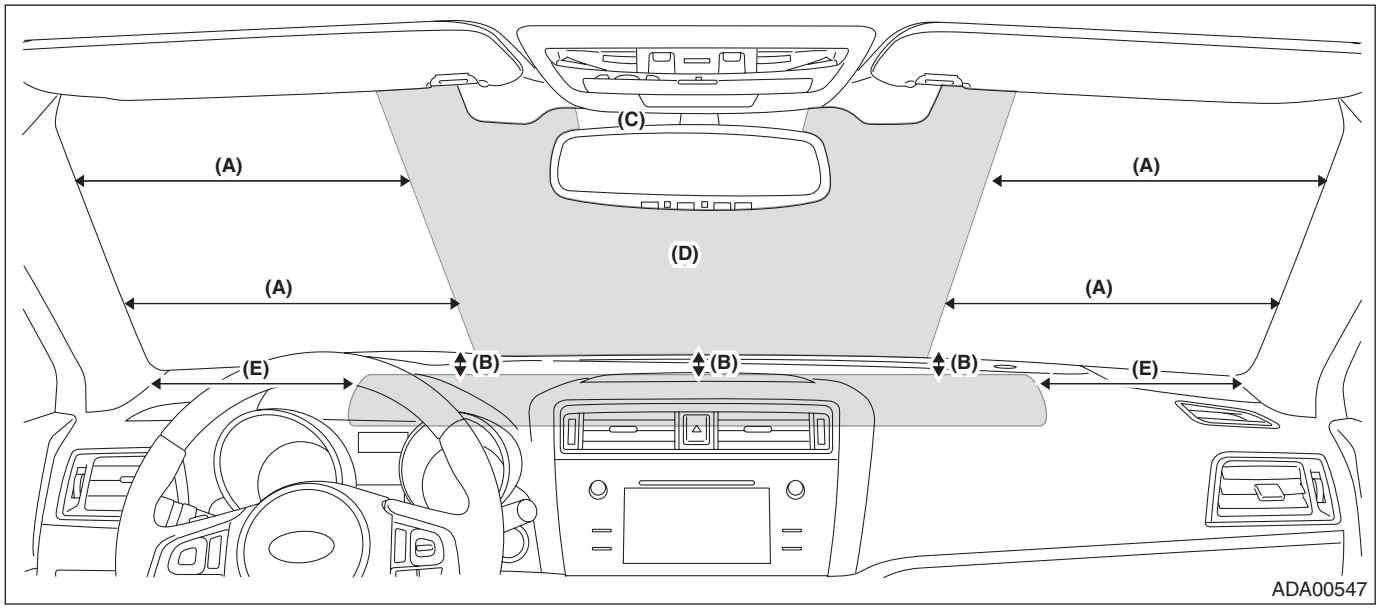

(A) 360 mm (14 in)
(B) 70 mm (2.7 in)
(C) Ceramic area
(D) Prohibited area
(E) 230 mm (9 in)

- Side view

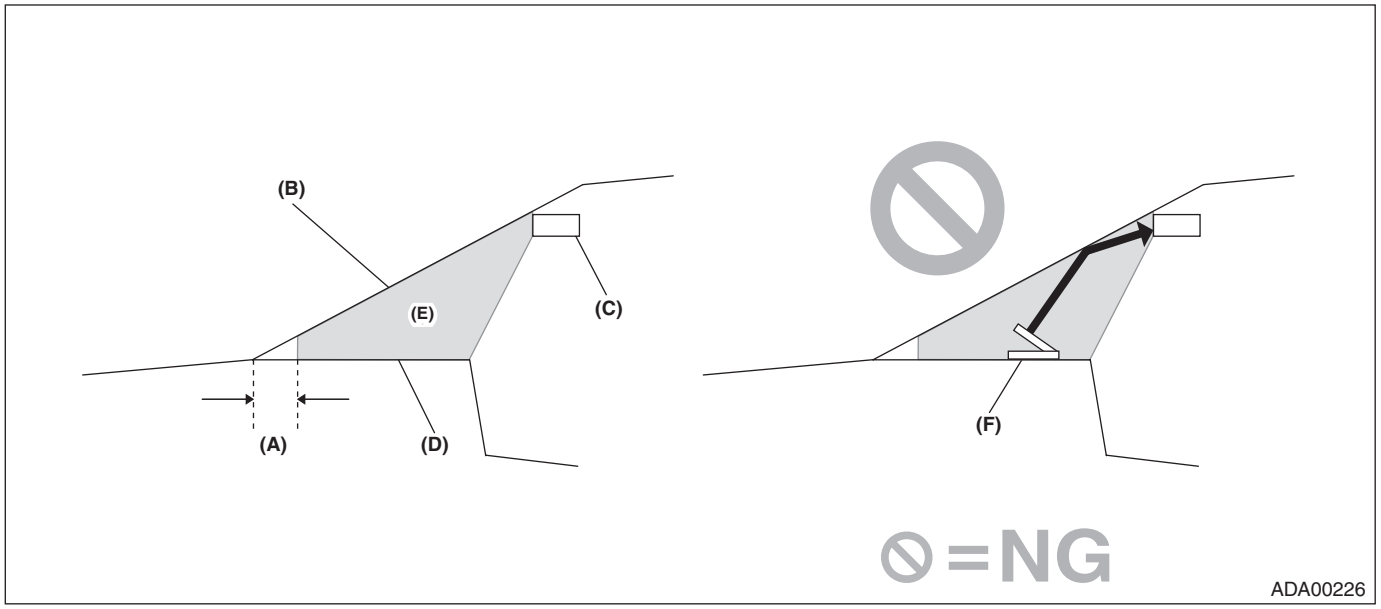

(A) 120 mm (4.7 in)
(B) Windshield glass
(C) Stereo camera cover
(D) Dashboard
(E) Prohibited area
(F) External monitor etc.

NOTE:
- Clean the windshield glass if dirt or fogging is found on the glass. Repair or replace the glass if damage is found.
  – When cleaning the inner side of the windshield glass, be careful not to touch the lens of the stereo camera. Take care so that the glass cleaner is not applied to the lens. (As with the removal procedure of the stereo camera, cover the opening of camera cover with a copy paper or similar dust-free paper before the procedure, in order to avoid any interference to the camera lens, and tape the paper while being careful not to let the adhesive surface contact the glass surface. Be sure to remove the paper after the procedure. <Ref. to ES-8, REMOVAL, Stereo Camera.>
  – When replacing the windshield glass, be sure to replace the part for the EyeSight.
  – If the glass is removed or replaced, always perform the stereo camera adjustment and inspection.
- If the damage is found in the glass repair prohibited area shown in the figure below, replace the glass.

– Damage in the prohibited area can affect the recognition of the stereo camera even if it is repaired, and thereby EyeSight function may not operate properly.

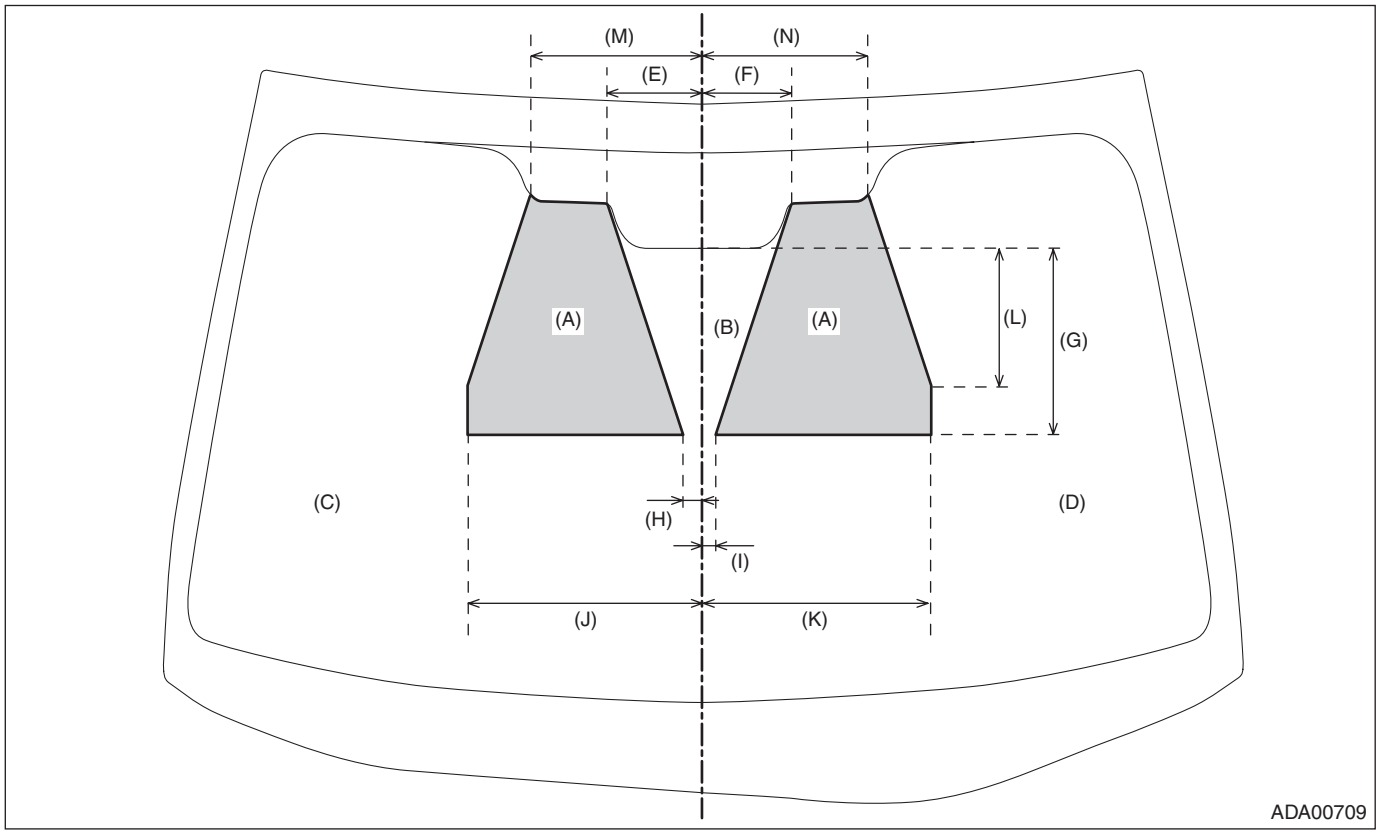

(A)	Glass repair prohibited area	(E)	130 mm (5.1 in)	(J)	315 mm (12.4 in)
(B)	Glass repairable area	(F)	130 mm (5.1 in)	(K)	315 mm (12.4 in)
(C)	Glass repairable area (LH side)	(G)	261 mm (10.3 in)	(L)	200 mm (7.9 in)
(D)	Glass repairable area (RH side)	(H)	23 mm (0.9 in)	(M)	228 mm (9.0 in)
		(I)	23 mm (0.9 in)	(N)	228 mm (9.0 in)

– Install the ETC transponder inside the area (A) shown in the figure below.
Before installing, attach a full-scale copy of the following figure onto the windshield glass surface to install the parts to correct positions.
  – Align the position with respect to the end of the ceramic area.
  – Prepare a full-scale copy in which the reference dimension on the upper part of the figure actually has 4 inches long.
  – Only the transponder with a thickness of 1.5 inches or less can be used.

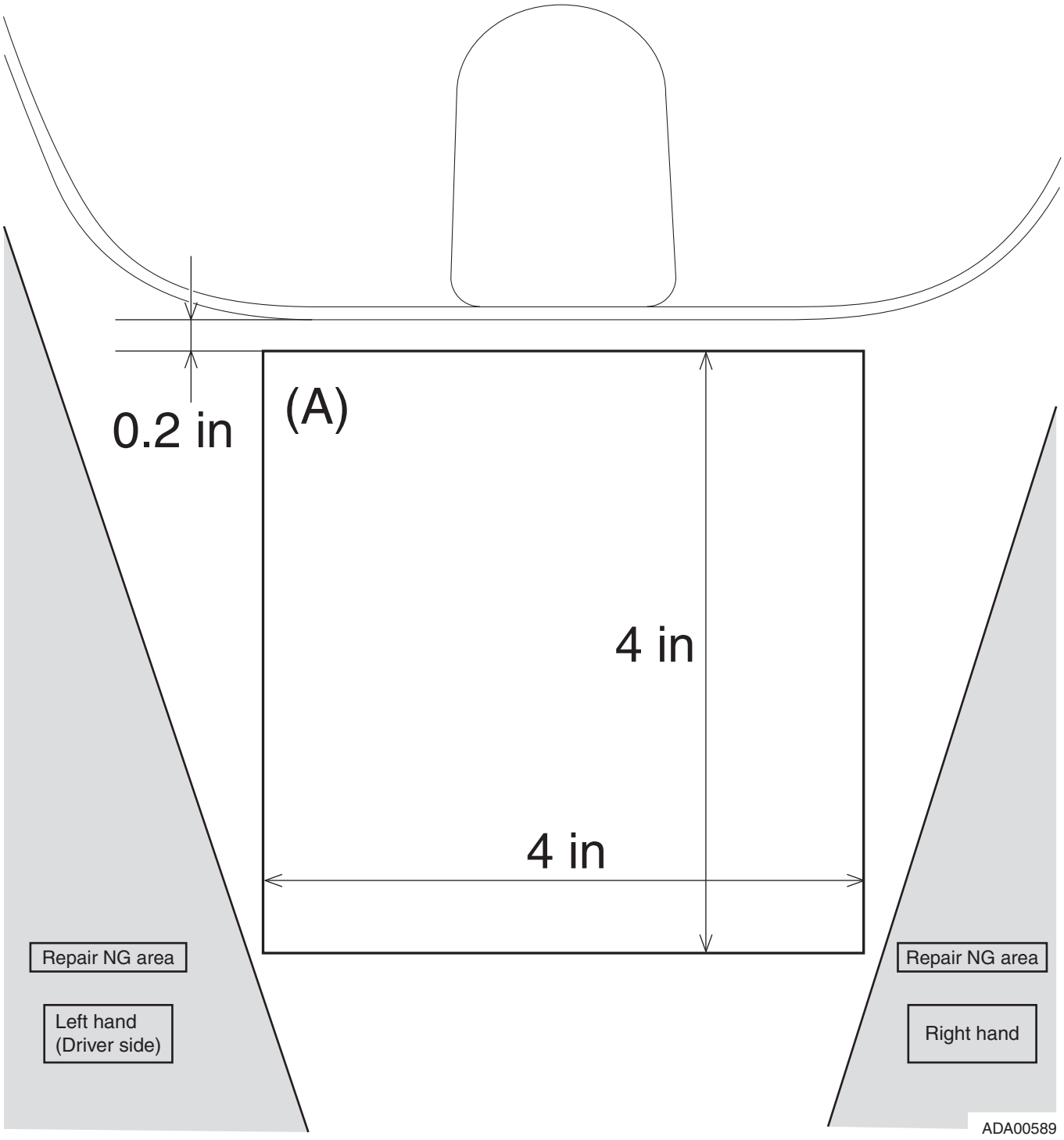

- Relocate any aftermarket parts out of the prohibited area.
- Do not touch the lens on the stereo camera. Do not clean the lens of the stereo camera. (If the lens surface is touched, the stereo camera must be replaced as it is impossible to clean the lens surface for ensuring quality.)

3. REAR VIEW MIRROR

Check the rear view mirror condition.

Standard:

The rear view mirror other than genuine parts shall not be used. (Wide mirrors shall not be used)
The visibility of the stereo camera shall not be blocked.
— This will affect the visibility of the stereo camera, causing the system not to operate correctly.

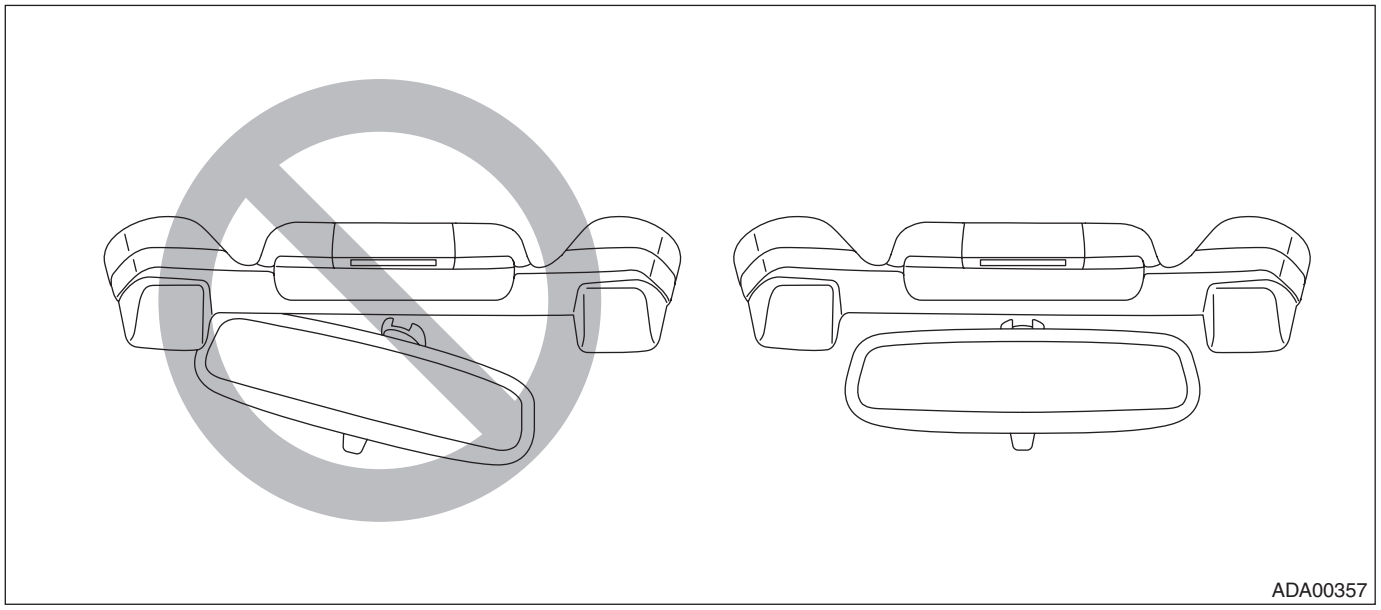

4. FRONT WIPER

Check the wiping condition of windshield glass.

Standard:

Use Subaru genuine part only for wiper blade body and blade rubber.
— Using the part other than genuine part will affect the recognition of the stereo camera, which may cause the function not to operate correctly.
Do not continue using the damaged blade rubber.
— The glass may be damaged. If the wiping performance decreases, or if the distinct streak is found, replace it as soon as possible.

NOTE:
Clean the windshield glass if there is an oil film or any dirt on the surface.

5. TIRE INFLATION PRESSURE

Check the tire air pressure.

Standard:

Adjust to the specified air pressure. <Ref. to WT-2, SPECIFICATION, General Description.>
Do not install worn tire or tires with excessive wear difference.
Install tires with specified size.

6. STEREO CAMERA

Through the windshield glass, check if there are any fingerprints or faults such as crack found on lens filters at the left and right camera lenses of the stereo camera.

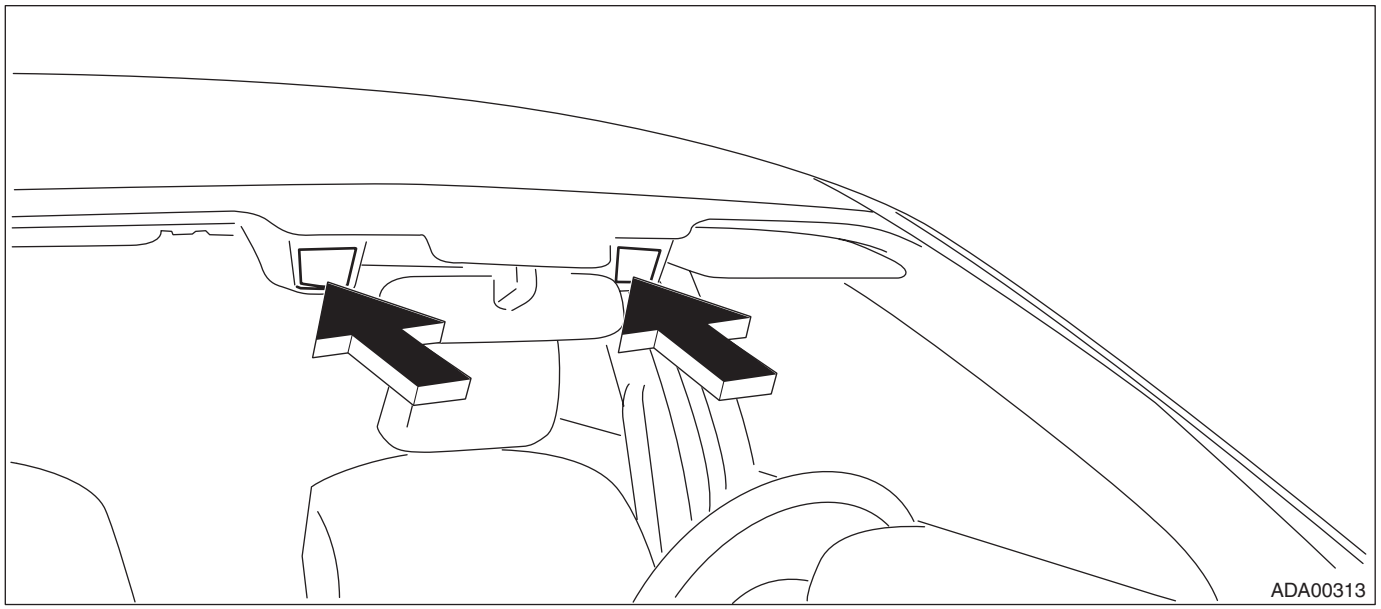

NOTE:

- Do not remove the camera or camera cover to check the lens.
- When spider's web or insects are found within the camera view or inside the lens hood, remove it by blowing air etc. while taking care not to touch the lens surface. Do not use a hand or a cloth.
- Thin and uniform adhesion of dust, dirt or tobacco stains to the lens filter surface resulting from normal use will not be an obstacle. Do not attempt to clean in such cases.
- If an oil film such as a fingerprint or any excessive dirt adheres, or if the lens filter cracks, replace the stereo camera. <Ref. to ES-8, Stereo Camera.>
- If the fingerprint adhesions or cracks occur on the lens filter, the following failures may arise.
  – The vehicle may not be able to detect the preceding vehicle or obstacle due to the effects of the headlight of the oncoming vehicle.
  – The vehicle may not be able to detect the preceding vehicle or obstacle due to the effects of the brake light operation of the preceding vehicle.
  – All the functions of the EyeSight may be suspended by the self-diagnosis function equipped with the camera.
  – When the lens filter is broken, the vehicle may not be able to detect the preceding vehicle or obstacle all day and all night.
- Do not clean the lens filter with any cleaner. It is quite difficult to uniformly clean both of the right and left lenses, and such an attempt just ends up spreading dirt and will cause problems as same as those from oil film.

7. LOAD ON THE ROOF

Check that load on the roof is not sticking out to the front of the stereo camera.

Standard:

The load on the roof is placed outside the prohibited area (A) shown in the figure below.

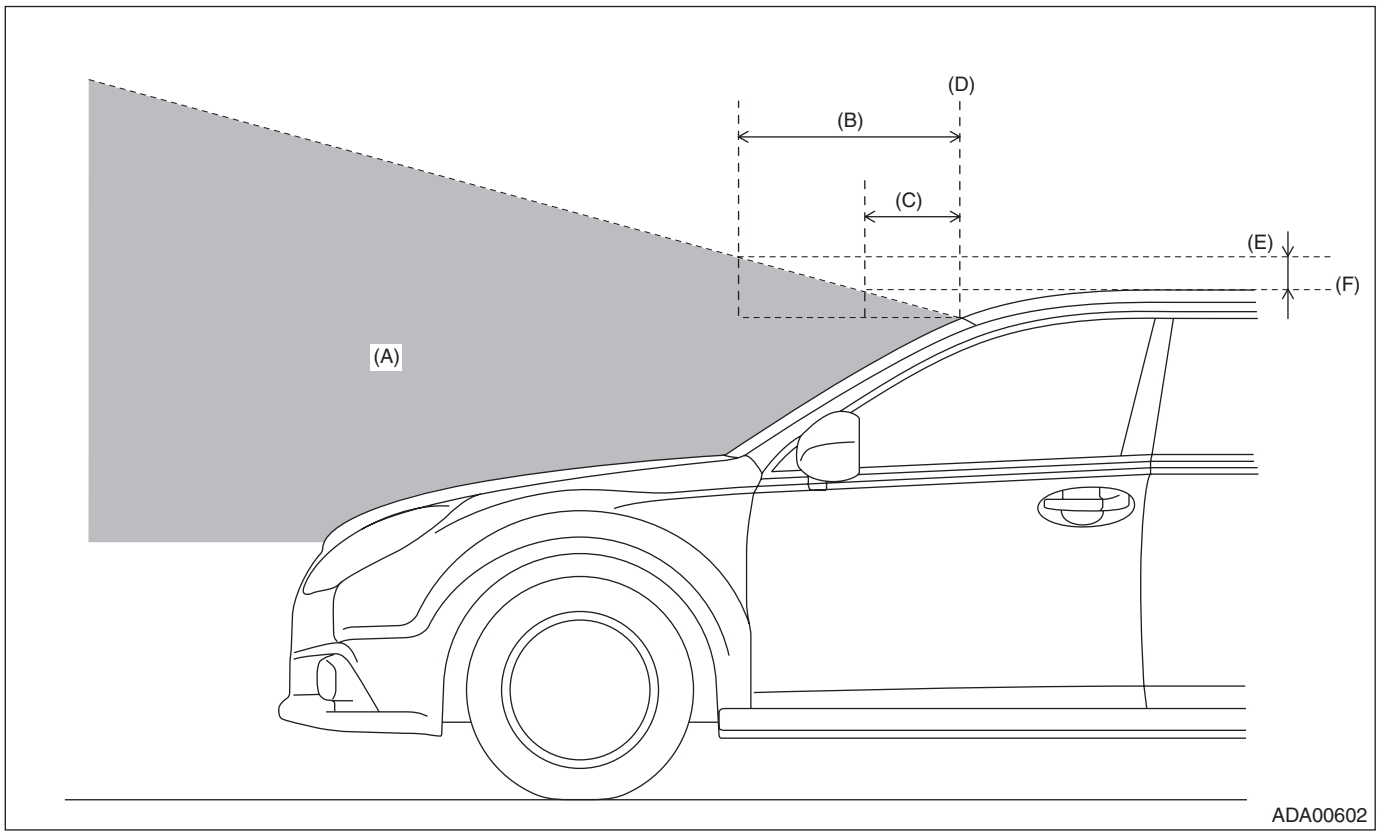

(A) Prohibited area
(B) 880 mm (34.6 in)
(C) 520 mm (20.5 in)
(D) Windshield glass upper end
(E) 100 mm (3.9 in)
(F) Highest surface of the roof

4. Electrical Component Location

A: LOCATION

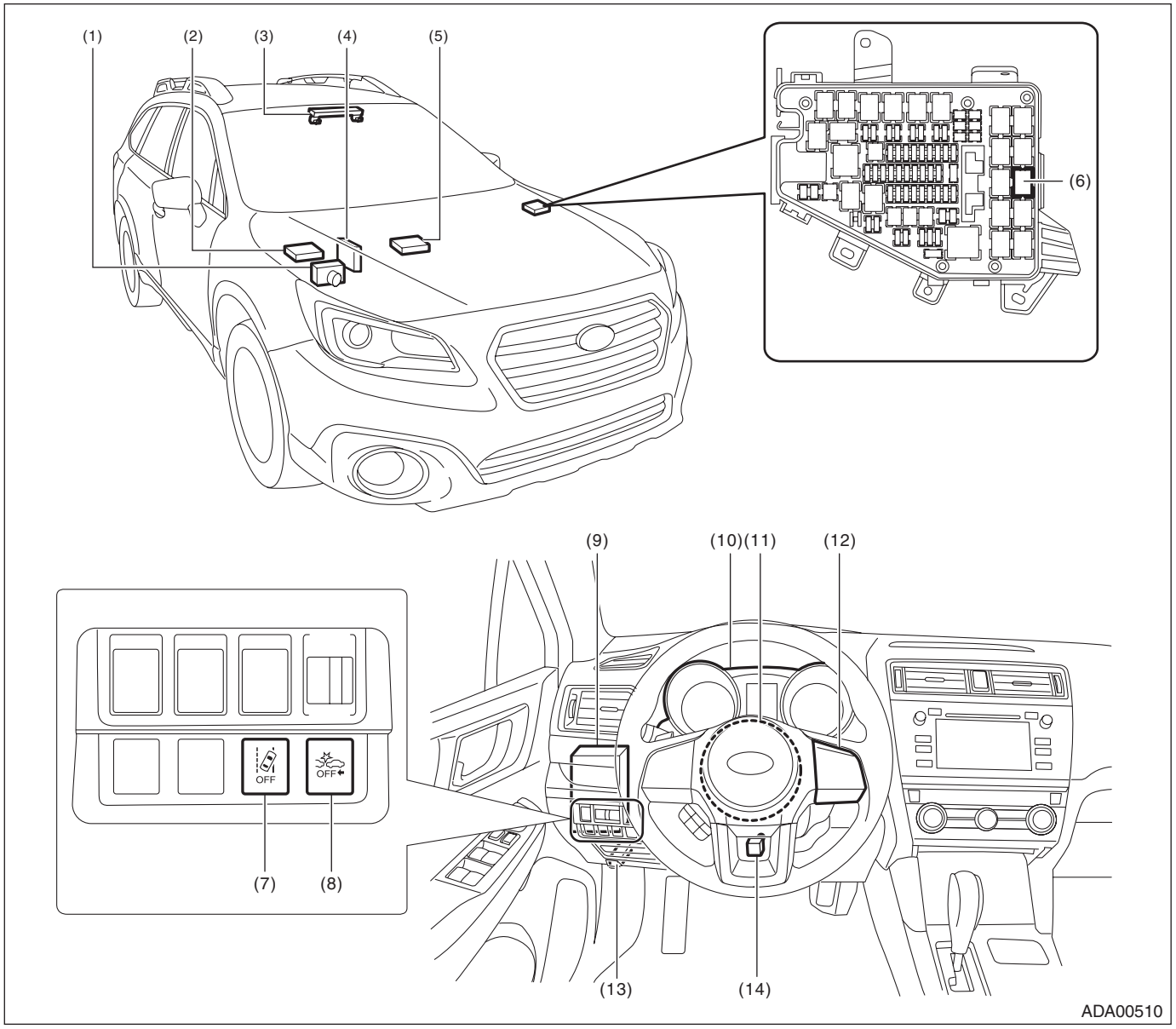

(1) VDC CM
(2) TCM (engine type: EZ)
(3) Stereo camera
(4) ECM
(5) TCM (engine type: FB)
(6) Brake light relay
(7) Lane departure warning OFF switch
(8) Pre-collision brake OFF switch
(9) Body integrated unit
(10) Combination meter
(11) Steering angle sensor
(12) EyeSight steering switch
(13) Data link connector
(14) Stop light and brake switch

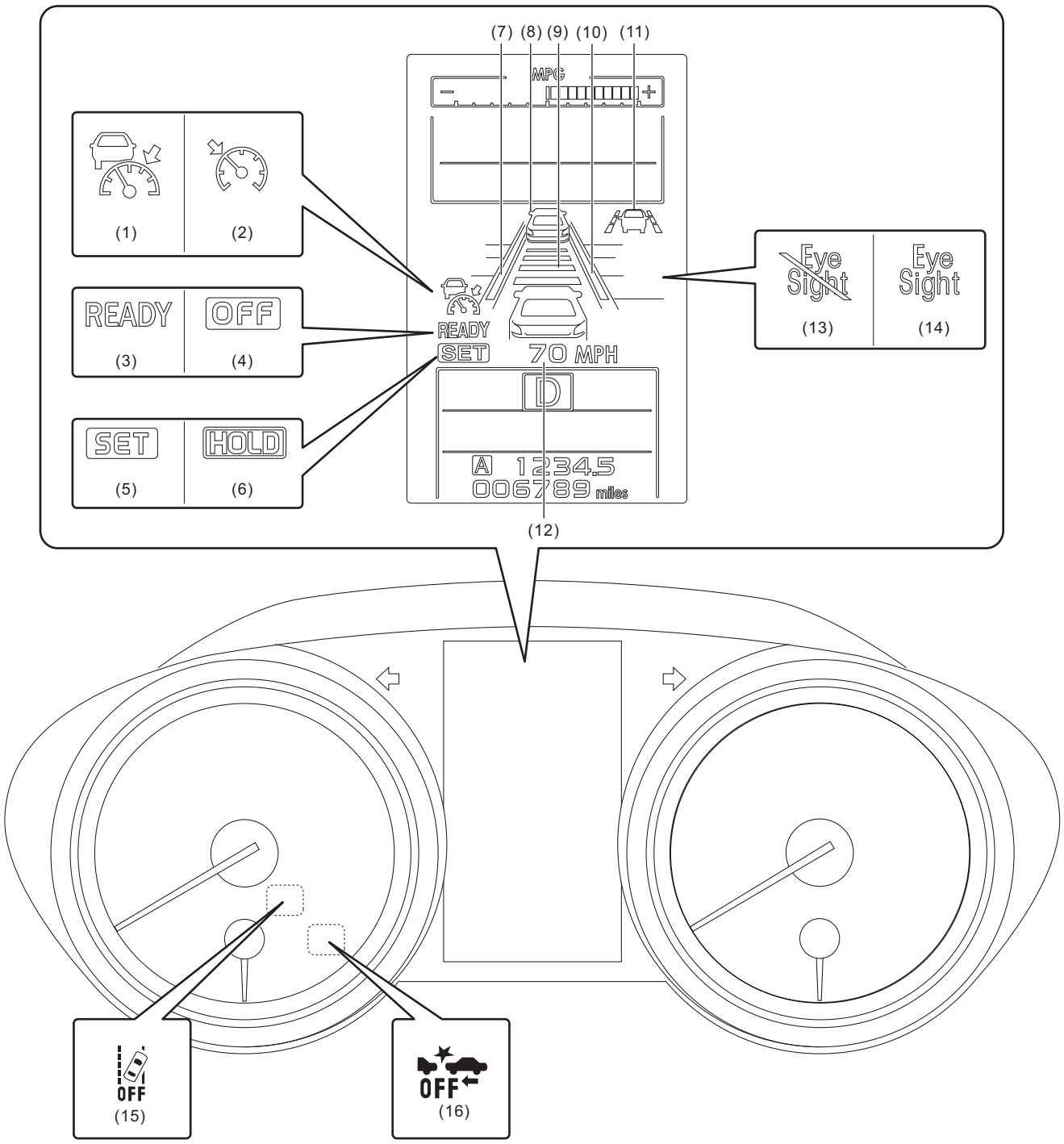

ADA10027

(1) Adaptive cruise display
(2) Conventional cruise display
(3) READY indicator
(4) OFF indicator
(5) SET indicator
(6) HOLD indicator
(7) Lane indicator (left)
(8) Preceding vehicle indicator
(9) Following distance setting indicator
(10) Lane indicator (right)
(11) Lane keep display
(12) Set vehicle speed display
(13) Steering wheel indicator
(14) EyeSight temporary stop indicator
(15) EyeSight warning indicator
(16) Lane departure warning OFF indicator light
(17) Pre-collision brake OFF indicator light

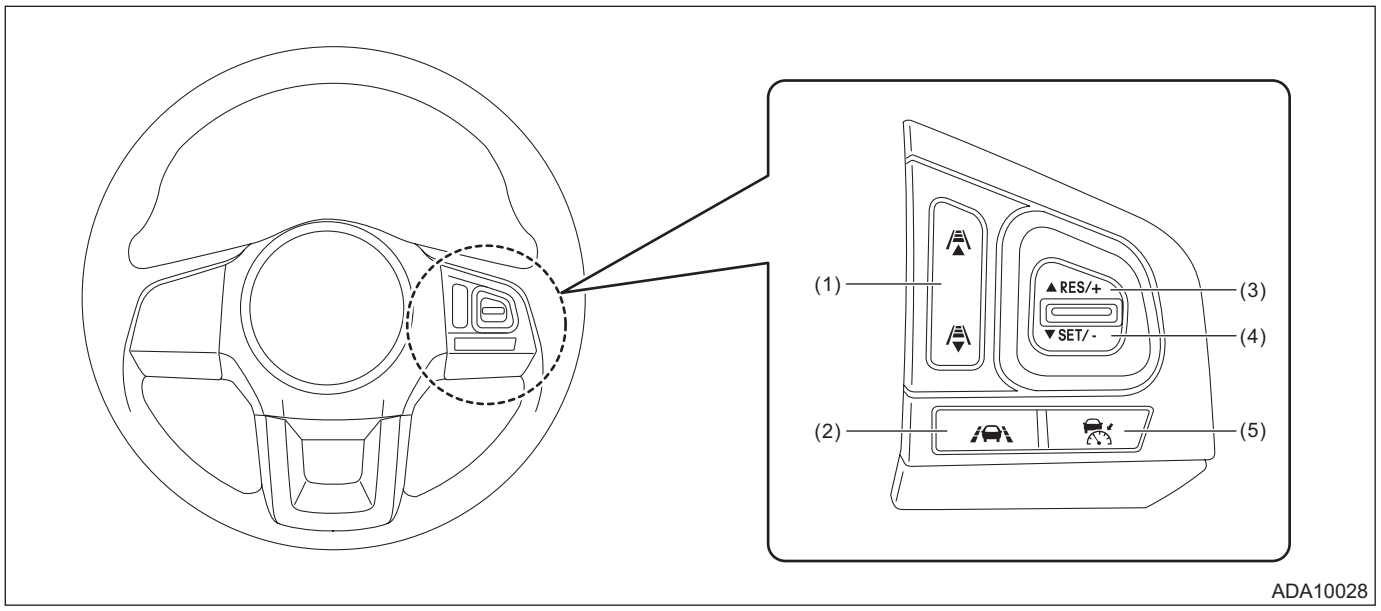

(1) Following distance setting switch
(2) Lane keep switch
(3) RES/+ (resume/plus) switch
(4) SET/– (set/minus) switch
(5) CRUISE switch

5. Control Module I/O Signal

A: ELECTRICAL SPECIFICATION

1. STEREO CAMERA

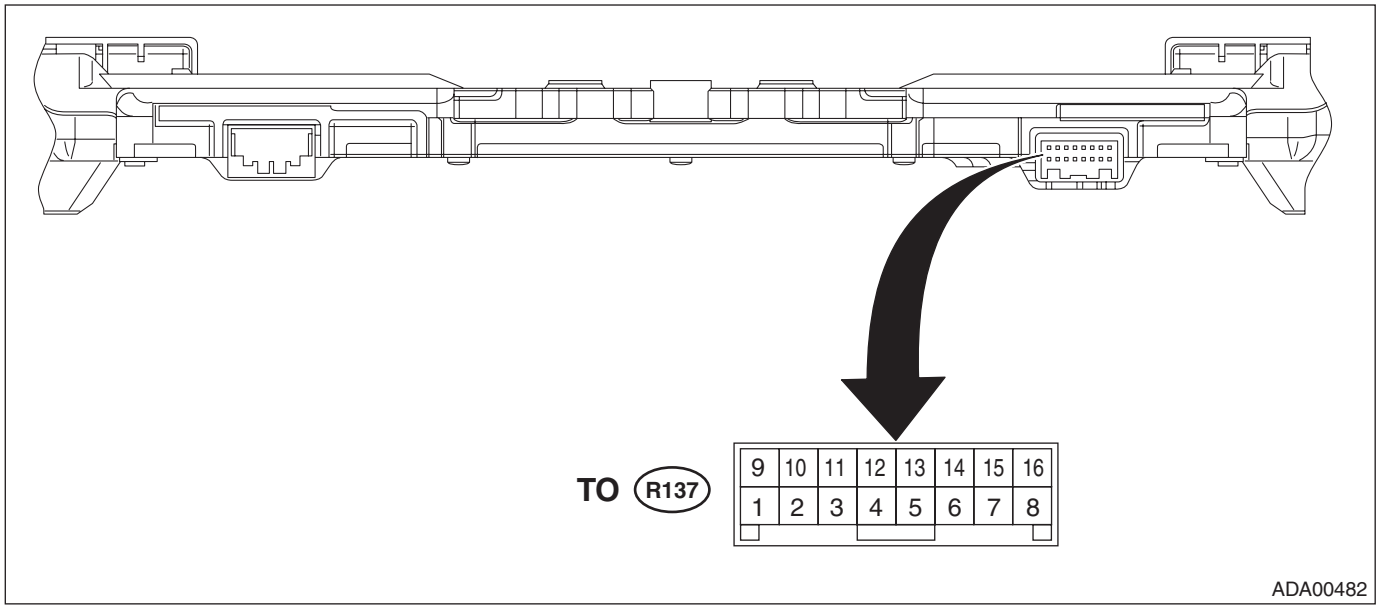

Terminal No.	Content	Measuring condition	Standard
(R137) No. 1	—	—	—
(R137) No. 2	—	—	—
(R137) No. 3	—	—	—
(R137) No. 4	—	—	—
(R137) No. 5	—	—	—
(R137) No. 6 ←→ Chassis ground	Ignition power supply	Ignition switch OFF → ON	Less than 1 V → 9 — 16 V
(R137) No. 7 ←→ Chassis ground	GND	Always	Less than 1 Ω
(R137) No. 8 ←→ Chassis ground	Battery power supply	Always	9 — 16 V
(R137) No. 9 ←→ Chassis ground	CAN L	Always	1 kΩ or more
(R137) No. 10 ←→ Chassis ground	CAN H	Always	1 kΩ or more
(R137) No. 11	—	—	—
(R137) No. 12 ←→ Chassis ground	Pre-collision brake OFF switch input	Pre-collision brake OFF switch OFF → ON	1 kΩ or more → less than 1 Ω
(R137) No. 13 ←→ Chassis ground	Lane departure warning OFF switch input	Lane departure warning OFF switch OFF → ON	1 kΩ or more → less than 1 Ω
(R137) No. 14 ←→ (R137) No. 15	EyeSight steering switch 1 input	No switch operation	Approx. 4 V
		RES/+ (Deep) OFF → ON	Approx. 4 V → approx. 3 V
		Lane keep switch OFF → ON	Approx. 4 V → approx. 2 V
		SET/- (Deep) OFF → ON	Approx. 4 V → approx. 1 V
		CRUISE OFF → ON	Approx. 4 V → approx. 0 V
(R137) No. 15 ←→ Chassis ground	EyeSight steering switch GND	Always	Less than 1 Ω
(R137) No. 16 ←→ (R137) No. 15	EyeSight steering switch 2 input	No switch operation	Approx. 4 V
		RES/+ (Shallow) OFF → ON	Approx. 4 V → approx. 3 V
		Following distance + OFF → ON	Approx. 4 V → approx. 2 V
		SET/- (Shallow) OFF → ON	Approx. 4 V → approx. 1 V
		Following distance – OFF → ON	Approx. 4 V → approx. 0 V

2. ENGINE CONTROL MODULE (ECM)

For details on the input/output signals for the engine control module, refer to ENGINE (DIAGNOSTICS). <Ref. to EN(H4DO)(diag)-20, Engine Control Module (ECM) I/O Signal.> <Ref. to EN(H6DO)(diag)-20, Engine Control Module (ECM) I/O Signal.>

3. VDC CONTROL MODULE (VDCCM)

For details on the input/output signals for VDC control module, refer to VDC (DIAGNOSTICS). <Ref. to VDC(diag)-17, ELECTRICAL SPECIFICATION, Control Module I/O Signal.>

4. TRANSMISSION CONTROL MODULE (TCM)

For details on the input/output signals for the transmission control module, refer to AUTOMATIC TRANSMISSION (DIAGNOSTICS). <Ref. to CVT(diag)-12, Transmission Control Module (TCM) I/O Signal.>

5. BODY INTEGRATED UNIT

Refer to the BODY CONTROL SYSTEM (DIAGNOSTICS) for the I/O Signal of the body integrated unit. <Ref. to BC(diag)-8, ELECTRICAL SPECIFICATION, Control Module I/O Signal.>

6. COMBINATION METER

For details on the input/output signals for the combination meter, refer to COMBINATION METER (DIAGNOSTICS). <Ref. to MET(diag)-6, ELECTRICAL SPECIFICATION, Control Module I/O Signal.>

B: WIRING DIAGRAM

Refer to “EyeSight System” in the wiring diagram. <Ref. to WI-230, EyeSight System.>

C: SYSTEM BLOCK DIAGRAM

Main signals used between stereo camera and relevant CM

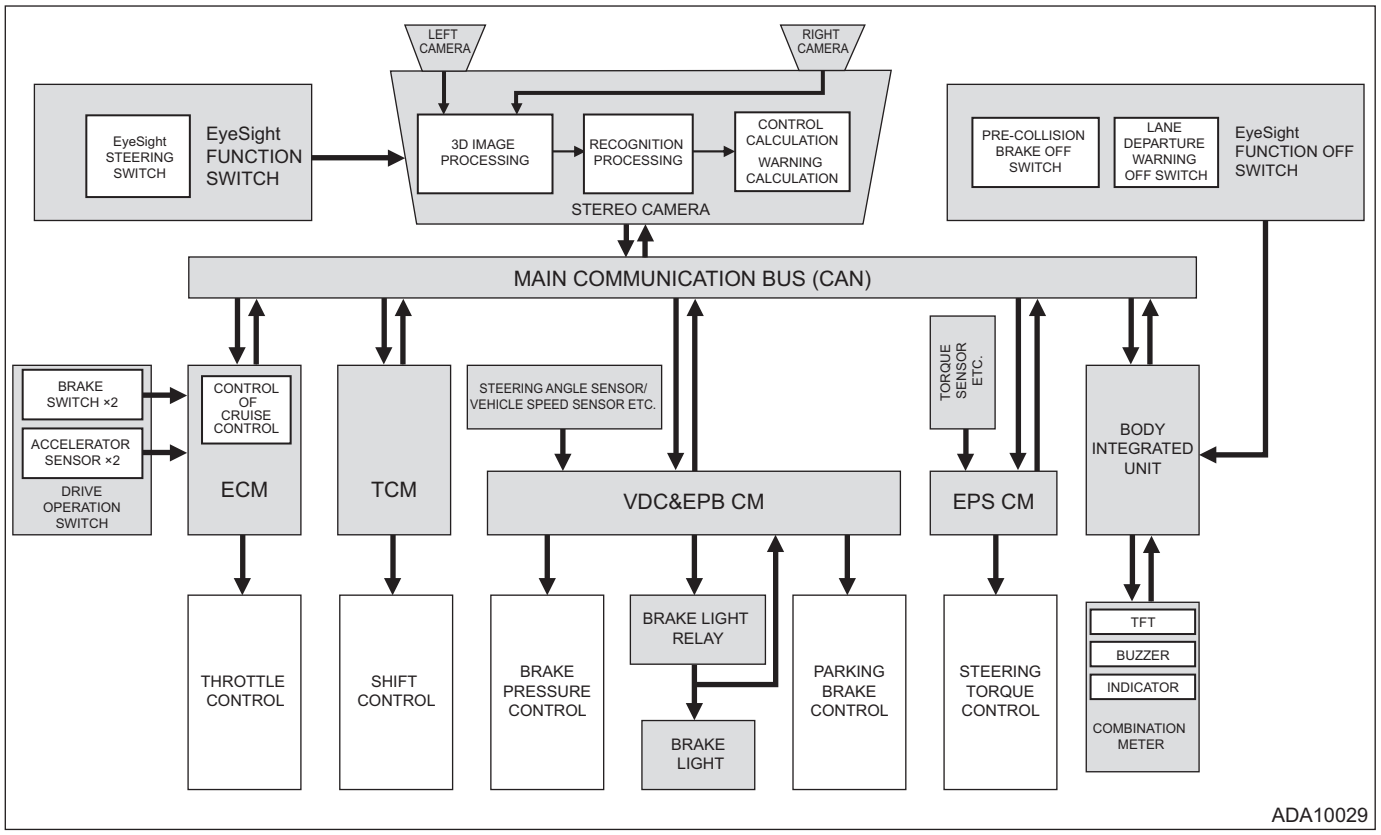

6. Subaru Select Monitor

A: OPERATION

1. GENERAL DESCRIPTION

For on-board diagnosis function of the EyeSight, use the Subaru Select Monitor.
The on-board diagnosis function operates in three categories, which are used depending on the type of problems.
1) Diagnosis with diagnostic trouble code (DTC):
When the electrical failure occurs in the EyeSight, DTC is detected from the stereo camera. If the DTC is detected, the relevant DTC is displayed by illuminating or blinking the EyeSight warning light. To check the details concerning the DTC, use the Subaru Select Monitor.
2) Diagnosis with cancel code and lane keep assist code:
(1) This category of diagnosis requires actual driving of the vehicle in order to determine the cause in such a case when the set speed is cancelled during cruise control driving or the control is cancelled during active lane keep driving although any cancel condition is not entered.
(2) With ECM cancel code and stereo camera ACC cancel code, cancel condition (Code No.) is stored when detected during cruise control driving. With lane keep assist code of stereo camera, cancel condition (Code No.) is stored if active lane keeping does not operate or if control cancel occurs during active lane keep driving.

CAUTION:
• With ECM cancel code, not only the cruise control "cancel" occurred (although the driver does not input the "cancel" operation), but also the "cancel" condition input by the driver is stored.
• The latest memory contents of the ECM cancel code (latest code) is cleared when the ignition switch is turned to OFF. However, memory contents set by the diagnosis of faulty switches related to the system and cruise control will remain as trouble history (memory code) after the ignition switch is turned to OFF.
3) Real-time diagnosis:
Real-time diagnosis function is used to determine whether or not the input signal system is in good order, according to signal emitted from switches, sensors, etc.
(1) Vehicle cannot be driven at cruise speed when the problem occurs in the cruise control system or relevant circuits.
(2) Monitor the signal conditions from switches and sensors.

2. BASIC OPERATION

For operation procedures, refer to "Application help".

B: INSPECTION

1. COMMUNICATION FOR INITIALIZING IMPOSSIBLE

- Communication error with stereo camera

DETECTING CONDITION:

- Defective harness connector
- Power supply circuit malfunction
- Defective stereo camera
- Defective CAN system
- Defective Subaru Select Monitor

TROUBLE SYMPTOM:

- EyeSight warning light blinks.

WIRING DIAGRAM:

NOTE:
For the coupling connector, refer to WIRING SYSTEM.
EyeSight System <Ref. to WI-230, WIRING DIAGRAM, EyeSight System.>

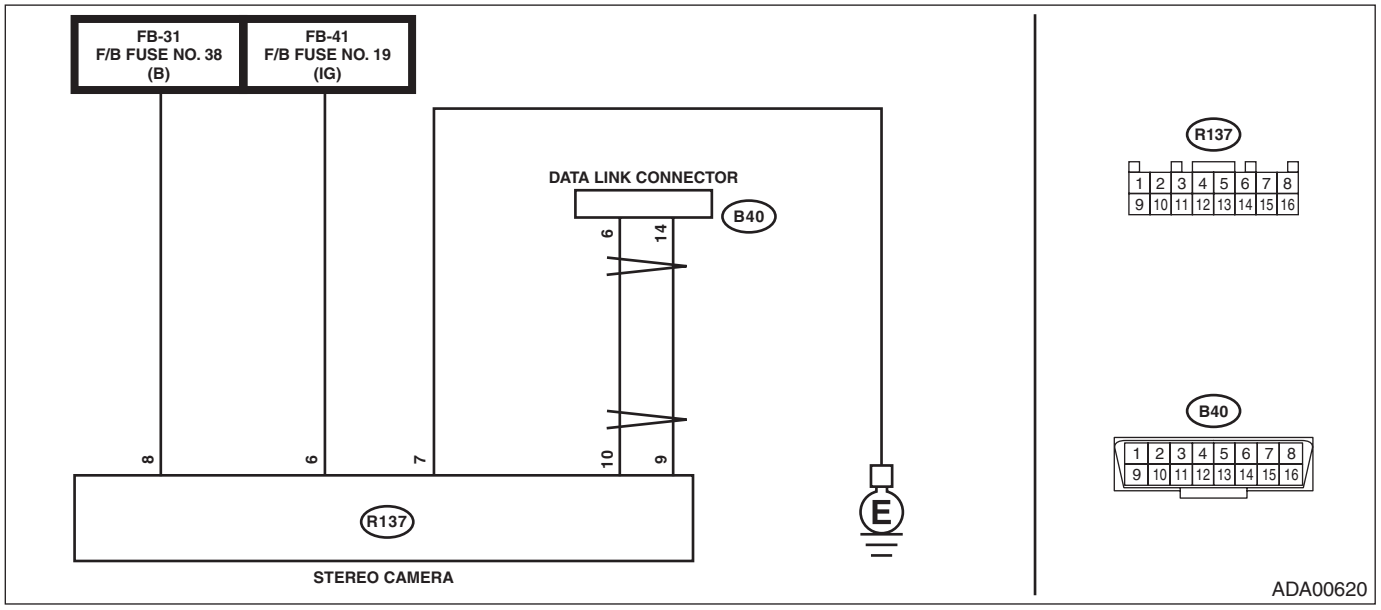

Step		Check	Yes	No
1	**CHECK IGNITION SWITCH.**	Is the ignition switch ON?	Go to step **2**.	Turn the ignition switch to ON, and select «EyeSight» using the Subaru Select Monitor.
2	**CHECK BATTERY.** 1) Turn the ignition switch to OFF. 2) Measure the battery voltage.	Is the voltage 10 V or more?	Go to step **3**.	Charge or replace the battery.
3	**CHECK BATTERY TERMINAL.**	Is the battery terminal contact proper?	Go to step **4**.	Connect the battery terminal securely or replace it.
4	**CHECK SUBARU SELECT MONITOR COMMUNICATION.** 1) Turn the ignition switch to ON. 2) Using the Subaru Select Monitor, check whether the communication can be executed normally.	Is the communication between Subaru Select Monitor and body integrated unit normal?	Go to step **5**.	Check the connection of the Subaru Select Monitor, and perform communication with the body integrated unit again.

	Step	Check	Yes	No
5	**READ DTC OF BODY INTEGRATED UNIT.** Select «Body Control», and check DTC.	Is any DTC other than "Lost Communication With EyeSight" detected?	Perform the diagnosis according to DTC.	Go to step **6**.
6	**CHECK HARNESS CONNECTOR BETWEEN STEREO CAMERA AND DATA LINK CONNECTOR.** 1) Turn the ignition switch to OFF. 2) Disconnect the stereo camera connector. 3) Measure the resistance between the stereo camera and the data link connector. ***Connector & terminal*** ***(R137) No. 10 — (B40) No. 6:*** ***(R137) No. 9 — (B40) No. 14:***	Is the resistance less than 10 Ω?	Go to step **7**.	Repair or replace the harness and connectors between the stereo camera and data link connector.
7	**CHECK POWER SUPPLY CIRCUIT.** 1) Turn the ignition switch to ON. 2) Measure the voltage between stereo camera and chassis ground. ***Connector & terminal*** ***(R137) No. 6 (+) — Chassis ground (–):*** ***(R137) No. 8 (+) — Chassis ground (–):***	Is the voltage 10 V or more?	Go to step **8**.	Repair or replace the harness and connectors between the stereo camera and fuse.
8	**CHECK GROUND CIRCUIT.** 1) Turn the ignition switch to OFF, then disconnect the ground cable from battery. 2) Measure the resistance between harness connector of stereo camera and chassis ground. ***Connector & terminal*** ***(R137) No. 7 — Chassis ground:***	Is the resistance less than 10 Ω?	Go to step **9**.	Check the harness from stereo camera to chassis ground.
9	**CHECK CONNECTOR.**	Is there poor contact of stereo camera connector?	Repair the connector, or replace harness.	Replace the stereo camera. <Ref. to ES-8, REMOVAL, Stereo Camera.>

7. Read Current Data

A: OPERATION

1. STEREO CAMERA

1) On «Start» display, select «Diagnosis».
2) On «Vehicle selection» display, input the target vehicle information and select «Confirmed».
3) On «Main Menu» display, select «Each System».
4) On «Select System» display, select «EyeSight» and select «Enter».
5) On «Select Function» display, select «Data Monitor».

NOTE:
For detailed operation procedures, refer to “Application help”.

- **LIST**

Display	Content	Unit of measure	Reference
Camera ID	Display of serial No. inside the stereo camera	—	—
Control Software Version	Control software version	—	—
Recognition Software Version	Recognition software version	—	—
Model registration information	Display of displacement and vehicle model	—	—
ECU Power Supply Voltage (IG)	Display of input voltage of stereo camera	V	—
Initial Aiming Completion Status	Initial aiming completion flag	—	Finished (After factory shipping, when stereo camera is replaced or adjusted, «Not Finish» is displayed.)
Aiming Completion Status	Aiming completion flag	—	Not Finish (After factory shipping, when stereo camera is replaced or adjusted, «Finished» is displayed.)
Ignition SW ON Count	Total count of ignition switch ON	times	—
Trip Meter	Odometer value	• km • mile	—
Front Axle Wheel Average Speed	Front axle average wheel speed	km/h	—
Engine Speed	Engine speed	rpm	—
Accel opening angle	Acceleration opening angle signal	%	—
ETC Throttle Angle Signal	Electronic throttle control opening angle signal	%	—
Steering Angle Sensor Value (Right +) (Left -)	Steering angle sensor value signal	deg	—
Longitudinal G Sensor Value (Deceleration +) (Acceleration -)	Longitudinal acceleration	m/s^2	—
Brake Fluid Target Pressure	Target value of brake fluid pressure	MPa	—
Master Cylinder Actual Fluid Pressure	Brake pressure	MPa	—
Right Front Wheel W/C Actual Fluid Pressure	Right front wheel cylinder fluid pressure	MPa	—
Left Front Wheel W/C Actual Fluid Pressure	Left front wheel cylinder fluid pressure	MPa	—
Target Torque	Target torque command signal	Nm	—
Engine Torque	Actual engine shaft torque value	Nm	—

Display	Content	Unit of measure	Reference
AT rapid start prevention, engine torque down command value	AT false start prevention control, engine torque down command value Or AT false start (reverse) prevention control, engine torque down command value	Nm	—
Warning Code	Warning code signal	—	• No alarm • HALT • Detection/Lost Beep • ACC Cancel • Lead Vehicle Start Alert • Brake More or Following Distance or Pre-Collision Brake(1st)/AT false start restraint • Pre-Collision Brake (2nd Braking) • Limit Speed Warning • Rear View Alarm • Steering Wheel Not Held • LDW -R • LDW -L • Lane Sway Warning
Brake SW Input	Brake switch signal status	—	• OFF • ON
Brake Lamp SW (BIU)	Brake light switch signal status	—	• OFF • ON
Brake Lamp SW (VDC)	Brake light switch status	—	• OFF • ON
Current Gear Position	Current gear position signal	—	• P • R • Auto N • 6 • 5 • 4 • 3 • 2 • 1 • N
SI Drive Mode	SI-DRIVE mode (display)	—	• OFF • S# • I • S
Trip Count	Number of ignition ON	times	—
Count	Original counts identification information	—	—
Time Count [msec]	Elapsed time after ignition switch ON	ms	—
Automatic Adjustment Status	Automatic adjustment status	—	—
Lane Recognition Status	Display of lane recognition status	—	• Other than follows: 00 • Both lanes are recognized at 40 km/h or more: 03 • Both lanes are recognized at 65 km/h or more (ALK recognition standby): 05
Distance from Leading Vehicle	Display of distance from preceding vehicle	m	—

Display	Content	Unit of measure	Reference
EyeSight Temporary 0 Count	Occurrence count of EyeSight temporary stop 0	times	Refer to “List of contents for camera temporary stop”. <Ref. to ES(diag)-76, LIST OF CONTENTS FOR CAMERA TEMPORARY STOP, LIST, EyeSight Temporary Code(s) Display.>
EyeSight Temporary 1 Count	Occurrence count of EyeSight temporary stop 1	times	
EyeSight Temporary 2 Count	Occurrence count of EyeSight temporary stop 2	times	
EyeSight Temporary 3 Count	Occurrence count of EyeSight temporary stop 3	times	
EyeSight Temporary 4 Count	Occurrence count of EyeSight temporary stop 4	times	
EyeSight Temporary 5 Count	Occurrence count of EyeSight temporary stop 5	times	
EyeSight Temporary 6 Count	Occurrence count of EyeSight temporary stop 6	times	
EyeSight Temporary 7 Count	Occurrence count of EyeSight temporary stop 7	times	
EyeSight Temporary 8 Count	Occurrence count of EyeSight temporary stop 8	times	
EyeSight Temporary 9 Count	Occurrence count of EyeSight temporary stop 9	times	
EyeSight Temporary 10 Count	Occurrence count of EyeSight temporary stop 10	times	
EyeSight Temporary 11 Count	Occurrence count of EyeSight temporary stop 11	times	
EyeSight Temporary 12 Count	Occurrence count of EyeSight temporary stop 12	times	
EyeSight Temporary 13 Count	Occurrence count of EyeSight temporary stop 13	times	
EyeSight Temporary 14 Count	Occurrence count of EyeSight temporary stop 14	times	
EyeSight Temporary 15 Count	Occurrence count of EyeSight temporary stop 15	times	
EyeSight Temporary 16 Count	Occurrence count of EyeSight temporary stop 16	times	
EyeSight Temporary 17 Count	Occurrence count of EyeSight temporary stop 17	times	
EyeSight Temporary 18 Count	Occurrence count of EyeSight temporary stop 18	times	
EyeSight Temporary 19 Count	Occurrence count of EyeSight temporary stop 19	times	
EyeSight Temporary 20 Count	Occurrence count of EyeSight temporary stop 20	times	
EyeSight Temporary 21 Count	Occurrence count of EyeSight temporary stop 21	times	
EyeSight Temporary 22 Count	Occurrence count of EyeSight temporary stop 22	times	
EyeSight Temporary 23 Count	Occurrence count of EyeSight temporary stop 23	times	
EyeSight Temporary 24 Count	Occurrence count of EyeSight temporary stop 24	times	
EyeSight Temporary 25 Count	Occurrence count of EyeSight temporary stop 25	times	
EyeSight Temporary 26 Count	Occurrence count of EyeSight temporary stop 26	times	
EyeSight Temporary 27 Count	Occurrence count of EyeSight temporary stop 27	times	
EyeSight Temporary 28 Count	Occurrence count of EyeSight temporary stop 28	times	
EyeSight Temporary 29 Count	Occurrence count of EyeSight temporary stop 29	times	
EyeSight Temporary 30 Count	Occurrence count of EyeSight temporary stop 30	times	
EyeSight Temporary 31 Count	Occurrence count of EyeSight temporary stop 31	times	
Camera Failure Check 1	Camera failure supplementary information	—	—
Camera Failure Check 2			
Camera Failure Check 3			
Camera Failure Check 4			
Camera Failure Check 5			
Cruise Control Main Status (ECM → EyeSight)	Status of the cruise control main switch (cruise switch)	—	• OFF • ON
Main Cruise Control Display (EyeSight → Combination Meter)	CRUISE indicator ON signal	—	• OFF • ON
Cruise Control Main Display (ECM → EyeSight)	CRUISE indicator ON request signal	—	• OFF • ON
Cruise Control SW (Main)	Status of the EyeSight steering switch 1 input side	—	• OFF • Main ON • SET- (Deep) ON • Lane Keeping Assist ON • RES+ (Deep) ON • Disconnected

Display	Content	Unit of measure	Reference
Cruise Control SW (Vehicle Distance Setting)	Status of the EyeSight steering switch 2 input side	—	• OFF • RES+ (Shallow) ON • F.D. Set(+) ON • SET- (Shallow) ON • F.D. Set(-) ON • Disconnected
Cruise Control SW (EyeSight → ECM)	Status of the EyeSight steering switch (EyeSight → ECM)	—	• OFF • Main ON • SET/- (Deep) ON • RES/+ (Deep) ON • Cancel ON • Open
Cruise Control Set Status (ECM → EyeSight)	Status of the cruise control set status	—	• Released • Set
Cruise Control Set Display (EyeSight → Combination Meter)	SET indicator illumination signal	—	• OFF • ON
Cruise Control Set Display (ECM → EyeSight)	Request signal for SET indicator illumination	—	• OFF • ON
Cruise Control Mode	Cruise control mode signal	—	• ACC Mode • CC Mode
Pre-Collision Brake OFF Display Signal	Pre-collision brake OFF indicator light illumination command signal	—	• OFF • ON
Pre-Collision Brake Function	ON/OFF status of pre-collision brake function	—	• OFF • ON
Pre-Collision Brake OFF SW Status (BIU)	Pre-collision brake OFF switch status	—	• OFF • ON • Disconnected
Lane Departure Warning OFF Indicator	Lane departure warning OFF indicator light illumination command signal	—	• OFF • ON
Lane Departure Warning Function	ON/OFF status of the lane departure warning function	—	• OFF • ON
Lane Departure Warning OFF SW (BIU)	Lane departure warning OFF switch status	—	• OFF • ON • Disconnected
Vehicle Speed Set Display	Cruise control set vehicle speed set value	• km/h • MPH	—
Cruise Control Set Speed	Set vehicle speed value for cruise control	• km/h • MPH	—
Drive Wheel Average Speed	Average wheel speed signal	km/h	—
Front Left Wheel Speed	Front left wheel speed signal	km/h	—
Front Right Wheel Speed	Front right wheel speed signal	km/h	—
Rear Left Wheel Speed	Rear left wheel speed signal	km/h	—
Rear Right Wheel Speed	Rear right wheel speed signal	km/h	—
Wheel Speed (Pulse)	Wheel speed pulse counter signal	—	—
CVT Target Revolution Speed Control Signal	CVT target revolution speed command signal	—	• OFF • ON
CVT Target Revolution Speed Value	CVT target revolution speed	rpm	—
Transmission Turbine Speed	AT turbine speed signal	rpm	—
Driver Torque Request	Torque value requested by driver	Nm	—
Accelerator wide opening judgment status	Signal that judges the accelerator opening angle to be “wide”	—	• Not established • Established
Intake Manifold Pressure Absolute	Engine intake manifold pressure	mmHg	—

Display	Content	Unit of measure	Reference
Gear Ratio	Current total reduction ratio signal	—	—
Atmosphere Pressure	Atmospheric pressure signal	mmHg	—
Adaptive Cruise Control Brake Control Status	Brake control permission signal for adaptive cruise control	—	• OFF • ON
Adaptive Cruise Control Braking Signal	Actuation signal of brake control	—	• Not performed • Perform
Adaptive Cruise Control Braking (ACC or Driver) Status (for CVT)	Adaptive cruise control braking (driver or control) signal (for CVT)	—	• No Braking • Braking applied
Brake Lamp Command	Brake lamp light up command signal	—	• OFF • ON
Hill Down Mode	Hill down mode signal	—	• Releasing • Going Down Grade
Adaptive Cruise Control Function	EyeSight function presence information (adaptive cruise control)	—	• OFF • ON
HOLD Display	HOLD display illumination signal (stop and hold)	—	• OFF • ON
READY Display	READY indicator illumination signal	—	• OFF • ON
Vehicle Distance Setting Display	Vehicle distance setting indicator signal	—	• Conventional Cruise Control • Close Distance (1st Step) • Medium Distance 1 (2nd Step) • Medium Distance 2 (3rd Step) • Far Distance (4th Step)
Preceding vehicle indication	Preceding vehicle indicator signal	—	• OFF • ON • Blink
Distance from Leading Vehicle	Preceding vehicle distance signal	m	• 0 <= x < 5 • 5 <= x < 10 • 10 <= x < 15 • 15 <= x < 20 • 20 <= x < 25 • 25 <= x < 30 • 30 <= x < 35 • 35 <= x < 40 • 40 <= x < 45 • 45 <= x < 50 • 50 <= x < 55 • 55 <= x < 60 • 60 <= x < 65 • 65 <= x < 70 • 70 <= x < 75 • 75 <= x
OFF Display	OFF indicator signal	—	• OFF • ON • Blink
Self-Vehicle Display	Display of your own vehicle	—	• OFF • ON
EPB Activate Request	Electronic parking brake activate request	—	• OFF • ON

Display	Content	Unit of measure	Reference
EPB State	Electronic parking brake operation status signal	—	• Error • Released • Operate • Operating • Releasing • Dynamic Parking
EPB active indicator	Electronic parking brake operating light status signal	—	• OFF • ON • Blink
EPB Warning Lamp	Electronic parking brake warning light status signal	—	• OFF • ON • Blink
EPB Buzzer	Electronic parking brake buzzer beeping	—	• No Sound • Change • Not Change • Cancel
Dynamic Parking Status	Dynamic parking signal	—	• OFF • ON
Adaptive Cruise Control Stop Hold Status	Signal of stop and hold status before reservation	—	• OFF • ON (stop holding and before reserve)
EPB Hill Hold Prohibited	Hill hold prohibition signal	—	• ON • OFF
Hill Hold Lamp	Hill hold function ON light status signal	—	• OFF • ON
Idle SW for EPB Control	Idle switch signal for electronic parking brake control	—	• OFF • ON
Hill Hold Operation Status	Hill hold operation status signal	—	• Not Operating • Operate
Fuel Cut Control Status	Fuel cut control permission signal	—	• ON • OFF
All Cylinder Fuel Cut Status	Fuel cut signal	—	• Normal • Cut
Low Speed Following	Low speed following mode signal	—	• No • Yes
Display for Adaptive Cruise Control Cancel Reason	Display for adaptive cruise control cancel reason	—	• Not Cancel • No Manual Mode or No D Position • Door Open • Driver Seat Belt Unfastened • Parking Brake • VDC SW OFF • X Mode • Steering Operation • High Speed • ABS Operation • VDC Operation • Road Surface Steep Slope • Other
Adaptive Cruise Control Forced Cancel	Adaptive cruise control forced cancel signal	—	• No • Yes
EyeSight Deceleration Request (VDC)	Deceleration request reception status signal from stereo camera	—	• Not yet received • Receive

Display	Content	Unit of measure	Reference
Parking Brake SW	Parking brake switch signal status	—	• OFF • ON
Driver Brake Detection	Driver brake detection signal	—	• OFF • ON
Driver Door Status	Driver's door switch signal status	—	• Close • Open
Passenger Door Front Status	Passenger's door switch signal status	—	• Close • Open
Right Rear Door Status	Right rear door switch signal status	—	• Close • Open
Left Rear Door Status	Left rear door switch signal status	—	• Close • Open
Driver Seat Belt Status	Status of driver's seat belt	—	• OFF • ON
VDC Over Steer Control	VDC operating status signal 1	—	• Not Controlling • Controlling
VDC Under Steer Control	VDC operating status signal 2	—	• Not Controlling • Controlling
ABS Operation	Operating status signal of ABS	—	• Not Operating • Operate
TCS Operation	Operating status signal of TCS	—	• Not Operating • Operate
RMI Operation	RMI operation signal	—	• Not Controlling • Controlling
Brake Control Actuation	Brake operation permission signal	—	• Not performed • Perform
Ignition SW ON Count When Pre-Collision Throttle Management at The Latest	Ignition switch ON count when AT false start prevention control is activated (the latest)	times	—
Ignition SW ON Count When Pre-Collision Throttle Management at The 1 Time before	Ignition switch ON count when AT false start prevention control is activated (1 time before)	times	—
Ignition SW ON Count When Pre-Collision Throttle Management at The 2 Time before	Ignition switch ON count when AT false start prevention control is activated (2 time before)	times	—
Ignition SW ON Count When Following Distance Warning at The Latest	Ignition switch ON count when the vehicle distance alarm is activated (the latest)	times	—
Ignition SW ON Count When Following Distance Warning at The 1 Time before	Ignition switch ON count when the vehicle distance alarm is activated (1 time before)	times	—
Ignition SW ON Count When Following Distance Warning at The 2 Time before	Ignition switch ON count when the vehicle distance alarm is activated (2 time before)	times	—
Ignition SW ON Count When Pre-Collision 1st Braking at The Latest	Ignition switch ON count when the pre-collision 1st braking is operated (at the latest)	times	—
Ignition SW ON Count When Pre-Collision 1st Braking at The 1 Time before	Ignition switch ON count when the pre-collision 1st braking is operated (1 time before)	times	—
Ignition SW ON Count When Pre-Collision 1st Braking at The 2 Time before	Ignition switch ON count when the pre-collision 1st braking is operated (2 times before)	times	—

Display	Content	Unit of measure	Reference
Ignition SW ON Count When Pre-Collision 1st Braking at The 3 Time before	Ignition switch ON count when the pre-collision 1st braking is operated (3 times before)	times	—
Ignition SW ON Count When Pre-Collision 2nd Braking at The Latest	Ignition switch ON count when the pre-collision 2nd braking is operated (at the latest)	times	—
Ignition SW ON Count When Pre-Collision 2nd Braking at The 1 Time before	Ignition switch ON count when the pre-collision 2nd braking is operated (1 time before)	times	—
Ignition SW ON Count When Pre-Collision 2nd Braking at The 2 Time before	Ignition switch ON count when the pre-collision 2nd braking is operated (2 time before)	times	—
Ignition SW ON Count When Pre-Collision 2nd Braking at The 3 Time before	Ignition switch ON count when the pre-collision 2nd braking is operated (3 time before)	times	—
Pre-Collision Brake Assist Command	Pre-collision brake assist command signal	—	• OFF • ON
Pre-Collision Brake Assist Operation	Pre-collision brake assist request reception status	—	• Not Operating • Operate
Pre-Collision Brake Action	Pre-collision brake command signal	—	• OFF • ON
Pre-Collision Brake Operation	Pre-collision brake operation status	—	• Not Operating • Operate
Pre-Collision Brake Assist Threshold	Pre-collision brake threshold	—	• Normal • Threshold 1 • Threshold 2 • No Request
Risk Avoidance Assist standby Command	Pre-collision steering assist, command signal	—	• Normal VDC State • AvoidRiskCmd
Risk Avoidance Assist Standby Status	Pre-collision steering assist stand-by status	—	• Normal VDC State • AvoidRiskStb
Risk Avoidance Assist State	Pre-collision steering assist, characteristic signal	—	• Normal • Parameter 1 • Parameter 2 • Invalid
Traction Mode	Traction mode signal	—	• OFF • ON
Rear Wheel Slip Control Operation	Rear wheel slip detection signal	—	• Not Operating • Operating
Active Lane Keep System Main Display	Lighting request of lane keep display	—	• OFF • ON(White) • ON(Green)
Left-Line Display (Grid Line)	Request signal for left-line (white) and lane keep display (green) illumination	—	• OFF • ON
Left-Line Display (Solid Line)	Request signal for left-line (white) illumination	—	• OFF • ON
Right-Line Display (Grid Line)	Request signal for right-line (white) and lane keep display (green) illumination	—	• OFF • ON
Right-Line Display (Solid Line)	Request signal for right-line (white) illumination	—	• OFF • ON
Lane Blink	Request signal for lane (solid line) blinking	—	• OFF • Flashing at The Same Time • Flashing Alternately

Display	Content	Unit of measure	Reference
Steering Wheel Display	(Steering wheel icon) illumination signal	—	• OFF • ON • Flashing1 • Flashing2
Turn SW (Left)	Operation status of left turn switch	—	• OFF • ON
Turn SW (Right)	Operation status of right turn switch	—	• OFF • ON
Calibration (EPS)	Calibration signal (not used)	—	• Not set • Set
Steering Control Active	Lane keep control operation instruction	—	• Not Operating • Operate
Steering Assistance Operation Status	Lane keep control operation status	—	• Normal • No Assist • Limited Assist
EyeSight Recognition Status (EPS)	EyeSight recognition status signal	—	• Not Detect • Detect
Absolute Steering Angle Detection	Absolute angle detection signal (not used)	—	• No detection • detection
Steering Angle Sensor Signal	Steering angle sensor signal	deg	—
Yaw Rate Value (Right -) (Left +)	Yaw rate value signal	rad/sec	—
Lateral G Sensor Value (Right -) (Left +)	Lateral acceleration signal	m/s^2	—
Steering Control Torque Target	Steering control instruction signal	Nm	—
Additional Steering Torque(Active Lane Keep System)	Additional steering torque signal (lane keep)	Nm	—
EPS Motor Operation Current	Motor operation current value	A	—
EPS Torque	Torque sensor main value	Nm	—
EPS Torque (Detailed)	Torque sensor value (resolution improved)	Nm	—
EPS Motor Operation Current (Steering Support High Speed)	Motor operation current value (high speed steering support)	Arms	—
Target Current Value (EPS)	Final target current value	Arms	—
EPS Motor Absolute Angle	Motor absolute angle	deg	—
Driver Throttle Input Override Control (Reverse)	EyeSight function presence/absence (AT false start (reverse) prevention control)	—	• OFF • ON
Reverse Speed Limit Display	Display of reverse speed limiter settings	—	• No Display • Display
Driver Throttle Input Override Control	Instruction signal of AT false start prevention control Or instruction signal of AT false start (reverse) prevention control	—	• OFF • ON
Adaptive Cruise Control Torque Down	Torque down prohibition signal of stereo camera	—	• ON • OFF
Traffic Light Display	Traffic light display information	—	• No Display • Flashing Red
Initial Inspection Distance Accuracy Rate	Accuracy rate of initial inspection distance	%	—
Initial inspection distance	Initial inspection distance	—	—
Initial Optical Axis (X-Axis)	Initial optical axis (X-axis)	pix	—
Initial Optical Axis (X-Axis2)	Initial optical axis (X-axis 2)	pix	—
Initial Optical Axis (Y-Axis)	Initial optical axis (Y-axis)	pix	—

Display	Content	Unit of measure	Reference
Initial Left Image Rotation Deviation Correction Value	Initial left image, rotation deviation correction value	—	—
Initial Left Image Rotation Deviation Correction Value	Initial left image, vertical deviation correction value	—	—
Initial Right Image Rotation Deviation Correction Value	Initial right image, rotation deviation correction value	—	—
Initial Distance Correction Value	Initial distance correction value	—	—
Initial Invalid Distance Data Count	Number of initial invalid distance data	—	—
Initial Other Inspection	Another initial inspection	—	—
Initial Error Code	Initial error code	—	—
DC-Ratio	Accuracy rate of inspection distance	%	—
Distance	Inspection distance	—	—
Optical Axis (X-Axis)	Optical axis (X-axis)	pix	—
Optical Axis (X-Axis2)	Optical axis (X-axis 2)	pix	—
Optical Axis (Y-Axis)	Optical axis (Y-axis)	pix	—
Left Image Rotation Deviation Correction Value	Left image, rotation deviation correction value	—	—
Left Image Vertical Deviation Correction Value	Left image, vertical deviation correction value	—	—
Initial Right Image Rotation Deviation Correction Value	Right image, rotation deviation correction value	—	—
Distance Correction Value	Distance correction value	—	—
Invalid Distance Data Count	Number of invalid distance data	—	—
Other Inspection	Other inspection	—	—
Error Code	Error code detailed information	—	—
Camera Battery Open Status (+B)	Display of stereo camera battery (+B circuit) status	—	• Connect • Disconnected
Image ON/OFF status	ON/OFF status of present image sensor	—	• OFF • ON
Camera Temperature (Current)	Current temperature display of stereo camera internal circuit	°C	—
Camera temperature, operation status	Camera temperature and operation status	—	• Normal • High Temp. • Low Temp.
Camera Temperature (Previous Maximum Value)	Display of stereo camera internal circuit temperature (past MAX value)	°C	—
Ignition SW ON Count When Camera Temperature (Previous Maximum Value)	Ignition switch ON count when stereo camera internal circuit temperature is displayed (past MAX value)	times	—
Camera Temperature (Previous Minimum Value)	Display of stereo camera internal circuit temperature (past MIN value)	°C	—
Ignition SW ON Count When Camera Temperature (Previous Minimum Value)	Ignition switch ON count when stereo camera internal circuit temperature is displayed (past MIN value)	times	—
EyeSight Temporary 0 Continuation Count	Continuation count of EyeSight temporary stop 0	times	—
EyeSight Temporary 1 Continuation Count	Continuation count of EyeSight temporary stop 1	times	—
EyeSight Temporary 2 Continuation Count	Continuation count of EyeSight temporary stop 2	times	—
EyeSight Temporary 3 Continuation Count	Continuation count of EyeSight temporary stop 3	times	—

Display	Content	Unit of measure	Reference
EyeSight Temporary 4 Continuation Count	Continuation count of EyeSight temporary stop 4	times	—
EyeSight Temporary 5 Continuation Count	Continuation count of EyeSight temporary stop 5	times	—
EyeSight Temporary 6 Continuation Count	Continuation count of EyeSight temporary stop 6	times	—
EyeSight Temporary 7 Continuation Count	Continuation count of EyeSight temporary stop 7	times	—
EyeSight HALT Code	EyeSight halt code signal	—	• No HALT • E1-1(No Camera View) • E2(Out of Temp. Range) • E3(Other)
Ambient Air Temperature(Indication)	Ambient air temperature signal	°C	—
Ambient Air Temperature(Control)	Outside temperature for control signal	°C	—
Head lamp : small	Headlight small signal status	—	• OFF • ON
Headlight SW (LO)	Headlight LO switch operation status	—	• OFF • ON
Head Lamp High Beam	Headlight Hi beam signal status	—	• OFF • ON
Wiper SW (Front)	Front wiper switch operation status	—	• OFF • ON
VDC OFF SW	VDC OFF signal	—	• OFF • ON
VDC "OFF" Indicator Status	VDC OFF indicator status	—	• OFF • ON
EyeSight Input Control Suspended Status (EPS)	Overheat protection limit signal	—	• No detection • detection
Camera Failure Real-Time Check (At The Time of Failure)	Camera failure real-time information at the time of failure	—	—
Camera Temperature (At The Time of Failure)	Camera temperature sensor at the time of failure	°C	—
Image ON/OFF Status/Sensor Ready Status (At The Time of Failure)	Image ON/OFF status at the time of failure	—	• OFF • ON
Adaptive Cruise Control Failure (EyeSight → Combination Meter)	Stereo camera failure signal for combination meter	—	• Normal • Abnormal
VDC Sensor Failure	VDC sensor failure signal	—	• Normal • Abnormal
ABS System Failure	ABS system failure signal	—	• Normal • Abnormal
Vehicle Speed Sensor Failure	Vehicle speed sensor failure signal	—	• Normal • Abnormal
Adaptive Cruise Control Failure (EyeSight → VDC)	Failure signal of stereo camera to VDC control module	—	• Normal • Abnormal
EyeSight Reception (VDC)	Failure signal of stereo camera	—	• Not yet received • Receive
EPB Error Status	Electronic parking brake error information signal	—	• Normal • Stroke Too Short • Urgent Release • Pulling Power Abnormal

Display	Content	Unit of measure	Reference
Hill Descent Control Status	Hill descent control status signal	—	• System OFF • Waiting • Operating • Infinitive
Hill Start Assist Operation Status	Hill start assist operation status signal	—	• Not Operating • Operate
EyeSight Failure	EyeSight failure signal	—	• Normal • Abnormal
Engine Failure	Engine failure signal	—	• Normal • Abnormal
Transmission Failure	TCM failure signal	—	• Normal • Abnormal
EyeSight Failure (EPS → EyeSight)	Failure signal for EyeSight (EPS)	—	• Normal • Abnormal
Adaptive Cruise Control Failure (EyeSight → EPS)	Stereo camera failure signal for EPS control module	—	• Normal • Abnormal
ETC Failure	Electronic throttle control failure signal	—	• Normal • Abnormal
EEPROM Failure	Failure signal of combination meter	—	• Normal • Abnormal
Brake Lamp SW Fail Status	Brake light switch failure signal	—	• Normal • Abnormal
Brake Lamp Relay Drive	Brake light relay drive status signal	—	• Not Operating • Operating
EyeSight Communication Error (VDC)	Stereo camera communication failure signal	—	• Normal • Abnormal
Judgment of Lost Communication with Adaptive Cruise Control ECM CAN	No-receive signal of EyeSight CAN data	—	• Normal • Not Receive
EyeSight Received Data (ECM)	NG signal of stereo camera data	—	• Normal • Abnormal
Steering Angle Sensor Status	Steering angle sensor status	—	• Normal • Abnormal
Steering Angle Sensor Error Code	Steering angle sensor error code signal	—	• Normal • EEPROM Abnormal • IG Voltage Drop • Counter Overflow • ROM Trouble • RAM Trouble • Magnetometric Sensor Trouble
EyeSight Customization Change Request (Combination Meter → EyeSight)	EyeSight customization change request signal	—	• OFF • ON
EyeSight Customization Reset Request (Combination Meter → EyeSight)	EyeSight customization reset request signal	—	• OFF • ON
Driver Throttle Input Override Control (Reverse) Customization (EyeSight → Combination Meter)	EyeSight customization signal for AT false start (reverse) prevention control	—	• OFF • ON (Low Speed) • ON (Middle Speed) • ON (High Speed)
Driver Throttle Input Override Control (Reverse) Customization	EyeSight current change setting signal (for AT false start (reverse) prevention control)	—	• OFF • ON (Low Speed) • ON (Middle Speed) • ON (High Speed)

Display	Content	Unit of measure	Reference
Red Light Recognition (EyeSight → Combination Meter)	EyeSight customization signal for traffic light recognition	—	• OFF • ON
Target Gear Position	Target gear position signal	—	• P • R • Auto N • 6 • 5 • 4 • 3 • 2 • 1 • N
Transmission Shift Control Mode	TCM shift control mode signal	—	• Position Fixed Mode • Gear Fixed Mode • Position Fixed Temporary • Gear Fixed Temporary • M Position • D Range • Display ” — ”
Shift Position	Shift position information	—	• Error • P • R • N • D • D-S • 3 • 2 • 1
CVT 8-speed Mode Control	CVT multi-stage speed control signal when EyeSight operates	—	• Not Operating • Operate
Lock Up Status	Lock up information	—	• Converter • Slip Lock Up • Lock Up
Brake Lamp Status	Brake light state signal	—	• OFF • ON
Brake Vectoring Control Operation	Active torque vectoring control operation status	—	• Not Operating • Operate
Speedometer / Distance Display Unit	Speedometer / distance display unit	—	• km/h • mile
EyeSight Specification	EyeSight judgment signal	—	• No • Yes
Vehicle Height	Vehicle height information	—	• Unknown • OBK • standard
Fuel Type	Fuel type	—	• Gasoline • Diesel
Engine Displacement	Engine displacement	—	• 1500 cc • 2000 cc • 2500 cc • 3000 cc • 3600 cc • 1600 cc
Camshaft Type	Engine type	—	• SOHC • DOHC
Number of Cylinders	Number of cylinder for engine	—	• 4 Cylinder • 6 Cylinder

Display	Content	Unit of measure	Reference
Turbo	Presence or absence of turbo	—	• Turbo • NA
Vehicle Type	Vehicle type information signal	—	• Impreza Type • Forester Type • Exiga Type • Legacy/Outback Type • WRX Type
Destination Code	Destination code signal	—	• Japan • U.S(U4,U5,U6) • Canada(C0) • EURO(Left) (EC,EA,E2,EL) • General(Left)(K4) & Latin America(C4) • Middle & Near East(KS) • U.K(EK) • Thailand/Singapore(ER,EN) • Australia(KA,KC) • China(EH) • South Korea(C6)
WGN/SDN	Vehicle type signal	—	• SEDAN • WAGON
Drive System	Driving method of AWD	—	• AWD • VTD • 2WD
AT Type	AT type	—	• CVT(TR58) • 4AT • 5AT • 6AT • CVT(TR690)
Idling Stop Specification	Auto Start Stop judgment signal	—	• No • Yes
EPB Check 1	Electronic parking brake failure information signal	—	• Abnormal • Normal
EPB Check 2	Electronic parking brake failure information signal	—	• Abnormal • Normal
EPB Check 3	Electronic parking brake failure information signal	—	• Abnormal • Normal
Steering Control Check 1	Stereo camera transmission data abnormal	—	• Normal • Abnormal
Steering Control Check 2	Steering control instruction value from stereo camera abnormal	—	• Normal • Abnormal
Active Lane Keep System Standby Status	Active lane keep assist stand-by status	—	• NG • OK
Lane Departure Prevention Assist Canceled Reason Control Check	Active lane keep, reason of cancelling the lane departure prevention assist	—	—
Active Lane Keep System Canceled Reason Control Check	Reason of cancelling the lane keep assist (system failure)	—	—
Active Lane Keep System Recognition Check 1	Lane keep assist - recognition data detailed information 1	—	—
Active Lane Keep System Recognition Check 2	Lane keep assist - recognition data detailed information 2	—	—
Active Lane Keep System Recognition Check 4	Lane keep assist - recognition data detailed information 4	—	—

Display	Content	Unit of measure	Reference
Active Lane Keep System Recognition Check 6	Lane keep assist - recognition data detailed information 6	—	—
Active Lane Keep System - White Line Curvature	Curvature of the white line	—	—
Active Lane Keep System - Left White Line Point-of-Regard Position X Coordinate - Add	Left white line point-of-regard position X coordinate (left + right)	mm	—
Active Lane Keep System - Left White Line Side Position - Add	Left white line lateral position (left + right)	mm	—
Active Lane Keep System - Left White Line Yaw Angles - Add	Left white line yaw angle (left + right)	mm	—
Active Lane Keep System - Automatic Adjustment State	Lane keep assist automatic adjustment state	—	—
Lane Departure Prevention Assist Control Check 3	Lane departure prevention assist - control data detailed information 3	—	—
Active Lane Keep System Control Check 3	Lane keep assist - control data detailed information 3	—	—
Active Lane Keep System Control Check 4	Lane keep assist - control data detailed information 4	—	—
Active Lane Keep System Control Check 5	Lane keep assist - control data detailed information 5	—	—
Lane Departure Prevention Assist Last Steerage Control Instructions Torque	Lane departure prevention - final steering operation control instruction torque	Nm	—
Active Lane Keep System Control Learning Value 3 (Steering Wheel Angles Offset)	Control learning value 3 (steering wheel angle offset)	deg	—
Active Lane Keep System Control Learning Value 4 (EPS Friction Value)	Control learning value 4 (EPS friction value)	Nm	—
Active Lane Keep System Control Learning Value 5 (Target Steering Wheel Angles - Target Steering Wheel Torque Map Gain)	Control learning value 5 (target steering angle - target steering torque conversion map gain)	%	—
Lane Departure Prevention Assist Target Yaw Rate	Target yaw rate	deg/sec	—
Lane Departure Prevention Assist Yaw Rate	Actual yaw rate	deg/sec	—
Camera Battery Voltage (At The Time of EyeSight Temporary)	ECM power supply voltage (at an EyeSight temporary stop)	V	—
Camera Temperature Sensor (At The Time of EyeSight Temporary)	Camera temperature (at an EyeSight temporary stop)	°C	—
Automatic Adjustment Status Check (At The Time of EyeSight Temporary)	Automatic adjustment status (at an EyeSight temporary stop)	—	—
Camera Adjustment Value 1 (At The Time of EyeSight Temporary)	Camera adjustment value detailed information 1 (at an EyeSight temporary stop)	—	—
Camera Adjustment Value 2 (At The Time of EyeSight Temporary)	Camera adjustment value detailed information 2 (at an EyeSight temporary stop)	—	—

Display	Content	Unit of measure	Reference
Camera Adjustment Value 3 (At The Time of EyeSight Temporary)	Camera adjustment value detailed information 3 (at an EyeSight temporary stop)	—	—
EyeSight Temporary Detail Check 1	EyeSight temporary stop, detailed information 1	—	—
EyeSight Temporary Detail Check 2	EyeSight temporary stop, detailed information 2	—	—
EyeSight Temporary Detail Check 3	EyeSight temporary stop, detailed information 3	—	—
EyeSight Temporary Detail Check 4	EyeSight temporary stop, detailed information 4	—	—
Details Check 1 (At The Time of EyeSight Temporary)	Detailed information 1 at the time of EyeSight temporary stop	—	—
Details Check 2 (At The Time of EyeSight Temporary)	Detailed information 2 at the time of EyeSight temporary stop	—	—
Details Check 3 (At The Time of EyeSight Temporary)	Detailed information 3 at the time of EyeSight temporary stop	—	—
Details Check 4 (At The Time of EyeSight Temporary)	Detailed information 4 at the time of EyeSight temporary stop	—	—
Camera Temperature Operation Status (At The Time of EyeSight Temporary)	Stereo camera operation status at the time of EyeSight temporary stop	—	• Normal • High Temp. • Low Temp.
Camera Failure Real-Time Check	Current camera failure information	—	—
Camera Failure Details Cumulative Check 1	Camera failure details, cumulative information 1	—	—
Camera Failure Details Cumulative Check 2	Camera failure details, cumulative information 2	—	—
Camera Failure Details Cumulative Check 3	Camera failure details, cumulative information 3	—	—
Camera Failure Details Cumulative Check 4	Camera failure details, cumulative information 4	—	—
Camera Failure Details Cumulative Check 5	Camera failure details, cumulative information 5	—	—
Camera Failure Details Cumulative Check 6	Camera failure details, cumulative information 6	—	—
Camera Failure Details Cumulative Check 7	Camera failure details, cumulative information 7	—	—
Camera Failure Details Cumulative Check 8	Camera failure details, cumulative information 8	—	—
Camera Failure Details Cumulative Check 9	Camera failure details, cumulative information 9	—	—
Camera Failure Details Cumulative Check 10	Camera failure details, cumulative information 10	—	—
Camera Failure Details Cumulative Check 11	Camera failure details, cumulative information 11	—	—
Camera Failure Details Cumulative Check 12	Camera failure details, cumulative information 12	—	—
Camera Failure Details Cumulative Check 13	Camera failure details, cumulative information 13	—	—
Camera Failure Details Cumulative Check 14	Camera failure details, cumulative information 14	—	—
Camera Temperature Abnormality Ignition SW ON Count Check 1	Camera temperature abnormal IG ON count 1	times	—

Display	Content	Unit of measure	Reference
Camera Temperature Abnormality Ignition SW ON Count Check 2	Camera temperature abnormal IG ON count 2	times	—
Camera Temperature Abnormality Ignition SW ON Count Check 3	Camera temperature abnormal IG ON count 3	times	—
Camera Temperature Abnormality Ignition SW ON Count Check 4	Camera temperature abnormal IG ON count 4	times	—
Camera Temperature Abnormality Ignition SW ON Count Check 5	Camera temperature abnormal IG ON count 5	times	—
Camera Adjustment Value 1	Camera adjustment value detailed information 1	—	—
Camera Adjustment Value 2	Camera adjustment value detailed information 2	—	—
Camera Adjustment Value 3	Camera adjustment value detailed information 3	—	—
Camera Status Check 1	Camera status detailed information 1	—	—
Camera Status Check 2	Camera status detailed information 2	—	—
Camera Status Check 3	Camera status detailed information 3	—	—
Camera Status Check 4	Camera status detailed information 4	—	—
Camera Status Check 5	Camera status detailed information 5	—	—
Camera Status Check 6	Camera status detailed information 6	—	—
Camera Status Check 7	Camera status detailed information 7	—	—
Camera Status Check 8	Camera status detailed information 8	—	—
Camera Status Check 9	Camera status detailed information 9	—	—
Camera Status Check 10	Camera status detailed information 10	—	—
Camera Status Check 11	Camera status detailed information 11	—	—
Camera Status Check 12	Camera status detailed information 12	—	—
Camera Status Check 13	Camera status detailed information 13	—	—
Camera Status Check 14	Camera status detailed information 14	—	—
Camera Status Check 15	Camera status detailed information 15	—	—
Camera Status Check 16	Camera status detailed information 16	—	—
Camera Status Check 17	Camera status detailed information 17	—	—
Camera Status Check 18	Camera status detailed information 18	—	—
Camera Status Check 19	Camera status detailed information 19	—	—
Camera Status Check 20	Camera status detailed information 20	—	—
Camera Status Check 21	Camera status detailed information 21	—	—
Camera Status Check 22	Camera status detailed information 22	—	—
Camera Status Check 23	Camera status detailed information 23	—	—
Camera Status Check 24	Camera status detailed information 24	—	—
Camera Status Check 25	Camera status detailed information 25	—	—
Front Axle Average Wheel Speed (At The Time of EyeSight Temporary)	Front axle wheel average speed at the time of EyeSight temporary stop	km/h	—
Ignition SW ON Count (At The Time of EyeSight Temporary)	IG ON count at the time of EyeSight temporary stop	times	—

2. ENGINE CONTROL MODULE (ECM)

For current data of engine control module, refer to ENGINE (DIAGNOSTICS). <Ref. to EN(H4DO)(diag)-45, Subaru Select Monitor.> <Ref. to EN(H6DO)(diag)-50, Subaru Select Monitor.>

3. VDC CONTROL MODULE (VDCCM)

For current data of VDC control module, refer to VDC (DIAGNOSTICS). <Ref. to VDC(diag)-19, READ CURRENT DATA, OPERATION, Subaru Select Monitor.>

4. TRANSMISSION CONTROL MODULE (TCM)

For current data of transmission control module, refer to CVT (DIAGNOSTICS). <Ref. to CVT(diag)-18, READ CURRENT DATA, OPERATION, Subaru Select Monitor.>

5. BODY INTEGRATED UNIT

For current data of body integrated unit, refer to BODY CONTROL (DIAGNOSTICS). <Ref. to BC(diag)-20, LIST, Read Current Data.>

6. COMBINATION METER

For current data of the combination meter, refer to COMBINATION METER (DIAGNOSTICS). <Ref. to MET(diag)-13, LIST, Read Current Data.>

8. Real-time Diagnosis

A: OPERATION

1) On «Start» display, select «Diagnosis».
2) On «Vehicle selection» display, input the target vehicle information and select «Confirmed».
3) On «Main Menu» display, select «Each System».
4) On «Select System» display, select «EyeSight» and select «Enter».
5) On «Select Function» display, select «Data Monitor».
6) Check that the display changes and the contents are correct when performing the operations as follows.

- Depress and release the brake pedal. (Stop light switch and brake switch are turned ON.)
  - Item «Brake Lamp SW (BIU)» «Brake SW Input» «Brake Lamp SW (VDC)»
- Turn the cruise switch to ON.
  - Item «Cruise Control Main Status (ECM → EyeSight)»
- Turn the “SET/–” switch to ON.
  - Item «Cruise Control SW»
- Turn the “RES/+” switch to ON.
  - Item «Cruise Control SW»
- Turn the “F.D. Set+” switch to ON.
  - Item «Cruise Control SW»
- Turn the “Following distance -” switch to ON.
  - Item «Cruise Control SW»
- Operate the shift lever.
  - Item «Current gear position»
- Press and hold the pre-collision brake OFF switch.
  - Item «Pre-Collision Brake OFF Indicator»
- Press and hold the lane departure warning OFF switch.
  - Item «Lane Departure Warning OFF Indicator»

NOTE:
For detailed operation procedures, refer to “Application help”.

9. Diagnostic Code(s) Display

A: OPERATION

1) On «Start» display, select «Diagnosis».
2) On «Vehicle selection» display, input the target vehicle information and select «Confirmed».
3) On «Main Menu» display, select «Each System».
4) On «Select System» display, select «EyeSight» and select «Enter».
5) On «Select Function» display, select «DTC».

NOTE:
- For detailed operation procedures, refer to “Application help”.
- For details concerning DTC, refer to “List of Diagnostic Trouble Code (DTC)”. <Ref. to ES(diag)-42, LIST, Diagnostic Code(s) Display.>
- Up to ten codes can be stored. When more than ten codes are output, they will not be stored.
- The same code is stored only once, and even when the same code occurs several times, information will not be updated.

B: LIST

- List of Diagnostic Trouble Code (DTC)

DTC	Item	Contents of diagnosis	Reference
U0073	CAN FAILURE, BUS ‘OFF’ DETECTION	Detected when bus off status (the stereo camera detects the failure and is disconnected from CAN line) occurs.	<Ref. to ES(diag)-84, DTC U0073 CONTROL MODULE COMMUNICATION BUS OFF, Diagnostic Procedure with Diagnostic Trouble Code (DTC).>
U0100	LOST COMMUNICATION WITH ECM/PCM "A"	Detected when CAN data from ECM is not transmitted to stereo camera.	<Ref. to ES(diag)-84, DTC U0100 LOST COMMUNICATION WITH ECM/PCM "A", Diagnostic Procedure with Diagnostic Trouble Code (DTC).>
U0101	LOST COMMUNICATION WITH TCM	Detected when CAN data from TCM is not transmitted to stereo camera.	<Ref. to ES(diag)-84, DTC U0101 LOST COMMUNICATION WITH TCM, Diagnostic Procedure with Diagnostic Trouble Code (DTC).>
U0122	LOST COMMUNICATION WITH VEHICLE DYNAMICS CONTROL MODULE	Detected when CAN data from VDC is not transmitted to stereo camera.	<Ref. to ES(diag)-84, DTC U0122 LOST COMMUNICATION WITH VEHICLE DYNAMICS CONTROL MODULE, Diagnostic Procedure with Diagnostic Trouble Code (DTC).>
U0126	LOST COMMUNICATION WITH STEERING ANGLE SENSOR MODULE	Detected when CAN data from steering angle sensor is not transmitted to stereo camera.	<Ref. to ES(diag)-84, DTC U0126 LOST COMMUNICATION WITH STEERING ANGLE SENSOR MODULE, Diagnostic Procedure with Diagnostic Trouble Code (DTC).>
U0131	LOST COMMUNICATION WITH POWER STEERING CONTROL MODULE	Detected when CAN data from EPS CM is not transmitted to stereo camera.	<Ref. to ES(diag)-84, DTC U0131 LOST COMMUNICATION WITH POWER STEERING CONTROL MODULE, Diagnostic Procedure with Diagnostic Trouble Code (DTC).>
U0140	LOST COMMUNICATION WITH BODY CONTROL MODULE	Detected when CAN data from body integrated unit is not transmitted to stereo camera.	<Ref. to ES(diag)-84, DTC U0140 LOST COMMUNICATION WITH BODY CONTROL MODULE, Diagnostic Procedure with Diagnostic Trouble Code (DTC).>
U0155	LOST COMMUNICATION WITH INSTRUMENT PANEL CLUSTER (IPC) CONTROL MODULE	Detected when CAN data from combination meter is not transmitted to stereo camera.	<Ref. to ES(diag)-84, DTC U0155 LOST COMMUNICATION WITH INSTRUMENT PANEL CLUSTER (IPC) CONTROL MODULE, Diagnostic Procedure with Diagnostic Trouble Code (DTC).>
U0401	INVALID DATA RECEIVED FROM ECM/PCM "A"	Failure counter diagnosis of engine control module (ECM)	<Ref. to ES(diag)-84, DTC U0401 INVALID DATA RECEIVED FROM ECM/PCM "A", Diagnostic Procedure with Diagnostic Trouble Code (DTC).>
U0402	INVALID DATA RECEIVED FROM TCM	Failure counter diagnosis of automatic transmission control module (TCM)	<Ref. to ES(diag)-85, DTC U0402 INVALID DATA RECEIVED FROM TCM, Diagnostic Procedure with Diagnostic Trouble Code (DTC).>

DTC	Item	Contents of diagnosis	Reference
U0416	INVALID DATA RECEIVED FROM VEHICLE DYNAMICS CONTROL MODULE	Failure counter diagnosis of VDC control module (VDC CM)	<Ref. to ES(diag)-85, DTC U0416 INVALID DATA RECEIVED FROM VEHICLE DYNAMICS CONTROL MODULE, Diagnostic Procedure with Diagnostic Trouble Code (DTC).>
U0420	INVALID DATA RECEIVED FROM POWER STEERING CONTROL MODULE	Failure counter diagnosis of EPS CM	<Ref. to ES(diag)-85, DTC U0420 INVALID DATA RECEIVED FROM POWER STEERING CONTROL MODULE, Diagnostic Procedure with Diagnostic Trouble Code (DTC).>
U0422	INVALID DATA RECEIVED FROM BODY CONTROL MODULE	Failure counter diagnosis of body integrated unit	<Ref. to ES(diag)-85, DTC U0422 INVALID DATA RECEIVED FROM BODY CONTROL MODULE, Diagnostic Procedure with Diagnostic Trouble Code (DTC).>
U0423	INVALID DATA RECEIVED FROM INSTRUMENT PANEL CLUSTER CONTROL MODULE	Failure counter diagnosis of combination meter	<Ref. to ES(diag)-85, DTC U0423 INVALID DATA RECEIVED FROM INSTRUMENT PANEL CLUSTER CONTROL MODULE, Diagnostic Procedure with Diagnostic Trouble Code (DTC).>
U0428	INVALID DATA RECEIVED FROM STEERING ANGLE SENSOR MODULE	Failure counter diagnosis of steering angle sensor	<Ref. to ES(diag)-85, DTC U0428 INVALID DATA RECEIVED FROM STEERING ANGLE SENSOR MODULE, Diagnostic Procedure with Diagnostic Trouble Code (DTC).>
B2801	TCM ABNORMAL	Detected when error occurs in the automatic transmission.	<Ref. to ES(diag)-85, DTC B2801 TCM ABNORMAL, Diagnostic Procedure with Diagnostic Trouble Code (DTC).>
B2802	ETC ABNORMAL	Detected when error occurs in the electronic throttle control.	<Ref. to ES(diag)-85, DTC B2802 ETC ABNORMAL, Diagnostic Procedure with Diagnostic Trouble Code (DTC).>
B2803	EPB OPERATION PROHIBIT	Detected when error occurs in EPB operation, or when executing VDC brake maintenance mode. (EPB operation prohibited)	<Ref. to ES(diag)-86, DTC B2803 EPB OPERATION PROHIBIT, Diagnostic Procedure with Diagnostic Trouble Code (DTC).>
B2804	EPB NO ACTIVITY DETECTED	Detected when error occurs in the EPB operation. (EPB operation abnormal)	<Ref. to ES(diag)-86, DTC B2804 EPB NO ACTIVITY DETECTED, Diagnostic Procedure with Diagnostic Trouble Code (DTC).>
B2806	ECM ABNORMAL	Detected when error occurs in the engine control module (ECM).	<Ref. to ES(diag)-86, DTC B2806 ECM ABNORMAL, Diagnostic Procedure with Diagnostic Trouble Code (DTC).>
B2807		Detected when cruise indicator illumination request from ECM and ON/OFF information of cruise function do not match.	<Ref. to ES(diag)-86, DTC B2807 ECM ABNORMAL, Diagnostic Procedure with Diagnostic Trouble Code (DTC).>
B2809	VDC MALFUNCTION	Detected when error occurs in the VDC.	<Ref. to ES(diag)-86, DTC B2809 VDC MALFUNCTION, Diagnostic Procedure with Diagnostic Trouble Code (DTC).>
B280A	VDC ECHO BACK DISAGREEMENT	Detected when error occurs in the VDC. (VDC brake control malfunction 1)	<Ref. to ES(diag)-86, DTC B280A VDC ECHO BACK DISAGREEMENT, Diagnostic Procedure with Diagnostic Trouble Code (DTC).>
B280B	VDC BRAKE FLUID PRESSURE	Detected when error occurs in the VDC. (VDC brake control malfunction 2)	<Ref. to ES(diag)-86, DTC B280B VDC BRAKE FLUID PRESSURE, Diagnostic Procedure with Diagnostic Trouble Code (DTC).>
B280C	VDC BRAKE CONTROL PROHIBIT	Detected when error occurs in the VDC. (VDC fluid pressure control prohibited)	<Ref. to ES(diag)-86, DTC B280C VDC BRAKE CONTROL PROHIBIT, Diagnostic Procedure with Diagnostic Trouble Code (DTC).>
B280F	COMBINATION METER MALFUNCTION	Detected when error occurs in the CAN communication with combination meter.	<Ref. to ES(diag)-87, DTC B280F COMBINATION METER MALFUNCTION, Diagnostic Procedure with Diagnostic Trouble Code (DTC).>

DTC	Item	Contents of diagnosis	Reference
B2810	INCOMPATIBLE WITH EyeSight (COMBINATION METER)	Detected when different (undesignated) type of combination meter is installed.	<Ref. to ES(diag)-87, DTC B2810 INCOMPATIBLE WITH EyeSight (COMBINATION METER), Diagnostic Procedure with Diagnostic Trouble Code (DTC).>
B2811	EPS ABNORMAL	EPS abnormal	<Ref. to ES(diag)-87, DTC B2811 EPS ABNORMAL, Diagnostic Procedure with Diagnostic Trouble Code (DTC).>
B2814	POWER SUPPLY LOW VOLTAGE	Detected when battery voltage is below specified value or when the +B harness of the stereo camera is broken.	<Ref. to ES(diag)-88, DTC B2814 POWER SUPPLY LOW VOLTAGE, Diagnostic Procedure with Diagnostic Trouble Code (DTC).>
B2815	POWER SUPPLY HIGH VOLTAGE	Detected when battery voltage exceeds the specified value.	<Ref. to ES(diag)-90, DTC B2815 POWER SUPPLY HIGH VOLTAGE, Diagnostic Procedure with Diagnostic Trouble Code (DTC).>
B2817	BRAKE LAMP	Detected when error occurs in the brake light illumination circuit.	<Ref. to ES(diag)-90, DTC B2817 BRAKE LAMP, Diagnostic Procedure with Diagnostic Trouble Code (DTC).>
B281B	STEERING ANGLE SENSOR FAIL	Detected when error occurs in the steering angle sensor system.	<Ref. to ES(diag)-90, DTC B281B STEERING ANGLE SENSOR FAIL, Diagnostic Procedure with Diagnostic Trouble Code (DTC).>
B281C	INCOMPATIBLE WITH EyeSight (EPS)	Detected when the EPS CM which is not exclusively for EyeSight is installed.	<Ref. to ES(diag)-90, DTC B281C INCOMPATIBLE WITH EyeSight (EPS), Diagnostic Procedure with Diagnostic Trouble Code (DTC).>
B28A0	VEHICLE MODEL JUDGMENT	Detected when the model code stored in EEPROM and the model code used for CAN data are different, or when +B harness of the stereo camera is broken at aiming completion.	<Ref. to ES(diag)-91, DTC B28A0 VEHICLE MODEL JUDGMENT, Diagnostic Procedure with Diagnostic Trouble Code (DTC).>
B28A1	EyeSight COMMUNICATION(ECM)	Abnormal judgment for stereo camera by ECM Or detected when the stereo camera or ECM is assembled incorrectly.	<Ref. to ES(diag)-93, DTC B28A1 EyeSight COMMUNICATION(ECM), Diagnostic Procedure with Diagnostic Trouble Code (DTC).>
B28A2	EyeSight COMMUNICATION(VDC)	Abnormal judgment for stereo camera data by VDC	<Ref. to ES(diag)-95, DTC B28A2 EyeSight COMMUNICATION(VDC), Diagnostic Procedure with Diagnostic Trouble Code (DTC).>
B28A3	EyeSight COMMUNICATION(METER)	Abnormal judgment for stereo camera data by combination meter	<Ref. to ES(diag)-96, DTC B28A3 EyeSight COMMUNICATION(METER), Diagnostic Procedure with Diagnostic Trouble Code (DTC).>
B28A4	EyeSight COMMUNICATION(EPS)	Abnormal judgment for stereo camera data by EPS CM	<Ref. to ES(diag)-97, DTC B28A4 EyeSight COMMUNICATION(EPS), Diagnostic Procedure with Diagnostic Trouble Code (DTC).>
B28A5	ENGINE TORQUE LIMITER CONTROL PROHIBIT	Detected when error occurs in the transmission data from stereo camera to ECM.	<Ref. to ES(diag)-98, DTC B28A5 ENGINE TORQUE LIMITER CONTROL PROHIBIT, Diagnostic Procedure with Diagnostic Trouble Code (DTC).>
B28A6	INTERNAL STEREO CAMERA COMMUNICATION 1	Detected when an communication error occurs inside the stereo camera.	<Ref. to ES(diag)-99, DTC B28A6 INTERNAL STEREO CAMERA COMMUNICATION 1, Diagnostic Procedure with Diagnostic Trouble Code (DTC).>
B28A7	STEREO CAMERA RECOGNITION(TARGET)	Detected when error occurs in the communication data inside the control module due to external factors such as noises.	<Ref. to ES(diag)-99, DTC B28A7 STEREO CAMERA RECOGNITION(TARGET), Diagnostic Procedure with Diagnostic Trouble Code (DTC).>
B28A8	INTERNAL STEREO CAMERA COMMUNICATION 2		<Ref. to ES(diag)-99, DTC B28A8 INTERNAL STEREO CAMERA COMMUNICATION 2, Diagnostic Procedure with Diagnostic Trouble Code (DTC).>
B28A9	STEREO CAMERA SYNCHRONIZED RECOGNITION DATA		<Ref. to ES(diag)-99, DTC B28A9 STEREO CAMERA SYNCHRONIZED RECOGNITION DATA, Diagnostic Procedure with Diagnostic Trouble Code (DTC).>

DTC	Item	Contents of diagnosis	Reference
B28AA	STEREO CAMERA MICROCOMPUTER 1	Detected when error occurs in the communication with microcomputer 1 system inside the stereo camera.	<Ref. to ES(diag)-99, DTC B28AA STEREO CAMERA MICROCOMPUTER 1, Diagnostic Procedure with Diagnostic Trouble Code (DTC).>
B28AB	STEREO CAMERA MICROCOMPUTER 2	Detected when error occurs in the communication with microcomputer 2 system inside the stereo camera.	<Ref. to ES(diag)-99, DTC B28AB STEREO CAMERA MICROCOMPUTER 2, Diagnostic Procedure with Diagnostic Trouble Code (DTC).>
B28AC	STEREO CAMERA ASIC	Detected when error occurs in the ASIC system inside the stereo camera.	<Ref. to ES(diag)-100, DTC B28AC STEREO CAMERA ASIC, Diagnostic Procedure with Diagnostic Trouble Code (DTC).>
B28AD	STEREO CAMERA IMAGE RECOGNITION	Detected when error occurs in the stereo camera image system.	<Ref. to ES(diag)-100, DTC B28AD STEREO CAMERA IMAGE RECOGNITION, Diagnostic Procedure with Diagnostic Trouble Code (DTC).>
B28AE	INTERNAL STEREO CAMERA POWER SUPPLY	Detected when error occurs in the internal power supply system of stereo camera.	<Ref. to ES(diag)-100, DTC B28AE INTERNAL STEREO CAMERA POWER SUPPLY, Diagnostic Procedure with Diagnostic Trouble Code (DTC).>
B28AF	STEREO CAMERA ADJUSTMENT INCOMPLETE	Detected when adjustment/ inspection of camera has not been completed normally.	<Ref. to ES(diag)-100, DTC B28AF STEREO CAMERA ADJUSTMENT INCOMPLETE, Diagnostic Procedure with Diagnostic Trouble Code (DTC).>
B28B1	STEREO CAMERA AUTOMATIC ADJUSTMENT	Detected when the optical axis of stereo camera is deviated in lateral direction or when the fluctuation range of automatic adjustment value has been enlarged.	<Ref. to ES(diag)-100, DTC B28B1 STEREO CAMERA AUTOMATIC ADJUSTMENT, Diagnostic Procedure with Diagnostic Trouble Code (DTC).>
B28B2	STEREO CAMERA HIGH TEMPERATURE	Detected when the temperature of the stereo camera excessively increases. (When this DTC is detected, the camera will not return to the normal state after performing adjustment or inspection. In this case, always replace the stereo camera.)	<Ref. to ES(diag)-100, DTC B28B2 STEREO CAMERA HIGH TEMPERATURE, Diagnostic Procedure with Diagnostic Trouble Code (DTC).>
B28B3	STEREO CAMERA LOW TEMPERATURE	Detected when the temperature of the stereo camera excessively decreases. (When this DTC is detected, the camera will not return to the normal state after performing adjustment or inspection. In this case, always replace the stereo camera.)	<Ref. to ES(diag)-101, DTC B28B3 STEREO CAMERA LOW TEMPERATURE, Diagnostic Procedure with Diagnostic Trouble Code (DTC).>
B28B5	+B CIRCUIT ABNORMAL	Detected when there is an open circuit in power supply line of the stereo camera.	<Ref. to ES(diag)-101, DTC B28B5 +B CIRCUIT OPEN, Diagnostic Procedure with Diagnostic Trouble Code (DTC).>
B28B6	PRE-COLLISION OFF SWITCH	Pre-collision brake switch or harness is faulty. Detected also when the switch is held down for over 45 seconds.	<Ref. to ES(diag)-102, DTC B28B6 PRE-COLLISION OFF SWITCH, Diagnostic Procedure with Diagnostic Trouble Code (DTC).>
B28B7	LDP OFF SWITCH	Lane departure warning OFF switch or harness is faulty. Detected also when the switch is held down for over 45 seconds.	<Ref. to ES(diag)-104, DTC B28B7 LDP OFF SWITCH, Diagnostic Procedure with Diagnostic Trouble Code (DTC).>

DTC	Item	Contents of diagnosis	Reference
B28B8	EyeSight STEERING SWITCH 1	Detected when EyeSight steering switch is malfunctioning, when the harness is abnormal or when there is an open circuit.	<Ref. to ES(diag)-106, DTC B28B8 EyeSight STEERING SWITCH 1, Diagnostic Procedure with Diagnostic Trouble Code (DTC).>
B28B9	EyeSight STEERING SWITCH 2		<Ref. to ES(diag)-107, DTC B28B9 EyeSight STEERING SWITCH 2, Diagnostic Procedure with Diagnostic Trouble Code (DTC).>
B28BA	STEERING ANGLE AND STEREO CAMERA CORRELATION MISALIGNED	• Detected when the center point of steering angle sensor deviates. • Detected when there is an excessive deviation in the alignment.	<Ref. to ES(diag)-108, DTC B28BA STEERING ANGLE AND STEREO CAMERA CORRELATION MISALIGNED, Diagnostic Procedure with Diagnostic Trouble Code (DTC).>

10.Freeze Frame Data Display

A: OPERATION

1) On «Start» display, select «Diagnosis».
2) On «Vehicle selection» display, input the target vehicle information and select «Confirmed».
3) On «Main Menu» display, select «Each System».
4) On «Select System» display, select «EyeSight» and select «Enter».
5) On «Select Function» display, select «DTC».
6) On «DTC» display, select «FFD».

NOTE:
- For detailed operation procedures, refer to “Application help”.
- Freeze frame data is stored for three DTCs. Allocation of the three DTCs are as follows:
  – DTC that occurred first.
  – DTC that occurred first during the latest driving cycle (from IGN ON to IGN OFF).
  – DTC that occurred first during the second latest driving cycle.
  – However, DTCs will be stored in order of occurrence until these three DTCs are stored.
- For details on freeze frame data, refer to List of freeze frame data. <Ref. to ES(diag)-47, LIST, Freeze Frame Data Display.>
- Freeze frame data is cleared in Clear Memory Mode. <Ref. to ES(diag)-48, Clear Memory Mode.>

B: LIST

- List of freeze frame data

Display	Content	Unit
ECU Power Supply Voltage (IG)	Display of input voltage of stereo camera	V
Engine Speed	Engine speed	rpm
Accel opening angle	Acceleration opening angle signal	%
Brake Fluid Target Pressure	Target value of brake fluid pressure	MPa
Master Cylinder Actual Fluid Pressure	Brake pressure	MPa
Right Front Wheel W/C Actual Fluid Pressure	Right front wheel cylinder fluid pressure	MPa
Left Front Wheel W/C Actual Fluid Pressure	Left front wheel cylinder fluid pressure	MPa
Brake SW Input	Brake switch signal status	—
Brake Lamp SW (BIU)	Brake light switch signal status	—
Brake Lamp SW (VDC)	Brake light switch status	—
Trip Count	Timestamp information_Trip counter	times
Count	Timestamp information_original count identification information	—
Time Count [msec]	Timestamp information_time counter	ms
Drive Wheel Average Speed	Average wheel speed signal	km/h
Brake Lamp Command	Brake lamp light up command signal	—
EPB Activate Request	Electronic parking brake activate request	—
EPB State	Electronic parking brake operation status signal	—
Idle SW for EPB Control	Idle switch signal for electronic parking brake control	—
Driver Brake Detection	Driver brake detection signal	—
Brake Control Actuation	Brake operation permission signal	—
Pre-Collision Brake Assist Command	Pre-collision brake assist command signal	—
Pre-Collision Brake Action	Pre-collision brake command signal	—
Risk Avoidance Assist standby Command	Risk avoidance assist stand-by command signal	—
Adaptive Cruise Control Torque Down	Torque down prohibition signal of stereo camera	—
Hill Descent Control Status	Hill descent control status signal	—
Engine Failure	Engine failure signal	—
Brake Lamp SW Fail Status	Brake light switch failure signal	—

11.Clear Memory Mode

A: OPERATION

1) On «Start» display, select «Diagnosis».
2) On «Vehicle selection» display, input the target vehicle information and select «Confirmed».
3) On «Main Menu» display, select «Each System».
4) On «Select System» display, select «EyeSight» and select «Enter».
5) On «Select Function» display, select «DTC».
6) On «DTC» display, select «Clear Memory».

NOTE:
For detailed operation procedures, refer to “Application help”.

12.Clear Active Lane Keep System Learning Value

A: OPERATION

1) On «Start» display, select «Diagnosis».
2) On «Vehicle selection» display, input the target vehicle information and select «Confirmed».
3) On «Main Menu» display, select «Each System».
4) On «Select System» display, select «EyeSight» and select «Enter».
5) On «Select Function» display, select «Work Support».
6) On «Work Support» display, select «Clear Active Lane Keep System Learning Value».

NOTE:
• When suspension parts are replaced or wheel alignment is adjusted, perform «Clear Active Lane Keep System Learning Value».
• For detailed operation procedures, refer to “Application help”.

13.Diagnostics with Phenomenon

A: DIAGNOSTIC PROCEDURE WITH PHENOMENON

1. TEMPORARY STOP OF EyeSight

Phenomenon		Check Item	Reference
1	Temporary stop occurs frequently. EyeSight temporary stop indicator illuminates frequently.	(1) Check EyeSight temporary stop code. <Ref. to ES(diag)-71, EyeSight Temporary Code(s) Display.>	For details on temporary stop codes, refer to Check list (Camera temporary stop). Check list (Camera temporary stop) <Ref. to ES(diag)-74, CHECK LIST (CAMERA TEMPORARY STOP), LIST, EyeSight Temporary Code(s) Display.> When there is a relevant item in the check list, it can be the cause of malfunction. Eliminate the cause, and check that the malfunction has been improved. If not solved, the stereo camera may be malfunctioning.

2. ADAPTIVE CRUISE CONTROL, CONVENTIONAL CRUISE CONTROL

Phenomenon		Check Item	Reference
1	Cruise control switch is not turned to ON. (CRUISE indicator light does not illuminate) Or cruise control was cancelled without operating the cruise switch.	(1) Check the ECM cruise control cancel code.	Perform the diagnosis according to displayed cancel code. <Ref. to ES(diag)-78, ECM Cancel Code(s) Display.> If not displayed, go to (2).
		(2) Perform the real-time diagnosis. Check the input signal of cruise control system.	Real-time Diagnosis <Ref. to ES(diag)-41, Real-time Diagnosis.> When normal, go to (4). When abnormal, go to (3).
		(3) Check the EyeSight steering switch.	Inspection of EyeSight steering switch <Ref. to ES(diag)-69, CHECK EyeSight STEERING SWITCH, Diagnostics with Phenomenon.>
		(4) Check the CRUISE indicator.	Inspection of cruise indicator <Ref. to ES(diag)-68, CHECK ADAPTIVE CRUISE CONTROL INDICATOR LIGHT/CONSTANT SPEED CRUISE CONTROL INDICATOR LIGHT AND CRUISE SET INDICATOR LIGHT, Diagnostics with Phenomenon.>
2	Cruise control cannot be set. Or cruise control is cancelled without releasing operation. NOTE: • Do not turn the ignition switch to OFF after the cruise control is deactivated. • Do not operate the EyeSight steering switch after the cruise control is deactivated. If the above is performed, the cancel code the ECM will be cleared.	(1) Check the ECM cruise control cancel code.	Perform the diagnosis according to displayed cancel code. <Ref. to ES(diag)-78, ECM Cancel Code(s) Display.> If not displayed, go to (2).
		(2) Perform the real-time diagnosis. Check the input signal of cruise control system.	Real-time Diagnosis <Ref. to ES(diag)-41, Real-time Diagnosis.> When normal, go to (6). When abnormal, go to the relevant items for (3), (4), (5).
		(3) Check the EyeSight steering switch.	Inspection of EyeSight steering switch <Ref. to ES(diag)-69, CHECK EyeSight STEERING SWITCH, Diagnostics with Phenomenon.>
		(4) Check stop light switch and brake switch.	Inspection of stop light switch and brake switch <Ref. to BR-77, Brake Pedal.> <Ref. to CC(diag)-17, 12, Diagnostic Procedure with Cancel Code.>
		(5) Check the neutral position switch.	Inspection of neutral position switch <Ref. to CC(diag)-20, 14, Diagnostic Procedure with Cancel Code.> <Ref. to CC(diag)-24, 62, Diagnostic Procedure with Cancel Code.>
		(6) Check vehicle speed sensor.	Inspection of vehicle speed sensor <Ref. to CC(diag)-23, 22, Diagnostic Procedure with Cancel Code.>

Phenomenon		Check Item	Reference
3	SET indicator does not illuminate.	Check the SET indicator.	Inspection of SET indicator <Ref. to ES(diag)-68, CHECK ADAPTIVE CRUISE CONTROL INDICATOR LIGHT/ CONSTANT SPEED CRUISE CONTROL INDICATOR LIGHT AND CRUISE SET INDICATOR LIGHT, Diagnostics with Phenomenon.>
4	Vehicle speed is not held within set speed ±3 km/h (±2 MPH) on a level road.	Check the vehicle speed sensor.	Inspection of vehicle speed sensor <Ref. to CC(diag)-23, 22, Diagnostic Procedure with Cancel Code.>
5	Vehicle speed does not increase or does not return to set speed after RES/+ switch has been pressed.	(1) Perform the real-time diagnosis. Check the input signal of cruise control system.	Real-time Diagnosis <Ref. to ES(diag)-41, Real-time Diagnosis.> When abnormal, go to (2).
		(2) Check the RES/+ switch.	Inspection of RES/+ switch <Ref. to ES(diag)-69, CHECK EyeSight STEERING SWITCH, Diagnostics with Phenomenon.>
6	Vehicle speed does not decrease after SET/– switch has been pressed.	(1) Perform the real-time diagnosis. Check the input signal of cruise control system.	Real-time Diagnosis <Ref. to ES(diag)-41, Real-time Diagnosis.> When abnormal, go to (2).
		(2) Check the SET/– switch.	Inspection of SET/– switch <Ref. to ES(diag)-69, CHECK EyeSight STEERING SWITCH, Diagnostics with Phenomenon.>
7	Cruise control is not deactivated after the cruise switch is pressed.	(1) Perform the real-time diagnosis. Check the input signal of cruise control system.	Real-time Diagnosis <Ref. to ES(diag)-41, Real-time Diagnosis.> When abnormal, go to (2).
		(2) Check the cruise switch.	Inspection of cruise switch <Ref. to ES(diag)-69, CHECK EyeSight STEERING SWITCH, Diagnostics with Phenomenon.>
8	Following distance does not change, even after the following distance switch is pressed.	(1) Perform the real-time diagnosis. Check the input signal of cruise control system.	Real-time Diagnosis <Ref. to ES(diag)-41, Real-time Diagnosis.> When abnormal, go to (2).
		(2) Check the following distance switch.	Inspection of following distance switch <Ref. to ES(diag)-69, CHECK EyeSight STEERING SWITCH, Diagnostics with Phenomenon.>
9	Cruise control is not released after brake pedal has been depressed.	(1) Perform the real-time diagnosis. Check the input signal of cruise control system.	Real-time Diagnosis <Ref. to ES(diag)-41, Real-time Diagnosis.> When abnormal, go to (2).
		(2) Check stop light switch and brake switch.	Inspection of stop light switch and brake switch <Ref. to CC(diag)-17, 12, Diagnostic Procedure with Cancel Code.> <Ref. to BR-81, INSTALLATION, Stop Light Switch.>
10	Cruise control is not released after shifting to the neutral position.	(1) Perform the real-time diagnosis. Check the input signal of cruise control system.	Real-time Diagnosis <Ref. to ES(diag)-41, Real-time Diagnosis.> When abnormal, go to (2).
		(2) Check the neutral position switch.	Inspection of neutral position switch <Ref. to CC(diag)-20, 14, Diagnostic Procedure with Cancel Code.>

Phenomenon		Check Item	Reference
11	Acceleration or deceleration does not occur according to the preceding vehicle. The preceding vehicle is difficult to be detected. Braking force is weaker than usual. Alarm for requiring more brake pedal force does not sound.	(1) Using CHECK LIST (ADAPTIVE CRUISE CONTROL), check the condition and respond to it. 1) Does it apply to the condition that the use of adaptive cruise control is not desired? 2) Does it apply to the condition or the object that is hard to be recognized by the stereo camera? 3) Does it apply to the driving condition that the preceding vehicle cannot be recognized or the vehicle on the next lane or the object on the roadside may be recognized by mistake? 4) Does it apply to the condition that brake force may become poor? 5) Does it apply to the condition that the alarm for requiring more brake pedal force does not sound even in a short vehicle distance?	CHECK LIST (ADAPTIVE CRUISE CONTROL) <Ref. to ES(diag)-58, CHECK LIST (ADAPTIVE CRUISE CONTROL), DIAGNOSTIC PROCEDURE WITH PHENOMENON, Diagnostics with Phenomenon.> When there is a relevant item in the check list, it can be the cause of malfunction. Eliminate the cause, and check that the malfunction has been improved. If not solved, go to (2).
		(2) Check the windshield glass and dashboard.	Inspection of windshield glass and dashboard <Ref. to ES(diag)-8, WINDSHIELD GLASS AND DASHBOARD, INSPECTION, General Description.> When normal, go to (3).
		(3) Check the front wiper.	Inspection of front wiper <Ref. to ES(diag)-12, FRONT WIPER, INSPECTION, General Description.> When normal, go to (4).
		(4) Check the stereo camera.	Inspection of stereo camera <Ref. to ES(diag)-13, STEREO CAMERA, INSPECTION, General Description.> When normal, go to (5).
		(5) Bleed air from brake system.	Air bleeding from brake system <Ref. to BR-70, BRAKE LINE, PROCEDURE, Air Bleeding.> Go to (6).
		(6) Check the optical axis of the stereo camera.	Adjust the optical axis of the stereo camera. <Ref. to ES-12, PROCEDURE, Camera Adjustment, Inspection.>

3. PRE-COLLISION BRAKE, AT RAPID START PREVENTION CONTROL

Phenomenon		Check Item	Reference
1	Pre-collision brake does not operate. Or the pre-collision brake operates, but the vehicle cannot stop safely before collision. Or the pre-collision brake is released automatically. Or the pre-collision brake assist does not operate.	(1) Check that the pre-collision brake OFF indicator light goes off.	If this indicator light illuminates, the operation is not performed.
		(2) Using CHECK LIST (PRE-COLLISION BRAKE), check the following and respond to it. 1) Does it apply to the condition that the pre-collision brake does not operate, or there is a high possibility that the vehicle cannot stop safely before collision with the pre-collision brake? 2) Does it apply to the condition that there is a high possibility that the pre-collision brake does not operate due to the recognition status of the stereo camera? 3) Does it apply to the condition that the system does not operate correctly and the turning OFF of the pre-collision brake is desired? 4) Does it apply to the condition that the pre-collision brake OFF indicator light illuminates?	Check list (Pre-collision brake) <Ref. to ES(diag)-60, CHECK LIST (PRE-COLLISION BRAKE), DIAGNOSTIC PROCEDURE WITH PHENOMENON, Diagnostics with Phenomenon.> When there is a relevant item in the check list, it can be the cause of malfunction. Eliminate the cause, and check that the malfunction has been improved. If not solved, the stereo camera may be malfunctioning.
2	Pre-collision brake operates improperly. Or the pre-collision brake is not released. Or the pre-collision brake assist operates improperly.	(1) Using CHECK LIST (PRE-COLLISION BRAKE), check the following and respond to it. 1) Does it apply to the condition that turning OFF of the pre-collision brake is desired? 2) Does it apply to the condition that the pre-collision brake may operate?	Check list (Pre-collision brake) <Ref. to ES(diag)-60, CHECK LIST (PRE-COLLISION BRAKE), DIAGNOSTIC PROCEDURE WITH PHENOMENON, Diagnostics with Phenomenon.> When there is a relevant item in the check list, it can be the cause of malfunction. Eliminate the cause, and check that the malfunction has been improved. If not solved, the stereo camera may be malfunctioning.
3	Pre-collision brake OFF indicator light does not go off. Or the pre-collision brake OFF indicator light illuminates automatically.	(1) Check that this failure occurs during engine start.	Light illumination for a while after the engine start is a normal.
		(2) Check EyeSight temporary stop code to see if temporary stop has occurred.	If the EyeSight temporary stop code is displayed, check the diagnosis from the List of EyeSight temporary stop code, and perform the corresponding operations. <Ref. to ES(diag)-71, EyeSight Temporary Code(s) Display.> If the cancel code is not displayed, go to (3).
		(3) Check the pre-collision brake OFF switch.	Inspection of pre-collision brake OFF switch <Ref. to ES(diag)-102, DTC B28B6 PRE-COLLISION OFF SWITCH, Diagnostic Procedure with Diagnostic Trouble Code (DTC).>
4	Pre-collision brake OFF indicator light does not illuminate. Or the pre-collision brake OFF indicator light goes off automatically.	(1) Check that this failure occurs during engine start.	Even if the pre-collision brake is turned off, it is turned on again when the engine switch is turned off and the engine has restarted.
		(2) Check the pre-collision brake OFF switch.	Inspection of pre-collision brake OFF switch <Ref. to ES(diag)-102, DTC B28B6 PRE-COLLISION OFF SWITCH, Diagnostic Procedure with Diagnostic Trouble Code (DTC).>

Phenomenon		Check Item	Reference
5	AT rapid start prevention control does not operate. Or the AT rapid start prevention control is released automatically.	(1) Check that the pre-collision brake OFF indicator light goes off.	If this indicator light illuminates, the operation is not performed.
		(2) Using CHECK LIST (AT RAPID START PREVENTION CONTROL), check the following and respond to it. 1) Does it apply to the condition that the AT rapid start prevention control may not operate? 2) Does it apply to the condition that the pre-collision brake OFF indicator light illuminates?	Check list (AT rapid start prevention control) <Ref. to ES(diag)-63, CHECK LIST (AT RAPID START PREVENTION CONTROL), DIAGNOSTIC PROCEDURE WITH PHENOMENON, Diagnostics with Phenomenon.> When there is a relevant item in the check list, it can be the cause of malfunction. Eliminate the cause, and check that the malfunction has been improved. If not solved, the stereo camera may be malfunctioning.
6	AT rapid start prevention control operates improperly. Or the AT rapid start prevention control is not released.	(1) Using CHECK LIST (AT RAPID START PREVENTION CONTROL), check the following and respond to it. 1) Does it apply to the condition that turning OFF of the AT rapid start prevention control is desired? 2) Does it apply to the condition that the AT rapid start prevention control may operate?	Check list (AT rapid start prevention control) <Ref. to ES(diag)-63, CHECK LIST (AT RAPID START PREVENTION CONTROL), DIAGNOSTIC PROCEDURE WITH PHENOMENON, Diagnostics with Phenomenon.> When there is a relevant item in the check list, it can be the cause of malfunction. Eliminate the cause, and check that the malfunction has been improved. If not solved, the stereo camera may be malfunctioning.

4. LANE DEPARTURE WARNING, SWAY WARNING, FORWARD VEHICLE'S START MONITORING FUNCTION

Phenomenon		Check Item	Reference
1	Lane departure warning does not operate. Or the lane departure warning is released automatically.	(1) Check that the lane departure warning OFF indicator light goes off.	If this indicator light illuminates, the operation is not performed.
		(2) Using CHECK LIST (LANE DEPARTURE WARNING, SWAY WARNING, FORWARD VEHICLE'S START MONITORING FUNCTION), check the following and respond to it. 1) Does it apply to the condition that the lane departure warning does not operate or is difficult to operate? 2) Does it apply to the condition that the lane departure warning OFF indicator light illuminates?	Check list (lane departure warning, sway warning, forward vehicle's start monitoring function) <Ref. to ES(diag)-64, CHECK LIST (LANE DEPARTURE WARNING, SWAY WARNING, FORWARD VEHICLE'S START MONITORING FUNCTION), DIAGNOSTIC PROCEDURE WITH PHENOMENON, Diagnostics with Phenomenon.> When there is a relevant item in the check list, it can be the cause of malfunction. Eliminate the cause, and check that the malfunction has been improved. If not solved, the stereo camera may be malfunctioning.

Phenomenon		Check Item	Reference
2	Lane departure warning operates improperly. Or the lane departure warning is not released.	(1) Using CHECK LIST (LANE DEPARTURE WARNING, SWAY WARNING, FORWARD VEHICLE'S START MONITORING FUNCTION), check the following and respond to it. 1) Does it apply to the condition that the vehicle lane is recognized erroneously and the lane departure warning may operate?	Check list (lane departure warning, sway warning, forward vehicle's start monitoring function) <Ref. to ES(diag)-64, CHECK LIST (LANE DEPARTURE WARNING, SWAY WARNING, FORWARD VEHICLE'S START MONITORING FUNCTION), DIAGNOSTIC PROCEDURE WITH PHENOMENON, Diagnostics with Phenomenon.> When there is a relevant item in the check list, it can be the cause of malfunction. Eliminate the cause, and check that the malfunction has been improved. If not solved, the stereo camera may be malfunctioning.
3	Lane departure warning OFF indicator light does not go off. Or the lane departure warning OFF indicator light illuminates automatically.	(1) Check that this failure occurs during engine start.	Light illumination for a while after the engine start is a normal. Even if the engine switch is turned off and the engine is restarted, the status before the engine switch off is maintained.
		(2) Check EyeSight temporary stop code to see if temporary stop has occurred.	If the EyeSight temporary stop code is displayed, check the diagnosis from the List of EyeSight temporary stop code, and perform the corresponding operations. <Ref. to ES(diag)-71, EyeSight Temporary Code(s) Display.> If the cancel code is not displayed, go to (3).
		(3) Check the lane departure warning OFF indicator light.	Inspection of lane departure warning OFF indicator light <Ref. to ES(diag)-104, DTC B28B7 LDP OFF SWITCH, Diagnostic Procedure with Diagnostic Trouble Code (DTC).>
4	Lane departure warning OFF indicator light does not illuminate. Or the lane departure warning OFF indicator light goes off automatically.	(1) Check the lane departure warning OFF indicator light.	Inspection of lane departure warning OFF indicator light <Ref. to ES(diag)-104, DTC B28B7 LDP OFF SWITCH, Diagnostic Procedure with Diagnostic Trouble Code (DTC).>
5	Sway warning does not operate. Or the sway warning is released automatically.	(1) Check that the lane departure warning OFF indicator light goes off.	If this indicator light illuminates, the operation is not performed.
		(2) Using CHECK LIST (LANE DEPARTURE WARNING, SWAY WARNING, FORWARD VEHICLE'S START MONITORING FUNCTION), check the following and respond to it. 1) Does it apply to the condition that the sway warning may not operate? 2) Does it apply to the condition that the lane departure warning OFF indicator light illuminates?	Check list (lane departure warning, sway warning, forward vehicle's start monitoring function) <Ref. to ES(diag)-64, CHECK LIST (LANE DEPARTURE WARNING, SWAY WARNING, FORWARD VEHICLE'S START MONITORING FUNCTION), DIAGNOSTIC PROCEDURE WITH PHENOMENON, Diagnostics with Phenomenon.> When there is a relevant item in the check list, it can be the cause of malfunction. Eliminate the cause, and check that the malfunction has been improved. If not solved, the stereo camera may be malfunctioning.
6	Sway warning operates improperly. Or the sway warning is not released.	(1) Using CHECK LIST (LANE DEPARTURE WARNING, SWAY WARNING, FORWARD VEHICLE'S START MONITORING FUNCTION), check the following and respond to it. 1) Does it apply to the condition that the sway warning may operate improperly?	Check list (lane departure warning, sway warning, forward vehicle's start monitoring function) <Ref. to ES(diag)-64, CHECK LIST (LANE DEPARTURE WARNING, SWAY WARNING, FORWARD VEHICLE'S START MONITORING FUNCTION), DIAGNOSTIC PROCEDURE WITH PHENOMENON, Diagnostics with Phenomenon.> When there is a relevant item in the check list, it can be the cause of malfunction. Eliminate the cause, and check that the malfunction has been improved. If not solved, the stereo camera may be malfunctioning.

	Phenomenon	Check Item	Reference
7	Forward vehicle's start monitoring function does not operate. Or the forward vehicle's start monitoring function is released automatically.	(1) Using CHECK LIST (LANE DEPARTURE WARNING, SWAY WARNING, FORWARD VEHICLE'S START MONITORING FUNCTION), check the following and respond to it. 1) Does it apply to the condition that the forward vehicle's start monitoring function does not operate even when the preceding vehicle has already started?	Check list (lane departure warning, sway warning, forward vehicle's start monitoring function) <Ref. to ES(diag)-64, CHECK LIST (LANE DEPARTURE WARNING, SWAY WARNING, FORWARD VEHICLE'S START MONITORING FUNCTION), DIAGNOSTIC PROCEDURE WITH PHENOMENON, Diagnostics with Phenomenon.> When there is a relevant item in the check list, it can be the cause of malfunction. Eliminate the cause, and check that the malfunction has been improved. If not solved, the stereo camera may be malfunctioning.
8	Forward vehicle's start monitoring function operates improperly. Or the forward vehicle's start monitoring function is not released.	(1) Using CHECK LIST (LANE DEPARTURE WARNING, SWAY WARNING, FORWARD VEHICLE'S START MONITORING FUNCTION), check the following and respond to it. 1) Does it apply to the condition that the forward vehicle's start monitoring function operates even when the preceding vehicle has not yet started?	Check list (lane departure warning, sway warning, forward vehicle's start monitoring function) <Ref. to ES(diag)-64, CHECK LIST (LANE DEPARTURE WARNING, SWAY WARNING, FORWARD VEHICLE'S START MONITORING FUNCTION), DIAGNOSTIC PROCEDURE WITH PHENOMENON, Diagnostics with Phenomenon.> When there is a relevant item in the check list, it can be the cause of malfunction. Eliminate the cause, and check that the malfunction has been improved. If not solved, the stereo camera may be malfunctioning.

5. ACTIVE LANE KEEP (LANE DEPARTURE PREVENTION)

	Phenomenon	Check Item	Reference
1	Lane keep switch is not turned to ON. (Lane keep indicator light does not illuminate in white.)	(1) Perform the real-time diagnosis. Check the input signal of EyeSight system.	Real-time Diagnosis <Ref. to ES(diag)-41, Real-time Diagnosis.> When normal, go to (3). When abnormal, go to (2).
		(2) Check the lane keep switch.	Check EyeSight steering switch <Ref. to ES(diag)-69, CHECK EyeSight STEERING SWITCH, Diagnostics with Phenomenon.>
		(3) Check the combination meter.	INSTRUMENTATION/DRIVER INFO (DIAGNOSTICS) <Ref. to MET(diag)-2, PROCEDURE, Basic Diagnostic Procedure.>

Phenomenon		Check Item	Reference
2	Lane keep (lane departure prevention) does not turn to standby mode. (Lane indicator light does not illuminate.) Lane keep (lane departure prevention) does not operate. (Lane keep indicator light does not illuminate in green.) Though lane keep (lane departure prevention) is operating, the vehicle departs out of the lane due to poor assistance.	(1) Read the lane departure prevention deactivate code. <Ref. to ES(diag)-83, Active Lane Keep System Code(s) Display.>	When there is a relevant item in the lane departure prevention deactivate code, it can be the cause of malfunction. Eliminate the cause, and check that the malfunction has been improved. If not solved, go to (2).
		(2) Using CHECK LIST (LANE KEEP), check the current conditions and respond to it. 1) Does it apply to the condition that use of lane keeping is not desired? 2) Does it apply to the condition or the object that is hard to be recognized by the stereo camera? 3) Does it apply to the road condition that the white line is difficult to be recognized?	Check list (lane keep) <Ref. to ES(diag)-66, CHECK LIST (ACTIVE LANE KEEP), DIAGNOSTIC PROCEDURE WITH PHENOMENON, Diagnostics with Phenomenon.> When there is a relevant item in the check list, it can be the cause of malfunction. Eliminate the cause, and check that the malfunction has been improved. If not solved, go to (3).
		(3) Check the windshield glass and dashboard.	Inspection of windshield glass and dashboard <Ref. to ES(diag)-8, WINDSHIELD GLASS AND DASHBOARD, INSPECTION, General Description.> When normal, go to (4).
		(4) Check the front wiper.	Inspection of front wiper <Ref. to ES(diag)-12, FRONT WIPER, INSPECTION, General Description.> When normal, go to (5).
		(5) Check the optical axis of the headlights.	Headlight optical axis adjustment <Ref. to LI-34, ADJUSTMENT, Headlight Assembly.> When normal, go to (6).
		(6) Check the stereo camera.	Inspection of stereo camera <Ref. to ES(diag)-13, STEREO CAMERA, INSPECTION, General Description.> When normal, go to (7).
		(7) Check the tires and wheel alignment.	When normal, go to (8).
		(8) Check the optical axis of the stereo camera.	Adjust the optical axis of the stereo camera. <Ref. to ES-12, PROCEDURE, Camera Adjustment, Inspection.>
3	Lane keep (lane departure prevention) is cancelled without releasing operation.	Read the lane departure prevention deactivate code. <Ref. to ES(diag)-83, Active Lane Keep System Code(s) Display.>	When there is a relevant item in the lane departure prevention deactivate code, it can be the cause of malfunction. Eliminate the cause, and check that the malfunction has been improved.

6. CHECK LIST (ADAPTIVE CRUISE CONTROL)

Item name			Yes/No	
[1]: When the vehicle does not accelerate or decelerate according to the preceding vehicle, or when it is difficult to detect the preceding vehicle.				
1	Check that the current status applies to the condition that the use of adaptive cruise control is not desired.			
	1	Tire pressure is not correct.	Yes	No
	2	The vehicle is equipped with the temporary spare tire.	Yes	No
	3	The vehicle is equipped with worn tire or tires with excessive wear difference.	Yes	No
	4	The vehicle is equipped with the tires out of specification.	Yes	No
	5	The suspension has been modified.	Yes	No
	6	The vehicle is equipped with the tire chain.	Yes	No
	7	Headlight is dirty or the optical axis is deviated. (The vehicle cannot correctly emit the headlight beam against the object and recognize it.)	Yes	No
	8	The driving of own vehicle is unstable due to an accident or failure.	Yes	No
	9	The brake warning light illuminates.	Yes	No
	10	Vehicle is tilted by the heavy load.	Yes	No
	11	Passenger capacity is exceeded.	Yes	No
	12	The vehicle is towing the trailer or other vehicle.	Yes	No
	13	The vehicle drives on the general road (other than limited highway). (Depending on the road environment (complicated roads etc.), the vehicle may not be able to drive according to the traffic condition, which may lead to the traffic accident.)	Yes	No
	14	The vehicle drives on the sharp bend.	Yes	No
	15	The vehicle drives on the slippery roads such as icy road or snow-covered road. (Tires can spin, losing the vehicle control.)	Yes	No
	16	The vehicle drives under the traffic condition that the certain vehicle distance is difficult to be maintained due to frequent acceleration and deceleration. (The vehicle may not be able to drive according to the traffic condition.)	Yes	No
	17	There is a steep downhill. (The vehicle may drive at higher speed than the set vehicle speed.)	Yes	No
	18	The vehicle performs adaptive driving while recognizing the preceding vehicle on the steep downhills. (Brake can be overheated.)	Yes	No
	19	The vehicle drives on the road with repeated steep uphills and downhills or crossover. (The vehicle may not be able to recognize the preceding vehicle or may recognize the road surface, and appropriate control may not be performed.)	Yes	No
	20	The vehicle is entering the interchange, service area, parking area, junction or tollgate. (The vehicle may not be able to recognize the preceding vehicle.)	Yes	No
	21	When the surrounding brightness (such as inlet and outlet of a tunnel) suddenly changes.	Yes	No
	22	There are water, snow or sandy dust raised by the preceding vehicle or oncoming vehicle, or sand or smoke blown in the wind, or moisture in front of own vehicle. (The vehicle may not be able to recognize the preceding vehicle or may recognize the water, and appropriate control may not be performed.)	Yes	No
	23	The windshield glass is covered with fog, snow, dirt, frost or sandy dust.	Yes	No
	24	The raindrops, water drops or dirt on the windshield glass are not wiped off sufficiently. (The vehicle may not be able to recognize the preceding vehicle, and appropriate control may not be performed.)	Yes	No
	25	Canoes etc. loaded on the roof block the visibility of the stereo camera.	Yes	No

		Item name	Yes/No	
2	Check that the current status applies to the condition or the object that is hard to be recognized by the stereo camera.			
	1	That was a vehicle with large speed difference (low-speed driving vehicle, stopping vehicle, oncoming vehicle).	Yes	No
	2	That was a cutting-in vehicle.	Yes	No
	3	That was a motorcycle, bicycle, pedestrian or animal, etc.	Yes	No
	4	It was dim in the evening or in the morning.	Yes	No
	5	The headlight did not illuminate during nighttime hours or inside the tunnel.	Yes	No
	6	The tail light of the preceding vehicle did not illuminate during nighttime hours or inside the tunnel.	Yes	No
	7	The vehicle was exposed to the intense light (backlight such as sunlight or headlight high-beam light) from the front of the vehicle.	Yes	No
	8	The rearmost surface of the preceding vehicle was small, low or uneven. That was a truck equipped with an unloaded platform without gate, a vehicle that the luggage was protruding from the rear end of the vehicle, a vehicle of special shape (carrier car, side car, etc.) or a vehicle with low vehicle height.	Yes	No
	9	There was an object extremely close to the bumper of the own vehicle.	Yes	No
3	Check that the current status applies to the driving condition that the preceding vehicle cannot be recognized or the vehicle on the next lane or the object on the roadside may be recognized by mistake.			
	1	The vehicle began adaptive cruise control from the condition that the vehicle distance was short immediately after the preceding vehicle was cut in.	Yes	No
	2	The vehicle drives on the curve, outlet and inlet of the curve, or the road with many curves in succession. (Recognition may not be performed properly, because the preceding vehicle is out of recognition area.)	Yes	No
	3	The position against the preceding vehicle deviated laterally.	Yes	No
	4	There were some objects just near the road side.		
	5	The speed difference against the preceding vehicle was large.	Yes	No
	6	Other vehicle cut ahead of the own vehicle.	Yes	No
	7	The vehicle distance was extremely short.	Yes	No
	8	The own vehicle swayed in the vehicle lane.	Yes	No
	9	The road surface was uneven due to roll or unpaved track.	Yes	No
	10	The vehicle drove on the narrow lane because of the lane closure or construction work.	Yes	No
	11	The driving of own vehicle was unstable due to an accident or failure.	Yes	No
	12	The own vehicle was loaded with the extremely heavy load in the luggage compartment or on the rear seat.	Yes	No
[2]: When braking force is weaker than usual.				
1	Check that the current status applies to the condition that brake force may become poor.			
	1	The vehicle status (loading amount, passenger, etc.) was inappropriate.	Yes	No
	2	The road surface was very steep, slippery, sharp turn, or uneven.	Yes	No
	3	The service maintenance condition of the vehicle (brake system, tire wear, tire pressure, spare tire, etc.) was inappropriate.	Yes	No
	4	The brake was cold at low ambient temperature or immediately after the driving had started.	Yes	No
	5	The symptom occurred between immediately after engine started and after a while the vehicle started driving (Completion of warming up operation can be used as an indication.).	Yes	No
	6	The brake force becomes poor due to the overheating of the brake on the downhills.	Yes	No
	7	The brake force becomes poor because of the wet brake after driving onto the puddle or washing the vehicle.	Yes	No

		Item name	Yes/No	
[3]: When the alarm for requiring more brake pedal force does not sound.				
1	Check that the current status applies to the condition that the alarm for requiring more brake pedal force does not sound even in a short vehicle distance.			
	1	The speed difference between own vehicle and preceding vehicle (when the vehicle speed of the own vehicle was approximately the same as that of the preceding vehicle) was small.	Yes	No
	2	The vehicle speed of the preceding vehicle was faster than that of the own vehicle (when the vehicle distance was getting longer).	Yes	No
	3	Other vehicle cut in extremely close to the own vehicle.	Yes	No
	4	The preceding vehicle decelerated abruptly.	Yes	No
	5	There are many continuous uphills and downhills.	Yes	No

7. CHECK LIST (PRE-COLLISION BRAKE)

		Item name	Yes/No	
[1]: When pre-collision brake did not operate, or when vehicle could not stop safely before collision in spite of pre-collision brake operation.				
1	Check that the current status applies to the condition that the pre-collision brake does not operate, or there is a high possibility that the vehicle cannot stop safely before collision in spite of pre-collision brake operation.			
	1	Conditions such as the followings occurred: 1) Vehicle speed difference with the preceding vehicle is small. 2) Distance from the preceding vehicle is long. 3) Lateral deviation (offset amount) is large.	Yes	No
	2	The vehicle status (loading amount, number of passenger, etc.) was inappropriate.	Yes	No
	3	The road surface was very steep, slippery, sharp turn, or uneven.	Yes	No
	4	There was problem for the frontal visibility (rain, snow, fog, smoke, etc.).	Yes	No
	5	The objects were livestock, animals, guardrail, telephone pole, tree, fence, wall, etc.	Yes	No
	6	The object was motorcycle, bicycle, or pedestrian. However, the system could not recognize the object due to surrounding brightness, motion, posture, and/or angle.	Yes	No
	7	Crash avoidance operation (accelerator pedal, brake pedal, steering wheel, etc.) was performed.	Yes	No
	8	The service maintenance condition of the vehicle (brake system, tire wear, tire pressure, spare tire, etc.) was inappropriate.	Yes	No
	9	The vehicle is towing the trailer or other vehicle.	Yes	No
	10	The brake was cold at low ambient temperature or immediately after the driving had started.	Yes	No
	11	The brake force becomes poor due to the overheating of the brake on the downhills.	Yes	No
	12	The brake force becomes poor because of the wet brake after driving onto the puddle or washing the vehicle.	Yes	No

		Item name	Yes/No	
2	Check that the current status applies to the condition that there is a high possibility that the pre-collision brake does not operate depending on the recognition status of the stereo camera.			
	1	It was bad weather (heavy rain, snowstorm, dense fog).	Yes	No
	2	The field of view was insufficient due to water, snow or sandy dust raised by the preceding vehicle or oncoming vehicle, or the moisture, sand or smoke blown in the wind.	Yes	No
	3	The headlight did not illuminate during nighttime hours or inside the tunnel.	Yes	No
	4	The tail light of the preceding vehicle did not illuminate during nighttime hours or inside the tunnel.	Yes	No
	5	The vehicle approached the motorcycle, bicycle or pedestrian in the night.	Yes	No
	6	It was dark in the evening or in the morning.	Yes	No
	7	The rearmost surface of the preceding vehicle was small, low or uneven. That was a truck equipped with an unloaded platform without gate, a vehicle that the luggage was protruding from the rear end of the vehicle, a vehicle of special shape (carrier car, side car, etc.) or a vehicle with low vehicle height.	Yes	No
	8	There was a wall in front of the stopping vehicle.	Yes	No
	9	There was an object close to the vehicle.	Yes	No
	10	That was a vehicle stopped sideways.	Yes	No
	11	That was a vehicle which was oncoming or driving in reverse.	Yes	No
	12	The object was small seen from the stereo camera. (small animals, infants, person squatting down or lying down)	Yes	No
	13	The preceding vehicle made a sharp turn, or performed abrupt acceleration or deceleration.	Yes	No
	14	Other vehicle, motorcycle, bicycle or pedestrian existed extremely close to the bumper of the own vehicle.	Yes	No
	15	The speed difference was 5 km/h (3.1 MPH) or less. (The control is performed in close distance. Depending on the objects shape and size, the rear end surface may be outside the camera visibility area.)	Yes	No
	16	Other vehicle, motorcycle, bicycle or pedestrian cut in from the side or jumped in front of the own vehicle.	Yes	No
	17	The own vehicle changed the vehicle lane, and followed the preceding vehicle right behind.	Yes	No
	18	The vehicle was exposed to the intense light (backlight such as sunlight or headlight high-beam light) from the front of the vehicle.	Yes	No
	19	The windshield glass was covered with fog, snow, dirt, frost or sandy dust.	Yes	No
	20	The windshield glass has not yet been wiped off sufficiently during or after the use of the window washer.	Yes	No
	21	The recognition of the object was imperfect due to the raindrop or droplet of the window washer or the wiper blade blocking the visibility of the stereo camera.	Yes	No
	22	Canoes etc. loaded on the roof blocked the visibility of the stereo camera.	Yes	No
	23	Other vehicle, motorcycle, bicycle or pedestrian existed out of the illuminating area of the headlight.	Yes	No
	24	The vehicle drove on the sharp turn, steep uphills or steep downhills.	Yes	No
	25	The road surface was uneven due to roll or unpaved track.	Yes	No
	26	The vehicle passed through the outlet or inlet of a tunnel.	Yes	No
	27	The object was fence or wall.	Yes	No
	28	The object was a plate of glass, mirror wall or door.	Yes	No

	Item name		Yes/No	
3	Check that the current status applies to the condition that the system does not operate correctly and the turning OFF of the pre-collision brake is desired.			
	1	Tire pressure is not correct.	Yes	No
	2	The vehicle is equipped with the temporary spare tire.	Yes	No
	3	The vehicle is equipped with worn tire or tires with excessive wear difference.	Yes	No
	4	The vehicle is equipped with the tires out of specification.	Yes	No
	5	The suspension has been modified.	Yes	No
	6	The vehicle is equipped with the tire chain.	Yes	No
	7	Headlight is dirty or the optical axis is deviated. (The vehicle cannot correctly emit the headlight beam against the object and recognize it.)	Yes	No
	8	The driving status of own vehicle is unstable due to an accident or failure.	Yes	No
	9	The brake warning light illuminates.	Yes	No
	10	Vehicle is tilted by the heavy load. Or, passenger capacity is exceeded.	Yes	No
4	Check that the current status applies to the condition that the pre-collision brake OFF indicator light illuminates. (When the pre-collision brake OFF indicator light illuminates, the pre-collision brake does not operate.)			
	1	The pre-collision brake is turned off, using the pre-collision brake OFF switch.	Yes	No
	2	Approximately for 7 seconds after the engine has started.	Yes	No
	3	EyeSight is malfunctioning.	Yes	No
	4	EyeSight is stopped temporarily.	Yes	No
[2]: When pre-collision brake operated improperly.				
1	Check that the current status applies to the condition that turning OFF of the pre-collision brake is desired.			
	1	The vehicle is towed.	Yes	No
	2	The vehicle is loaded on the carrier car.	Yes	No
	3	The chassis dynamometer or free roller is used.	Yes	No
	4	The vehicle is lifted up, engine is started and the tire is spun.	Yes	No
	5	The vehicle passes through the banners, flags, drooping branches or grass while making contact with them.	Yes	No
	6	The vehicle performs sporty driving on the circuit.	Yes	No
	7	When the vehicle uses the movable type car wash machine.	Yes	No
2	Check that the current status applies to the condition that the pre-collision brake may operate.			
	1	The vehicle passes through the ETC gate at a speed exceeding the specification.	Yes	No
	2	The vehicle drives close to the preceding vehicle.	Yes	No
	3	The vehicle drives on the place where the road surface gradient changed suddenly.	Yes	No
	4	The vehicle passes through the moisture or mass of smoke.	Yes	No
	5	When the exhaust gas emitted from the preceding vehicle is visible clearly at cold weather.	Yes	No
	6	There is an obstacle on the curve or crossing.	Yes	No
	7	The vehicle passes through close to other vehicle or obstacle.	Yes	No
	8	The vehicle parks close to the wall in front or to other vehicle.	Yes	No

8. CHECK LIST (AT RAPID START PREVENTION CONTROL)

Item name			Yes/No	
[1]: When AT rapid start prevention control did not operate.				
1	Check that the current status applies to the condition that the AT rapid start prevention control may not operate.			
	1	Conditions such as the followings occurred: 1) Distance from the front object is long. 2) Vehicle speed difference is small. 3) Lateral deviation (offset amount) is large.	Yes	No
	2	It was bad weather (heavy rain, snowstorm, dense fog).	Yes	No
	3	The visibility was insufficient due to sand or smoke blown in the air.	Yes	No
	4	The vehicle approached the object in the evening, in the morning or in the night.	Yes	No
	5	The vehicle approached the object in the dark place (e.g. closed-in parking lot).	Yes	No
	6	The height of the object was low. (low wall, low guardrail, vehicle with low height etc.)	Yes	No
	7	The object was small seen from the stereo camera. (Small animals, infants, person squatting down or lying down)	Yes	No
	8	The object or rearmost area of the preceding vehicle (trailer, etc.) was small. Or the vehicle approached them too close. (The system triggers the operation by recognizing the area other than the rearmost section, resulting in insufficient control.)	Yes	No
	9	The object such as other vehicle, motorcycle, bicycle or pedestrian cut in from the side or jumped in front of the own vehicle.	Yes	No
	10	The own vehicle changed the vehicle lane when it started, and approached right behind the object.	Yes	No
	11	The vehicle was exposed to the intense light (backlight such as sunlight or headlight high-beam light) from the front of the vehicle.	Yes	No
	12	The windshield glass was covered with fog, snow, dirt, frost or sandy dust.	Yes	No
	13	The windshield glass has not yet been wiped off sufficiently during or after the use of the window washer.	Yes	No
	14	The recognition of the object was imperfect due to the raindrop or droplet of the window washer or the wiper blade blocking the visibility of the stereo camera.	Yes	No
	15	Canoes etc. loaded on the roof blocked the visibility of the stereo camera.	Yes	No
	16	The object existed out of the illuminating area of the headlight.	Yes	No
	17	The vehicle drove on the sharp turn, steep uphills or steep downhills.	Yes	No
	18	The object was a fence or wall with even pattern (striped pattern or bricks) or unpatterned surface.	Yes	No
	19	The object was a plate of glass, mirror wall or door.	Yes	No
	20	Crash avoidance operation (accelerator pedal, brake pedal, steering wheel, etc.) was performed.	Yes	No
2	Check that the current status applies to the condition that the pre-collision brake OFF indicator light illuminates. (When the pre-collision brake OFF indicator light illuminates, the AT rapid start prevention control does not operate.)			
	1	The pre-collision brake was turned off, using the pre-collision brake OFF switch.	Yes	No
	2	Approximately for 7 seconds after the engine has started.	Yes	No
	3	EyeSight is malfunctioning.	Yes	No
	4	EyeSight is stopped temporarily.	Yes	No
[2]: When AT rapid start prevention control operated improperly.				
1	Check that the current status applies to the condition that the releasing of the AT rapid start prevention control is desired.			
	1	The vehicle is towed.	Yes	No
	2	The vehicle is loaded on the carrier car.	Yes	No
	3	The chassis dynamometer or free roller is used.	Yes	No
	4	The vehicle is lifted up, engine is started and the tire is spun.	Yes	No
	5	The vehicle passes through the banners, flags, drooping branches or grass while making contact with them.	Yes	No
	6	The vehicle performs sporty driving on the circuit.	Yes	No

		Item name	Yes/No	
2	Check that the current status applies to the condition that the AT rapid start prevention control may operate.			
	1	The vehicle passes through the ETC gate at a speed exceeding the specification.	Yes	No
	2	The vehicle drives close to the preceding vehicle.	Yes	No
	3	The vehicle drives on the place where the road surface gradient changed suddenly.	Yes	No
	4	The vehicle passes through the moisture or mass of smoke.	Yes	No
	5	There is an obstacle on the curve or crossing.	Yes	No
	6	The vehicle passes through close to other vehicle or obstacle.	Yes	No
	7	The vehicle parks close to the wall in front or to other vehicle.	Yes	No

9. CHECK LIST (LANE DEPARTURE WARNING, SWAY WARNING, FORWARD VEHICLE'S START MONITORING FUNCTION)

		Item name	Yes/No	
[1]: When the lane departure warning did not operate.				
1	Check that the current status applies to the condition that the lane departure warning does not operate or is difficult to operate.			
	1	The lane departure warning is turned off.	Yes	No
	2	The vehicle speed of the own vehicle is approximately less than 50 km/h (31 MPH).	Yes	No
	3	That was approximately 7 seconds period after the lane departure warning had occurred once.	Yes	No
	4	The steering wheel was turned fully or rapidly.	Yes	No
	5	The brake pedal is depressed.	Yes	No
	6	The vehicle is accelerated by depressing the accelerator pedal.	Yes	No
	7	The vehicle distance from the preceding vehicle is short.	Yes	No
	8	That was approximately 7 seconds period while the turn signal indicator was operating or after the lever was returned.	Yes	No
	9	The vehicle has not returned inside the vehicle lane after the operation of the lane departure warning.	Yes	No
	10	The width of the vehicle lane is narrow.	Yes	No
	11	The vehicle lane is difficult to be recognized seen from the stereo camera. (Lane line (white line, etc.) does not exist or is fading out. Or the color of the lane line is very similar to that of the road surface, and difficult to be seen. Or the width of the lane line is very thin.)	Yes	No
	12	The preceding vehicle performed crash avoidance action to avoid the obstacle, and the own vehicle performed steering operation after the preceding vehicle.	Yes	No
2	Check that the current status applies to the condition that the lane departure warning OFF indicator light illuminates. (When the lane departure warning OFF indicator light illuminates, the lane departure warning does not operate.)			
	1	The lane departure warning is turned off, using the lane departure warning OFF switch.	Yes	No
	2	Approximately for 7 seconds after the engine has started.	Yes	No
	3	EyeSight is malfunctioning.	Yes	No
	4	EyeSight is stopped temporarily.	Yes	No
[2]: When the lane departure warning malfunctioned.				
1	Check that the current status applies to the condition that the vehicle lane is recognized erroneously and the lane departure warning may operate.			
	1	There was the tire track on the wet road or snow-covered road.	Yes	No
	2	There was the boundary line between snow-covered area and asphalt or on the trace of road repair.	Yes	No
	3	There was the double vehicle lane.	Yes	No
	4	The shadow of the guardrail was detected by mistake.	Yes	No

Item name			Yes/No	
[3]: When the sway warning did not operate.				
1	Check that the current status applies to the condition that the sway warning may not operate.			
	1	The vehicle drove on the road with many curves in succession.	Yes	No
	2	The vehicle speed changed greatly.	Yes	No
	3	That was immediately after the vehicle lane had changed.	Yes	No
	4	The vehicle lane was difficult to be recognized seen from the stereo camera. (Lane line (white line, etc.) does not exist or is fading out. Or the color of the lane line is very similar to that of the road surface, and difficult to be seen. Or the width of the lane line is very thin.)	Yes	No
	5	That was immediately after the sway had begun.	Yes	No
2	Check that the current status applies to the condition that the lane departure warning OFF indicator light illuminates. (When the lane departure warning OFF indicator light illuminates, the sway warning does not operate.)			
	1	The lane departure warning is turned off, using the lane departure warning OFF switch.	Yes	No
	2	Approximately for 7 seconds after the engine has started.	Yes	No
	3	EyeSight is malfunctioning.	Yes	No
	4	EyeSight is stopped temporarily.	Yes	No
[4]: When the sway warning malfunctioned.				
1	Check that the current status applies to the condition that the sway warning may operate.			
	1	That was after the sway had stopped.	Yes	No
	2	The driver lost concentration on driving the vehicle due to fatigue or looking away.	Yes	No
[5]: When the forward vehicle's start monitoring function did not operate or when it malfunctioned.				
1	Check that the current status applies to the condition that the forward vehicle's start monitoring function does not operate even when the preceding vehicle has already started, or that the forward vehicle's start monitoring function operates even when the preceding vehicle has not yet started.			
	1	The motorcycle cut in the space between the own vehicle and the stopped preceding vehicle.	Yes	No
	2	The vehicle could not recognize the preceding vehicle properly due to the weather condition or road shape.	Yes	No
	3	The stereo camera lost sight of the preceding vehicle.	Yes	No
	4	The driver did not depress the brake pedal with select lever in D, M or N range. (At this time, forward vehicle's start monitoring function does not operate.)	Yes	No
	5	The forward vehicle's start monitoring function was turned OFF via the customization function.	Yes	No

10.CHECK LIST (ACTIVE LANE KEEP)

Item name			Yes/No	
1	Check that the current status applies to the condition that use of lane keeping is not desired.			
	1	An object was placed on the dashboard.	Yes	No
	2	Tire pressure is not correct.	Yes	No
	3	The vehicle is equipped with the temporary spare tire.	Yes	No
	4	The vehicle is equipped with worn tire or tires with excessive wear difference.	Yes	No
	5	The vehicle is equipped with the tires out of specification.	Yes	No
	6	The flat tire is repaired using the temporary repair kit.	Yes	No
	7	The suspension (including STI parts) has been modified.	Yes	No
	8	Wheel balance is abnormal (balance weight falls off, slides off, etc.).	Yes	No
	9	Wheel alignment is out of the specified value.	Yes	No
	10	The steering wheel has been replaced with a non-genuine part.	Yes	No
	11	The steering wheel is off-center.	Yes	No
	12	The lighting devices, such as headlights and fog lights, have been modified.	Yes	No
	13	An abnormal vibration can be felt on the steering wheel.	Yes	No
	14	The steering wheel operation is heavier than usual.	Yes	No
	15	An error occurs, for example, no display appears in the combination meter or no alarm sounds.	Yes	No
	16	The headlight cannot illuminate the road surface sufficiently because the headlight is dirty, attached with ice, snow or mud, or the optical axis is deviated.	Yes	No
	17	The driving status of own vehicle was unstable due to an accident or failure.	Yes	No
	18	The vehicle carried heavy load.	Yes	No
	19	Passenger capacity was exceeded.	Yes	No
	20	The vehicle towed another vehicle.	Yes	No
	21	The vehicle drove on a general road (other than limited highways).	Yes	No
	22	The vehicle drove on a road with sharp curves, such as an urban highway.	Yes	No
	23	The vehicle drove on a slippery road such as icy roads or snow-covered roads.	Yes	No
	24	The vehicle drove on a lane restricted road or a temporary road due to road construction.	Yes	No
	25	The vehicle drove on a road where obsolete white lines did not disappear completely.	Yes	No
	26	On the road surface there were some snow, puddles, snow melting agent, cracks, road repair traces, obsolete white lines.	Yes	No
	27	The vehicle entered the interchange, service area, parking area, junction or tollgate.	Yes	No
	28	The vehicle drove on a road where the surrounding brightness (such as inlet and outlet of a tunnel) suddenly changed.	Yes	No
	29	The vehicle drove on a road where there was some water or sandy dust raised by a preceding vehicle or oncoming vehicle, or sand or smoke blown in the wind, or moisture in front of own vehicle.	Yes	No
	30	The windshield glass was covered with fog, snow, dirt, frost or sandy dust.	Yes	No
	31	The raindrops, water drops or dirt on the windshield glass were not wiped off sufficiently.	Yes	No
	32	Canoes etc. loaded on the roof block the visibility of the stereo camera.	Yes	No
	33	The vehicle drove immediately after the stereo camera was replaced or adjusted.	Yes	No

Item name			Yes/No	
2	Check that the current status applies to the condition or the object, such as a white line, that is hard to be recognized by the stereo camera.			
	1	The vehicle drove when it was dark in the evening or in the morning.	Yes	No
	2	The vehicle drove under the road condition, such as rainy or snowy weather, that the white line was difficult to be recognized.	Yes	No
	3	The headlight did not illuminate during nighttime hours or inside the tunnel.	Yes	No
	4	The vehicle was exposed to the intense light (backlight such as sunlight or headlight) from the front of the vehicle.	Yes	No
	5	The vehicle drove on a road where the driving lane was yellow.	Yes	No
	6	The vehicle drove on a road where the color of the lane division line was similar to the color of the road surface, which was difficult to be recognized.	Yes	No
	7	The vehicle drove on a road where the width of the lane division line was narrow.	Yes	No
	8	The vehicle drove on a road where the lane division line did not exist or almost disappeared.	Yes	No
	9	The vehicle drove on a road where the width of the driving lane was narrow.	Yes	No
	10	The vehicle drove on a road where there was a fork lane, such as an interchange outlet of the highway, or an intersection.	Yes	No
	11	The vehicle drove on a road where the surrounding brightness (such as inlet and outlet of a tunnel) suddenly changed.	Yes	No
	12	The vehicle drove on a road where the white line had a special shape, such as a double line.	Yes	No
	13	The vehicle drove under the condition that the white line was difficult to be recognized due to the short distance to the preceding vehicle.	Yes	No
	14	Another vehicle cut in ahead of the vehicle from the next lane, or the preceding vehicle changed the driving lane.	Yes	No
	15	The vehicle drove on a road where the curve shape changed suddenly.	Yes	No
	16	A shadow of the guardrail formed on the white line.	Yes	No
3	Check that the current status applies to the condition that sufficient performance of lane keeping cannot be achieved.		Yes	No
	1	The vehicle was subjected to cross wind.	Yes	No
	2	The vehicle is equipped with winter tires or non-genuine tires.	Yes	No
	3	The vehicle drove on a uphill or a downhill where the road surface gradient suddenly changed.	Yes	No
	4	The vehicle drove on an uneven, rolling or jointed road surface.	Yes	No
	5	The vehicle drove on a road where the road surface cross gradient changed suddenly or was large.	Yes	No
	6	The acceleration or deceleration speed was large.	Yes	No
	7	The vehicle drove immediately after the tire was replaced or the tire air pressure was changed.	Yes	No
	8	The vehicle drove immediately after the vehicle weight was extremely changed.	Yes	No
	9	The vehicle drove immediately after the stereo camera was repaired, adjusted or replaced.	Yes	No
	10	The vehicle drove immediately after the suspension or steering system was repaired or replaced.	Yes	No
	11	The vehicle drove immediately after the engine was started at a low outside temperature.	Yes	No

B: CHECK ADAPTIVE CRUISE CONTROL INDICATOR LIGHT/CONSTANT SPEED CRUISE CONTROL INDICATOR LIGHT AND CRUISE SET INDICATOR LIGHT

TROUBLE SYMPTOM:
Adaptive cruise control or conventional cruise control can be set, but adaptive cruise control indicator light/constant speed cruise control indicator light and cruise SET indicator light do not illuminate.

	Step	Check	Yes	No
1	**CHECK ADAPTIVE CRUISE CONTROL INDICATOR LIGHT/CONSTANT SPEED CRUISE CONTROL INDICATOR LIGHT AND CRUISE SET INDICATOR LIGHT.** Check the combination meter. <Ref. to MET(diag)-15, OPERATION, System Operation Check Mode.>	Does adaptive cruise control indicator light/constant speed cruise control indicator light and cruise SET indicator light illuminate?	Go to step **2**.	Replace the meter case assembly. <Ref. to IDI-11, Combination Meter.>
2	**CHECK LAN SYSTEM.** Perform the diagnosis for LAN system. <Ref. to LAN(diag)-2, Basic Diagnostic Procedure.>	Is there any fault?	Perform the diagnosis according to diagnosis for LAN system.	Replace the ECM. <Ref. to FU(H4DO)-82, REMOVAL, Engine Control Module (ECM).> <Ref. to FU(H6DO)-83, REMOVAL, Engine Control Module (ECM).>

C: CHECK EyeSight STEERING SWITCH

TROUBLE SYMPTOM:

- Cruise control cannot be set. (Cancelled immediately.)
- Cruise control cannot be released.

WIRING DIAGRAM:

NOTE:
For the coupling connector, refer to WIRING SYSTEM.
EyeSight System <Ref. to WI-230, WIRING DIAGRAM, EyeSight System.>

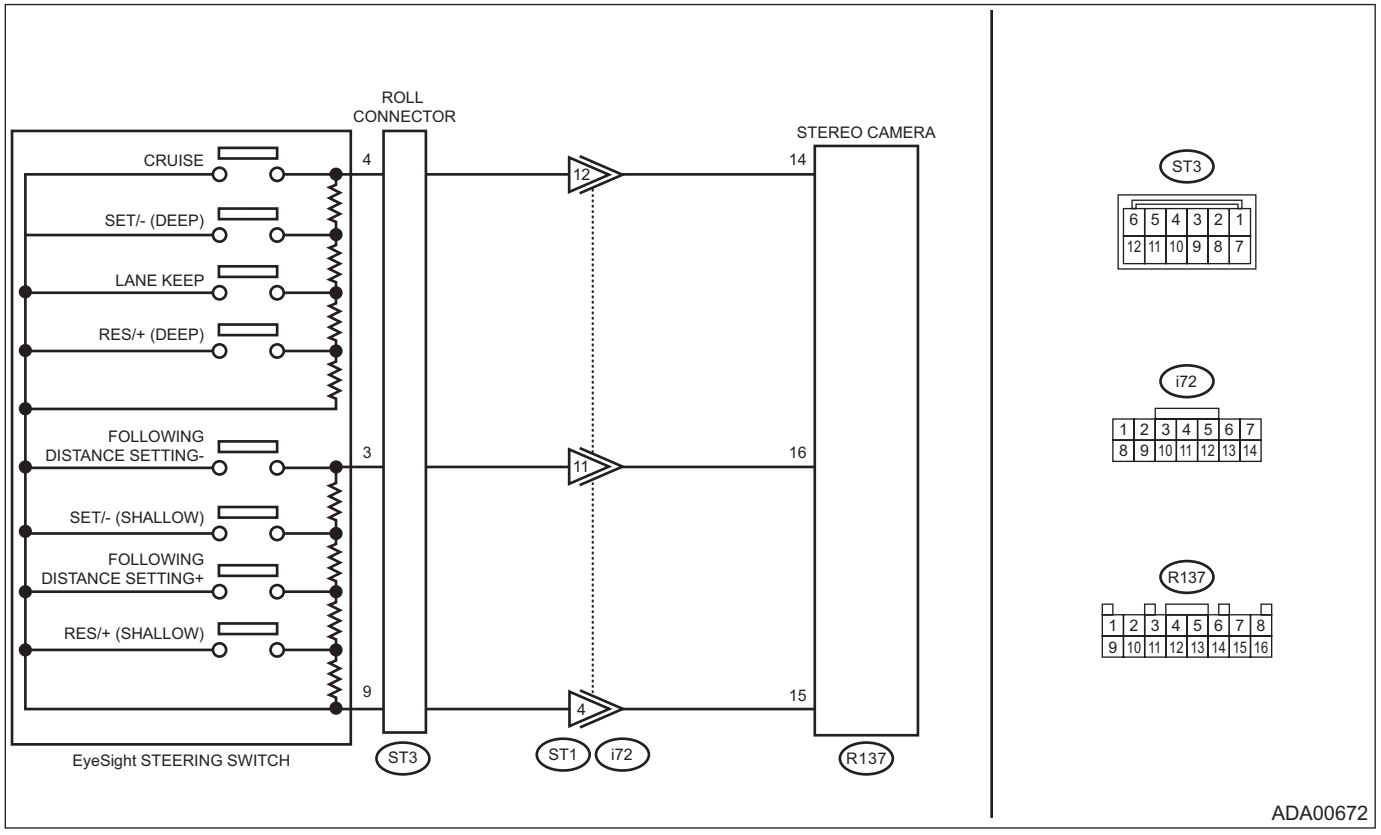

Step		Check	Yes	No
1	**CHECK EyeSight STEERING SWITCH CIRCUIT.** 1) Remove the driver's airbag module. <Ref. to AB-32, REMOVAL, Driver's Airbag Module.> 2) Disconnect the EyeSight steering switch harness connector. 3) Turn the ignition switch to ON. 4) Measure the voltage between harness connector terminal and chassis ground. ***Connector & terminal*** ***(ST3) No. 3 (+) — Chassis ground (–):*** ***(ST3) No. 4 (+) — Chassis ground (–):***	Is the voltage 5 V or more?	Go to step **2**.	Check for open/short circuit or poor contact in the harness between EyeSight steering switch and ECM and in the steering roll connector.
2	**CHECK EyeSight STEERING SWITCH CIRCUIT.** 1) Turn the ignition switch to OFF. 2) Remove the EyeSight steering switch. <Ref. to ES-32, Switches and Harness.> 3) Measure the resistance between harness connector terminal and chassis ground. ***Connector & terminal*** ***(ST3) No. 9 — Chassis ground:***	Is the resistance less than 10 Ω?	Go to step **3**.	Check for open circuit between EyeSight steering switch and chassis ground.

	Step	Check	Yes	No
3	**CHECK EyeSight STEERING SWITCH.** Check EyeSight steering switch. <Ref. to ES-32, Switches and Harness.>	Is the EyeSight steering switch normal?	Replace the ECM. <Ref. to FU(H4DO)-82, REMOVAL, Engine Control Module (ECM).> <Ref. to FU(H6DO)-83, REMOVAL, Engine Control Module (ECM).>	Replace the EyeSight steering switch. <Ref. to ES-32, Switches and Harness.>

14.EyeSight Temporary Code(s) Display

A: OPERATION

If the EyeSight pause code is detected from the stereo camera, all the functions of the EyeSight excluding the conventional cruise control stop temporarily and cannot be used. When the failure is resolved, the function starts operating.

1) On «Start» display, select «Diagnosis».
2) On «Vehicle selection» display, input the target vehicle information and select «Confirmed».
3) On «Main Menu» display, select «Each System».
4) On «Select System» display, select «EyeSight» and select «Enter».
5) On «Select Function» display, select «Cancel Code».
6) On «Cancel Code» display, select «EyeSight Pause Code».

NOTE:

- For detailed operation procedures, refer to “Application help”.
- Temporary stop is not released even if the lane departure warning OFF switch or pre-collision brake OFF switch is pressed.
- Depending on the situation, temporary stop may not be released even if the ignition switch is turned off.
- Up to 20 codes can be stored.
- Stored codes will be cleared by Clear Memory.
- For details on EyeSight temporary stop codes, refer to List of EyeSight temporary stop code. <Ref. to ES(diag)-72, LIST, EyeSight Temporary Code(s) Display.>

B: LIST

- List of EyeSight temporary stop code

EyeSight pause code	Item	Contents of diagnosis	Reference
E5	Stereo Camera Temporary Stop	The operation stopped temporarily due to vertical deviation of the optical axis of the stereo camera. (During CRUISE MAIN ON, “Temporary stop” is displayed in the multi-information display.)	Perform inspection concerning the item for E5 of the “CHECK LIST (CAMERA TEMPORARY STOP)”. <Ref. to ES(diag)-74, CHECK LIST (CAMERA TEMPORARY STOP), LIST, EyeSight Temporary Code(s) Display.> This code may be displayed when the rear of the vehicle is lowered by the overload. When the failure is resolved, and the operation returns from the temporary stop status after driving for a while, it is normal. If this item is displayed in an ordinary use under which the vehicle is not tilted, readjust the stereo camera. <Ref. to ES-12, PROCEDURE, Camera Adjustment, Inspection.> If the same cancel code is still detected after readjustment, replace the stereo camera. <Ref. to ES-8, REMOVAL, Stereo Camera.>
CC CD		Temporary stop was performed due to the bad weather, backlight, fogged window or dirty window interfering with the recognition function of the stereo camera. And this code may be displayed also when the front of the camera is blocked by the hand or when it is very dark around the vehicle or when the vehicle is surrounded by the blanket of snow and nothing can be seen from the stereo camera. (During CRUISE MAIN ON, “Temporary stop Camera view defectiveness” is displayed in the multi-information display.)	Investigate the following items No. 1 and No. 2, and check that the possible cause of the temporary stop is applied either to No. 1 or No. 2. 1. Perform inspection concerning the item for CC and CD of the “CHECK LIST (CAMERA TEMPORARY STOP)”. <Ref. to ES(diag)-74, CHECK LIST (CAMERA TEMPORARY STOP), LIST, EyeSight Temporary Code(s) Display.> When there is a relevant item in the check list, it can be the cause of malfunction. 2. Read the temporary stop count stored in the temporary stop count of current data, and check the cause of the temporary stop occurred in the past from “LIST OF CONTENTS FOR CAMERA TEMPORARY STOP: 0 — 23 COUNTS”. <Ref. to ES(diag)-76, LIST OF CONTENTS FOR CAMERA TEMPORARY STOP, LIST, EyeSight Temporary Code(s) Display.> When the causes of the temporary stop for No. 1 and No. 2 correspond, drive the vehicle for a while after the cause of the temporary stop has been eliminated. If the operation returns from the temporary stop status, it is normal. (However, when the temporary stop takes place and is cancelled repeatedly, the temporary stop status is kept for a while to delay the return of the operation, which prevents the irritation.) When this is not the case, check the stereo camera and its periphery. <Ref. to ES(diag)-8, WINDSHIELD GLASS AND DASHBOARD, INSPECTION, General Description.> <Ref. to ES(diag)-12, FRONT WIPER, INSPECTION, General Description.> <Ref. to ES(diag)-13, STEREO CAMERA, INSPECTION, General Description.>
CE		The temperature of the stereo camera became excessively high or low, and the operation stopped temporarily. (During CRUISE MAIN ON, “Temporary stop Camera temperature range outside” is displayed in the multi-information display.)	Perform inspection concerning the item for CE of the “CHECK LIST (CAMERA TEMPORARY STOP)”. <Ref. to ES(diag)-74, CHECK LIST (CAMERA TEMPORARY STOP), LIST, EyeSight Temporary Code(s) Display.> When the failure is resolved, and the operation returns from the temporary stop status, it is normal. When the operation does not return from the temporary status even if driving the vehicle for a while after the failure has been resolved, replace the stereo camera. <Ref. to ES-8, REMOVAL, Stereo Camera.>
33		Detected when engine speed is 300 rpm or less. (Not detected at an initial ignition switch ON.) (During CRUISE MAIN ON, “Temporary stop” is displayed in the multi-information display.)	Detected when the engine speed drops below 300 rpm after the engine has started once. If the same EyeSight temporary stop code is detected again when the engine is restarted, check the ECM. <Ref. to EN(H4DO)(diag)-2, PROCEDURE, Basic Diagnostic Procedure.> <Ref. to EN(H6DO)(diag)-2, PROCEDURE, Basic Diagnostic Procedure.>

EyeSight Temporary Code(s) Display

EyeSight pause code	Item	Contents of diagnosis	Reference
C0	Pre-Collision Second Braking Activation	Because the pre-collision secondary brake operated three times between engine starting and stopping, the temporary stop is performed. (This is not a normal driving operation, or the system may be malfunctioning.) (During CRUISE MAIN ON, “Temporary stop” is displayed in the multi-information display.)	This code may be displayed when the pre-collision brake is operated intentionally. Turn the ignition switch to OFF, and restart after a while. If the operation returns from the temporary stop status, it is normal. When temporary stop status continues with a code other than C0 after restart, perform diagnosis according to the code. When temporary stop status continues with the code of C0 after restart, the stereo camera may be malfunctioning. Replace the stereo camera. <Ref. to ES-8, REMOVAL, Stereo Camera.>
A0	CAN Diagnosis	The voltage dropped below 10 V immediately after IGN ON. (During CRUISE MAIN ON, “Temporary stop” is displayed in the multi-information display.)	This code may be displayed when the engine is not started for a while with the ignition switch ON and when the engine has started after that. This is a normal operation. If this is not the case, the supply voltage may be malfunctioning. <Ref. to ES(diag)-88, DTC B2814 POWER SUPPLY LOW VOLTAGE, Diagnostic Procedure with Diagnostic Trouble Code (DTC).>
A1	ECM Reprogramming	Because the control module (CM) is being reprogrammed, temporary stop is performed. (During CRUISE MAIN ON, “Temporary stop” is displayed in the multi-information display.)	After the completion of the reprogramming operation, turn the ignition to OFF and restart. If the operation returns from the temporary stop status, it is normal.
F9	EPS Input Control Suspended	Temporary stop is performed because an assist limitation (overheat prevention control) was operated in order to prevent the electric power steering malfunction due to overheat.	This code may be displayed when the steering wheel is operated repeatedly while the vehicle is stopped or running in very low speed. After stopping the engine, leave the vehicle for approximately 30 minutes to cool down, and restart the engine. If the operation returns from the temporary stop status, it is normal.
		Temporary stop was performed because of an electric power steering voltage decrease.	This code may be displayed when battery power is low. Replace or charge the battery, and restart the engine. If the operation returns from the temporary stop status, it is normal.
		Temporary stop was performed because of an electric power steering bus off.	Electric power steering detected a failure and was disconnected from CAN line.

NOTE:
*: Automatic adjustment by driving
1. Drive vehicle at a speed from 45 km/h (25 MPH) to 100 km/h (62 MPH).
2. Drive the vehicle so that the distance from the preceding vehicle is 40 m (131 ft) or more or there are no preceding vehicles. (To recognize both right and left white lines)
3. Drive the vehicle on a road where right and left white lines are clearly recognized and there are many straight segments. (If there are no corresponding general roads, drive the vehicle on a limited highway.)
4. Display the current data «Lane recognition status» with Subaru Select Monitor, and then drive the vehicle on a road where Subaru Select Monitor indicates 03 or 05 (the system recognizes both white lines). <Ref. to ES(diag)-23, STEREO CAMERA, OPERATION, Read Current Data.>

1. CHECK LIST (CAMERA TEMPORARY STOP)

Even when the set status of the adaptive cruise control is canceled or when a temporary stop status occurs, the EyeSight temporary stop code will not be retained for the following conditions.

- When the VDC operation is stopped by pressing the VDC OFF switch
- When the pre-collision brake operation is stopped by pressing the pre-collision brake OFF switch
- When the lane departure warning is stopped by pressing the lane departure warning OFF switch
- Immediately after the engine start

When these cases does not apply but the EyeSight temporary stop code is displayed, perform the inspection according to the following items.

Item name			Yes/No	
[1]: EyeSight temporary stop code [CC, CD] (At this time, “HALT(E1 camera view defectiveness)” is displayed in the multi-information display.)				
1	Check that the current status applies to the condition that are difficult to be recognized by the stereo camera.			
	1	It was bad weather (heavy rain, snowstorm, dense fog; especially when the oil film adheres to the windshield glass, the glass coating agent is used, or when the old wiper is used).	Yes	No
	2	The vehicle was exposed to the intense light (backlight such as sunlight or headlight high-beam light) from the front of the vehicle.	Yes	No
	3	The raindrops, water drops or dirt on the windshield glass are not wiped off sufficiently.	Yes	No
	4	The windshield glass is covered with fog, snow, dirt, frost or sandy dust, and either of them blocks the visibility of the stereo camera.	Yes	No
	5	The vehicle was tilted excessively by the heavy load.	Yes	No
	6	Canoes etc. loaded on the roof blocked the visibility of the stereo camera.	Yes	No
	7	The field of view was insufficient due to water or snow raised by the preceding vehicle or oncoming vehicle, or the moisture, sand, smoke or sandy dust blown in the wind.	Yes	No
	8	The vehicle passed through the outlet or inlet of a tunnel.	Yes	No
	9	The rearmost area of preceding vehicle was small (trailer, etc.), low or uneven.	Yes	No
	10	The object was a fence or wall with even pattern (striped pattern or bricks) or unpatterned surface.	Yes	No
	11	The object was a plate of glass, mirror wall or door.	Yes	No
	12	The tail light of the preceding vehicle did not illuminate during nighttime hours or inside the tunnel.	Yes	No
	13	The vehicle passed through the banners, flags, drooping branches or grass.	Yes	No
	14	The vehicle drove on the steep uphills or steep downhills.	Yes	No
	15	Front of the camera was blocked by the hand.	Yes	No
	16	It was very dark and there was no obstacle around the vehicle.	Yes	No
	17	The surrounding ground surface was similarly colored. (There is snow as far as the eye can see.)	Yes	No
	18	Dirt such as fingerprint adhered to the lens portion of the stereo camera.	Yes	No
	19	Stable recognition was difficult because of reflection to the windshield glass.	Yes	No
	20	The stereo camera was subject to impact, and the displacement or distortion occurred.	Yes	No
[2]: EyeSight temporary stop code [CE] (At this time, “HALT(E2 camera temperature range outside)” is displayed in the multi-information display.)				
1	Check that the current status applies to the condition that the temperature of the stereo camera becomes excessively high or low.			
	1	The compartment temperature was high. (For example: The vehicle was left under the scorching sun.) Or the compartment temperature was low. (For example: The vehicle was left under the frigid environment.)	Yes	No
[3]: EyeSight temporary stop code [E5] (At this time, “Temporary stop” is displayed in the multi-information display.)				
1	Check that the current status applies to the condition that the vertical deviation occurs on the stereo camera optical axis.			
	1	The vehicle was tilted excessively by the heavy load.	Yes	No
	2	The vehicle drove on the steep uphills or steep downhills.	Yes	No
	3	The stereo camera was subject to impact, and the displacement or distortion occurred.	Yes	No
[4]: EyeSight temporary stop code [33] (At this time, “Temporary stop” is displayed in the multi-information display.)				
1	Check that the current status applies to the condition that the engine speed drops to 300 rpm or below.		Yes	No

EyeSight Temporary Code(s) Display

	Item name	Yes/No	
[5]: EyeSight temporary stop code [C0] (At this time, “Temporary stop” is displayed in the multi-information display.)			
1	Check that the current status applies to the condition that the pre-collision secondary brake operated three times between starting and stopping of engine.	Yes	No
[6]: EyeSight temporary stop code [A0] (At this time, “Temporary stop” is displayed in the multi-information display.)			
1	Check that the current status applies to the condition that the voltage dropped below 10 V immediately after the ignition ON.	Yes	No
[7]: EyeSight temporary stop code [A1] (At this time, “Temporary stop” is displayed in the multi-information display.)			
1	Check that the control module (CM) is currently being reprogrammed.	Yes	No
[8]: EyeSight temporary stop code [F9] (At this time, “Temporary stop” is displayed in the multi-information display.)			
1	Check that the current status applies to the condition that the steering wheel is operated repeatedly when the vehicle stops or moves very slowly.	Yes	No

2. LIST OF CONTENTS FOR CAMERA TEMPORARY STOP

Read the camera temporary stop count from Current Data Display & Save of Subaru Select Monitor, estimate the possible cause of the temporary stop according to the chart below. (After clearing the memory, the number of occurrences for each temporary stop is accumulated.)

Displayed item	Main causes	Possible conditions for temporary stop (including events occurring less frequently)
EyeSight Temporary 0 Count	Front of the camera is blocked by hand, dirty window glass	Backlight, dirty window glass, fogged window glass, frost on the window glass, oil film on the window glass, raindrop adhering to the window glass, fingerprint adhering to the lens, deteriorated wiper, front of the camera is blocked by hand, bad weather (heavy rain, snowstorm, dense fog), unpatterned wall, water or snow raised by preceding vehicle
EyeSight Temporary 1 Count	Front of the camera is blocked by hand, dirty window glass	Backlight, dirty window glass, fogged window glass, frost on the window glass, oil film on the window glass, raindrop adhering to the window glass, fingerprint adhering to the lens, deteriorated wiper, front of the camera is blocked by hand, bad weather (heavy rain, snowstorm, dense fog), water or snow raised by preceding vehicle, very dark and no obstacle around the vehicle, unpatterned wall, blanket of snow around the vehicle and no obstacle is found
EyeSight Temporary 2 Count	Fogged window glass, frost on the window glass	Dirty window glass, fogged window glass, frost on the window glass, oil film on the window glass, raindrop adhering to the window glass, fingerprint adhering to the lens, deteriorated wiper, front of the camera is blocked by hand, bad weather (heavy rain, snowstorm, dense fog), unpatterned wall, water or snow raised by preceding vehicle
EyeSight Temporary 3 Count	Backlight	Backlight, dirty window glass, fogged window glass, frost on the window glass, oil film on the window glass, raindrop adhering to the window glass, fingerprint adhering to the lens, deteriorated wiper, bad weather (heavy rain, snowstorm, dense fog), unpatterned wall, water or snow raised by preceding vehicle
EyeSight Temporary 4 Count	Water raised by preceding vehicle	Backlight, dirty window glass, fogged window glass, frost on the window glass, oil film on the window glass, raindrop adhering to the window glass, fingerprint adhering to the lens, deteriorated wiper, front of the camera is blocked by hand, bad weather (heavy rain, snowstorm, dense fog), unpatterned wall, water or snow raised by preceding vehicle, use of the window washer
EyeSight Temporary 5 Count	Dirty window glass, fogged window glass, oil film on the window glass	Dirty window glass, fogged window glass, frost on the window glass, oil film on the window glass, raindrop adhering to the window glass, fingerprint adhering to the lens, deteriorated wiper, bad weather (heavy rain, snowstorm, dense fog), water or snow raised by preceding vehicle
EyeSight Temporary 6 Count	Storm of rain	Dirty window glass, fogged window glass, frost on the window glass, oil film on the window glass, raindrop adhering to the window glass, fingerprint adhering to the lens, deteriorated wiper, bad weather (heavy rain, snowstorm, dense fog), water or snow raised by preceding vehicle, use of the window washer
EyeSight Temporary 7 Count	Object on the dashboard reflected against the windshield glass	Object on the dashboard reflected against the windshield glass, snowstorm
EyeSight Temporary 8 Count	Dirty window glass, bad weather	Backlight, dirty window glass, fogged window glass, frost on the window glass, oil film on the window glass, raindrop adhering to the window glass, fingerprint adhering to the lens, deteriorated wiper, front of the camera is blocked by hand, object on the dashboard reflected against the windshield glass, bad weather (heavy rain, snowstorm, dense fog), unpatterned wall, water drop raised by preceding vehicle, steep slope, continuous sharp curve, banner, grass, preceding vehicle with large uneven surface (trailer, etc.), preceding vehicle driving in the night without illuminating the tail light, preceding vehicle with snow adhered, use of the window washer
EyeSight Temporary 9 Count	Not used	—
EyeSight Temporary 10 Count	Not used	—

EyeSight Temporary Code(s) Display

Displayed item	Main causes	Possible conditions for temporary stop (including events occurring less frequently)
EyeSight Temporary 11 Count	Not used	—
EyeSight Temporary 12 Count	Camera has been deformed by hitting it.	The stereo camera was subject to impact, and the displacement or distortion occurred.
EyeSight Temporary 13 Count	Not used	—
EyeSight Temporary 14 Count	Not used	—
EyeSight Temporary 15 Count	Not used	—
EyeSight Temporary 16 Count	Not used	—
EyeSight Temporary 17 Count	Not used	—
EyeSight Temporary 18 Count	Not used	—
EyeSight Temporary 19 Count	Not used	—
EyeSight Temporary 20 Count	Not used	—
EyeSight Temporary 21 Count	The vehicle is tilted excessively by the heavy load.	• The vehicle is tilted excessively by the heavy load. • The vehicle drives on the steep uphills or steep downhills. • The stereo camera was subject to impact, and the displacement or distortion occurred.
EyeSight Temporary 22 Count	Camera has been deformed by hitting it.	The stereo camera was subject to impact, and the displacement or distortion occurred.
EyeSight Temporary 23 Count	Camera has been deformed by hitting it.	The stereo camera was subject to impact, and the displacement or distortion occurred.
EyeSight Temporary 24 Count	Camera has been deformed by hitting it.	The stereo camera was subject to impact, and the displacement or distortion occurred.
EyeSight Temporary 25 Count	Camera has been deformed by hitting it.	The stereo camera was subject to impact, and the displacement or distortion occurred.
EyeSight Temporary 26 Count	Dirty window glass left for a long time	Dirty window glass, fogged window glass, frost on the window glass, raindrop adhering to the window glass, fingerprint adhering to the lens
EyeSight Temporary 27 Count	Not used	—
EyeSight Temporary 28 Count	Can't see anything in a complete darkness.	The vehicle drove in a complete darkness with the headlight turned off. Or, the camera was blinded when driving.
EyeSight Temporary 29 Count	Not used	—
EyeSight Temporary 30 Count	Not used	—
EyeSight Temporary 31 Count	In a high temperature of 70°C (158°F) or more or in a low temperature of -10°C (14°F) or less	—

15.ECM Cancel Code(s) Display

A: OPERATION

1) On «Main Menu» display, select «Each System Check».
On «System Selection Menu» display, select «Engine Control System».
2) Drive vehicle at 40 km/h (25 MPH) or more and set the cruise control.

CAUTION:
- **When performing diagnosis, observe the legal speed limit on the road.**
- **The cancel code will also appear when the cruise control is cancelled by the driver's operation. Do not confuse them.**
- **Be sure to get an assistant to support the diagnosis while driving, and have him/her operate the select monitor.**

3) When the set speed is cancelled by itself (without any cancel operations such as applying brake) or when the cruise control could not be set by performing the setting operation, select the «Cancel Code(s) Display» on the engine malfunction diagnosis screen.

NOTE:
The «Current» and «The past» are contained in the cancel code. The latest code recognized during current test drive is displayed in «Current». Cancel codes resulting from fault diagnosis of switches relating to the system and cruise control are also displayed in «The past».
4) Perform Engine DTC Clear Memory operation. <Ref. to EN(H4DO)(diag)-78, Clear Memory Mode.> <Ref. to EN(H6DO)(diag)-85, Clear Memory Mode.>
Cancel codes for switches relating to the system and cruise control are deleted by clearing memory on the engine side.

NOTE:
- For detailed operation procedures, refer to "Application help".
- The latest code will be cleared by turning ignition switch to OFF.
- For details on cancel codes, refer to List of ECM cruise control cancel code. <Ref. to ES(diag)-78, LIST, ECM Cancel Code(s) Display.>

B: LIST

- List of ECM cruise control cancel code(s)

When the cruise control is cancelled, the ECM outputs the following cancel codes.

Cancel code	Item	Contents of diagnosis	Reference
11	Main switch	Main switch of the EyeSight steering switch is turned to OFF, and the cruise control is released.	This DTC is displayed without operating the main switch. <Ref. to ES(diag)-69, CHECK EyeSight STEERING SWITCH, Diagnostics with Phenomenon.>
12	Stop & Brake switch	Stop light switch or brake switch is turned to ON, and then the cruise control is released.	This DTC is displayed without depressing the brake pedal. <Ref. to CC(diag)-17, 12, Diagnostic Procedure with Cancel Code.>
14	Neutral switch	Neutral position switch is turned to ON, and then the cruise control is released.	This DTC is displayed without shifting to neutral position. <Ref. to CC(diag)-20, 14, Diagnostic Procedure with Cancel Code.>
15	Cancel switch	Cancel switch is turned to ON, and then the cruise control is released.	This DTC is displayed without operating the cancel switch. <Ref. to CC(diag)-21, 15, Diagnostic Procedure with Cancel Code.>
16	Ignition switch	Ignition switch is turned to OFF, and then the cruise control is released.	This DTC is displayed without operating the ignition switch. <Ref. to CC(diag)-22, 16, Diagnostic Procedure with Cancel Code.>

Cancel code	Item	Contents of diagnosis	Reference
21	Abnormality of switches when Ignition switch on	When the ignition switch is turned to ON, each switch of the EyeSight steering switch is already turned ON.	This DTC is displayed when turning ignition switch to ON without operating the EyeSight steering switch. <Ref. to CC(diag)-22, 21, Diagnostic Procedure with Cancel Code.>
22	Abnormality of change in vehicle speed	Malfunction of vehicle speed signal variation is detected.	<Ref. to CC(diag)-23, 22, Diagnostic Procedure with Cancel Code.>
24	Abnormality of switches related to cruise control	Open circuit of the EyeSight steering switch is detected during cruise driving. (The system is judged as model without cruise control.)	This DTC is displayed with normal operation. <Ref. to CC(diag)-23, 24, Diagnostic Procedure with Cancel Code.>
31	Engine Speed	• Abnormal increase of engine speed is detected. • Gear is placed in Neutral, 1st or Reverse position.	Cruise in 2nd shift position or more. <Ref. to CC(diag)-23, 31, Diagnostic Procedure with Cancel Code.>
32	Cruse Control out of Range	• Vehicle speed exceeds the controllable range during cruising. • Set operation was performed at vehicle speed unavailable for setting. • RESUME operation was performed without memorized vehicle speed.	This DTC is displayed, though the vehicle speed is increased to the speed available for cruise set and set operation was performed again. <Ref. to CC(diag)-23, 32, Diagnostic Procedure with Cancel Code.>
34	Prohibition of cruise control at continuing big Accel. angle	The vehicle has been driven at higher speed than set vehicle speed for an abnormally long time (approximately 10 minutes) during cruise driving.	<Ref. to CC(diag)-23, 34, Diagnostic Procedure with Cancel Code.>
35	Prohibition of cruise control at vehicle speed F/B malfunction	Set vehicle speed cannot be kept because of some reasons (steep uphill, parking brake, abnormal decrease of engine output, etc.) during cruise driving.	<Ref. to CC(diag)-24, 35, Diagnostic Procedure with Cancel Code.>
41	VDC/TCS/EPB Operating	Vehicle dynamics control (VDC), TCS or EPB is operated during cruise driving or cruise setting.	<Ref. to CC(diag)-24, 41, Diagnostic Procedure with Cancel Code.>
43	ABS/VDC Failure	When the cruise switch is ON, ABS or vehicle dynamics control (VDC) system malfunction is detected.	<Ref. to CC(diag)-24, 43, Diagnostic Procedure with Cancel Code.>
44	Body Integrated unit Failure	When the cruise switch is ON, body integrated unit system malfunction is detected.	<Ref. to CC(diag)-24, 44, Diagnostic Procedure with Cancel Code.>
45	Meter Failure	When the cruise switch is ON, combination meter malfunction is detected.	<Ref. to CC(diag)-24, 45, Diagnostic Procedure with Cancel Code.>
47	Adaptive cruise control ECM abnormal	When the cruise switch is ON, stereo camera malfunction is detected.	Check the DTCs related to stereo camera.
49	TCM Failure	Transmission control module (TCM) malfunction is detected during cruise driving or cruise setting.	<Ref. to CC(diag)-24, 49, Diagnostic Procedure with Cancel Code.>
53	Adaptive Cruise Control Forced Cancel	Stereo camera detects the release command of the cruise control during cruise driving or cruise setting operation.	Check the stereo camera. Check the ACC cancel code. <Ref. to ES(diag)-81, ACC Cancel Code(s) Display.>
54	Release SW	Brake control module detects the brake pedal operation by the driver during cruise driving or cruise setting operation.	If this code is detected when the brake pedal is not depressed intentionally, check the release switch.
55	Adaptive cruise control reception data abnormal	When the cruise switch is ON, malfunction is detected in the reception data from the stereo camera.	Check the cancel code of stereo camera.
61	Brake Switch Failure	Malfunction in the stop light & brake switch is detected.	<Ref. to CC(diag)-24, 61, Diagnostic Procedure with Cancel Code.>
62	Neutral Switch Failure	Neutral position switch malfunction is detected.	<Ref. to CC(diag)-24, 62, Diagnostic Procedure with Cancel Code.>

Cancel code	Item	Contents of diagnosis	Reference
63	Abnormality 1 of change in vehicle speed	Malfunction of vehicle speed signal variation is detected. This code may be displayed by a sudden starting of the vehicle on a road with low μ and with the VDC OFF. In this case, restart the engine and perform the cruise setting again. If the cancel code is not displayed, the vehicle is in normal status.	<Ref. to CC(diag)-25, 63, Diagnostic Procedure with Cancel Code.>
64	Engine Sensor Failure 1	Malfunction related to engine is detected.	<Ref. to CC(diag)-25, 64, Diagnostic Procedure with Cancel Code.>
65	Abnormality 1 of switches related to cruise control	Malfunction of the EyeSight steering switch is detected. (When the switch is pressed ON for a long time (approximately two minutes), stuck ON condition is detected.)	<Ref. to CC(diag)-25, 65, Diagnostic Procedure with Cancel Code.>
66	Cruise Control Calculation Error	Malfunction of the cruise control calculation (microcomputer) is detected.	<Ref. to CC(diag)-25, 66, Diagnostic Procedure with Cancel Code.>

16.ACC Cancel Code(s) Display

A: OPERATION

When the ACC cancel code is detected from the stereo camera, the cruise control will be cancelled.
1) On «Start» display, select «Diagnosis».
2) On «Vehicle selection» display, input the target vehicle information and select «Confirmed».
3) On «Main Menu» display, select «Each System».
4) On «Select System» display, select «EyeSight» and select «Enter».
5) On «Select Function» display, select «Cancel Code».
6) On «Cancel Code» display, select «Cancel Code of ACC Cruise Control».

NOTE:
- For detailed operation procedures, refer to “Application help”.
- Up to eight codes can be stored. When more than eight codes are output, the oldest code will be deleted to store the latest code.
- Stored codes will be cleared by Clear Memory.
- For details on ACC cancel codes, refer to List of ACC cancel code. <Ref. to ES(diag)-81, LIST, ACC Cancel Code(s) Display.>

B: LIST

- List of ACC cancel code(s)

ACC cancel code	Item	Contents of diagnosis
02	ACC Mode:Maintaining Standstill Position	Displayed when the cruise control is cancelled after the own vehicle stops following the preceding vehicle.
04	ACC Mode:Stereo Camera Temporary	Displayed when the cruise control is canceled by the EyeSight temporarily stop while driving in the adaptive cruise mode.
08	Common:Vehicle Speed Sensor Abnormal	Displayed when the cruise control is canceled due to a wheel speed sensor malfunction.
09	Common:Depress The Brake Pedal	Displayed when the cruise control is canceled by the brake operation of the driver.
0A	Common:Pre-Collision Braking	Displayed when the cruise control is canceled because the pre-collision brake function is activated.
0B	Common:AT Manual Mode	Displayed when the cruise control is canceled because the AT manual mode is selected or paddle operation is performed.
0C	Common:VDC SW OFF	Displayed when the VDC function is turned OFF by the VDC OFF switch and the cruise control is canceled.
0D	Common:Any Doors is Opened	Displayed when the cruise control is canceled because either of the driver’s door, passenger’s door, or rear doors is opened.
0E	Common:Unfastened The Driver’s Seatbelt	Displayed when the cruise control is canceled because the driver’s seat belt is unfastened.
0F	Common:EPB Activation	Displayed when the cruise control is canceled because the EPB is activated.
10	Common:EPB Special Mode	Displayed when the cruise control is canceled by an irregular operation of a driver, which repeats activation/deactivation of the EPB.
12	Common:AT Gear Range	Displayed in the following situations: The driver performed the SET or RES operation to drive the vehicle either in the adaptive cruise mode or in the constant speed mode, but that operation was not accepted because it was done immediately after shifting into D range.
13	Common:Steep Sloping Road	Displayed when the road surface was judged to be too steep and therefore the cruise control is canceled.
14	Common:ABS Activation	Displayed when the cruise control is canceled because the ABS is activated.
15	Common:Steering Angle Excessive	Displayed when the cruise control is canceled because the steering wheel is fully turned.
16	ACC Mode:Vehicle Stop Judge	Displayed when the cruise control is cancelled after the own vehicle stops following the preceding vehicle while driving in the adaptive cruise control mode.

ACC Cancel Code(s) Display

ACC cancel code	Item	Contents of diagnosis
17	Common:Parking Brake Activation	Displayed when the cruise control is cancelled because the parking brake is applied.
18	ACC Mode:Automatic Cancellation	Displayed when the cruise control is cancelled under the following situations: The own vehicle stops following the preceding vehicle while driving in the adaptive cruise control mode, and the driver repeats the SET or RES operation and the automatic brake control continues for 120 seconds.
19	common:X mode	Displayed when the cruise control is canceled because the X mode is activated.
1B	VDC actuation	Displayed when the cruise control is canceled because the VDC is activated.
1C	Common:Cancel SW Operation	This item is displayed when the cruise control is canceled by the operation of CANCEL switch.
1D	Common:Cruise SW OFF	This item is displayed when the cruise control is canceled by turning the cruise switch OFF.
1E	CC Mode:Max Speed Exceeded	Displayed when the cruise control is canceled because the own vehicle speed exceeds the controllable range while driving in the constant speed mode.
1F	ACC Mode:Max Speed Exceeded	Displayed when the cruise control is canceled because the own vehicle speed exceeds the controllable range while driving in the adaptive cruise mode.

NOTE:

- “Adaptive cruise mode”: Adaptive cruise control
- “Constant speed mode”: Conventional cruise control
- “Common”: Adaptive cruise control and conventional cruise control

17.Active Lane Keep System Code(s) Display

A: OPERATION

Lane Departure Prevention Deactivate Code(s) Display: The lane departure prevention deactivate code is output, when the lane keep (lane departure prevention) is canceled during the operation or the standby state is canceled.

1) On «Start» display, select «Diagnosis».
2) On «Vehicle selection» display, input the target vehicle information and select «Confirmed».
3) On «Main Menu» display, select «Each System».
4) On «Select System» display, select «EyeSight» and select «Enter».
5) On «Select Function» display, select «Cancel Code».
6) On «Cancel Code» display, select «Lane Departure Prevention Assist Deactivate Code(s) Display».

NOTE:

- For detailed operation procedures, refer to “Application help”.
- Up to eight codes can be stored. When more than eight codes are output, the oldest code will be deleted to store the latest code.
- Stored codes will be cleared by Clear Memory.
- For details on lane keep assist codes, refer to List of lane keep assist code. <Ref. to ES(diag)-83, OPERATION, Active Lane Keep System Code(s) Display.>

B: LIST

- List of lane keep assist code

Code	Item	Contents of diagnosis
02	Judging Steering Wheel Not Held	Detected when steering wheel operation by the driver is not detected for a predetermined time (approx. 17 seconds).
04	Lateral Acceleration is Large	Detected when control output value exceeds the controllable range by a driving operation such as rounding a curve at high speed or making a sharp turn.
0C	Lane Recognition Prohibition(Environmental Factor)	Detected when a driving lane width is narrowed.
18	Out of Control Return Possibility Range	Detected when lane departure prevention control continues for a predetermined time.
26	Real Yaw Rate Excessive	Detected when actual yaw rate exceeds the maximum value of target yaw rate by a specified amount.
28	Wiper Hi Speed	Detected when wiper Hi operation is activated.
37	Yaw Rate Sensor Abnormal(Control)	Detected when the difference between actual yaw rate and expected yaw rate becomes the specified value or more.

18.Diagnostic Procedure with Diagnostic Trouble Code (DTC)

A: DTC U0073 CONTROL MODULE COMMUNICATION BUS OFF

Detected when an error occurs in the CAN line. (Bus off)

NOTE:
Perform the diagnosis for LAN system. <Ref. to LAN(diag)-2, PROCEDURE, Basic Diagnostic Procedure.>

B: DTC U0100 LOST COMMUNICATION WITH ECM/PCM "A"

Detected when CAN data from engine control module (ECM) is not transmitted to stereo camera.

NOTE:
Perform the diagnosis for LAN system. <Ref. to LAN(diag)-2, PROCEDURE, Basic Diagnostic Procedure.>

C: DTC U0101 LOST COMMUNICATION WITH TCM

Detected when CAN data from TCM is not transmitted to stereo camera.

NOTE:
Perform the diagnosis for LAN system. <Ref. to LAN(diag)-2, PROCEDURE, Basic Diagnostic Procedure.>

D: DTC U0122 LOST COMMUNICATION WITH VEHICLE DYNAMICS CONTROL MODULE

Detected when CAN data from VDC is not transmitted to stereo camera.

NOTE:
Perform the diagnosis for LAN system. <Ref. to LAN(diag)-2, PROCEDURE, Basic Diagnostic Procedure.>

E: DTC U0126 LOST COMMUNICATION WITH STEERING ANGLE SENSOR MODULE

Detected when CAN data from steering angle sensor is not transmitted to stereo camera.

NOTE:
Perform the diagnosis for LAN system. <Ref. to LAN(diag)-2, PROCEDURE, Basic Diagnostic Procedure.>

F: DTC U0131 LOST COMMUNICATION WITH POWER STEERING CONTROL MODULE

Detected when CAN data from EPS CM is not transmitted to stereo camera.

NOTE:
Perform the diagnosis for LAN system. <Ref. to LAN(diag)-2, PROCEDURE, Basic Diagnostic Procedure.>

G: DTC U0140 LOST COMMUNICATION WITH BODY CONTROL MODULE

Detected when CAN data from body integrated unit is not transmitted to stereo camera.

NOTE:
Perform the diagnosis for LAN system. <Ref. to LAN(diag)-2, PROCEDURE, Basic Diagnostic Procedure.>

H: DTC U0155 LOST COMMUNICATION WITH INSTRUMENT PANEL CLUSTER (IPC) CONTROL MODULE

Detected when CAN data from combination meter is not transmitted to stereo camera.

NOTE:
Perform the diagnosis for LAN system. <Ref. to LAN(diag)-2, PROCEDURE, Basic Diagnostic Procedure.>

I: DTC U0401 INVALID DATA RECEIVED FROM ECM/PCM "A"

Failure counter diagnosis of engine control module (ECM)

NOTE:
Perform the diagnosis for LAN system. <Ref. to LAN(diag)-2, PROCEDURE, Basic Diagnostic Procedure.>

J: DTC U0402 INVALID DATA RECEIVED FROM TCM

Failure counter diagnosis of automatic transmission control module (TCM)

NOTE:
Perform the diagnosis for LAN system. <Ref. to LAN(diag)-2, PROCEDURE, Basic Diagnostic Procedure.>

K: DTC U0416 INVALID DATA RECEIVED FROM VEHICLE DYNAMICS CONTROL MODULE

Failure counter diagnosis of VDC control module (VDC CM)

NOTE:
Perform the diagnosis for LAN system. <Ref. to LAN(diag)-2, PROCEDURE, Basic Diagnostic Procedure.>

L: DTC U0420 INVALID DATA RECEIVED FROM POWER STEERING CONTROL MODULE

Failure counter diagnosis of EPS CM

NOTE:
Perform the diagnosis for LAN system. <Ref. to LAN(diag)-2, PROCEDURE, Basic Diagnostic Procedure.>

M: DTC U0422 INVALID DATA RECEIVED FROM BODY CONTROL MODULE

Failure counter diagnosis of body integrated unit

NOTE:
Perform the diagnosis for LAN system. <Ref. to LAN(diag)-2, PROCEDURE, Basic Diagnostic Procedure.>

N: DTC U0423 INVALID DATA RECEIVED FROM INSTRUMENT PANEL CLUSTER CONTROL MODULE

Failure counter diagnosis of combination meter

NOTE:
Perform the diagnosis for LAN system. <Ref. to LAN(diag)-2, PROCEDURE, Basic Diagnostic Procedure.>

O: DTC U0428 INVALID DATA RECEIVED FROM STEERING ANGLE SENSOR MODULE

Failure counter diagnosis of steering angle sensor

NOTE:
Perform the diagnosis for LAN system. <Ref. to LAN(diag)-2, PROCEDURE, Basic Diagnostic Procedure.>

P: DTC B2801 TCM ABNORMAL

Detected when error occurs in the automatic transmission.

NOTE:
Check the automatic transmission. <Ref. to CVT(diag)-2, PROCEDURE, Basic Diagnostic Procedure.>

Q: DTC B2802 ETC ABNORMAL

Detected when error occurs in the electronic throttle control.

NOTE:
Check the electronic throttle control. <Ref. to EN(H4DO)(diag)-2, PROCEDURE, Basic Diagnostic Procedure.> <Ref. to EN(H6DO)(diag)-2, PROCEDURE, Basic Diagnostic Procedure.>

R: DTC B2803 EPB OPERATION PROHIBIT

EPB operation is prohibited.
In addition, in VDC brake maintenance mode <Ref. to VDC-16, BRAKE MAINTENANCE MODE, MAINTENANCE MODE, VDC Control Module and Hydraulic Control Unit (VDCCM&H/U).>, even if any DTC is detected, the system malfunction does not exist. Therefore, perform Clear Memory Mode. <Ref. to ES(diag)-48, Clear Memory Mode.>

NOTE:
Check the VDC. <Ref. to VDC(diag)-2, PROCEDURE, Basic Diagnostic Procedure.>

S: DTC B2804 EPB NO ACTIVITY DETECTED

EPB control is abnormal.

NOTE:
Check the VDC. <Ref. to VDC(diag)-2, PROCEDURE, Basic Diagnostic Procedure.>

T: DTC B2806 ECM ABNORMAL

Detected when error occurs in the engine control module (ECM).

NOTE:
Perform check of the ECM. <Ref. to EN(H4DO)(diag)-2, PROCEDURE, Basic Diagnostic Procedure.> <Ref. to EN(H6DO)(diag)-2, PROCEDURE, Basic Diagnostic Procedure.>

U: DTC B2807 ECM ABNORMAL

Detected when cruise indicator illumination request from ECM and ON/OFF information of cruise function do not match.

NOTE:
- Perform check of the ECM. <Ref. to EN(H4DO)(diag)-2, PROCEDURE, Basic Diagnostic Procedure.> <Ref. to EN(H6DO)(diag)-2, PROCEDURE, Basic Diagnostic Procedure.>
- Check the ECM cruise control cancel code. <Ref. to ES(diag)-78, ECM Cancel Code(s) Display.>

V: DTC B2809 VDC MALFUNCTION

Detected when error occurs in the VDC. (VDC failure)

NOTE:
Check the VDC. <Ref. to VDC(diag)-2, PROCEDURE, Basic Diagnostic Procedure.>

W: DTC B280A VDC ECHO BACK DISAGREEMENT

Detected when error occurs in the VDC. (VDC brake control malfunction 1)

NOTE:
Check the VDC. <Ref. to VDC(diag)-2, PROCEDURE, Basic Diagnostic Procedure.>

X: DTC B280B VDC BRAKE FLUID PRESSURE

Detected when error occurs in the VDC. (VDC brake control malfunction 2)

NOTE:
Check the VDC. <Ref. to VDC(diag)-2, PROCEDURE, Basic Diagnostic Procedure.>

Y: DTC B280C VDC BRAKE CONTROL PROHIBIT

Detected when error occurs in the VDC. (VDC fluid pressure control prohibited)

NOTE:
Check the VDC. <Ref. to VDC(diag)-2, PROCEDURE, Basic Diagnostic Procedure.>

Z: DTC B280F COMBINATION METER MALFUNCTION

Malfunction is detected in the combination meter.
DTC DETECTING CONDITION:
Defective combination meter
TROUBLE SYMPTOM:
- All functions of EyeSight system do not operate.
- EyeSight warning light blinks or illuminates.
- Combination meter does not illuminate.

NOTE:
Check the combination meter. <Ref. to IDI-10, INSPECTION, Combination Meter System.>

AA:DTC B2810 INCOMPATIBLE WITH EyeSight (COMBINATION METER)

Detected when the combination meter, which is not designed exclusively for EyeSight is installed.
DTC DETECTING CONDITION:
Incorrect specifications of combination meter
TROUBLE SYMPTOM:
All functions of EyeSight system do not operate.

NOTE:
Replace the combination meter with the one designed for EyeSight. <Ref. to IDI-11, Combination Meter.>

AB:DTC B2811 EPS ABNORMAL

Malfunction is detected in the electric power steering.

NOTE:
Check the electric power steering. <Ref. to PS(diag)-2, PROCEDURE, Basic Diagnostic Procedure.>

AC:DTC B2814 POWER SUPPLY LOW VOLTAGE

Detected when the status of 7.0 V or less continues approximately for 5 seconds and is judged to be low-voltage malfunction, or when the +B harness of the stereo camera is broken.

DTC DETECTING CONDITION:

- Input voltage to stereo camera is out of specifications.
- Defective stereo camera control harness (open circuit in +B harness)
- Defective stereo camera

TROUBLE SYMPTOM:

- All functions of EyeSight system do not operate.
- EyeSight warning light blinks or illuminates.
- Cruise indicator light blinks.
- Malfunction indicator light illuminates.
- VDC warning light illuminates.
- ATF temperature warning light illuminates.

WIRING DIAGRAM:

NOTE:
For the coupling connector, refer to “WIRING SYSTEM”.
EyeSight System <Ref. to WI-230, WIRING DIAGRAM, EyeSight System.>

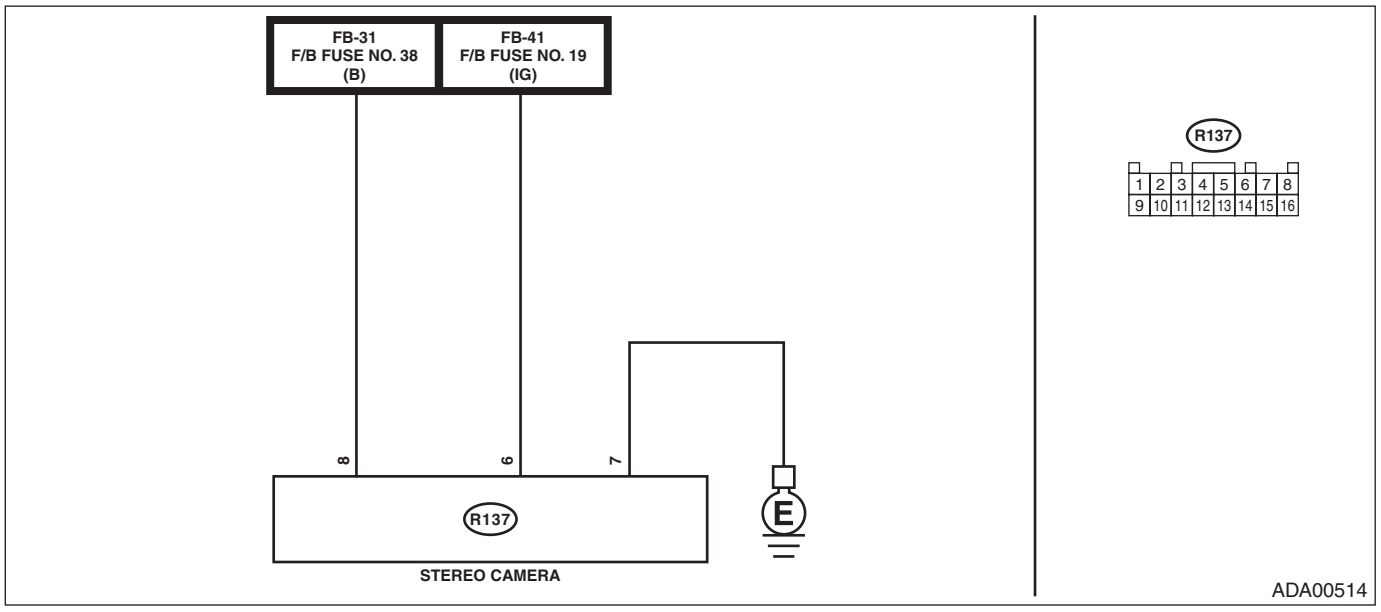

	Step	Check	Yes	No
1	**CHECK GENERATOR.** 1) Start the engine and idle for a while. 2) Measure the voltage between generator terminal B and chassis ground. ***Connector & terminal*** ***Generator terminal B (+) — Chassis ground (–):***	Is the voltage 10 V or more?	Go to step **2**.	Check the generator. <Ref. to SC(H4DO)-38, Generator.> <Ref. to SC(H6DO)-33, Generator.>
2	**CHECK BATTERY TERMINAL.** Turn the ignition switch to OFF.	Is the battery terminal connected securely?	Go to step **3**.	Tighten the battery terminal securely.
3	**CHECK FUSE.** Check fuses No. 19 and No. 38 in the fuse & relay box. <Ref. to ES-5, Relay and Fuse.>	Is the fuse OK?	Go to step **4**.	Replace the faulty fuse. When the replaced fuse blows out easily, check the short circuit in harness.

	Step	Check	Yes	No
4	**CHECK HARNESS (POWER SUPPLY CIRCUIT).** 1) Disconnect the stereo camera. 2) Turn the ignition switch to ON. 3) Measure the voltage between harness connector of stereo camera and chassis ground. ***Connector & terminal*** ***(R137) No. 6 (+) — Chassis ground (–):*** ***(R137) No. 8 (+) — Chassis ground (–):***	Is the voltage 10 V or more?	Go to step **5**.	Check the power supply system circuit, and if any fault is found, repair the defective parts or replace the harness.
5	**CHECK HARNESS (GROUND CIRCUIT).** 1) Turn the ignition switch to OFF. 2) Disconnect the ground cable from battery. 3) Measure the resistance between stereo camera and chassis ground. ***Connector & terminal*** ***(R137) No. 7 — Chassis ground:***	Is the resistance less than 10 Ω?	Go to step **6**.	Check the ground system circuit, and if any fault is found, repair the defective parts or replace the harness.
6	**CHECK POOR CONTACT OF CONNECTORS.** Check stereo camera connector.	Is there poor contact of the connector?	Repair the connector.	Go to step **7**.
7	**CHECK STEREO CAMERA.** 1) Connect all connectors and battery terminals securely. 2) Start the engine, drive the vehicle at 40 km/h (24.9 MPH) or more, stop the vehicle and then stop the engine. 3) After 3 seconds or more have elapsed, restart the engine. 4) Clear the memory. <Ref. to ES(diag)-48, Clear Memory Mode.> 5) Read the DTC. <Ref. to ES(diag)-42, Diagnostic Code(s) Display.>	Is the same DTC (DTC B2814 or B2815) displayed?	Replace the stereo camera. <Ref. to ES-8, REMOVAL, Stereo Camera.>	Even if DTC is displayed, the circuit has returned to a normal condition at this time. Reproduce the failure, and then perform the diagnosis again. NOTE: In this case, temporary poor contact of connector, or temporary open or short circuit of harness may be the cause.

AD:DTC B2815 POWER SUPPLY HIGH VOLTAGE

Detected when the status for the battery voltage of 16 V or more continues approximately for 5 seconds and is judged to be abnormally high voltage.
Refer to DTC B2814 for DTC detecting condition, trouble symptom and diagnostic procedure. <Ref. to ES(diag)-88, DTC B2814 POWER SUPPLY LOW VOLTAGE, Diagnostic Procedure with Diagnostic Trouble Code (DTC).>

AE:DTC B2817 BRAKE LAMP

DTC DETECTING CONDITION:

- Defective brake light relay
- Defective brake light switch
- Defective VDC

TROUBLE SYMPTOM:

- All functions of EyeSight system do not operate.
- EyeSight warning light illuminates.
- Brake light does not go off or illuminate.

NOTE:
When this DTC is detected, check VDC system. <Ref. to VDC(diag)-2, PROCEDURE, Basic Diagnostic Procedure.>

AF:DTC B281B STEERING ANGLE SENSOR FAIL

DTC DETECTING CONDITION:
Defective steering angle sensor
TROUBLE SYMPTOM:
All functions of EyeSight system do not operate.

NOTE:
Check the steering angle sensor. <Ref. to VDC(diag)-2, PROCEDURE, Basic Diagnostic Procedure.>

AG:DTC B281C INCOMPATIBLE WITH EyeSight (EPS)

Detected when the EPS CM which is not exclusively for EyeSight is installed.
DTC DETECTING CONDITION:
Incorrect specifications of EPS CM.
TROUBLE SYMPTOM:
All functions of EyeSight system do not operate.

NOTE:
Replace the EPS CM with the one exclusively designed for EyeSight.

AH:DTC B28A0 VEHICLE MODEL JUDGMENT

Detected when the model code for stereo camera and the model code used for CAN data are different.

DTC DETECTING CONDITION:

- Defective CAN system
- Defective stereo camera
- In the aiming operation, there is an open circuit in the +B harness of the stereo camera.
- In the completion of the aiming operation, the switching from IGN OFF to IGN ON takes place too early, and the recording of the model information has not yet been finished.

TROUBLE SYMPTOM:

- All functions of EyeSight system do not operate.
- EyeSight warning light illuminates.

WIRING DIAGRAM:

NOTE:
For the coupling connector, refer to “WIRING SYSTEM”.
EyeSight System <Ref. to WI-230, WIRING DIAGRAM, EyeSight System.>

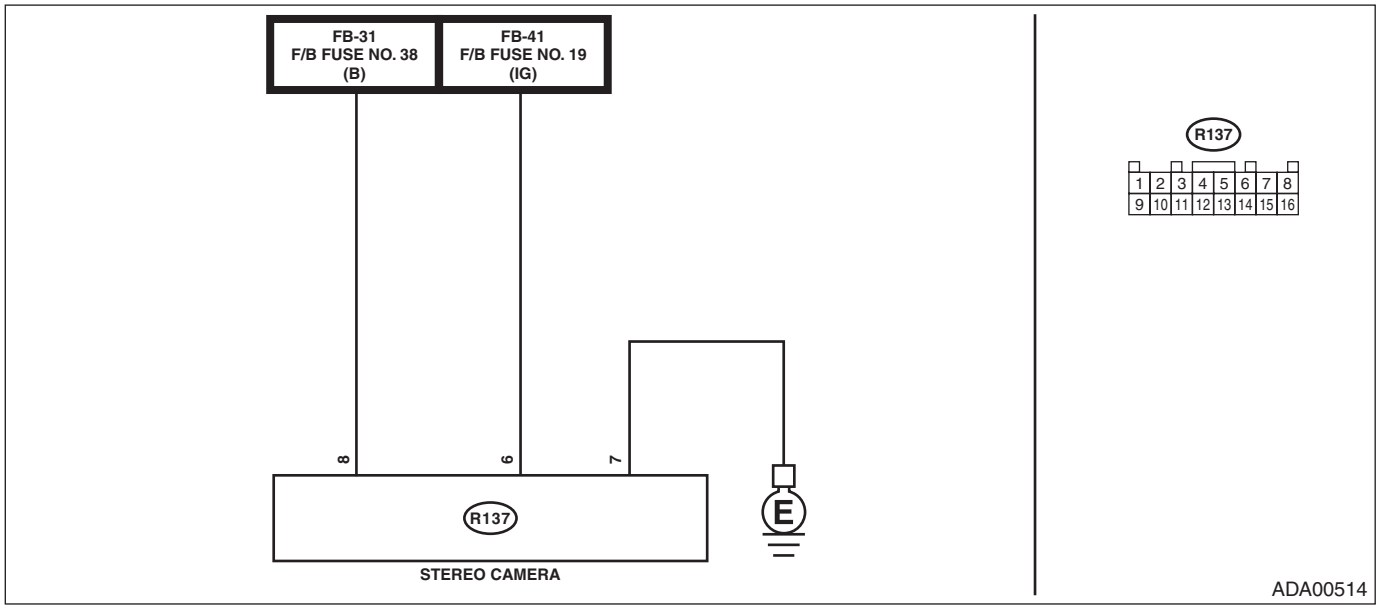

Step		Check	Yes	No
1	**CHECK RELATED CM.** Check the part number of the ECM, TCM, VDC CM and combination meter.	Is each CM a genuine part?	Go to step **2**.	Replace the non-genuine CM with a genuine one.
2	**CHECK STEREO CAMERA.** 1) Remove the camera cover. 2) Check the part number of the stereo camera.	Is the stereo camera genuine?	Go to step **3**.	Replace the stereo camera. <Ref. to ES-8, REMOVAL, Stereo Camera.>
3	**CHECK LAN SYSTEM.** Perform the diagnosis for LAN system. <Ref. to LAN(diag)-2, Basic Diagnostic Procedure.>	Is DTC displayed?	Perform the diagnosis according to DTC.	Go to step **4**.
4	**CHECK MODEL REGISTRATION INFORMATION.** Check the «Model registration information» from the current data of stereo camera. <Ref. to ES(diag)-23, Read Current Data.>	Does vehicle and data correspond?	Perform the adjustment or inspection of the camera. <Ref. to ES-12, Camera Adjustment, Inspection.>	Go to step **5**.

	Step	Check	Yes	No
5	**CHECK FUSE.** Check fuses No. 19 and No. 38 in the fuse & relay box. <Ref. to ES-5, Relay and Fuse.>	Is the fuse OK?	Go to step **6**.	Replace the faulty fuse. When the replaced fuse blows out easily, check the short circuit in harness.
6	**CHECK HARNESS (POWER SUPPLY CIRCUIT).** 1) Disconnect the stereo camera. 2) Turn the ignition switch to ON. 3) Measure the voltage between harness connector of stereo camera and chassis ground. ***Connector & terminal*** ***(R137) No. 6 (+) — Chassis ground (–):*** ***(R137) No. 8 (+) — Chassis ground (–):***	Is the voltage 10 V or more?	Go to step **7**.	Check the power supply system circuit, and if any fault is found, repair the defective parts or replace the harness.
7	**CHECK HARNESS (GROUND CIRCUIT).** 1) Turn the ignition switch to OFF. 2) Disconnect the ground cable from battery. 3) Measure the resistance between stereo camera and chassis ground. ***Connector & terminal*** ***(R137) No. 7 — Chassis ground:***	Is the resistance less than 10 Ω?	Go to step **8**.	Check the ground system circuit, and if any fault is found, repair the defective parts or replace the harness.
8	**CHECK POOR CONTACT OF CONNECTORS.** Check stereo camera connector.	Is there poor contact of the connector?	Repair the connector.	Go to step **9**.
9	**CHECK STEREO CAMERA.** 1) Connect all connectors and battery terminals securely. 2) Clear the memory. <Ref. to ES(diag)-48, Clear Memory Mode.> 3) Read the DTC. <Ref. to ES(diag)-42, Diagnostic Code(s) Display.>	Is the same DTC (DTC B28A0) displayed?	Replace the stereo camera. <Ref. to ES-8, REMOVAL, Stereo Camera.>	Even if DTC is displayed, the circuit has returned to a normal condition at this time. Reproduce the failure, and then perform the diagnosis again. NOTE: In this case, temporary poor contact of connector, or temporary open or short circuit of harness may be the cause.

AI: DTC B28A1 EyeSight COMMUNICATION(ECM)

Detected when the engine control module (ECM) detects the malfunction of stereo camera, or when the stereo camera or ECM is assembled incorrectly.

DTC DETECTING CONDITION:

- Defective CAN system
- Defective engine control module (ECM)
- Defective stereo camera
- Incorrect assembly of stereo camera (when the stereo camera designed for EyeSight (Ver. 2) type vehicle is installed to the EyeSight (Ver. 3) type vehicle, etc.)
- Incorrect assembly of ECM (when the ECM designed for another model is installed, etc.)

TROUBLE SYMPTOM:

- All functions of EyeSight system do not operate.
- EyeSight warning light illuminates.

	Step	Check	Yes	No
1	**CHECK ECM.** Check the part number of the ECM.	Is the ECM genuine?	Go to step **2**.	Replace the ECM. <Ref. to FU(H4DO)-82, REMOVAL, Engine Control Module (ECM).> <Ref. to FU(H6DO)-83, REMOVAL, Engine Control Module (ECM).>
2	**CHECK STEREO CAMERA.** 1) Remove the camera cover. 2) Check the part number of the stereo camera.	Is the stereo camera genuine?	Go to step **3**.	Replace the stereo camera. <Ref. to ES-8, REMOVAL, Stereo Camera.>
3	**CHECK LAN SYSTEM.** Perform the diagnosis for LAN system. <Ref. to LAN(diag)-2, PROCEDURE, Basic Diagnostic Procedure.>	Is DTC displayed?	Perform the diagnosis according to DTC.	Go to step **4**.
4	**CHECK ECM.** Perform the diagnosis for the engine. <Ref. to EN(H4DO)(diag)-2, PROCEDURE, Basic Diagnostic Procedure.> <Ref. to EN(H6DO)(diag)-2, PROCEDURE, Basic Diagnostic Procedure.>	Is DTC displayed?	Perform the diagnosis according to DTC.	Go to step **5**.
5	**CHECK CONNECTOR.** Check the ECM connector and the stereo camera connector.	Is the connector OK?	Go to step **6**.	Repair or replace the connector.
6	**CHECK STEREO CAMERA.** Read the DTC. <Ref. to ES(diag)-42, Diagnostic Code(s) Display.>	Is another DTC displayed?	Perform the diagnosis according to DTC.	Go to step **7**.

	Step	Check	Yes	No
7	**CHECK STEREO CAMERA.** 1) Clear the memory. <Ref. to ES(diag)-48, Clear Memory Mode.> 2) Read the DTC. <Ref. to ES(diag)-42, Diagnostic Code(s) Display.>	Is the same DTC displayed?	Replace the stereo camera. <Ref. to ES-8, REMOVAL, Stereo Camera.>	Even if DTC is displayed, the circuit has returned to a normal condition at this time. Reproduce the failure, and then perform the diagnosis again. NOTE: In this case, temporary poor contact of connector, or temporary open or short circuit of harness may be the cause.

AJ:DTC B28A2 EyeSight COMMUNICATION(VDC)

Detected when the VDC control module (VDCCM) detects the malfunction of stereo camera.

DTC DETECTING CONDITION:

- Defective CAN system
- Defective VDC control module (VDCCM)
- Defective stereo camera

TROUBLE SYMPTOM:

- All functions of EyeSight system do not operate.
- EyeSight warning light illuminates.

	Step	Check	Yes	No
1	**CHECK LAN SYSTEM.** Perform the diagnosis for LAN system. <Ref. to LAN(diag)-2, PROCEDURE, Basic Diagnostic Procedure.>	Is DTC displayed?	Perform the diagnosis according to DTC.	Go to step **2**.
2	**CHECK VDC.** Perform the diagnosis for VDC. <Ref. to VDC(diag)-2, PROCEDURE, Basic Diagnostic Procedure.>	Is DTC displayed?	Perform the diagnosis according to DTC.	Go to step **3**.
3	**CHECK CONNECTOR.** Check the VDC connector and the stereo camera connector.	Is the connector OK?	Go to step **4**.	Repair or replace the connector.
4	**CHECK STEREO CAMERA.** Read the DTC. <Ref. to ES(diag)-42, Diagnostic Code(s) Display.>	Is another DTC displayed?	Perform the diagnosis according to DTC.	Go to step **5**.
5	**CHECK STEREO CAMERA.** 1) Clear the memory. <Ref. to ES(diag)-48, Clear Memory Mode.> 2) Read the DTC. <Ref. to ES(diag)-42, Diagnostic Code(s) Display.>	Is the same DTC displayed?	Replace the stereo camera. <Ref. to ES-8, REMOVAL, Stereo Camera.>	Even if DTC is displayed, the circuit has returned to a normal condition at this time. Reproduce the failure, and then perform the diagnosis again. NOTE: In this case, temporary poor contact of connector, or temporary open or short circuit of harness may be the cause.

AK:DTC B28A3 EyeSight COMMUNICATION(METER)

Detected when the combination meter detects the malfunction of stereo camera.

DTC DETECTING CONDITION:

- Defective CAN system
- Defective combination meter
- Defective stereo camera

TROUBLE SYMPTOM:

- All functions of EyeSight system do not operate.
- EyeSight warning light illuminates.

	Step	Check	Yes	No
1	**CHECK LAN SYSTEM.** Perform the diagnosis for LAN system. <Ref. to LAN(diag)-2, PROCEDURE, Basic Diagnostic Procedure.>	Is the DTC displayed in the LAN system?	Perform the diagnosis according to DTC.	Go to step **2**.
2	**CHECK COMBINATION METER.** Check the combination meter. <Ref. to MET(diag)-2, PROCEDURE, Basic Diagnostic Procedure.>	Is combination meter OK?	Go to step **3**.	Perform the diagnosis for combination meter.
3	**CHECK CONNECTOR.** Check the combination meter connector and the stereo camera connector.	Is the connector OK?	Go to step **4**.	Repair or replace the connector.
4	**CHECK STEREO CAMERA.** Read the DTC. <Ref. to ES(diag)-42, Diagnostic Code(s) Display.>	Is another DTC displayed?	Perform the diagnosis according to DTC.	Go to step **5**.
5	**CHECK STEREO CAMERA.** 1) Clear the memory. <Ref. to ES(diag)-48, Clear Memory Mode.> 2) Read the DTC. <Ref. to ES(diag)-42, Diagnostic Code(s) Display.>	Is the same DTC displayed?	Replace the stereo camera. <Ref. to ES-8, REMOVAL, Stereo Camera.>	Even if DTC is displayed, the circuit has returned to a normal condition at this time. Reproduce the failure, and then perform the diagnosis again. NOTE: In this case, temporary poor contact of connector, or temporary open or short circuit of harness may be the cause.

AL:DTC B28A4 EyeSight COMMUNICATION(EPS)

Detected when the power steering control module (EPS CM) detects the malfunction of stereo camera.

DTC DETECTING CONDITION:

- Defective CAN system
- Defective EPS CM
- Defective stereo camera

TROUBLE SYMPTOM:

- All functions of EyeSight system do not operate.
- EyeSight warning light illuminates.

	Step	Check	Yes	No
1	**CHECK LAN SYSTEM.** Perform the diagnosis for LAN system. <Ref. to LAN(diag)-2, PROCEDURE, Basic Diagnostic Procedure.>	Is the DTC displayed in the LAN system?	Perform the diagnosis according to DTC.	Go to step **2**.
2	**CHECK EPS CM.** Perform the diagnosis for the power steering system. <Ref. to PS(diag)-2, PROCEDURE, Basic Diagnostic Procedure.>	Is DTC displayed?	Perform the diagnosis according to DTC.	Go to step **3**.
3	**CHECK CONNECTOR.** Check the EPS CM connector and the stereo camera connector.	Is the connector OK?	Go to step **4**.	Repair or replace the connector.
4	**CHECK STEREO CAMERA.** Read the DTC. <Ref. to ES(diag)-42, Diagnostic Code(s) Display.>	Is another DTC displayed?	Perform the diagnosis according to DTC.	Go to step **5**.
5	**CHECK STEREO CAMERA.** 1) Clear the memory. <Ref. to ES(diag)-48, Clear Memory Mode.> 2) Read the DTC. <Ref. to ES(diag)-42, Diagnostic Code(s) Display.>	Is the same DTC displayed?	Replace the stereo camera. <Ref. to ES-8, REMOVAL, Stereo Camera.>	Even if DTC is displayed, the circuit has returned to a normal condition at this time. Reproduce the failure, and then perform the diagnosis again. NOTE: In this case, temporary poor contact of connector, or temporary open or short circuit of harness may be the cause.

AM:DTC B28A5 ENGINE TORQUE LIMITER CONTROL PROHIBIT

Detected when abnormal data is transmitted from stereo camera to engine control module (ECM) and the engine control module (ECM) prohibits the AT rapid start prevention control, or when the engine control module (ECM) prohibits the AT rapid start prevention control.

DTC DETECTING CONDITION:

- Defective CAN system
- Defective engine control module (ECM)
- Defective stereo camera
- Defective combination meter
- Incorrect assembly of combination meter (when the combination meter that is not for EyeSight is installed.)

TROUBLE SYMPTOM:

- All functions of EyeSight system do not operate.
- EyeSight warning light illuminates.

	Step	Check	Yes	No
1	**CHECK COMBINATION METER.** Check the part number of the combination meter.	Is the combination meter genuine?	Go to step **2**.	Replace the combination meter. <Ref. to IDI-11, Combination Meter.>
2	**CHECK LAN SYSTEM.** Perform the diagnosis for LAN system. <Ref. to LAN(diag)-2, Basic Diagnostic Procedure.>	Is DTC displayed?	Perform the diagnosis according to DTC.	Go to step **3**.
3	**CHECK ECM.** Perform the diagnosis for the engine. <Ref. to EN(H4DO)(diag)-2, Basic Diagnostic Procedure.> <Ref. to EN(H6DO)(diag)-2, Basic Diagnostic Procedure.>	Is DTC displayed?	Perform the diagnosis according to DTC.	Go to step **4**.
4	**CHECK CONNECTOR.** Check the ECM connector and the stereo camera connector.	Is the connector OK?	Go to step **5**.	Repair or replace the connector.
5	**CHECK STEREO CAMERA.** Read the DTC. <Ref. to ES(diag)-42, Diagnostic Code(s) Display.>	Is another DTC displayed?	Perform the diagnosis according to DTC.	Go to step **6**.
6	**CHECK STEREO CAMERA.** 1) Clear the memory. <Ref. to ES(diag)-48, Clear Memory Mode.> 2) Read the DTC again. <Ref. to ES(diag)-42, Diagnostic Code(s) Display.>	Is the same DTC displayed?	Replace the stereo camera. <Ref. to ES-8, REMOVAL, Stereo Camera.>	Even if DTC is displayed, the circuit has returned to a normal condition at this time. Reproduce the failure, and then perform the diagnosis again. NOTE: In this case, temporary poor contact of connector, or temporary open or short circuit of harness may be the cause.

AN:DTC B28A6 INTERNAL STEREO CAMERA COMMUNICATION 1

Detected when communication error occurs inside the stereo camera.
DTC DETECTING CONDITION:
Communication error occurs inside the stereo camera.
TROUBLE SYMPTOM:
All functions of EyeSight system do not operate.

	Step	Check	Yes	No
1	**CHECK RESTARTING.** 1) Turn the ignition switch to OFF. 2) Start the engine. 3) Read the DTC related to the stereo camera using the Subaru Select Monitor. <Ref. to ES(diag)-42, Diagnostic Code(s) Display.>	Is DTC displayed after restarting the engine?*1	Replace the stereo camera. <Ref. to ES-8, REMOVAL, Stereo Camera.>	Clear the memory, in which temporary communication failure occurs and complete the step.

*1: When malfunction is detected after restarting the engine, 0 is registered in IG counter. Other values can be regarded as DTCs detected in the past.

AO:DTC B28A7 STEREO CAMERA RECOGNITION(TARGET)

Detected when error occurs in the communication data inside the control module caused by external factors such as noises.

NOTE:
If the same DTC is still detected after the engine has restarted, replace the stereo camera. <Ref. to ES-8, REMOVAL, Stereo Camera.>

AP:DTC B28A8 INTERNAL STEREO CAMERA COMMUNICATION 2

Detected when error occurs in the communication data inside the control module caused by external factors such as noises.

NOTE:
If the same DTC is still detected after the engine has restarted, replace the stereo camera. <Ref. to ES-8, REMOVAL, Stereo Camera.>

AQ:DTC B28A9 STEREO CAMERA SYNCHRONIZED RECOGNITION DATA

Detected when error occurs in the communication data inside the control module caused by external factors such as noises.

NOTE:
If the same DTC is still detected after the engine has restarted, replace the stereo camera. <Ref. to ES-8, REMOVAL, Stereo Camera.>

AR:DTC B28AA STEREO CAMERA MICROCOMPUTER 1

Detected when communication error occurs due to malfunction of microcomputer inside the stereo camera.
DTC DETECTING CONDITION:
Communication error occurs due to malfunction of microcomputer inside the stereo camera.
TROUBLE SYMPTOM:
All functions of EyeSight system do not operate.
Refer to DTC B28A6 for diagnostic procedure. <Ref. to ES(diag)-99, DTC B28A6 INTERNAL STEREO CAMERA COMMUNICATION 1, Diagnostic Procedure with Diagnostic Trouble Code (DTC).>

AS:DTC B28AB STEREO CAMERA MICROCOMPUTER 2

Detected when communication error occurs due to malfunction of microcomputer inside the stereo camera.
DTC DETECTING CONDITION:
Communication error occurs due to malfunction of microcomputer inside the stereo camera.
TROUBLE SYMPTOM:
All functions of EyeSight system do not operate.
Refer to DTC B28A6 for diagnostic procedure. <Ref. to ES(diag)-99, DTC B28A6 INTERNAL STEREO CAMERA COMMUNICATION 1, Diagnostic Procedure with Diagnostic Trouble Code (DTC).>

AT:DTC B28AC STEREO CAMERA ASIC

Detected when communication error occurs due to malfunction of ASIC.
DTC DETECTING CONDITION:
Communication error occurs due to malfunction of ASIC.
TROUBLE SYMPTOM:
All functions of EyeSight system do not operate.
Refer to DTC B28A6 for diagnostic procedure. <Ref. to ES(diag)-99, DTC B28A6 INTERNAL STEREO CAMERA COMMUNICATION 1, Diagnostic Procedure with Diagnostic Trouble Code (DTC).>

AU:DTC B28AD STEREO CAMERA IMAGE RECOGNITION

Detected when improper image recognition occurs in the microcomputer inside the stereo camera.
DTC DETECTING CONDITION:
Improper image recognition occurs in the microcomputer inside the stereo camera.
TROUBLE SYMPTOM:
All functions of EyeSight system do not operate.
Refer to DTC B28A6 for diagnostic procedure. <Ref. to ES(diag)-99, DTC B28A6 INTERNAL STEREO CAMERA COMMUNICATION 1, Diagnostic Procedure with Diagnostic Trouble Code (DTC).>

AV:DTC B28AE INTERNAL STEREO CAMERA POWER SUPPLY

Detected when improper power supply inside the stereo camera occurs.
DTC DETECTING CONDITION:
Improper power supply inside the stereo camera occurs.
TROUBLE SYMPTOM:
All functions of EyeSight system do not operate.
Refer to DTC B28A6 for diagnostic procedure. <Ref. to ES(diag)-99, DTC B28A6 INTERNAL STEREO CAMERA COMMUNICATION 1, Diagnostic Procedure with Diagnostic Trouble Code (DTC).>

AW:DTC B28AF STEREO CAMERA ADJUSTMENT INCOMPLETE

Detected when adjustment or inspection of stereo camera has not been completed normally.
DTC DETECTING CONDITION:
- Operation is aborted during adjustment or inspection of the stereo camera.
- After the replacement of the stereo camera, adjustment or inspection of camera has not yet been performed.

TROUBLE SYMPTOM:
All functions of EyeSight system do not operate.
For diagnostic procedure, perform adjustment/inspection of camera. When the adjustment or inspection of camera is performed, and if it is not completed successfully, replace the camera.

AX:DTC B28B1 STEREO CAMERA AUTOMATIC ADJUSTMENT

Detected when the optical axis of stereo camera is deviated in lateral direction or when the fluctuation range of automatic adjustment value has expanded.

NOTE:
Readjust the stereo camera. <Ref. to ES-12, PROCEDURE, Camera Adjustment, Inspection.>
If the same DTC is still detected after readjustment, replace the stereo camera. <Ref. to ES-8, REMOVAL, Stereo Camera.>

AY:DTC B28B2 STEREO CAMERA HIGH TEMPERATURE

Detected when the temperature of the stereo camera excessively increases.

NOTE:
When this DTC is detected, performing adjustment or inspection of the camera will not return to the normal state. In this case, always replace the stereo camera. <Ref. to ES-8, REMOVAL, Stereo Camera.>

AZ:DTC B28B3 STEREO CAMERA LOW TEMPERATURE

Detected when the temperature of the stereo camera excessively decreases.

NOTE:
When this DTC is detected, performing adjustment or inspection of the camera will not return to the normal state. In this case, always replace the stereo camera. <Ref. to ES-8, REMOVAL, Stereo Camera.>

BA:DTC B28B5 +B CIRCUIT OPEN

Detected when there is an open circuit in power supply line.

NOTE:
Refer to DTC B2814 for diagnostic procedure. <Ref. to ES(diag)-88, DTC B2814 POWER SUPPLY LOW VOLTAGE, Diagnostic Procedure with Diagnostic Trouble Code (DTC).>

BB:DTC B28B6 PRE-COLLISION OFF SWITCH

Detected when pre-collision brake OFF switch circuit is not installed, open-circuited or is stuck to ON.

DTC DETECTING CONDITION:

- Wiring of pre-collision brake OFF switch is not connected.
- Pre-collision brake OFF switch circuit is open.
- Pre-collision brake OFF switch circuit stays ON for 45 seconds or more.

TROUBLE SYMPTOM:

All functions of EyeSight system do not operate.

WIRING DIAGRAM:

EyeSight System <Ref. to WI-230, WIRING DIAGRAM, EyeSight System.>

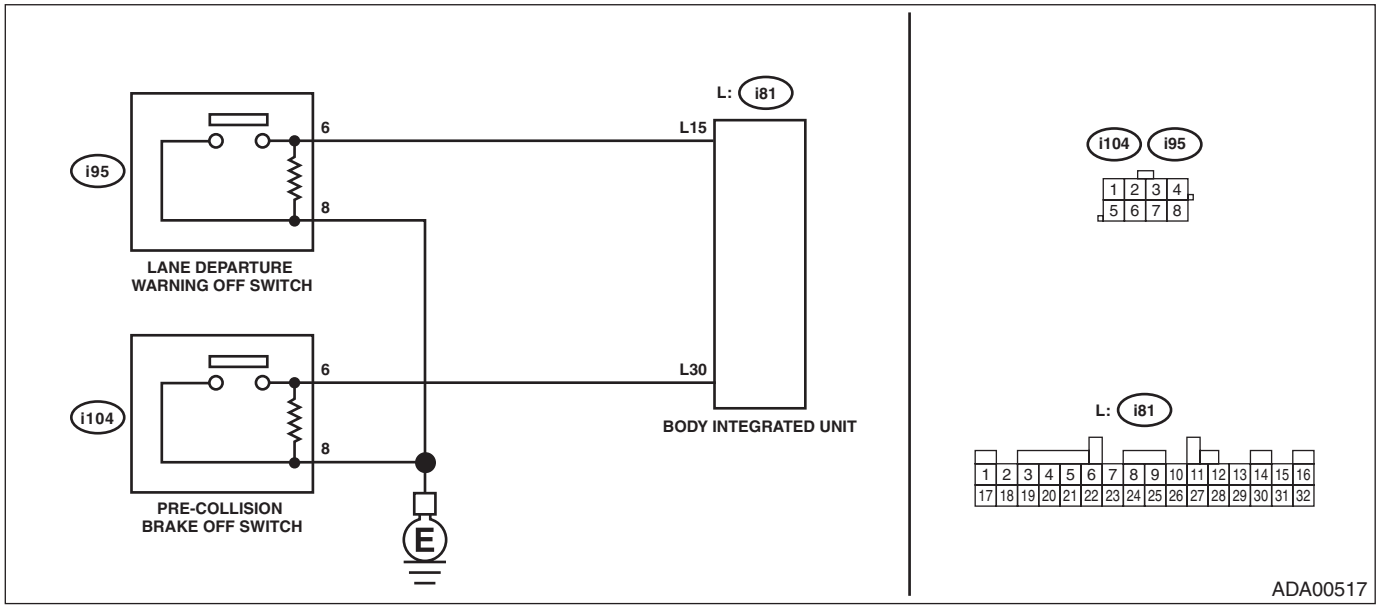

Step		Check	Yes	No
1	**CHECK CURRENT DATA.** Confirm the current data «Pre-Collision Brake OFF SW Status (BIU)» of EyeSight using Subaru Select Monitor. <Ref. to ES(diag)-23, Read Current Data.>	Does the display change according to ON/OFF operation of the pre-collision brake OFF switch?	Even if DTC is displayed, the circuit has returned to a normal condition at this time. Reproduce the failure, and then perform the diagnosis again. NOTE: In this case, temporary poor contact of connector, or temporary open or short circuit of harness may be the cause.	Go to step **2**.

	Step	Check	Yes	No
2	**CHECK HARNESS.** 1) Disconnect the stereo camera connector and the pre-collision brake OFF switch connector. 2) Using the tester, measure the resistance between the stereo camera connector and pre-collision brake OFF switch connector as well as chassis ground. ***Connector & terminal*** ***(i104) No. 6 — (i81) No. 30:*** ***(i104) No. 8 — Chassis ground:***	Is the resistance less than 1 Ω?	Go to step **3**.	Repair or replace an open circuit in harness between the stereo camera connector and pre-collision brake OFF switch connector.
3	**CHECK HARNESS.** Using the tester, measure the resistance between the pre-collision brake OFF switch connector and chassis ground. ***Connector & terminal*** ***(i104) No. 6 — Chassis ground:***	Is the resistance 1 MΩ or more?	Check the pre-collision brake OFF switch. <Ref. to ES-33, INSPECTION, Switches and Harness.>	Repair or replace the short circuit to ground in harness between the stereo camera connector and pre-collision brake OFF switch connector.

BC:DTC B28B7 LDP OFF SWITCH

Detected when lane departure warning OFF switch circuit is not installed, open-circuited, or is stuck to ON.

DTC DETECTING CONDITION:

- Wiring of lane departure warning OFF switch is not connected.
- Lane departure warning OFF switch circuit is open.
- Lane departure warning OFF switch circuit stays ON for 45 seconds or more.

TROUBLE SYMPTOM:

All functions of EyeSight system do not operate.

WIRING DIAGRAM:

EyeSight System <Ref. to WI-230, WIRING DIAGRAM, EyeSight System.>

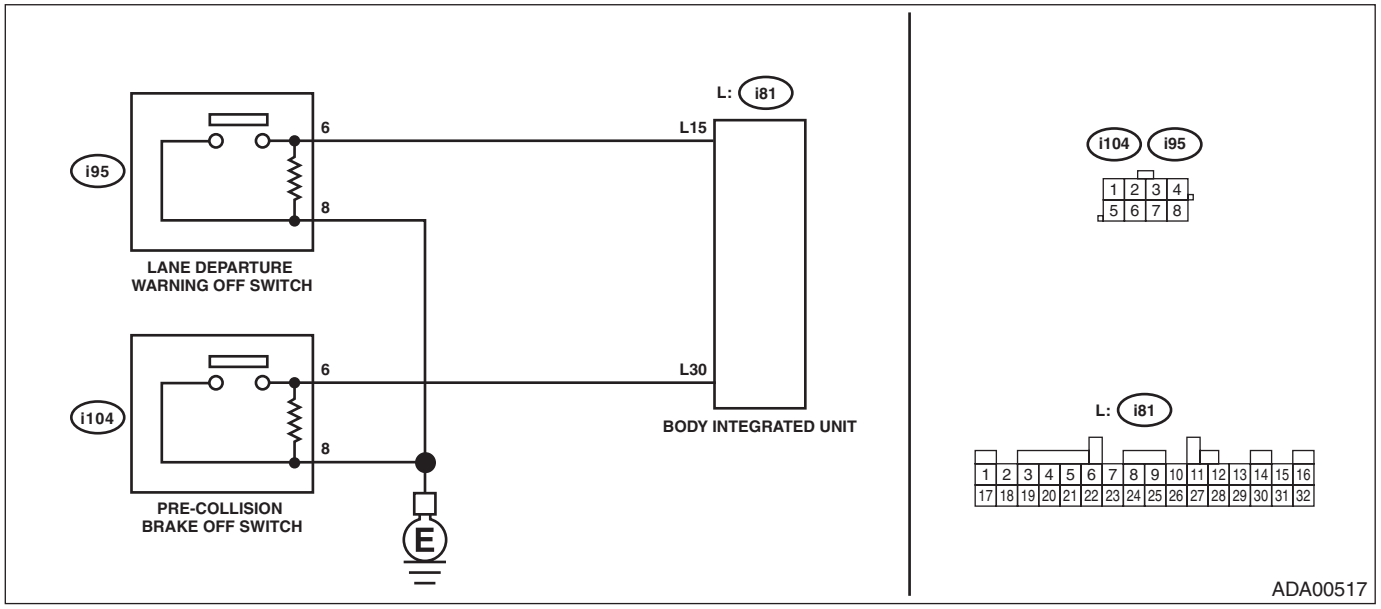

	Step	Check	Yes	No
1	**CHECK CURRENT DATA.** Confirm the current data «Lane Departure Warning OFF SW (BIU)» of EyeSight using Subaru Select Monitor. <Ref. to ES(diag)-23, Read Current Data.>	Does the display change according to the lane departure warning OFF switch ON/OFF operation?	Even if DTC is displayed, the circuit has returned to a normal condition at this time. Reproduce the failure, and then perform the diagnosis again. NOTE: In this case, temporary poor contact of connector, or temporary open or short circuit of harness may be the cause.	Go to step **2**.
2	**CHECK HARNESS.** 1) Disconnect the stereo camera connector and the lane departure warning OFF switch connector. 2) Using the tester, measure the resistance between the stereo camera connector and lane departure warning OFF switch connector. ***Connector & terminal*** ***(i95) No. 6 — (i81) No. 15:*** ***(i95) No. 8 — Chassis ground:***	Is the resistance less than 1 Ω?	Go to step **3**.	Repair or replace an open circuit in harness between the stereo camera connector and lane departure warning OFF switch connector.

Step		Check	Yes	No
3	**CHECK HARNESS.** Using the tester, measure the resistance between the lane departure warning OFF switch connector and chassis ground. ***Connector & terminal*** ***(i95) No. 6 — Chassis ground:***	Is the resistance 1 MΩ or more?	Check the lane departure warning OFF switch. <Ref. to ES-33, INSPECTION, Switches and Harness.>	Repair or replace the short circuit to ground in harness between the stereo camera connector and lane departure warning OFF switch connector.

BD:DTC B28B8 EyeSight STEERING SWITCH 1

Detected when EyeSight steering switch is not installed or has malfunction, or when the harness is faulty or open-circuited or in stuck ON condition.

DTC DETECTING CONDITION:

- Wiring of the EyeSight steering switch is not connected.
- EyeSight steering switch circuit is open.
- EyeSight steering switch circuit stays ON.

TROUBLE SYMPTOM:

All functions of EyeSight system do not operate.

WIRING DIAGRAM:

EyeSight System <Ref. to WI-230, WIRING DIAGRAM, EyeSight System.>

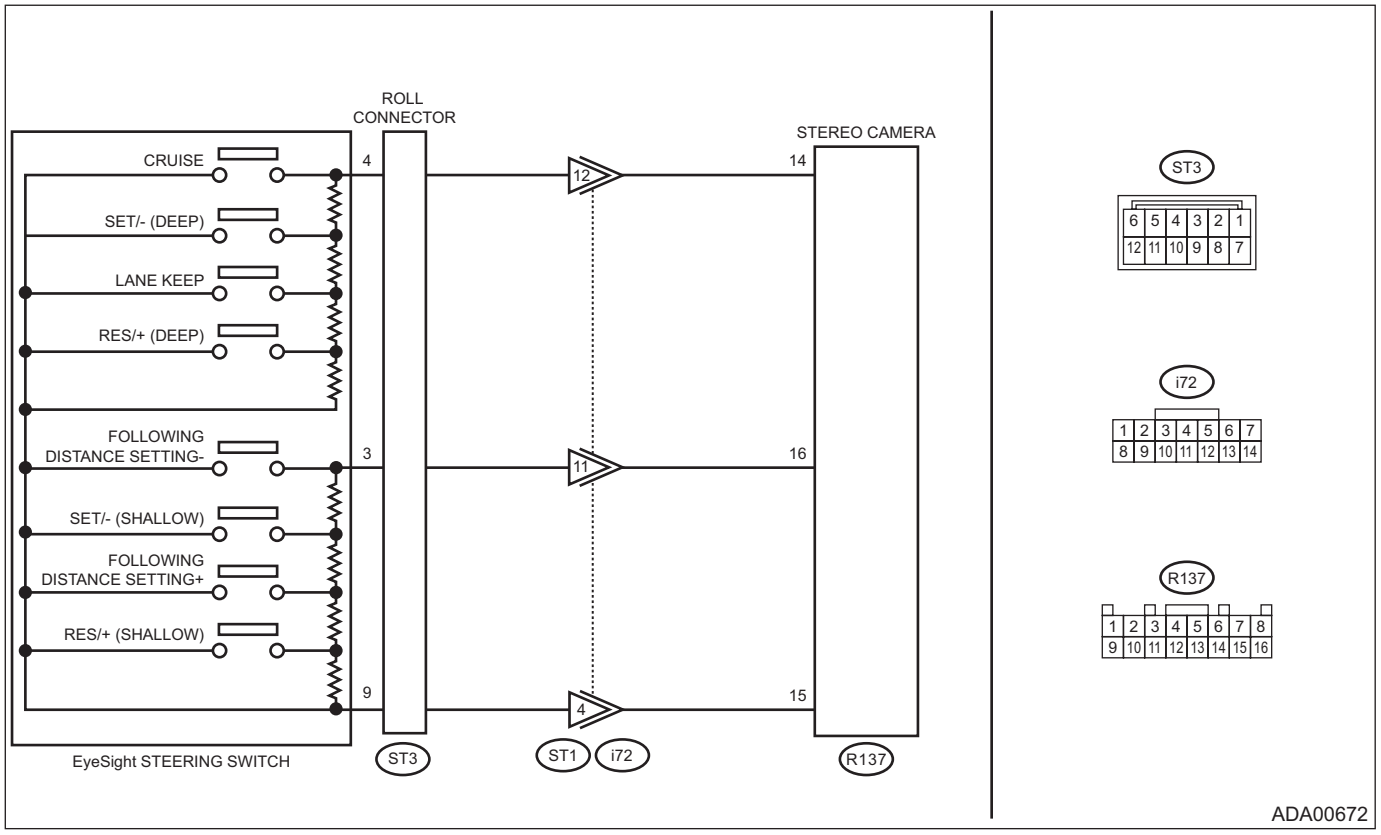

Step		Check	Yes	No
1	**CHECK CURRENT DATA.** Confirm the current data «Cruise Control SW» of EyeSight using Subaru Select Monitor. <Ref. to ES(diag)-23, Read Current Data.>	Does the display change according to the EyeSight steering switch operation?	Even if DTC is displayed, the circuit has returned to a normal condition at this time. Reproduce the failure, and then perform the diagnosis again. NOTE: In this case, temporary poor contact of connector, or temporary open or short circuit of harness may be the cause.	Go to step **2**.

	Step	Check	Yes	No
2	**CHECK HARNESS.** 1) Disconnect the stereo camera connector and EyeSight steering switch connector. 2) Using the tester, measure the resistance between stereo camera connector and EyeSight steering switch connector. ***Connector & terminal*** ***(ST3) No. 4 — (R137) No. 14:*** ***(ST3) No. 3 — (R137) No. 16:*** ***(ST3) No. 9 — (R137) No. 15:***	Is the resistance less than 1 Ω?	Go to step **3**.	Repair or replace an open circuit in harness between the stereo camera connector and the EyeSight steering switch connector.
3	**CHECK HARNESS.** Using the tester, measure the resistance between EyeSight steering switch connector and chassis ground. ***Connector & terminal*** ***(ST3) No. 4 — Chassis ground:*** ***(ST3) No. 3 — Chassis ground:*** ***(ST3) No. 9 — Chassis ground:***	Is the resistance 1 MΩ or more?	Check the EyeSight steering switch. <Ref. to ES-33, INSPECTION, Switches and Harness.>	Repair or replace the short circuit to ground in harness between the stereo camera connector and the EyeSight steering switch connector.

BE:DTC B28B9 EyeSight STEERING SWITCH 2

Detected when steering switch for EyeSight is not installed, is open-circuited or is stuck to ON.
Refer to DTC B28B8 for diagnostic procedure. <Ref. to ES(diag)-106, DTC B28B8 EyeSight STEERING SWITCH 1, Diagnostic Procedure with Diagnostic Trouble Code (DTC).>

BF:DTC B28BA STEERING ANGLE AND STEREO CAMERA CORRELATION MISALIGNED

- Detected when the center point of the steering angle sensor is misaligned.
- Detected when the alignment is extremely misaligned.

DTC DETECTING CONDITION:

- Defective wheel alignment
- Defective VDC CM
- Defective stereo camera

TROUBLE SYMPTOM:

- All functions of EyeSight system do not operate.
- EyeSight warning light illuminates.

NOTE:

- Prior confirmation is required to check if the work related to alignment has been performed or there is an accident history.
- Record the value of current data «Active Lane Keep System Control Learning Value 3» of stereo camera using Subaru Select Monitor.

	Step	Check	Yes	No
1	**CHECK DTC.** Read the DTC of VDC. <Ref. to VDC(diag)-2, Basic Diagnostic Procedure.>	Is DTC related to steering angle sensor displayed?	Perform the diagnosis according to DTC, and Go to step **2**.	Go to step **2**.
2	**CHECK DRIVING CONDITION.** Check the driving condition.	Is the steering wheel obviously tilted when the vehicle is in the straight ahead position? (Check if it is obviously tilted at the closest point between the column cover and the steering wheel.)	Perform the wheel alignment adjustment. <Ref. to FS-10, Wheel Alignment.>, and Go to step **3**.	Go to step **3**.
3	**CHECK CURRENT DATA.** 1) Display the current data «Steer Angle Sensor Op» of stereo camera using Subaru Select Monitor. <Ref. to ES(diag)-23, Read Current Data.> NOTE: Do not use «Steering Angle Sensor Value (Right +) (Left -)» when checking. 2) Check the value when the vehicle is in the straight ahead position.	Is the value from -2 to +2 degrees?	Go to step **4**.	Perform «VSC(VDC) Centering Mode» for VDC. <Ref. to VDC-15, VDC SENSOR MID-POINT SETTING MODE, ADJUSTMENT, VDC Control Module and Hydraulic Control Unit (VDCCM&H/U).> Repeat the step 3. Go to step **3**.
4	**CHECK JOB CONTENT.** Check the job contents performed so far. (To identify whether the problem belongs to the vehicle or the stereo camera.)	Is one of the following actions performed: steering angle sensor diagnosis, wheel alignment adjustment or VDC sensor centering mode?	Go to step **5**.	Replace the stereo camera. <Ref. to ES-8, Stereo Camera.>
5	**LANE KEEP ASSIST LEARNING VALUE CLEAR.** 1) Perform «Clear Active Lane Keep System Learning Value». <Ref. to ES(diag)-49, Clear Active Lane Keep System Learning Value.> 2) Turn the ignition switch OFF → ON. 3) Display the current data «Active Lane Keep System Control Learning Value 3» of stereo camera using Subaru Select Monitor. <Ref. to ES(diag)-23, Read Current Data.>	Is the value of «Active Lane Keep System Control Learning Value 3» 0?	Go to step **6**.	Performing «Clear Active Lane Keep System Learning Value» is not complete. Go to step **7**.

	Step	Check	Yes	No
6	**CHECK DTC.** 1) Clear the memory. <Ref. to ES(diag)-48, Clear Memory Mode.> 2) Turn the ignition switch OFF → ON. 3) Read the DTC. <Ref. to ES(diag)-42, Diagnostic Code(s) Display.>	Is DTC B28BA displayed?	Clearing the memory is not complete. Go to step **7**.	The current state is normal. Finish the diagnosis.
7	**CHECK SUBARU SELECT MONITOR CONNECTION.** Check the connection of Subaru Select Monitor.	Is there any fault in the harness and connection between Subaru Select Monitor and stereo camera?	Replace the harness or repair the connection. In case that the step 5 is not performed Go to step **5**. In case that the step 5 has been performed Go to step **6**.	Replace the stereo camera. <Ref. to ES-8, Stereo Camera.>

Blind Spot Detection/Rear Cross Traffic Alert

RVD

		Page
1.	General Description	2
2.	Relay and Fuse	4
3.	Blind Spot Detection/Rear Cross Traffic Alert	5
4.	Radar Sensor	6
5.	Switches and Harness	13
6.	Combination Meter	14
7.	Outer Mirror Assembly	15
8.	Diagnostics with Phenomenon	16

1. General Description

A: LOCATION

Refer to “LOCATION” of “Blind Spot Detection/Rear Cross Traffic Alert (DIAGNOSTICS)” section. <Ref. to RVD(diag)-8, LOCATION, Electrical Component Location.>

B: COMPONENT

1. RADAR SENSOR

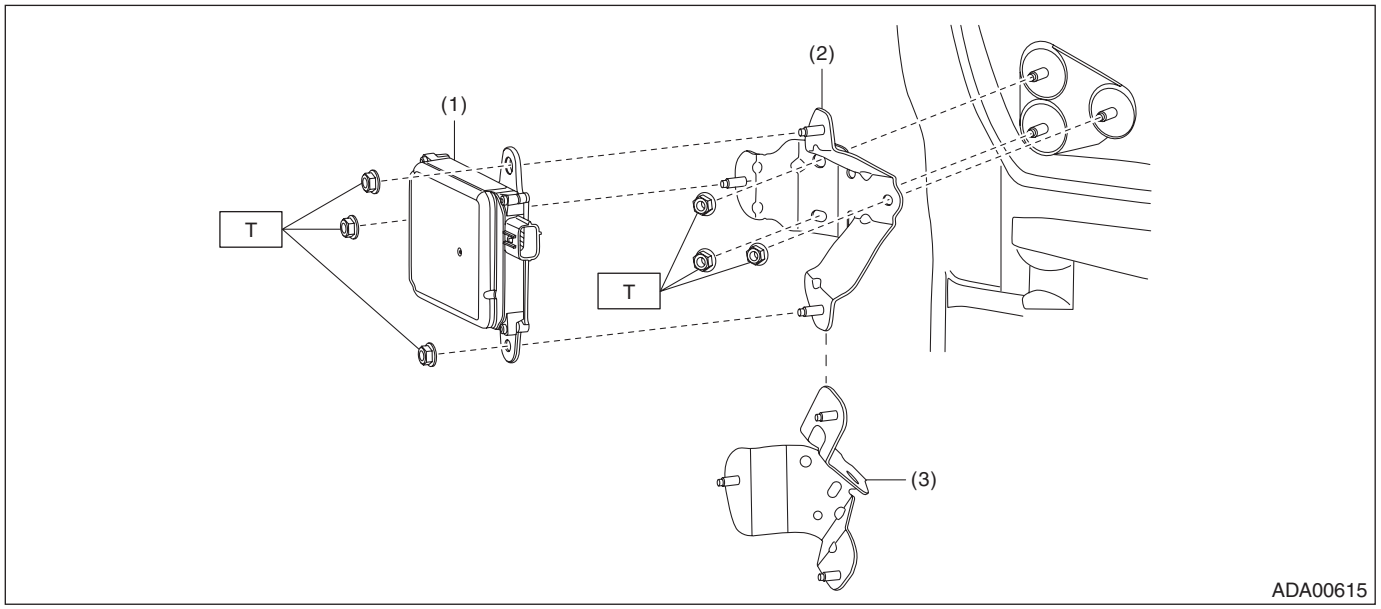

(1) Radar sensor (master & slave)
(2) Radar bracket (Sedan model)
(3) Radar bracket (OUTBACK model)

Tightening torque: N·m (kgf-m, ft-lb)
T: 7.5 (0.8, 5.5)

C: CAUTION

• Before disconnecting connectors of sensors or units, be sure to disconnect the ground cable from battery. When replacing the electrical parts provided with memory functions that store contents specified by a customer, record the memory contents before disconnecting the battery ground cable.
• For precautions for rear vehicle detection function, refer to “CAUTION” in “Blind Spot Detection/Rear Cross Traffic Alert (DIAGNOSTICS)” section. <Ref. to RVD(diag)-4, CAUTION, General Description.>

D: PREPARATION TOOL

1. SPECIAL TOOL

ILLUSTRATION	TOOL NUMBER	DESCRIPTION	REMARKS
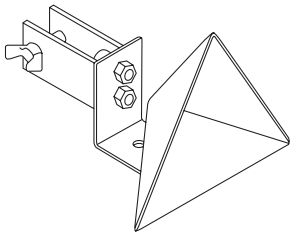 ST87699AL00A	87699AL00A	RADAR REFLECTOR	Used for adjusting the radar axis of the radar sensor. NOTE: Attach the radar reflector to a round pole with a diameter of approx. 20 mm (0.79 in) or a 20-mm (0.79-in) square pole.
 STSSM4	— (Newly adopted tool)	SUBARU SELECT MONITOR 4	Used for setting of each function and trouble-shooting for electrical system. NOTE: For detailed operation procedures of Subaru Select Monitor 4, refer to “Application help”.

2. GENERAL TOOL

TOOL NAME	REMARKS
Circuit tester	Used for measuring resistance, voltage and current.
DST-i	Used together with Subaru Select Monitor 4.
Measure (5 m (16 ft) or more)	Used for adjusting the radar axis of the radar sensor.
Leveling line	
Plumb bob	
Packing tape	
Stand, tripod, etc.	

2. Relay and Fuse

A: LOCATION

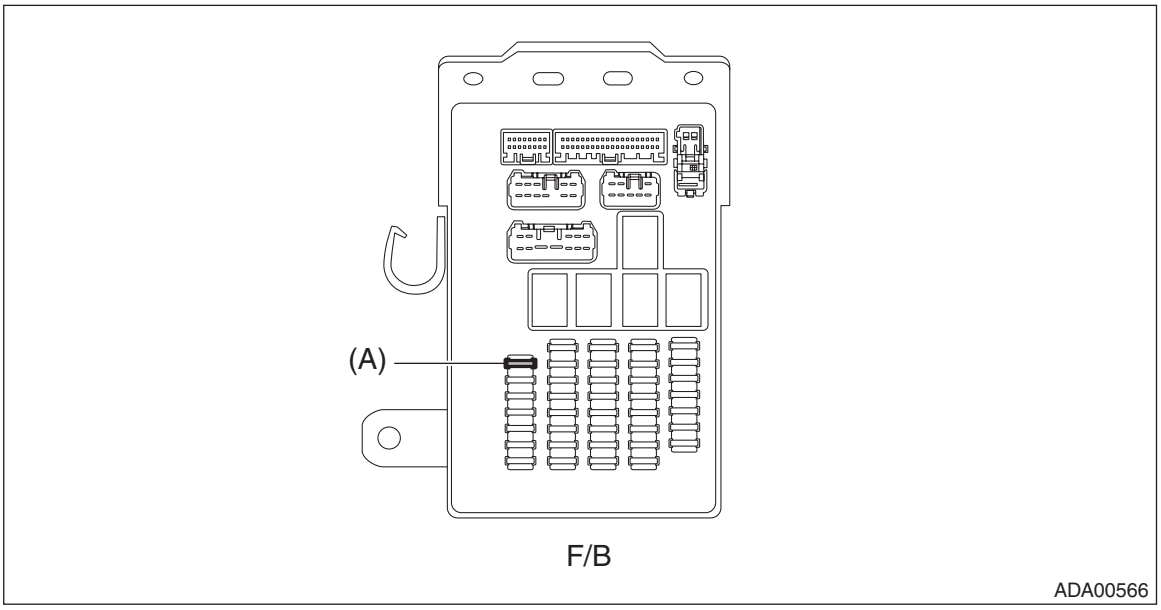

Fuse & relay box (F/B)	Fuse 15 A (Radar sensor (master & slave))	(A)

NOTE:
For other related fuses, refer to the wiring diagram. <Ref. to WI-21, Power Supply Circuit.>

B: INSPECTION

1. CHECK FUSE

1) Remove the fuse and inspect visually.
2) If the fuse is blown out, replace the fuse.

NOTE:
If the fuse is blown again, check the system wiring harness.

3. Blind Spot Detection/Rear Cross Traffic Alert

A: WIRING DIAGRAM

Refer to “Blind Spot Detection/Rear Cross Traffic Alert” in the wiring diagram. <Ref. to WI-130, WIRING DIAGRAM, Blind Spot Detection/Rear Cross Traffic Alert.>

B: INSPECTION

Refer to “Basic Diagnostic Procedure” of “Blind Spot Detection/Rear Cross Traffic Alert (DIAGNOSTICS)” section. <Ref. to RVD(diag)-2, Basic Diagnostic Procedure.>

C: NOTE

For procedure of each component in the Subaru Rear Vehicle Detection system, refer to the respective sections.

- Radar sensor: <Ref. to RVD-6, Radar Sensor.>
- BSD/RCTA OFF switch: <Ref. to RVD-13, Switches and Harness.>
- Combination meter: <Ref. to RVD-14, Combination Meter.>
- Outer mirror assembly: <Ref. to RVD-15, Outer Mirror Assembly.>

4. Radar Sensor

A: REMOVAL

1. RADAR SENSOR LH (MASTER)

1) Disconnect the ground terminal from battery sensor. <Ref. to RC-4, BATTERY, NOTE, Repair Contents.>
2) Remove the bumper face - rear. <Ref. to EI-44, REMOVAL, Rear Bumper.>
3) Remove the radar sensor LH (master).
   (1) Disconnect the connector.
   (2) Remove the nut and remove the radar sensor LH.

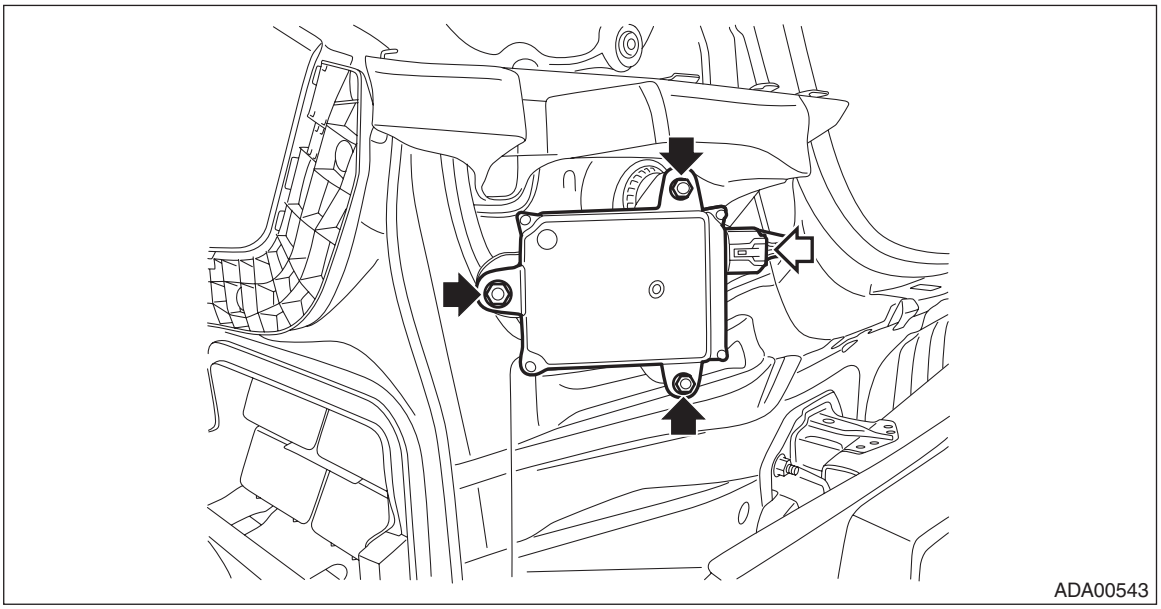

4) Remove the radar bracket.
   (1) Remove the harness clamp. (OUTBACK model)
   (2) Remove the nut and remove the radar bracket.

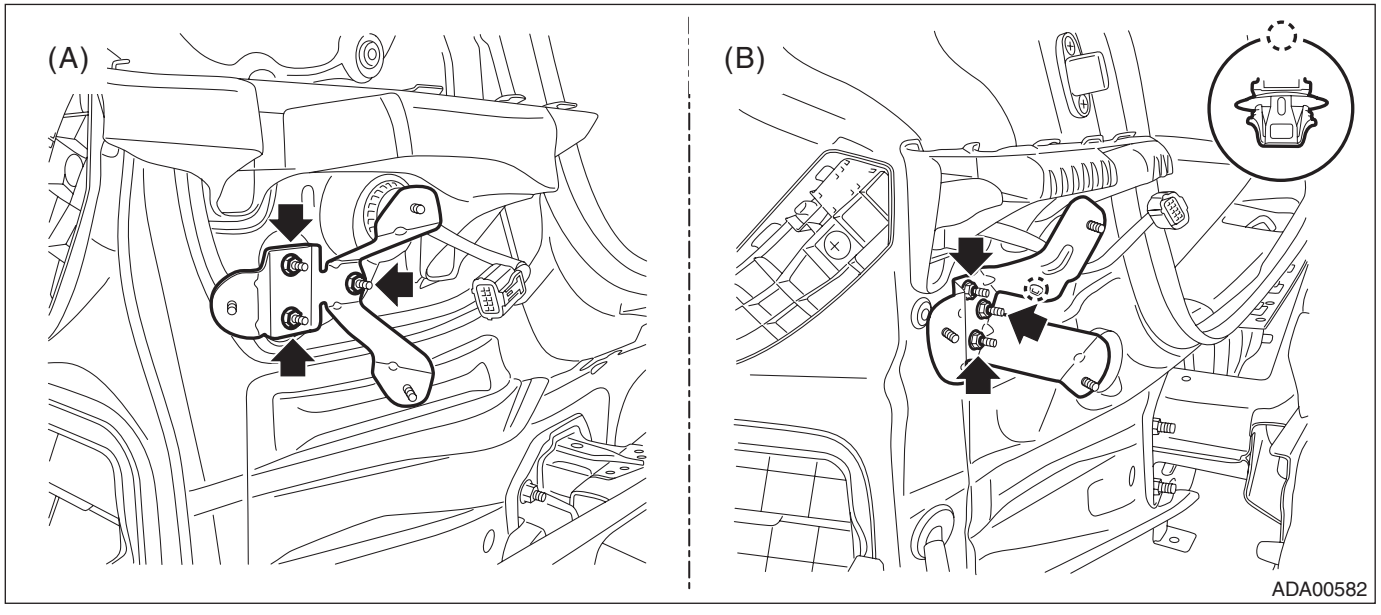

(A) Sedan model (B) OUTBACK model

2. RADAR SENSOR RH (SLAVE)

NOTE:
For the procedure of radar sensor RH (slave), refer to “RADAR SENSOR LH (MASTER)”.

B: INSTALLATION

1) Install the radar bracket.

Tightening torque:
7.5 N·m (0.8 kgf-m, 5.5 ft-lb)
2) Install the radar sensor.

Tightening torque:
7.5 N·m (0.8 kgf-m, 5.5 ft-lb)
3) Install the bumper face - rear.
4) Connect the ground terminal to battery sensor. <Ref. to RC-4, BATTERY, NOTE, Repair Contents.>
5) Perform the adjustment of the radar sensor radar axis. <Ref. to RVD-7, RADAR AXIS ADJUSTMENT, ADJUSTMENT, Radar Sensor.>

C: ADJUSTMENT

1. RADAR AXIS ADJUSTMENT

CAUTION:
- **After removal/installation or replacement of the radar sensor, perform the radar axis adjustment.**
- **The procedure for the master is only shown here. However the procedure for the slave can also be done in the same way as the master.**

1) Before performing the inspection, check the following items.
- The inflation pressure of tires is correct.
- The vehicle does not have load.
- Vehicle’s fuel tank is fully filled.

2) Place the vehicle on a level surface, where approximately 5 square meters (16.41 square ft) area can be secured behind the vehicle.

CAUTION:
- **No metallic objects around the vehicle and on the floor in the area.**
- **Do not let in objects other than the radar reflector (ST), persons and metallic objects inside the area.**

NOTE:
The illustration shows the secured area for adjusting the radar axis on the master side.

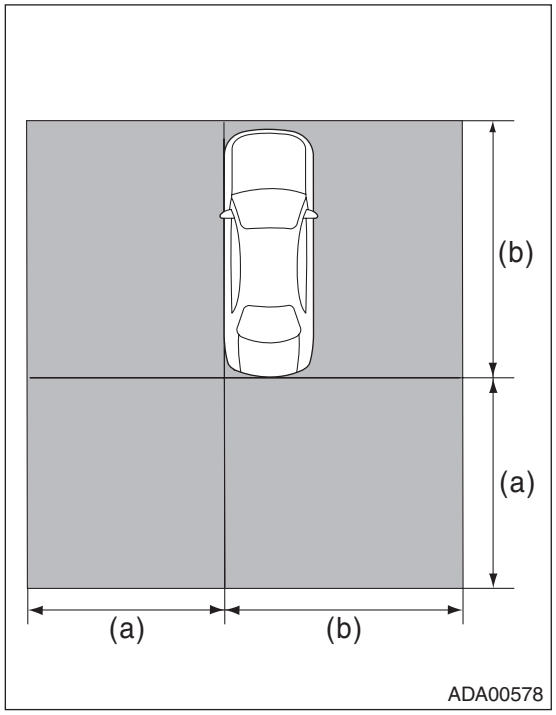

(a) Approx. 4 m (13.12 ft)
(b) Approx. 5 m (16.41 ft)

3) Prepare the Subaru Select Monitor, measure, leveling line, plumb bob, packing tape, RADAR REFLECTOR (ST), and stand or tripod for fixing the RADAR REFLECTOR.

Preparation tool:
ST: RADAR REFLECTOR (87699AL00A)

4) Set up the radar reflector.

NOTE:
The following procedure explains the method of setting the radar reflector so that the distance between radar reflector and radar sensor is 1,500 mm (4.92 ft) and the radar is positioned at an angle of 50 degree.

(1) Suspend the plumb bob from the center of the front hole cap, and mark the position where the plumb bob touches the ground. (Point A)

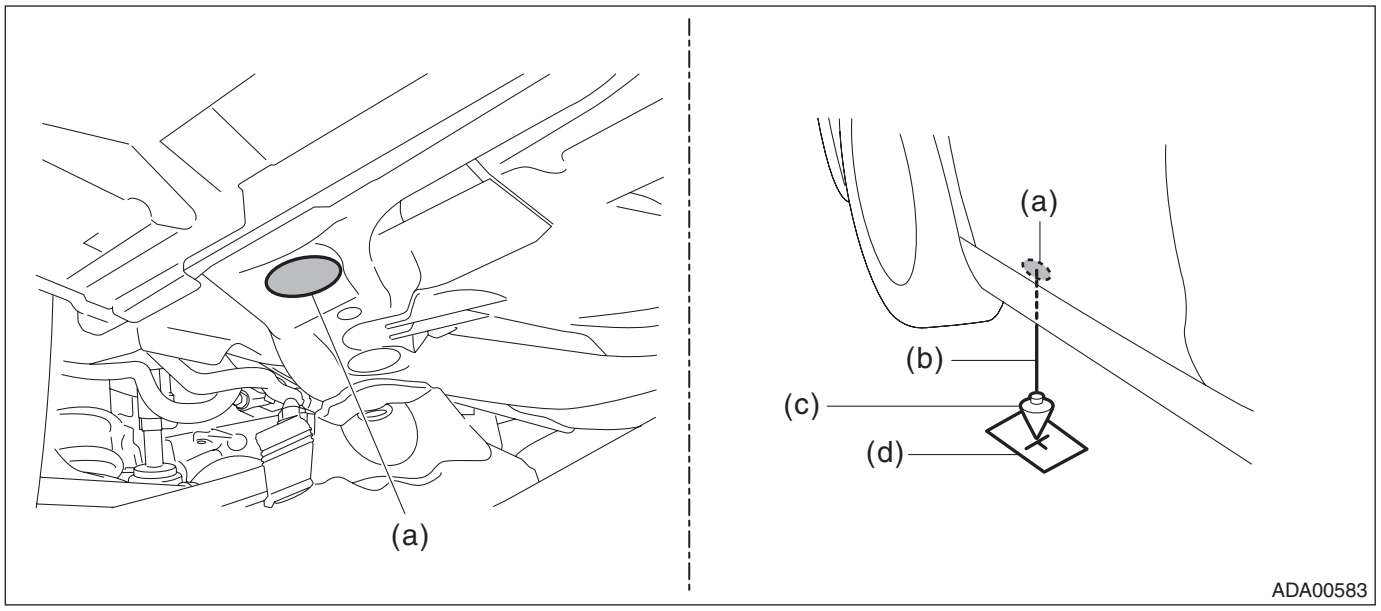

(a) Front hole cap
(b) Leveling line
(c) Plumb bob
(d) Point A

NOTE:
Stick the packing tape etc. on the floor, then make a marking on the tape.

(2) Suspend the plumb bob from the center of the center clip located on the lower side of the rear bumper, and mark the position where the plumb bob touches the ground. (Point B)

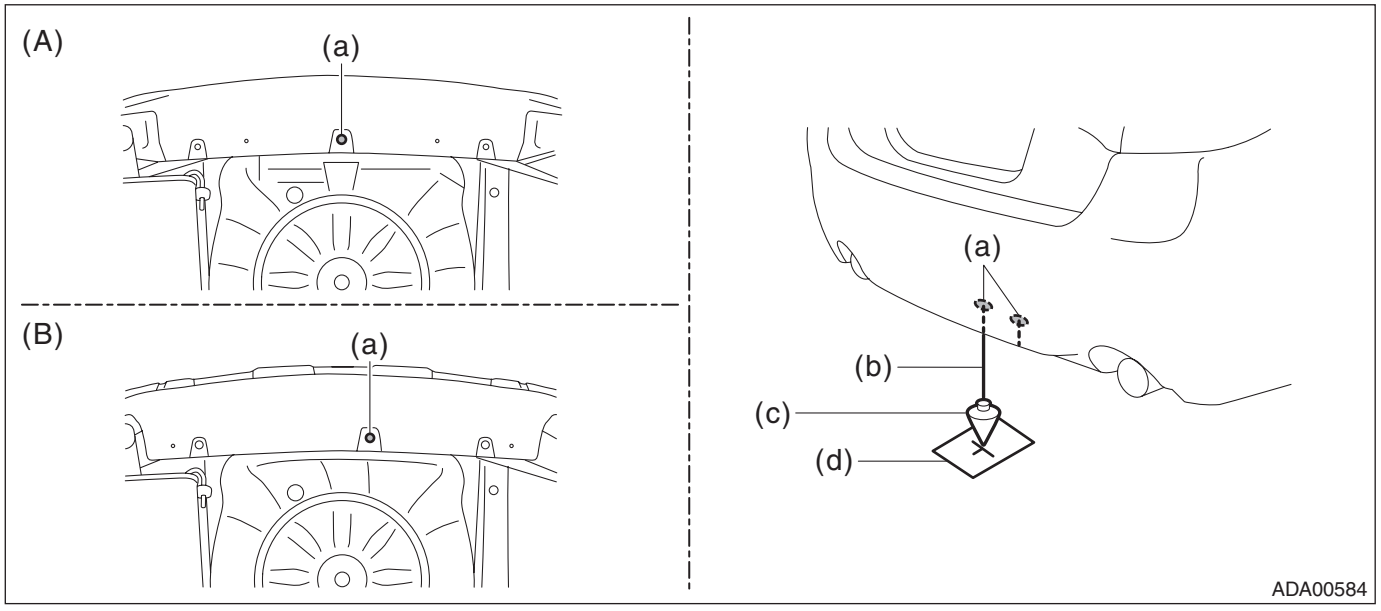

(A) Sedan model
(B) OUTBACK model
(a) Center clip
(b) Leveling line
(c) Plumb bob
(d) Point B

NOTE:
Stick the packing tape etc. on the floor, then make a marking on the tape.

(3) Stretch a leveling line to draw an arc with the marked point A as a pivot.
(4) Stretch a leveling line to draw an arc with the marked point B as a pivot.
(5) Set up the radar reflector at the cross point.

CAUTION:
When setting up the radar reflector, adjust the height so that the center of the pyramid points at the radar sensor as shown in the figure.

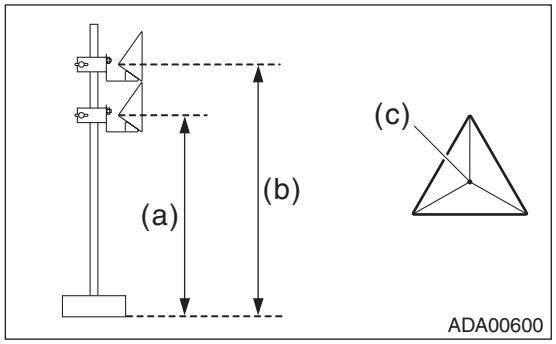

(a) Sedan model: 685±10 mm (26.97±0.39 in)
(b) OUTBACK model: 800±10 mm (31.50±0.39 in)
(c) Center of pyramid

- Sedan model

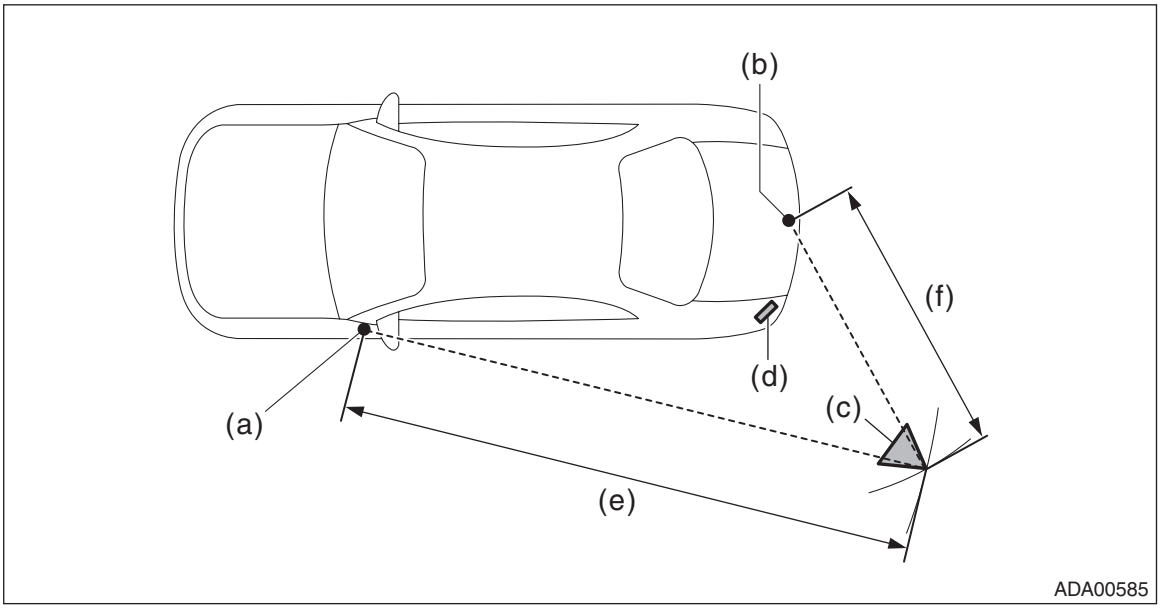

(a) Point A
(b) Point B
(c) Radar reflector
(d) Radar sensor
(e) 4,420 mm (14.50 ft)
(f) 2,025 mm (6.64 ft)

- OUTBACK model

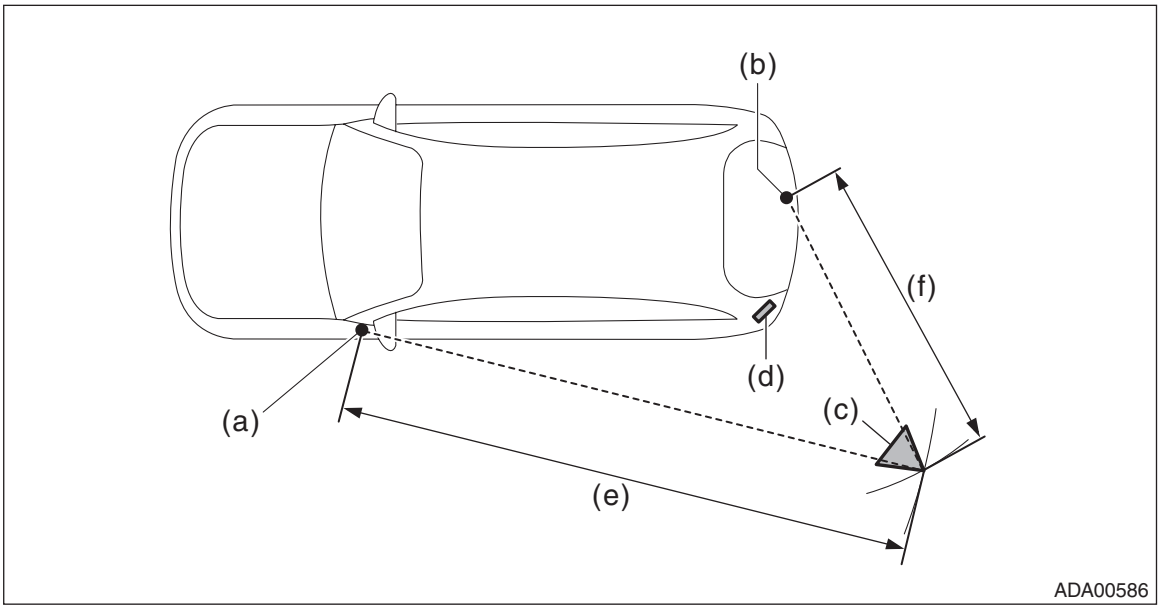

(a) Point A
(b) Point B
(c) Radar reflector
(d) Radar sensor
(e) 4,430 mm (14.53 ft)
(f) Master side: 2,100 mm (6.89 ft)
Slave side: 2,005 mm (6.58 ft)

5) Connect the Subaru Select Monitor.

NOTE:
Use the Subaru Select Monitor equipped with the latest version of the software.

6) Turn the ignition switch to ON and wait for 10 seconds.
7) Perform radar axis adjustment.
   (1) Connect the Subaru Select Monitor.
   (2) On «Start» display, select «Diagnosis».
   (3) On «Vehicle selection» display, enter vehicle information and select «Confirmed».
   (4) On «Main Menu» display, select «Each System».
   (5) On «Select System» display, select «RADAR ASSY B&S LH» or «RADAR ASSY B&S RH».
   (6) On «Select Function» display, select «Work Support».
   (7) From the work support item list, select «RADAR Alignment».
   (8) Follow the messages displayed on the Subaru Select Monitor screen when working.

NOTE:
Deviation of radar axis direction is indicated by + (plus) or – (minus).

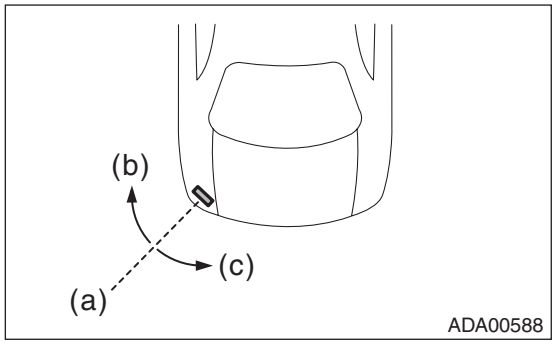

(a) Center of radar
(b) + (plus)
(c) – (minus)

(9) If the result is out of permissive range, it is assumed that the radar reflector position may be incorrect or the radar bracket or its installation location on the vehicle may be deformed. Check the set position of the radar reflector, radar bracket and other attachment, and perform the radar axis adjustment again.

5. Switches and Harness

A: REMOVAL

BSD/RCTA OFF switch

1) Disconnect the ground terminal from battery sensor. <Ref. to RC-4, BATTERY, NOTE, Repair Contents.>
2) Remove the cover assembly - instrument panel LWR driver. <Ref. to EI-75, REMOVAL, Instrument Panel Lower Cover.>
3) Release the claws and remove the BSD/RCTA OFF switch (f).

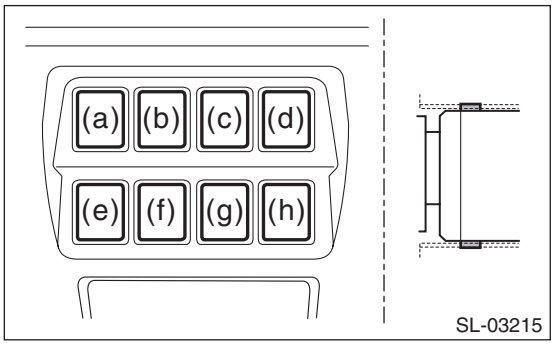

B: INSTALLATION

BSD/RCTA OFF switch

1) Install the BSD/RCTA OFF switch.
2) Install the cover assembly - instrument panel LWR driver.
3) Connect the ground terminal to battery sensor. <Ref. to RC-4, BATTERY, NOTE, Repair Contents.>

C: INSPECTION

BSD/RCTA OFF switch

1) Measure the resistance between connector terminals.

Preparation tool:
Circuit tester

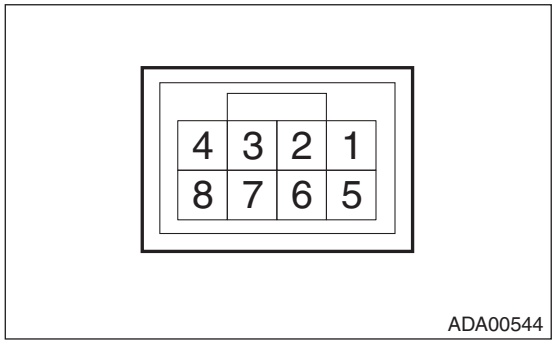

Terminal No.	Inspection conditions	Standard
6 — 8	Switch OFF	1 MΩ or more
	Switch ON	Less than 1 Ω

2) Apply battery voltage between the connector terminals to check lighting condition of illumination inside the switch.

Terminal No.	Inspection conditions	Specification
1 (+) — 4 (–)	Apply battery voltage.	Light ON

3) Replace the BSD/RCTA OFF switch if the inspection result is not within the standard value.

6. Combination Meter

A: NOTE

For the operation procedures for combination meter, refer to “INSTRUMENTATION/DRIVER INFO” section. <Ref. to IDI-11, Combination Meter.>

7. Outer Mirror Assembly

A: NOTE

For the operation procedures for the outer mirror assembly, refer to “GLASS/WINDOWS/MIRRORS” section. <Ref. to GW-27, Outer Mirror Assembly.>

8. Diagnostics with Phenomenon

A: INSPECTION

Refer to “Diagnostics with Phenomenon” of “Blind Spot Detection/Rear Cross Traffic Alert (DIAGNOSTICS)” section. <Ref. to RVD(diag)-40, Diagnostics with Phenomenon.>

Blind Spot Detection/Rear Cross Traffic Alert (DIAGNOSTICS)

RVD(diag)

		Page
1.	Basic Diagnostic Procedure	2
2.	Check List for Interview	3
3.	General Description	4
4.	Electrical Component Location	8
5.	Control Module I/O Signal	9
6.	Subaru Select Monitor	11
7.	Read Diagnostic Trouble Code (DTC)	13
8.	Clear Memory Mode	14
9.	Read Cancel Code	15
10.	Inspection Mode	16
11.	Read Current Data	18
12.	System Operation Check Mode	20
13.	List of Diagnostic Trouble Code (DTC)	21
14.	List of Cancel Code	22
15.	Diagnostic Procedure with Diagnostic Trouble Code (DTC)	23
16.	Diagnostic Procedure with Cancel Code	39
17.	Diagnostics with Phenomenon	40

1. Basic Diagnostic Procedure

A: PROCEDURE

	Step	Check	Yes	No
1	**PERFORM CUSTOMER INTERVIEW.** Using the Check List for Interview, ask the customer the condition of how trouble occurs.	Did you interview the customer?	Go to step **2**.	Interview the customer. <Ref. to RVD(diag)-3, Check List for Interview.>
2	**CHECK SUBARU SELECT MONITOR COMMUNICATION.** Check for communication with the radar sensor. NOTE: If the communication function of the Subaru Select Monitor cannot be executed properly, check the communication circuit. <Ref. to RVD(diag)-11, INSPECTION, Subaru Select Monitor.>	Is communication possible?	Go to step **3**.	Check the communication circuit.
3	**CHECK RADAR SENSOR.** Read the DTC and cancel code of the radar sensors LH and RH using the Subaru Select Monitor. <Ref. to RVD(diag)-13, Read Diagnostic Trouble Code (DTC).> <Ref. to RVD(diag)-15, Read Cancel Code.>	Is DTC displayed?	Perform the diagnosis according to DTC and cancel code. (Perform the diagnosis to the side that displayed the DTC.) <Ref. to RVD(diag)-21, List of Diagnostic Trouble Code (DTC).> <Ref. to RVD(diag)-15, Read Cancel Code.> After diagnosis, Go to step **6**.	Go to step **4**.
4	**PERFORM DIAGNOSTICS WITH PHENOMENON.** Check the list of Diagnostics with Phenomenon. <Ref. to RVD(diag)-40, Diagnostics with Phenomenon.>	Does the symptom apply?	Perform diagnosis according to the procedures in the diagnostics with phenomenon.	Go to step **5**.
5	**CHECK TROUBLE PHENOMENON.** 1) Perform the basic inspection. <Ref. to RVD(diag)-6, INSPECTION, General Description.> 2) Check the radar sensor. <Ref. to RVD(diag)-9, Control Module I/O Signal.> 3) Perform check of current data. <Ref. to RVD(diag)-18, Read Current Data.>	Was the trouble cause found?	Perform the Clear Memory after repairing or replacing the cause of trouble.	System is normal.
6	**PERFORM DIAGNOSIS.** 1) Perform the Clear Memory Mode. <Ref. to RVD(diag)-14, Clear Memory Mode.> 2) Perform the Inspection Mode. <Ref. to RVD(diag)-16, Inspection Mode.>	Is DTC displayed?	Perform the diagnosis according to DTC. <Ref. to RVD(diag)-21, List of Diagnostic Trouble Code (DTC).>	Finish the diagnosis.

2. Check List for Interview

A: CHECK

- Inspect the following items regarding the vehicle's state.
- Print out this page for interviewing customers.

<table>
<tr><td colspan="2">Blind Spot Detection/Rear Cross Traffic Alert
Check List for Interview</td><td colspan="2">Received Year Month Date</td></tr>
<tr><td colspan="2" rowspan="2">Customer's name</td><td>Registration No.</td><td>Initial year of registration
Year Month Date</td></tr>
<tr><td>Vehicle model</td><td>Frame number</td></tr>
<tr><td>Interviewer</td><td>Inspector</td><td>Engine type</td><td>Odometer reading</td></tr>
<tr><td colspan="4">Customer specified content
•
•
•</td></tr>
<tr><td>Date when problem occurred</td><td>Year Month Date</td><td>Frequency of trouble occurrence</td><td>Always occurs
Sometimes occurs (times per day, times per month)</td></tr>
<tr><td rowspan="2">Condition of trouble occurrence
(How the trouble occurs)</td><td rowspan="2"></td><td>Weather</td><td>Fine • Cloudy •
Rainy • Snowy •
Others ( )</td></tr>
<tr><td>Temperature</td><td>°C (°F) — °C (°F)</td></tr>
<tr><td>Road conditions</td><td></td><td>Occurrence location</td><td></td></tr>
<tr><td>Accessory installation condition</td><td colspan="3"></td></tr>
<tr><td>Confirmation of trouble condition</td><td colspan="3"></td></tr>
<tr><td>Diagnostic code</td><td colspan="3"></td></tr>
</table>

3. General Description

A: CAUTION

1. BSD/RCTA

1. In some cases, BSD/RCTA may not work correctly under the following conditions.
   - In bad weather such as heavy rain, fog, snow, sand storm, etc.
   - When ice, snow, dirt, etc. cover the rear bumper.
   - When the rear bumper has scratches or deformation in the area of the radar sensor.
   - When a difference of vehicle speeds between your own vehicle and another vehicle within the detection range is too large.
   - When there is another vehicle remaining within the detection range while your own vehicle starts from stationary state.
   - While driving on a steep slope with a series of uphills and downhills.
   - While driving on a wet road with such as puddles.
   - When more than one vehicle is approaching one after another with a short distance.
   - When vehicle speed of your own vehicle is almost the same as that of the vehicle within the detection range.
   - When a difference of the vehicle heights between your own vehicle and another vehicle in the next lane is too large.
   - Immediately after operating the BSD/RCTA OFF switch.
   - On wide lanes, when another vehicle of the next lane drives along the opposite edge so the distance is too large for the detection.
2. BSD/RCTA does not detect the following type of vehicles as well as objects other than vehicles.
   - Oncoming vehicle
   - Small motorcycle, bike, pedestrian, etc. *
   - Vehicle following behind on the same lane *
   - Stationary objects such as guardrail, wall, sign and parked vehicle*
   - Another vehicle driving on two lanes away*

NOTE:
*: Detection may be successful depending on circumstances.

3. BSD/RCTA may perform unnecessary detection in the following conditions.
   - When guardrails or walls are close enough to be within the detection range.
   - When distance from the vehicle behind is short.
   - On narrow lanes, when another vehicle driving on two lanes away enters the detection range.

4. Radar sensors of BSD/RCTA are each located on LH and RH sides. Always observe the followings for proper operation of the system.
- Always clean the vicinity of radar sensors.
- Do not give a strong impact to the radar sensor areas. Displacement of the radar sensors may result in improper operation of the system such that it may not detect the vehicle entering the detection range.
- Do not disassemble the radar sensors.
- Do not scratch or deform the bumper areas with the radar sensors.

NOTE:
Replace the rear bumper in the following cases.
- When there is any collision trace or dent inside the radar projection area.
- When there is any scuffed (chipped off) section inside the radar projection area on the resin bumper.
- When there is any crack inside the radar projection area.

NOTE:
Radar projection area
- OUTBACK model

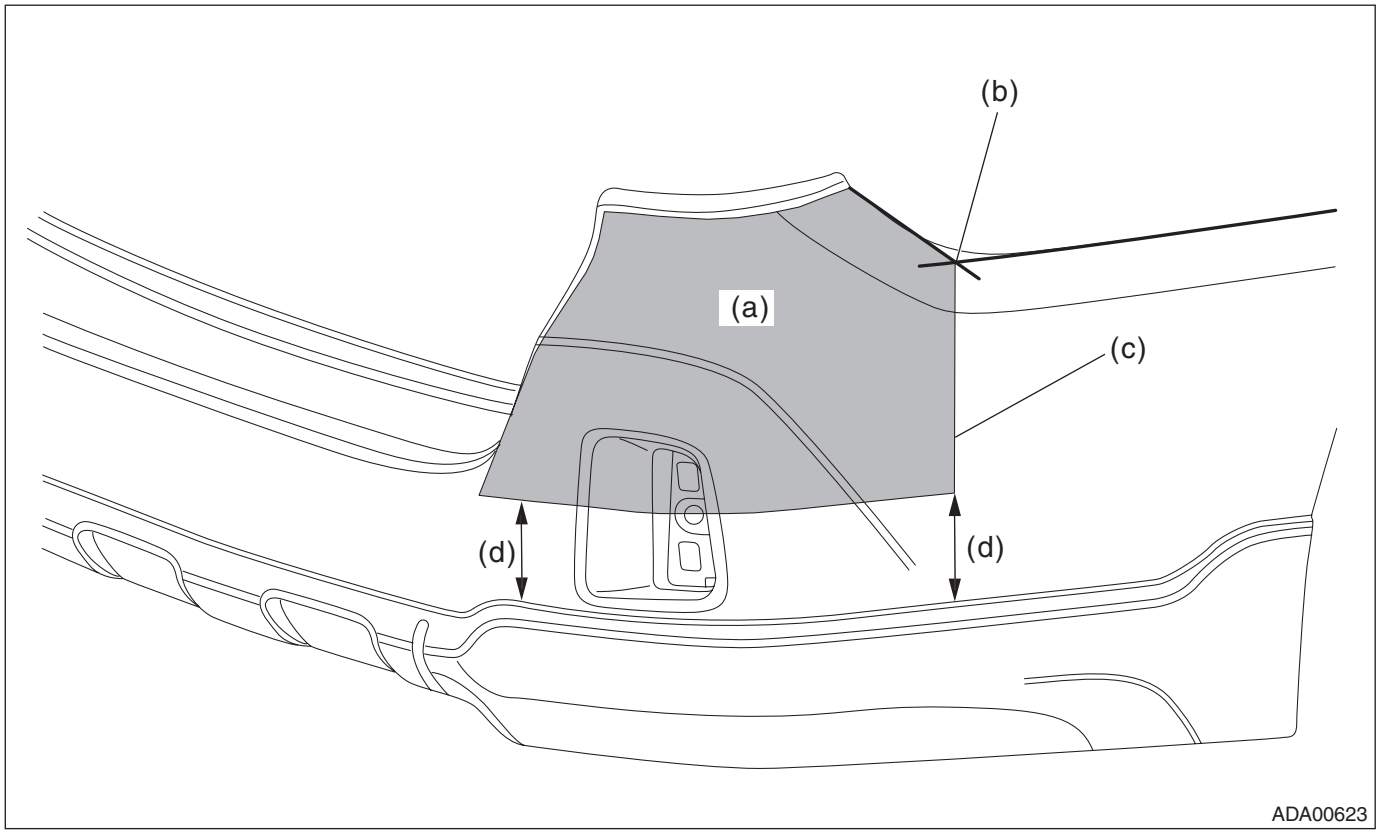

(a) Radar projection area (b) Point of intersection (c) Vertical line
(d) 100 mm (3.9 in)

- Sedan model

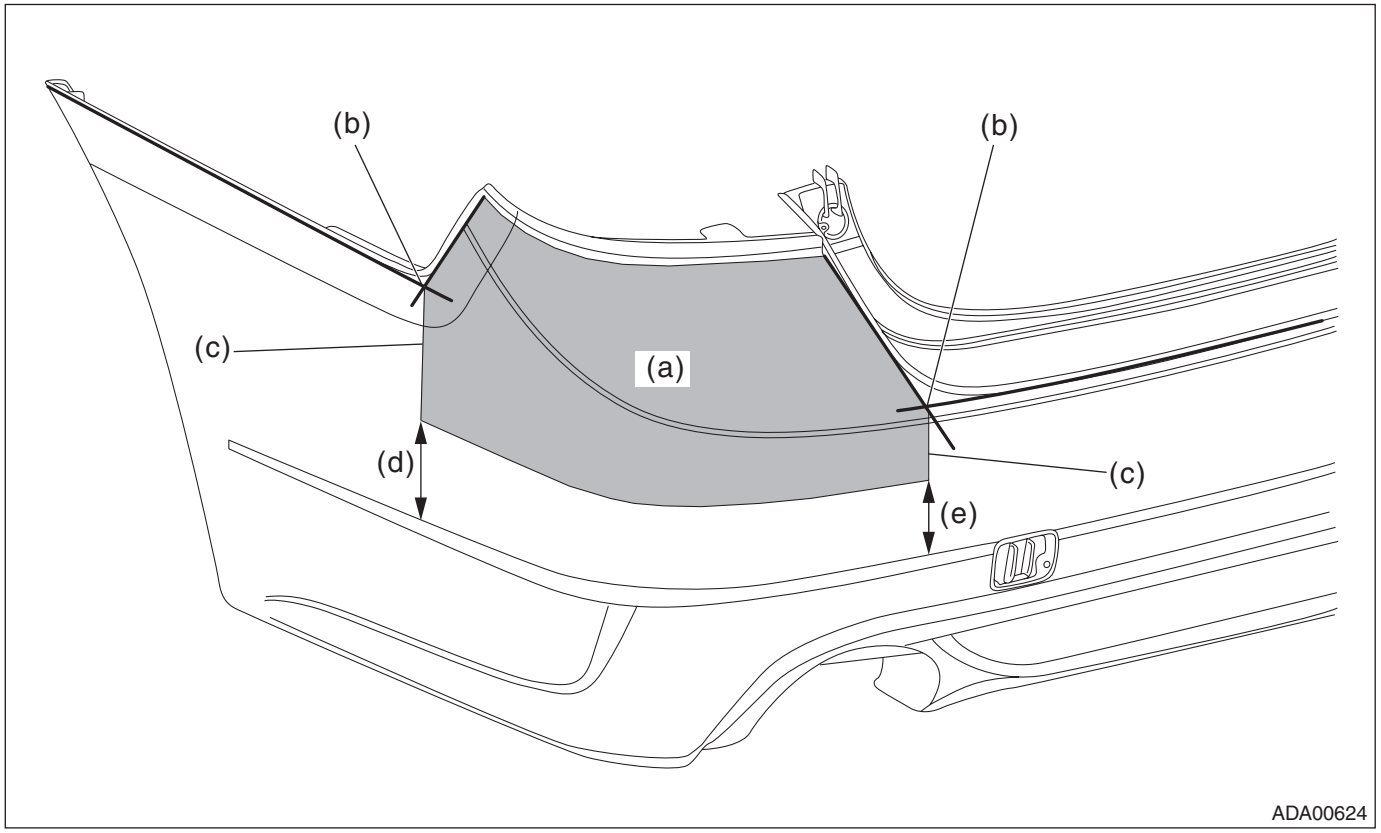

(a) Radar projection area
(b) Point of intersection
(c) Vertical line
(d) 100 mm (3.9 in)
(e) 80 mm (3.1 in)

For other flaws, perform the sensor readjustment. If no problem is found, replacement is unnecessary.
- Do not put a sticker, etc. on/around the radar sensors.
- Do not retrofit the radar sensors or the bumper close to the radar sensors.
- Do not repaint the radar sensors or the bumper close to the radar sensors.

NOTE:
If there is any painting defect inside the radar projection area, replace the rear bumper without trying to repair it.
- Do not give a strong impact, force or drop-off to the radar sensors because they are precision devices.
- Do not reuse the radar sensors that were affected by strong impact, force, or fell off.

B: INSPECTION

1. BASIC INSPECTION

Before performing diagnosis, check the following items that might provoke the problems related to BSD/RCTA.
1) Check the battery. <Ref. to SC(H4DO)-63, Battery.> <Ref. to SC(H6DO)-57, Battery.>
2) Check the relay and fuse condition. <Ref. to RVD-4, Relay and Fuse.>
3) Check the connecting condition of harness and connector.

C: PREPARATION TOOL

1. SPECIAL TOOL

ILLUSTRATION	TOOL NUMBER	DESCRIPTION	REMARKS
 STSSM4	— (Newly adopted tool)	SUBARU SELECT MONITOR 4	Used for setting of each function and trouble-shooting for electrical system. NOTE: For detailed operation procedures of Subaru Select Monitor 4, refer to “Application help”.

2. GENERAL TOOL

TOOL NAME	REMARKS
Circuit tester	Used for measuring resistance, voltage and current.
DST-i	Used together with Subaru Select Monitor 4.

4. Electrical Component Location

A: LOCATION

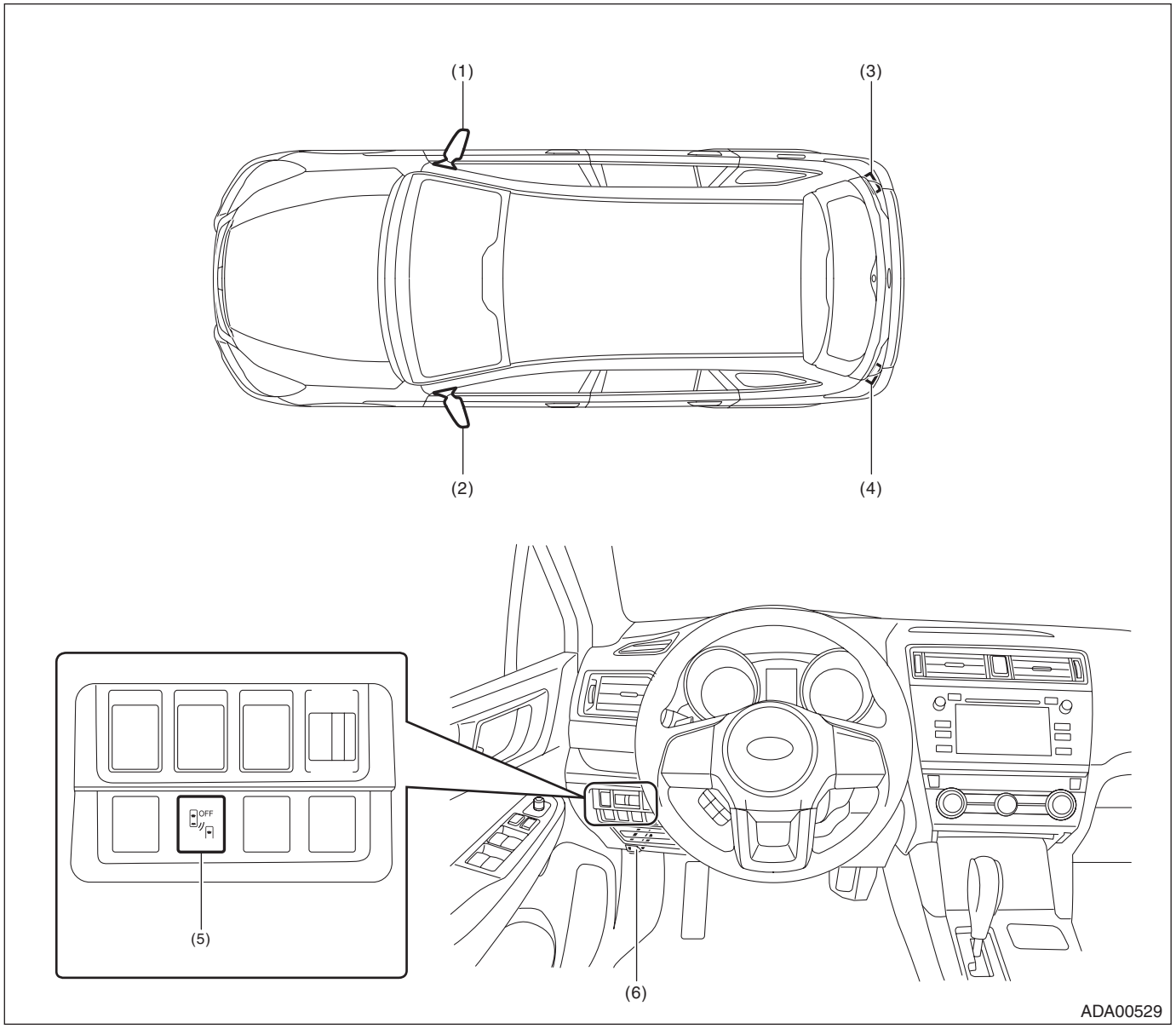

(1) Outer mirror ASSY RH
(2) Outer mirror ASSY LH
(3) Radar sensor RH (slave)
(4) Radar sensor LH (master)
(5) BSD/RCTA OFF switch
(6) Data link connector

5. Control Module I/O Signal

A: ELECTRICAL SPECIFICATION

1. RADAR SENSOR

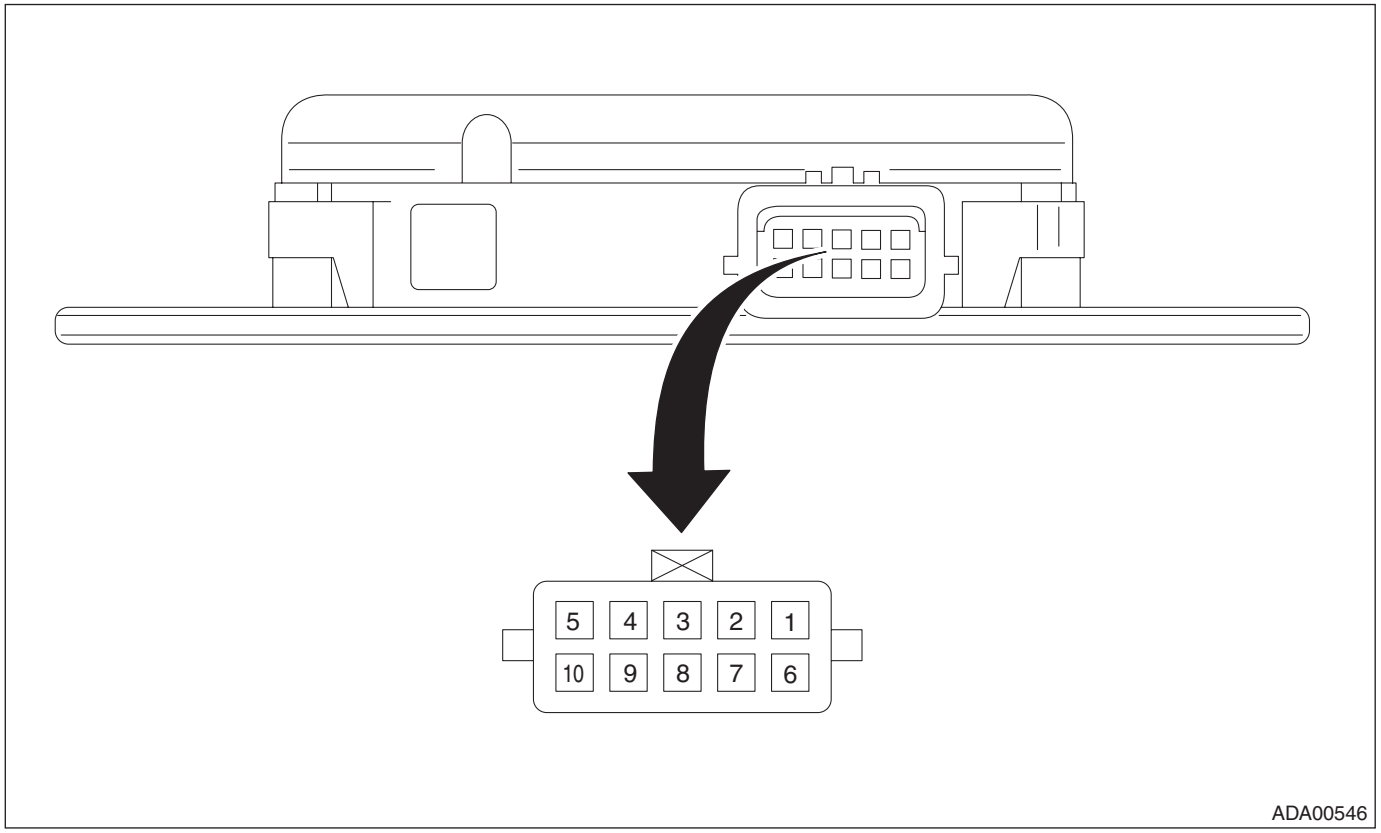

Terminal No.	Content		Measuring condition	Standard
	Radar sensor LH (master)	Radar sensor RH (slave)		
1 ←→ Chassis ground	Private CAN H	Private CAN H	Always	1 MΩ or more
2 ←→ Chassis ground	Master CAN H	—	Always	1 MΩ or more
3 ←→ Chassis ground	—	—	—	—
4 ←→ Chassis ground	Left mirror LED output	Right mirror LED output	• Ignition switch OFF → ON • BSD/RCTA OFF switch OFF → ON	• When indicator is ON: 2.5 — 10.5 V • When indicator is blinking: 0 ←→ 2.5 — 10.5 V • When indicator is OFF: Less than 1 V
5 ←→ Chassis ground	Ignition power supply	Ignition power supply	Ignition switch OFF → ON	Less than 1 V → 9 — 16 V
6 ←→ Chassis ground	Private CAN L	Private CAN L	Always	1 MΩ or more
7 ←→ Chassis ground	Master CAN L	—	Always	1 MΩ or more
8 ←→ Chassis ground	BSD/RCTA OFF switch	—	• Ignition switch ON • BSD/RCTA OFF switch OFF → ON (while pressing and holding the switch)	Less than 1 V → 9 — 16 V
9 ←→ Chassis ground	—	—	—	—
10 ←→ Chassis ground	GND	GND	Always	Less than 1 Ω

B: WIRING DIAGRAM

Refer to “BSD/RCTA System” in the wiring diagram. <Ref. to WI-130, WIRING DIAGRAM, Blind Spot Detection/Rear Cross Traffic Alert.>

C: SYSTEM BLOCK DIAGRAM

- BSD/RCTA system is configured by the following components.
- There is a control ECM in the radar sensor main body, which performs the vehicle identification and the alert judgment control.
- The LH/RH radar sensors are identified as Master/Slave for control purposes. They are connected by the private CAN to execute the controls through mutual communication. The radar on the Master side receives the input from the vehicle CAN and the BSD/RCTA OFF switch, so information necessary for control can be obtained from other modules via the vehicle CAN.
- The outer mirror LED is directly driven by the signal from the radar sensor.

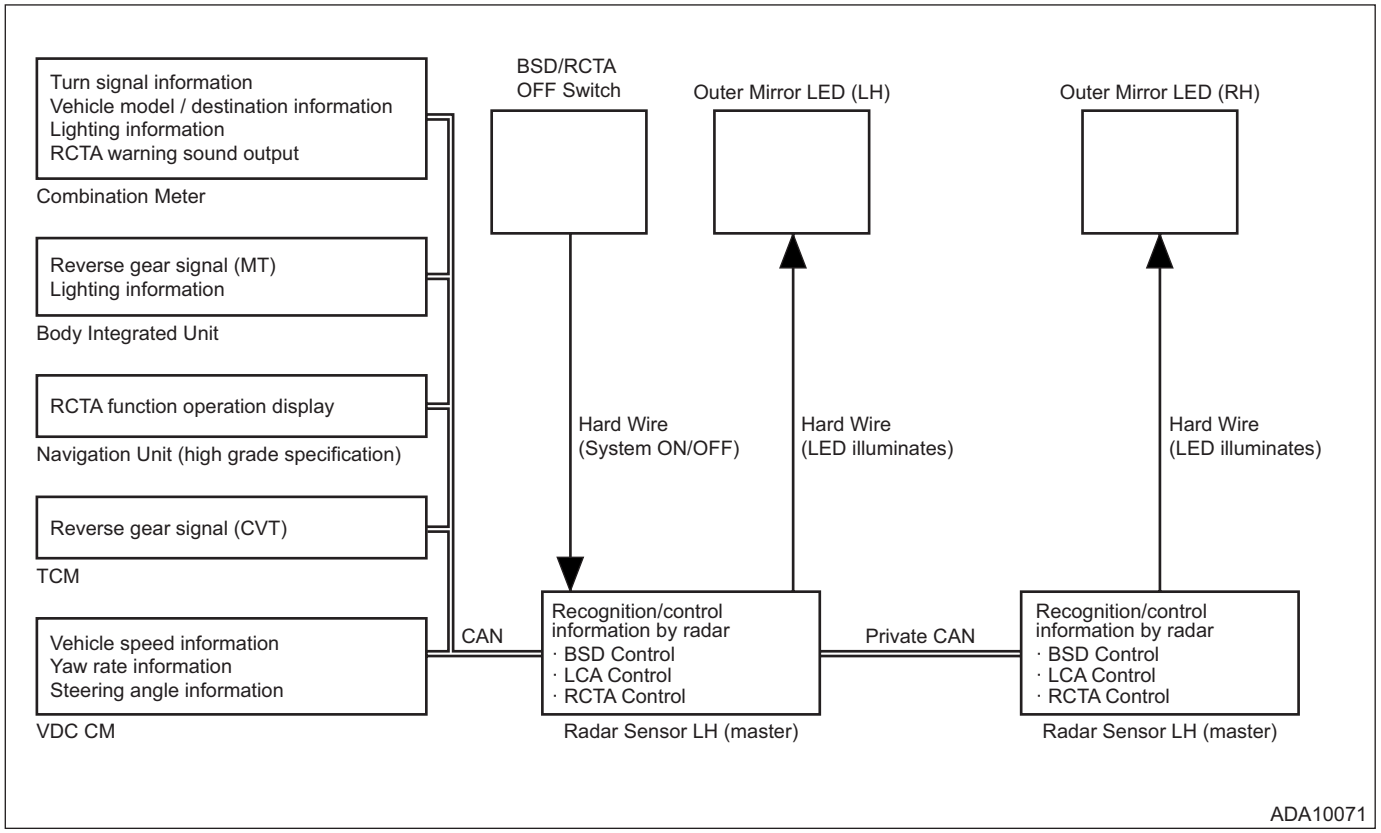

6. Subaru Select Monitor

A: OPERATION

- For operation procedures, refer to “Application help”.
- When the radar sensor cannot communicate with Subaru Select Monitor, perform “COMMUNICATION FOR INITIALIZING IMPOSSIBLE”. <Ref. to RVD(diag)-11, COMMUNICATION FOR INITIALIZING IMPOSSIBLE, INSPECTION, Subaru Select Monitor.>

B: INSPECTION

1. COMMUNICATION FOR INITIALIZING IMPOSSIBLE

When communication with the radar sensor is impossible

DETECTING CONDITION:

- Defective harness connector
- Power supply circuit malfunction
- Defective radar sensor
- Defective CAN communication circuit
- Defective Subaru Select Monitor

TROUBLE SYMPTOM:

Communication is impossible between radar sensor and Subaru Select Monitor.

WIRING DIAGRAM:

NOTE:
For the coupling connector, refer to “WIRING SYSTEM”.
BSD/RCTA system <Ref. to WI-130, WIRING DIAGRAM, Blind Spot Detection/Rear Cross Traffic Alert.>

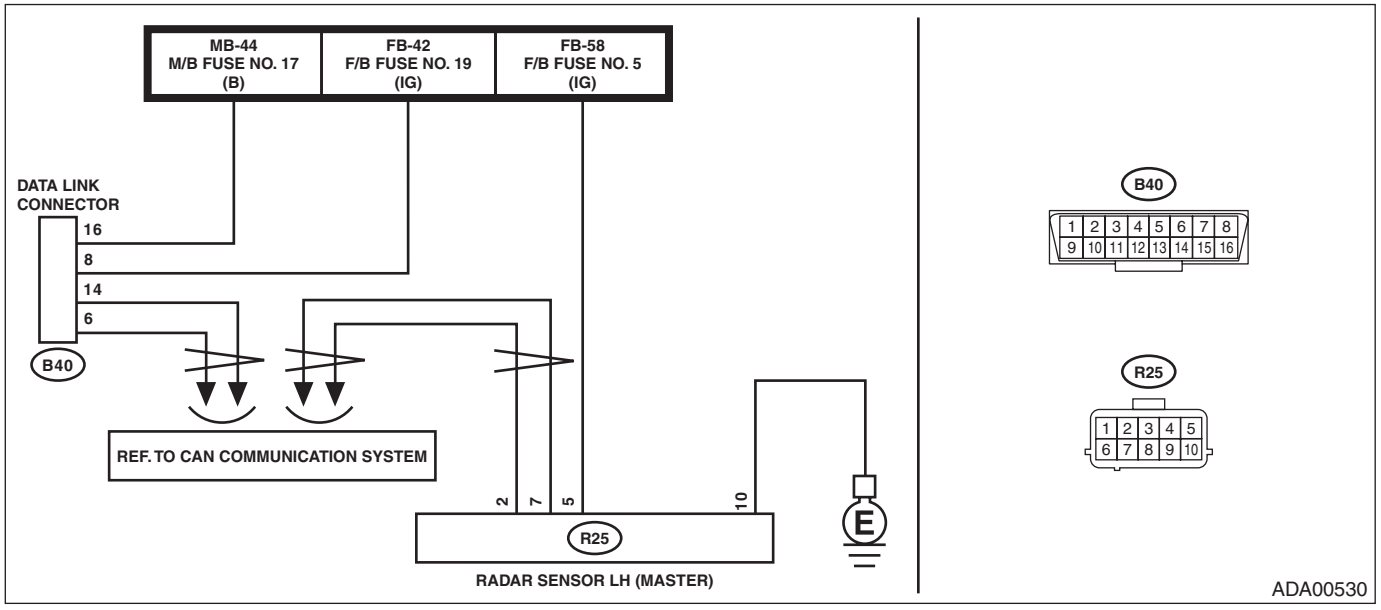

Step		Check	Yes	No
1	**CHECK FUSE.** 1) Turn the ignition switch to OFF. 2) Check the fuse for radar sensor LH. <Ref. to RVD-4, Relay and Fuse.>	Is it normal?	Go to step **2**.	Replace the fuse. If the replaced fuse has blown out immediately, repair the short circuit to ground in harness between fuse and radar sensor LH.

	Step	Check	Yes	No
2	**CHECK HARNESS (OPEN CIRCUIT).** 1) Disconnect the radar sensor LH connector. 2) Turn the ignition switch to ON. 3) Using a tester, measure the voltage between radar sensor LH connector (harness side) and chassis ground. ***Connector & terminal*** ***(R25) No. 5 (+) — Chassis ground (–):***	Is the voltage 10 V or more?	Go to step **3**.	Repair the open circuit of harness between fuse and radar sensor LH connector.
3	**CHECK HARNESS (OPEN CIRCUIT).** 1) Turn the ignition switch to OFF. 2) Using a tester, measure the resistance between radar sensor LH connector (harness side) and chassis ground. ***Connector & terminal*** ***(R25) No. 10 — Chassis ground:***	Is the resistance less than 1 Ω?	Go to step **4**.	Repair the open circuit in harness between radar sensor and chassis ground.
4	**CHECK LAN SYSTEM.** 1) Connect the radar sensor LH connector. 2) Inspect LAN system. <Ref. to RVD(diag)-2, Basic Diagnostic Procedure.>	Is it normal?	Go to step **5**.	Perform the inspection according to the diagnosis for LAN system.
5	**CHECK RADAR SENSOR.** Communicate with the radar sensor.	Is communication possible?	The circuit has returned to a normal condition at this time. Reproduce the failure, and then perform the diagnosis again. NOTE: In this case, temporary poor contact of connector, temporary open or short circuit of harness may be the cause.	Replace the radar sensor LH. <Ref. to RVD-6, Radar Sensor.>

7. Read Diagnostic Trouble Code (DTC)

A: OPERATION

1) On «Start» display, select «Diagnosis».
2) On «Vehicle selection» display, input the target vehicle information and select «Confirmed».
3) On «Main Menu» display, select «Each System».
4) On «Select System» display, select «Subaru Rear Vehicle Detection(RH)» or «Subaru Rear Vehicle Detection(LH)» and then select «Enter».
5) On «Select Function» display, select «DTC».

NOTE:
- For operation procedures, refer to “Application help”.
- For details concerning DTC, refer to the List of Diagnostic Trouble Codes (DTC). <Ref. to RVD(diag)-21, List of Diagnostic Trouble Code (DTC).>
- Check and replace the side that displayed the DTC.

8. Clear Memory Mode

A: OPERATION

1) On «Start» display, select «Diagnosis».
2) On «Vehicle selection» display, input the target vehicle information and select «Confirmed».
3) On «Main Menu» display, select «Each System».
4) On «Select System» display, select «Subaru Rear Vehicle Detection(RH)» or «Subaru Rear Vehicle Detection(LH)» and then select «Enter».
5) On «Select Function» display, select «DTC».
6) On «DTC» display, select «Clear Memory».

NOTE:
For operation procedures, refer to “Application help”.

9. Read Cancel Code

A: OPERATION

1) On «Start» display, select «Diagnosis».
2) On «Vehicle selection» display, input the target vehicle information and select «Confirmed».
3) On «Main Menu» display, select «Each System».
4) On «Select System» display, select «Subaru Rear Vehicle Detection(RH)» or «Subaru Rear Vehicle Detection(LH)» and then select «Enter».
5) On «Select Function» display, select «Cancel Code».

NOTE:
- For operation procedures, refer to “Application help”.
- For details concerning cancel codes, refer to the List of Cancel Codes. <Ref. to RVD(diag)-22, List of Cancel Code.>

10.Inspection Mode

A: OPERATION

It is possible to diagnose the DTC by performing the indicated inspection mode. After correcting the DTC, perform a necessary inspection mode and make sure that the function is resumed correctly and the DTC is recorded.

1. INSPECTION MODE 1

DTC	Item	Note
U0073	CAN FAILURE, BUS 'OFF' DETECTION	—
U0101	LOST COMMUNICATION WITH TCM	—
U0122	LOST COMMUNICATION WITH VEHICLE DYNAMICS CONTROL MODULE	—
U0140	LOST COMMUNICATION WITH BODY CONTROL MODULE	—
U0155	LOST COMMUNICATION WITH INSTRUMENT PANEL CLUSTER (IPC) CONTROL MODULE	—
U0402	INVALID DATA RECEIVED FROM TCM	—
U0416	INVALID DATA RECEIVED FROM VEHICLE DYNAMICS CONTROL MODULE	—
U0422	INVALID DATA RECEIVED FROM BODY CONTROL MODULE	—
U0423	INVALID DATA RECEIVED FROM INSTRUMENT PANEL CLUSTER CONTROL MODULE	—
B2304	REAR RADAR ON-OFF SWITCH STUCK	—
B2311	REAR RADAR DETECT TCM	—
B2313	REAR RADAR DETECT VDC	—
B2327	REAR RADAR INTERNAL FAILURE (INTERNAL ELECTRIC CIRCUIT)	—
B2350	REAR RADAR COMMUNICATION ERROR BETWEEN MASTER AND SLAVE	—

1) Perform the Clear Memory Mode. <Ref. to RVD(diag)-14, Clear Memory Mode.>
2) Read the DTC and check that the DTC is not displayed. <Ref. to RVD(diag)-13, Read Diagnostic Trouble Code (DTC).>

NOTE:
If the DTC is displayed on the screen, the trouble is still present. Perform the diagnosis according to DTC. After solving the DTC, repeat from step 1).
3) Start the engine and wait for 30 seconds or more.
4) Read the DTC and check that the DTC is not displayed. <Ref. to RVD(diag)-13, Read Diagnostic Trouble Code (DTC).>

NOTE:
If the DTC is displayed on the screen, the trouble is still present. Perform the diagnosis according to DTC. <Ref. to RVD(diag)-21, List of Diagnostic Trouble Code (DTC).>

2. INSPECTION MODE 2

DTC	Item	Note
B2300	REAR RADAR CIRCUIT LOW	—
B2301	REAR RADAR CIRCUIT HIGH	—

1) Perform the Clear Memory Mode. <Ref. to RVD(diag)-14, Clear Memory Mode.>
2) Read the DTC and check that the DTC is not displayed. <Ref. to RVD(diag)-13, Read Diagnostic Trouble Code (DTC).>

NOTE:
If the DTC is displayed on the screen, the trouble is still present. Perform the diagnosis according to DTC. After solving the DTC, repeat from step 1).
3) Start the engine.
4) Perform the System Operation Check Mode «Door mirror indicator active test». <Ref. to RVD(diag)-20, System Operation Check Mode.>
5) Read the DTC and check that the DTC is not displayed. <Ref. to RVD(diag)-13, Read Diagnostic Trouble Code (DTC).>

NOTE:
If the DTC is displayed on the screen, the trouble is still present. Perform the diagnosis according to DTC. <Ref. to RVD(diag)-21, List of Diagnostic Trouble Code (DTC).>

3. INSPECTION MODE 3

DTC	Item	Note
B2329	REAR RADAR AXIS ALIGNMENT INCOMPLETE	—

1) Perform the Clear Memory Mode. <Ref. to RVD(diag)-14, Clear Memory Mode.>
2) Read the DTC and check that the DTC is not displayed. <Ref. to RVD(diag)-13, Read Diagnostic Trouble Code (DTC).>

NOTE:
If the DTC is displayed on the screen, the trouble is still present. Perform the diagnosis according to DTC. After solving the DTC, repeat from step 1).
3) Perform the adjustment of radar axis.
4) Read the DTC and check that the DTC is not displayed. <Ref. to RVD(diag)-13, Read Diagnostic Trouble Code (DTC).>

NOTE:
If the DTC is displayed on the screen, the trouble is still present. Perform the diagnosis according to DTC. <Ref. to RVD(diag)-21, List of Diagnostic Trouble Code (DTC).>

11.Read Current Data

A: OPERATION

1) On «Start» display, select «Diagnosis».
2) On «Vehicle selection» display, input the target vehicle information and select «Confirmed».
3) On «Main Menu» display, select «Each System».
4) On «Select System» display, select «Subaru Rear Vehicle Detection(RH)» or «Subaru Rear Vehicle Detection(LH)» and then select «Enter».
5) On «Select Function» display, select «Data Monitor».

NOTE:
For detailed operation procedures, refer to “Application help”.

B: LIST

- «Subaru Rear Vehicle Detection(LH)»

Display	Content	Reference value	Note
SRVD System fail flag	Current failure status of BSD/RCTA system is displayed.	• Normal • Fail	—
SRVD System HALT flag	Current temporary stop status of BSD/RCTA system is displayed. Temporary stop: Temporarily stops when reception of radar sensor waves failed due to some obstacles or when the temperature is not within the range of –40°C (–40°F) — 85°C (185°F).	• Normal • Halt	—
SRVD System ON-OFF flag	ON/OFF status of BSD/RCTA system is displayed. If this flag is set to «OFF» while the values of «SRVD System fail flag» and «SRVD System HALT flag» are «Normal», the BSD/RCTA system is set to OFF by the BSD/RCTA OFF switch.	• OFF • ON	—
LH-Side Target detection flag	Detection status of the control target vehicle on the rear left side is displayed. Detection is possible if the target vehicle is moving when the own vehicle drives forward at 12 km/h (8 MPH) or more or backward at 0 km/h (0 MPH) or more.	• Un-detect • Detect	—
LH-Side BSD caution 1st flag	ON is displayed when the 1st stage BSD warning on the left side is activated (when the outer mirror assembly illuminates).	• OFF • ON	—
LH-Side LCA caution 1st flag	ON is displayed when the 1st stage LCA warning on the left side is activated (when the outer mirror assembly illuminates).	• OFF • ON	—
LH-Side RCTA caution flag	ON is displayed when the RCTA warning on the left side is activated (when the outer mirror assembly illuminates and buzzer sounds).	• OFF • ON	—
LH-Side Radar Voltage value	Power supply voltage of the radar sensor LH is displayed.	0 — 25.5 V	—
LH-Side Temperature value	Ambient temperature of the radar sensor LH is displayed.	–128 — 127°C	—
Ignition SW ON Count	Time stamp information <Ref. to LAN(diag)-6, TIME STAMP, CAUTION, General Description.>	—	—
Count		—	—
Time Count		—	—

- «Subaru Rear Vehicle Detection(RH)»

Display	Content	Reference value	Note
SRVD System fail flag	Current failure status of BSD/RCTA system is displayed.	• Normal • Fail	—
SRVD System HALT flag	Current temporary stop status of BSD/RCTA system is displayed. Temporary stop: Temporarily stops when reception of radar sensor waves failed due to some obstacles or when the temperature is not within the range of –40°C (–40°F) — 85°C (185°F).	• Normal • Halt	—
SRVD System ON-OFF flag	ON/OFF status of BSD/RCTA system is displayed. If this flag is set to «OFF» while the values of «SRVD System fail flag» and «SRVD System HALT flag» are «Normal», the BSD/RCTA system is set to OFF by the BSD/RCTA OFF switch.	• OFF • ON	—
RH-Side Target detection flag	Detection status of the control target vehicle on the rear right side is displayed. Detection is possible if the target vehicle is moving when the own vehicle drives forward at 12 km/h (8 MPH) or more or backward at 0 km/h (0 MPH) or more.	• Un-detect • Detect	—
RH-Side BSD caution 1st flag	ON is displayed when the 1st stage BSD warning on the right side is activated (outer mirror assembly illuminates).	• OFF • ON	—
RH-Side LCA caution 1st flag	ON is displayed when the 1st stage LCA warning on the right side is activated (outer mirror assembly illuminates).	• OFF • ON	—
RH-Side RCTA caution flag	ON is displayed when the RCTA warning on the right side is activated (when the outer mirror assembly illuminates and buzzer sounds).	• OFF • ON	—
RH-Side Radar Voltage value	Power supply voltage of the radar sensor RH is displayed.	0 — 25.5 V	—
RH-Side Temperature value	Ambient temperature of the radar sensor RH is displayed.	–128 — 127°C	—
Ignition SW ON Count	Time stamp information <Ref. to LAN(diag)-6, TIME STAMP, CAUTION, General Description.>	—	—
Count		—	—
Time Count		—	—

12.System Operation Check Mode

A: OPERATION

1) On «Start» display, select «Diagnosis».
2) On «Vehicle selection» display, input the target vehicle information and select «Confirmed».
3) On «Main Menu» display, select «Each System».
4) On «Select System» display, select «Subaru Rear Vehicle Detection(RH)» or «Subaru Rear Vehicle Detection(LH)» and then select «Enter».
5) On «Select Function» display, select «Active Test».

NOTE:
For detailed operation procedures, refer to “Application help”.

B: LIST

Data	Note
Door mirror indicator active test	Outer mirror assembly indicator is illuminated.

13.List of Diagnostic Trouble Code (DTC)

A: LIST

DTC	Item	Reference
B2300	REAR RADAR CIRCUIT LOW	<Ref. to RVD(diag)-23, DTC B2300 REAR RADAR CIRCUIT LOW, Diagnostic Procedure with Diagnostic Trouble Code (DTC).>
B2301	REAR RADAR CIRCUIT HIGH	<Ref. to RVD(diag)-26, DTC B2301 REAR RADAR CIRCUIT HIGH, Diagnostic Procedure with Diagnostic Trouble Code (DTC).>
B2304	REAR RADAR ON-OFF SWITCH STUCK	<Ref. to RVD(diag)-29, DTC B2304 REAR RADAR ON-OFF SWITCH STUCK, Diagnostic Procedure with Diagnostic Trouble Code (DTC).> NOTE: Only radar sensor LH (master) is detected.
B2311	REAR RADAR DETECT TCM	<Ref. to RVD(diag)-32, DTC B2311 REAR RADAR DETECT TCM, Diagnostic Procedure with Diagnostic Trouble Code (DTC).>
B2313	REAR RADAR DETECT VDC	<Ref. to RVD(diag)-33, DTC B2313 REAR RADAR DETECT VDC, Diagnostic Procedure with Diagnostic Trouble Code (DTC).>
B2327	REAR RADAR INTERNAL FAILURE (INTERNAL ELECTRIC CIRCUIT)	<Ref. to RVD(diag)-34, DTC B2327 REAR RADAR INTERNAL FAILURE (INTERNAL ELECTRIC CIRCUIT), Diagnostic Procedure with Diagnostic Trouble Code (DTC).>
B2329	REAR RADAR AXIS ALIGNMENT INCOMPLETE	<Ref. to RVD(diag)-35, DTC B2329 REAR RADAR AXIS ALIGNMENT INCOMPLETE, Diagnostic Procedure with Diagnostic Trouble Code (DTC).>
B2350	REAR RADAR COMMUNICATION ERROR BETWEEN MASTER AND SLAVE	<Ref. to RVD(diag)-36, DTC B2350 REAR RADAR COMMUNICATION ERROR BETWEEN MASTER AND SLAVE, Diagnostic Procedure with Diagnostic Trouble Code (DTC).>
U0073	CAN FAILURE, BUS ‘OFF’ DETECTION	<Ref. to RVD(diag)-38, DTC U0073 CONTROL MODULE COMMUNICATION BUS OFF, Diagnostic Procedure with Diagnostic Trouble Code (DTC).>
U0101	LOST COMMUNICATION WITH TCM	<Ref. to RVD(diag)-38, DTC U0101 LOST COMMUNICATION WITH TCM, Diagnostic Procedure with Diagnostic Trouble Code (DTC).>
U0122	LOST COMMUNICATION WITH VEHICLE DYNAMICS CONTROL MODULE	<Ref. to RVD(diag)-38, DTC U0122 LOST COMMUNICATION WITH VEHICLE DYNAMICS CONTROL MODULE, Diagnostic Procedure with Diagnostic Trouble Code (DTC).>
U0140	LOST COMMUNICATION WITH BODY CONTROL MODULE	<Ref. to RVD(diag)-38, DTC U0140 LOST COMMUNICATION WITH BODY CONTROL MODULE, Diagnostic Procedure with Diagnostic Trouble Code (DTC).>
U0155	LOST COMMUNICATION WITH INSTRUMENT PANEL CLUSTER (IPC) CONTROL MODULE	<Ref. to RVD(diag)-38, DTC U0155 LOST COMMUNICATION WITH INSTRUMENT PANEL CLUSTER (IPC) CONTROL MODULE, Diagnostic Procedure with Diagnostic Trouble Code (DTC).>
U0402	INVALID DATA RECEIVED FROM TCM	<Ref. to RVD(diag)-38, DTC U0402 INVALID DATA RECEIVED FROM TCM, Diagnostic Procedure with Diagnostic Trouble Code (DTC).>
U0416	INVALID DATA RECEIVED FROM VEHICLE DYNAMICS CONTROL MODULE	<Ref. to RVD(diag)-38, DTC U0416 INVALID DATA RECEIVED FROM VEHICLE DYNAMICS CONTROL MODULE, Diagnostic Procedure with Diagnostic Trouble Code (DTC).>
U0422	INVALID DATA RECEIVED FROM BODY CONTROL MODULE	<Ref. to RVD(diag)-38, DTC U0422 INVALID DATA RECEIVED FROM BODY CONTROL MODULE, Diagnostic Procedure with Diagnostic Trouble Code (DTC).>
U0423	INVALID DATA RECEIVED FROM INSTRUMENT PANEL CLUSTER CONTROL MODULE	<Ref. to RVD(diag)-38, DTC U0423 INVALID DATA RECEIVED FROM INSTRUMENT PANEL CLUSTER CONTROL MODULE, Diagnostic Procedure with Diagnostic Trouble Code (DTC).>

14.List of Cancel Code

A: LIST

Code	Item	Contents of diagnosis
B2320	REAR RADAR LOW VOLTAGE (LESS THAN 9 V)	Temporarily stops because the voltage supplied to radar drops to or below 9 V. Returns to normal when the voltage becomes normal.
B2321	REAR RADAR HIGH VOLTAGE (MORE THAN 16 V)	Temporarily stops because the voltage supplied to radar rises to or above 16 V. Returns to normal when the voltage becomes normal.
B2328	REAR RADAR INTERNAL FAILURE (RADAR MISALIGNMENT)	Deviation of the radar axis prevents normal detection. Returns to normal when the radar axis becomes normal. When B2328 is frequently detected, perform “Diagnostic Procedure with Cancel Code”. <Ref. to RVD(diag)-39, DTC B2328 REAR RADAR INTERNAL FAILURE (RADAR MISALIGNMENT), Diagnostic Procedure with Cancel Code.>
B2340	RADAR ASSY B&S OUT OF OPERATION TEMPERATURE RANGE	Temporarily stops because the temperature is outside the operative range (–40°C (–40°F) — 85°C (185°F)). Returns to normal when the ambient temperature falls within the operative range.
B2341	RADAR ASSY B&S DEGRADATION OF DETECTING PERFORMANCE	Temporarily stops because some obstacles blocked radar waves of the back and side radar. Returns to normal when the transmission and reception of radar signals becomes normal.

15.Diagnostic Procedure with Diagnostic Trouble Code (DTC)

A: DTC B2300 REAR RADAR CIRCUIT LOW

DTC DETECTING CONDITION:

- Short circuit to ground in the harness between radar sensor and outer mirror assembly
- Ground short circuit of the harness in outer mirror assembly module (Malfunction of the outer mirror assembly)
- Defective radar sensor

TROUBLE SYMPTOM:

- All functions of BSD/RCTA stop.
- Fail icon is displayed in the combination meter LCD display.
- Failure-related notification is displayed for approx. two seconds on LCD display in the combination meter.

WIRING DIAGRAM:

NOTE:
For the coupling connector, refer to “WIRING SYSTEM”.
BSD/RCTA system <Ref. to WI-130, WIRING DIAGRAM, Blind Spot Detection/Rear Cross Traffic Alert.>

- Radar sensor LH

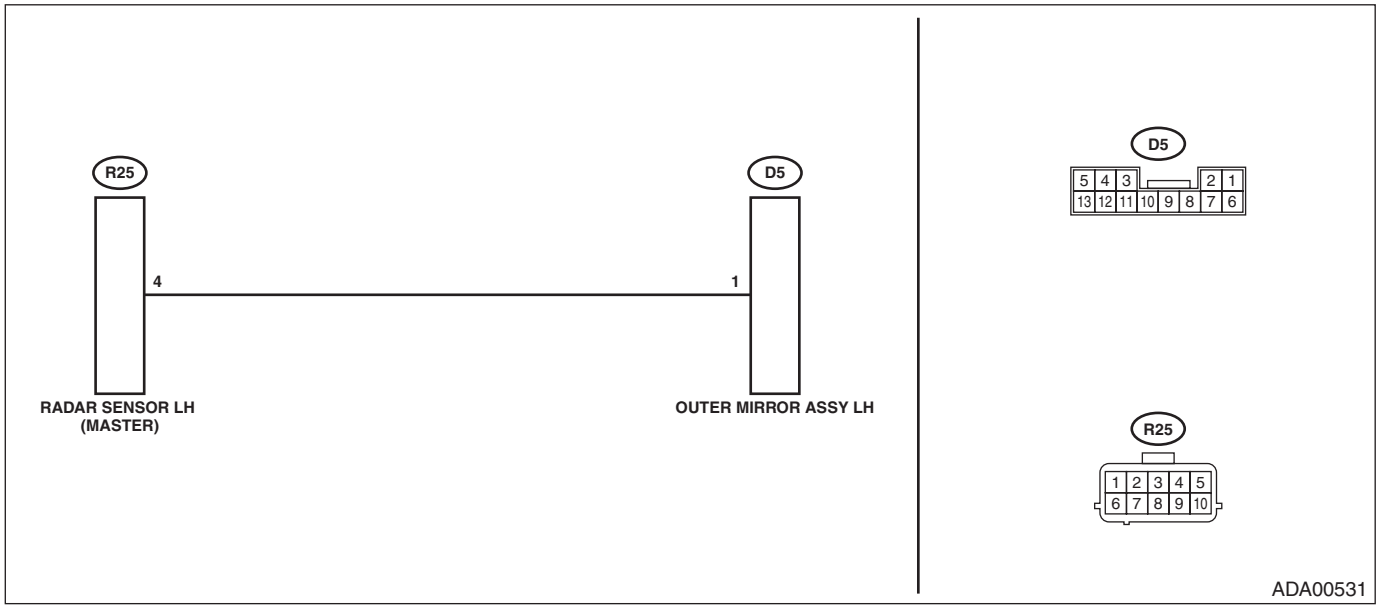

- Radar sensor RH

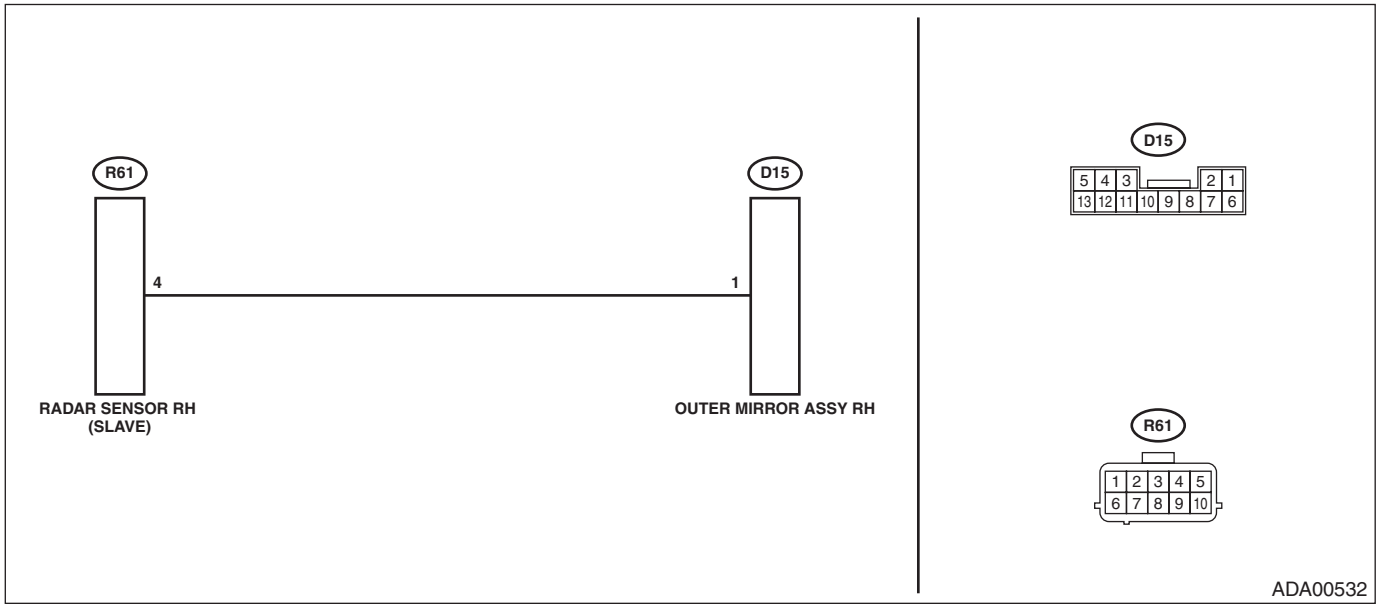

NOTE:
Check and replace the side that displayed the DTC.

	Step	Check	Yes	No
1	**CHECK DTC.** Read the DTC. <Ref. to RVD(diag)-13, OPERATION, Read Diagnostic Trouble Code (DTC).>	Is DTC B2327 displayed? (Current malfunction)	Perform the diagnosis according to DTC. <Ref. to RVD(diag)-34, DTC B2327 REAR RADAR INTERNAL FAILURE (INTERNAL ELECTRIC CIRCUIT), Diagnostic Procedure with Diagnostic Trouble Code (DTC).>	Go to step **2**.
2	**CHECK DTC.** Read the DTC. <Ref. to RVD(diag)-13, OPERATION, Read Diagnostic Trouble Code (DTC).>	Is DTC B2300 displayed? (Current malfunction)	Go to step **3**.	Even if DTC is displayed, the circuit has returned to a normal condition at this time. Reproduce the failure, and then perform the diagnosis again. NOTE: In this case, temporary poor contact of connector, temporary open or short circuit of harness may be the cause.
3	**CHECK OPERATION CHECK MODE.** Perform the system operation check mode «Door mirror indicator active test» from «Subaru Rear Vehicle Detection(RH)» or «Subaru Rear Vehicle Detection(LH)». <Ref. to RVD(diag)-20, System Operation Check Mode.>	Does the indicator illuminate?	Even if DTC is displayed, the circuit has returned to a normal condition at this time. Reproduce the failure, and then perform the diagnosis again. NOTE: In this case, temporary poor contact of connector, temporary open or short circuit of harness may be the cause.	Go to step **4**.

	Step	Check	Yes	No
4	**CHECK HARNESS (GROUND SHORT CIRCUIT).** 1) Disconnect the radar sensor connector. 2) Disconnect the outer mirror assembly connector. 3) Using a tester, measure the resistance between radar sensor connector (harness side) and the chassis ground. ***Connector & terminal*** ***Radar sensor LH*** ***(R25) No. 4 — Chassis ground:*** ***Radar sensor RH*** ***(R61) No. 4 — Chassis ground:***	Is the resistance 1 MΩ or more?	Go to step **5**.	Repair the short to ground in harness between radar sensor connector and outer mirror assembly connector.
5	**CHECK CONNECTOR.** Check the radar sensor connector and the outer mirror assembly connector.	Is there any fault? (Insecure connection, poor contact, etc.)	Repair the connector.	Go to step **6**.
6	**CHECK OUTER MIRROR ASSEMBLY.** Perform unit-check for the outer mirror assembly. <Ref. to GW-27, Outer Mirror Assembly.>	Is there any fault?	Replace the outer mirror assembly. <Ref. to GW-27, Outer Mirror Assembly.>	Go to step **7**.
7	**CHECK BSD/RCTA.** 1) Restore the vehicle to its original state. 2) Perform the Inspection Mode. <Ref. to RVD(diag)-16, Inspection Mode.>	Is DTC B2300 displayed? (Current malfunction)	Replace the radar sensor. <Ref. to RVD-6, Radar Sensor.>	Even if DTC is displayed, the circuit has returned to a normal condition at this time. Reproduce the failure, and then perform the diagnosis again. NOTE: In this case, temporary poor contact of connector, temporary open or short circuit of harness may be the cause.

B: DTC B2301 REAR RADAR CIRCUIT HIGH

DTC DETECTING CONDITION:

- Open circuit or short circuit to power supply in harness between radar sensor and outer mirror assembly.
- Open circuit or short circuit to power supply of harness in the outer mirror assembly module. (Malfunction of the outer mirror assembly)
- Open circuit or short circuit to power supply of harness between outer mirror assembly and ground.
- Defective radar sensor

TROUBLE SYMPTOM:

- All functions of BSD/RCTA stop.
- Fail icon is displayed in the combination meter LCD display.
- Failure-related notification is displayed for approx. two seconds on LCD display in the combination meter.

WIRING DIAGRAM:

NOTE:
For the coupling connector, refer to “WIRING SYSTEM”.
BSD/RCTA system <Ref. to WI-130, WIRING DIAGRAM, Blind Spot Detection/Rear Cross Traffic Alert.>

- Radar sensor LH

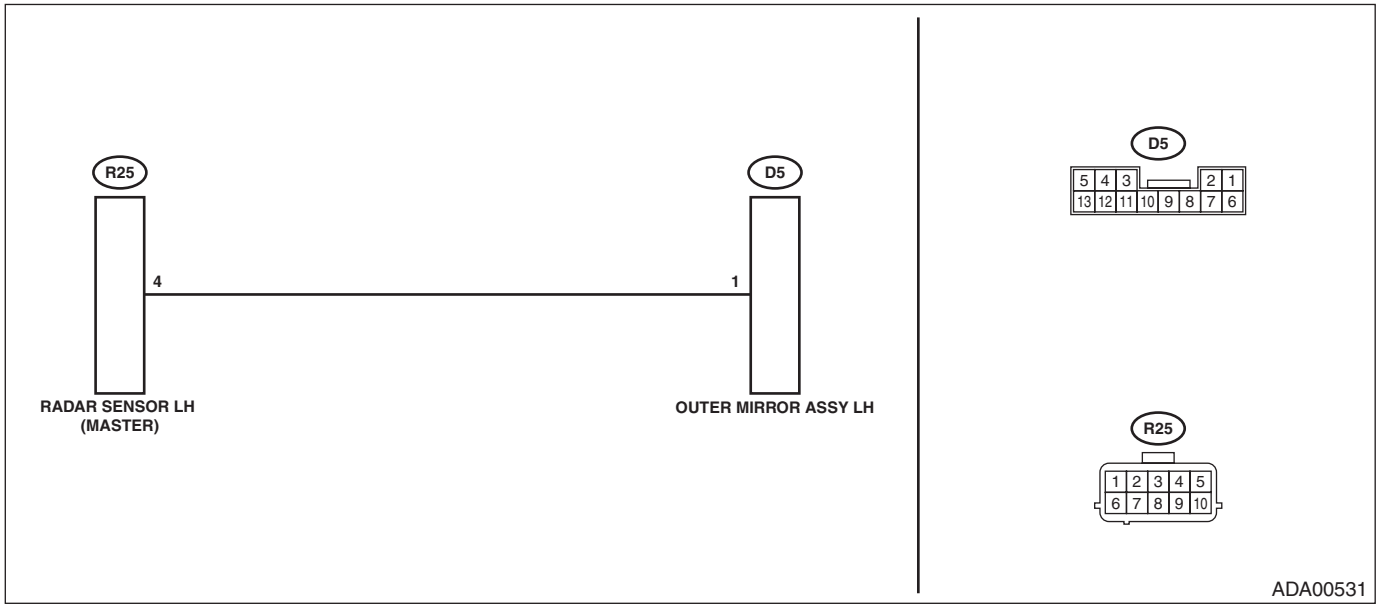

- Radar sensor RH

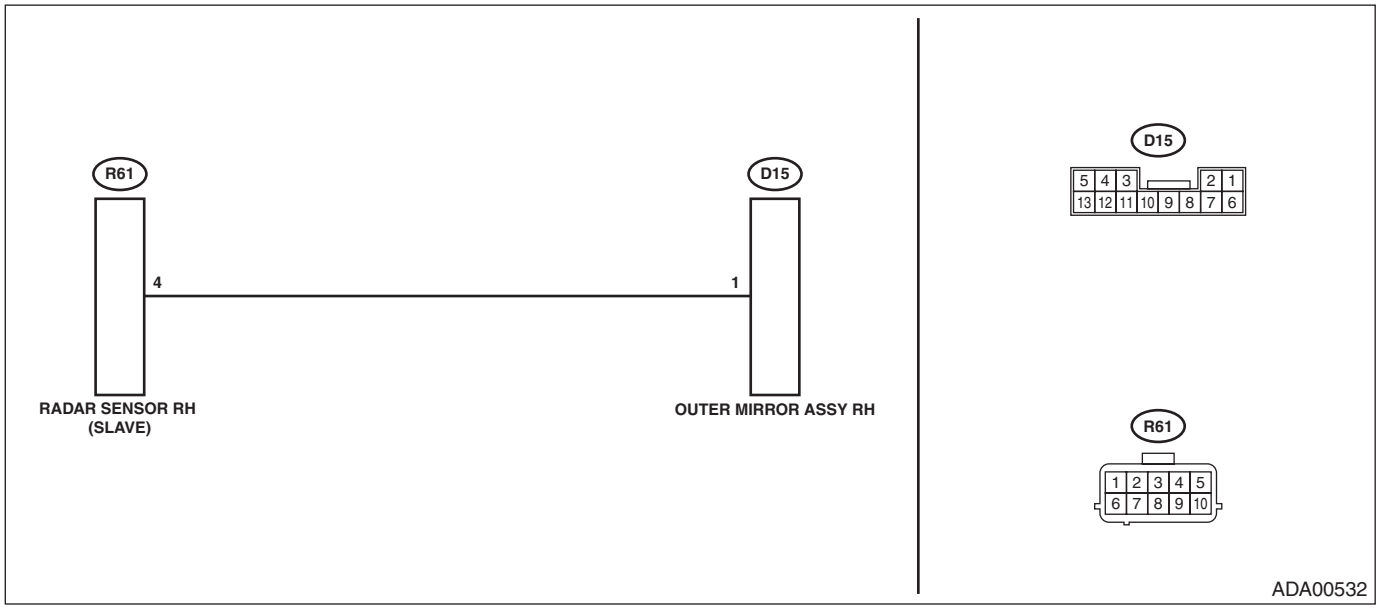

NOTE:
Check and replace the side that displayed the DTC.

	Step	Check	Yes	No
1	**CHECK DTC.** Read the DTC. <Ref. to RVD(diag)-13, OPERATION, Read Diagnostic Trouble Code (DTC).>	Is DTC B2327 displayed? (Current malfunction)	Perform the diagnosis according to DTC. <Ref. to RVD(diag)-34, DTC B2327 REAR RADAR INTERNAL FAILURE (INTERNAL ELECTRIC CIRCUIT), Diagnostic Procedure with Diagnostic Trouble Code (DTC).>	Go to step **2**.
2	**CHECK DTC.** Read the DTC. <Ref. to RVD(diag)-13, OPERATION, Read Diagnostic Trouble Code (DTC).>	Is DTC B2301 displayed? (Current malfunction)	Go to step **3**.	Even if DTC is displayed, the circuit has returned to a normal condition at this time. Reproduce the failure, and then perform the diagnosis again. NOTE: In this case, temporary poor contact of connector, temporary open or short circuit of harness may be the cause.
3	**CHECK OPERATION CHECK MODE.** Perform the system operation check mode «Door mirror indicator active test» from «Subaru Rear Vehicle Detection(RH)» or «Subaru Rear Vehicle Detection(LH)». <Ref. to RVD(diag)-20, System Operation Check Mode.>	Does the indicator illuminate?	Even if DTC is displayed, the circuit has returned to a normal condition at this time. Reproduce the failure, and then perform the diagnosis again. NOTE: In this case, temporary poor contact of connector, temporary open or short circuit of harness may be the cause.	Go to step **4**.

	Step	Check	Yes	No
4	**CHECK HARNESS (OPEN CIRCUIT).** 1) Disconnect the radar sensor connector. 2) Disconnect the outer mirror assembly connector. 3) Using a tester, measure the resistance between radar sensor connector (harness side) and outer mirror assembly connector (harness side). ***Connector & terminal*** ***Radar sensor LH*** ***(R25) No. 4 — (D5) No. 2:*** ***Radar sensor RH*** ***(R61) No. 4 — (D15) No. 2:***	Is the resistance less than 1 Ω?	Go to step **5**.	Repair the open circuit of harness between radar sensor connector and outer mirror assembly connector.
5	**CHECK HARNESS (SHORT CIRCUIT TO POWER SUPPLY).** 1) Turn the ignition switch to ON. 2) Using a tester, measure the voltage between radar sensor connector (harness side) and the chassis ground. ***Connector & terminal*** ***Radar sensor LH*** ***(R25) No. 4 (+) — Chassis ground (–):*** ***Radar sensor RH*** ***(R61) No. 4 (+) — Chassis ground (–):***	Is the voltage less than 1 V?	Go to step **6**.	Repair the short circuit to power supply in harness between radar sensor connector and outer mirror assembly connector.
6	**CHECK CONNECTOR.** Check the radar sensor connector and the outer mirror assembly connector.	Is there any fault? (Insecure connection, poor contact, etc.)	Repair the connector.	Go to step **7**.
7	**CHECK OUTER MIRROR ASSEMBLY.** Perform unit-check for the outer mirror assembly. <Ref. to GW-27, Outer Mirror Assembly.>	Is there any fault?	Replace the outer mirror assembly. <Ref. to GW-27, Outer Mirror Assembly.>	Go to step **8**.
8	**CHECK BSD/RCTA.** 1) Restore the vehicle to its original state. 2) Perform the Inspection Mode. <Ref. to RVD(diag)-16, Inspection Mode.>	Is DTC B2301 displayed? (Current malfunction)	Replace the radar sensor. <Ref. to RVD-6, Radar Sensor.>	Even if DTC is displayed, the circuit has returned to a normal condition at this time. Reproduce the failure, and then perform the diagnosis again. NOTE: In this case, temporary poor contact of connector, temporary open or short circuit of harness may be the cause.

C: DTC B2304 REAR RADAR ON-OFF SWITCH STUCK

DTC DETECTING CONDITION:

- BSD/RCTA OFF switch is stuck to ON. (Switch malfunction)
- Switch was left pressed for a prolonged time.
- Defective radar sensor

TROUBLE SYMPTOM:

- All functions of BSD/RCTA stop.
- Fail icon is displayed in the combination meter LCD display.
- Failure-related notification is displayed for approx. two seconds on LCD display in the combination meter.

WIRING DIAGRAM:

NOTE:
For the coupling connector, refer to “WIRING SYSTEM”.
BSD/RCTA system <Ref. to WI-130, WIRING DIAGRAM, Blind Spot Detection/Rear Cross Traffic Alert.>

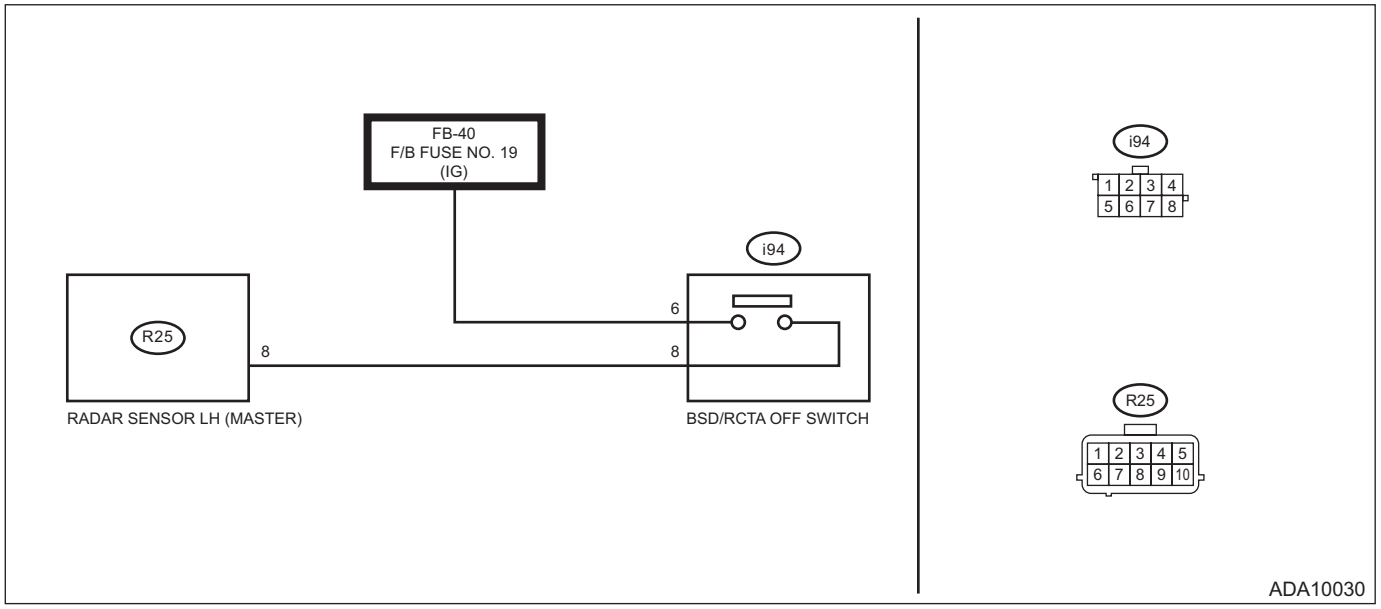

Step		Check	Yes	No
1	**CHECK METER DISPLAY.** 1) Turn the ignition switch to ON. 2) Check the display of OFF indicator in the combination meter LCD display.	Does the display change according to operation of BSD/RCTA OFF switch?	Even if DTC is displayed, the circuit has returned to a normal condition at this time. Reproduce the failure, and then perform the diagnosis again. NOTE: • Temporary poor contact of connector, temporary open or short circuit of harness may be the cause. • User may have kept pressing the switch for 30 seconds or more.	Go to step **2**.

	Step	Check	Yes	No
2	**CHECK CURRENT DATA.** Check the current data «SRVD System ON-OFF flag» of «Subaru Rear Vehicle Detection(RH)» or «Subaru Rear Vehicle Detection(LH)». <Ref. to RVD(diag)-18, Read Current Data.>	Does the display change according to operation of BSD/RCTA OFF switch?	Check the combination meter. <Ref. to MET(diag)-2, Basic Diagnostic Procedure.>	Go to step **3**.
3	**INSPECTION OF SWITCH UNIT.** Perform unit inspection of the BSD/RCTA OFF switch. <Ref. to RVD-13, Switches and Harness.>	Is it normal?	Go to step **4**.	Replace the BSD/RCTA OFF switch. <Ref. to RVD-13, Switches and Harness.>
4	**CHECK BATTERY.** Check the battery. <Ref. to SC(H4DO)-63, Battery.> <Ref. to SC(H6DO)-57, Battery.>	Is it normal?	Go to step **5**.	Charge or replace the battery.
5	**CHECK FUSE.** Check the fuse of BSD/RCTA OFF switch. <Ref. to RVD-4, Relay and Fuse.>	Is it normal?	Go to step **6**.	Replace the fuse. If the replaced fuse blows out easily, repair the ground short circuit in harness between the fuse and the BSD/RCTA OFF switch.
6	**CHECK HARNESS (OPEN CIRCUIT).** 1) Disconnect the BSD/RCTA OFF switch connector. 2) Turn the ignition switch to ON. 3) Using a tester, measure the voltage between BSD/RCTA OFF switch connector and chassis ground. ***Connector & terminal*** ***(i94) No. 6 (+) — Chassis ground (–):***	Is the voltage 10 V or more?	Go to step **7**.	Repair the open circuit of harness between the fuse and the BSD/RCTA OFF switch.
7	**CHECK HARNESS (OPEN CIRCUIT).** 1) Turn the ignition switch to OFF. 2) Disconnect the radar sensor LH connector. 3) Using a tester, measure the resistance between BSD/RCTA OFF switch connector and radar sensor LH connector (harness side). ***Connector & terminal*** ***(i94) No. 8 — (R25) No. 8:***	Is the resistance less than 1 Ω?	Go to step **8**.	Repair the open circuit of harness between BSD/RCTA OFF switch and radar sensor LH.
8	**CHECK HARNESS (GROUND SHORT CIRCUIT).** Using a tester, measure the resistance between the BSD/RCTA OFF switch connector (harness side) and the chassis ground. ***Connector & terminal*** ***(i94) No. 8 — Chassis ground:***	Is the resistance 1 MΩ or more?	Go to step **9**.	Repair the short circuit to ground in harness between BSD/RCTA OFF switch and radar sensor LH.
9	**CHECK HARNESS (SHORT CIRCUIT TO POWER SUPPLY).** 1) Turn the ignition switch to ON. 2) Using a tester, measure the voltage between the BSD/RCTA OFF switch connector (harness side) and the chassis ground. ***Connector & terminal*** ***(i94) No. 8 (+) — Chassis ground (–):***	Is the voltage less than 1 V?	Go to step **10**.	Repair the short circuit to power supply in harness between BSD/RCTA OFF switch and radar sensor LH.
10	**CHECK CONNECTOR.** Check the radar sensor LH connector.	Is there any fault? (Insecure connection, poor contact, etc.)	Repair the connector.	Go to step **11**.

	Step	Check	Yes	No
11	**CHECK BSD/RCTA.** 1) Restore the vehicle to its original state. 2) Perform the Inspection Mode. <Ref. to RVD(diag)-16, Inspection Mode.>	Is DTC B2304 displayed? (Current malfunction)	Replace the radar sensor LH. <Ref. to RVD-6, Radar Sensor.>	Even if DTC is displayed, the circuit has returned to a normal condition at this time. Reproduce the failure, and then perform the diagnosis again. NOTE: In this case, temporary poor contact of connector, temporary open or short circuit of harness may be the cause.

D: DTC B2311 REAR RADAR DETECT TCM

DTC DETECTING CONDITION:
Automatic transmission fails.
TROUBLE SYMPTOM:

- All functions of BSD/RCTA stop.
- Fail icon is displayed in the combination meter LCD display.
- Failure-related notification is displayed for approx. two seconds on LCD display in the combination meter.
- AT OIL TEMP light blinks in the combination meter.

NOTE:
Check and replace the side that displayed the DTC.

	Step	Check	Yes	No
1	**CHECK TRANSMISSION.** Check the transmission. <Ref. to CVT(diag)-2, Basic Diagnostic Procedure.>	Is there any fault?	Perform the inspection according to the diagnosis of the transmission.	Go to step **2**.
2	**CHECK BSD/RCTA.** 1) Restore the vehicle to its original state. 2) Perform the Inspection Mode. <Ref. to RVD(diag)-16, Inspection Mode.>	Is DTC B2311 displayed? (Current malfunction)	Replace the radar sensor. <Ref. to RVD-6, Radar Sensor.>	Even if DTC is displayed, the circuit has returned to a normal condition at this time. Reproduce the failure, and then perform the diagnosis again. NOTE: In this case, temporary poor contact of connector, temporary open or short circuit of harness may be the cause.

E: DTC B2313 REAR RADAR DETECT VDC

DTC DETECTING CONDITION:
Vehicle dynamics control (VDC) fails.
TROUBLE SYMPTOM:

- All functions of BSD/RCTA stop.
- Fail icon is displayed in the combination meter LCD display.
- Failure-related notification is displayed for approx. two seconds on LCD display in the combination meter.
- VDC warning light illuminates in the combination meter.

NOTE:
Check and replace the side that displayed the DTC.

	Step	Check	Yes	No
1	**CHECK VDC.** Check the VDC. <Ref. to VDC(diag)-2, Basic Diagnostic Procedure.>	Is there any fault?	Perform the inspection according to the VDC diagnosis.	Go to step **2**.
2	**CHECK BSD/RCTA.** 1) Restore the vehicle to its original state. 2) Perform the Inspection Mode. <Ref. to RVD(diag)-16, Inspection Mode.>	Is DTC B2313 displayed? (Current malfunction)	Replace the radar sensor. <Ref. to RVD-6, Radar Sensor.>	Even if DTC is displayed, the circuit has returned to a normal condition at this time. Reproduce the failure, and then perform the diagnosis again. NOTE: In this case, temporary poor contact of connector, temporary open or short circuit of harness may be the cause.

F: DTC B2327 REAR RADAR INTERNAL FAILURE (INTERNAL ELECTRIC CIRCUIT)

DTC DETECTING CONDITION:
Defective radar sensor
TROUBLE SYMPTOM:
- All functions of BSD/RCTA stop.
- Fail icon is displayed in the combination meter LCD display.
- Failure-related notification is displayed for approx. two seconds on LCD display in the combination meter.

NOTE:
Check and replace the side that displayed the DTC.

	Step	Check	Yes	No
1	**CHECK BSD/RCTA.** 1) Perform the Clear Memory Mode. <Ref. to RVD(diag)-14, Clear Memory Mode.> 2) Read the DTC again. <Ref. to RVD(diag)-13, Read Diagnostic Trouble Code (DTC).>	Is DTC B2327 displayed? (Current malfunction)	Replace the radar sensor. <Ref. to RVD-6, Radar Sensor.>	Even if DTC is displayed, the circuit has returned to a normal condition at this time. Reproduce the failure, and then perform the diagnosis again. NOTE: In this case, temporary poor contact of connector, temporary open or short circuit of harness may be the cause.

G: DTC B2329 REAR RADAR AXIS ALIGNMENT INCOMPLETE

DTC DETECTING CONDITION:

Axis adjustment of the radar sensor has failed.
(Forced termination of the Subaru Select Monitor, improper location of the target reflector, or deviation of the radar sensor due to impact.)

TROUBLE SYMPTOM:

- All functions of BSD/RCTA stop.
- Fail icon is displayed in the combination meter LCD display.
- Failure-related notification is displayed for approx. two seconds on LCD display in the combination meter.

NOTE:
Check and replace the side that displayed the DTC.

	Step	Check	Yes	No
1	**CHECK REAR BUMPER.** Check the rear bumper.	Is there any fault? (Stickered, trace of repainting, etc.)	Replace or repair the bumper. <Ref. to EI-44, Rear Bumper.> Go to step **2**.	Go to step **2**.
2	**CHECK RADAR SENSOR BRACKET.** 1) Remove the rear bumper. <Ref. to EI-44, Rear Bumper.> 2) Check the mounting bracket of the radar sensor as well as its installation position. <Ref. to RVD-6, Radar Sensor.>	Is there any fault? (Visible damage, deformation, etc.)	Replace the mounting bracket of the radar sensor, or repair the installation position. <Ref. to RVD-6, Radar Sensor.> Go to step **3**.	Go to step **3**.
3	**ADJUSTMENT OF RADAR SENSOR AXIS.** 1) Install the rear bumper. 2) Perform the adjustment of radar axis. <Ref. to RVD-7, ADJUSTMENT, Radar Sensor.> 3) Perform the Inspection Mode. <Ref. to RVD(diag)-16, Inspection Mode.>	Is DTC B2329 displayed? (Current malfunction)	Replace the radar sensor. <Ref. to RVD-6, Radar Sensor.>	Even if DTC is displayed, the circuit has returned to a normal condition at this time. Reproduce the failure, and then perform the diagnosis again. NOTE: In this case, temporary poor contact of connector, temporary open or short circuit of harness may be the cause.

H: DTC B2350 REAR RADAR COMMUNICATION ERROR BETWEEN MASTER AND SLAVE

DTC DETECTING CONDITION:

- Defective harness for CAN communication between radar sensor LH and radar sensor RH
- Defective radar sensor

TROUBLE SYMPTOM:

- All functions of BSD/RCTA stop.
- Fail icon is displayed in the combination meter LCD display.
- Failure-related notification is displayed for approx. two seconds on LCD display in the combination meter.

WIRING DIAGRAM:

NOTE:
For the coupling connector, refer to “WIRING SYSTEM”.
BSD/RCTA system <Ref. to WI-130, WIRING DIAGRAM, Blind Spot Detection/Rear Cross Traffic Alert.>

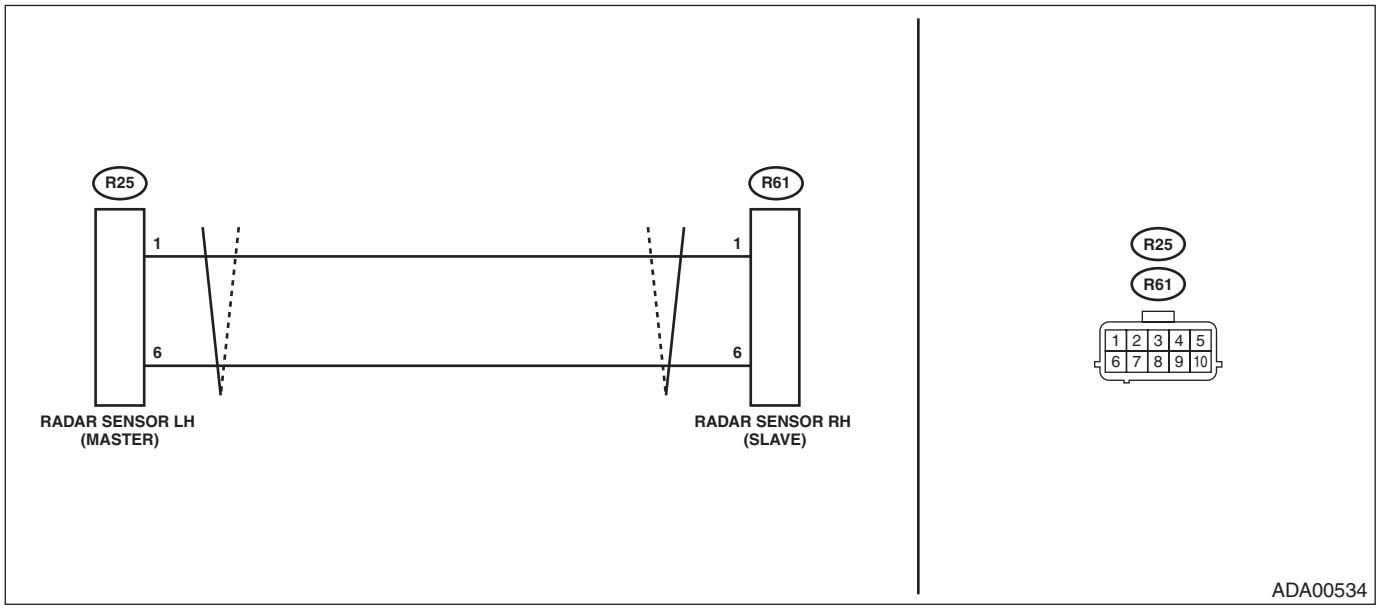

Step		Check	Yes	No
1	**CHECK DTC.** Read the DTC. <Ref. to RVD(diag)-13, OPERATION, Read Diagnostic Trouble Code (DTC).>	Is DTC B2350 displayed? (Current malfunction)	Go to step **2**.	Even if DTC is displayed, the circuit has returned to a normal condition at this time. Reproduce the failure, and then perform the diagnosis again. NOTE: In this case, temporary poor contact of connector, temporary open or short circuit of harness may be the cause.

	Step	Check	Yes	No
2	**CHECK HARNESS (OPEN CIRCUIT).** 1) Disconnect the radar sensor connectors LH and RH. 2) Using a tester, measure the resistance between radar sensor RH connector (harness side) and radar sensor LH connector (harness side). ***Connector & terminal*** ***(R25) No. 1 — (R61) No. 1:*** ***(R25) No. 6 — (R61) No. 6:***	Is the resistance less than 1 Ω?	Go to step **3**.	Repair the open circuit of harness between radar sensor RH connector and radar sensor LH connector.
3	**CHECK HARNESS (SHORT BETWEEN LINES, GROUND SHORT CIRCUIT).** Using a tester, measure the resistance between radar sensor LH connectors (harness side) and the resistance between radar sensor LH connector (harness side) and chassis ground. ***Connector & terminal*** ***(R25) No. 1 — (R25) No. 6:*** ***(R25) No. 1 — Chassis ground:*** ***(R25) No. 6 — Chassis ground:***	Is the resistance 1 MΩ or more?	Go to step **4**.	Repair the short circuit of harness between radar sensor RH connector and radar sensor LH connector.
4	**CHECK HARNESS (SHORT CIRCUIT TO POWER SUPPLY).** 1) Turn the ignition switch to ON. 2) Using a tester, measure the voltage between radar sensor LH connector (harness side) and chassis ground. ***Connector & terminal*** ***(R25) No. 1 (+) — Chassis ground (–):*** ***(R25) No. 6 (+) — Chassis ground (–):***	Is the voltage less than 1 V?	Go to step **5**.	Repair the short to power supply in harness between radar sensor RH connector and radar sensor LH connector.
5	**CHECK RADAR SENSOR. (INTERNAL IMPEDANCE).** Using a tester, measure the resistance between radar sensor LH connectors (module side) and the resistance between radar sensor RH connectors (module side). ***Connector & terminal*** ***(R25) No. 1 — (R25) No. 6:*** ***(R61) No. 1 — (R61) No. 6:***	Is the resistance approximately 120 Ω?	Go to step **6**.	Replace the radar sensor RH or radar sensor LH. <Ref. to RVD-6, Radar Sensor.>
6	**CHECK BSD/RCTA.** 1) Restore the vehicle to its original state. 2) Perform the Clear Memory Mode. <Ref. to RVD(diag)-14, Clear Memory Mode.> 3) Perform the Inspection Mode. <Ref. to RVD(diag)-16, Inspection Mode.>	Is DTC B2350 displayed? (Current malfunction)	Replace the radar sensor on the side that displayed the DTC. <Ref. to RVD-6, Radar Sensor.>	Even if DTC is displayed, the circuit has returned to a normal condition at this time. Reproduce the failure, and then perform the diagnosis again. NOTE: In this case, temporary poor contact of connector, temporary open or short circuit of harness may be the cause.

I: DTC U0073 CONTROL MODULE COMMUNICATION BUS OFF

Detected when CAN line abnormality is detected.

NOTE:
Perform the diagnosis for LAN system. <Ref. to LAN(diag)-2, PROCEDURE, Basic Diagnostic Procedure.>

J: DTC U0101 LOST COMMUNICATION WITH TCM

Detected when CAN data from TCM does not arrive.

NOTE:
Perform the diagnosis for LAN system. <Ref. to LAN(diag)-2, PROCEDURE, Basic Diagnostic Procedure.>

K: DTC U0122 LOST COMMUNICATION WITH VEHICLE DYNAMICS CONTROL MODULE

Detected when CAN data from VDC CM does not arrive.

NOTE:
Perform the diagnosis for LAN system. <Ref. to LAN(diag)-2, PROCEDURE, Basic Diagnostic Procedure.>

L: DTC U0140 LOST COMMUNICATION WITH BODY CONTROL MODULE

Detected when CAN data from BIU does not arrive.

NOTE:
Perform the diagnosis for LAN system. <Ref. to LAN(diag)-2, PROCEDURE, Basic Diagnostic Procedure.>

M: DTC U0155 LOST COMMUNICATION WITH INSTRUMENT PANEL CLUSTER (IPC) CONTROL MODULE

Detected when CAN data from combination meter does not arrive.

NOTE:
Perform the diagnosis for LAN system. <Ref. to LAN(diag)-2, PROCEDURE, Basic Diagnostic Procedure.>

N: DTC U0402 INVALID DATA RECEIVED FROM TCM

Received error data from TCM.

NOTE:
Perform the diagnosis for LAN system. <Ref. to LAN(diag)-2, PROCEDURE, Basic Diagnostic Procedure.>

O: DTC U0416 INVALID DATA RECEIVED FROM VEHICLE DYNAMICS CONTROL MODULE

Received error data from VDC CM.

NOTE:
Perform the diagnosis for LAN system. <Ref. to LAN(diag)-2, PROCEDURE, Basic Diagnostic Procedure.>

P: DTC U0422 INVALID DATA RECEIVED FROM BODY CONTROL MODULE

Received error data from BIU.

NOTE:
Perform the diagnosis for LAN system. <Ref. to LAN(diag)-2, PROCEDURE, Basic Diagnostic Procedure.>

Q: DTC U0423 INVALID DATA RECEIVED FROM INSTRUMENT PANEL CLUSTER CONTROL MODULE

Received error data from combination meter.

NOTE:
Perform the diagnosis for LAN system. <Ref. to LAN(diag)-2, PROCEDURE, Basic Diagnostic Procedure.>

16.Diagnostic Procedure with Cancel Code

A: DTC B2328 REAR RADAR INTERNAL FAILURE (RADAR MISALIGNMENT)

DETECTING CONDITION:

- Excessive impact was given to the installation area of the radar sensor, which resulted in deviation of the radar sensor axis.
- Mounting bracket for the radar sensor is deformed.
- Defective radar sensor

TROUBLE SYMPTOMS:

- All functions of BSD/RCTA are temporarily suspended.
- The icon indicating function suspended will be displayed in the combination meter LCD display.
- Function-suspended confirmation will be displayed for approx. two seconds on LCD display in the combination meter.

NOTE:
If DTC B2328 is detected repeatedly, check or replace the part corresponding to the cancel code.

	Step	Check	Yes	No
1	**CHECK REAR BUMPER.** Check the rear bumper.	Is there any fault? (Stickered, trace of repainting, etc.)	Replace or repair the bumper. <Ref. to EI-44, Rear Bumper.> Go to step **2**.	Go to step **2**.
2	**CHECK RADAR SENSOR BRACKET.** 1) Remove the rear bumper. <Ref. to EI-44, Rear Bumper.> 2) Check the mounting bracket of the radar sensor as well as its installation position. <Ref. to RVD-6, Radar Sensor.>	Is there any fault? (Visible damage, deformation, etc.)	Replace the mounting bracket of the radar sensor, or repair the installation position. <Ref. to RVD-6, Radar Sensor.> Go to step **3**.	Go to step **3**.
3	**ADJUSTMENT OF RADAR SENSOR AXIS.** 1) Install the rear bumper. 2) Perform the adjustment of radar axis. <Ref. to RVD-7, ADJUSTMENT, Radar Sensor.> 3) Read the cancel code. <Ref. to RVD(diag)-15, Read Cancel Code.>	Is B2328 displayed?	Replace the radar sensor. <Ref. to RVD-6, Radar Sensor.>	The circuit has returned to a normal condition at this time. Reproduce the failure, and then perform the diagnosis again. NOTE: In this case, temporary poor contact of connector, temporary open or short circuit of harness may be the cause.

17.Diagnostics with Phenomenon

A: INSPECTION

Symptoms	Maintenance parts
BSD/RCTA does not operate.	Fuse
	LAN system <Ref. to LAN(diag)-2, Basic Diagnostic Procedure.>
	Body control system <Ref. to BC(diag)-2, Basic Diagnostic Procedure.>
	Radar sensor LH
	Radar sensor RH
BSD/RCTA cannot be turned OFF.	BSD/RCTA OFF switch
	LAN system <Ref. to LAN(diag)-2, Basic Diagnostic Procedure.>
	Body control system <Ref. to BC(diag)-2, Basic Diagnostic Procedure.>
	Radar sensor LH
Error message appears in the combination meter.	Check cancel code. <Ref. to RVD(diag)-15, Read Cancel Code.>
	Radar sensor LH
	Radar sensor RH
	Combination meter <Ref. to MET(diag)-2, Basic Diagnostic Procedure.>
Outer mirror assembly (LH) indicator does not illuminate.	Outer mirror assembly <Ref. to GW-27, Outer Mirror Assembly.>
	Radar sensor LH
Outer mirror assembly (RH) indicator does not illuminate.	Outer mirror assembly <Ref. to GW-27, Outer Mirror Assembly.>
	Radar sensor RH
Outer mirror assembly (LH) indicator remains on.	Radar sensor LH
Outer mirror assembly (RH) indicator remains on.	Radar sensor RH
Outer mirror assembly (LH) indicator does not blink.	Radar sensor LH
Outer mirror assembly (RH) indicator does not blink.	Radar sensor RH
Outer mirror assembly (LH) indicator keeps blinking.	Radar sensor LH
Outer mirror assembly (RH) indicator keeps blinking.	Radar sensor RH

KEYLESS ACCESS WITH PUSH BUTTON START SYSTEM (DIAGNOSTICS)

KPS(diag)

		Page
1.	Basic Diagnostic Procedure	2
2.	Check List for Interview	4
3.	General Description	5
4.	Electrical Component Location	12
5.	Control Module I/O Signal	14
6.	Subaru Select Monitor	22
7.	Read Diagnostic Trouble Code (DTC)	24
8.	Clear Memory Mode	25
9.	Read Current Data	26
10.	Inspection Mode	32
11.	Keyless Access System Check	35
12.	System Operation Check Mode	36
13.	List of Diagnostic Trouble Code (DTC)	37
14.	Diagnostic Procedure with Diagnostic Trouble Code (DTC)	39
15.	General Diagnostic Table	107
16.	Diagnostics with Phenomenon	109

1. Basic Diagnostic Procedure

A: PROCEDURE

CAUTION:
• Subaru Select Monitor kit is required for reading DTC, performing diagnosis and reading current data.
• Before removal or installation, be sure to remove any foreign matter (dust, moisture, oil, etc.).
• Registration of immobilizer may be needed after the replacement of control modules, etc. For detailed procedure, refer to the "REGISTRATION MANUAL FOR IMMOBILIZER" provided as a separate volume.

NOTE:
• Using the Function Setting (Customize), check that the keyless access system is not in a cancelled state. <Ref. to SL-110, OPERATION, Function Setting (Customize).>
• Check List for Interview <Ref. to KPS(diag)-4, Check List for Interview.>

	Step	Check	Yes	No
1	**CHECK BATTERY.** Using a tester, measure the battery voltage.	Is the voltage 11 V or more?	Go to step **2**.	Charge or replace the battery and perform check pre-inspection. Go to step **2**.
2	**CHECK PRE-INSPECTION.** Use the interview check list to interview the user. <Ref. to KPS(diag)-4, Check List for Interview.>	Was the symptoms of the trouble recorded in the interview?	Go to step **3**.	Interview the user again.
3	**BASIC INSPECTION.** Perform the inspection for LAN system. <Ref. to LAN(diag)-2, PROCEDURE, Basic Diagnostic Procedure.>	Is LAN system normal?	Go to step **4**.	Check it according to DTC of LAN system. <Ref. to LAN(diag)-2, PROCEDURE, Basic Diagnostic Procedure.>
4	**CHECK TROUBLE SYMPTOM.** 1) Read diagnostic trouble code (DTC) for the «keyless access with push button start». <Ref. to KPS(diag)-24, Read Diagnostic Trouble Code (DTC).> NOTE: If the communication function of the Subaru Select Monitor cannot be executed properly, check the communication circuit. <Ref. to KPS(diag)-22, COMMUNICATION FOR INITIALIZING IMPOSSIBLE, INSPECTION, Subaru Select Monitor.> 2) Record all DTCs, time stamp and freeze frame data. NOTE: For time stamp, refer to "LAN SYSTEM". <Ref. to LAN(diag)-6, TIME STAMP, CAUTION, General Description.>	Is DTC displayed on Subaru Select Monitor?	Perform diagnosis according to the DTC. After diagnosis, Go to step **7**.	Go to step **5**.
5	**CHECK PHENOMENON LIST.** Check the "Phenomenon List". <Ref. to KPS(diag)-107, General Diagnostic Table.>	Is there a symptom that corresponds in the phenomenon list?	Perform diagnosis according to the procedures in the phenomenon list.	Go to step **6**.
6	**CHECK TROUBLE PHENOMENON.** 1) Perform check of current data. <Ref. to KPS(diag)-26, Read Current Data.> 2) Perform a function check. 3) Perform a unit check.	Was the trouble cause found?	Repair the cause of trouble.	Repeat a basic check again.

Step		Check	Yes	No
7	**PERFORM DIAGNOSIS.** 1) Perform the Clear Memory Mode. <Ref. to KPS(diag)-25, Clear Memory Mode.> 2) Perform the Inspection Mode. <Ref. to KPS(diag)-32, Inspection Mode.>	Is DTC displayed on Subaru Select Monitor?	Perform diagnosis according to the DTC.	Finish the diagnosis.

2. Check List for Interview

A: CHECK

Inspect the following items regarding the vehicle's state.

<table>
<tr><td colspan="4">Keyless Access with Push Button Start System Trouble Check List for Interview
Received Year Month Date</td></tr>
<tr><td colspan="2" rowspan="2">Customer's name</td><td>Registration No.</td><td>Initial year of registration
Year Month Date</td></tr>
<tr><td>Vehicle model</td><td>Frame number</td></tr>
<tr><td>Interviewer</td><td>Inspector</td><td>Engine type</td><td>Odometer reading</td></tr>
<tr><td colspan="4">Customer specified content</td></tr>
<tr><td>Date and time when the trouble occurred</td><td></td><td>Frequency of trouble occurrence</td><td></td></tr>
<tr><td>Condition of trouble occurrence</td><td></td><td>Weather</td><td></td></tr>
<tr><td>Road conditions</td><td></td><td>Occurrence location</td><td></td></tr>
<tr><td>Accessory installation condition</td><td colspan="3"></td></tr>
<tr><td colspan="4">Trouble condition</td></tr>
<tr><td colspan="2">❑ Diagnostic code</td><td colspan="2">❑( )</td></tr>
<tr><td rowspan="2">❑ Immobilizer system</td><td>Engine does not start</td><td colspan="2">❑ Starter does not operate
❑ Starter operates but engine does not start
❑ Engine starts but stops immediately</td></tr>
<tr><td colspan="3">Does not start with remote engine starter</td></tr>
<tr><td rowspan="2">❑ Steering lock system</td><td colspan="3">The steering lock is not released</td></tr>
<tr><td colspan="3">The steering lock does not lock</td></tr>
<tr><td rowspan="6">❑ Keyless access system</td><td colspan="3">Can not lock/unlock using the touch sensor (lock), touch sensor (unlock), trunk opener button or rear gate opener button and rear lock button</td></tr>
<tr><td>Cannot lock with the touch sensor (lock)
Cannot unlock with the touch sensor (unlock)
Cannot lock nor unlock with the touch sensor (lock), touch sensor (unlock)
Trunk does not open with the trunk opener button.
Rear gate can not be locked with the rear lock button</td><td colspan="2">❑ Driver's side door
❑ Passenger's side door
❑ Trunk</td></tr>
<tr><td>Access key lockout protection function does not operate</td><td colspan="2">❑ Passenger room
❑ Luggage room</td></tr>
<tr><td colspan="3">The LED does not illuminate when the access key button is pressed</td></tr>
<tr><td colspan="3">The external buzzer does not beep</td></tr>
<tr><td colspan="3">The passenger room buzzer does not sound</td></tr>
<tr><td>❑ Other</td><td colspan="3">The room light or map light does not illuminate
( )</td></tr>
</table>

NOTE:
- Perform the diagnostics according to the basic diagnostic procedure.
- If the room light or map light does not illuminate and the keyless access does not function at the same time, the backup fuse may be loose or blown.

3. General Description

A: CAUTION

1. SRS AIRBAG SYSTEM

The airbag system wiring harness is routed near the keyless access with push button start system.

CAUTION:
- **Do not use the electrical test equipment on all airbag system wiring harnesses and connectors.**
- **Be careful not to damage the wiring harness of the airbag system when servicing the keyless access with push button start system.**

2. KEYLESS ACCESS WITH PUSH BUTTON START SYSTEM

NOTE:
- Using the function setting (ECM customizing), check that the keyless access system is not OFF. <Ref. to SL-110, OPERATION, Function Setting (Customize).>
- The dark current is approx. 400 mA if there is communication between the vehicle and access key.
- The dark current is approx. 40 mA if there is no communication between the vehicle and access key.*

* No communication with the vehicle means that the keyless access function has been cancelled or that the access key has not been near the vehicle for 15 minutes or more after door locking.

1) Keyless access door unlock function check

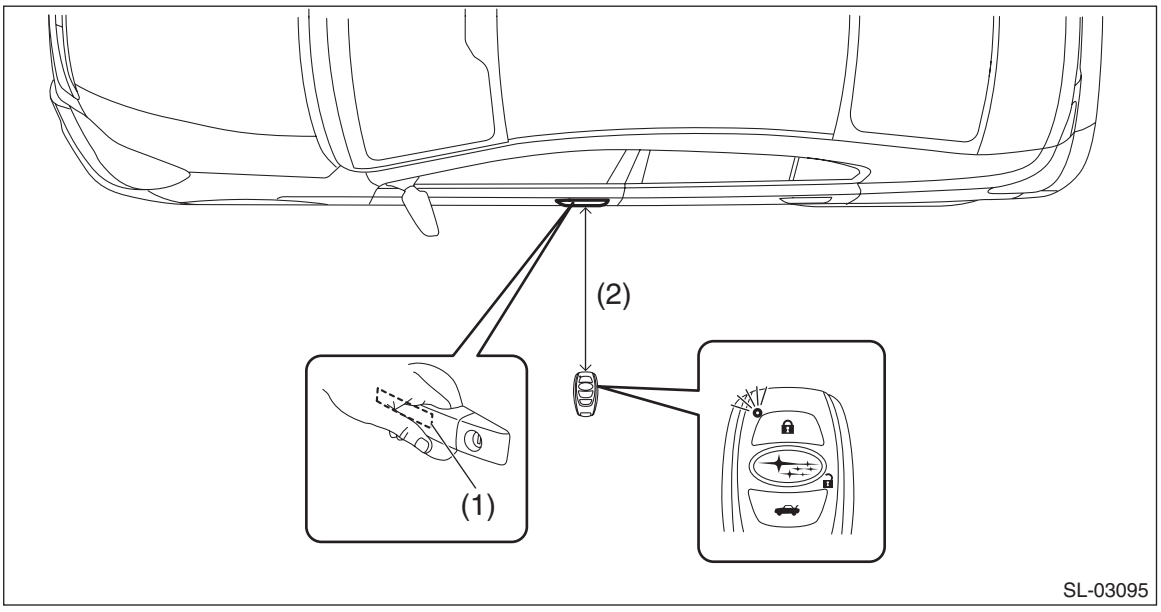

(1) Touch sensor (unlock) (2) 40 — 80 cm

(1) When carrying the access key with all doors locked by keyless lock operation, check that when the touch sensor (unlock) built in to the back side surface of door outer handle of front door is touched, the driver's door will unlock (when touched on the driver's side) or all doors will unlock (when touched on the passenger's side) and the answer-back function operates (hazard light blinks twice, access buzzer sounds twice).

(2) In the keyless access door unlock detection area, hold the access key at the same height as the outer handle (approx. 80 cm from the ground) and in the direction shown in the figure, and check that the vehicle becomes unlock mode [access key LED (red) blinks] at 40 to 80 cm from the vehicle.

NOTE:
Check the access key battery if the LED (red) does not illuminates when the access key button is pressed. <Ref. to SL-89, INSPECTION, Access Key.>

2) Keyless access door lock function check

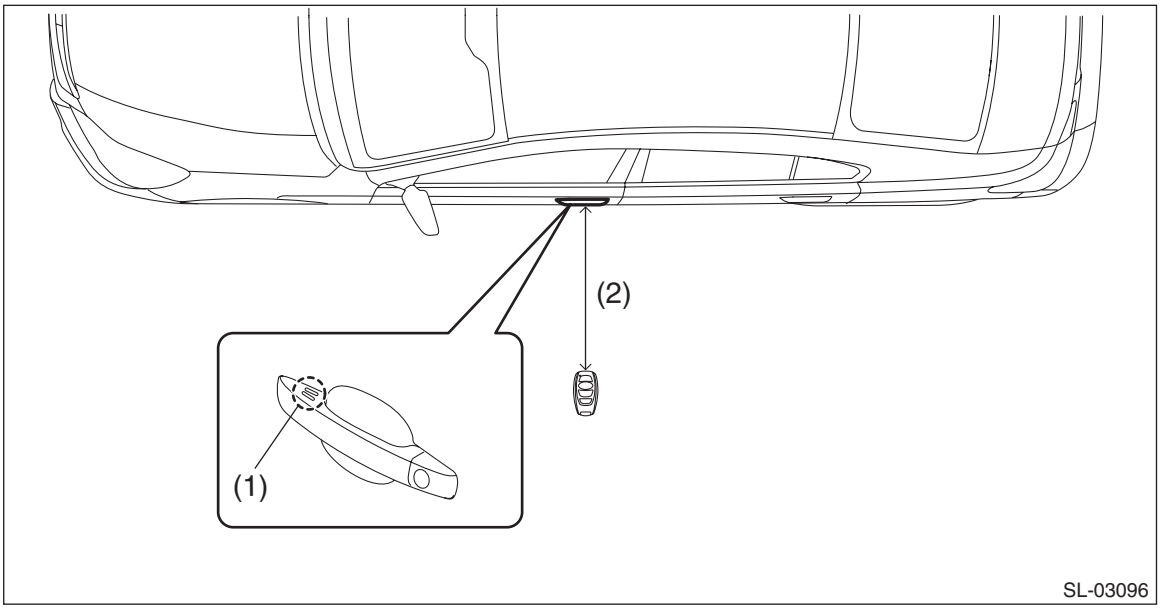

(1) Touch sensor (lock) (2) Approx. 30 cm

(1) When carrying the access key outside of the vehicle with all doors closed and unlocked, check that when the touch sensor (lock) on the surface of door outer handle of front door is touched, all doors will lock and the answer-back function operates (hazard light blinks once, access buzzer sounds once).

CAUTION:
If the access key is within the vehicle but not within the detection area (in the instrument panel, on the rear tray, in the glove box, on the floor, or in the door trim pocket), then lockout protection will not function when the doors are locked and the access key will be locked into the vehicle.

(2) To check the keyless access door lock operation range, hold the access key at a height of 10 cm under the bottom edge of the door glass (approx. 80 cm from the ground), point it in the direction shown in the figure at a distance of approx. 30 cm from the vehicle, and check that all doors lock and the answer-back function operates (hazard light blinks once, access buzzer sounds once) when you touch the touch sensor (lock).

(3) Check the passenger's side door in the same manner.

NOTE:
- When the door cannot lock if the touch sensor (lock) is touched, touch the touch sensor (lock) with palm.
- Since communication is not possible within close range (20 cm or less) of the door outer handle, the access key may not operate if you touch the touch sensor (lock) with the same hand you are holding the access key.
- If the lockout prevention buzzer sounds, it is possible that the interior transmitter has radio wave leakage.

3) Check of the keyless access trunk open function

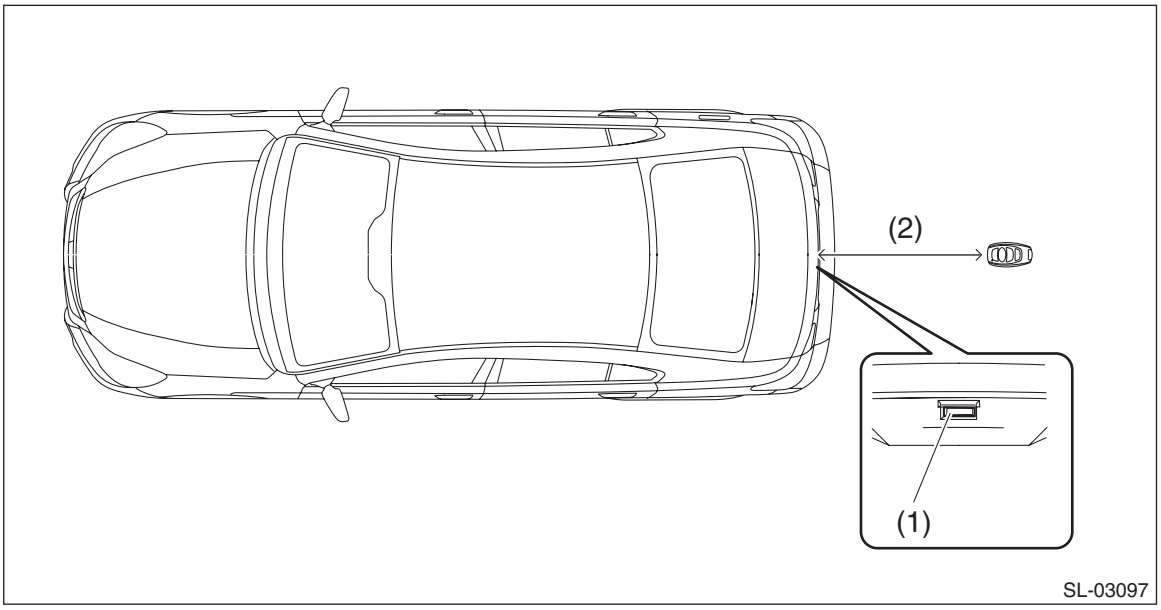

(1) Trunk opener button (2) 40 — 80 cm

(1) With the trunk closed, check that the trunk opens and the answer-back function operates (hazard light blinks twice, access buzzer sounds twice) when you press the trunk opener button while carrying the access key.
(2) To check the keyless access trunk open operation range, hold the access key behind and in the center of the vehicle at the same height as the trunk opener button (90 cm from the ground), point it in the direction shown in the figure at a distance of 40 to 80 cm from the vehicle, and check that the trunk opens and the answer-back function operates (hazard light blinks twice, access buzzer sounds twice) when the trunk opener button is pressed.

4) Check of the keyless access rear gate function

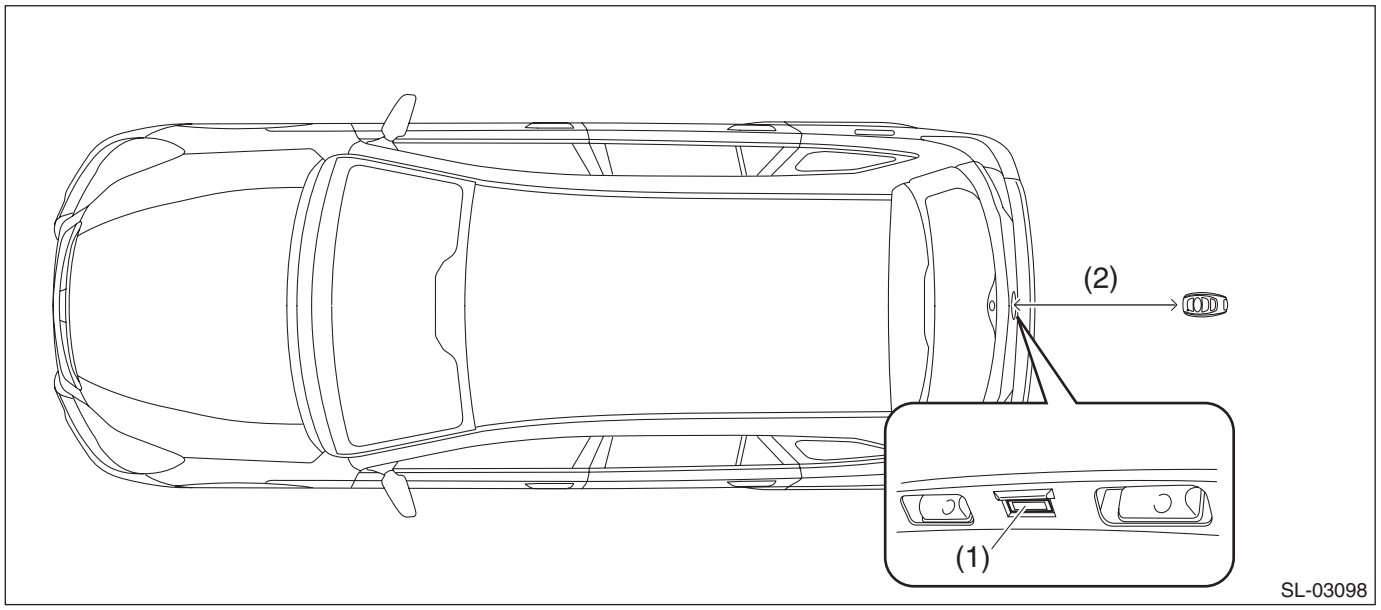

(1) Rear gate opener button (2) 40 — 80 cm

(1) With the rear gate locked, the all doors unlocks and the rear gate opens simultaneously and the answer-back function operates (hazard light blinks twice, external buzzer sounds twice) when you press the rear gate opener button while carrying the access key.
(2) To check the range for keyless access rear gate open operation, hold the access key behind and in the center of the vehicle at the same height as the rear gate opener button (90 cm from the ground), point it in the direction shown in the figure at a distance of 40 to 80 cm from the vehicle, and check that the all doors unlocks and the rear gate opens simultaneously and the answer-back function operates (hazard light blinks twice, external buzzer sounds twice) when the rear gate opener button is pressed.
(3) With the rear gate unlock, check that the all doors lock and the answer-back function operates (hazard light blinks once, external buzzer sounds once) when rear lock button is pressed while carrying the access key.

5) Keyless access ignition switching function check
(1) With the ignition OFF, enter the vehicle while carrying the access key. Depress the brake pedal with the shift lever in the “P” range (except for MT model) or depress the clutch pedal (MT model), and check that the push button ignition switch indicator is illuminated in green, and check that the engine starts when you press the push button ignition switch.
(2) While carrying the access key, check that the status changes as follows each time you press the push button ignition switch without depressing the brake pedal (except for MT model) or clutch pedal (MT model): ‘Ignition OFF’ → ‘ACC ON’ → ‘Ignition ON’ → ‘Ignition OFF’. However on the model except for MT, if the shift lever is a range other than the “P” range and the push button ignition switch is pressed from ignition ON, then the status will not change to ignition OFF and instead will change to ACC ON.
(3) After the vehicle has stopped, press the push button ignition switch and ignition is turned OFF (engine stopped · all power supplies OFF). However on the model except for MT, if the shift lever is in a range other than the “P” range and the push button ignition switch is pressed with the vehicle stopped, then the power supply will not change to ignition OFF and instead will change to ACC ON. Check that the steering lock operates if the door is opened in the ignition OFF state. (However, except for MT model, the shift must be in the “P” range.)
(4) To check the range of the keyless access ignition operation, check that the engine can start when you set the access key at the check position on the seat in the direction indicated in the figure.

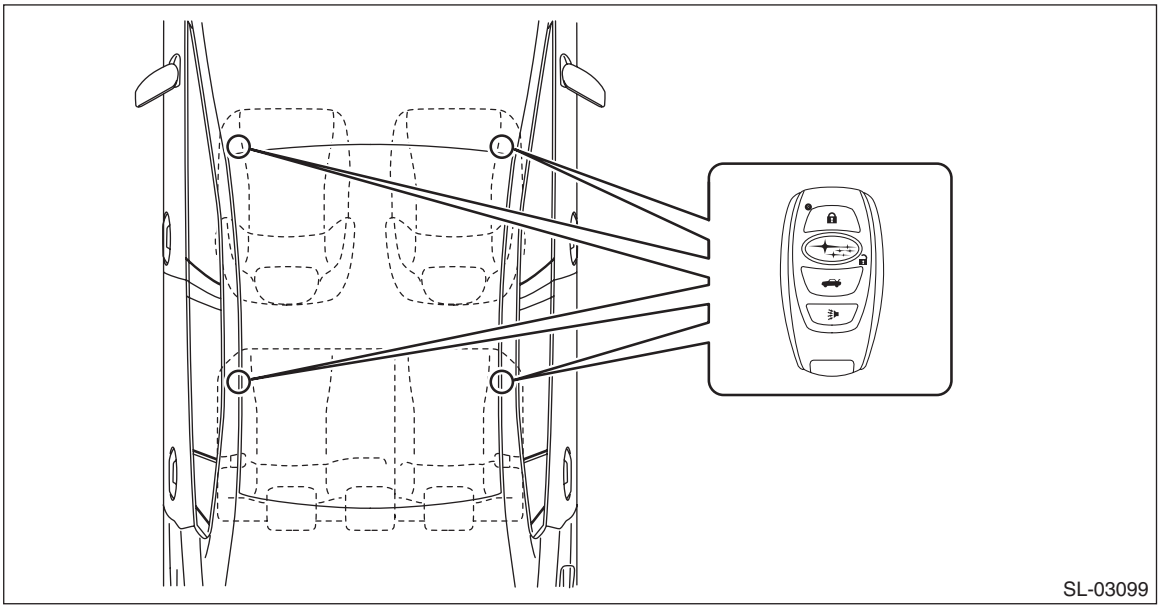

CAUTION:
The access key may not be correctly detected even though it is within the detection area within the passenger room, if it is on the instrument panel, on the rear tray, in the glove box, on the floor, or in the door trim pocket.

NOTE:
Perform the check multiple times, once each with the access key positioned on the driver’s seat, on the passenger’s seat, and on the rear seat in 2 locations.

6) Lockout protection function check with the access key in the trunk

CAUTION:
Open one of the windows before performing this check in order to prevent the key from being locked inside the vehicle.

(1) With all doors closed and locked, and with the access key in the trunk room and the trunk closed, check that the access buzzer sounds (approx. 2 seconds). Also check that the trunk opens when you press the trunk opener button.

(2) To check the detection range of the lockout protection function with the access key in the trunk, position the access key in the direction shown in the figure, and check that the lockout protection function operates normally when you check the lockout protection function for the access key locked in the trunk.

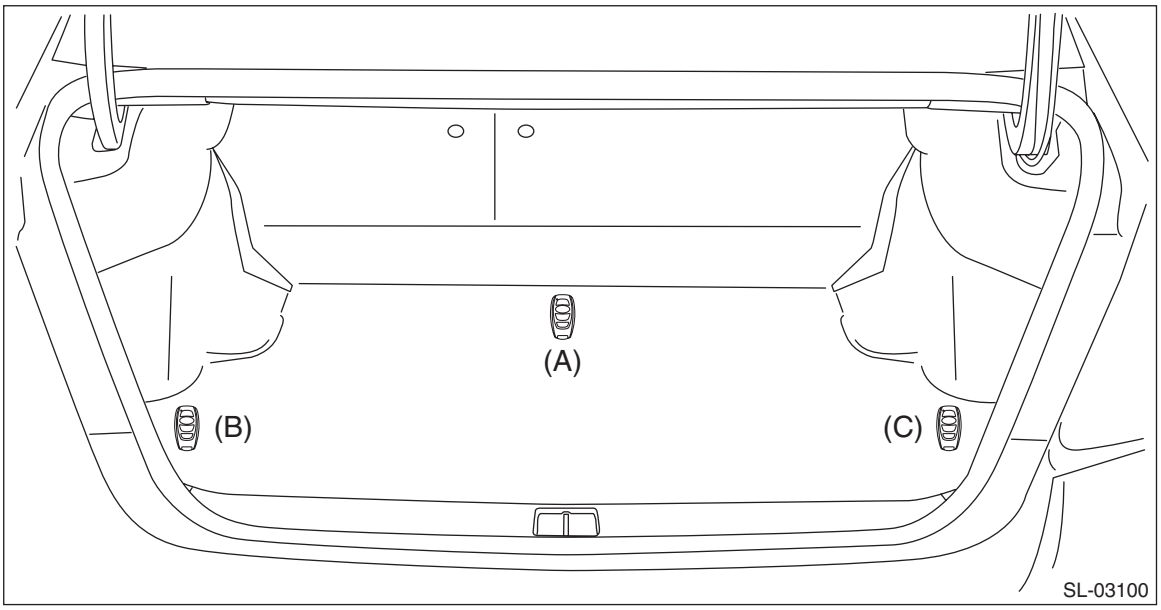

CAUTION:
The lockout protection function will not operate if the access key is any of the locations described below.

- Near the spare tire or on the edge of the trunk room.
- Inside a bag made of metallic material or near metal objects.

NOTE:
Check the trunk in two locations or more.

7) Lockout protection function check (in the passenger room)

CAUTION:
Open one of the windows before performing this check in order to prevent the key from being locked inside the vehicle.

(1) Position the access key on the driver's or passenger's seat.

(2) Close all doors. (with all doors unlocked)

(3) Check that the doors do not lock and the lockout protection buzzer (exterior) sounds for 2 seconds when you touch the touch sensor (lock) of either the driver's or passenger's door.

8) Keyless access cancel function check
(1) After setting the keyless access cancel function, check that all keyless access and start system (keyless access) functions are inoperable. (For cancel setting, refer to <Ref. to SL-110, OPERATION, Function Setting (Customize).>)

NOTE:
When keyless access is cancelled, door lock and unlock can be operated by access key button operation and the starter system can be operated by passing the access key over the push button ignition switch with the access key button toward you.

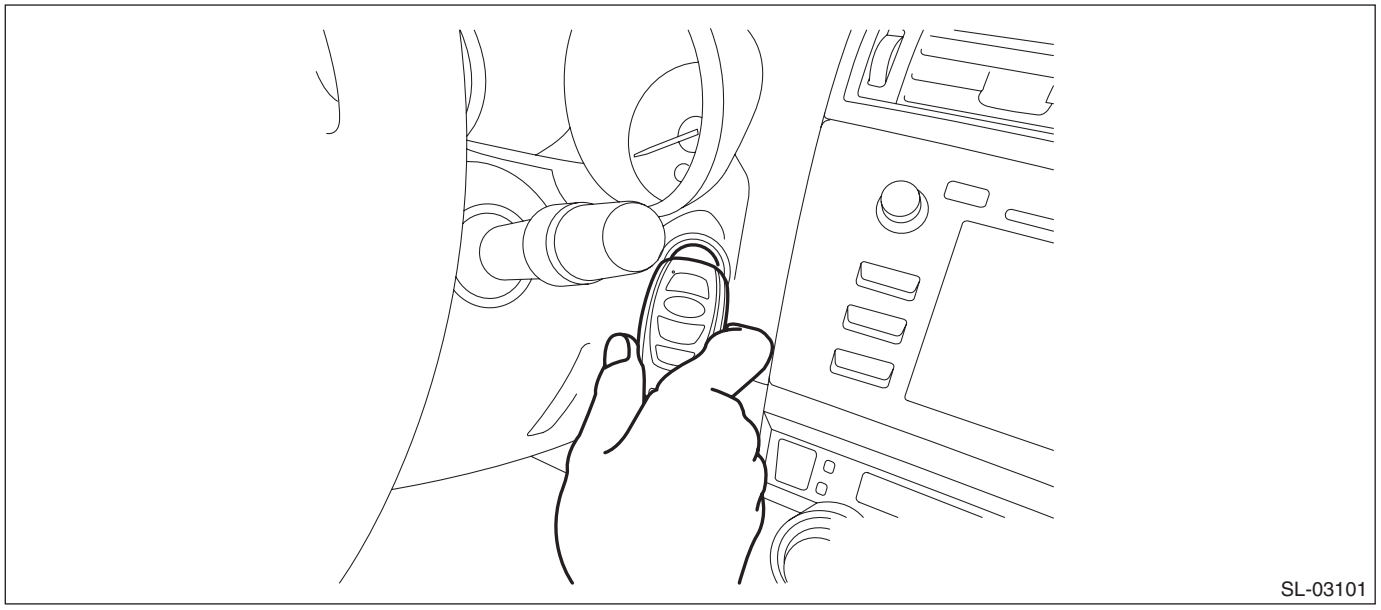
SL-03101

9) Access key diagnostic mode
(1) Connect to the Subaru Select Monitor, and select «Diagnosis» on the «Start» display.
(2) On «Vehicle selection» display, input the target vehicle information and select «Confirmed».
(3) On «Main Menu» display, select «Each System».
(4) On «Select System» display, select «Keyless Access with Push Button Start» and then select «Enter».
(5) On «Select Function» display, select «Work Support».
(6) From «Work Support», select «Keyless access system check».
(7) Select the transmitter to check from the items.
(8) Check that the door lock buzzer sounds (short blips, a continuous beeping sound for the center room antenna) when the access key is near the selected transmitter or antenna.

B: PREPARATION TOOL

1. SPECIAL TOOL

ILLUSTRATION	TOOL NUMBER	DESCRIPTION	REMARKS
 STSSM4	— (Newly adopted tool)	SUBARU SELECT MONITOR 4	Used for setting of each function and trouble-shooting for electrical system. NOTE: For detailed operation procedures of Subaru Select Monitor 4, refer to “Application help”.

2. GENERAL TOOL

TOOL NAME	REMARKS
Circuit tester	Used for measuring resistance, voltage and current.
DST-i	Used together with Subaru Select Monitor 4.

4. Electrical Component Location

A: LOCATION

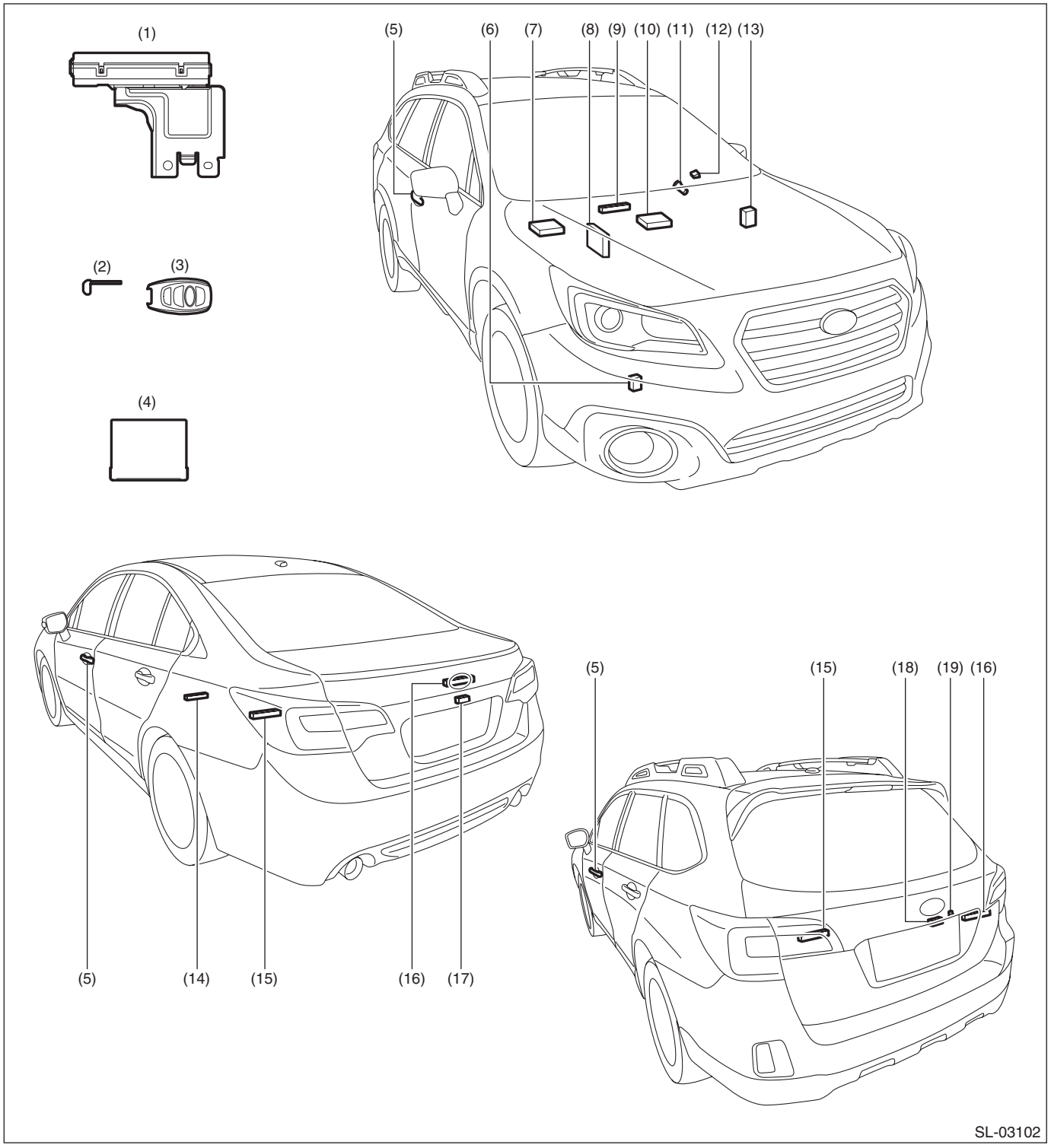

(1) Keyless access CM
(2) Mechanical key
(3) Access key
(4) ID code box
(For C0 and C5 model only)
(5) Front outer handle (front exterior antenna)
– Touch sensor (lock)
– Touch sensor (unlock)
(6) Access buzzer
(7) TCM (engine type: EZ)
(8) ECM
(9) Front interior antenna
(10) TCM (engine type: FB)
(11) Push button ignition switch
(12) Steering lock CM
(13) Body integrated unit
(14) Center interior antenna
(15) Rear interior antenna
(16) Rear exterior antenna
(17) Trunk opener button
(18) Rear gate opener button
(19) Rear lock button

5. Control Module I/O Signal

A: ELECTRICAL SPECIFICATION

1. KEYLESS ACCESS CM

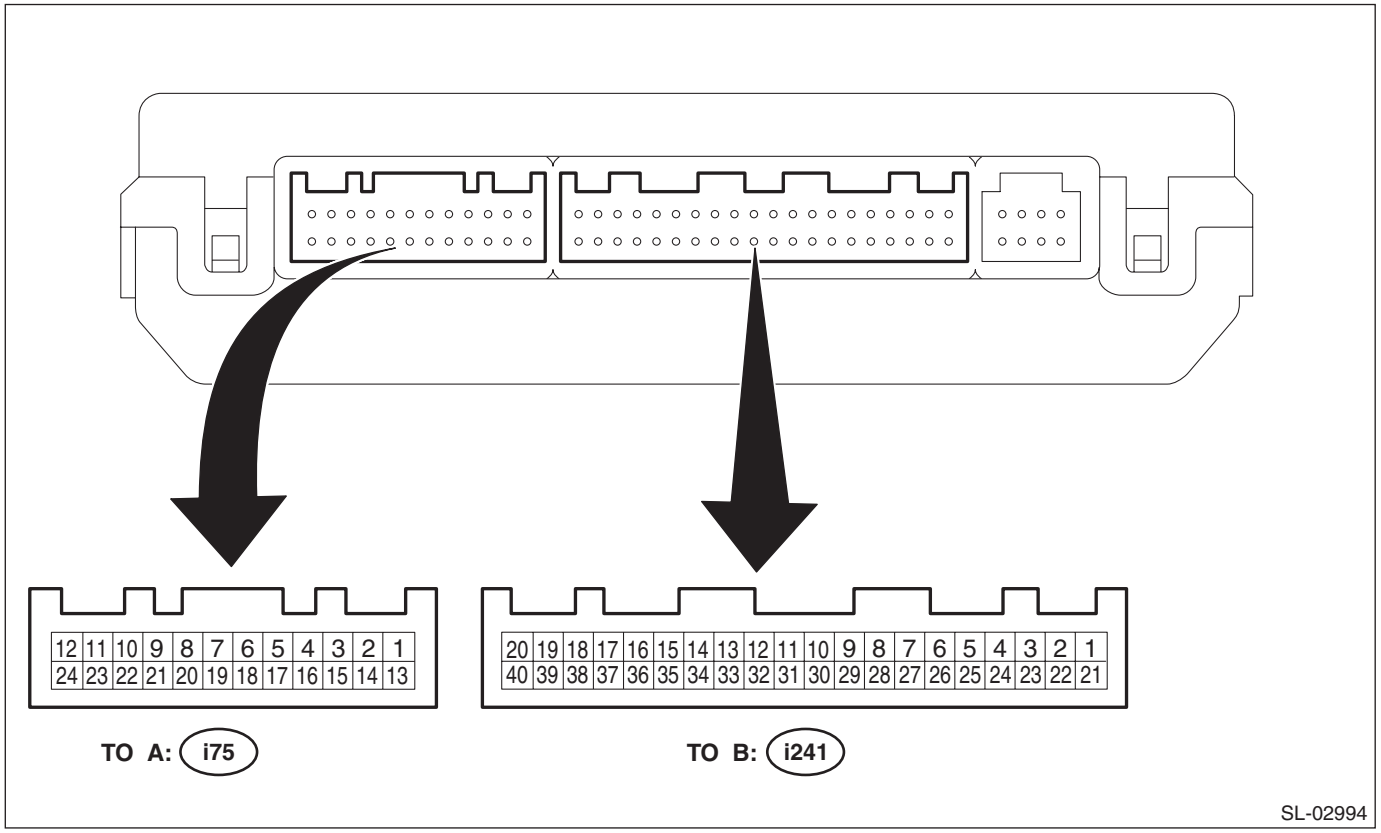

Terminal No.	Contents	Measuring condition	Standard
(i75) No. 1 ←→ Chassis ground	Ground	Always *1	Less than 1 Ω
(i75) No. 2 ←→ 1	Immobilizer signal reception (ignition switch)	Wait for 30 seconds or more after the door was opened or closed with IG OFF and the brake pedal (except for MT model) or clutch pedal (MT model) released.	1 V or less
		Turn the ignition switch to OFF and with the access key near the push button ignition switch, press the push button ignition switch. (with the access key battery removed)	Waveform 1
(i75) No. 3	—	—	—
(i75) No. 4 ←→ 1	Start switch input 1	Push button ignition switch pressed → released*1	Less than 1 Ω → 10 kΩ or more
(i75) No. 5 ←→ 1	Indicator output (orange)	With ACC ON or IG ON, brake pedal (AT model) or clutch pedal (MT model) not depressed	9.5 V or more
(i75) No. 6 ←→ 1	Start switch character illumination	When illumination of start switch goes off, the headlight is OFF → ON, after setting the illumination control to MAX	Less than 2 V → 9.5 V or more
(i75) No. 7 ←→ Chassis ground	Engine speed	While engine idling	Waveform 2
(i75) No. 8 ←→ Chassis ground (except for MT model)	Shift P position	Except for shift positions P → Shift position P	40 kΩ or more → 200 Ω or less
(i75) No. 9 ←→ Chassis ground	Steering lock power supply	Always *1	10 kΩ or more

Terminal No.	Contents	Measuring condition	Standard
(i75) No. 10	—	—	—
(i75) No. 11 ←→ Chassis ground	IGN2 relay drive	Always (20°C) *1	74.15 — 460.88 Ω
(i75) No. 12 ←→ Chassis ground	IGN1 relay drive	Always (20°C) *1	50.87 — 72.17 Ω
(i75) No. 13 ←→ Chassis ground	Immobilizer amplifier ground	Always *1	Less than 1 Ω
(i75) No. 14 ←→ 1	Immobilizer signal transmission (ignition switch)	Wait for 30 seconds or more after the door was opened or closed with IG OFF and the brake pedal (except for MT model) or clutch pedal (MT model) released.	1 V or less
		Turn the ignition switch to OFF and with the access key near the push button ignition switch, press the push button ignition switch. (with the access key battery removed)	Waveform 3
(i75) No. 15 ←→ 1	Immobilizer amplifier power supply	Wait for 30 seconds or more after the door was opened or closed with IG OFF and the brake pedal (except for MT model) or clutch pedal (MT model) released.	1 V or less
		Within 30 seconds after the push button ignition switch is pressed with IG OFF and access key not in the passenger room	Waveform 4
(i75) No. 16	—	—	—
(i75) No. 17 ←→ 1	Start switch input 2	Push button ignition switch pressed → released*1	Less than 1 Ω → 10 kΩ or more
(i75) No. 18 ←→ 1	Indicator output (green)	Depress the brake pedal (except for MT models) or clutch pedal (MT models) with the access key in the passenger room.	9.5 V or more
(i75) No. 19	—	—	—
(i75) No. 20 ←→ Chassis ground (MT model)	Clutch switch input	Clutch pedal depressed → Released	9.5 V or more → 1 V or less
(i75) No. 21 ←→ 1	Steering lock position input	With ignition switch OFF and shift position P, and with push button ignition switch pressed, Steering lock → Steering unlock	9.5 V or more → 1.2 V or less
(i75) No. 22	—		
(i75) No. 23 ←→ Chassis ground	ACC relay drive	Always (20°C) *1	152.61 — 216.5 Ω
(i75) No. 24 ←→ 1	+B power supply 1 (main)	Always *1	9.5 — 16 V
(i241) No. 1 ←→ 21	Front interior antenna –	All doors closed, power OFF, access key not in passenger room, touch sensor (lock) OFF → ON	No pulse output → Pulse output detected
(i241) No. 2 ←→ 21	Front interior antenna +	All doors closed, power OFF, access key not in passenger room, touch sensor (lock) OFF → ON	No pulse output → Pulse output detected
(i241) No. 3 ←→ 21	Passenger side external antenna –	Power OFF, all doors closed, all doors locked by lock operation with wireless remote control, access key not in passenger room	No pulse output → Pulse output detected
(i241) No. 4 ←→ 21	Passenger side external antenna +	Power OFF, all doors closed, all doors locked by lock operation with wireless remote control, access key not in passenger room	No pulse output → Pulse output detected
(i241) No. 5 ←→ 21	Driver side external antenna +	Power OFF, all doors closed, all doors locked by lock operation with wireless remote control, access key not in passenger room	No pulse output → Pulse output detected

Terminal No.	Contents	Measuring condition	Standard
(i241) No. 6 ←→ 21	Driver side external antenna –	Power OFF, all doors closed, all doors locked by lock operation with wireless remote control, access key not in passenger room	No pulse output → Pulse output detected
(i241) No. 7 ←→ 21	Passenger's sensor drive power supply	Power OFF → IG ON	9.5 V or more → less than 2 V
(i241) No. 8	—	—	—
(i241) No. 9 ←→ 21	Driver's sensor drive power supply	Power OFF → IG ON	9.5 V or more → less than 2 V
(i241) No. 10 ←→ Chassis ground	CAN communication (Hi)	ACC ON or IGN ON or power OFF, and open/close the door	Pulse generation
(i241) No. 11 ←→ Chassis ground	CAN communication (Lo)	ACC ON or IGN ON or power OFF, and open/close the door	Pulse generation
(i241) No. 12	—	—	—
(i241) No. 13	LIN communication	ACC ON or IGN ON or power OFF, and open/close the door	Pulse generation
(i241) No. 14	—	—	—
(i241) No. 15 ←→ 21	Rear exterior antenna –	Power OFF, all doors closed, all doors locked, trunk or rear gate opener button OFF → ON	No pulse output → Pulse output detected
(i241) No. 16 ←→ 21	Rear exterior antenna +	Power OFF, all doors closed, all doors locked, trunk or rear gate opener button OFF → ON	No pulse output → Pulse output detected
(i241) No. 17 ←→ 21	Rear interior antenna –	All doors closed, power OFF, access key not in passenger room, touch sensor (lock) OFF → ON	No pulse output → Pulse output detected
(i241) No. 18 ←→ 21	Rear interior antenna +	All doors closed, power OFF, access key not in passenger room, touch sensor (lock) OFF → ON	No pulse output → Pulse output detected
(i241) No. 19 ←→ 21	Center interior antenna –	All doors closed, power OFF, access key not in passenger room, touch sensor (lock) OFF → ON	No pulse output → Pulse output detected
(i241) No. 20 ←→ 21	Center interior antenna +	All doors closed, power OFF, access key not in passenger room, touch sensor (lock) OFF → ON	No pulse output → Pulse output detected
(i241) No. 21 ←→ Chassis ground	Ground	Always *1	Less than 1 Ω
(i241) No. 22	—	—	—
(i241) No. 23 ←→ Chassis ground	ID code box presence judgment terminal	Always *1	With ID code box Less than 1 Ω
			Without ID code box 1 MΩ or more
(i241) No. 24 ←→ 21	Request switch input	Power OFF, all doors locked, trunk or rear gate lock button OFF → ON	9.5 V or more → less than 2 V
(i241) No. 25 ←→ 21	Passenger's lock sensor signal	Power OFF, all doors closed, all doors locked, access key carried, passenger's seat touch sensor (lock) OFF → ON	9.5 V or more → less than 2 V (→ 9.5 V or more)
(i241) No. 26 ←→ 21	Driver's lock sensor signal	Power OFF, all doors closed, all doors locked, access key carried, driver's seat touch sensor (lock) OFF → ON	9.5 V or more → less than 2 V (→ 9.5 V or more)
(i241) No. 27	—	—	—
(i241) No. 28 ←→ 21	Passenger's unlock sensor signal	Power OFF, all doors closed, all doors locked, access key carried, passenger's seat touch sensor (unlock) OFF → ON	9.5 V or more → less than 2 V (→ 9.5 V or more)
(i241) No. 29 ←→ 21	Driver's unlock sensor signal	Power OFF, all doors closed, all doors locked, access key carried, driver's seat touch sensor (unlock) OFF → ON	9.5 V or more → less than 2 V (→ 9.5 V or more)
(i241) No. 30	—	—	—

Terminal No.	Contents	Measuring condition	Standard
(i241) No. 31 ←→ Chassis ground (except for MT model)	Stop light switch input	Brake pedal depressed → released	9.5 V or more → 1 V or less
(i241) No. 32 ←→ Chassis ground	Vehicle speed signal input	Always	30 kΩ or more
(i241) No. 33	—	—	—
(i241) No. 34 ←→ 21 (except for MT model)	Neutral switch input	Shift position N → any shift position other than P or N	Less than 2 V → 9.5 V or more
(i241) No. 35 ←→ 21	Starter drive request	Shift lever is in position P or position N and access key is in passenger compartment. While depressing the brake pedal (AT model) or clutch pedal (MT model), press the push button ignition switch (engine starts).	Less than 2 V → 9.5 V or more
(i241) No. 36 ←→ 21	ACC cutoff input	When brake pedal (AT model) or clutch pedal (MT model) depressed, push button ignition switch pressed (while cranking) → Except when cranking	Less than 2 V → 9.5 V or more
(i241) No. 37 ←→ 21	Immobilizer collation	Ignition switch ON	7 V or more → pulse generates temporarily
(i241) No. 38	—	—	—
(i241) No. 39	—	—	—
(i241) No. 40 ←→ Chassis ground	+B power supply 2 (DCDC backup)	Always *1	9.5 — 16 V

NOTE:
*1: Perform while the control module connector is disconnected.
1. Waveform 1

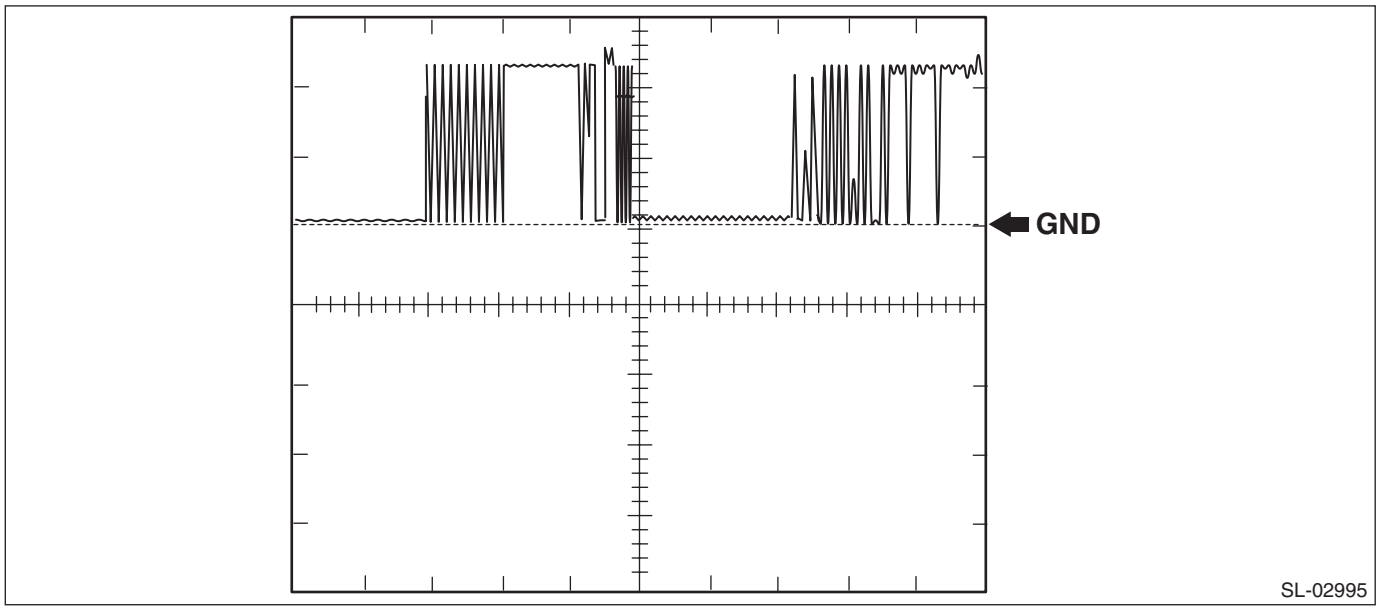

Item	Contents
Measured terminal	(i75) No. 2 ←→ 1
Equipment setting	2 V/DIV, 20 ms/DIV
Measuring condition	Turn the ignition switch to OFF and with the access key near the push button ignition switch, press the push button ignition switch (with the access key battery removed).

2. Waveform 2

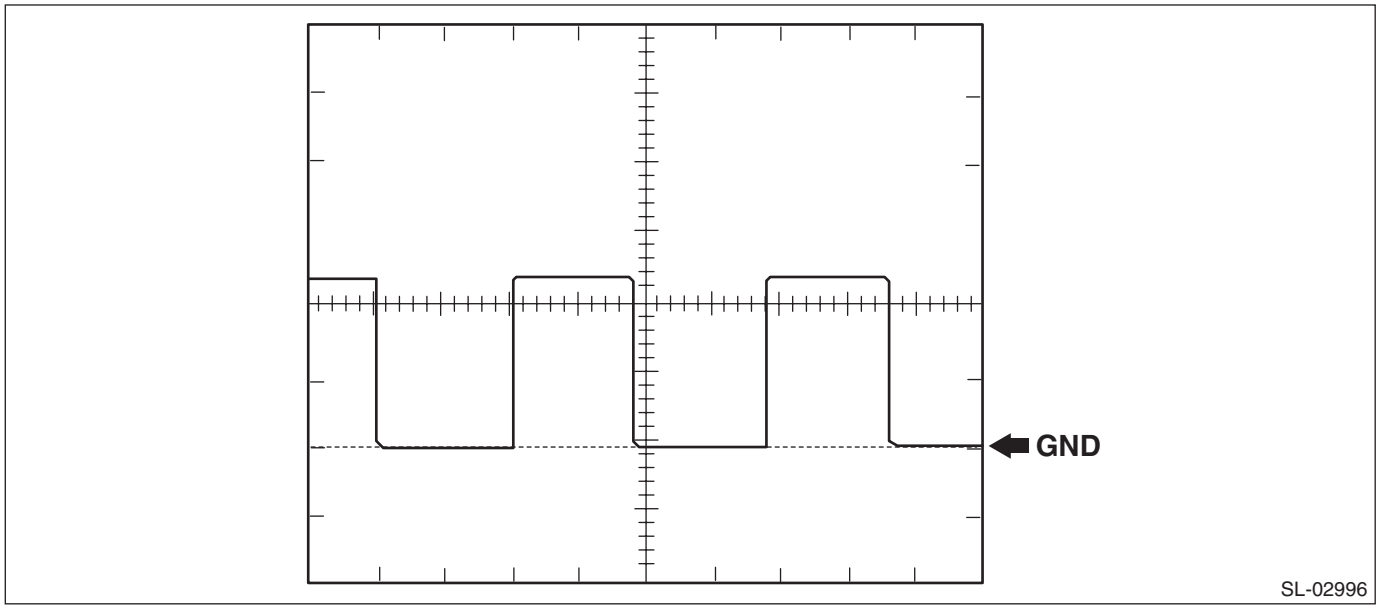

Item	Contents
Measured terminal	(i75) No. 7 ⟷ Chassis ground
Equipment setting	5 V/DIV, 100 ms/DIV
Measuring condition	While engine idling

3. Waveform 3

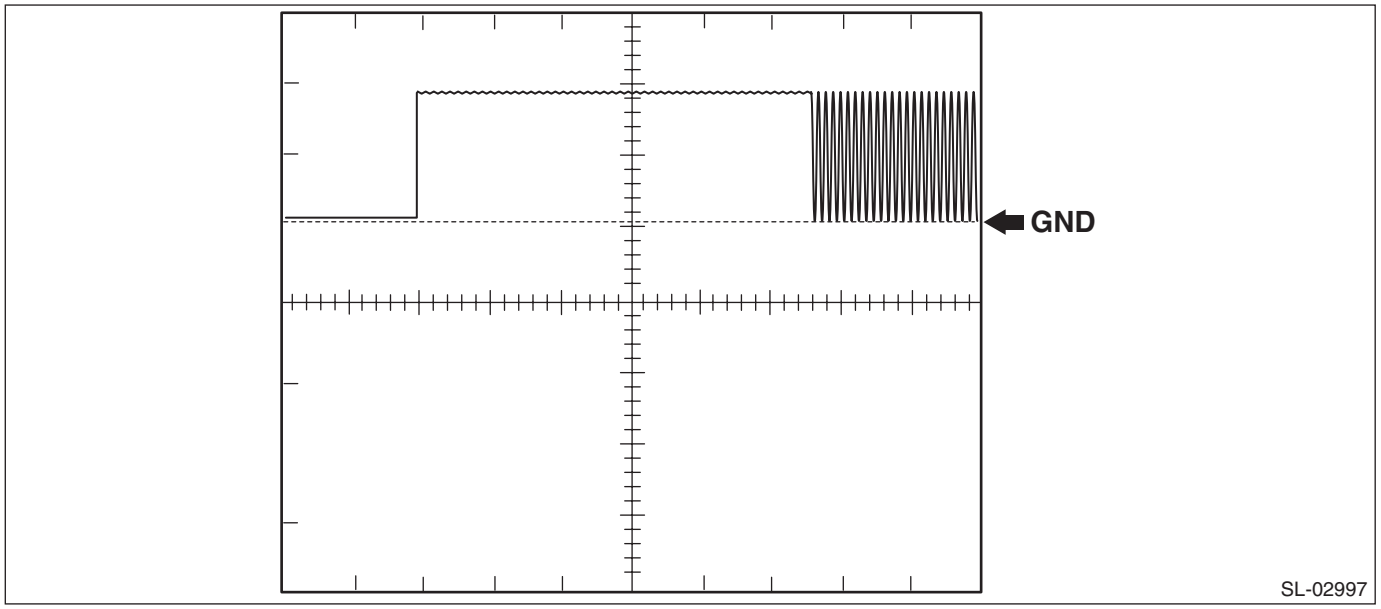

Item	Contents
Measured terminal	(i75) No. 14 ⟷ 1
Equipment setting	2 V/DIV, 20 ms/DIV
Measuring condition	Turn the ignition switch to OFF and with the access key near the push button ignition switch, press the push button ignition switch (with the access key battery removed).

4. Waveform 4

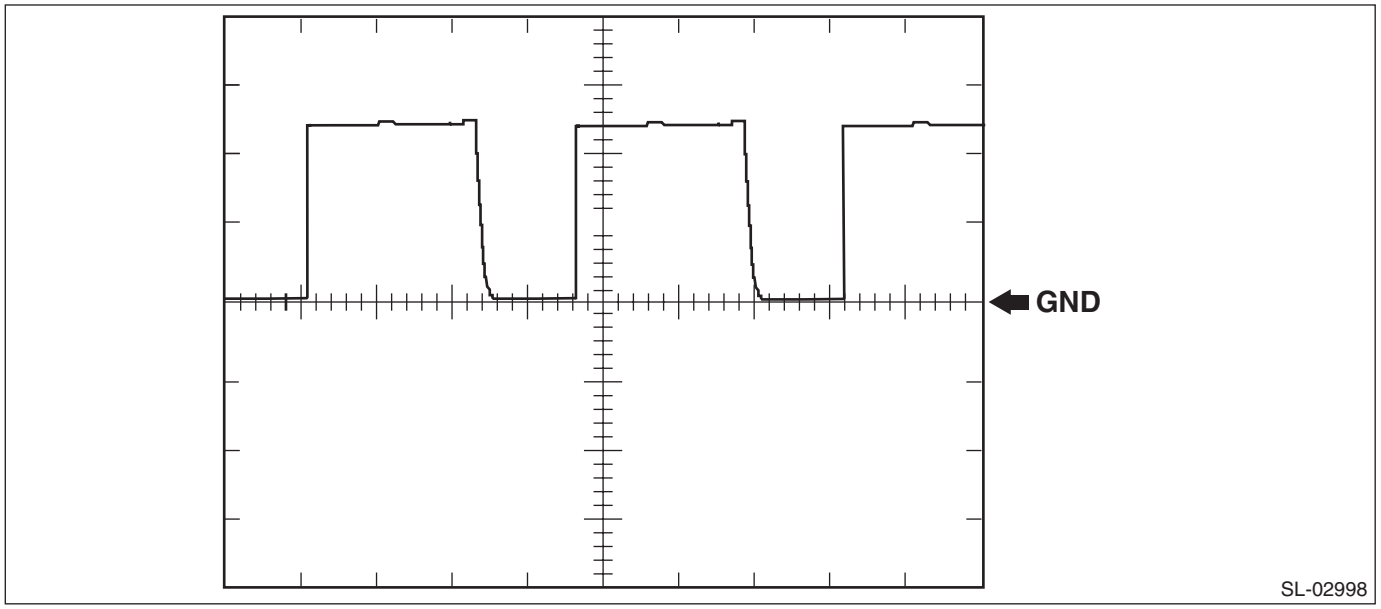

Item	Contents
Measured terminal	(i75) No. 15 ←→ 1
Equipment setting	2 V/DIV, 200 ms/DIV
Measuring condition	Within 30 seconds after the push button ignition switch is pressed with IG OFF and access key not in the passenger room

2. ID CODE BOX

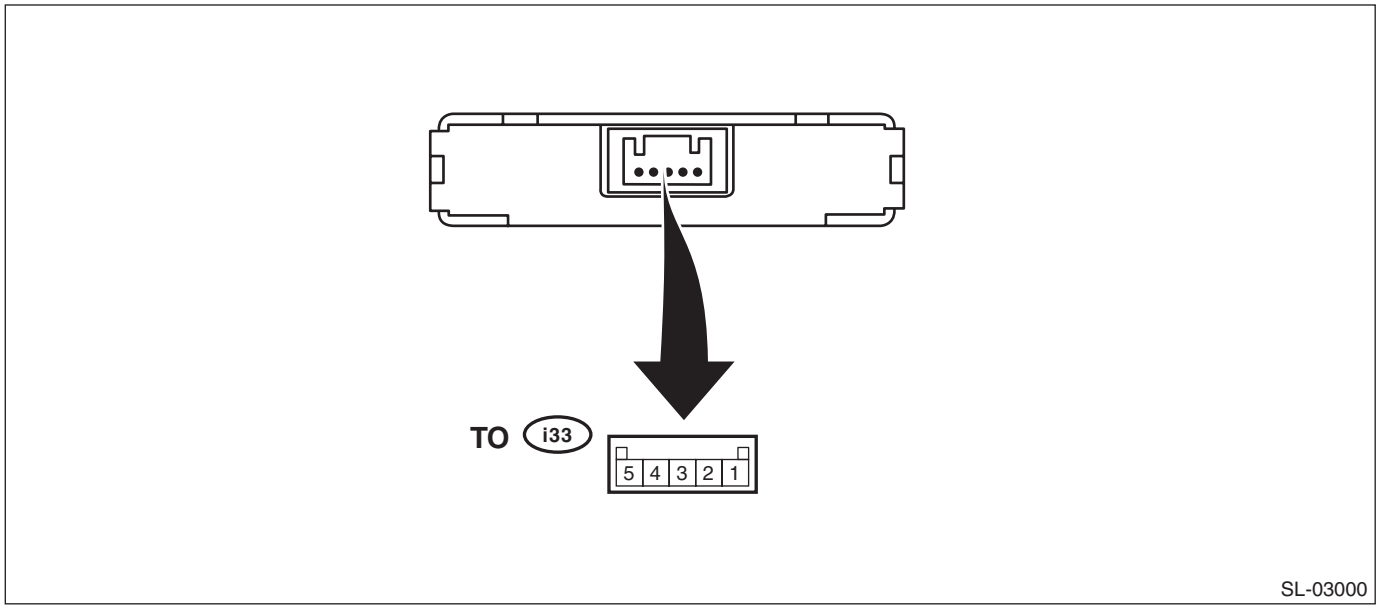

Terminal No.	Contents	Measuring condition	Standard
(i33) No. 1 ←→ 5	Battery power supply	Always *1	9.5 V or more
(i33) No. 2	LIN communication	ACC ON, IGN ON or power OFF, and open/close the door	Pulse generation
(i33) No. 3	—	—	—
(i33) No. 4 ←→ 5	Immobilizer communication 1	Ignition switch OFF	0 V
		Ignition switch ON	7 V or more → pulse generates temporarily
(i33) No. 5 ←→ Chassis ground	Ground	Always *1	Less than 1 Ω

NOTE:
*1: Perform while the control module connector is disconnected.

3. BODY INTEGRATED UNIT

Refer to the BODY CONTROL SYSTEM (DIAGNOSTICS) for the I/O Signal of the body integrated unit. <Ref. to BC(diag)-8, ELECTRICAL SPECIFICATION, Control Module I/O Signal.>

4. STEERING LOCK CM

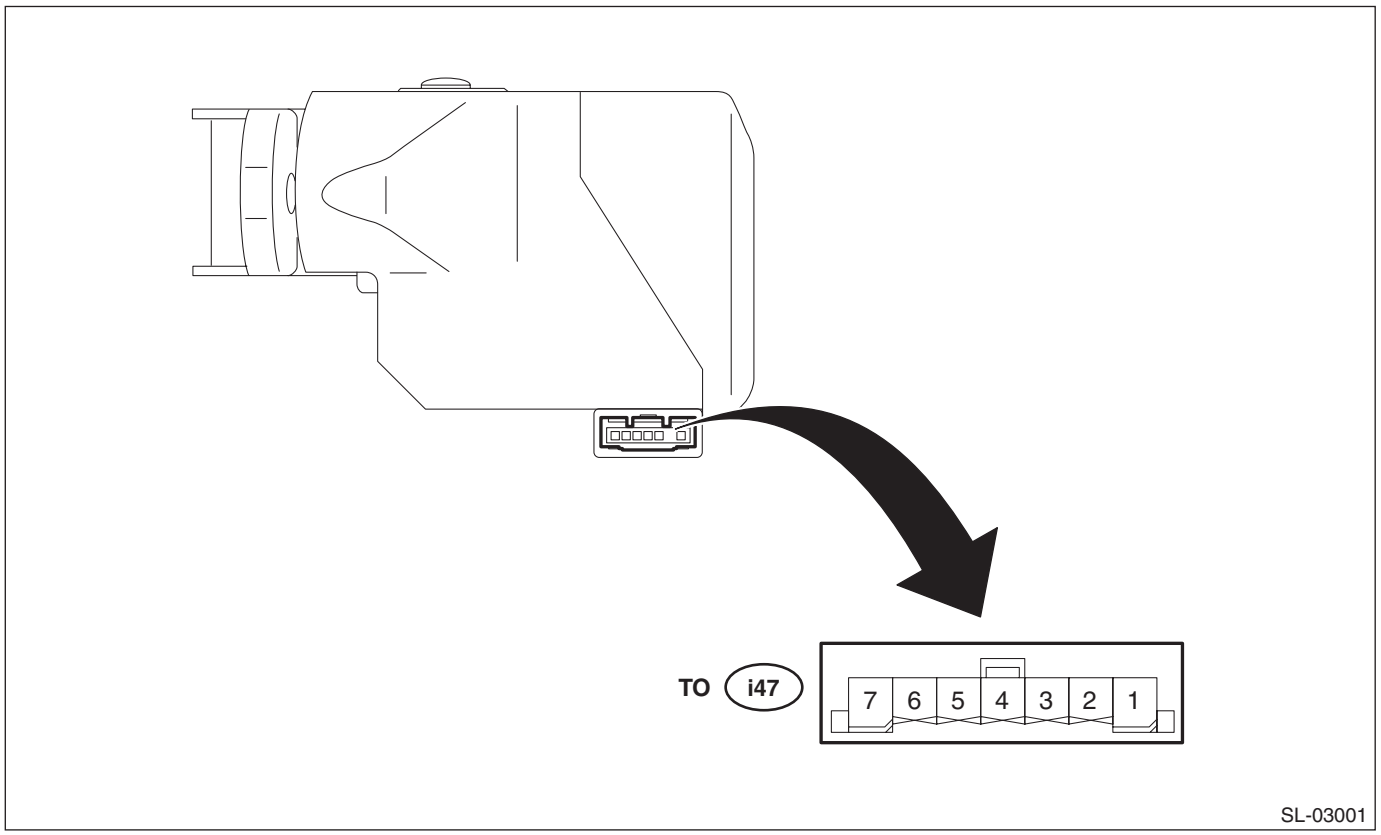

Terminal No.	Contents	Measuring condition	Standard
(i47) No. 1 ←→ Chassis ground	Ground	Always *1	Less than 1 Ω
(i47) No. 2	—	—	—
(i47) No. 3 ←→ Chassis ground	Steering lock motor drive power supply	Motor not operating → Motor operating	9.5 V or more → 1 V or less
(i47) No. 4 ←→ Chassis ground	Unlock position output	Lock → Unlock	9.5 V or more → 1 V or less
(i47) No. 5	LIN communication	ACC ON, IGN ON or power OFF, and open/close the door	Pulse generation
(i47) No. 6 ←→ Chassis ground	Ignition power supply	Ignition switch ON *1	9.5 V or more
(i47) No. 7 ←→ Chassis ground	Battery power supply	Always *1	9.5 V or more

NOTE:
*1: Perform while the control module connector is disconnected.

B: WIRING DIAGRAM

Refer to “KEYLESS ACCESS WITH PUSH BUTTON START SYSTEM” in WI section. <Ref. to WI-260, WIRING DIAGRAM, Keyless Access With Push Button Start System.>

6. Subaru Select Monitor

A: OPERATION

- For detailed operation procedures, refer to “Application help”.
- When the keyless access system cannot communicate with Subaru Select Monitor, perform “COMMUNICATION FOR INITIALIZING IMPOSSIBLE”.

B: INSPECTION

1. COMMUNICATION FOR INITIALIZING IMPOSSIBLE

Communication error with keyless access system

DETECTING CONDITION:

- Defective harness
- Power supply circuit malfunction
- Defective keyless access CM
- Defective CAN communication circuit
- Defective Subaru Select Monitor

TROUBLE SYMPTOM:

Not communicable with Subaru Select Monitor.

CAUTION:

For replacement procedure of keyless access CM, refer to the “REGISTRATION MANUAL FOR IMMOBILIZER” provided as a separate volume.

WIRING DIAGRAM:

NOTE:

For the coupling connector, refer to “WIRING SYSTEM”.

– Keyless access with push button start system <Ref. to WI-260, WIRING DIAGRAM, Keyless Access With Push Button Start System.>

– CAN communication system <Ref. to WI-132, WIRING DIAGRAM, CAN Communication System.>

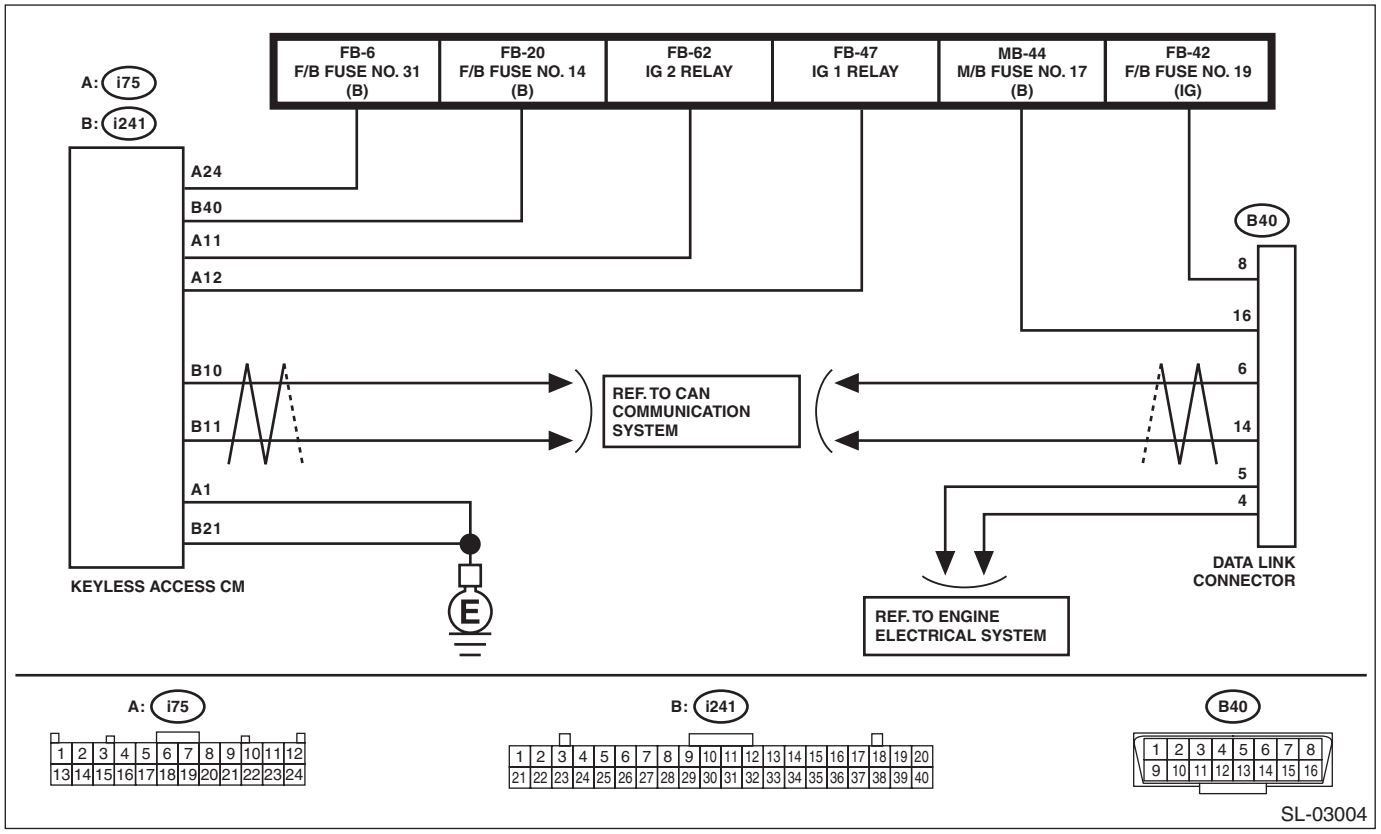

	Step	Check	Yes	No
1	**CHECK FUSE.** 1) Turn the ignition switch to OFF. 2) Check the fuse for keyless access CM. <Ref. to SL-10, INSPECTION, Relay and Fuse.>	Is there any fault?	Replace the fuse. If the replaced fuse has blown out immediately, repair the short circuit to ground in harness between fuse and keyless access CM.	Go to step **2**.
2	**CHECK HARNESS (OPEN CIRCUIT).** 1) Disconnect the keyless access CM connector. 2) Using a tester, measure the voltage between the keyless access CM connector (harness side) and chassis ground. ***Connector & terminal*** ***(i75) No. 24 (+) — Chassis ground (–):*** ***(i241) No. 40 (+) — Chassis ground (–):***	Is the voltage 10 V or more?	Go to step **3**.	Repair the open circuit of harness between fuse and keyless access CM connector.
3	**CHECK HARNESS (OPEN CIRCUIT).** 1) Turn the ignition switch to ON. 2) Using a tester, measure the voltage between the keyless access CM connector (harness side) and chassis ground. ***Connector & terminal*** ***(i75) No. 11 (+) — Chassis ground (–):*** ***(i75) No. 12 (+) — Chassis ground (–):***	Is the voltage 10 V or more?	Go to step **4**.	Check IG relay circuit.
4	**CHECK HARNESS (OPEN CIRCUIT).** 1) Turn the ignition switch to OFF. 2) Using a tester, measure the resistance between the keyless access CM connector (harness side) and chassis ground. ***Connector & terminal*** ***(i75) No. 1 — Chassis ground:*** ***(i241) No. 21 — Chassis ground:***	Is the resistance less than 1 Ω?	Go to step **5**.	Repair the open circuit of harness between keyless access CM connector and chassis ground.
5	**CHECK LAN SYSTEM.** Inspect LAN system. <Ref. to LAN(diag)-2, Basic Diagnostic Procedure.>	Is there any fault?	Perform the inspection according to the diagnosis for LAN system.	Go to step **6**.
6	**CHECK KEYLESS ACCESS CM.** Communicate with the keyless access system.	Is communication possible?	Even if DTC is displayed, the circuit has returned to a normal condition at this time. Reproduce the failure, and then perform the diagnosis again. NOTE: In this case, temporary poor contact of connector, temporary open or short circuit of harness may be the cause.	Replace the keyless access CM. <Ref. to SL-102, Keyless Access CM.>

7. Read Diagnostic Trouble Code (DTC)

A: OPERATION

1) On «Start» display, select «Diagnosis».
2) On «Vehicle selection» display, input the target vehicle information and select «Confirmed».
3) On «Main Menu» display, select «Each System».
4) On «Select System» display, select «Keyless Access with Push Button Start» and then select «Enter».
5) On «Select Function» display, select «DTC».

NOTE:
- For detailed operation procedures, refer to “Application help”.
- For details concerning DTC, refer to “List of Diagnostic Trouble Code (DTC)”. <Ref. to KPS(diag)-37, List of Diagnostic Trouble Code (DTC).>

8. Clear Memory Mode

A: OPERATION

1) On «Start» display, select «Diagnosis».
2) On «Vehicle selection» display, input the target vehicle information and select «Confirmed».
3) On «Main Menu» display, select «Each System».
4) On «Select System» display, select «Keyless Access with Push Button Start» and then select «Enter».
5) On «Select Function» display, select «DTC».
6) On «DTC» display, select «Clear Memory».

NOTE:
- For detailed operation procedures, refer to “Application help”.
- Initial diagnosis of electronic throttle control is performed after memory clearance. Wait for 10 seconds or more after turning the ignition switch to ON, and then start the engine.

9. Read Current Data

A: OPERATION

1) On «Start» display, select «Diagnosis».
2) On «Vehicle selection» display, input the target vehicle information and select «Confirmed».
3) On «Main Menu» display, select «Each System».
4) On «Select System» display, select «Keyless Access with Push Button Start» and then select «Enter».
5) On «Select Function» display, select «Data Monitor».

NOTE:
For detailed operation procedures, refer to “Application help”.

B: LIST

Items to be displayed	Contents	Standard	Note
Driver’s unlock touch sensor switch	Status of the touch sensor (unlock) built on the back surface of the driver’s door outer handle	ON: ON when the touch sensor is touched OFF: OFF when the touch sensor is not touched	—
Passenger’s unlock touch sensor switch	Status of the touch sensor (unlock) built on the back surface of the passenger’s door outer handle	ON: ON when the touch sensor is touched OFF: OFF when the touch sensor is not touched	—
Driver's lock touch sensor SW	Status of the touch sensor (lock) built on the surface of the driver’s door outer handle	ON: ON when the touch sensor is touched OFF: OFF when the touch sensor is not touched	—
Passenger's lock touch sensor SW	Status of the touch sensor (unlock) built on the back surface of the passenger’s door outer handle	ON: ON when the touch sensor is touched OFF: OFF when the touch sensor is not touched	—
Rear Gate Request SW	Rear gate lock/unlock button status	ON: When the switch is ON OFF: When the switch is OFF	—
Trunk Request SW	Trunk opener button status	ON: When the switch is ON OFF: When the switch is OFF	—
Secret code Keyless registration	Secret code keyless registration status	unregistered: When not registered registered: When registered	—
ECU ACC	Keyless access CM power supply voltage status	ON: When the voltage is present OFF: When the voltage is not present	—
Control Module Voltage(Backup)	Keyless access CM back-up power supply voltage status	ON: When the voltage is present OFF: When the voltage is not present	—
B/up fuse	Keyless access CM back-up fuse status	Connecting: When the fuse is connected Not connected: When the fuse is not connected	—
Incorrect vehicle ID	ID information when performing the keyless access	No: Registered access key Yes: Unregistered access key	—
No response	Access key response status	No: There is a response from the access key when the keyless access is performed Yes: There is no response from the access key when keyless access is performed	—
Response code; Different format	Response status from the access key	No: Response from the access key is normal when keyless access is performed Yes: Response from the access key is different when keyless access is performed	—

Items to be displayed	Contents	Standard	Note
Battery consumption	Access key battery status	No: When the access key battery is not depleted Yes: When the access key battery is depleted	—
Incorrect response code, ID code	Access key response status when performing the keyless access	No: Response from the access key is normal when keyless access is performed Yes: When response from the access key is different when the keyless access is performed	—
Incorrect response code, collation result	Access key response status when performing the keyless access	No: Response from the access key is normal when keyless access is performed Yes: When response from the access key is different when the keyless access is performed	—
Incorrect ID code	Access key response status when performing the keyless access	No: Response from the access key is normal when keyless access is performed Yes: When response from the access key is different when the keyless access is performed	—
Incorrect rolling code	Access key response status when performing the keyless access	No: Response from the access key is normal when keyless access is performed Yes: When response from the access key is different when the keyless access is performed	—
Smart Cancel	Keyless access function status	Normal: Keyless access function is activated Cancel: Keyless access function is deactivated	—
Simple Smart system cancel	Keyless access function status	Normal: Keyless access function is activated Cancel: Keyless access function is deactivated	—
ID Code Box W/H Connection State	Connecting status of the terminal (i241) No. 23	Not connected: ID code box is not connected Connecting: ID code box is connected	—
ID Code Box Existence Judging	ID code box connection setting	—	Normal «Existence Judging»
Immobilizer	Immobilizer set status	Set: When the immobilizer is set Unset: When the immobilizer is not set	—
Remote engine starter communication ID confirmation	Remote control engine starter communication ID confirmation status	Collation NG: When using an unregistered remote control engine starter Collation OK: When using a registered remote control engine starter	—
Remote engine starter code registration confirmation	Remote control engine starter registration status	unregistered: When the code is not registered registered: When the code is registered	—
STLC sleep possible status	Steering lock CM sleep possible status	Impossible: Sleep is not possible Possible: Sleep is possible	—
STLC wake-up transmission status	Steering lock CM wake-up transmission status	No transmission: Wake-up signal is not transmitted Transmission: Wake-up signal is transmitted	—
Lock side sensor status	Steering lock CM status	ON: Locked status OFF: Unlocked status	—
Unlock side sensor status	Steering lock CM status	ON: Locked status OFF: Unlocked status	—
Lock confirmation	Steering lock CM status	Unconfirmed: When not locked Confirmed: When locked	—
Unlock confirmation	Steering lock CM status	Unconfirmed: When not unlocked Confirmed: When unlocked	—
Sensor initialization	Steering lock CM status	incomplete: Sensor initial operation not completed Completed: Sensor initial operation completed	—
Motor protection control status	Steering lock CM status	Permitted range: Motor protection control is activated Rejected range: Motor protection control is not activated	—
Motor operation prohibition voltage evaluation	Steering lock CM status	ON: Motor operation is permitted OFF: Motor operation is prohibited	—

Items to be displayed	Contents	Standard	Note
Diagnosis response	Steering lock CM status	Normal: Diagnostic communication is not in progress response: Diagnostic communication is in progress	—
Sensor abnormal	Steering lock CM status	Normal: When the steering lock CM is normal Abnormal: When the steering lock CM is abnormal	—
Motor power supply short-circuit abnormal	Steering lock CM status	Normal: When the steering lock CM is normal Abnormal: When the steering lock CM is abnormal	—
Motor driver short-circuit abnormal	Steering lock CM status	Normal: When the steering lock CM is normal Abnormal: When the steering lock CM is abnormal	—
Lock bar engagement abnormal	Steering lock bar status	Normal: Steering lock bar is normal Abnormal: Steering lock bar is stuck	—
Push start abnormal	Steering lock CM status	Normal: When the steering lock CM is normal Abnormal: When the steering lock CM is abnormal	—
Lock side relay operation	Steering lock CM status	Stopped: Other than in Unlock → Lock status Operating: In Unlock → Lock status	—
Unlock side relay operation	Steering lock CM status	Stopped: Other than in Unlock → Lock status Operating: In Unlock → Lock status	—
Motor drive FET drive	Steering lock CM status	Stopped: Not when the motor drive FET is operating Operating: When the motor drive FET is operating	—
Motor reversal protection control	Steering lock CM status	Stopped: Not when the motor drive FET is operating Operating: When the motor drive FET is operating	—
Engine start	Engine start permission status	Engine start permission: When the ignition switch is ON Engine start prohibition: When the ignition switch is OFF	—
Sensor abnormal (past)	Steering lock CM status	Normal: When the steering lock CM is normal Abnormal: When the steering lock CM is abnormal	—
Motor power supply short-circuit abnormal (past)	Steering lock CM status	Normal: When the steering lock CM is normal Abnormal: When the steering lock CM is abnormal	—
Motor driver short-circuit abnormal (past)	Steering lock CM status	Normal: When the steering lock CM is normal Abnormal: When the steering lock CM is abnormal	—
Steering lock lock/unlock command reception history	Steering lock CM status	OFF: — ON (keep 10 sec): When steering lock is locked → unlocked, or unlocked → locked	—
Lock bar engagement abnormal (past)	Steering lock bar status	Normal: Steering lock bar is normal Abnormal: Steering lock bar has been stuck	—
Push start abnormal (past)	Steering lock CM status	Normal: When the steering lock CM is normal Abnormal: When the steering lock CM is abnormal	—
STLC Abnormal EEPROM access	Steering lock CM status	Normal: When the steering lock CM is normal Abnormal: When the steering lock CM is abnormal	—
ID code BOX sleep possible status	ID code box status	Impossible: Sleep is not possible Possible: Sleep is possible	—
ID code BOX wake-up transmission status	ID code box status	No transmission: Wake-up signal is not transmitted Transmission: Wake-up signal is transmitted	—
ID code BOX Abnormal EEPROM access (now)	ID code box status	Normal: When the ID code box is normal Abnormal: When the ID code box is abnormal	—
EGI code reception status	Engine start operation status	Reception: When the engine start operation is performed Not yet received: When the engine start operation is not performed	—
Engine start permission request reception status	Engine start permission request reception status	Reception: Ignition ON Not yet received: Ignition OFF	—
Code collation result between smart ECM and ID code box	Check result of collation code between keyless access CM and ID code box	Normal: When the engine start is possible Abnormal: When the engine start is not possible	—
Code collation result between steering locked ECM and ID code box	Check result of collation code between steering lock CM and ID code box	Normal: When the steering lock operation is possible Abnormal: When the steering lock operation is not possible	—

Items to be displayed	Contents	Standard	Note
Steering lock unlock request reception status	Steering lock CM unlock request reception status	Reception (keep 10 sec): When the steering lock unlock operation is performed Not yet received: —	—
Steering lock lock request reception status	Steering lock CM lock request reception status	Reception (keep 10 sec): When the steering lock lock operation is performed Not yet received: —	—
Driver's external transmitter output circuit abnormal	Transmitter output circuit status	Normal: When the transmitter output circuit is normal Abnormal: When the transmitter output circuit is abnormal	—
Passenger's external transmitter output circuit abnormal	Transmitter output circuit status	Normal: When the transmitter output circuit is normal Abnormal: When the transmitter output circuit is abnormal	—
Driver's external transmitter output circuit abnormal (past)	Transmitter output circuit status	Normal: When the transmitter output circuit is normal Abnormal: There was a transmitter output error in the past	—
Passenger's external transmitter output circuit abnormal (past)	Transmitter output circuit status	Normal: When the transmitter output circuit is normal Abnormal: There was a transmitter output error in the past	—
ID code registration mode status	Immobilizer registration status	Normal: Not while registering/deleting Regist.: While registering Deletion: While deleting	—
Smart related ECM code registration mode status	Immobilizer registration status	Normal: When not in the smart related ECM code registration mode On mode: When in the smart related ECM code registration mode	—
ID code collation completion confirmation	Immobilizer registration status	Normal: Not when the ID code collation is complete Completed: When the ID code collation is complete	—
ID code registration completion confirmation	Immobilizer registration status	Normal: Not when the ID code registration is complete Completed: When the ID code registration is complete	—
Smart related ECM code registration completion confirmation	Immobilizer registration status	Normal: Not when the smart related ECM code registration is complete Completed: When the smart related ECM code registration is complete	—
Registered smart key confirmation status	Immobilizer registration status	Normal: Not while confirming the registered access keys Confirming: While confirming the registered access keys	—
Smart related ECM code confirmation status	Immobilizer registration status	Normal: Not while confirming the smart related ECM code Confirming: While confirming the smart related ECM code	—
ID code registration status	Immobilizer registration status	Normal: Not during the ID code registration Confirming: During the ID code registration	—
ID code collation status	Immobilizer registration status	Normal: Not during the ID code registration Collating the immobilizer: During the ID code collation (immobilizer collation) Collating the smart: During the ID code collation (smart collation)	—
All registered keys confirmation status	Immobilizer registration status	Normal: Not while confirming all registered keys Confirming: While confirming all registered keys	—
Confirmed number of all registered keys	Immobilizer registration status	Display range: 0 — 7	—
Number of required registrations (smart)	Immobilizer registration status	Display range: 0 — 7	—
Number of collation completed (smart)	Immobilizer registration status	Display range: 0 — 7	—
Number of registration completed (smart)	Number of recognized keyless access CM	Display range: 0 — 7	—
ID Code Box	ID code box connection status	Not connected: ID code box is not connected Connecting: ID code box is connected	—

Items to be displayed	Contents	Standard	Note
Steer Lock ECM	Steering lock CM connection status	Not connected: The steering lock CM is not connected Connecting: The steering lock CM is connected	—
Driver's lock request SW/ touch sensor switch ON edge record	Collation history is displayed	OFF: When the collation has never been completed before ON: When the collation has succeeded at least once in the past	When confirming the data on the left, confirm after performing Keyless access system check. <Ref. to KPS(diag)-35, Keyless Access System Check.>
Passenger's unlock request SW/touch sensor switch ON edge record	Collation history is displayed	OFF: When the collation has never been completed before ON: When the collation has succeeded at least once in the past	
Rear gate lock request SW ON edge history	Collation history is displayed	OFF: When the collation has never been completed before ON: When the collation has succeeded at least once in the past	
Driver's unlock touch sensor switch ON edge record	Collation history is displayed	OFF: When the collation has never been completed before ON: When the collation has succeeded at least once in the past	
Passenger's unlock touch sensor switch ON edge record	Collation history is displayed	OFF: When the collation has never been completed before ON: When the collation has succeeded at least once in the past	
Trunk unlock request SW ON edge history	Collation history is displayed	OFF: When the collation has never been completed before ON: When the collation has succeeded at least once in the past	
Collation OK result history (driver's external transmitter + interior tuner)	Collation history is displayed	OFF: When the collation has never been completed before ON: When the collation has succeeded at least once in the past	
Collation OK result history (passenger's external transmitter + interior tuner)	Collation history is displayed	OFF: When the collation has never been completed before ON: When the collation has succeeded at least once in the past	
Collation OK result history (front interior transmitter + interior tuner)	Collation history is displayed	OFF: When the collation has never been completed before ON: When the collation has succeeded at least once in the past	
Collation OK result history (rear interior transmitter + interior tuner)	Collation history is displayed	OFF: When the collation has never been completed before ON: When the collation has succeeded at least once in the past	
Collation OK result history (trunk internal transmitter + interior tuner)	Collation history is displayed	OFF: When the collation has never been completed before ON: When the collation has succeeded at least once in the past	
Collation OK result history (trunk external transmitter + interior tuner)	Collation history is displayed	OFF: When the collation has never been completed before ON: When the collation has succeeded at least once in the past	
Collation OK result history (rear gate internal transmitter + interior tuner)	Collation history is displayed	OFF: When the collation has never been completed before ON: When the collation has succeeded at least once in the past	
Collation OK result history (rear gate external transmitter + interior tuner)	Collation history is displayed	OFF: When the collation has never been completed before ON: When the collation has succeeded at least once in the past	
Collation OK result history (immobilizer amplifier + immobilizer amplifier)	Collation history is displayed	OFF: When the collation has never been completed before ON: When the collation has succeeded at least once in the past	
Push start SW 1	Push start SW 1 status	ON: When the push start SW is pressed OFF: When the push start SW is not pressed	—
Push start SW 2	Push start SW 2 status	ON: When the push start SW is pressed OFF: When the push start SW is not pressed	—
Stop Light Switch	Brake pedal SW status	ON: When the brake pedal is depressed OFF: When the brake pedal is not depressed	Except for MT model
Steering unlock SW	Steering lock CM status	ON: When the steering lock is unlocked OFF: Not when the steering lock is unlocked	—
Shift P signal(AT only)	Shift (P) status	ON: When the shift position is "P" OFF: When the shift position is other than "P"	—

Items to be displayed	Contents	Standard	Note
Neutral SW/Clutch SW	Shift (N, P) status	ON: When the shift position is “P” or “N” (except for MT models), or when the clutch pedal is depressed (MT models) OFF: When the shift position is other than “P” or “N” (except for MT models), or when the clutch pedal is not depressed (MT models)	—
Shift N signal(AT only)	Shift (N) status	ON: When the shift position is “N” OFF: When the shift position is other than “N”	—
Delivery mode signal(AT only)	Delivery mode status	ON: When in delivery mode OFF: When in other than the delivery mode	—
ACC relay monitor	Drive status of ACC relay	ON: While the accessory relay drive is output OFF: While the accessory relay drive stops	—
IGN latch monitor	IGN latch status	ON: While the IGN latch signal is output OFF: While the IGN latch signal stops	—
STSW signal monitor	Engine start permission signal output status	ON: When pressing the push button ignition switch while depressing the brake pedal (except for MT model) or the clutch pedal (MT model) OFF: Other than the above	—
IGN1/2 relay monitor (drive output)	Drive output monitoring status of IG relay	ON: While the IG relay 1/2 drive is output OFF: While the IG relay stops	—
IGN1/2 relay monitor (coil voltage)	Coil voltage monitoring status of IG relay	ON: While the IG relay 1/2 drive is output OFF: While the IG relay stops	—
ACCR signal	Accessory cut relay drive status	ON: While the accessory cut relay drive is output OFF: While the accessory cut relay drive stops	—
Vehicle Speed Signal	Driving status	Stopped status: While the vehicle stops Drive status: While the vehicle is driving	—
Engine Speed	Condition of the engine	Stopped: While the engine stops Rotating: While the engine is rotating	—
Vehicle identification	Vehicle recognition status	GAS MT: Equipped vehicle is displayed. GAS AT: Equipped vehicle is displayed. HEV AT: Equipped vehicle is displayed. Auto Start Stop MT: Equipped vehicle is displayed. Auto Start Stop AT: Equipped vehicle is displayed.	—
Power Supply Condition	Power supply status	All OFF status: IG 1 relay, IG 2 relay, and ACC relay is all OFF ACC relay ON status: Accessory is ON IGN relay ON status: Ignition is ON STSW Condition: The push button ignition switch is pressed while the brake pedal (except for MT model) or the clutch pedal (MT model) is depressed	—
Start SW trouble	Start SW mismatch	No: Start SW is normal Yes: Start SW is faulty	—
P signal mismatch	Shift P signal error	No: Shift P signal is normal Yes: Shift P signal is abnormal	—
Steering lock unlock waiting time out	Detecting status of the steering lock unlock waiting time out	No: Steering lock unlock time out has not occurred Yes: Steering lock unlock time out occurred	—
Key collation waiting time out	Detecting status of the key collation waiting time out	No: Key collation time out has not occurred Yes: Key collation time out occurred	—
IGN1/2 external circuit abnormal	IGN relay output status	No: IGN 1/2 external circuit is normal Yes: IGN 1/2 external circuit is faulty	—

10.Inspection Mode

A: PROCEDURE

It is possible to diagnose the DTC by performing the indicated inspection mode. After correcting the DTC, perform a necessary inspection mode and make sure that the function is resumed correctly and the DTC is recorded.

1. PREPARATION FOR THE INSPECTION MODE

1) Check that the battery voltage is 12 V or more and fuel remains approx. half [20 — 40 L (5.3 — 10.6 US gal, 4.4 — 8.8 Imp gal)].
2) Perform the Clear Memory Mode. <Ref. to KPS(diag)-25, Clear Memory Mode.>
3) Read the DTC and check that the DTC is not displayed. <Ref. to KPS(diag)-24, Read Diagnostic Trouble Code (DTC).>

NOTE:
If the DTC is displayed on the screen, the trouble is still present. Perform the diagnosis according to DTC. After solving the DTC, repeat from step 2).

2. INSPECTION MODE 1

DTC	Item	Note
U0073	CAN FAILURE, BUS ‘OFF’ DETECTION	—
U0100	LOST COMMUNICATION WITH ECM/PCM "A"	—
U0101	LOST COMMUNICATION WITH TCM	—
U0122	LOST COMMUNICATION WITH VEHICLE DYNAMICS CONTROL MODULE	—
U0140	LOST COMMUNICATION WITH BODY CONTROL MODULE	—
U0155	LOST COMMUNICATION WITH INSTRUMENT PANEL CLUSTER (IPC) CONTROL MODULE	—
U0401	INVALID DATA RECEIVED FROM ECM/PCM "A"	—
U0422	INVALID DATA RECEIVED FROM BODY CONTROL MODULE	—
B1571	REFERENCE CODE INCOMPATIBILITY (IMMOBILIZER CM TO ECM)	—
B1572	IMM CIRCUIT EXCEPT ANTENNA CIRCUIT	—
B1576	EGI CONTROL MODULE EEPROM	—
B1577	IMM CONTROL MODULE EEPROM	—
B2271	IGN RELAY CONTROL CIRCUIT	—
B2274	ACC RELAY CONTROL CIRCUIT	—
B2275	ENGINE START REQUEST CONTROL CIRCUIT	—
B2276	ACC RELAY OFF SIGNAL	—
B2277	SUBMERGING CIRCUIT	—
B2285	STEERING LOCK POSITION SIGNAL CORRELATION	—
B2286	ENGINE SPEED SIGNAL(WITHOUT Auto Start Stop)	—
B2781	STEERING LOCK CM CONTROL CIRCUIT	—
B2782	STEERING LOCK DRIVE REQUEST SIGNAL CORRELATION	—
B2785	LIN COMMUNICATION	—
B2786	STEERING LOCK CM COMMUNICATION	—
B2788	IGN SIGNAL CORRELATION (STEERING LOCK CM)	—
B2789	ID CODE BOX COMMUNICATION	—
B278D	ID CODE BOX JUDGMENT CIRCUIT	—
B2793	BACK UP POWER	—

Diagnostic procedure:
1) Prepare for the inspection mode. <Ref. to KPS(diag)-32, PREPARATION FOR THE INSPECTION MODE, PROCEDURE, Inspection Mode.>
2) Start the engine, and let it idle for 40 seconds or more.
3) Read the DTC and check that the DTC is not displayed. <Ref. to KPS(diag)-24, Read Diagnostic Trouble Code (DTC).>

NOTE:
If the DTC is displayed on the screen, the trouble is still present. Perform the diagnosis according to DTC.

3. INSPECTION MODE 2

DTC	Item	Note
B2779	REMOTE CONTROL ENGINE STARTER COLLATION	—

Diagnostic procedure:
1) Prepare for the inspection mode. <Ref. to KPS(diag)-32, PREPARATION FOR THE INSPECTION MODE, PROCEDURE, Inspection Mode.>
2) Register the remote engine starter, and operate it.
3) Read the DTC and check that the DTC is not displayed. <Ref. to KPS(diag)-24, Read Diagnostic Trouble Code (DTC).>

NOTE:
If the DTC is displayed on the screen, the trouble is still present. Perform the diagnosis according to DTC.

4. INSPECTION MODE 3

DTC	Item	Note
B2790	ID CODE BOX CIRCUIT	—
B27A1	DRIVER SIDE EXTERNAL ANTENNA OPEN	—
B27A2	PASSENGER SIDE EXTERNAL ANTENNA OPEN	—
B27A5	FRONT INTERNAL ANTENNA OPEN	—
B27A6	REAR INTERNAL ANTENNA OPEN	—
B27A7	TRUNK/REAR GATE INTERNAL ANTENNA OPEN	—
B27A8	TRUNK/REAR GATE EXTERNAL ANTENNA OPEN	—

Diagnostic procedure:
1) Prepare for the inspection mode. <Ref. to KPS(diag)-32, PREPARATION FOR THE INSPECTION MODE, PROCEDURE, Inspection Mode.>
2) Read the DTC and check that the DTC is not displayed. <Ref. to KPS(diag)-24, Read Diagnostic Trouble Code (DTC).>

NOTE:
If the DTC is displayed on the screen, the trouble is still present. Perform the diagnosis according to DTC.

5. INSPECTION MODE 4

DTC	Item	Note
B2282	VEHICLE SPEED SIGNAL CORRELATION	—
B2283	VEHICLE SPEED SENSOR	—

Diagnostic procedure:
1) Prepare for the inspection mode. <Ref. to KPS(diag)-32, PREPARATION FOR THE INSPECTION MODE, PROCEDURE, Inspection Mode.>
2) Drive for 20 seconds or more at a vehicle speed of 25 km/h (15.5 MPH) or more.
3) Read the DTC and check that the DTC is not displayed. <Ref. to KPS(diag)-24, Read Diagnostic Trouble Code (DTC).>

NOTE:
If the DTC is displayed on the screen, the trouble is still present. Perform the diagnosis according to DTC.

6. INSPECTION MODE 5

DTC	Item	Note
B2784	ANTENNA CIRCUIT (PUSH ENGINE SWITCH)	—
B278A	PUSH ENGINE SWITCH POWER SUPPLY CIRCUIT	—

Diagnostic procedure:
1) Prepare for the inspection mode. <Ref. to KPS(diag)-32, PREPARATION FOR THE INSPECTION MODE, PROCEDURE, Inspection Mode.>
2) Press the push button ignition switch with no access key in the passenger room.
3) Read the DTC and check that the DTC is not displayed. <Ref. to KPS(diag)-24, Read Diagnostic Trouble Code (DTC).>

NOTE:
If the DTC is displayed on the screen, the trouble is still present. Perform the diagnosis according to DTC.

7. INSPECTION MODE 6

DTC	Item	Note
B2284	BRAKE SIGNAL CORRELATION	—

Diagnostic procedure:
1) Prepare for the inspection mode. <Ref. to KPS(diag)-32, PREPARATION FOR THE INSPECTION MODE, PROCEDURE, Inspection Mode.>
2) Turn the ignition switch to ON, depress and hold the brake pedal for 20 seconds of more, then release the brake pedal and wait for 20 seconds and more.
3) Read the DTC and check that the DTC is not displayed. <Ref. to KPS(diag)-24, Read Diagnostic Trouble Code (DTC).>

NOTE:
If the DTC is displayed on the screen, the trouble is still present. Perform the diagnosis according to DTC.

11.Keyless Access System Check

A: OPERATION

1) On «Start» display, select «Diagnosis».
2) On «Vehicle selection» display, input the target vehicle information and select «Confirmed».
3) On «Main Menu» display, select «Each System».
4) On «Select System» display, select «Keyless Access with Push Button Start» and then select «Enter».
5) On «Select Function» display, select «Work Support».
6) On «Work Support» display, select «Keyless access system check».
7) Select a transmitter to be checked.
8) Select [Exit] to exit the system check. The screen will return to the «Keyless access system check» screen.

Data	Customize setting	Remarks
Keyless access system check	Driver side external transmitter - internal tuner	When the setting content on the left is selected, the access key is neared to the selected transmitter (access antenna) and collation matches, the buzzer will sound.
	Passenger side external transmitter - internal tuner	
	Fr internal transmitter - internal tuner	
	Rr internal transmitter - internal tuner	
	Trunk-internal transmitter - trunk-internal tuner	
	Trunk-external transmitter - trunk-internal tuner	
	R gate internal transmitter - internal tuner	
	R gate external transmitter - internal tuner	
	Immobilizer amplifier transmission	
Collation result history Clear	Execution	
	—	

NOTE:
For detailed operation procedures, refer to “Application help”.

12.System Operation Check Mode

A: OPERATION

1) On «Start» display, select «Diagnosis».
2) On «Vehicle selection» display, input the target vehicle information and select «Confirmed».
3) On «Main Menu» display, select «Each System».
4) On «Select System» display, select «Keyless Access with Push Button Start» and then select «Enter».
5) On «Select Function» display, select «Active Test».
6) Select a location to be inspected.

Data	Keyless access CM output check	Remarks
Driver seat sensor power supply	Output	Perform the output check for the driver's door touch sensor.
	Stop	
Passenger seat sensor power supply	Output	Perform the output check for the passenger's door touch sensor.
	Stop	
STSW	Output	Turn on the STSW. *2
	Stop	
ACC	Output	Turn on the ACC.
	Stop	
IGN1/2	Output	Turn on the IGN1/2.
	Stop	
Start SW character illumination lighted	Output	Perform ON output of the push button ignition switch back-up light. *1
	Stop	
Start SW indicator lighted (green)	Output	Perform ON output of the push button ignition switch back-up light. *1
	Stop	
Start SW indicator lighted (orange)	Output	Perform ON output of the push button ignition switch back-up light. *1
	Stop	
Steering lock power supply	Output	Output the power supply signal from keyless access CM to steering lock CM.
	Stop	

*1: When lit by a condition other than for a system operation check mode, it will not become unlit even when set to OFF or no output.
*2: When performed with ignition switch ON, engine will start. Therefore, great care must be exercised.

NOTE:
For detailed operation procedures, refer to “Application help”.

13.List of Diagnostic Trouble Code (DTC)

A: LIST

1. Keyless access system

DTC	Item	Note
U0073	CAN FAILURE, BUS 'OFF' DETECTION	<Ref. to KPS(diag)-39, DTC U0073 CONTROL MODULE COMMUNICATION BUS OFF, Diagnostic Procedure with Diagnostic Trouble Code (DTC).>
U0100	LOST COMMUNICATION WITH ECM/PCM "A"	<Ref. to KPS(diag)-39, DTC U0100 LOST COMMUNICATION WITH ECM/PCM "A", Diagnostic Procedure with Diagnostic Trouble Code (DTC).>
U0101	LOST COMMUNICATION WITH TCM	<Ref. to KPS(diag)-39, DTC U0101 LOST COMMUNICATION WITH TCM, Diagnostic Procedure with Diagnostic Trouble Code (DTC).>
U0122	LOST COMMUNICATION WITH VEHICLE DYNAMICS CONTROL MODULE	<Ref. to KPS(diag)-39, DTC U0122 LOST COMMUNICATION WITH VEHICLE DYNAMICS CONTROL MODULE, Diagnostic Procedure with Diagnostic Trouble Code (DTC).>
U0140	LOST COMMUNICATION WITH BODY CONTROL MODULE	<Ref. to KPS(diag)-39, DTC U0140 LOST COMMUNICATION WITH BODY CONTROL MODULE, Diagnostic Procedure with Diagnostic Trouble Code (DTC).>
U0155	LOST COMMUNICATION WITH INSTRUMENT PANEL CLUSTER (IPC) CONTROL MODULE	<Ref. to KPS(diag)-39, DTC U0155 LOST COMMUNICATION WITH INSTRUMENT PANEL CLUSTER (IPC) CONTROL MODULE, Diagnostic Procedure with Diagnostic Trouble Code (DTC).>
U0401	INVALID DATA RECEIVED FROM ECM/PCM "A"	<Ref. to KPS(diag)-39, DTC U0401 INVALID DATA RECEIVED FROM ECM/PCM "A", Diagnostic Procedure with Diagnostic Trouble Code (DTC).>
U0422	INVALID DATA RECEIVED FROM BODY CONTROL MODULE	<Ref. to KPS(diag)-39, DTC U0422 INVALID DATA RECEIVED FROM BODY CONTROL MODULE, Diagnostic Procedure with Diagnostic Trouble Code (DTC).>
B2271	IGN RELAY CONTROL CIRCUIT	<Ref. to KPS(diag)-40, DTC B2271 IGN RELAY CONTROL CIRCUIT, Diagnostic Procedure with Diagnostic Trouble Code (DTC).>
B2274	ACC RELAY CONTROL CIRCUIT	<Ref. to KPS(diag)-43, DTC B2274 ACC RELAY CONTROL CIRCUIT, Diagnostic Procedure with Diagnostic Trouble Code (DTC).>
B2275	ENGINE START REQUEST CONTROL CIRCUIT	<Ref. to KPS(diag)-45, DTC B2275 ENGINE START REQUEST CONTROL CIRCUIT, Diagnostic Procedure with Diagnostic Trouble Code (DTC).>
B2276	ACC RELAY OFF SIGNAL	<Ref. to KPS(diag)-47, DTC B2276 ACC RELAY OFF SIGNAL, Diagnostic Procedure with Diagnostic Trouble Code (DTC).>
B2277	SUBMERGING CIRCUIT	<Ref. to KPS(diag)-49, DTC B2277 SUBMERGING CIRCUIT, Diagnostic Procedure with Diagnostic Trouble Code (DTC).>
B2282	VEHICLE SPEED SIGNAL CORRELATION	<Ref. to KPS(diag)-50, DTC B2282 VEHICLE SPEED SIGNAL CORRELATION, Diagnostic Procedure with Diagnostic Trouble Code (DTC).>
B2283	VEHICLE SPEED SENSOR	<Ref. to KPS(diag)-52, DTC B2283 VEHICLE SPEED SENSOR, Diagnostic Procedure with Diagnostic Trouble Code (DTC).>
B2284	BRAKE SIGNAL CORRELATION	<Ref. to KPS(diag)-54, DTC B2284 BRAKE SIGNAL CORRELATION, Diagnostic Procedure with Diagnostic Trouble Code (DTC).>
B2285	STEERING LOCK POSITION SIGNAL CORRELATION	<Ref. to KPS(diag)-56, DTC B2285 STEERING LOCK POSITION SIGNAL CORRELATION, Diagnostic Procedure with Diagnostic Trouble Code (DTC).>
B2286	ENGINE SPEED SIGNAL(WITHOUT Auto Start Stop)	<Ref. to KPS(diag)-59, DTC B2286 ENGINE SPEED SIGNAL(WITHOUT Auto Start Stop), Diagnostic Procedure with Diagnostic Trouble Code (DTC).>
B2779	REMOTE CONTROL ENGINE STARTER COLLATION	<Ref. to KPS(diag)-61, DTC B2779 REMOTE CONTROL ENGINE STARTER COLLATION, Diagnostic Procedure with Diagnostic Trouble Code (DTC).>
B2781	STEERING LOCK CM CONTROL CIRCUIT	<Ref. to KPS(diag)-61, DTC B2781 STEERING LOCK CM CONTROL CIRCUIT, Diagnostic Procedure with Diagnostic Trouble Code (DTC).>

DTC	Item	Note
B2782	STEERING LOCK DRIVE REQUEST SIGNAL CORRELATION	<Ref. to KPS(diag)-62, DTC B2782 STEERING LOCK DRIVE REQUEST SIGNAL CORRELATION, Diagnostic Procedure with Diagnostic Trouble Code (DTC).>
B2784	ANTENNA CIRCUIT (PUSH ENGINE SWITCH)	<Ref. to KPS(diag)-64, DTC B2784 ANTENNA CIRCUIT (PUSH ENGINE SWITCH), Diagnostic Procedure with Diagnostic Trouble Code (DTC).>
B2785	LIN COMMUNICATION	<Ref. to KPS(diag)-66, DTC B2785 LIN COMMUNICATION, Diagnostic Procedure with Diagnostic Trouble Code (DTC).>
B2786	STEERING LOCK CM COMMUNICATION	<Ref. to KPS(diag)-68, DTC B2786 STEERING LOCK CM COMMUNICATION, Diagnostic Procedure with Diagnostic Trouble Code (DTC).>
B2788	IGN SIGNAL CORRELATION (STEERING LOCK CM)	<Ref. to KPS(diag)-70, DTC B2788 IGN SIGNAL CORRELATION (STEERING LOCK CM), Diagnostic Procedure with Diagnostic Trouble Code (DTC).>
B2789	ID CODE BOX COMMUNICATION	<Ref. to KPS(diag)-72, DTC B2789 ID CODE BOX COMMUNICATION, Diagnostic Procedure with Diagnostic Trouble Code (DTC).>
B278A	PUSH ENGINE SWITCH POWER SUPPLY CIRCUIT	<Ref. to KPS(diag)-74, DTC B278A PUSH ENGINE SWITCH POWER SUPPLY CIRCUIT, Diagnostic Procedure with Diagnostic Trouble Code (DTC).>
B278D	ID CODE BOX JUDGMENT CIRCUIT	<Ref. to KPS(diag)-76, DTC B278D ID CODE BOX JUDGMENT CIRCUIT, Diagnostic Procedure with Diagnostic Trouble Code (DTC).>
B2790	ID CODE BOX CIRCUIT	<Ref. to KPS(diag)-78, DTC B2790 ID CODE BOX CIRCUIT, Diagnostic Procedure with Diagnostic Trouble Code (DTC).>
B2793	BACK UP POWER	<Ref. to KPS(diag)-79, DTC B2793 BACK UP POWER, Diagnostic Procedure with Diagnostic Trouble Code (DTC).>
B27A1	DRIVER SIDE EXTERNAL ANTENNA OPEN	<Ref. to KPS(diag)-81, DTC B27A1 DRIVER SIDE EXTERNAL ANTENNA OPEN, Diagnostic Procedure with Diagnostic Trouble Code (DTC).>
B27A2	PASSENGER SIDE EXTERNAL ANTENNA OPEN	<Ref. to KPS(diag)-84, DTC B27A2 PASSENGER SIDE EXTERNAL ANTENNA OPEN, Diagnostic Procedure with Diagnostic Trouble Code (DTC).>
B27A5	FRONT INTERNAL ANTENNA OPEN	<Ref. to KPS(diag)-87, DTC B27A5 FRONT INTERNAL ANTENNA OPEN, Diagnostic Procedure with Diagnostic Trouble Code (DTC).>
B27A6	REAR INTERNAL ANTENNA OPEN	<Ref. to KPS(diag)-90, DTC B27A6 REAR INTERNAL ANTENNA OPEN, Diagnostic Procedure with Diagnostic Trouble Code (DTC).>
B27A7	TRUNK/REAR GATE INTERNAL ANTENNA OPEN	<Ref. to KPS(diag)-93, DTC B27A7 TRUNK/REAR GATE INTERNAL ANTENNA OPEN, Diagnostic Procedure with Diagnostic Trouble Code (DTC).>
B27A8	TRUNK/REAR GATE EXTERNAL ANTENNA OPEN	<Ref. to KPS(diag)-96, DTC B27A8 TRUNK/REAR GATE EXTERNAL ANTENNA OPEN, Diagnostic Procedure with Diagnostic Trouble Code (DTC).>

2. Immobilizer (ECM)

DTC	Item	Note
B1571	REFERENCE CODE INCOMPATIBILITY (IMMOBILIZER CM TO ECM)	<Ref. to KPS(diag)-99, DTC B1571 REFERENCE CODE INCOMPATIBILITY (IMMOBILIZER CM TO ECM), Diagnostic Procedure with Diagnostic Trouble Code (DTC).>
B1572	IMM CIRCUIT EXCEPT ANTENNA CIRCUIT	<Ref. to KPS(diag)-100, DTC B1572 IMM CIRCUIT EXCEPT ANTENNA CIRCUIT, Diagnostic Procedure with Diagnostic Trouble Code (DTC).>
B1576	EGI CONTROL MODULE EEPROM	<Ref. to KPS(diag)-104, DTC B1576 EGI CONTROL MODULE EEPROM, Diagnostic Procedure with Diagnostic Trouble Code (DTC).>
B1577	IMM CONTROL MODULE EEPROM	<Ref. to KPS(diag)-105, DTC B1577 IMM CONTROL MODULE EEPROM, Diagnostic Procedure with Diagnostic Trouble Code (DTC).>

14.Diagnostic Procedure with Diagnostic Trouble Code (DTC)

A: DTC U0073 CONTROL MODULE COMMUNICATION BUS OFF

Detected when CAN line abnormality is detected.

NOTE:
Perform the diagnosis for LAN system. <Ref. to LAN(diag)-2, PROCEDURE, Basic Diagnostic Procedure.>

B: DTC U0100 LOST COMMUNICATION WITH ECM/PCM "A"

Detected when CAN data from the engine control module (ECM) does not arrive.

NOTE:
Perform the diagnosis for LAN system. <Ref. to LAN(diag)-2, PROCEDURE, Basic Diagnostic Procedure.>

C: DTC U0101 LOST COMMUNICATION WITH TCM

Detected when CAN data from TCM does not arrive.

NOTE:
Perform the diagnosis for LAN system. <Ref. to LAN(diag)-2, PROCEDURE, Basic Diagnostic Procedure.>

D: DTC U0122 LOST COMMUNICATION WITH VEHICLE DYNAMICS CONTROL MODULE

Detected when CAN data from VDC does not arrive.

NOTE:
Perform the diagnosis for LAN system. <Ref. to LAN(diag)-2, PROCEDURE, Basic Diagnostic Procedure.>

E: DTC U0140 LOST COMMUNICATION WITH BODY CONTROL MODULE

Detected when CAN data from BIU does not arrive.

NOTE:
Perform the diagnosis for LAN system. <Ref. to LAN(diag)-2, PROCEDURE, Basic Diagnostic Procedure.>

F: DTC U0155 LOST COMMUNICATION WITH INSTRUMENT PANEL CLUSTER (IPC) CONTROL MODULE

Detected when CAN data from meter does not arrive.

NOTE:
Perform the diagnosis for LAN system. <Ref. to LAN(diag)-2, PROCEDURE, Basic Diagnostic Procedure.>

G: DTC U0401 INVALID DATA RECEIVED FROM ECM/PCM "A"

Detected when there is malfunction in CAN data from the engine control module (ECM).

NOTE:
Perform the diagnosis for LAN system. <Ref. to LAN(diag)-2, PROCEDURE, Basic Diagnostic Procedure.>

H: DTC U0422 INVALID DATA RECEIVED FROM BODY CONTROL MODULE

Detected when CAN data from BIU is abnormal.

NOTE:
Perform the diagnosis for LAN system. <Ref. to LAN(diag)-2, PROCEDURE, Basic Diagnostic Procedure.>

I: DTC B2271 IGN RELAY CONTROL CIRCUIT

DTC DETECTING CONDITION:

- When malfunction is detected in IG1 and IG2 drive circuits in the keyless access CM.
- When malfunction is detected in IG hold circuit in the keyless access CM.

TROUBLE SYMPTOM:

Not all functions operate at IGN ON.

CAUTION:

For replacement procedure of keyless access CM, refer to the "REGISTRATION MANUAL FOR IMMOBILIZER" provided as a separate volume.

WIRING DIAGRAM:

NOTE:

For the coupling connector, refer to "WIRING SYSTEM".

Keyless access with push button start system <Ref. to WI-260, WIRING DIAGRAM, Keyless Access With Push Button Start System.>

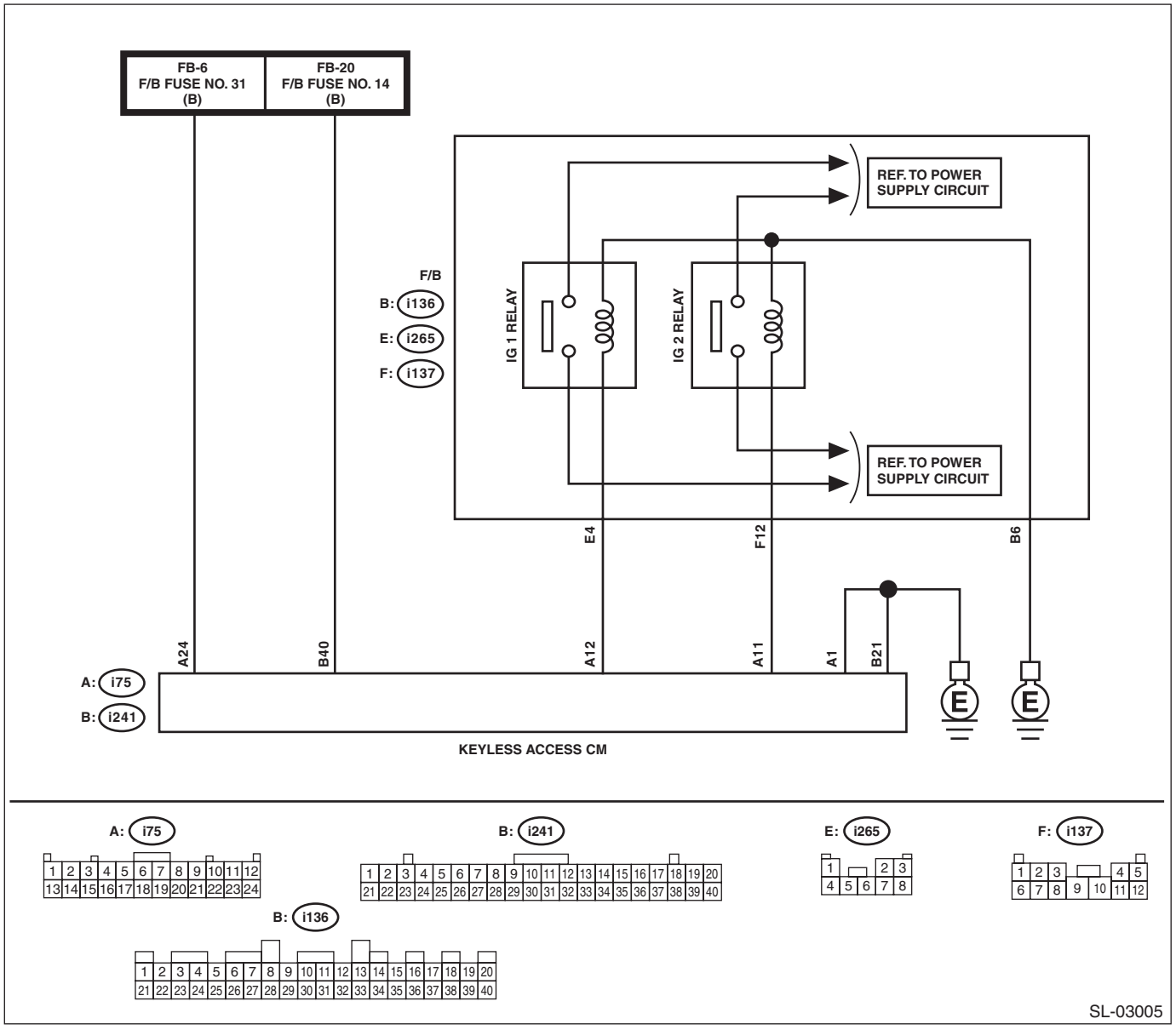

	Step	Check	Yes	No
1	**CHECK LAN SYSTEM.** Inspect LAN system. <Ref. to LAN(diag)-2, PROCEDURE, Basic Diagnostic Procedure.>	Is LAN system normal?	Go to step **2**.	Perform the inspection according to the diagnosis for LAN system.
2	**CHECK FUSE.** Check the fuse. <Ref. to SL-10, INSPECTION, Relay and Fuse.>	Is the fuse OK?	Go to step **3**.	Replace the fuse. When the replaced fuse is blown immediately, check the power supply circuit for short-circuited.
3	**CHECK HARNESS.** 1) Disconnect the keyless access CM connector. 2) Using a tester, measure the voltage between the keyless access CM connector and chassis ground. ***Connector & terminal*** ***(i75) No. 24 (+) — Chassis ground (–):*** ***(i241) No. 40 (+) — Chassis ground (–):***	Is the voltage 9.5 — 16 V?	Go to step **4**.	Check the power supply circuit.
4	**CHECK HARNESS.** Using a tester, measure the resistance between the keyless access CM connector and chassis ground. ***Connector & terminal*** ***(i241) No. 21 — Chassis ground:*** ***(i75) No. 1 — Chassis ground:***	Is the resistance less than 1 Ω?	Go to step **5**.	Repair or replace the open circuit of harness.
5	**CHECK HARNESS.** 1) Disconnect the keyless access CM connector. 2) Using a tester, measure the resistance between the keyless access CM connector and chassis ground. ***Connector & terminal*** ***(i75) No. 11 — Chassis ground:***	Is resistance 74.15 — 460.88 Ω? (20°C)	Go to step **6**.	Check IG relay 2. Go to step **7**.
6	**CHECK HARNESS.** 1) Disconnect the keyless access CM connector. 2) Using a tester, measure the resistance between the keyless access CM connector and chassis ground. ***Connector & terminal*** ***(i75) No. 12 — Chassis ground:***	Is resistance 50.87 — 72.17 Ω? (20°C)	Go to step **8**.	Check IG relay 1. Go to step **7**.
7	**CHECK RELAY.** Perform unit inspection of IG relay 1 and IG relay 2. <Ref. to SL-10, CHECK RELAY, INSPECTION, Relay and Fuse.>	Is the relay OK?	Go to step **8**.	Replace the relay. <Ref. to SL-9, Relay and Fuse.>

	Step	Check	Yes	No
8	**CHECK KEYLESS ACCESS CM.** 1) Connect the keyless access CM connector. 2) Using a tester, measure the voltage between the terminals of keyless access CM connector. ***Connector & terminal*** ***(i75) No. 11 (+) — Chassis ground (–):*** ***(i75) No. 12 (+) — Chassis ground (–):***	Is the voltage 1 V or less → 9.5 — 16 V when ACC → IGN ON?	Even if DTC is displayed, the circuit has returned to a normal condition at this time. Reproduce the failure, and then perform the diagnosis again. NOTE: In this case, temporary poor contact of connector, temporary open or short circuit of harness may be the cause.	Replace the keyless access CM. <Ref. to SL-102, REMOVAL, Keyless Access CM.>

J: DTC B2274 ACC RELAY CONTROL CIRCUIT

DTC DETECTING CONDITION:
When malfunction is detected in ACC relay drive circuit in the keyless access CM or external circuit.
TROUBLE SYMPTOM:
Each function does not operate at the ACC position.

CAUTION:
For replacement procedure of keyless access CM, refer to the "REGISTRATION MANUAL FOR IMMOBILIZER" provided as a separate volume.
WIRING DIAGRAM:

NOTE:
For the coupling connector, refer to "WIRING SYSTEM".
Stop light system <Ref. to WI-344, WIRING DIAGRAM, Stop Light System.>

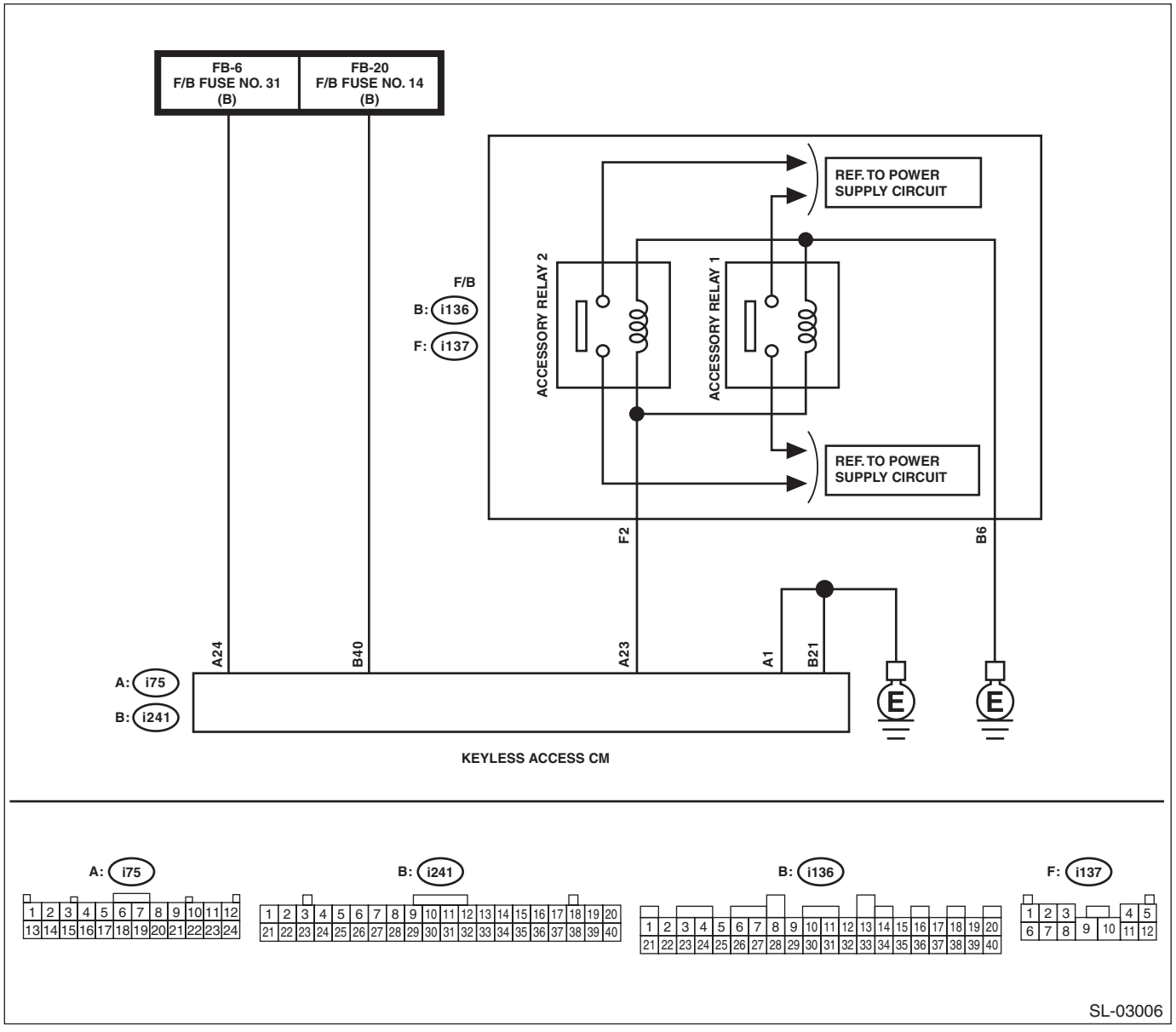

Step		Check	Yes	No
1	**CHECK LAN SYSTEM.** Inspect LAN system. <Ref. to LAN(diag)-2, PROCEDURE, Basic Diagnostic Procedure.>	Is LAN system normal?	Go to step **2**.	Perform the inspection according to the diagnosis for LAN system.

	Step	Check	Yes	No
2	**CHECK FUSE.** Remove the fuse. <Ref. to SL-10, INSPECTION, Relay and Fuse.>	Is the fuse OK?	Go to step **3**.	Replace the fuse. When the replaced fuse is blown immediately, check the power supply circuit for short-circuited.
3	**CHECK HARNESS.** 1) Disconnect the keyless access CM connector. 2) Using a tester, measure the resistance between the keyless access CM connector and chassis ground. ***Connector & terminal*** ***(i75) No. 24 (+) — Chassis ground (–):*** ***(i241) No. 40 (+) — Chassis ground (–):***	Is the voltage 9.5 — 16 V?	Go to step **4**.	Check the power supply circuit.
4	**CHECK HARNESS.** Using a tester, measure the resistance between the keyless access CM connector and chassis ground. ***Connector & terminal*** ***(i241) No. 21 — Chassis ground:*** ***(i75) No. 1 — Chassis ground:***	Is the resistance less than 1 Ω?	Go to step **5**.	Repair or replace the open circuit of harness.
5	**CHECK HARNESS.** 1) Disconnect the keyless access CM connector. 2) Using a tester, measure the resistance between the keyless access CM connector and chassis ground. ***Connector & terminal*** ***(i75) No. 23 — Chassis ground:***	Is resistance 152.61 — 216.5 Ω? (20°C)	Go to step **7**.	Go to step **6**.
6	**CHECK RELAY.** Perform inspection of ACC relay unit. <Ref. to SL-9, Relay and Fuse.>	Is the relay OK?	Go to step **7**.	Replace the relay.
7	**CHECK HARNESS.** Using a tester, measure the resistance between keyless access CM connectors. ***Connector & terminal*** ***(i75) No. 23 — (i137) No. 2:*** ***(i136) No. 6 — Chassis ground:***	Is the resistance less than 1 Ω?	Go to step **8**.	Repair or replace the open circuit of harness.
8	**CHECK KEYLESS ACCESS CM.** 1) Connect the keyless access CM connector. 2) Using a tester, measure the voltage between keyless access CM connectors. ***Connector & terminal*** ***(i75) No. 23 (+) — Chassis ground (–):***	Is the voltage 1 V or less → 9.5 — 16 V when OFF → ACC ON?	Even if DTC is displayed, the circuit has returned to a normal condition at this time. Reproduce the failure, and then perform the diagnosis again. NOTE: In this case, temporary poor contact of connector, temporary open or short circuit of harness may be the cause.	Replace the keyless access CM. <Ref. to SL-102, Keyless Access CM.>

K: DTC B2275 ENGINE START REQUEST CONTROL CIRCUIT

DTC DETECTING CONDITION:

- When malfunction is detected in engine start permission signal output circuit in the keyless access CM.
- When malfunction is detected in external engine start permission signal circuit.

TROUBLE SYMPTOM:

Engine will not start.

CAUTION:

For replacement procedure of keyless access CM, refer to the "REGISTRATION MANUAL FOR IMMOBILIZER" provided as a separate volume.

WIRING DIAGRAM:

NOTE:

For the coupling connector, refer to "WIRING SYSTEM".

Keyless access with push button start system <Ref. to WI-260, WIRING DIAGRAM, Keyless Access With Push Button Start System.>

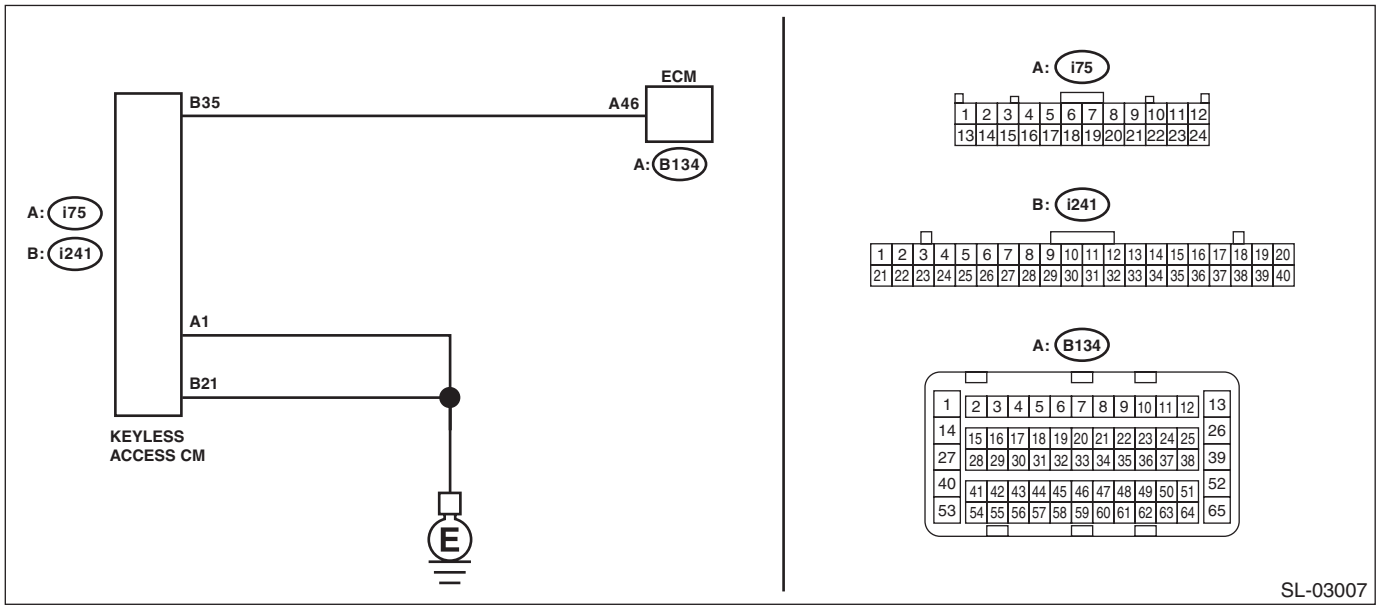

	Step	Check	Yes	No
1	**CHECK LAN SYSTEM.** Inspect LAN system. <Ref. to LAN(diag)-2, PROCEDURE, Basic Diagnostic Procedure.>	Is LAN system normal?	Go to step **2**.	Perform the inspection according to the diagnosis for LAN system.
2	**CHECK FUSE.** Remove the fuse. <Ref. to SL-10, INSPECTION, Relay and Fuse.>	Is the fuse OK?	Go to step **3**.	Replace the fuse. When the replaced fuse is blown immediately, check the power supply circuit for short-circuited.
3	**CHECK HARNESS.** 1) Disconnect the keyless access CM connector and ECM connector. 2) Using a tester, measure the resistance between the keyless access CM connector and ECM. ***Connector & terminal*** ***(i241) No. 35 — (B134) No. 46:***	Is the resistance less than 1 Ω?	Go to step **4**.	Repair or replace the open circuit of harness.

	Step	Check	Yes	No
4	**CHECK HARNESS.** Using a tester, measure the resistance between the keyless access CM connector and chassis ground. ***Connector & terminal*** ***(i241) No. 21 — Chassis ground:*** ***(i75) No. 1 — Chassis ground:***	Is the resistance less than 1 Ω?	Go to step **5**.	Repair or replace the open circuit of harness.
5	**CHECK HARNESS.** Using a tester, measure the resistance between the keyless access CM connector and chassis ground. ***Connector & terminal*** ***(i241) No. 35 — Chassis ground:***	Is the resistance 10 kΩ or more?	Go to step **6**.	Repair or replace the short circuit of the harness.
6	**CHECK KEYLESS ACCESS CM.** 1) Connect the keyless access CM connector and ECM connector. 2) Place the access key in the passenger room. 3) Using a tester, measure the voltage between the terminals of keyless access CM connector. ***Connector & terminal*** ***(i241) No. 35 (+) — (i241) No. 21 (–):***	Does the voltage change as 2 V or less → 9 V or more when the push button ignition switch is turned on while depressing the brake pedal with the shift position in P or N (AT model) or while depressing clutch pedal (MT model)?	Perform inspection according to the diagnosis of engine. <Ref. to EN(H4DO)(diag)-83, PROCEDURE, Diagnostics for Engine Starting Failure.> <Ref. to EN(H6DO)(diag)-92, PROCEDURE, Diagnostics for Engine Starting Failure.>	Replace the keyless access CM. <Ref. to SL-102, Keyless Access CM.>

L: DTC B2276 ACC RELAY OFF SIGNAL

DTC DETECTING CONDITION:
When input error occurs in accessory relay cut input signal of keyless access CM.
TROUBLE SYMPTOM:
- The accessory power supply is not cut during engine start.
- Starter rotation is slow.

CAUTION:
For replacement procedure of keyless access CM and ECM, refer to the "REGISTRATION MANUAL FOR IMMOBILIZER" provided as a separate volume.
WIRING DIAGRAM:

NOTE:
For the coupling connector, refer to "WIRING SYSTEM".
Keyless access with push button start system <Ref. to WI-260, WIRING DIAGRAM, Keyless Access With Push Button Start System.>

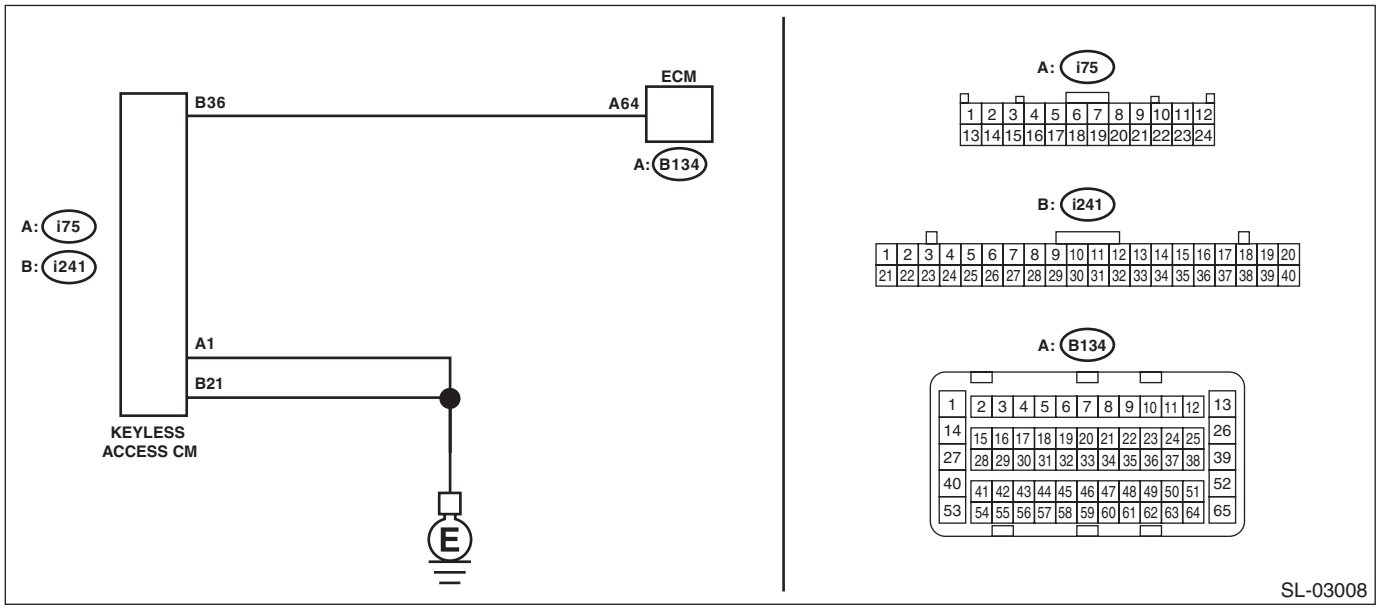

Step		Check	Yes	No
1	**CHECK LAN SYSTEM.** Inspect LAN system. <Ref. to LAN(diag)-2, PROCEDURE, Basic Diagnostic Procedure.>	Is LAN system normal?	Go to step **2**.	Perform the inspection according to the diagnosis for LAN system.
2	**CHECK HARNESS.** 1) Disconnect the keyless access CM connector and ECM connector. 2) Using a tester, measure the resistance between the keyless access CM connector and ECM. ***Connector & terminal*** ***(i241) No. 36 — (B134) No. 64:***	Is the resistance less than 1 Ω?	Go to step **3**.	Repair or replace the open circuit of harness.
3	**CHECK HARNESS.** Using a tester, measure the resistance between the keyless access CM connector and chassis ground. ***Connector & terminal*** ***(i241) No. 36 — Chassis ground:***	Is the resistance 10 kΩ or more?	Go to step **4**.	Repair or replace the short circuit of the harness.

	Step	Check	Yes	No
4	**CHECK HARNESS.** Using a tester, measure the resistance between the keyless access CM connector and chassis ground. ***Connector & terminal*** ***(i241) No. 21 — Chassis ground:*** ***(i75) No. 1 — Chassis ground:***	Is the resistance less than 1 Ω?	Go to step **5**.	Repair or replace the open circuit of harness.
5	**CHECK KEYLESS ACCESS CM.** 1) Connect the keyless access CM connector and ECM connector. 2) Place the access key in the passenger room. 3) Using a tester, measure the voltage between terminals of the keyless access CM connector when the push button ignition switch is pressed while depressing the brake pedal, with the shift lever in the P range for model except for MT or while depressing the clutch pedal for MT model. ***Connector & terminal*** ***(i241) No. 36 (+) — (i241) No. 21 (–):***	Is the voltage 9.5 — 16 V → 1 V or less?	Replace the keyless access CM. <Ref. to SL-102, Keyless Access CM.>	Replace the ECM. <Ref. to FU(H4DO)-82, REMOVAL, Engine Control Module (ECM).> <Ref. to FU(H6DO)-83, REMOVAL, Engine Control Module (ECM).>

M: DTC B2277 SUBMERGING CIRCUIT

DTC DETECTING CONDITION:

When the water-submersion detection circuit integrated into the keyless access CM detects the water submersion.

TROUBLE SYMPTOM:

- The ignition can be turned ON, but cannot be turned OFF.
- Engine will not start.

CAUTION:

For replacement procedure of keyless access CM, refer to the "REGISTRATION MANUAL FOR IMMOBILIZER" provided as a separate volume.

	Step	Check	Yes	No
1	**CHECK LAN SYSTEM.** Inspect LAN system. <Ref. to LAN(diag)-2, PROCEDURE, Basic Diagnostic Procedure.>	Is LAN system normal?	Go to step **2**.	Perform the inspection according to the diagnosis for LAN system.
2	**CHECK SUBMERSION CONDITION.** Check the keyless access CM and environment of equipment, and check the harness for any trace of water submersion.	Is there any trace of water submersion?	Take necessary measures against water submersion and replace the keyless access CM. <Ref. to SL-102, Keyless Access CM.>	Replace the keyless access CM. <Ref. to SL-102, Keyless Access CM.>

N: DTC B2282 VEHICLE SPEED SIGNAL CORRELATION

DTC DETECTING CONDITION:

When the vehicle speed signal transmitted from VDC via solid line and the vehicle speed signal transmitted from VDC via CAN communication line do not match.

CAUTION:

For replacement procedure of keyless access CM, refer to the "REGISTRATION MANUAL FOR IMMOBILIZER" provided as a separate volume.

WIRING DIAGRAM:

NOTE:

For the coupling connector, refer to "WIRING SYSTEM".

Keyless access with push button start system <Ref. to WI-260, WIRING DIAGRAM, Keyless Access With Push Button Start System.>

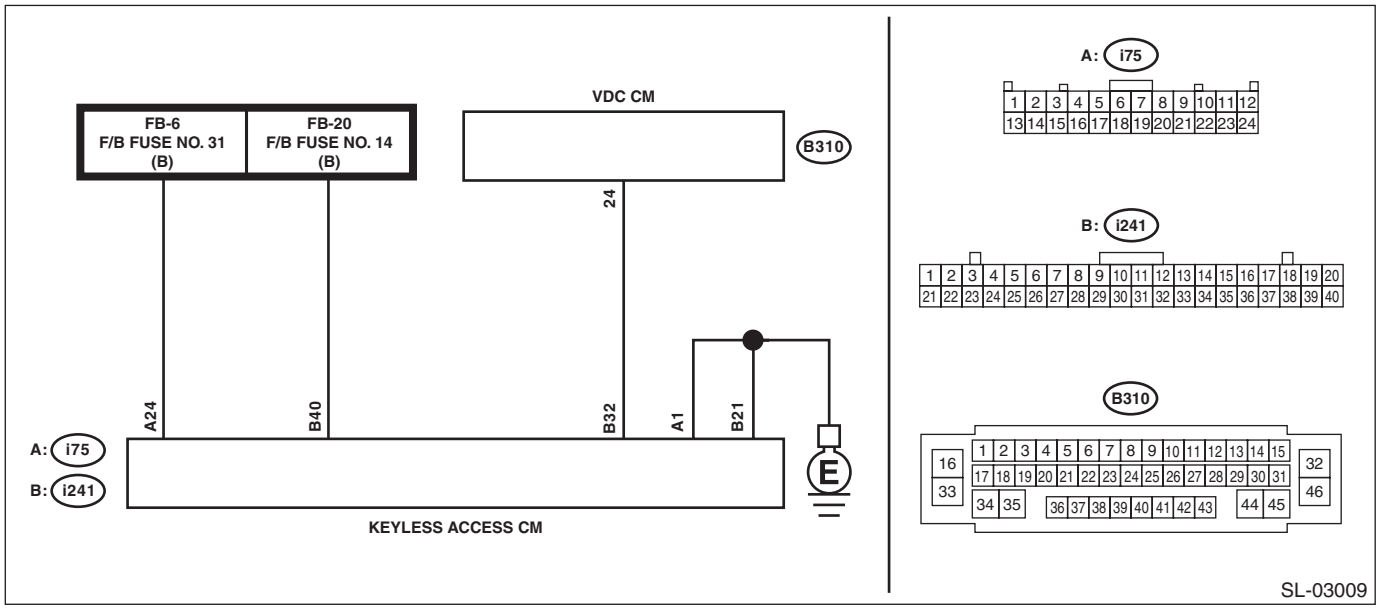

Step		Check	Yes	No
1	**CHECK LAN SYSTEM.** Inspect LAN system. <Ref. to LAN(diag)-2, PROCEDURE, Basic Diagnostic Procedure.>	Is LAN system normal?	Go to step **2**.	Perform the inspection according to the diagnosis for LAN system.
2	**CHECK COMBINATION METER.** Check that the speedometer is displayed normally.	Is the meter display normal?	Go to step **3**.	Check the VDC. <Ref. to VDC(diag)-2, PROCEDURE, Basic Diagnostic Procedure.>

	Step	Check	Yes	No
3	**CHECK CURRENT DATA.** Check the current data display of «Keyless access with push button start» using Subaru Select Monitor. <Ref. to KPS(diag)-26, Read Current Data.> «Vehicle speed signal»	Is the display normal according to the parked state or driving state?	Even if DTC is displayed, the circuit has returned to a normal condition at this time. Reproduce the failure, and then perform the diagnosis again. NOTE: In this case, temporary poor contact of connector, temporary open or short circuit of harness may be the cause.	Go to step **4**.
4	**CHECK HARNESS (OPEN CIRCUIT).** 1) Disconnect the keyless access CM connector. 2) Disconnect the VDC CM connector. 3) Using a tester, measure the resistance between the keyless access CM connector and VDC CM connector. ***Connector & terminal*** ***(i241) No. 32 — (B310) No. 24:***	Is the resistance less than 1 Ω?	Go to step **5**.	Repair or replace the open circuit of harness.
5	**CHECK HARNESS (OPEN CIRCUIT).** Using a tester, measure the resistance between the keyless access CM connector and chassis ground. ***Connector & terminal*** ***(i241) No. 32 — Chassis ground:***	Is the resistance 30 kΩ or more?	Go to step **6**.	Repair or replace the short circuit of the harness.
6	**CHECK KEYLESS ACCESS CM.** 1) Connect each connector. 2) Using the Subaru Select Monitor, measure the waveform between the terminals of keyless access CM. ***Connector & terminal*** ***(i241) No. 32 — Chassis ground:***	Is 3.54 Hz displayed when the vehicle is driven at approx. 5 km/h? Or does the value change from 3.54 Hz when the vehicle stops?	Replace the keyless access CM. <Ref. to SL-102, Keyless Access CM.>	Check the VDC. <Ref. to VDC(diag)-2, PROCEDURE, Basic Diagnostic Procedure.>

O: DTC B2283 VEHICLE SPEED SENSOR

DTC DETECTING CONDITION:

Either of the following malfunctions is detected. (Vehicle speed sensor failure is detected.)

- Vehicle speed signal failure detection 1: Excessive deceleration detection
- Vehicle speed signal failure detection 2: Engine speed interlock detection

TROUBLE SYMPTOM:

The steering lock cannot be released.

CAUTION:

For replacement procedure of keyless access CM, refer to the "REGISTRATION MANUAL FOR IMMOBILIZER" provided as a separate volume.

WIRING DIAGRAM:

NOTE:

For the coupling connector, refer to "WIRING SYSTEM".

Keyless access with push button start system <Ref. to WI-260, WIRING DIAGRAM, Keyless Access With Push Button Start System.>

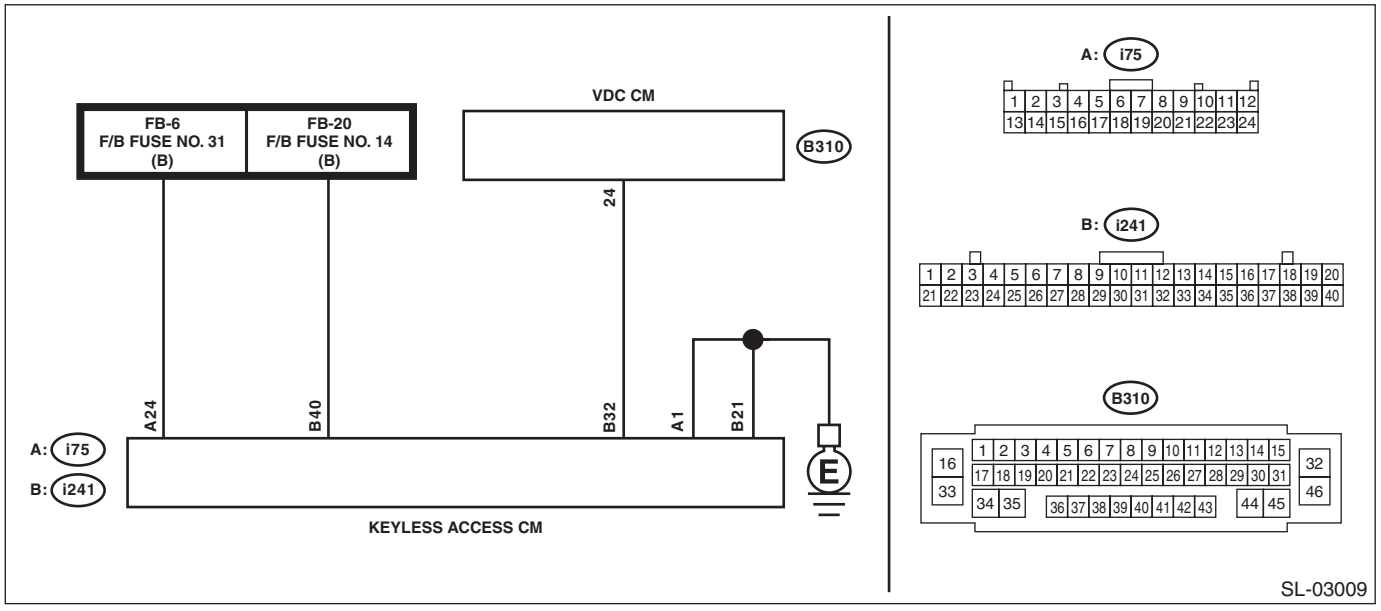

Step		Check	Yes	No
1	**CHECK LAN SYSTEM.** Inspect LAN system. <Ref. to LAN(diag)-2, PROCEDURE, Basic Diagnostic Procedure.>	Is LAN system normal?	Go to step **2**.	Perform the inspection according to the diagnosis for LAN system.
2	**CHECK COMBINATION METER.** Check that the speedometer is displayed normally.	Is the meter display normal?	Go to step **3**.	Check the VDC. <Ref. to VDC(diag)-2, PROCEDURE, Basic Diagnostic Procedure.>

	Step	Check	Yes	No
3	**CHECK CURRENT DATA.** Check the current data display of «Keyless access with push button start» using Subaru Select Monitor. <Ref. to KPS(diag)-26, Read Current Data.> «Vehicle speed signal»	Is the display normal according to the parked state or driving state?	Even if DTC is displayed, the circuit has returned to a normal condition at this time. Reproduce the failure, and then perform the diagnosis again. NOTE: In this case, temporary poor contact of connector, temporary open or short circuit of harness may be the cause.	Go to step **4**.
4	**CHECK HARNESS (OPEN CIRCUIT).** 1) Disconnect the keyless access CM connector. 2) Disconnect the VDC CM connector. 3) Using a tester, measure the resistance between the keyless access CM connector and VDC CM connector. ***Connector & terminal*** ***(i241) No. 32 — (B310) No. 24:***	Is the resistance less than 1 Ω?	Go to step **5**.	Repair or replace the open circuit of harness.
5	**CHECK HARNESS (OPEN CIRCUIT).** Using a tester, measure the resistance between the keyless access CM connector and chassis ground. ***Connector & terminal*** ***(i241) No. 32 — Chassis ground:***	Is the resistance 30 kΩ or more?	Go to step **6**.	Repair or replace the short circuit of the harness.
6	**CHECK KEYLESS ACCESS CM.** 1) Connect each connector. 2) Using the Subaru Select Monitor, measure the waveform between the terminals of keyless access CM. ***Connector & terminal*** ***(i241) No. 32 — Chassis ground:***	Is 3.54 Hz displayed when the vehicle is driven at approx. 5 km/h? Or does the value change from 3.54 Hz when the vehicle stops?	Replace the keyless access CM. <Ref. to SL-102, Keyless Access CM.>	Check the VDC. <Ref. to VDC(diag)-2, PROCEDURE, Basic Diagnostic Procedure.>

P: DTC B2284 BRAKE SIGNAL CORRELATION

DTC DETECTING CONDITION:
When the brake signal transmitted via the hard wire and the brake signal transmitted from body integrated unit via CAN communication line do not match.
TROUBLE SYMPTOM:
If the hard-wired brake signal is faulty, the engine will not start.

CAUTION:
For replacement procedure of keyless access CM, refer to the "REGISTRATION MANUAL FOR IMMOBILIZER" provided as a separate volume.
WIRING DIAGRAM:

NOTE:
For the coupling connector, refer to "WIRING SYSTEM".
Stop light system <Ref. to WI-344, WIRING DIAGRAM, Stop Light System.>

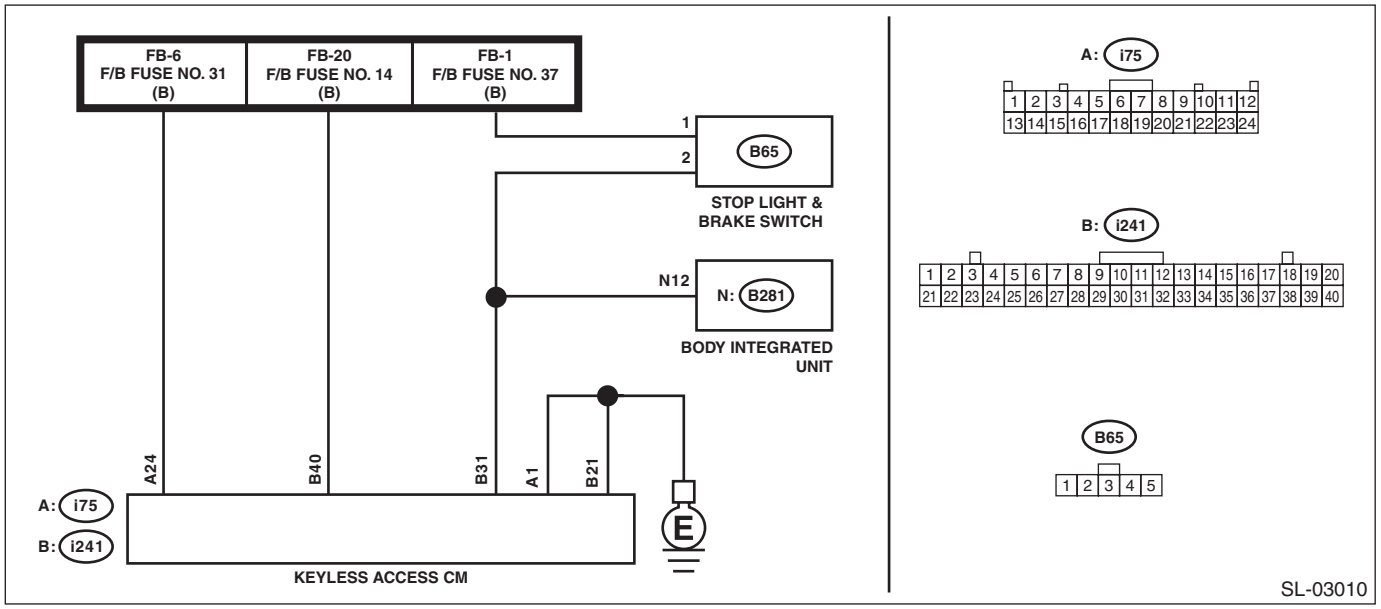

	Step	Check	Yes	No
1	**CHECK LAN SYSTEM.** Inspect LAN system. <Ref. to LAN(diag)-2, PROCEDURE, Basic Diagnostic Procedure.>	Is LAN system normal?	Go to step **2**.	Perform the inspection according to the diagnosis for LAN system.
2	**CHECK CURRENT DATA.** Check the current data display of «Keyless access with push button start» using Subaru Select Monitor. <Ref. to KPS(diag)-26, Read Current Data.> «Stop light SW»	Is DTC displayed normally according to the brake pedal operation?	Go to step **3**.	Check the stop light system.
3	**CHECK CURRENT DATA.** Check the current data display of body integrated unit using Subaru Select Monitor. <Ref. to BC(diag)-20, Read Current Data.> «Stop light SW»	Is DTC displayed normally according to the brake pedal operation?	Go to step **4**.	Check body integrated unit <Ref. to BC(diag)-2, PROCEDURE, Basic Diagnostic Procedure.> and the stop light switch circuit.

	Step	Check	Yes	No
4	**CHECK FUSE.** Check the fuse. <Ref. to SL-10, INSPECTION, Relay and Fuse.>	Is the fuse OK?	Go to step **5**.	Replace the fuse. When the replaced fuse is blown immediately, check the power supply circuit for short-circuited.
5	**CHECK HARNESS.** 1) Disconnect the keyless access CM connector. 2) Using a tester, measure the voltage between keyless access CM connectors. ***Connector & terminal*** ***(i75) No. 24 (+) — Chassis ground (–):*** ***(i241) No. 40 (+) — Chassis ground (–):***	Is the voltage 9.5 — 16 V?	Go to step **6**.	Check the power supply circuit.
6	**CHECK HARNESS.** Using a tester, measure the resistance between the keyless access CM connector and chassis ground. ***Connector & terminal*** ***(i241) No. 21 — Chassis ground:*** ***(i75) No. 1 — Chassis ground:***	Is the resistance less than 1 Ω?	Go to step **7**.	Repair or replace the open circuit of harness.
7	**CHECK HARNESS.** 1) Disconnect the stop light switch connector. 2) Using a tester, measure the resistance between the keyless access CM connector and stop light switch connector. ***Connector & terminal*** ***(i241) No. 31 — (B65) No. 2:***	Is the resistance less than 1 Ω?	Go to step **8**.	Repair or replace the open circuit of harness.
8	**CHECK HARNESS.** Using a tester, measure the resistance between the keyless access CM connector and chassis ground. ***Connector & terminal*** ***(i241) No. 31 — Chassis ground:***	Is the resistance 10 kΩ or more?	Go to step **9**.	Repair or replace the short circuit of the harness.
9	**CHECK HARNESS.** Using a tester, measure the voltage between the keyless access CM connector and chassis ground when the brake pedal is depressed. ***Connector & terminal*** ***(i241) No. 31 (+) — Chassis ground (–):***	Does the voltage change as follows? Brake pedal not depressed: 1 V or less → Brake pedal depressed: 11 — 14 V	Replace the keyless access CM. <Ref. to SL-102, REMOVAL, Keyless Access CM.>	Check the power supply circuit of stop light switch.

Q: DTC B2285 STEERING LOCK POSITION SIGNAL CORRELATION

DTC DETECTING CONDITION:

When the steering lock position signal transmitted from the steering lock CM via solid line and the steering lock position signal transmitted via LIN communication system do not match.

TROUBLE SYMPTOM:

- There are conditions when the steering lock is not released.
- Engine will not start.

CAUTION:

For replacement procedure of keyless access CM and steering lock CM, refer to the "REGISTRATION MANUAL FOR IMMOBILIZER" provided as a separate volume.

WIRING DIAGRAM:

NOTE:

For the coupling connector, refer to "WIRING SYSTEM".

Keyless access with push button start system <Ref. to WI-260, WIRING DIAGRAM, Keyless Access With Push Button Start System.>

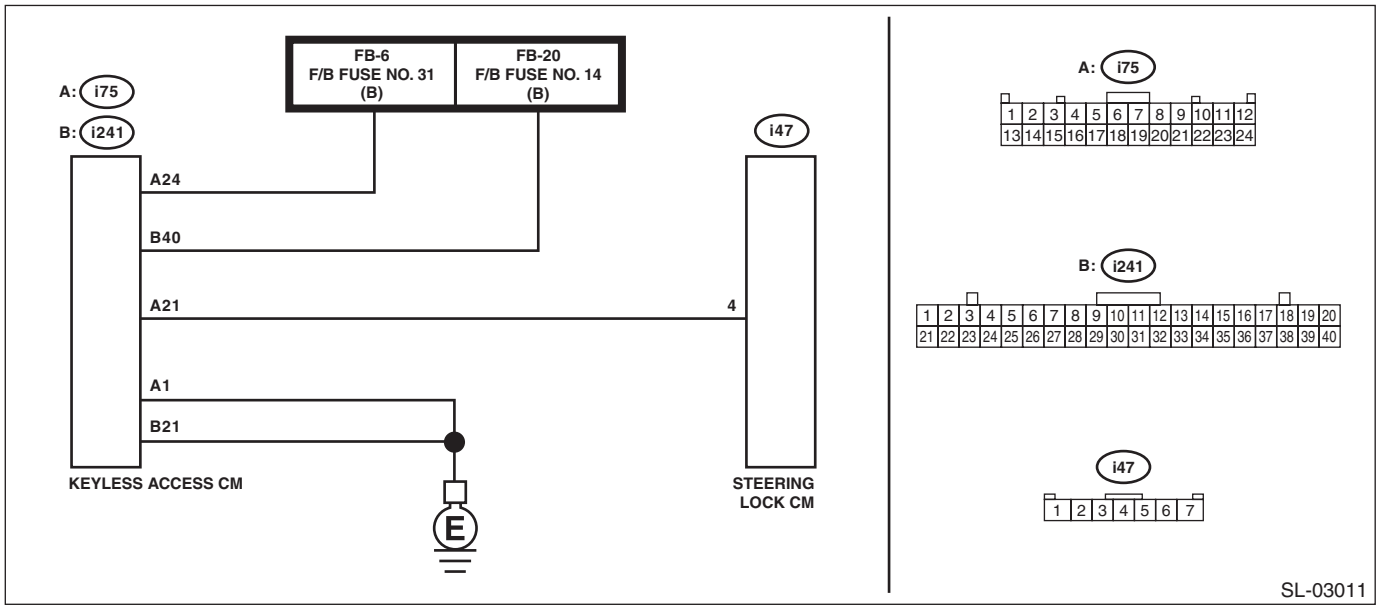

Step		Check	Yes	No
1	**CHECK LAN SYSTEM.** Inspect LAN system. <Ref. to LAN(diag)-2, PROCEDURE, Basic Diagnostic Procedure.>	Is LAN system normal?	Go to step **2**.	Perform the inspection according to the diagnosis for LAN system.
2	**CHECK DTC.** Read DTC using the Subaru Select Monitor. <Ref. to KPS(diag)-24, Read Diagnostic Trouble Code (DTC).>	Is DTC B2785 displayed?	Perform inspection according to DTC B2785. <Ref. to KPS(diag)-66, DTC B2785 LIN COMMUNICATION, Diagnostic Procedure with Diagnostic Trouble Code (DTC).>	Go to step **3**.

	Step	Check	Yes	No
3	**CHECK CURRENT DATA.** Check the current data display of «Keyless access with push button start» using Subaru Select Monitor. <Ref. to KPS(diag)-26, Read Current Data.> When locked: • Lock side sensor status: ON • Unlock side sensor status: OFF • Lock confirmation: Confirmed • Unlock confirmation: Not confirmed When unlocked: • Lock side sensor status: OFF • Unlock side sensor status: ON • Lock confirmation: Not confirmed • Unlock confirmation: Confirmed NOTE: To lock the steering lock, turn off the power, and open → close, or close → open the driver's door. To unlock the steering lock, turn the ignition switch to ACC ON or IGN ON.	Are the readings as shown on the left according to the steering lock status?	Go to step **4**.	Replace the steering lock CM. <Ref. to SL-104, REMOVAL, Steering Lock CM.>
4	**CHECK CURRENT DATA.** Check the current data display of «Keyless access with push button start» using Subaru Select Monitor. <Ref. to KPS(diag)-26, Read Current Data.> When locked: • Steering unlock switch: OFF When unlocked: • Steering unlock switch: ON NOTE: To lock the steering lock, turn off the power, and open → close, or close → open the driver's door. To unlock the steering lock, turn the ignition switch to ACC ON or IGN ON.	Are the readings as shown on the left according to the steering lock status?	Replace the keyless access CM. <Ref. to SL-102, REMOVAL, Keyless Access CM.>	Go to step **5**.
5	**CHECK FUSE.** Check the fuse. <Ref. to SL-10, INSPECTION, Relay and Fuse.>	Is the fuse OK?	Go to step **6**.	Replace the fuse. When the replaced fuse is blown immediately, check the power supply circuit for short-circuited.
6	**CHECK HARNESS.** 1) Disconnect the keyless access CM connector. 2) Using a tester, measure the voltage between keyless access CM connectors. ***Connector & terminal*** ***(i75) No. 24 (+) — Chassis ground (–):*** ***(i241) No. 40 (+) — Chassis ground (–):***	Is the voltage 9.5 — 16 V?	Go to step **7**.	Check the power supply circuit.
7	**CHECK HARNESS.** Using a tester, measure the resistance between the keyless access CM connector and chassis ground. ***Connector & terminal*** ***(i241) No. 21 — Chassis ground:*** ***(i75) No. 1 — Chassis ground:***	Is the resistance less than 1 Ω?	Go to step **8**.	Repair or replace the open circuit of harness.

	Step	Check	Yes	No
8	**CHECK HARNESS.** Using a tester, measure the resistance between the steering lock CM connector and chassis ground. ***Connector & terminal*** ***(i47) No. 4 — Chassis ground:***	Does the following occur? Steering lock: 10 kΩ or more → Steering unlock: less than 1 Ω	Go to step **9**.	Replace the steering lock CM. <Ref. to SL-104, REMOVAL, Steering Lock CM.>
9	**CHECK HARNESS.** 1) Disconnect the keyless access CM connector. 2) Disconnect the steering lock CM connector. 3) Using a tester, measure the resistance between the keyless access CM connector and steering lock CM. ***Connector & terminal*** ***(i75) No. 21 — (i47) No. 4:***	Is the resistance less than 1 Ω?	Go to step **10**.	Repair or replace the open circuit of harness.
10	**CHECK HARNESS.** Using a tester, measure the resistance between the keyless access CM connector and chassis ground. ***Connector & terminal*** ***(i75) No. 21 — Chassis ground:***	Is the resistance 10 kΩ or more?	Replace the keyless access CM. <Ref. to SL-102, REMOVAL, Keyless Access CM.>	Repair or replace the short circuit of the harness.

R: DTC B2286 ENGINE SPEED SIGNAL(WITHOUT Auto Start Stop)

DTC DETECTING CONDITION:

When the engine speed signal transmitted from the ECM via solid line and the engine speed signal transmitted from the ECM via CAN communication line do not match.

TROUBLE SYMPTOM:

Cannot start the engine, or the engine stops after starting.

CAUTION:

For replacement procedure of keyless access CM, refer to the "REGISTRATION MANUAL FOR IMMOBILIZER" provided as a separate volume.

WIRING DIAGRAM:

NOTE:

For the coupling connector, refer to "WIRING SYSTEM".

Keyless access with push button start system <Ref. to WI-260, WIRING DIAGRAM, Keyless Access With Push Button Start System.>

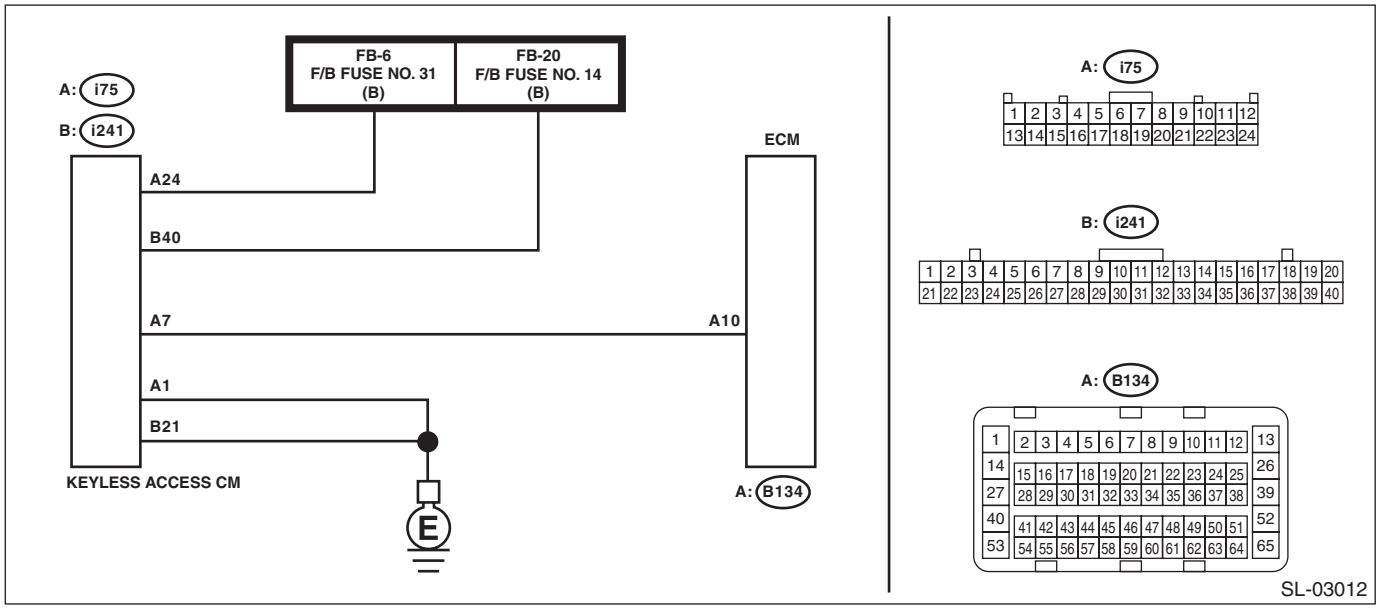

Step		Check	Yes	No
1	**CHECK LAN SYSTEM.** Inspect LAN system. <Ref. to LAN(diag)-2, PROCEDURE, Basic Diagnostic Procedure.>	Is LAN system normal?	Go to step **2**.	Perform the inspection according to the diagnosis for LAN system.
2	**CHECK COMBINATION METER.** Confirm that the speedometer is displayed normally.	Can the data be read normally?	Go to step **3**.	Perform the diagnosis for the engine. <Ref. to EN(H4DO)(diag)-83, PROCEDURE, Diagnostics for Engine Starting Failure.> <Ref. to EN(H6DO)(diag)-92, PROCEDURE, Diagnostics for Engine Starting Failure.>

	Step	Check	Yes	No
3	**CHECK CURRENT DATA.** Check the current data display of «Keyless access with push button start» using Subaru Select Monitor. <Ref. to KPS(diag)-26, Read Current Data.> «Engine speed»	Can the data be read normally?	Even if DTC is displayed, the circuit has returned to a normal condition at this time. Reproduce the failure, and then perform the diagnosis again. NOTE: In this case, temporary poor contact of connector, temporary open or short circuit of harness may be the cause.	Go to step **4**.
4	**CHECK HARNESS (OPEN CIRCUIT).** 1) Disconnect the keyless access CM connector. 2) Disconnect the ECM connector. 3) Using a tester, measure the resistance between the keyless access CM connector and ECM connector. ***Connector & terminal*** ***(i75) No. 7 — (B134) No. 10:***	Is the resistance less than 1 Ω?	Go to step **5**.	Repair or replace the open circuit of harness.
5	**CHECK HARNESS (GROUND SHORT CIRCUIT).** Using a tester, measure the resistance between the keyless access CM connector and chassis ground. ***Connector & terminal*** ***(i75) No. 7 — Chassis ground:***	Is the resistance 10 kΩ or more?	Go to step **6**.	Repair or replace the short circuit of the harness.
6	**CHECK HARNESS.** 1) Connect the keyless access CM connector and ECM connector. 2) Using the Subaru Select Monitor, measure the waveform between the keyless access CM connector and chassis ground. ***Connector & terminal*** ***(i75) No. 7 — Chassis ground:***	Does the pulse stop when the engine is stopped, and does the pulse generate when the engine is started?	Replace the keyless access CM. <Ref. to SL-102, Keyless Access CM.>	Perform the diagnosis for the engine. <Ref. to EN(H4DO)(diag)-83, PROCEDURE, Diagnostics for Engine Starting Failure.> <Ref. to EN(H6DO)(diag)-92, PROCEDURE, Diagnostics for Engine Starting Failure.>

S: DTC B2779 REMOTE CONTROL ENGINE STARTER COLLATION

DTC DETECTING CONDITION:
When the keyless access CM does not respond to engine start even when the remote control engine starter is ON, or when there is a code mismatch.
TROUBLE SYMPTOM:
Remote engine starter does not function.

	Step	Check	Yes	No
1	**REGISTER THE REMOTE ENGINE STARTER.** 1) Clear the DTC. <Ref. to KPS(diag)-25, Clear Memory Mode.> 2) Register the remote engine starter using the Subaru Select Monitor. (Refer to the "REGISTRATION MANUAL FOR IMMOBILIZER" provided as a separate volume.) NOTE: When the registration failed, refer to "Correspondence table when registration is not possible" in "REGISTRATION MANUAL FOR IMMOBILIZER" provided as a separate volume. 3) Read the DTC again. <Ref. to KPS(diag)-24, Read Diagnostic Trouble Code (DTC).>	Is B2779 displayed?	Replace the remote engine starter.	Even if DTC is displayed, the circuit has returned to a normal condition at this time. Reproduce the failure, and then perform the diagnosis again. NOTE: In this case, temporary poor contact of connector, temporary open or short circuit of harness may be the cause.

T: DTC B2781 STEERING LOCK CM CONTROL CIRCUIT

DTC DETECTING CONDITION:
- When malfunction is detected in lock/unlock position detection sensor.
- When the open or short circuit in the steering lock motor drive circuit is detected.

TROUBLE SYMPTOM:
- The steering lock cannot be released.
- Engine will not start.

CAUTION:
For replacement procedure of steering lock CM, refer to the "REGISTRATION MANUAL FOR IMMOBILIZER" provided as a separate volume.

NOTE:
When all ECMs connected to collation system LIN bus cannot communicate with the keyless access CM, DTC B2785 is output.

	Step	Check	Yes	No
1	**CHECK DTC.** Read DTC using the Subaru Select Monitor. <Ref. to KPS(diag)-24, Read Diagnostic Trouble Code (DTC).>	Is DTC B2785 displayed?	Perform the diagnosis according to DTC. <Ref. to KPS(diag)-66, DTC B2785 LIN COMMUNICATION, Diagnostic Procedure with Diagnostic Trouble Code (DTC).>	Replace the steering lock CM. <Ref. to SL-104, Steering Lock CM.>

U: DTC B2782 STEERING LOCK DRIVE REQUEST SIGNAL CORRELATION

DTC DETECTING CONDITION:
When the open or short circuit in the steering lock motor power supply circuit is detected.
TROUBLE SYMPTOM:
- The steering lock cannot be released.
- Engine will not start.

CAUTION:
For replacement procedure of keyless access CM and steering lock CM, refer to the "REGISTRATION MANUAL FOR IMMOBILIZER" provided as a separate volume.
WIRING DIAGRAM:

NOTE:
For the coupling connector, refer to "WIRING SYSTEM".
Keyless access with push button start system <Ref. to WI-260, WIRING DIAGRAM, Keyless Access With Push Button Start System.>

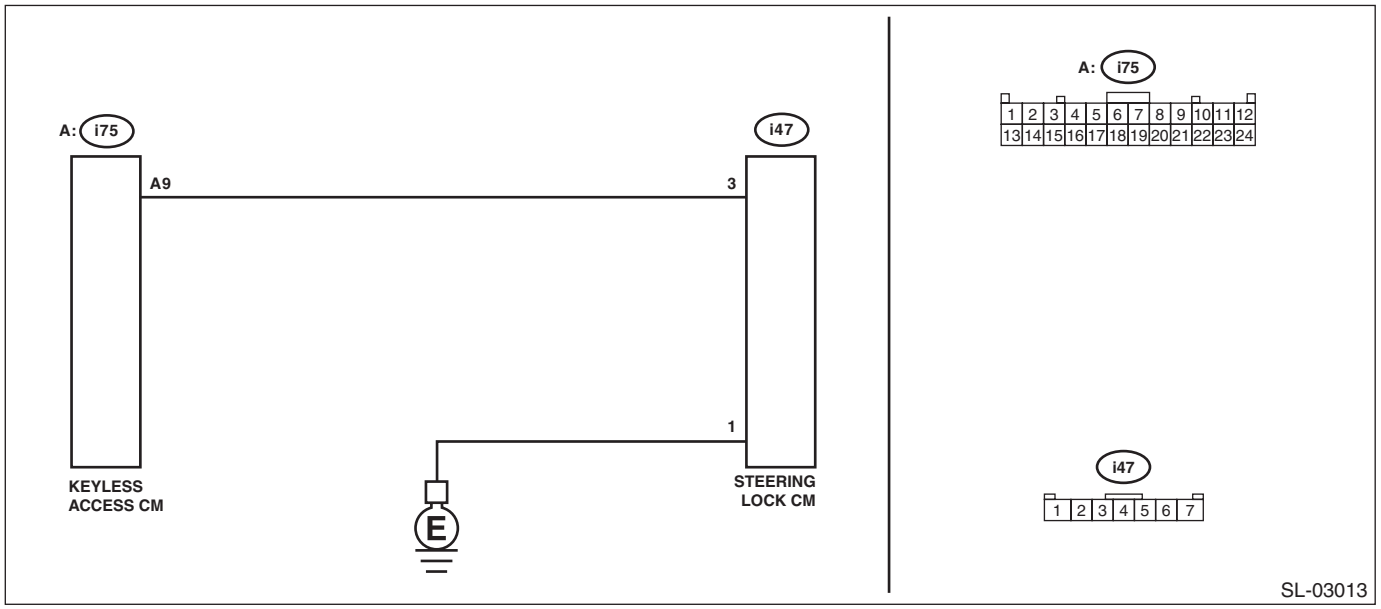

Step		Check	Yes	No
1	**CHECK HARNESS.** 1) Disconnect the steering lock CM connector. 2) Using a tester, measure the resistance between the steering lock CM connector and chassis ground. ***Connector & terminal*** ***(i47) No. 1 — Chassis ground:***	Is the resistance less than 1 Ω?	Go to step **2**.	Repair or replace the open circuit of harness.
2	**CHECK STEERING LOCK CM.** 1) Connect the steering lock CM connector. 2) Set to ACC OFF, IGN OFF, and shift position P. 3) Using a tester, open the door, and measure the voltage between terminals of steering CM connector when the steering lock motor is driven. ***Connector & terminal*** ***(i47) No. 3 (+) — (i47) No. 1 (–):***	Does the voltage change as follows? Steering lock motor in operation: 1 V or less → Steering lock motor not in operation: 11 — 14 V	Go to step **3**.	Go to step **4**.

	Step	Check	Yes	No
3	**CHECK DTC.** 1) Turn the ignition switch to ON. 2) Using the Subaru Select Monitor, clear the memory. <Ref. to KPS(diag)-25, Clear Memory Mode.> 3) Turn the ignition switch to OFF. 4) Disconnect the battery ground cable and reconnect it, and then clear the abnormal information displayed on the data monitor. 5) Turn the ignition switch to ON. 6) Read DTC using the Subaru Select Monitor. <Ref. to KPS(diag)-24, Read Diagnostic Trouble Code (DTC).>	Is B2782 displayed?	Replace the steering lock CM. <Ref. to SL-104, Steering Lock CM.>	Even if DTC is displayed, the circuit has returned to a normal condition at this time. Reproduce the failure, and then perform the diagnosis again. NOTE: In this case, temporary poor contact of connector, temporary open or short circuit of harness may be the cause.
4	**CHECK CONNECTOR.** 1) Disconnect the steering lock CM connector. 2) Disconnect the keyless access CM connector.	Are connectors normal?	Go to step **5**.	Repair or replace the connector.
5	**CHECK HARNESS.** Using a tester, measure the resistance between steering lock CM connector and keyless access CM connector. ***Connector & terminal*** ***(i75) No. 9 — (i47) No. 3:***	Is the resistance less than 1 Ω?	Go to step **6**.	Repair or replace the open circuit of harness.
6	**CHECK HARNESS.** Using a tester, measure the resistance between steering lock CM connector and chassis ground, and between keyless access CM connector and chassis ground. ***Connector & terminal*** ***(i75) No. 9 — Chassis ground:***	Is the resistance 10 kΩ or more?	Replace the keyless access CM. <Ref. to SL-102, Keyless Access CM.>	Repair or replace the short circuit of the harness.

V: DTC B2784 ANTENNA CIRCUIT (PUSH ENGINE SWITCH)

DTC DETECTING CONDITION:
When open or short circuit occurs in the antenna coil.
TROUBLE SYMPTOM:
The keyless access function may not be operable.

CAUTION:
For replacement procedure of keyless access CM, refer to the "REGISTRATION MANUAL FOR IMMOBILIZER" provided as a separate volume.
WIRING DIAGRAM:

NOTE:
For the coupling connector, refer to "WIRING SYSTEM".
Immobilizer system <Ref. to WI-251, WIRING DIAGRAM, Immobilizer System.>

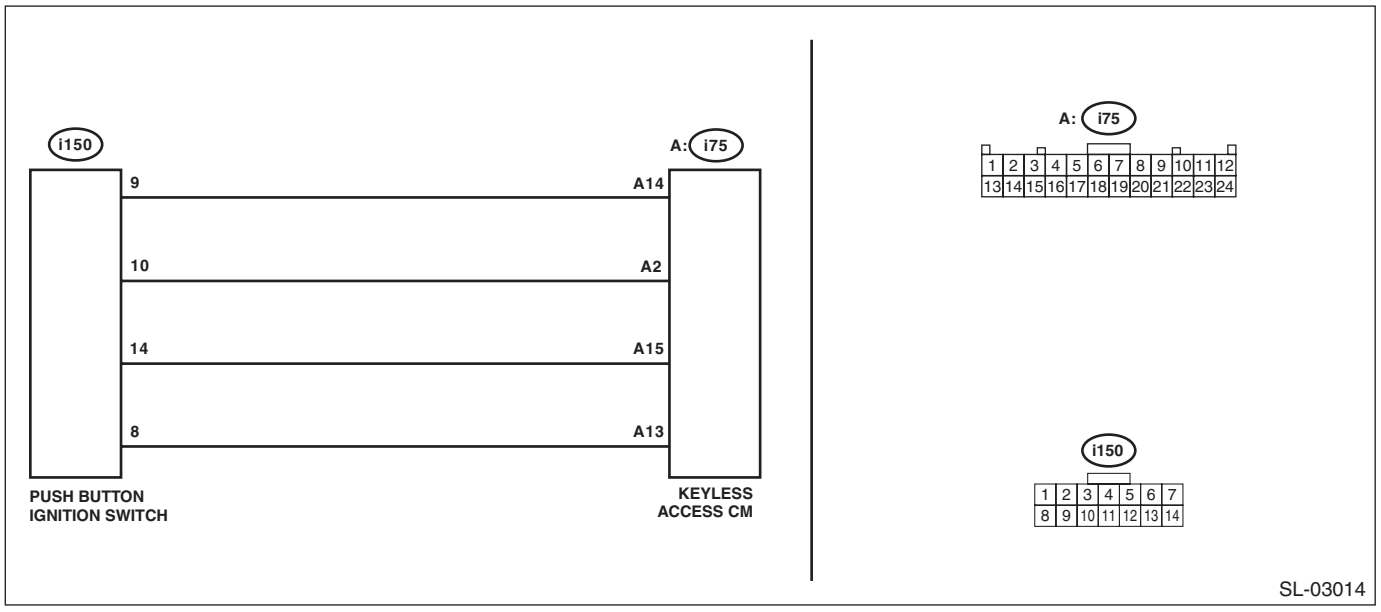

	Step	Check	Yes	No
1	**CHECK STEERING LOCK CM.** 1) Disconnect the push button ignition switch connector. 2) Disconnect the keyless access CM connector. 3) Using the tester, measure the resistance between terminals. ***Connector & terminal*** ***(i150) No. 14 — (i75) No. 15:*** ***(i150) No. 9 — (i75) No. 14:*** ***(i150) No. 10 — (i75) No. 2:*** ***(i150) No. 8 — (i75) No. 13:***	Is the resistance less than 1 Ω?	Go to step **2**.	Repair or replace the open circuit of harness.
2	**CHECK HARNESS.** Using the tester, measure the resistance between terminals. ***Connector & terminal*** ***(i150) No. 14 — Chassis ground:*** ***(i150) No. 9 — Chassis ground:*** ***(i150) No. 10 — Chassis ground:***	Is the resistance 10 kΩ or more?	Go to step **3**.	Repair or replace the short circuit of the harness.

	Step	Check	Yes	No
3	**CHECK PUSH BUTTON IGNITION SWITCH.** 1) Replace the push button ignition switch. <Ref. to SL-106, Push Button Ignition Switch.> 2) Using the Subaru Select Monitor, clear the memory. <Ref. to KPS(diag)-25, Clear Memory Mode.> 3) Read DTC using the Subaru Select Monitor. <Ref. to KPS(diag)-24, Read Diagnostic Trouble Code (DTC).>	Is DTC B2784 displayed?	Replace the keyless access CM. <Ref. to SL-102, Keyless Access CM.>	Malfunction occurred in the push button ignition switch.

W: DTC B2785 LIN COMMUNICATION

DTC DETECTING CONDITION:
When the keyless access CM detected the collation system LIN bus communication error three times in a row.

TROUBLE SYMPTOM:
The keyless access function may not be operable.

CAUTION:
For replacement procedure of keyless access CM, steering lock CM and ID code box, refer to "REGISTRATION MANUAL FOR IMMOBILIZER" provided as a separate volume.

WIRING DIAGRAM:

NOTE:
For the coupling connector, refer to "WIRING SYSTEM".
Keyless access with push button start system <Ref. to WI-260, WIRING DIAGRAM, Keyless Access With Push Button Start System.>

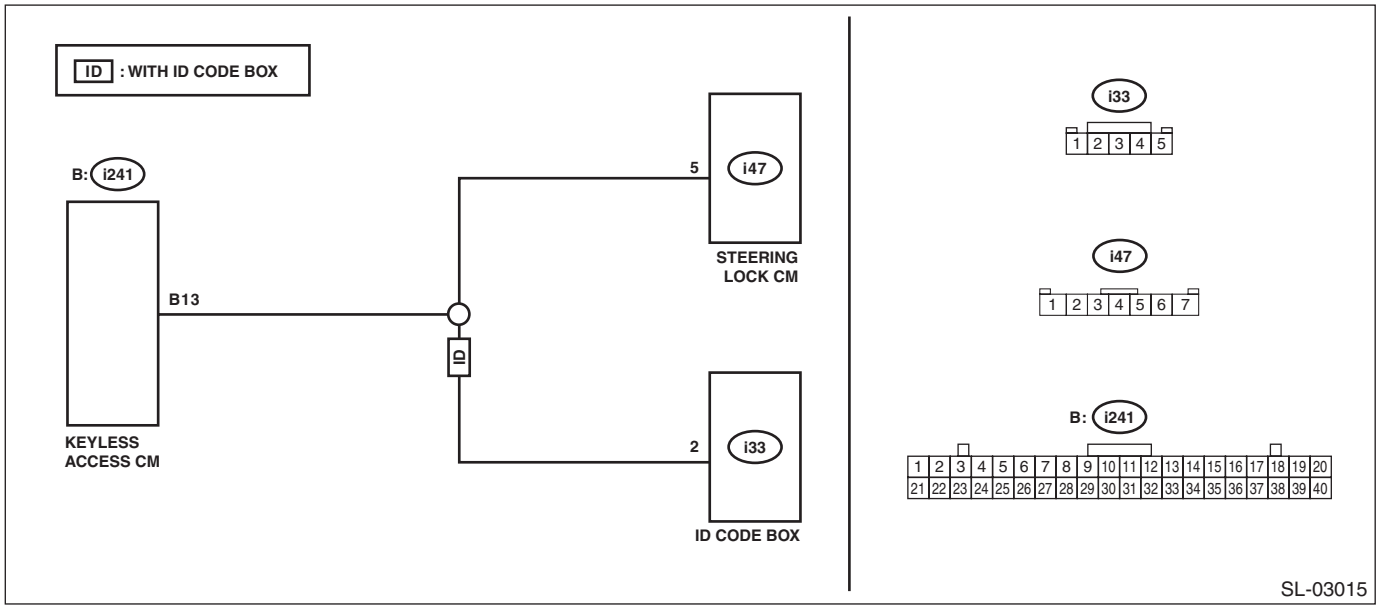

Step		Check	Yes	No
1	**CHECK DTC.** 1) Using the Subaru Select Monitor, clear the memory. <Ref. to KPS(diag)-25, Clear Memory Mode.> 2) Read DTC using the Subaru Select Monitor. <Ref. to KPS(diag)-24, Read Diagnostic Trouble Code (DTC).>	Is DTC B2785 displayed?	Go to step **2**.	Even if DTC is displayed, the circuit has returned to a normal condition at this time. Reproduce the failure, and then perform the diagnosis again. NOTE: In this case, temporary poor contact of connector, temporary open or short circuit of harness may be the cause.

	Step	Check	Yes	No
2	**CHECK HARNESS (OPEN CIRCUIT).** 1) Disconnect the keyless access CM connector. 2) Disconnect the steering lock CM connector. 3) Disconnect the ID code box connector. (With ID code box) 4) Using the tester, measure the resistance between terminals. ***Connector & terminal*** ***(i241) No. 13 — (i47) No. 5:*** ***(i241) No. 13 — (i33) No. 2: (with ID code box)***	Is the resistance less than 1 Ω?	Go to step **3**.	Repair or replace the open circuit of harness.
3	**CHECK HARNESS (GROUND SHORT CIRCUIT).** Using the tester, measure the resistance between terminals. ***Connector & terminal*** ***(i241) No. 13 — Chassis ground:*** ***(i47) No. 5 — Chassis ground:*** ***(i33) No. 2 — Chassis ground: (with ID code box)***	Is the resistance 10 kΩ or more?	Go to step **4**.	Repair or replace the short circuit of the harness.
4	**CHECK HARNESS.** 1) Connect the keyless access CM connector only. 2) Read DTC using the Subaru Select Monitor. <Ref. to KPS(diag)-24, Read Diagnostic Trouble Code (DTC).>	Is B2785 displayed?	Replace the keyless access CM. <Ref. to SL-102, Keyless Access CM.>	Go to step **5**.
5	**CHECK ID CODE BOX.** NOTE: For model without ID code box, go to the next step. 1) Connect the ID code box. 2) Read DTC using the Subaru Select Monitor. <Ref. to KPS(diag)-24, Read Diagnostic Trouble Code (DTC).>	Is B2785 displayed?	Replace the ID code box. <Ref. to SL-103, ID Code Box.>	Go to step **6**.
6	**CHECK STEERING LOCK CM.** 1) Connect the steering lock CM. 2) Using the Subaru Select Monitor, clear the memory. <Ref. to KPS(diag)-25, Clear Memory Mode.> 3) Read DTC using the Subaru Select Monitor. <Ref. to KPS(diag)-24, Read Diagnostic Trouble Code (DTC).>	Is B2785 displayed?	Replace the steering lock CM. <Ref. to SL-104, Steering Lock CM.>	Even if DTC is displayed, the circuit has returned to a normal condition at this time. Reproduce the failure, and then perform the diagnosis again. NOTE: In this case, temporary poor contact of connector, temporary open or short circuit of harness may be the cause.

X: DTC B2786 STEERING LOCK CM COMMUNICATION

DTC DETECTING CONDITION:
When communication between keyless access CM and steering lock CM is interrupted for a set amount of time.

TROUBLE SYMPTOM:
The steering lock cannot be released.

CAUTION:
For replacement procedure of keyless access CM and steering lock CM, refer to the "REGISTRATION MANUAL FOR IMMOBILIZER" provided as a separate volume.

WIRING DIAGRAM:

NOTE:
For the coupling connector, refer to "WIRING SYSTEM".
Keyless access with push button start system <Ref. to WI-260, WIRING DIAGRAM, Keyless Access With Push Button Start System.>

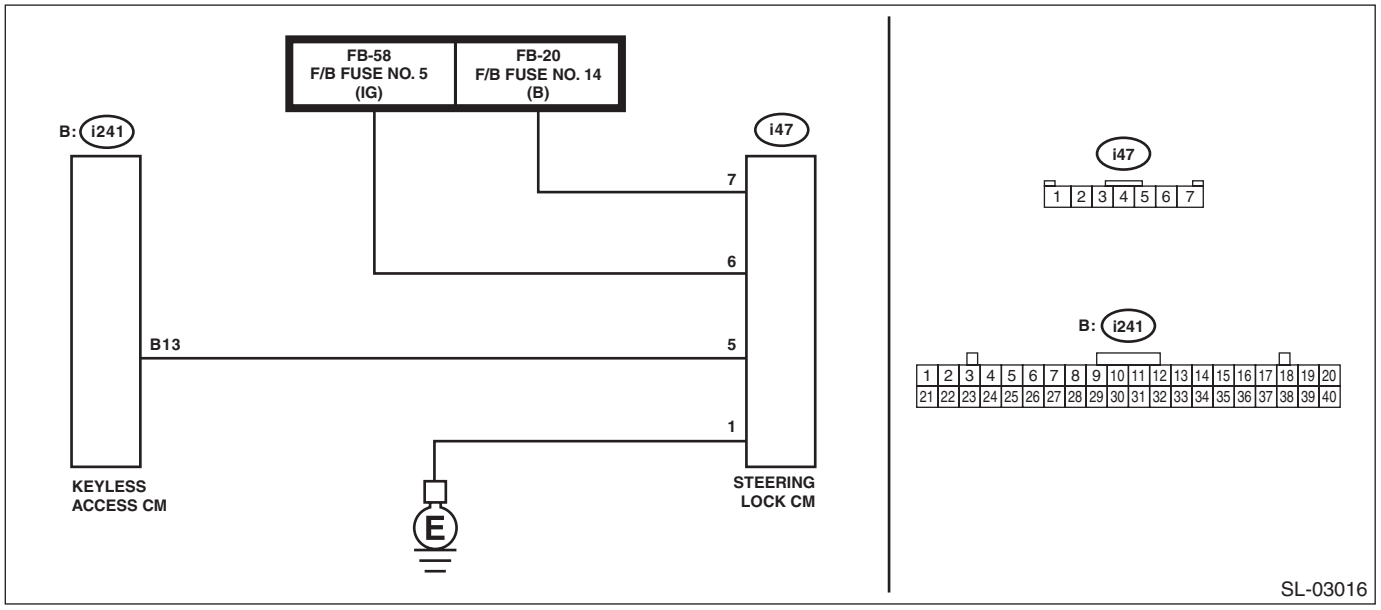

Step		Check	Yes	No
1	**CHECK DTC.** Read DTC using the Subaru Select Monitor. <Ref. to KPS(diag)-24, Read Diagnostic Trouble Code (DTC).>	Are DTCs other than DTC B2786 displayed?	Perform the diagnosis according to DTC.	Go to step **2**.
2	**CHECK HARNESS (OPEN CIRCUIT).** 1) Disconnect the keyless access CM connector. 2) Disconnect the steering lock CM connector. 3) Using the tester, measure the resistance between terminals. ***Connector & terminal*** ***(i241) No. 13 — (i47) No. 5:***	Is the resistance less than 1 Ω?	Go to step **3**.	Repair or replace the open circuit of harness.
3	**CHECK HARNESS (GROUND SHORT CIRCUIT).** Using the tester, measure the resistance between terminals. ***Connector & terminal*** ***(i241) No. 13 — Chassis ground:***	Is the resistance 10 kΩ or more?	Go to step **4**.	Repair or replace the short circuit of the harness.

	Step	Check	Yes	No
4	**CHECK HARNESS (OPEN CIRCUIT).** Using a tester, measure the resistance between the steering lock CM connector and chassis ground. ***Connector & terminal*** ***(i47) No. 1 — Chassis ground:***	Is the resistance less than 1 Ω?	Go to step **5**.	Repair or replace the open circuit of harness.
5	**CHECK HARNESS.** 1) Turn the ignition switch to ON. 2) Using a tester, measure the voltage between the steering lock CM connector and chassis ground. ***Connector & terminal*** ***(i47) No. 6 (+) — Chassis ground (–):*** ***(i47) No. 7 (+) — Chassis ground (–):***	Is the voltage 11 — 14 V?	Go to step **6**.	Repair or replace the faulty portion of the power supply circuit.
6	**CHECK STEERING LOCK CM.** 1) Turn the ignition switch to ON. 2) Using the Subaru Select Monitor, clear the memory. <Ref. to KPS(diag)-25, Clear Memory Mode.> 3) Read DTC using the Subaru Select Monitor. <Ref. to KPS(diag)-24, Read Diagnostic Trouble Code (DTC).>	Is DTC B2785 displayed?	Replace the keyless access CM. <Ref. to SL-102, Keyless Access CM.>	Go to step **7**.
7	**CHECK STEERING LOCK CM.** 1) Turn the ignition switch to ON. 2) Using the Subaru Select Monitor, clear the memory. <Ref. to KPS(diag)-25, Clear Memory Mode.> 3) Read DTC using the Subaru Select Monitor. <Ref. to KPS(diag)-24, Read Diagnostic Trouble Code (DTC).>	Is DTC B2786 displayed?	Replace the steering lock CM. <Ref. to SL-104, Steering Lock CM.>	Even if DTC is displayed, the circuit has returned to a normal condition at this time. Reproduce the failure, and then perform the diagnosis again. NOTE: In this case, temporary poor contact of connector, temporary open or short circuit of harness may be the cause.

Y: DTC B2788 IGN SIGNAL CORRELATION (STEERING LOCK CM)

DTC DETECTING CONDITION:
When mismatch occurs in the IG1 input of the steering lock CM for both LIN communication line input (IG1 input value of keyless access CM) and solid line input.

TROUBLE SYMPTOM:
The steering lock cannot be released.

CAUTION:
For replacement procedure of keyless access CM and steering lock CM, refer to the "REGISTRATION MANUAL FOR IMMOBILIZER" provided as a separate volume.

WIRING DIAGRAM:

NOTE:
For the coupling connector, refer to "WIRING SYSTEM".
Keyless access with push button start system <Ref. to WI-260, WIRING DIAGRAM, Keyless Access With Push Button Start System.>

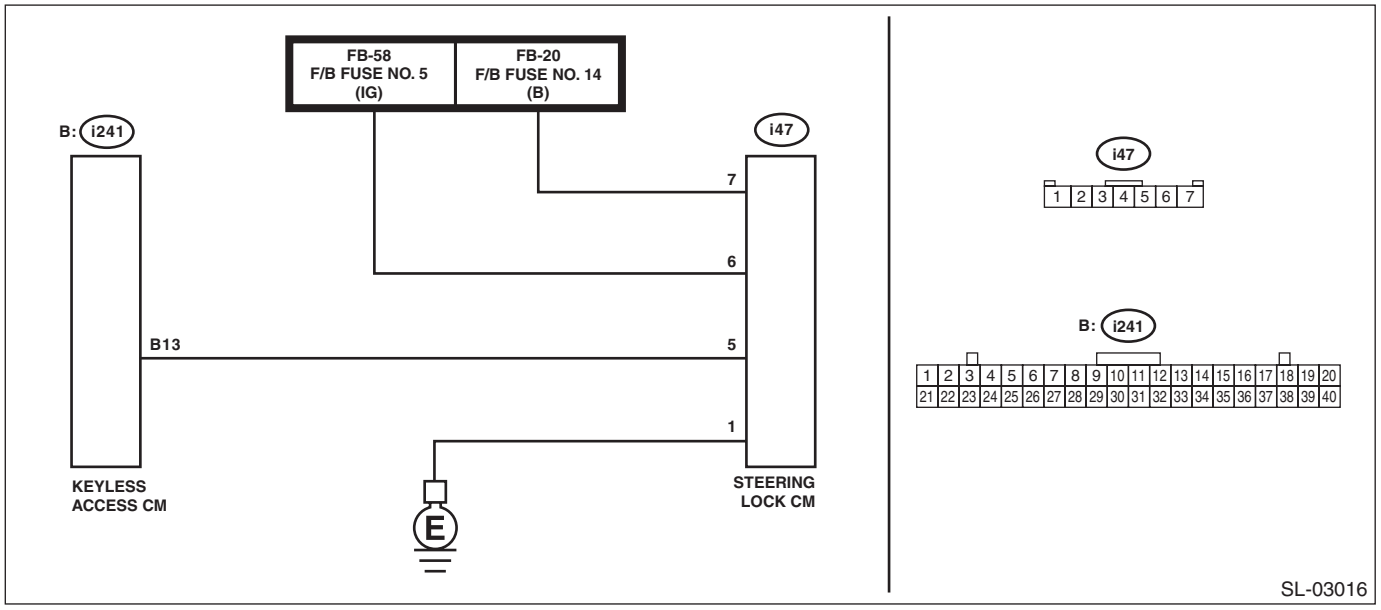

Step		Check	Yes	No
1	**CHECK FUSE.** Check the fuse. <Ref. to SL-10, INSPECTION, Relay and Fuse.>	Is the fuse OK?	Go to step **2**.	Replace the fuse. When the replaced fuse is blown immediately, check the power supply circuit for short-circuited.
2	**CHECK CURRENT DATA.** Check the current data display of «Keyless access with push button start» using Subaru Select Monitor. <Ref. to KPS(diag)-26, Read Current Data.> «IGN1/2 relay monitor (drive output)»	Is the display normal according to the ignition switch operation?	Go to step **3**.	Go to step **5**.
3	**CHECK HARNESS (OPEN CIRCUIT).** 1) Disconnect the steering lock CM connector. 2) Using a tester, measure the resistance between the steering lock CM connector and chassis ground. ***Connector & terminal*** ***(i47) No. 1 — Chassis ground:***	Is the resistance less than 1 Ω?	Go to step **4**.	Repair or replace the open circuit of harness.

Step		Check	Yes	No
4	**CHECK HARNESS.** 1) Connect the steering lock CM connector. 2) Using the tester, measure the voltage between terminals. ***Connector & terminal*** ***(i47) No. 6 (+) — (i47) No. 1 (–):***	Is the voltage 11 — 14 V with IG ON? Is the voltage less than 1 V with IG OFF?	Replace the steering lock CM. <Ref. to SL-104, REMOVAL, Steering Lock CM.>	Check the DC power supply circuit.
5	**CHECK DTC.** Read DTC using the Subaru Select Monitor. <Ref. to KPS(diag)-24, Read Diagnostic Trouble Code (DTC).>	Is DTC B2271 displayed?	Perform the diagnosis according to DTC B2271. <Ref. to KPS(diag)-40, DTC B2271 IGN RELAY CONTROL CIRCUIT, Diagnostic Procedure with Diagnostic Trouble Code (DTC).>	Replace the keyless access CM. <Ref. to SL-102, REMOVAL, Keyless Access CM.>

Z: DTC B2789 ID CODE BOX COMMUNICATION

DTC DETECTING CONDITION:

- When communication between keyless access CM and ID code box is interrupted for a set amount of time.
- Open or short circuit in the wiring harness between keyless access CM and ID code box

TROUBLE SYMPTOM:

Engine will not start.

CAUTION:

For replacement procedure of keyless access CM and ID code box, refer to the "REGISTRATION MANUAL FOR IMMOBILIZER" provided as a separate volume.

WIRING DIAGRAM:

NOTE:

For the coupling connector, refer to "WIRING SYSTEM".

Keyless access with push button start system <Ref. to WI-260, WIRING DIAGRAM, Keyless Access With Push Button Start System.>

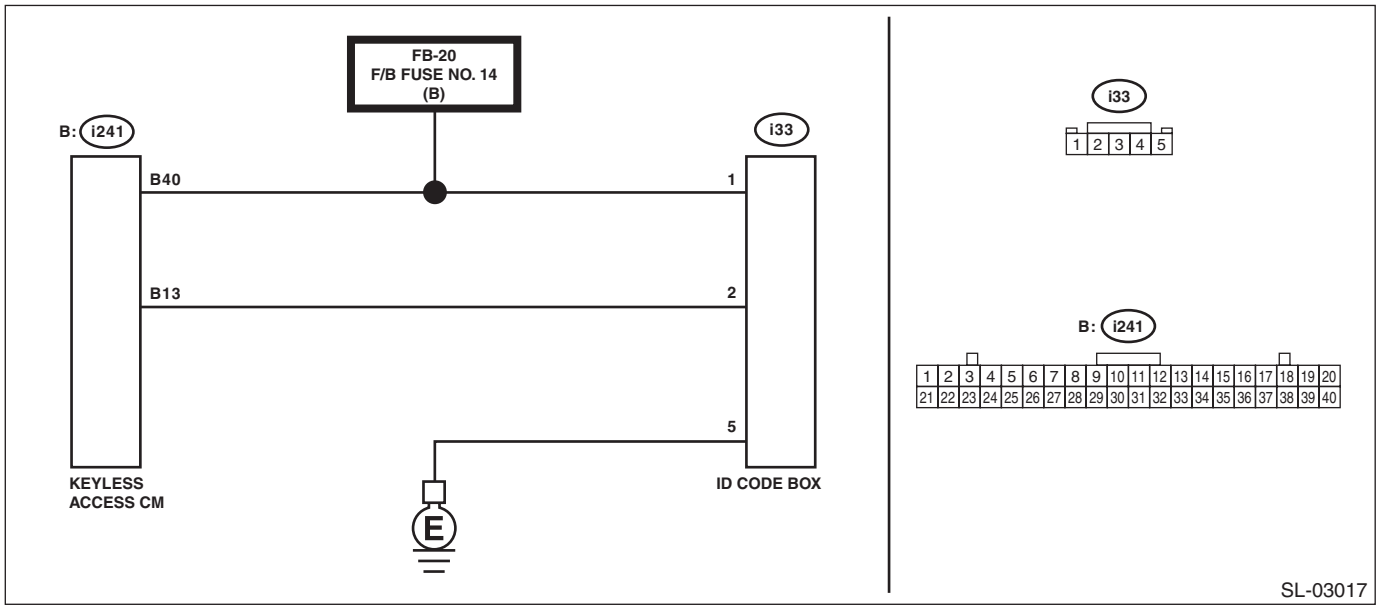

Step		Check	Yes	No
1	**CHECK DTC.** 1) Using the Subaru Select Monitor, clear the memory. <Ref. to KPS(diag)-25, Clear Memory Mode.> 2) Read DTC using the Subaru Select Monitor. <Ref. to KPS(diag)-24, Read Diagnostic Trouble Code (DTC).>	Is DTC B2789 displayed?	Go to step **2**.	Even if DTC is displayed, the circuit has returned to a normal condition at this time. Reproduce the failure, and then perform the diagnosis again. NOTE: In this case, temporary poor contact of connector, temporary open or short circuit of harness may be the cause.

	Step	Check	Yes	No
2	**CHECK HARNESS (OPEN CIRCUIT).** 1) Disconnect the keyless access CM connector. 2) Disconnect the ID code box connector. 3) Using the tester, measure the resistance between terminals. ***Connector & terminal*** ***(i241) No. 13 — (i47) No. 2:***	Is the resistance less than 1 Ω?	Go to step **3**.	Repair or replace the open circuit of harness.
3	**CHECK HARNESS (GROUND SHORT CIRCUIT).** Using a tester, measure the resistance between the keyless access CM connector and chassis ground, and between ID code box connector and chassis ground. ***Connector & terminal*** ***(i241) No. 13 — Chassis ground:***	Is the resistance 10 kΩ or more?	Go to step **4**.	Repair or replace the short circuit of the harness.
4	**CHECK HARNESS (OPEN CIRCUIT).** Using a tester, measure the resistance between ID code box connector and chassis ground. ***Connector & terminal*** ***(i47) No. 5 — Chassis ground:***	Is the resistance less than 1 Ω?	Go to step **5**.	Repair or replace the open circuit of harness.
5	**CHECK HARNESS.** Using a tester, measure the voltage between ID code box connector and chassis ground. ***Connector & terminal*** ***(i33) No. 1 (+) — Chassis ground (–):***	Is the voltage 11 — 14 V?	Go to step **6**.	Repair or replace the faulty portion of the power supply circuit.
6	**CHECK ID CODE BOX.** 1) Using the Subaru Select Monitor, clear the memory. <Ref. to KPS(diag)-25, Clear Memory Mode.> 2) Read DTC using the Subaru Select Monitor. <Ref. to KPS(diag)-24, Read Diagnostic Trouble Code (DTC).>	Is DTC B2785 displayed?	Replace the keyless access CM. <Ref. to SL-102, Keyless Access CM.>	Go to step **7**.
7	**CHECK ID CODE BOX.** 1) Turn the ignition switch to ON. 2) Using the Subaru Select Monitor, clear the memory. <Ref. to KPS(diag)-25, Clear Memory Mode.> 3) Read DTC using the Subaru Select Monitor. <Ref. to KPS(diag)-24, Read Diagnostic Trouble Code (DTC).>	Is DTC B2789 displayed?	Replace the ID code box. <Ref. to SL-103, ID Code Box.>	Even if DTC is displayed, the circuit has returned to a normal condition at this time. Reproduce the failure, and then perform the diagnosis again. NOTE: In this case, temporary poor contact of connector, temporary open or short circuit of harness may be the cause.

AA:DTC B278A PUSH ENGINE SWITCH POWER SUPPLY CIRCUIT

DTC DETECTING CONDITION:

When the power supply circuit of the push button ignition switch is shorted to ground.

TROUBLE SYMPTOM:

- Engine does not start even when the access key is pointed toward the vehicle.
- The keyless access system function does not operate.

CAUTION:

For replacement procedure of keyless access CM, refer to the "REGISTRATION MANUAL FOR IMMOBILIZER" provided as a separate volume.

WIRING DIAGRAM:

Immobilizer system <Ref. to WI-251, WIRING DIAGRAM, Immobilizer System.>

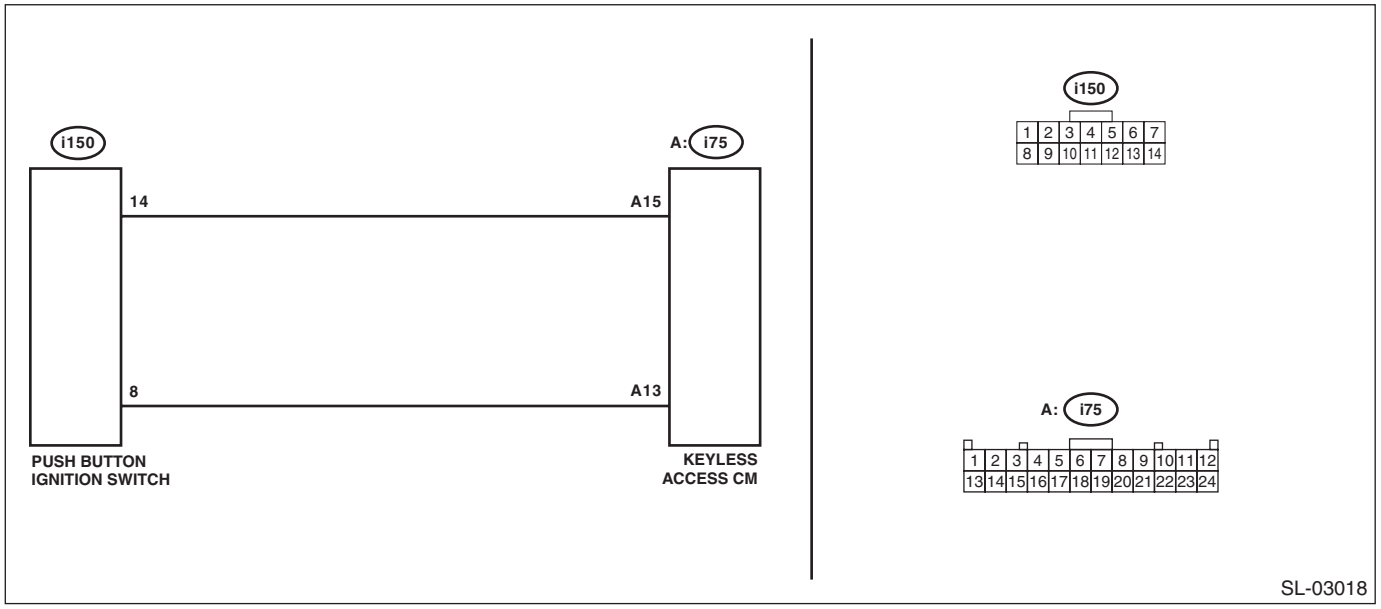

Step		Check	Yes	No
1	**CHECK KEYLESS ACCESS CM.** 1) Turn the ignition switch to OFF. 2) Take the access key out of the passenger room. 3) Push the push button ignition switch. Within 30 seconds, use oscilloscope to measure the waveform between connectors. ***Connector & terminal*** ***(i150) No. 14 — (i150) No. 8:*** 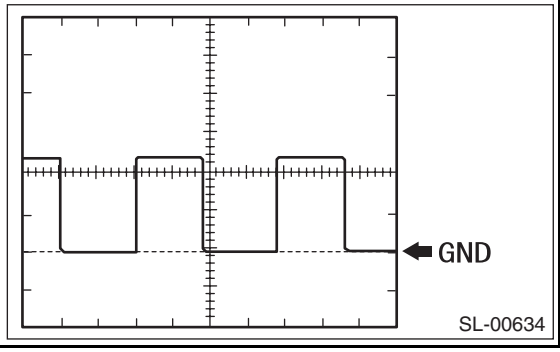	Is the waveform shown in the left column displayed?	Replace the push button ignition switch. <Ref. to SL-106, Push Button Ignition Switch.>	Go to step **2**.

	Step	Check	Yes	No
2	**CHECK HARNESS (OPEN CIRCUIT).** 1) Disconnect the keyless access CM connector. 2) Disconnect the push button ignition switch connector. 3) Using the tester, measure the resistance between terminals. ***Connector & terminal*** ***(i150) No. 8 — (i75) No. 13:*** ***(i150) No. 14 — (i75) No. 15:***	Is the resistance less than 1 Ω?	Go to step **3**.	Repair or replace the open circuit of harness.
3	**CHECK HARNESS (GROUND SHORT CIRCUIT).** Using a tester, measure the resistance between the keyless access CM connector and chassis ground. ***Connector & terminal*** ***(i75) No. 15 — Chassis ground:***	Is the resistance 10 kΩ or more?	Go to step **4**.	Repair or replace the short circuit of the harness.
4	**CHECK HARNESS.** Using a tester, measure the resistance between the keyless access CM connector and chassis ground. ***Connector & terminal*** ***(i75) No. 13 — Chassis ground:***	Is the resistance 1 Ω or less?	Go to step **5**.	Repair or replace the harness.
5	**CHECK DTC.** 1) Using the Subaru Select Monitor, clear the memory. <Ref. to KPS(diag)-25, Clear Memory Mode.> 2) Read DTC using the Subaru Select Monitor. <Ref. to KPS(diag)-24, Read Diagnostic Trouble Code (DTC).>	Is DTC B278A displayed?	Replace the keyless access CM. <Ref. to SL-102, Keyless Access CM.>	Even if DTC is displayed, the circuit has returned to a normal condition at this time. Reproduce the failure, and then perform the diagnosis again. NOTE: In this case, temporary poor contact of connector, temporary open or short circuit of harness may be the cause.

AB:DTC B278D ID CODE BOX JUDGMENT CIRCUIT

DTC DETECTING CONDITION:
When the evaluation of the ID code box setting circuit via the hard wire is judged as none, ID code box communication is received. (at new registration)
TROUBLE SYMPTOM:
Initial registration for the access key is not possible.

CAUTION:
For replacement procedure of keyless access CM, refer to the "REGISTRATION MANUAL FOR IMMOBILIZER" provided as a separate volume.
WIRING DIAGRAM:

NOTE:
For the coupling connector, refer to "WIRING SYSTEM".
Keyless access with push button start system <Ref. to WI-260, WIRING DIAGRAM, Keyless Access With Push Button Start System.>

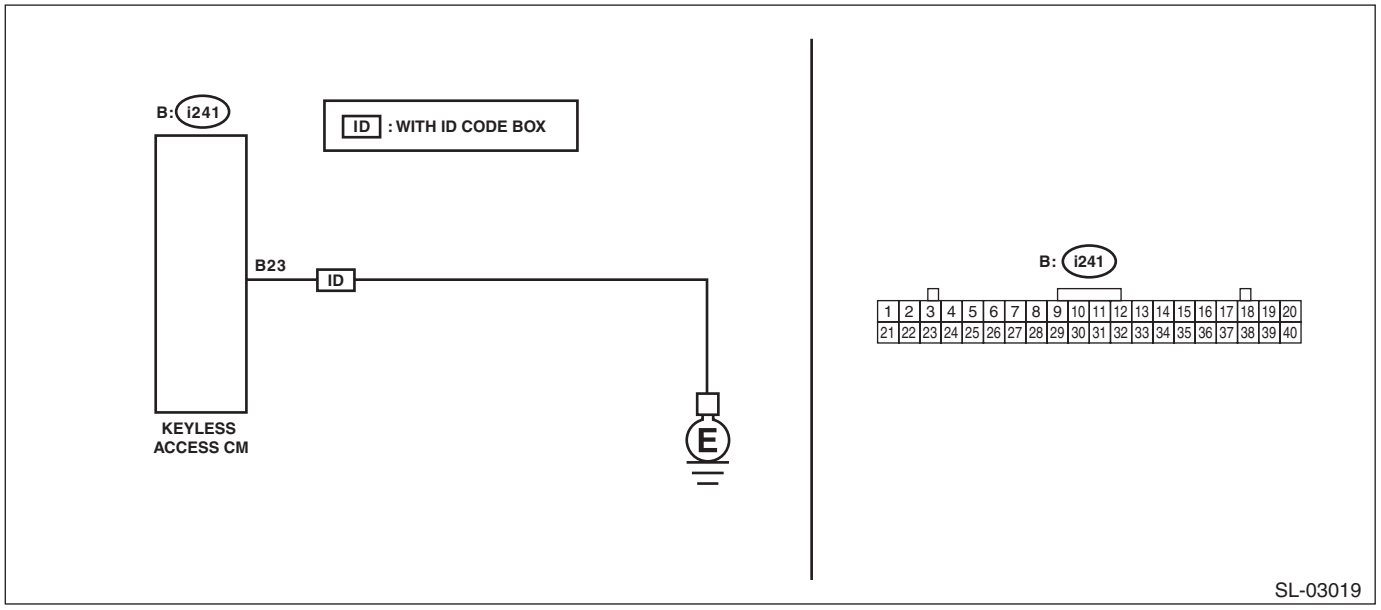

Step		Check	Yes	No
1	**CHECK DTC.** 1) Turn the ignition switch to OFF. 2) Using the Subaru Select Monitor, clear the memory of «keyless access with push button start». <Ref. to KPS(diag)-25, Clear Memory Mode.> 3) Turn the ignition switch to OFF → ON. 4) Read DTC using the Subaru Select Monitor. <Ref. to KPS(diag)-24, Read Diagnostic Trouble Code (DTC).>	Is DTC B278D displayed?	Go to step **2**.	Even if DTC is displayed, the circuit has returned to a normal condition at this time. Reproduce the failure, and then perform the diagnosis again. NOTE: In this case, temporary poor contact of connector, temporary open or short circuit of harness may be the cause.

	Step	Check	Yes	No
2	**CHECK HARNESS.** 1) Disconnect the keyless access CM connector. 2) Measure the resistance between keyless access CM connector and chassis ground. ***Connector & terminal*** ***(i241) No. 23 — Chassis ground:***	Is the resistance 10 kΩ or more?	Replace the keyless access CM. <Ref. to SL-102, Keyless Access CM.>	Repair or replace the short circuit of the harness.

AC:DTC B2790 ID CODE BOX CIRCUIT

DTC DETECTING CONDITION:
An error has occurred inside the ID code box.
TROUBLE SYMPTOM:
Engine will not start.

CAUTION:
For replacement procedure of ID code box, refer to the "REGISTRATION MANUAL FOR IMMOBILIZER" provided as a separate volume.

	Step	Check	Yes	No
1	**CHECK DTC.** 1) Turn the ignition switch to OFF. 2) Using the Subaru Select Monitor, clear the memory of «keyless access with push button start». <Ref. to KPS(diag)-25, Clear Memory Mode.> 3) Turn the ignition switch to OFF → ON. 4) Register the ID code box. Refer to the "REGISTRATION MANUAL FOR IMMOBILIZER" provided as a separate volume. 5) Read DTC using the Subaru Select Monitor. <Ref. to KPS(diag)-24, Read Diagnostic Trouble Code (DTC).>	Is DTC B2790 displayed?	Replace the ID code box. <Ref. to SL-103, ID Code Box.>	ID code box registration was not performed properly.

AD:DTC B2793 BACK UP POWER

DTC DETECTING CONDITION:
When a fault occurs in +B2 power input for the keyless access CM.
TROUBLE SYMPTOM:
None

CAUTION:
For replacement procedure of keyless access CM, refer to the "REGISTRATION MANUAL FOR IMMOBILIZER" provided as a separate volume.
WIRING DIAGRAM:
Keyless access with push button start system <Ref. to WI-260, WIRING DIAGRAM, Keyless Access With Push Button Start System.>

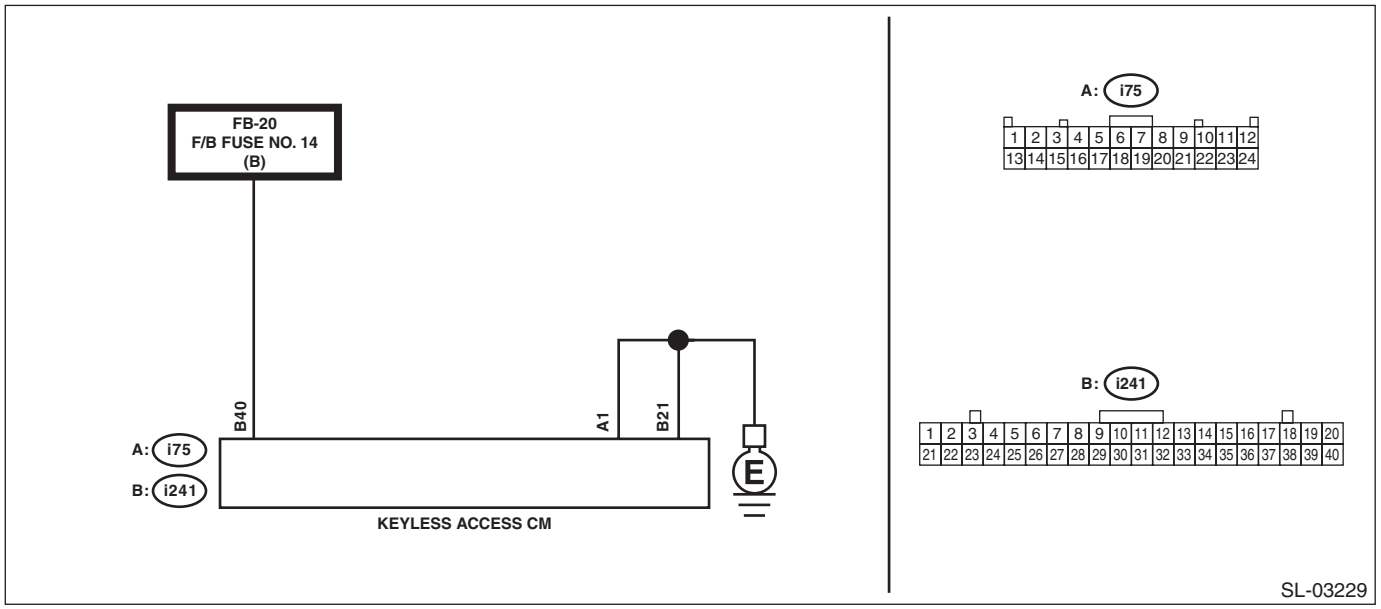

	Step	Check	Yes	No
1	**CHECK CURRENT DATA.** Check the current data display of «Keyless access with push button start» using Subaru Select Monitor. <Ref. to KPS(diag)-26, Read Current Data.> «ECM power supply voltage (back-up)»	Is «ON» displayed?	Go to step **2**.	Go to step **3**.
2	**CHECK DTC.** 1) Using the Subaru Select Monitor, clear the memory. <Ref. to KPS(diag)-25, Clear Memory Mode.> 2) Start the engine, and let it idle for 40 seconds or more. 3) Read DTC using the Subaru Select Monitor. <Ref. to KPS(diag)-24, Read Diagnostic Trouble Code (DTC).>	Is B2793 displayed?	Go to step **3**.	Even if DTC is displayed, the circuit has returned to a normal condition at this time. Reproduce the failure, and then perform the diagnosis again. NOTE: In this case, temporary poor contact of connector, temporary open or short circuit of harness may be the cause.

	Step	Check	Yes	No
3	**CHECK FUSE.** Check the fuse. <Ref. to SL-10, INSPECTION, Relay and Fuse.>	Is the fuse OK?	Go to step **4**.	Replace the fuse. When the replaced fuse is blown immediately, check the power supply circuit for short-circuited.
4	**CHECK HARNESS.** 1) Disconnect the keyless access CM connector. 2) Using a tester, measure the voltage between the keyless access CM connector and chassis ground. ***Connector & terminal*** ***(i241) No. 40 (+) — Chassis ground (–):***	Is the voltage 9.5 — 16 V?	Replace the keyless access CM. <Ref. to SL-102, Keyless Access CM.>	Repair or replace the open circuit of harness.

AE:DTC B27A1 DRIVER SIDE EXTERNAL ANTENNA OPEN

DTC DETECTING CONDITION:

When open circuit occurs in the harness between keyless access CM and driver's side front door outer handle antenna.

TROUBLE SYMPTOM:

Keyless access system does not function.

CAUTION:

For replacement procedure of keyless access CM, refer to the "REGISTRATION MANUAL FOR IMMOBILIZER" provided as a separate volume.

WIRING DIAGRAM:

NOTE:

For the coupling connector, refer to "WIRING SYSTEM".

Keyless access with push button start system <Ref. to WI-260, WIRING DIAGRAM, Keyless Access With Push Button Start System.>

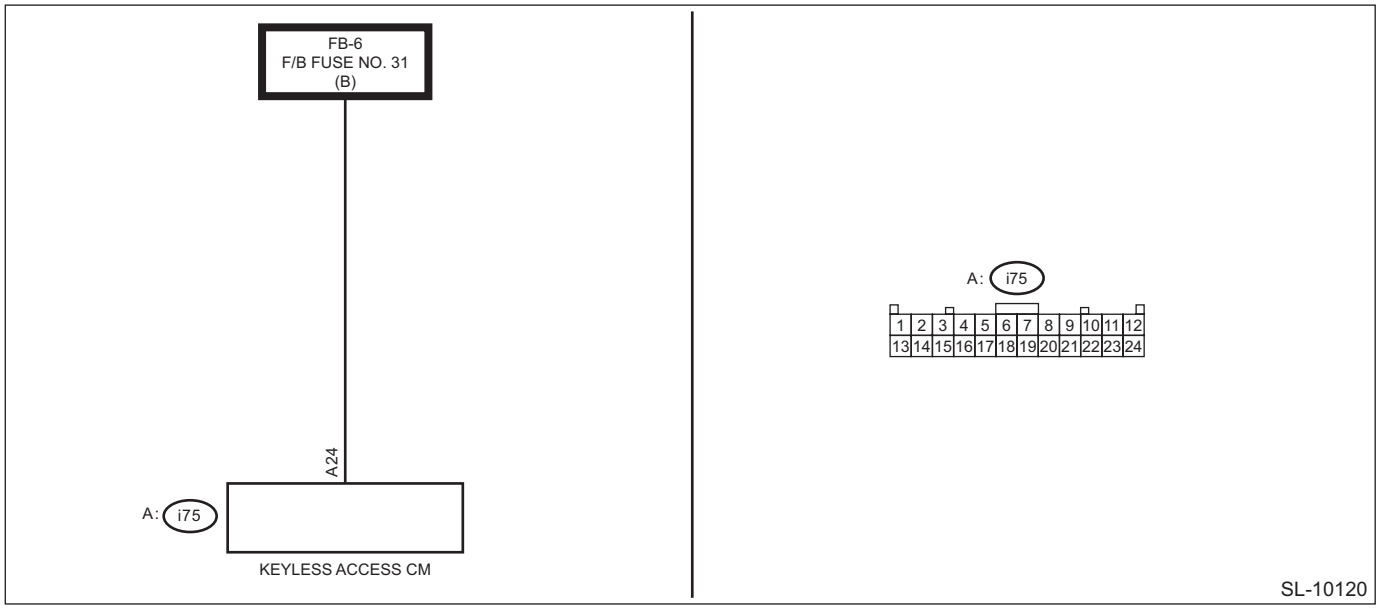

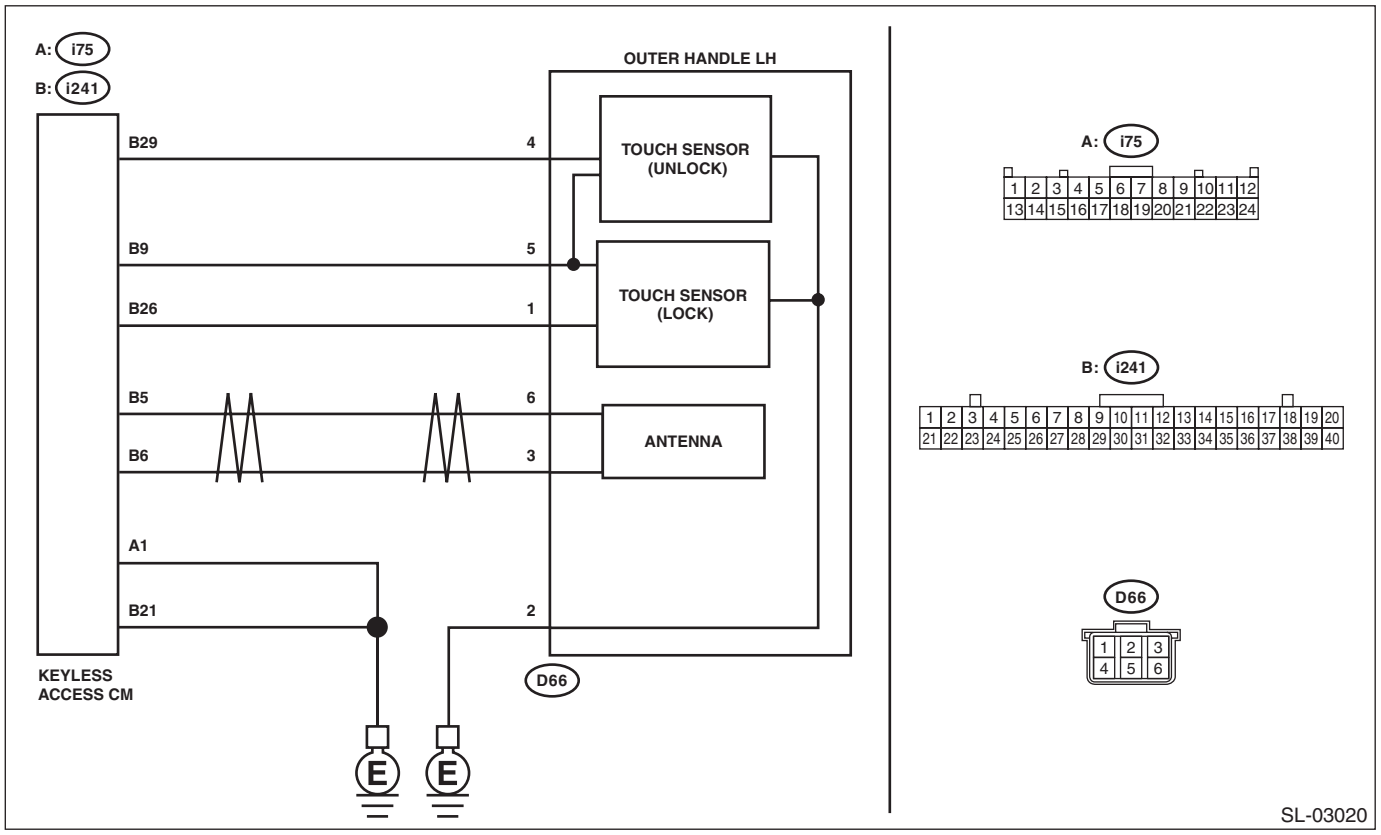

	Step	Check	Yes	No
1	**CHECK LAN SYSTEM.** Inspect LAN system. <Ref. to LAN(diag)-2, PROCEDURE, Basic Diagnostic Procedure.>	Is LAN system normal?	Go to step **2**.	Perform the inspection according to the diagnosis for LAN system.
2	**CHECK CONNECTOR.** 1) Disconnect the keyless access CM connector. 2) Disconnect the front door outer handle connector.	Is the connector OK?	Go to step **3**.	Repair or replace the connector.
3	**CHECK POWER SUPPLY CIRCUIT.** Using a tester, measure the voltage between the keyless access CM connector and chassis ground. ***Connector & terminal*** ***(i75) No. 24 (+) — Chassis ground (–):***	Is the voltage 9.5 — 16 V?	Go to step **4**.	Check the power supply circuit.
4	**CHECK HARNESS (OPEN CIRCUIT).** Using a tester, measure the resistance between the keyless access CM connector and front door outer handle connector, and between front door outer handle connector, keyless access CM connector and chassis ground. ***Connector & terminal*** ***(i241) No. 5 — (D66) No. 6:*** ***(i241) No. 6 — (D66) No. 3:*** ***(D66) No. 2 — Chassis ground:*** ***(i75) No. 1 — Chassis ground:*** ***(i241) No. 21 — Chassis ground:***	Is the resistance less than 1 Ω?	Go to step **5**.	Repair or replace the open circuit of harness.

	Step	Check	Yes	No
5	**CHECK HARNESS (GROUND SHORT CIRCUIT).** Using a tester, measure the resistance between the keyless access CM connector and chassis ground. ***Connector & terminal*** ***(i241) No. 5 — Chassis ground:*** ***(i241) No. 6 — Chassis ground:***	Is the resistance 10 kΩ or more?	Go to step **6**.	Repair or replace the short circuit of the harness.
6	**CHECK DTC.** 1) Connect the keyless access CM connector. 2) Using the Subaru Select Monitor, clear the memory. <Ref. to KPS(diag)-25, Clear Memory Mode.> 3) Read DTC using the Subaru Select Monitor. <Ref. to KPS(diag)-24, Read Diagnostic Trouble Code (DTC).>	Is DTC B27A1 displayed?	Go to step **7**.	Even if DTC is displayed, the circuit has returned to a normal condition at this time. Reproduce the failure, and then perform the diagnosis again. NOTE: In this case, temporary poor contact of connector, temporary open or short circuit of harness may be the cause.
7	**CHECK FRONT DOOR OUTER HANDLE.** 1) Replace the driver's front door outer handle with the passenger's front door outer handle. 2) Using the Subaru Select Monitor, clear the memory. <Ref. to KPS(diag)-25, Clear Memory Mode.> 3) Read DTC using the Subaru Select Monitor. <Ref. to KPS(diag)-24, Read Diagnostic Trouble Code (DTC).>	Is DTC B27A1 displayed?	Replace the keyless access CM. <Ref. to SL-102, Keyless Access CM.>	Replace the driver's front door outer handle. <Ref. to SL-34, Front Outer Handle.>

AF:DTC B27A2 PASSENGER SIDE EXTERNAL ANTENNA OPEN

DTC DETECTING CONDITION:

When open circuit occurs in the harness between keyless access CM and passenger's side front door outer handle antenna.

TROUBLE SYMPTOM:

Keyless access system does not function.

CAUTION:

For replacement procedure of keyless access CM, refer to the "REGISTRATION MANUAL FOR IMMOBILIZER" provided as a separate volume.

WIRING DIAGRAM:

NOTE:

For the coupling connector, refer to "WIRING SYSTEM".

Keyless access with push button start system <Ref. to WI-260, WIRING DIAGRAM, Keyless Access With Push Button Start System.>

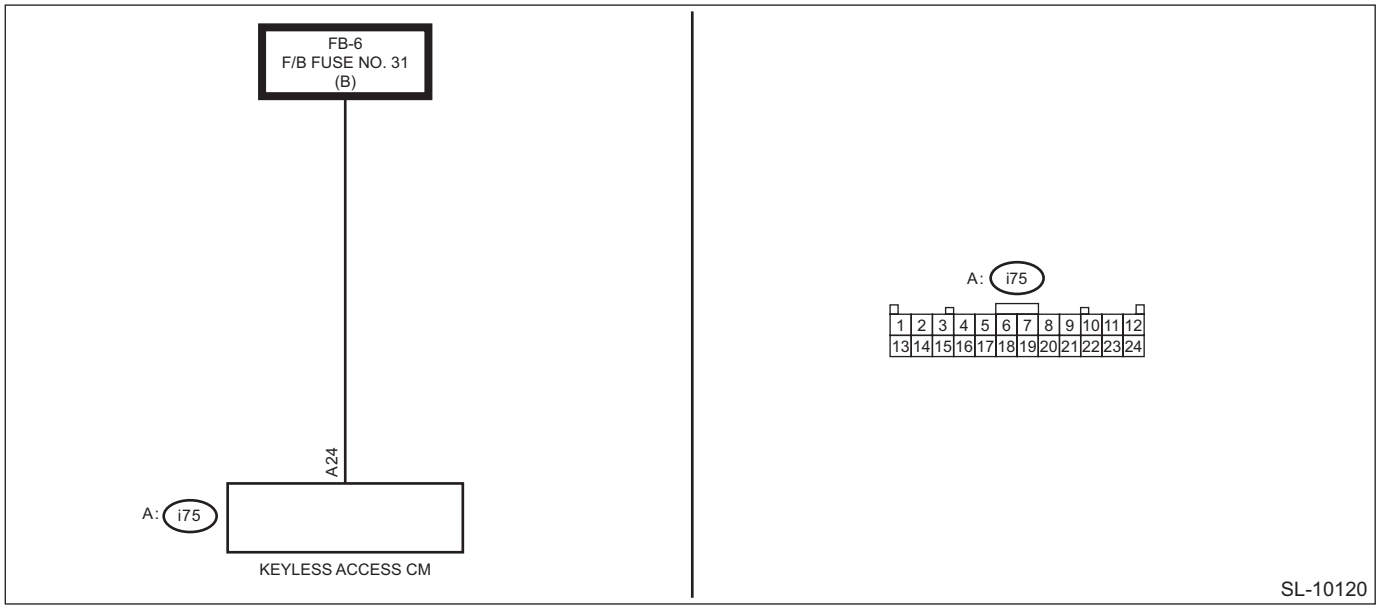

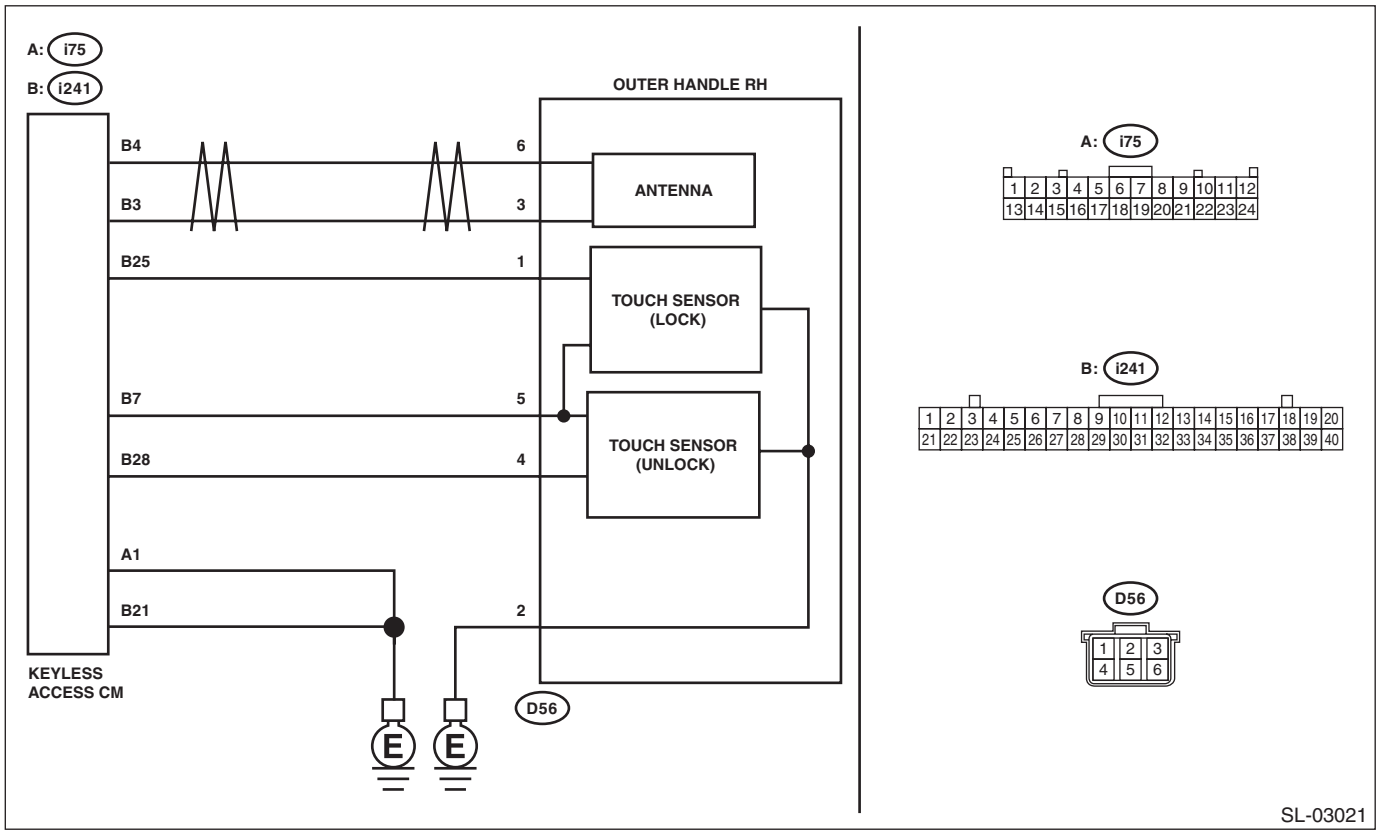

	Step	Check	Yes	No
1	**CHECK LAN SYSTEM.** Inspect LAN system. <Ref. to LAN(diag)-2, PROCEDURE, Basic Diagnostic Procedure.>	Is LAN system normal?	Go to step **2**.	Perform the inspection according to the diagnosis for LAN system.
2	**CHECK CONNECTOR.** 1) Disconnect the keyless access CM connector. 2) Disconnect the front door outer handle connector.	Is the connector OK?	Go to step **3**.	Repair or replace the connector.
3	**CHECK POWER SUPPLY CIRCUIT.** Using a tester, measure the voltage between the keyless access CM connector and chassis ground. ***Connector & terminal*** ***(i75) No. 24 (+) — Chassis ground (–):***	Is the voltage 9.5 — 16 V?	Go to step **4**.	Check the power supply circuit.
4	**CHECK HARNESS (OPEN CIRCUIT).** Using a tester, measure the resistance between the keyless access CM connector and front door outer handle connector, and between front door outer handle connector, keyless access CM connector and chassis ground. ***Connector & terminal*** ***(i241) No. 4 — (D56) No. 6:*** ***(i241) No. 3 — (D56) No. 3:*** ***(D56) No. 2 — Chassis ground:*** ***(i75) No. 1 — Chassis ground:*** ***(i241) No. 21 — Chassis ground:***	Is the resistance less than 1 Ω?	Go to step **5**.	Repair or replace the open circuit of harness.

	Step	Check	Yes	No
5	**CHECK HARNESS (GROUND SHORT CIRCUIT).** Using a tester, measure the resistance between the keyless access CM connector and chassis ground. ***Connector & terminal*** ***(i241) No. 3 — Chassis ground:*** ***(i241) No. 4 — Chassis ground:***	Is the resistance 10 kΩ or more?	Go to step **6**.	Repair or replace the short circuit of the harness.
6	**CHECK DTC.** 1) Connect the keyless access CM connector. 2) Using the Subaru Select Monitor, clear the memory. <Ref. to KPS(diag)-25, Clear Memory Mode.> 3) Read DTC using the Subaru Select Monitor. <Ref. to KPS(diag)-24, Read Diagnostic Trouble Code (DTC).>	Is DTC B27A2 displayed?	Go to step **7**.	Even if DTC is displayed, the circuit has returned to a normal condition at this time. Reproduce the failure, and then perform the diagnosis again. NOTE: In this case, temporary poor contact of connector, temporary open or short circuit of harness may be the cause.
7	**CHECK FRONT DOOR OUTER HANDLE.** 1) Replace the passenger's front door outer handle with the driver's front door outer handle. 2) Using the Subaru Select Monitor, clear the memory. <Ref. to KPS(diag)-25, Clear Memory Mode.> 3) Read DTC using the Subaru Select Monitor. <Ref. to KPS(diag)-24, Read Diagnostic Trouble Code (DTC).>	Is DTC B27A2 displayed?	Replace the keyless access CM. <Ref. to SL-102, Keyless Access CM.>	Replace the passenger's front door outer handle. <Ref. to SL-34, Front Outer Handle.>

AG:DTC B27A5 FRONT INTERNAL ANTENNA OPEN

DTC DETECTING CONDITION:

When open circuit occurs in the harness between keyless access CM and front interior antenna.

TROUBLE SYMPTOM:

Keyless access system does not function. (when the access key is in the front area of the passenger room)

CAUTION:

For replacement procedure of keyless access CM, refer to the "REGISTRATION MANUAL FOR IMMOBILIZER" provided as a separate volume.

WIRING DIAGRAM:

NOTE:

For the coupling connector, refer to "WIRING SYSTEM".

Keyless access with push button start system <Ref. to WI-260, WIRING DIAGRAM, Keyless Access With Push Button Start System.>

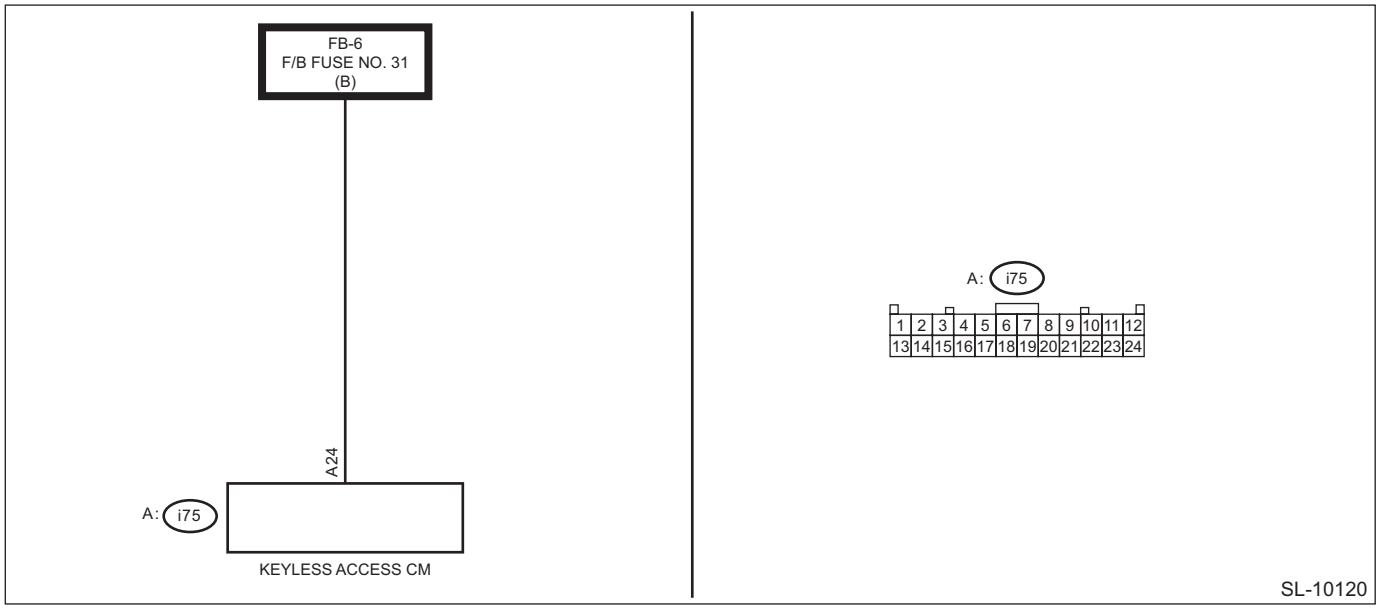

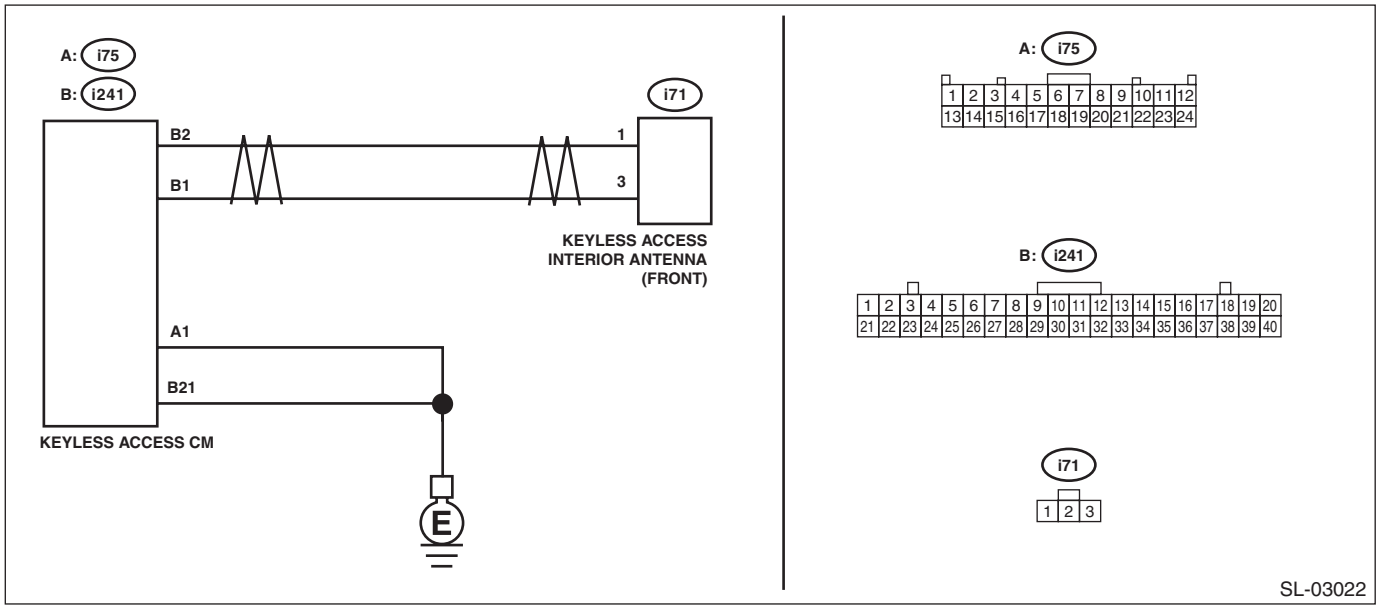

	Step	Check	Yes	No
1	**CHECK LAN SYSTEM.** Inspect LAN system. <Ref. to LAN(diag)-2, PROCEDURE, Basic Diagnostic Procedure.>	Is LAN system normal?	Go to step **2**.	Perform the inspection according to the diagnosis for LAN system.
2	**CHECK CONNECTOR.** 1) Disconnect the keyless access CM connector. 2) Disconnect the front interior antenna connector.	Is the connector OK?	Go to step **3**.	Repair or replace the connector.
3	**CHECK POWER SUPPLY CIRCUIT.** Using a tester, measure the voltage between the keyless access CM connector and chassis ground. ***Connector & terminal*** ***(i75) No. 24 (+) — Chassis ground (–):***	Is the voltage 9.5 — 16 V?	Go to step **4**.	Check the power supply circuit.
4	**CHECK HARNESS (OPEN CIRCUIT).** Using a tester, measure the resistance between the keyless access CM connector and front interior antenna connector, and between front interior antenna connector, keyless access CM connector and chassis ground. ***Connector & terminal*** ***(i241) No. 1 — (i71) No. 3:*** ***(i241) No. 2 — (i71) No. 1:*** ***(i75) No. 1 — Chassis ground:*** ***(i241) No. 21 — Chassis ground:***	Is the resistance less than 1 Ω?	Go to step **5**.	Repair or replace the open circuit of harness.
5	**CHECK HARNESS (GROUND SHORT CIRCUIT).** Using a tester, measure the resistance between the keyless access CM connector and chassis ground. ***Connector & terminal*** ***(i241) No. 1 — Chassis ground:*** ***(i241) No. 2 — Chassis ground:***	Is the resistance 10 kΩ or more?	Go to step **6**.	Repair or replace the short circuit of the harness.
6	**CHECK DTC.** 1) Connect the keyless access CM connector. 2) Using the Subaru Select Monitor, clear the memory. <Ref. to KPS(diag)-25, Clear Memory Mode.> 3) Read DTC using the Subaru Select Monitor. <Ref. to KPS(diag)-24, Read Diagnostic Trouble Code (DTC).>	Is DTC B27A5 displayed?	Go to step **7**.	Even if DTC is displayed, the circuit has returned to a normal condition at this time. Reproduce the failure, and then perform the diagnosis again. NOTE: In this case, temporary poor contact of connector, temporary open or short circuit of harness may be the cause.

	Step	Check	Yes	No
7	**CHECK FRONT INTERIOR ANTENNA.** 1) Replace the rear interior antenna with the front interior antenna. <Ref. to SL-93, Keyless Access Indoor Antenna.> 2) Using the Subaru Select Monitor, clear the memory. <Ref. to KPS(diag)-25, Clear Memory Mode.> 3) Read DTC using the Subaru Select Monitor. <Ref. to KPS(diag)-24, Read Diagnostic Trouble Code (DTC).>	Is DTC B27A5 displayed?	Replace the keyless access CM. <Ref. to SL-102, Keyless Access CM.>	Malfunction occurred in the front interior antenna.

AH:DTC B27A6 REAR INTERNAL ANTENNA OPEN

DTC DETECTING CONDITION:
When open circuit occurs in the harness between keyless access CM and center interior antenna.
TROUBLE SYMPTOM:
Keyless access system does not function. (when the access key is in the rear area of the passenger room (near the seat))

CAUTION:
For replacement procedure of keyless access CM, refer to the "REGISTRATION MANUAL FOR IMMOBILIZER" provided as a separate volume.
WIRING DIAGRAM:

NOTE:
For the coupling connector, refer to "WIRING SYSTEM".
Keyless access with push button start system <Ref. to WI-260, WIRING DIAGRAM, Keyless Access With Push Button Start System.>

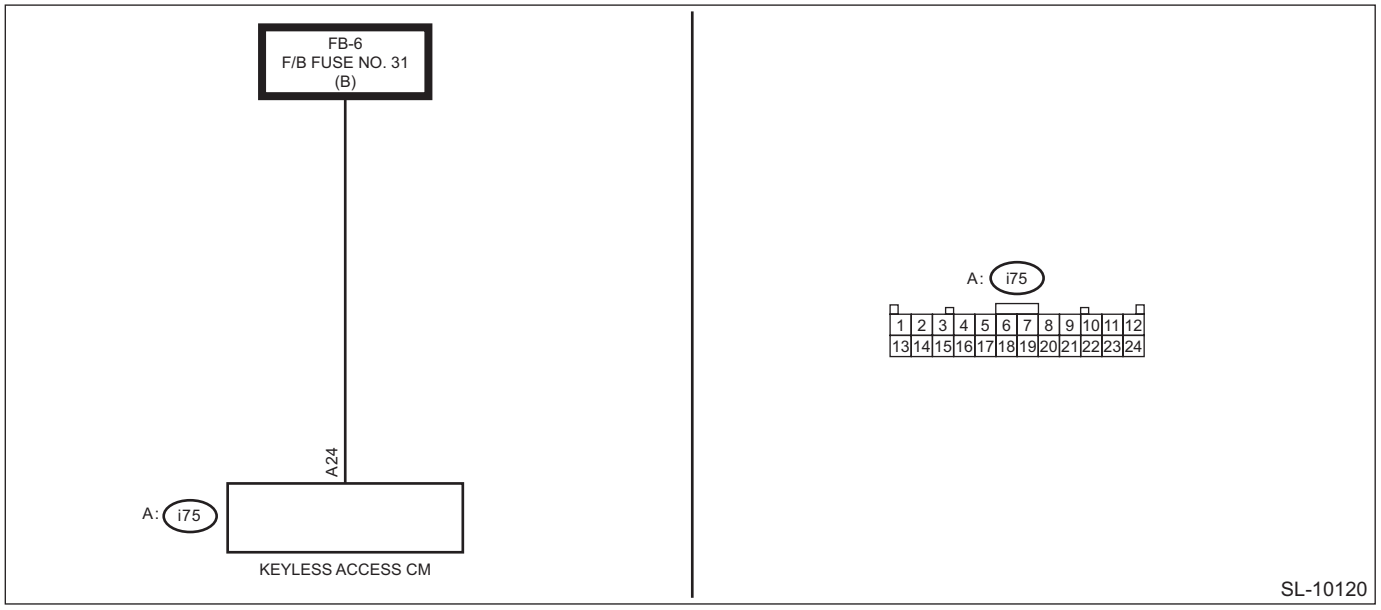

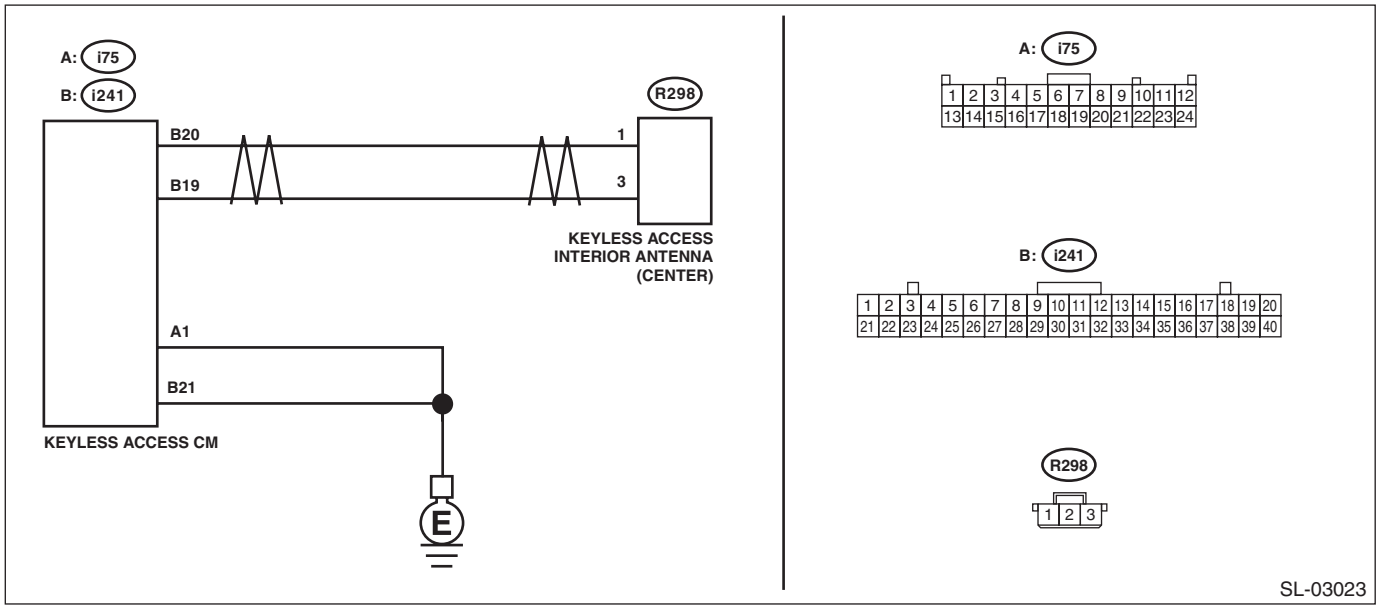

	Step	Check	Yes	No
1	**CHECK LAN SYSTEM.** Inspect LAN system. <Ref. to LAN(diag)-2, PROCEDURE, Basic Diagnostic Procedure.>	Is LAN system normal?	Go to step **2**.	Perform the inspection according to the diagnosis for LAN system.
2	**CHECK CONNECTOR.** 1) Disconnect the keyless access CM connector. 2) Disconnect the center interior antenna connector.	Is the connector OK?	Go to step **3**.	Repair or replace the connector.
3	**CHECK POWER SUPPLY CIRCUIT.** Using a tester, measure the voltage between the keyless access CM connector and chassis ground. ***Connector & terminal*** ***(i75) No. 24 (+) — Chassis ground (–):***	Is the voltage 9.5 — 16 V?	Go to step **4**.	Check the power supply circuit.
4	**CHECK HARNESS (OPEN CIRCUIT).** Using a tester, measure the resistance between the keyless access CM connector and center interior antenna connector, and between center interior antenna connector, keyless access CM connector and chassis ground. ***Connector & terminal*** ***(i241) No. 19 — (R298) No. 3:*** ***(i241) No. 20 — (R298) No. 1:*** ***(i75) No. 1 — Chassis ground:*** ***(i241) No. 21 — Chassis ground:***	Is the resistance less than 1 Ω?	Go to step **5**.	Repair or replace the open circuit of harness.
5	**CHECK HARNESS (GROUND SHORT CIRCUIT).** Using a tester, measure the resistance between the keyless access CM connector and chassis ground. ***Connector & terminal*** ***(i241) No. 19 — Chassis ground:*** ***(i241) No. 20 — Chassis ground:***	Is the resistance 10 kΩ or more?	Go to step **6**.	Repair or replace the short circuit of the harness.
6	**CHECK DTC.** 1) Connect the keyless access CM connector. 2) Using the Subaru Select Monitor, clear the memory. <Ref. to KPS(diag)-25, Clear Memory Mode.> 3) Read DTC using the Subaru Select Monitor. <Ref. to KPS(diag)-24, Read Diagnostic Trouble Code (DTC).>	Is DTC B27A6 displayed?	Go to step **7**.	Even if DTC is displayed, the circuit has returned to a normal condition at this time. Reproduce the failure, and then perform the diagnosis again. NOTE: In this case, temporary poor contact of connector, temporary open or short circuit of harness may be the cause.

	Step	Check	Yes	No
7	**CHECK CENTER INTERIOR ANTENNA.** 1) Replace the center interior antenna with the front interior antenna. <Ref. to SL-93, Keyless Access Indoor Antenna.> 2) Using the Subaru Select Monitor, clear the memory. <Ref. to KPS(diag)-25, Clear Memory Mode.> 3) Read DTC using the Subaru Select Monitor. <Ref. to KPS(diag)-24, Read Diagnostic Trouble Code (DTC).>	Is DTC B27A6 displayed?	Replace the keyless access CM. <Ref. to SL-102, Keyless Access CM.>	Malfunction occurred in the center interior antenna.

AI: DTC B27A7 TRUNK/REAR GATE INTERNAL ANTENNA OPEN

DTC DETECTING CONDITION:
When open circuit occurs in the harness between keyless access CM and rear interior antenna.
TROUBLE SYMPTOM:
Keyless access system does not function. (when the access key is in the rear area of the passenger room (in the luggage room or trunk))

CAUTION:
For replacement procedure of keyless access CM, refer to the "REGISTRATION MANUAL FOR IMMOBILIZER" provided as a separate volume.
WIRING DIAGRAM:

NOTE:
For the coupling connector, refer to "WIRING SYSTEM".
Keyless access with push button start system <Ref. to WI-260, WIRING DIAGRAM, Keyless Access With Push Button Start System.>

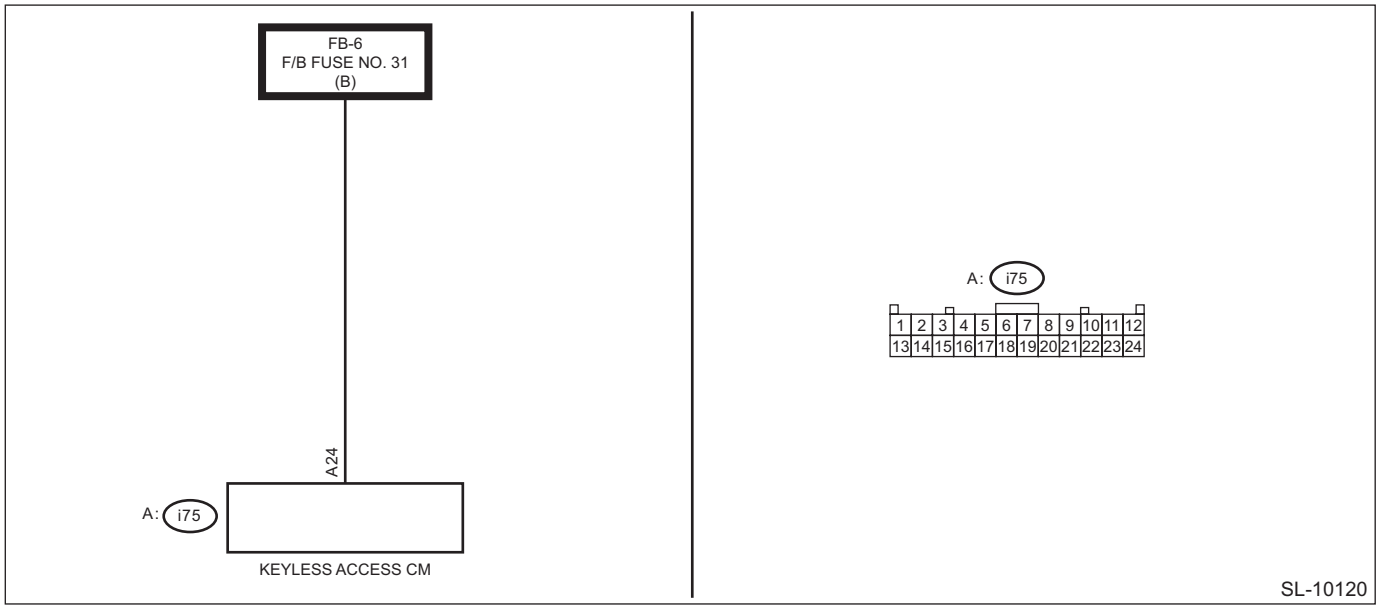

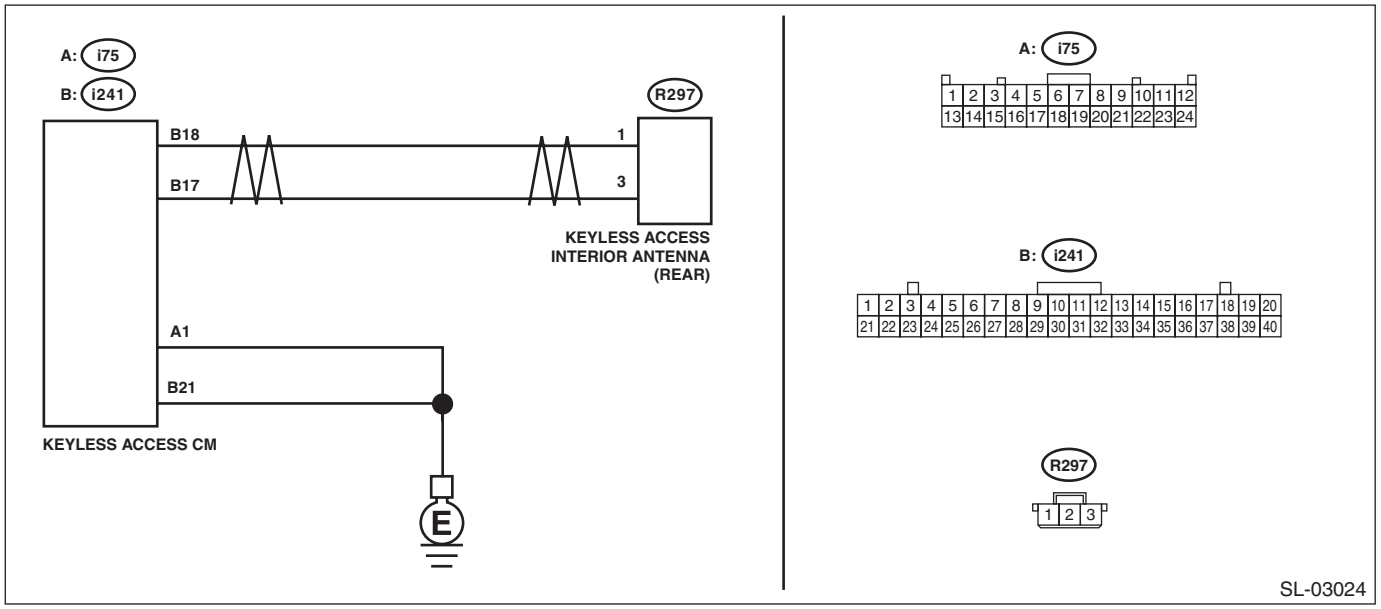

	Step	Check	Yes	No
1	**CHECK LAN SYSTEM.** Inspect LAN system. <Ref. to LAN(diag)-2, PROCEDURE, Basic Diagnostic Procedure.>	Is LAN system normal?	Go to step **2**.	Perform the inspection according to the diagnosis for LAN system.
2	**CHECK CONNECTOR.** 1) Disconnect the keyless access CM connector. 2) Disconnect the rear interior antenna connector.	Is the connector OK?	Go to step **3**.	Repair or replace the connector.
3	**CHECK POWER SUPPLY CIRCUIT.** Using a tester, measure the voltage between the keyless access CM connector and chassis ground. ***Connector & terminal*** ***(i75) No. 24 (+) — Chassis ground (–):***	Is the voltage 9.5 — 16 V?	Go to step **4**.	Check the power supply circuit.
4	**CHECK HARNESS (OPEN CIRCUIT).** Using a tester, measure the resistance between the keyless access CM connector and rear interior antenna connector, and between rear interior antenna connector, keyless access CM connector and chassis ground. ***Connector & terminal*** ***(i241) No. 17 — (R297) No. 3:*** ***(i241) No. 18 — (R297) No. 1:*** ***(i75) No. 1 — Chassis ground:*** ***(i241) No. 21 — Chassis ground:***	Is the resistance less than 1 Ω?	Go to step **5**.	Repair or replace the open circuit of harness.
5	**CHECK HARNESS (GROUND SHORT CIRCUIT).** Using a tester, measure the resistance between the keyless access CM connector and chassis ground. ***Connector & terminal*** ***(i241) No. 17 — Chassis ground:*** ***(i241) No. 18 — Chassis ground:***	Is the resistance 10 kΩ or more?	Go to step **6**.	Repair or replace the short circuit of the harness.
6	**CHECK DTC.** 1) Connect the keyless access CM connector. 2) Using the Subaru Select Monitor, clear the memory. <Ref. to KPS(diag)-25, Clear Memory Mode.> 3) Read DTC using the Subaru Select Monitor. <Ref. to KPS(diag)-24, Read Diagnostic Trouble Code (DTC).>	Is DTC B27A7 displayed?	Go to step **7**.	Even if DTC is displayed, the circuit has returned to a normal condition at this time. Reproduce the failure, and then perform the diagnosis again. NOTE: In this case, temporary poor contact of connector, temporary open or short circuit of harness may be the cause.

	Step	Check	Yes	No
7	**CHECK REAR INTERIOR ANTENNA.** 1) Replace the rear interior antenna with the front interior antenna. <Ref. to SL-93, Keyless Access Indoor Antenna.> 2) Using the Subaru Select Monitor, clear the memory. <Ref. to KPS(diag)-25, Clear Memory Mode.> 3) Read DTC using the Subaru Select Monitor. <Ref. to KPS(diag)-24, Read Diagnostic Trouble Code (DTC).>	Is DTC B27A7 displayed?	Replace the keyless access CM. <Ref. to SL-102, Keyless Access CM.>	Malfunction occurred in the rear interior antenna.

AJ:DTC B27A8 TRUNK/REAR GATE EXTERNAL ANTENNA OPEN

DTC DETECTING CONDITION:

When open circuit occurs in the harness between keyless access CM and rear exterior antenna.

TROUBLE SYMPTOM:

Keyless access system does not function.
(Unable to unlock with the rear gate opener button, or unable to lock with the rear lock button, unable to open the trunk with the trunk opener button)

CAUTION:

For replacement procedure of keyless access CM, refer to the "REGISTRATION MANUAL FOR IMMOBILIZER" provided as a separate volume.

WIRING DIAGRAM:

NOTE:
For the coupling connector, refer to "WIRING SYSTEM".
Keyless access with push button start system <Ref. to WI-260, WIRING DIAGRAM, Keyless Access With Push Button Start System.>

- Sedan model

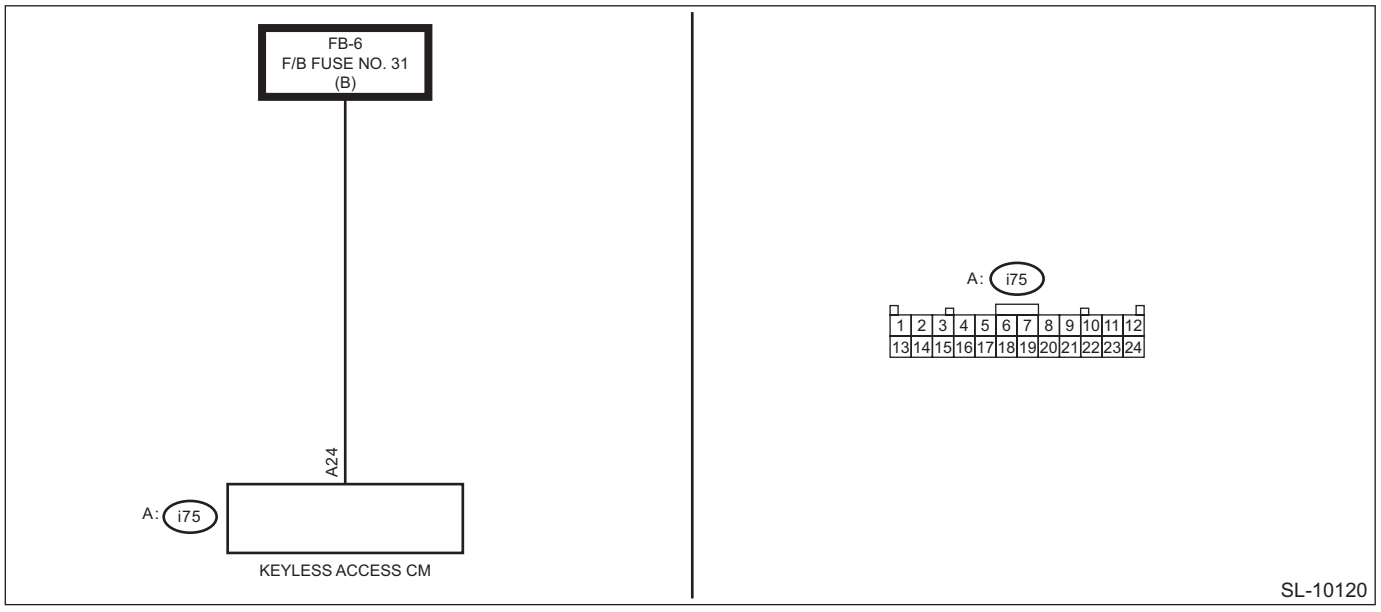

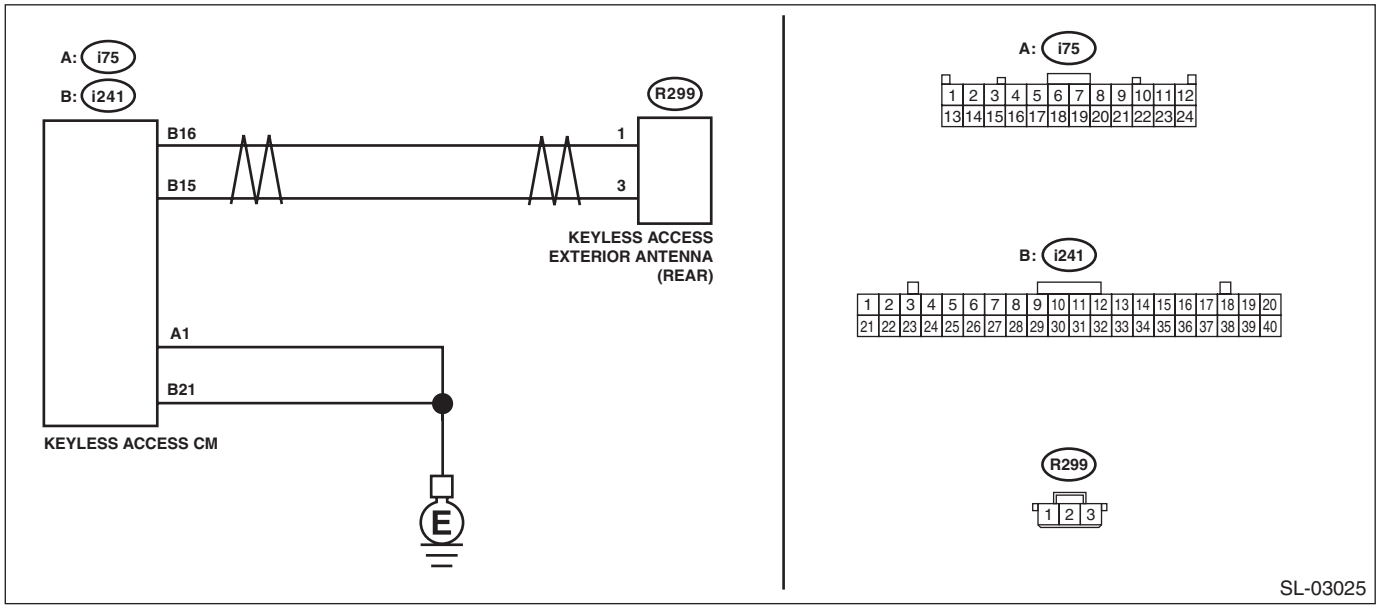

- OUTBACK model

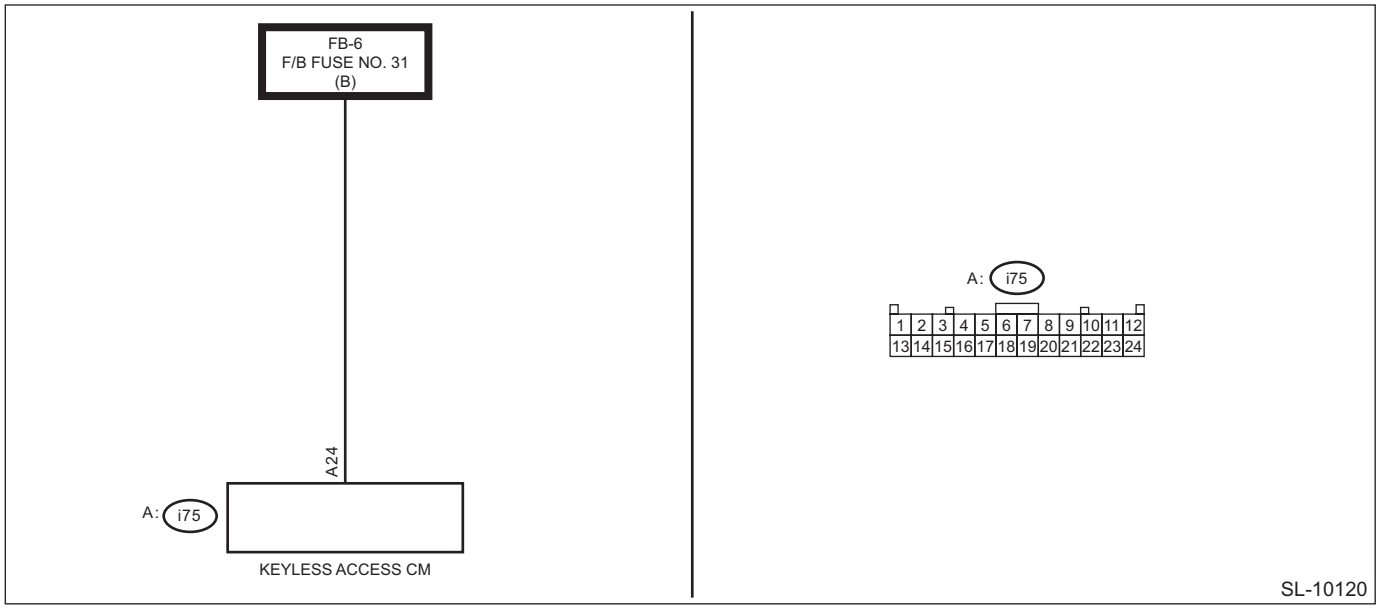

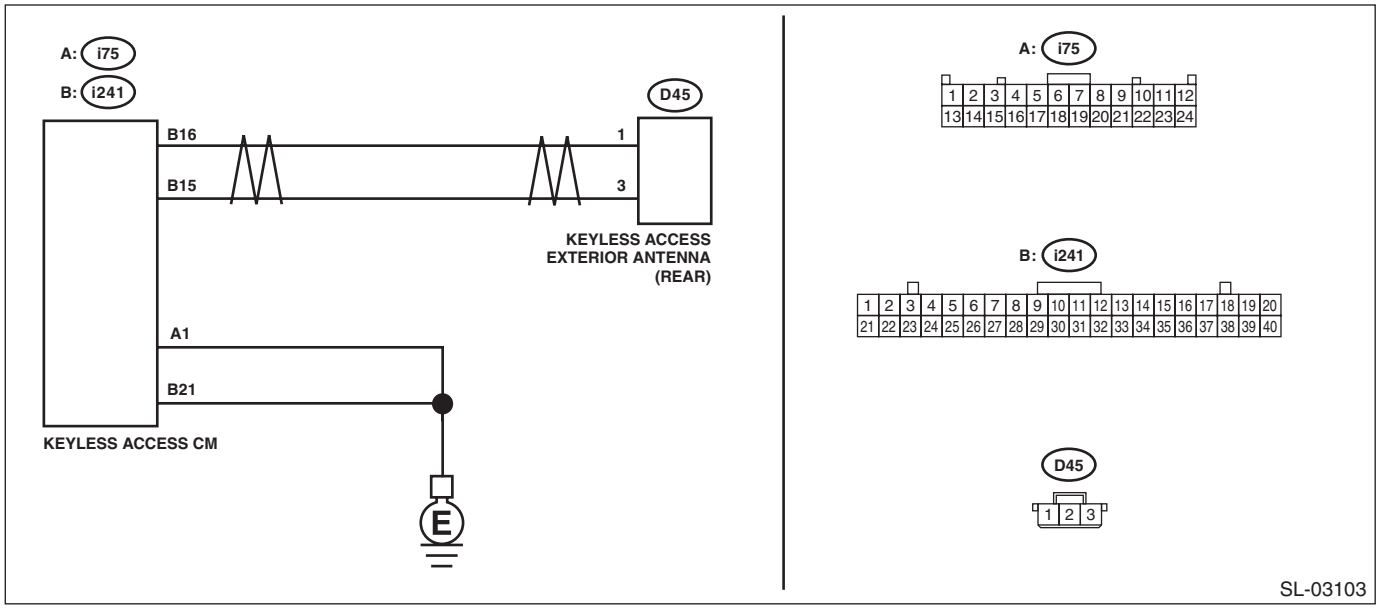

Step		Check	Yes	No
1	**CHECK LAN SYSTEM.** Inspect LAN system. <Ref. to LAN(diag)-2, PROCEDURE, Basic Diagnostic Procedure.>	Is LAN system normal?	Go to step **2**.	Perform the inspection according to the diagnosis for LAN system.
2	**CHECK CONNECTOR.** 1) Disconnect the keyless access CM connector. 2) Disconnect the rear exterior antenna connector.	Is the connector OK?	Go to step **3**.	Repair or replace the connector.
3	**CHECK POWER SUPPLY CIRCUIT.** Using a tester, measure the voltage between the keyless access CM connector and chassis ground. ***Connector & terminal*** ***(i75) No. 24 (+) — Chassis ground (–):***	Is the voltage 9.5 — 16 V?	Go to step **4**.	Check the power supply circuit.

	Step	Check	Yes	No
4	**CHECK HARNESS (OPEN CIRCUIT).** Using a tester, measure the resistance between the keyless access CM connector and rear external antenna connector. ***Connector & terminal*** ***Sedan model*** ***(i241) No. 15 — (R299) No. 3:*** ***(i241) No. 16 — (R299) No. 1:*** ***OUTBACK model*** ***(i241) No. 15 — (D45) No. 3:*** ***(i241) No. 16 — (D45) No. 1:***	Is the resistance less than 1 Ω?	Go to step **5**.	Repair or replace the open circuit of harness.
5	**CHECK HARNESS (GROUND SHORT CIRCUIT).** Using a tester, measure the resistance between the keyless access CM connector and chassis ground. ***Connector & terminal*** ***Sedan model*** ***(i241) No. 15 — Chassis ground:*** ***(i241) No. 16 — Chassis ground:*** ***OUTBACK model*** ***(i241) No. 15 — Chassis ground:*** ***(i241) No. 16 — Chassis ground:***	Is the resistance 10 kΩ or more?	Go to step **6**.	Repair or replace the short circuit of the harness.
6	**CHECK DTC.** 1) Connect the keyless access CM connector. 2) Using the Subaru Select Monitor, clear the memory. <Ref. to KPS(diag)-25, Clear Memory Mode.> 3) Read DTC using the Subaru Select Monitor. <Ref. to KPS(diag)-24, Read Diagnostic Trouble Code (DTC).>	Is DTC B27A8 displayed?	Go to step **7**.	Even if DTC is displayed, the circuit has returned to a normal condition at this time. Reproduce the failure, and then perform the diagnosis again. NOTE: In this case, temporary poor contact of connector, temporary open or short circuit of harness may be the cause.
7	**CHECK REAR EXTERIOR ANTENNA.** 1) Replace the rear exterior antenna with the rear interior antenna. <Ref. to SL-93, Keyless Access Indoor Antenna.> <Ref. to SL-97, Keyless Access Outdoor Antenna.> 2) Using the Subaru Select Monitor, clear the memory. <Ref. to KPS(diag)-25, Clear Memory Mode.> 3) Read DTC using the Subaru Select Monitor. <Ref. to KPS(diag)-24, Read Diagnostic Trouble Code (DTC).>	Is DTC B27A8 displayed?	Replace the keyless access CM. <Ref. to SL-102, Keyless Access CM.>	Malfunction occurred in the rear external antenna.

AK:DTC B1571 REFERENCE CODE INCOMPATIBILITY (IMMOBILIZER CM TO ECM)

DTC DETECTING CONDITION:

Incompatibility of reference code between keyless access CM (model without ID code box) or ID code box (model with ID code box) and ECM occurs.

TROUBLE SYMPTOM:

Engine will not start.

CAUTION:

For replacement procedure of keyless access CM, ECM and ID code box, refer to "REGISTRATION MANUAL FOR IMMOBILIZER" provided as a separate volume.

	Step	Check	Yes	No
1	**CHECK ECM.** Perform ECM registration. Refer to the "REGISTRATION MANUAL FOR IMMOBILIZER" provided as a separate volume.	Is ECM registration finished? And does the engine start?	ECM registration was not performed properly.	Go to step **2**.
2	**REPLACE ECM.** 1) Install the ECM from other normal operating vehicle (with push button start) which use same ECM to the vehicle to be diagnosed. 2) Perform ECM registration. Refer to the "REGISTRATION MANUAL FOR IMMOBILIZER" provided as a separate volume.	Is ECM registration finished? And does the engine start?	Replace the ECM. <Ref. to FU(H4DO)-82, REMOVAL, Engine Control Module (ECM).> <Ref. to FU(H6DO)-83, REMOVAL, Engine Control Module (ECM).> Install the ECM from other vehicle to the original vehicle.	Replace Keyless access CM (model without ID code box), <Ref. to SL-102, Keyless Access CM.> or replace ID code box (model with ID code box). <Ref. to SL-103, NOTE, ID Code Box.>

AL:DTC B1572 IMM CIRCUIT EXCEPT ANTENNA CIRCUIT

1. EXCEPT FOR C0 AND C5 MODELS

DTC DETECTING CONDITION:
Communication error between keyless access CM and ECM
TROUBLE SYMPTOM:
Engine will not start.

CAUTION:
For replacement procedure of keyless access CM and ECM, refer to the "REGISTRATION MANUAL FOR IMMOBILIZER" provided as a separate volume.
WIRING DIAGRAM:

NOTE:
For the coupling connector, refer to "WIRING SYSTEM".
Keyless access with push button start system <Ref. to WI-260, WIRING DIAGRAM, Keyless Access With Push Button Start System.>

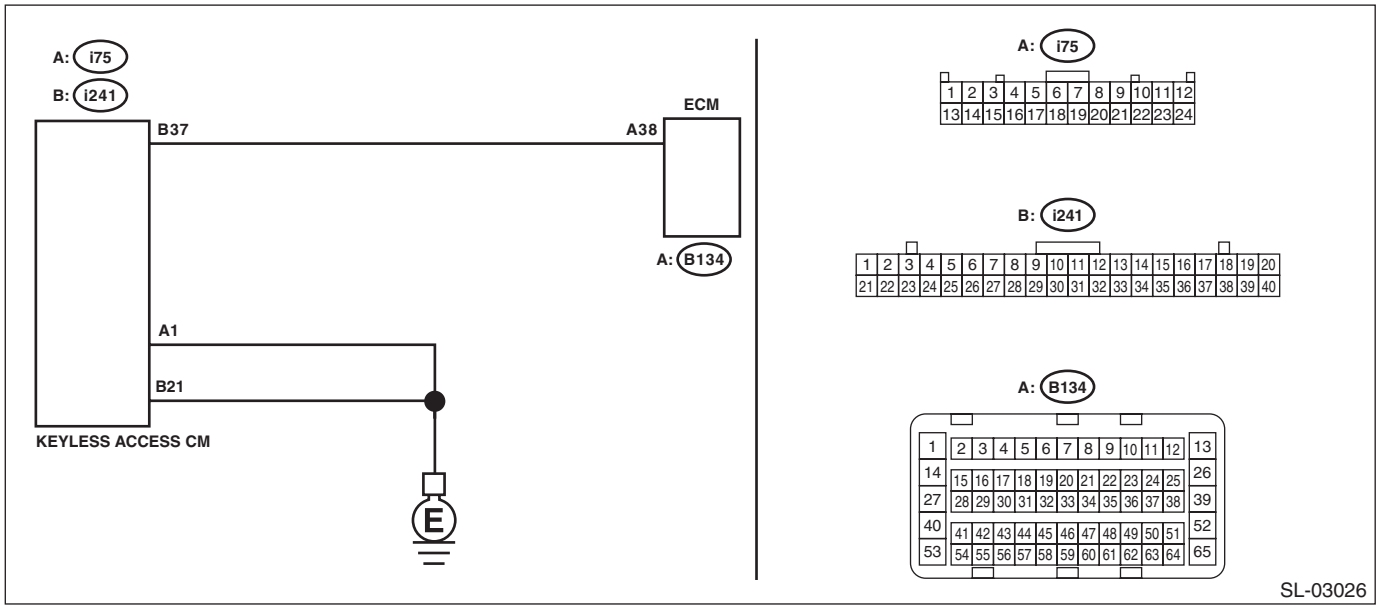

Step		Check	Yes	No
1	**CHECK GROUNDING POINT.** Check the grounding point of the engine ground and chassis ground.	Is there any looseness? Are there any foreign matters caught on the ground or contact surface? Are there any oil-soiled areas?	Remove the foreign matters, and tighten to the specified torque. Then start the engine, and check that the fault was removed. Check DTC <Ref. to KPS(diag)-24, Read Diagnostic Trouble Code (DTC).>, and when DTC B1572 is still displayed, Go to step **2**.	Go to step **2**.

	Step	Check	Yes	No
2	**CHECK CURRENT DATA.** 1) Turn the ignition switch to ON. 2) Check the current data display of «Keyless access with push button start» using Subaru Select Monitor. <Ref. to KPS(diag)-26, Read Current Data.> 3) Display the next data. «Immobilizer» «Engine start» «Unlock confirmation» ***Data*** ***«Immobilizer» = «Unset»:*** ***«Engine start» = «Engine start permission»:*** ***«Unlock confirmation» = «Confirmed»:***	Is the data displayed as described above?	Go to step **3**.	Perform diagnostics with phenomenon. <Ref. to KPS(diag)-138, ENGINE DOES NOT START, INSPECTION, Diagnostics with Phenomenon.>
3	**CHECK CURRENT DATA.** Use the Subaru Select Monitor to check the current data of «Keyless access with push button start» when holding down the push button ignition switch while depressing the brake pedal (except for MT models) or the clutch pedal (MT models). <Ref. to KPS(diag)-26, Read Current Data.> ***Data*** ***«EGI code reception status» = «Reception»:*** NOTE: If «Reception» is displayed, the status changes to «Not yet received» in 10 seconds. When performing the check again, perform the check after turning the ignition to OFF.	Is the data displayed as described above?	Go to step **4**.	Repair or replace the harness between keyless access CM and ECM.
4	**CHECK WIRING HARNESS.** 1) Turn the ignition switch to OFF. 2) Disconnect the keyless access CM connector and ECM connector. 3) Using a tester, measure the resistance between the keyless access CM connector and ECM. ***Connector & terminal*** ***(i241) No. 37 — (B134) No. 38:***	Is the resistance less than 10 Ω?	Go to step **5**.	Repair or replace the open circuit of harness.
5	**CHECK WIRING HARNESS.** Using a tester, measure the resistance between the keyless access CM connector and chassis ground. ***Connector & terminal*** ***(i75) No. 1 — Chassis ground:*** ***(i241) No. 21 — Chassis ground:***	Is the resistance less than 10 Ω?	Go to step **6**.	Repair or replace the open circuit of harness.
6	**CHECK ECM.** 1) Install the ECM from other normal operating vehicle (with push button start) which use same ECM to the vehicle to be diagnosed. 2) Perform ECM registration. Refer to the “REGISTRATION MANUAL FOR IMMOBILIZER” provided as a separate volume.	Is ECM registration finished? And does the engine start?	Replace the ECM. <Ref. to FU(H4DO)-82, REMOVAL, Engine Control Module (ECM).> <Ref. to FU(H6DO)-83, REMOVAL, Engine Control Module (ECM).> Install the ECM from other vehicle to the original vehicle.	Replace the keyless access CM. <Ref. to SL-102, Keyless Access CM.>

2. FOR C0 AND C5 MODELS

DTC DETECTING CONDITION:
Communication error between ID code box and ECM
TROUBLE SYMPTOM:
Engine will not start.

CAUTION:
For replacement procedure of ID code box and ECM, refer to "REGISTRATION MANUAL FOR IMMOBILIZER" provided as a separate volume.
WIRING DIAGRAM:

NOTE:
For the coupling connector, refer to "WIRING SYSTEM".
Keyless access with push button start system <Ref. to WI-260, WIRING DIAGRAM, Keyless Access With Push Button Start System.>

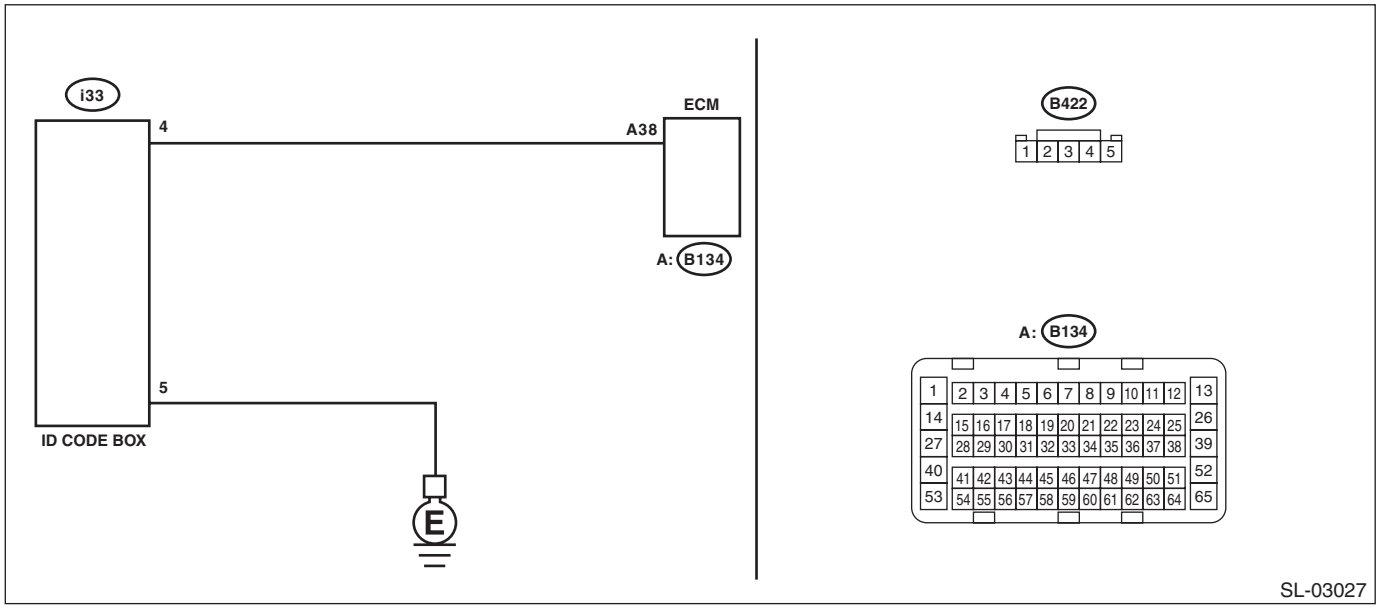

Step		Check	Yes	No
1	**CHECK GROUNDING POINT.** Check the grounding point of the engine ground and chassis ground.	Is there any looseness? Are there any foreign matters caught on the ground or contact surface? Are there any oil-soiled areas?	Remove the foreign matters, and tighten to the specified torque. Then start the engine, and check that the fault was removed. Check DTC <Ref. to KPS(diag)-24, Read Diagnostic Trouble Code (DTC).>, and when DTC B1572 is still displayed, Go to step **2**.	Go to step **2**.

	Step	Check	Yes	No
2	**CHECK CURRENT DATA.** 1) Turn the ignition switch to ON. 2) Check the current data display of «Keyless access with push button start» using Subaru Select Monitor. <Ref. to KPS(diag)-26, Read Current Data.> 3) Display the next data. «Immobilizer» «Engine start» «Unlock confirmation» ***Data*** ***«Immobilizer» = «Unset»:*** ***«Engine start» = «Engine start permission»:*** ***«Unlock confirmation» = «Confirmed»:***	Is the data displayed as described above?	Go to step **3**.	Perform diagnostics with phenomenon. <Ref. to KPS(diag)-138, ENGINE DOES NOT START, INSPECTION, Diagnostics with Phenomenon.>
3	**CHECK CURRENT DATA.** Use the Subaru Select Monitor to check the current data of «Keyless access with push button start» when holding down the push button ignition switch while depressing the brake pedal (except for MT models) or the clutch pedal (MT models). <Ref. to KPS(diag)-26, Read Current Data.> ***Data*** ***«EGI code reception status» = «Reception»:*** NOTE: If «Reception» is displayed, the status changes to «Not yet received» in 10 seconds. When performing the check again, perform the check after turning the ignition to OFF.	Is the data displayed as described above?	Go to step **4**.	Repair or replace the harness between ID code box and ECM.
4	**CHECK WIRING HARNESS.** 1) Turn the ignition switch to OFF. 2) Disconnect the ID code box connector and the ECM connector. 3) Using a tester, measure the resistance between ID code box connector and ECM. ***Connector & terminal*** ***(i33) No. 4 — (B134) No. 38:***	Is the resistance less than 10 Ω?	Go to step **5**.	Repair or replace the open circuit of harness.
5	**CHECK WIRING HARNESS.** Using a tester, measure the resistance between ID code box connector and chassis ground. ***Connector & terminal*** ***(i33) No. 5 — Chassis ground:***	Is the resistance less than 10 Ω?	Go to step **6**.	Repair or replace the open circuit of harness.
6	**CHECK ECM.** 1) Install the ECM from other normal operating vehicle (with push button start) which use same ECM to the vehicle to be diagnosed. 2) Perform ECM registration. Refer to the “REGISTRATION MANUAL FOR IMMOBILIZER” provided as a separate volume.	Is ECM registration finished? And does the engine start?	Replace the ECM. <Ref. to FU(H4DO)-82, REMOVAL, Engine Control Module (ECM).> <Ref. to FU(H6DO)-83, REMOVAL, Engine Control Module (ECM).> Install the ECM from other vehicle to the original vehicle.	Replace the ID code box. <Ref. to SL-103, NOTE, ID Code Box.>

AM:DTC B1576 EGI CONTROL MODULE EEPROM

DTC DETECTING CONDITION:

- ECM malfunctioning
- When the ROM in ECM was inaccessible during registration.

TROUBLE SYMPTOM:

Engine will not start.

CAUTION:

For replacement procedure of ECM, refer to "REGISTRATION MANUAL FOR IMMOBILIZER" provided as a separate volume.

	Step	Check	Yes	No
1	**PERFORM ECM REGISTRATION.** Perform ECM registration. Refer to the "REGISTRATION MANUAL FOR IMMOBILIZER" provided as a separate volume.	Is ECM registration complete?	Make sure that the engine can start. This completes the work.	Go to step **2**.
2	**PERFORM ECM REGISTRATION.** Perform ECM registration. Refer to the "REGISTRATION MANUAL FOR IMMOBILIZER" provided as a separate volume.	Is ECM registration complete?	Make sure that the engine can start. This completes the work.	Go to step **3**.
3	**PERFORM ECM REGISTRATION.** Perform ECM registration. Refer to the "REGISTRATION MANUAL FOR IMMOBILIZER" provided as a separate volume.	Is ECM registration complete?	Make sure that the engine can start. This completes the work.	Replace the ECM. <Ref. to FU(H4DO)-82, REMOVAL, Engine Control Module (ECM).> <Ref. to FU(H6DO)-83, REMOVAL, Engine Control Module (ECM).>

AN:DTC B1577 IMM CONTROL MODULE EEPROM

1. EXCEPT FOR C0 AND C5 MODELS

DTC DETECTING CONDITION:

- Defective keyless access CM
- When inaccessible to ROM in keyless access CM.

TROUBLE SYMPTOM:

Engine will not start.

CAUTION:

For replacement procedure of keyless access CM, refer to the "REGISTRATION MANUAL FOR IMMOBILIZER" provided as a separate volume.

	Step	Check	Yes	No
1	**CHECK DTC.** 1) Turn the ignition switch to ON. 2) Perform the clear memory operation of ECM. <Ref. to EN(H4DO)(diag)-78, Clear Memory Mode.> <Ref. to EN(H6DO)(diag)-85, Clear Memory Mode.> 3) Turn the ignition switch to OFF. 4) Remove and install the battery. 5) Turn the ignition switch to ON. 6) After 5 seconds or more, read DTC. <Ref. to KPS(diag)-24, Read Diagnostic Trouble Code (DTC).>	Is B1577 displayed?	Replace the keyless access CM. <Ref. to SL-102, Keyless Access CM.>	Even if DTC is displayed, the circuit has returned to a normal condition at this time. Reproduce the failure, and then perform the diagnosis again. NOTE: In this case, temporary poor contact of connector, temporary open or short circuit of harness may be the cause.

2. FOR C0 AND C5 MODELS

DTC DETECTING CONDITION:

- ID code box malfunction
- When inaccessible to ROM in ID code box.

TROUBLE SYMPTOM:

Engine will not start.

CAUTION:

For replacement procedure of ID code box, refer to the "REGISTRATION MANUAL FOR IMMOBILIZER" provided as a separate volume.

	Step	Check	Yes	No
1	**CHECK DTC.** 1) Turn the ignition switch to ON. 2) Perform the clear memory operation of ECM. <Ref. to EN(H4DO)(diag)-78, Clear Memory Mode.> <Ref. to EN(H6DO)(diag)-85, Clear Memory Mode.> 3) Turn the ignition switch to OFF. 4) Register the ID code box. Refer to the "REGISTRATION MANUAL FOR IMMOBILIZER" provided as a separate volume. 5) Read the DTC again. <Ref. to KPS(diag)-24, Read Diagnostic Trouble Code (DTC).>	Is B1577 displayed?	Replace the ID code box. <Ref. to SL-103, ID Code Box.>	Even if DTC is displayed, the circuit has returned to a normal condition at this time. Reproduce the failure, and then perform the diagnosis again. NOTE: In this case, temporary poor contact of connector, temporary open or short circuit of harness may be the cause.

15.General Diagnostic Table

A: INSPECTION

1. IMMOBILIZER SYSTEM

Symptoms	Note
Engine does not start	<Ref. to KPS(diag)-138, ENGINE DOES NOT START, INSPECTION, Diagnostics with Phenomenon.>
	<Ref. to KPS(diag)-64, DTC B2784 ANTENNA CIRCUIT (PUSH ENGINE SWITCH), Diagnostic Procedure with Diagnostic Trouble Code (DTC).>
	<Ref. to KPS(diag)-74, DTC B278A PUSH ENGINE SWITCH POWER SUPPLY CIRCUIT, Diagnostic Procedure with Diagnostic Trouble Code (DTC).>
	<Ref. to KPS(diag)-66, DTC B2785 LIN COMMUNICATION, Diagnostic Procedure with Diagnostic Trouble Code (DTC).>
	<Ref. to KPS(diag)-72, DTC B2789 ID CODE BOX COMMUNICATION, Diagnostic Procedure with Diagnostic Trouble Code (DTC).>
	<Ref. to KPS(diag)-78, DTC B2790 ID CODE BOX CIRCUIT, Diagnostic Procedure with Diagnostic Trouble Code (DTC).>
	Check the brake switch (except for MT model). <Ref. to BR-82, INSPECTION, Stop Light Switch.> Check the clutch switch for MT model. <Ref. to CL-32, INSPECTION, Clutch Switch.>
	Check the parking switch signal. <Ref. to CS-54, INSPECTION, AT Shift Lock Solenoid and “P” Range Switch.>
	Check the DTC of the ECM.
Cannot register the immobilizer.	Refer to the “REGISTRATION MANUAL FOR IMMOBILIZER”.
Engine does not start with the remote engine starter.	<Ref. to KPS(diag)-61, DTC B2779 REMOTE CONTROL ENGINE STARTER COLLATION, Diagnostic Procedure with Diagnostic Trouble Code (DTC).>

2. KEYLESS ACCESS SYSTEM

Symptoms	Reference
All doors cannot be locked/unlocked with keyless access.	<Ref. to KPS(diag)-109, KEYLESS ACCESS LOCK/UNLOCK CANNOT BE PERFORMED FROM ANY OF THE DOORS, INSPECTION, Diagnostics with Phenomenon.>
Cannot lock with keyless access from the driver's door.	<Ref. to KPS(diag)-110, CANNOT LOCK WITH KEYLESS ACCESS FROM THE DRIVER'S DOOR, INSPECTION, Diagnostics with Phenomenon.>
Cannot lock/unlock from the driver's door with keyless access.	<Ref. to KPS(diag)-111, CANNOT LOCK/UNLOCK WITH KEYLESS ACCESS FROM THE DRIVER'S DOOR, INSPECTION, Diagnostics with Phenomenon.>
Cannot unlock from the driver's door with keyless access.	<Ref. to KPS(diag)-112, CANNOT UNLOCK WITH KEYLESS ACCESS FROM THE DRIVER'S DOOR, INSPECTION, Diagnostics with Phenomenon.>
Cannot unlock from the passenger's door with keyless access.	<Ref. to KPS(diag)-115, CANNOT UNLOCK WITH KEYLESS ACCESS FROM THE PASSENGER'S DOOR, INSPECTION, Diagnostics with Phenomenon.>
Cannot lock/unlock from the passenger's door with keyless access.	<Ref. to KPS(diag)-114, CANNOT LOCK/UNLOCK WITH KEYLESS ACCESS FROM THE PASSENGER'S DOOR, INSPECTION, Diagnostics with Phenomenon.>
Cannot lock from the passenger's door with keyless access.	<Ref. to KPS(diag)-113, CANNOT LOCK WITH KEYLESS ACCESS FROM THE PASSENGER'S DOOR, INSPECTION, Diagnostics with Phenomenon.>
Keyless access passenger room buzzer does not sound.	<Ref. to KPS(diag)-116, KEYLESS ACCESS PASSENGER ROOM BUZZER DOES NOT SOUND, INSPECTION, Diagnostics with Phenomenon.>
Keyless access external buzzer does not beep.	<Ref. to KPS(diag)-116, KEYLESS ACCESS EXTERNAL BUZZER DOES NOT BEEP, INSPECTION, Diagnostics with Phenomenon.>
Interior collation does not function.	<Ref. to KPS(diag)-118, INTERIOR COLLATION DOES NOT FUNCTION, INSPECTION, Diagnostics with Phenomenon.>
Trunk does not open with the trunk opener button.	<Ref. to KPS(diag)-120, TRUNK WILL NOT OPEN WITH KEYLESS ACCESS, INSPECTION, Diagnostics with Phenomenon.>
Access key lockout protection function in the trunk does not operate.	<Ref. to KPS(diag)-122, ACCESS KEY LOCKOUT PROTECTION FUNCTION IN THE TRUNK DOES NOT OPERATE, INSPECTION, Diagnostics with Phenomenon.>
Rear gate cannot be unlocked with the rear gate opener button.	<Ref. to KPS(diag)-124, REAR GATE CANNOT BE UNLOCKED WITH THE REAR GATE OPENER BUTTON, INSPECTION, Diagnostics with Phenomenon.>
Rear gate can not be locked when using the rear lock button.	<Ref. to KPS(diag)-126, CAN NOT LOCK WHEN USING THE REAR LOCK BUTTON, INSPECTION, Diagnostics with Phenomenon.>

3. STEERING LOCK SYSTEM

Symptoms	Reference
The steering lock cannot be released (Cannot start the engine).	<Ref. to KPS(diag)-128, THE STEERING LOCK IS NOT RELEASED, INSPECTION, Diagnostics with Phenomenon.>
The steering lock does not operate.	<Ref. to KPS(diag)-130, THE STEERING LOCK DOES NOT OPERATE, INSPECTION, Diagnostics with Phenomenon.>

4. POWER SUPPLY SWITCHING SYSTEM

Symptoms	Reference
Power will not turn ON (both accessory and ignition).	<Ref. to KPS(diag)-131, POWER WILL NOT TURN ON (BOTH ACCESSORY AND IGNITION), INSPECTION, Diagnostics with Phenomenon.>
Power will not turn ON (accessory only).	<Ref. to KPS(diag)-134, POWER WILL NOT TURN ON (ACCESSORY DOES NOT TURN ON, BUT IGNITION TURNS ON), INSPECTION, Diagnostics with Phenomenon.>
Power will not turn ON (ignition only).	<Ref. to KPS(diag)-136, POWER WILL NOT TURN ON (ACCESSORY TURNS ON, BUT IGNITION DOES NOT TURN ON), INSPECTION, Diagnostics with Phenomenon.>

16.Diagnostics with Phenomenon

A: INSPECTION

1. KEYLESS ACCESS LOCK/UNLOCK CANNOT BE PERFORMED FROM ANY OF THE DOORS

CAUTION:
- **Check that there are no other registered access keys inside the passenger room.**
- **Check that the access key is not too close to the vehicle.**
- **Inspect LAN system according to the basic diagnostic procedure, and make sure that there is no fault.**
- **Check that the keyless access function is not stopped.**
- **When the access key or keyless access CM is replaced, registration of the immobilizer is required. For the relevant procedures, refer to the "REGISTRATION MANUAL FOR IMMOBILIZER" provided as a separate volume.**

	Step	Check	Yes	No
1	**CHECK OPERATION OF KEYLESS DOOR LOCK.** Using the keyless function of the access key, check the operation of the door lock.	Does it lock/unlock normally?	Check the exterior antenna, touch sensor, lock/unlock button.	Go to step **2**.
2	**CHECK ACCESS KEY.** Check for whether lock and unlock is possible with the registered access key.	Is there any access key which can lock/unlock when the touch sensor is operated?	Check the access key that does not operate. Go to step **3**.	Go to step **4**.
3	**CHECK ACCESS KEY.** Measure the battery voltage of the access key that does not operate.	Is the voltage 2.5 — 3.2 V?	Replace the access key.	Replace the battery.
4	**CHECK DOOR LOCK.** Operate the driver's center door lock switch.	Does the door lock operate?	Go to step **5**.	Check the door lock control system. <Ref. to SL-11, INSPECTION, Door Lock Control System.>
5	**CHECK HARNESS.** 1) Disconnect the keyless access CM connector. 2) Using a tester, measure the voltage between the keyless access CM connector and chassis ground. ***Connector & terminal*** ***(i75) No. 24 (+) — Chassis ground (–):*** ***(i241) No. 40 (+) — Chassis ground (–):***	Is the voltage 10 V or more?	Go to step **6**.	Check the keyless access CM power supply circuit.
6	**CHECK HARNESS.** Using a tester, measure the resistance between the keyless access CM connector and chassis ground. ***Connector & terminal*** ***(i241) No. 21 — Chassis ground:*** ***(i75) No. 1 — Chassis ground:***	Is the resistance less than 10 Ω?	Replace the keyless access CM. <Ref. to SL-102, REMOVAL, Keyless Access CM.>	Repair or replace the open circuit of harness.

2. CANNOT LOCK WITH KEYLESS ACCESS FROM THE DRIVER'S DOOR

CAUTION:
- **Check that there are no other registered access keys inside the passenger room.**
- **Check that the access key is not too close to the vehicle.**
- **Inspect LAN system according to the basic diagnostic procedure, and make sure that there is no fault.**
- **Check that the keyless access function is not stopped.**
- **When the access key or keyless access CM is replaced, registration of the immobilizer is required. For the relevant procedures, refer to the "REGISTRATION MANUAL FOR IMMOBILIZER" provided as a separate volume.**

	Step	Check	Yes	No
1	**CHECK DOOR LOCK SWITCH.** Check that the lock/unlock operates with the driver's door lock switch.	Does it lock/unlock normally?	Go to step **2**.	Check the door lock circuit. <Ref. to SL-11, SYMPTOM CHART, INSPECTION, Door Lock Control System.>
2	**CHECK CURRENT DATA.** 1) Display the current data «Driver's seat lock status SW input» of body integrated unit using Subaru Select Monitor. <Ref. to BC(diag)-20, Read Current Data.> 2) Read the data when locking/unlocking the driver's side lock actuator.	Does the data change from ON/OFF?	Go to step **3**.	Check the door lock switch circuit.
3	**CHECK CURRENT DATA.** 1) Display the current data «Driver's lock touch sensor SW» of «Keyless access with push button start» using Subaru Select Monitor. <Ref. to KPS(diag)-26, Read Current Data.> 2) Read the data when operating the touch sensor (lock) of the door outer handle.	Does the data change from ON/OFF according to the sensor operation?	Replace the keyless access CM. <Ref. to SL-102, Keyless Access CM.>	Go to step **4**.
4	**CHECK HARNESS.** 1) Disconnect the keyless access CM connector. 2) Disconnect the front outer handle connector. 3) Using a tester, measure the resistance between the keyless access CM connector and front outer handle connector. ***Connector & terminal*** ***(i241) No. 26 — (D66) No. 1:***	Is the resistance less than 1 Ω?	Go to step **5**.	Repair or replace the open circuit of harness.
5	**CHECK HARNESS.** Using a tester, measure the resistance between the keyless access CM connector and chassis ground, and between front outer handle connector and chassis ground. ***Connector & terminal*** ***(i241) No. 26 — Chassis ground:*** ***(D66) No. 1 — Chassis ground:***	Is the resistance 10 kΩ or more?	Go to step **6**.	Repair or replace the short circuit of the harness.
6	**REPLACE FRONT DOOR OUTER HANDLE.** Replace the driver's side front outer handle with the passenger's side front outer handle.	Does it operate properly?	Replace the driver's front outer handle. <Ref. to SL-34, REMOVAL, Front Outer Handle.>	Replace the keyless access CM. <Ref. to SL-102, Keyless Access CM.>

3. CANNOT LOCK/UNLOCK WITH KEYLESS ACCESS FROM THE DRIVER'S DOOR

CAUTION:
- **Check that there are no other registered access keys inside the passenger room.**
- **Check that the access key is not too close to the vehicle.**
- **Inspect LAN system according to the basic diagnostic procedure, and make sure that there is no fault.**
- **Check that the keyless access function is not stopped.**
- **When the access key or keyless access CM is replaced, registration of the immobilizer is required. For the relevant procedures, refer to the "REGISTRATION MANUAL FOR IMMOBILIZER" provided as a separate volume.**

	Step	Check	Yes	No
1	**CHECK DOOR LOCK SWITCH.** Check that the lock/unlock operates with the driver's door lock switch.	Does it lock/unlock normally?	Go to step **2**.	Check the door lock circuit. <Ref. to SL-11, SYMPTOM CHART, INSPECTION, Door Lock Control System.>
2	**CHECK FUSE.** Check the fuse. <Ref. to SL-10, INSPECTION, Relay and Fuse.>	Is the fuse OK?	Go to step **3**.	Replace the fuse.
3	**CHECK HARNESS.** 1) Disconnect the keyless access CM connector. 2) Disconnect the front outer handle connector. 3) Using a tester, measure the resistance between the keyless access CM connector and front outer handle connector, and between front outer handle connector and chassis ground. ***Connector & terminal*** ***(i241) No. 5 — (D66) No. 6:*** ***(i241) No. 6 — (D66) No. 3:*** ***(i241) No. 9 — (D66) No. 5:*** ***(D66) No. 2 — Chassis ground:***	Is the resistance less than 1 Ω?	Go to step **4**.	Repair or replace the open circuit of harness.
4	**CHECK HARNESS.** Using a tester, measure the resistance between the keyless access CM connector and chassis ground, and between front outer handle connector and chassis ground. ***Connector & terminal*** ***(i241) No. 5 — Chassis ground:*** ***(i241) No. 6 — Chassis ground:*** ***(D66) No. 6 — Chassis ground:*** ***(D66) No. 3 — Chassis ground:***	Is the resistance 10 kΩ or more?	Go to step **5**.	Repair or replace the short circuit of the harness.
5	**CHECK KEYLESS ACCESS CM.** 1) Connect the keyless access CM connector. 2) Turn the ignition switch to OFF, close all doors and take the access key out of passenger room. 3) Use the Subaru Select Monitor, measure the waveform between the keyless access CM connectors. ***Connector & terminal*** ***(i241) No. 5 — (i241) No. 21:*** ***(i241) No. 6 — (i241) No. 21:***	Does pulse output change from pulse output OFF → pulse output ON by the lock operation using access key?	Go to step **6**.	Replace the keyless access CM. <Ref. to SL-102, Keyless Access CM.>

	Step	Check	Yes	No
6	**REPLACE FRONT DOOR OUTER HANDLE.** Replace the driver's side front outer handle with the passenger's side front outer handle.	Does it operate properly?	Replace the driver's front outer handle. <Ref. to SL-34, Front Outer Handle.>	Replace the keyless access CM. <Ref. to SL-102, Keyless Access CM.>

4. CANNOT UNLOCK WITH KEYLESS ACCESS FROM THE DRIVER'S DOOR

CAUTION:
- **Check that there are no other registered access keys inside the passenger room.**
- **Check that the access key is not too close to the vehicle.**
- **Inspect LAN system according to the basic diagnostic procedure, and make sure that there is no fault.**
- **Check that the keyless access function is not stopped.**
- **When the access key or keyless access CM is replaced, registration of the immobilizer is required. For the relevant procedures, refer to the "REGISTRATION MANUAL FOR IMMOBILIZER" provided as a separate volume.**

	Step	Check	Yes	No
1	**CHECK DOOR LOCK SWITCH.** Check that the lock/unlock operates with the driver's door lock switch.	Does it lock/unlock normally?	Go to step **2**.	Check the door lock circuit. <Ref. to SL-11, SYMPTOM CHART, INSPECTION, Door Lock Control System.>
2	**CHECK CURRENT DATA.** 1) Display the current data «Driver's seat lock status SW input» of body integrated unit using Subaru Select Monitor. <Ref. to BC(diag)-20, Read Current Data.> 2) Read the data when locking/unlocking the driver's side lock actuator.	Does the data change from ON/OFF?	Go to step **3**.	Check the door lock switch circuit.
3	**CHECK CURRENT DATA.** 1) Display the current data «Driver's unlock touch sensor switch» of «Keyless access with push button start» using Subaru Select Monitor. <Ref. to KPS(diag)-26, Read Current Data.> 2) Read the data when operating the touch sensor (unlock) of the door outer handle.	Does the data change from ON/OFF according to the sensor operation?	Replace the keyless access CM. <Ref. to SL-102, Keyless Access CM.>	Go to step **4**.
4	**CHECK HARNESS.** 1) Disconnect the keyless access CM connector. 2) Disconnect the front outer handle connector. 3) Using a tester, measure the resistance between the keyless access CM connector and front outer handle connector. ***Connector & terminal*** ***(i241) No. 29 — (D66) No. 4:***	Is the resistance less than 1 Ω?	Go to step **5**.	Repair or replace the open circuit of harness.
5	**CHECK HARNESS.** Using a tester, measure the resistance between the keyless access CM connector and chassis ground, and between front outer handle connector and chassis ground. ***Connector & terminal*** ***(i241) No. 29 — Chassis ground:*** ***(D66) No. 4 — Chassis ground:***	Is the resistance 10 kΩ or more?	Go to step **6**.	Repair or replace the short circuit of the harness.

	Step	Check	Yes	No
6	**REPLACE FRONT DOOR OUTER HANDLE.** Replace the driver's side front outer handle with the passenger's side front outer handle.	Does it operate properly?	Replace the driver's front outer handle. <Ref. to SL-34, REMOVAL, Front Outer Handle.>	Replace the keyless access CM. <Ref. to SL-102, Keyless Access CM.>

5. CANNOT LOCK WITH KEYLESS ACCESS FROM THE PASSENGER'S DOOR

CAUTION:
• Check that there are no other registered access keys inside the passenger room.
• Check that the access key is not too close to the vehicle.
• Inspect LAN system according to the basic diagnostic procedure, and make sure that there is no fault.
• Check that the keyless access function is not stopped.
• When the access key or keyless access CM is replaced, registration of the immobilizer is required. For the relevant procedures, refer to the "REGISTRATION MANUAL FOR IMMOBILIZER" provided as a separate volume.

	Step	Check	Yes	No
1	**CHECK DOOR LOCK SWITCH.** Check that the lock/unlock operates with the driver's door lock switch.	Does it lock/unlock normally?	Go to step **2**.	Check the door lock circuit. <Ref. to SL-11, SYMPTOM CHART, INSPECTION, Door Lock Control System.>
2	**CHECK CURRENT DATA.** 1) Display the current data «Passenger's seat lock status SW input» of body integrated unit using Subaru Select Monitor. <Ref. to BC(diag)-20, Read Current Data.> 2) Read the data when locking/unlocking the passenger's side lock actuator.	Does the data change from ON/OFF?	Go to step **3**.	Check the door lock switch circuit.
3	**CHECK CURRENT DATA.** 1) Display the current data «Passenger's lock touch sensor SW» of «Keyless access with push button start» using Subaru Select Monitor. <Ref. to KPS(diag)-26, Read Current Data.> 2) Read the data when operating the touch sensor (lock) of the door outer handle.	Does the data change from ON/OFF according to the sensor operation?	Replace the keyless access CM. <Ref. to SL-102, Keyless Access CM.>	Go to step **4**.
4	**CHECK HARNESS.** 1) Disconnect the keyless access CM connector. 2) Disconnect the front outer handle connector. 3) Using a tester, measure the resistance between the keyless access CM connector and front outer handle connector. ***Connector & terminal*** ***(i241) No. 25 — (D56) No. 1:***	Is the resistance less than 1 Ω?	Go to step **5**.	Repair or replace the open circuit of harness.
5	**CHECK HARNESS.** Using a tester, measure the resistance between the keyless access CM connector and chassis ground, and between front outer handle connector and chassis ground. ***Connector & terminal*** ***(i241) No. 25 — Chassis ground:*** ***(D56) No. 1 — Chassis ground:***	Is the resistance 10 kΩ or more?	Go to step **6**.	Repair or replace the short circuit of the harness.

	Step	Check	Yes	No
6	**REPLACE FRONT DOOR OUTER HANDLE.** Replace the passenger's side front outer handle with the driver's side front outer handle.	Does it operate properly?	Replace the passenger's front outer handle. <Ref. to SL-34, REMOVAL, Front Outer Handle.>	Replace the keyless access CM. <Ref. to SL-102, Keyless Access CM.>

6. CANNOT LOCK/UNLOCK WITH KEYLESS ACCESS FROM THE PASSENGER'S DOOR

CAUTION:
• Check that there are no other registered access keys inside the passenger room.
• Check that the access key is not too close to the vehicle.
• Inspect LAN system according to the basic diagnostic procedure, and make sure that there is no fault.
• Check that the keyless access function is not stopped.
• When the access key or keyless access CM is replaced, registration of the immobilizer is required. For the relevant procedures, refer to the "REGISTRATION MANUAL FOR IMMOBILIZER" provided as a separate volume.

	Step	Check	Yes	No
1	**CHECK DOOR LOCK SWITCH.** Check that the lock/unlock operates with the driver's door lock switch.	Does it lock/unlock normally?	Go to step **2**.	Check the door lock circuit. <Ref. to SL-11, SYMPTOM CHART, INSPECTION, Door Lock Control System.>
2	**CHECK FUSE.** Check the fuse. <Ref. to SL-10, INSPECTION, Relay and Fuse.>	Is the fuse OK?	Go to step **3**.	Replace the fuse.
3	**CHECK HARNESS.** 1) Disconnect the keyless access CM connector. 2) Disconnect the front outer handle connector. 3) Using a tester, measure the resistance between the keyless access CM connector and front outer handle connector, and between front outer handle connector and chassis ground. ***Connector & terminal*** ***(i241) No. 4 — (D56) No. 6:*** ***(i241) No. 3 — (D56) No. 3:*** ***(i241) No. 7 — (D56) No. 5:*** ***(D56) No. 2 — Chassis ground:***	Is the resistance less than 1 Ω?	Go to step **4**.	Repair or replace the open circuit of harness.
4	**CHECK HARNESS.** Using a tester, measure the resistance between the keyless access CM connector and chassis ground, and between front outer handle connector and chassis ground. ***Connector & terminal*** ***(i241) No. 3 — Chassis ground:*** ***(i241) No. 4 — Chassis ground:*** ***(D56) No. 3 — Chassis ground:*** ***(D56) No. 6 — Chassis ground:***	Is the resistance 10 kΩ or more?	Go to step **5**.	Repair or replace the short circuit of the harness.

	Step	Check	Yes	No
5	**CHECK KEYLESS ACCESS CM.** 1) Connect the keyless access CM connector. 2) Turn the ignition switch to OFF, close all doors and take the access key out of passenger room. 3) Use the Subaru Select Monitor, measure the waveform between the keyless access CM connectors. ***Connector & terminal*** ***(i241) No. 3 — (i241) No. 21:*** ***(i241) No. 4 — (i241) No. 21:***	Does pulse output change from pulse output OFF → pulse output ON by the lock operation using access key?	Go to step **6**.	Replace the keyless access CM. <Ref. to SL-102, Keyless Access CM.>
6	**REPLACE FRONT DOOR OUTER HANDLE.** Replace the passenger's side front outer handle with the driver's side front outer handle.	Does it operate properly?	Replace the passenger's front outer handle. <Ref. to SL-34, Front Outer Handle.>	Replace the keyless access CM. <Ref. to SL-102, Keyless Access CM.>

7. CANNOT UNLOCK WITH KEYLESS ACCESS FROM THE PASSENGER'S DOOR

CAUTION:
- **Check that there are no other registered access keys inside the passenger room.**
- **Check that the access key is not too close to the vehicle.**
- **Inspect LAN system according to the basic diagnostic procedure, and make sure that there is no fault.**
- **Check that the keyless access function is not stopped.**
- **When the access key or keyless access CM is replaced, registration of the immobilizer is required. For the relevant procedures, refer to the "REGISTRATION MANUAL FOR IMMOBILIZER" provided as a separate volume.**

	Step	Check	Yes	No
1	**CHECK DOOR LOCK SWITCH.** Check that the lock/unlock operates with the driver's door lock switch.	Does it lock/unlock normally?	Go to step **2**.	Check the door lock circuit. <Ref. to SL-11, SYMPTOM CHART, INSPECTION, Door Lock Control System.>
2	**CHECK CURRENT DATA.** 1) Display the current data «Passenger's seat lock status SW input» of body integrated unit using Subaru Select Monitor. <Ref. to BC(diag)-20, Read Current Data.> 2) Read the data when locking/unlocking the passenger's side lock actuator.	Does the data change from ON/OFF?	Go to step **3**.	Check the door lock switch circuit.
3	**CHECK CURRENT DATA.** 1) Display the current data «Passenger's unlock touch sensor switch» of «Keyless access with push button start» using Subaru Select Monitor. <Ref. to KPS(diag)-26, Read Current Data.> 2) Read the data when operating the touch sensor (unlock) of the door outer handle.	Does the data change from ON/OFF according to the sensor operation?	Replace the keyless access CM. <Ref. to SL-102, Keyless Access CM.>	Go to step **4**.

	Step	Check	Yes	No
4	**CHECK HARNESS.** 1) Disconnect the keyless access CM connector. 2) Disconnect the front outer handle connector. 3) Using a tester, measure the resistance between the keyless access CM connector and front outer handle connector. ***Connector & terminal*** ***(i241) No. 28 — (D56) No. 4:***	Is the resistance less than 1 Ω?	Go to step **5**.	Repair or replace the open circuit of harness.
5	**CHECK HARNESS.** Using a tester, measure the resistance between the keyless access CM connector and chassis ground, and between front outer handle connector and chassis ground. ***Connector & terminal*** ***(i241) No. 28 — Chassis ground:*** ***(D56) No. 4 — Chassis ground:***	Is the resistance 10 kΩ or more?	Go to step **6**.	Repair or replace the short circuit of the harness.
6	**REPLACE FRONT DOOR OUTER HANDLE.** Replace the passenger's side front outer handle with the driver's side front outer handle.	Does it operate properly?	Replace the passenger's front outer handle. <Ref. to SL-34, REMOVAL, Front Outer Handle.>	Replace the keyless access CM. <Ref. to SL-102, Keyless Access CM.>

8. KEYLESS ACCESS PASSENGER ROOM BUZZER DOES NOT SOUND

CAUTION:
• Inspect LAN system according to the basic diagnostic procedure, and make sure that there is no fault.
• Check that the keyless access function is not stopped.
• When the access key or keyless access CM is replaced, registration of the immobilizer is required. For the relevant procedures, refer to the "REGISTRATION MANUAL FOR IMMOBILIZER" provided as a separate volume.

	Step	Check	Yes	No
1	**CHECK COMBINATION METER.** Check the combination meter. <Ref. to MET(diag)-2, PROCEDURE, Basic Diagnostic Procedure.>	Is combination meter OK?	Replace the keyless access CM. <Ref. to SL-102, Keyless Access CM.>	Replace the combination meter. <Ref. to IDI-11, REMOVAL, Combination Meter.>

9. KEYLESS ACCESS EXTERNAL BUZZER DOES NOT BEEP

	Step	Check	Yes	No
1	**CHECK BODY INTEGRATED UNIT SETTING.** Using the Subaru Select Monitor, check the «Ans.-back Buzzer» data of body integrated unit. <Ref. to BC(diag)-20, Read Current Data.>	Is the setting "ON"?	Go to step **2**.	Change the setting to "ON".
2	**CHECK BUZZER OPERATION.** Use the Subaru Select Monitor to perform the body integrated unit function check «Keyless Buzzer Output». <Ref. to BC(diag)-36, OPERATION, Function Check.>	Does the buzzer sound?	Go to step **3**.	Go to step **5**.

	Step	Check	Yes	No
3	**CHECK KEYLESS ACCESS SYSTEM.** 1) Turn to IGN OFF. 2) With all doors closed and the access key carried, touch the touch sensor (lock) on the driver's door handle.	Does the door lock?	Go to step **4**.	Refer to "CANNOT LOCK WITH KEYLESS ACCESS FROM THE DRIVER'S DOOR" and perform inspection. <Ref. to KPS(diag)-110, CANNOT LOCK WITH KEYLESS ACCESS FROM THE DRIVER'S DOOR, INSPECTION, Diagnostics with Phenomenon.>
4	**CHECK KEYLESS ACCESS SYSTEM.** 1) Turn to IGN ON. 2) Open the door glass. 3) Turn to IGN OFF. 4) Place the access key on the driver's seat, and close the door. 5) Touch the touch sensor (lock) on the driver's door handle.	Does the buzzer sound? (Lock-out protection warning)	The circuit has returned to a normal condition at this time. Reproduce the failure, and then perform the diagnosis again. NOTE: In this case, temporary poor contact of connector, temporary open or short circuit of harness may be the cause.	Replace the keyless access CM. <Ref. to SL-102, REMOVAL, Keyless Access CM.>
5	**CHECK HARNESS.** 1) Turn to IGN OFF. 2) Disconnect the connectors of the body integrated unit and keyless buzzer. 3) Measure the resistance between body integrated unit connector and keyless buzzer connector. ***Connector & terminal*** ***(B281) No. 10 — (B490) No. 1:***	Is the resistance less than 10 Ω?	Go to step **6**.	Repair or replace the open circuit of harness.
6	**CHECK HARNESS.** Measure the resistance between keyless buzzer connector and chassis ground. ***Connector & terminal*** ***(B490) No. 1 — Chassis ground:***	Is the resistance 10 kΩ or more?	Go to step **7**.	Repair or replace the short circuit of the harness.
7	**CHECK HARNESS.** Measure the resistance between keyless buzzer connector and chassis ground. ***Connector & terminal*** ***(B490) No. 2 — Chassis ground:***	Is the resistance less than 10 Ω?	Go to step **8**.	Repair or replace the open circuit of harness.

	Step	Check	Yes	No
8	**CHECK BODY INTEGRATED UNIT.** 1) Connect the connector of body integrated unit. 2) Use the Subaru Select Monitor to perform the body integrated unit function check «Keyless Buzzer Output». <Ref. to BC(diag)-36, OPERATION, Function Check.> 3) Measure the voltage between body integrated unit connector and chassis ground using an oscilloscope. ***Connector & terminal*** ***(B281) No. 10 (+) — Chassis ground (–):***	Is the frequency 2kHz, voltage 9 V or more?	Replace the keyless buzzer. <Ref. to SL-108, Access Buzzer.>	Replace the body integrated unit. <Ref. to SL-83, Body Integrated Unit.>

10.INTERIOR COLLATION DOES NOT FUNCTION

CAUTION:
When the access key or keyless access CM is replaced, registration of the immobilizer is required. For the relevant procedures, refer to the "REGISTRATION MANUAL FOR IMMOBILIZER" provided as a separate volume.

	Step	Check	Yes	No
1	**CHECK ACCESS KEY.** Check the access key. <Ref. to SL-89, INSPECTION, Access Key.>	Is the battery OK?	Go to step **2**.	Replace the battery.
2	**CHECK POWER SUPPLY CIRCUIT.** 1) Disconnect the keyless access CM connector. 2) Using a tester, measure the voltage between the keyless access CM connector and chassis ground. ***Connector & terminal*** ***(i75) No. 24 (+) — Chassis ground (–):*** ***(i241) No. 40 (+) — Chassis ground (–):***	Is the voltage 9.5 — 16 V?	Go to step **3**.	Check the power supply circuit.
3	**CHECK INTERIOR ANTENNA (FRONT).** 1) Using the Subaru Select Monitor, select System check of «Keyless access with push button start»: «Front interior transmitter + interior tuner». <Ref. to KPS(diag)-35, Keyless Access System Check.> 2) Using a tester, check the output between keyless access CM connector terminals while performing the Keyless access system check. ***Connector & terminal*** ***(i241) No. 1 — No. 2:***	Is a pulse output?	Go to step **4**.	Replace the keyless access CM. <Ref. to SL-102, Keyless Access CM.>
4	**CHECK INTERIOR ANTENNA (CENTER).** 1) Using the Subaru Select Monitor, select System check of «Keyless access with push button start»: «Rear interior transmitter + interior tuner». <Ref. to KPS(diag)-35, Keyless Access System Check.> 2) Using a tester, check the output between keyless access CM connector terminals while performing the Keyless access system check. ***Connector & terminal*** ***(i241) No. 19 — No. 20:***	Is a pulse output?	Go to step **5**.	Replace the keyless access CM. <Ref. to SL-102, Keyless Access CM.>

Step		Check	Yes	No
5	**CHECK INTERIOR ANTENNA (REAR).** 1) Using the Subaru Select Monitor, select System check of «Keyless access with push button start»: «Trunk internal transmitter + interior tuner» or «Rear gate internal transmitter + interior tuner». <Ref. to KPS(diag)-35, Keyless Access System Check.> 2) Using a tester, check the output between keyless access CM connector terminals while performing the Keyless access system check. ***Connector & terminal*** ***(i241) No. 17 — No. 18:***	Is a pulse output?	Go to step **6**.	Replace the keyless access CM. <Ref. to SL-102, Keyless Access CM.>
6	**CHECK WIRING HARNESS.** 1) Disconnect the front interior antenna connector and the keyless access CM connector. 2) Using a tester, check continuity between the front interior antenna connector and the keyless access CM connector. ***Connector & terminal*** ***(i71) No. 1 — (i241) No. 2:*** ***(i71) No. 3 — (i241) No. 1:***	Is there continuity?	Go to step **7**.	Repair or replace the open circuit of harness.
7	**CHECK WIRING HARNESS.** 1) Disconnect the center interior antenna connector and the keyless access CM connector. 2) Using a tester, check continuity between the center interior antenna connector and the keyless access CM connector. ***Connector & terminal*** ***(R298) No. 1 — (i241) No. 20:*** ***(R298) No. 3 — (i241) No. 19:***	Is there continuity?	Go to step **8**.	Repair or replace the open circuit of harness.
8	**CHECK WIRING HARNESS.** 1) Disconnect the rear interior antenna connector and the keyless access CM connector. 2) Using a tester, check continuity between the rear interior antenna connector and the keyless access CM connector. ***Connector & terminal*** ***(R297) No. 1 — (i241) No. 18:*** ***(R297) No. 3 — (i241) No. 17:***	Is there continuity?	Go to step **9**.	Repair or replace the open circuit of harness.
9	**CHECK ANTENNA.** Replace the front interior antenna with a new or properly functioning part.	Does it operate properly?	Replace the front interior antenna. <Ref. to SL-93, REMOVAL, Keyless Access Indoor Antenna.>	Go to step **10**.
10	**CHECK ANTENNA.** Replace the center interior antenna with a new or properly functioning part.	Does it operate properly?	Replace the center interior antenna. <Ref. to SL-93, REMOVAL, Keyless Access Indoor Antenna.>	Go to step **11**.
11	**CHECK ANTENNA.** Replace the rear interior antenna with a new or properly functioning part.	Does it operate properly?	Replace the rear interior antenna. <Ref. to SL-93, REMOVAL, Keyless Access Indoor Antenna.>	Go to step **12**.

	Step	Check	Yes	No
12	**CHECK KEYLESS ACCESS SYSTEM CHECK.** 1) Using the Subaru Select Monitor, select System check of «Keyless access with push button start»: «Front interior transmitter + interior tuner». <Ref. to KPS(diag)-35, Keyless Access System Check.> 2) Hold the access key 1 m or more away from the audio panel, then come closer to within 0.8 m.	Does the buzzer sound?	Go to step **13**.	Replace the keyless access CM. <Ref. to SL-102, Keyless Access CM.>
13	**CHECK KEYLESS ACCESS SYSTEM CHECK.** 1) Using the Subaru Select Monitor, select System check of «Keyless access with push button start»: «Rear interior transmitter + interior tuner». <Ref. to KPS(diag)-35, Keyless Access System Check.> 2) Hold the access key 1 m or more away from the center of the second row seats, then come closer to within 0.8 m.	Does the buzzer sound?	Go to step **14**.	Replace the keyless access CM. <Ref. to SL-102, Keyless Access CM.>
14	**CHECK KEYLESS ACCESS SYSTEM CHECK.** 1) Using the Subaru Select Monitor, select System check of «Keyless access with push button start»: «Trunk internal transmitter + interior tuner» or «R gate internal transmitter - internal tuner». <Ref. to KPS(diag)-35, Keyless Access System Check.> 2) Hold the access key 1 m or more away from the back of the rear seat, then come closer to within 0.8 m.	Does the buzzer sound?	The circuit has returned to a normal condition at this time. Reproduce the failure, and then perform the diagnosis again. NOTE: In this case, temporary poor contact of connector, temporary open or short circuit of harness may be the cause.	Replace the keyless access CM. <Ref. to SL-102, Keyless Access CM.>

11.TRUNK WILL NOT OPEN WITH KEYLESS ACCESS

CAUTION:
• Check that there are no other registered access keys inside the trunk.
• Inspect LAN system according to the basic diagnostic procedure, and make sure that there is no fault.
• Check that the keyless access function is not stopped.
• When the access key or keyless access CM is replaced, registration of the immobilizer is required. For the relevant procedures, refer to the "REGISTRATION MANUAL FOR IMMOBILIZER" provided as a separate volume.

	Step	Check	Yes	No
1	**CHECK TRUNK OPENER BUTTON.** Check that the trunk opens with the driver's seat trunk opener button.	Does it open normally?	Go to step **2**.	Check the door lock circuit. <Ref. to SL-11, SYMPTOM CHART, INSPECTION, Door Lock Control System.>
2	**CHECK KEYLESS OPERATION.** Check that the trunk opens when the trunk opener button of the access key is operated.	Does it open normally?	Go to step **9**.	Go to step **3**.

	Step	Check	Yes	No
3	**CHECK TRUNK UNLOCK OPERATION.** 1) Using the Subaru Select Monitor, select the function check «R gate/trunk UNLK output» of the body integrated unit. <Ref. to BC(diag)-36, Function Check.> 2) Check that the trunk opens when the R gate/trunk UNLK signal is output.	Does it open normally?	Go to step **7**.	Go to step **4**.
4	**CHECK WIRING HARNESS.** 1) Disconnect the body integrated unit connector and trunk lid lock actuator connector. 2) Check the continuity between body integrated unit connector and trunk lid lock actuator connector. ***Connector & terminal*** ***(i266) No. 7 — (R186) No. 1:***	Is there continuity?	Go to step **5**.	Repair or replace the open circuit of harness.
5	**CHECK WIRING HARNESS.** Check the continuity between the trunk lid lock actuator connector and chassis ground. ***Connector & terminal*** ***(R186) No. 2 — Chassis ground:***	Is there continuity?	Go to step **6**.	Repair or replace the open circuit of harness.
6	**CHECK TRUNK LID LOCK ACTUATOR.** Check the trunk lid lock actuator. <Ref. to SL-53, Trunk Lid Latch and Actuator Assembly.>	Is trunk lid actuator normal?	Replace the body integrated unit. <Ref. to SL-83, Body Integrated Unit.>	Replace the trunk lid latch & actuator assembly. <Ref. to SL-53, Trunk Lid Latch and Actuator Assembly.>
7	**CHECK ACCESS KEY.** Check the access key LED when the trunk opener button of the access key is operated.	Does the access key LED illuminate?	Go to step **8**.	Replace the access key. <Ref. to SL-89, REPLACEMENT, Access Key.>
8	**CHECK ACCESS KEY.** 1) Prepare all access keys registered to the vehicle. 2) Check that the trunk opens with each access key.	Does it open normally?	Go to step **9**.	Replace the access key. <Ref. to SL-89, REPLACEMENT, Access Key.>
9	**CHECK CURRENT DATA.** 1) Display the current data «Trunk Request SW» of «Keyless access with push button start» using Subaru Select Monitor. <Ref. to KPS(diag)-26, Read Current Data.> 2) Read the data when pressing the trunk opener button.	Does the data display ON?	Go to step **13**.	Go to step **10**.
10	**CHECK WIRING HARNESS.** 1) Disconnect the trunk opener button connector and the keyless access CM connector. 2) Using a tester, check continuity between the trunk opener button connector and keyless access CM connector. ***Connector & terminal*** ***(R294) No. 2 — (i241) No. 24:***	Is there continuity?	Go to step **11**.	Repair or replace the open circuit of harness.
11	**CHECK WIRING HARNESS.** 1) Using a tester, check the continuity between the trunk opener button connector and chassis ground. ***Connector & terminal*** ***(R294) No. 1 — Chassis ground:***	Is there continuity?	Go to step **12**.	Repair or replace the open circuit of harness.

	Step	Check	Yes	No
12	**CHECK TRUNK OPENER BUTTON.** Using a tester, check the continuity between trunk opener button connector terminals. ***Connector & terminal*** ***(R294) No. 1 — No. 2:***	Is there continuity when pressing the switch?	Go to step **13**.	Replace the trunk opener button. <Ref. to SL-100, Trunk Opener Button.>
13	**CHECK WIRING HARNESS.** 1) Disconnect the exterior rear antenna connector and the keyless access CM connector. 2) Using a tester, check continuity between the exterior rear antenna connector and keyless access CM connector. ***Connector & terminal*** ***(R299) No. 1 — (i241) No. 16:*** ***(R299) No. 3 — (i241) No. 15:***	Is there continuity?	Go to step **14**.	Repair or replace the open circuit of harness.
14	**CHECK OUTSIDE REAR ANTENNA.** Replace the outside rear antenna with new or properly working parts.	Does it operate properly?	Replace the outside rear antenna. <Ref. to SL-97, REMOVAL, Keyless Access Outdoor Antenna.>	Go to step **15**.
15	**CHECK KEYLESS ACCESS SYSTEM CHECK.** 1) Using the Subaru Select Monitor, select System check of «Keyless access with push button start»: «Trunk external transmitter + interior tuner». <Ref. to KPS(diag)-35, Keyless Access System Check.> 2) Hold the access key 1 m or more away from the trunk, then come closer to within 0.8 m.	Does the outside buzzer sound?	The circuit has returned to a normal condition at this time. Reproduce the failure, and then perform the diagnosis again. NOTE: In this case, temporary poor contact of connector, temporary open or short circuit of harness may be the cause.	Replace the keyless access CM. <Ref. to SL-102, Keyless Access CM.>

12.ACCESS KEY LOCKOUT PROTECTION FUNCTION IN THE TRUNK DOES NOT OPERATE

CAUTION:
• Inspect LAN system according to the basic diagnostic procedure, and make sure that there is no fault.
• Check that the keyless access function is not stopped.
• When the access key or keyless access CM is replaced, registration of the immobilizer is required. For the relevant procedures, refer to the "REGISTRATION MANUAL FOR IMMOBILIZER" provided as a separate volume.

	Step	Check	Yes	No
1	**CHECK TRUNK OPENER BUTTON.** Check that the trunk opens with the driver's seat trunk opener button.	Does it open normally?	Go to step **2**.	Check the door lock circuit. <Ref. to SL-11, INSPECTION, Door Lock Control System.>
2	**CHECK KEYLESS OPERATION.** Check that the trunk opens when the trunk opener button of the access key is operated.	Does it open normally?	Go to step **7**.	Go to step **3**.

	Step	Check	Yes	No
3	**CHECK TRUNK UNLOCK OPERATION.** 1) Using the Subaru Select Monitor, select the function check «R gate/trunk UNLK output» of the body integrated unit. <Ref. to BC(diag)-36, Function Check.> 2) Check that the trunk opens when the R gate/trunk UNLK signal is output.	Does it open normally?	Go to step **7**.	Go to step **4**.
4	**CHECK WIRING HARNESS.** 1) Disconnect the body integrated unit connector and trunk lid lock actuator connector. 2) Check the continuity between body integrated unit connector and trunk lid lock actuator connector. ***Connector & terminal*** ***(i266) No. 7 — (R186) No. 1:***	Is there continuity?	Go to step **5**.	Repair or replace the open circuit of harness.
5	**CHECK WIRING HARNESS.** Check the continuity between the trunk lid lock actuator connector and chassis ground. ***Connector & terminal*** ***(R186) No. 2 — Chassis ground:***	Is there continuity?	Go to step **6**.	Repair or replace the open circuit of harness.
6	**CHECK TRUNK LID LOCK ACTUATOR.** Check the trunk lid lock actuator. <Ref. to SL-53, Trunk Lid Latch and Actuator Assembly.>	Is trunk lid lock actuator normal?	Replace the body integrated unit. <Ref. to SL-83, Body Integrated Unit.>	Replace the trunk lid latch & actuator assembly. <Ref. to SL-53, Trunk Lid Latch and Actuator Assembly.>
7	**CHECK ACCESS KEY.** 1) Prepare all access keys registered to the vehicle. 2) Check that the trunk opens with each access key.	Does it open normally?	Go to step **8**.	Replace the access key. <Ref. to SL-89, REPLACEMENT, Access Key.>
8	**CHECK KEYLESS ACCESS SYSTEM CHECK.** 1) Using the Subaru Select Monitor, select System check of «Keyless access with push button start»: «Trunk internal transmitter + interior tuner». <Ref. to KPS(diag)-35, Keyless Access System Check.> 2) Hold the access key 1 m or more away from the center of inside the trunk, then come closer to within 0.8 m.	Does the outside buzzer sound?	Check the circuit of the rear gate/trunk opener button. <Ref. to SL-15, CHECK REAR GATE OPENER BUTTON CIRCUIT, INSPECTION, Door Lock Control System.>	Go to step **9**.
9	**CHECK WIRING HARNESS.** 1) Disconnect the interior rear antenna connector and the keyless access CM connector. 2) Using a tester, check continuity between the interior rear antenna connector and keyless access CM connector. ***Connector & terminal*** ***(R297) No. 1 — (i241) No. 18:*** ***(R297) No. 3 — (i241) No. 17:***	Is there continuity?	Go to step **10**.	Repair or replace the open circuit of harness.
10	**CHECK PASSENGER ROOM REAR ANTENNA.** Replace the passenger room rear antenna with a new or properly functioning part.	Does it operate properly?	Replace the passenger room rear antenna. <Ref. to SL-93, REMOVAL, Keyless Access Indoor Antenna.>	Replace the keyless access CM. <Ref. to SL-102, Keyless Access CM.>

13.REAR GATE CANNOT BE UNLOCKED WITH THE REAR GATE OPENER BUTTON

CAUTION:
• Check that there are no other registered access keys inside the rear gate.
• Inspect LAN system according to the basic diagnostic procedure, and make sure that there is no fault.
• Check that the keyless access function is not stopped.
• When the access key or keyless access CM is replaced, registration of the immobilizer is required. For the relevant procedures, refer to the "REGISTRATION MANUAL FOR IMMOBILIZER" provided as a separate volume.

	Step	Check	Yes	No
1	**CHECK KEYLESS OPERATION.** Check that the rear gate unlocks when the rear gate unlock button of the access key is pressed.	Does it operate properly?	Go to step **6**.	For vehicles without power rear gate Go to step **2**. For vehicles with power rear gate <Ref. to PRG(diag)-53, PRG OPENER BUTTON DOES NOT FUNCTION, INSPECTION, Diagnostics with Phenomenon.>
2	**CHECK REAR GATE UNLOCK OPERATION.** 1) Using the Subaru Select Monitor, select the function check «R gate/trunk UNLK output» of the body integrated unit. <Ref. to BC(diag)-36, Function Check.> 2) Check that the rear gate unlocks when the R gate/trunk UNLK signal is output.	Does it operate properly?	Go to step **6**.	Go to step **3**.
3	**CHECK HARNESS.** 1) Disconnect the body integrated unit connector and rear gate lock actuator connector. 2) Check the continuity between body integrated unit connector and rear gate lock actuator connector. ***Connector & terminal*** ***(i266) No. 7 — (D46) No. 1:***	Is there continuity?	Go to step **4**.	Repair or replace the open circuit of harness.
4	**CHECK HARNESS.** 1) Check the continuity between the rear gate lock actuator connector and chassis ground. ***Connector & terminal*** ***(D46) No. 2 — Chassis ground:***	Is there continuity?	Go to step **5**.	Repair or replace the open circuit of harness.
5	**CHECK REAR GATE LOCK ACTUATOR.** 1) Check the rear gate lock actuator. <Ref. to SL-51, INSPECTION, Rear Gate Latch and Actuator Assembly.>	Is the rear gate lock actuator normal?	Replace the body integrated unit. <Ref. to SL-83, Body Integrated Unit.>	Replace the rear gate latch and actuator assembly. <Ref. to SL-50, Rear Gate Latch and Actuator Assembly.>
6	**CHECK ACCESS KEY.** 1) Prepare all access keys registered to the vehicle. 2) Check that the rear gate lock can be unlocked with each access key.	Does it operate properly?	Go to step **7**.	Replace the access key. <Ref. to SL-89, REPLACEMENT, Access Key.>

Step		Check	Yes	No
7	**CHECK CURRENT DATA.** 1) Display the current data «R Gate Release SW input» of body integrated unit using Subaru Select Monitor. <Ref. to BC(diag)-20, Read Current Data.> 2) Read the data when pressing the rear gate opener button.	Does the data display ON?	Go to step **14**.	Go to step **8**.
8	**CHECK WIRING HARNESS.** 1) Disconnect the rear gate opener button connector and body integrated unit connector. 2) Using a tester, check the continuity between the rear gate opener button connector and body integrated unit connector. ***Connector & terminal*** ***(D77) No. 1 — (i171) No. 6:***	Is there continuity?	Go to step **9**.	Repair or replace the open circuit of harness.
9	**CHECK WIRING HARNESS.** 1) Using a tester, check the continuity between the rear gate opener button connector and chassis ground. ***Connector & terminal*** ***(D77) No. 2 — Chassis ground:***	Is there continuity?	Go to step **10**.	Repair or replace the open circuit of harness.
10	**CHECK REAR GATE OPENER BUTTON.** Using a tester, check the continuity between rear gate opener button switch terminals. ***Connector & terminal*** ***(D77) No. 1 — (D77) No. 2:***	Is there continuity when pressing the switch?	Go to step **11**.	Replace the rear gate opener button. <Ref. to SL-48, REMOVAL, Rear Gate Opener Button.>
11	**CHECK WIRING HARNESS.** 1) Disconnect the exterior rear antenna connector and the keyless access CM connector. 2) Using a tester, check continuity between the exterior rear antenna connector and keyless access CM connector. ***Connector & terminal*** ***(D45) No. 1 — (i241) No. 16:*** ***(D45) No. 3 — (i241) No. 15:***	Is there continuity?	Go to step **12**.	Repair or replace the open circuit of harness.
12	**CHECK OUTSIDE REAR ANTENNA.** Replace the outside rear antenna with new or properly working parts. <Ref. to SL-97, REMOVAL, Keyless Access Outdoor Antenna.>	Does it operate properly?	The outside rear antenna has a failure.	Go to step **13**.
13	**CHECK CURRENT DATA.** 1) Display the current data «R gate lock status SW input» of body integrated unit using Subaru Select Monitor. <Ref. to BC(diag)-20, Read Current Data.> 2) Read the data when locking/unlocking the rear gate lock actuator.	Does the data change from ON ←→ OFF?	Go to step **14**.	Check body integrated unit. <Ref. to SL-84, REMOVAL, Body Integrated Unit.>

	Step	Check	Yes	No
14	**CHECK KEYLESS ACCESS SYSTEM CHECK.** 1) Using the Subaru Select Monitor, select System check of «Keyless access with push button start»: «Rear gate external transmitter + interior tuner». <Ref. to KPS(diag)-35, Keyless Access System Check.> 2) Hold the access key 1 m or more away from the rear gate, then come closer to within 0.8 m.	Does the outside buzzer sound?	The circuit has returned to a normal condition at this time. Reproduce the failure, and then perform the diagnosis again. NOTE: In this case, temporary poor contact of connector, temporary open or short circuit of harness may be the cause.	Replace the keyless access CM. <Ref. to SL-102, REMOVAL, Keyless Access CM.>

14.CAN NOT LOCK WHEN USING THE REAR LOCK BUTTON

CAUTION:
- **Check that there are no other registered access keys inside the vehicle.**
- **Check that the keyless access function is not stopped.**
- **Inspect LAN system or keyless access system according to the basic diagnostic procedure, and make sure that DTC is not input.**
- **When the access key or keyless access CM is replaced, registration of the immobilizer is required. For the relevant procedures, refer to the "REGISTRATION MANUAL FOR IMMOBILIZER" provided as a separate volume.**

	Step	Check	Yes	No
1	**CHECK REAR GATE ACTUATOR.** While carrying the access key, operate the touch sensor (lock) and touch sensor (unlock).	When the switch is operated, does the rear gate lock/unlock?	Go to step **2**.	Go to step **9**.
2	**CHECK REAR LOCK BUTTON.** 1) Display the current data «Rear Gate Request SW» of «Keyless access with push button start» using Subaru Select Monitor. <Ref. to KPS(diag)-26, Read Current Data.> 2) Read the data when operating the rear lock button.	Does the data change between ON/OFF?	Go to step **7**.	Go to step **3**.
3	**CHECK HARNESS.** 1) Disconnect the rear lock button connector and the keyless access CM connector. 2) Using a tester, measure the resistance between harness. ***Connector & terminal*** ***(D77) No. 3 — (i241) No. 24:***	Is the resistance less than 10 Ω?	Go to step **4**.	Repair or replace the open circuit of the harness.
4	**CHECK HARNESS.** Using a tester, measure the resistance between harness and chassis ground. ***Connector & terminal*** ***(D77) No. 3 — Chassis ground:***	Is the resistance 10 MΩ or more?	Go to step **5**.	Repair or replace the short of harness.
5	**CHECK HARNESS.** Using a tester, measure the resistance between harness and chassis ground. ***Connector & terminal*** ***(D77) No. 4 — Chassis ground:***	Is the resistance less than 10 Ω?	Go to step **6**.	Repair or replace the open circuit of the harness.

	Step	Check	Yes	No
6	**CHECK REAR LOCK BUTTON.** Measure the resistance when the rear lock button is operated using the tester. ***Connector & terminal*** ***(D77) No. 3 — No. 4:***	Did the resistance change from 1 MΩ or more to less than 10 Ω?	Replace the keyless access CM. <Ref. to SL-102, REMOVAL, Keyless Access CM.>	Replace the rear lock button. <Ref. to SL-101, REMOVAL, Rear Lock Button.>
7	**CHECK WIRING HARNESS.** 1) Disconnect the exterior rear antenna connector and the keyless access CM connector. 2) Using a tester, check continuity between the exterior rear antenna connector and keyless access CM connector. ***Connector & terminal*** ***(D45) No. 1 — (i241) No. 16:*** ***(D45) No. 3 — (i241) No. 15:***	Is there continuity?	Go to step **8**.	Repair or replace the open circuit of harness.
8	**CHECK OUTSIDE REAR ANTENNA.** Replace the outside rear antenna with new or properly working parts. <Ref. to SL-97, REMOVAL, Keyless Access Outdoor Antenna.>	Does it operate properly?	The outside rear antenna has a failure.	Go to step **9**.
9	**CHECK BODY INTEGRATED UNIT.** 1) Connect the disconnected connectors. 2) Use the Subaru Select Monitor to perform the body integrated unit function check. <Ref. to BC(diag)-36, Function Check.> 3) Actuate the door lock actuator LOCK output.	Does the rear gate lock actuator lock?	It is possible that temporary poor communication occurs.	Go to step **10**.
10	**CHECK HARNESS.** 1) Disconnect the body integrated unit connector and rear gate lock actuator connector. 2) Check the continuity between body integrated unit connector and rear gate lock actuator connector. ***Connector & terminal*** ***(i266) No. 7 — (D46) No. 1:***	Is there continuity?	Go to step **11**.	Repair or replace the open circuit of harness.
11	**CHECK HARNESS.** 1) Check the continuity between the rear gate lock actuator connector and chassis ground. ***Connector & terminal*** ***(D46) No. 2 — Chassis ground:***	Is there continuity?	Go to step **12**.	Repair or replace the open circuit of harness.
12	**CHECK REAR GATE LOCK ACTUATOR.** 1) Check the rear gate lock actuator. <Ref. to SL-51, INSPECTION, Rear Gate Latch and Actuator Assembly.>	Is the rear gate lock actuator normal?	Replace the body integrated unit. <Ref. to SL-83, Body Integrated Unit.>	Replace the rear gate latch and actuator assembly. <Ref. to SL-50, Rear Gate Latch and Actuator Assembly.>

15.THE STEERING LOCK IS NOT RELEASED

CAUTION:
When the steering lock CM is replaced, registration of the immobilizer is required. For the relevant procedures, refer to the "REGISTRATION MANUAL FOR IMMOBILIZER" provided as a separate volume.

	Step	Check	Yes	No
1	**CHECK OPERATION.** 1) Depress the brake pedal. 2) While turning the steering wheel lightly to the left and right, press the push button ignition switch. 3) Confirm that the steering lock is released and the engine start.	Does the engine fail to start with the steering lock released?	Perform the diagnosis for engine system. <Ref. to EN(H4DO)(diag)-83, PROCEDURE, Diagnostics for Engine Starting Failure.> <Ref. to EN(H6DO)(diag)-92, PROCEDURE, Diagnostics for Engine Starting Failure.>	Go to step **2**.
2	**CHECK DTC.** Read DTCs of «keyless access with push button start» using the Subaru Select Monitor. <Ref. to KPS(diag)-24, Read Diagnostic Trouble Code (DTC).>	Is a DTC displayed?	Perform the diagnosis according to the corresponding procedures of DTC.	Go to step **3**.
3	**CHECK CURRENT DATA.** 1) Using the Subaru Select Monitor, display the current data of «Keyless access with push button start»: «Steering lock unlock request reception status» and «Steering lock lock/unlock command reception history». <Ref. to KPS(diag)-26, Read Current Data.> 2) Read the data when the push button ignition switch is pressed while in possession of the access key. (Maintain for 10 seconds after switch operation)	Does the data change from «Not yet received» to «Reception», and from «OFF» to «ON»?	Go to step **4**.	Go to step **7**.
4	**CHECK STEERING LOCK CM.** 1) Disconnect the steering lock CM connector. 2) Using a tester, measure the voltage between the steering lock CM connector and chassis ground. ***Connector & terminal*** ***(i47) No. 7 (+) — Chassis ground (–):***	Is the voltage 10 V or more?	Go to step **5**.	Repair or replace the open circuit of harness.
5	**CHECK STEERING LOCK CM.** Using a tester, check continuity between the steering lock CM connector and chassis ground. ***Connector & terminal*** ***(i47) No. 1 — Chassis ground:***	Is there continuity?	Go to step **6**.	Repair or replace the open circuit of harness.
6	**CHECK STEERING LOCK CM.** 1) Connect the disconnected connectors. 2) Using a tester, measure the voltage between steering lock CM terminals right after the ignition switch is turned to ON. ***Connector & terminal*** ***(i47) No. 3 (+) — (i47) No. 1 (–):***	Does the voltage remain 1 V or less immediately after the ignition ON?	Replace the steering lock CM. <Ref. to SL-104, REMOVAL, Steering Lock CM.>	Repair or replace the open circuit of harness.

	Step	Check	Yes	No
7	**CHECK CURRENT DATA.** Using the Subaru Select Monitor, display the current data of «Keyless access with push button start»: «Code collation result between smart ECM and ID code box». <Ref. to KPS(diag)-26, Read Current Data.>	Is data displayed as being normal?	Go to step **9**.	Go to step **8**.
8	**CHECK CURRENT DATA.** 1) Replace with a properly functioning or new ID code box. <Ref. to SL-103, NOTE, ID Code Box.> 2) Using the Subaru Select Monitor, display the current data of «Keyless access with push button start»: «Code collation result between smart ECM and ID code box». <Ref. to KPS(diag)-26, Read Current Data.>	Is data displayed as being normal?	The circuit has returned to a normal condition at this time. Reproduce the failure, and then perform the diagnosis again. NOTE: In this case, temporary poor contact of connector, temporary open or short circuit of harness may be the cause.	Replace the keyless access CM. <Ref. to SL-102, Keyless Access CM.>
9	**CHECK CURRENT DATA.** Using the Subaru Select Monitor, display the current data of «Keyless access with push button start»: «Code collation result between steering locked ECM and ID code box». <Ref. to KPS(diag)-26, Read Current Data.>	Is data displayed as being normal?	The circuit has returned to a normal condition at this time. Reproduce the failure, and then perform the diagnosis again. NOTE: In this case, temporary poor contact of connector, temporary open or short circuit of harness may be the cause.	Go to step **10**.
10	**CHECK ID CODE BOX.** 1) Replace with a properly functioning or new ID code box. <Ref. to SL-103, NOTE, ID Code Box.> 2) Using the Subaru Select Monitor, display the current data of «Keyless access with push button start»: «Code collation result between steering locked ECM and ID code box». <Ref. to KPS(diag)-26, Read Current Data.>	Is data displayed as being normal?	The circuit has returned to a normal condition at this time. Reproduce the failure, and then perform the diagnosis again. NOTE: In this case, temporary poor contact of connector, temporary open or short circuit of harness may be the cause.	Go to step **11**.

Step		Check	Yes	No
11	**CHECK STEERING LOCK CM.** 1) Replace with a properly functioning or new steering lock CM. <Ref. to SL-104, REMOVAL, Steering Lock CM.> 2) After registering, the steering lock operates when the ignition is turned to OFF and the driver's door is opened and closed. 3) Turn the ignition to ON. 4) Operate the steering and check for whether the steering lock is released.	Is the steering lock released, and does the engine start?	Replace the steering lock CM. <Ref. to SL-104, REMOVAL, Steering Lock CM.>	Replace the keyless access CM. <Ref. to SL-102, Keyless Access CM.>

16.THE STEERING LOCK DOES NOT OPERATE

CAUTION:
When the keyless access CM or steering lock CM is replaced, registration of the immobilizer is required. For the relevant procedures, refer to the "REGISTRATION MANUAL FOR IMMOBILIZER" provided as a separate volume.

Step		Check	Yes	No
1	**CHECK DTC.** Read DTCs of «keyless access with push button start» using the Subaru Select Monitor. <Ref. to KPS(diag)-24, Read Diagnostic Trouble Code (DTC).>	Is a DTC displayed?	Perform the diagnosis according to the corresponding DTC.	Go to step **2**.
2	**CHECK CURRENT DATA.** 1) Display the current data «Driver's door SW input» of body integrated unit using Subaru Select Monitor. <Ref. to BC(diag)-20, Read Current Data.> 2) Read the data when opening and closing the driver's door.	Does the data change from ON to OFF according to the opening and closing?	Go to step **3**.	Inspect door switch circuit.
3	**CHECK CURRENT DATA.** Display the current data «Shift P Signal» of «Keyless access with push button start» using Subaru Select Monitor. <Ref. to KPS(diag)-26, Read Current Data.>	Is the status displayed correctly when the shift lever is shifted from P to other than P?	Go to step **4**.	Check the P range switch and harness.
4	**CHECK CURRENT DATA.** Using the Subaru Select Monitor, display the current data of «Keyless access with push button start»: «Code collation result between smart ECM and ID code box». <Ref. to KPS(diag)-26, Read Current Data.>	Is the status normal?	Go to step **5**.	Replace the keyless access CM. <Ref. to SL-102, REMOVAL, Keyless Access CM.>
5	**CHECK CURRENT DATA.** Using the Subaru Select Monitor, display the current data of «Keyless access with push button start»: «Code collation result between steering locked ECM and ID code box». <Ref. to KPS(diag)-26, Read Current Data.>	Is the status normal?	Go to step **6**.	Replace the steering lock CM. <Ref. to SL-104, REMOVAL, Steering Lock CM.>
6	**CHECK CURRENT DATA.** 1) Display the current data «Steering lock lock/unlock command reception history» of «Keyless access with push button start» using Subaru Select Monitor. <Ref. to KPS(diag)-26, Read Current Data.> 2) While in possession of the access key, perform engine start operations, and read data within 10 seconds after starting.	Is data displayed as ON?	Go to step **7**.	Replace the keyless access CM. <Ref. to SL-102, REMOVAL, Keyless Access CM.>

	Step	Check	Yes	No
7	**CHECK STEERING LOCK CM.** Using a tester, measure the waveform between steering lock CM terminals immediately after the following operations. Perform ignition ON, driver's side door close → shift lever "P" range, ignition OFF, and close → open the driver's side door. ***Connector & terminal*** ***(i47) No. 3 — (i47) No. 1:***	Is the waveform immediately after opening the driver's side door abnormal?	Replace the steering lock CM. <Ref. to SL-104, REMOVAL, Steering Lock CM.>	Go to step **8**.
8	**CHECK WIRING HARNESS.** 1) Disconnect the keyless access CM connector and the steering lock CM connector. 2) Using a tester, check continuity between the keyless access CM connector and steering lock CM connector. ***Connector & terminal*** ***(i47) No. 3 — (i75) No. 9:***	Is there continuity?	Go to step **9**.	Repair or replace the open circuit of harness.
9	**CHECK WIRING HARNESS.** Using a tester, check continuity between the keyless access CM connector and chassis ground. ***Connector & terminal*** ***(i241) No. 21 — Chassis ground:*** ***(i75) No. 1 — Chassis ground:***	Is there continuity?	Replace the keyless access CM. <Ref. to SL-102, REMOVAL, Keyless Access CM.>	Repair or replace the open circuit of harness.

17.POWER WILL NOT TURN ON (BOTH ACCESSORY AND IGNITION)

CAUTION:
• When the keyless access CM is replaced with a new unit, and the battery ground terminal is connected, it will become ignition ON. Also, if the battery is disconnected, it will resume to a condition with the battery cut off.
• When the keyless access CM is replaced, registration of the immobilizer is required. For the relevant procedures, refer to the "REGISTRATION MANUAL FOR IMMOBILIZER" provided as a separate volume.

	Step	Check	Yes	No
1	**CHECK FUSE.** Check the fuse. <Ref. to SL-10, INSPECTION, Relay and Fuse.>	Is the fuse OK?	Go to step **2**.	Replace the fuse.
2	**CHECK POWER SUPPLY.** 1) Remove IG relay 1 (push button start), IG relay 2 (push button start) and accessory relay (push button start). 2) Using a tester, measure the voltage between the relay block connector and chassis ground.	Is the voltage 10 V or more?	Go to step **3**.	Check the DC power supply circuit.
3	**CHECK CONNECTOR.** Check the engagement of each connector and for any deformation or looseness.	Are the connectors and terminals normal?	Go to step **4**.	Repair the connector, or replace harness.
4	**CHECK WIRING HARNESS.** 1) Disconnect the keyless access CM connector. 2) Using a tester, measure the voltage between the keyless access CM connector and chassis ground. ***Connector & terminal*** ***(i75) No. 24 (+) — Chassis ground (–):*** ***(i241) No. 40 (+) — Chassis ground (–):***	Is the voltage between 8 V and 16 V?	Go to step **5**.	Repair or replace the open circuit of harness.

	Step	Check	Yes	No
5	**CHECK WIRING HARNESS.** Using a tester, check continuity between the keyless access CM connector and chassis ground. ***Connector & terminal*** ***(i241) No. 21 — Chassis ground:*** ***(i75) No. 1 — Chassis ground:***	Is there continuity?	Go to step **6**.	Repair or replace the open circuit of harness.
6	**CHECK DTC.** 1) Connect the keyless access CM connector. 2) Carrying the access key, depress the brake pedal (except for MT model) or clutch pedal (MT model), and push the push button ignition switch. 3) Read DTCs of «keyless access with push button start» using the Subaru Select Monitor. <Ref. to KPS(diag)-24, Read Diagnostic Trouble Code (DTC).>	Is a DTC output?	Perform diagnosis according to the DTC.	Go to step **7**.
7	**CHECK CURRENT DATA.** 1) Display the current data «Push start SW 1» and «Push start SW 2» of «Keyless access with push button start» using Subaru Select Monitor. <Ref. to KPS(diag)-26, Read Current Data.> 2) Read the data when pressing the push button ignition switch. <Ref. to KPS(diag)-24, Read Diagnostic Trouble Code (DTC).>	Does it change from OFF to ON along with the operation?	Go to step **8**.	Go to step **13**.
8	**CHECK RELAY (PUSH BUTTON START).** Check IG relay 1 and 2 (push button start), and accessory relay (push button start). <Ref. to SL-9, Relay and Fuse.>	Is each relay normal?	Go to step **9**.	Replace the faulty relay.
9	**CHECK WIRING HARNESS.** 1) Disconnect the keyless access CM connector, IG relay 1 (push button start), IG relay 2 (push button start) and accessory relay (push button start). 2) Using a tester, check continuity between terminals of keyless access CM connector, IG relay 1 (push button start), IG relay 2 (push button start) and accessory relay (push button start). ***Connector & terminal*** ***(i75) No. 12 — (i265) No. 4:*** ***(i75) No. 11 — (i137) No. 12:*** ***(i75) No. 23 — (i137) No. 2:***	Is there continuity?	Go to step **10**.	Repair or replace the open circuit of harness.
10	**CHECK WIRING HARNESS.** Using a tester, check continuity between the keyless access CM connector and chassis ground. ***Connector & terminal*** ***(i75) No. 12 — Chassis ground:*** ***(i75) No. 11 — Chassis ground:*** ***(i75) No. 23 — Chassis ground:***	Is there continuity?	Repair or replace the short circuit of the harness.	Go to step **11**.
11	**CHECK WIRING HARNESS.** Using a tester, check the continuity between F/B connector and chassis ground. ***Connector & terminal*** ***(i136) No. 6 — Chassis ground:***	Is there continuity?	Go to step **12**.	Repair or replace the open circuit of harness.

	Step	Check	Yes	No
12	**CHECK KEYLESS ACCESS CM.** 1) Connect all the disconnected connectors. 2) Using a tester, measure the voltage between the keyless access CM connector and chassis ground when the ignition is turned from OFF to ON. ***Connector & terminal*** ***(i75) No. 12 (+) — Chassis ground (–):*** ***(i75) No. 11 (+) — Chassis ground (–):*** ***(i75) No. 23 (+) — Chassis ground (–):***	Did the voltage change from 1 V or less to +B-2 V or more?	The circuit has returned to a normal condition at this time. Reproduce the failure, and then perform the diagnosis again. NOTE: In this case, temporary poor contact of connector, temporary open or short circuit of harness may be the cause.	Replace the keyless access CM. <Ref. to SL-102, Keyless Access CM.>
13	**CHECK PUSH BUTTON IGNITION SWITCH.** 1) Disconnect the push button ignition switch. 2) Using a tester, check the continuity between terminals. ***Connector & terminal*** ***(i150) No. 7 — No. 5:*** ***(i150) No. 2 — No. 5:***	When the button was pressed, did it change to continuity exists? (No continuity when button is released)	Go to step **14**.	Replace the push button ignition switch. <Ref. to SL-106, REMOVAL, Push Button Ignition Switch.>
14	**CHECK WIRING HARNESS.** Using a tester, check the continuity between the push button ignition switch connector and chassis ground. ***Connector & terminal*** ***(i150) No. 4 — Chassis ground:*** ***(i150) No. 5 — Chassis ground:***	Is there continuity?	Go to step **15**.	Repair or replace the open circuit of harness.
15	**CHECK WIRING HARNESS.** 1) Disconnect the keyless access CM connector. 2) Using a tester, check continuity between the keyless access CM connector and push button ignition switch. ***Connector & terminal*** ***(i150) No. 7 — (i75) No. 4:*** ***(i150) No. 2 — (i75) No. 17:***	Is there continuity?	The circuit has returned to a normal condition at this time. Reproduce the failure, and then perform the diagnosis again. NOTE: In this case, temporary poor contact of connector, temporary open or short circuit of harness may be the cause.	Repair or replace the open circuit of harness.

18.POWER WILL NOT TURN ON (ACCESSORY DOES NOT TURN ON, BUT IGNITION TURNS ON)

CAUTION:

- **When the keyless access CM is replaced with a new unit, and the battery ground terminal is connected, it will become ignition ON. Also, if the battery is disconnected, it will resume to a condition with the battery cut off.**
- **When the keyless access CM is replaced, registration of the immobilizer is required. For the relevant procedures, refer to the "REGISTRATION MANUAL FOR IMMOBILIZER" provided as a separate volume.**

WIRING DIAGRAM:

NOTE:
For the coupling connector, refer to "WIRING SYSTEM".
Keyless access with push button start system <Ref. to WI-260, WIRING DIAGRAM, Keyless Access With Push Button Start System.>

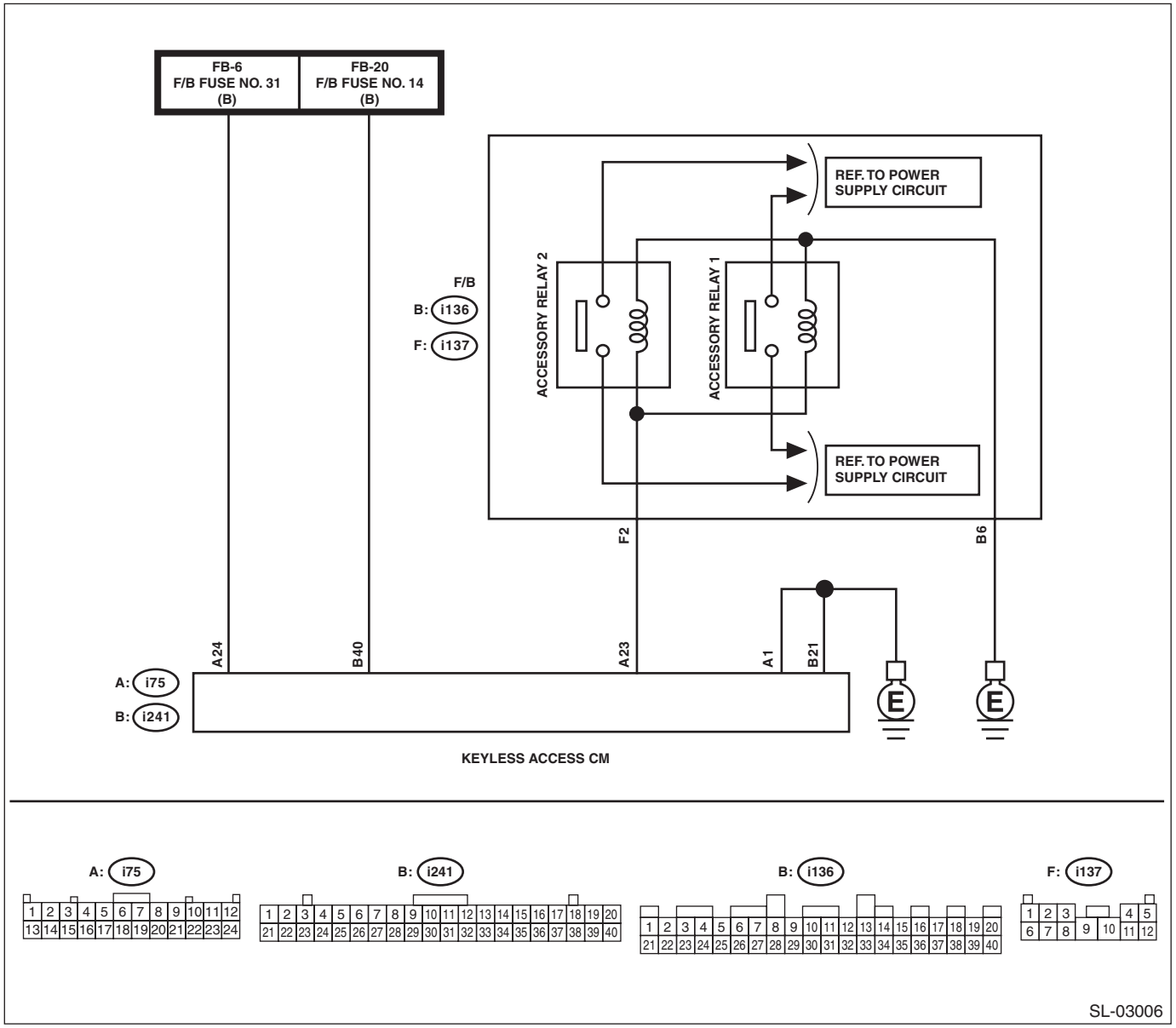

	Step	Check	Yes	No
1	**CHECK FUSE.** Check the fuse. <Ref. to SL-10, INSPECTION, Relay and Fuse.>	Is the fuse OK?	Go to step **2**.	Replace the fuse.
2	**CHECK CONNECTOR.** Check the engagement of each connector and for any deformation or looseness.	Are the connectors and terminals normal?	Go to step **3**.	Repair the connector, or replace harness.
3	**CHECK WIRING HARNESS.** 1) Disconnect the keyless access CM connector. 2) Using a tester, measure the voltage between the keyless access CM connector and chassis ground. ***Connector & terminal*** ***(i75) No. 24 (+) — Chassis ground (–):*** ***(i241) No. 40 (+) — Chassis ground (–):***	Is the voltage between 8 V and 16 V?	Go to step **4**.	Repair or replace the open circuit of harness.
4	**CHECK WIRING HARNESS.** Using a tester, check continuity between the keyless access CM connector and chassis ground. ***Connector & terminal*** ***(i241) No. 21 — Chassis ground:*** ***(i75) No. 1 — Chassis ground:***	Is there continuity?	Go to step **5**.	Repair or replace the open circuit of harness.
5	**CHECK ACCESSORY RELAY (PUSH BUTTON START).** Check the accessory relay (push button start). <Ref. to SL-9, Relay and Fuse.>	Is the relay OK?	Go to step **6**.	Replace the relay.
6	**CHECK WIRING HARNESS.** 1) Disconnect the keyless access CM connector and F/B connector. 2) Using a tester, check continuity between keyless access CM connector and F/B connector. ***Connector & terminal*** ***(i75) No. 23 — (i137) No. 2:***	Is there continuity?	Go to step **7**.	Repair or replace the open circuit of harness.
7	**CHECK WIRING HARNESS.** Using a tester, check continuity between the keyless access CM connector and chassis ground. ***Connector & terminal*** ***(i75) No. 23 — Chassis ground:***	Is there continuity?	Repair or replace the short circuit of the harness.	Go to step **8**.
8	**CHECK KEYLESS ACCESS CM.** 1) Connect the keyless access CM connector. 2) Using a tester, measure the voltage between the keyless access CM connector and chassis ground when the ignition is turned from OFF to ON. ***Connector & terminal*** ***(i75) No. 23 (+) — Chassis ground (–):***	Did the voltage change from 1 V or less → +B-2 V or more?	The circuit has returned to a normal condition at this time. Reproduce the failure, and then perform the diagnosis again. NOTE: In this case, temporary poor contact of connector, temporary open or short circuit of harness may be the cause.	Replace the keyless access CM. <Ref. to SL-102, Keyless Access CM.>

19.POWER WILL NOT TURN ON (ACCESSORY TURNS ON, BUT IGNITION DOES NOT TURN ON)

CAUTION:

- **When the keyless access CM is replaced with a new unit, and the battery ground terminal is connected, it will become ignition ON. Also, if the battery is disconnected, it will resume to a condition with the battery cut off.**
- **When the keyless access CM is replaced, registration of the immobilizer is required. For the relevant procedures, refer to the "REGISTRATION MANUAL FOR IMMOBILIZER" provided as a separate volume.**

WIRING DIAGRAM:

NOTE:
For the coupling connector, refer to "WIRING SYSTEM".
Keyless access with push button start system <Ref. to WI-260, WIRING DIAGRAM, Keyless Access With Push Button Start System.>

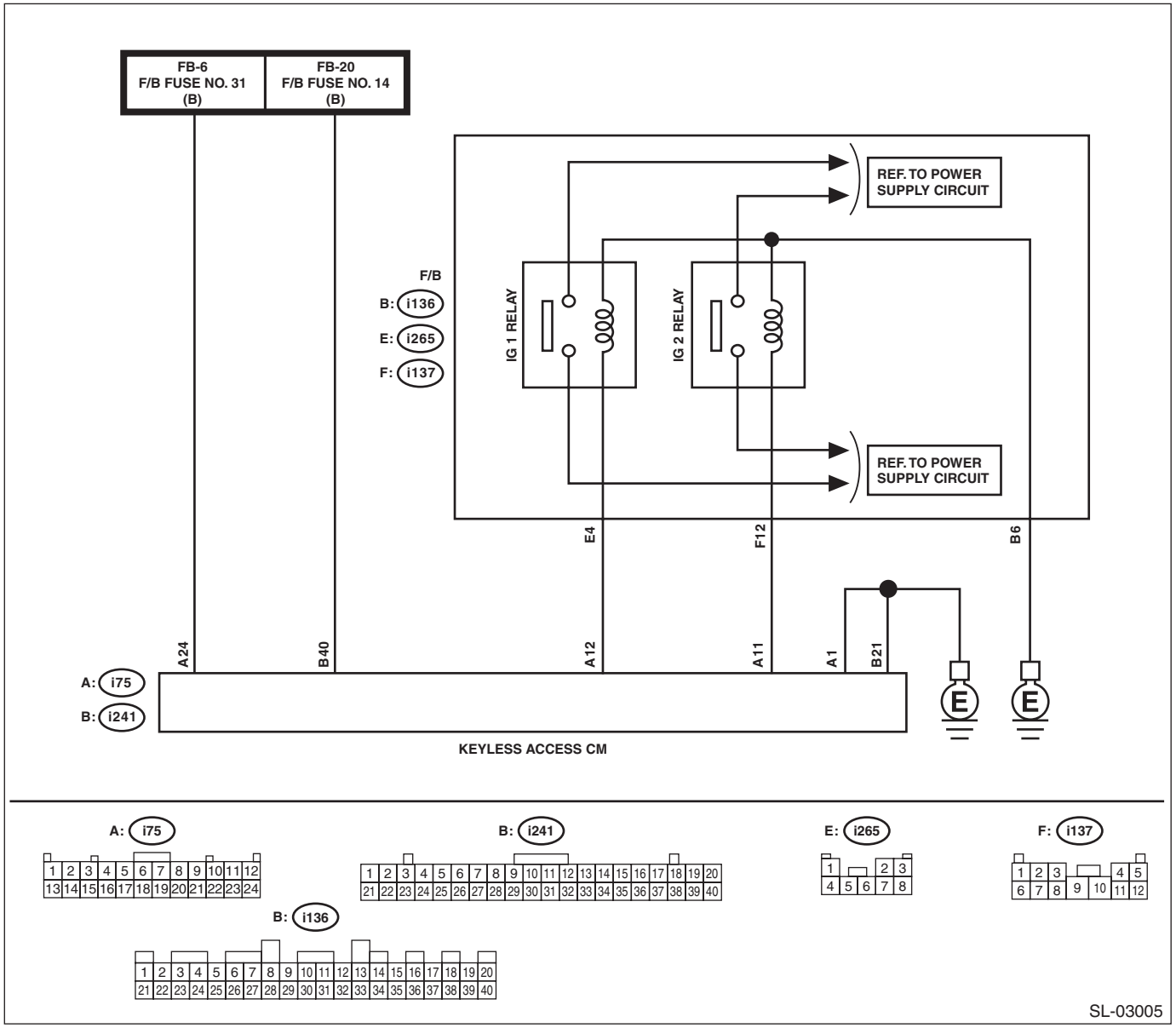

	Step	Check	Yes	No
1	**CHECK FUSE.** Check the fuse. <Ref. to SL-10, INSPECTION, Relay and Fuse.>	Is the fuse OK?	Go to step **2**.	Replace the fuse.
2	**CHECK CONNECTOR.** Check the engagement of each connector and for any deformation or looseness.	Are the connectors and terminals normal?	Go to step **3**.	Repair the connector, or replace harness.
3	**CHECK WIRING HARNESS.** 1) Disconnect the keyless access CM connector. 2) Using a tester, measure the voltage between the keyless access CM connector and chassis ground. ***Connector & terminal*** ***(i75) No. 24 (+) — Chassis ground (–):*** ***(i241) No. 40 (+) — Chassis ground (–):***	Is the voltage between 8 V and 16 V?	Go to step **4**.	Repair or replace the open circuit of harness.
4	**CHECK WIRING HARNESS.** Using a tester, check continuity between the keyless access CM connector and chassis ground. ***Connector & terminal*** ***(i241) No. 21 — Chassis ground:*** ***(i75) No. 1 — Chassis ground:***	Is there continuity?	Go to step **5**.	Repair or replace the open circuit of harness.
5	**CHECK IG RELAY 1 AND 2 (PUSH BUTTON START).** Check IG relay 1 (push button start) and IG relay 2 (push button start). <Ref. to SL-9, Relay and Fuse.>	Is the relay OK?	Go to step **6**.	Replace the relay.
6	**CHECK WIRING HARNESS.** 1) Disconnect the keyless access CM connector and F/B connector. 2) Using a tester, check continuity between keyless access CM connector and F/B connector. ***Connector & terminal*** ***(i75) No. 11 — (i137) No. 12:*** ***(i75) No. 12 — (i265) No. 4:***	Is there continuity?	Go to step **7**.	Repair or replace the open circuit of harness.
7	**CHECK WIRING HARNESS.** Using a tester, check continuity between the keyless access CM connector and chassis ground. ***Connector & terminal*** ***(i75) No. 11 — Chassis ground:*** ***(i75) No. 12 — Chassis ground:***	Is there continuity?	Repair or replace the short circuit of the harness.	Go to step **8**.
8	**CHECK KEYLESS ACCESS CM.** 1) Connect the keyless access CM connector. 2) Using a tester, measure the voltage between the keyless access CM connector and chassis ground when the ignition is turned from OFF to ON. ***Connector & terminal*** ***(i75) No. 11 (+) — Chassis ground (–):*** ***(i75) No. 12 (+) — Chassis ground (–):***	Did the voltage change from 1 V or less → +B-2 V or more?	The circuit has returned to a normal condition at this time. Reproduce the failure, and then perform the diagnosis again. NOTE: In this case, temporary poor contact of connector, temporary open or short circuit of harness may be the cause.	Replace the keyless access CM. <Ref. to SL-102, Keyless Access CM.>

20.ENGINE DOES NOT START

CAUTION:
• When the keyless access CM is replaced with a new unit, and the battery ground terminal is connected, it will become ignition ON. Also, if the battery is disconnected, it will resume to a condition with the battery cut off.
• When the keyless access CM is replaced, registration of the immobilizer is required. For the relevant procedures, refer to the "REGISTRATION MANUAL FOR IMMOBILIZER" provided as a separate volume.

	Step	Check	Yes	No
1	**INITIALIZE STEERING LOCK.** 1) Place the shift lever in the Parking range. 2) Operate the driver's door switch ON/OFF with the ignition switch OFF. 3) Wait for 10 seconds. 4) Place the access key on the driver's seat. 5) Press the push button ignition switch while depressing the brake pedal.	Can the engine start?	The circuit has returned to a normal condition at this time. Reproduce the failure, and then perform the diagnosis again. NOTE: In this case, temporary poor contact of connector, temporary open or short circuit of harness may be the cause.	Go to step **2**.
2	**CHECK DTC.** Read the DTC of «keyless access with push button start» using Subaru Select Monitor. <Ref. to KPS(diag)-24, Read Diagnostic Trouble Code (DTC).>	Is DTC displayed?	Perform the diagnosis according to the DTC. <Ref. to KPS(diag)-37, LIST, List of Diagnostic Trouble Code (DTC).>	Go to step **3**.
3	**CHECK POWER SUPPLY SWITCHING.** 1) Place the access key on the driver's seat. 2) Press the push button ignition switch without depressing the brake pedal.	When the switch is operated, does the <IG-OFF> → <ACC-ON> → <IG-ON> → <IG-OFF> change occur?	Go to step **4**.	Perform the diagnostics according to the symptom for power supply switching system in General Diagnostic Table. <Ref. to KPS(diag)-108, POWER SUPPLY SWITCHING SYSTEM, INSPECTION, General Diagnostic Table.>
4	**CHECK CURRENT DATA.** 1) Place the access key on the driver's seat. 2) Press the push button ignition switch while depressing the brake pedal. 3) Using the Subaru Select Monitor, confirm the keyless access CM, the current data «STSW signal monitor» when pressing the push button ignition switch. <Ref. to KPS(diag)-26, Read Current Data.> NOTE: If it is difficult to confirm, press the push button ignition switch for approximately five seconds longer.	Does the data change from OFF → ON?	Go to step **10**.	Except for MT model: Go to step **5**. MT model: Go to step **7**.

	Step	Check	Yes	No
5	**CHECK CURRENT DATA.** Check the keyless access CM, current data «Shift P Signal» using the Subaru Select Monitor. <Ref. to KPS(diag)-26, Read Current Data.>	Is «ON» displayed in parking position, and «OFF» displayed in other positions?	Go to step **6**.	Go to step **11**.
6	**CHECK CURRENT DATA.** Confirm the keyless access CM, current data «Stop Light Switch» using the Subaru Select Monitor. <Ref. to KPS(diag)-26, Read Current Data.>	Is «ON» displayed when brake pedal depressed, and «OFF» displayed when brake pedal not depressed?	Go to step **7**.	Go to step **13**.
7	**CHECK CURRENT DATA.** Confirm the keyless access CM, current data «Neutral SW/Clutch SW» using the Subaru Select Monitor. <Ref. to KPS(diag)-26, Read Current Data.>	Is «ON» displayed in parking and neutral positions, and «OFF» displayed in other positions?	Go to step **8**.	Go to step **15**.
8	**CHECK STEERING LOCK.** Operate the push button ignition switch to perform the power supply switching and check steering lock condition during ACC-ON condition.	Is the steering lock in unlocked condition?	Go to step **9**.	Perform the diagnostics according to the symptom for steering lock system in General Diagnostic Table. <Ref. to KPS(diag)-108, STEERING LOCK SYSTEM, INSPECTION, General Diagnostic Table.>
9	**CHECK KEYLESS ACCESS CM.** 1) Turn the ignition switch to OFF. 2) Disconnect the ECM connector. 3) Using a tester, measure the battery voltage in following procedures. 1. Press the push button ignition switch with the brake pedal depressed. (Measure within 10 seconds.) 2. Release the push button ignition switch from the condition of step 1. above. ***Connector & terminal*** ***(i241) No. 37 (+) — Chassis ground (–):***	Does the value change from 1 V or less to +B-2 V or more in the step 1, and return to 1 V or less in the step 2?	Perform the diagnosis for engine system. <Ref. to EN(H4DO)(diag)-83, PROCEDURE, Diagnostics for Engine Starting Failure.> <Ref. to EN(H6DO)(diag)-92, PROCEDURE, Diagnostics for Engine Starting Failure.>	Replace the keyless access CM. <Ref. to SL-102, Keyless Access CM.>
10	**CHECK CURRENT DATA.** 1) Connect the disconnected connectors. 2) Confirm the keyless access CM, current data «Engine start permission request reception status» using the Subaru Select Monitor. <Ref. to KPS(diag)-26, Read Current Data.>	Is “Reception” displayed with ignition switch ON, and “Not yet received” displayed in other positions?	Perform the diagnosis for engine system. <Ref. to EN(H4DO)(diag)-83, PROCEDURE, Diagnostics for Engine Starting Failure.> <Ref. to EN(H6DO)(diag)-92, PROCEDURE, Diagnostics for Engine Starting Failure.>	Replace the keyless access CM. <Ref. to SL-102, Keyless Access CM.>

	Step	Check	Yes	No
11	**CHECK "P" RANGE SWITCH.** 1) Turn the ignition switch to OFF. 2) Disconnect the AT shift lever connector. 3) Using a tester, check the continuity of "P" range switch. ***Connector & terminal*** ***(i44) No. 1 — 2:***	Does it change from Continuity ←→ No continuity according to shift lever operation?	Go to step **12**.	Replace the "P" range switch. <Ref. to CS-49, REMOVAL, AT Shift Lock Solenoid and "P" Range Switch.>
12	**CHECK HARNESS.** 1) Turn the ignition switch to OFF. 2) Disconnect the keyless access CM connector. 3) Using a tester, check continuity between the keyless access CM and AT select lever. ***Connector & terminal*** ***(i44) No. 1 — (i75) No. 8:*** ***(i44) No. 2 — Chassis ground:***	Is there continuity?	Replace the keyless access CM. <Ref. to SL-102, Keyless Access CM.>	Repair or replace the harness.
13	**CHECK STOP LIGHT SWITCH.** 1) Turn the ignition switch to OFF. 2) Disconnect the stop light switch connector. 3) Using a tester, check the continuity of the stop light switch. ***Connector & terminal*** ***(B65) No. 1 — No. 2:***	Does it change from Continuity ←→ No continuity according to brake pedal operation?	Go to step **14**.	Replace the stop light switch. <Ref. to BR-81, REMOVAL, Stop Light Switch.>
14	**CHECK HARNESS.** 1) Turn the ignition switch to OFF. 2) Using a tester, check continuity between the keyless access CM and stop light switch. ***Connector & terminal*** ***(i241) No. 31 — (B65) No. 2:*** ***(B65) No. 1 — F/B fuse No. 37:***	Is there continuity?	Replace the keyless access CM. <Ref. to SL-102, Keyless Access CM.>	Repair or replace the harness.
15	**CHECK INHIBITOR SWITCH.** Check the inhibitor switch. <Ref. to CVT(TR690)-102, INSPECTION, Inhibitor Switch.>	Is the inhibitor switch working normal?	Go to step **16**.	Replace the inhibitor switch. <Ref. to CVT(TR690)-107, REMOVAL, Inhibitor Switch.>
16	**CHECK HARNESS.** 1) Turn the ignition switch to OFF. 2) Disconnect the inhibitor switch connector. 3) Using a tester, check continuity between the keyless access CM connector and inhibitor switch connector. ***Connector & terminal*** ***Engine type: FB*** ***(i241) No. 34 — (B12) No. 1:*** ***(B12) No. 5 — Starter motor:*** ***Engine type: EZ*** ***(i241) No. 34 — (B12) No. 12:*** ***(B12) No. 11 — Starter motor:***	Is there continuity?	Replace the keyless access CM. <Ref. to SL-102, Keyless Access CM.>	Repair or replace the harness.

BODY CONTROL SYSTEM (DIAGNOSTICS)

BC(diag)

		Page
1.	Basic Diagnostic Procedure	2
2.	Check List for Interview	3
3.	General Description	6
4.	Electrical Component Location	7
5.	Control Module I/O Signal	8
6.	Subaru Select Monitor	13
7.	Read Diagnostic Trouble Code (DTC)	14
8.	Clear Memory Mode	15
9.	Inspection Mode	16
10.	Read Current Data	20
11.	User Customizing	30
12.	Registration Body Integrated Unit	33
13.	Function Check	36
14.	List of Diagnostic Trouble Code (DTC)	37
15.	Diagnostic Procedure with Diagnostic Trouble Code (DTC)	39
16.	General Diagnostic Table	70

1. Basic Diagnostic Procedure

A: PROCEDURE

CAUTION:
• Subaru Select Monitor is required for reading DTC, performing diagnosis and reading current data.
• Remove foreign matter (dust, water, oil, etc.) from the body integrated unit connector during removal and installation.
• Registration of immobilizer may be needed after the replacement of control modules, etc. For detailed procedure, refer to the "REGISTRATION MANUAL FOR IMMOBILIZER" provided as a separate volume.

NOTE:
• To check harness for open or short circuits, shake the suspected trouble spot or connector.
• Check List for Interview <Ref. to BC(diag)-3, Check List for Interview.>

	Step	Check	Yes	No
1	**CHECK PRE-INSPECTION.** Ask the customer when and how the trouble occurred using the interview check list. <Ref. to BC(diag)-3, Check List for Interview.>	Did you interview the customer?	Go to step **2**.	Interview the customer.
2	**BASIC INSPECTION.** Check components which might affect body control. <Ref. to BC(diag)-6, INSPECTION, General Description.>	Is the component that might influence the body control problem normal?	Go to step **3**.	Repair or replace each component.
3	**CHECK DTC.** 1) Read the DTC. <Ref. to BC(diag)-14, Read Diagnostic Trouble Code (DTC).> NOTE: If the communication function of the Subaru Select Monitor cannot be executed properly, check the communication circuit. <Ref. to LAN(diag)-11, COMMUNICATION FOR INITIALIZING IMPOSSIBLE, Subaru Select Monitor.> 2) Record all DTCs, time stamp and freeze frame data. NOTE: For time stamp, refer to "LAN SYSTEM". <Ref. to LAN(diag)-6, TIME STAMP, CAUTION, General Description.>	Is DTC displayed on Subaru Select Monitor?	Perform diagnosis according to the DTC. <Ref. to BC(diag)-37, List of Diagnostic Trouble Code (DTC).> Go to step **5**.	Go to step **4**.
4	**PERFORM GENERAL DIAGNOSTICS.** Inspect using the "General Diagnostic Table". <Ref. to BC(diag)-70, General Diagnostic Table.>	Is result of inspection OK?	The body control system is normal.	Go to step **5**.
5	**PERFORM DIAGNOSIS.** 1) Perform the Clear Memory Mode. <Ref. to BC(diag)-15, Clear Memory Mode.> 2) Perform the Inspection Mode. <Ref. to BC(diag)-16, Inspection Mode.>	Is DTC displayed on Subaru Select Monitor?	Perform diagnosis according to the DTC. <Ref. to BC(diag)-37, List of Diagnostic Trouble Code (DTC).>	Finish the diagnosis.

2. Check List for Interview

A: CHECK

Inspect the following items regarding the vehicle's state.

Body Control System Check List for Interview		Date of Vehicle Bring-in	Year Month Day
Customer's name		Registration No.	Initial year of registration Year Month Date
		Vehicle model	Frame number
Interviewer	Inspector	Engine type	Odometer reading
Customer specified content			
Date and time when the trouble occurred		Frequency of trouble occurrence	
Condition of trouble occurrence		Weather	
Road conditions		Occurrence location	
Accessory installation condition			
Trouble condition			
❑ Diagnostic code		❑ ( )	

1. CONDITION OF IGNITION POWER SUPPLY

Ignition position	❑ OFF ❑ ACC ❑ ON (before starting engine) ❑ START ❑ ON (after starting engine, engine is running) ❑ ON (after starting engine, engine is at a standstill)
Timing	❑ Immediately after turning the ignition ON. ❑ Immediately after turning the ignition to START.

2. SYMPTOMS

NOTE:
The items vary depending on destinations and equipment.

Vehicle condition	Clearance light does not illuminate.	❑ Yes / ❑ No
	Clearance light indicator does not illuminate.	❑ Yes / ❑ No
	Low beam does not illuminate.	❑ Yes / ❑ No
	High beam does not illuminate.	❑ Yes / ❑ No
	High beam indicator does not illuminate.	❑ Yes / ❑ No
	Front fog light does not illuminate.	❑ Yes / ❑ No
	Front fog light indicator does not illuminate.	❑ Yes / ❑ No
	Key cannot be removed from key cylinder.	❑ Yes / ❑ No
	Key can be removed with the shift in a range other than P.	❑ Yes / ❑ No
	Shift lever can not be operated.	❑ Yes / ❑ No
	Shift lock does not operate.	❑ Yes / ❑ No
	Warning buzzer for key left in ignition does not beep.	❑ Yes / ❑ No
	Immobilizer indicator does not illuminate.	❑ Yes / ❑ No
	Wiper deicer does not operate.	❑ Yes / ❑ No
	Rear defogger does not operate.	❑ Yes / ❑ No
	Combination meter does not dim when headlights are ON.	❑ Yes / ❑ No
	Rear wiper does not operate.	❑ Yes / ❑ No
	Doors can not be locked/unlocked with central door lock switch.	❑ Yes / ❑ No
	Doors and rear gate can not be locked/unlocked with keyless entry system or keyless access.	❑ Yes / ❑ No
	Trunk can not be opened with keyless entry system or keyless access.	❑ Yes / ❑ No
	Rear gate can not be opened when rear gate opener button is pressed.	❑ Yes / ❑ No
	Hazard answer-back does not operate.	❑ Yes / ❑ No
	Ignition key illumination does not light.	❑ Yes / ❑ No
	Ignition key illumination blinks.	❑ Yes / ❑ No
	Room light does not operate in accordance with door open/close operations.	❑ Yes / ❑ No
	Room light blinks.	❑ Yes / ❑ No
	Map light does not operate in accordance with door open/close operations.	❑ Yes / ❑ No
	Map light blinks.	❑ Yes / ❑ No
	Luggage/trunk room light does not operate in accordance with rear gate/ trunk open/close operations.	❑ Yes / ❑ No
	Luggage/trunk room light is blinking.	❑ Yes / ❑ No
	Security monitoring does not start	❑ Yes / ❑ No
	Security cannot be cancelled	❑ Yes / ❑ No
	Hazard does not blink during security monitoring	❑ Yes / ❑ No
	Horn does not sound during security monitoring	❑ Yes / ❑ No
	Alarm operates as soon as security monitor condition occurs.	❑ Yes / ❑ No
	Security alarm does not operate even when impact is applied (model with impact sensor).	❑ Yes / ❑ No
	Engine does not start.	❑ Yes / ❑ No

3. CONDITIONS UNDER WHICH TROUBLE OCCURS

Driving condition	❑ At standstill (while idling) ❑ When the vehicle is running Vehicle speed km/h (MPH) ❑ While accelerating Acceleration km/h (MPH) to km/h (MPH) ❑ Decelerating (with braking) Deceleration km/h (MPH) to km/h (MPH) ❑ Decelerating (without braking) Deceleration km/h (MPH) to km/h (MPH)
	❑ Flat road ❑ Uphill ❑ Downhill ❑ Gravel road ❑ Bumpy road ❑ Snowy road
	Does it occur when operating any part? Operated part: TROUBLE SYMPTOM:
	Are there any other troubles occurred? From where: TROUBLE SYMPTOM:

3. General Description

A: CAUTION

1. SRS AIRBAG SYSTEM

Airbag system wiring harness is routed near the body integrated unit and body control circuits.

CAUTION:
- **Do not use the electrical test equipment on all airbag system wiring harnesses and connectors.**
- **Be careful not to damage the airbag system wiring harness, when servicing the body control system.**

B: INSPECTION

Before performing diagnosis, check the following items which might affect body control system problems.
1) Check the battery. <Ref. to SC(H4DO)-65, INSPECTION, Battery.> <Ref. to SC(H6DO)-59, INSPECTION, Battery.>
2) Check the fuse condition. <Ref. to SL-9, Relay and Fuse.>
Make sure that ampere of the fuse is setting value, and it is not blown out.
3) Check the connecting condition of harness and harness connector.
4) Confirm settings of body integrated unit are corresponded to vehicle equipment. <Ref. to BC(diag)-33, OPERATION, Registration Body Integrated Unit.>
5) Make sure that the User Customizing of the body integrated unit matches the vehicle equipment. <Ref. to BC(diag)-30, OPERATION, User Customizing.>
6) Confirm “Factory initial setting” of body integrated unit registrations is “Market”.

C: PREPARATION TOOL

1. SPECIAL TOOL

ILLUSTRATION	TOOL NUMBER	DESCRIPTION	REMARKS
 STSSM4	— (Newly adopted tool)	SUBARU SELECT MONITOR 4	Used for setting of each function and trouble-shooting for electrical system. NOTE: For detailed operation procedures of Subaru Select Monitor 4, refer to “Application help”.

2. GENERAL TOOL

TOOL NAME	REMARKS
Circuit tester	Used for measuring resistance, voltage and current.
DST-i	Used together with Subaru Select Monitor 4.

4. Electrical Component Location

A: LOCATION

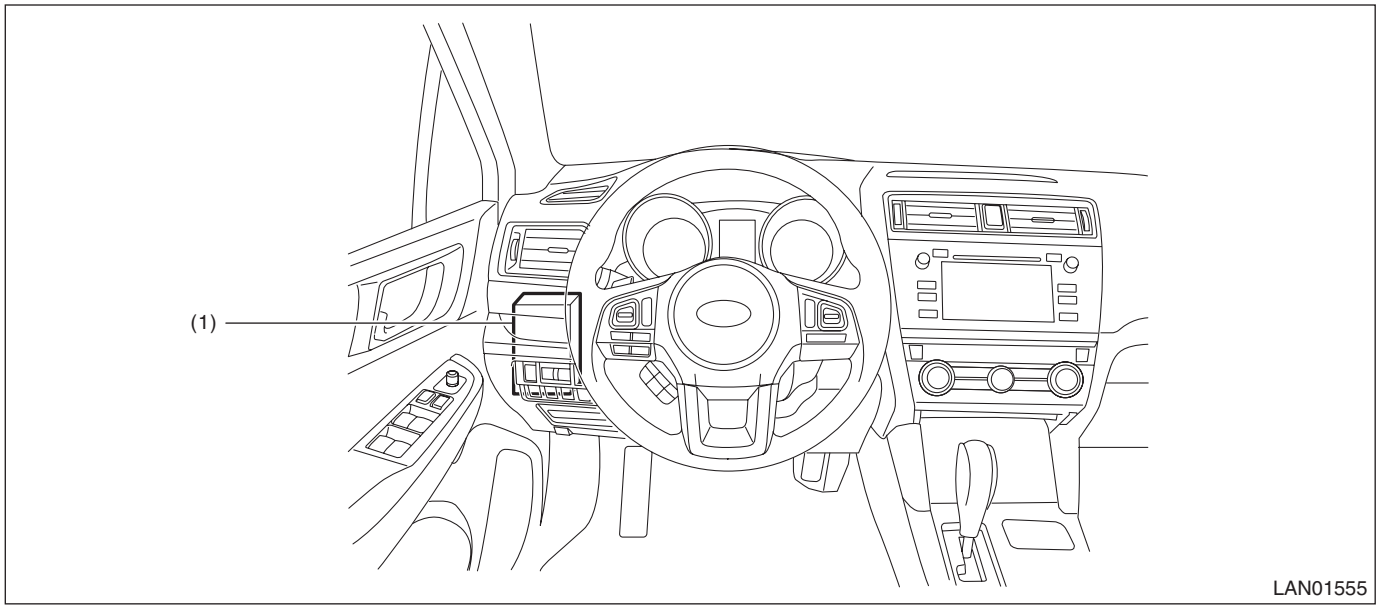

(1) Body integrated unit

5. Control Module I/O Signal

A: ELECTRICAL SPECIFICATION

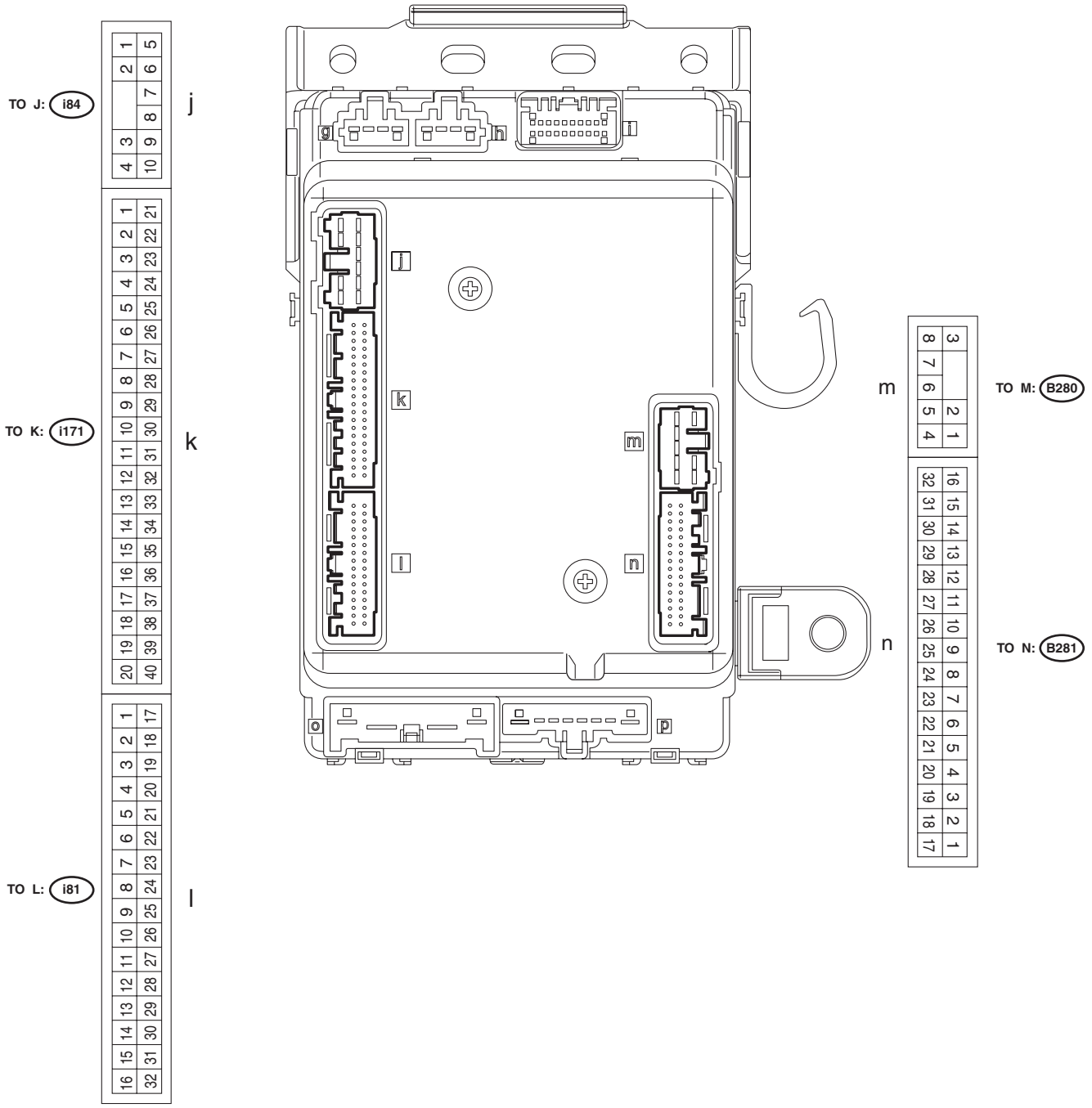

LAN01554

Terminal No.	Content	Measuring condition	Standard
(i84) No. 1 ←→ Chassis ground	Turn output (left rear side)	Left turn signal OFF → ON	Less than 1 V → 9 — 16 V
(i84) No. 2	—	—	—
(i84) No. 3 ←→ Chassis ground	Shift lock solenoid output (CVT model)	• IG ON • Shift lever P range • Stop light switch ON (brake pedal depressed)	9 — 16 V
		• IG ON • Shift lever P range • Stop light switch OFF (brake pedal not depressed)	Less than 1 V
(i84) No. 4 ←→ Chassis ground	GND	Always	Less than 1 Ω
(i84) No. 5 ←→ Chassis ground	Turn output (right rear side)	Right turn signal OFF → ON	Less than 1 V → 9 — 16 V
(i84) No. 6 ←→ Chassis ground	Door lock (driver's seat unlock)	When UNLOCK signal is output	Less than 1 V → 9 — 16 V
(i84) No. 7	—	—	—
(i84) No. 8 ←→ Chassis ground	Luggage/trunk light output	Luggage/trunk light OFF → ON	Less than 1 V → 9 — 16 V
(i84) No. 9 ←→ Chassis ground	Room light output	Room light OFF → ON	Less than 1 V → 9 — 16 V
(i84) No. 10 ←→ Chassis ground	ACC (model with keyless access with push button start system)	ACC OFF → ON	Less than 1 V → 9 — 16 V
	Key-in switch (model without keyless access with push button start system)	Ignition key not inserted → inserted	Less than 1 V → 9 — 16 V
(i171) No. 1	—	—	—
(i171) No. 2	Main system CAN (L)	—	Communication line
(i171) No. 3 ←→ (i171) No. 4	Immobilizer antenna (B)	When ignition key inserted	Pulse generation
(i171) No. 4 ←→ Chassis ground	Immobilizer antenna amplifier GND	Always	Less than 1 Ω
(i171) No. 5	—	—	—
(i171) No. 6 ←→ Chassis ground	Opener switch (rear gate/trunk)	Rear gate/trunk opener switch ON	9 — 16 V → less than 1 V
(i171) No. 7 ←→ (i171) No. 8	—	—	—
(i171) No. 8 ←→ Chassis ground	Illumination sensor GND	Always	Less than 1 Ω
(i171) No. 9 ←→ Chassis ground	Key ring illumination (LED drive)	Key ring OFF → ON	Less than 1 V → 9 — 16 V
(i171) No. 10 ←→ Chassis ground	Map light output	Map light OFF → ON	Less than 1 V → 9 — 16 V
(i171) No. 11	—	—	—
(i171) No. 12 ←→ Chassis ground	Manual switch (unlock)	Door unlock switch OFF → ON	9 — 16 V → less than 1 V
(i171) No. 13 ←→ Chassis ground	Door switch (passenger's seat)	Passenger's door closed → open	9 — 16 V → less than 1 V
(i171) No. 14 ←→ Chassis ground	Door switch (rear seat LH)	Rear seat LH door closed → open	9 — 16 V → less than 1 V
(i171) No. 15 ←→ Chassis ground	Door switch (rear gate/trunk)	Rear gate/trunk closed → open	9 — 16 V → less than 1 V
(i171) No. 16 ←→ Chassis ground	Dimmer Hi switch	Dimmer switch Hi beam OFF → ON	9 — 16 V → less than 1 V
(i171) No. 17	—	—	—
(i171) No. 18 ←→ Chassis ground	Turn signal right	Left turn signal OFF → ON	Less than 1 V → 9 — 16 V
(i171) No. 19 ←→ Chassis ground	Lighting II switch (redundant circuit)	Lighting switch 2 OFF → ON	9 — 16 V → less than 1 V

Terminal No.	Content	Measuring condition	Standard
(i171) No. 20 ←→ Chassis ground	Lighting Lo relay output (redundant circuit)	Lighting switch 2 OFF → ON	9 — 16 V → less than 1 V
(i171) No. 21 ←→ Chassis ground	Power supply for lighting relay (redundant circuit)	ACC OFF → ON (with keyless access with push button start system), or ignition key not inserted → inserted (without keyless access with push button start system)	Less than 1 V → 9 — 16 V
(i171) No. 22	Main system CAN (H)	—	Communication line
(i171) No. 23 ←→ (i171) No. 4	Immobilizer antenna (A)	When ignition key inserted	Pulse generation
(i171) No. 24 ←→ (i171) No. 4	Immobilizer antenna amplifier power supply	Ignition switch ON	4.5 V — 5.5 V
(i171) No. 25 ←→ Chassis ground	P range switch	AT shift lever, other than P range → P range	9 — 16 V → less than 1 V
(i171) No. 26 ←→ Chassis ground	Security light	When security light is illuminating	Pulse generation
(i171) No. 27 ←→ (i171) No. 8	Illumination sensor power supply	Ignition switch OFF → ON	Less than 1 V → 5 V
(i171) No. 28 ←→ (i171) No. 8	Illumination sensor signal	When lighting switch is at AUTO	0 — 5 V
(i171) No. 29 ←→ Chassis ground	Pull cup illumination output	• All doors closed • Lighting switch 1 OFF → ON	Less than 1 V → 9 — 16 V
(i171) No. 30	—	—	—
(i171) No. 31	—	—	—
(i171) No. 32 ←→ Chassis ground	Manual switch (lock)	Door lock switch OFF → ON	9 — 16 V → less than 1 V
(i171) No. 33 ←→ Chassis ground	Door switch (driver's seat)	Driver's door closed → open	9 — 16 V → less than 1 V
(i171) No. 34 ←→ Chassis ground	Door switch (rear seat RH)	Rear seat RH door closed → open	9 — 16 V → less than 1 V
(i171) No. 35 ←→ Chassis ground	Lighting I switch	Lighting switch 1 OFF → ON	9 — 16 V → less than 1 V
(i171) No. 36 ←→ Chassis ground	Dimmer Pass switch	Dimmer switch Pass OFF → ON	9 — 16 V → less than 1 V
(i171) No. 37 ←→ Chassis ground	Turn hazard switch	Turn hazard switch OFF → ON	9 — 16 V → less than 1 V
(i171) No. 38 ←→ Chassis ground	Turn signal left	Turn signal switch left OFF → ON	9 — 16 V → less than 1 V
(i171) No. 39	—	—	—
(i171) No. 40	—	—	—
(i81) No. 1 ←→ Chassis ground	Rear washer switch	Rear washer switch OFF → ON	9 — 16 V → less than 1 V
(i81) No. 2 ←→ Chassis ground	Lighting II switch (control)	Lighting switch 2 OFF → ON	9 — 16 V → less than 1 V
(i81) No. 3 ←→ Chassis ground	Rear wiper switch (INT)	Rear wiper switch INT OFF → ON	9 — 16 V → less than 1 V
(i81) No. 4	—	—	—
(i81) No. 5	—	—	—
(i81) No. 6 ←→ Chassis ground	Door lock status switch passenger's seat	Passenger's door lock → unlock	9 — 16 V → less than 1 V
(i81) No. 7	—	—	—
(i81) No. 8	—	—	—

Terminal No.	Content	Measuring condition	Standard
(i81) No. 9 ←→ Chassis ground	Towing switch	Towing switch OFF → ON	9 — 16 V → less than 1 V
(i81) No. 10	Keyless UART	—	Communication line
(i81) No. 11	—	—	—
(i81) No. 12	Front washer switch	Front washer switch OFF → ON	9 — 16 V → less than 1 V
(i81) No. 13	—	—	—
(i81) No. 14	—	—	—
(i81) No. 15 ←→ Chassis ground	LANE OFF switch	Lane departure warning OFF switch, OFF → ON (when pressed)	9 — 16 V → less than 1 V
(i81) No. 16	—	—	—
(i81) No. 17 ←→ Chassis ground	Front fog light switch	Front fog light switch OFF → ON	9 — 16 V → less than 1 V
(i81) No. 18	LIN	—	Communication line
(i81) No. 19 ←→ Chassis ground	Rear wiper switch (ON)	Rear wiper switch OFF → ON	9 — 16 V → less than 1 V
(i81) No. 20 ←→ Chassis ground	Lighting AUTO switch	Lighting switch AUTO OFF → ON	9 — 16 V → less than 1 V
(i81) No. 21	—	—	—
(i81) No. 22 ←→ Chassis ground	Door lock status switch driver's seat	Driver's door unlock → lock	9 — 16 V → less than 1 V
(i81) No. 23 ←→ Chassis ground	Impact sensor	Impact sensor, impact not applied → impact applied	Less than 1 V → 9 — 16 V
(i81) No. 24	—	—	—
(i81) No. 25	—	—	—
(i81) No. 26	—	—	—
(i81) No. 27	—	—	—
(i81) No. 28	—	—	—
(i81) No. 29	—	—	—
(i81) No. 30 ←→ Chassis ground	P-CR OFF switch	Pre-collision brake OFF switch, OFF → ON (when pressed)	9 — 16 V → less than 1 V
(i81) No. 31	—	—	—
(i81) No. 32	—	—	—
(B280) No. 1 ←→ Chassis ground	Front wiper RTN	Front wiper stop position → in operation	Less than 1 V → 9 — 16 V
(B280) No. 2 ←→ Chassis ground	GND	Always	Less than 1 Ω
(B280) No. 3 ←→ Chassis ground	Turn output (left front)	Left front turn signal OFF → ON	Less than 1 V → 9 — 16 V
(B280) No. 4 ←→ Chassis ground	BAT (shift lock, key lock, turn)	Always	9 — 16 V
(B280) No. 5 ←→ Chassis ground	Key lock solenoid (CVT model without keyless access with push button start system)	• Ignition key inserted • Shift lever, P range → other than P range	Less than 1 V → 9 — 16 V
(B280) No. 6	—	—	—
(B280) No. 7 ←→ Chassis ground	BAT (control)	Always	9 — 16 V
(B280) No. 8 ←→ Chassis ground	Turn output (right front)	Right front turn signal OFF → ON	Less than 1 V → 9 — 16 V
(B281) No. 1	—	—	—
(B281) No. 2	—	—	—
(B281) No. 3 ←→ Chassis ground	Lighting Hi relay output (left)	Dimmer switch Pass OFF → ON	Less than 1 V → 9 — 16 V
(B281) No. 4	—	—	—

Terminal No.	Content	Measuring condition	Standard
(B281) No. 5 ←→ Chassis ground	—	—	—
(B281) No. 6 ←→ Chassis ground	DRL cancel	During DRL on, dimmer switch Pass OFF → ON	9 — 16 V → less than 1 V
(B281) No. 7 ←→ Chassis ground	Lighting 1 relay output	Lighting switch 1 OFF → ON	9 — 16 V → less than 1 V
(B281) No. 8 ←→ Chassis ground	Rear wiper RTN	Rear wiper stop position → in operation	Less than 1 V → 9 — 16 V
(B281) No. 9 ←→ Chassis ground	Lighting Hi relay output (right)	Dimmer switch Pass OFF → ON	Less than 1 V → 9 — 16 V
(B281) No. 10 ←→ Chassis ground	Answer-back buzzer	Answer-back buzzer OFF → ON	Less than 1 V → 9 — 16 V
(B281) No. 11	—	—	—
(B281) No. 12 ←→ Chassis ground	Stop light switch	Brake pedal, not depressed → depressed	Less than 1 V → 9 — 16 V
(B281) No. 13 ←→ Chassis ground	MT reverse switch	MT shift lever, other than reverse → reverse	Less than 1 V → 9 — 16 V
(B281) No. 14 ←→ Chassis ground	EGI immobilizer communication	Always	1 MΩ or more
(B281) No. 15	Body system CAN (L)	—	Communication line
(B281) No. 16	—	—	—
(B281) No. 17	—	—	—
(B281) No. 18 ←→ Chassis ground	Wiper deicer relay output	Rear window defogger switch OFF → ON	9 — 16 V → less than 1 V
(B281) No. 19	—	—	—
(B281) No. 20 ←→ Chassis ground	Security output horn	Security horn, not operating → operating	9 — 16 V → less than 1 V
(B281) No. 21 ←→ Chassis ground	Rear defogger relay output	Rear window defogger switch OFF → ON	9 — 16 V → less than 1 V
(B281) No. 22	—	—	—
(B281) No. 23 ←→ Chassis ground	Lighting Lo relay output (control)	Lighting switch 2 OFF → ON	9 — 16 V → less than 1 V
(B281) No. 24 ←→ Chassis ground	Rear wiper ON	Rear wiper switch, not operating → operating	Less than 1 V → 9 — 16 V
(B281) No. 25 ←→ Chassis ground	Front fog light output	Front fog light switch OFF → ON	9 — 16 V → less than 1 V
(B281) No. 26 ←→ Chassis ground	Power supply for lighting relay (control)	ACC OFF → ON (with keyless access with push button start system), or ignition key not inserted → inserted (without keyless access with push button start system)	Less than 1 V → 9 — 16 V
(B281) No. 27	—	—	—
(B281) No. 28	—	—	—
(B281) No. 29	—	—	—
(B281) No. 30	—	—	—
(B281) No. 31	Body system CAN (H)	—	Communication line
(B281) No. 32 ←→ Chassis ground	BAT (backup)	Always	9 — 16 V

6. Subaru Select Monitor

A: OPERATION

- For detailed operation procedures, refer to “Application help”.
- When communication with Subaru Select Monitor is not possible, perform “COMMUNICATION FOR INITIALIZING IMPOSSIBLE” of LAN system. <Ref. to LAN(diag)-11, COMMUNICATION FOR INITIALIZING IMPOSSIBLE, Subaru Select Monitor.>

7. Read Diagnostic Trouble Code (DTC)

A: OPERATION

1) On «Start» display, select «Diagnosis».
2) On «Vehicle selection» display, input the target vehicle information and select «Confirmed».
3) On «Main Menu» display, select «Each System».
4) On «Select System» display, select «Body Control» and then select «Enter».
5) On «Select Function» display, select «DTC».

NOTE:
- For detailed operation procedures, refer to “Application help”.
- For details concerning DTC, refer to List of Diagnostic Trouble Code (DTC). <Ref. to BC(diag)-37, List of Diagnostic Trouble Code (DTC).>

8. Clear Memory Mode

A: OPERATION

1) On «Start» display, select «Diagnosis».
2) On «Vehicle selection» display, input the target vehicle information and select «Confirmed».
3) On «Main Menu» display, select «Each System».
4) On «Select System» display, select «Body Control» and then select «Enter».
5) On «Select Function» display, select «DTC».
6) On «DTC» display, select «Clear Memory».

NOTE:
For detailed operation procedures, refer to “Application help”.

9. Inspection Mode

A: PROCEDURE

It is possible to diagnose the DTC by performing the indicated inspection mode. After correcting the DTC, perform a necessary inspection mode and make sure that the function is resumed correctly and the DTC is recorded.

1. INSPECTION MODE 1

DTC	Item	Note
B1010	BODY CONTROL SYSTEM (BIU) MALFUNCTION	—
B1011	BATTERY CONTROL POWER SUPPLY	—

Diagnostic procedure:
1) Perform the Clear Memory Mode. <Ref. to BC(diag)-15, Clear Memory Mode.>
2) Read the DTC and check that the DTC is not displayed. <Ref. to BC(diag)-14, Read Diagnostic Trouble Code (DTC).>

NOTE:
If the DTC is displayed on the screen, the trouble is still present. Perform the diagnosis according to DTC. After solving the DTC, repeat from step 1).
3) Disconnect and reconnect the battery, and then wait for one minute or more.
4) Read the DTC and check that the DTC is not displayed. <Ref. to BC(diag)-14, Read Diagnostic Trouble Code (DTC).>

NOTE:
If the DTC is displayed on the screen, the trouble is still present. Perform the diagnosis according to DTC.

2. INSPECTION MODE 2

DTC	Item	Note
B1012	BATTERY BACKUP POWER SUPPLY	—

Diagnostic procedure:
1) Perform the Clear Memory Mode. <Ref. to BC(diag)-15, Clear Memory Mode.>
2) Read the DTC and check that the DTC is not displayed. <Ref. to BC(diag)-14, Read Diagnostic Trouble Code (DTC).>

NOTE:
If the DTC is displayed on the screen, the trouble is still present. Perform the diagnosis according to DTC. After solving the DTC, repeat from step 1).
3) Disconnect and reconnect the back-up fuse, and then wait for one minute or more.
4) Read the DTC and check that the DTC is not displayed. <Ref. to BC(diag)-14, Read Diagnostic Trouble Code (DTC).>

NOTE:
If the DTC is displayed on the screen, the trouble is still present. Perform the diagnosis according to DTC.

3. INSPECTION MODE 3

DTC	Item	Note
B1013	IGNITION POWER	—

Diagnostic procedure:
1) Perform the Clear Memory Mode. <Ref. to BC(diag)-15, Clear Memory Mode.>
2) Read the DTC and check that the DTC is not displayed. <Ref. to BC(diag)-14, Read Diagnostic Trouble Code (DTC).>

NOTE:
If the DTC is displayed on the screen, the trouble is still present. Perform the diagnosis according to DTC. After solving the DTC, repeat from step 1).
3) After the ignition switch is ON, wait for one minute or more.
4) Read the DTC and check that the DTC is not displayed. <Ref. to BC(diag)-14, Read Diagnostic Trouble Code (DTC).>

NOTE:
If the DTC is displayed on the screen, the trouble is still present. Perform the diagnosis according to DTC.

4. INSPECTION MODE 4

DTC	Item	Note
B1014	ACC POWER	—

Diagnostic procedure:
1) Perform the Clear Memory Mode. <Ref. to BC(diag)-15, Clear Memory Mode.>
2) Read the DTC and check that the DTC is not displayed. <Ref. to BC(diag)-14, Read Diagnostic Trouble Code (DTC).>

NOTE:
If the DTC is displayed on the screen, the trouble is still present. Perform the diagnosis according to DTC. After solving the DTC, repeat from step 1).
3) After ACC is ON, wait for one minute or more.
4) Read the DTC and check that the DTC is not displayed. <Ref. to BC(diag)-14, Read Diagnostic Trouble Code (DTC).>

NOTE:
If the DTC is displayed on the screen, the trouble is still present. Perform the diagnosis according to DTC.

5. INSPECTION MODE 5

DTC	Item	Note
B1015	KEY INTERLOCK CIRCUIT	CVT model without keyless access with push button start system

Diagnostic procedure:
1) Perform the Clear Memory Mode. <Ref. to BC(diag)-15, Clear Memory Mode.>
2) Read the DTC and check that the DTC is not displayed. <Ref. to BC(diag)-14, Read Diagnostic Trouble Code (DTC).>

NOTE:
If the DTC is displayed on the screen, the trouble is still present. Perform the diagnosis according to DTC. After solving the DTC, repeat from step 1).
3) After the ignition switch is ON, press the shift knob switch and wait for 10 seconds or more.
4) Read the DTC and check that the DTC is not displayed. <Ref. to BC(diag)-14, Read Diagnostic Trouble Code (DTC).>

NOTE:
If the DTC is displayed on the screen, the trouble is still present. Perform the diagnosis according to DTC.

6. INSPECTION MODE 6

DTC	Item	Note
B1016	SHIFT LOCK CIRCUIT	CVT model

Diagnostic procedure:
1) Perform the Clear Memory Mode. <Ref. to BC(diag)-15, Clear Memory Mode.>
2) Read the DTC and check that the DTC is not displayed. <Ref. to BC(diag)-14, Read Diagnostic Trouble Code (DTC).>

NOTE:
If the DTC is displayed on the screen, the trouble is still present. Perform the diagnosis according to DTC. After solving the DTC, repeat from step 1).
3) After the ignition switch is ON, wait for 10 seconds or more without depressing the brake pedal. Or, after the ignition switch is ON, press the shift knob switch with the brake pedal depressed and wait for 10 seconds or more.
4) Read the DTC and check that the DTC is not displayed. <Ref. to BC(diag)-14, Read Diagnostic Trouble Code (DTC).>

NOTE:
If the DTC is displayed on the screen, the trouble is still present. Perform the diagnosis according to DTC.

7. INSPECTION MODE 7

DTC	Item	Note
B1401	METER COLLATION	Model without keyless access with push button start system / model without immobilizer CM
B1402	IMMOBILIZER KEY COLLATION	Model without keyless access with push button start system / model without immobilizer CM
B1407	MET COMMUNICATION	Model without keyless access with push button start system / model without immobilizer CM
B1408	METER NON-VOLATILE MEMORY	Model without keyless access with push button start system / model without immobilizer CM
B1410	TRANSPONDER COMMUNICATION	Model without keyless access with push button start system / model without immobilizer CM
B1411	IMMOBILIZER ANTENNA	—
U0073	CAN FAILURE, BUS ‘OFF’ DETECTION	—
U0074	CONTROL MODULE COMMUNICATION BUS "BODY-CAN" OFF	—
U0100	LOST COMMUNICATION WITH ECM/PCM "A"	—
U0122	LOST COMMUNICATION WITH VEHICLE DYNAMICS CONTROL MODULE	—
U0128	LOST COMMUNICATION WITH PARK BRAKE CONTROL MODULE	—
U0131	LOST COMMUNICATION WITH POWER STEERING CONTROL MODULE	—
U0151	LOST COMMUNICATION WITH RESTRAINTS CONTROL MODULE	—
U0155	LOST COMMUNICATION WITH INSTRUMENT PANEL CLUSTER (IPC) CONTROL MODULE	—
U0167	LOST COMMUNICATION WITH IMMOBILIZER CONTROL MODULE	Model without keyless access with push button start system / model without immobilizer CM
U0327	SOFTWARE INCOMPATIBILITY WITH VEHICLE SECURITY CONTROL MODULE	Model with keyless access with push button start system
U0401	INVALID DATA RECEIVED FROM ECM/PCM "A"	—
U0416	INVALID DATA RECEIVED FROM VEHICLE DYNAMICS CONTROL MODULE	—

DTC	Item	Note
U0423	INVALID DATA RECEIVED FROM INSTRUMENT PANEL CLUSTER CONTROL MODULE	—
U0426	INVALID DATA RECEIVED FROM IMMOBILIZER CONTROL MODULE	Model without keyless access with push button start system / model without immobilizer CM
U0427	INVALID DATA RECEIVED FROM VEHICLE SECURITY CONTROL MODULE	Model with keyless access with push button start system
U1673	LIN COMMUNICATION BUS ERROR BODY CONTROL MODULE	Depends on the customize setting
U0101	LOST COMMUNICATION WITH TCM	Depends on the customize setting
U0164	LOST COMMUNICATION WITH HVAC CONTROL MODULE	Depends on the customize setting
U0169	LOST COMMUNICATION WITH SUNROOF CONTROL MODULE	Depends on the customize setting
U0208	LOST COMMUNICATION WITH SEAT MEMORY	Depends on the customize setting
U0230	LOST COMMUNICATION WITH POWER REAR GATE CONTROL MODULE	Depends on the customize setting
U0402	INVALID DATA RECEIVED FROM TCM	Depends on the customize setting
U0424	INVALID DATA RECEIVED FROM HVAC CONTROL MODULE	Depends on the customize setting
U123C	LOST COMMUNICATION WITH HIGH BEAM ASSIST CONTROL MODULE	Depends on the customize setting
U153D	INVALID DATA RECEIVED FROM HIGH BEAM ASSIST CONTROL MODULE	Depends on the customize setting

Diagnostic procedure:
1) Perform the Clear Memory Mode. <Ref. to BC(diag)-15, Clear Memory Mode.>
2) Read the DTC and check that the DTC is not displayed. <Ref. to BC(diag)-14, Read Diagnostic Trouble Code (DTC).>

NOTE:
If the DTC is displayed on the screen, the trouble is still present. Perform the diagnosis according to DTC. After solving the DTC, repeat from step 1).
3) Turn the ignition switch OFF → ON, and wait for 10 seconds or more.
4) Read the DTC and check that the DTC is not displayed. <Ref. to BC(diag)-14, Read Diagnostic Trouble Code (DTC).>

NOTE:
If the DTC is displayed on the screen, the trouble is still present. Perform the diagnosis according to DTC.

8. INSPECTION MODE 8

DTC	Item	Note
B1107	CAN COMMUNICATION (BIU) STUCK	—
U1500	KEYLESS UART COM. MALFUNCTION	—

Diagnostic procedure:
1) Perform the Clear Memory Mode. <Ref. to BC(diag)-15, Clear Memory Mode.>
2) Read the DTC and check that the DTC is not displayed. <Ref. to BC(diag)-14, Read Diagnostic Trouble Code (DTC).>

NOTE:
If the DTC is displayed on the screen, the trouble is still present. Perform the diagnosis according to DTC. After solving the DTC, repeat from step 1).
3) Disconnect and reconnect the battery and wait for one minute or more. Then turn the ignition switch OFF → ON and wait for 10 seconds or more.
4) Read the DTC and check that the DTC is not displayed. <Ref. to BC(diag)-14, Read Diagnostic Trouble Code (DTC).>

NOTE:
If the DTC is displayed on the screen, the trouble is still present. Perform the diagnosis according to DTC.

10.Read Current Data

A: OPERATION

1) On «Start» display, select «Diagnosis».
2) On «Vehicle selection» display, input the target vehicle information and select «Confirmed».
3) On «Main Menu» display, select «Each System».
4) On «Select System» display, select «Body Control» and then select «Enter».
5) On «Select Function» display, select «Data Monitor».

NOTE:
For detailed operation procedures, refer to “Application help”.

B: LIST

Items to be displayed	Content	Unit of measure	Note
BATT voltage (control)	Constant power supply from the battery. Input value to the body integrated unit.	0 — 21.5 V	—
BATT voltage (BACKUP)	Constant power supply from the battery. Input value to the body integrated unit.	0 — 21.5 V	—
Ignition Power Supply Voltage	IG system circuit voltage. Input value to the body integrated unit.	0 — 21.5 V	—
ACC voltage	ACC system circuit voltage. Input value to the body integrated unit.	0 — 21.5 V	—
number of regist.	Number of the registered key in the keyless entry system.	0 — 4	Model without keyless access with push button start system
Front Wheel Speed	Front wheel average speed. CAN data input value. Received from the VDC CM.	km/h	—
Fuel consumption	Injection quantity per 1 sec calculated from an instantaneous fuel injection quantity per 50 msec. CAN data input value. Received from the ECM.	cc/s	—
Engine Coolant Temperature	Engine coolant temperature. CAN data input value. Received from the ECM.	–40 — 215°C	—
Shift Position	Shift position. CAN data input value. Received from the TCM.	1 — 3, D-S, D, N, R, P	—
Buzzer beeping request	Passenger room buzzer beeping request. CAN data output value. Sent to the combination meter.	Status for ’beeping deactivated’ Reverse warning Key warning buzzer Light Remained Buzzer Customize 1 Customize 2 Registration completed 1 Registration completed 2 Registered Registration NG	—

Items to be displayed	Content	Unit of measure	Note
EPB State	EPB operating status. CAN data input value, received from the VDC.	Error Released Operate Operating Releasing Dynamic Parking	—
Destination Code	Vehicle destination information. CAN data receiving value. Received from the combination meter.	JPN U4, U5, U6 C0 EC, EA, E2, EL K4, C4, C6 KS EK ER, EN KA, KC EH C6	—
Illumination Sensor Output	Output voltage from the illumination sensor. Body integrated unit input value.	0 — 5 V	—
Off delay time	Interior light off delay time. Body integrated unit custom setting values.	OFF 10 Sec 20 Sec 30 Sec	—
Auto Light Sensitivity Adjustment	Sensitivity of auto light function. Body integrated unit custom setting values.	Dull Normal Sensitive Very sensitive	—
key-lock warning SW	Key warning switch ON/OFF status. Body integrated unit input value. Set to ON when the ignition key is inserted.	ON/OFF	Model without keyless access with push button start system
ACC Input	ACC ON/OFF status. Body integrated unit input value. Set to ON when the ignition switch is turned to ACC.	ON/OFF	Model with keyless access with push button start system
Stop Light Switch	Brake switch ON/OFF status. Body integrated unit input value. Set to ON when the brake pedal is pressed.	ON/OFF	—
Front fog lamp SW input	Front fog light switch ON/OFF status. Body integrated unit input value. Set to ON when the front fog light switch is ON.	ON/OFF	—
Driver's door SW input	Driver's door switch ON/OFF status. Body integrated unit input value. Set to ON when the door is open.	ON/OFF	—
P-door SW input	Passenger's door switch ON/OFF status. Body integrated unit input value. Set to ON when the door is open.	ON/OFF	—
Rear right door SW input	Rear right door switch ON/OFF status. Body integrated unit input value. Set to ON when the door is open.	ON/OFF	—
Rear left door SW input	Rear left door switch ON/OFF status. Body integrated unit input value. Set to ON when the door is open.	ON/OFF	—
R Gate SW input	Rear gate / trunk switch ON/OFF status. Body integrated unit input value. Set to ON when the rear gate / trunk is open.	ON/OFF	—

Items to be displayed	Content	Unit of measure	Note
Manual lock SW input	ON/OFF status of the manual lock switch located on the power window main switch (or on the passenger's side power window switch). Body integrated unit input value. Set to ON when the manual lock switch is set to lock.	ON/OFF	—
Manual unlock SW input	ON/OFF status of the manual lock switch located on the power window main switch (or on the passenger's side power window switch). Body integrated unit input value. Set to ON when the manual lock switch is set to unlock.	ON/OFF	—
P SW	P range switch ON/OFF status. Body integrated unit input value. Set to ON in the P range.	ON/OFF	—
MT Reverse Switch	MT back-up light switch ON/OFF status. Body integrated unit input value. Set to ON when the shift lever is set to R range and the back-up light switch is ON.	ON/OFF	—
R wiper ON SW input	Rear wiper ON switch ON/OFF status. Body integrated unit input value. Set to ON when the rear wiper switch is ON.	ON/OFF	—
R wiper INT SW input	Rear wiper INT switch ON/OFF status. Body integrated unit input value. Set to ON when the rear wiper switch is in the INT position.	ON/OFF	—
R washer SW input	Rear washer switch ON/OFF status. Body integrated unit input value. Set to ON when the rear washer switch is ON.	ON/OFF	—
Fr wiper input	Front wiper return switch ON/OFF status. Body integrated unit input value. Set to ON when the front wiper is outside of the stop position.	ON/OFF	—
Driver's seat lock status SW input	ON/OFF status of the driver's seat lock status switch. Body integrated unit input value. Set to ON when the door status is LOCK.	ON/OFF	Model with keyless access with push button start system
Passenger's seat lock status SW input	ON/OFF status of the passenger's seat lock status switch. Body integrated unit input value. Set to ON when the door status is LOCK.	ON/OFF	Model with keyless access with push button start system
R gate lock status SW input	ON/OFF status of the rear gate lock status switch. Body integrated unit input value. Set to ON when the rear gate status is LOCK.	ON/OFF	—
R Gate Release SW input	ON/OFF status of the rear gate release switch / trunk opener switch. Body integrated unit input value. Set to ON when the rear gate release switch / trunk opener switch is pressed.	ON/OFF	—
Rr Defogger output	Rear defogger relay output ON/OFF status. Body integrated unit output value. Set to ON when the rear defogger is activated.	ON/OFF	—
lock actuator LOCK output	Door lock actuator output ON/OFF status. Body integrated unit output value. Set to ON when a lock signal is output.	ON/OFF	—
All seat UNLOCK output	ON/OFF status of the all door lock actuator output. Body integrated unit output value. Set to ON when an all door unlock signal is output.	ON/OFF	—
D-seat UNLOCK output	ON/OFF status of the driver's door lock actuator output Body integrated unit output value. Set to ON when a driver's door / all door unlock signal is output.	ON/OFF	—

Items to be displayed	Content	Unit of measure	Note
R gate/trunk UNLK output	Rear gate / trunk lock actuator ON/OFF status. Body integrated unit output value. Set to ON when an unlock signal is output.	ON/OFF	—
Rear Wiper Output	Rear wiper relay output ON/OFF status. Body integrated unit output value. Set to ON when the rear wiper is activated.	ON/OFF	—
Shift Lock Solenoid	Shift lock solenoid output ON/OFF status. Body integrated unit output value. Solenoid is activated to set this item to ON when depressing the brake pedal with the shift lever in P range.	ON/OFF	—
Key lock solenoid output	Key lock solenoid output ON/OFF status. Body integrated unit output value. Solenoid is activated to set this item to ON when the key is inserted with the shift lever in other than P range.	Lock/Unlock	Model without keyless access with push button start system
wiper deicer output	Wiper deicer output ON/OFF status. Body integrated unit output value. Set to ON while the wiper deicer is operating.	ON/OFF	—
Keyless Buzzer Output	Keyless buzzer ON/OFF status. Body integrated unit output value. Set to ON while the keyless buzzer is sounding.	ON/OFF	—
Horn Output	Security horn output ON/OFF status. Body integrated unit output value. Set to ON while the horn is sounding due to a security breach.	ON/OFF	—
Room lamp output	Room light output ON/OFF status. Body integrated unit output value. Set to ON while the room light illuminates with the switch in DOOR position.	ON/OFF	—
key illumination lamp o/p	Key illumination light output ON/OFF status. Body integrated unit output value. Set to ON while the key illumination light illuminates.	ON/OFF	Model without keyless access with push button start system
Immobilizer lamp output	Immobilizer pilot light output ON/OFF status. Body integrated unit output value. Set to ON while the immobilizer indicator in the combination meter illuminates.	ON/OFF	—
Keyless operation 1	Keyless mode registration mode status of the body integrated unit. Set to Register while in the keyless registration mode.	Register/Normal	Model without keyless access with push button start system
Keyless operation 2	Keyless mode delete mode status of the body integrated unit. Set to Deletion while in the keyless delete mode.	Deletion/Normal	Model without keyless access with push button start system
Small Light SW	Lighting 1 relay CAN output ON/OFF status. CAN data sending value. Set to ON when the position light indicator in the combination meter illuminates.	ON/OFF	—
Headlamp	Lighting Lo relay CAN output ON/OFF status. CAN data output value. Set to ON when the headlight Lo illuminates.	ON/OFF	—
High Beam	Lighting Hi relay CAN output ON/OFF status. CAN data output value. Set to ON when the headlight Hi illuminates.	ON/OFF	—
Power rear gate setting	Presence or absence of the power rear gate. Body integrated unit custom setting values.	ON/OFF	—
Lane change signal setting	Presence or absence of the one-touch blinker control. Body integrated unit custom setting values.	ON/OFF	—

Items to be displayed	Content	Unit of measure	Note
Rear wiper auto setting	Presence or absence of the rear wiper control linked with reverse shift. Body integrated unit custom setting values.	ON/OFF	—
Left turn signal input	Left turn signal switch ON/OFF status. Body integrated unit input value. Set to ON while the left turn signal switch is ON.	ON/OFF	—
Right turn signal input	Right turn signal switch ON/OFF status. Body integrated unit input value. Set to ON while the right turn signal switch is ON.	ON/OFF	—
Left turn signal output	Left turn signal light output ON/OFF status. Body integrated unit output value. Set to ON while the left turn signal light illuminates.	ON/OFF	—
Right turn signal output	Right turn signal light output ON/OFF status. Body integrated unit output value. Set to ON while the right turn signal light illuminates.	ON/OFF	—
TPMS Setting	Presence or absence of TPMS. Body integrated unit custom setting values.	TPMS/No TPMS	—
Driver's Door Unlock Setting	Presence or absence of the driver's seat select unlock control. Body integrated unit custom setting values.	Selection/ALL	Model with keyless access with push button start system
Rear Gate Unlock Setting	Presence or absence of the rear gate select unlock control. Body integrated unit custom setting values.	Selection/ALL	Model with keyless access with push button start system
Wiper link Auto Light Setup	ON/OFF status of the wiper interlock auto light function control. Body integrated unit custom setting values.	ON/OFF	—
High Beam Assist Function	Presence or absence of high beam assist. Body integrated unit custom setting values.	ON/OFF	—
Head Lamp Low Beam Specification	Headlight low beam light source type. Body integrated unit custom setting values.	Halogen/HID/LED	—
Head Lamp High Beam Specification	Headlight high beam light source type. Body integrated unit custom setting values.	Halogen/HID/LED	—
High Beam Assist Current Setting	Presence or absence of high beam assist. Body integrated unit custom setting values.	ON/OFF	—
HBA indicator	Set to ON when high beam assist is activated. CAN data output value.	OFF/ON	—
High Beam Assist Failure Indicator	Set to ON when high beam assist fails. CAN data output value.	OFF/ON	—
High Beam Assist Failure Message	Sends display status of high beam assist related words. CAN data output value.	No Display/HALT/Fail	—
<HBA>High Beam Request Status	Set to Request when high beam is requested for high beam assist module. High beam assist module CAN data output value.	Non Request/Request	—
<HBA>R Range Signal	Set to ON when shift lever is at reverse position. High beam assist module CAN data input value.	ON/OFF	—
<HBA>Head Lamp Low Beam Signal	Set to ON when the headlight low beam illuminates. High beam assist module CAN data input value.	ON/OFF	—
<HBA>Head Lamp High Beam Signal	Set to ON when the headlight high beam illuminates. High beam assist module CAN data input value.	ON/OFF	—

Items to be displayed	Content	Unit of measure	Note
<HBA>High Beam Assist Status	High beam assist module internal status. High beam assist module CAN data output value.	Initialization/ Poor Visibility/ Nothing Sensed/Head light Detect/Taill light Detect/ Speed Under Threshold/Day Detect/Village Mode/Yaw Not Used/Abnormal/Delay/SAE Mode/Temp Malfunction	—
<HBA>Yaw Rate & Speed Signal	Set to ON during high beam suppression when rounding a curve. High beam assist module CAN data output value.	ON/OFF	—
<HBA>Brightness & Color Detection	Set to Detect when a tunnel is detected. High beam assist module CAN data output value.	Not Detect/ Detect	—
<HBA>Street Lamp & Surrounding Detection	Set to Detect when an urban area is detected. High beam assist module CAN data output value.	Not Detect/ Detect	—
<HBA>High Speed Signal	Set to ON in high speed mode. High beam assist module CAN data output value.	ON/OFF	—
<HBA>High Beam Assist Camera	Set to Abnormal when camera is faulty. High beam assist module CAN data output value.	Normal/Abnormal	—
<HBA> ECU	Set to Abnormal when high beam assist module is malfunctioning. High beam assist module CAN data output value.	Normal/Abnormal	—
<HBA>Camera Position Correlation	Set to Abnormal when camera's angle of view is outside the tolerance. High beam assist module CAN data output value.	Normal/Abnormal	—
<HBA> Adjustment	Set to Completed when high beam assist operation becomes enabled. High beam assist module CAN data output value.	incomplete/ complete	—
<HBA> Registration	Set to Abnormal when specifications are not confirmed. High beam assist module CAN data output value.	Normal/Abnormal	—
<HBA>Lost Communication with VDC	Set to Abnormal when VDC data has not yet arrived. High beam assist module CAN data output value.	Normal/Abnormal	—
<HBA>Invalid Data Received from VDC	Set to Abnormal when VDC data is abnormal. High beam assist module CAN data output value.	Normal/Abnormal	—
<HBA>Lost Communication with Body Integrated Unit(BIU)	Set to Abnormal when body integrated unit data has not yet arrived. High beam assist module CAN data output value.	Normal/Abnormal	—

Items to be displayed	Content	Unit of measure	Note
<HBA>Invalid Data Received from Body Integrated Unit(BIU)	Set to Abnormal when body integrated unit data is abnormal. High beam assist module CAN data output value.	Normal/Abnormal	—
<HBA>Lost Communication with Combination Meter (MET)	Set to Abnormal when combination meter data has not yet arrived. High beam assist module CAN data output value.	Normal/Abnormal	—
<HBA>Invalid Data Received from Combination Meter (MET)	Set to Abnormal when combination meter data is abnormal. High beam assist module CAN data output value.	Normal/Abnormal	—
<HBA>Head Lamp Low Beam Specification	High beam assist module CAN data input value. High beam assist module CAN data output value.	Halogen/HID/LED	—
<HBA>Head Lamp High Beam Specification	High beam assist module CAN data input value. High beam assist module CAN data output value.	Halogen/HID/LED	—
<HBA>Lane Recognition Status	High beam assist module lane recognition status. High beam assist module CAN data output value.	RIGHT/LEFT	—
<HBA>Street Lamp & Surrounding Status	When Street Lamp & Surrounding Status mode is activated, set to Enable. High beam assist module CAN data output value.	Disable/Enable	—
<HBA>Vehicle Yaw Direction	Vehicle input in the yaw direction. High beam assist module CAN data output value.	CENTER/RIGHT/LEFT	—
<HBA>Destination Code	Vehicle destination. High beam assist module CAN data output value.	JPN U4, U5, U6 C0 EC, EA, E2, EL K4, C4, C6 KS EK ER, EN KA, KC EH C6	—
<HBA>Vehicle Model Information	Vehicle model. High beam assist module CAN data output value.	Impreza Type / WRX Type / Legacy/Outback Type / Forester Type	—
<HBA>Vehicle Speed	Vehicle speed (resolution: low). High beam assist module CAN data output value.	—	—
Camera X direction Coordinate	High beam assist module, correction value of the angle of view center position (X coordinate). High beam assist module CAN data output value.	—	—
Camera Y direction Coordinate	High beam assist module, correction value of the angle of view center position (Y coordinate). High beam assist module CAN data output value.	—	—

Items to be displayed	Content	Unit of measure	Note
Lighting I Switch Input	Lighting 1 switch ON/OFF status. Body integrated unit input value. Set to ON while the lighting 1 switch is ON.	ON/OFF	—
Lighting II Switch Input	Lighting 2 switch ON/OFF status. Body integrated unit input value. Set to ON while the lighting 2 switch is ON.	ON/OFF	—
Lighting AUTO input	Lighting AUTO switch ON/OFF status. Body integrated unit input value. Set to ON while the lighting AUTO switch is ON.	ON/OFF	—
Dimmer Hi Switch Input	Dimmer Hi switch ON/OFF status. Body integrated unit input value. Set to ON while the dimmer Hi switch is ON.	ON/OFF	—
Dimmer Passing Switch Input	Dimmer Pass switch ON/OFF status. Body integrated unit input value. Set to ON while the dimmer Pass switch is ON.	ON/OFF	—
Illumination sensor flag	Presence or absence of the illumination sensor. Body integrated unit internal data.	ON/OFF	—
Lighting I Lamp Output	Lighting 1 relay output ON/OFF status. Body integrated unit output value. Set to ON while the position light illuminates.	ON/OFF	—
Lighting II Lamp Output	Lighting Lo relay output ON/OFF status. Body integrated unit output value. Set to ON while the lighting Lo illuminates.	ON/OFF	—
Lighting Hi Light Output	Lighting Hi relay output ON/OFF status. Body integrated unit output value. Set to ON while the lighting Hi illuminates.	ON/OFF	—
Front Fog Lamp Output	Front fog light relay output ON/OFF status. Body integrated unit output value. Set to ON while the front fog light illuminates.	ON/OFF	—
DRL Cancel Output	DRL cancel relay output ON/OFF status. Body integrated unit output value. Set to ON while the lighting Hi illuminates.	ON/OFF	—
Power Supply Tr	Lighting power supply relay output ON/OFF status. Body integrated unit output value. Set to ON while the light illuminates with the key removed or while the key is inserted (including ACC and IGN ON).	ON/OFF	—
Map lamp output	Map light output ON/OFF status. Body integrated unit output value. Set to ON while the map light illuminates with the switch in DOOR position.	ON/OFF	—
Luggage/Trunk lamp output	Luggage/trunk light output ON/OFF status. Body integrated unit output value. Set to ON while the luggage/trunk light illuminates with the switch in DOOR position.	ON/OFF	—
Front washer switch input	ON when the front wiper washer switch is ON. Body integrated unit input value.	ON/OFF	—
Rear defogger operation mode	Status of the rear defogger operation mode. Body integrated unit custom setting values.	Continuous/ Normal	—
Security Alarm Setup	Alarm ON/OFF status when the security system is activated. Body integrated unit custom setting values.	ON/OFF	—
Impact Sensor Setup	Impact sensor ON/OFF status. Body integrated unit custom setting values.	ON/OFF	—
Alarm delay setup	Alarm monitoring delay function ON/OFF status. Body integrated unit custom setting values.	ON/OFF	—

Items to be displayed	Content	Unit of measure	Note
Lockout prevention	Key lockout prevention function ON/OFF status. Body integrated unit custom setting values.	ON/OFF	—
Impact sensor	Presence or absence of the impact sensor. Body integrated unit custom setting values.	ON/OFF	—
Buzzer sounding setting	Answer-back buzzer sounding ON/OFF status. Body integrated unit custom setting values.	ON/OFF	—
Abnormal warning lamp flashing setting	Hazard answer-back ON/OFF status. Body integrated unit custom setting values.	ON/OFF	—
Answer-back Buzzer	Presence or absence of the answer-back buzzer. Body integrated unit custom setting values.	ON/OFF	—
Automatic lock YES/NO	Presence or absence of the auto lock function. Body integrated unit custom setting values.	ON/OFF	—
Door open warning	Presence or absence of the door open warning function. Body integrated unit custom setting values.	ON/OFF	—
Dome Light Alarm Setting	Room light illumination ON/OFF status when the alarm is activated. Body integrated unit custom setting values.	ON/OFF	—
Auto A/C ECU Setting	Presence or absence of the A/C ECM. Body integrated unit custom setting values.	ON/OFF	*For LEGACY, set to ON for models with manual A/C, too.
Wiper Deicer setting	Presence or absence of the wiper deicer. Body integrated unit custom setting values.	ON/OFF	—
Sedan/Wagon Setting	Vehicle type, Sedan/Wagon (OBK). Body integrated unit custom setting values.	SEDAN/ WAGON	—
MT/AT Setting	Transmission type, MT/AT (CVT). Body integrated unit custom setting values.	MT/AT	—
Destination Setting	Vehicle destination information. Body integrated unit internal data.	JPN KA, KC KS EU LHD Other than KS Canada(C0, C5) U.S. (U4, U5, U6, C6) EK, ER	—
Seat Memory Setting	Presence or absence of the seat memory. Body integrated unit custom setting values.	ON/OFF	—
Illumination Sensor Setting	Presence or absence of the illumination sensor. Body integrated unit custom setting values.	ON/OFF	—
Factory initial setting	Status of the Factory/Market mode. Body integrated unit custom setting values.	Market/Factory	—
Ignition SW ON Count	Time stamp information.	0 — 65534	<Ref. to LAN(diag)-6, TIME STAMP, CAUTION, General Description.>
Count	Time stamp information.	Common/Originally	
Time Count	Time stamp information.	0 — 53687091000	
Sunroof setting	Presence or absence of sunroof. Body integrated unit custom setting values.	ON/OFF	—
Welcome Light (Exit)	Time setting to turn off the light for the welcome lighting (exiting) function. Body integrated unit custom setting values.	OFF 30 Sec 60 Sec 90 Sec	—

Items to be displayed	Content	Unit of measure	Note
Welcome Light Off Delay Time(Approaching)	Time setting to turn off the light for the welcome lighting (approaching) function. Body integrated unit custom setting values.	OFF 30 Sec 60 Sec 90 Sec	—
Keyless Buzzer Volume	Volume of the keyless buzzer. Body integrated unit custom setting values.	1 — 7	—
Hazard switch Input	Turn hazard switch input ON/OFF status. Body integrated unit input value. Set to ON when the turn hazard switch is ON.	ON/OFF	—
P-CR OFF switch Input	Pre-collision brake OFF switch ON/OFF status. Body integrated unit input value. Set to ON when the pre-collision brake OFF switch is ON.	ON/OFF	—
LANE OFF switch Input	Lane departure warning OFF switch ON/OFF status. Body integrated unit input value. Set to ON when the lane departure warning OFF switch is ON.	ON/OFF	—
Towing switch input	Towing switch ON/OFF status. Body integrated unit input value. Set to ON when the towing switch is ON.	ON/OFF	—
Door handle Light output	Door handle light output ON/OFF status. Body integrated unit output value. Set to ON when the pull handle LED illuminates.	ON/OFF	—
Auto Dimmer Cancel setting	Sensitivity of auto dimmer cancel function. Body integrated unit custom setting values.	0 (OFF) Least 2 Normal 4 Most	—

11.User Customizing

A: OPERATION

1) On «Start» display, select «Diagnosis».
2) On «Vehicle selection» display, input the target vehicle information and select «Confirmed».
3) On «Main Menu» display, select «Each System».
4) On «Select System» display, select «Body Control» and then select «Enter».
5) On «Select Function» display, select «Customize».

NOTE:
• If not equipped (depending on destination area or vehicle equipment condition), customizing is not possible.
• For detailed operation procedures, refer to “Application help”.
List of User Customizing item

Item	Initial setting value	Setting value	Note
Off delay time	30 Sec	OFF 10 Sec 20 Sec 30 Sec	Room light off delay time can be selected.
Auto Light Sensitivity Adjustment	Sensitive	Dull Normal Sensitive Very sensitive	Sensitivity of the automatic lighting can be adjusted.
Lane change signal setting	ON	ON OFF	ON: One-touch blinker function operates. OFF: One-touch blinker function does not operate.
Rear wiper auto setting	OFF (U0, U4, U5 models) ON: (C0, C5 models)	ON OFF	ON: Rear wiper operates in sync with the reverse shift. OFF: Rear wiper does not operate in sync with the reverse shift.
Driver’s Door Unlock Setting	Selection	Selection ALL	Selection: When the touch sensor (unlock) on the driver’s side is touched, only the driver’s door is unlocked. When the touch sensor (unlock) on the passenger’s side is touched, all doors are unlocked. ALL: When the touch sensor (unlock) on the driver’s side is touched, all doors are unlocked. When the touch sensor (unlock) on the passenger’s side is touched, all doors are unlocked.
Rear Gate Unlock Setting	Selection	Selection ALL	Selection: When the rear gate opener button is pressed, only the rear gate is unlocked. ALL: When the rear gate opener button is pressed, all doors are unlocked.
Wiper link Auto Light Setup	ON	ON OFF	ON: Wiper interlock auto light function is activated. OFF: Wiper interlock auto light function is deactivated.
High Beam Assist Function	— (*1)	ON OFF	Set to ON for models with high beam assist.
Head Lamp Low Beam Specification	— (*1)	Halogen HID LED	Set according to the headlight type.
Head Lamp High Beam Specification	— (*1)	Halogen HID LED	Set according to the headlight type.
High Beam Assist Current Setting	— (*1)	ON OFF	Set to ON for models with high beam.

Item	Initial setting value	Setting value	Note
Rear defogger operation mode	Normal	Normal Continuous	Normal: Automatically stops in 15 minutes after the switch is turned to ON. Continuous: Repeats the cycle of 15-minute active condition and 2-minute inactive condition until the switch is turned to OFF.
Security Alarm Setup	ON	ON OFF	ON: Warning function (hazard, horn) is activated. OFF: Warning function (hazard, horn) is deactivated.
Impact Sensor Setup	ON	ON OFF	ON: Impact sensor is activated. OFF: Impact sensor is deactivated. (Set to “OFF” in models without the impact sensor.)
Alarm delay setup	ON	ON OFF	ON: The alarm monitor starts 30 seconds after the keyless lock operation. OFF: The alarm monitor starts immediately after the keyless lock operation.
Lockout prevention	ON	ON OFF	ON: Key lockout prevention function is activated. (The function does not operate if safety knob is locked by hand.) OFF: Key lockout prevention function is deactivated.
Impact sensor	OFF	ON OFF	ON: Vehicle is controlled in impact sensor equipped mode. (Make sure to set to “OFF” for models without the impact sensor. When set to “ON”, hazard, horn or siren become activated by keyless lock (alarm monitor start).) OFF: Vehicle is controlled in no impact sensor mode.
Buzzer sounding setting	ON	ON OFF	ON: Buzzer sounds when lock/unlock is selected by keyless entry system. OFF: Buzzer does not sound when lock/unlock is selected by keyless entry system.
Abnormal warning lamp flashing setting	ON	ON OFF	ON: Hazard blinks when lock/unlock is selected by keyless entry system. OFF: Hazard does not blink when lock/unlock is selected by keyless entry system.
Initial keyless setting	—	— Execution	—
Initial button setting	—	— Execution	—
Initial Security setting	—	— Execution	—
Door open warning	ON	ON OFF	ON: If a door stays half shut for 20 minutes, interior lighting linked with the door such as room light, map light, luggage room light, trunk room light and key ring illumination go off to prevent battery run-out. OFF: Room light, map light, luggage room light, trunk room light, key ring illumination and door warning light remain lit.
Dome Light Alarm Setting	OFF	ON OFF	ON: Room light illumination is interlocked with the alarm. OFF: Room light illumination is not interlocked with the alarm.
Welcome Light (Exit)	30 Sec	OFF 30 Sec 60 Sec 90 Sec	Lighting time length of the welcome lighting (exiting) function can be set.
Welcome Light Off Delay Time(Approaching)	30 Sec	OFF 30 Sec 60 Sec 90 Sec	Lighting time length of the welcome lighting (approaching) function can be set.
Keyless Buzzer Volume	5	1 — 7	Buzzer volume can be set.

Item	Initial setting value	Setting value	Note
Auto Dimmer Cancel setting	3	0 (OFF) Least 2 Normal 4 Most	Auto dimmer cancel sensitivity can be set.

NOTE:
*1: Customization item according to the actual vehicle equipment
6) When the setting is complete, see «Data monitor» to make sure that the alterations are consistent with the actual equipment on the vehicle.

CAUTION:
- **the above settings must match the actual vehicle equipment.**
- **Do not change settings except for setting above while setting the functions.**
- **Be sure not to change Factory initial setting except when installing a new body integrated unit.**

12.Registration Body Integrated Unit

A: OPERATION

1. CONFIRM CURRENT SETTING

1) On «Start» display, select «Diagnosis».
2) On «Vehicle selection» display, input the target vehicle information and select «Confirmed».
3) On «Main Menu» display, select «Each System».
4) On «Select System» display, select «Body Control» and then select «Enter».
5) On «Select Function» display, select «Customize».
6) Save the setting.

Required items for new registration. (Except for system not equipped)

Item	Content				Note
number of regist.	1	2	3	4	Number of registered key
Off delay time	OFF	10 Sec	20 Sec	30 Sec	—
Auto Light Sensitivity Adjustment	Dull	Normal (Standard)	Sensitive	Very sensitive	—
Power rear gate setting	ON		OFF		—
Lane change signal setting	ON		OFF		—
Rear wiper auto setting	ON		OFF		—
TPMS Setting	ON		OFF		—
Driver's Door Unlock Setting	ALL		Selection		—
Rear Gate Unlock Setting	ALL		Selection		—
Wiper link Auto Light Setup	ON		OFF		—
High Beam Assist Function	ON		OFF		—
Head Lamp Low Beam Specification	Halogen/HID/LED				—
Head Lamp High Beam Specification	Halogen/HID/LED				—
High Beam Assist Current Setting	ON		OFF		—
Illumination sensor flag	ON		OFF		—
Rear defogger operation mode	Normal		Continuous		—
Security Alarm Setup	ON		OFF		—
Impact Sensor Setup	ON		OFF		Option setting
Alarm delay setup	ON		OFF		—
Lockout prevention	ON		OFF		—
Impact sensor	ON		OFF		Option setting
Buzzer sounding setting	ON		OFF		—
Abnormal warning lamp flashing setting	ON		OFF		—
Automatic lock setting	ON		OFF		—
Door open warning	ON		OFF		—
Dome Light Alarm Setting	ON		OFF		—
Auto A/C ECU Setting	ON		OFF		—
Wiper Deicer setting	ON		OFF		—
Sedan/Wagon Setting	WAGON		SEDAN		—
MT/AT Setting	MT		AT		—
Seat Memory Setting	ON		OFF		—
Illumination Sensor Setting	ON		OFF		—
Factory initial setting	Factory		Market		Do not set to Factory mode.
Sunroof setting	ON		OFF		—
Welcome Light (Exit)	OFF/30 Sec/60 Sec/90 Sec				—
Welcome Light Off Delay Time(Approaching)	OFF/30 Sec/60 Sec/90 Sec				—
Keyless Buzzer Volume	1 2 3 4 5 6 7				—
Auto Dimmer Cancel setting	0 (OFF)/Least/Less/Normal/More/Most				—

2. REGISTRATION BODY INTEGRATED UNIT (FUNCTION SETTING)

CAUTION:
For the body integrated unit, function selection is available to control the entire vehicle systems. It is possible to control the original functions of vehicle when registrations of body integrated unit and function setting are corresponded to vehicle equipment.
If registrations and function setting are different from vehicle equipment, vehicle system does not operate normally and diagnosis cannot be performed correctly. Pay attention to following item.
- **Be sure to correspond registrations, or User Customizing settings to vehicle equipment.**
- **Do not change the settings of vehicle improperly.**
- **Make sure that the key illumination does not blink with ignition switch ON, or that the body integrated unit registration item «Factory initial setting» is set to «Market». If "Factory initial setting" is set to «Factory», key illumination blinks when the ignition switch is turned ON, to notify that the settings are not confirmed. (If the vehicle is a model with the keyless access with push button start system, check by the current data display function of Subaru Select Monitor because no key illumination is available.)**
- **Key illumination does not blink with ignition switch turned to ON and go off with door closed. (Models without the keyless access with push button start system)**
- **Be sure to register immobilizer if body integrated unit is replaced with a new part. (Models without the keyless access with push button start system)**
- **Make a registration of immobilizer when the parts related to immobilizer have been replaced. Refer to the "REGISTRATION MANUAL FOR IMMOBILIZER" provided as a separate volume.**

1) On «Start» display, select «Diagnosis».
2) On «Vehicle selection» display, input the target vehicle information and select «Confirmed».
3) On «Main Menu» display, select «Each System».
4) On «Select System» display, select «Body Control» and then select «Enter».
5) On «Select Function» display, select «Customize».
6) Change the setting to the contents saved at confirmation of current setting.

CAUTION:
- **To perform normal operation of vehicle and diagnosis, above settings must match the actual vehicle equipment.**
- **When the body integrated unit is new or in Factory mode, the key illumination blinks, and user customizing is incomplete. Check the user customizing settings. (For models with keyless access with push button start system, the room light illuminates.)**
- **Be sure not to change Factory initial setting except when installing a new body integrated unit.**

NOTE:
"Factory" mode:
- Body integrated unit has not been set yet. For model without keyless access with push button start system, it can be recognized by key ring illumination blinking with ignition switch turned to ON. For model with keyless access with push button start system, it can be recognized by room light, map light and luggage room light blinking with ignition switch turned to ON.
- All replacement body integrated units are set to "Factory" mode. When replacing a body integrated unit, be sure to perform the registration operation.

"Market" mode:
- Each settings have been set. For model without keyless access with push button start system, it can be recognized by key ring illumination coming on in concocting with room light and going off with ignition switch turned to ON. For model with keyless access with push button start system, it can be recognized by room light, map light and luggage room light not blinking with ignition switch turned to ON.

7) Perform the Factory initial setting. On the «Customize» display screen of Subaru Select Monitor, select the «Factory initial setting».
8) Change the mode from Factory to Market.
9) Turn the ignition switch to OFF to settle the setting.
10) Change the system selection to «Immobilizer» on Subaru Select Monitor, and perform registration of immobilizer. (Models without the keyless access with push button start system)
11) Follow the procedure of the "REGISTRATION MANUAL FOR IMMOBILIZER" provided as a separate volume. (Models without the keyless access with push button start system)

12) For vehicles with remote engine starter, refer to “REGISTRATION MANUAL FOR IMMOBILIZER” provided as a separate volume and perform registration of the remote engine starter. (Models without the keyless access with push button start system)
13) Perform the User Customizing. <Ref. to BC(diag)-30, OPERATION, User Customizing.>

NOTE:
For detailed operation procedures, refer to “PC application help for Subaru Select Monitor”.

13.Function Check

A: OPERATION

1) On «Start» display, select «Diagnosis».
2) On «Vehicle selection» display, input the target vehicle information and select «Confirmed».
3) On «Main Menu» display, select «Each System».
4) On «Select System» display, select «Body Control» and then select «Enter».
5) On «Select Function» display, select «Active Test».

NOTE:
• In order to check the body integrated unit function, inspect the body integrated unit and actuator using Subaru Select Monitor without operating switches.
• For detailed operation procedures, refer to “Application help”.

B: LIST

1) On «Main Menu» display, select «Each System Check».
2) On «Each System Check» display, select «Integ. unit mode».
3) On «Integ. unit mode» display, select «Work Support».
4) On «Work Support» display, select «Active Test».
5) Select an item to be operated on «Active Test» display, and press the [OK] button.
6) Pressing [Next] starts, [End] cancels the operation and [OK] returns to the System Operation Check Mode display screen.

Item	Display	Note
lock actuator LOCK output	ON/OFF	—
All seat UNLOCK output	ON/OFF	—
R gate/trunk UNLOCK output	ON/OFF	—
Shift lock solenoid output	ON/OFF	—
Key lock solenoid output	ON/OFF	—
Keyless Buzzer Output	ON/OFF	—
Horn Output	ON/OFF	—
Panic Braking Hazard Light Setting	ON/OFF	—

NOTE:
If not equipped due to the vehicle settings, the operation will not start.

14.List of Diagnostic Trouble Code (DTC)

A: LIST

DTC	Item	Note
B1010	BODY CONTROL SYSTEM (BIU) MALFUNCTION	<Ref. to BC(diag)-39, DTC B1010 BODY CONTROL SYSTEM (BIU) MALFUNCTION, Diagnostic Procedure with Diagnostic Trouble Code (DTC).>
B1011	BATTERY CONTROL POWER SUPPLY	<Ref. to BC(diag)-40, DTC B1011 BATTERY CONTROL POWER SUPPLY, Diagnostic Procedure with Diagnostic Trouble Code (DTC).>
B1012	BATTERY BACKUP POWER SUPPLY	<Ref. to BC(diag)-42, DTC B1012 BATTERY BACKUP POWER SUPPLY, Diagnostic Procedure with Diagnostic Trouble Code (DTC).>
B1013	IGNITION POWER	<Ref. to BC(diag)-44, DTC B1013 IGNITION POWER, Diagnostic Procedure with Diagnostic Trouble Code (DTC).>
B1014	ACC POWER	<Ref. to BC(diag)-46, DTC B1014 ACC POWER, Diagnostic Procedure with Diagnostic Trouble Code (DTC).>
B1015	KEY INTERLOCK CIRCUIT	<Ref. to BC(diag)-48, DTC B1015 KEY INTERLOCK CIRCUIT, Diagnostic Procedure with Diagnostic Trouble Code (DTC).>
B1016	SHIFT LOCK CIRCUIT	<Ref. to BC(diag)-50, DTC B1016 SHIFT LOCK CIRCUIT, Diagnostic Procedure with Diagnostic Trouble Code (DTC).>
B1107	CAN COMMUNICATION (BIU) STUCK	<Ref. to BC(diag)-52, DTC B1107 CAN COMMUNICATION (BIU) STUCK, Diagnostic Procedure with Diagnostic Trouble Code (DTC).>
B1401	METER COLLATION	<Ref. to BC(diag)-53, DTC B1401 METER COLLATION, Diagnostic Procedure with Diagnostic Trouble Code (DTC).>
B1402	IMMOBILIZER KEY COLLATION	<Ref. to BC(diag)-53, DTC B1402 IMMOBILIZER KEY COLLATION, Diagnostic Procedure with Diagnostic Trouble Code (DTC).>
B1407	MET COMMUNICATION	<Ref. to BC(diag)-53, DTC B1407 MET COMMUNICATION, Diagnostic Procedure with Diagnostic Trouble Code (DTC).>
B1408	METER NON-VOLATILE MEMORY	<Ref. to BC(diag)-53, DTC B1408 METER NON-VOLATILE MEMORY, Diagnostic Procedure with Diagnostic Trouble Code (DTC).>
B1410	TRANSPONDER COMMUNICATION	<Ref. to BC(diag)-53, DTC B1410 TRANSPONDER COMMUNICATION, Diagnostic Procedure with Diagnostic Trouble Code (DTC).>
B1411	IMMOBILIZER ANTENNA	<Ref. to BC(diag)-53, DTC B1411 IMMOBILIZER ANTENNA, Diagnostic Procedure with Diagnostic Trouble Code (DTC).>
U0073	CAN FAILURE, BUS ‘OFF’ DETECTION	<Ref. to BC(diag)-53, DTC U0073 CONTROL MODULE COMMUNICATION BUS OFF, Diagnostic Procedure with Diagnostic Trouble Code (DTC).>
U0074	CONTROL MODULE COMMUNICATION BUS "BODY-CAN" OFF	<Ref. to BC(diag)-53, DTC U0074 CONTROL MODULE COMMUNICATION BUS "BODY-CAN" OFF, Diagnostic Procedure with Diagnostic Trouble Code (DTC).>
U0100	LOST COMMUNICATION WITH ECM/PCM "A"	<Ref. to BC(diag)-53, DTC U0100 LOST COMMUNICATION WITH ECM/PCM "A", Diagnostic Procedure with Diagnostic Trouble Code (DTC).>
U0101	LOST COMMUNICATION WITH TCM	<Ref. to BC(diag)-53, DTC U0101 LOST COMMUNICATION WITH TCM, Diagnostic Procedure with Diagnostic Trouble Code (DTC).>
U0122	LOST COMMUNICATION WITH VEHICLE DYNAMICS CONTROL MODULE	<Ref. to BC(diag)-53, DTC U0122 LOST COMMUNICATION WITH VEHICLE DYNAMICS CONTROL MODULE, Diagnostic Procedure with Diagnostic Trouble Code (DTC).>
U0128	LOST COMMUNICATION WITH PARK BRAKE CONTROL MODULE	<Ref. to BC(diag)-54, DTC U0128 LOST COMMUNICATION WITH PARK BRAKE CONTROL MODULE, Diagnostic Procedure with Diagnostic Trouble Code (DTC).>
U0131	LOST COMMUNICATION WITH POWER STEERING CONTROL MODULE	<Ref. to BC(diag)-54, DTC U0131 LOST COMMUNICATION WITH POWER STEERING CONTROL MODULE, Diagnostic Procedure with Diagnostic Trouble Code (DTC).>
U0151	LOST COMMUNICATION WITH RESTRAINTS CONTROL MODULE	<Ref. to BC(diag)-54, DTC U0151 LOST COMMUNICATION WITH RESTRAINTS CONTROL MODULE, Diagnostic Procedure with Diagnostic Trouble Code (DTC).>
U0155	LOST COMMUNICATION WITH INSTRUMENT PANEL CLUSTER (IPC) CONTROL MODULE	<Ref. to BC(diag)-54, DTC U0155 LOST COMMUNICATION WITH INSTRUMENT PANEL CLUSTER (IPC) CONTROL MODULE, Diagnostic Procedure with Diagnostic Trouble Code (DTC).>

DTC	Item	Note
U0164	LOST COMMUNICATION WITH HVAC CONTROL MODULE	<Ref. to BC(diag)-54, DTC U0164 LOST COMMUNICATION WITH HVAC CONTROL MODULE, Diagnostic Procedure with Diagnostic Trouble Code (DTC).>
U0167	LOST COMMUNICATION WITH IMMOBILIZER CONTROL MODULE	<Ref. to BC(diag)-54, DTC U0167 LOST COMMUNICATION WITH IMMOBILIZER CONTROL MODULE, Diagnostic Procedure with Diagnostic Trouble Code (DTC).>
U0169	LOST COMMUNICATION WITH SUNROOF CONTROL MODULE	<Ref. to BC(diag)-55, DTC U0169 LOST COMMUNICATION WITH SUNROOF CONTROL MODULE, Diagnostic Procedure with Diagnostic Trouble Code (DTC).>
U0208	LOST COMMUNICATION WITH SEAT MEMORY	<Ref. to BC(diag)-58, DTC U0208 LOST COMMUNICATION WITH SEAT MEMORY, Diagnostic Procedure with Diagnostic Trouble Code (DTC).>
U0230	LOST COMMUNICATION WITH POWER REAR GATE CONTROL MODULE	<Ref. to BC(diag)-61, DTC U0230 LOST COMMUNICATION WITH POWER REAR GATE CONTROL MODULE, Diagnostic Procedure with Diagnostic Trouble Code (DTC).>
U0327	SOFTWARE INCOMPATIBILITY WITH VEHICLE SECURITY CONTROL MODULE	<Ref. to BC(diag)-62, DTC U0327 SOFTWARE INCOMPATIBILITY WITH VEHICLE SECURITY CONTROL MODULE, Diagnostic Procedure with Diagnostic Trouble Code (DTC).>
U0401	INVALID DATA RECEIVED FROM ECM/PCM "A"	<Ref. to BC(diag)-62, DTC U0401 INVALID DATA RECEIVED FROM ECM/PCM "A", Diagnostic Procedure with Diagnostic Trouble Code (DTC).>
U0402	INVALID DATA RECEIVED FROM TCM	<Ref. to BC(diag)-62, DTC U0402 INVALID DATA RECEIVED FROM TCM, Diagnostic Procedure with Diagnostic Trouble Code (DTC).>
U0416	INVALID DATA RECEIVED FROM VEHICLE DYNAMICS CONTROL MODULE	<Ref. to BC(diag)-63, DTC U0416 INVALID DATA RECEIVED FROM VEHICLE DYNAMICS CONTROL MODULE, Diagnostic Procedure with Diagnostic Trouble Code (DTC).>
U0417	INVALID DATA RECEIVED FROM PARK BRAKE CONTROL MODULE	<Ref. to BC(diag)-63, DTC U0417 INVALID DATA RECEIVED FROM PARK BRAKE CONTROL MODULE, Diagnostic Procedure with Diagnostic Trouble Code (DTC).>
U0423	INVALID DATA RECEIVED FROM INSTRUMENT PANEL CLUSTER CONTROL MODULE	<Ref. to BC(diag)-63, DTC U0423 INVALID DATA RECEIVED FROM INSTRUMENT PANEL CLUSTER CONTROL MODULE, Diagnostic Procedure with Diagnostic Trouble Code (DTC).>
U0424	INVALID DATA RECEIVED FROM HVAC CONTROL MODULE	<Ref. to BC(diag)-63, DTC U0424 INVALID DATA RECEIVED FROM HVAC CONTROL MODULE, Diagnostic Procedure with Diagnostic Trouble Code (DTC).>
U0426	INVALID DATA RECEIVED FROM IMMOBILIZER CONTROL MODULE	<Ref. to BC(diag)-63, DTC U0426 INVALID DATA RECEIVED FROM IMMOBILIZER CONTROL MODULE, Diagnostic Procedure with Diagnostic Trouble Code (DTC).>
U0427	INVALID DATA RECEIVED FROM VEHICLE SECURITY CONTROL MODULE	<Ref. to BC(diag)-63, DTC U0427 INVALID DATA RECEIVED FROM VEHICLE SECURITY CONTROL MODULE, Diagnostic Procedure with Diagnostic Trouble Code (DTC).>
U123C	LOST COMMUNICATION WITH HIGH BEAM ASSIST CONTROL MODULE	<Ref. to BC(diag)-63, DTC U123C LOST COMMUNICATION WITH HIGH BEAM ASSIST CONTROL MODULE, Diagnostic Procedure with Diagnostic Trouble Code (DTC).>
U1500	KEYLESS UART COM. MALFUNCTION	<Ref. to BC(diag)-64, DTC U1500 KEYLESS UART COM. MALFUNCTION, Diagnostic Procedure with Diagnostic Trouble Code (DTC).>
U153D	INVALID DATA RECEIVED FROM HIGH BEAM ASSIST CONTROL MODULE	<Ref. to BC(diag)-67, DTC U153D INVALID DATA RECEIVED FROM HIGH BEAM ASSIST CONTROL MODULE, Diagnostic Procedure with Diagnostic Trouble Code (DTC).>
U1673	LIN COMMUNICATION BUS ERROR BODY CONTROL MODULE	<Ref. to BC(diag)-68, DTC U1673 LIN COMMUNICATION BUS ERROR BODY CONTROL MODULE, Diagnostic Procedure with Diagnostic Trouble Code (DTC).>

15.Diagnostic Procedure with Diagnostic Trouble Code (DTC)

A: DTC B1010 BODY CONTROL SYSTEM (BIU) MALFUNCTION

DTC DETECTING CONDITION:
System error in body integrated unit (integrated unit EEPROM malfunction)
Time Needed for Diagnosis:
Immediately
TROUBLE SYMPTOM:
LAN communication immobilizer function may not be executed normally.

	Step	Check	Yes	No
1	**CHECK DTC.** Check DTC indicated by body integrated unit. <Ref. to BC(diag)-14, Read Diagnostic Trouble Code (DTC).>	Is DTC B1010 displayed? (Current malfunction)	Go to step **2**.	Temporary EEPROM access error occurred.
2	**CHECK CONNECTOR.** 1) Turn the ignition switch to OFF. 2) Disconnect the body integrated unit connector. 3) Connect the disconnected connectors. 4) Read the DTC of body integrated unit using Subaru Select Monitor. <Ref. to BC(diag)-14, Read Diagnostic Trouble Code (DTC).>	Is DTC B1010 displayed? (Current malfunction)	Replace the body integrated unit. <Ref. to SL-83, Body Integrated Unit.>	Temporary EEPROM access error occurred.

B: DTC B1011 BATTERY CONTROL POWER SUPPLY

DTC DETECTING CONDITION:

- Voltage failure caused by poor contact of battery power supply control circuit
- Battery voltage of body integrated unit is not within the range of 8.3 — 16.7 V.

Time Needed for Diagnosis:

40 s or more

TROUBLE SYMPTOM:

Functions of body integrated unit stop.

NOTE:

When B1012 BATT P/SUPPLY MALFUNCTION BACKUP is output at the same time, all the function of body integrated unit may not operate.

WIRING DIAGRAM:

Immobilizer system <Ref. to WI-251, WIRING DIAGRAM, Immobilizer System.>

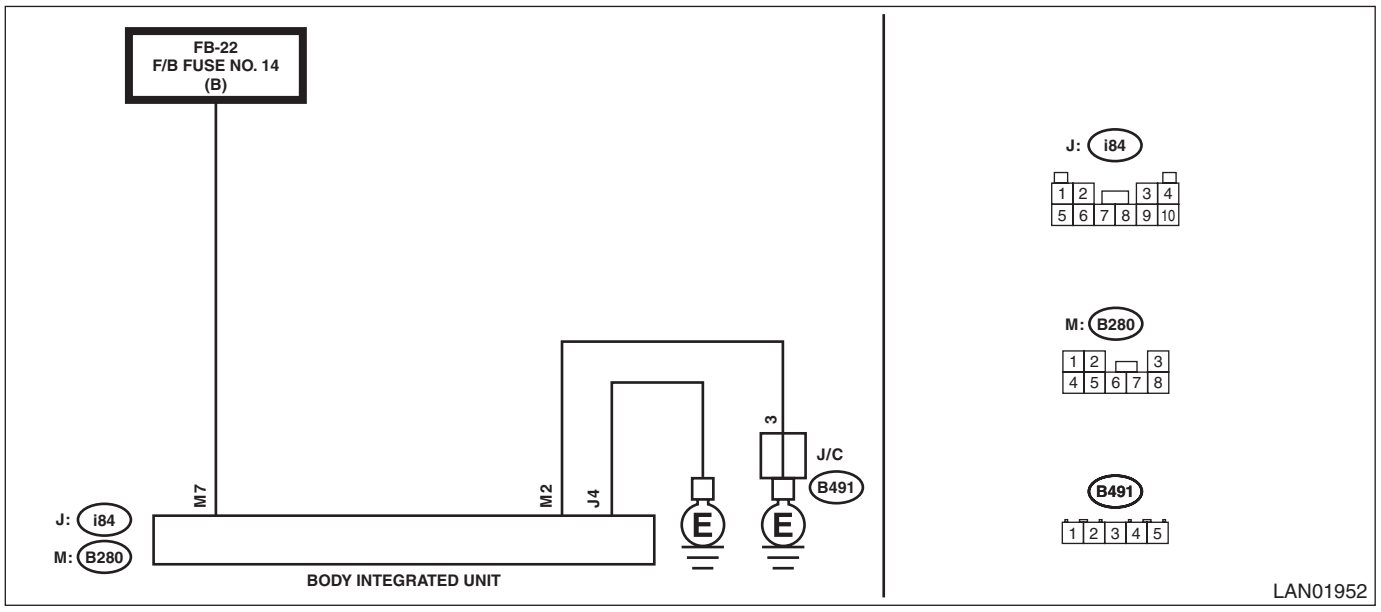

Step		Check	Yes	No
1	**CHECK DTC.** Read the DTC of body integrated unit using Subaru Select Monitor. <Ref. to BC(diag)-14, Read Diagnostic Trouble Code (DTC).>	Is DTC B1011 displayed? (Current malfunction)	Go to step **2**.	Go to step **5**.
2	**CHECK DTC.** 1) Turn the ignition switch to OFF. 2) Disconnect and then connect the body integrated unit connector. 3) Wait approx. 2 minutes. 4) Turn the ignition switch to ON. 5) Read the DTC of body integrated unit using Subaru Select Monitor. <Ref. to BC(diag)-14, Read Diagnostic Trouble Code (DTC).>	Is DTC B1011 displayed? (Current malfunction)	Go to step **3**.	Go to step **5**.
3	**CHECK FUSE.** 1) Turn the ignition switch to OFF. 2) Check the fuse.	Is the fuse OK?	Go to step **4**.	Replace the defective fuse.
4	**CHECK HARNESS.** 1) Disconnect the body integrated unit connector. 2) Using the tester, measure the voltage between terminals. ***Connector & terminal*** ***(B280) No. 7 (+) — Chassis ground (–):***	Is the voltage 8.5 — 16.5 V?	Replace the body integrated unit. <Ref. to SL-83, Body Integrated Unit.>	Repair the harness between body integrated unit and fuse.

	Step	Check	Yes	No
5	**CHECK CONNECTOR.** 1) Turn the ignition switch to OFF. 2) Disconnect the body integrated unit connector.	Is there poor contact of connector?	Repair or replace the poor contact of connector.	Even if DTC is displayed, the circuit has returned to a normal condition at this time. Reproduce the failure, and then perform the diagnosis again. NOTE: In this case, temporary poor contact of connector, temporary open or short circuit of harness may be the cause.

C: DTC B1012 BATTERY BACKUP POWER SUPPLY

DTC DETECTING CONDITION:
Voltage failure caused by poor contact of battery power supply backup circuits
BAT (back-up) voltage was outside the range of 8.3 — 16.7 V, when the BAT (back-up) power supply was ON.
Time Needed for Diagnosis:
40 s or more
TROUBLE SYMPTOM:
Illuminations for the keyless entry, map light, luggage light, trunk light, room light, and ignition switch do not turn on.

NOTE:
When B1011 BATTERY CONTROL POWER SUPPLY is output at the same time, all the function of body integrated unit may not operate.
WIRING DIAGRAM:
Immobilizer system <Ref. to WI-251, WIRING DIAGRAM, Immobilizer System.>

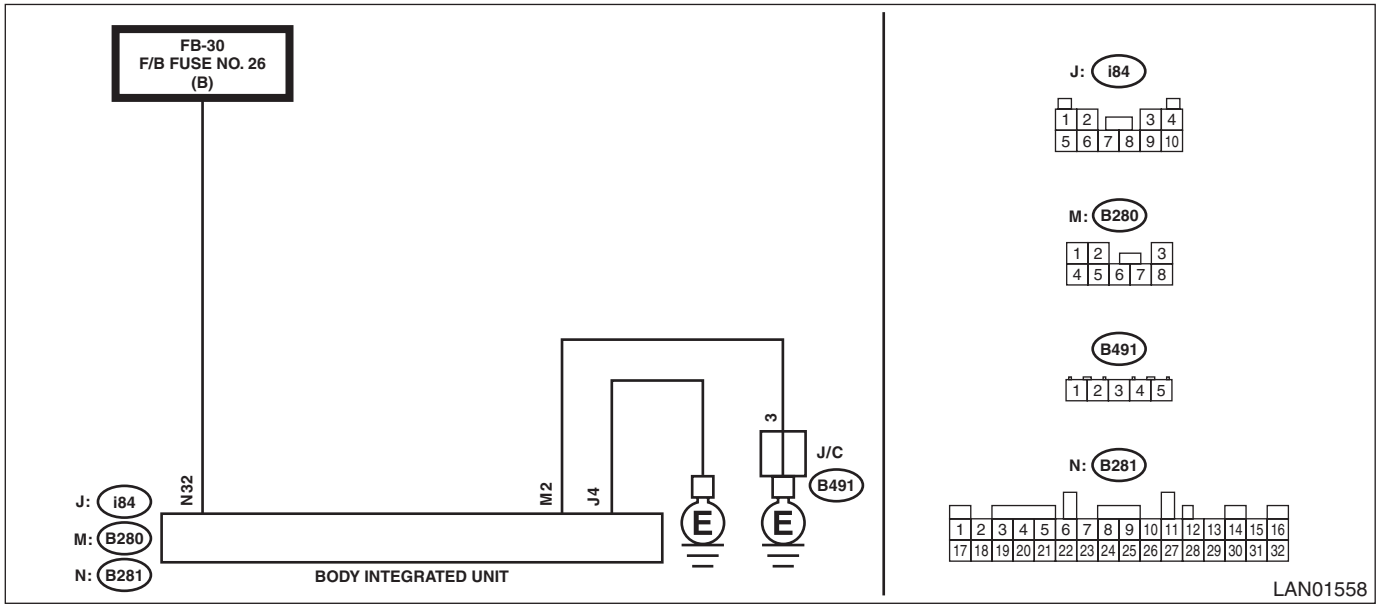

Step		Check	Yes	No
1	**CHECK DTC.** Read the DTC of body integrated unit using Subaru Select Monitor. <Ref. to BC(diag)-14, Read Diagnostic Trouble Code (DTC).>	Is DTC B1012 displayed? (Current malfunction)	Go to step **2**.	Go to step **5**.
2	**CHECK DTC.** 1) Turn the ignition switch to OFF. 2) Disconnect and then connect the body integrated unit connector. 3) Wait approx. 2 minutes. 4) Turn the ignition switch to ON. 5) Read the DTC of body integrated unit using Subaru Select Monitor. <Ref. to BC(diag)-14, Read Diagnostic Trouble Code (DTC).>	Is DTC B1012 displayed? (Current malfunction)	Go to step **3**.	Go to step **5**.
3	**CHECK FUSE.** 1) Turn the ignition switch to OFF. 2) Check the fuse.	Is the fuse OK?	Go to step **4**.	Replace the defective fuse.

	Step	Check	Yes	No
4	**CHECK HARNESS.** 1) Disconnect the body integrated unit connector. 2) Using the tester, measure the voltage between terminals. ***Connector & terminal*** ***(B281) No. 32 (+) — Chassis ground (–):***	Is the voltage 8.5 — 16.5 V?	Replace the body integrated unit. <Ref. to SL-83, Body Integrated Unit.>	Repair the harness between body integrated unit and fuse.
5	**CHECK CONNECTOR.** 1) Turn the ignition switch to OFF. 2) Disconnect the body integrated unit connector.	Is there poor contact of connector?	Repair or replace the poor contact of connector.	Even if DTC is displayed, the circuit has returned to a normal condition at this time. Reproduce the failure, and then perform the diagnosis again. NOTE: In this case, temporary poor contact of connector, temporary open or short circuit of harness may be the cause.

D: DTC B1013 IGNITION POWER

DTC DETECTING CONDITION:
Voltage failure caused by poor contact of IGN power supply circuits
IGN voltage was outside the range of 8.3 — 16.7 V, when the IGN power supply was ON.
Time Needed for Diagnosis:
40 s or more
TROUBLE SYMPTOM:
Symptoms such as shift lock or wiper not operating may occur.
WIRING DIAGRAM:
Shift lock control system <Ref. to WI-337, WIRING DIAGRAM, Shift Lock Control System.>

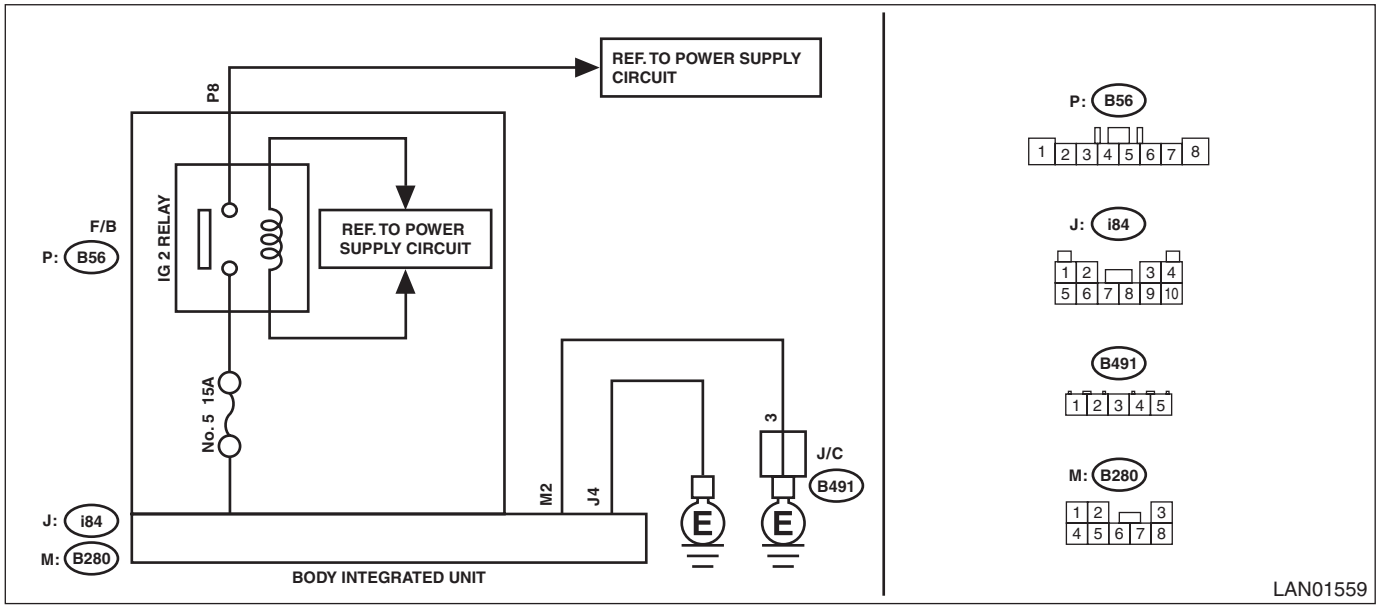

Step		Check	Yes	No
1	**CHECK DTC.** Read the DTC of body integrated unit using Subaru Select Monitor. <Ref. to BC(diag)-14, Read Diagnostic Trouble Code (DTC).>	Is DTC B1013 displayed? (Current malfunction)	Go to step **2**.	Go to step **6**.
2	**CHECK DTC.** 1) Turn the ignition switch to OFF. 2) Disconnect and then connect the body integrated unit connector. 3) Wait approx. 2 minutes. 4) Turn the ignition switch to ON. 5) Read the DTC of body integrated unit using Subaru Select Monitor. <Ref. to BC(diag)-14, Read Diagnostic Trouble Code (DTC).>	Is DTC B1013 displayed? (Current malfunction)	Go to step **3**.	Go to step **6**.
3	**CHECK FUSE.** 1) Turn the ignition switch to OFF. 2) Check the fuse.	Is the fuse OK?	Go to step **4**.	Replace the defective fuse.
4	**CHECK HARNESS.** 1) Turn the ignition switch to ON. 2) Using the tester, measure the voltage between terminals. ***Connector & terminal*** ***F/B fuse No. 5 (+) — Chassis ground (–):***	Is the voltage 8.5 — 16.5 V?	Replace the body integrated unit. <Ref. to SL-83, Body Integrated Unit.>	Go to step **5**.
5	**CHECK IG2 RELAY.** Perform individual inspection of IG2 relay. <Ref. to SL-9, Relay and Fuse.>	Is there any fault?	Replace the relay.	Repair the harness between F/B and M/B.

	Step	Check	Yes	No
6	**CHECK CONNECTOR.** 1) Turn the ignition switch to OFF. 2) Disconnect the body integrated unit connector.	Is there poor contact of connector?	Repair or replace the poor contact of connector.	Even if DTC is displayed, the circuit has returned to a normal condition at this time. Reproduce the failure, and then perform the diagnosis again. NOTE: In this case, temporary poor contact of connector, temporary open or short circuit of harness may be the cause.

E: DTC B1014 ACC POWER

DTC DETECTING CONDITION:
Voltage failure caused by poor contact of ACC power supply circuit
ACC voltage was outside the range of 8.3 — 16.7 V, when ACC power supply was ON.
Time Needed for Diagnosis:
40 s or more
TROUBLE SYMPTOM:
DRL may not illuminate.
WIRING DIAGRAM:
Shift lock control system <Ref. to WI-337, WIRING DIAGRAM, Shift Lock Control System.>

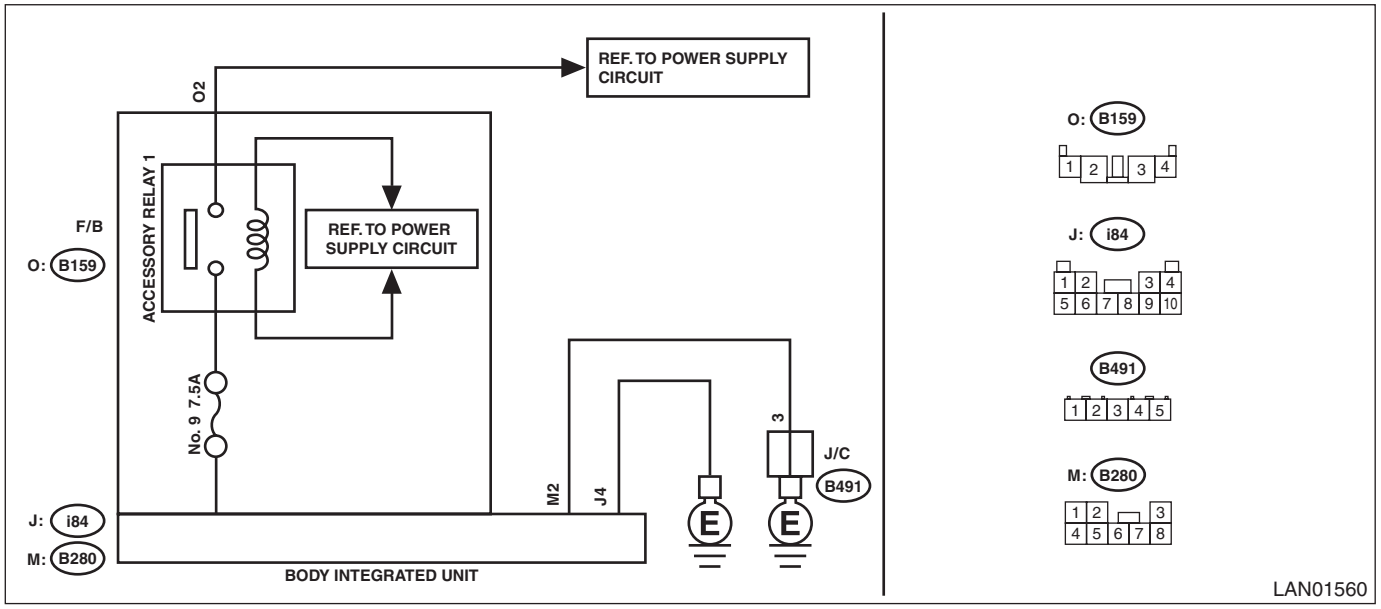

Step		Check	Yes	No
1	**CHECK DTC.** Read the DTC of body integrated unit using Subaru Select Monitor. <Ref. to BC(diag)-14, Read Diagnostic Trouble Code (DTC).>	Is DTC B1014 displayed? (Current malfunction)	Go to step **2**.	Go to step **6**.
2	**CHECK DTC.** 1) Turn the ignition switch to OFF. 2) Disconnect and then connect the body integrated unit connector. 3) Wait approx. 2 minutes. 4) Turn the ignition switch to ON. 5) Read the DTC of body integrated unit using Subaru Select Monitor. <Ref. to BC(diag)-14, Read Diagnostic Trouble Code (DTC).>	Is DTC B1014 displayed? (Current malfunction)	Go to step **3**.	Go to step **6**.
3	**CHECK FUSE.** 1) Turn the ignition switch to OFF. 2) Check the fuse.	Is the fuse OK?	Go to step **4**.	Replace the defective fuse.
4	**CHECK HARNESS.** 1) Turn the ignition switch to ACC. 2) Using the tester, measure the voltage between terminals. ***Connector & terminal*** ***F/B fuse No. 9 (+) — Chassis ground (–):***	Is the voltage 8.5 — 16.5 V?	Replace the body integrated unit. <Ref. to SL-83, Body Integrated Unit.>	Go to step **5**.
5	**CHECK ACCESSORY 1 RELAY.** Perform individual inspection of the accessory 1 relay. <Ref. to SL-9, Relay and Fuse.>	Is there any fault?	Replace the relay.	Repair the harness between F/B and M/B.

	Step	Check	Yes	No
6	**CHECK CONNECTOR.** 1) Turn the ignition switch to OFF. 2) Disconnect the body integrated unit connector.	Is there poor contact of connector?	Repair or replace the poor contact of connector.	Even if DTC is displayed, the circuit has returned to a normal condition at this time. Reproduce the failure, and then perform the diagnosis again. NOTE: In this case, temporary poor contact of connector, temporary open or short circuit of harness may be the cause.

F: DTC B1015 KEY INTERLOCK CIRCUIT

DTC DETECTING CONDITION:
Short to ground in key interlock circuit
Key interlock output monitor is OFF, while BAT power supply voltage is 8.3 V or more and key lock operation judgment condition is met.
Time Needed for Diagnosis:
50 ms or more
TROUBLE SYMPTOM:
Key interlock does not keep lock condition.
WIRING DIAGRAM:

NOTE:
For the coupling connector, refer to “WIRING SYSTEM”.
Shift lock control system <Ref. to WI-337, WIRING DIAGRAM, Shift Lock Control System.>

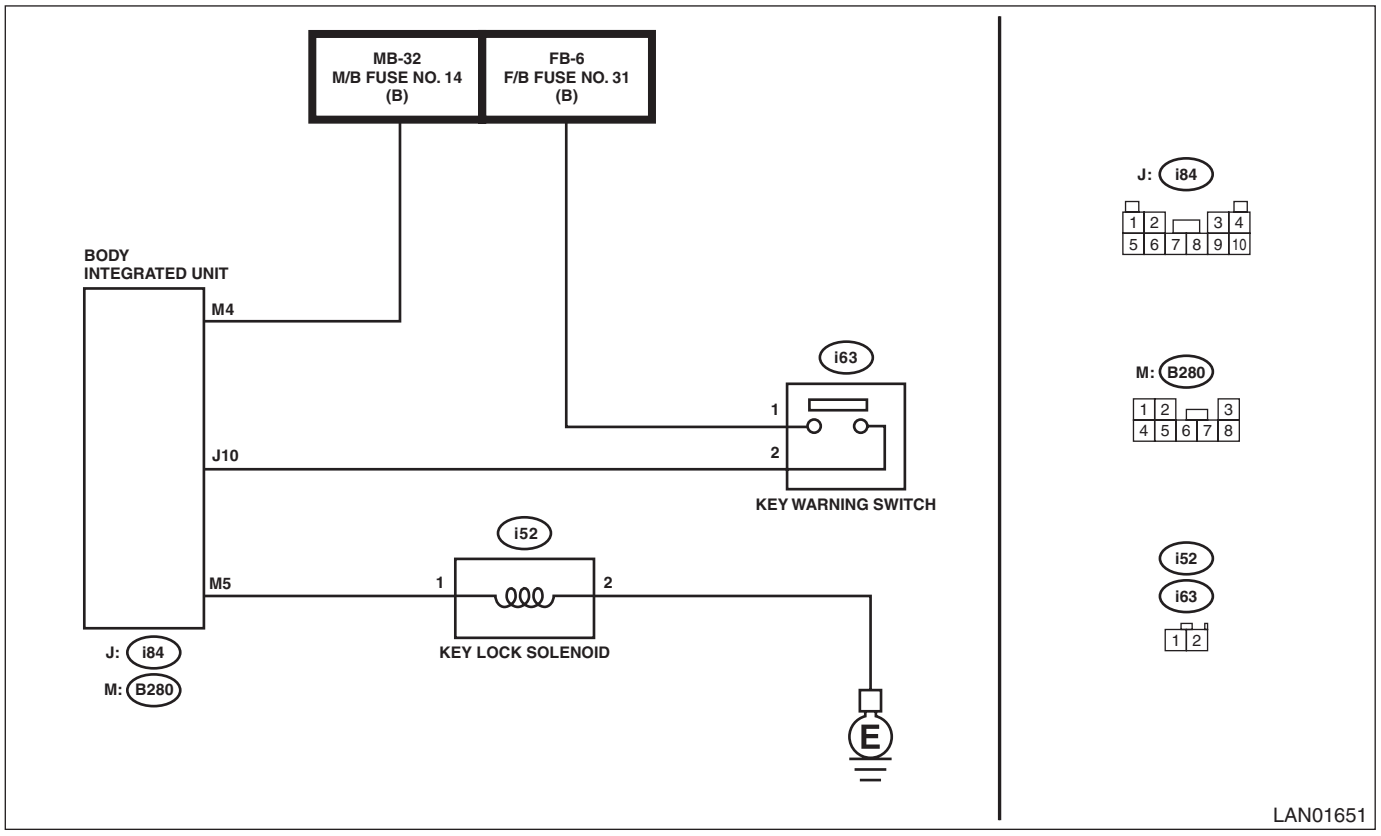

	Step	Check	Yes	No
1	**CHECK DTC.** 1) Insert the ignition key. 2) Turn the ignition switch to ON. 3) Shift to the Neutral range. 4) Shift into P range. 5) Shift to the Neutral range. 6) Shift into P range. 7) Shift to the Neutral range. 8) Read the DTC of body integrated unit using Subaru Select Monitor. <Ref. to BC(diag)-14, Read Diagnostic Trouble Code (DTC).>	Is DTC B1015 displayed? (Current malfunction)	Go to step **2**.	Even if DTC is displayed, the circuit has returned to a normal condition at this time. Reproduce the failure, and then perform the diagnosis again. NOTE: In this case, temporary poor contact of connector, temporary open or short circuit of harness may be the cause.
2	**CHECK KEY LOCK SOLENOID.** 1) Turn the ignition switch to OFF. 2) Disconnect the key lock solenoid connector (i52). 3) Measure the resistance between the key lock solenoid connector. ***Connector & terminal*** ***(i52) No. 1 — No. 2:***	Is the resistance 103 — 115 Ω?	Go to step **3**.	Replace the key lock solenoid. <Ref. to SL-70, Key Lock Cylinders.>
3	**CHECK HARNESS (GROUND SHORT CIRCUIT).** 1) Disconnect the body integrated unit connector. 2) Measure the resistance between body integrated unit and chassis ground using tester. ***Connector & terminal*** ***(B280) No. 5 — Chassis ground:***	Is the resistance 1 MΩ or more?	Go to step **4**.	Repair or replace the short circuit of the harness.
4	**CHECK CONNECTOR.** 1) Turn the ignition switch to OFF. 2) Disconnect the body integrated unit connector.	Is there poor contact at disconnected connector terminal?	Repair the terminal where poor contact exists, or replace harness.	Go to step **5**.
5	**CHECK DTC.** 1) Insert the ignition key. 2) Turn the ignition switch to ON. 3) Shift to the Neutral range. 4) Shift into P range. 5) Shift to the Neutral range. 6) Shift into P range. 7) Shift to the Neutral range. 8) Read the DTC of body integrated unit using Subaru Select Monitor. <Ref. to BC(diag)-14, Read Diagnostic Trouble Code (DTC).>	Is DTC B1015 displayed? (Current malfunction)	Replace the body integrated unit. <Ref. to SL-83, Body Integrated Unit.>	Even if DTC is displayed, the circuit has returned to a normal condition at this time. Reproduce the failure, and then perform the diagnosis again. NOTE: In this case, temporary poor contact of connector, temporary open or short circuit of harness may be the cause.

G: DTC B1016 SHIFT LOCK CIRCUIT

DTC DETECTING CONDITION:

- Shift lock circuit is open, or shorted to power or ground.
- Shift lock solenoid output monitor is OFF, while BAT power supply voltage is 8.3 V or more and shift lock solenoid output is ON.*1
- Shift lock solenoid output monitor is ON, while BAT power supply voltage is 8.3 V or more and shift lock solenoid output is OFF.*2

Time Needed for Diagnosis:

*1: 50 ms or more
*2: 3 s or more

TROUBLE SYMPTOM:

Shift lock does not be released or remain locked.

WIRING DIAGRAM:

Shift lock control system <Ref. to WI-337, WIRING DIAGRAM, Shift Lock Control System.>

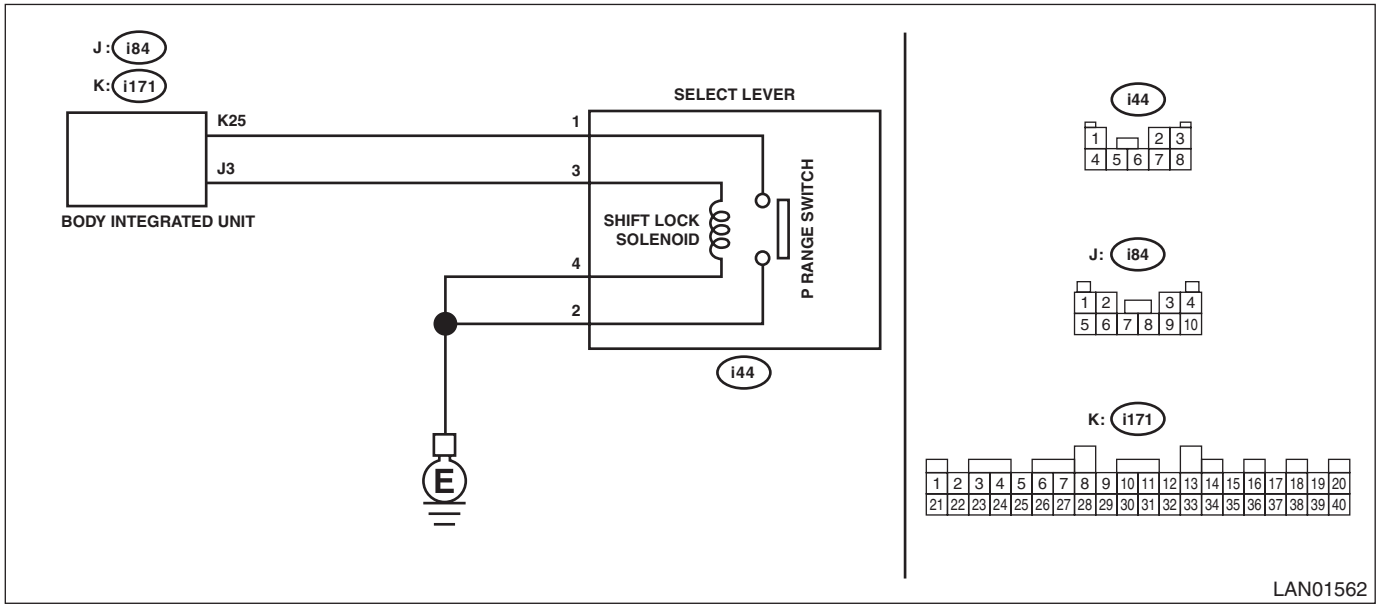

Step		Check	Yes	No
1	**CHECK DTC.** 1) Turn the ignition switch to ON. 2) Maintain the shift lever in P range for five seconds or more. 3) Maintain the brake pedal depressed for one second or more. 4) Read the DTC of body integrated unit using Subaru Select Monitor. <Ref. to BC(diag)-14, Read Diagnostic Trouble Code (DTC).>	Is DTC B1016 displayed? (Current malfunction)	Go to step **2**.	Even if DTC is displayed, the circuit has returned to a normal condition at this time. Reproduce the failure, and then perform the diagnosis again. NOTE: In this case, temporary poor contact of connector, temporary open or short circuit of harness may be the cause.

	Step	Check	Yes	No
2	**CHECK HARNESS (OPEN CIRCUIT).** 1) Turn the ignition switch to OFF. 2) Disconnect the shift lock solenoid connector. 3) Using the tester, measure the resistance between terminals. ***Connector & terminal*** ***(i44) No. 4 — Chassis ground:***	Is the resistance less than 10 Ω?	Go to step **3**.	Repair or replace the open circuit of harness.
3	**CHECK SHIFT LOCK SOLENOID.** Using a tester, measure the resistance between shift lock solenoid terminals. ***Connector & terminal*** ***(i44) No. 3 — (i44) No. 4:***	Is the resistance between 27.6 — 30.5 Ω?	Go to step **4**.	Replace the shift lock solenoid. <Ref. to CS-49, REMOVAL, AT Shift Lock Solenoid and "P" Range Switch.>
4	**CHECK HARNESS (OPEN CIRCUIT).** Use a tester to measure the resistance between harness terminals. ***Connector & terminal*** ***(i44) No. 3 — (i84) No. 3:*** NOTE: If body integrated unit and shift lock connector are not disconnected, disconnect them first and then perform measurement.	Is the resistance less than 10 Ω?	Go to step **5**.	Repair or replace the open circuit of harness.
5	**CHECK HARNESS (GROUND SHORT CIRCUIT).** Measure the resistance between body integrated unit and chassis ground using a tester. ***Connector & terminal*** ***(i84) No. 3 — Chassis ground:***	Is the resistance 1 MΩ or more?	Go to step **6**.	Repair or replace the ground short circuit of the harness.
6	**CHECK HARNESS (SHORT CIRCUIT TO POWER SUPPLY).** Measure the voltage between body integrated unit and chassis ground using a tester. ***Connector & terminal*** ***(i84) No. 3 (+) — Chassis ground (–):***	Is the voltage less than 1 V?	Go to step **7**.	Repair or replace the short circuit to power supply of the harness.
7	**CHECK CONNECTOR.** 1) Turn the ignition switch to OFF. 2) Disconnect the body integrated unit connector and shift lock connector.	Is there poor contact of connector terminal?	Repair or replace the poor contact of terminal.	Go to step **8**.
8	**CHECK DTC.** 1) Connect all the disconnected connectors. 2) Turn the ignition switch to ON. 3) Maintain the shift lever in P range and the brake pedal depressed for five seconds or more. 4) Read the DTC of body integrated unit using Subaru Select Monitor. <Ref. to BC(diag)-14, Read Diagnostic Trouble Code (DTC).>	Is DTC B1016 displayed? (Current malfunction)	Replace the body integrated unit. <Ref. to SL-83, Body Integrated Unit.>	Even if DTC is displayed, the circuit has returned to a normal condition at this time. Reproduce the failure, and then perform the diagnosis again. NOTE: In this case, temporary poor contact of connector, temporary open or short circuit of harness may be the cause.

H: DTC B1107 CAN COMMUNICATION (BIU) STUCK

DTC DETECTING CONDITION:
CAN message in the body integrated unit stuck in register
Time Needed for Diagnosis:
Immediately
TROUBLE SYMPTOM:
CAN communication can not be executed normally.

	Step	Check	Yes	No
1	**CHECK DTC.** 1) Turn the ignition switch to ON. 2) Check DTC indicated by body integrated unit. <Ref. to BC(diag)-14, Read Diagnostic Trouble Code (DTC).>	Is DTC B1017 displayed? (Current malfunction)	Go to step **2**.	Even if DTC is displayed, the circuit has returned to a normal condition at this time. Reproduce the failure, and then perform the diagnosis again. NOTE: In this case, temporary poor contact of connector, temporary open or short circuit of harness may be the cause.
2	**CHECK CONNECTOR.** 1) Turn the ignition switch to OFF. 2) Disconnect the body integrated unit connector. 3) Connect the disconnected connectors. 4) Turn the ignition switch to ON. 5) Read the DTC of body integrated unit using Subaru Select Monitor. <Ref. to BC(diag)-14, Read Diagnostic Trouble Code (DTC).>	Is DTC B1017 displayed? (Current malfunction)	Replace the body integrated unit. <Ref. to SL-83, Body Integrated Unit.>	Even if DTC is displayed, the circuit has returned to a normal condition at this time. Reproduce the failure, and then perform the diagnosis again. NOTE: In this case, temporary poor contact of connector, temporary open or short circuit of harness may be the cause.

I: DTC B1401 METER COLLATION

For detailed diagnosis procedure, refer to IMMOBILIZER (DIAG). <Ref. to IM(diag)-23, DTC B1401 METER COLLATION, Diagnostic Procedure with Diagnostic Trouble Code (DTC).>

J: DTC B1402 IMMOBILIZER KEY COLLATION

For detailed diagnosis procedure, refer to IMMOBILIZER (DIAG). <Ref. to IM(diag)-23, DTC B1402 IMMOBILIZER KEY COLLATION, Diagnostic Procedure with Diagnostic Trouble Code (DTC).>

K: DTC B1407 MET COMMUNICATION

For detailed diagnosis procedure, refer to IMMOBILIZER (DIAG). <Ref. to IM(diag)-24, DTC B1407 MET COMMUNICATION, Diagnostic Procedure with Diagnostic Trouble Code (DTC).>

L: DTC B1408 METER NON-VOLATILE MEMORY

For detailed diagnosis procedure, refer to IMMOBILIZER (DIAG). <Ref. to IM(diag)-24, DTC B1408 METER NON-VOLATILE MEMORY, Diagnostic Procedure with Diagnostic Trouble Code (DTC).>

M: DTC B1410 TRANSPONDER COMMUNICATION

For detailed diagnosis procedure, refer to IMMOBILIZER (DIAG). <Ref. to IM(diag)-25, DTC B1410 TRANSPONDER COMMUNICATION, Diagnostic Procedure with Diagnostic Trouble Code (DTC).>

N: DTC B1411 IMMOBILIZER ANTENNA

For detailed diagnosis procedure, refer to IMMOBILIZER (DIAG). <Ref. to IM(diag)-25, DTC B1411 IMMOBILIZER ANTENNA, Diagnostic Procedure with Diagnostic Trouble Code (DTC).>

O: DTC U0073 CONTROL MODULE COMMUNICATION BUS OFF

Detected when malfunction occurs in CAN line. (Bus off)

NOTE:
Perform the diagnosis for LAN system. <Ref. to LAN(diag)-2, PROCEDURE, Basic Diagnostic Procedure.>

P: DTC U0074 CONTROL MODULE COMMUNICATION BUS "BODY-CAN" OFF

Detected when malfunction occurs in BODY-CAN line. (Bus off)

NOTE:
Perform the diagnosis for LAN system. <Ref. to LAN(diag)-2, PROCEDURE, Basic Diagnostic Procedure.>

Q: DTC U0100 LOST COMMUNICATION WITH ECM/PCM "A"

No data is received from ECM.

NOTE:
Perform the diagnosis for LAN system. <Ref. to LAN(diag)-2, PROCEDURE, Basic Diagnostic Procedure.>

R: DTC U0101 LOST COMMUNICATION WITH TCM

No data is received from TCM.

NOTE:
Perform the diagnosis for LAN system. <Ref. to LAN(diag)-2, PROCEDURE, Basic Diagnostic Procedure.>

S: DTC U0122 LOST COMMUNICATION WITH VEHICLE DYNAMICS CONTROL MODULE

No data is received from VDC CM.

NOTE:
Perform the diagnosis for LAN system. <Ref. to LAN(diag)-2, PROCEDURE, Basic Diagnostic Procedure.>

T: DTC U0128 LOST COMMUNICATION WITH PARK BRAKE CONTROL MODULE

No data is received from VDC CM.

NOTE:
Perform the diagnosis for LAN system. <Ref. to LAN(diag)-2, PROCEDURE, Basic Diagnostic Procedure.>

U: DTC U0131 LOST COMMUNICATION WITH POWER STEERING CONTROL MODULE

No data is received from EPS CM.

NOTE:
Perform the diagnosis for LAN system. <Ref. to LAN(diag)-2, PROCEDURE, Basic Diagnostic Procedure.>

V: DTC U0151 LOST COMMUNICATION WITH RESTRAINTS CONTROL MODULE

No data is received from airbag CM.

NOTE:
Perform the diagnosis for LAN system. <Ref. to LAN(diag)-2, PROCEDURE, Basic Diagnostic Procedure.>

W: DTC U0155 LOST COMMUNICATION WITH INSTRUMENT PANEL CLUSTER (IPC) CONTROL MODULE

No data is received from combination meter.

NOTE:
Perform the diagnosis for LAN system. <Ref. to LAN(diag)-2, PROCEDURE, Basic Diagnostic Procedure.>

X: DTC U0164 LOST COMMUNICATION WITH HVAC CONTROL MODULE

No data is received from A/C CM.

NOTE:
Perform the diagnosis for LAN system. <Ref. to LAN(diag)-2, PROCEDURE, Basic Diagnostic Procedure.>

Y: DTC U0167 LOST COMMUNICATION WITH IMMOBILIZER CONTROL MODULE

No data is received from immobilizer CM.

NOTE:
Perform the diagnosis for LAN system. <Ref. to LAN(diag)-2, PROCEDURE, Basic Diagnostic Procedure.>

Z: DTC U0169 LOST COMMUNICATION WITH SUNROOF CONTROL MODULE

DTC DETECTING CONDITION:
No data is received from sunroof unit.
TROUBLE SYMPTOM:
The sunroof does not operate normally.
WIRING DIAGRAM:

NOTE:
For the coupling connector, refer to “WIRING SYSTEM”.
Sunroof Control System <Ref. to WI-348, WIRING DIAGRAM, Sunroof Control System.>

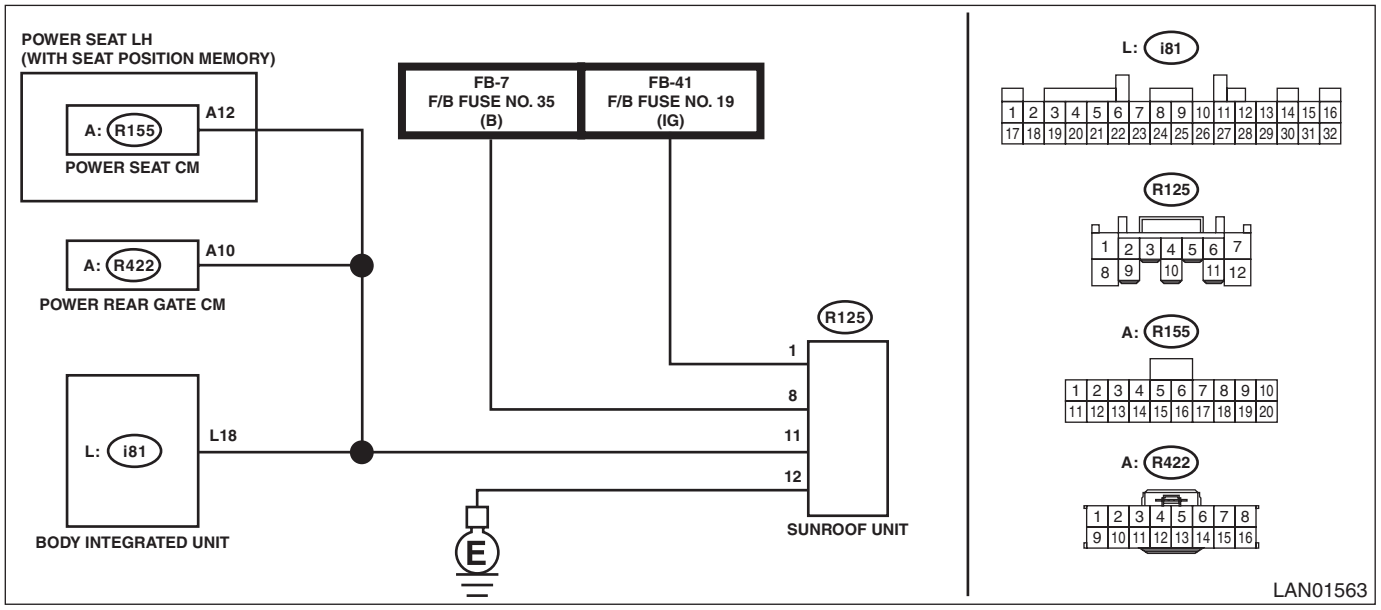

Step		Check	Yes	No
1	**CHECK DTC.** Read the DTC of body integrated unit using Subaru Select Monitor. <Ref. to BC(diag)-14, Read Diagnostic Trouble Code (DTC).>	Is DTC U0169 displayed? (Current malfunction)	Go to step **2**.	Even if DTC is displayed, the circuit has returned to a normal condition at this time. Reproduce the failure, and then perform the diagnosis again. NOTE: In this case, temporary poor contact of connector, temporary open or short circuit of harness may be the cause.

	Step	Check	Yes	No
2	**CHECK DTC.** 1) Turn the ignition switch to OFF. 2) Disconnect the sunroof unit connector and body integrated unit connector. 3) Connect the disconnected connectors. 4) Read the DTC of the CAN system using the Subaru Select Monitor. <Ref. to BC(diag)-14, Read Diagnostic Trouble Code (DTC).>	Is DTC U0169 displayed? (Current malfunction)	Go to step **3**.	Even if DTC is displayed, the circuit has returned to a normal condition at this time. Reproduce the failure, and then perform the diagnosis again. NOTE: In this case, temporary poor contact of connector, temporary open or short circuit of harness may be the cause.
3	**CHECK HARNESS.** 1) Turn the ignition switch to OFF. 2) Disconnect the sunroof unit and body integrated unit connector. 3) Using the tester, measure the resistance between terminals. ***Connector & terminal*** ***(R125) No. 11 — (i81) No. 18:*** ***(R125) No. 12 — Chassis ground:***	Is the resistance less than 10 Ω?	Go to step **4**.	Repair the open circuit of harness.
4	**CHECK HARNESS.** 1) Disconnect the power rear gate CM connector. (With power rear gate) 2) Disconnect the power seat CM connector. (With power seat (with memory)) 3) Using the tester, measure the resistance between terminals. ***Connector & terminal*** ***(R125) No. 11 — Chassis ground:***	Is the resistance 10 kΩ or more?	Go to step **5**.	Repair the shorted portion of harness.
5	**CHECK HARNESS.** 1) Turn the ignition switch to ON. 2) Using the tester, measure the voltage between terminals. ***Connector & terminal*** ***(R125) No. 11 — Chassis ground:***	Is the voltage less than 1 V?	Go to step **6**.	Repair the shorted portion of harness.
6	**CHECK HARNESS.** 1) Turn the ignition switch to ON. 2) Using the tester, measure the voltage between terminals. ***Connector & terminal*** ***(R125) No. 1 (+) — Chassis ground (–):*** ***(R125) No. 8 (+) — Chassis ground (–):***	Is the voltage 9 V or more?	Go to step **7**.	Repair the open circuit of harness.
7	**CHECK CONTROL MODULE.** 1) Turn the ignition switch to OFF. 2) Replace the sunroof unit with a properly functioning part. <Ref. to SR-20, Sunroof Motor.> 3) Read the DTC of body integrated unit using Subaru Select Monitor. <Ref. to BC(diag)-14, Read Diagnostic Trouble Code (DTC).>	Is DTC U0169 displayed? (Current malfunction)	Replace the body integrated unit. <Ref. to SL-83, Body Integrated Unit.>	For model without power rear gate and without power seat (with memory), malfunction occurred in the sunroof unit. For models with power rear gate or with power seat (with memory), Go to step **8**.

	Step	Check	Yes	No
8	**CHECK CONTROL MODULE.** NOTE: For models without power rear gate, Go to step **9**. 1) Connect the power rear gate CM connector. 2) Read the DTC of body integrated unit using Subaru Select Monitor. <Ref. to BC(diag)-14, Read Diagnostic Trouble Code (DTC).>	Is DTC U0169 displayed? (Current malfunction)	Replace the power rear gate CM. <Ref. to PRG-6, Power Rear Gate Control Module.>	Go to step **9**.
9	**CHECK CONTROL MODULE.** 1) Connect the power seat CM connector. 2) Read the DTC of body integrated unit using Subaru Select Monitor. <Ref. to BC(diag)-14, Read Diagnostic Trouble Code (DTC).>	Is DTC U0170 displayed? (Current malfunction)	Replace the power seat CM. <Ref. to SE-53, POWER SEAT CONTROL MODULE (SEAT WITH MEMORY FUNCTION), REMOVAL, Power Seat System.>	Malfunction occurred in the sunroof unit.

AA:DTC U0208 LOST COMMUNICATION WITH SEAT MEMORY

DTC DETECTING CONDITION:
No data is received from power seat CM.
TROUBLE SYMPTOM:
The power seat does not operate normally.
WIRING DIAGRAM:

NOTE:
For the coupling connector, refer to “WIRING SYSTEM”.
Power seat system <Ref. to WI-299, WIRING DIAGRAM, Power Seat System.>

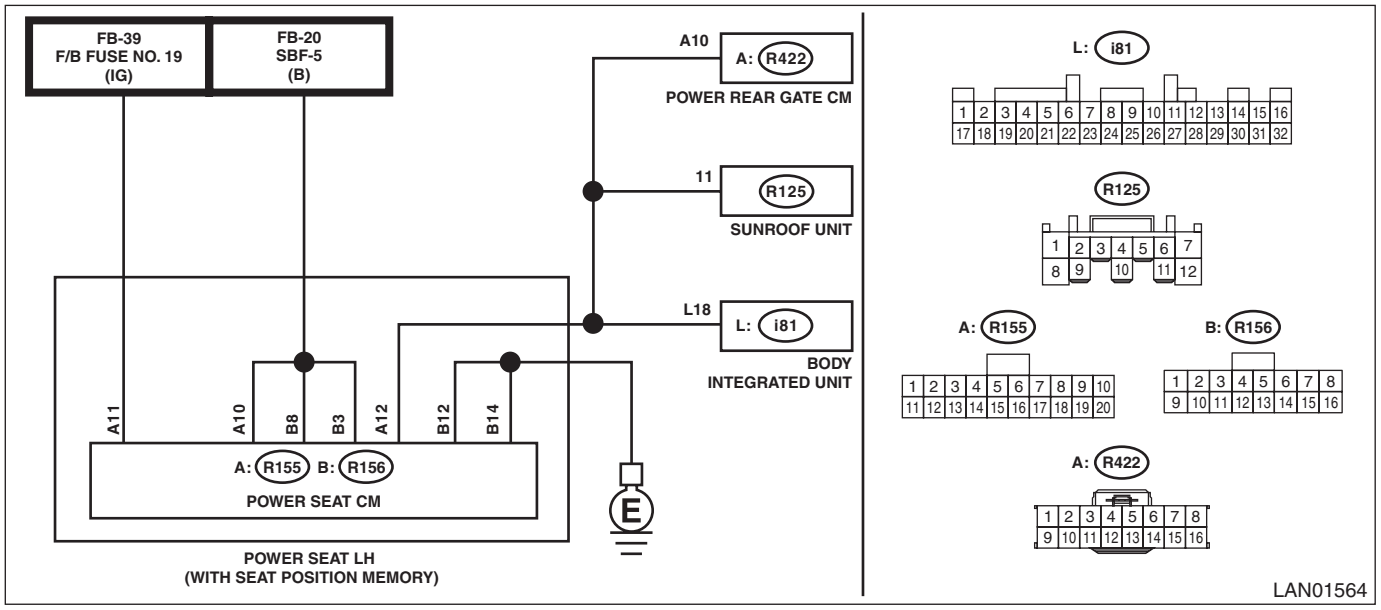

Step		Check	Yes	No
1	**CHECK DTC.** Read the DTC of body integrated unit using Subaru Select Monitor. <Ref. to BC(diag)-14, Read Diagnostic Trouble Code (DTC).>	Is DTC U0208 displayed? (Current malfunction)	Go to step **2**.	Even if DTC is displayed, the circuit has returned to a normal condition at this time. Reproduce the failure, and then perform the diagnosis again. NOTE: In this case, temporary poor contact of connector, temporary open or short circuit of harness may be the cause.

	Step	Check	Yes	No
2	**CHECK DTC.** 1) Turn the ignition switch to OFF. 2) Disconnect the power seat CM connector and the body integrated unit connector. 3) Connect the disconnected connectors. 4) Using the Subaru Select Monitor, read DTC of CAN system. <Ref. to BC(diag)-14, Read Diagnostic Trouble Code (DTC).>	Is DTC U0208 displayed? (Current malfunction)	Go to step **3**.	Even if DTC is displayed, the circuit has returned to a normal condition at this time. Reproduce the failure, and then perform the diagnosis again. NOTE: In this case, temporary poor contact of connector, temporary open or short circuit of harness may be the cause.
3	**CHECK HARNESS.** 1) Turn the ignition switch to OFF. 2) Disconnect the power seat CM connector and the body integrated unit connector. 3) Using the tester, measure the resistance between terminals. ***Connector & terminal*** ***(R155) No. 12 — (i81) No. 18:*** ***(R156) No. 12 — Chassis ground:*** ***(R156) No. 14 — Chassis ground:***	Is the resistance less than 10 Ω?	Go to step **4**.	Repair the open circuit of harness.
4	**CHECK HARNESS.** 1) Disconnect the power rear gate CM connector. (With power rear gate) 2) Disconnect the sunroof unit connector. (With sunroof) 3) Using the tester, measure the resistance between terminals. ***Connector & terminal*** ***(R155) No. 12 — Chassis ground:***	Is the resistance 10 kΩ or more?	Go to step **5**.	Repair the shorted portion of harness.
5	**CHECK HARNESS.** 1) Turn the ignition switch to ON. 2) Using the tester, measure the voltage between terminals. ***Connector & terminal*** ***(R155) No. 12 (+) — Chassis ground (–):***	Is the voltage less than 1 V?	Go to step **6**.	Repair the shorted portion of harness.
6	**CHECK HARNESS.** 1) Turn the ignition switch to ON. 2) Using the tester, measure the voltage between terminals. ***Connector & terminal*** ***(R155) No. 10 (+) — Chassis ground (–):*** ***(R155) No. 11 (+) — Chassis ground (–):*** ***(R156) No. 3 (+) — Chassis ground (–):*** ***(R156) No. 8 (+) — Chassis ground (–):***	Is the voltage 9 V or more?	Go to step **7**.	Repair the open circuit of harness.

	Step	Check	Yes	No
7	**CHECK CONTROL MODULE.** 1) Turn the ignition switch to OFF. 2) Replace the sunroof unit with a properly functioning part. <Ref. to SR-20, Sunroof Motor.> 3) Read the DTC of body integrated unit using Subaru Select Monitor. <Ref. to BC(diag)-14, Read Diagnostic Trouble Code (DTC).>	Is DTC U0208 displayed? (Current malfunction)	Replace the body integrated unit. <Ref. to SL-83, Body Integrated Unit.>	For models without power rear gate and without sunroof, malfunction occurred in the power seat CM. For models with power rear gate or with sunroof, Go to step **8**.
8	**CHECK CONTROL MODULE.** NOTE: For models without power rear gate, Go to step **9**. 1) Connect the power rear gate CM connector. 2) Read the DTC of body integrated unit using Subaru Select Monitor. <Ref. to BC(diag)-14, Read Diagnostic Trouble Code (DTC).>	Is DTC U0208 displayed? (Current malfunction)	Replace the power rear gate CM. <Ref. to PRG-6, Power Rear Gate Control Module.>	Go to step **9**.
9	**CHECK CONTROL MODULE.** 1) Connect the sunroof unit connector. 2) Read the DTC of body integrated unit using Subaru Select Monitor. <Ref. to BC(diag)-14, Read Diagnostic Trouble Code (DTC).>	Is DTC U0170 displayed? (Current malfunction)	Malfunction occurred in the sunroof unit.	Malfunction occurred in the power seat CM.

AB:DTC U0230 LOST COMMUNICATION WITH POWER REAR GATE CONTROL MODULE

DTC DETECTING CONDITION:
No data is received from the power rear gate CM.
TROUBLE SYMPTOM:
The power rear gate does not operate normally.
WIRING DIAGRAM:

NOTE:
For the coupling connector, refer to “WIRING SYSTEM”.
Power rear gate system <Ref. to WI-296, WIRING DIAGRAM, Power Rear Gate System.>

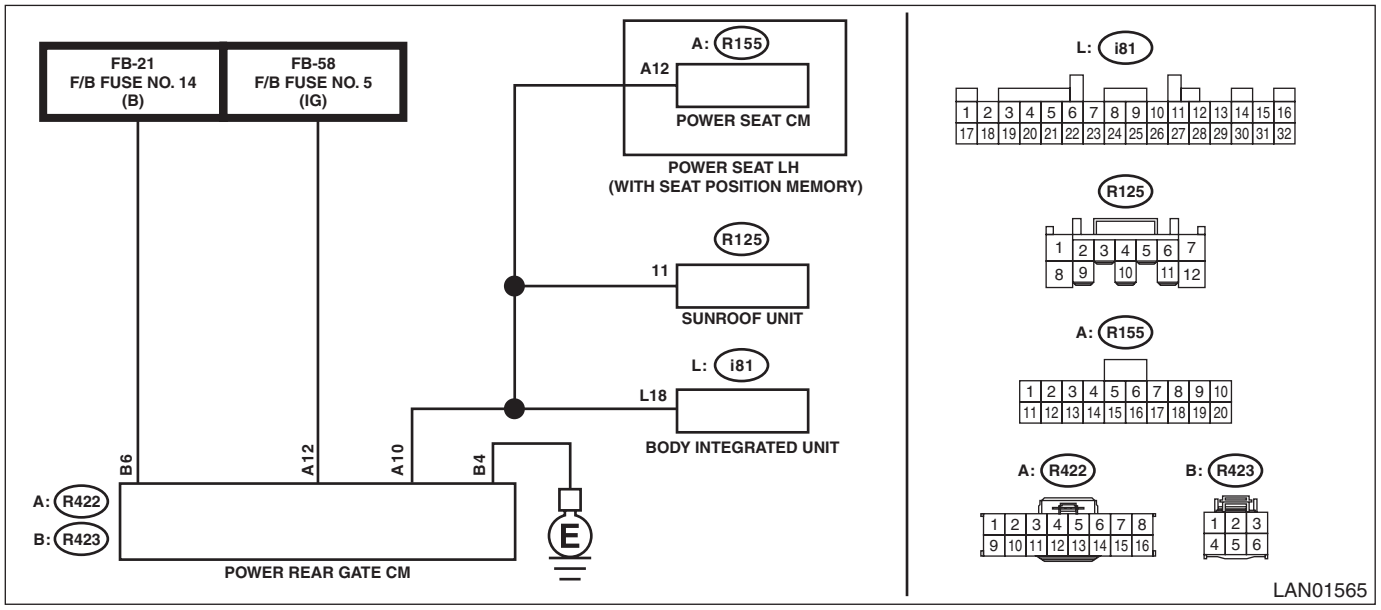

Step		Check	Yes	No
1	**CHECK DTC.** Read the DTC of body integrated unit using Subaru Select Monitor. <Ref. to BC(diag)-14, Read Diagnostic Trouble Code (DTC).>	Is DTC U0230 displayed? (Current malfunction)	Go to step **2**.	Even if DTC is displayed, the circuit has returned to a normal condition at this time. Reproduce the failure, and then perform the diagnosis again. NOTE: In this case, temporary poor contact of connector, temporary open or short circuit of harness may be the cause.

	Step	Check	Yes	No
2	**CHECK DTC.** 1) Turn the ignition switch to OFF. 2) Disconnect the power rear gate CM connector and the body integrated unit connector, and then reconnect them. 3) Turn the ignition switch to ON. 4) Wait for 5 seconds. 5) Read the DTC. <Ref. to BC(diag)-14, Read Diagnostic Trouble Code (DTC).>	Is DTC U0230 displayed? (Current malfunction)	Go to step **3**.	Even if DTC is displayed, the circuit has returned to a normal condition at this time. Reproduce the failure, and then perform the diagnosis again. NOTE: In this case, temporary poor contact of connector, temporary open or short circuit of harness may be the cause.
3	**CHECK HARNESS.** 1) Turn the ignition switch to ON. 2) Using the tester, measure the voltage between terminals. ***Connector & terminal*** ***(R422) No. 12 (+) — Chassis ground (–):*** ***(R423) No. 6 (+) — Chassis ground (–):***	Is the voltage 9 V or more?	Go to step **4**.	Repair the open circuit of harness.
4	**CHECK HARNESS.** 1) Turn the ignition switch to OFF. 2) Disconnect the power rear gate connector and the body integrated unit connector. 3) Using the tester, measure the resistance between terminals. ***Connector & terminal*** ***(R422) No. 10 — (i81) No. 18:*** ***(R423) No. 4 — Chassis ground:***	Is the resistance less than 10 Ω?	Go to step **5**.	Repair the open circuit of harness.
5	**CHECK DTC.** 1) Connect the power rear gate CM connector and the body integrated unit connector. 2) Turn the ignition switch to ON. 3) Wait for 5 seconds. 4) Read the DTC. <Ref. to BC(diag)-14, Read Diagnostic Trouble Code (DTC).>	Are DTCs U0230, U0231, U0208, U0169 displayed? (Current malfunction)	Replace the body integrated unit. <Ref. to SL-83, Body Integrated Unit.>	Replace the power rear gate CM. <Ref. to PRG-6, Power Rear Gate Control Module.>

AC:DTC U0327 SOFTWARE INCOMPATIBILITY WITH VEHICLE SECURITY CONTROL MODULE

No data is received from keyless access CM.

NOTE:
Perform the diagnosis for LAN system. <Ref. to LAN(diag)-2, PROCEDURE, Basic Diagnostic Procedure.>

AD:DTC U0401 INVALID DATA RECEIVED FROM ECM/PCM "A"

Received error data from ECM.

NOTE:
Perform the diagnosis for LAN system. <Ref. to LAN(diag)-2, PROCEDURE, Basic Diagnostic Procedure.>

AE:DTC U0402 INVALID DATA RECEIVED FROM TCM

Received error data from TCM.

NOTE:
Perform the diagnosis for LAN system. <Ref. to LAN(diag)-2, PROCEDURE, Basic Diagnostic Procedure.>

AF:DTC U0416 INVALID DATA RECEIVED FROM VEHICLE DYNAMICS CONTROL MODULE

Received error data from VDC CM.

NOTE:
Perform the diagnosis for LAN system. <Ref. to LAN(diag)-2, PROCEDURE, Basic Diagnostic Procedure.>

AG:DTC U0417 INVALID DATA RECEIVED FROM PARK BRAKE CONTROL MODULE

Received error data from VDC CM.

NOTE:
Perform the diagnosis for LAN system. <Ref. to LAN(diag)-2, PROCEDURE, Basic Diagnostic Procedure.>

AH:DTC U0423 INVALID DATA RECEIVED FROM INSTRUMENT PANEL CLUSTER CONTROL MODULE

Received error data from combination meter.

NOTE:
Perform the diagnosis for LAN system. <Ref. to LAN(diag)-2, PROCEDURE, Basic Diagnostic Procedure.>

AI: DTC U0424 INVALID DATA RECEIVED FROM HVAC CONTROL MODULE

Received error data from A/C CM.

NOTE:
Perform the diagnosis for LAN system. <Ref. to LAN(diag)-2, PROCEDURE, Basic Diagnostic Procedure.>

AJ:DTC U0426 INVALID DATA RECEIVED FROM IMMOBILIZER CONTROL MODULE

Received error data from immobilizer CM.

NOTE:
Perform the diagnosis for LAN system. <Ref. to LAN(diag)-2, PROCEDURE, Basic Diagnostic Procedure.>

AK:DTC U0427 INVALID DATA RECEIVED FROM VEHICLE SECURITY CONTROL MODULE

Received error data from keyless access CM.

NOTE:
Perform the diagnosis for LAN system. <Ref. to LAN(diag)-2, PROCEDURE, Basic Diagnostic Procedure.>

AL:DTC U123C LOST COMMUNICATION WITH HIGH BEAM ASSIST CONTROL MODULE

NOTE:
When the customize setting for the high beam assist is not the same as the actual setting on the vehicle, DTC is detected. Therefore, check the customize setting. <Ref. to BC(diag)-30, User Customizing.>

AM:DTC U1500 KEYLESS UART COM. MALFUNCTION

1. WITHOUT KEYLESS ACCESS WITH PUSH BUTTON START SYSTEM

DTC DETECTING CONDITION:

- UART between the TPMS & keyless entry CM and the body integrated unit is open or shorted, or has communication failure.
- Communication with TPMS & keyless entry CM is faulty.

Time Needed for Diagnosis:

10 times

TROUBLE SYMPTOM:

Door lock does not operate with keyless.

WIRING DIAGRAM:

NOTE:
For the coupling connector, refer to “WIRING SYSTEM”.
Keyless entry system <Ref. to WI-271, WIRING DIAGRAM, Keyless Entry System.>

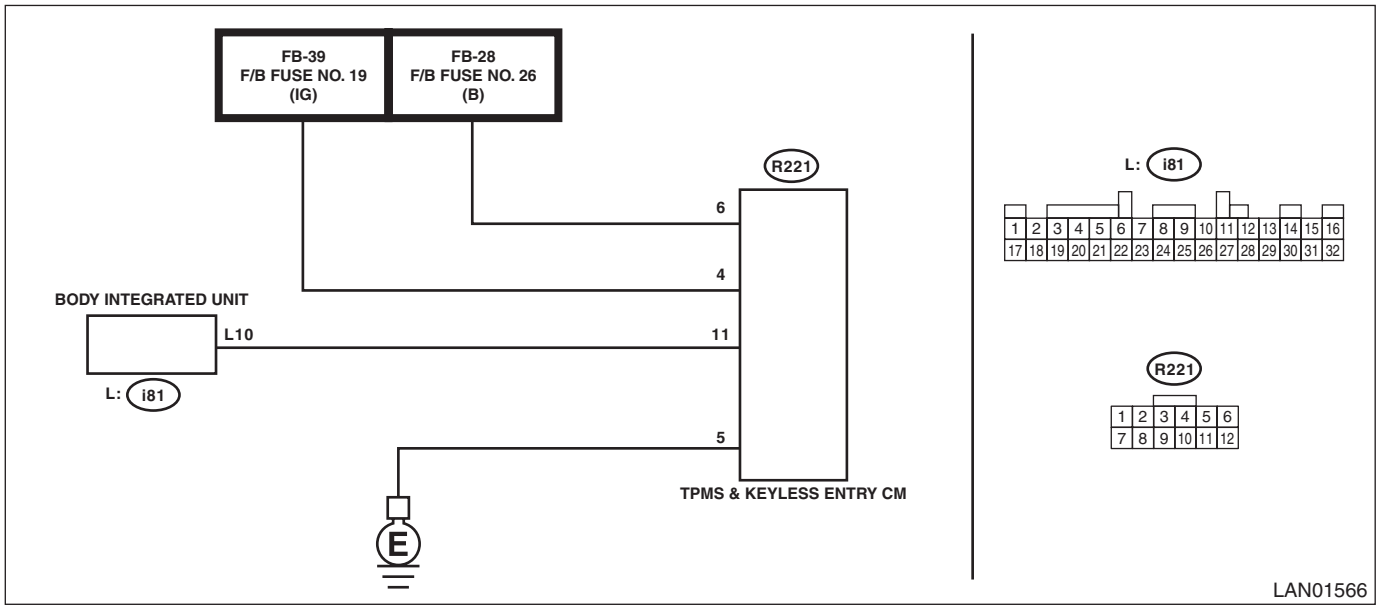

Step		Check	Yes	No
1	**CHECK DTC.** 1) Insert the ignition key to the ignition key cylinder and remove. 2) Read the DTC of body integrated unit using Subaru Select Monitor. <Ref. to BC(diag)-14, Read Diagnostic Trouble Code (DTC).>	Is DTC U1500 displayed? (Current malfunction)	Go to step **2**.	Go to step **7**.
2	**CHECK DTC.** 1) Turn the ignition switch to OFF. 2) Disconnect the body integrated unit and the TPMS & keyless entry CM connector. 3) Connect the disconnected connectors. 4) Insert the ignition key to the ignition key cylinder and remove. 5) Read the DTC of body integrated unit using Subaru Select Monitor. <Ref. to BC(diag)-14, Read Diagnostic Trouble Code (DTC).>	Is DTC U1500 displayed? (Current malfunction)	Go to step **3**.	Go to step **7**.

	Step	Check	Yes	No
3	**CHECK HARNESS (OPEN CIRCUIT).** 1) Turn the ignition switch to OFF. 2) Disconnect the body integrated unit and the TPMS & keyless entry CM connector. 3) Using the tester, measure the resistance between terminals. ***Connector & terminal*** ***(i81) No. 10 — (R221) No. 11:***	Is the resistance 10 Ω or less?	Go to step **4**.	Repair the open circuit of harness or replace harness.
4	**CHECK HARNESS.** 1) Turn the ignition switch to ON. 2) Use a tester to measure the voltage between the terminals. ***Connector & terminal*** ***(R221) No. 4 (+) — Chassis ground (–):*** ***(R221) No. 6 (+) — Chassis ground (–):***	Is the voltage 10 V or more?	Go to step **5**.	Repair or replace the open circuit of harness.
5	**CHECK HARNESS (OPEN CIRCUIT).** 1) Turn the ignition switch to OFF. 2) Using the tester, measure the resistance between terminals. ***Connector & terminal*** ***(R221) No. 5 — Chassis ground:***	Is the resistance 10 Ω or less?	Go to step **6**.	Repair or replace the open circuit of harness.
6	**CHECK DTC.** 1) Connect all the disconnected connectors. 2) Turn the ignition switch to ON. 3) Read the DTC of body integrated unit using Subaru Select Monitor. <Ref. to BC(diag)-14, Read Diagnostic Trouble Code (DTC).>	Is any DTC other than U1500 displayed?	Replace the body integrated unit. <Ref. to SL-83, Body Integrated Unit.>	Replace the TPMS & keyless entry CM. <Ref. to SL-79, REMOVAL, Keyless Entry Control Module.>
7	**CHECK CONNECTOR.** Check for a poor contact between the body integrated unit and the TPMS & keyless entry CM connector.	Is there poor contact of connector?	Repair the connector that has poor contact, or replace harness.	Even if DTC is displayed, the circuit has returned to a normal condition at this time. Reproduce the failure, and then perform the diagnosis again. NOTE: In this case, temporary poor contact of connector, temporary open or short circuit of harness may be the cause.

2. WITH KEYLESS ACCESS WITH PUSH BUTTON START SYSTEM

DTC DETECTING CONDITION:

- UART between the TPMS CM and the body integrated unit is open or shorted, or has communication failure.
- Communication with TPMS CM is faulty.

Time Needed for Diagnosis:

10 times

TROUBLE SYMPTOM:

Door lock does not operate with keyless.

WIRING DIAGRAM:

NOTE:
For the coupling connector, refer to “WIRING SYSTEM”.
Tire Pressure Monitoring System <Ref. to WI-355, WIRING DIAGRAM, Tire Pressure Monitoring System.>

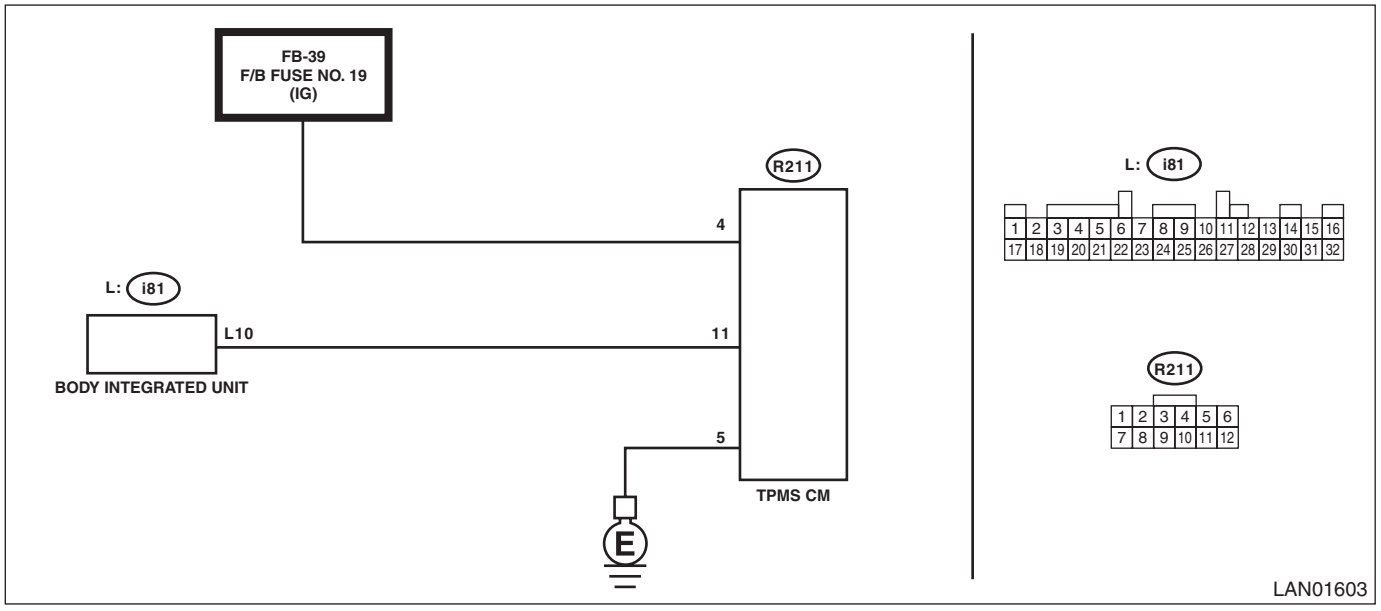

	Step	Check	Yes	No
1	**CHECK DTC.** 1) With the access key in the vehicle, press the push button ignition switch twice without depressing the brake to turn the ignition switch to ON. 2) Read the DTC of body integrated unit using Subaru Select Monitor. <Ref. to BC(diag)-14, Read Diagnostic Trouble Code (DTC).>	Is DTC U1500 displayed? (Current malfunction)	Go to step **2**.	Go to step **7**.
2	**CHECK DTC.** 1) Turn the ignition switch to OFF. 2) Disconnect the body integrated unit and the TPMS CM connector. 3) Connect the disconnected connectors. 4) With the access key in the vehicle, press the push button ignition switch twice without depressing the brake to turn the ignition switch to ON. 5) Read the DTC of body integrated unit using Subaru Select Monitor. <Ref. to BC(diag)-14, Read Diagnostic Trouble Code (DTC).>	Is DTC U1500 displayed? (Current malfunction)	Go to step **3**.	Go to step **7**.

	Step	Check	Yes	No
3	**CHECK HARNESS (OPEN CIRCUIT).** 1) Turn the ignition switch to OFF. 2) Disconnect the body integrated unit and the TPMS CM connector. 3) Using the tester, measure the resistance between terminals. ***Connector & terminal*** ***(i81) No. 10 — (R211) No. 11:***	Is the resistance 10 Ω or less?	Go to step **4**.	Repair the open circuit of harness or replace harness.
4	**CHECK HARNESS.** 1) Turn the ignition switch to ON. 2) Use a tester to measure the voltage between the terminals. ***Connector & terminal*** ***(R211) No. 4 (+) — Chassis ground (–):***	Is the voltage 10 V or more?	Go to step **5**.	Repair or replace the open circuit of harness.
5	**CHECK HARNESS (OPEN CIRCUIT).** 1) Turn the ignition switch to OFF. 2) Using the tester, measure the resistance between terminals. ***Connector & terminal*** ***(R211) No. 5 — Chassis ground:***	Is the resistance 10 Ω or less?	Go to step **6**.	Repair or replace the open circuit of harness.
6	**CHECK DTC.** 1) Connect all the disconnected connectors. 2) Turn the ignition switch to ON. 3) Read the DTC of body integrated unit using Subaru Select Monitor. <Ref. to BC(diag)-14, Read Diagnostic Trouble Code (DTC).>	Is any DTC other than U1500 displayed?	Replace the body integrated unit. <Ref. to SL-83, Body Integrated Unit.>	Replace the TPMS CM. <Ref. to SL-79, REMOVAL, Keyless Entry Control Module.>
7	**CHECK CONNECTOR.** Check for a poor contact between the body integrated unit and the TPMS CM connector.	Is there poor contact of connector?	Repair the connector that has poor contact, or replace harness.	Even if DTC is displayed, the circuit has returned to a normal condition at this time. Reproduce the failure, and then perform the diagnosis again. NOTE: In this case, temporary poor contact of connector, temporary open or short circuit of harness may be the cause.

AN:DTC U153D INVALID DATA RECEIVED FROM HIGH BEAM ASSIST CONTROL MODULE

NOTE:
When the customize setting for the high beam assist is not the same as the actual setting on the vehicle, DTC is detected. Therefore, check the customize setting. <Ref. to BC(diag)-30, User Customizing.>

AO:DTC U1673 LIN COMMUNICATION BUS ERROR BODY CONTROL MODULE

DTC DETECTING CONDITION:
Integrated unit communication is shut down because of LIN error.
TROUBLE SYMPTOM:
LIN communication is not normal.
WIRING DIAGRAM:

NOTE:
For the coupling connector, refer to “WIRING SYSTEM”.
- Sunroof Control System <Ref. to WI-348, WIRING DIAGRAM, Sunroof Control System.>
- Power seat system <Ref. to WI-299, WIRING DIAGRAM, Power Seat System.>
- Power rear gate system <Ref. to WI-296, WIRING DIAGRAM, Power Rear Gate System.>

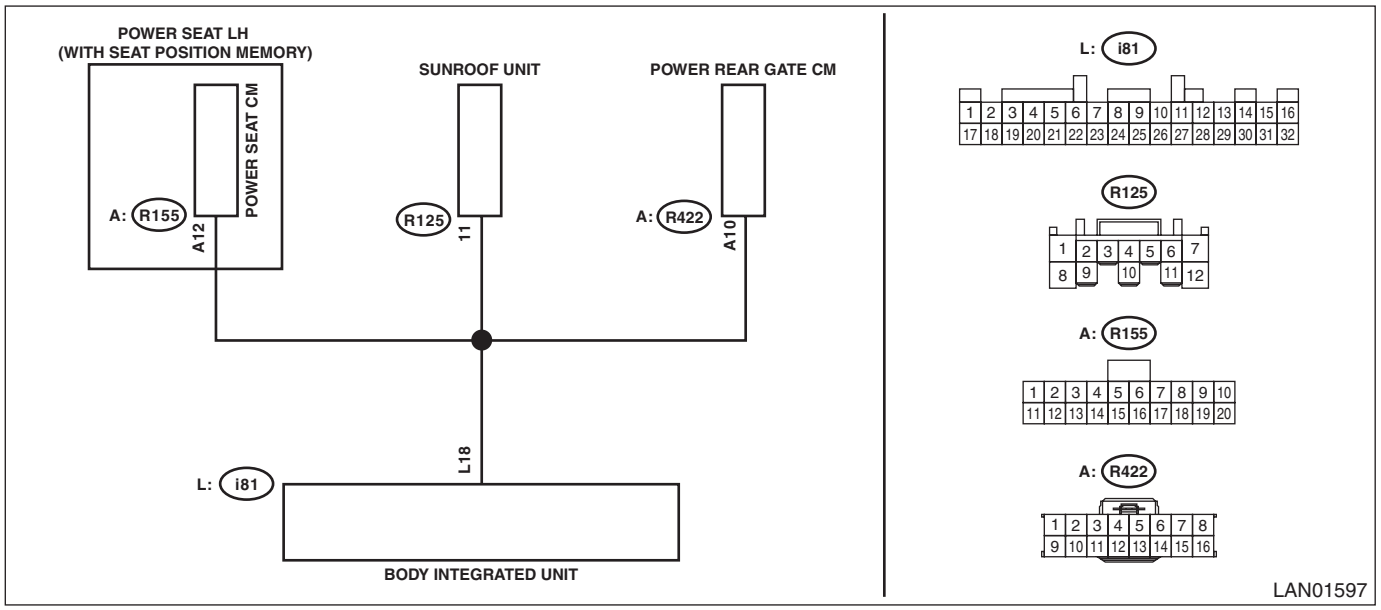

Step		Check	Yes	No
1	**CHECK DTC.** 1) Turn the ignition switch to OFF. 2) Turn the ignition switch to ON. 3) Wait for 5 seconds. 4) Read the DTC. <Ref. to BC(diag)-14, Read Diagnostic Trouble Code (DTC).>	Is DTC U1673 displayed? (Current malfunction)	Go to step **2**.	Even if DTC is displayed, the circuit has returned to a normal condition at this time. Reproduce the failure, and then perform the diagnosis again. NOTE: In this case, temporary poor contact of connector, temporary open or short circuit of harness may be the cause.
2	**CHECK CONTROL MODULE.** 1) Turn the ignition switch to OFF. 2) Disconnect the power rear gate CM connector. 3) Turn the ignition switch to ON. 4) Wait for 5 seconds. 5) Read the DTC. <Ref. to BC(diag)-14, Read Diagnostic Trouble Code (DTC).>	Is DTC U1673 displayed? (Current malfunction)	Go to step **3**.	Replace the power rear gate CM. <Ref. to PRG-6, Power Rear Gate Control Module.>

	Step	Check	Yes	No
3	**CHECK CONTROL MODULE.** 1) Turn the ignition switch to OFF. 2) Disconnect the power seat memory CM connector. (With the power rear gate CM connector disconnected) 3) Turn the ignition switch to ON. 4) Wait for 5 seconds. 5) Read the DTC. <Ref. to BC(diag)-14, Read Diagnostic Trouble Code (DTC).>	Is DTC U1673 displayed? (Current malfunction)	Go to step **4**.	Replace the power seat memory CM. <Ref. to SE-53, POWER SEAT CONTROL MODULE (SEAT WITH MEMORY FUNCTION), REMOVAL, Power Seat System.>
4	**CHECK CONTROL MODULE.** 1) Turn the ignition switch to OFF. 2) Disconnect the sunroof unit connector. (With the power rear gate CM connector and power seat memory CM connector disconnected) 3) Turn the ignition switch to ON. 4) Wait for 5 seconds. 5) Read the DTC. <Ref. to BC(diag)-14, Read Diagnostic Trouble Code (DTC).>	Is DTC U1673 displayed? (Current malfunction)	Go to step **5**.	Replace the sunroof unit. <Ref. to SR-20, Sunroof Motor.>
5	**CHECK HARNESS (OPEN CIRCUIT).** 1) Turn the ignition switch to OFF. 2) Disconnect the body integrated unit connector. 3) Measure the resistance between body integrated unit connector and each unit connector. ***Connector & terminal*** ***(i81) No. 18 — (R422) No. 10:*** ***(i81) No. 18 — (R155) No. 12:*** ***(i81) No. 18 — (R125) No. 11:***	Is the resistance less than 10 Ω?	Go to step **6**.	Repair the open circuit of harness.
6	**CHECK HARNESS (SHORT CIRCUIT TO POWER SUPPLY).** Measure the voltage between each unit connector and chassis ground. ***Connector & terminal*** ***(i81) No. 18 (+) — Chassis ground (–):*** ***(R422) No. 10 (+) — Chassis ground (–):*** ***(R155) No. 12 (+) — Chassis ground (–):*** ***(i125) No. 11 (+) — Chassis ground (–):***	Is the voltage less than 1 V?	Go to step **7**.	Repair the short circuit to power supply.
7	**CHECK HARNESS (GROUND SHORT CIRCUIT).** Measure the resistance between each unit connector and chassis ground. ***Connector & terminal*** ***(i81) No. 18 — Chassis ground:*** ***(R422) No. 10 — Chassis ground:*** ***(R155) No. 12 — Chassis ground:*** ***(i125) No. 11 — Chassis ground:***	Is the resistance 1 MΩ or more?	Replace the body integrated unit. <Ref. to SL-83, Body Integrated Unit.>	Repair the ground short circuit of harness.

16.General Diagnostic Table

A: INSPECTION

Read the DTC using Subaru Select Monitor. <Ref. to BC(diag)-14, Read Diagnostic Trouble Code (DTC).>
Or check the following data under the current data display screen.

Item	Operation	Specifications		Note
		YES	NO	
Diagnostic code	DTC is not displayed when inspecting all DTCs.	DTC is not displayed.	Perform the diagnosis according to DTC.	—
Clearance light (Low beam) (High beam)	Clearance light and low/high beams illuminate normally when the switch is operated. Indicator in the meter illuminates at the same time.	System is normal.	Check the lighting system, combination meter system and LAN system.	—
Auto light	When the area around the light control sensor is darkened after the ignition switch and the lighting switch (AUTO) are turned to ON, the clearance light and the low beam illuminate after 15 seconds. Indicator in the combination meter illuminates at the same time.	System is normal.	Check the lighting system, combination meter system and LAN system.	—
	When the ignition switch and the lighting switch (AUTO) are turned to ON after the area around the light control sensor is darkened, the clearance light and the low beam illuminate immediately. Indicator in the combination meter illuminates at the same time.			—
Fog light	Front fog light illuminates when the switch is operated. Indicator in the meter illuminates at the same time.	System is normal.	Check the lighting system, combination meter system and LAN system.	—
Rear defogger	Rear defogger operates when the switch is operated. The indicator illuminates at the same time.	System is normal.	Check the rear window defogger system and A/C system.	—
Wiper deicer	Wiper deicer operates by operating the switch. The indicator illuminates at the same time. When the ambient temperature is 5°C (41°F) or higher, press the switch 3 seconds or more to forcibly activate the system.	System is normal.	Check the wiper deicer system and A/C system.	Wiper deicer operates when “Wiper deicer setting” of the body integrated unit is set to on.
DRL	After starting the engine and releasing the parking brake with shift lever in other than P range, the DRL illuminates.	System is normal.	Check the lighting system and LAN system.	—
Rear wiper	Rear wiper operates when the switch is operated.	System is normal.	Check wiper or washer system.	Depending on user customizing “Sedan/Wagon Setting” of the body integrated unit, vehicle sensory time varies.
Key interlock	• Key cannot be removed in other than P range. • Key can be removed in P range.	System is normal.	Check the body control system.	—

Item	Operation	Specifications		Note
		YES	NO	
Shift lock	The select lever can be moved from the P range to other ranges only when the brake pedal is depressed with IG ON.	System is normal.	Check the body control system.	—
Door lock	The doors lock/unlock when the door switch is operated. Rear gate/ trunk opens when the rear gate/ trunk release switch is operated.	System is normal.	Check the security & lock and body control system.	If user customizing “Sedan/Wagon Setting” is different, trunk and rear gate do not open.
Keyless entry	The lock locks/unlocks when the keyless transmitter is operated. Trunk/rear gate unlocks when trunk/ rear gate unlock button is operated.	System is normal.	Check the keyless entry and body control system.	—
Keyless access with push button start system	The lock locks/unlocks when the access key is operated. With the access key held, the touch sensor (lock) operation locks/touch sensor (unlock) operation unlocks. Rear gate unlocks by operating the rear gate unlock button.	System is normal.	Check the keyless access with push button start system and the body control system.	—
Answer back	Answer-back operates when the keyless entry / keyless access with push button start system locks/ unlocks.	System is normal.	Check the security & lock, keyless access with push button start system, and LAN system.	—
Room light	Turns ON/OFF according to the door open/close operation, the lock/ unlock operation with the keyless entry/keyless access with push button start system, and the ignition operation.	System is normal.	Check the room light system, security & lock, keyless access with push button start system, and LAN system.	For vehicle with the keyless access with push button start system, the room light blinks when “Factory mode” is selected. For vehicles with the keyless entry, the room light blinks when the keyless registration mode is selected.
Map light	Turns ON/OFF according to the door open/close operation, the lock/ unlock operation with the keyless entry/keyless access with push button start system, and the ignition operation. (Except for rear gate)	System is normal.	Check the spot map light, security & lock, keyless access with push button start system, and LAN system.	For vehicle with the keyless access with push button start system, the map light blinks when “Factory mode” is selected. For vehicles with the keyless entry, the map light blinks when the keyless registration mode is selected.
Luggage room light	The light illuminates/goes off according to the rear gate open/ close. The light goes off, when the doors are locked with the keyless entry/keyless access with push button start system, or the ignition is turned to ON, while the light is illuminating.	System is normal.	Check the lighting system (interior light system), security & lock, keyless access with push button start system, and LAN system.	—

Item	Operation	Specifications		Note
		YES	NO	
Trunk room light	The light illuminates/goes off according to the trunk open/close.	System is normal.	Check the lighting system (interior light system), security & lock, keyless access with push button start system, and LAN system.	—
Key illumination	The light illuminates/goes off according to the driver's door open/close. The light goes off, when the doors are locked with the keyless entry/keyless access with push button start system and the ignition is turned ON while illuminating.	System is normal.	Check the ignition switch illumination, security & lock, and LAN system.	For vehicles with keyless entry, the key illumination blinks when "Factory" mode is selected.
Turn signal & hazard	Each turn signal light illuminates, when the turn signal switch is turned ON. The hazard light and indicator in the combination meter blink, when the hazard switch is turned ON.	System is normal.	Check the lighting system (turn signal light and hazard light system).	—
Engine start	Engine starts.	System is normal.	Check the engine system, immobilizer, and LAN system.	Model without keyless access with push button start system
Vehicle security	Security monitoring/security canceling can be performed by operating the keyless entry/keyless access with push button start system.	System is normal.	Check the security & lock, keyless access with push button start system, and LAN system.	Security monitoring starts and at the same time the warning buzzer sounds, when impact sensor is not connected and user customizing "Impact Sensor" of the body integrated unit is set to on.
Welcome lighting (enter)	When dimming out around the light control sensor after turning the lighting switch (AUTO) to ON, use keyless transmitter or access key to unlock. At this time, the clearance light and headlight low beam illuminates for the preset time. And, use keyless transmitter or access key to lock. At this time, the clearance light and headlight low beam go off.	System is normal.	Check the lighting system (auto light), security & lock (keyless entry) or keyless access with push button start system.	Operates when user customization item "Illumination Sensor Setting" in body integrated unit is set to ON and "Welcome Light Off Delay Time(Approaching)" is set to other than OFF.
Welcome lighting (exit)	The clearance light and headlight low beam continues to illuminate, when the ignition switch is OFF (or when the key is removed for vehicles without keyless access with push button start system) while the auto light function is operating. Use keyless transmitter or access key to lock two consecutive times. At this time, the clearance light and headlight low beam go off.	System is normal.	Check the lighting system (auto light), security & lock (keyless entry) or keyless access with push button start system.	Operates when user customization item "Illumination Sensor Setting" in body integrated unit is set to ON and "Welcome Light Off Delay Time(Exiting)" is set to other than OFF.

TELEMATICS SYSTEM (DIAGNOSTICS)

TEL(diag)

Page

1. Basic Diagnostic Procedure 2
2. Check List for Interview 3
3. General Description 5
4. Electrical Component Location 6
5. Control Module I/O Signal 8
6. Subaru Select Monitor 10
7. Read Current Data 12
8. Diagnostic Code(s) Display 16
9. Clear Memory Mode 18
10. Inspection Mode 19
11. System Operation Check Mode 21
12. Diagnostic Procedure with Diagnostic Trouble Code (DTC) 22
13. Diagnostics with Phenomenon 53

1. Basic Diagnostic Procedure

A: PROCEDURE

	Step	Check	Yes	No
1	**PERFORM CUSTOMER INTERVIEW.** Using the Check List for Interview, ask the customer the condition of how the trouble occurred. <Ref. to TEL(diag)-3, CHECK, Check List for Interview.>	Did you interview the customer?	Go to step **2**.	Interview the customer. <Ref. to TEL(diag)-3, CHECK, Check List for Interview.>
2	**CHECK SUBARU SELECT MONITOR COMMUNICATION.** Using the Subaru Select Monitor, check whether communication to the telematics system can be executed. NOTE: If the communication function of the Subaru Select Monitor cannot be executed properly, check the communication circuit. (Refer to "Communication for initializing impossible".) <Ref. to TEL(diag)-10, INSPECTION, Subaru Select Monitor.>	Is communication possible?	Go to step **3**.	Check the communication circuit.
3	**CHECK TELEMATICS.** Using the Subaru Select Monitor, read DTC of the telematics system. <Ref. to TEL(diag)-16, OPERATION, Diagnostic Code(s) Display.> NOTE: If DTC is detected, only RED LED will illuminate. For details, refer to "LED operation status list". <Ref. to TEL(diag)-4, LED ILLUMINATION STATUS LIST, CHECK, Check List for Interview.>	Is DTC displayed?	Perform the diagnosis according to DTC. <Ref. to TEL(diag)-16, LIST, Diagnostic Code(s) Display.>	Go to step **4**.
4	**CHECK DIAGNOSTICS WITH PHENOMENON.** Check the list of Diagnostics with Phenomenon. <Ref. to TEL(diag)-53, Diagnostics with Phenomenon.>	Does the symptom apply?	Perform diagnosis according to the procedures in the diagnostics with phenomenon.	Go to step **5**.
5	**CHECK TROUBLE PHENOMENON.** 1) Perform the basic inspection and function check. <Ref. to TEL(diag)-5, INSPECTION, General Description.> 2) Check the data communication module. <Ref. to TEL(diag)-8, Control Module I/O Signal.> 3) Perform check of current data. <Ref. to TEL(diag)-12, Read Current Data.> 4) Perform a unit check.	Was the trouble cause found?	Perform the Clear Memory after repairing or replacing the cause of trouble. <Ref. to TEL(diag)-18, Clear Memory Mode.>	System is normal.

2. Check List for Interview

A: CHECK

1. CHECK LIST FOR INTERVIEW

- Inspect the following items regarding the vehicle's state.
- Print out this page for interviewing customers.

<table>
<tr><td colspan="2">Telematics Check List for Interview</td><td colspan="2">Received Year Month Date</td></tr>
<tr><td colspan="2" rowspan="2">Customer's name</td><td>Registration No.</td><td>Initial year of registration
Year Month Date</td></tr>
<tr><td>Vehicle model</td><td>Frame number</td></tr>
<tr><td>Interviewer
( )</td><td>Inspector
( )</td><td>Engine type
( )</td><td>Odometer reading
( )</td></tr>
<tr><td colspan="4">Customer specified content
•
•
•</td></tr>
<tr><td>Date when problem occurred</td><td>Year Month Date</td><td>Frequency of trouble occurrence</td><td>Always occurs
Sometimes occurs (times per day, times per month)</td></tr>
<tr><td rowspan="4">Conditions at event</td><td colspan="3">Weather ❑ Fine ❑ Cloudy ❑ Rainy ❑ Snowy ❑ Others ( )</td></tr>
<tr><td colspan="3">Temperature °C (°F)</td></tr>
<tr><td colspan="3">How often ❑ Always ❑ Once before
❑ Sometimes (times a day / times a week / times a month)</td></tr>
<tr><td colspan="3">When and how</td></tr>
<tr><td rowspan="2">Situations at event</td><td colspan="3">In what situations did it occur?
❑ Fast Driving ❑ Rough Roads ❑ Parked ❑ Unknown ❑ Other</td></tr>
<tr><td colspan="3">In what operations did it occur?
❑ ACC On ❑ Press Icall Button or SOS Button
❑ Operating door lock function with mobile phone
❑ Operating door unlock function with mobile phone
❑ Operating horn and hazard function with mobile phone
❑ Operating own vehicle positioning function
❑ Unknown ❑ Other</td></tr>
<tr><td>Situations at restoration</td><td colspan="3">What helped the status return to normal?
❑ Recover on its own ❑ ACC Off and On ❑ Does not recover ❑ Other</td></tr>
<tr><td>Location at event</td><td colspan="3">❑ Unknown ❑ Any Place
❑ Driving around open areas like in the country
❑ Driving around hills or mountains
❑ Driving around cities with large buildings
❑ Driving around residential areas or no large buildings
❑ Driving around areas with power lines
❑ Driving around rough roads or railway tracks</td></tr>
<tr><td>Error message</td><td colspan="3">Error message displayed</td></tr>
</table>

Mobile phone	Mobile phone carrier (example: Docomo)
	Mobile phone model (example: Apple iPhone 6)
	Mobile phone OS version (software version information)
Telematics subscription status	❑ Subscription (Year Month Date) ❑ Non-contract
LED illumination status <Ref. to TEL(diag)-4, LED ILLUMINATION STATUS LIST, CHECK, Check List for Interview.>	RED LED ❑ OFF ❑ ON ❑ Blink
	GREEN LED ❑ OFF ❑ ON ❑ Blink
Check result	Reproductivity ❑ Reproduced ❑ Always ❑ Sometimes ❑ Cannot be reproduced Condition ❑ Cold ❑ Warm ❑ At starting ❑ Immediately after starting ❑ During warm-up ❑ At idle ❑ When start driving ❑ While driving ❑ At acceleration ❑ At deceleration ❑ When applying brake
MSISDN No. of SIM	* Confirm on data monitor. <Ref. to TEL(diag)-12, Read Current Data.>
Diagnostic code	

2. LED ILLUMINATION STATUS LIST

LED	Light OFF	Blink	Light ON
RED	Communication with the server and DCM are operating normally (communication failure with the STARLINK server. DTCs are not found within the vehicle unit.)	It is possible that communication with the server/DCM are malfunctioning.	It is possible that communication with the server/DCM are malfunctioning.
GREEN	—	Connection to the server is being attempted and in progress.	Communication status with the server is READY.
RED and GREEN	Telematics function is not activated.	Collation with the server is in progress.	Collation with the server failed. It is possible that the server/DCM are malfunctioning.

3. General Description

A: CAUTION

1. AIRBAG SYSTEM

CAUTION:
- **Do not use the electrical test equipment on all airbag harnesses and connector circuits.**
- **Be careful not to damage the airbag harness.**

B: INSPECTION

1. BASIC INSPECTION

Before performing the diagnosis, check the following items which may affect the problems relating to the telematics system.
1) Check the battery. <Ref. to SC(H4DO)-65, INSPECTION, Battery.> <Ref. to SC(H6DO)-2, General Description.>
2) Check the relay and fuse condition. <Ref. to ET-7, Relay and Fuse.> <Ref. to SC(H6DO)-2, General Description.>
3) Check the connecting condition of harness and harness connector.

C: PREPARATION TOOL

1. SPECIAL TOOL

ILLUSTRATION	TOOL NUMBER	DESCRIPTION	REMARKS
 STSSM4	— (Newly adopted tool)	SUBARU SELECT MONITOR 4	Used for setting of each function and trouble-shooting for electrical system. NOTE: For detailed operation procedures of Subaru Select Monitor 4, refer to “Application help”.

2. GENERAL TOOL

TOOL NAME	REMARKS
Circuit tester	Used for measuring resistance, voltage and current.
DST-i	Used together with Subaru Select Monitor 4.

4. Electrical Component Location

A: LOCATION

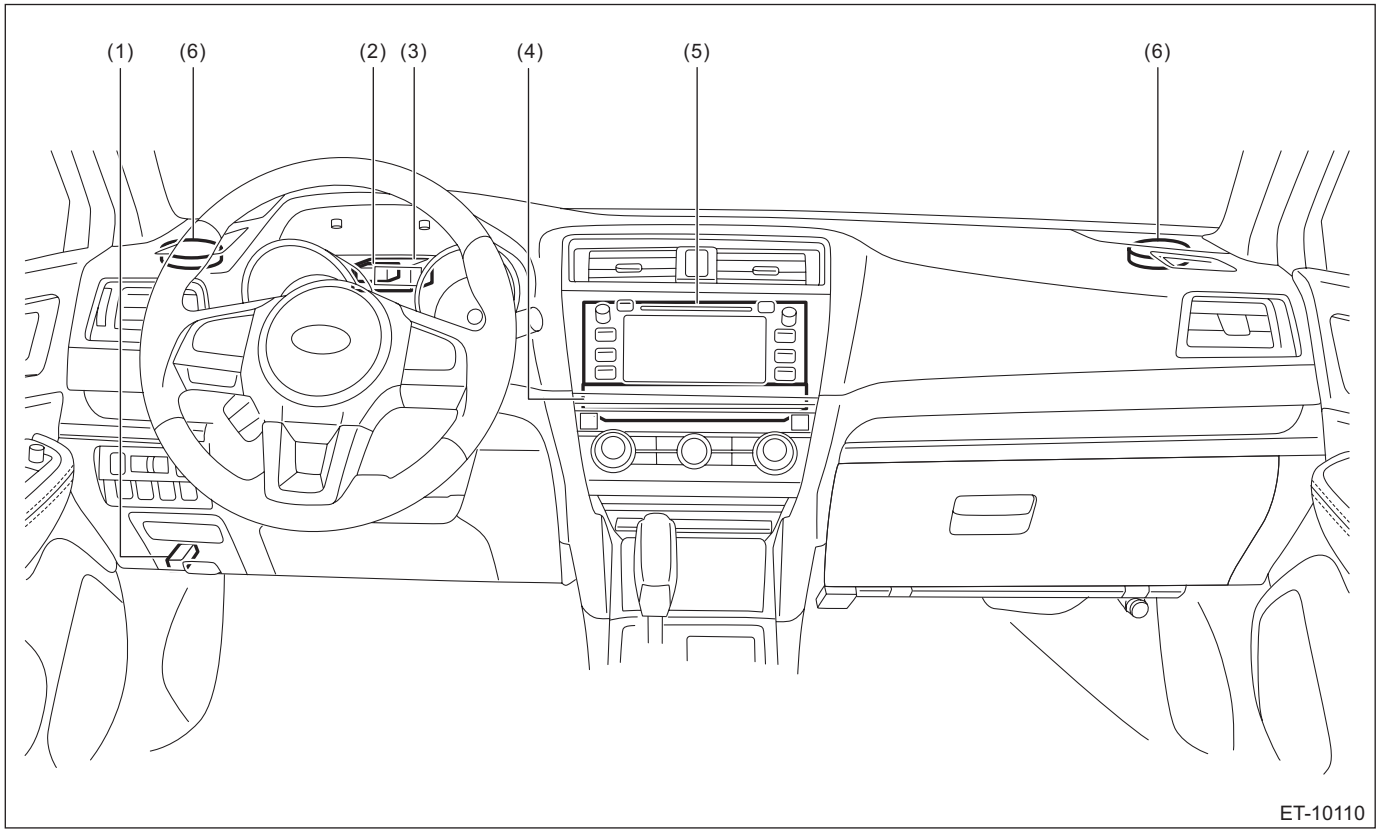

(1) Data link connector
(2) GPS antenna
(3) Telematics sub antenna
(4) Data communication module (DCM)
(5) Audio or navigation
(6) Instrument panel speaker (standard and H/K specifications)

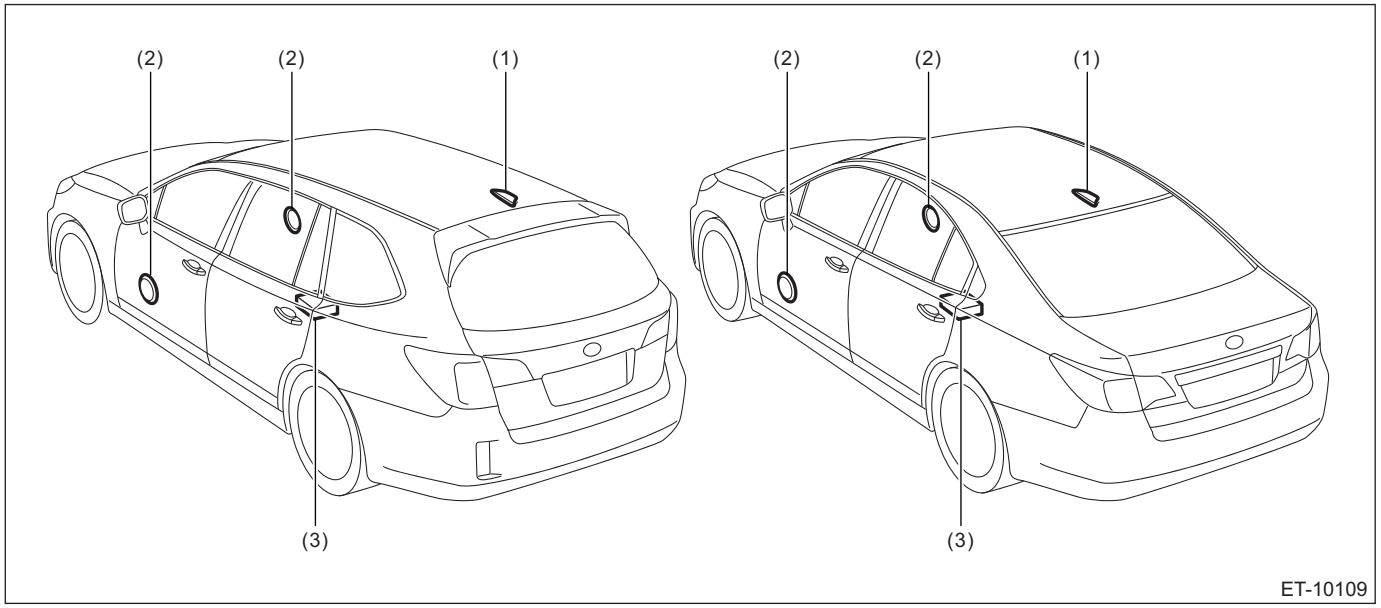

(1) Telematics antenna
(2) Door speaker (standard specification)
(3) Airbag CM

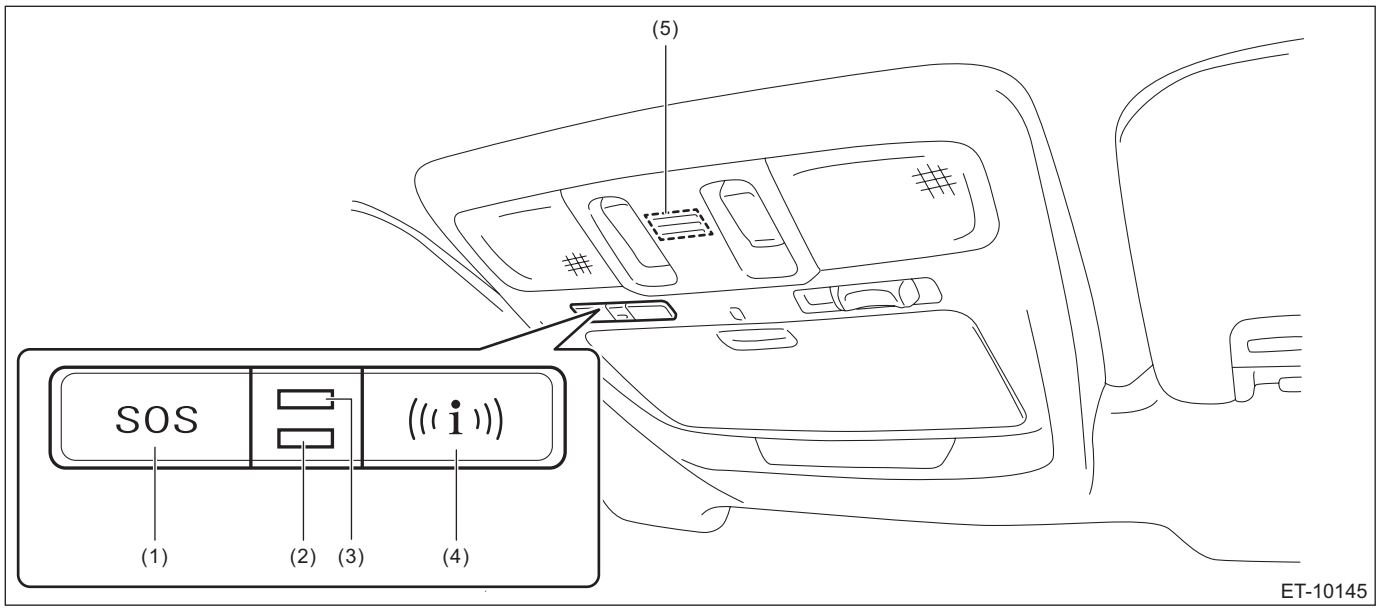

(1) SOS button
(2) RED LED
(3) GREEN LED
(4) i-button
(5) Microphone

NOTE:
For the LED operation condition, refer to "LED operation condition" in "Check List for Interview". <Ref. to TEL(diag)-4, LED ILLUMINATION STATUS LIST, CHECK, Check List for Interview.>

5. Control Module I/O Signal

A: SPECIFICATION

1. DATA COMMUNICATION MODULE (DCM)

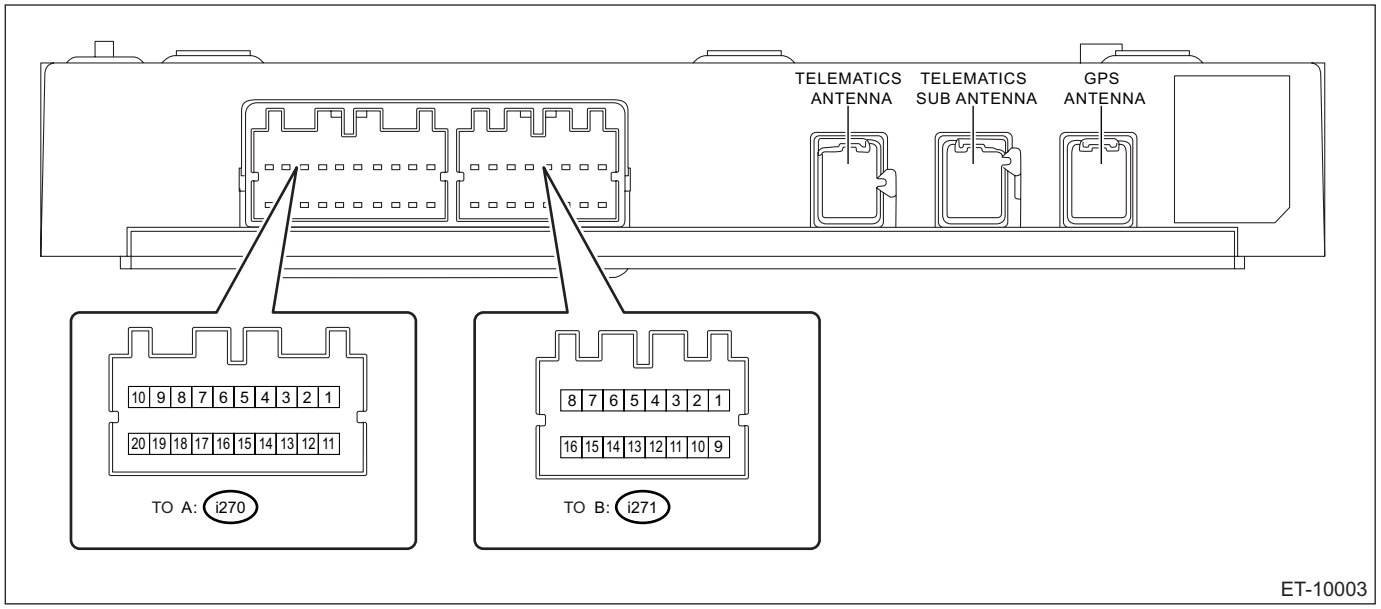

Terminal No.	Description	Measuring condition	Standard
A1	—	—	—
A2	—	—	—
A3	LED GREEN	—	—
A4 ←→ Chassis ground	i-button	i-button OFF → ON	1 MΩ or more → less than 1 Ω
A5 ←→ Chassis ground	SOS button	SOS button OFF → ON	1 MΩ or more → less than 1 Ω
A6	—	—	—
A7	CAN L	—	—
A8	Ignition power supply	Ignition switch OFF → ON	Less than 1 V → 9 — 16 V
A9	—	—	—
A10	Battery power supply	Always	9 — 16 V
A11	—	—	—
A12	—	—	—
A13	LED RED	—	—
A14 ←→ Chassis ground	GND	Always	Less than 1 Ω
A15	—	—	—
A16	—	—	—
A17	CAN H	—	—
A18	Airbag communication line	—	—
A19	MUTE	—	—
A20 ←→ Chassis ground	ACC	Ignition switch OFF → ACC ON	Less than 1 V → 9 — 16 V
B1	Front speaker input LH –	—	—
B2	Front speaker output LH –	—	—
B3	Front speaker input RH –	—	—
B4	Front speaker output RH –	—	—
B5	MIC signal OUT	—	—
B6	MIC signal	—	—
B7	MIC DET	—	—

Terminal No.	Description	Measuring condition	Standard
B8	MIC 5 V	—	—
B9	Front speaker input LH +	—	—
B10	Front speaker output LH +	—	—
B11	Front speaker input RH +	—	—
B12	Front speaker output RH +	—	—
B13 ←→ Chassis ground	MIC GND OUT	Always	Less than 1 Ω
B14	MIC GND IN	—	—
B15	—	—	—
B16	—	—	—

B: WIRING DIAGRAM

Refer to “TELEMATICS SYSTEM” in the wiring diagram. <Ref. to WI-349, WIRING DIAGRAM, Telematics System.>

C: SYSTEM BLOCK DIAGRAM

Main signals used between DCM and relevant CM

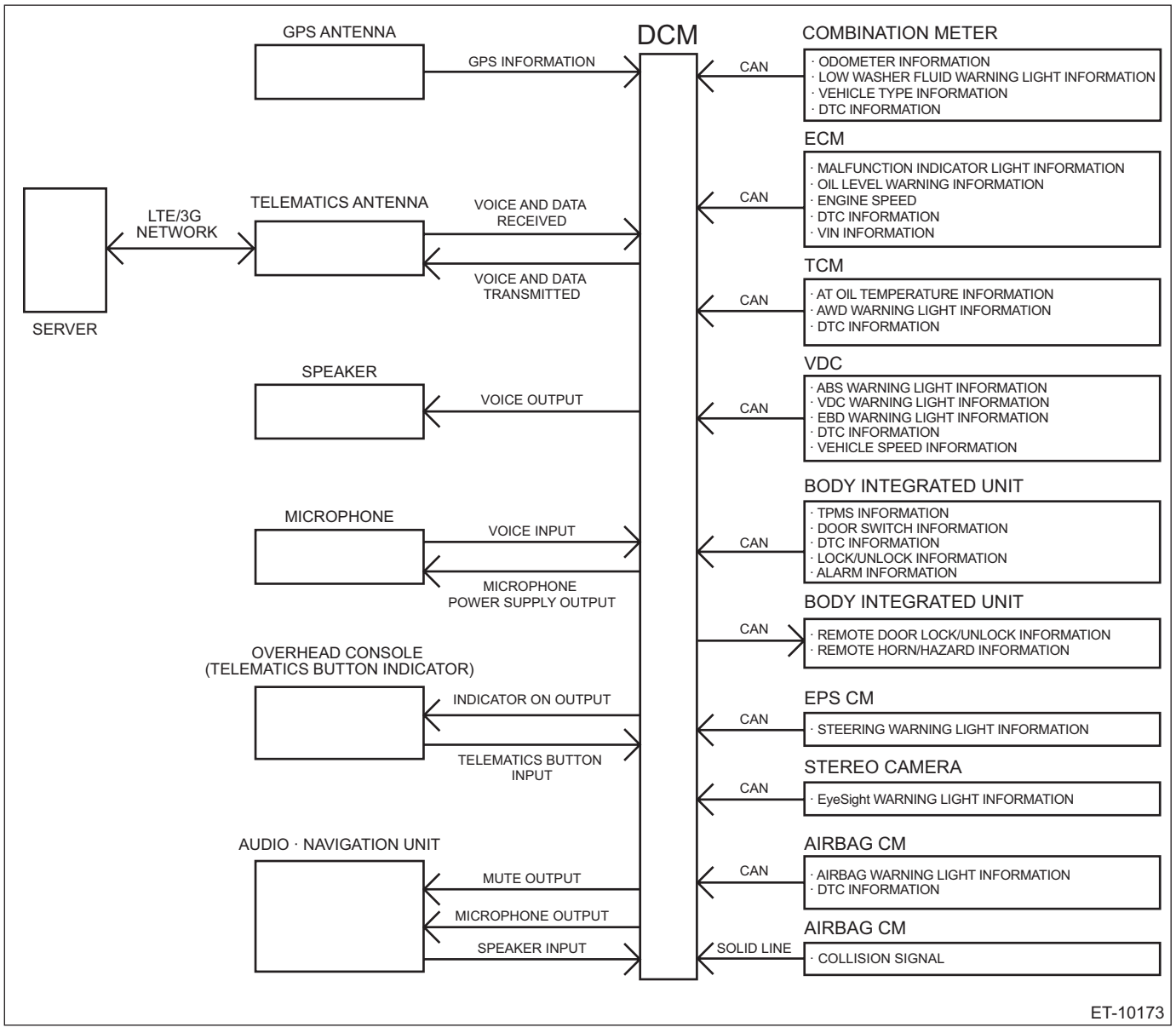

6. Subaru Select Monitor

A: OPERATION

- For operation procedures, refer to “Application help”.
- When DCM cannot establish communication with Subaru Select Monitor, perform “COMMUNICATION FOR INITIALIZING IMPOSSIBLE”. <Ref. to TEL(diag)-10, INSPECTION, Subaru Select Monitor.>

B: INSPECTION

1. COMMUNICATION FOR INITIALIZING IMPOSSIBLE

When communication with DCM is impossible

DETECTING CONDITION:

- Defective harness connector
- Power supply circuit malfunction
- Defective DCM
- Defective CAN communication circuit
- Defective Subaru Select Monitor

TROUBLE SYMPTOM:

Communication is impossible between DCM and Subaru Select Monitor.

CAUTION:

CommCheck is required after replacing the DCM. <Ref. to ET-22, REGISTRATION (COMM CHECK), OPERATION, Telematics System.>

WIRING DIAGRAM:

NOTE:

For the coupling connector, refer to “WIRING SYSTEM”.

Telematics <Ref. to WI-349, WIRING DIAGRAM, Telematics System.>

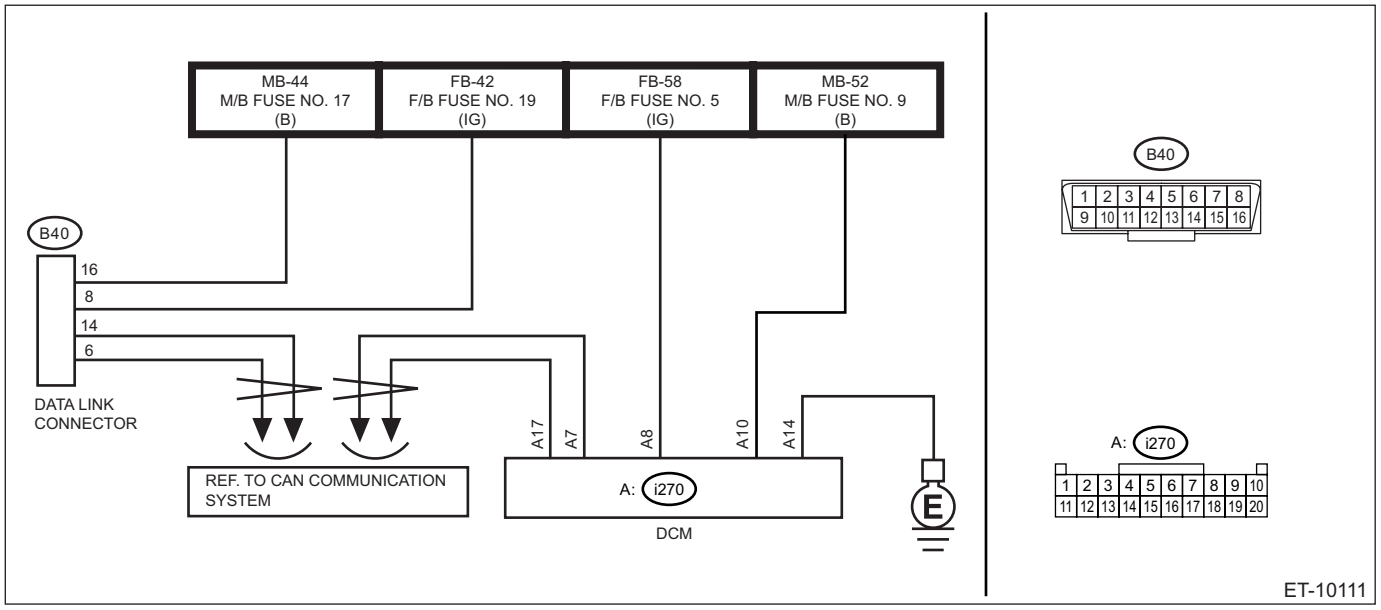

Step		Check	Yes	No
1	**CHECK FUSE.** 1) Turn the ignition switch to OFF. 2) Check the fuse of the DCM.	Is there any fault?	Replace the fuse. If the replaced fuse blows out easily, repair the ground short circuit in harness between the fuse — DCM connector.	Go to step **2**.

	Step	Check	Yes	No
2	**CHECK HARNESS (OPEN CIRCUIT).** 1) Disconnect the DCM connector. 2) Turn the ignition switch to ON. 3) Using a tester, measure the voltage between DCM connector (harness side) and the chassis ground. ***Connector & terminal*** ***(i270) No. 8 (+) — Chassis ground (–):*** ***(i270) No. 10 (+) — Chassis ground (–):***	Is the voltage 10 V or more?	Go to step **3**.	Repair the open circuit in the wiring harness between fuse and DCM connector.
3	**CHECK HARNESS (OPEN CIRCUIT).** 1) Turn the ignition switch to OFF. 2) Using a tester, measure the resistance between DCM connector (harness side) and the chassis ground. ***Connector & terminal*** ***(i270) No. 14 — Chassis ground:***	Is the resistance 1 Ω or less?	Go to step **4**.	Repair the open circuit in the wiring harness between fuse and DCM connector.
4	**CHECK LAN SYSTEM.** 1) Inspect LAN system.	Is there any fault?	Perform the inspection according to the diagnosis for LAN system.	Go to step **5**.
5	**CHECK TELEMATICS.** Using the Subaru Select Monitor, communicate with the telematics system.	Is communication possible?	Even if DTC is detected, the circuit has returned to a normal condition at this time. Reproduce the failure, and then perform the diagnosis again. In this case, temporary poor contact of connector, temporary open or short circuit of harness may be the cause.	Replace the DCM. <Ref. to ET-50, Data Communication Module.>

7. Read Current Data

A: OPERATION

1) On «Start» display, select «Diagnosis».
2) On «Vehicle selection» display, input the target vehicle information and select «Confirmed».
3) On «Main Menu» display, select «Each System».
4) On «Select System» display, select «Telematics» and then select «Enter».
5) On «Select Function» display, select «Data Monitor».

NOTE:
For detailed operation procedures, refer to “Application help”.

B: LIST

Display	Content	Reference value	Unit
Trip Count	Refer to “LAN SYSTEM (DIAGNOSTICS)”. <Ref. to LAN(diag)-6, TIME STAMP, CAUTION, General Description.>	—	—
Count		—	—
Time Count [msec]		—	—
Current GPS Data	Current GPS information	—	—
Signal Strength	Current signal strength	—	—
MSISDN	Phone number of DCM built-in SIM	—	—
GPS Data at ACN Event	GPS information at ACN event occurrence	—	—
TimeStamp at ACN Event	Time stamp information at ACN event occurrence	NOTE: The time stamp is displayed in the Coordinated Universal Time (UTC), which is different from actual time at each location. Therefore, time difference needs to be corrected for use. Example: [12/22 01:30 in UTC time] is corrected as [12/21 20:30 in New York time].	—
Call Type at ACN Event	Information of ACN event occurrence	No Attempt ACN	—
RSSI at ACN Event	Signal strength at ACN event occurrence	—	%
Call Status at ACN Event	Result of call connection at ACN event occurrence	call not started service not provisioned no network service call ended by Agero call ended by driver call ended by exhausted retry call started call connected	—
ACN Active	Subscription information on ACN function	FALSE TRUE	—
SOS Active	Subscription information on SOS function	FALSE TRUE	—
ICALL Active	Subscription information on I-CALL function	FALSE TRUE	—
Security Alarm Active	Subscription information on Security Alarm function	FALSE TRUE	—

Display	Content	Reference value	Unit
Maintenance Alert Active	Subscription information on Maintenance Alert function	FALSE TRUE	—
MVR Active	Subscription information on MVR function	FALSE TRUE	—
Diagnostic Alert Active	Subscription information on Diagnostic Alert function	FALSE TRUE	—
Account Status	Basic subscription information	FALSE TRUE	—
Power Source Status	Operation power supply information (main battery or DCM built-in BUB)	DCM currently running on BUB DCM currently running on VBATT	—
Subscription Status	DCM mode information	Factory Mode Comm Check Unsubscribed subscribed	—
Battery Voltage	Voltage information on main battery	—	V
Stored VIN	VIN information stored in DCM	—	—
GPS Data at Time of Button Push(1)	GPS information at SOS/I-CALL event occurrence (latest record)	—	—
Timestamp at Time of Button Push(1)	Time stamp information at SOS/I-CALL event occurrence (latest record)	NOTE: The time stamp is displayed in the Coordinated Universal Time (UTC), which is different from actual time at each location. Therefore, time difference needs to be corrected for use. Example: [12/22 01:30 in UTC time] is corrected as [12/21 20:30 in New York time].	—
Call Type at SOS/ICALL Event(1)	Information of SOS/I-CALL event occurrence (latest record)	no call SOS I-Call	—
RSSI at SOS/ICALL(1)	Signal strength at SOS/I-CALL event occurrence (latest record)	—	%
Call status at SOS/ICALL Event(1)	Result of call connection at SOS/I-CALL event occurrence (latest record)	call not started service not provisioned no network service call ended by Agero call ended by driver call ended by exhausted retry call started call connected	—
GPS Data at Time of Button Push(2)	GPS information at SOS/I-CALL event occurrence (second last record)	—	—

Display	Content	Reference value	Unit
Timestamp at Time of Button Push(2)	Time stamp information at SOS/I-CALL event occurrence (second last record)	NOTE: The time stamp is displayed in the Coordinated Universal Time (UTC), which is different from actual time at each location. Therefore, time difference needs to be corrected for use. Example: [12/22 01:30 in UTC time] is corrected as [12/21 20:30 in New York time].	—
Call Type at SOS/ICALL Event(2)	Information of SOS/I-CALL event occurrence (second last record)	no call SOS I-Call	—
RSSI at SOS/ICALL(2)	Signal strength at SOS/I-CALL event occurrence (second last record)	—	%
Call status at SOS/ICALL Event(2)	Result of call connection at SOS/I-CALL event occurrence (second last record)	call not started service not provisioned no network service call ended by Agero call ended by driver call ended by exhausted retry call started call connected	—
GPS Data at Time of Button Push(3)	GPS information at SOS/I-CALL event occurrence (third last record)	—	—
Timestamp at Time of Button Push(3)	Time stamp information at SOS/I-CALL event occurrence (third last record)	NOTE: The time stamp is displayed in the Coordinated Universal Time (UTC), which is different from actual time at each location. Therefore, time difference needs to be corrected for use. Example: [12/22 01:30 in UTC time] is corrected as [12/21 20:30 in New York time].	—
Call Type at SOS/ICALL Event(3)	Information of SOS/I-CALL event occurrence (third last record)	no call SOS I-Call	—
RSSI at SOS/ICALL(3)	Signal strength at SOS/I-CALL event occurrence (third last record)	—	%

Display	Content	Reference value	Unit
Call status at SOS/ICALL Event(3)	Result of call connection at SOS/I-CALL event occurrence (third last record)	call not started service not provisioned no network service call ended by Agero call ended by driver call ended by exhausted retry call started call connected	—
Speaker Gain Level	Speaker specification information (standard or H/K)	standard radio/2 speakers premium radio/4 speakers	—
GREEN LED Voltage	GREEN LED voltage information	—	V
RED LED Voltage	RED LED voltage information	—	V
Left Speaker Status	Left speaker connection status	No Speaker Diagnostic Faults Detected (Default) Output Short to PVDD is Present Output Short to Ground is Present Open Load is Present Shorted Load is Present Fault Condition Present Load Diagnostics in Present Speaker Muted Speaker in Play Mode	—
Right Speaker Status	Right speaker connection status	No Speaker Diagnostic Faults Detected (Default) Output Short to PVDD is Present Output Short to Ground is Present Open Load is Present Shorted Load is Present Fault Condition Present Load Diagnostics in Present Speaker Muted Speaker in Play Mode	—

8. Diagnostic Code(s) Display

A: OPERATION

1) On «Start» display, select «Diagnosis».
2) On «Vehicle selection» display, input the target vehicle information and select «Confirmed».
3) On «Main Menu» display, select «Each System».
4) On «Select System» display, select «Telematics» and then select «Enter».
5) On «Select Function» display, select «DTC».

NOTE:
- For detailed operation procedures, refer to “Application help”.
- For details concerning DTC, refer to the List of Diagnostic Trouble Codes (DTC). <Ref. to TEL(diag)-16, LIST, Diagnostic Code(s) Display.>

B: LIST

DTC	Item	Note
U0073	CAN FAILURE, BUS ‘OFF’ DETECTION	<Ref. to TEL(diag)-22, DTC U0073 CONTROL MODULE COMMUNICATION BUS OFF, Diagnostic Procedure with Diagnostic Trouble Code (DTC).>
U0074	CONTROL MODULE COMMUNICATION BUS "BODY-CAN" OFF	<Ref. to TEL(diag)-22, DTC U0074 CONTROL MODULE COMMUNICATION BUS "BODY-CAN" OFF, Diagnostic Procedure with Diagnostic Trouble Code (DTC).>
U0100	LOST COMMUNICATION WITH ECM/PCM "A"	<Ref. to TEL(diag)-22, DTC U0100 LOST COMMUNICATION WITH ECM/PCM "A", Diagnostic Procedure with Diagnostic Trouble Code (DTC).>
U0101	LOST COMMUNICATION WITH TCM	<Ref. to TEL(diag)-22, DTC U0101 LOST COMMUNICATION WITH TCM, Diagnostic Procedure with Diagnostic Trouble Code (DTC).>
U0122	LOST COMMUNICATION WITH VEHICLE DYNAMICS CONTROL MODULE	<Ref. to TEL(diag)-22, DTC U0122 LOST COMMUNICATION WITH VEHICLE DYNAMICS CONTROL MODULE, Diagnostic Procedure with Diagnostic Trouble Code (DTC).>
U0140	LOST COMMUNICATION WITH BODY CONTROL MODULE	<Ref. to TEL(diag)-22, DTC U0140 LOST COMMUNICATION WITH BODY CONTROL MODULE, Diagnostic Procedure with Diagnostic Trouble Code (DTC).>
U0151	LOST COMMUNICATION WITH RESTRAINTS CONTROL MODULE	<Ref. to TEL(diag)-22, DTC U0151 LOST COMMUNICATION WITH RESTRAINTS CONTROL MODULE, Diagnostic Procedure with Diagnostic Trouble Code (DTC).>
U0155	LOST COMMUNICATION WITH INSTRUMENT PANEL CLUSTER (IPC) CONTROL MODULE	<Ref. to TEL(diag)-22, DTC U0155 LOST COMMUNICATION WITH INSTRUMENT PANEL CLUSTER (IPC) CONTROL MODULE, Diagnostic Procedure with Diagnostic Trouble Code (DTC).>
U0401	INVALID DATA RECEIVED FROM ECM/PCM "A"	<Ref. to TEL(diag)-22, DTC U0401 INVALID DATA RECEIVED FROM ECM/PCM "A", Diagnostic Procedure with Diagnostic Trouble Code (DTC).>
U0402	INVALID DATA RECEIVED FROM TCM	<Ref. to TEL(diag)-23, DTC U0402 INVALID DATA RECEIVED FROM TCM, Diagnostic Procedure with Diagnostic Trouble Code (DTC).>
U0416	INVALID DATA RECEIVED FROM VEHICLE DYNAMICS CONTROL MODULE	<Ref. to TEL(diag)-23, DTC U0416 INVALID DATA RECEIVED FROM VEHICLE DYNAMICS CONTROL MODULE, Diagnostic Procedure with Diagnostic Trouble Code (DTC).>
U0452	INVALID DATA RECEIVED FROM RESTRAINTS CONTROL MODULE	<Ref. to TEL(diag)-23, DTC U0452 INVALID DATA RECEIVED FROM RESTRAINTS CONTROL MODULE, Diagnostic Procedure with Diagnostic Trouble Code (DTC).>

DTC	Item	Note
U1235	LOST COMMUNICATION WITH EyeSight	<Ref. to TEL(diag)-23, DTC U1235 LOST COMMUNICATION WITH EyeSight, Diagnostic Procedure with Diagnostic Trouble Code (DTC).>
B2A00	VIN READING	<Ref. to TEL(diag)-24, DTC B2A00 VIN READING, Diagnostic Procedure with Diagnostic Trouble Code (DTC).>
B2A01	LTE1 ANTENNA CIRCUIT	<Ref. to TEL(diag)-25, DTC B2A01 LTE1 ANTENNA CIRCUIT, Diagnostic Procedure with Diagnostic Trouble Code (DTC).>
B2A02	LTE2 ANTENNA CIRCUIT	<Ref. to TEL(diag)-27, DTC B2A02 LTE2 ANTENNA CIRCUIT, Diagnostic Procedure with Diagnostic Trouble Code (DTC).>
B2A03	GPS ANTENNA CIRCUIT	<Ref. to TEL(diag)-28, DTC B2A03 GPS ANTENNA CIRCUIT, Diagnostic Procedure with Diagnostic Trouble Code (DTC).>
B2A04	MIC CIRCUIT	<Ref. to TEL(diag)-29, DTC B2A04 MIC CIRCUIT, Diagnostic Procedure with Diagnostic Trouble Code (DTC).>
B2A05	LEFT SPEAKER/AUDIO CIRCUIT	<Ref. to TEL(diag)-31, DTC B2A05 LEFT SPEAKER/AUDIO CIRCUIT, Diagnostic Procedure with Diagnostic Trouble Code (DTC).>
B2A06	RIGHT SPEAKER/AUDIO CIRCUIT	<Ref. to TEL(diag)-34, DTC B2A06 RIGHT SPEAKER/AUDIO CIRCUIT, Diagnostic Procedure with Diagnostic Trouble Code (DTC).>
B2A07	BACKUP BATTERY CHARGE SYSTEM PERFORMANCE	<Ref. to TEL(diag)-37, DTC B2A07 BACKUP BATTERY CHARGE SYSTEM PERFORMANCE, Diagnostic Procedure with Diagnostic Trouble Code (DTC).>
B2A08	SOS BUTTON CIRCUIT	<Ref. to TEL(diag)-38, DTC B2A08 SOS BUTTON CIRCUIT, Diagnostic Procedure with Diagnostic Trouble Code (DTC).>
B2A09	I-CALL BUTTON CIRCUIT	<Ref. to TEL(diag)-40, DTC B2A09 I-CALL BUTTON CIRCUIT, Diagnostic Procedure with Diagnostic Trouble Code (DTC).>
B2A0A	RED LED CIRCUIT	<Ref. to TEL(diag)-42, DTC B2A0A RED LED CIRCUIT, Diagnostic Procedure with Diagnostic Trouble Code (DTC).>
B2A0B	GREEN LED CIRCUIT	<Ref. to TEL(diag)-44, DTC B2A0B GREEN LED CIRCUIT, Diagnostic Procedure with Diagnostic Trouble Code (DTC).>
B2A0C	DCM INTERNAL FAULT	<Ref. to TEL(diag)-46, DTC B2A0C DCM INTERNAL FAULT, Diagnostic Procedure with Diagnostic Trouble Code (DTC).>
B2A0D	AIRBAG SIGNAL	<Ref. to TEL(diag)-47, DTC B2A0D AIRBAG SIGNAL, Diagnostic Procedure with Diagnostic Trouble Code (DTC).>
B2A0E	MUTE LINE CIRCUIT	<Ref. to TEL(diag)-49, DTC B2A0E MUTE LINE CIRCUIT, Diagnostic Procedure with Diagnostic Trouble Code (DTC).>
B2A0F	BACKUP BATTERY DEGRADATION	<Ref. to TEL(diag)-51, DTC B2A0F BACKUP BATTERY DEGRADATION, Diagnostic Procedure with Diagnostic Trouble Code (DTC).>
B2A10	BATTERY VOLTAGE HIGH	<Ref. to TEL(diag)-52, DTC B2A10 BATTERY VOLTAGE HIGH, Diagnostic Procedure with Diagnostic Trouble Code (DTC).>

9. Clear Memory Mode

A: OPERATION

1) On «Start» display, select «Diagnosis».
2) On «Vehicle selection» display, input the target vehicle information and select «Confirmed».
3) On «Main Menu» display, select «Each System».
4) On «Select System» display, select «Telematics» and then select «Enter».
5) On «Select Function» display, select «DTC».
6) On «DTC» display, select «Clear Memory».

NOTE:
For detailed operation procedures, refer to “Application help”.

10.Inspection Mode

A: PROCEDURE

It is possible to diagnose the DTC by performing the indicated inspection mode.
After correcting the DTC, perform a necessary inspection mode and make sure that the function is resumed correctly and the DTC is recorded.

1. INSPECTION MODE 1

DTC	Item	Note
U0073	CAN FAILURE, BUS 'OFF' DETECTION	<Ref. to TEL(diag)-22, DTC U0073 CONTROL MODULE COMMUNICATION BUS OFF, Diagnostic Procedure with Diagnostic Trouble Code (DTC).>
U0074	CONTROL MODULE COMMUNICATION BUS "BODY-CAN" OFF	<Ref. to TEL(diag)-22, DTC U0074 CONTROL MODULE COMMUNICATION BUS "BODY-CAN" OFF, Diagnostic Procedure with Diagnostic Trouble Code (DTC).>
U0100	LOST COMMUNICATION WITH ECM/PCM "A"	<Ref. to TEL(diag)-22, DTC U0100 LOST COMMUNICATION WITH ECM/PCM "A", Diagnostic Procedure with Diagnostic Trouble Code (DTC).>
U0101	LOST COMMUNICATION WITH TCM	<Ref. to TEL(diag)-22, DTC U0101 LOST COMMUNICATION WITH TCM, Diagnostic Procedure with Diagnostic Trouble Code (DTC).>
U0122	LOST COMMUNICATION WITH VEHICLE DYNAMICS CONTROL MODULE	<Ref. to TEL(diag)-22, DTC U0122 LOST COMMUNICATION WITH VEHICLE DYNAMICS CONTROL MODULE, Diagnostic Procedure with Diagnostic Trouble Code (DTC).>
U0140	LOST COMMUNICATION WITH BODY CONTROL MODULE	<Ref. to TEL(diag)-22, DTC U0140 LOST COMMUNICATION WITH BODY CONTROL MODULE, Diagnostic Procedure with Diagnostic Trouble Code (DTC).>
U0151	LOST COMMUNICATION WITH RESTRAINTS CONTROL MODULE	<Ref. to TEL(diag)-22, DTC U0151 LOST COMMUNICATION WITH RESTRAINTS CONTROL MODULE, Diagnostic Procedure with Diagnostic Trouble Code (DTC).>
U0155	LOST COMMUNICATION WITH INSTRUMENT PANEL CLUSTER (IPC) CONTROL MODULE	<Ref. to TEL(diag)-22, DTC U0155 LOST COMMUNICATION WITH INSTRUMENT PANEL CLUSTER (IPC) CONTROL MODULE, Diagnostic Procedure with Diagnostic Trouble Code (DTC).>
U0401	INVALID DATA RECEIVED FROM ECM/PCM "A"	<Ref. to TEL(diag)-22, DTC U0401 INVALID DATA RECEIVED FROM ECM/PCM "A", Diagnostic Procedure with Diagnostic Trouble Code (DTC).>
U0402	INVALID DATA RECEIVED FROM TCM	<Ref. to TEL(diag)-23, DTC U0402 INVALID DATA RECEIVED FROM TCM, Diagnostic Procedure with Diagnostic Trouble Code (DTC).>
U0416	INVALID DATA RECEIVED FROM VEHICLE DYNAMICS CONTROL MODULE	<Ref. to TEL(diag)-23, DTC U0416 INVALID DATA RECEIVED FROM VEHICLE DYNAMICS CONTROL MODULE, Diagnostic Procedure with Diagnostic Trouble Code (DTC).>
U0452	INVALID DATA RECEIVED FROM RESTRAINTS CONTROL MODULE	<Ref. to TEL(diag)-23, DTC U0452 INVALID DATA RECEIVED FROM RESTRAINTS CONTROL MODULE, Diagnostic Procedure with Diagnostic Trouble Code (DTC).>
U1235	LOST COMMUNICATION WITH EyeSight	<Ref. to TEL(diag)-23, DTC U1235 LOST COMMUNICATION WITH EyeSight, Diagnostic Procedure with Diagnostic Trouble Code (DTC).>
B2A00	VIN READING	<Ref. to TEL(diag)-24, DTC B2A00 VIN READING, Diagnostic Procedure with Diagnostic Trouble Code (DTC).>
B2A01	LTE1 ANTENNA CIRCUIT	<Ref. to TEL(diag)-25, DTC B2A01 LTE1 ANTENNA CIRCUIT, Diagnostic Procedure with Diagnostic Trouble Code (DTC).>
B2A02	LTE2 ANTENNA CIRCUIT	<Ref. to TEL(diag)-27, DTC B2A02 LTE2 ANTENNA CIRCUIT, Diagnostic Procedure with Diagnostic Trouble Code (DTC).>
B2A03	GPS ANTENNA CIRCUIT	<Ref. to TEL(diag)-28, DTC B2A03 GPS ANTENNA CIRCUIT, Diagnostic Procedure with Diagnostic Trouble Code (DTC).>
B2A07	BACKUP BATTERY CHARGE SYSTEM PERFORMANCE	<Ref. to TEL(diag)-37, DTC B2A07 BACKUP BATTERY CHARGE SYSTEM PERFORMANCE, Diagnostic Procedure with Diagnostic Trouble Code (DTC).>
B2A08	SOS BUTTON CIRCUIT	<Ref. to TEL(diag)-38, DTC B2A08 SOS BUTTON CIRCUIT, Diagnostic Procedure with Diagnostic Trouble Code (DTC).>

DTC	Item	Note
B2A09	I-CALL BUTTON CIRCUIT	<Ref. to TEL(diag)-40, DTC B2A09 I-CALL BUTTON CIRCUIT, Diagnostic Procedure with Diagnostic Trouble Code (DTC).>
B2A0C	DCM INTERNAL FAULT	<Ref. to TEL(diag)-46, DTC B2A0C DCM INTERNAL FAULT, Diagnostic Procedure with Diagnostic Trouble Code (DTC).>
B2A0D	AIRBAG SIGNAL	<Ref. to TEL(diag)-47, DTC B2A0D AIRBAG SIGNAL, Diagnostic Procedure with Diagnostic Trouble Code (DTC).>
B2A0E	MUTE LINE CIRCUIT	<Ref. to TEL(diag)-49, DTC B2A0E MUTE LINE CIRCUIT, Diagnostic Procedure with Diagnostic Trouble Code (DTC).>
B2A0F	BACKUP BATTERY DEGRADATION	<Ref. to TEL(diag)-51, DTC B2A0F BACKUP BATTERY DEGRADATION, Diagnostic Procedure with Diagnostic Trouble Code (DTC).>
B2A10	BATTERY VOLTAGE HIGH	<Ref. to TEL(diag)-52, DTC B2A10 BATTERY VOLTAGE HIGH, Diagnostic Procedure with Diagnostic Trouble Code (DTC).>

Inspection steps:
1) Perform the Clear Memory Mode. <Ref. to TEL(diag)-18, Clear Memory Mode.>
2) Read the DTC and check that the DTC is not displayed. <Ref. to TEL(diag)-16, Diagnostic Code(s) Display.>

NOTE:
If the DTC is displayed on the screen, the trouble is still present. Perform the diagnosis according to DTC. After solving the DTC, repeat from step 1).
3) Turn the ignition switch to OFF.
4) Turn the ignition switch to ON, and wait for 5 seconds or more.
5) Read the DTC and check that the DTC is not displayed.

NOTE:
If the DTC is displayed on the screen, the trouble is still present. Perform the diagnosis according to DTC.

2. INSPECTION MODE 2

DTC	Item	Note
B2A04	MIC CIRCUIT	<Ref. to TEL(diag)-29, DTC B2A04 MIC CIRCUIT, Diagnostic Procedure with Diagnostic Trouble Code (DTC).>
B2A05	LEFT SPEAKER/AUDIO CIRCUIT	<Ref. to TEL(diag)-31, DTC B2A05 LEFT SPEAKER/AUDIO CIRCUIT, Diagnostic Procedure with Diagnostic Trouble Code (DTC).>
B2A06	RIGHT SPEAKER/AUDIO CIRCUIT	<Ref. to TEL(diag)-34, DTC B2A06 RIGHT SPEAKER/AUDIO CIRCUIT, Diagnostic Procedure with Diagnostic Trouble Code (DTC).>
B2A0A	RED LED CIRCUIT	<Ref. to TEL(diag)-42, DTC B2A0A RED LED CIRCUIT, Diagnostic Procedure with Diagnostic Trouble Code (DTC).>
B2A0B	GREEN LED CIRCUIT	<Ref. to TEL(diag)-44, DTC B2A0B GREEN LED CIRCUIT, Diagnostic Procedure with Diagnostic Trouble Code (DTC).>

Inspection steps:
1) Perform the Clear Memory Mode. <Ref. to TEL(diag)-18, Clear Memory Mode.>
2) Read the DTC and check that the DTC is not displayed. <Ref. to TEL(diag)-16, Diagnostic Code(s) Display.>

NOTE:
If the DTC is displayed on the screen, the trouble is still present. Perform the diagnosis according to DTC. After solving the DTC, repeat from step 1).
3) Turn the ignition switch to OFF.
4) Close all doors. (The vehicle enters CAN sleep state.)
5) Wait for approx. 1 minute. After the indicator goes off, wait for another 1 minute. (DCM standby mode)
6) Turn the ignition switch to ON, and wait for 5 seconds or more.
7) Read the DTC and check that the DTC is not displayed.

NOTE:
If the DTC is displayed on the screen, the trouble is still present. Perform the diagnosis according to DTC.

11.System Operation Check Mode

A: OPERATION

1) On «Start» display, select «Diagnosis».
2) On «Vehicle selection» display, input the target vehicle information and select «Confirmed».
3) On «Main Menu» display, select «Each System».
4) On «Select System» display, select «Telematics» and then select «Enter».
5) On «Select Function» display, select «Active Test».

NOTE:
For detailed operation procedures, refer to “Application help”.

B: LIST

System operation check mode	Note
GREEN LED Lighting	GREEN LED illuminates/flashes/goes off.
GREEN LED Flashing	
GREEN LED OFF	
RED LED Lighting	RED LED illuminates/flashes/goes off.
RED LED Flashing	
RED LED OFF	
Speaker ON	Outputs to speaker.

12.Diagnostic Procedure with Diagnostic Trouble Code (DTC)

A: DTC U0073 CONTROL MODULE COMMUNICATION BUS OFF

Detected when CAN line abnormality is detected.

NOTE:
Perform the diagnosis for LAN system. <Ref. to LAN(diag)-2, PROCEDURE, Basic Diagnostic Procedure.>

B: DTC U0074 CONTROL MODULE COMMUNICATION BUS "BODY-CAN" OFF

Detected when CAN line abnormality is detected.

NOTE:
Perform the diagnosis for LAN system. <Ref. to LAN(diag)-2, PROCEDURE, Basic Diagnostic Procedure.>

C: DTC U0100 LOST COMMUNICATION WITH ECM/PCM "A"

Detected when CAN data from ECM does not arrive.

NOTE:
Perform the diagnosis for LAN system. <Ref. to LAN(diag)-2, PROCEDURE, Basic Diagnostic Procedure.>

D: DTC U0101 LOST COMMUNICATION WITH TCM

Detected when CAN data from TCM does not arrive.

NOTE:
Perform the diagnosis for LAN system. <Ref. to LAN(diag)-2, PROCEDURE, Basic Diagnostic Procedure.>

E: DTC U0122 LOST COMMUNICATION WITH VEHICLE DYNAMICS CONTROL MODULE

Detected when CAN data from VDC does not arrive.

NOTE:
Perform the diagnosis for LAN system. <Ref. to LAN(diag)-2, PROCEDURE, Basic Diagnostic Procedure.>

F: DTC U0140 LOST COMMUNICATION WITH BODY CONTROL MODULE

Detected when CAN data is not received from body integrated unit.

NOTE:
Perform the diagnosis for LAN system. <Ref. to LAN(diag)-2, PROCEDURE, Basic Diagnostic Procedure.>

G: DTC U0151 LOST COMMUNICATION WITH RESTRAINTS CONTROL MODULE

Detected when CAN data is not received from airbag CM.

NOTE:
Perform the diagnosis for LAN system. <Ref. to LAN(diag)-2, PROCEDURE, Basic Diagnostic Procedure.>

H: DTC U0155 LOST COMMUNICATION WITH INSTRUMENT PANEL CLUSTER (IPC) CONTROL MODULE

Detected when CAN data from combination meter does not arrive.

NOTE:
Perform the diagnosis for LAN system. <Ref. to LAN(diag)-2, PROCEDURE, Basic Diagnostic Procedure.>

I: DTC U0401 INVALID DATA RECEIVED FROM ECM/PCM "A"

Detected when CAN data from ECM is abnormal.

NOTE:
Perform the diagnosis for LAN system. <Ref. to LAN(diag)-2, PROCEDURE, Basic Diagnostic Procedure.>

J: DTC U0402 INVALID DATA RECEIVED FROM TCM

This is detected when CAN data from TCM is abnormal.

NOTE:
Perform the diagnosis for LAN system. <Ref. to LAN(diag)-2, PROCEDURE, Basic Diagnostic Procedure.>

K: DTC U0416 INVALID DATA RECEIVED FROM VEHICLE DYNAMICS CONTROL MODULE

This is detected when CAN data from VDC is abnormal.

NOTE:
Perform the diagnosis for LAN system. <Ref. to LAN(diag)-2, PROCEDURE, Basic Diagnostic Procedure.>

L: DTC U0452 INVALID DATA RECEIVED FROM RESTRAINTS CONTROL MODULE

Detected when CAN data from airbag CM is abnormal.

NOTE:
Perform the diagnosis for LAN system. <Ref. to LAN(diag)-2, PROCEDURE, Basic Diagnostic Procedure.>

M: DTC U1235 LOST COMMUNICATION WITH EyeSight

Detected when CAN data from the stereo camera does not arrive.

NOTE:
Perform the diagnosis for LAN system. <Ref. to LAN(diag)-2, PROCEDURE, Basic Diagnostic Procedure.>

N: DTC B2A00 VIN READING

DIAGNOSIS START CONDITION:
When ignition switch is ON.
TROUBLE SYMPTOM:
When ignition switch is ON, VIN information (CAN) sent from ECM cannot be read.
DTC DETECTING CONDITION:
- Telematics function cannot be used.
- RED LED illuminates.

CAUTION:
CommCheck is required after replacing the DCM. <Ref. to ET-22, REGISTRATION (COMM CHECK), OPERATION, Telematics System.>

	Step	Check	Yes	No
1	**CHECK DTC.** Read the DTC. <Ref. to TEL(diag)-16, Diagnostic Code(s) Display.>	Is DTC B2A00 displayed? (Current malfunction)	Go to step **2**.	Even if DTC is displayed, the circuit has returned to a normal condition at this time. Reproduce the failure, and then perform the diagnosis again. In this case, temporary poor contact of connector, temporary open or short circuit of harness may be the cause.
2	**CHECK DTC.** Check DTCs in the following systems; • Telematics <Ref. to TEL(diag)-16, Diagnostic Code(s) Display.> • Engine <Ref. to EN(H4DO)(diag)-63, Read Diagnostic Trouble Code (DTC).> <Ref. to EN(H6DO)(diag)-68, Read Diagnostic Trouble Code (DTC).>	Is DTC U**** displayed? (Current malfunction)	Perform the diagnosis for LAN system. <Ref. to LAN(diag)-2, Basic Diagnostic Procedure.>	Go to step **3**.
3	**CHECK CURRENT DATA.** Confirm VIN information from the engine OBD mode. <Ref. to EN(H4DO)(diag)-44, MODE $09, OPERATION, General Scan Tool.> <Ref. to EN(H6DO)(diag)-49, MODE $09, OPERATION, General Scan Tool.>	Is VIN information displayed?	Replace the DCM. <Ref. to ET-50, Data Communication Module.>	Replace the ECM. <Ref. to FU(H4DO)-82, Engine Control Module (ECM).> <Ref. to FU(H6DO)-83, Engine Control Module (ECM).>

O: DTC B2A01 LTE1 ANTENNA CIRCUIT

DIAGNOSIS START CONDITION:
When ignition switch is ON.
DTC DETECTING CONDITION:
Any of the followings continues for 5 seconds or more.
- LTE1 impedance is more than 1 MΩ. (Detached antenna, etc.)
- LTE1 impedance is less than 1 kΩ. (Short-circuited antenna, etc.)

TROUBLE SYMPTOM:
- Telematics function cannot be used.
- RED LED illuminates.

WIRING DIAGRAM:

NOTE:
For the coupling connector, refer to “WIRING SYSTEM”.
Telematics <Ref. to WI-349, WIRING DIAGRAM, Telematics System.>

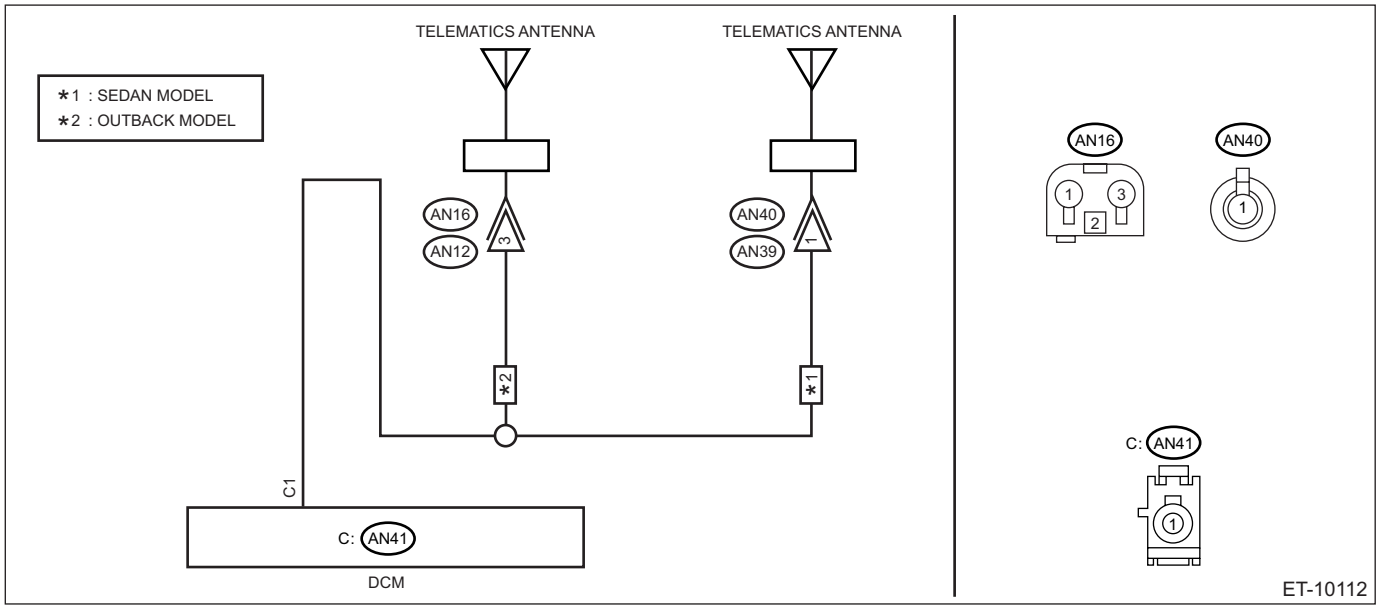

CAUTION:
CommCheck is required after replacing the DCM. <Ref. to ET-22, REGISTRATION (COMM CHECK), OPERATION, Telematics System.>

	Step	Check	Yes	No
1	**CHECK DTC.** Read the DTC. <Ref. to TEL(diag)-16, Diagnostic Code(s) Display.>	Is DTC B2A01 displayed? (Current malfunction)	Go to step **2**.	Even if DTC is displayed, the circuit has returned to a normal condition at this time. Reproduce the failure, and then perform the diagnosis again. In this case, temporary poor contact of connector, temporary open or short circuit of harness may be the cause.

	Step	Check	Yes	No
2	**CHECK HARNESS (OPEN CIRCUIT).** 1) Turn the ignition switch to OFF. 2) Disconnect the antenna connector. 3) Disconnect the DCM connector. 4) Disconnect the PRG DU connector. 5) Measure the resistance between antenna connector and DCM connector. ***Connector & terminal*** ***OUTBACK model*** ***(AN41) No. 1 — (AN16) No. 3:*** ***Sedan model*** ***(AN41) No. 1 — (AN40) No. 1:***	Is the resistance less than 1 Ω?	Go to step **3**.	Repair or replace the open circuit of harness.
3	**CHECK HARNESS (GROUND SHORT CIRCUIT).** Measure the resistance between DCM connector and chassis ground. ***Connector & terminal*** ***(AN41) No. 1 — Chassis ground:***	Is the resistance 1 MΩ or more?	Go to step **4**.	Repair or replace the short circuit of the harness.
4	**CHECK HARNESS (SHORT CIRCUIT TO POWER SUPPLY).** 1) Turn the ignition switch to ON. 2) Measure the voltage between DCM connector and chassis ground. ***Connector & terminal*** ***(AN41) No. 1 (+) — Chassis ground (–):***	Is the voltage less than 1 V?	Go to step **5**.	Repair or replace the short circuit of the harness.
5	**CHECK ANTENNA.** Check the telematics antenna. <Ref. to ET-31, Antenna.>	Is the telematics antenna OK?	Replace the DCM. <Ref. to ET-50, Data Communication Module.>	Replace the telematics antenna. <Ref. to ET-31, Antenna.>

P: DTC B2A02 LTE2 ANTENNA CIRCUIT

DIAGNOSIS START CONDITION:
When ignition switch is ON.
DTC DETECTING CONDITION:
Any of the followings continues for 5 seconds or more.
- LTE2 impedance is more than 1 MΩ. (Detached antenna, etc.)
- LTE2 impedance is less than 1 kΩ. (Short-circuited antenna, etc.)

TROUBLE SYMPTOM:
- Telematics function cannot be used.
- RED LED illuminates.

CAUTION:
CommCheck is required after replacing the DCM. <Ref. to ET-22, REGISTRATION (COMM CHECK), OPERATION, Telematics System.>

	Step	Check	Yes	No
1	**CHECK DTC.** Read the DTC. <Ref. to TEL(diag)-16, Diagnostic Code(s) Display.>	Is DTC B2A01 displayed? (Current malfunction)	Go to step **2**.	Even if DTC is displayed, the circuit has returned to a normal condition at this time. Reproduce the failure, and then perform the diagnosis again. In this case, temporary poor contact of connector, temporary open or short circuit of harness may be the cause.
2	**CHECK ANTENNA.** Visually check the telematics sub antenna. <Ref. to ET-31, Antenna.>	Is the telematics sub antenna OK?	Replace the DCM. <Ref. to ET-50, Data Communication Module.>	Replace the telematics sub antenna. <Ref. to ET-31, Antenna.>

Q: DTC B2A03 GPS ANTENNA CIRCUIT

DIAGNOSIS START CONDITION:
When ignition switch is ON.
DTC DETECTING CONDITION:
Any of the followings continues for 5 seconds or more.
- GPS antenna impedance is more than 1 MΩ. (Detached antenna, etc.)
- GPS antenna impedance is less than 1 kΩ. (Short-circuited antenna, etc.)

TROUBLE SYMPTOM:
- Telematics function cannot be used.
- RED LED illuminates.

CAUTION:
CommCheck is required after replacing the DCM. <Ref. to ET-22, REGISTRATION (COMM CHECK), OPERATION, Telematics System.>

	Step	Check	Yes	No
1	**CHECK DTC.** Read the DTC. <Ref. to TEL(diag)-16, Diagnostic Code(s) Display.>	Is DTC B2A01 displayed? (Current malfunction)	Go to step **2**.	Even if DTC is displayed, the circuit has returned to a normal condition at this time. Reproduce the failure, and then perform the diagnosis again. In this case, temporary poor contact of connector, temporary open or short circuit of harness may be the cause.
2	**CHECK GPS ANTENNA.** Visually check the GPS antenna. <Ref. to ET-48, GPS Antenna.>	Is the GPS antenna OK?	Replace the DCM. <Ref. to ET-50, Data Communication Module.>	Replace the GPS antenna. <Ref. to ET-48, GPS Antenna.>

R: DTC B2A04 MIC CIRCUIT

DIAGNOSIS START CONDITION:
When ACC is ON.
DTC DETECTING CONDITION:
Any of the followings continues for 5 seconds or more.
- MIC impedance is more than 1 MΩ. (Detached MIC, etc.)
- MIC impedance is less than 1 kΩ. (Short-circuited MIC, etc.)

TROUBLE SYMPTOM:
- Call function cannot be used.
- RED LED illuminates.

WIRING DIAGRAM:

NOTE:
For the coupling connector, refer to “WIRING SYSTEM”.
Telematics <Ref. to WI-349, WIRING DIAGRAM, Telematics System.>

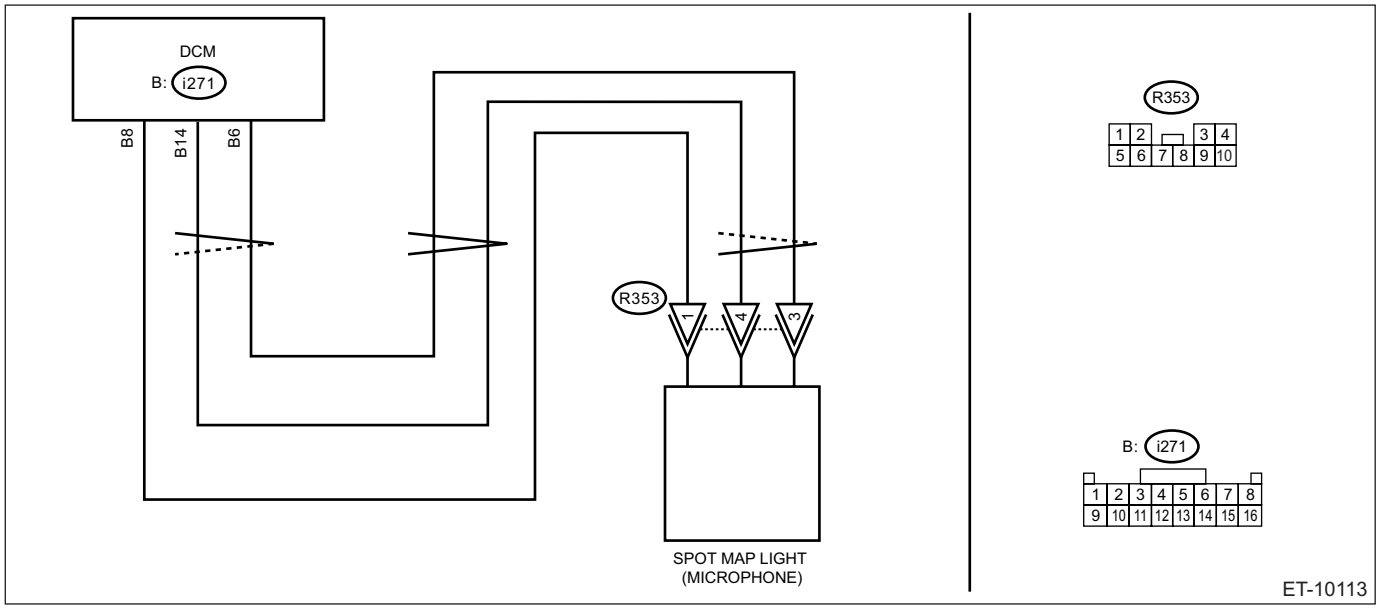

CAUTION:
CommCheck is required after replacing the DCM. <Ref. to ET-22, REGISTRATION (COMM CHECK), OPERATION, Telematics System.>

Step		Check	Yes	No
1	**CHECK DTC.** Read the DTC. <Ref. to TEL(diag)-16, Diagnostic Code(s) Display.>	Is DTC B2A04 displayed? (Current malfunction)	Go to step **2**.	Even if DTC is displayed, the circuit has returned to a normal condition at this time. Reproduce the failure, and then perform the diagnosis again. In this case, temporary poor contact of connector, temporary open or short circuit of harness may be the cause.

	Step	Check	Yes	No
2	**CHECK HARNESS (OPEN CIRCUIT).** 1) Turn the ignition switch to OFF. 2) Disconnect the microphone connector. 3) Disconnect the DCM connector. 4) Measure the resistance between microphone connector and DCM connector. ***Connector & terminal*** ***(R353) No. 1 — (i271) No. 8:*** ***(R353) No. 4 — (i271) No. 14:*** ***(R353) No. 3 — (i271) No. 6:***	Is the resistance 1 Ω or less?	Go to step **3**.	Repair or replace the open circuit of harness.
3	**CHECK HARNESS (GROUND SHORT CIRCUIT).** Measure the resistance between DCM connector and chassis ground. ***Connector & terminal*** ***(i271) No. 8 — Chassis ground:*** ***(i271) No. 14 — Chassis ground:*** ***(i271) No. 6 — Chassis ground:***	Is the resistance 1 MΩ or more?	Go to step **4**.	Repair or replace the open circuit of harness.
4	**CHECK THE CONNECTOR (SHORT CIRCUIT TO POWER SUPPLY).** Measure the voltage between DCM connector and chassis ground. ***Connector & terminal*** ***(i271) No. 8 (+) — Chassis ground (–):*** ***(i271) No. 14 (+) — Chassis ground (–):*** ***(i271) No. 6 (+) — Chassis ground (–):***	Is the voltage less than 1 V?	Go to step **5**.	Repair or replace the short circuit of the harness.
5	**CHECK MICROPHONE.** Confirm the microphone voice input.	Is the voice input OK?	Replace the DCM. <Ref. to ET-50, Data Communication Module.>	Replace the microphone. <Ref. to ET-46, Microphone.>

S: DTC B2A05 LEFT SPEAKER/AUDIO CIRCUIT

DIAGNOSIS START CONDITION:
When ACC is ON.
DTC DETECTING CONDITION:
Speaker impedance is more than 10 kΩ for 100 mS. (Detached speaker connection, etc.)
TROUBLE SYMPTOM:
- Call function cannot be used.
- RED LED illuminates.

WIRING DIAGRAM:

NOTE:
For the coupling connector, refer to “WIRING SYSTEM”.
Telematics <Ref. to WI-349, WIRING DIAGRAM, Telematics System.>
- Without audio amplifier

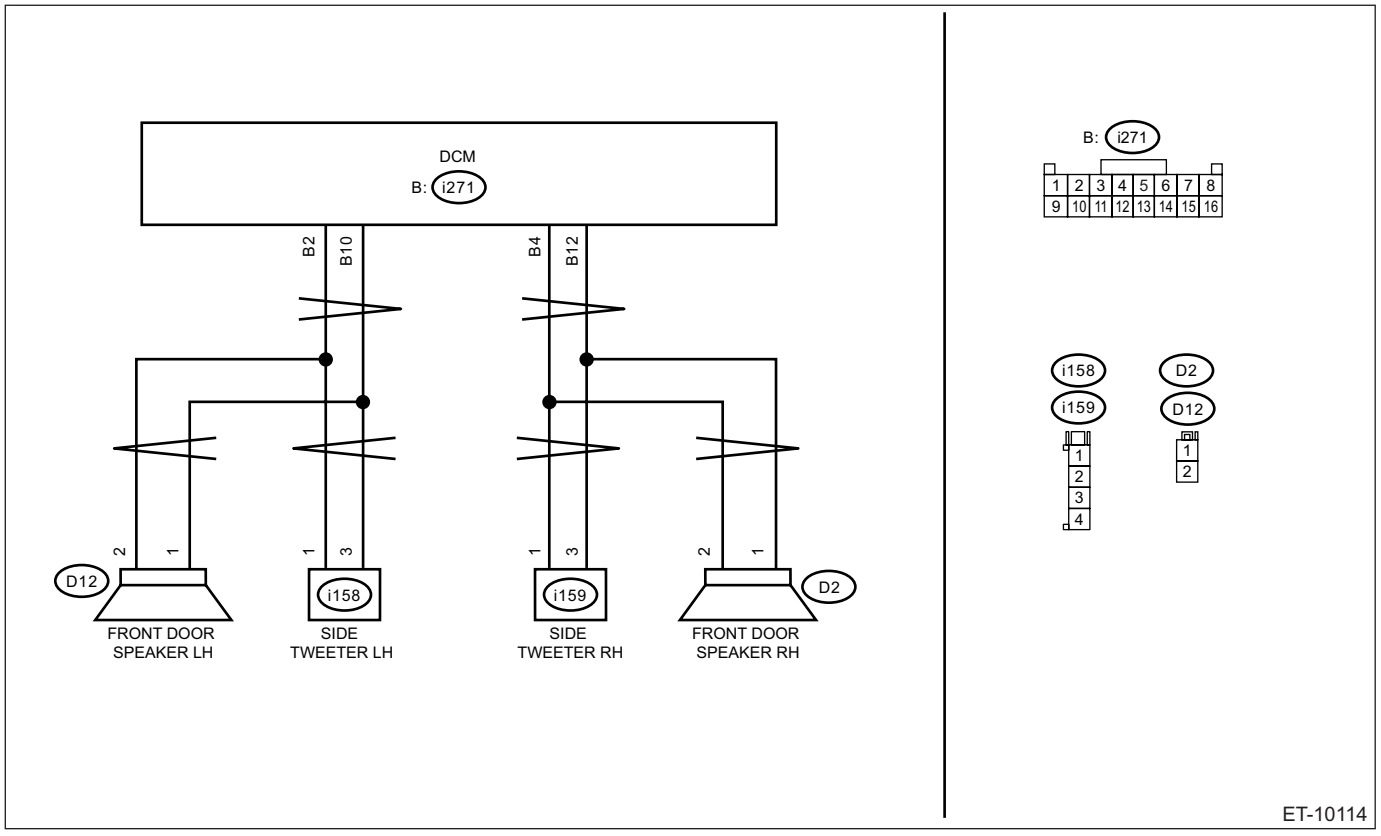

- With audio amplifier

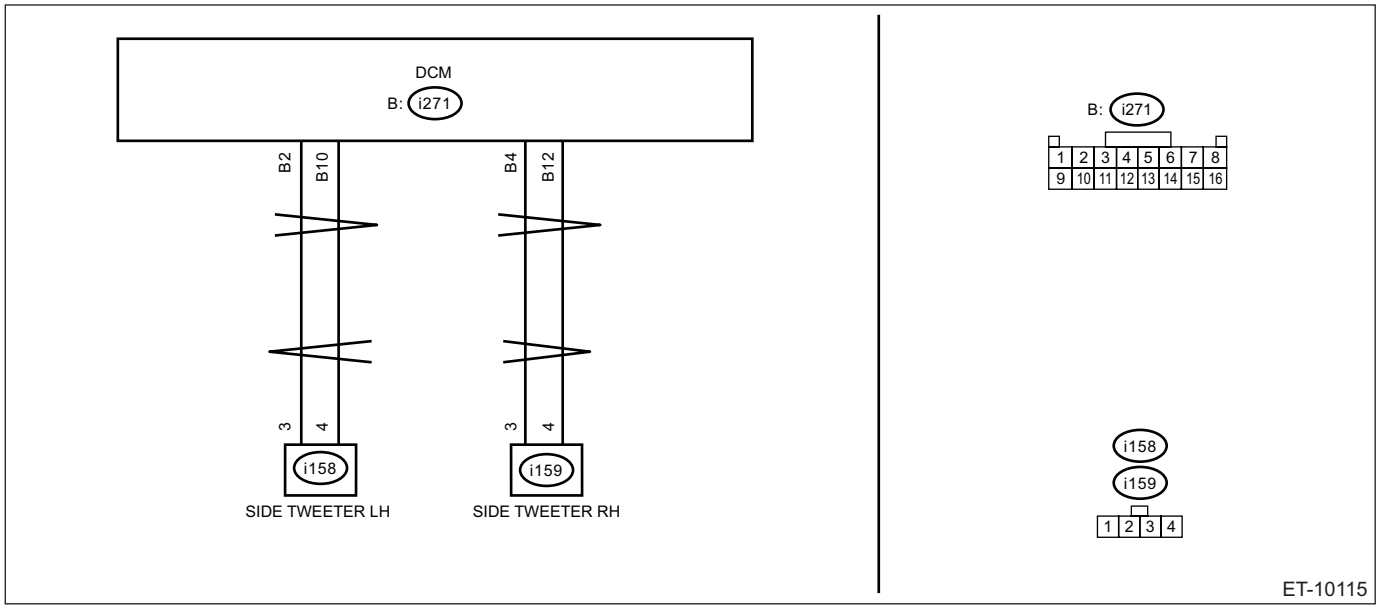

CAUTION:
CommCheck is required after replacing the DCM. <Ref. to ET-22, REGISTRATION (COMM CHECK), OPERATION, Telematics System.>

	Step	Check	Yes	No
1	**CHECK DTC.** Read the DTC. <Ref. to TEL(diag)-16, Diagnostic Code(s) Display.>	Is DTC B2A05 displayed? (Current malfunction)	Go to step **2**.	Even if DTC is displayed, the circuit has returned to a normal condition at this time. Reproduce the failure, and then perform the diagnosis again. In this case, temporary poor contact of connector, temporary open or short circuit of harness may be the cause.
2	**PERFORM THE SYSTEM OPERATION CHECK.** Perform [Speaker ON] in the system operation check mode. <Ref. to TEL(diag)-21, System Operation Check Mode.>	Does it sound?	Go to step **3**.	Even if DTC is displayed, the circuit has returned to a normal condition at this time. Reproduce the failure, and then perform the diagnosis again. In this case, temporary poor contact of connector, temporary open or short circuit of harness may be the cause.

	Step	Check	Yes	No
3	**CHECK HARNESS (OPEN CIRCUIT).** 1) Turn the ignition switch to OFF. 2) Disconnect the speaker connector and tweeter connector. 3) Disconnect the DCM connector. 4) Measure the resistance between speaker connector and tweeter connector and DCM connector. ***Connector & terminal*** ***Without audio amplifier*** ***(i271) No. 2 — (D12) No. 2:*** ***(i271) No. 2 — (i158) No. 1:*** ***(i271) No. 10 — (D12) No. 1:*** ***(i271) No. 10 — (i158) No. 3:*** ***With audio amplifier*** ***(i271) No. 2 — (i158) No. 3:*** ***(i271) No. 10 — (i158) No. 4:***	Is the resistance 1 Ω or less?	Go to step **4**.	Repair or replace the open circuit of harness.
4	**CHECK HARNESS (GROUND SHORT CIRCUIT).** Measure the resistance between DCM connector and chassis ground. ***Connector & terminal*** ***(i271) No. 2 — Chassis ground:*** ***(i271) No. 10 — Chassis ground:***	Is the resistance 1 MΩ or more?	Go to step **5**.	Repair or replace the open circuit of harness.
5	**CHECK THE CONNECTOR (SHORT CIRCUIT TO POWER SUPPLY).** Measure the voltage between DCM connector and chassis ground. ***Connector & terminal*** ***(i271) No. 2 (+) — Chassis ground (–):*** ***(i271) No. 10 (+) — Chassis ground (–):***	Is the voltage less than 1 V?	Go to step **6**.	Repair or replace the short circuit of the harness.
6	**CHECK THE SPEAKER.** Perform the inspection of speaker unit and tweeter unit. <Ref. to ET-24, Front Speaker.> <Ref. to ET-27, Rear Speaker.>	Are the speaker and tweeter OK?	Replace the DCM. <Ref. to ET-50, Data Communication Module.>	Replace the speaker and tweeter. <Ref. to ET-24, Front Speaker.> <Ref. to ET-27, Rear Speaker.>

T: DTC B2A06 RIGHT SPEAKER/AUDIO CIRCUIT

DIAGNOSIS START CONDITION:
When ACC is ON.
DTC DETECTING CONDITION:
Speaker impedance is more than 10 kΩ for 100 mS. (Detached speaker connection, etc.)
TROUBLE SYMPTOM:
- Call function cannot be used.
- RED LED illuminates.

WIRING DIAGRAM:

NOTE:
For the coupling connector, refer to “WIRING SYSTEM”.
Telematics <Ref. to WI-349, WIRING DIAGRAM, Telematics System.>
- Without audio amplifier

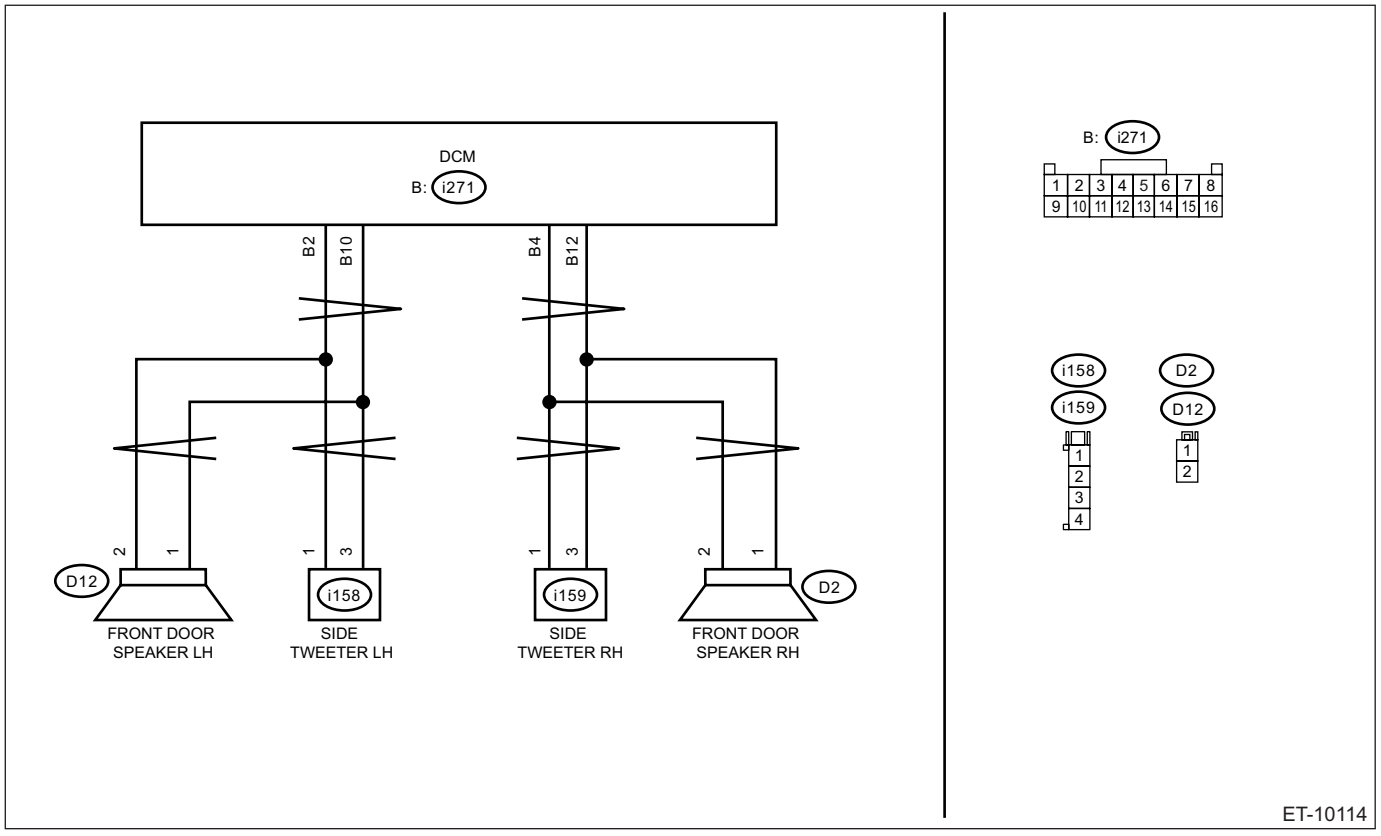

- With audio amplifier

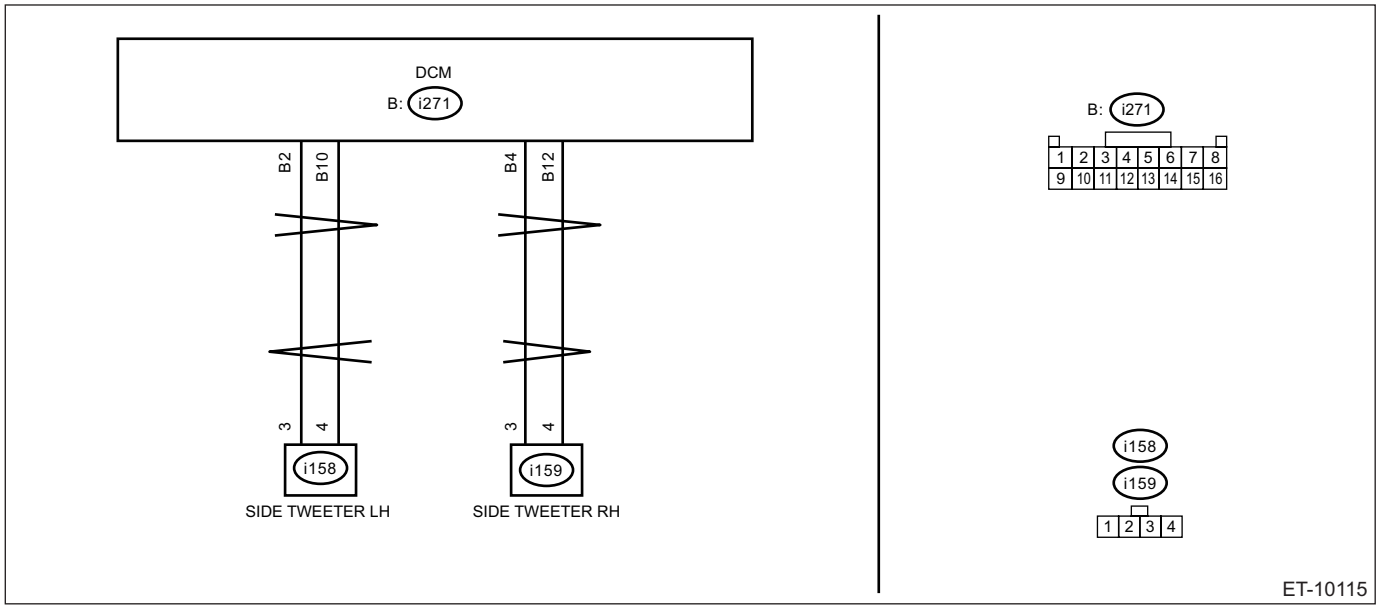

CAUTION:
CommCheck is required after replacing the DCM. <Ref. to ET-22, REGISTRATION (COMM CHECK), OPERATION, Telematics System.>

	Step	Check	Yes	No
1	**CHECK DTC.** Read the DTC. <Ref. to TEL(diag)-16, Diagnostic Code(s) Display.>	Is DTC B2A06 displayed? (Current malfunction)	Go to step **2**.	Even if DTC is displayed, the circuit has returned to a normal condition at this time. Reproduce the failure, and then perform the diagnosis again. In this case, temporary poor contact of connector, temporary open or short circuit of harness may be the cause.
2	**PERFORM THE SYSTEM OPERATION CHECK.** Perform [Speaker ON] in the system operation check mode. <Ref. to TEL(diag)-21, System Operation Check Mode.>	Does it sound?	Go to step **3**.	Even if DTC is displayed, the circuit has returned to a normal condition at this time. Reproduce the failure, and then perform the diagnosis again. In this case, temporary poor contact of connector, temporary open or short circuit of harness may be the cause.

	Step	Check	Yes	No
3	**CHECK HARNESS (OPEN CIRCUIT).** 1) Turn the ignition switch to OFF. 2) Disconnect the speaker connector and tweeter connector. 3) Disconnect the DCM connector. 4) Measure the resistance between speaker connector and tweeter connector and DCM connector. ***Connector & terminal*** ***Without audio amplifier*** ***(i271) No. 4 — (D2) No. 2:*** ***(i271) No. 4 — (i159) No. 1:*** ***(i271) No. 12 — (D2) No. 1:*** ***(i271) No. 12 — (i159) No. 3:*** ***With audio amplifier*** ***(i271) No. 4 — (i159) No. 3:*** ***(i271) No. 12 — (i159) No. 4:***	Is the resistance 1 Ω or less?	Go to step **4**.	Repair or replace the open circuit of harness.
4	**CHECK HARNESS (GROUND SHORT CIRCUIT).** Measure the resistance between DCM connector and chassis ground. ***Connector & terminal*** ***(i271) No. 4 — Chassis ground:*** ***(i271) No. 12 — Chassis ground:***	Is the resistance 1 MΩ or more?	Go to step **5**.	Repair or replace the open circuit of harness.
5	**CHECK THE CONNECTOR (SHORT CIRCUIT TO POWER SUPPLY).** Measure the voltage between DCM connector and chassis ground. ***Connector & terminal*** ***(i271) No. 4 (+) — Chassis ground (–):*** ***(i271) No. 12 (+) — Chassis ground (–):***	Is the voltage less than 1 V?	Go to step **6**.	Repair or replace the short circuit of the harness.
6	**CHECK THE SPEAKER.** Perform the inspection of speaker unit and tweeter unit. <Ref. to ET-24, Front Speaker.> <Ref. to ET-27, Rear Speaker.>	Are the speaker and tweeter OK?	Replace the DCM. <Ref. to ET-50, Data Communication Module.>	Replace the speaker and tweeter. <Ref. to ET-24, Front Speaker.> <Ref. to ET-27, Rear Speaker.>

U: DTC B2A07 BACKUP BATTERY CHARGE SYSTEM PERFORMANCE

DIAGNOSIS START CONDITION:
When ignition switch is ON.
DTC DETECTING CONDITION:
Backup battery is disconnected for at least 5 seconds when the ignition switch is turned ON. (Detached back-up battery connection, etc.)
TROUBLE SYMPTOM:
- ACN/SOS function cannot be used when the main battery is disconnected.
- RED LED illuminates.

CAUTION:
CommCheck is required after replacing the DCM. <Ref. to ET-22, REGISTRATION (COMM CHECK), OPERATION, Telematics System.>

	Step	Check	Yes	No
1	**CHECK DTC.** Read the DTC. <Ref. to TEL(diag)-16, Diagnostic Code(s) Display.>	Is DTC B2A07 displayed? (Current malfunction)	Go to step **2**.	Even if DTC is displayed, the circuit has returned to a normal condition at this time. Reproduce the failure, and then perform the diagnosis again. In this case, temporary poor contact of connector, temporary open or short circuit of harness may be the cause.
2	**CHECK THE BACKUP BATTERY.** 1) Remove the DCM. <Ref. to ET-50, Data Communication Module.> 2) Remove the backup battery cover. 3) Disconnect the backup battery connector. 4) Measure the backup battery voltage.	Is the voltage 2.0 V or more?	Replace the DCM. <Ref. to ET-50, Data Communication Module.>	Replace the backup battery. <Ref. to ET-50, Data Communication Module.>

V: DTC B2A08 SOS BUTTON CIRCUIT

DIAGNOSIS START CONDITION:
When ignition switch is ON.
DTC DETECTING CONDITION:
The following conditions occur for at least 50 ms.
- SOS button impedance is more than 10 kΩ.
- SOS button is stuck for at least 60 seconds.

TROUBLE SYMPTOM:
- SOS function cannot be used.
- RED LED illuminates.

WIRING DIAGRAM:

NOTE:
For the coupling connector, refer to “WIRING SYSTEM”.
Telematics <Ref. to WI-349, WIRING DIAGRAM, Telematics System.>

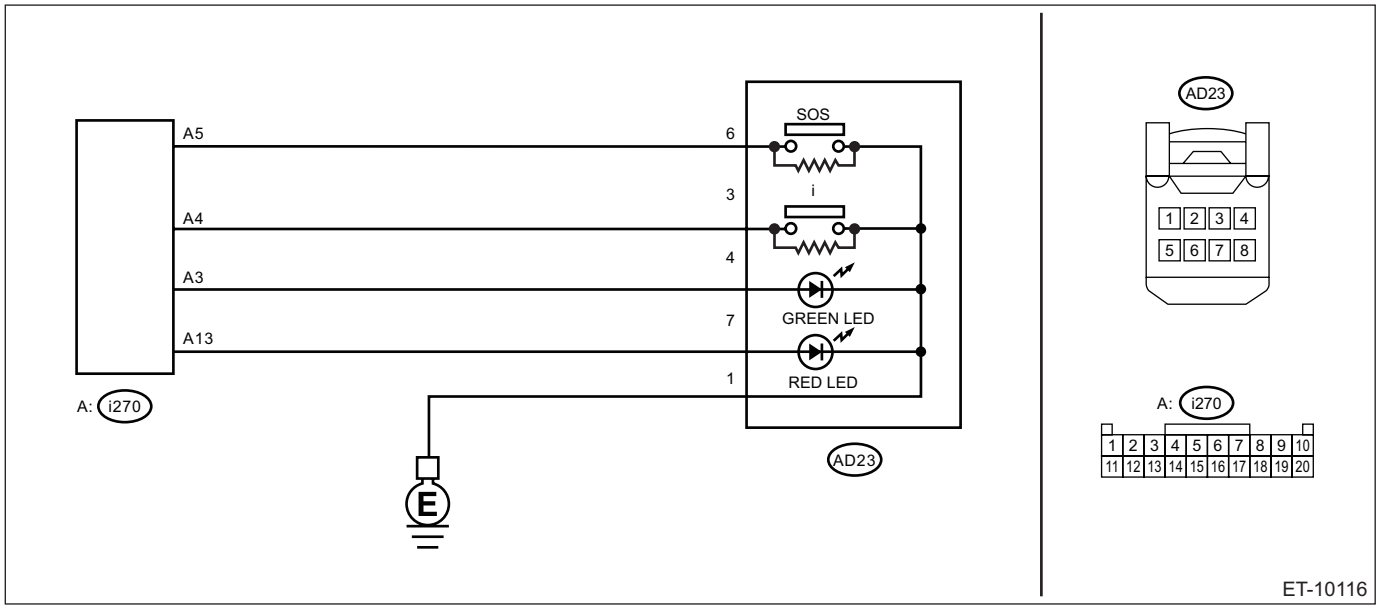

CAUTION:
CommCheck is required after replacing the DCM. <Ref. to ET-22, REGISTRATION (COMM CHECK), OPERATION, Telematics System.>

	Step	Check	Yes	No
1	**CHECK DTC.** Read the DTC. <Ref. to TEL(diag)-16, Diagnostic Code(s) Display.>	Is DTC B2A08 displayed? (Current malfunction)	Go to step **2**.	Even if DTC is displayed, the circuit has returned to a normal condition at this time. Reproduce the failure, and then perform the diagnosis again. In this case, temporary poor contact of connector, temporary open or short circuit of harness may be the cause.

	Step	Check	Yes	No
2	**CHECK HARNESS (OPEN CIRCUIT).** 1) Turn the ignition switch to OFF. 2) Disconnect the telematics button connector. 3) Disconnect the DCM connector. 4) Measure the resistance between telematics button connector and DCM connector. ***Connector & terminal*** ***(i270) No. 5 — (AD2) No. 6:*** ***(AD2) No. 1 — Chassis ground:***	Is the resistance 1 Ω or less?	Go to step **3**.	Repair or replace the open circuit of harness.
3	**CHECK HARNESS (GROUND SHORT CIRCUIT).** Measure the resistance between DCM connector and chassis ground. ***Connector & terminal*** ***(i271) No. 4 — Chassis ground:***	Is the resistance 1 MΩ or more?	Go to step **4**.	Repair or replace the open circuit of harness.
4	**CHECK THE CONNECTOR (SHORT CIRCUIT TO POWER SUPPLY).** Measure the voltage between DCM connector and chassis ground. ***Connector & terminal*** ***(i270) No. 5 (+) — Chassis ground (–):*** ***(AD2) No. 1 (+) — Chassis ground (–):***	Is the voltage less than 1 V?	Go to step **5**.	Repair or replace the short circuit of the harness.
5	**CHECK THE SOS BUTTON UNIT.** Measure the resistance of the SOS button unit. ***Connector & terminal*** ***(AD1) No. 6 — (AD1) No. 1:***	Is the resistance 1 Ω or less when SOS button is ON, and 1.6 (±5%) kΩ or more when SOS button is OFF?	Replace the DCM. <Ref. to ET-50, Data Communication Module.>	Replace the telematics button. <Ref. to ET-43, Switches and Harness.>

W: DTC B2A09 I-CALL BUTTON CIRCUIT

DIAGNOSIS START CONDITION:
When ignition switch is ON.
DTC DETECTING CONDITION:
The following conditions occur for at least 50 ms.
- i-button impedance is more than 10 kΩ.
- i-button is stuck for at least 60 seconds.

TROUBLE SYMPTOM:
- i-Call function cannot be used.
- RED LED illuminates.

WIRING DIAGRAM:

NOTE:
For the coupling connector, refer to “WIRING SYSTEM”.
Telematics <Ref. to WI-349, WIRING DIAGRAM, Telematics System.>

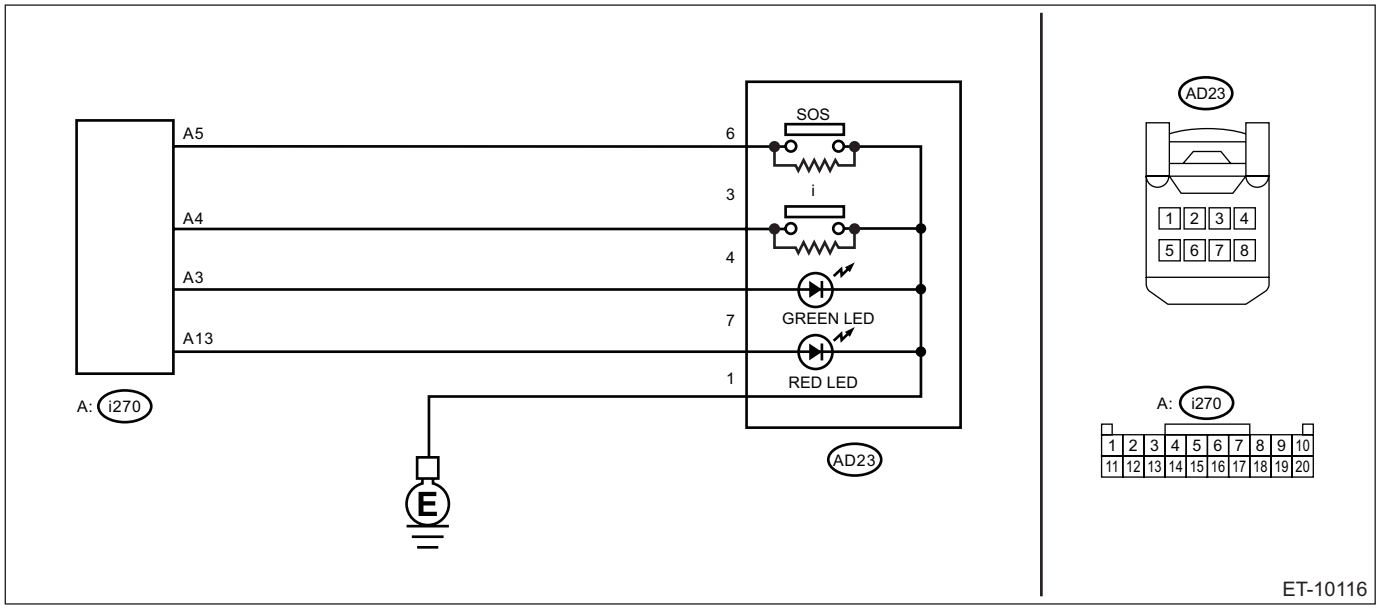

CAUTION:
CommCheck is required after replacing the DCM. <Ref. to ET-22, REGISTRATION (COMM CHECK), OPERATION, Telematics System.>

Step		Check	Yes	No
1	**CHECK DTC.** Read the DTC. <Ref. to TEL(diag)-16, Diagnostic Code(s) Display.>	Is DTC B2A09 displayed? (Current malfunction)	Go to step **2**.	Even if DTC is displayed, the circuit has returned to a normal condition at this time. Reproduce the failure, and then perform the diagnosis again. In this case, temporary poor contact of connector, temporary open or short circuit of harness may be the cause.

	Step	Check	Yes	No
2	**CHECK HARNESS (OPEN CIRCUIT).** 1) Turn the ignition switch to OFF. 2) Disconnect the telematics button connector. 3) Disconnect the DCM connector. 4) Measure the resistance between telematics button connector and DCM connector. ***Connector & terminal*** ***(i270) No. 4 — (AD2) No. 3:*** ***(AD2) No. 1 — Chassis ground:***	Is the resistance 1 Ω or less?	Go to step **3**.	Repair or replace the open circuit of harness.
3	**CHECK HARNESS (GROUND SHORT CIRCUIT).** Measure the resistance between DCM connector and chassis ground. ***Connector & terminal*** ***(i271) No. 4 — Chassis ground:***	Is the resistance 1 MΩ or more?	Go to step **4**.	Repair or replace the open circuit of harness.
4	**CHECK THE CONNECTOR (SHORT CIRCUIT TO POWER SUPPLY).** Measure the voltage between DCM connector and chassis ground. ***Connector & terminal*** ***(i270) No. 4 (+) — Chassis ground (–):*** ***(AD2) No. 1 (+) — Chassis ground (–):***	Is the voltage less than 1 V?	Go to step **5**.	Repair or replace the short circuit of the harness.
5	**CHECK THE I-BUTTON.** Measure the resistance of the i-button unit. ***Connector & terminal*** ***(AD1) No. 3 — (AD1) No. 1:***	Is the resistance 1 Ω or less when i-button is ON, and 1.6 (±5%) kΩ or more when i-button is OFF?	Replace the DCM. <Ref. to ET-50, Data Communication Module.>	Replace the telematics button. <Ref. to ET-43, Switches and Harness.>

X: DTC B2A0A RED LED CIRCUIT

DIAGNOSIS START CONDITION:
When ACC is ON.
DTC DETECTING CONDITION:
- Current in LED is less than 1 mA. (Improper LED connection, etc.)
- Current is more than 200 mA for at least 50 ms. (Short-circuited LED, etc.)

TROUBLE SYMPTOM:
LED does not illuminate.
WIRING DIAGRAM:

NOTE:
For the coupling connector, refer to “WIRING SYSTEM”.
Telematics <Ref. to WI-349, WIRING DIAGRAM, Telematics System.>

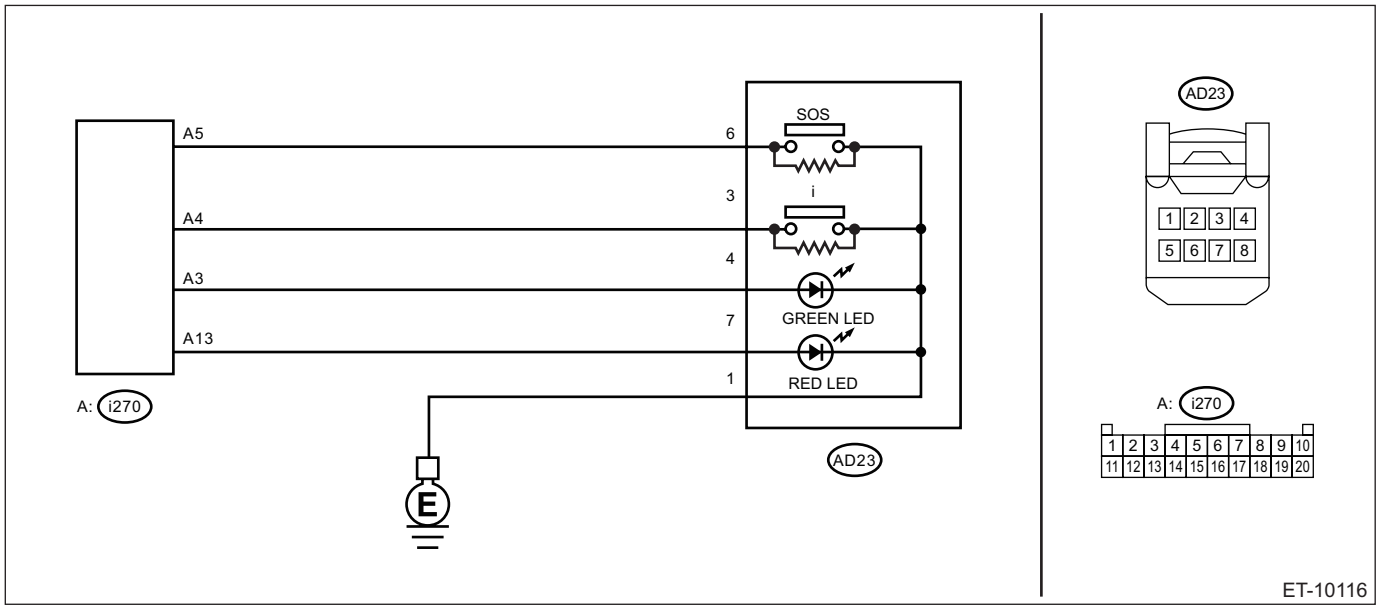

CAUTION:
CommCheck is required after replacing the DCM. <Ref. to ET-22, REGISTRATION (COMM CHECK), OPERATION, Telematics System.>

Step		Check	Yes	No
1	**CHECK DTC.** Read the DTC. <Ref. to TEL(diag)-16, Diagnostic Code(s) Display.>	Is DTC B2A0A displayed? (Current malfunction)	Go to step **2**.	Even if DTC is displayed, the circuit has returned to a normal condition at this time. Reproduce the failure, and then perform the diagnosis again. In this case, temporary poor contact of connector, temporary open or short circuit of harness may be the cause.

	Step	Check	Yes	No
2	**PERFORM THE SYSTEM OPERATION CHECK.** Perform [RED LED Lighting] in the system operation check mode. <Ref. to TEL(diag)-21, System Operation Check Mode.>	Does it sound?	Go to step **3**.	Even if DTC is displayed, the circuit has returned to a normal condition at this time. Reproduce the failure, and then perform the diagnosis again. In this case, temporary poor contact of connector, temporary open or short circuit of harness may be the cause.
3	**CHECK HARNESS (OPEN CIRCUIT).** 1) Turn the ignition switch to OFF. 2) Disconnect the telematics button connector. 3) Disconnect the DCM connector. 4) Measure the resistance between telematics button connector and DCM connector. ***Connector & terminal*** ***(i270) No. 13 — (AD2) No. 7:*** ***(AD2) No. 1 — Chassis ground:***	Is the resistance 1 Ω or less?	Go to step **4**.	Repair or replace the open circuit of harness.
4	**CHECK HARNESS (GROUND SHORT CIRCUIT).** Measure the resistance between DCM connector and chassis ground. ***Connector & terminal*** ***(i270) No. 13 — Chassis ground:***	Is the resistance 1 MΩ or more?	Go to step **5**.	Repair or replace the open circuit of harness.
5	**CHECK THE CONNECTOR (SHORT CIRCUIT TO POWER SUPPLY).** Measure the voltage between DCM connector and chassis ground. ***Connector & terminal*** ***(i270) No. 13 (+) — Chassis ground (–):*** ***(AD2) No. 1 (+) — Chassis ground (–):***	Is the voltage less than 1 V?	Go to step **6**.	Repair or replace the short circuit of the harness.
6	**CHECK THE TELEMATICS BUTTON (LED) UNIT.** Measure the resistance of the telematics button (LED) unit. ***Connector & terminal*** ***(AD1) No. 7 — (AD1) No. 1:***	Is there continuity?	Replace the DCM. <Ref. to ET-50, Data Communication Module.>	Replace the telematics button. <Ref. to ET-43, Switches and Harness.>

Y: DTC B2A0B GREEN LED CIRCUIT

DIAGNOSIS START CONDITION:
When ACC is ON.
DTC DETECTING CONDITION:
- Current in LED is less than 1 mA. (Improper LED connection, etc.)
- Current is more than 200 mA for at least 50 ms. (Short-circuited LED, etc.)

TROUBLE SYMPTOM:
RED LED illuminates.
WIRING DIAGRAM:

NOTE:
For the coupling connector, refer to “WIRING SYSTEM”.
Telematics <Ref. to WI-349, WIRING DIAGRAM, Telematics System.>

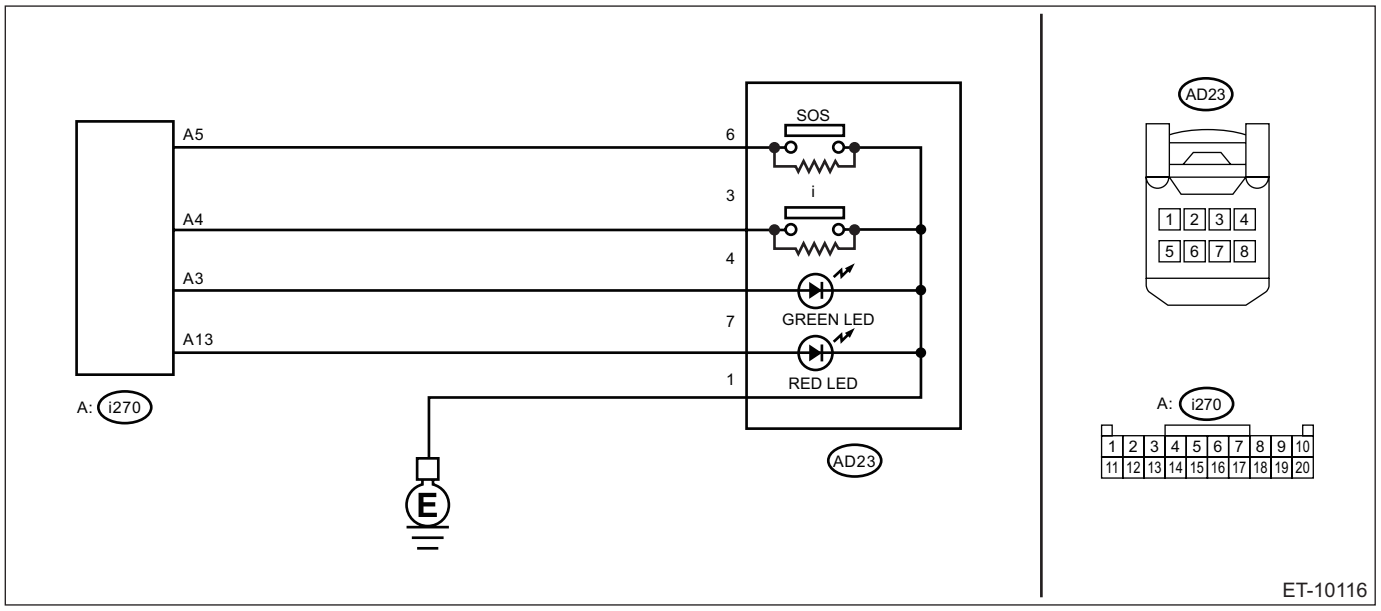

CAUTION:
CommCheck is required after replacing the DCM. <Ref. to ET-22, REGISTRATION (COMM CHECK), OPERATION, Telematics System.>

	Step	Check	Yes	No
1	**CHECK DTC.** Read the DTC. <Ref. to TEL(diag)-16, Diagnostic Code(s) Display.>	Is DTC B2A0B displayed? (Current malfunction)	Go to step **2**.	Even if DTC is displayed, the circuit has returned to a normal condition at this time. Reproduce the failure, and then perform the diagnosis again. In this case, temporary poor contact of connector, temporary open or short circuit of harness may be the cause.

	Step	Check	Yes	No
2	**PERFORM THE SYSTEM OPERATION CHECK.** Perform [GREEN LED Lighting] in the system operation check mode. <Ref. to TEL(diag)-21, System Operation Check Mode.>	Does it sound?	Go to step **3**.	Even if DTC is displayed, the circuit has returned to a normal condition at this time. Reproduce the failure, and then perform the diagnosis again. In this case, temporary poor contact of connector, temporary open or short circuit of harness may be the cause.
3	**CHECK HARNESS (OPEN CIRCUIT).** 1) Turn the ignition switch to OFF. 2) Disconnect the telematics button connector. 3) Disconnect the DCM connector. 4) Measure the resistance between telematics button connector and DCM connector. ***Connector & terminal*** ***(i270) No. 3 — (AD2) No. 4:*** ***(AD2) No. 1 — Chassis ground:***	Is the resistance 1 Ω or less?	Go to step **4**.	Repair or replace the open circuit of harness.
4	**CHECK HARNESS (GROUND SHORT CIRCUIT).** Measure the resistance between DCM connector and chassis ground. ***Connector & terminal*** ***(i270) No. 3 — Chassis ground:***	Is the resistance 1 MΩ or more?	Go to step **5**.	Repair or replace the open circuit of harness.
5	**CHECK THE CONNECTOR (SHORT CIRCUIT TO POWER SUPPLY).** Measure the voltage between DCM connector and chassis ground. ***Connector & terminal*** ***(i270) No. 3 (+) — Chassis ground (–):*** ***(AD2) No. 1 (+) — Chassis ground (–):***	Is the voltage less than 1 V?	Go to step **6**.	Repair or replace the short circuit of the harness.
6	**CHECK THE TELEMATICS BUTTON (LED) UNIT.** Measure the resistance of the telematics button (LED) unit. ***Connector & terminal*** ***(AD1) No. 4 — (AD1) No. 1:***	Is there continuity?	Replace the DCM. <Ref. to ET-50, Data Communication Module.>	Replace the telematics button. <Ref. to ET-43, Switches and Harness.>

Z: DTC B2A0C DCM INTERNAL FAULT

DIAGNOSIS START CONDITION:
When ignition switch is ON.
DTC DETECTING CONDITION:
- Main microcomputer and communication circuit IC cannot communicate. (Defective IPC)
- SIM (communication chip) cannot be read. (Defective SIM)

TROUBLE SYMPTOM:
- Telematics function cannot be used.
- RED LED illuminates.

CAUTION:
CommCheck is required after replacing the DCM. <Ref. to ET-22, REGISTRATION (COMM CHECK), OPERATION, Telematics System.>

	Step	Check	Yes	No
1	**CHECK DTC.** Read the DTC. <Ref. to TEL(diag)-16, Diagnostic Code(s) Display.>	Is DTC B2A0C displayed? (Current malfunction)	Replace the DCM. <Ref. to ET-50, Data Communication Module.>	Even if DTC is displayed, the circuit has returned to a normal condition at this time. Reproduce the failure, and then perform the diagnosis again. In this case, temporary poor contact of connector, temporary open or short circuit of harness may be the cause.

AA:DTC B2A0D AIRBAG SIGNAL

DIAGNOSIS START CONDITION:
When ignition switch is ON.
DTC DETECTING CONDITION:
Either the regular signal or collision signal cannot be detected from the airbag CM for at least 2 seconds.
TROUBLE SYMPTOM:
- ACN function does not operate.
- RED LED illuminates.

WIRING DIAGRAM:

NOTE:
For the coupling connector, refer to “WIRING SYSTEM”.
Telematics <Ref. to WI-349, WIRING DIAGRAM, Telematics System.>

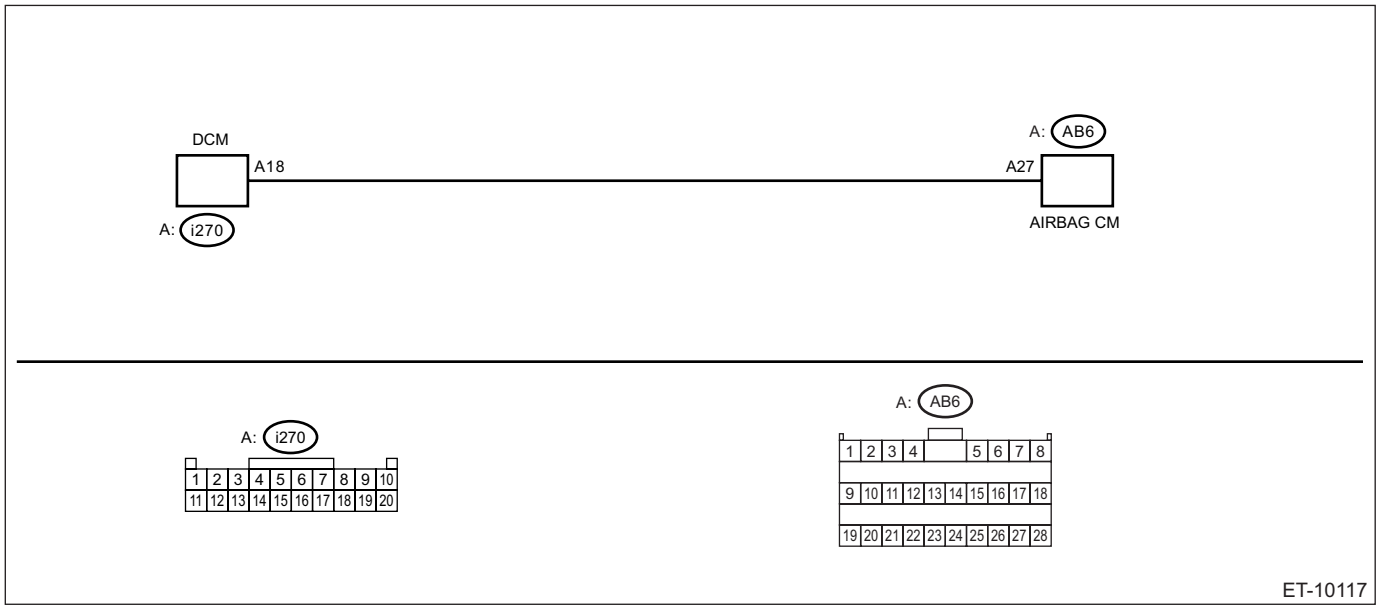

CAUTION:
CommCheck is required after replacing the DCM. <Ref. to ET-22, REGISTRATION (COMM CHECK), OPERATION, Telematics System.>

	Step	Check	Yes	No
1	**CHECK DTC.** Read the DTC. <Ref. to TEL(diag)-16, Diagnostic Code(s) Display.>	Is DTC B2A0D displayed? (Current malfunction)	Go to step **2**.	Even if DTC is displayed, the circuit has returned to a normal condition at this time. Reproduce the failure, and then perform the diagnosis again. In this case, temporary poor contact of connector, temporary open or short circuit of harness may be the cause.
2	**CHECK DTC.** Read DTC of the airbag. <Ref. to AB(diag)-30, Read Diagnostic Trouble Code (DTC).>	Is DTC displayed? (Current malfunction)	Perform the diagnosis according to DTC.	Go to step **3**.

	Step	Check	Yes	No
3	**CHECK HARNESS (OPEN CIRCUIT).** 1) Turn the ignition switch to OFF. 2) Disconnect the airbag CM connector. 3) Disconnect the DCM connector. 4) Measure the resistance between airbag CM connector and DCM connector. **CAUTION:** **To measure the voltage and resistance of airbag system component, be sure to use the specified test harness. <Ref. to AB(diag)-4, General Description.>** ***Connector & terminal*** ***(i270) No. 18 — (AB6) No. 27:***	Is the resistance 1 Ω or less?	Go to step **4**.	Repair or replace the open circuit of harness.
4	**CHECK HARNESS (GROUND SHORT CIRCUIT).** Measure the resistance between DCM connector and chassis ground. ***Connector & terminal*** ***(i270) No. 18 — Chassis ground:***	Is the resistance 1 MΩ or more?	Go to step **5**.	Repair or replace the open circuit of harness.
5	**CHECK THE CONNECTOR (SHORT CIRCUIT TO POWER SUPPLY).** Measure the voltage between DCM connector and chassis ground. ***Connector & terminal*** ***(i270) No. 18 (+) — Chassis ground (–):***	Is the voltage less than 1 V?	Replace the DCM. <Ref. to ET-50, Data Communication Module.>	Repair or replace the short circuit of the harness.

AB:DTC B2A0E MUTE LINE CIRCUIT

DIAGNOSIS START CONDITION:
When ignition switch is ON.

DTC DETECTING CONDITION:
The following conditions occur continuously after the ignition switch is turned to ON when DCM does not mute the audio or navigation system.

- Current in the mute line is less than 1 mA. (Improper line connection, etc.)
- Current is more than 50 mA for at least 50 ms. (Short-circuited line, etc.)

TROUBLE SYMPTOM:

- The mute function of audio or navigation system does not operate.
- RED LED illuminates.

WIRING DIAGRAM:
Telematics <Ref. to WI-349, WIRING DIAGRAM, Telematics System.>

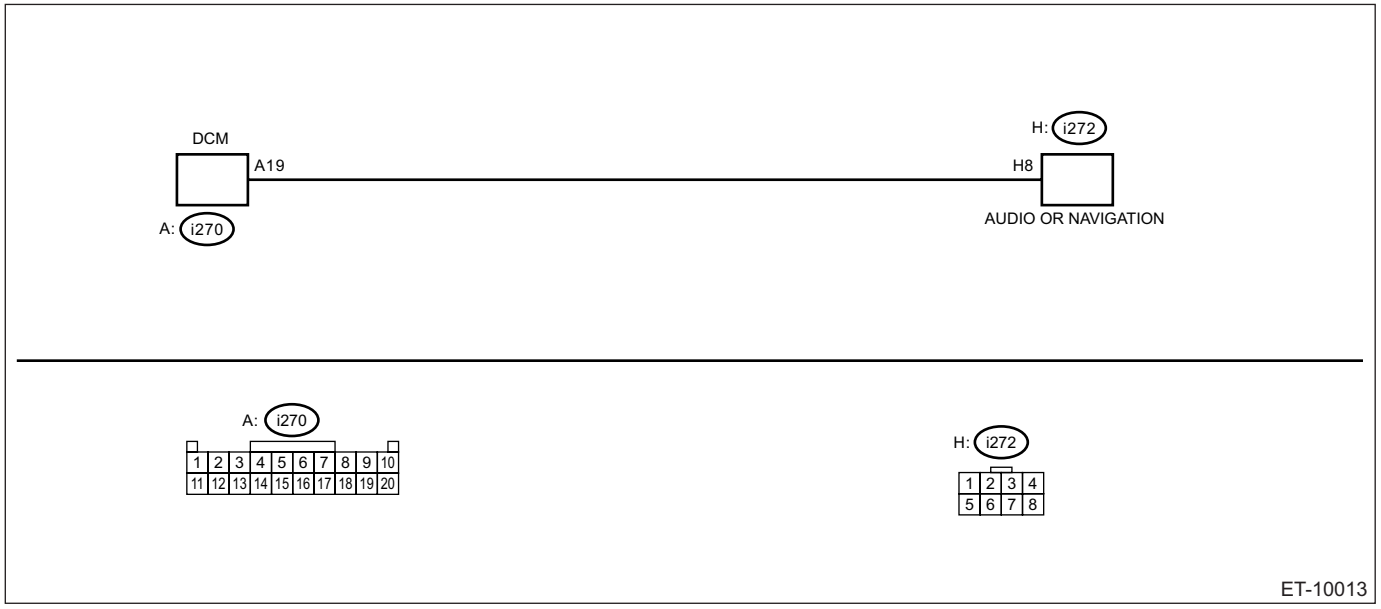

CAUTION:
CommCheck is required after replacing the DCM. <Ref. to ET-22, REGISTRATION (COMM CHECK), OPERATION, Telematics System.>

	Step	Check	Yes	No
1	**CHECK DTC.** Read the DTC. <Ref. to TEL(diag)-16, Diagnostic Code(s) Display.>	Is DTC B2A0E displayed? (Current malfunction)	Go to step **2**.	Even if DTC is displayed, the circuit has returned to a normal condition at this time. Reproduce the failure, and then perform the diagnosis again. In this case, temporary poor contact of connector, temporary open or short circuit of harness may be the cause.

Step		Check	Yes	No
2	**CHECK HARNESS (OPEN CIRCUIT).** 1) Turn the ignition switch to OFF. 2) Disconnect the audio or navigation connector. 3) Disconnect the DCM connector. 4) Measure the resistance between audio or navigation connector and DCM connector. ***Connector & terminal*** ***(i270) No. 19 — (i272) No. 8:***	Is the resistance 1 Ω or less?	Go to step **3**.	Repair or replace the open circuit of harness.
3	**CHECK HARNESS (GROUND SHORT CIRCUIT).** Measure the resistance between DCM connector and chassis ground. ***Connector & terminal*** ***(i270) No. 19 — Chassis ground:***	Is the resistance 1 MΩ or more?	Go to step **4**.	Repair or replace the open circuit of harness.
4	**CHECK THE CONNECTOR (SHORT CIRCUIT TO POWER SUPPLY).** Measure the voltage between DCM connector and chassis ground. ***Connector & terminal*** ***(i270) No. 19 (+) — Chassis ground (–):***	Is the voltage less than 1 V?	Replace the DCM. <Ref. to ET-50, Data Communication Module.>	Repair or replace the short circuit of the harness.

AC:DTC B2A0F BACKUP BATTERY DEGRADATION

DIAGNOSIS START CONDITION:
When ignition switch is ON.
DTC DETECTING CONDITION:
- Backup battery voltage of charger is low.
- Charging attempt of 2 V or more fails after the backup battery has been charged for 1 hour continuously.
- Full charging is not achieved after the backup battery is charged for 7 hours in total (not continuously).

TROUBLE SYMPTOM:
RED LED illuminates.

CAUTION:
CommCheck is required after replacing the DCM. <Ref. to ET-22, REGISTRATION (COMM CHECK), OPERATION, Telematics System.>

	Step	Check	Yes	No
1	**CHECK DTC.** Read the DTC. <Ref. to TEL(diag)-16, Diagnostic Code(s) Display.>	Is DTC B2A0F displayed? (Current malfunction)	Go to step **2**.	Even if DTC is displayed, the circuit has returned to a normal condition at this time. Reproduce the failure, and then perform the diagnosis again. In this case, temporary poor contact of connector, temporary open or short circuit of harness may be the cause.
2	**CHECK THE BACKUP BATTERY.** Check the backup battery unit. <Ref. to ET-50, Data Communication Module.>	Is the backup battery OK?	Replace the DCM. <Ref. to ET-50, Data Communication Module.>	Replace the backup battery. <Ref. to ET-50, Data Communication Module.>

AD:DTC B2A10 BATTERY VOLTAGE HIGH

DIAGNOSIS START CONDITION:
When ignition switch is ON.
DTC DETECTING CONDITION:
DCM battery power supply input of 16 V or more continues for 5 seconds.
TROUBLE SYMPTOM:
RED LED illuminates.

CAUTION:
CommCheck is required after replacing the DCM. <Ref. to ET-22, REGISTRATION (COMM CHECK), OPERATION, Telematics System.>

	Step	Check	Yes	No
1	**CHECK DTC.** Read the DTC. <Ref. to TEL(diag)-16, Diagnostic Code(s) Display.>	Is DTC B2A10 displayed? (Current malfunction)	Go to step **2**.	Even if DTC is displayed, the circuit has returned to a normal condition at this time. Reproduce the failure, and then perform the diagnosis again. In this case, temporary poor contact of connector, temporary open or short circuit of harness may be the cause.
2	**CHECK CURRENT DATA.** Check «Battery Voltage» in «Current Data Display & Save». <Ref. to TEL(diag)-12, Read Current Data.>	Is «Battery Voltage» OK?	Replace the DCM. <Ref. to ET-50, Data Communication Module.>	Go to step **3**.
3	**CHECK BATTERY.** Check the battery unit. <Ref. to SC(H4DO)-65, INSPECTION, Battery.> <Ref. to SC(H6DO)-2, SPECIFICATION, General Description.>	Is the battery OK?	Replace the DCM. <Ref. to ET-50, Data Communication Module.>	Replace the battery. <Ref. to SC(H4DO)-63, Battery.> <Ref. to SC(H6DO)-2, General Description.>

13.Diagnostics with Phenomenon

A: LIST

No.	Symptoms	Reference
1	The system does not notify the Telematics Service Provider Center automatically after collision.	<Ref. to TEL(diag)-54, THE SYSTEM DOES NOT NOTIFY THE TELEMATICS SERVICE PROVIDER CENTER AUTOMATICALLY AFTER COLLISION, INSPECTION, Diagnostics with Phenomenon.>
2	The system does not notify the center even if the SOS button is pressed.	<Ref. to TEL(diag)-56, THE SYSTEM DOES NOT NOTIFY THE CENTER EVEN IF THE SOS BUTTON IS PRESSED, INSPECTION, Diagnostics with Phenomenon.>
3	The system places an SOS call unintentionally during driving.	<Ref. to TEL(diag)-57, THE SYSTEM PLACES AN SOS CALL UNINTENTIONALLY DURING DRIVING, INSPECTION, Diagnostics with Phenomenon.>
4	The system places an I-CALL unintentionally during driving.	<Ref. to TEL(diag)-57, THE SYSTEM PLACES AN I-CALL UNINTENTIONALLY DURING DRIVING, INSPECTION, Diagnostics with Phenomenon.>
5	The system does not notify the center even if the i-button is pressed upon vehicle malfunction.	<Ref. to TEL(diag)-57, THE SYSTEM DOES NOT NOTIFY THE CENTER EVEN IF THE I-BUTTON IS PRESSED UPON VEHICLE MALFUNCTION, INSPECTION, Diagnostics with Phenomenon.>
6	Remote Vehicle Locator cannot locate the vehicle.	<Ref. to TEL(diag)-59, REMOTE VEHICLE LOCATOR CANNOT LOCATE THE VEHICLE, INSPECTION, Diagnostics with Phenomenon.>
7	Remote Vehicle Locator indicates an incorrect location and therefore the vehicle cannot be located.	<Ref. to TEL(diag)-60, REMOTE VEHICLE LOCATOR INDICATES AN INCORRECT LOCATION FOR THE VEHICLE, INSPECTION, Diagnostics with Phenomenon.>
8	Remote Door Lock does not lock the doors of the vehicle.	<Ref. to TEL(diag)-60, REMOTE DOOR LOCK DOES NOT LOCK THE DOORS OF THE VEHICLE, INSPECTION, Diagnostics with Phenomenon.>
9	The doors lock unintentionally.	<Ref. to TEL(diag)-62, THE DOORS LOCK UNINTENTIONALLY, INSPECTION, Diagnostics with Phenomenon.>
10	The doors unlock unintentionally.	<Ref. to TEL(diag)-62, THE DOORS UNLOCK UNINTENTIONALLY, INSPECTION, Diagnostics with Phenomenon.>
11	Remote Horn & HAZARD Lights do not operate upon request.	<Ref. to TEL(diag)-63, REMOTE HORN & HAZARD LIGHTS DO NOT OPERATE UPON REQUEST, INSPECTION, Diagnostics with Phenomenon.>
12	When the Vehicle Security Alarm is activated, notification is not sent.	<Ref. to TEL(diag)-64, WHEN THE VEHICLE SECURITY ALARM IS ACTIVATED, NOTIFICATION IS NOT SENT, INSPECTION, Diagnostics with Phenomenon.>
13	When a Malfunction indicator light/warning light is lit, notification is not sent.	<Ref. to TEL(diag)-66, WHEN A MALFUNCTION INDICATOR LIGHT/WARNING LIGHT IS LIT, NOTIFICATION IS NOT SENT, INSPECTION, Diagnostics with Phenomenon.>
14	Maintenance Notifications are not sent.	<Ref. to TEL(diag)-67, MAINTENANCE NOTIFICATIONS ARE NOT SENT, INSPECTION, Diagnostics with Phenomenon.>
15	The LED does not display the status. (LED malfunction)	<Ref. to TEL(diag)-68, THE LED DOES NOT DISPLAY THE STATUS. (LED MALFUNCTION), INSPECTION, Diagnostics with Phenomenon.>
16	Phone conversation is not possible. (The microphone does not respond to a voice. No sound is heard from the speaker.)	<Ref. to TEL(diag)-70, PHONE CONVERSATION IS NOT POSSIBLE. (THE MICROPHONE DOES NOT RESPOND TO A VOICE. NO SOUND IS HEARD FROM THE SPEAKER.), INSPECTION, Diagnostics with Phenomenon.>

B: INSPECTION

1. THE SYSTEM DOES NOT NOTIFY THE TELEMATICS SERVICE PROVIDER CENTER AUTOMATICALLY AFTER COLLISION

NOTE:
Perform the diagnostics for "Phone conversation is not possible. (The microphone does not respond to a voice. No sound is heard from the speaker.)". <Ref. to TEL(diag)-70, PHONE CONVERSATION IS NOT POSSIBLE. (THE MICROPHONE DOES NOT RESPOND TO A VOICE. NO SOUND IS HEARD FROM THE SPEAKER.), INSPECTION, Diagnostics with Phenomenon.>

CAUTION:
CommCheck is required after replacing the DCM. <Ref. to ET-22, REGISTRATION (COMM CHECK), OPERATION, Telematics System.>

	Step	Check	Yes	No
1	**CHECK COLLISION TYPE.** Check the collision type of the vehicle.	Is it any of a head-on collision, rear-end collision, or rollover?	Go to step **2**.	If it is a rear-end collision,Go to step **4**.
2	**CHECK AIRBAG WARNING LIGHT.** Check the airbag warning light.	Does the airbag warning light always illuminate?	Go to step **3**.	The airbag system is normal. If it is a minor collision, the airbag CM does not transmit a collision detection signal. Therefore, it is normal that the automatic notification function does not operate.
3	**CHECK DTCS.** Read DTC of the airbag. <Ref. to AB(diag)-30, Read Diagnostic Trouble Code (DTC).>	Is DTC any of «Front Impact Deployment» «Side Impact Deployment» «Rollover Deployment History»?	The airbag system is normal. Go to step **7**.	Perform the diagnosis of the airbag system. <Ref. to AB(diag)-2, Basic Diagnostic Procedure.>
4	**CHECK RECEPTION STATUS OF COLLISION DETECTION SIGNAL.** Display the current data «TimeStamp at ACN Event» of the Telematics. <Ref. to TEL(diag)-12, Read Current Data.>	Are the time stamps recorded?	Go to step **7**. (A rear-end collision was detected.)	Go to step **5**.
5	**CHECK DTCS.** Read DTCs of the Telematics. <Ref. to TEL(diag)-16, Diagnostic Code(s) Display.>	Is DTC displayed?	Perform the diagnosis according to DTC. <Ref. to TEL(diag)-16, LIST, Diagnostic Code(s) Display.>	Go to step **6**.
6	**CHECK AIRBAG WARNING LIGHT.** Check the airbag warning light.	Does the airbag warning light always illuminate?	Perform the diagnosis of the airbag system. <Ref. to AB(diag)-2, Basic Diagnostic Procedure.>	The airbag system is normal. If it is a minor collision, the airbag CM does not transmit a collision detection signal. Therefore, it is normal that the automatic notification function does not operate.

	Step	Check	Yes	No
7	**CHECK SUBSCRIPTION STATUS.** Display the current data «ACN Active» of the Telematics. <Ref. to TEL(diag)-12, Read Current Data.>	Is the data «TRUE»?	Go to step **8**.	The user does not have a service subscription; therefore, it is not a failure.
8	**CHECK DTCS.** Read DTCs of the Telematics. <Ref. to TEL(diag)-16, Diagnostic Code(s) Display.>	Is DTC displayed?	Perform the diagnosis according to DTC. <Ref. to TEL(diag)-16, LIST, Diagnostic Code(s) Display.>	Go to step **9**.
9	**CHECK RECEIVED SIGNAL STRENGTH AT TIME OF ACCIDENT. (CHECK CURRENT DATA.)** Display the current data «RSSI at ACN Event» of the Telematics. <Ref. to TEL(diag)-12, Read Current Data.>	Is the data 26% or more?	Go to step **11**.	Go to step **10**.
10	**CHECK AT&T CELLULAR COVERAGE AREA.** 1) Check whether the collision occurred within the cellular coverage area. 2) Display the current data «GPS Data at ACN Event» of the Telematics. <Ref. to TEL(diag)-12, Read Current Data.>	Is the displayed location data indicated within the AT&T cellular coverage area? (For the AT&T cellular coverage area, refer to the AT&T website. The system operates only on 3G and 4G technology.)	Go to step **11**.	The collision occurred outside the cellular coverage area.
11	**CHECK COMMUNICATION STATUS AT TIME OF ACCIDENT. (CHECK CURRENT DATA.)** Display the current data «Call Status at at ACN Event» of the Telematics. <Ref. to TEL(diag)-12, Read Current Data.>	If the data shows «Call Started» or «Call Connected»; Go to A. If the data shows «Call Not Started»; Go to B. If the data shows «No Network Service»; Go to C. If the data shows «Call Ended by SXM»; Go to D.	A:Go to step **12**. B: Replace the DCM. <Ref. to ET-50, Data Communication Module.> C: Replace the antenna. <Ref. to ET-31, Antenna.> D: The connection ended due to a server-side reason; therefore, there is no failure on the vehicle.	—
12	**CHECK TIME OF ACCIDENT. (CHECK CURRENT DATA.)** Display the current data «TimeStamp at ACN Event» of the Telematics. <Ref. to TEL(diag)-12, Read Current Data.> NOTE: The time stamp is displayed in the Coordinated Universal Time (UTC), which is different from actual time at each location. Therefore, time difference needs to be corrected for use. Example: [12/22 01:30 in UTC time] is corrected as [12/21 20:30 in New York time].	Does the time of the accident match with the data?	Replace the antenna. <Ref. to ET-31, Antenna.>	Replace the DCM. <Ref. to ET-50, Data Communication Module.>

2. THE SYSTEM DOES NOT NOTIFY THE CENTER EVEN IF THE SOS BUTTON IS PRESSED

NOTE:
Perform the diagnostics for "Phone conversation is not possible. (The microphone does not respond to a voice. No sound is heard from the speaker.)". <Ref. to TEL(diag)-70, PHONE CONVERSATION IS NOT POSSIBLE. (THE MICROPHONE DOES NOT RESPOND TO A VOICE. NO SOUND IS HEARD FROM THE SPEAKER.), INSPECTION, Diagnostics with Phenomenon.>

CAUTION:
CommCheck is required after replacing the DCM. <Ref. to ET-22, REGISTRATION (COMM CHECK), OPERATION, Telematics System.>

	Step	Check	Yes	No
1	**CHECK THE SUBSCRIPTION STATUS.** Display the current data «SOS Active» of the Telematics. <Ref. to TEL(diag)-12, Read Current Data.>	Is the data «TRUE»?	Go to step **2**.	The user does not have a service subscription; therefore, it is not a failure.
2	**CHECK DTCS.** Read DTCs of the Telematics. <Ref. to TEL(diag)-16, Diagnostic Code(s) Display.>	Is DTC displayed?	Perform the diagnosis according to DTC.	Go to step **3**.
3	**CHECK THE RECEIVED SIGNAL STRENGTH WHEN THE SOS BUTTON WAS PRESSED. (CHECK THE CURRENT DATA.).** Display the current data «RSSI at SOS/ICALL(1)» of the Telematics. <Ref. to TEL(diag)-12, Read Current Data.>	Is the data 26% or more?	Go to step **5**.	Go to step **4**.
4	**CHECK THE AT&T CELLULAR COVERAGE AREA.** 1) Check whether the SOS button was pressed within the cellular coverage area. 2) Display the current data «GPS Data at Time of Button Push(1)» of the Telematics. <Ref. to TEL(diag)-12, Read Current Data.>	Is the displayed location data indicated within the AT&T cellular coverage area? (For the AT&T cellular coverage area, refer to the AT&T website. The system operates only on 3G and 4G technology.)	Go to step **5**.	The SOS button was pressed outside the cellular coverage area.
5	**CHECK THE COMMUNICATION STATUS OF WHEN THE SOS BUTTON WAS PRESSED. (CHECK THE CURRENT DATA.).** Display the current data «Call status at SOS/ICALL Event(1)» of the Telematics. <Ref. to TEL(diag)-12, Read Current Data.>	If the data shows «Call Started» or «Call Connected»; Go to A. If the data shows «Call Not Started»; Go to B. If the data shows «No Network Service»; Go to C. If the data shows «Call Ended by SXM»; Go to D.	A: Go to step **6**. B: Go to step **7**. C: Replace the antenna. <Ref. to ET-31, Antenna.> D: The connection ended due to a server-side reason; therefore, there is no failure on the vehicle.	—
6	**CHECK THE TIME OF WHEN THE SOS BUTTON WAS PRESSED. (CHECK THE CURRENT DATA.).** Display the current data «Timestamp at Time of Button Push(1)» of the Telematics. <Ref. to TEL(diag)-12, Read Current Data.> NOTE: The time stamp is displayed in the Coordinated Universal Time (UTC), which is different from actual time at each location. Therefore, time difference needs to be corrected for use. Example: [12/22 01:30 in UTC time] is corrected as [12/21 20:30 in New York time].	Does the time of the SOS button operation match with the data?	Go to step **7**.	Replace the DCM. <Ref. to ET-50, Data Communication Module.>

	Step	Check	Yes	No
7	**CHECK THE SOS BUTTON.** Check the SOS button. <Ref. to TEL(diag)-38, DTC B2A08 SOS BUTTON CIRCUIT, Diagnostic Procedure with Diagnostic Trouble Code (DTC).>	Is there any fault?	Replace the SOS button. <Ref. to ET-43, Switches and Harness.>	Replace the DCM. <Ref. to ET-50, Data Communication Module.>

3. THE SYSTEM PLACES AN SOS CALL UNINTENTIONALLY DURING DRIVING

	Step	Check	Yes	No
1	**CHECK DTCS.** Read DTCs of the Telematics. <Ref. to TEL(diag)-16, Diagnostic Code(s) Display.>	Is DTC displayed?	Perform the diagnosis according to DTC.	Check the SOS button. <Ref. to ET-43, Switches and Harness.>

4. THE SYSTEM PLACES AN I-CALL UNINTENTIONALLY DURING DRIVING

	Step	Check	Yes	No
1	**CHECK DTCS.** Read DTCs of the Telematics. <Ref. to TEL(diag)-16, Diagnostic Code(s) Display.>	Is DTC displayed?	Perform the diagnosis according to DTC.	Check the i-button. <Ref. to ET-43, Switches and Harness.>

5. THE SYSTEM DOES NOT NOTIFY THE CENTER EVEN IF THE I-BUTTON IS PRESSED UPON VEHICLE MALFUNCTION

NOTE:
Perform the diagnostics for "Phone conversation is not possible. (The microphone does not respond to a voice. No sound is heard from the speaker.)".

CAUTION:
CommCheck is required after replacing the DCM. <Ref. to ET-22, REGISTRATION (COMM CHECK), OPERATION, Telematics System.>

	Step	Check	Yes	No
1	**CHECK THE SUBSCRIPTION STATUS.** Display the current data «ICALL Active» of the Telematics. <Ref. to TEL(diag)-12, Read Current Data.>	Is the data «TRUE»?	Go to step **2**.	The user does not have a service subscription; therefore, it is not a failure.
2	**CHECK DTCS.** Read DTCs of the Telematics. <Ref. to TEL(diag)-16, Diagnostic Code(s) Display.>	Is DTC displayed?	Perform the diagnosis according to DTC.	Go to step **3**.
3	**CHECK THE RECEIVED SIGNAL STRENGTH WHEN THE I-BUTTON WAS PRESSED. (CHECK THE CURRENT DATA.).** Display the current data «RSSI at SOS/ICALL(1)» of the Telematics. <Ref. to TEL(diag)-12, Read Current Data.>	Is the data 26% or more?	Go to step **5**.	Go to step **4**.
4	**CHECK THE AT&T CELLULAR COVERAGE AREA.** 1) Check whether the i-button was pressed within the cellular coverage area. 2) Display the current data «GPS Data at Time of Button Push(1)» of the Telematics. <Ref. to TEL(diag)-12, Read Current Data.>	Is the displayed location data indicated within the AT&T cellular coverage area? (For the AT&T cellular coverage area, refer to the AT&T website. The system operates only on 3G and 4G technology.)	Go to step **5**.	The i-button was pressed outside the cellular coverage area.

	Step	Check	Yes	No
5	**CHECK THE COMMUNICATION STATUS OF WHEN THE I-BUTTON WAS PRESSED. (CHECK THE CURRENT DATA.).** Display the current data «Call status at SOS/ICALL Event(1)» of the Telematics. <Ref. to TEL(diag)-12, Read Current Data.>	If the data shows «Call Started» or «Call Connected»; Go to A. If the data shows «Call Not Started»; Go to B. If the data shows «No Network Service»; Go to C. If the data shows «Call Ended by SXM»; Go to D.	A: Go to step **6**. B: Go to step **7**. C: Replace the antenna. <Ref. to ET-31, Antenna.> D: The connection ended due to a server-side reason; therefore, there is no failure on the vehicle.	—
6	**CHECK THE COMMUNICATION STATUS OF WHEN THE I-BUTTON WAS PRESSED. (CHECK THE CURRENT DATA.).** Display the current data «Timestamp at Time of Button Push(1)» of the Telematics. <Ref. to TEL(diag)-12, Read Current Data.> NOTE: The time stamp is displayed in the Coordinated Universal Time (UTC), which is different from actual time at each location. Therefore, time difference needs to be corrected for use. Example: [12/22 01:30 in UTC time] is corrected as [12/21 20:30 in New York time].	Does the time of the i-button operation match with the data?	Go to step **7**.	Replace the DCM. <Ref. to ET-50, Data Communication Module.>
7	**CHECK THE I-BUTTON.** Check the i-button. <Ref. to TEL(diag)-40, DTC B2A09 I-CALL BUTTON CIRCUIT, Diagnostic Procedure with Diagnostic Trouble Code (DTC).>	Is there any fault?	Replace the i-button. <Ref. to ET-43, Switches and Harness.>	Replace the DCM. <Ref. to ET-50, Data Communication Module.>

6. REMOTE VEHICLE LOCATOR CANNOT LOCATE THE VEHICLE

	Step	Check	Yes	No
1	**CHECK THE SUBSCRIPTION STATUS.** Display the current data «Account Status» of the Telematics. <Ref. to TEL(diag)-12, Read Current Data.>	Is the data «TRUE»?	Go to step **2**.	The user does not have a service subscription; therefore, it is not a failure.
2	**CHECK THE CURRENT COMMUNICATION ENVIRONMENT OF THE USER'S SMARTPHONE.** Check that the user's smartphone can be connected to the Internet.	Can it be connected to the Internet?	Go to step **3**.	The user's smartphone or the Internet environment has a problem.
3	**CHECK THE CURRENT COMMUNICATION ENVIRONMENT OF THE USER'S SMARTPHONE.** Check that the user's smartphone can display the current location.	Is the current location displayed?	Currently no failure is found. If the current location is not displayed, the user's Internet environment (radio waves, etc.) possibly had a problem.	Go to step **4**.
4	**CHECK THE CURRENT RECEIVED SIGNAL STRENGTH. (CHECK THE CURRENT DATA.).** Display the current data «Signal Strength» of the Telematics. <Ref. to TEL(diag)-12, Read Current Data.>	Is the data 26% or more?	Go to step **6**.	Go to step **5**.
5	**CHECK THE AT&T CELLULAR COVERAGE AREA.** Ask the user where he/she operated the remote control.	Is the location of the remote control operation within the AT&T cellular coverage area? (For the AT&T cellular coverage area, refer to the AT&T website. The system operates only on 3G and 4G technology.)	Go to step **6**.	The location of the remote control operation was outside the cellular coverage area.
6	**CHECK DTCS.** Check DTCs in the following systems; • Body control <Ref. to BC(diag)-14, Read Diagnostic Trouble Code (DTC).> • Telematics <Ref. to TEL(diag)-16, Diagnostic Code(s) Display.>	Is DTC displayed?	Perform the diagnosis according to DTC. <Ref. to BC(diag)-37, LIST, List of Diagnostic Trouble Code (DTC).> <Ref. to TEL(diag)-16, LIST, Diagnostic Code(s) Display.>	Check the Starlink Server report to verify that there was no server outage that coincides with the day/time the customer reported that the issue occurred. (Refer to STARLINK Server Maintenance/Down Report under Reports and Starlink section in Subarunet.) If no outage exists for that time frame, it is possible that there was environmental interference (radio waves, etc.) when the user performed the operation. No further actions are recommended.

7. REMOTE VEHICLE LOCATOR INDICATES AN INCORRECT LOCATION FOR THE VEHICLE

CAUTION:
CommCheck is required after replacing the DCM. <Ref. to ET-22, REGISTRATION (COMM CHECK), OPERATION, Telematics System.>

	Step	Check	Yes	No
1	**CHECK DTCS.** Read DTCs of the Telematics. <Ref. to TEL(diag)-16, Diagnostic Code(s) Display.>	Is DTC displayed?	Perform the diagnosis according to DTC.	Go to step **2**.
2	**CHECK THE CURRENT COMMUNICATION ENVIRONMENT OF THE USER'S SMARTPHONE.** Check that the user's smartphone can display the current location.	Is it displayed correctly? (Is there a deviation of 100 m (328 ft) or more?)	Currently no failure is found. When the user had a problem, there was a failure with the GPS antenna reception environment, etc.	Go to step **3**.
3	**CHECK THE CURRENT COMMUNICATION ENVIRONMENT OF THE USER'S SMARTPHONE.** Check again that the user's smartphone can display the current location in a place where the sky is open.	Is it displayed correctly? (Is there a deviation of 100 m (328 ft) or more?)	Currently no failure is found. When the user had a problem, there was a failure with the GPS antenna reception environment, etc.	Replace the DCM. <Ref. to ET-50, Data Communication Module.>

8. REMOTE DOOR LOCK DOES NOT LOCK THE DOORS OF THE VEHICLE

	Step	Check	Yes	No
1	**CHECK THE SUBSCRIPTION STATUS.** Display the current data «Account Status» of the Telematics. <Ref. to TEL(diag)-12, Read Current Data.>	Is the data «TRUE»?	Go to step **2**.	The user does not have a service subscription; therefore, it is not a failure.
2	**CHECK THE CURRENT COMMUNICATION ENVIRONMENT OF THE USER'S SMARTPHONE.** Check that the user's smartphone can be connected to the Internet.	Can it be connected to the Internet?	Go to step **3**.	The user's smartphone or the Internet environment has a problem.
3	**CHECK THE DOOR LOCK FUNCTION.** Check that the user's smartphone can lock the doors in the current situation.	Are the doors locked?	Currently no failure is found. When the user had a problem, there was a failure with the Internet connection environment, etc.	Go to step **4**.
4	**CHECK THE CURRENT RECEIVED SIGNAL STRENGTH. (CHECK THE CURRENT DATA.).** Display the current data «Signal Strength» of the Telematics. <Ref. to TEL(diag)-12, Read Current Data.>	Is the data 26% or more?	Go to step **6**.	Go to step **5**.

	Step	Check	Yes	No
5	**CHECK THE AT&T CELLULAR COVERAGE AREA.** Ask the user where he/she operated the remote control.	Is the location of the remote control operation within the AT&T cellular coverage area? (For the AT&T cellular coverage area, refer to the AT&T website. The system operates only on 3G and 4G technology.)	Go to step **6**.	The location of the remote control operation was outside the cellular coverage area.
6	**CHECK THE DOOR LOCK FUNCTION.** Check that the keyless transmitter can lock the doors of the vehicle.	Are the doors locked?	Go to step **7**.	Perform the diagnosis according to the inspection for the door lock control system. <Ref. to SL-11, INSPECTION, Door Lock Control System.>
7	**CHECK DTCS.** Check DTCs in the following systems; • Body control <Ref. to BC(diag)-14, Read Diagnostic Trouble Code (DTC).> • Telematics <Ref. to TEL(diag)-16, Diagnostic Code(s) Display.>	Is DTC displayed?	Perform the diagnosis according to DTC. <Ref. to BC(diag)-37, LIST, List of Diagnostic Trouble Code (DTC).> <Ref. to TEL(diag)-16, LIST, Diagnostic Code(s) Display.>	Check the Starlink Server report to verify that there was no server outage that coincides with the day/time the customer reported that the issue occurred. (Refer to STARLINK Server Maintenance/Down Report under Reports and Starlink section in Subarunet.) If no outage exists for that time frame, it is possible that there was environmental interference (radio waves, etc.) when the user performed the operation. No further actions are recommended.

9. THE DOORS LOCK UNINTENTIONALLY

	Step	Check	Yes	No
1	**CHECK DOOR LOCK SWITCH.** Check the door lock switch. <Ref. to SL-11, INSPECTION, Door Lock Control System.>	Is the door lock switch OK?	Check the Starlink Server report to verify that there was no server outage that coincides with the day/time the customer reported that the issue occurred. (Refer to STARLINK Server Maintenance/Down Report under Reports and Starlink section in Subarunet.) If no outage exists for that time frame, it is possible that there was environmental interference (radio waves, etc.) when the user performed the operation. No further actions are recommended.	Perform the diagnosis according to the inspection for the door lock switch. <Ref. to SL-11, INSPECTION, Door Lock Control System.>

10.THE DOORS UNLOCK UNINTENTIONALLY

	Step	Check	Yes	No
1	**CHECK DOOR LOCK SWITCH.** Check the door unlock switch. <Ref. to SL-11, INSPECTION, Door Lock Control System.>	Is the door lock switch OK?	Check the Starlink Server report to verify that there was no server outage that coincides with the day/time the customer reported that the issue occurred. (Refer to STARLINK Server Maintenance/Down Report under Reports and Starlink section in Subarunet.) If no outage exists for that time frame, it is possible that there was environmental interference (radio waves, etc.) when the user performed the operation. No further actions are recommended.	Perform the diagnosis according to the inspection for the door lock switch. <Ref. to SL-11, INSPECTION, Door Lock Control System.>

11.REMOTE HORN & HAZARD LIGHTS DO NOT OPERATE UPON REQUEST

	Step	Check	Yes	No
1	**CHECK THE SUBSCRIPTION STATUS.** Display the current data «Account Status» of the Telematics. <Ref. to TEL(diag)-12, Read Current Data.>	Does the data display «TRUE»?	Go to step **2**.	The user does not have a service subscription; therefore, it is not a failure.
2	**CHECK THE CURRENT COMMUNICATION ENVIRONMENT OF THE USER'S SMARTPHONE.** Check that the user's smartphone can be connected to the Internet.	Can it be connected to the Internet?	Go to step **3**.	The user's smartphone or the Internet environment has a problem.
3	**CHECK THE HORN AND HAZARD LIGHT FUNCTIONS.** Check that the horn and hazard light currently operate by the user's smartphone.	Do the horn and hazard light operate?	Currently no failure is found. When the user had a problem, there was a failure with the Internet connection environment, etc.	Go to step **4**.
4	**CHECK THE CURRENT RECEIVED SIGNAL STRENGTH. (CHECK THE CURRENT DATA.).** Display the current data «Signal Strength» of the Telematics. <Ref. to TEL(diag)-12, Read Current Data.>	Does the data indicate 26% or more?	Go to step **6**.	Go to step **5**.
5	**CHECK THE AT&T CELLULAR COVERAGE AREA.** Ask the user where he/she operated the remote control.	Is the location of the remote control operation within the AT&T cellular coverage area? (For the AT&T cellular coverage area, refer to the AT&T website. The system operates only on 3G and 4G technology.)	Go to step **6**.	The location of the remote control operation was outside the cellular coverage area.
6	**CHECK THE HORN AND HAZARD LIGHT FUNCTIONS.** Check that the horn and hazard light operate by the keyless transmitter. (Press the lock button three times.)	Do the horn and hazard light operate?	Go to step **8**.	Go to step **7**.
7	**CHECK HORN OPERATION.** Activate the function check «Horn Output» of the body integrated unit. <Ref. to BC(diag)-36, Function Check.>	Does the horn sound?	Check the keyless transmitter. <Ref. to SL-86, Keyless Transmitter.><Ref. to SL-88, Access Key.>	Check the horn circuit. <Ref. to WI-250, Horn System.>

	Step	Check	Yes	No
8	**CHECK DTCS.** Check DTCs in the following systems; • Body control <Ref. to BC(diag)-14, Read Diagnostic Trouble Code (DTC).> • Telematics <Ref. to TEL(diag)-16, Diagnostic Code(s) Display.>	Is DTC displayed?	Perform the diagnosis according to DTC. <Ref. to BC(diag)-37, LIST, List of Diagnostic Trouble Code (DTC).> <Ref. to TEL(diag)-16, LIST, Diagnostic Code(s) Display.>	Check the Starlink Server report to verify that there was no server outage that coincides with the day/time the customer reported that the issue occurred. (Refer to STARLINK Server Maintenance/Down Report under Reports and Starlink section in Subarunet.) If no outage exists for that time frame, it is possible that there was environmental interference (radio waves, etc.) when the user performed the operation. No further actions are recommended.

12.WHEN THE VEHICLE SECURITY ALARM IS ACTIVATED, NOTIFICATION IS NOT SENT

	Step	Check	Yes	No
1	**CHECK THE SUBSCRIPTION STATUS.** Display the current data «Account Status» of the Telematics. <Ref. to TEL(diag)-12, Read Current Data.>	Does the data display «TRUE»?	Go to step **2**.	The user does not have a service subscription; therefore, it is not a failure.
2	**CHECK THE CURRENT COMMUNICATION ENVIRONMENT OF THE USER'S SMARTPHONE.** Check that the user's smartphone can be connected to the Internet.	Can it be connected to the Internet?	Go to step **3**.	The user's smartphone or the Internet environment has a problem.
3	**CHECK THE SECURITY ALERT SYSTEM.** Operate the security alert system.	Does it operate?	Go to step **4**.	Check the security alert system. <Ref. to SL-28, INSPECTION, Security System.>
4	**CHECK THE CURRENT COMMUNICATION ENVIRONMENT OF THE USER'S SMARTPHONE.** Check that a notification is sent to the user's smartphone after the security alert is activated.	Does the smartphone receive a notification?	Currently no failure is found.	Go to step **5**.
5	**CHECK THE CURRENT RECEIVED SIGNAL STRENGTH. (CHECK THE CURRENT DATA.).** Display the current data «Signal Strength» of the Telematics. <Ref. to TEL(diag)-12, Read Current Data.>	Does the data indicate 26% or more?	Go to step **7**.	Go to step **6**.

	Step	Check	Yes	No
6	**CHECK THE AT&T CELLULAR COVERAGE AREA.** Ask the user where he/she operated the remote control.	Is the location of the remote control operation within the AT&T cellular coverage area? (For the AT&T cellular coverage area, refer to the AT&T website. The system operates only on 3G and 4G technology.)	Go to step **7**.	The location of the remote control operation was outside the cellular coverage area.
7	**CHECK DTCS.** Check DTCs in the following systems; • Body control <Ref. to BC(diag)-14, Read Diagnostic Trouble Code (DTC).> • Telematics <Ref. to TEL(diag)-16, Diagnostic Code(s) Display.>	Is DTC displayed?	Perform the diagnosis according to DTC. <Ref. to BC(diag)-37, LIST, List of Diagnostic Trouble Code (DTC).> <Ref. to TEL(diag)-16, LIST, Diagnostic Code(s) Display.>	Check the Starlink Server report to verify that there was no server outage that coincides with the day/time the customer reported that the issue occurred. (Refer to STARLINK Server Maintenance/Down Report under Reports and Starlink section in Subarunet.) If no outage exists for that time frame, it is possible that there was environmental interference (radio waves, etc.) when the user performed the operation. No further actions are recommended.

13.WHEN A MALFUNCTION INDICATOR LIGHT/WARNING LIGHT IS LIT, NOTIFICATION IS NOT SENT

	Step	Check	Yes	No
1	**CHECK THE SUBSCRIPTION STATUS.** Display the current data «Diagnostic Alert Active» of the Telematics. <Ref. to TEL(diag)-12, Read Current Data.>	Does the data display «TRUE»?	Go to step **2**.	The user does not have a service subscription; therefore, it is not a failure.
2	**CHECK WARNING LIGHT.** Check if the warning light illuminates.	Does it Illuminate?	Go to step **3**.	Currently no failure is found. Since the warning light is not lit, notification is not sent.
3	**CHECK DTCS.** Check the DTC of telematics. <Ref. to TEL(diag)-16, Diagnostic Code(s) Display.>	Is DTC displayed?	Perform the diagnosis according to DTC.	Go to step **4**.
4	**CHECK THE AT&T CELLULAR COVERAGE AREA.** Ask the user where he/she turned the ignition switch to OFF after the warning light was lit.	Is the location, where the ignition switch was turned to OFF after the warning light was lit, within the AT&T cellular coverage area? (For the AT&T cellular coverage area, refer to the AT&T website. The system operates only on 3G and 4G technology.)	Check the Starlink Server report to verify that there was no server outage that coincides with the day/time the customer reported that the issue occurred. (Refer to STARLINK Server Maintenance/Down Report under Reports and Starlink section in Subarunet.) If no outage exists for that time frame, it is possible that there was environmental interference (radio waves, etc.) when the user performed the operation. No further actions are recommended.	The location where the ignition switch was turned to OFF (where warning light illumination information was sent) was outside the cellular coverage area.

14.MAINTENANCE NOTIFICATIONS ARE NOT SENT

	Step	Check	Yes	No
1	**CHECK THE SUBSCRIPTION STATUS.** Display the current data «Maintenance Alert Active» of the Telematics. <Ref. to TEL(diag)-12, Read Current Data.>	Does the data display «TRUE»?	Go to step **2**.	The user does not have a service subscription; therefore, it is not a failure.
2	**CHECK DTCS.** Read DTCs of the Telematics. <Ref. to TEL(diag)-16, Diagnostic Code(s) Display.>	Is DTC displayed?	Perform the diagnosis according to DTC. <Ref. to TEL(diag)-16, LIST, Diagnostic Code(s) Display.>	Check the Starlink Server report to verify that there was no server outage that coincides with the day/time the customer reported that the issue occurred. (Refer to STARLINK Server Maintenance/Down Report under Reports and Starlink section in Subarunet.) If no outage exists for that time frame, it is possible that there was environmental interference (radio waves, etc.) when the user performed the operation. No further actions are recommended.

15.THE LED DOES NOT DISPLAY THE STATUS. (LED MALFUNCTION)

CAUTION:
CommCheck is required after replacing the DCM. <Ref. to ET-22, REGISTRATION (COMM CHECK), OPERATION, Telematics System.>

	Step	Check	Yes	No
1	**CHECK THE SUBSCRIPTION STATUS.** Display the current data «Account Status» of the Telematics. <Ref. to TEL(diag)-12, Read Current Data.>	Is the data «TRUE»?	Go to step **2**.	The user does not have a service subscription; therefore, it is not a failure. (Both LEDs are turned off.)
2	**CHECK THE LED.** 1) Turn the ignition switch to ON. 2) Check the LED condition.	Does the RED LED go off and the GREEN LED illuminate?	The circuit has returned to a normal condition at this time. Reproduce the failure, and then perform the diagnosis again. NOTE: In this case, temporary poor contact of connector, temporary open or short circuit of harness may be the cause.	Go to step **3**.
3	**CHECK DTCS.** Read DTCs of the Telematics. <Ref. to TEL(diag)-16, Diagnostic Code(s) Display.>	Is DTC B2A0A or B2A0B displayed?	Perform the diagnosis according to DTC. <Ref. to TEL(diag)-42, DTC B2A0A RED LED CIRCUIT, Diagnostic Procedure with Diagnostic Trouble Code (DTC).> <Ref. to TEL(diag)-44, DTC B2A0B GREEN LED CIRCUIT, Diagnostic Procedure with Diagnostic Trouble Code (DTC).>	Go to step **4**.
4	**CHECK THE LED ILLUMINATION CONDITION.** Perform the telematics system operation check. <Ref. to TEL(diag)-21, System Operation Check Mode.>	Is the LED turned on or off?	Go to step **5**.	Go to step **6**.

	Step	Check	Yes	No
5	**CHECK THE LED.** 1) Turn the ignition switch to ON. 2) Check the LED condition.	Does the RED LED go off and the GREEN LED illuminate?	The circuit has returned to a normal condition at this time. Reproduce the failure, and then perform the diagnosis again. NOTE: In this case, temporary poor contact of connector, temporary open or short circuit of harness may be the cause.	Replace the DCM. <Ref. to ET-50, Data Communication Module.>
6	**CHECK THE LED.** Measure the continuity of the telematics button (LED) unit. ***Connector & terminal*** ***(AD1) No. 7 — (AD1) No. 1:*** ***(AD1) No. 4 — (AD1) No. 1:***	Is there continuity?	Replace the DCM. <Ref. to ET-50, Data Communication Module.>	Replace the telematics button. <Ref. to ET-43, Switches and Harness.>

16.PHONE CONVERSATION IS NOT POSSIBLE. (THE MICROPHONE DOES NOT RESPOND TO A VOICE. NO SOUND IS HEARD FROM THE SPEAKER.)

	Step	Check	Yes	No
1	**CHECK DTCS.** Read DTCs of the Telematics. <Ref. to TEL(diag)-16, Diagnostic Code(s) Display.>	Is DTC B2A04, B2A05 or B2A06 displayed?	Perform the diagnosis according to DTC. <Ref. to TEL(diag)-29, DTC B2A04 MIC CIRCUIT, Diagnostic Procedure with Diagnostic Trouble Code (DTC).> <Ref. to TEL(diag)-31, DTC B2A05 LEFT SPEAKER/AUDIO CIRCUIT, Diagnostic Procedure with Diagnostic Trouble Code (DTC).> <Ref. to TEL(diag)-34, DTC B2A06 RIGHT SPEAKER/AUDIO CIRCUIT, Diagnostic Procedure with Diagnostic Trouble Code (DTC).>	Go to step **2**.
2	**CHECK THE SPEAKER OPERATION.** Perform [Speaker ON] in the telematics system operation check. <Ref. to TEL(diag)-21, System Operation Check Mode.>	Does it sound?	Go to step **3**.	Go to step **4**.
3	**CHECK MICROPHONE.** Perform the microphone voice input.	Is the voice recognized?	Go to step **4**.	Replace the microphone.
4	**CHECK THE SPEAKER.** Check the speaker.	Is there any fault?	Replace the speaker.	Go to step **5**.
5	**CHECK THE TELEPHONE CALL.** 1) Place the mobile phone in the vehicle. 2) Establish a Bluetooth connection between the mobile phone in the vehicle and the vehicle unit. 3) Make a call from outside to the mobile phone in the vehicle. 4) Check that a telephone call is available through the in-vehicle microphone with the hands-free function.	Is a telephone call successful?	The circuit has returned to a normal condition at this time. Reproduce the failure, and then perform the diagnosis again. NOTE: In this case, temporary poor contact of connector, temporary open or short circuit of harness may be the cause.	Perform the diagnosis according to inspection for DTC B2A04 MIC CIRCUIT. <Ref. to TEL(diag)-29, DTC B2A04 MIC CIRCUIT, Diagnostic Procedure with Diagnostic Trouble Code (DTC).>

WIRING SYSTEM SECTION

This service manual has been prepared to provide SUBARU service personnel with the necessary information and data for the correct maintenance and repair of SUBARU vehicles.
This manual includes the procedures for maintenance, disassembling, reassembling, inspection and adjustment of components and diagnostics for guidance of experienced mechanics.
Please peruse and utilize this manual fully to ensure complete repair work for satisfying our customers by keeping their vehicle in optimum condition. When replacement of parts during repair work is needed, be sure to use SUBARU genuine parts.

All information, illustration and specifications contained in this manual are based on the latest product information available at the time of publication approval.

WIRING SYSTEM

WI

		Page
1.	Basic Diagnostic Procedure	3
2.	Working Precautions	17
3.	Fuse And Relay	19
4.	Power Supply Circuit	21
5.	Ground Circuit	75
6.	Active Grille Shutter	88
7.	Airbag System	89
8.	Air Conditioning System	94
9.	Audio System	102
10.	Back-up Light System	122
11.	Blind Spot Detection/Rear Cross Traffic Alert	130
12.	CAN Communication System	132
13.	Charging System	135
14.	Clearance Light and Illumination Light System	136
15.	Combination Meter System	144
16.	Coolant Temperature System	150
17.	Cruise Control System	151
18.	CVT Control System	156
19.	Electric Power Steering System	168
20.	Engine Electrical System	170
21.	EyeSight System	230
22.	Front Accessory Power Supply Socket System	236
23.	Front Fog Light System	237
24.	Front Wiper and Washer System	239
25.	Fuel Gauge System	241
26.	Headlight Beam Leveler System	242
27.	Headlight System	246
28.	Horn System	250
29.	Immobilizer System	251
30.	Interior Light System	256
31.	Keyless Access With Push Button Start System	260
32.	Keyless Entry System	271
33.	Navigation System	276
34.	Occupant Detection System	291
35.	Oil Pressure Warning Light System	293
36.	Parking Brake / Brake Fluid Level Warning Light System	294
37.	Power Rear Gate System	296
38.	Power Seat System	299
39.	Power Window System	304
40.	Radiator Fan System	312
41.	Rear Accessory Power Supply Socket System	314
42.	Rear Defogger System	315
43.	Rearview Camera System	316
44.	Rearview Mirror System	322
45.	Rear Wiper and Washer System	324

46. Remote Control Mirror System 326
47. Remote Engine Start System 327
48. Seat Belt Warning System 330
49. Seat Heater System 331
50. Security System 334
51. Shift Lock Control System 337
52. Speedometer System 339
53. Starter System 340
54. Stop Light System 344
55. Sunroof Control System 348
56. Telematics System 349
57. Tire Pressure Monitoring System 355
58. Turn Signal Light and Hazard Light System 357
59. Vehicle Dynamics Control System 360
60. Wiper Deicer System 364
61. Harness Components Location 365
62. Front Wiring Harness 367
63. Bulkhead Wiring Harness (In Engine Compartment) RH 369
64. Bulkhead Wiring Harness (In Engine Compartment) LH 371
65. Bulkhead Wiring Harness (In Compartment) 373
66. Engine Wiring Harness and Transmission Cord 375
67. Instrument Panel Wiring Harness RH 379
68. Instrument Panel Wiring Harness LH 382
69. Roof Cord 384
70. Rear Wiring Harness RH 386
71. Rear Wiring Harness LH 388
72. Door Cord RH 390
73. Door Cord LH 392
74. Rear Wiring Harness and Trunk Lid Cord 394
75. Rear Wiring Harness and Rear Gate Cord 397
76. Antenna Cord 400

1. Basic Diagnostic Procedure

A: BASIC PROCEDURES

1. GENERAL DESCRIPTION

The most important purpose of diagnostics is to quickly determine which fault is the root cause of the symptom, to save time and labor.

2. IDENTIFICATION OF TROUBLE CAUSE

1) Using the diagnostics, narrow down the causes.
2) Refer to the wiring diagram and check the system's circuit. If necessary, use a voltmeter, ohmmeter, etc.
3) Before replacing component parts, check for fuse blowout, open wiring harness on the power supply circuit and the ground circuit, and poor connectors, switches, relays, etc. If no problem is encountered, check the component parts.

3. SYSTEM OPERATION CHECK

After inspection and repair, ensure that the system operates properly.

B: BASIC INSPECTION

1. VOLTAGE MEASUREMENT

1) Using a voltmeter, connect the negative lead to a good ground point or negative battery terminal. Connect the positive lead to the connector or component terminal.
2) Contact the positive lead of the voltmeter on connector (A). The voltmeter will indicate a voltage.
3) Shift the positive lead contacting the connector (A) to the connector (B). The voltmeter will indicate no voltage.
4) Turn the switch to ON with the positive lead contacting the connector (B).
The voltmeter will indicate a voltage and, at the same time, the light will illuminate.
5) The circuit is normal. If a problem such as a light failing to illuminate occurs, use the procedures above to track down the malfunction.

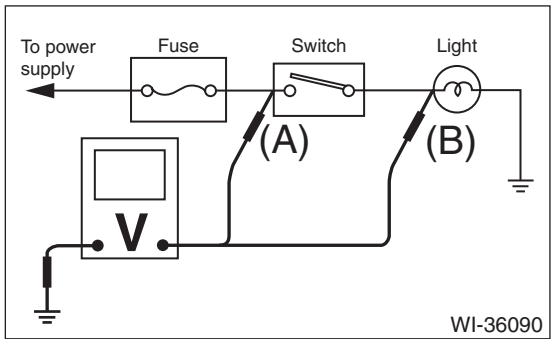

2. CONTINUITY CHECK

1) Disconnect the battery terminal or connector so there is no voltage between the check points.
Contact the leads of an ohmmeter between the check points, and check that there is continuity.
2) When checking the diode continuity using an ohmmeter, allow the positive lead to contact the diode positive side and the negative lead to the negative side. At this time, there must be continuity. Also, when contacting the leads in reverse, there should be no continuity.

NOTE:
Some testers have reverse polarity, therefore, refer to the instruction manual of the tester.

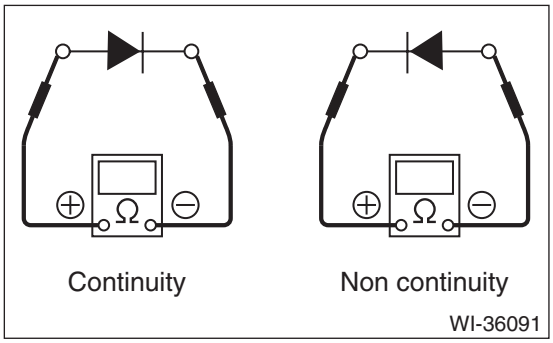

3) When checking switch continuity using an ohmmeter, perform the check while the switch operates. For example, when a switch position is at 3, continuity exists among terminals 1, 3 and 6, as shown below.

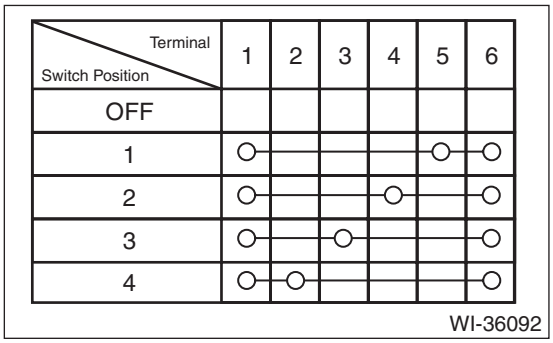

3. HOW TO IDENTIFY AN OPEN CIRCUIT

1) With voltmeter:
An open circuit is determined by measuring the voltage between respective connectors and ground using a voltmeter, starting with the connector closest to the power supply. The power supply must be turned ON so that current flows in the circuit. If voltage is not present between a particular connector and ground, the circuit between that connector and the previously checked point is open.

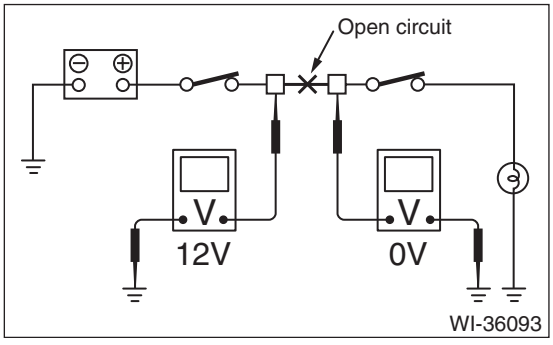

2) With ohmmeter:
Disconnect all connectors affected, and check continuity in the harness between adjacent connectors. When the ohmmeter indicates “infinite”, the harness is open.

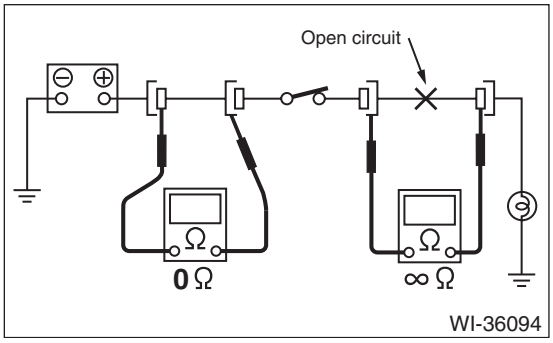

4. HOW TO DETERMINE A SHORT CIRCUIT

1) With test light:
Connect a test light (rated at approx. 3 watts) in place of the blown fuse and allow current to flow through the circuit. Disconnect one connector at a time. At that time, always start with the connector located farthest from the power supply. If the test light goes out when a connector is disconnected, the harness between that connector and the next connector (farther from the power supply) is shorted.

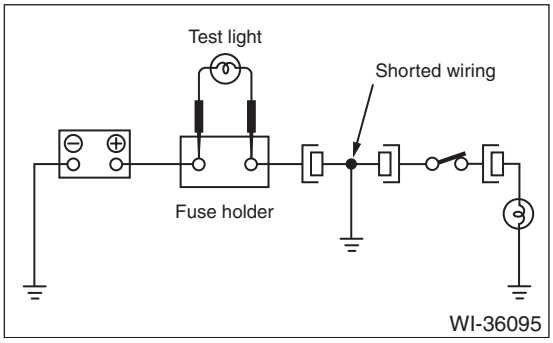

2) With ohmmeter:
Disconnect all affected connectors, and check continuity between each connector and ground. When the ohmmeter indicates continuity between a particular connector and a ground, that connector is shorted.

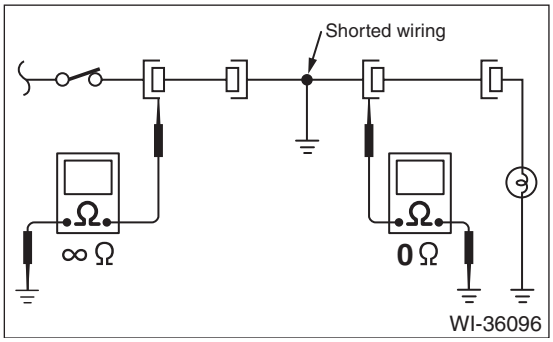

C: HOW TO READ WIRING DIAGRAMS

1. POWER SUPPLY CIRCUIT

Circuits are described to indicate the power supply in the wiring diagram of each system. “MB-5”, “MB-6”, etc., which are used as power- supply symbols throughout the text, correspond with those shown in the “DC POWER SUPPLY CIRCUIT” in the wiring diagram of each system. Accordingly, using the DC power supply circuit and the wiring diagram of each system permits service personnel to understand the entire electrical arrangement of the system.

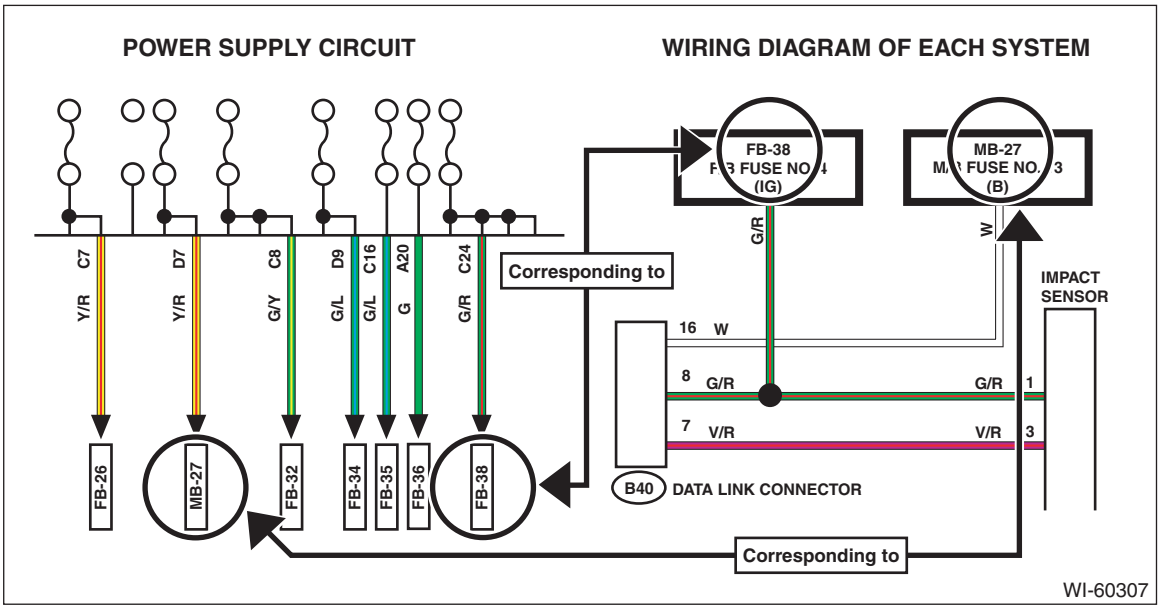

2. WIRING DIAGRAM OF EACH SYSTEM

1. **Fuse No. & rating**

The “Fuse No. & rating” is the same description as that in the DC power supply circuit, and corresponds with that used in the vehicle.

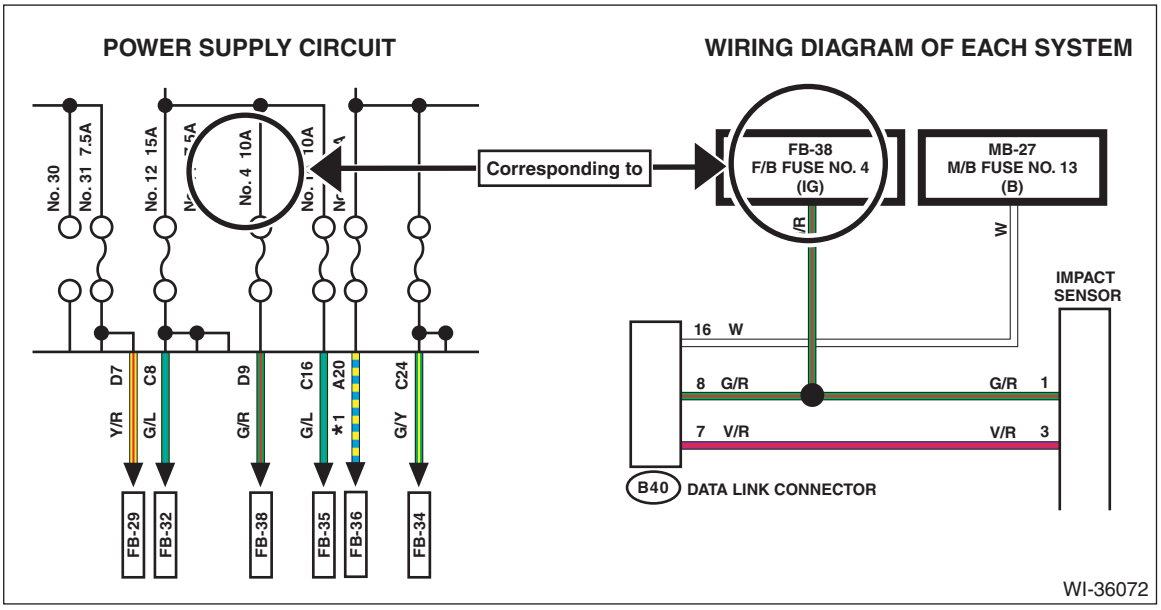

2. **Wiring diagram of each system**

To help figure out the route from the DC power supply circuit, wiring diagrams are classified and described in each system.

NOTE:

This manual includes harness information. Information of parts that are not routed via harness and adapter code is described as a reference. If no information is described in this manual, refer to each section.

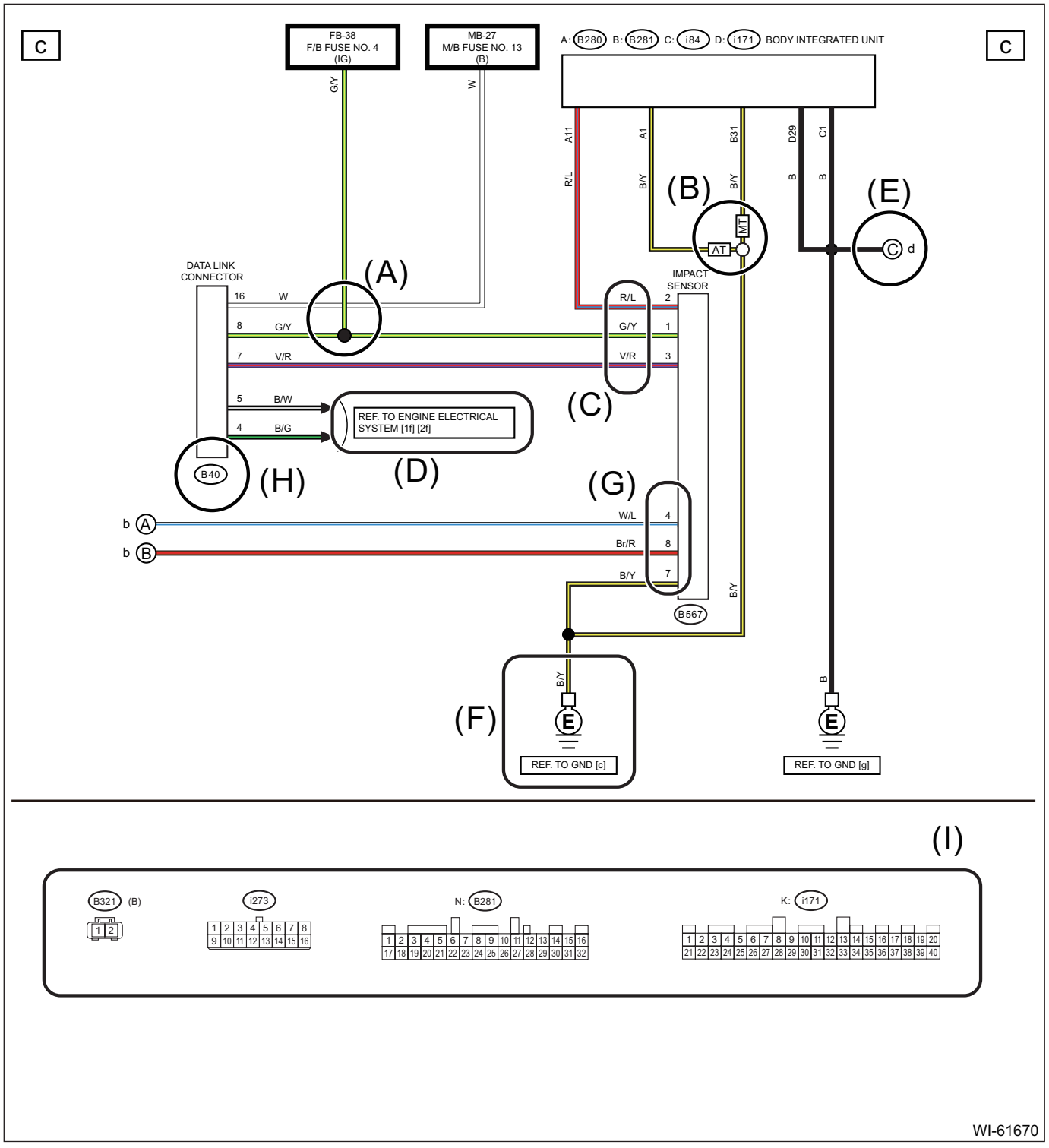

WI-61670

- (A):Wire connection and crossing in a circuit

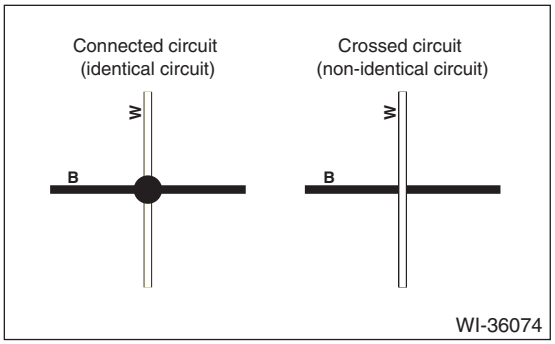

- (B):Classification by specifications

If a circuit differs from another circuit according to vehicle specifications, the specification difference is indicated with abbreviations.

- (C):Color code

Indicates the color of harness and connector housing.

Color code	Color	Color code	Color	Color code	Color
B	Black	S	Shield line	Gr	Gray
G	Green	V	Violet	Lg	Light green
L	Blue	W	White	Sb	Light blue
Or	Orange	Y	Yellow	★	White or natural color
P	Pink	Be	Beige		
R	Red	Br	Brown		

(Color code of harness)

Single color is indicated with a color code, and double colors are indicated with “standard color / marking color”.

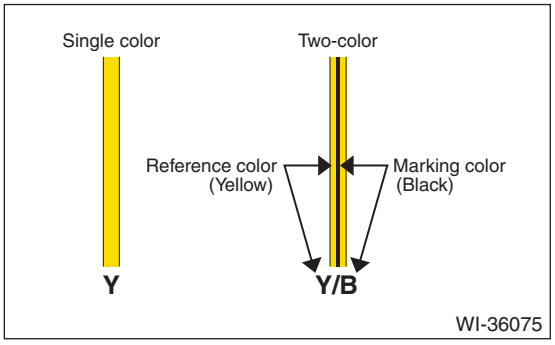

(Color code of connector housing)
Used in the connector sketch and the locations.

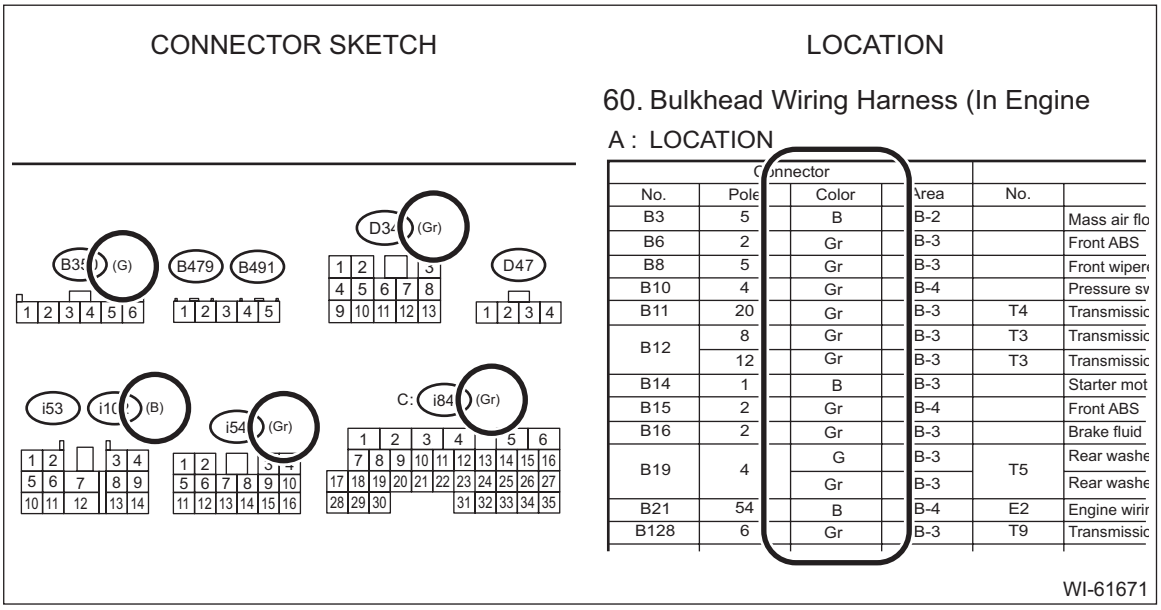

Connector No.	Pole	Color	Area	No.	
B3	5	B	B-2		Mass air flo
B6	2	Gr	B-3		Front ABS
B8	5	Gr	B-3		Front wiper
B10	4	Gr	B-4		Pressure sv
B11	20	Gr	B-3	T4	Transmissic
B12	8	Gr	B-3	T3	Transmissic
	12	Gr	B-3	T3	Transmissic
B14	1	B	B-3		Starter mot
B15	2	Gr	B-4		Front ABS
B16	2	Gr	B-3		Brake fluid
B19	4	G	B-3	T5	Rear washe
		Gr	B-3		Rear washe
B21	54	B	B-4	E2	Engine wirir
B128	6	Gr	B-3	T9	Transmissic

- (D):Connection to another system in the same circuit

Indicates the connecting to with alphanumeric characters, which correspond to the descriptions shown on the upper section of each page.

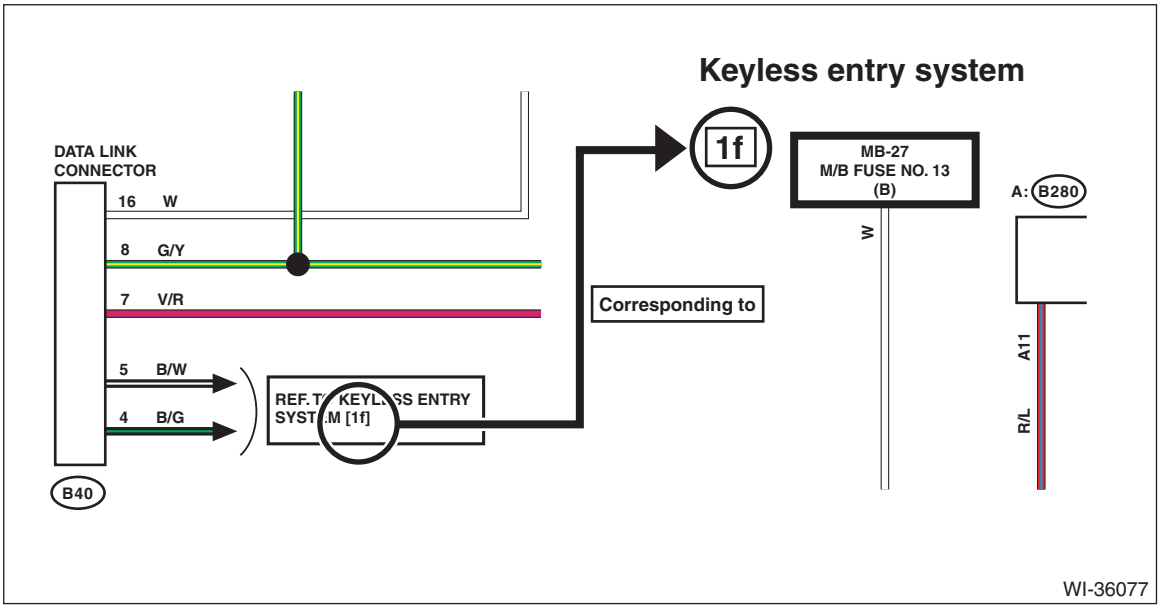

- (E):Connections in the system

(A) indicates destination of this circuit, and (B) indicates a page corresponding to the destination.

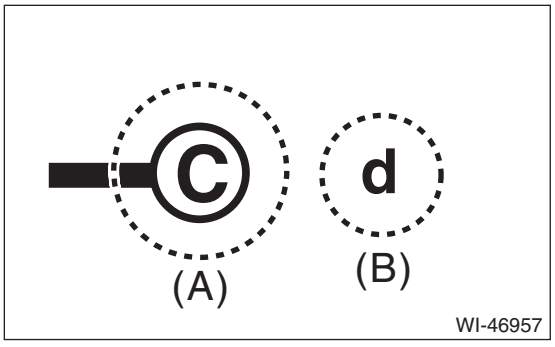

- (F):Ground

The ground points shown in the ground circuit refer to the following, which correspond to the locations.

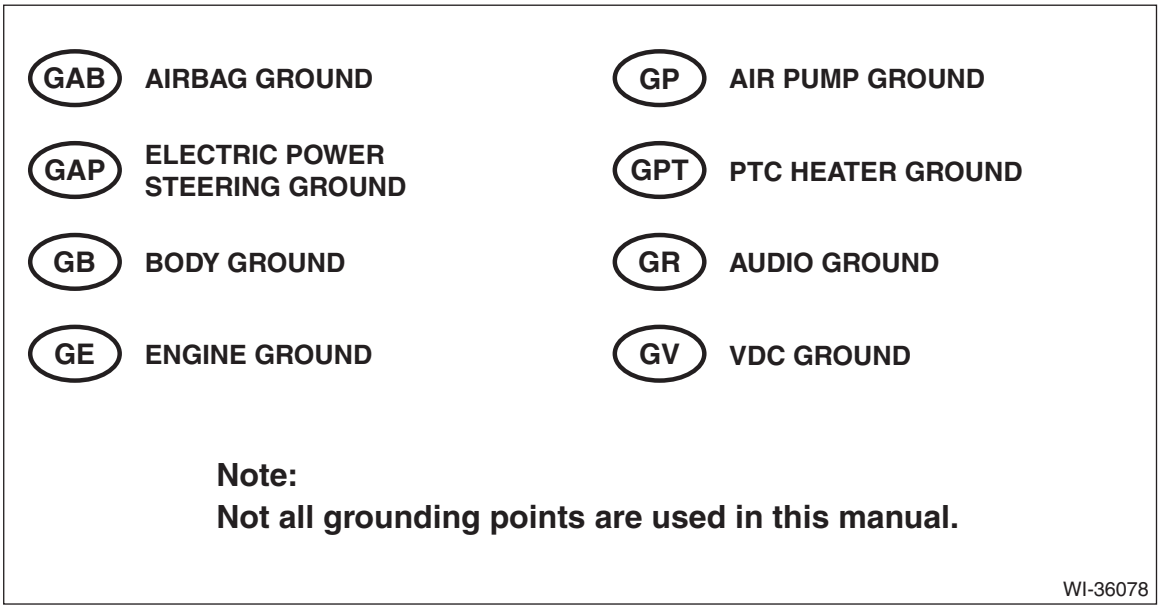

- (G):Terminal No.

Indicates the terminal number of the connector to be connected. If several connectors are connected to a component, they are identified with alphabetic characters.

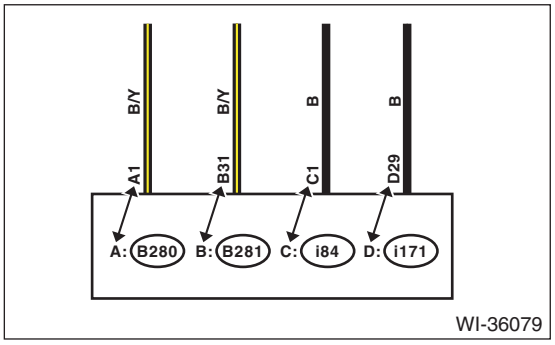

- (H):Connector No.

The first alphabetic characters of the connector number correspond with the following symbols that indicate harnesses or systems.

Symbol	Harness/cord	Symbol	Harness/cord
AB	Airbag wiring harness	F	Front wiring harness
AD	Adapter cord		Generator cord
AT/T	Transmission cord	i	Instrument panel Wiring harness
B	Bulkhead wiring harness		
D	Door cord / Rear gate code	R	Rear wiring harness
E	Engine wiring harness		Fuel cord / Roof cord
	Oxygen sensor cord		Rear gate cord / Trunk lid cord
ST	Steering cord		

- (I) Connector sketch

The connector sketch at the bottom shows the connectors used in the wiring diagram.

3. **Connector**

The following shows the connector shape, lock position, connection and terminal number that are used in this manual.

For connector shape, refer to the connector sketch.

Connector used in vehicle	Connector shown in wiring diagram		
	Connector sketch	Wiring diagram symbol	Terminal arrangement order
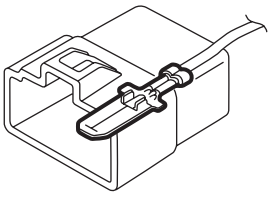 Male connector	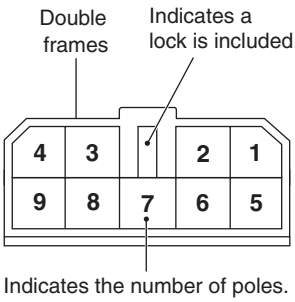		Numbered in order from upper right to lower left.
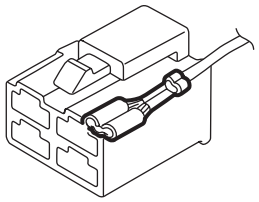 Female connector	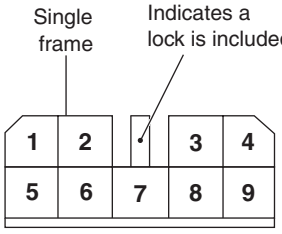		Numbered in order from upper left to lower right.

WI-41116

- The sketch of the connector and the terminal number are indicated in a disconnected state which is viewed from the terminal side.

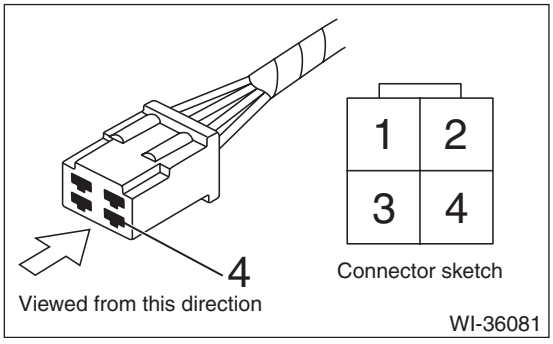

- The connector sketch usually indicates a female connector.

• The connector used in the wiring diagram of the system indicates only the intermediate connection, therefore, no parts, J/Cs and grounds are described. In addition, if the different circuits are connected with the same connector, a dot line is used to indicate that these are the same.

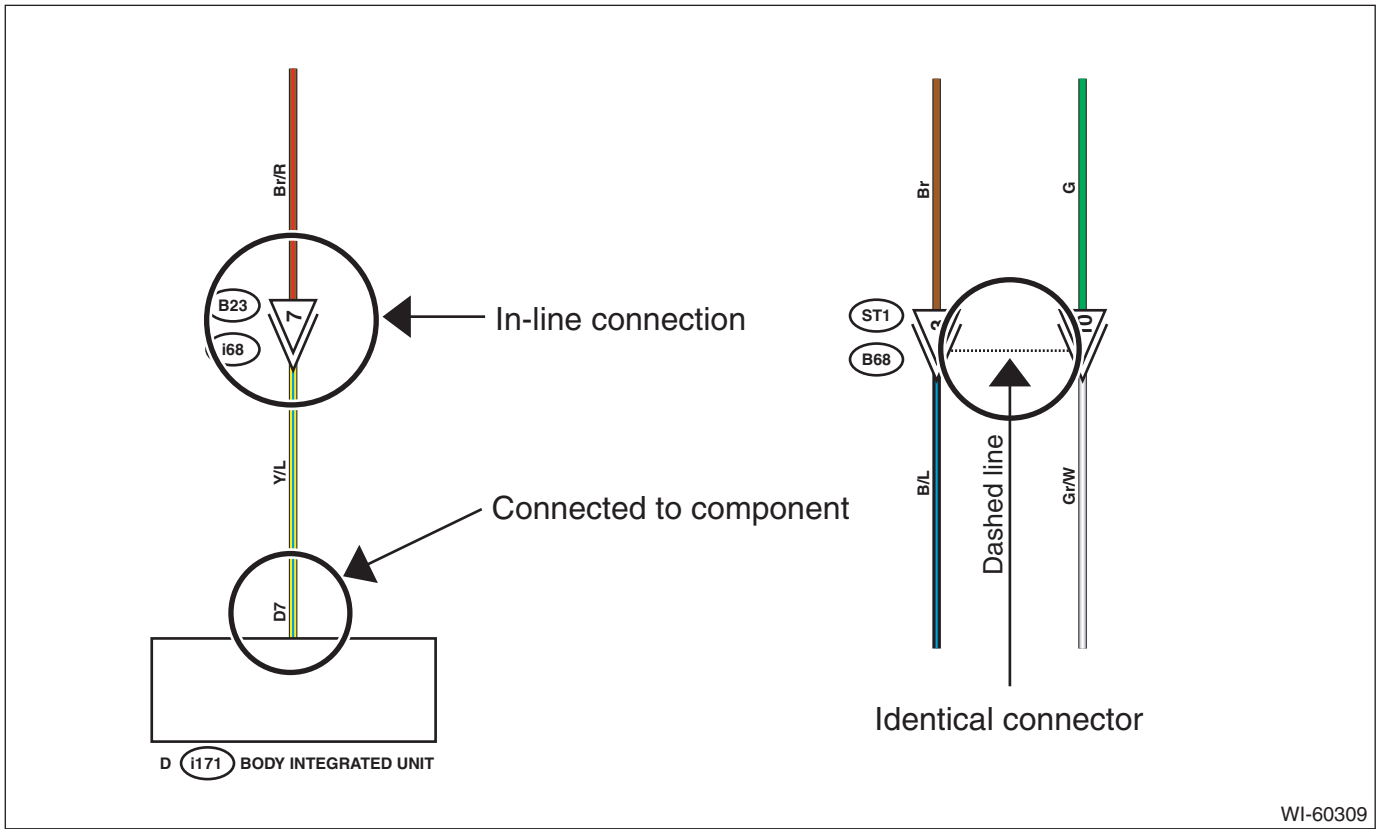

• When connecting the connector, the terminals with the same number are jointed. When the connector is disconnected, the terminal location is symmetrical.

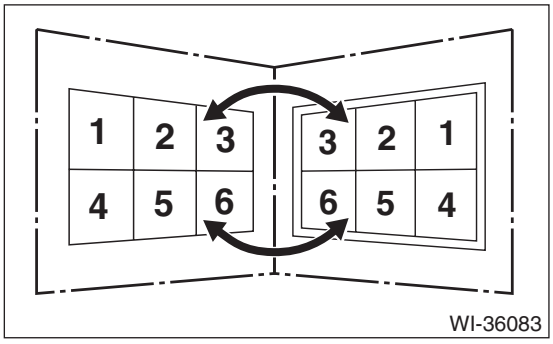

3. LOCATION

In this manual, the location is classified in each harness, and the connector location is indicated using coordinates.

CONNECTOR LOCATION CHART

60. Bulkhead Wiring Harness (In Engine Com

A : LOCATION

Connector					
No.	Pole	Color	Area	No.	
B3	5	B	B-2		Mass air fl
B6	2	Gr	B-3		Front ABS
B8	5	Gr	B-3		Front wiper
B10	4	Gr	B-4		Pressure s
B11	20	Gr	B-3	T4	Transmissi
B12	8	Gr	B-3	T3	Transmissi
	12	Gr	B-3	T3	Transmissi
B14	1	B	B-3		Starter mo
B15	2	Gr	B-3		Front ABS
B16	2	Gr	B-3		Brake fluid
B19	4	G	B-3	T5	Rear wash
		Gr	B-3		Rear wash
B21	54	B	B-4	E2	Engine wir
B128	6	Gr	B-3	T9	Transmissi

Letters in "Area" corresponds with connector location view.
"B" indicates vertical line and "3" indicates horizontal line in above chart.

CONNECTOR LOCATION VIEW

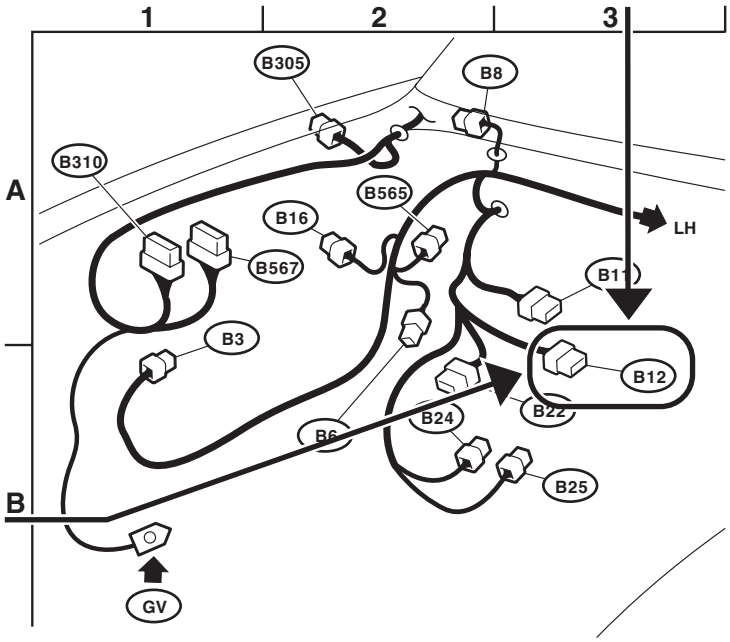

WI-60310

- The following connector symbols are used to easily identify the connectors.

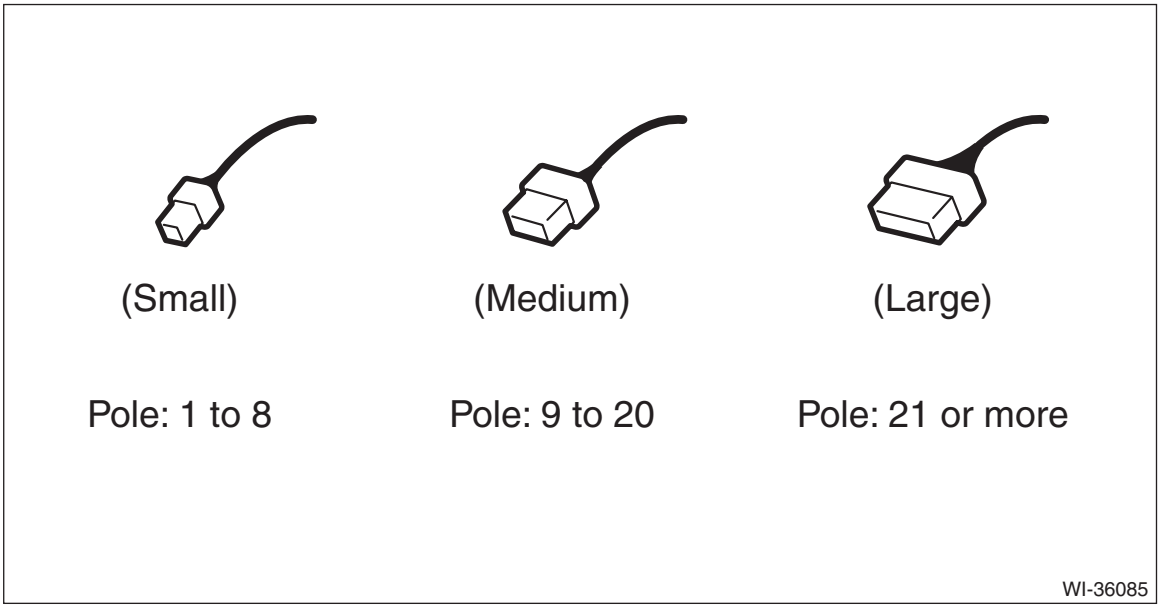

WI-36085

- The ground point is indicated as follows.

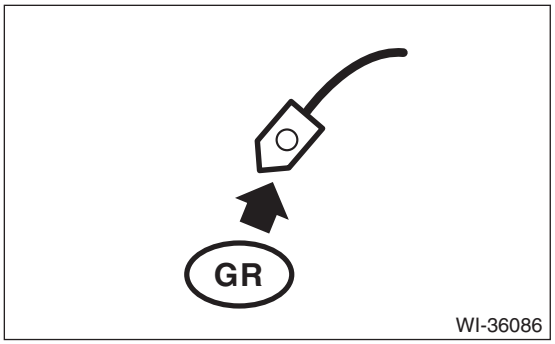

4. SYMBOLS IN WIRING DIAGRAMS

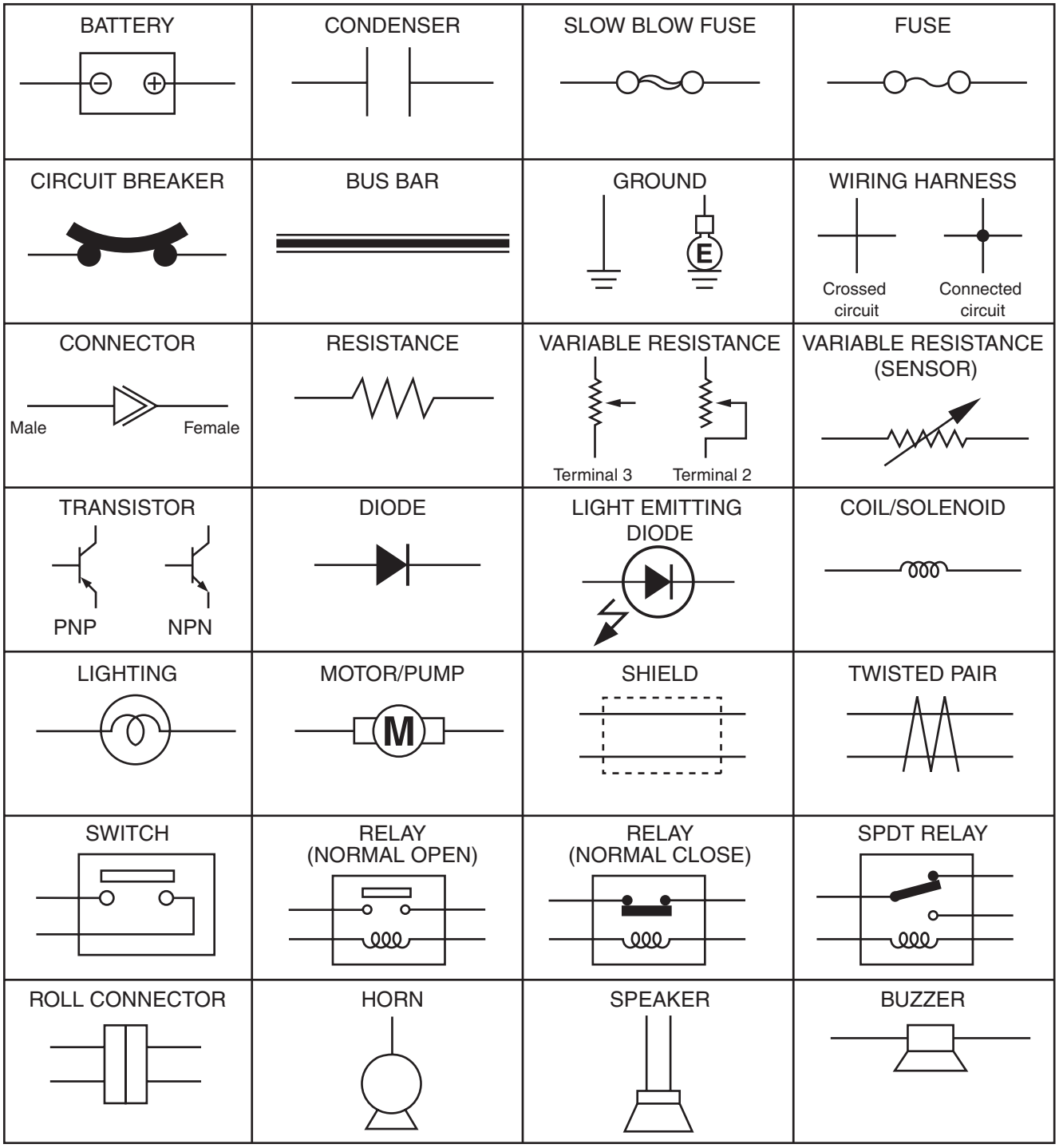

WI-36087

5. ABBREVIATIONS IN THIS MANUAL

Abbr.	Full name
ABS	Anti-lock Brake System
ACC	Accessory
A/C	Air Conditioner
ASSY	Assembly
A/F	Air/Fuel (air fuel ratio sensor)
ATF	Automatic Transmission Fluid
AUX	Auxiliary Audio Input Terminal
AWD	All Wheel Drive
B, BAT	Battery
BSD/RCTA	Blind Spot Detection/Rear Cross Traffic Alert
CAN	Controller Area Network
CL	Close
CM	Control Module
CVT	Continuously Variable Transmission
D	Drive range or Down
DC/DC	Direct Current / Direct Current (converter)
DN	Down
E	Ground
ECM	Engine Control Module
EEPROM	Electrically Erasable Programmable Read-Only Memory
EGR	Exhaust Gas Recirculation
ELCM	Evaporative Leak Check Module
EPB	Electronic Parking Brake
F	Front
F/B	Fuse & Relay Box
FL	Front Left
FR	Front Right
G	Gravity (G sensor)
GPS	Global Positioning System
H/L	Headlight
HI	High
I/F	Interface
IG	Ignition
INT	Intermittent
ISO	International Organization for Standardization
J/C	Joint Connector
LCD	Liquid Crystal Display
L, LH	Left Hand
LO	Low
LWR	Lower
M	Motor
M/B	Main Fuse Box
MFD	Multi Function Display
MIST	Wiper for mist
MT	Manual Transmission
N	Neutral Range

Abbr.	Full name
OP	Optional Parts or Open
P	Parking or Parking range
PASS	Passing
R	Reverse Range
RES	Reset
R, RH	Rear or Right Hand
RL	Rear Left
RR	Rear Right
SBF	Slow Blow Fuse
SRF	Steering Responsive Fog Lights
ST	Starter
SW	Switch
TCM	Transmission Control Module
TEL	Telephone
TFT	Thin Film Transistor
TPMS	Tire Pressure Monitor System
UP	Up
UPR	Upper
VDC	Vehicle Dynamics Control
WASH	Washer

2. Working Precautions

A: PRECAUTIONS WHEN WORKING WITH THE PARTS MOUNTED ON THE VEHICLE

1) Always refer to “CAUTION” and “NOTE” of “General Description” in the same model’s service manual before starting the service.
2) When working under a vehicle which is jacked-up, always be sure to use rigid rack.
3) The parking brake must always be applied during working. Also, in automatic transmission vehicles, keep the select lever set to the P (Parking) range.
4) Be sure the workshop is properly ventilated when running the engine.
5) Be careful not to touch the rotating parts such as a belt or a fan while the engine is operating.
6) Be careful not to touch hot metal parts immediately after the engine has been turned on or off.

B: PRECAUTIONS IN TROUBLE DIAGNOSIS AND REPAIR OF ELECTRIC PARTS

1) Always refer to “CAUTION” and “NOTE” of “General Description” in the same models service manual before starting the diagnostics and repair.
2) Always refer to the cautions of each section when diagnosing and repairing each system and component.
3) The battery cable must be disconnected from the negative terminal after the ignition switch is set to the OFF position, unless otherwise required by the diagnostics.
4) When disconnecting a connector, do not pull the harness, but pull while holding the connector housing.

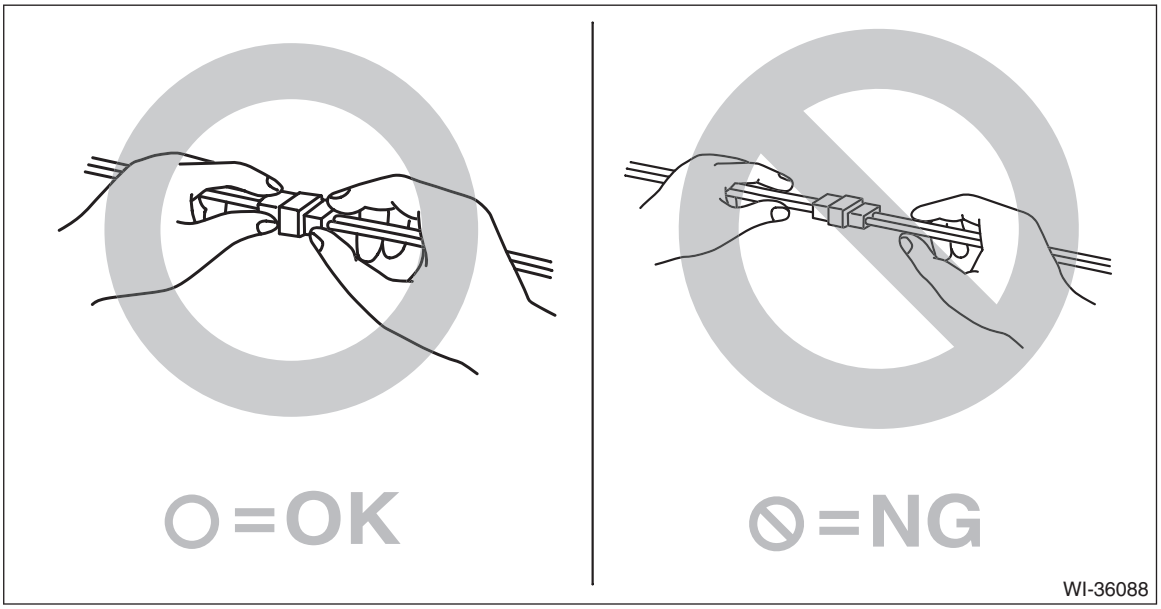

5) Confirm the locking shape completely before disconnecting a connector. In addition, firmly push in the connector until a click sounds when connecting a connector.
6) When checking continuity between connector terminals, or measuring voltage across the terminal and ground, always touch tester probe (s) to terminals from the harness side.
If the probe is too thick to gain access to the terminal, do not push it in forcibly but use a mini test lead.
7) When measuring the voltage or resistance of individual sensor or all electrical control modules, use a tapered pin with a diameter of 0.6 mm (0.024 in) or less and touch it to the tip of terminal. Never insert the tapered pin into the terminal at this time. Doing so may cause internal deformation and a malfunction can occur.

8) To check water-proof connectors (which are not measurable from the harness side), touch tester probes on the terminal side and be very careful not to bend or damage the terminals.

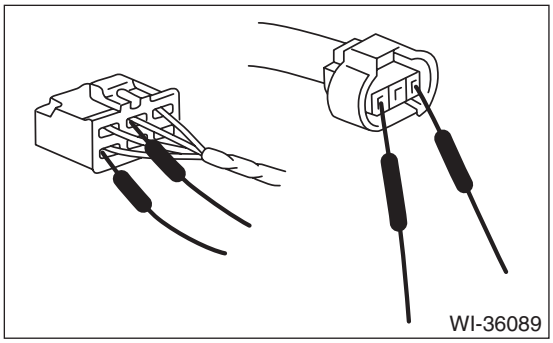

9) Securely fasten the harness with clamps and clips so that the harness does not interfere with the body end parts, edges, bolts or screws.
10) When installing a harness and a component, be careful not to catch them on the harness.
11) Sensors, relays, units, etc., are sensitive to strong impacts. Handle them with extra care so that they are not dropped or mishandled.
12) Because the HID headlight uses high voltage, be sure to confirm that the power supply is turned off before diagnostics and repair. Furthermore, do not perform diagnostics and repair with wet hands because there is a possibility of electrical shock.
13) When inspecting the airbag system, in order to avoid malfunction, always refer to “CAUTION” of “General Description” of the airbag system in the same model’s service manual.

3. Fuse And Relay

A: LOCATION

1. ENGINE COMPARTMENT SIDE

1a 1a

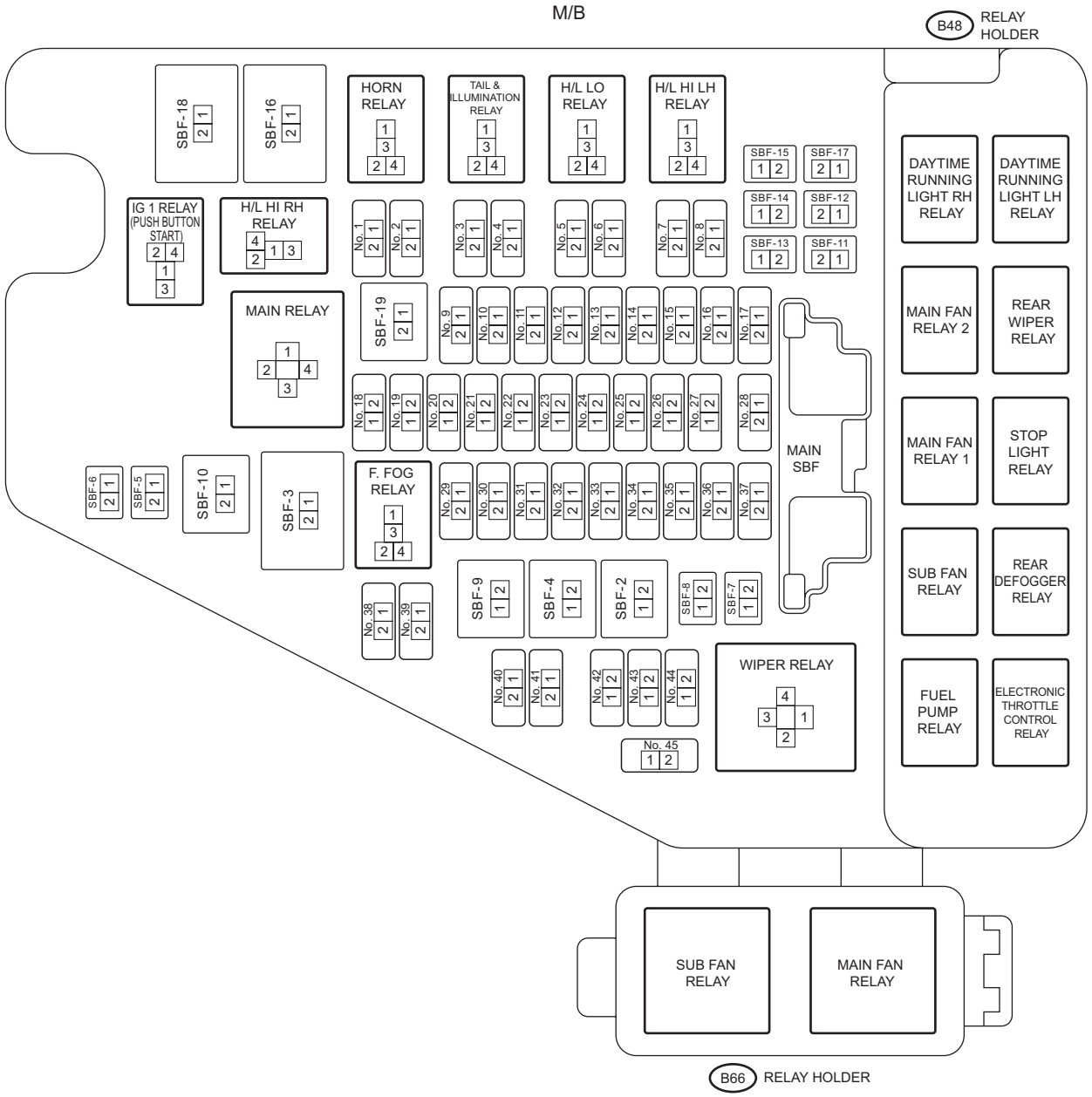

WI-60319

2. PASSENGER ROOM SIDE

2a 2a

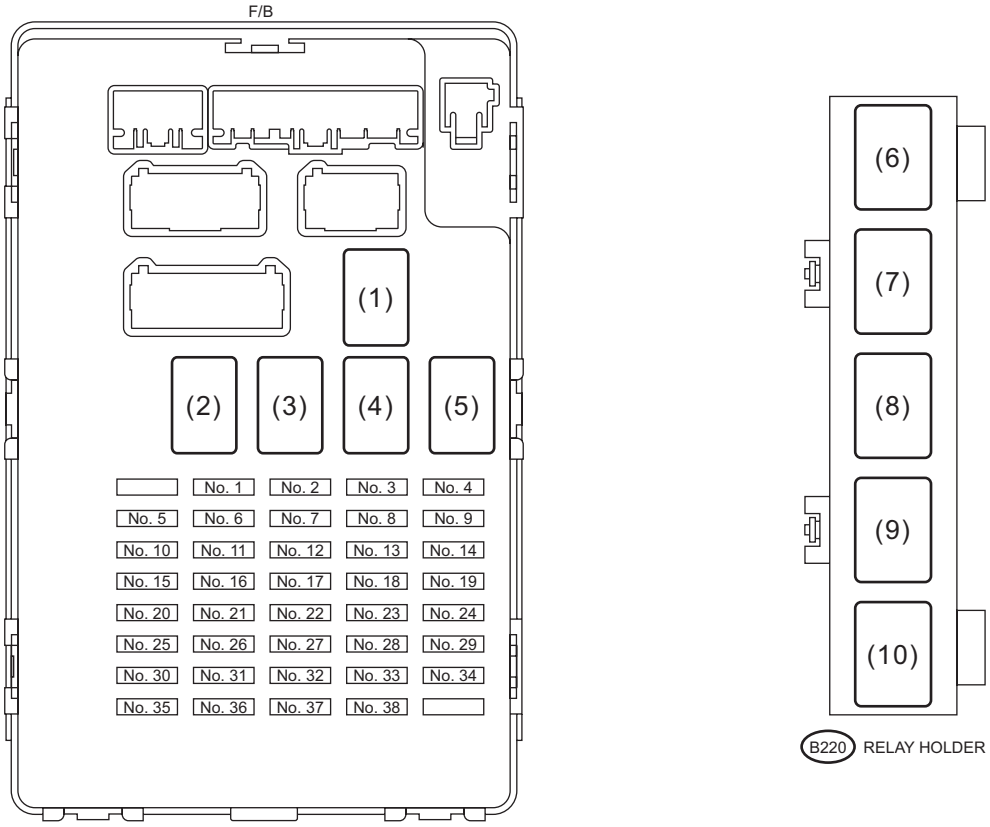

(1) IG 1 RELAY
(2) IG 2 RELAY
(3) STARTER RELAY
(4) ACCESSORY RELAY 2
(5) ACCESSORY RELAY 1
(6) POWER WINDOW RELAY
(7) WIPER DEICER RELAY
(8) MIRROR HEATER RELAY
(9) SEAT HEATER RELAY
(10) STARTER CUT RELAY

WI-60320

4. Power Supply Circuit

A: WIRING DIAGRAM

1. ENGINE TYPE FB WITHOUT PUSH BUTTON START

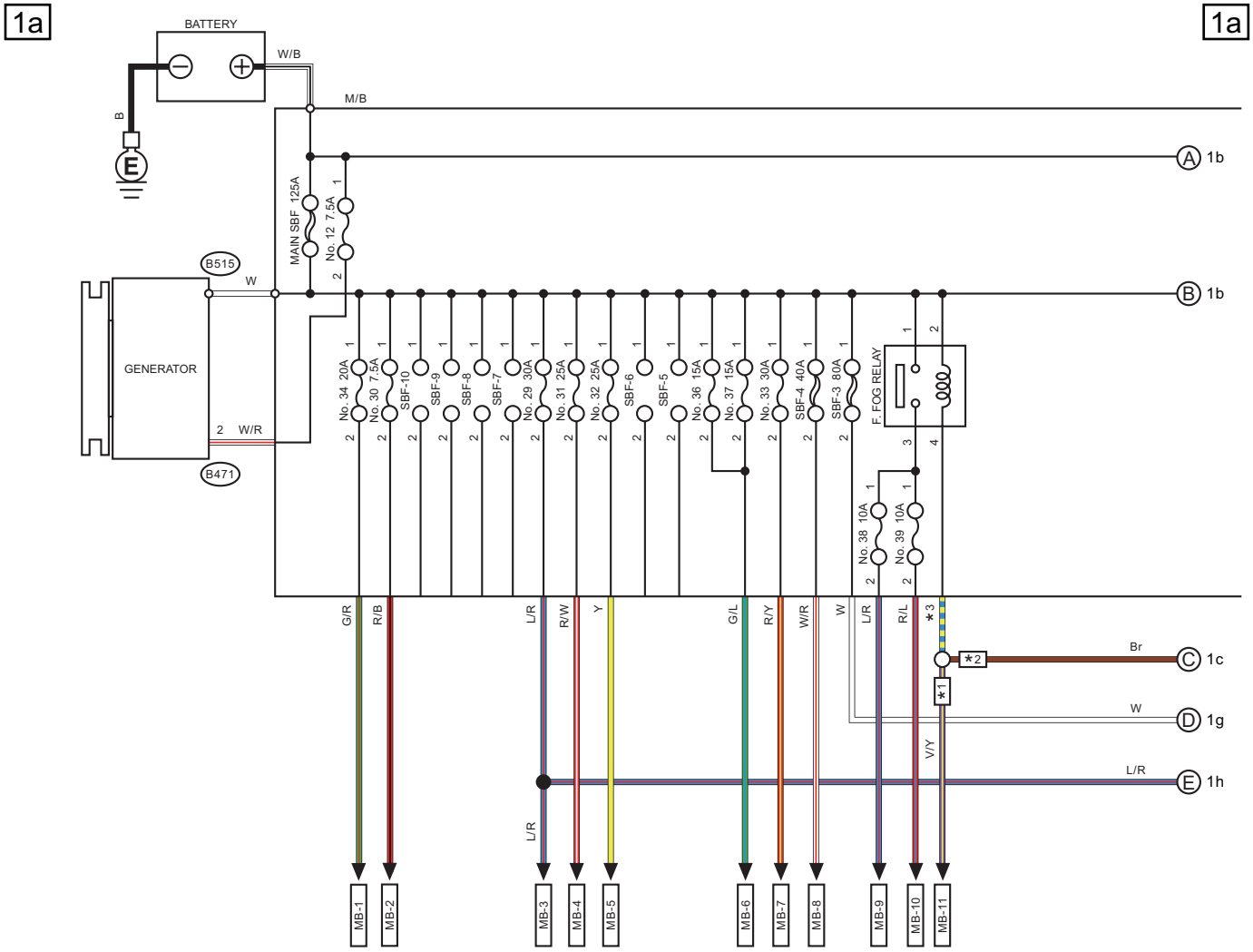

*1 : WITHOUT SRF
*2 : WITH SRF
*3 : WITHOUT SRF : V/Y
WITH SRF : Br



WI-60321

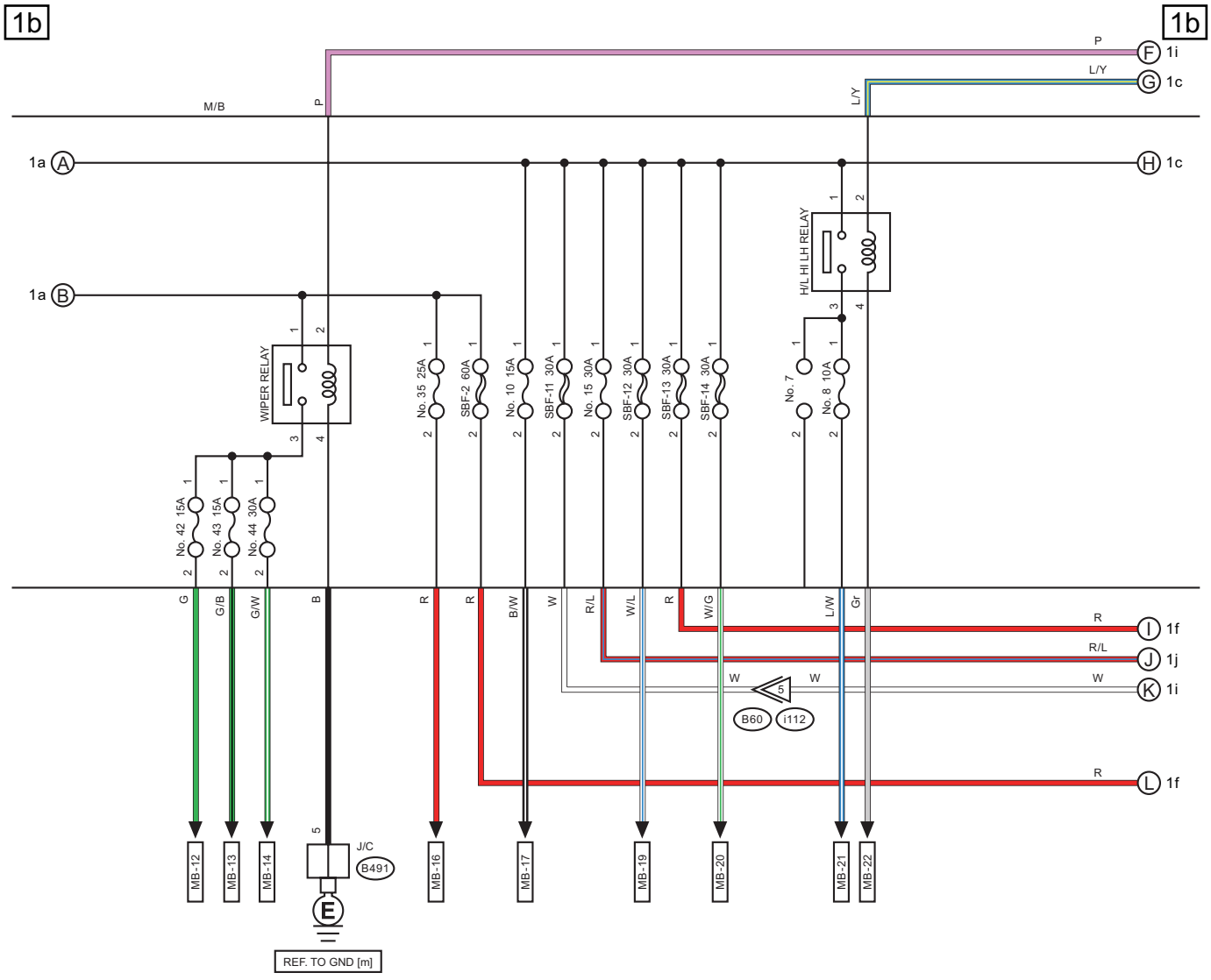
1b
1b
P
F 1i
L/Y
G 1c
M/B
P
L/Y
1a A
H 1c
1a B
H/L HI LH RELAY
WIPER RELAY
No. 35 25A
SBF-2 60A
No. 10 15A
SBF-11 30A
No. 15 30A
SBF-12 30A
SBF-13 30A
SBF-14 30A
No. 7
No. 8 10A
No. 42 15A
No. 43 15A
No. 44 30A
G
G/B
G/W
B
R
R
B/W
W
R/L
W/L
R
W/G
L/W
Gr
R
I 1f
R/L
J 1j
W
W
W
K 1i
5
B60
i112
R
L 1f
MB-12
MB-13
MB-14
J/C
B491
E
REF. TO GND [m]
MB-16
MB-17
MB-19
MB-20
MB-21
MB-22

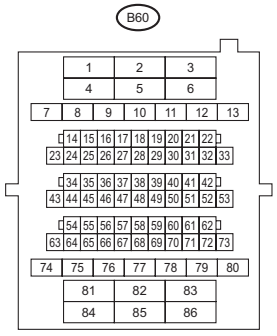
B60
1 2 3
4 5 6
7 8 9 10 11 12 13
14 15 16 17 18 19 20 21 22
23 24 25 26 27 28 29 30 31 32 33
34 35 36 37 38 39 40 41 42
43 44 45 46 47 48 49 50 51 52 53
54 55 56 57 58 59 60 61 62
63 64 65 66 67 68 69 70 71 72 73
74 75 76 77 78 79 80
81 82 83
84 85 86


B491
1 2 3 4 5

WI-60322

Power Supply Circuit

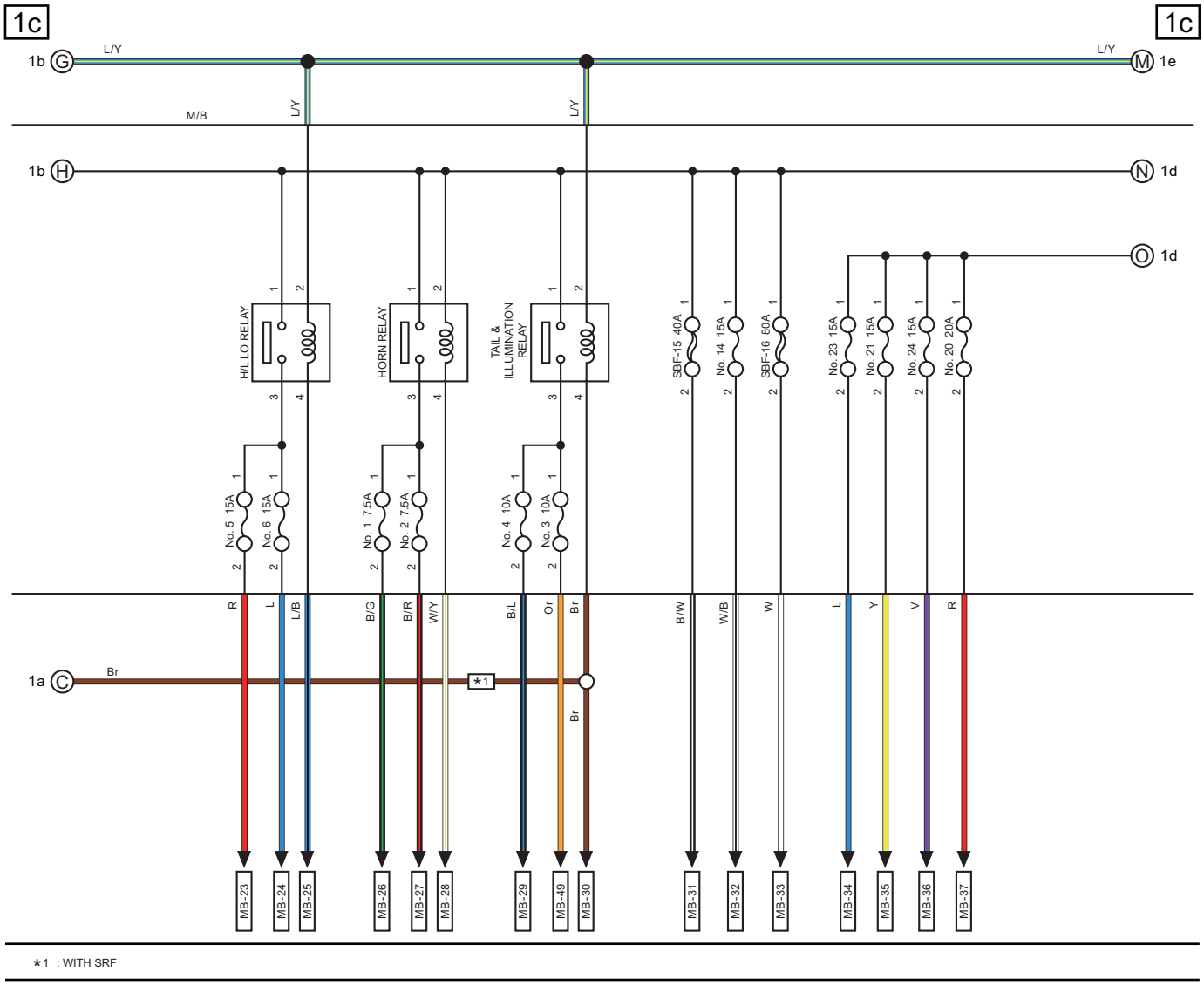

*1 : WITH SRF

WI-60323

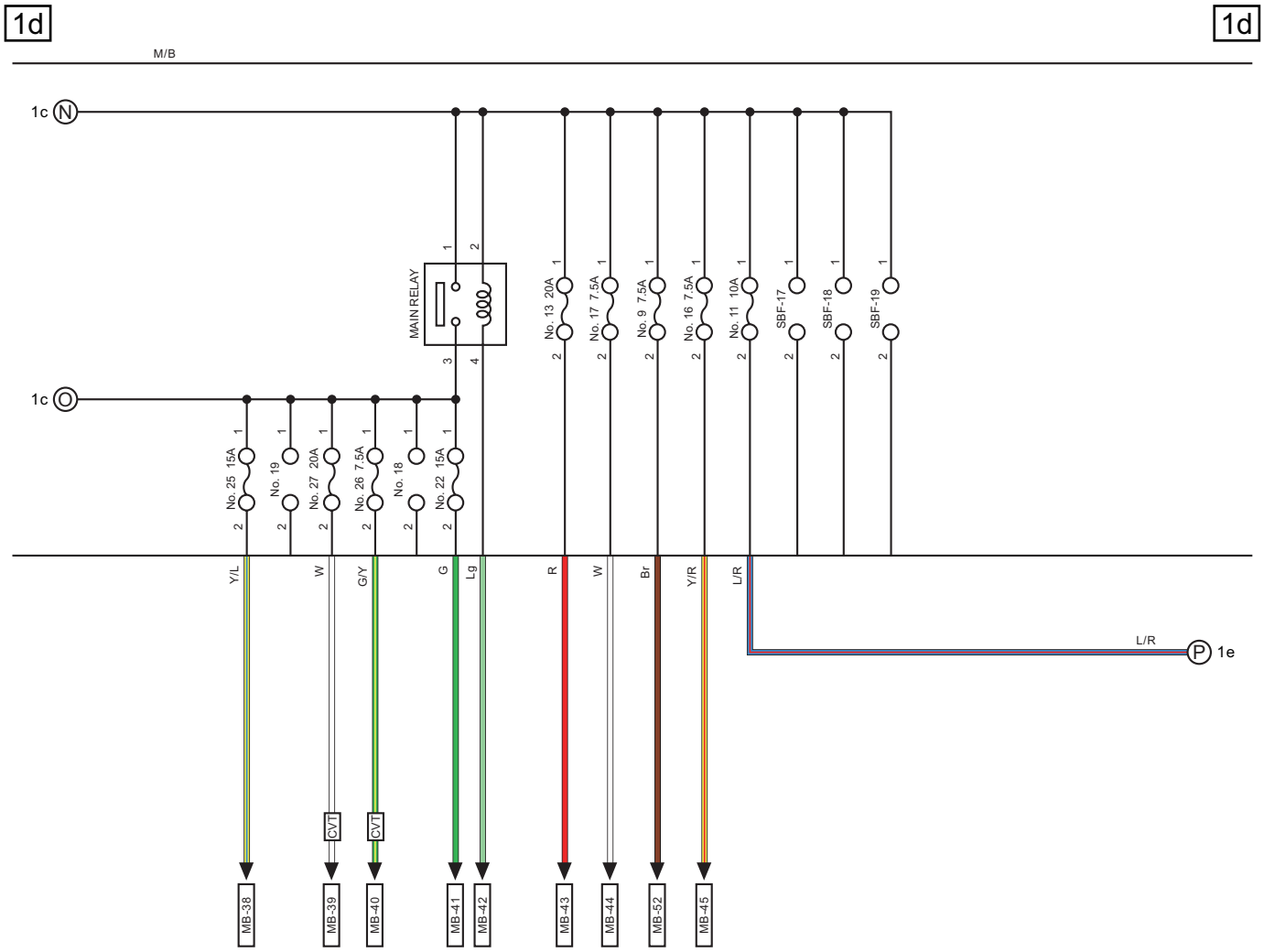
1d
1d
M/B
1c N
1c O
MAIN RELAY
No. 25 15A
No. 19
No. 27 20A
No. 26 7.5A
No. 18
No. 22 15A
No. 13 20A
No. 17 7.5A
No. 9 7.5A
No. 16 7.5A
No. 11 10A
SBF-17
SBF-18
SBF-19
Y/L
W
G/Y
G
L-g
R
W
Br
Y/R
L/R
L/R
P 1e
CVT
CVT
MB-38
MB-39
MB-40
MB-41
MB-42
MB-43
MB-44
MB-52
MB-45

WI-60324

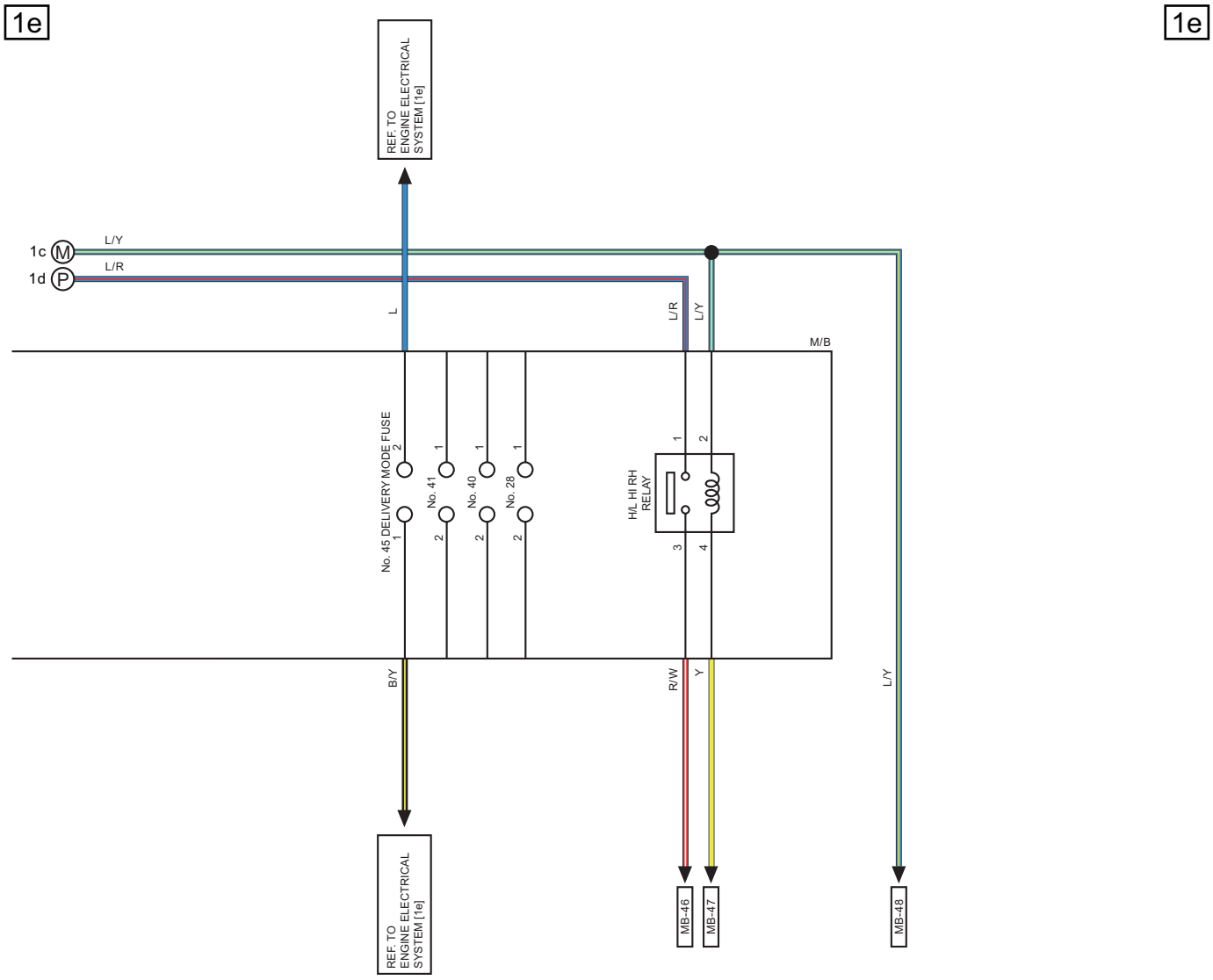
1e
1e
REF. TO ENGINE ELECTRICAL SYSTEM [1e]
1c M
1d P
L/Y
L/R
L
L/R
L/Y
M/B
No. 45 DELIVERY MODE FUSE
No. 41
No. 40
No. 28
H/L HI RH RELAY
B/Y
R/W
Y
L/Y
REF. TO ENGINE ELECTRICAL SYSTEM [1e]
MB-46
MB-47
MB-48

WI-60325

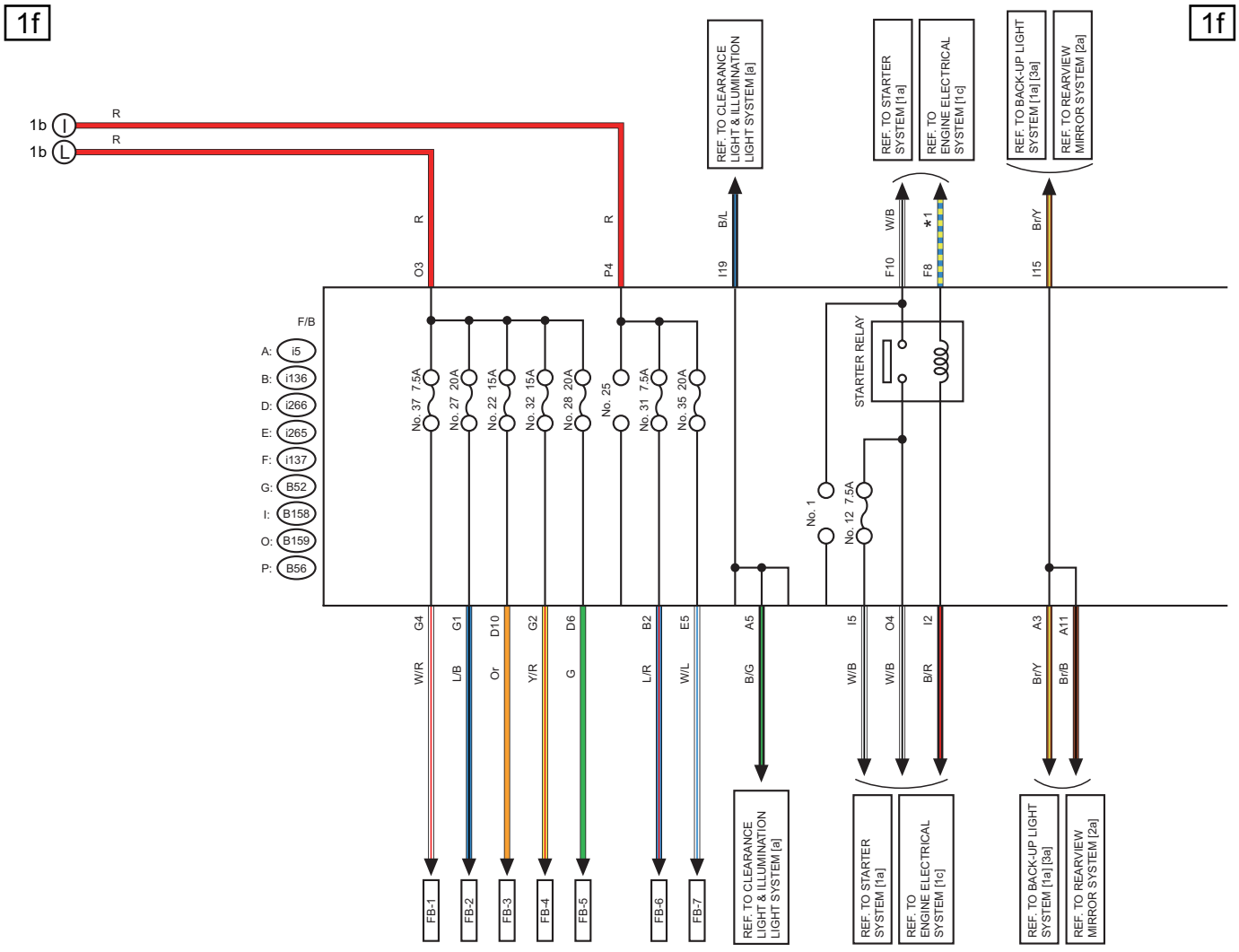

*1 : MT MODEL : B/R
CVT MODEL : G/R

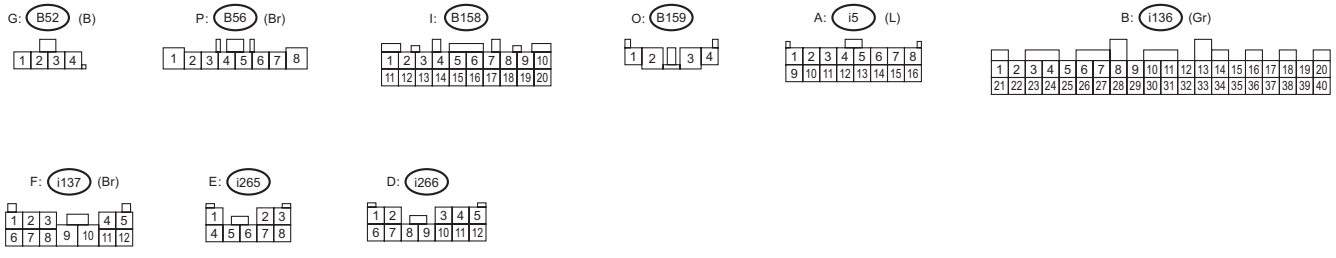

WI-63012

Power Supply Circuit

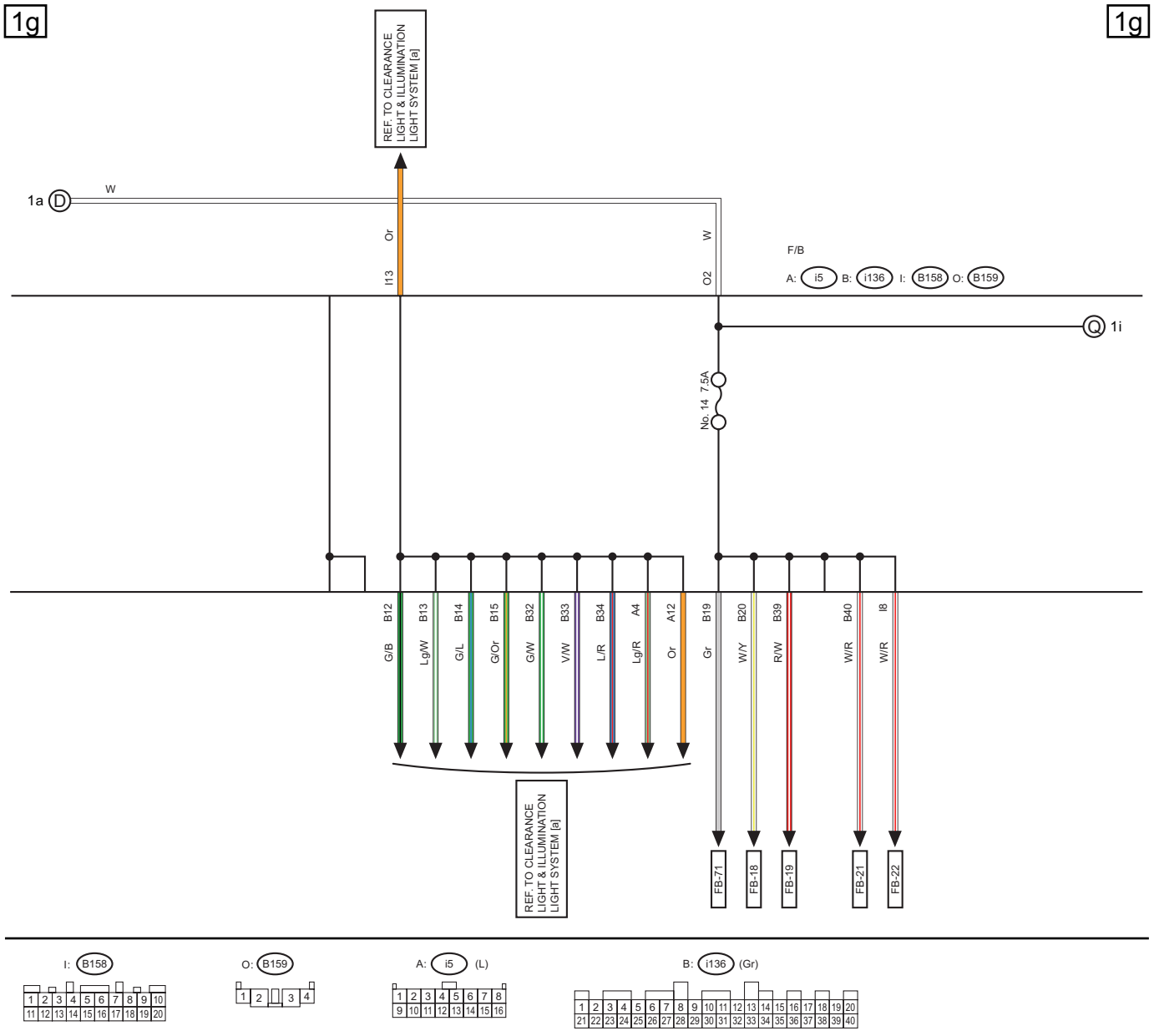

WI-60327

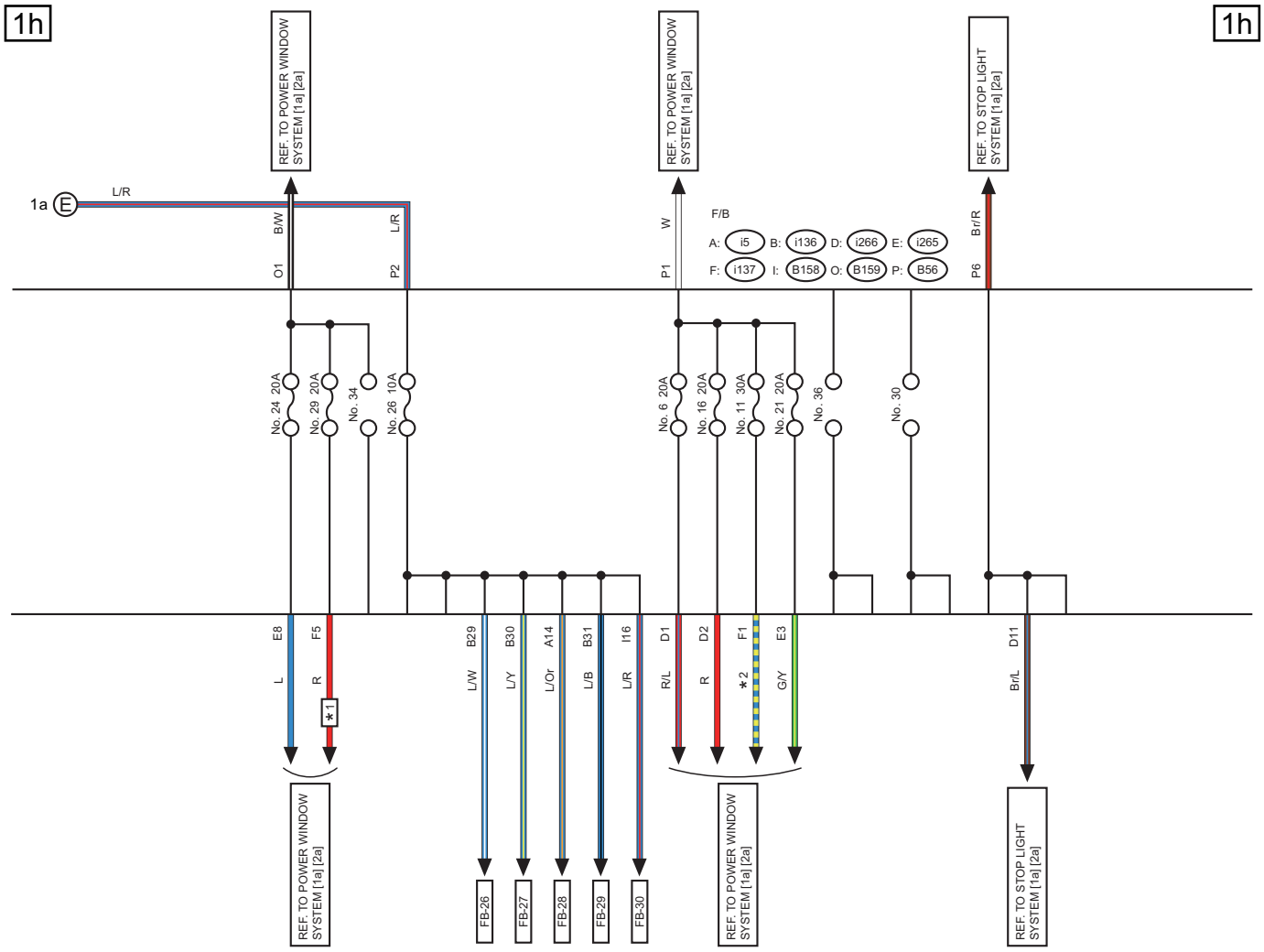

*1 : WITH DRIVER'S SEAT AND PASSENGER'S SEAT AUTO-REVERSE FUNCTION
*2 : WITH DRIVER'S SEAT AND PASSENGER'S SEAT AUTO-REVERSE FUNCTION : L
WITH DRIVER'S SEAT AND PASSENGER'S SEAT AUTO-REVERSE FUNCTION : R/W

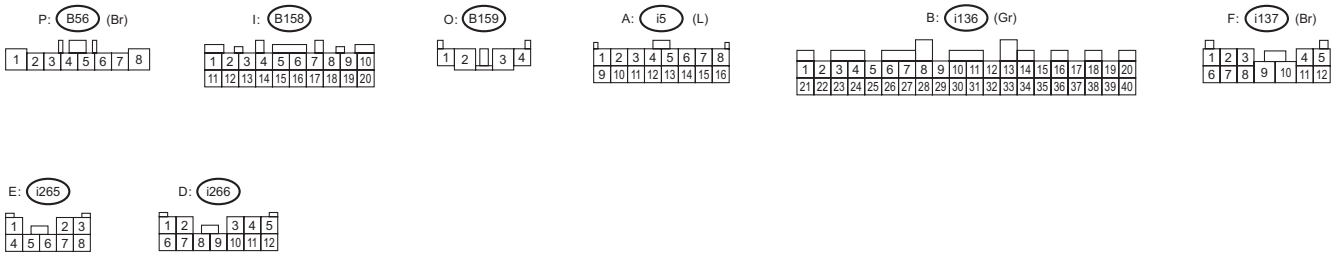

WI-60328

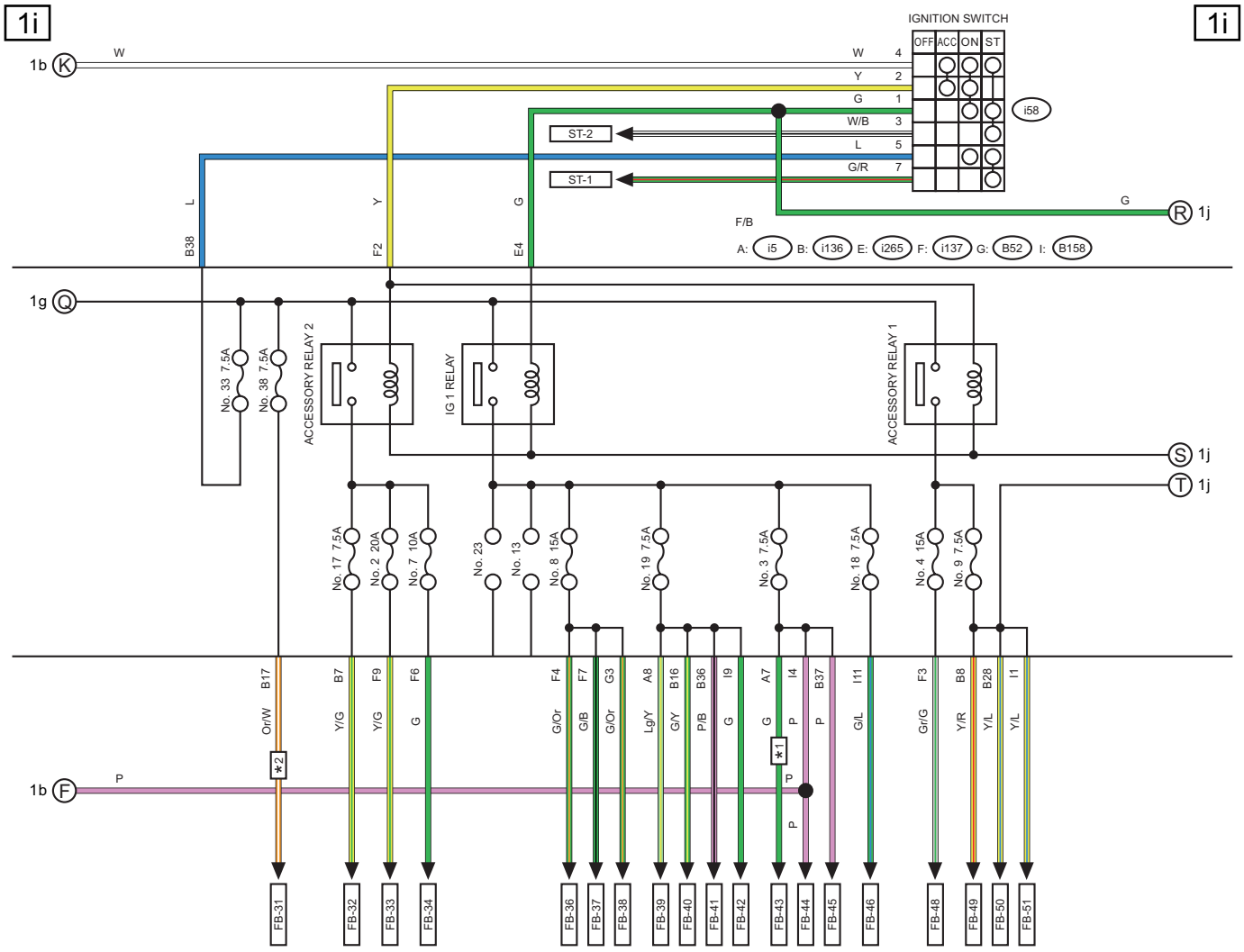

*1 : WITH IMMOBILIZER CM
*2 : WITH EyeSight

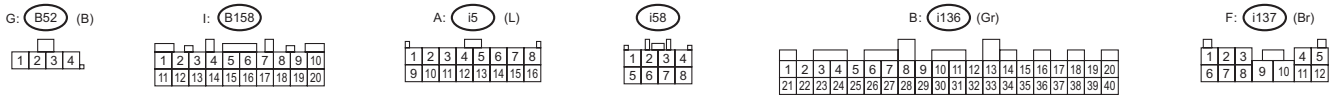



WI-60329

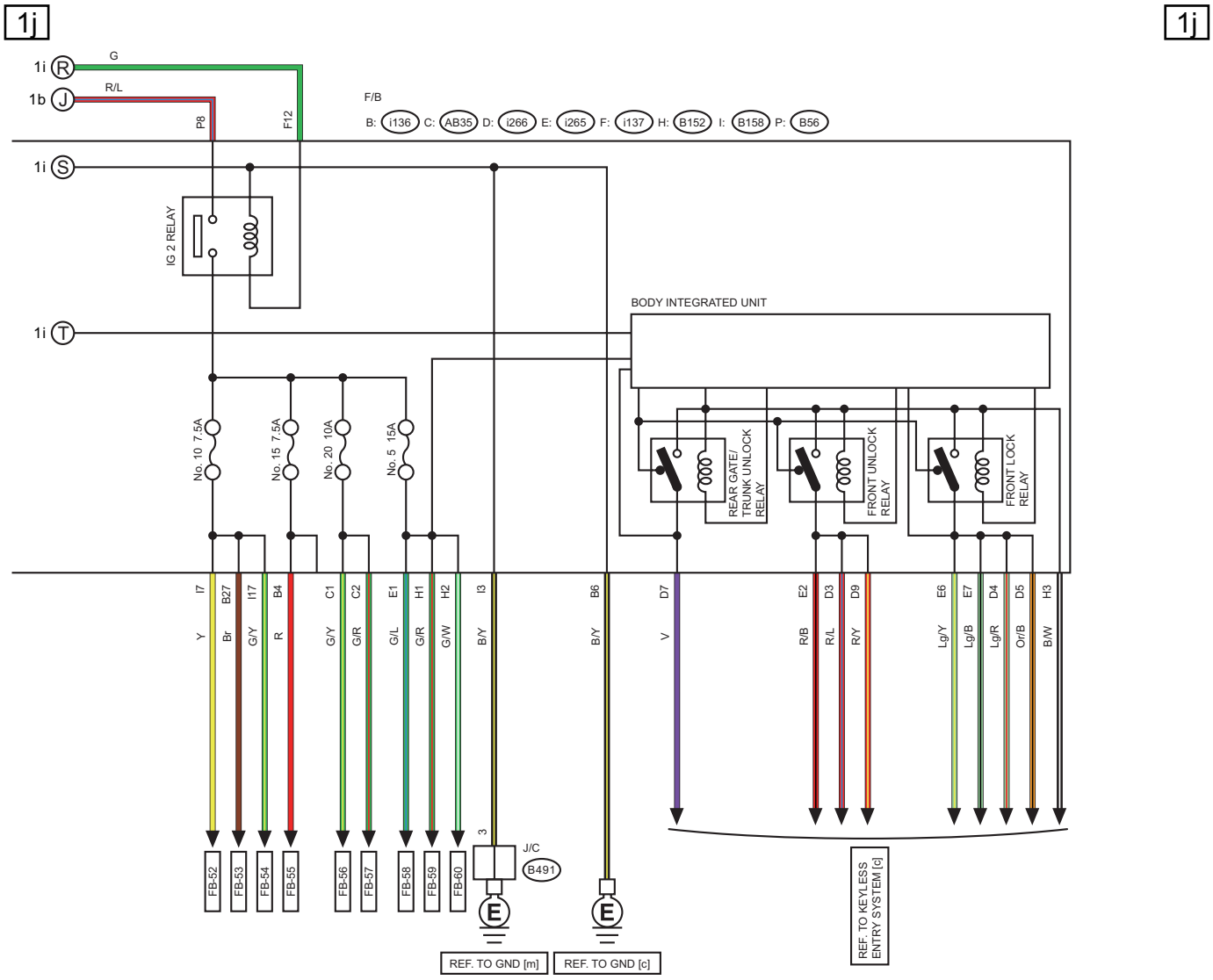
1j
1j
1i R
1b J
G
R/L
P8
F12
F/B
B: i136 C: AB35 D: i266 E: i265 F: i137 H: B152 I: B158 P: B56
1i S
IG 2 RELAY
1i T
BODY INTEGRATED UNIT
No. 10 7.5A
No. 15 7.5A
No. 20 10A
No. 5 15A
REAR GATE/ TRUNK UNLOCK RELAY
FRONT UNLOCK RELAY
FRONT LOCK RELAY
I7 B27 I17 B4 C1 C2 E1 H1 H2 I3 B6 D7 E2 D3 D9 E6 E7 D4 D5 H3
Y Br G/Y R G/Y G/R G/L G/R G/W B/Y B/Y V R/B R/L R/Y Lg/Y Lg/B Lg/R Or/B B/W
FB-52 FB-53 FB-54 FB-55 FB-56 FB-57 FB-58 FB-59 FB-60
3
J/C
B491
REF. TO GND [m]
REF. TO GND [c]
REF. TO KEYLESS ENTRY SYSTEM [c]
C: AB35
P: B56 (Br)
H: B152
I: B158
B491
B: i136 (Gr)
F: i137 (Br)
E: i265
D: i266

WI-60330

No.	Load
MB-1	Audio amplifier
MB-2	Active grille shutter
MB-3	Audio
	Navigation unit
MB-4	Sub fan relay
MB-5	Main fan relay 1
MB-6	Blower motor relay
MB-7	VDC CM
MB-8	VDC CM
MB-9	Front fog light RH
	SRF CM
MB-10	Front fog light LH
	SRF CM
MB-11	Body integrated unit
MB-12	Rear wiper relay
	Rear washer motor
	Rear wiper motor
MB-13	Front washer motor
MB-14	Combination switch
	Front wiper motor
MB-16	Rear defogger relay
MB-17	Body integrated unit
	Front lock relay
	Front unlock relay
	Rear gate/trunk unlock relay
MB-19	Power rear gate CM
MB-20	Power seat LH
	Power seat RH
MB-21	Front combination light LH
MB-22	Body integrated unit
MB-23	Front combination light RH
MB-24	Front combination light LH
MB-25	Body integrated unit
MB-26	Horn RH
MB-27	Horn LH
MB-28	Body integrated unit
	Horn switch
MB-29	License plate light LH
	License plate light RH
	Rear combination light LH
	Rear combination light RH
	Trailer connector
MB-30	Body integrated unit
MB-31	Power window main switch
	Power window relay
MB-32	Body integrated unit
MB-33	Power steering CM

No.	Load
MB-34	Ignition coil No. 1
	Ignition coil No. 2
	Ignition coil No. 3
	Ignition coil No. 4
MB-35	Intake camshaft position sensor LH
	Intake camshaft position sensor RH
MB-36	Intake oil control solenoid LH
	Intake oil control solenoid RH
MB-37	Front oxygen (A/F) sensor
	Rear oxygen sensor
MB-38	ECM
	EGR control valve
	ELCM
	Fuel injector No. 1
	Fuel injector No. 2
	Fuel injector No. 3
	Fuel injector No. 4
	Mass air flow & intake air temperature sensor
	Purge control solenoid valve
MB-39	TCM
MB-40	Primary speed sensor
	Secondary speed sensor
	Turbine speed sensor
MB-41	Electronic throttle control relay
MB-42	ECM
MB-43	Fuel pump relay
MB-44	Data link connector
MB-45	Battery sensor
	ECM
	TCM
MB-46	Front combination light RH
MB-47	Body integrated unit
MB-48	Body integrated unit
	Daytime running light LH relay
	Daytime running light RH relay

No.	Load
MB-49	A/C control panel
	Audio
	BSD/RCTA OFF switch
	EPB control switch
	Glove box light
	Hazard switch
	Hill hold switch
	Illumination control switch
	Lane departure warning OFF switch
	Lower cover switch (trunk lid opener)
	Navigation unit
	OP connector (fog light switch)
	Pocket light
	Pre-collision brake OFF switch
	Memory height switch
	Power rear gate driver's switch
	Remote control mirror switch
	Satellite switch illumi. light
	Seat heater switch
	Select lever
	Spot map light
	SRF OFF switch
	Steering switch illumi. light
	VDC OFF switch
	X mode switch
MB-52	Data communication module
ST-1	Clutch start switch
	Starter relay
ST-2	Starter relay
FB-1	Stop light relay
	Stop light & brake switch
FB-2	Mirror heater relay
	Wiper deicer relay
FB-3	Rear seat heater CM
FB-4	Seat heater relay
FB-5	Trailer connector
FB-6	Immobilizer antenna
	Key warning switch
FB-7	Sunroof unit
FB-18	Combination meter
FB-19	A/C CM
FB-21	Immobilizer CM
	Impact sensor
	Power rear gate CM
FB-22	Body integrated unit
FB-26	Door step light RH
	Door pocket light RH
	Outer mirror ASSY RH

No.	Load
FB-27	Door step light LH
	Door pocket light LH
	Outer mirror ASSY LH
FB-28	Luggage room light
	TPMS & keyless entry CM
	Trunk room light
FB-29	A/C control panel
	Rearview mirror
	Room light
	Spot map light
	Vanity mirror light LH
	Vanity mirror light RH
FB-30	Body integrated unit
FB-31	Stereo camera
FB-32	Rearview mirror
	Remote control mirror switch
FB-33	Rear accessory power supply socket (cargo room)
	Rear accessory power supply socket (console)
FB-34	Front accessory power supply socket
FB-36	Blower motor relay
	Intake door actuator
FB-37	A/C CM
FB-38	Rear defogger relay
	Sub fan relay
FB-39	Power seat LH
	Rear seat heater CM
	TPMS & keyless entry CM
FB-40	A/C control panel
	Audio
	BSD/RCTA OFF switch
	Navigation unit
FB-41	Impact sensor
	Rearview mirror
	Spot map light
	Stereo camera
	Sunroof unit
FB-42	Clutch switch
	Data link connector
	Stop light & brake switch
	Wiper deicer relay
FB-43	Immobilizer CM
FB-44	Main fan relay 1
	Main fan relay 2
	Power window relay
FB-45	Hill hold switch
FB-46	Auto headlight beam leveler CM
	Back-up light switch
	Inhibitor switch
	SRF CM

No.	Load
FB-48	Audio
	Audio amplifier
	AUX input terminal
	Navigation unit
	Data communication module
FB-49	A/C CM
FB-50	A/C control panel
FB-51	Seat heater relay
FB-52	Stop light relay
	VDC CM
FB-53	Steering angle sensor
FB-54	Power steering CM
FB-55	Combination meter
FB-56	Airbag CM
FB-57	Occupant detection CM
FB-58	Radar sensor LH (master)
	Power rear gate CM
	Radar sensor RH (slave)
	Data communication module
FB-59	ECM
	TCM
FB-60	Fuel pump relay
FB-71	EPB control switch

2. ENGINE TYPE FB WITH PUSH BUTTON START

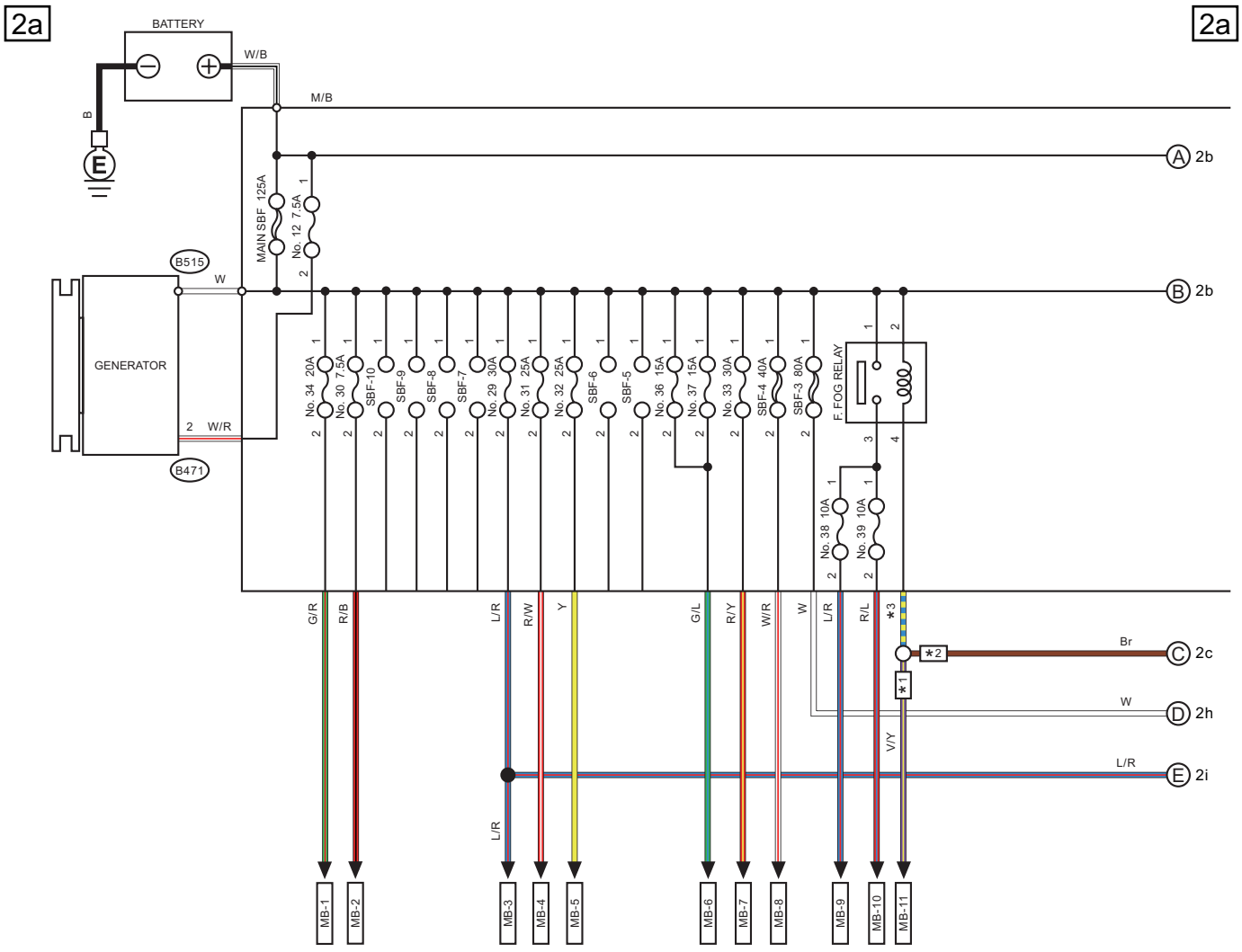

*1 : WITHOUT SRF
*2 : WITH SRF

*3 : WITHOUT SRF : V/Y
WITH SRF : Br



WI-60331

Power Supply Circuit

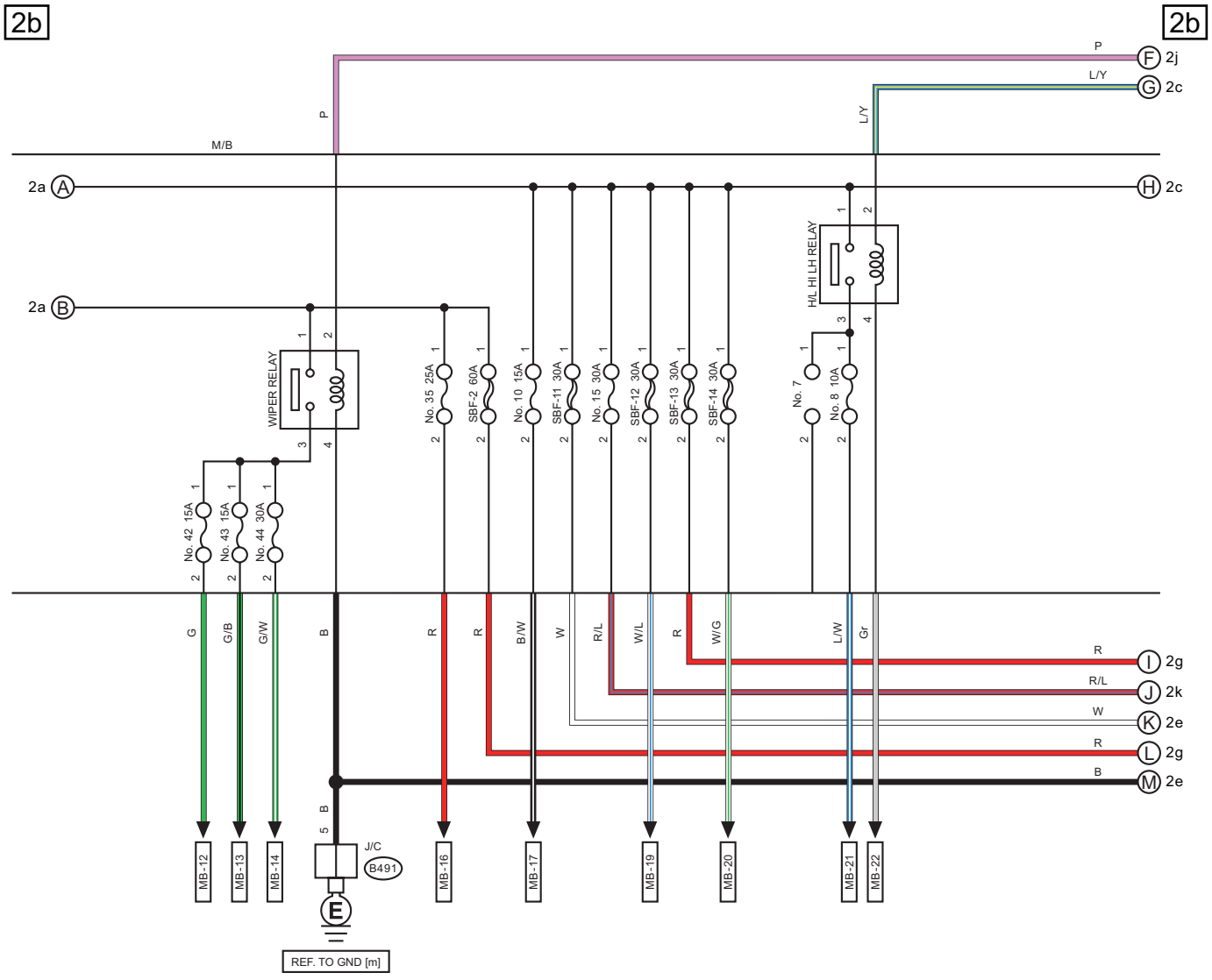



WI-60332

Power Supply Circuit

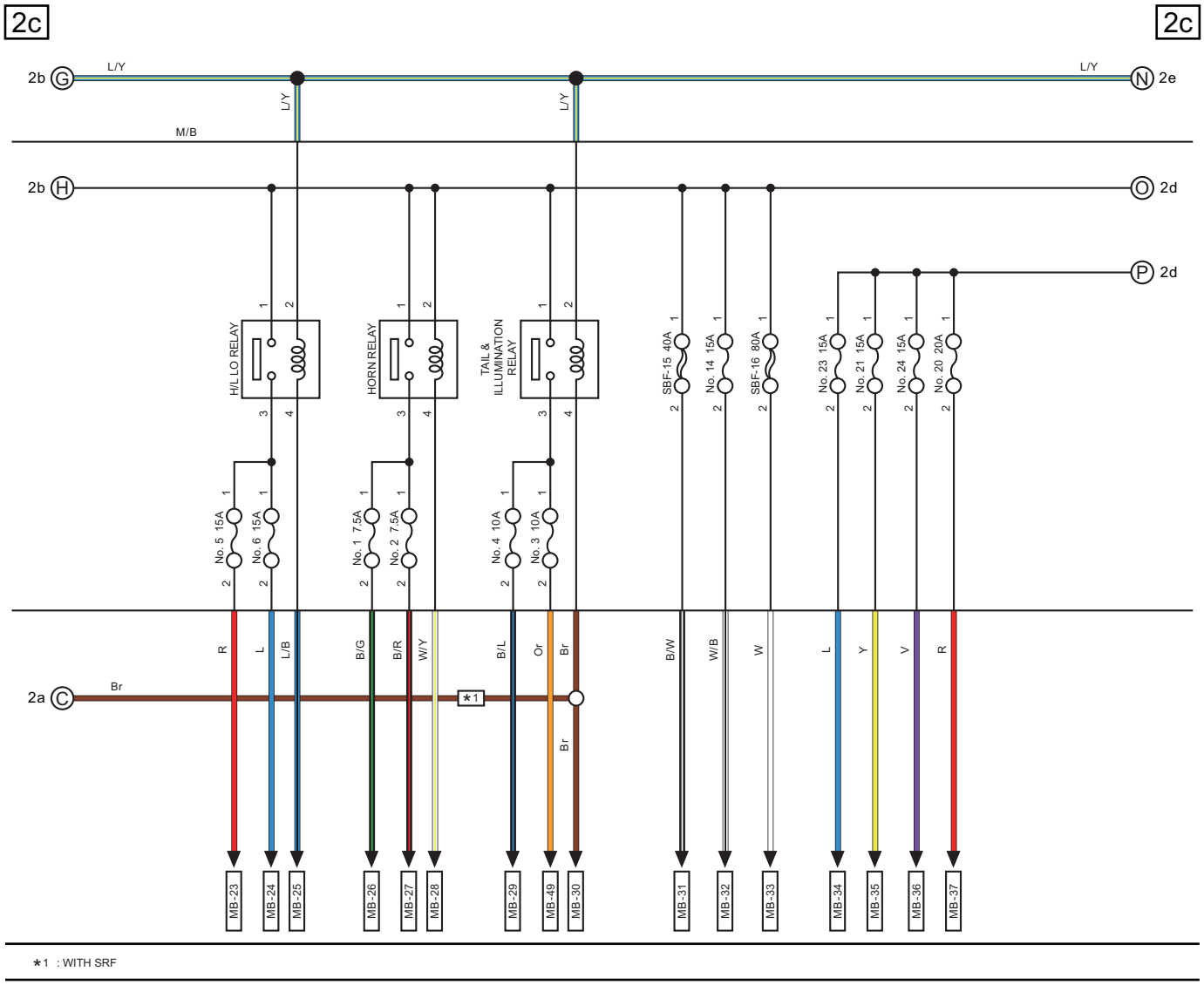

WI-60333

2d 2d

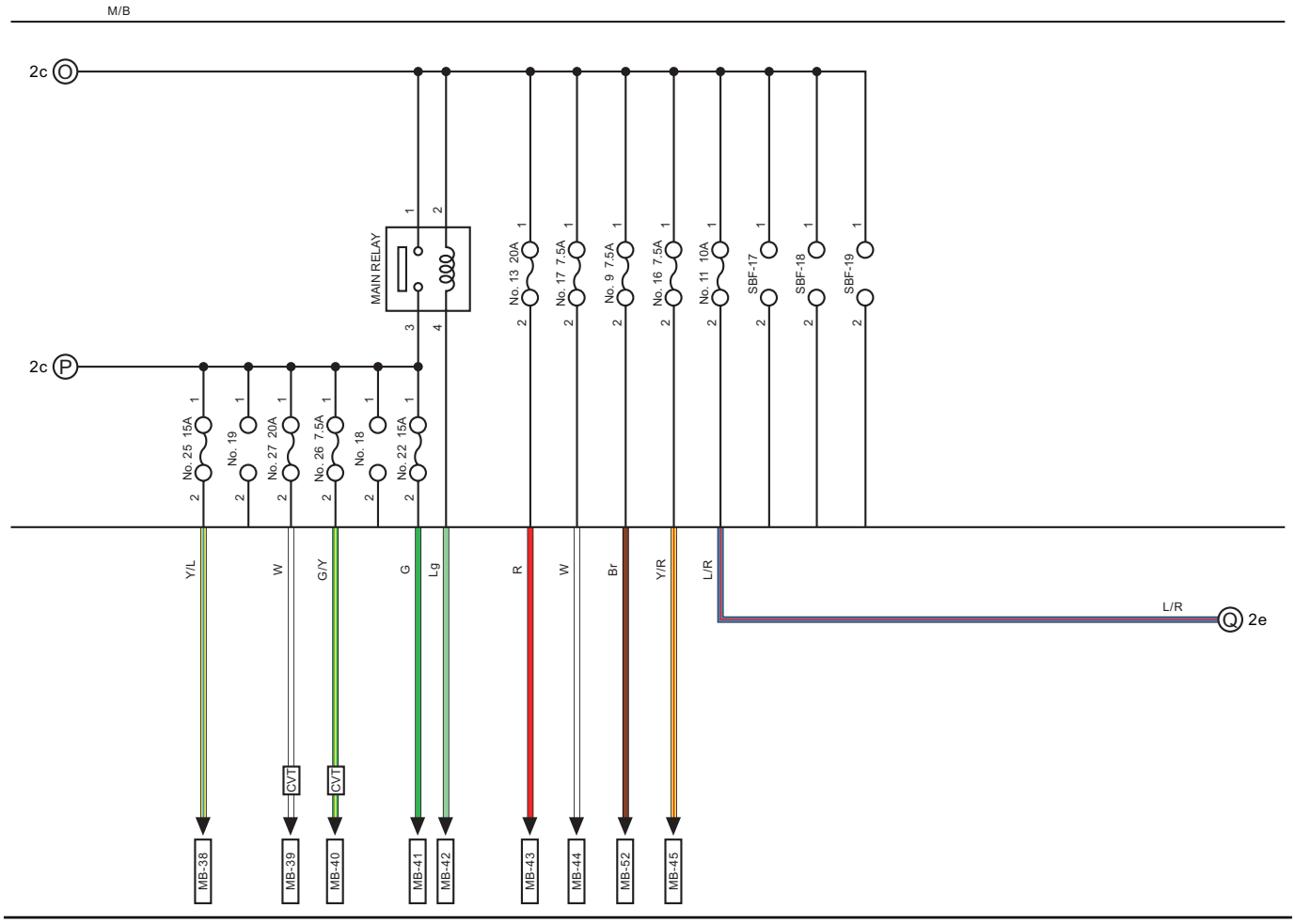

WI-60334

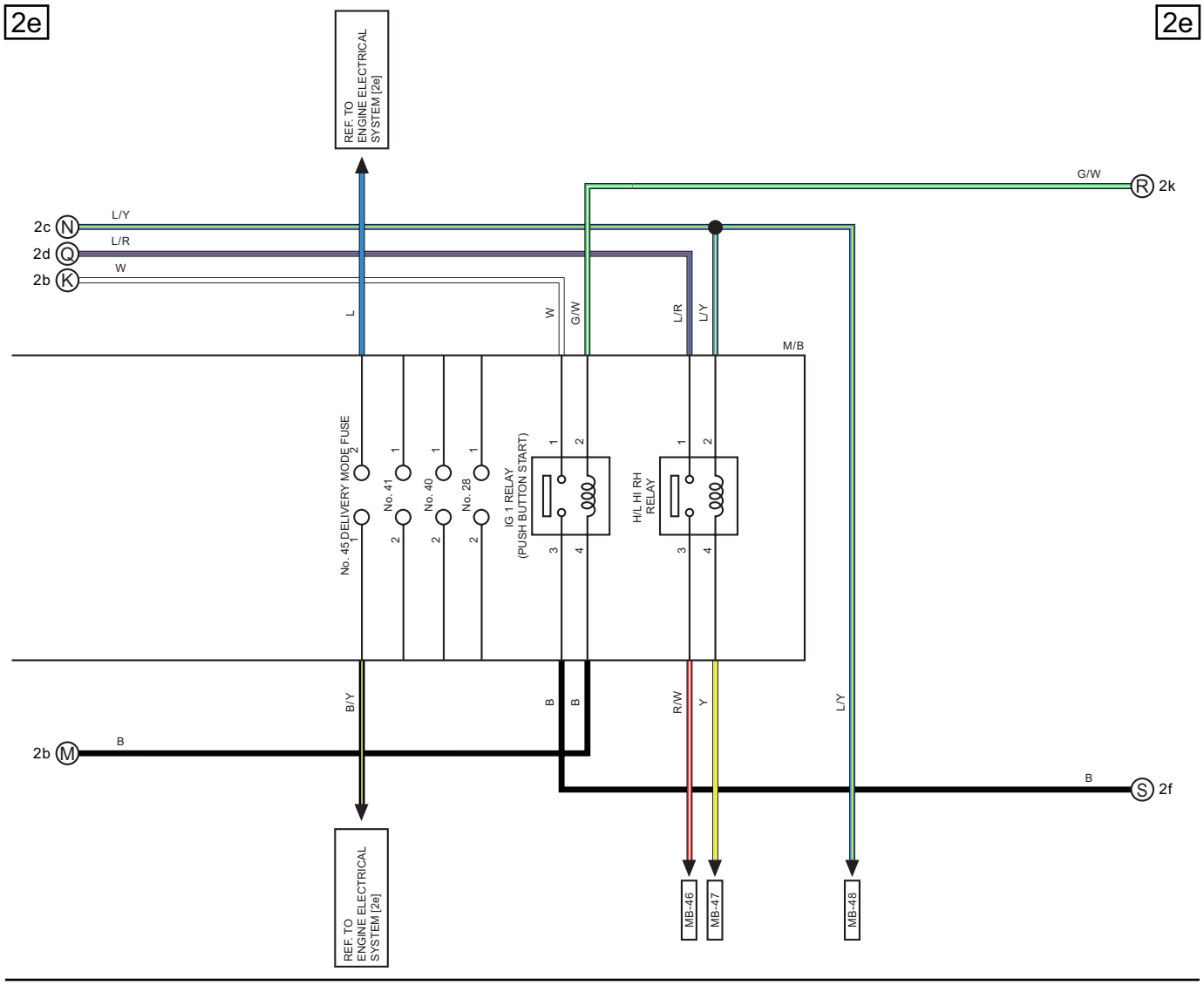
2e
2e
REF. TO ENGINE ELECTRICAL SYSTEM [2e]
G/W
2k
2c N
2d Q
2b K
L/Y
L/R
W
L
W
G/W
L/R
L/Y
M/B
No. 45 DELIVERY MODE FUSE
No. 41
No. 40
No. 28
IG 1 RELAY (PUSH BUTTON START)
H/L HI RH RELAY
2b M
B
B/Y
B
B
R/W
Y
L/Y
B
2f
REF. TO ENGINE ELECTRICAL SYSTEM [2e]
MB-46
MB-47
MB-48

WI-60335

2f

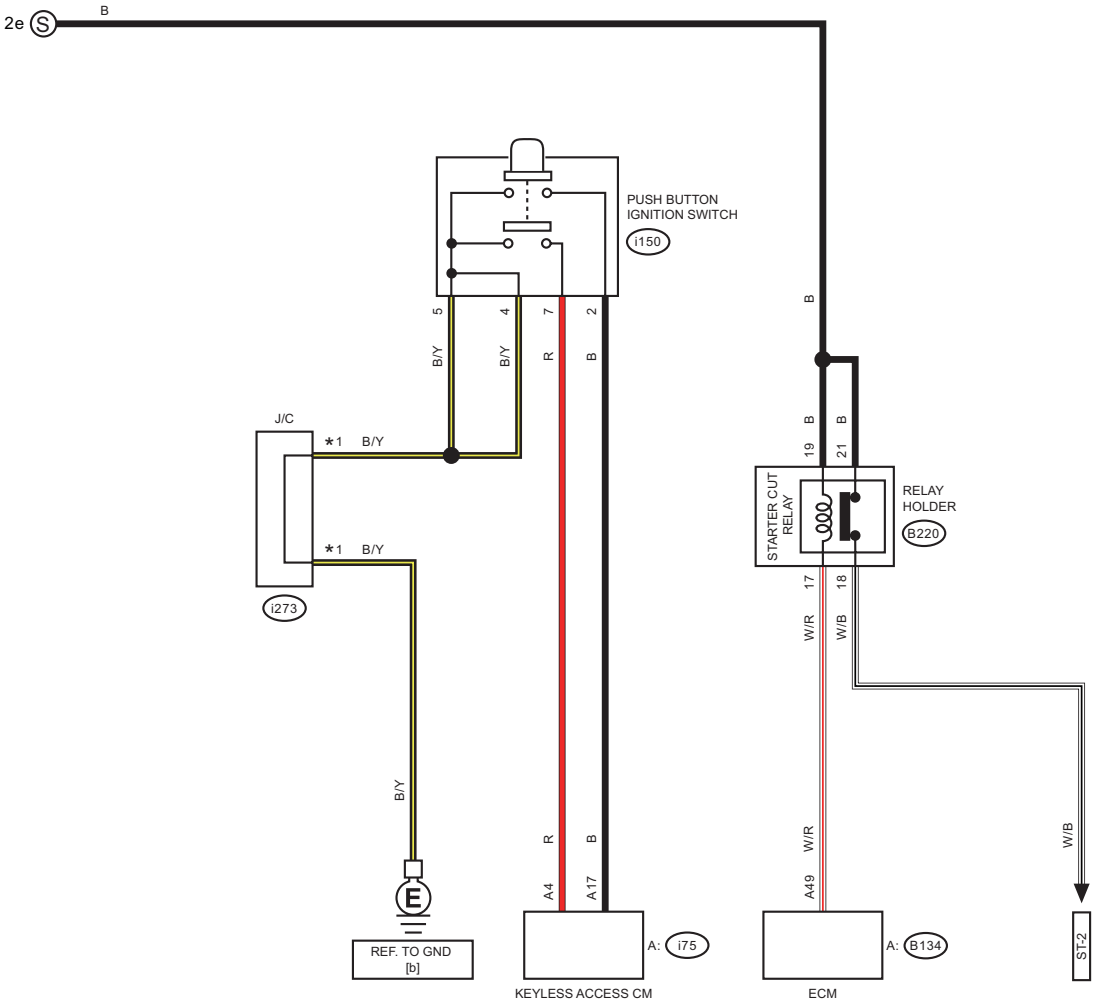

*1 : TERMINAL No. OPTIONAL ARRANGEMENT

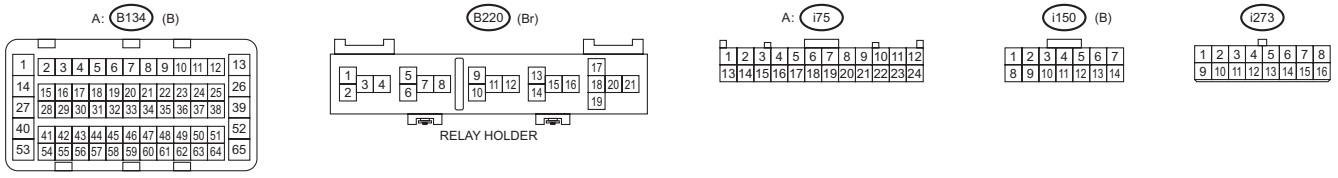

WI-60336

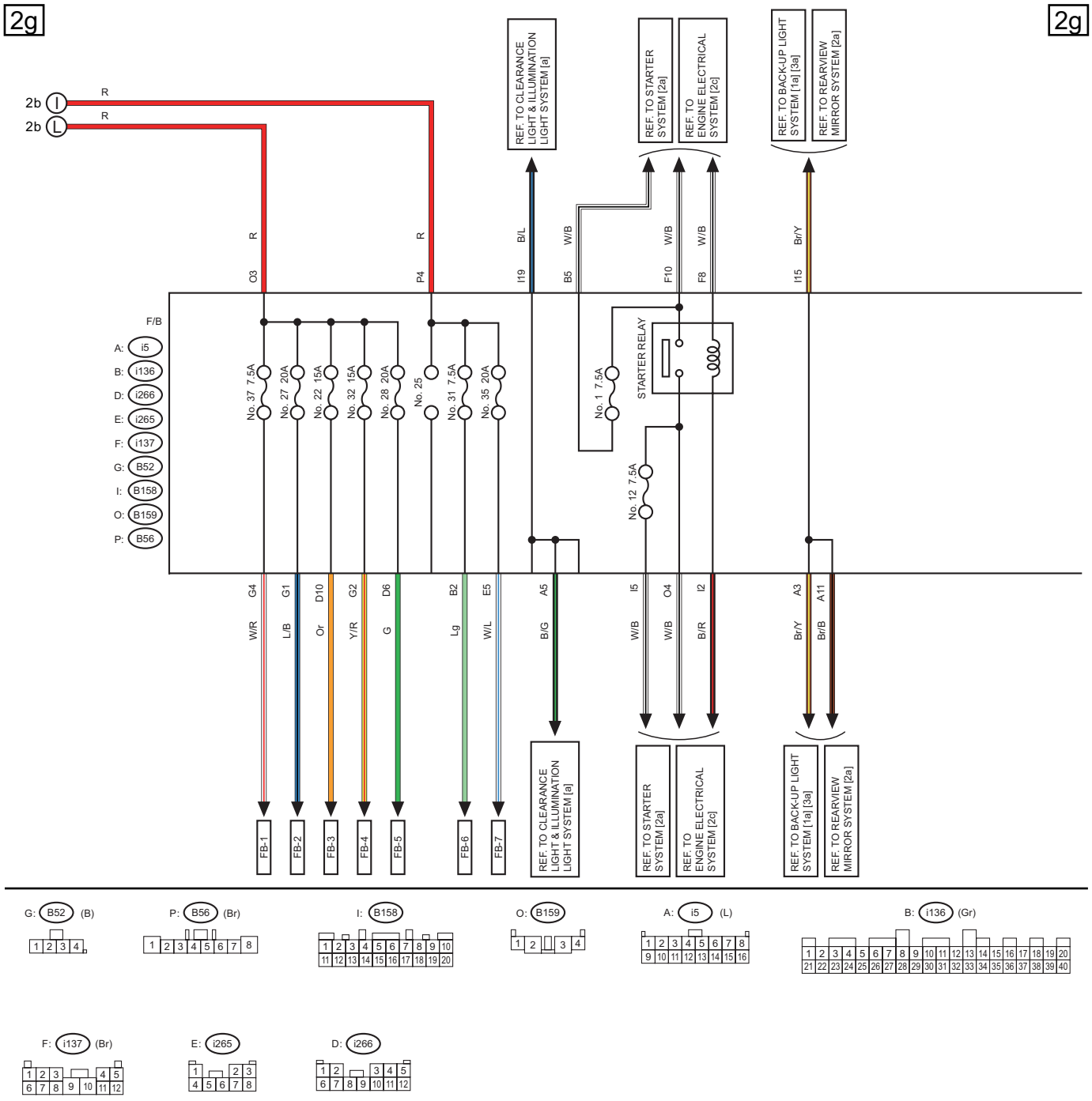
2g
2g
2b
2b
R
R
REF. TO CLEARANCE LIGHT & ILLUMINATION LIGHT SYSTEM [a]
REF. TO STARTER SYSTEM [2a]
REF. TO ENGINE ELECTRICAL SYSTEM [2c]
REF. TO BACK-UP LIGHT SYSTEM [1a] [3a]
REF. TO REARVIEW MIRROR SYSTEM [2a]
O3
P4
I19
B5
F10
F8
I15
F/B
A: i5
B: i136
D: i266
E: i265
F: i137
G: B52
I: B158
O: B159
P: B56
No. 37 7.5A
No. 27 20A
No. 22 15A
No. 32 15A
No. 28 20A
No. 25
No. 31 7.5A
No. 35 20A
No. 1 7.5A
No. 12 7.5A
STARTER RELAY
G4
G1
D10
G2
D6
B2
E5
A5
I5
O4
I2
A3
A11
W/R
L/B
Or
Y/R
G
Lg
W/L
B/G
W/B
W/B
B/R
Br/Y
Br/B
FB-1
FB-2
FB-3
FB-4
FB-5
FB-6
FB-7
REF. TO CLEARANCE LIGHT & ILLUMINATION LIGHT SYSTEM [a]
REF. TO STARTER SYSTEM [2a]
REF. TO ENGINE ELECTRICAL SYSTEM [2c]
REF. TO BACK-UP LIGHT SYSTEM [1a] [3a]
REF. TO REARVIEW MIRROR SYSTEM [2a]
G: B52 (B)
P: B56 (Br)
I: B158
O: B159
A: i5 (L)
B: i136 (Gr)
F: i137 (Br)
E: i265
D: i266

WI-63013

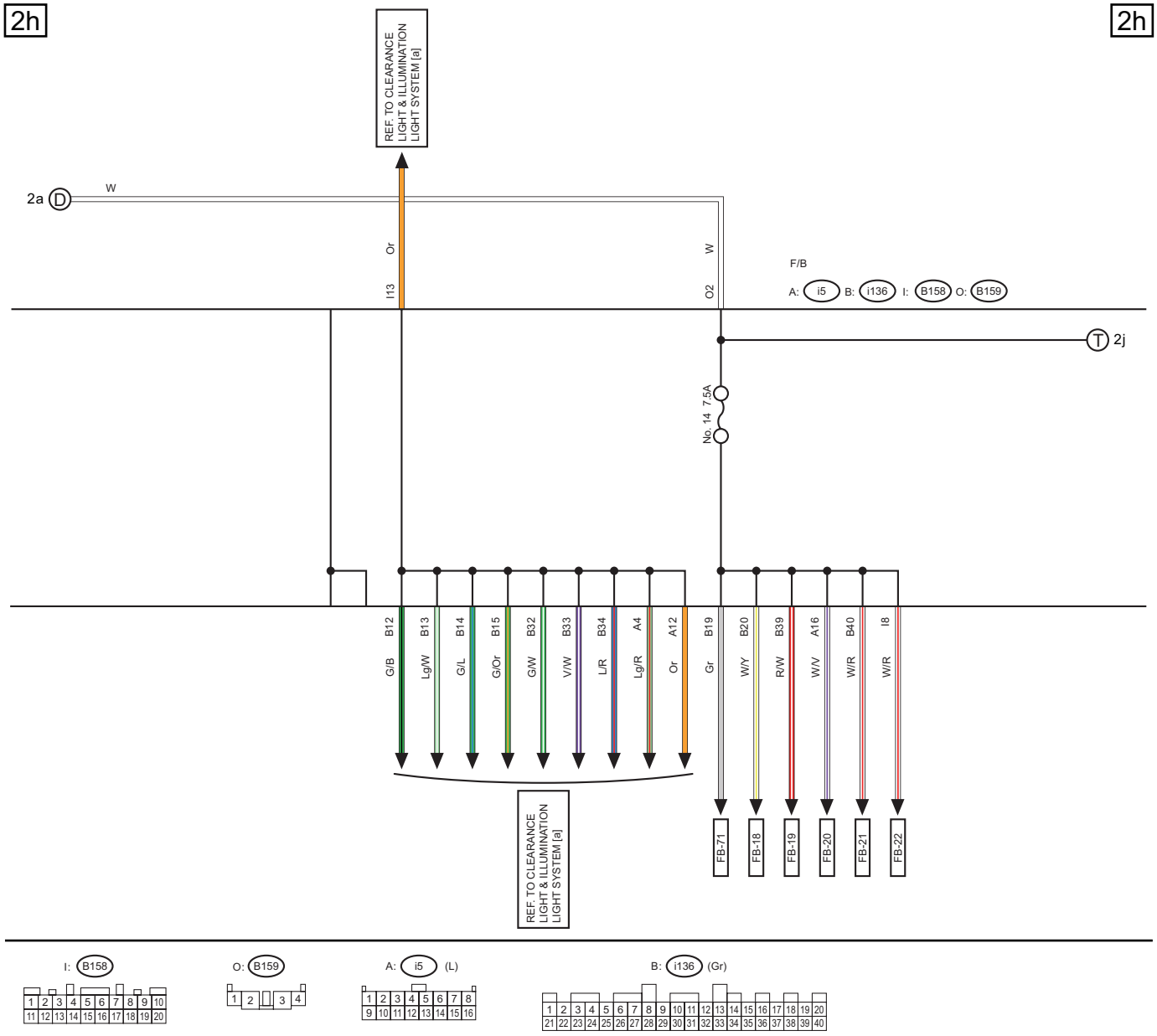
2h
2h
REF. TO CLEARANCE LIGHT & ILLUMINATION LIGHT SYSTEM [a]
2a D
W
Or
I13
W
O2
F/B
A: i5 B: i136 I: B158 O: B159
T 2j
No. 14 7.5A
B12 G/B
B13 Lg/W
B14 G/L
B15 G/Or
B32 G/W
B33 V/W
B34 L/R
A4 Lg/R
A12 Or
B19 Gr
B20 W/Y
B39 R/W
A16 W/V
B40 W/R
I8 W/R
FB-71
FB-18
FB-19
FB-20
FB-21
FB-22
REF. TO CLEARANCE LIGHT & ILLUMINATION LIGHT SYSTEM [a]
I: B158
O: B159
A: i5 (L)
B: i136 (Gr)

WI-60338

WIRING SYSTEM

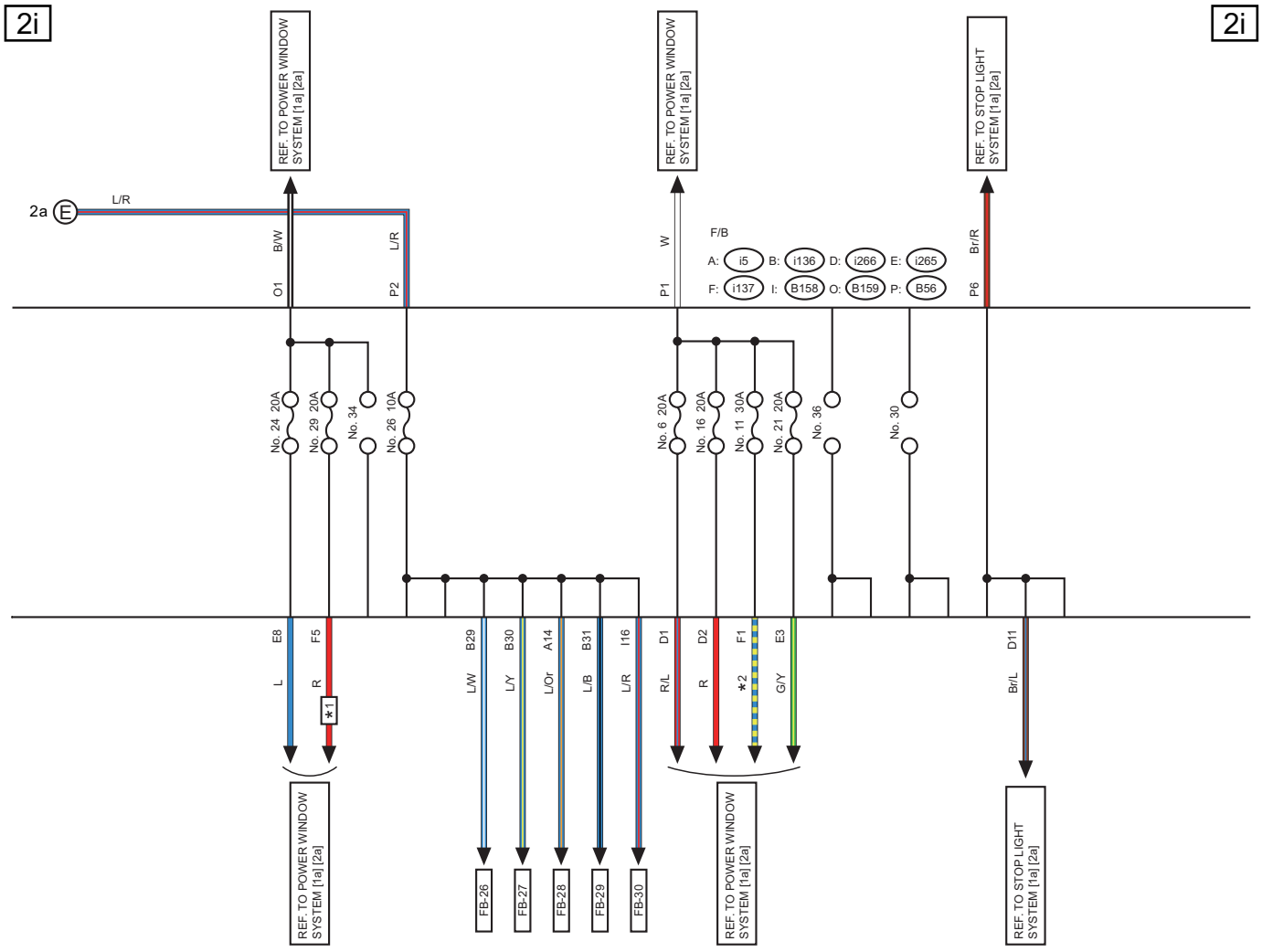

*1 : WITH DRIVER'S SEAT AND PASSENGER'S SEAT AUTO-REVERSE FUNCTION
*2 : WITH DRIVER'S SEAT AUTO-REVERSE FUNCTION : L
WITH DRIVER'S SEAT AND PASSENGER'S SEAT AUTO-REVERSE FUNCTION : R/W

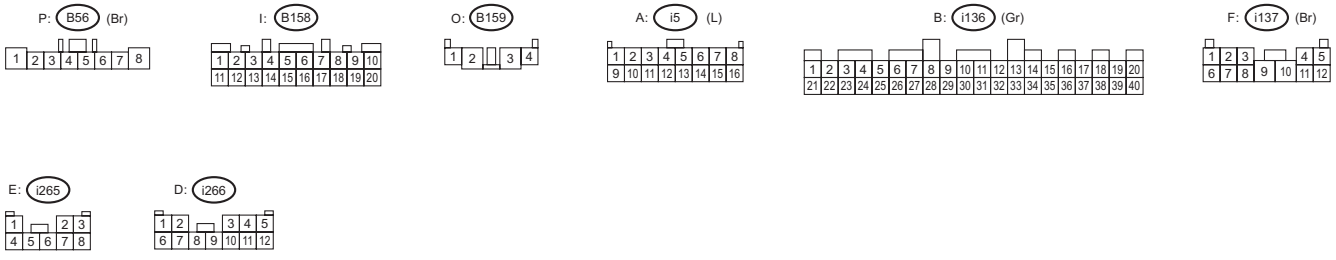

WI-60339

2j 2j

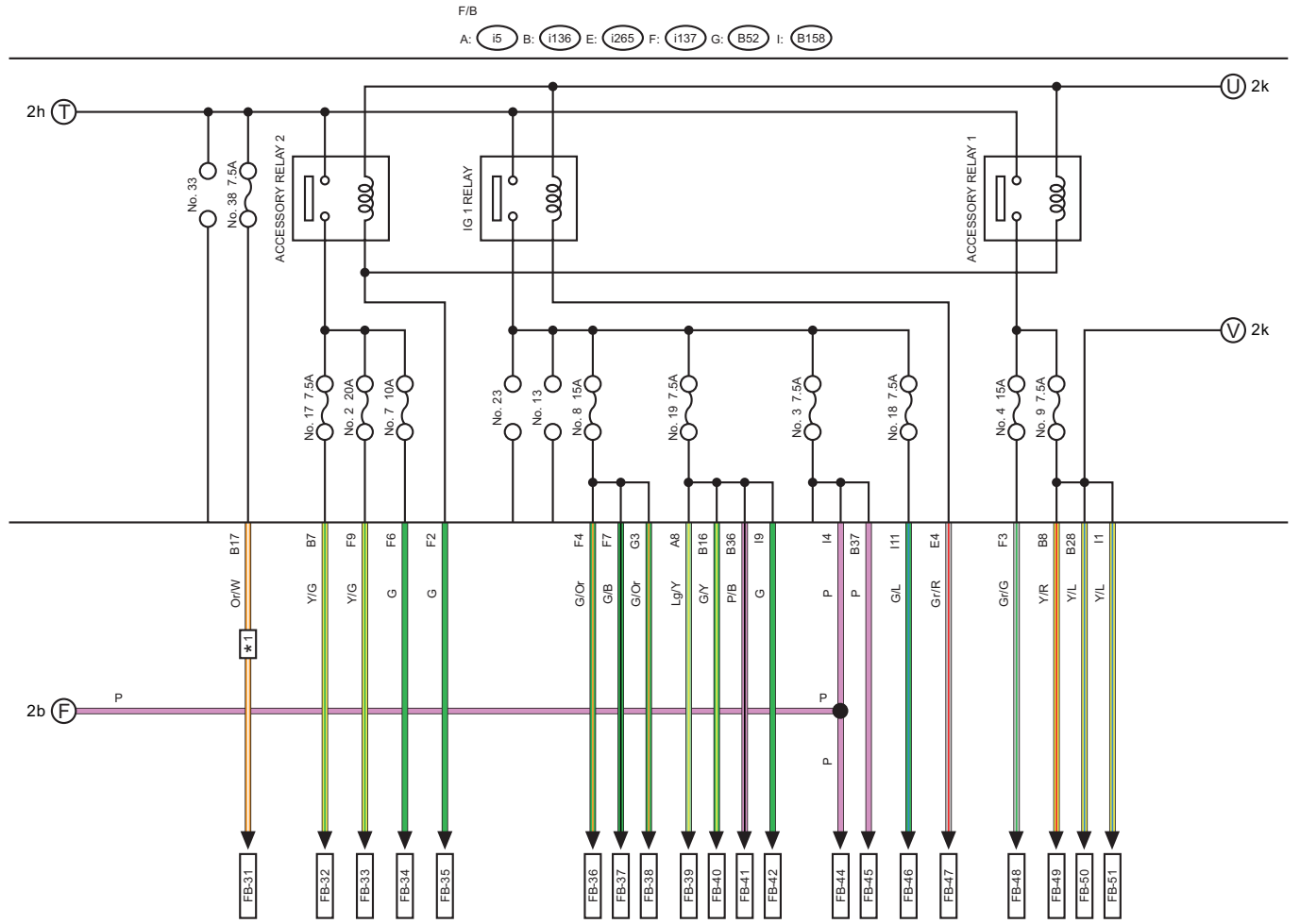

*1 : WITH EyeSight

G: B52 (B)



I: B158

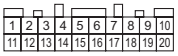

A: i5 (L)

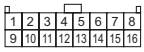

B: i136 (Gr)

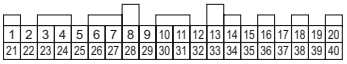

F: i137 (Br)

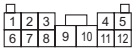

E: i265



WI-60340

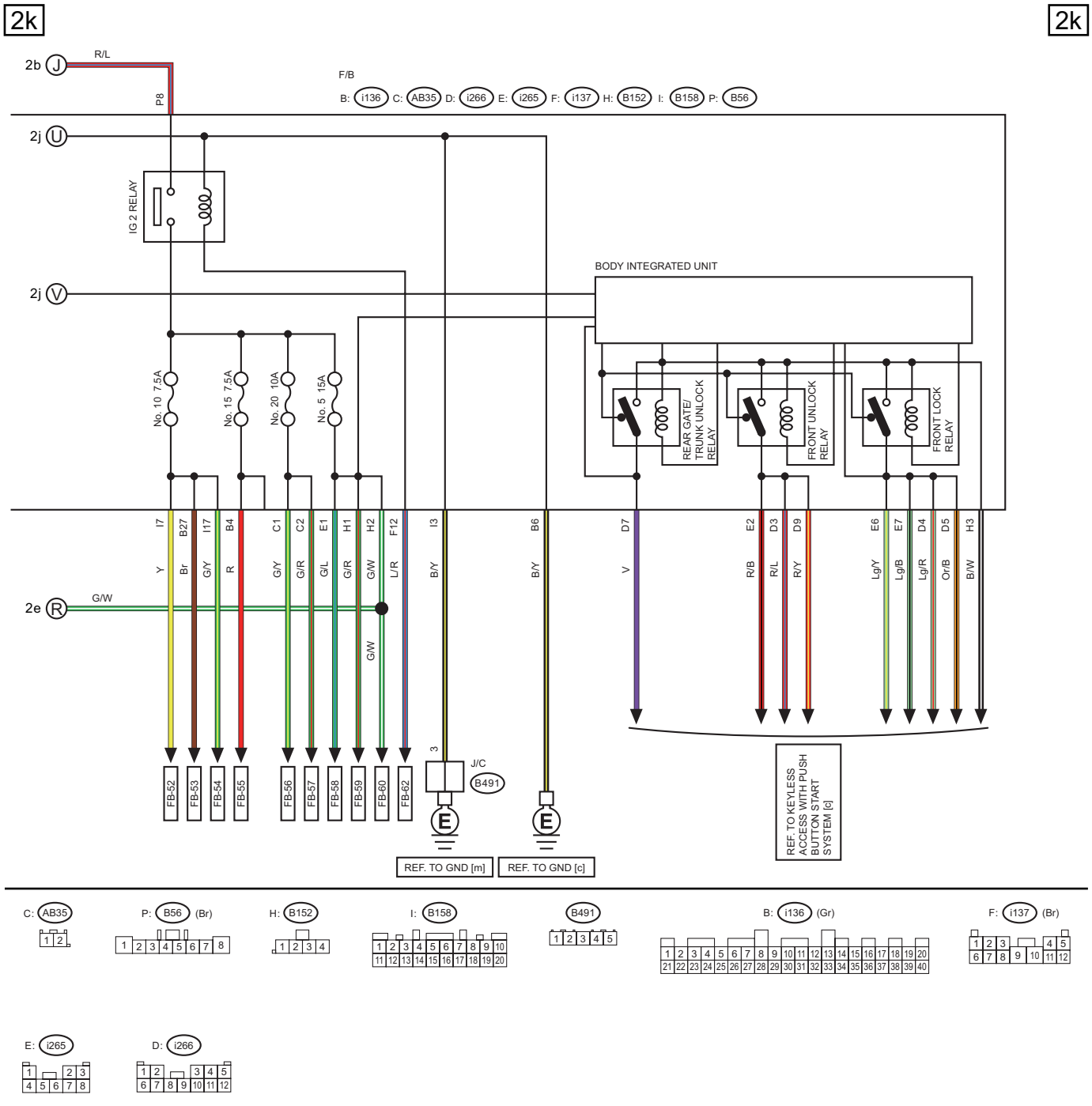
2k
2k
2b J
R/L
P8
F/B
B: i136 C: AB35 D: i266 E: i265 F: i137 H: B152 I: B158 P: B56
2j U
IG 2 RELAY
2j V
BODY INTEGRATED UNIT
No. 10 7.5A
No. 15 7.5A
No. 20 10A
No. 5 15A
REAR GATE/ TRUNK UNLOCK RELAY
FRONT UNLOCK RELAY
FRONT LOCK RELAY
I7 B27 I17 B4 C1 C2 E1 H1 H2 F12 I3 B6 D7 E2 D3 D9 E6 E7 D4 D5 H3
Y Br G/Y R G/Y G/R G/L G/R G/W L/R B/Y B/Y V R/B R/L R/Y Lg/Y Lg/B Lg/R Or/B B/W
2e R
G/W
G/W
FB-52 FB-53 FB-54 FB-55 FB-56 FB-57 FB-58 FB-59 FB-60 FB-62
3
J/C
B491
REF. TO GND [m]
REF. TO GND [c]
REF. TO KEYLESS ACCESS WITH PUSH BUTTON START SYSTEM [c]
C: AB35
P: B56 (Br)
H: B152
I: B158
B491
B: i136 (Gr)
F: i137 (Br)
E: i265
D: i266

WI-60341

No.	Load
MB-1	Audio amplifier
MB-2	Active grille shutter
MB-3	Audio
	Navigation unit
MB-4	Sub fan relay
MB-5	Main fan relay 1
MB-6	Blower motor relay
MB-7	VDC CM
MB-8	VDC CM
MB-9	Front fog light RH
	SRF CM
MB-10	Front fog light LH
	SRF CM
MB-11	Body integrated unit
MB-12	Rear wiper relay
	Rear washer motor
	Rear wiper motor
MB-13	Front washer motor
MB-14	Combination switch
	Front wiper motor
MB-16	Rear defogger relay
MB-17	Body integrated unit
	Front lock relay
	Front unlock relay
	Rear gate/trunk unlock relay
MB-19	Power rear gate CM
MB-20	Power seat LH
	Power seat RH
MB-21	Front combination light LH
MB-22	Body integrated unit
MB-23	Front combination light RH
MB-24	Front combination light LH
MB-25	Body integrated unit
MB-26	Horn RH
MB-27	Horn LH
MB-28	Body integrated unit
	Horn switch
MB-29	License plate light LH
	License plate light RH
	Rear combination light LH
	Rear combination light RH
	Trailer connector
MB-30	Body integrated unit
MB-31	Power window main switch
	Power window relay
MB-32	Body integrated unit
MB-33	Power steering CM

No.	Load
MB-34	Ignition coil No. 1
	Ignition coil No. 2
	Ignition coil No. 3
	Ignition coil No. 4
MB-35	Intake camshaft position sensor LH
	Intake camshaft position sensor RH
MB-36	Intake oil control solenoid LH
	Intake oil control solenoid RH
MB-37	Front oxygen (A/F) sensor
	Rear oxygen sensor
MB-38	ECM
	EGR control valve
	ELCM
	Fuel injector No. 1
	Fuel injector No. 2
	Fuel injector No. 3
	Fuel injector No. 4
	Mass air flow & intake air temperature sensor
	Purge control solenoid valve
MB-39	TCM
MB-40	Primary speed sensor
	Secondary speed sensor
	Turbine speed sensor
MB-41	Electronic throttle control relay
MB-42	ECM
MB-43	Fuel pump relay
MB-44	Data link connector
MB-45	Battery sensor
	ECM
	TCM
MB-46	Front combination light RH
MB-47	Body integrated unit
MB-48	Body integrated unit
	Daytime running light LH relay
	Daytime running light RH relay

No.	Load
MB-49	A/C control panel
	Audio
	BSD/RCTA OFF switch
	EPB control switch
	Glove box light
	Hazard switch
	Hill hold switch
	Illumination control switch
	Lane departure warning OFF switch
	Lower cover switch (trunk lid opener)
	Navigation unit
	OP connector (fog light switch)
	Pocket light
	Pre-collision brake OFF switch
	Memory height switch
	Power rear gate driver's switch
	Remote control mirror switch
	Satellite switch illumi. light
	Seat heater switch
	Select lever
	Spot map light
	SRF OFF switch
	Steering switch illumi. light
	VDC OFF switch
	X mode switch
MB-52	Data communication module
ST-2	Starter relay
FB-1	Stop light relay
	Stop light & brake switch
FB-2	Mirror heater relay
	Wiper deicer relay
FB-3	Rear seat heater CM
FB-4	Seat heater relay
FB-5	Trailer connector
FB-6	Keyless access CM
FB-7	Sunroof unit
FB-18	Combination meter
FB-19	A/C CM
FB-20	ID code box
	Keyless access CM
	Steering lock CM
FB-21	Impact sensor
	Power rear gate CM
FB-22	Body integrated unit
FB-26	Door pocket light RH
	Door step light RH
	Outer mirror ASSY RH
FB-27	Door pocket light LH
	Door step light LH
	Outer mirror ASSY LH

No.	Load
FB-28	Luggage room light
	Trunk room light
FB-29	A/C control panel
	Rearview mirror
	Room light
	Spot map light
	Vanity mirror light LH
	Vanity mirror light RH
FB-30	Body integrated unit
	Remote engine start CM
FB-31	Stereo camera
FB-32	Rearview mirror
	Remote control mirror switch
FB-33	Rear accessory power supply socket (cargo room)
	Rear accessory power supply socket (console)
FB-34	Front accessory power supply socket
FB-35	Keyless access CM
FB-36	Blower motor relay
	Intake door actuator
FB-37	A/C CM
FB-38	Rear defogger relay
	Sub fan relay
FB-39	Power seat LH
	Rear seat heater CM
	TPMS CM
FB-40	A/C control panel
	Audio
	BSD/RCTA OFF switch
	Navigation unit
FB-41	Impact sensor
	Rearview mirror
	Spot map light
	Stereo camera
	Sunroof unit
FB-42	Stop light & brake switch
	Data link connector
	Remote engine start CM
	Wiper deicer relay
FB-44	Main fan relay 1
	Main fan relay 2
	Power window relay
FB-45	Hill hold switch
FB-46	Auto headlight beam leveler CM
	Inhibitor switch
	SRF CM
FB-47	Keyless access CM

No.	Load
FB-48	Audio
	Audio amplifier
	AUX input terminal
	Navigation unit
	Data communication module
FB-49	A/C CM
	Body integrated unit
FB-50	A/C control panel
FB-51	Seat heater relay
FB-52	Stop light relay
	VDC CM
FB-53	Steering angle sensor
FB-54	Power steering CM
FB-55	Combination meter
FB-56	Airbag CM
FB-57	Occupant detection CM
FB-58	Radar sensor LH (master)
	Power rear gate CM
	Radar sensor RH (slave)
	Steering lock CM
	Data communication module
FB-59	ECM
	TCM
FB-60	Fuel pump relay
FB-62	Keyless access CM
FB-71	EPB control switch

3. ENGINE TYPE EZ WITHOUT PUSH BUTTON START

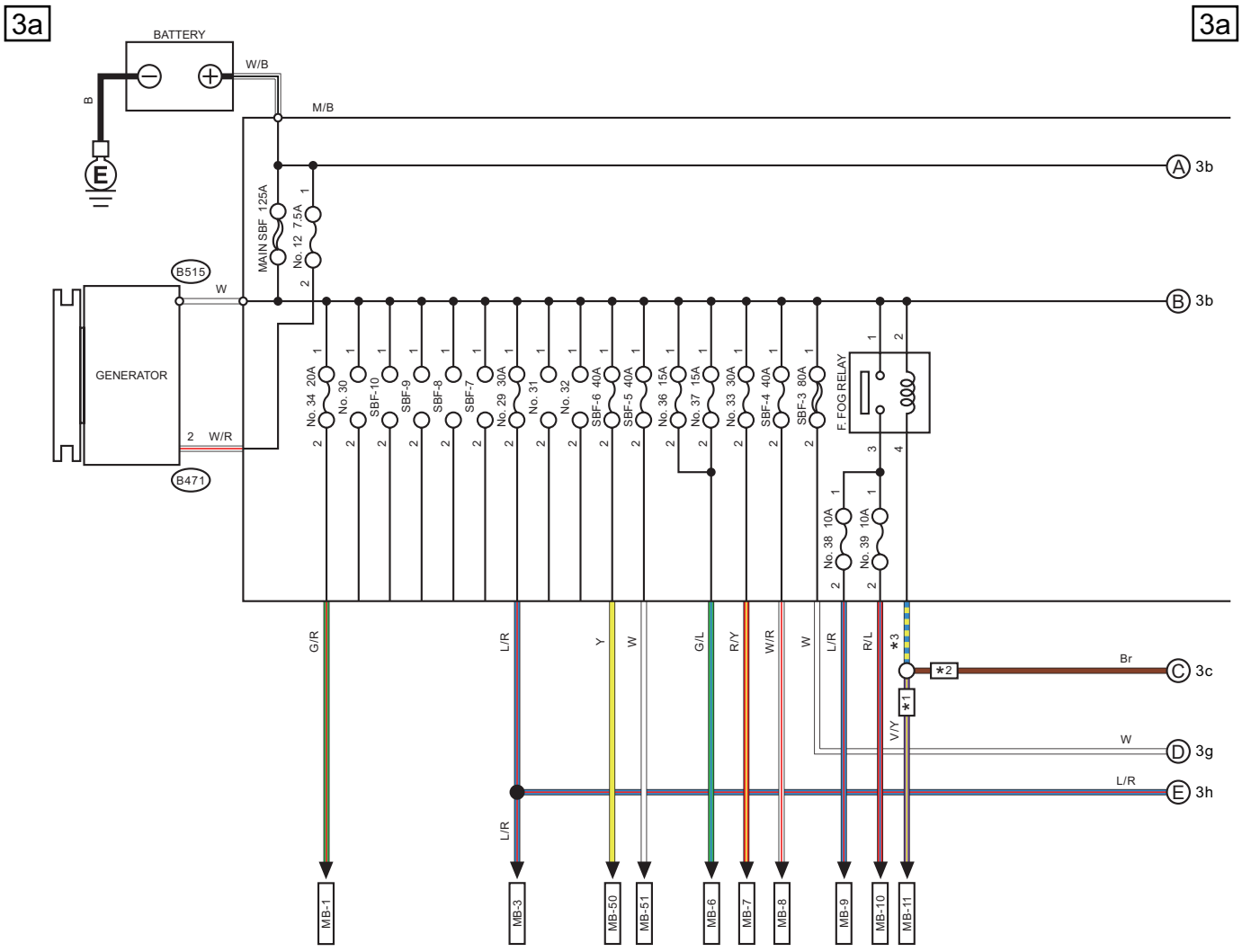

*1 : WITHOUT SRF
*2 : WITH SRF

*3 : WITHOUT SRF : V/Y
WITH SRF : Br



WI-60342

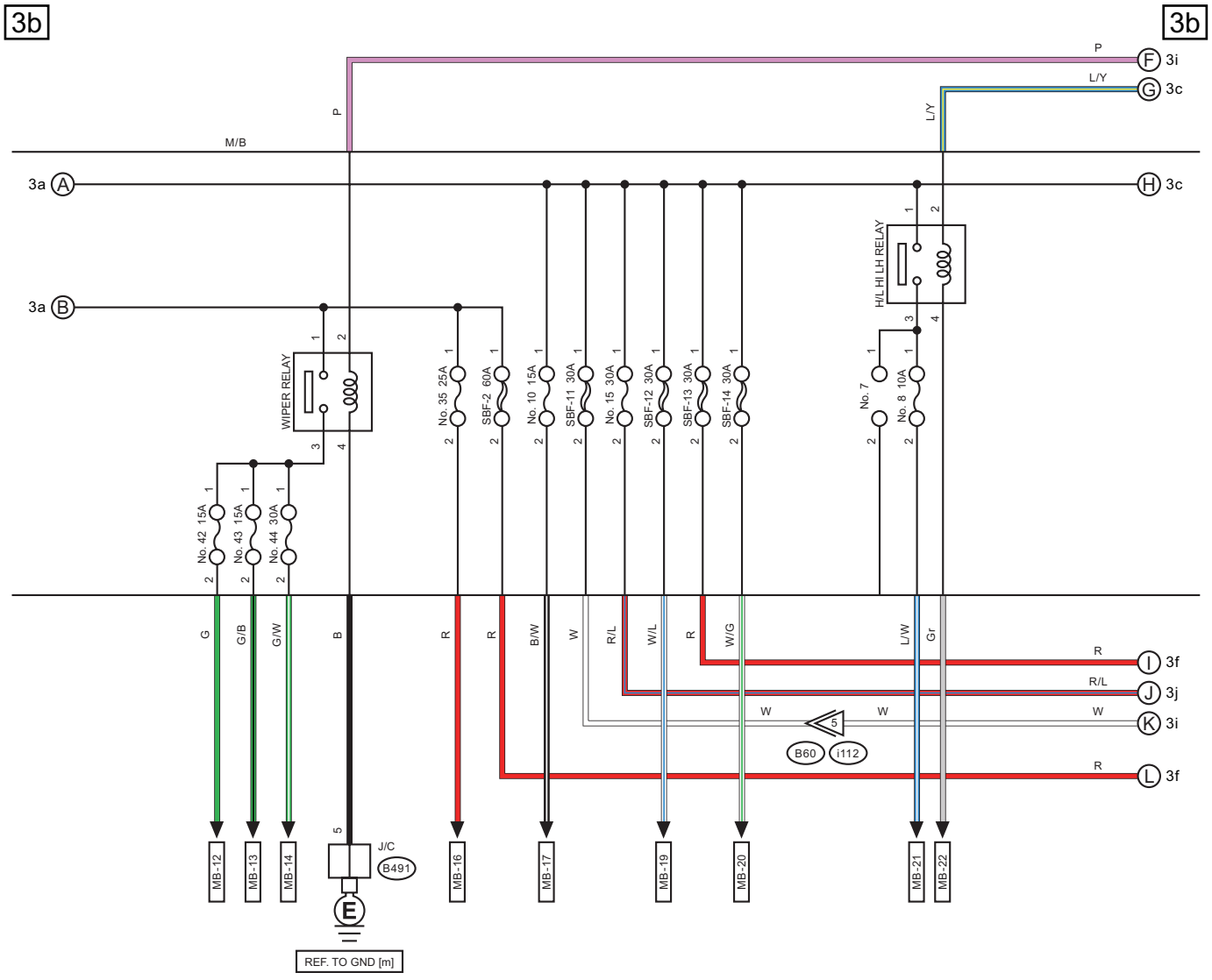
3b
3b
P
F 3i
L/Y
G 3c
P
L/Y
M/B
3a A
H 3c
3a B
WIPER RELAY
H/L HI LH RELAY
No. 42 15A
No. 43 15A
No. 44 30A
No. 35 25A
SBF-2 60A
No. 10 15A
SBF-11 30A
No. 15 30A
SBF-12 30A
SBF-13 30A
SBF-14 30A
No. 7
No. 8 10A
G
G/B
G/W
B
R
R
B/W
W
R/L
W/L
R
W/G
L/W
Gr
R
I 3f
R/L
J 3j
W
W
W
K 3i
5
B60
i112
R
L 3f
MB-12
MB-13
MB-14
J/C
B491
E
REF. TO GND [m]
MB-16
MB-17
MB-19
MB-20
MB-21
MB-22

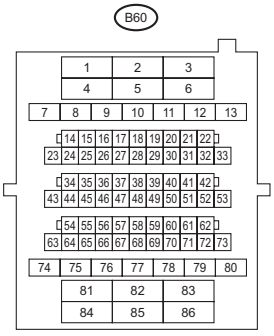
B60
1 2 3
4 5 6
7 8 9 10 11 12 13
14 15 16 17 18 19 20 21 22
23 24 25 26 27 28 29 30 31 32 33
34 35 36 37 38 39 40 41 42
43 44 45 46 47 48 49 50 51 52 53
54 55 56 57 58 59 60 61 62
63 64 65 66 67 68 69 70 71 72 73
74 75 76 77 78 79 80
81 82 83
84 85 86


B491
1 2 3 4 5

WI-60343

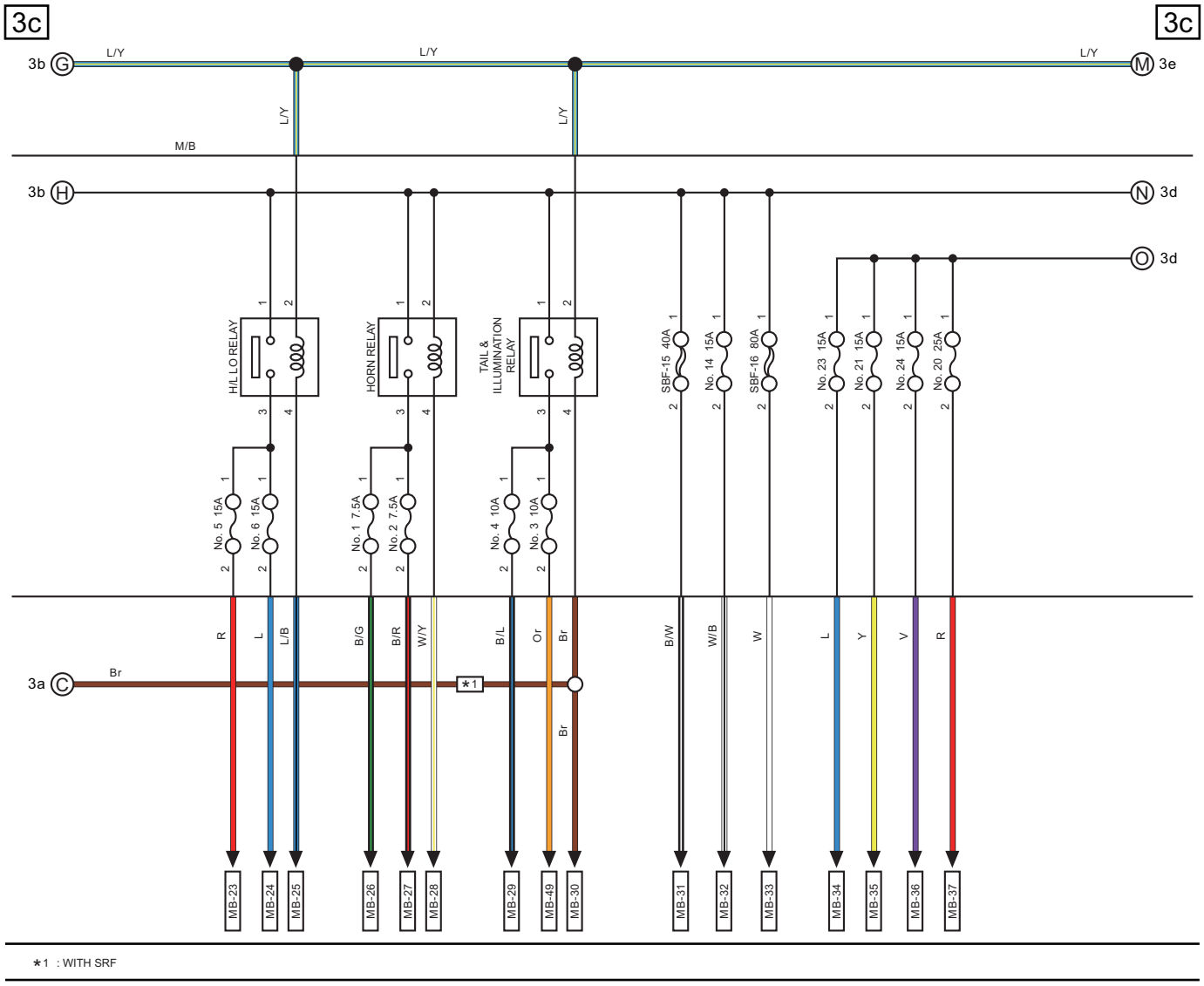

*1 : WITH SRF

WI-60344

3d 3d

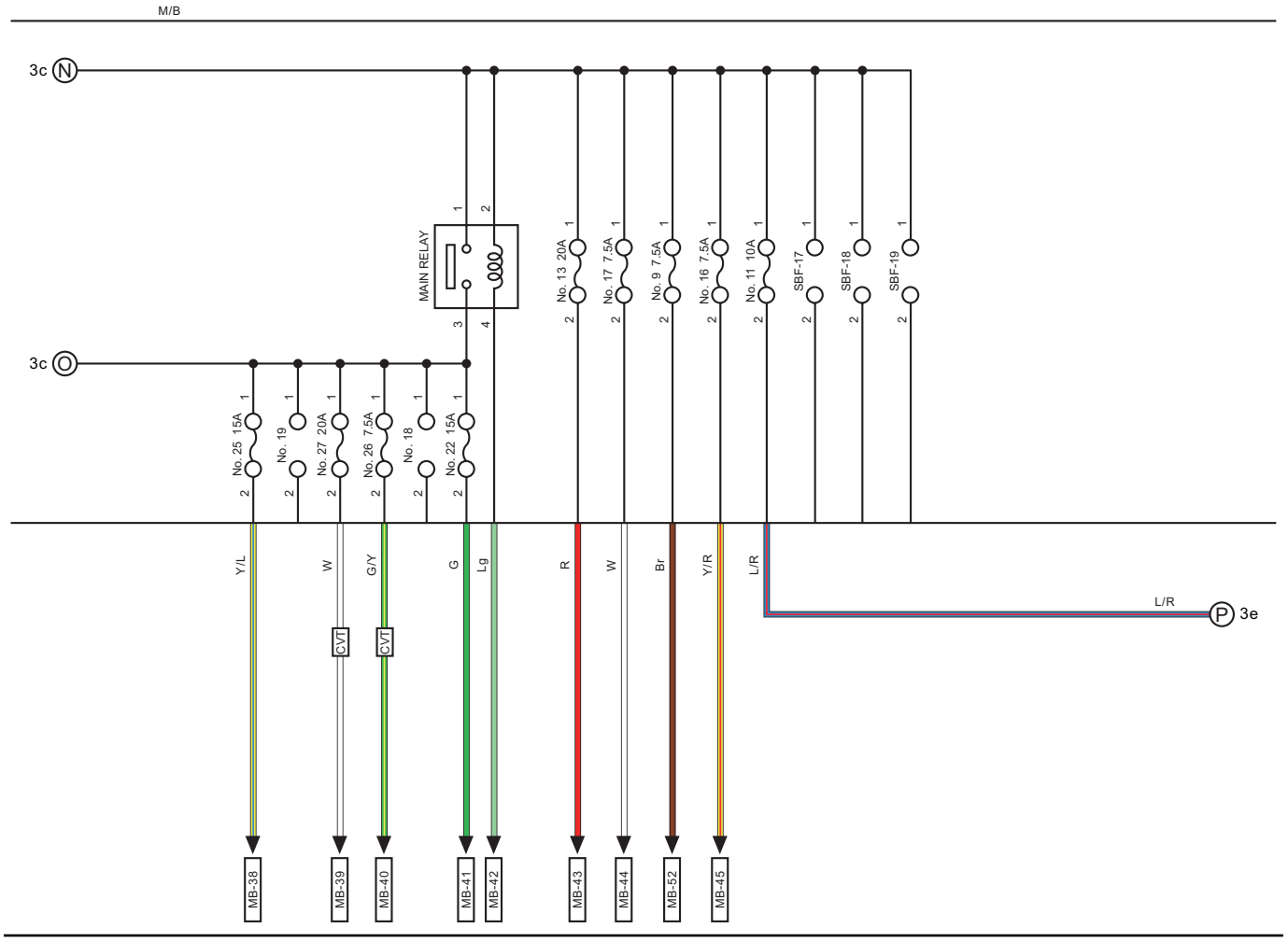

WI-60345

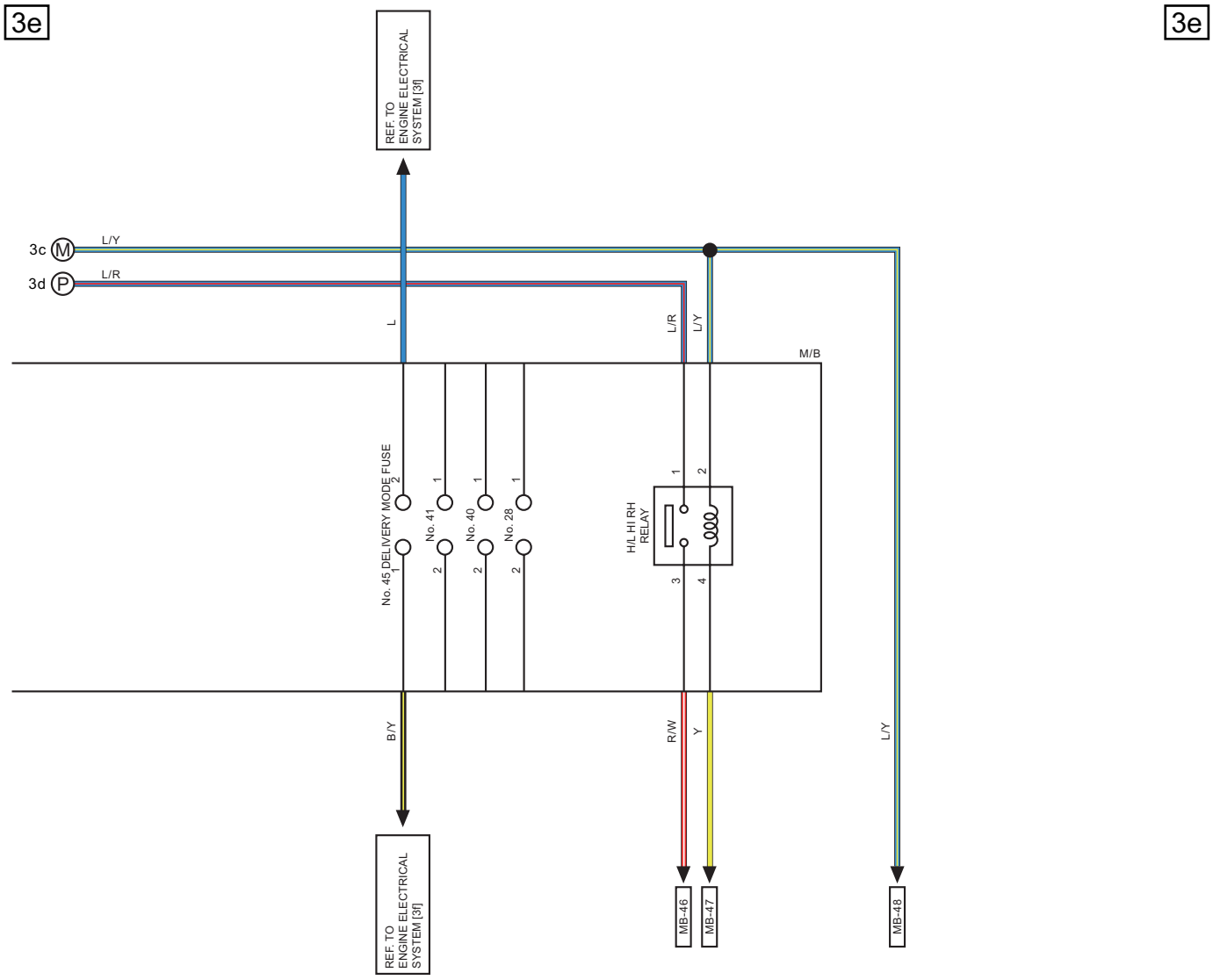
3e
3e
REF. TO ENGINE ELECTRICAL SYSTEM [3f]
3c M
3d P
L/Y
L/R
L
L/R
L/Y
M/B
No. 45 DELIVERY MODE FUSE
No. 41
No. 40
No. 28
H/L HI RH RELAY
B/Y
R/W
Y
L/Y
REF. TO ENGINE ELECTRICAL SYSTEM [3f]
MB-46
MB-47
MB-48

WI-60346

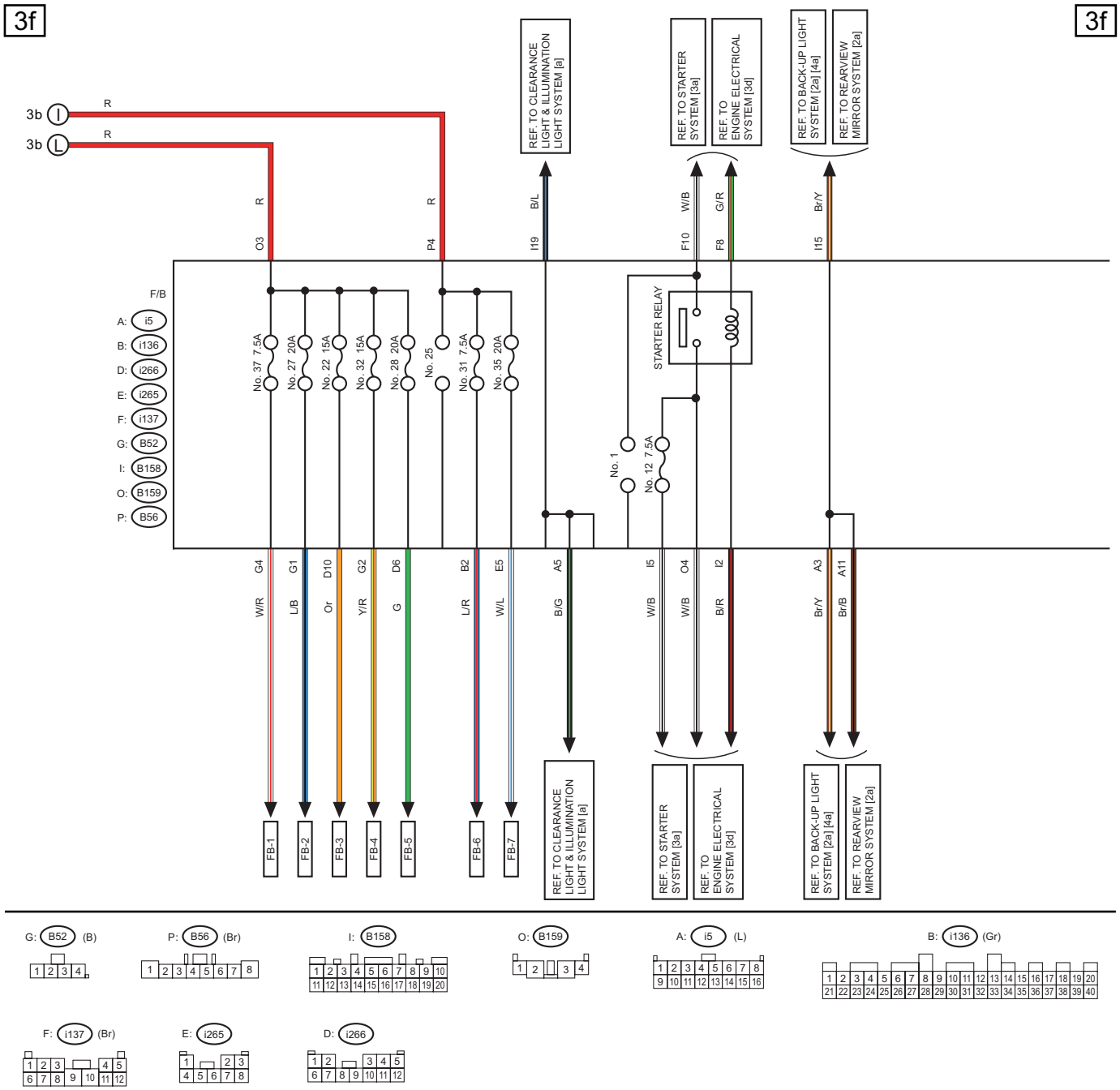
3f
3f
3b
R
3b
R
REF. TO CLEARANCE LIGHT & ILLUMINATION LIGHT SYSTEM [a]
REF. TO STARTER SYSTEM [3a]
REF. TO ENGINE ELECTRICAL SYSTEM [3d]
REF. TO BACK-UP LIGHT SYSTEM [2a] [4a]
REF. TO REARVIEW MIRROR SYSTEM [2a]
O3
P4
I19
F10
F8
I15
B/L
W/B
G/R
Br/Y
F/B
A: i5
B: i136
D: i266
E: i265
F: i137
G: B52
I: B158
O: B159
P: B56
No. 37 7.5A
No. 27 20A
No. 22 15A
No. 32 15A
No. 28 20A
No. 25
No. 31 7.5A
No. 35 20A
STARTER RELAY
No. 1
No. 12 7.5A
G4
G1
D10
G2
D6
B2
E5
A5
I5
O4
I2
A3
A11
W/R
L/B
Or
Y/R
G
L/R
W/L
B/G
W/B
W/B
B/R
Br/Y
Br/B
FB-1
FB-2
FB-3
FB-4
FB-5
FB-6
FB-7
REF. TO CLEARANCE LIGHT & ILLUMINATION LIGHT SYSTEM [a]
REF. TO STARTER SYSTEM [3a]
REF. TO ENGINE ELECTRICAL SYSTEM [3d]
REF. TO BACK-UP LIGHT SYSTEM [2a] [4a]
REF. TO REARVIEW MIRROR SYSTEM [2a]
G: B52 (B)
P: B56 (Br)
I: B158
O: B159
A: i5 (L)
B: i136 (Gr)
F: i137 (Br)
E: i265
D: i266

WI-63014

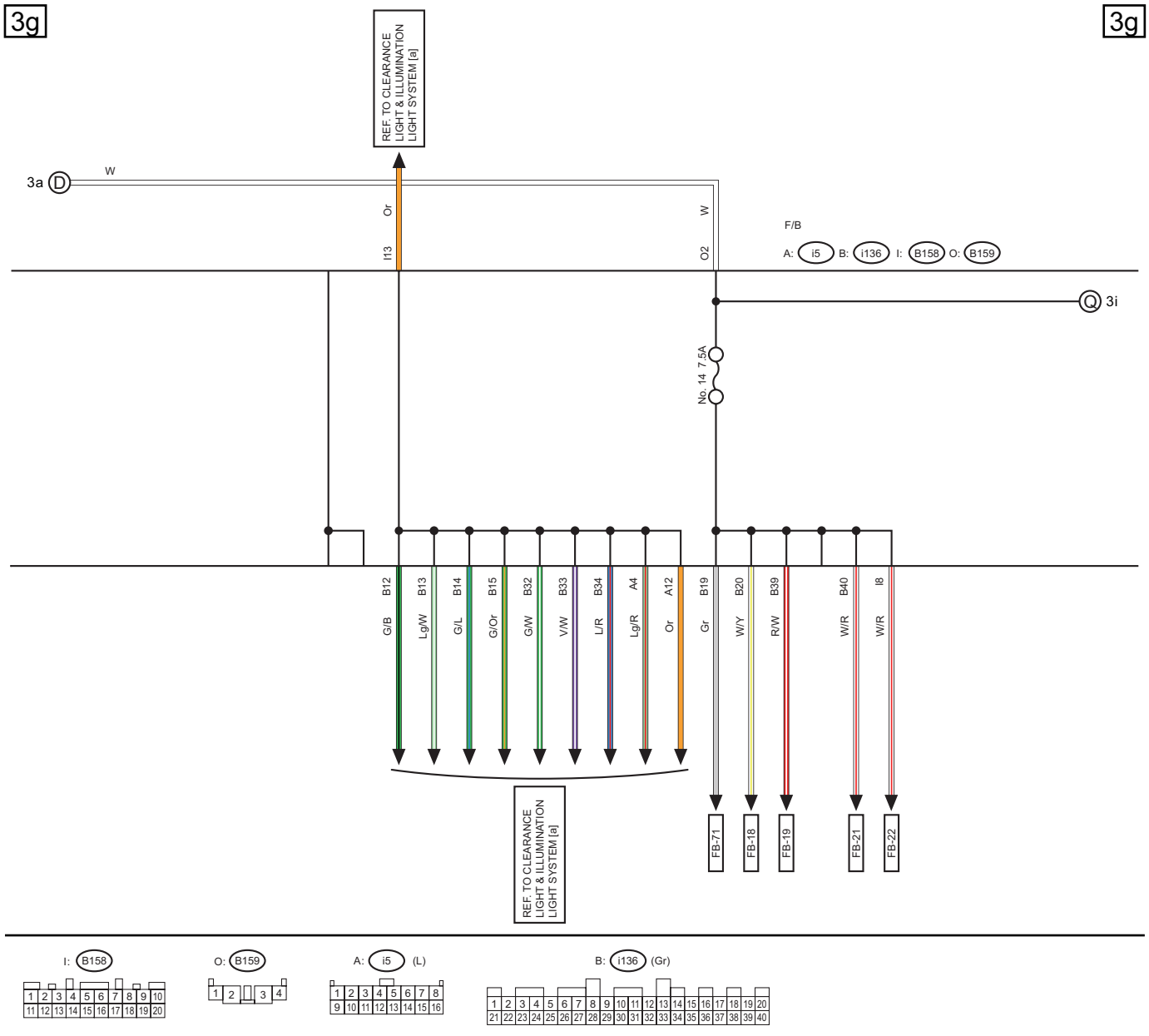
3g
3g
REF. TO CLEARANCE LIGHT & ILLUMINATION LIGHT SYSTEM [a]
3a D
W
Or
I13
W
O2
F/B
A: i5 B: i136 I: B158 O: B159
Q 3i
No. 14 7.5A
B12 G/B
B13 Lg/W
B14 G/L
B15 G/Or
B32 G/W
B33 V/W
B34 L/R
A4 Lg/R
A12 Or
B19 Gr
B20 W/Y
B39 R/W
B40 W/R
I8 W/R
FB-71
FB-18
FB-19
FB-21
FB-22
REF. TO CLEARANCE LIGHT & ILLUMINATION LIGHT SYSTEM [a]
I: B158
O: B159
A: i5 (L)
B: i136 (Gr)

WI-60348

Power Supply Circuit

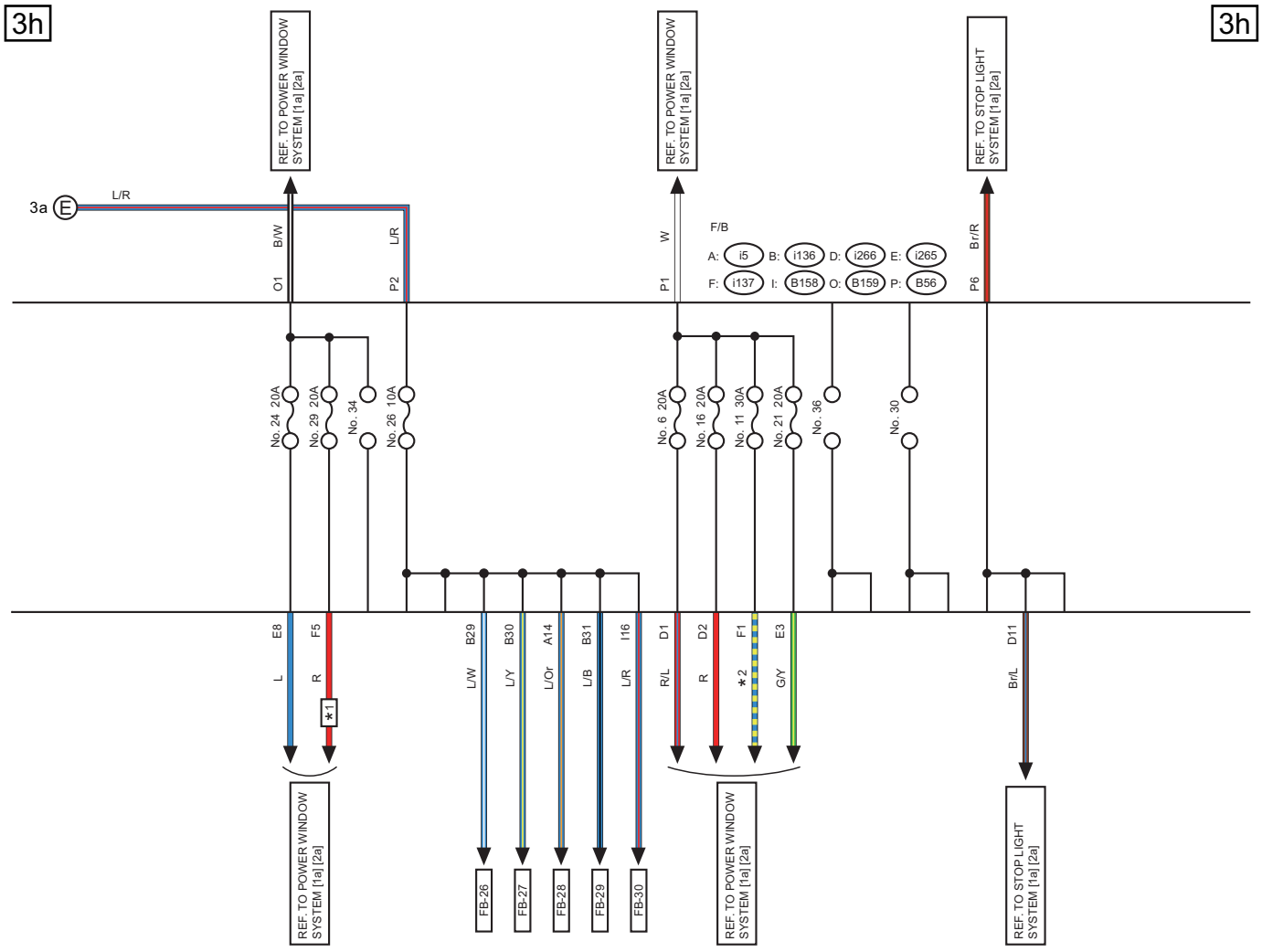

*1 : WITH DRIVER'S SEAT AND PASSENGER'S SEAT AUTO-REVERSE FUNCTION
*2 : WITH DRIVER'S SEAT AUTO-REVERSE FUNCTION : L
WITH DRIVER'S SEAT AND PASSENGER'S SEAT AUTO-REVERSE FUNCTION : R/W

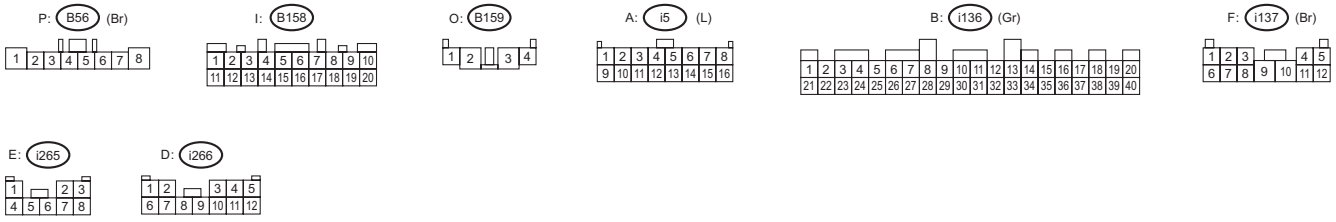

WI-60349

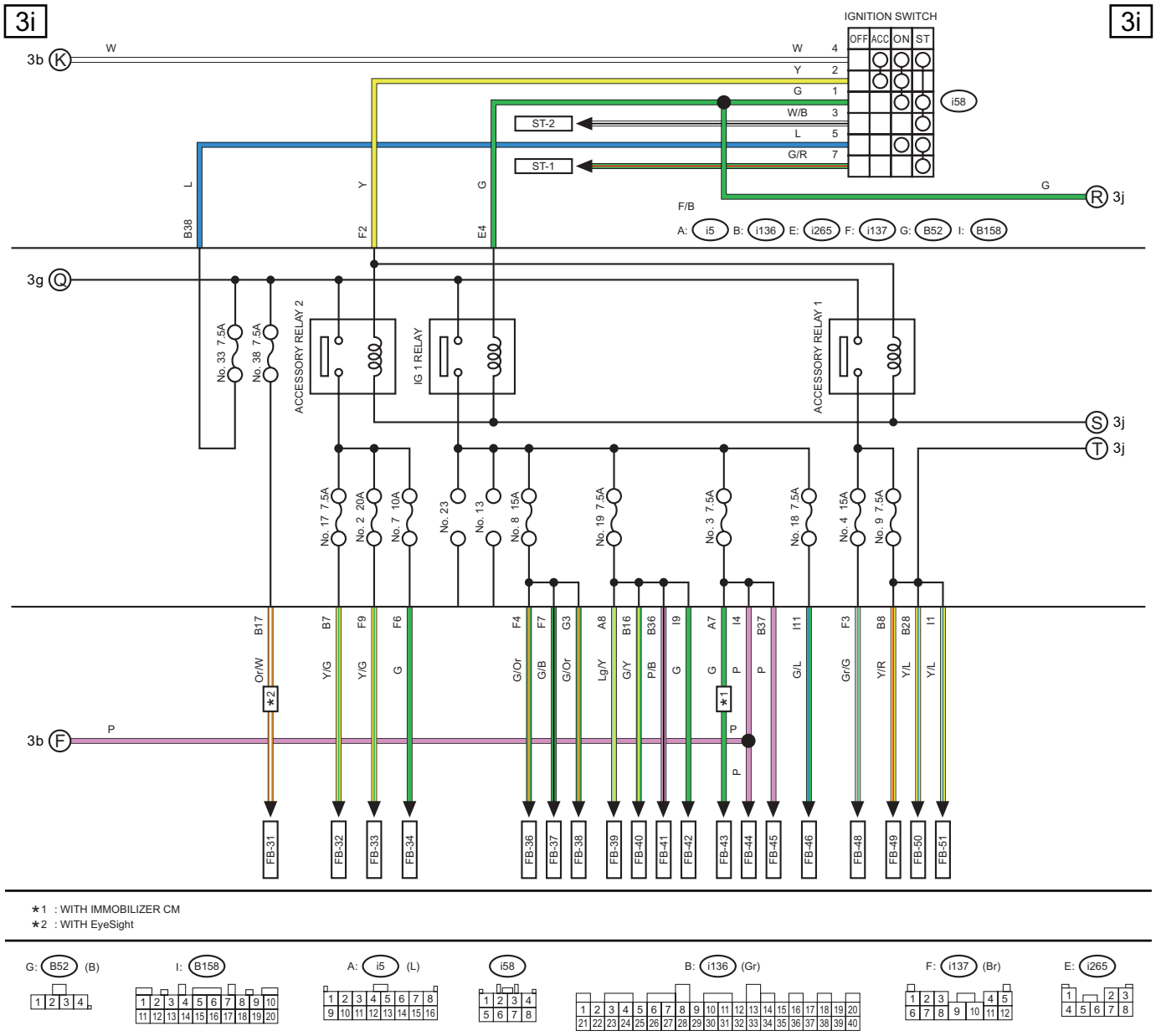

*1 : WITH IMMOBILIZER CM
*2 : WITH EyeSight

WI-60350

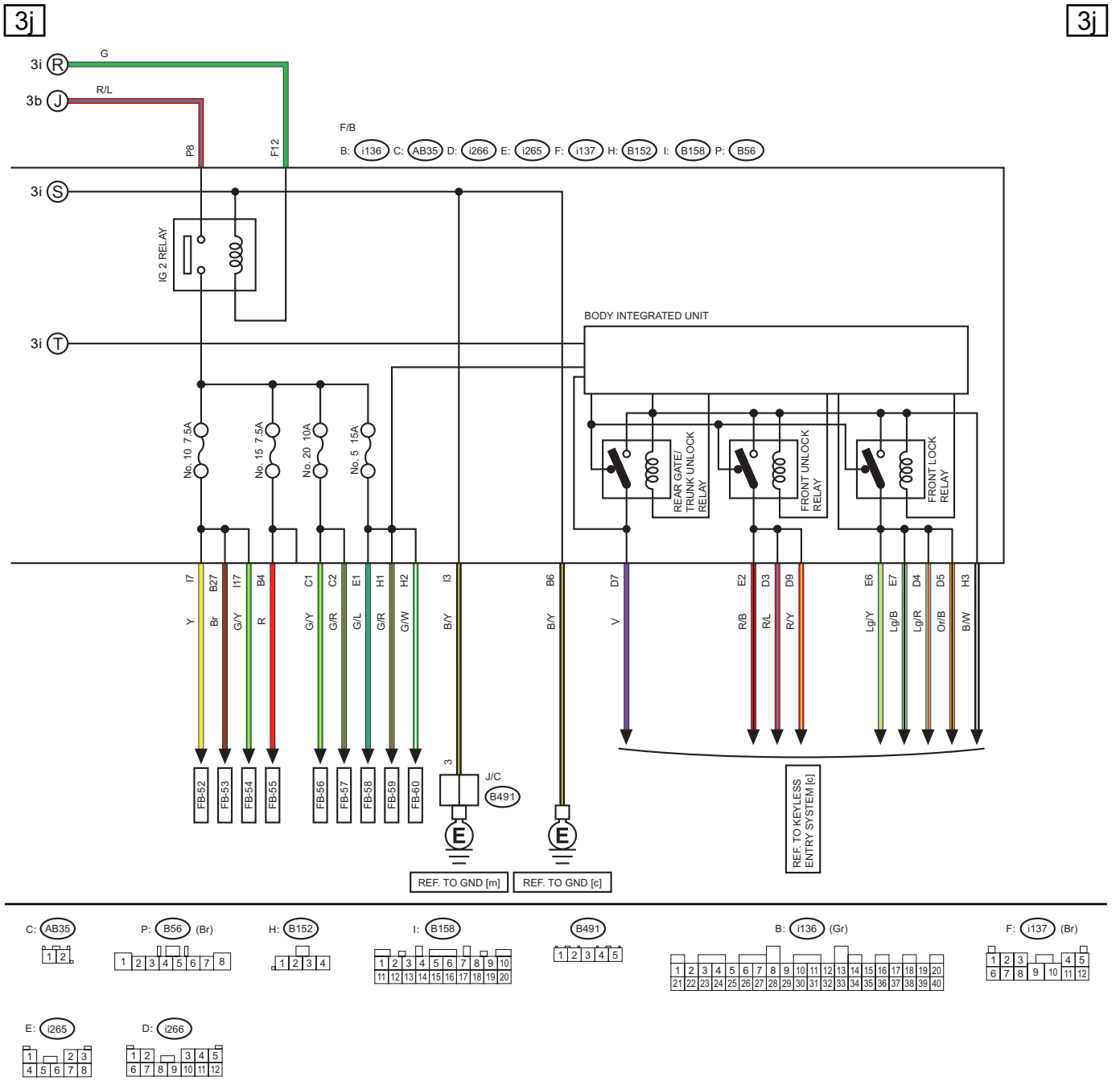
3j
3j
3i R
G
3b J
R/L
P8
F12
F/B
B: i136 C: AB35 D: i266 E: i265 F: i137 H: B152 I: B158 P: B56
3i S
IG 2 RELAY
3i T
BODY INTEGRATED UNIT
No. 10 7.5A
No. 15 7.5A
No. 20 10A
No. 5 15A
REAR GATE/ TRUNK UNLOCK RELAY
FRONT UNLOCK RELAY
FRONT LOCK RELAY
I7 Y
B27 Br
I17 G/Y
B4 R
C1 G/Y
C2 G/R
E1 G/L
H1 G/R
H2 G/W
I3 B/Y
B6 B/Y
D7 V
E2 R/B
D3 R/L
D9 R/Y
E6 Lg/Y
E7 Lg/B
D4 Lg/R
D5 Or/B
H3 B/W
FB-52
FB-53
FB-54
FB-55
FB-56
FB-57
FB-58
FB-59
FB-60
3
J/C
B491
REF. TO GND [m]
REF. TO GND [c]
REF. TO KEYLESS ENTRY SYSTEM [c]
C: AB35
P: B56 (Br)
H: B152
I: B158
B491
B: i136 (Gr)
F: i137 (Br)
E: i265
D: i266

WI-60351

No.	Load
MB-1	Audio amplifier
MB-3	Audio
	Navigation unit
MB-6	Blower motor relay
MB-7	VDC CM
MB-8	VDC CM
MB-9	Front fog light RH
MB-10	Front fog light LH
MB-11	Body integrated unit
MB-12	Rear wiper relay
	Rear washer motor
	Rear wiper motor
MB-13	Front washer motor
MB-14	Combination switch
	Front wiper motor
MB-16	Rear defogger relay
MB-17	Body integrated unit
	Front lock relay
	Front unlock relay
	Rear gate/trunk unlock relay
MB-19	Power rear gate CM
MB-20	Power seat LH
	Power seat RH
MB-21	Front combination light LH
MB-22	Body integrated unit
MB-23	Front combination light RH
MB-24	Front combination light LH
MB-25	Body integrated unit
MB-26	Horn RH
MB-27	Horn LH
MB-28	Body integrated unit
	Horn switch
MB-29	License plate light LH
	License plate light RH
	Rear combination light LH
	Rear combination light RH
	Trailer connector
MB-30	Body integrated unit
MB-31	Power window main switch
	Power window relay
MB-32	Body integrated unit
MB-33	Power Steering CM
MB-34	Ignition coil No. 1
	Ignition coil No. 2
	Ignition coil No. 3
	Ignition coil No. 4
	Ignition coil No. 5
	Ignition coil No. 6

No.	Load
MB-35	Exhaust camshaft position sensor LH
	Exhaust camshaft position sensor RH
	Intake camshaft position sensor LH
	Intake camshaft position sensor RH
MB-36	EGR control valve
	Exhaust oil flow control solenoid valve LH
	Exhaust oil flow control solenoid valve RH
	Intake oil flow control solenoid valve LH
	Intake oil flow control solenoid valve RH
	Purge control solenoid valve
MB-37	Front oxygen (A/F) sensor LH
	Front oxygen (A/F) sensor RH
	Rear oxygen sensor LH
	Rear oxygen sensor RH
MB-38	ECM
	ELCM
	Fuel injector No. 1
	Fuel injector No. 2
	Fuel injector No. 3
	Fuel injector No. 4
	Fuel injector No. 5
	Fuel injector No. 6
	Mass air flow & intake air temperature sensor
MB-39	TCM
MB-40	Front wheel speed sensor
	Primary speed sensor
	Secondary speed sensor
MB-41	Electronic throttle control relay
MB-42	ECM
MB-43	Fuel pump relay
MB-44	Data link connector
MB-45	Battery sensor
	ECM
	TCM
MB-46	Front combination light RH
MB-47	Body integrated unit
MB-48	Body integrated unit
	Daytime running light LH relay
	Daytime running light RH relay

No.	Load
MB-49	A/C control panel
	Audio
	BSD/RCTA OFF switch
	EPB control switch
	Glove box light
	Hazard switch
	Hill hold switch
	Illumination control switch
	Lane departure warning OFF switch
	Lower cover switch (trunk lid opener)
	Navigation unit
	OP connector (fog light switch)
	Pocket light
	Pre-collision brake OFF switch
	Memory height switch
	Power rear gate driver's switch
	Remote control mirror switch
	Satellite switch illumi. light
	Seat heater switch
	Select lever
	Spot map light
	SRF OFF switch
	Steering switch illumi. Light
	VDC OFF switch
	X mode switch
MB-50	Sub fan relay
MB-51	Main fan relay
MB-52	Data communication module
ST-1	Starter relay
ST-2	Starter relay
FB-1	Stop light relay
	Stop light & brake switch
FB-2	Mirror heater relay
	Wiper deicer relay
FB-3	Rear seat heater CM
FB-4	Seat heater relay
FB-5	Trailer connector
FB-6	Key warning switch
	Immobilizer antenna
FB-7	Sunroof unit
FB-18	Combination meter
FB-19	A/C CM
FB-21	Immobilizer CM
	Impact sensor
	Power rear gate CM
FB-22	Body integrated unit
FB-26	Door pocket light RH
	Door step light RH
	Outer mirror ASSY RH

No.	Load
FB-27	Door pocket light LH
	Door step light LH
	Outer mirror ASSY LH
FB-28	Luggage room light
	TPMS & keyless entry CM
	Trunk room light
FB-29	Spot map light
	A/C control panel
	Rearview mirror
	Room light
	Vanity mirror light LH
	Vanity mirror light RH
FB-30	Body integrated unit
FB-31	Stereo camera
FB-32	Rear view mirror
	Remote control mirror switch
FB-33	Rear accessory power supply socket (cargo room)
	Rear accessory power supply socket (console)
FB-34	Front accessory power supply socket
FB-36	Blower motor relay
	Intake door actuator
FB-37	A/C CM
FB-38	Rear defogger relay
FB-39	Power seat LH
	Rear seat heater CM
	TPMS & keyless entry CM
FB-40	A/C control panel
	Audio
	BSD/RCTA OFF switch
	Navigation unit
FB-41	Spot map light
	Impact sensor
	Rear view mirror
	Stereo camera
	Sunroof unit
FB-42	Data link connector
	Stop light & brake switch
	Wiper deicer relay
FB-43	Immobilizer CM
FB-44	Power window relay
	Main fan relay
	Sub fan relay
FB-45	Hill hold switch
FB-46	Inhibitor switch
	SRF CM
	Auto headlight beam leveler CM

No.	Load
FB-48	Audio
	Audio amplifier
	AUX input terminal
	Navigation unit
	Data communication module
FB-49	A/C CM
	Body integrated unit
	Key warning switch
FB-50	A/C control panel
FB-51	Seat heater relay
FB-52	Stop light relay
	VDC CM
FB-53	Steering angle sensor
FB-54	Power Steering CM
FB-55	Combination meter
FB-56	Airbag CM
FB-57	Occupant detection CM
FB-58	Radar sensor LH (master)
	Power rear gate CM
	Radar sensor RH (slave)
	Data communication module
FB-59	ECM
	TCM
FB-60	Fuel pump relay
FB-71	EPB control switch

4. ENGINE TYPE EZ WITH PUSH BUTTON START

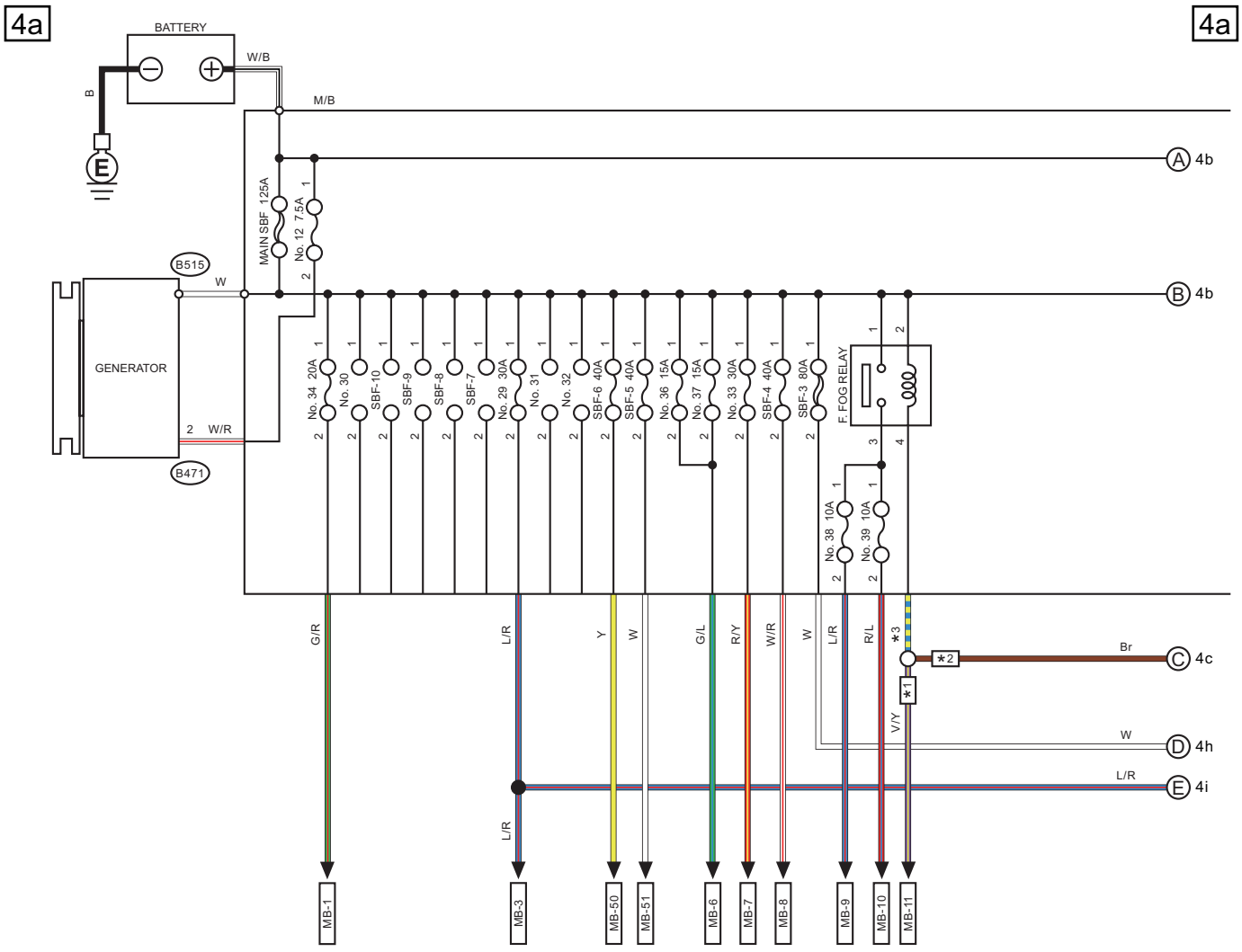

*1 : WITHOUT SRF
*2 : WITH SRF
*3 : WITHOUT SRF : V/Y
WITH SRF : Br



WI-60352

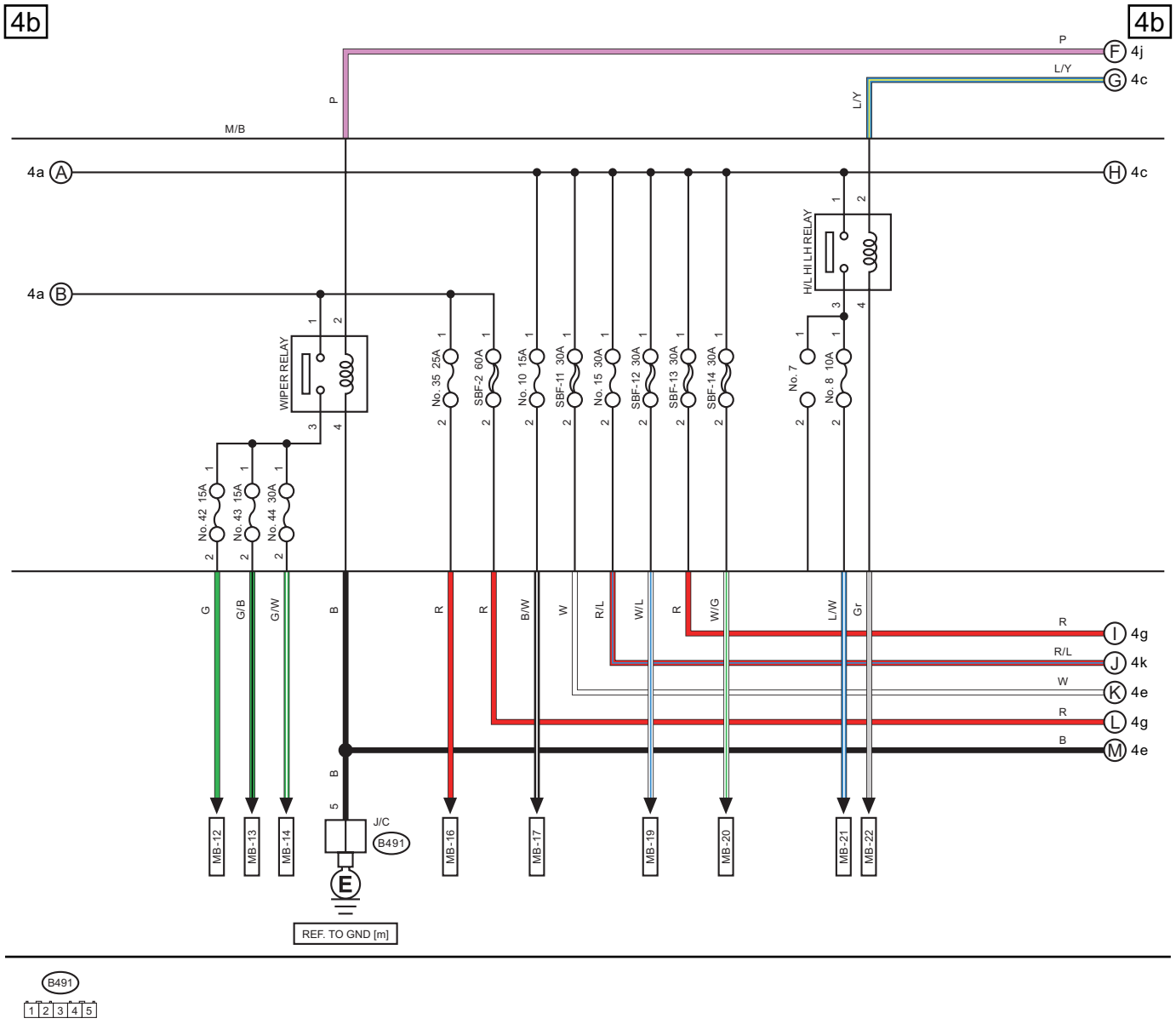
4b
4b
P
F 4j
L/Y
G 4c
M/B
4a A
H 4c
4a B
WIPER RELAY
H/L HI LH RELAY
No. 42 15A
No. 43 15A
No. 44 30A
No. 35 25A
SBF-2 60A
No. 10 15A
SBF-11 30A
No. 15 30A
SBF-12 30A
SBF-13 30A
SBF-14 30A
No. 7
No. 8 10A
G
G/B
G/W
B
R
R
B/W
W
R/L
W/L
R
W/G
L/W
Gr
R
I 4g
R/L
J 4k
W
K 4e
R
L 4g
B
M 4e
J/C
B491
MB-12
MB-13
MB-14
MB-16
MB-17
MB-19
MB-20
MB-21
MB-22
REF. TO GND [m]
B491
1 2 3 4 5

WI-60353

Power Supply Circuit

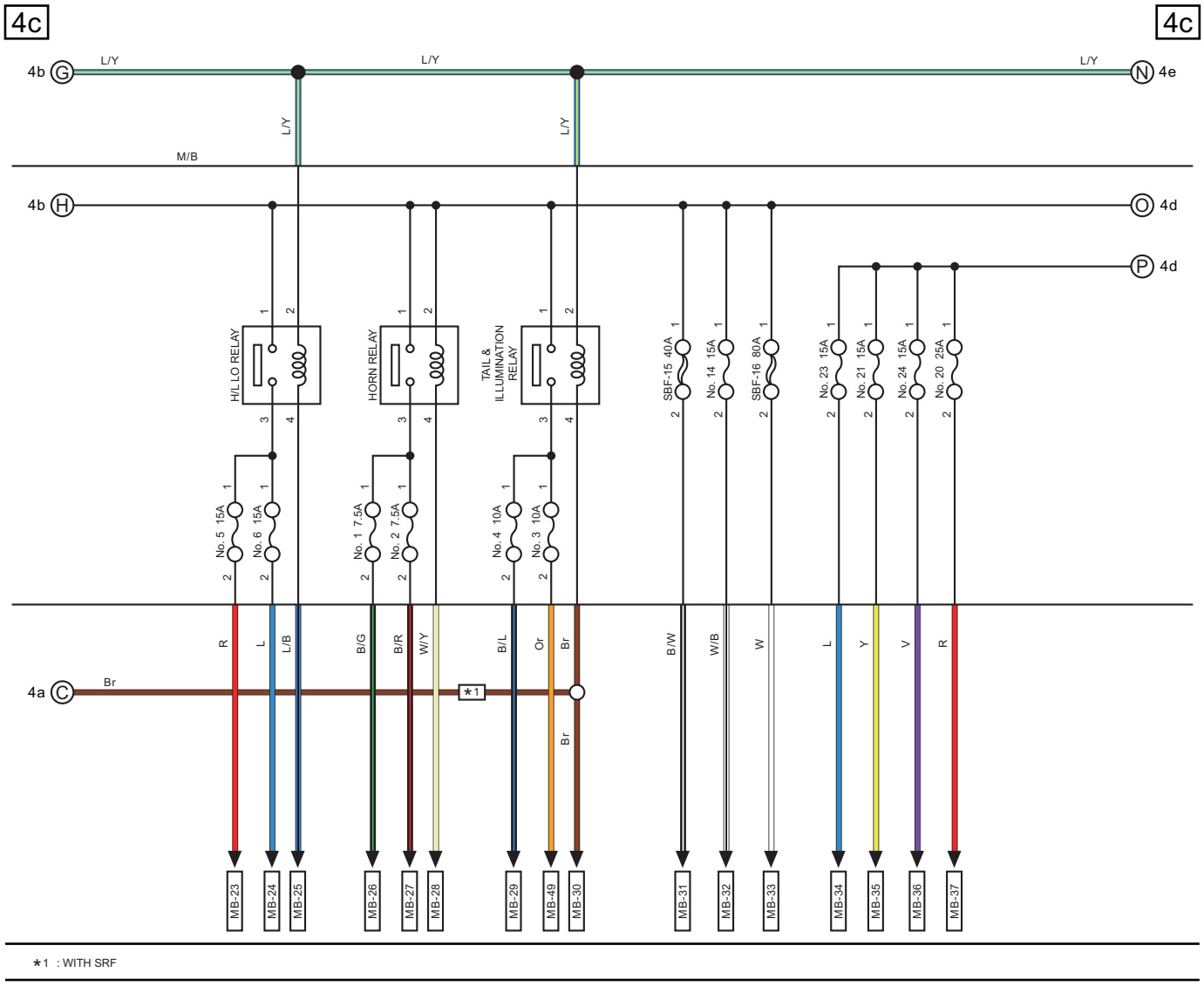

*1 : WITH SRF

WI-60354

4d 4d

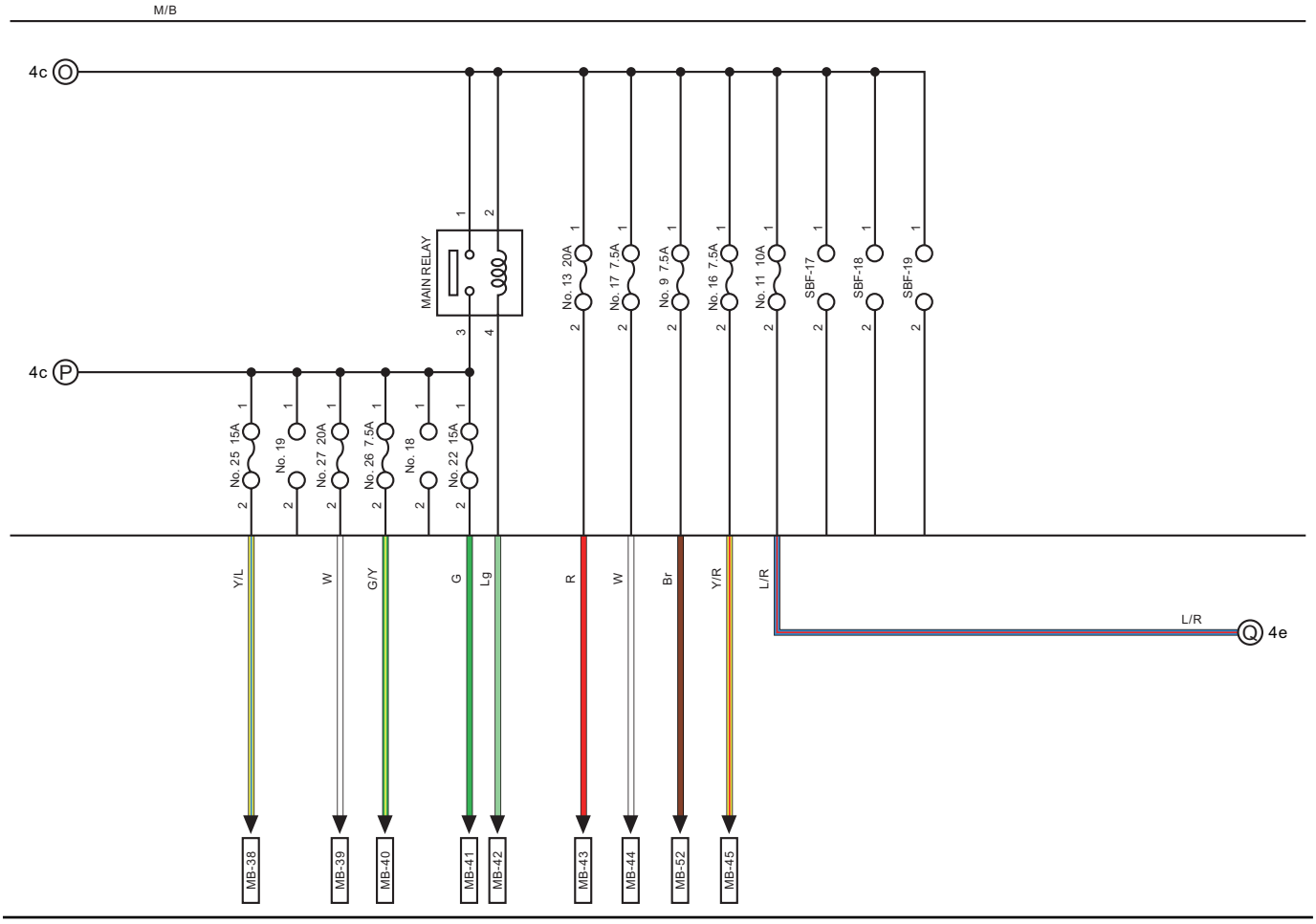

WI-60355

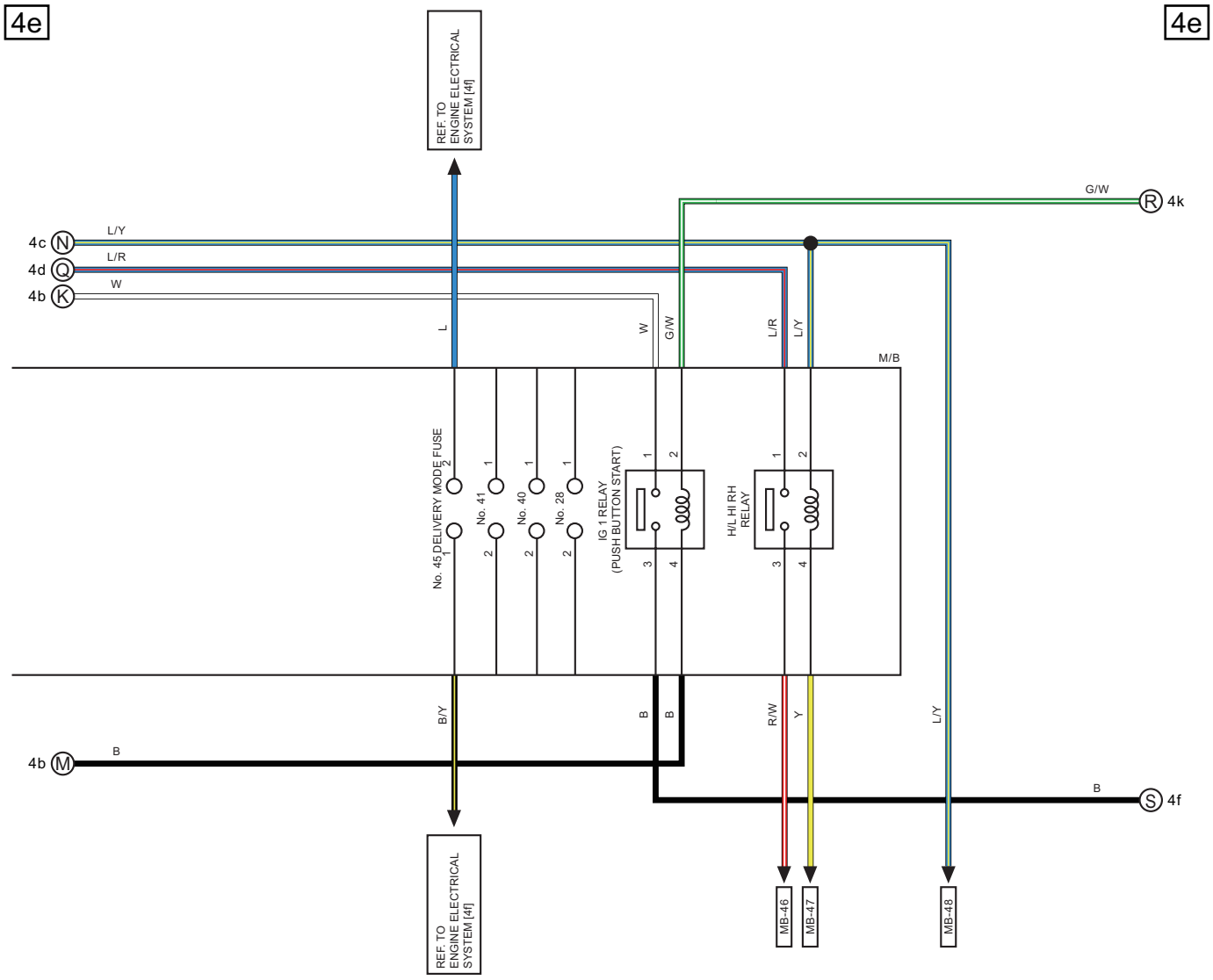
4e
4e
REF. TO ENGINE ELECTRICAL SYSTEM [4f]
G/W
R 4k
4c N L/Y
4d Q L/R
4b K W
L
W
G/W
L/R
L/Y
M/B
No. 45 DELIVERY MODE FUSE
No. 41
No. 40
No. 28
IG 1 RELAY (PUSH BUTTON START)
H/L HI RH RELAY
B/Y
B
B
R/W
Y
L/Y
4b M B
B
S 4f
REF. TO ENGINE ELECTRICAL SYSTEM [4f]
MB-46
MB-47
MB-48

WI-60356

4f

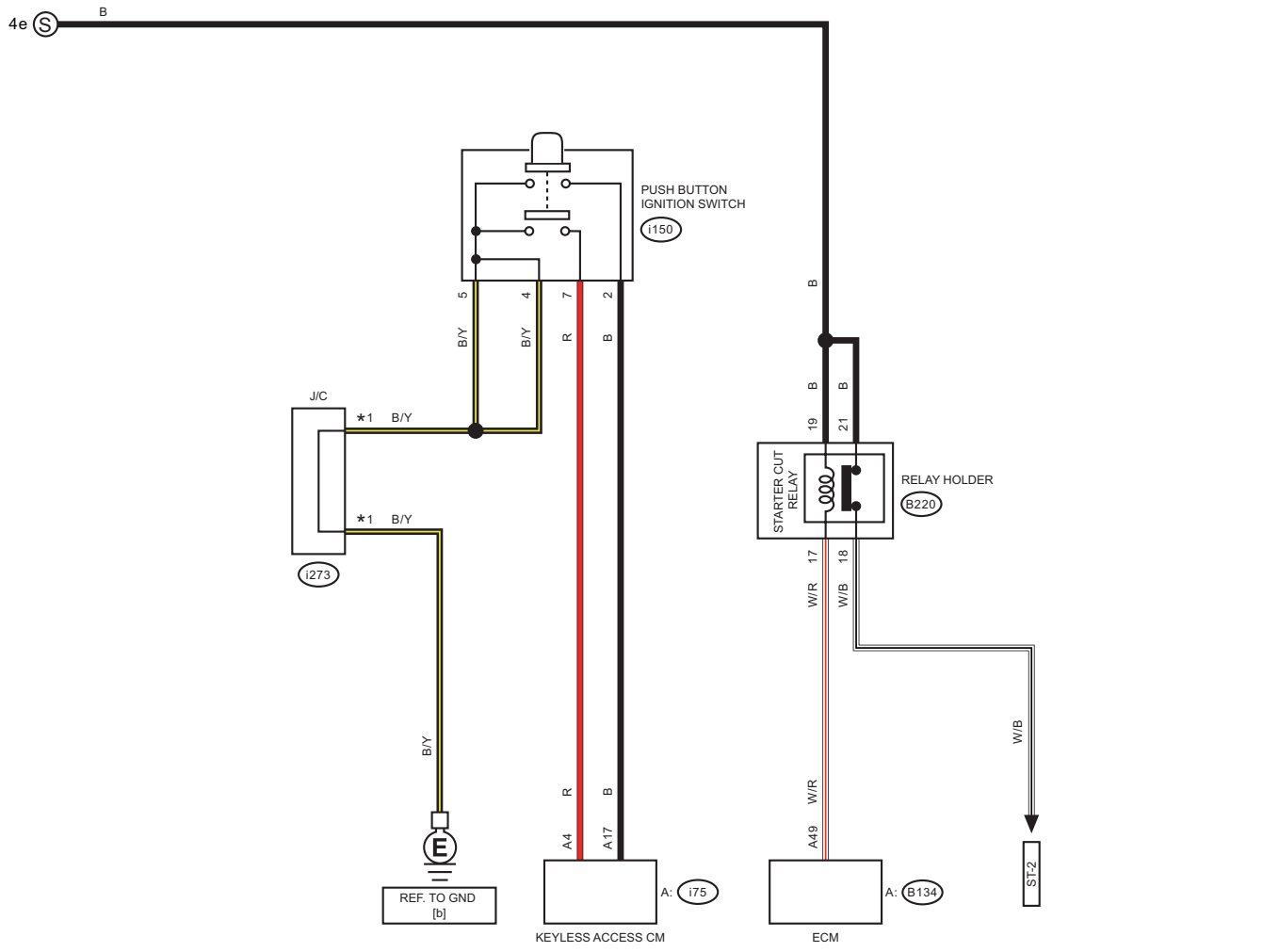

*1 : TERMINAL No. OPTIONAL ARRANGEMENT

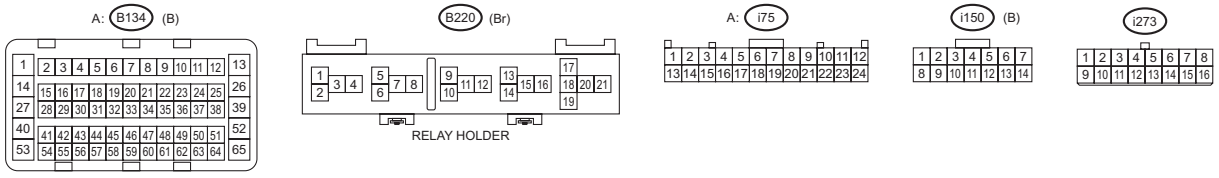

WI-60357

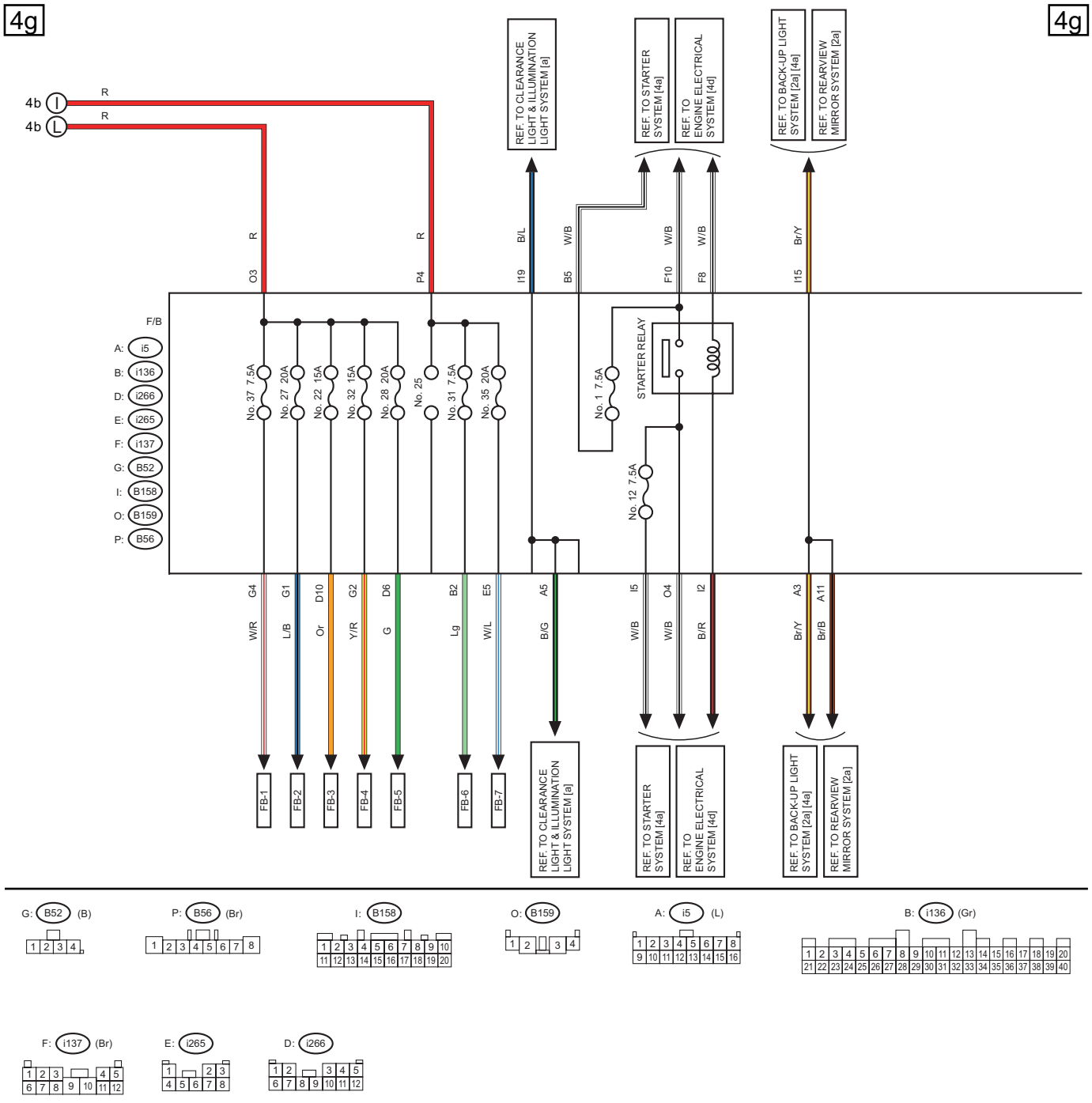
4g
4g
4b
4b
R
R
REF. TO CLEARANCE LIGHT & ILLUMINATION LIGHT SYSTEM [a]
REF. TO STARTER SYSTEM [4a]
REF. TO ENGINE ELECTRICAL SYSTEM [4d]
REF. TO BACK-UP LIGHT SYSTEM [2a] [4a]
REF. TO REARVIEW MIRROR SYSTEM [2a]
O3
P4
I19
B5
F10
F8
I15
B/L
W/B
W/B
W/B
Br/Y
F/B
A: i5
B: i136
D: i266
E: i265
F: i137
G: B52
I: B158
O: B159
P: B56
No. 37 7.5A
No. 27 20A
No. 22 15A
No. 32 15A
No. 28 20A
No. 25
No. 31 7.5A
No. 35 20A
No. 1 7.5A
STARTER RELAY
No. 12 7.5A
G4
G1
D10
G2
D6
B2
E5
A5
I5
O4
I2
A3
A11
W/R
L/B
Or
Y/R
G
Lg
W/L
B/G
W/B
W/B
B/R
Br/Y
Br/B
FB-1
FB-2
FB-3
FB-4
FB-5
FB-6
FB-7
REF. TO CLEARANCE LIGHT & ILLUMINATION LIGHT SYSTEM [a]
REF. TO STARTER SYSTEM [4a]
REF. TO ENGINE ELECTRICAL SYSTEM [4d]
REF. TO BACK-UP LIGHT SYSTEM [2a] [4a]
REF. TO REARVIEW MIRROR SYSTEM [2a]

G: B52 (B)
P: B56 (Br)
I: B158
O: B159
A: i5 (L)
B: i136 (Gr)
F: i137 (Br)
E: i265
D: i266

WI-63015

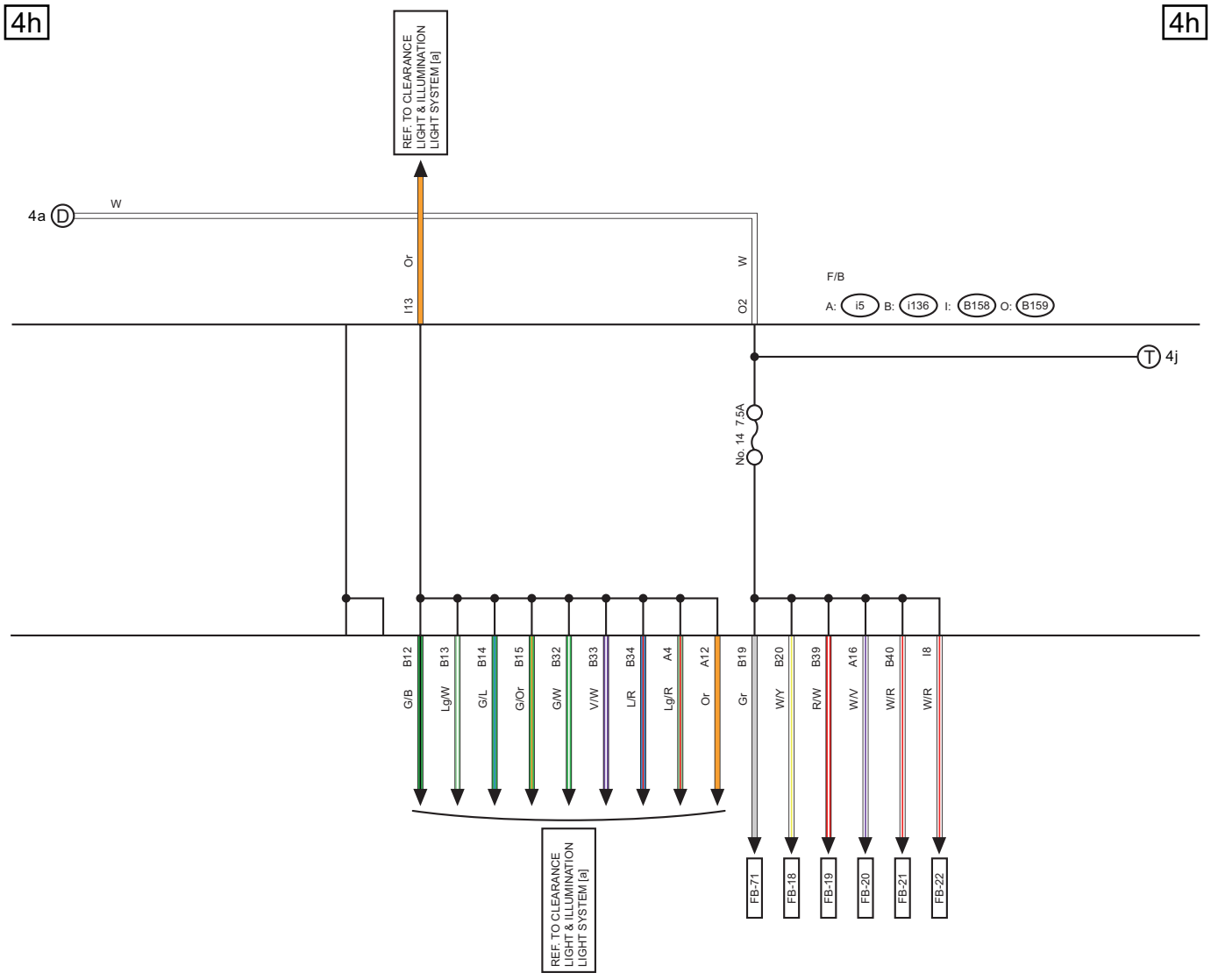
4h
4h
REF. TO CLEARANCE LIGHT & ILLUMINATION LIGHT SYSTEM [a]
4a D
W
Or
I13
W
O2
F/B
A: i5 B: i136 I: B158 O: B159
T 4j
No. 14 7.5A
B12 G/B
B13 Lg/W
B14 G/L
B15 G/Or
B32 G/W
B33 V/W
B34 L/R
A4 Lg/R
A12 Or
B19 Gr
B20 W/Y
B39 R/W
A16 W/V
B40 W/R
I8 W/R
FB-71
FB-18
FB-19
FB-20
FB-21
FB-22
REF. TO CLEARANCE LIGHT & ILLUMINATION LIGHT SYSTEM [a]
I: B158
O: B159
A: i5 (L)
B: i136 (Gr)

WI-60359

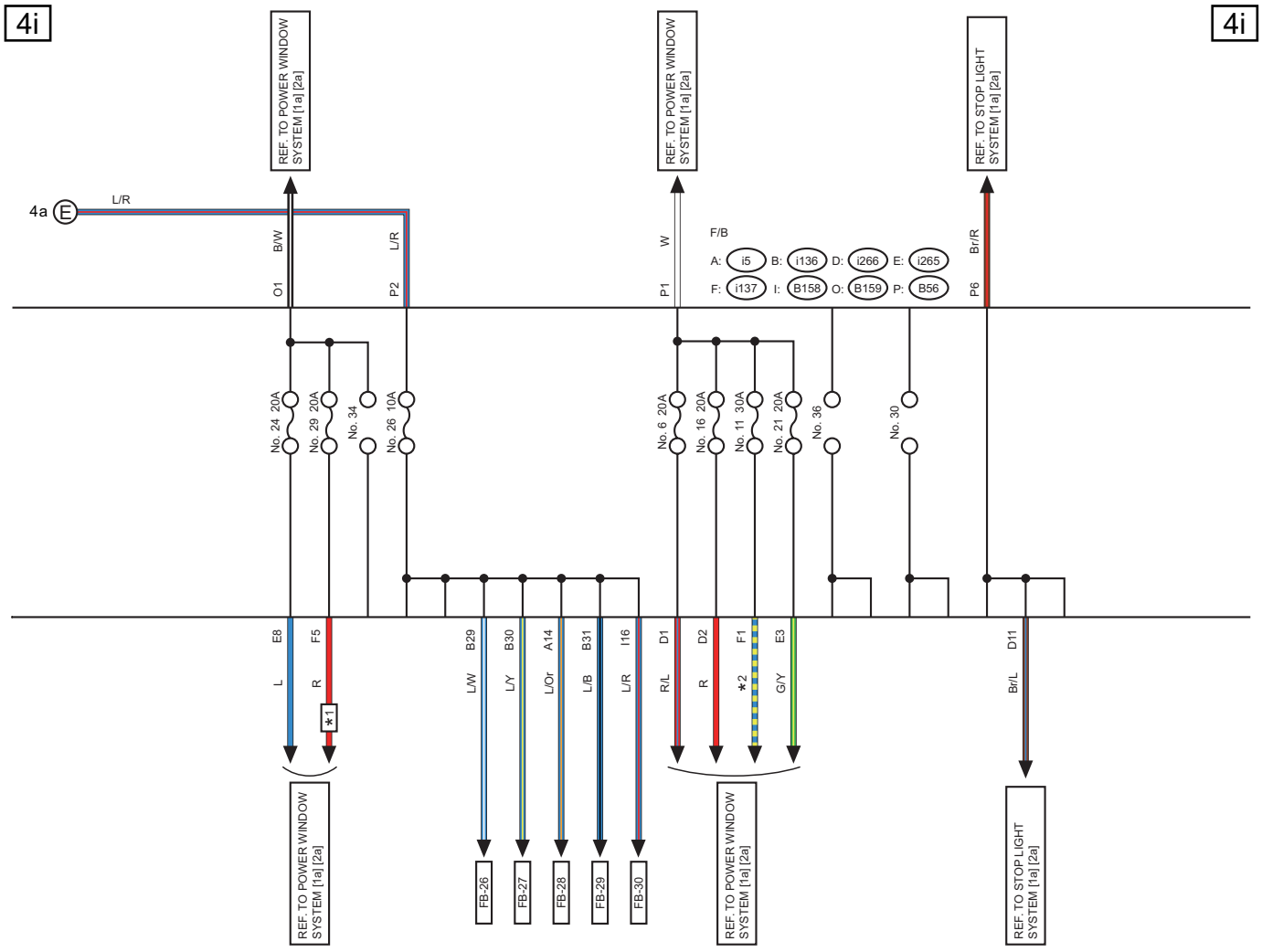

*1 : WITH DRIVER'S SEAT AND PASSENGER'S SEAT AUTO-REVERSE FUNCTION
*2 : WITH DRIVER'S SEAT AUTO-REVERSE FUNCTION : L
WITH DRIVER'S SEAT AND PASSENGER'S SEAT AUTO-REVERSE FUNCTION : R/W

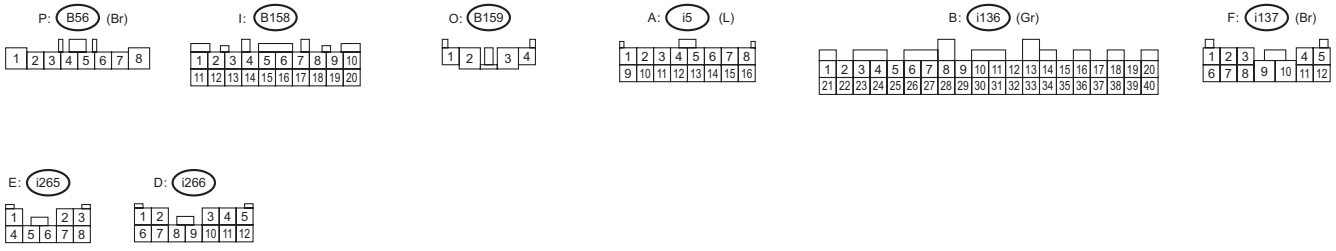

WI-60360

Power Supply Circuit

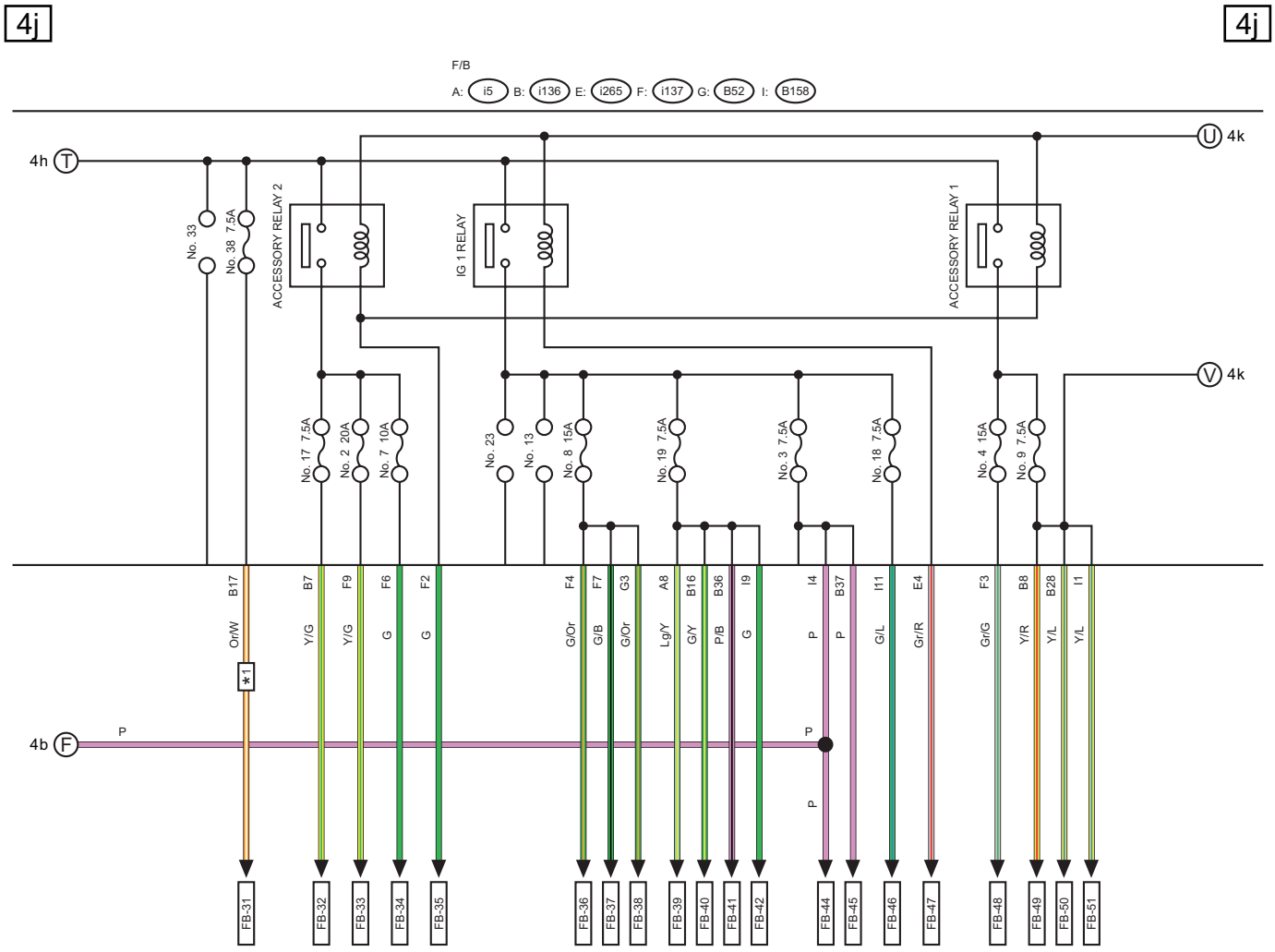

*1 : WITH EyeSight

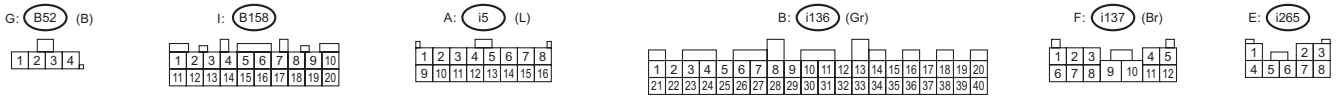

WI-60361

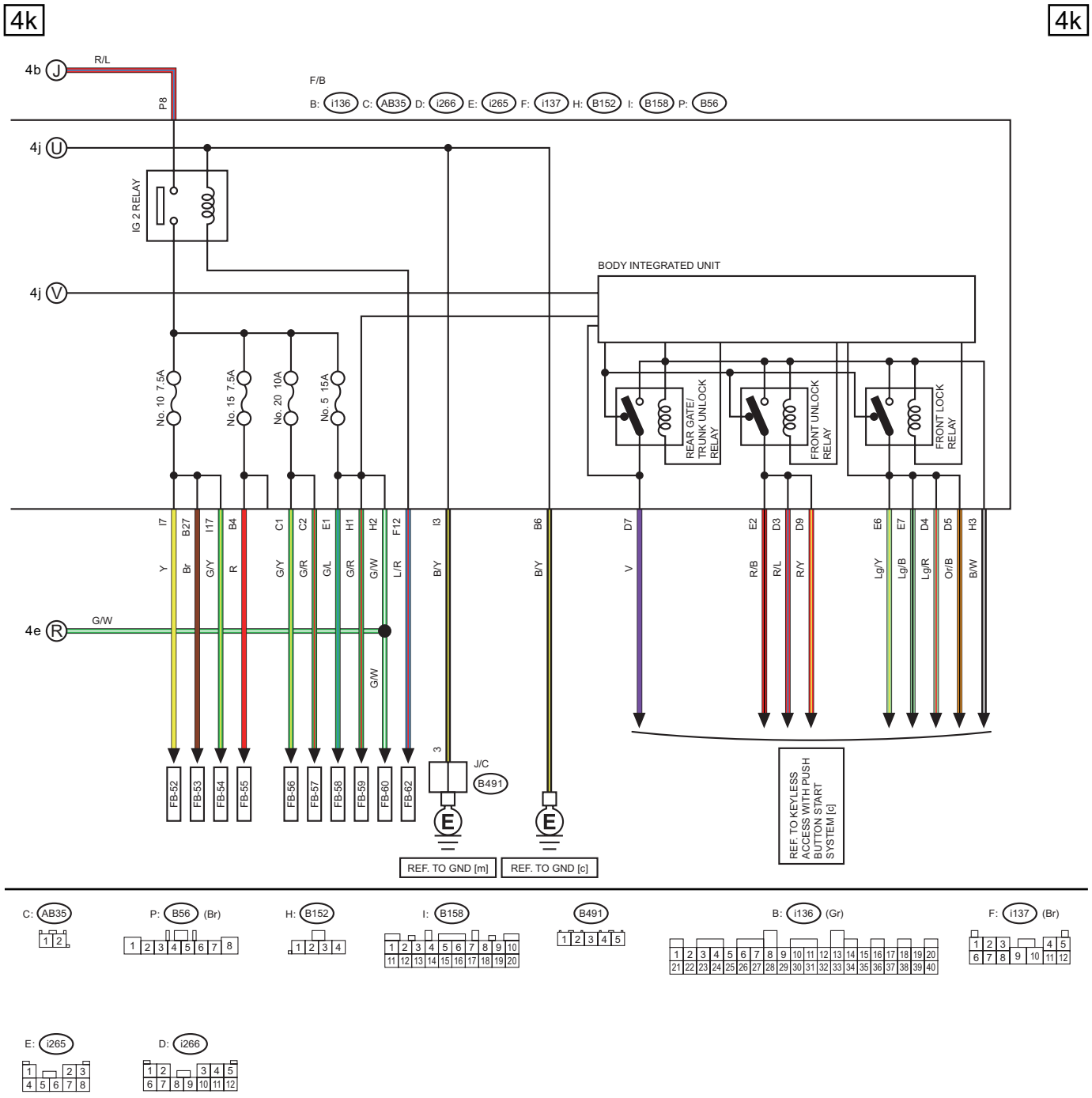
4k
4k
4b J
R/L
P8
F/B
B: i136 C: AB35 D: i266 E: i265 F: i137 H: B152 I: B158 P: B56
4j U
IG 2 RELAY
4j V
BODY INTEGRATED UNIT
No. 10 7.5A
No. 15 7.5A
No. 20 10A
No. 5 15A
REAR GATE/ TRUNK UNLOCK RELAY
FRONT UNLOCK RELAY
FRONT LOCK RELAY
I7 Y
B27 Br
I17 G/Y
B4 R
C1 G/Y
C2 G/R
E1 G/L
H1 G/R
H2 G/W
F12 L/R
I3 B/Y
B6 B/Y
D7 V
E2 R/B
D3 R/L
D9 R/Y
E6 Lg/Y
E7 Lg/B
D4 Lg/R
D5 Or/B
H3 B/W
4e R
G/W
G/W
FB-52
FB-53
FB-54
FB-55
FB-56
FB-57
FB-58
FB-59
FB-60
FB-62
3
J/C
B491
E
E
REF. TO GND [m]
REF. TO GND [c]
REF. TO KEYLESS ACCESS WITH PUSH BUTTON START SYSTEM [c]

C: AB35
P: B56 (Br)
H: B152
I: B158
B491
B: i136 (Gr)
F: i137 (Br)
E: i265
D: i266

WI-60362

No.	Load
MB-1	Audio amplifier
MB-3	Audio
	Navigation unit
MB-6	Blower motor relay
MB-7	VDC CM
MB-8	VDC CM
MB-9	Front fog light RH
	SRF CM
MB-10	Front fog light LH
	SRF CM
MB-11	Body integrated unit
MB-12	Rear wiper relay
	Rear washer motor
	Rear wiper motor
MB-13	Front washer motor
MB-14	Combination switch
	Front wiper motor
MB-16	Rear defogger relay
MB-17	Body integrated unit
	Front lock relay
	Front unlock relay
	Rear gate/trunk unlock relay
MB-19	Power rear gate CM
MB-20	Power seat LH
	Power seat RH
MB-21	Front combination light LH
MB-22	Body integrated unit
MB-23	Front combination light RH
MB-24	Front combination light LH
MB-25	Body integrated unit
MB-26	Horn RH
MB-27	Horn LH
MB-28	Body integrated unit
	Horn switch
MB-29	License plate light LH
	License plate light RH
	Rear combination light LH
	Rear combination light RH
	Trailer connector
MB-30	Body integrated unit
MB-31	Power window relay
	Front power window sub-switch
	Power window main switch
MB-32	Body integrated unit
MB-33	Power Steering CM

No.	Load
MB-34	Ignition coil No. 1
	Ignition coil No. 2
	Ignition coil No. 3
	Ignition coil No. 4
	Ignition coil No. 5
	Ignition coil No. 6
MB-35	Exhaust camshaft position sensor LH
	Exhaust camshaft position sensor RH
	Intake camshaft position sensor LH
	Intake camshaft position sensor RH
MB-36	EGR control valve
	Exhaust oil flow control solenoid valve LH
	Exhaust oil flow control solenoid valve RH
	Intake oil flow control solenoid valve LH
	Intake oil flow control solenoid valve RH
	Purge control solenoid valve
MB-37	Front oxygen (A/F) sensor LH
	Front oxygen (A/F) sensor RH
	Rear oxygen sensor LH
	Rear oxygen sensor RH
MB-38	ECM
	ELCM
	Fuel injector No. 1
	Fuel injector No. 2
	Fuel injector No. 3
	Fuel injector No. 4
	Fuel injector No. 5
	Fuel injector No. 6
	Mass air flow & intake air temperature sensor
MB-39	TCM
MB-40	Primary speed sensor
	Front wheel speed sensor
	Secondary speed sensor
MB-41	Electronic throttle control relay
MB-42	ECM
MB-43	Fuel pump relay
MB-44	Data link connector
MB-45	Battery sensor
	ECM
	TCM
MB-46	Front combination light RH
MB-47	Body integrated unit
MB-48	Body integrated unit
	Daytime running light LH relay
	Daytime running light RH relay

No.	Load
MB-49	A/C control panel
	Audio
	BSD/RCTA OFF switch
	EPB control switch
	Glove box light
	Hazard switch
	Hill hold switch
	Illumination control switch
	Lane departure warning OFF switch
	Lower cover switch (trunk lid opener)
	Navigation unit
	OP connector (fog light switch)
	Pocket light
	Pre-collision brake OFF switch
	Memory height switch
	Power rear gate driver's switch
	Remote control mirror switch
	Satellite switch illumi. light
	Seat heater switch
	Select lever
	Spot map light
	SRF OFF switch
	Steering switch illumi. light
	VDC OFF switch
	X mode switch
MB-50	Sub fan relay
MB-51	Main fan relay
MB-52	Data communication module
ST-2	Starter relay
FB-1	Stop light relay
	Stop light & brake switch
FB-2	Mirror heater relay
	Wiper deicer relay
FB-3	Rear seat heater CM
FB-4	Seat heater relay
FB-5	Trailer connector
FB-6	Keyless access CM
FB-7	Sunroof unit
FB-18	Combination meter
FB-19	A/C CM
FB-20	ID code box
	Keyless access CM
	Steering lock CM
FB-21	Impact sensor
	Power rear gate CM
FB-22	Body integrated unit
FB-26	Door pocket light RH
	Door step light RH
	Outer mirror ASSY RH

No.	Load
FB-27	Door step light LH
	Door pocket light LH
	Outer mirror ASSY LH
FB-28	Luggage room light
	Trunk room light
FB-29	A/C control panel
	Rearview mirror
	Room light
	Spot map light
	Vanity mirror light LH
	Vanity mirror light RH
FB-30	Body integrated unit
	Remote engine start CM
FB-31	Stereo camera
FB-32	Rear view mirror
	Remote control mirror switch
FB-33	Rear accessory power supply socket (cargo room)
	Rear accessory power supply socket (console)
FB-34	Front accessory power supply socket
FB-35	Keyless access CM
FB-36	Blower motor relay
	Intake door actuator
FB-37	A/C CM
FB-38	Rear defogger relay
	Sub fan relay
FB-39	Power seat LH
	Rear seat heater CM
	TPMS CM
FB-40	A/C control panel
	Audio
	BSD/RCTA OFF switch
	Navigation unit
FB-41	Impact sensor
	Rearview mirror
	Spot map light
	Stereo camera
	Sunroof unit
FB-42	Data link connector
	Remote engine start CM
	Stop light & brake switch
	Wiper deicer relay
FB-44	Power window relay
	Main fan relay
	Sub fan relay
FB-45	Hill hold switch
FB-46	Inhibitor switch
	SRF CM
	Auto headlight beam leveler CM
FB-47	Keyless access CM

No.	Load
FB-48	Audio
	Audio amplifier
	AUX input terminal
	Navigation unit
	Data communication module
FB-49	A/C CM
	Body integrated unit
FB-50	A/C control panel
FB-51	Seat heater relay
FB-52	Stop light relay
	VDC CM
FB-53	Steering angle sensor
FB-54	Power Steering CM
FB-55	Combination meter
FB-56	Airbag CM
FB-57	Occupant detection CM
FB-58	Radar sensor LH (master)
	Power rear gate CM
	Radar sensor RH (slave)
	Steering lock CM
	Data communication module
FB-59	ECM
	TCM
FB-60	Fuel pump relay
FB-62	Keyless access CM
FB-71	EPB control switch

5. Ground Circuit

A: WIRING DIAGRAM

a

a

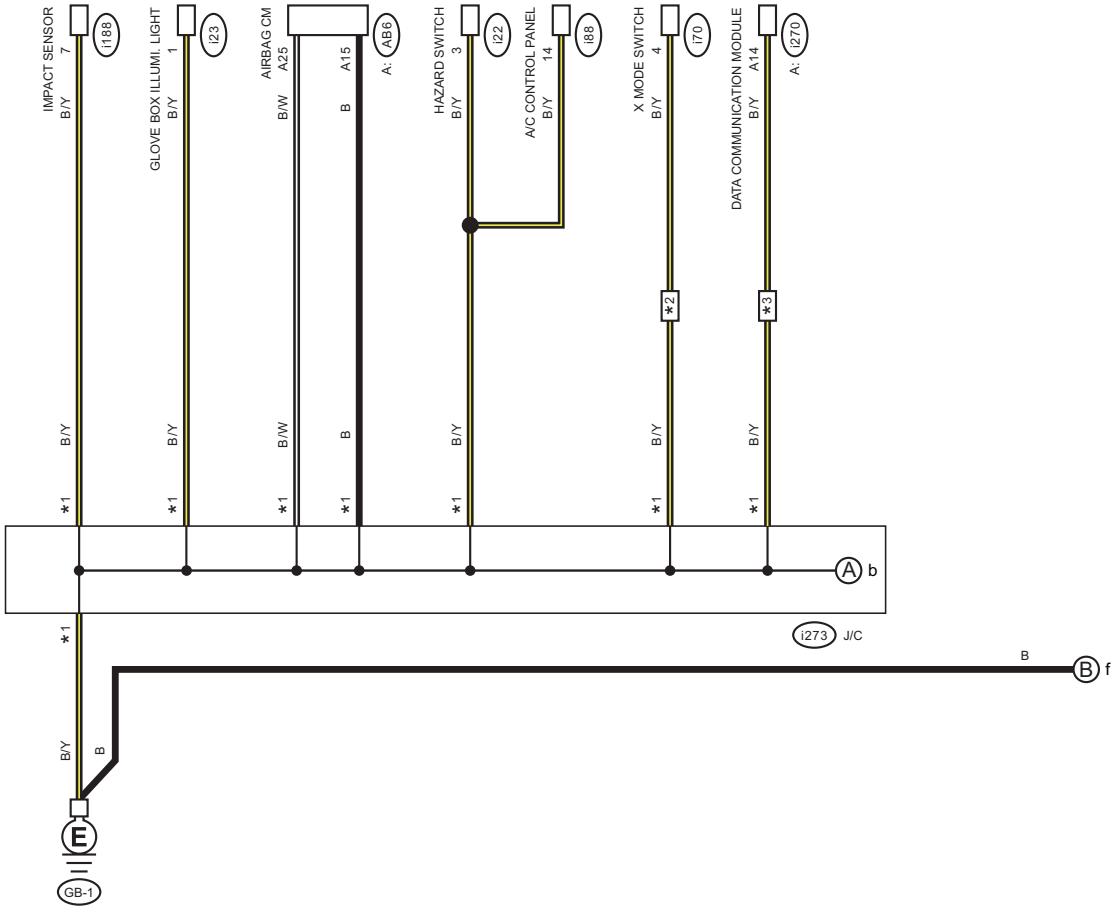

*1 : TERMINAL No. OPTIONAL ARRANGEMENT
*2 : WITH X MODE
*3 : WITH TELEMATICS

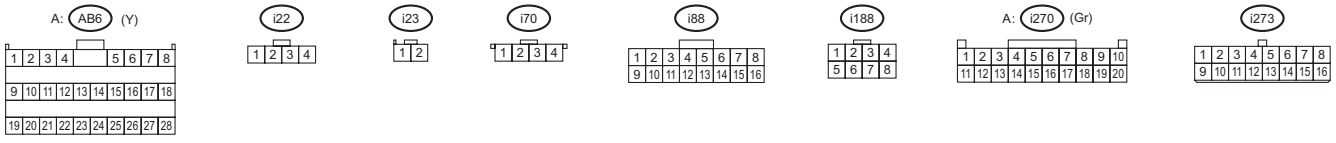

WI-60363

b

b

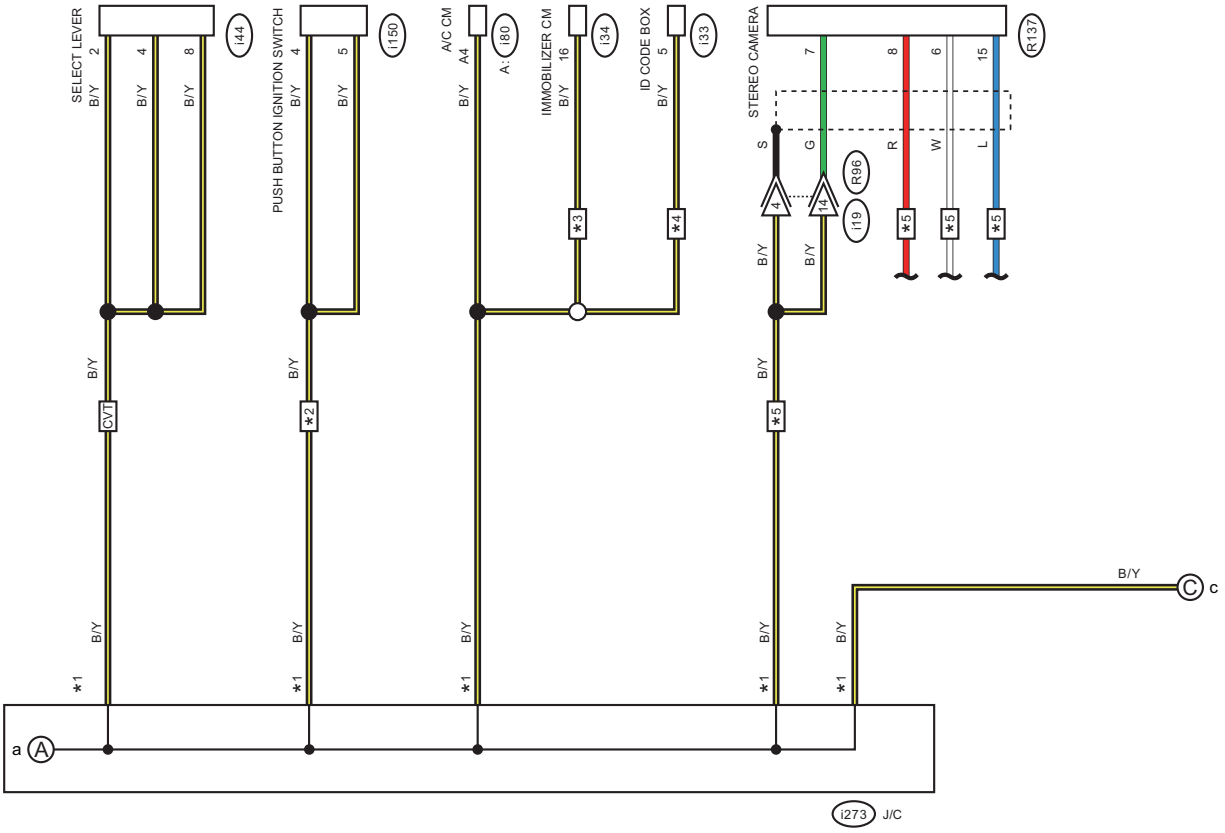

*1 : TERMINAL No. OPTIONAL ARRANGEMENT
*2 : WITH PUSH BUTTON START
*3 : WITH IMMOBILIZER CM
*4 : WITH ID CODE BOX
*5 : WITH EyeSight

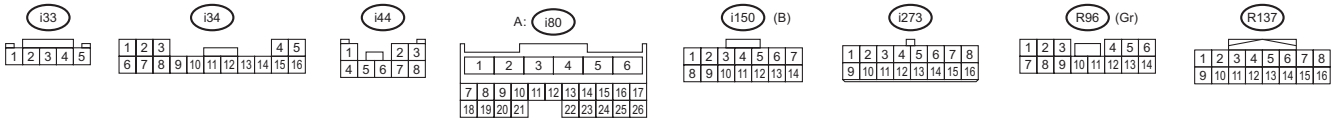

WI-60364

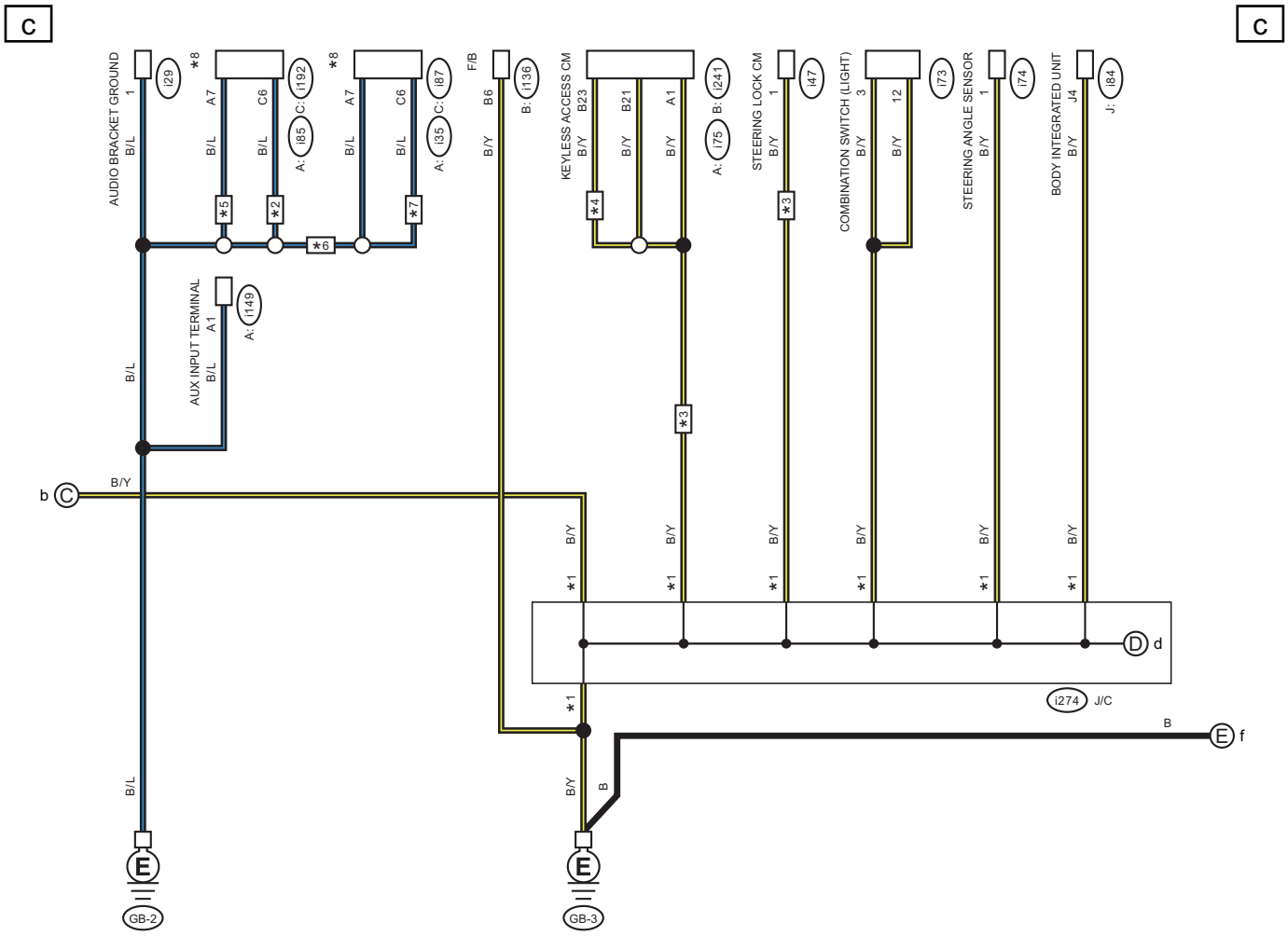

∗1 : TERMINAL No. OPTIONAL ARRANGEMENT
∗2 : 6.2 INCH DISPLAY
∗3 : WITH PUSH BUTTON START
∗4 : WITH ID CODE BOX
∗5 : WITHOUT AUDIO AMPLIFIER
∗6 : WITH AUDIO AMPLIFIER
∗7 : WITHOUT TELEMATICS
∗8 : WITHOUT NAVIGATION : AUDIO
WITH NAVIGATION : NAVIGATION UNIT

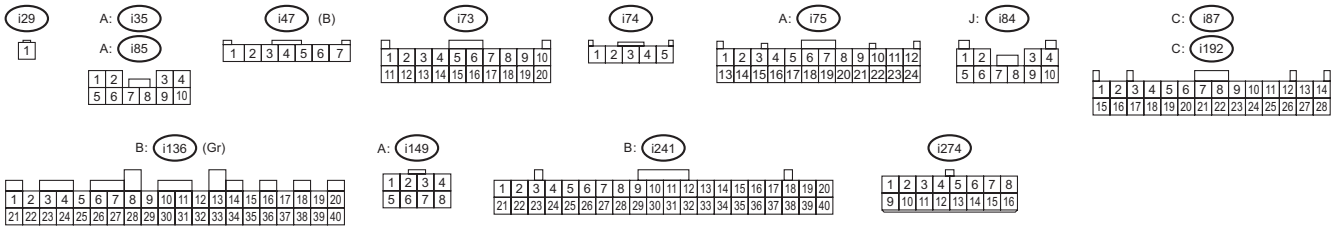

WI-60365

d

d

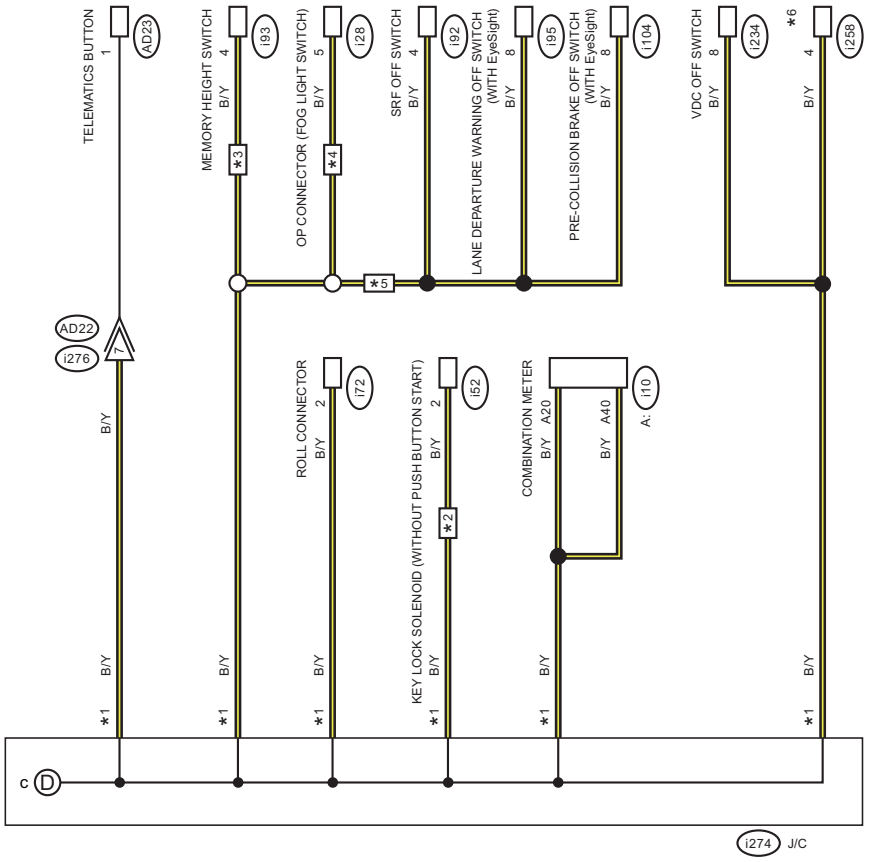

*1 : TERMINAL No. OPTIONAL ARRANGEMENT
*2 : CVT MODEL WITHOUT PUSH BUTTON START
*3 : WITH POWER REAR GATE
*4 : WITHOUT EyeSight
*5 : WITH EyeSight
*6 : SEDAN MODEL : LOWER COVER SWITCH (TRUNK LID OPENER)
OUTBACK MODEL : POWER REAR GATE DRIVER'S SWITCH

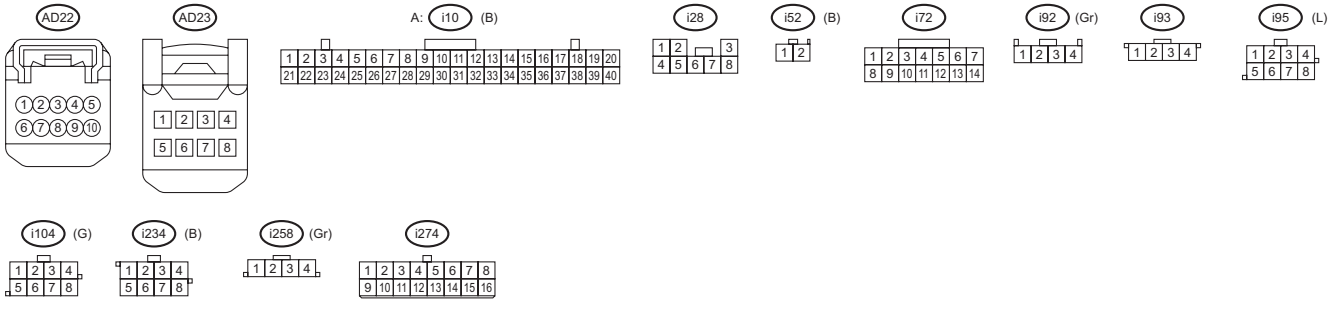

WI-60366

e

e

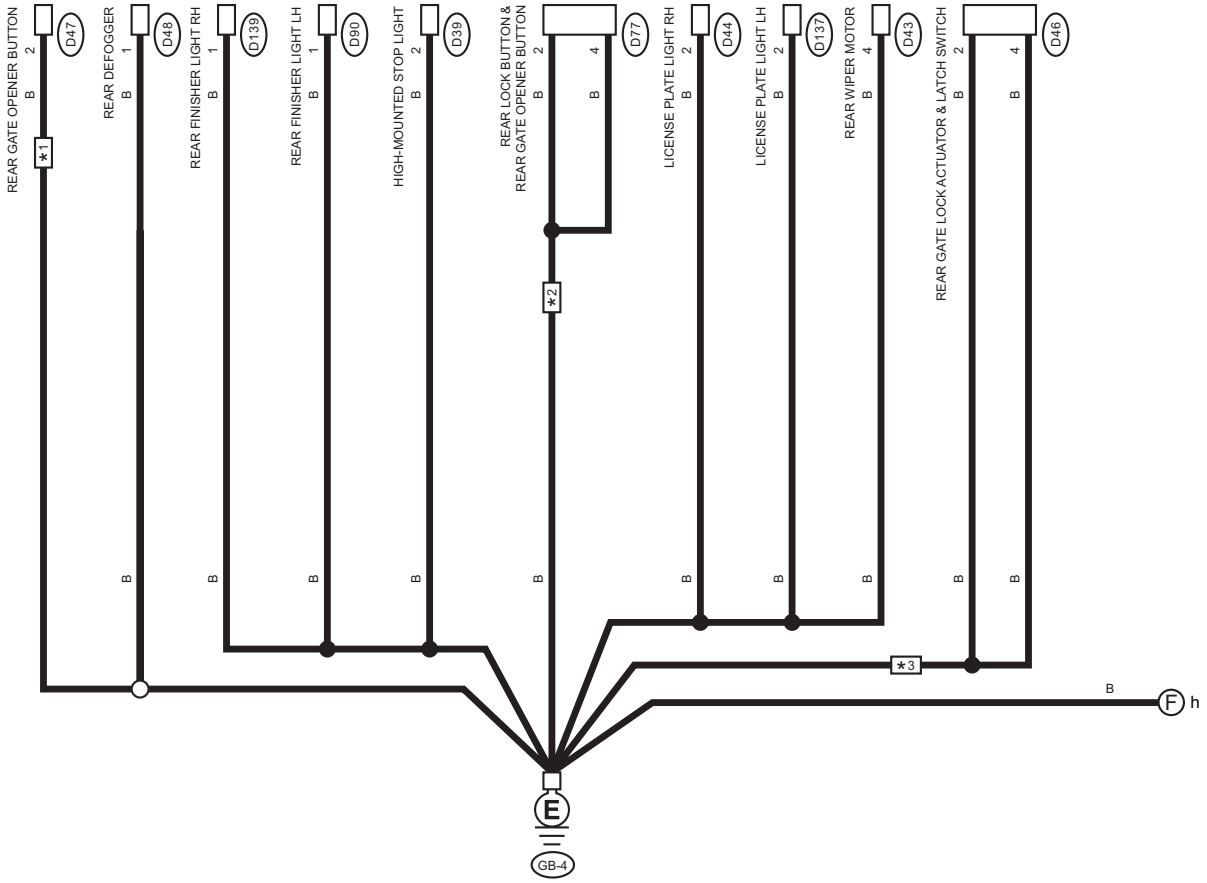

*1 : WITHOUT PUSH BUTTON START
*2 : WITH PUSH BUTTON START
*3 : WITHOUT POWER REAR GATE

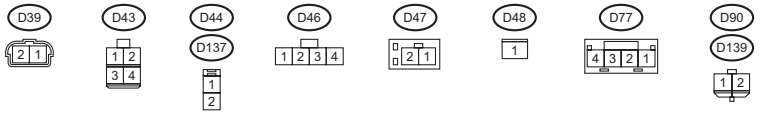

WI-60367

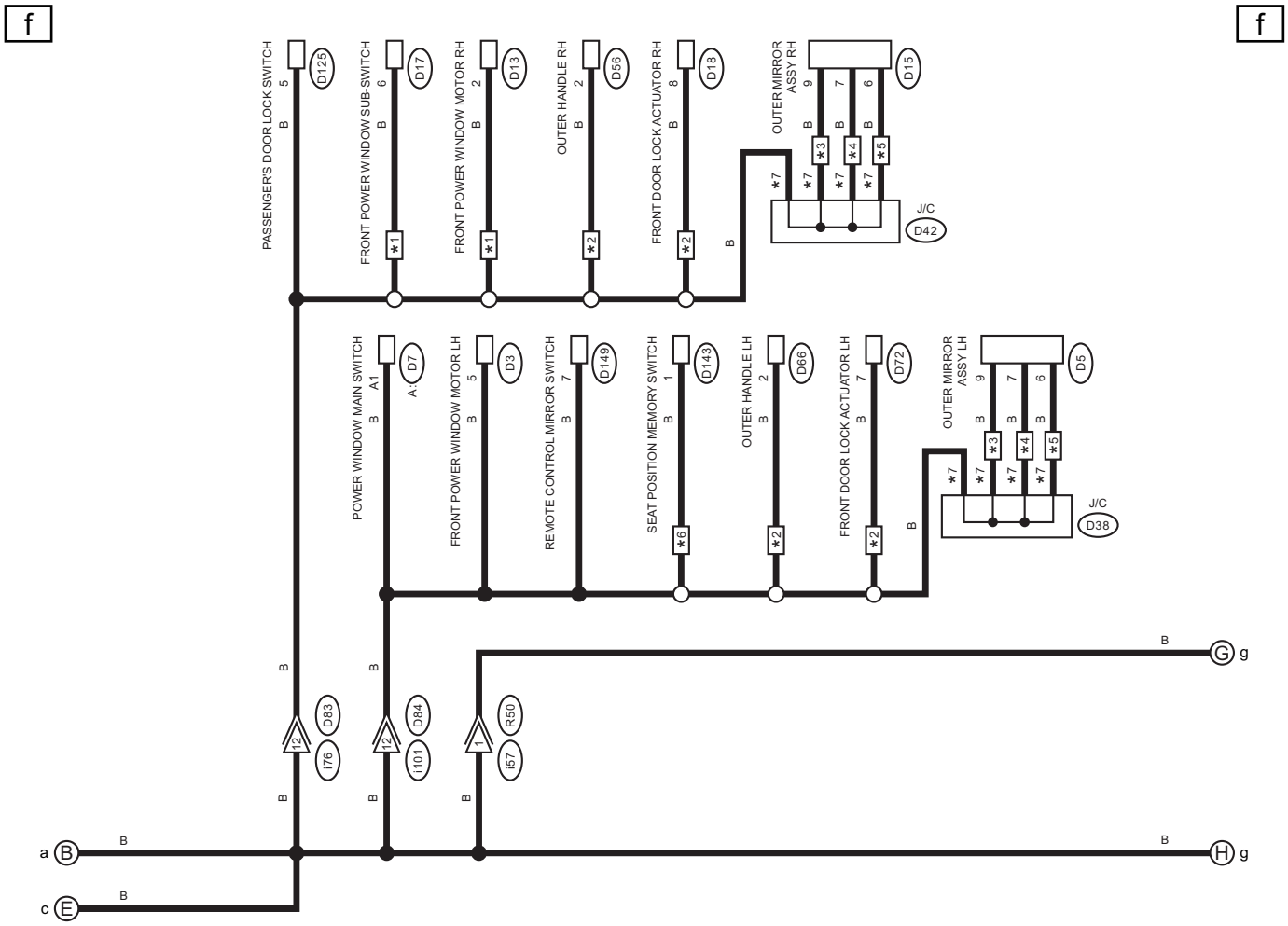

∗1 : WITH DRIVER'S SEAT AND PASSENGER'S SEAT AUTO-REVERSE FUNCTION
∗2 : WITH PUSH BUTTON START
∗3 : WITH MIRROR HEATER
∗4 : WITH MIRROR TURN
∗5 : WITH BSD/RCTA
∗6 : WITH SEAT POSITION MEMORY
∗7 : TERMINAL No. OPTIONAL ARRANGEMENT

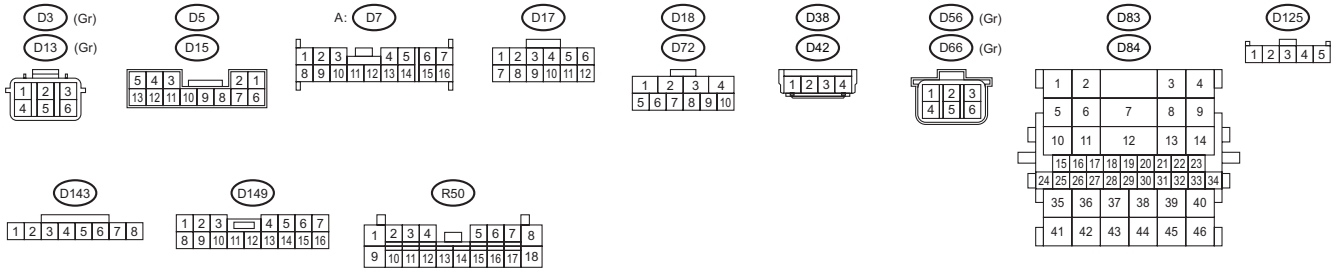

WI-60368

g

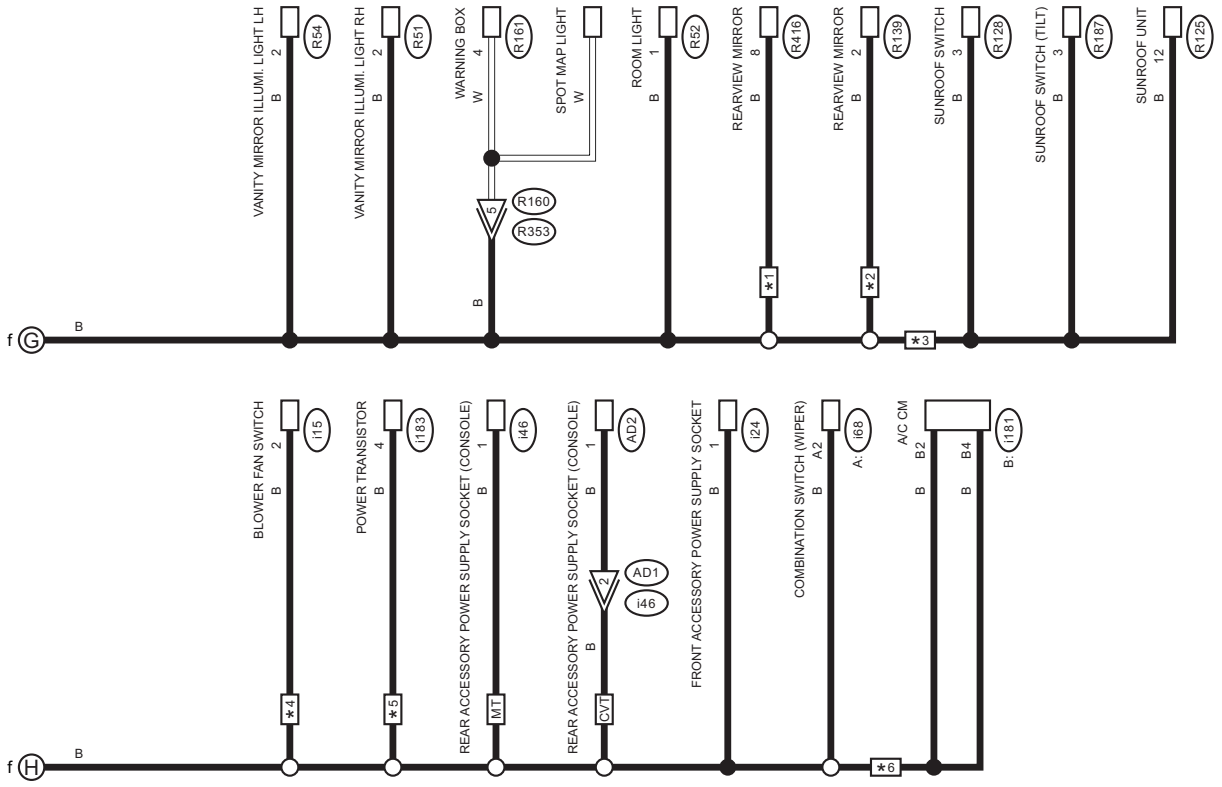

*1 : WITH AUTOMATIC ANTI-GLARE
*2 : WITH COMPASS MIRROR
*3 : WITH SUNROOF
*4 : MANUAL A/C
*5 : AUTO A/C
*6 : WITH SEAT HEATER

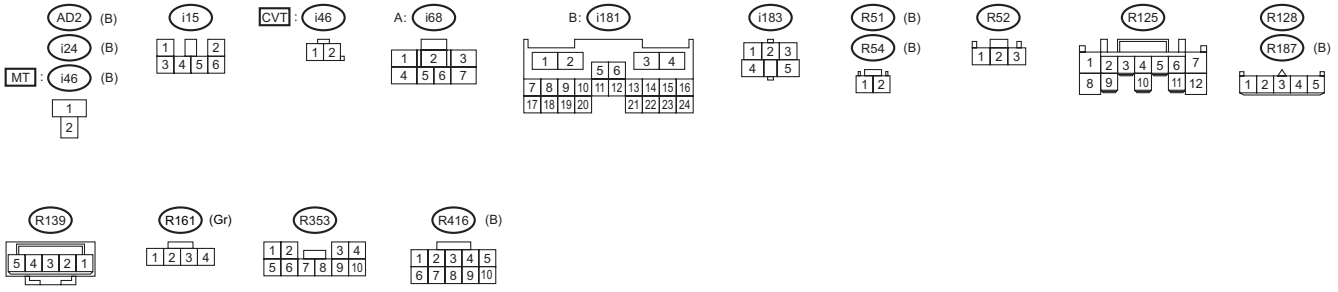

WI-60369

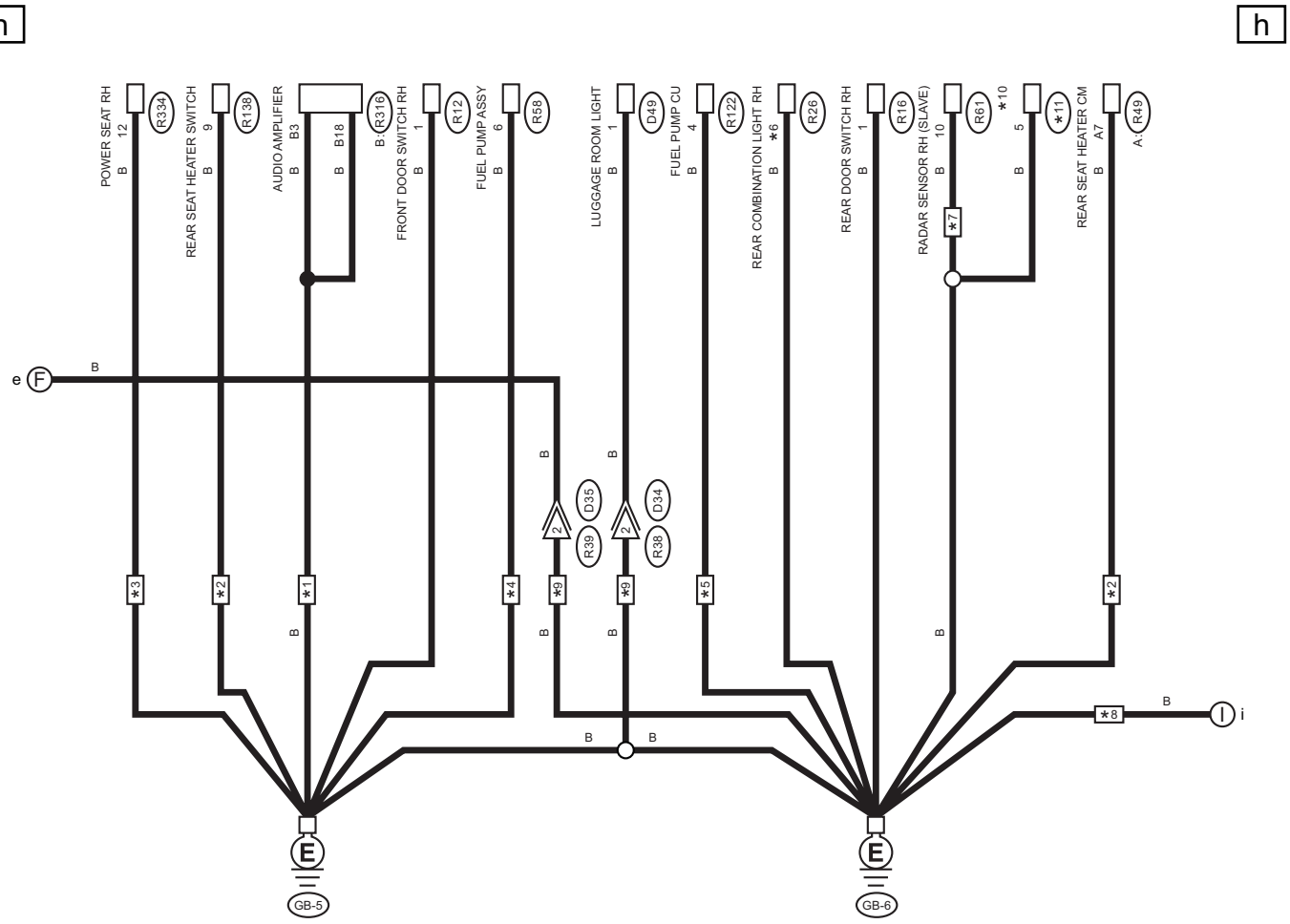

*1 : 7 INCH DISPLAY
*2 : WITH REAR SEAT HEATER
*3 : WITH POWER SEAT (PASSENGER'S SEAT)
*4 : ENGINE TYPE FB
*5 : ENGINE TYPE EZ
*6 : SEDAN MODEL : 2
OUTBACK MODEL : 3
*7 : WITH BSD/RCTA
*8 : SEDAN MODEL
*9 : OUTBACK MODEL
*10 : WITHOUT PUSH BUTTON START : TPMS & KEYLESS ENTRY CM
WITH PUSH BUTTON START : TPMS CM
*11 : WITHOUT PUSH BUTTON START : R221
WITH PUSH BUTTON START : R211

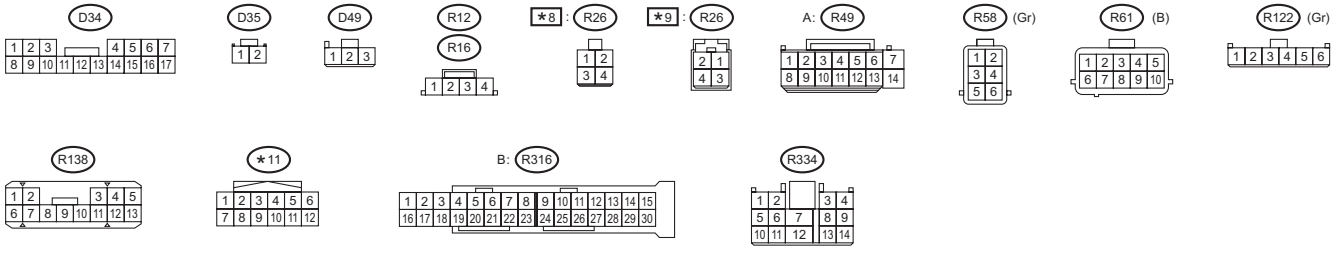

WI-60370

i

i

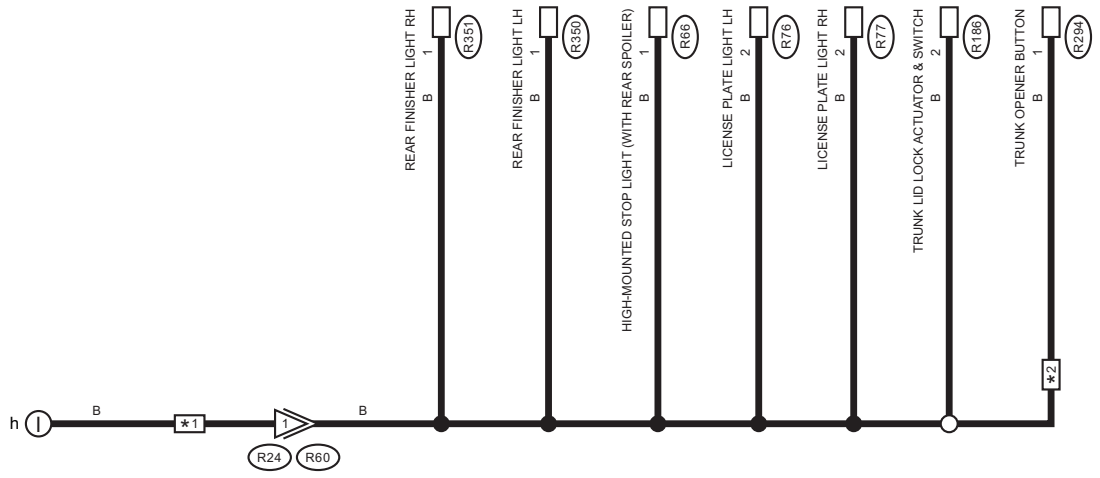

*1 : SEDAN MODEL
*2 : WITH PUSH BUTTON START

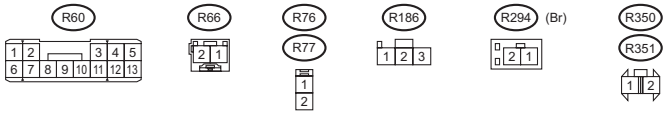

WI-60371

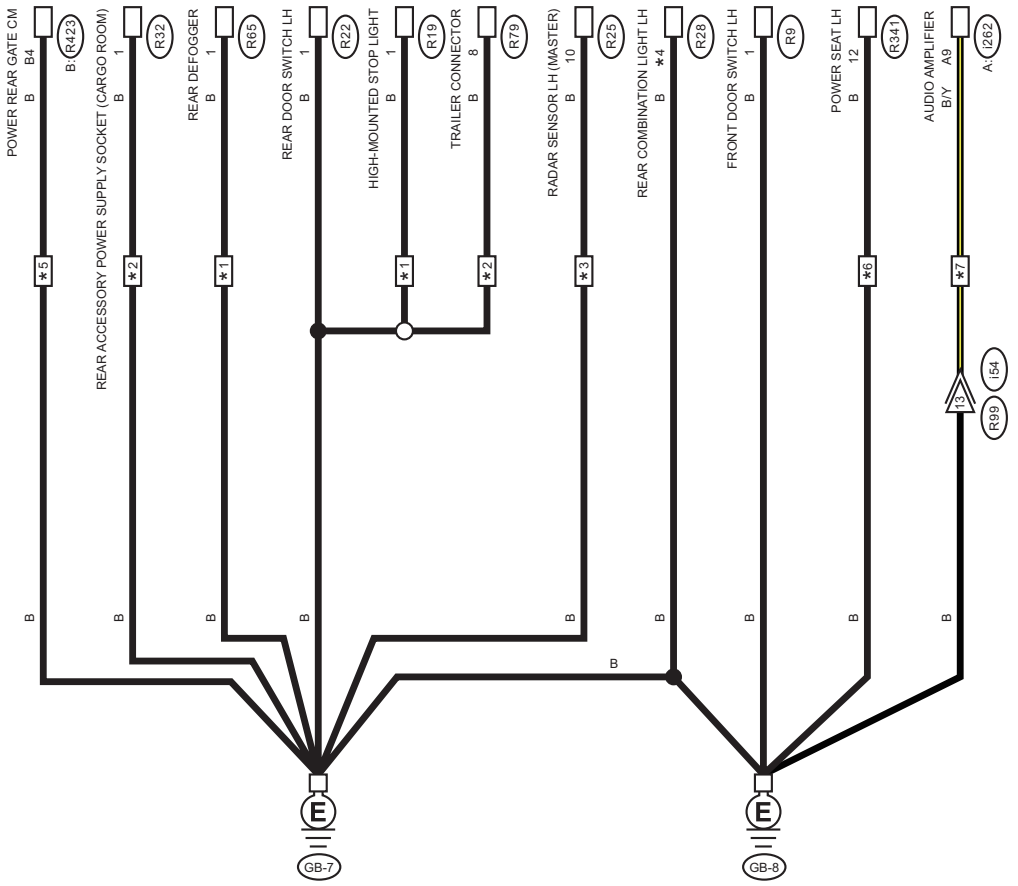

*1 : SEDAN MODEL
*2 : OUTBACK MODEL
*3 : WITH BSD/RCTA
*4 : SEDAN MODEL : 2
OUTBACK MODEL : 3
*5 : WITH POWER REAR GATE
*6 : WITH POWER SEAT
*7 : SEDAN MODEL WITH AUDIO AMPLIFIER

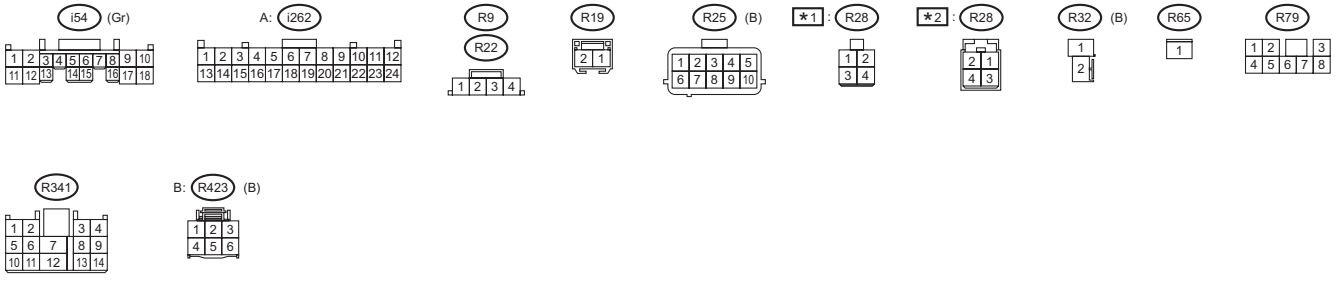

WI-60372

k

k

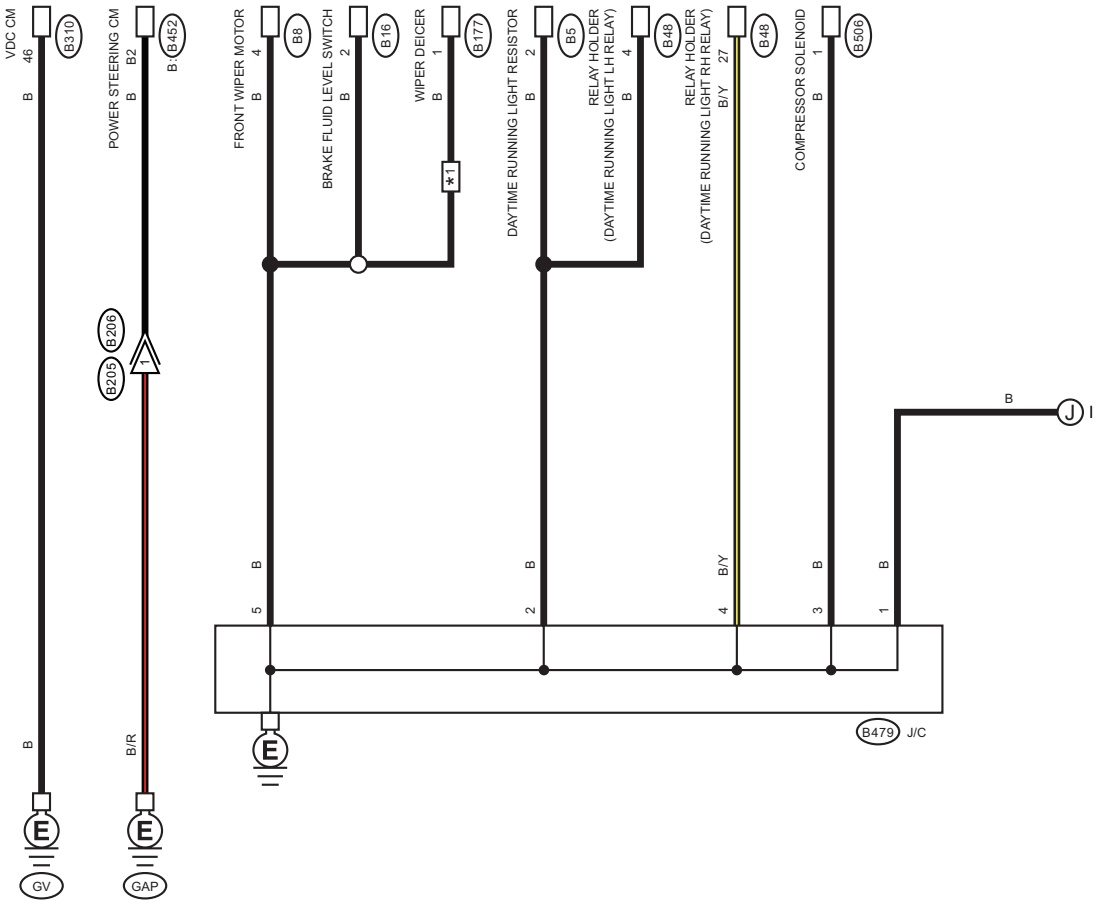

*1 : WITH DEICER

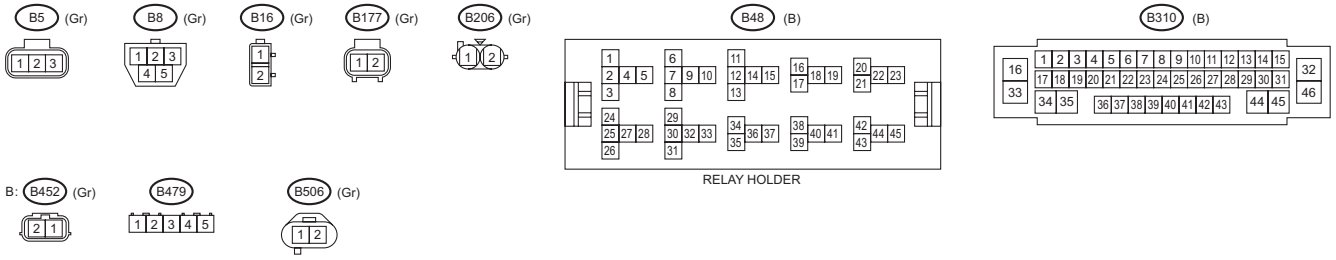

WI-60373

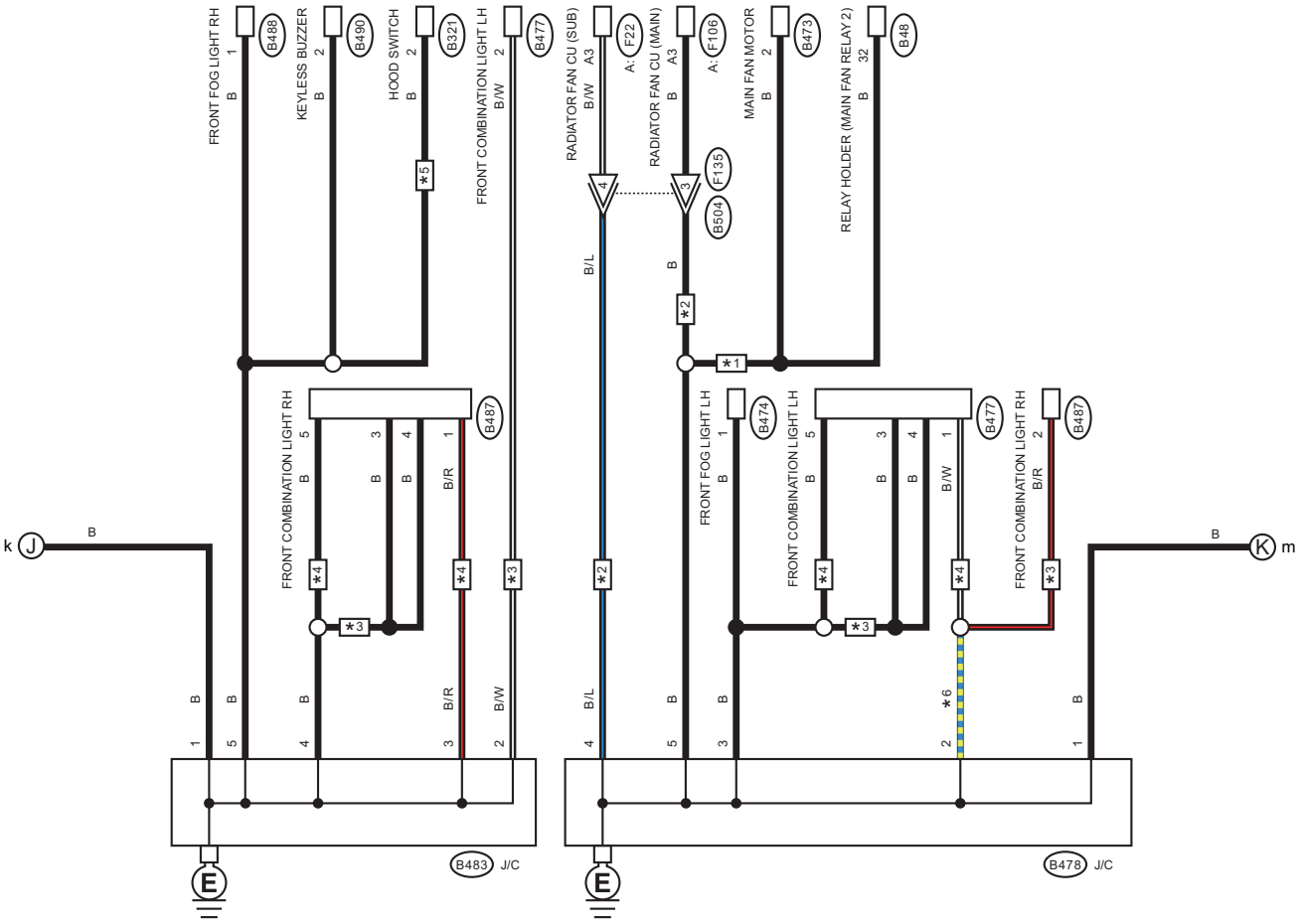

∗1 : ENGINE TYPE FB
∗2 : ENGINE TYPE EZ
∗3 : HALOGEN MODEL
∗4 : EXCEPT FOR HALOGEN MODEL
∗5 : WITH REMOTE ENGINE START
∗6 : HALOGEN MODEL : B/R
EXCEPT FOR HALOGEN MODEL : B/W

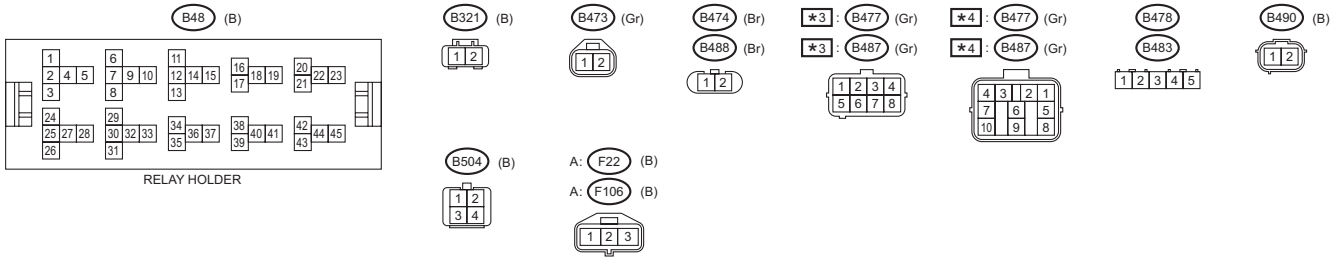

WI-60374

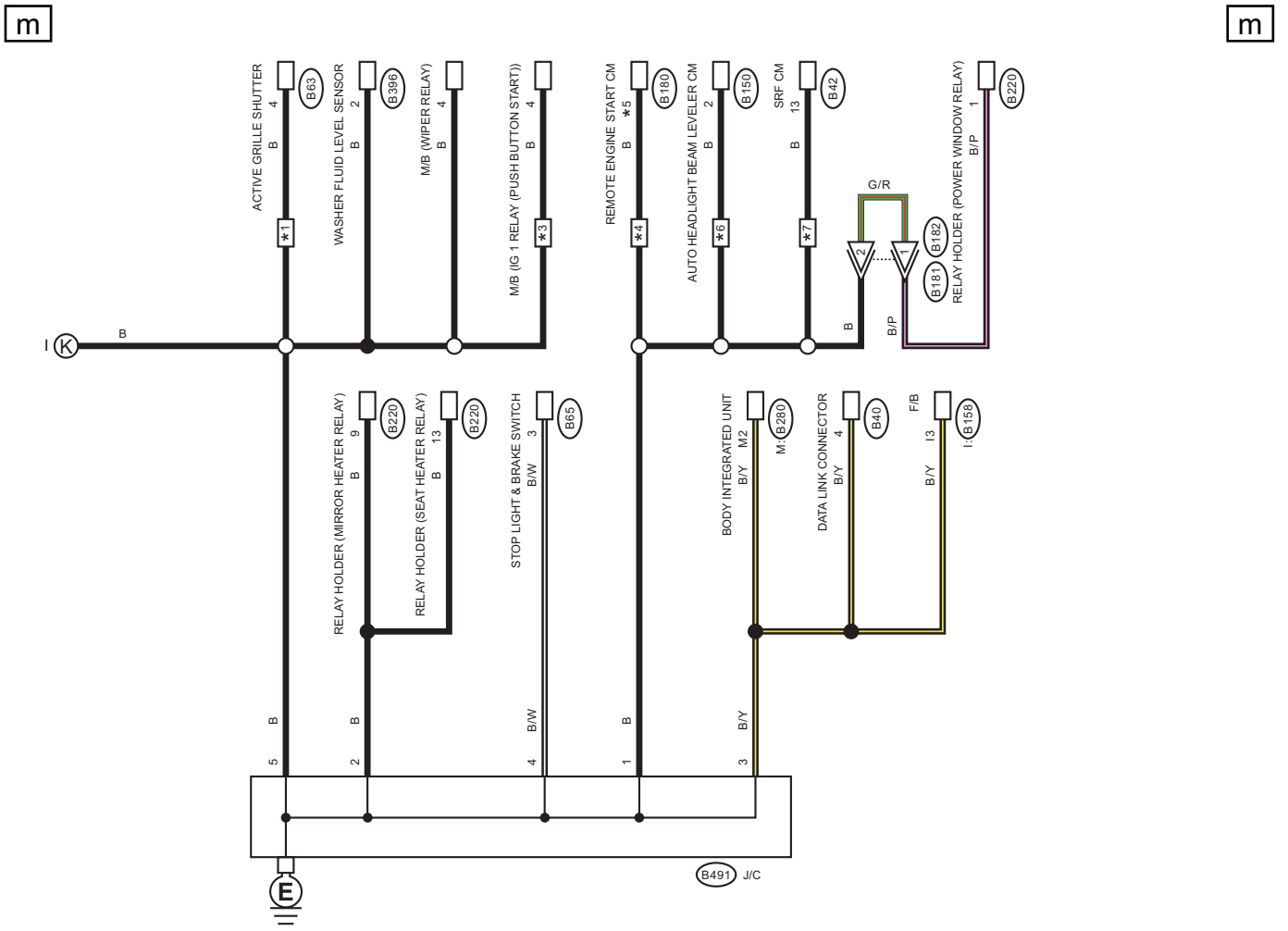

∗1 : ENGINE TYPE FB
∗2 : WITHOUT PUSH BUTTON START
∗3 : WITH PUSH BUTTON START
∗4 : WITH REMOTE ENGINE START
∗5 : WITHOUT PUSH BUTTON START : 3
WITH PUSH BUTTON START : 4
∗6 : WITHOUT SRF & WITH AUTO HEADLIGHT BEAM LEVELER
∗7 : WITH SRF

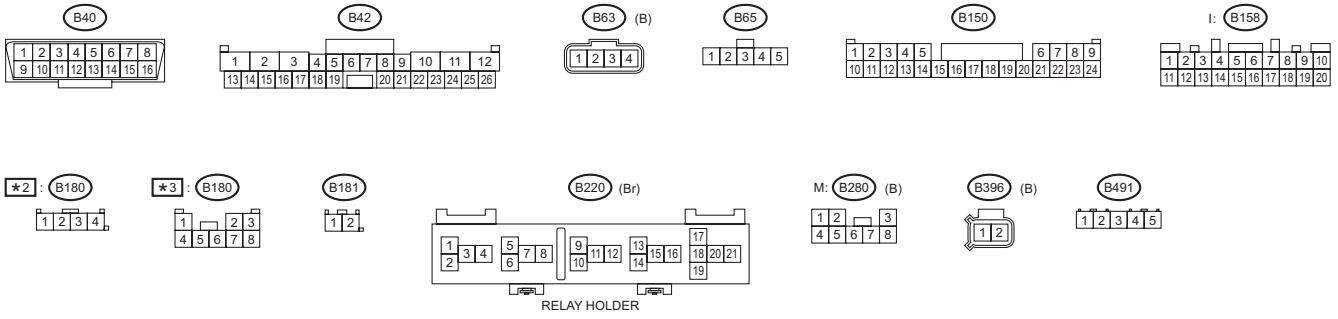

WI-60375

6. Active Grille Shutter

A: WIRING DIAGRAM

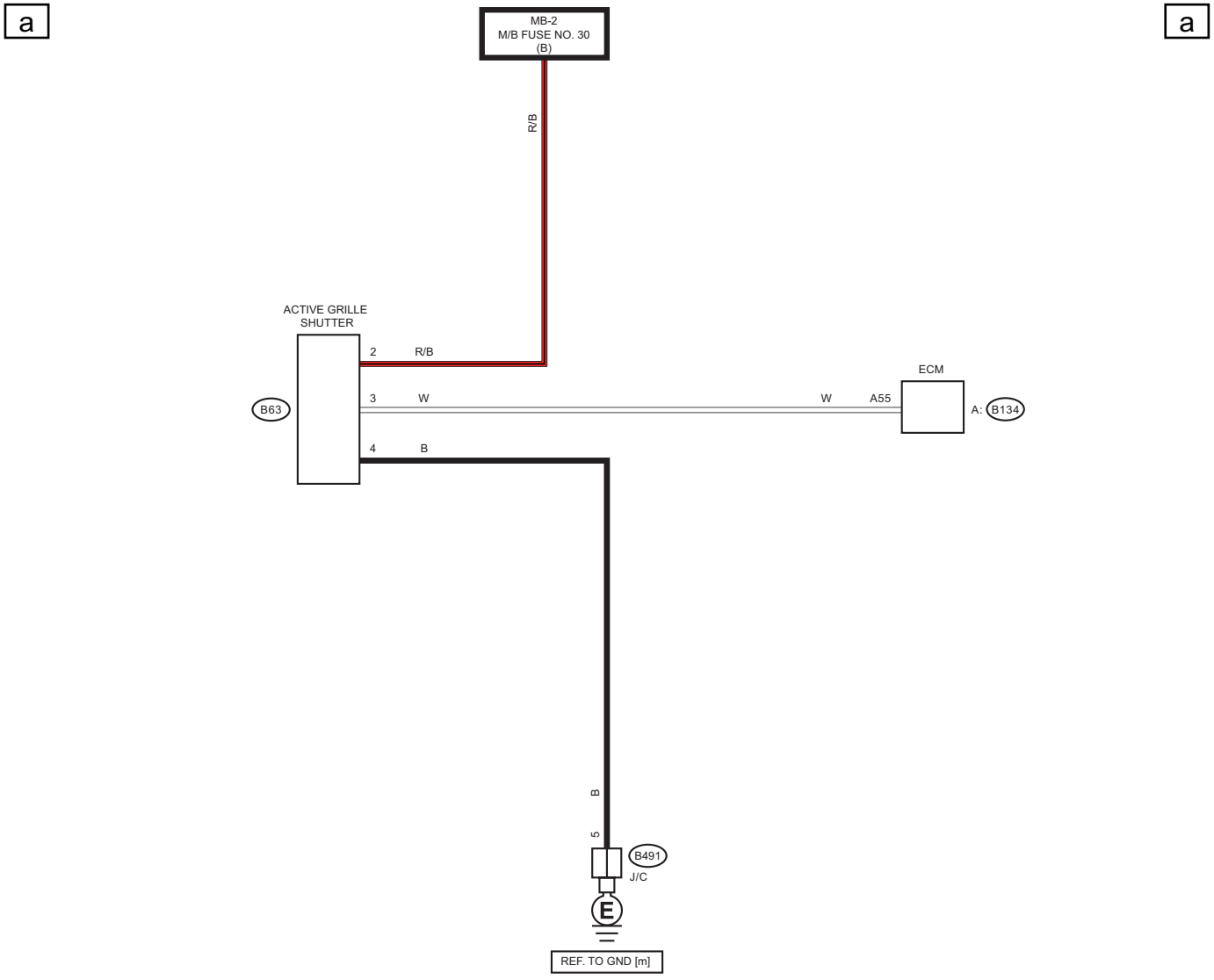

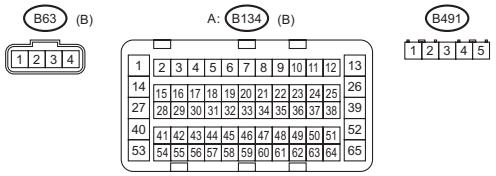

WI-60376

7. Airbag System

A: WIRING DIAGRAM

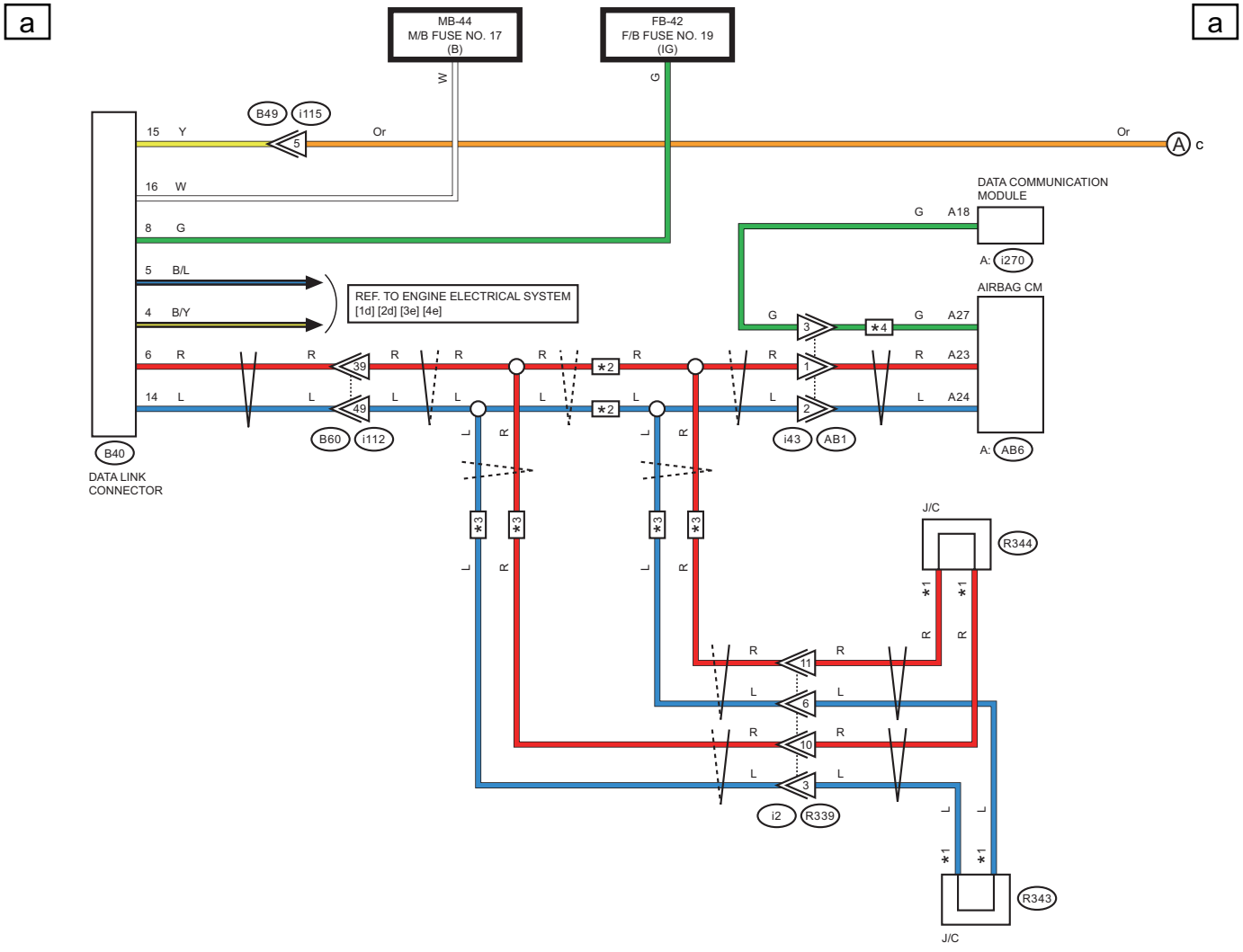

*1 : TERMINAL No. OPTIONAL ARRANGEMENT
*2 : WITHOUT BSD/RCTA
*3 : WITH BSD/RCTA
*4 : WITH TELEMATICS

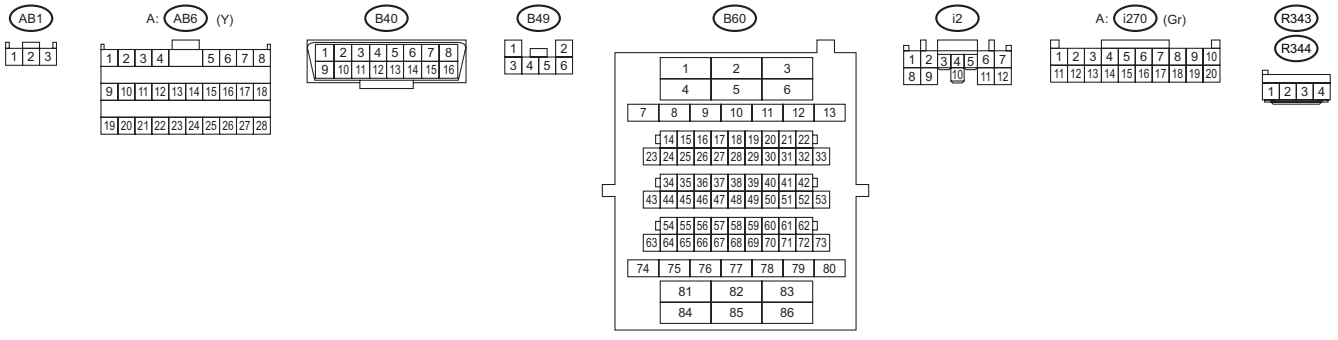

WI-60377

WIRING SYSTEM

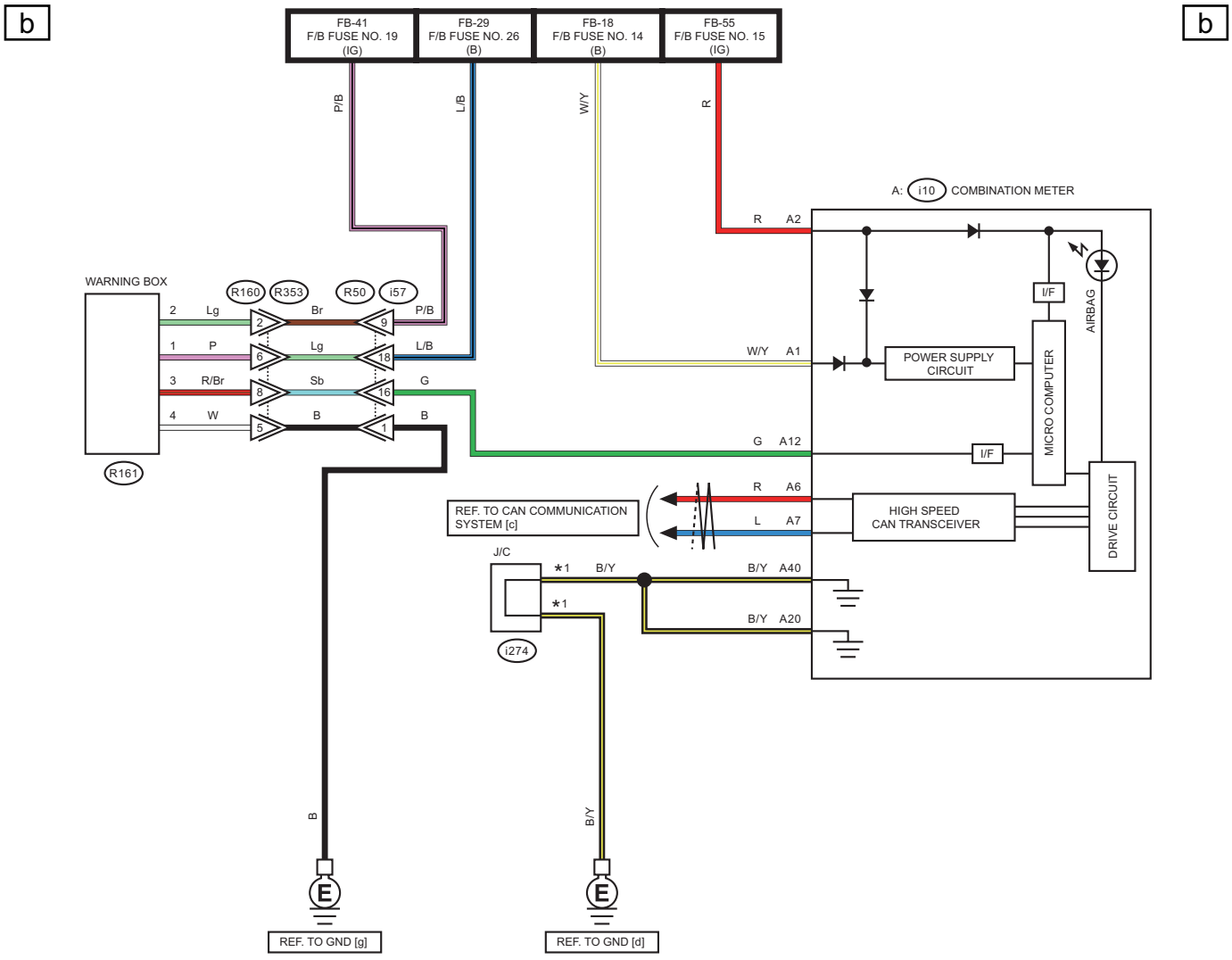

*1 : TERMINAL No. OPTIONAL ARRANGEMENT

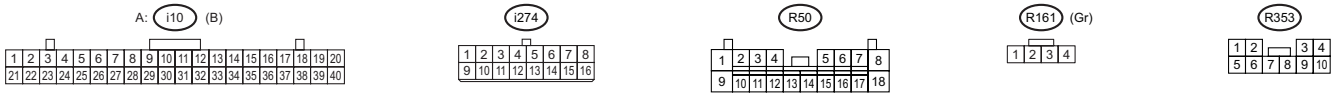

WI-60378

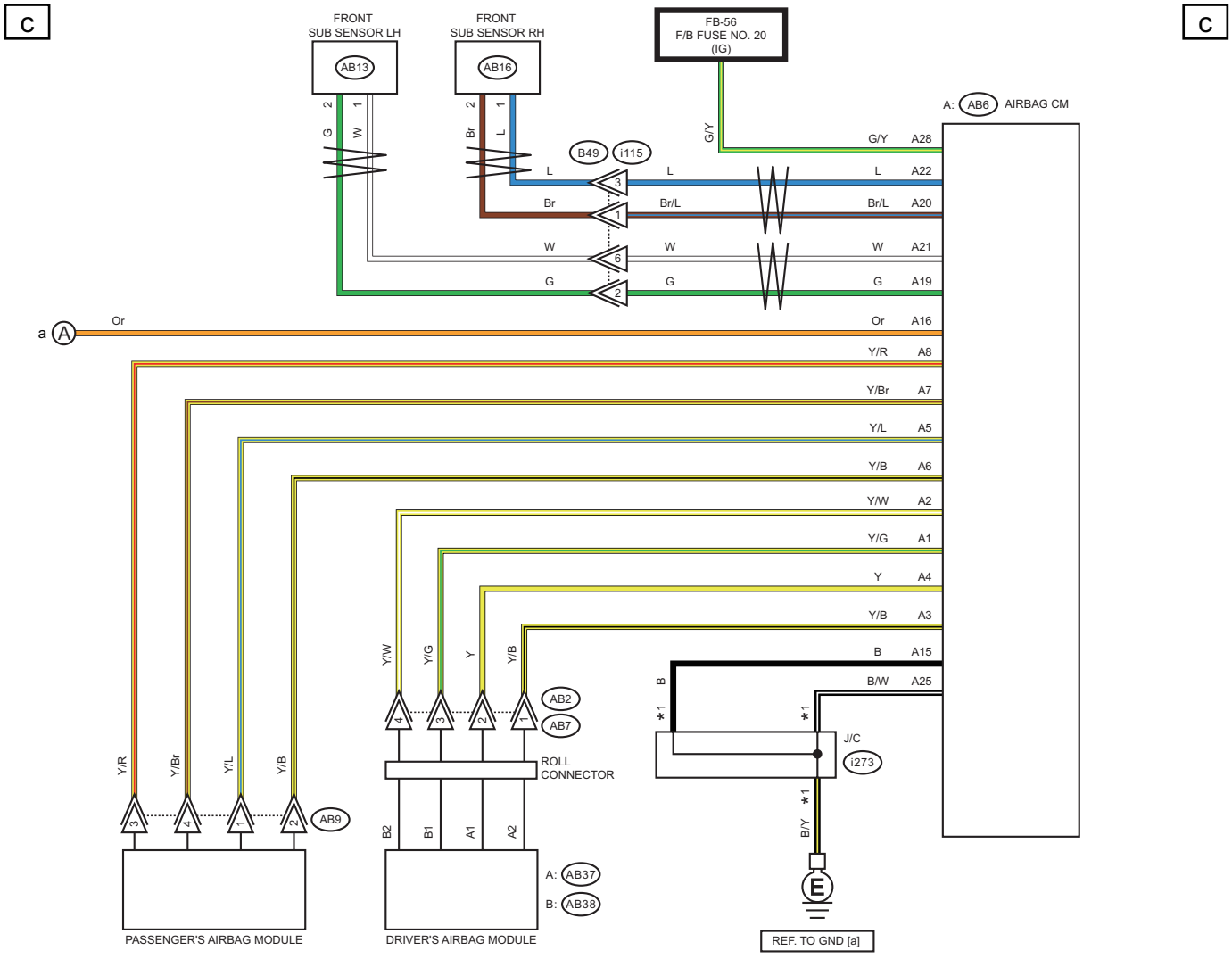

*1 : TERMINAL No. OPTIONAL ARRANGEMENT

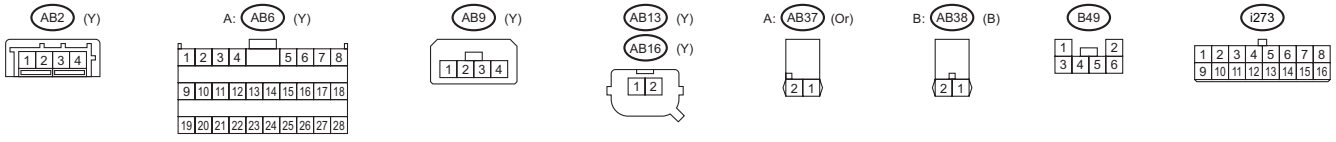

WI-60379

WIRING SYSTEM

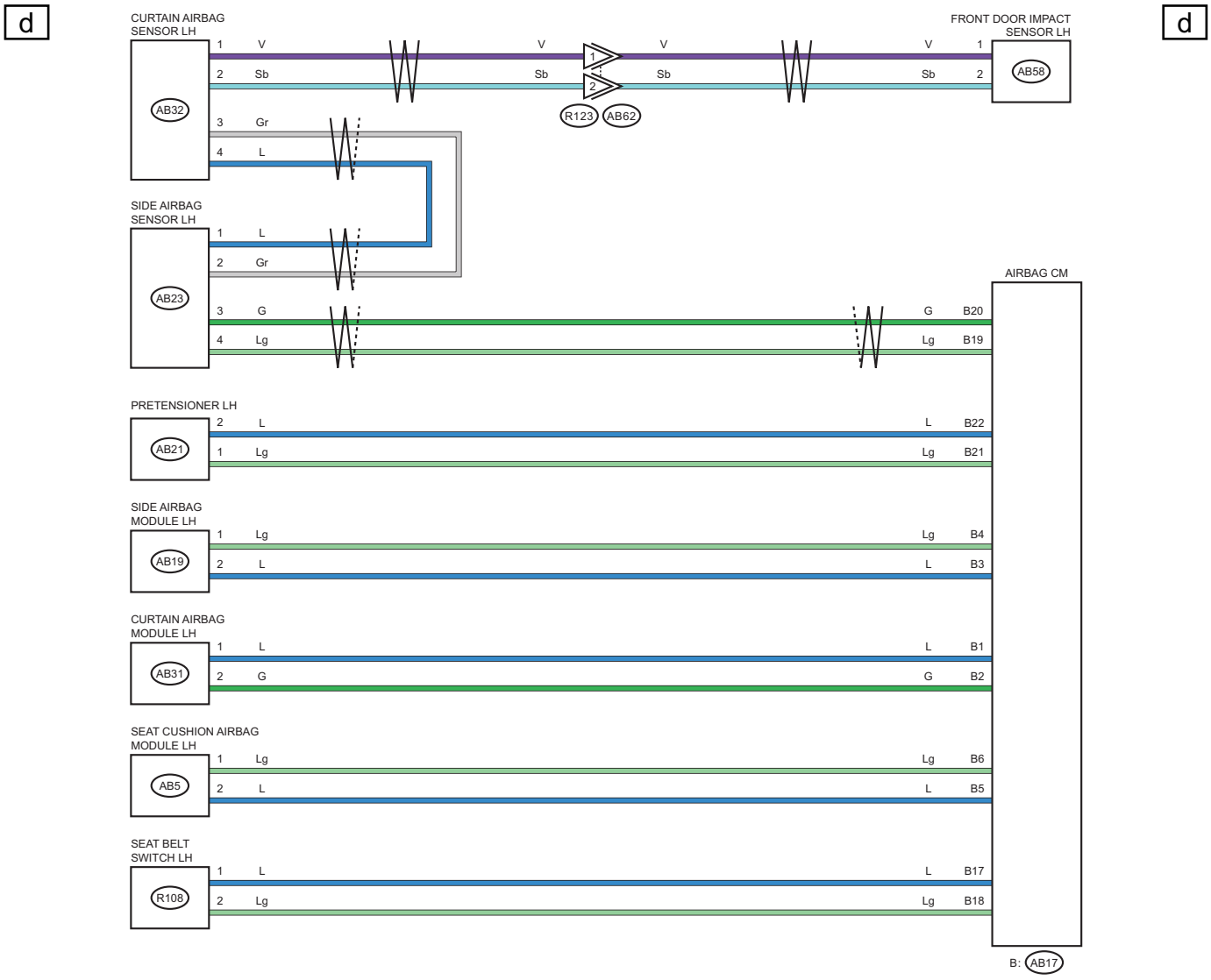

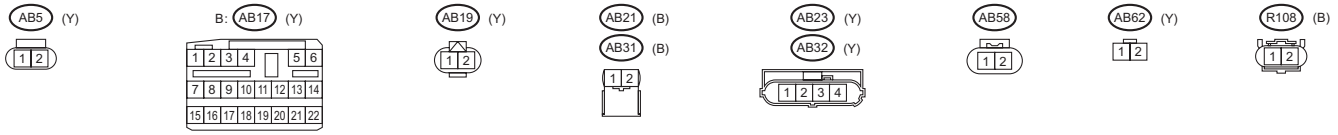

WI-60380

e

e

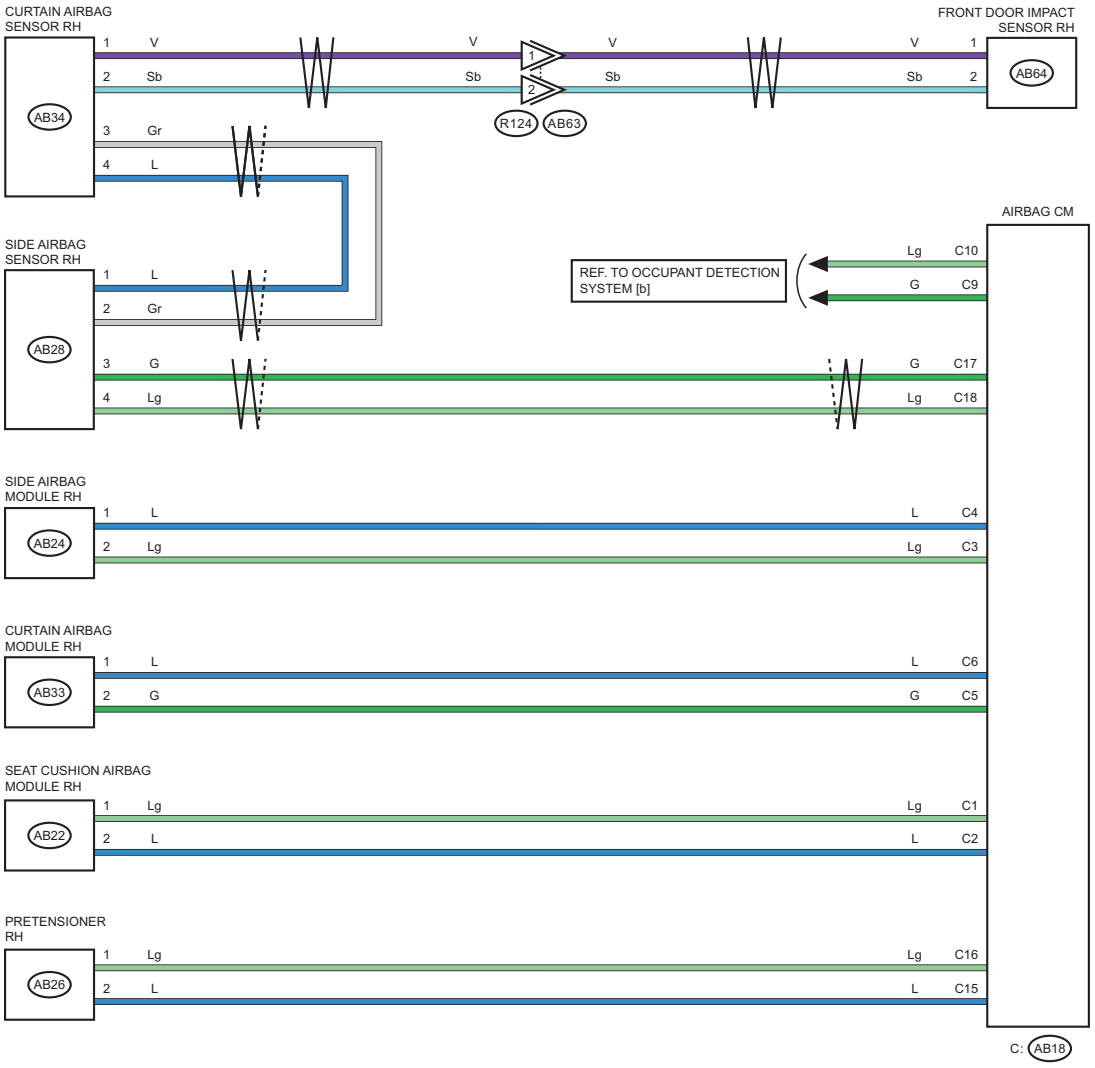
CURTAIN AIRBAG SENSOR RH
FRONT DOOR IMPACT SENSOR RH
AB34
AB64
R124
AB63
SIDE AIRBAG SENSOR RH
AB28
AIRBAG CM
REF. TO OCCUPANT DETECTION SYSTEM [b]
SIDE AIRBAG MODULE RH
AB24
CURTAIN AIRBAG MODULE RH
AB33
SEAT CUSHION AIRBAG MODULE RH
AB22
PRETENSIONER RH
AB26
C: AB18

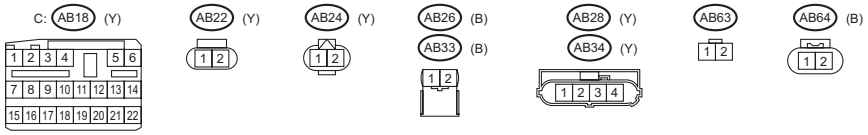
C: AB18 (Y)
AB22 (Y)
AB24 (Y)
AB26 (B)
AB33 (B)
AB28 (Y)
AB34 (Y)
AB63
AB64 (B)

WI-60381

8. Air Conditioning System

A: WIRING DIAGRAM

1. MANUAL A/C

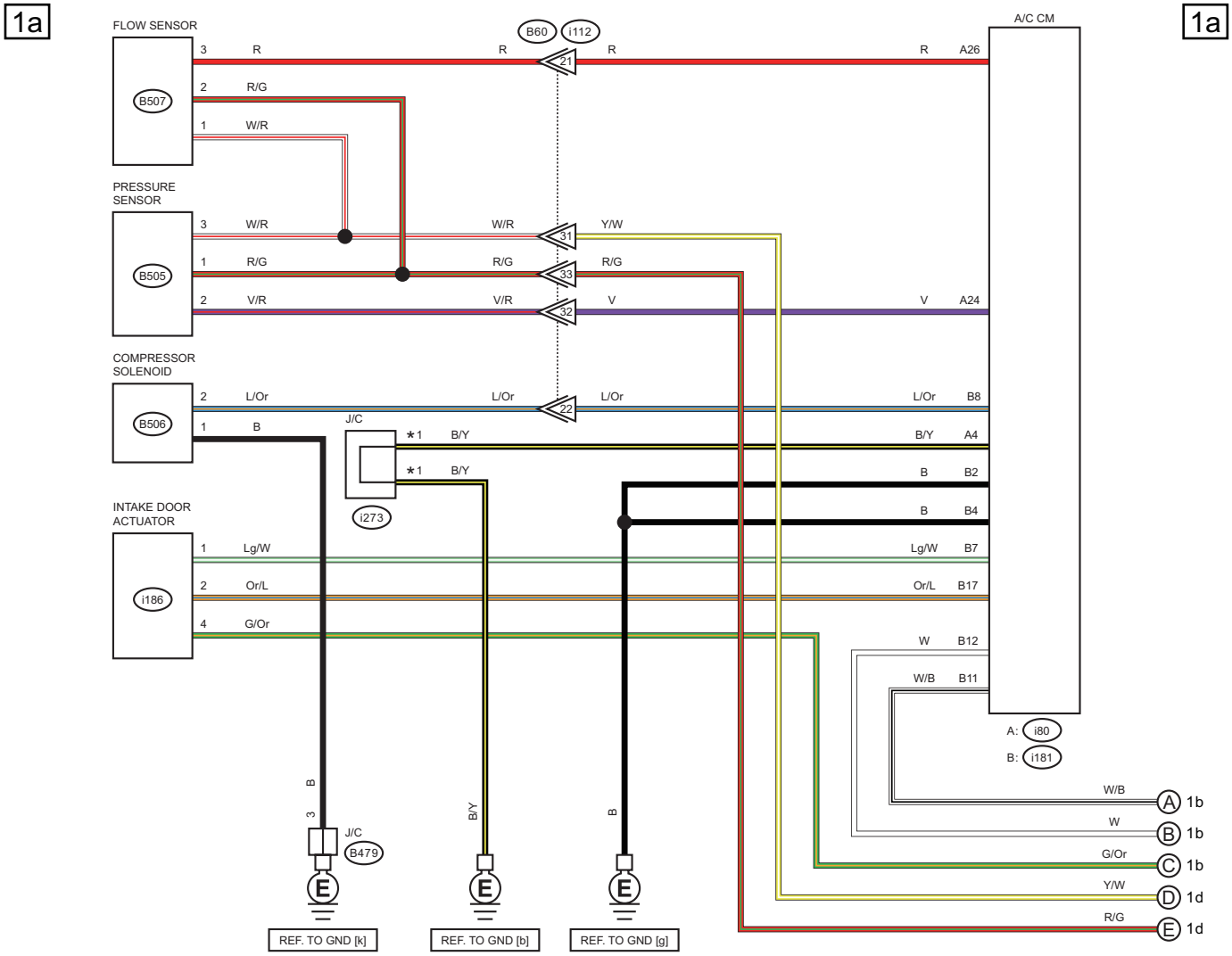

*1 : TERMINAL No. OPTIONAL ARRANGEMENT

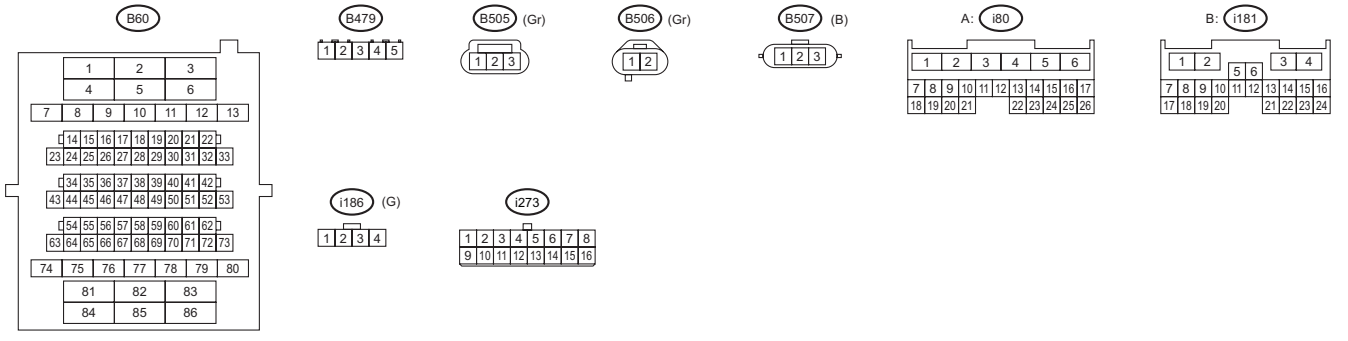

WI-60382

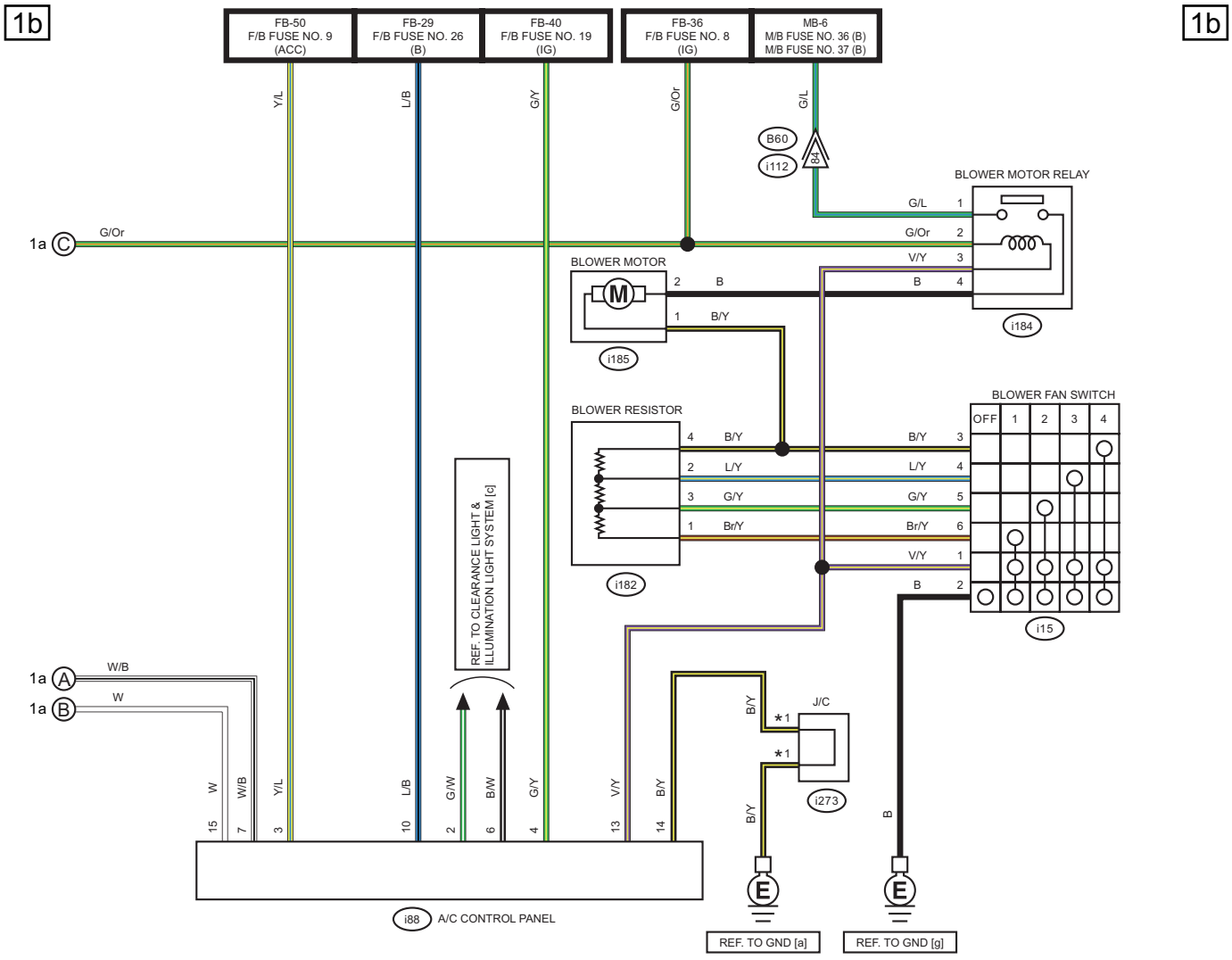

*1 : TERMINAL No. OPTIONAL ARRANGEMENT

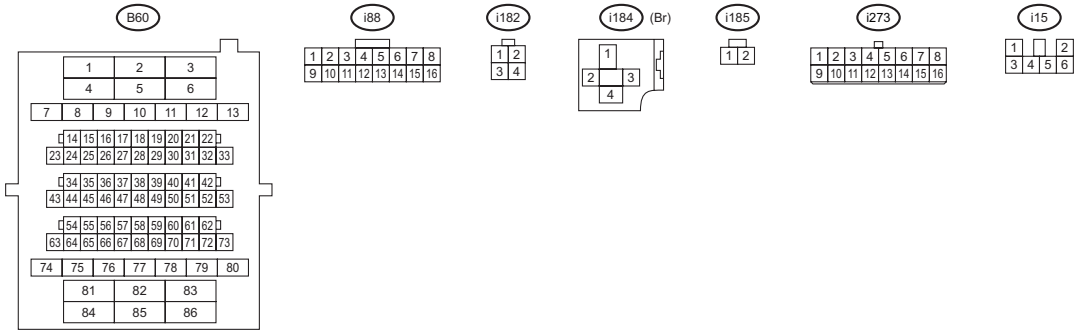

WI-60383

WIRING SYSTEM

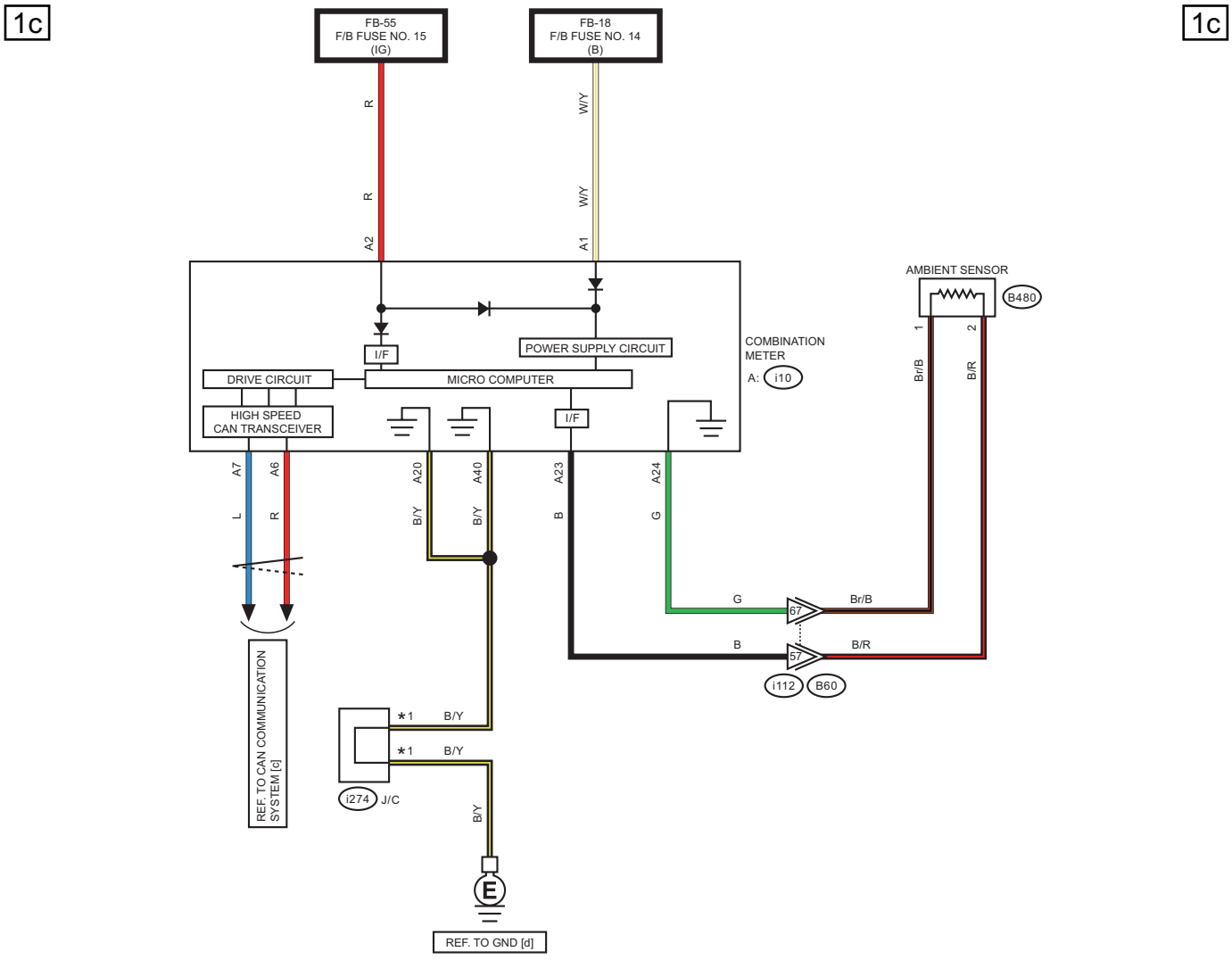

*1 : TERMINAL No. OPTIONAL ARRANGEMENT

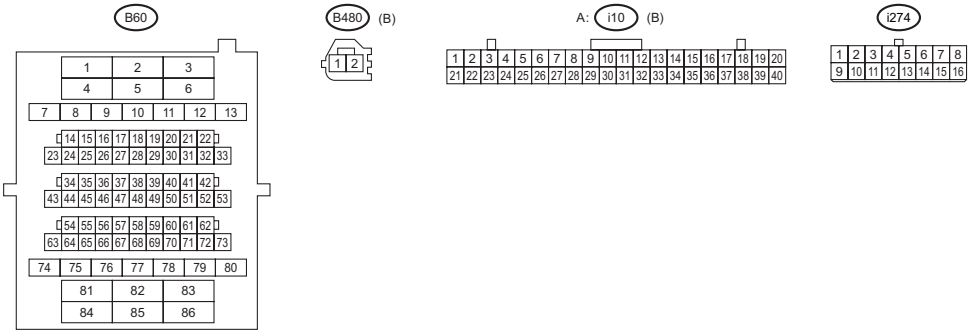

WI-60384

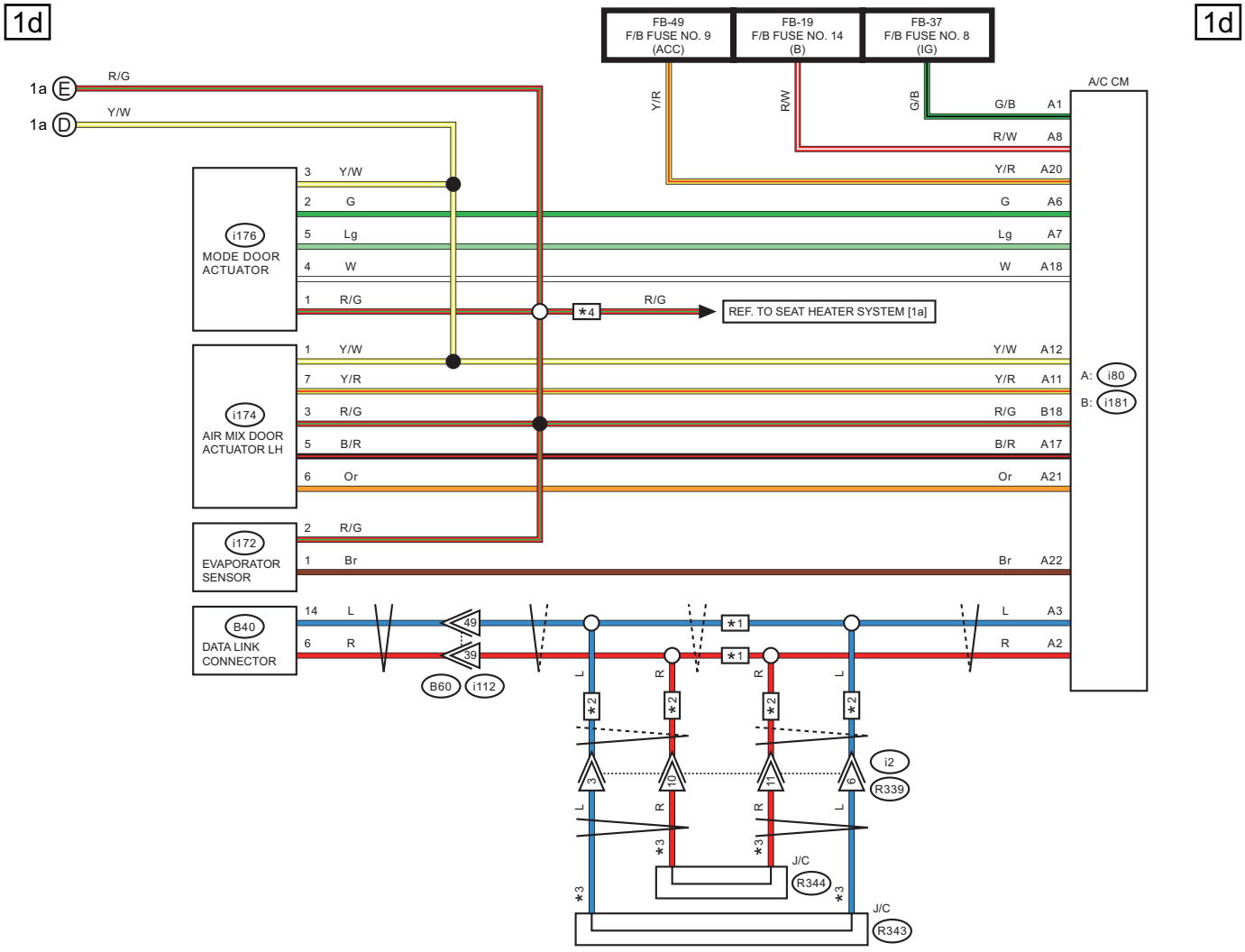

*1 : WITHOUT BSD/RCTA
*2 : WITH BSD/RCTA
*3 : TERMINAL No. OPTIONAL ARRANGEMENT
*4 : WITH SEAT HEATER

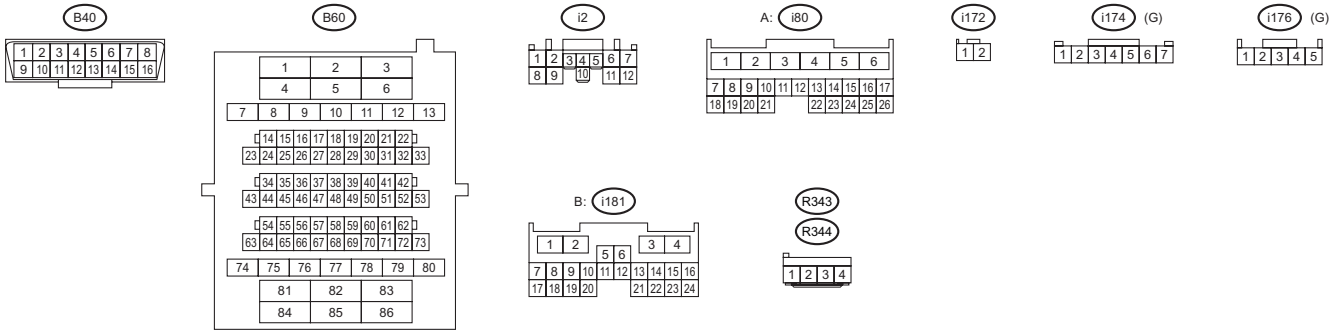

WI-60385

2. AUTO A/C

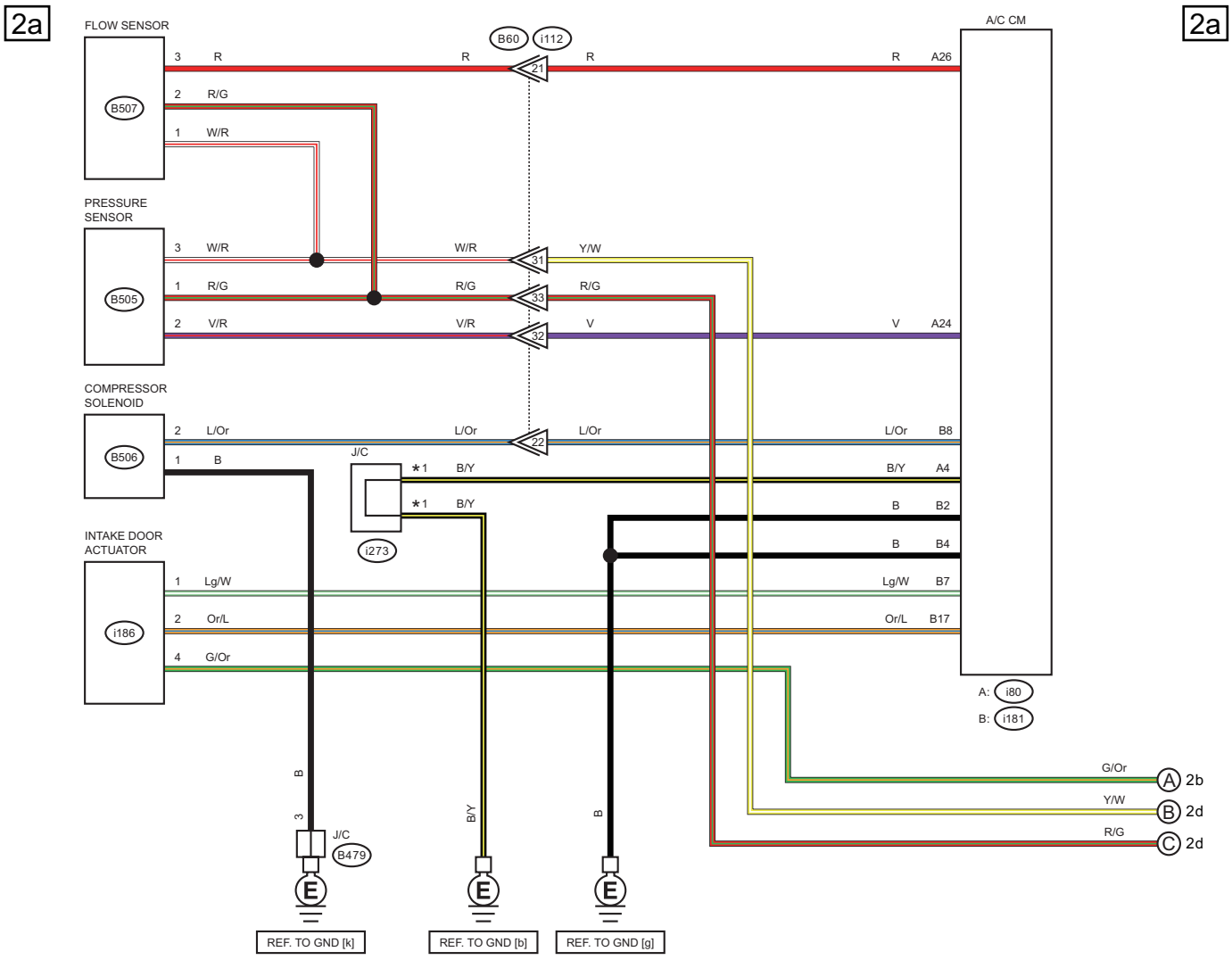

*1 : TERMINAL No. OPTIONAL ARRANGEMENT

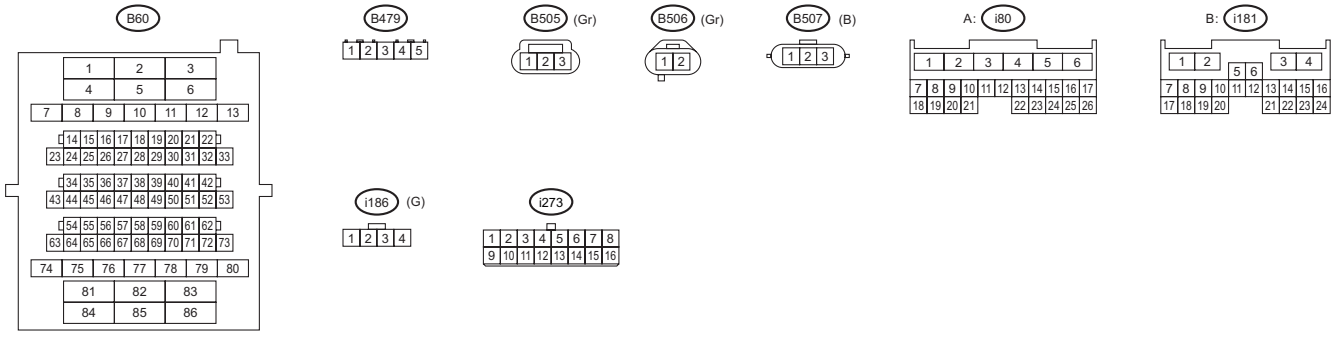

WI-60386

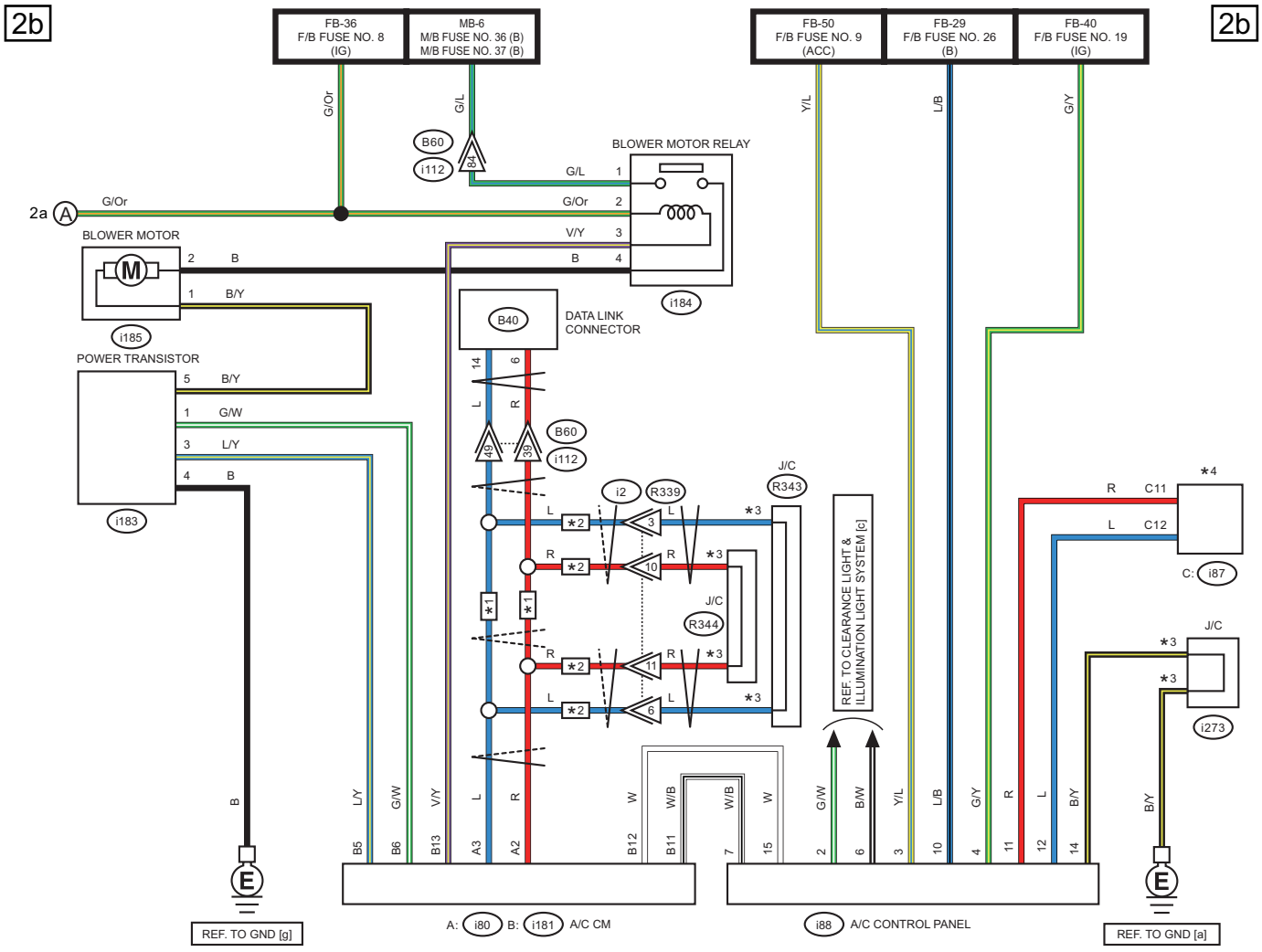

∗1 : WITHOUT BSD/RCTA
∗2 : WITH BSD/RCTA
∗3 : TERMINAL No. OPTIONAL ARRANGEMENT
∗4 : WITHOUT NAVIGATION : AUDIO
WITH NAVIGATION : NAVIGATION UNIT

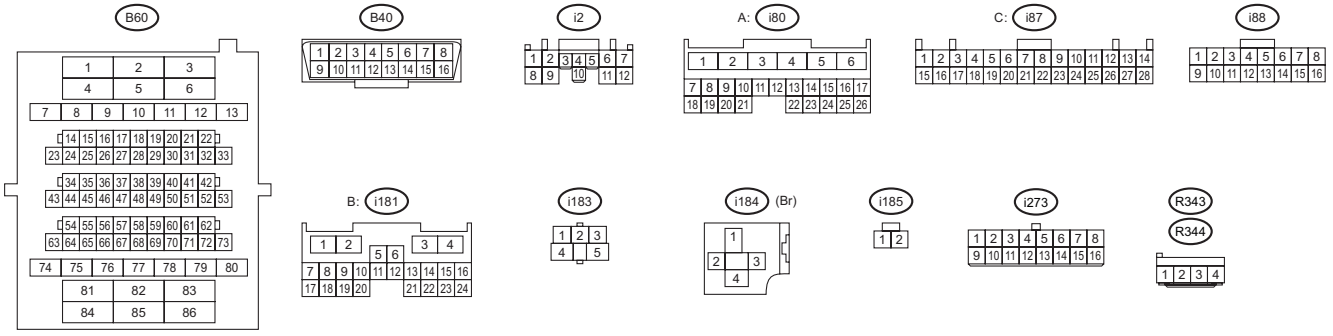

WI-60387

WIRING SYSTEM

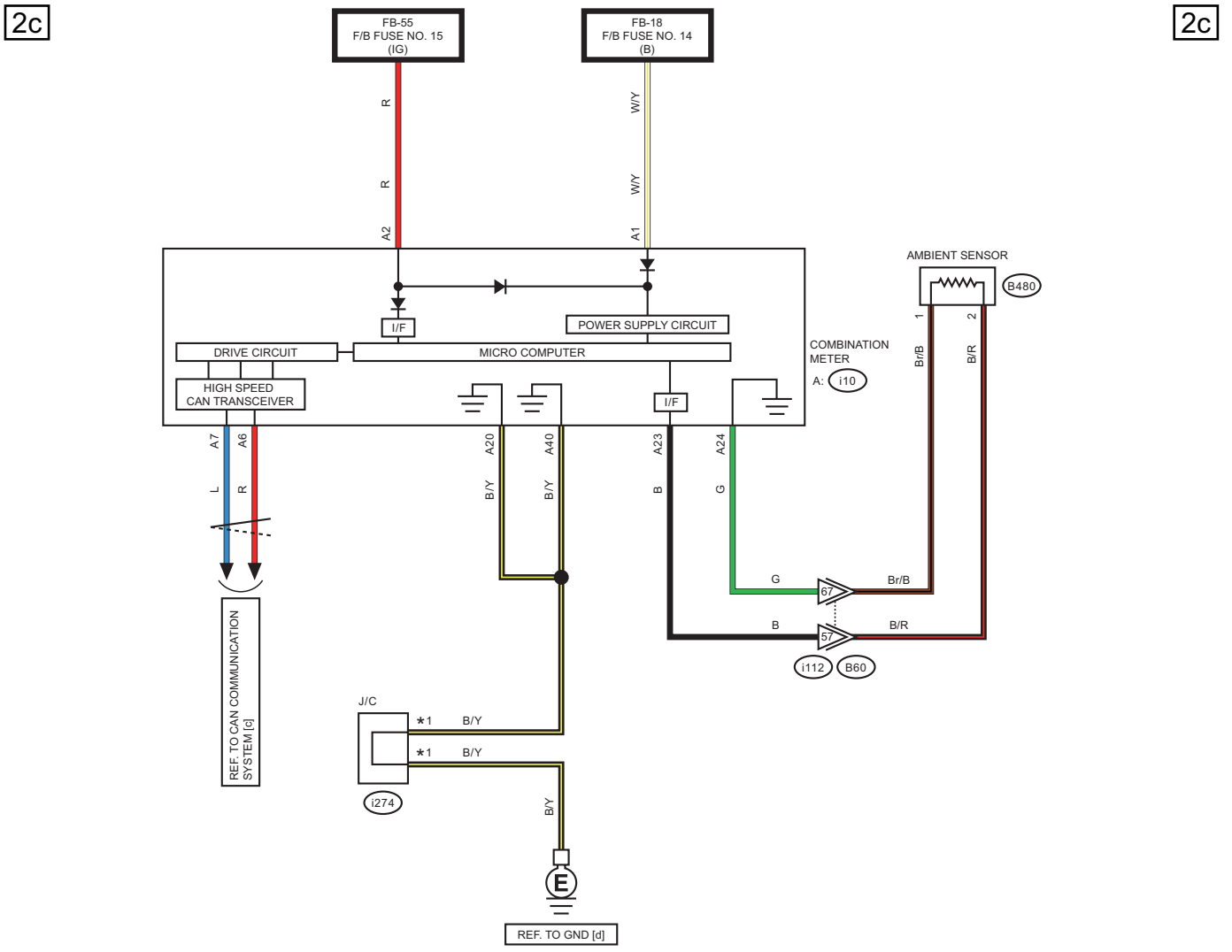

*1 : TERMINAL No. OPTIONAL ARRANGEMENT

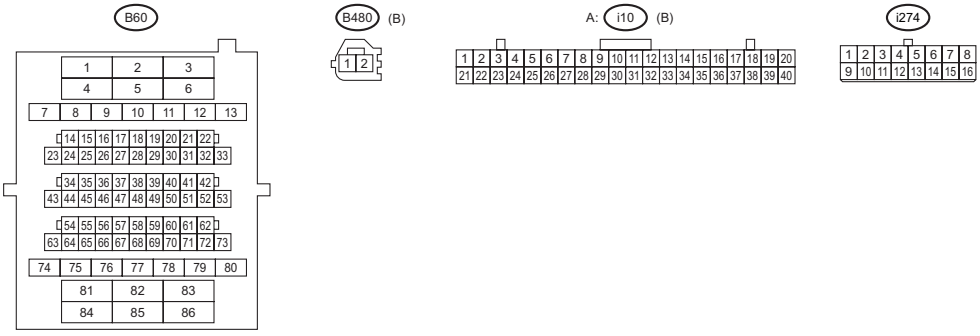

WI-60388

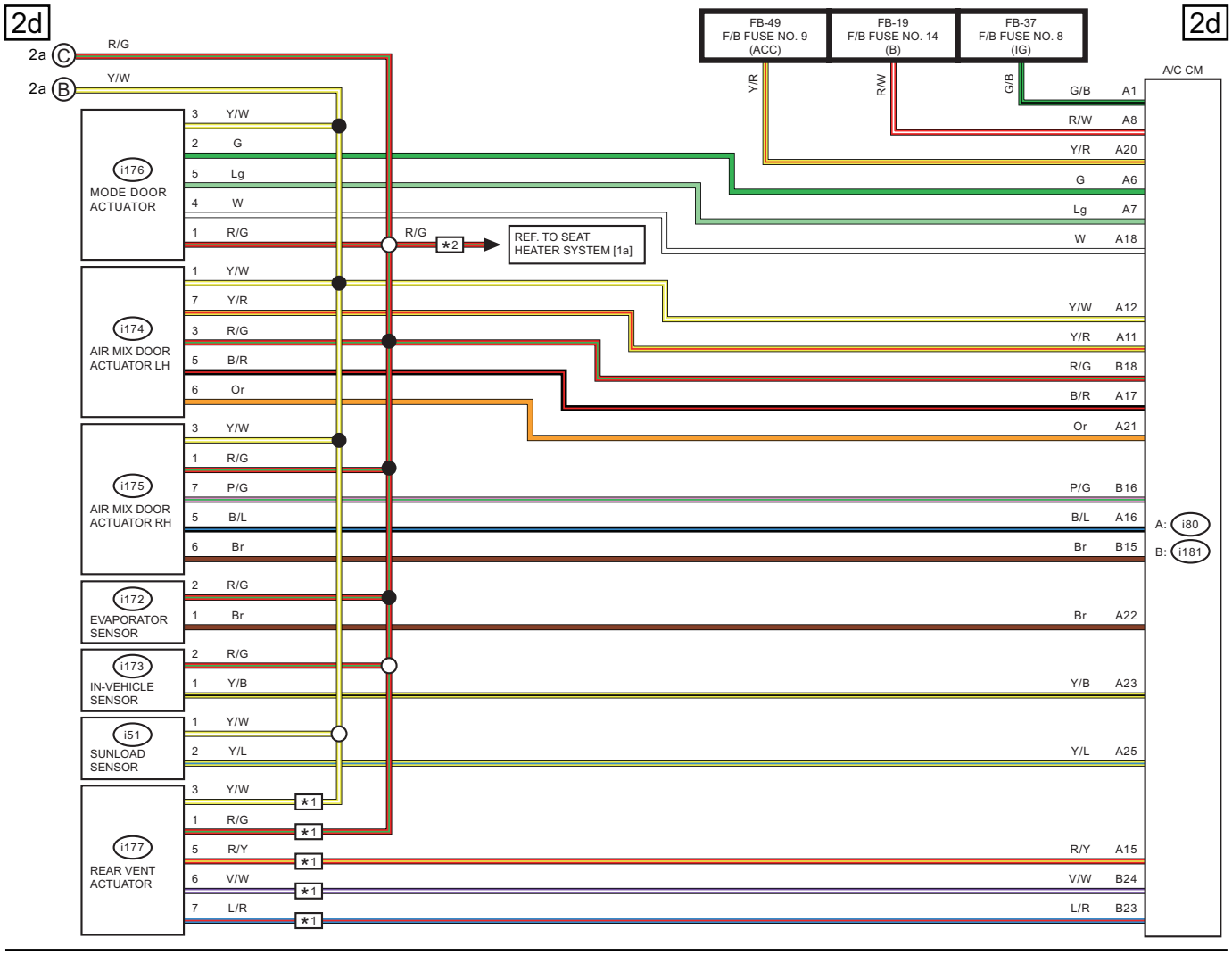

*1 : WITH REAR SEAT A/C
*2 : WITH SEAT HEATER

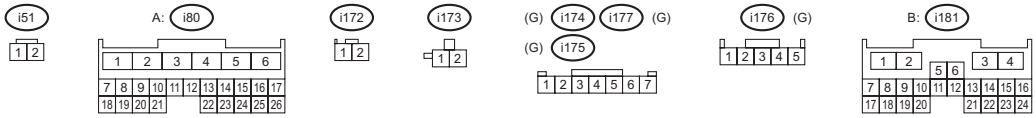

WI-60389

9. Audio System

A: WIRING DIAGRAM

1. 6.2 INCH DISPLAY

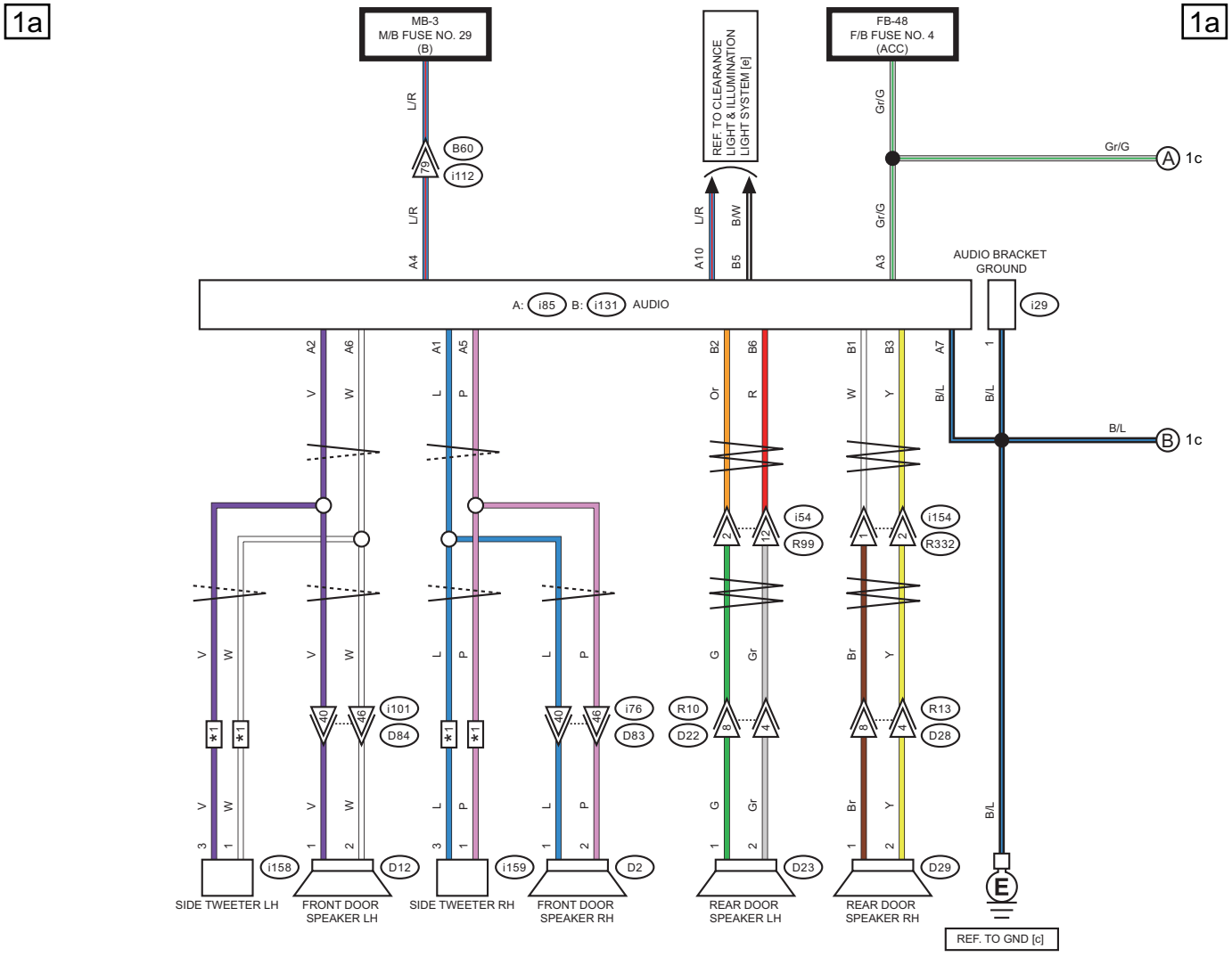

*1 : WITH TWEETER

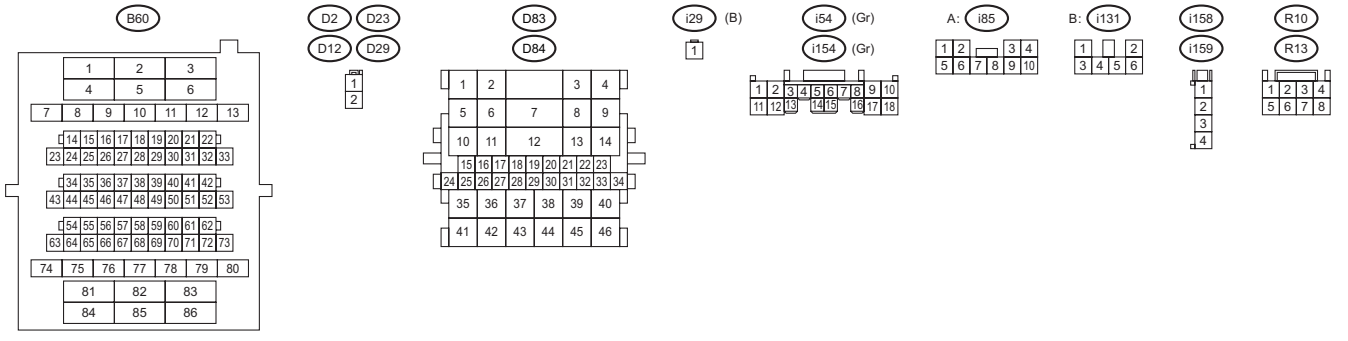

WI-60390

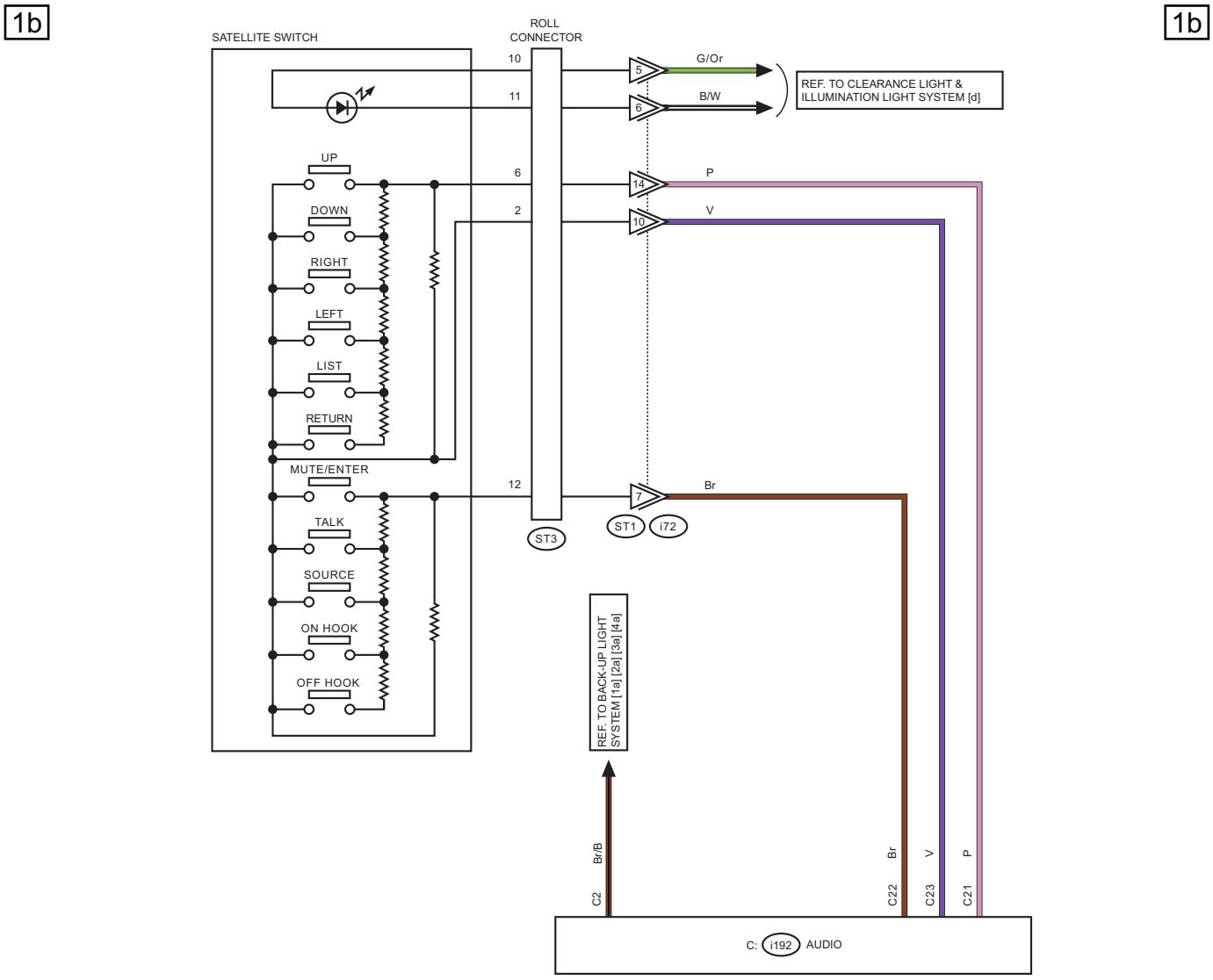
1b
1b
SATELLITE SWITCH
ROLL CONNECTOR
10
11
6
2
12
G/Or
B/W
P
V
Br
5
6
14
10
7
REF. TO CLEARANCE LIGHT & ILLUMINATION LIGHT SYSTEM [d]
UP
DOWN
RIGHT
LEFT
LIST
RETURN
MUTE/ENTER
TALK
SOURCE
ON HOOK
OFF HOOK
ST3
ST1
i72
REF. TO BACK-UP LIGHT SYSTEM [1a] [2a] [3a] [4a]
Br/B
C2
Br
C22
V
C23
P
C21
C: i192 AUDIO

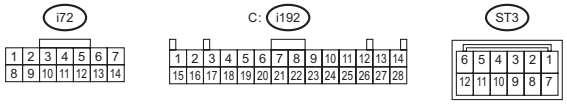
i72
1 2 3 4 5 6 7
8 9 10 11 12 13 14
C: i192
1 2 3 4 5 6 7 8 9 10 11 12 13 14
15 16 17 18 19 20 21 22 23 24 25 26 27 28
ST3
6 5 4 3 2 1
12 11 10 9 8 7

WI-60391

WIRING SYSTEM

1c 1c

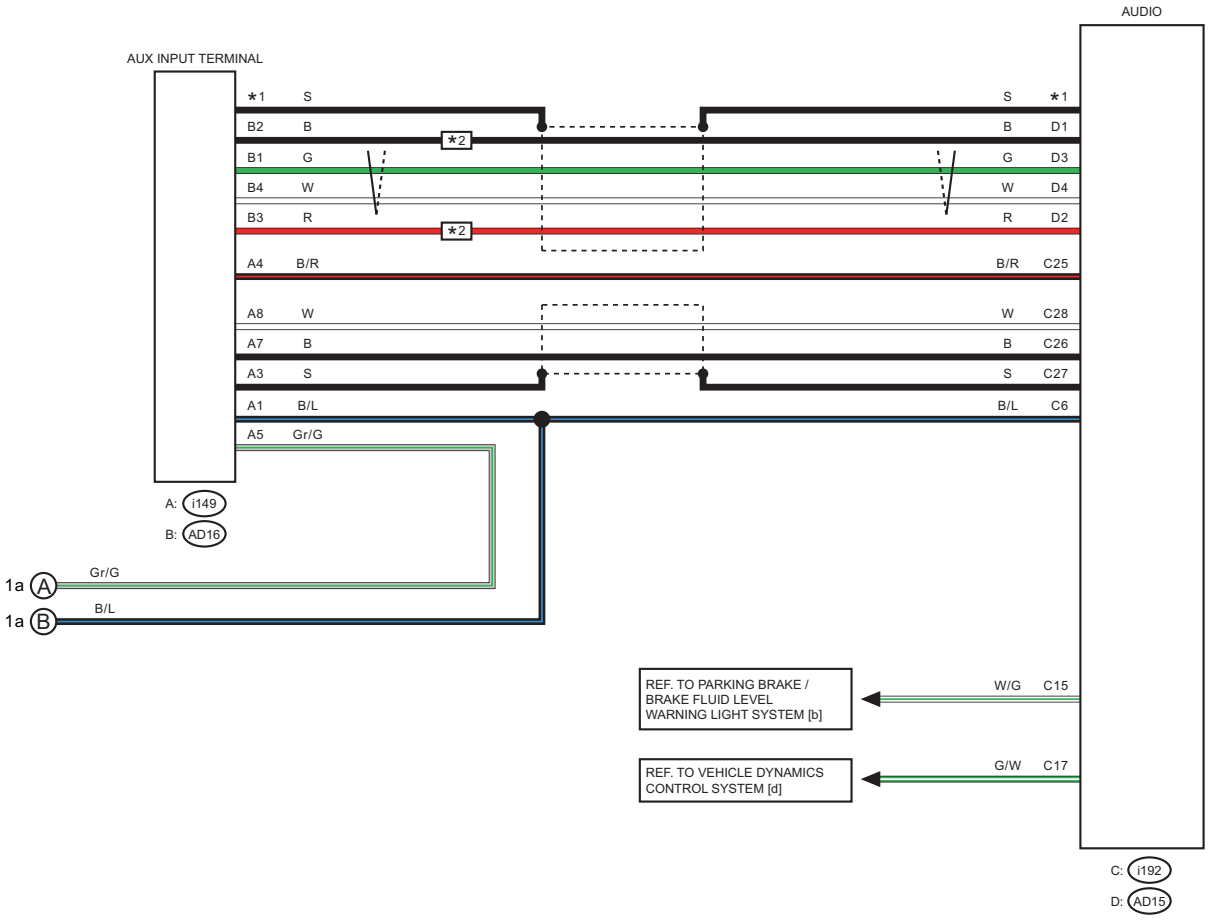

*1 : SHIELD CONNECTOR
*2 : SINGLE USB PORT TYPE

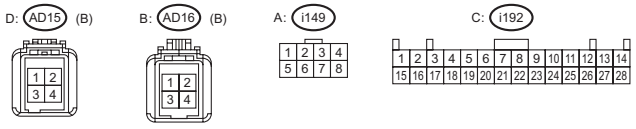

WI-60392

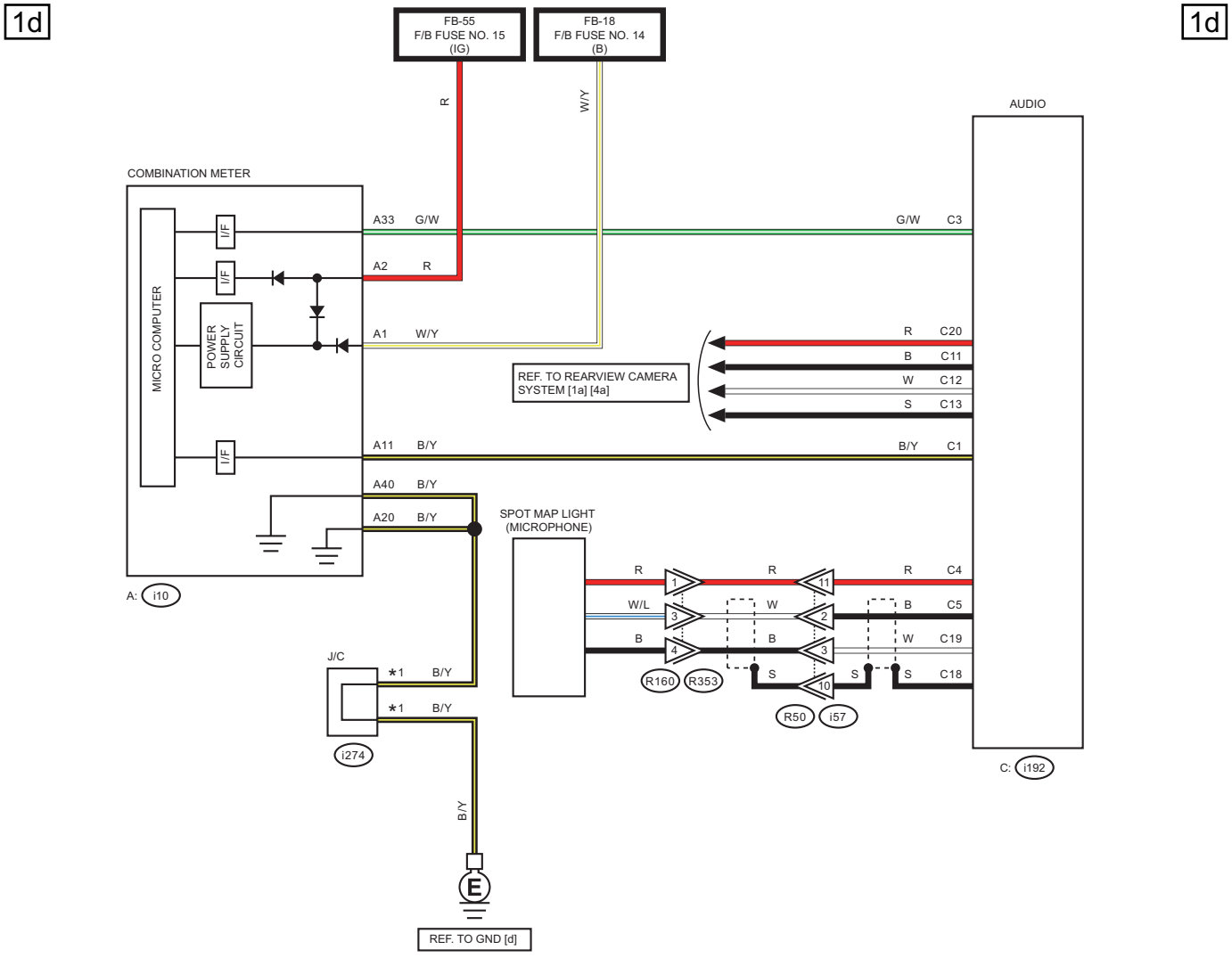

*1 : TERMINAL No. OPTIONAL ARRANGEMENT

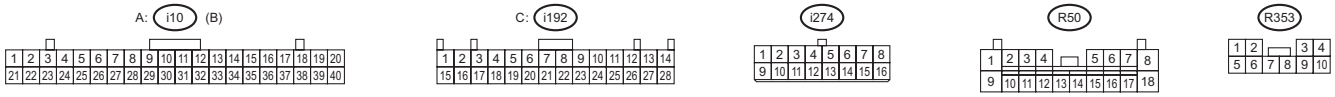

WI-60393

WIRING SYSTEM

1e

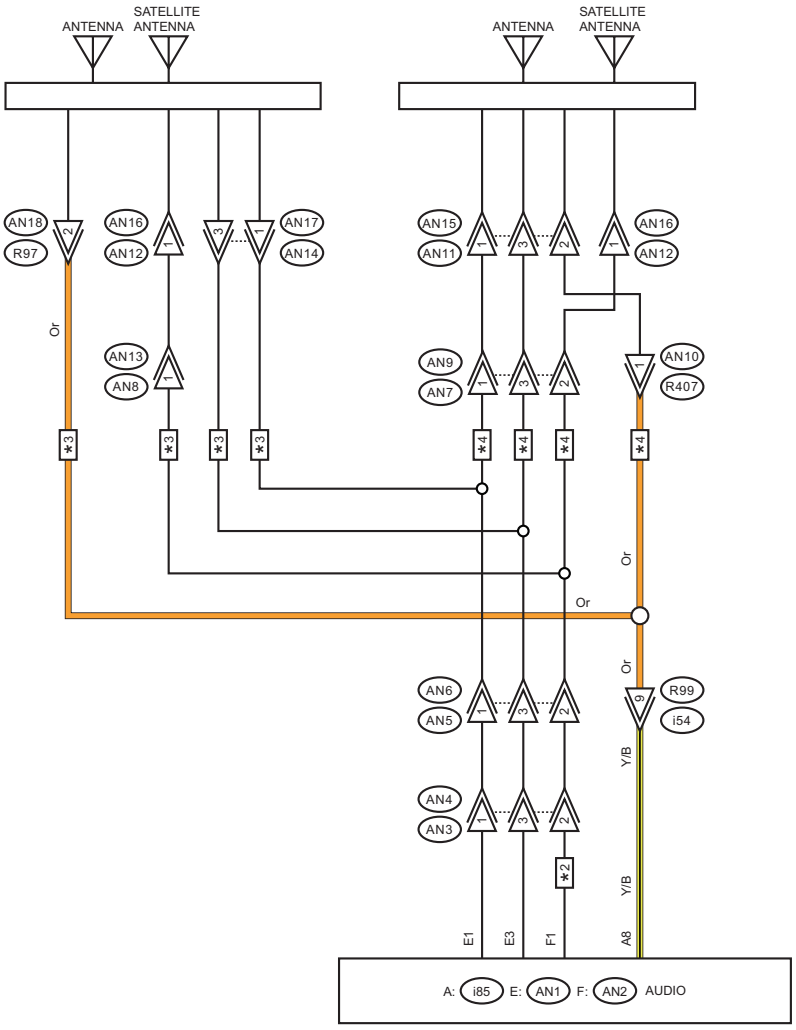

1e

*1 : WITHOUT SATELLITE ANTENNA
*2 : WITH SATELLITE ANTENNA
*3 : SEDAN MODEL
*4 : OUTBACK MODEL

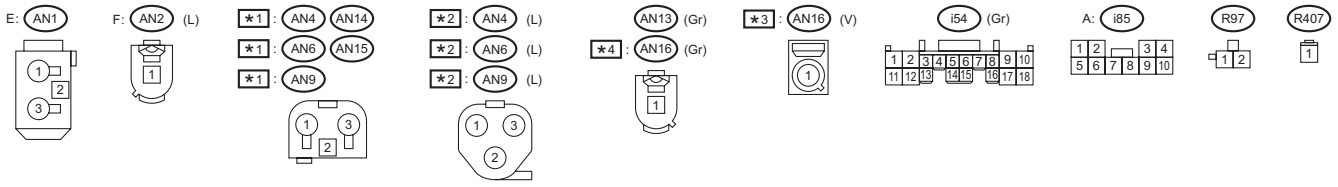

WI-60394

2. 7 INCH DISPLAY (WITHOUT AUDIO AMPLIFIER)

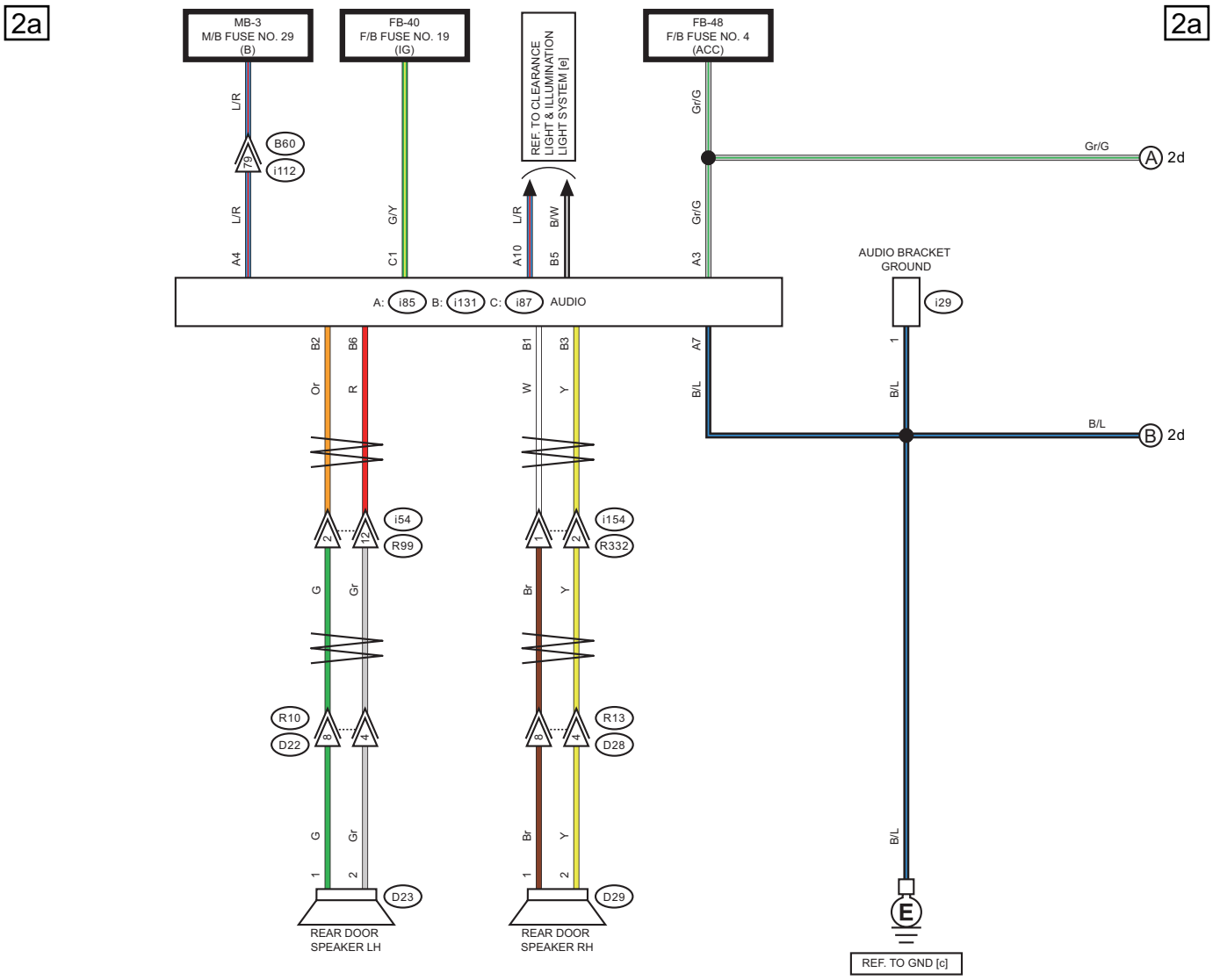

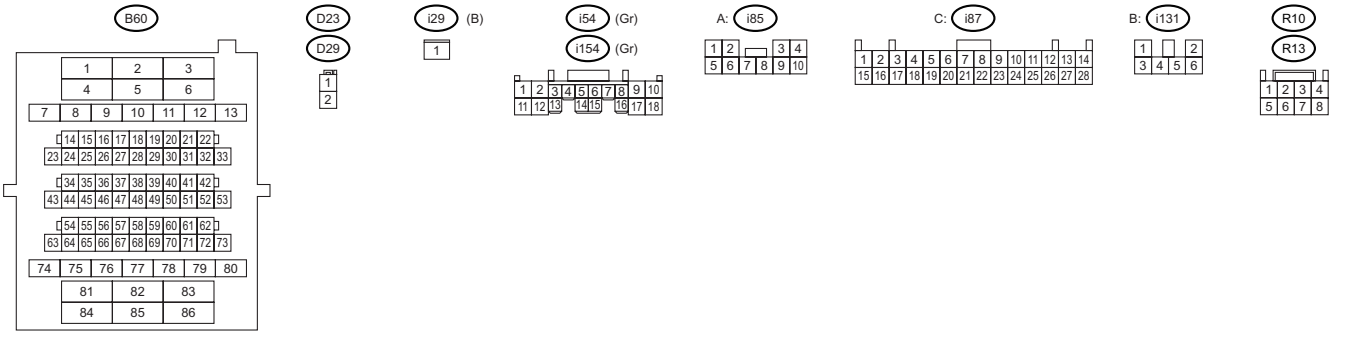

WI-60395

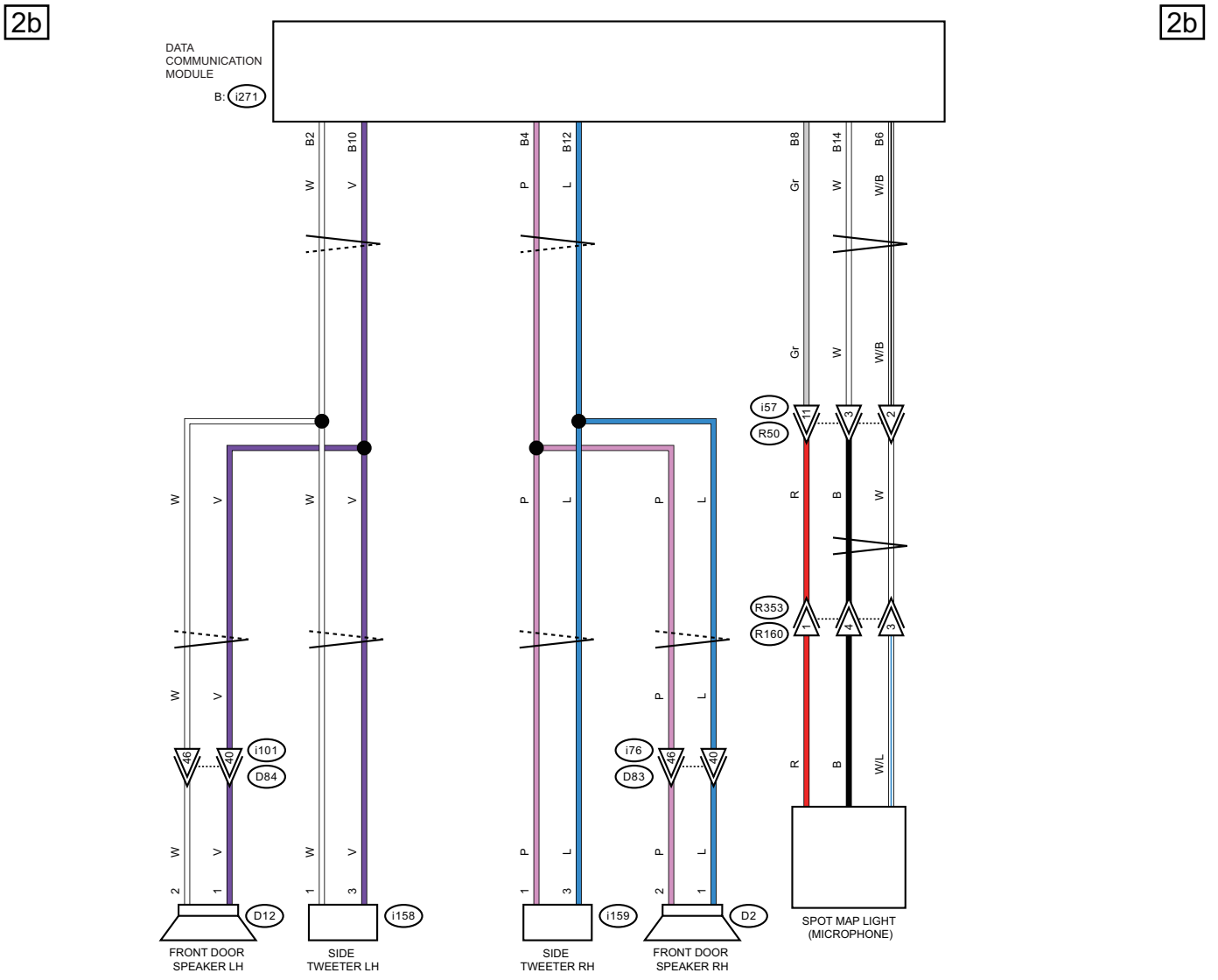
2b
2b
DATA COMMUNICATION MODULE
B: i271
B2
B10
B4
B12
B8
B14
B6
W
V
P
L
Gr
W
W/B
i57
R50
R353
R160
i101
D84
i76
D83
D12
i158
i159
D2
R
B
W
W/L
SPOT MAP LIGHT (MICROPHONE)
FRONT DOOR SPEAKER LH
SIDE TWEETER LH
SIDE TWEETER RH
FRONT DOOR SPEAKER RH

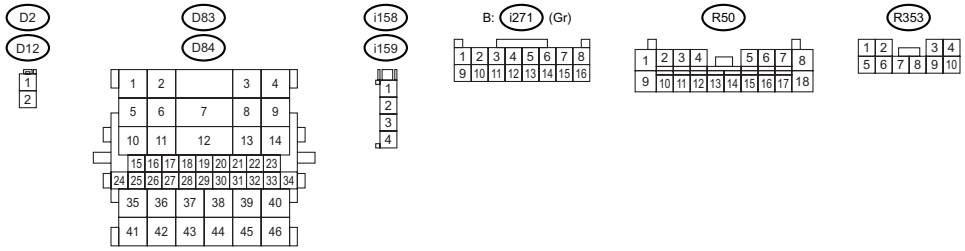
D2
D12
D83
D84
i158
i159
B: i271 (Gr)
R50
R353

WI-60396

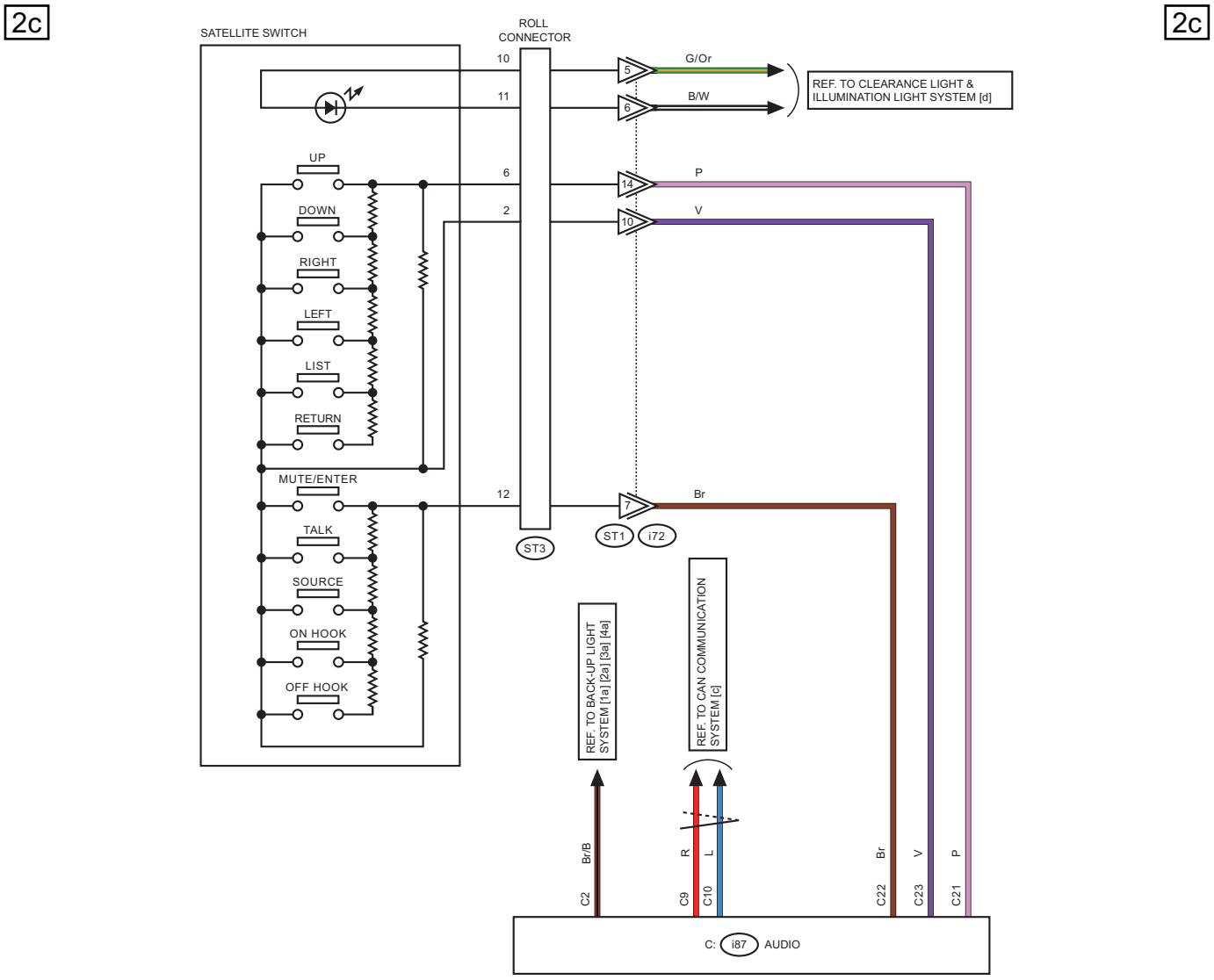
2c
2c
SATELLITE SWITCH
ROLL CONNECTOR
10
11
6
2
12
G/Or
B/W
P
V
Br
REF. TO CLEARANCE LIGHT & ILLUMINATION LIGHT SYSTEM [d]
UP
DOWN
RIGHT
LEFT
LIST
RETURN
MUTE/ENTER
TALK
SOURCE
ON HOOK
OFF HOOK
ST3
ST1
i72
REF. TO BACK-UP LIGHT SYSTEM [1a] [2a] [3a] [4a]
REF. TO CAN COMMUNICATION SYSTEM [c]
Br/B
R
L
Br
V
P
C2
C9
C10
C22
C23
C21
C: i87 AUDIO

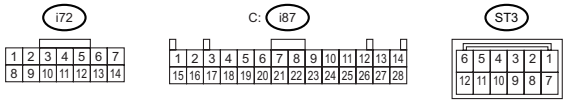
i72
1 2 3 4 5 6 7
8 9 10 11 12 13 14
C: i87
1 2 3 4 5 6 7 8 9 10 11 12 13 14
15 16 17 18 19 20 21 22 23 24 25 26 27 28
ST3
6 5 4 3 2 1
12 11 10 9 8 7

WI-60397

2d 2d

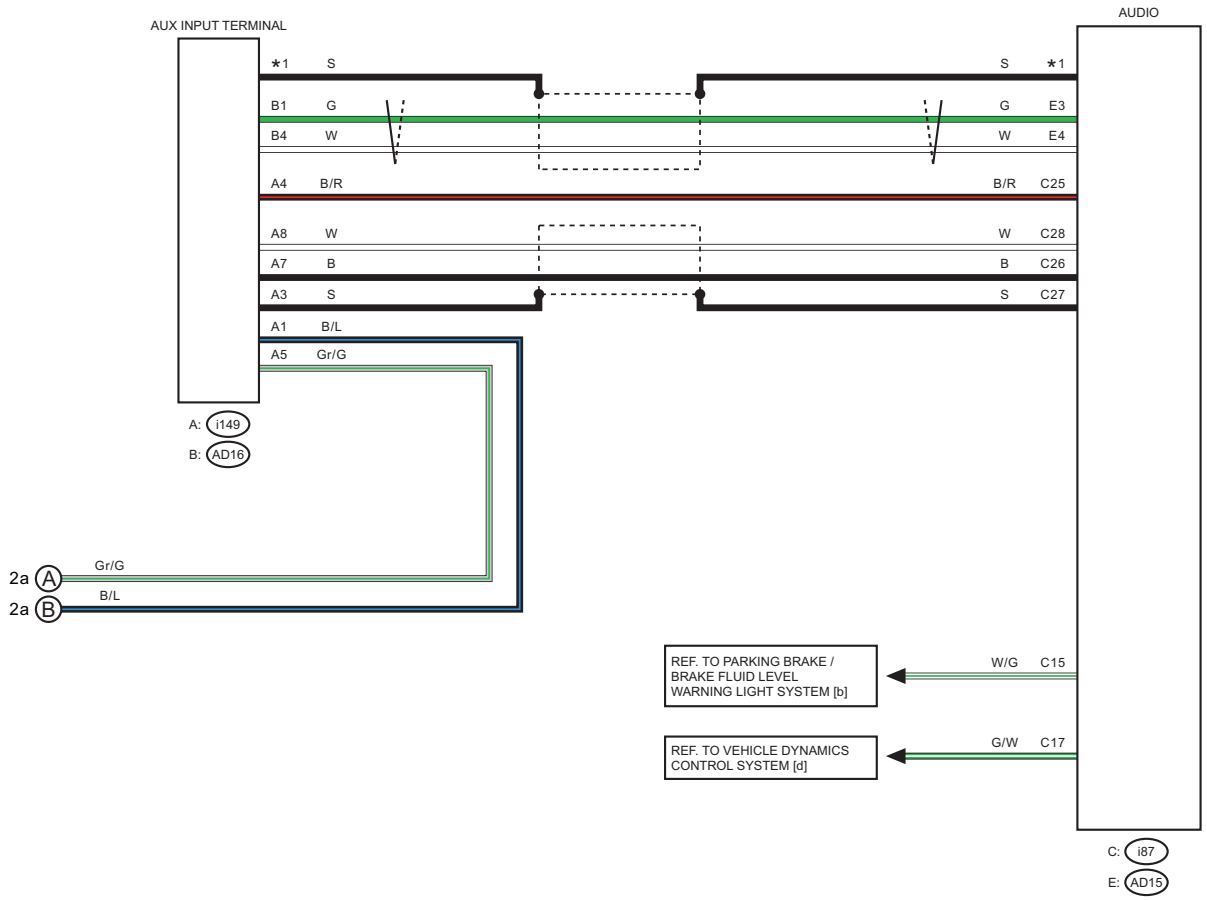

*1 : SHIELD CONNECTOR

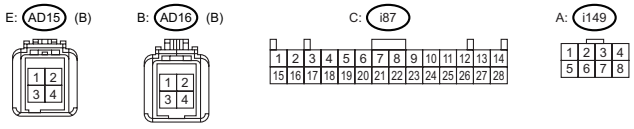

WI-60398

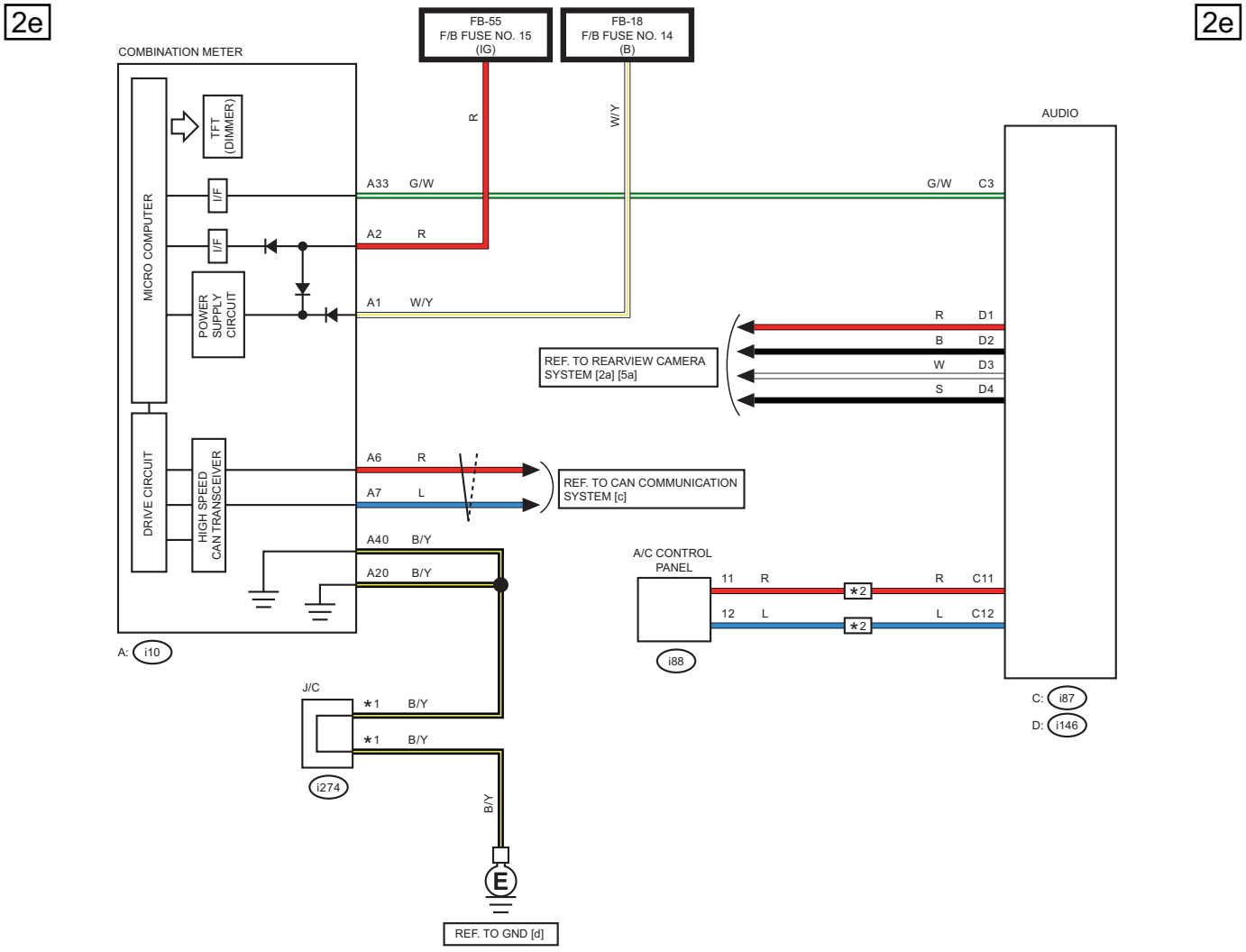

∗1 : TERMINAL No. OPTIONAL ARRANGEMENT
∗2 : AUTO A/C

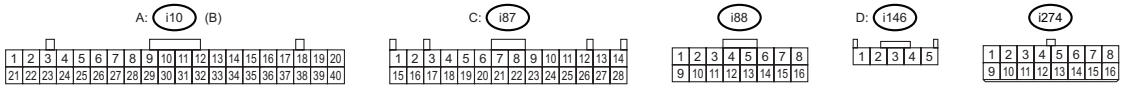

WI-60399

WIRING SYSTEM

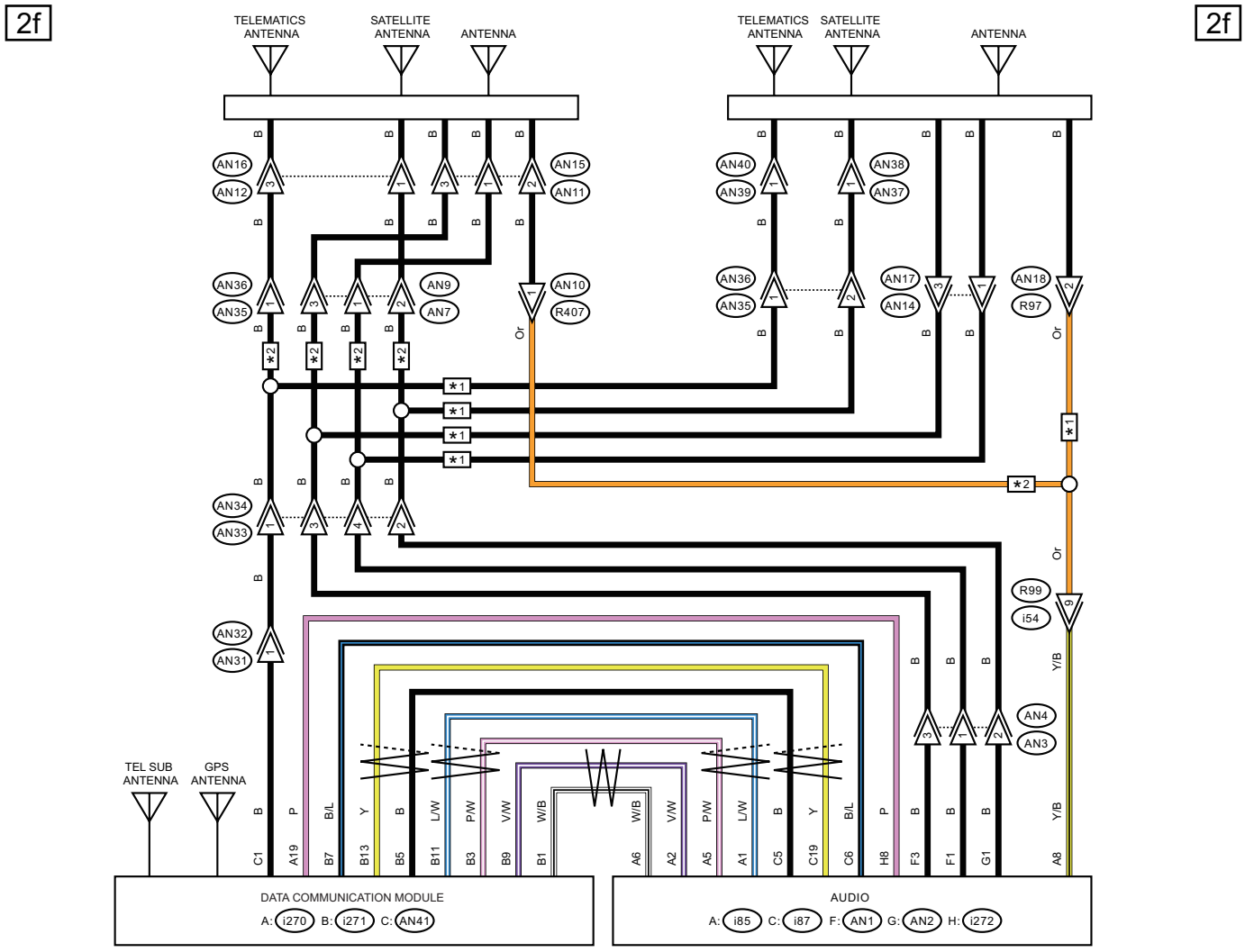

*1 : SEDAN MODEL
*2 : OUTBACK MODEL
*3 : WITHOUT SATELLITE ANTENNA
*4 : WITH SATELLITE ANTENNA

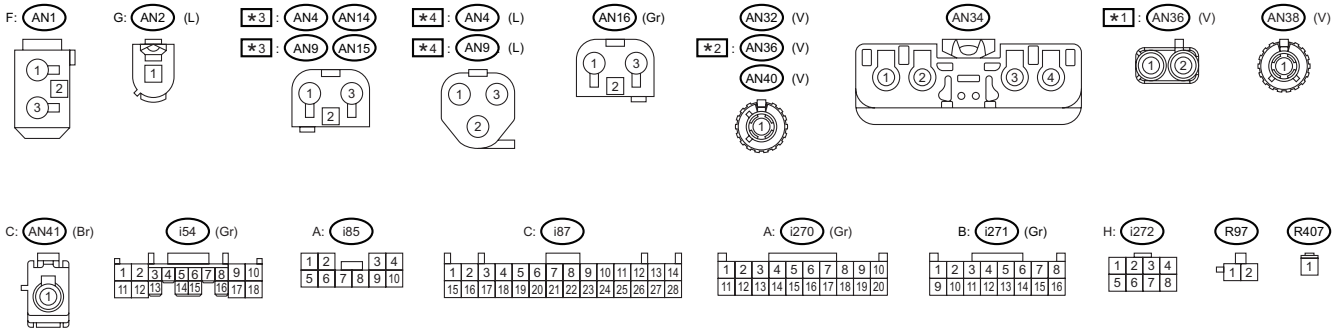

WI-60400

3. 7 INCH DISPLAY (WITH AUDIO AMPLIFIER)

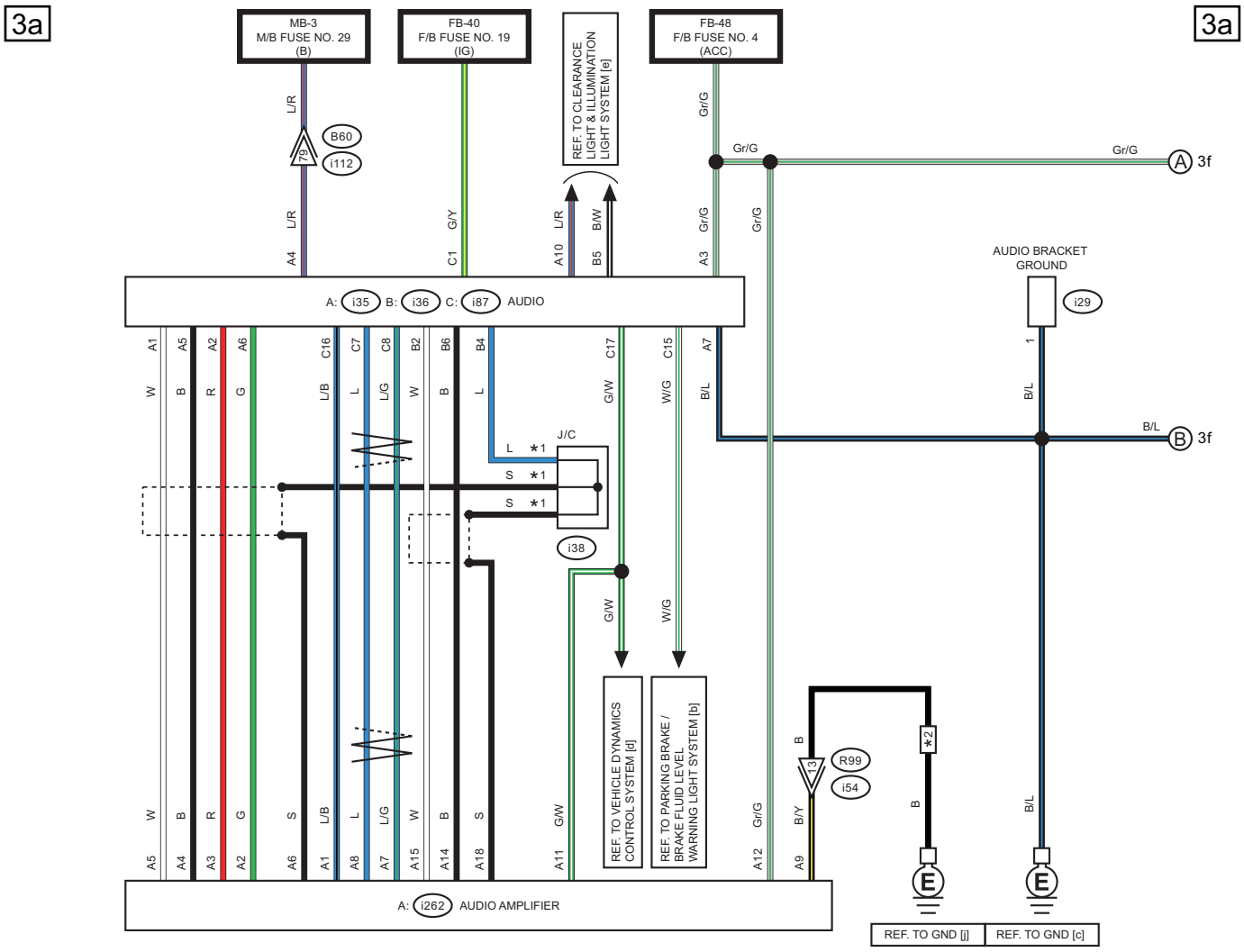

★1 : TERMINAL No. OPTIONAL ARRANGEMENT
★2 : SEDAN MODEL

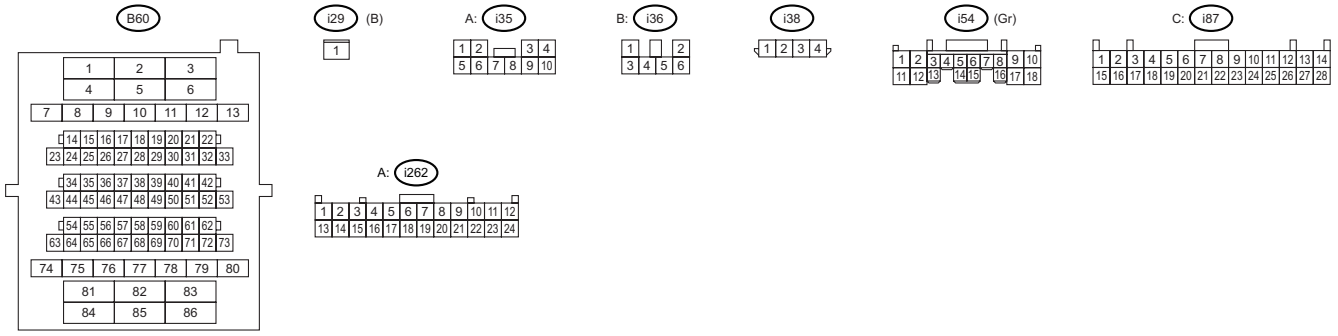

WI-60401

3b 3b

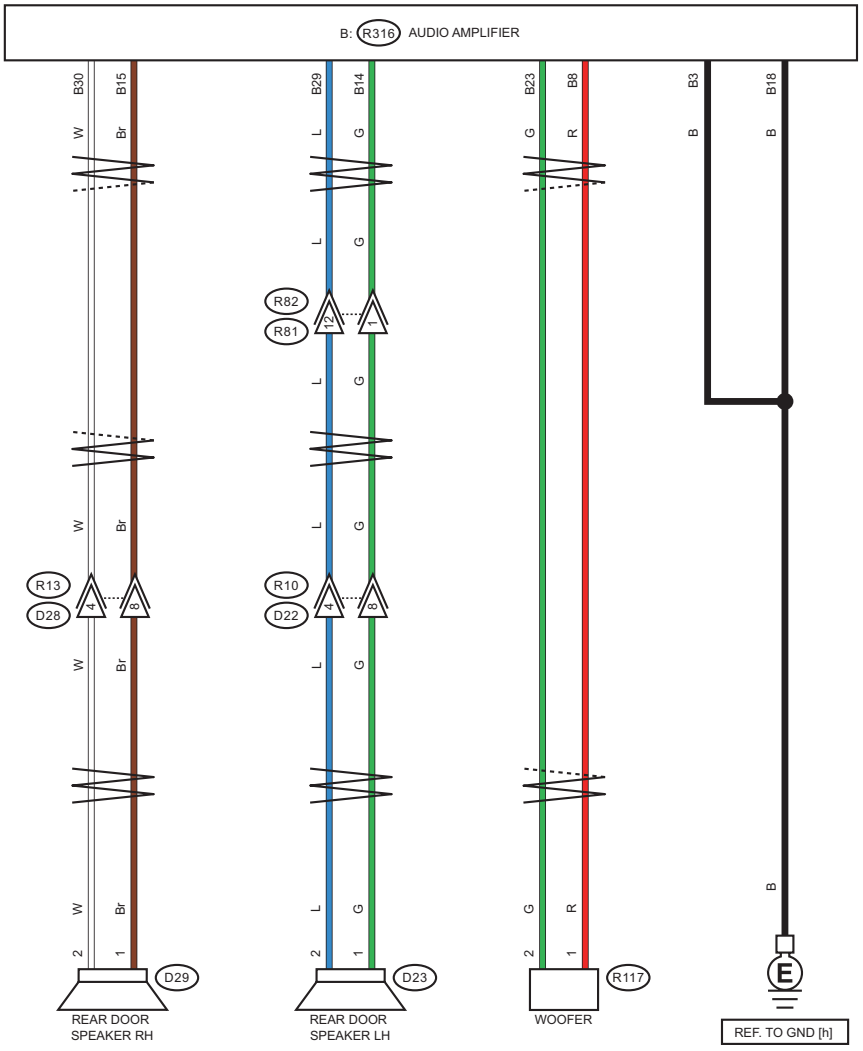

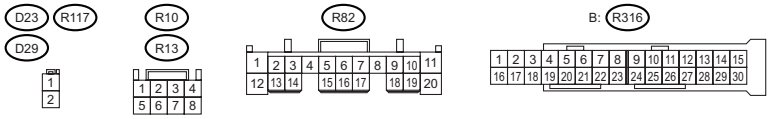

WI-60402

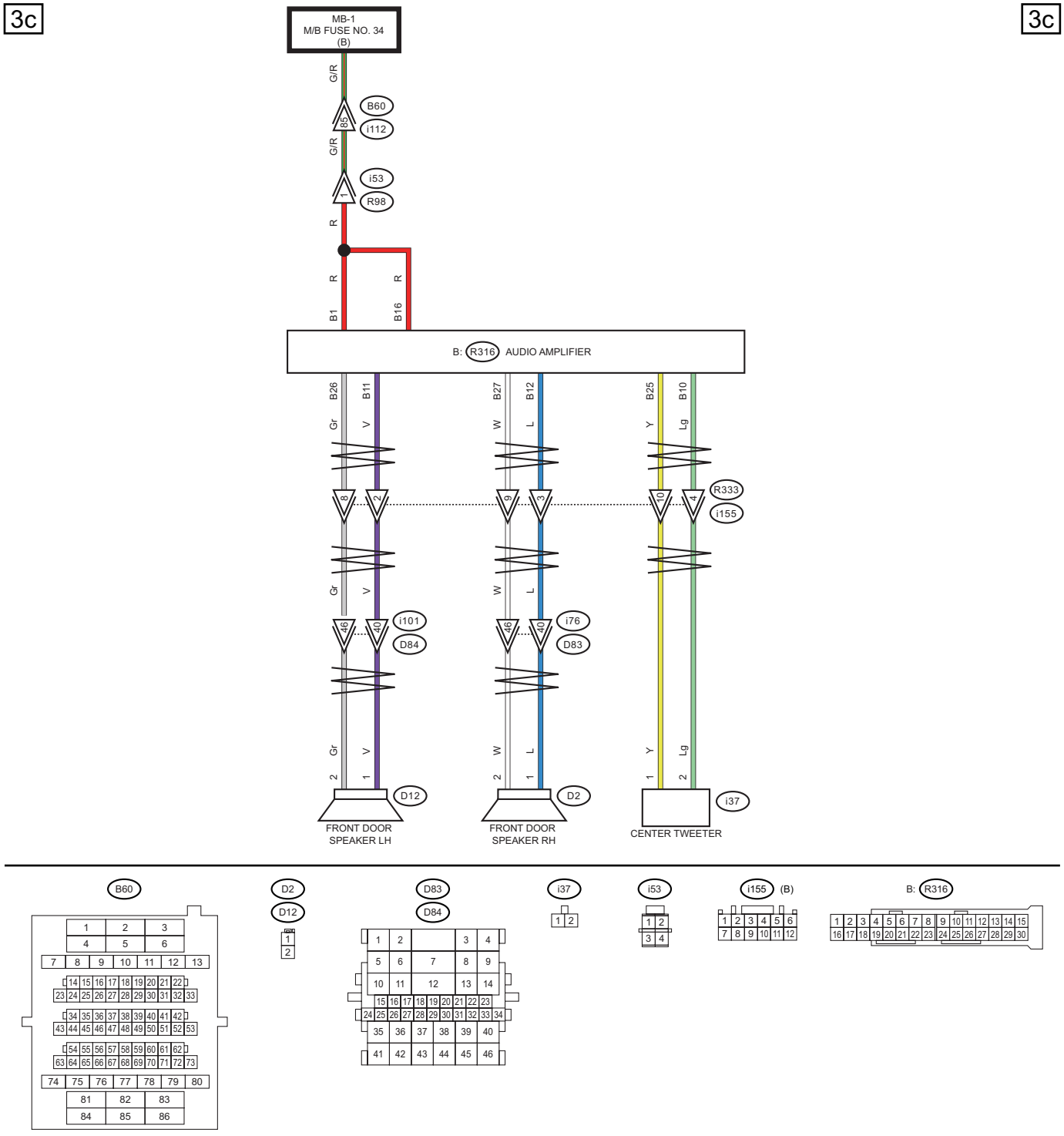
3c
3c
MB-1
M/B FUSE NO. 34
(B)
G/R
B60
85
i112
G/R
i53
1
R98
R
R
B1
R
B16
B: R316 AUDIO AMPLIFIER
B26
B11
Gr
V
B27
B12
W
L
B25
B10
Y
Lg
8
2
9
3
10
4
R333
i155
Gr
V
W
L
46
40
i101
D84
i76
D83
Gr
V
W
L
Y
Lg
2
1
1
2
D12
D2
i37
FRONT DOOR
SPEAKER LH
FRONT DOOR
SPEAKER RH
CENTER TWEETER
B60
D2
D12
D83
D84
i37
i53
i155
(B)
B: R316

WI-60403

WIRING SYSTEM

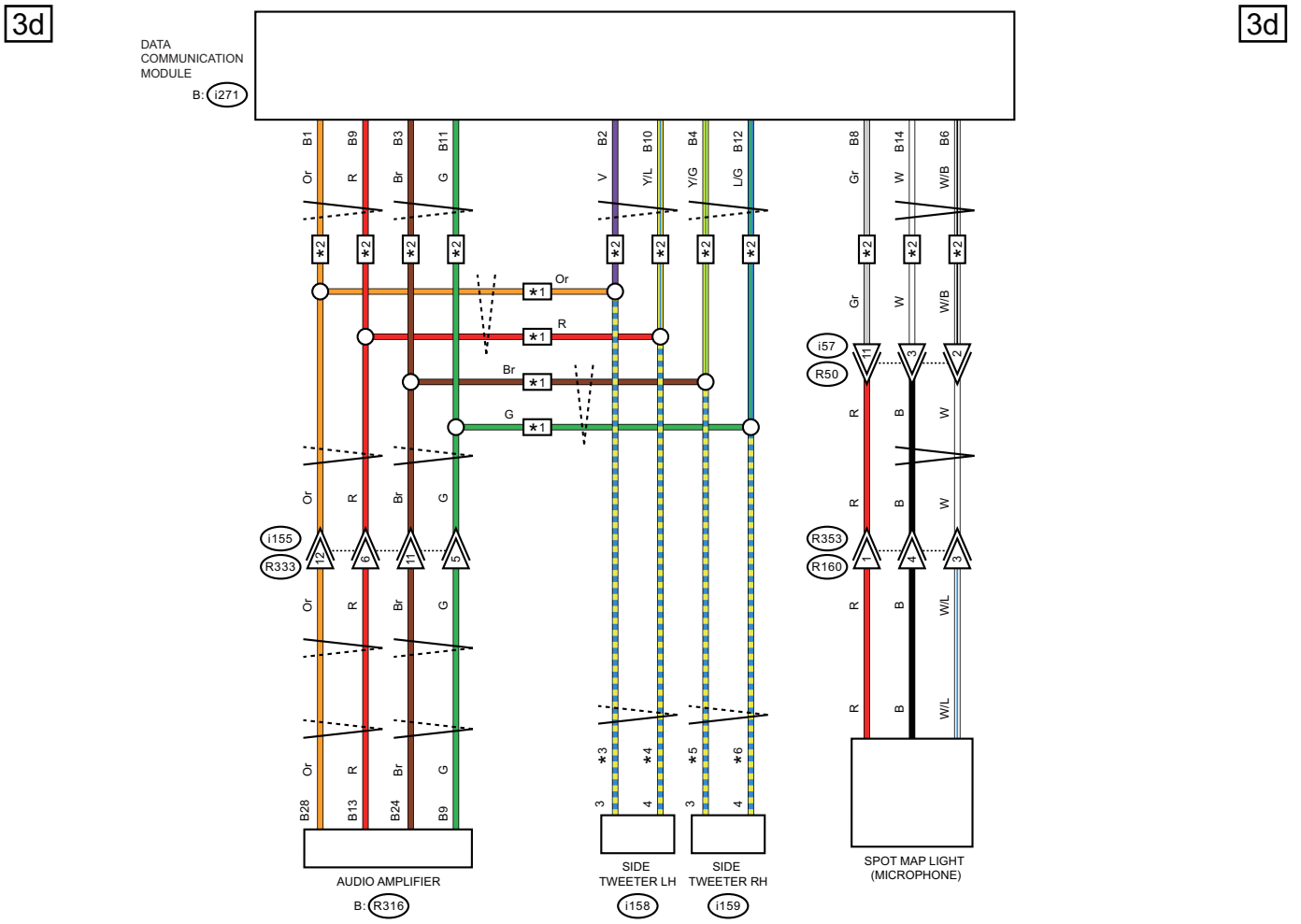

*1 : WITHOUT TELEMATICS
*2 : WITH TELEMATICS
*3 : WITHOUT TELEMATICS : Or
WITH TELEMATICS : V
*4 : WITHOUT TELEMATICS : R
WITH TELEMATICS : Y/L
*5 : WITHOUT TELEMATICS : Br
WITH TELEMATICS : Y/G
*6 : WITHOUT TELEMATICS : G
WITH TELEMATICS : L/G

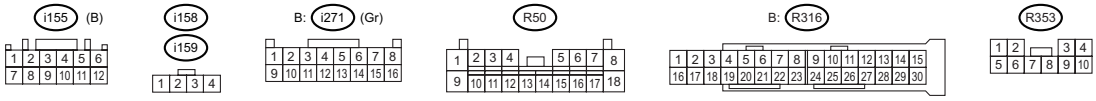

WI-60404

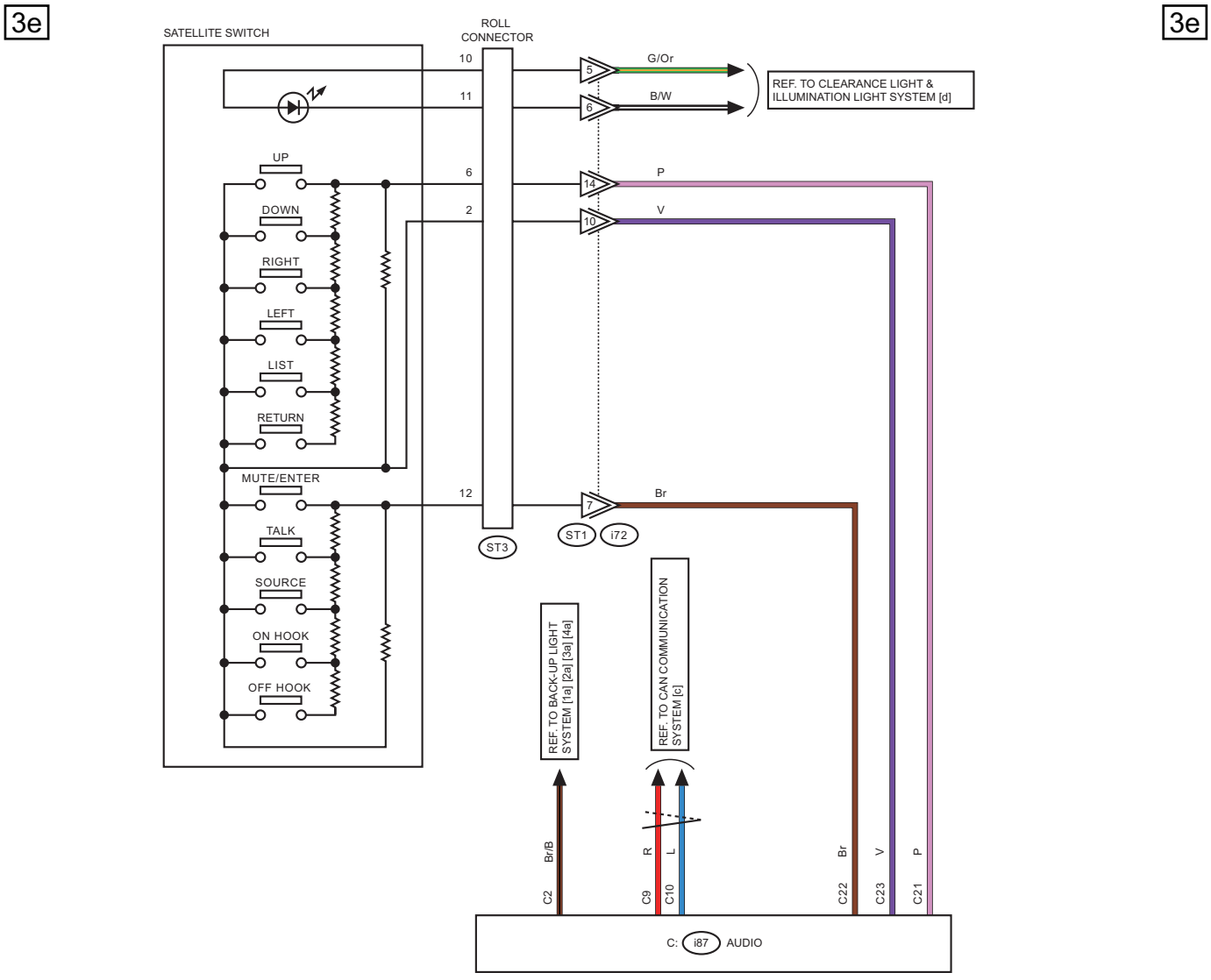
3e
3e
SATELLITE SWITCH
ROLL CONNECTOR
10
11
6
2
12
G/Or
B/W
P
V
Br
5
6
14
10
7
REF. TO CLEARANCE LIGHT & ILLUMINATION LIGHT SYSTEM [d]
UP
DOWN
RIGHT
LEFT
LIST
RETURN
MUTE/ENTER
TALK
SOURCE
ON HOOK
OFF HOOK
ST3
ST1
i72
REF. TO BACK-UP LIGHT SYSTEM [1a] [2a] [3a] [4a]
REF. TO CAN COMMUNICATION SYSTEM [c]
Br/B
R
L
Br
V
P
C2
C9
C10
C22
C23
C21
C: i87 AUDIO

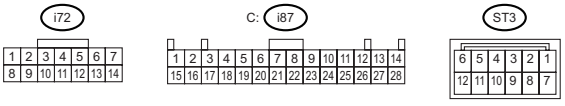
i72
1 2 3 4 5 6 7
8 9 10 11 12 13 14
C: i87
1 2 3 4 5 6 7 8 9 10 11 12 13 14
15 16 17 18 19 20 21 22 23 24 25 26 27 28
ST3
6 5 4 3 2 1
12 11 10 9 8 7

WI-60405

WIRING SYSTEM

3f

3f

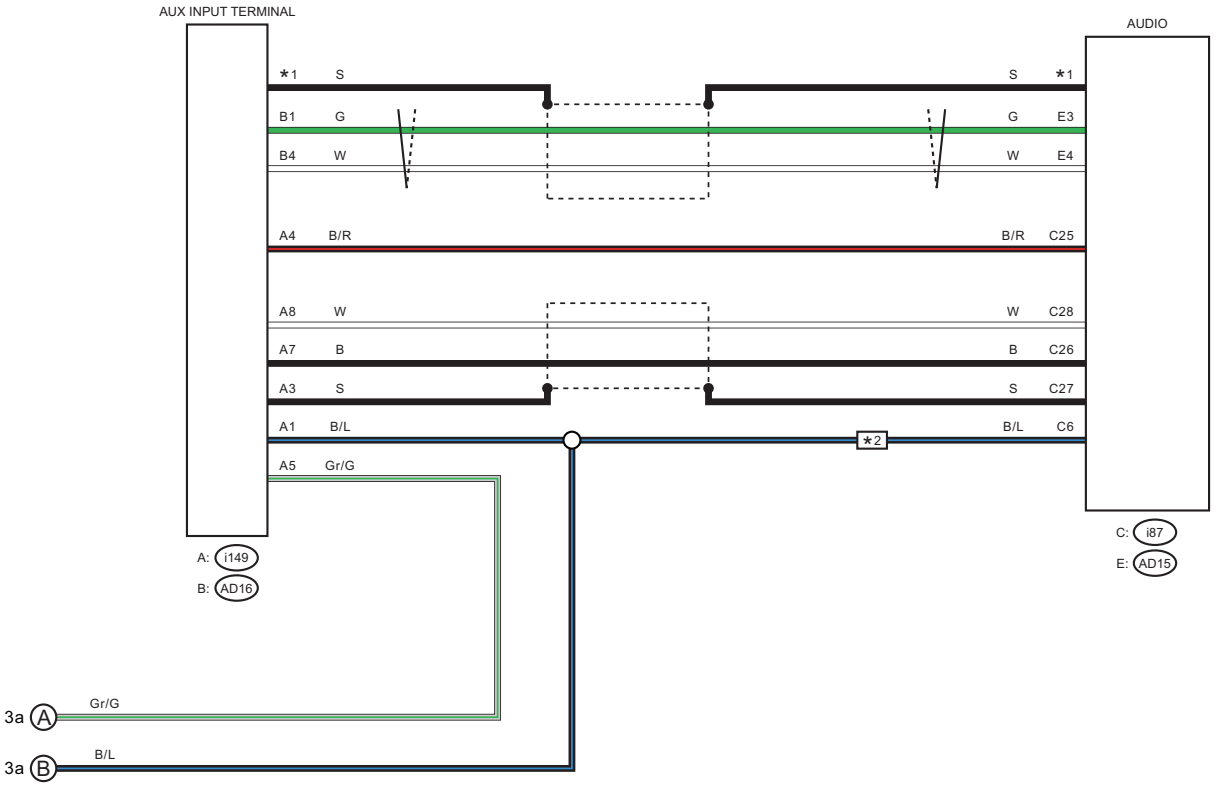

*1 : SHIELD CONNECTOR
*2 : WITHOUT TELEMATICS

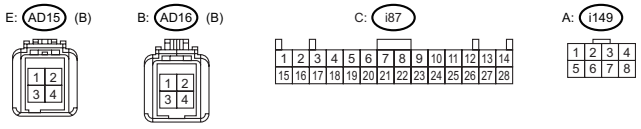

WI-60406

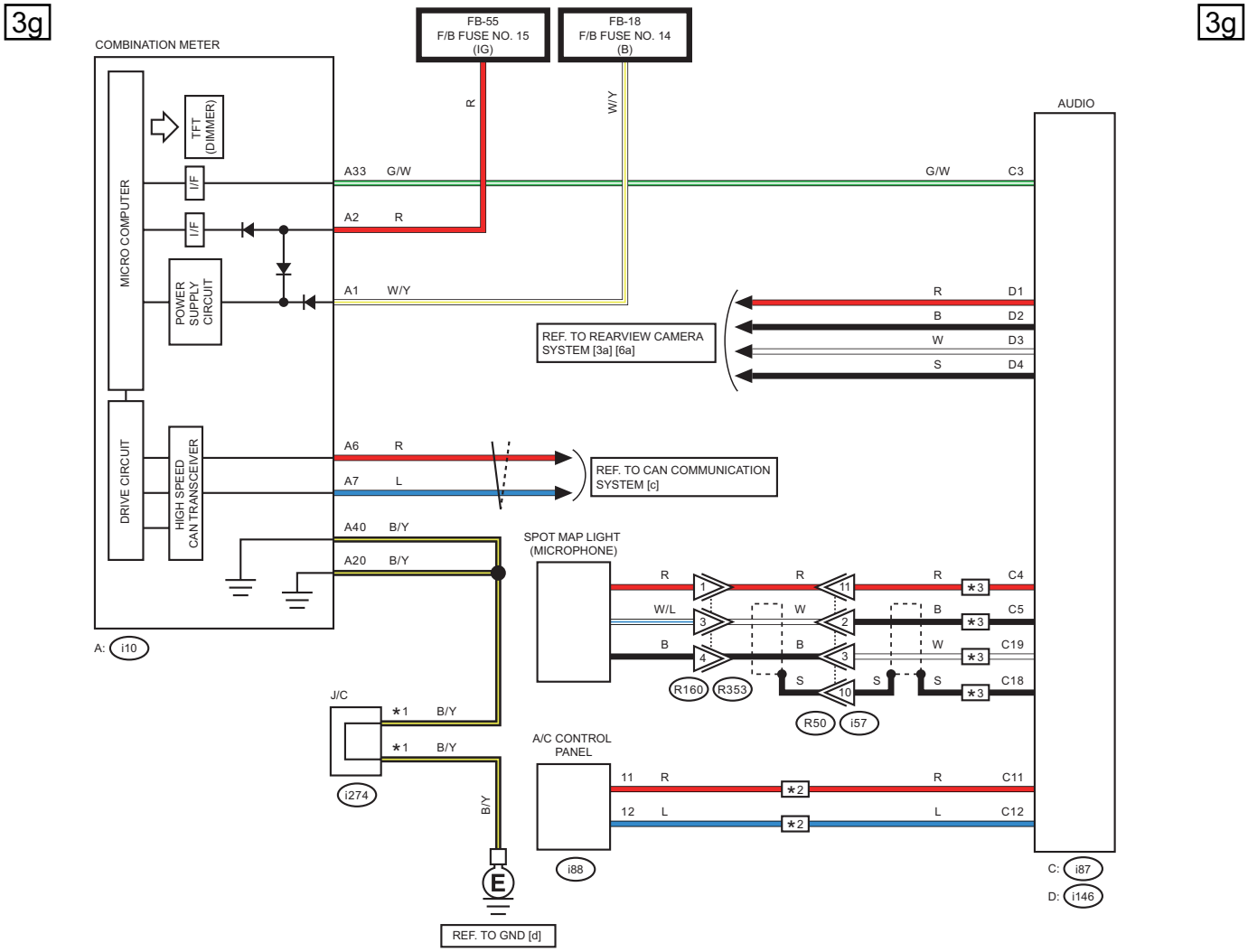

✱1 : TERMINAL No. OPTIONAL ARRANGEMENT
✱2 : AUTO A/C
✱3 : WITHOUT TELEMATICS

A: i10 (B)

1	2	3	4	5	6	7	8	9	10	11	12	13	14	15	16	17	18	19	20
21	22	23	24	25	26	27	28	29	30	31	32	33	34	35	36	37	38	39	40

C: i87

1	2	3	4	5	6	7	8	9	10	11	12	13	14	
15	16	17	18	19	20	21	22	23	24	25	26	27	28	

i88

1	2	3	4	5	6	7	8
9	10	11	12	13	14	15	16

D: i146

1	2	3	4	5

i274

1	2	3	4	5	6	7	8
9	10	11	12	13	14	15	16

R50

1	2	3	4		5	6	7	8
9	10	11	12	13	14	15	16	17	18

R353

1	2	3	4	
5	6	7	8	9	10

WI-60407

WIRING SYSTEM

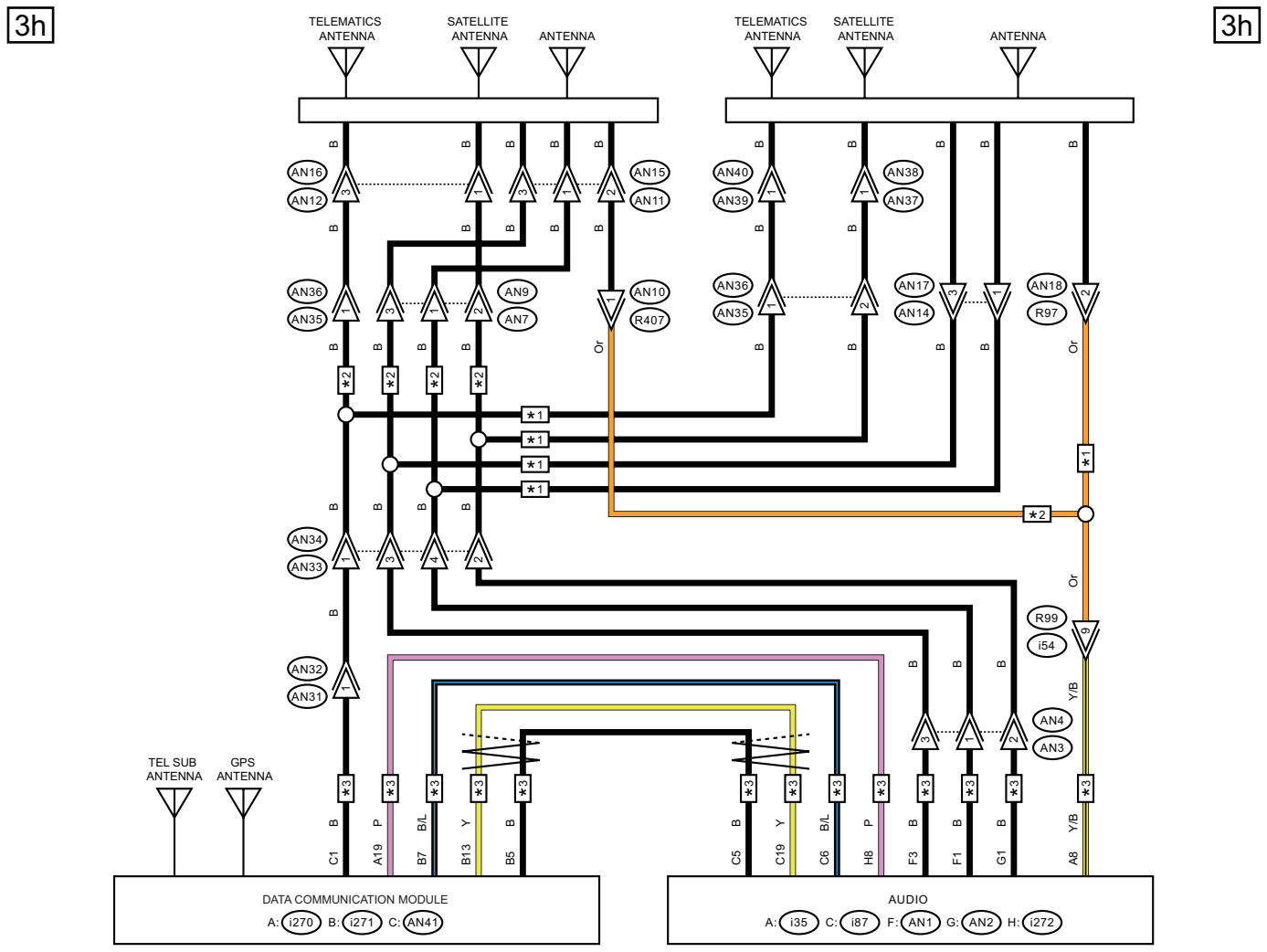

★1 : SEDAN MODEL
★2 : OUTBACK MODEL
★3 : WITH TELEMATICS

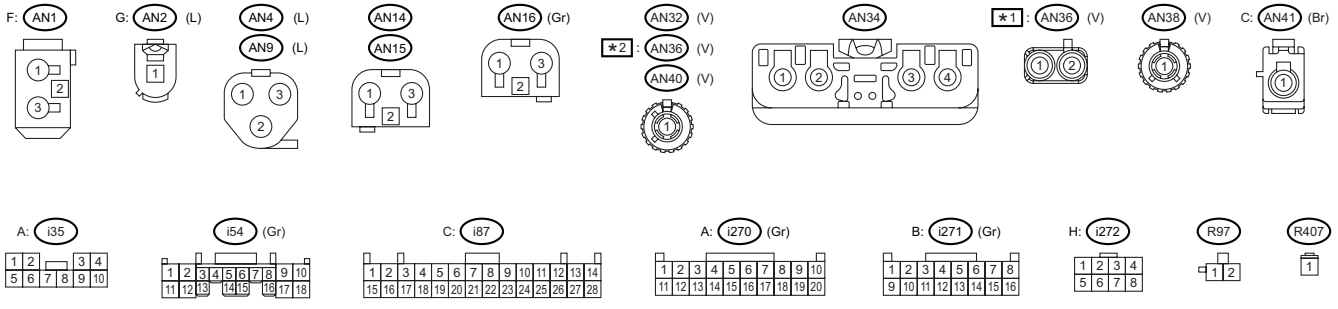

WI-60408

3i

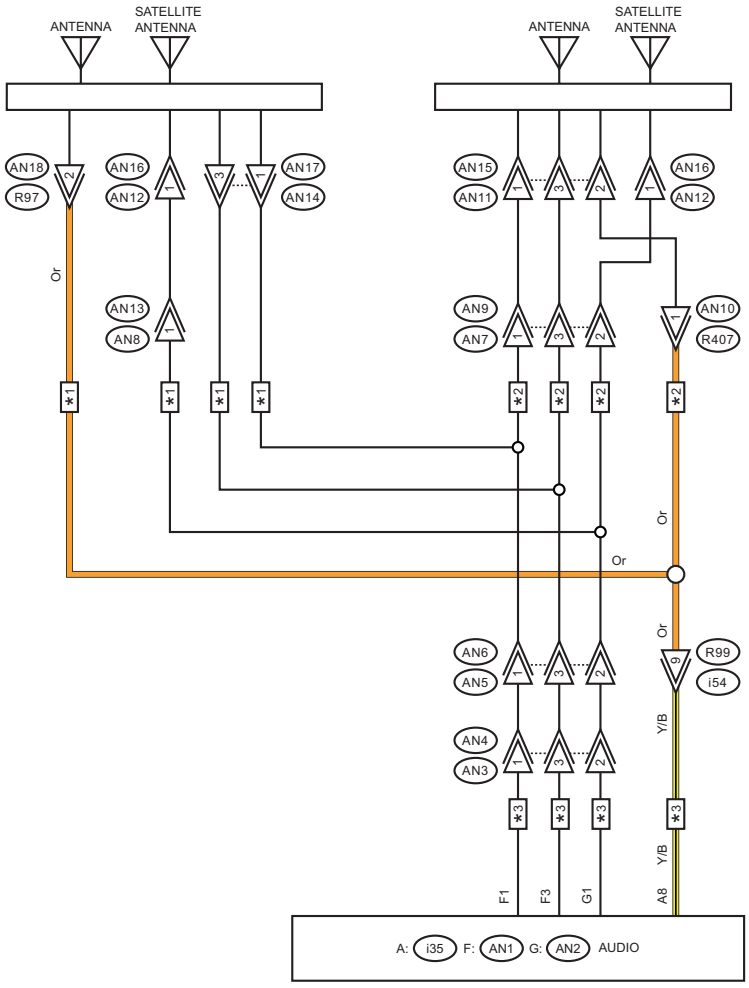

3i

*1 : SEDAN MODEL
*2 : OUTBACK MODEL
*3 : WITHOUT TELEMATICS

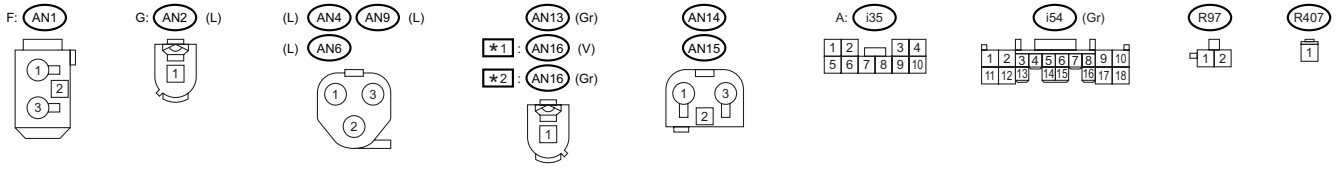

WI-60409

10.Back-up Light System

A: WIRING DIAGRAM

1. SEDAN MODEL (ENGINE TYPE FB)

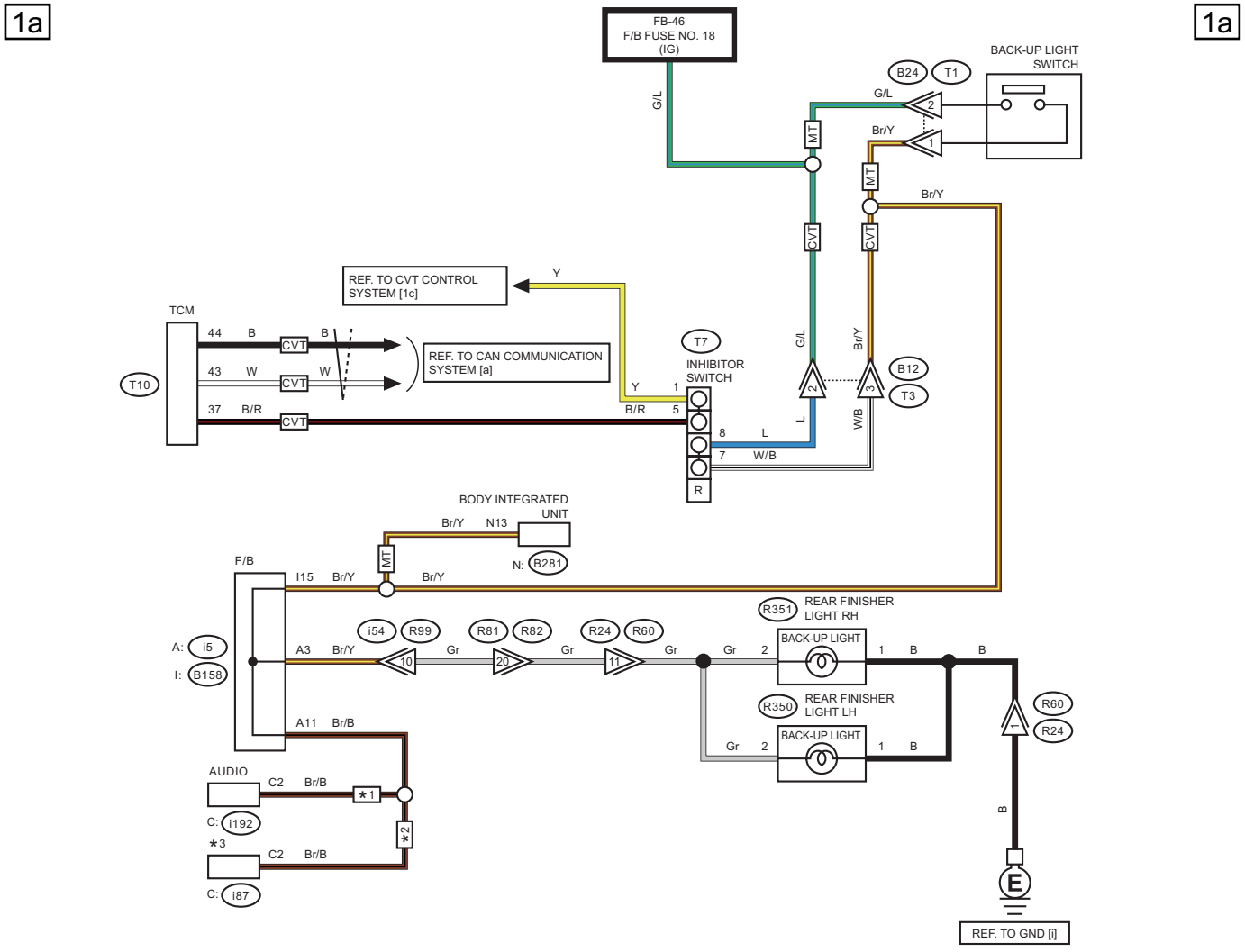

∗1 : 6.2 INCH DISPLAY
∗2 : 7 INCH DISPLAY
∗3 : WITHOUT NAVIGATION : AUDIO
WITH NAVIGATION : NAVIGATION UNIT

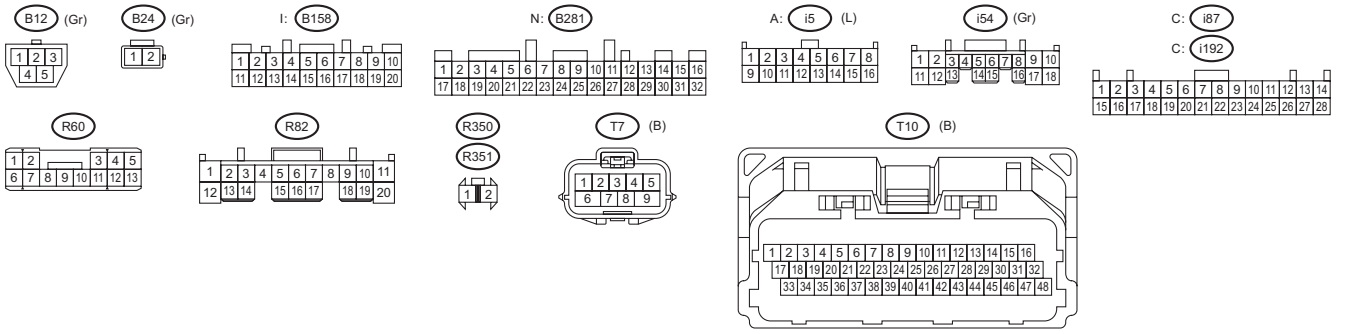

WI-60410

1b

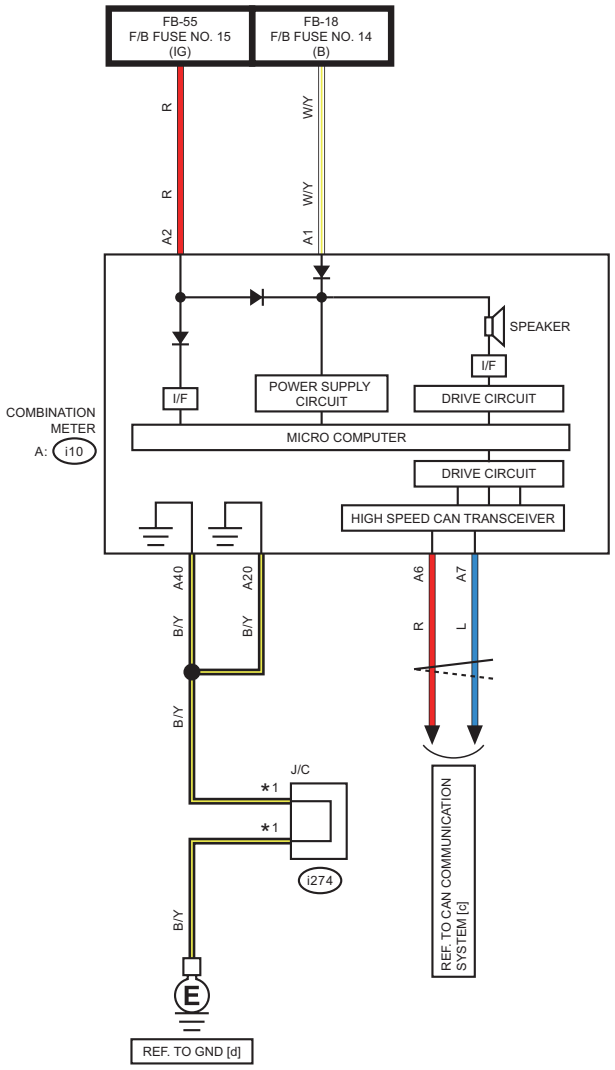

1b

*1 : TERMINAL No. OPTIONAL ARRANGEMENT

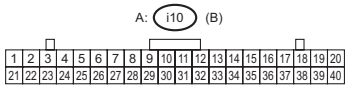

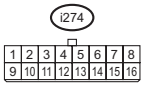

WI-60411

2. SEDAN MODEL (ENGINE TYPE EZ)

2a

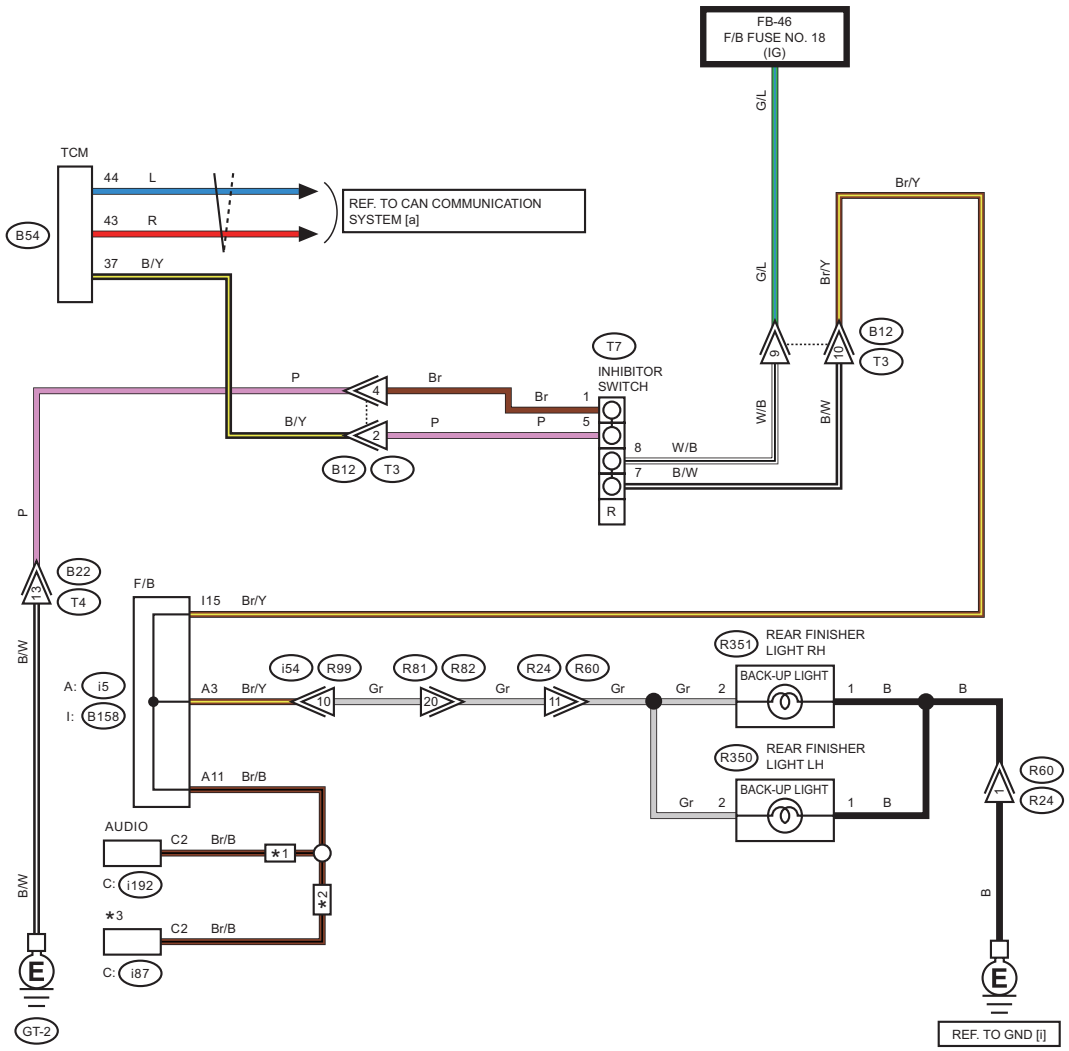

*1 : 6.2 INCH DISPLAY
*2 : 7 INCH DISPLAY
*3 : WITHOUT NAVIGATION : AUDIO
WITH NAVIGATION : NAVIGATION UNIT

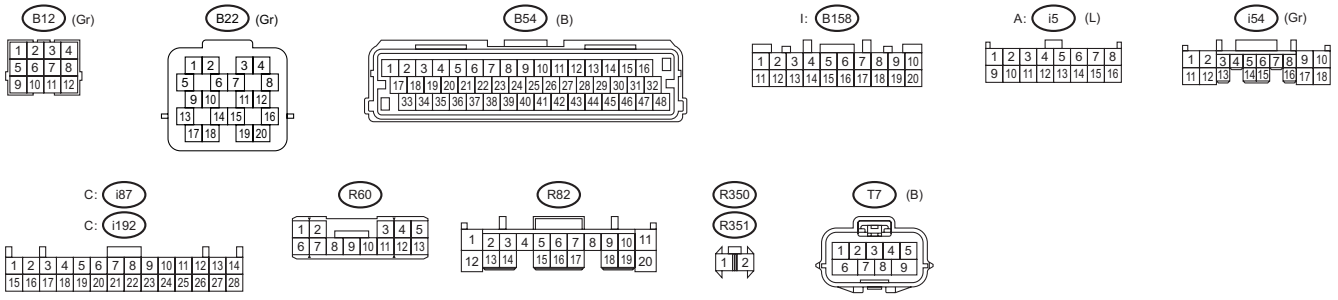

WI-60412

2b

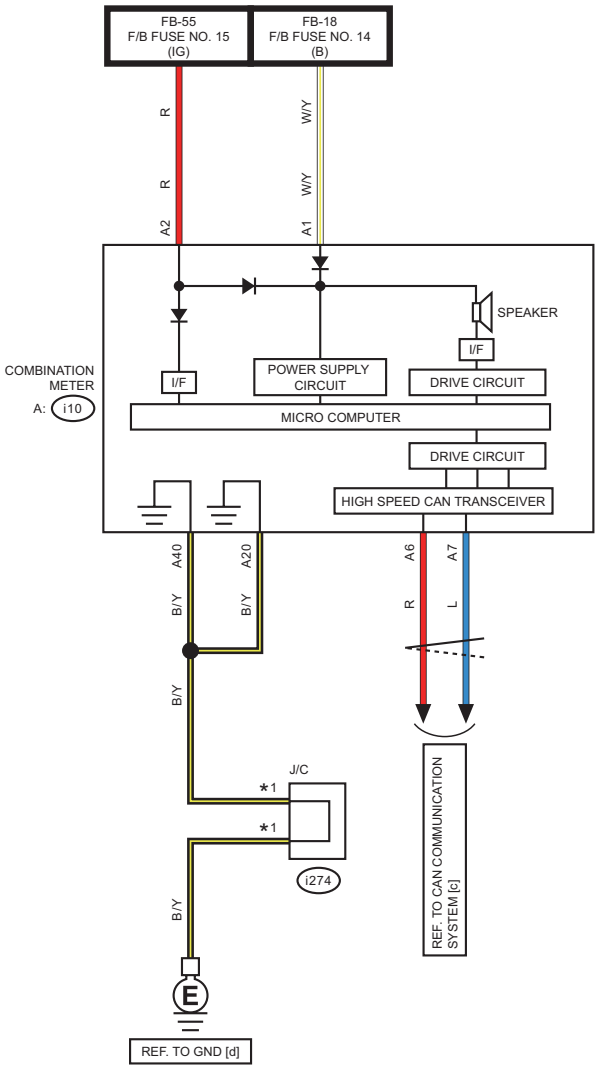

2b

*1 : TERMINAL No. OPTIONAL ARRANGEMENT

A: i10 (B)

1	2	3	4	5	6	7	8	9	10	11	12	13	14	15	16	17	18	19	20
21	22	23	24	25	26	27	28	29	30	31	32	33	34	35	36	37	38	39	40

i274

1	2	3	4	5	6	7	8
9	10	11	12	13	14	15	16

WI-60413

3. OUTBACK MODEL (ENGINE TYPE FB)

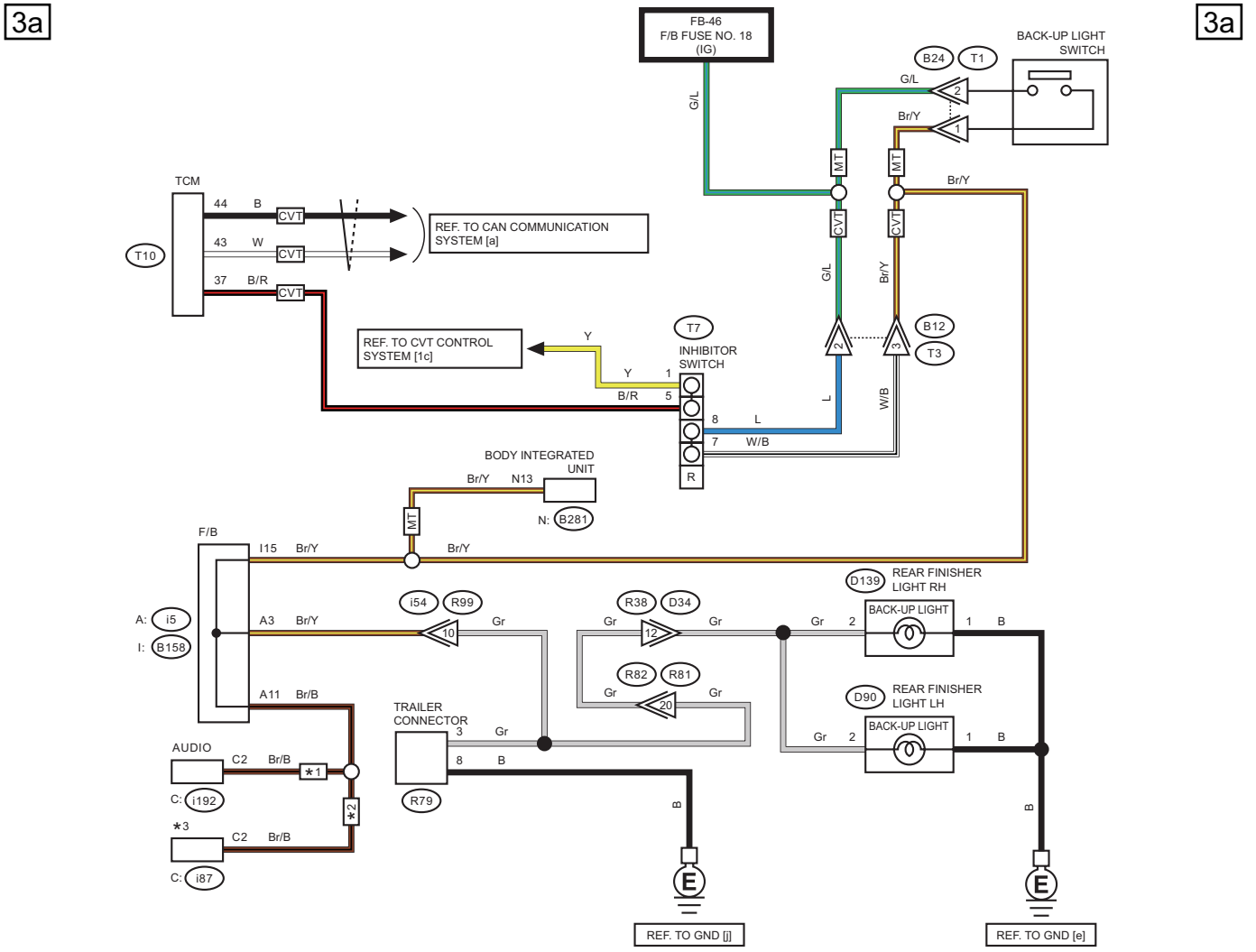

★1 : 6.2 INCH DISPLAY
★2 : 7 INCH DISPLAY
★3 : WITHOUT NAVIGATION : AUDIO
WITH NAVIGATION : NAVIGATION UNIT

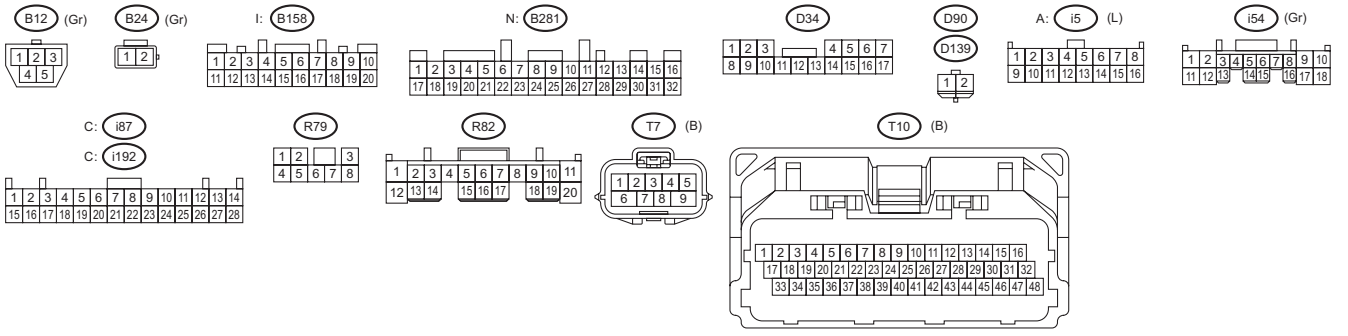

WI-60414

3b

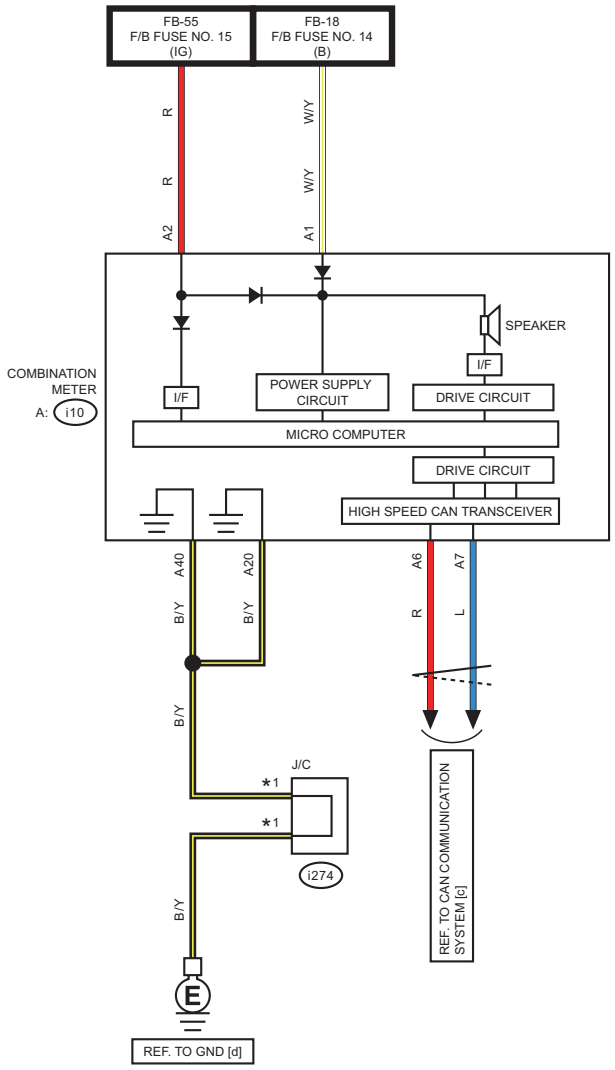

3b

*1 : TERMINAL No. OPTIONAL ARRANGEMENT

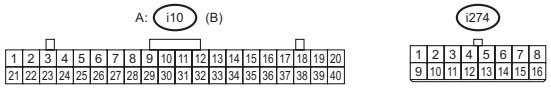

WI-60415

4. OUTBACK MODEL (ENGINE TYPE EZ)

4a

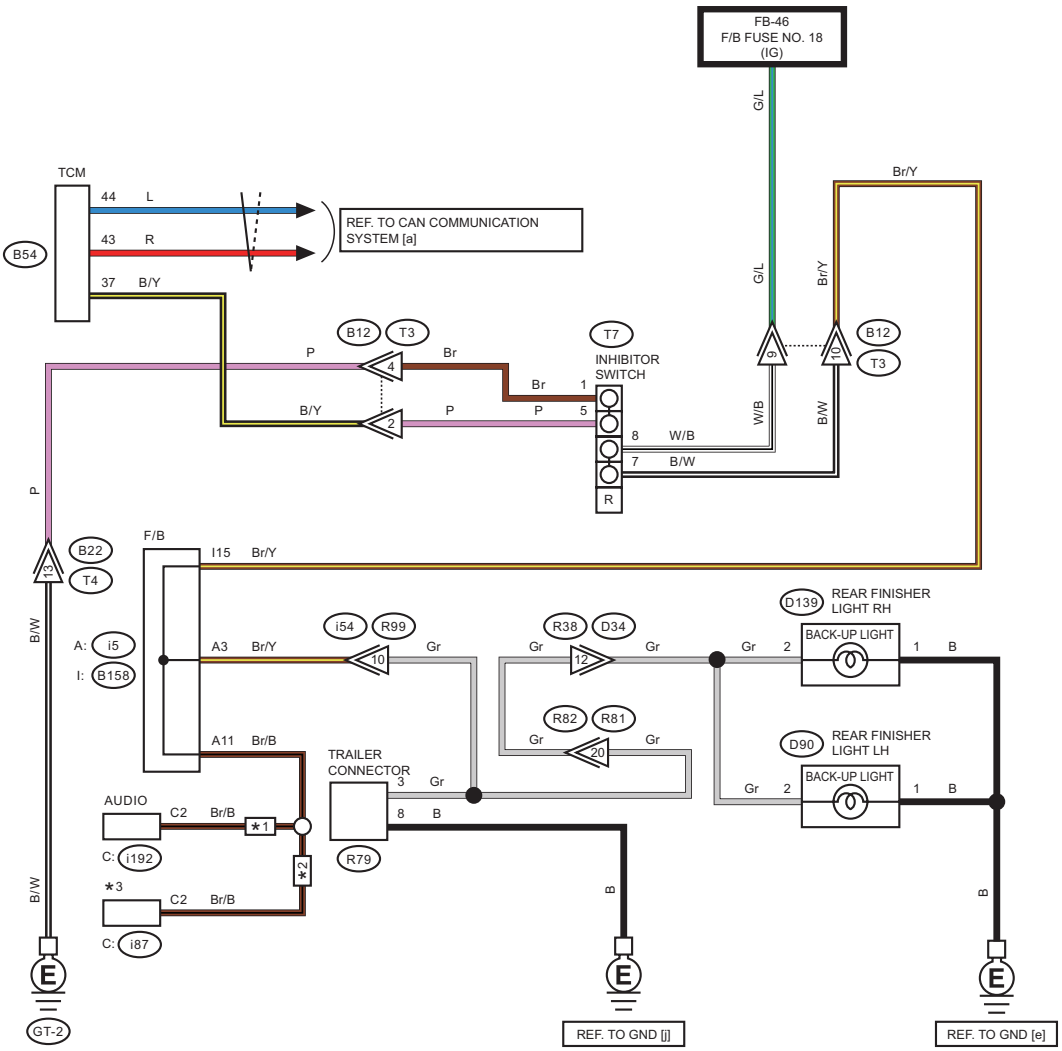

★1 : 6.2 INCH DISPLAY
★2 : 7 INCH DISPLAY
★3 : WITHOUT NAVIGATION : AUDIO
WITH NAVIGATION : NAVIGATION UNIT

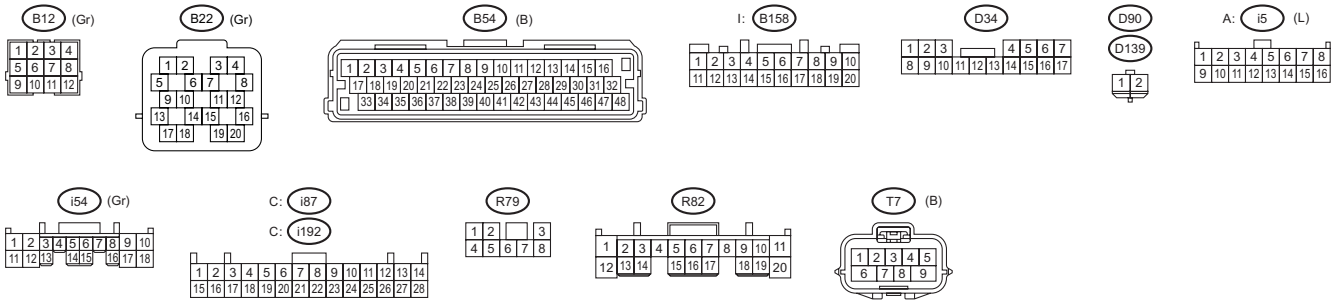

WI-60416

4b

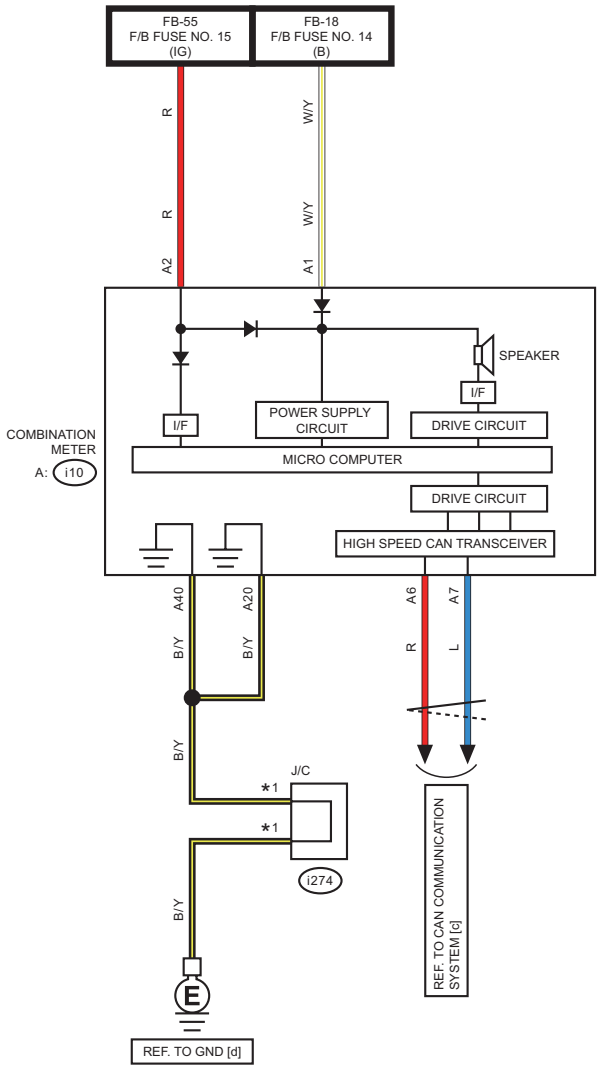

4b

*1 : TERMINAL No. OPTIONAL ARRANGEMENT

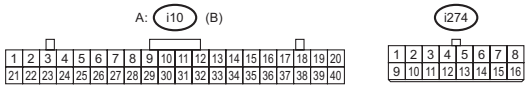

WI-60417

11.Blind Spot Detection/Rear Cross Traffic Alert

A: WIRING DIAGRAM

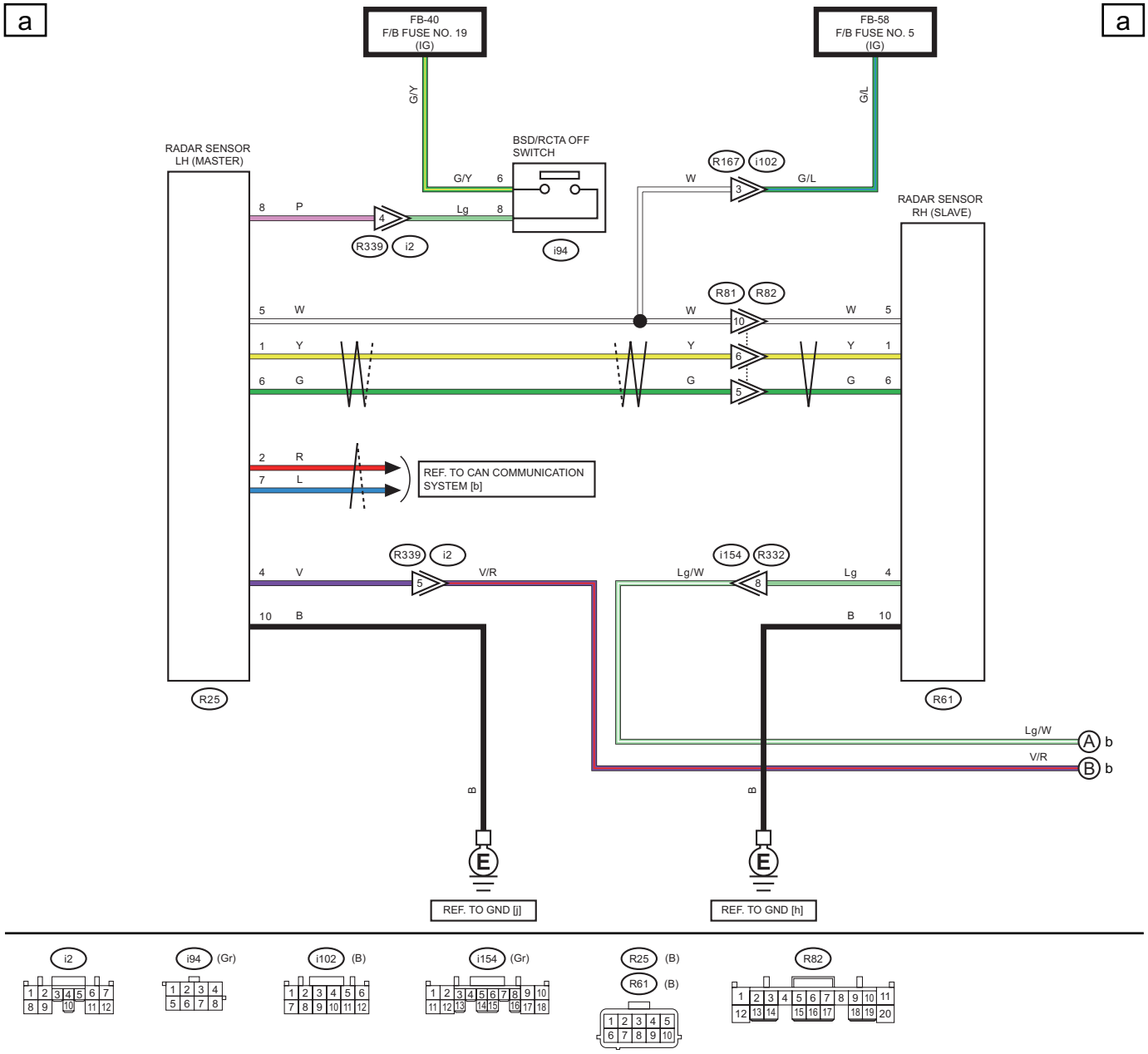

WI-60418

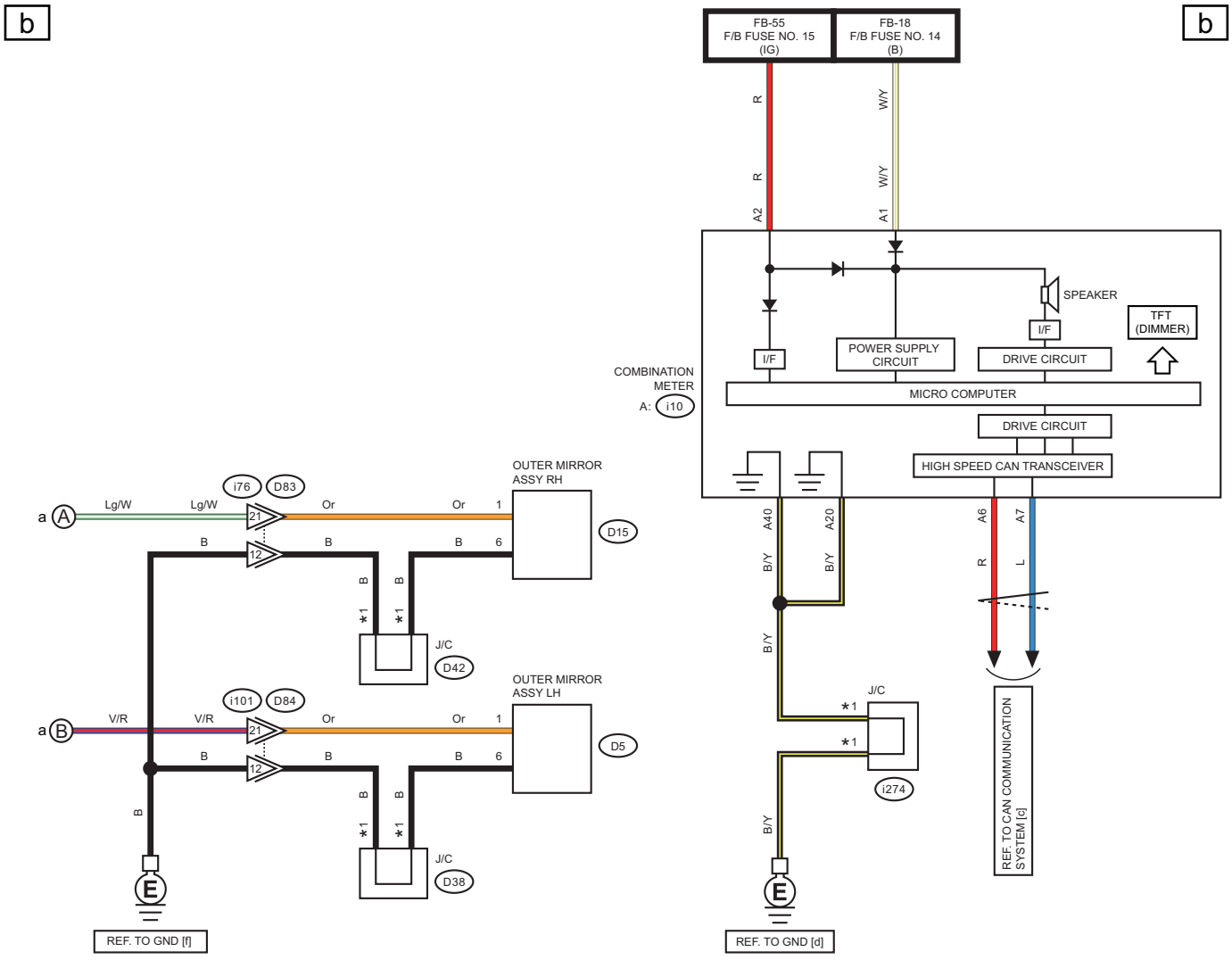

*1 : TERMINAL No. OPTIONAL ARRANGEMENT

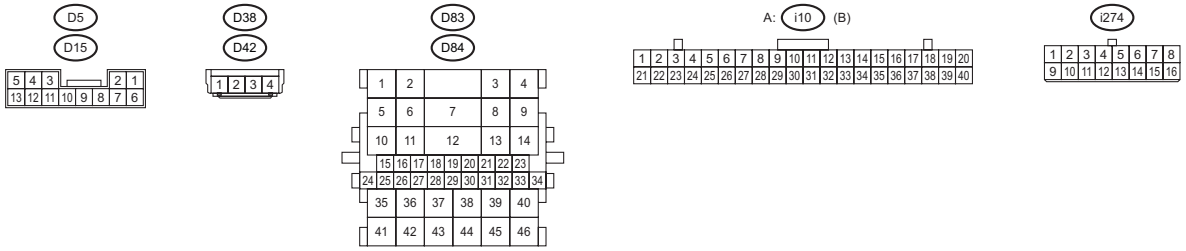

WI-60419

12.CAN Communication System

A: WIRING DIAGRAM

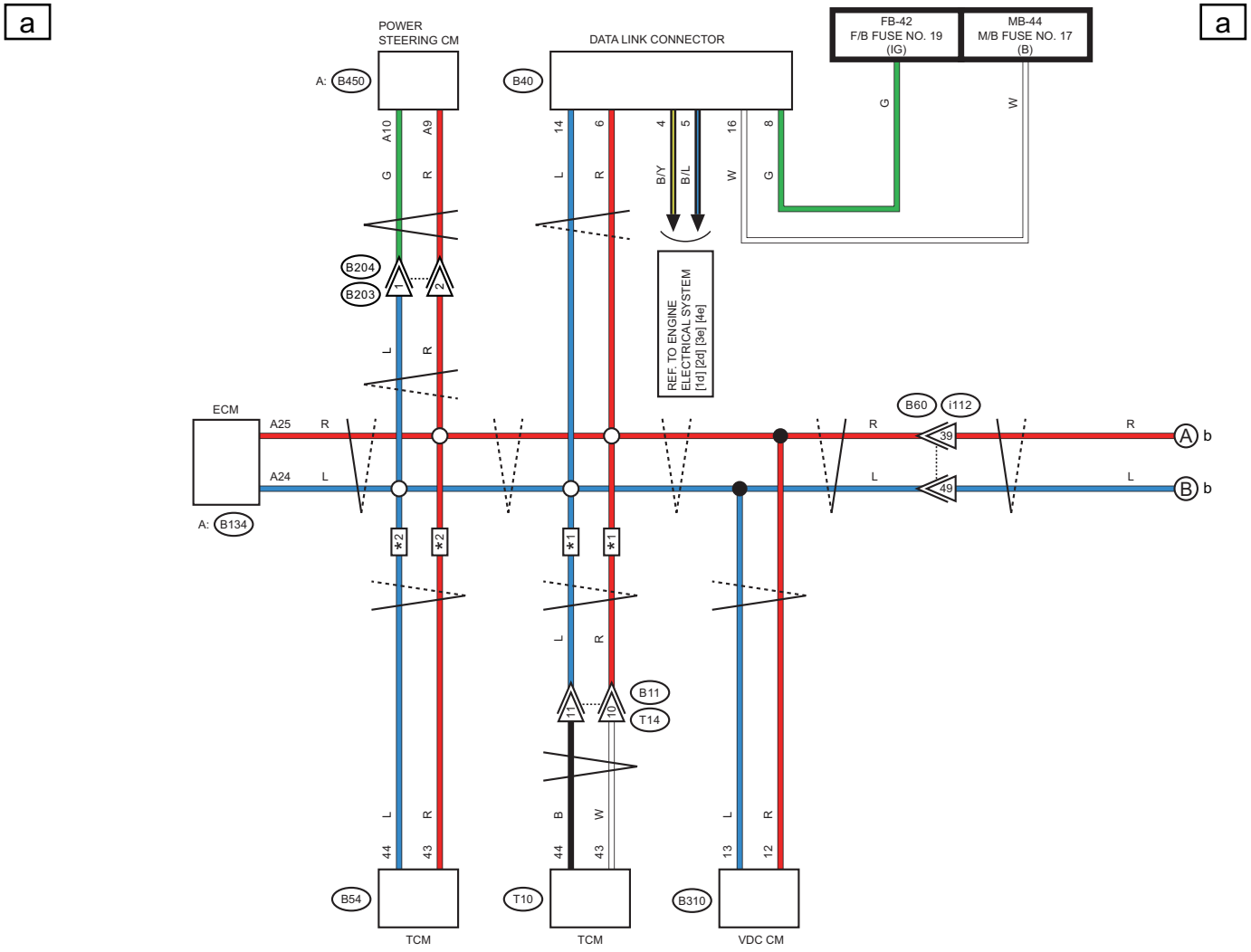

*1 : ENGINE TYPE FB CVT MODEL
*2 : ENGINE TYPE EZ

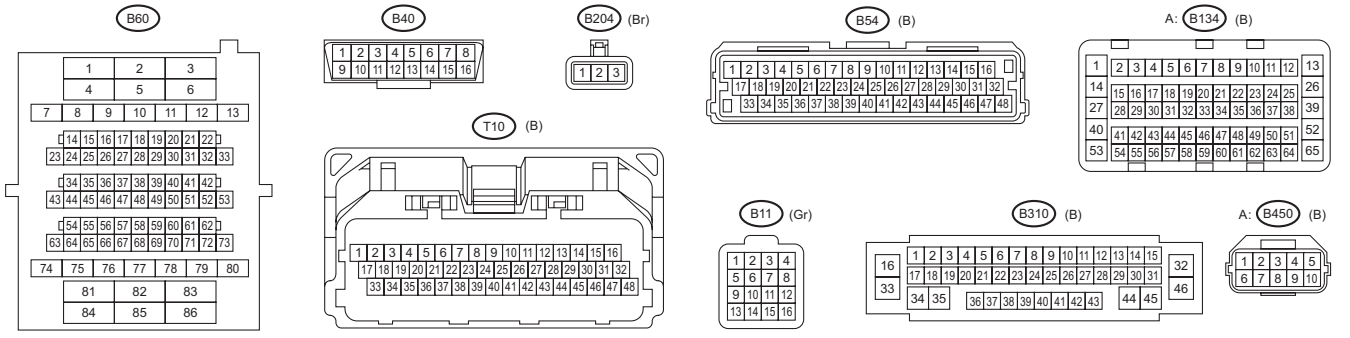

WI-60420

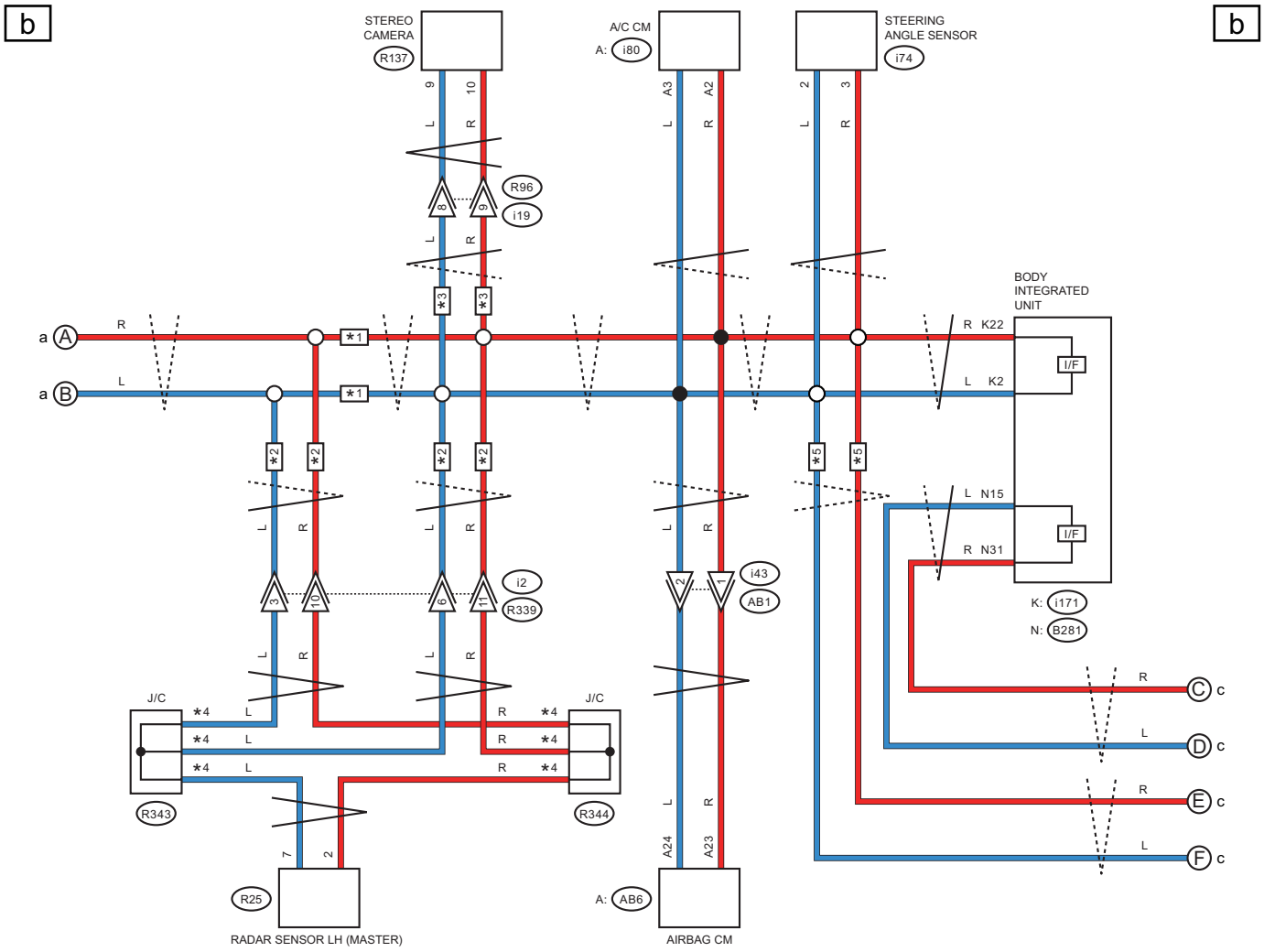

★1 : WITHOUT BSD/RCTA
★2 : WITH BSD/RCTA
★3 : WITH EyeSight
★4 : TERMINAL No. OPTIONAL ARRANGEMENT
★5 : WITH TELEMATICS

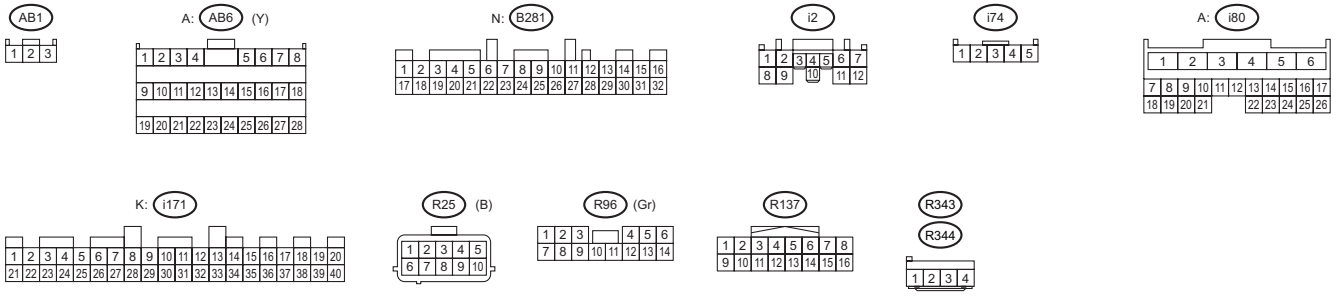

WI-60421

WIRING SYSTEM

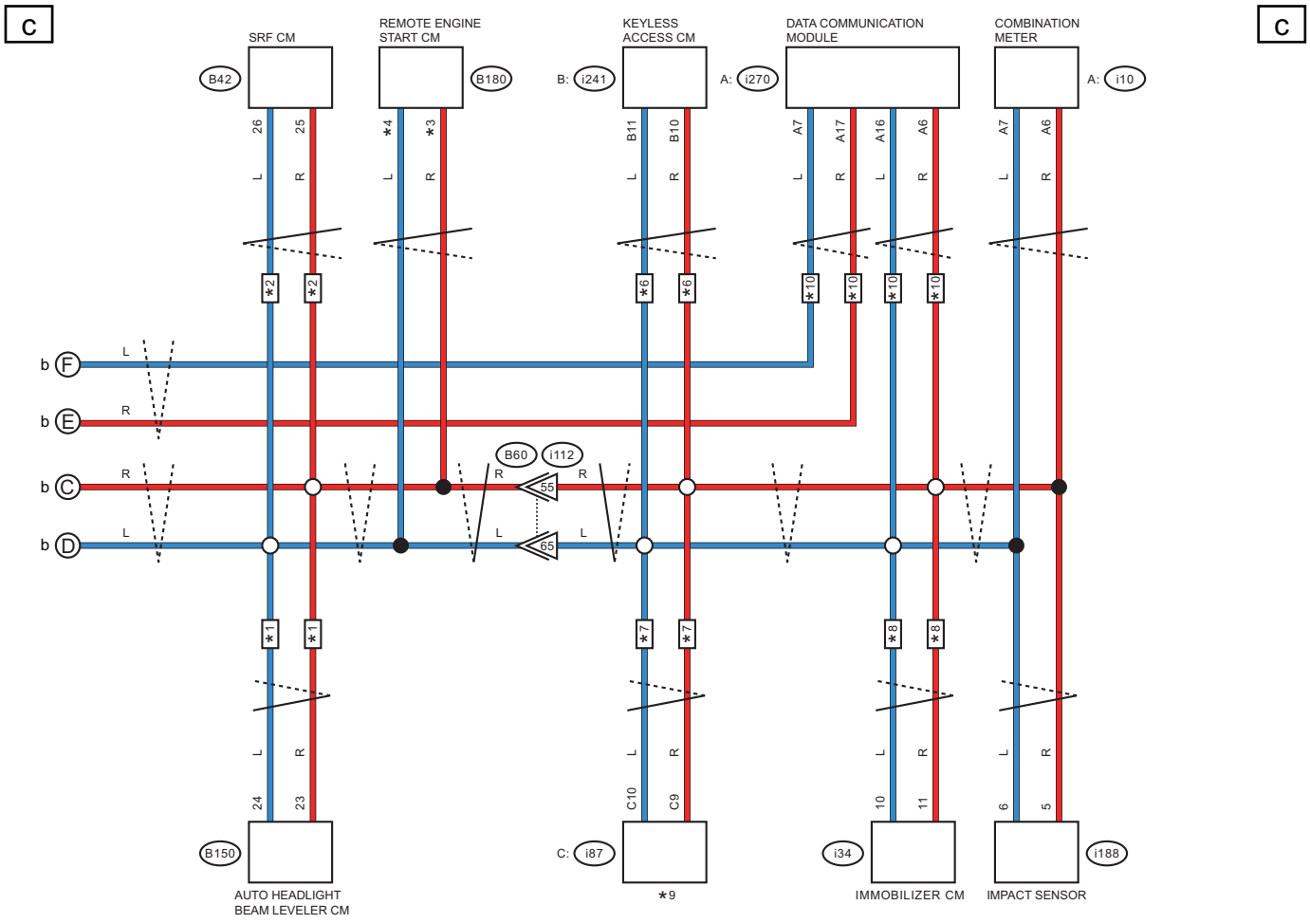

∗1 : WITHOUT SRF
∗2 : WITH SRF
∗3 : WITHOUT PUSH BUTTON START : 1
WITH PUSH BUTTON START : 2
∗4 : WITHOUT PUSH BUTTON START : 2
WITH PUSH BUTTON START : 3
∗5 : WITHOUT PUSH BUTTON START
∗6 : WITH PUSH BUTTON START
∗7 : 7 INCH DISPLAY
∗8 : WITH IMMOBILIZER CM
∗9 : WITHOUT NAVIGATION : AUDIO
WITH NAVIGATION : NAVIGATION UNIT
∗10 : WITH TELEMATICS

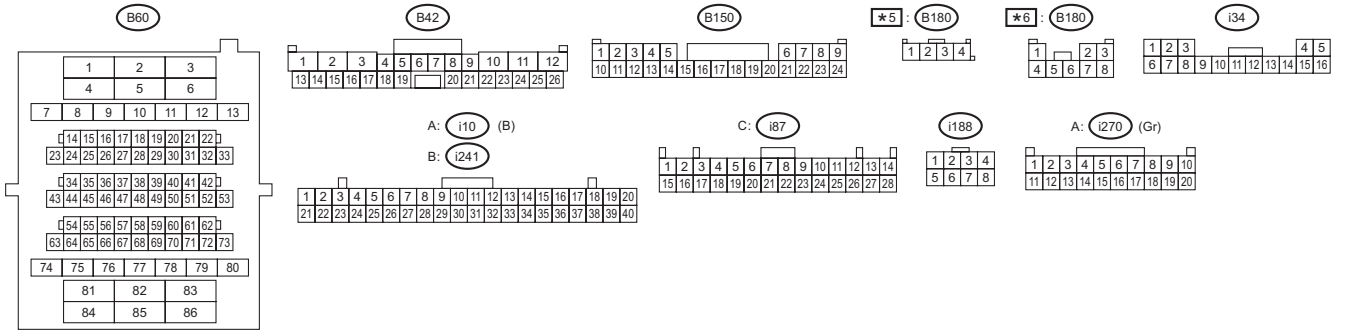

WI-60422

13.Charging System

A: WIRING DIAGRAM

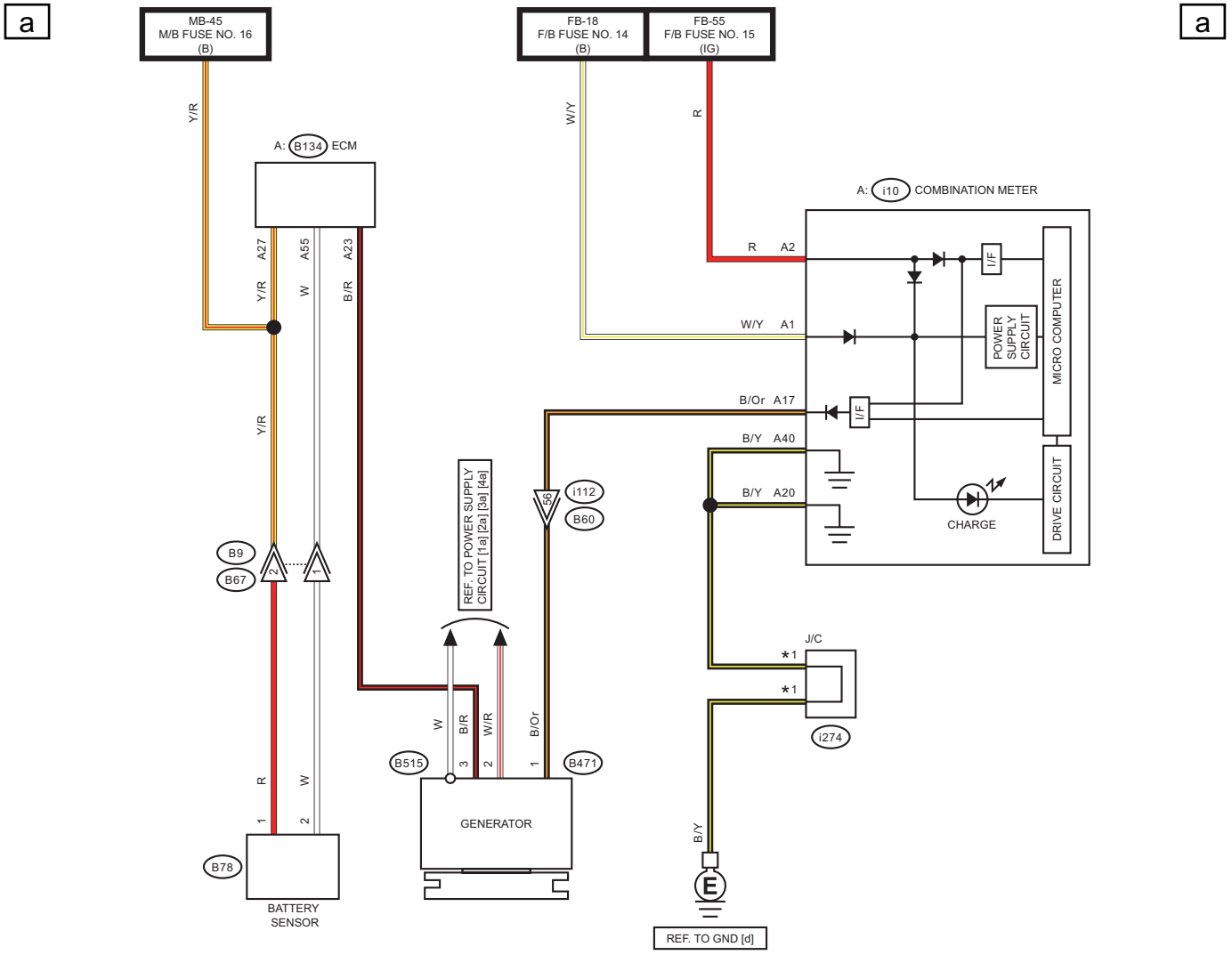

*1 : TERMINAL No. OPTIONAL ARRANGEMENT

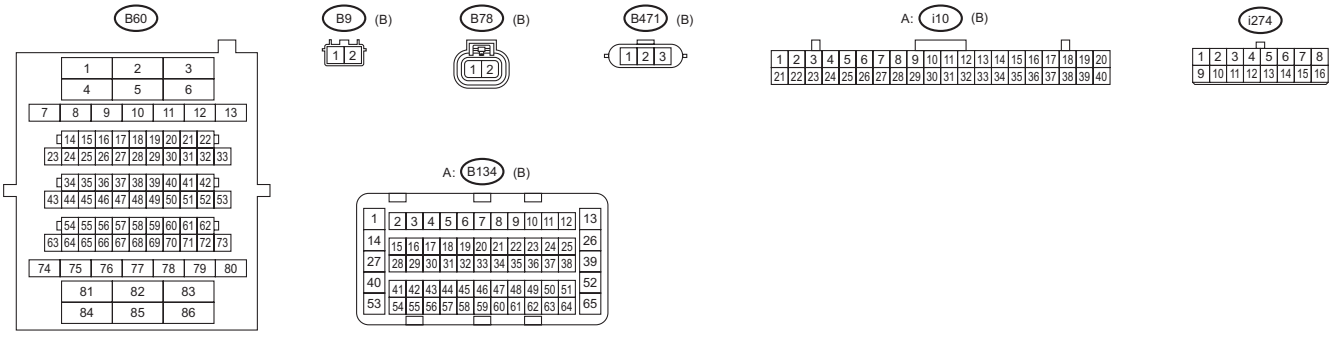

WI-60423

14.Clearance Light and Illumination Light System

A: WIRING DIAGRAM

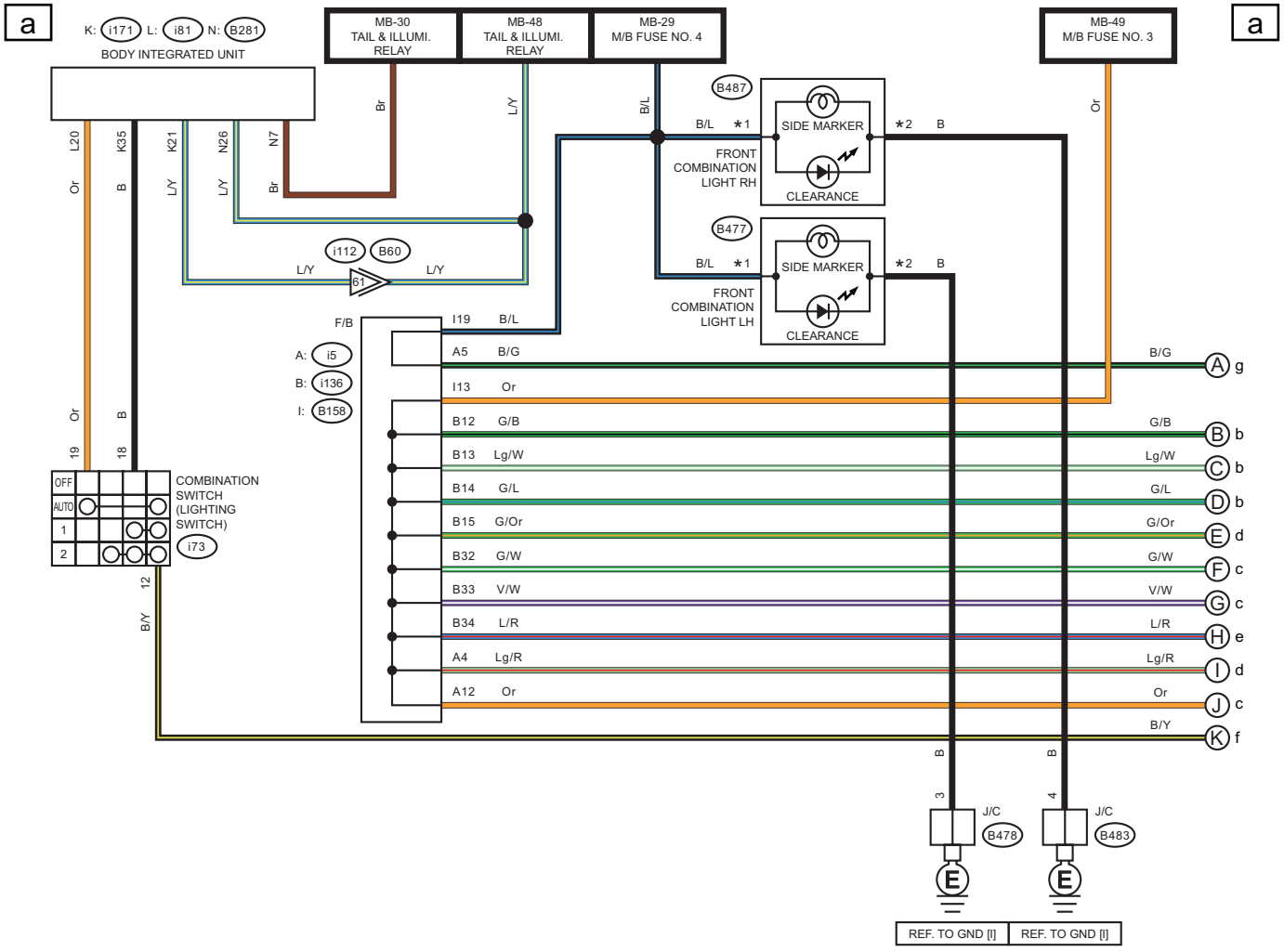

∗1 : HALOGEN MODEL : 7
EXCEPT FOR HALOGEN MODEL : 6
∗2 : HALOGEN MODEL : 3
EXCEPT FOR HALOGEN MODEL : 5
∗3 : HALOGEN MODEL
∗4 : EXCEPT FOR HALOGEN MODEL

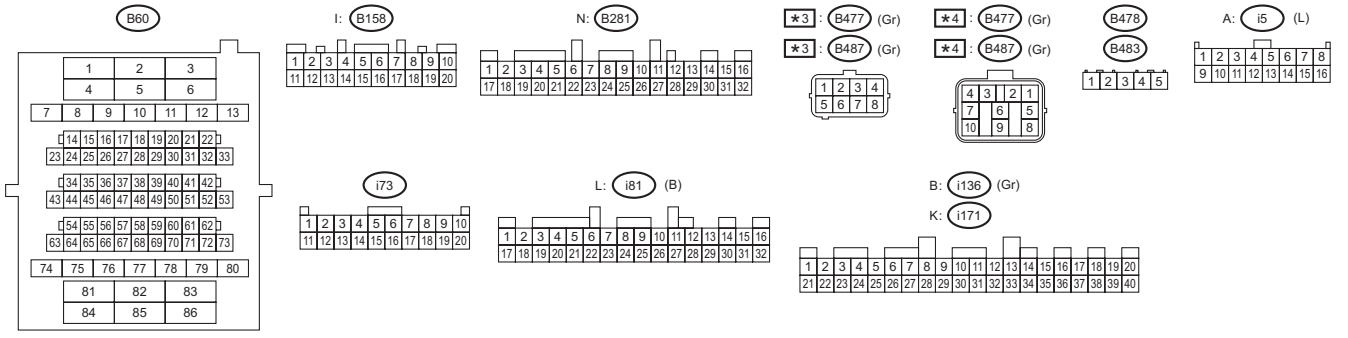

WI-60424

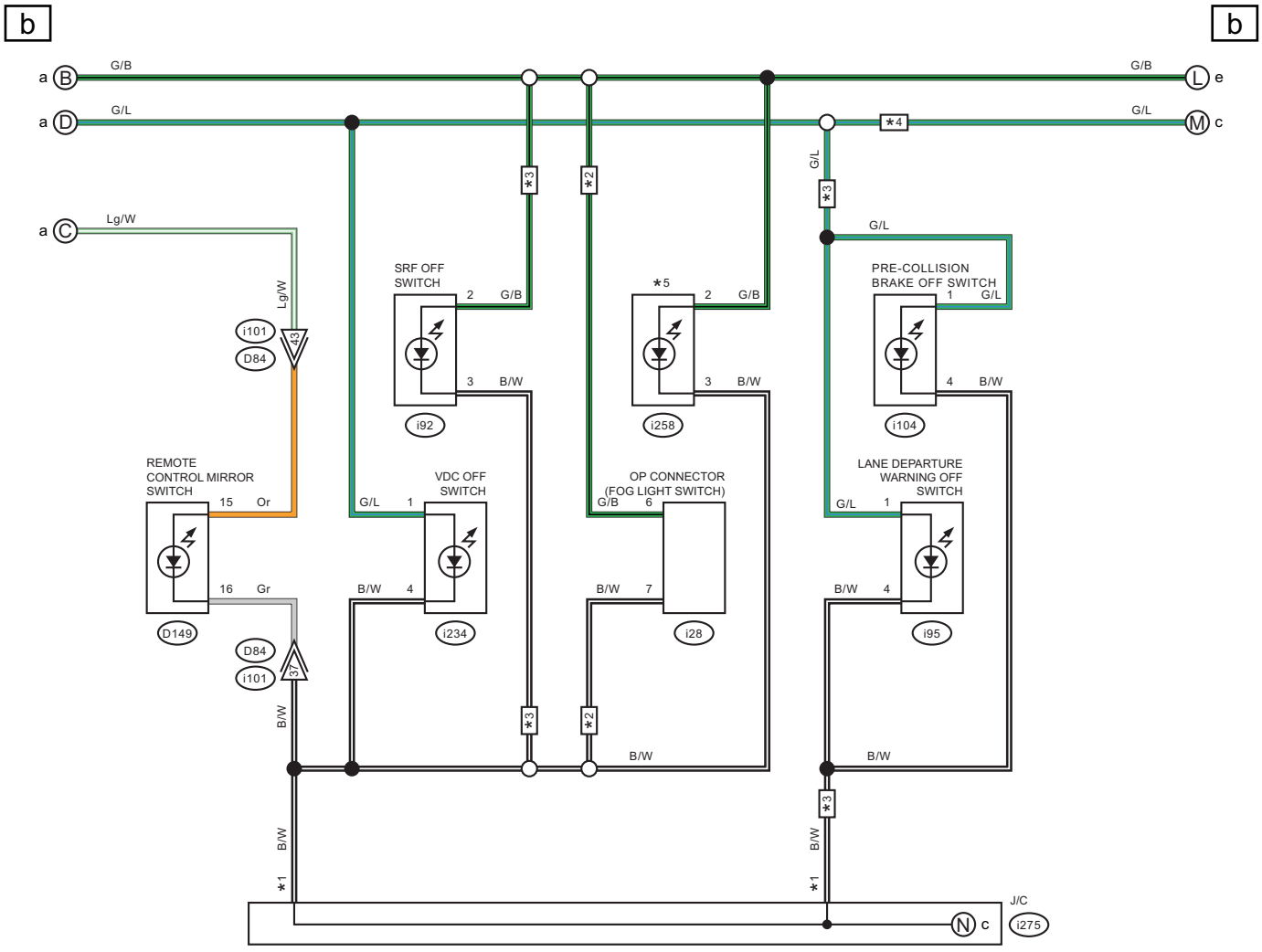

*1 : TERMINAL No. OPTIONAL ARRANGEMENT
*2 : WITHOUT EyeSight
*3 : WITH EyeSight
*4 : WITH BSD/RCTA
*5 : SEDAN MODEL : LOWER COVER SWITCH (TRUNK LID OPENER)
OUTBACK MODEL : POWER REAR GATE DRIVER'S SWITCH

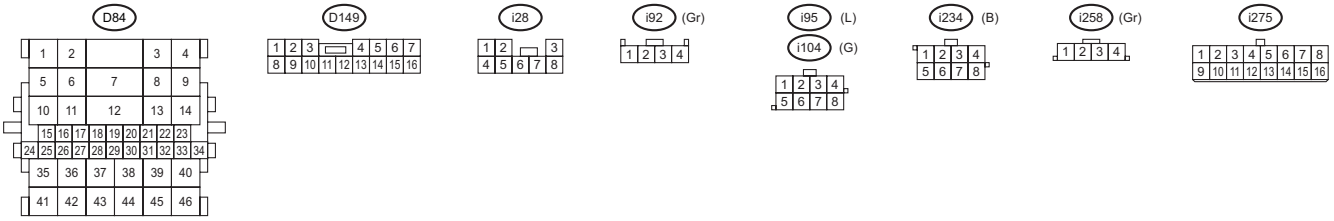

WI-60425

C

C

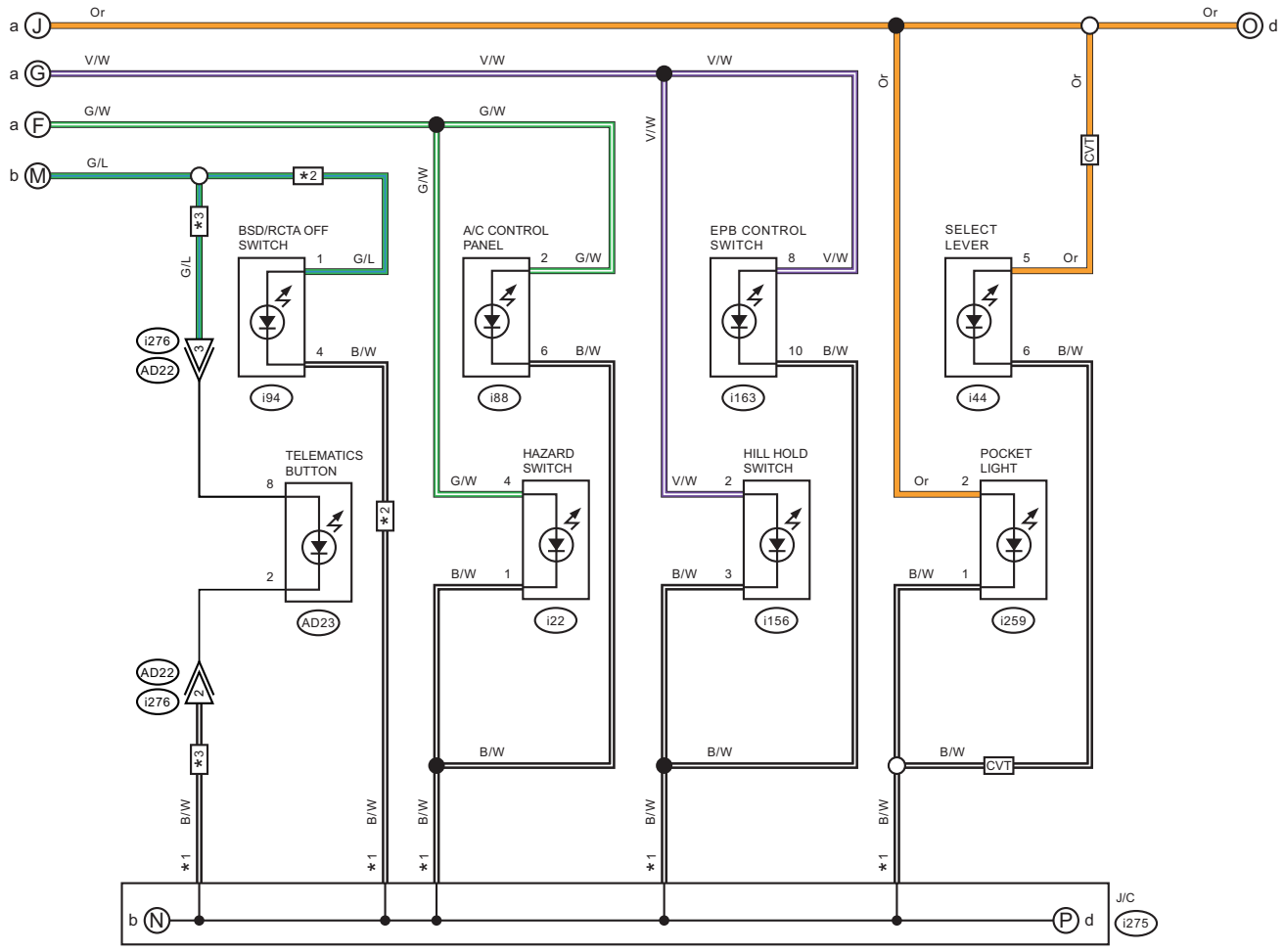

*1 : TERMINAL No. OPTIONAL ARRANGEMENT
*2 : WITH BSD/RCTA
*3 : WITH TELEMATICS

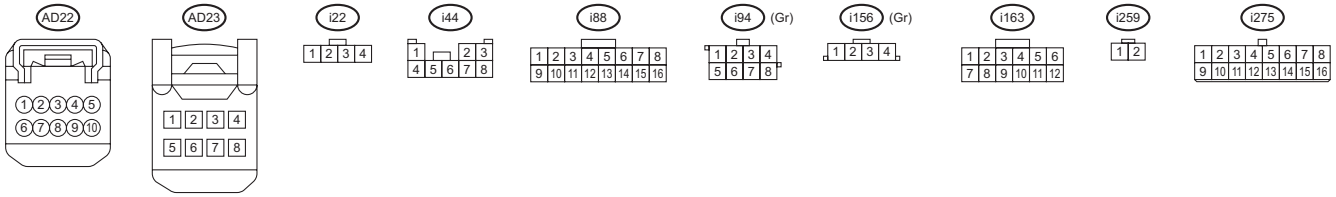

WI-60426

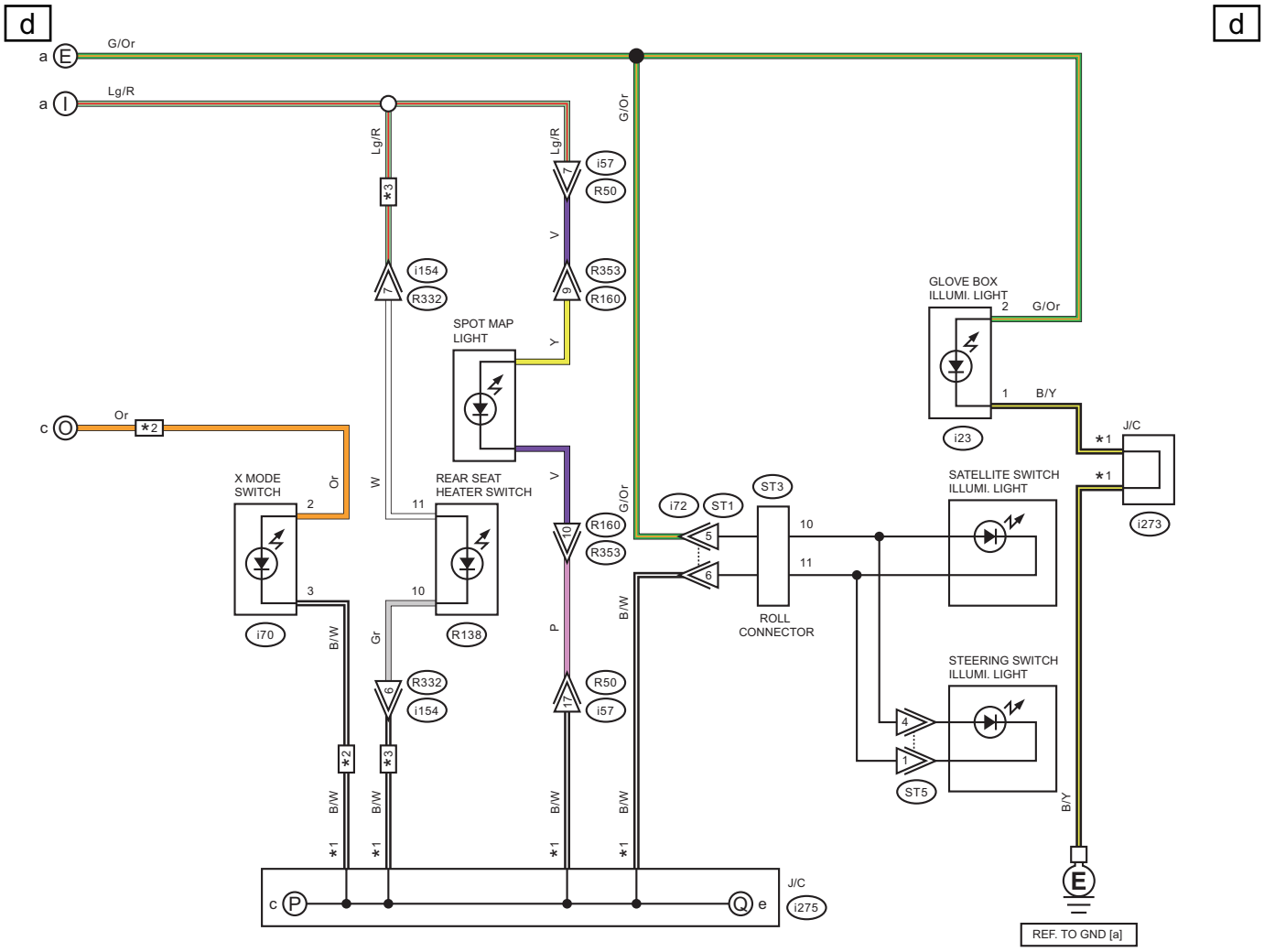

*1 : TERMINAL No. OPTIONAL ARRANGEMENT
*2 : WITH X MODE
*3 : WITH REAR SEAT HEATER

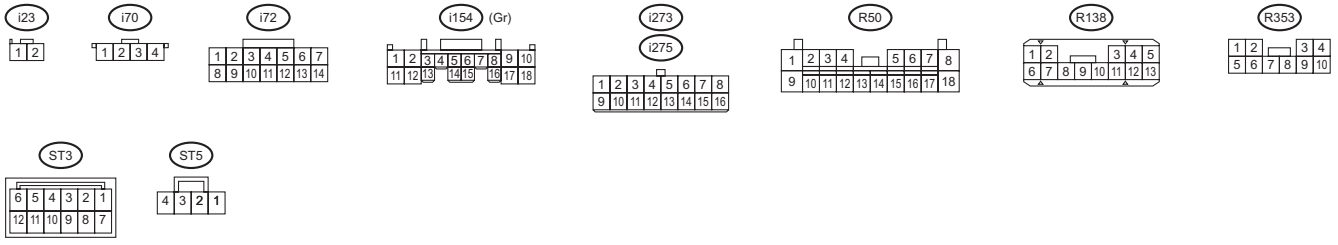

WI-60427

e

e

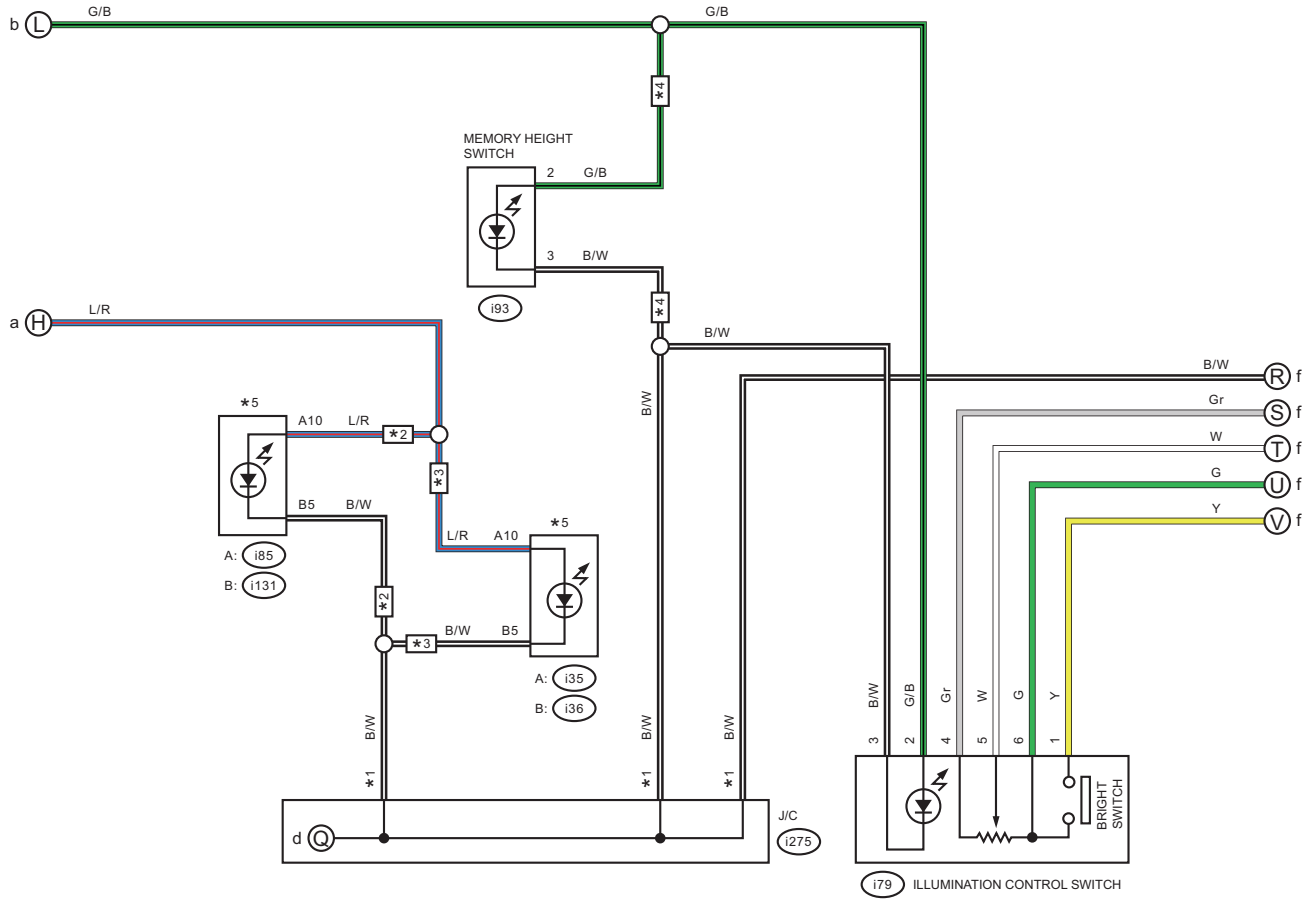

*1 : TERMINAL No. OPTIONAL ARRANGEMENT
*2 : WITHOUT AUDIO AMPLIFIER
*3 : WITH AUDIO AMPLIFIER
*4 : WITH POWER REAR GATE
*5 : WITHOUT NAVIGATION : AUDIO
WITH NAVIGATION : NAVIGATION UNIT

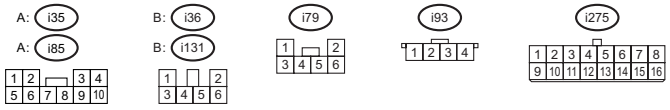

WI-60428

f

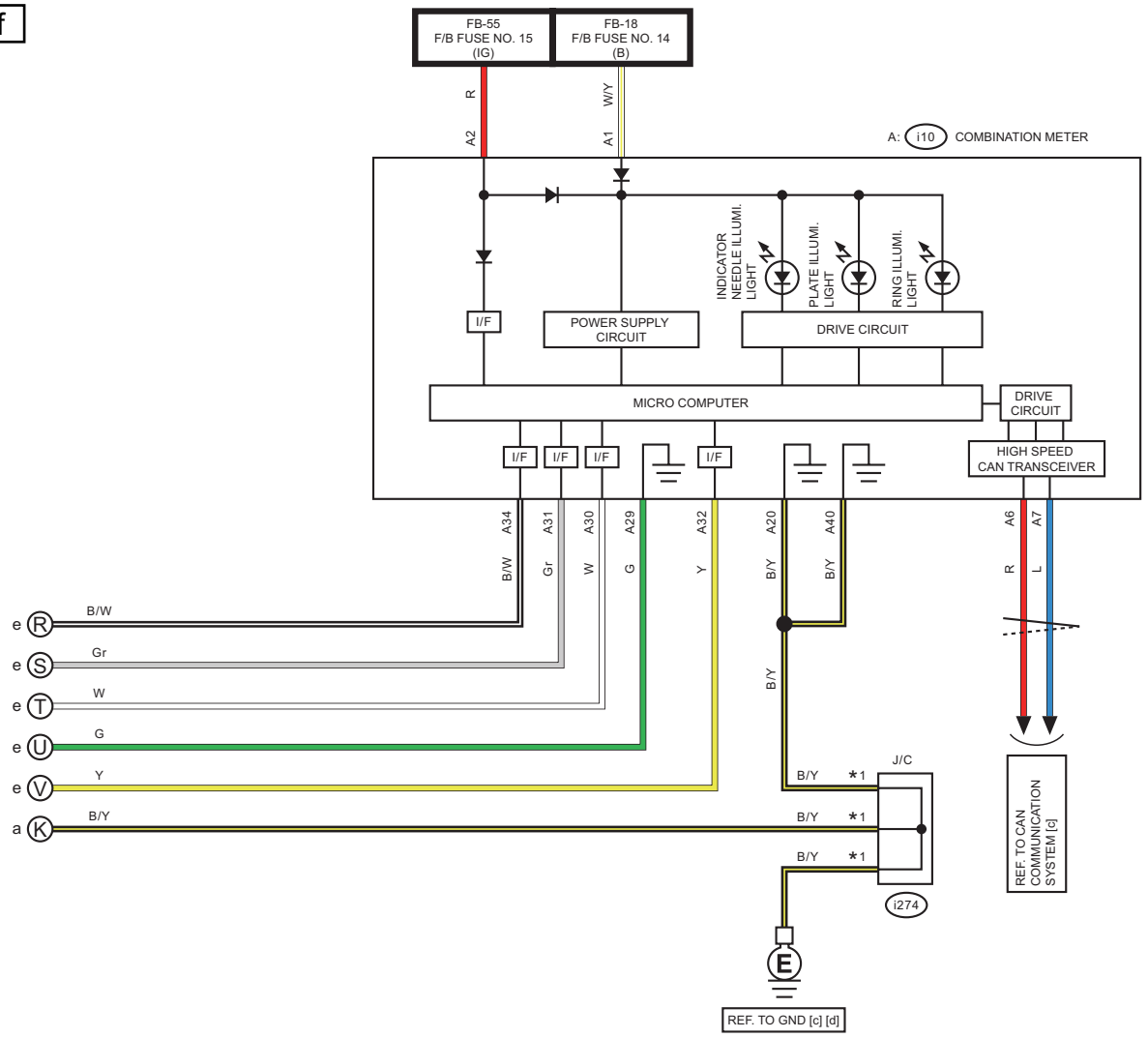

f

*1 : TERMINAL No. OPTIONAL ARRANGEMENT

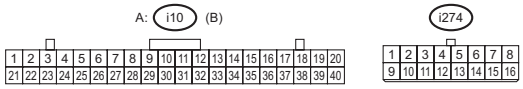

WI-60429

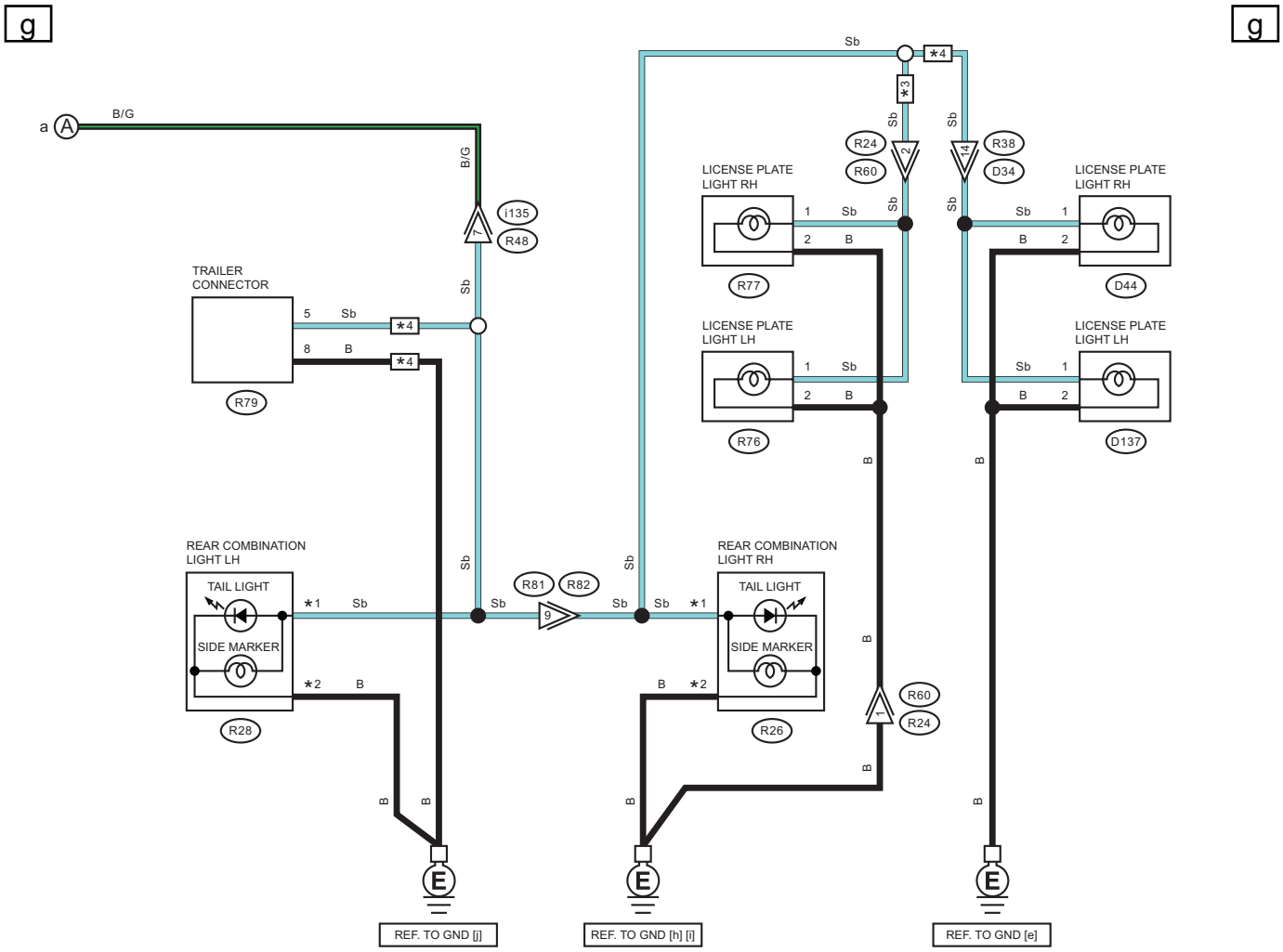

∗1 : SEDAN MODEL : 4
OUTBACK MODEL : 2
∗2 : SEDAN MODEL : 2
OUTBACK MODEL : 3
∗3 : SEDAN MODEL
∗4 : OUTBACK MODEL

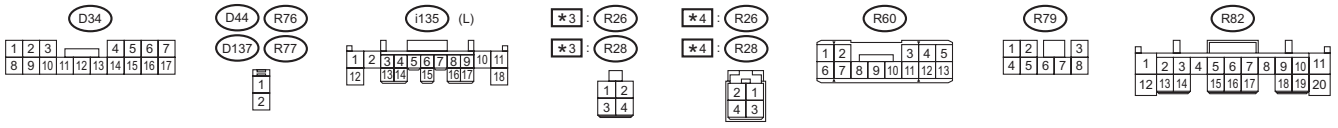

WI-60430

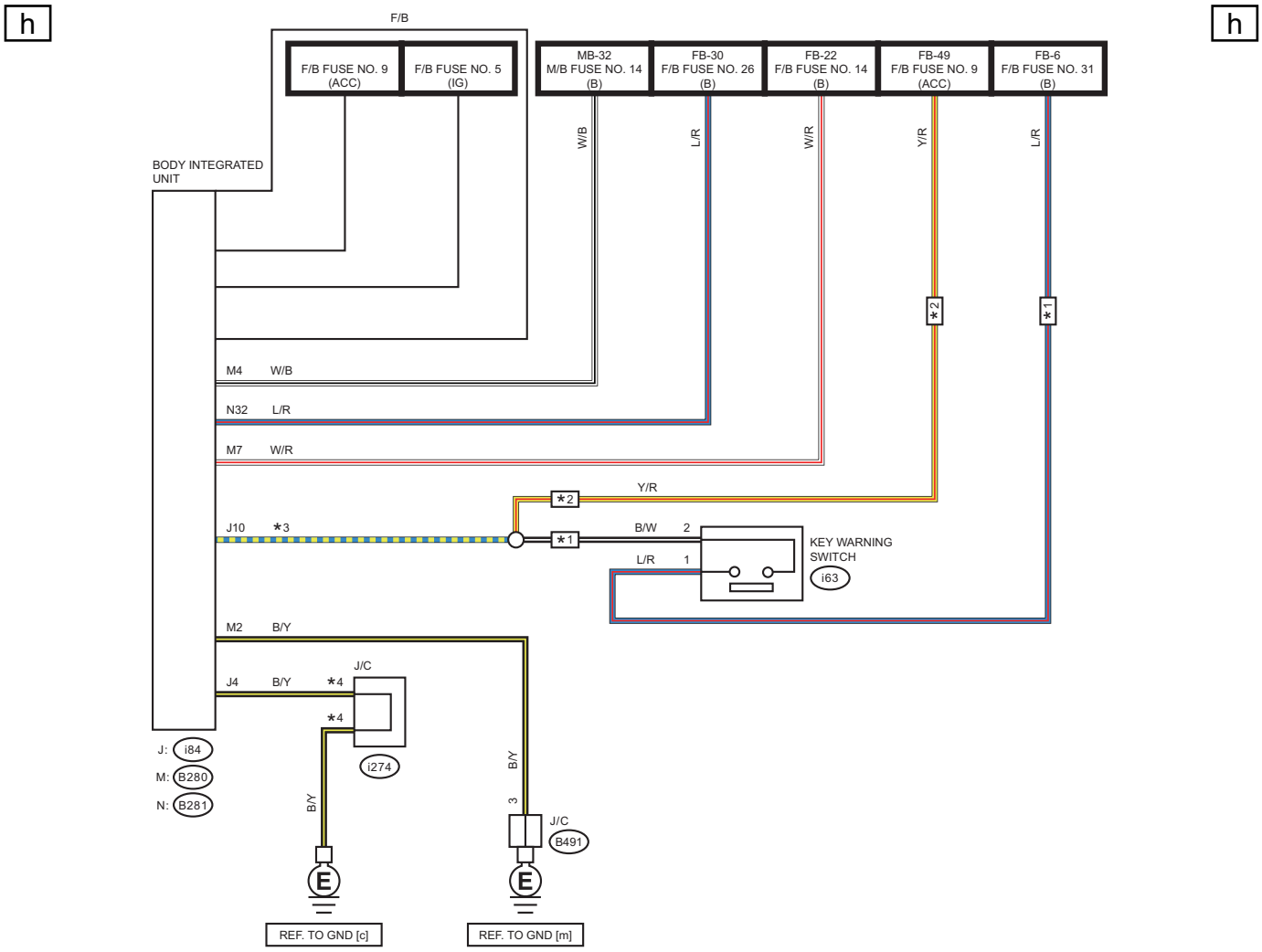

*1 : WITHOUT PUSH BUTTON START
*2 : WITH PUSH BUTTON START
*3 : WITHOUT PUSH BUTTON START : B/W
WITH PUSH BUTTON START : Y/R
*4 : TERMINAL No. OPTIONAL ARRANGEMENT

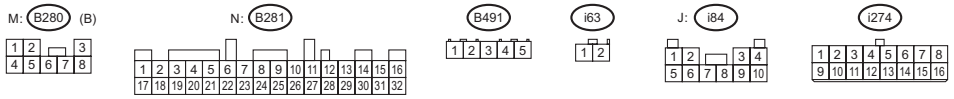

WI-60431

15.Combination Meter System

A: WIRING DIAGRAM

a

a

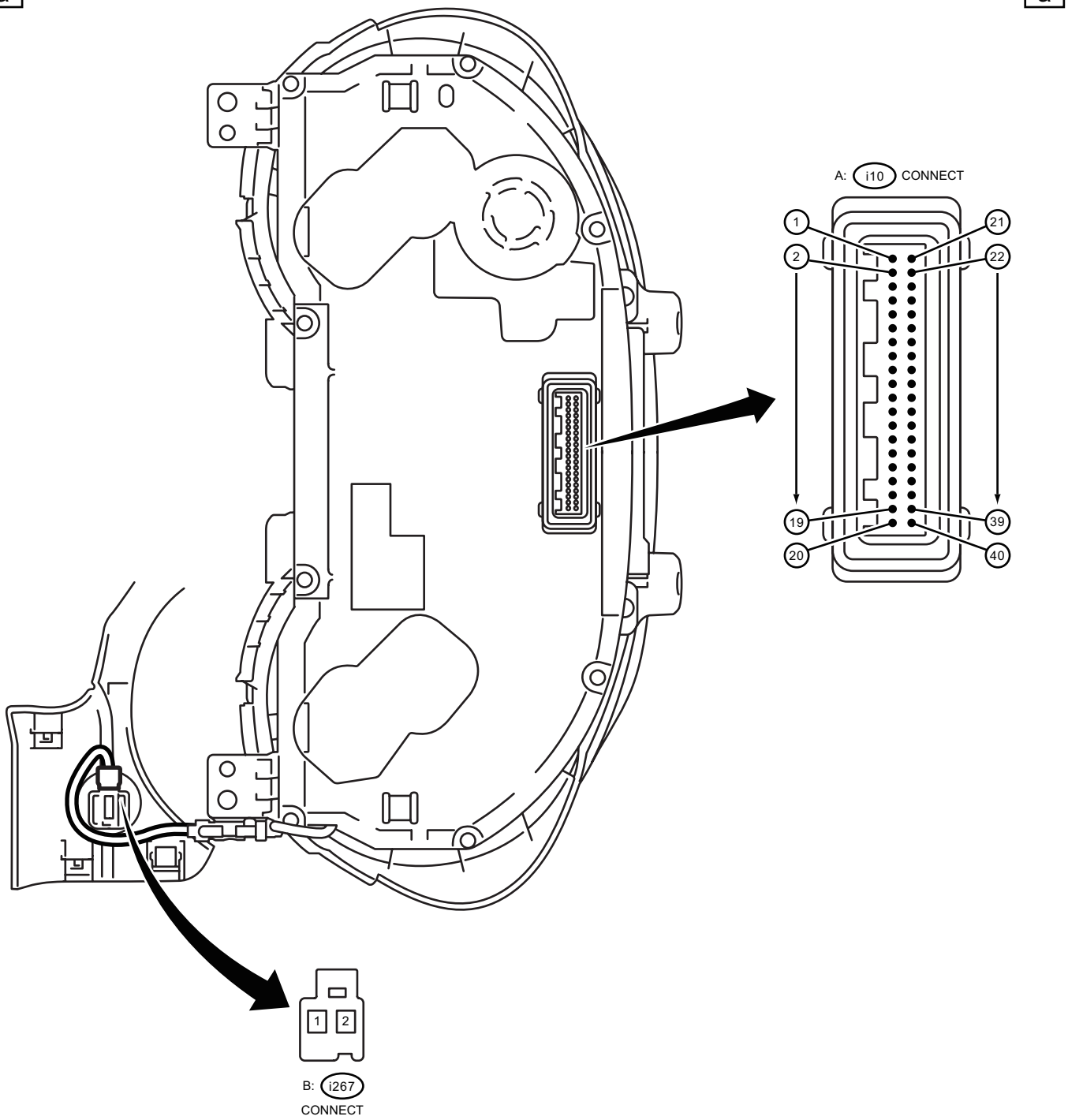

WI-60432

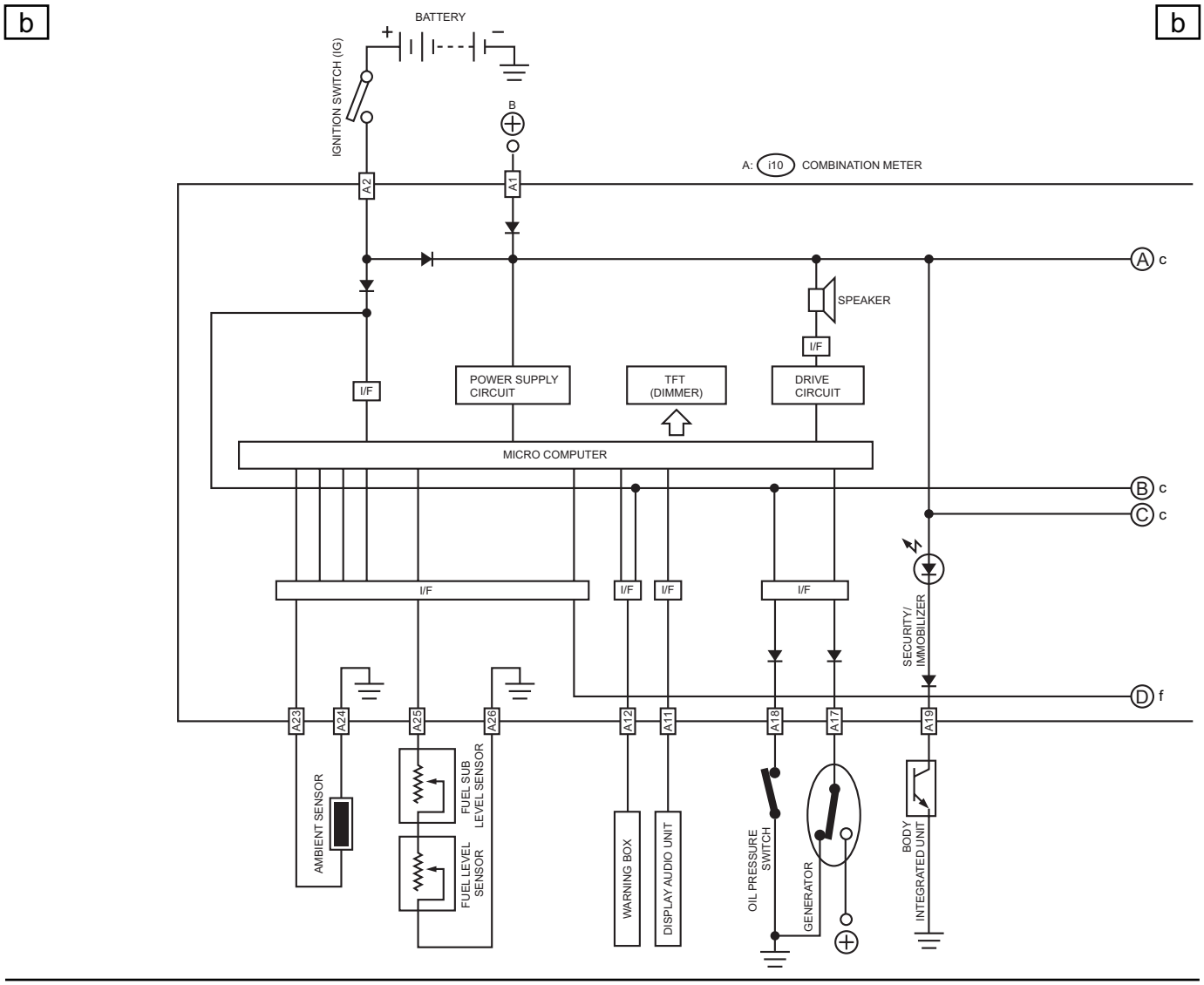
b
b
BATTERY
IGNITION SWITCH (IG)
B
A: i10 COMBINATION METER
A2
A1
A c
SPEAKER
I/F
I/F
POWER SUPPLY CIRCUIT
TFT (DIMMER)
DRIVE CIRCUIT
MICRO COMPUTER
B c
C c
I/F
I/F
I/F
I/F
SECURITY/ IMMOBILIZER
D f
A23
A24
A25
A26
A12
A11
A18
A17
A19
AMBIENT SENSOR
FUEL SUB LEVEL SENSOR
FUEL LEVEL SENSOR
WARNING BOX
DISPLAY AUDIO UNIT
OIL PRESSURE SWITCH
GENERATOR
BODY INTEGRATED UNIT

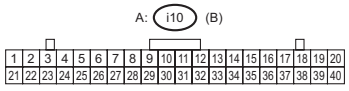
A: i10 (B)
1 2 3 4 5 6 7 8 9 10 11 12 13 14 15 16 17 18 19 20
21 22 23 24 25 26 27 28 29 30 31 32 33 34 35 36 37 38 39 40

WI-60433

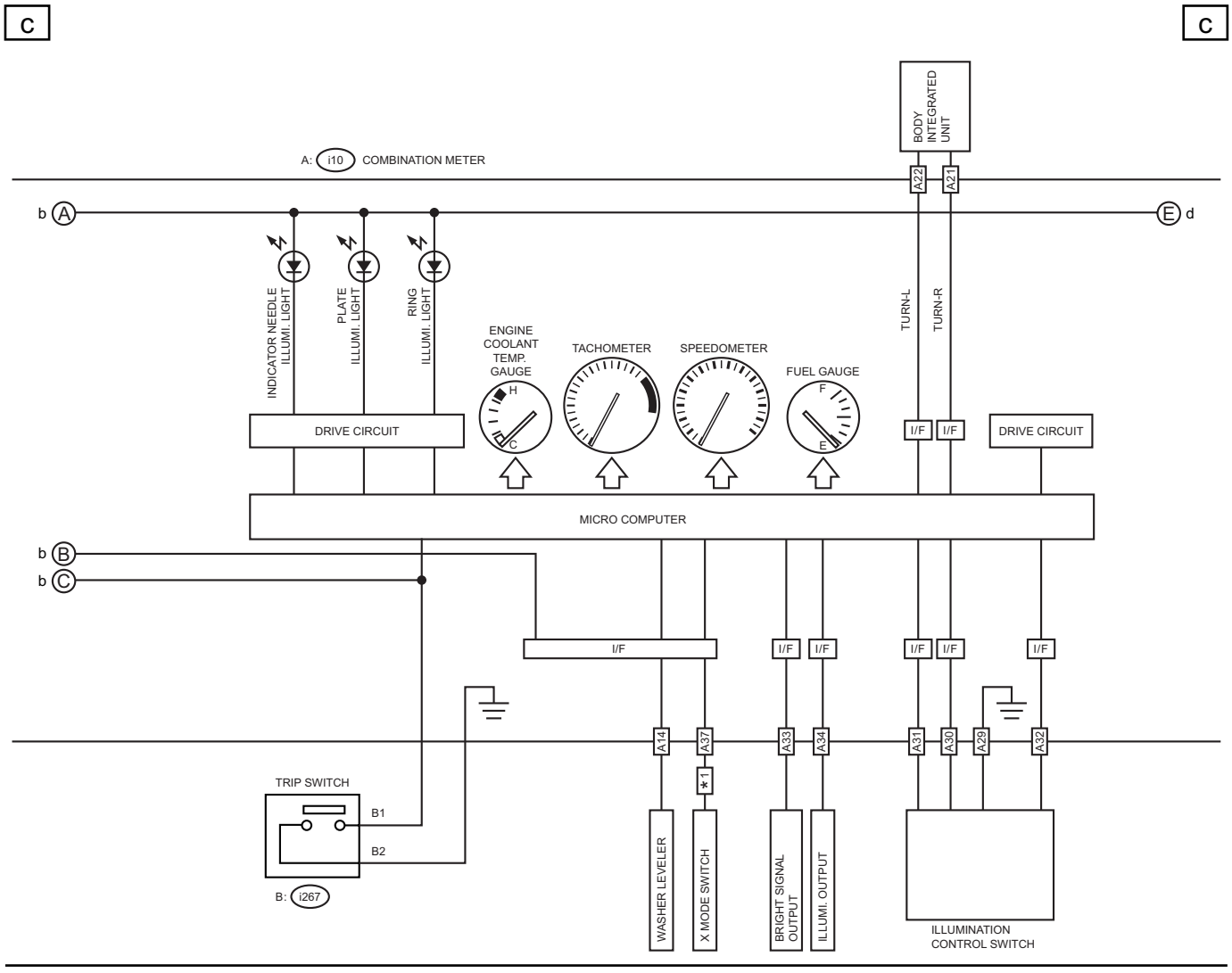

*1 : WITH X MODE

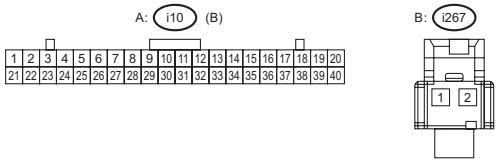

WI-60434

d

d

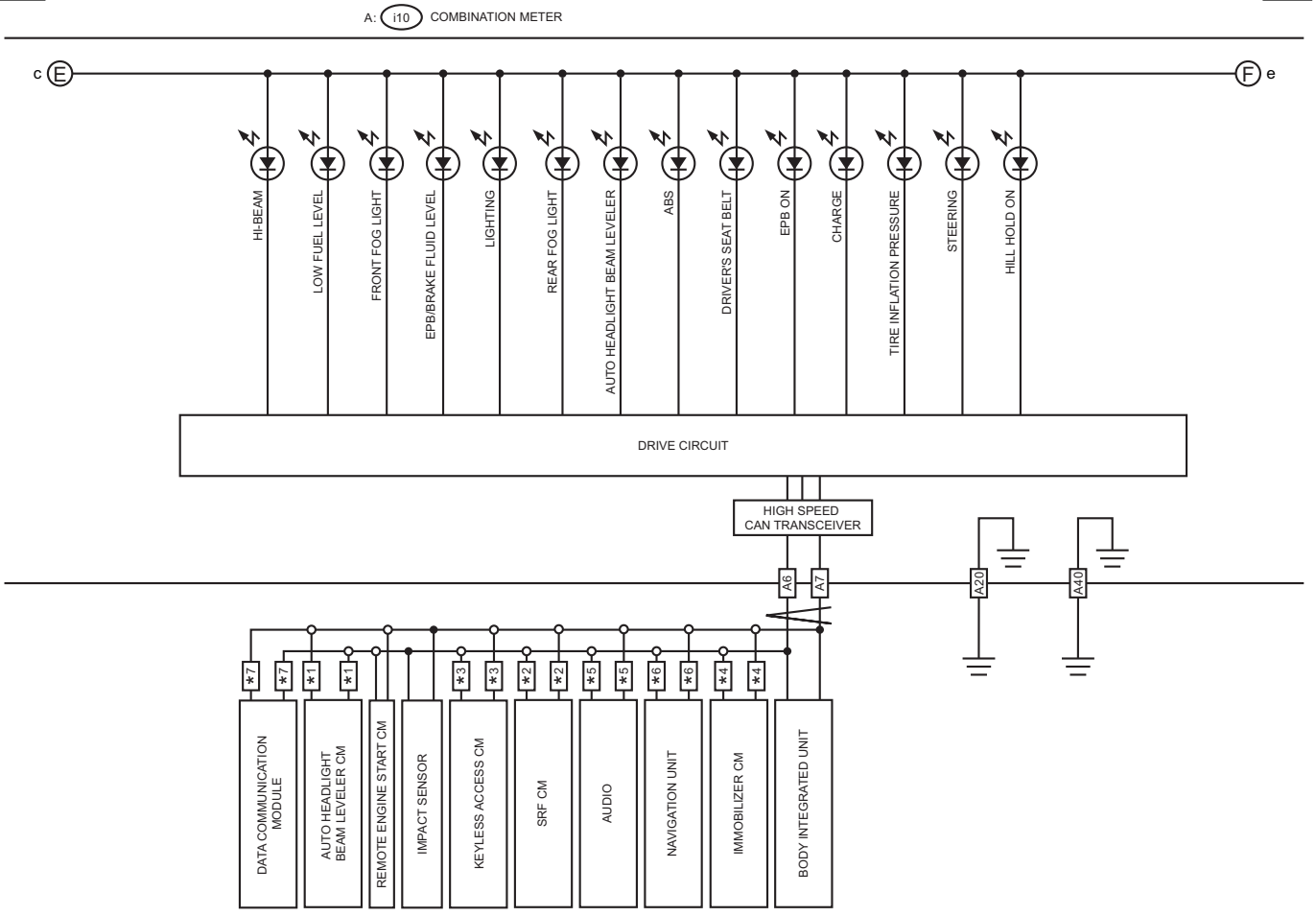

*1 : WITHOUT SRF
*2 : WITH SRF
*3 : WITH PUSH BUTTON START
*4 : WITH IMMOBILIZER CM
*5 : WITHOUT NAVIGATION
*6 : WITH NAVIGATION
*7 : WITH TELEMATICS

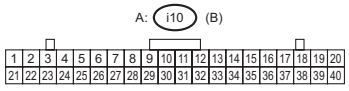

WI-60435

e

e

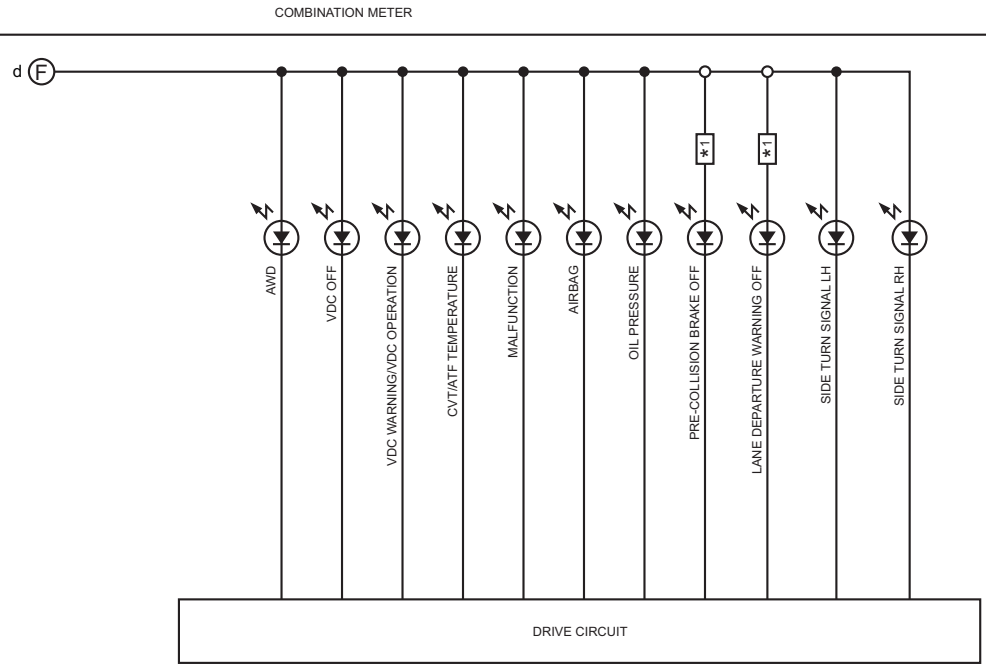

*1 : WITH EyeSight

WI-60436

f

f

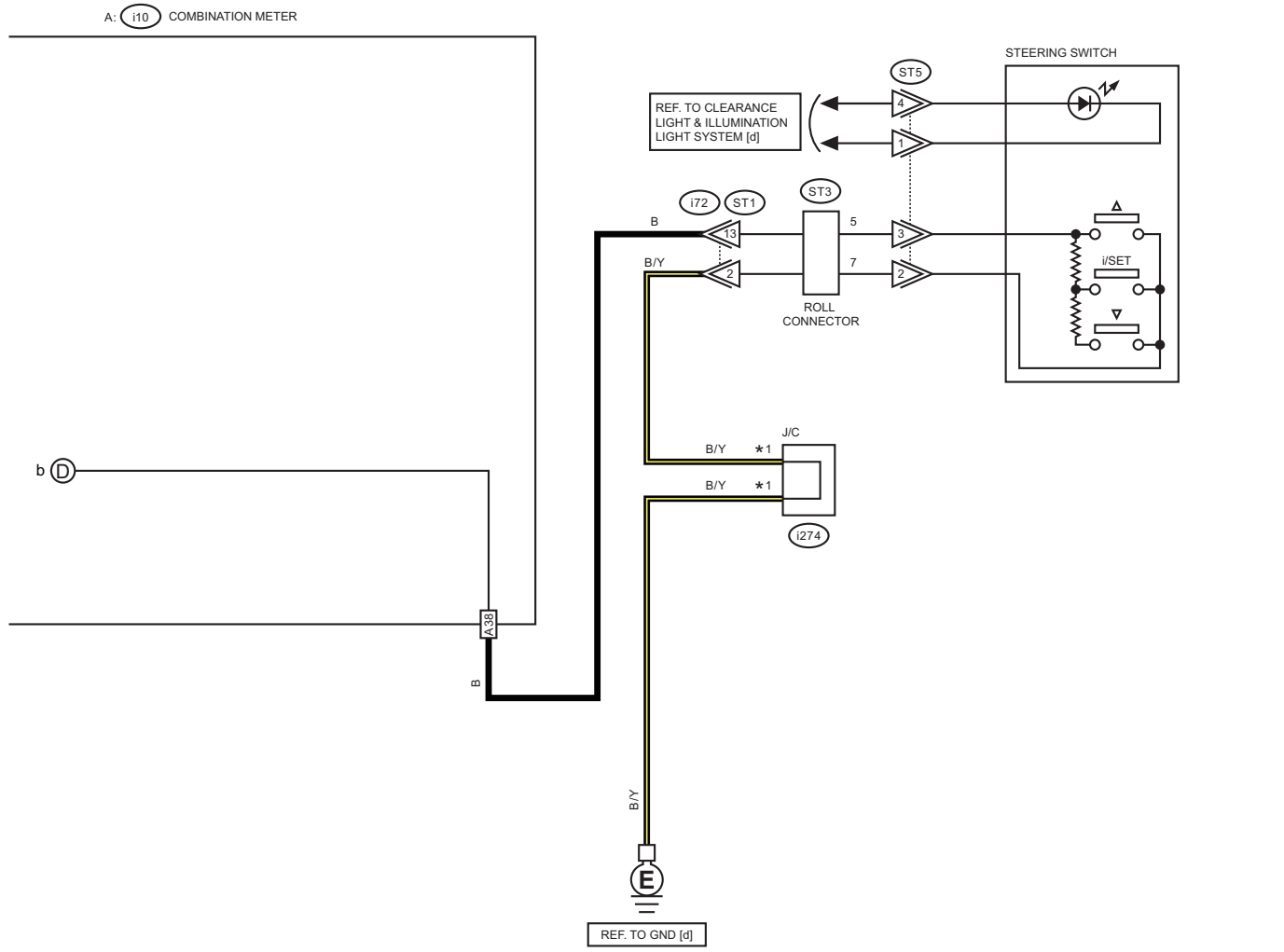

*1 : TERMINAL No. OPTIONAL ARRANGEMENT

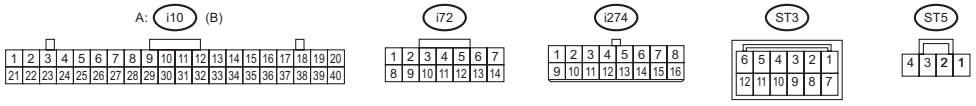

WI-60437

16.Coolant Temperature System

A: WIRING DIAGRAM

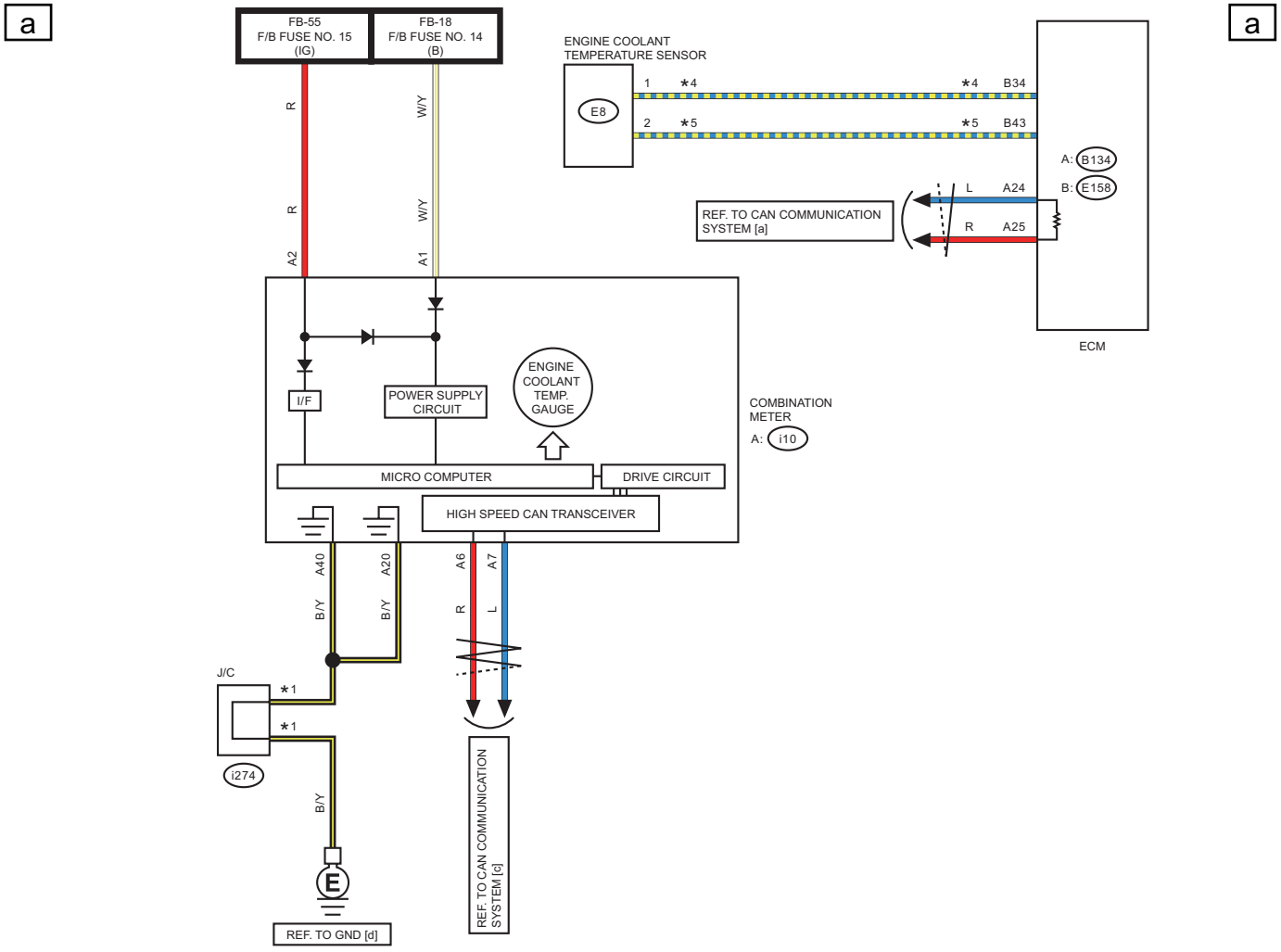

∗1 : TERMINAL No. OPTIONAL ARRANGEMENT
∗2 : ENGINE TYPE FB
∗3 : ENGINE TYPE EZ

∗4 : ENGINE TYPE FB : Lg
ENGINE TYPE EZ : B/Y
∗5 : ENGINE TYPE FB : W/G
ENGINE TYPE EZ : Gr

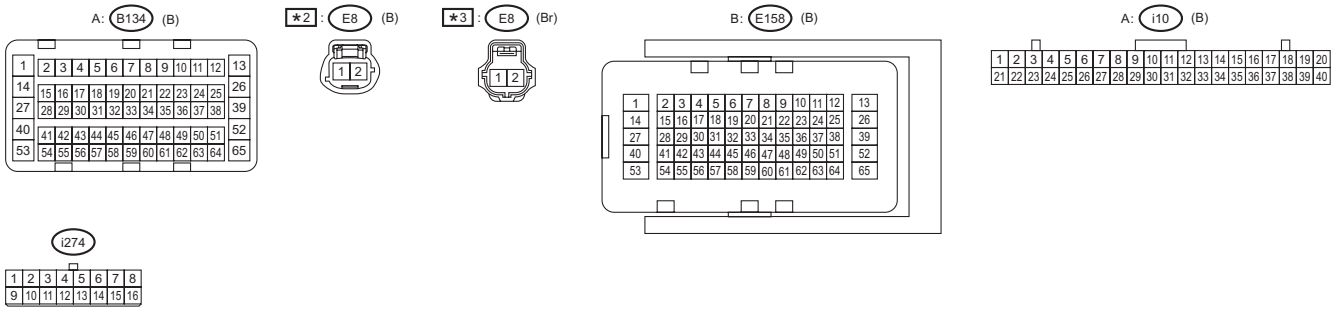

WI-60438

17.Cruise Control System

A: WIRING DIAGRAM

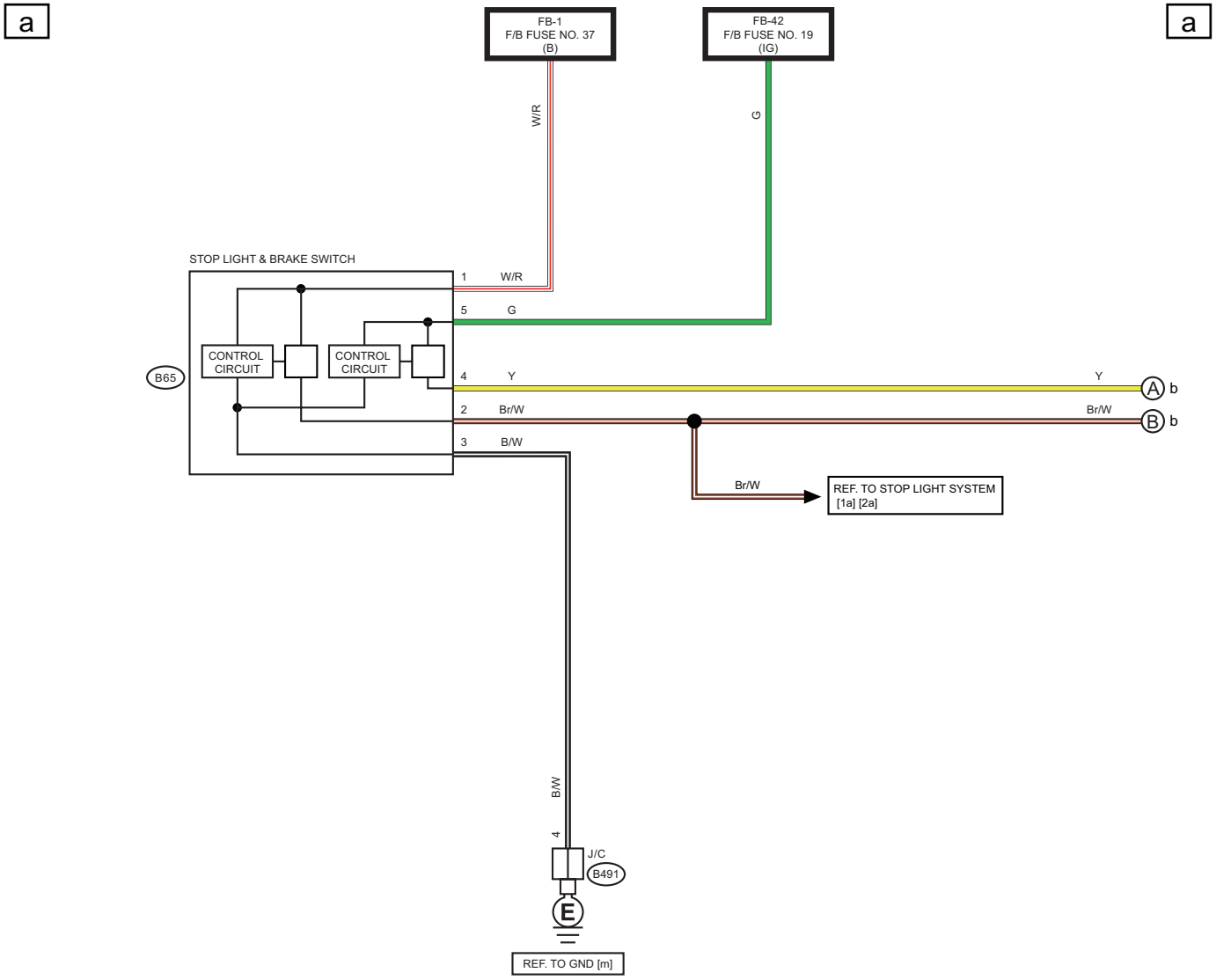



WI-60439

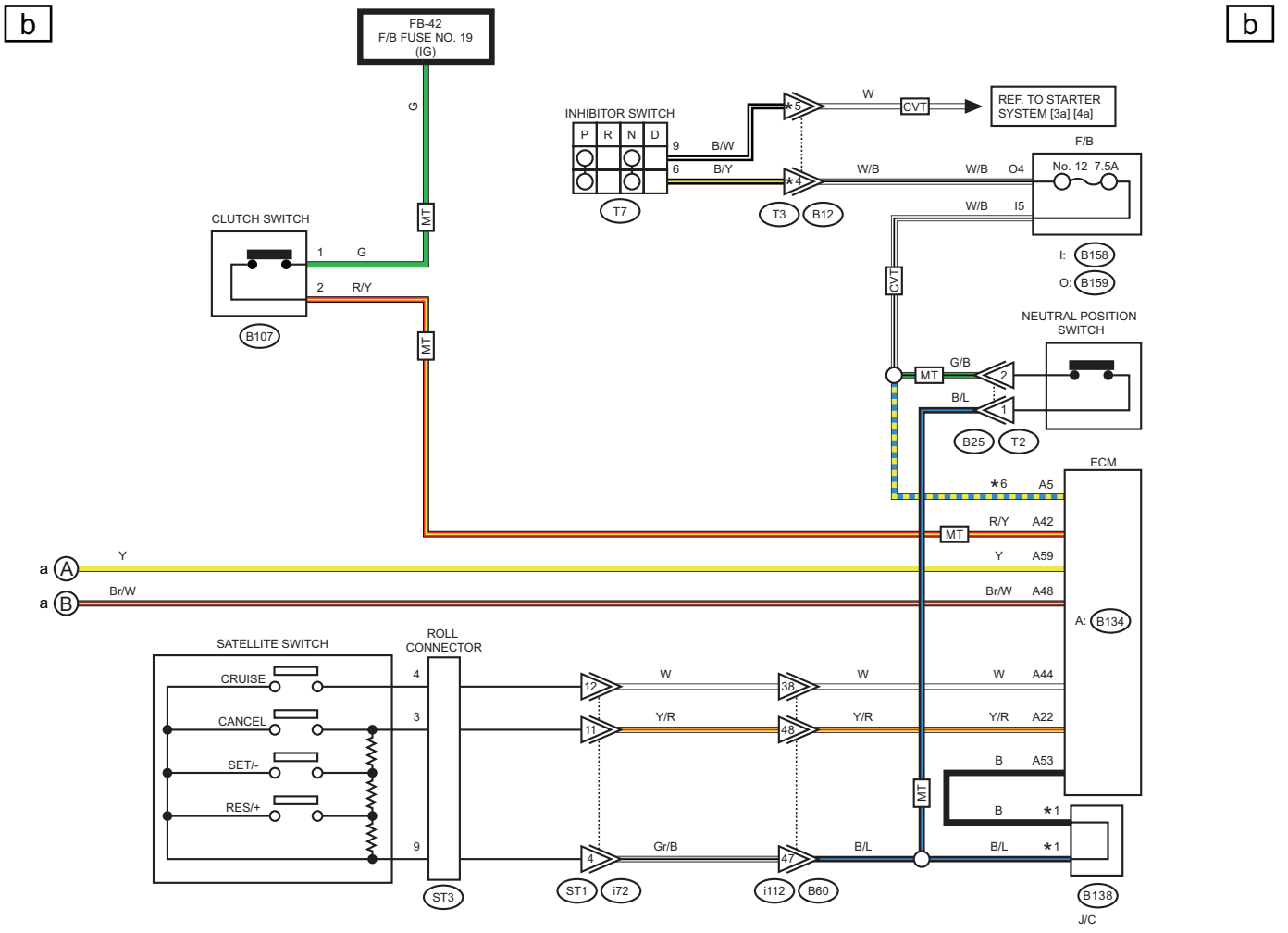

*1 : TERMINAL No. OPTIONAL ARRANGEMENT AMONG 1, 2, 5 AND 6
*2 : ENGINE TYPE FB
*3 : ENGINE TYPE EZ
*4 : ENGINE TYPE FB : 1
ENGINE TYPE EZ : 12
*5 : ENGINE TYPE FB : 5
ENGINE TYPE EZ : 11
*6 : MT MODEL : G/B
CVT MODEL : W/B

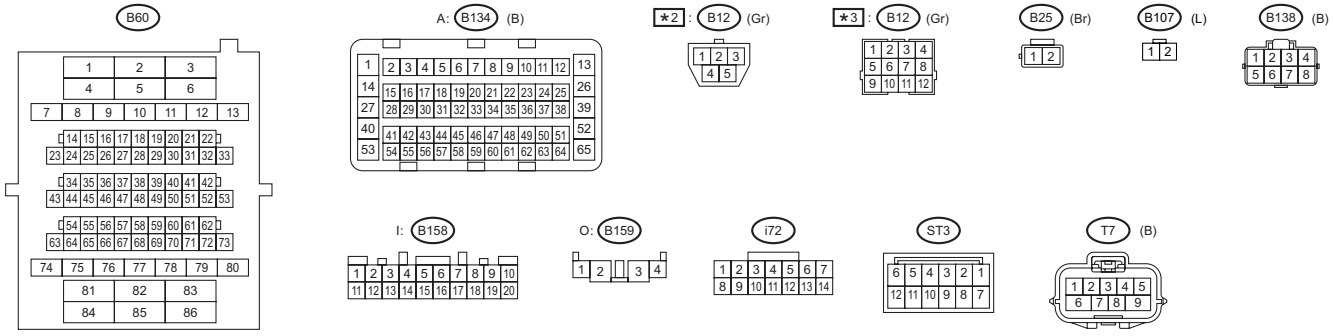

WI-60440

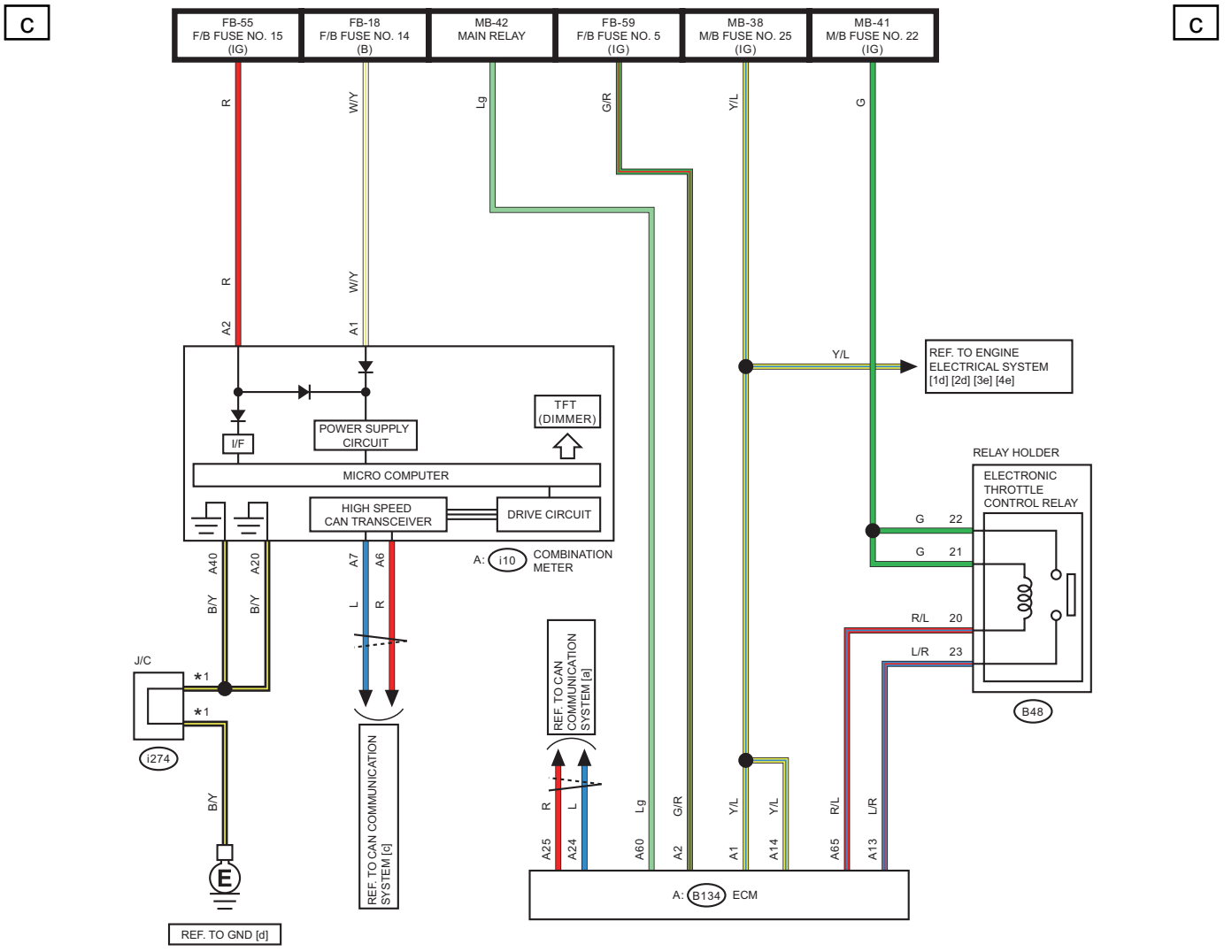

*1 : TERMINAL No. OPTIONAL ARRANGEMENT

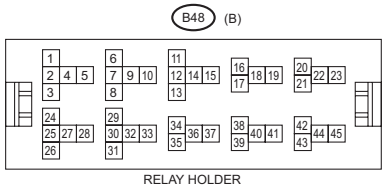

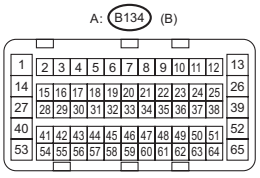

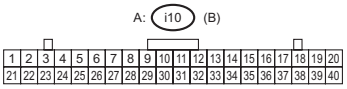

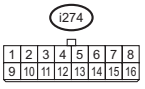

WI-60441

d

d

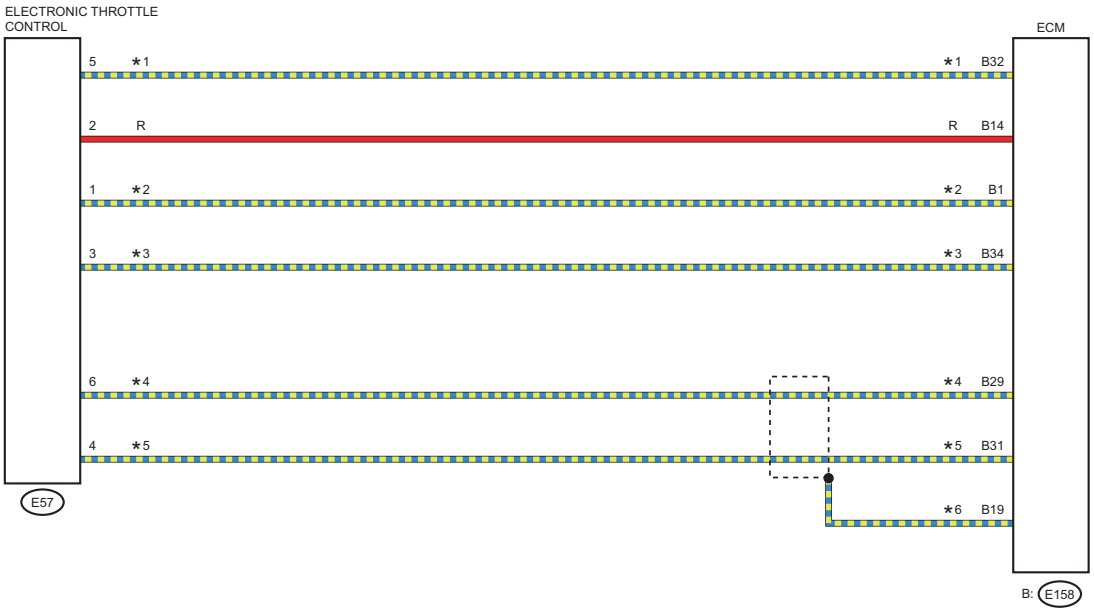

★1 : ENGINE TYPE FB : G/B
ENGINE TYPE EZ : B/L
★2 : ENGINE TYPE FB : Br
ENGINE TYPE EZ : Br/W
★3 : ENGINE TYPE FB : Lg
ENGINE TYPE EZ : B/Y
★4 : ENGINE TYPE FB : P
ENGINE TYPE EZ : Br
★5 : ENGINE TYPE FB : L
ENGINE TYPE EZ : Y
★6 : ENGINE TYPE FB : B
ENGINE TYPE EZ : Gr

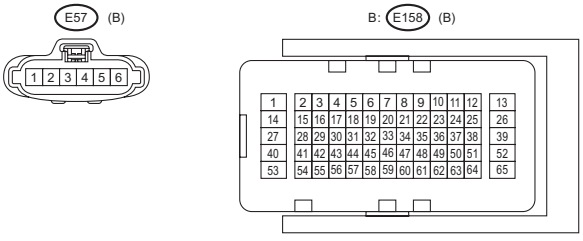

WI-60442

e

e

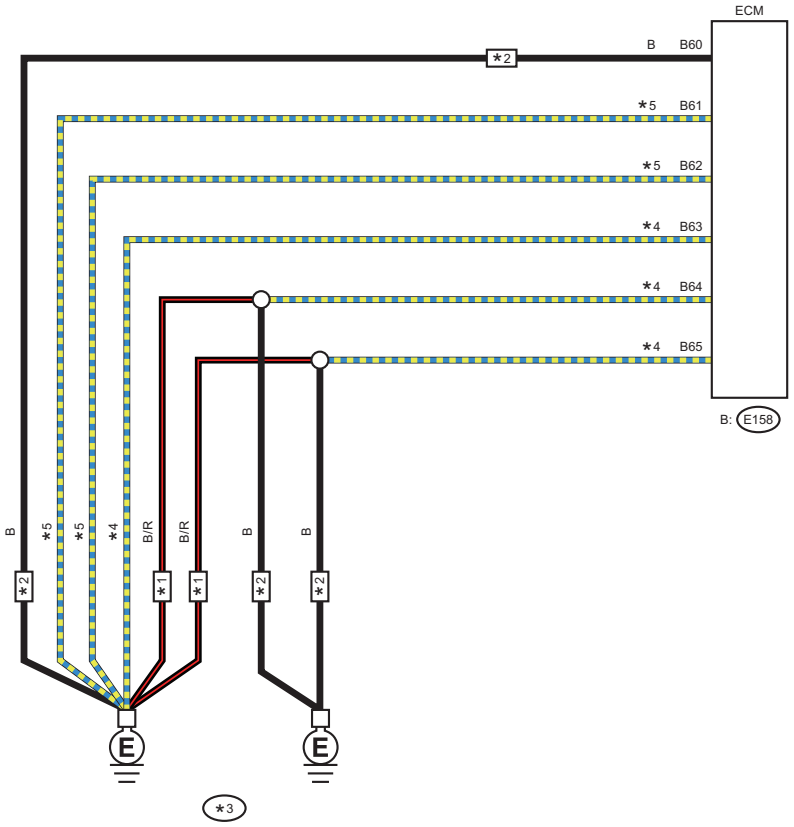

*1 : ENGINE TYPE FB
*2 : ENGINE TYPE EZ
*3 : ENGINE TYPE FB : GE-1
ENGINE TYPE EZ : GE-3
*4 : ENGINE TYPE FB : B/R
ENGINE TYPE EZ : B
*5 : ENGINE TYPE FB : B/W
ENGINE TYPE EZ : B

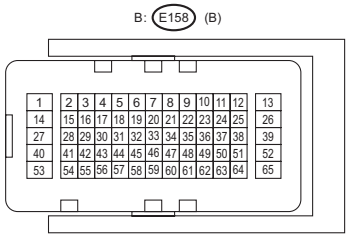

WI-60443

18.CVT Control System

A: WIRING DIAGRAM

1. ENGINE TYPE FB

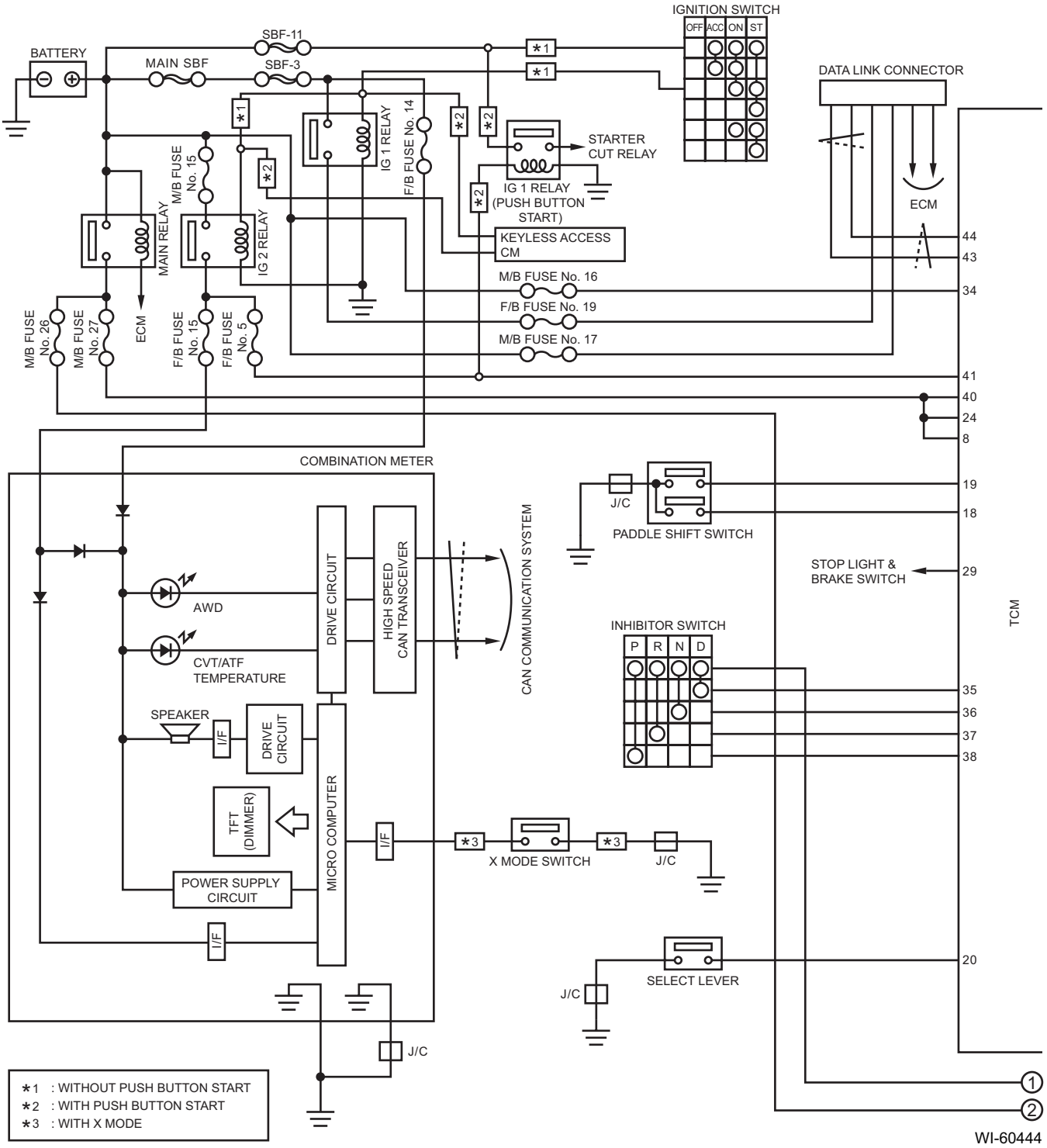

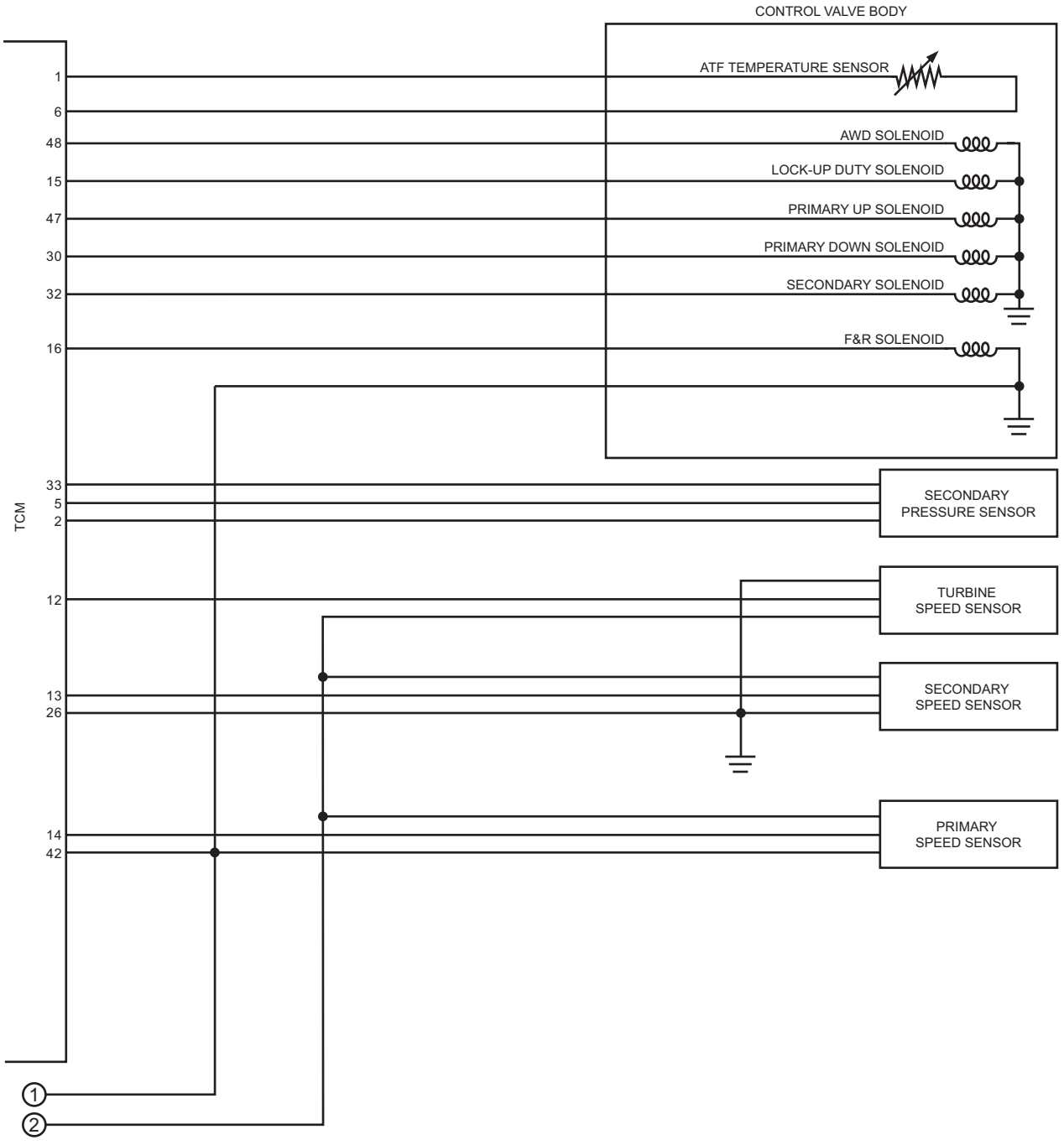
CONTROL VALVE BODY
ATF TEMPERATURE SENSOR
AWD SOLENOID
LOCK-UP DUTY SOLENOID
PRIMARY UP SOLENOID
PRIMARY DOWN SOLENOID
SECONDARY SOLENOID
F&R SOLENOID
TCM
1
6
48
15
47
30
32
16
33
5
2
12
13
26
14
42
SECONDARY PRESSURE SENSOR
TURBINE SPEED SENSOR
SECONDARY SPEED SENSOR
PRIMARY SPEED SENSOR
1
2

WI-60445

WIRING SYSTEM

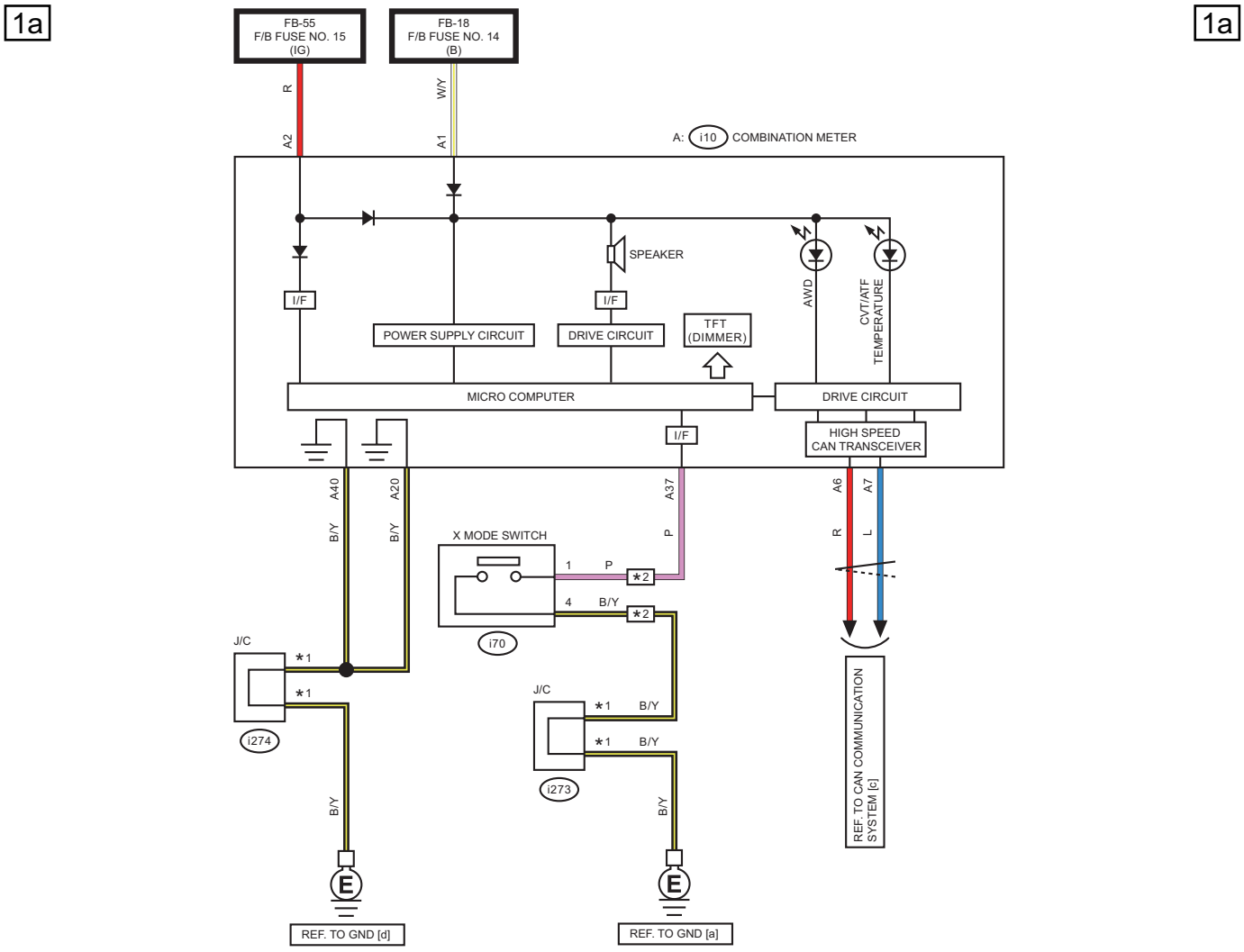

*1 : TERMINAL No. OPTIONAL ARRANGEMENT
*2 : WITH X MODE

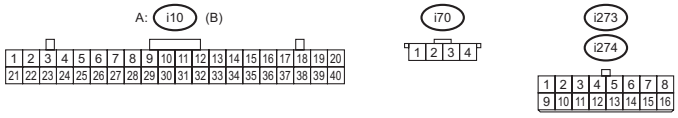

WI-60446

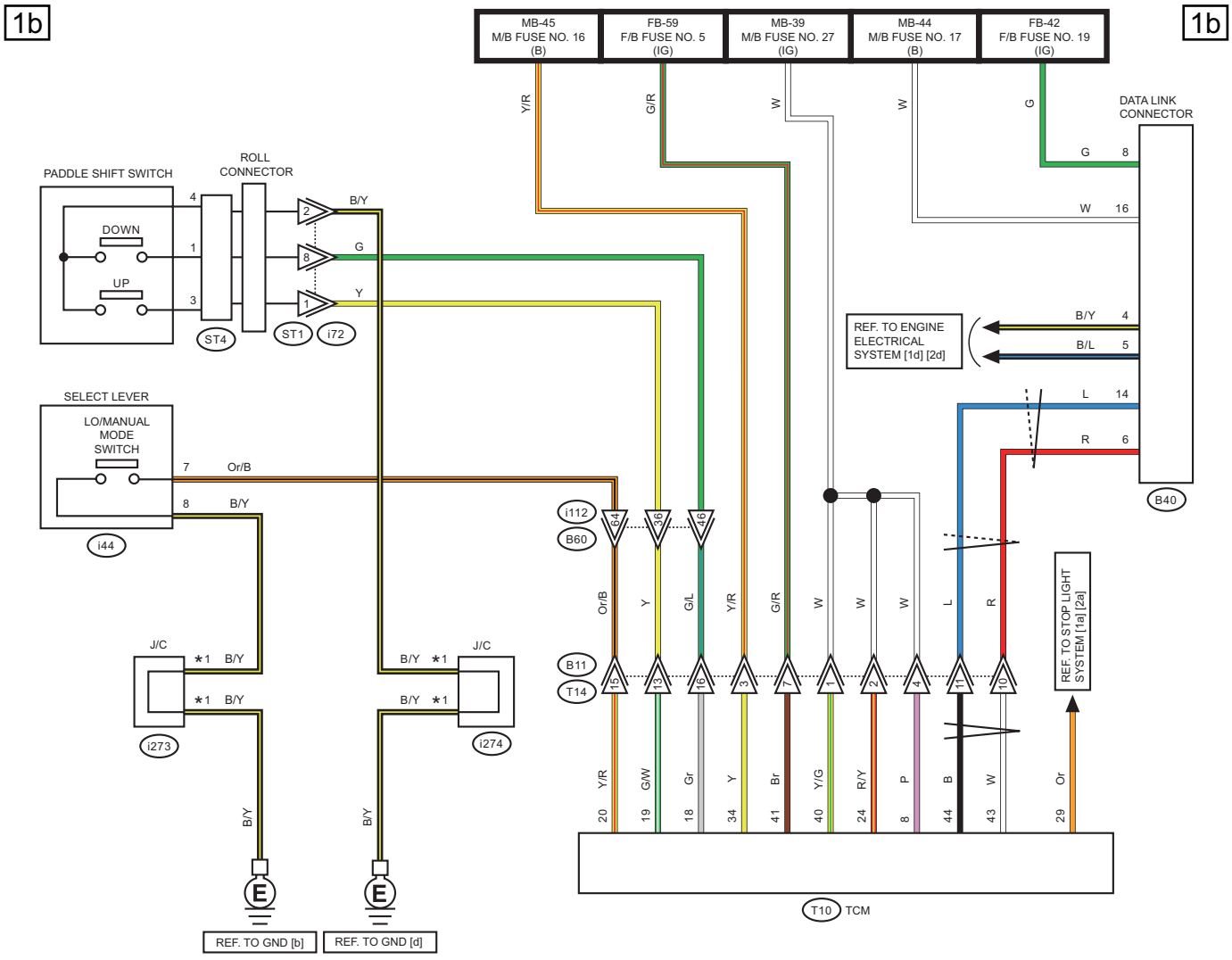

∗1 : TERMINAL No. OPTIONAL ARRANGEMENT

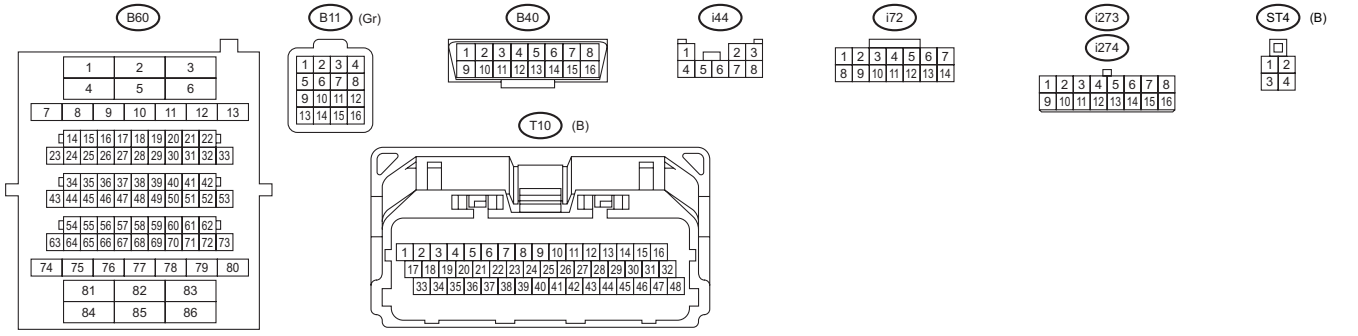

WI-60447

WIRING SYSTEM

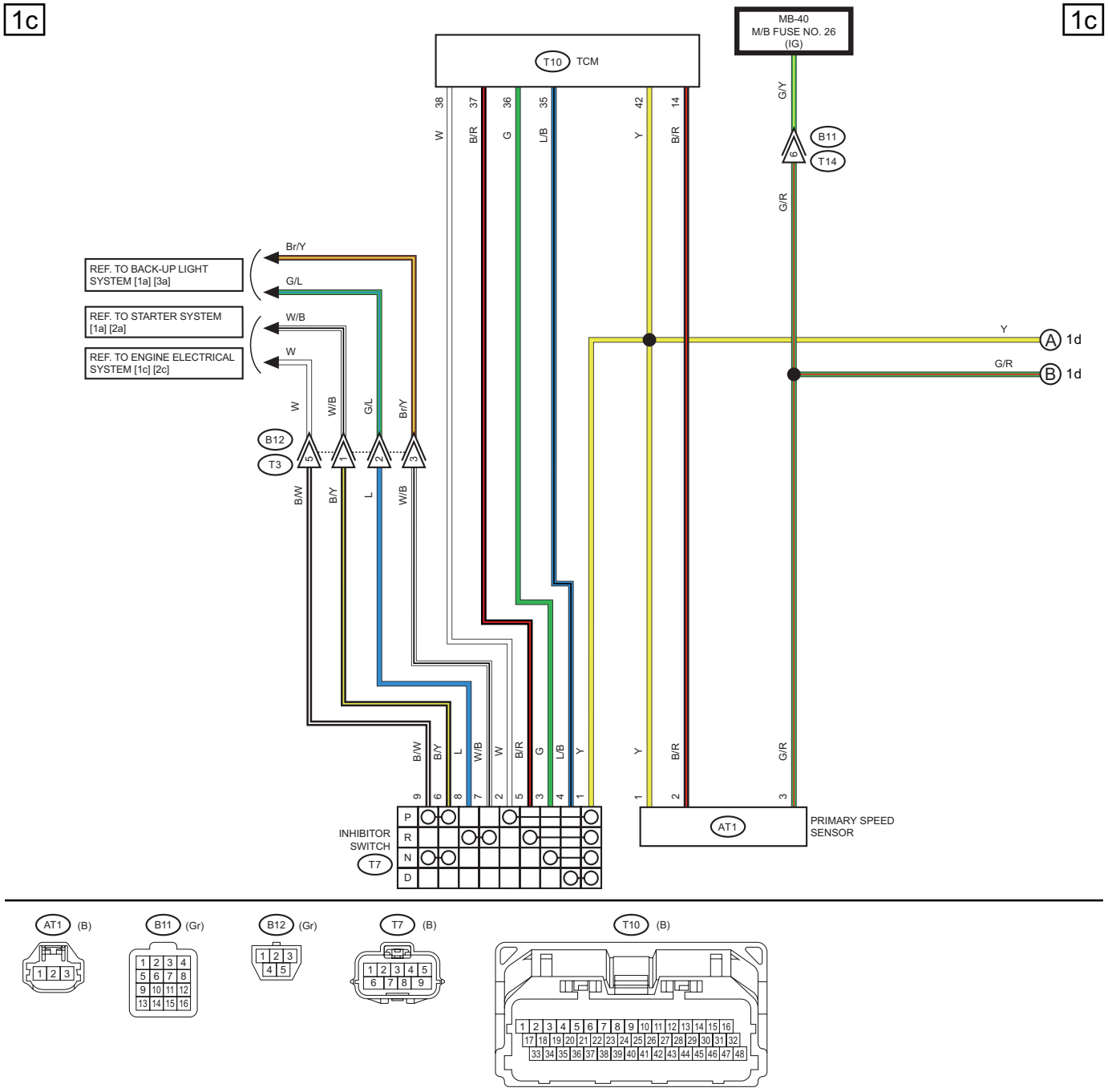

WI-60448

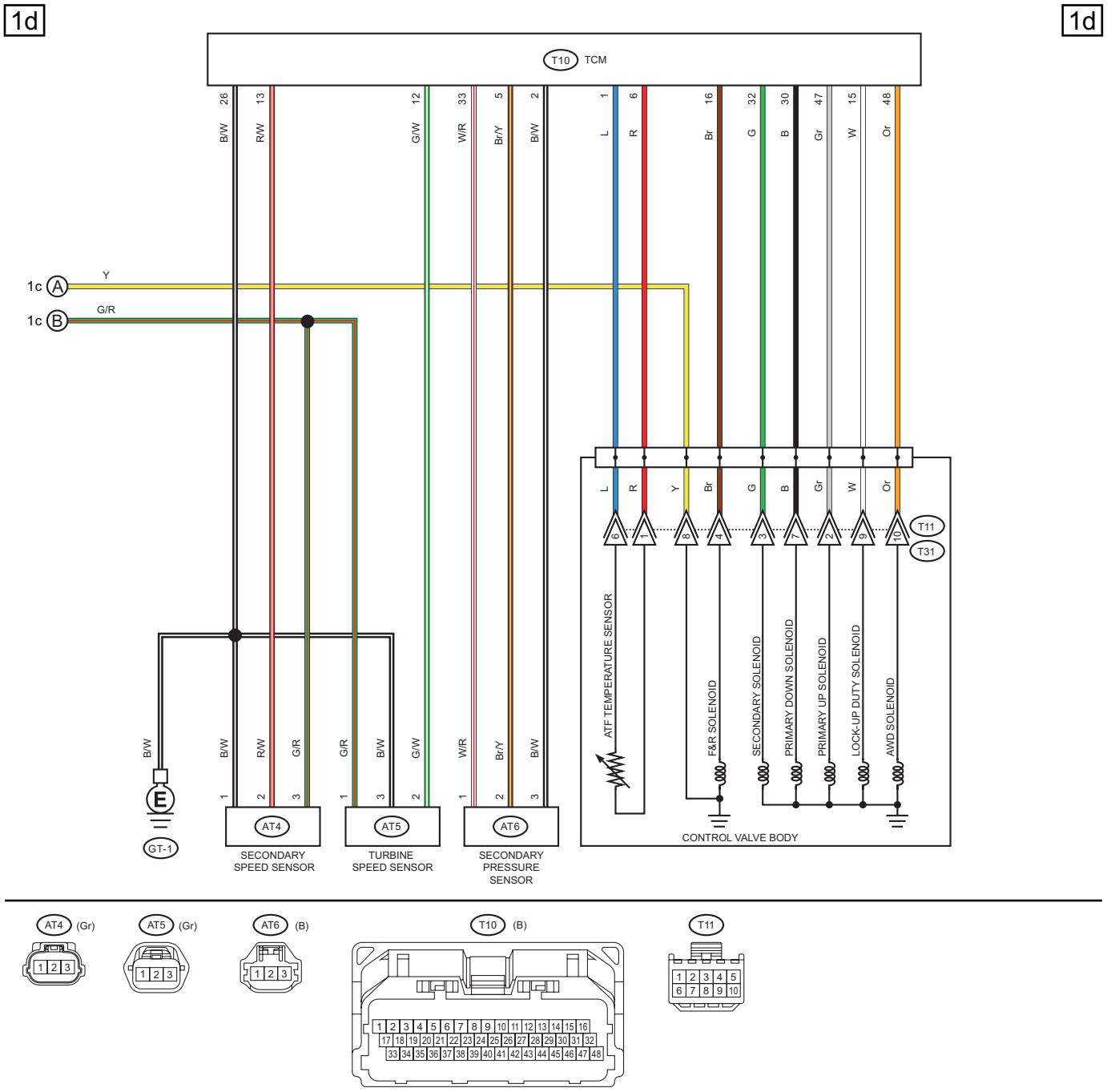
1d
1d
T10 TCM
26 B/W
13 R/W
12 G/W
33 W/R
5 Br/Y
2 B/W
1 L
6 R
16 Br
32 G
30 B
47 Gr
15 W
48 Or
1c A
Y
1c B
G/R
T11
T31
ATF TEMPERATURE SENSOR
F&R SOLENOID
SECONDARY SOLENOID
PRIMARY DOWN SOLENOID
PRIMARY UP SOLENOID
LOCK-UP DUTY SOLENOID
AWD SOLENOID
CONTROL VALVE BODY
B/W
E
GT-1
AT4
SECONDARY SPEED SENSOR
AT5
TURBINE SPEED SENSOR
AT6
SECONDARY PRESSURE SENSOR

AT4 (Gr)
AT5 (Gr)
AT6 (B)
T10 (B)
T11

WI-60449

2. ENGINE TYPE EZ

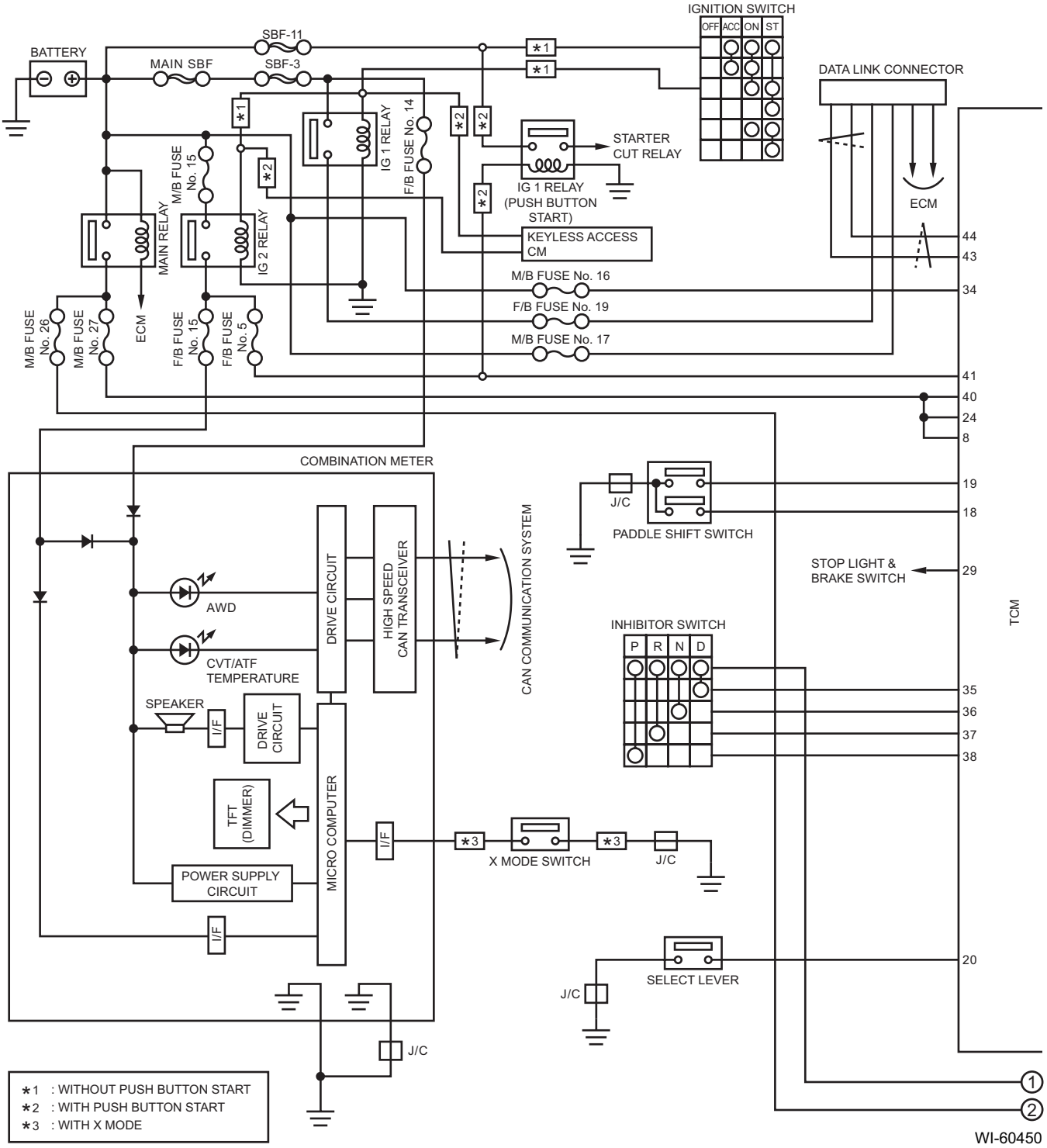

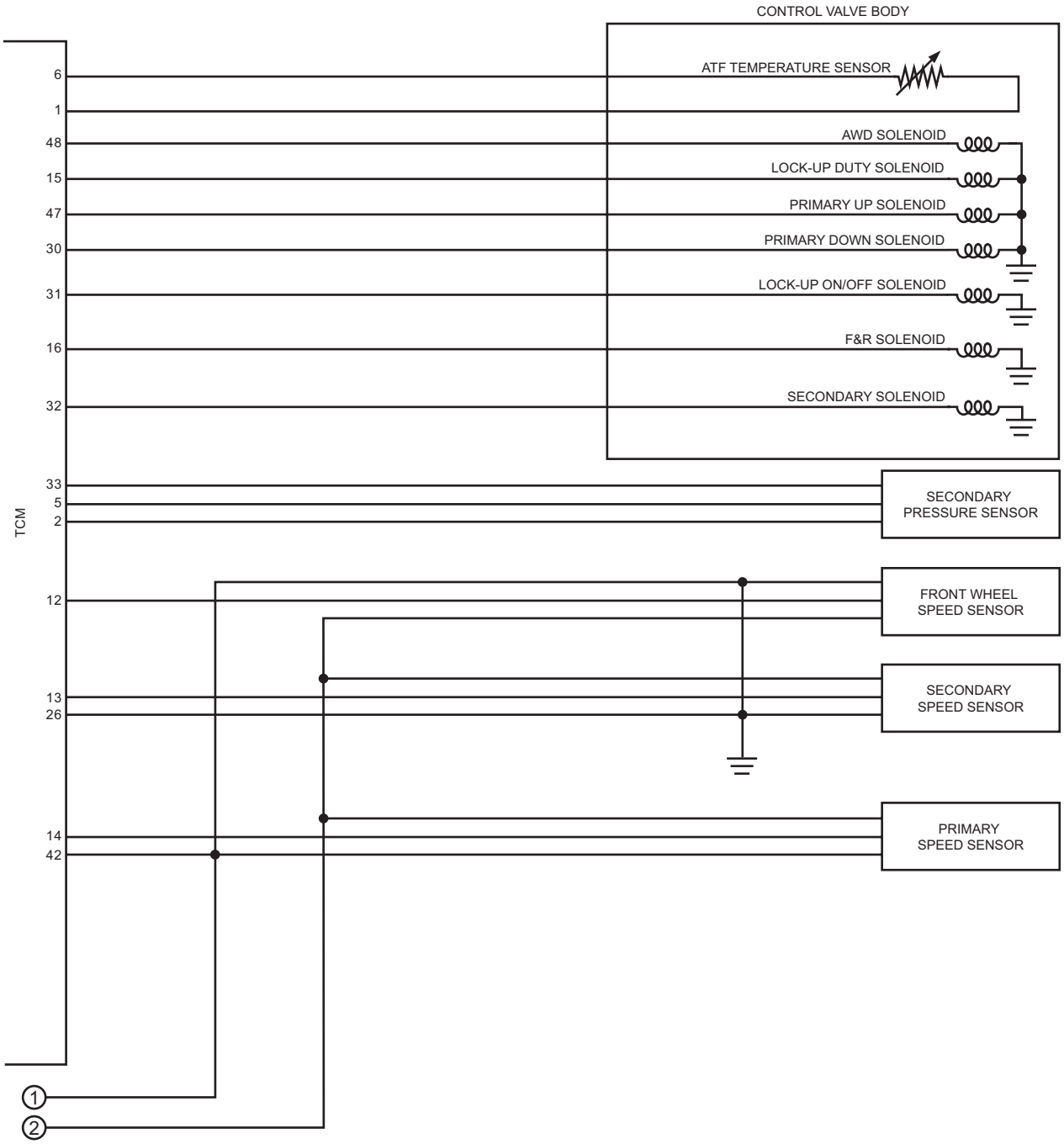
CONTROL VALVE BODY
ATF TEMPERATURE SENSOR
AWD SOLENOID
LOCK-UP DUTY SOLENOID
PRIMARY UP SOLENOID
PRIMARY DOWN SOLENOID
LOCK-UP ON/OFF SOLENOID
F&R SOLENOID
SECONDARY SOLENOID
TCM
6
1
48
15
47
30
31
16
32
33
5
2
12
13
26
14
42
SECONDARY PRESSURE SENSOR
FRONT WHEEL SPEED SENSOR
SECONDARY SPEED SENSOR
PRIMARY SPEED SENSOR
1
2

WI-60451

WIRING SYSTEM

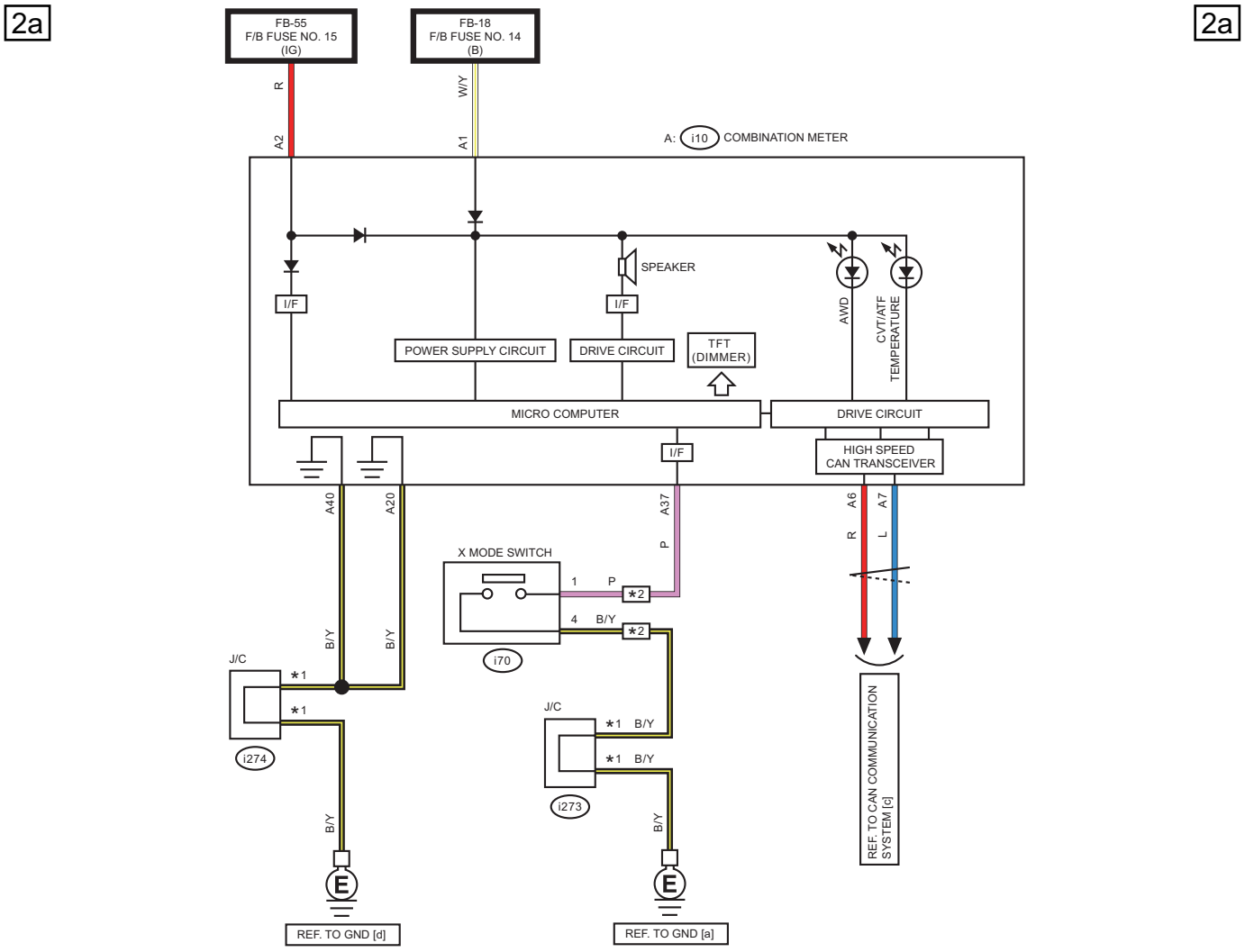

*1 : TERMINAL No. OPTIONAL ARRANGEMENT
*2 : WITH X MODE

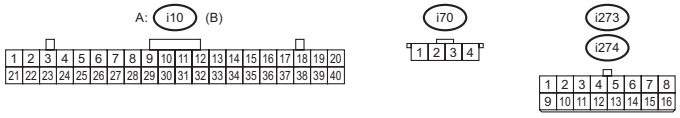

WI-60452

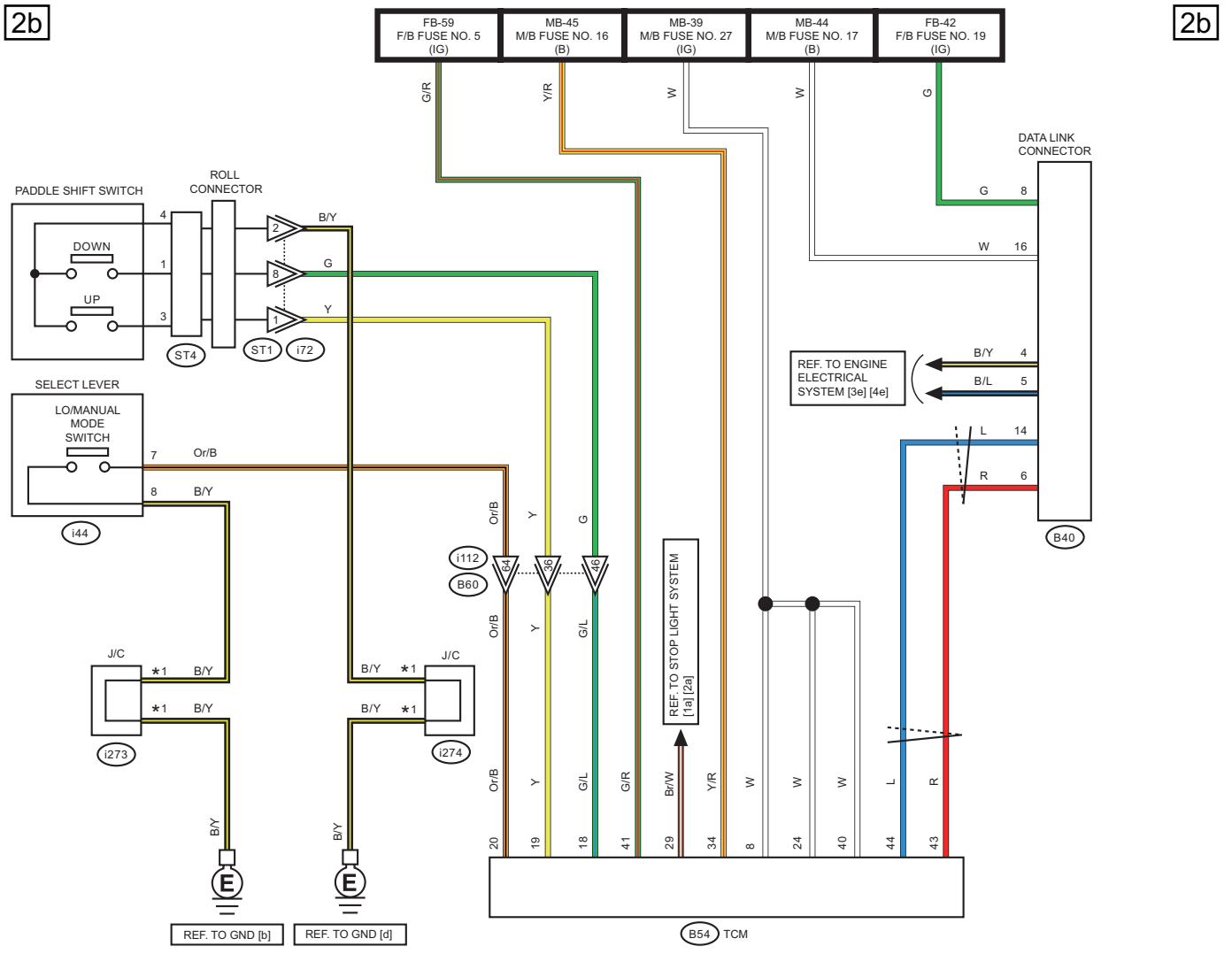

*1 : TERMINAL No. OPTIONAL ARRANGEMENT

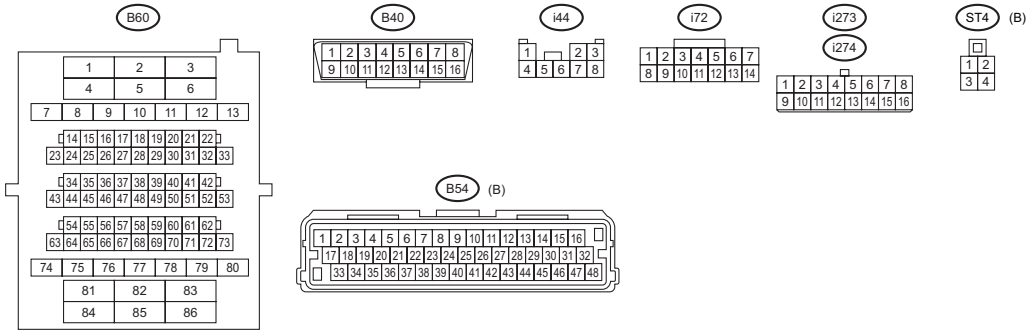

WI-60453

WIRING SYSTEM

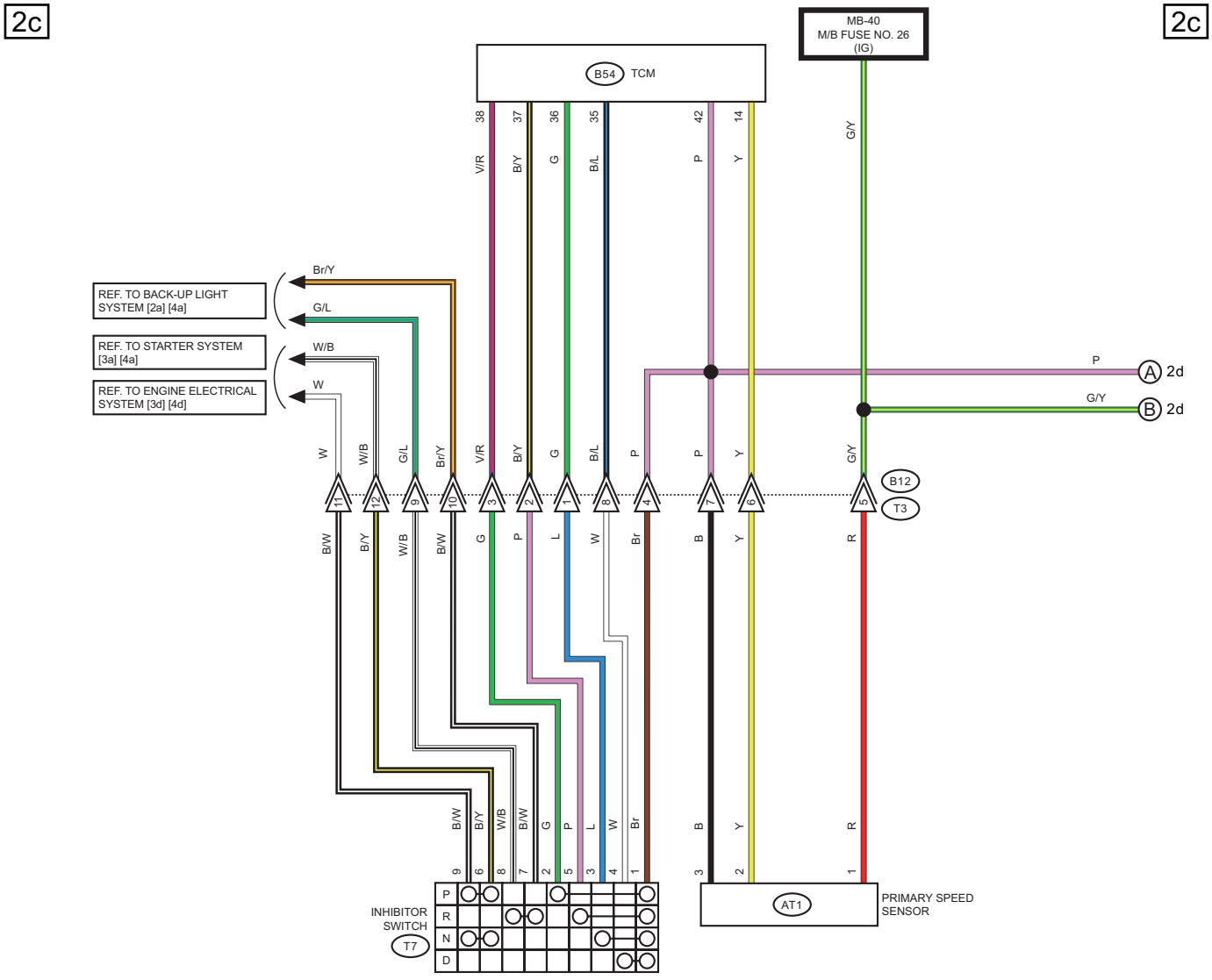

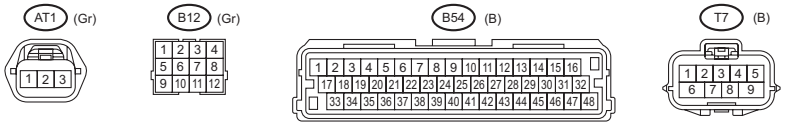

WI-60454

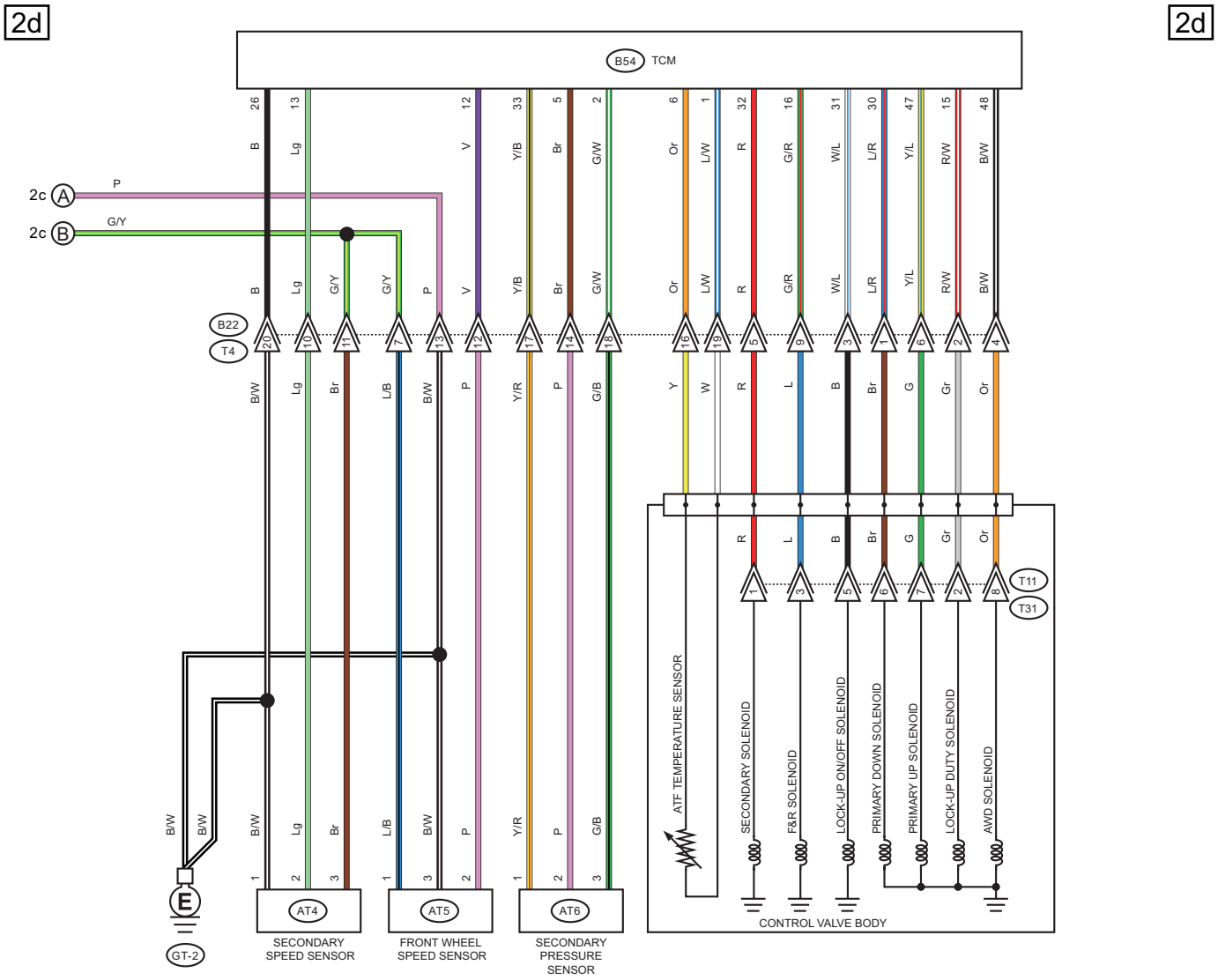
2d
2d
B54 TCM
2c A
2c B
P
G/Y
B22
T4
AT4
AT5
AT6
SECONDARY SPEED SENSOR
FRONT WHEEL SPEED SENSOR
SECONDARY PRESSURE SENSOR
GT-2
ATF TEMPERATURE SENSOR
SECONDARY SOLENOID
F&R SOLENOID
LOCK-UP ON/OFF SOLENOID
PRIMARY DOWN SOLENOID
PRIMARY UP SOLENOID
LOCK-UP DUTY SOLENOID
AWD SOLENOID
CONTROL VALVE BODY
T11
T31

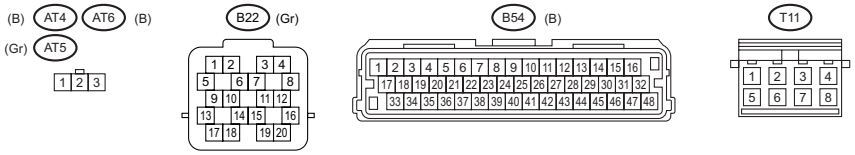
(B) AT4 AT6 (B)
(Gr) AT5
B22 (Gr)
B54 (B)
T11

WI-60455

19.Electric Power Steering System

A: WIRING DIAGRAM

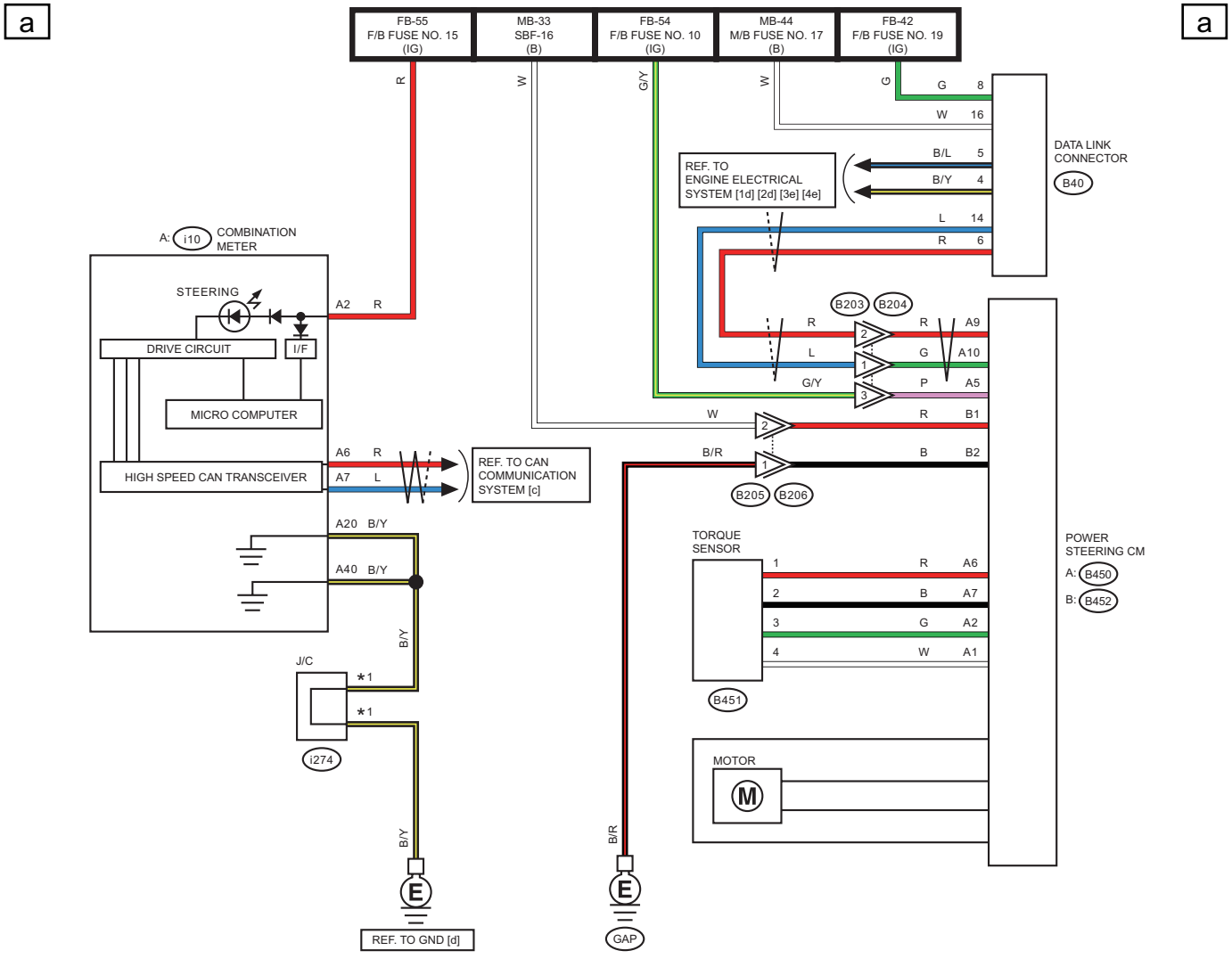

*1 : TERMINAL No. OPTIONAL ARRANGEMENT

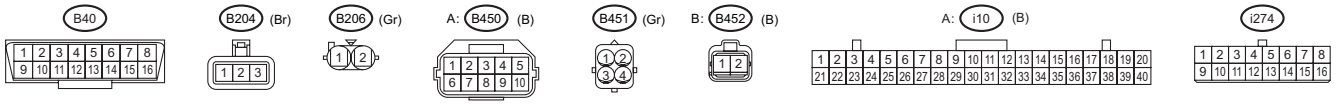

WI-60456

20.Engine Electrical System

A: WIRING DIAGRAM

1. ENGINE TYPE FB (WITHOUT PUSH BUTTON START)

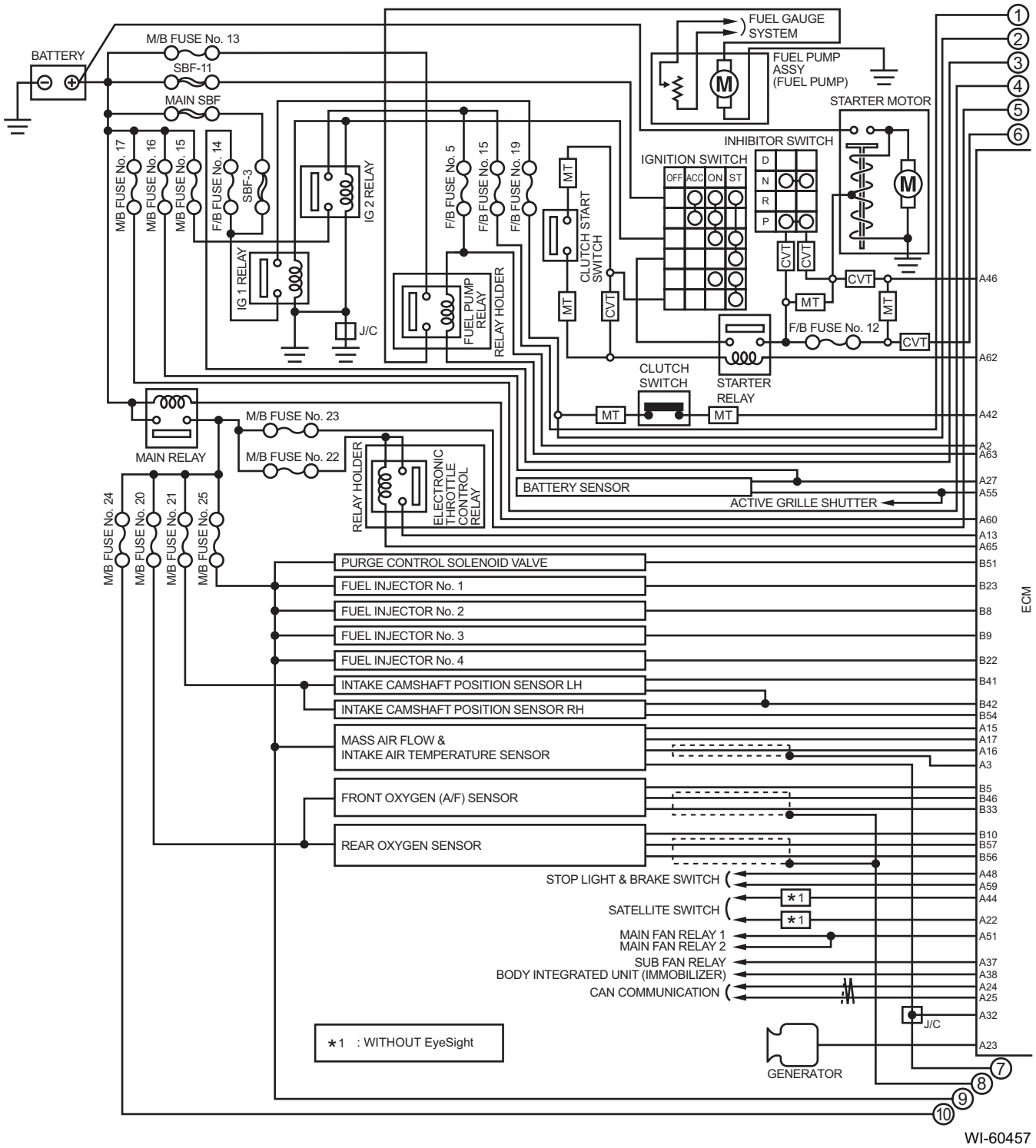

WI-60457

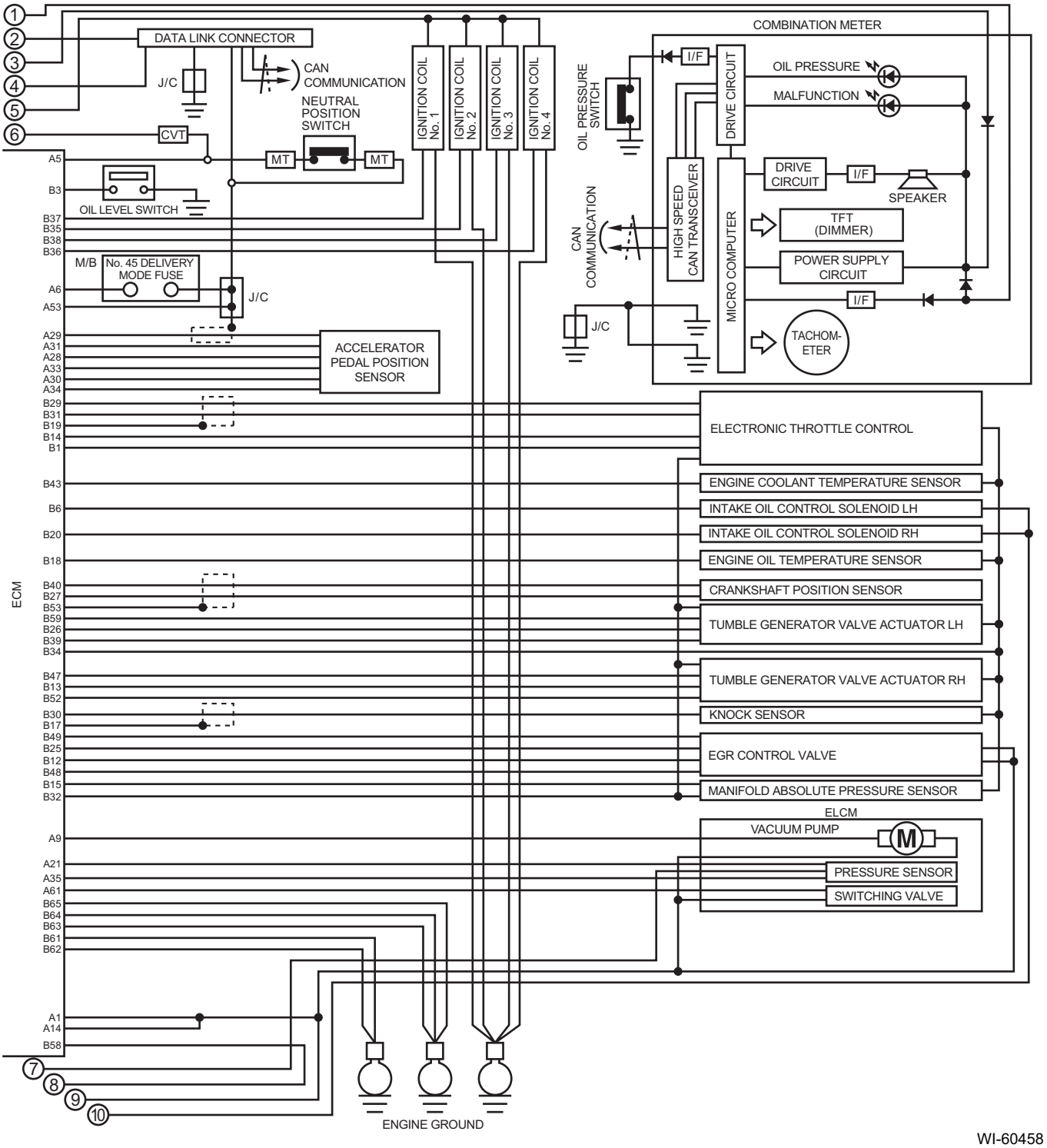
COMBINATION METER
DATA LINK CONNECTOR
J/C
CAN COMMUNICATION
NEUTRAL POSITION SWITCH
CVT
MT
MT
IGNITION COIL No. 1
IGNITION COIL No. 2
IGNITION COIL No. 3
IGNITION COIL No. 4
OIL PRESSURE SWITCH
I/F
DRIVE CIRCUIT
OIL PRESSURE
MALFUNCTION
DRIVE CIRCUIT
I/F
SPEAKER
TFT (DIMMER)
POWER SUPPLY CIRCUIT
I/F
TACHOM-ETER
HIGH SPEED CAN TRANSCEIVER
MICRO COMPUTER
CAN COMMUNICATION
J/C
OIL LEVEL SWITCH
M/B
No. 45 DELIVERY MODE FUSE
J/C
ACCELERATOR PEDAL POSITION SENSOR
ECM
ELECTRONIC THROTTLE CONTROL
ENGINE COOLANT TEMPERATURE SENSOR
INTAKE OIL CONTROL SOLENOID LH
INTAKE OIL CONTROL SOLENOID RH
ENGINE OIL TEMPERATURE SENSOR
CRANKSHAFT POSITION SENSOR
TUMBLE GENERATOR VALVE ACTUATOR LH
TUMBLE GENERATOR VALVE ACTUATOR RH
KNOCK SENSOR
EGR CONTROL VALVE
MANIFOLD ABSOLUTE PRESSURE SENSOR
ELCM
VACUUM PUMP
M
PRESSURE SENSOR
SWITCHING VALVE
ENGINE GROUND
WI-60458

WIRING SYSTEM

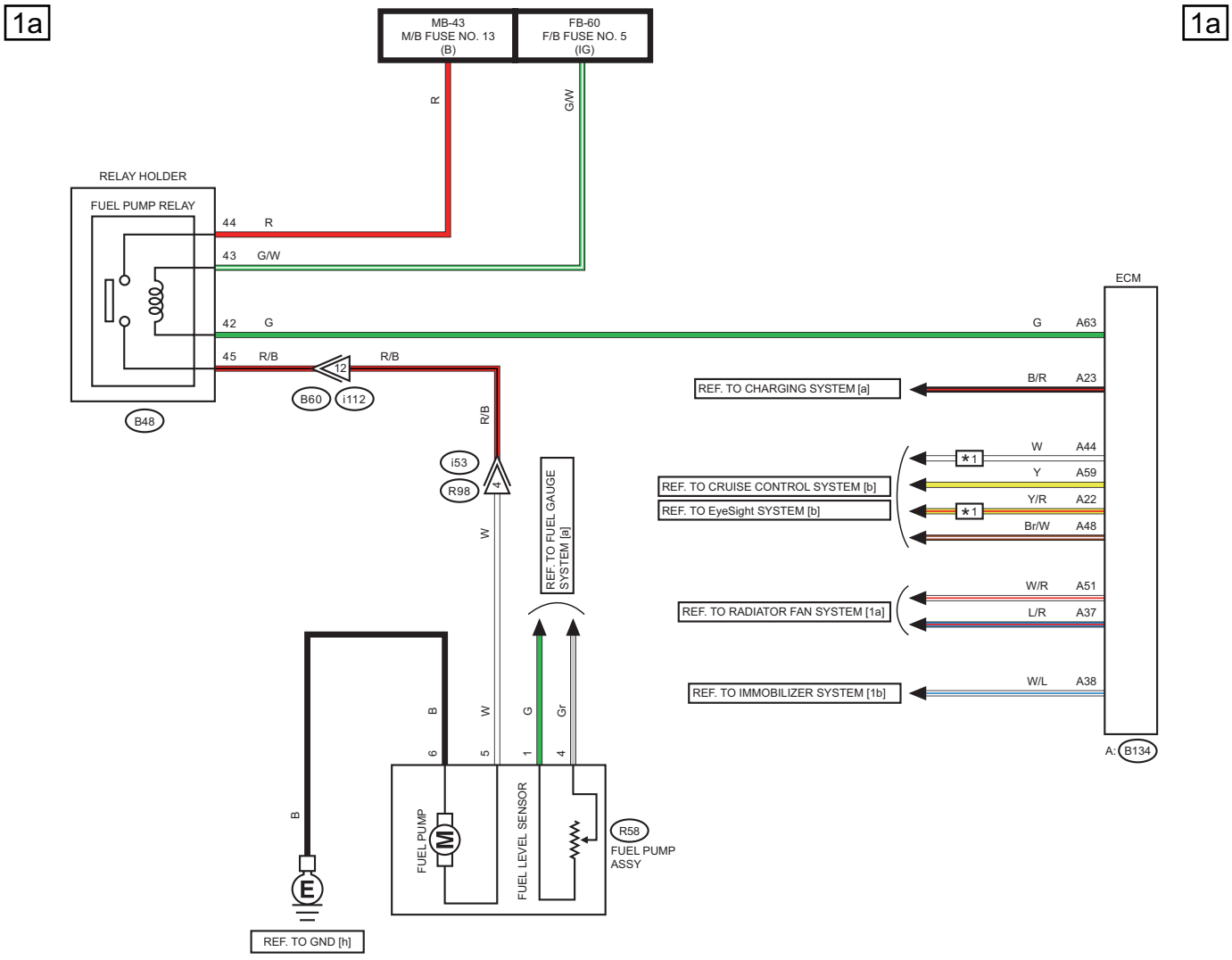

*1 : WITHOUT EyeSight

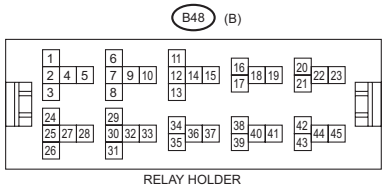

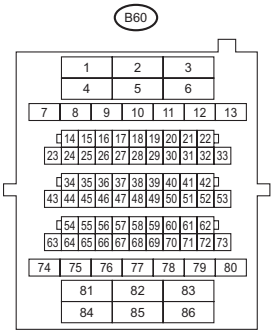

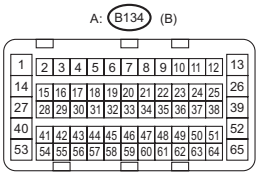



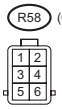

WI-60459

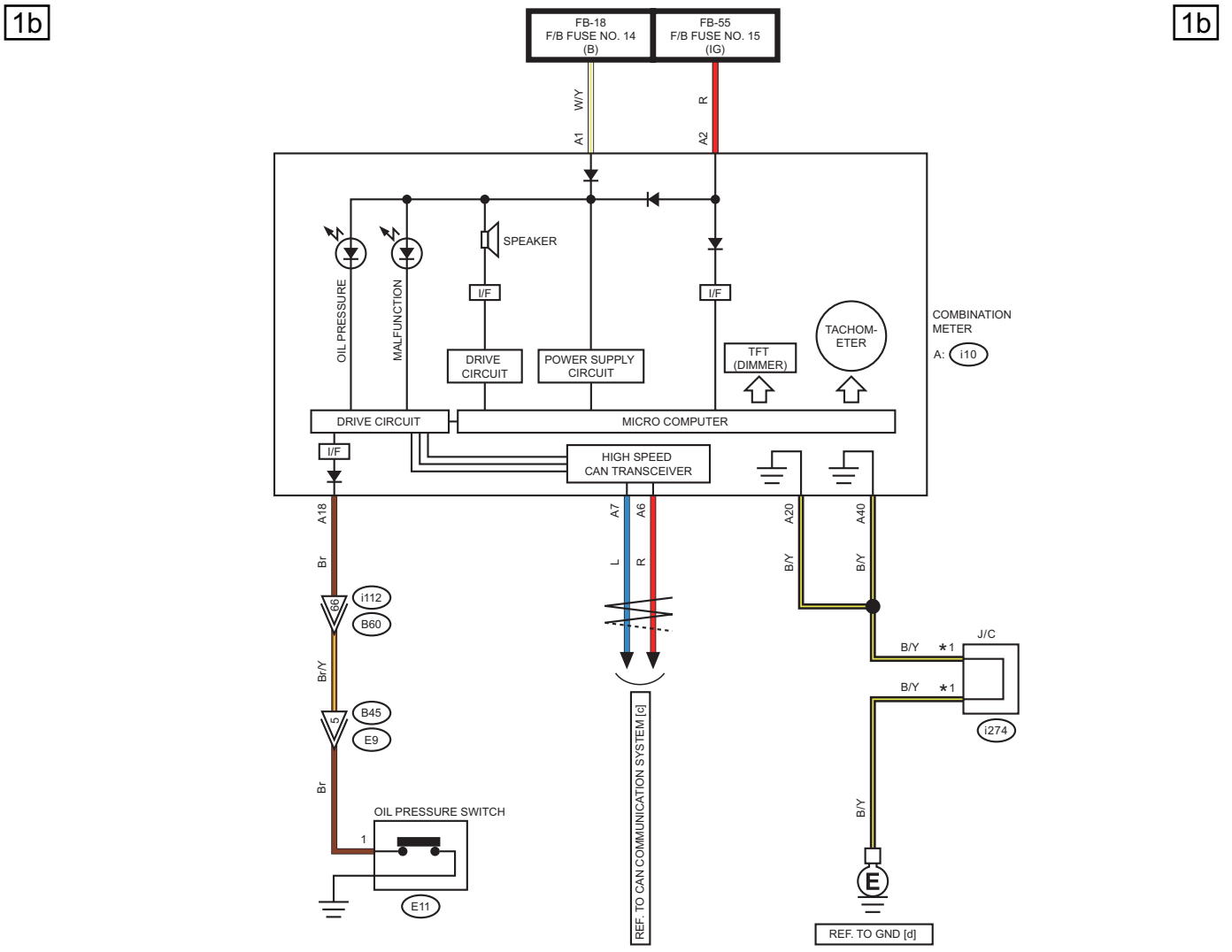

*1 : TERMINAL No. OPTIONAL ARRANGEMENT

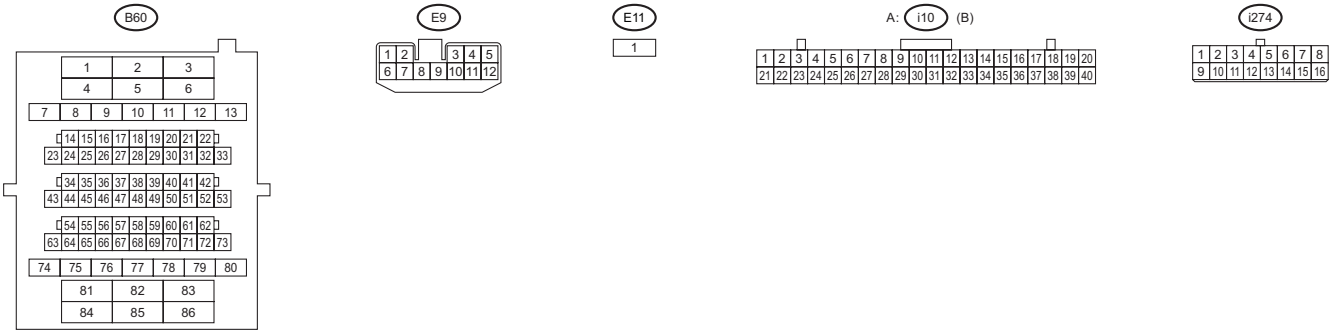

WI-60460

WIRING SYSTEM

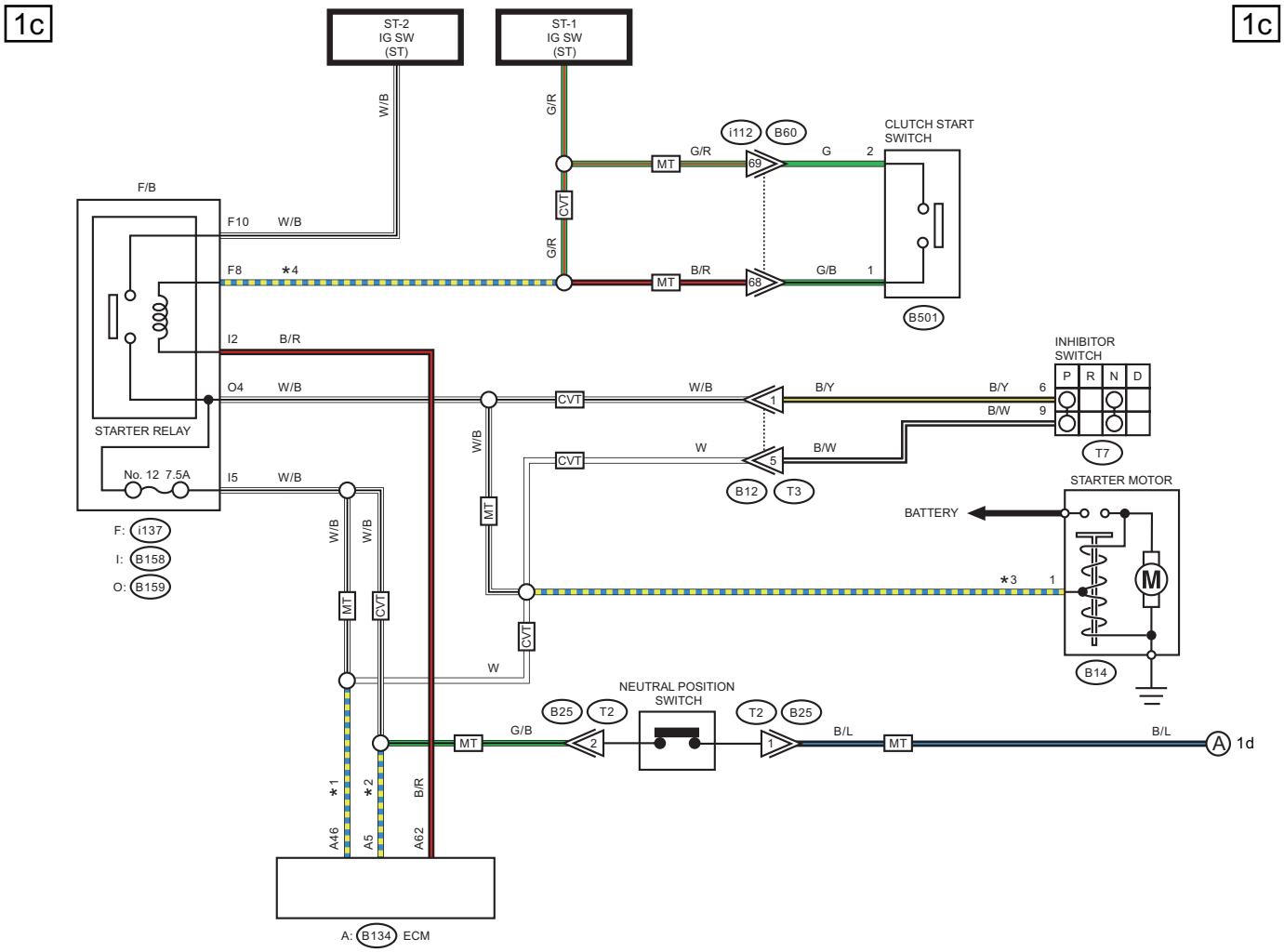

*1 : MT MODEL : W/B
CVT MODEL : W

*2 : MT MODEL : G/B
CVT MODEL : W/B

*3 : MT MODEL : W/B
CVT MODEL : W

*4 : MT MODEL : B/R
CVT MODEL : G/R

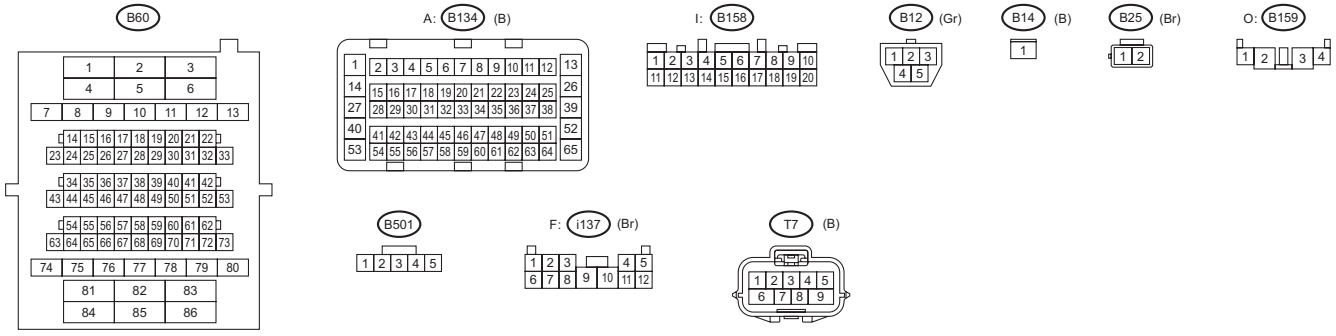

WI-60461

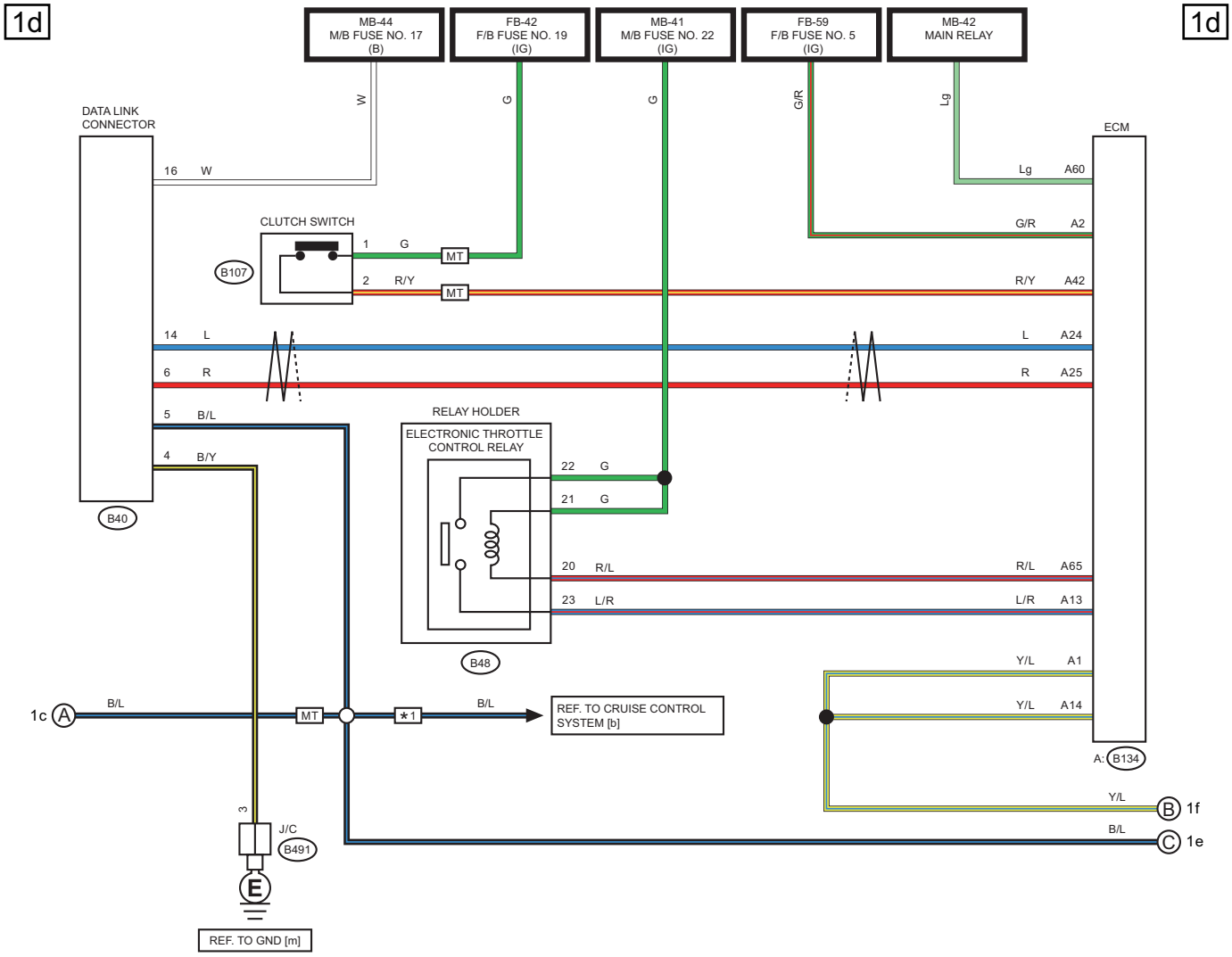

*1 : WITHOUT EyeSight

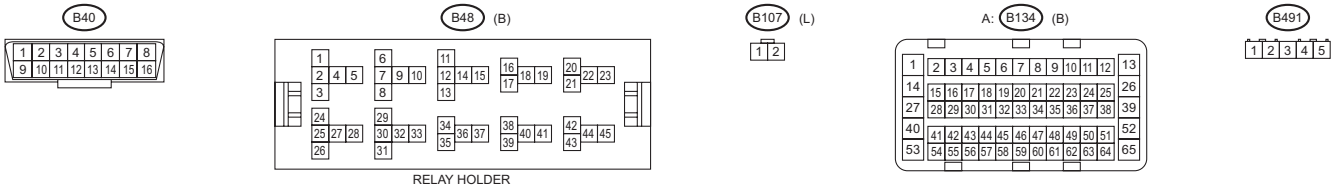

WI-60462

1e

1e

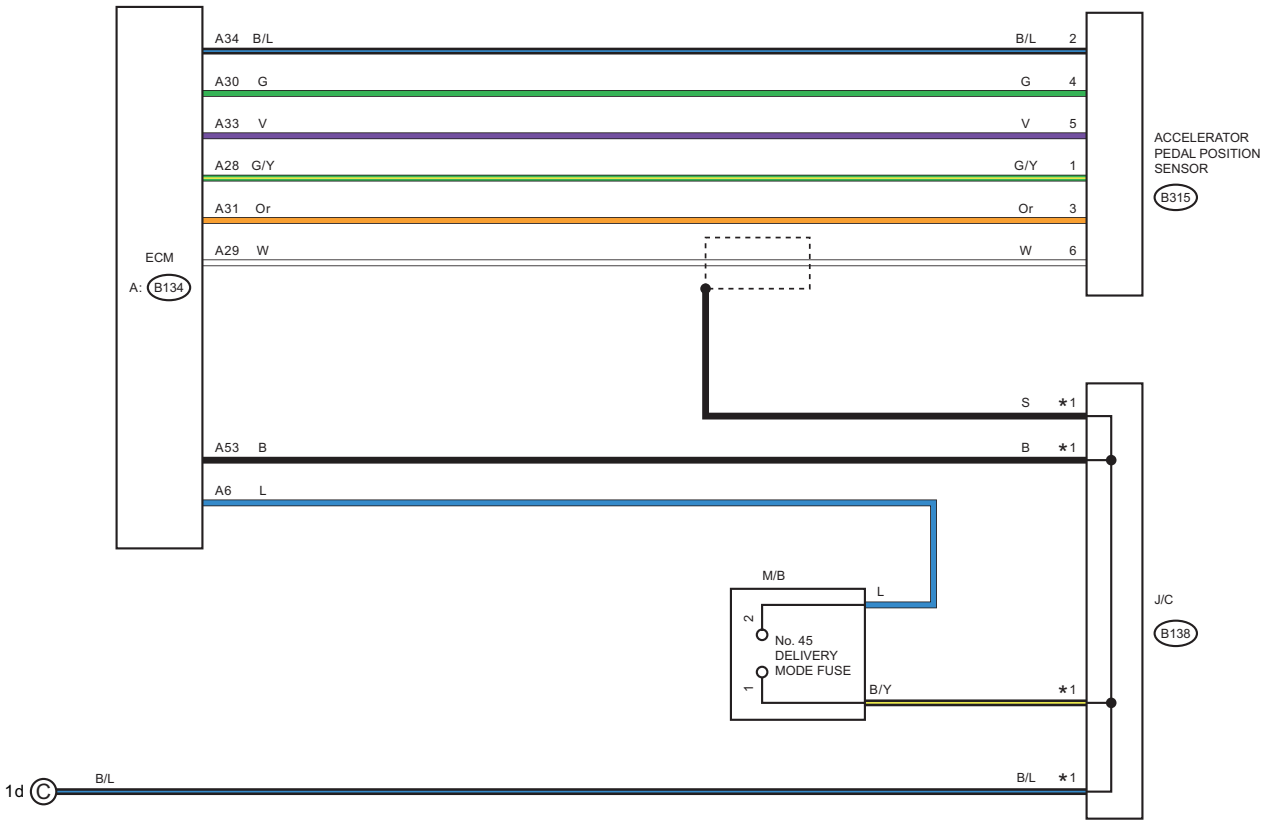

*1 : TERMINAL No. OPTIONAL ARRANGEMENT AMONG 1, 2, 5 AND 6

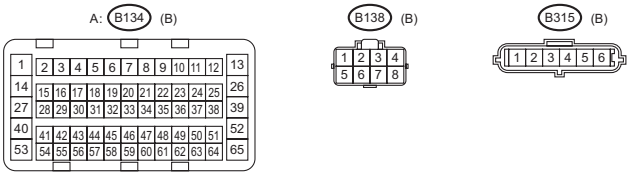

WI-60463

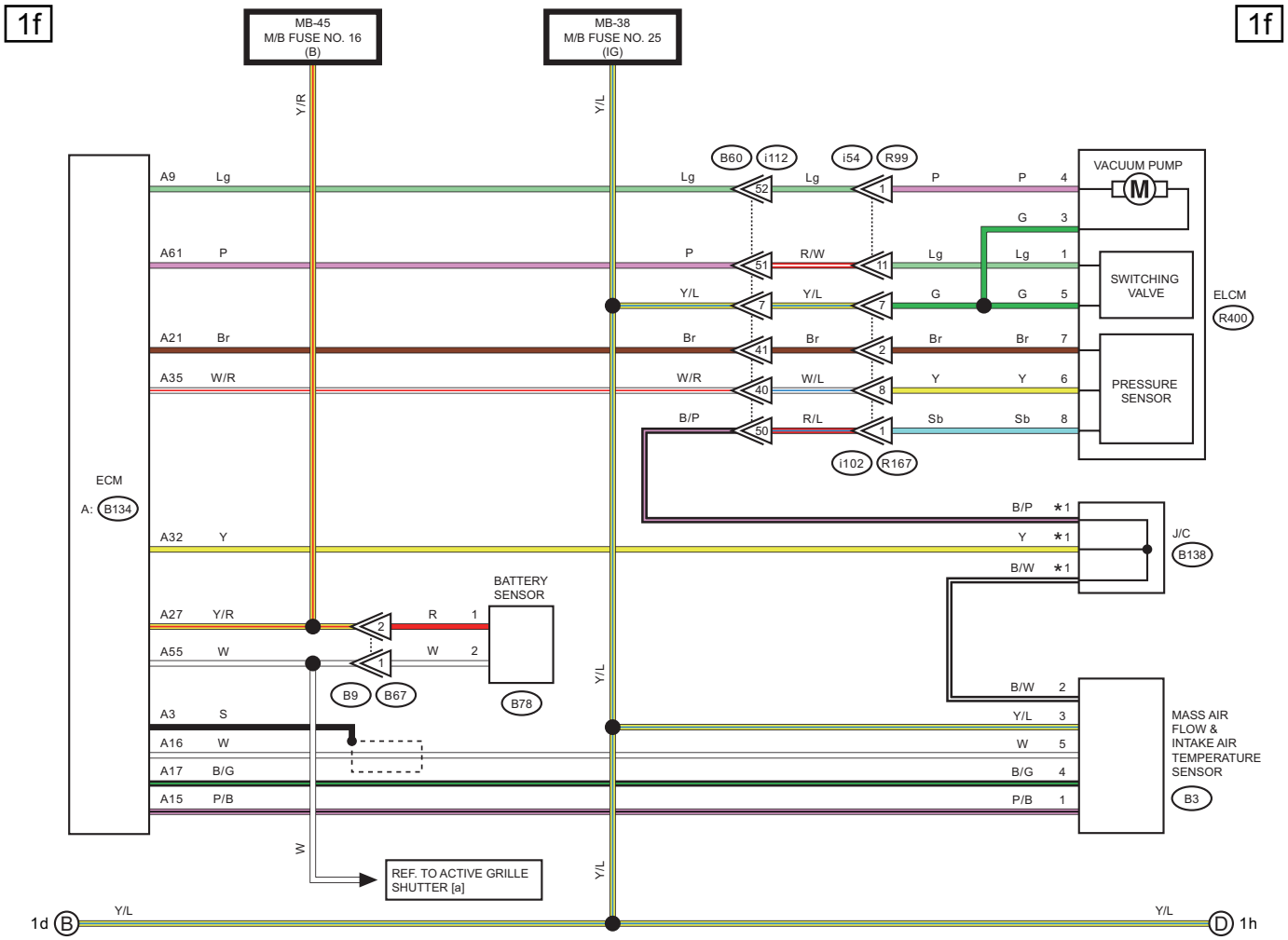

*1 : TERMINAL No. OPTIONAL ARRANGEMENT AMONG 3, 4, 7 AND 8

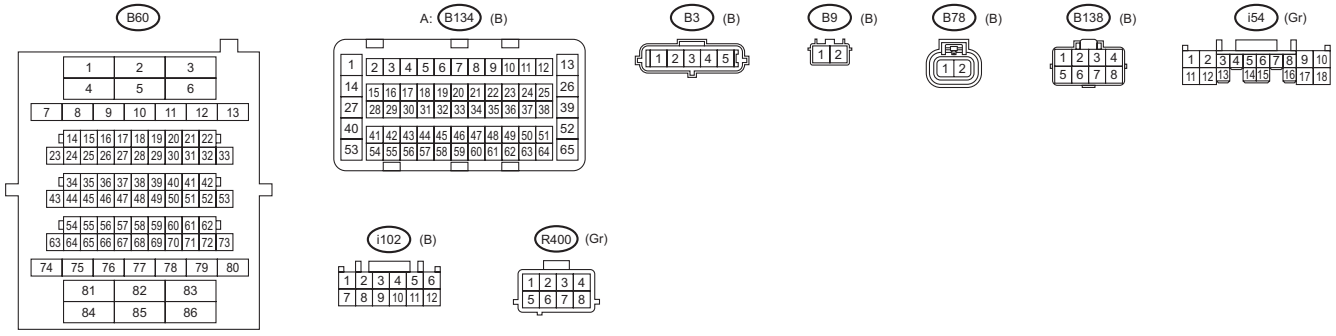

WI-60464

1g 1g

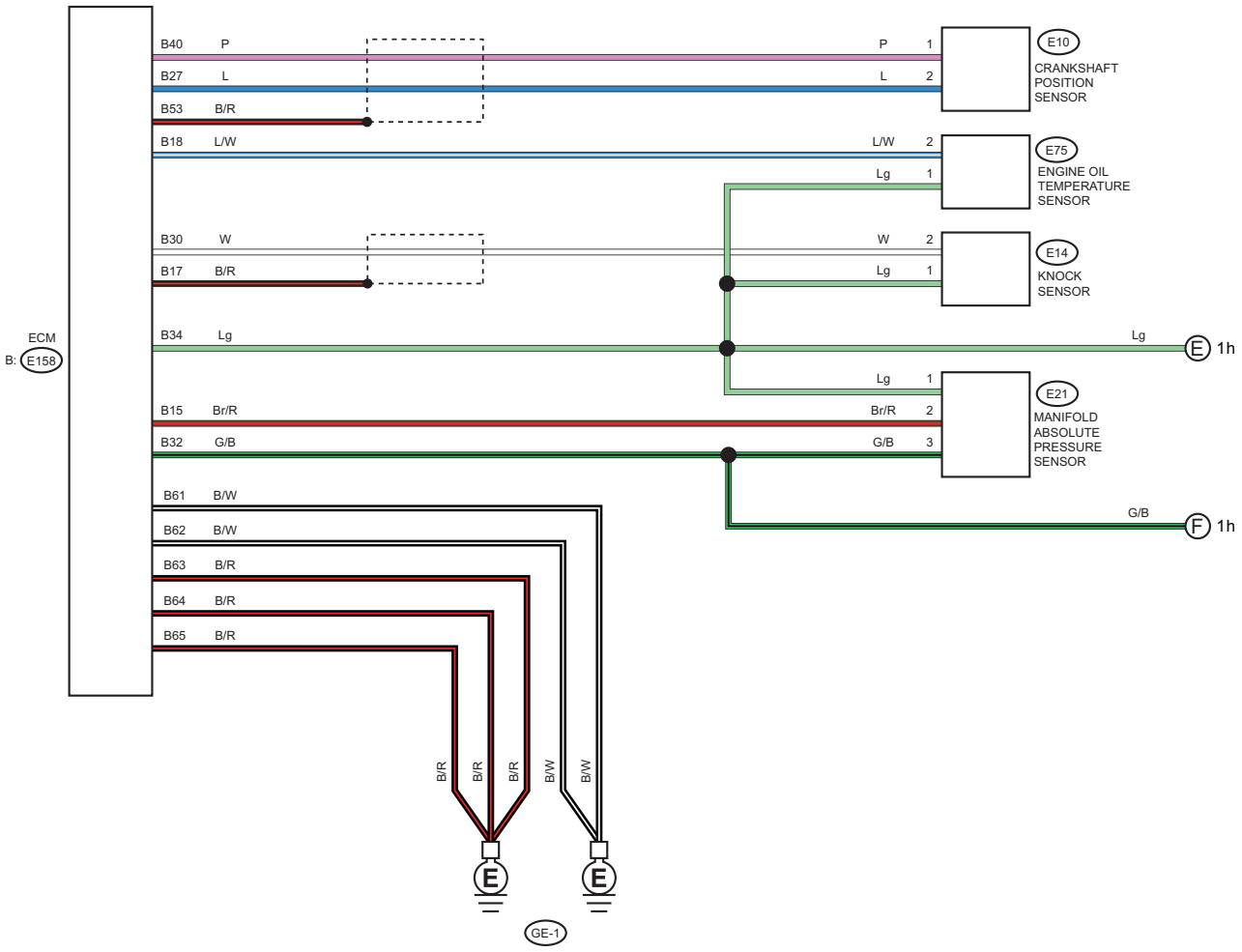



WI-60465

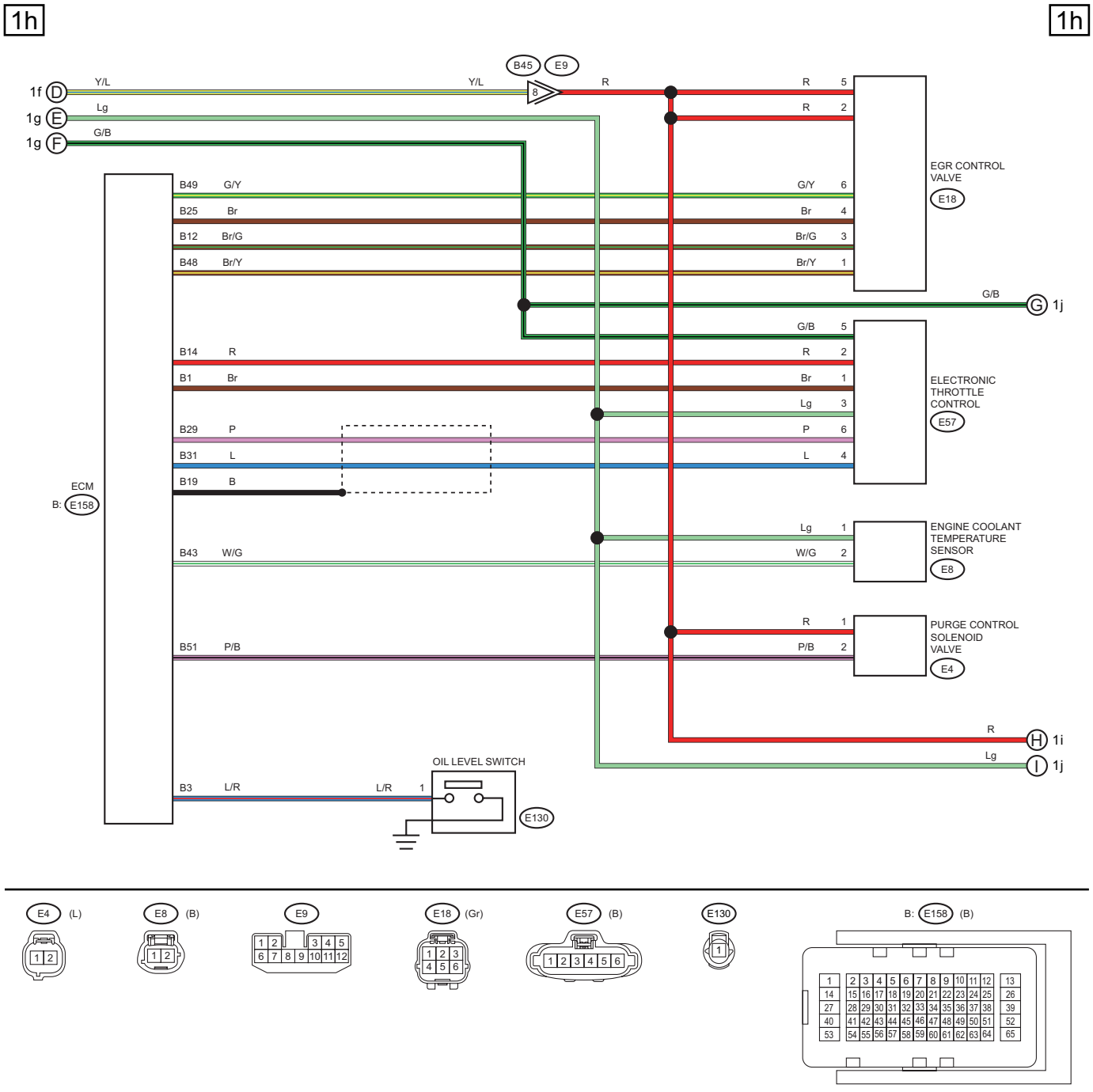
1h
1h
B45
E9
1f D Y/L
Y/L
8
R
1g E Lg
1g F G/B
R 5
R 2
EGR CONTROL VALVE
E18
B49 G/Y
B25 Br
B12 Br/G
B48 Br/Y
G/Y 6
Br 4
Br/G 3
Br/Y 1
G/B
G 1j
G/B 5
B14 R
B1 Br
R 2
Br 1
Lg 3
ELECTRONIC THROTTLE CONTROL
E57
B29 P
B31 L
B19 B
P 6
L 4
ECM
B: E158
Lg 1
B43 W/G
W/G 2
ENGINE COOLANT TEMPERATURE SENSOR
E8
R 1
B51 P/B
P/B 2
PURGE CONTROL SOLENOID VALVE
E4
R
H 1i
Lg
I 1j
OIL LEVEL SWITCH
B3 L/R
L/R 1
E130

E4 (L)
E8 (B)
E9
E18 (Gr)
E57 (B)
E130
B: E158 (B)

WI-60466

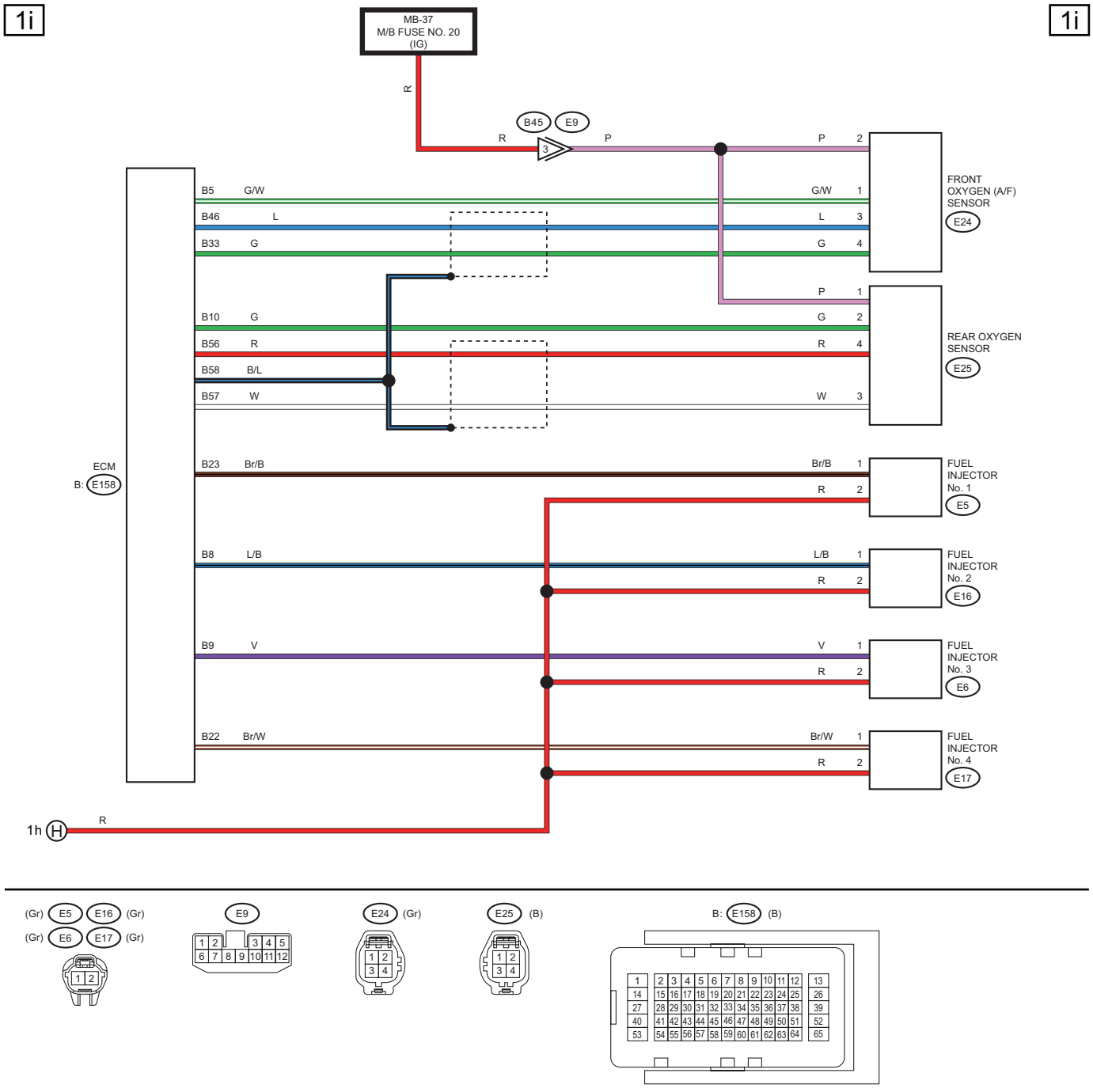
1i
1i
MB-37
M/B FUSE NO. 20
(IG)
R
B45
E9
3
R
P
P 2
FRONT
OXYGEN (A/F)
SENSOR
E24
B5 G/W
G/W 1
B46 L
L 3
B33 G
G 4
P 1
REAR OXYGEN
SENSOR
E25
B10 G
G 2
B56 R
R 4
B58 B/L
B57 W
W 3
ECM
B: E158
B23 Br/B
Br/B 1
R 2
FUEL
INJECTOR
No. 1
E5
B8 L/B
L/B 1
R 2
FUEL
INJECTOR
No. 2
E16
B9 V
V 1
R 2
FUEL
INJECTOR
No. 3
E6
B22 Br/W
Br/W 1
R 2
FUEL
INJECTOR
No. 4
E17
1h
R

(Gr) E5 E16 (Gr)
(Gr) E6 E17 (Gr)
E9
E24 (Gr)
E25 (B)
B: E158 (B)

WI-60467

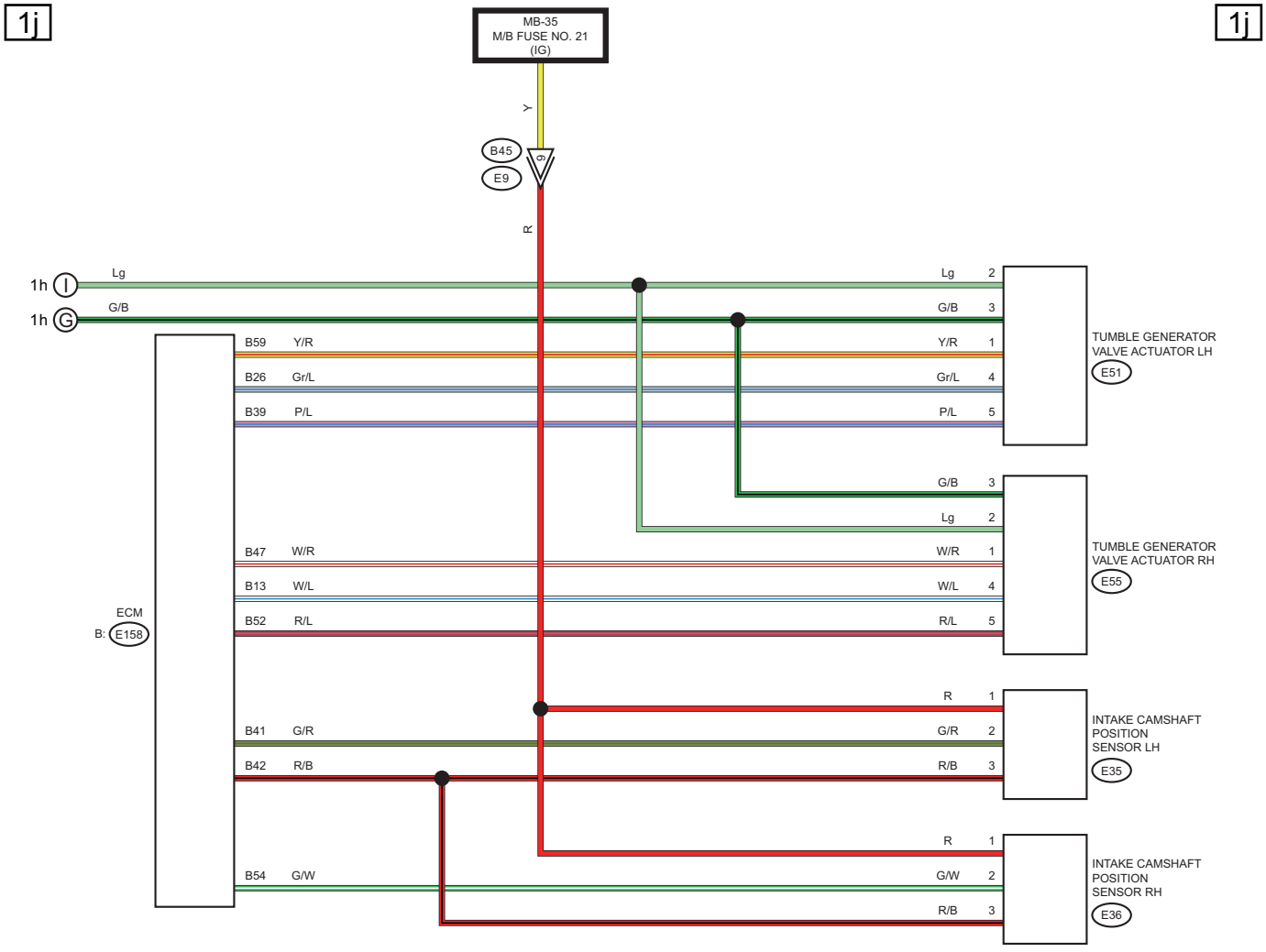
1j
1j
MB-35
M/B FUSE NO. 21
(IG)
Y
B45
E9
6
R
1h I
Lg
1h G
G/B
B59 Y/R
B26 Gr/L
B39 P/L
B47 W/R
B13 W/L
B52 R/L
B41 G/R
B42 R/B
B54 G/W
ECM
B: E158
Lg 2
G/B 3
Y/R 1
Gr/L 4
P/L 5
TUMBLE GENERATOR
VALVE ACTUATOR LH
E51
G/B 3
Lg 2
W/R 1
W/L 4
R/L 5
TUMBLE GENERATOR
VALVE ACTUATOR RH
E55
R 1
G/R 2
R/B 3
INTAKE CAMSHAFT
POSITION
SENSOR LH
E35
R 1
G/W 2
R/B 3
INTAKE CAMSHAFT
POSITION
SENSOR RH
E36

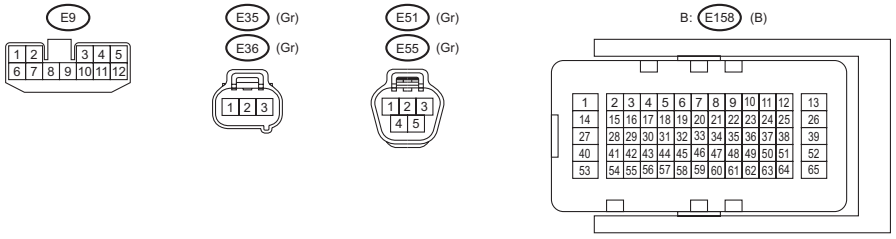
E9
1 2 3 4 5
6 7 8 9 10 11 12
E35 (Gr)
E36 (Gr)
1 2 3
E51 (Gr)
E55 (Gr)
1 2 3
4 5
B: E158 (B)
1 2 3 4 5 6 7 8 9 10 11 12 13
14 15 16 17 18 19 20 21 22 23 24 25 26
27 28 29 30 31 32 33 34 35 36 37 38 39
40 41 42 43 44 45 46 47 48 49 50 51 52
53 54 55 56 57 58 59 60 61 62 63 64 65

WI-60468

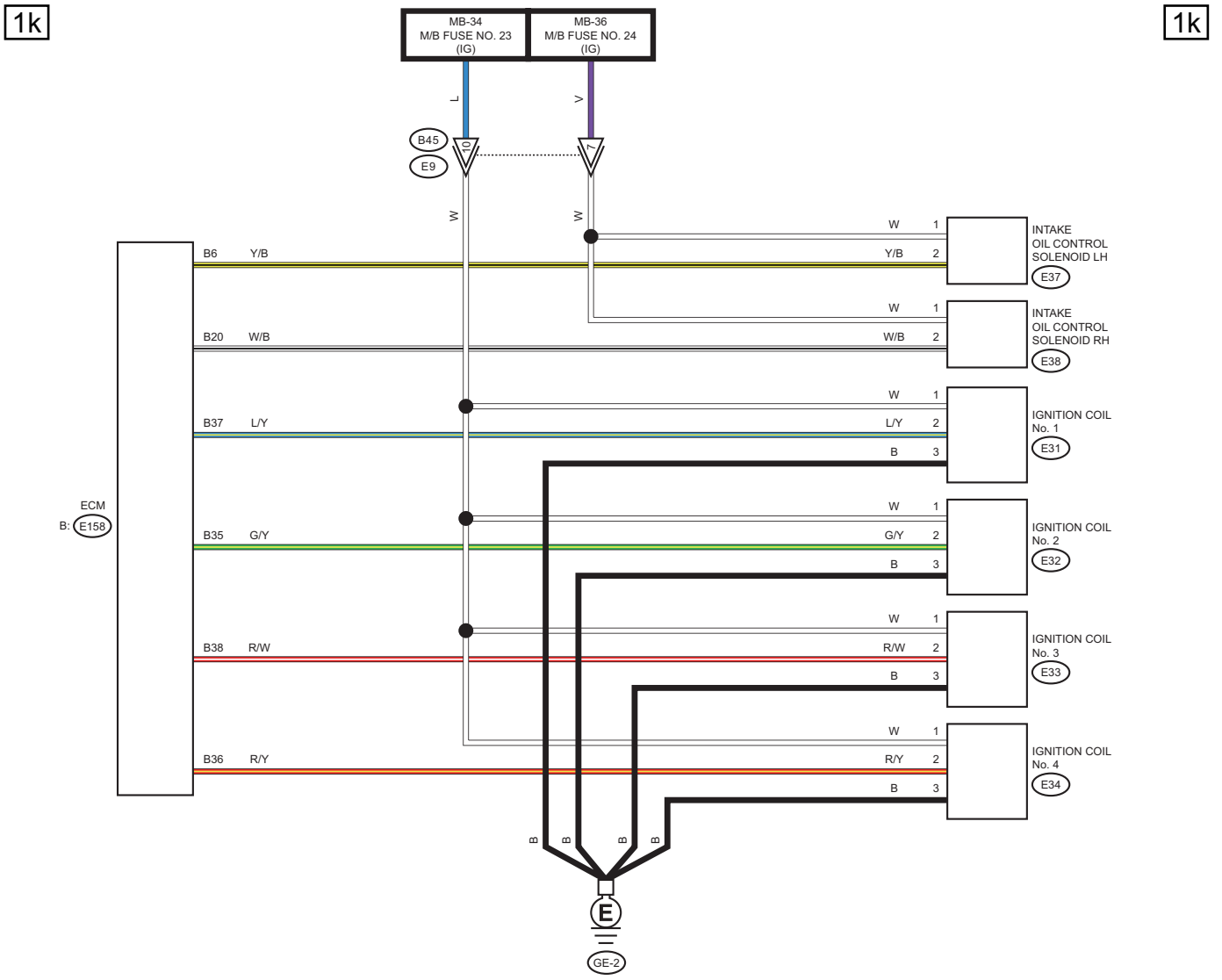
1k
1k
MB-34
M/B FUSE NO. 23
(IG)
MB-36
M/B FUSE NO. 24
(IG)
L
V
B45
E9
W
W
ECM
B: E158
B6 Y/B
B20 W/B
B37 L/Y
B35 G/Y
B38 R/W
B36 R/Y
W 1
Y/B 2
INTAKE
OIL CONTROL
SOLENOID LH
E37
W 1
W/B 2
INTAKE
OIL CONTROL
SOLENOID RH
E38
W 1
L/Y 2
B 3
IGNITION COIL
No. 1
E31
W 1
G/Y 2
B 3
IGNITION COIL
No. 2
E32
W 1
R/W 2
B 3
IGNITION COIL
No. 3
E33
W 1
R/Y 2
B 3
IGNITION COIL
No. 4
E34
B
B
B
B
E
GE-2

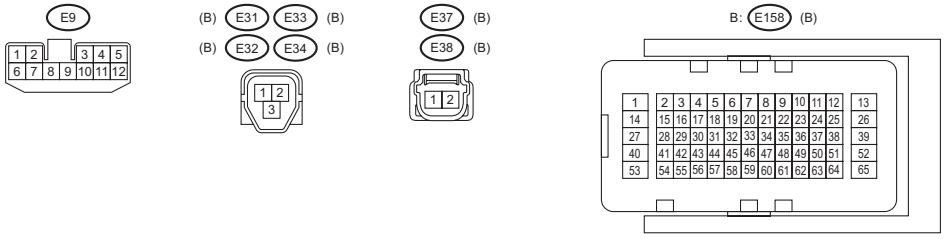
E9
(B) E31 E33 (B)
(B) E32 E34 (B)
E37 (B)
E38 (B)
B: E158 (B)

WI-60469

2. ENGINE TYPE FB (WITH PUSH BUTTON START)

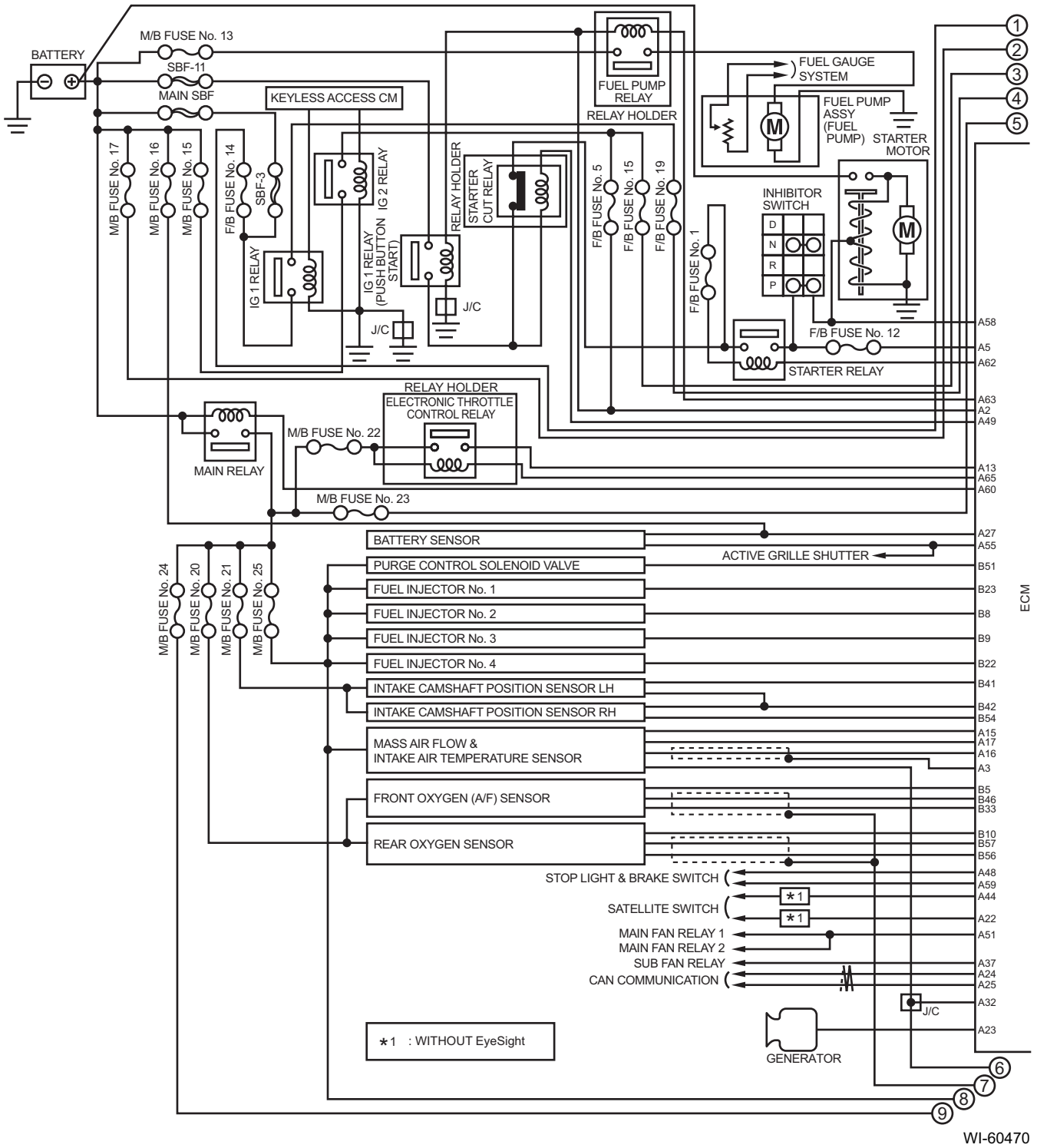

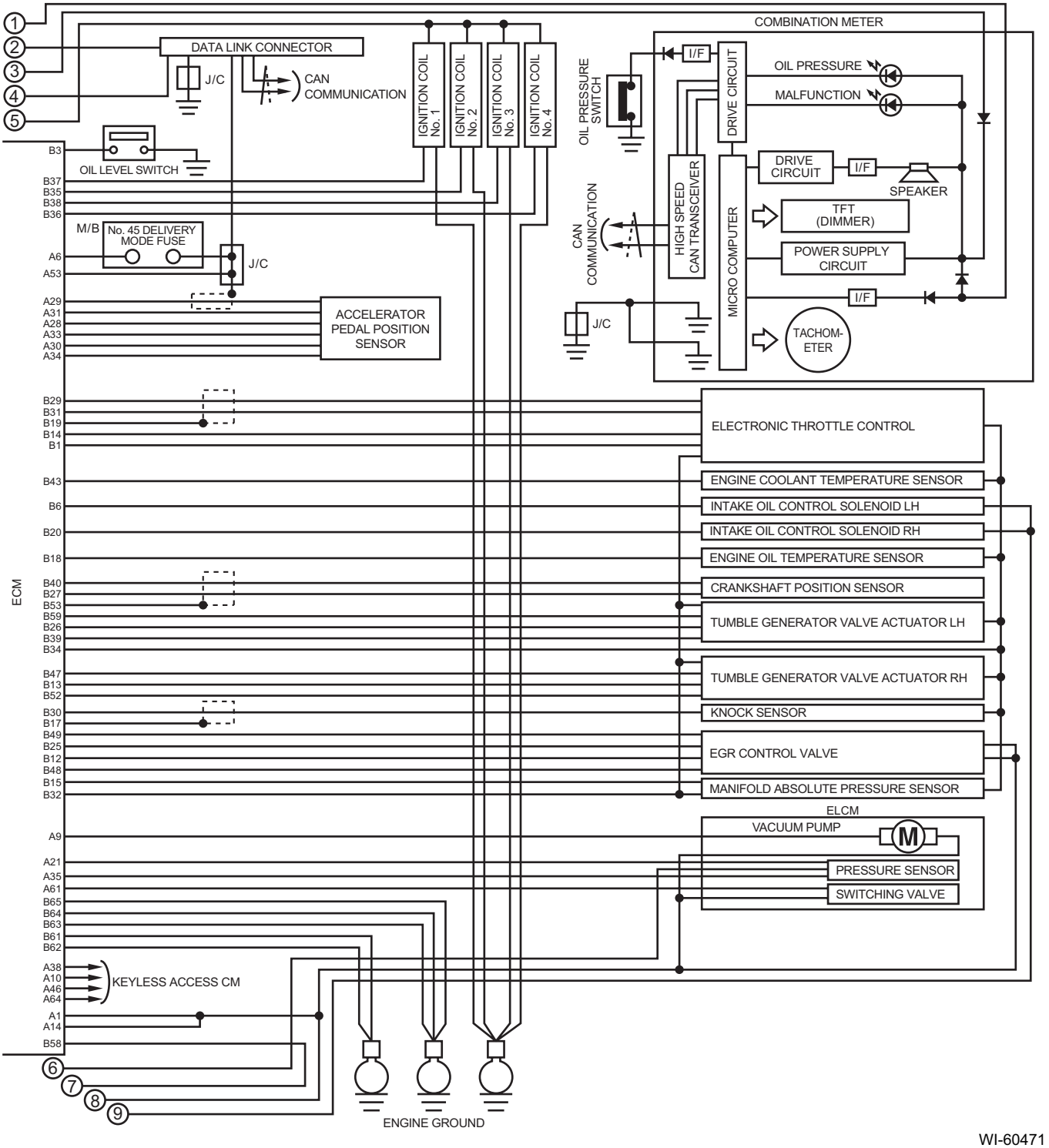
COMBINATION METER
DATA LINK CONNECTOR
J/C
CAN COMMUNICATION
IGNITION COIL No. 1
IGNITION COIL No. 2
IGNITION COIL No. 3
IGNITION COIL No. 4
OIL PRESSURE SWITCH
I/F
DRIVE CIRCUIT
OIL PRESSURE
MALFUNCTION
DRIVE CIRCUIT
I/F
SPEAKER
TFT (DIMMER)
POWER SUPPLY CIRCUIT
I/F
TACHOM-ETER
HIGH SPEED CAN TRANSCEIVER
MICRO COMPUTER
CAN COMMUNICATION
J/C
OIL LEVEL SWITCH
M/B
No. 45 DELIVERY MODE FUSE
J/C
ACCELERATOR PEDAL POSITION SENSOR
ECM
ELECTRONIC THROTTLE CONTROL
ENGINE COOLANT TEMPERATURE SENSOR
INTAKE OIL CONTROL SOLENOID LH
INTAKE OIL CONTROL SOLENOID RH
ENGINE OIL TEMPERATURE SENSOR
CRANKSHAFT POSITION SENSOR
TUMBLE GENERATOR VALVE ACTUATOR LH
TUMBLE GENERATOR VALVE ACTUATOR RH
KNOCK SENSOR
EGR CONTROL VALVE
MANIFOLD ABSOLUTE PRESSURE SENSOR
ELCM
VACUUM PUMP
M
PRESSURE SENSOR
SWITCHING VALVE
KEYLESS ACCESS CM
ENGINE GROUND
B3
B37
B35
B38
B36
A6
A53
A29
A31
A28
A33
A30
A34
B29
B31
B19
B14
B1
B43
B6
B20
B18
B40
B27
B53
B59
B26
B39
B34
B47
B13
B52
B30
B17
B49
B25
B12
B48
B15
B32
A9
A21
A35
A61
B65
B64
B63
B61
B62
A38
A10
A46
A64
A1
A14
B58
1
2
3
4
5
6
7
8
9

WI-60471

WIRING SYSTEM

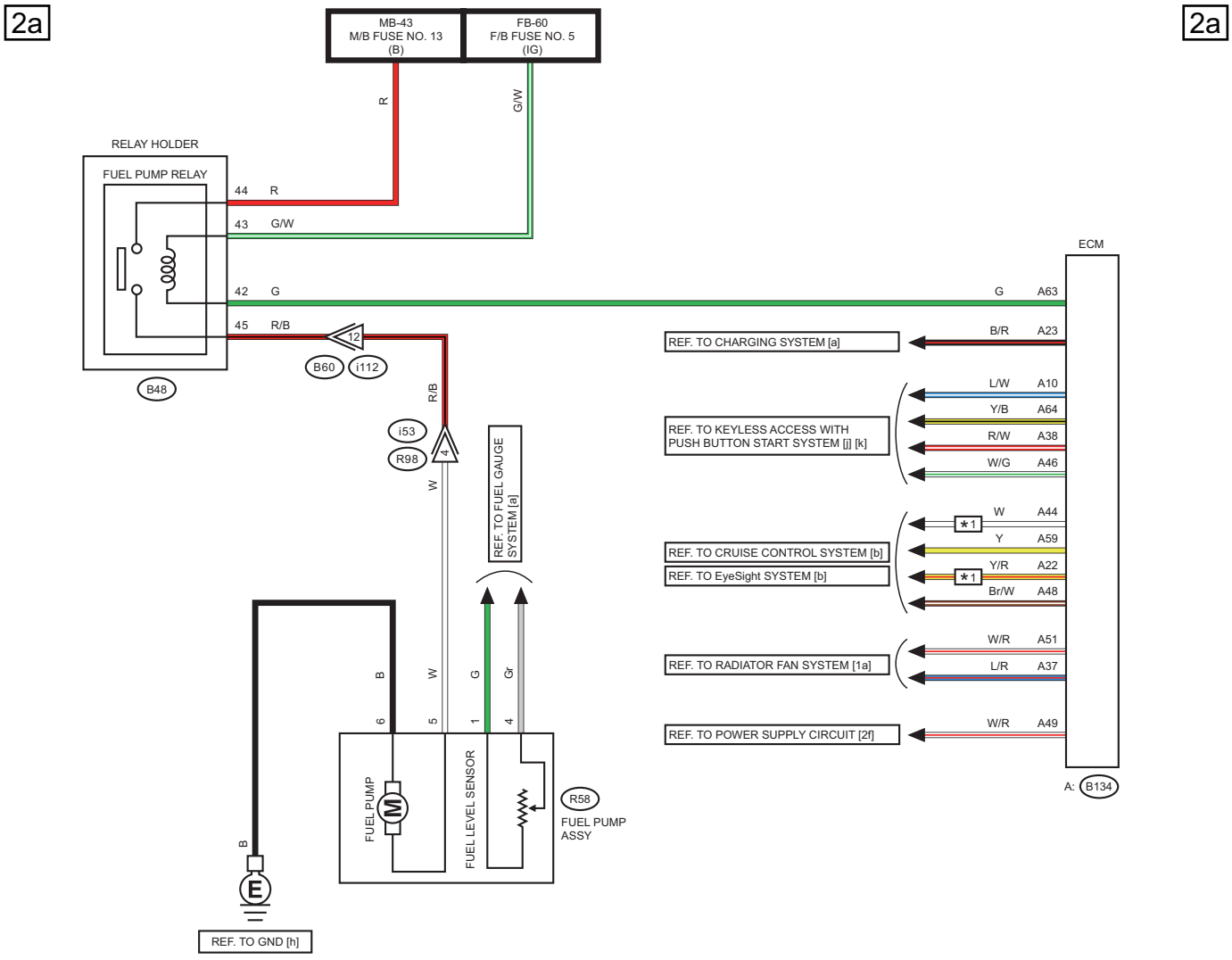

*1 : WITHOUT EyeSight

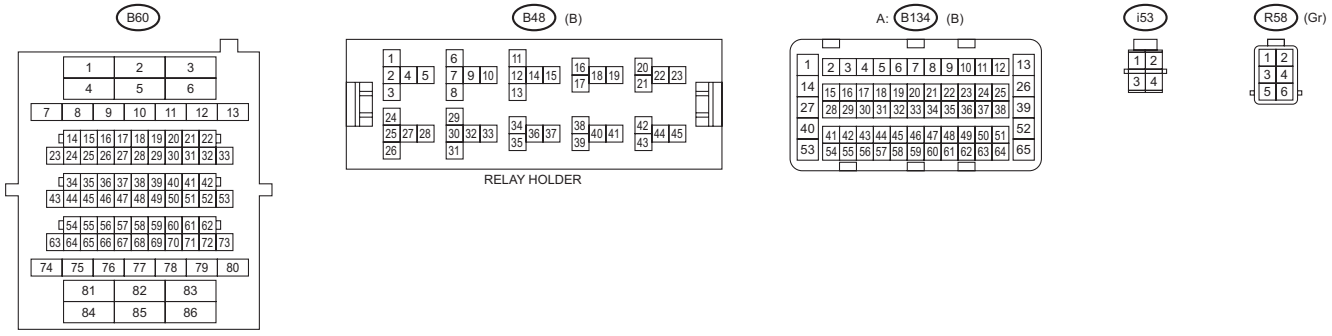

WI-60472

2b

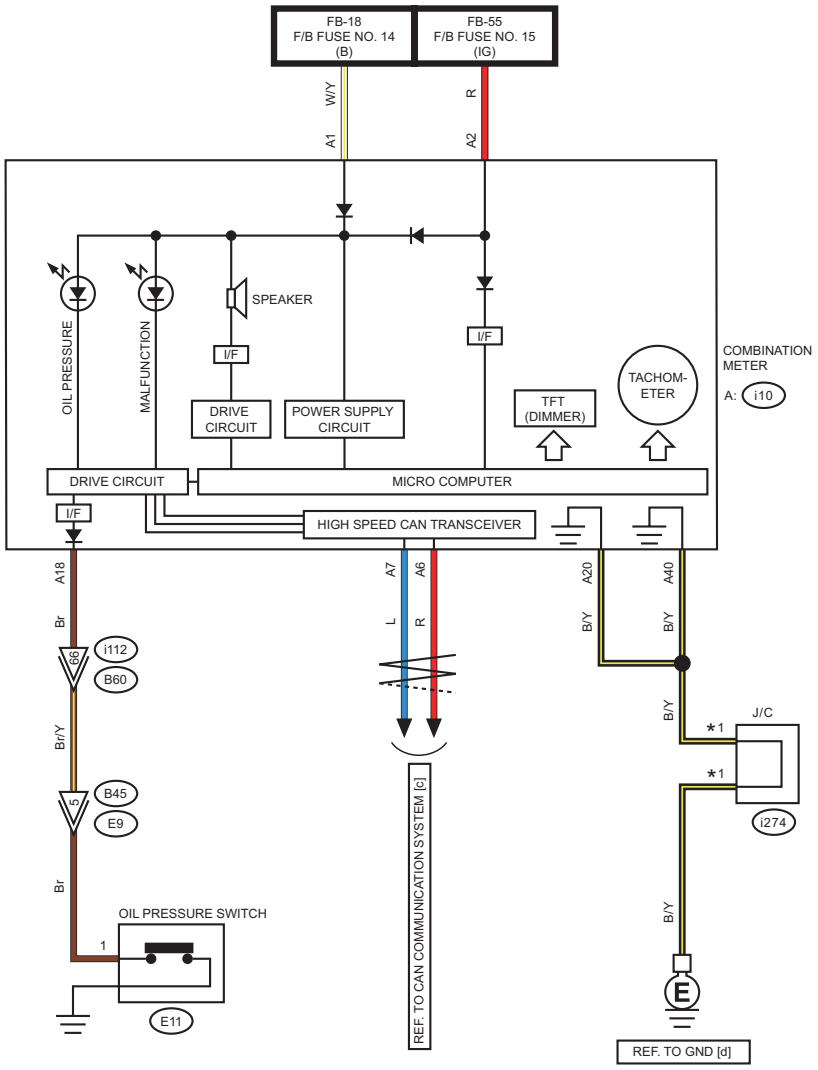

*1 : TERMINAL No. OPTIONAL ARRANGEMENT

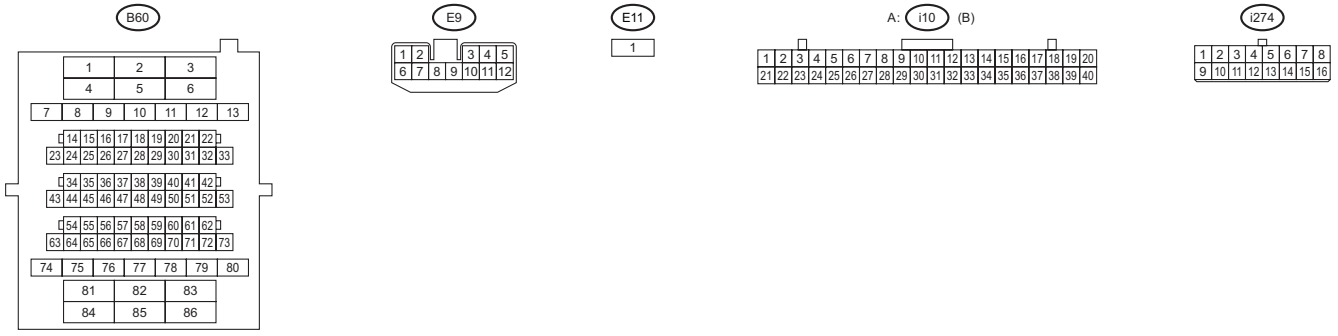

WI-60473

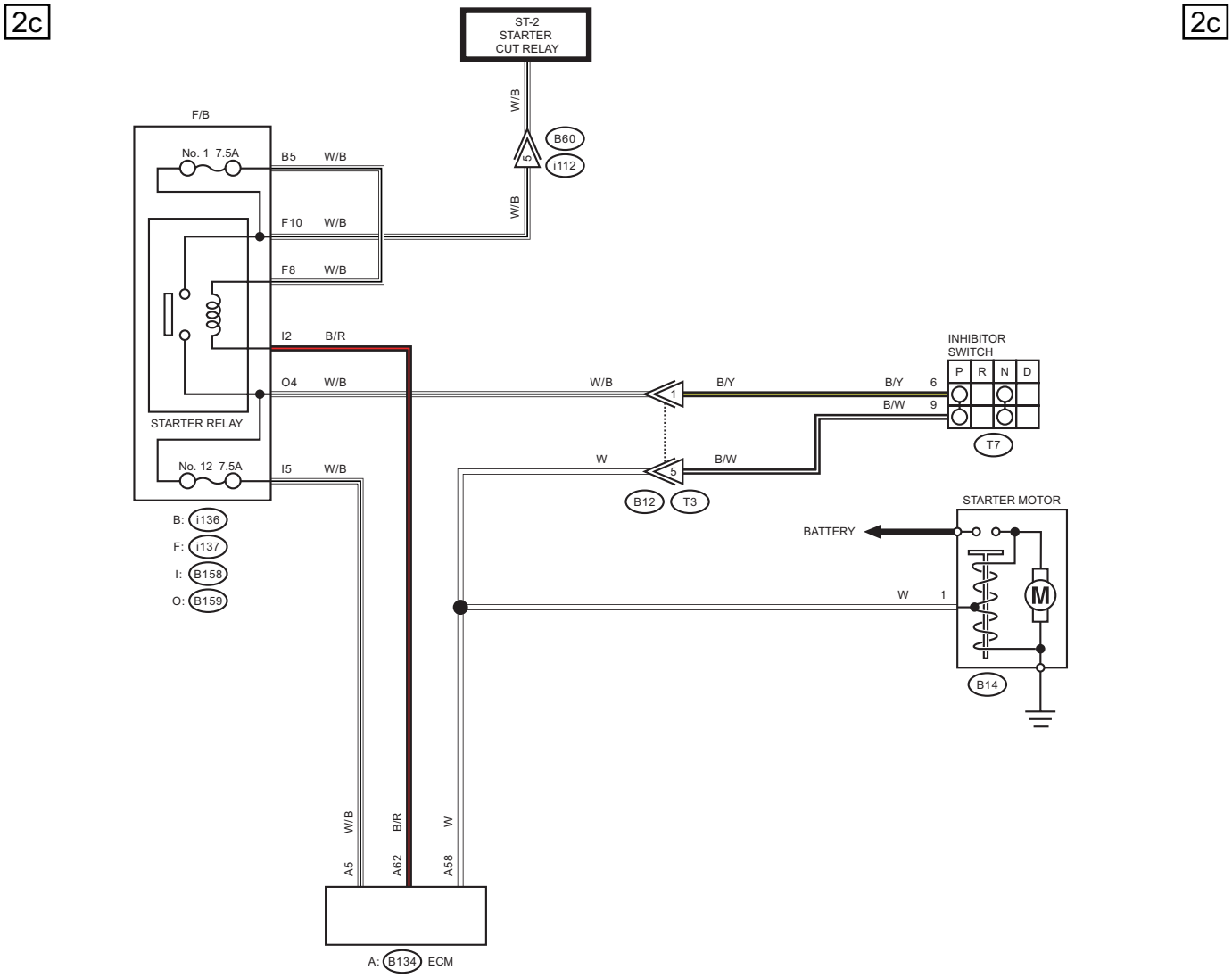
2c
2c
ST-2
STARTER
CUT RELAY
W/B
B60
i112
F/B
No. 1 7.5A
B5 W/B
F10 W/B
F8 W/B
I2 B/R
O4 W/B
STARTER RELAY
No. 12 7.5A
I5 W/B
B: i136
F: i137
I: B158
O: B159
W/B
B/Y
B/Y 6
B/W 9
INHIBITOR
SWITCH
P R N D
T7
W
B/W
B12 T3
STARTER MOTOR
BATTERY
W 1
M
B14
W/B
B/R
W
A5
A62
A58
A: B134 ECM

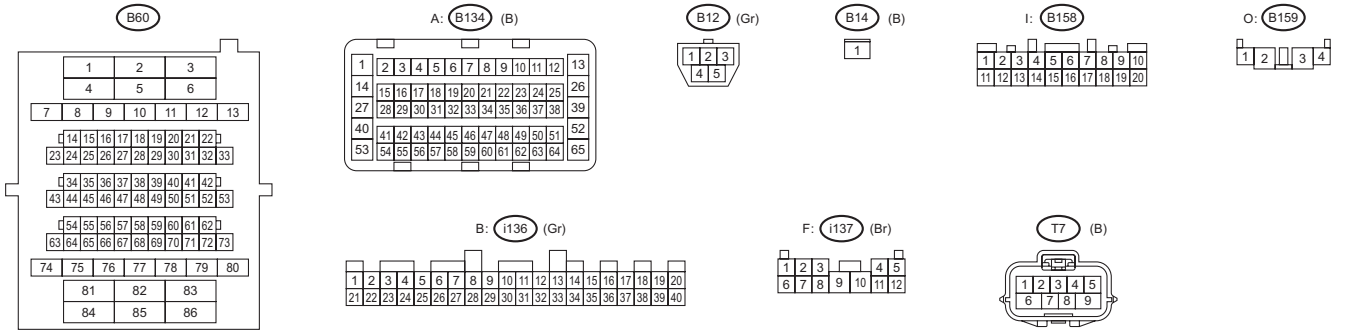
B60
A: B134 (B)
B12 (Gr)
B14 (B)
I: B158
O: B159
B: i136 (Gr)
F: i137 (Br)
T7 (B)

WI-60474

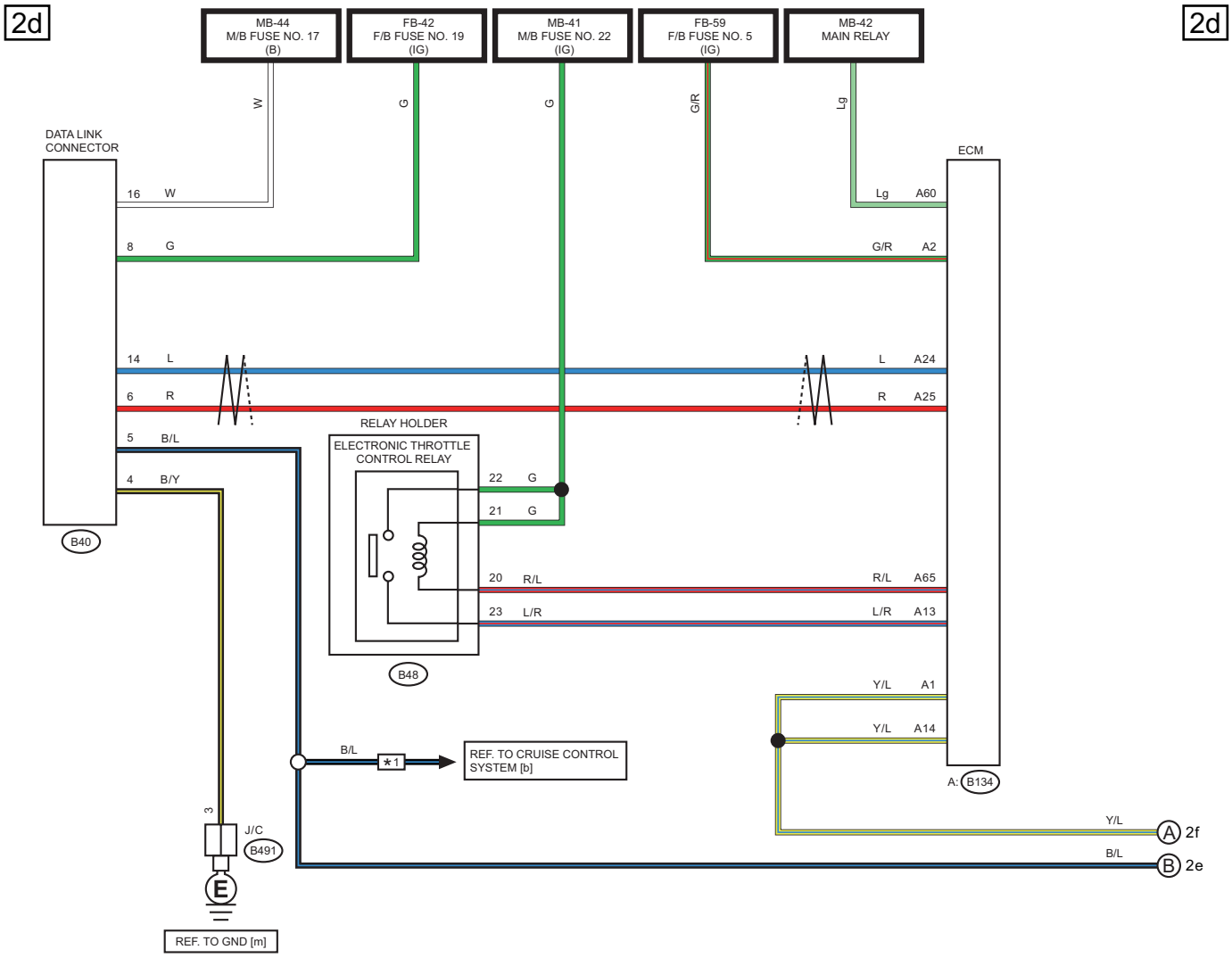

*1 : WITHOUT EyeSight

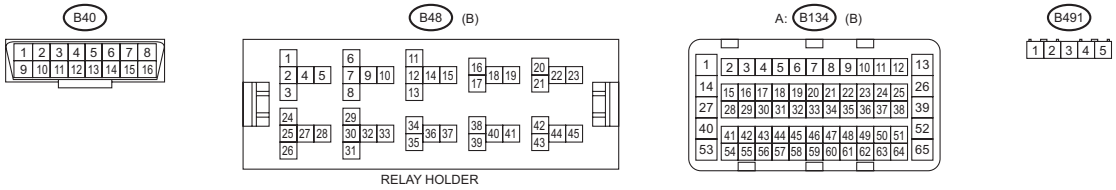

WI-60475

2e

2e

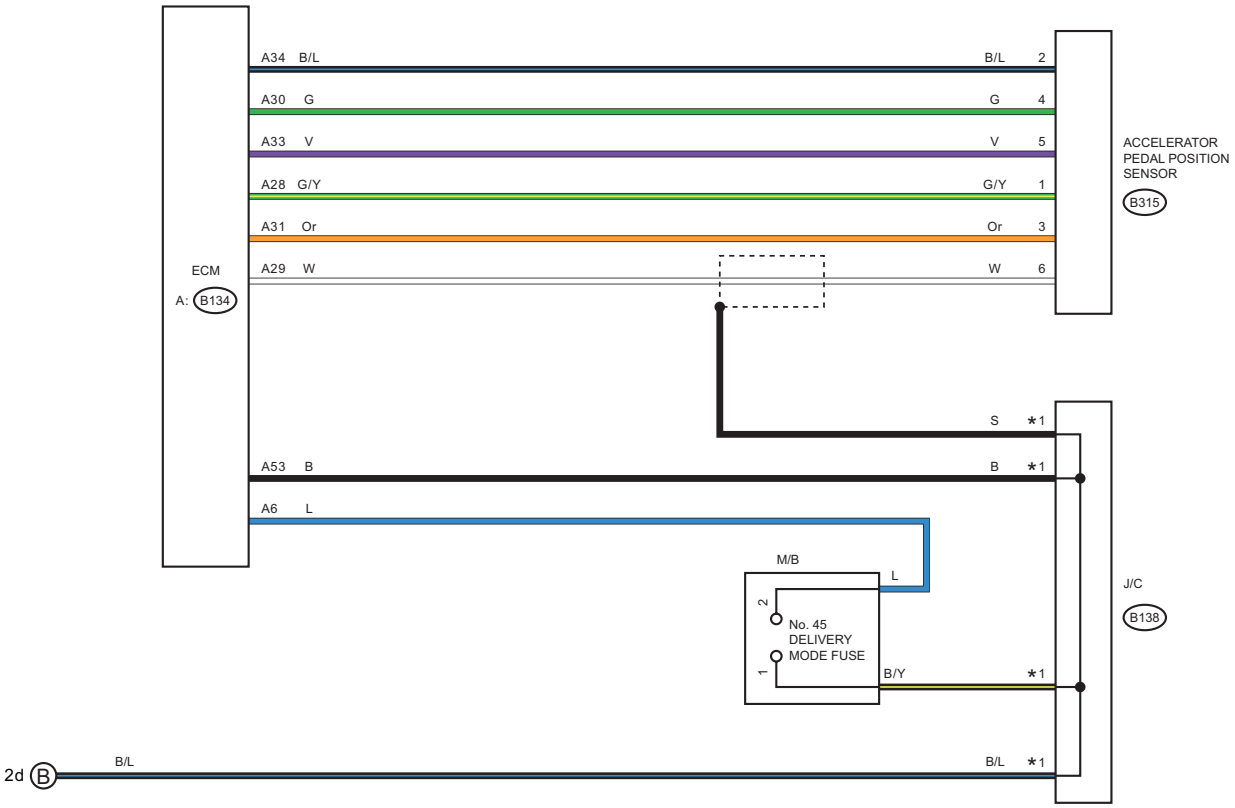

*1 : TERMINAL No. OPTIONAL ARRANGEMENT AMONG 1, 2, 5 AND 6

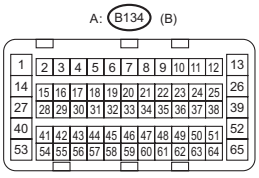



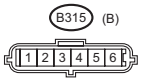

WI-60476

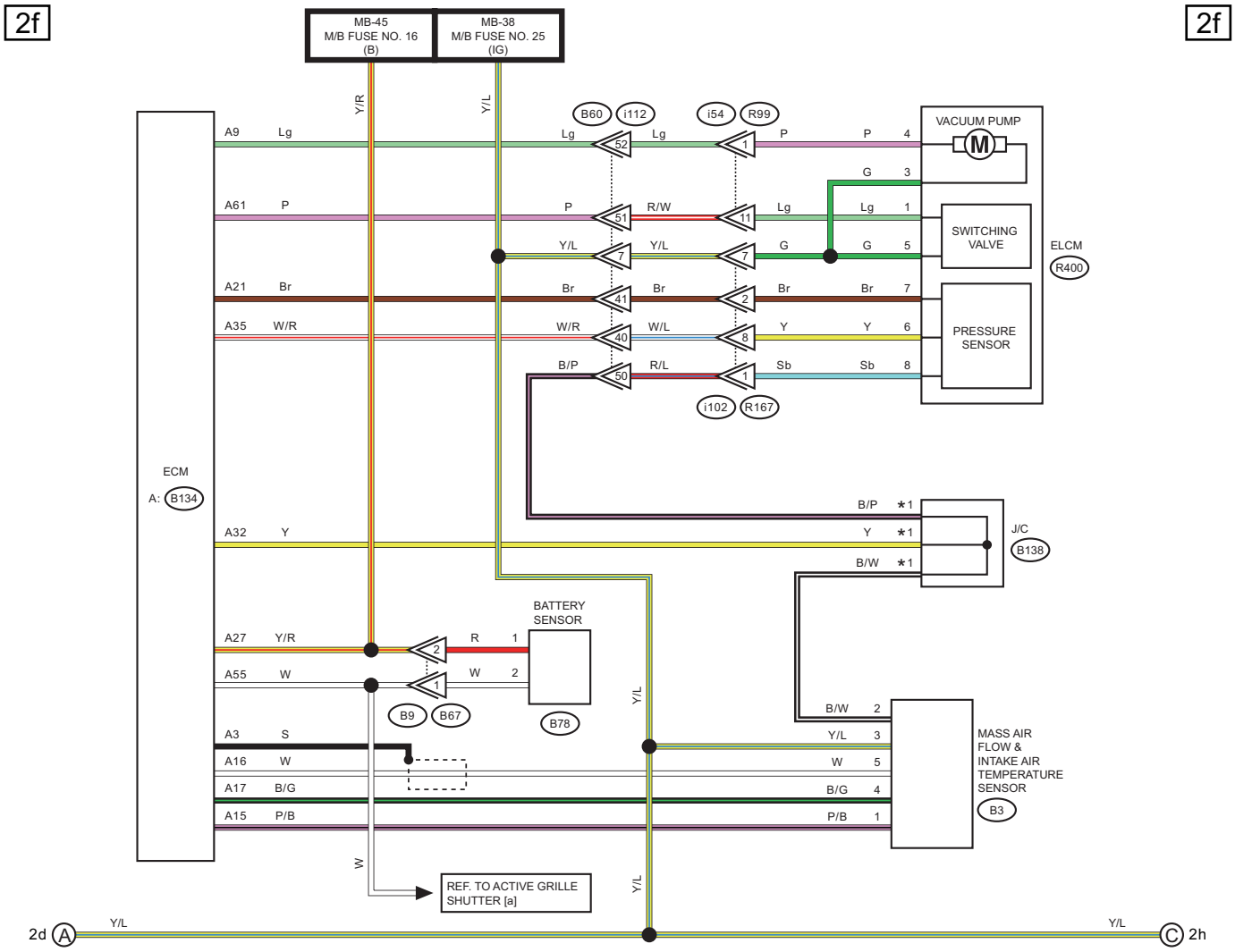

*1 : TERMINAL No. OPTIONAL ARRANGEMENT AMONG 3, 4, 7 AND 8

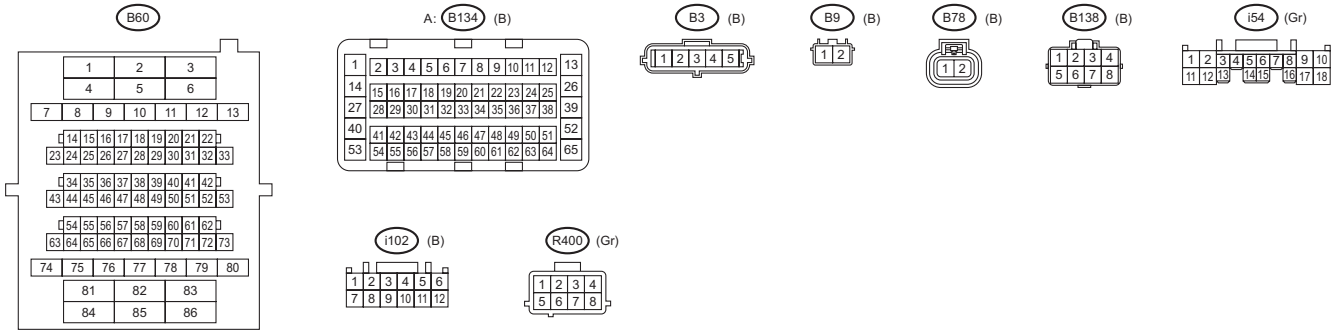

WI-60477

2g 2g

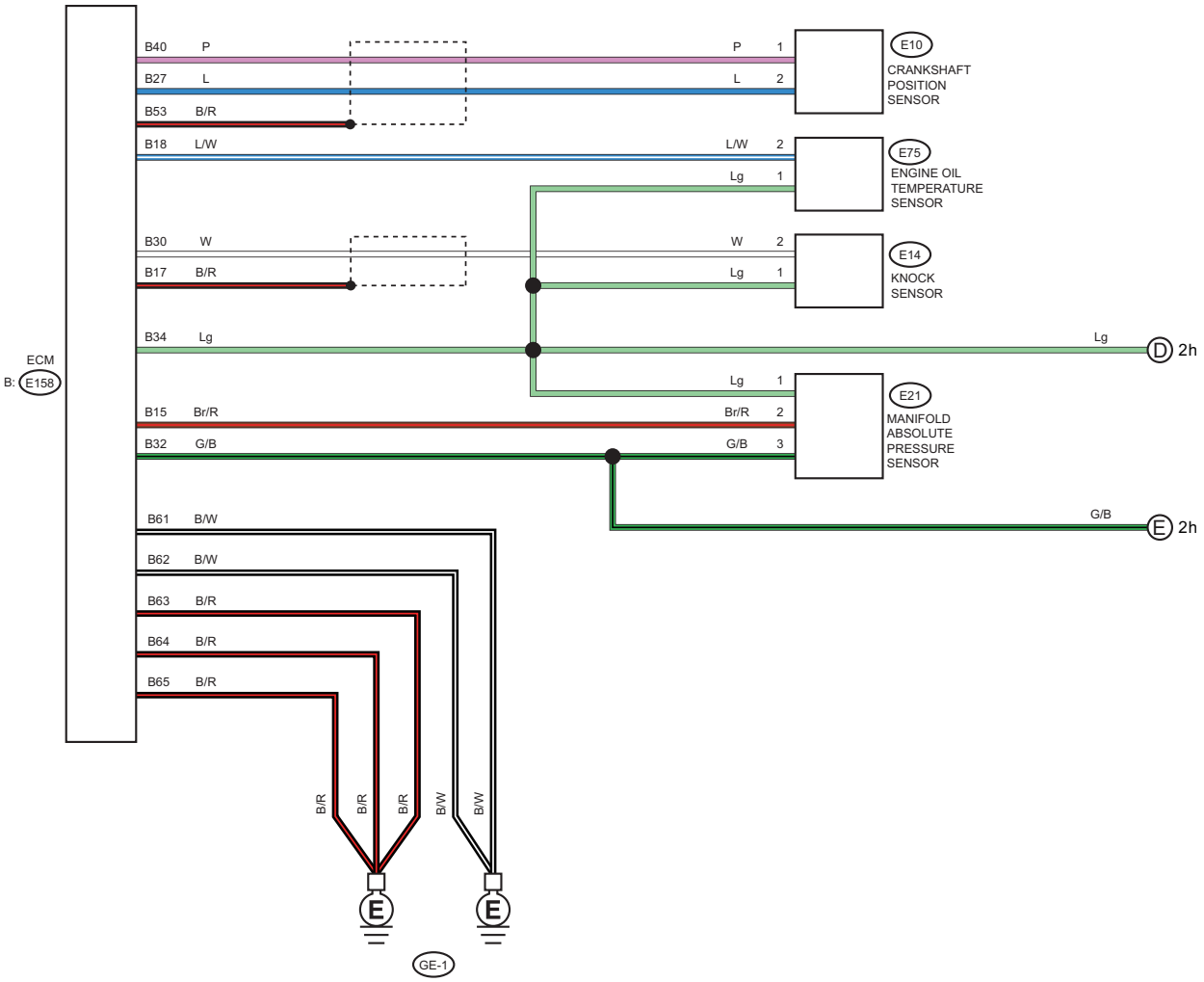



WI-60478

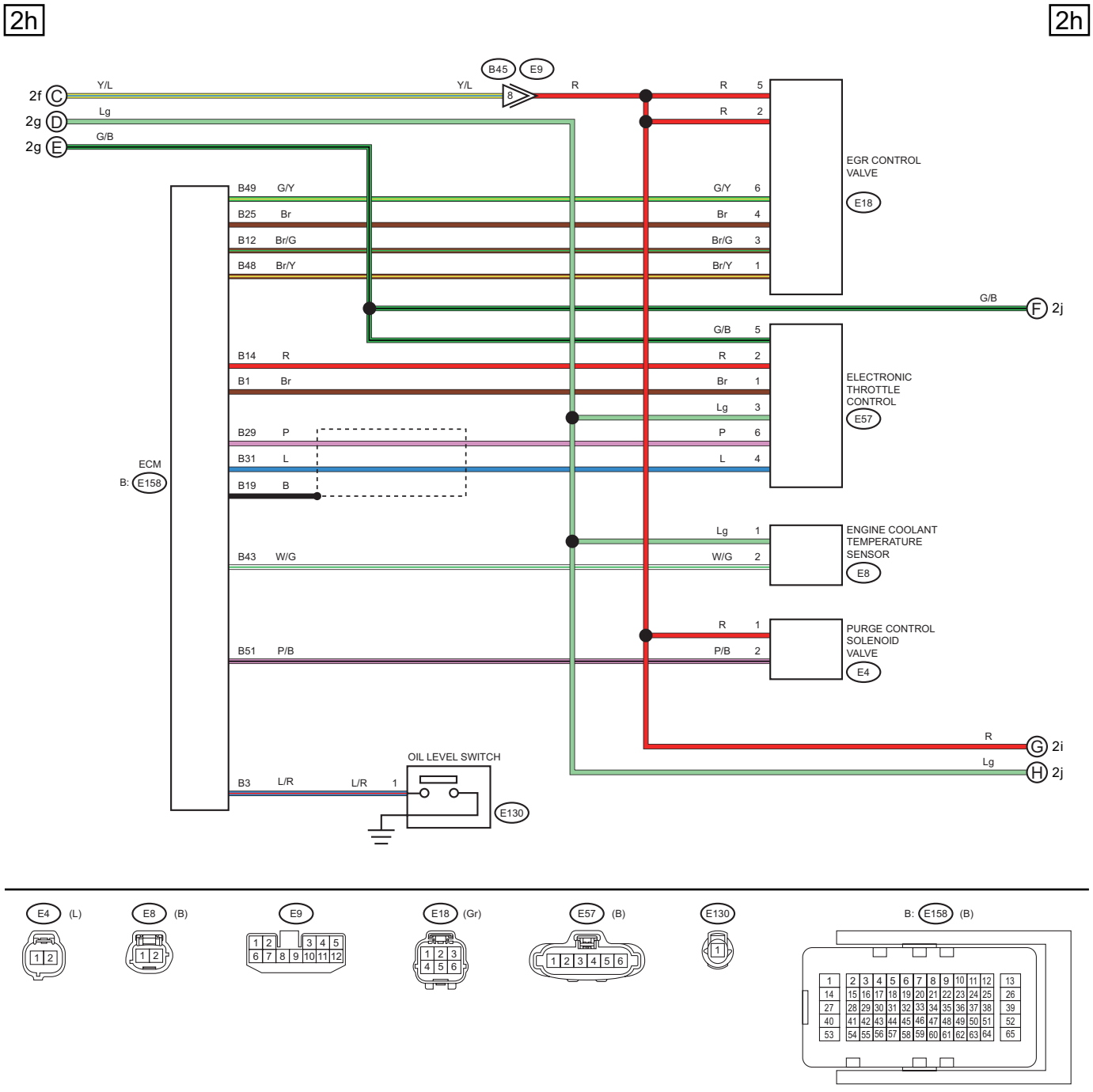
2h
2h
B45
E9
2f C
2g D
2g E
Y/L
Y/L
8
R
Lg
G/B
R 5
R 2
EGR CONTROL VALVE
E18
B49 G/Y
B25 Br
B12 Br/G
B48 Br/Y
G/Y 6
Br 4
Br/G 3
Br/Y 1
G/B
F 2j
G/B 5
B14 R
B1 Br
R 2
Br 1
Lg 3
ELECTRONIC THROTTLE CONTROL
E57
B29 P
B31 L
B19 B
P 6
L 4
ECM
B: E158
Lg 1
B43 W/G
W/G 2
ENGINE COOLANT TEMPERATURE SENSOR
E8
R 1
B51 P/B
P/B 2
PURGE CONTROL SOLENOID VALVE
E4
R
G 2i
Lg
H 2j
OIL LEVEL SWITCH
B3 L/R
L/R 1
E130

E4 (L)
E8 (B)
E9
E18 (Gr)
E57 (B)
E130
B: E158 (B)

WI-60479

WIRING SYSTEM

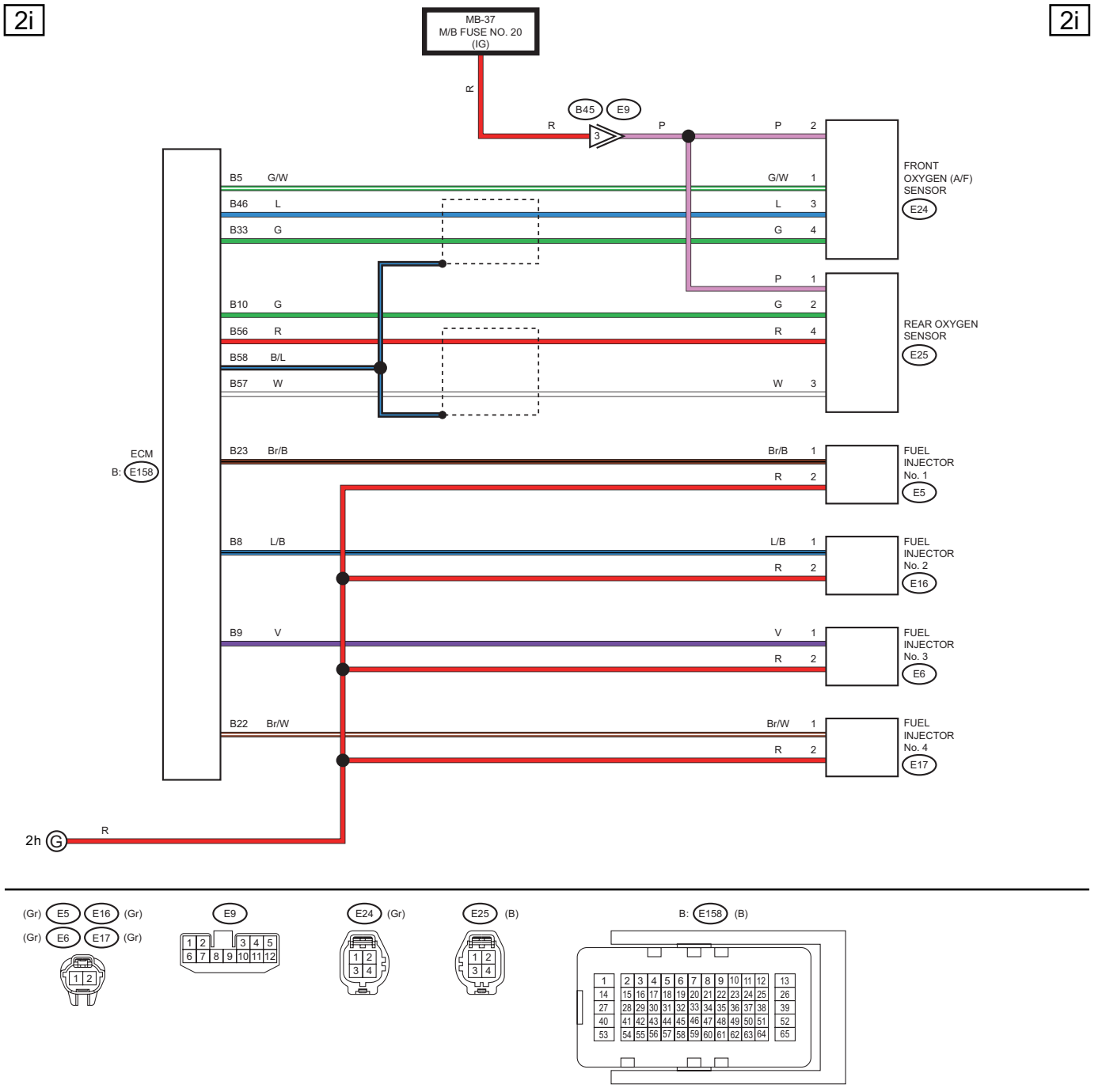

WI-60480

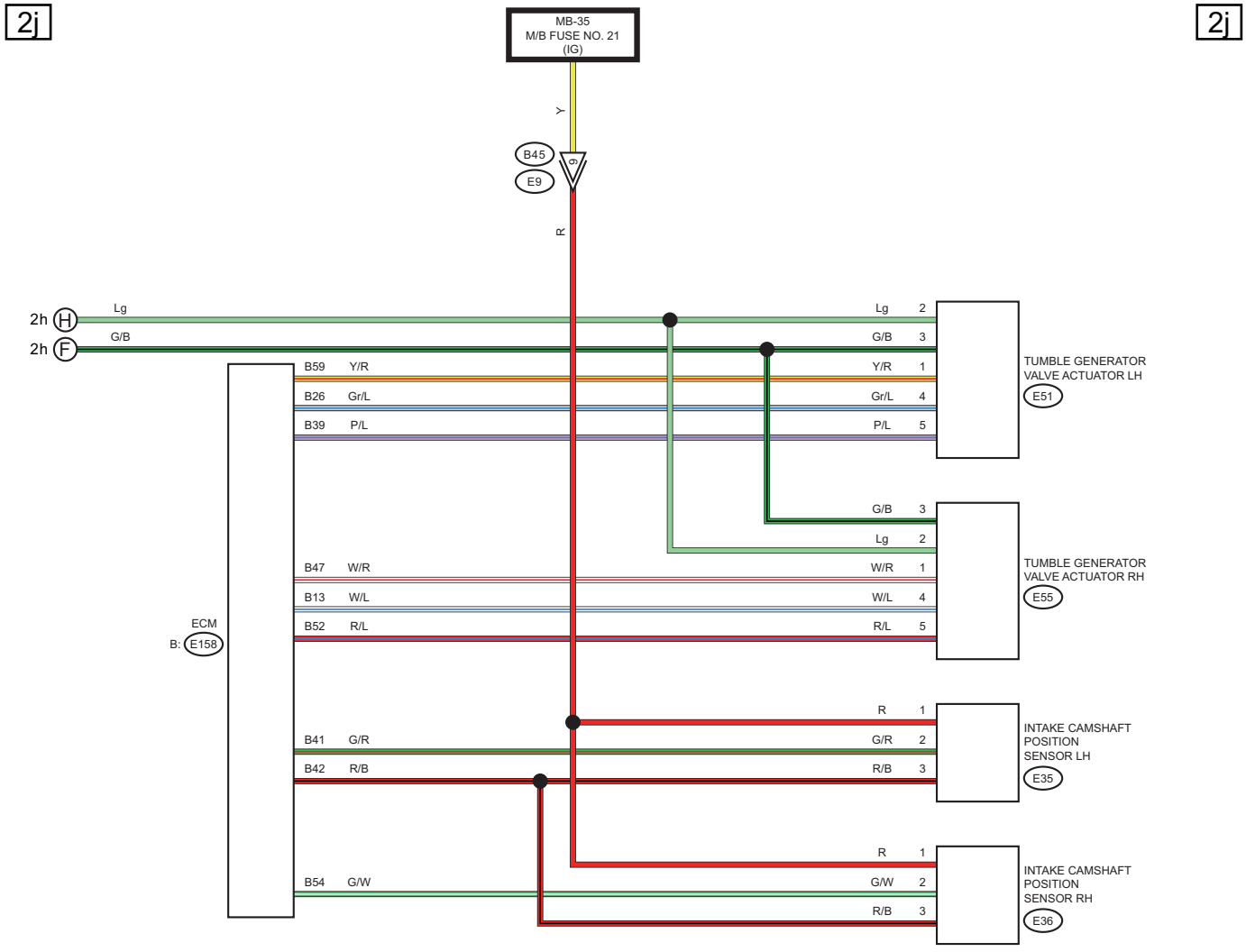
2j
2j
MB-35
M/B FUSE NO. 21
(IG)
Y
B45
E9
R
2h H
2h F
Lg
G/B
B59 Y/R
B26 Gr/L
B39 P/L
B47 W/R
B13 W/L
B52 R/L
B41 G/R
B42 R/B
B54 G/W
ECM
B: E158
Lg 2
G/B 3
Y/R 1
Gr/L 4
P/L 5
TUMBLE GENERATOR VALVE ACTUATOR LH
E51
G/B 3
Lg 2
W/R 1
W/L 4
R/L 5
TUMBLE GENERATOR VALVE ACTUATOR RH
E55
R 1
G/R 2
R/B 3
INTAKE CAMSHAFT POSITION SENSOR LH
E35
R 1
G/W 2
R/B 3
INTAKE CAMSHAFT POSITION SENSOR RH
E36

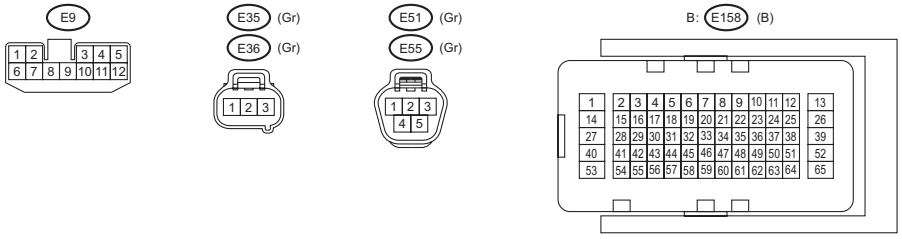
E9
E35 (Gr)
E36 (Gr)
E51 (Gr)
E55 (Gr)
B: E158 (B)

WI-60481

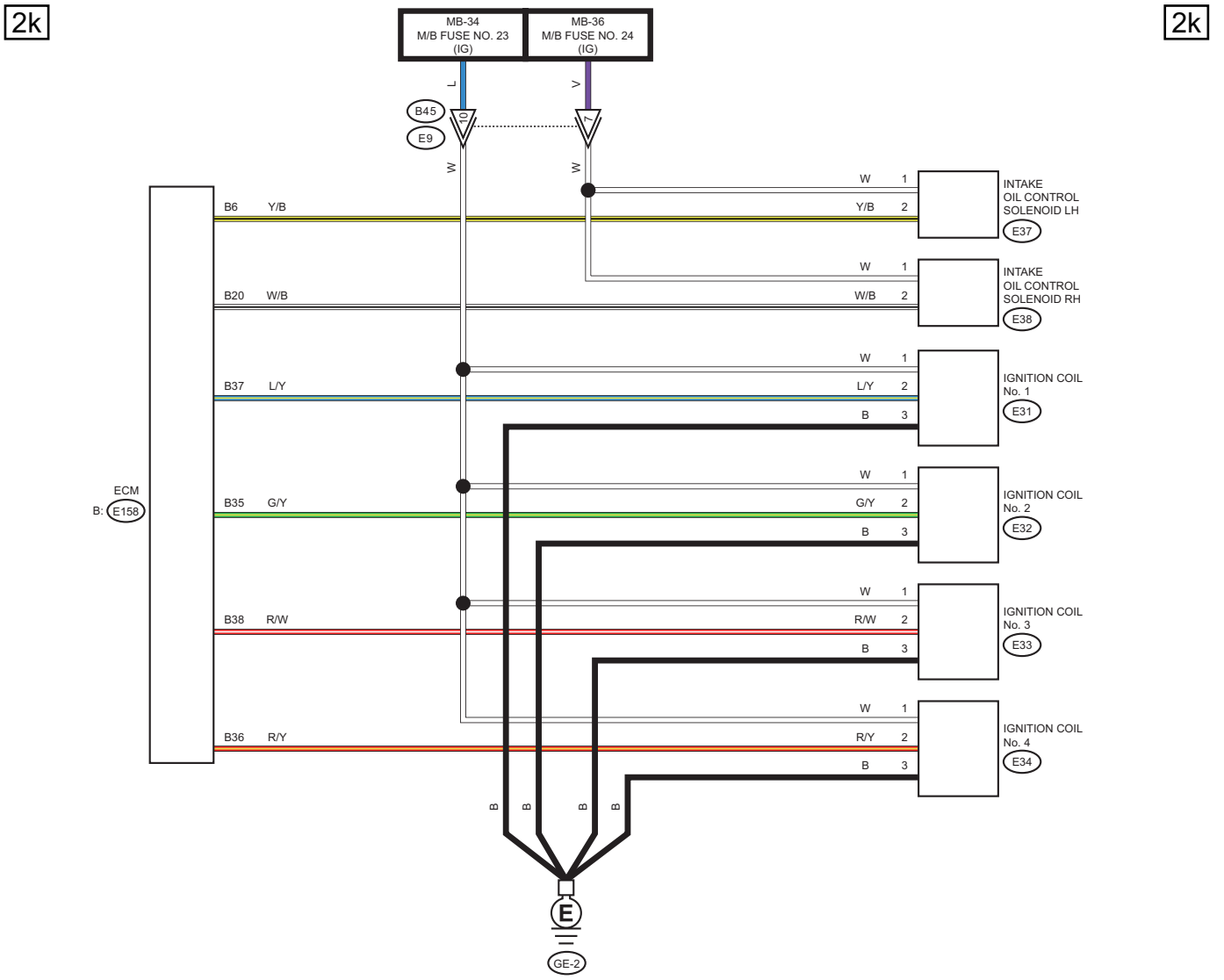
2k
2k
MB-34
M/B FUSE NO. 23
(IG)
MB-36
M/B FUSE NO. 24
(IG)
L
V
B45
E9
10
7
W
W
ECM
B: E158
B6 Y/B
B20 W/B
B37 L/Y
B35 G/Y
B38 R/W
B36 R/Y
W 1
Y/B 2
INTAKE OIL CONTROL SOLENOID LH
E37
W 1
W/B 2
INTAKE OIL CONTROL SOLENOID RH
E38
W 1
L/Y 2
B 3
IGNITION COIL No. 1
E31
W 1
G/Y 2
B 3
IGNITION COIL No. 2
E32
W 1
R/W 2
B 3
IGNITION COIL No. 3
E33
W 1
R/Y 2
B 3
IGNITION COIL No. 4
E34
B
B
B
B
E
GE-2

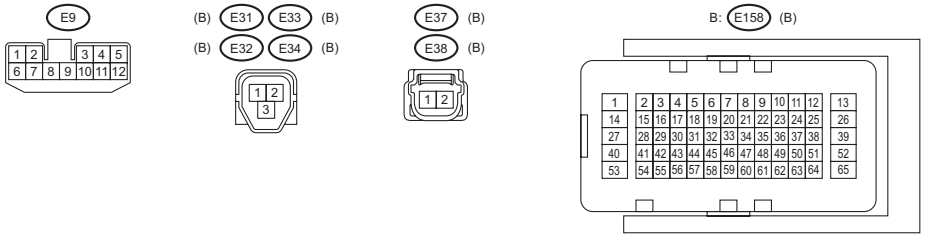
E9
1 2 3 4 5
6 7 8 9 10 11 12
(B) E31 E33 (B)
(B) E32 E34 (B)
1 2
3
E37 (B)
E38 (B)
1 2
B: E158 (B)
1 2 3 4 5 6 7 8 9 10 11 12 13
14 15 16 17 18 19 20 21 22 23 24 25 26
27 28 29 30 31 32 33 34 35 36 37 38 39
40 41 42 43 44 45 46 47 48 49 50 51 52
53 54 55 56 57 58 59 60 61 62 63 64 65

WI-60482

3. ENGINE TYPE EZ (WITHOUT PUSH BUTTON START)

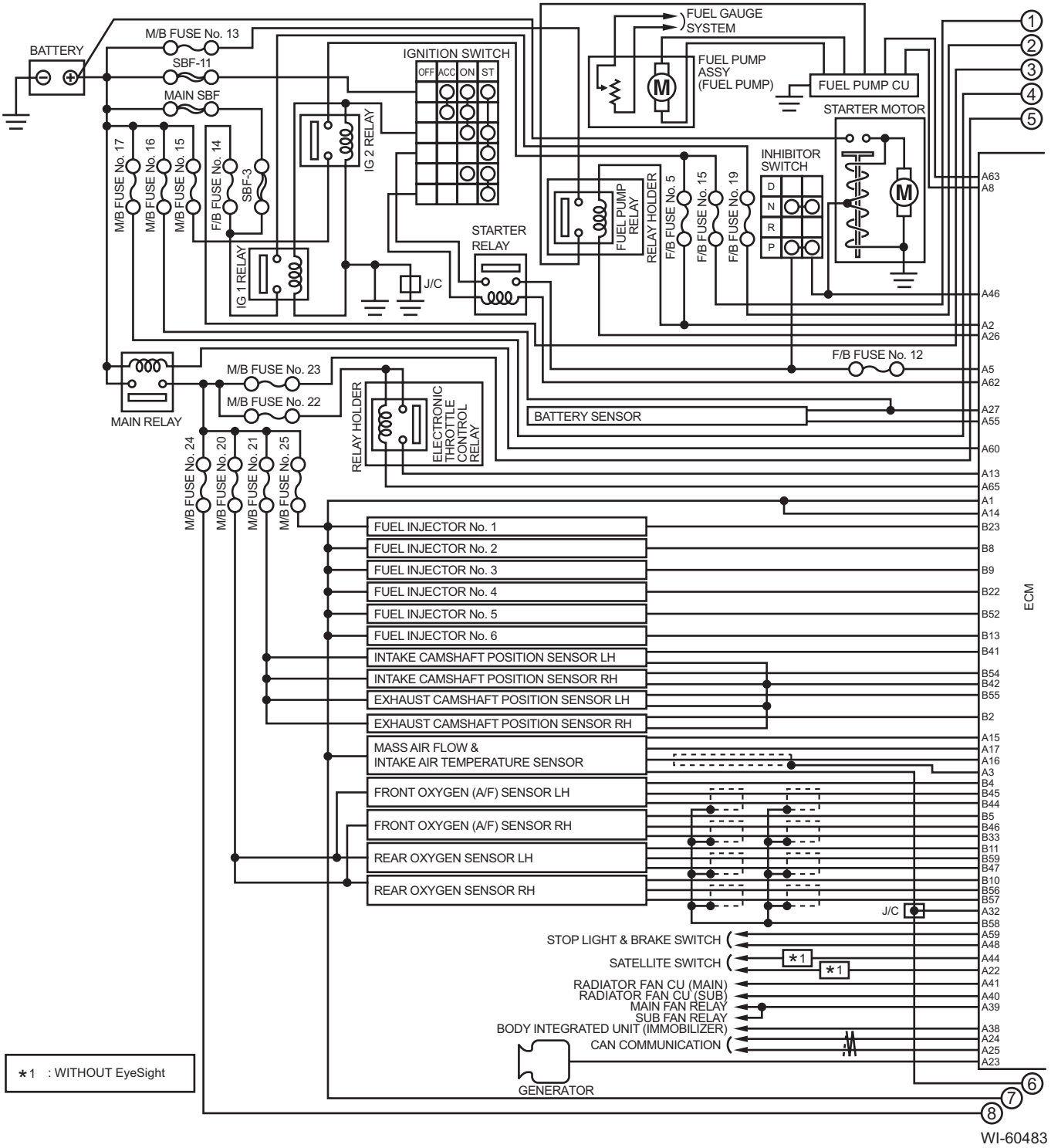

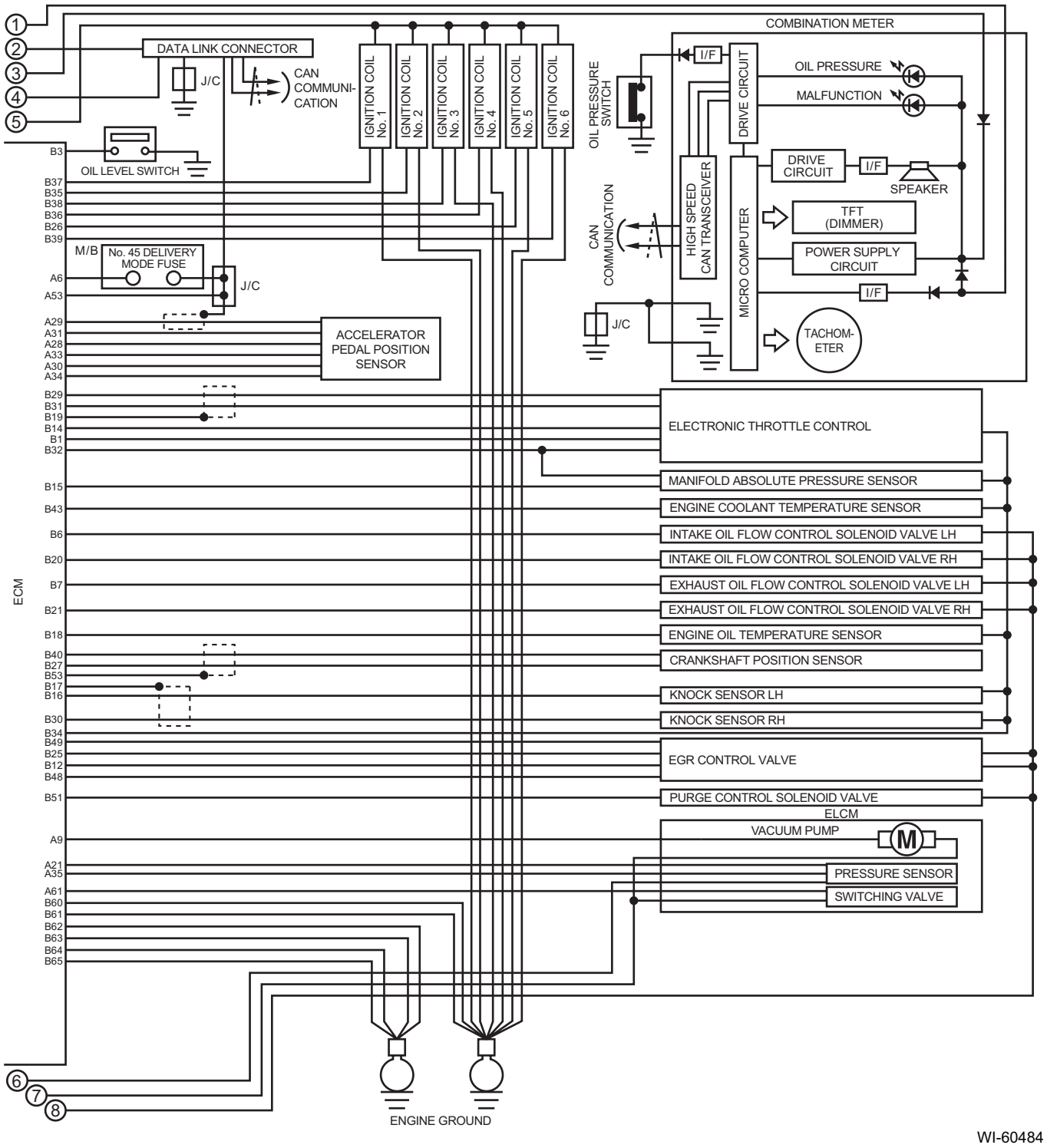
COMBINATION METER
DATA LINK CONNECTOR
J/C
CAN COMMUNI-CATION
IGNITION COIL No. 1
IGNITION COIL No. 2
IGNITION COIL No. 3
IGNITION COIL No. 4
IGNITION COIL No. 5
IGNITION COIL No. 6
OIL PRESSURE SWITCH
I/F
DRIVE CIRCUIT
OIL PRESSURE
MALFUNCTION
DRIVE CIRCUIT
I/F
SPEAKER
TFT (DIMMER)
POWER SUPPLY CIRCUIT
I/F
MICRO COMPUTER
HIGH SPEED CAN TRANSCEIVER
CAN COMMUNICATION
J/C
TACHOM-ETER
OIL LEVEL SWITCH
M/B
No. 45 DELIVERY MODE FUSE
J/C
ACCELERATOR PEDAL POSITION SENSOR
ECM
B3
B37
B35
B38
B36
B26
B39
A6
A53
A29
A31
A28
A33
A30
A34
B29
B31
B19
B14
B1
B32
B15
B43
B6
B20
B7
B21
B18
B40
B27
B53
B17
B16
B30
B34
B49
B25
B12
B48
B51
A9
A21
A35
A61
B60
B61
B62
B63
B64
B65
ELECTRONIC THROTTLE CONTROL
MANIFOLD ABSOLUTE PRESSURE SENSOR
ENGINE COOLANT TEMPERATURE SENSOR
INTAKE OIL FLOW CONTROL SOLENOID VALVE LH
INTAKE OIL FLOW CONTROL SOLENOID VALVE RH
EXHAUST OIL FLOW CONTROL SOLENOID VALVE LH
EXHAUST OIL FLOW CONTROL SOLENOID VALVE RH
ENGINE OIL TEMPERATURE SENSOR
CRANKSHAFT POSITION SENSOR
KNOCK SENSOR LH
KNOCK SENSOR RH
EGR CONTROL VALVE
PURGE CONTROL SOLENOID VALVE
ELCM
VACUUM PUMP
M
PRESSURE SENSOR
SWITCHING VALVE
1
2
3
4
5
6
7
8
ENGINE GROUND

WI-60484

WIRING SYSTEM

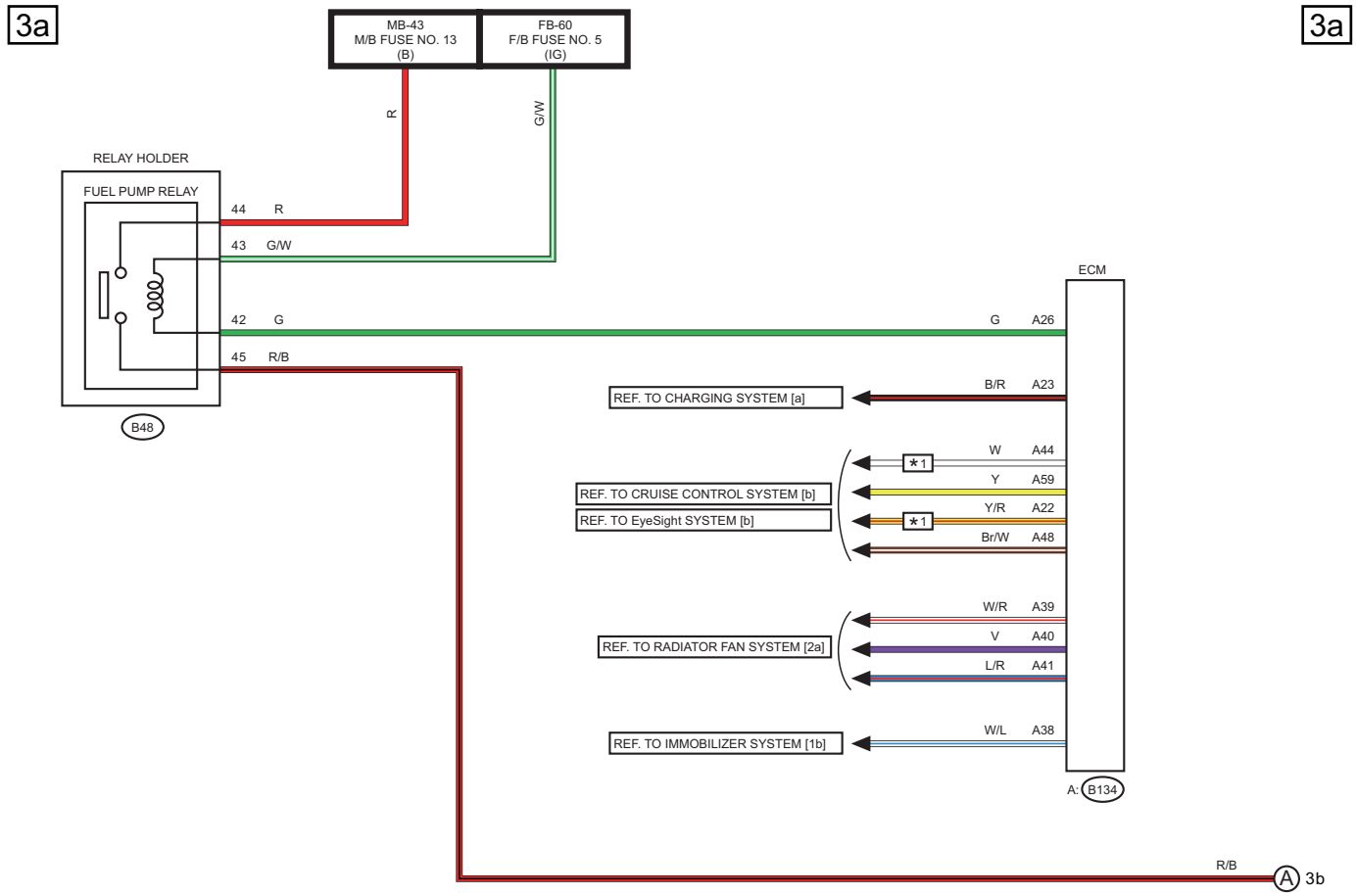

*1 : WITHOUT EyeSight

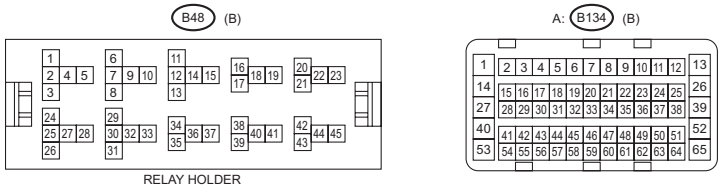

WI-60485

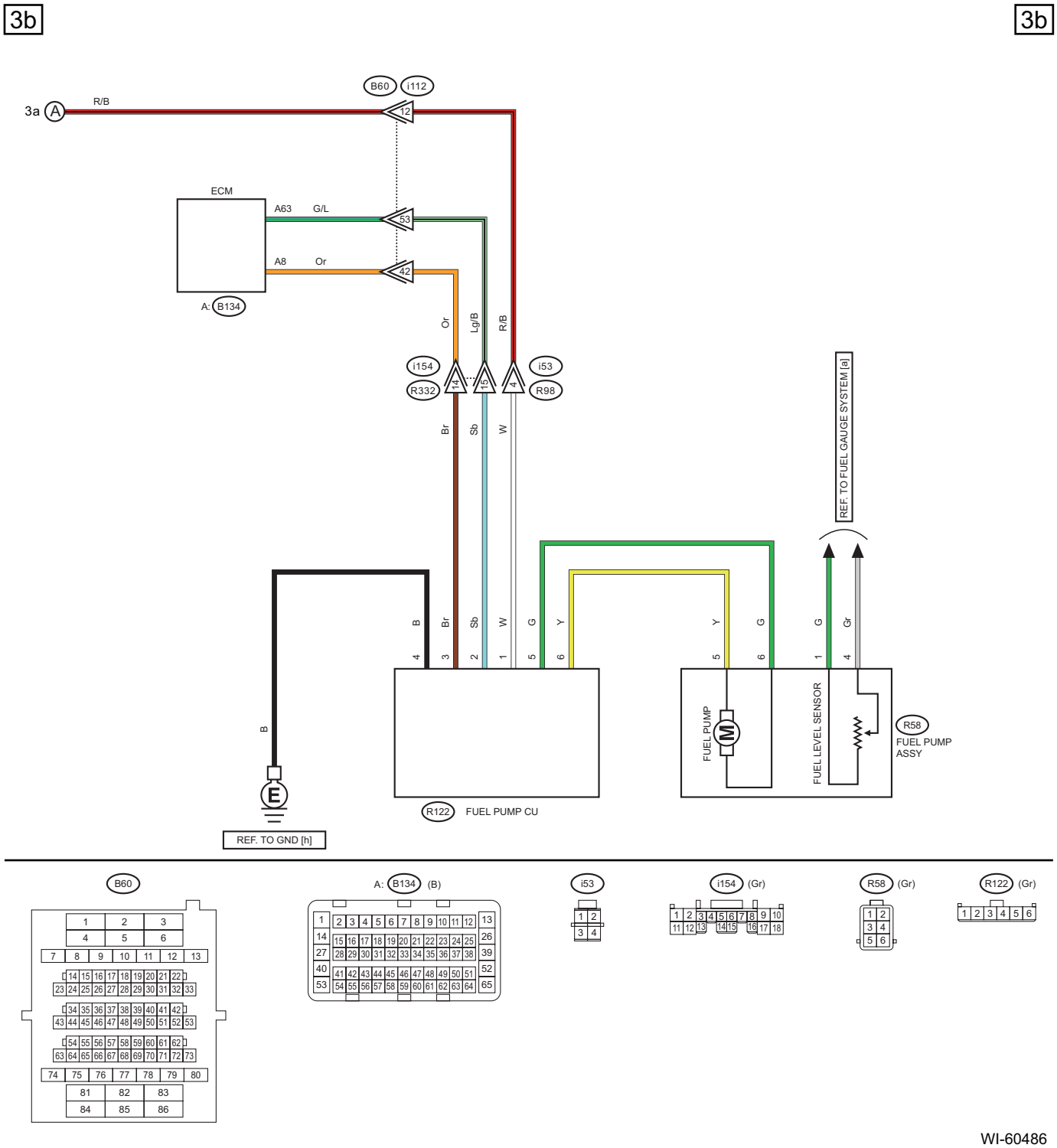
3b
3b
3a
A
R/B
B60
i112
12
ECM
A63
G/L
53
A8
Or
42
A: B134
Or
Lg/B
R/B
i154
R332
14
15
4
i53
R98
Br
Sb
W
REF. TO FUEL GAUGE SYSTEM [a]
B
Br
Sb
W
G
Y
Y
G
G
Gr
4
3
2
1
5
6
5
6
1
4
B
E
REF. TO GND [h]
R122
FUEL PUMP CU
FUEL PUMP
FUEL LEVEL SENSOR
R58
FUEL PUMP ASSY

B60
A: B134
(B)
i53
i154
(Gr)
R58
(Gr)
R122
(Gr)

WI-60486

3c

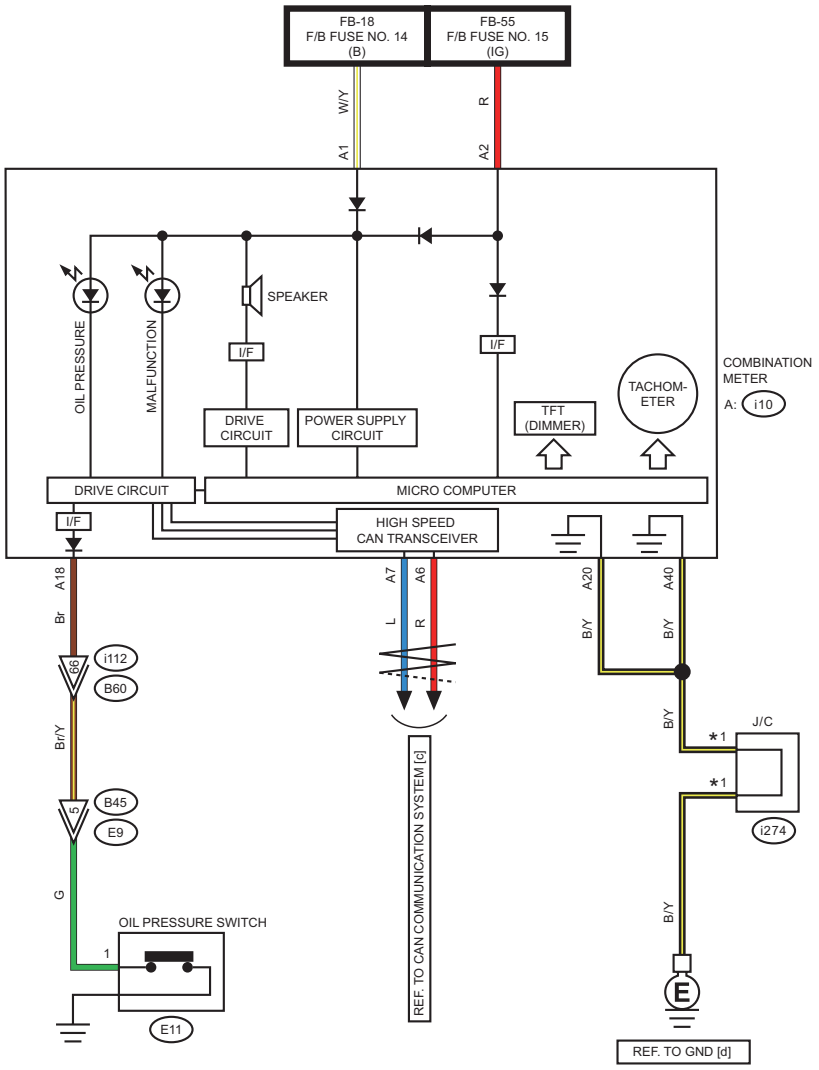

*1 : TERMINAL No. OPTIONAL ARRANGEMENT

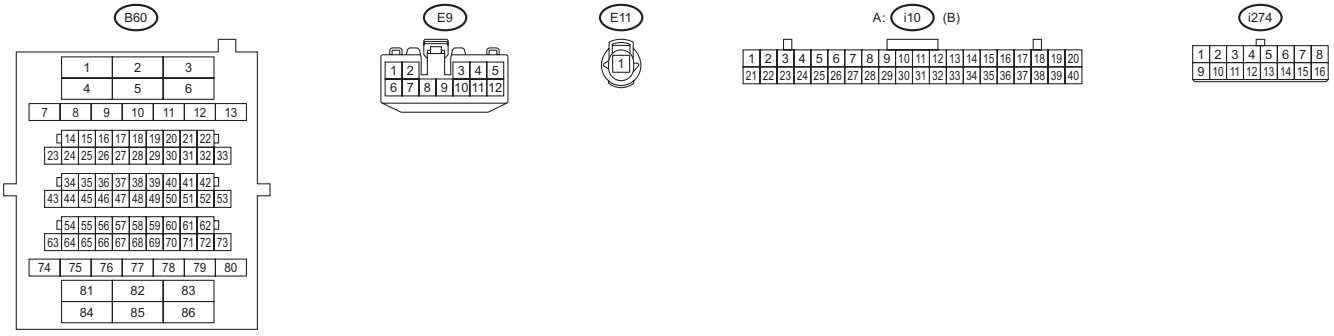

WI-60487

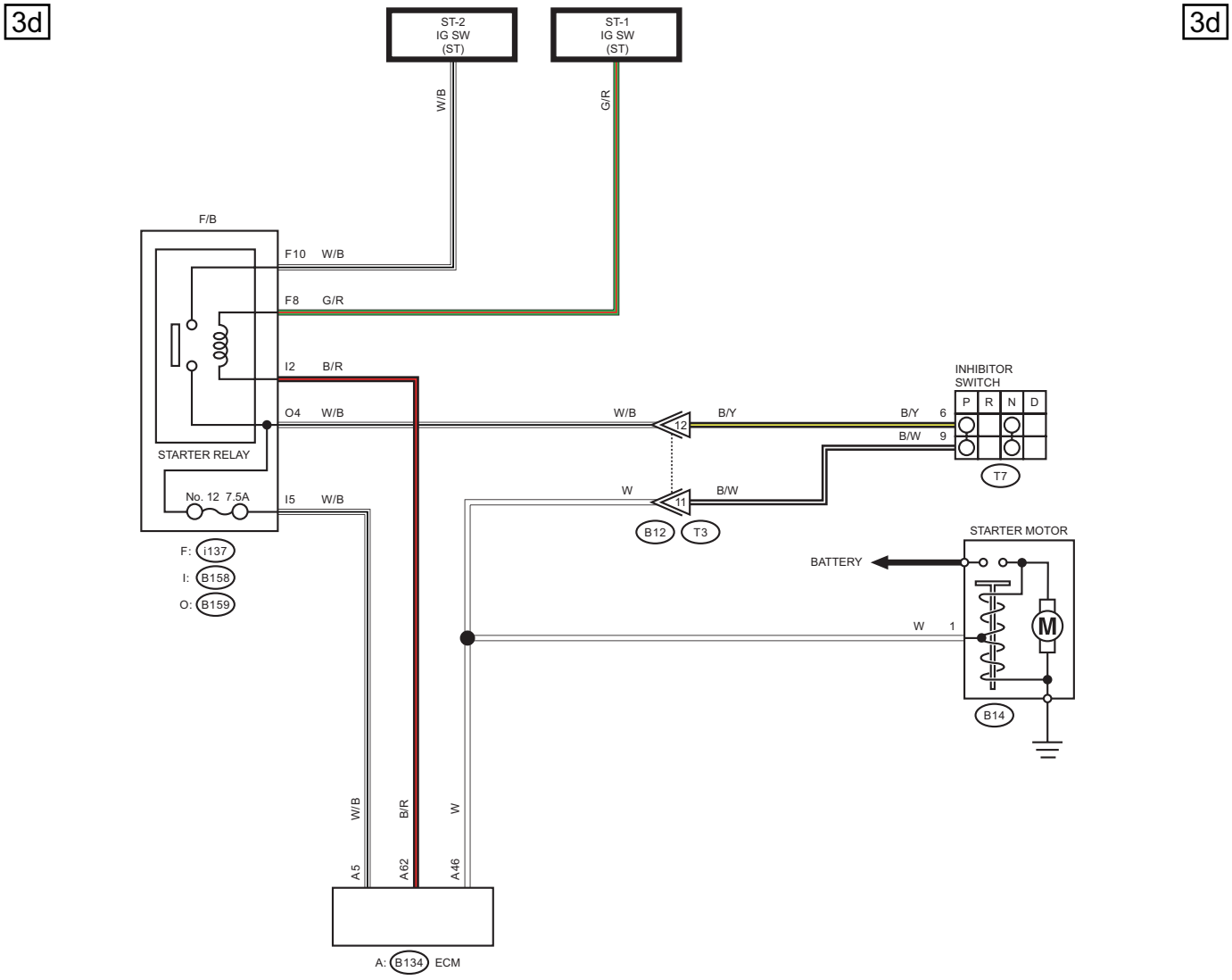
3d
3d
ST-2
IG SW
(ST)
ST-1
IG SW
(ST)
W/B
G/R
F/B
F10 W/B
F8 G/R
I2 B/R
O4 W/B
STARTER RELAY
No. 12 7.5A
I5 W/B
F: I137
I: B158
O: B159
W/B
12
B/Y
B/Y 6
B/W 9
INHIBITOR
SWITCH
P R N D
T7
W
11
B/W
B12 T3
STARTER MOTOR
BATTERY
W 1
M
B14
W/B
B/R
W
A5
A62
A46
A: B134 ECM

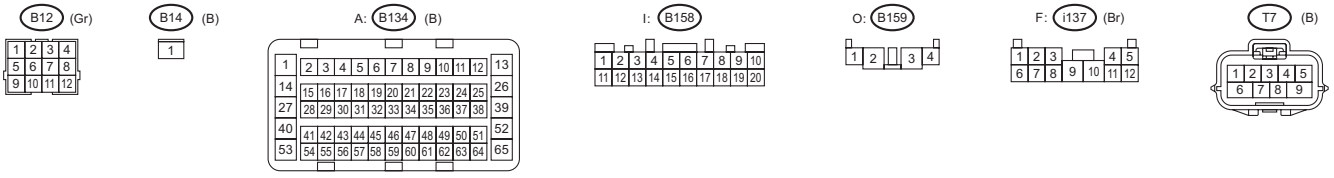
B12 (Gr)
B14 (B)
A: B134 (B)
I: B158
O: B159
F: i137 (Br)
T7 (B)

WI-60488

WIRING SYSTEM

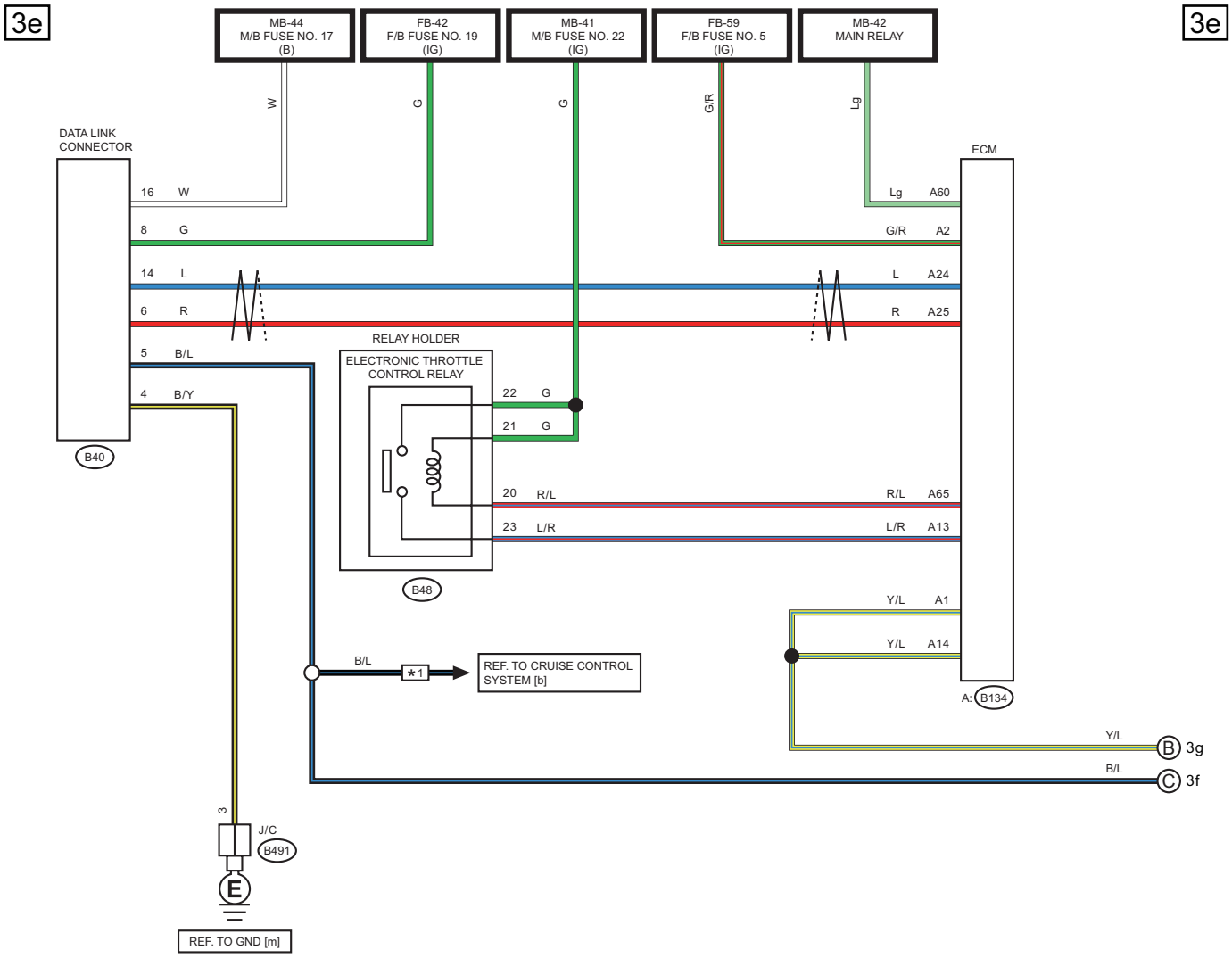

*1 : WITHOUT EyeSight

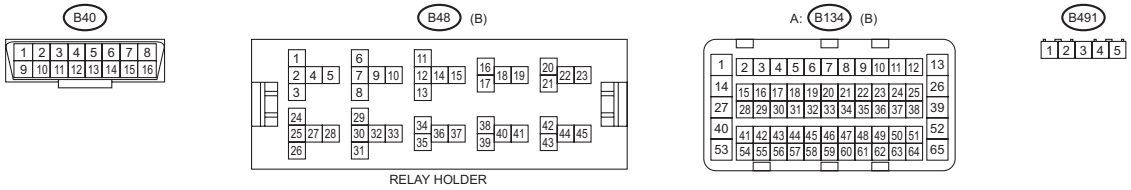

WI-60489

3f

3f

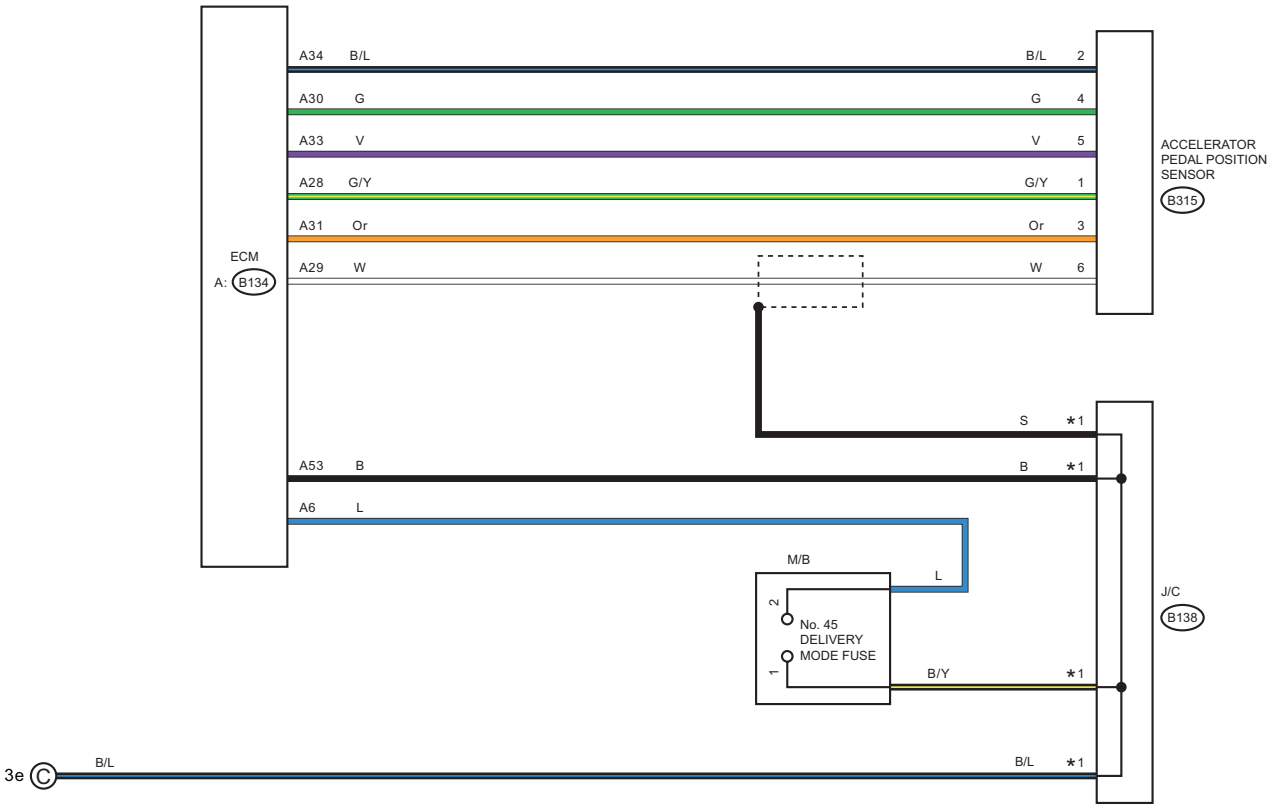

✶1 : TERMINAL No. OPTIONAL ARRANGEMENT AMONG 1, 2, 5 AND 6

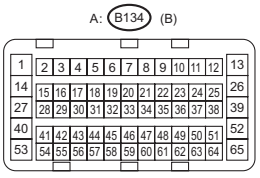



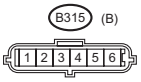

WI-60490

WIRING SYSTEM

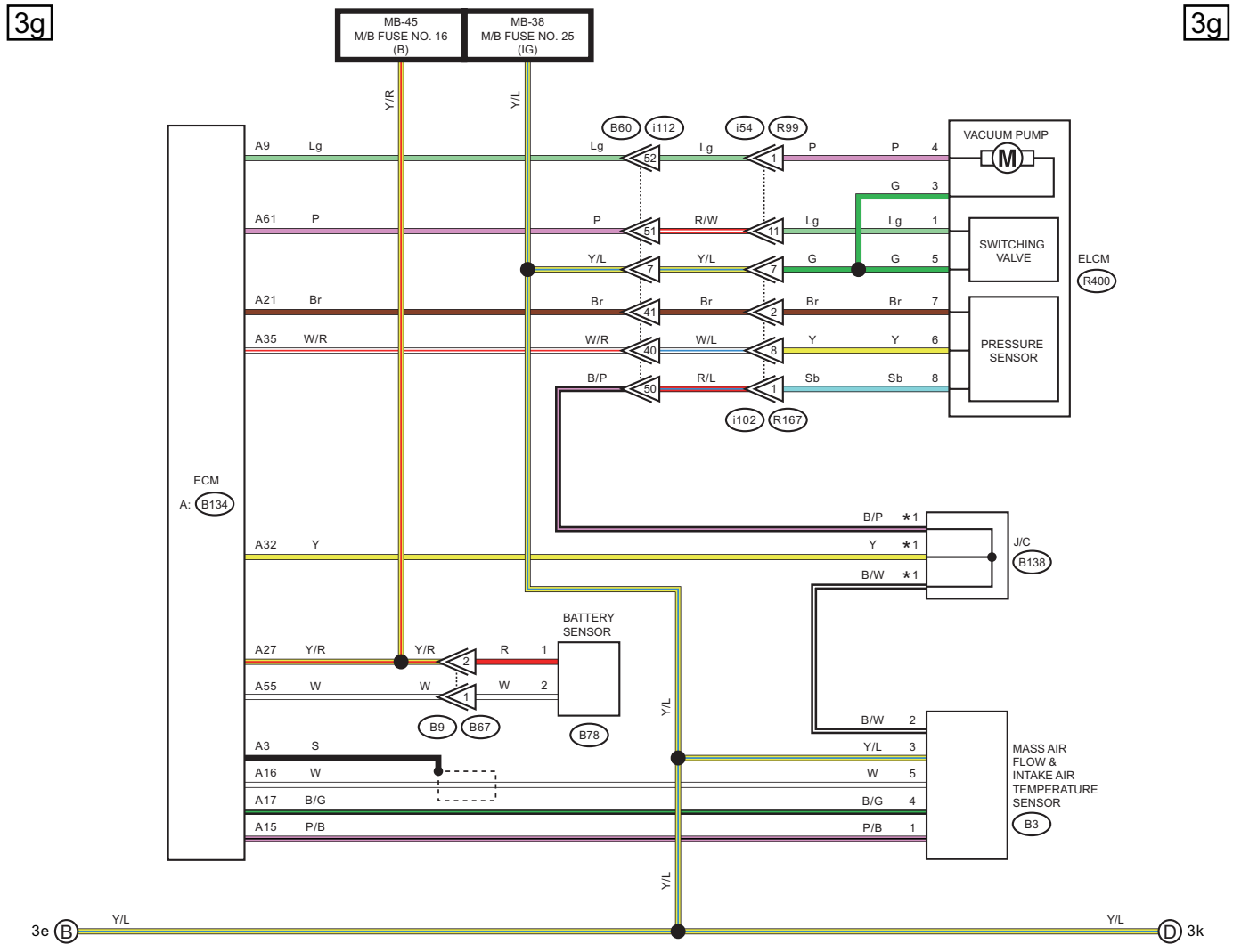

✶1 : TERMINAL No. OPTIONAL ARRANGEMENT AMONG 3, 4, 7 AND 8

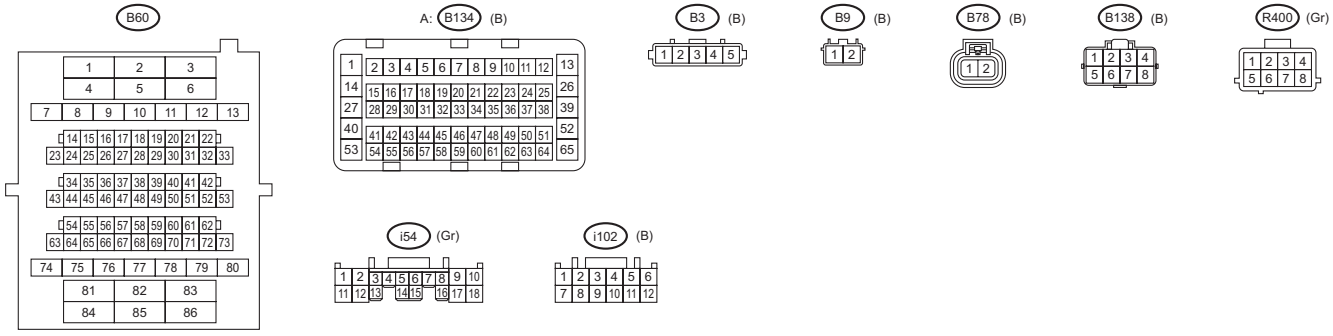

WI-60491

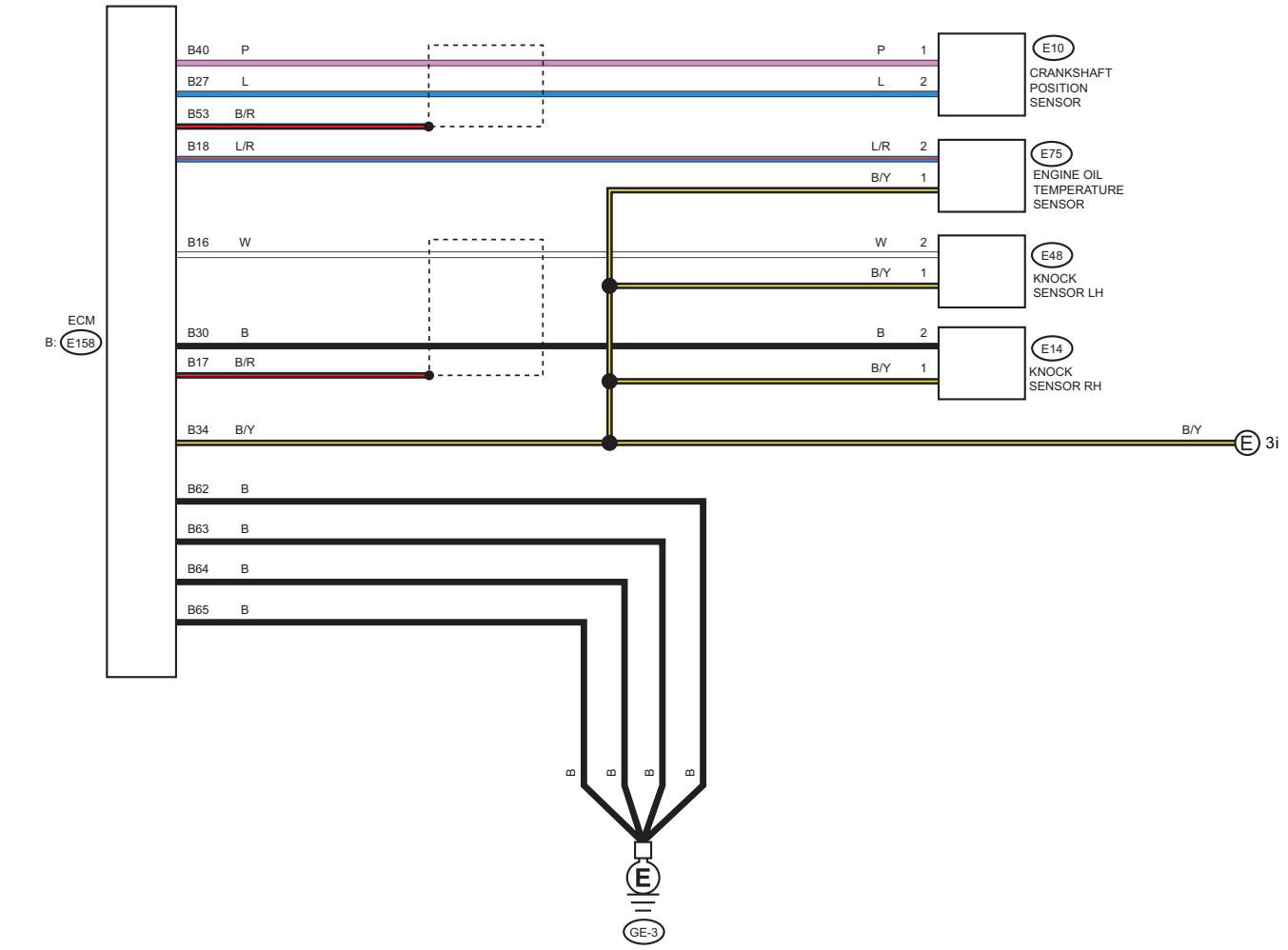
3h
3h
ECM
B: E158
B40 P
B27 L
B53 B/R
B18 L/R
B16 W
B30 B
B17 B/R
B34 B/Y
P 1
L 2
E10
CRANKSHAFT POSITION SENSOR
L/R 2
B/Y 1
E75
ENGINE OIL TEMPERATURE SENSOR
W 2
B/Y 1
E48
KNOCK SENSOR LH
B 2
B/Y 1
E14
KNOCK SENSOR RH
B/Y
E 3i
B62 B
B63 B
B64 B
B65 B
B B B B
E
GE-3

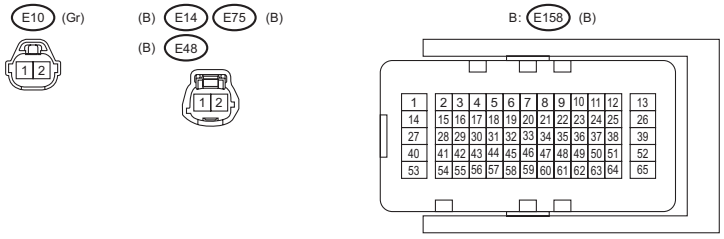
E10 (Gr)
(B) E14 E75 (B)
(B) E48
B: E158 (B)

WI-60492

3i

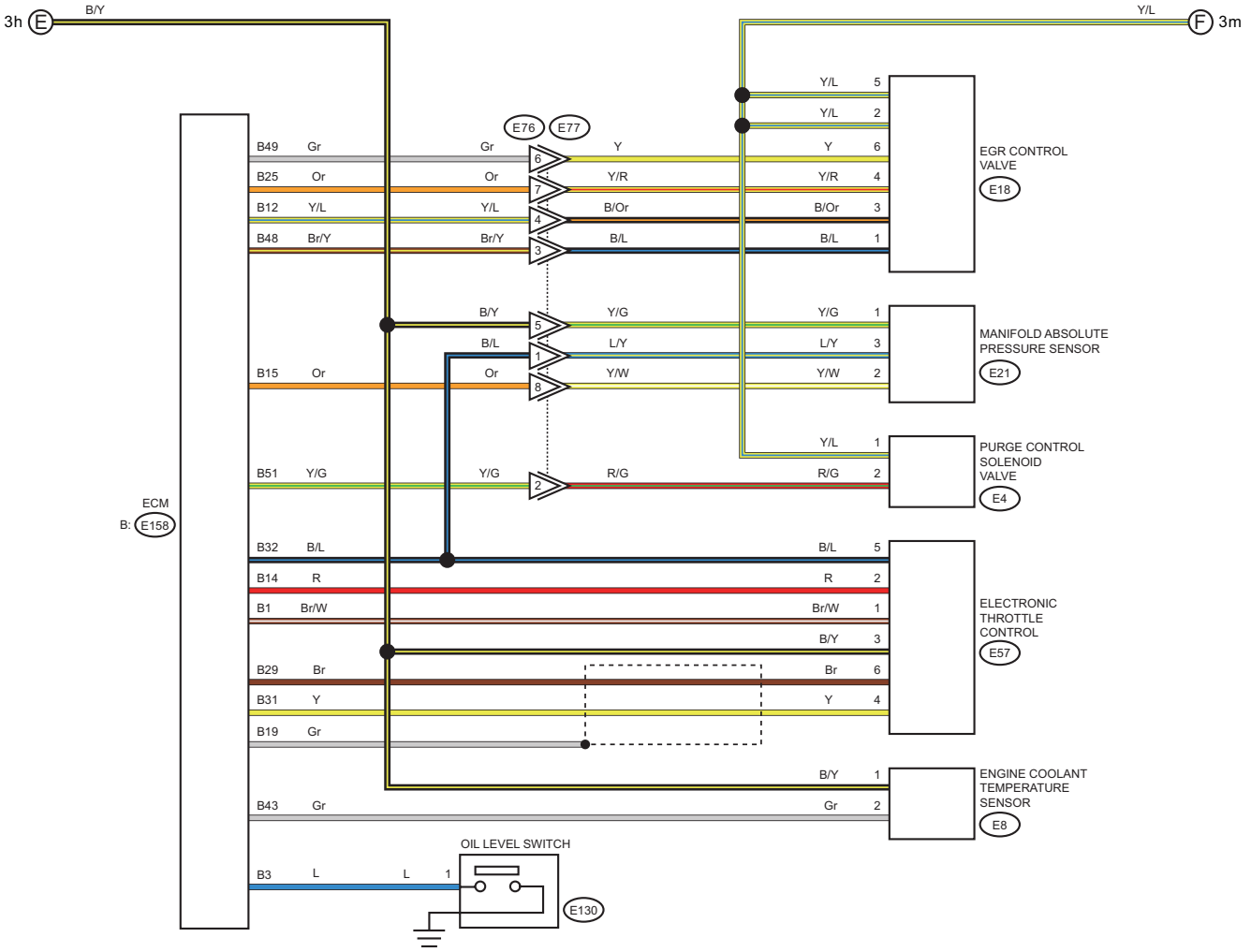
3h E B/Y
F 3m Y/L
ECM
B: E158
E76 E77
B49 Gr Gr 6 Y Y 6
B25 Or Or 7 Y/R Y/R 4
B12 Y/L Y/L 4 B/Or B/Or 3
B48 Br/Y Br/Y 3 B/L B/L 1
Y/L 5
Y/L 2
EGR CONTROL VALVE E18
B/Y 5 Y/G Y/G 1
B/L 1 L/Y L/Y 3
B15 Or Or 8 Y/W Y/W 2
MANIFOLD ABSOLUTE PRESSURE SENSOR E21
Y/L 1
B51 Y/G Y/G 2 R/G R/G 2
PURGE CONTROL SOLENOID VALVE E4
B32 B/L B/L 5
B14 R R 2
B1 Br/W Br/W 1
B/Y 3
B29 Br Br 6
B31 Y Y 4
B19 Gr
ELECTRONIC THROTTLE CONTROL E57
B/Y 1
B43 Gr Gr 2
ENGINE COOLANT TEMPERATURE SENSOR E8
OIL LEVEL SWITCH
B3 L L 1
E130

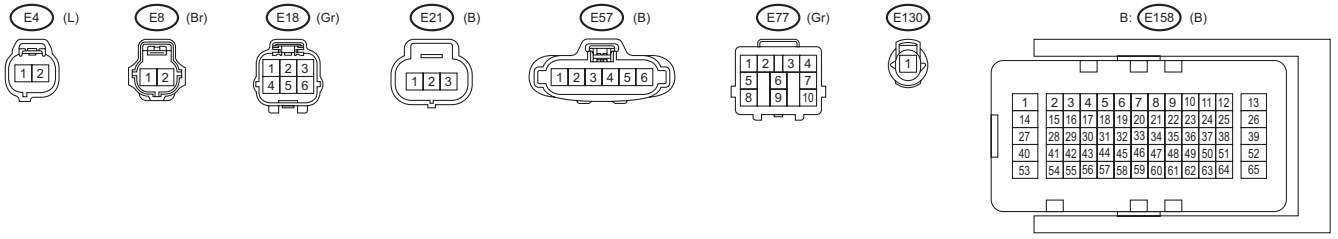
E4 (L)
E8 (Br)
E18 (Gr)
E21 (B)
E57 (B)
E77 (Gr)
E130
B: E158 (B)

WI-60493

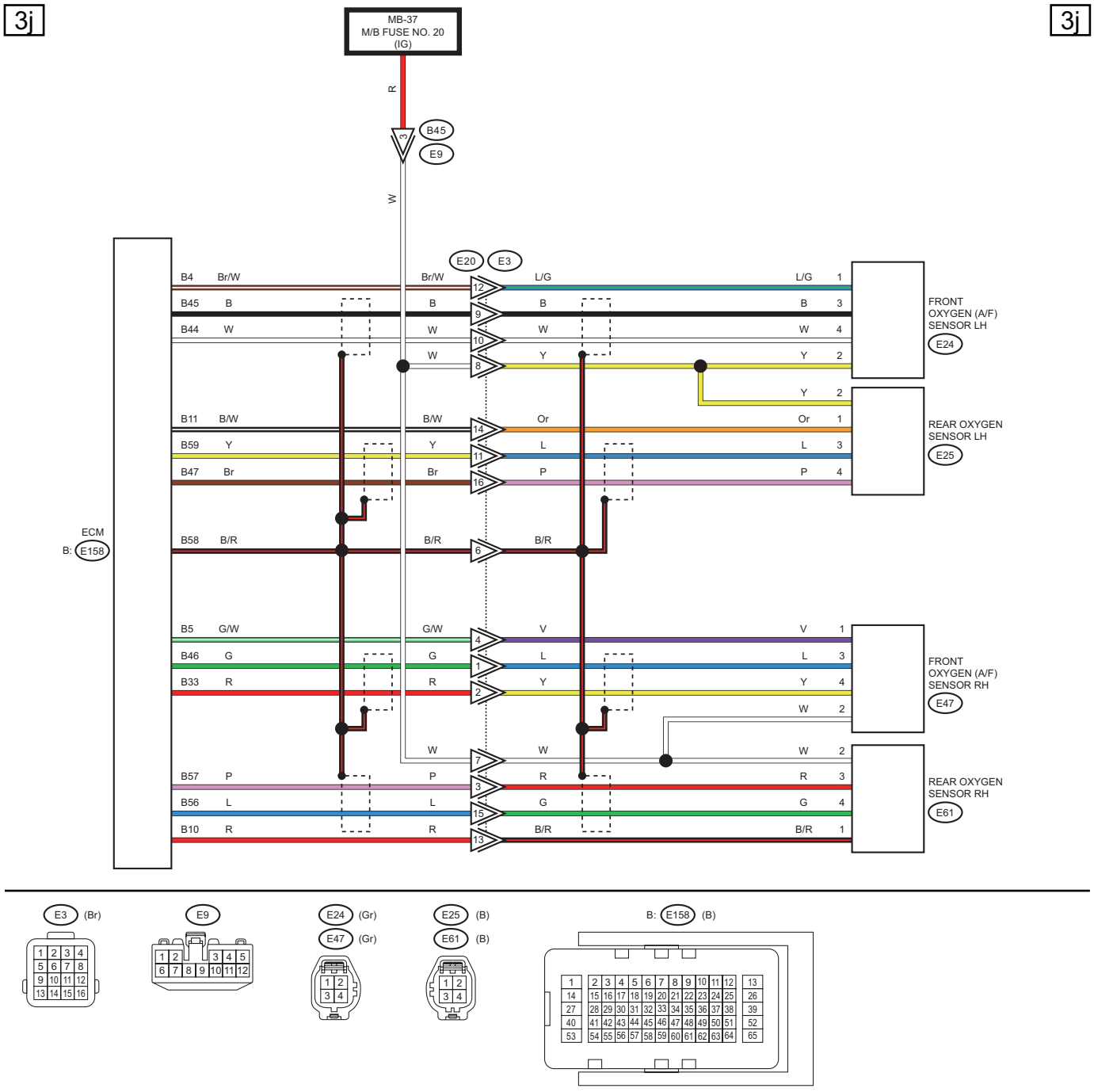
3j
3j
MB-37
M/B FUSE NO. 20
(IG)
R
W
B45
E9
E20
E3
ECM
B: E158
B4 Br/W
B45 B
B44 W
B11 B/W
B59 Y
B47 Br
B58 B/R
B5 G/W
B46 G
B33 R
B57 P
B56 L
B10 R
L/G
Or
L
P
V
FRONT OXYGEN (A/F) SENSOR LH
E24
REAR OXYGEN SENSOR LH
E25
FRONT OXYGEN (A/F) SENSOR RH
E47
REAR OXYGEN SENSOR RH
E61
E3 (Br)
E9
E24 (Gr)
E47 (Gr)
E25 (B)
E61 (B)
B: E158 (B)

WI-60494

3k

3k

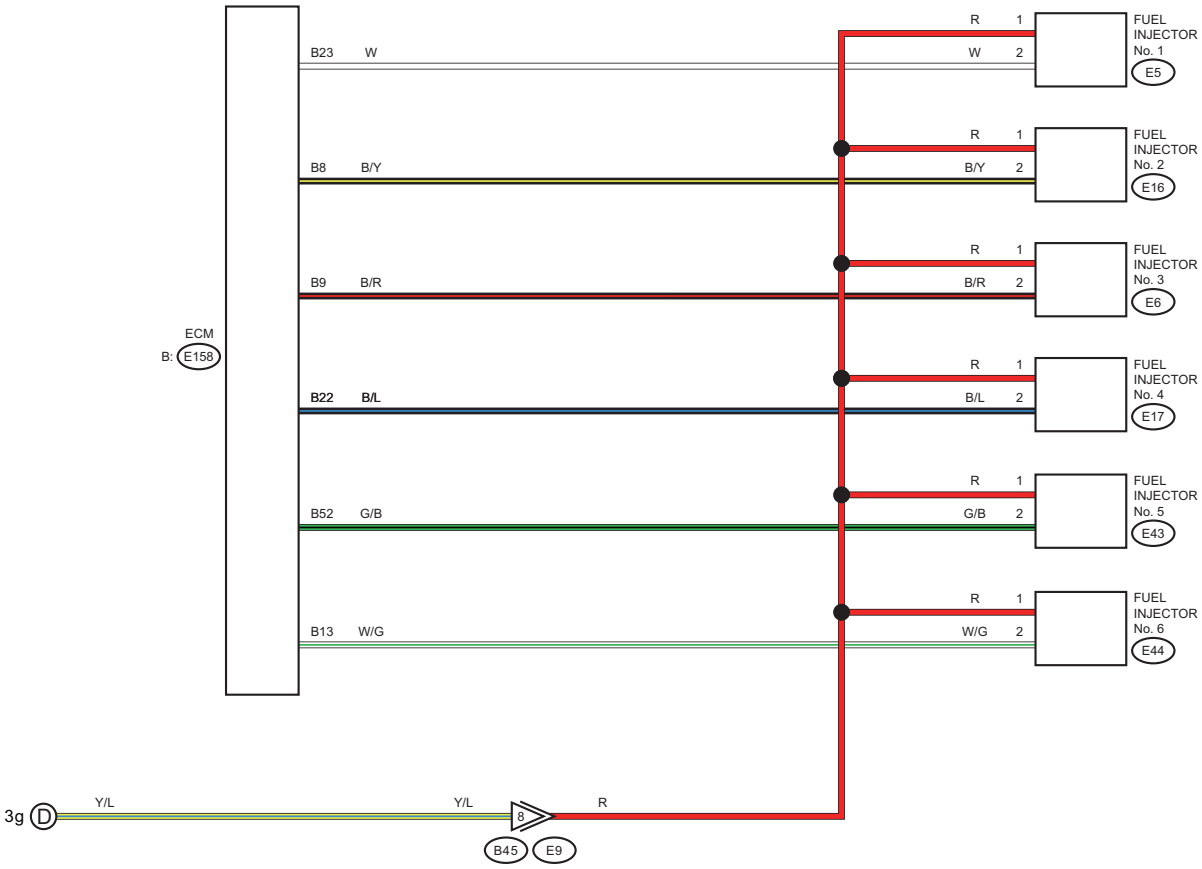

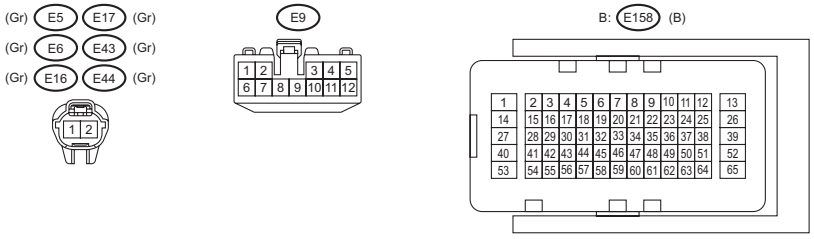

WI-60495

3I

3I

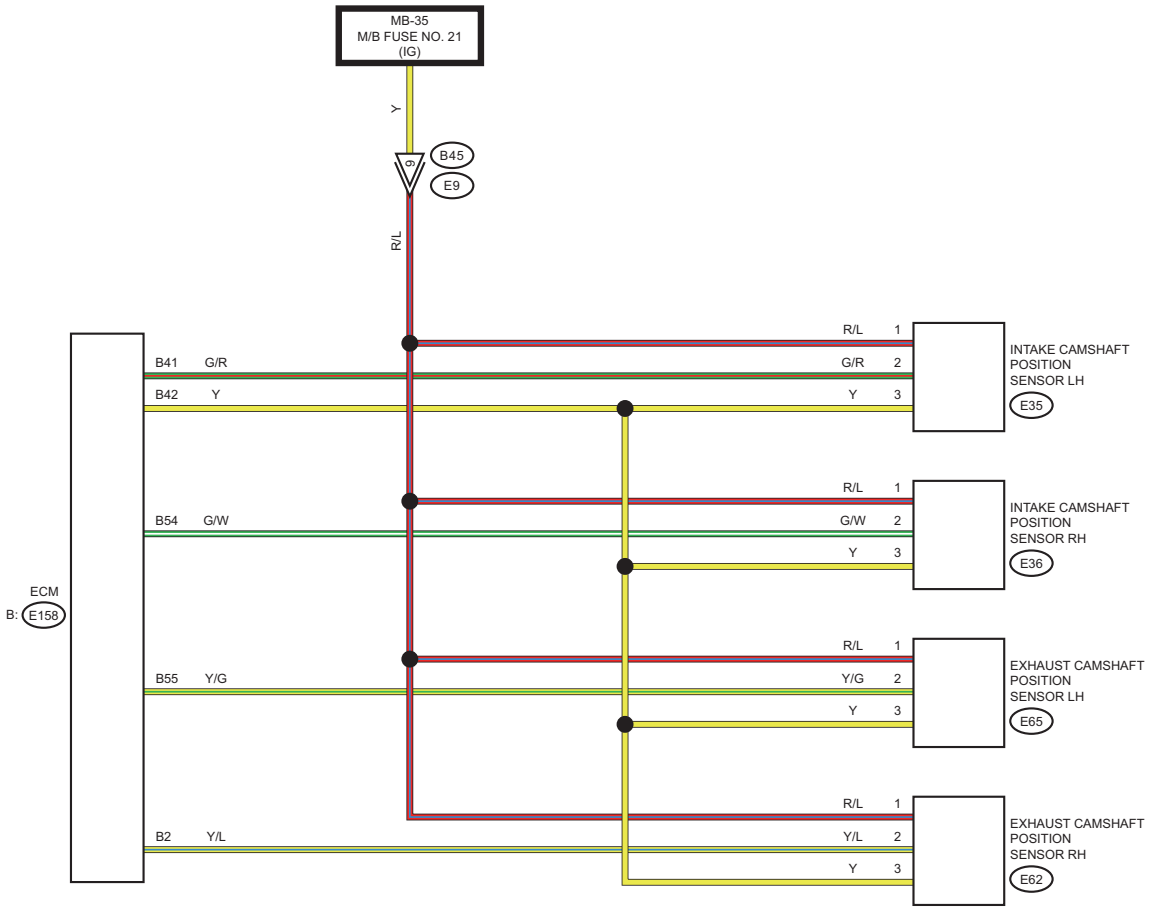

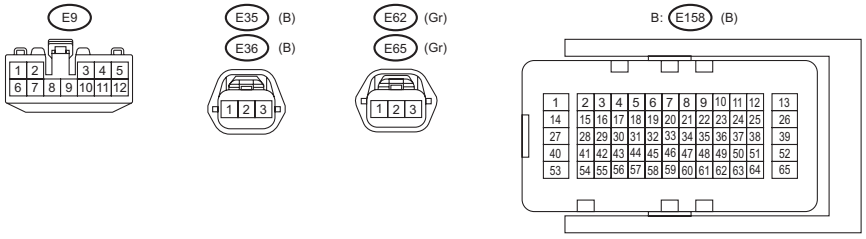

WI-60496

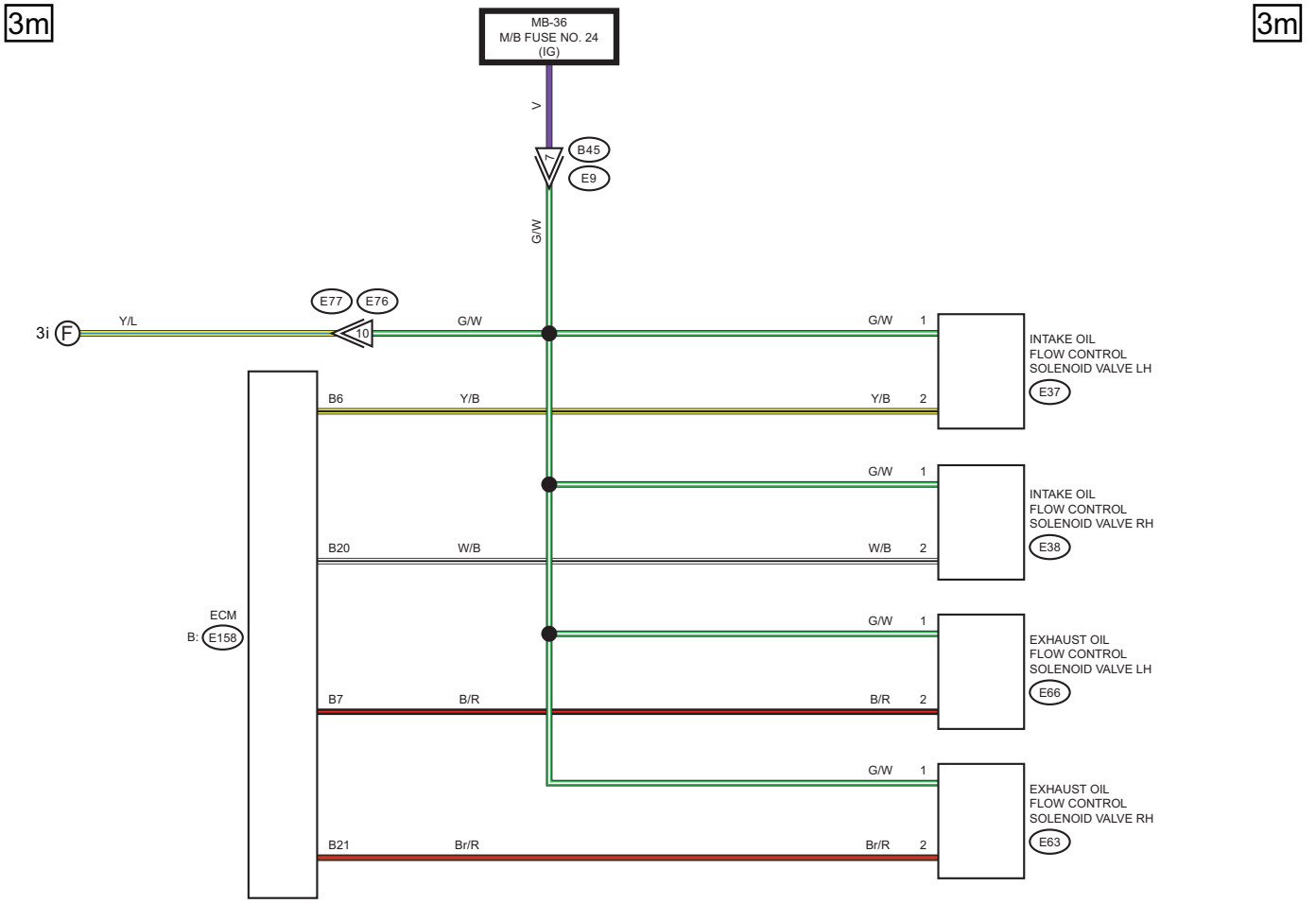
3m
3m
MB-36
M/B FUSE NO. 24
(IG)
V
B45
E9
G/W
E77
E76
3i
F
Y/L
10
G/W
G/W 1
INTAKE OIL
FLOW CONTROL
SOLENOID VALVE LH
E37
B6
Y/B
Y/B 2
G/W 1
INTAKE OIL
FLOW CONTROL
SOLENOID VALVE RH
E38
B20
W/B
W/B 2
ECM
B:
E158
G/W 1
EXHAUST OIL
FLOW CONTROL
SOLENOID VALVE LH
E66
B7
B/R
B/R 2
G/W 1
EXHAUST OIL
FLOW CONTROL
SOLENOID VALVE RH
E63
B21
Br/R
Br/R 2

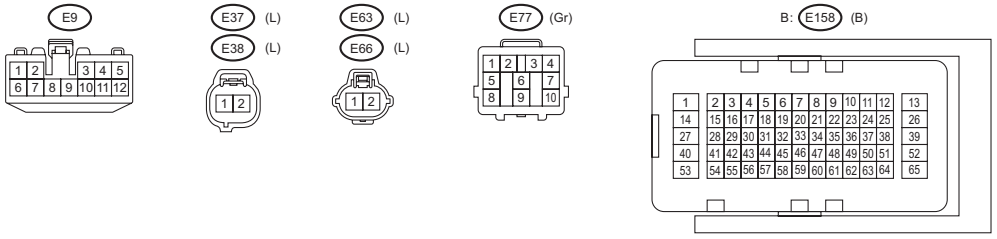
E9
E37 (L)
E38 (L)
E63 (L)
E66 (L)
E77 (Gr)
B: E158 (B)

WI-60497

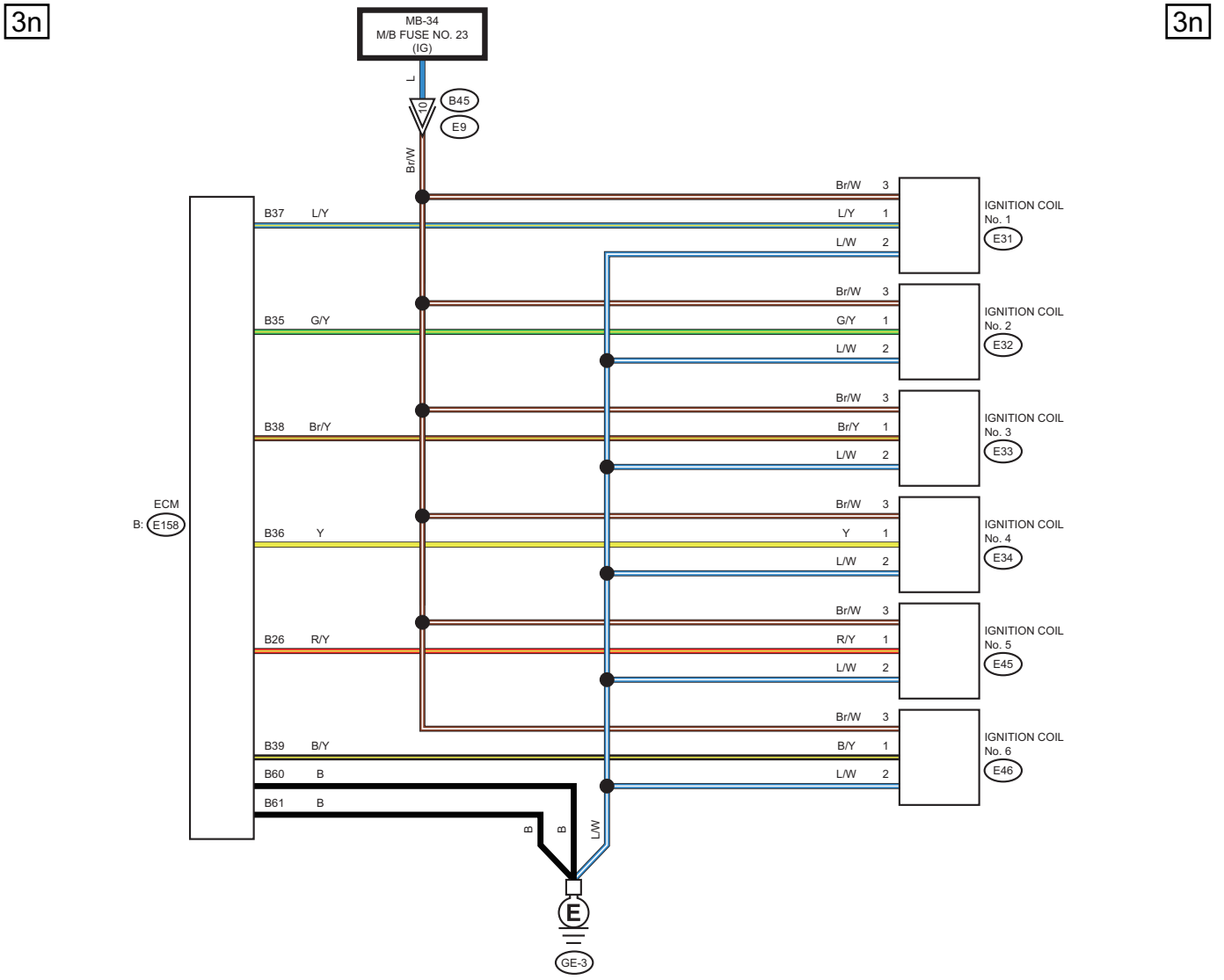
3n
3n
MB-34
M/B FUSE NO. 23
(IG)
L
B45
E9
Br/W
B37 L/Y
B35 G/Y
B38 Br/Y
B36 Y
B26 R/Y
B39 B/Y
B60 B
B61 B
ECM
B: E158
Br/W 3
L/Y 1
L/W 2
IGNITION COIL
No. 1
E31
G/Y 1
IGNITION COIL
No. 2
E32
Br/Y 1
IGNITION COIL
No. 3
E33
Y 1
IGNITION COIL
No. 4
E34
R/Y 1
IGNITION COIL
No. 5
E45
B/Y 1
IGNITION COIL
No. 6
E46
B
L/W
E
GE-3

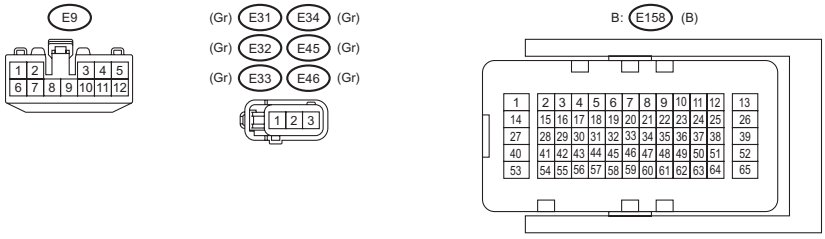
E9
(Gr) E31 E34 (Gr)
(Gr) E32 E45 (Gr)
(Gr) E33 E46 (Gr)
B: E158 (B)

WI-60498

4. ENGINE TYPE EZ (WITH PUSH BUTTON START)

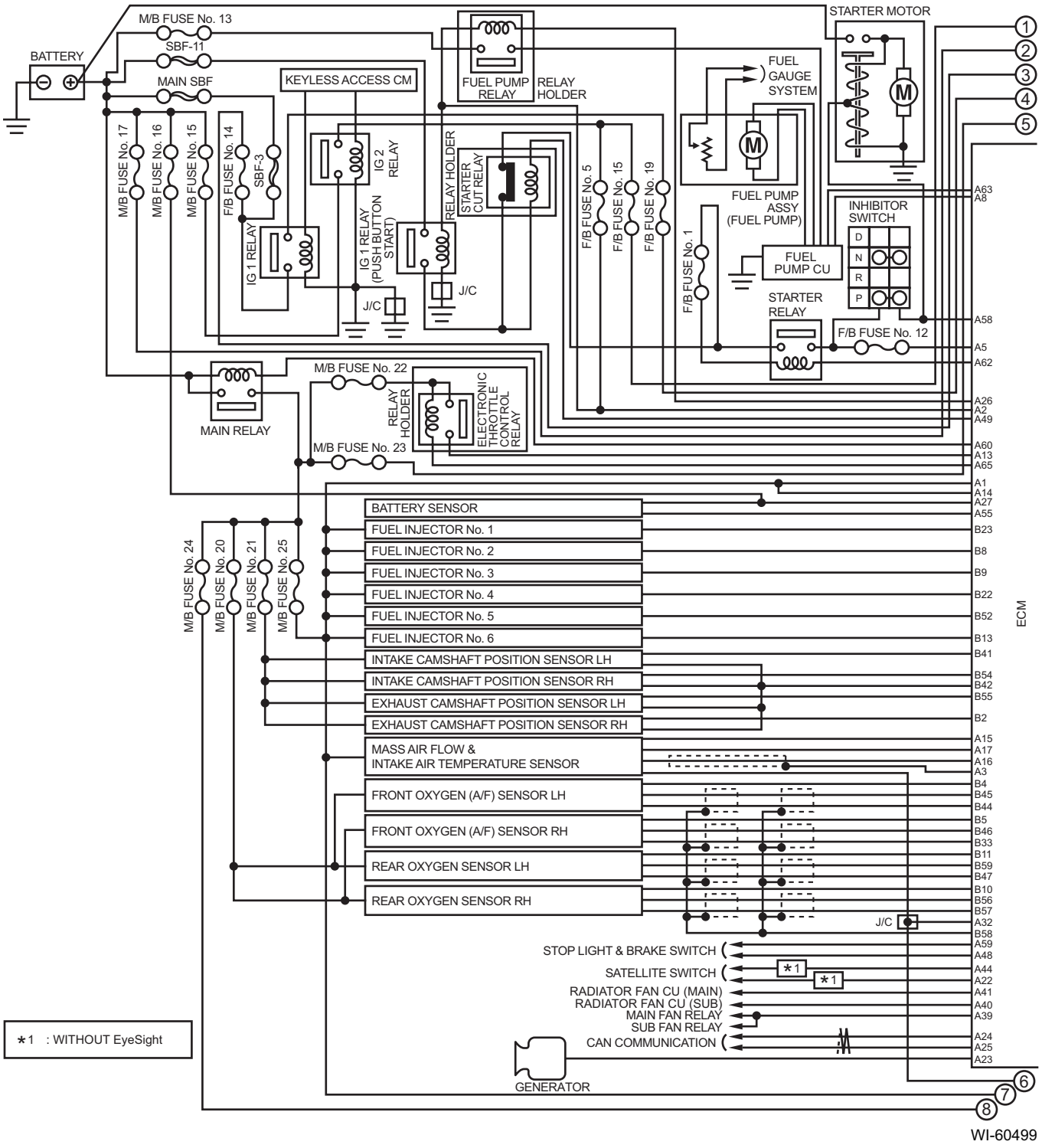

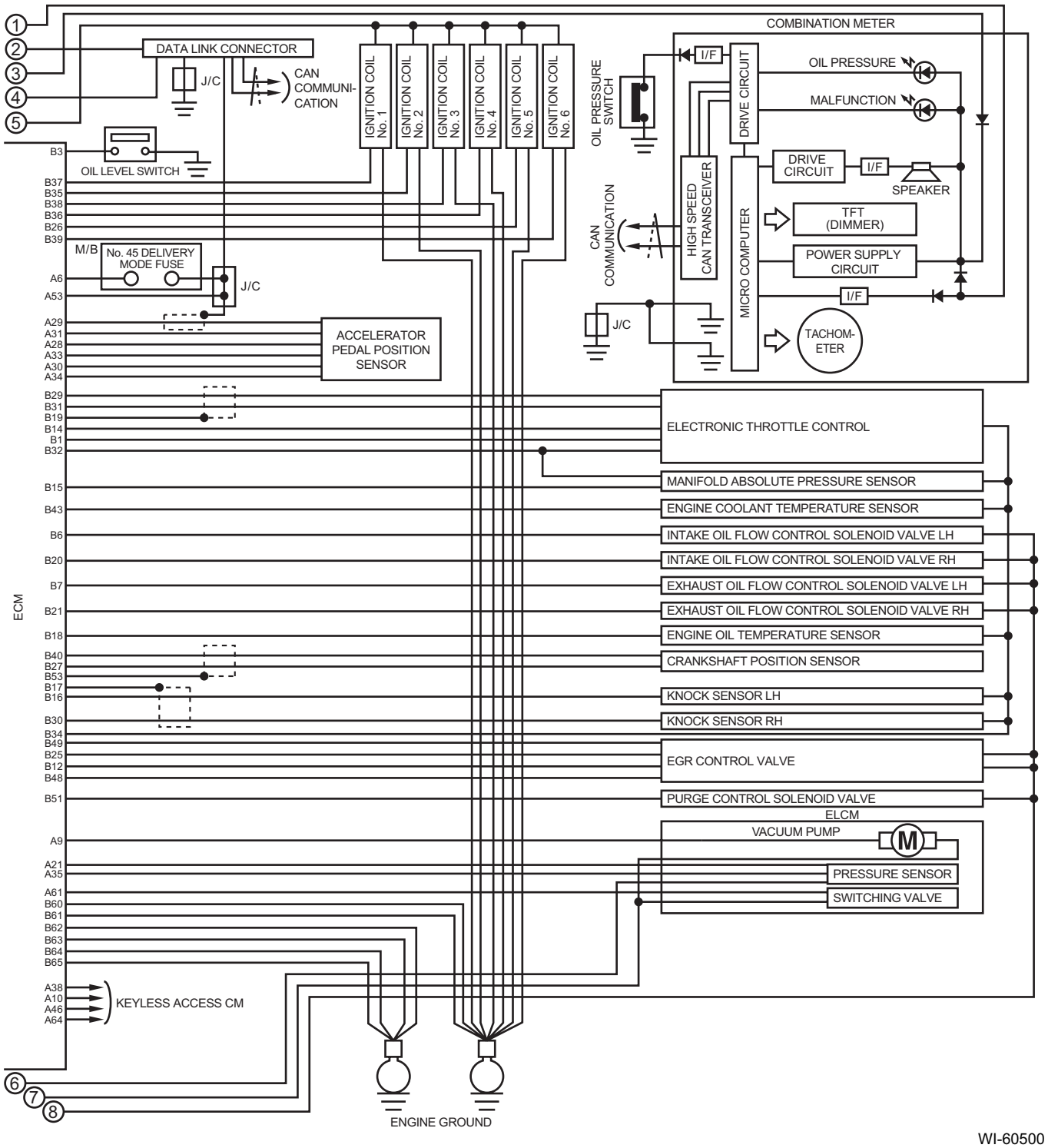
COMBINATION METER
DATA LINK CONNECTOR
J/C
CAN COMMUNI-CATION
IGNITION COIL No. 1
IGNITION COIL No. 2
IGNITION COIL No. 3
IGNITION COIL No. 4
IGNITION COIL No. 5
IGNITION COIL No. 6
OIL PRESSURE SWITCH
I/F
DRIVE CIRCUIT
OIL PRESSURE
MALFUNCTION
DRIVE CIRCUIT
I/F
SPEAKER
HIGH SPEED CAN TRANSCEIVER
MICRO COMPUTER
TFT (DIMMER)
POWER SUPPLY CIRCUIT
I/F
TACHOM-ETER
CAN COMMUNICATION
J/C
OIL LEVEL SWITCH
M/B
No. 45 DELIVERY MODE FUSE
J/C
ACCELERATOR PEDAL POSITION SENSOR
ECM
ELECTRONIC THROTTLE CONTROL
MANIFOLD ABSOLUTE PRESSURE SENSOR
ENGINE COOLANT TEMPERATURE SENSOR
INTAKE OIL FLOW CONTROL SOLENOID VALVE LH
INTAKE OIL FLOW CONTROL SOLENOID VALVE RH
EXHAUST OIL FLOW CONTROL SOLENOID VALVE LH
EXHAUST OIL FLOW CONTROL SOLENOID VALVE RH
ENGINE OIL TEMPERATURE SENSOR
CRANKSHAFT POSITION SENSOR
KNOCK SENSOR LH
KNOCK SENSOR RH
EGR CONTROL VALVE
PURGE CONTROL SOLENOID VALVE
ELCM
VACUUM PUMP
M
PRESSURE SENSOR
SWITCHING VALVE
KEYLESS ACCESS CM
ENGINE GROUND
WI-60500

WIRING SYSTEM

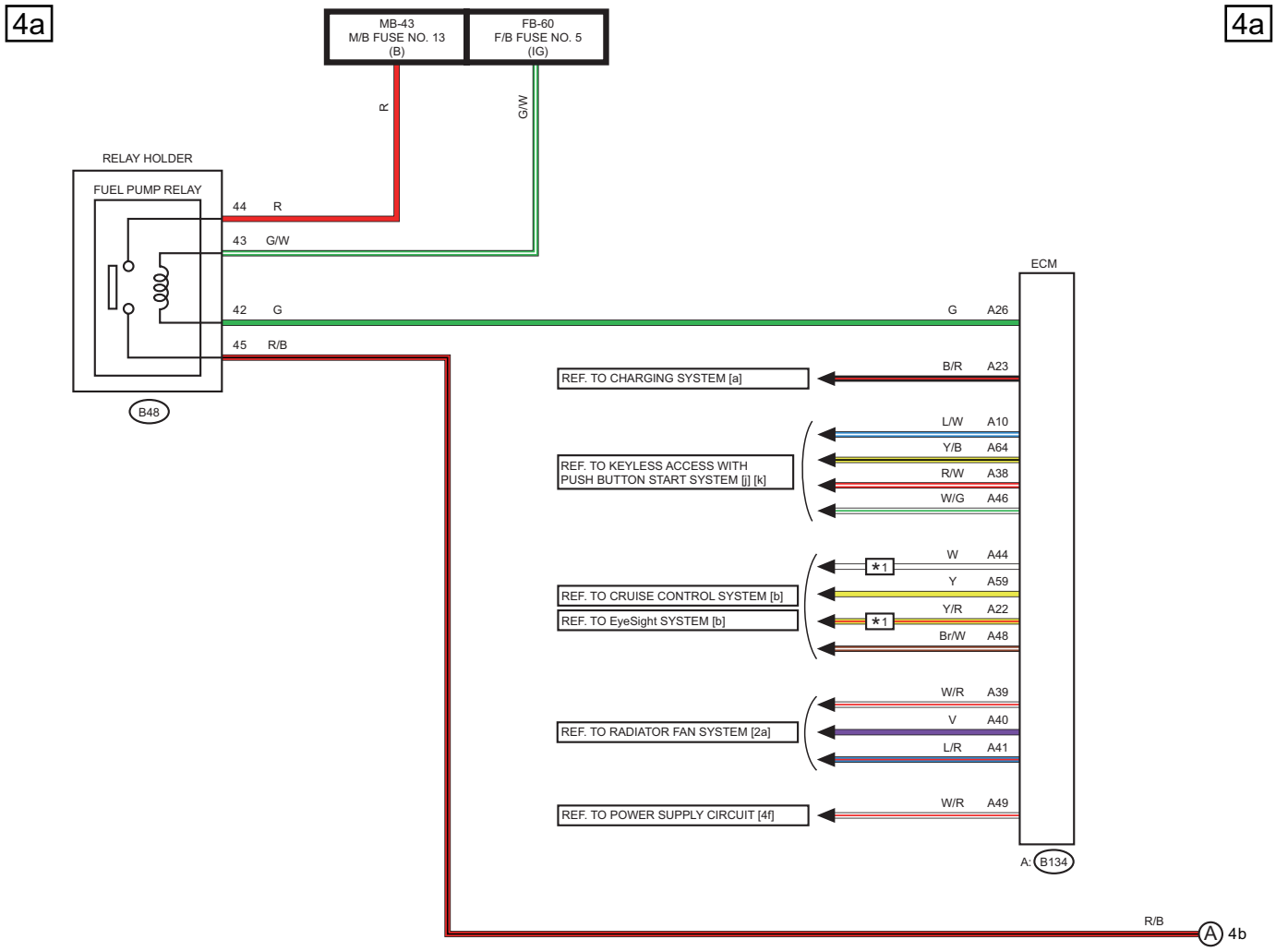

*1 : WITHOUT EyeSight

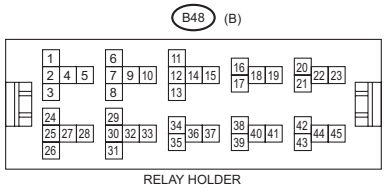

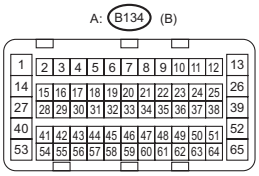

WI-60501

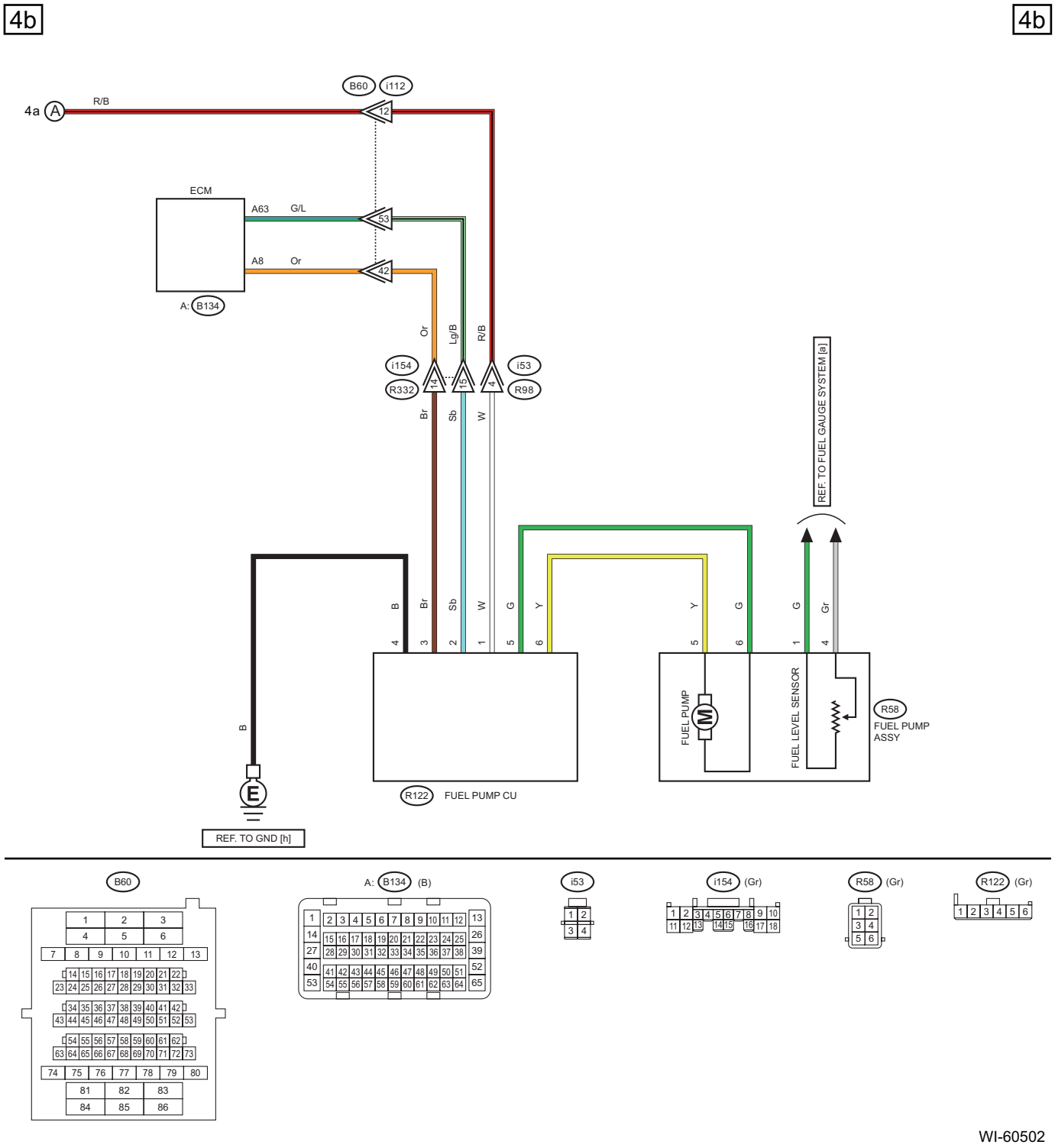
4b
4b
4a A
R/B
B60
i112
12
ECM
A63
G/L
53
A8
Or
42
A: B134
Or
Lg/B
R/B
i154
R332
i53
R98
14
15
4
Br
Sb
W
REF. TO FUEL GAUGE SYSTEM [a]
B
Br
Sb
W
G
Y
Y
G
G
Gr
4
3
2
1
5
6
5
6
1
4
B
E
FUEL PUMP
FUEL LEVEL SENSOR
R58
FUEL PUMP ASSY
R122
FUEL PUMP CU
REF. TO GND [h]
B60
A: B134 (B)
i53
i154 (Gr)
R58 (Gr)
R122 (Gr)
WI-60502

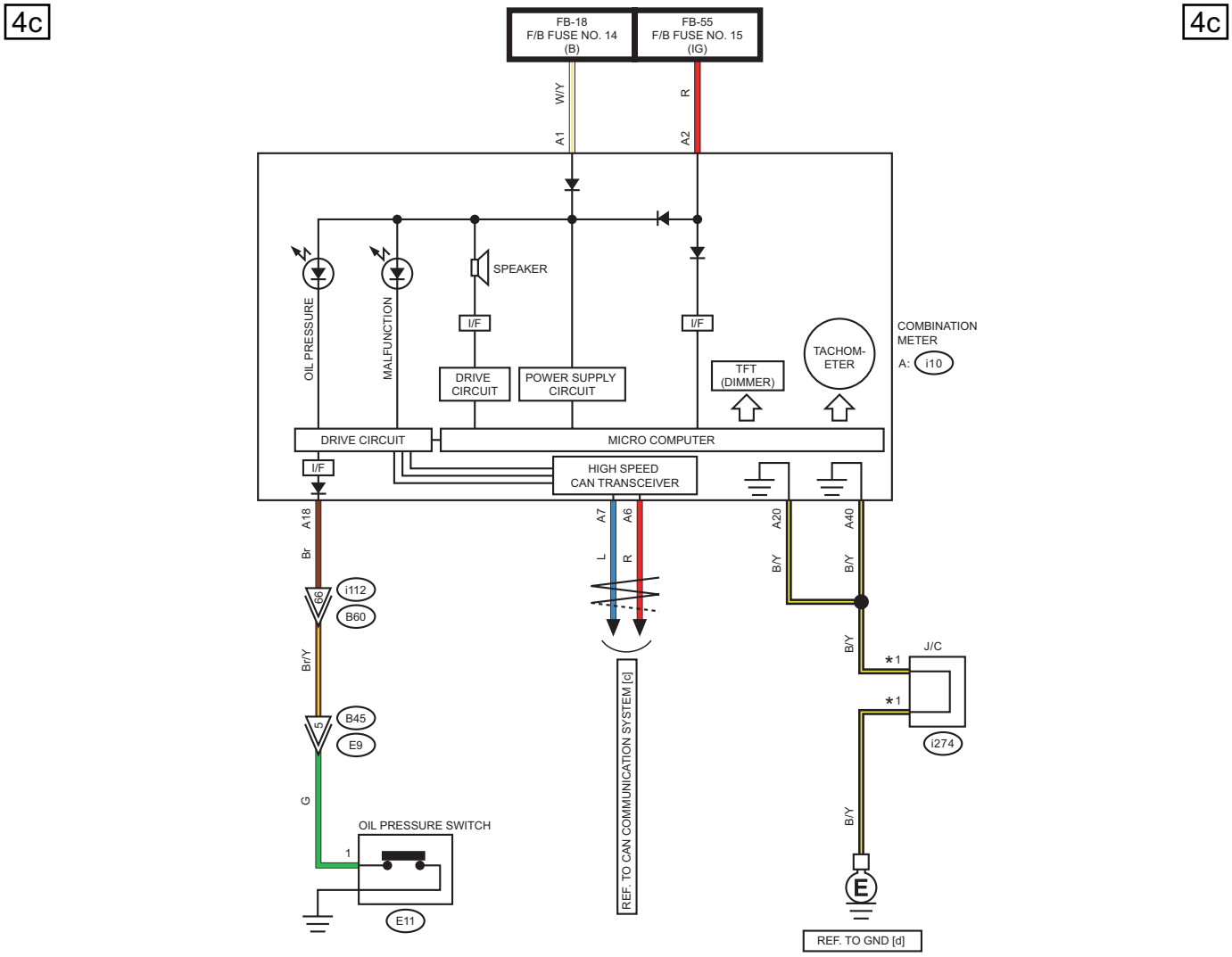

*1 : TERMINAL No. OPTIONAL ARRANGEMENT

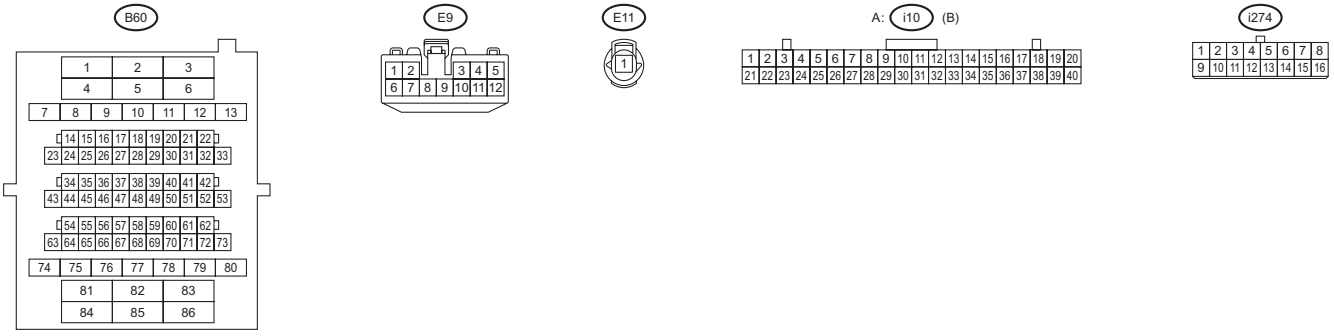

WI-60503

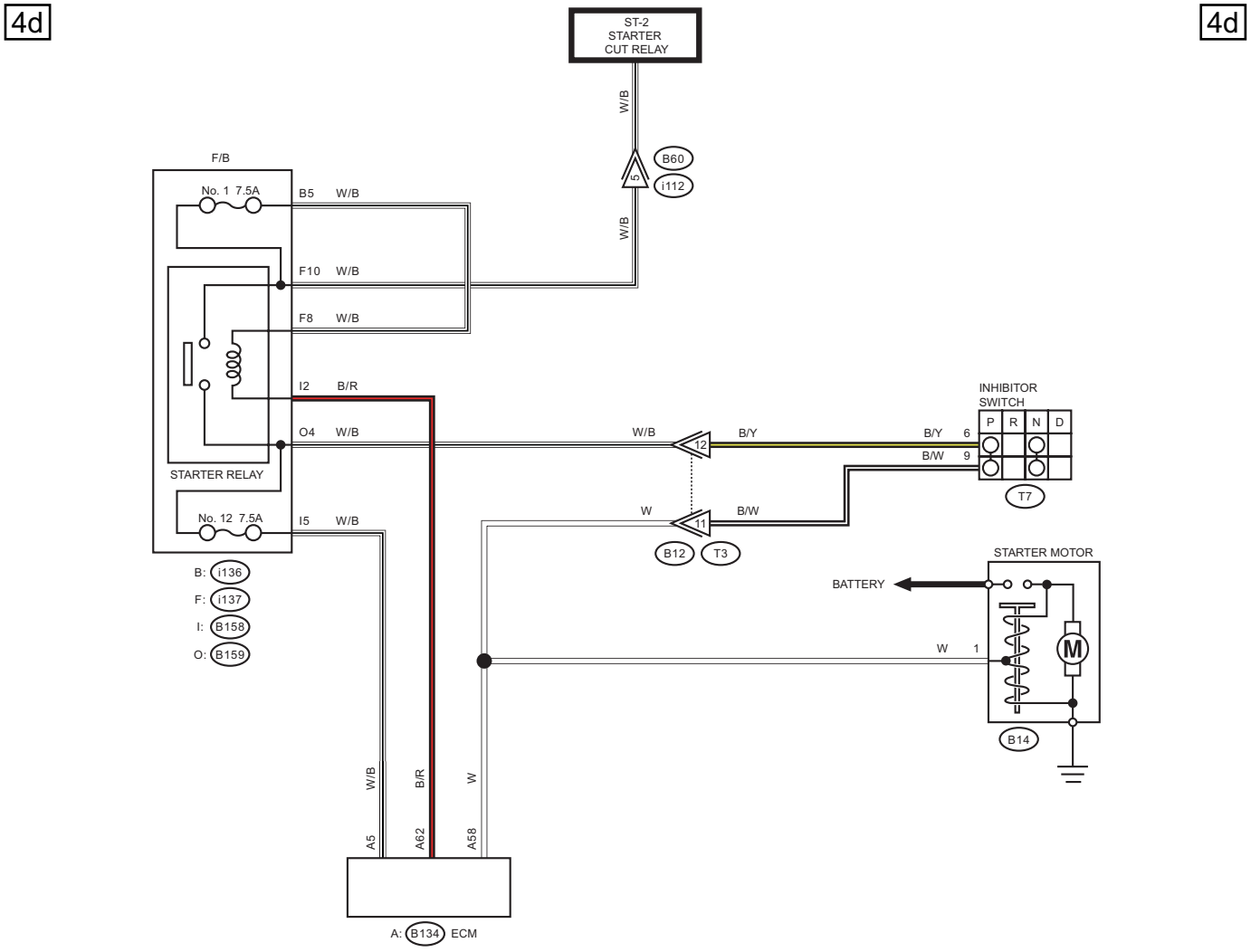
4d
4d
ST-2
STARTER
CUT RELAY
W/B
B60
i112
W/B
F/B
No. 1 7.5A
B5 W/B
F10 W/B
F8 W/B
I2 B/R
O4 W/B
STARTER RELAY
No. 12 7.5A
I5 W/B
B: i136
F: i137
I: B158
O: B159
W/B
B/R
W
A5
A62
A58
A: B134 ECM
INHIBITOR
SWITCH
P R N D
B/Y 6
B/W 9
T7
W/B
B/Y
12
W
B/W
11
B12 T3
STARTER MOTOR
BATTERY
W 1
M
B14

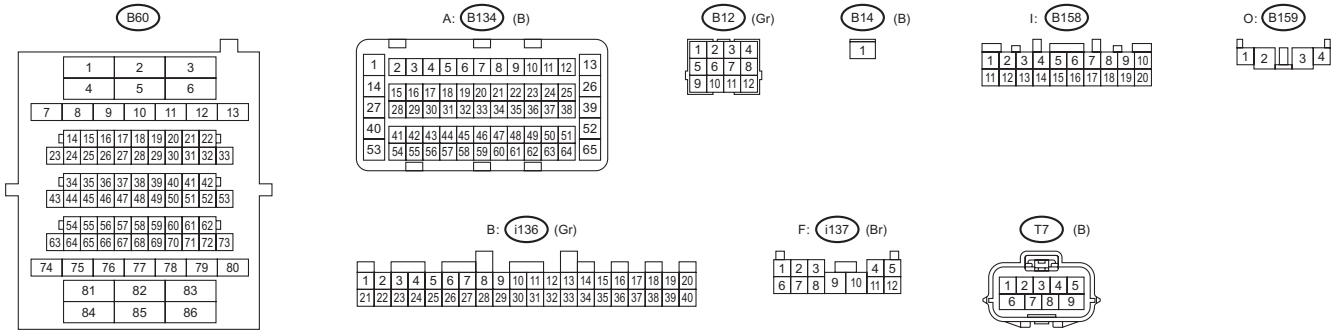
B60
A: B134 (B)
B12 (Gr)
B14 (B)
I: B158
O: B159
B: i136 (Gr)
F: i137 (Br)
T7 (B)

WI-60504

WIRING SYSTEM

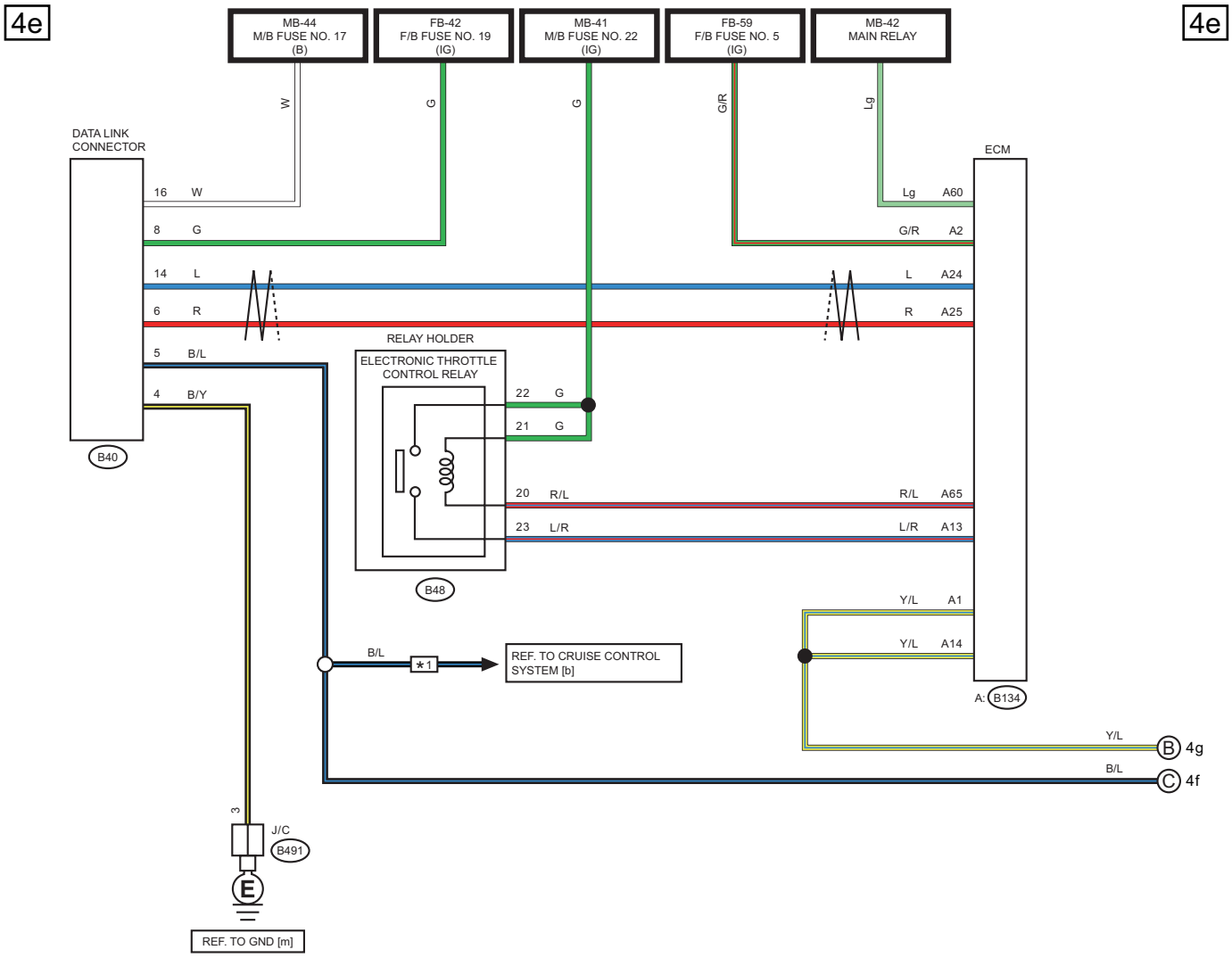

*1 : WITHOUT EyeSight

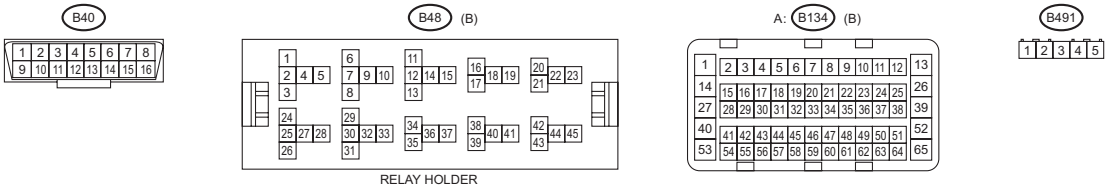

WI-60505

4f

4f

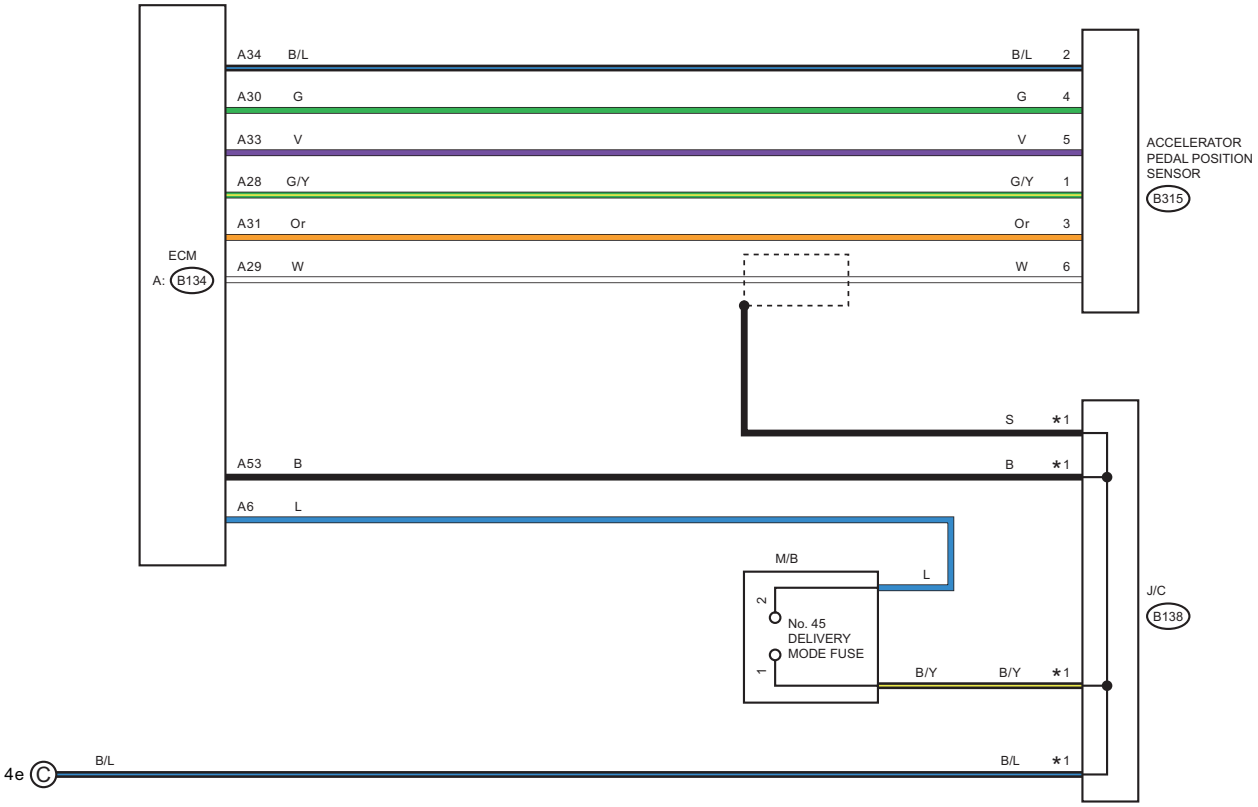

*1 : TERMINAL No. OPTIONAL ARRANGEMENT AMONG 1, 2, 5 AND 6

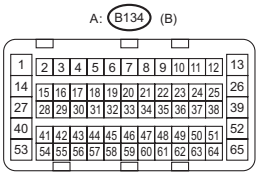



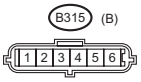

WI-60506

WIRING SYSTEM

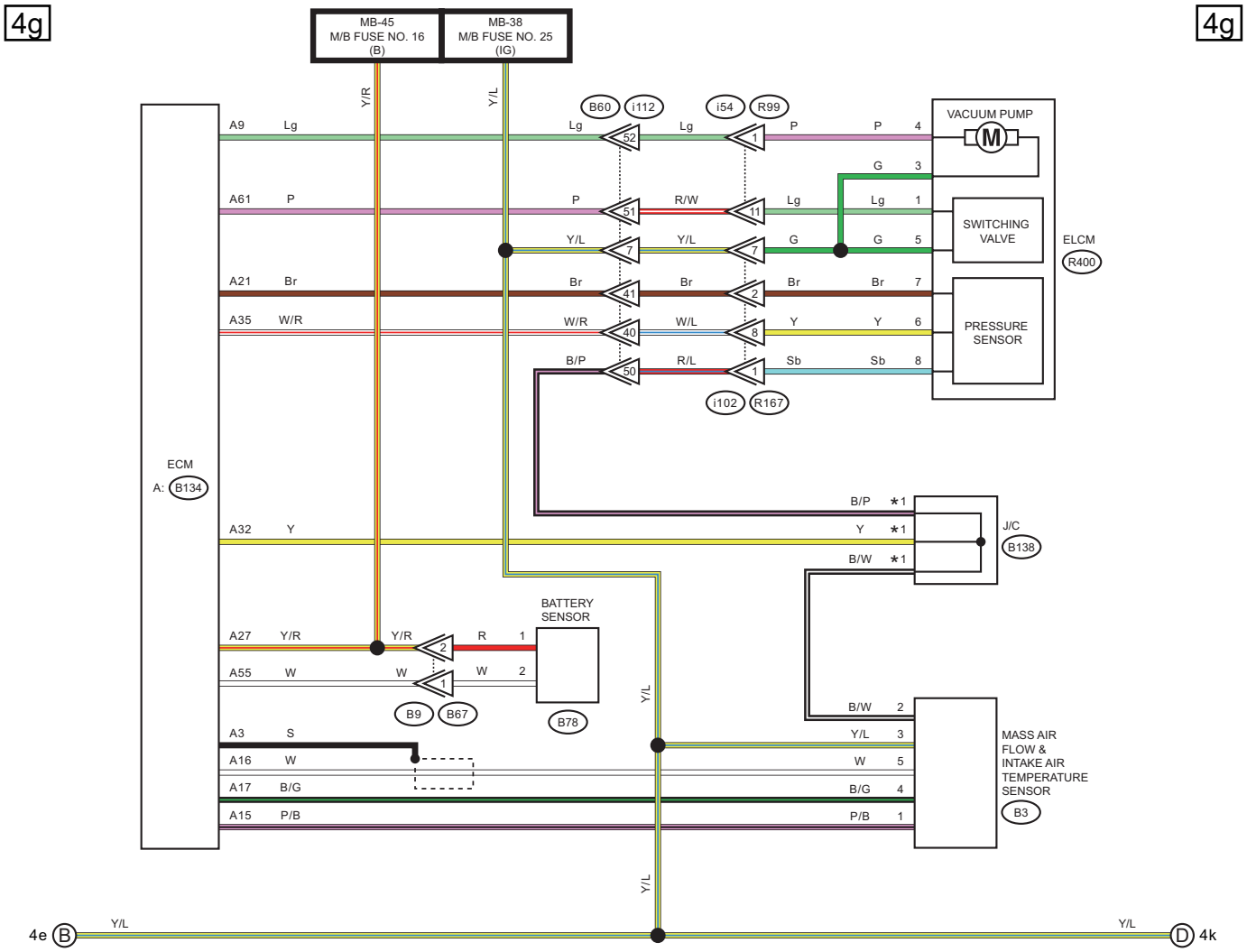

*1 : TERMINAL No. OPTIONAL ARRANGEMENT AMONG 3, 4, 7 AND 8

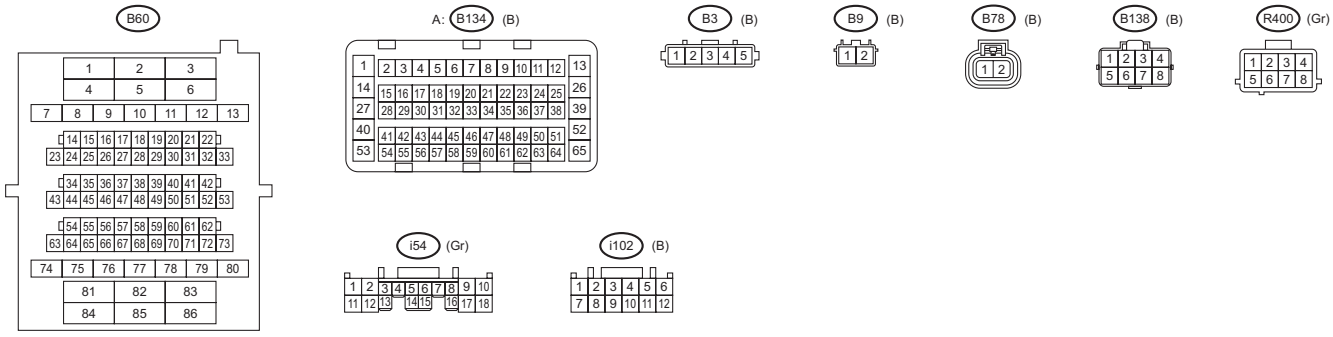

WI-60507

4h 4h

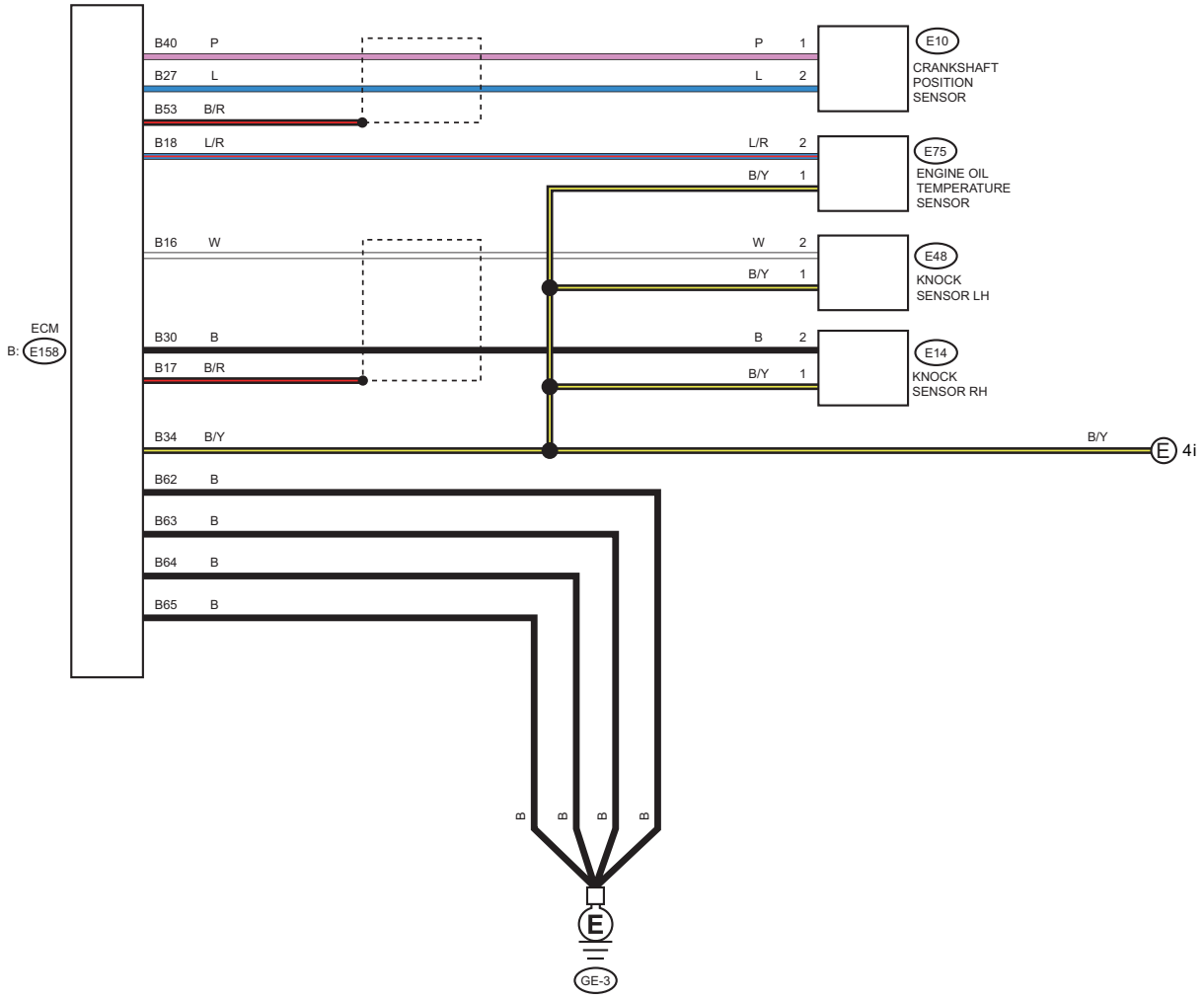

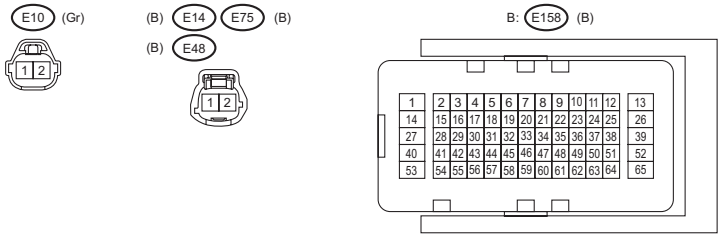

WI-60508

4i 4i

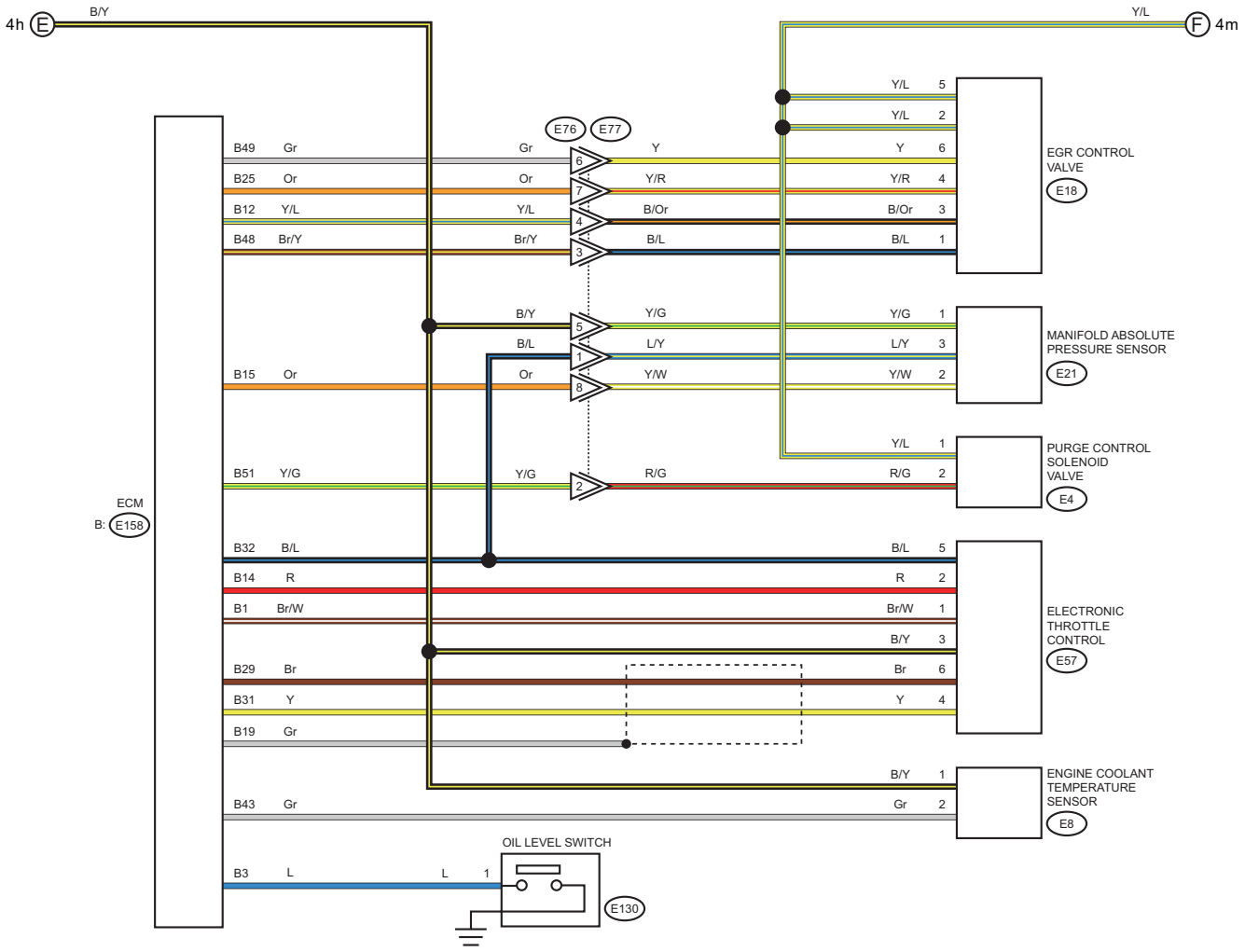

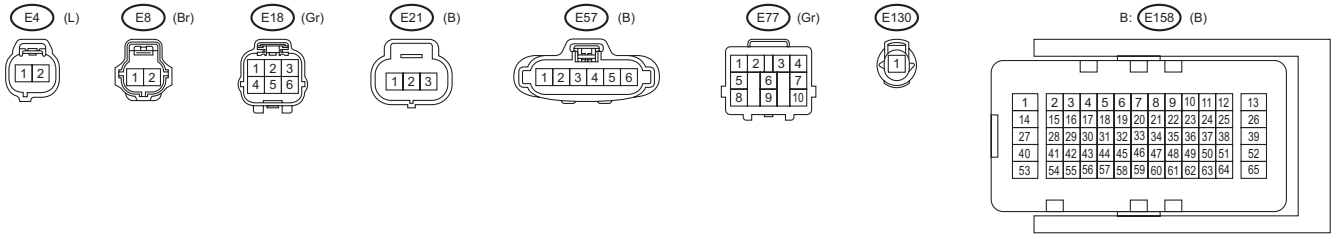

WI-60509

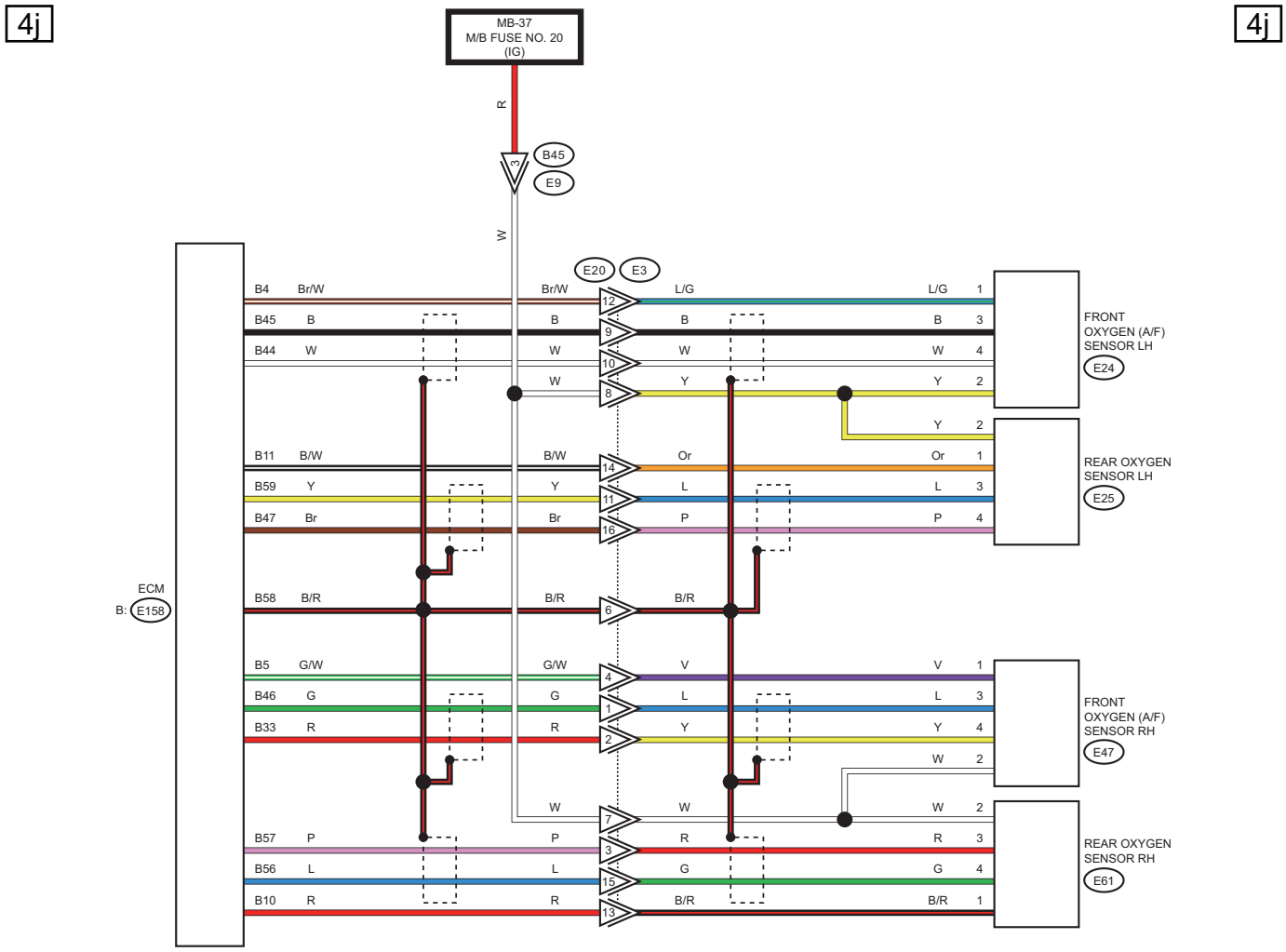
4j
4j
MB-37
M/B FUSE NO. 20
(IG)
R
W
B45
E9
E20
E3
ECM
B: E158
B4 Br/W
B45 B
B44 W
B11 B/W
B59 Y
B47 Br
B58 B/R
B5 G/W
B46 G
B33 R
B57 P
B56 L
B10 R
FRONT OXYGEN (A/F) SENSOR LH
E24
REAR OXYGEN SENSOR LH
E25
FRONT OXYGEN (A/F) SENSOR RH
E47
REAR OXYGEN SENSOR RH
E61

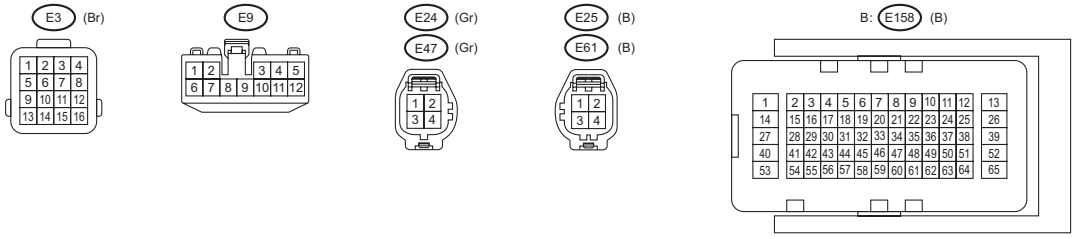
E3 (Br)
E9
E24 (Gr)
E47 (Gr)
E25 (B)
E61 (B)
B: E158 (B)

WI-60510

4k 4k

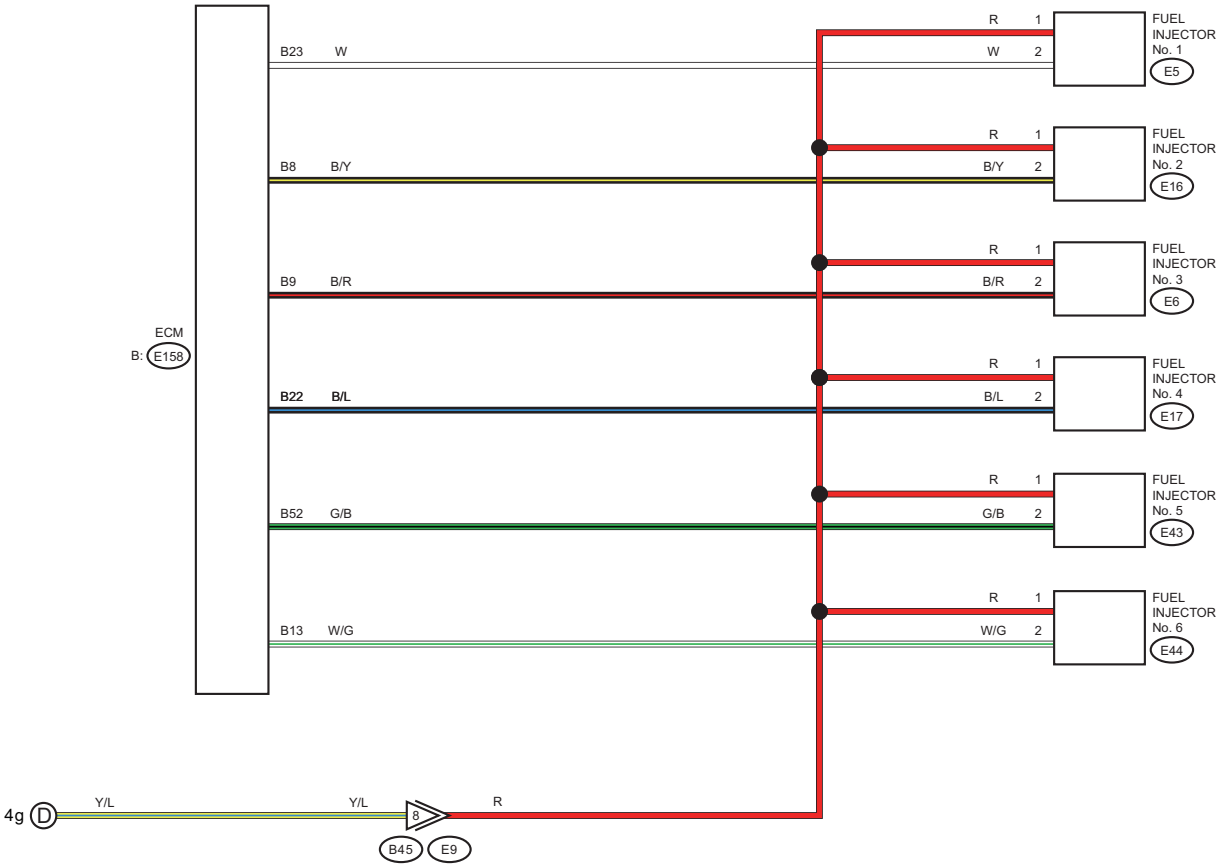

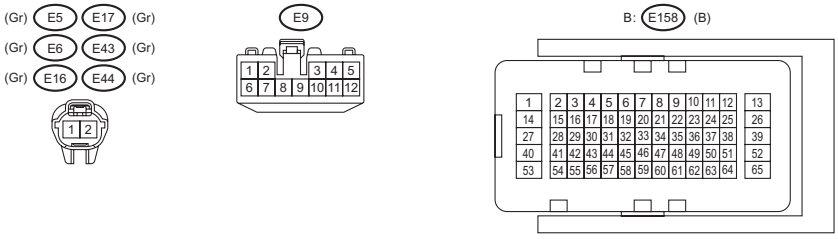

WI-60511

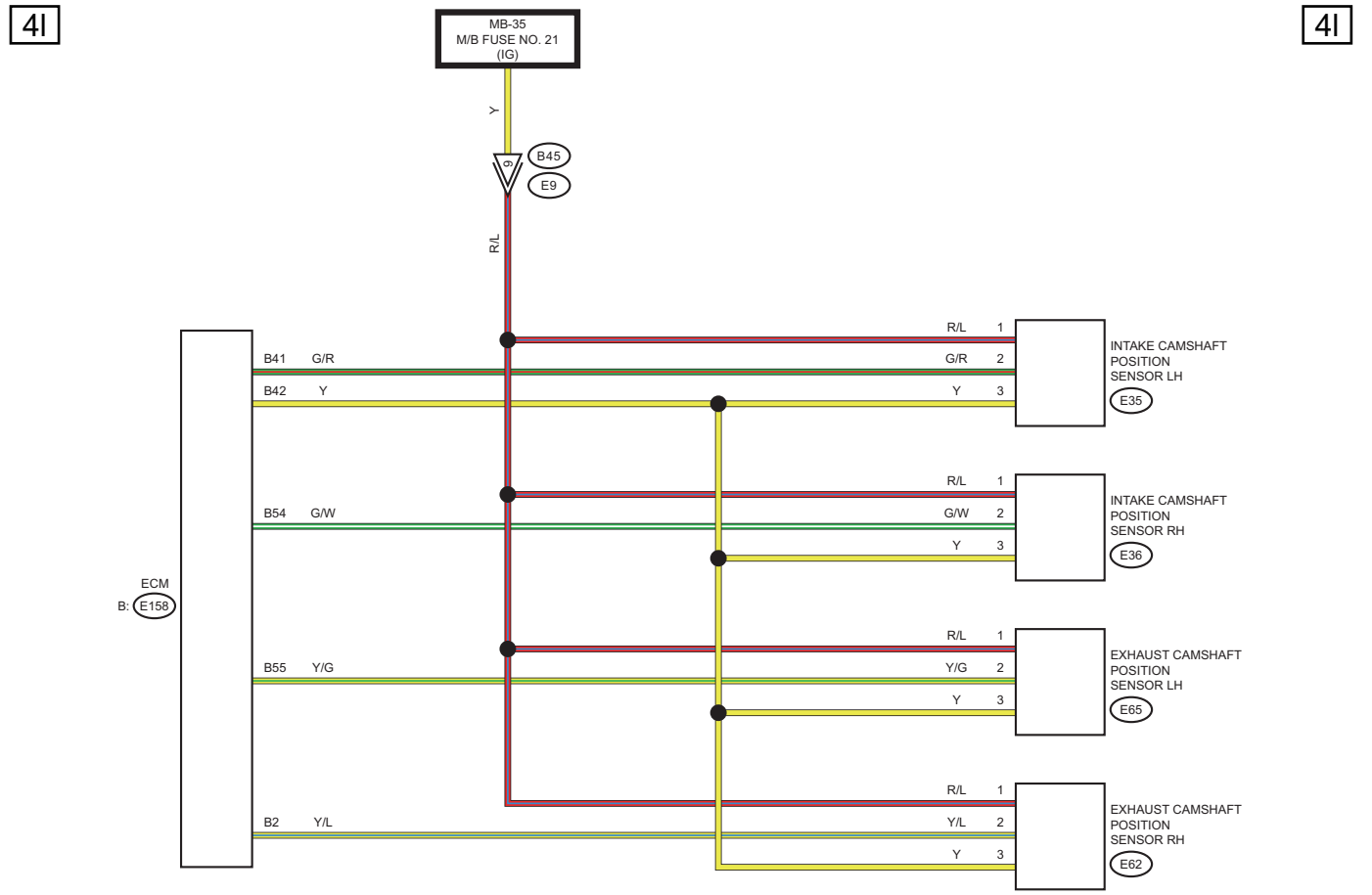
4I
4I
MB-35
M/B FUSE NO. 21
(IG)
Y
9
B45
E9
R/L
ECM
B: E158
B41 G/R
B42 Y
B54 G/W
B55 Y/G
B2 Y/L
R/L 1
G/R 2
Y 3
INTAKE CAMSHAFT POSITION SENSOR LH
E35
R/L 1
G/W 2
Y 3
INTAKE CAMSHAFT POSITION SENSOR RH
E36
R/L 1
Y/G 2
Y 3
EXHAUST CAMSHAFT POSITION SENSOR LH
E65
R/L 1
Y/L 2
Y 3
EXHAUST CAMSHAFT POSITION SENSOR RH
E62

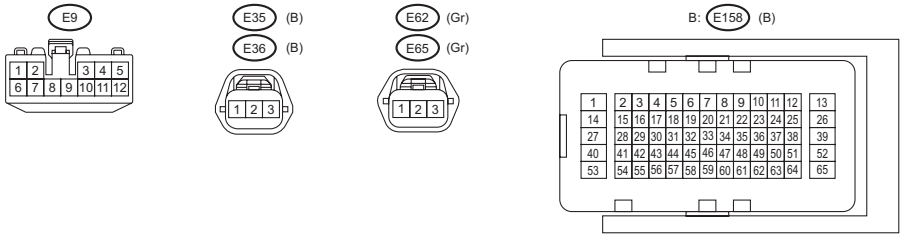
E9
E35 (B)
E36 (B)
E62 (Gr)
E65 (Gr)
B: E158 (B)

WI-60512

WIRING SYSTEM

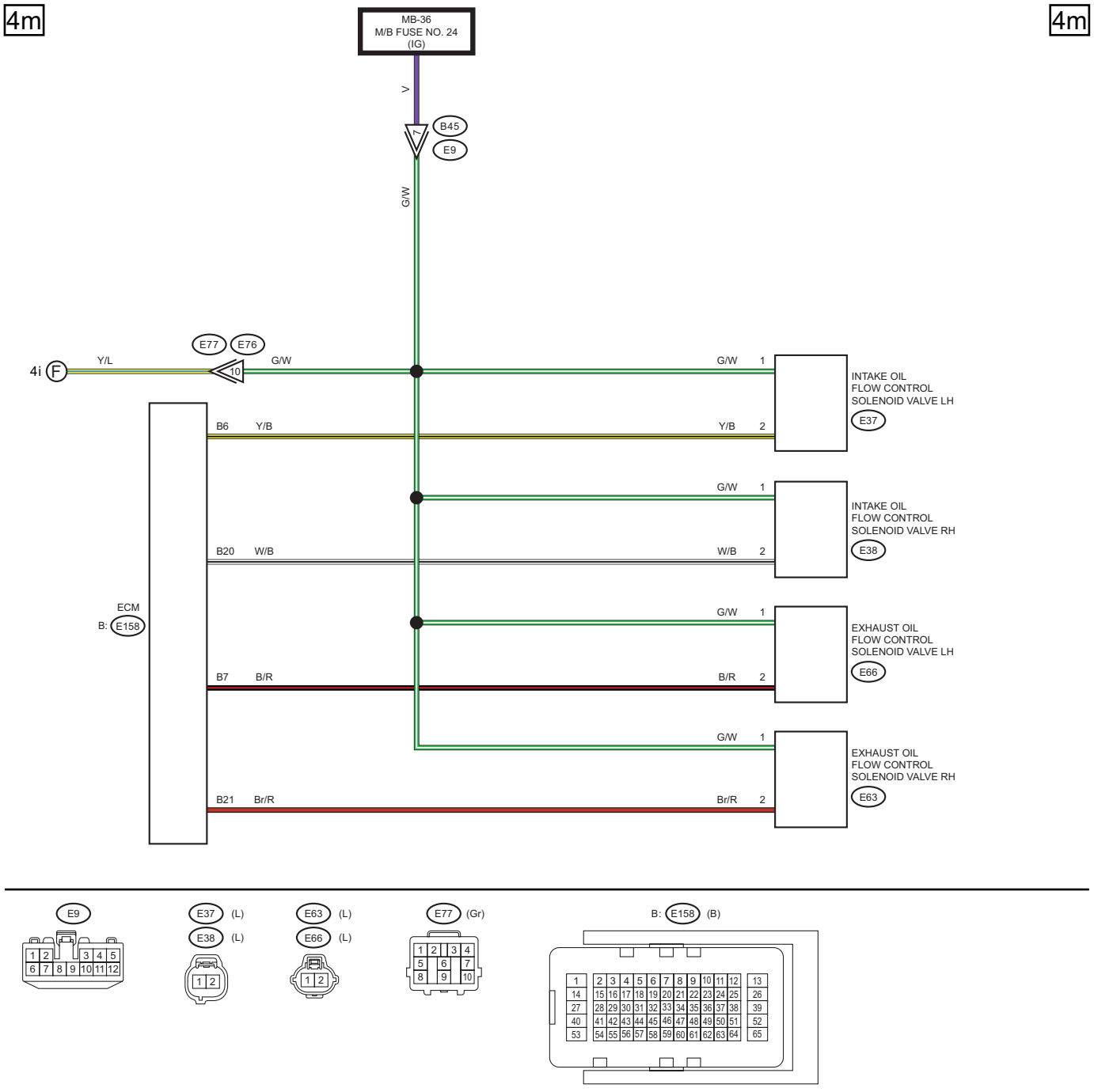

WI-60513

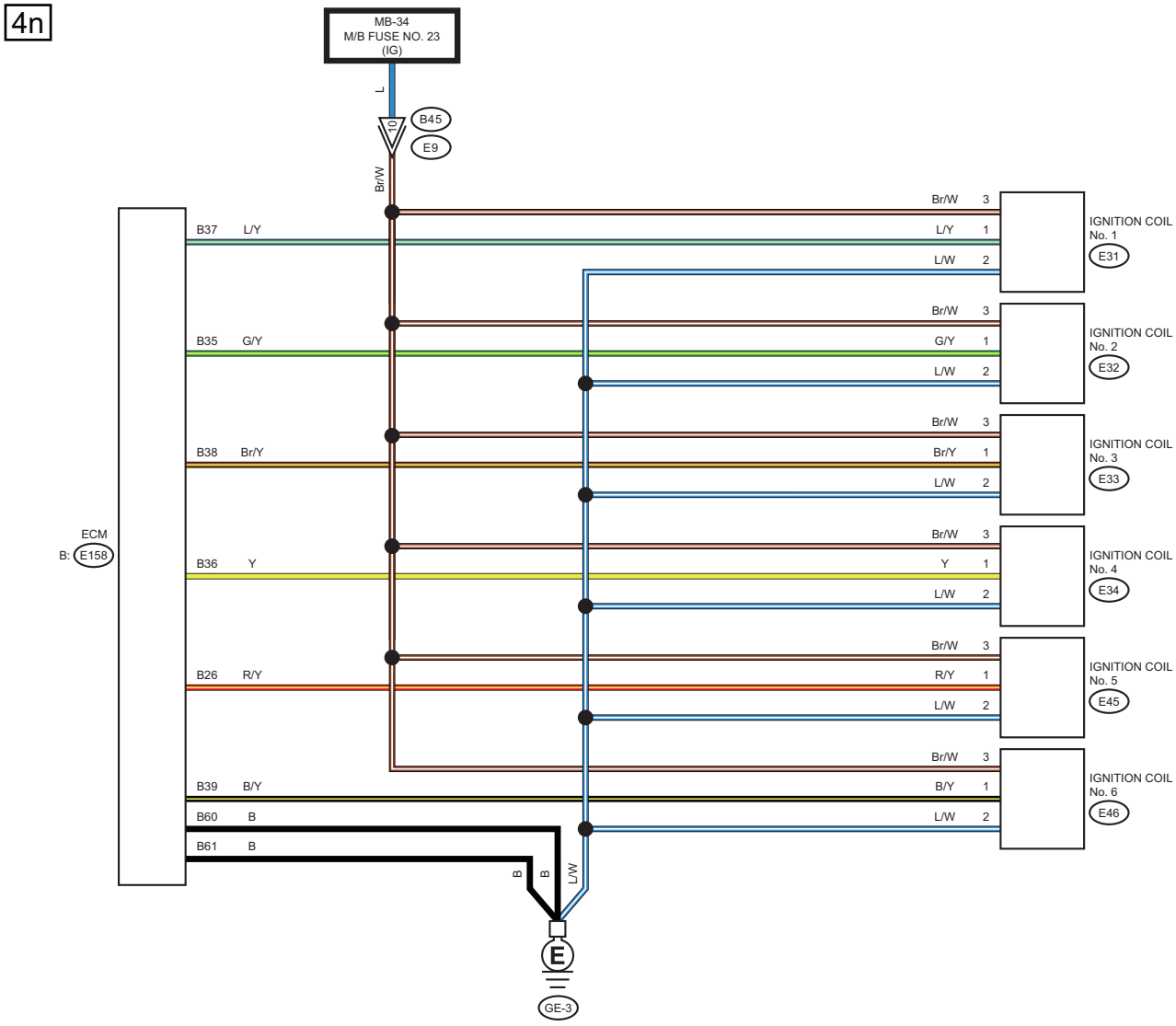
4n
4n
MB-34
M/B FUSE NO. 23
(IG)
L
B45
E9
Br/W
ECM
B: E158
B37 L/Y
B35 G/Y
B38 Br/Y
B36 Y
B26 R/Y
B39 B/Y
B60 B
B61 B
Br/W 3
L/Y 1
L/W 2
G/Y 1
Br/Y 1
Y 1
R/Y 1
B/Y 1
IGNITION COIL
No. 1
E31
IGNITION COIL
No. 2
E32
IGNITION COIL
No. 3
E33
IGNITION COIL
No. 4
E34
IGNITION COIL
No. 5
E45
IGNITION COIL
No. 6
E46
B
L/W
GE-3

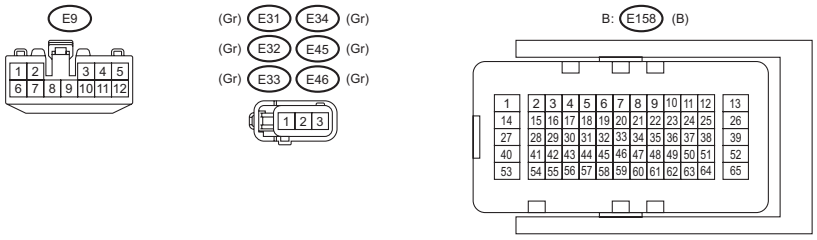
E9
1 2 3 4 5
6 7 8 9 10 11 12
(Gr) E31 E34 (Gr)
(Gr) E32 E45 (Gr)
(Gr) E33 E46 (Gr)
1 2 3
B: E158 (B)
1 2 3 4 5 6 7 8 9 10 11 12 13
14 15 16 17 18 19 20 21 22 23 24 25 26
27 28 29 30 31 32 33 34 35 36 37 38 39
40 41 42 43 44 45 46 47 48 49 50 51 52
53 54 55 56 57 58 59 60 61 62 63 64 65

WI-60514

21.EyeSight System

A: WIRING DIAGRAM

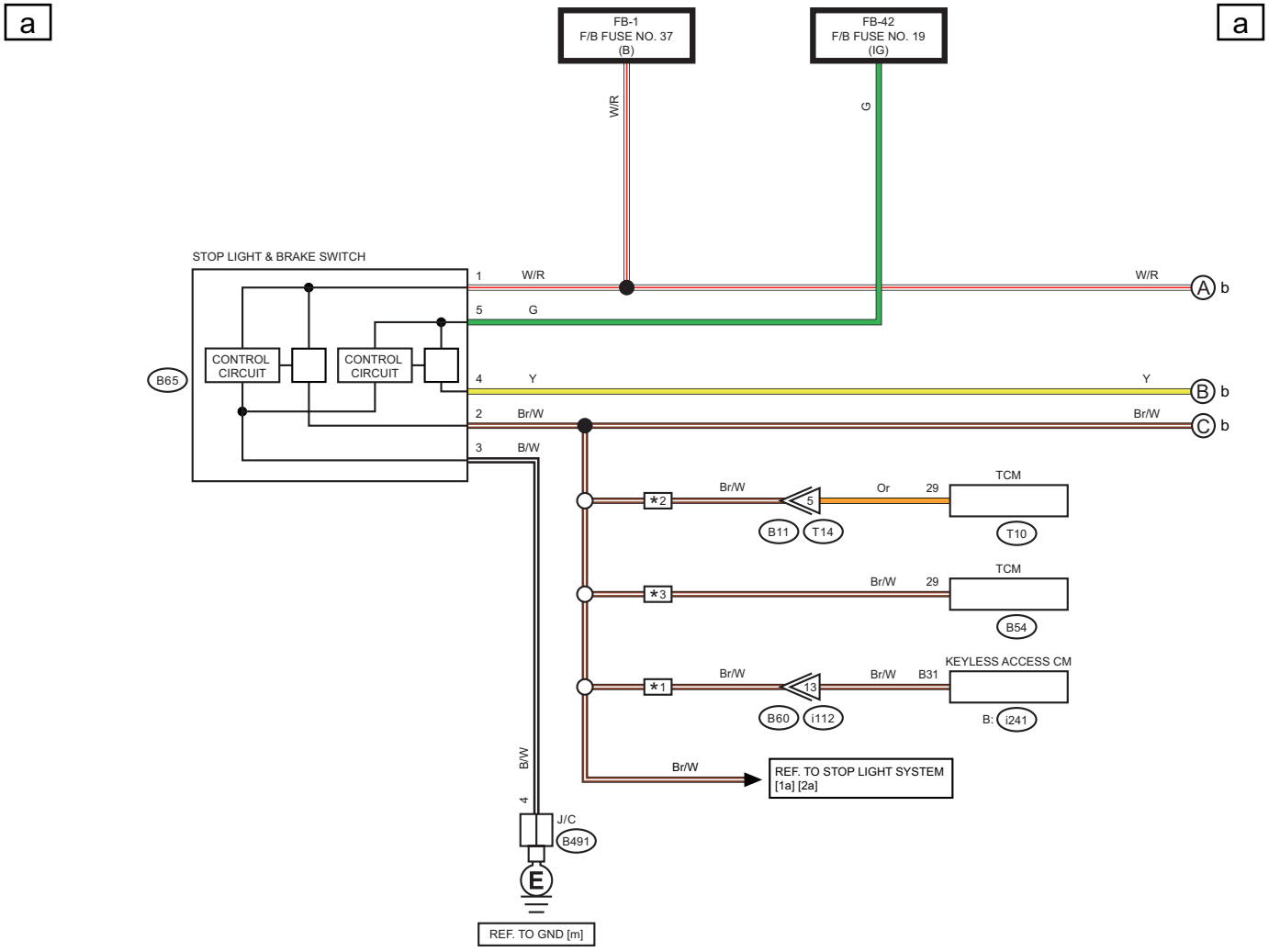

*1 : WITH PUSH BUTTON START
*2 : ENGINE TYPE FB
*3 : ENGINE TYPE EZ

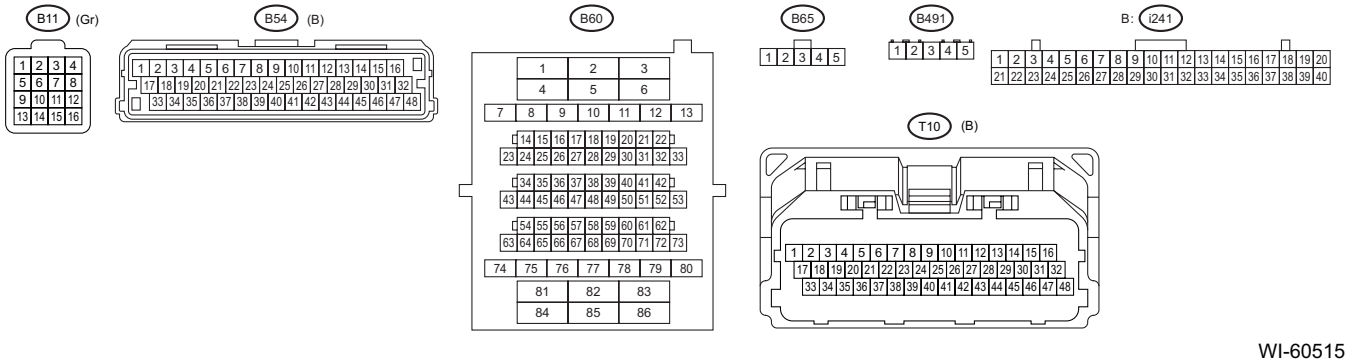

WI-60515

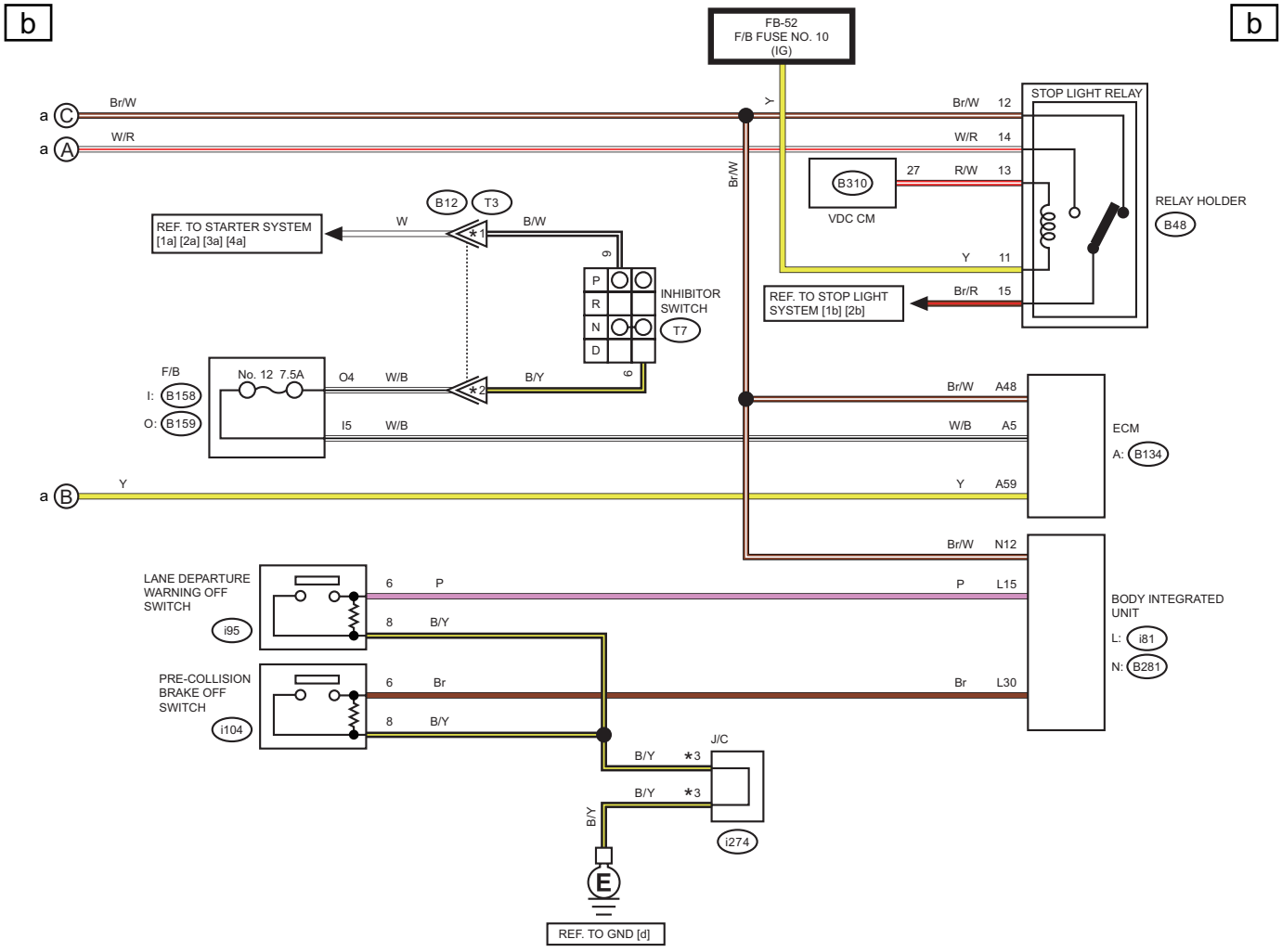

∗1 : ENGINE TYPE FB : 5
ENGINE TYPE EZ : 11
∗2 : ENGINE TYPE FB : 1
ENGINE TYPE EZ : 12

∗3 : TERMINAL No. OPTIONAL ARRANGEMENT
∗4 : ENGINE TYPE FB
∗5 : ENGINE TYPE EZ

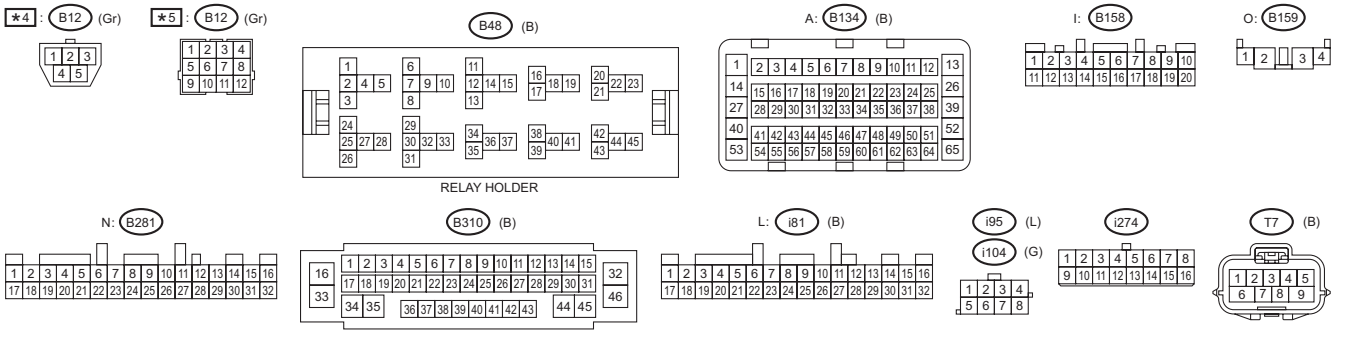

WI-60516

WIRING SYSTEM

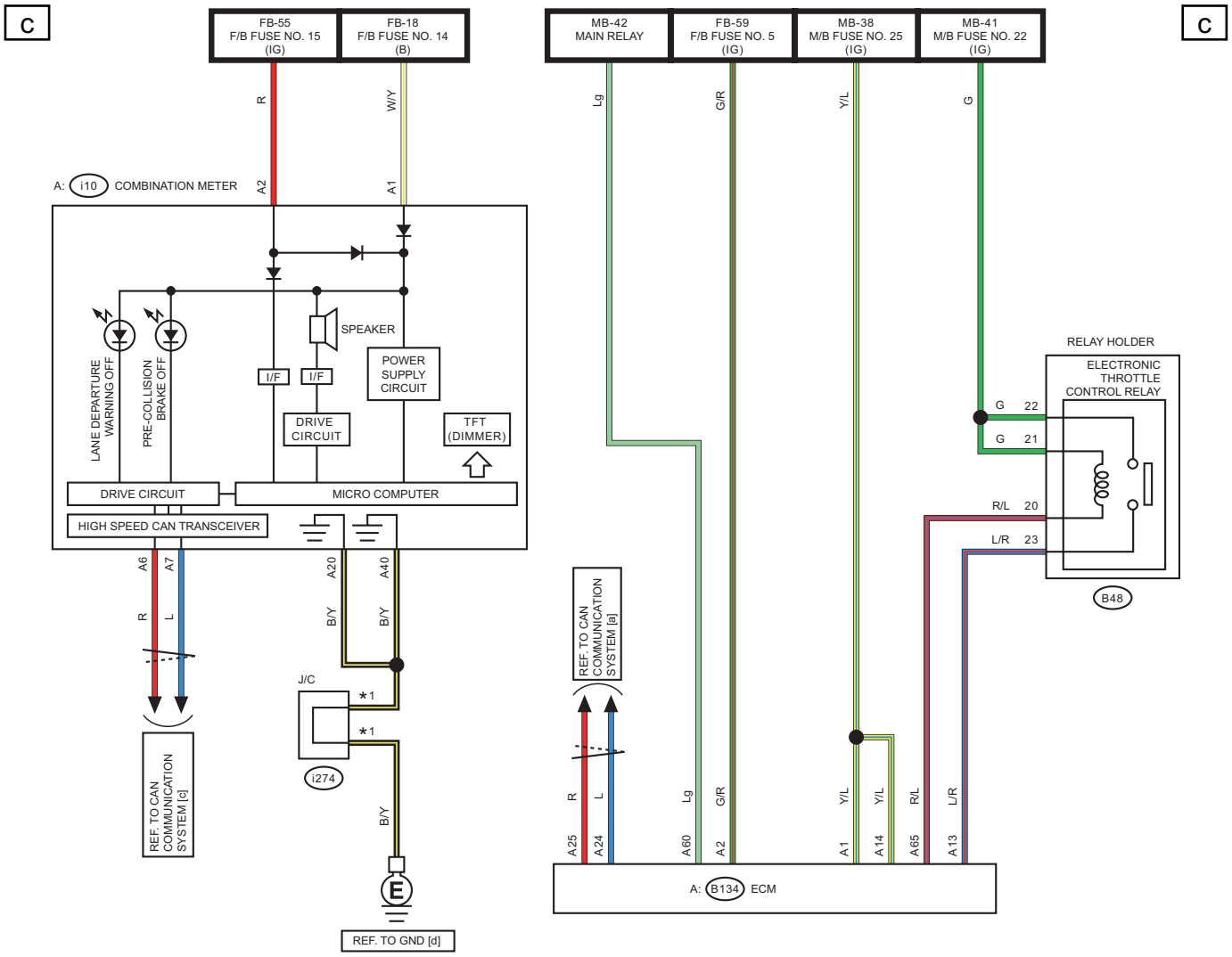

*1 : TERMINAL No. OPTIONAL ARRANGEMENT

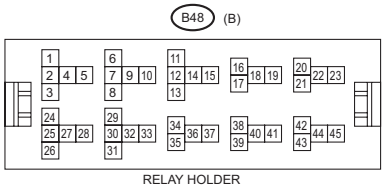

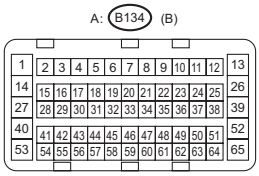

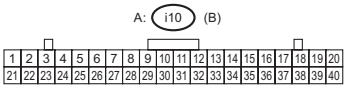

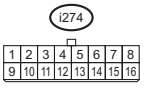

WI-60517

d

d

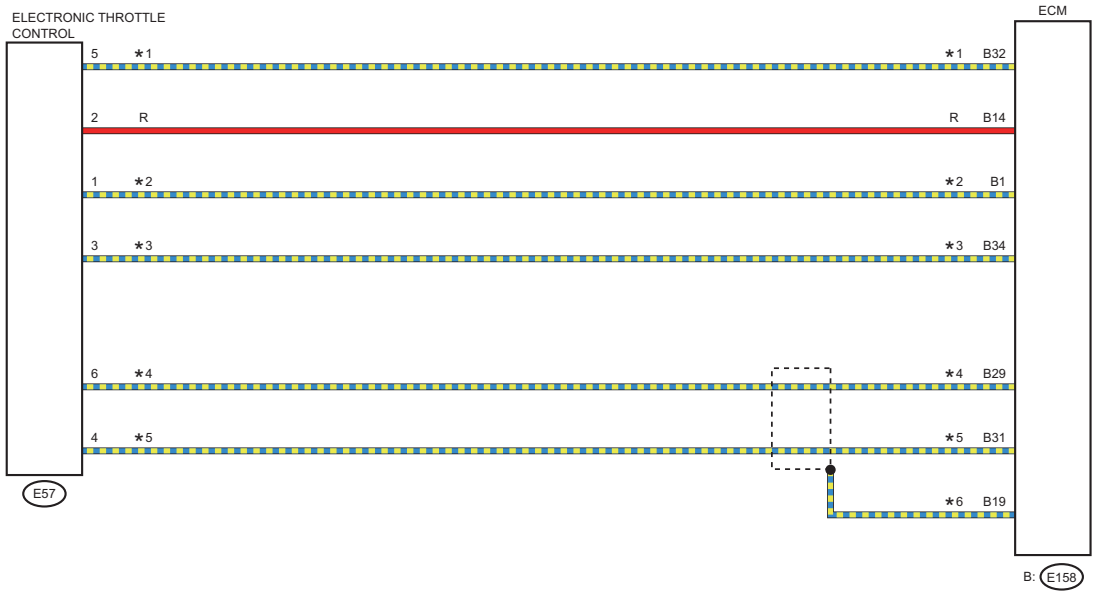

★1 : ENGINE TYPE FB : G/B
ENGINE TYPE EZ : B/L
★2 : ENGINE TYPE FB : Br
ENGINE TYPE EZ : Br/W
★3 : ENGINE TYPE FB : Lg
ENGINE TYPE EZ : B/Y
★4 : ENGINE TYPE FB : P
ENGINE TYPE EZ : Br
★5 : ENGINE TYPE FB : L
ENGINE TYPE EZ : Y
★6 : ENGINE TYPE FB : B
ENGINE TYPE EZ : Gr

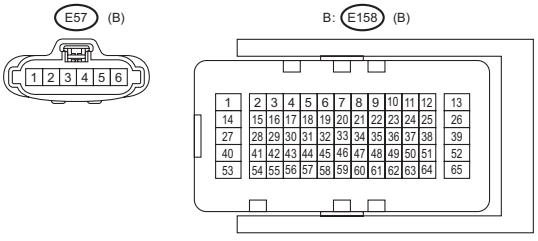

WI-60518

e

e

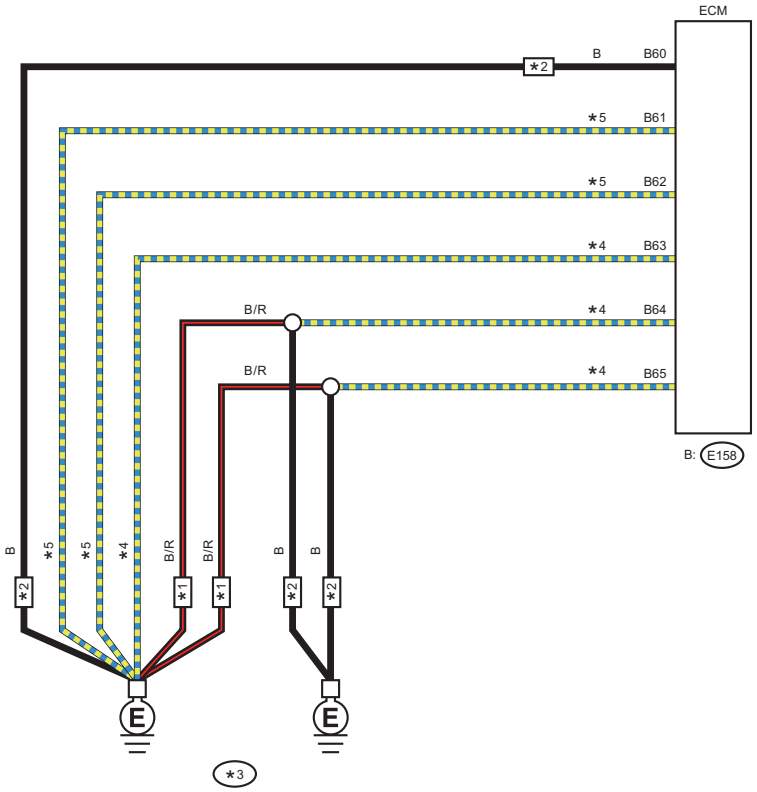

*1 : ENGINE TYPE FB
*2 : ENGINE TYPE EZ
*3 : ENGINE TYPE FB : GE-1
ENGINE TYPE EZ : GE-3
*4 : ENGINE TYPE FB : B/R
ENGINE TYPE EZ : B
*5 : ENGINE TYPE FB : B/W
ENGINE TYPE EZ : B

B: E158 (B)

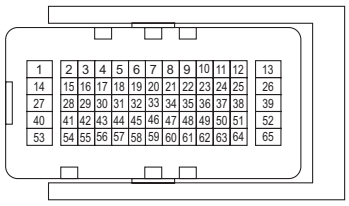

WI-60519

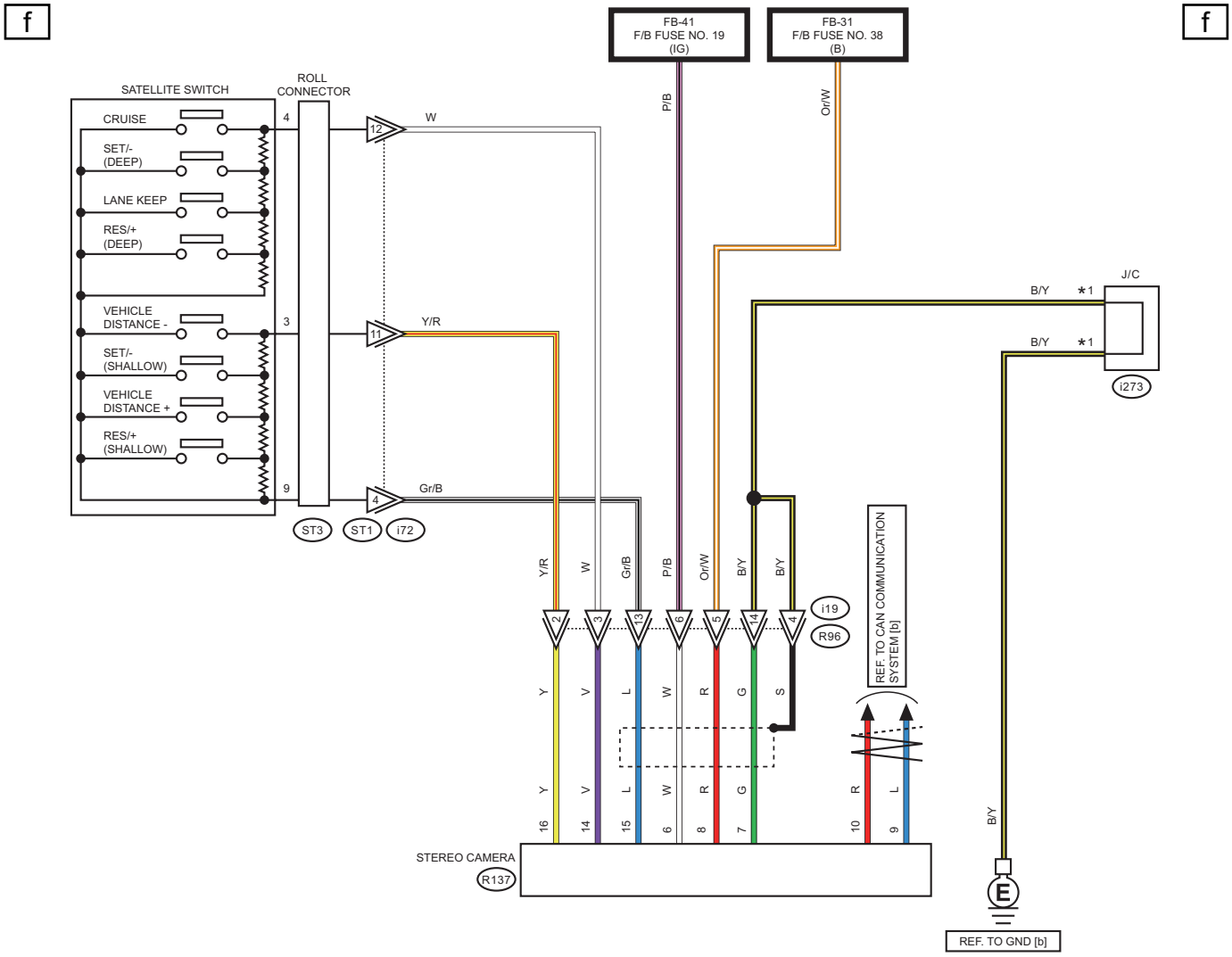

*1 : TERMINAL No. OPTIONAL ARRANGEMENT

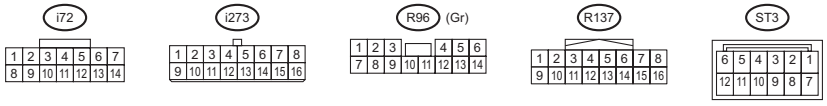

WI-60520

22.Front Accessory Power Supply Socket System

A: WIRING DIAGRAM

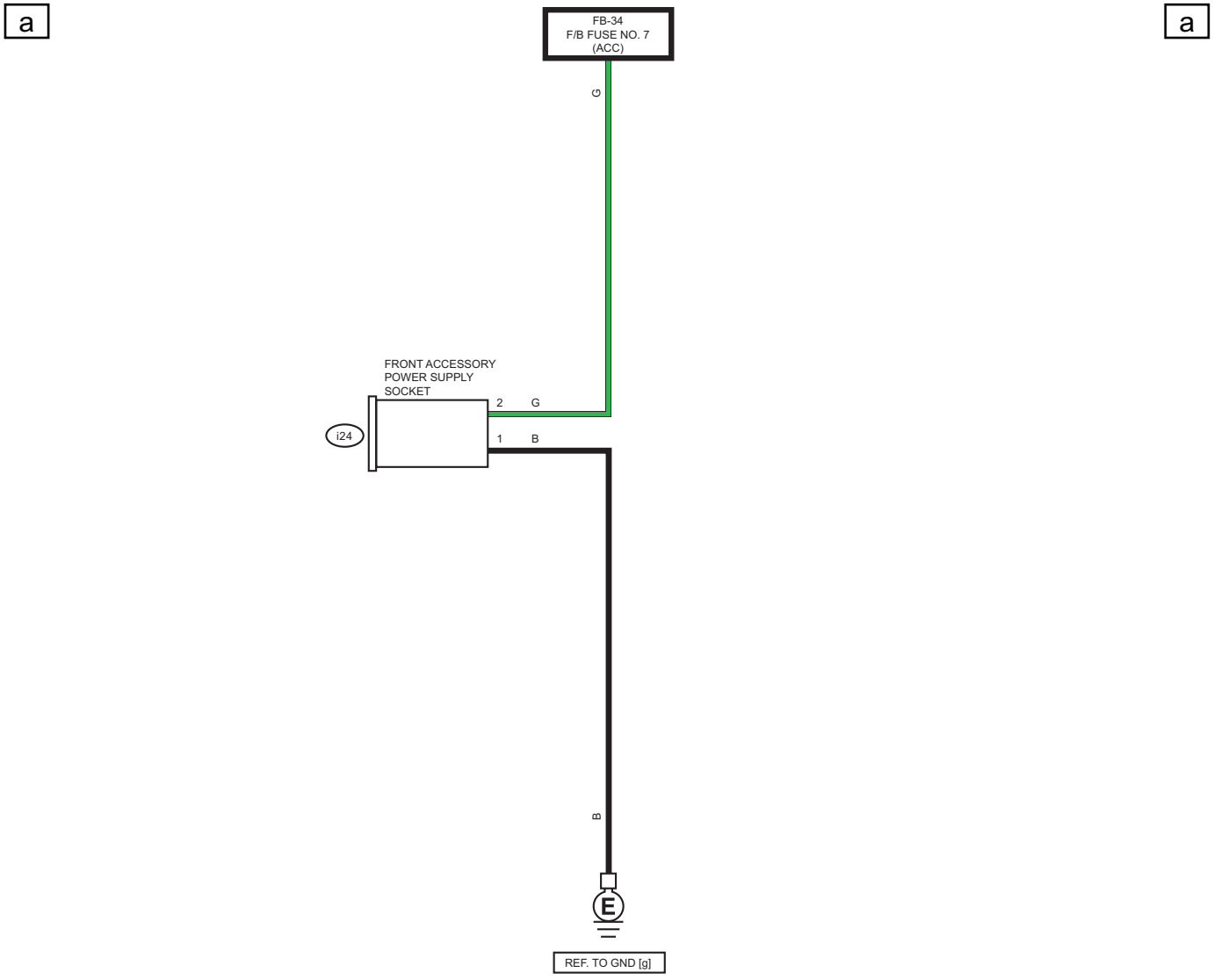

i24 (B)
1
2

WI-60521

23.Front Fog Light System

A: WIRING DIAGRAM

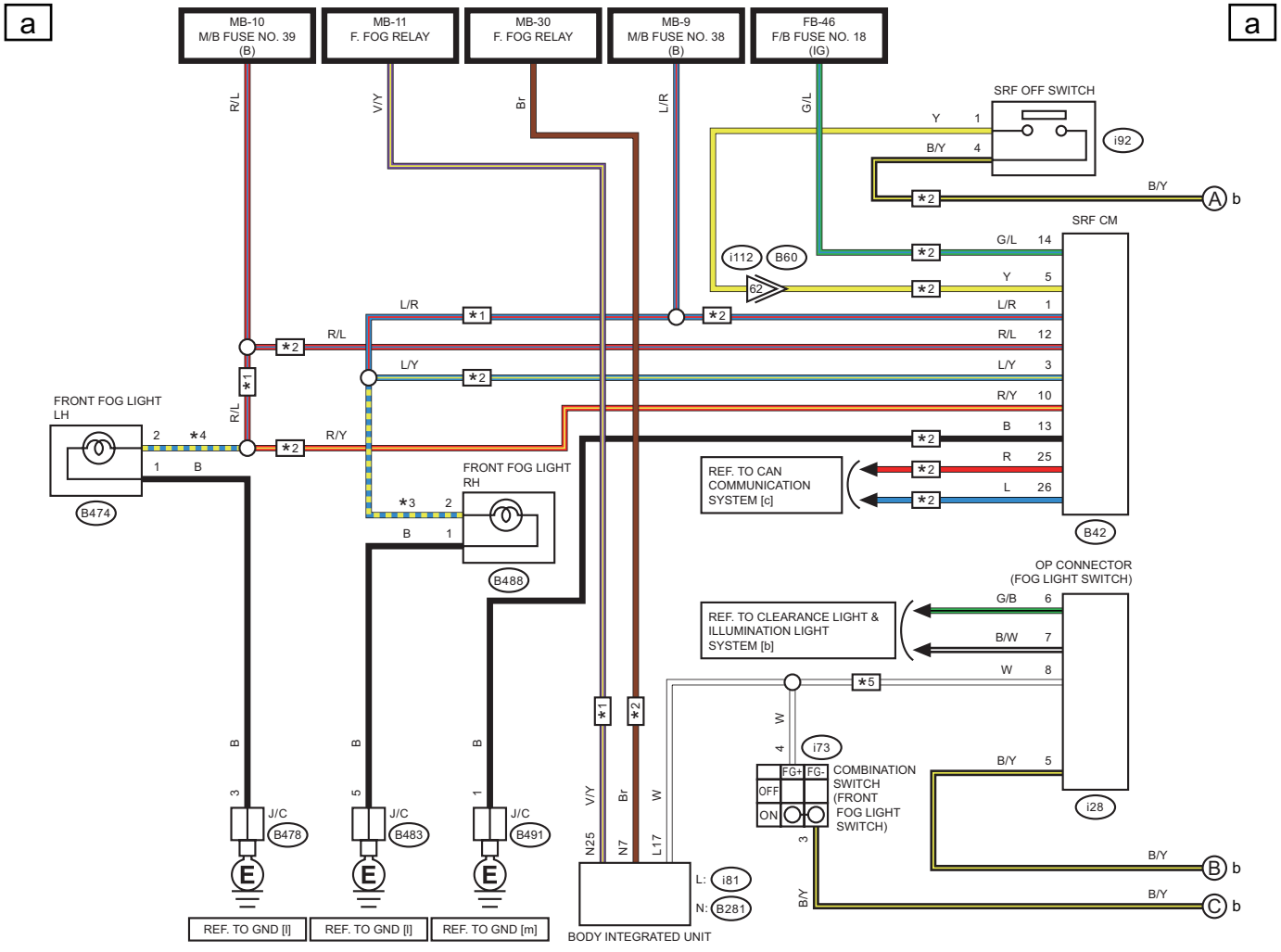

∗1 : WITHOUT SRF
∗2 : WITH SRF
∗3 : WITHOUT SRF : L/R
WITH SRF : L/Y
∗4 : WITHOUT SRF : R/L
WITH SRF : R/Y
∗5 : WITH OP CONNECTOR

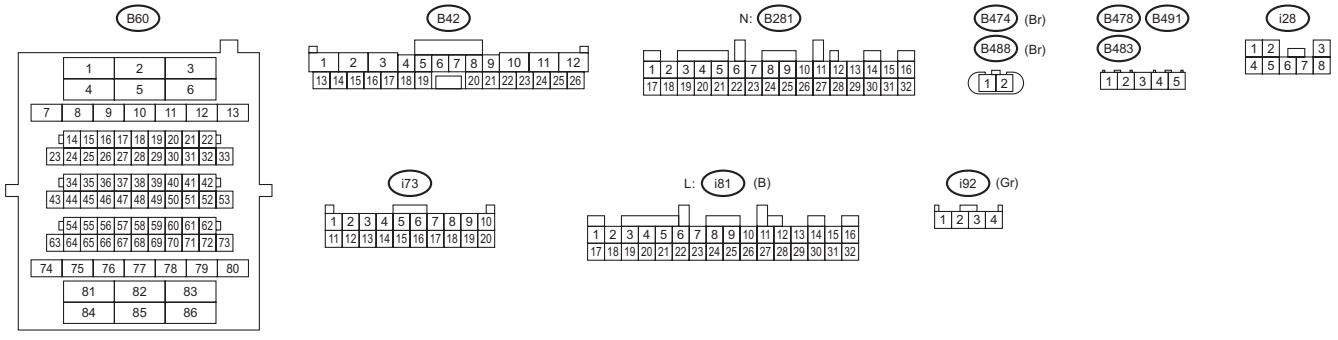

WI-60522

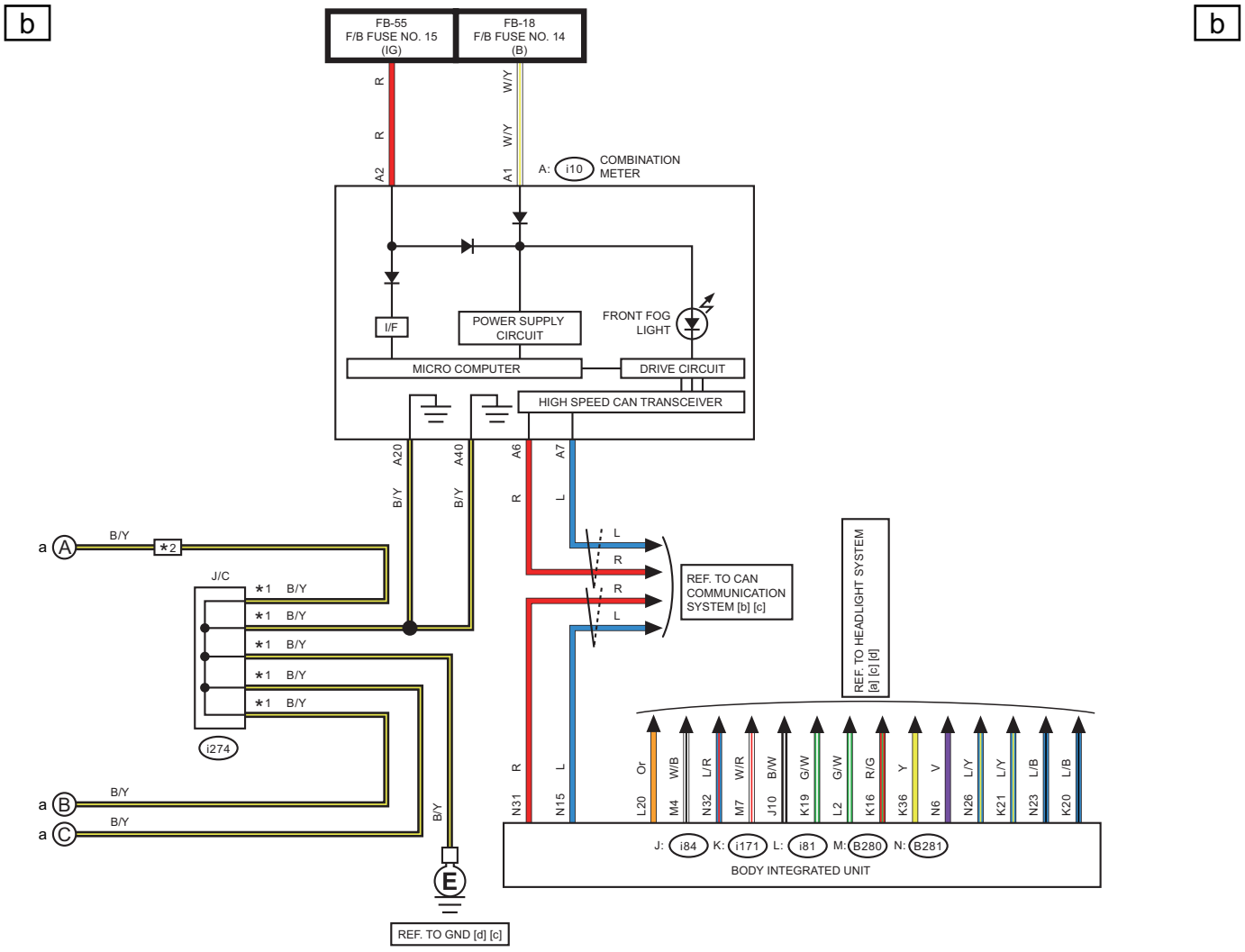

*1 : TERMINAL No. OPTIONAL ARRANGEMENT
*2 : WITH SRF

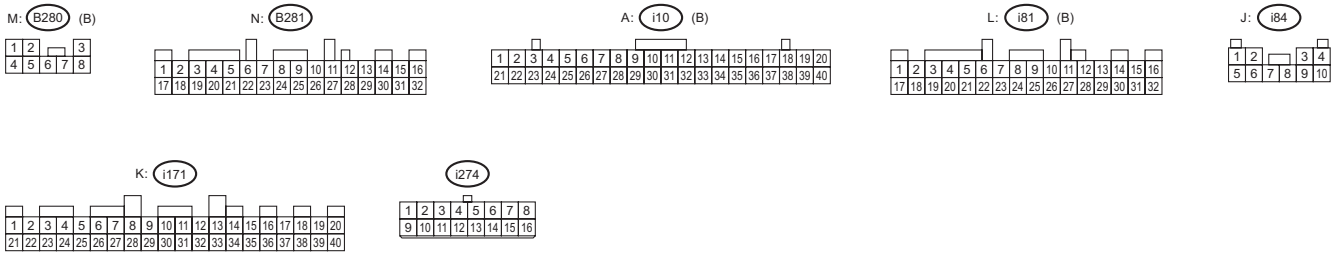

WI-60523

24.Front Wiper and Washer System

A: WIRING DIAGRAM

a

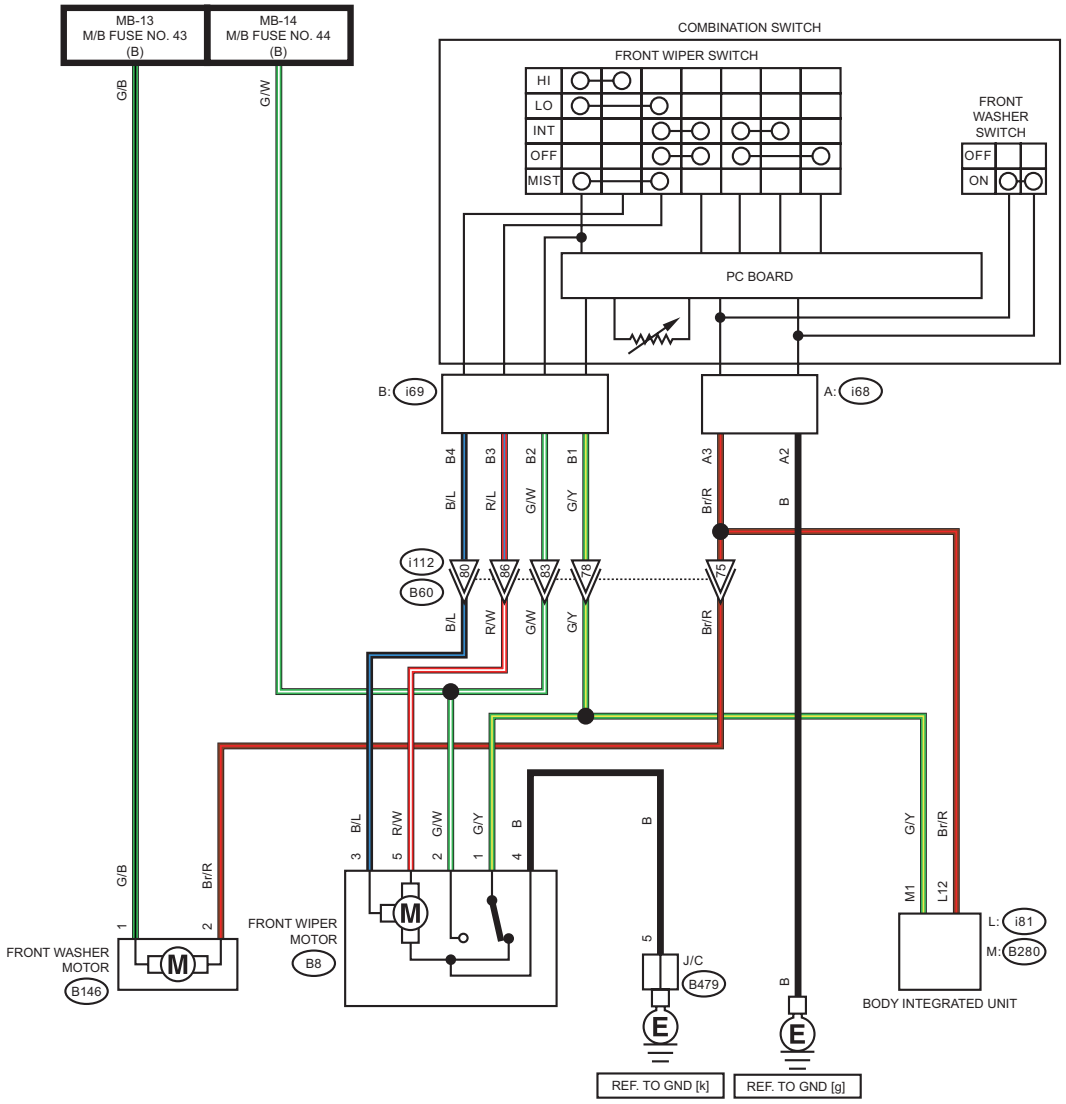

a

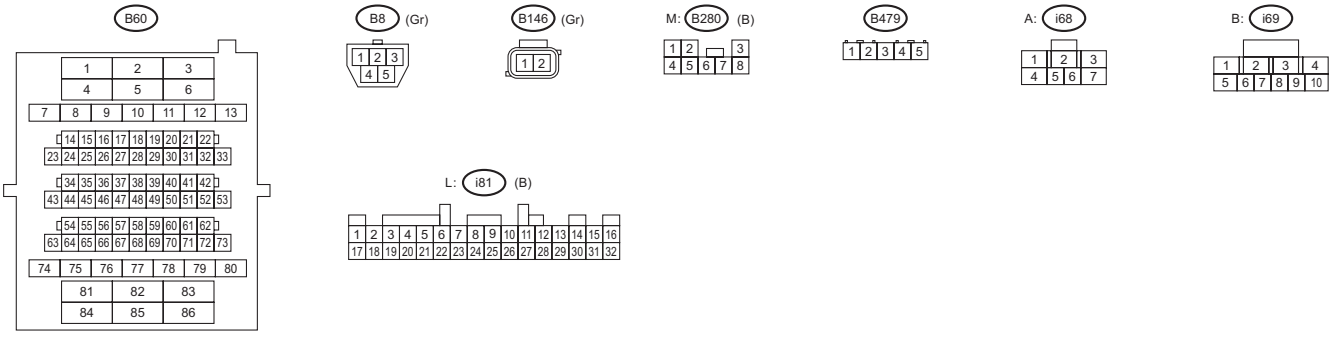

WI-60524

WIRING SYSTEM

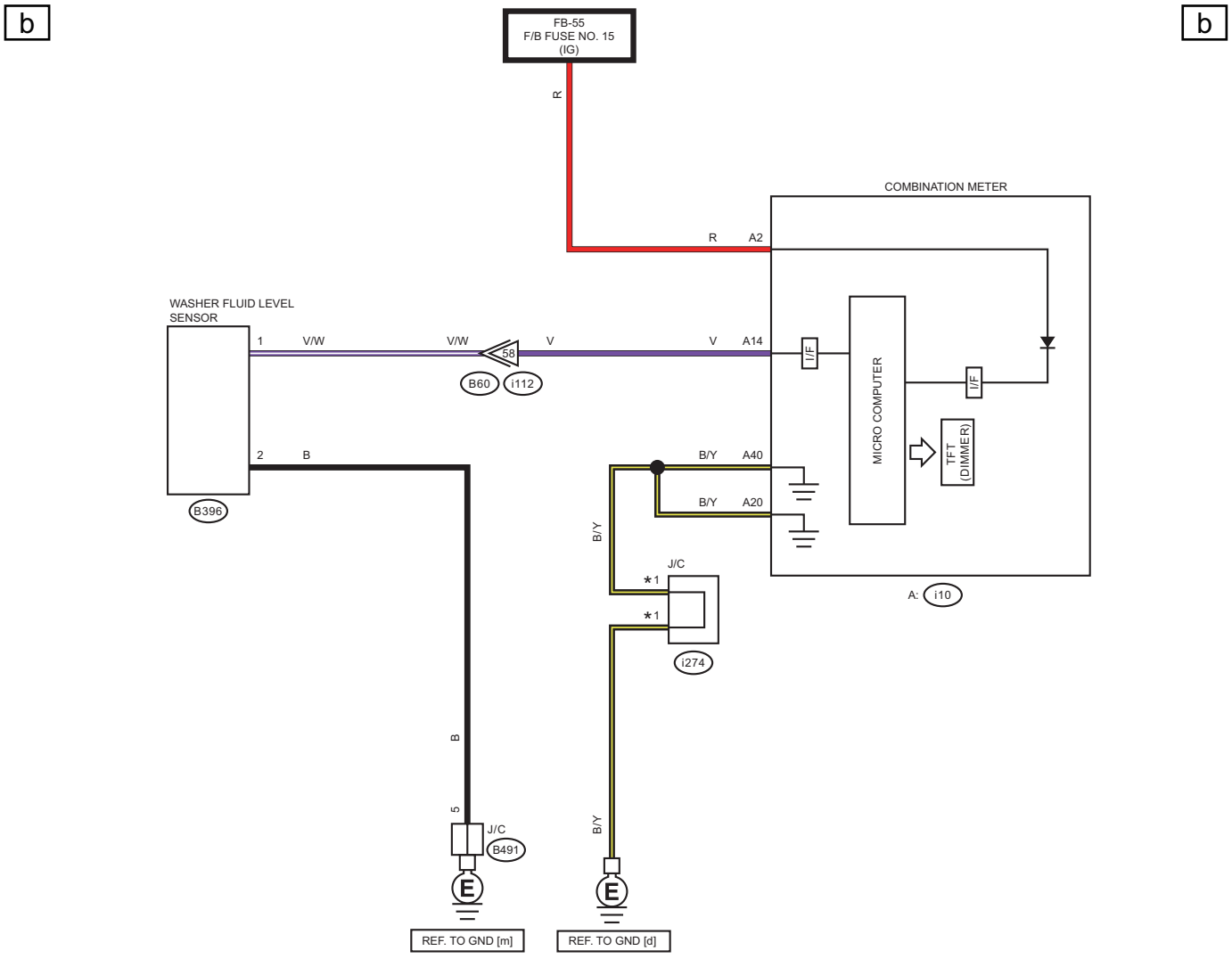

*1 : TERMINAL No. OPTIONAL ARRANGEMENT

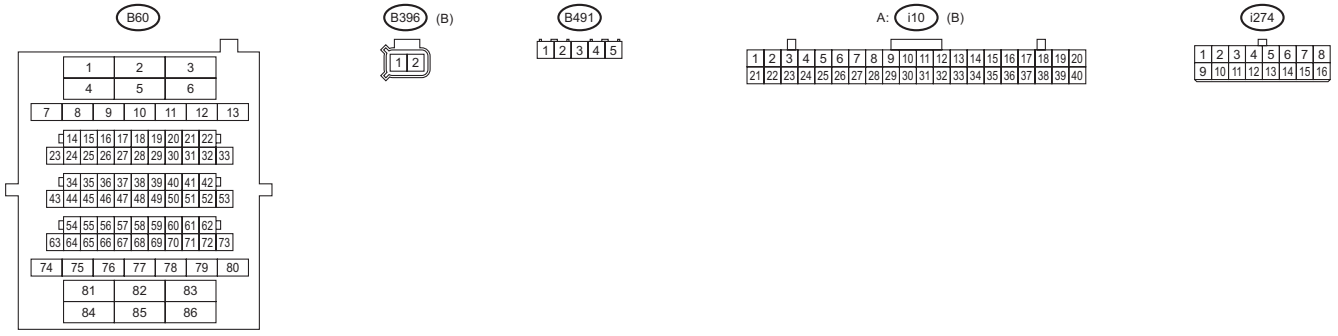

WI-60525

25.Fuel Gauge System

A: WIRING DIAGRAM

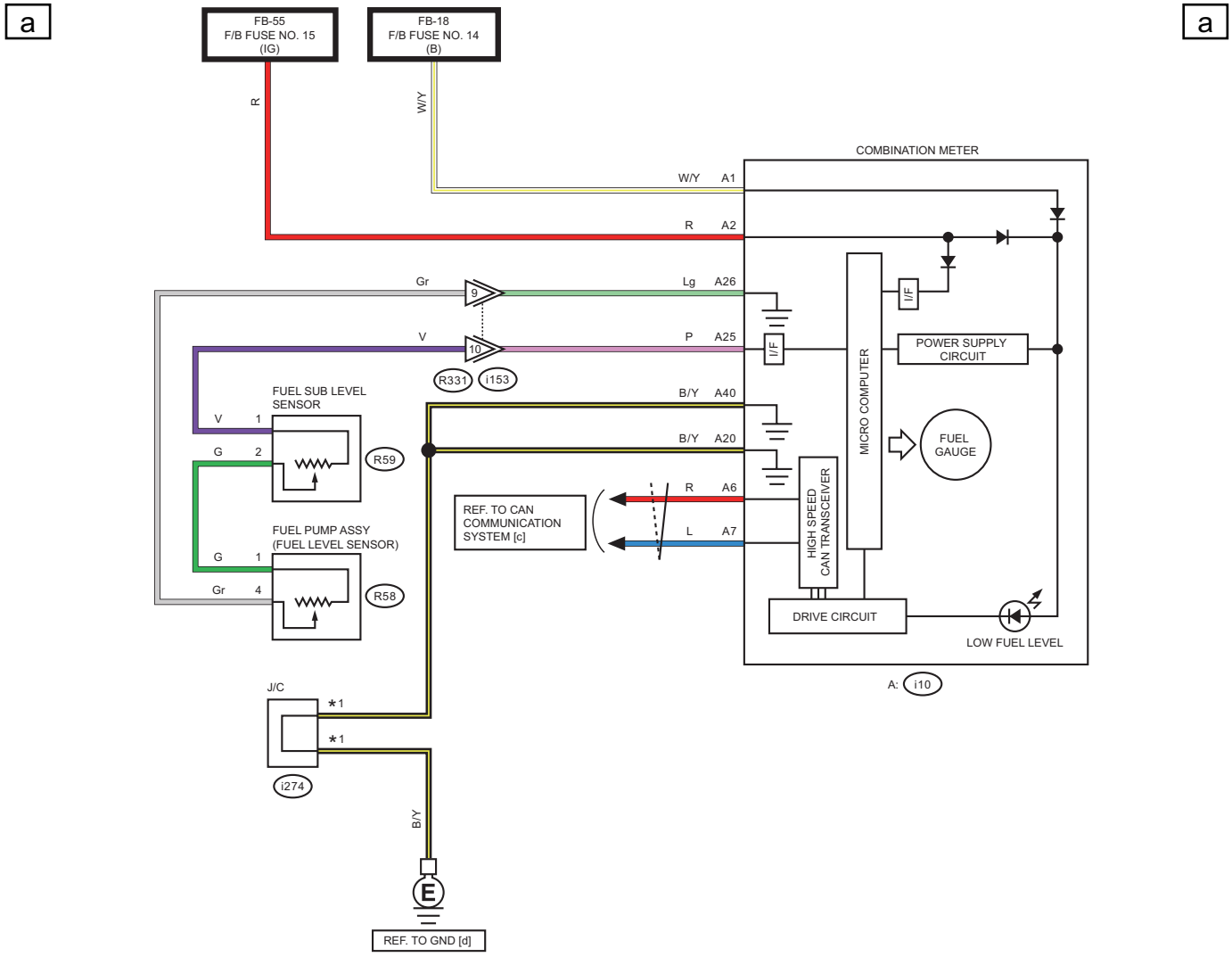

*1 : TERMINAL No. OPTIONAL ARRANGEMENT

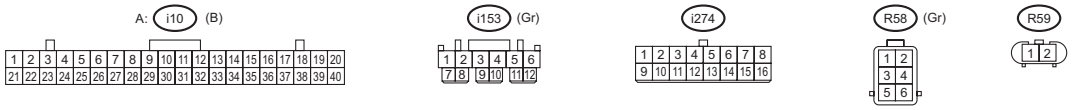

WI-60526

26.Headlight Beam Leveler System

A: WIRING DIAGRAM

1. WITHOUT SRF

1a

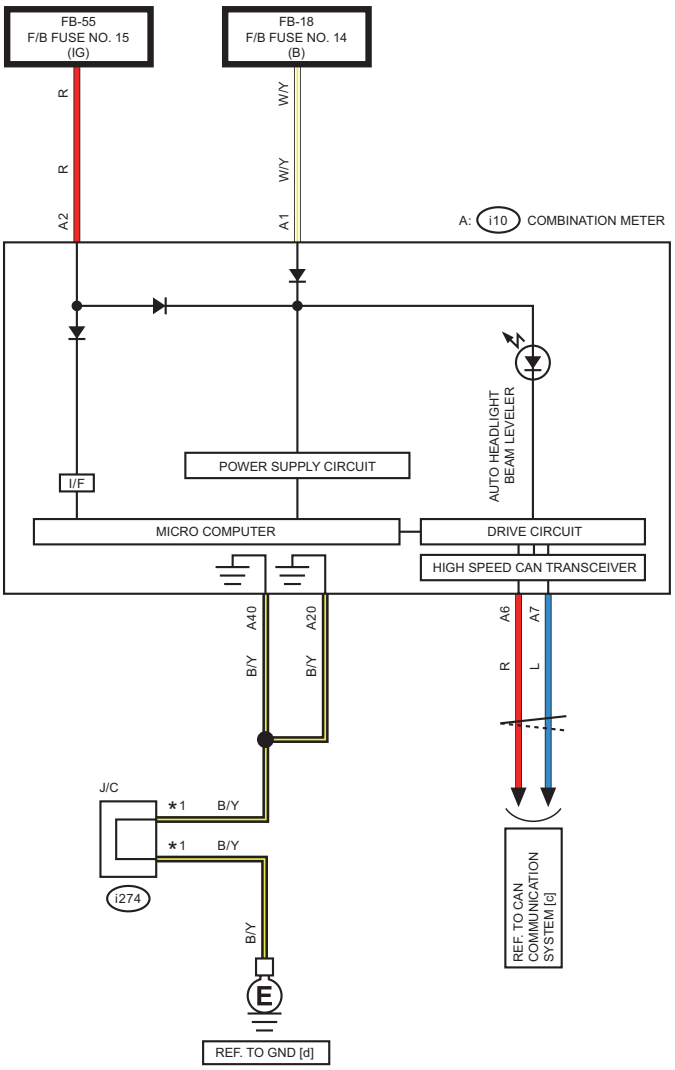

1a

*1 : TERMINAL No. OPTIONAL ARRANGEMENT

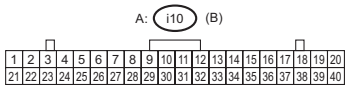

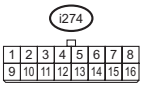

WI-60527

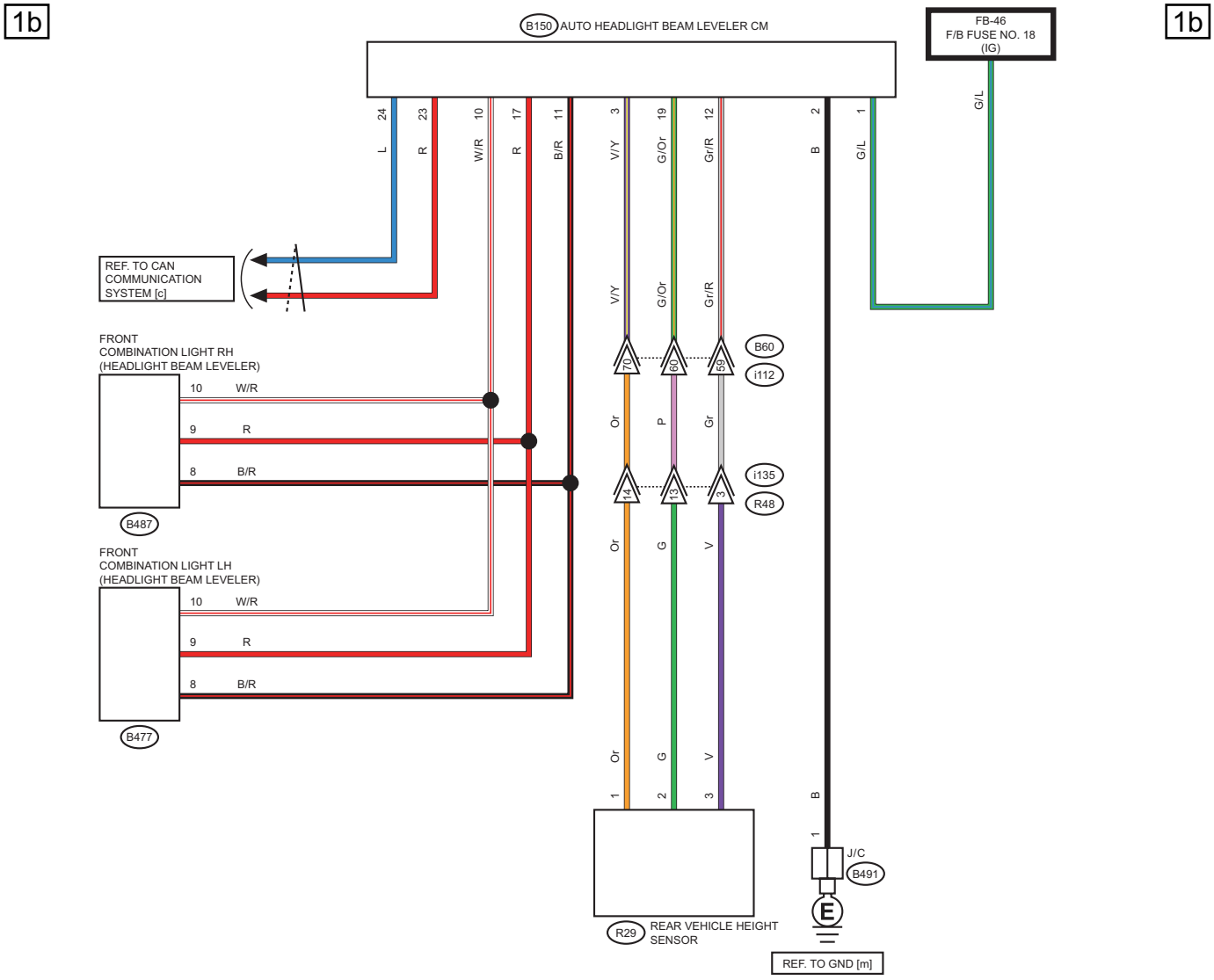
1b
1b
B150 AUTO HEADLIGHT BEAM LEVELER CM
FB-46
F/B FUSE NO. 18
(IG)
G/L
24 L
23 R
10 W/R
17 R
11 B/R
3 V/Y
19 G/Or
12 Gr/R
2 B
1 G/L
REF. TO CAN
COMMUNICATION
SYSTEM [c]
FRONT
COMBINATION LIGHT RH
(HEADLIGHT BEAM LEVELER)
10 W/R
9 R
8 B/R
B487
FRONT
COMBINATION LIGHT LH
(HEADLIGHT BEAM LEVELER)
10 W/R
9 R
8 B/R
B477
V/Y
G/Or
Gr/R
B60
i112
70
60
59
Or
P
Gr
i135
R48
14
13
3
Or
G
V
1 Or
2 G
3 V
B
1
J/C
B491
R29 REAR VEHICLE HEIGHT
SENSOR
REF. TO GND [m]

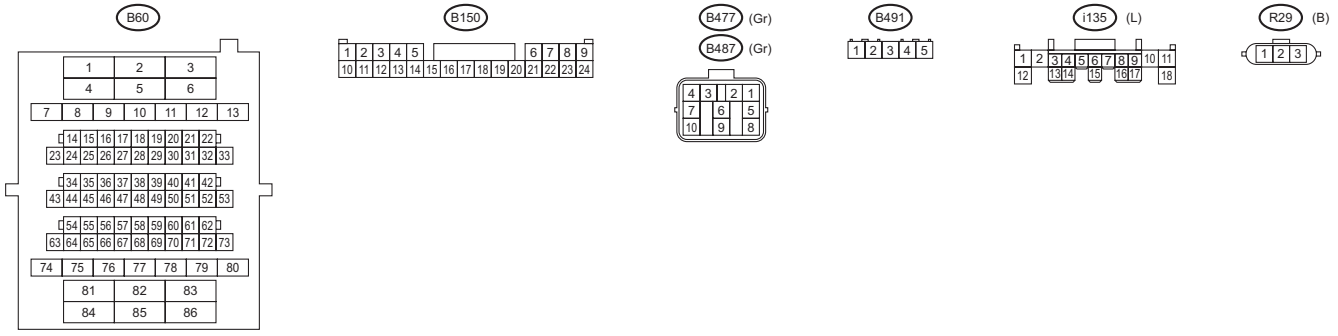
B60
B150
B477 (Gr)
B487 (Gr)
B491
i135 (L)
R29 (B)

WI-60528

2. WITH SRF

2a

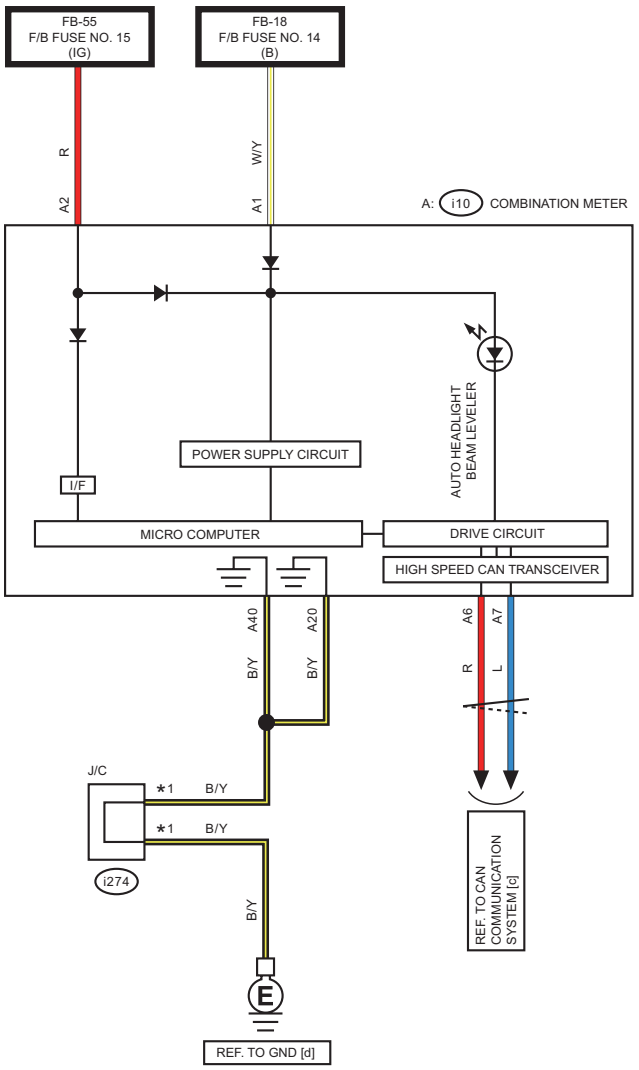

2a

*1 : TERMINAL No. OPTIONAL ARRANGEMENT

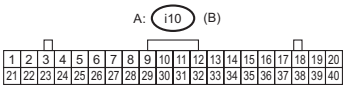

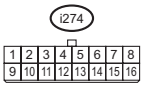

WI-60529

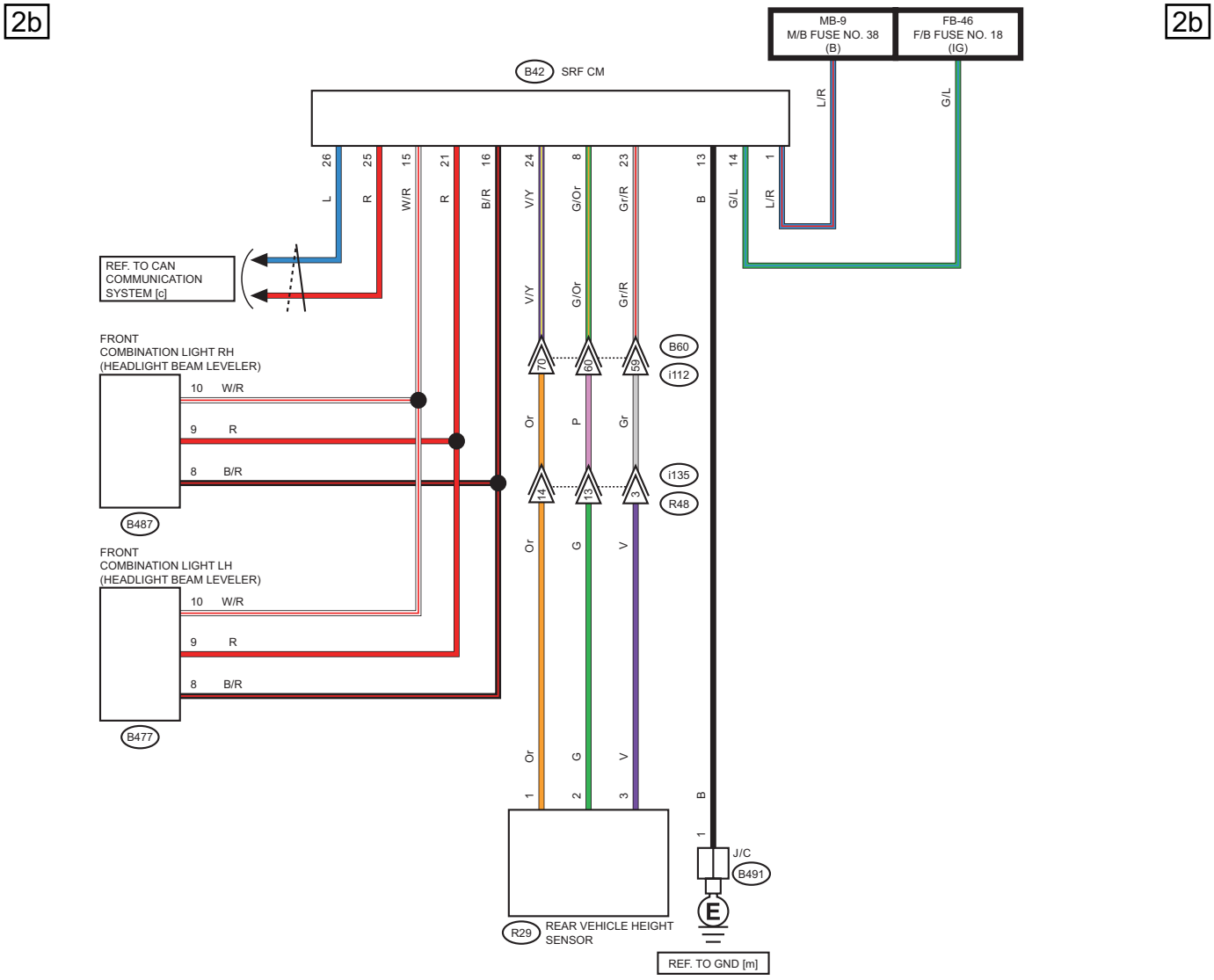
2b
2b
MB-9
M/B FUSE NO. 38
(B)
FB-46
F/B FUSE NO. 18
(IG)
B42
SRF CM
L/R
G/L
REF. TO CAN
COMMUNICATION
SYSTEM [c]
FRONT
COMBINATION LIGHT RH
(HEADLIGHT BEAM LEVELER)
10 W/R
9 R
8 B/R
B487
FRONT
COMBINATION LIGHT LH
(HEADLIGHT BEAM LEVELER)
10 W/R
9 R
8 B/R
B477
B60
i112
i135
R48
J/C
B491
R29
REAR VEHICLE HEIGHT
SENSOR
REF. TO GND [m]

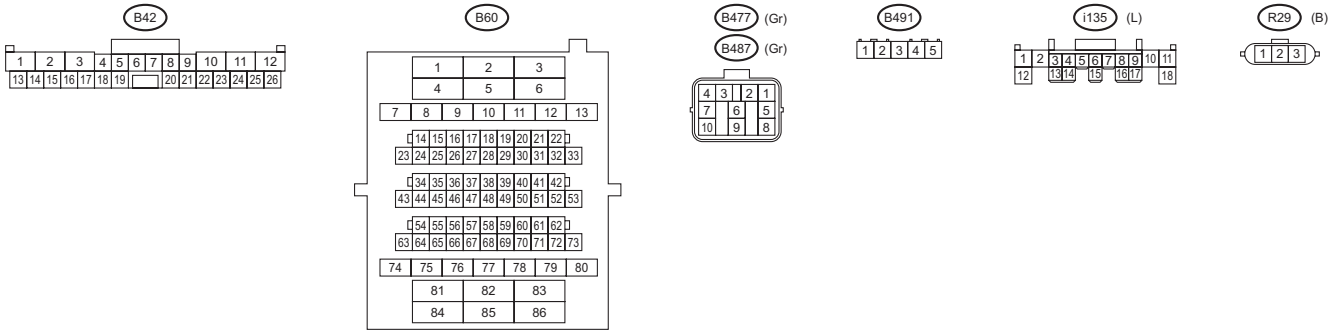
B42
B60
B477 (Gr)
B487 (Gr)
B491
i135 (L)
R29 (B)

WI-60530

27.Headlight System

A: WIRING DIAGRAM

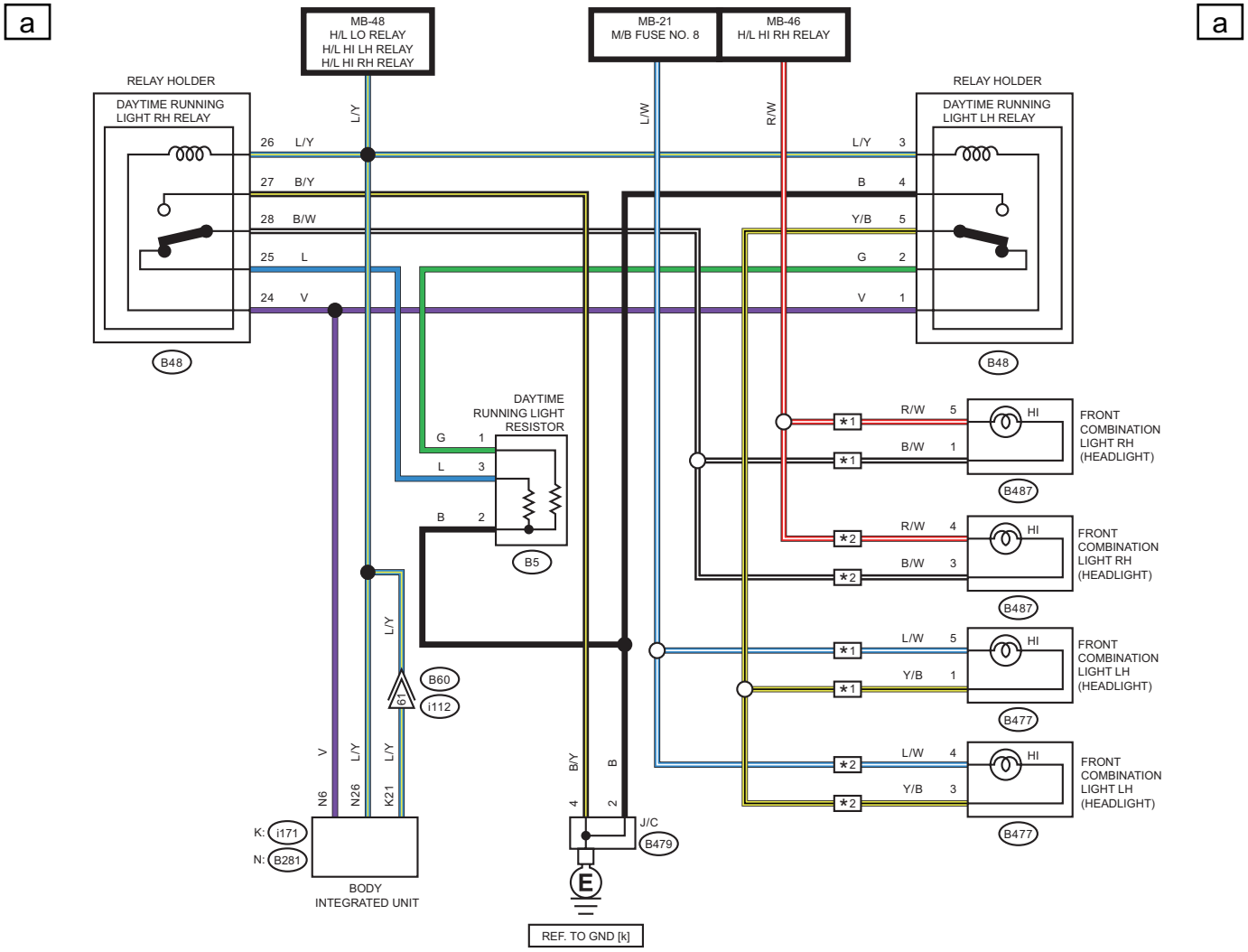

*1 : HALOGEN MODEL
*2 : EXCEPT FOR HALOGEN MODEL

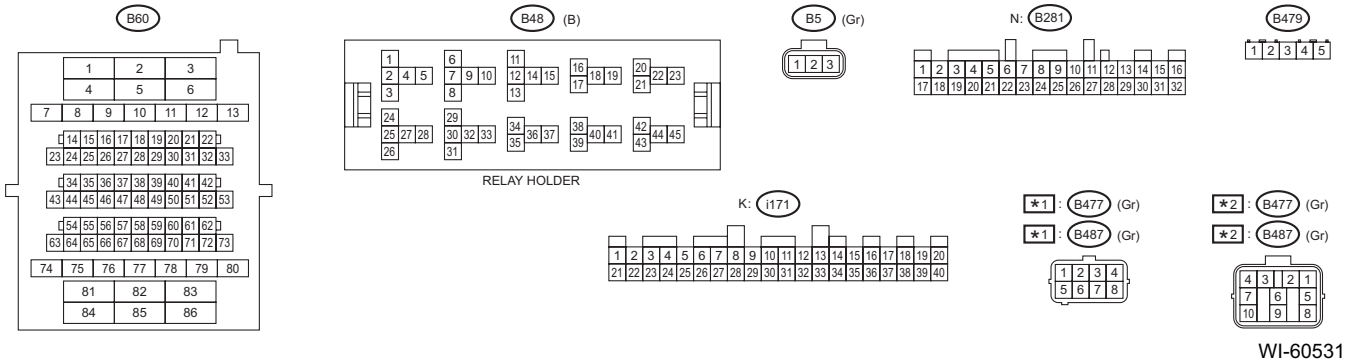

WI-60531

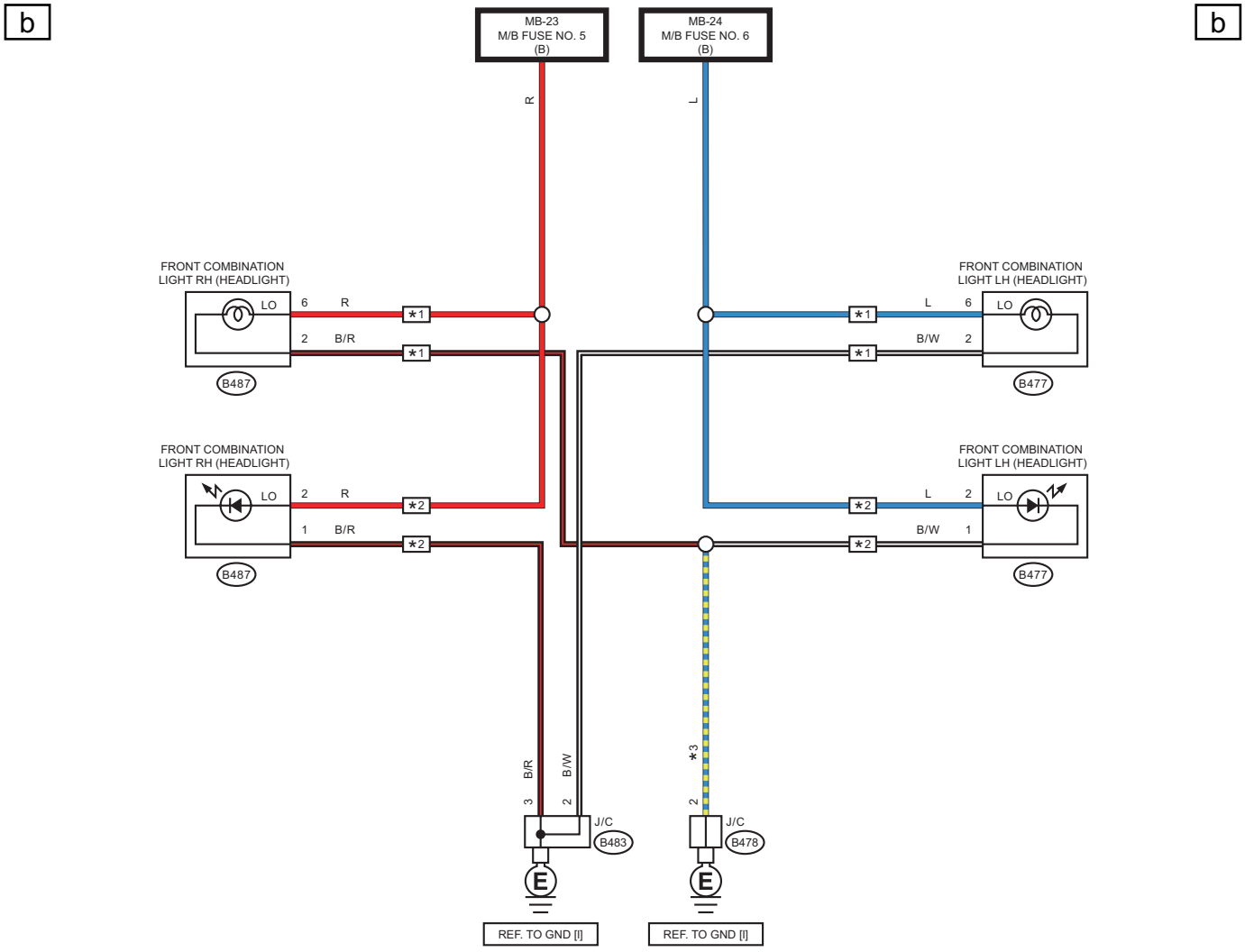

∗1 : HALOGEN MODEL
∗2 : EXCEPT FOR HALOGEN MODEL

∗3 : HALOGEN MODEL : B/R
EXCEPT FOR HALOGEN MODEL : B/W

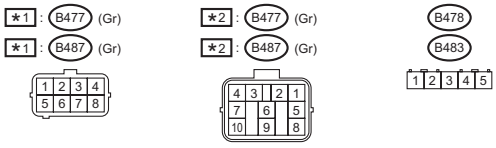

WI-60532

WIRING SYSTEM

C

C

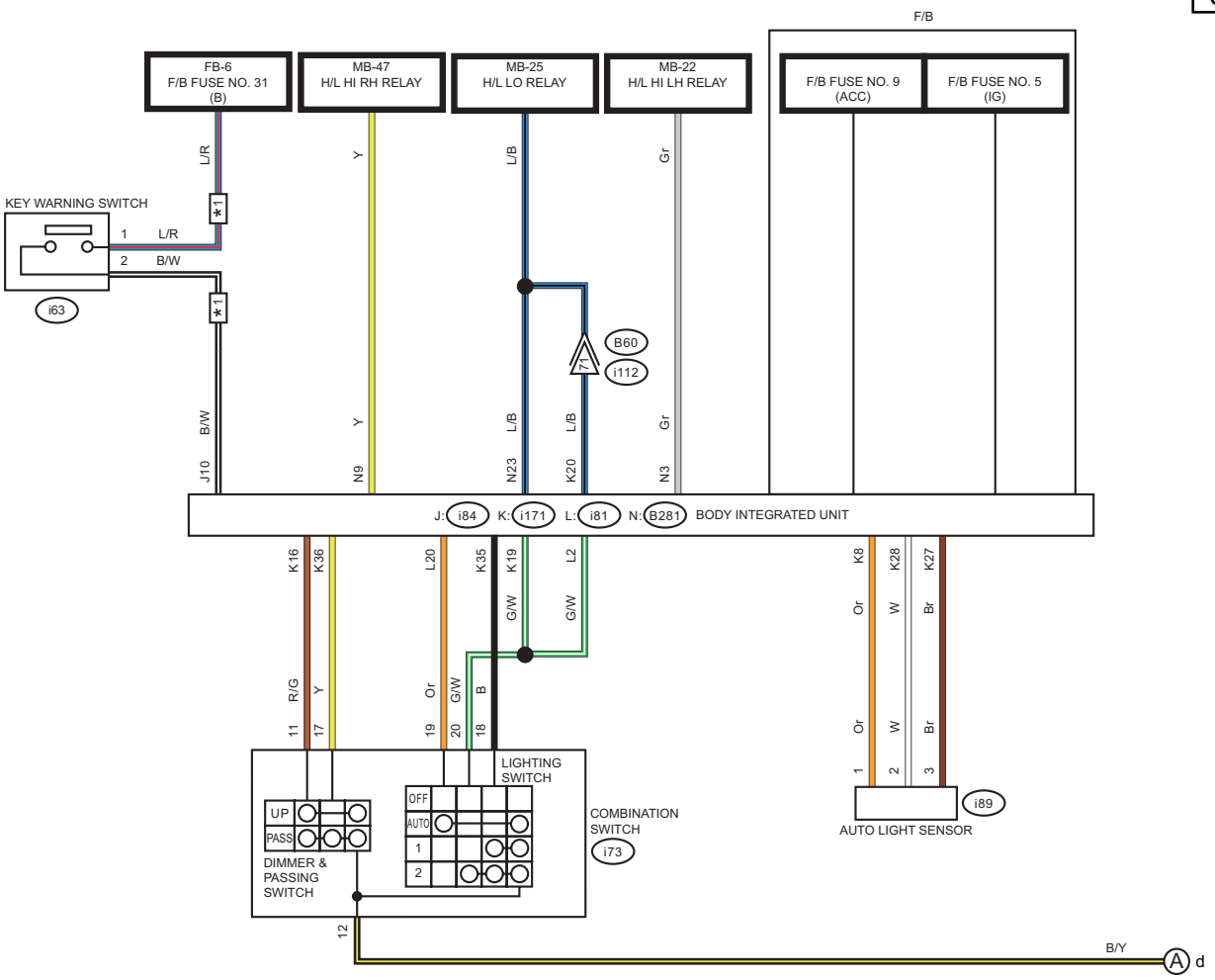

*1 : WITHOUT PUSH BUTTON START

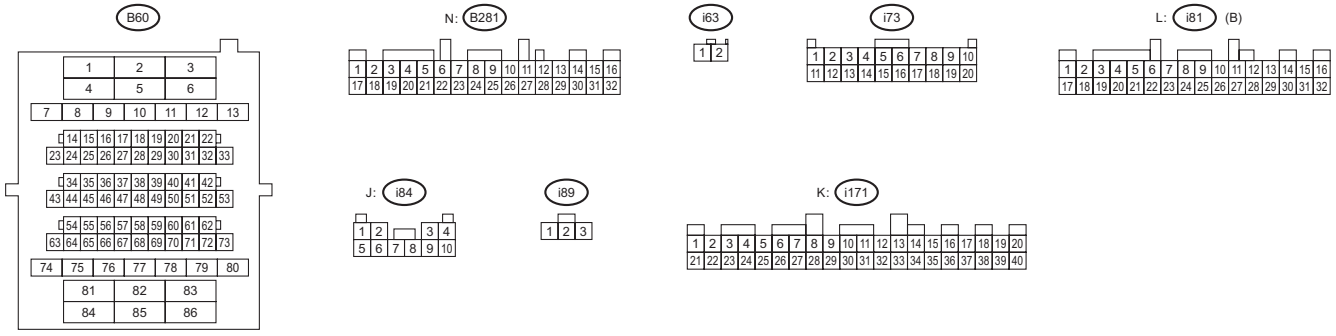

WI-60533

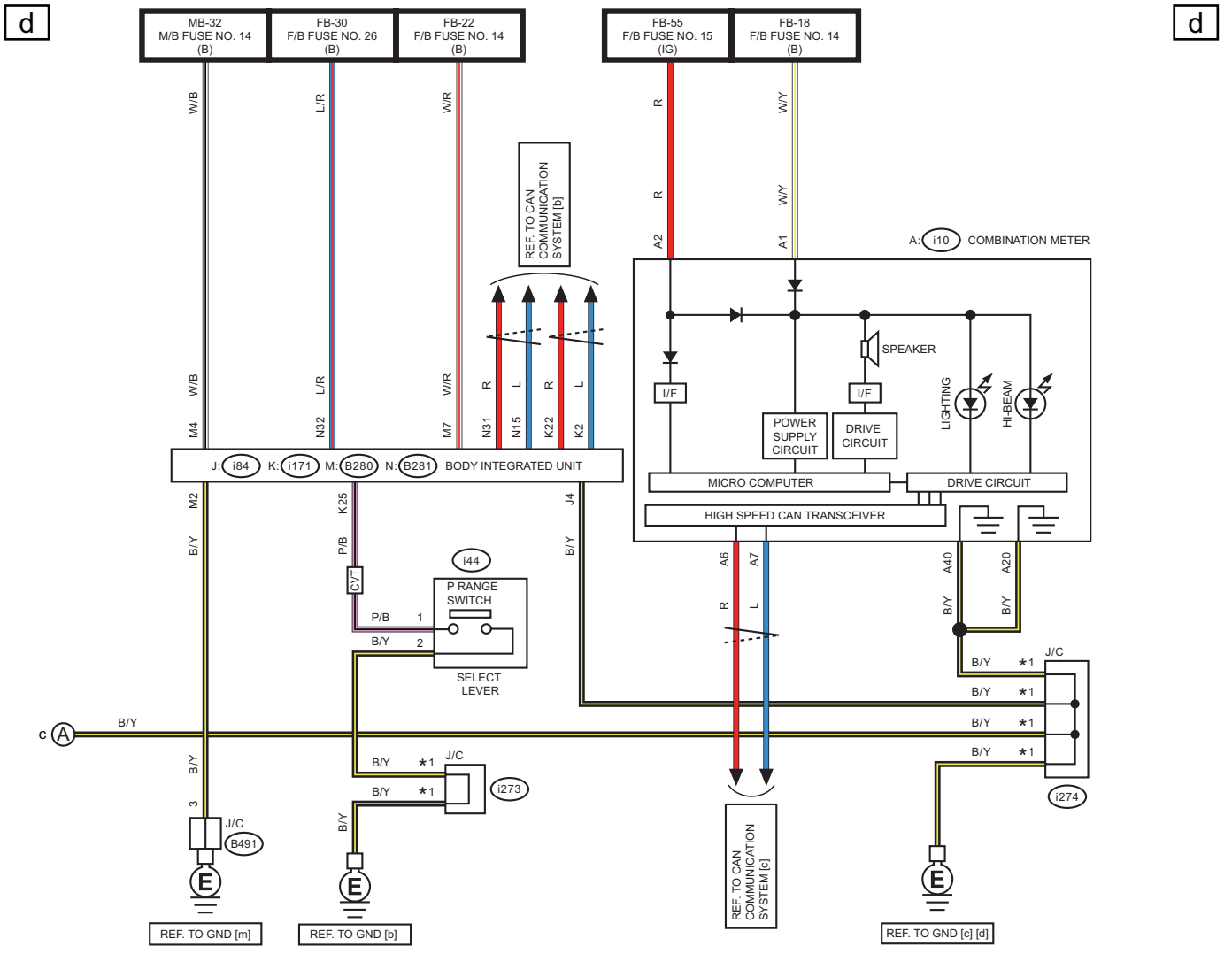

*1 : TERMINAL No. OPTIONAL ARRANGEMENT

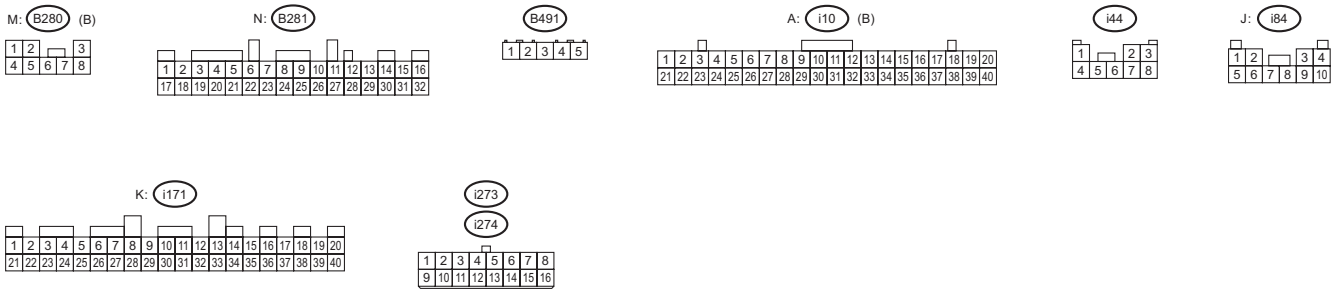

WI-60534

28.Horn System

A: WIRING DIAGRAM

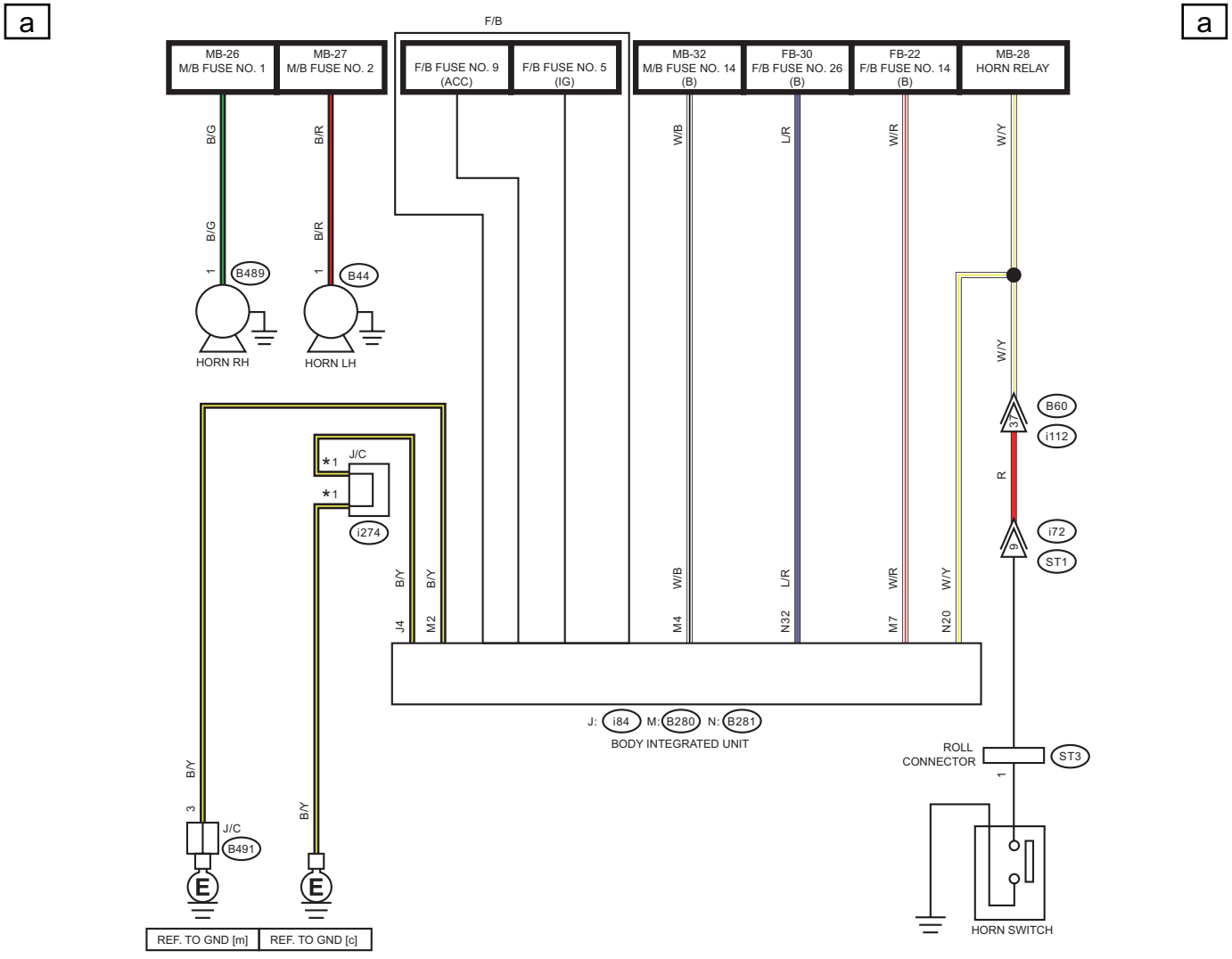

*1 : TERMINAL No. OPTIONAL ARRANGEMENT

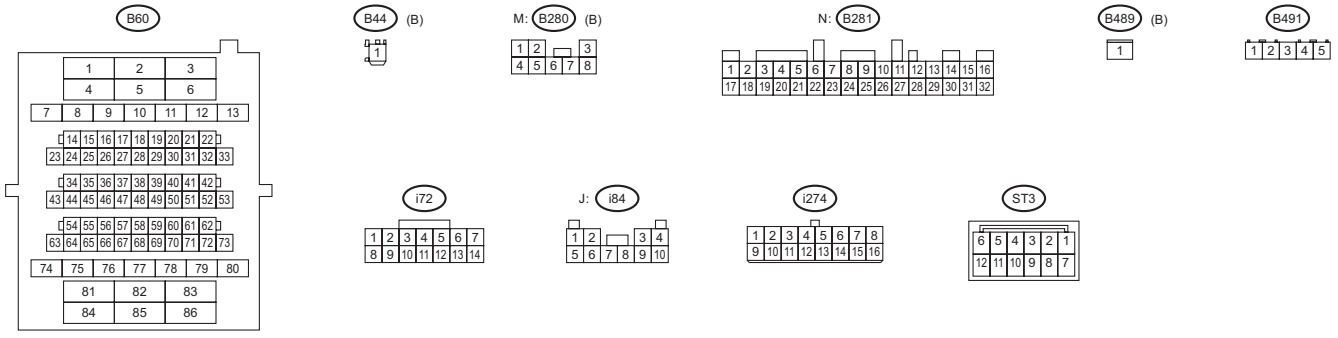

WI-60535

29.Immobilizer System

A: WIRING DIAGRAM

1. WITHOUT PUSH BUTTON START

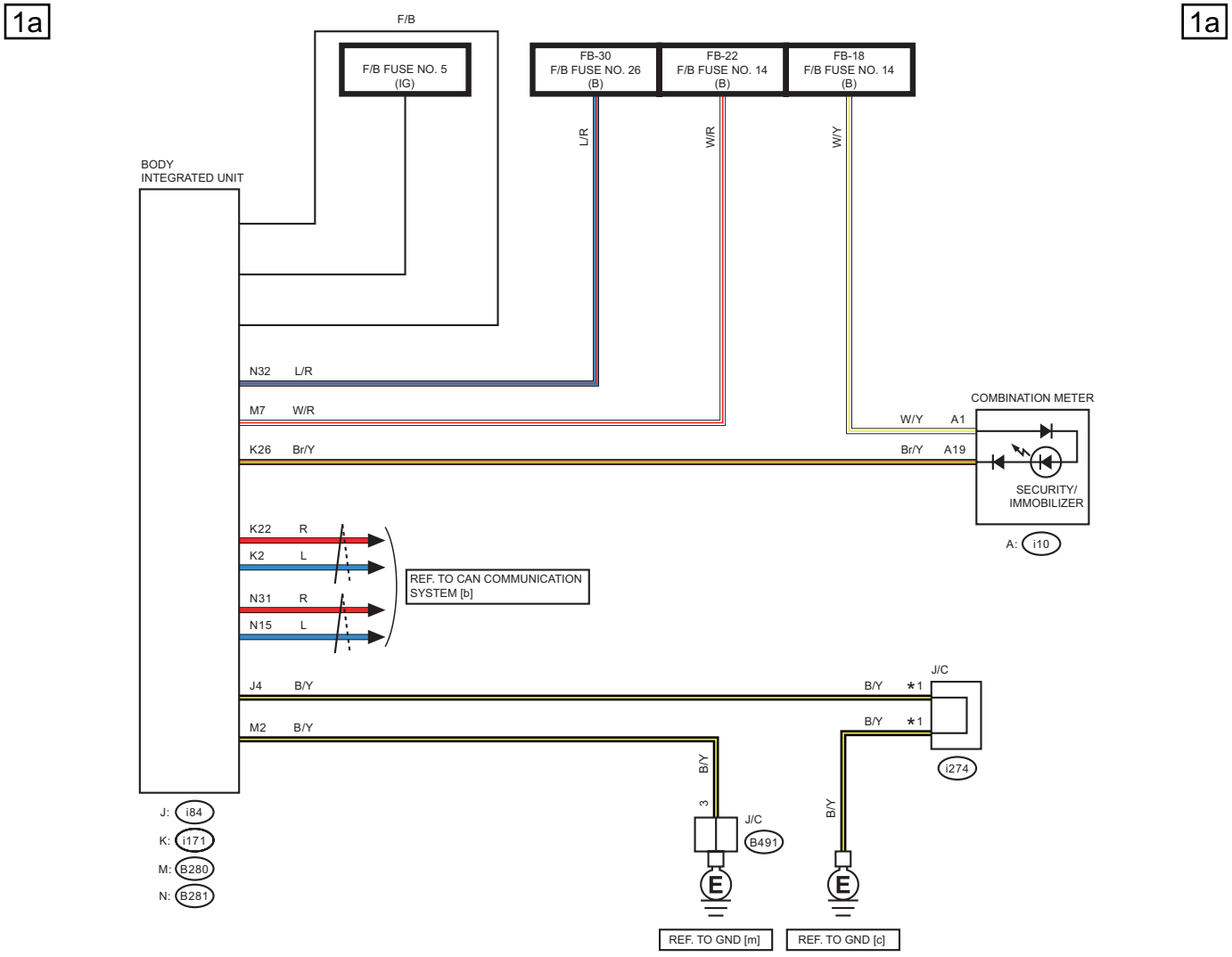

*1 : TERMINAL No. OPTIONAL ARRANGEMENT

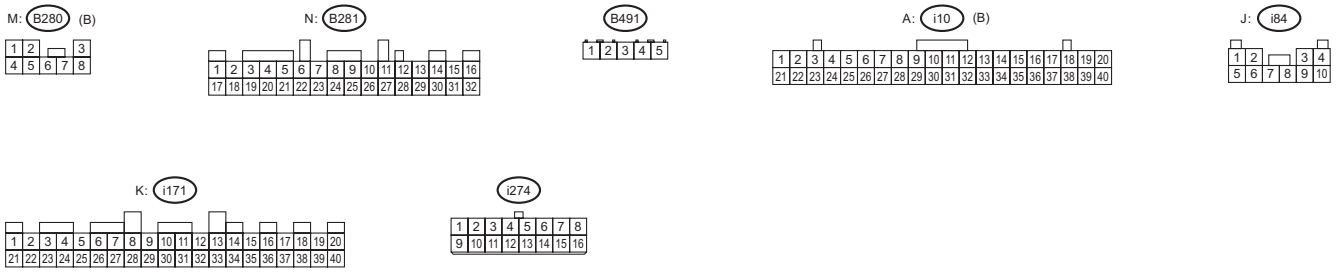

WI-60536

WIRING SYSTEM

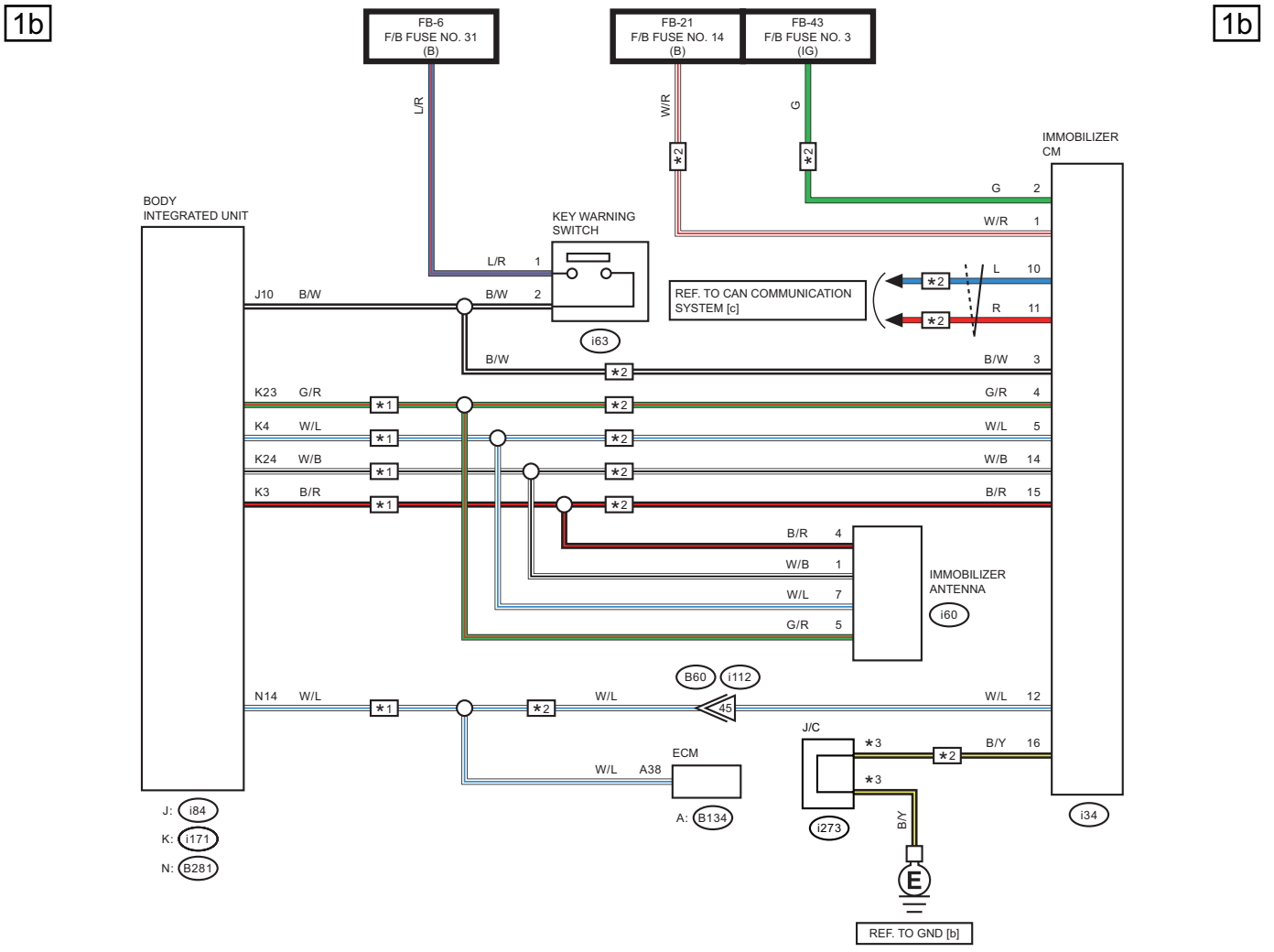

★1 : WITHOUT IMMOBILIZER CM
★2 : WITH IMMOBILIZER CM
★3 : TERMINAL No. OPTIONAL ARRANGEMENT

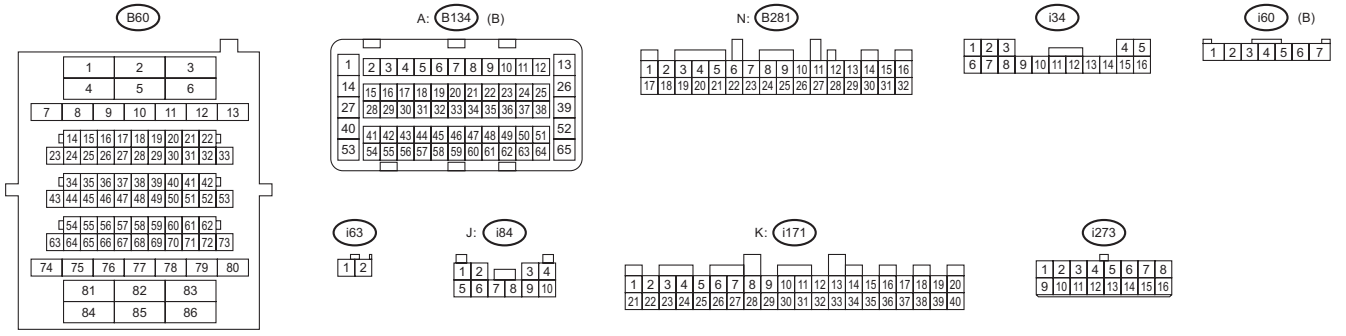

WI-60537

2. WITH PUSH BUTTON START

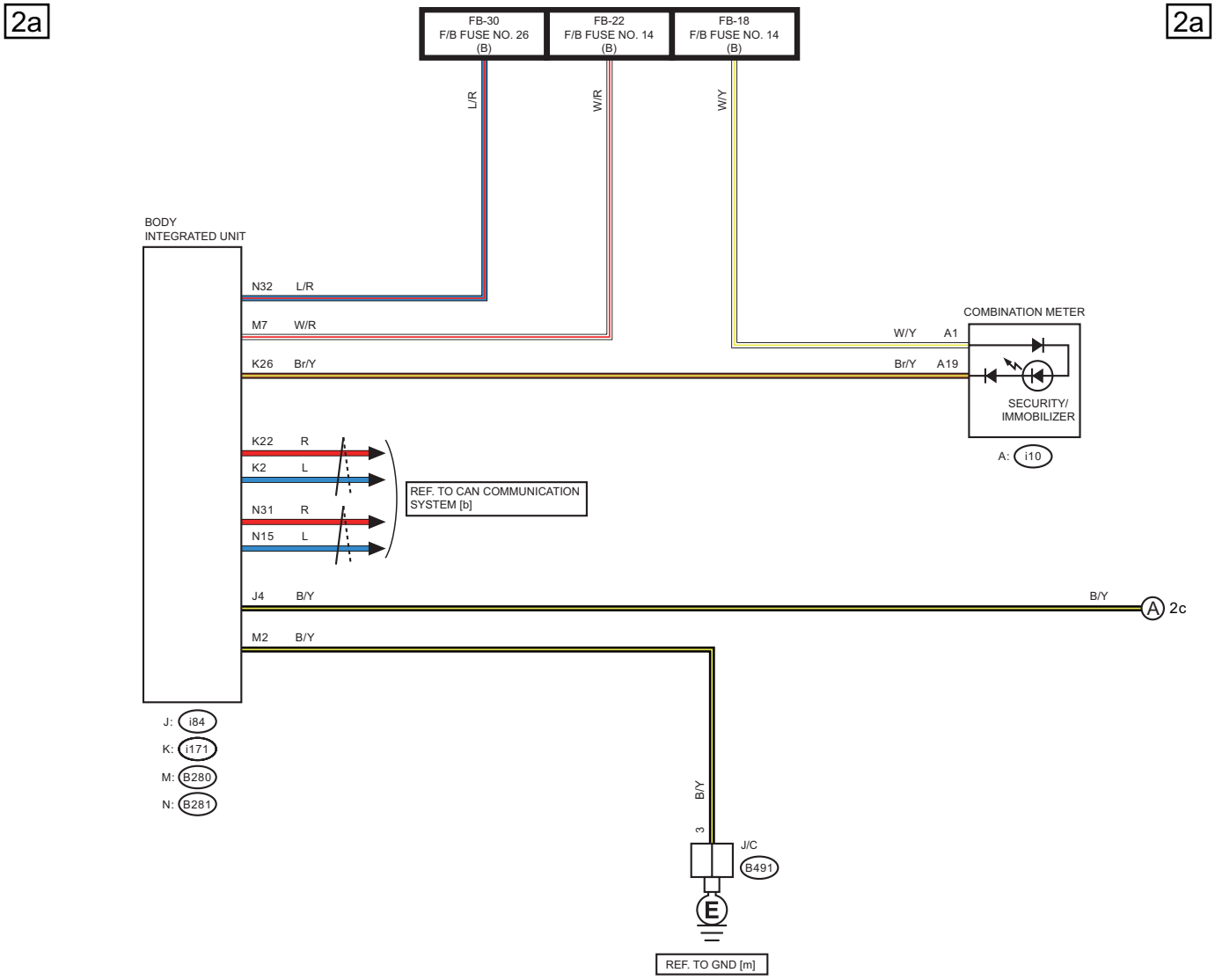

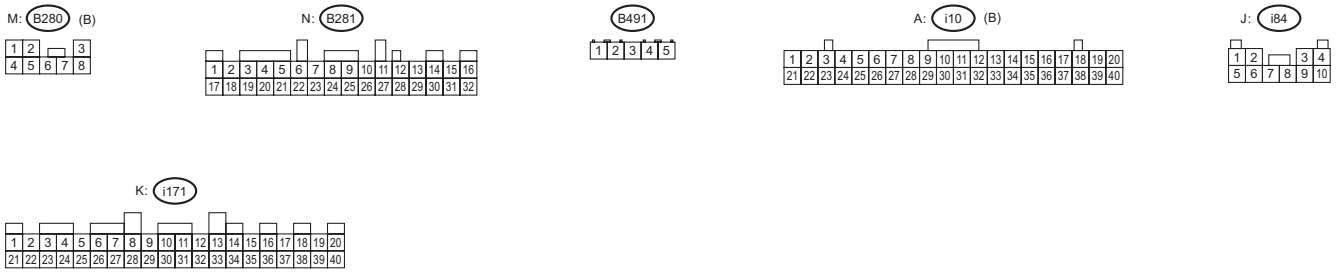

WI-60538

WIRING SYSTEM

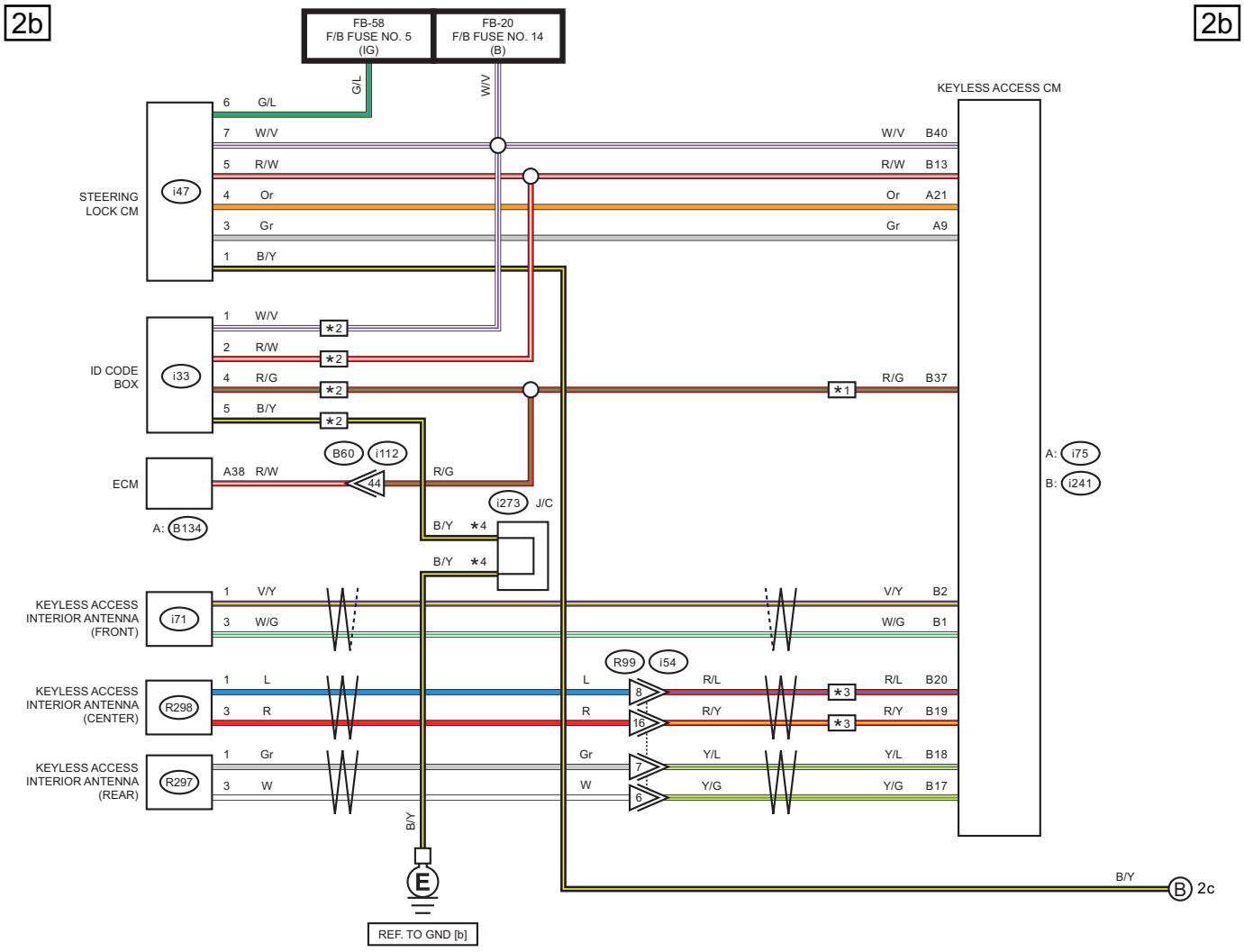

*1 : WITHOUT ID CODE BOX
*2 : WITH ID CODE BOX
*3 : SEDAN MODEL
*4 : TERMINAL No. OPTIONAL ARRANGEMENT

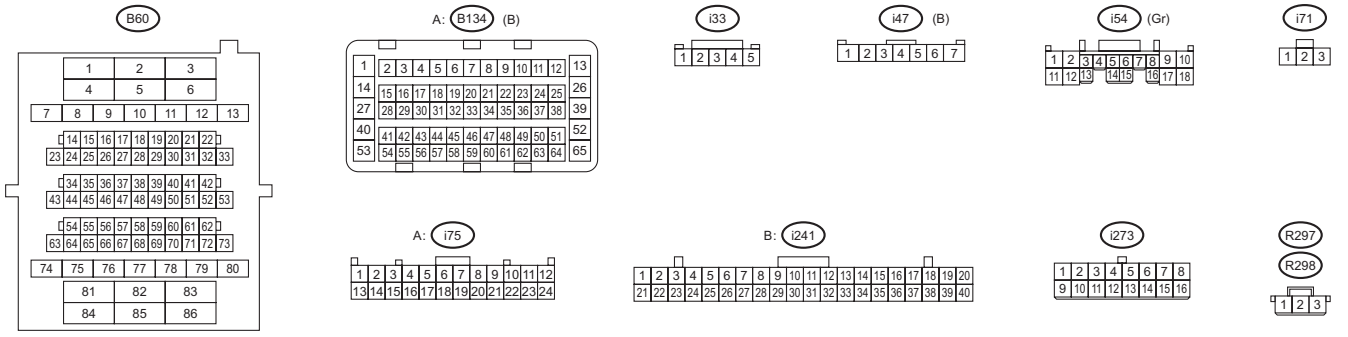

WI-60539

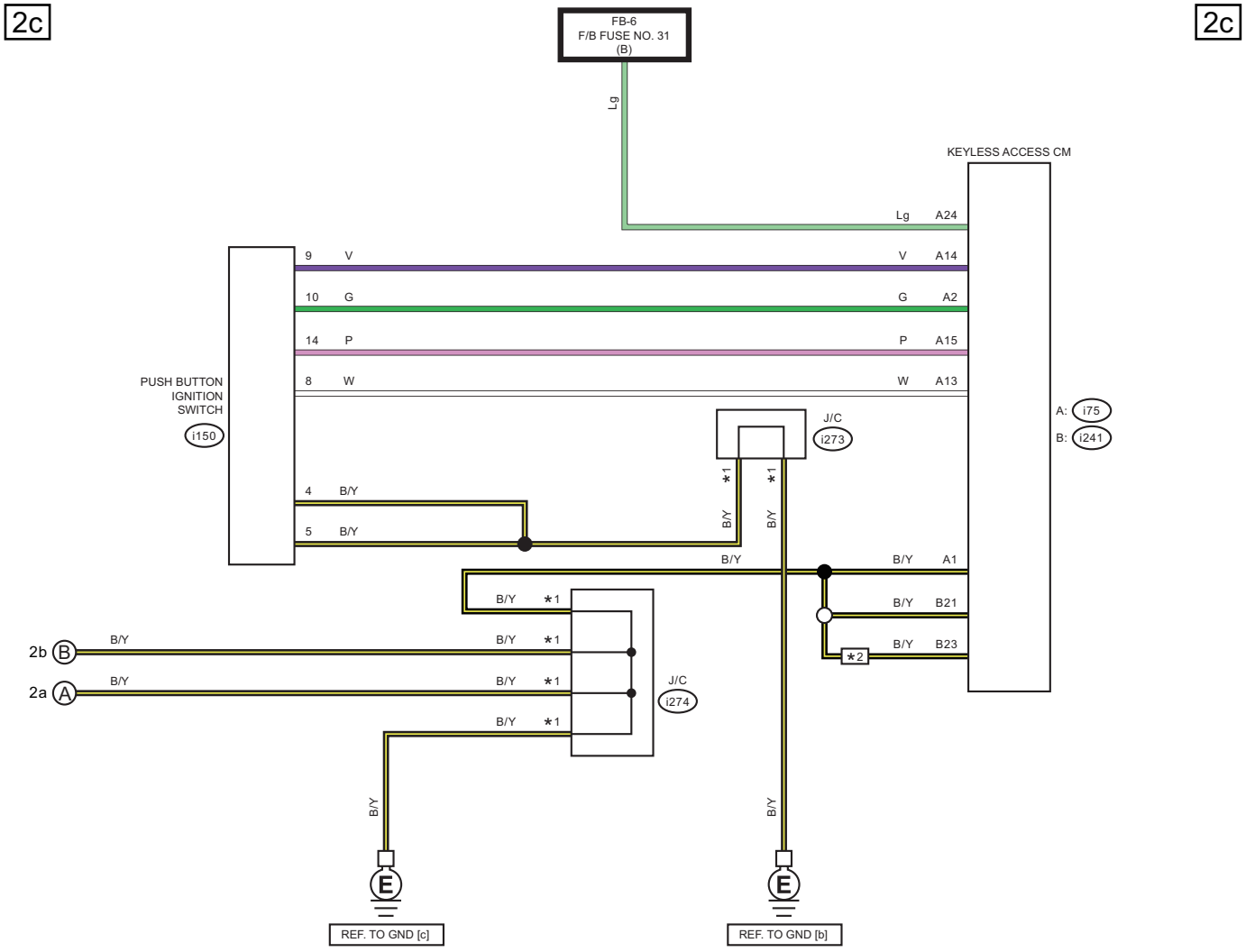

*1 : TERMINAL No. OPTIONAL ARRANGEMENT
*2 : WITH ID CODE BOX

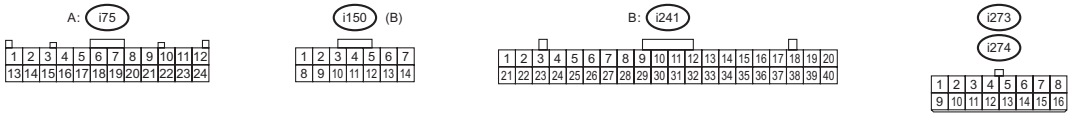

WI-60540

30.Interior Light System

A: WIRING DIAGRAM

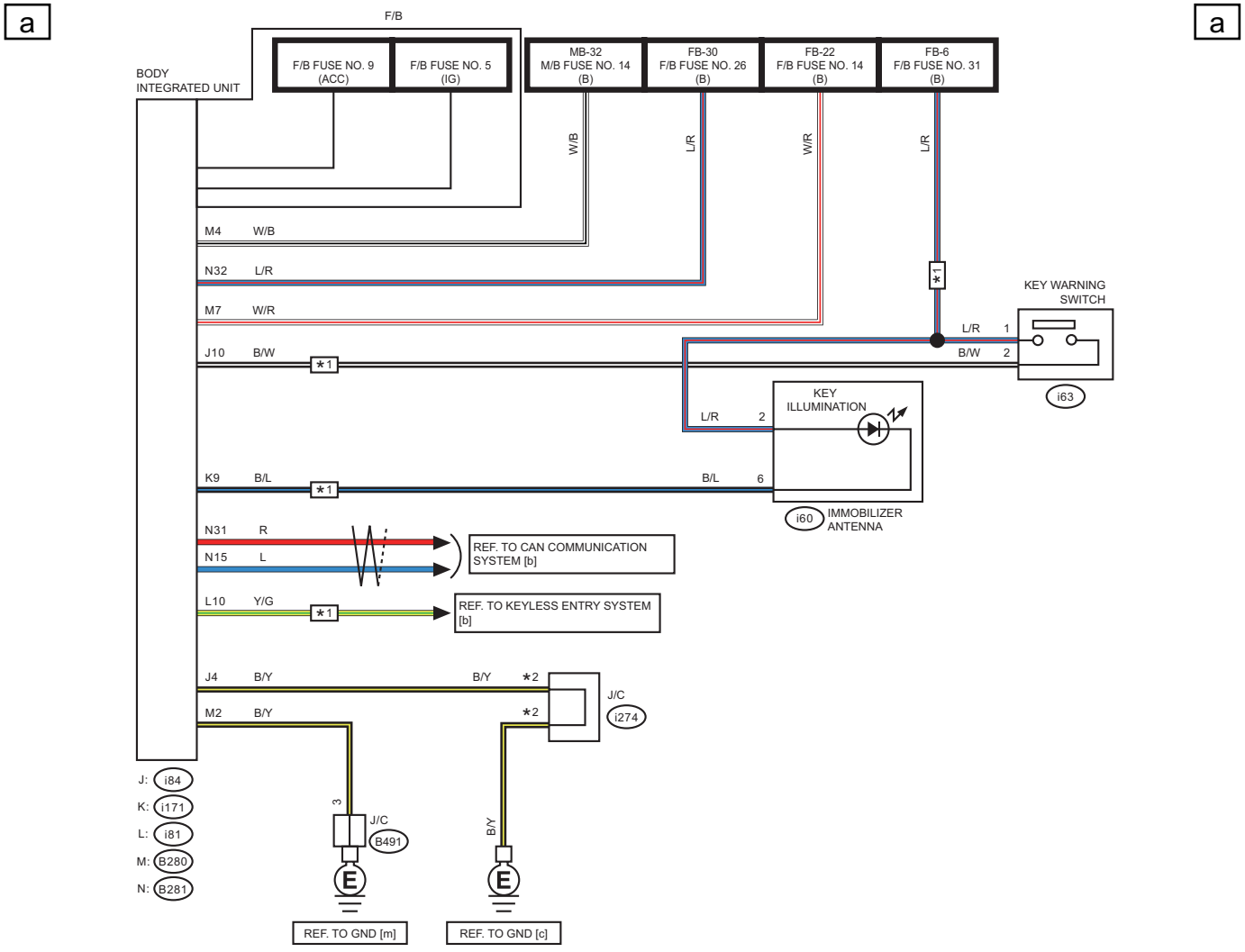

*1 : WITHOUT PUSH BUTTON START
*2 : TERMINAL No. OPTIONAL ARRANGEMENT

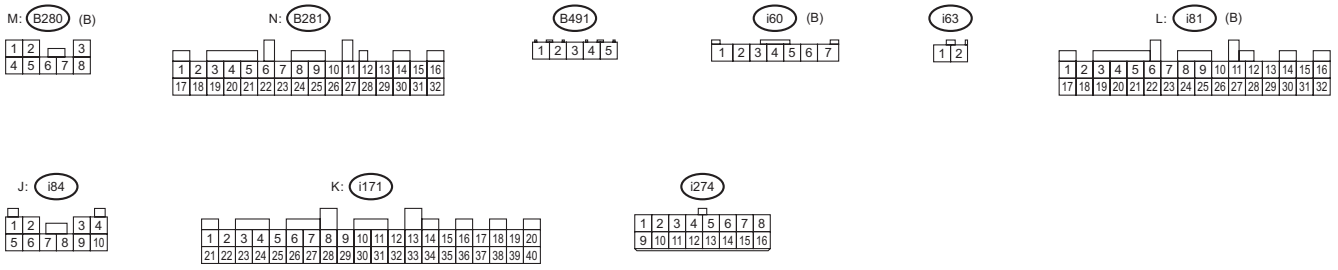

WI-60541

b

b

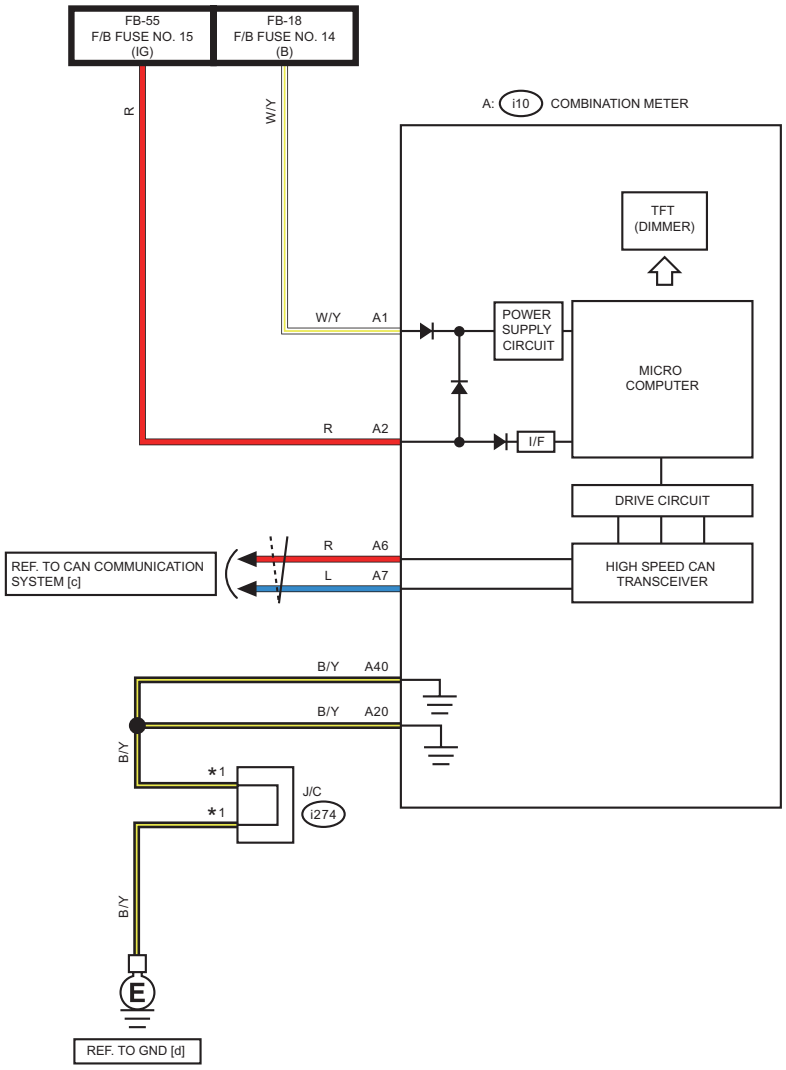

*1 : TERMINAL No. OPTIONAL ARRANGEMENT

A: i10 (B)

1	2	3	4	5	6	7	8	9	10	11	12	13	14	15	16	17	18	19	20
21	22	23	24	25	26	27	28	29	30	31	32	33	34	35	36	37	38	39	40

i274

1	2	3	4	5	6	7	8
9	10	11	12	13	14	15	16

WI-60542

WIRING SYSTEM

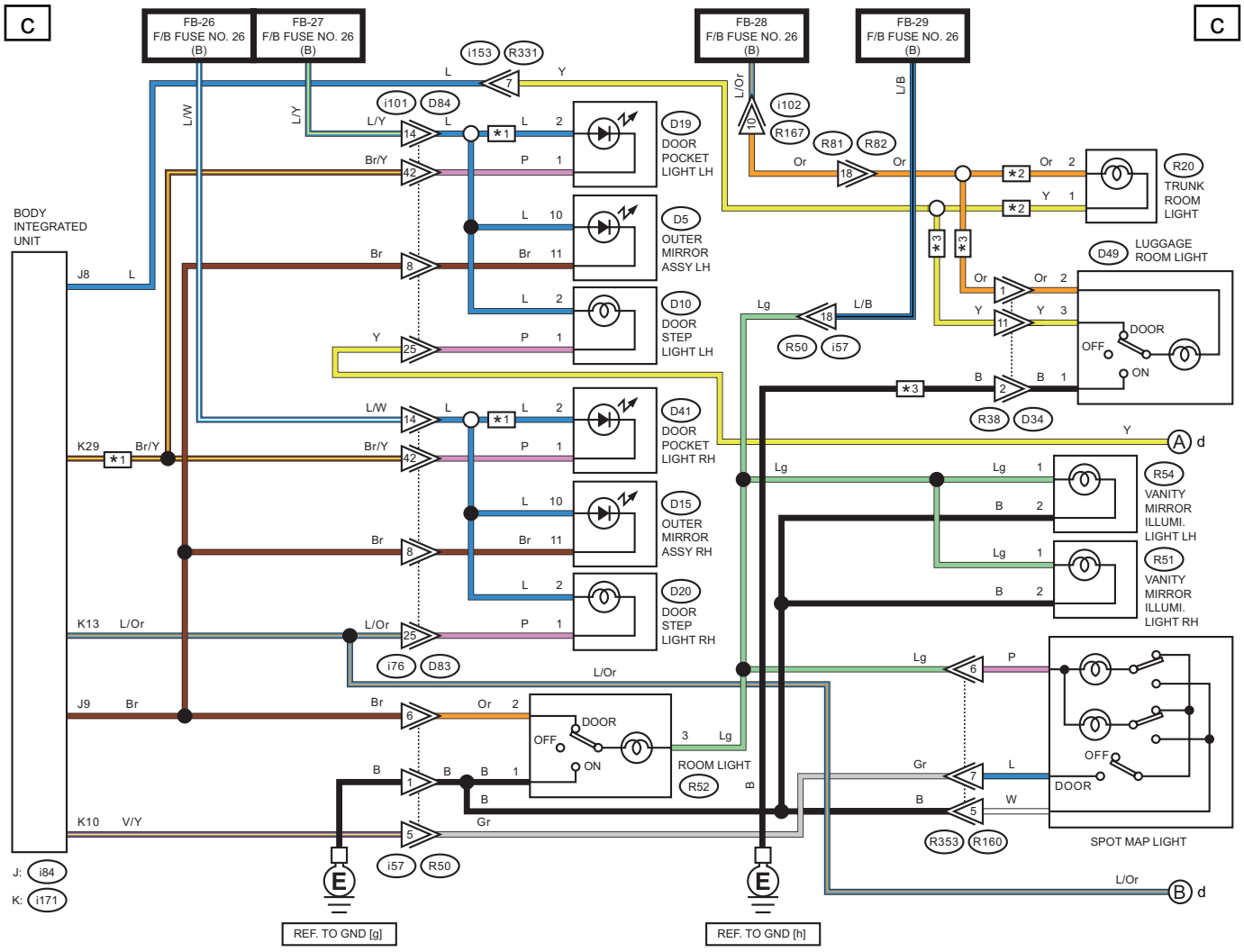

★1 : WITH DOOR POCKET LIGHT
★2 : SEDAN MODEL
★3 : OUTBACK MODEL

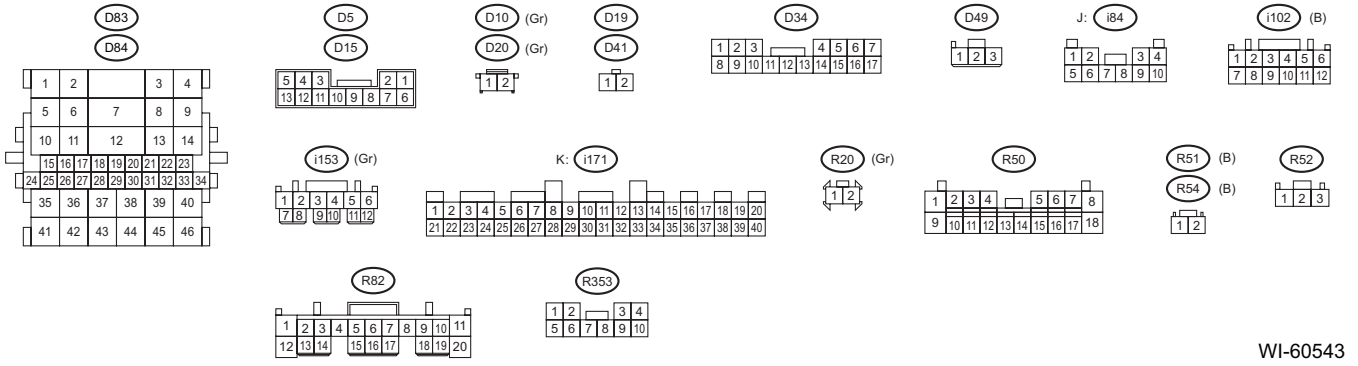

WI-60543

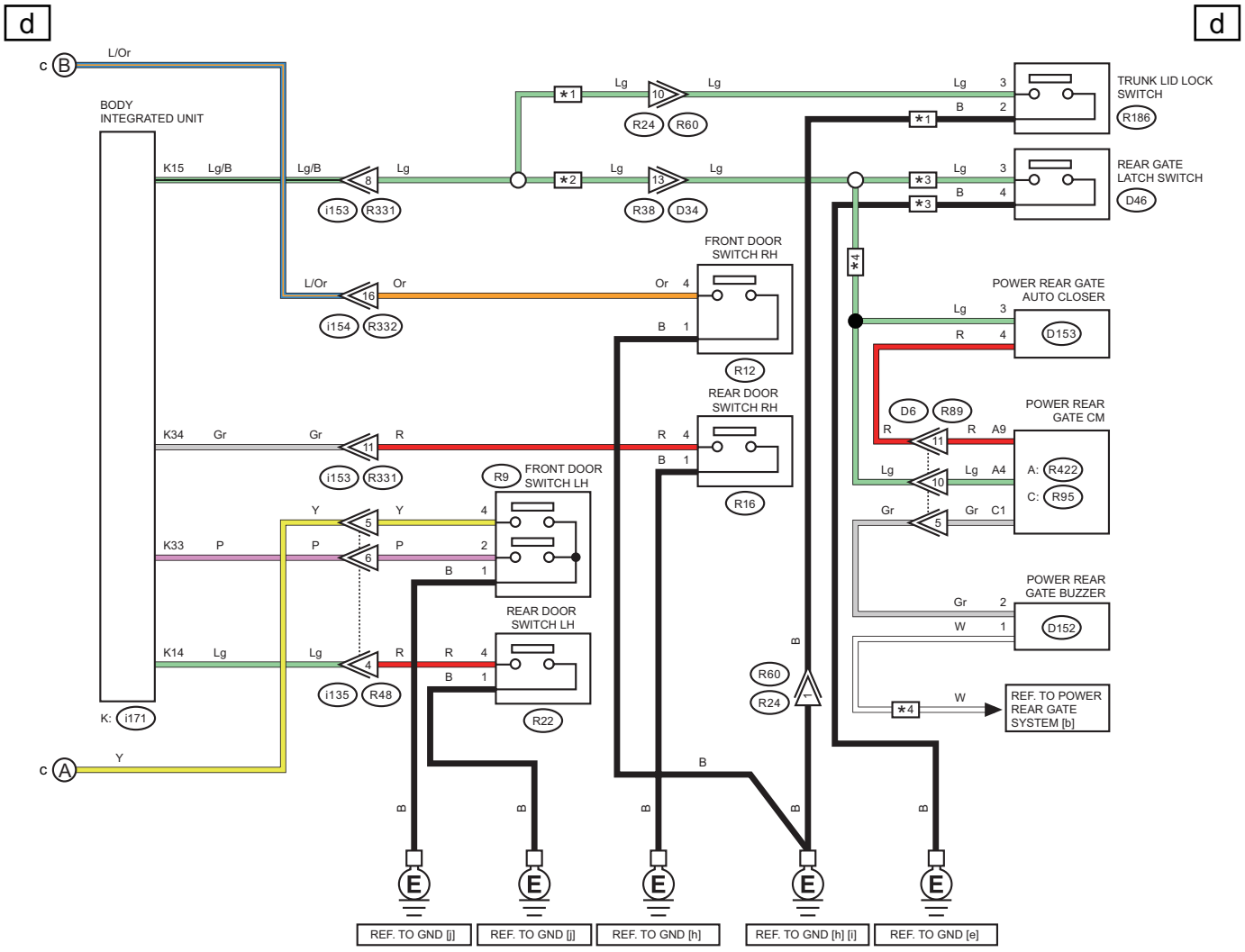

*1 : SEDAN MODEL
*2 : OUTBACK MODEL
*3 : WITHOUT POWER REAR GATE
*4 : WITH POWER REAR GATE

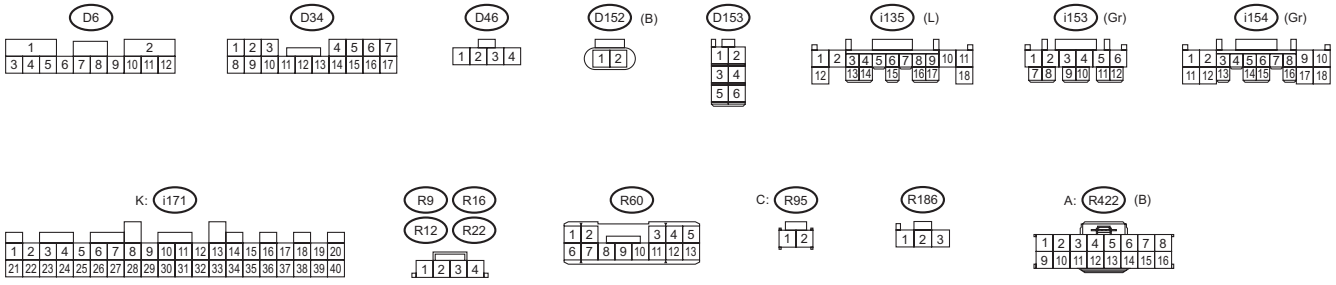

WI-60544

31.Keyless Access With Push Button Start System

A: WIRING DIAGRAM

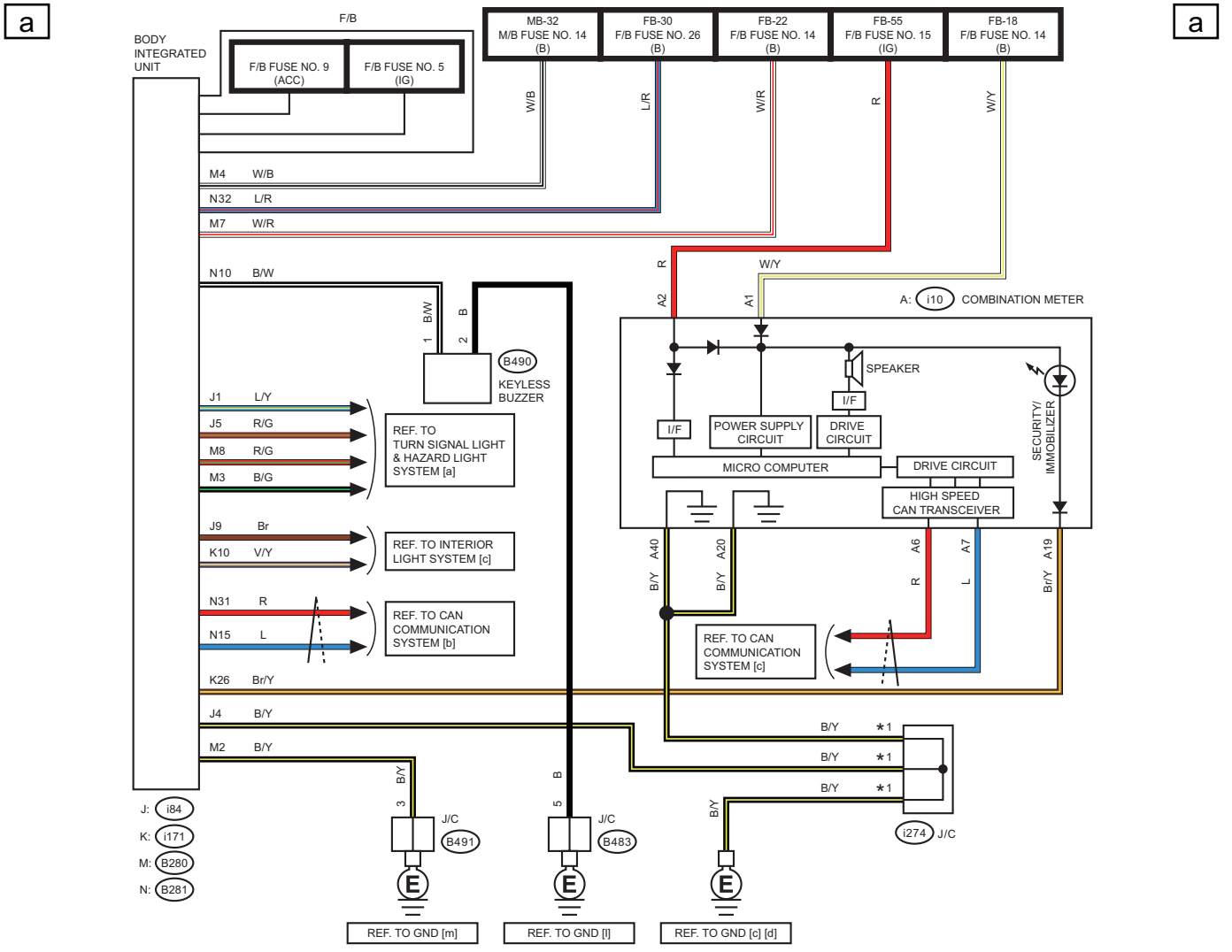

*1 : TERMINAL No. OPTIONAL ARRANGEMENT

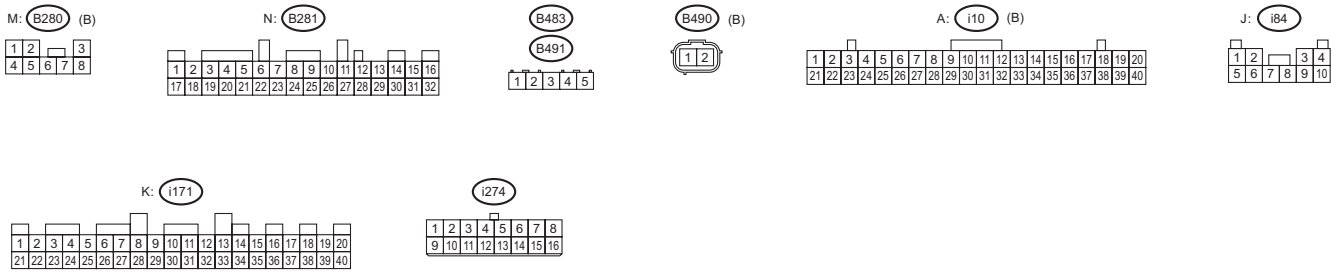

WI-60545

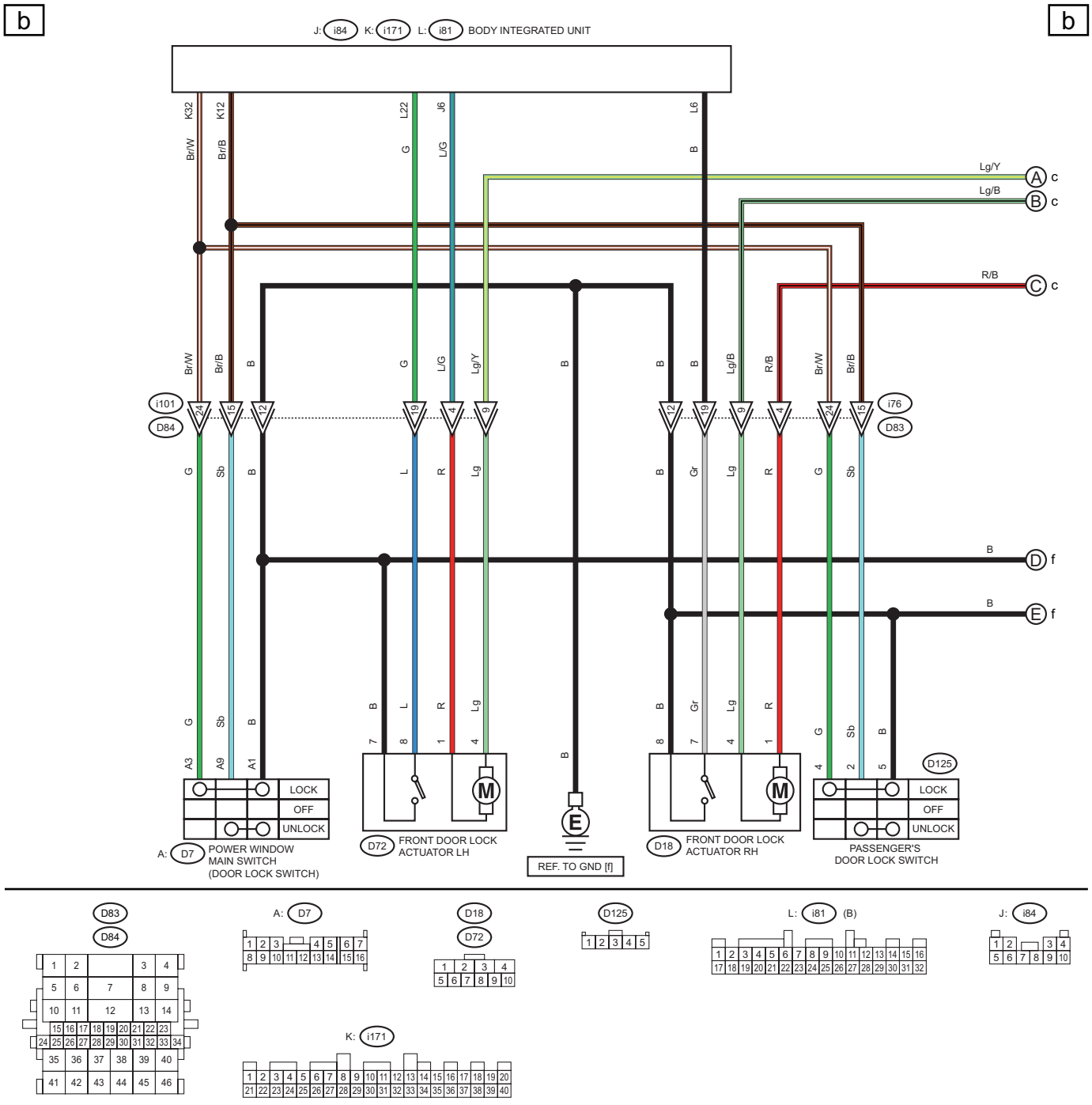
b
b
J: i84 K: i171 L: i81 BODY INTEGRATED UNIT
K32
K12
L22
J6
L6
Br/W
Br/B
G
L/G
B
Lg/Y
Lg/B
R/B
A c
B c
C c
i101
D84
i76
D83
Sb
L
R
Lg
Gr
D f
E f
A3
A9
A1
LOCK
OFF
UNLOCK
A: D7 POWER WINDOW MAIN SWITCH (DOOR LOCK SWITCH)
D72 FRONT DOOR LOCK ACTUATOR LH
REF. TO GND [f]
D18 FRONT DOOR LOCK ACTUATOR RH
D125
PASSENGER'S DOOR LOCK SWITCH
D83
D84
A: D7
D18
D72
D125
L: i81 (B)
J: i84
K: i171

WI-60546

WIRING SYSTEM

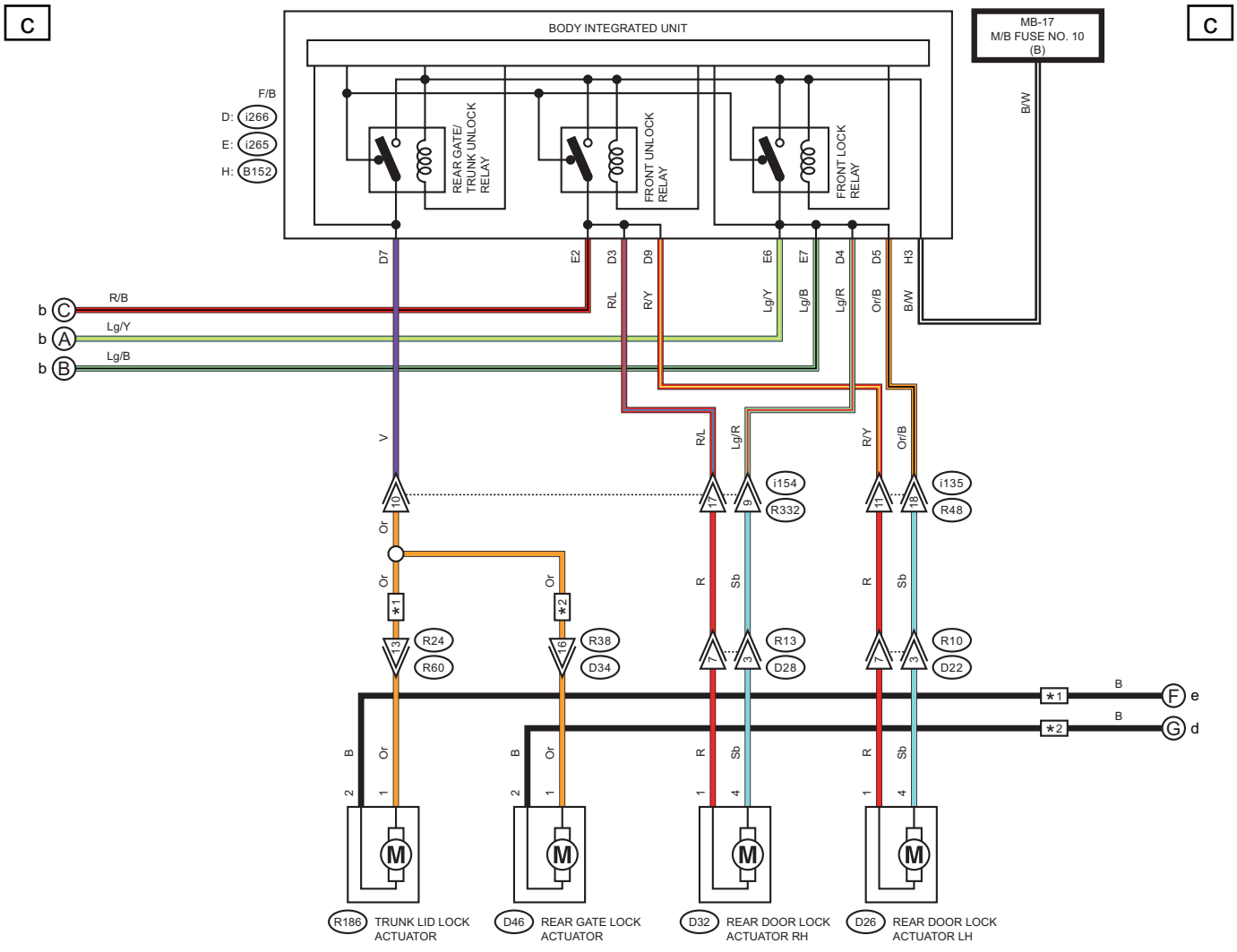

*1 : SEDAN MODEL
*2 : OUTBACK MODEL WITHOUT POWER REAR GATE

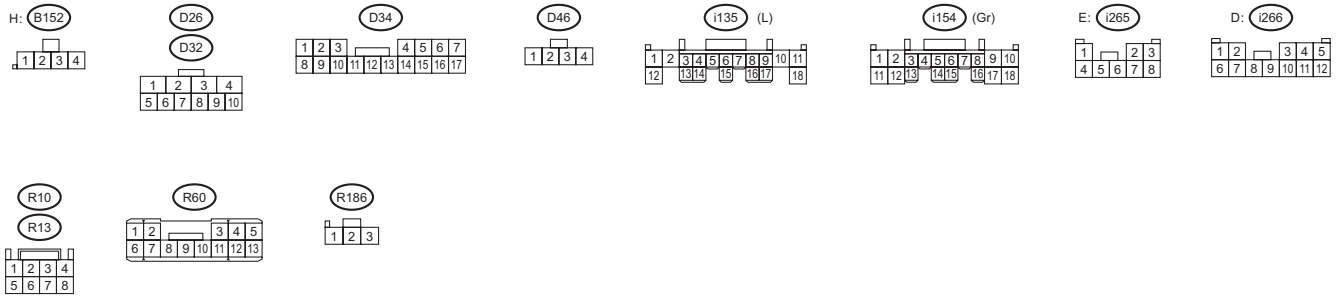

WI-60547

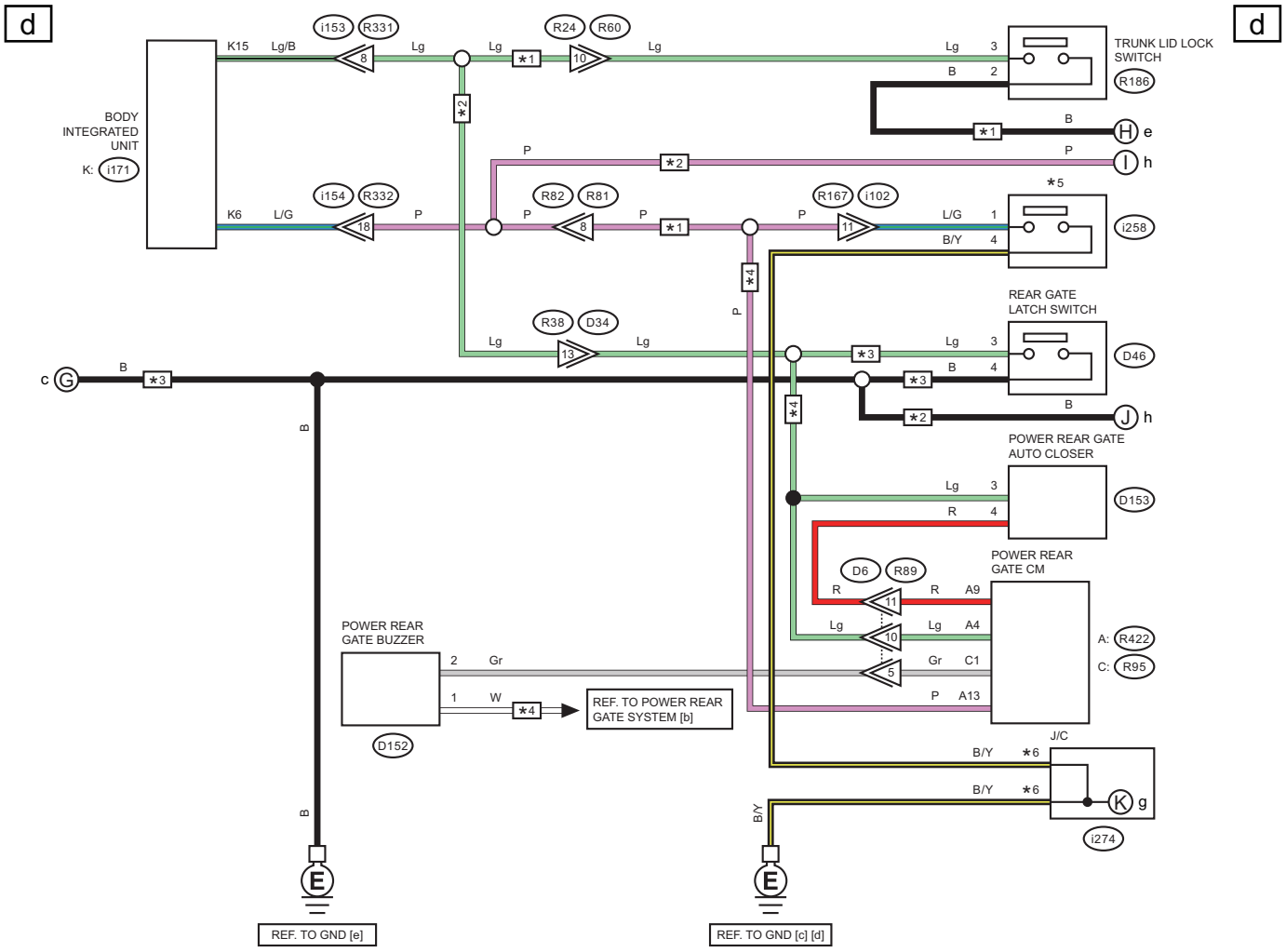

★1 : SEDAN MODEL
★2 : OUTBACK MODEL
★3 : OUTBACK MODEL WITHOUT POWER REAR GATE
★4 : OUTBACK MODEL WITH POWER REAR GATE
★5 : SEDAN MODEL : LOWER COVER SWITCH (TRUNK LID OPENER)
OUTBACK MODEL : POWER REAR GATE DRIVER'S SWITCH
★6 : TERMINAL No. OPTIONAL ARRANGEMENT

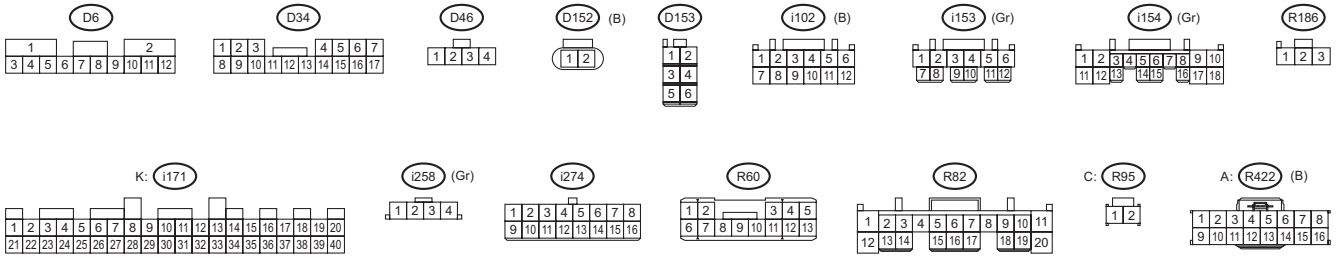

WI-60548

e

e

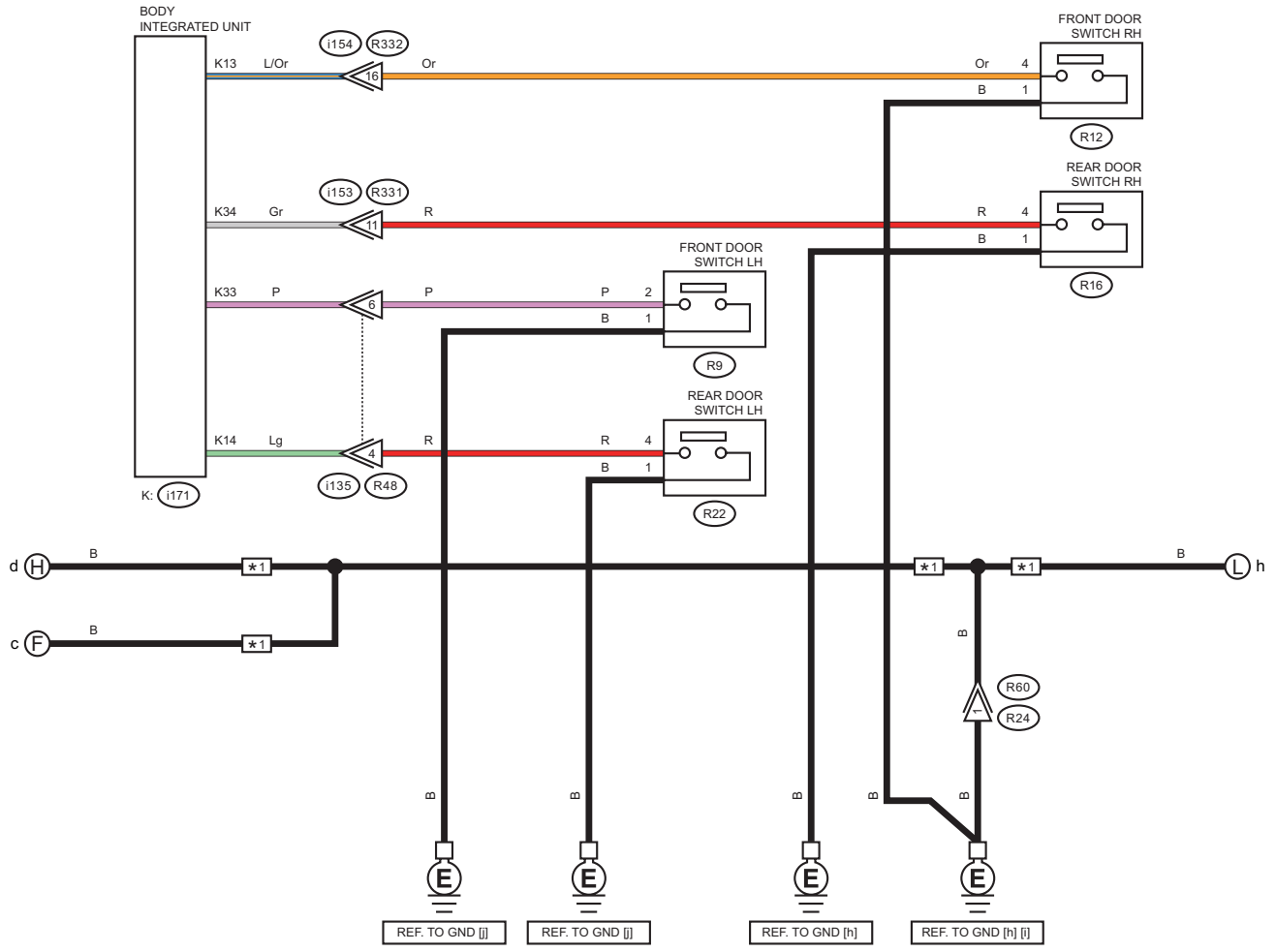

*1 : SEDAN MODEL

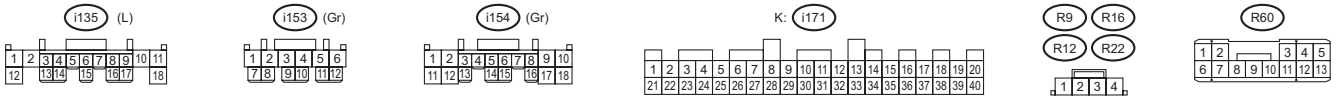

WI-60549

f f

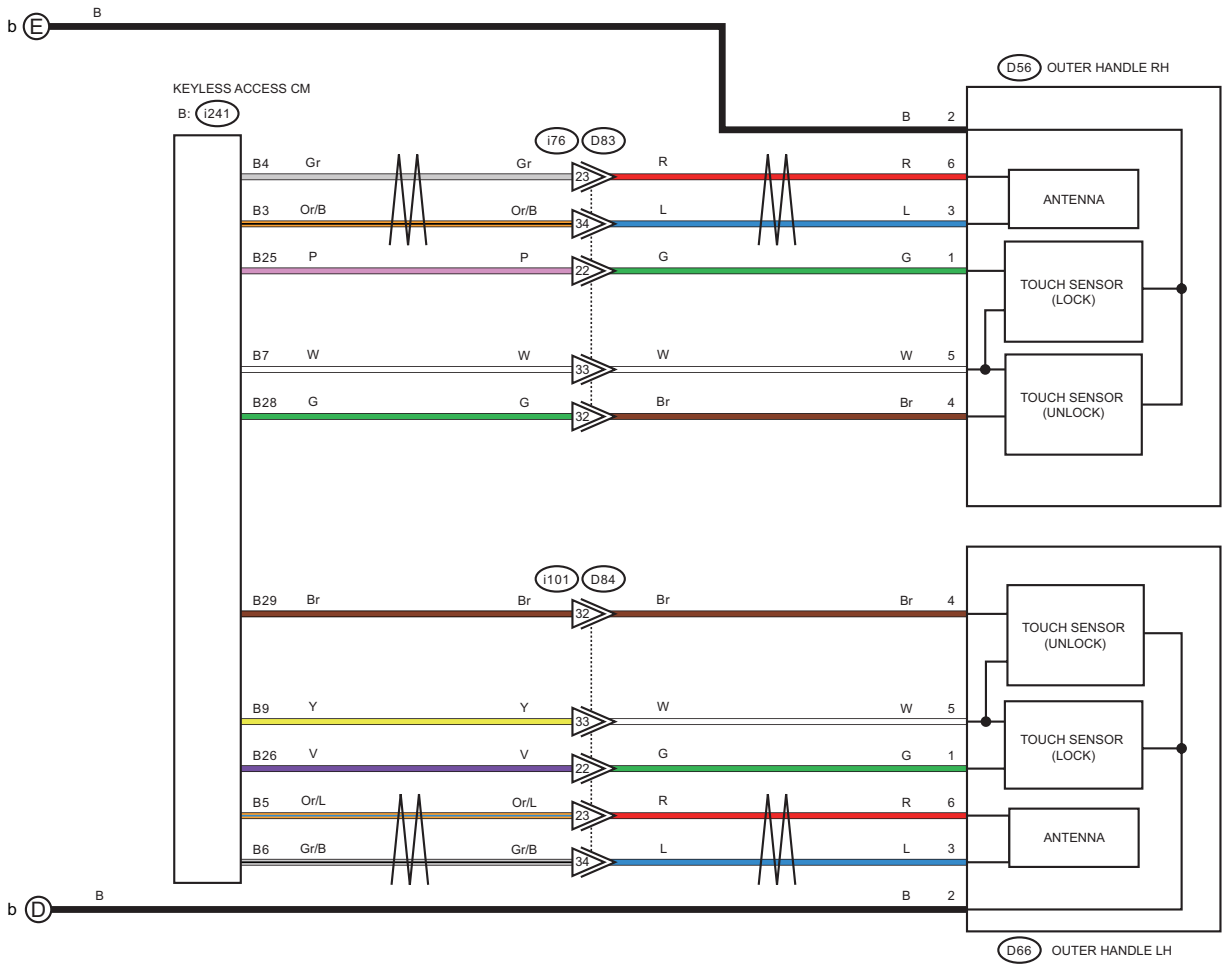
b E B
KEYLESS ACCESS CM
B: i241
i76 D83
B4 Gr Gr 23 R R 6
B3 Or/B Or/B 34 L L 3
B25 P P 22 G G 1
B7 W W 33 W W 5
B28 G G 32 Br Br 4
B 2
D56 OUTER HANDLE RH
ANTENNA
TOUCH SENSOR (LOCK)
TOUCH SENSOR (UNLOCK)
i101 D84
B29 Br Br 32 Br Br 4
B9 Y Y 33 W W 5
B26 V V 22 G G 1
B5 Or/L Or/L 23 R R 6
B6 Gr/B Gr/B 34 L L 3
TOUCH SENSOR (UNLOCK)
TOUCH SENSOR (LOCK)
ANTENNA
b D B
B 2
D66 OUTER HANDLE LH

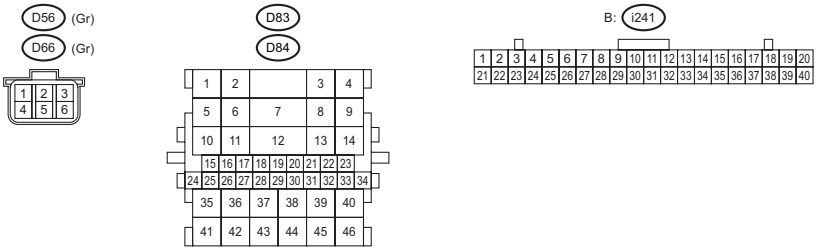
D56 (Gr)
D66 (Gr)
1 2 3
4 5 6
D83
D84
1 2 3 4
5 6 7 8 9
10 11 12 13 14
15 16 17 18 19 20 21 22 23
24 25 26 27 28 29 30 31 32 33 34
35 36 37 38 39 40
41 42 43 44 45 46
B: i241
1 2 3 4 5 6 7 8 9 10 11 12 13 14 15 16 17 18 19 20
21 22 23 24 25 26 27 28 29 30 31 32 33 34 35 36 37 38 39 40

WI-60550

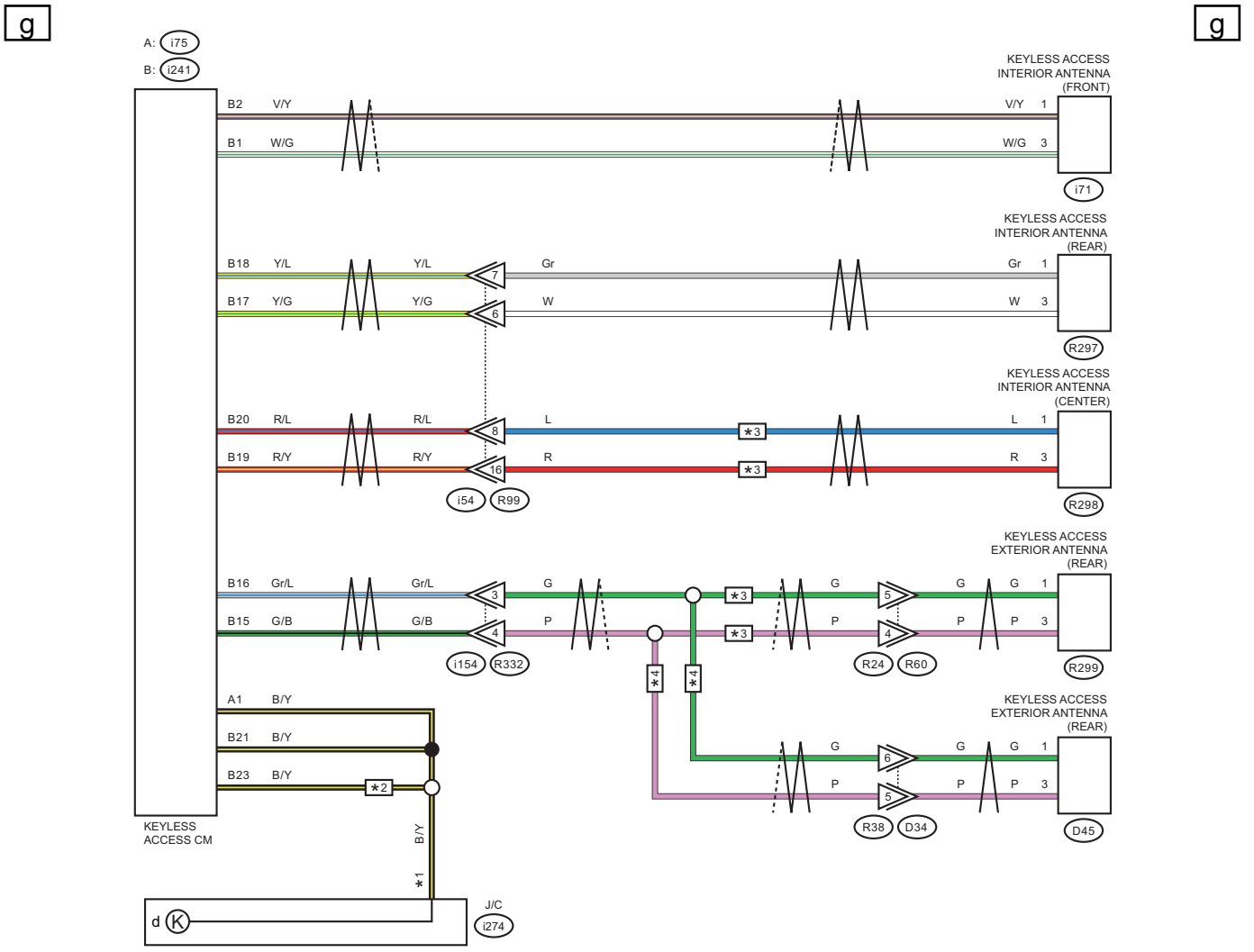

*1 : TERMINAL No. OPTIONAL ARRANGEMENT
*2 : WITH ID CODE BOX
*3 : SEDAN MODEL
*4 : OUTBACK MODEL

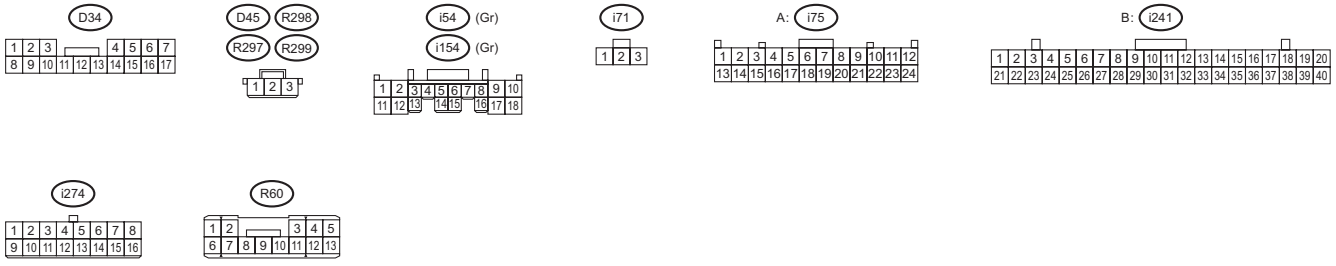

WI-60551

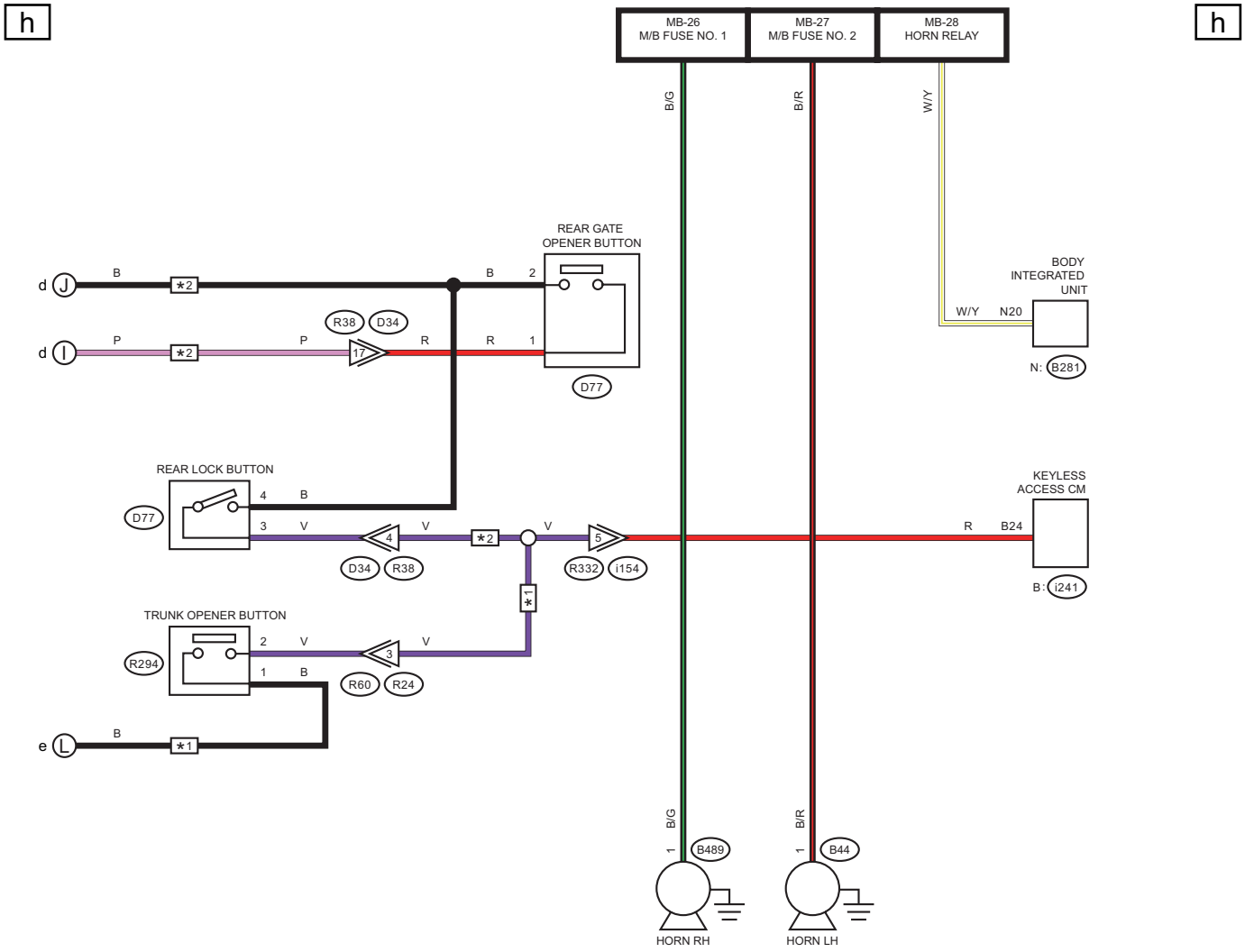

*1 : SEDAN MODEL
*2 : OUTBACK MODEL

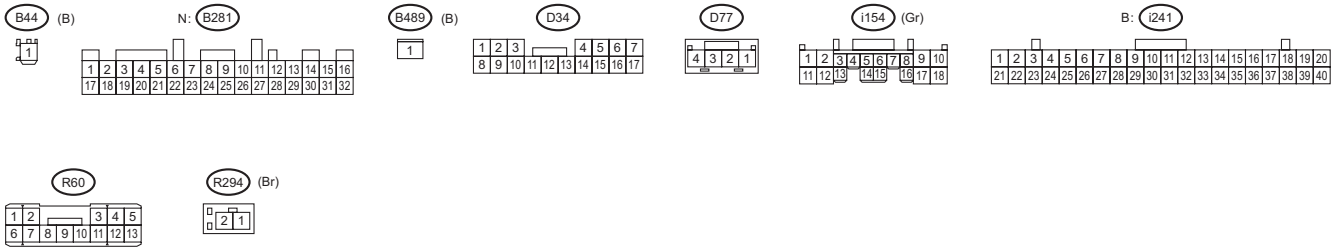

WI-60552

WIRING SYSTEM

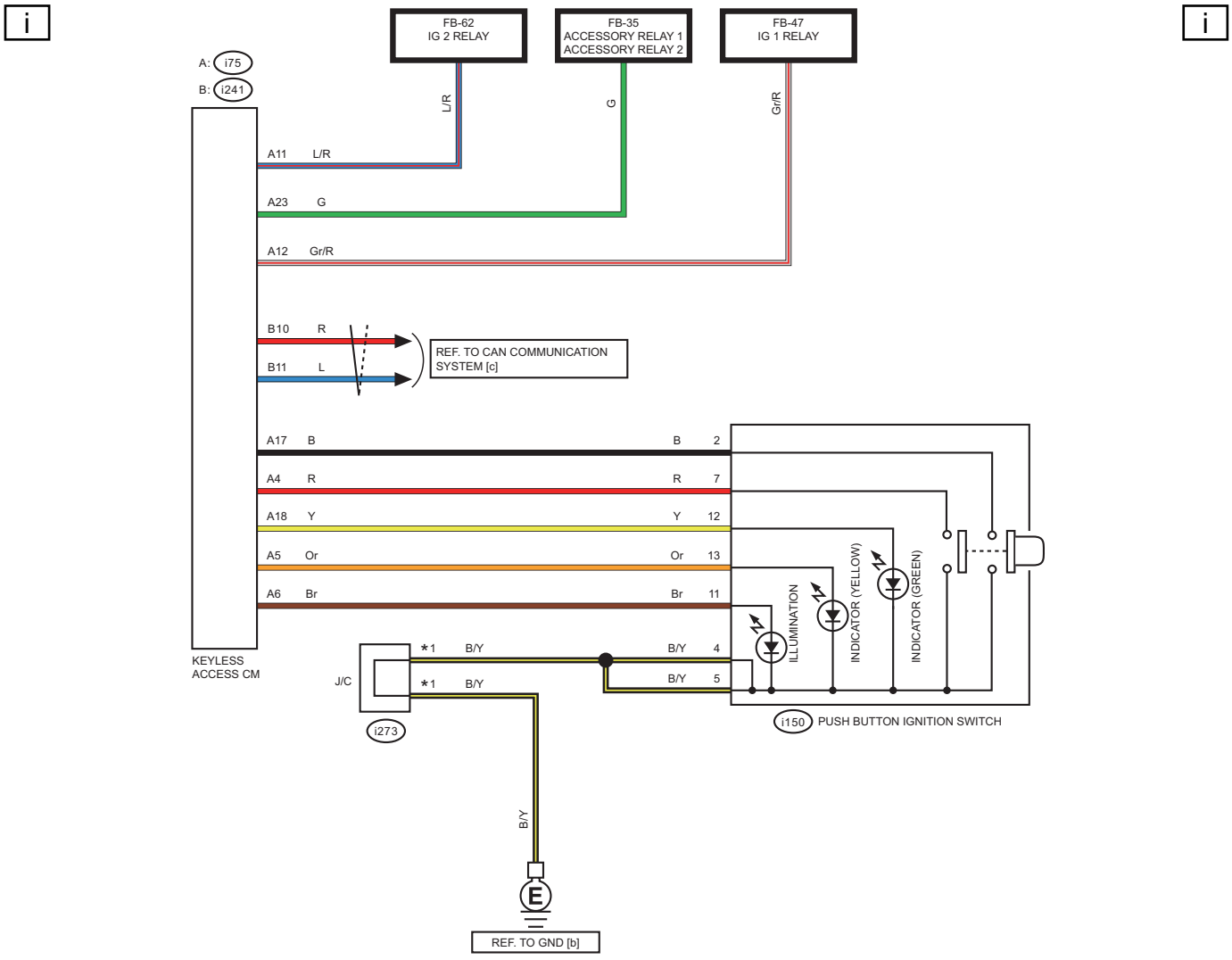

*1 : TERMINAL No. OPTIONAL ARRANGEMENT

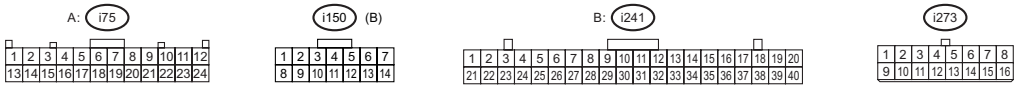

WI-60553

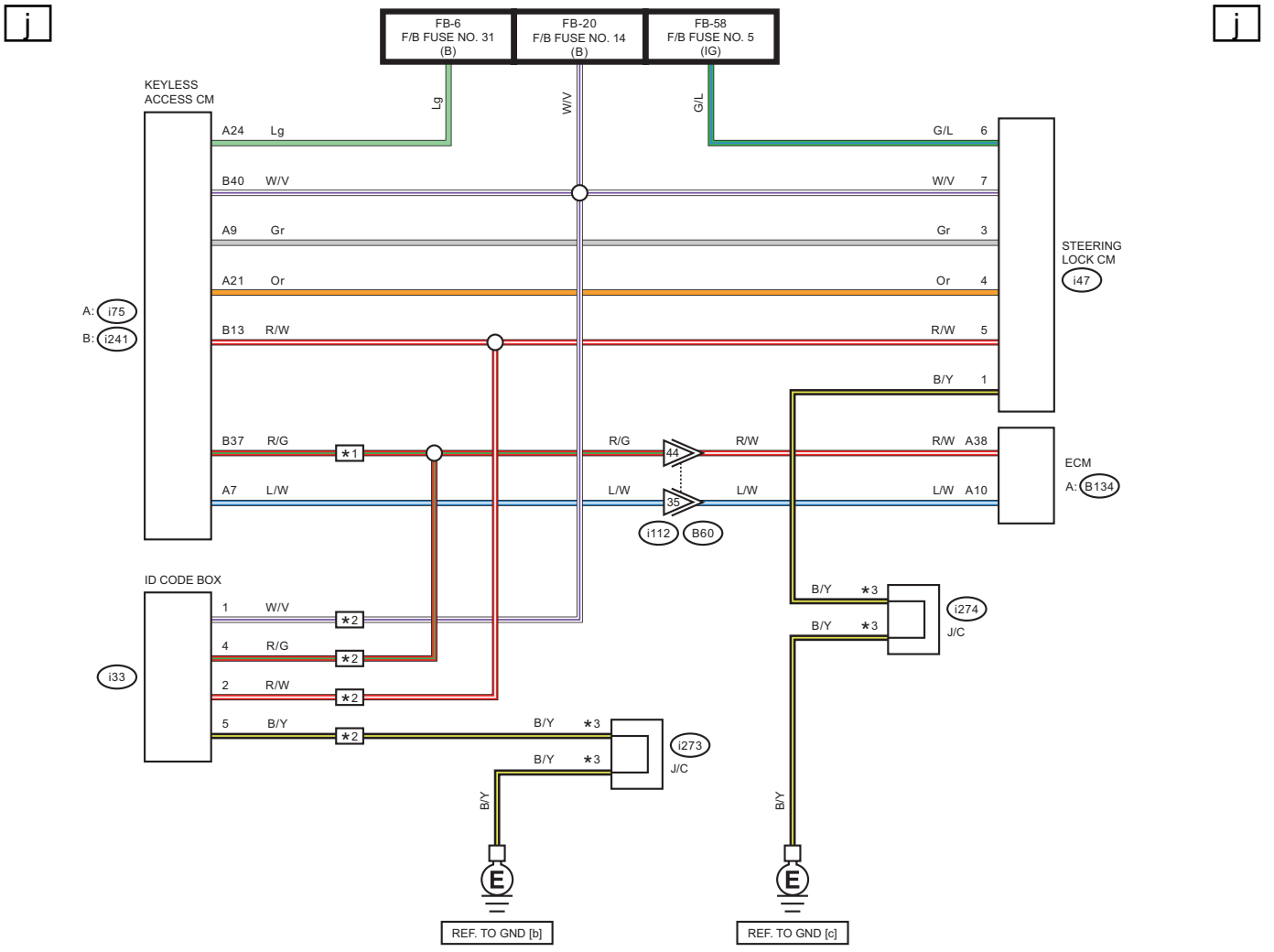

∗1 : WITHOUT ID CODE BOX
∗2 : WITH ID CODE BOX
∗3 : TERMINAL No. OPTIONAL ARRANGEMENT

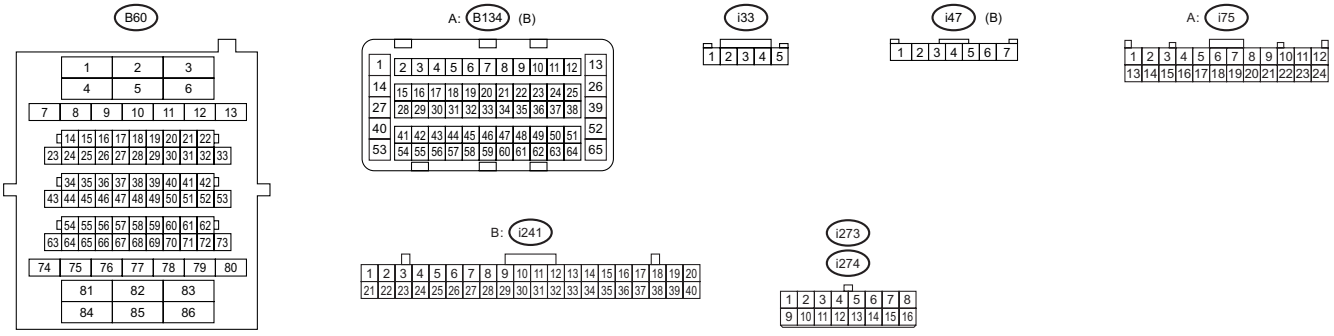

WI-60554

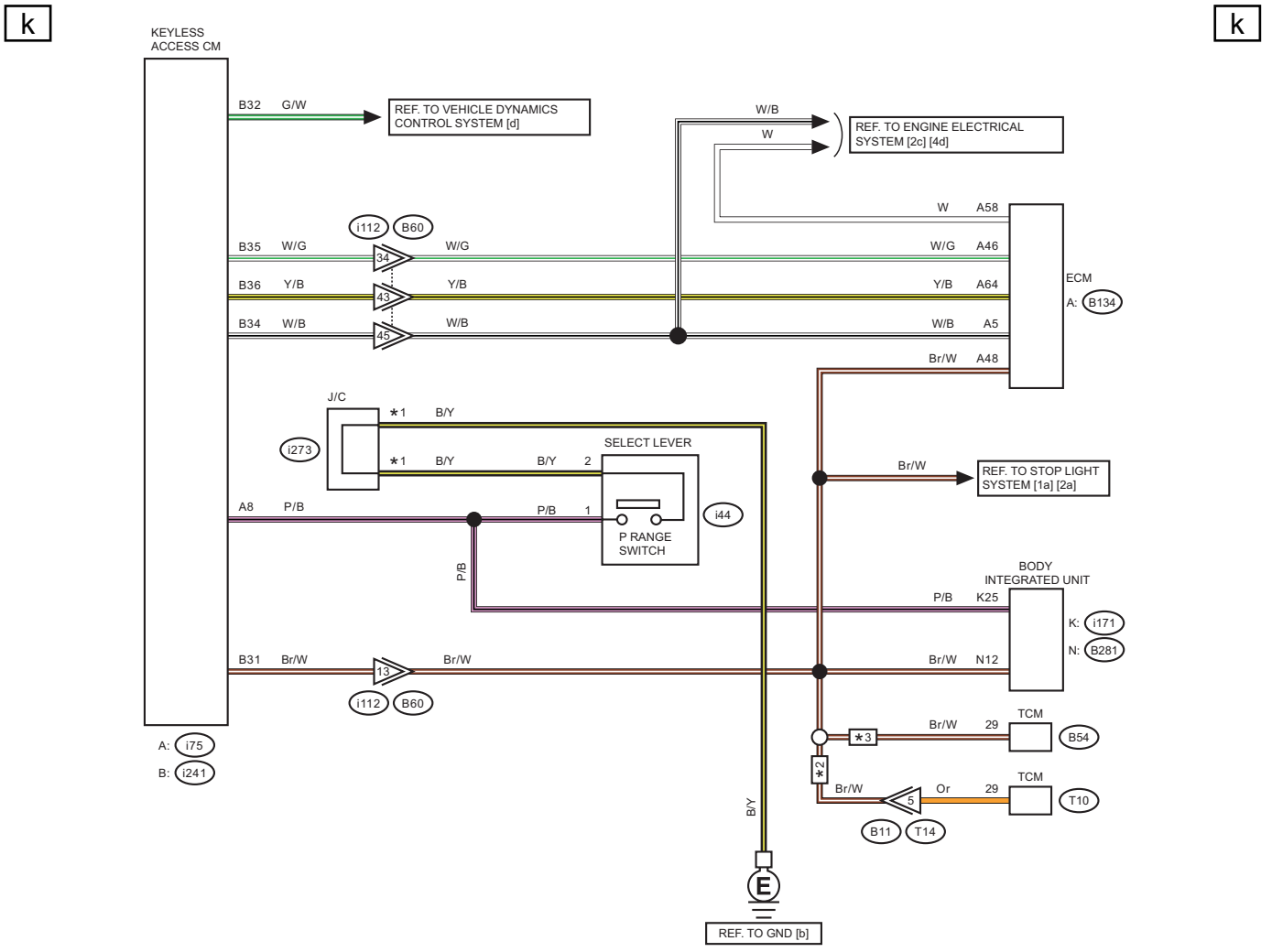

*1 : TERMINAL No. OPTIONAL ARRANGEMENT
*2 : ENGINE TYPE FB
*3 : ENGINE TYPE EZ

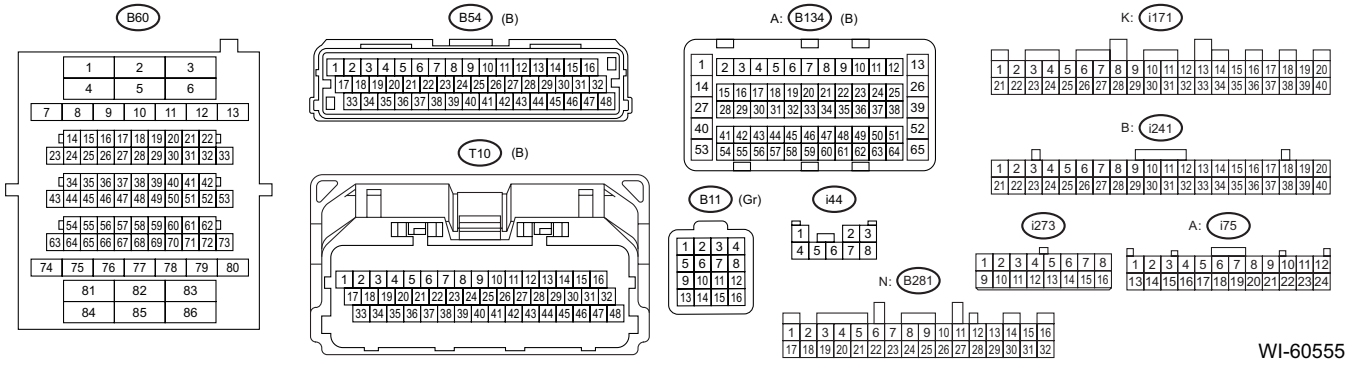

32.Keyless Entry System

A: WIRING DIAGRAM

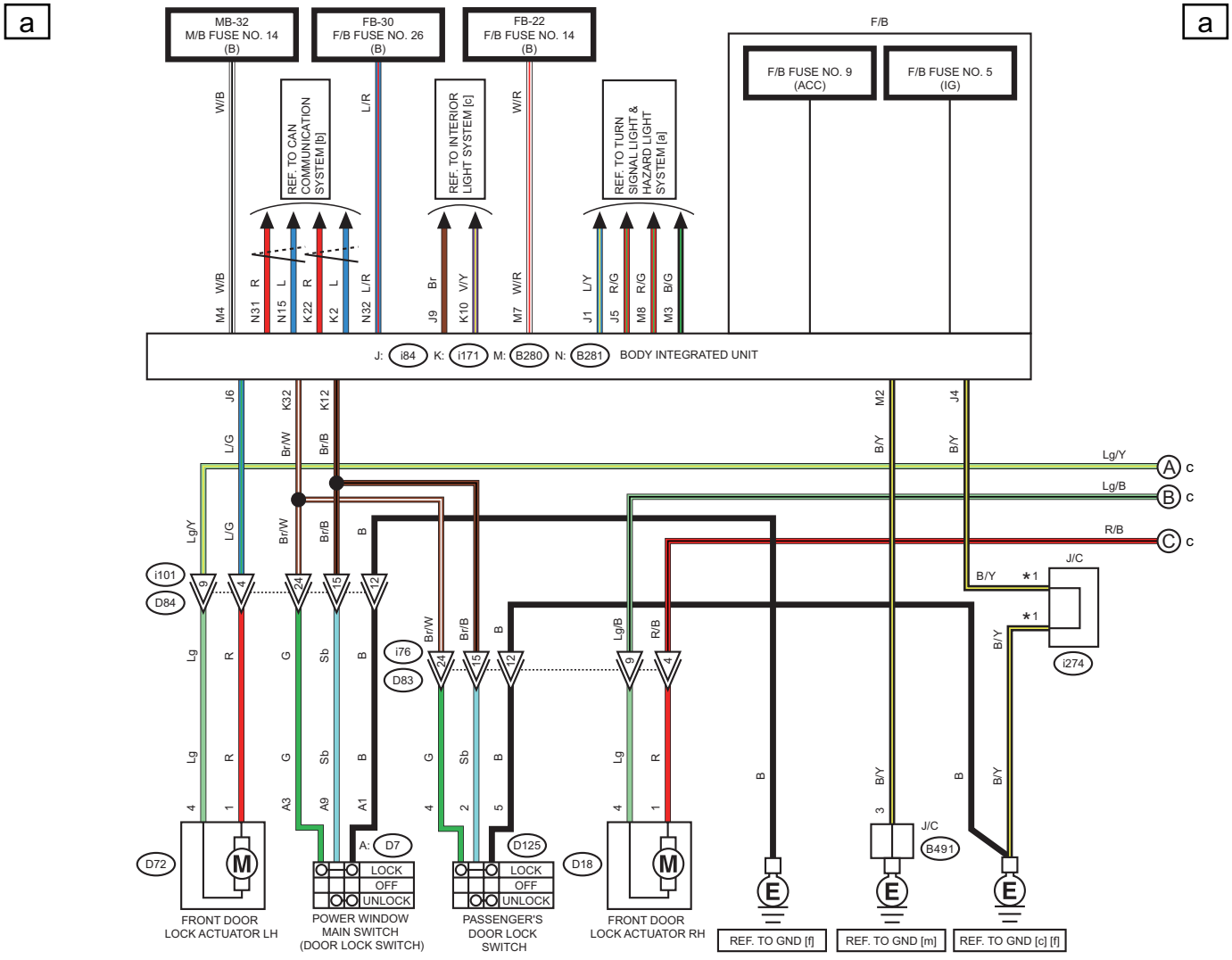

*1 : TERMINAL No. OPTIONAL ARRANGEMENT

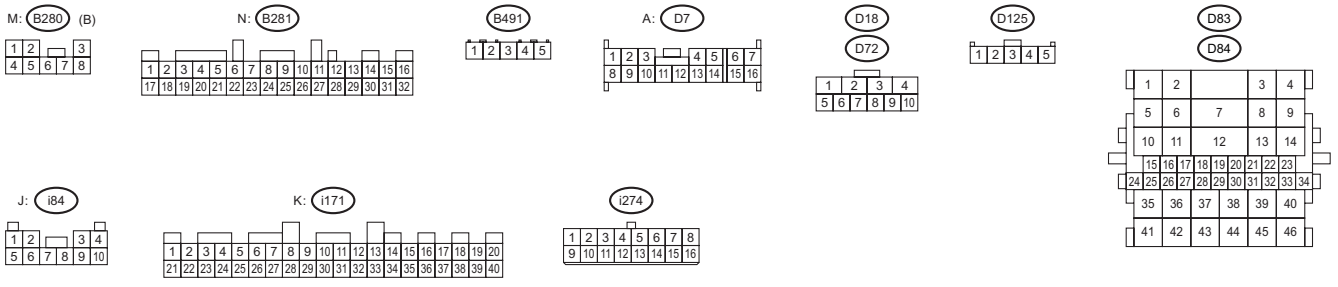

WI-60556

WIRING SYSTEM

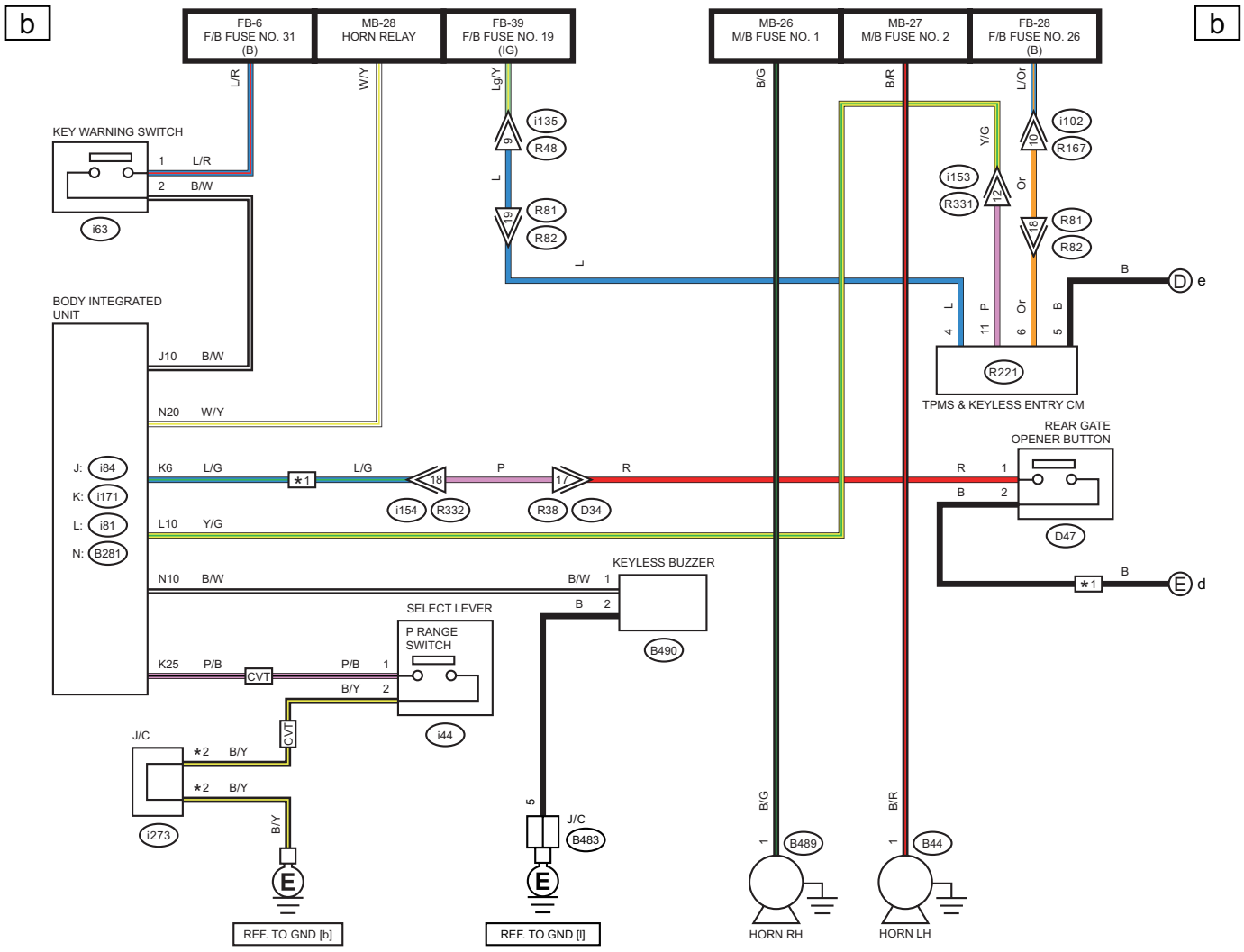

*1 : OUTBACK MODEL
*2 : TERMINAL No. OPTIONAL ARRANGEMENT

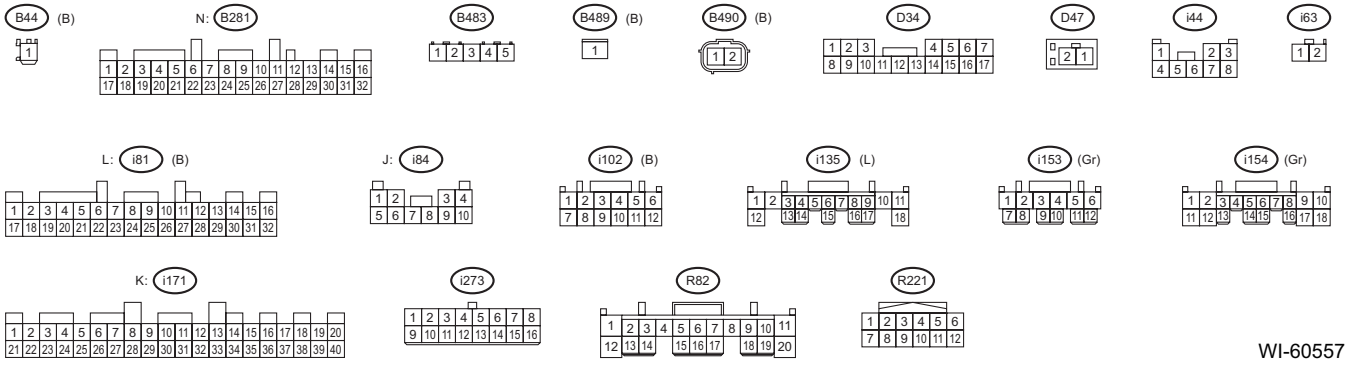

WI-60557

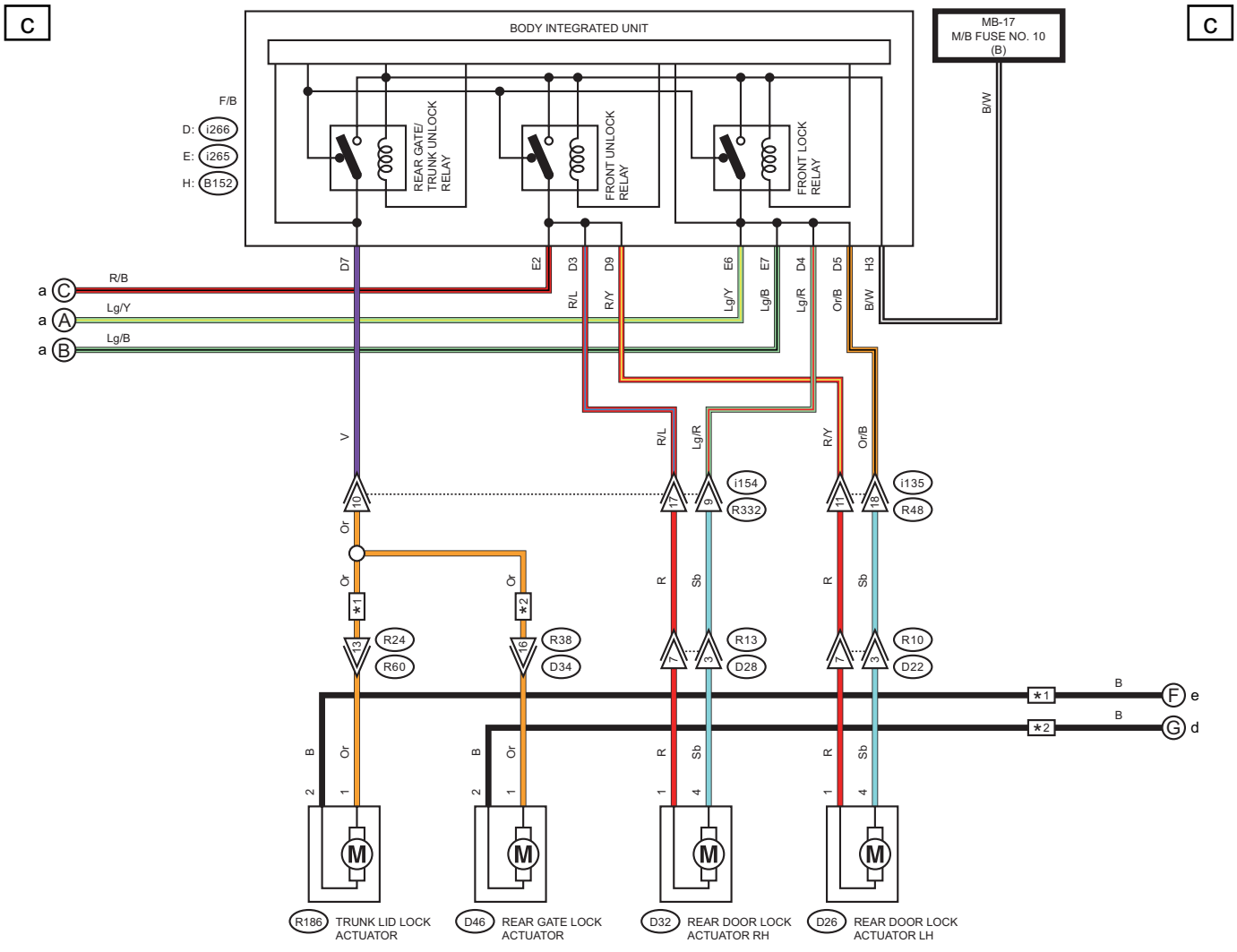

*1 : SEDAN MODEL
*2 : OUTBACK MODEL WITHOUT POWER REAR GATE

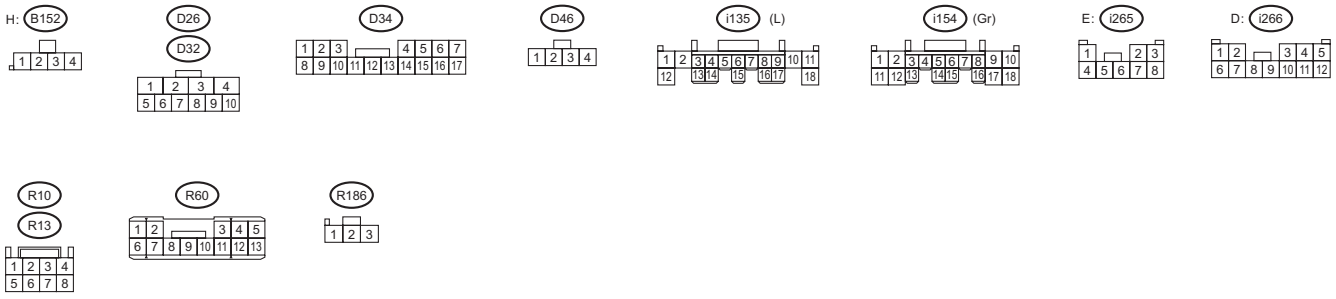

WI-60558

WIRING SYSTEM

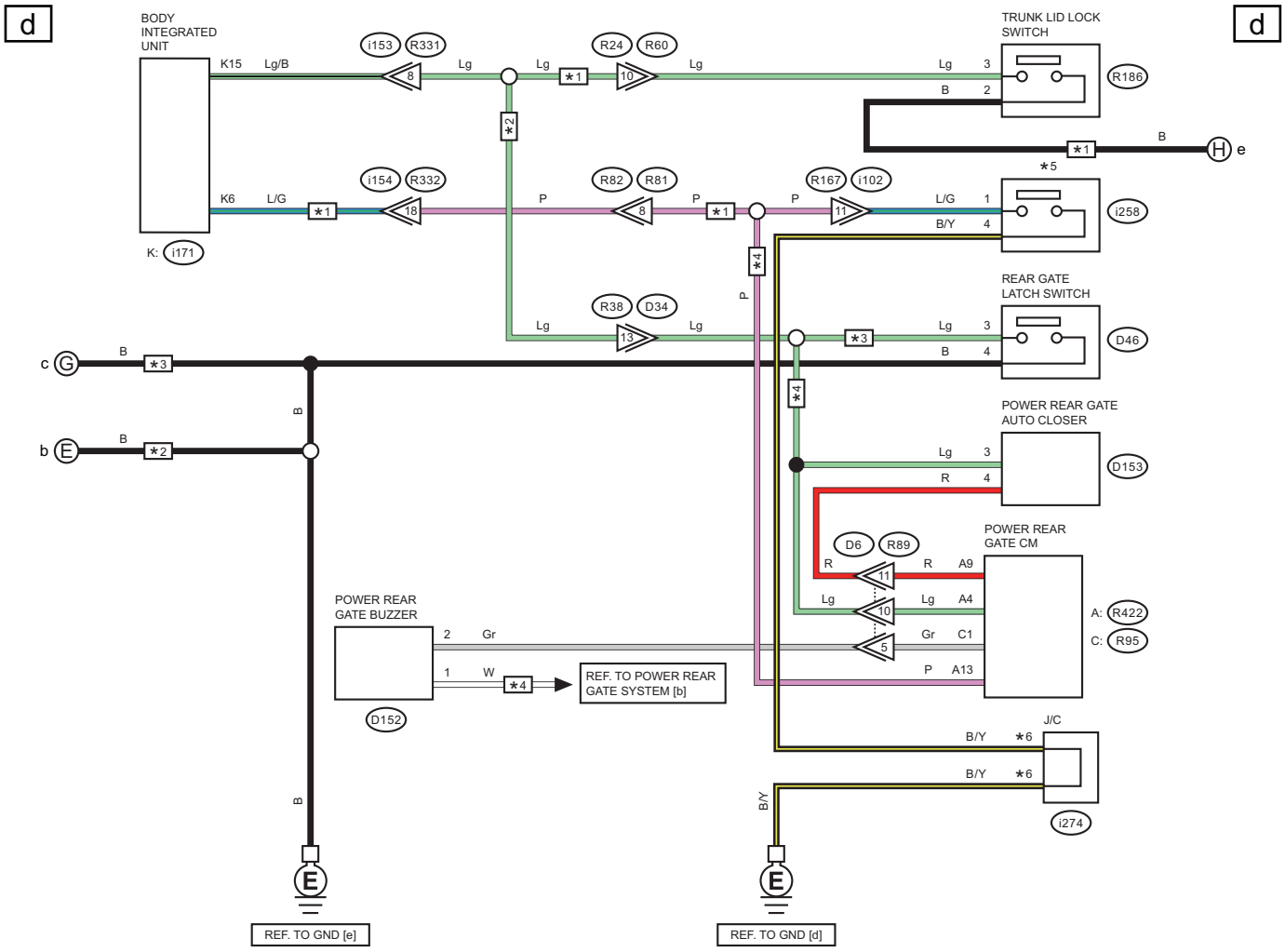

*1 : SEDAN MODEL
*2 : OUTBACK MODEL
*3 : OUTBACK MODEL WITHOUT POWER REAR GATE
*4 : OUTBACK MODEL WITH POWER REAR GATE
*5 : SEDAN MODEL : LOWER COVER SWITCH (TRUNK LID OPENER)
OUTBACK MODEL : POWER REAR GATE DRIVER'S SWITCH
*6 : TERMINAL No. OPTIONAL ARRANGEMENT

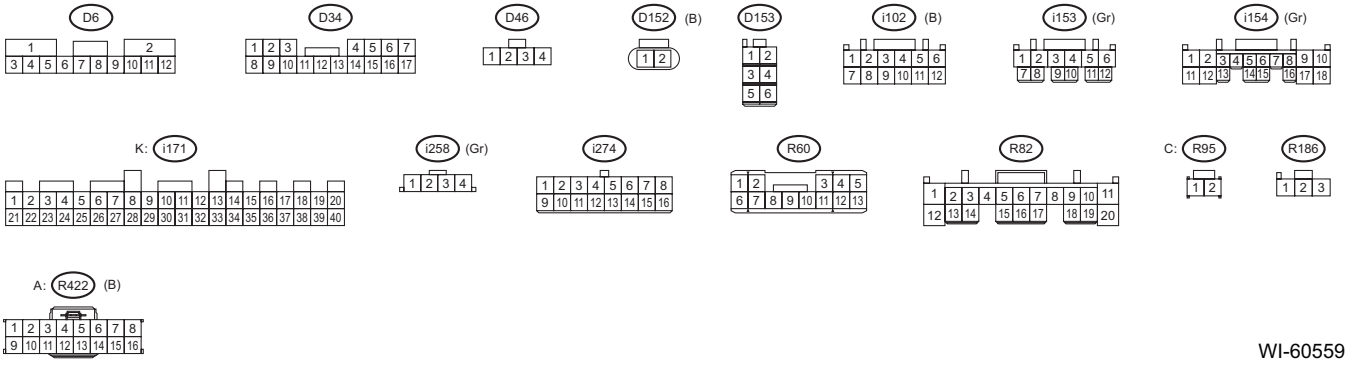

WI-60559

e

e

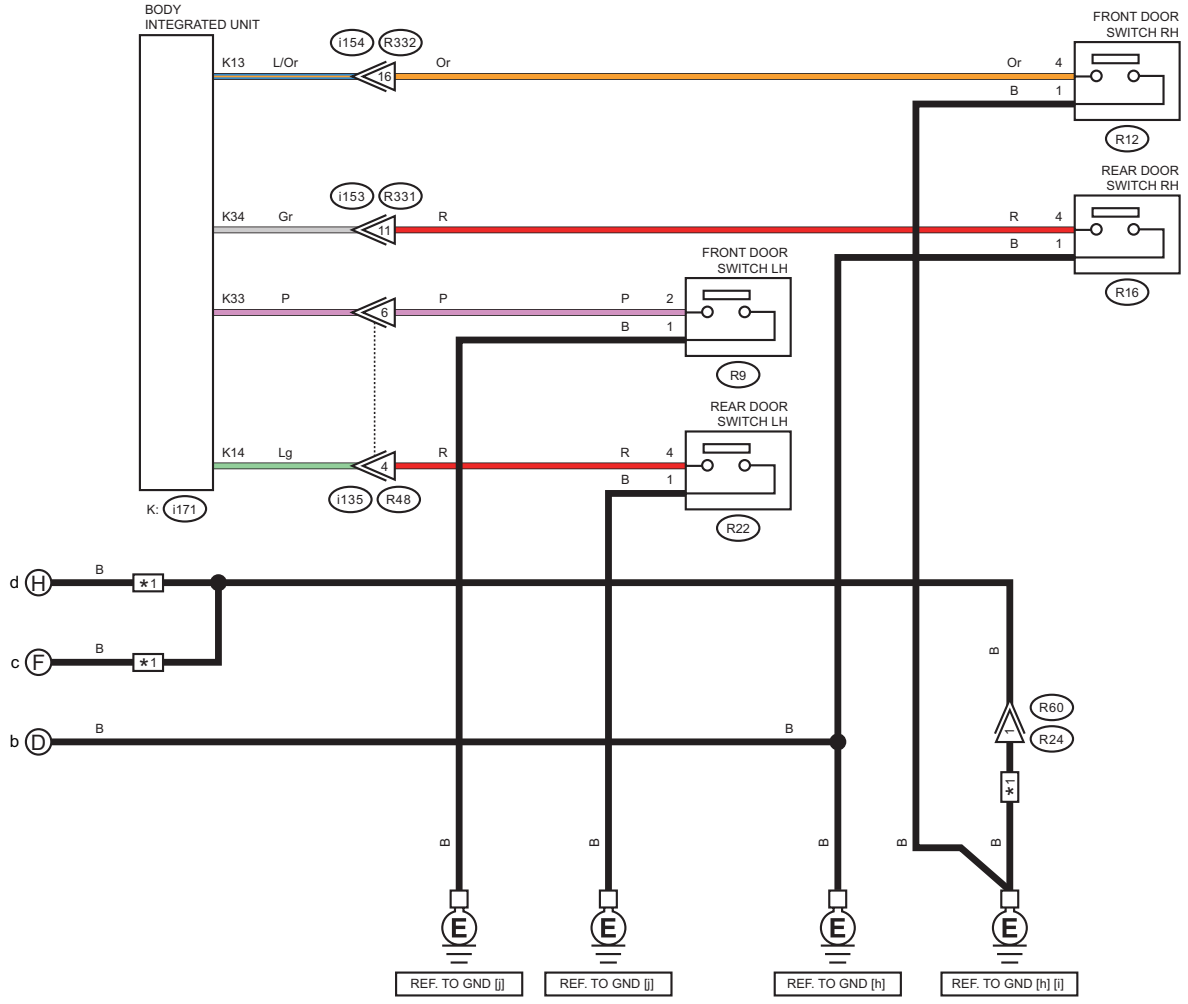

*1 : SEDAN MODEL

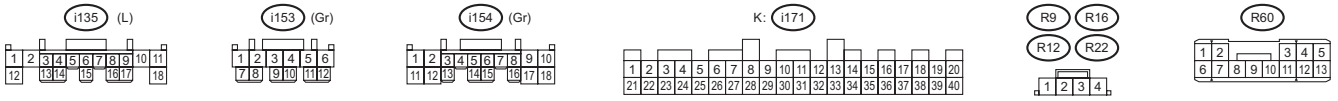

WI-60560

33.Navigation System

A: WIRING DIAGRAM

1. WITHOUT AUDIO AMPLIFIER

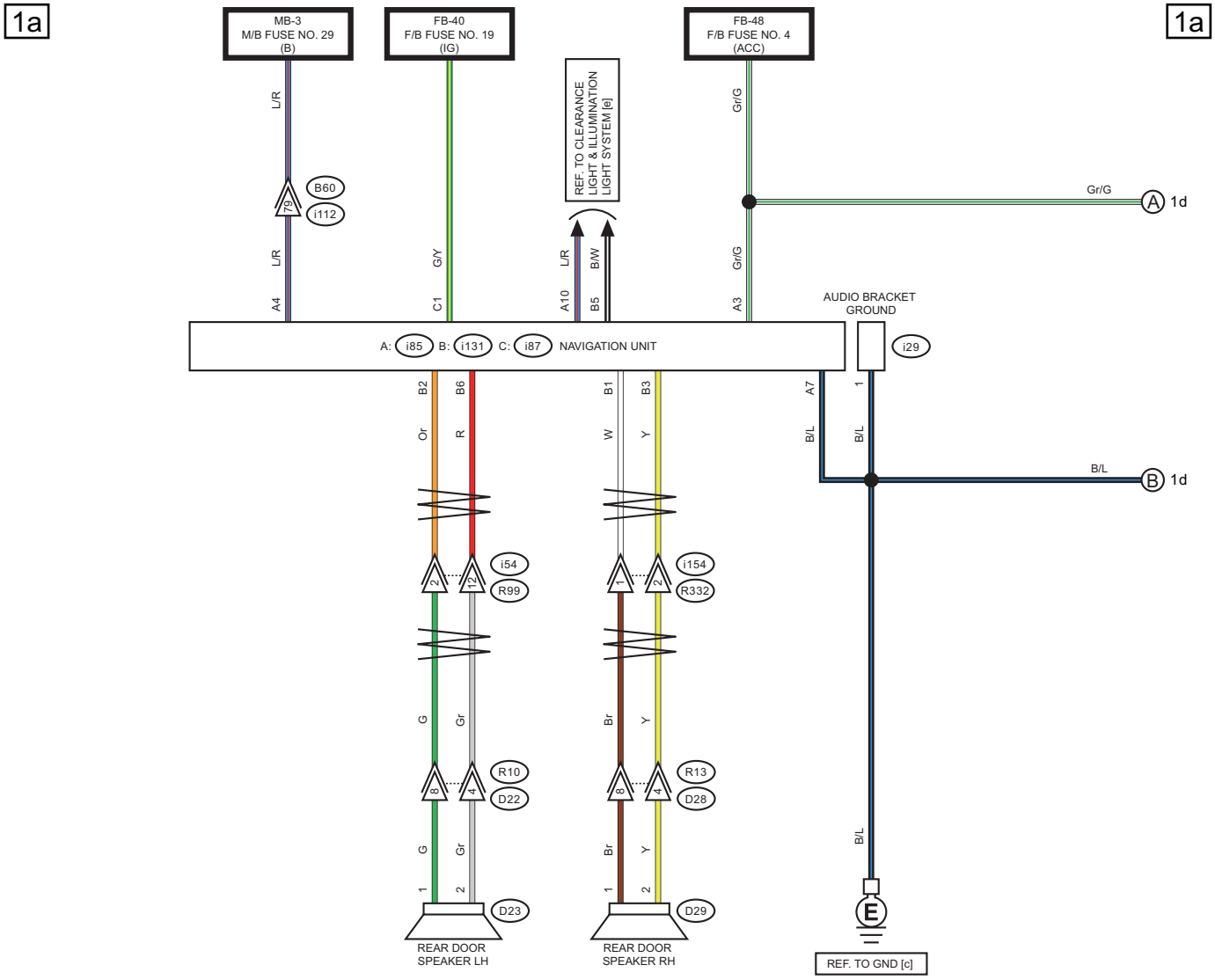

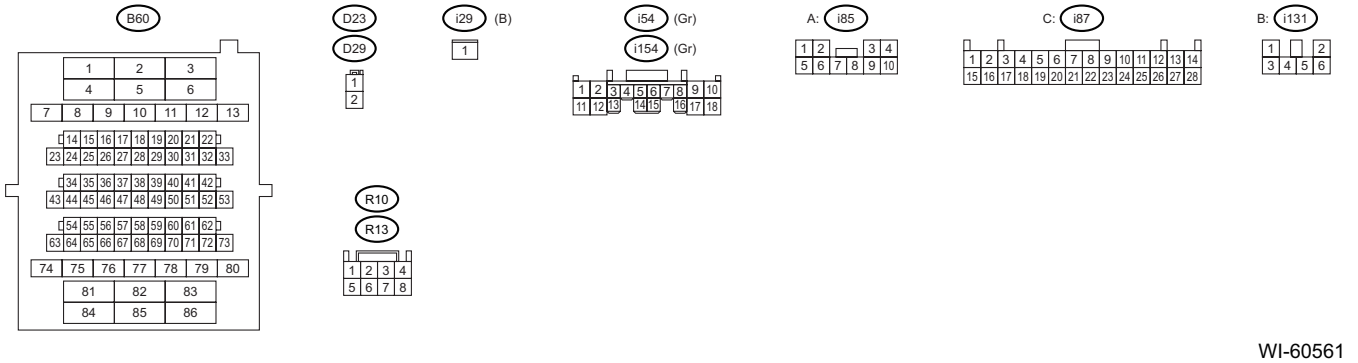

WI-60561

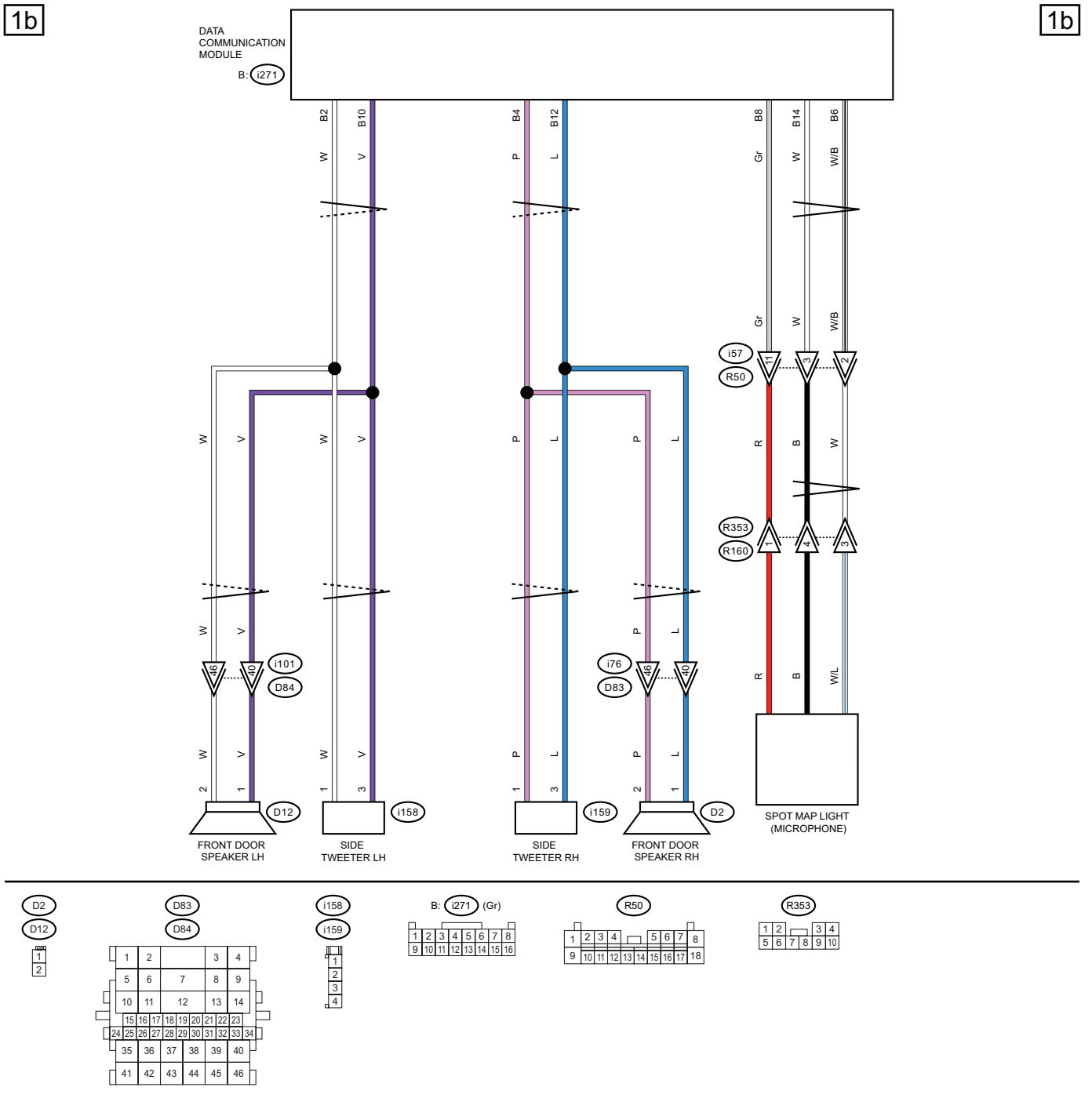
1b
1b
DATA COMMUNICATION MODULE
B: i271
B2
B10
B4
B12
B8
B14
B6
W
V
P
L
Gr
W
W/B
i57
R50
R353
R160
i101
D84
i76
D83
D12
i158
i159
D2
R
B
W
W/L
SPOT MAP LIGHT (MICROPHONE)
FRONT DOOR SPEAKER LH
SIDE TWEETER LH
SIDE TWEETER RH
FRONT DOOR SPEAKER RH

D2
D12
D83
D84
i158
i159
B: i271 (Gr)
R50
R353

WI-60562

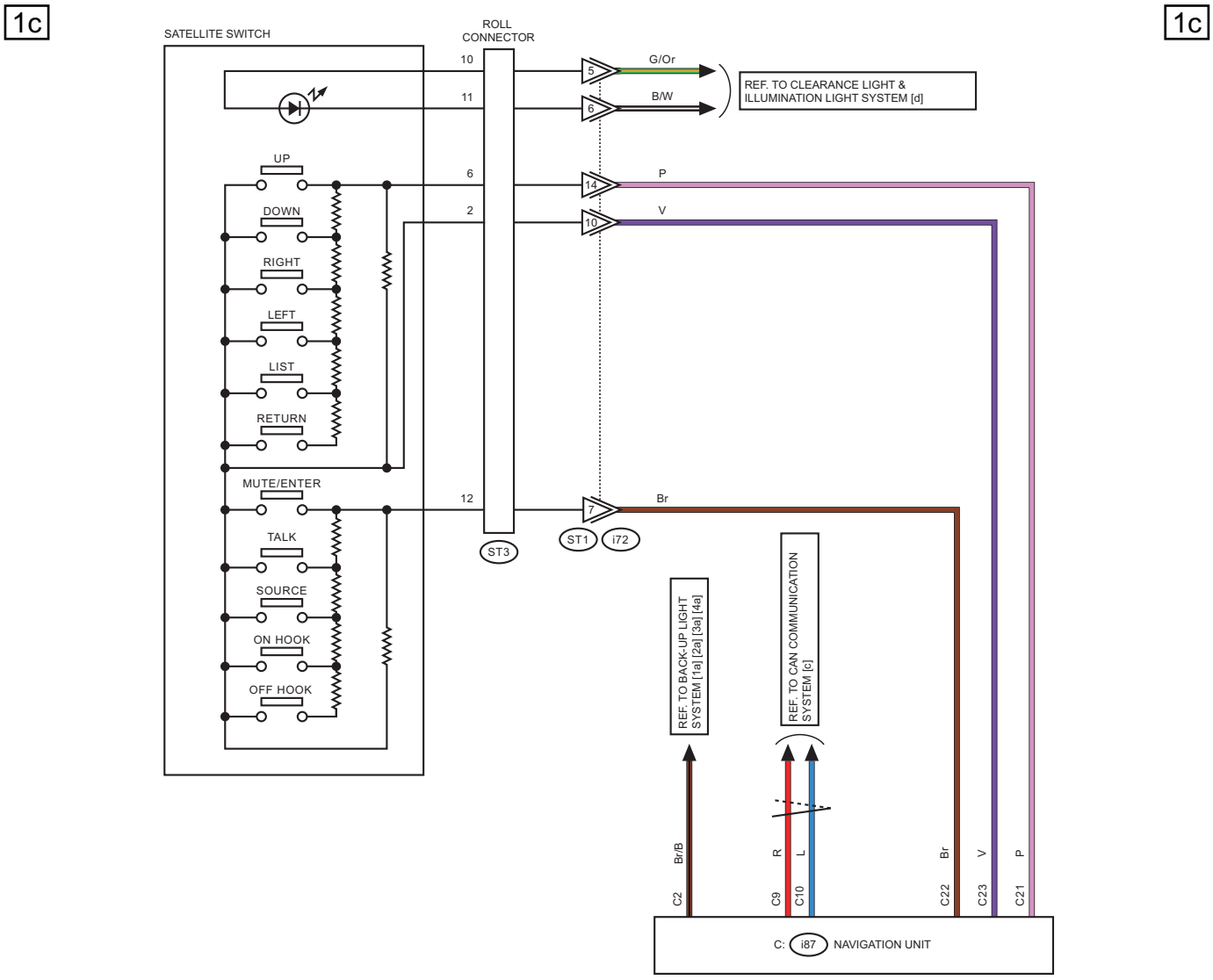
1c
1c
SATELLITE SWITCH
ROLL CONNECTOR
10
11
6
2
12
5
6
14
10
7
G/Or
B/W
P
V
Br
REF. TO CLEARANCE LIGHT & ILLUMINATION LIGHT SYSTEM [d]
UP
DOWN
RIGHT
LEFT
LIST
RETURN
MUTE/ENTER
TALK
SOURCE
ON HOOK
OFF HOOK
ST3
ST1
i72
REF. TO BACK-UP LIGHT SYSTEM [1a] [2a] [3a] [4a]
REF. TO CAN COMMUNICATION SYSTEM [c]
Br/B
R
L
Br
V
P
C2
C9
C10
C22
C23
C21
C: i87 NAVIGATION UNIT

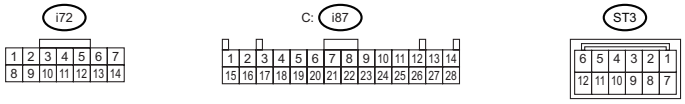
i72
1 2 3 4 5 6 7
8 9 10 11 12 13 14
C: i87
1 2 3 4 5 6 7 8 9 10 11 12 13 14
15 16 17 18 19 20 21 22 23 24 25 26 27 28
ST3
6 5 4 3 2 1
12 11 10 9 8 7

WI-60563

1d

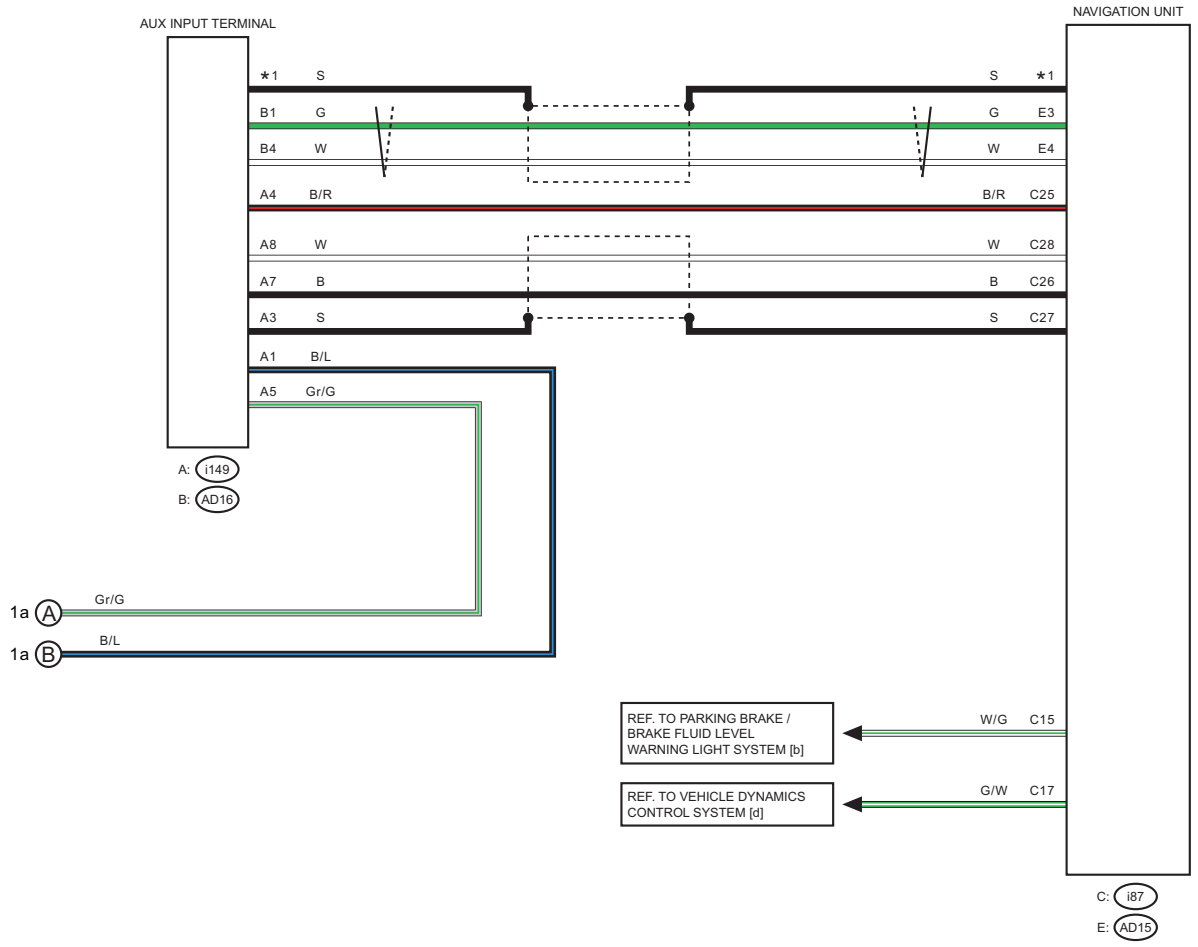

*1 : SHIELD CONNECTOR

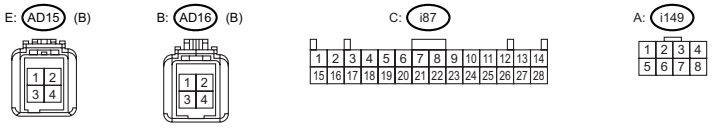

WI-60565

WIRING SYSTEM

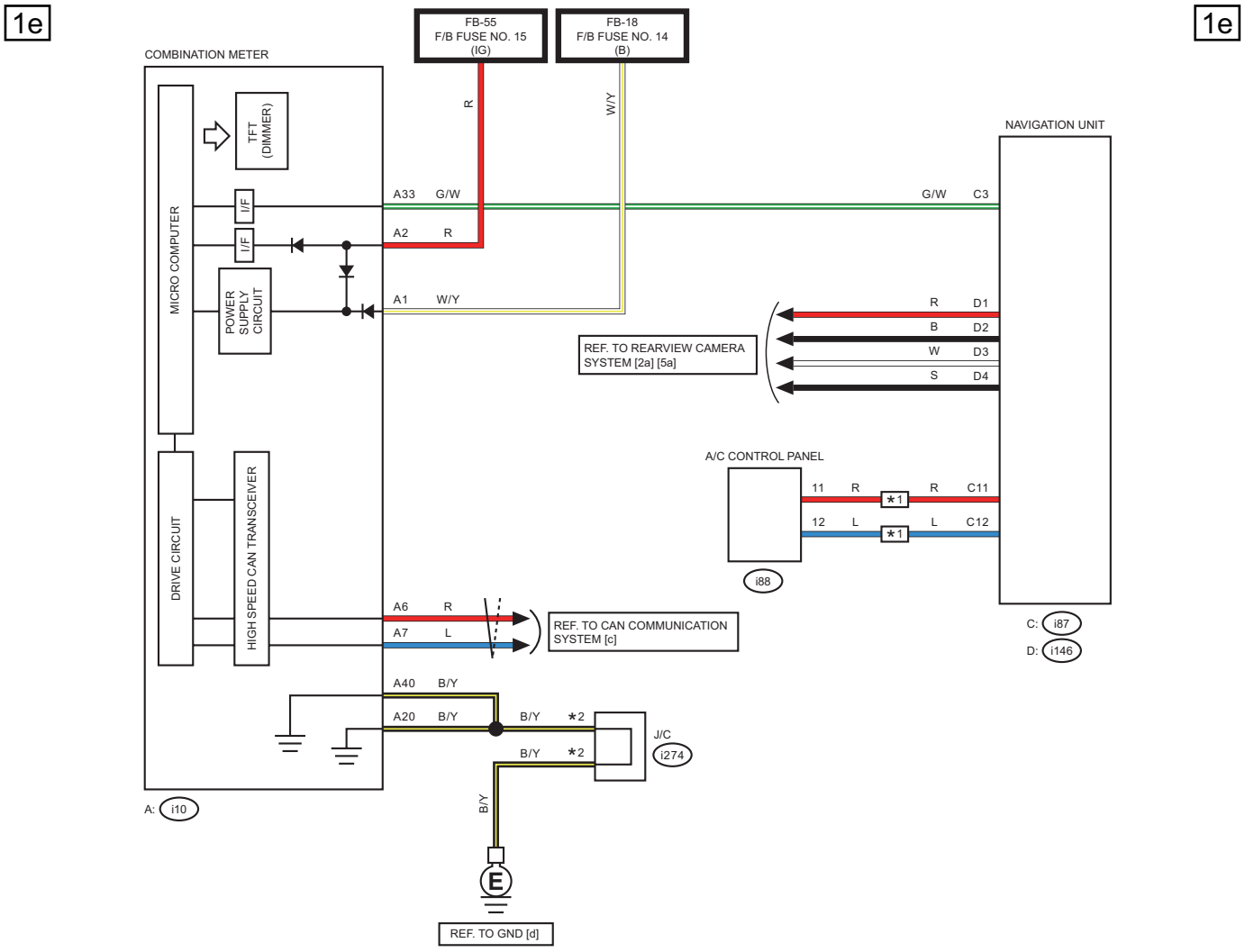

*1 : AUTO A/C
*2 : TERMINAL No. OPTIONAL ARRANGEMENT

A: i10 (B)

1	2	3	4	5	6	7	8	9	10	11	12	13	14	15	16	17	18	19	20
21	22	23	24	25	26	27	28	29	30	31	32	33	34	35	36	37	38	39	40

C: i87

1	2	3	4	5	6	7	8	9	10	11	12	13	14
15	16	17	18	19	20	21	22	23	24	25	26	27	28

i88

1	2	3	4	5	6	7	8
9	10	11	12	13	14	15	16

D: i146

1	2	3	4	5

i274

1	2	3	4	5	6	7	8
9	10	11	12	13	14	15	16

WI-60566

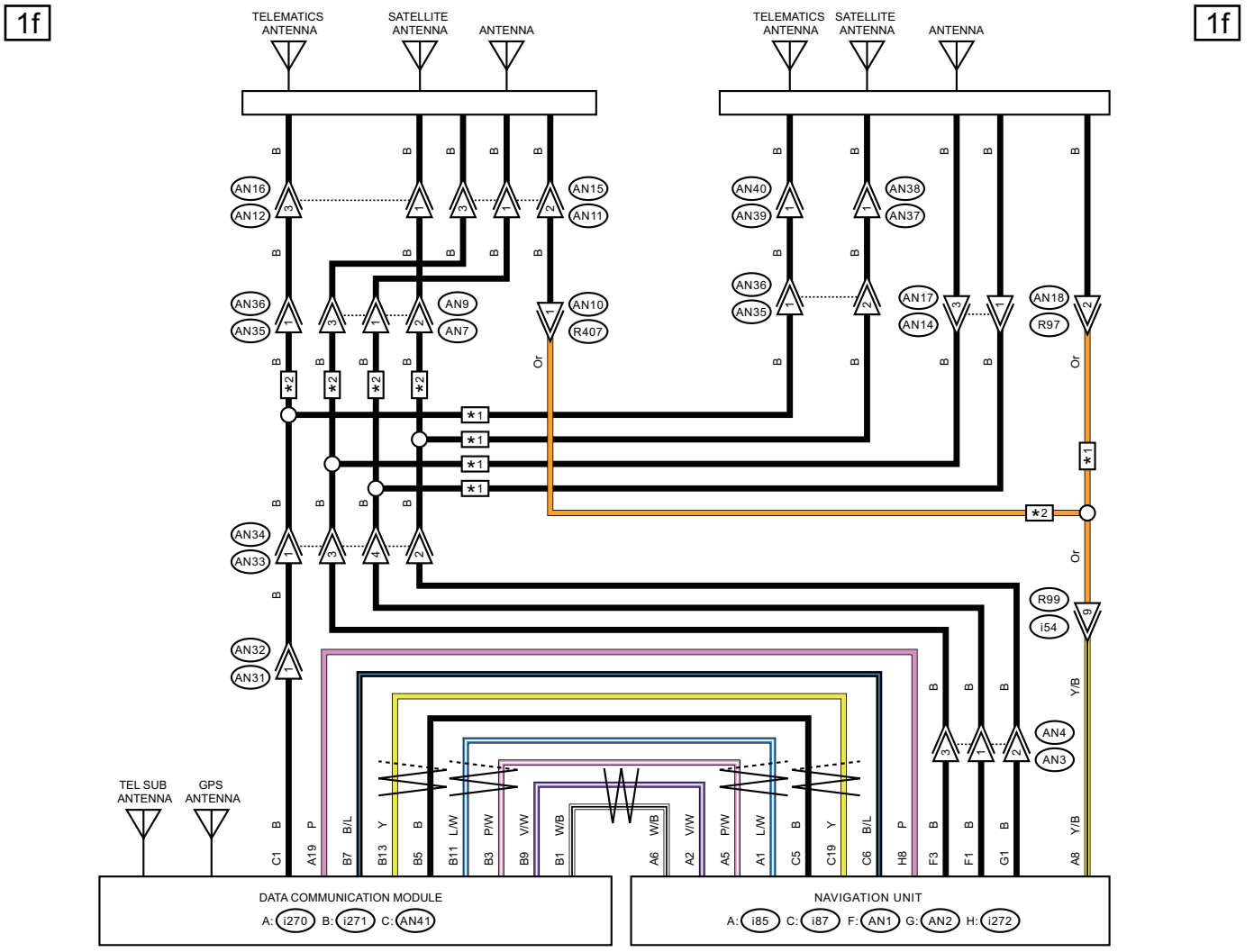

*1 : SEDAN MODEL
*2 : OUTBACK MODEL

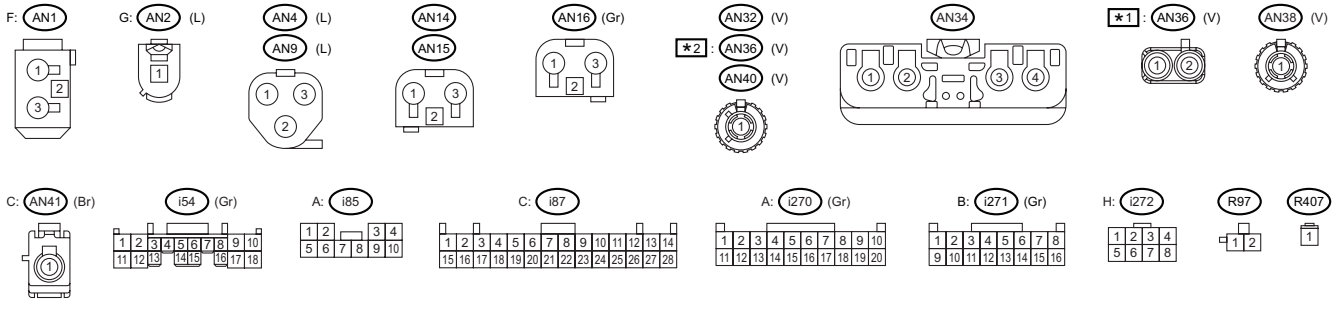

WI-60567

2. WITH AUDIO AMPLIFIER

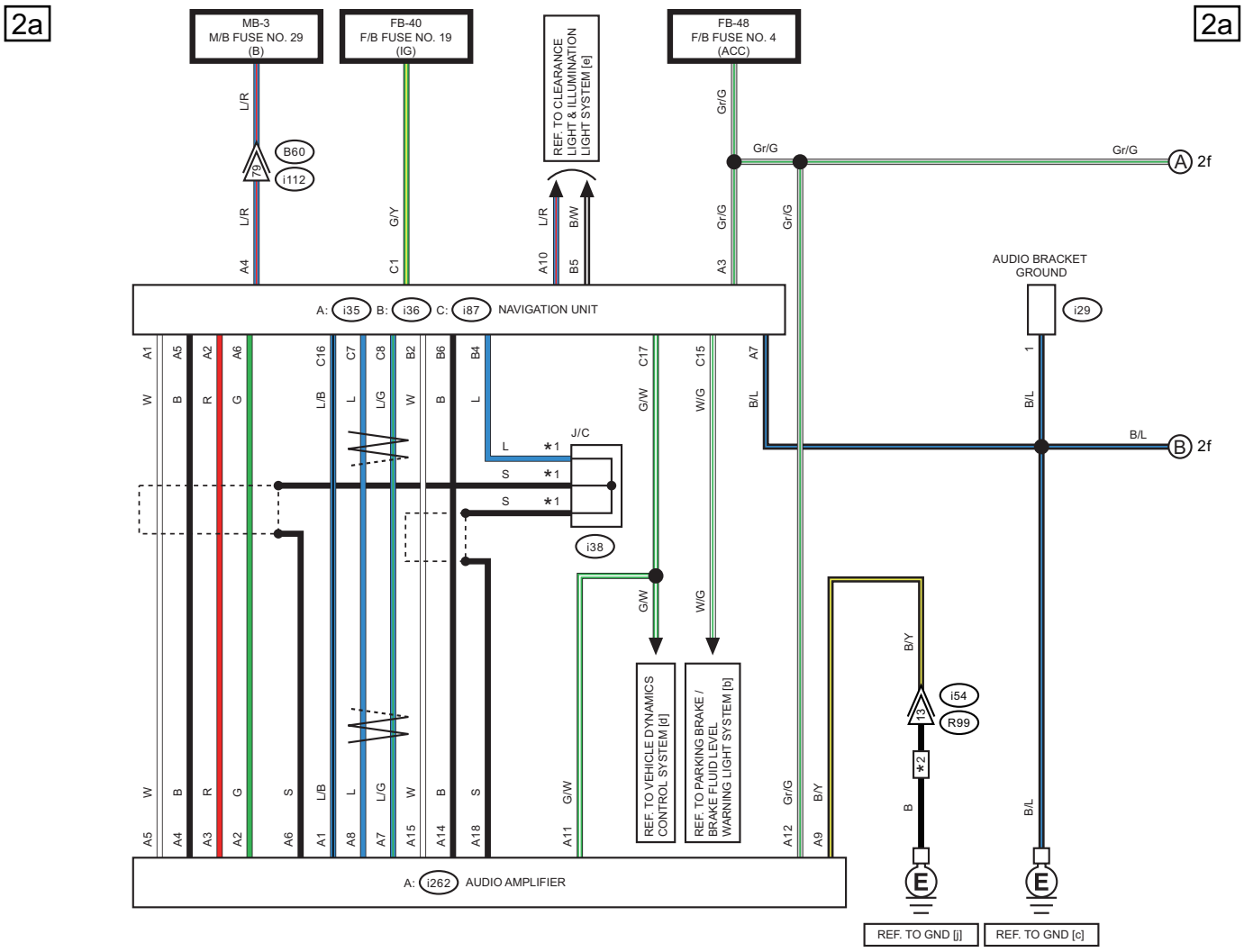

*1 : TERMINAL No. OPTIONAL ARRANGEMENT
*2 : SEDAN MODEL

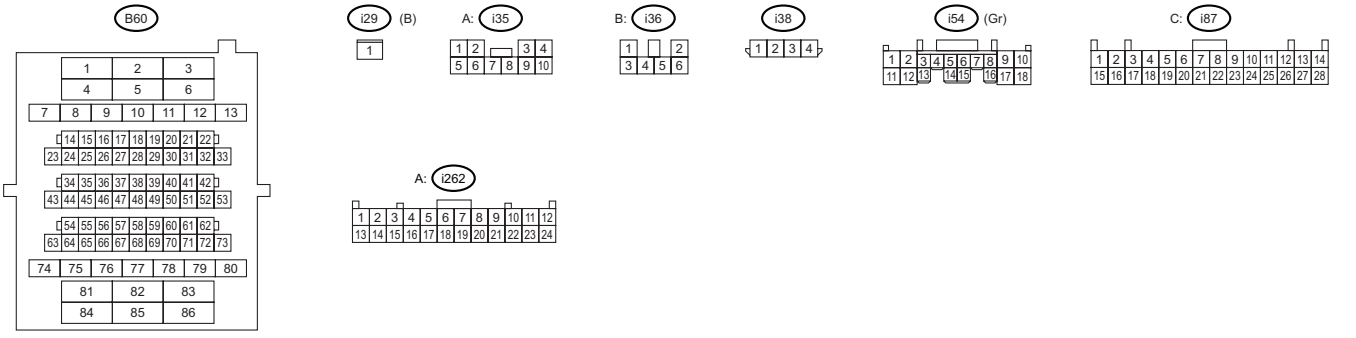

WI-60568

2b

2b

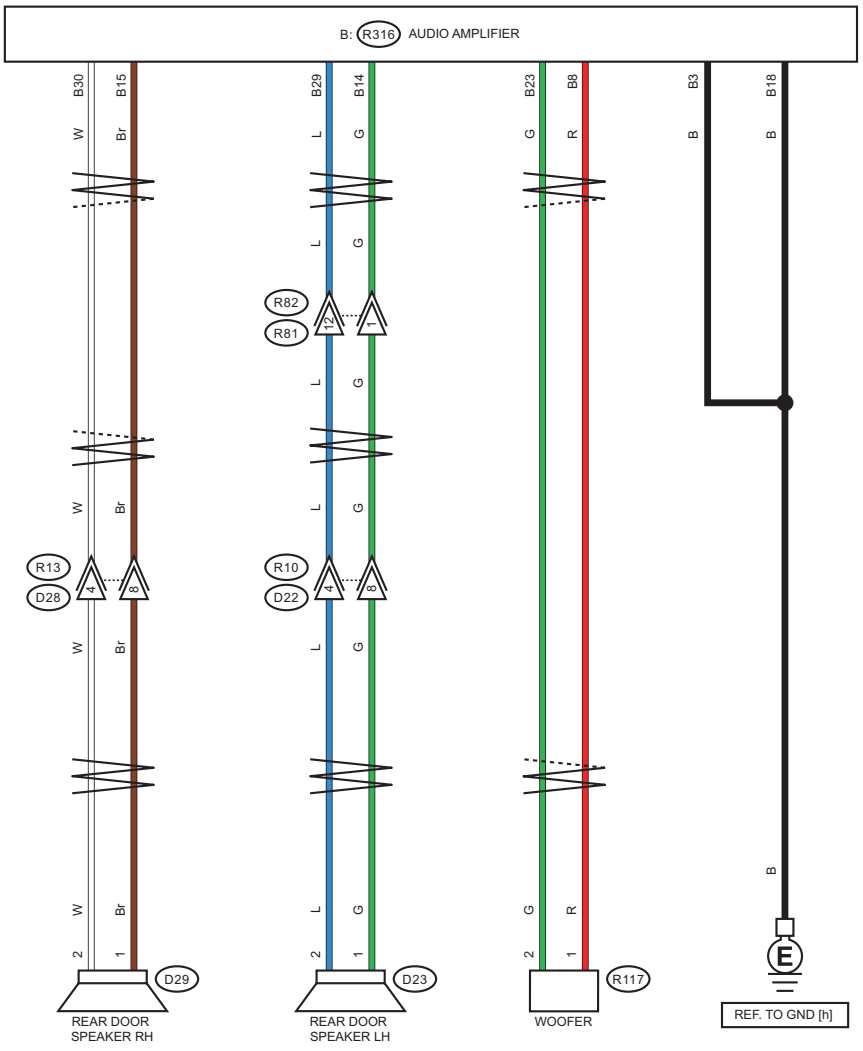

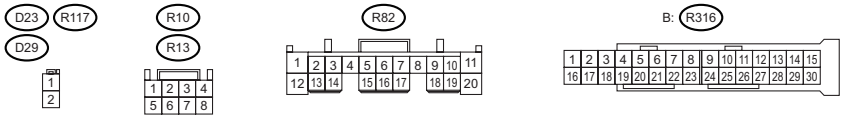

WI-60569

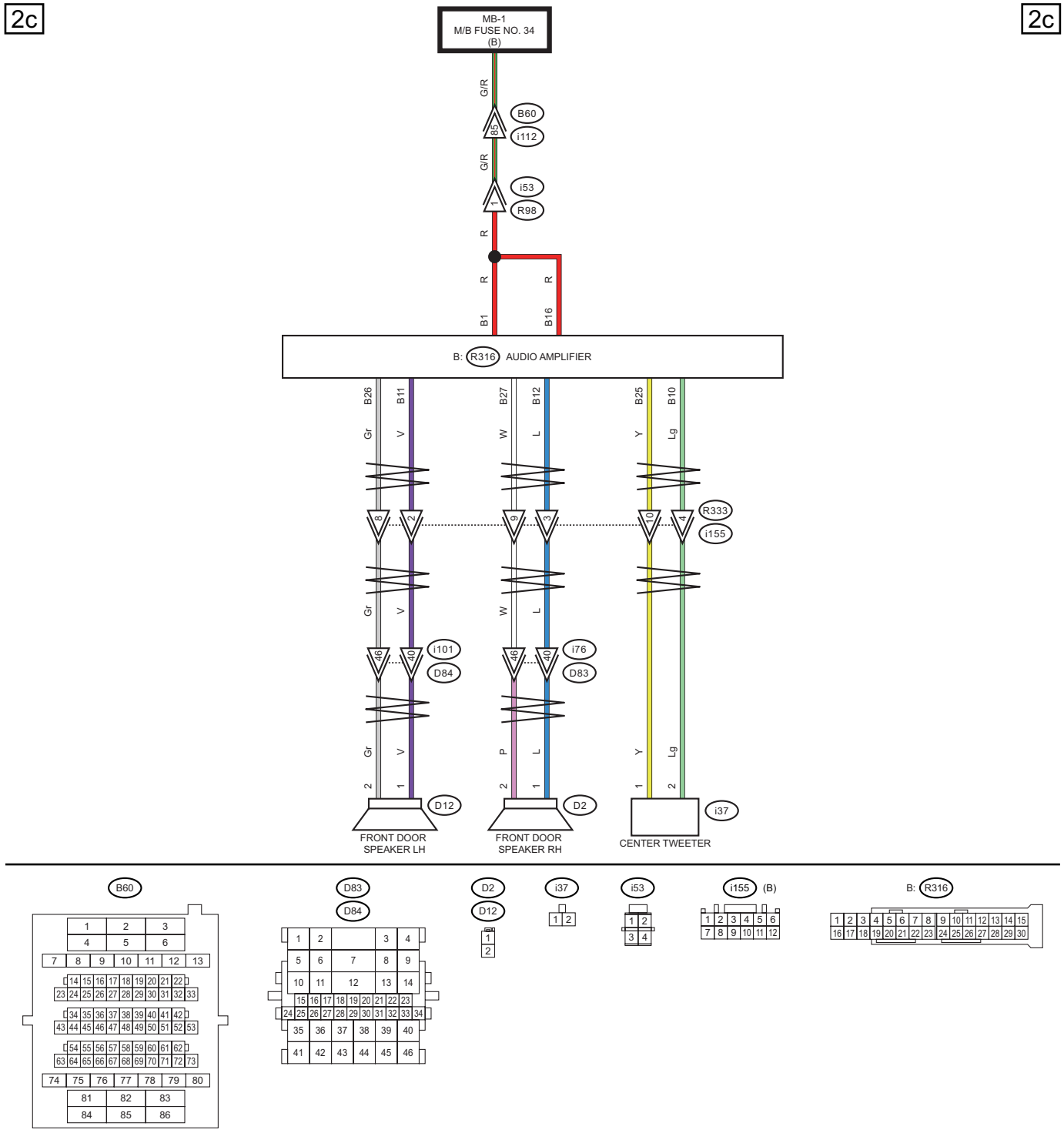
2c
2c
MB-1
M/B FUSE NO. 34
(B)
G/R
B60
i112
G/R
i53
R98
R
R
R
B1
B16
B: R316 AUDIO AMPLIFIER
B26
B11
B27
B12
B25
B10
Gr
V
W
L
Y
Lg
R333
i155
i101
D84
i76
D83
P
D12
D2
i37
FRONT DOOR SPEAKER LH
FRONT DOOR SPEAKER RH
CENTER TWEETER
B60
D83
D84
D2
D12
i37
i53
i155
(B)
B: R316

WI-60570

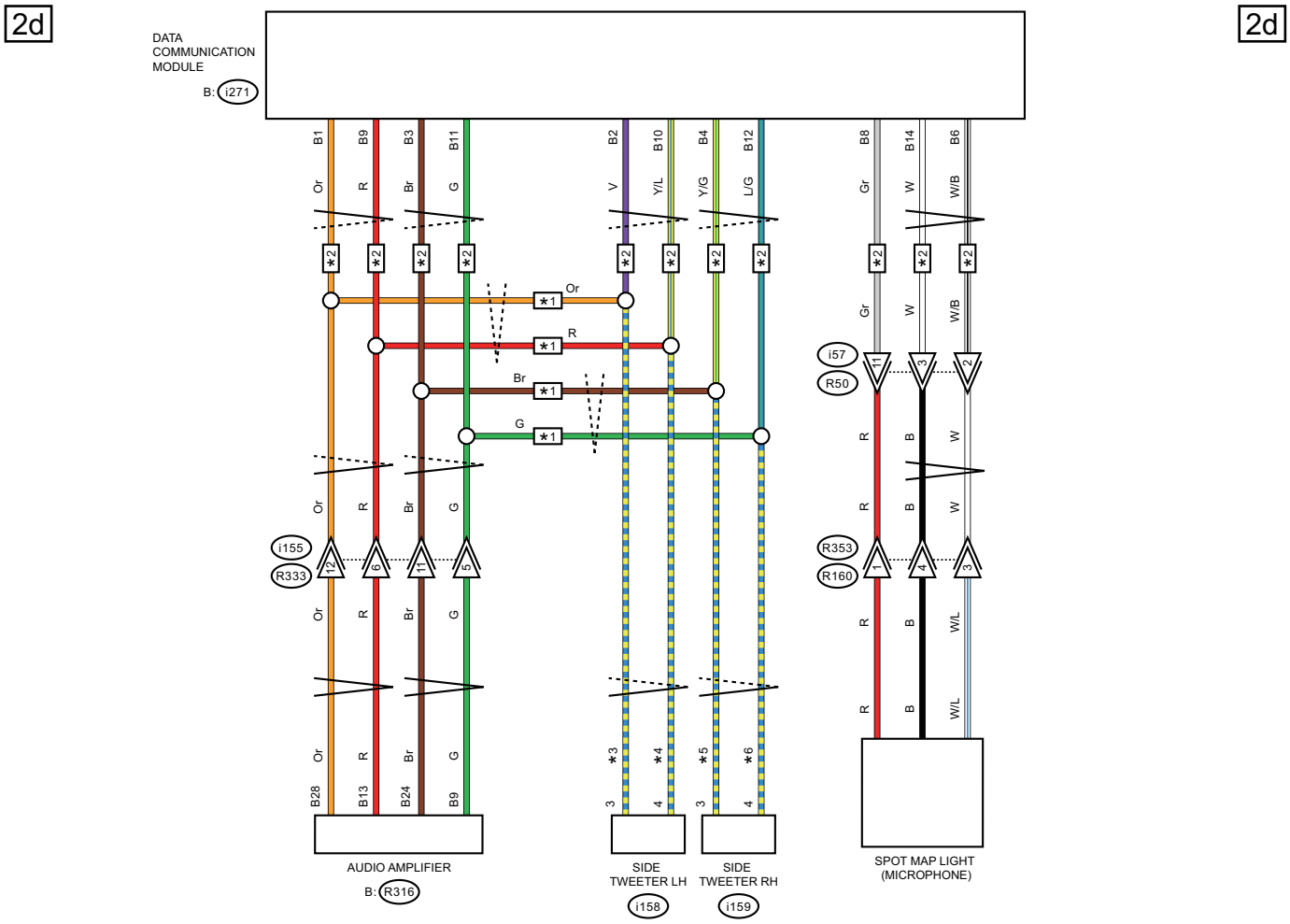

∗1 : WITHOUT TELEMATICS
∗2 : WITH TELEMATICS
∗3 : WITHOUT TELEMATICS : Or
WITH TELEMATICS : V
∗4 : WITHOUT TELEMATICS : R
WITH TELEMATICS : Y/L
∗5 : WITHOUT TELEMATICS : Br
WITH TELEMATICS : Y/G
∗6 : WITHOUT TELEMATICS : G
WITH TELEMATICS : L/G



WI-60571

WIRING SYSTEM

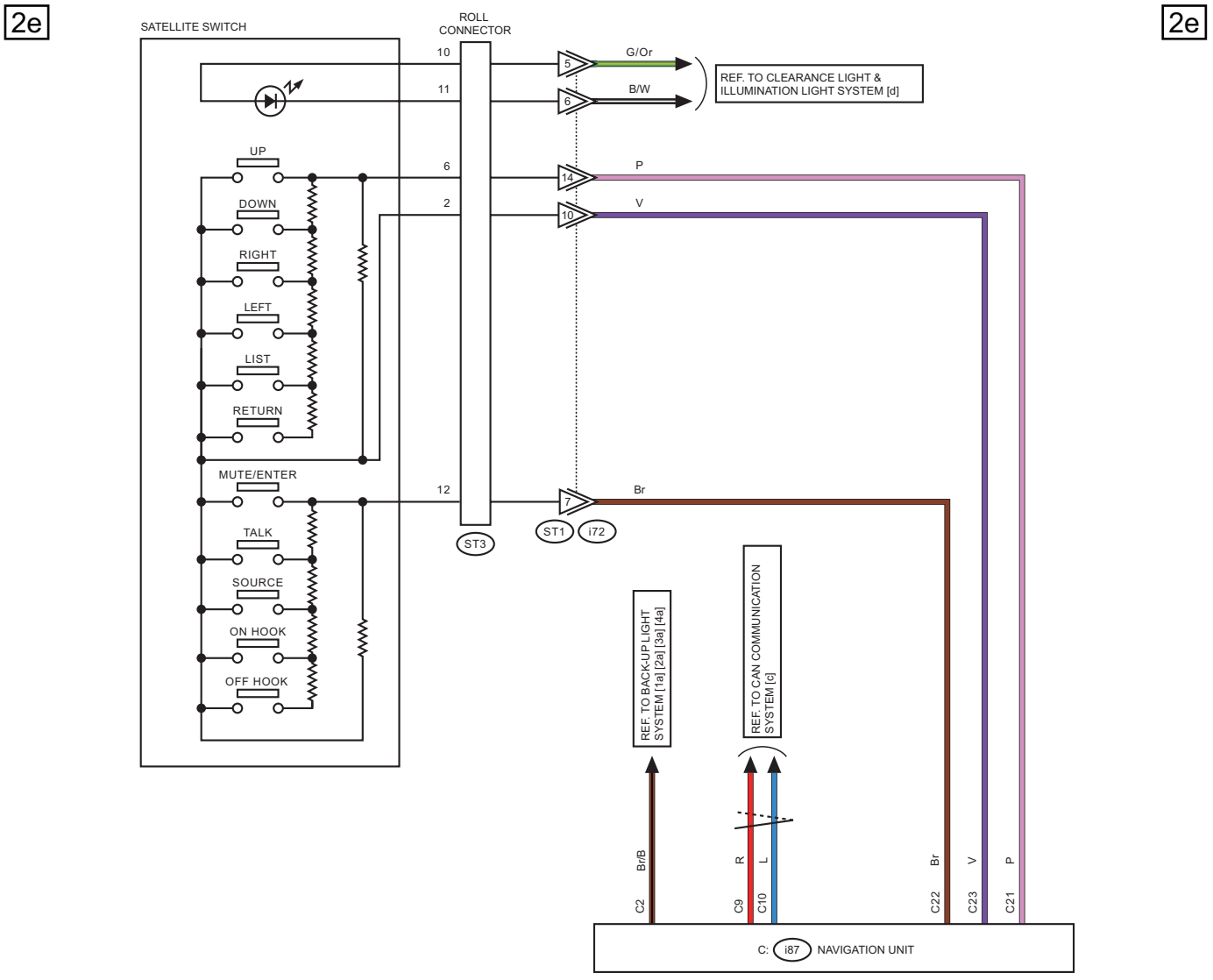

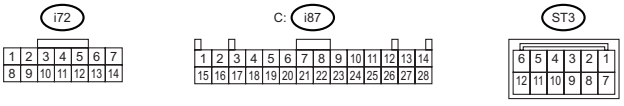

WI-60572

2f

2f

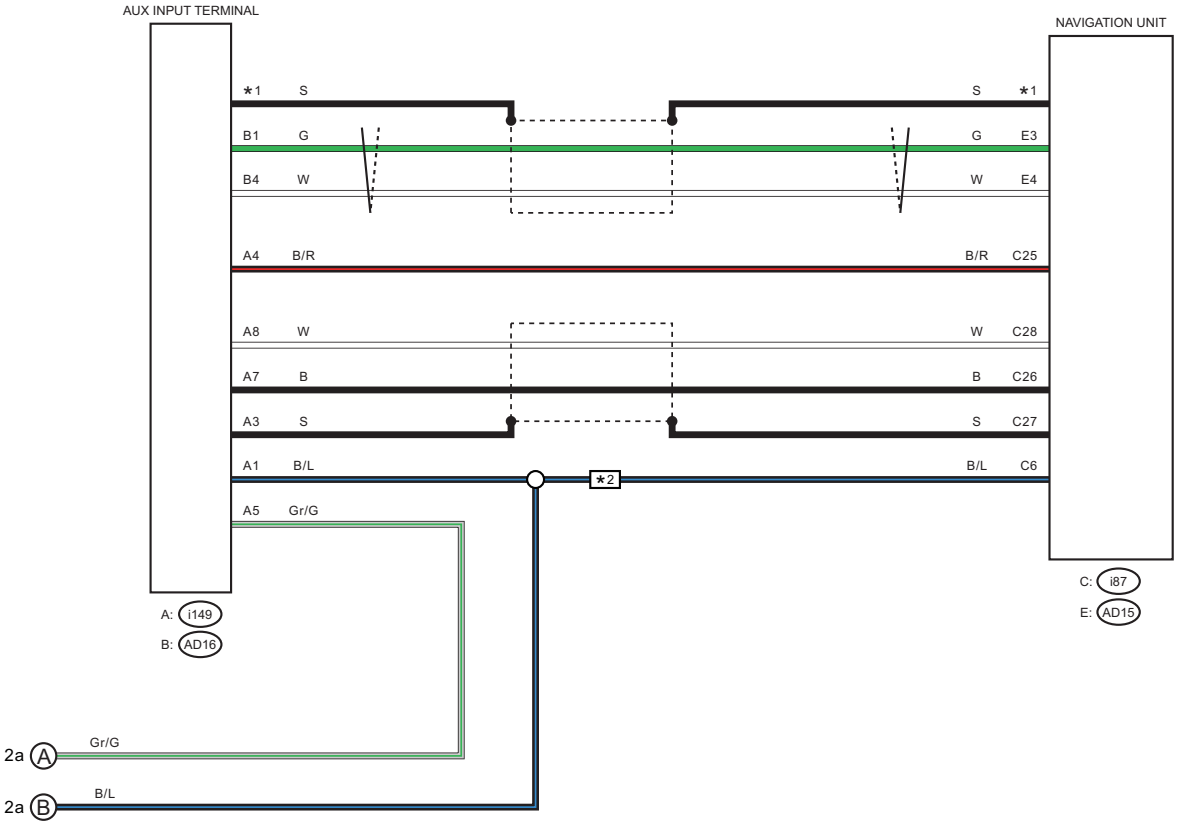

*1 : SHIELD CONNECTOR
*2 : WITHOUT TELEMATICS

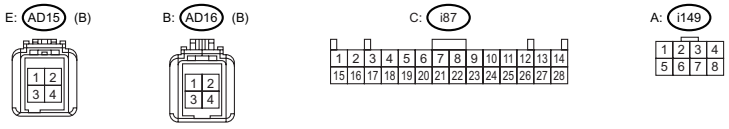

WI-60573

WIRING SYSTEM

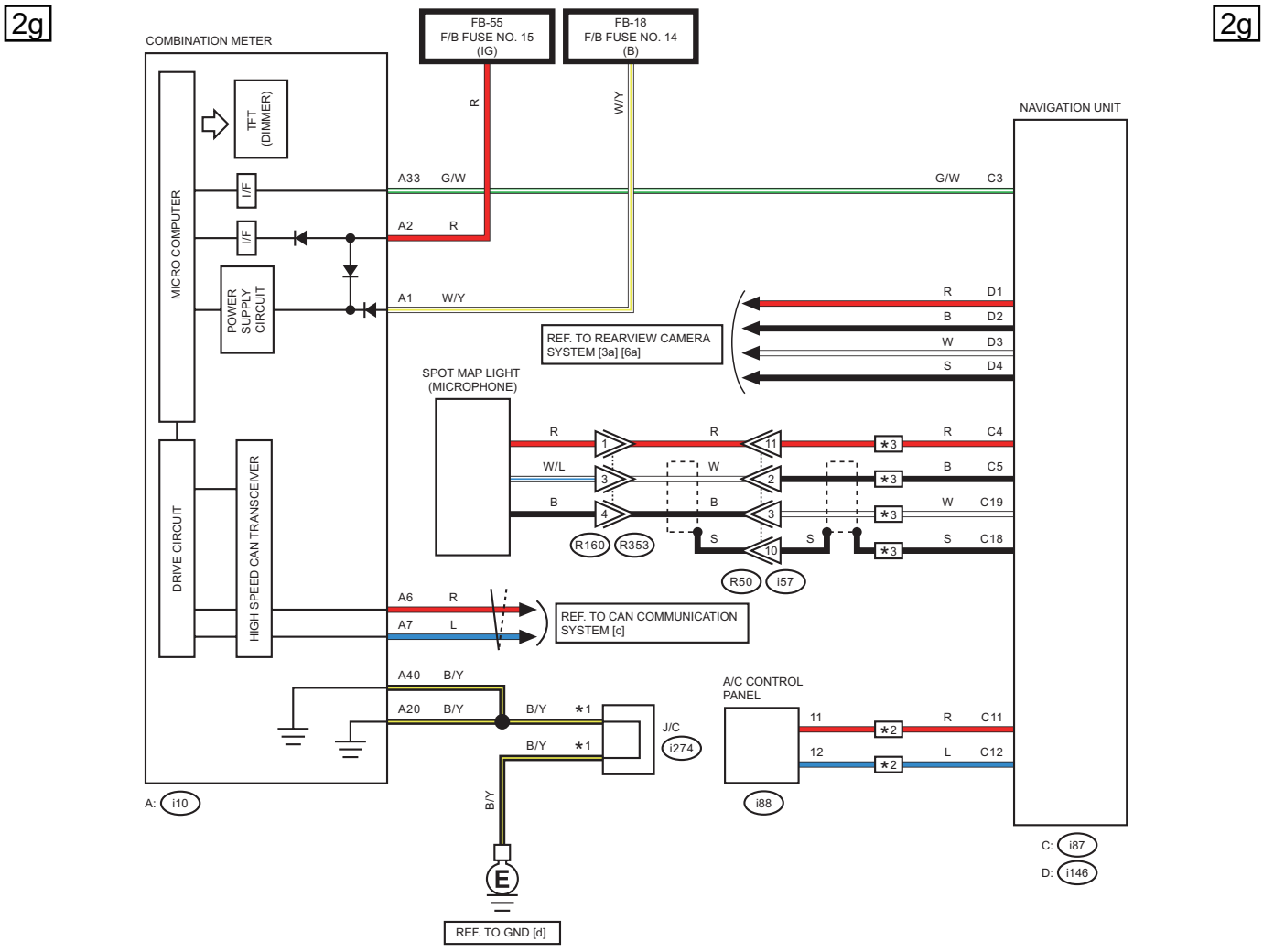

∗1 : TERMINAL No. OPTIONAL ARRANGEMENT
∗2 : AUTO A/C
∗3 : WITHOUT TELEMATICS

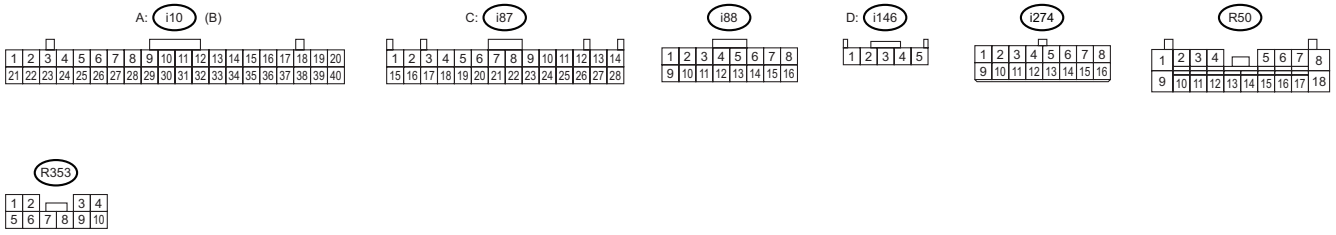

WI-60574

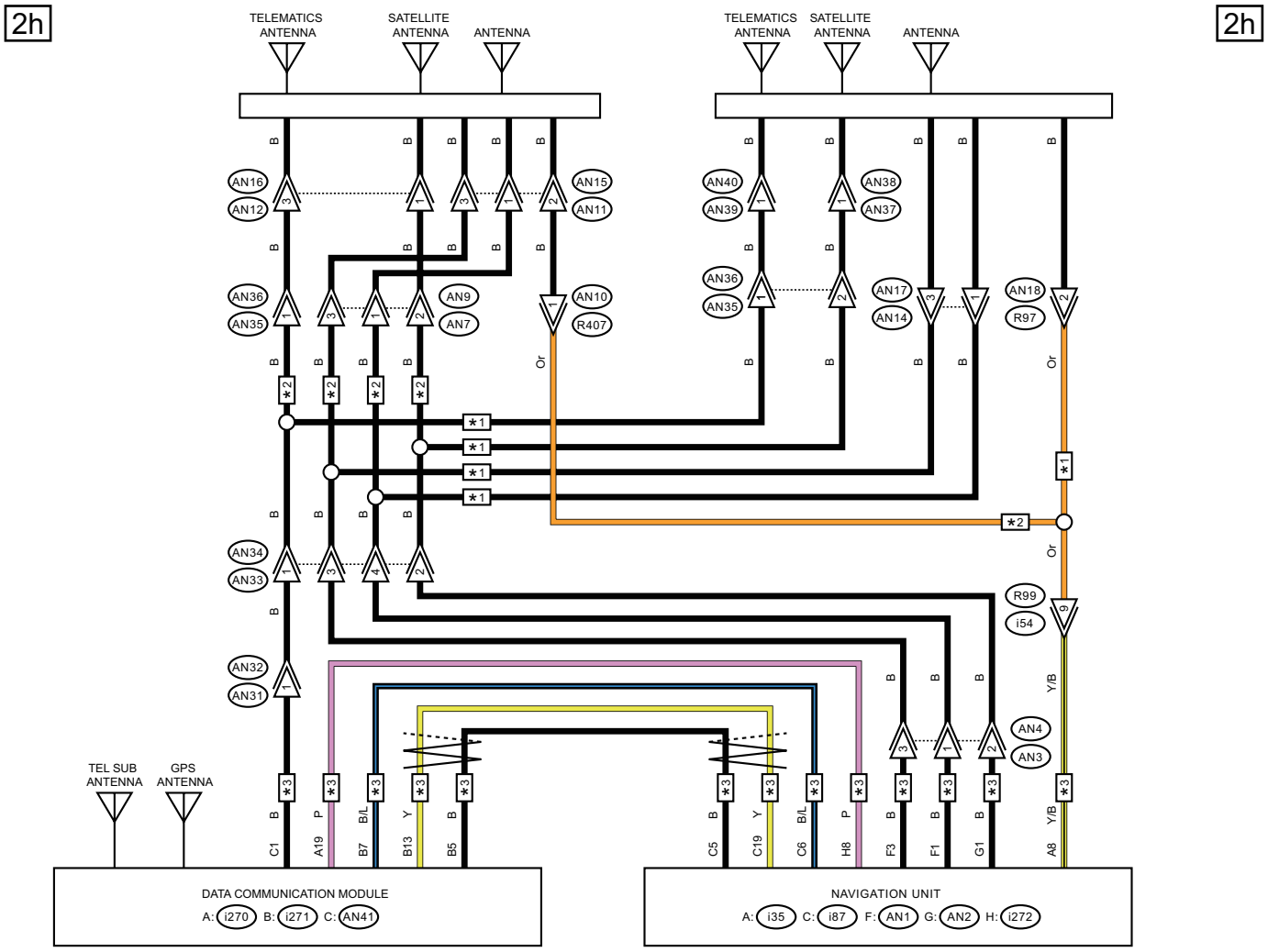

*1 : SEDAN MODEL
*2 : OUTBACK MODEL
*3 : WITH TELEMATICS

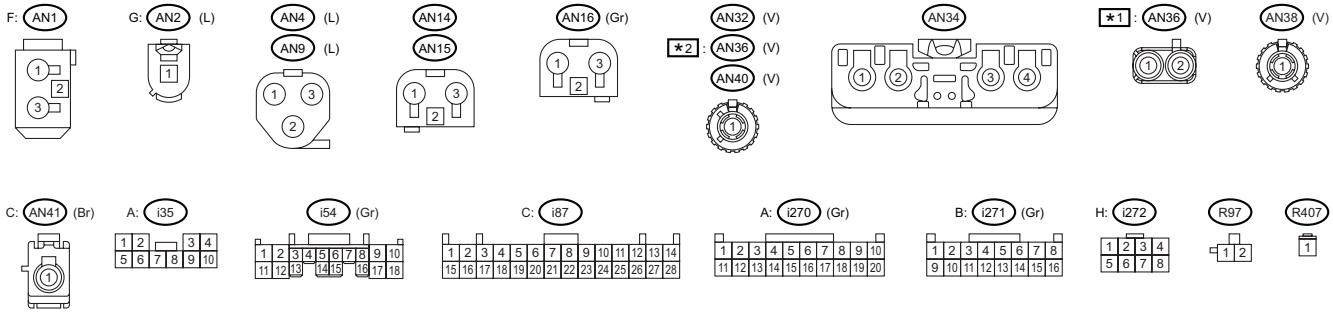

WI-60575

WIRING SYSTEM

2i

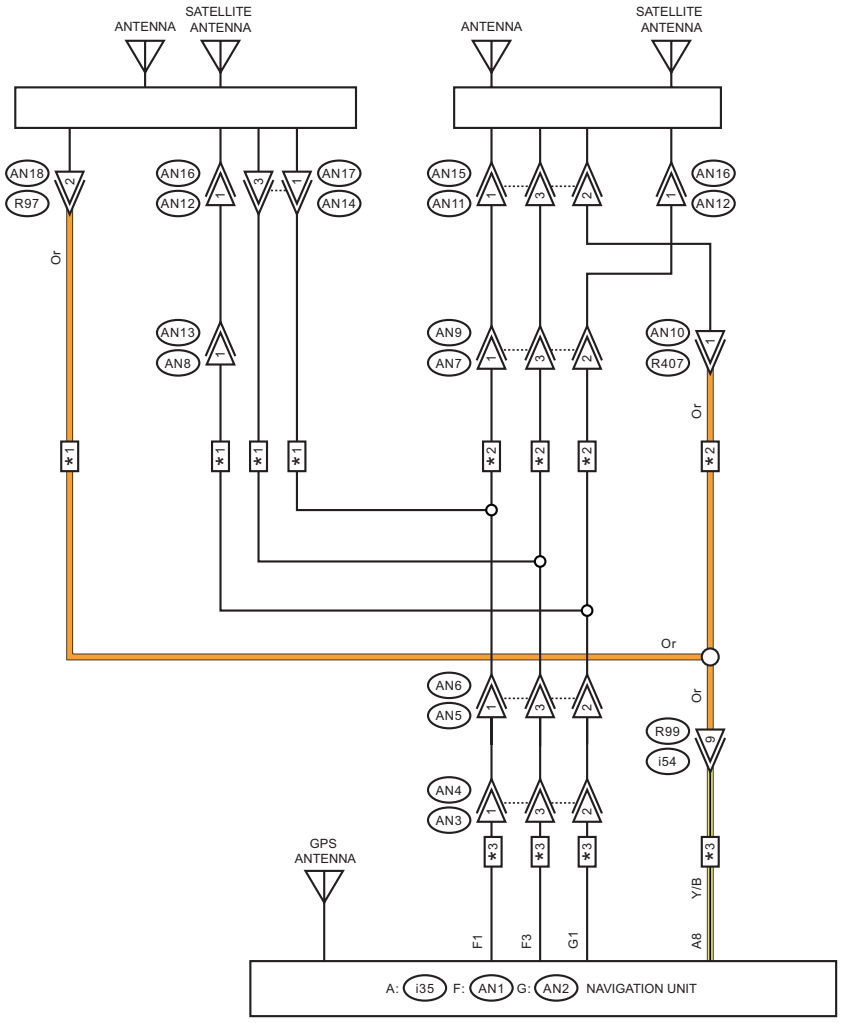

2i

∗1 : SEDAN MODEL
∗2 : OUTBACK MODEL
∗3 : WITHOUT TELEMATICS

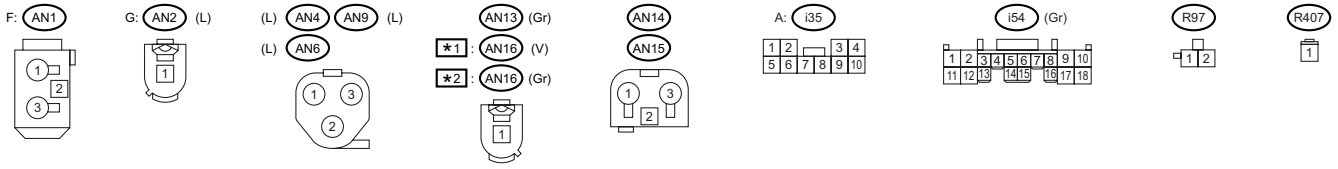

WI-60576

34.Occupant Detection System

A: WIRING DIAGRAM

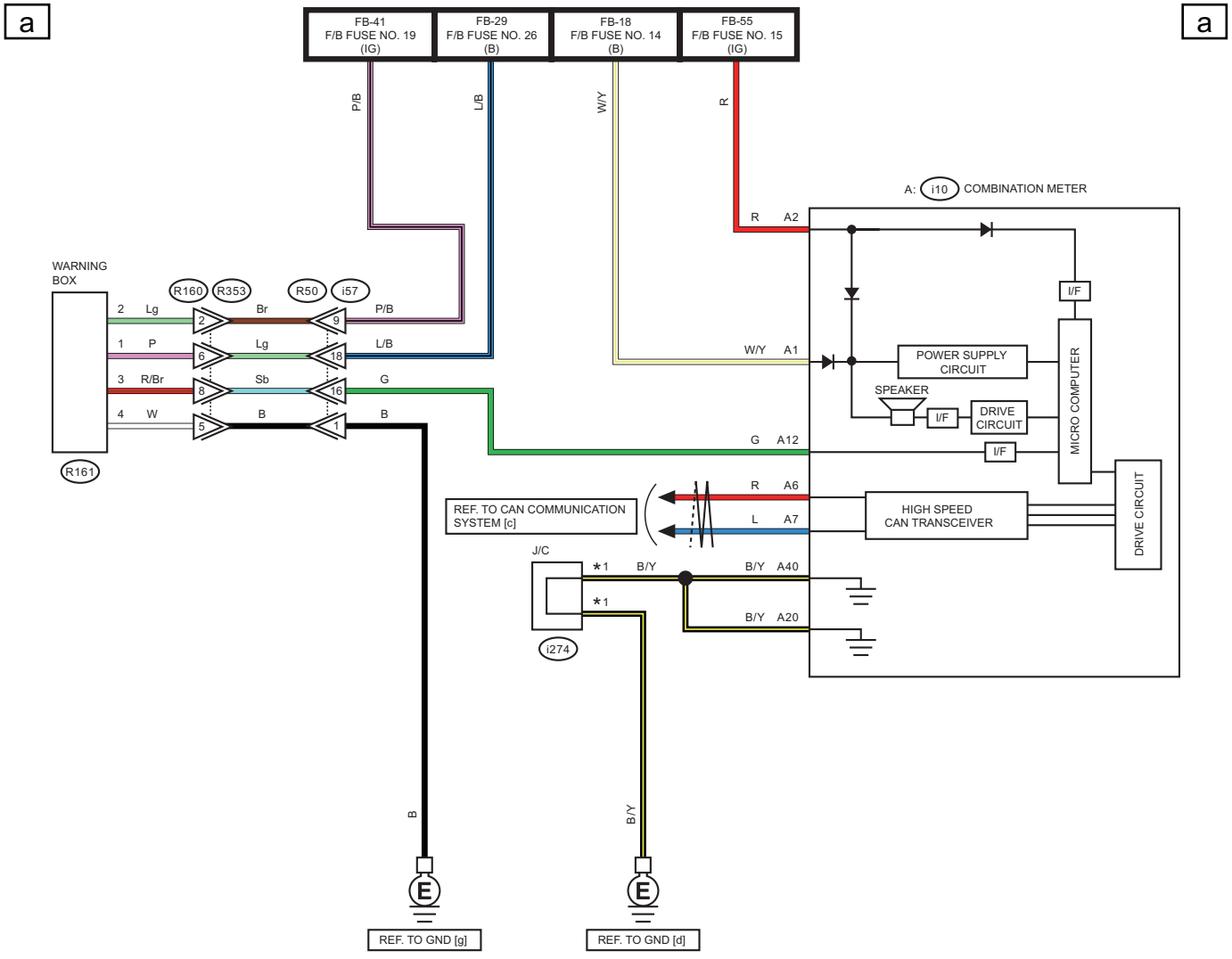

*1 : TERMINAL No. OPTIONAL ARRANGEMENT

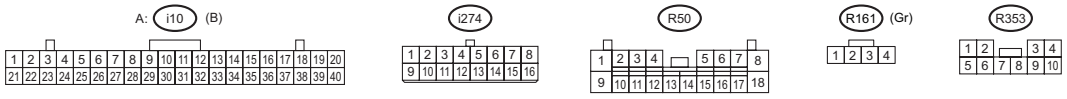

WI-60577

WIRING SYSTEM

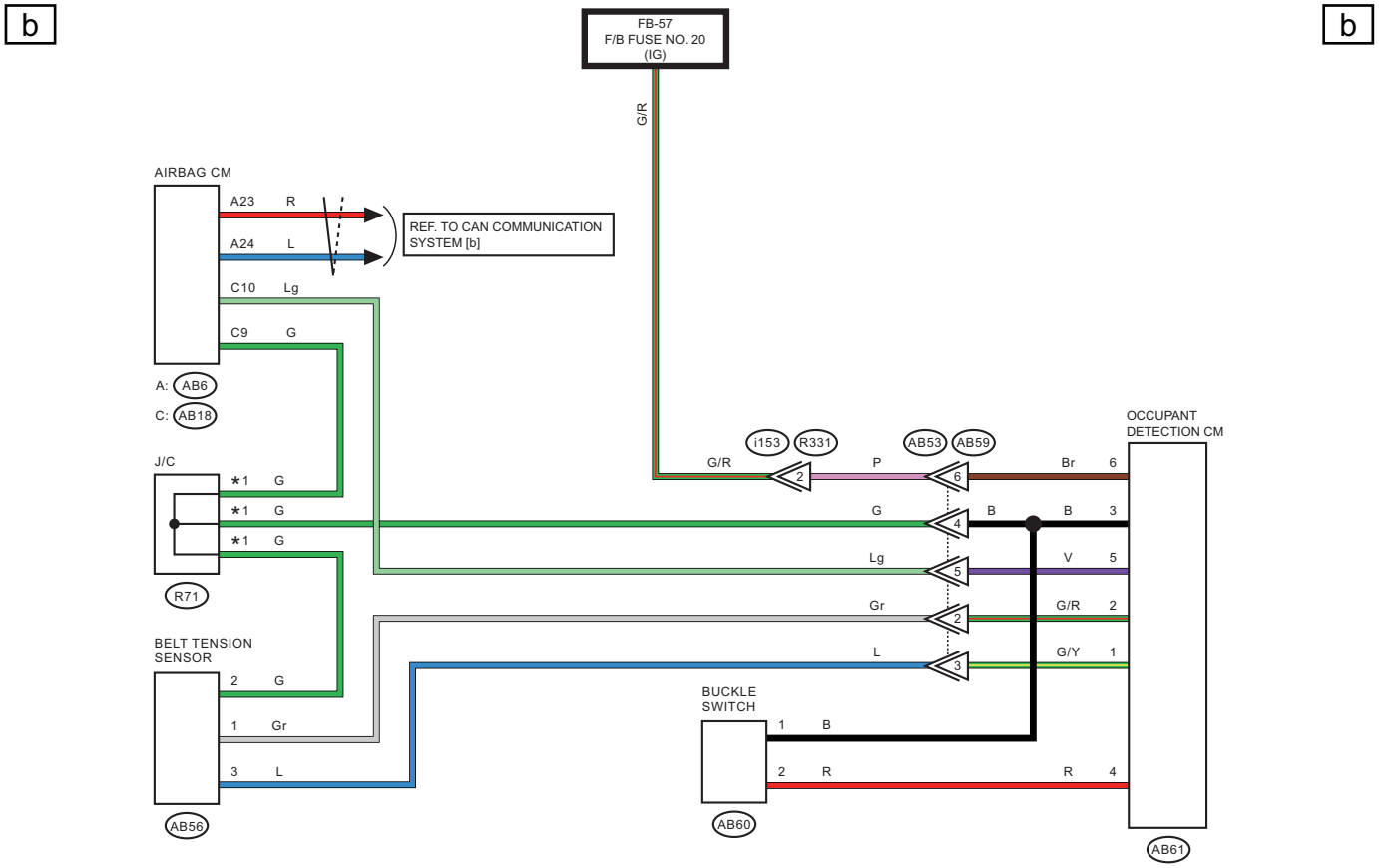

*1 : TERMINAL No. OPTIONAL ARRANGEMENT

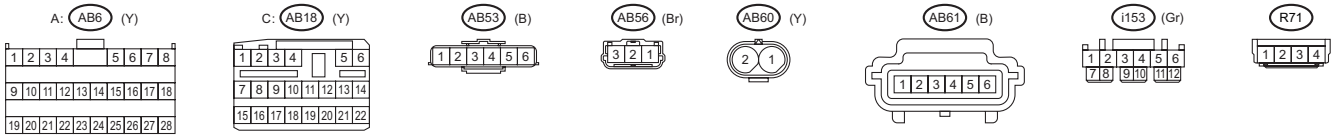

WI-60578

35.Oil Pressure Warning Light System

A: WIRING DIAGRAM

a

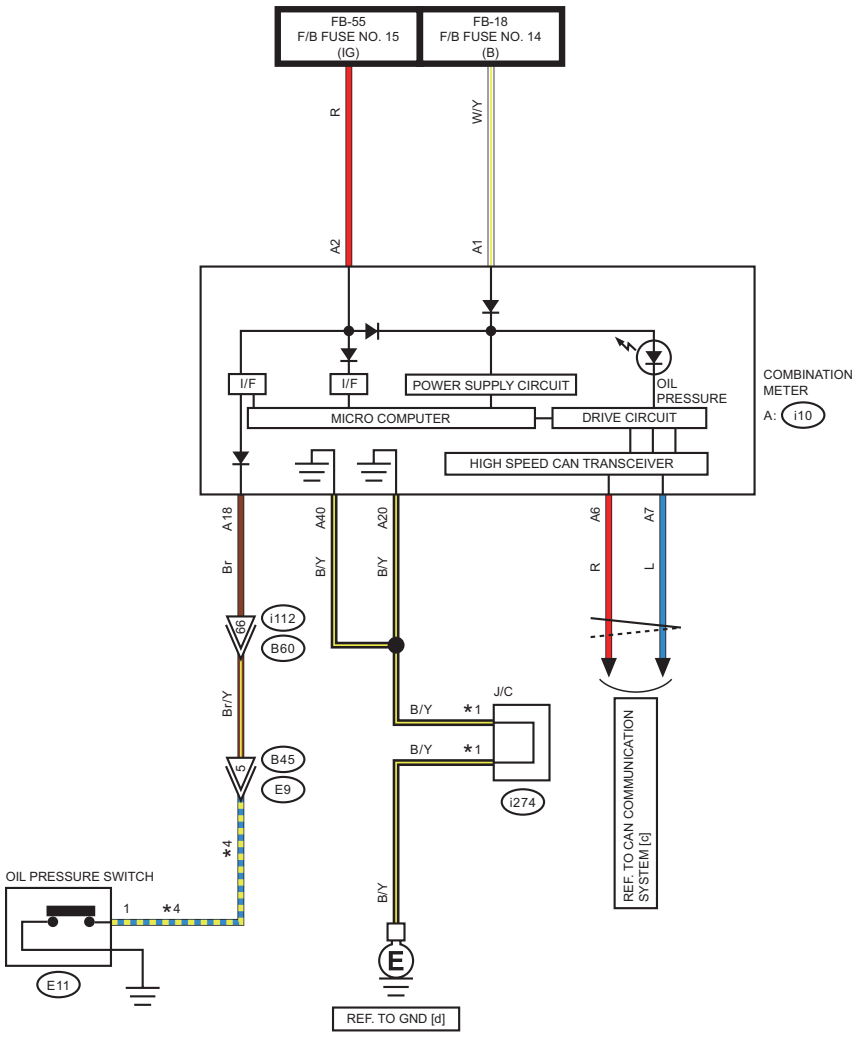

a

*1 : TERMINAL No. OPTIONAL ARRANGEMENT
*2 : ENGINE TYPE FB
*3 : ENGINE TYPE EZ
*4 : ENGINE TYPE FB : Br
ENGINE TYPE EZ : G

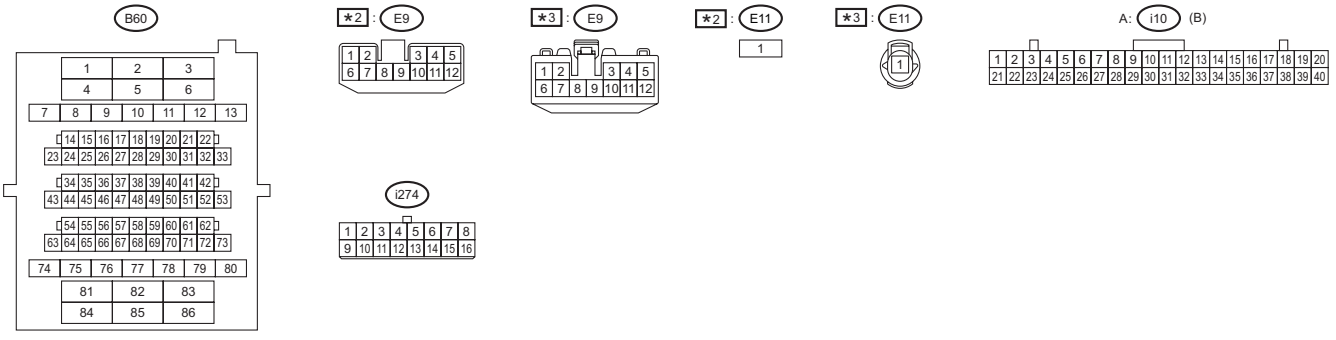

WI-60579

36.Parking Brake / Brake Fluid Level Warning Light System

A: WIRING DIAGRAM

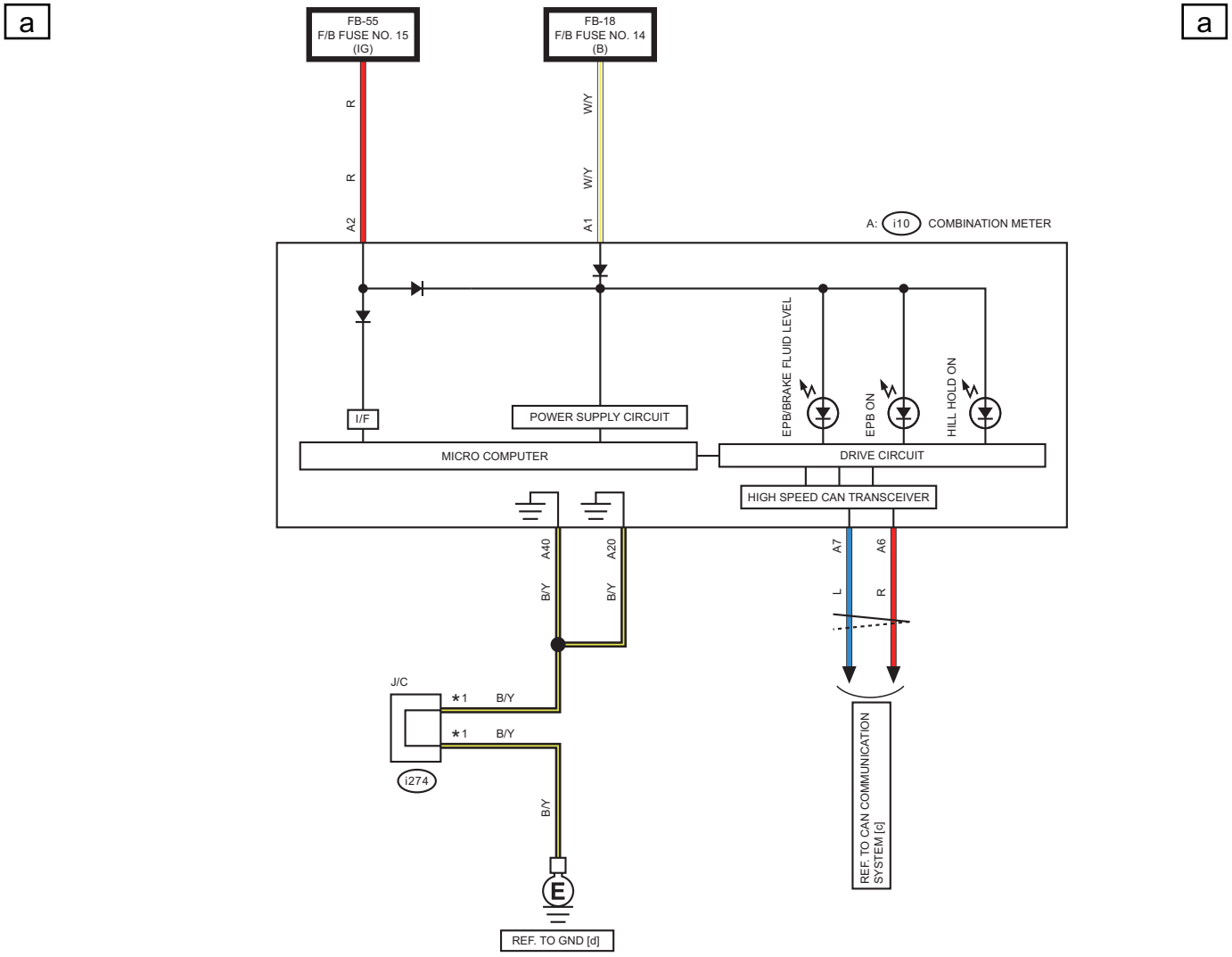

*1 : TERMINAL No. OPTIONAL ARRANGEMENT

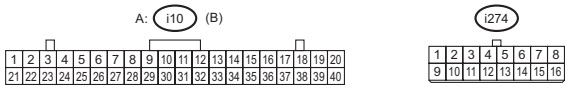

WI-60580

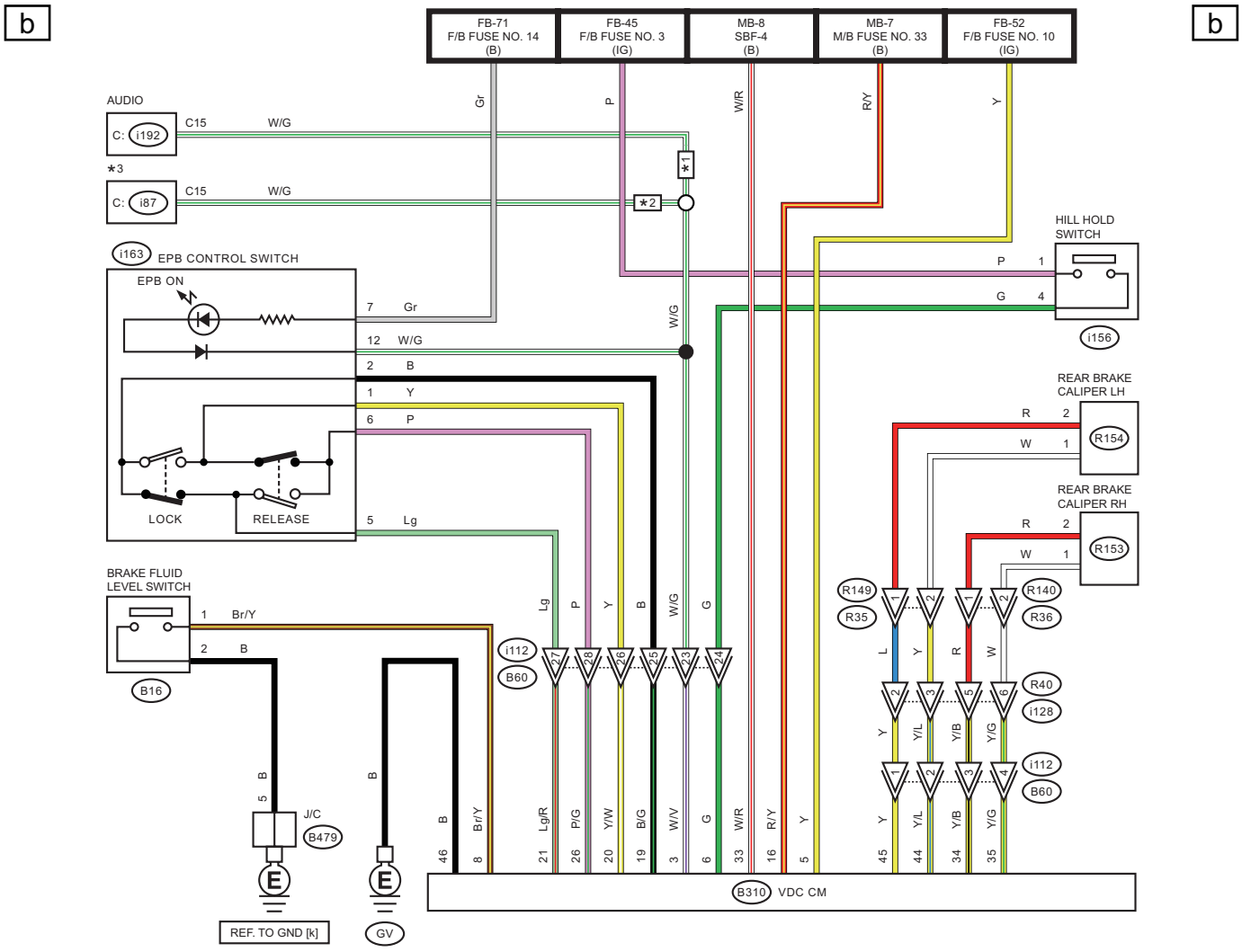

*1 : 6.2 INCH DISPLAY
*2 : 7 INCH DISPLAY

*3 : WITHOUT NAVIGATION : AUDIO
WITH NAVIGATION : NAVIGATION UNIT

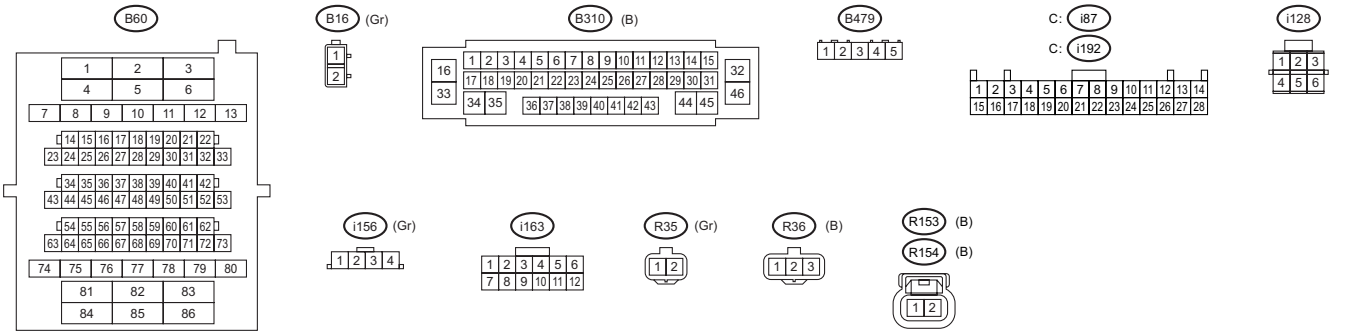

WI-60581

37.Power Rear Gate System

A: WIRING DIAGRAM

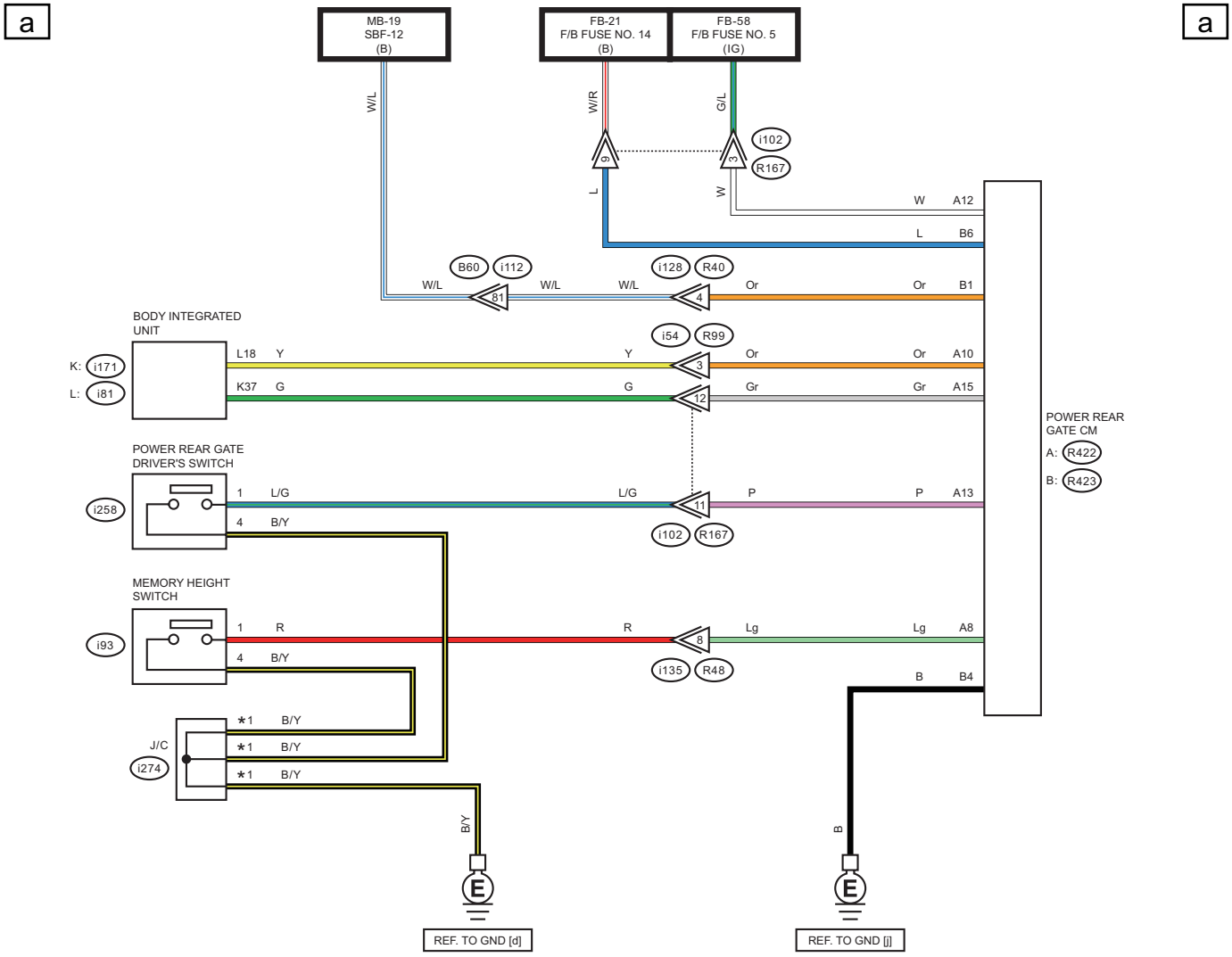

*1 : TERMINAL No. OPTIONAL ARRANGEMENT

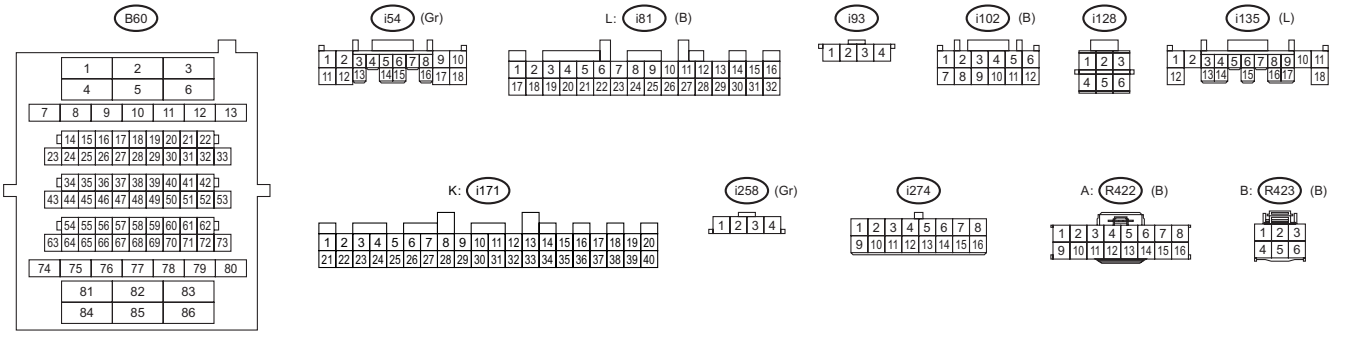

WI-60582

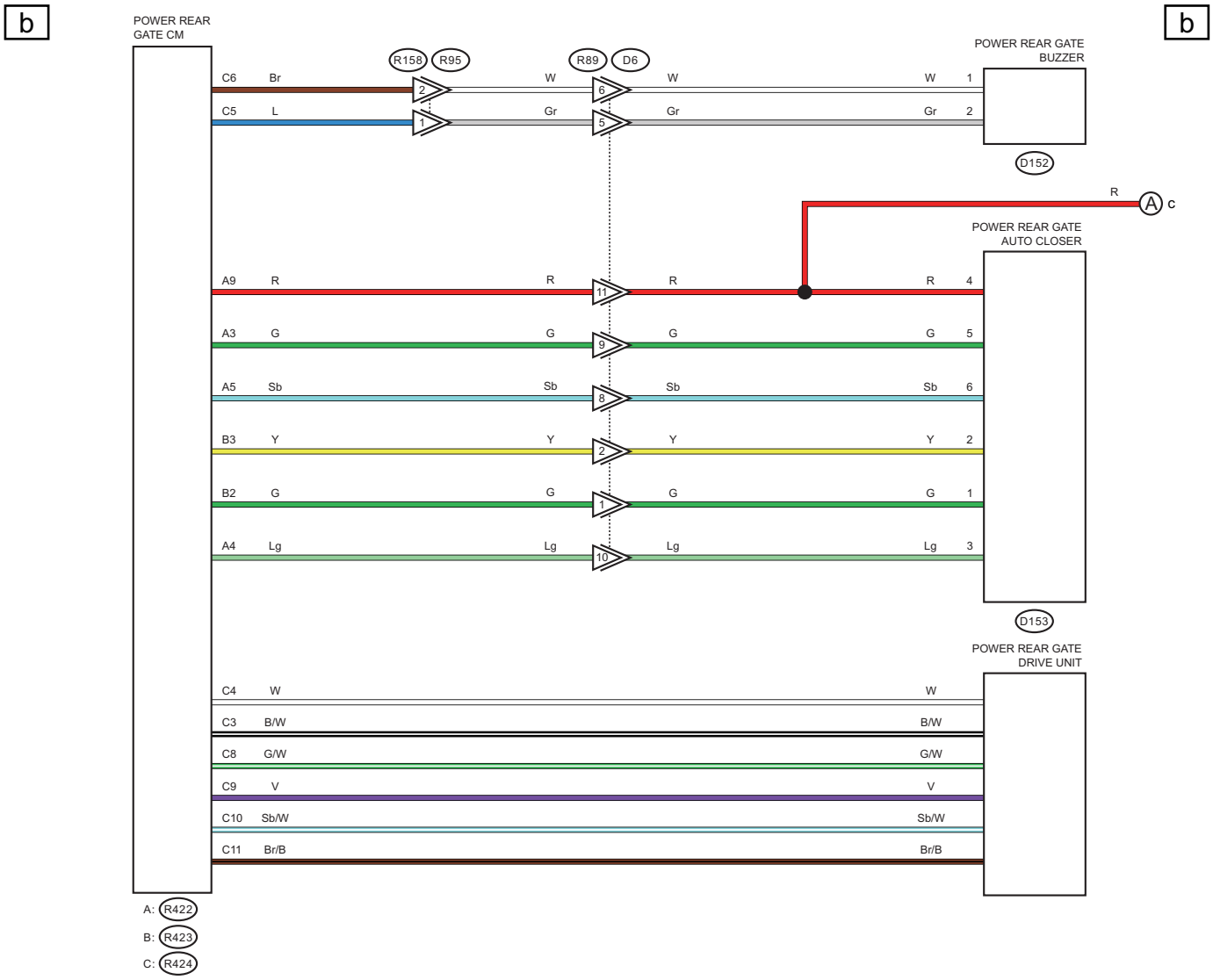
b
b
POWER REAR GATE CM
R158
R95
R89
D6
POWER REAR GATE BUZZER
C6 Br W W W 1
C5 L Gr Gr Gr 2
D152
R
A c
POWER REAR GATE AUTO CLOSER
A9 R R R R 4
A3 G G G G 5
A5 Sb Sb Sb Sb 6
B3 Y Y Y Y 2
B2 G G G G 1
A4 Lg Lg Lg Lg 3
D153
POWER REAR GATE DRIVE UNIT
C4 W W
C3 B/W B/W
C8 G/W G/W
C9 V V
C10 Sb/W Sb/W
C11 Br/B Br/B
A: R422
B: R423
C: R424

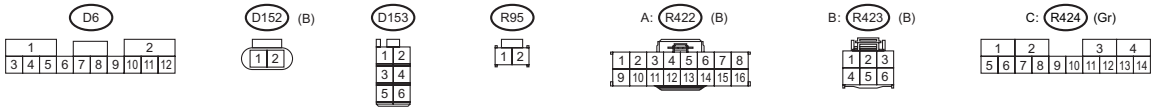
D6
D152 (B)
D153
R95
A: R422 (B)
B: R423 (B)
C: R424 (Gr)

WI-60583

C

C

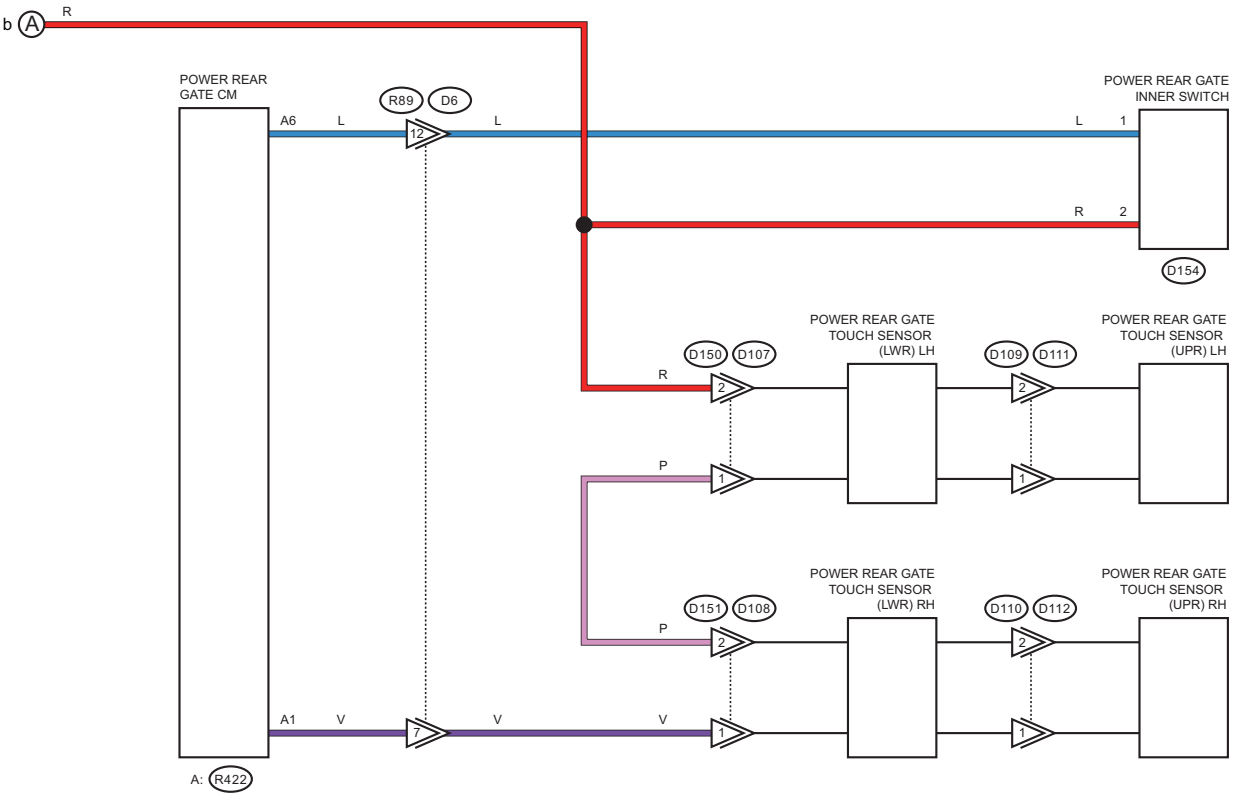
b A R
POWER REAR GATE CM
A6 L
R89 D6
12
L
L 1
POWER REAR GATE INNER SWITCH
R 2
D154
POWER REAR GATE TOUCH SENSOR (LWR) LH
POWER REAR GATE TOUCH SENSOR (UPR) LH
D150 D107
D109 D111
R
P
2
1
POWER REAR GATE TOUCH SENSOR (LWR) RH
POWER REAR GATE TOUCH SENSOR (UPR) RH
D151 D108
D110 D112
P
A1 V
7
V
V
A: R422

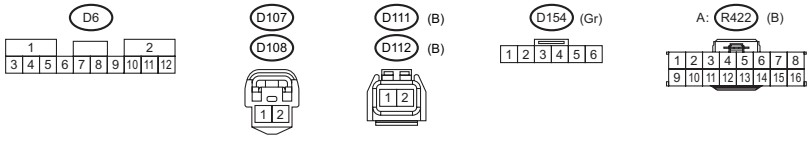
D6
1 2
3 4 5 6 7 8 9 10 11 12
D107
D108
1 2
D111 (B)
D112 (B)
1 2
D154 (Gr)
1 2 3 4 5 6
A: R422 (B)
1 2 3 4 5 6 7 8
9 10 11 12 13 14 15 16

WI-60584

38.Power Seat System

A: WIRING DIAGRAM

1. DRIVER'S SEAT (WITHOUT MEMORY)

1a

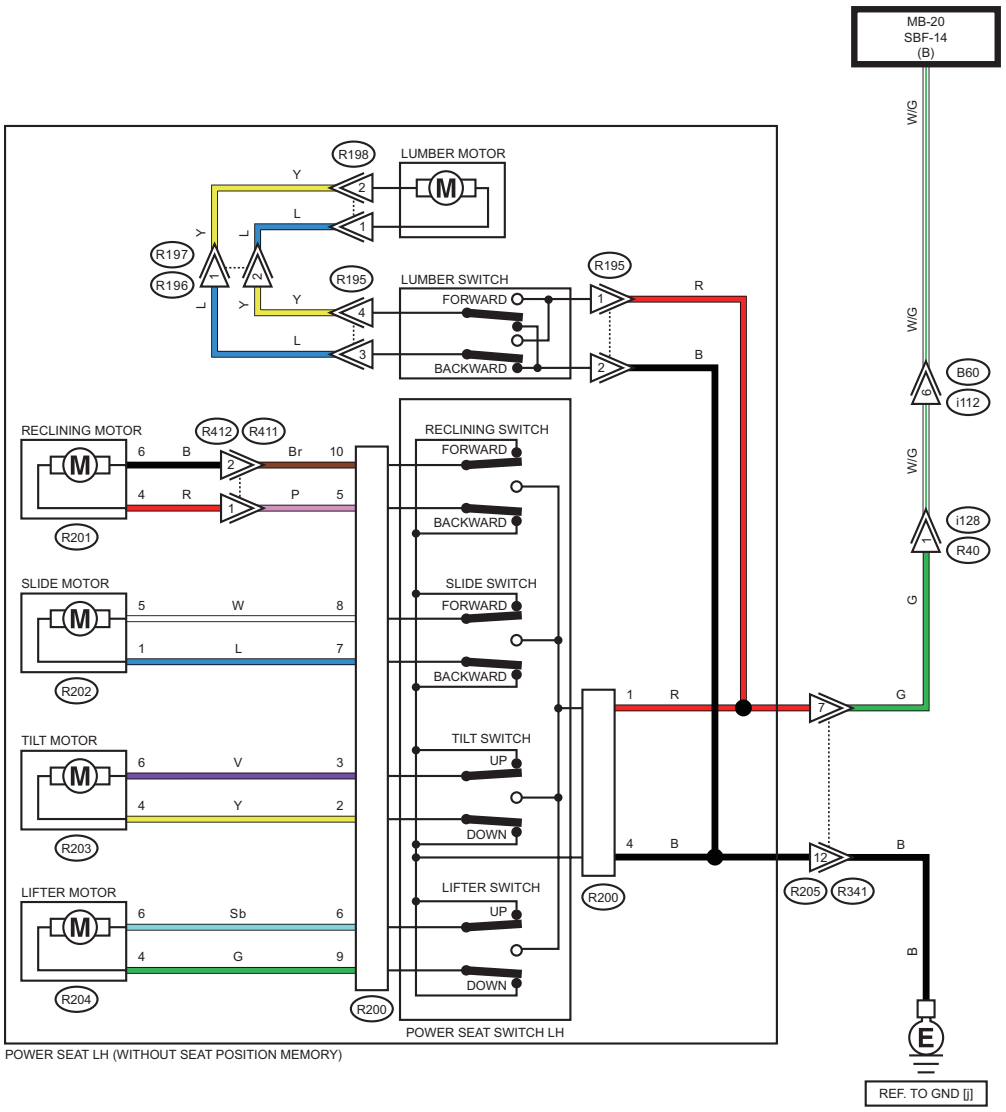

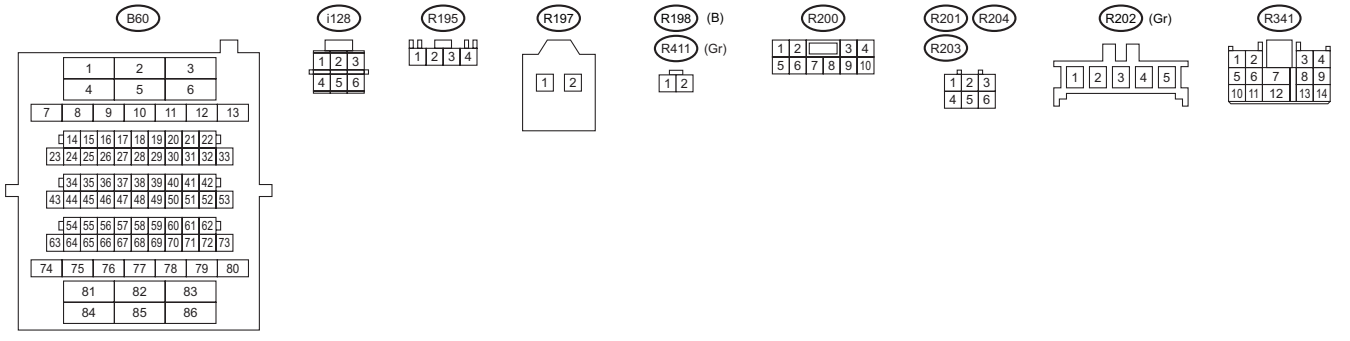

WI-60585

2. DRIVER'S SEAT (WITH MEMORY)

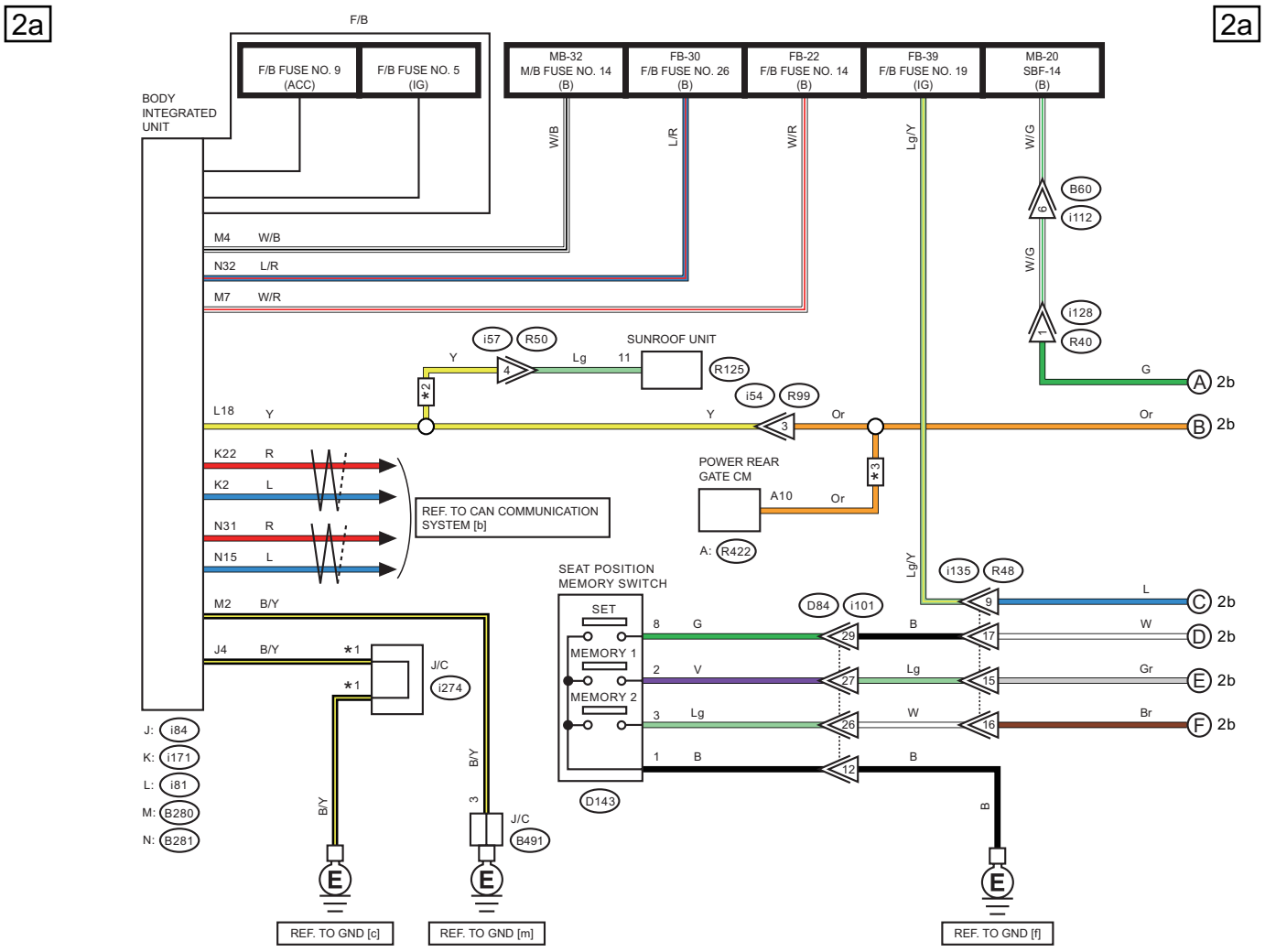

∗1 : TERMINAL No. OPTIONAL ARRANGEMENT
∗2 : WITH SUNROOF
∗3 : WITH POWER REAR GATE

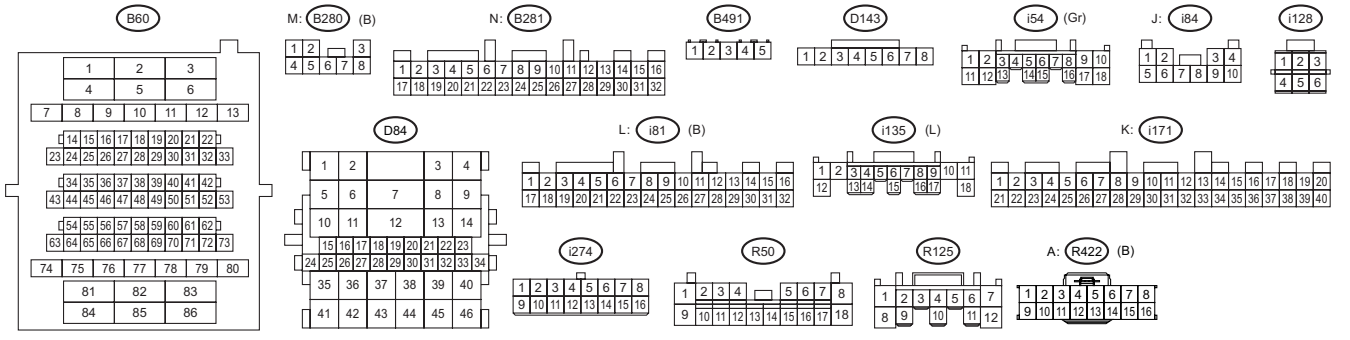

WI-60586

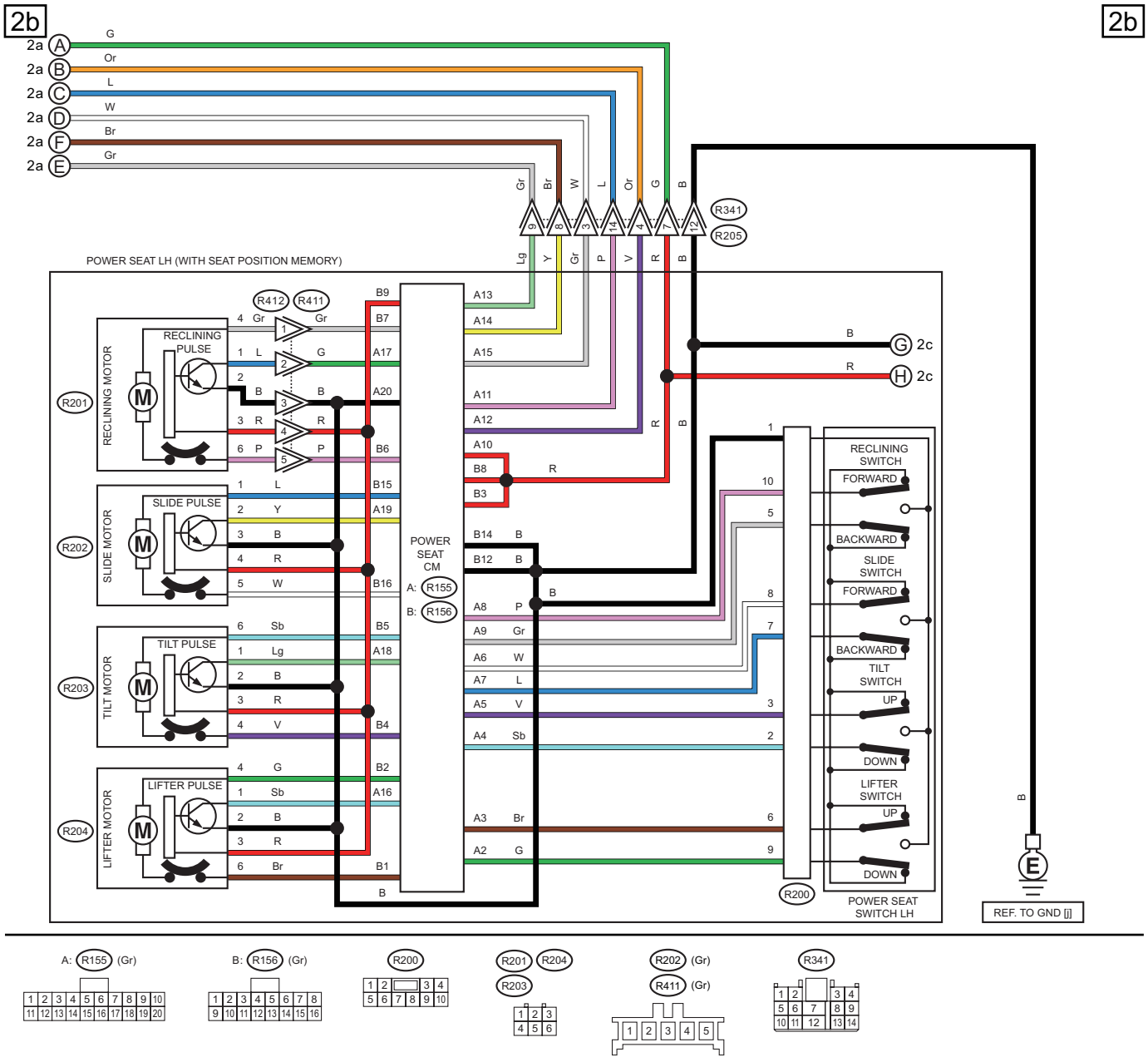
2b
2a A G
2a B Or
2a C L
2a D W
2a F Br
2a E Gr
R341
R205
POWER SEAT LH (WITH SEAT POSITION MEMORY)
R412
R411
RECLINING MOTOR
RECLINING PULSE
R201
SLIDE MOTOR
SLIDE PULSE
R202
TILT MOTOR
TILT PULSE
R203
LIFTER MOTOR
LIFTER PULSE
R204
POWER SEAT CM
A: R155
B: R156
R200
RECLINING SWITCH
FORWARD
BACKWARD
SLIDE SWITCH
FORWARD
BACKWARD
TILT SWITCH
UP
DOWN
LIFTER SWITCH
UP
DOWN
POWER SEAT SWITCH LH
G 2c
H 2c
REF. TO GND [j]

A: R155 (Gr)
B: R156 (Gr)
R200
R201 R204
R203
R202 (Gr)
R411 (Gr)
R341

WI-60587

2c

2c

POWER SEAT LH (WITH SEAT POSITION MEMORY)

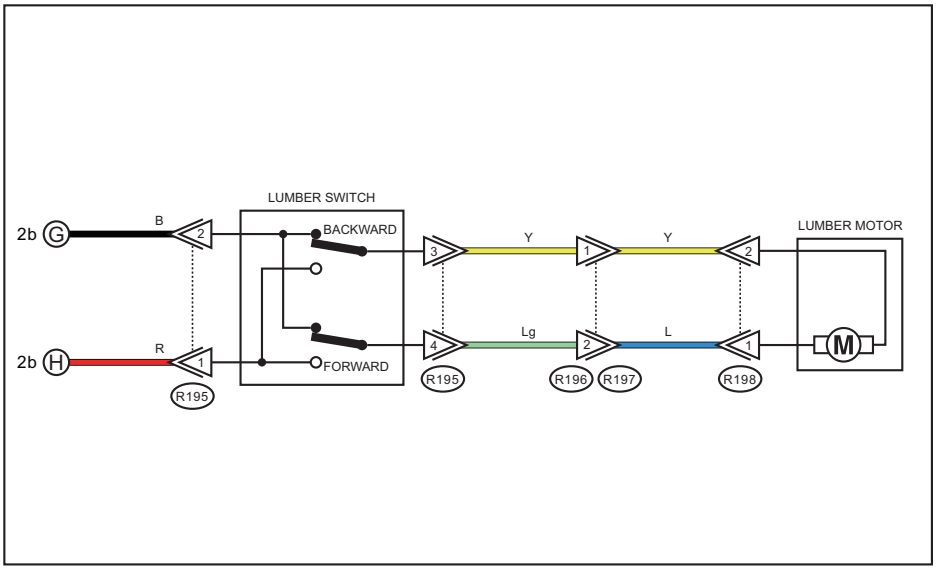

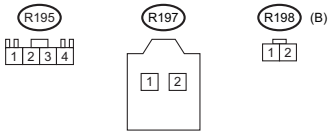

WI-60588

3. PASSENGER'S SEAT

3a

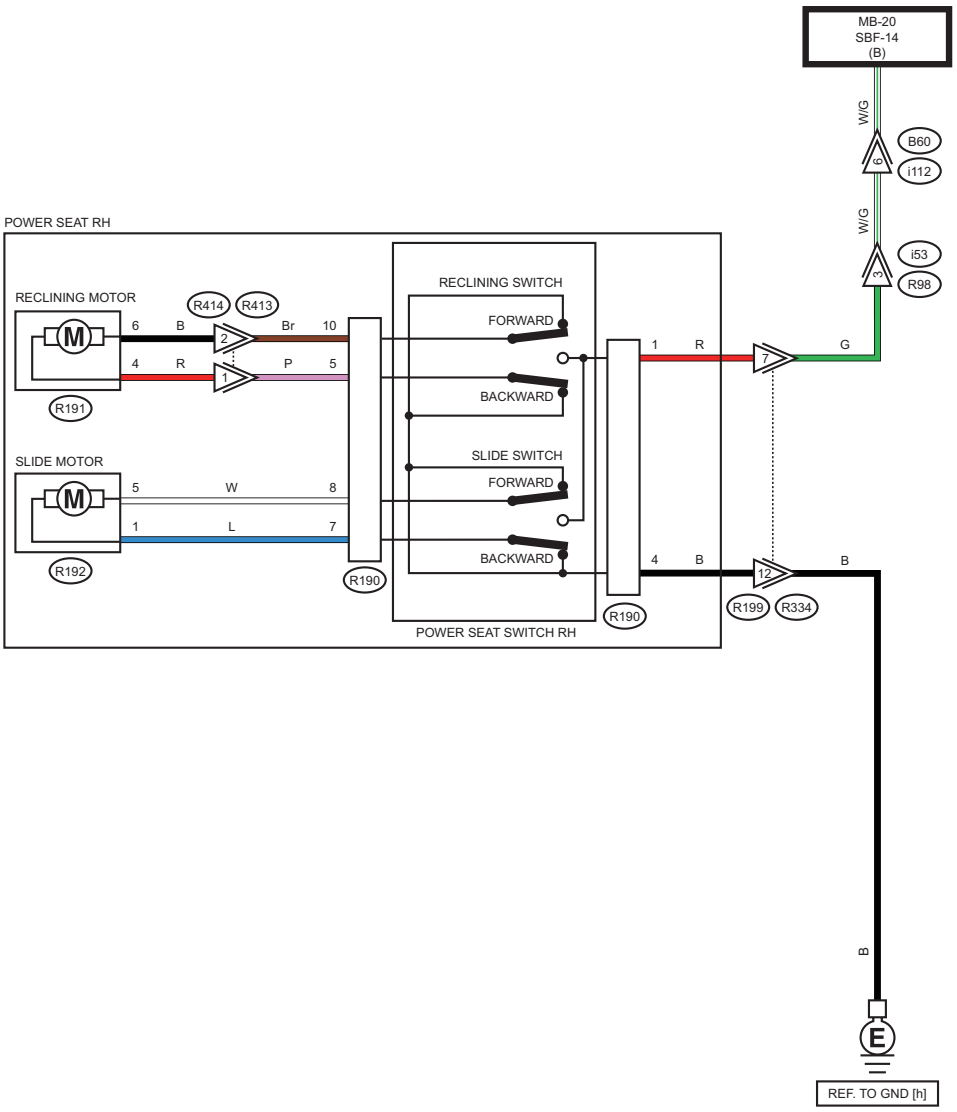

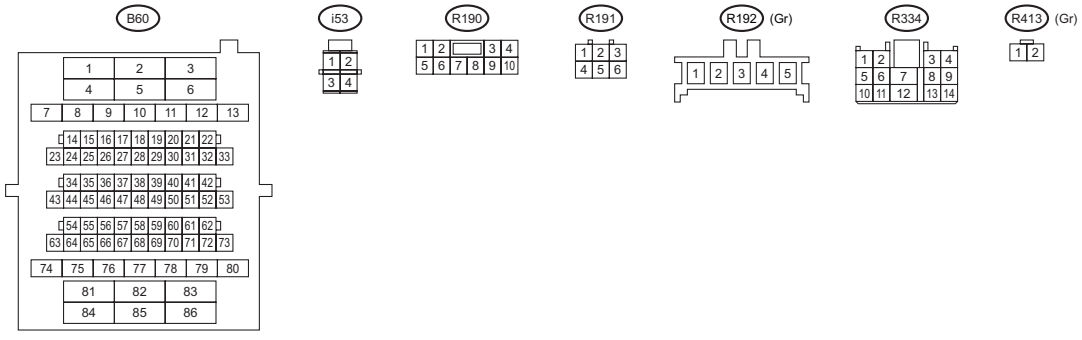

WI-60589

39.Power Window System

A: WIRING DIAGRAM

1. WITH DRIVER'S SEAT AUTO-REVERSE FUNCTION

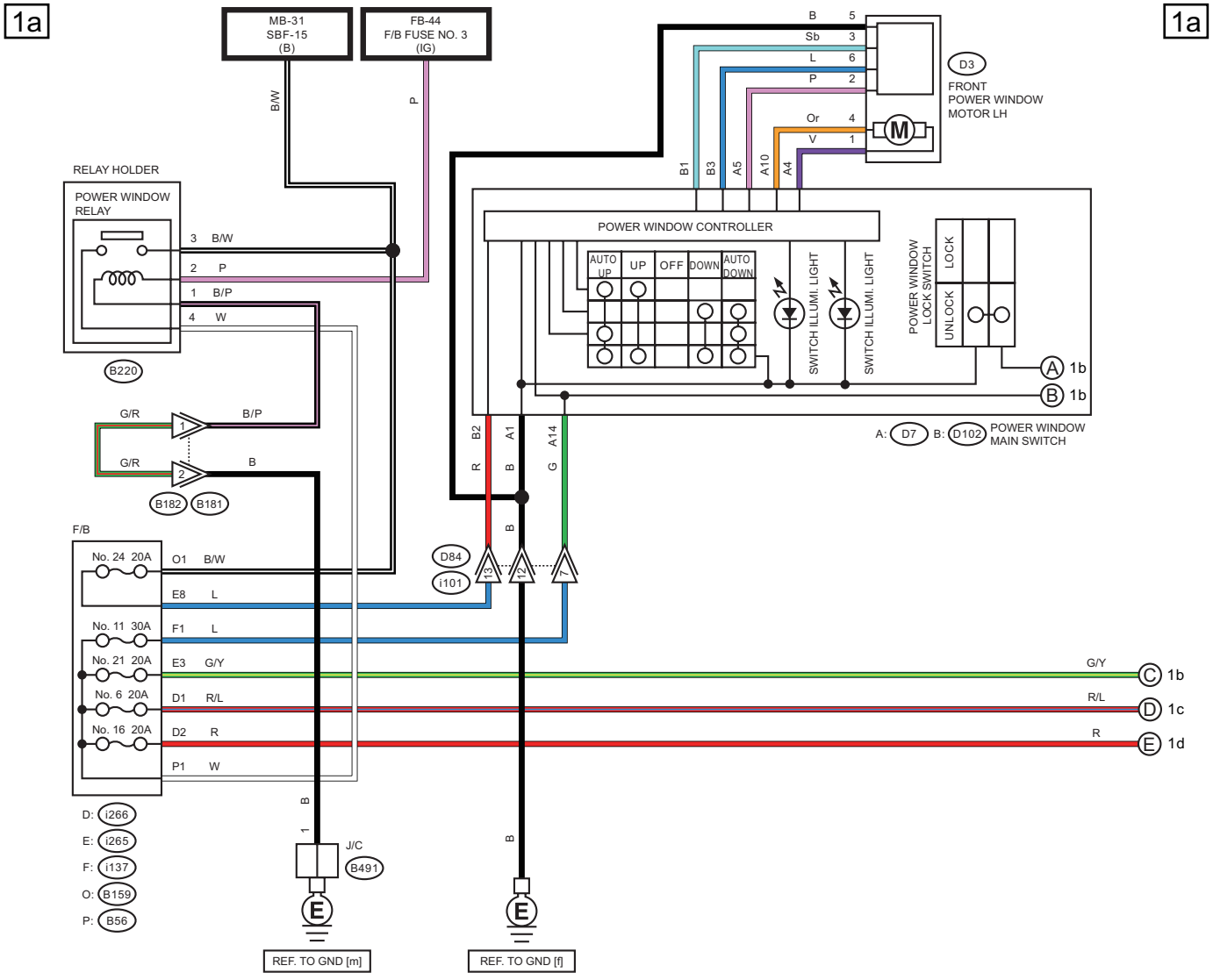

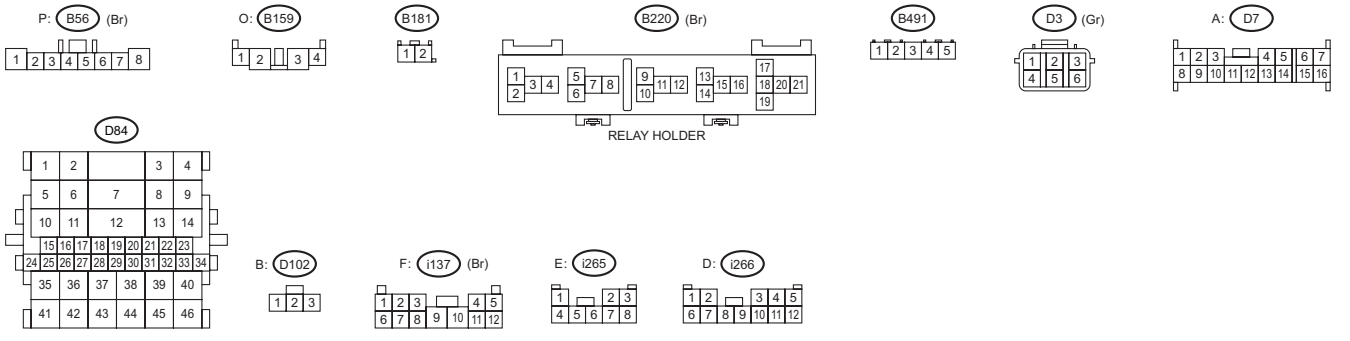

WI-60590

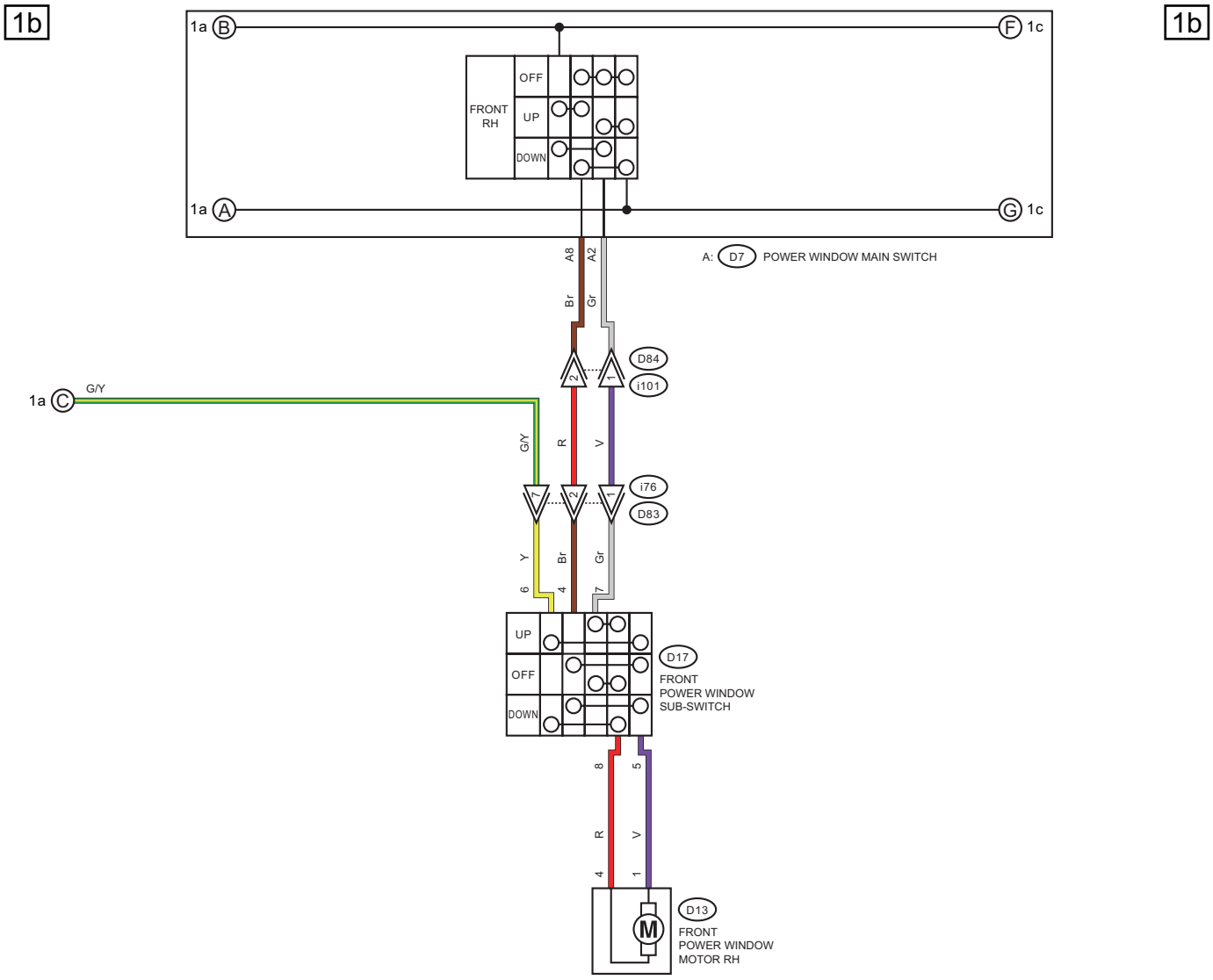
1b
1a B
F 1c
1b
FRONT RH
OFF
UP
DOWN
1a A
G 1c
A: D7 POWER WINDOW MAIN SWITCH
A8
A2
Br
Gr
D84
i101
1a C
G/Y
G/Y
R
V
i76
D83
Y
Br
Gr
UP
OFF
DOWN
D17
FRONT POWER WINDOW SUB-SWITCH
R
V
D13
FRONT POWER WINDOW MOTOR RH
M

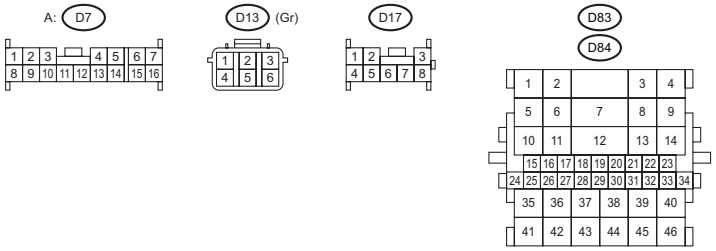
A: D7
D13 (Gr)
D17
D83
D84

WI-60591

WIRING SYSTEM

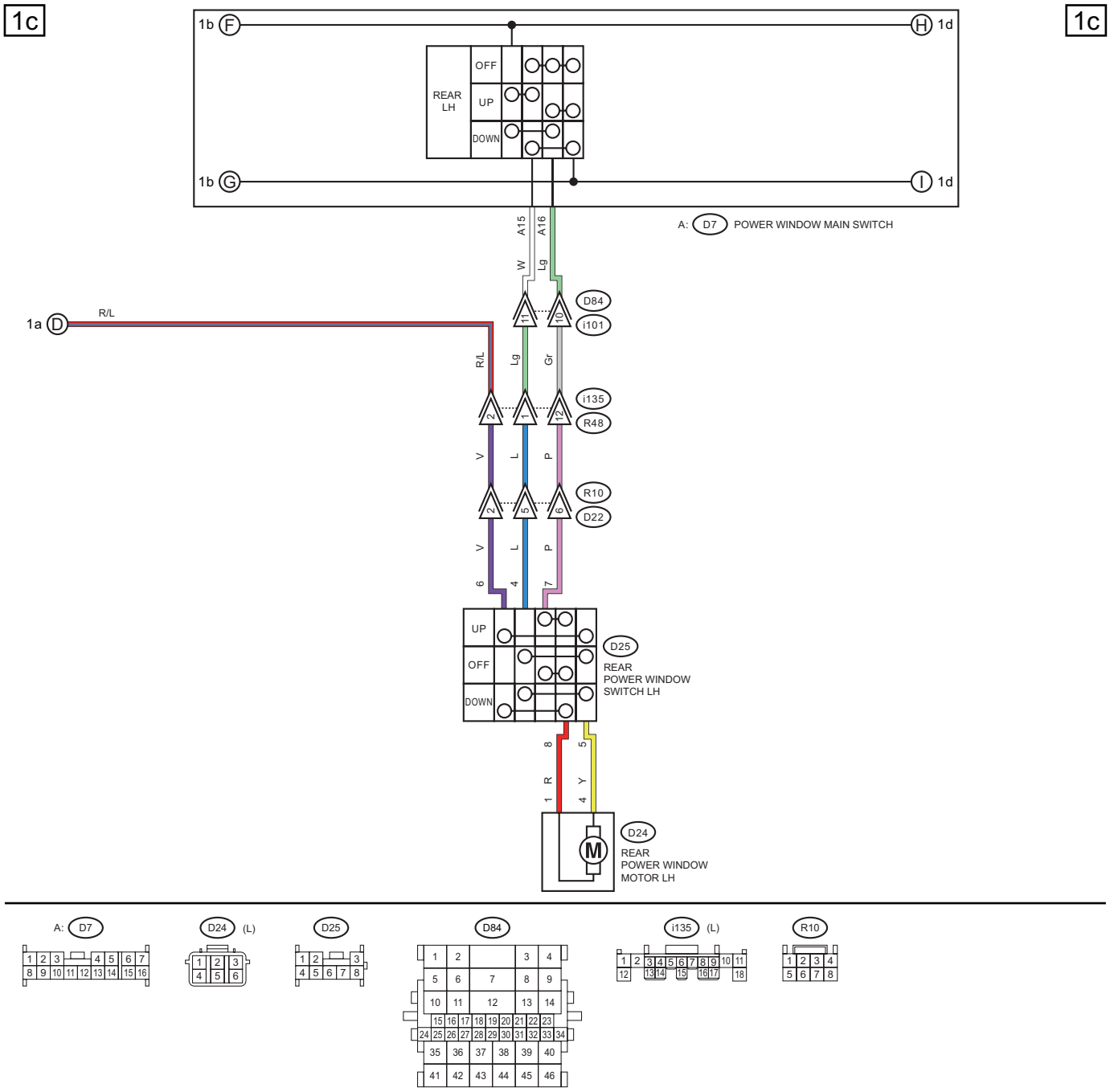

WI-60592

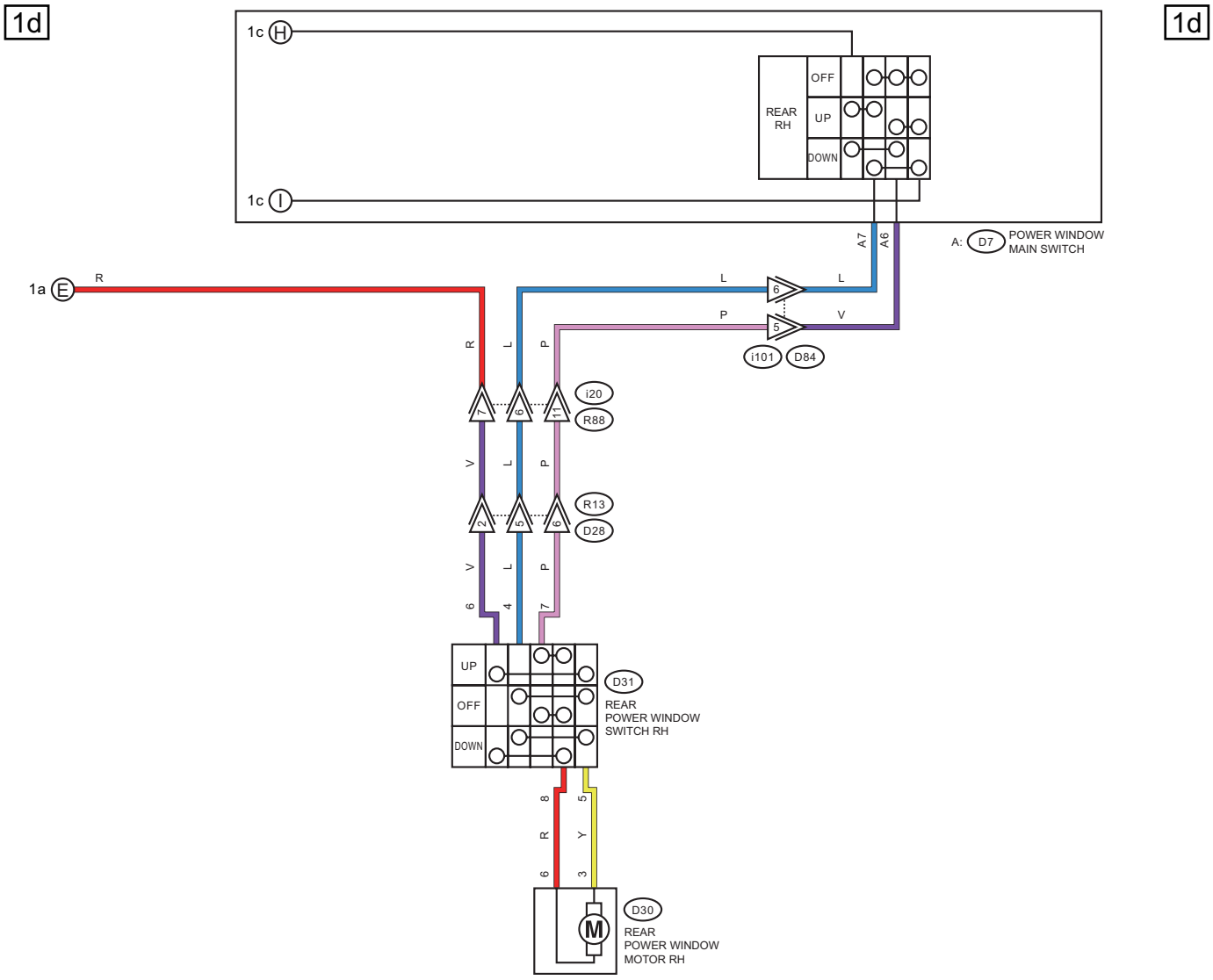
1d
1d
1c H
1c I
REAR RH
OFF
UP
DOWN
A: D7 POWER WINDOW MAIN SWITCH
A7
A6
1a E
R
L
L
P
V
6
5
i101
D84
i20
R88
R13
D28
UP
OFF
DOWN
D31
REAR POWER WINDOW SWITCH RH
Y
D30
M
REAR POWER WINDOW MOTOR RH

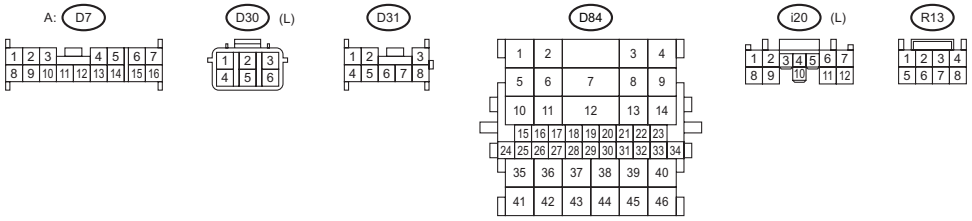
A: D7
D30 (L)
D31
D84
i20 (L)
R13

WI-60593

2. WITH DRIVER'S SEAT AND PASSENGER'S SEAT AUTO-REVERSE FUNCTION

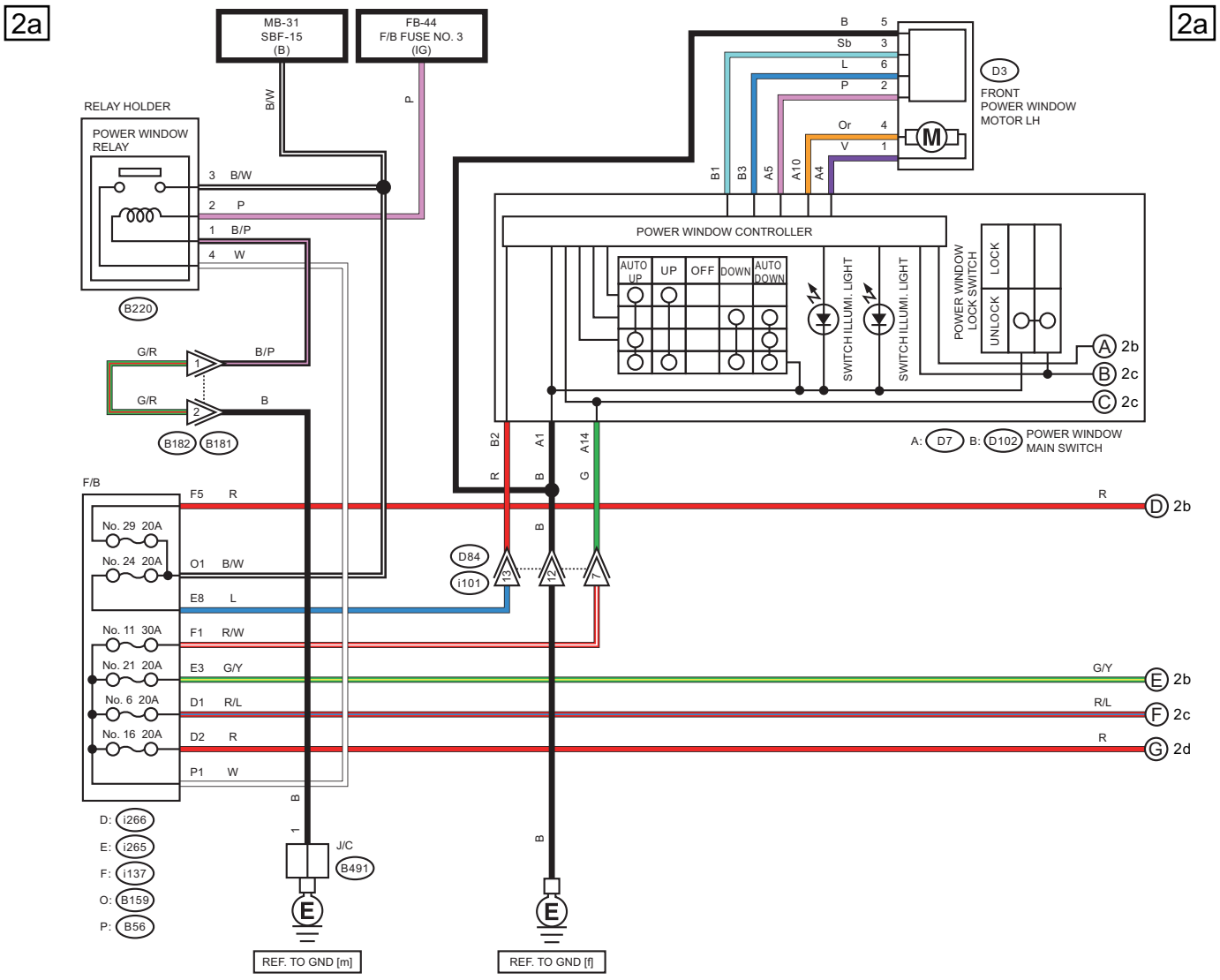

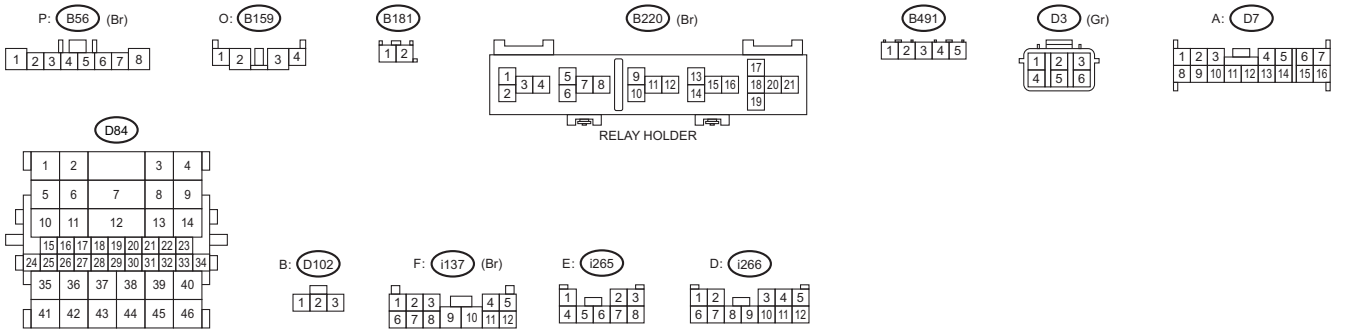

WI-70999

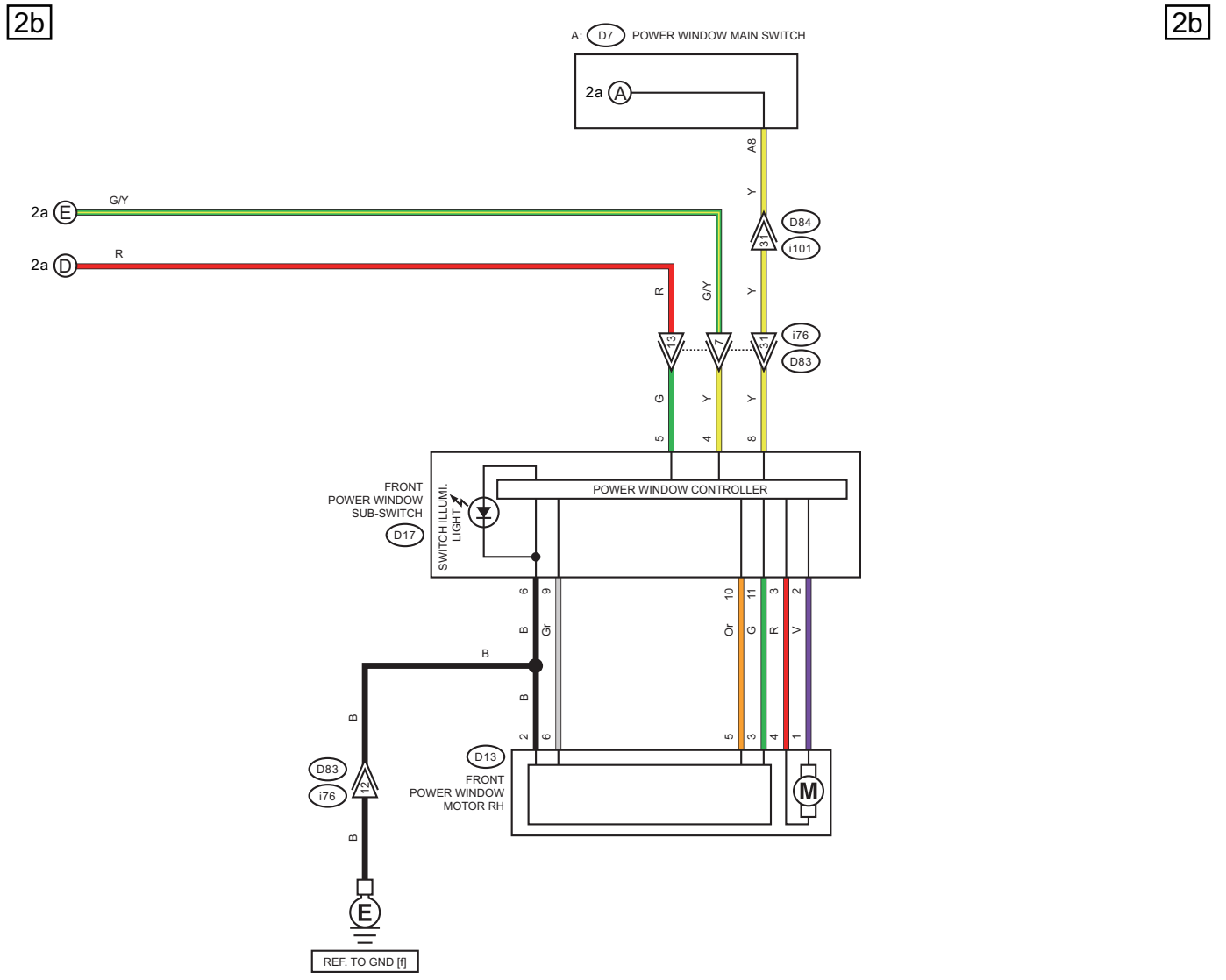
2b
2b
A: D7 POWER WINDOW MAIN SWITCH
2a A
A8
Y
D84
31
i101
2a E
G/Y
2a D
R
R
G/Y
Y
i76
D83
i3
7
31
G
Y
Y
5
4
8
FRONT
POWER WINDOW
SUB-SWITCH
D17
SWITCH ILLUMI.
LIGHT
POWER WINDOW CONTROLLER
6
B
9
Gr
10
Or
11
G
3
R
2
V
B
B
2
6
5
3
4
1
B
D83
i76
i2
D13
FRONT
POWER WINDOW
MOTOR RH
M
B
E
REF. TO GND [f]

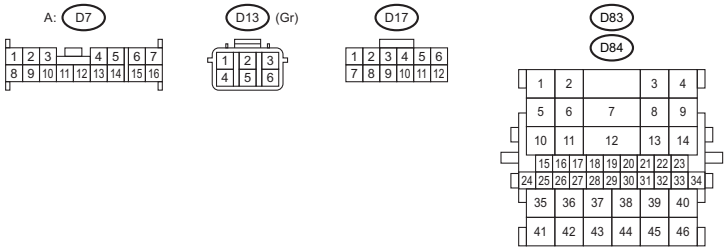
A: D7
1 2 3 4 5 6 7
8 9 10 11 12 13 14 15 16
D13 (Gr)
1 2 3
4 5 6
D17
1 2 3 4 5 6
7 8 9 10 11 12
D83
D84
1 2 3 4
5 6 7 8 9
10 11 12 13 14
15 16 17 18 19 20 21 22 23
24 25 26 27 28 29 30 31 32 33 34
35 36 37 38 39 40
41 42 43 44 45 46

WI-71000

WIRING SYSTEM

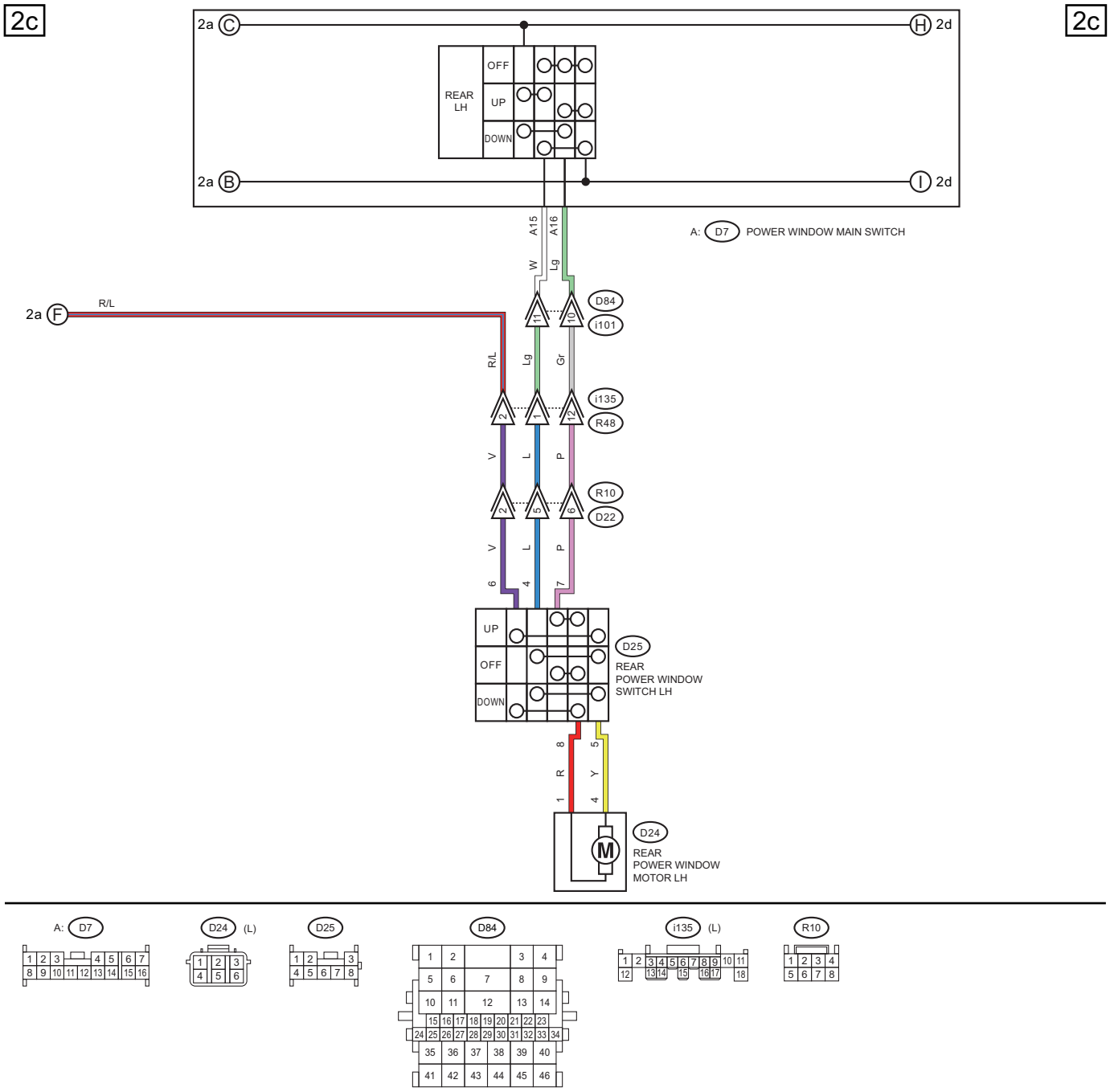

WI-71001

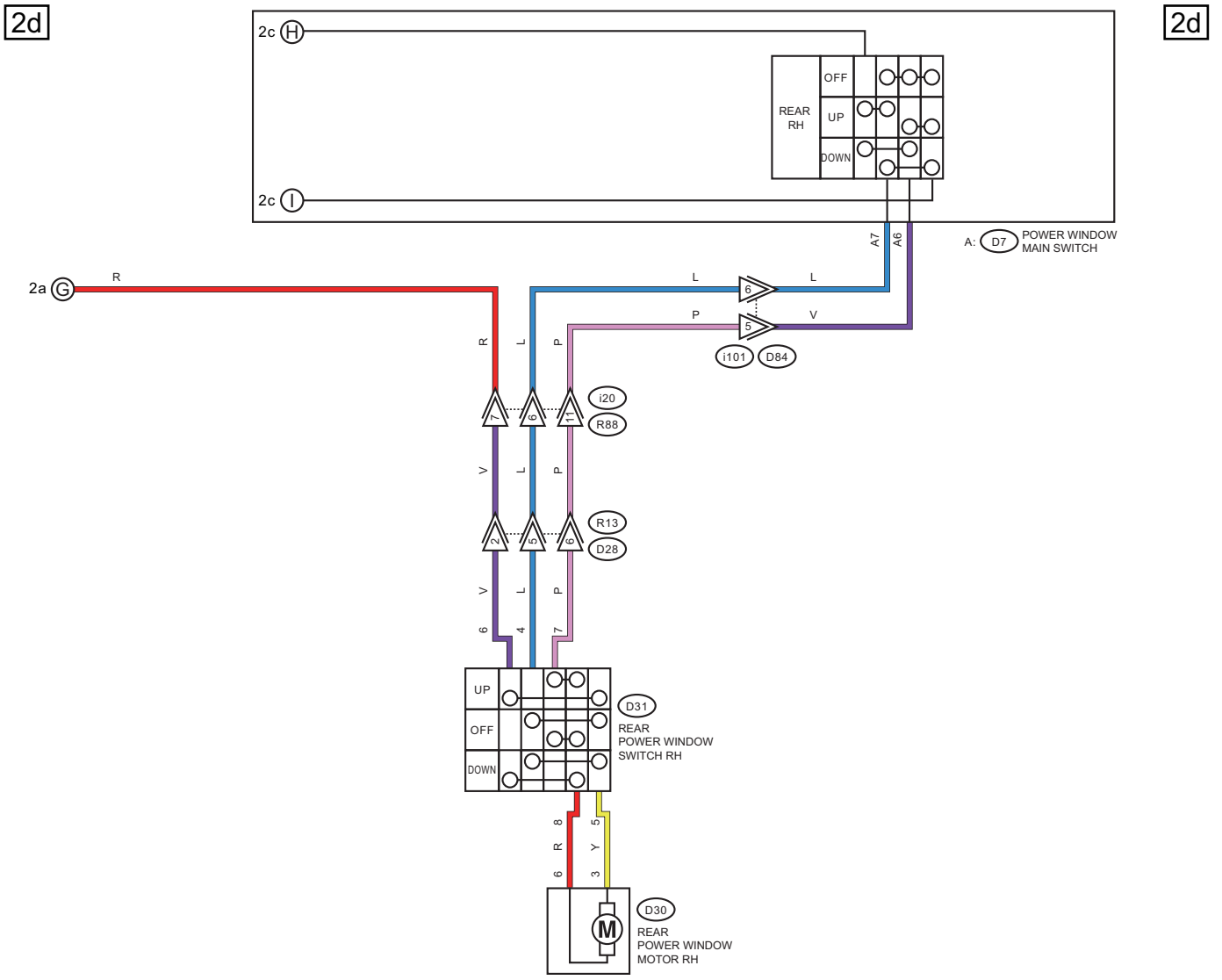
2d
2d
2c H
2c I
REAR RH
OFF
UP
DOWN
A: D7 POWER WINDOW MAIN SWITCH
A7
A6
2a G
R
L
L
P
V
6
5
i101
D84
i20
R88
R13
D28
UP
OFF
DOWN
D31
REAR POWER WINDOW SWITCH RH
D30
REAR POWER WINDOW MOTOR RH
M

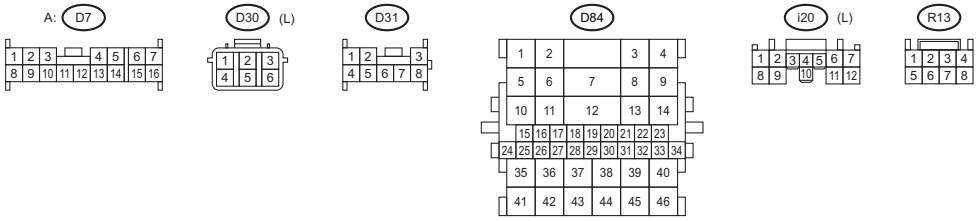
A: D7
D30 (L)
D31
D84
i20 (L)
R13

WI-71002

40.Radiator Fan System

A: WIRING DIAGRAM

1. ENGINE TYPE FB

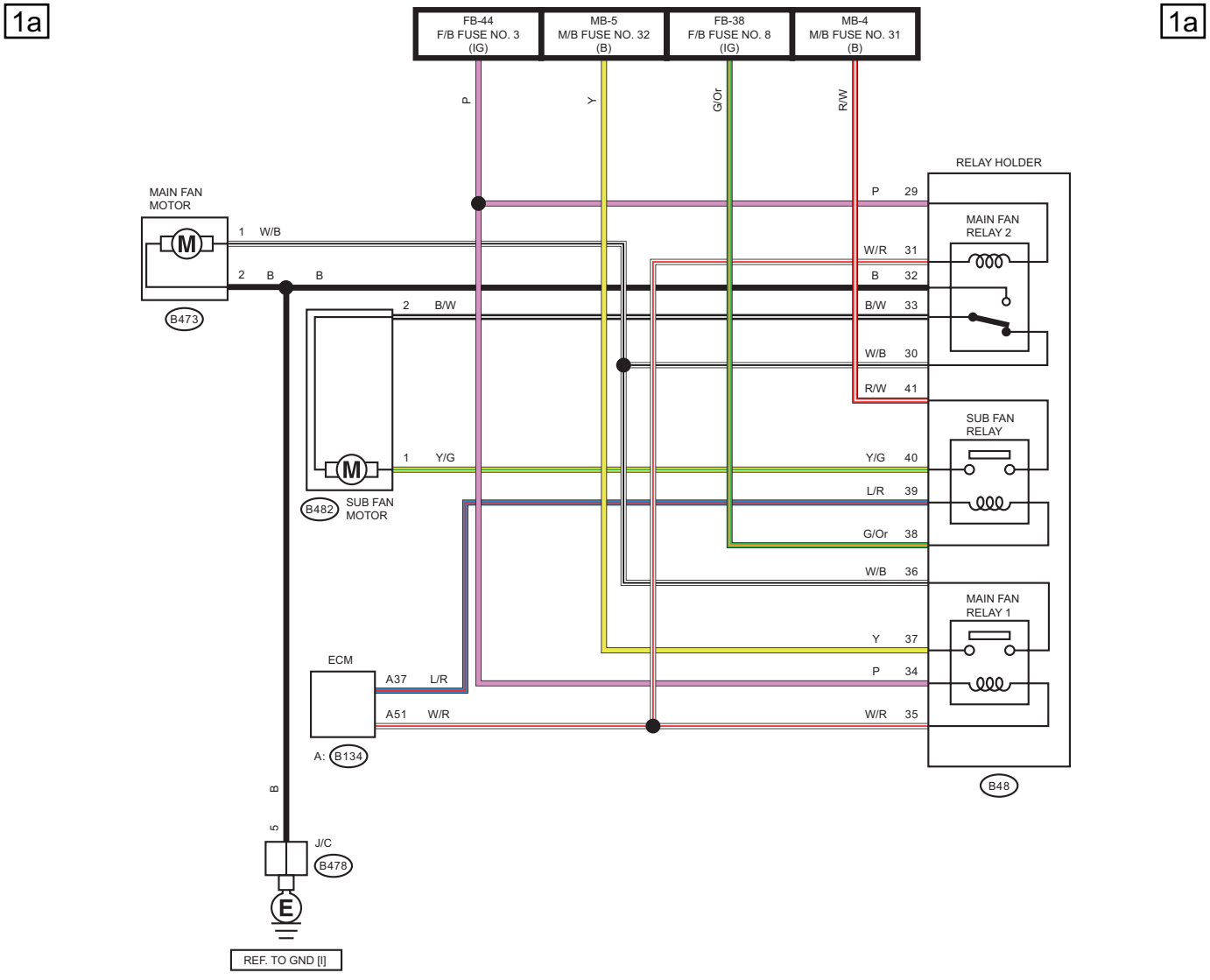

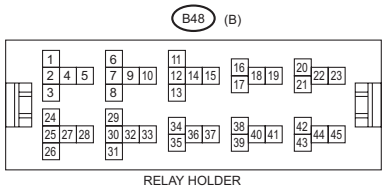

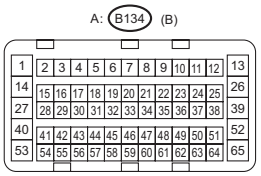

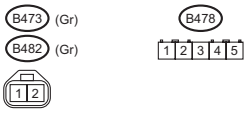

WI-60598

2. ENGINE TYPE EZ

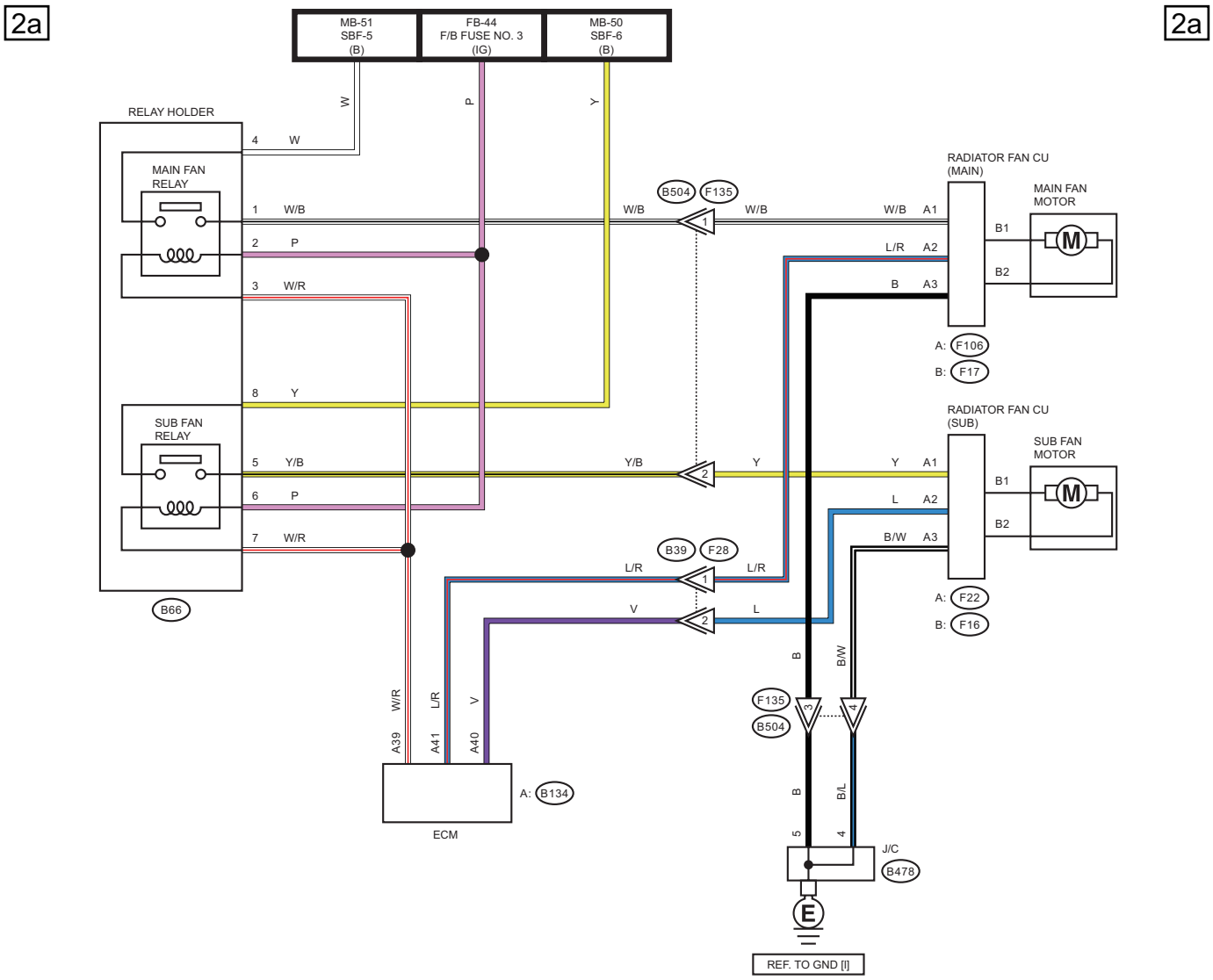

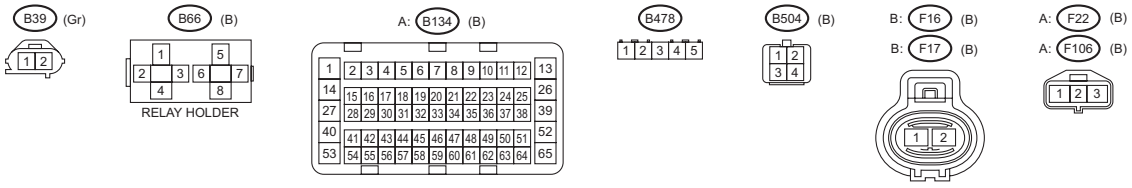

WI-60599

41.Rear Accessory Power Supply Socket System

A: WIRING DIAGRAM

a

a

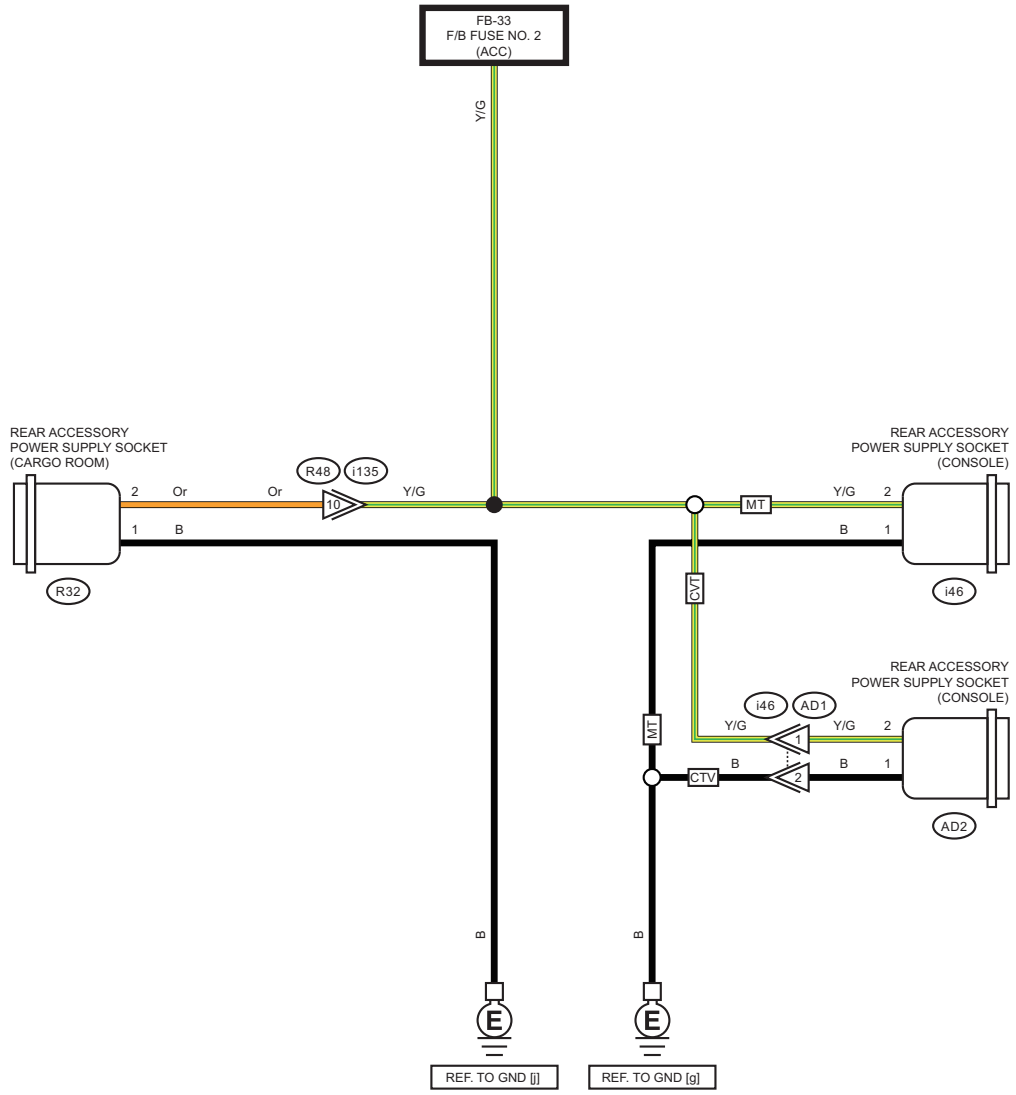

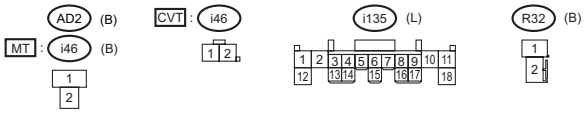

WI-60600

42.Rear Defogger System

A: WIRING DIAGRAM

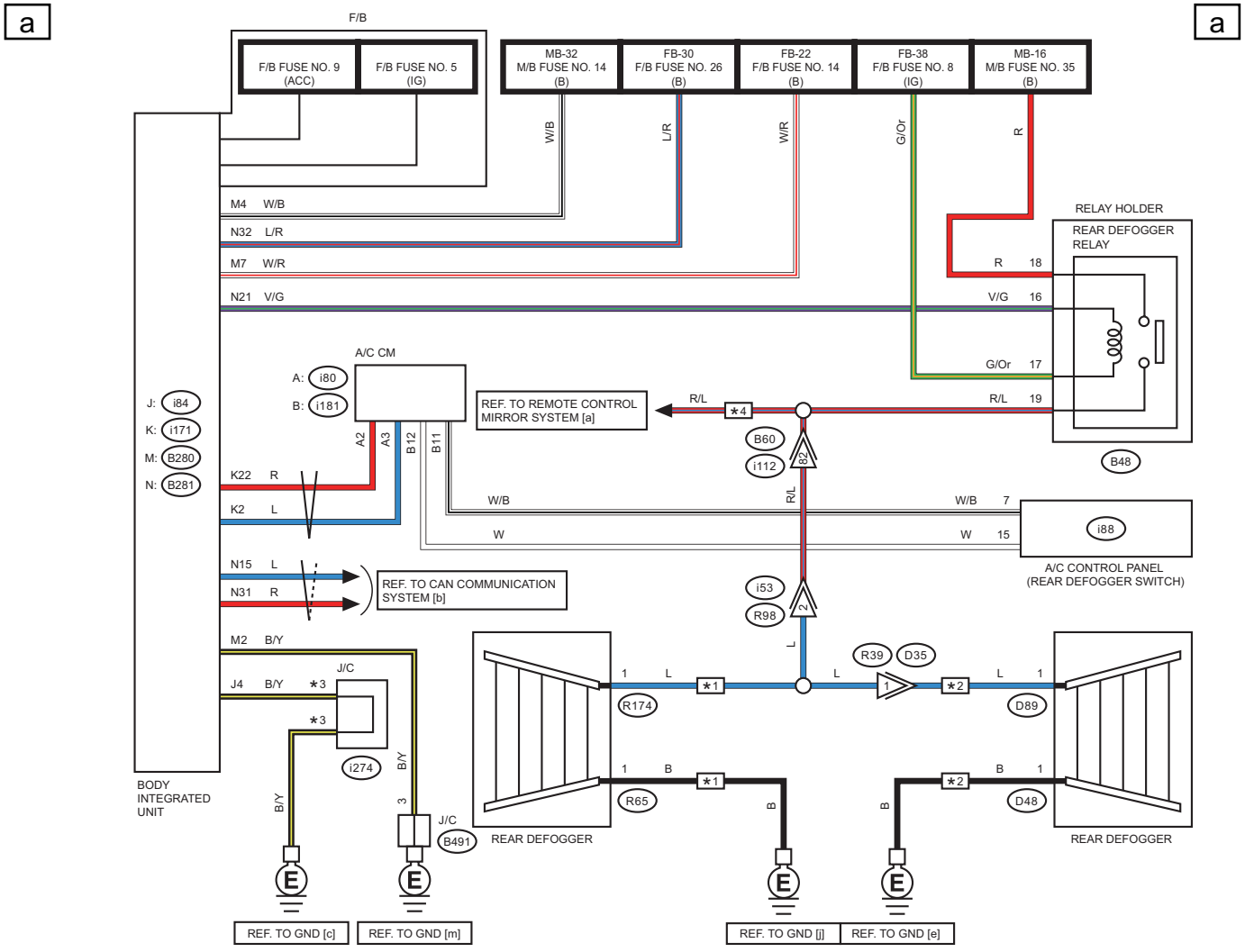

*1 : SEDAN MODEL
*2 : OUTBACK MODEL
*3 : TERMINAL No. OPTIONAL ARRANGEMENT
*4 : WITH MIRROR HEATER

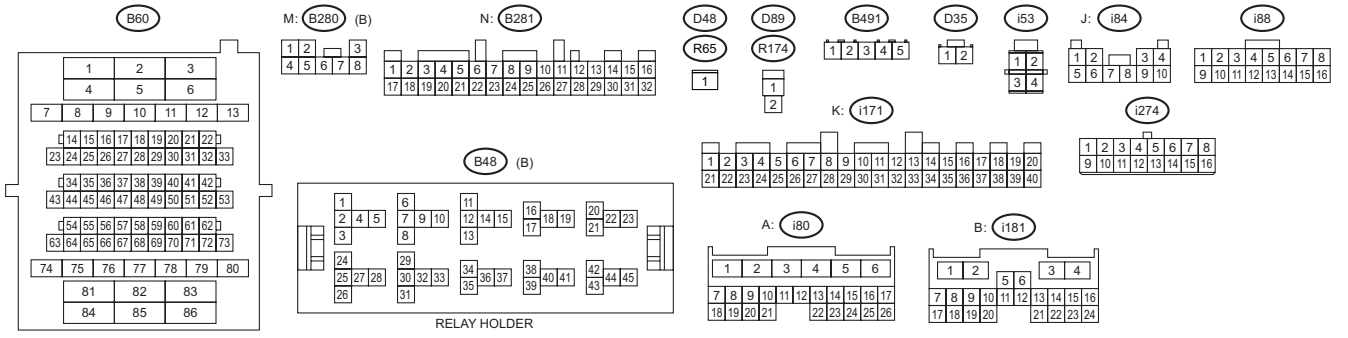

WI-60601

43.Rearview Camera System

A: WIRING DIAGRAM

1. SEDAN MODEL (6.2 INCH DISPLAY)

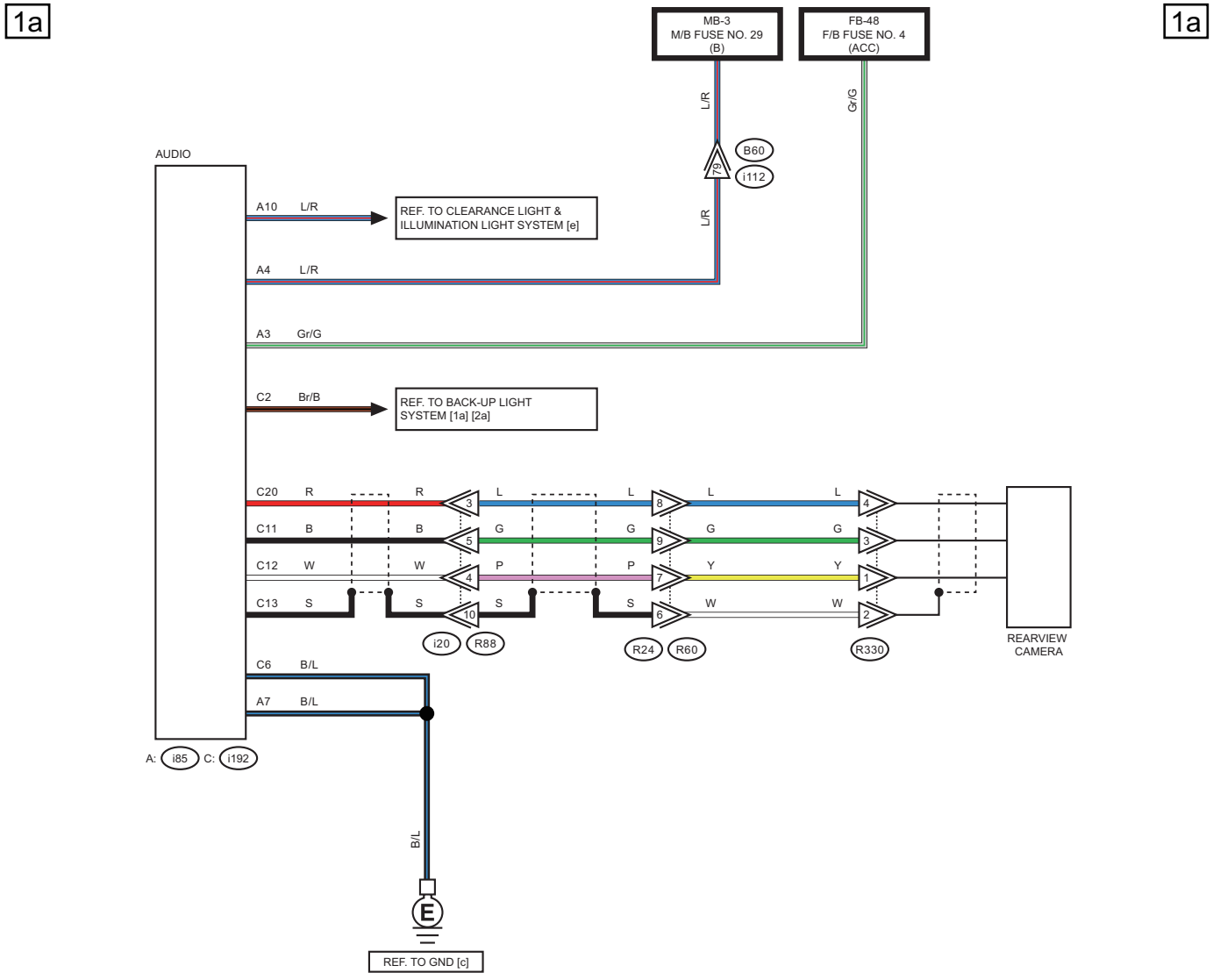

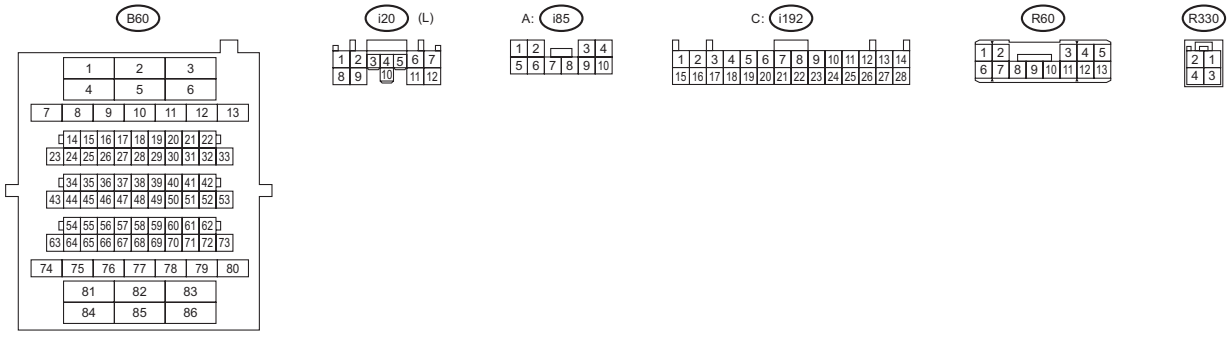

WI-60602

2. SEDAN MODEL (7 INCH DISPLAY WITHOUT AUDIO AMPLIFIER)

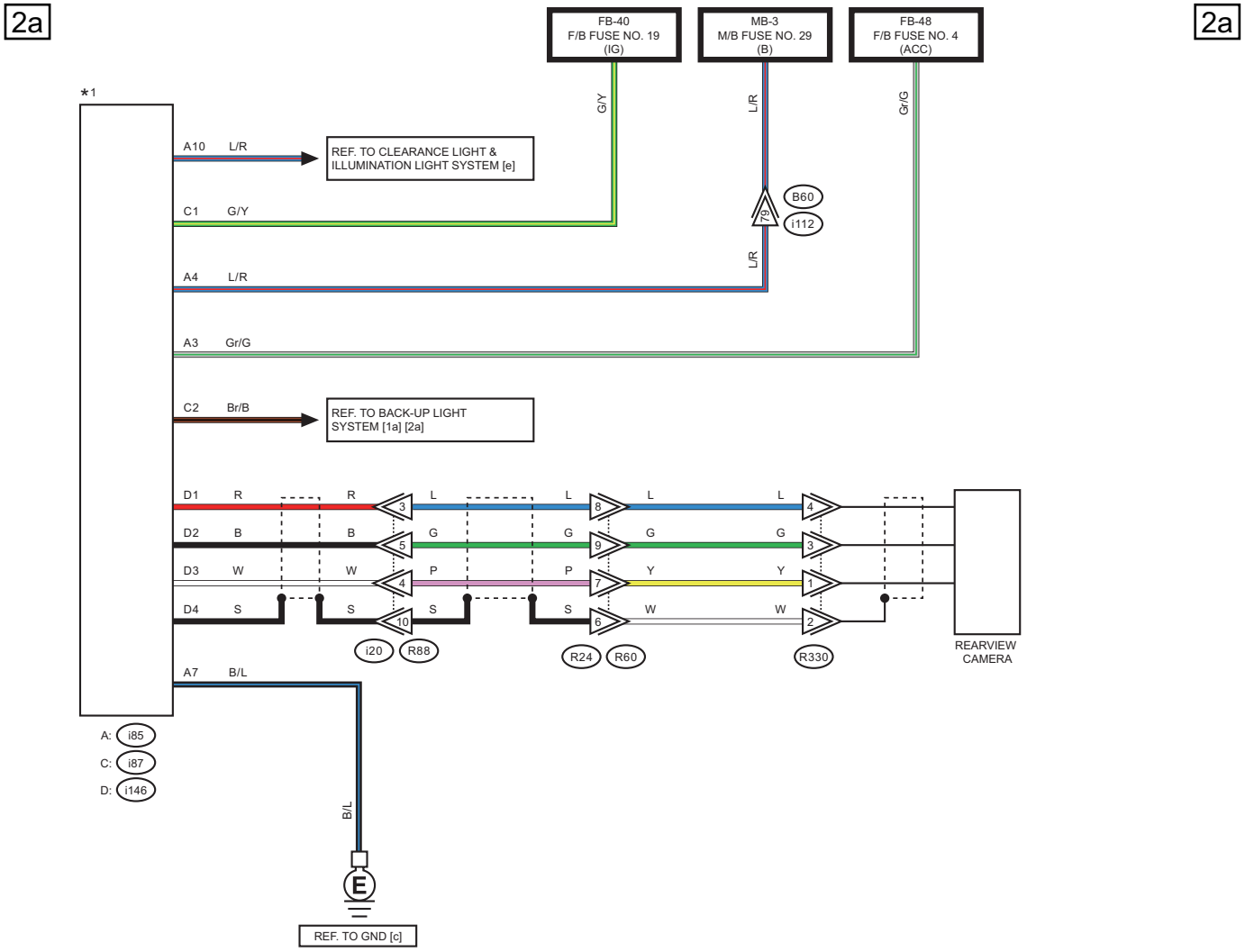

*1 : WITHOUT NAVIGATION : AUDIO
WITH NAVIGATION : NAVIGATION UNIT

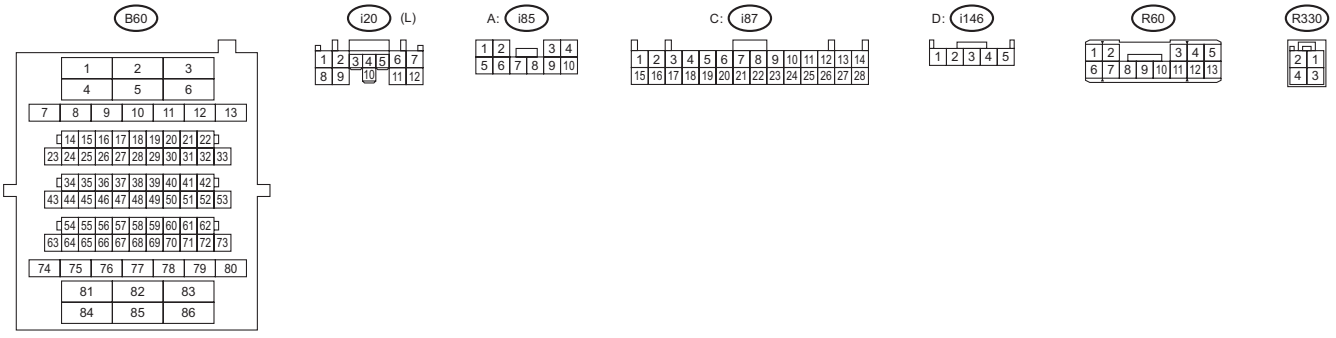

WI-60603

3. SEDAN MODEL (7 INCH DISPLAY WITH AUDIO AMPLIFIER)

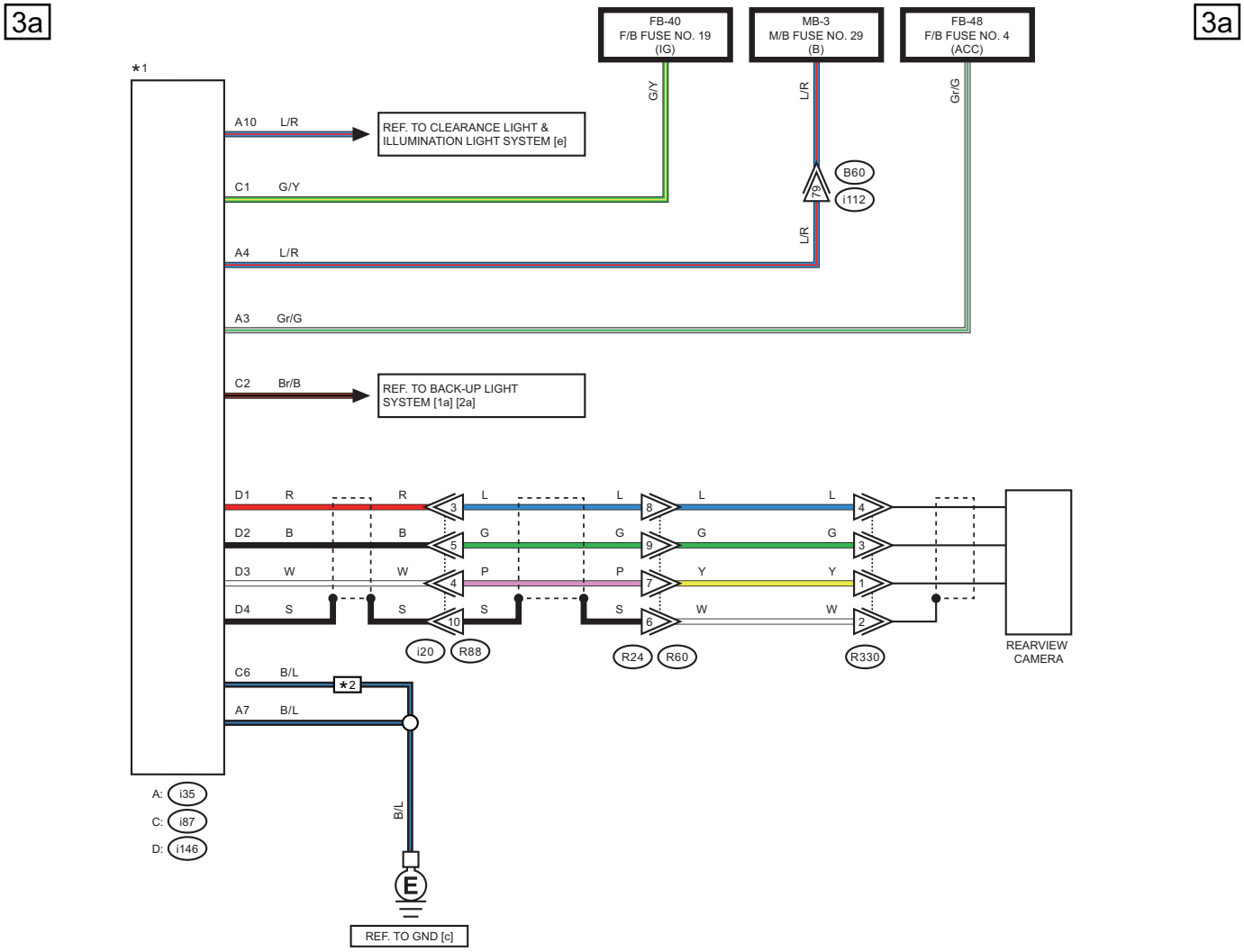

*1 : WITHOUT NAVIGATION : AUDIO
WITH NAVIGATION : NAVIGATION UNIT

*2 : WITHOUT TELEMATICS

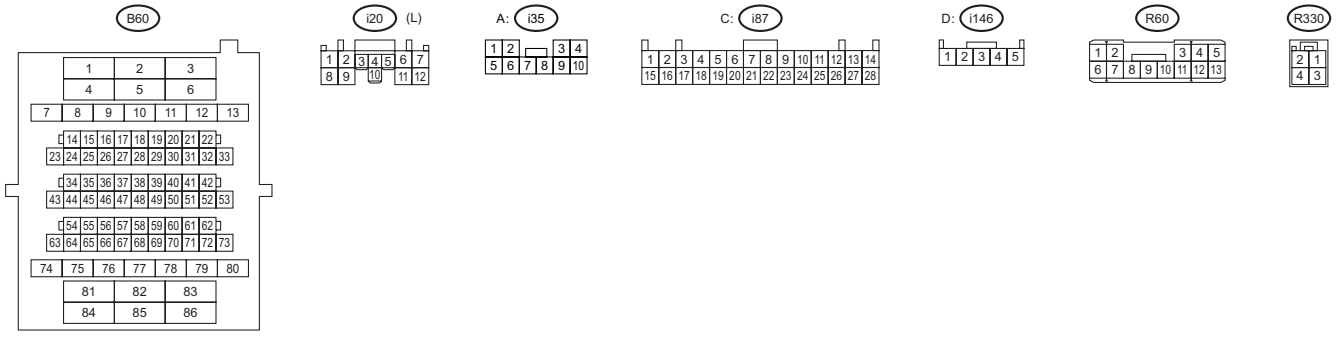

WI-60604

4. OUTBACK MODEL (6.2 INCH DISPLAY)

4a

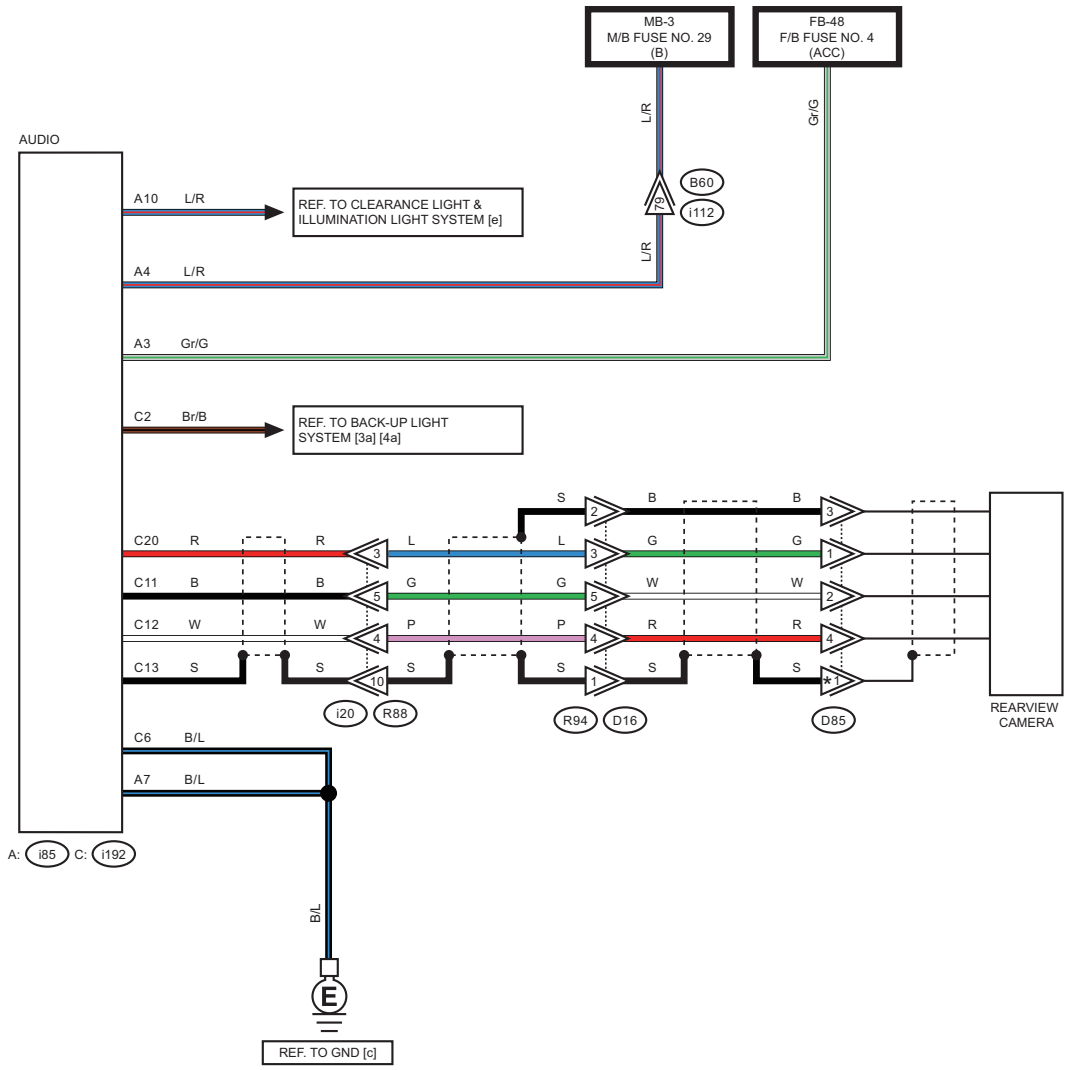

4a

*1 : SHIELD CONNECTOR

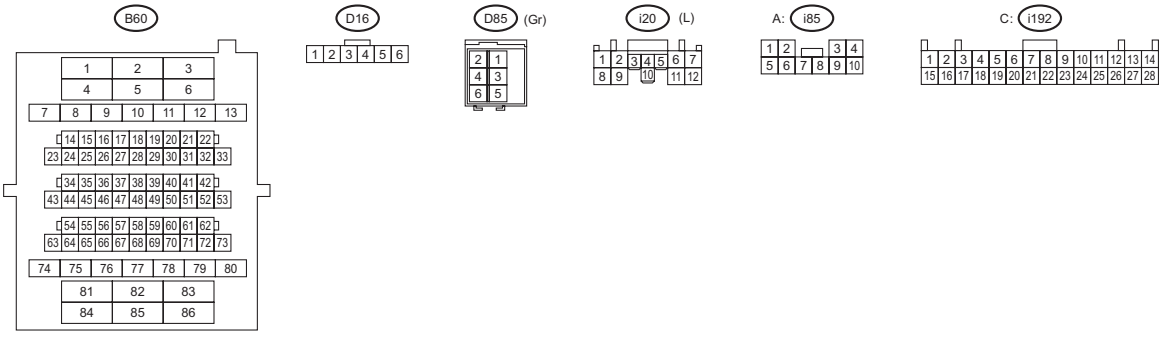

WI-60605

5. OUTBACK MODEL (7 INCH DISPLAY WITHOUT AUDIO AMPLIFIER)

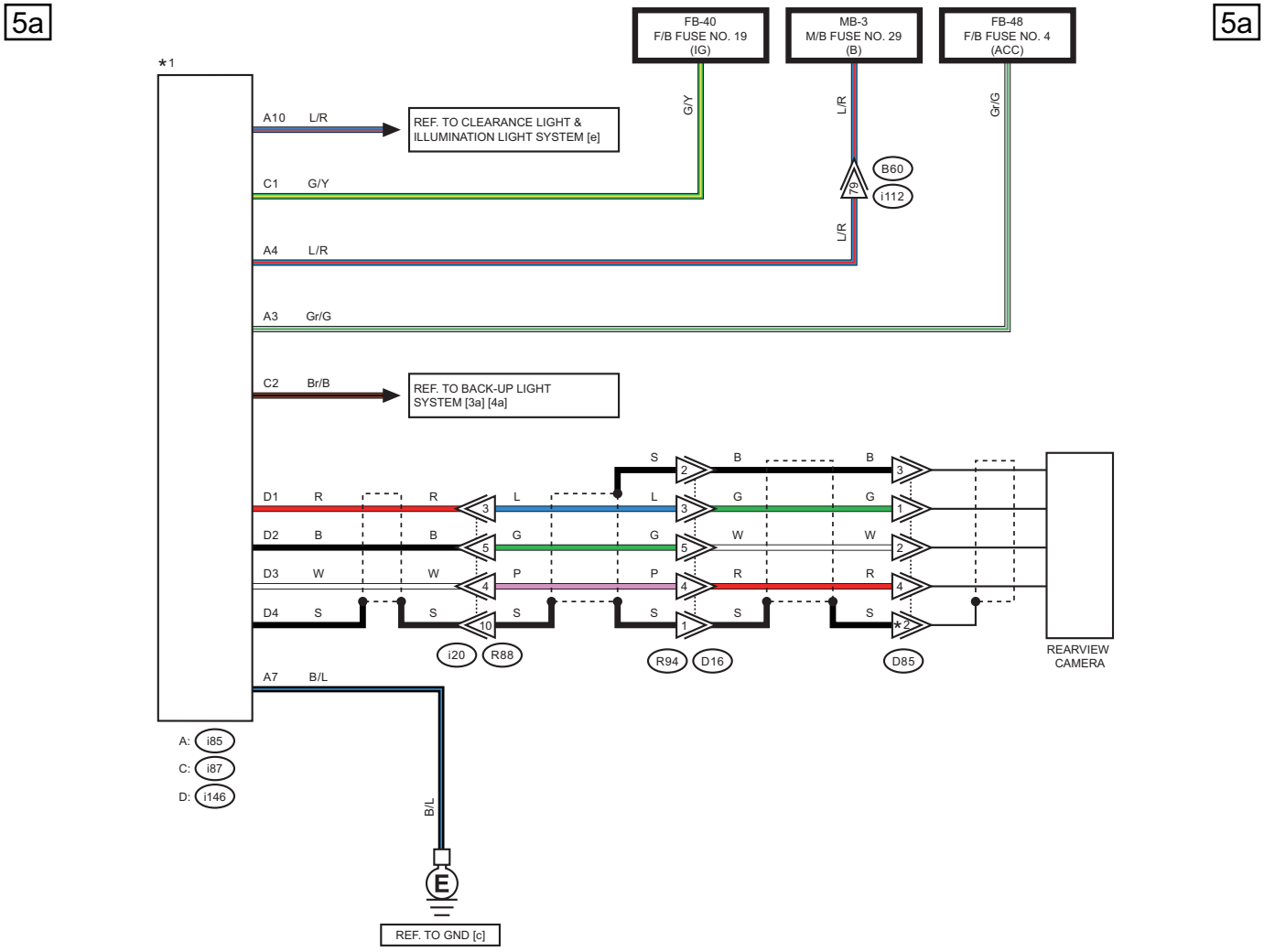

*1 : WITHOUT NAVIGATION : AUDIO
WITH NAVIGATION : NAVIGATION UNIT
*2 : SHIELD CONNECTOR

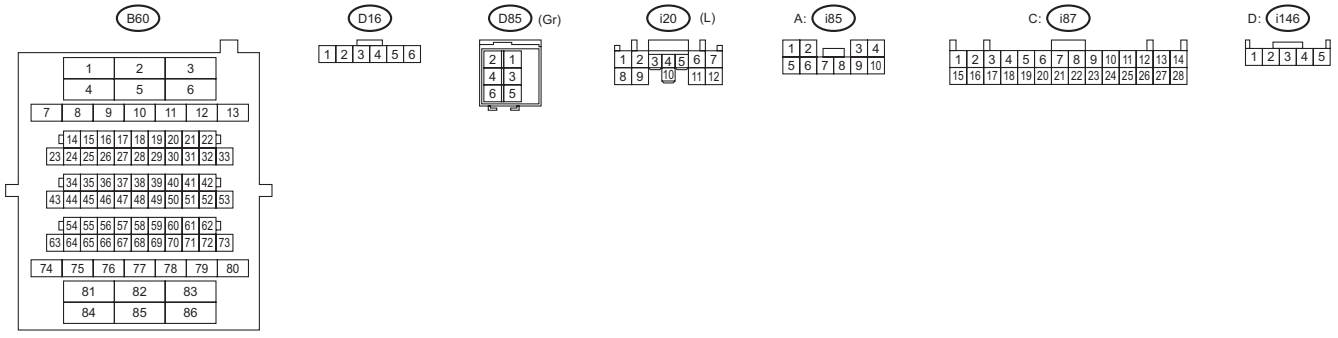

WI-60606

6. OUTBACK MODEL (7 INCH DISPLAY WITH AUDIO AMPLIFIER)

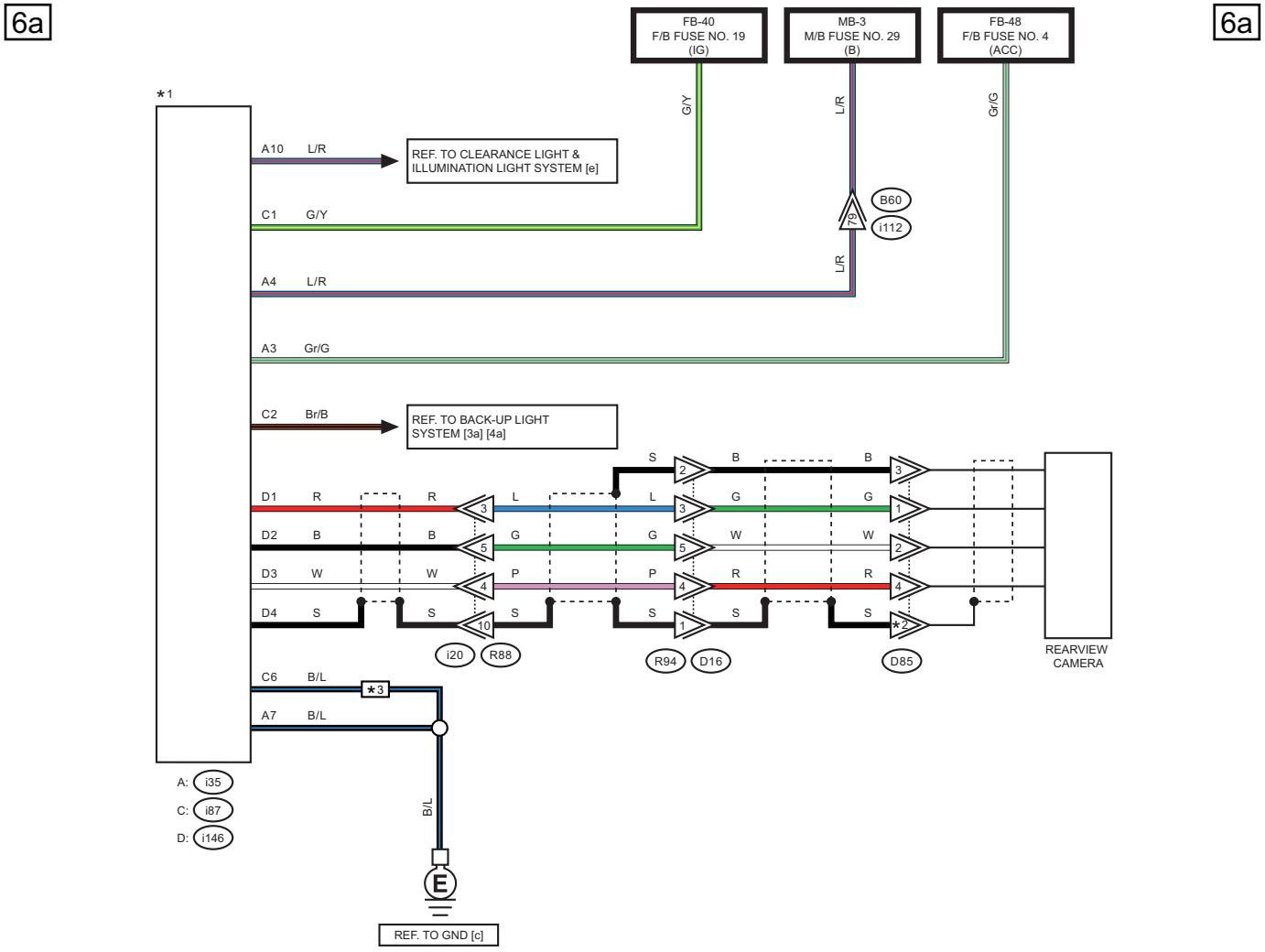

*1 : WITHOUT NAVIGATION : AUDIO
WITH NAVIGATION : NAVIGATION UNIT
*2 : SHIELD CONNECTOR
*3 : WITHOUT TELEMATICS

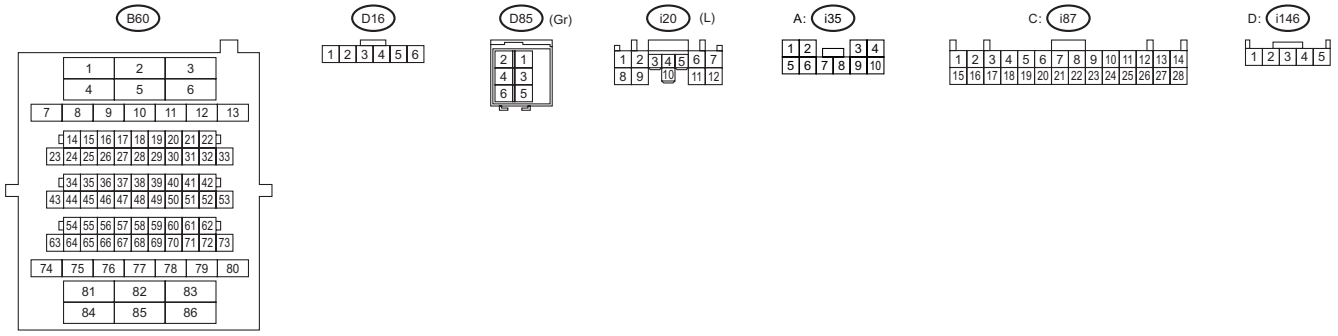

WI-60607

44.Rearview Mirror System

A: WIRING DIAGRAM

1. WITHOUT AUTOMATIC ANTI-GLARE

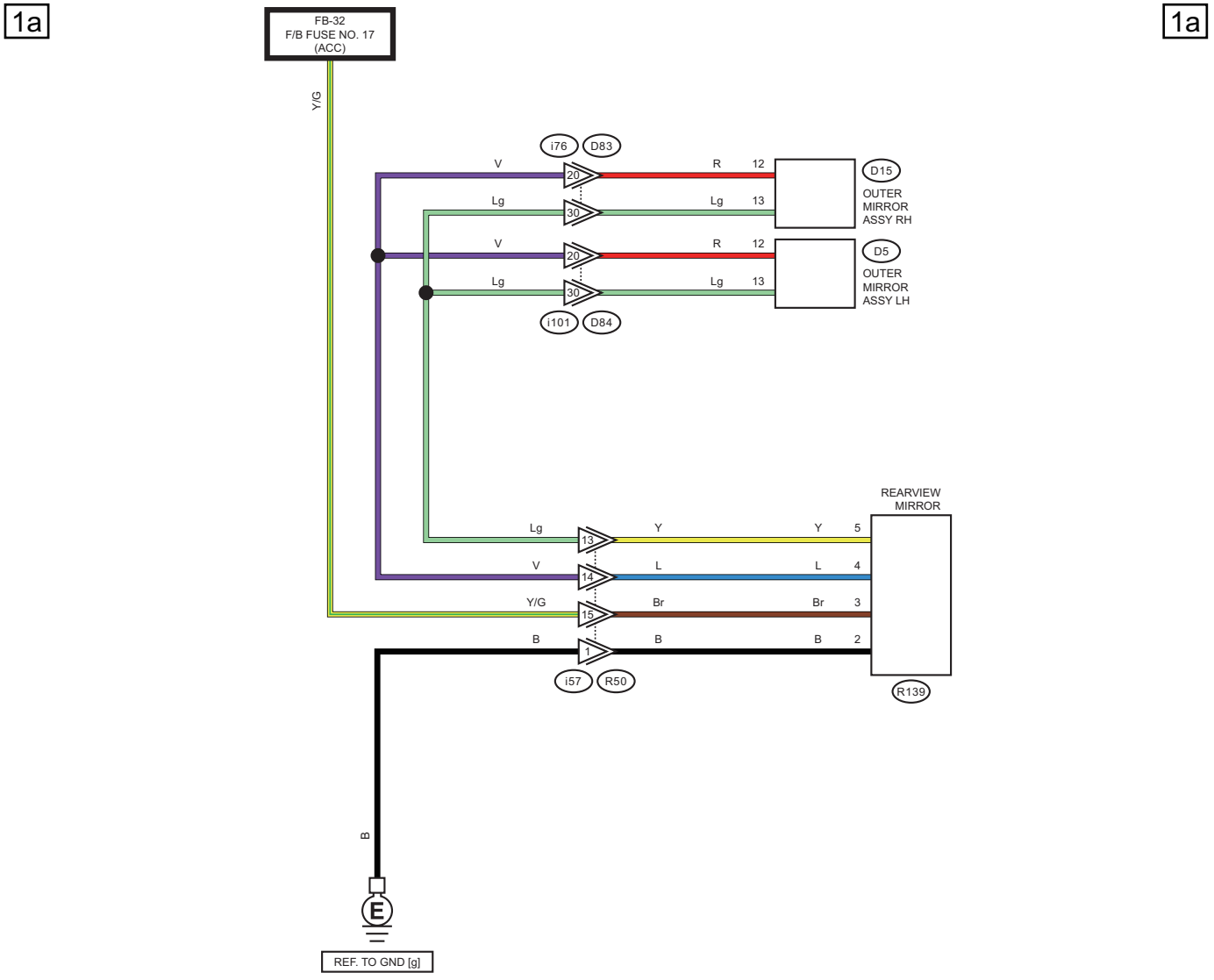

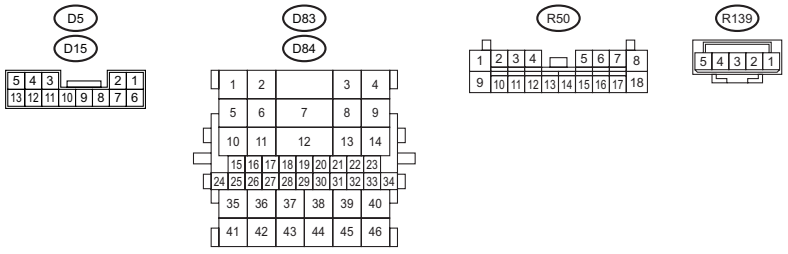

WI-60608

2. WITH AUTOMATIC ANTI-GLARE

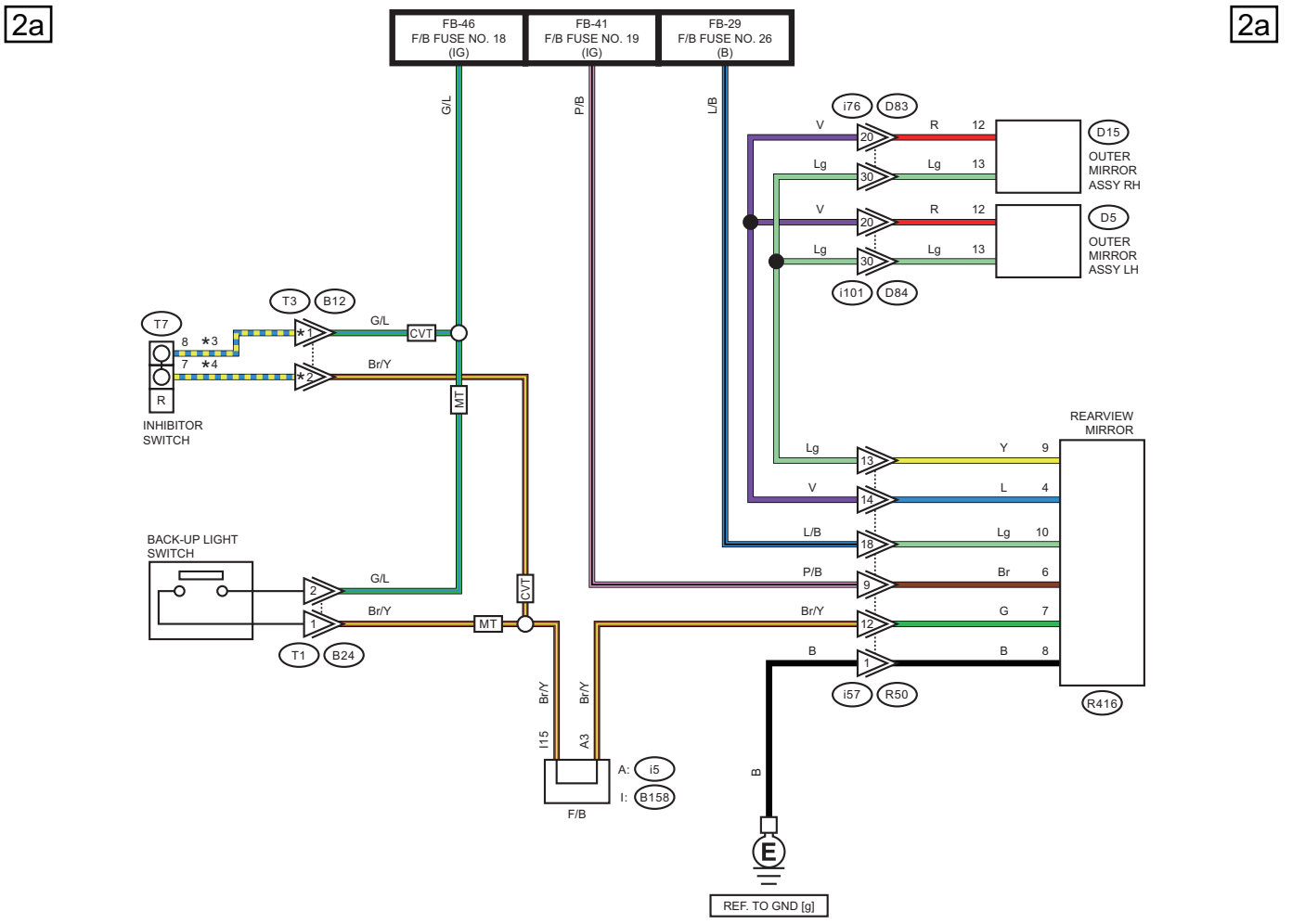

★1 : ENGINE TYPE FB : 2
ENGINE TYPE EZ : 9
★2 : ENGINE TYPE FB : 3
ENGINE TYPE EZ : 10
★3 : ENGINE TYPE FB : L
ENGINE TYPE EZ : W/B
★4 : ENGINE TYPE FB : W/B
ENGINE TYPE EZ : B/W
★5 : ENGINE TYPE FB
★6 : ENGINE TYPE EZ

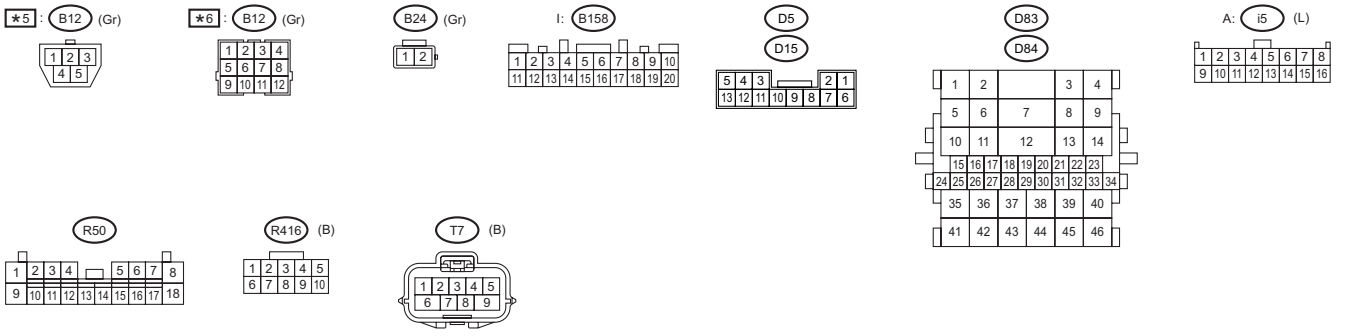

WI-60609

45.Rear Wiper and Washer System

A: WIRING DIAGRAM

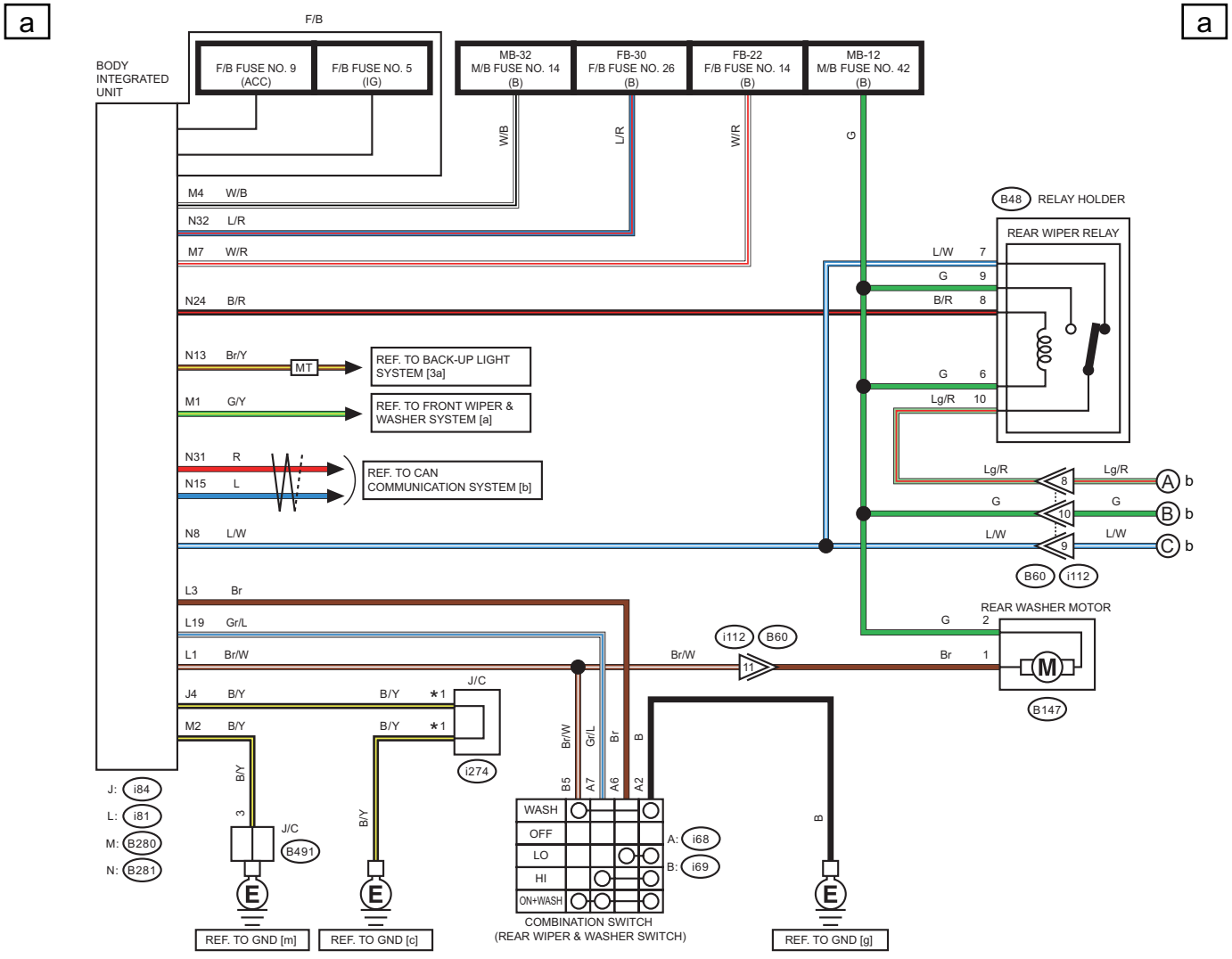

*1 : TERMINAL No. OPTIONAL ARRANGEMENT

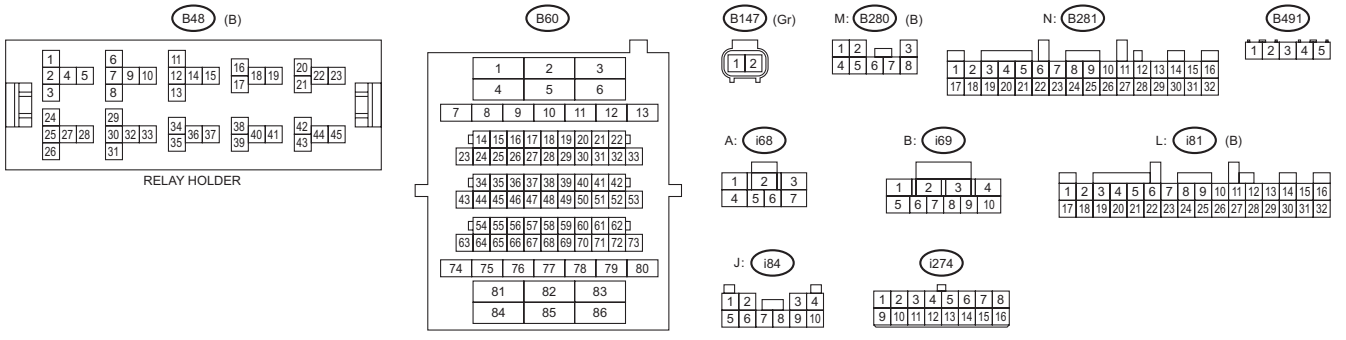

WI-60610

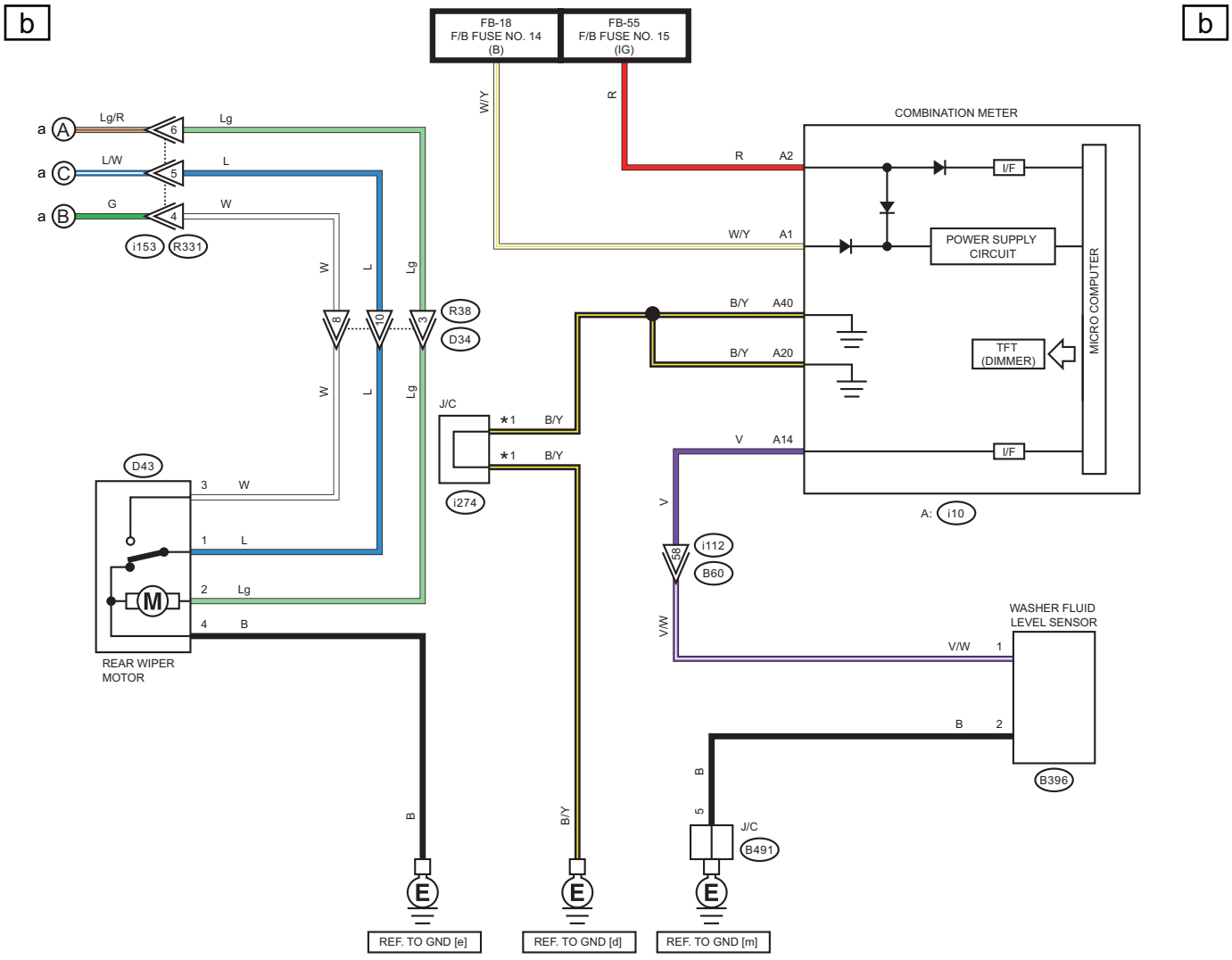

*1 : TERMINAL No. OPTIONAL ARRANGEMENT

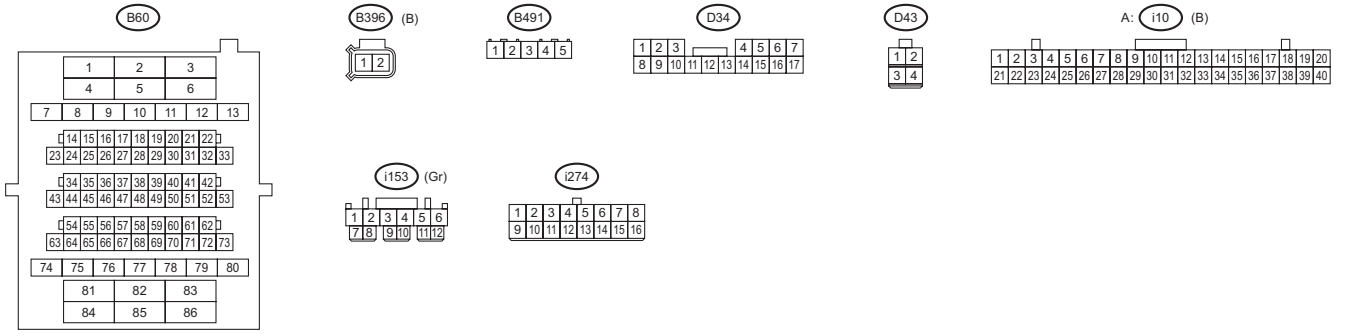

WI-60611

46.Remote Control Mirror System

A: WIRING DIAGRAM

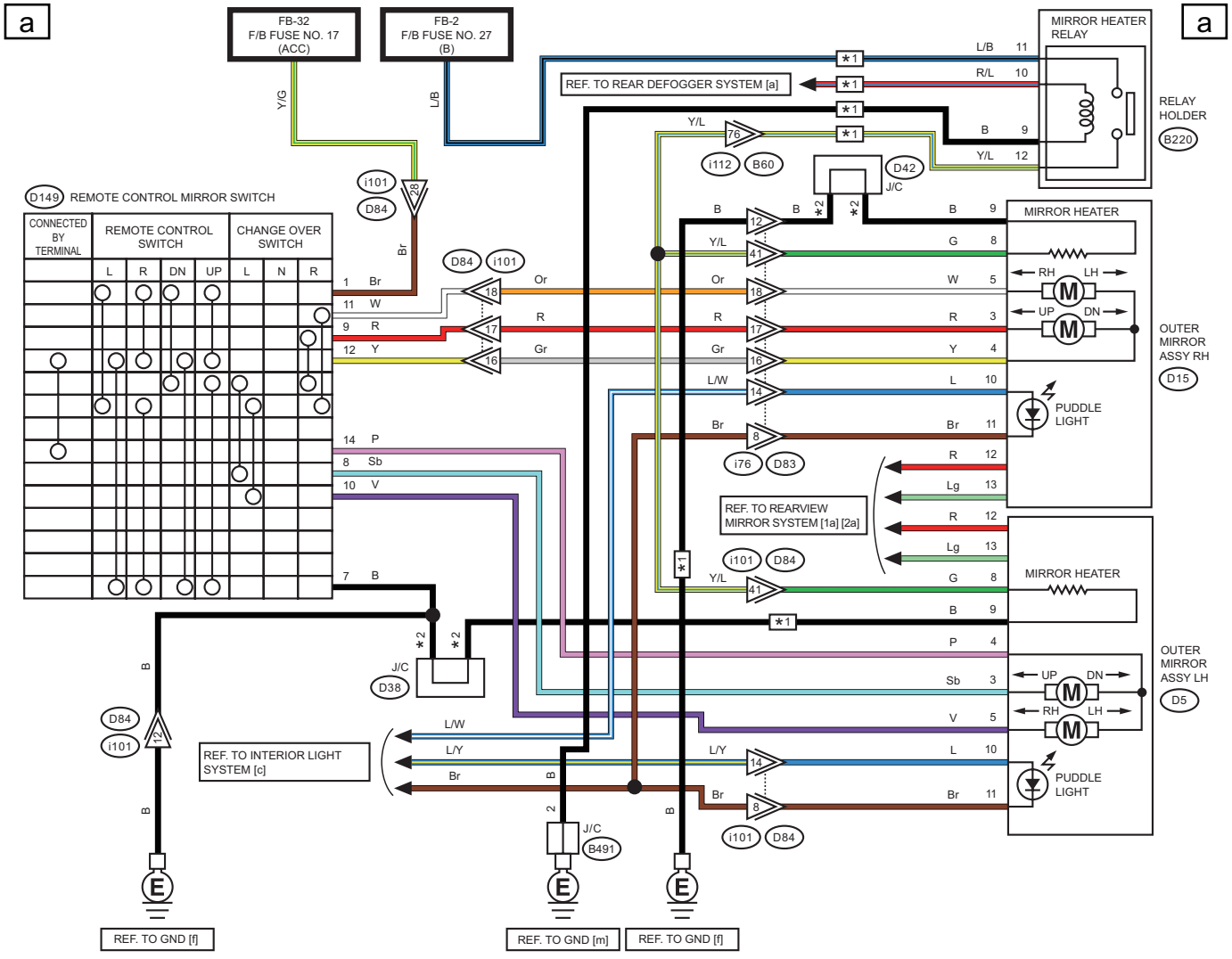

WI-60612

47.Remote Engine Start System

A: WIRING DIAGRAM

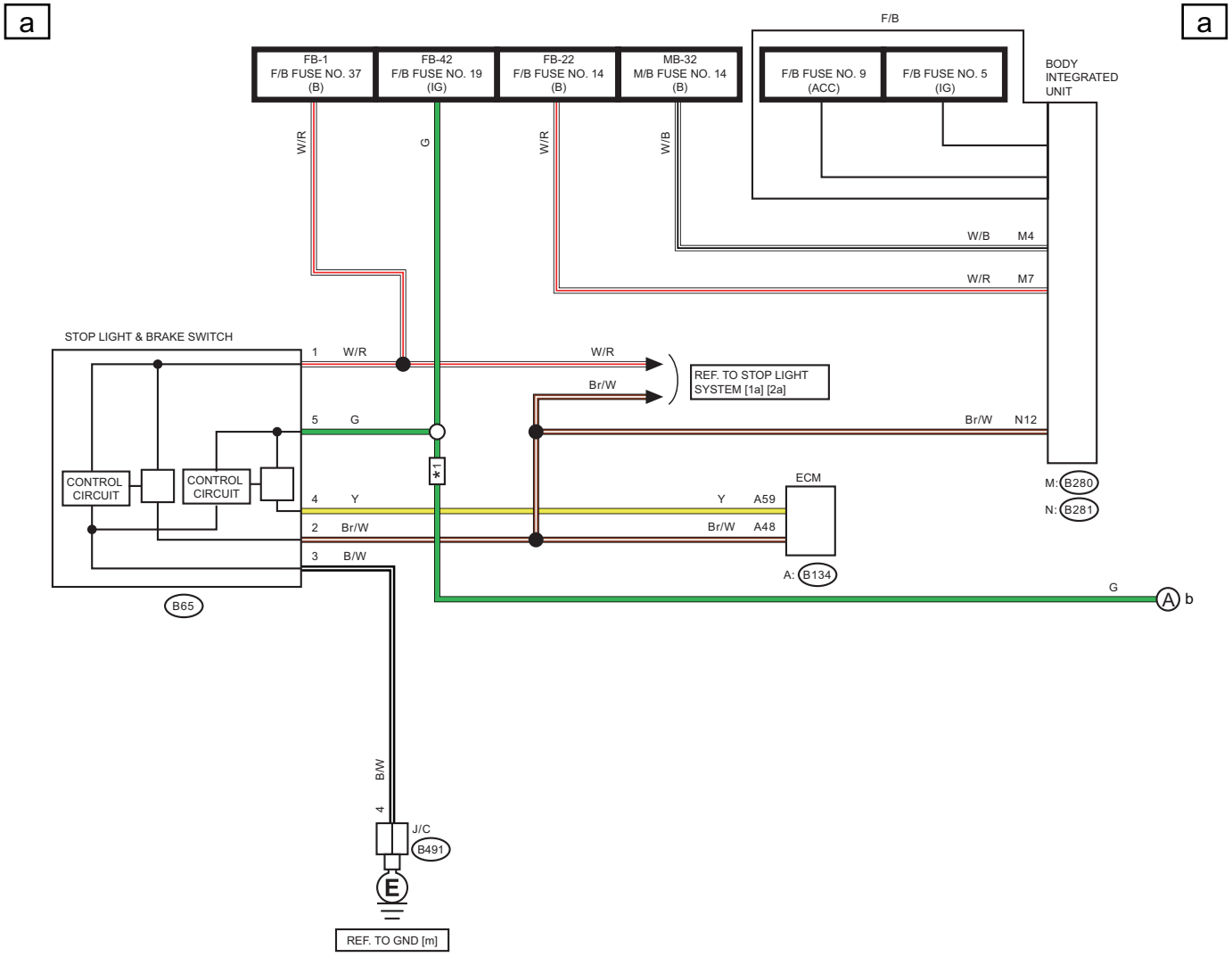

*1 : WITH PUSH BUTTON START

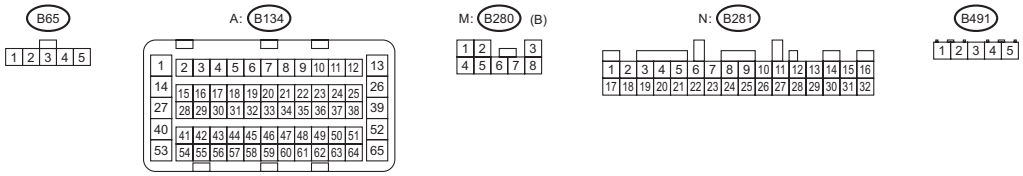

WI-60613

WIRING SYSTEM

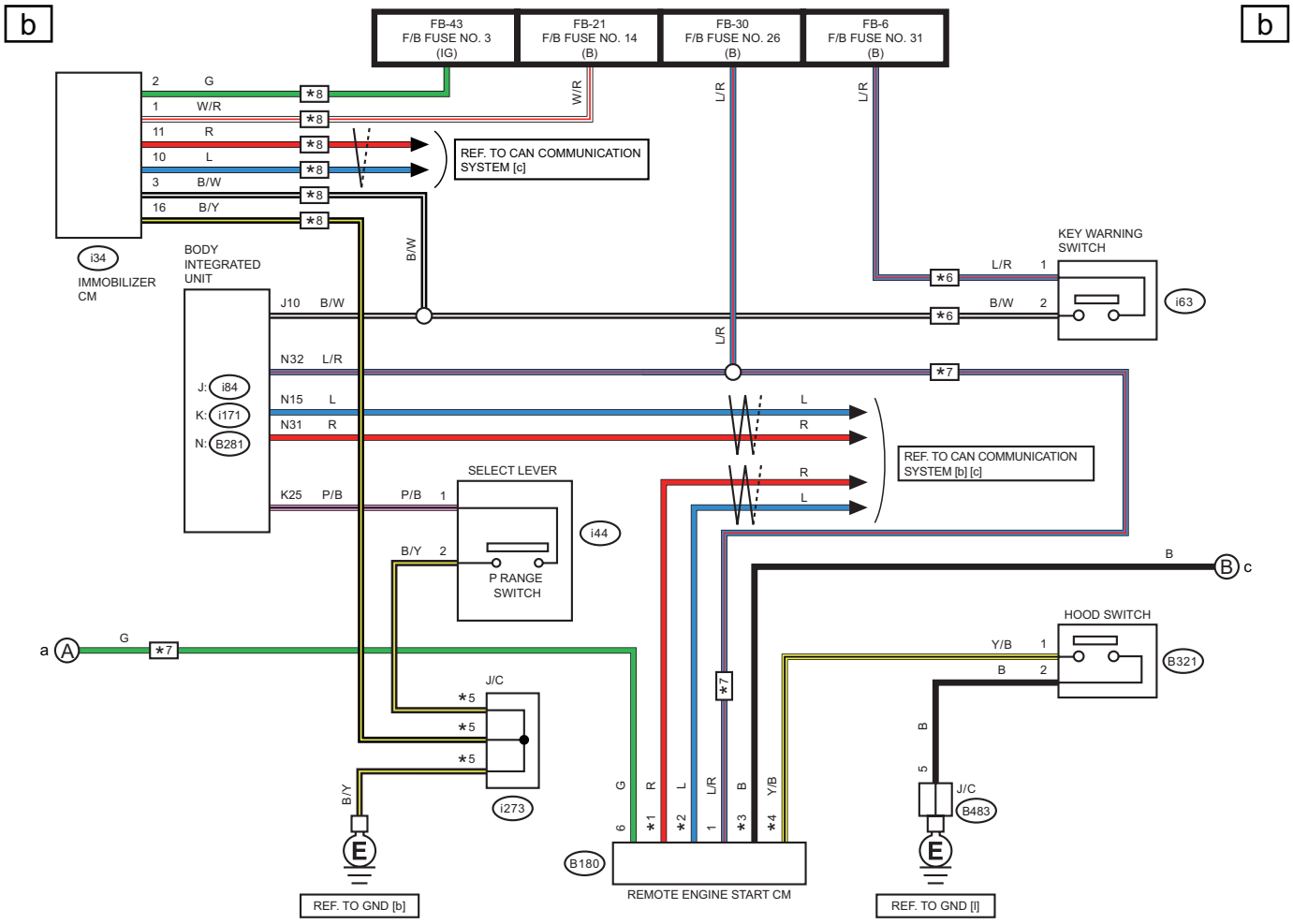

∗1 : WITHOUT PUSH BUTTON START : 1
WITH PUSH BUTTON START : 2
∗2 : WITHOUT PUSH BUTTON START : 2
WITH PUSH BUTTON START : 3
∗3 : WITHOUT PUSH BUTTON START : 3
WITH PUSH BUTTON START : 4
∗4 : WITHOUT PUSH BUTTON START : 4
WITH PUSH BUTTON START : 5
∗5 : TERMINAL No. OPTIONAL ARRANGEMENT
∗6 : WITHOUT PUSH BUTTON START
∗7 : WITH PUSH BUTTON START
∗8 : WITH IMMOBILIZER CM

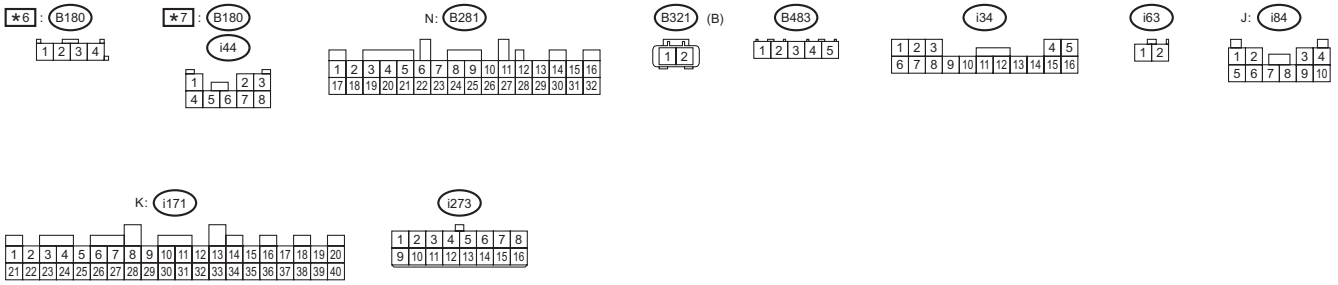

WI-60614

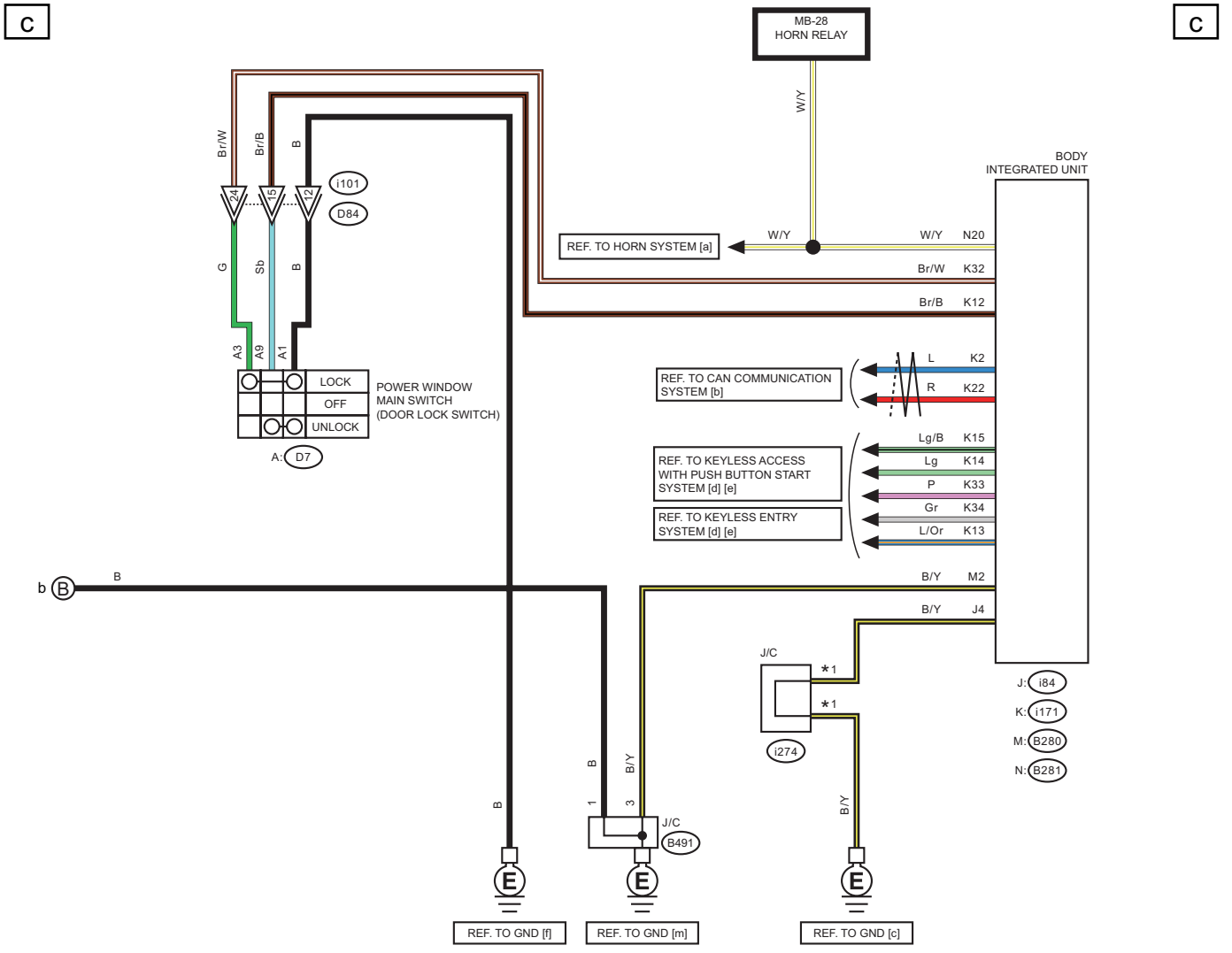

*1 : TERMINAL No. OPTIONAL ARRANGEMENT

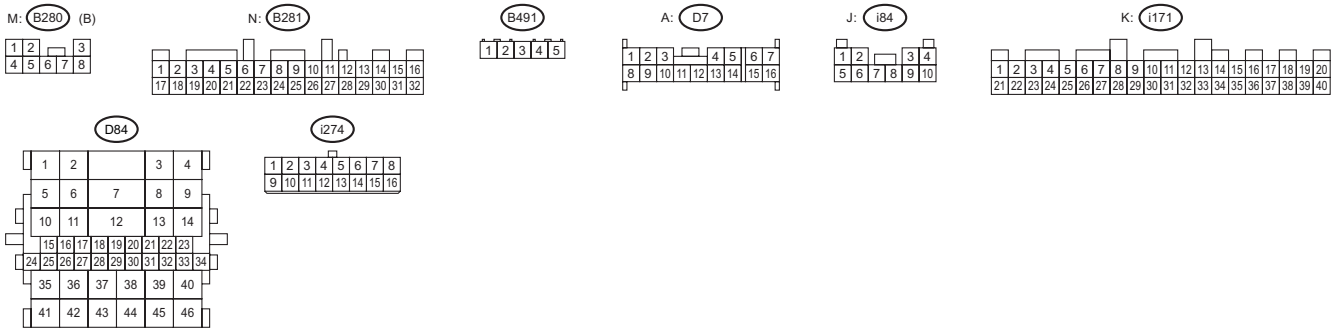

WI-60615

48.Seat Belt Warning System

A: WIRING DIAGRAM

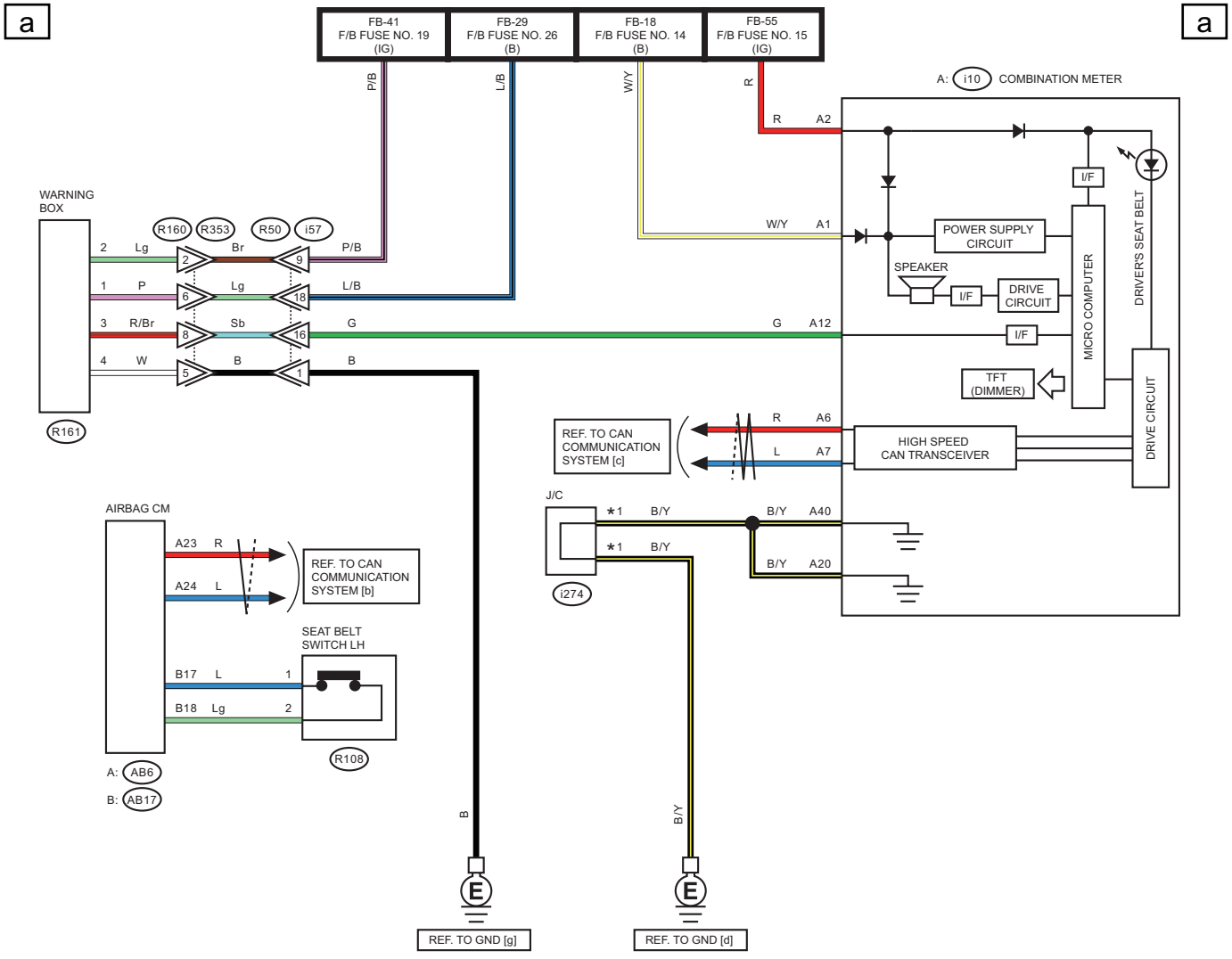

*1 : TERMINAL No. OPTIONAL ARRANGEMENT

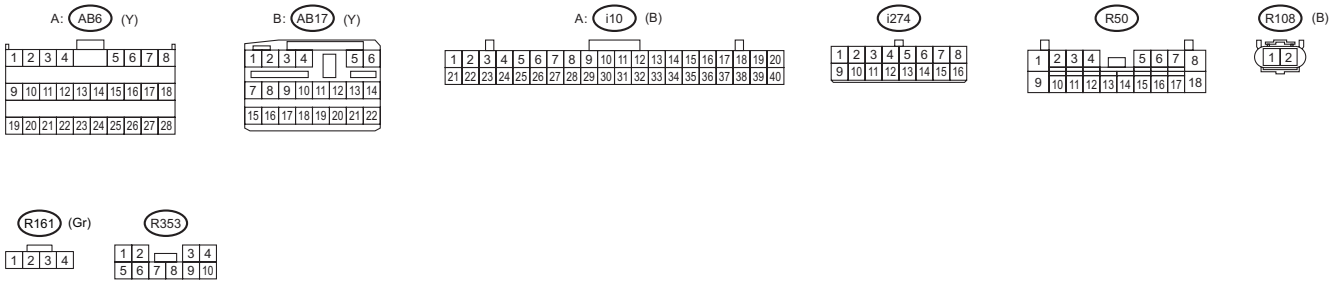

WI-60616

49.Seat Heater System

A: WIRING DIAGRAM

1. FRONT SEAT

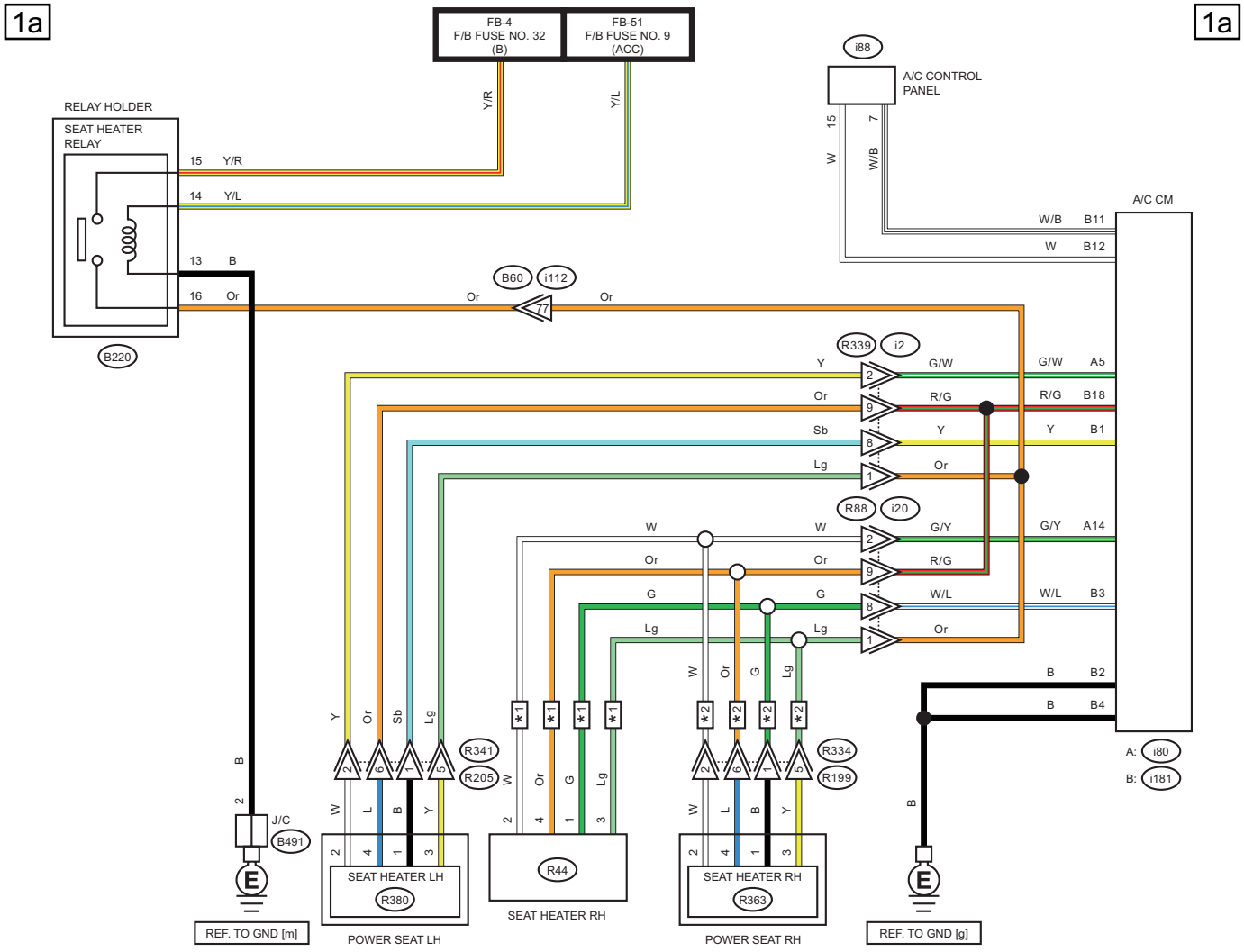

∗1 : WITHOUT POWER SEAT (PASSENGER'S SEAT)
∗2 : WITH POWER SEAT (PASSENGER'S SEAT)

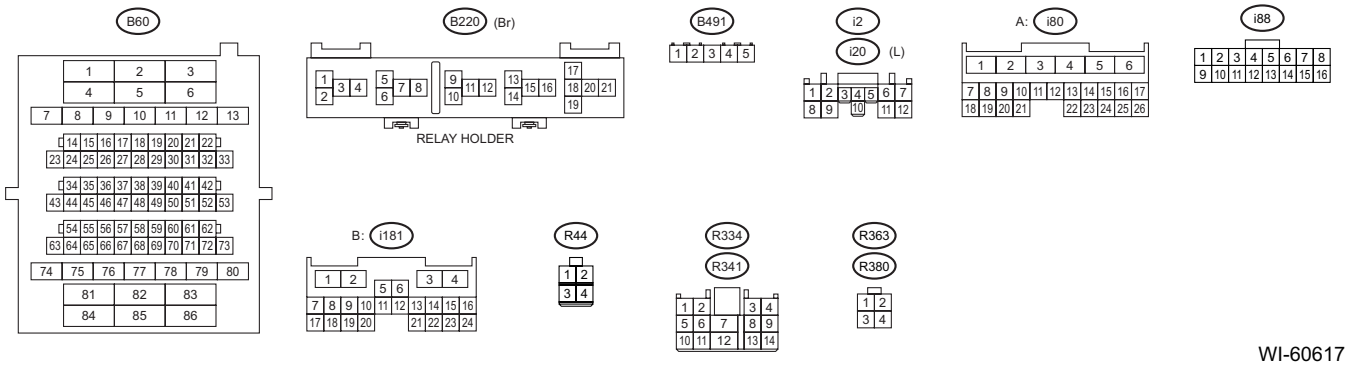

WI-60617

2. REAR SEAT

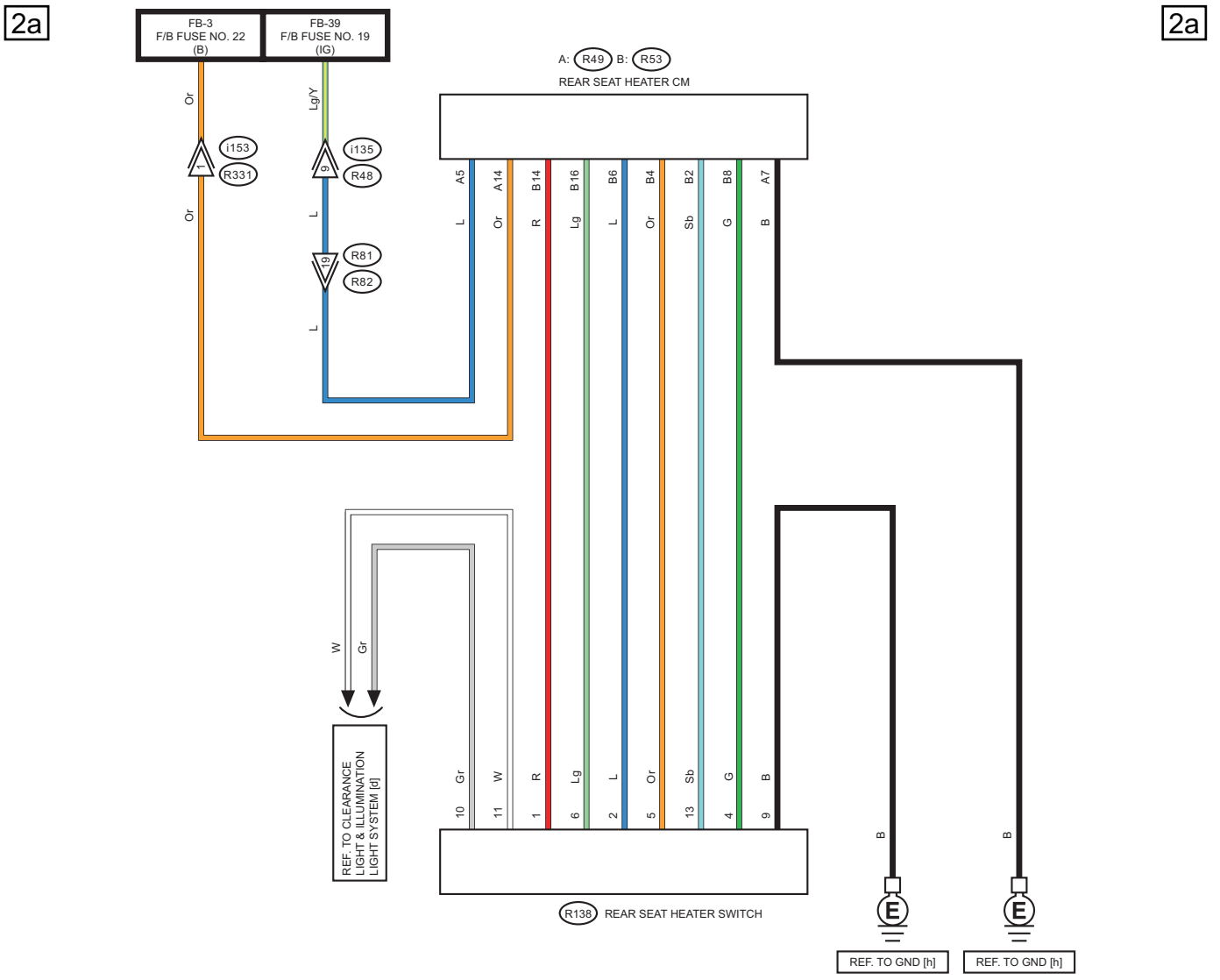

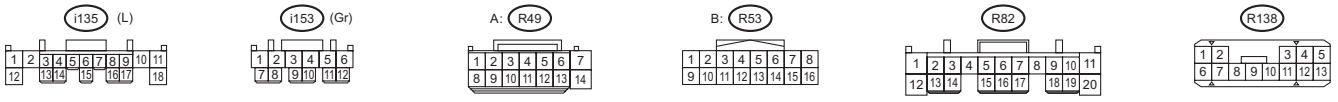

WI-60618

2b

2b

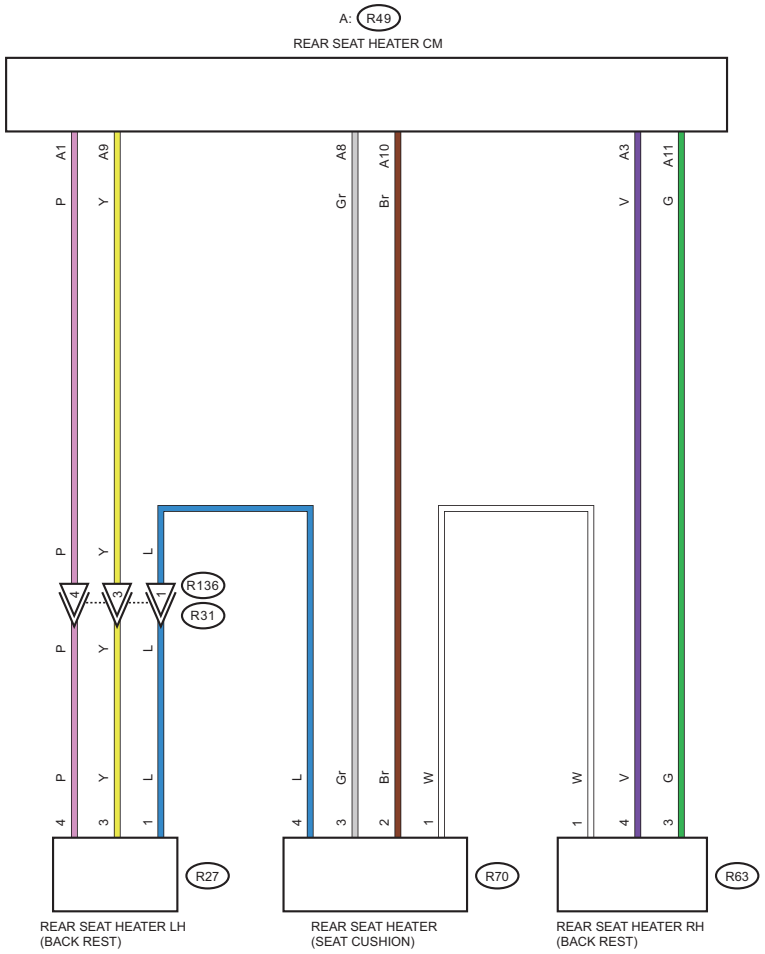



WI-60619

50.Security System

A: WIRING DIAGRAM

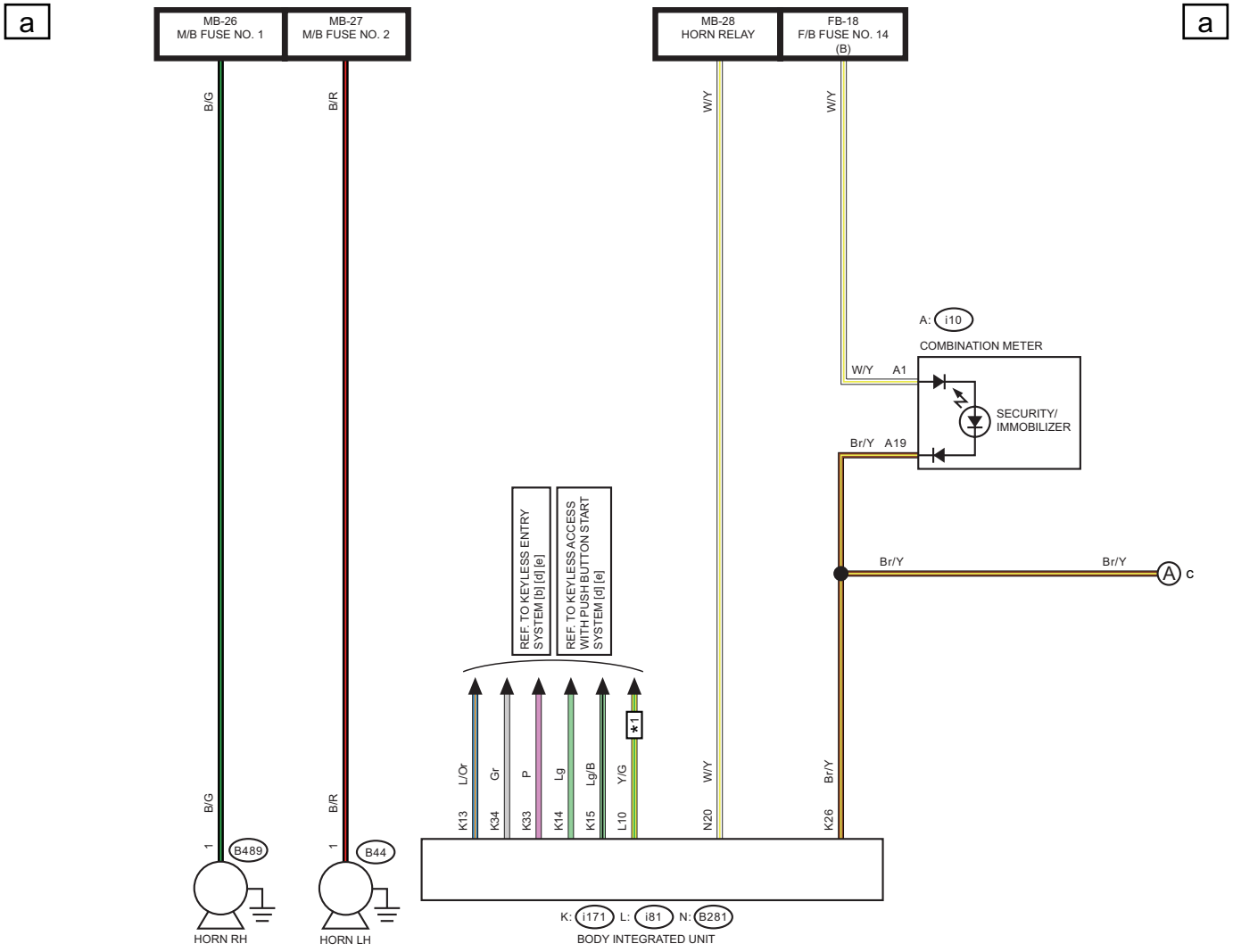

*1 : WITHOUT PUSH BUTTON START

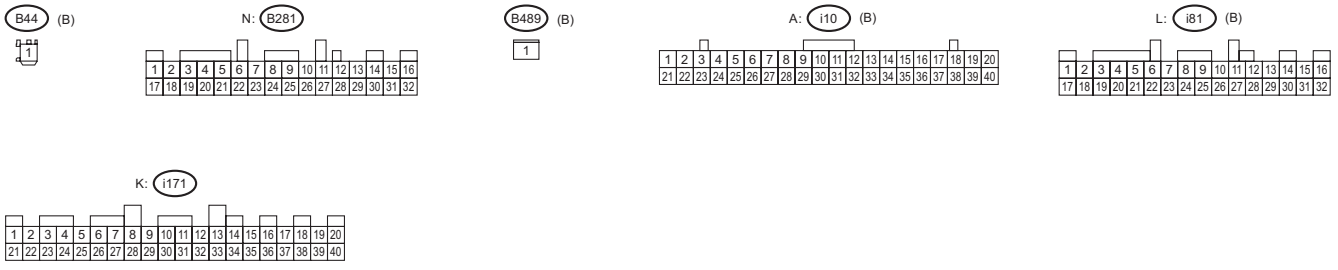

WI-60620

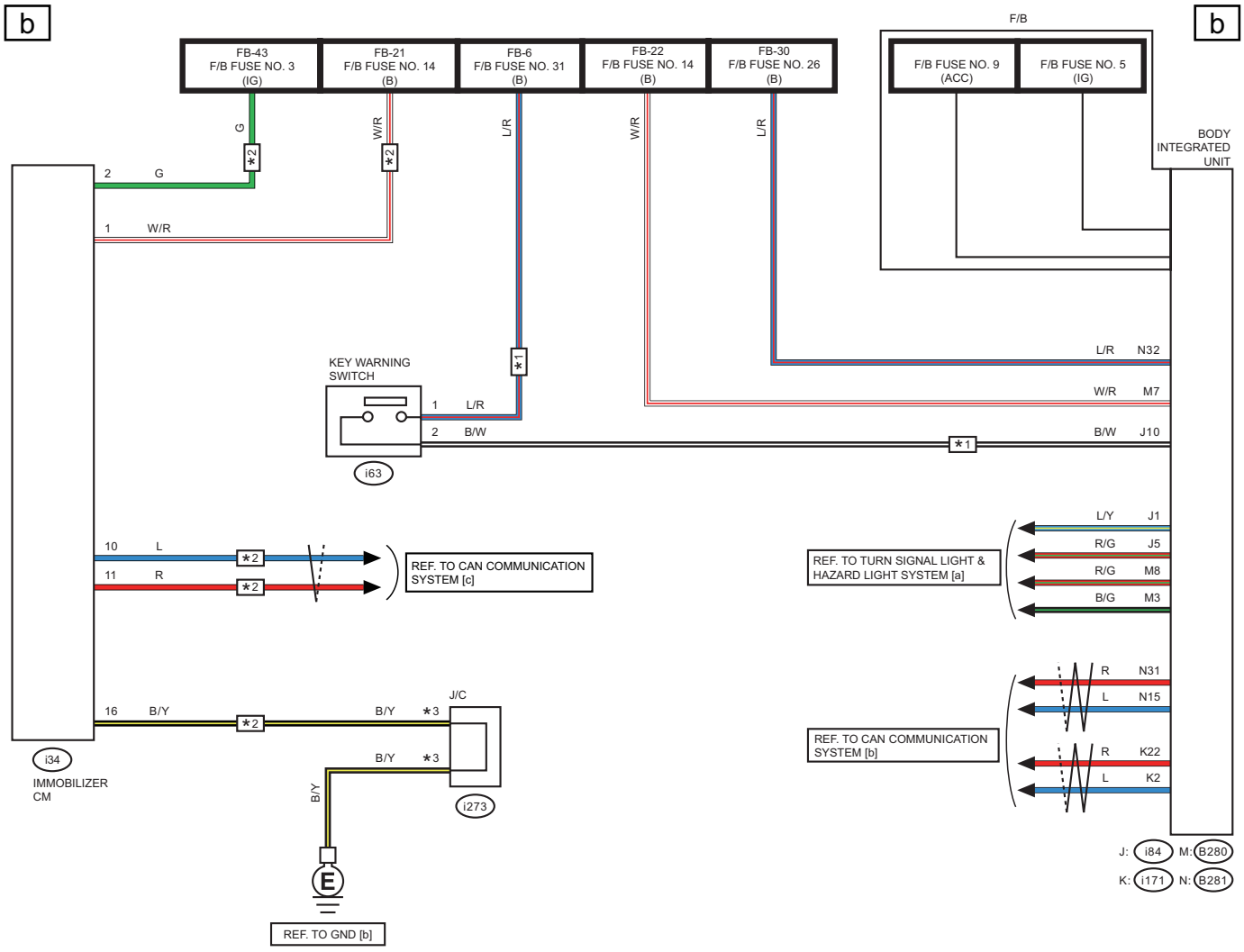

*1 : WITHOUT PUSH BUTTON START
*2 : WITH IMMOBILIZER CM
*3 : TERMINAL No. OPTIONAL ARRANGEMENT

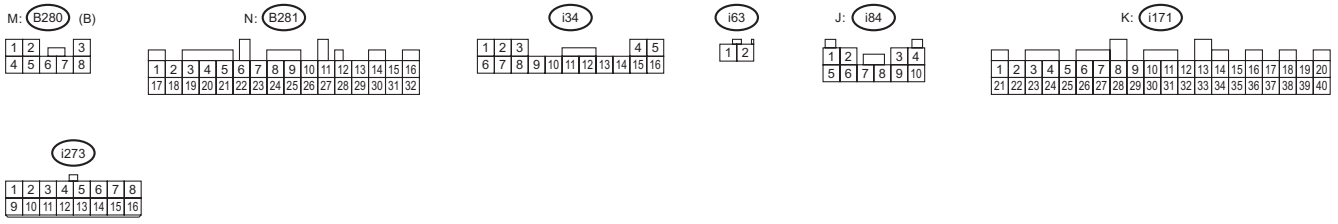

WI-60621

WIRING SYSTEM

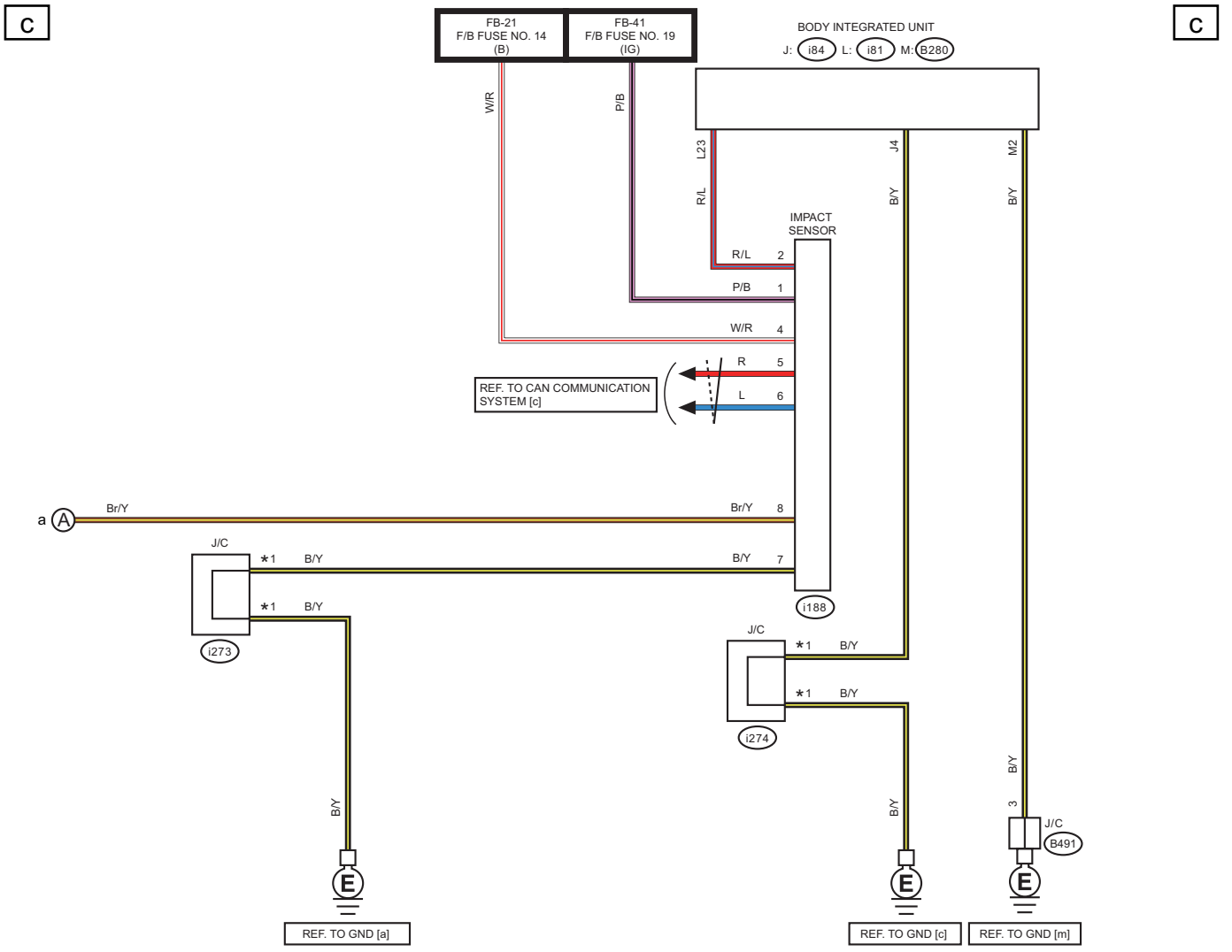

*1 : TERMINAL No. OPTIONAL ARRANGEMENT

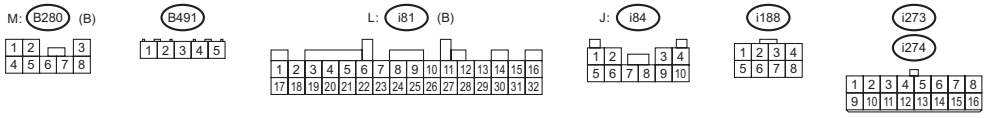

WI-60622

51.Shift Lock Control System

A: WIRING DIAGRAM

a

a

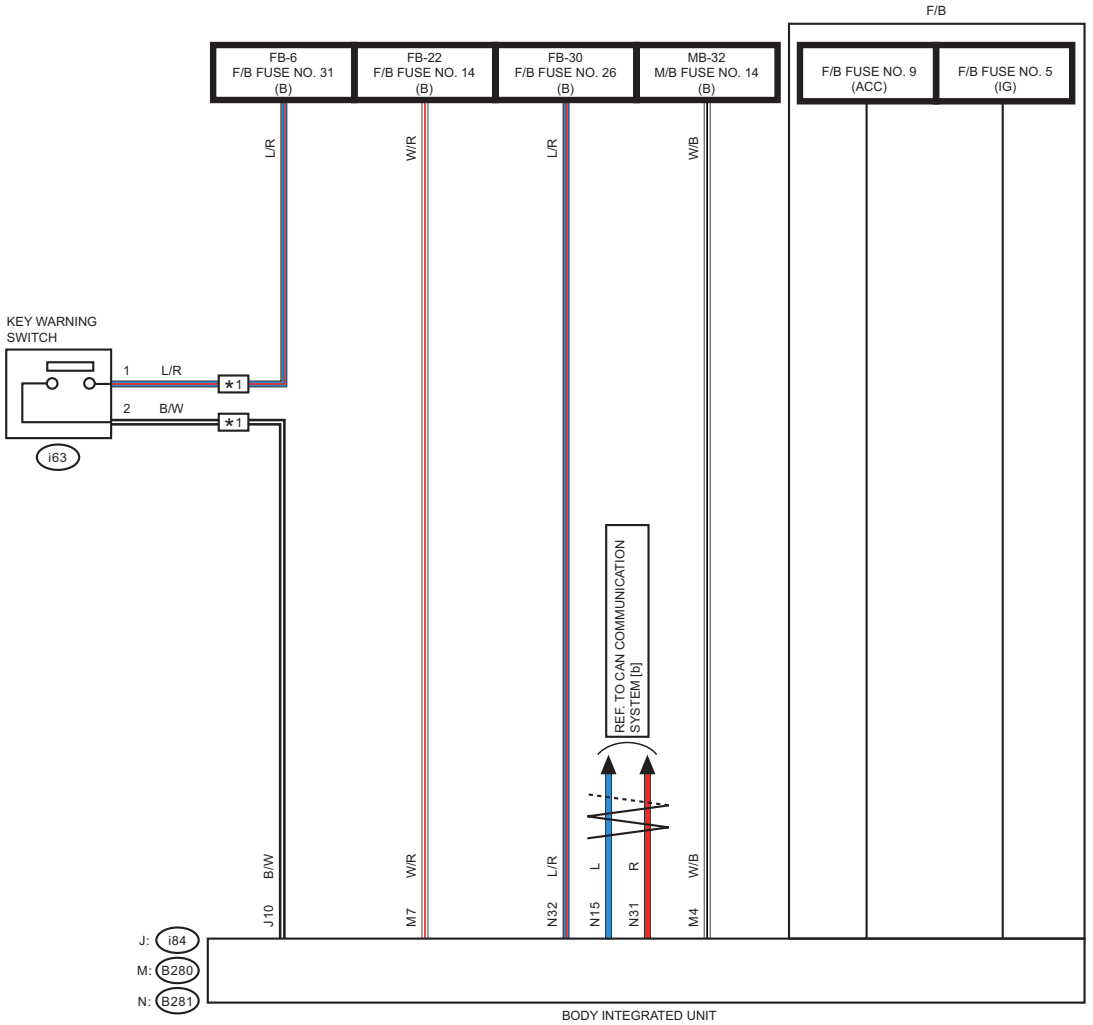

*1 : WITHOUT PUSH BUTTON START



WI-60623

WIRING SYSTEM

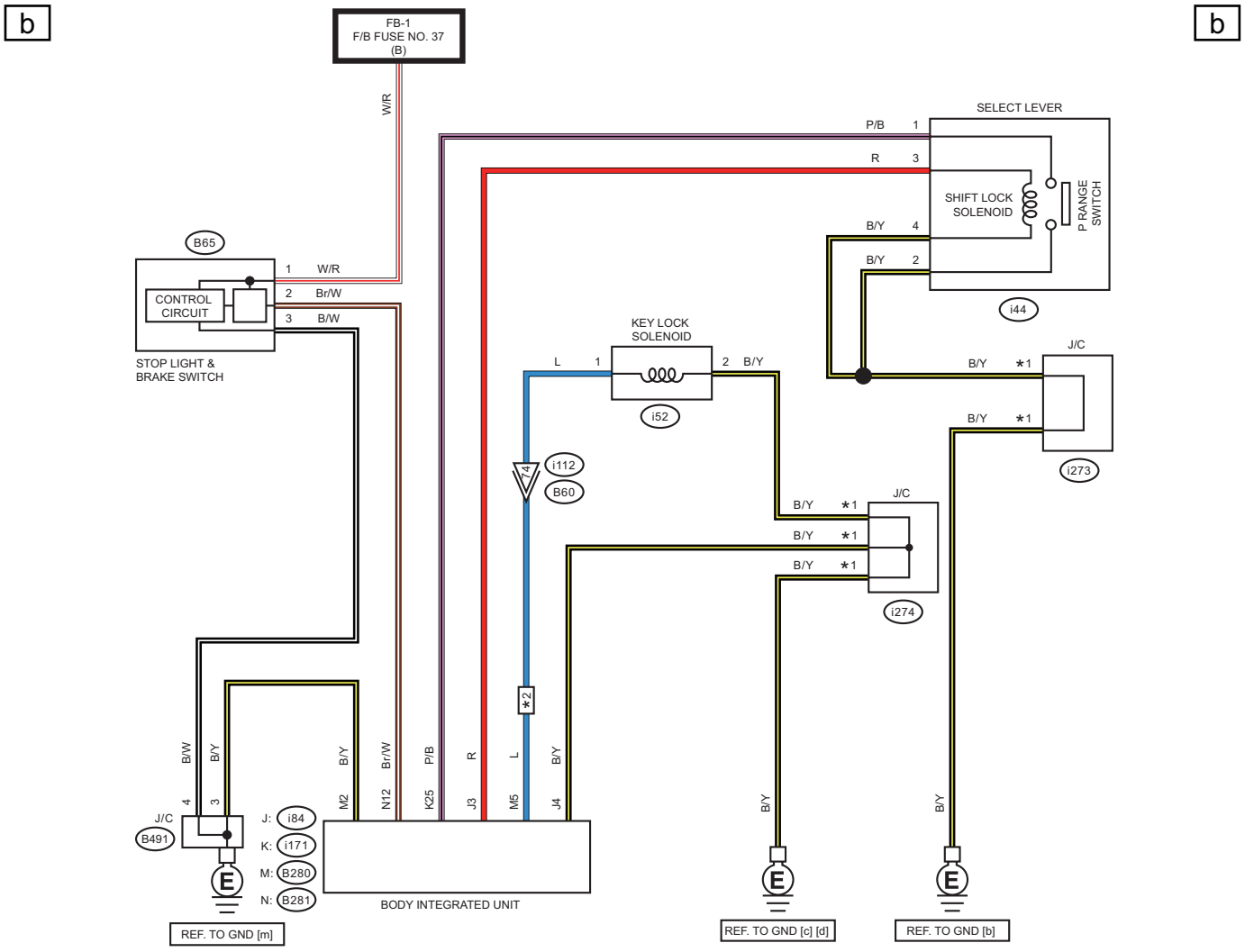

*1 : TERMINAL No. OPTIONAL ARRANGEMENT
*2 : WITHOUT PUSH BUTTON START

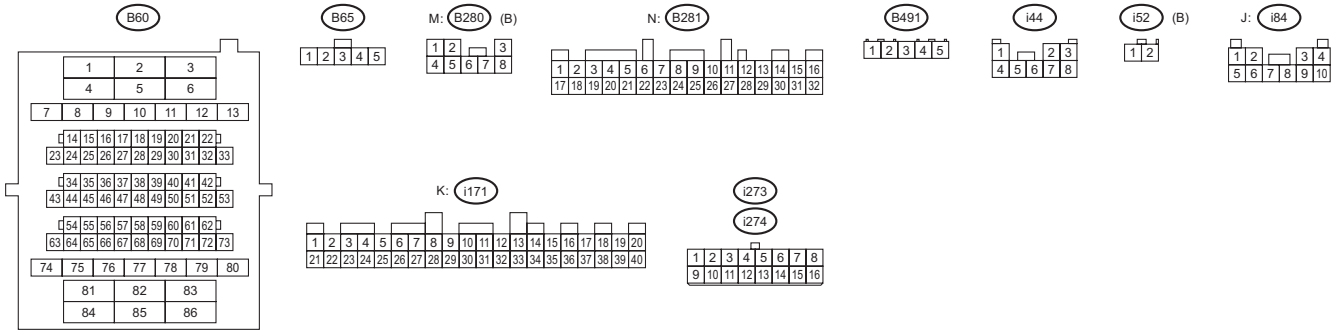

WI-60624

52.Speedometer System

A: WIRING DIAGRAM

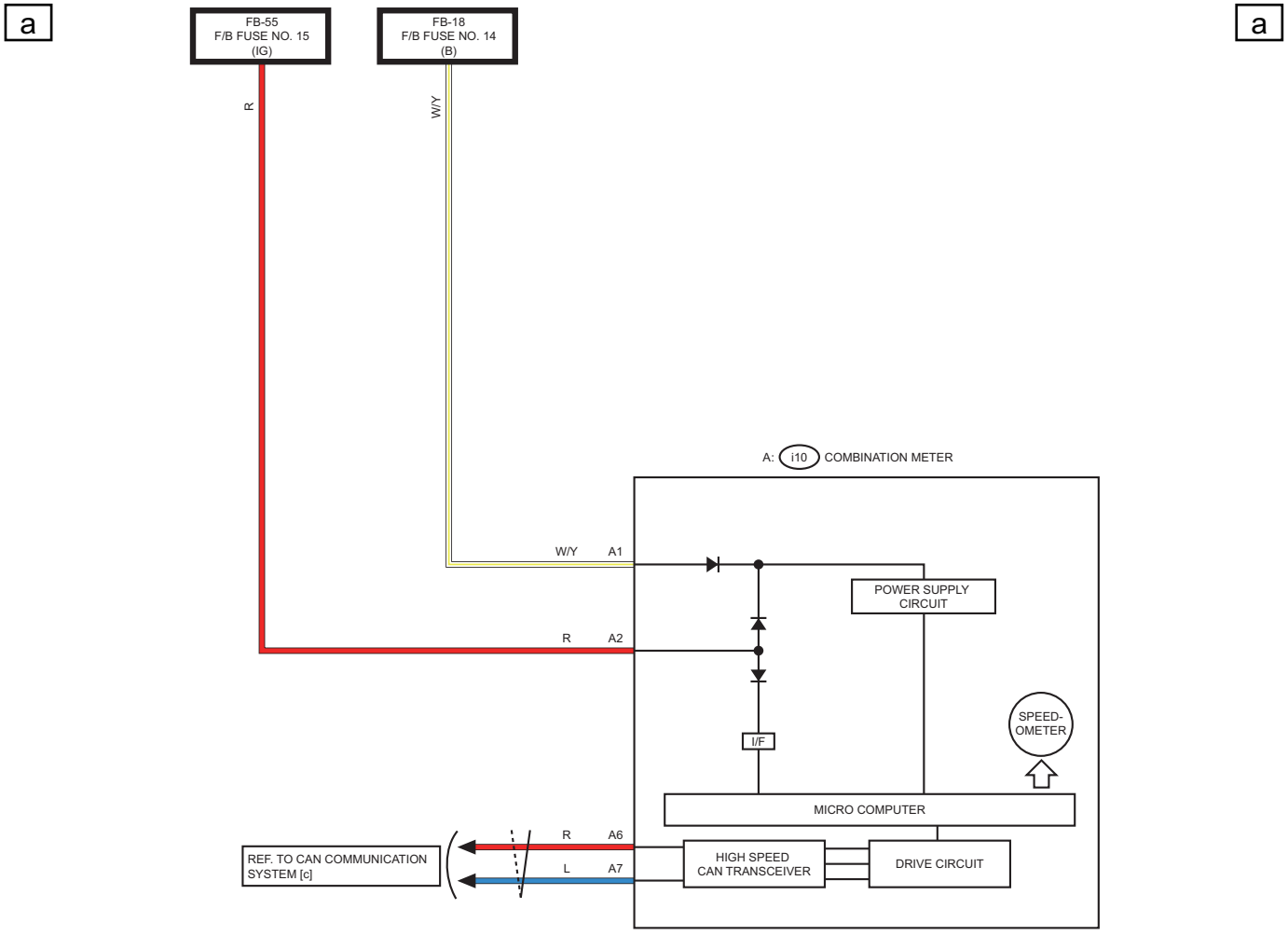

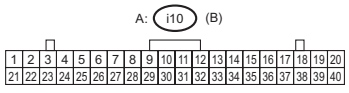

WI-60625

53.Starter System

A: WIRING DIAGRAM

1. ENGINE TYPE FB (WITHOUT PUSH BUTTON START)

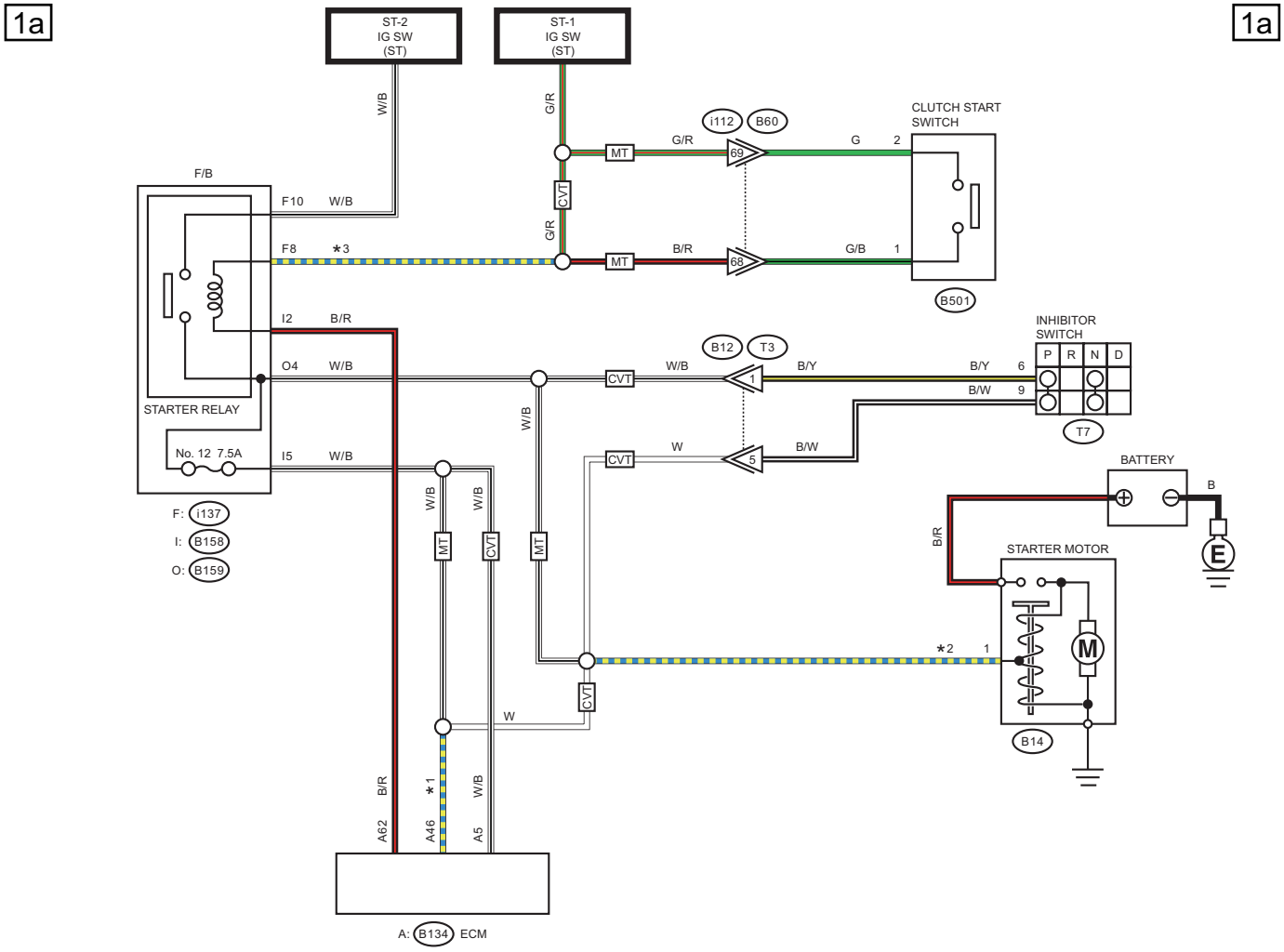

*1 : MT MODEL : W/B
CVT MODEL : W
*2 : MT MODEL : W/B
CVT MODEL : W
*3 : MT MODEL : B/R
CVT MODEL : G/R

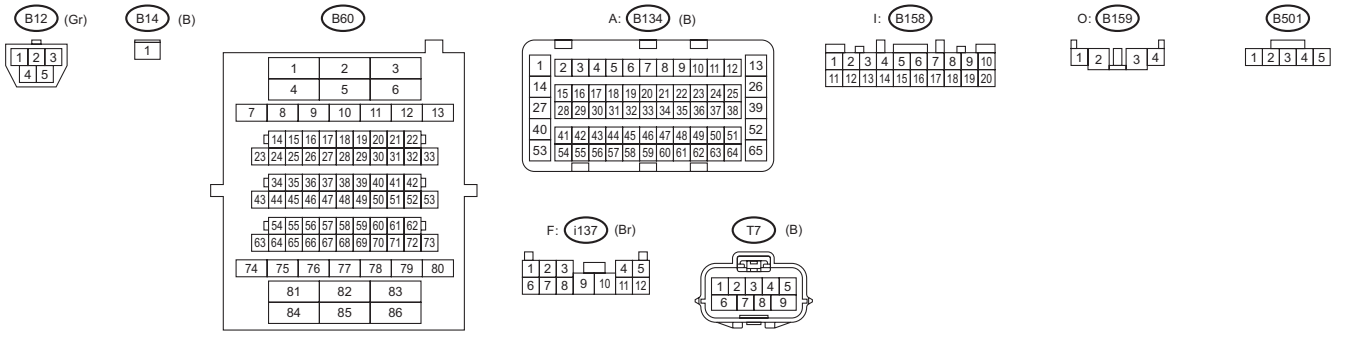

WI-60626

2. ENGINE TYPE FB (WITH PUSH BUTTON START)

2a 2a

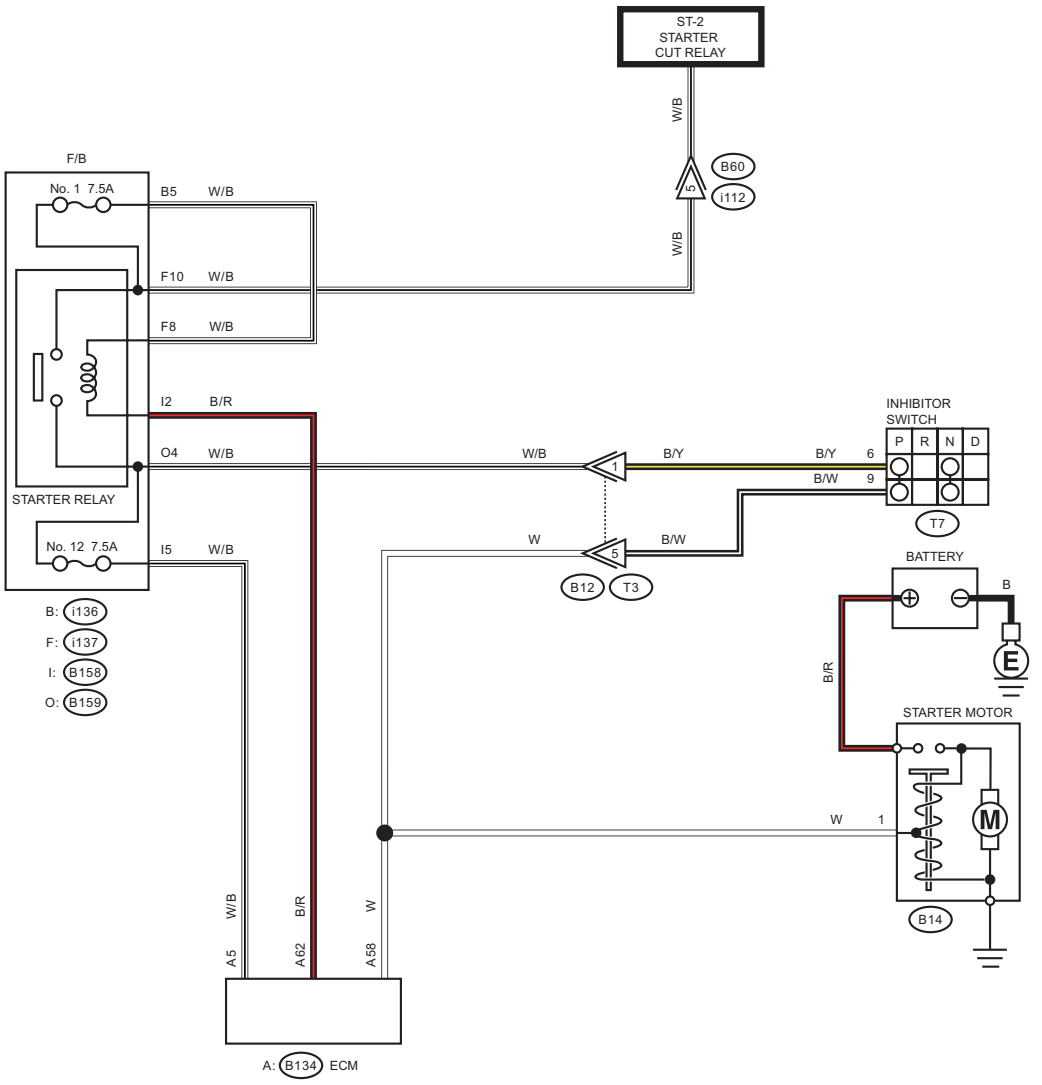

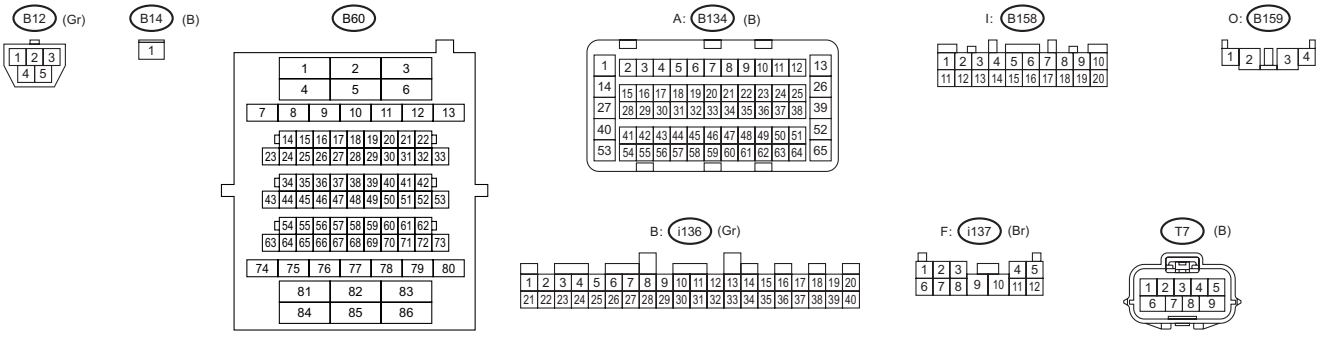

WI-60627

3. ENGINE TYPE EZ (WITHOUT PUSH BUTTON START)

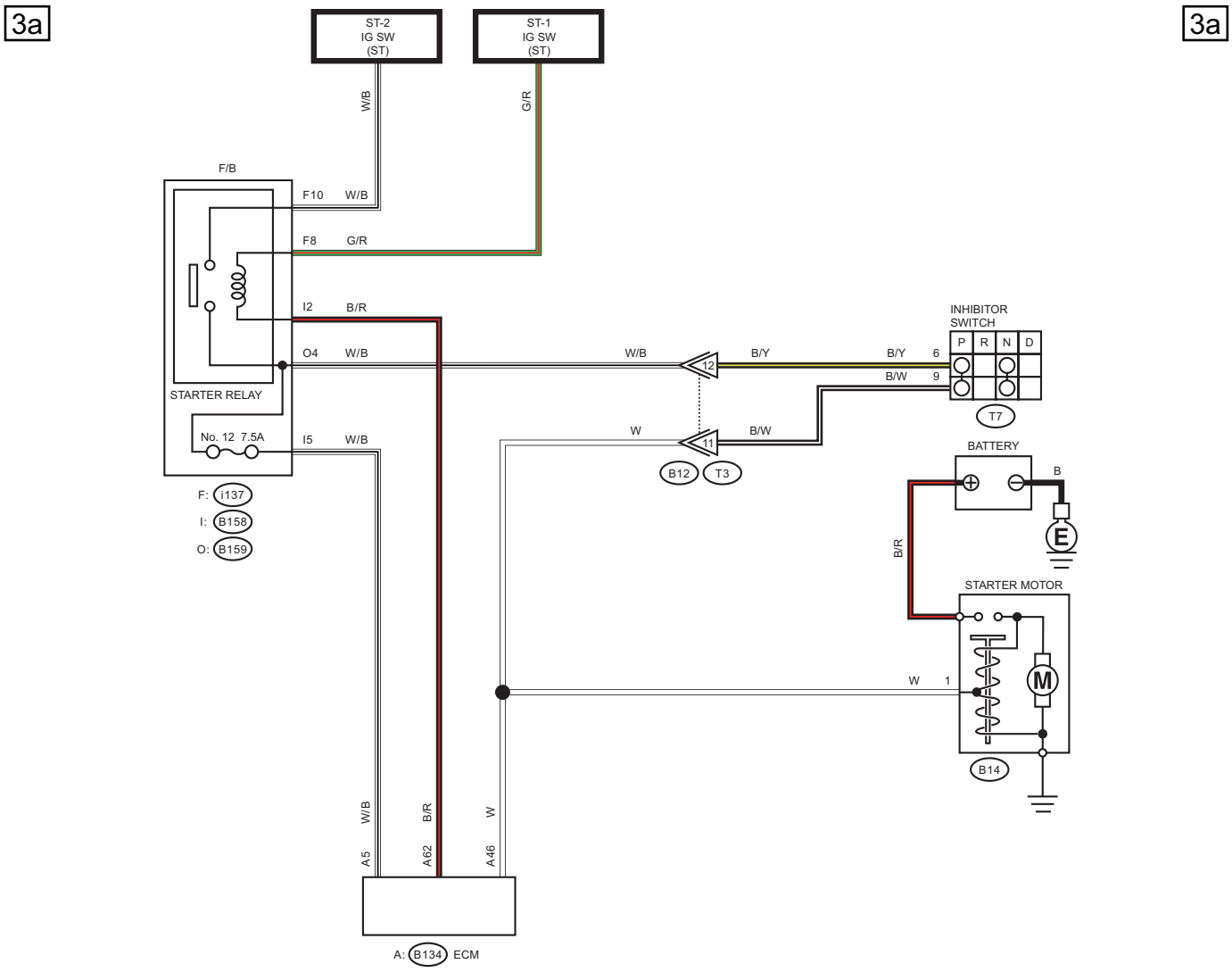

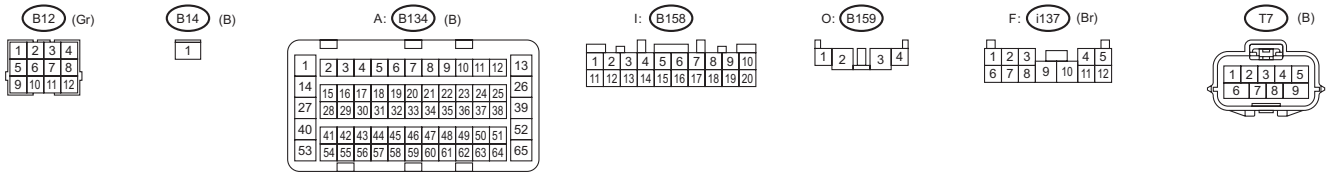

WI-60628

4. ENGINE TYPE EZ (WITH PUSH BUTTON START)

4a

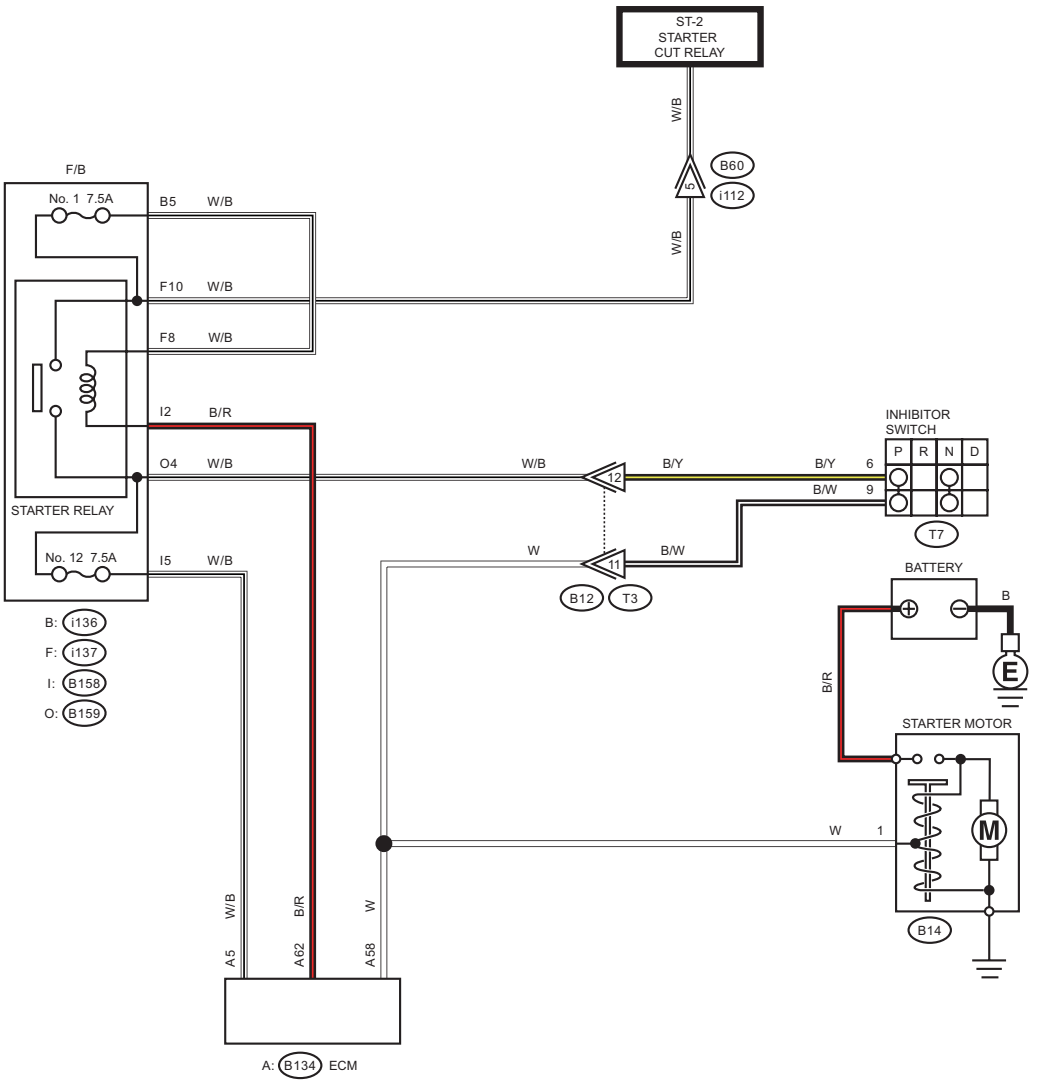

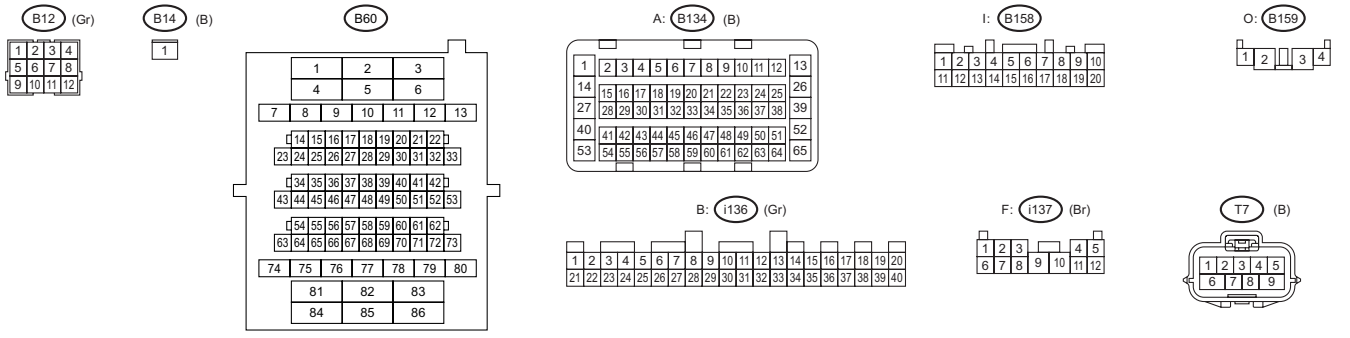

WI-60629

54.Stop Light System

A: WIRING DIAGRAM

1. SEDAN MODEL

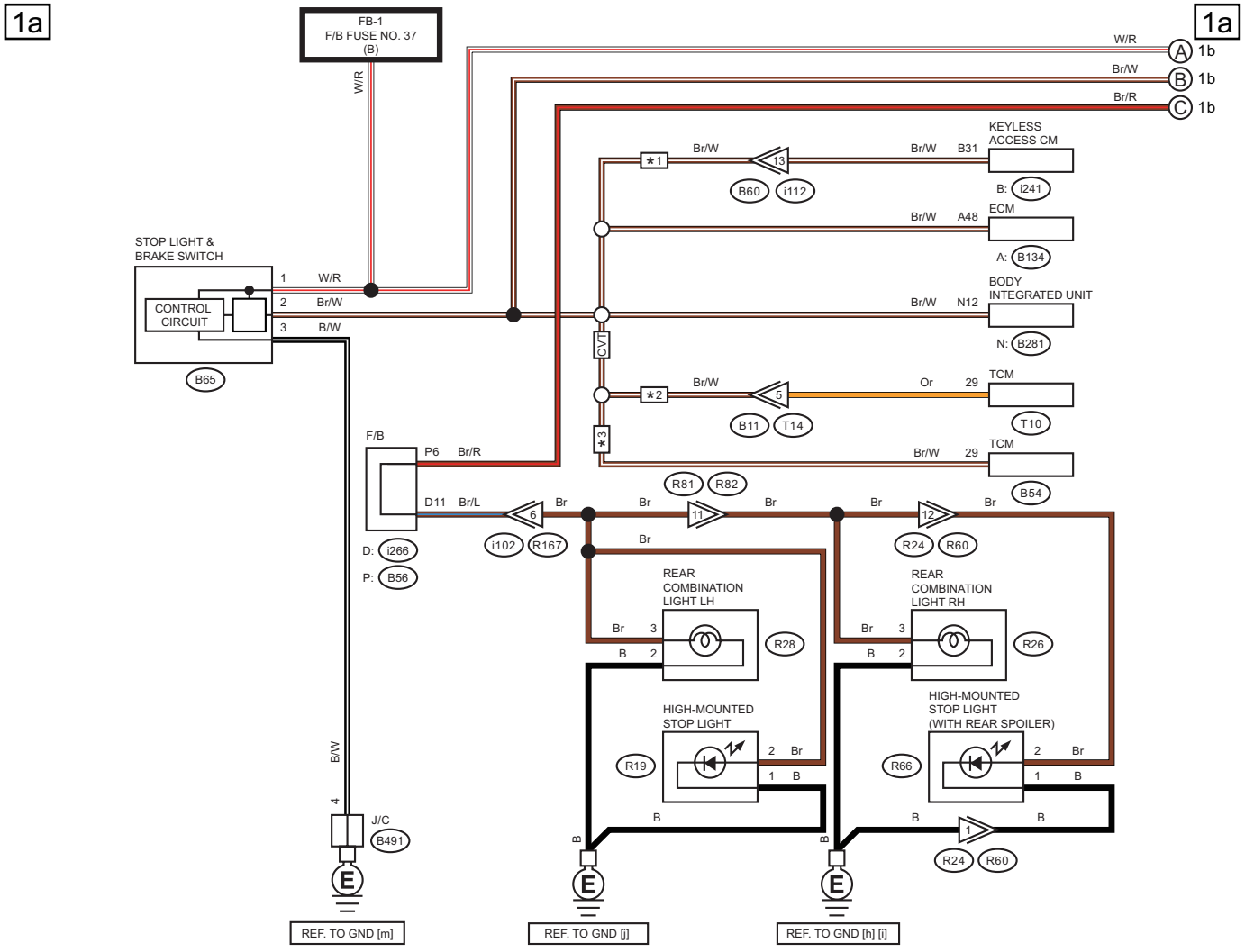

∗1 : WITH PUSH BUTTON START
∗2 : ENGINE TYPE FB
∗3 : ENGINE TYPE EZ

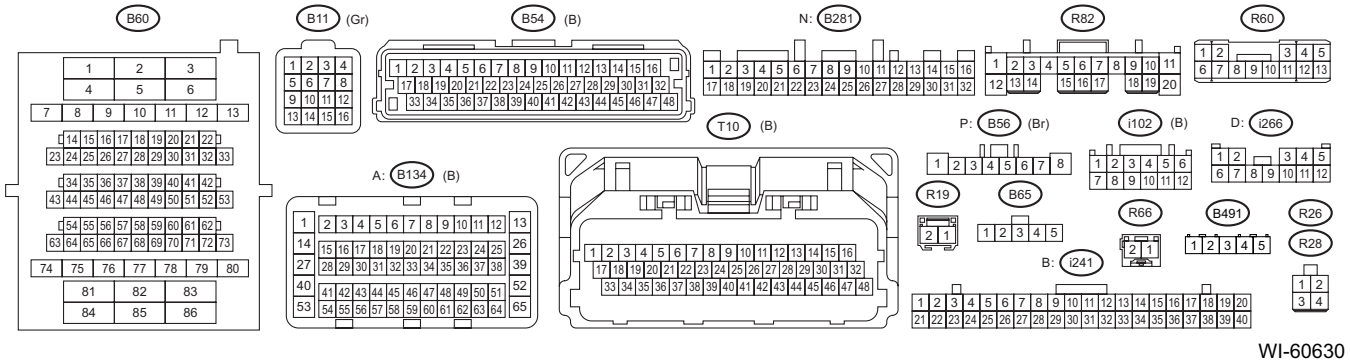

WI-60630

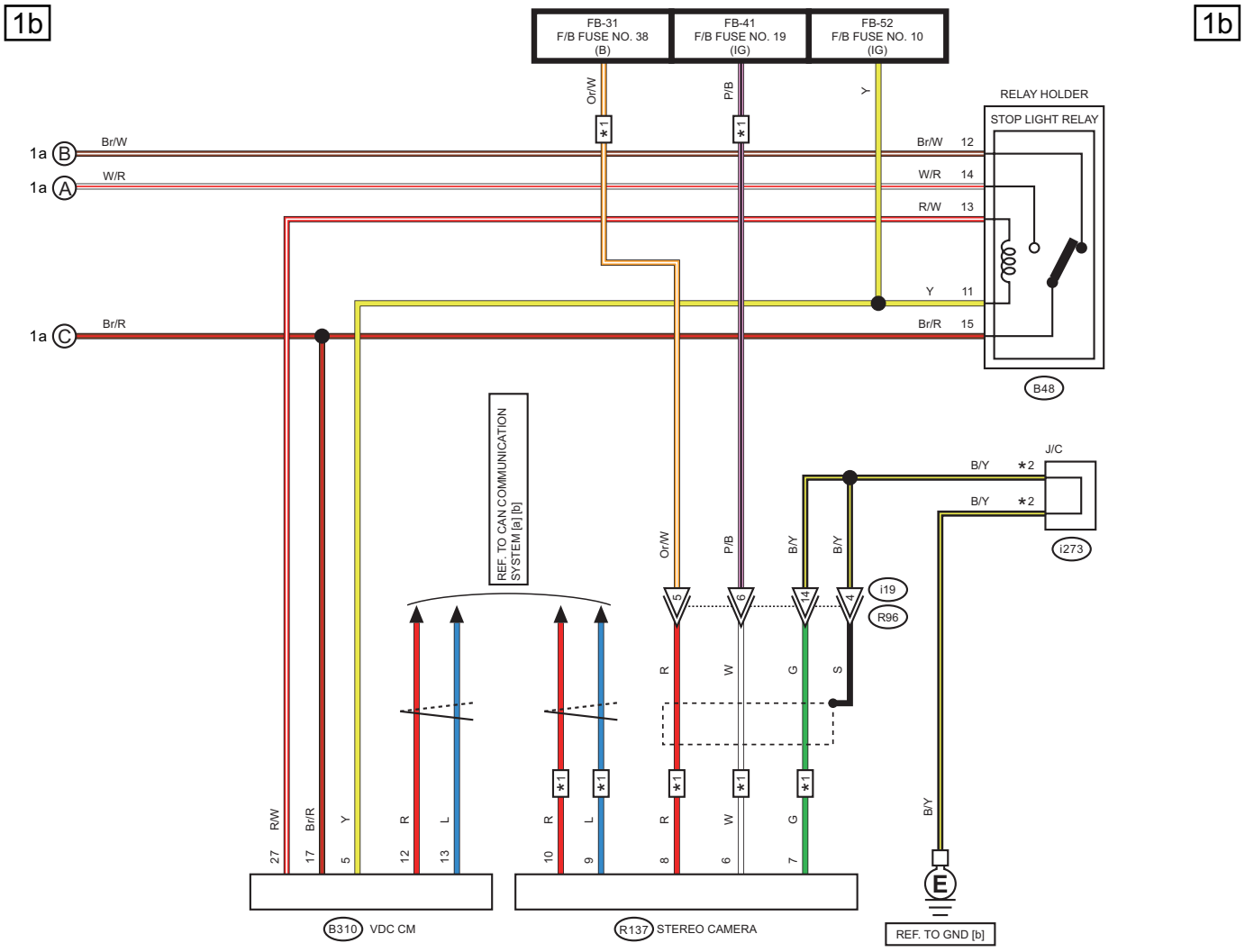

∗1 : WITH EyeSight
∗2 : TERMINAL No. OPTIONAL ARRANGEMENT

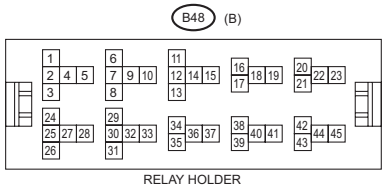

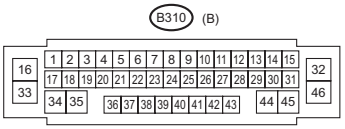

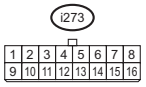

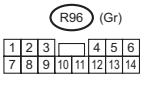

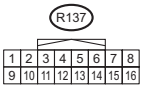

WI-60631

2. OUTBACK MODEL

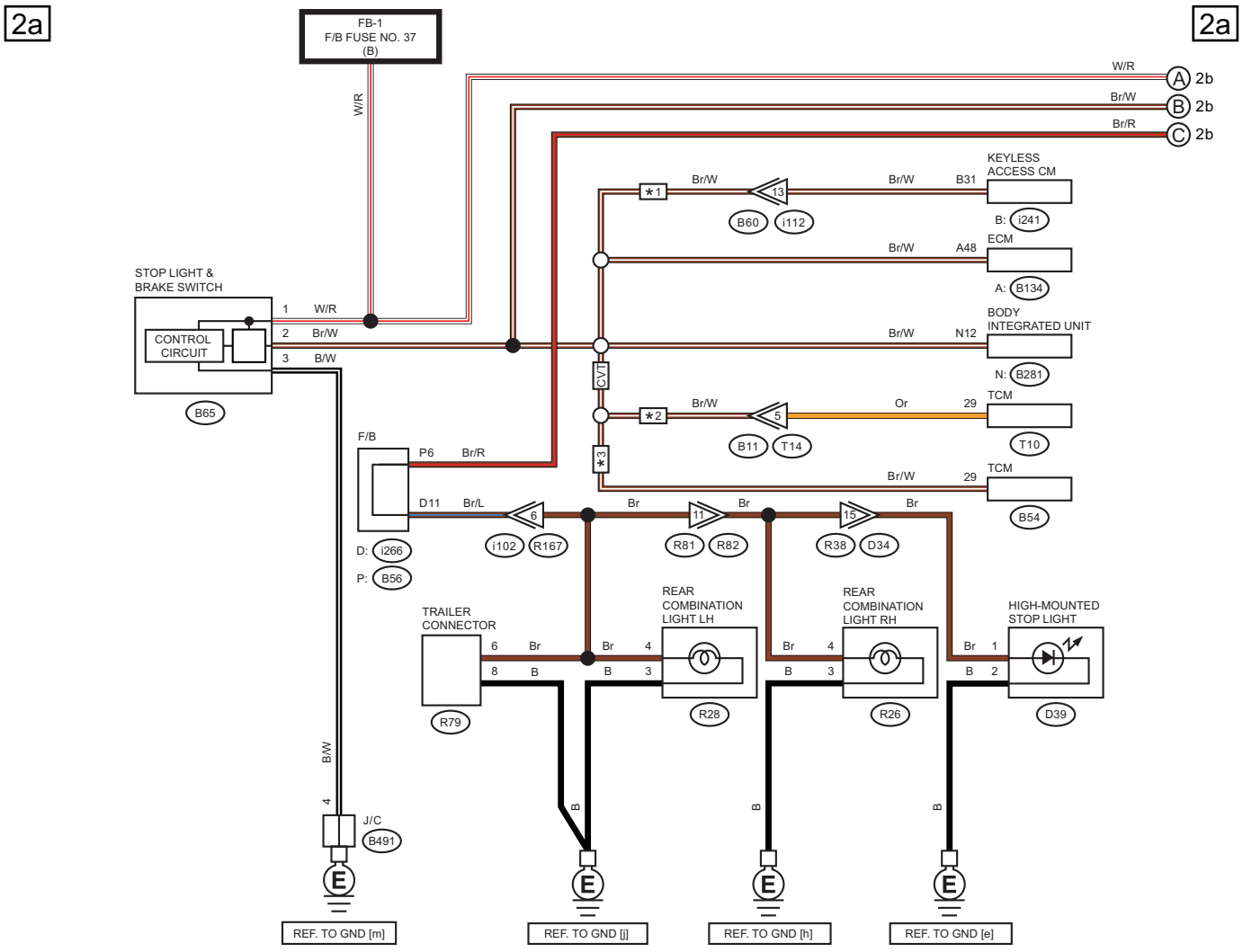

*1 : WITH PUSH BUTTON START
*2 : ENGINE TYPE FB
*3 : ENGINE TYPE EZ

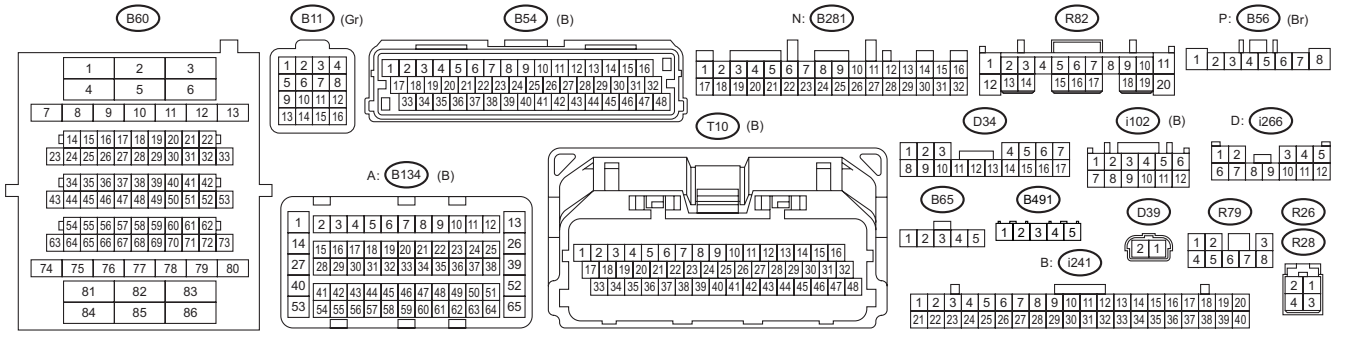

WI-60632

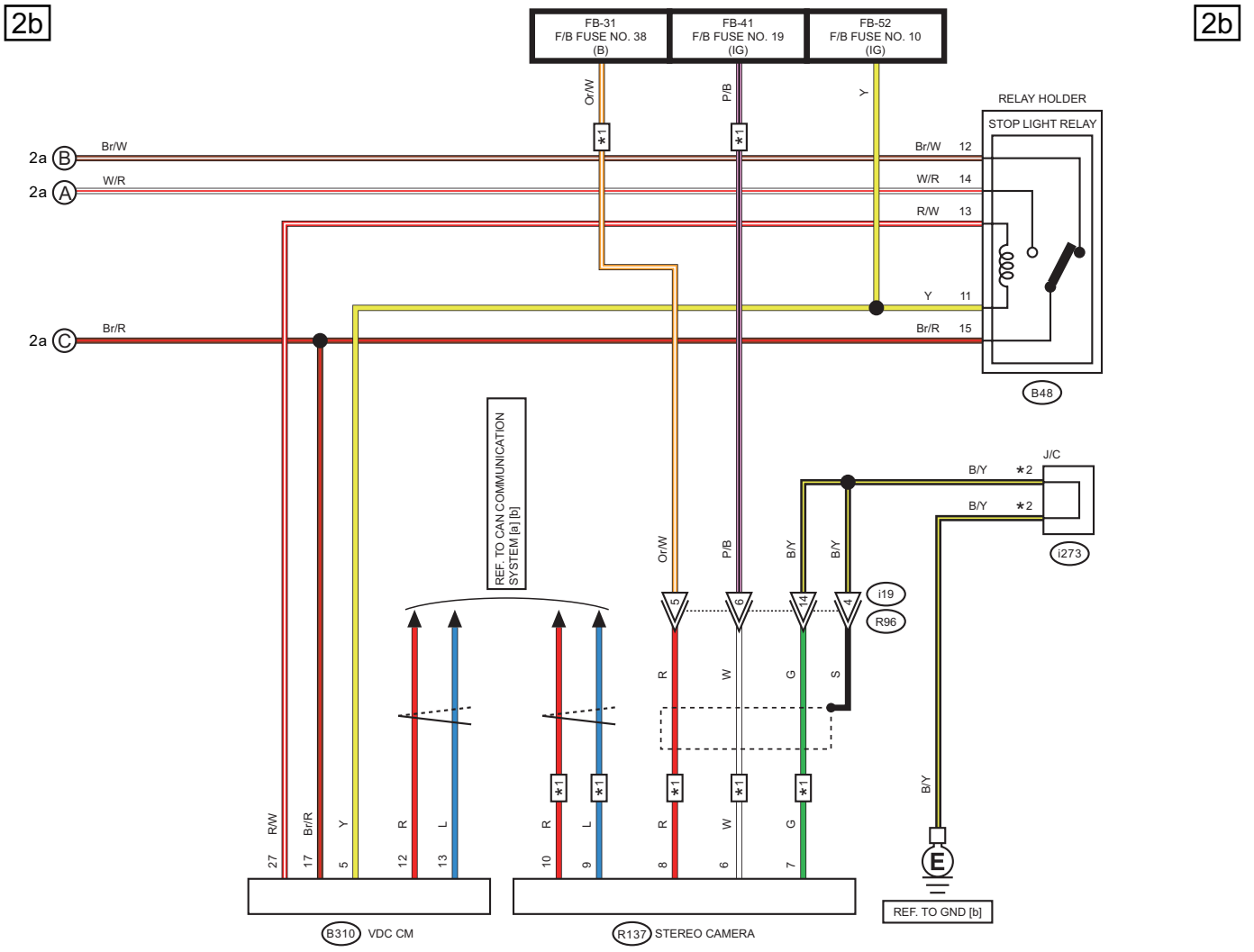

∗1 : WITH EyeSight
∗2 : TERMINAL No. OPTIONAL ARRANGEMENT

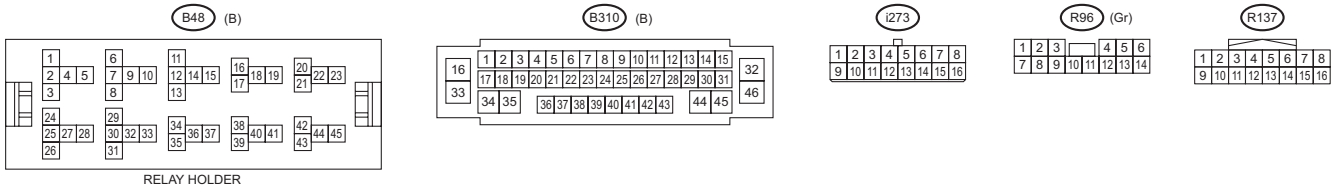

WI-60633

55.Sunroof Control System

A: WIRING DIAGRAM

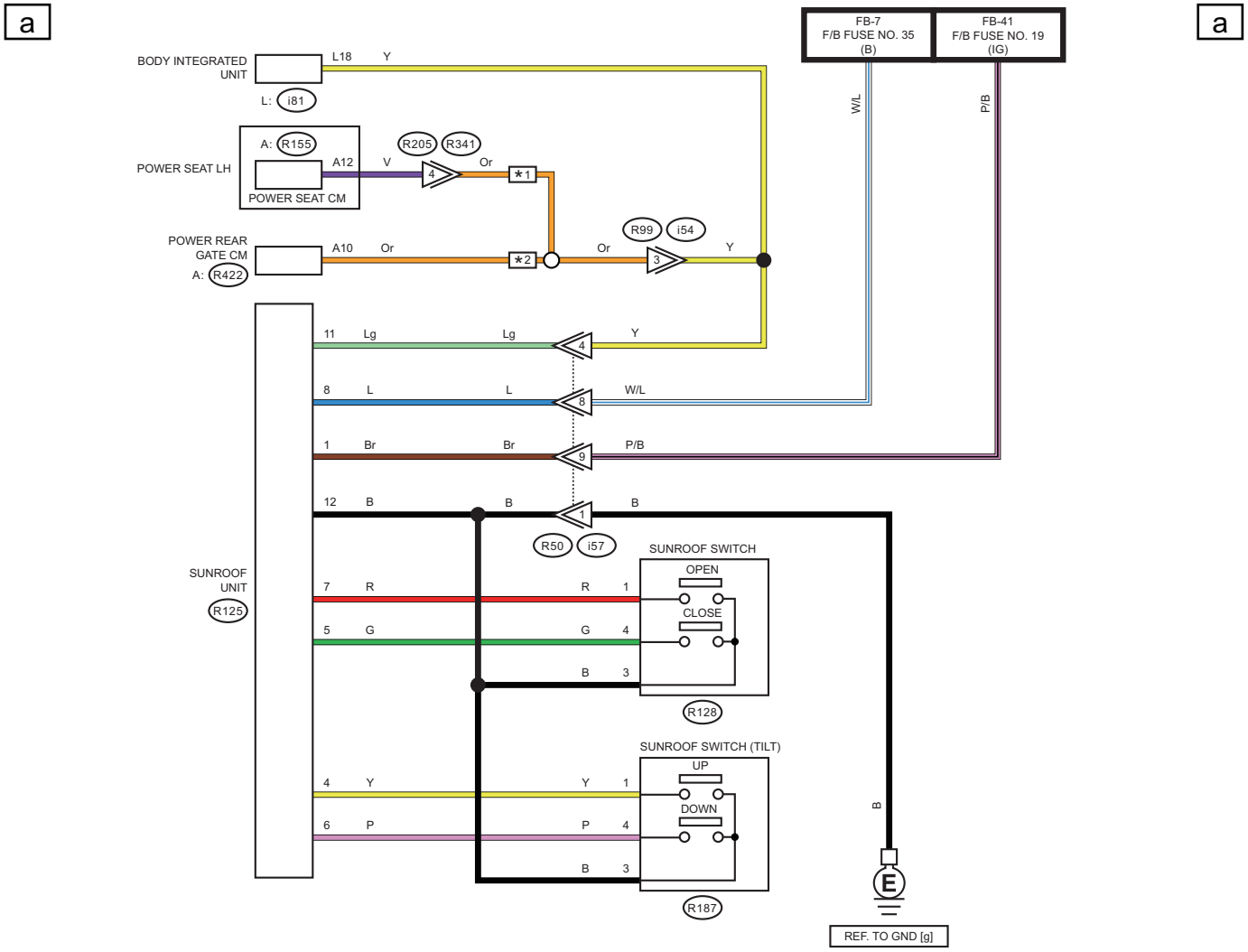

*1 : WITH SEAT POSITION MEMORY
*2 : WITH POWER REAR GATE

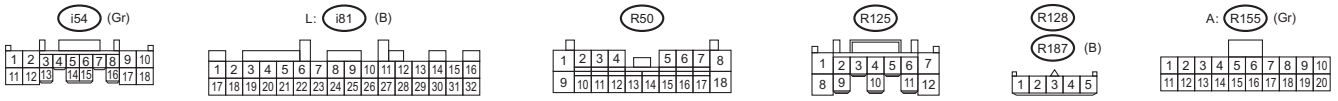

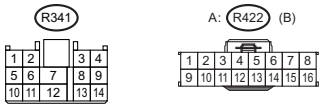

WI-71070

56.Telematics System

A: WIRING DIAGRAM

1. WITHOUT AUDIO AMPLIFIER

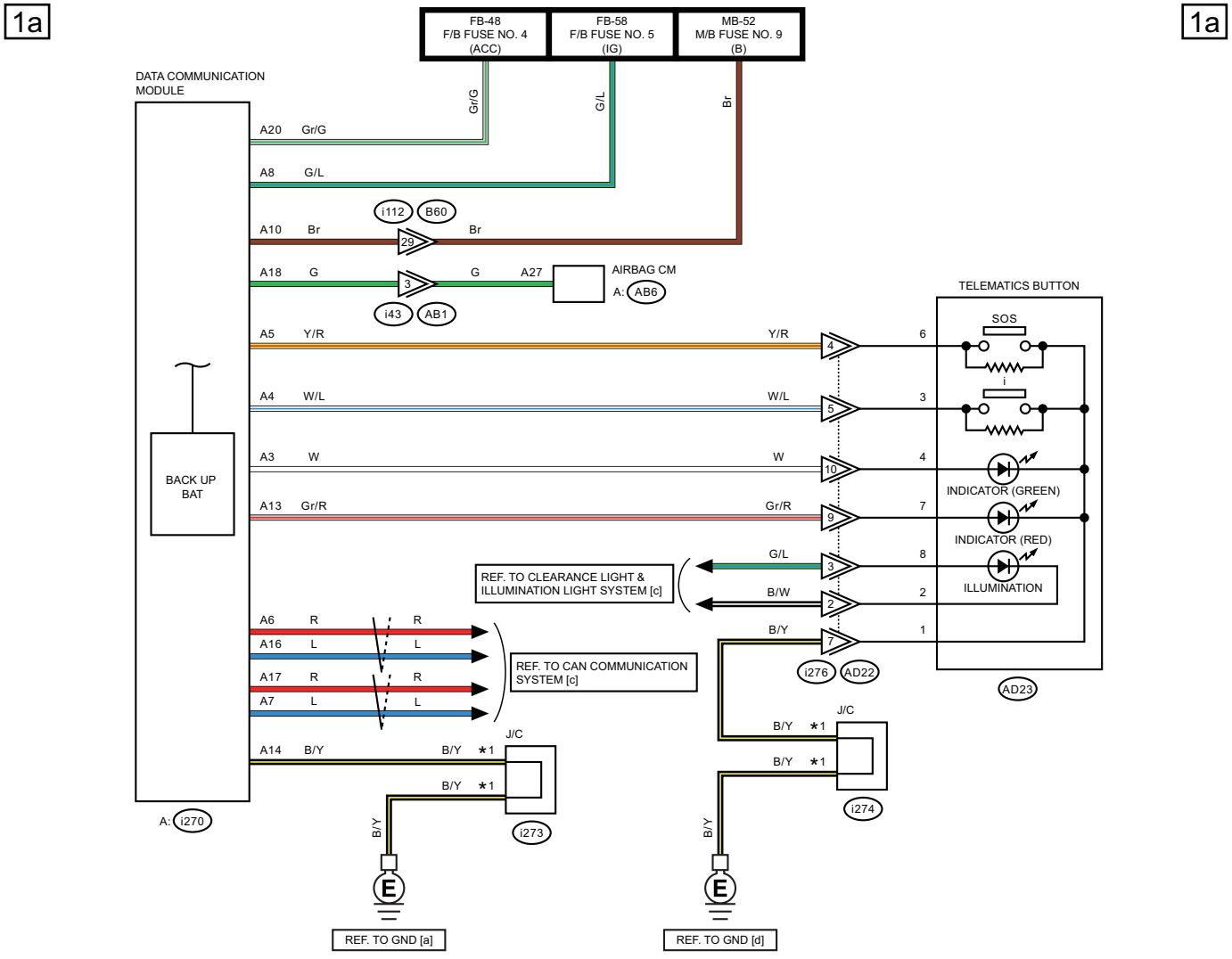

*1 : TERMINAL No. OPTIONAL ARRANGEMENT

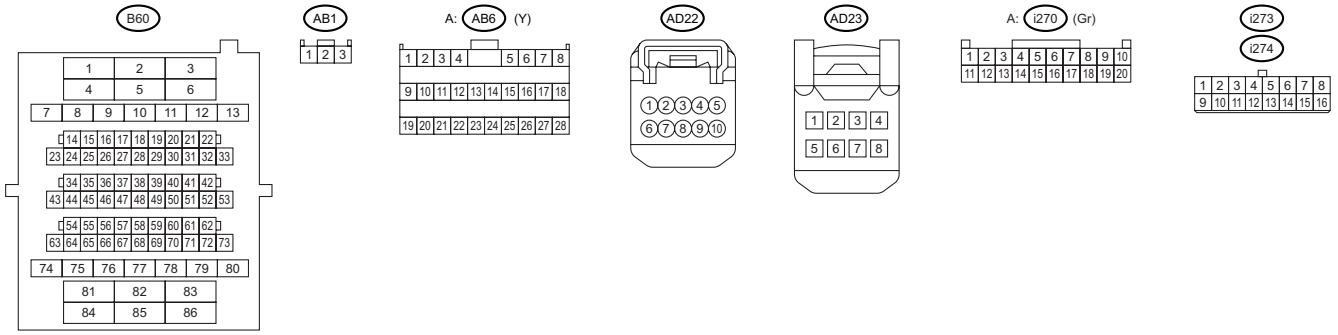

WI-60635

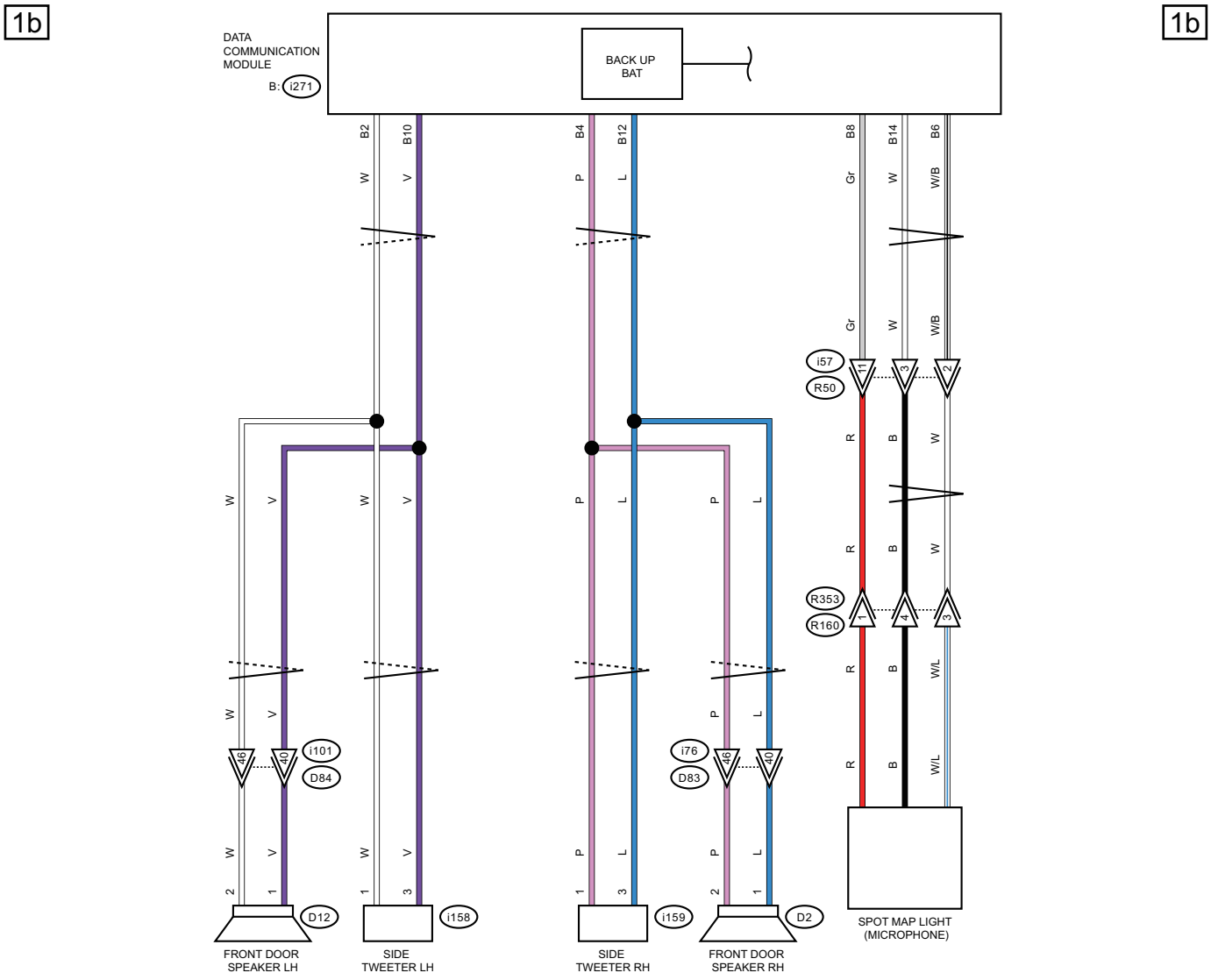
1b
1b
DATA COMMUNICATION MODULE
B: i271
BACK UP BAT
B2
B10
B4
B12
B8
B14
B6
W
V
P
L
Gr
W
W/B
i57
R50
R353
R160
i101
D84
i76
D83
D12
i158
i159
D2
FRONT DOOR SPEAKER LH
SIDE TWEETER LH
SIDE TWEETER RH
FRONT DOOR SPEAKER RH
SPOT MAP LIGHT (MICROPHONE)

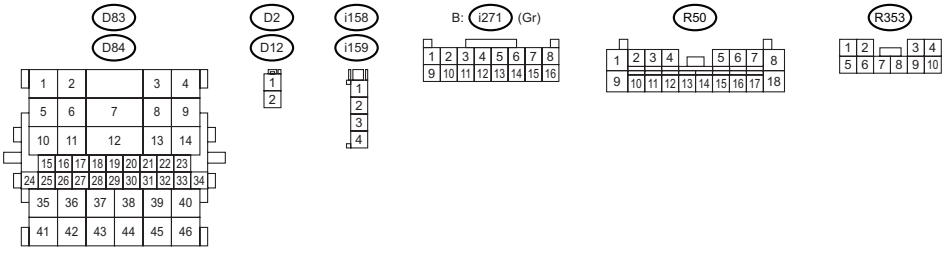
D83
D84
D2
D12
i158
i159
B: i271 (Gr)
R50
R353

WI-60636

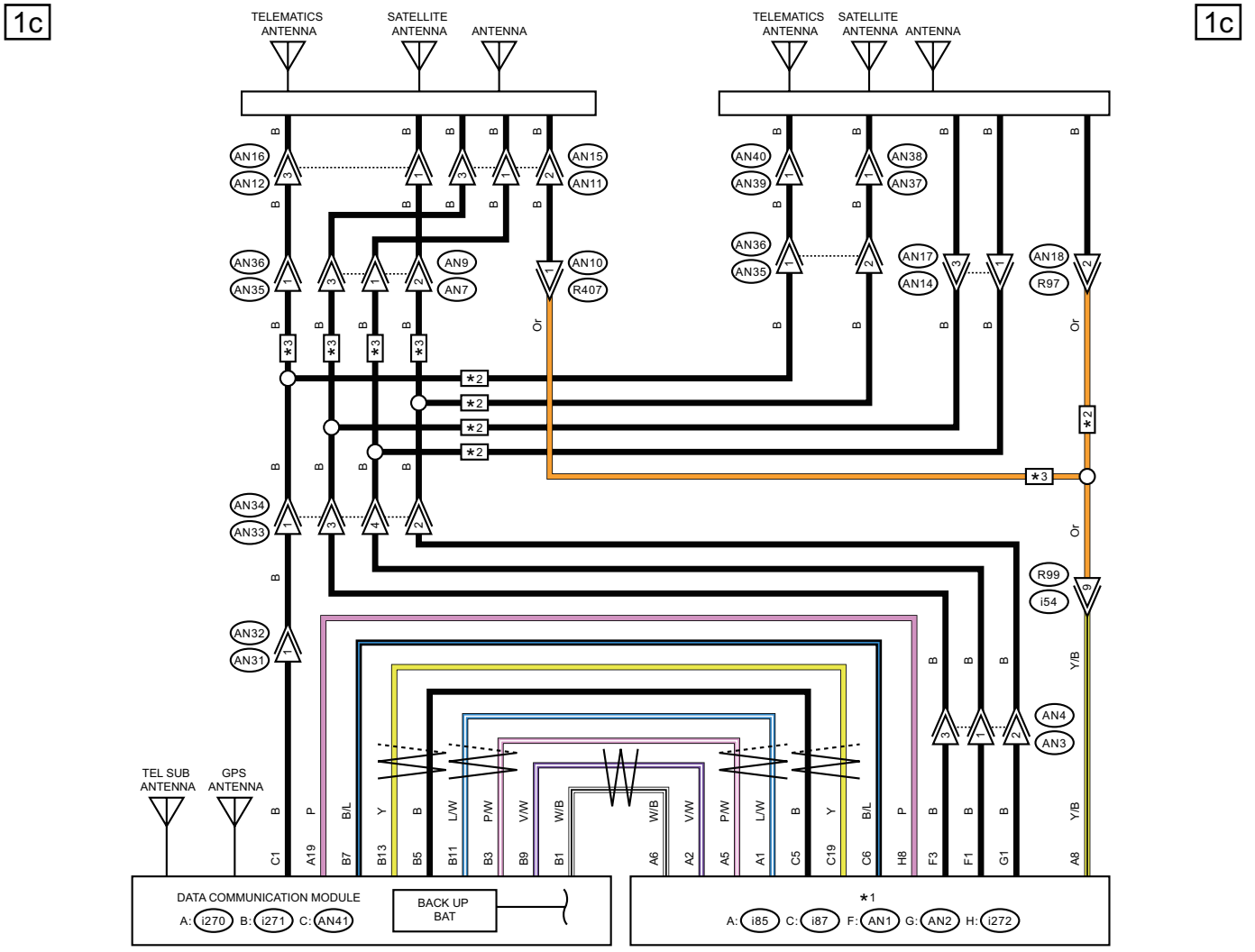

∗1 : WITHOUT NAVIGATION : AUDIO
WITH NAVIGATION : NAVIGATION UNIT

∗2 : SEDAN MODEL
∗3 : OUTBACK MODEL

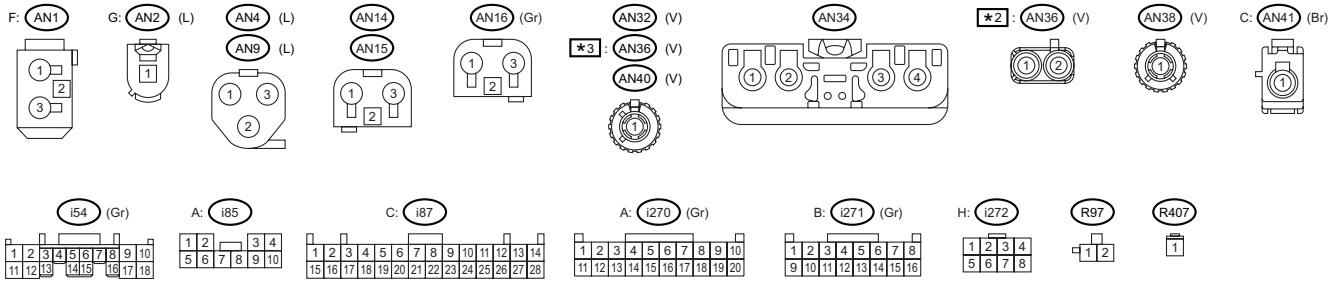

WI-60637

2. WITH AUDIO AMPLIFIER

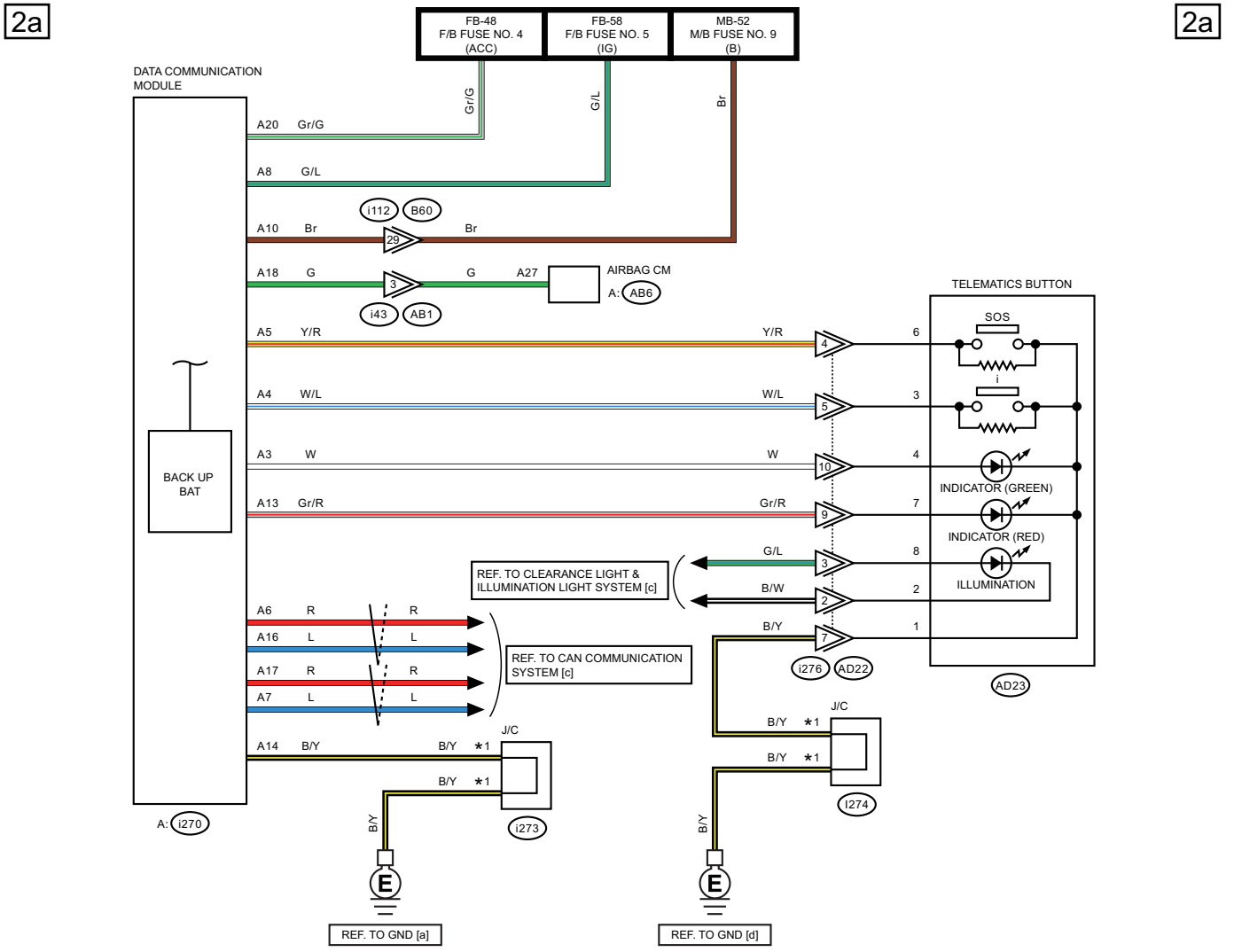

✱1 : TERMINAL No. OPTIONAL ARRANGEMENT

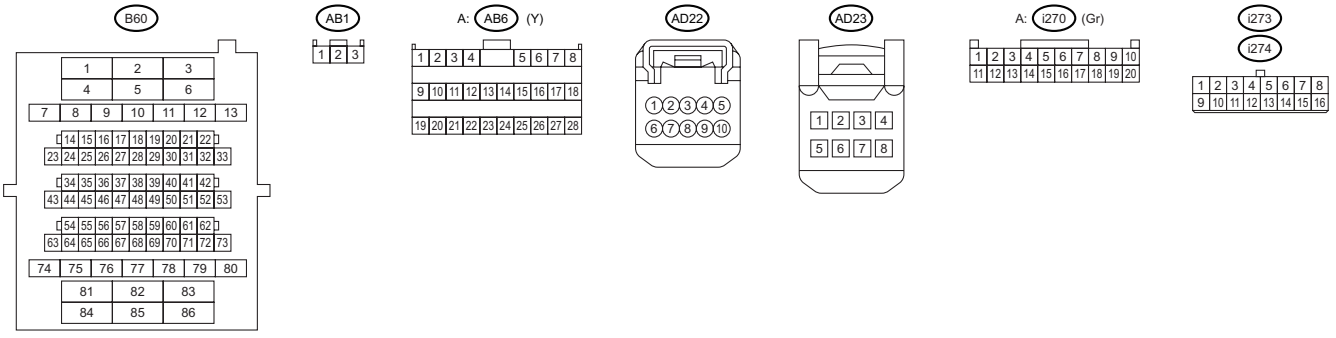

WI-60638

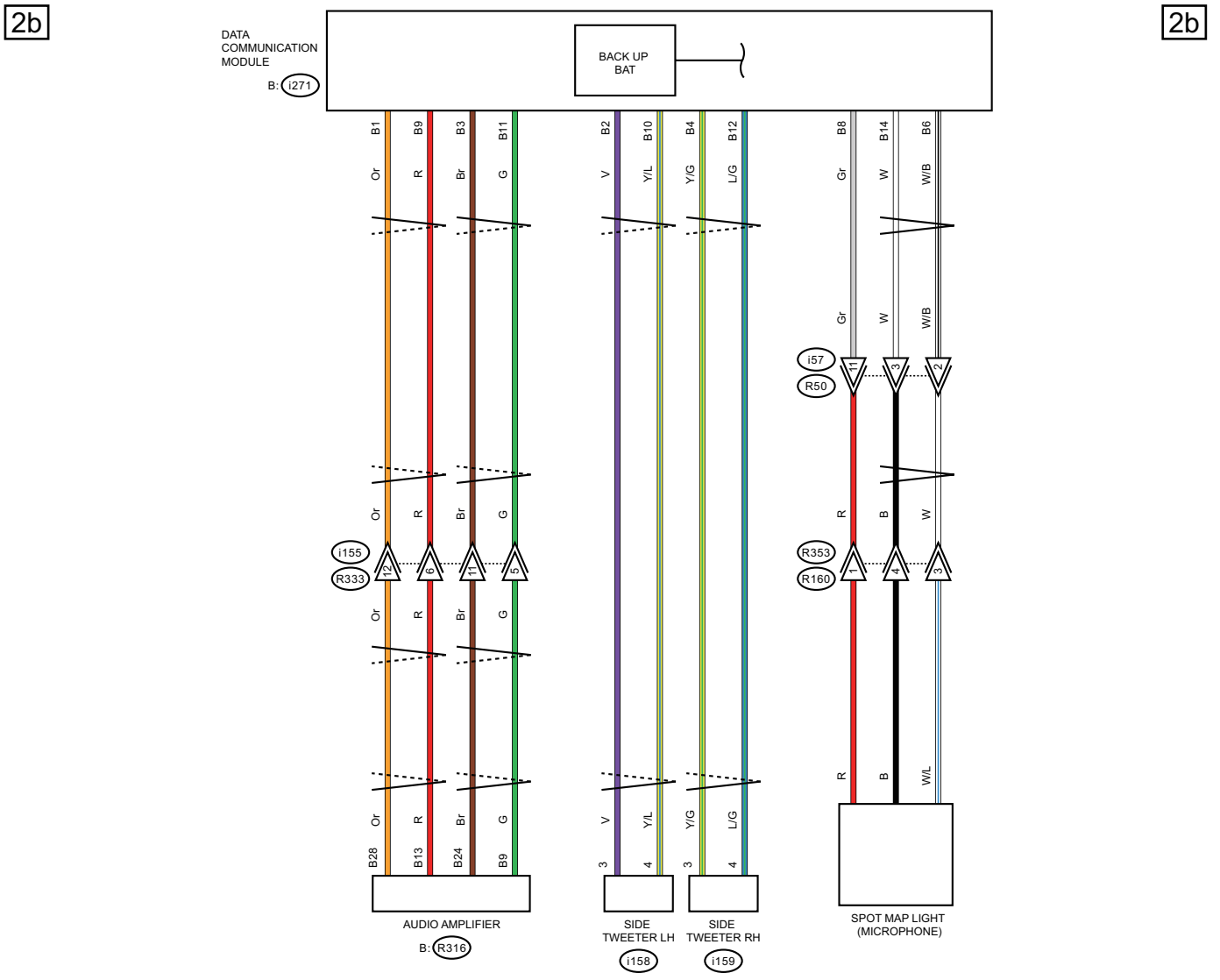
2b
2b
DATA COMMUNICATION MODULE
B: i271
BACK UP BAT
B1
B9
B3
B11
B2
B10
B4
B12
B8
B14
B6
Or
R
Br
G
V
Y/L
Y/G
L/G
Gr
W
W/B
i57
R50
i155
R333
12
6
11
5
R353
R160
1
4
3
2
B
W/L
B28
B13
B24
B9
AUDIO AMPLIFIER
B: R316
SIDE TWEETER LH
i158
SIDE TWEETER RH
i159
SPOT MAP LIGHT (MICROPHONE)

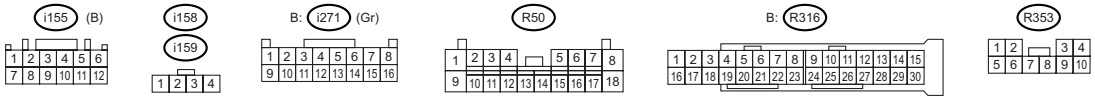
i155 (B)
i158
i159
B: i271 (Gr)
R50
B: R316
R353

WI-60639

WIRING SYSTEM

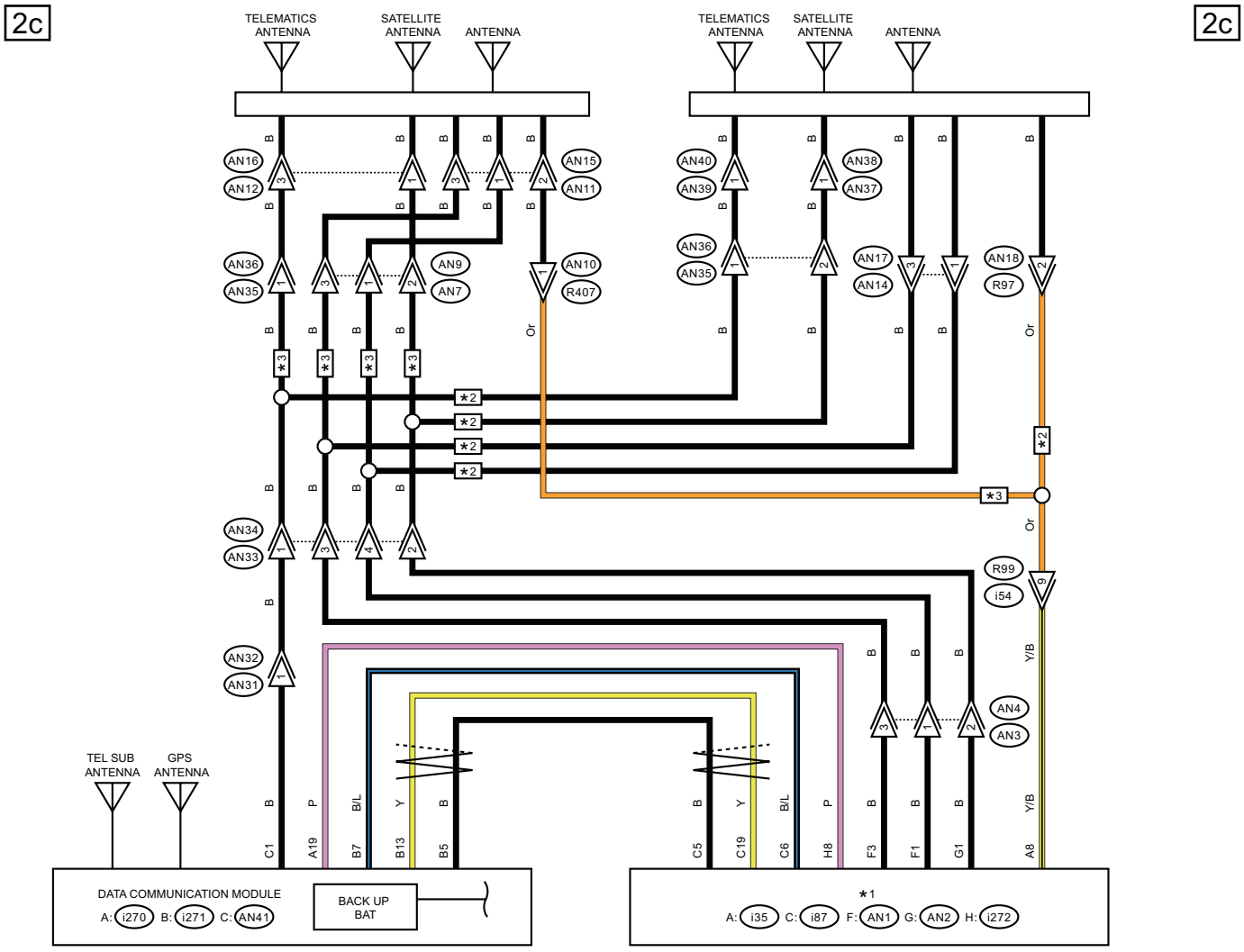

*1 : WITHOUT NAVIGATION : AUDIO
WITH NAVIGATION : NAVIGATION UNIT

*2 : SEDAN MODEL
*3 : OUTBACK MODEL

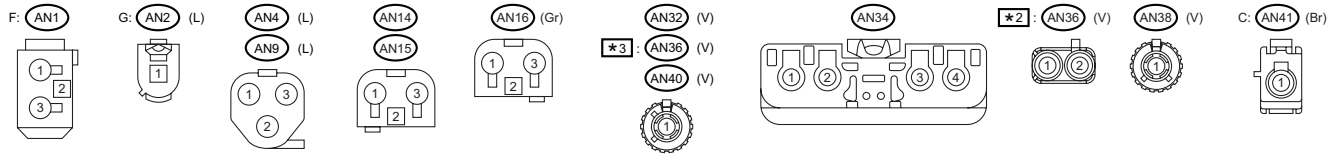

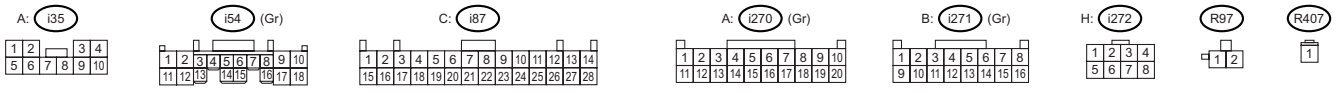

WI-60640

57.Tire Pressure Monitoring System

A: WIRING DIAGRAM

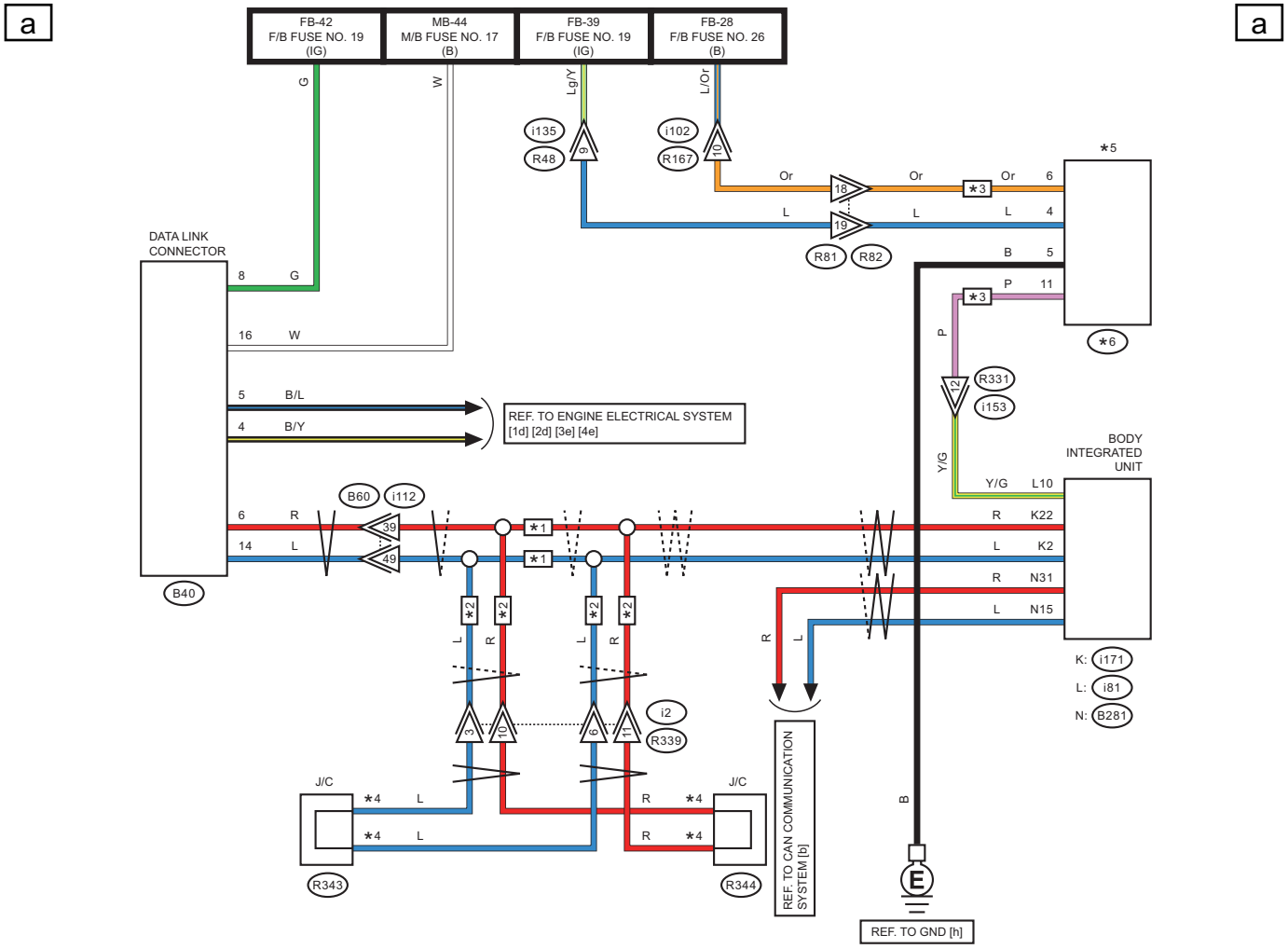

∗1 : WITHOUT BSD/RCTA
∗2 : WITH BSD/RCTA
∗3 : WITHOUT PUSH BUTTON START
∗4 : TERMINAL No. OPTIONAL ARRANGEMENT
∗5 : WITHOUT PUSH BUTTON START : TPMS & KEYLESS ENTRY CM
WITH PUSH BUTTON START : TPMS CM
∗6 : WITHOUT PUSH BUTTON START : R221
WITH PUSH BUTTON START : R211

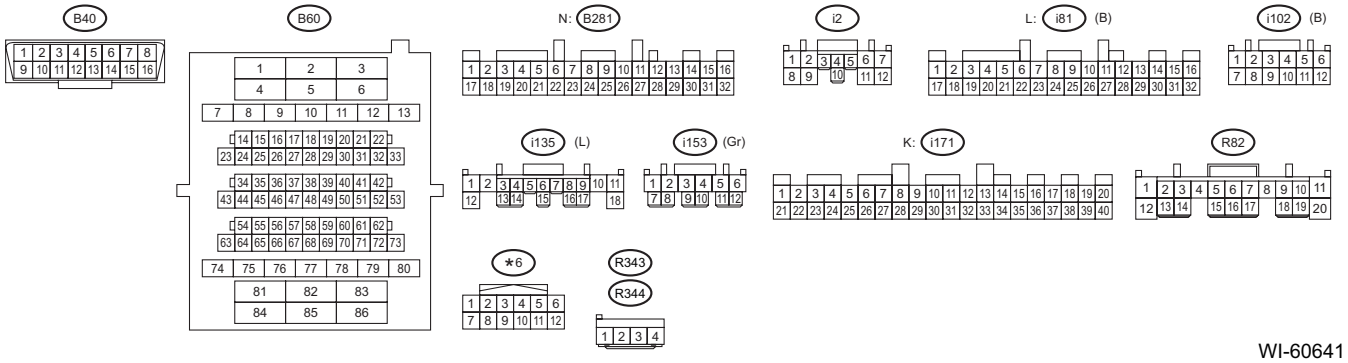

WI-60641

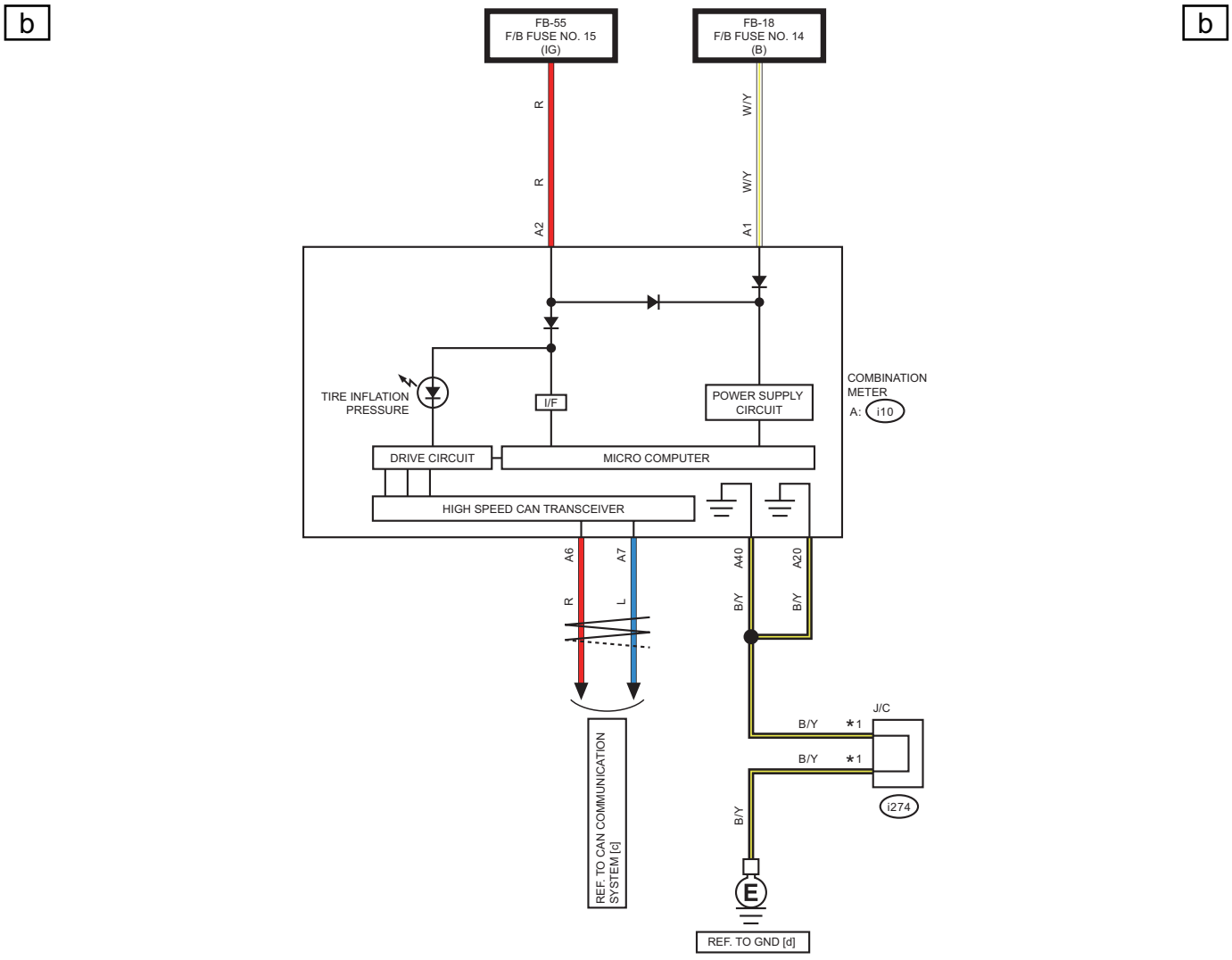

*1 : TERMINAL No. OPTIONAL ARRANGEMENT

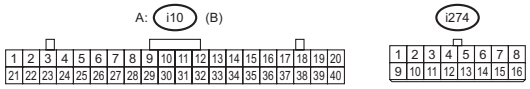

WI-60642

58. Turn Signal Light and Hazard Light System

A: WIRING DIAGRAM

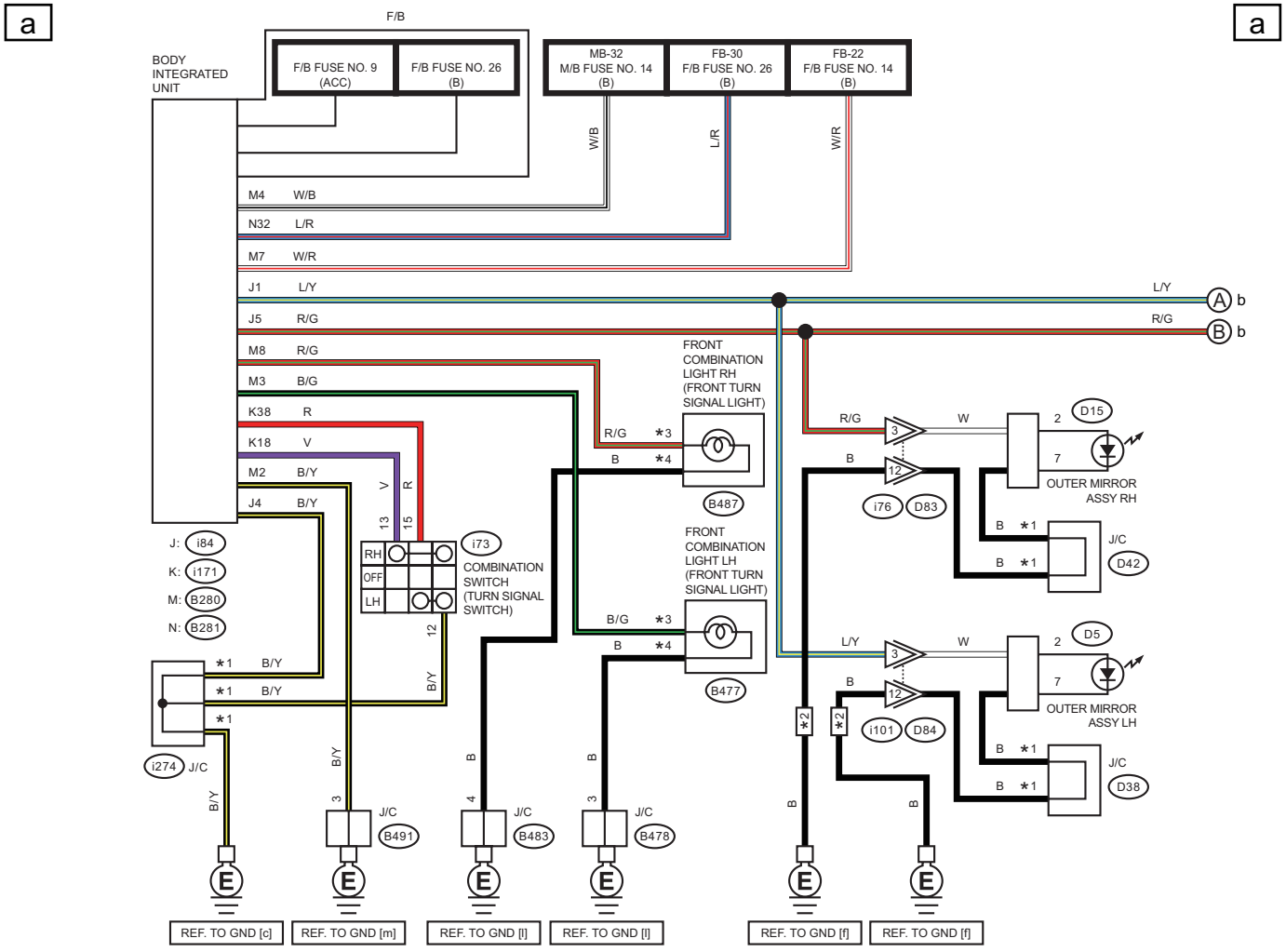

∗1 : TERMINAL No. OPTIONAL ARRANGEMENT
∗2 : WITH MIRROR TURN
∗3 : HALOGEN MODEL : 8
EXCEPT FOR HALOGEN MODEL : 7
∗4 : HALOGEN MODEL : 4
EXCEPT FOR HALOGEN MODEL : 5
∗5 : HALOGEN MODEL
∗6 : EXCEPT FOR HALOGEN MODEL

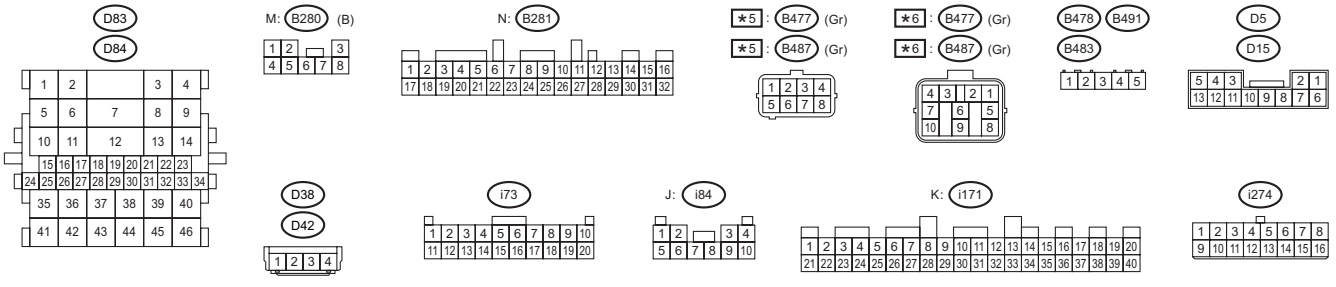

WI-60643

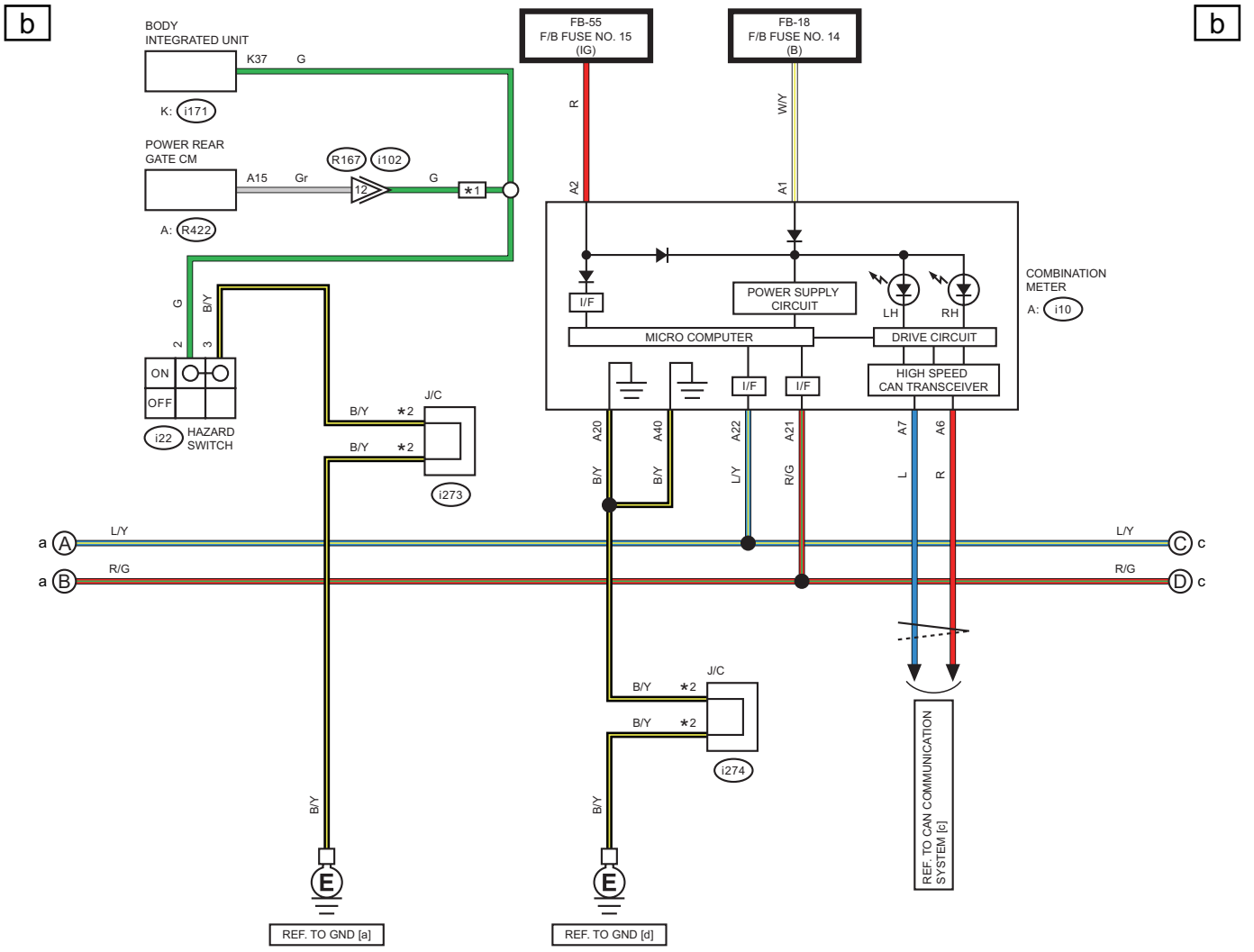

*1 : WITH POWER REAR GATE
*2 : TERMINAL No. OPTIONAL ARRANGEMENT

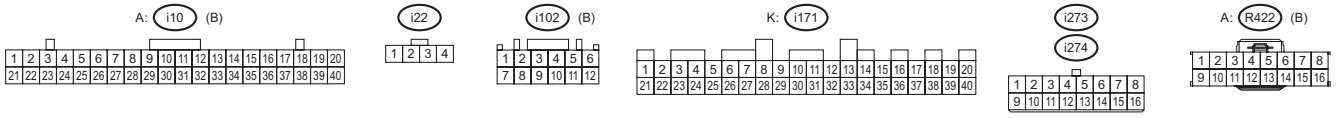

WI-60644

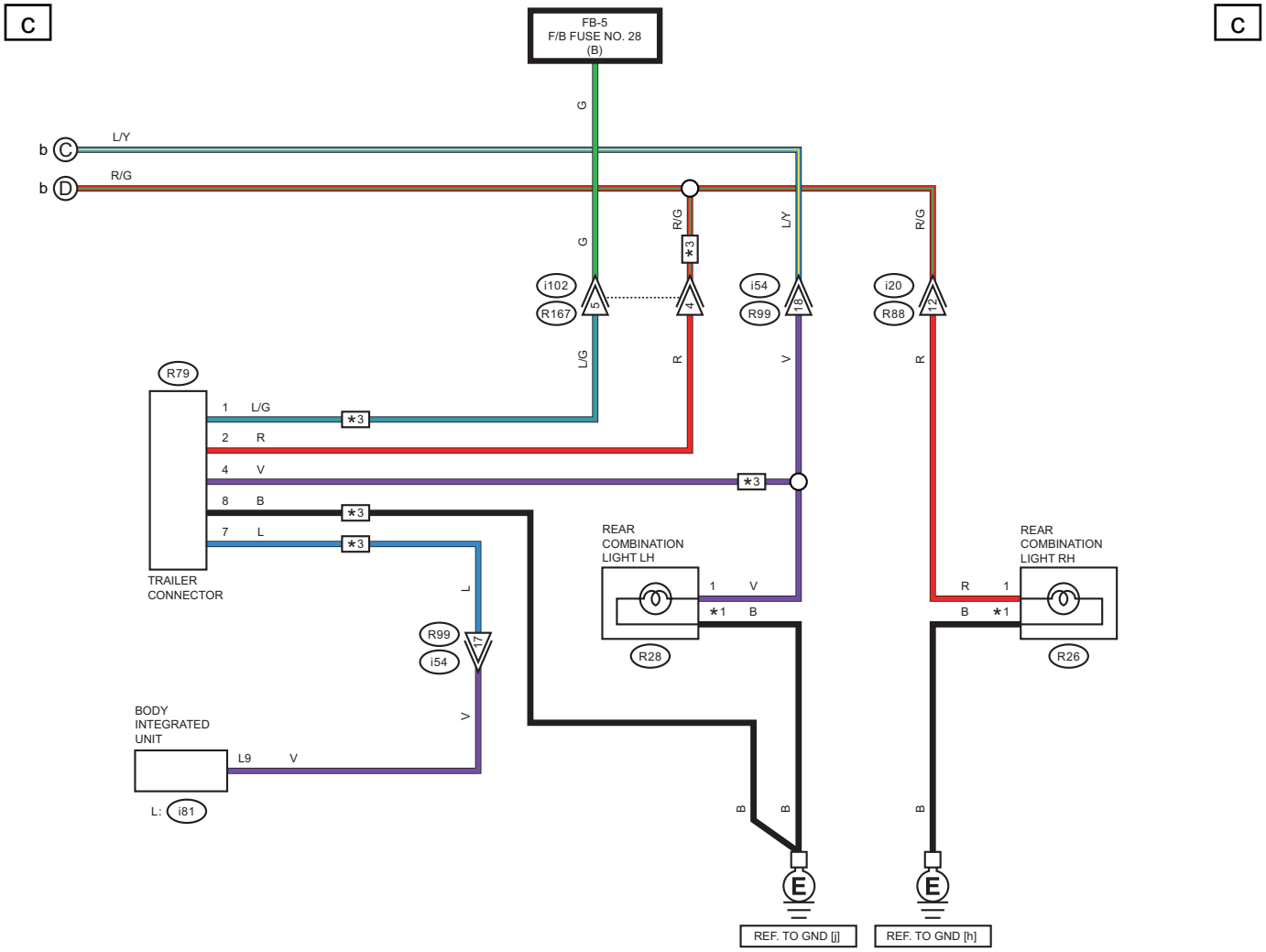

✶1 : SEDAN MODEL : 2
OUTBACK MODEL : 3

✶2 : SEDAN MODEL
✶3 : OUTBACK MODEL

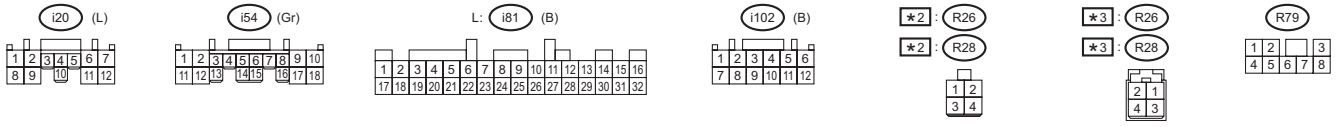

WI-60645

59.Vehicle Dynamics Control System

A: WIRING DIAGRAM

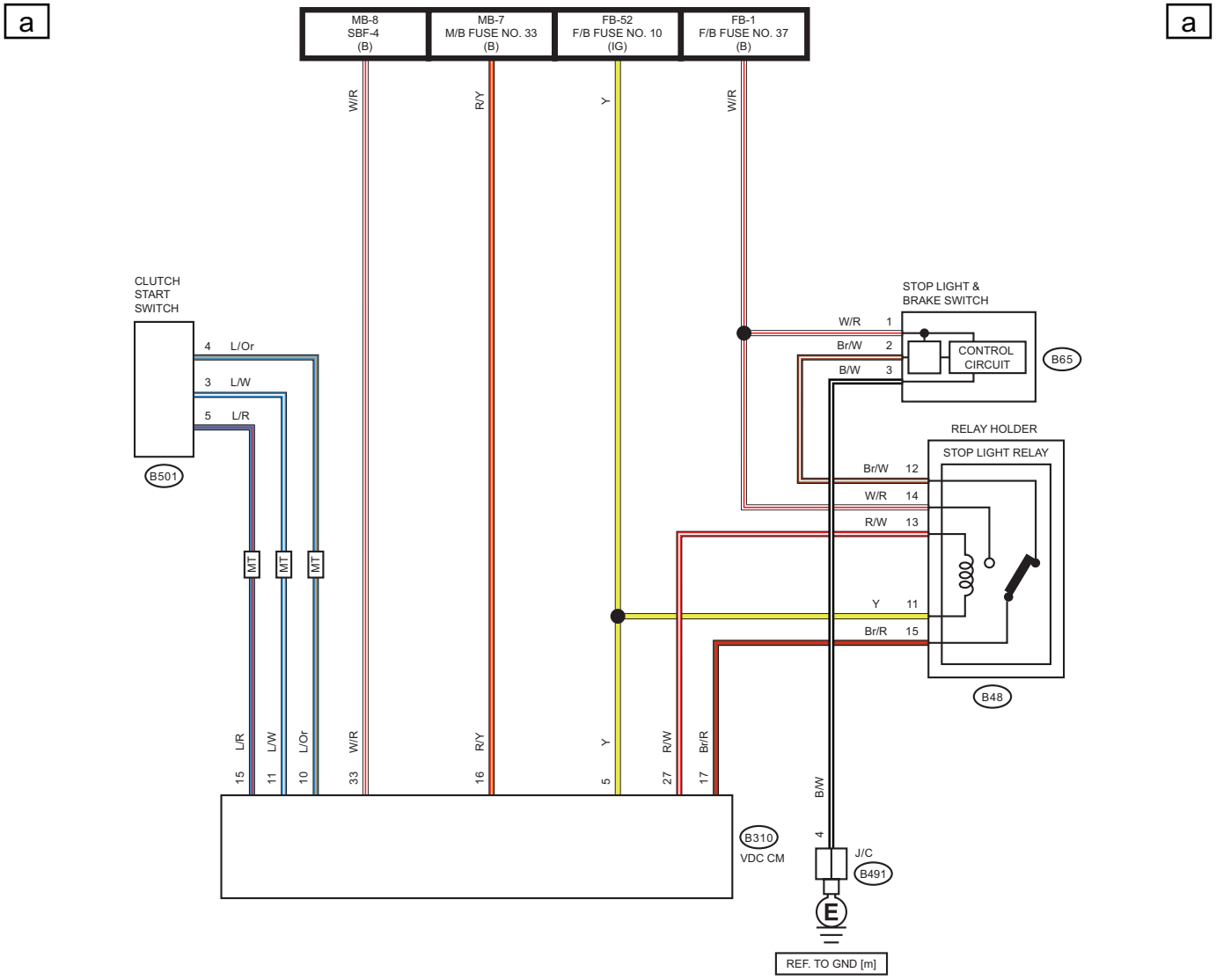

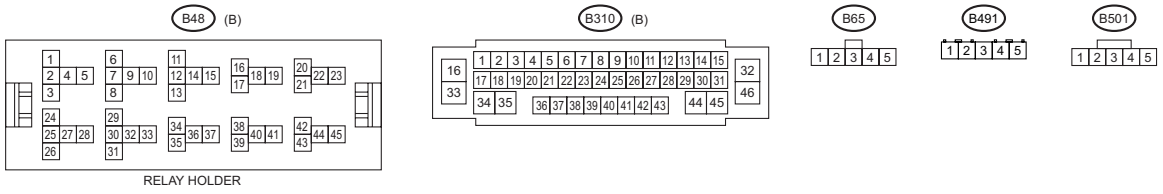

WI-60646

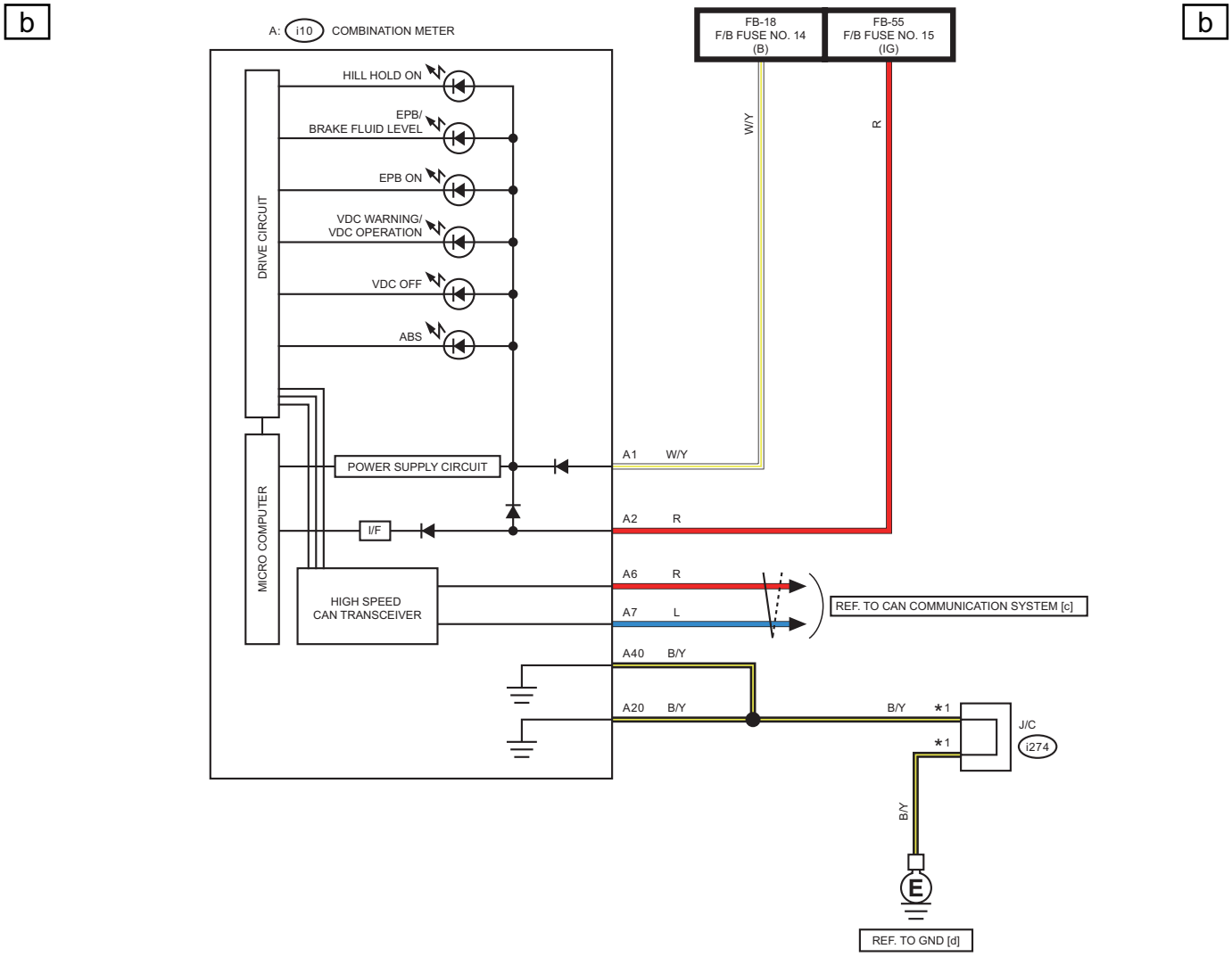

∗1 : TERMINAL No. OPTIONAL ARRANGEMENT

A: i10 (B)

1	2	3	4	5	6	7	8	9	10	11	12	13	14	15	16	17	18	19	20
21	22	23	24	25	26	27	28	29	30	31	32	33	34	35	36	37	38	39	40

i274

1	2	3	4	5	6	7	8
9	10	11	12	13	14	15	16

WI-60647

C

C

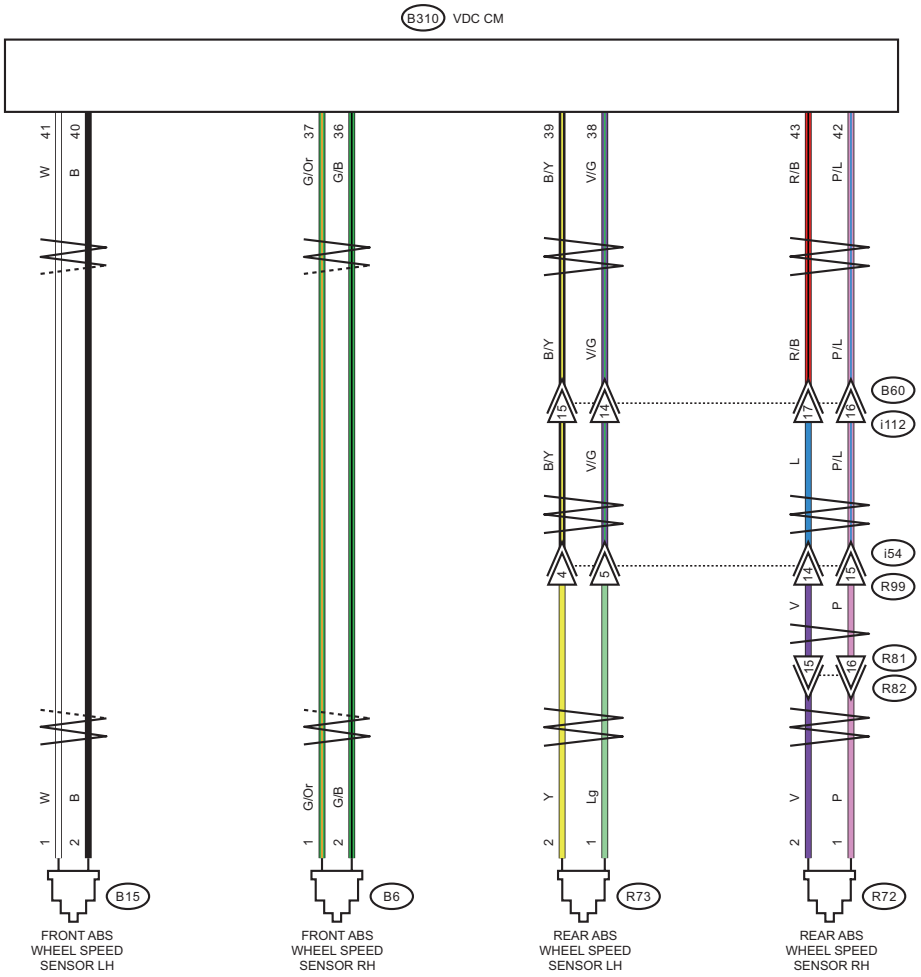
B310 VDC CM
41 40 37 36 39 38 43 42
W B G/Or G/B B/Y V/G R/B P/L
B/Y V/G R/B P/L
15 14 7 16
B60
i112
B/Y V/G L P/L
4 5 14 15
i54
R99
V P
R81
R82
15 16
W B G/Or G/B Y Lg V P
1 2 1 2 2 1 2 1
B15 B6 R73 R72
FRONT ABS WHEEL SPEED SENSOR LH
FRONT ABS WHEEL SPEED SENSOR RH
REAR ABS WHEEL SPEED SENSOR LH
REAR ABS WHEEL SPEED SENSOR RH

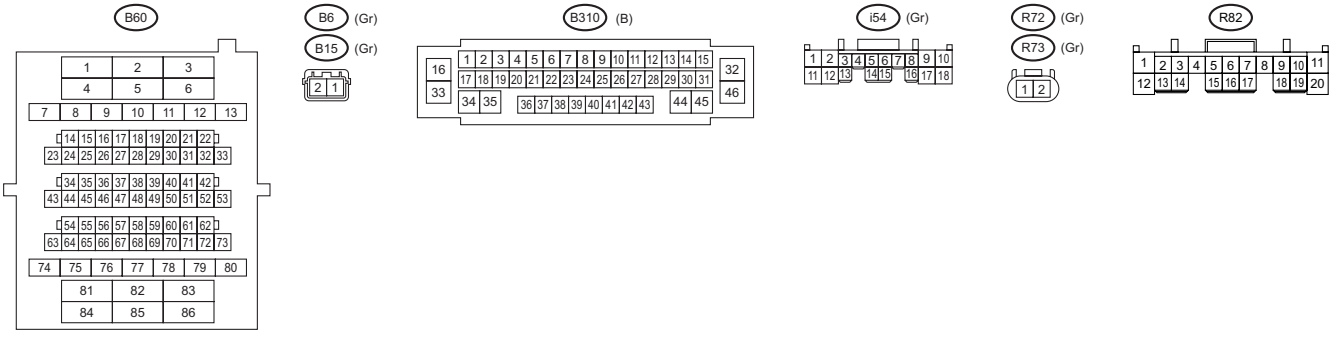
B60
B6 (Gr)
B15 (Gr)
B310 (B)
i54 (Gr)
R72 (Gr)
R73 (Gr)
R82

WI-60648

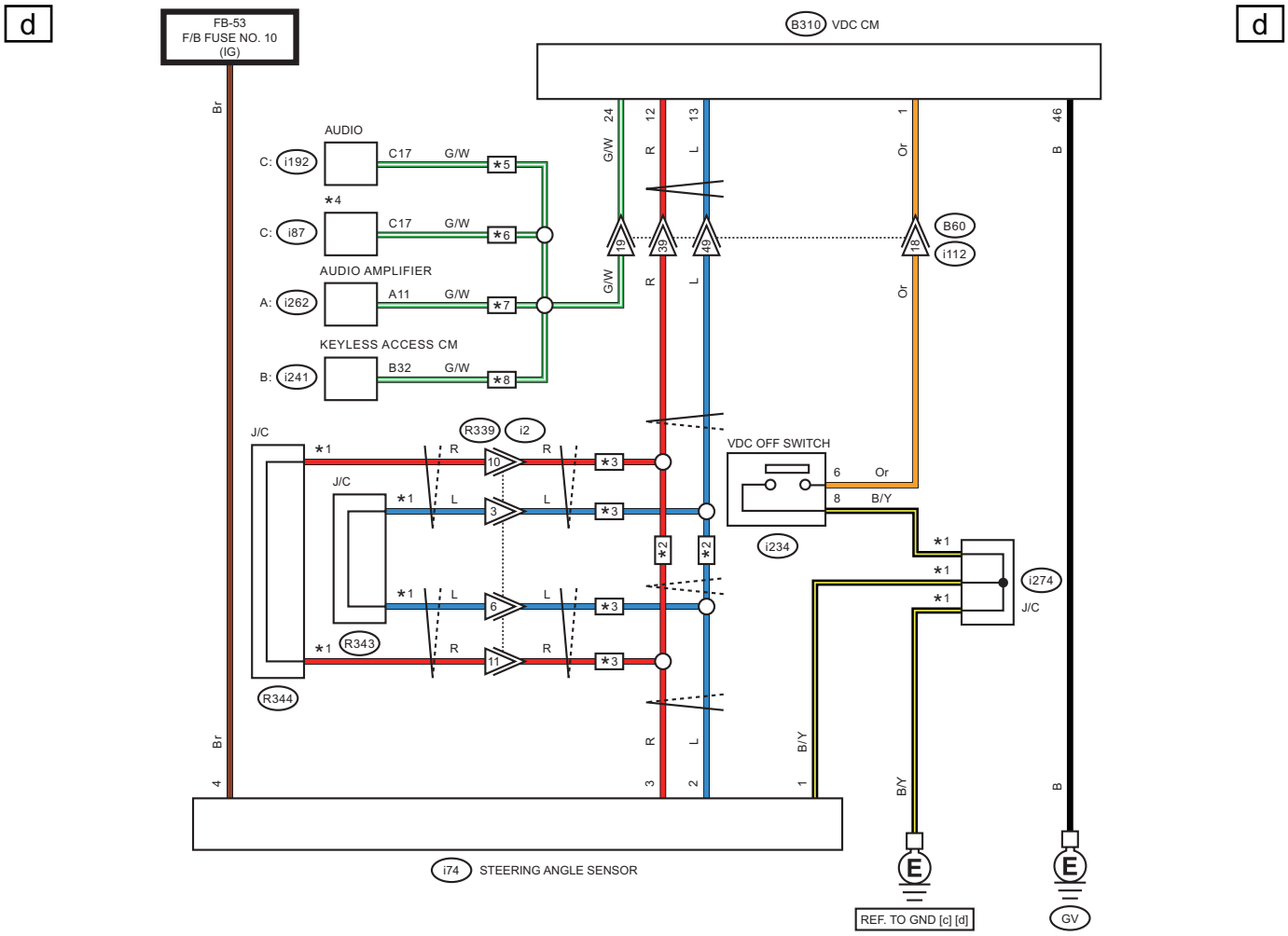

*1 : TERMINAL No. OPTIONAL ARRANGEMENT
*2 : WITHOUT BSD/RCTA
*3 : WITH BSD/RCTA
*4 : WITHOUT NAVIGATION : AUDIO
WITH NAVIGATION : NAVIGATION UNIT
*5 : 6.2 INCH DISPLAY
*6 : 7 INCH DISPLAY
*7 : WITH AUDIO AMPLIFIER
*8 : WITH PUSH BUTTON START

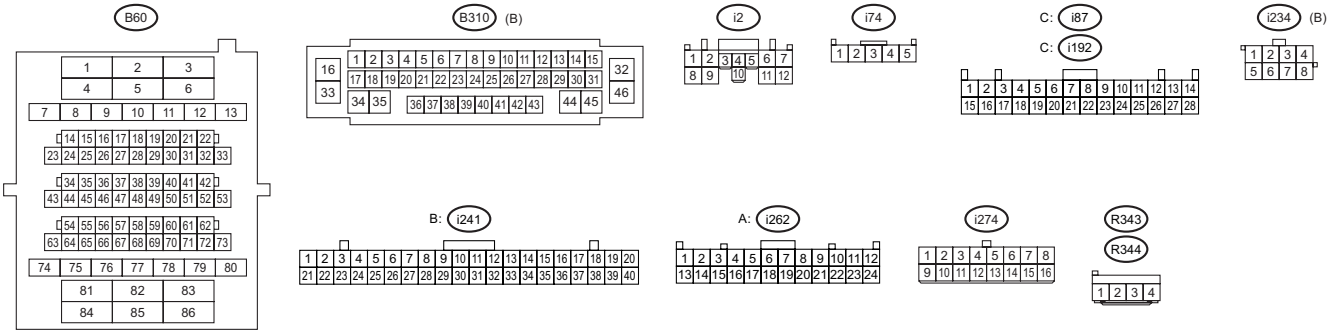

WI-60649

60.Wiper Deicer System

A: WIRING DIAGRAM

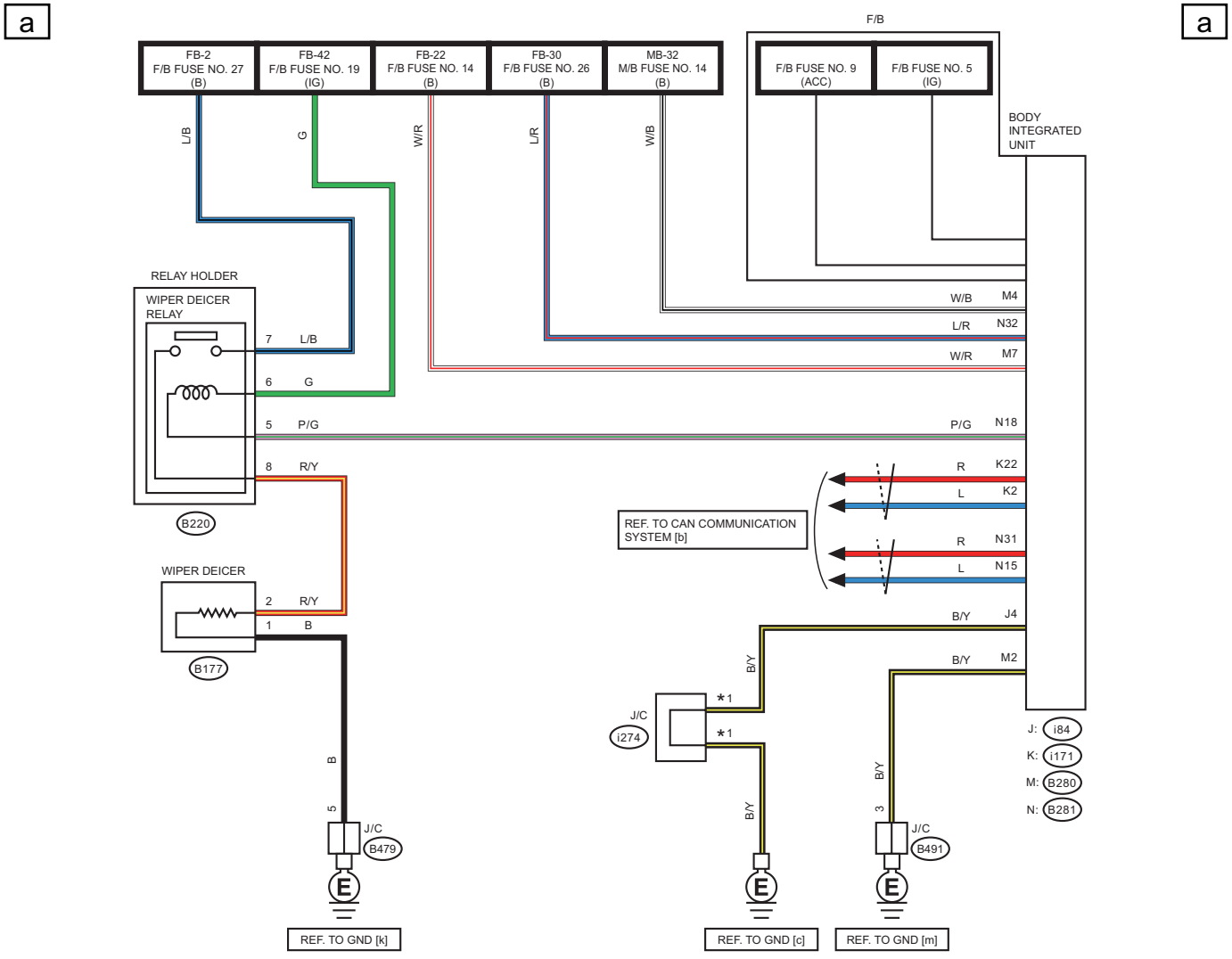

*1 : TERMINAL No. OPTIONAL ARRANGEMENT

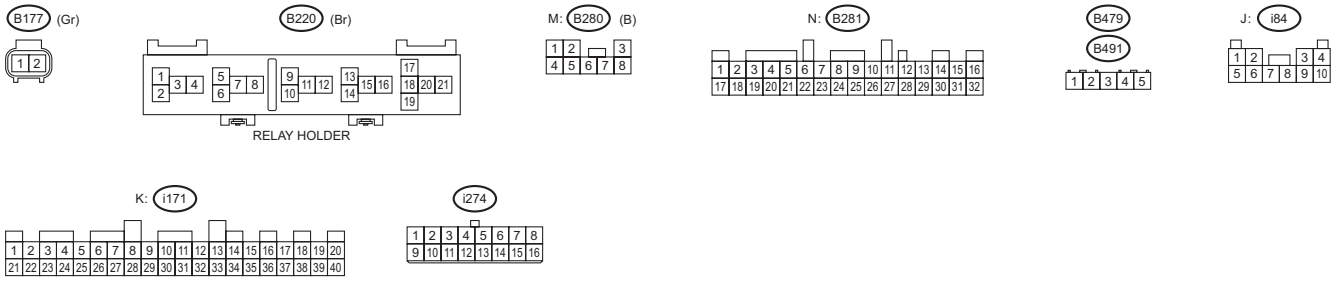

WI-60650

61.Harness Components Location

A: LOCATION

1. SEDAN MODEL

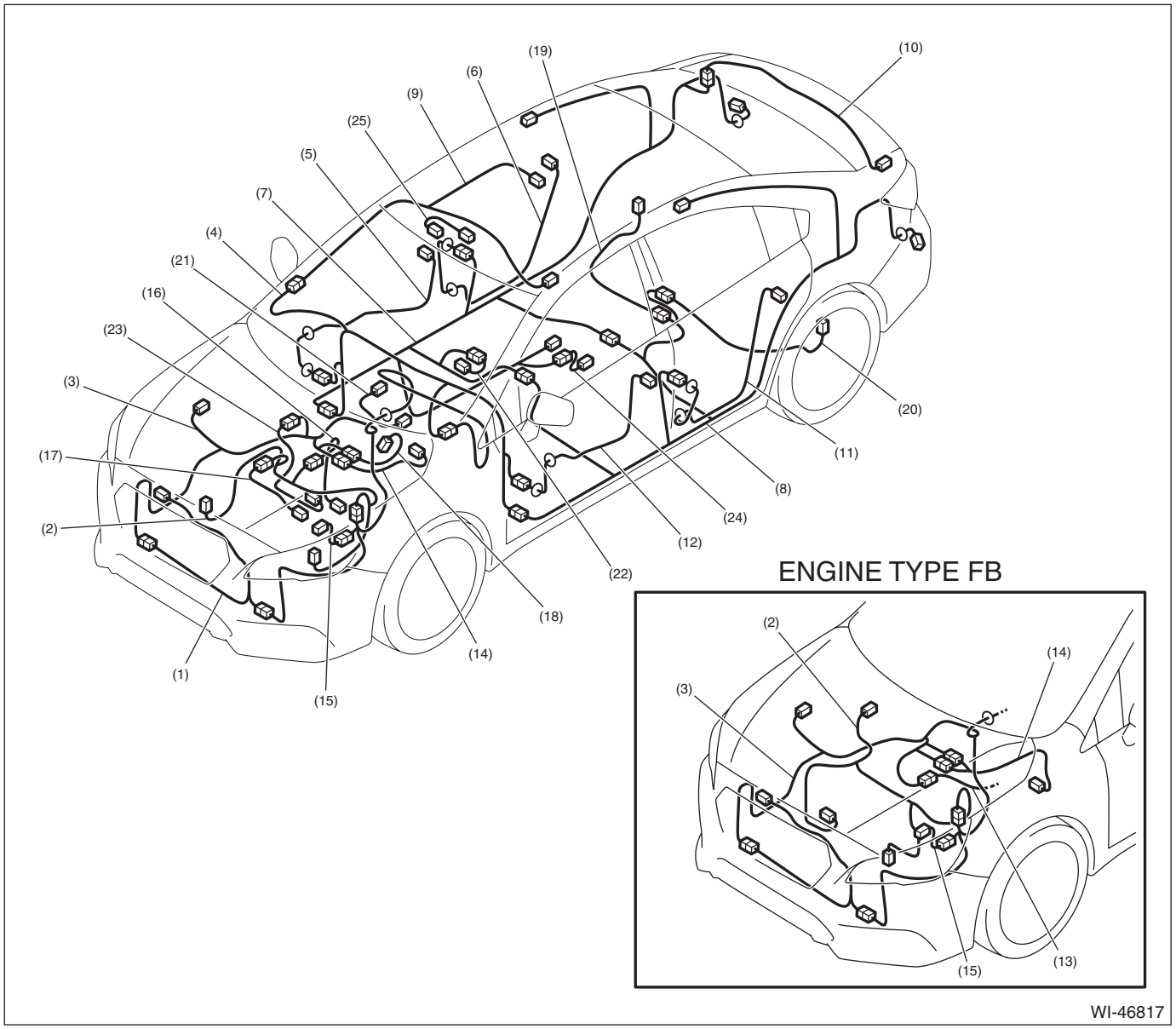

(1)	Front wiring harness	(10)	Trunk lid cord	(18)	Inhibitor harness
(2)	Engine wiring harness	(11)	Rear door cord LH	(19)	Parking brake sub wiring harness RH
(3)	Bulkhead wiring harness	(12)	Front door cord LH	(20)	Parking brake sub wiring harness LH
(4)	Instrument panel wiring harness	(13)	Transmission cord (MT model)	(21)	Adapter cord
(5)	Front door cord RH	(14)	Transmission cord (CVT model)	(22)	Occupant sensor harness
(6)	Rear door cord RH	(15)	Generator cord	(23)	Electrical power steering harness
(7)	Rear wiring harness RH	(16)	Oxygen sensor cord	(24)	Power socket adapter harness
(8)	Rear wiring harness LH	(17)	Engine sub wiring harness	(25)	Spot map light cord
(9)	Roof cord				

2. OUTBACK MODEL

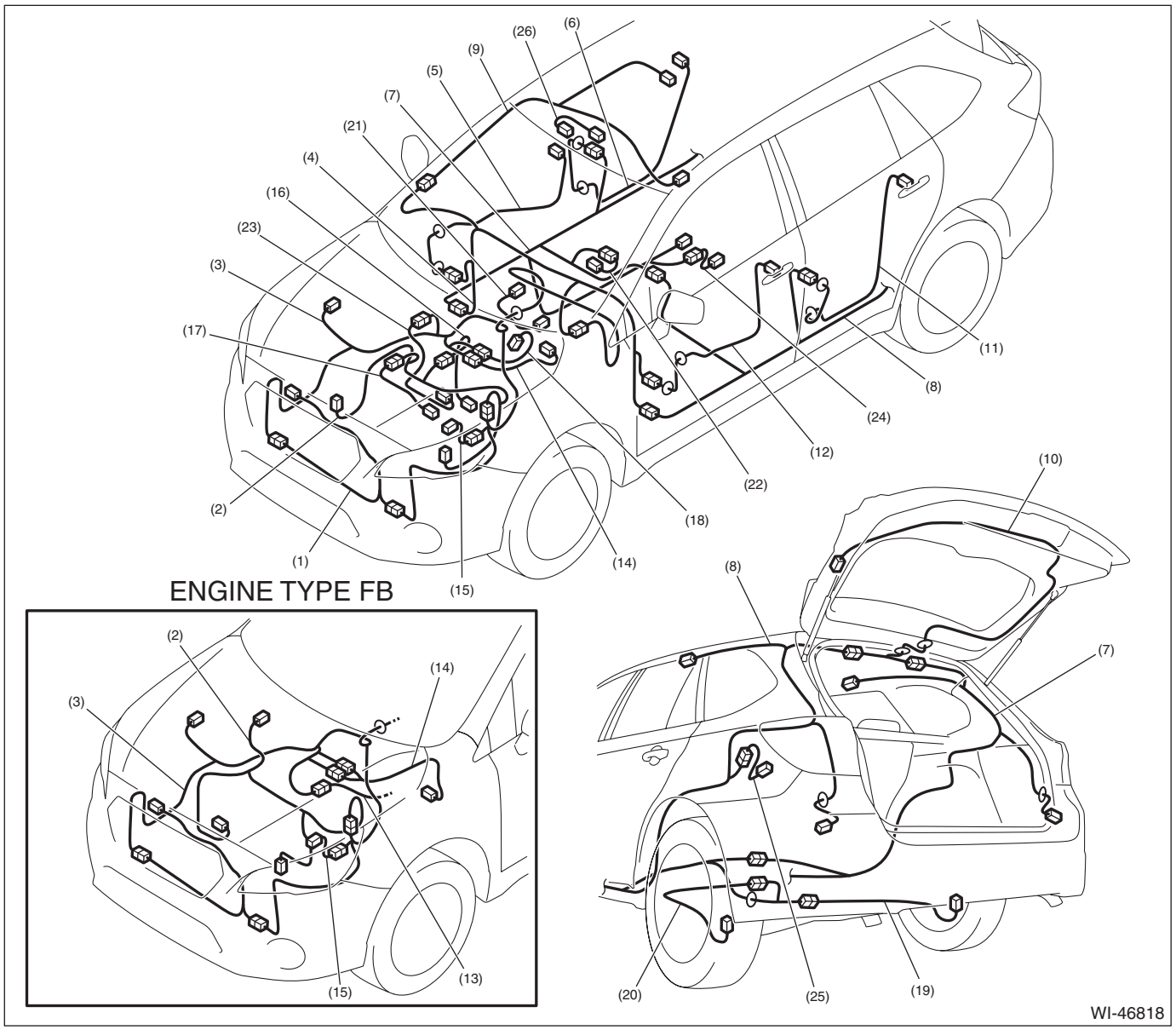

(1)	Front wiring harness	(10)	Rear gate cord	(19)	Parking brake sub wiring harness RH
(2)	Engine wiring harness	(11)	Rear door cord LH	(20)	Parking brake sub wiring harness LH
(3)	Bulkhead wiring harness	(12)	Front door cord LH	(21)	Adapter cord
(4)	Instrument panel wiring harness	(13)	Transmission cord (MT model)	(22)	Occupant sensor harness
(5)	Front door cord RH	(14)	Transmission cord (CVT model)	(23)	Electrical power steering harness
(6)	Rear door cord RH	(15)	Generator cord	(24)	Power socket adapter harness
(7)	Rear wiring harness RH	(16)	Oxygen sensor cord	(25)	Power rear gate drive unit cord
(8)	Rear wiring harness LH	(17)	Engine sub wiring harness	(26)	Spot map light cord
(9)	Roof cord	(18)	Inhibitor harness		

62.Front Wiring Harness

A: LOCATION

Connector				Connecting to	
No.	Pole	Color	Area	No.	Description
F22	3	B	B-1		Radiator fan CM (sub)
F28	2	Gr	C-1	B39	Bulkhead wiring harness
F106	3	B	C-2		Radiator fan CM (main)
F135	4	B	D-3	B504	Bulkhead wiring harness
★:White or natural color					

Front Wiring Harness

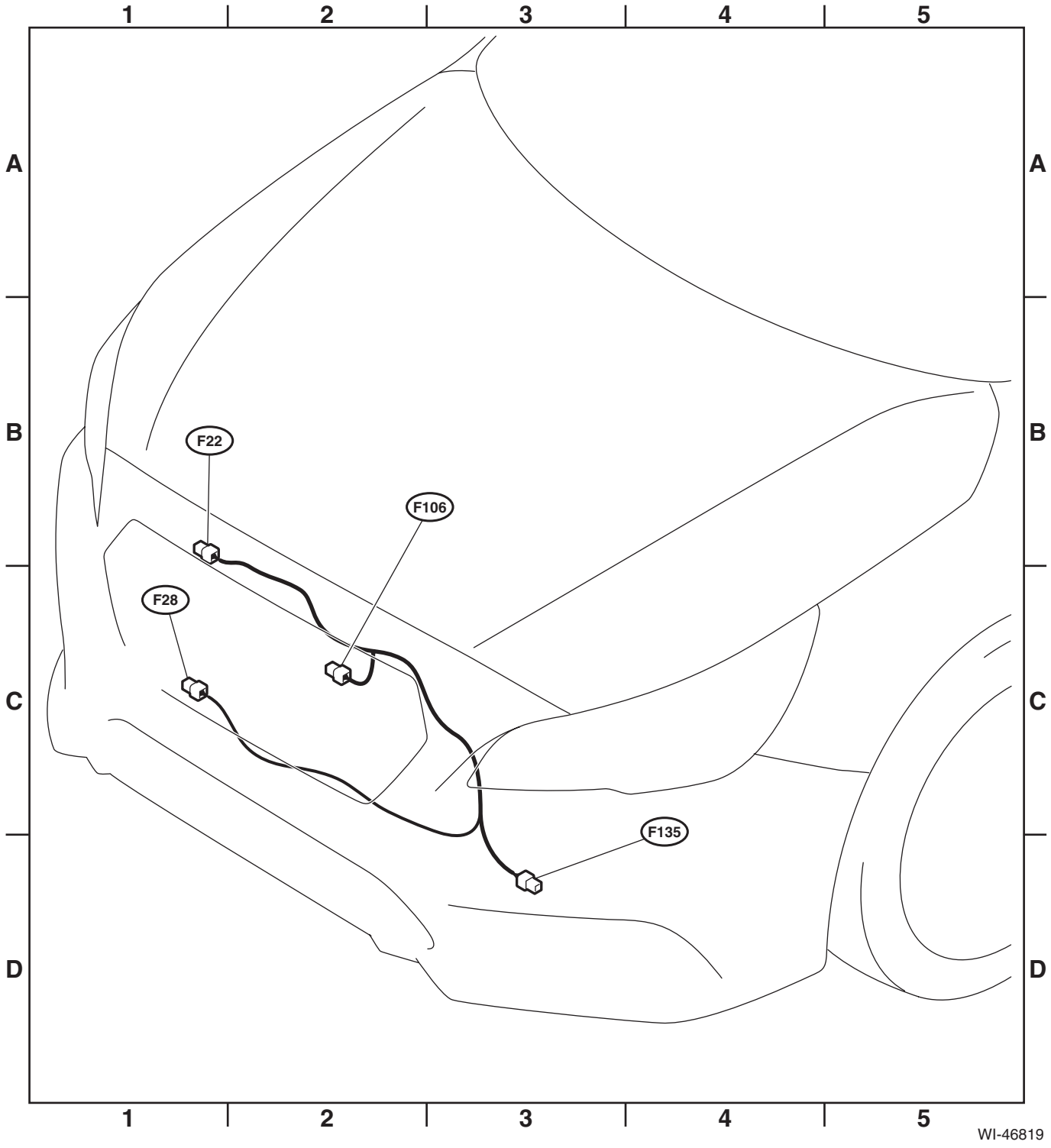

63.Bulkhead Wiring Harness (In Engine Compartment) RH

A: LOCATION

Connector				Connecting to	
No.	Pole	Color	Area	No.	Description
AB16	2	Y	B-1		Front sub sensor RH
B3	5	B	B-2		Mass air flow & intake air temperature sensor
B6	2	Gr	B-3		Front ABS wheel speed sensor RH
B11	16	Gr	B-4	T14	Transmission cord
B12	5	Gr	B-4	T3	Inhibitor switch (engine type FB)
	12	Gr	B-4	T3	Inhibitor switch (engine type EZ)
B22	20	Gr	B-4	T4	Transmission cord
B24	2	Gr	B-4	T1	Back-up light switch (MT model)
B25	2	Br	B-4	T2	Neutral position switch (MT model)
B39	2	Gr	C-1	F28	Front wiring harness
B54	48	B	B-2		TCM
B134	65	B	B-3		ECM
B138	8	B	B-3		J/C
B203	3	Br	B-3	B204	Electrical power steering harness
B204	3	Br	B-3	B203	Bulkhead wiring harness
B205	2	Gr	B-3	B206	Electrical power steering harness
B206	2	Gr	B-3	B205	Bulkhead wiring harness
B310	46	B	B-2		VDC CM
B321	2	B	B-2		Hood switch
B450	10	B	C-3		Power steering CM
B451	4	Gr	C-4		Torque sensor
B452	2	B	C-3		Power steering CM
B480	2	B	C-1		Ambient sensor
B482	2	Gr	C-1		Sub fan motor
B483	5	★	C-2		J/C
B487	8	Gr	B-1		Front combination light RH (halogen model)
	10	Gr	B-1		Front combination light RH (except for halogen model)
B488	2	Br	C-1		Front fog light RH
B489	1	B	C-1		Horn RH
B490	2	B	B-1		Keyless buzzer
B505	3	Gr	B-4		Pressure sensor

★:White or natural color

Bulkhead Wiring Harness (In Engine Compartment) RH

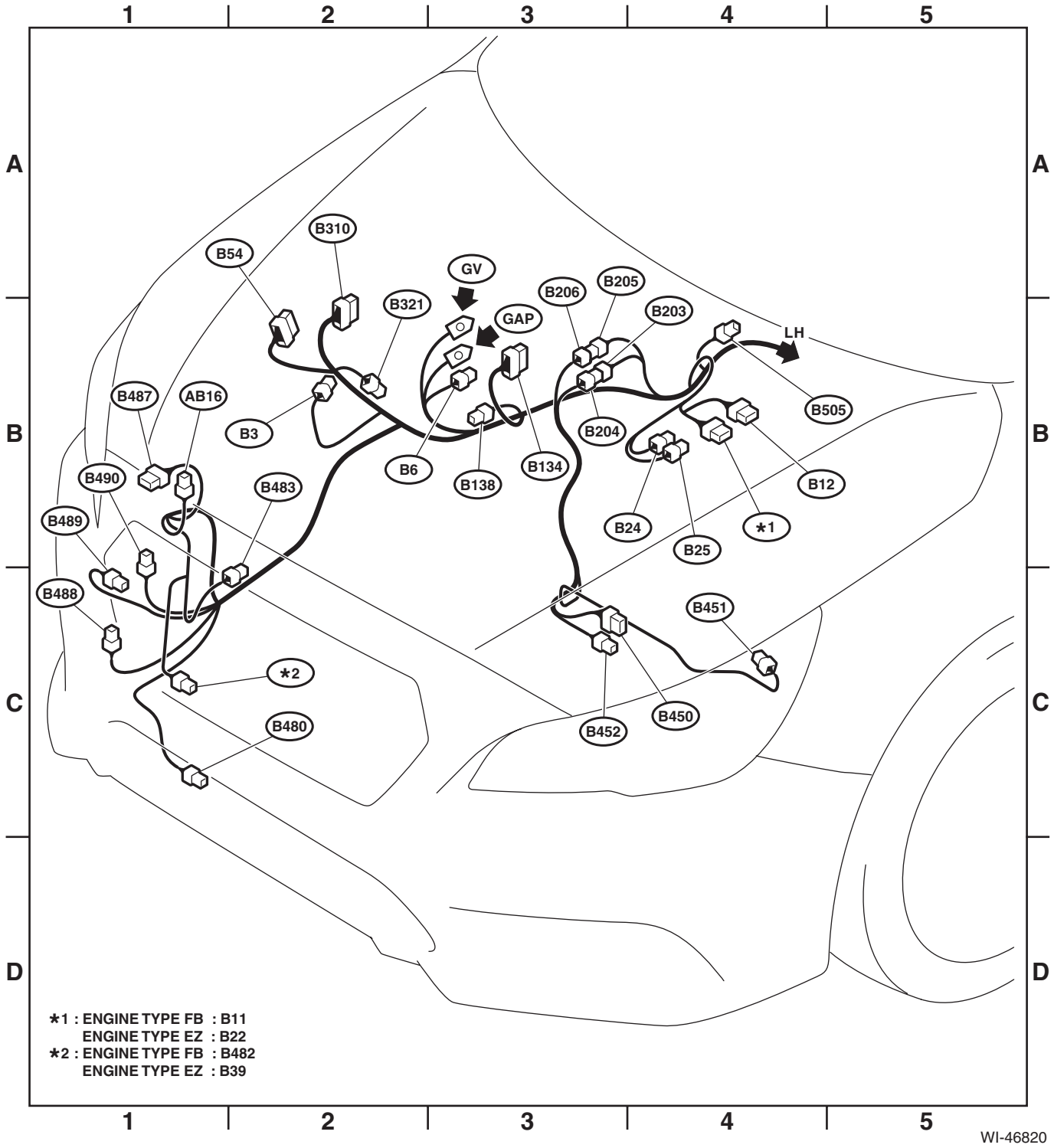

64.Bulkhead Wiring Harness (In Engine Compartment) LH

A: LOCATION

Connector				Connecting to	
No.	Pole	Color	Area	No.	Description
AB13	2	Y	C-3		Front sub sensor LH
B5	3	Gr	D-3		Daytime running light resistor
B8	5	Gr	B-5		Front wiper motor
B9	2	B	C-4	B67	Battery current & temperature sensor
B14	1	B	B-4		Starter motor
B15	2	Gr	C-5		Front ABS wheel speed sensor LH
B16	2	Gr	B-5		Brake fluid level switch
B44	1	B	D-4		Horn LH
B45	12	★	B-4	E9	Short connector
B48	45	B	B-4		Relay holder
B63	4	B	D-3		Active grille shutter
B66	8	B	C-4		Relay holder
B67	2	Gr	C-4	B9	Bulkhead wiring harness
B78	2	B	C-4		Battery sensor
B146	2	Gr	D-4		Front washer motor
B147	2	Gr	D-4		Rear washer motor
B177	2	Gr	B-4		Wiper deicer
B396	2	B	D-4		Washer fluid level sensor
B471	3	B	B-3		Generator
B473	2	Gr	D-3		Main fan motor
B474	2	Br	D-4		Front fog light LH
B477	8	Gr	C-3		Front combination light LH (halogen model)
	10	Gr	C-3		Front combination light LH (except for halogen model)
B478	5	★	C-5		J/C
B479	5	★	B-5		
B504	4	B	D-3	F135	Front wiring harness
B506	2	Gr	C-3		Compressor solenoid (engine type EZ)
	2	Gr	B-3		Compressor solenoid (engine type FB)
B507	3	B	B-3		Flow sensor
B515	1	—	B-3		Generator terminal B

★:White or natural color

Bulkhead Wiring Harness (In Engine Compartment) LH

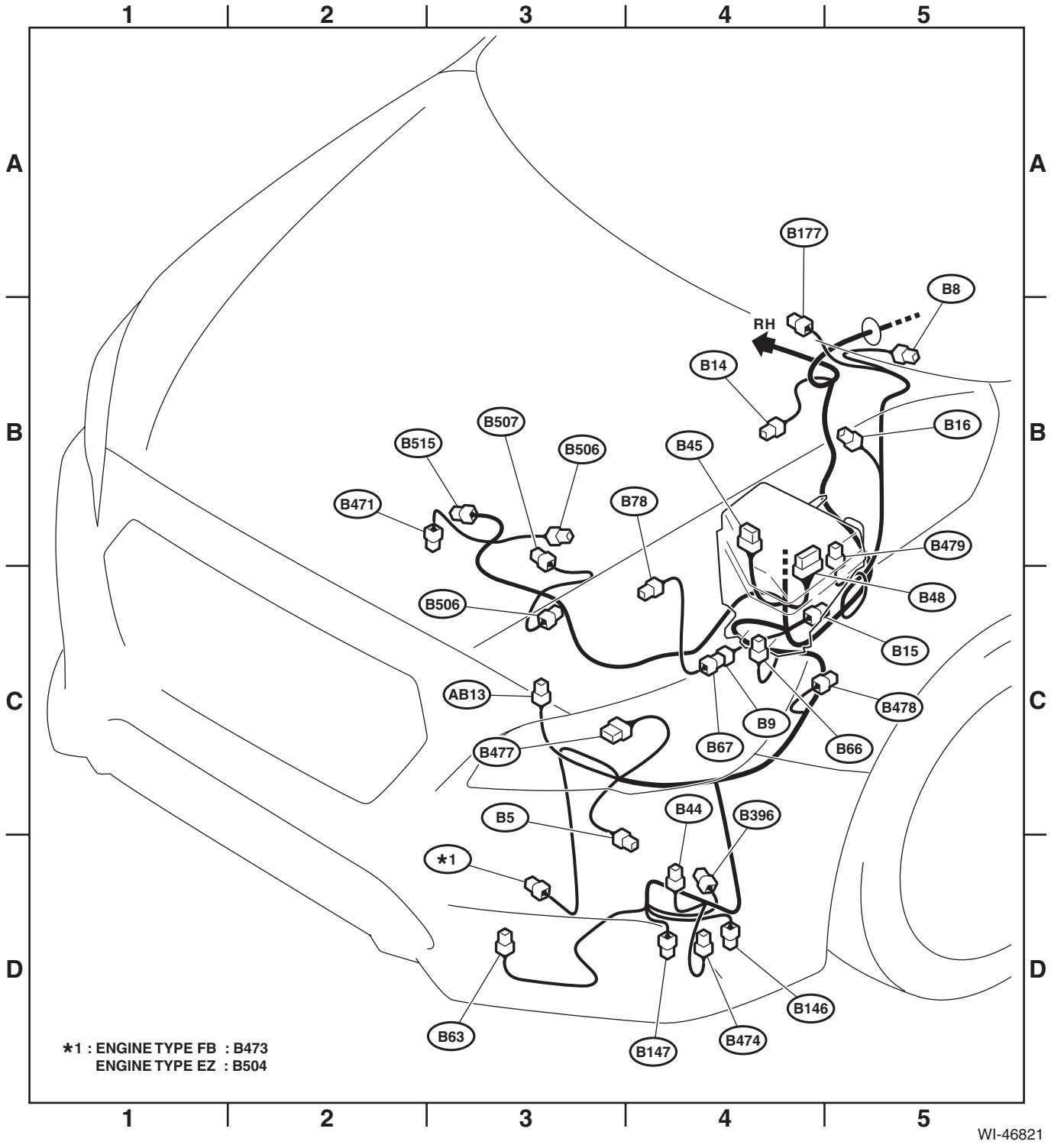

65.Bulkhead Wiring Harness (In Compartment)

A: LOCATION

Connector				Connecting to	
No.	Pole	Color	Area	No.	Description
B40	16	★	C-2		Data link connector
B42	26	★	B-1		SRF CM
B49	6	★	B-2	i115	Instrument panel wiring harness
B52	4	B	C-2		F/B
B56	8	Br	C-2		
B60	86	★	C-2	i112	Instrument panel wiring harness
B65	5	★	B-3		Stop light & brake switch
B107	2	L	B-2		Clutch switch
B150	24	★	B-2		Auto headlight beam leveler CM
B152	4	★	C-2		F/B
B158	20	★	C-2		
B159	4	★	C-2		
B180	4	★	C-1		Remote engine start CM (without push button start)
	8	★	C-1		Remote engine start CM (with push button start)
B181	2	★	C-1	B182	Short connector
B182	2	★	C-2	B181	
B220	21	Br	C-2		Relay holder
B280	8	B	C-2		Body integrated unit
B281	32	★	C-2		
B315	6	B	C-3		Accelerator pedal position sensor
B491	5	★	C-1		J/C
B501	5	★	B-2		Clutch start switch
★:White or natural color					

Bulkhead Wiring Harness (In Compartment)

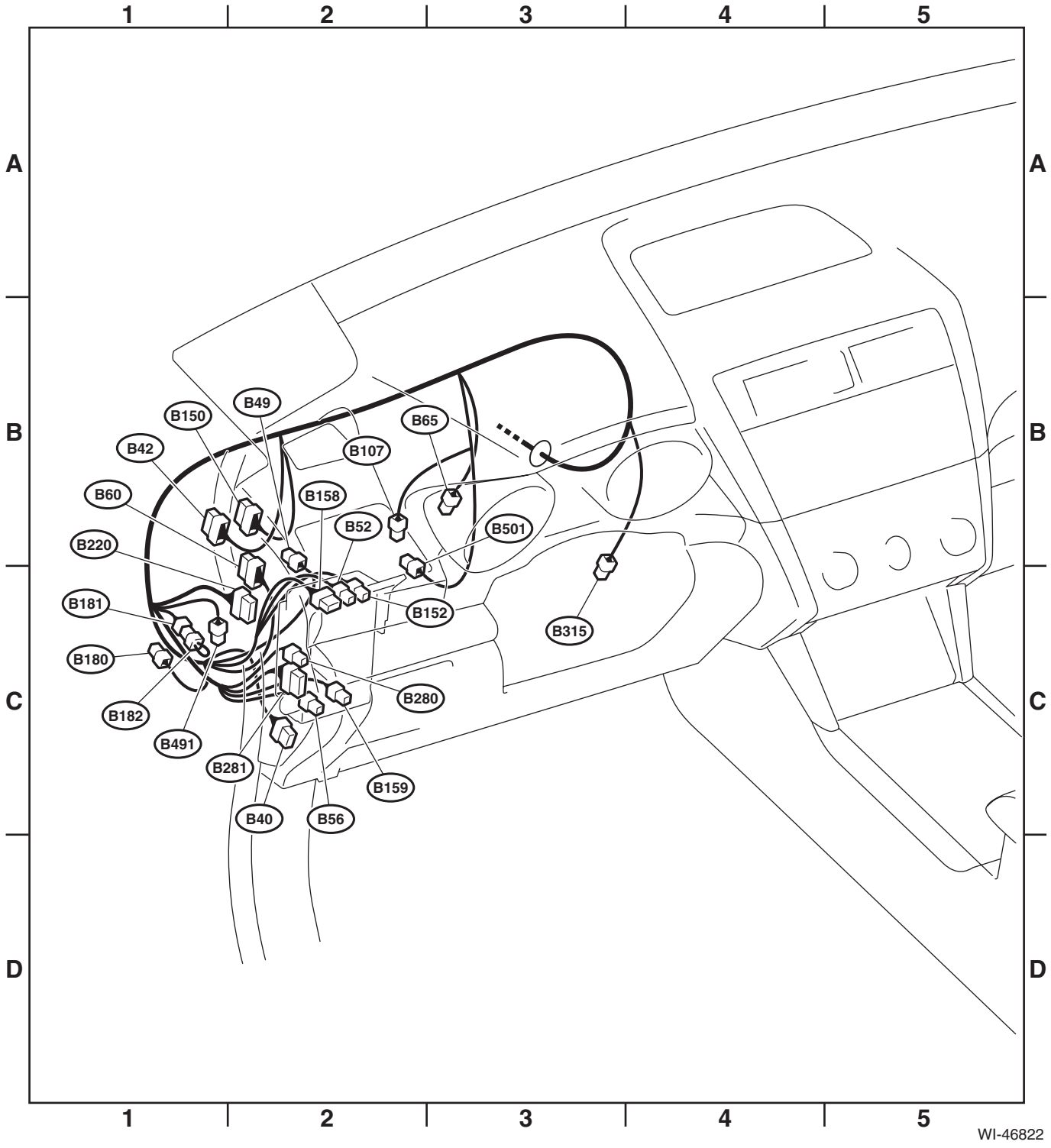

66.Engine Wiring Harness and Transmission Cord

A: LOCATION

1. ENGINE TYPE FB

Connector				Connecting to	
No.	Pole	Color	Area	No.	Description
AT1	3	B	D-5		Primary speed sensor
AT4	3	Gr	D-5		Secondary speed sensor
AT5	3	Gr	D-4		Turbine speed sensor
AT6	3	B	D-5		Secondary pressure sensor
E4	2	L	B-4		Purge control solenoid valve
E5	2	Gr	A-2		Fuel injector No. 1
E6	2	Gr	A-3		Fuel injector No. 3
E8	2	B	B-4		Engine coolant temperature sensor
E9	12	★	B-5	B45	Short connector
E10	2	Gr	B-4		Crankshaft position sensor
E11	1	★	B-3		Oil pressure switch
E14	2	B	B-3		Knock sensor
E16	2	Gr	B-4		Fuel injector No. 2
E17	2	Gr	B-4		Fuel injector No. 4
E18	6	Gr	A-3		EGR control valve
E21	3	B	A-4		Manifold absolute pressure sensor
E24	4	Gr	B-2		Front oxygen (A/F) sensor
E25	4	B	B-2		Rear oxygen sensor
E31	3	B	B-2		Ignition coil No. 1
E32	3	B	B-4		Ignition coil No. 2
E33	3	B	B-3		Ignition coil No. 3
E34	3	B	B-5		Ignition coil No. 4
E35	3	Gr	B-4		Intake camshaft position sensor LH
E36	3	Gr	B-2		Intake camshaft position sensor RH
E37	2	B	B-4		Intake oil control solenoid LH
E38	2	B	B-2		Intake oil control solenoid RH
E51	5	Gr	B-5		Tumble generator valve actuator LH
E55	5	Gr	A-3		Tumble generator valve actuator RH
E57	6	B	A-4		Electronic throttle control
E75	2	B	B-3		Engine oil temperature sensor
E130	1	★	C-3		Oil level switch
E158	65	B	A-3		ECM
T1	2	Gr	C-1	B24	Bulkhead wiring harness
T2	2	Br	C-1	B25	
T3	5	Gr	C-4	B12	
T7	9	B	D-4		Inhibitor switch
T10	48	B	C-4		TCM
T11	10	★	D-4	B31	Control valve body
T14	16	Gr	C-4	B11	Bulkhead wiring harness
★:White or natural color					

Engine Wiring Harness and Transmission Cord

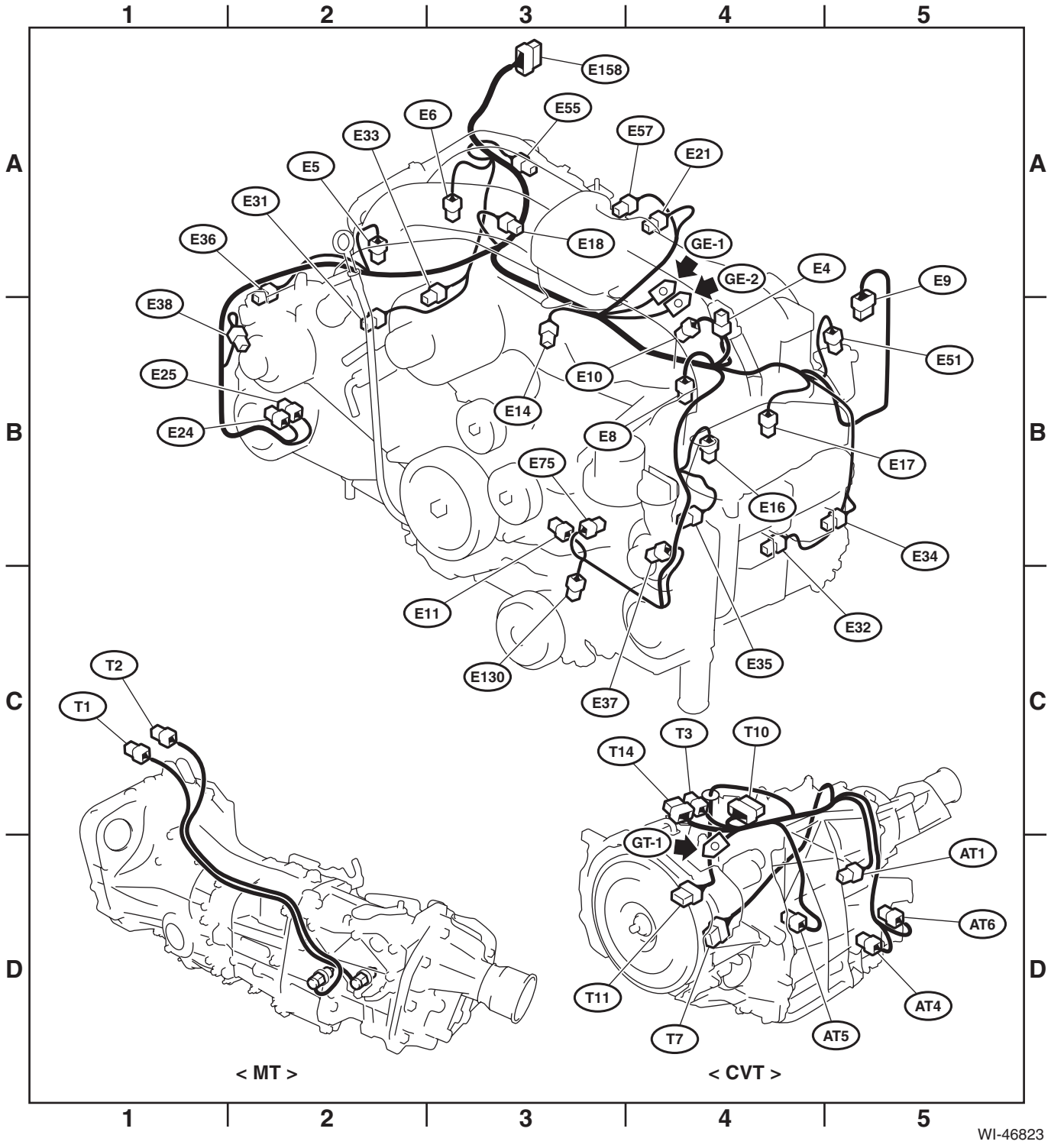

2. ENGINE TYPE EZ

Connector				Connecting to	
No.	Pole	Color	Area	No.	Description
AT1	3	Gr	D-3		Primary speed sensor
AT4	3	B	D-3		Secondary speed sensor
AT5	3	Gr	D-4		Front wheel speed sensor
AT6	3	B	D-2		Secondary pressure sensor
E3	16	Br	D-2	E20	Engine wiring harness
E4	2	L	A-3		Purge control solenoid valve
E5	2	Gr	B-2		Fuel injector No. 1
E6	2	Gr	A-2		Fuel injector No. 3
E8	2	Br	B-3		Engine coolant temperature sensor
E9	12	★	B-4	B45	Short connector
E10	2	Gr	B-4		Crankshaft position sensor
E11	1	★	B-2		Oil pressure switch
E14	2	B	B-3		Knock sensor RH
E16	2	Gr	B-4		Fuel injector No. 2
E17	2	Gr	B-4		Fuel injector No. 4
E18	6	Gr	B-4		EGR control valve
E20	16	Br	A-4	E3	Engine wiring harness
E21	3	B	A-3		Manifold absolute pressure sensor
E24	4	Gr	D-3		Front oxygen (A/F) sensor LH
E25	4	B	D-3		Rear oxygen sensor LH
E31	3	Gr	B-2		Ignition coil No. 1
E32	3	Gr	C-4		Ignition coil No. 2
E33	3	Gr	B-2		Ignition coil No. 3
E34	3	Gr	C-4		Ignition coil No. 4
E35	3	B	B-4		Intake camshaft position sensor LH
E36	3	B	A-3		Intake camshaft position sensor RH
E37	2	L	B-4		Intake oil flow control solenoid valve LH
E38	2	L	A-2		Intake oil flow control solenoid valve RH
E43	2	Gr	A-3		Fuel injector No. 5
E44	2	Gr	B-4		Fuel injector No. 6
E45	3	Gr	B-3		Ignition coil No. 5
E46	3	Gr	B-4		Ignition coil No. 6
E47	4	Gr	D-3		Front oxygen (A/F) sensor RH
E48	2	B	B-4		Knock sensor LH
E57	6	B	A-4		Electronic throttle control
E61	4	B	D-3		Rear oxygen sensor RH
E62	3	Gr	B-2		Exhaust camshaft position sensor RH
E63	2	L	B-2		Exhaust oil flow control solenoid valve RH
E65	3	Gr	C-4		Exhaust camshaft position sensor LH
E66	2	L	C-4		Exhaust oil flow control solenoid valve LH
E75	2	B	B-4		Engine oil temperature sensor
E76	10	Gr	A-3	E77	Engine wiring harness
E77	10	Gr	A-3	E76	
E130	1	★	C-4		Oil level switch
E158	65	B	A-3		ECM
T3	12	B	D-3	B12	Bulkhead wiring harness
T4	20	Gr	D-3	B22	

Connector				Connecting to	
No.	Pole	Color	Area	No.	Description
T7	9	B	D-3		Inhibitor switch
T11	8	★	D-3		Control valve body
★ White or natural color					

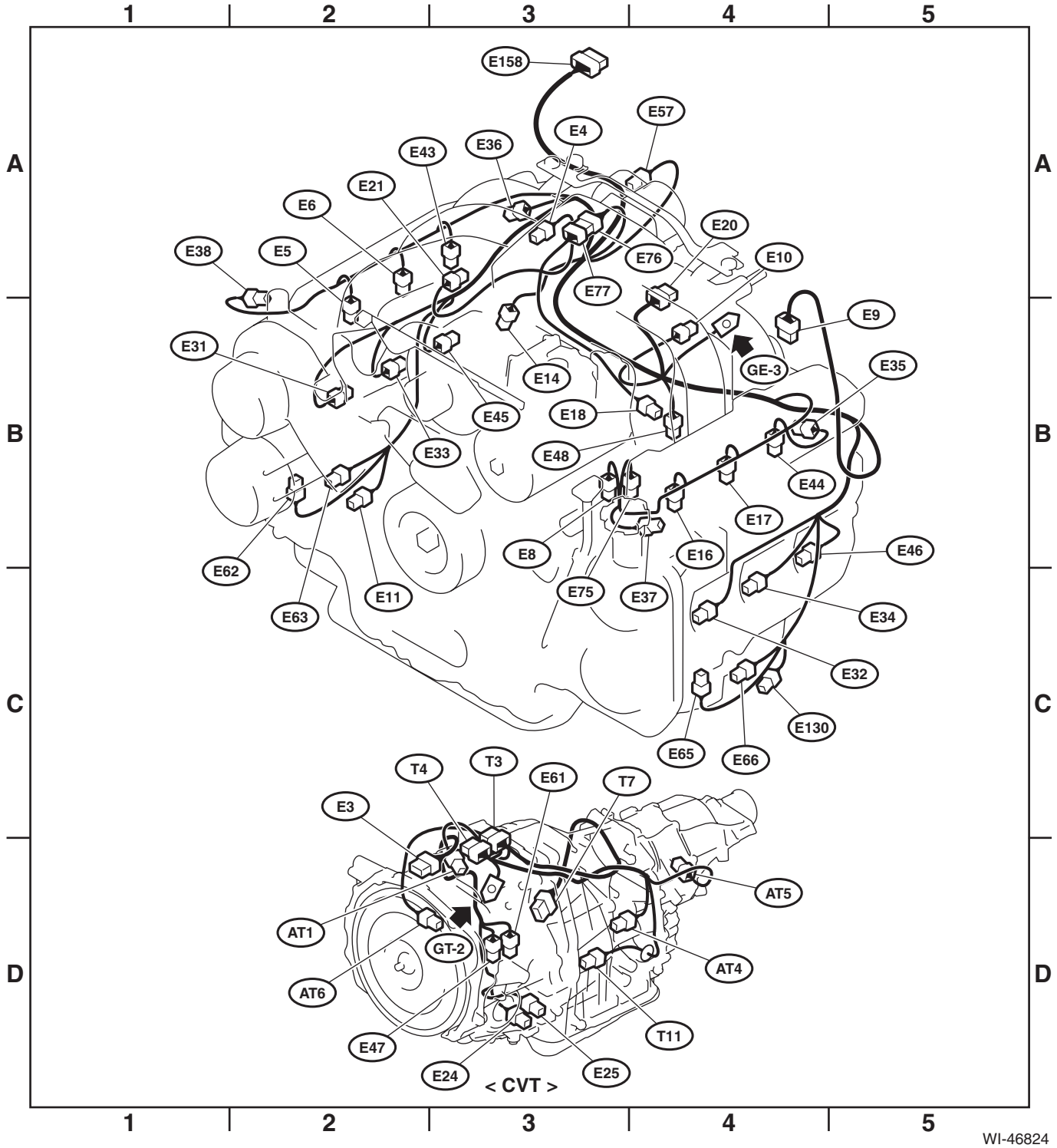

67.Instrument Panel Wiring Harness RH

A: LOCATION

Connector				Connecting to	
No.	Pole	Color	Area	No.	Description
AB1	3	★	D-3	i43	Instrument panel wiring harness
AB6	28	Y	D-3		Airbag CM
AB9	4	Y	B-3		Passenger's airbag module
AD1	2	★	D-3	i46	Instrument panel wiring harness
AD2	2	B	D-3		Rear accessory power supply socket (console) (CVT model)
AD15	4	B	B-2		Audio
	4	B	B-2		Navigation unit
AD16	4	B	C-2		AUX input terminal
i15	6	★	B-2		Blower fan switch
i19	14	Gr	A-4	R96	Roof cord
i20	12	L	B-4	R88	Rear wiring harness RH
i22	4	★	B-2		Hazard switch
i23	2	★	B-3		Glove box light
i24	2	B	C-2		Front accessory power supply socket
i29	1	B	B-2		Audio bracket ground (except 6.2 inch type)
	1	B	D-5		Audio bracket ground (6.2 inch type)
i33	5	★	A-3		ID code box
i34	16	★	A-3		Immobilizer CM
i35	10	★	B-2		Audio
	10	★	B-2		Navigation unit
i36	6	★	B-2		Audio
	6	★	B-2		Navigation unit
i37	2	★	A-1		Center tweeter
i38	4	★	B-3		J/C
i43	3	★	D-3	AB1	Airbag wiring harness
i44	8	★	C-2		Select lever
i46	2	B	D-3		Rear accessory power supply socket (console) (MT model)
	2	★	D-3	AD1	Power socket adapter harness
i51	2	★	A-1		Sunload sensor
i53	4	★	B-4	R98	Rear wiring harness RH
i57	18	★	A-4	R50	Roof cord
i70	4	★	D-2		X MODE switch
i71	3	★	C-2		Keyless access interior antenna (front)
i76	46	★	B-4	D83	Front door cord RH
i80	26	★	B-3		A/C CM
i85	10	★	D-5		Audio
	10	★	D-5		Navigation unit
i87	28	★	B-2		Audio
	28	★	B-2		Navigation unit
i88	16	★	B-2		A/C control panel
i89	3	★	A-2		Auto light sensor
i131	6	★	D-5		Audio
	6	★	D-5		Navigation unit
i146	5	★	B-2		Audio
	5	★	B-2		Navigation unit
i149	8	★	C-2		AUX input terminal

Connector				Connecting to	
No.	Pole	Color	Area	No.	Description
i153	12	Gr	B-4	R331	Rear wiring harness RH
i154	18	Gr	B-4	R332	
i155	12	B	B-4	R333	
i156	4	Gr	C-3		Hill hold switch (MT model)
	4	Gr	D-2		Hill hold switch (CVT model)
i159	4	★	A-3		Side tweeter RH
i163	12	★	C-2		EPB control switch (MT model)
	12	★	D-2		EPB control switch (CVT model)
i175	7	G	B-2		Air mix door actuator RH
i177	7	G	C-2		Rear vent actuator
i181	24	★	B-3		A/C CM
i182	4	★	B-3		Blower resistor
i183	5	★	B-3		Power transistor
i184	4	Br	B-3		Blower motor relay
i185	2	★	B-3		Blower motor
i186	4	G	B-4		Intake door actuator
i188	8	★	B-4		Impact sensor
i192	28	★	D-5		Audio
i259	2	★	C-2		Pocket light
i262	24	★	D-4		Audio amplifier
i270	20	Gr	B-2		Data communication module
i271	16	Gr	B-2		
i272	8	★	B-2		Audio
	8	★	B-2		Navigation unit
i273	16	★	B-3		J/C
i275	16	★	C-2		

★ White or natural color

Instrument Panel Wiring Harness RH

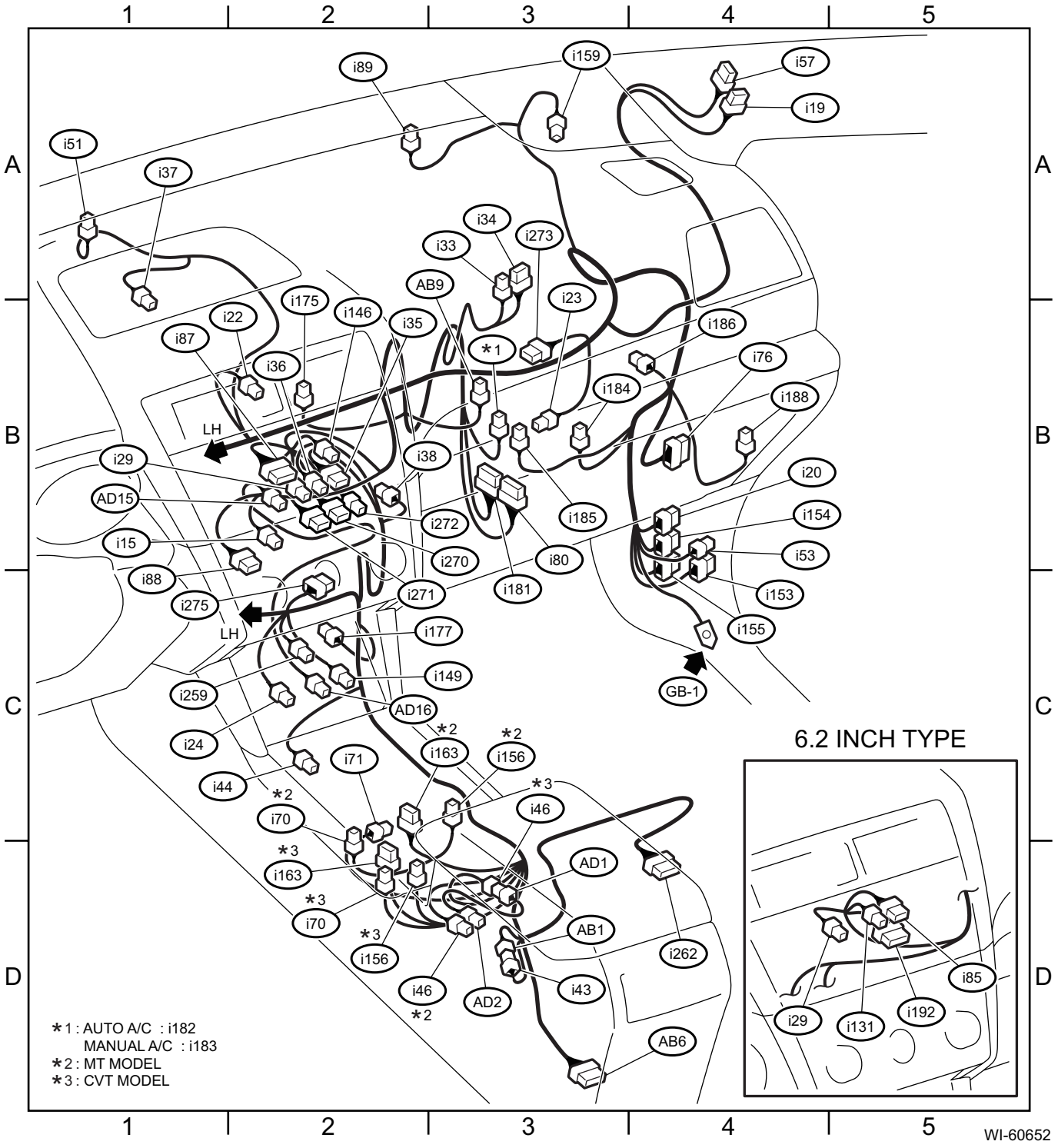

68.Instrument Panel Wiring Harness LH

A: LOCATION

Connector				Connecting to	
No.	Pole	Color	Area	No.	Description
AB2	4	Y	C-4	AB7	Driver's airbag module
AB35	2	★	C-2		F/B
i2	12	★	C-1	R339	Rear wiring harness LH
i5	16	L	C-2		F/B
i10	40	B	B-3		Combination meter
i28	8	★	C-2		OP connector (fog light switch)
i47	7	B	C-4		Steering lock CM
i52	2	B	C-4		Key lock solenoid (without push button start)
i54	18	Gr	D-1	R99	Rear wiring harness LH
i58	8	★	C-4		Ignition switch (without push button start)
i60	7	B	C-4		Immobilizer antenna (without push button start)
i63	2	★	C-4		Key warning switch
i68	7	★	C-4		Combination switch
i69	10	★	C-4		
i72	14	★	C-4	ST1	Roll connector
i73	20	★	C-4		Combination switch
i74	5	★	C-4		Steering angle sensor
i75	24	★	B-3		Keyless access CM
i79	6	★	C-2		Illumination control switch
i81	32	B	C-2		Body integrated unit
i84	10	★	C-2		
i92	4	Gr	C-2		SRF OFF switch
i93	4	★	C-2		Memory height switch
i94	8	Gr	C-2		BSD/RCTA OFF switch
i95	8	L	C-2		Lane departure warning OFF switch (with EyeSight)
i101	46	★	C-2	D84	Front door cord LH
i102	12	B	D-1	R167	Rear wiring harness LH
i104	8	G	C-2		Pre-collision brake OFF switch (with EyeSight)
i112	84	★	C-2	B60	Bulkhead wiring harness
i115	6	Y	C-2	B49	
i128	6	★	D-2	R40	Rear wiring harness LH
i135	18	L	D-2	R48	
i136	40	Gr	C-2		F/B
i137	12	Br	C-2		
i150	14	B	B-4		Push button ignition switch
i158	4	★	B-2		Side tweeter LH
i171	40	★	C-2		Body integrated unit
i172	2	★	B-3		Evaporator sensor
i173	2	★	C-4		In-vehicle sensor
i174	7G	G	B-3		Air mix door actuator LH (auto A/C)
	7	G	B-3		Air mix door actuator (manual A/C)
i176	5	G	B-3		Mode door actuator
i234	8	B	C-2		VDC OFF switch
i241	40	★	B-3		Keyless access CM
i258	4	Gr	C-2		Lower cover switch (trunk lid opener) (sedan model)
	4	Gr	C-2		Power rear gate driver's switch

Instrument Panel Wiring Harness LH

Connector				Connecting to	
No.	Pole	Color	Area	No.	Description
i265	8	★	C-2		F/B
i266	12	★	C-2		
i274	16	★	B-4		J/C
i276	10	★	B-2		Adapter code
★:White or natural color					

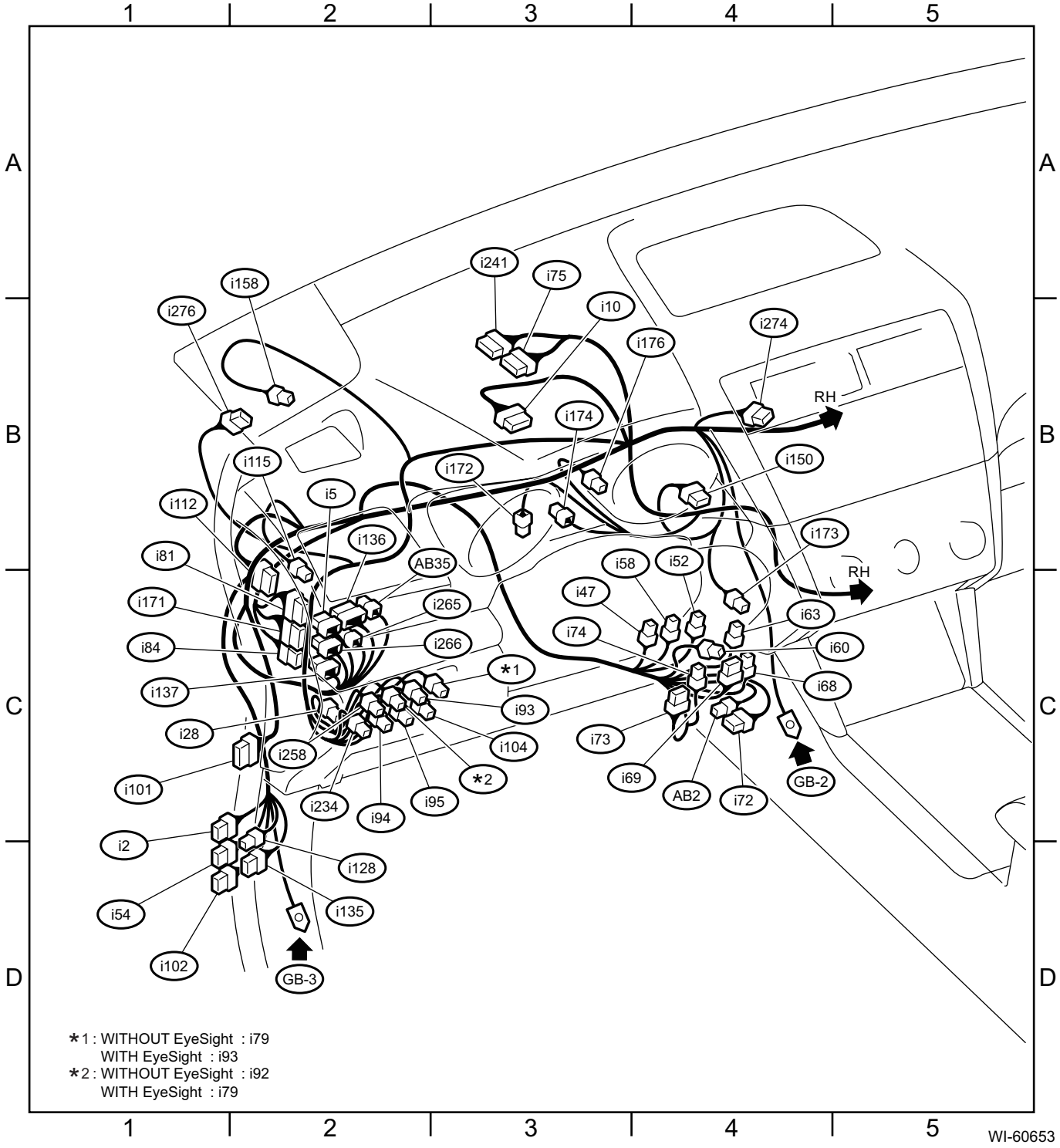

69.Roof Cord

A: LOCATION

Connector				Connecting to	
No.	Pole	Color	Area	No.	Description
R50	18	★	C-1	i57	Instrument panel wiring harness
R51	2	B	B-2		Vanity mirror light RH
R52	3	★	B-4		Room light
R54	2	B	C-4		Vanity mirror light LH
R96	14	Gr	C-1	i19	Instrument panel wiring harness
R125	12	★	B-3		Sunroof unit
R128	5	★	B-3		Sunroof switch
R137	16	★	B-3		Stereo camera
R139	5	★	B-3		Rearview mirror
R160	10	★	B-3	R353	Roof cord
R161	4	Gr	B-3		Warning box
R187	5	B	B-3		Sunroof switch (tilt)
R353	10	★	B-3	R160	Spot map light cord
R416	10	B	C-3		Rearview mirror
★:White or natural color					

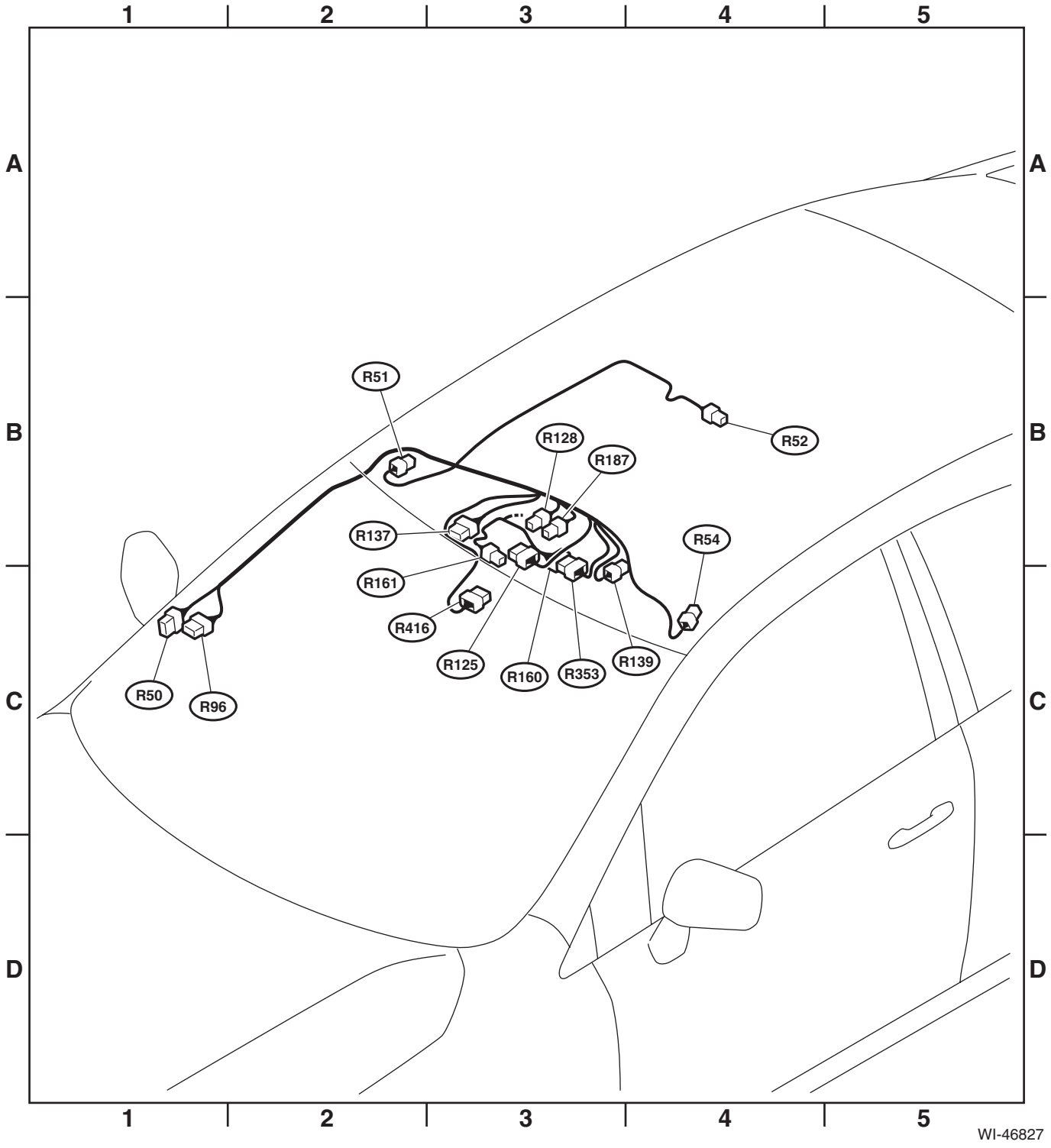
1
2
3
4
5
A
B
C
D
R51
R52
R128
R187
R137
R54
R161
R416
R125
R160
R353
R139
R50
R96
WI-46827

70.Rear Wiring Harness RH

A: LOCATION

Connector				Connecting to	
No.	Pole	Color	Area	No.	Description
AB18	22	Y	C-4		Airbag CM
AB22	2	Y	C-3		Seat cushion airbag module RH
AB24	2	Y	C-3		Side airbag module RH
AB26	2	B	B-3		Pretensioner RH
AB28	4	Y	B-3		Side airbag sensor RH
AB53	6	B	C-4	AB59	Occupant detection wiring harness
AB59	6	B	C-4	AB53	Rear wiring harness RH
AB60	2	Y	C-3		Buckle switch
AB61	6	B	C-4		Occupant detection CM
R12	4	★	B-3		Front door switch RH
R13	8	★	B-3	D28	Rear door cord RH
R44	4	★	C-3		Seat heater RH
R71	4	★	B-3		J/C
R82	20	★	C-4	R81	Rear wiring harness LH
R88	12	L	C-1	i20	Instrument panel wiring harness
R98	4	★	C-1	i53	
R124	2	Y	C-1	AB63	Airbag wiring harness
R138	13	★	C-4		Rear seat heater switch
R316	30	★	C-3		Audio amplifier
R331	12	Gr	C-1	i153	Instrument panel wiring harness
R332	18	Gr	C-1	i154	
R333	12	B	C-1	i155	
R334	14	★	C-3	R199	Power seat RH
★:White or natural color					

Rear Wiring Harness RH

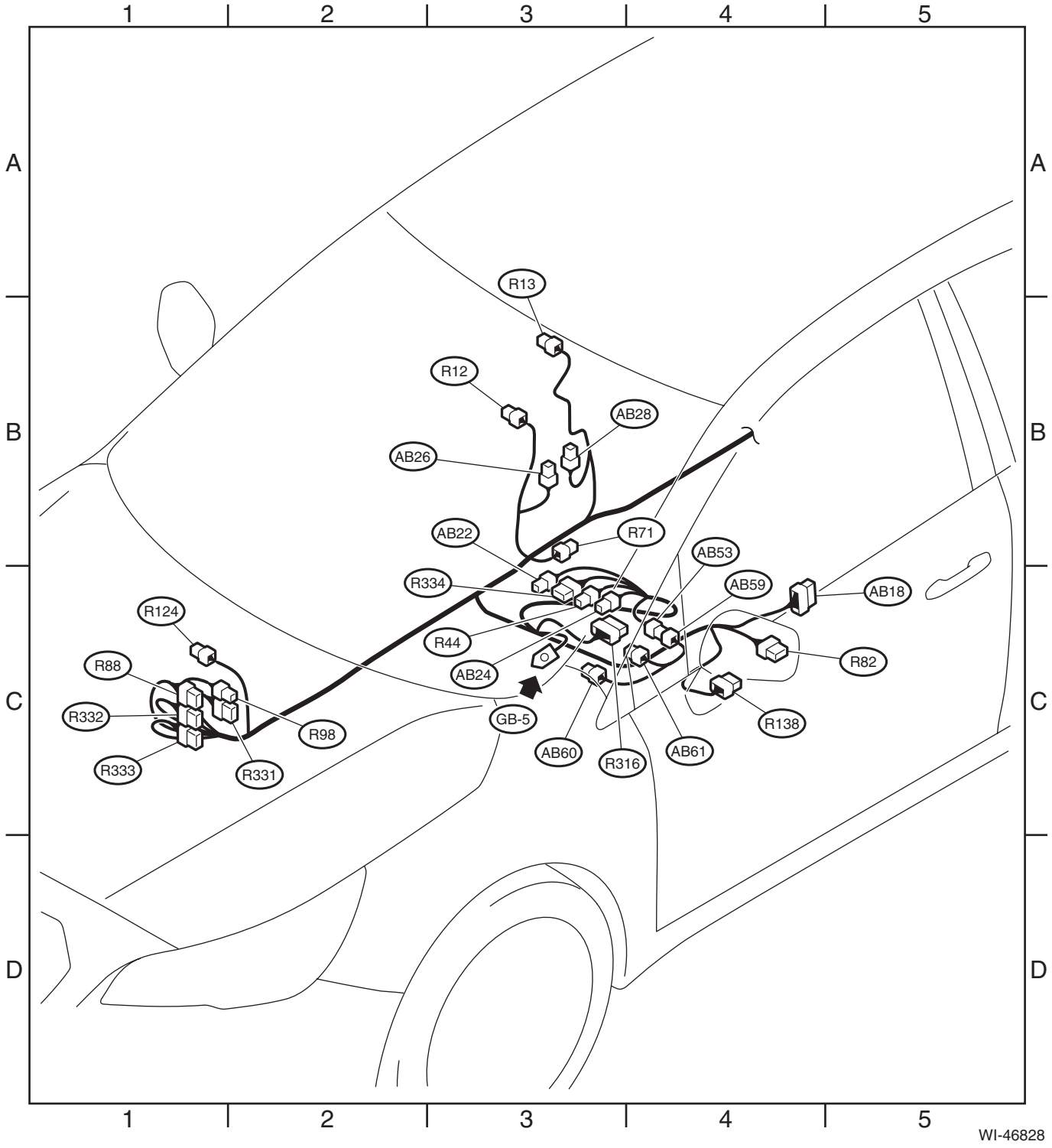

71.Rear Wiring Harness LH

A: LOCATION

Connector				Connecting to	
No.	Pole	Color	Area	No.	Description
AB5	2	Y	C-3		Seat cushion airbag module LH
AB17	22	Y	B-3		Airbag CM
AB19	2	Y	C-3		Side airbag module LH
AB21	2	B	C-4		Pretensioner LH
AB23	4	Y	B-4		Side airbag sensor LH
R9	4	★	B-4		Front door switch LH
R10	8	★	B-4	D22	Rear door cord LH
R40	6	★	C-2	i128	Instrument panel wiring harness
R48	18	L	C-2	i135	
R81	20	★	B-3	R82	Rear wiring harness RH
R99	18	Gr	C-2	i54	Instrument panel wiring harness
R108	2	B	C-3		Seat belt switch LH
R123	2	Y	C-2	AB62	Airbag wiring harness
R167	12	B	C-2	i102	Instrument panel wiring harness
R339	12	★	C-2	i2	
R341	14	★	C-3	R205	Power seat LH
★:White or natural color					

Rear Wiring Harness LH



72.Door Cord RH

A: LOCATION

Connector				Connecting to	
No.	Pole	Color	Area	No.	Description
AB63	2	★	D-1	R124	Rear wiring harness RH
AB64	2	B	C-2		Front door impact sensor RH
D2	2	★	C-2		Front door speaker RH
D13	6	Gr	C-2		Front power window motor RH
D15	13	★	C-1		Outer mirror assy RH
D17	8	★	C-2		Front power window sub-switch
D18	10	★	B-3		Front door lock actuator RH
D20	2	Gr	C-2		Door step light RH
D28	8	★	B-3	R13	Rear wiring harness RH
D29	2	★	C-3		Rear door speaker RH
D30	6	L	B-4		Rear power window motor RH
D31	8	★	B-3		Rear power window switch RH
D32	10	★	B-4		Rear door lock actuator RH
D41	2	★	C-2		Door pocket light RH
D42	4	★	C-2		J/C
D56	6	Gr	B-2		Outer handle RH
D83	46	★	C-1	i76	Instrument panel wiring harness
D125	5	★	C-2		Passenger's door lock switch
★:White or natural color					

Door Cord RH

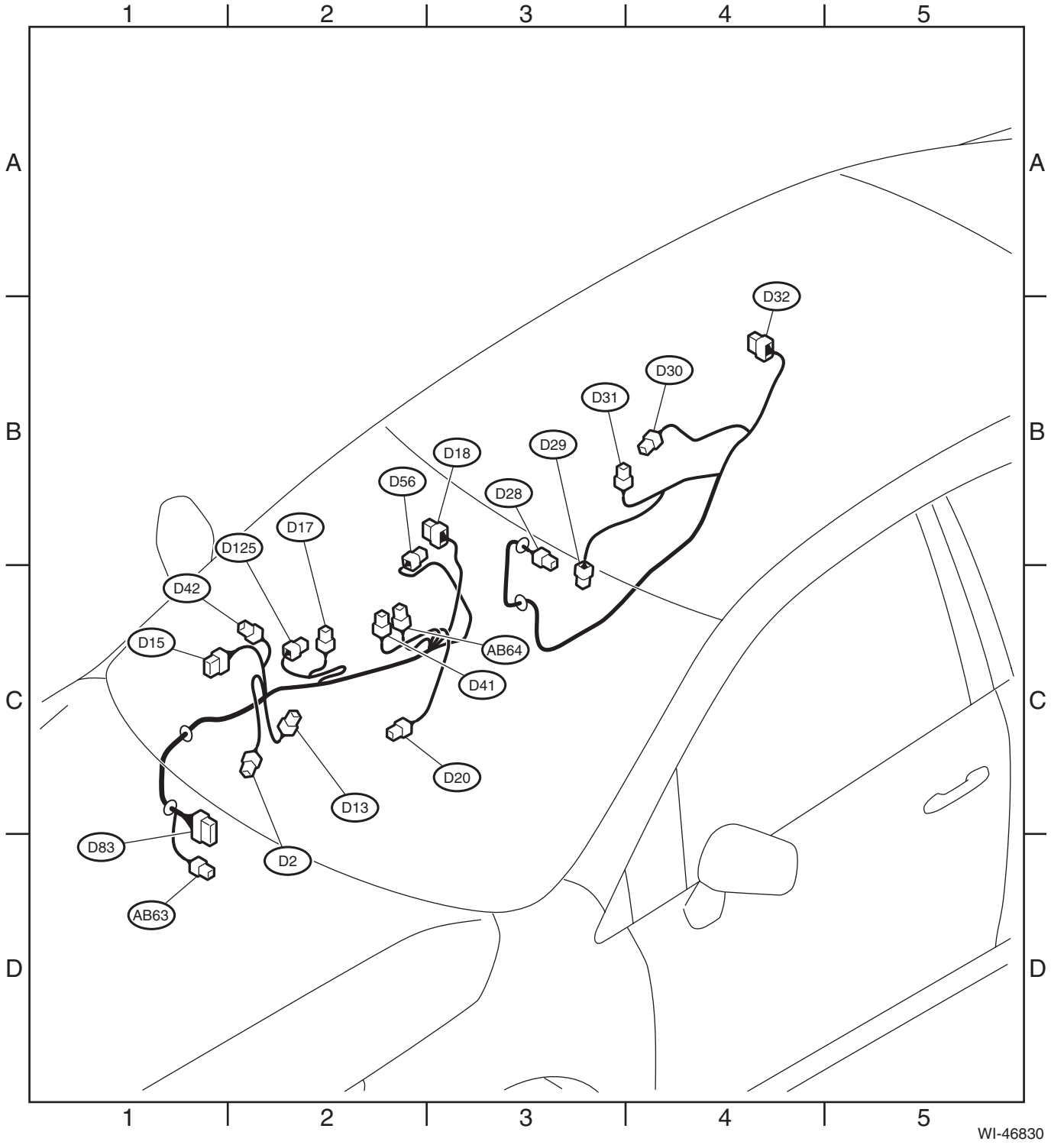
1
2
3
4
5
A
B
C
D
D32
D30
D31
D29
D18
D56
D28
D17
D125
D42
D15
AB64
D41
D20
D13
D83
D2
AB63
WI-46830

73.Door Cord LH

A: LOCATION

Connector				Connecting to	
No.	Pole	Color	Area	No.	Description
AB58	2	★	C-3		Front door impact sensor LH
AB62	2	Y	D-1	R123	Rear wiring harness LH
D3	6	Gr	C-2		Front power window motor LH
D5	13	★	C-2		Outer mirror assy LH
D7	16	★	C-2		Power window main switch
D10	2	Gr	C-3		Door step light LH
D12	2	★	D-2		Front door speaker LH
D19	2	★	C-3		Door pocket light LH
D22	8	★	B-3	R10	Rear wiring harness LH
D23	2	★	C-4		Rear door speaker LH
D24	6	L	B-4		Rear power window motor LH
D25	8	★	B-4		Rear power window switch LH
D26	10	★	B-5		Rear door lock actuator LH
D38	4	★	C-2		J/C
D66	6	Gr	C-3		Outer handle LH
D72	10	★	C-3		Front door lock actuator LH
D84	46	★	C-1	i101	Instrument panel wiring harness
D102	3	★	C-2		Power window main switch
D143	8	★	C-2		Seat position memory switch
D149	16	★	C-2		Remote control mirror switch
★:White or natural color					

Door Cord LH

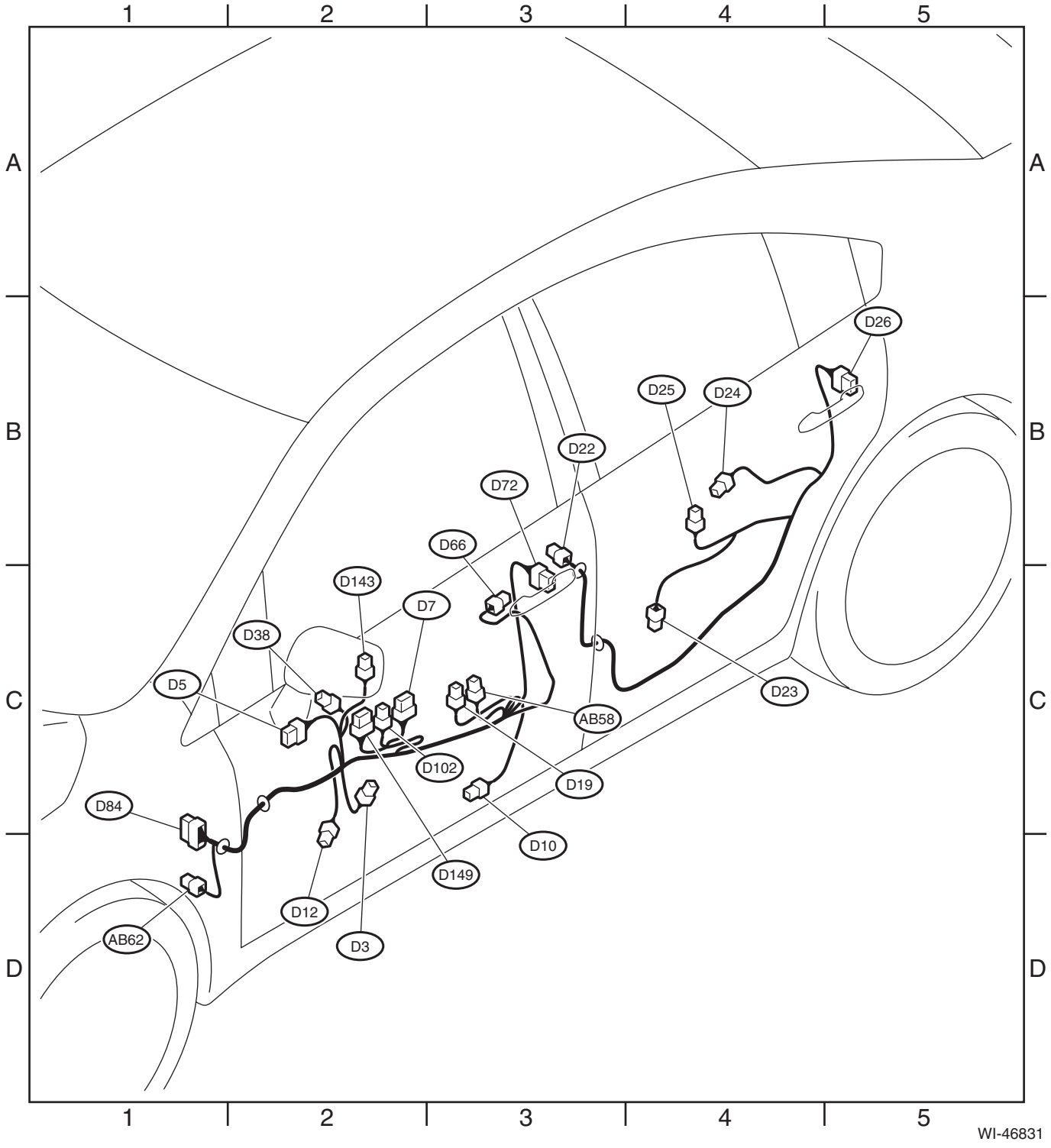
1
2
3
4
5
A
B
C
D
D26
D25
D24
D22
D72
D66
D143
D7
D38
D5
D23
AB58
D102
D19
D84
D10
D149
D12
AB62
D3
WI-46831

74.Rear Wiring Harness and Trunk Lid Cord

A: LOCATION

Connector				Connecting to	
No.	Pole	Color	Area	No.	Description
AB31	2	B	B-1		Curtain airbag module LH
AB32	4	Y	C-1		Curtain airbag sensor LH
AB33	2	B	A-3		Curtain airbag module RH
AB34	4	Y	B-3		Curtain airbag sensor RH
AB56	3	Br	B-2		Belt tension sensor
R16	4	★	B-4		Rear door switch RH
R19	2	★	C-2		High-mounted stop light
R20	2	Gr	B-4		Trunk room light
R22	4	★	C-2		Rear door switch LH
R24	13	★	B-5	R60	Trunk lid cord
R25	10	B	D-3		Radar sensor LH (master)
R26	4	★	B-5		Rear combination light RH
R27	4	★	C-2		Rear seat heater LH (backrest)
R28	4	★	C-3		Rear combination light LH
R29	3	B	C-3		Rear vehicle height sensor
R31	4	★	B-2	R136	Rear wiring harness RH
R35	2	Gr	C-2	R149	EPB adapter cord LH
R36	3	B	C-2	R140	EPB adapter cord RH
R49	14	★	B-4		Rear seat heater CM
R53	16	★	B-4		
R58	6	Gr	C-3		Fuel pump assy
R59	2	★	C-2		Fuel sub level sensor
R60	13	★	B-5	R24	Rear wiring harness RH
R61	10	B	C-5		Radar sensor RH (slave)
R63	4	★	C-3		Rear seat heater RH (backrest)
R65	1	★	C-3		Rear defogger
R66	2	★	C-5		High-mounted stop light (with rear spoiler)
R70	4	★	B-3		Rear seat heater (seat cushion)
R72	2	Gr	C-4		Rear ABS wheel speed sensor RH
R73	2	Gr	C-2		Rear ABS wheel speed sensor LH
R76	2	★	C-4		License plate light LH
R77	2	★	C-5		License plate light RH
R97	2	★	C-3	AN18	Antenna
R117	2	★	B-3		Woofer
R122	6	Gr	B-5		Fuel pump CM
R136	4	★	B-2	R31	Rear wiring harness LH
R140	3	B	C-2	R36	Rear wiring harness RH
R149	2	Gr	C-2	R35	Rear wiring harness LH
R153	2	B	C-4		Rear brake caliper RH
R154	2	B	C-2		Rear brake caliper LH
R174	2	★	B-4		Rear defogger
R186	3	★	C-5		Trunk lid lock actuator & switch
R211	12	★	B-4		TPMS CM
R221	12	★	B-4		TPMS & keyless entry CM
R294	2	Br	C-5		Trunk Opener Button
R297	3	★	C-3		Keyless access interior antenna (rear)

Connector				Connecting to	
No.	Pole	Color	Area	No.	Description
R298	3	★	C-2		Keyless access interior antenna (center)
R299	3	★	C-4		Keyless access exterior antenna (rear)
R330	4	★	C-4		Rearview camera
R343	4	★	C-2		J/C
R344	4	★	C-2		
R350	2	★	C-4		Rear Finisher Light LH
R351	2	★	C-5		Rear Finisher Light RH
R400	8	Gr	C-3		ELCM
★:White or natural color					

Rear Wiring Harness and Trunk Lid Cord

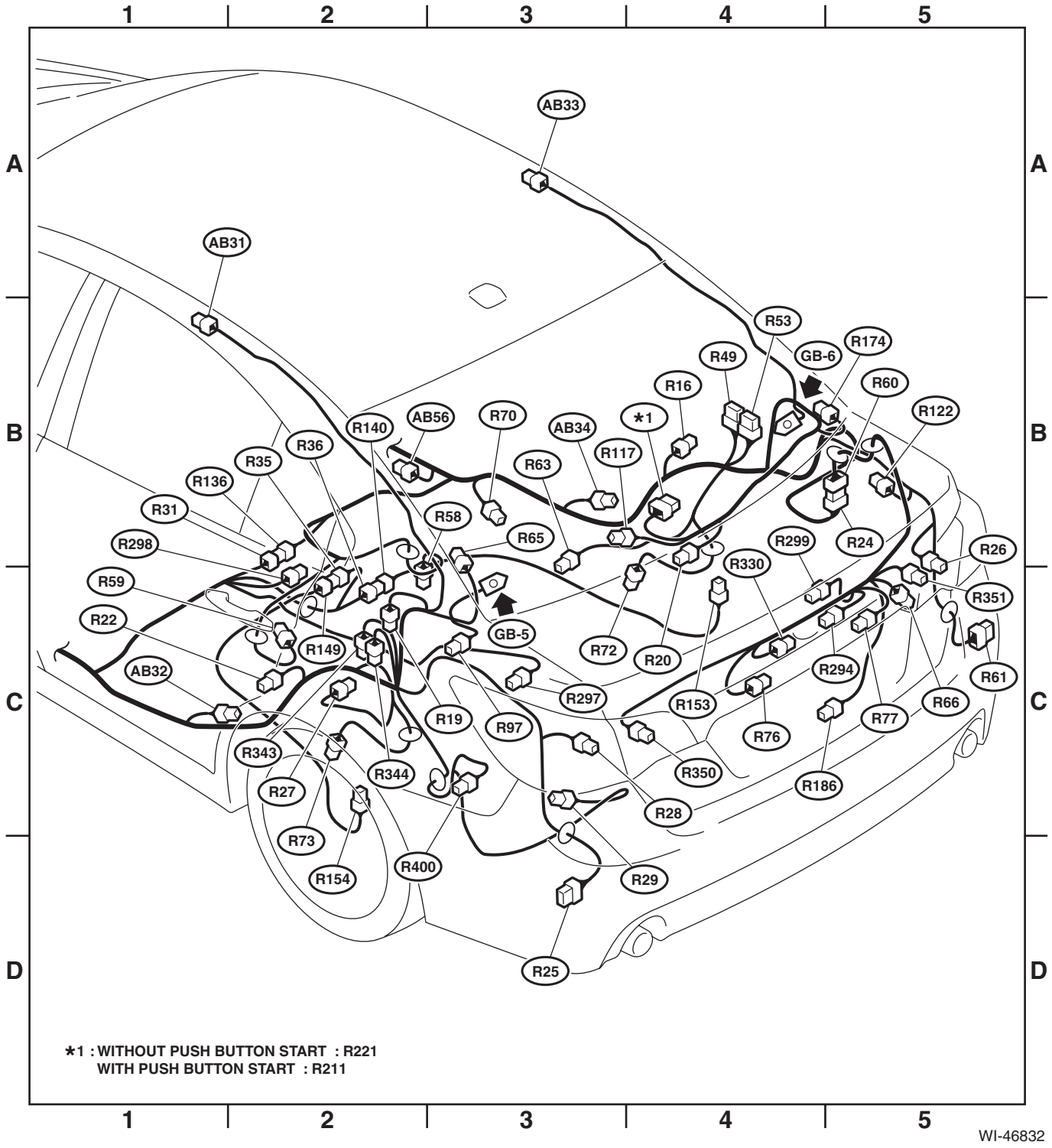

75.Rear Wiring Harness and Rear Gate Cord

A: LOCATION

Connector				Connecting to	
No.	Pole	Color	Area	No.	Description
AB31	2	B	B-1		Curtain airbag module LH
AB32	4	Y	C-1		Curtain airbag sensor LH
AB33	2	B	B-3		Curtain airbag module RH
AB34	4	Y	C-3		Curtain airbag sensor RH
AB56	3	Br	C-3		Belt tension sensor
D6	13	★	B-3	R89	Rear wiring harness LH
D16	6	★	B-4	R94	Rear wiring harness RH
D34	17	★	B-3	R38	
D35	2	★	B-3	R39	
D39	2	★	B-3		High-mounted stop light
D43	4	★	A-4		Rear wiper motor
D44	2	★	A-4		License plate light RH
D45	3	★	A-5		Keyless access exterior antenna (rear)
D46	4	★	A-4		Rear gate lock actuator & latch switch
D47	2	★	A-4		Rear gate opener button
D48	1	★	A-3		Rear defogger
D49	3	★	B-3		Luggage room light
D77	4	★	A-4		Rear lock button & rear gate opener button
D85	6	Gr	A-4		Rearview camera
D89	2	★	A-5		Rear defogger
D90	2	★	A-3		Rear finisher light LH
D107	2	★	A-3	D150	Rear gate cord
D108	2	★	A-5	D151	
D137	2	★	A-4		License plate light LH
D139	2	★	A-5		Rear finisher light RH
D150	2	★	A-4		Power rear gate touch sensor (LWR) LH
D151	2	★	A-5		Power rear gate touch sensor (LWR) RH
D152	2	B	A-5		Power rear gate buzzer
D153	6	★	A-4		Power rear gate auto closer
D154	6	Gr	A-4		Power rear gate inner switch
R16	4	★	C-4		Rear door switch RH
R22	4	★	C-1		Rear door switch LH
R25	10	B	C-3		Radar sensor LH (master)
R26	4	★	C-4		Rear combination light RH
R27	4	★	C-1		Rear seat heater LH (backrest)
R28	4	★	C-3		Rear combination light LH
R29	3	B	C-2		Rear vehicle height sensor
R31	4	★	C-2	R136	Rear wiring harness RH
R32	2	B	C-3		Rear accessory power supply socket (cargo room)
R35	2	Gr	C-2	R149	EPB adapter cord LH
R36	3	B	D-2	R140	EPB adapter cord RH
R38	17	★	B-3	D34	Rear gate cord
R39	2	★	B-3	D35	Rear gate cord
R49	14	★	B-4		Rear seat heater CM
R53	16	★	B-4		
R58	6	Gr	C-3		Fuel pump assy

Connector				Connecting to	
No.	Pole	Color	Area	No.	Description
R59	2	★	C-2		Fuel sub level sensor
R61	10	B	C-5		Radar sensor RH (slave)
R63	4	★	C-3		Rear seat heater RH (backrest)
R70	4	★	C-3		Rear seat heater (seat cushion)
R72	2	Gr	C-3		Rear ABS wheel speed sensor RH
R73	2	Gr	C-1		Rear ABS wheel speed sensor LH
R79	8	★	C-2		Trailer connector
R89	12	★	B-3	D6	Rear gate cord
R94	6	★	B-4	D16	
R95	2	★	C-2	R158	Power rear gate drive unit cord
R117	2	★	C-4		Woofer
R122	6	Gr	B-4		Fuel pump CM
R136	4	★	C-2	R31	Rear wiring harness LH
R140	3	B	D-3	R36	Rear wiring harness RH
R149	2	Gr	C-2	R35	Rear wiring harness LH
R153	2	B	D-4		Rear brake caliper RH
R154	2	B	D-2		Rear brake caliper LH
R158	2	★	C-2	R95	Rear gate cord
R211	12	★	B-4		TPMS CM
R221	12	★	B-4		TPMS & keyless entry CM
R297	3	★	C-3		Keyless access interior antenna (rear)
R343	4	★	C-2		J/C
R344	4	★	C-2		
R400	8	Gr	C-2		ELCM
R407	1	★	B-2	AN14	Antenna cord
R422	16	B	C-2		Power rear gate CM
R423	6	B	C-2		
R424	14	Gr	C-2		
★:White or natural color					

Rear Wiring Harness and Rear Gate Cord

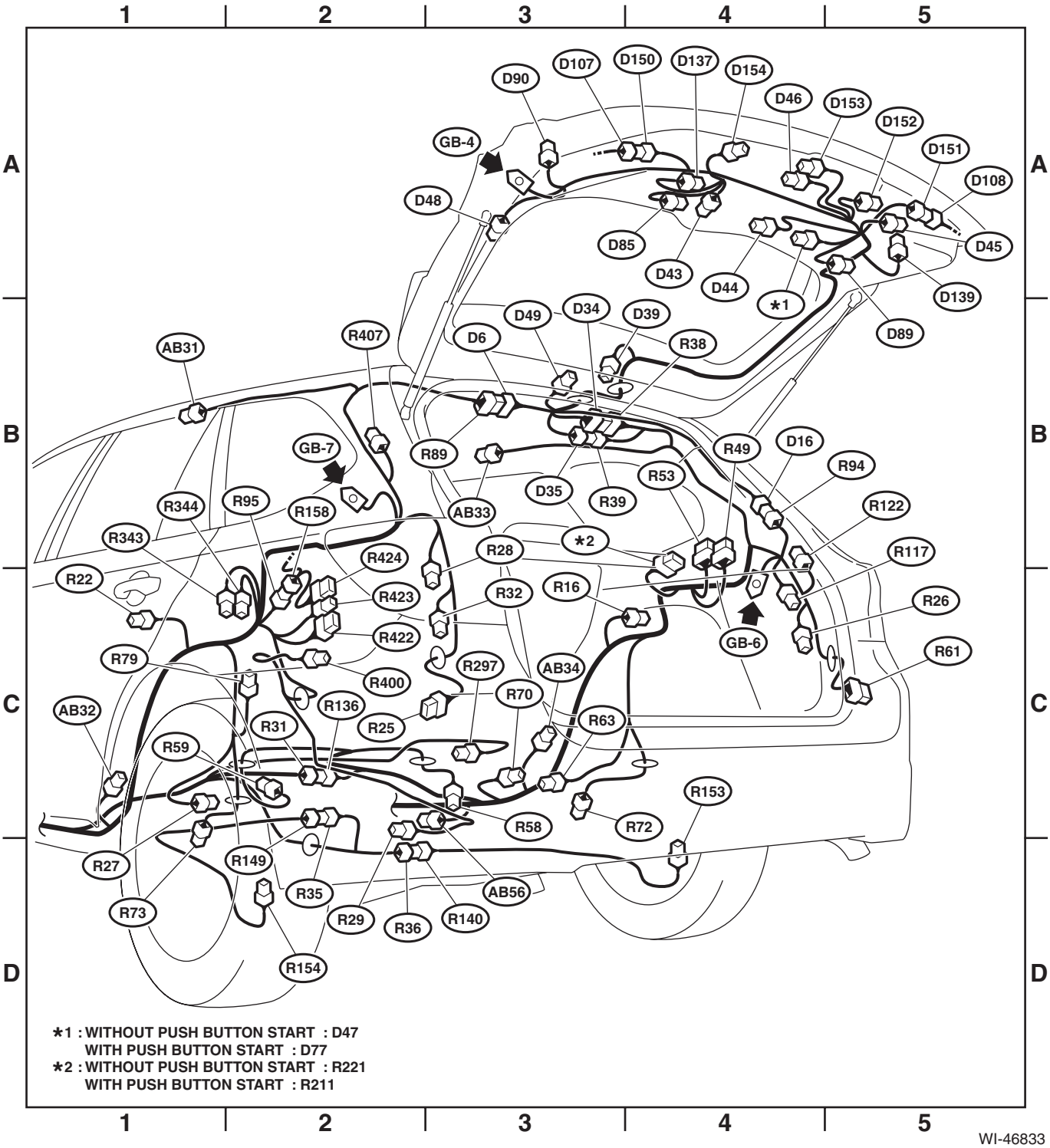

76.Antenna Cord

A: LOCATION

1. WITHOUT TELEMATICS

Connector				Connecting to	
No.	Pole	Color	Area	No.	Description
AN1	3	★	A-2		Audio (sedan model without navigation)
	3	★	C-2		Audio (outback model without navigation)
	3	★	A-2		Navigation unit (sedan model with navigation)
	3	★	C-2		Navigation unit (outback model with navigation)
AN2	1	L	A-2		Audio (sedan model without navigation)
	1	L	C-2		Audio (outback model without navigation)
	1	L	A-2		Navigation unit (sedan model with navigation)
	1	L	C-2		Navigation unit (outback model with navigation)
AN3	3	★	A-2	AN4	Antenna cord (sedan model without satellite antenna)
	3	★	C-2	AN4	Antenna cord (outback model without satellite antenna)
	3	L	A-2	AN4	Antenna cord (sedan model with satellite antenna)
	3	L	C-2	AN4	Antenna cord (outback model with satellite antenna)
AN4	3	★	A-2	AN3	Antenna cord (sedan model without satellite antenna)
	3	★	C-2	AN3	Antenna cord (outback model without satellite antenna)
	3	L	A-2	AN3	Antenna cord (sedan model with satellite antenna)
	3	L	C-2	AN3	Antenna cord (outback model with satellite antenna)
AN5	3	★	A-1	AN6	Antenna cord (sedan model without satellite antenna)
	3	★	C-1	AN6	Antenna cord (outback model without satellite antenna)
	3	L	A-1	AN6	Antenna cord (sedan model with satellite antenna)
	3	L	C-1	AN6	Antenna cord (outback model with satellite antenna)
AN6	3	★	A-1	AN5	Antenna cord (sedan model without satellite antenna)
	3	★	C-1	AN5	Antenna cord (outback model without satellite antenna)
	3	L	A-1	AN5	Antenna cord (sedan model with satellite antenna)
	3	L	C-1	AN5	Antenna cord (outback model with satellite antenna)
AN7	3	★	C-4	AN9	Antenna cord (without satellite antenna)
	3	L	C-4	AN9	Antenna cord (with satellite antenna)
AN8	1	Gr	B-3	AN13	Antenna cord
AN9	3	★	C-4	AN7	Antenna cord (without satellite antenna)
	3	L	C-4	AN7	Antenna cord (with satellite antenna)
AN10	1	★	D-4	R407	Rear wiring harness LH
AN11	3	★	C-4	AN15	Antenna
AN12	1	V	A-3	AN16	Antenna (sedan model)
	1	Gr	C-4	AN16	Antenna (outback model)
AN13	1	Gr	A-3	AN8	Antenna cord
AN14	3	★	B-3	AN17	Antenna
AN15	3	★	C-4	AN11	Antenna cord
AN16	1	V	A-3	AN12	Antenna cord (sedan model)
	1	Gr	C-4	AN12	Antenna cord (outback model)
AN17	3	★	B-3	AN14	Antenna cord
AN18	2	★	B-3	R97	
★:White or natural color					

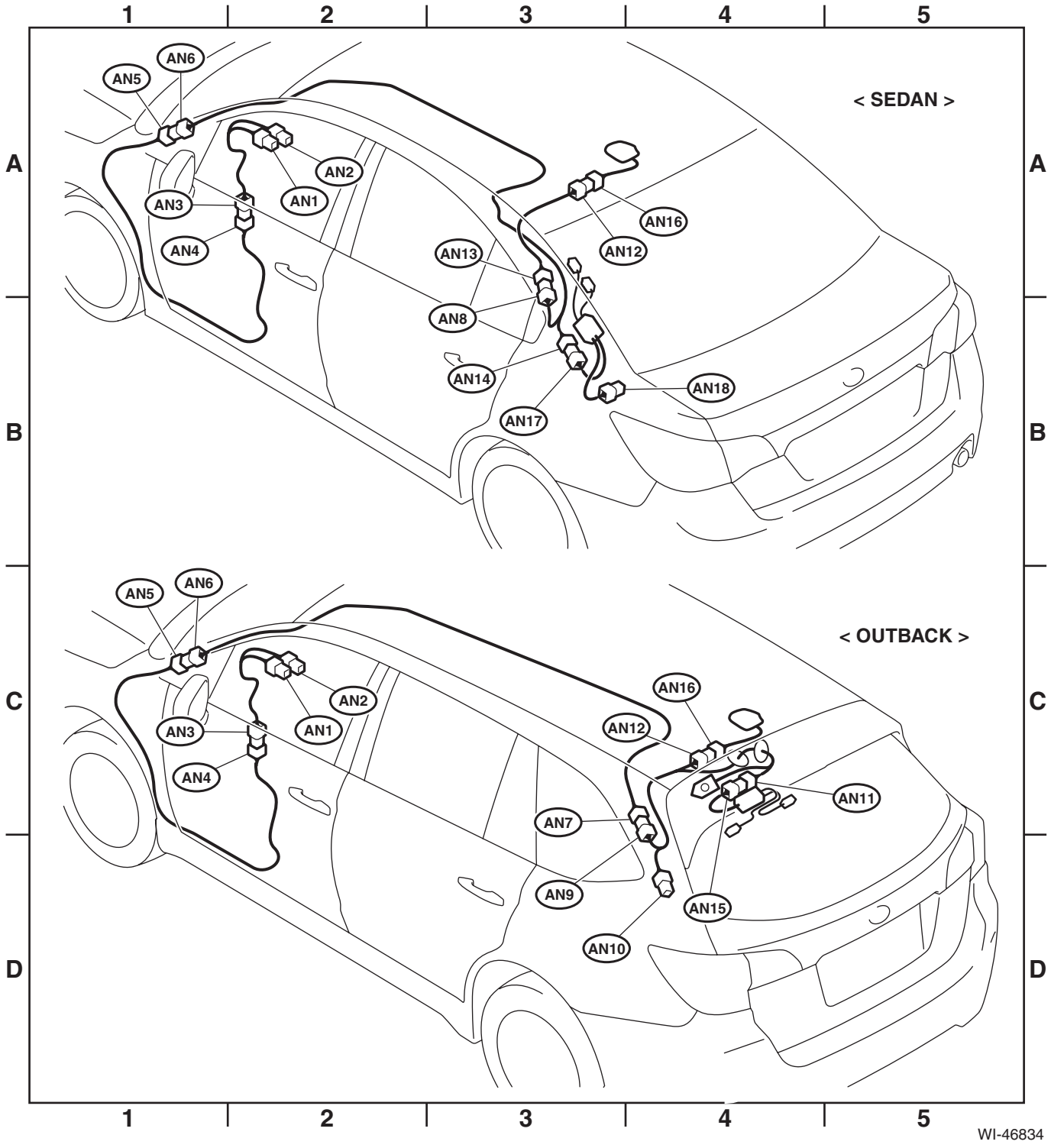
1
2
3
4
5
A
B
C
D
< SEDAN >
AN5
AN6
AN2
AN1
AN3
AN4
AN16
AN12
AN13
AN8
AN14
AN18
AN17
< OUTBACK >
AN5
AN6
AN2
AN1
AN3
AN4
AN16
AN12
AN11
AN7
AN9
AN15
AN10
WI-46834

2. WITH TELEMATICS

Connector				Connecting to	
No.	Pole	Color	Area	No.	Description
AD22	10	★	A-1	i276	Instrument panel wiring harness (sedan model)
	10	★	C-1	i276	Instrument panel wiring harness (outback model)
AD23	8	★	A-2		Telematics button (sedan model)
	8	★	C-2		Telematics button (outback model)
AN1	3	★	A-2		Audio (sedan model without navigation)
	3	★	C-2		Audio (outback model without navigation)
	3	★	A-2		Navigation unit (sedan model with navigation)
	3	★	C-2		Navigation unit (outback model with navigation)
AN2	1	L	A-2		Audio (sedan model without navigation)
	1	L	C-2		Audio (outback model without navigation)
	1	L	A-2		Navigation unit (sedan model with navigation)
	1	L	C-2		Navigation unit (outback model with navigation)
AN3	3	★	A-2	AN4	Antenna cord (sedan model without satellite antenna)
	3	★	C-2	AN4	Antenna cord (outback model without satellite antenna)
	3	L	A-2	AN4	Antenna cord (sedan model with satellite antenna)
	3	L	C-2	AN4	Antenna cord (outback model with satellite antenna)
AN4	3	★	A-2	AN3	Antenna cord (sedan model without satellite antenna)
	3	★	C-2	AN3	Antenna cord (outback model without satellite antenna)
	3	L	A-2	AN3	Antenna cord (sedan model with satellite antenna)
	3	L	C-2	AN3	Antenna cord (outback model with satellite antenna)
AN7	3	★	C-4	AN9	Antenna cord (without telematics without satellite antenna)
	3	L	C-4	AN9	Antenna cord (without telematics with satellite antenna)
	3	L	C-4	AN9	Antenna cord (with telematics)
AN9	3	★	D-4	AN7	Antenna cord (without satellite antenna)
	3	L	D-4	AN7	Antenna cord (with satellite antenna)
AN10	1	★	D-4	R407	Rear wiring harness LH
AN11	3	★	C-4	AN15	Antenna
AN12	1	V	C-4	AN16	Antenna (sedan model)
	1	Gr	C-4	AN16	Antenna (outback model)
AN14	3	★	B-3	AN17	Antenna
AN15	3	★	C-4	AN11	Antenna cord
AN16	1	V	C-4	AN12	Antenna cord (sedan model)
	1	Gr	C-4	AN12	Antenna cord (outback model)
AN17	3	★	B-3	AN14	Antenna cord
AN18	2	★	B-3	R97	
AN31	1	V	A-2	AN32	Antenna cord (sedan model)
	1	V	C-2	AN32	Antenna cord (outback model)
AN32	1	V	A-2	AN31	Antenna cord (sedan model)
	1	V	C-2	AN31	Antenna cord (outback model)
AN33	4	★	A-1	AN34	Antenna cord (sedan model)
	4	★	C-1	AN34	Antenna cord (outback model)
AN34	4	★	A-1	AN33	Antenna cord (sedan model)
	4	★	C-1	AN33	Antenna cord (outback model)
AN35	2	V	B-3	AN36	Antenna cord (sedan model)
	1	L	C-3	AN36	Antenna cord (outback model)
AN36	2	V	A-3	AN35	Antenna cord (sedan model)
	1	V	D-4	AN35	Antenna cord (outback model)

Connector				Connecting to	
No.	Pole	Color	Area	No.	Description
AN37	1	V	A-3	AN38	Antenna
AN38	1	V	A-4	AN37	Antenna cord
AN39	1	V	A-3	AN40	Antenna
AN40	1	V	A-3	AN39	Antenna cord
AN41	1	Br	A-2		Data communication module (sedan model)
	1	Br	C-2		Data communication module (outback model)
★:White or natural color					

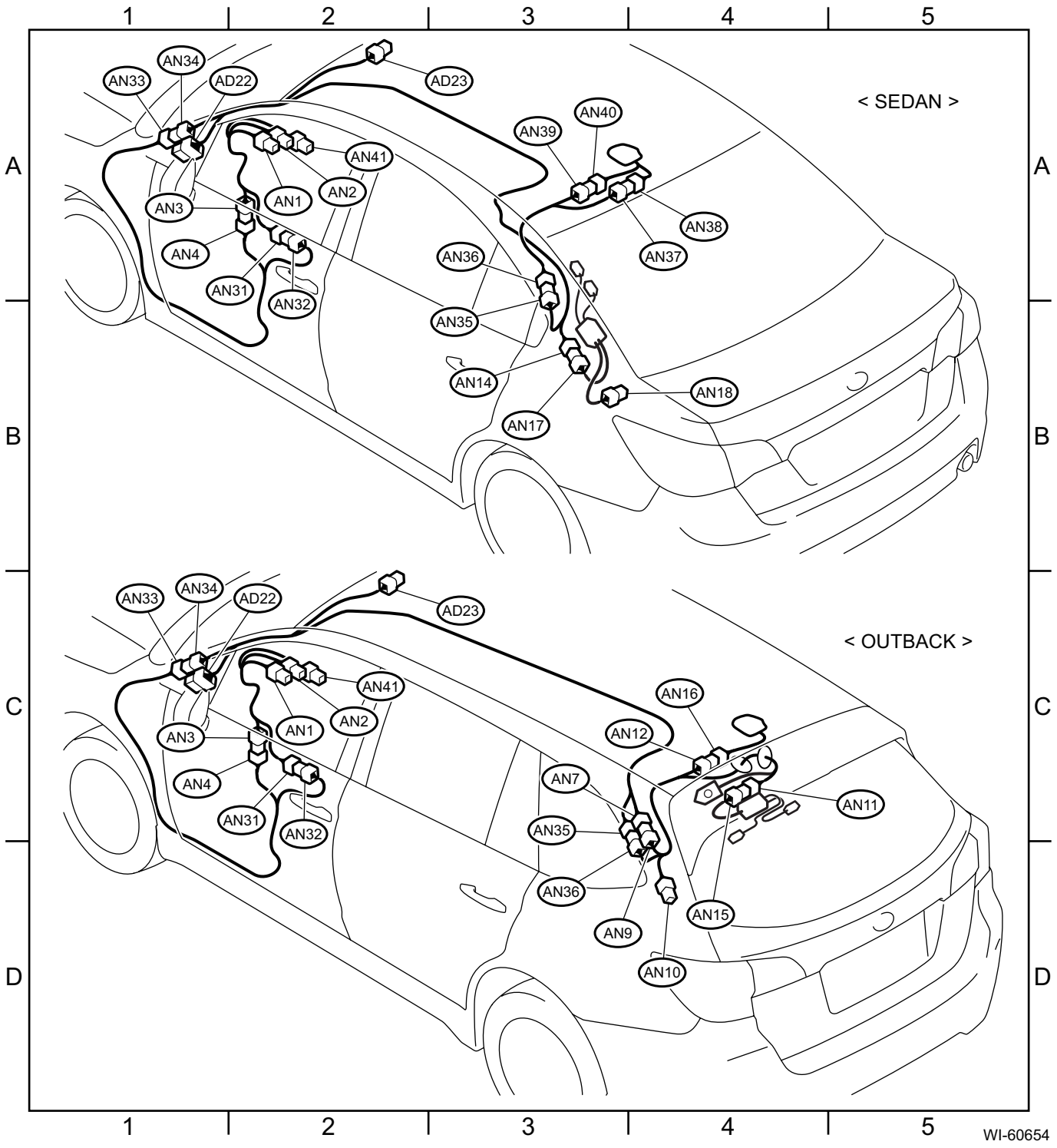
1
2
3
4
5
A
B
C
D
< SEDAN >
AN33
AN34
AD22
AD23
AN40
AN39
AN41
AN1
AN2
AN3
AN38
AN4
AN37
AN36
AN31
AN32
AN35
AN14
AN18
AN17
< OUTBACK >
AN33
AN34
AD22
AD23
AN41
AN16
AN1
AN2
AN3
AN12
AN7
AN4
AN11
AN31
AN32
AN35
AN36
AN15
AN9
AN10
WI-60654